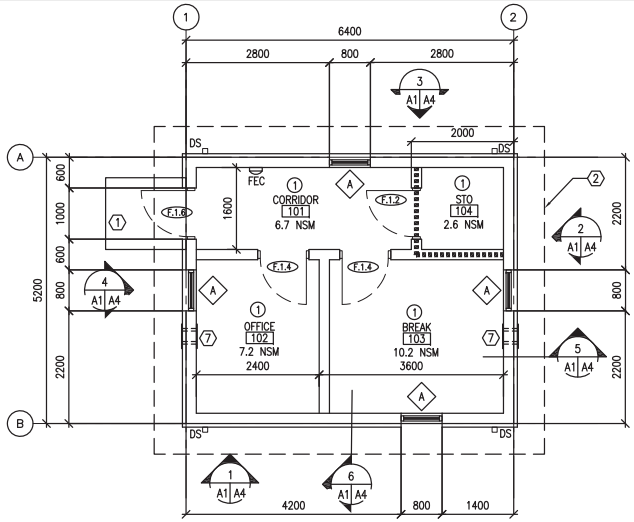

1 A1 A1 FLOOR PLAN
SCALE: 1:50
33.3 GSM

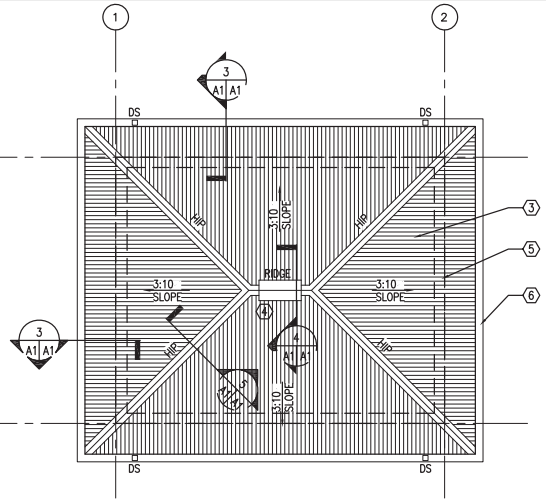

2 A1 A1 ROOF PLAN
SCALE: 1:50

GENERAL NOTES:

A. INTERIOR PARTITIONS SHALL BE 200 MM CMU UNLESS NOTED OTHERWISE.

B. OPENINGS FOR DOORS SHALL BE LOCATED 200 MM FROM THE ADJACENT WALL UNLESS NOTED OTHERWISE.

C. SURFACES TO BE PAINTED SHALL BE CLEAN AND FREE OF FOREIGN MATTER BEFORE APPLICATION OF PAINT. CLEANING SHALL BE SCHEDULED SO THAT DUST AND OTHER CONTAMINANTS WILL NOT FALL ON WET, NEWLY PAINTED SURFACES.

D. CONCRETE AND INTERIOR MASONRY SURFACES GROUTED SOLID SHALL BE ALLOWED TO DRY AT LEAST 30 DAYS BEFORE PAINTING EXCEPT CONCRETE SLAB ON GRADE WHICH SHALL BE ALLOWED TO CURE 90 DAYS BEFORE PAINTING.

E. PAINTS CONTAINING LEAD IN EXCESS OF 0.06 PERCENT BY WEIGHT OF THE TOTAL NONVOLATILE CONTENT SHALL NOT BE USED.

F. MERCURIAL FUNGICIDES SHALL NOT BE USED IN OIL-BASE PAINT.

G. REMOVE LOOSE DIRT AND CLEAN SURFACES BEFORE PAINTING. APPLY PAINT TO INTERIOR STRUCTURAL RIGID FRAMINGS AND CEILINGS AND TEST FOR ADHESION. PRIMER COAT FOR MASONRY. INITIAL FIRST COAT WITH AN ACRYLIC LATEX PAINT FOR EXTERIOR SURFACES AND A SECOND COAT WITH A WATER REPELLENT ACRYLIC LATEX PAINT.

H. METAL DOORS AND FRAMES SHALL RECEIVE A PRIMER COAT PLUS TWO COATS OF PAINT.

I. DIMENSIONS ARE TO STRUCTURAL COLUMN GRID, EDGE OF WINDOW OPENINGS, AND TO HINGE SIDE OF DOOR OPENINGS.

KEY NOTES: (X)

1. CONCRETE STOOP – RE: DETAIL 8/A3
2. LINE OF ROOF OVERHANG ABOVE
3. CORRUGATED METAL ROOF ON COLD-FORMED METAL FRAMING
4. RIDGE VENT
5. LINE OF BUILDING WALL, BELOW
6. METAL GUTTER
7. TWO-PIECE WALL THIMBLE AND TRIM PLATE FOR OPTIONAL WOOD BURNING STOVE CHIMNEY PIPE. STOVE AND PIPE BY OTHERS.

ROOM FINISHES: (X)

1. WALLS: PAINTED PLASTER,
   FLOOR: SEALED CONCRETE
   CEILING: PAINTED PLASTER APPLIED TO STRUCTURE

LEGEND:

- (F.1.6) DOOR TYPE, SEE SHEET A3
- (A) WINDOW TYPE, SEE SHEET A3
- (X) KEY NOTE
- FEC FIRE EXTINGUISHER CABINET
- 1-HOUR RATED PARTITION
- (1) ROOM FINISH TYPE DESIGNATION

FP3

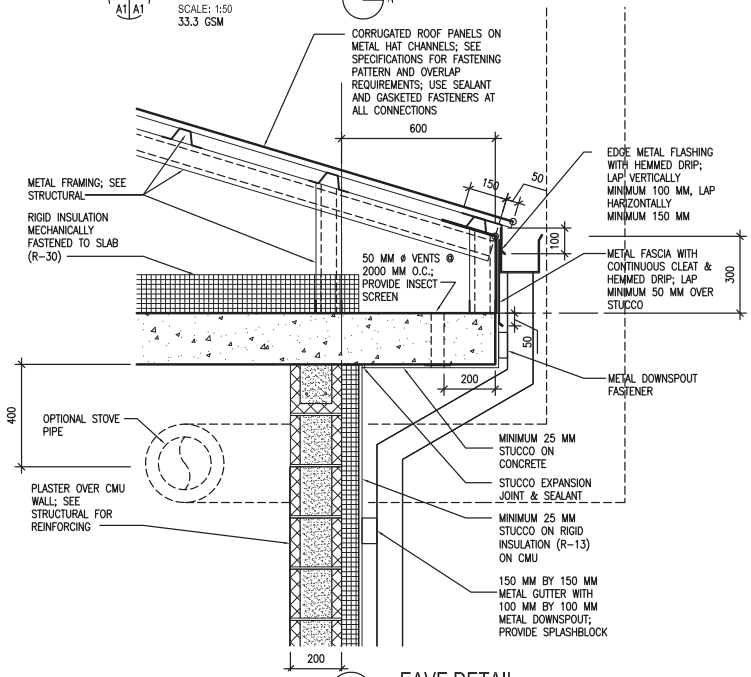

3 A1 A1 EAVE DETAIL
SCALE: 1:10

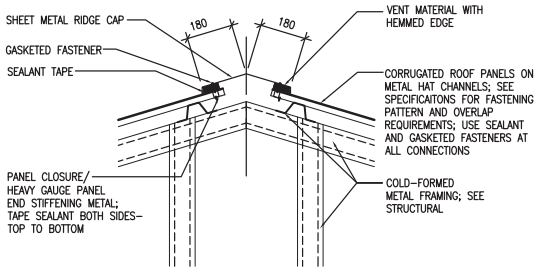

4 A1 A1 RIDGE VENT DETAIL
SCALE: 1:10

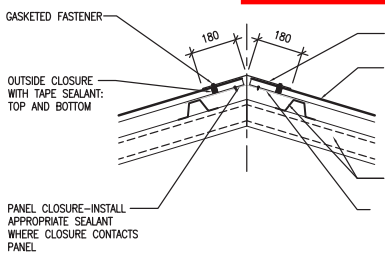

5 A1 A1 HIP DETAIL
SCALE: 1:10

UNLESS OTHERWISE NOTED, LINEAR DIMENSIONS SHOWN ARE IN MILLIMETERS (MM)

0 200 400 800
SCALE: 1: 10

0 1000 2000 4000
SCALE: 1: 50

US Army Corps of Engineers
Afghanistan Engineer District

SYMBOL	DESCRIPTION	DATE	APP'D

DESIGNED BY: PFF	DATE: 09-30-09
DWN BY: ECN	SUBMITTED BY: BAKER
CHK BY: NLJ	FILE NO.: ANPSDA-101XXX

Michael Baker Jr., Inc
A unit of Michael Baker Corporation
Airside Business Park
100 Airport Drive
Moon Township PA 15108
www.mbakercorp.com

STANDARD DESIGN
FOR CHAPEL SCHOOL
WOOD FIRED HEAT OPTION

FLOOR AND ROOF PLANS AND DETAILS

SHEET REFERENCE NUMBER:
A1

100% SUBMISSION