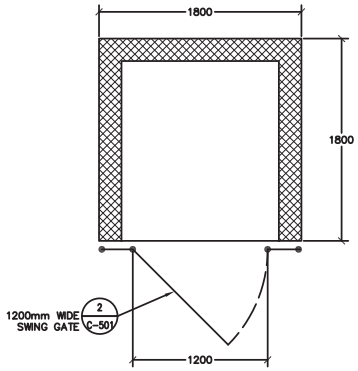

1 C-101 TRASH COLLECTION POINT
SCALE: 1:20

0 200 400 800
SCALE: 1:20

G1

US ARMY CORPS OF ENGINEERS
AFGHANISTAN ENGINEER DISTRICT

Mark	Description	Date	Appr.	Mark	Description	Date	Appr.

U.S. ARMY CORPS OF ENGINEERS
AFGHANISTAN ENGINEER DISTRICT
APO AE 96338

Michael Baker Jr., Inc.
A unit of Michael Baker Corporation
Airside Business Park
100 Airside Drive
Moon Township PA 15108
www.mbakercorp.com

Designed by: GPH
Dwn by: JDS
Ckd by: JMB
Reviewed by: LHM
Submitted by: BAKER
Date: 2/23/10
Design file no. C-101
Drawing code:
File name: AN4TCPC-101
Plot date: 6/30/10
Plot scale: 1:20
Rev: 0

STANDARD DESIGN
VARIOUS PROJECTS
VARIOUS LOCATIONS, AFGHANISTAN

TRASH COLLECTION POINT

PLAN

Sheet reference number:
C-101