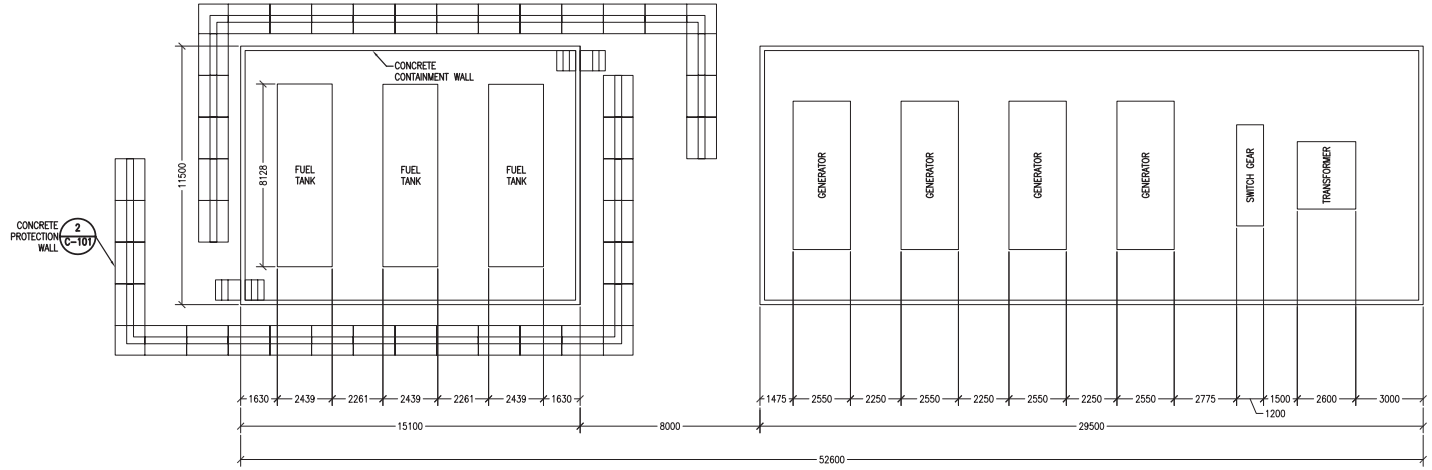

1 C-101 PLAN
SCALE: 1:100

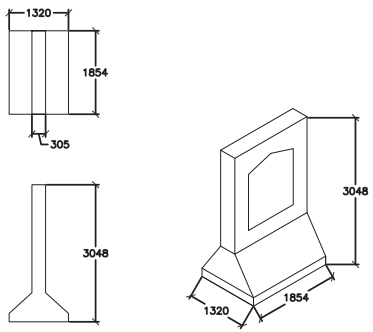

2 C-101 PROTECTION WALL DETAIL
SCALE: NTS

0 1000 2000 4000
SCALE: 1:100

U1

US ARMY CORPS OF ENGINEERS
AFGHANISTAN ENGINEER DISTRICT

Mark	Description	Date	Appr.

Mark	Description	Date	Appr.

U.S. ARMY CORPS OF ENGINEERS
AFGHANISTAN ENGINEER DISTRICT
APO AE 96338

Michael Baker Jr., Inc.
A unit of Michael Baker Corporation
Airside Business Park
100 Airside Drive
Moon Township PA 15108
www.mbakercorp.com

Designed by:
Dwn by: JDS
Ckd by: JMB
Reviewed by: LHM
Submitted by: BAKER
Date: 2/23/10
Rev: 0
Design file no. C-101
Drawing code:
File name: AN-XXFGEC-001
Plot date: 8/9/2010
Plot scale: 1:100

STANDARD DESIGN
VARIOUS PROJECTS
VARIOUS LOCATIONS, AFGHANISTAN

ELECTRICAL POWER GENERATION AND DISTRIBUTION

PLAN

Sheet reference number:
C-101