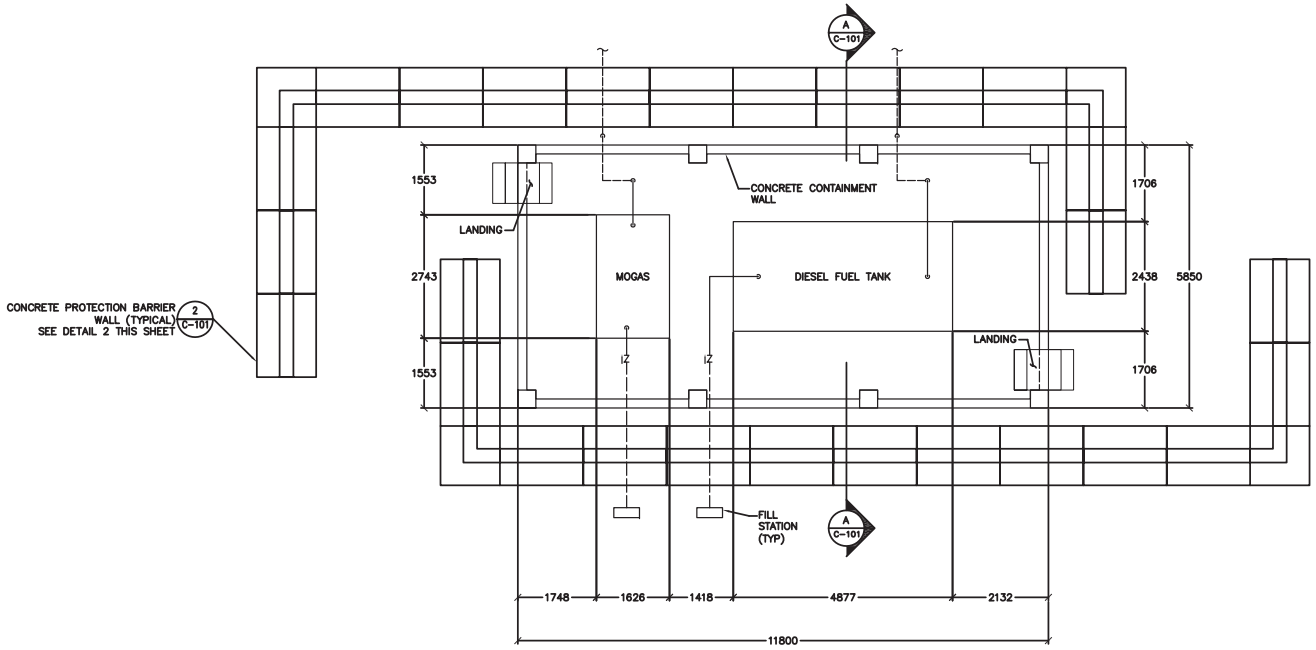

NOTE:
PROVIDE EMERGENCY SHUT-OFF SWITCH IN FUEL OPERATOR'S BUILDING.

1 C-101 PLAN VIEW
SCALE: 1:50

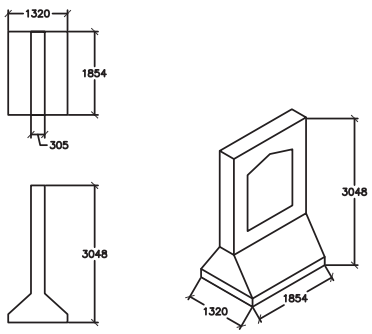

2 C-101 PROTECTION WALL DETAIL
SCALE: 1:50

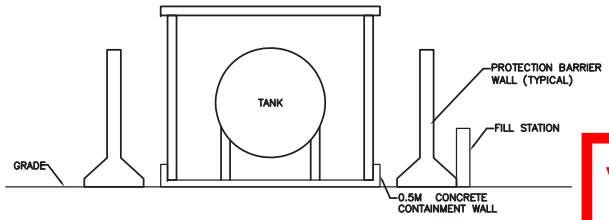

A C-101 SECTION A-A
SCALE: 1:50

0 500 1000 2000
SCALE: 1:50

APPROVED:

VM3

US ARMY CORPS OF ENGINEERS
AFGHANISTAN ENGINEER DISTRICT

Mark	Description	Date	Appr.	Mark	Description	Date	Appr.

U.S. ARMY ENGINEER DISTRICT, AFGHANISTAN
CORPS OF ENGINEERS
APO AE 09339

Michael Baker Jr., Inc.
A unit of Michael Baker Corporation
100 Airside Drive
Moon Township PA, 15108
www.mbakercorp.com

Designed by: RCP
Dwn by: JTP
Ckd by: LHM
Reviewed by: LHM
Submitted by: BAKER
Date: 2/23/10
Rev: 0
Design file no. C-101
Drawing scale:
File name: 090139-C-101
Plot date: 2/23/2010
Plot scale: 1:50

STANDARD DESIGN
VARIOUS PROJECTS
VARIOUS LOCATIONS, AFGHANISTAN

FUEL STORAGE AND VEHICLE REFUELING POINT

PLAN AND DETAILS

Sheet reference number:
C-101