CONSTRUCTIVELY SPEAKING

US Army Corps of Engineers—Afghanistan Engineer District—

March 27, 2010

Issue No. 5

Inside this issue:

Raceways	1
Construction Schedules	2
Firm-Fixed Contracts	5
Water Quality for Boilers Part 2	7

Quality Assurance Branch

Reed Freeman, *Chief Geotechnical/Materials*

Sandy Higgins, *Team Lead Training CQM/RMS/Contract Admin*

Tom Urbaniak, *Team Lead Technical Civil/Materials*

Yvan Nobile, *Team Lead Electrical*

Shafak Pervez, *Electrical*

Chris Devries, *Electrical*

Daniel Keenum, *Mech/Elec*

Steve Baughman *Mechanical/Plumbing*

Hahns Copeland *Civil/Structural*

Bal Multani *Mechanical/Plumbing*

RACEWAYS

By Shafak Pervez, Electrical Engineer

Raceways are electrical highways of distributing power. Without them, we would have a mass of wires that we couldn't tell apart and there would be no protection for the circuit. Raceways are an integral part of an electrical system, and one of the primary functions of a raceway is to provide physical protection for conductors. It is not only important to have the raceways, but it is essential to have the raceways installed correctly.

There are number of things to keep in mind when installing a raceway, such as:

1. Pulling conductors ONLY after the raceway system is complete
2. Size and type of junction/pull box
3. Number and size of conductors in Raceway (Fill ratio)
4. Number of bends in one run
5. Supporting of the raceway

In the interest of time and space, I will only cover number 1 and 2 in this article. The following are pictures of common mistakes seen throughout AED-N project sites and brief description of why it is not in compliance.

For questions regarding this topic and any other electrical issues you may encounter, please feel free to contact the Quality Assurance Branch.

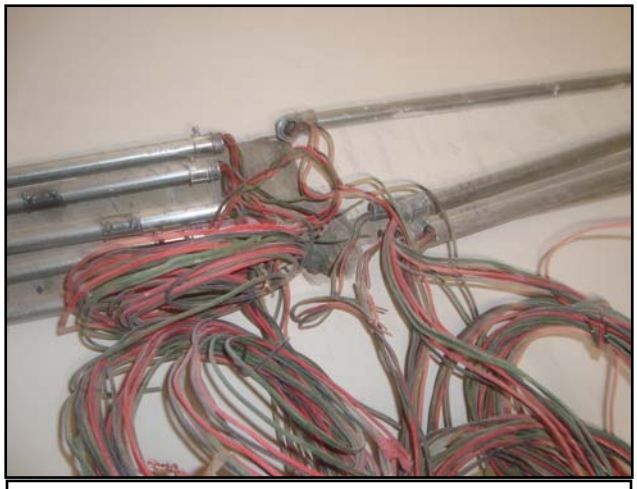

This is a violation of **NEC article 300.18.** It is important to complete the conduit system before pulling conductors. If a conduit system is incomplete at the time of conductor installation, there is a greater possibility for damage to the conductors.

This type of junction box is not acceptable for terminations, angle or U-pulls. The size of box can only be used for a straight pull.
The size of the junction box needs to be calculated using NEC article 314.16.

Importance of Schedules in Managing Construction Projects

By Phillip Di Salvi, Senior Scheduler, Baker

Most contractors and owners can agree that project schedules are a critical ingredient in the successful management of any project. Moreover, an acceptable* project schedule is one of the primary means by which an owner, construction manager, or contractor has available with which to effectively manage a project.

The schedule's primary purpose is to map out and plan the progress on a project in a timeline that is the most efficient and cost effective possible. This gives those associated with the project a realistic timeline by which to expect the project to be completed and a tool by which to monitor its progress. A well thought out and planned construction schedule will help keep a project moving along smoothly, alert the CM and contractor when the project is about to run into snags, and help make needed adjustments when unforeseen circumstances arise. When updated, the schedule becomes a periodic benchmark of the actual progress on the project, and serves as a base plan from which changes can be evaluated.

In order to effectively serve its purpose, it is necessary that contractors provide contractually compliant baseline and monthly update schedules; schedules that are not only compliant, but also conform to accepted industry standards.

But what if the CPM schedule is unacceptable in that it may be inaccurate or lacks sufficient detail, fails to properly represent the contractor's planned sequence of work; or is contractually non compliant? The result is the inability by the Corps and contractor to effectively track construction progress, monitor costs and resources, plan the work sufficiently for a successful project completion; or to provide an accurate as-built history of the project.

While a well developed schedule is necessary to eliminate problems in the planning and prosecution of the work, a poorly developed schedule can result in the loss of time and money, and even project failure.

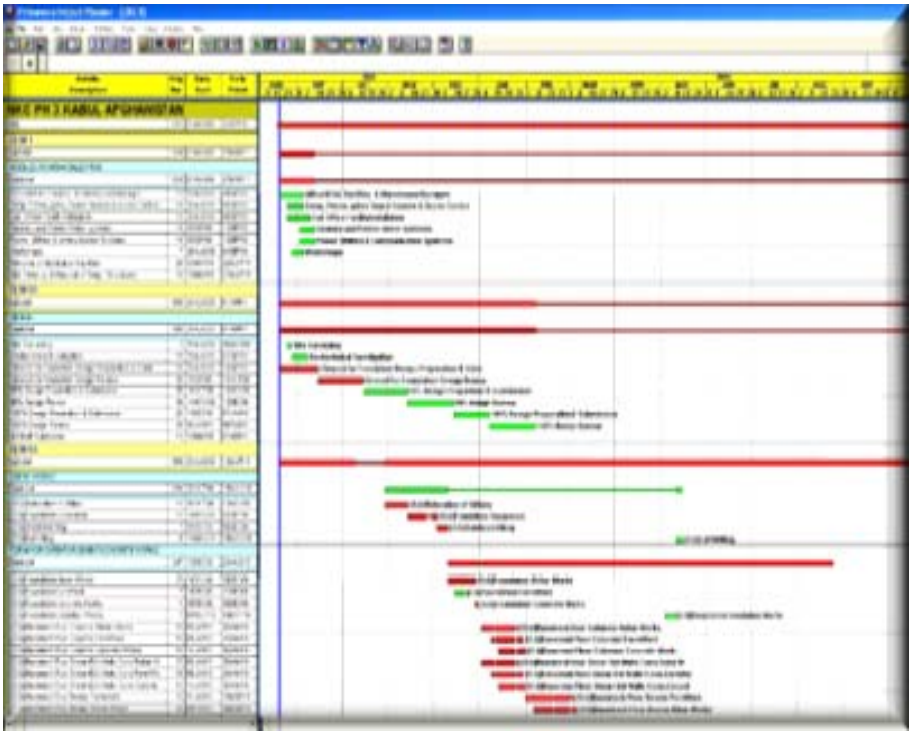

Unfortunately, we find all too often that contractors submit inadequate schedules; schedules that fail to meet the minimum requirement of both the contract and industry standards. Anytime a deficient or substandard schedule is "accepted", the ability to successfully manage the project is impacted; leaving the management team with little understanding of the contractor's work plan. In addition, the flawed logic will result in a skewed and unreliable critical path.

Ultimately, acceptance of an inferior or substandard schedule will without doubt directly impact the client/owner's ability to manage the project, and to defend against delay claims. The contractor's schedule, once accepted, becomes a contract document offering both historical as-built data and a plan for completing the works. Therefore, the need for accuracy of such cannot be overstated. If the contractor's plan is flawed, it cannot be accepted into the contract record. If a schedule is accepted without first being reviewed for contract compliance and analyzed for accuracy of both the as-built data and remaining logic and work sequence, that defective schedule becomes part of the contract record.

So, how can we know what schedules are acceptable? The answer is fairly simple; each schedule should be analyzed by a qualified construction / scheduling professional in an effort to ensure that the schedule complies with the requirements of the contract and meets minimum industry standards in terms of its development.

continued

Importance of Schedules in Managing Construction Projects

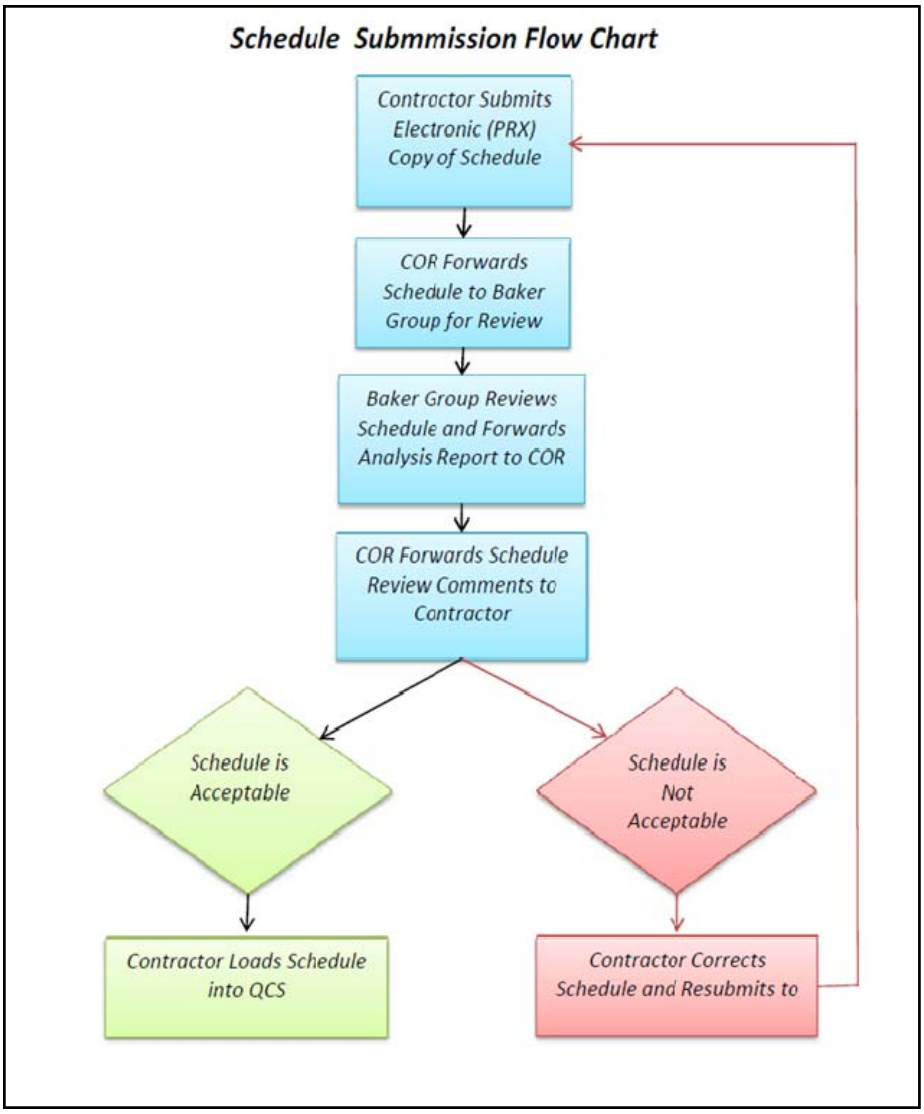

Let's take into account a few of the items that need to be considered are when reviewing a schedule are:

1. Are the contract start and finish milestone dates contractually compliant.

2. Is the project duration contractually compliant

3. Does the schedule provide enough detail to demonstrate the contractors understanding of the work scope

4. Are there loose ends in the activity logic

5. Is the critical path realistic

6. Does the schedule contain out of sequence activities

7. Does the schedule contain excessive float

8. Does the schedule contain negative float, and if so, why

9. Does the schedule contain non contractual milestones or constraints

10. Does the schedule contain excessive lags, or sequestered float

11. Are the activity durations reasonable and contractually compliant

12. Are the work sequence and activity logic realistic

13. Does the schedule contain the required activity coding to effectively organize the project, and illustrate a clear and practical work plan

14. Is the cost loading accurate

15. Are the design, submittal, and procurement activities accurately represented

16. Are contract changes accurately represented

17. Do the Auto-Cost rules compute the project's earned value correctly based on the actual value of the work in place

The construction manager's acceptance of only contractually compliant schedules is critical to maintaining the quality of project schedules. Moreover, the submission of a competent realistic schedule that complies with the requirements of the contract and meets basic industry standards also indicates that the contractor understands the project scope and has a viable plan to prosecute the works.

continued

Importance of Schedules in Managing Construction Projects

Further, the need to ensure timely submission of compliant update schedules by our contractors is no less important. It is the accurate schedule update submitted timely that will provide the construction manager with the current status of the project and a realistic plan to complete the work.

And how then do we ensure that submitted schedules are contract compliant; and if the status is updated correctly, or if it meets accepted industry standards? By making certain that all schedule submittals are effectively analyzed is before acceptance, thereby make certain that only schedules that have been reviewed are considered for acceptance.

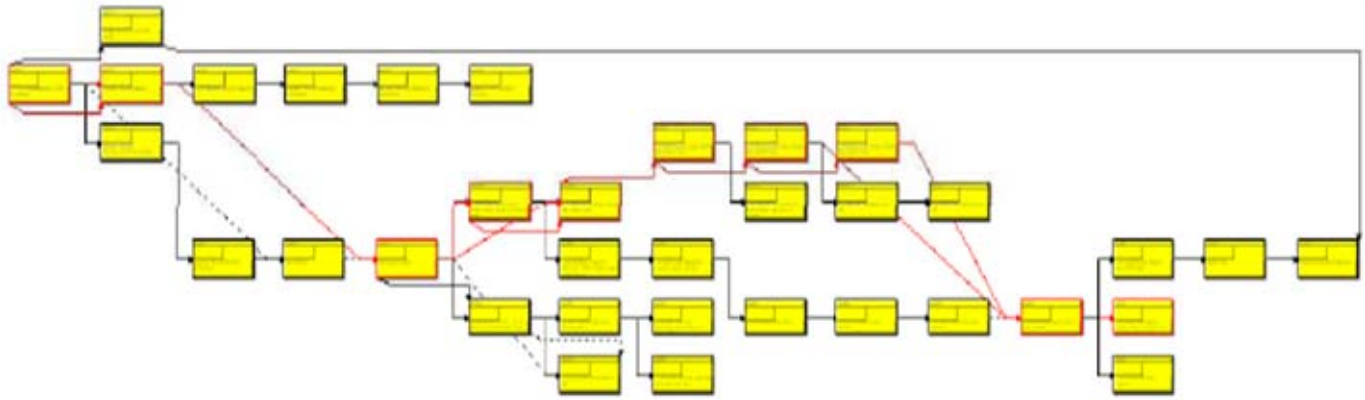

To sum up, the accepted schedule becomes a contract document and therefore must comply with the requirements of the contract. Conversely, acceptance of a non compliant schedule severely impacts the owner's ability to determine the accurate status of the project, to evaluate the contractor's request for time extension, and to analyze and defend against a delay claim.

Finally, in an effort to assist contractors in developing contractually compliant, realistic, manageable project schedules, the Baker Group is offering a series of eight 4-hour classes offering instruction on the preparation of high quality project schedules. In so doing, it is our hope that future construction schedules will provide an opportunity for all parties to succeed.

** Reference to the word "accepted or acceptable" herein in intended to indicate a schedule that meets the requirements of the contract and minimum applicable industry standards; and can therefore be accepted by the COR.*

FIRM-FIXED CONTRACTS

Taken from AED Bulletin

The Afghanistan Engineer District is convinced that firm-fixed price contracts are the most effective and fiscally responsible acquisition methodology in providing the facilities and services for the people of Afghanistan and Coalition Forces operating in Afghanistan as part of NATO's International Security Assistance Force.

Facts:

What are *firm-fixed price* contracts?

Firm fixed-price contracts, as their name implies, require contractors to estimate upfront, what the project will cost to complete. Once the contract is awarded, the contractor assumes a greater responsibility for the control of costs that exceed the agreed upon dollar amount. This type of contract is used when the scope of work is clearly defined, and there are no variables in engineering or technical specifications. This contract also gives the contractor the incentive to be cautious in their spending to ensure a fair profit margin is achieved for their company.

Why is AED choosing to award this type of contract?

Firm-fixed price contracts are a good fit for AED for many reasons. Other contracts require a higher level of vigilance and oversight on the part of contracting personnel. Given the volume of projects AED is projected to undertake in the coming years, and the relatively high turnover of personnel in the district, other contract types, including cost-reimbursable contracts, are not as feasible for the district to manage following contract award. In addition, AED has worked extensively on Site-Adapt Standard Designs for high-density facilities. These designs were developed to take the "guess work" out of constructing relatively standard buildings used on Afghanistan National Security Forces installations throughout the country. Since we will essentially be awarding contracts with very specific scopes of work and engineering specifications, the uncertainty associated with the use of cost-reimbursable contracts is greatly minimized.

Cost Comparison:

The cost comparison depicted in Figure 1 below illustrates data loosely based on two actual AED contracts. In this anecdotal scenario, Company A was awarded a firm fixed price contract for $36 million to build Concrete Masonry Unit (CMU) Barracks for Coalition Forces. Company B was awarded a cost-reimbursable contract for a base cost of $32.7 million for a similar scope of work. Company B's contract allowed for reimbursement of supply and personnel costs and additional fees. Although initially, the contract was cheaper, the additional costs and fees increased the total contract cost by more than $10 million.

Figure 1

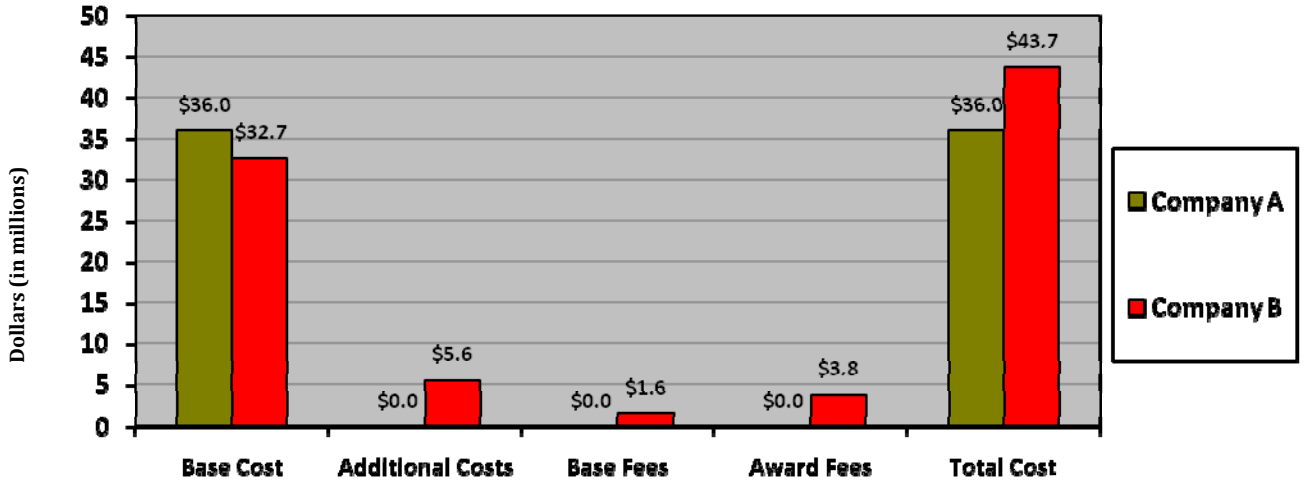

How does AED determine which company will be awarded a contract?

AED uses the "Best Value" trade-off analysis to award projects for contracts in which the prospective contractor's technical proficiency is valued over the price due to the complexity of the project. For smaller and less-complex projects, AED uses the *"Lowest price, Technically-acceptable,"* or LPTA award method.

FIRM-FIXED CONTRACTS

The "Best Value" award process:

For contracts awarded under the "Best Value" methodology, AED will evaluate the proposals as follows:

1. The technical (non-pricing) volumes of *all* of the proposals submitted are sent to the Source Selection Evaluation Board for consideration. Proposals are reviewed in accordance with the evaluation factors and sub-factors identified in the solicitation.

2. A significant part of the evaluation process is determining the contractor's experience and past performance on projects similar to the type being considered.

3. The proposals determined to be the most technically qualified and providing a marked advantage over others are then combined with the cost and pricing analysis performed by the cost team. The cost team compares the cost proposals against the Independent Government Estimate (IGE) and the cost proposal of the most highly qualified contractor to determine if there are any "unbalanced" proposals. After these two independent evaluations are completed, the Contracting Officer or Source Selection Authority must determine which proposal presents the "Best Value" to the government when overall technical rating and price are combined. **Important consideration -- using the "Best Value" trade-off analysis process allows the government to select other than the lowest price for award, where technical rating is considered more important than the price, due to the complexity of the project.** This determination must be supported in the Source Selection Authority's rationale in the source selection documents.

The "Lowest price, Technically-acceptable" award process:

For projects in which the LPTA award method is most appropriate, an initial analysis is conducted on the offeror's prices using techniques pursuant to the Federal Acquisition Regulation* 15.404-1(b) and in accordance with the solicitation. An evaluation for acceptability is also performed on each proposal in accordance with FAR 15.101-2(b). For contracts awarded using the LPTA method, AED will evaluate proposals as follows:

1. Government price evaluators will conduct a price analysis of overall prices and then perform a cost realism analysis for the purpose of measuring each offeror's understanding of the requirements and to assess the risk inherent in an offeror's proposal. Total prices submitted by the offeror that are determined to be more than 25% above or below the Independent Government Estimate and more than 25% above or below the average of all the price proposals received in response to the solicitation will be considered to be unreasonably high or unrealistically low and will not be considered for award.

2. Government price evaluators will rank, by proposal price, the proposals meeting the established reasonable price criteria and cost realism analysis.

3. Government price evaluators will select the ten lowest-priced proposals that meet the established cost and realism criteria and send the technical proposals, without pricing information, to the Source Selection Evaluation Board. The technical (non-pricing) volume(s) of each of these ten proposals will be given to the Technical Evaluators for review, without any actual or indicated price information. The Technical Evaluation Team will review these ten proposals for technical acceptability. If any offerors are determined to be "technically acceptable" from this group, the offeror with the lowest price technically acceptable proposal will be awarded the contract. If, on the other hand, no proposals are found to be "technically acceptable" within this first group of ten proposals, then the process described above will be conducted again, as many times as necessary, until such time as the district identifies a technically acceptable proposal.

Figure 2

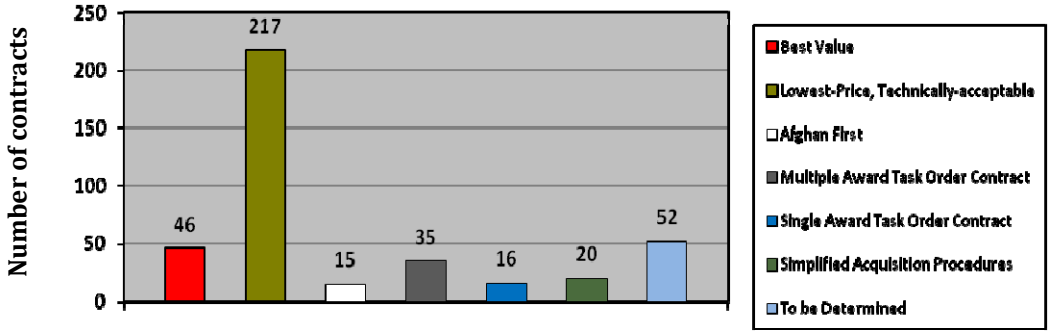

WATER QUALITY FOR BOILERS

Part 2: Water Treatment

By: Steven Baughman, P.E. Mechanical Engineer, Quality Assurance

The following is the conclusion to a two part examination of Boilers aimed to help identify parameters helpful in maintaining water quality for proper operation and maintenance. We shall be following the same basic outline as shown in Chapter 48, Water Treatment, of ASHRAE's 2003 HVAC Applications Handbook. As such we shall discuss 1) Water Characteristics, 2) Corrosion Control, 3) Scale Control, 4) Biological Growth Control, 5) Suspended Solids and Deposition Control, and 6) Selection of Water Treatment.

Water Characteristics

When examining the quality or property of water specific to boilers or other hydronic equipment there are a multitude of parameters or characteristics that should be known. The following definitions will help us as we examine water quality.

Alkalinity is the concentration or quality of an alkali-containing substance (American Heritage Dictionary). Alkali refers to various bases capable of neutralizing acids. PH is often thought of as a measurement of alkalinity or acidity. This is incorrect, as PH is a measurement of acidity and can tell if a substance is a base or an acid. Alkalinity on the other hand is the ability of a substance to resist change in PH. Alkalinity is measured by phenolphthalein alkalinity (P Alk) and methyl orange alkalinity (M Alk). M Alk is a measurement of the entire alkalinity and represents the amount of carbonate and bicarbonate constituents in the water. P Alk is a measurement of the carbonate, strong alkali, present. The difference in these measurements gives the amount of bicarbonate, weak alkali, that exists in the water. There are other noncarbonated alkali present in water that are not measured by P Alk and M Alk, but in most cases the amount is very small in comparison to the carbonates and can be safely ignored. Alkalinity is an important factor is corrosion control and also contributes to scale formation.

Chlorides are compounds with one or more covalently bonded chlorine atoms. They effect the corrosion due to conductivity and small size of the free chloride ions. Chloride does not readily react to chemicals added to the water. Other than evaporation, chloride is unaffected by most operations or treatments to the water.

Dissolved Solids will affect corrosion and scale formation. The amount of dissolved solids is usually referred to as the total dissolved solids (TDS). Low TDS usually results in higher corrosion due to lower scale build up. High TDS usually results in higher scale build up and as a result lower corrosion problems.

Conductivity, as would be expected, is the ability of water to conduct electricity. As TDS increases the conductivity of the water usually goes up.

Silica or silicon dioxide can also be found in water and will form scale that is very difficult to remove. While silica deposition is less likely than other deposit types, it should be considered when examining the water TDS make up.

Soluble Iron is iron in solution that usually comes from corrosion in the system. When it deposits as iron hydroxide or iron phosphate it can increase thermal resistance and diminish heat transfer.

Sulfates, SO4 bonded molecules, contribute to scale formation. Calcium sulfate is of particular concern in high calcium concentration water. At low concentrations however, calcium sulfate scale does not readily form. Sulfates are also an issue with corrosion due to high conductivity.

Suspended solids, those solids not represented by the TDS, are of particular concern at high velocity water flow due to increased ware and erosion effects. Suspended solids can be both organic and inorganic and are usually found in unpurified surface water sources.

Biological characteristics of water include the presence of bacteria, algae, and fungi. They can contribute to operational as well as health related problems. Below 150 degrees F the growth of these constituents can be increasingly problematic. Foul odors and mud-like deposits are often a sign of dead biological material. Some bacteria can contribute to corrosion.

continued

WATER QUALITY FOR BOILERS

Part 2: Water Treatment (cont'd)

Corrosion Control

Within hydronic system corrosion will be seen in many different forms with different results. Generally corrosion increases the rate of further corrosion as more soluble iron is supplied to the water system and eventually leads to wide spread corrosion problems. Dissolved oxygen accelerates the corrosion of ferrous metals and should be minimized if possible.

When selecting boilers or other hydronic equipment consider corrosion resistant materials and protective coatings to minimize the problem with corrosion. Proper maintenance of equipment and repair of protective coatings when damaged will increase the life of the equipment and reduce future corrosion problems.

Some scale build up can help to prevent corrosion and it should be considered. Adjustments in water change and PH can be used to form an optimum balance between scale and acidity.

Chemical treatments are available to inhibit corrosion. They are usually quite dangerous and should be handled with care. Some treatments form a protective coating over the entire surface of the system while others specifically target the already formed anodes or cathodes to inhibit further growth.

Scale Control

Inorganic materials forming on the insides of hydronic systems are what we refer to as scale. Common forms of scale are calcium carbonate, calcium phosphate, magnesium slats, and silica. Temperature, alkalinity, and the materials found within the water control and contribute to scale build up.

Understanding the constituents that exist in your water supply is important. What increases scale for one may decrease scale for another. Scale from salts tends to diminish at higher temperature due to higher solubility while calcium carbonate becomes less soluble with increased temperature and scale build up will increase. Silica is less soluble at low PH levels and scale build up will increase. Calcium carbonate is less soluble at high PH levels and more scale will begin to be formed.

One method of controlling scale is to optimize the cycles of concentration, or the ratio of makeup water to the rate of blow down. Blow down is the emptying of the boiler by blowing out under pressure the water within the tank. The emptying under pressure will help to force out or empty the boiler of dissolved solids and other materials that have become concentrated in the system during operation. The longer a boiler system runs the more materials will be formed and deposited in the boiler and the higher the likelihood of scale formation. Controlling scale causing material concentrations in makeup water and the rate at which this make up water is exchanged with the existing system water will help to control the buildup of scale in the boiler system.

Chemical treatment can also help to control scale build up. Threshold inhibitors can keep the scale causing materials in solution and scale conditioners can be used to cause the scale causing materials to fall out of solution as sludge rather than form hard scale build up. Pretreatment of makeup water via reverse osmosis and or ion exchange can also be used to control scale build up.

Biological Growth

In addition to inorganic materials algae, bacteria, fungi, yeasts, and mold can also be issues in boiler water. While these issues have an impact on low temperature and chilled water systems they are relatively insignificant with hot water systems with sufficient temperature elevation (140 degrees F) as they can't live and flourish in the extreme temperature.

When biological growth may be an issue, eliminating or minimizing exposure to sunlight and or the addition of micro biocides can control or eliminate the problem. Other treatments can also be effective such as chlorine, bromine, and iodine.

Any portion of a water system that is subject to temperatures between 80 and 120 degrees Fahrenheit are in danger of cultivating Legionnaires Disease, Legionella pneumophila. While it is of specific concern for potable water systems, Legionnaires is capable of spreading by inhalation in aerosol form. Systems that operate within this temperature band can be harmful for maintenance crews and other people who may come into contact with the bacteria. Humidifiers,

WATER QUALITY FOR BOILERS

Part 2: Water Treatment (cont'd)

Suspended Solids and Deposition Control

There are several methods for controlling suspended solids and minimizing the deposition of these solids in the system. Most methods involve filtering or straining the water prior to introduction and also inline within the system.

Strainers that contain cleanable screens can be used to remove solids down to .001 inches in diameter. Disposable cartridge filters can be used to remove solids down to .00004 inches in diameter. Sand filters can be used to filter materials by allowing the water to settle through a graded bed of sand. Other methods include centrifugal-gravity type separators synthetic mesh mediums. In most cases disposable cartridges or strainers are the best choices depending upon the system and maintenance costs that are willing to be assumed.

Selection of Water Treatment

It is fairly obvious that the various methods we have examined each carry an economic and maintenance factor. These factors as well as others will be the determining factor in what methods you will choose to employ for your system including how it will effect operation and the level of training that will be required for personnel to maintain the system. Let us examine several hydronic systems in a bit more detail.

Once-Through: Systems that work with water that is continually refreshed so that none of the water is recalculated back into the system are once-through systems. Residential water heaters are a good example of a once-through system. Such systems are easier to control because many of the corrosive and scale causing processes do not have time to accumulate as long as the water is properly treated before introduction. Basic filtering or water softening type treatments can be used to treat the water fairly easily. Since water is continually refreshed in the system use of chemicals is not economic because they will be used/added on a continual basis. It is best to avoid chemical treatment for these type systems if possible.

Open Recirculating: Systems that reuse part or all of the water over and over again while exposing the water to the exterior environment are open recirculating systems. Evaporation and loss of water makes chemical treatment expensive but not as bad as once-through systems as a smaller continual dosage will be required to maintain chemical levels. Systems of this type are typically treated with scale and corrosion inhibitors as required. Filtration and pre-treatment of makeup water are the easiest means of controlling system water compositions. Additionally blow down or purging of system water can be used to control build up within the system its self.

Closed Recirculating: Systems that reuse all of the water in a continual process without intended loss are closed reciruclating systems. Hydronic heating and cooling systems are the most common closed recirculating systems. Because the water levels and chemical levels remain very constant in these systems (no loss due to use or evaporation) chemical treatment can be very economic requiring only makeup water to be treated after blow down or purging operations and only if they are employed in system operation.

Water Heating: In addition to the above issues water heating systems have other issues. Water heating systems are subject to greater corrosion and deposition problems. Makeup water should be dematerialized or softened to prevent scale and oxygen scavengers such as sodium sulfite can be added to control corrosion. Electrode boilers require the water conductivity to be of a given level and addition of chemical treatment can affect the efficiency of the system. In such cases oil based inhibitors are used as they do not affect the conductivity of the water.