ENGINEERING AND CONSTRUCTION DIVISION
AFGHANISTAN ENGINEER DISTRICT - SOUTH
APO AE, 09355

# PROJECT NO.

## APPENDIX:
## ANP REGIONAL POLICE TRAINING CENTER

# KANDAHAR PROVINCE, AFGHANISTAN

## SECTION/DETAIL CROSS REFERENCING CONVENTIONS

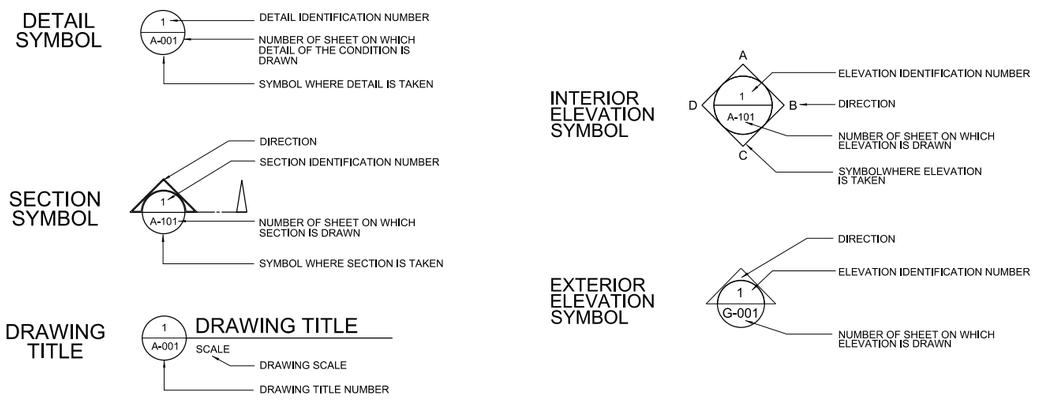


## SCHEDULE OF DRAWINGS

| SHEET NO | DWG CODE | SHEET REFERENCE NO | DESCRIPTION | REV STATUS |
|---|---|---|---|---|
| | | | **GENERAL** | |
| | | G-001 | TITLE SHEET & SCHEDULE OF DRAWINGS | |
| | | | | |
| | | | **CONCEPT PLANS** | |
| | | C-01 | CONCEPTUAL PLAN | |
| | | C-02 | CONCEPTUAL PLAN | |
| | | C-03 | CONCEPTUAL PLAN | |
| | | C-04 | CONCEPTUAL PLAN | |
| | | C-05 | CONCEPTUAL PLAN | |
| | | | | |
| | | | **FACILITY PLANS** | |
| | | | RMTC HEADQUARTERS BUILDING | |
| | | | ADMIN INSTRUCTORS OFFICE | |
| | | | ADMIN TRAINING COMPANY | |
| | | | MEDICAL CLINIC | |
| | | | PX FINANCE BUILDING | |
| | | | BOQ BARRACKS | |
| | | | SUPPORT STAFF BARRACKS | |
| | | | ENLISTED BARRACKS | |
| | | | SENIOR BOQ BARRACKS | |
| | | | DFAC | |
| | | | MEDIUM LATRINE | |
| | | | SMALL LATRINE | |
| | | | LAUNDRY | |
| | | | 8X25 STUDENT CLASSROOM BUILDING | |
| | | | 4X50 STUDENT CLASSROOM BUILDING | |
| | | | 2X150 CLASSROOM BUILDING | |
| | | | 300 CLASSROOM BUILDING | |
| | | | WEAPONS STORAGE | |
| | | | RMTC STORAGE | |
| | | | BRIDMAL AND BWT STORAGE | |
| | | | POL STORAGE BUILDING | |
| | | | FUEL OPERATORS BUILDING | |
| | | | GUARD HOUSE | |
| | | | WELL HOUSE | |
| | | | BOOSTER PUMP HOUSE | |
| | | | OUTHOUSES | |
| | | | GUARD TOWER | |
| | | | | |
| | | | VEHICLE MAINTENANCE FACILITY | |
| | | | OBSERVATION TOWER | |

| SHEET NO | DWG CODE | SHEET REFERENCE NO | DESCRIPTION | REV STATUS |
|---|---|---|---|---|
| | | | **FACILITY PLANS CONT.** | |
| | | | AMMUNITION DISTRIBUTION BUILDING | |
| | | | COVERED MESS | |
| | | | COVERED BLEACHERS | |
| | | | RANGE BUILDINGS ARCHITECTURAL DETAILS | |
| | | | RANGE CIVIL DETAILS | |
| | | | | |
| | | | | |
| | | | PERSONNEL BUNKERS | |
| | | | TRASH COLLECTION POINT | |
| | | | WASH RACK | |
| | | | OUTDOOR ASSEMBLY AREA REVIEWING STAND | |
| | | | | |
| | | | | |
| | | | FUEL STORAGE AND VEHICLE REFUELING POINT | |
| | | | FLOORPLAN OF RANGE COMMAND AND CONTROL BUILDING | |
| | | | **REFERENCE DRAWINGS** | |
| | | | POWER PLANT (FOR REFERENCE ONLY) | |
| | | | ELECTRICAL POWER GENERATION AND DISTRIBUTION | |
| | | | | |
| | | | | |
| | | | **TECHNICAL MANUALS** | |
| | | | PM 385-63 | |
| | | | TC 25-8 | |
| | | | **SPECIFICATIONS** | |
| | | | TECHNICAL SPECIFICATIONS | |
| | | | | |
| | | | **REFERENCE MATERIAL** (FOR REFERENCE ONLY, GOVERNMENT DOES NOT TAKE RESPONSIBILITY FOR THE ACCURACY OF THIS REPORT) | |
| | | | SITE ASSESSMENT SURVEY | |
| | | | | |
| | | | | |
| | | | | |
| | | | | |

US ARMY CORPS OF ENGINEERS
AFGHANISTAN ENGINEER DISTRICT - SOUTH

APP | DATE | DESCRIPTION | SYMBOL

DESIGNED BY:
DRAWN BY: BRJ
CKD BY:
REVIEWED BY:
SUBMITTED BY:

DATE: 9 JAN 2011
DESIGN FILE NO.
REV: —
DRAWING CODE:
FILE NAME: G-TitSdgn
PLOT SCALE: AS SHOWN
CONTRACT NO. xxxxxxx

U.S. ARMY CORPS OF ENGINEERS
AFGHANISTAN ENGINEER DISTRICT - SOUTH
APO AE 09355

ENGINEERING AND CONSTRUCTION DIVISION

ANP RPTC
KANDAHAR PROVINCE, AFGHANISTAN

TITLE SHEET
SCHEDULE OF DRAWINGS

SHEET REFERENCE NUMBER:
G-001

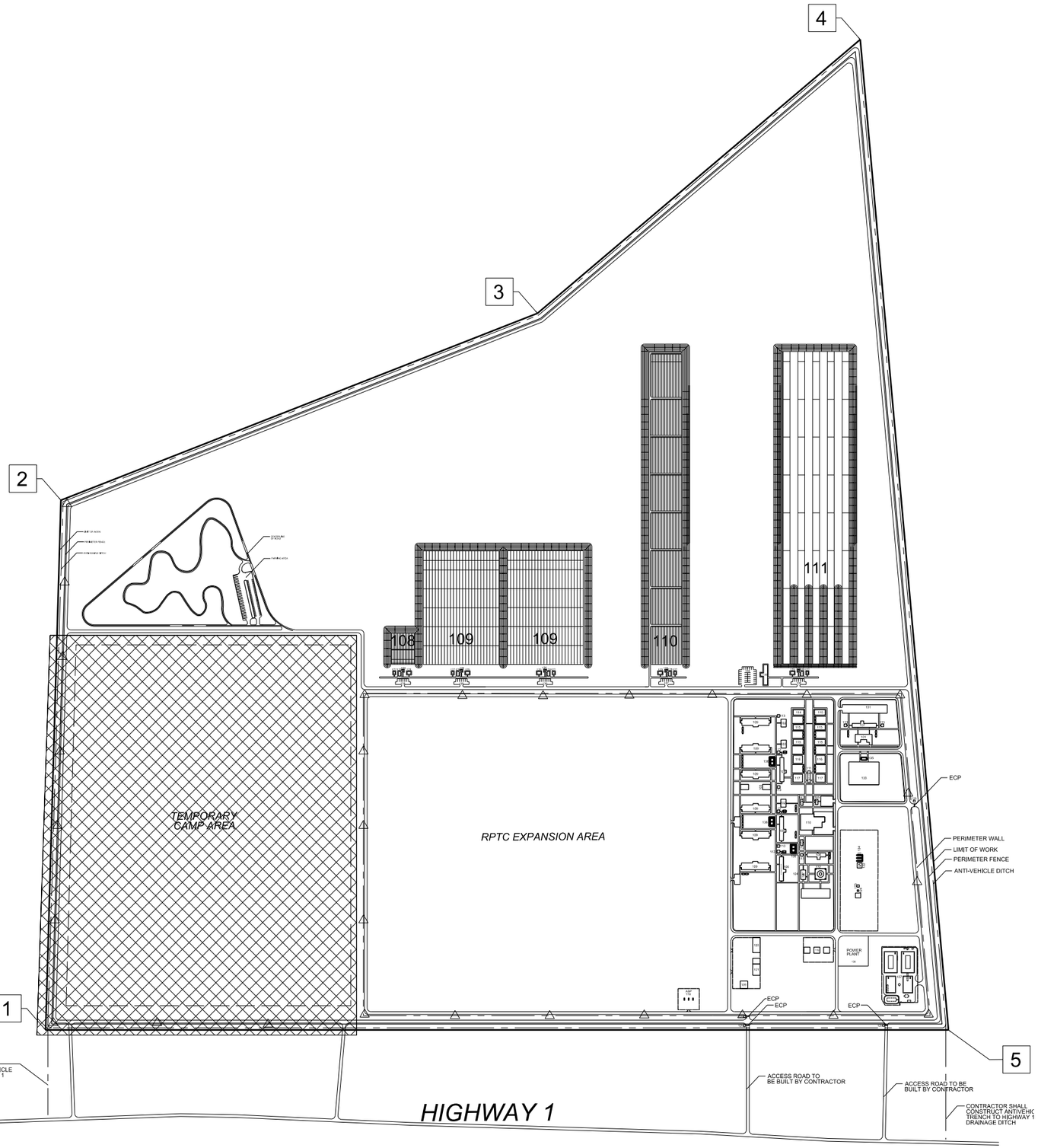


# LEGEND

WORK BY OTHERS (CONTRACTOR SHALL CONSTRUCT GUARD TOWERS & ANTIVEHICLE TRENCH IN THIS AREA)

| POINT COORDINATE TABLE | | | |
|---|---|---|---|
| POINT # | X | Y | MGRS |
| 1 | 610109.0000 | 3525692.0000 | 41RPR1010925692 |
| 2 | 611008.9986 | 3525698.9983 | 41RPR1100925699 |
| 3 | 610999.9986 | 3526599.9983 | 41RPR1100026600 |
| 4 | 610099.9986 | 3526590.9983 | 41RPR1010026591 |
| 5 | 610099.9986 | 3526590.9983 | 41RPR1010026591 |

GRAPHIC SCALE

300 120 60 0 300 600

US Army Corps of Engineers
AFGHANISTAN ENGINEER DISTRICT SOUTH

| MARK | DESCRIPTION | DATE | APPR. |
|---|---|---|---|
| MARK | DESCRIPTION | DATE | APPR. |

U.S. ARMY CORPS OF ENGINEERS
AFGHANISTAN ENGINEER DISTRICT SOUTH

DESIGNED BY: BRIAN JOHNSON PE
DWN BY: RDW
CKD BY: BRJ
SUBMITTED BY: BRIAN JOHNSON PE
PLOT SCALE: 1:2000:1
SIZE: 11x17
DATE: 14 JAN 2011
SOLICITATION NO.: W912P8-##-X-####
CONTRACT NO.: W912P8-##-X-####
PLOT DATE: 14 JAN 2011
FILE NAME: XXXXXXXX.dgn
FILE NUMBER: 1-NS-#####

REGIONAL POLICE TRAINING CENTER
KANDAHAR PROVINCE, AFGHANISTAN

CONCEPT PLAN

SHEET IDENTIFICATION
C-01

# CONCEPT PLAN
# REGIONAL POLICE TRAINING CENTER

## PLAN KEY

101 HEADQUARTERS BUILDING
102 ADMIN INSTRUCTOR OFFICES
103 ADMIN TRAINING COMPANY
104 MEDICAL CLINIC
105 PX/FINANCE
106 BOQ/NCO/OFFICER BARRACK
107 SR BOQ OFFICER BARRACK
108 SUPPORT STAFF BARRACK
109 ENLISTED BARRACK
110 DFAC W/ STORAGE YARD
111 LATRINE MEDIUM
112 LATRINE SMALL
113 LAUNDRY (TOTAL 9)
114 200 STUDENT CLASSROOM (25 STUDENT CLASSROMS)
115 200 STUDENT CLASSROOM (50 STUDENT CLASSROMS)
116 300 STUDENT CLASSROOM (150 STUDENT CLASSROOMS)
117 300 STUDENT CLASSROOM (300 STUDENT CLASSROOM)
118 AMMUNITION SUPPLY POINT
119 WEAPONS STORAGE
120 RPTC STORAGE BUILDING
121 BRIDMAL AND BWT STORAGE
122 VEHICLE MAINTENANCE
123 POL STORAGE BUILDING
124 FUEL OPERATORS BUILDING
125 GATE HOUSE
131 PARKING FOR 50 VEHICLES
132 MOSQUE (NOT TO BE DESIGNED OR CONSTRUCTED BY CONTRACTOR)
133 PARADE GROUNDS
134 WASH RACK
135 REVIEW STAND
136 VOLLEYBALL COURTS
137 WWTP
138 POWER PLANT
139 DFAC DRY STORAGE

## LEGEND

GUARD TOWER

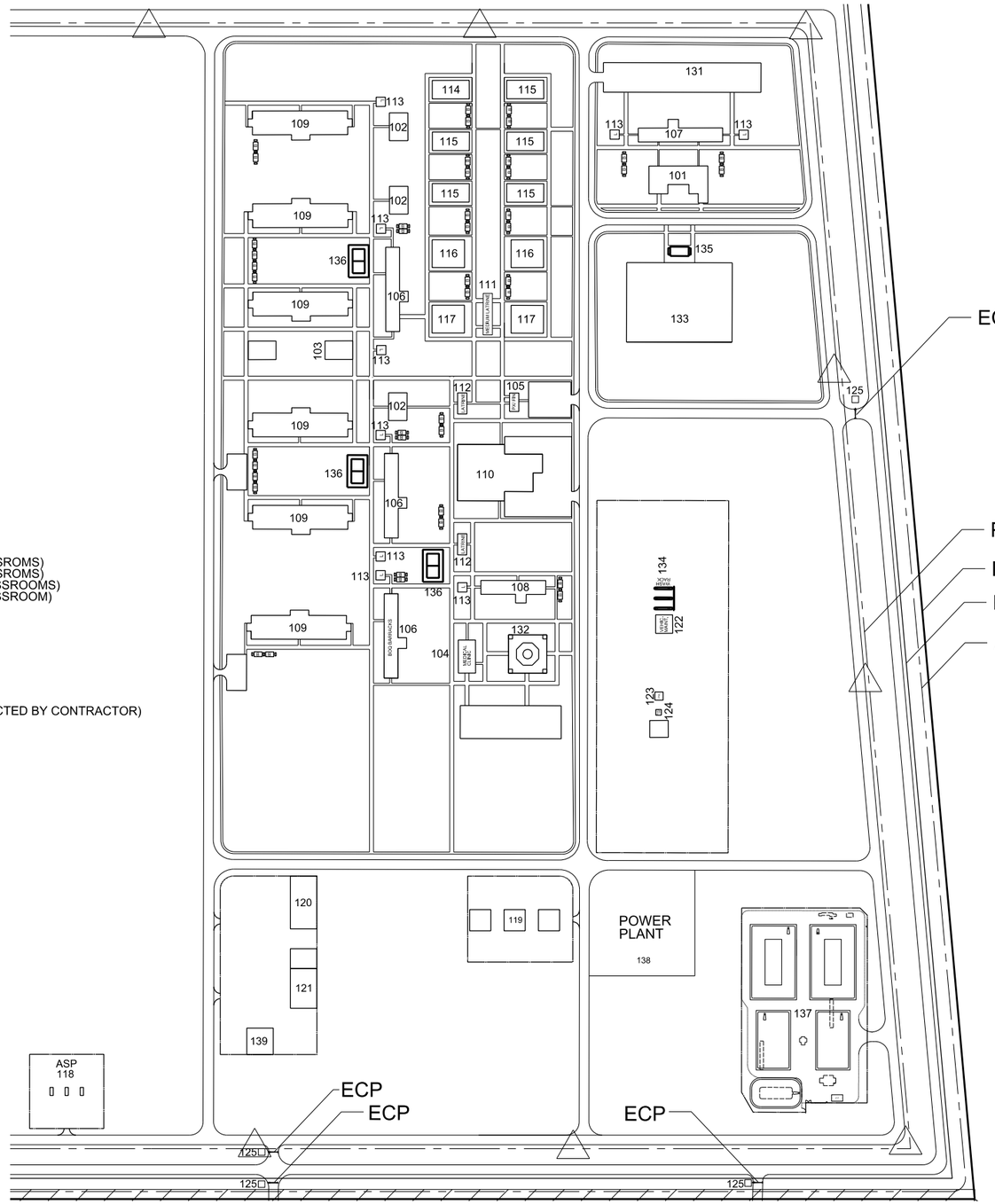


N

GRAPHIC SCALE

100 40 20 0 100 200

# REGIONAL POLICE TRAINING CENTER
# KANDAHAR PROVINCE, AFGHANISTAN

US Army Corps of Engineers
AFGHANISTAN ENGINEER DISTRICT SOUTH

| MARK | DESCRIPTION | DATE | APPR. |
|---|---|---|---|
| MARK | DESCRIPTION | DATE | APPR. |

DESIGNED BY: BRIAN JOHNSON PE
DWN BY: RDW
CKD BY: BRJ
SUBMITTED BY: BRIAN JOHNSON PE
PLOT SCALE: 40051
SIZE: 11x17
DATE: 14 JAN 2011
PLOT DATE: 14 JAN 2011
FILE NAME: XXXXXXXX.dgn
SOLICITATION NO.: W912P8-##-X-####
CONTRACT NO.: W912P8-##-X-####
FILE NUMBER: 21-##-#####

U.S. ARMY CORPS OF ENGINEERS
AFGHANISTAN ENGINEER DISTRICT SOUTH

RPTC SMALL ARMS RANGE
KANDAHAR PROVINCE, AFGHANISTAN

CONCEPT PLAN

SHEET IDENTIFICATION
C-02

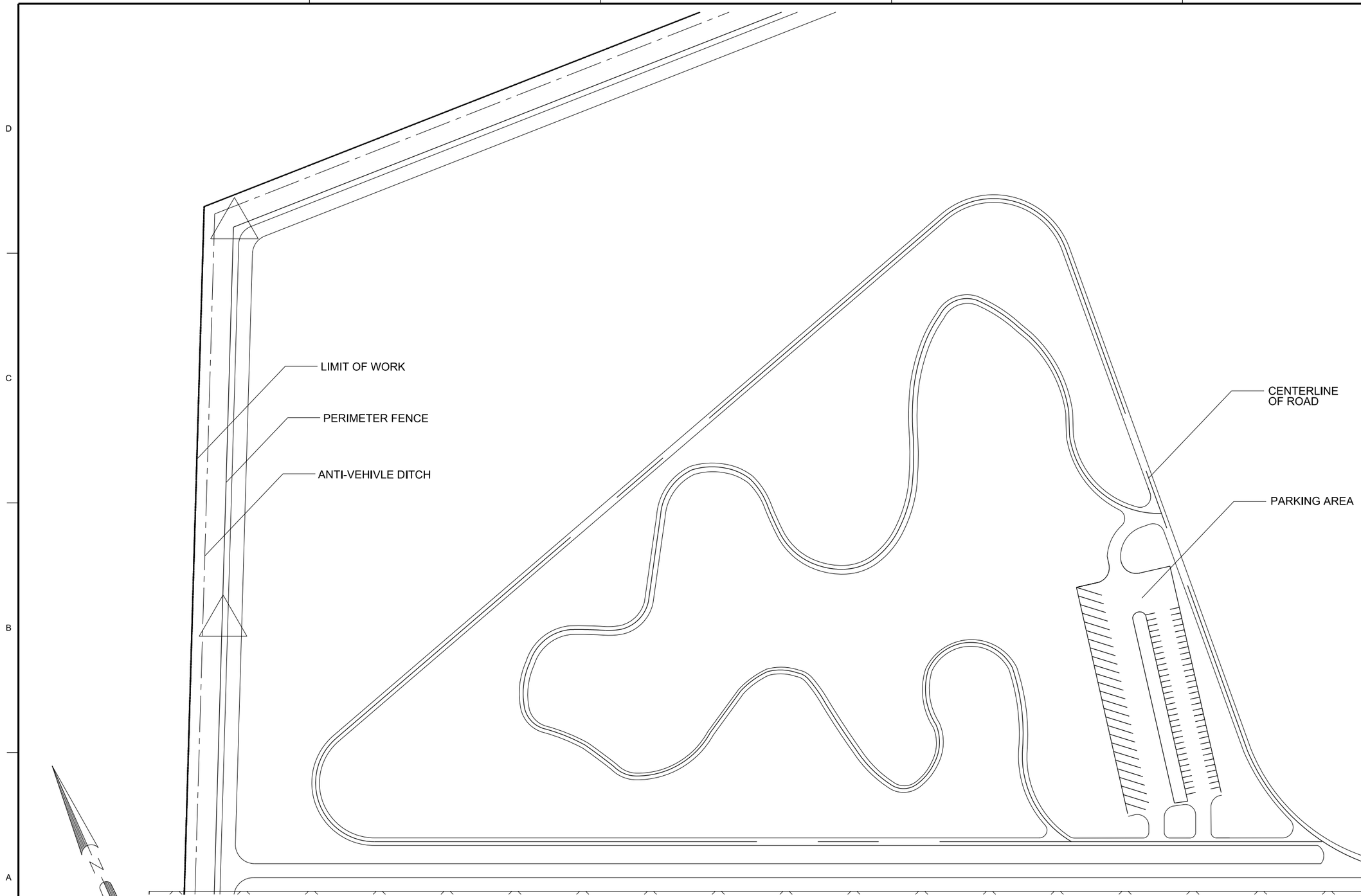


# RPTC UAH TRACK/RANGE
# KANDAHAR PROVINCE, AFGHANISTAN

US Army Corps of Engineers
AFGHANISTAN ENGINEER DISTRICT SOUTH

| MARK | DESCRIPTION | DATE | APPR. |
|---|---|---|---|
| | | | |

| MARK | DESCRIPTION | DATE | APPR. |
|---|---|---|---|
| | | | |

U.S. ARMY CORPS OF ENGINEERS
AFGHANISTAN ENGINEER DISTRICT SOUTH

DESIGNED BY: BRIAN JOHNSON PE
DWN BY: RDW
CKD BY: BRJ
SUBMITTED BY: BRIAN JOHNSON PE
PLOT SCALE: 20001
SCALE: 11 X 17
DATE: 14 JAN 2011
PLOT DATE: 14 JAN 2011
FILE NAME: XXXXXXXX.dgn
SOLICITATION NO.: W912P8-##-X-####
CONTRACT NO.: W912P8-##-X-####
FILE NUMBER: 11-##-#####

RPTC SMALL ARMS RANGE
KANDAHAR PROVINCE, AFGHANISTAN

CONCEPT PLAN

SHEET IDENTIFICATION
C-03

RPTC Concept.dgn 1/16/2011 11:07:24 AM

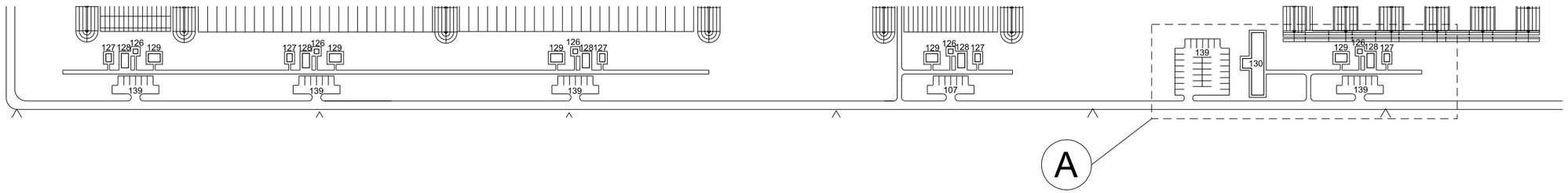


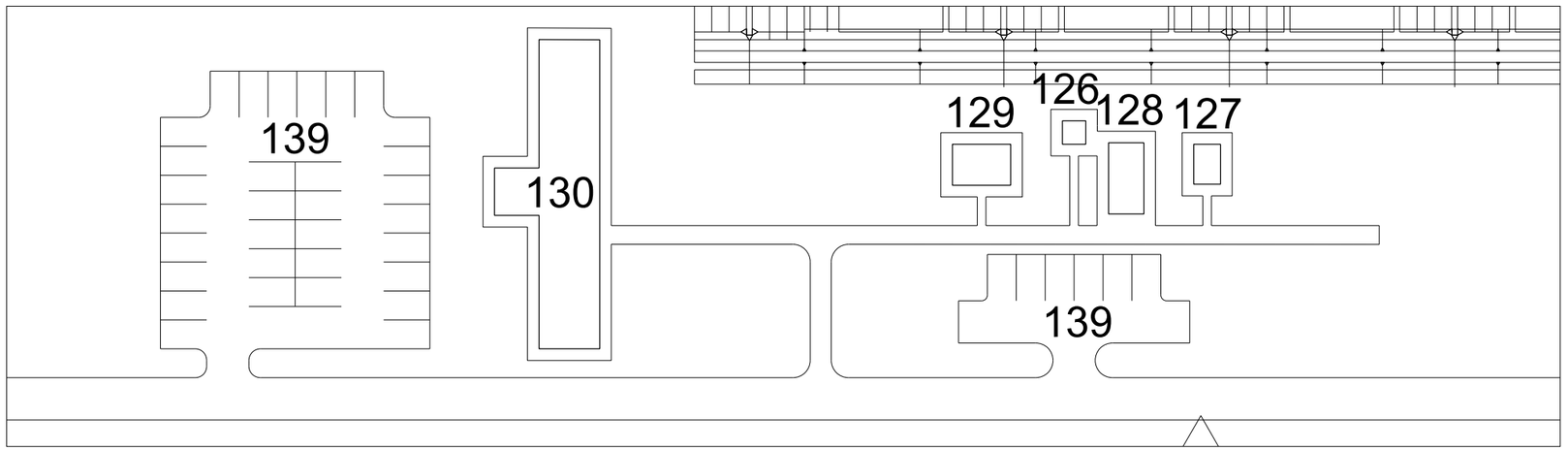


A ENLARGED VIEW

# CONCEPT PLAN
# REGIONAL MILITARY TRAINING CENTER

## PLAN KEY

126 OBSERVATION TOWER
127 AMMUNITION DISTRIBUTION BUILDING
128 COVERED MESS
129 COVERED BLEACHERS
130 COMMAND AND CONTROL BUILDING
139 PARKING

GRAPHIC SCALE
25 10 5 0 25 50

# RPTC SMALL ARMS RANGE
# KANADAHAR PROVINCE, AFGHANISTAN

US Army Corps of Engineers
AFGHANISTAN ENGINEER DISTRICT SOUTH

| MARK | DESCRIPTION | DATE | APPR. |
|---|---|---|---|
| | | | |

| MARK | DESCRIPTION | DATE | APPR. |
|---|---|---|---|
| | | | |

DESIGNED BY: BRIAN JOHNSON PE
DWN BY: RDW
CKD BY: BRJ
SUBMITTED BY: BRIAN JOHNSON PE
DATE: 14 JAN 2011
SOLICITATION NO.: W912P8-##-X-####
CONTRACT NO.: W912P8-##-X-####
FILE NUMBER: H-##-######
PLOT SCALE: 4000:1
PLOT DATE: 14 JAN 2011
SIZE: 11x17
FILE NAME: XXXXXXXX.dgn

U.S. ARMY CORPS OF ENGINEERS
AFGHANISTAN ENGINEER DISTRICT SOUTH

RPTC SMALL ARMS RANGE
KANDAHAR, AFGHANISTAN

CONCEPT PLAN

SHEET IDENTIFICATION
C-04

# CONCEPT PLAN
# REGIONAL POLICE TRAINING CENTER

## PLAN KEY

108 PISTOL RANGE
109 RIFLE RANGE
110 HEAVY MACHINE GUN RANGE
111 RPG RANGE

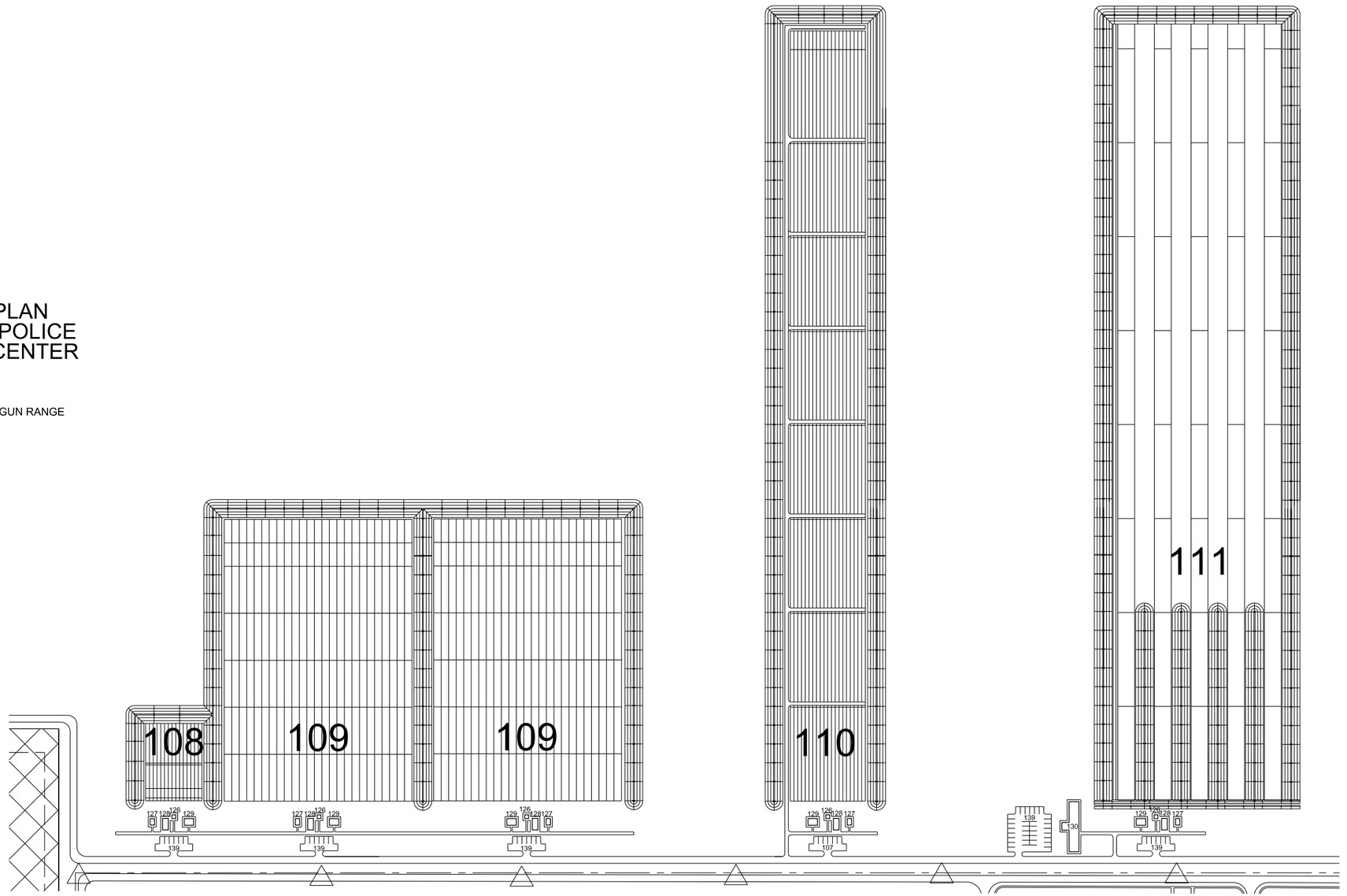


GRAPHIC SCALE
100 40 20 0 100 200

# RPTC SMALL ARMS RANGE
# KANDAHAR PROVINCE, AFGHANISTAN

US Army Corps of Engineers
AFGHANISTAN ENGINEER DISTRICT SOUTH

| MARK | DESCRIPTION | DATE | APPR. |
|---|---|---|---|
| | | | |

| MARK | DESCRIPTION | DATE | APPR. |
|---|---|---|---|
| | | | |

DESIGNED BY: BRIAN JOHNSON PE
DWN BY: RDW
CKD BY: BRJ
SUBMITTED BY: BRIAN JOHNSON PE
PLOT SCALE: 1=1
PLOT DATE: 14 JAN 2011
SHEET SIZE: 11x17
DATE: 14 JAN 2011
SOLICITATION NO.: W912P8-##-X-####
CONTRACT NO.: W912P8-##-X-####
FILE NUMBER: 1=94-####
FILE NAME: XXXXXXXX.dgn

U.S. ARMY CORPS OF ENGINEERS
AFGHANISTAN ENGINEER DISTRICT SOUTH

RPTC SMALL ARMS RANGE
KANDAHAR PROVINCE, AFGHANISTAN

CONCEPT PLAN

SHEET IDENTIFICATION
C-05

# AFGHAN NATIONAL ARMY

## STANDARD BUILDING DESIGN

## RMTC HEADQUARTERS BUILDING

## 100% FINAL DESIGN SUBMITTAL

### SHEET INDEX


G-001 COVER SHEET

STRUCTURAL

S-001 GENERAL NOTES & DESIGN CRITERIA
S-101 FOUNDATION/SLAB PLAN
S-102 ROOF FRAMING PLAN
S-401 BUILDING SECTIONS
S-402 ENLARGED LATRINE SLAB PLAN
S-501 FOUNDATION SECTIONS
S-502 FRAMING SECTIONS
S-503 BEAM & COLUMN DETAILS
S-504 BEAM & COLUMN DETAILS
S-601 SCHEDULES
S-701 TYPICAL DETAILS
S-702 TYPICAL DETAILS

ARCHITECTURAL

A-001 LIFE SAFETY PLAN
A-101 FLOOR PLAN
A-102 ROOF PLAN
A-201 ELEVATIONS
A-301 BUILDING SECTIONS
A-401 WALL SECTIONS
A-402 ENLARGED PLAN
A-501 EXTERIOR DETAILS
A-502 HEAD, JAMB, & SILL DETAILS
A-503 STOOP DETAILS
A-504 TOILET, LAVATORY, & ABLUTION DETAILS
A-505 ISOLATION JOINT DETAILS
A-601 WINDOW & DOOR SCHEDULES

MECHANICAL

P-101 FLOOR PLAN-PLUMBING
P-501 PLUMBING DETAILS
P-502 PLUMBING DETAILS
P-901 PLUMBING ISOMETRICS

M-101 HVAC FLOOR PLAN & SCHEDULES & DETAILS
M-501 HVAC DETAILS

ELECTRICAL

E-001 ELECTRICAL SYMBOLS & ABBREVIATIONS
E-101 ELECTRICAL LIGHTING PLAN
E-102 ELECTRICAL POWER PLAN
E-103 ELECTRICAL MECHANICAL POWER PLAN
E-104 ELECTRICAL LIGHTNING PROTECTION PLAN
E-501 ELECTRICAL DETAILS
E-502 ELECTRICAL DETAILS
E-601 ELECTRICAL LIGHT FIXTURE SCHEDULE
E-602 ELECTRICAL PANEL SCHEDULES
E-603 ELECTRICAL PANEL SCHEDULES


US ARMY CORPS OF ENGINEERS
AFGHANISTAN ENGINEER DISTRICT

| Mark | Description | Date | Appr. |
|---|---|---|---|
| | | | |

| Mark | Description | Date | Appr. |
|---|---|---|---|
| | | | |

Rev: 0
Date: 2/23/10
Design file no.
Drawing code:
File name: ANAH06-001CS
Plot date: 2/23/2010
Plot scale: X:X

Designed by: KMF/MMY
Dwn by: RCG
Ckd by: CWW
Reviewed by: LHM
Submitted by: BAKER

U.S. ARMY CORPS OF ENGINEERS
AFGHANISTAN ENGINEER DISTRICT
APO AE 96338


*Michael Baker Jr., Inc.*
*A unit of Michael Baker Corporation*
Airside Business Park
100 Airside Drive
Moon Township, PA 15108
www.mbakercorp.com


AFGHAN NATIONAL ARMY
REGIONAL MILITARY TRAINING CENTER
STANDARD DESIGN

RMTC HEADQUARTERS BUILDING

COVER SHEET

Sheet reference number:
G-001

STRUCTURAL ABBREVIATIONS:

| | |
|---|---|
| ACI | AMERICAN CONCRETE INSTITUTE |
| ADD'L | ADDITIONAL |
| AISC | AMERICAN INSTITUTE OF STEEL CONSTRUCTION |
| AISI | AMERICAN IRON AND STEEL INSTITUTE |
| ASTM | AMERICAN SOCIETY FOR TESTING AND MATERIALS |
| ARCH | ARCHITECTURAL |
| B | BOTTOM |
| BLDG | BUILDING |
| BOTT | BOTTOM |
| ℄ | CENTER LINE |
| CFMRF | COLD FORM METAL ROOF FRAME |
| CFMF | COLD FORM METAL FRAME |
| CFS | COLD FORMED STEEL |
| CIP | CAST-IN-PLACE |
| CIPL | CAST-IN-PLACE LINTEL |
| CJ | CONTROL JOINT |
| CLR | CLEAR |
| CMU | CONCRETE MASONRY UNIT |
| COEFF | COEFFICIENT |
| COL | COLUMN |
| CONC | CONCRETE |
| CONT | CONTINUOUS |
| COORD | COORDINATE |
| CRSI | CONCRETE REINFORCING STEEL INSTITUTE |
| CSJ | CONSTRUCTION JOINT |
| DIA | DIAMETER |
| DIAG | DIAGONAL |
| DIM | DIMENSION |
| DWG | DRAWING |
| DWL | DOWEL |
| EA | EACH |
| EF | EACH FACE |
| ELEC | ELECTRICAL |
| ELEV | ELEVATION |
| EMBED | EMBEDMENT |
| EQUIV | EQUIVALENT |
| ETC | ET CETERA |
| EW | EACH WAY |
| EXP | EXPANSION |
| EXT | EXTERIOR |
| FTG | FOOTING |
| GA | GAUGE |
| GB | GRADE BEAM |
| HORIZ | HORIZONTAL |
| h | HOUR |
| HRS | HOURS |
| IBC | INTERNATIONAL BUILDING CODE |
| INFO | INFORMATION |
| INT | INTERIOR |
| kg | KILOGRAM |
| km | KILOMETER |
| kN | KILONEWTON |
| kPa | KILOPASCAL |
| L# | ANGLE (# INDICATES SIZE) |
| LONG | LONGITUDINAL |
| LLV | LONG LEG VERTICAL |
| m | METER |
| MAX | MAXIMUM |
| MECH | MECHANICAL |
| MFG | MANUFACTURER |
| MID | MIDDLE |
| MIN | MINIMUM |
| MISC | MISCELLANEOUS |
| mm | MILLIMETER |
| MPa | MEGAPASCAL |
| MTL | METAL |
| MWFRS | MAIN WIND FORCE RESISTING SYSTEM |
| N | NEWTON |
| N | NORTH |
| N/A | NOT APPLICABLE |
| # | NUMBER SYMBOL FOR REBAR SIZE |
| NTS | NOT TO SCALE |
| OC | ON CENTER |
| OD | OUTSIDE DIAMETER |
| OPNG | OPENING |
| PL or PL | PLATE |
| PRE-ENG | PRE-ENGINEERED |
| REINF | REINFORCED |
| REQ'D | REQUIRED |
| RB | ROOF BEAM |
| SIM | SIMILAR |
| SPECS | SPECIFICATIONS |
| STD | STANDARD |
| STRUCT | STRUCTURAL |
| SW | SHEAR WALL |
| T | TOP |
| T/ | TOP OF |
| T/ELEV | TOP ELEVATION |
| T/SLAB | TOP OF SLAB |
| T&B | TOP AND BOTTOM |
| THK | THICK |
| TYP | TYPICAL |
| UFC | UNIFIED FACILITIES CRITERIA |
| UON | UNLESS OTHERWISE NOTED |
| VERT | VERTICAL |
| W | WIDTH |
| W/ | WITH |

1.0 GENERAL NOTES:

1.1 THIS PROJECT HAS BEEN DESIGNED FOR THE WEIGHTS AND MATERIALS INDICATED ON THE SHEETS AND FOR THE LIVE LOADS INDICATED IN THE DESIGN DATA. IT IS THE CONTRACTOR'S RESPONSIBILITY TO DETERMINE ALLOWABLE CONSTRUCTION LOADS AND TO PROVIDE PROPER DESIGN AND CONSTRUCTION OF FALSEWORK, FORMWORK, STAGING, BRACING, SHEETING AND SHORING, ETC.

1.1 COORDINATE THESE SHEETS WITH THE ARCHITECTURAL, MECHANICAL, ELECTRICAL, PLUMBING, AND CIVIL SHEETS. ALL DIMENSIONS SHOWN ON THE SHEETS ARE MILLIMETERS UNLESS NOTED OTHERWISE.

1.2 THE CONTRACTOR SHALL VERIFY AND COORDINATE ALL FLOOR AND ROOF OPENING SIZES AND LOCATIONS, EQUIPMENT PAD SIZES AND LOCATIONS, ANCHOR BOLT LAYOUTS, ETC WITH EQUIPMENT SELECTED. THE CONTRACTOR SHALL MAKE ANY REQUIRED MODIFICATIONS AT NO ADDITIONAL COST.

1.3 THE CONTRACTOR SHALL REFER TO THE ARCHITECTURAL, MECHANICAL, ELECTRICAL AND PLUMBING SHEETS FOR SLEEVES, CURBS, INSERTS OR OPENINGS, ETC. NOT HEREIN INDICATED.

1.4 WORK NOT INCLUDED ON THE SHEETS BUT IMPLIED TO BE SIMILAR TO THAT SHOWN AT CORRESPONDING PLACES ELSEWHERE ON THE SHEETS SHALL BE REPEATED.

1.5 IN CASE OF CONFLICT BETWEEN THE NOTES, DETAILS AND SPECIFICATIONS THE MOST RIGID REQUIREMENTS SHALL GOVERN.

1.6 SEE ARCHITECTURAL SHEETS FOR LOCATIONS OF MASONRY AND NON-LOAD BEARING PARTITIONS. PROVIDE COMPRESSIBLE FIRESAFING AT TOP OF WALL AS REQUIRED BY ARCHITECTURAL SHEETS.

1.7 COORDINATE FINISHED FLOOR DATUM ELEVATION 0.0m WITH THE CIVIL SHEETS.

2.0 FOUNDATION NOTES

2.1 THE GEOTECHNICAL ANALYSIS FOR THIS PROJECT IS THE RESPONSIBILITY OF THE CONTRACTOR AWARDED THE WORK. AN ASSUMED ALLOWABLE SOIL BEARING VALUE OF 72 kPa HAS BEEN USED IN THE STRUCTURAL ANALYSIS OF THE BUILDING HEREIN AND SHALL BE CONFIRMED AND VERIFIED AS PART OF THE GEOTECHNICAL INVESTIGATION. VALUES WHICH DO NOT MEET THE REQUIREMENTS INDICATED ON THE BASIS OF DESIGN SHEET SHALL BE IMMEDIATELY BROUGHT TO THE ATTENTION OF THE CONTRACTING OFFICER FOR CONSIDERATION AND DETERMINATION ON THE NEXT APPROPRIATE COURSE OF ACTION.

2.2 SEE THE SPECIFICATION FOR ADDITIONAL REQUIREMENTS TO THOSE OUTLINED IN THE GEOTECHNICAL INVESTIGATION FOR EXCAVATION AND PREPARATION OF THE FOUNDATION AND THE SLAB ON GRADE SUBGRADE INCLUDING COMPACTION PROCEDURES.

2.3 EXCAVATIONS FOR FOOTINGS SHALL HAVE THE SIDES AND BOTTOMS TEMPORARILY LINED WITH 0.25mm POLYETHYLENE IF PLACEMENT OF CONCRETE DOES NOT OCCUR WITHIN 24 HRS OF THE EXCAVATION OF THE FOOTING.

2.4 FOUNDATION CONDITIONS NOTED DURING CONSTRUCTION WHICH DIFFER FROM THOSE DESCRIBED IN THE GEOTECHNICAL REPORT SHALL BE REPORTED TO THE GENERAL CONTRACTOR BEFORE FURTHER CONSTRUCTION IS ATTEMPTED. SEE PROJECT SPECIFICATIONS.

2.5 NO FOOTINGS OR SLABS SHALL BE POURED INTO OR AGAINST SUBGRADE CONTAINING FREE WATER, FROST, ICE OR LOOSE MATERIAL. FROST DEPTH ASSUMED TO BE 800mm.

2.6 ALL SLAB-ON-GRADE, TRENCH BOTTOMS AND OTHER ON-GRADE INTERIOR HORIZONTAL SURFACES SHALL BE PLACED OVER A 0.25mm POLYETHYLENE VAPOR RETARDER OVER A 100mm #57 STONE WATER CAPILLARY BARRIER PLACED ON SUBGRADE PROPERLY PREPARED IN ACCORDANCE WITH THE CONTRACT SPECIFICATIONS. (UON)

2.7 PRIOR TO START OF FOUNDATION OR SLAB-ON-GRADE CONSTRUCTION, EXISTING SUBGRADES SHALL BE COMPACTED TO MINIMUM OF 95% MAXIMUM DRY DENSITY OBTAINED THRU ASTM D 1557 MODIFIED PROCTOR TESTING.

2.8 SEE PLUMBING, ELECTRICAL & CIVIL SHEETS FOR REQUIRED UNDERSLAB UTILITIES.

2.9 SEE ARCHITECTURAL SHEETS FOR ALL WATERPROOFING DETAILS AND MATERIALS.

2.10 IF UNDERMINING OF FOOTINGS OCCURS, FILL VOIDS WITH 18 MPa CONCRETE. DO NOT ATTEMPT TO REPLACE AND RE-COMPACT SOIL.

3.0 CONCRETE

3.1 CONCRETE SHALL HAVE THE UNIT WEIGHT OF 2400 kg/m$^3$ AND A MINIMUM COMPRESSIVE STRENGTH (f'c) OF 28 MPa AT 28 DAYS. ALL CONCRETE SHALL HAVE A WATER-CEMENT RATIO OF 0.45. SEE SPECIFICATIONS FOR ADDITIONAL INFORMATION. ENTRAIN AIR TO PRODUCE TOTAL AIR CONTENT ACCORDING TO THE SPECIFICATIONS FOR CONCRETE EXPOSED TO FREEZING TEMPERATURES (EXTERIOR FOOTINGS, SLAB TURNDOWNS, EXTERIOR SLABS AND SLABS-ON-GRADE, EXTERIOR RETAINING WALLS, AND EXTERIOR GRADE BEAMS.)

3.2 NO CALCIUM CHLORIDE SHALL BE USED IN ANY CONCRETE.

3.3 MIXING, TRANSPORTING AND PLACING OF CONCRETE SHALL CONFORM TO ACI 301M-05.

3.4 ALL CONCRETE WORK SHALL CONFORM TO THE REQUIREMENTS OF THE AMERICAN CONCRETE INSTITUTE (ACI) 318M MANUAL (metric), "BUILDING CODE REQUIREMENTS FOR REINFORCED CONCRETE", AND REQUIREMENTS OUTLINED IN THE CONTRACT SPECIFICATIONS. WHEN THERE IS A CONFLICT BETWEEN ACI AND THE SPECIFICATIONS, THE MORE STRINGENT SHALL GOVERN.

3.5 CHAMFER ALL EXPOSED EXTERNAL CORNERS OF CONCRETE WITH 20mm x45 DEGREE CHAMFER UON.

3.6 CONCRETE REINFORCEMENT BARS SHALL CONFORM TO ASTM A615M-96a, GRADE 420 MPa, REINFORCING BARS SHALL NOT BE TACK WELDED, WELDED, HEATED OR CUT, UNLESS INDICATED ON THE CONTRACT DOCUMENTS. ALL LAP SPLICES SHALL BE CLASS "B" UON.

3.7 HORIZONTAL FOOTING AND HORIZONTAL WALL REINFORCEMENT SHALL BE CONTINUOUS AND SHALL HAVE 90 DEGREE BENDS AND EXTENSIONS, OR CORNER BARS OF EQUIVALENT SIZE LAPPED WITH A CLASS B TENSION SPLICE AT CORNERS AND INTERSECTIONS. TOP BAR CRITERIA SHALL APPLY IF 300mm OR MORE OF FRESH CONCRETE IS PLACED BELOW BAR.

3.8 SLABS-ON-GRADE SHALL HAVE CONSTRUCTION JOINTS OR CRACK CONTROL JOINTS AS SHOWN ON THE DRAWINGS. CONSTRUCTION JOINTS CAN BE USED AT CONTROL JOINT LOCATIONS AT CONTRACTORS OPTION. SEE SLAB PLANS & JOINT DETAILS FOR ADDITIONAL INFORMATION. FOR AREAS NOT SHOWN ON DWGS, THE MAXIMUM SPACING OF CONSTRUCTION/ CRACK CONTROL JOINTS SHALL BE 4800mm

3.9 ALL CONCRETE REINFORCEMENT SHALL BE DETAILED, FABRICATED, LABELED, SUPPORTED, AND SPACED IN FORMS AND SECURED IN PLACE IN ACCORDANCE WITH THE PROCEDURES AND REQUIREMENTS OUTLINED IN THE LATEST EDITION OF THE "BUILDING CODE REQUIREMENTS FOR REINFORCED CONCRETE", ACI 318M, AND THE "MANUAL OF STANDARD PRACTICE FOR DETAILING REINFORCED CONCRETE STRUCTURES", ACI 315M, LATEST EDITION. BASED ON IN COUNTRY REINFORCEMENT AVAILABILITY, IT IS THE CONTRACTOR'S OPTION TO ROUND DESIGNATED ODD NUMBERED REINFORCEMENT SIZES UP (1) ONE BAR SIZE.

3.10 ALL DOWELS SHALL MATCH SIZE AND NUMBER OF MAIN REINFORCING, UNLESS NOTED OTHERWISE ON THE SHEETS.

3.11 ADDITIONAL BARS SHALL BE PROVIDED AROUND ALL FLOOR AND WALL OPENINGS AS SHOWN ON THE SHEETS.

3.12 SEE ARCHITECTURAL SHEETS FOR TYPE AND LOCATION OF ALL FLOOR FINISHES.

3.13 THE CONTRACTOR SHALL COORDINATE ADDITIONAL WALL/SLAB OPENINGS NOT SHOWN ON STRUCTURAL SHEETS. SEE MECHANICAL, ELECTRICAL, PLUMBING AND CIVIL SHEETS.

3.14 UNLESS NOTED OTHERWISE, ALL CURBS SHALL BE REINFORCED WITH AT LEAST (1)-#13 CONTINUOUS AND #13 AT 300mm O.C. DOWELS TO STRUCTURE BELOW.

3.15 THE CONTRACTOR SHALL VERIFY ALL OPENINGS, PAD SIZES, AND ANCHOR BOLTS WITH EQUIPMENT SELECTED.

3.16 FOR ALL WALLS & PIERS, PROVIDE DOWELS INTO FOOTING AT EACH VERT REINF BAR, UON DOWEL SIZE SHALL BE SAME AS VERT REINF.

3.17 PROVIDE CONCRETE POUR STOPS OR FORMED AS REQUIRED FOR INSTALLATION OF ALL CONCRETE WORK.

3.18 PROVIDE ADDITIONAL (2)-#13 x 600mm REINFORCING BARS IN SLAB-ON GRADE AT ALL RE-ENTRANT CORNERS. PLACE BARS AT MID-DEPTH OF SLAB WITH A CLEARANCE OF 50mm FROM CORNER UON.

3.19 COLD-WEATHER PLACEMENT: COMPLY WITH ACI 306.1 AND AS FOLLOWS. PROTECT CONCRETE WORK FROM PHYSICAL DAMAGE OR REDUCED STRENGTH THAT COULD BE CAUSED BY FROST, FREEZING ACTIONS, OR LOW TEMPERATURES. SUBMIT A COLD WEATHER CONCRETING PLAN FOR APPROVAL.

3.20 PROVIDE BONDING COMPOUND PER ASTM C 1059-99: SPECIFICATION FOR LATEX AGENTS FOR BONDING FRESH CONCRETE (GROUT) TO HARDENED CONCRETE.

3.21 THE FORMED SURFACES FOR REINFORCED CONCRETE SHALL ACHIEVE A "CLASS A" FINISH WHEN RECEIVING PAINT OR A "CLASS B" FINISH WHEN RECEIVING PLASTER OR TILE AS PER SPECIFICATION SECTION 03 31 00 CAST-IN-PLACE STRUCTURAL CONCRETE.

3.22 AT INTERSECTING GRADE BEAMS AND SHEAR WALLS, PROVIDE CORNER BARS AT INTERSECTIONS WITH SAME QUANTITY, SIZE AND SPACING AS HORIZONTAL BARS WITH LEG LENGTH = 50db.

3.23 REFER TO S-800 SERIES REINFORCING BAR PLACEMENT DRAWINGS DEFINING LENGTHS, BENDS, AND SPACINGS FOR ALL STRUCTURAL CONCRETE. THE S-800 SERIES DRAWING ARE BASED ON THE S-400, S-500, S-600, AND S-700 SERIES DRAWING SCHEDULES, DETAILS, AND DIAGRAMS.

4.0 CONCRETE MASONRY

4.1 MASONRY CONSTRUCTION SHALL CONFORM TO SPECIFICATION FOR MASONRY STRUCTURES (ACI 530.1) UON.

4.2 STRENGTH OF MASONRY MATERIALS SHALL BE AS FOLLOWS:

a. CONCRETE MASONRY UNITS SHALL BE NORMAL WEIGHT, GRADE N, TYPE 1, CONFORMING TO ASTM C-90 AND HAVE A MINIMUM COMPRESSIVE STRENGTH OF 10.4 MPa ON THE NET AREA.

b. MORTAR SHALL CONFORM TO ASTM C-270 TYPE S.

c. GROUT FOR MASONRY SHALL BE NORMAL WEIGHT AND HAVE A MINIMUM COMPRESSIVE STRENGTH OF 14 MPa AT 28 DAYS. GROUT SHALL CONFORM TO ASTM C476M. GROUT LIFTS SHALL NOT EXCEED 1,400mm.

d. REINFORCED MASONRY SHALL HAVE A STRENGTH F'm = 10 MPa. (F'm IS THE COMPRESSIVE STRENGTH OF THE MASONRY AT 28 DAYS AS DETERMINED BY PRISM TESTS).

4.3 ALL VERTICAL REINFORCEMENT FOR CONCRETE MASONRY SHALL BE ASTM A615M-96a, GRADE 420 MPa. ALL SPLICES SHALL BE LAPPED 48 BAR DIAMETERS MINIMUM.

4.4 BOND BEAMS SHALL BE SPACED AT 1200mm OC VERTICALLY. BOND BEAM REINFORCING SHALL BE CONTINUOUS AND PROVIDED AT WALL INTERSECTIONS AND WALL CORNERS (REFERENCE CONCRETE MASONRY NOTE 4.11). ALL BOND BEAM REINFORCING SHALL BE CONTINUOUS AND HAVE STANDARD ACI HOOKS AT EACH END. PROVIDE STANDARD BAR SPLICES AS SPECIFIED. AS AN ALTERNATE TO CMU BOND BEAMS, IT IS THE CONTRACTOR'S OPTION TO PROVIDE 200mm x 200mm CONTINUOUS CAST-IN-PLACE CONCRETE BOND BEAMS WITH (2)-#16 IN LIEU OF CMU BOND BEAMS INDICATED ON THE DRAWINGS.

4.5 SEE TYPICAL DETAILS FOR MINIMUM REINFORCEMENT REQUIREMENTS FOR CMU WALLS. PROVIDE STANDARD BAR SPLICES AS SPECIFIED. ALL VERTICAL REINFORCEMENT EXTENDS FULL HEIGHT OF WALL.

4.6 CMU CELLS THAT REQUIRE VERTICAL REINFORCING BARS AS INDICATED ON THE CONTRACT DRAWINGS AND/OR SPECS SHALL HAVE REINF BARS PLACED IN CENTERS OF CMU CELLS AND CONTINUOUSLY GROUTED UON.

4.7 ALL CMU CELLS, OPEN CAVITIES, AND AIR SPACES OF ALL EXTERIOR WALLS SHALL BE GROUTED TO STOP FRAGMENTS FROM MORTAR BLAST.

4.8 CONTRACTOR SHALL COORDINATE LOCATION OF ALL OPENINGS SEE ARCH, MECH, ELEC, AND PLUMBING SHEETS FOR SIZE AND LOCATION OF OPENINGS.

4.9 MASONRY WALLS SHALL NOT BE BACK FILLED PRIOR TO THE MORTAR AND GROUT ATTAINING THEIR RESPECTIVE MAXIMUM DESIGN STRENGTHS PER SPECIFICATIONS.

4.10 PROVIDE GALVANIZED MORTAR/GROUT SCREEN W/ 3mm MESH WHERE CELLS BELOW ARE NOT GROUTED.

4.11 AT INTERSECTING BOND BEAMS, PROVIDE CORNER BAR FOR EACH HORIZONTAL BAR IN BOND BEAMS AT INTERSECTING WALLS. USE SAME SIZE AND SPACING AS HORIZONTAL BARS WITH LEG LENGTH = 50db.

4.12 THE ALTERNATE TOP OF CMU WALL BRACING DETAIL(S) SHOWN ON S-701 CAN BE UTILIZED AT THE CONTRACTOR'S OPTION IN PLACE OF THE "SLEEVED DOWEL" WALL CONNECTIONS DEPICTED ON S-400 AND S-500 SERIES DRAWINGS. IN ADDITION, ALTERNATE DETAIL(S) SHOW CAST-IN-PLACE WALL BOND BEAMS THAT CAN BE UTILIZED AT THE CONTRACTOR'S OPTION IN PLACE OF THE STANDARD CMU BOND BEAMS CONSTRUCTED OF CMU BLOCKS.

5.0 COLD-FORMED METAL FRAMING

5.1 ALL COLD-FORMED METAL FRAMING MEMBERS SHALL CONFORM TO ASTM A1003M, STRUCTURAL GRADE ST340 (MPa), WITH A GALVANIZED COATING OF Z275 OR BETTER IN ACCORDANCE WITH ASTM A653M.

5.2 ALL COLD-FORMED METAL FRAMING MEMBERS SHALL HAVE THE FOLLOWING MINIMUM PROPERTIES:

a. MINIMUM METAL THICKNESS:
TRACK = 1.37mm;
STUD/OTHER = 1.09mm

b. MINIMUM FLANGE WIDTH:
TRACK = 38mm;
STUD/OTHER = 35mm

c. MINIMUM MEMBER DEPTH:
ALL SECTIONS = 152.2mm

d. PURLIN (HAT CHANNEL)
DEPTHxWIDTH(FLAT TOP)xTHICK = 25mmx42mmx1.59mm

5.3 ALL CONNECTIONS SHALL BE MADE WITH CORROSION RESISTANT (ASTM A153M), SELF-DRILLING, SELF-TAPPING STEEL DRILL SCREWS IN ACCORDANCE WITH ASTM C1513. SCREWS SHALL HAVE A LOW PROFILE HEAD BENEATH ROOF DECK, AND STANDARD HEAD ALL OTHER LOCATIONS.

5.4 FABRICATE COLD FORMED METAL FRAMING AND ACCESSORIES PLUMB, SQUARE AND TRUE TO LINE, WITH CONNECTIONS SECURELY FASTENED ACCORDING TO AISI STANDARD FOR COLD FORMED STEEL FRAMING.

5.5 CUT FRAMING MEMBERS BY SAWING OR SHEATHING, DO NOT TORCH CUT.

5.6 INSTALL FRAMING MEMBERS IN ONE-PIECE LENGTHS UNLESS SPLICE CONNECTIONS ARE INDICATED FOR TRACK OR TENSION MEMBERS

5.7 INSTALL TEMPORARY BRACING AND SUPPORTS TO SECURE FRAMING DURING CONSTRUCTION. MAINTAIN BRACING AND SUPPORTS IN PLACE UNTIL THE STRUCTURE HAS BEEN COMPLETED WITH ALL CONNECTIONS AND PERMANENT BRACING SECURED.

6.0 STRUCTURAL DESIGN CRITERIA

6.1 ALL DESIGNS SHALL CONFORM TO THE PROVISIONS OF THE IBC 2006 AND UFC AS APPLICABLE.

6.2 DESIGN LOADS

6.2.1 DEAD LOADS (PER IBC 2006 & UFC 3-310-01)

| | |
|---|---|
| MECH/ELEC/PLUMBING | 0.20 kPa |
| MISCELLANEOUS | 0.15 kPa |
| COLD-FORMED FRAMING | 0.20 kPa |
| INSULATION | 0.10 kPa |
| METAL ROOF PANEL | 0.14 kPa |
| | 0.79 kPa |
| FLOOR PARTITION ALLOWANCE | 0.96 kPa |

6.2.2 LIVE LOADS (PER IBC 2006 & UFC 3-310-01)

| | |
|---|---|
| ROOF | 1.00 kPa |
| CORRIDOR (2-STORY BLDG ONLY) | 4.80 kPa |
| ALL OTHERS (2-STORY BLDG ONLY) | 2.40 kPa |
| SLAB ON GRADE | 4.80 kPa |

6.2.3 SNOW LOADS (PER IBC 2006 & UFC 3-310-01)

| | |
|---|---|
| GROUND SNOW LOAD (Pg) | 1.2 kPa |
| SNOW IMPORTANCE FACTOR (I) | 1.0 |
| SNOW EXPOSURE FACTOR (Ce) | 1.0 |
| THERMAL FACTOR (Ct) | 1.0 |

6.2.4 WIND LOADS (PER IBC 2006)

| | |
|---|---|
| BASIC WIND SPEED | 137 km/h |
| WIND IMPORTANCE FACTOR | 1.0 |
| WIND EXPOSURE CATEGORY | D |
| DIRECTIONALITY COEFFICIENT (Kd) | 0.85 |
| TOPOGRAPHIC FACTOR (Kzt) | 1.0 |

6.2.5 SEISMIC LOADS (PER IBC 2006 & UFC 3-310-04)

| | |
|---|---|
| OCCUPANCY USE CATEGORY | II |
| SEISMIC IMPORTANCE FACTOR (Ie) | 1.0 |
| SEISMIC SITE CLASS | D |

$S_s$ = 2.4 (FOR IRREGULAR PORTION OF BUILDING – COLUMN LINE 4 THRU 9)

$S_s$ = 1.50 (REDUCED FROM 2.40 PER ASCE 7-05, 12.8.1.3 FOR A BUILDING WITHOUT IRREGULARITIES – COLUMN LINES 1 THRU 3)

$S_1$ = 1.20

$S_{DS}$ = 1.60 (IRREGULAR BUILDING); 1.00 (REGULAR BUILDING)

$S_{D1}$ = 1.20

| | |
|---|---|
| SEISMIC DESIGN CATEGORY | E |
| SEISMIC RESISTING SYSTEM: –SPECIAL REINFORCED CONCRETE SHEAR WALL | |
| RESPONSE MODIFICATION FACTOR (R) | 6 |
| RESPONSE COEFFICIENT (Cs) | 0.267 |
| SEISMIC ANALYTICAL PROCEDURE = | EQUIV LATERAL FORCE |
| SEISMIC BASE SHEAR | |
| REGULAR PORTION OF BUILDING = | 740 kN |
| IRREGULAR PORTION OF BUILDING = | 2300 kN |

APPROVED:

A/E DESIGNER OF RECORD

SEAL:

GEORGIA REGISTERED No. 27141 PROFESSIONAL ENGINEER CHRISTOPHER W. WHITMORE 1-27-10

US ARMY CORPS OF ENGINEERS
AFGHANISTAN ENGINEER DISTRICT

| Mark | Description | Date | Appr. |
|---|---|---|---|

Date: 2/23/10 | Rev. 0
Design file no.
Drawing code:
File name: ANAHQS001GN
Plot date: 2/23/2010
Plot scale: XX

Designed by: KMP/MMY | Dwn by: RCG | Ckd by: CWW
Reviewed by: LHM
Submitted by: BAKER

U.S. ARMY CORPS OF ENGINEERS
AFGHANISTAN ENGINEER DISTRICT
APO AE 96338

Michael Baker Jr., Inc
A unit of Michael Baker Corporation
Airside Business Park
100 Airside Drive
Moon Township, PA 15108
www.mbakercorp.com

AFGHAN NATIONAL ARMY
REGIONAL MILITARY TRAINING CENTER
STANDARD DESIGN

RMTC HEADQUARTERS BUILDING

GENERAL NOTES & DESIGN CRITERIA

Sheet reference number:
S-001

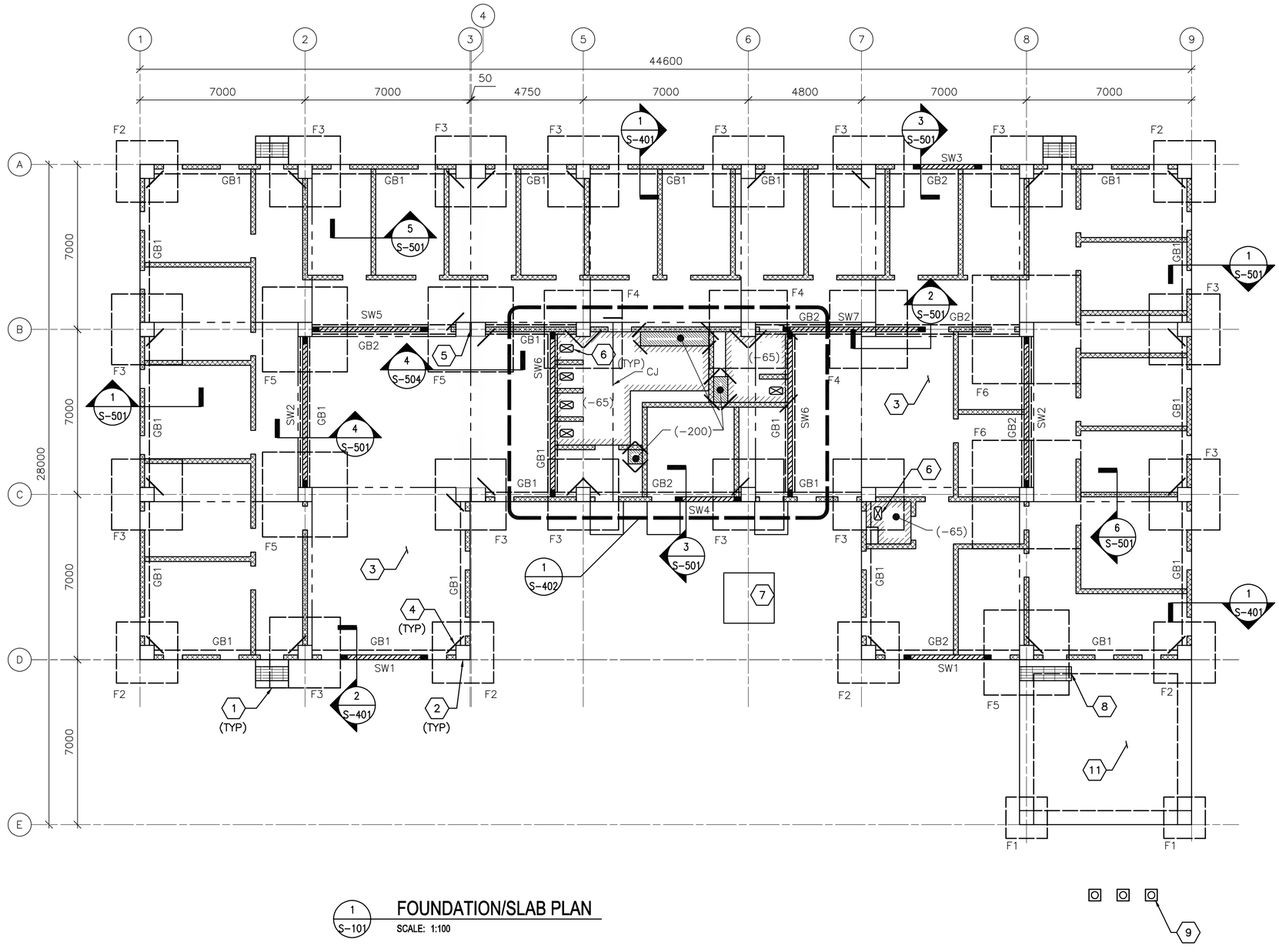


1 S-101 FOUNDATION/SLAB PLAN
SCALE: 1:100

## FOUNDATION/SLAB PLAN NOTES:

1. REFER TO SHEET S-001 FOR STRUCTURAL NOTES AND DESIGN CRITERIA.
2. FINISH FIRST FLOOR ELEVATION SHALL BE (DATUM 0.00MM) ALL PLUS OR MINUS DIMENSIONS INDICATED ON PLAN OR REFERRED TO IN NOTES RELATE TO FINISH FIRST FLOOR ELEVATION.
3. SLAB-ON-GRADE IS 150 WITH #13 @ 300 OC EW LOCATED 38 FROM T/SLAB UON. WHERE NOTED, 300 SLAB-ON-GRADE SHALL BE REINFORCED W/ #13 @300 OC EW T&B.
4. TOP OF EXTERIOR FOOTINGS SHALL BE -950 UNLESS OTHERWISE INDICATED.
5. TOP OF INTERIOR FOOTINGS WITH GRADE BEAM ABOVE SHALL BE -950.
6. TOP OF INTERIOR FOOTING WITHOUT GRADE BEAM ABOVE SHALL BE -600
7. COLUMN FOOTINGS INDICATED BY F# ON PLAN. REFER TO COLUMN FOOTING SCHEDULE ON SHEET S-601.
8. REFER TO COLUMN SCHEDULE ON SHEET S-601.
9. GRADE BEAM INDICATED BY GB# ON PLAN, REFER TO BEAM SCHEDULE ON SHEET S-601.
10. SHEARWALL INDICATED BY SW# ON PLAN, REFER TO SHEARWALL SCHEDULE ON SHEET S-601.
11. SEE TYP EXTERIOR AND INTERIOR CMU WALL REINFORCING DETAILS ON SHEET S-701.
12. SEE MECHANICAL AND ELECTRICAL SHEETS FOR CONCRETE PAD LOCATIONS, SIZES, AND THICKNESS NOT SHOWN. SEE SHEET S-701 FOR DETAILS.
13. THICKENED SLAB UNDER CMU PERIMETER/PARTITION WALLS NOT SHOWN FOR CLARITY.

## FOUNDATION/SLAB PLAN KEY NOTES: (X)

1. CONC PAD (ENTRANCE) - SEE ARCH DWGS FOR INFORMATION
2. REINF CONC COLUMN
3. REINF CONC SLAB-ON-GRADE
4. (2)-#13 @ RE-ENTRANT CORNERS - SEE S-701 FOR INFORMATION
5. 50 ISOLATION JOINT BETWEEN STRUCTURES LOCATED ABOVE FIRST FLOOR SLAB-ON-GRADE
6. SLAB OPENING - COORDINATE W/ARCH AND PLUB DWGS
7. EMERGENCY GENERATOR PAD - SEE SECTION 9 ON SHEET S-701
8. PROVIDE DEPRESSED SLAB AREA FOR BOOT SCRAPE GRATING - COORDINATE WITH ARCH DWGS. SLOPE BOTTOM OF DEPRESSED AREA TO DRAIN TO EXTERIOR OF SLAB.
9. (3) FLAGPOLES - SEE DETAIL ON SHEET S-702
10. NOT USED
11. SLAB-ON-GRADE W/ THICKENED EDGES. SEE SECTION 9 ON SHEET S-701

## FOUNDATION/SLAB PLAN LEGEND:

- REINF CONC SHEAR WALL
- REINF CMU WALL
- CONTROL JOINT
- INDICATES DROP SLAB 65 BELOW FINISH FLOOR
- INDICATES DROP SLAB 200 BELOW FINISH FLOOR
- SLAB OPENING

0 2000 4000
SCALE: 1:100

UNLESS OTHERWISE NOTED, LINEAR DIMENSIONS SHOWN ON DRAWINGS ARE IN MILLIMETERS (mm)

APPROVED:

A/E DESIGNER OF RECORD

SEAL:

GEORGIA REGISTERED 1-27-10 No. 27141 PROFESSIONAL ENGINEER CHRISTOPHER W. WHITMORE

US ARMY CORPS OF ENGINEERS
AFGHANISTAN ENGINEER DISTRICT

| Mark | Description | Date | Appr. | Mark | Description | Date | Appr. |
|---|---|---|---|---|---|---|---|

Designed by: KMP/MMY
Dwn by: RCG
Ckd by: CWW
Reviewed by: LHM
Submitted by: BAKER
Date: 2/23/10
Rev: 0
Design file no.
Drawing code:
File name: ANAHQS-101FNP
Plot date: 2/23/2010
Plot scale: X:X

U.S. ARMY CORPS OF ENGINEERS
AFGHANISTAN ENGINEER DISTRICT
APO AE 96338

Michael Baker Jr., Inc
A unit of Michael Baker Corporation
Airside Business Park
100 Airside Drive
Moon Township PA 15108
www.mbakercorp.com

AFGHAN NATIONAL ARMY
REGIONAL MILITARY TRAINING CENTER
STANDARD DESIGN

RMTC HEADQUARTERS BUILDING

FOUNDATION/SLAB PLAN

Sheet reference number:
S-101

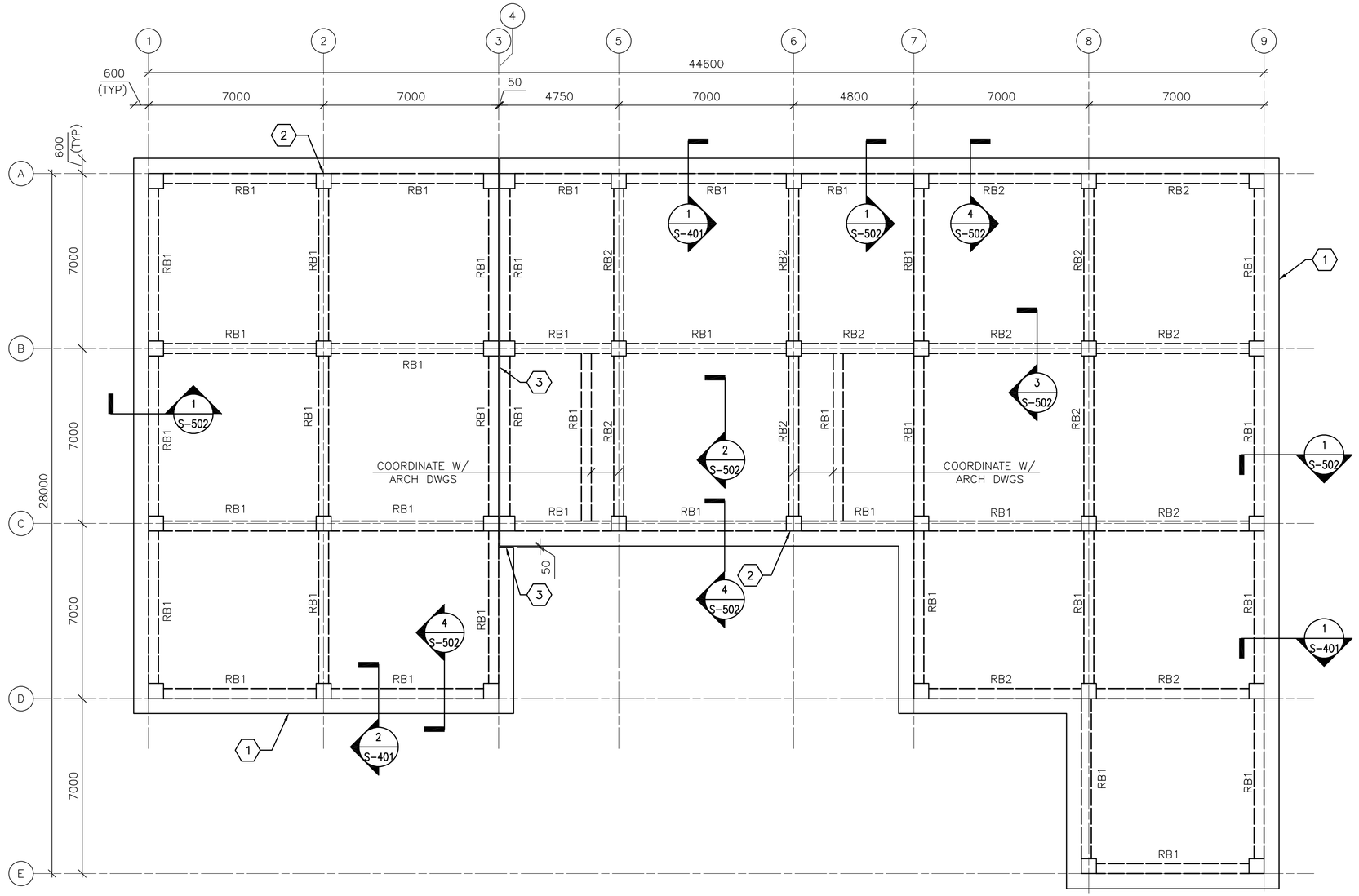


1 S-102 **ROOF FRAMING PLAN**

SCALE: 1:100

## ROOF FRAMING PLAN NOTES:

1. REFER TO SHEETS S-001 FOR STRUCTURAL NOTES AND DESIGN CRITERIA.
2. TOP OF SLAB ELEVATION = 3600 UNLESS NOTED OTHERWISE.
3. ROOF SLAB IS 250 WITH #16 @ 300 OC EW T&B.
4. ROOF BEAM INDICATED BY RB# ON PLAN. REFER TO BEAM SCHEDULE ON SHEET S-601.
5. COORDINATE WITH ARCHITECTURAL SHEETS FOR COLD-FORMED STEEL OVERBUILD FRAMING ABOVE ROOF SLAB.
6. COLD-FORMED METAL OVERBUILD ROOF FRAMING NOT SHOWN FOR CLARITY. SEE OVERBUILD ROOF FRAMING DETAILS AND SECTIONS ON SHEET S-702.
7. CMU PARTITION WALLS (BELOW ROOF SLAB) NOT SHOWN FOR CLARITY.
8. OVERHANG AREAS OF ROOF SLAB CONTAIN ROOF VENT PENETRATIONS. REFERENCE ARCHITECTURAL DRAWINGS FOR INFORMATION.
9. DISCONTINUE ALL ROOF FRAMING AT BUILDING EXPANSION JOINT. REFER TO ARCHITECTURAL SHEETS FOR COLD-FORMED ROOF OVERBUILD FRAMING EXPANSION JOINT DETAIL.

## ROOF FRAMING PLAN KEY NOTES: (X)

1. CONC ROOF SLAB (BELOW ROOF OVERBUILD)
2. REINF CONC COLUMN (BELOW CONC ROOF SLAB)
3. 50 ISOLATION JOINT BETWEEN STRUCTURES LOCATED ABOVE FIRST FLOOR SLAB-ON-GRADE

0 2000 4000
SCALE: 1:100

UNLESS OTHERWISE NOTED, LINEAR DIMENSIONS SHOWN ON DRAWINGS ARE IN MILLIMETERS (mm)

APPROVED:

A/E DESIGNER OF RECORD

SEAL:

GEORGIA REGISTERED 1-27-10 No. 27141 PROFESSIONAL ENGINEER CHRISTOPHER W. WHITMORE

US ARMY CORPS OF ENGINEERS
AFGHANISTAN ENGINEER DISTRICT

| Mark | Description | Date | Appr. |
|---|---|---|---|
| | | | |

Date: 2/23/10
Rev: 0
Design file no.
Drawing code:
File name: ANA%S-102FRP
Plot date: 2/23/2010
Plot scale: x:x

Designed by: KMP/MMY
Drawn by: RCG
Ckd by: CWW
Reviewed by: LHM
Submitted by: BAKER

U.S. ARMY CORPS OF ENGINEERS
AFGHANISTAN ENGINEER DISTRICT
APO AE 96338

Michael Baker Jr., Inc
A unit of Michael Baker Corporation
Airside Business Park
100 Airside Drive
Moon Township, PA 15108
www.mbakercorp.com

AFGHAN NATIONAL ARMY
REGIONAL MILITARY TRAINING CENTER
STANDARD DESIGN

RMTC HEADQUARTERS BUILDING

ROOF FRAMING PLAN

Sheet reference number:
S-102

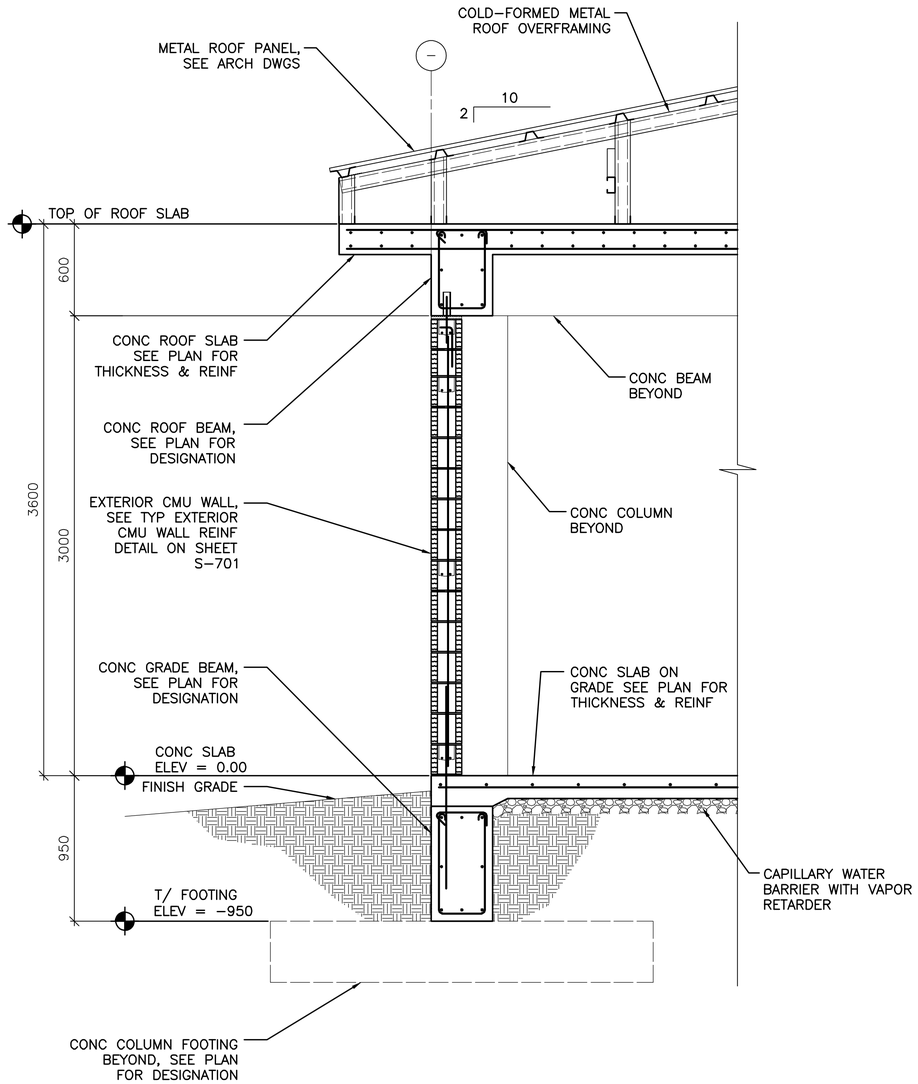


1 / S–101 1 / S–102 **TYPICAL WALL SECTION AT EXTERIOR MASONRY WALL**

SCALE: 1:20

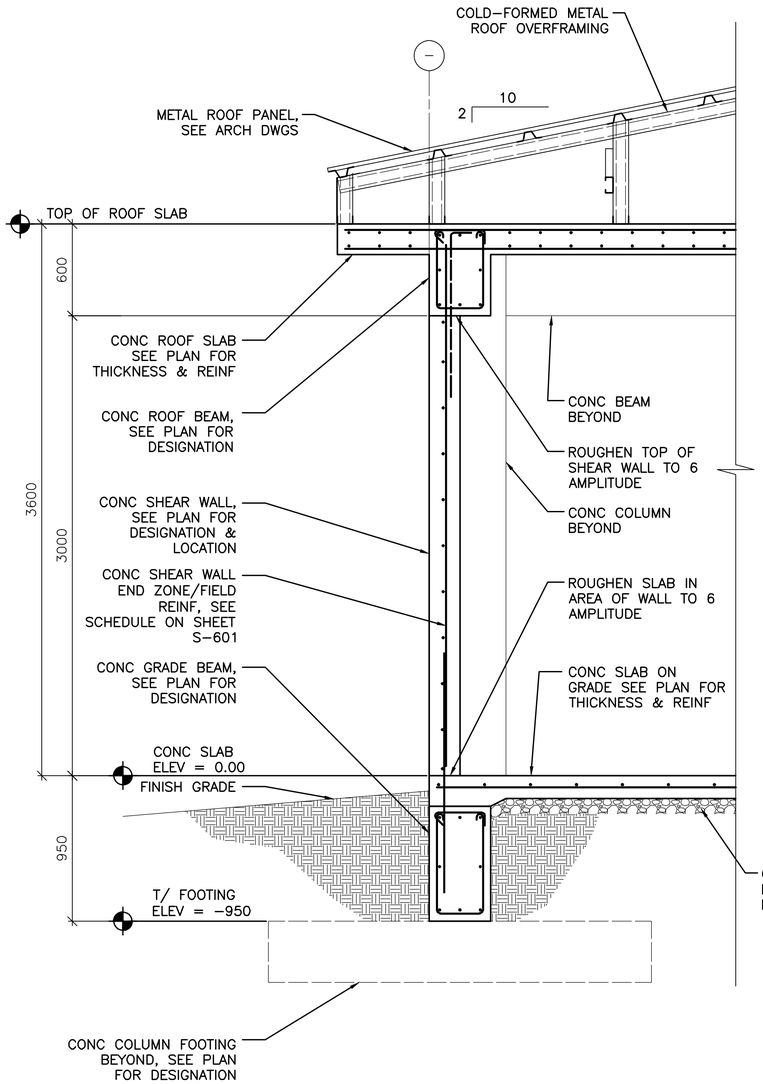


2 / S–101 2 / S–102 **TYPICAL WALL SECTION AT CONCRETE SHEAR WALL**

SCALE: 1:20

0 400 800

SCALE: 1:20

UNLESS OTHERWISE NOTED, LINEAR DIMENSIONS SHOWN ON DRAWINGS ARE IN MILLIMETERS (mm)

APPROVED:

A/E DESIGNER OF RECORD

SEAL:

GEORGIA REGISTERED 1-27-10 No. 27141 PROFESSIONAL ENGINEER CHRISTOPHER W. WHITMORE

US ARMY CORPS OF ENGINEERS
AFGHANISTAN ENGINEER DISTRICT

| Mark | Description | Date | Appr. |
|---|---|---|---|
| | | | |

Date: 2/23/10 | Rev: 0
Design file no.
Drawing code:
File name: ANAHQS-40188
Plot date: 2/23/2010
Plot scale: x:x

Designed by: KMP/MMY | Ckd by: CWW
Dwn by: RCG | Reviewed by: LHM
Submitted by: BAKER

U.S. ARMY CORPS OF ENGINEERS
AFGHANISTAN ENGINEER DISTRICT
APO AE 96338

*Michael Baker Jr., Inc*
*A unit of Michael Baker Corporation*
Airside Business Park
100 Airside Drive
Moon Township, PA 15108
www.mbakercorp.com

AFGHAN NATIONAL ARMY
REGIONAL MILITARY TRAINING CENTER
STANDARD DESIGN

RMTC HEADQUARTERS BUILDING

BUILDING SECTIONS

Sheet reference number:
S–401

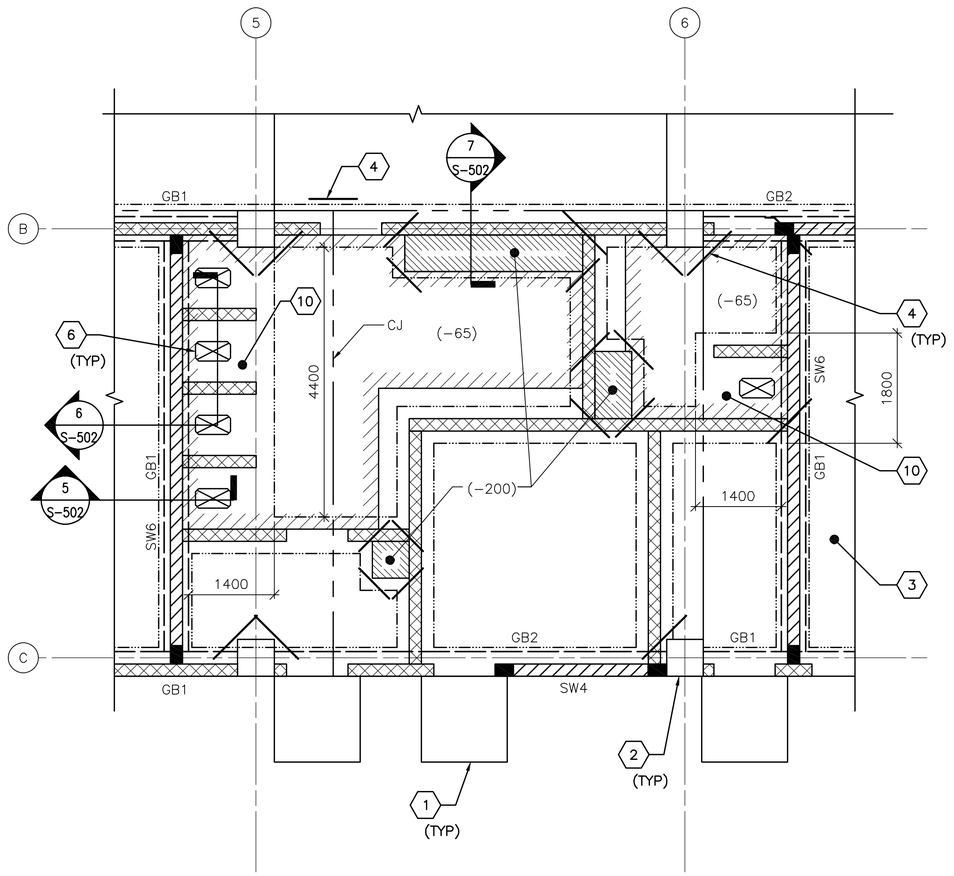


1 S-101 **ENLARGED LATRINE SLAB PLAN**

SCALE: 1:50

## ENLARGED PLAN NOTES:

1. REFER TO SHEET S-001 FOR STRUCTURAL NOTES AND DESIGN CRITERIA.
2. FINISH FIRST FLOOR ELEVATION SHALL BE (DATUM 0.00MM) ALL PLUS OR MINUS DIMENSIONS INDICATED ON PLAN OR REFERRED TO IN NOTES RELATE TO FINISH FIRST FLOOR ELEVATION.
3. SLAB-ON-GRADE IS 150 WITH #13 @ 300 OC EW LOCATED 38 FROM T/SLAB UON. WHERE NOTED, 300 SLAB-ON-GRADE SHALL BE REINFORCED W/ #13 @300 OC EW T&B.
4. REFER TO FOUNDATION/SLAB PLAN ON SHEET S-101 FOR COLUMN DESIGNATION AND COLUMN SCHEDULE ON SHEET S-601.
5. REFER TO FOUNDATION/SLAB PLAN ON SHEET S-101 FOR SHEARWALL DESIGNATION AND SHEARWALL SCHEDULE ON SHEET S-601.
6. REFER TO FOUNDATION/SLAB PLAN ON SHEET S-101 FOR GRADE BEAM DESIGNATION AND GRADE BEAM SCHEDULE ON SHEET S-601.
7. SEE TYP EXTERIOR AND INTERIOR CMU WALL REINFORCING DETAILS ON SHEET S-701.

## ENLARGED PLAN KEYNOTES: (X)

1. CONC PAD (ENTRANCE) - SEE ARCH DWGS FOR INFORMATION
2. REINF CONC COLUMN
3. REINF CONC SLAB-ON-GRADE. SEE SECTION 8 ON SHEET S-701.
4. (2)-#13 @ RE-ENTRANT CORNERS - SEE S-701 FOR INFORMATION
5. NOT USED
6. SLAB OPENING - COORDINATE W/ARCH AND PLUMBING DWGS.
7. NOT USED
8. NOT USED
9. NOT USED
10. 300 SLAB-ON-GRADE.
11. NOT USED

## PLAN LEGEND:

- REINF CONC SHEAR WALL
- REINF CMU WALL
- CONTROL JOINT
- INDICATES DROP SLAB 65 BELOW FINISH FLOOR
- INDICATES DROP SLAB 200 BELOW FINISH FLOOR
- SLAB OPENING
- OUTLINE OF THICKENED SLAB AREAS
- GRADE BEAM

0 1000 2000
SCALE: 1:50

UNLESS OTHERWISE NOTED, LINEAR DIMENSIONS SHOWN ON DRAWINGS ARE IN MILLIMETERS (mm)

APPROVED:

A/E DESIGNER OF RECORD

SEAL:

GEORGIA REGISTERED 1-27-10 No. 27141 PROFESSIONAL ENGINEER CHRISTOPHER W. WHITMORE

US ARMY CORPS OF ENGINEERS
AFGHANISTAN ENGINEER DISTRICT

| Mark | Description | Date | Appr. |
|---|---|---|---|
| | | | |

Date: 2/23/10 | Rev: 0
Design file no.
Drawing code:
File name: ANAHQS-402EP
Plot date: 2/23/2010
Plot scale: x:x

Designed by: KMP/MMY
Dwn by: RCG
Ckd by: CWW
Reviewed by: LHM
Submitted by: BAKER

U.S. ARMY CORPS OF ENGINEERS
AFGHANISTAN ENGINEER DISTRICT
APO AE 96338

*Michael Baker Jr., Inc*
*A unit of Michael Baker Corporation*
Airside Business Park
100 Airside Drive
Moon Township, PA 15108
www.mbakercorp.com

AFGHAN NATIONAL ARMY
REGIONAL MILITARY TRAINING CENTER
STANDARD DESIGN

RMTC HEADQUARTERS BUILDING

ENLARGED LATRINE SLAB PLAN

Sheet reference number:
S-402

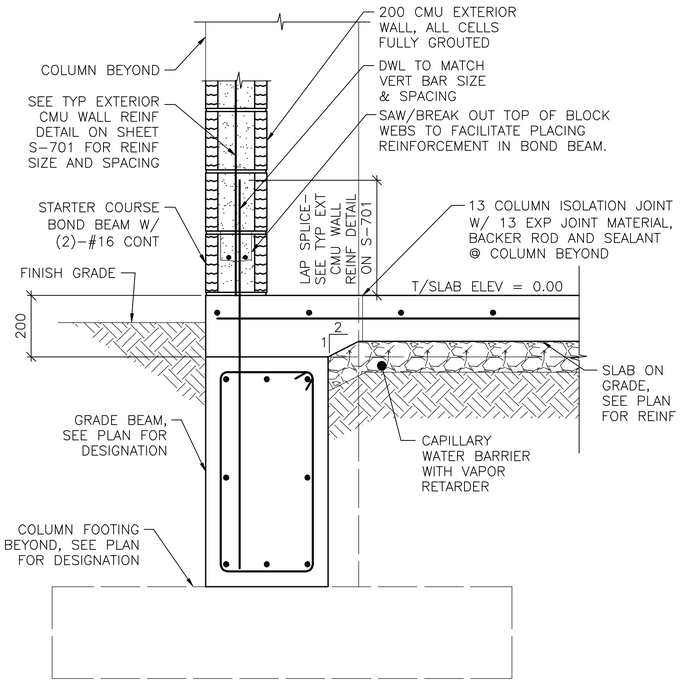


NOTE:
1. SECTION IS SIMILAR FOR INTERIOR CMU PARTITIONS OVER GRADE BEAMS SHOWING THICKENED 200 CONC SLAB AREA.

1 S-101 **SECTION**
SCALE: 1:10

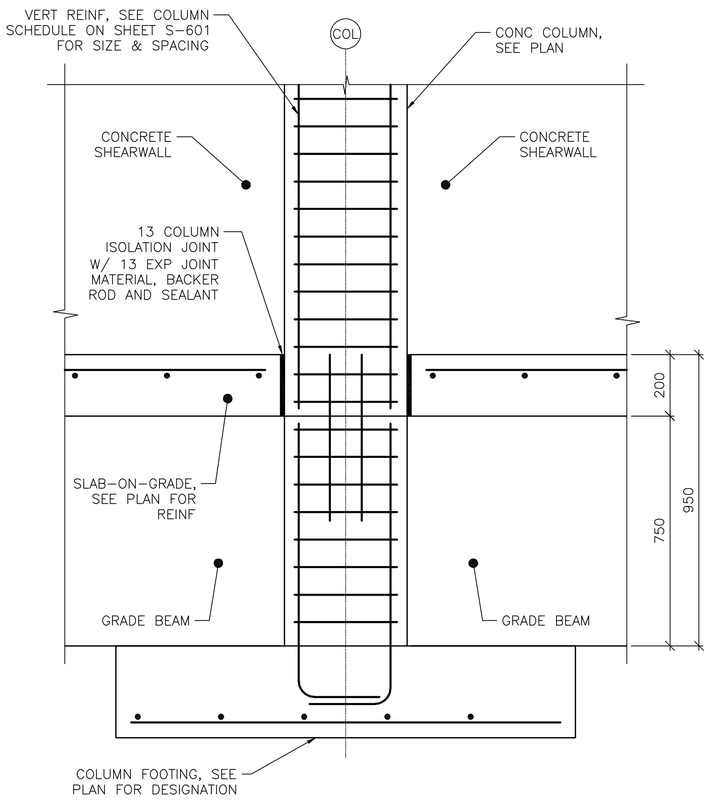


NOTE:
1. GRADE BEAM REINF NOT SHOWN FOR CLARITY

2 S-101 **SECTION**
SCALE: 1:10

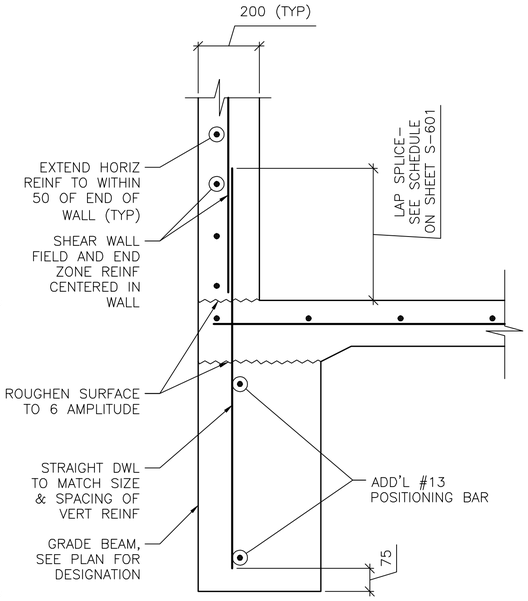


NOTES:
1. SECTION DEPICTS SHEAR WALL TERMINATION ONLY. GRADE BEAM REINFORCING NOT SHOWN FOR CLARITY
2. SEE SHEET S-601 AND SHEET S-702 FOR SCHEDULED FIELD AND END ZONE REINF.

3 S-101 **SECTION**
SCALE: 1:10

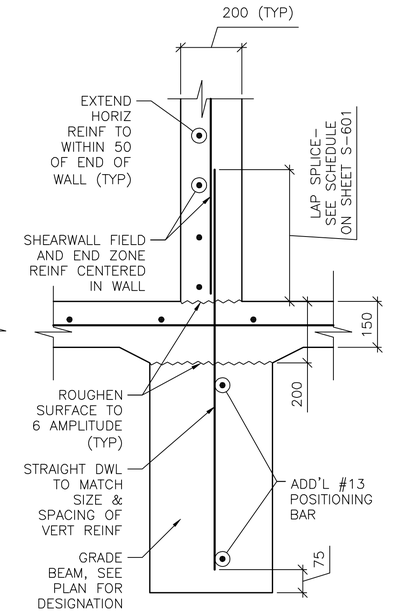


SECTION NOTES:
1. SECTION DEPICTS SHEAR WALL TERMINATION ONLY. GRADE BEAM REINFORCING NOT SHOWN FOR CLARITY
2. SEE SHEET S-601 AND SHEET S-702 FOR SCHEDULED FIELD AND END ZONE REINF.

4 S-101 **SECTION**
SCALE: 1:10

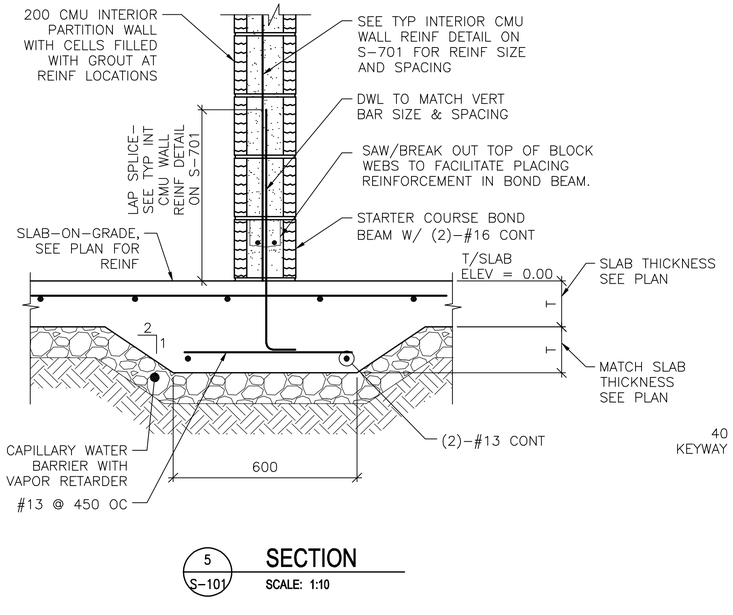


5 S-101 **SECTION**
SCALE: 1:10

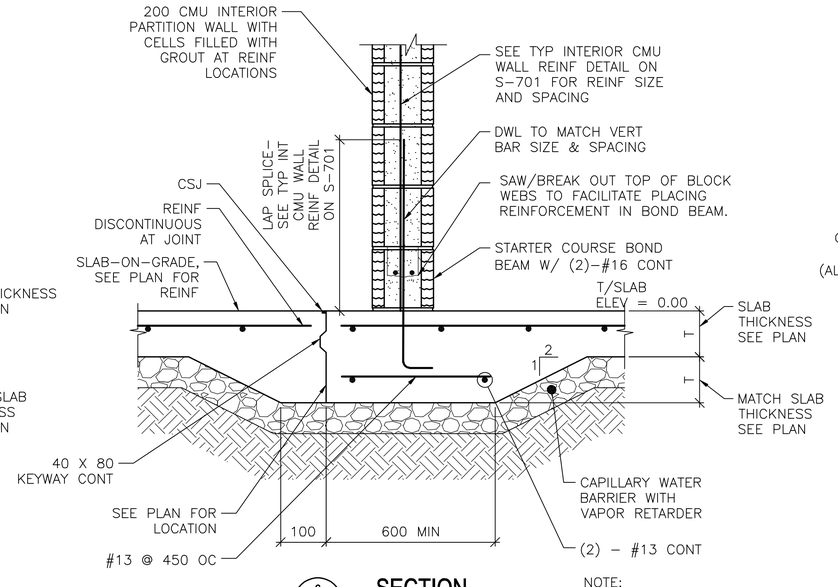


6 S-101 **SECTION**
SCALE: 1:10

NOTE:
1. DETAIL IS APPLICABLE AT CONTROL JOINTS RUNNING PARALLEL TO CMU WALLS AND WITHIN 300 OF FACE OF WALL.

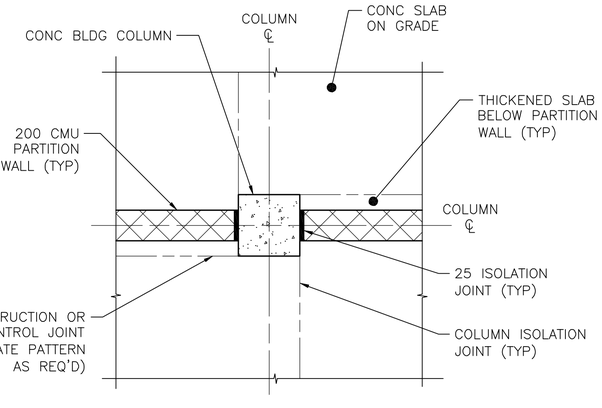


A S-501 **COLUMN ISOLATION JOINT DETAIL**
SCALE: NTS

0 200 400
SCALE: 1:10

UNLESS OTHERWISE NOTED, LINEAR DIMENSIONS SHOWN ON DRAWINGS ARE IN MILLIMETERS (mm)

APPROVED:

A/E DESIGNER OF RECORD

SEAL:

GEORGIA REGISTERED 12-17 No. 87141 PROFESSIONAL ENGINEER CHRISTOPHER W. WHITMORE

US ARMY CORPS OF ENGINEERS
AFGHANISTAN ENGINEER DISTRICT

| Mark | Description | Date | Appr. | Mark | Description | Date | Appr. |
|---|---|---|---|---|---|---|---|
| | | | | | | | |

Designed by: KMP/MMY | Ckd by: CWW
Dwn by: RCG | Reviewed by: LHM | Submitted by: BAKER

U.S. ARMY CORPS OF ENGINEERS
AFGHANISTAN ENGINEER DISTRICT
APO AE 96338

*Michael Baker Jr., Inc*
*A unit of Michael Baker Corporation*
Airside Business Park
100 Airside Drive
Moon Township, PA 15108
www.mbakercorp.com

Date: 2/23/10
Design file no.
Drawing code:
File name: ANAH2S-501SC
Plot date: 2/23/2010
Plot scale: x:x
Rev: 0

AFGHAN NATIONAL ARMY
REGIONAL MILITARY TRAINING CENTER
STANDARD DESIGN

RMTC HEADQUARTERS BUILDING

FOUNDATION SECTIONS

Sheet reference number:
S-501

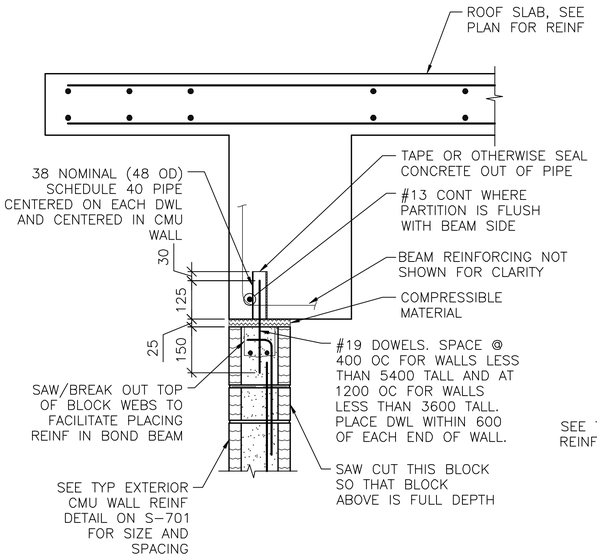


NOTES:
1. EXTEND DOWEL REINF TO 25 CLEAR FROM TOP OF CMU WALL.

1 S-102 **SECTION**
SCALE: 1:10

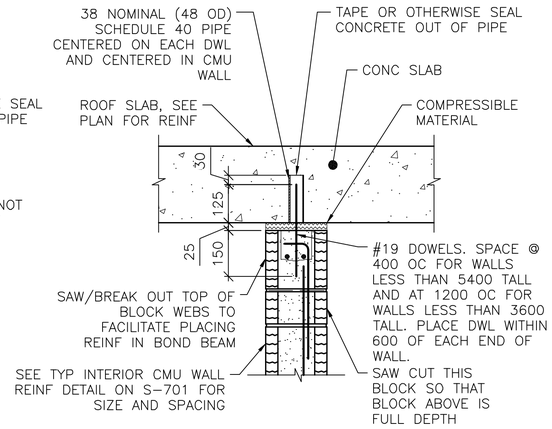


NOTES:
1. EXTEND DOWEL REINF TO 25 CLEAR FROM TOP OF CMU WALL.
2. SLAB REINF NOT SHOWN FOR CLARITY.

2 S-102 **SECTION**
SCALE: 1:10

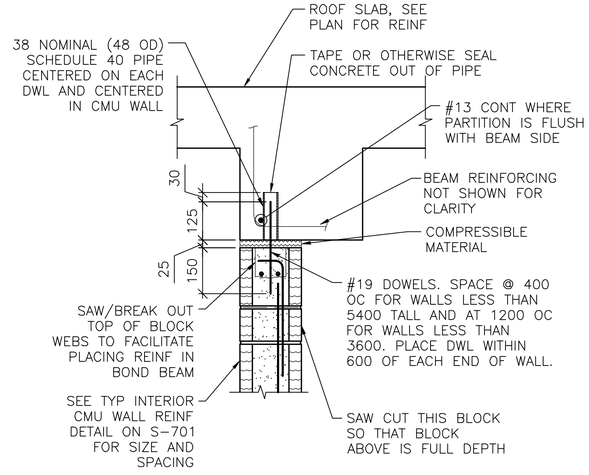


NOTES:
1. EXTEND DOWEL REINF TO 25 CLEAR FROM TOP OF CMU WALL.
2. PARTITION WALL MAY BE CENTERED UNDER THE BEAM OR FLUSH AS SHOWN. SEE PLAN FOR LOCATION.
3. SLAB REINF NOT SHOWN FOR CLARITY.

3 S-102 **SECTION**
SCALE: 1:10

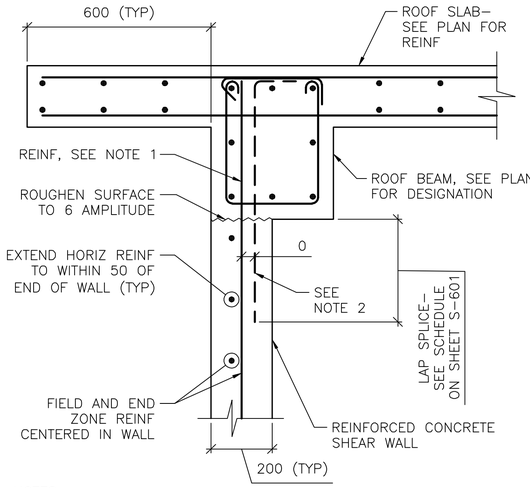


NOTES:
1. TERMINATE "FIELD" VERT REINF & END ZONE REINF @ 50 CLEAR FROM TOP OF ROOF SLAB.
2. WHERE END ZONE REINFORCING CANNOT BE DEVELOPED IN BEAM DEPTH, PROVIDE HOOKED DWLS SAME SIZE & SPACING. PROVIDE TENSION LAP BELOW ROOF BEAM.
3. SEE SHEET S-601 AND SHEET S-702 FOR SCHEDULED FIELD AND END ZONE REINF.

4 S-102 **SECTION**
SCALE: 1:10

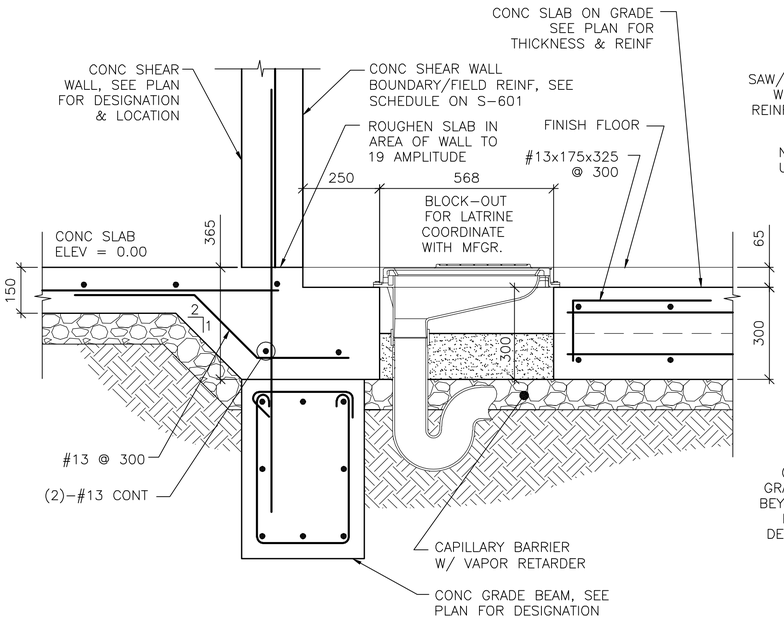


5 S-402 **SECTION**
SCALE: 1:10

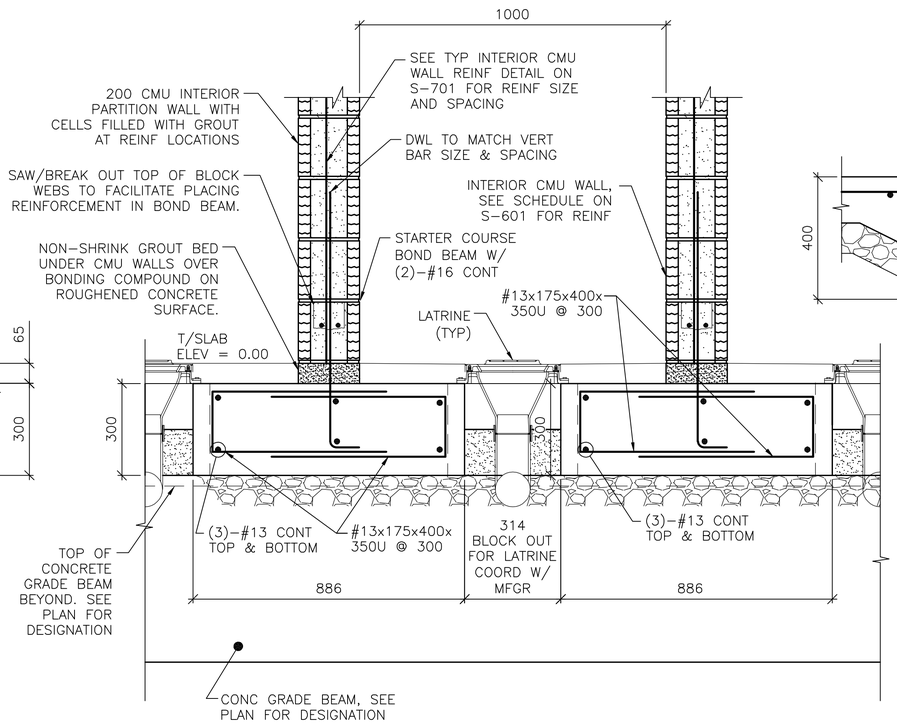


6 S-402 **SECTION**
SCALE: 1:10

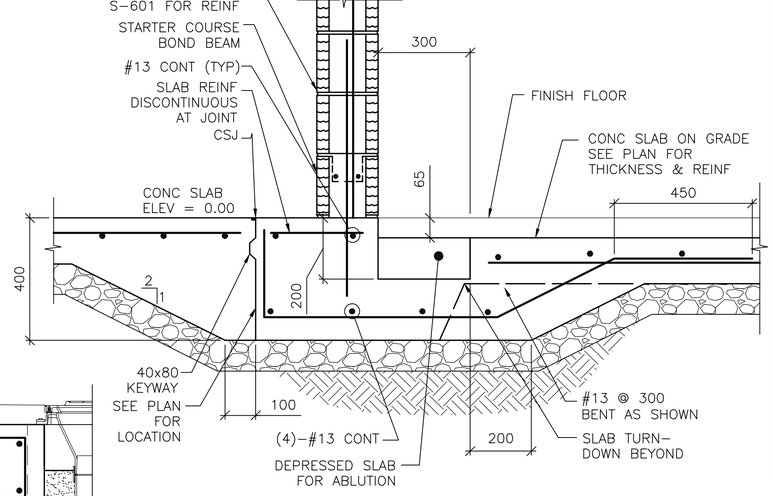


7 S-402 **SECTION**
SCALE: 1:10

0 200 400
SCALE: 1:10

UNLESS OTHERWISE NOTED, LINEAR DIMENSIONS SHOWN ON DRAWINGS ARE IN MILLIMETERS (mm)

APPROVED:

A/E DESIGNER OF RECORD

SEAL:

GEORGIA REGISTERED 2-23-10 No. 27141 PROFESSIONAL ENGINEER CHRISTOPHER W WHITMORE

US ARMY CORPS OF ENGINEERS
AFGHANISTAN ENGINEER DISTRICT

| Mark | Description | Date | Appr. |
|---|---|---|---|

Rev: 0
Date: 2/23/10
Design file no.
Drawing code:
File name: ANAHQS-502SC
Plot date: 2/23/2010
Plot scale: x:x

Designed by: KMP/MMY
Drn by: RCG
Ckd by: CWW
Reviewed by: LHM
Submitted by: BAKER

U.S. ARMY CORPS OF ENGINEERS
AFGHANISTAN ENGINEER DISTRICT
APO AE 96338


Michael Baker Jr, Inc
A unit of Michael Baker Corporation
Airside Business Park
100 Airside Drive
Moon Township, PA 15108
www.mbakercorp.com


AFGHAN NATIONAL ARMY
REGIONAL MILITARY TRAINING CENTER
STANDARD DESIGN

RMTC HEADQUARTERS BUILDING

FRAMING SECTIONS

Sheet reference number:
S-502

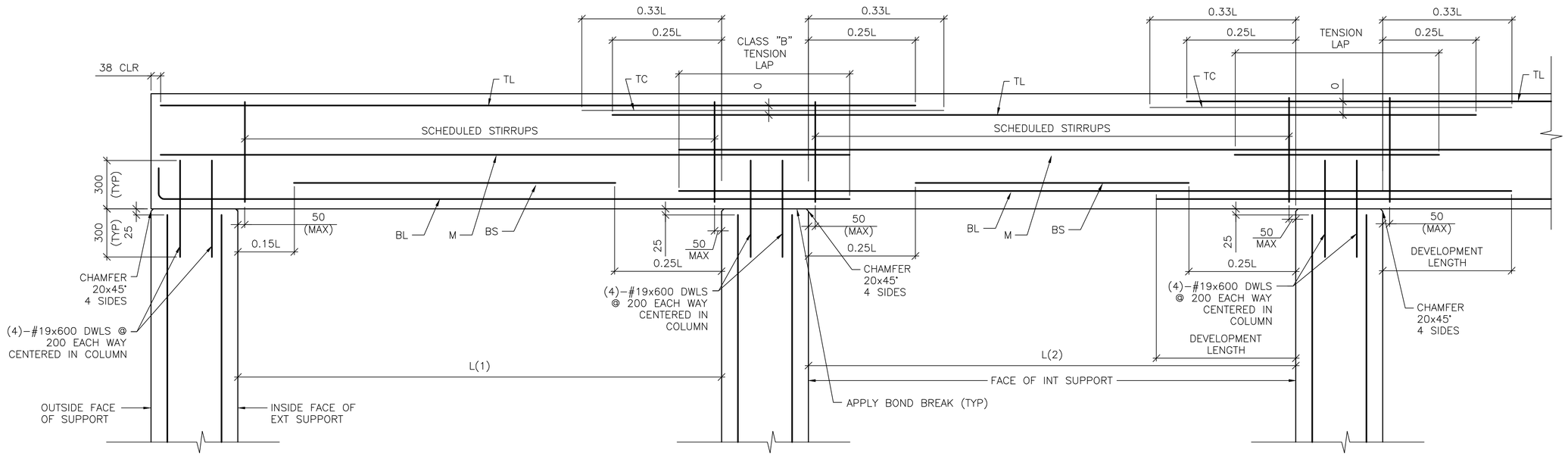


DETAIL NOTE:
1. WORK THIS DETAIL WITH BEAM SCHEDULE ON SHEET S-601.
2. L=GREATEST OF ADJACENT SPANS L(1) OR L(2)
3. ONLY COLUMN CORNER BARS ARE SHOWN

1 / S-503 **ROOF BEAM REINFORCING DETAIL**

SCALE: NTS

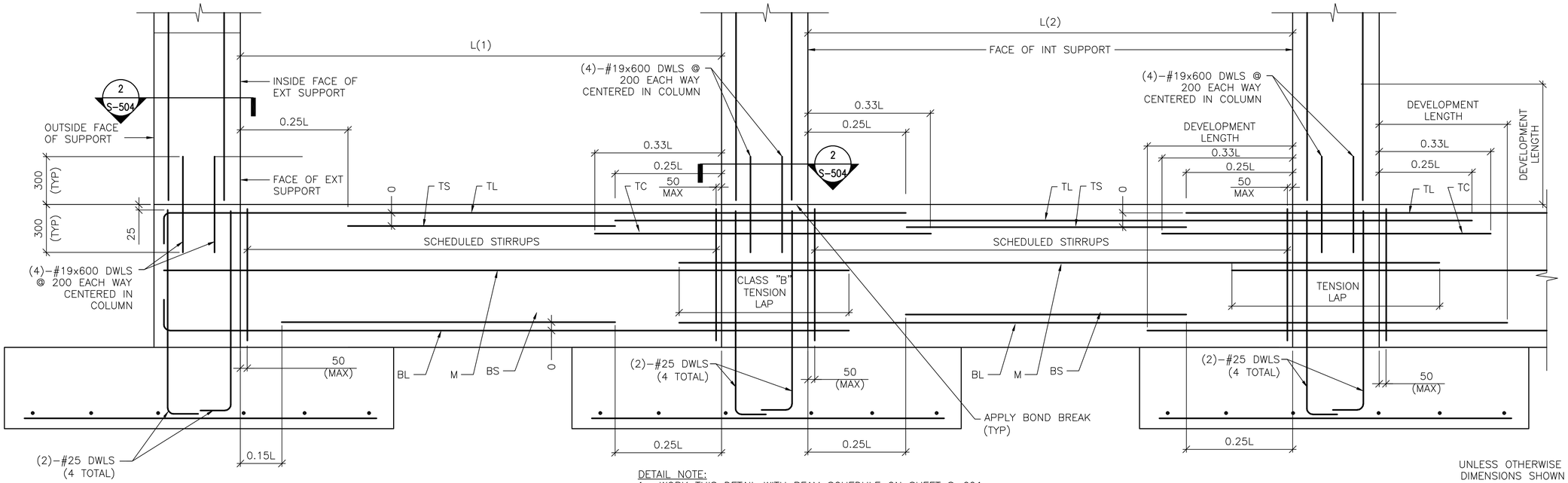


DETAIL NOTE:
1. WORK THIS DETAIL WITH BEAM SCHEDULE ON SHEET S-601.
2. L=GREATEST OF ADJACENT SPANS L(1) OR L(2)
3. ONLY COLUMN CORNER BARS ARE SHOWN.

2 / S-503 **GRADE BEAM REINFORCING DETAIL**

SCALE: NTS

UNLESS OTHERWISE NOTED, LINEAR DIMENSIONS SHOWN ON DRAWINGS ARE IN MILLIMETERS (mm)

APPROVED:

A/E DESIGNER OF RECORD

SEAL:

GEORGIA REGISTERED No. 27141 PROFESSIONAL ENGINEER CHRISTOPHER W. WHITMORE 2-23-10

US ARMY CORPS OF ENGINEERS
AFGHANISTAN ENGINEER DISTRICT

| Mark | Description | Date | Appr. |
|---|---|---|---|
| | | | |

Rev: 0
Date: 2/23/10
Design file no.
Drawing code:
Designed by: KMP/MMY
Dwn by: RCG
Ckd by: CWW
Reviewed by: LHM
Submitted by: BAKER
File name: ANAH05-50307
Plot date: 2/23/2010
Plot scale: X:X

U.S. ARMY CORPS OF ENGINEERS
AFGHANISTAN ENGINEER DISTRICT
APO AE 96338

Michael Baker Jr., Inc
A unit of Michael Baker Corporation
Airside Business Park
100 Airside Drive
Moon Township, PA 15108
www.mbakercorp.com

AFGHAN NATIONAL ARMY
REGIONAL MILITARY TRAINING CENTER
STANDARD DESIGN

RMTC HEADQUARTERS BUILDING

BEAM & COLUMN DETAILS

Sheet reference number:
S-503

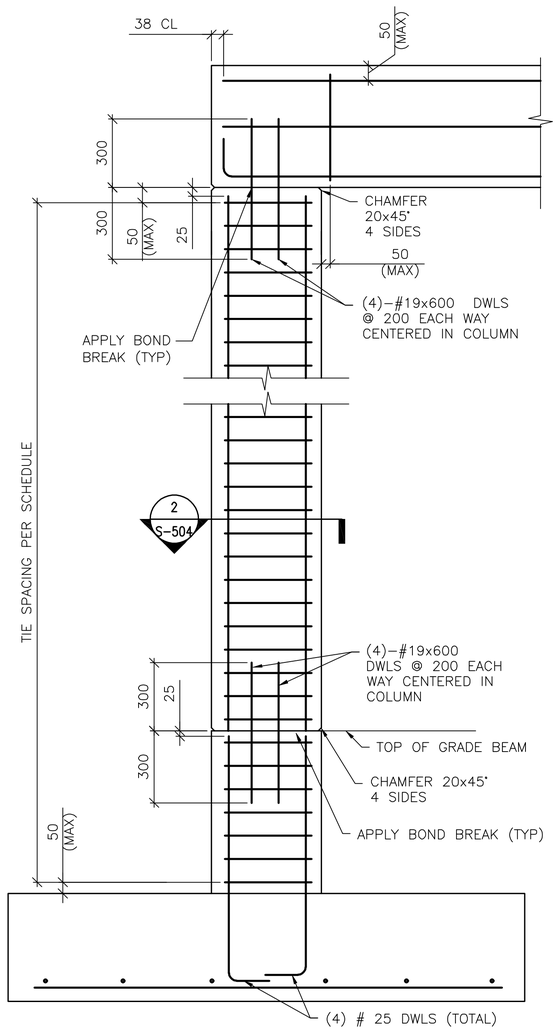


DETAIL NOTE:
1. ONLY COLUMN CORNER BARS ARE SHOWN

1 S–504 **1-STORY COLUMN REINF DETAILS**
SCALE: NTS
(WITH GRADE BEAM)

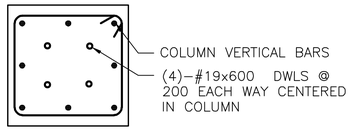


DETAIL NOTE:
1. INTERIOR TIES NOT SHOWN FOR CLARITY. REFER TO DETAIL A THIS SHEET FOR INTERIOR TIE CONFIGURATION.

2 S–503 2 S–504 **SECTION**
SCALE: NTS

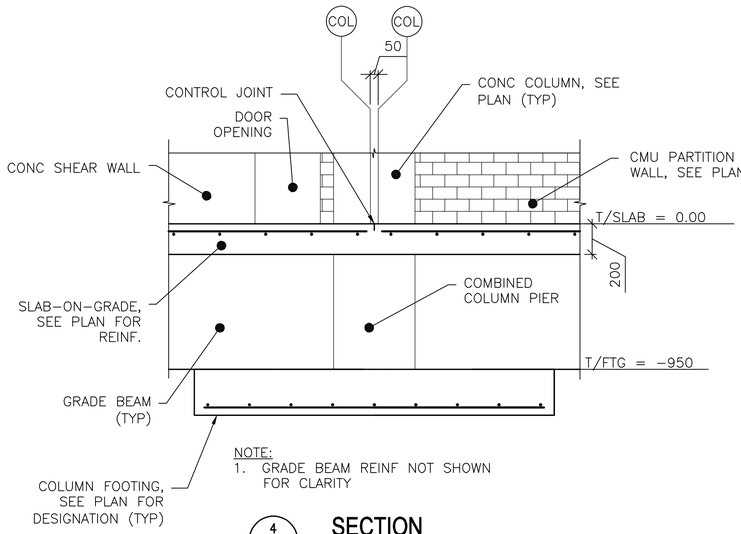


NOTE:
1. GRADE BEAM REINF NOT SHOWN FOR CLARITY

4 S–101 **SECTION**
SCALE: NTS

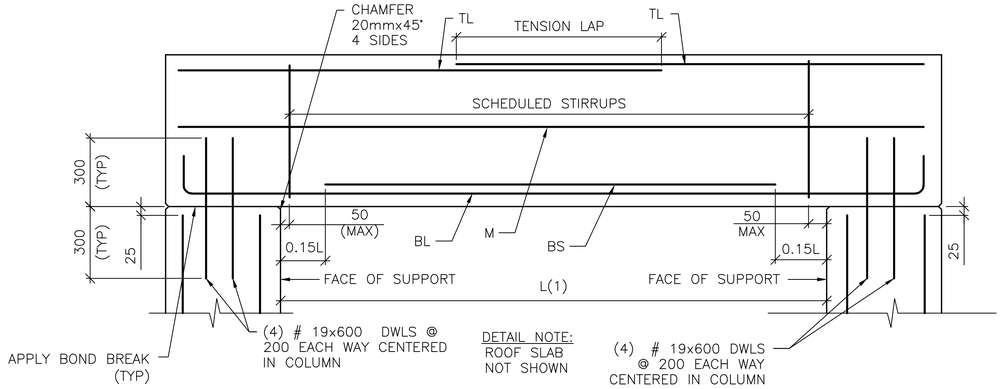


3 S–504 **SINGLE SPAN ROOF BEAM REINFORCING DETAIL**
SCALE: NTS

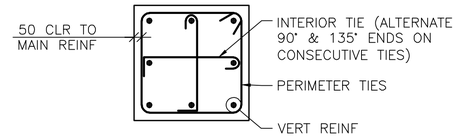


A S–504 **8 BAR COLUMN**
SCALE: NTS

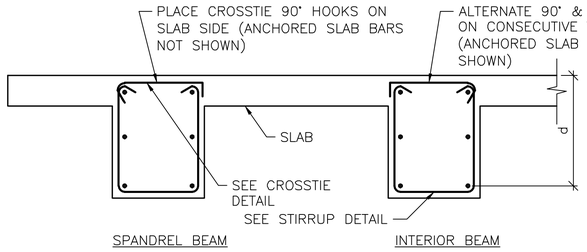


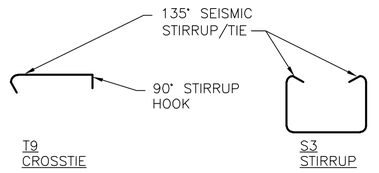


B S–504 **BEAM REINFORCEMENT DETAILS**
SCALE: NTS

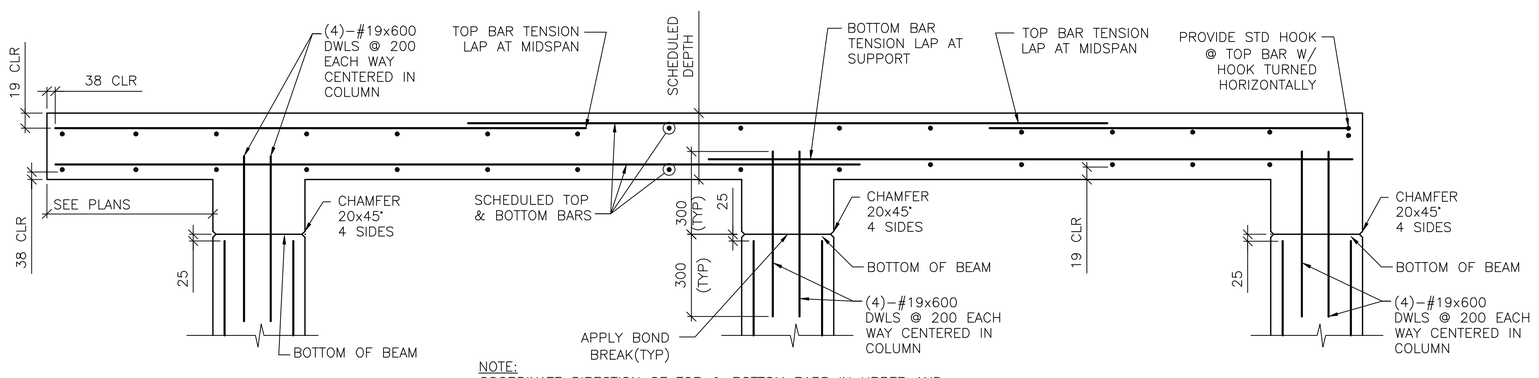


NOTE:
COORDINATE DIRECTION OF TOP & BOTTOM BARS IN UPPER AND LOWER MATS OF REINFORCING WITH BEAM TOP BAR DIRECTIONS

5 S–504 **FRAMED SLAB REINFORCING DETAIL**
SCALE: NTS

UNLESS OTHERWISE NOTED, LINEAR DIMENSIONS SHOWN ARE IN MILLIMETERS (mm)

APPROVED:

A/E DESIGNER OF RECORD

SEAL:

GEORGIA REGISTERED 11-23-10 No. 27141 PROFESSIONAL ENGINEER CHRISTOPHER W. WHITMORE

US ARMY CORPS OF ENGINEERS
AFGHANISTAN ENGINEER DISTRICT

| Mark | Description | Date | Appr. |
|---|---|---|---|

Date: 2/23/10 | Rev: 0
Design file no.
Drawing code:
File name: ANAH25-S0401
Plot date: 2/23/2010
Plot scale: X:X

Designed by: KMP/MMY | Ckd by: CWW
Dwn by: RCG | Reviewed by: LHM
Submitted by: BAKER

U.S. ARMY CORPS OF ENGINEERS
AFGHANISTAN ENGINEER DISTRICT
APO AE 96338

*Michael Baker Jr., Inc*
*A unit of Michael Baker Corporation*
Airside Business Park
100 Airside Drive
Moon Township, PA 15108
www.mbakercorp.com

AFGHAN NATIONAL ARMY
REGIONAL MILITARY TRAINING CENTER
STANDARD DESIGN

RMTC HEADQUARTERS BUILDING

BEAM & COLUMN DETAILS

Sheet reference number:
S–504

# CONCRETE REINFORCEMENT TENSION DEVELOPMENT/LAP SPLICE SCHEDULE

| f'c = 28 MPa | LAP CLASS | UNCOATED BARS | | | |
|---|---|---|---|---|---|
| | | TOP BARS | | OTHER BARS | |
| BAR SIZES | | CASE 1 | CASE 2 | CASE 1 | CASE 2 |
| #10 TO #19 | A | 50 BAR DIA | 74 BAR DIA | 38 BAR DIA | 57 BAR DIA |
| | B | 64 BAR DIA | 96 BAR DIA | 50 BAR DIA | 74 BAR DIA |
| #22 TO #57 | A | 62 BAR DIA | 93 BAR DIA | 48 BAR DIA | 71 BAR DIA |
| | B | 80 BAR DIA | 121 BAR DIA | 62 BAR DIA | 93 BAR DIA |

NOTES:
1. TABULATED TENSION DEVELOPMENT LENGTH VALUES ARE TAKEN FROM CRSI DESIGN HANDBOOK 2008 10TH ED.
2. TENSION DEVELOPMENT & TENSION LAP SPLICE LENGTHS ARE EXPRESSED AS MULTIPLES OF BAR DIAMETERS.
3. TABULATED VALUES ARE BASED ON MINIMUM YIELD STRENGTH OF REINFORCEMENT, fy, OF 420MPa.
4. CONCRETE IS NORMAL WEIGHT (2400Kg/m$^3$) AND 28 DAY COMPRESSIVE STRENGTH = 28MPa.
5. TABULATED VALUES FOR BEAMS & COLUMNS ARE BASED ON TRANSVERSE REINFORCEMENT AND CONCRETE COVER MEETING MINIMUM CODE REQUIREMENTS.
6. CASES 1 & 2, WHICH DEPEND ON THE TYPE OF STRUCTURAL MEMBER, CONCRETE COVER, AND CENTER-TO-CENTER SPACING OF THE BARS ARE DEFINED IN THE TABLE BELOW.
7. LAP SPLICE LENGTHS (MINIMUM 300mm) ARE MULTIPLES OF TENSION DEVELOPMENT LENGTHS: CLASS A = 1.0(TENSION DEVELOPMENT LENGTH) & CLASS B = 1.3(TENSION DEVELOPMENT LENGTH)
8. TOP BARS ARE HORIZONTAL REINFORCEMENT WITH MORE THAN 300mm OF CONCRETE CAST BELOW THE BARS.
9. IT SHALL BE PERMISSIBLE TO CALCULATE WALL AND SLAB REINFORCEMENT TENSION DEVELOPMENT/SPLICE LENGTHS IN ACCORDANCE WITH ACI 12.2.3 OR TABLE 5.3(b) OF CRSI 2008 IN LIEU OF VALUES TABULATED ABOVE.

| | | |
|---|---|---|
| BEAMS, COLUMNS | CASE 1 | CONCRETE COVER AT LEAST 1 BAR DIA AND CENTER-TO-CENTER SPACING AT LEAST 2 BAR DIA |
| | CASE 2 | CONCRETE COVER LESS THAN 1 BAR DIA OR CENTER-TO-CENTER SPACING LESS THAN 2 BAR DIA |
| ALL OTHERS | CASE 1 | CONCRETE COVER AT LEAST 1 BAR DIA AND CENTER-TO-CENTER SPACING AT LEAST 3 BAR DIA |
| | CASE 2 | CONCRETE COVER LESS THAN 1 BAR DIA OR CENTER-TO-CENTER SPACING LESS THAN 3 BAR DIA |

# CONCRETE COVER SCHEDULE

MINIMUM CONCRETE COVER PROTECTION FOR REINFORCEMENT BARS SHALL BE AS LISTED BELOW: (SEE ACI 318M-05, SECTION 7.7 FOR CONDITIONS NOT NOTED). DIMENSIONS FOR BAR PLACEMENT GIVEN IN SECTIONS AND DETAILS SHALL SUPERSEDE MINIMUM COVER REQUIREMENTS GIVEN HERE. DIMENSIONS ARE IN mm. PROVIDE STANDARD BAR CHAIRS AND SUPPORT BARS @1200mm MAXIMUM AS REQUIRED TO MAINTAIN CONCRETE PROTECTION SPECIFIED.

| | | |
|---|---|---|
| FOOTINGS (EARTH FORMED): | | 70 |
| COLUMNS / PIERS (TO TIES) | | 40 |
| GRADE BEAMS OR SLAB TURNED DOWN EDGES: | | |
| TOP | | 40 |
| BOTTOM (EARTH FORMED) | | 70 |
| SIDES (EARTH FORMED) | | 70 |
| SIDES (BOARD FORMED) | #16 BAR & SMALLER | 40 |
| | #19 THRU #36 BAR | 50 |
| ELEVATED BEAMS & SLABS: | | |
| BEAM TIES & STIRRUPS (NOT EXPOSED TO WEATHER) | | 40 |
| BEAM TIES & STIRRUPS (EXPOSED TO WEATHER) | | 50 |
| FLOOR SLABS (NOT EXPOSED TO WEATHER) | | 20 |
| FLOOR SLABS (EXPOSED TO WEATHER) | | |
| #19 & LARGER | | 50 |
| #13 & SMALLER | | 40 |
| ROOF SLAB BARS | | 25 |
| SLABS ON GRADE | | |
| NOT EXPOSED TO WEATHER (FROM TOP) | | 20 |
| EXPOSED TO WEATHER (FROM TOP) | | 40 |
| UTILITY TUNNEL WALLS, RETAINING WALLS AND SHEAR WALLS. (NO SURFACES SHALL BE EARTH FORMED) | | |
| EARTH SIDE AND FRONT SIDE (EXPOSED TO WEATHER) | | |
| #16 BAR AND SMALLER | | 40 |
| #19 THRU #36 BAR | | 50 |

# COLUMN FOOTING SCHEDULE

| MARK | FOOTING SIZE (mm) | | | FOOTING REINFORCING | REMARKS |
|---|---|---|---|---|---|
| | LENGTH | WIDTH | THICKNESS | | |
| F1 | 1750 | 1750 | 300 | (5)-#16 EW BOTT | ----- |
| F2 | 2600 | 2600 | 300 | (6)-#22 EW BOTT | ----- |
| F3 | 3000 | 3000 | 300 | (10)-#19 EW BOTT | ----- |
| F4 | 3300 | 3300 | 300 | (11)-#22 EW BOTT | ----- |
| F5 | 3600 | 3600 | 300 | (14)-#22 EW BOTT | ----- |
| F6 | 4600 | 4600 | 400 | (15)-#22 EW BOTT | ----- |

# CONCRETE SHEAR WALL SCHEDULE

| MARK | TYPE | WALL LENGTH (L) (mm) | WALL REINFORCEMENT | | REMARKS |
|---|---|---|---|---|---|
| | | | END ZONE | FIELD | |
| SW1 | A | 3700 | (3)-#16 @ 150mm OC | #13 @ 250mm OC | ----- |
| SW2 | C | 6400 | (8)-#16 @ 150mm OC | #13 @ 250mm OC | ----- |
| SW3 | A | 2900 | (8)-#16 @ 150mm OC | #13 @ 250mm OC | ----- |
| SW4 | B | 2800 | (9)-#16 @ 150mm OC | #13 @ 250mm OC | ----- |
| SW5 | B | 4900 | (6)-#19 @ 230mm OC | #13 @ 250mm OC | ----- |
| SW6 | A | 7000 | (6)-#19 @ 150mm OC | #13 @ 250mm OC | ----- |
| SW7 | D | 6000 | (7)-#19 @ 230mm OC | #13 @ 250mm OC | ----- |

NOTES:
1. WORK THIS SCHEDULE WITH SHEAR WALL DETAILS ON SHEETS S-702
2. SEE PLAN FOR LOCATION OF SHEAR WALL(S).
3. WALL "FIELD" REINFORCEMENT LISTED APPLIES TO VERTICAL & HORIZONTAL BARS.
4. WALL "FIELD" REINFORCEMENT SHOULD BE CENTERED IN WALL.
5. VERTICAL "FIELD" BARS MAY BE OMITTED IN LOCATION OF "END ZONE" REINFORCEMENT.

# STANDARD HOOKS IN TENSION PER (ACI 318M-05)

| HOOK DEVELOPMENT LENGTH (mm) | |
|---|---|
| BAR SIZE | f'c 28 MPa |
| #10 | 180 |
| #13 | 250 |
| #16 | 300 |
| #19 | 380 |
| #22 | 430 |
| #25 | 480 |
| #29 | 560 |
| #32 | 610 |
| #36 | 690 |

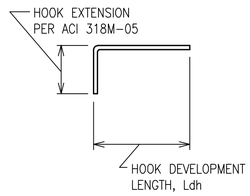


NOTES:
1. CONCRETE IS NORMAL WEIGHT CONCRETE.
2. BAR YIELD STRENGTH, fy = 420 MPa
3. SIDE COVER REQUIREMENTS OF ACI SECT. 12.5.3 ARE ASSUMED TO NOT BE MET.
4. TIE OR STIRRUP REQUIREMENTS OF ACI SECT. 12.5.3 ARE ASSUMED TO NOT BE MET.
5. REDUCTION FOR EXCESS REINFORCEMENT IS NOT TAKEN.
6. HOOK DEVELOPMENT LENGTH IS VALID FOR 180° HOOKS ALSO.

# CMU OR CAST IN PLACE CONC LINTEL SCHEDULE (TYP)

| OPENING TYPE OR SIZE, BEAM LOCATION OR TYPE | MAX SPAN (mm) | LINTEL DEPTH (mm) | REINFORCING BOTTOM |
|---|---|---|---|
| WALL OPENING | 4000 | 600 | (2)-#16 T&B |
| WALL OPENING | 1900 | 400 | (2)-#16 T&B |
| WALL OPENING | 1000 | 400 | (2)-#13 B |
| | | | |
| | | | |
| | | | |
| | | | |
| | | | |
| | | | |

1. STRUCTURAL SHEETS DO NOT INDICATE ALL OPENINGS IN MASONRY WALLS. VERIFY NUMBER, SIZE AND LOCATION OF ALL OPENINGS IN MASONRY WALLS FROM ARCHITECTURAL SHEETS AND APPROVED PLUMBING, MECHANICAL, AND ELECTRICAL SHOP DRAWINGS.
2. PROVIDE 200mm BEARING EA END.
3. FOR HEAD DETAILS REFER TO ARCHITECTURAL SHEETS.
4. REINFORCING SHALL BE ASTM A615M, GRADE 420. GROUT FOR CMU LINTELS SHALL HAVE A MINIMUM COMPRESSIVE STRENGTH OF 14 MPa AT 28 DAYS.
5. CONTRACTOR SHALL SUBMIT FOR APPROVAL SHOP DRAWINGS AND SCHEDULES SHOWING SIZE, SPAN, REINFORCEMENT, DETAILS, LOCATIONS, ETC.

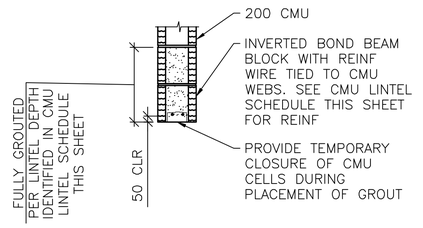


A / S-601 **LINTEL DETAIL**
SCALE: NTS

# BEAM SCHEDULE

| MARK | BEAM SIZE (mm) | | BEAM REINFORCING | | | | | | STIRRUPS | | | REMARKS |
|---|---|---|---|---|---|---|---|---|---|---|---|---|
| | DEPTH | WIDTH | BL | BS | TL | TS | TC | M | SIZE | TYPE | SPACING | ----- |
| GRADE BEAM | | | | | | | | | | | | |
| GB1 | 750/585 | 400 | (2)-#22 | (1)-#22 | (3)-#19 | --- | --- | #25 EF | #13 | S3 + T9 | d/2 | LOWER TOP BETWEEN B4-B5, B4.6-C4.6, B6.3-C6.3, C7-D7 |
| GB2 | 750/585 | 400 | (2)-#25 | (2)-#25 | (2)-#22 | --- | --- | --- | #13 | S3 + T9 | d/2 | LOWER TOP @ LATRINES BETWEEN B6-B7 |
| ROOF BEAM | | | | | | | | | | | | |
| RB1 | 600 | 400 | (2)-#19 | (1)-#19 | (2)-#22 | --- | --- | --- | #13 | S3 + T9 | d/2 | ----- |
| RB2 | 600 | 400 | (2)-#25 | (1)-#25 | (2)-#25 | --- | --- | --- | #13 | S3 + T9 | d/2 | ----- |

NOTES:
1. WORK THIS SCHEDULE WITH BEAM REINFORCING DETAILS ON SHEETS S-503 AND S-504.
2. HOOKS SHOWN ON SECTIONS AND DETAILS SHALL BE 90° STD UON.
3. USE ONLY (1) TC AT BEAM COLUMN INTERSECTION WHERE REQ'D.

# COLUMN SCHEDULE

| DESCRIPTION \ COLUMN MARK | TYP UON | --- | --- | --- |
|---|---|---|---|---|
| TYPE | 8-BAR | --- | --- | --- |
| DIMENSIONS | 600mm SQ. | --- | --- | --- |
| VERTICAL REINFORCEMENT | (8)-#25 | --- | --- | --- |
| TIES | #13 @ d/2 | --- | --- | --- |
| TOP OF ROOF ELEVATION | 3600mm | --- | --- | --- |
| TOP OF GRADE BEAM ELEVATION | -200mm | --- | --- | --- |
| TOP OF FOOTING ELEVATION | -950mm | --- | --- | --- |

NOTES:
1. WORK THIS SCHEDULE WITH COLUMN DETAILS ON SHEET S-504.
2. SEE FOOTING SCHEDULE THIS SHEET FOR FOOTING INFORMATION.
3. COLUMN TIES: INTERIOR TIES TO MATCH SIZE & SPACING OF PERIMETER TIES.
4. HOOKS SHOWN ON SECTIONS & DETAILS SHALL BE 90° STD UON.

UNLESS OTHERWISE NOTED, LINEAR DIMENSIONS SHOWN ON DRAWINGS ARE IN MILLIMETERS (mm)

APPROVED:

A/E DESIGNER OF RECORD

SEAL:

GEORGIA REGISTERED PROFESSIONAL ENGINEER CHRISTOPHER W. WHITMORE No. 27141 1-27-10

US ARMY CORPS OF ENGINEERS
AFGHANISTAN ENGINEER DISTRICT

| Mark | Description | Date | Appr. |
|---|---|---|---|
| | | | |

| Mark | Description | Date | Appr. |
|---|---|---|---|
| | | | |

Date: 2/23/10
Design file no.
Drawing code:
Rev: 0
File name: ANAHDS6015CH
Plot date: 2/23/2010
Plot scale: XX

Designed by: KMP/MMY
Dwn by: RCG
Ckd by: CWW
Reviewed by: LHM
Submitted by: BAKER

U.S. ARMY CORPS OF ENGINEERS
AFGHANISTAN ENGINEER DISTRICT
APO AE 96338

Michael Baker Jr., Inc
A unit of Michael Baker Corporation
Airside Business Park
100 Airside Drive
Moon Township, PA 15108
www.mbakercorp.com

AFGHAN NATIONAL ARMY
REGIONAL MILITARY TRAINING CENTER
STANDARD DESIGN

RMTC HEADQUARTERS BUILDING

SCHEDULES

Sheet reference number:
S-601

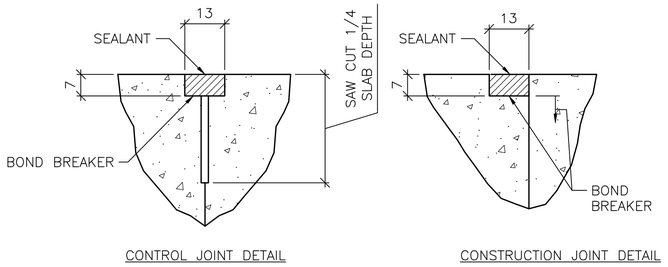


CONTROL JOINT DETAIL

CONSTRUCTION JOINT DETAIL

## 1 S-701 TYPICAL CONCRETE SLAB JOINT FINISH DETAILS

SCALE: NTS

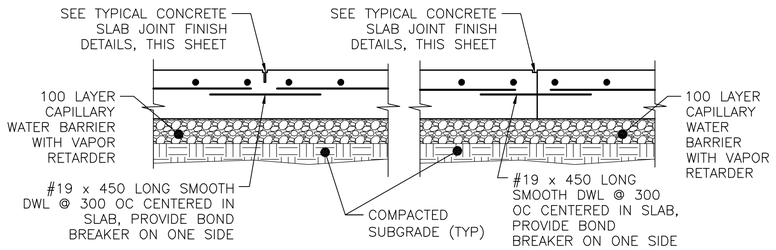


CONTROL JOINT DETAIL

CONSTRUCTION JOINT DETAIL

## 2 S-701 TYPICAL SLAB ON GRADE JOINT DETAIL

SCALE: NTS

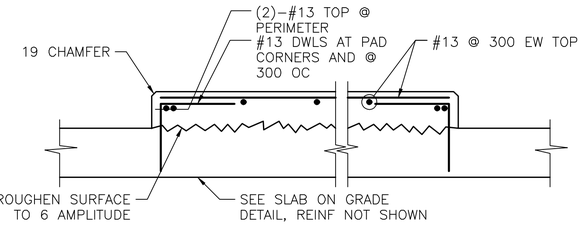


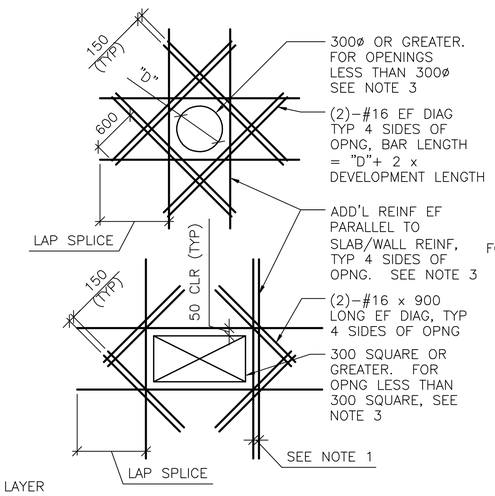


SHEAR WALL/SLAB OPENINGS

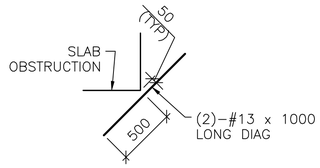


RE–ENTRANT CORNERS

DETAIL NOTES:
1. WHERE MORE THAN ONE ADDITIONAL BAR IS REQUIRED PARALLEL TO THE EXISTING SLAB/WALL REINFORCING THE ADDITIONAL REINFORCING BARS SHALL BE SPACED AT 100 ON CENTER.
2. ADDITIONAL REINFORCING PARALLEL TO THE SLAB/WALL REINFORCING SHALL BE #16 BARS THAT PROVIDE A STEEL AREA ON EACH SIDE OF THE OPENING EQUAL TO 1/2 THE AREA OF THE REINFORCING CUT BY THE OPENING.
3. FOR OPENINGS WITH SIDES OR DIAMETERS LESS THAN 300 SPREAD THE SLAB/WALL REINFORCING TO CLEAR THE OPENING.

## 4 S-701 ADD'L CONCRETE REINFORCEMENT DETAILS

SCALE: NTS

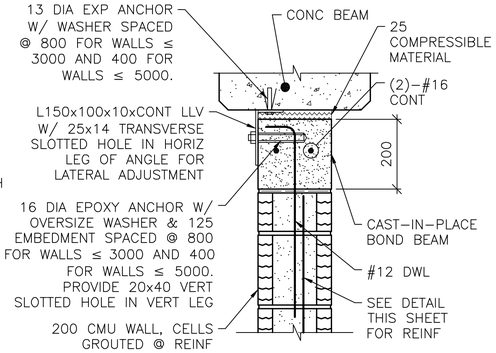


NOTE:
1. AT ANCHOR BOLTS, ADD AN ADDITIONAL 25 COMPRESSIBLE MATERIAL BELOW EXP ANCHOR HEAD.

INTERIOR BEAM

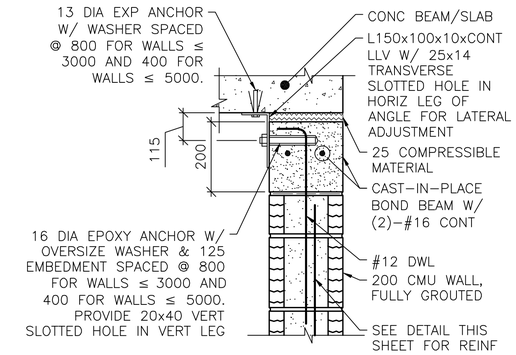


EXTERIOR WALL OR SLAB

NOTES:
1. THIS DETAIL IS AN ALTERNATE TOP OF WALL ANCHORAGE DETAIL TO BE USED AT THE CONTRACTOR'S OPTION IN LIEU OF DETAILS SHOWN ON S–400 & S–500 DRAWINGS.
2. CAST–IN–PLACE BOND BEAM SHOWN AT TOP OF WALL IS ALSO APPLICABLE FOR INTERMEDIATE AND STARTER COURSE BOND BEAMS WITHIN WALL.

## 5 S-701 ALTERNATE TOP OF CMU WALL BRACING DETAILS

SCALE: NTS

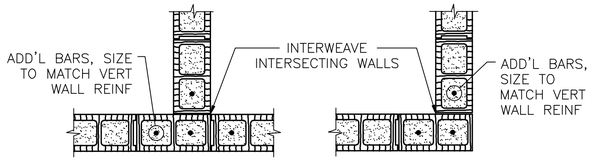


INTERSECTION

WALL CORNER

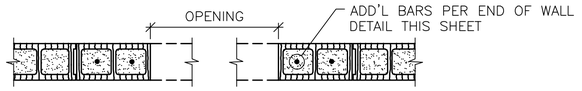


MASONRY OPENING W/ LINTEL

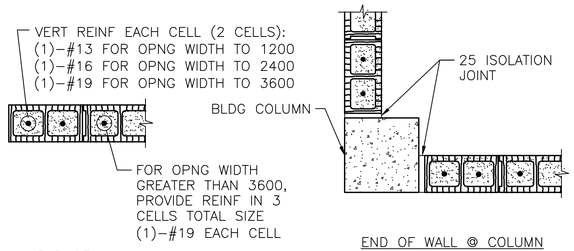


END OF WALL

END OF WALL @ COLUMN

NOTES:
1. OPENING WIDTH SHALL NOT EXCEED 3600 FOR THIS TYPE OF JAMB.
2. ALL CELLS FULLY GROUTED AT EXTERIOR WALLS. AT INTERIOR WALLS, ONLY GROUT CELLS CONTAINING REINF.

## 6 S-701 TYP CMU DETAILS

SCALE: NTS

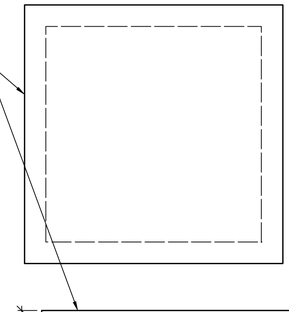


NOTE:
1. COORDINATE W/ ELECTRICAL CONTRACTOR FOR DIMENSIONS @ ELECTRICAL EQUIPMENT

## 9 S-701 SLAB ON GRADE

SCALE: NTS

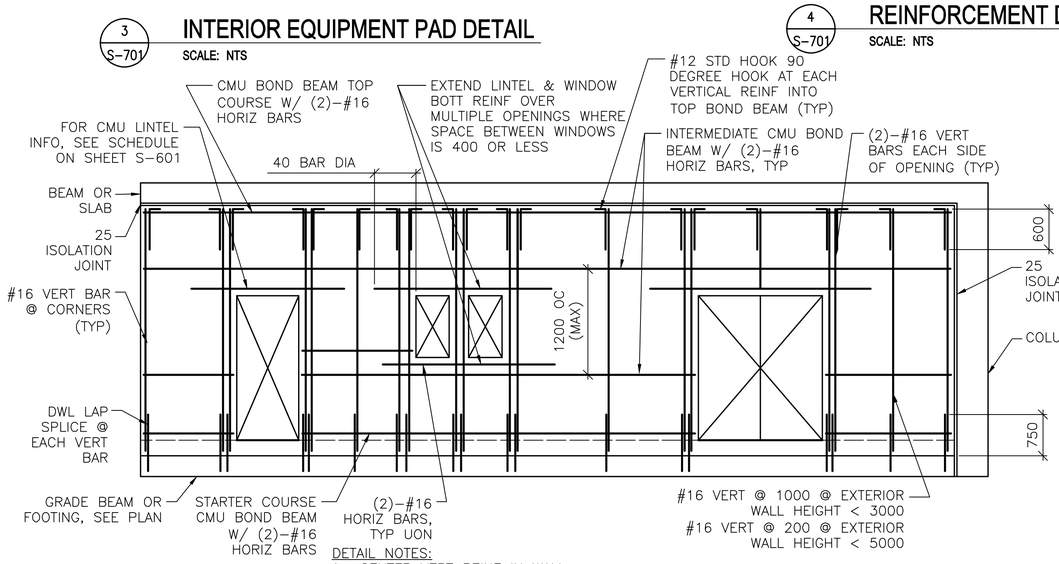


DETAIL NOTES:
1. CENTER VERT REINF IN WALL.
2. GROUT ALL CMU CELLS.
3. REFERENCE ARCH DWGS FOR JOINT INFORMATION
4. DOWELS BETWEEN TOP BOND BEAM AND BEAM/SLAB ABOVE (INCLUDING EMBEDDED PIPE SLEEVE) NOT SHOWN FOR CLARITY. SEE SPECIFIC S–500 SERIES DWGS FOR INFO.
5. FOR INFORMATION ON ALTERNATE CAST–IN–PLACE WALL BOND BEAMS, REFERENCE ALTERNATE TOP OF CMU WALL BRACING DETAILS THIS SHEET.

## 7 S-701 TYP EXTERIOR CMU WALL REINF DETAIL

SCALE: NTS

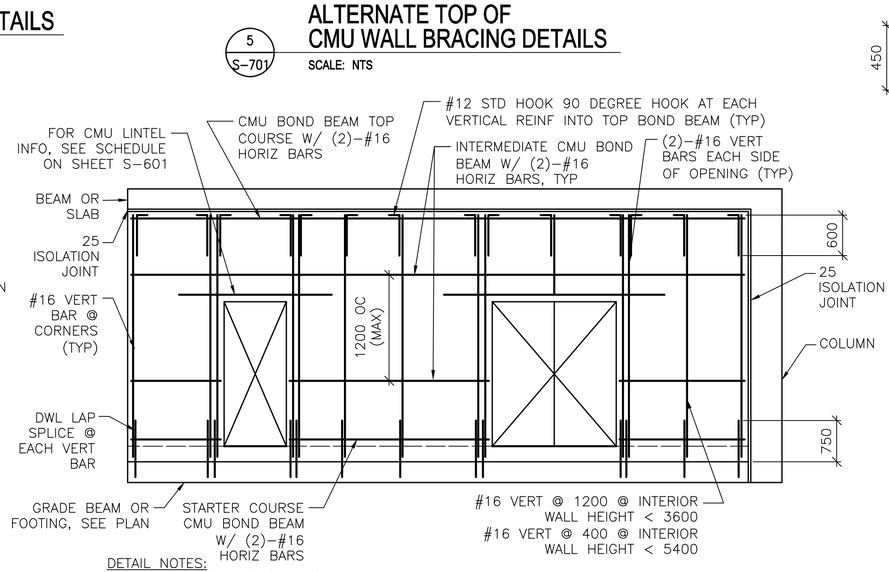


DETAIL NOTES:
1. CENTER VERT REINF IN WALL.
2. GROUT ALL CMU CELLS.
3. REFERENCE ARCH DWGS FOR JOINT INFORMATION
4. DOWELS BETWEEN TOP BOND BEAM AND BEAM/SLAB ABOVE (INCLUDING EMBEDDED PIPE SLEEVE) NOT SHOWN FOR CLARITY. SEE SPECIFIC S–500 SERIES DWGS FOR INFO.
5. FOR INFORMATION ON ALTERNATE CAST–IN–PLACE WALL BOND BEAMS, REFERENCE ALTERNATE TOP OF CMU WALL BRACING DETAILS THIS SHEET.

## 8 S-701 TYP INTERIOR CMU WALL REINF DETAIL

SCALE: NTS

UNLESS OTHERWISE NOTED, LINEAR DIMENSIONS SHOWN ON DRAWINGS ARE IN MILLIMETERS (mm)

APPROVED:

A/E DESIGNER OF RECORD

SEAL:

GEORGIA REGISTERED 1-29-10 No. 27141 PROFESSIONAL ENGINEER CHRISTOPHER W. WHITMORE

US ARMY CORPS OF ENGINEERS
AFGHANISTAN ENGINEER DISTRICT

| Mark | Description | Date | Appr. |
|---|---|---|---|

Rev: 0
Date: 2/23/10
Design file no.
Drawing code:
File name: ANAM25-701DT
Plot date: 2/23/2010
Plot scale: XX

Designed by: KMP/MMY
Dwn by: RCG
Ckd by: CWW
Reviewed by: LHM
Submitted by:
BAKER

U.S. ARMY CORPS OF ENGINEERS
AFGHANISTAN ENGINEER DISTRICT
APO AE 96338

Michael Baker Jr., Inc
A unit of Michael Baker Corporation
Airside Business Park
100 Airside Drive
Moon Township, PA 15108
www.mbakercorp.com

AFGHAN NATIONAL ARMY
REGIONAL MILITARY TRAINING CENTER
STANDARD DESIGN

RMTC HEADQUARTERS BUILDING

TYPICAL DETAILS

Sheet reference number:
S–701

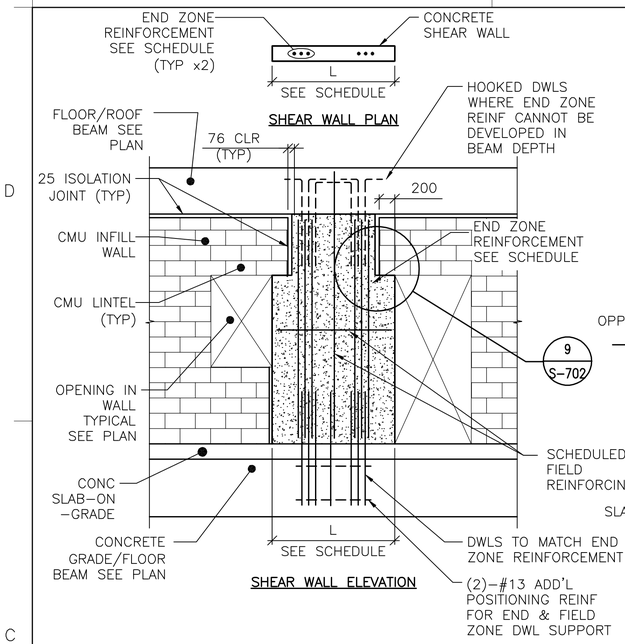


DETAIL NOTES:
1. FIELD REINFORCEMENT IN SHEAR WALL NOT SHOWN COMPLETELY FOR CLARITY.
2. FIELD REINFORCEMENT CENTERED IN WALL.
3. MINIMUM CONC CLEAR DISTANCE FOR END ZONE REINF = 76
4. SEE CONC SHEAR WALL SCHEDULE ON SHEET S-601
5. SEE ARCH DWGS FOR JOINT INFORMATION

## 1 S-702 TYPE "A" SHEAR WALL DETAIL
SCALE: NTS

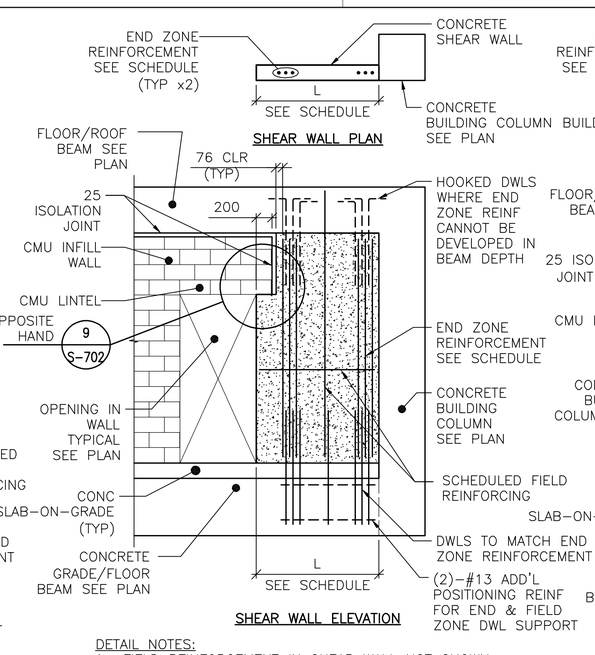


DETAIL NOTES:
1. FIELD REINFORCEMENT IN SHEAR WALL NOT SHOWN COMPLETELY FOR CLARITY.
2. FIELD REINFORCEMENT CENTERED IN WALL.
3. MINIMUM CONC CLEAR DISTANCE FOR END ZONE REINF = 76
4. SEE CONC SHEAR WALL SCHEDULE ON SHEET S-601
5. SEE ARCH DWGS FOR JOINT INFORMATION

## 2 S-702 TYPE "B" SHEAR WALL DETAIL
SCALE: NTS

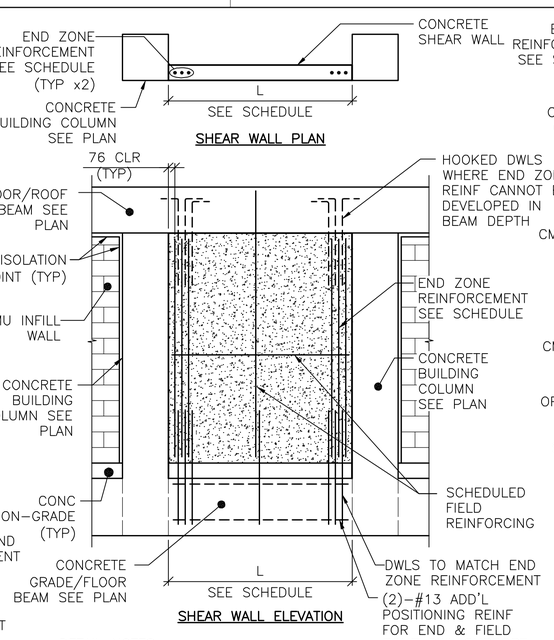


DETAIL NOTES:
1. FIELD REINFORCEMENT IN SHEAR WALL NOT SHOWN COMPLETELY FOR CLARITY.
2. FIELD REINFORCEMENT CENTERED IN WALL.
3. MINIMUM CONC CLEAR DISTANCE FOR END ZONE REINF = 76
4. SEE CONC SHEAR WALL SCHEDULE ON SHEET S-601
5. SEE ARCH DWGS FOR JOINT INFORMATION

## 3 S-702 TYPE "C" SHEAR WALL DETAIL
SCALE: NTS

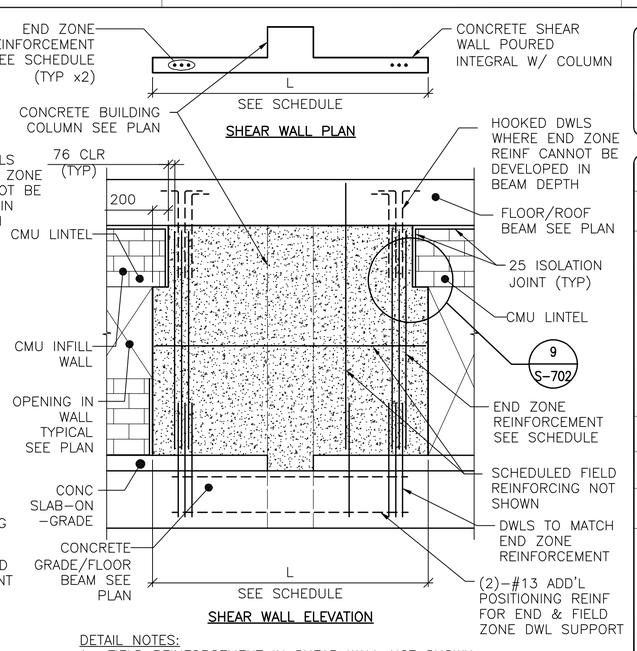


DETAIL NOTES:
1. FIELD REINFORCEMENT IN SHEAR WALL NOT SHOWN COMPLETELY FOR CLARITY.
2. FIELD REINFORCEMENT CENTERED IN WALL.
3. MINIMUM CONC CLEAR DISTANCE FOR END ZONE REINF = 76
4. SEE CONC SHEAR WALL SCHEDULE ON SHEET S-601
5. SEE ARCH DWGS FOR JOINT INFORMATION

## 4 S-702 TYPE "D" SHEAR WALL DETAIL
SCALE: NTS

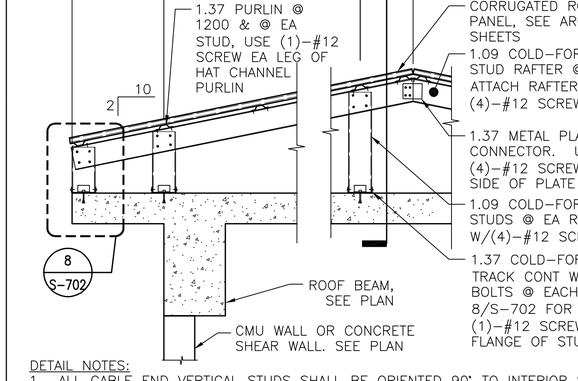


DETAIL NOTES:
1. ALL GABLE END VERTICAL STUDS SHALL BE ORIENTED 90° TO INTERIOR STUDS & SPACED @ 600 OC. GABLE END RAFTER SHALL BE 1.37 METAL TRACK SPANNING CONTINUOUSLY OVER GABLE END STUDS. INSET GIRTS AT GABLE END SHALL BE 1.09 COLD-FORMED METAL STUDS @ 1200 OC ATTACHED VIA 1.37 THICKNESS CLIP ANGLE W/ (2) #12 SCREWS EA LEG.
2. ALL INTERIOR, NON-GABLE END VERTICAL STUDS GREATER THAN 2400 IN LENGTH SHALL BE BACK-TO-BACK W/ #12 SCREWS @ 200 OC STAGGERED.

## 5 S-702 TYPICAL OVERBUILT ROOF FRAMING DETAIL
SCALE: NTS

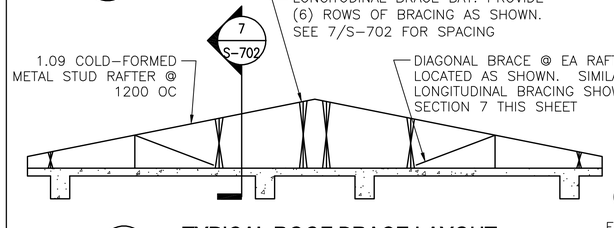


## 6 S-702 TYPICAL ROOF BRACE LAYOUT
SCALE: NTS

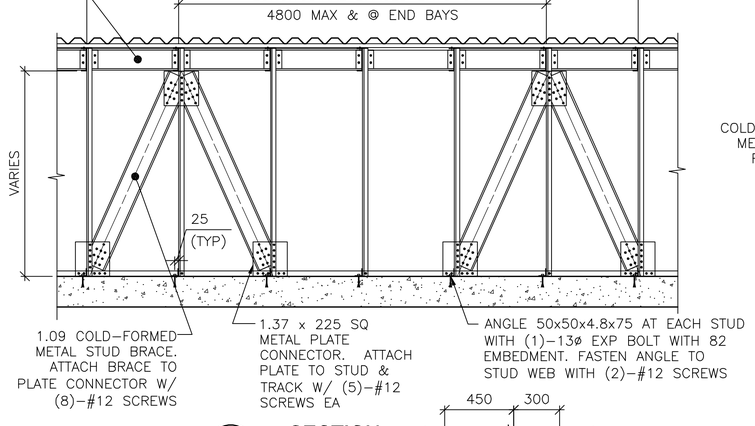


## 7 S-702 SECTION
SCALE: NTS

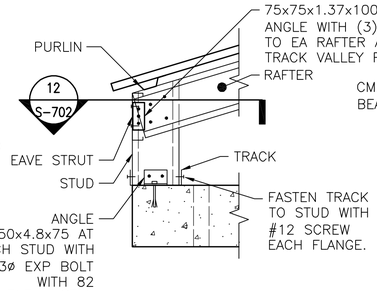


## 8 S-702 DETAIL
SCALE: NTS

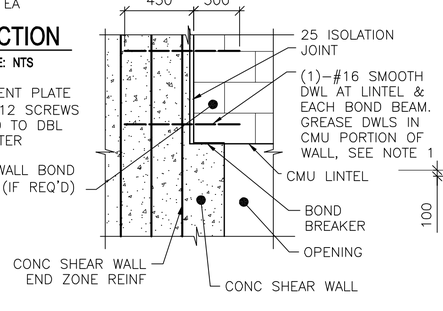


NOTE:
1. TIE SMOOTH DOWEL ROD TO SHEAR WALL END ZONE REINF FOR EACH BOND BEAM AND LINTEL.

## 9 S-702 SECTION
SCALE: NTS

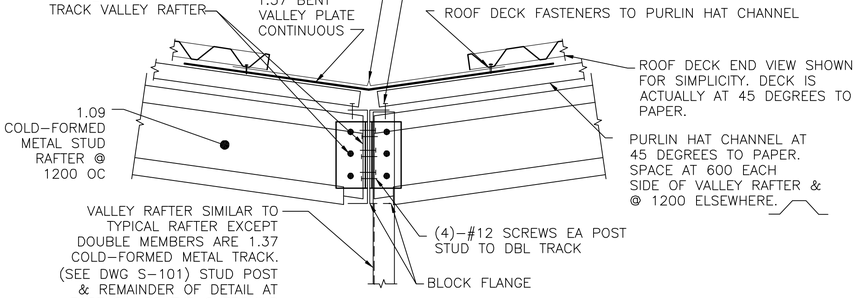


## 11 S-702 TYPICAL OVERBUILT ROOF SECTION THROUGH VALLEY
SCALE: NTS

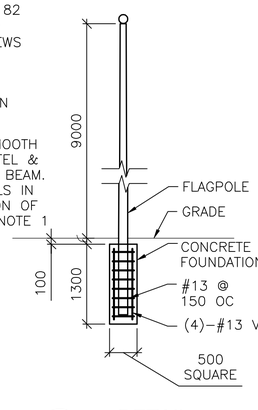


## 10 S-702 DETAIL
SCALE: NTS

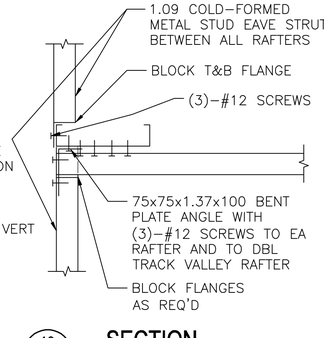


## 12 S-702 SECTION
SCALE: NTS

UNLESS OTHERWISE NOTED, LINEAR DIMENSIONS SHOWN ARE IN MILLIMETERS (mm)

APPROVED:

A/E DESIGNER OF RECORD .

SEAL:

GEORGIA REGISTERED 1-29-10 No. 27141 PROFESSIONAL ENGINEER CHRISTOPHER W. WHITMORE

US ARMY CORPS OF ENGINEERS
AFGHANISTAN ENGINEER DISTRICT

| Mark | Description | Date | Appr. |
|---|---|---|---|

U.S. ARMY CORPS OF ENGINEERS
AFGHANISTAN ENGINEER DISTRICT
APO AE 96338

Michael Baker Jr., Inc.
A unit of Michael Baker Corporation
Airside Business Park
100 Airside Drive
Moon Township, PA 15108
www.mbakercorp.com

Designed by: KMP/MMY
Drwn by: RCG
Ckd by: CWW
Reviewed by: LHM
Submitted by: BAKER

Date: 2/23/10
Design file no.
Drawing code:
Rev: 0
File name: ANAHQS-702TDT
Plot date: 2/23/2010
Plot scale: x:x

AFGHAN NATIONAL ARMY
REGIONAL MILITARY TRAINING CENTER
STANDARD DESIGN

RMTC HEADQUARTERS BUILDING

TYPICAL DETAILS

Sheet reference number:
S-702

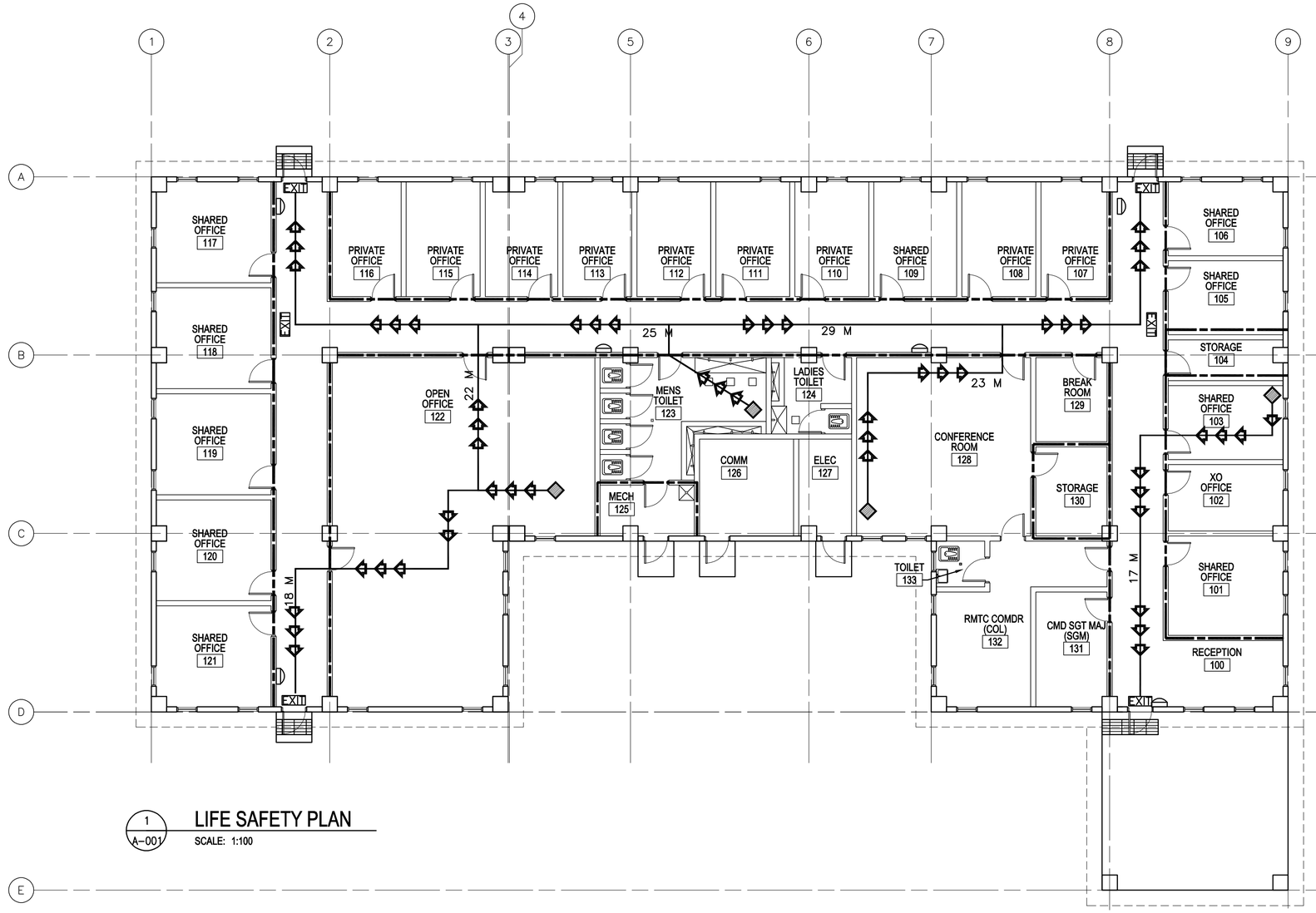


1 A-001 **LIFE SAFETY PLAN**
SCALE: 1:100

## CODE ANALYSIS:

1. REFERENCES:
   2006 INTERNATIONAL BUILDING CODE (2006 IBC)
   2006 LIFE SAFETY CODE (2006 NFPA 101)

2. IBC OCCUPANCY CLASSIFICATION:
   GROUP B (BUSINESS NFPA 101 6.1.11 AND CHAPTER 38)

3. TYPE OF CONSTRUCTION (IBC): TYPE II–B (UNPROTECTED/NONSPRINKLERED)

4. IBC TABLE 503: ALLOWABLE HEIGHT AND BUILDING AREAS:
   GROUP B
   ALLOWABLE AREA: 2,137 SM
   ALLOWABLE HEIGHT: 3 STORIES (18 M)

   GROUP B
   PROPOSED AREA: 821 SM
   PROPOSED HEIGHT: 1 STORY (<16 M)

5. IBC TABLE 601 & 602: FIRE RESISTANCE RATING REQUIREMENTS FOR BUILDING ELEMENTS FOR TYPE II–B

| BUILDING ELEMENT | RATING (HOUR) | REFERENCE |
|---|---|---|
| STRUCTURAL FRAME (COLUMNS, GIRDERS & TRUSSES) | 0 | TABLE 601 |
| BEARING WALLS | | |
| EXTERIOR | 0 | TABLE 601 |
| INTERIOR | 0 | TABLE 601 |
| NONBEARING WALLS & PARTITIONS | | |
| INTERIOR | 0 | TABLE 601 |
| FLOOR CONSTRUCTION | 0 | TABLE 601 |
| ROOF CONSTRUCTION | 0 | TABLE 601 |
| EXTERIOR WALL | 0 | TABLE 602 |

6. IBC TABLE 803.5 – INTERIOR WALL AND CEILING FINISH REQUIREMENTS FOR B OCCUPANCY/NONSPRINKLERED

| GROUP | EXIT ENCLOSURES AND EXIT PASSAGEWAY | CORRIDORS | ROOMS AND ENCLOSED SPACES |
|---|---|---|---|
| B | A | B | C |

7. NFPA 101 TABLE 7.3.1.2 – OCCUPANT LOAD
   BUSINESS = 9.3 SM/PERSON BUSINESS PROPOSED = 89 OCCUPANTS
   ASSEMBLY = 1.4 NSM/PERSON ASSEMBLY PROPOSED = 35 OCCUPANTS
   AS CONFERENCE ROOM WILL BE OCCUPIED BY PEOPLE WORKING IN THE BUILDING, THE TOTAL BUILDING OCCUPANCY IS NOT INCREASED.

8. NFPA 101 TABLE 7.3.3.1 – EGRESS CAPACITY
   BUSINESS = 5 MM PER OCCUPANT

   REQUIRED: 445 MM (89 OCCUPANTS x 5 MM PER OCCUPANT)
   PROPOSED EGRESS CAPACITY: 4500 MM: (3) 900 MM DOORS
   (1) 900 MM DOUBLE DOOR

9. NFPA 101 PARAGRAPH 38.2.6.2 – EXIT ACCESS TRAVEL DISTANCE (NONSPRINKLERED)
   REQUIRED: 60 METERS
   PROPOSED: 28 METERS

10. NFPA 101 PARAGRAPH 38.3.6.1(2) – CORRIDORS
    RATED CORRIDOR NOT REQUIRED WITHIN A SPACE OCCUPIED BY A SINGLE TENANT

11. NFPA 101 PARAGRAPH 38.2.3.2 – CORRIDOR WIDTH NOT LESS THAN 1120"
    PROVIDED: (1800) MM

12. NFPA 101 PARAGRAPH 38.2.5.2.1 – DEAD END CORRIDOR
    BUSINESS: PERMITTED: 6 METERS
    PROPOSED: NO DEAD END CORRIDOR

13. NFPA 101 PARAGRAPH 38.2.4.1 – NUMBER OF EXITS
    BUSINESS REQUIRED: 2 MINIMUM
    BUSINESS PROPOSED: 4 EXITS

14. NFPA 101 PARAGRAPH 38.3.2.1 & 8.7.1.1 (1) – PROTECTION FROM HAZARDS
    REQUIRED SEPARATION AT GENERAL STORAGE: 1 HOUR WALL AND 45 MINUTE DOOR
    PROVIDED: 1 HOUR WALL AND 45 MINUTE DOOR

## LEGEND:

- DENOTES PATHS OF EXIT TRAVEL
- EXIT — DENOTES DOOR AS AN EMERGENCY EXIT
- DENOTES STARTING POINT FOR TRAVEL DISTANCE
- DENOTES FIRE EXTINGUISHER LOCATIONS
- (1) HOUR RATED WALL
- (2) HOUR RATED WALL
- (3) HOUR RATED WALL

LINEAR DIMENSIONS SHOWN ARE IN MILLIMETERS (MM), UNLESS OTHERWISE NOTED

0 2000 4000
SCALE: 1:100

APPROVED:

A/E DESIGNER OF RECORD

SEAL:

STATE OF SOUTH CAROLINA
KEVIN R. CHAFIN
N. Charleston, SC
6374
REGISTERED ARCHITECT

US ARMY CORPS OF ENGINEERS
AFGHANISTAN ENGINEER DISTRICT

| Mark | Description | Date | Appr. |
|---|---|---|---|

Rev: 0
Date: 2/23/10
Design file no.
Drawing code:
File name: ANAHQA001.tif
Plot date: 2/23/2010
Plot scale: x:x

Designed by: KRC
Drwn by: EBB
Ckd by: NLJ
Reviewed by: LHM
Submitted by: BAKER

U.S. ARMY CORPS OF ENGINEERS
AFGHANISTAN ENGINEER DISTRICT
APO AE 96338

*Michael Baker Jr., Inc*
*A unit of Michael Baker Corporation*
Airside Business Park
100 Airside Drive
Moon Township, PA 15108
www.mbakercorp.com

AFGHAN NATIONAL ARMY
REGIONAL MILITARY TRAINING CENTER
STANDARD DESIGN

RMTC HEADQUARTERS BUILDING

LIFE SAFETY PLAN

Sheet reference number:
A–001

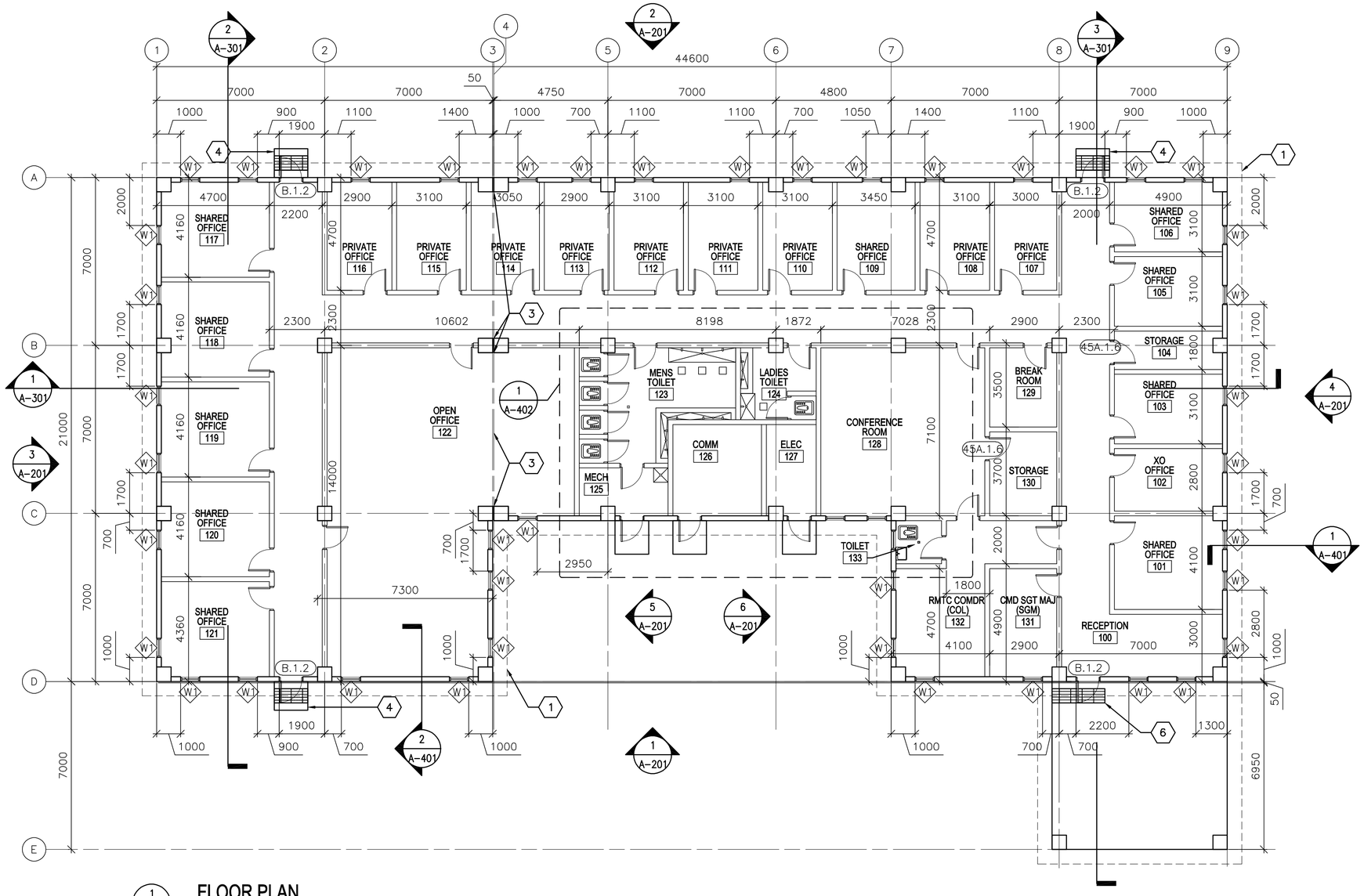


1 FLOOR PLAN
SCALE: 1:100

## GENERAL NOTES:

A. DIMENSIONS ARE SHOWN TO OUTER EDGE OF EXTERIOR STRUCTURAL COLUMNS, STRUCTURAL COLUMN GRID, EDGE OF INTERIOR PARTITIONS, EDGE OF WINDOW OPENINGS, AND TO HINGED SIDE OF DOOR FRAME OPENINGS.

B. HINGE SIDE OF OPENINGS FOR DOORS AND FRAMES SHALL BE LOCATED 200 MM FROM THE ADJACENT WALL OR COLUMN, UNLESS NOTED OTHERWISE.

C. INTERIOR PARTITIONS SHALL BE 200 MM CMU. SEE STRUCTURAL DRAWINGS FOR LOCATION OF CONCRETE SHEAR WALLS.

D. COSMETIC REPAIR OF MINOR DEFECTS: REPAIR OR FILL MORTAR JOINTS AND MINOR DEFECTS, INCLUDING BUT NOT LIMITED TO SPALLS, IN ACCORDANCE WITH MANUFACTURER'S RECOMMENDATIONS AND PRIOR TO COATING APPLICATION. SURFACES TO BE PAINTED SHALL BE CLEAN AND FREE OF FOREIGN MATTER BEFORE APPLICATION OF PAINT. CLEANING SHALL BE SCHEDULED SO THAT DUST AND OTHER CONTAMINANTS WILL NOT FALL ON NEWLY PAINTED SURFACES.

E. PLASTER AND MASONRY SURFACES SHALL BE ALLOWED TO CURE FOR AT LEAST 30 DAYS BEFORE PAINTING. CONCRETE SLABS-ON-GRADE SHALL BE ALLOWED TO CURE 90 DAYS BEFORE STAINING OR SEALING.

F. DO NOT USE PAINT MATERIALS CONTAINING LEAD CONTENT IN EXCESS OF 0.009 PERCENT OF THE WEIGHT OF THE TOTAL NONVOLATILE CONTENT OF THE PAINT OR THE WEIGHT OF THE DRIED PAINT FILM.

G. DO NOT USE ANY ASBESTOS CONTAINING MATERIALS (ACM) IN PROJECT. ACM IS DEFINED AS 1% OR MORE BY VOLUME.

H. DO NOT USE PAINT MATERIALS CONTAINING MERCURIAL FUNGICIDES.

I. FACTORY PRIMED METAL DOORS AND FRAMES SHALL RECEIVE TWO COATS OF PAINT.

J. FILL REMAINING SPACE AT PENETRATIONS IN FIRE-RATED FLOORS, PARTITIONS AND CEILINGS WITH APPROPRIATE FIRESTOPPING MATERIALS.

K. ALL CEILING FINISHES SHALL BE PAINTED PLASTER APPLIED TO STRUCTURE.

L. ALL WALL FINISHES SHALL BE PAINTED PLASTER APPLIED TO STRUCTURE, UNLESS NOTED OTHERWISE.

M. ALL FLOOR FINISHES SHALL BE EPOXY SEALED CONCRETE, UNLESS NOTED OTHERWISE

N. PROVIDE TILE FINISHES AS INDICATED IN DETAILS.

O. ALL DOOR, FRAME AND HARDWARE TYPES SHALL BE 20A.1.6 UNLESS NOTED OTHERWISE.

P. TOILETS STALL DOOR, FRAME & HARDWARE TYPE SHALL BE F.2.12.

Q. PROVIDE POLISHED STAINLESS STEEL MIRROR 600 X 900 ABOVE LAVATORY FAUCET.

## KEY NOTES:

1. LINE OF ROOF OVERHANG ABOVE.
2. CONCRETE STOOP – SEE DETAIL 3/A-503.
3. ISOLATION JOINT COVER– SEE SHEET A-505.
4. CONCRETE STOOP WITH GRATE – SEE DETAIL 1/A-503.
5. NOT USED.
6. GRATE – SEE SIMILAR DETAIL 1/A-503.

## LEGEND:

(XXX) DOOR FRAME AND HARDWARE TYPE, SEE SHEET A-601

(A) WINDOW TYPE, SEE SHEET A-601

(X) KEY NOTE

## ABBREVIATIONS:

| | |
|---|---|
| COMM | COMMUNICATIONS |
| ELEC | ELECTRICAL |
| MECH | MECHANICAL |
| JAN | JANITOR |
| CLOS | CLOSET |

LINEAR DIMENSIONS SHOWN ARE IN MILLIMETERS (MM), UNLESS OTHERWISE NOTED

0 2000 4000
SCALE: 1:100

APPROVED:

A/E DESIGNER OF RECORD

SEAL:

STATE OF SOUTH CAROLINA
KEVIN R. CHAFIN
N. Charleston, SC
6374
REGISTERED ARCHITECT

US ARMY CORPS OF ENGINEERS
AFGHANISTAN ENGINEER DISTRICT

| Mark | Description | Date | Appr. |
|---|---|---|---|

Rev: 0
Date: 2/23/10
Design file no.
Drawing code:
Designed by: KRC
Drwn by: EBB
Ckd by: NLJ
Reviewed by: LHM
Submitted by: BAKER
File name: ANAHQA-101FP
Plot date: 2/23/2010
Plot scale:

U.S. ARMY CORPS OF ENGINEERS
AFGHANISTAN ENGINEER DISTRICT
APO AE 96338

Michael Baker Jr., Inc
A unit of Michael Baker Corporation
Airside Business Park
100 Airside Drive
Moon Township, PA 15108
www.mbakercorp.com

AFGHAN NATIONAL ARMY
REGIONAL MILITARY TRAINING CENTER
STANDARD DESIGN

RMTC HEADQUARTERS BUILDING

FLOOR PLAN

Sheet reference number:
A-101

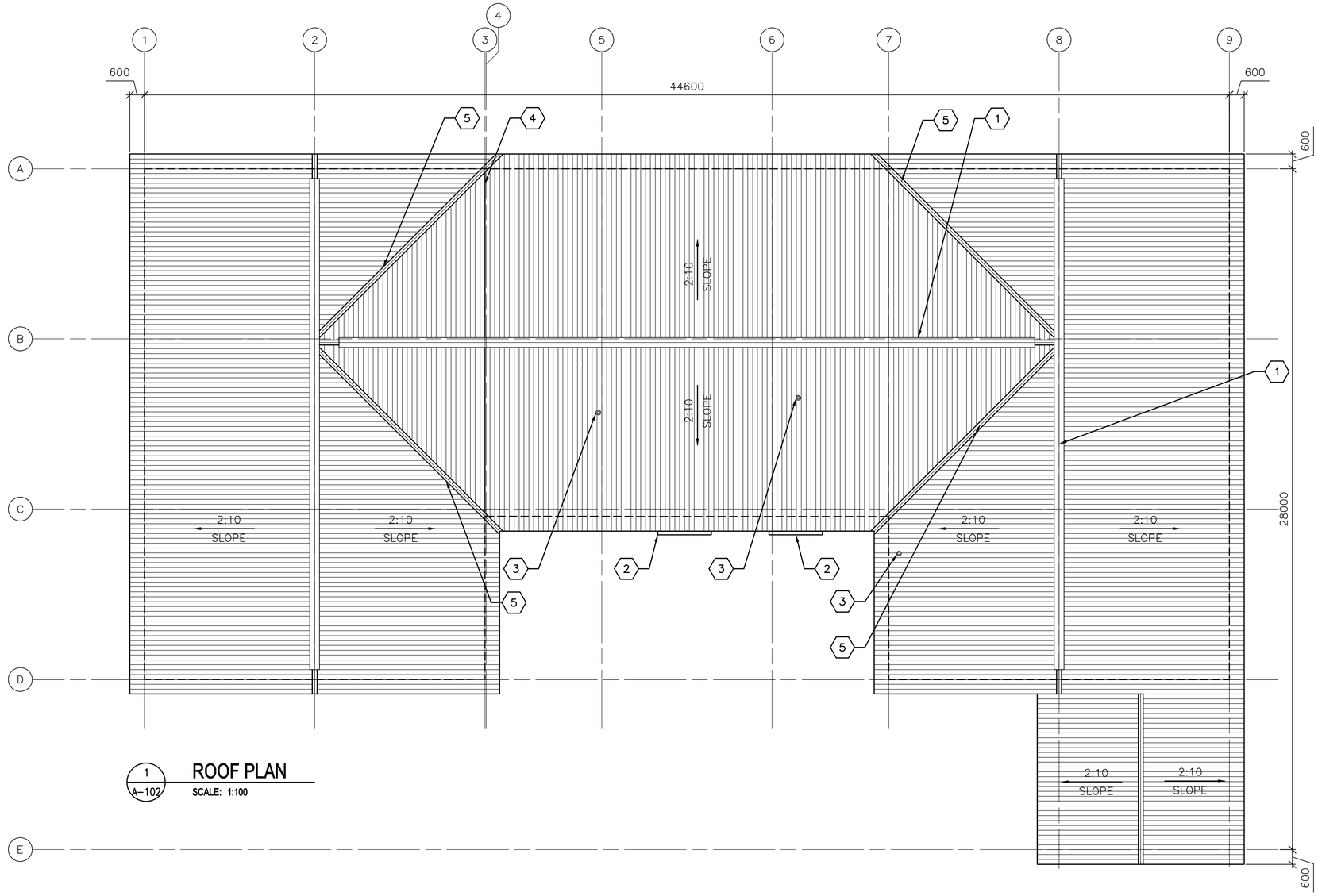


1 A–102 **ROOF PLAN**
SCALE: 1:100

## GENERAL NOTES:

A. THE APPROXIMATE LOCATION OF ROOF DEVICES AND PENETRATIONS ARE SHOWN ON THE ROOF PLAN FOR INFORMATION ONLY. THE CONTRACTOR SHALL BE RESPONSIBLE FOR UNDERSTANDING THE ACTUAL LOCATION OF THESE AND ALL OTHER ITEMS PRIOR TO BEGINNING CONSTRUCTION. COORDINATE ALL ROOF PENETRATIONS WITH STRUCTURAL, MECHANICAL AND PLUMBING WORK.

B. PLUMBING VENT PENETRATIONS SHALL TERMINATE 300 MM MINIMUM ABOVE THE ROOF.

C. UNLESS OTHERWISE NOTED, NOTES, DETAILS OR FEATURES INDICATED FOR ONE CONDITION SHALL BE APPLICABLE FOR ALL ALIKE AND SIMILAR CONDITIONS.

D. STOCKPILING OF MATERIALS, EQUIPMENT AND ANY OTHER ITEMS ON THE ROOF IS PROHIBITED.

E. ROOFS SHALL BE CORRUGATED METAL ROOF PANELS ON COLD–FORMED METAL FRAMING ON CONCRETE SLAB.

## KEY NOTES: (X)

1. CONTINUOUS METAL RIDGE VENT – SEE DETAIL 4/A–501.
2. METAL GUTTER, CENTER ON DOOR, 1400 MM – SEE DETAIL 1A/A–501.
3. PLUMBING VENT – SEE DETAIL 5/A–501.
4. ROOF EXPANSION JOINT – SEE DETAIL 4A/A–501.
5. VALLEY – SEE DETAIL 6/A–501

LINEAR DIMENSIONS SHOWN ARE IN MILLIMETERS (MM), UNLESS OTHERWISE NOTED

0 2000 4000
SCALE: 1:100

APPROVED:

A/E DESIGNER OF RECORD

SEAL:

STATE OF SOUTH CAROLINA
KEVIN R. CHAFIN
N. Charleston, SC
6374
REGISTERED ARCHITECT

US ARMY CORPS OF ENGINEERS
AFGHANISTAN ENGINEER DISTRICT

| Mark | Description | Date | Appr. |
|---|---|---|---|
| | | | |

| Mark | Description | Date | Appr. |
|---|---|---|---|
| | | | |

Rev: 0
Date: 2/23/10
Design file no.
Drawing code:
File name: ANHQA-102RP
Plot date: 2/23/2010
Plot scale: x:x

Designed by: KRC
Dwn by: EBB
Ckd by: NLJ
Reviewed by: LHM
Submitted by: BAKER

U.S. ARMY CORPS OF ENGINEERS
AFGHANISTAN ENGINEER DISTRICT
APO AE 96338

*Michael Baker Jr., Inc*
*A unit of Michael Baker Corporation*
Airside Business Park
100 Airside Drive
Moon Township, PA 15108
www.mbakercorp.com

AFGHAN NATIONAL ARMY
REGIONAL MILITARY TRAINING CENTER
STANDARD DESIGN

RMTC HEADQUARTERS BUILDING

ROOF PLAN

Sheet reference number:
A–102

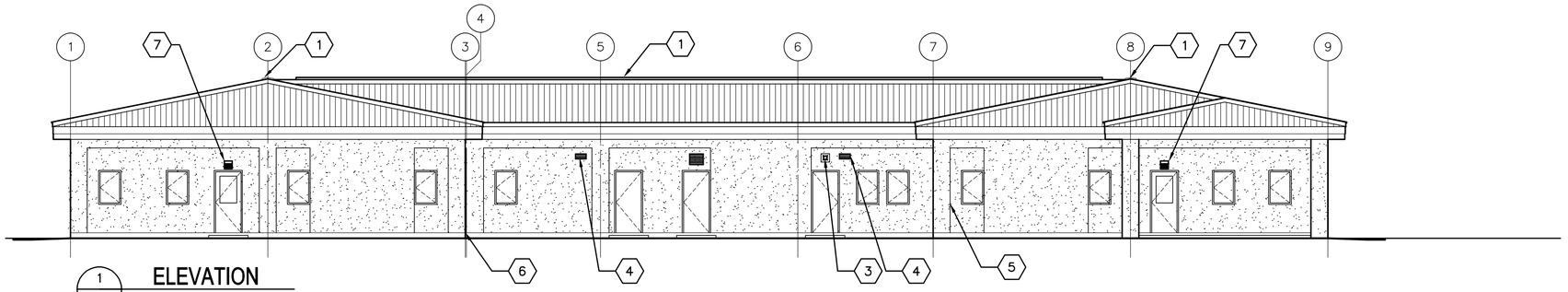


1 A–201 **ELEVATION**

SCALE: 1:100

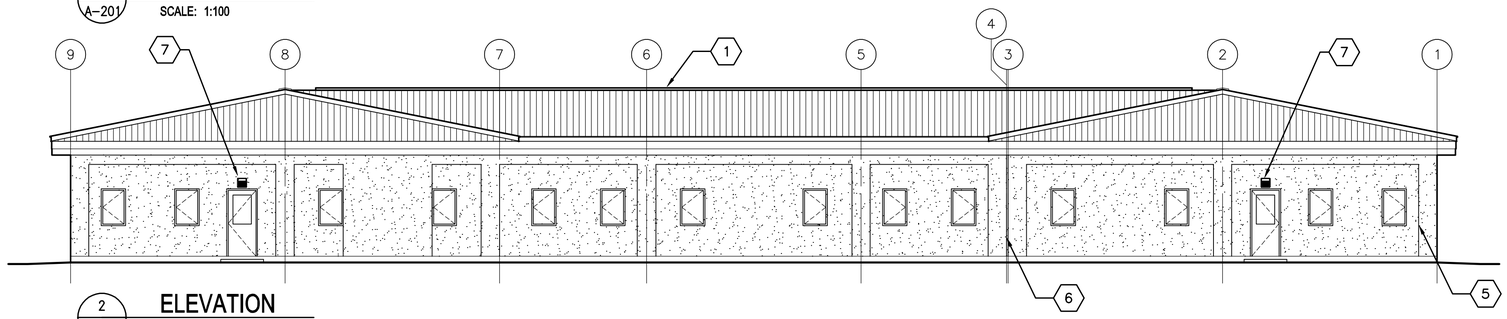


2 A–201 **ELEVATION**

SCALE: 1:100

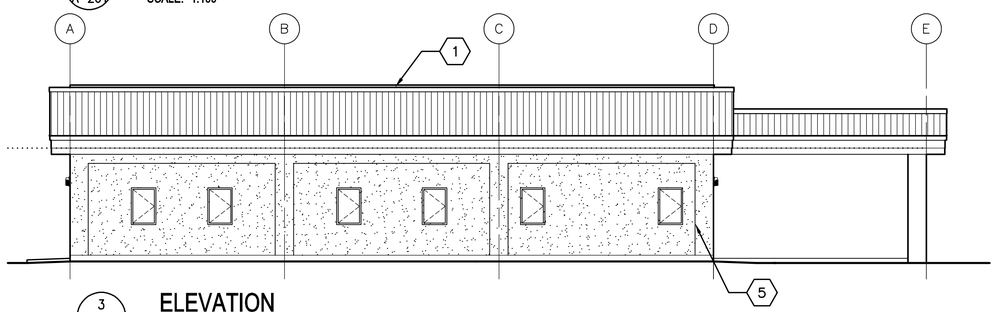


3 A–201 **ELEVATION**

SCALE: 1:100

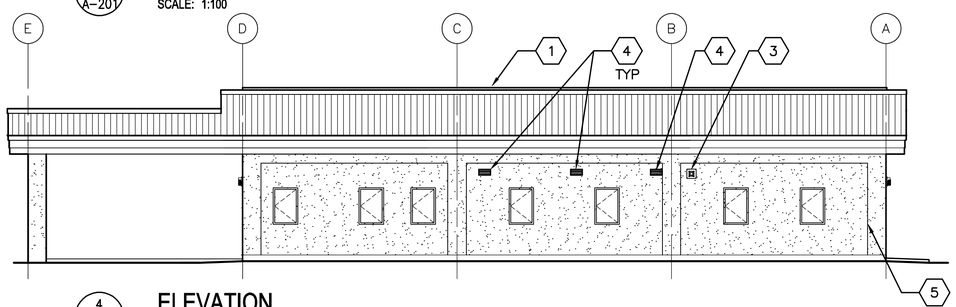


4 A–201 **ELEVATION**

SCALE: 1:100

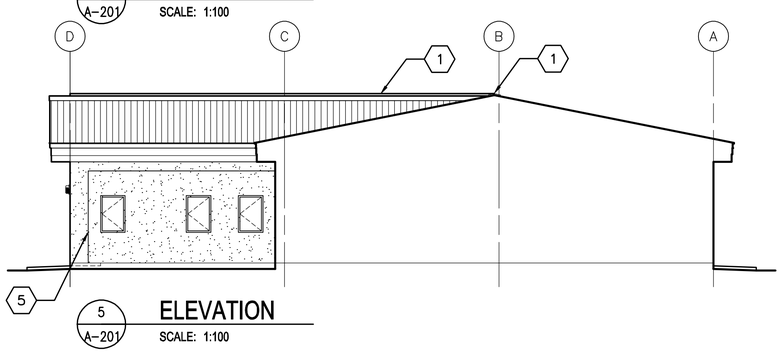


5 A–201 **ELEVATION**

SCALE: 1:100

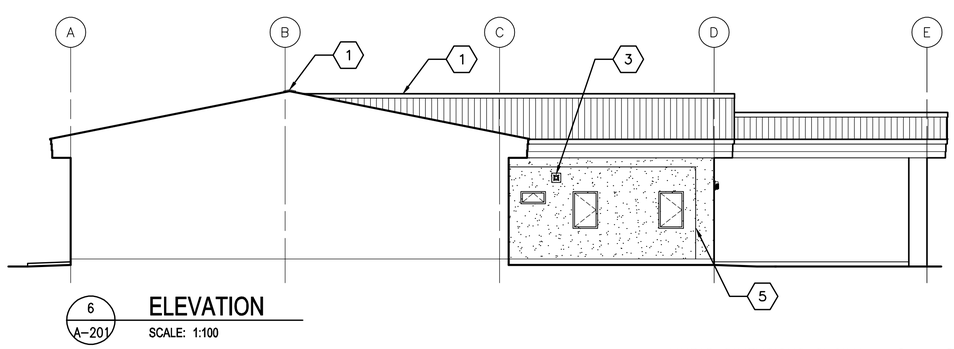


6 A–201 **ELEVATION**

SCALE: 1:100

## GENERAL NOTES:

A. COORDINATE SIZE AND LOCATION OF OPENINGS FOR MECHANICAL ITEMS WITH MECHANICAL DRAWINGS.

B. PROVIDE STRUCTURAL LINTELS AS REQUIRED – SEE STRUCTURAL DRAWINGS

C. ALL EXTERIOR WALL FINISHES SHALL BE STUCCO OVER CMU AND CONCRETE SUBSTRATES. PROVIDE CONTROL JOINTS IN STUCCO WALL FINISH AS NOTED.

D. ROOF SHALL BE CORRUGATED METAL ROOF PANELS ON COLD–FORMED METAL FRAMING ON CONCRETE SLAB.

## KEY NOTES: (X)

1. CONTINUOUS METAL RIDGE VENT – SEE DETAIL 4/A–501.
2. LOUVER, LOCATE TOP OF WALL PENETRATION 2800 MM ABOVE FINISHED FLOOR – SEE MECHANICAL DRAWINGS.
3. EXHAUST FAN, LOCATE TOP OF WALL PENETRATION 2800 MM ABOVE FINISHED FLOOR – SEE MECHANICAL DRAWINGS.
4. WALL GRILL, LOCATE TOP OF WALL PENETRATION 2800 MM ABOVE FINISHED FLOOR – SEE MECHANICAL DRAWINGS.
5. STUCCO CONTROL JOINT – SEE DETAIL 2A/A–501.
6. EXPANSION JOINT COVER – SEE SHEET A–505.
7. EXTERIOR LIGHT FIXTURE – SEE ELECTRICAL.

LINEAR DIMENSIONS SHOWN ARE IN MILLIMETERS (MM), UNLESS OTHERWISE NOTED

0 2000 4000
SCALE: 1:100

APPROVED:

A/E DESIGNER OF RECORD

SEAL:

STATE OF SOUTH CAROLINA
KEVIN R. CHAFIN
N. Charleston, SC
6374
REGISTERED ARCHITECT

US ARMY CORPS OF ENGINEERS
AFGHANISTAN ENGINEER DISTRICT

| Mark | Description | Date | Appr. |
|---|---|---|---|
| | | | |

Date: 2/23/10
Design file no.
Drawing code:
File name: ANAHQA201ELV
Plot date: 2/23/2010
Plot scale: x:x
Designed by: KRC
Dwn by: EBB
Ckd by: NLJ
Reviewed by: LHM
Submitted by: BAKER

U.S. ARMY CORPS OF ENGINEERS
AFGHANISTAN ENGINEER DISTRICT
APO AE 96338


*Michael Baker Jr., Inc*
*A unit of Michael Baker Corporation*
Airside Business Park
100 Airside Drive
Moon Township, PA 15108
www.mbakercorp.com


AFGHAN NATIONAL ARMY
REGIONAL MILITARY TRAINING CENTER
STANDARD DESIGN

RMTC HEADQUARTERS BUILDING

ELEVATIONS

Sheet reference number:
A–201

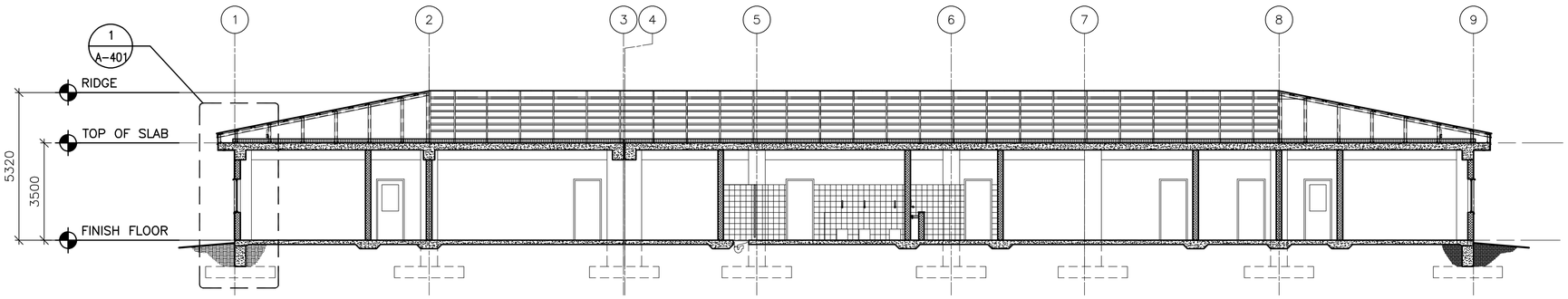


1 A-301 **BUILDING SECTION**
SCALE: 1:100

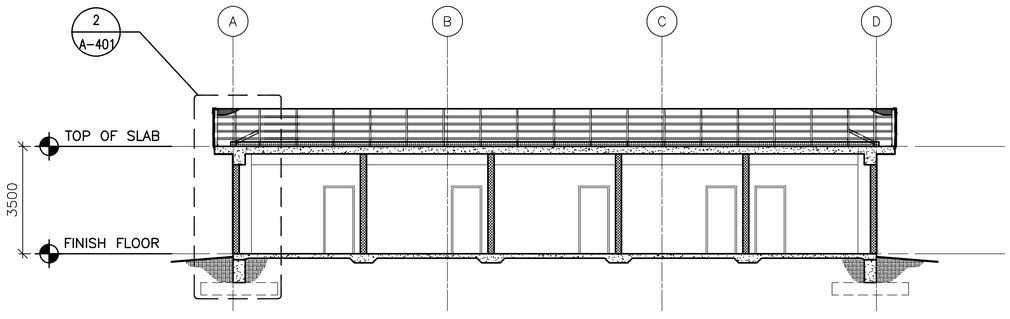


2 A-301 **BUILDING SECTION**
SCALE: 1:100

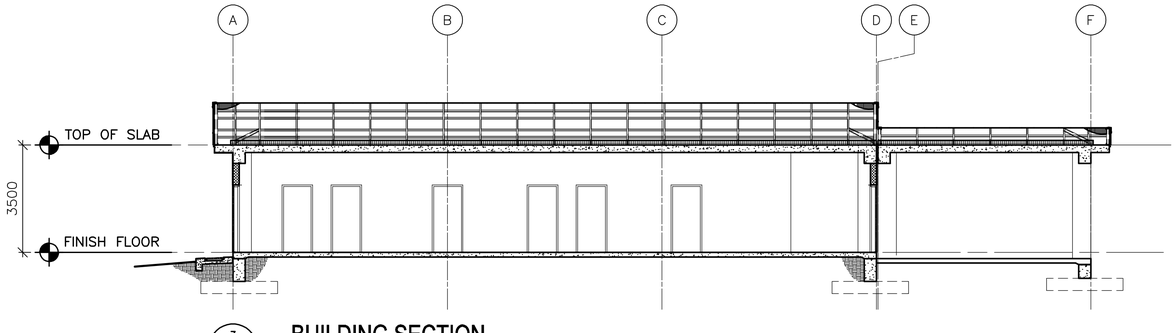


3 A-301 **BUILDING SECTION**
SCALE: 1:100

LINEAR DIMENSIONS SHOWN ARE IN MILLIMETERS (MM), UNLESS OTHERWISE NOTED

0 2000 4000
SCALE: 1:100

APPROVED:

A/E DESIGNER OF RECORD

SEAL:

STATE OF SOUTH CAROLINA
KEVIN R. CHAFIN
N. Charleston, SC
6374
REGISTERED ARCHITECT

US ARMY CORPS OF ENGINEERS
AFGHANISTAN ENGINEER DISTRICT

| Mark | Description | Date | Appr. |
|---|---|---|---|
| | | | |

| Mark | Description | Date | Appr. |
|---|---|---|---|
| | | | |

U.S. ARMY CORPS OF ENGINEERS
AFGHANISTAN ENGINEER DISTRICT
APO AE 96338

*Michael Baker Jr., Inc*
*A unit of Michael Baker Corporation*
Airside Business Park
100 Airside Drive
Moon Township, PA 15108
www.mbakercorp.com

Designed by: KRC
Dwn by: EBB
Ckd by: NLJ
Reviewed by: LHM
Submitted by: BAKER

Date: 2/23/10
Design file no.
Drawing code:
File name: ANAHQA-301BS
Plot date: 2/23/2010
Plot scale: x:X

Rev: 0

AFGHAN NATIONAL ARMY
REGIONAL MILITARY TRAINING CENTER
STANDARD DESIGN

RMTC HEADQUARTERS BUILDING

BUILDING SECTIONS

Sheet reference number:
A-301

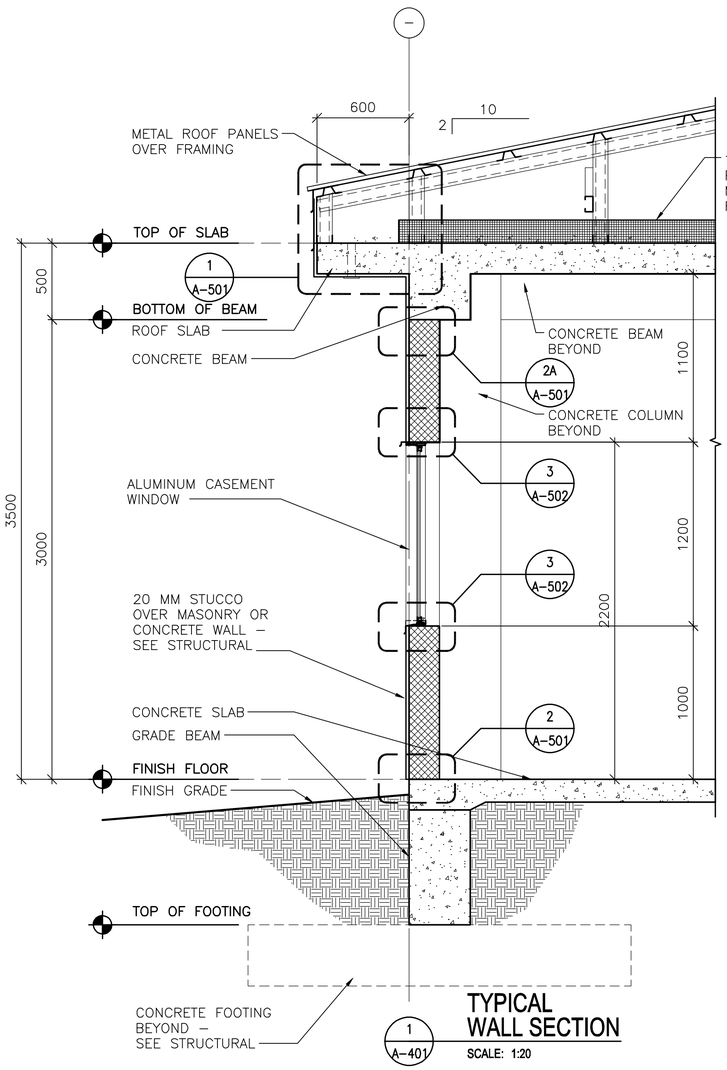


1 A-401 **TYPICAL WALL SECTION**

SCALE: 1:20

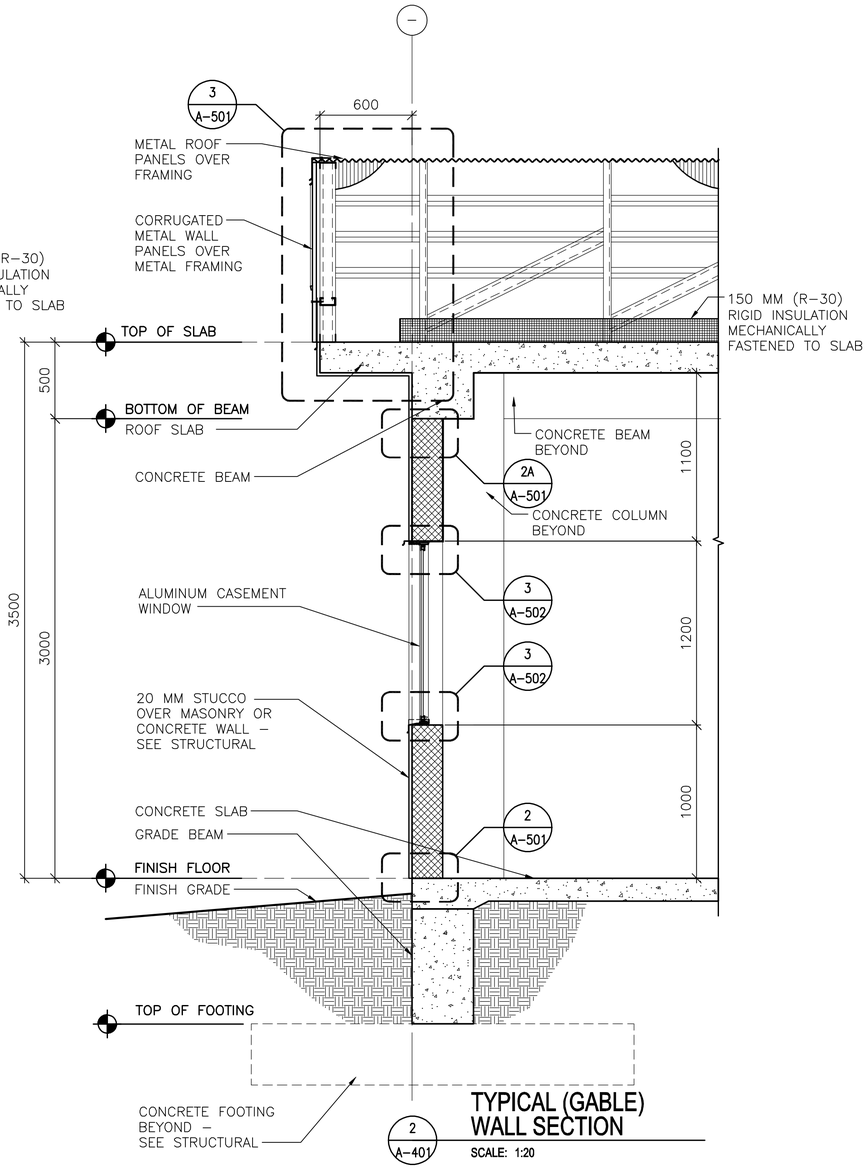


2 A-401 **TYPICAL (GABLE) WALL SECTION**

SCALE: 1:20

LINEAR DIMENSIONS SHOWN ARE IN MILLIMETERS (MM), UNLESS OTHERWISE NOTED

0 400 800

SCALE: 1:20

APPROVED:

A/E DESIGNER OF RECORD

SEAL:

STATE OF SOUTH CAROLINA
KEVIN R. CHAFIN
N. Charleston, SC
6374
REGISTERED ARCHITECT

US ARMY CORPS OF ENGINEERS
AFGHANISTAN ENGINEER DISTRICT

| Mark | Description | Date | Appr. |
|---|---|---|---|
| | | | |

U.S. ARMY CORPS OF ENGINEERS
AFGHANISTAN ENGINEER DISTRICT
APO AE 96338

*Michael Baker Jr., Inc*
*A unit of Michael Baker Corporation*
Airside Business Park
100 Airside Drive
Moon Township, PA 15108
www.mbakercorp.com

Designed by: KRC
Dwn by: EBB
Ckd by: NLJ
Reviewed by: LHM
Submitted by: BAKER

Date: 2/23/10
Design file no.
Drawing code:
File name: ANAHQA-401WS
Plot date: 2/23/2010
Plot scale: x:x

AFGHAN NATIONAL ARMY
REGIONAL MILITARY TRAINING CENTER
STANDARD DESIGN

RMTC HEADQUARTERS BUILDING

WALL SECTIONS

Sheet reference number:
A-401

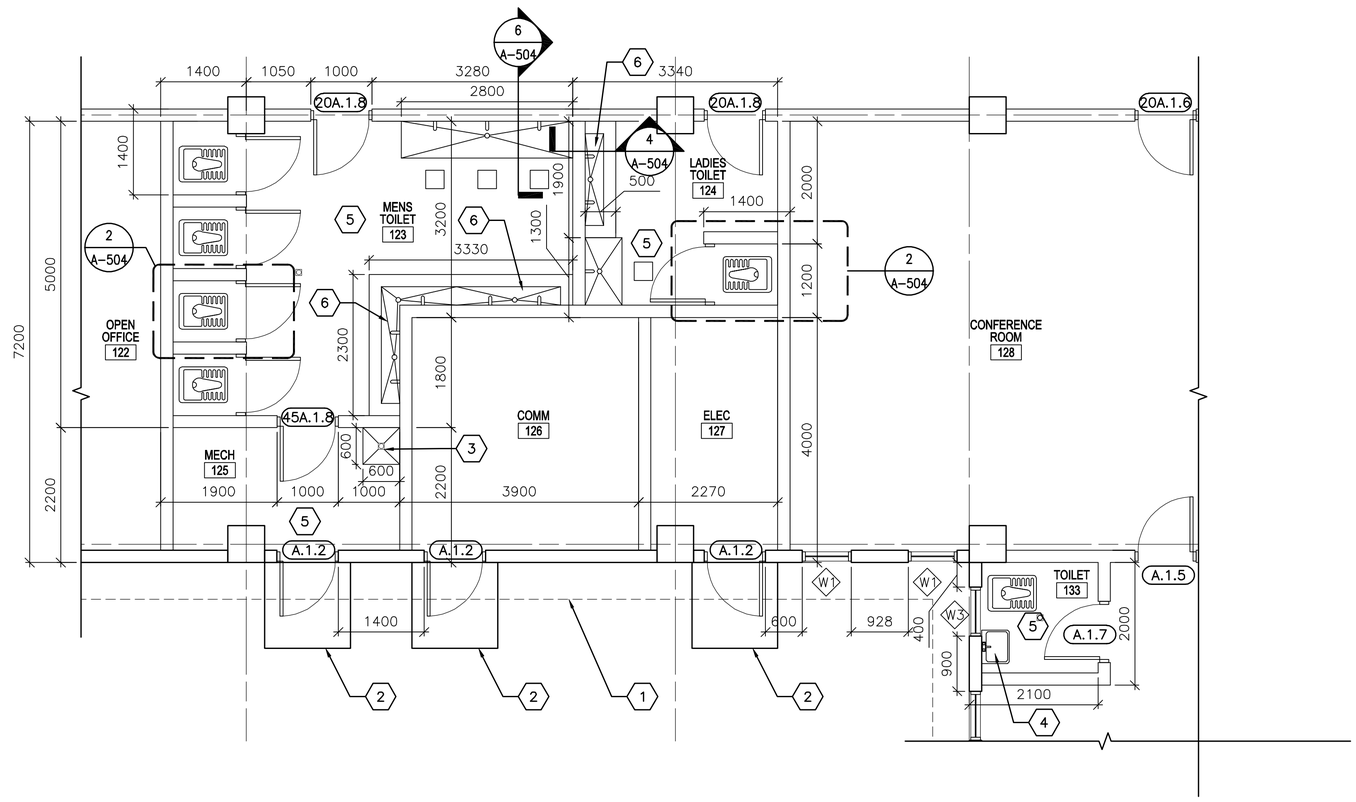


1 / A-402 **ENLARGED PLAN**

SCALE: 1:50

## GENERAL NOTES:

A. DIMENSIONS ARE SHOWN TO OUTER EDGE OF EXTERIOR STRUCTURAL COLUMNS, STRUCTURAL COLUMN GRID, EDGE OF INTERIOR PARTITIONS, EDGE OF WINDOW OPENINGS, AND TO HINGE SIDE OF DOOR FRAME OPENINGS.

B. OPENINGS FOR DOORS AND FRAMES SHALL BE LOCATED 200 MM FROM THE ADJACENT WALL OR COLUMN, UNLESS NOTED OTHERWISE.

C. INTERIOR PARTITIONS SHALL BE 200 MM CMU. SEE STRUCTURAL DRAWINGS FOR LOCATION OF CONCRETE SHEAR WALLS.

D. COSMETIC REPAIR OF MINOR DEFECTS: REPAIR OR FILL MORTAR JOINTS AND MINOR DEFECTS, INCLUDING BUT NOT LIMITED TO SPALLS, IN ACCORDANCE WITH MANUFACTURER'S RECOMMENDATIONS AND PRIOR TO COATING APPLICATION. SURFACES TO BE PAINTED SHALL BE CLEAN AND FREE OF FOREIGN MATTER BEFORE APPLICATION OF PAINT. CLEANING SHALL BE SCHEDULED SO THAT DUST AND OTHER CONTAMINANTS WILL NOT FALL ON NEWLY PAINTED SURFACES.

E. CONCRETE, PLASTER AND MASONRY SURFACES SHALL BE ALLOWED TO CURE FOR AT LEAST 30 DAYS BEFORE PAINTING. CONCRETE SLABS-ON-GRADE SHALL BE ALLOWED TO CURE 90 DAYS BEFORE STAINING OR SEALING.

F. DO NOT USE PAINT MATERIALS CONTAINING LEAD CONTENT IN EXCESS OF 0.009 PERCENT OF THE WEIGHT OF THE TOTAL NONVOLATILE CONTENT OF THE PAINT OR THE WEIGHT OF THE DRIED PAINT FILM.

G. DO NOT USE ANY ASBESTOS CONTAINING MATERIALS (ACM) IN PROJECT. ACM IS DEFINED AS 1% OR MORE BY VOLUME.

H. DO NOT USE PAINT MATERIALS CONTAINING MERCURIAL FUNGICIDES.

I. FACTORY PRIMED METAL DOORS AND FRAMES SHALL RECEIVE TWO COATS OF PAINT.

J. FILL REMAINING SPACE AT PENETRATIONS IN FIRE-RATED FLOORS, PARTITIONS AND CEILINGS WITH APPROPRIATE FIRESTOPPING MATERIALS.

K. ALL CEILING FINISHES SHALL BE PAINTED PLASTER APPLIED TO STRUCTURE.

L. ALL WALL FINISHES SHALL BE PAINTED PLASTER APPLIED TO STRUCTURE, UNLESS NOTED OTHERWISE.

M. ALL FLOOR FINISHES SHALL BE EPOXY SEALED CONCRETE, UNLESS NOTED OTHERWISE

N. PROVIDE TILE FINISHES AS INDICATED IN DETAILS.

O. ALL DOOR, FRAME AND HARDWARE TYPES SHALL BE 20A.1.6 UNLESS NOTED OTHERWISE.

P. TOILETS STALL DOOR, FRAME & HARDWARE TYPE SHALL BE F.2.12.

Q. PROVIDE POLISHED STAINLESS STEEL MIRROR 600 X 900 ABOVE LAVATORY FAUCET.

## KEY NOTES: (X)

1. LINE OF ROOF OVERHANG ABOVE.
2. CONCRETE STOOP – SEE DETAIL 3/A-503.
3. RECESSED TROUGH – SEE DETAIL 7/A-504.
4. WALL MOUNTED LAVATORY – SEE DETAIL 10/A-504.
5. TERRAZZO FLOOR TILE AND CERAMIC WALL TILE TO 2000 MM ABOVE FINISHED FLOOR.
6. LAVATORY – SEE DETAIL 4/A-504.

## LEGEND:

(XXX) DOOR FRAME AND HARDWARE TYPE, SEE SHEET A-601

◇ A WINDOW TYPE, SEE SHEET A-601

⬡ X KEY NOTE

## ABBREVIATIONS:

| | |
|---|---|
| COMM | COMMUNICATIONS |
| ELEC | ELECTRICAL |
| MECH | MECHANICAL |
| JAN | JANITOR |
| CLOS | CLOSET |

LINEAR DIMENSIONS SHOWN ARE IN MILLIMETERS (MM), UNLESS OTHERWISE NOTED

0 1000 2000
SCALE: 1:50

APPROVED:

A/E DESIGNER OF RECORD

SEAL:

STATE OF SOUTH CAROLINA
KEVIN R. CHAFIN
N. Charleston, SC
6374
REGISTERED ARCHITECT

US ARMY CORPS OF ENGINEERS
AFGHANISTAN ENGINEER DISTRICT

| Mark | Description | Date | Appr. |
|---|---|---|---|
| | | | |

| Mark | Description | Date | Appr. |
|---|---|---|---|
| | | | |

Date: 2/23/10
Rev: 0
Design file no.
Drawing code:
File name: ANAHQA-402EP
Plot date: 2/23/2010
Plot scale: X:X

Designed by: KRC
Dwn by: EBB
Ckd by: NLJ
Reviewed by: LHM
Submitted by: BAKER

U.S. ARMY CORPS OF ENGINEERS
AFGHANISTAN ENGINEER DISTRICT
APO AE 96338

*Michael Baker Jr., Inc*
*A unit of Michael Baker Corporation*
Airside Business Park
100 Airside Drive
Moon Township, PA 15108
www.mbakercorp.com

AFGHAN NATIONAL ARMY
REGIONAL MILITARY TRAINING CENTER
STANDARD DESIGN

RMTC HEADQUARTERS BUILDING

ENLARGED PLAN

Sheet reference number:
A-402

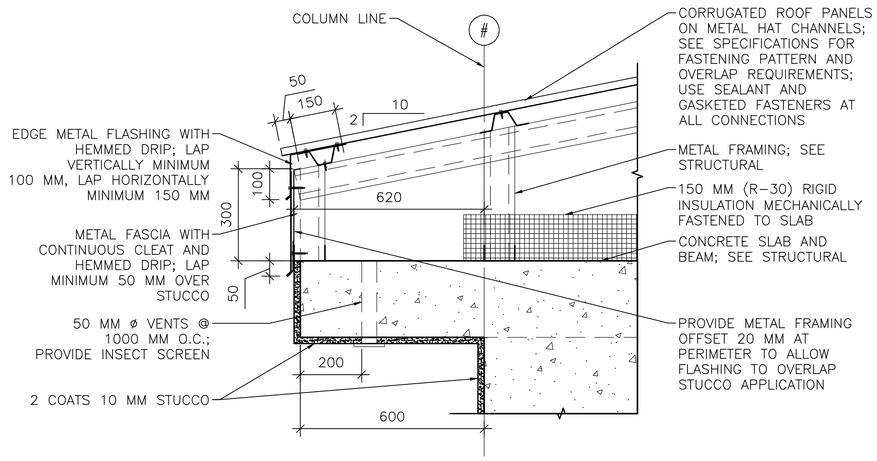


1 A-501 **EAVE DETAIL**
SCALE: 1:10

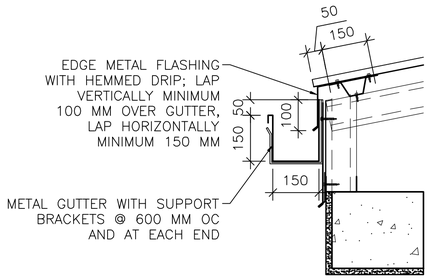


1A A-501 **GUTTER DETAIL**
SCALE: 1:10

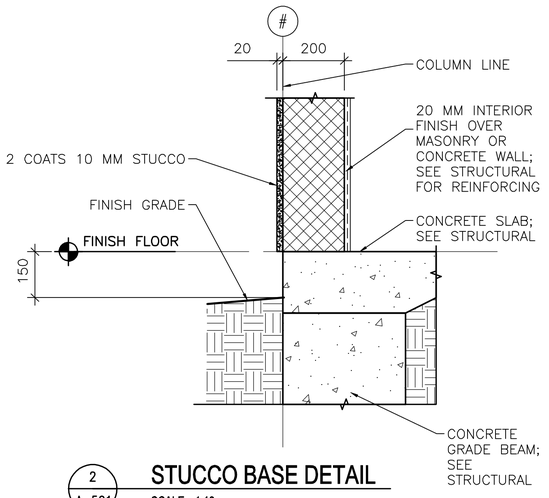


2 A-501 **STUCCO BASE DETAIL**
SCALE: 1:10

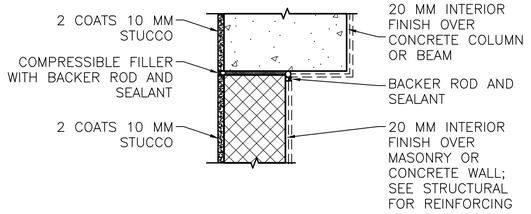


NOTE: DETAIL TYPICAL AT ALL WALL/COLUMN AND WALL/BEAM LOCATIONS, SEE ALTERNATE BRACING DETAIL BELOW 2B/A-501.

2A A-501 **STUCCO JOINT DETAIL**
SCALE: 1:10

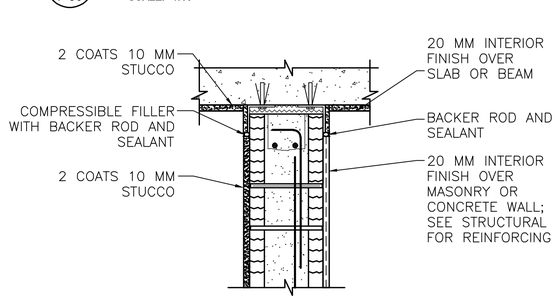


INTERIOR WALL/BEAM

2B A-501 **ALTERNATE BRACING DETAIL**
SCALE: 1:10

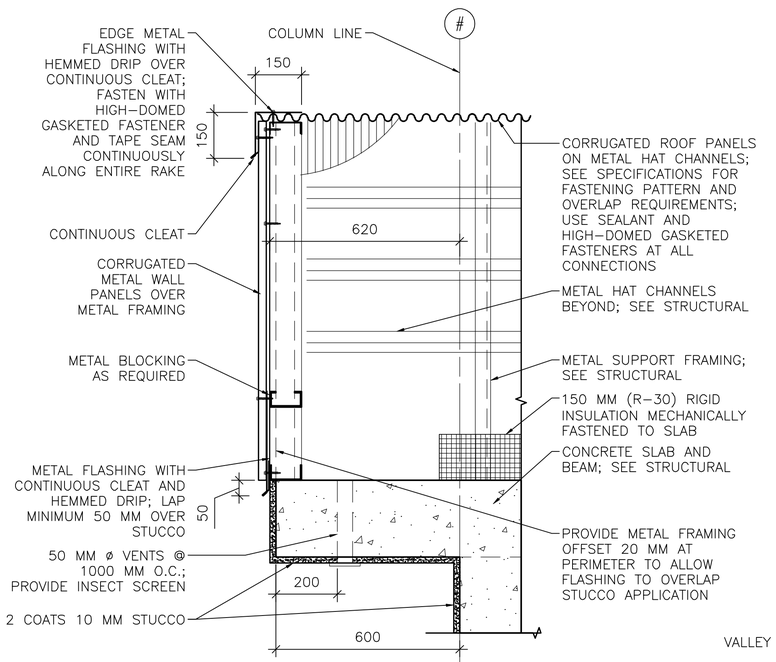


3 A-501 **RAKE/EAVE DETAIL**
SCALE: 1:10

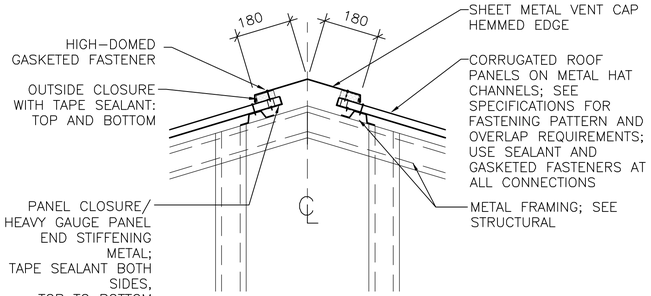


4 A-501 **RIDGE VENT DETAIL**
SCALE: 1:10

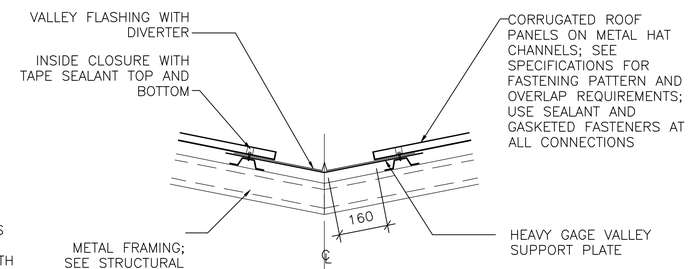


6 A-501 **VALLEY DETAIL**
SCALE: 1:10

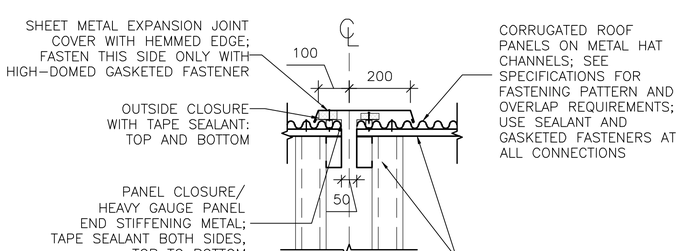


4A A-501 **ROOF EXPANSION JOINT DETAIL**
SCALE: 1:10

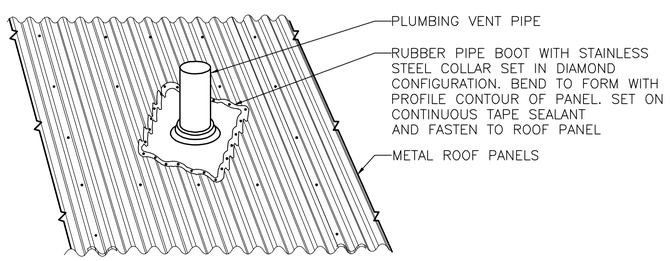


5 A-501 **PLUMBING VENT DETAIL**
SCALE: NTS

LINEAR DIMENSIONS SHOWN ARE IN MILLIMETERS (MM), UNLESS OTHERWISE NOTED

0 200 400
SCALE: 1:10

APPROVED:

A/E DESIGNER OF RECORD

SEAL:

STATE OF SOUTH CAROLINA
KEVIN R. CHAFIN
N. Charleston, SC
8374
REGISTERED ARCHITECT

US ARMY CORPS OF ENGINEERS
AFGHANISTAN ENGINEER DISTRICT

| Mark | Description | Date | Appr. |
|---|---|---|---|
| | | | |

| Mark | Description | Date | Appr. |
|---|---|---|---|
| | | | |

Designed by: KRC
Drawn by: EBB
Checked by: NLJ
Reviewed by: LHM
Submitted by: BAKER

Date: 2/23/10
Design file no.
Drawing code:
Rev: 0
File name: ANHQA-501DT
Plot date: 2/23/2010
Plot scale: x:x

U.S. ARMY CORPS OF ENGINEERS
AFGHANISTAN ENGINEER DISTRICT
APO AE 96338

Michael Baker Jr., Inc
A unit of Michael Baker Corporation
Airside Business Park
100 Airside Drive
Moon Township, PA 15108
www.mbakercorp.com

AFGHAN NATIONAL ARMY
REGIONAL MILITARY TRAINING CENTER
STANDARD DESIGN

RMTC HEADQUARTERS BUILDING

EXTERIOR DETAILS

Sheet reference number:
A-501

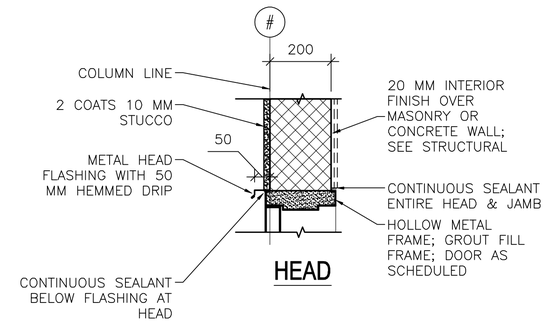


HEAD

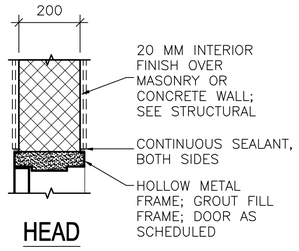


HEAD

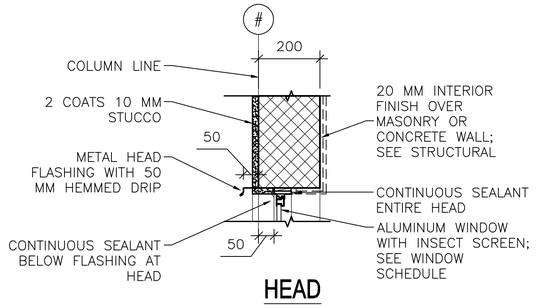


HEAD

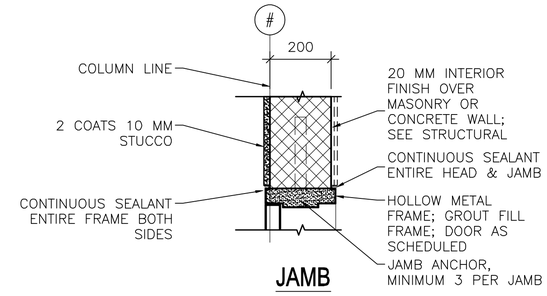


JAMB

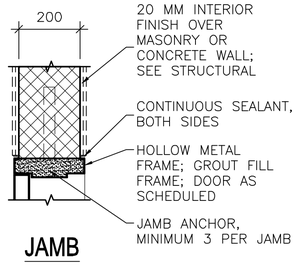


JAMB

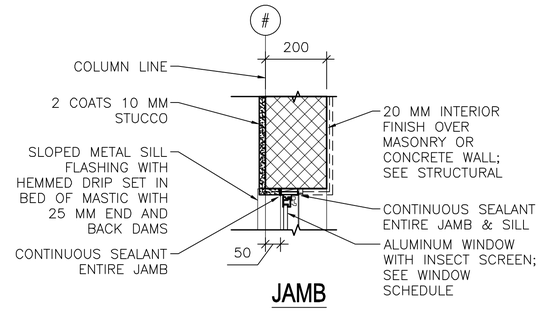


JAMB

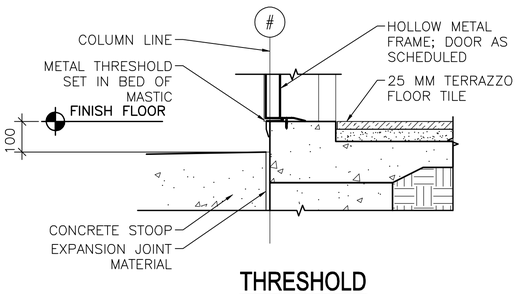


THRESHOLD

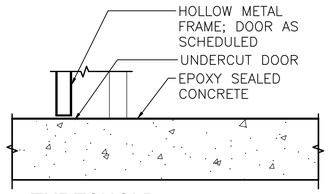


THRESHOLD

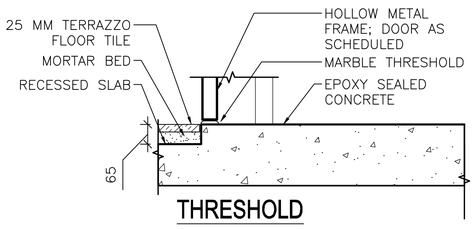


THRESHOLD

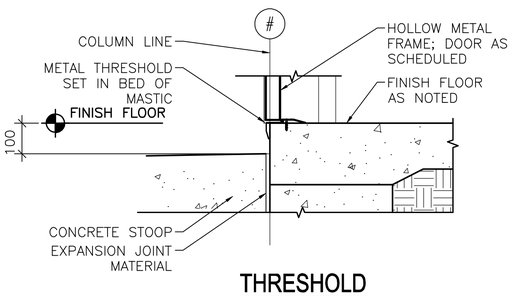


THRESHOLD

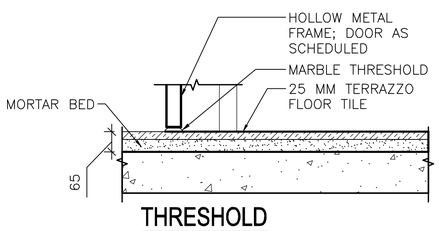


THRESHOLD

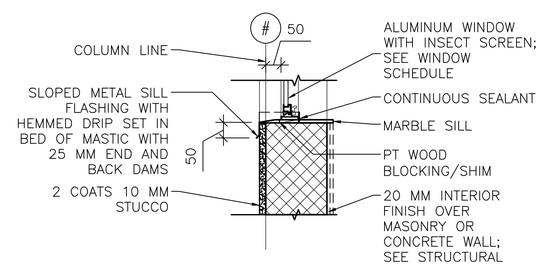


SILL

1 A–502 **EXTERIOR DOOR DETAILS**
SCALE: 1:10

2 A–502 **INTERIOR DOOR DETAILS**
SCALE: 1:10

3 A–502 **EXTERIOR WINDOW DETAILS**
SCALE: 1:10

LINEAR DIMENSIONS SHOWN ARE IN MILLIMETERS (MM), UNLESS OTHERWISE NOTED

0 200 400
SCALE: 1:10

APPROVED:

A/E DESIGNER OF RECORD

SEAL:

STATE OF SOUTH CAROLINA
KEVIN R. CHAFIN
N. Charleston, SC
6374
REGISTERED ARCHITECT

US ARMY CORPS OF ENGINEERS
AFGHANISTAN ENGINEER DISTRICT

| Mark | Description | Date | Appr. |
|---|---|---|---|
| | | | |
| | | | |
| | | | |
| | | | |
| | | | |
| | | | |

U.S. ARMY CORPS OF ENGINEERS
AFGHANISTAN ENGINEER DISTRICT
APO AE 96338

*Michael Baker Jr., Inc*
*A unit of Michael Baker Corporation*
Airside Business Park
100 Airside Drive
Moon Township, PA 15108
www.mbakercorp.com

Designed by: KRC
Dwn by: EBB
Ckd by: NLJ
Reviewed by: LHM
Submitted by: BAKER

Date: 2/23/10
Design file no.
Drawing code:
File name: ANAHQA-502HJS
Plot date: 2/23/2010
Plot scale: x:x
Rev: 0

AFGHAN NATIONAL ARMY
REGIONAL MILITARY TRAINING CENTER
STANDARD DESIGN

RMTC HEADQUARTERS BUILDING

HEAD, JAMB & SILL DETAILS

Sheet reference number:
A–502

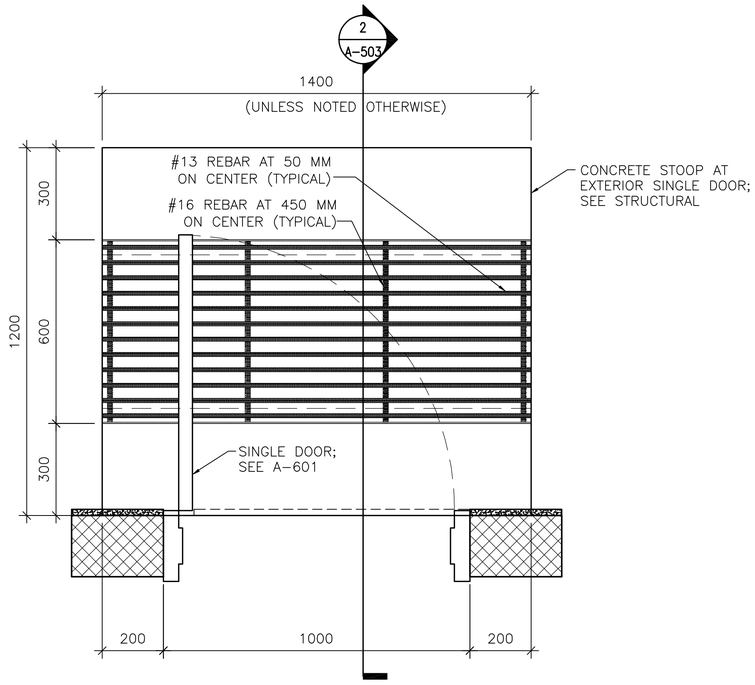


1 A-503 **DOOR STOOP PLAN (WITH GRATE)**

SCALE: 1:10

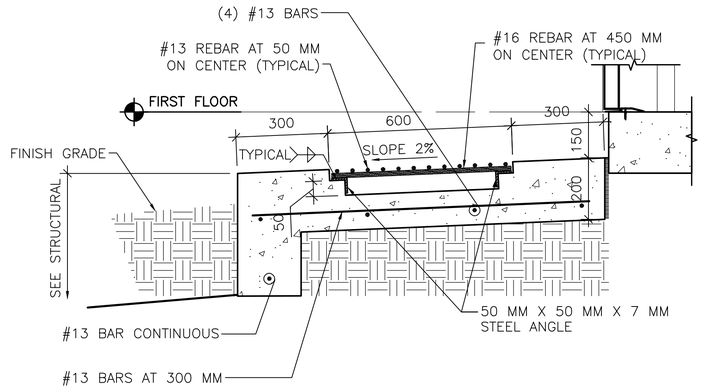


2 A-503 **DOOR STOOP DETAIL**

SCALE: 1:10

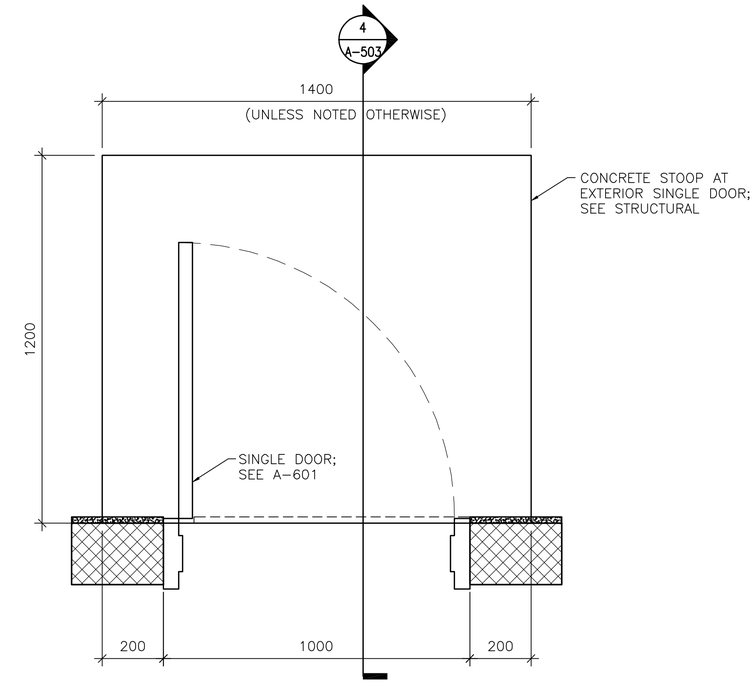


3 A-503 **DOOR STOOP PLAN (WITHOUT GRATE)**

SCALE: 1:10

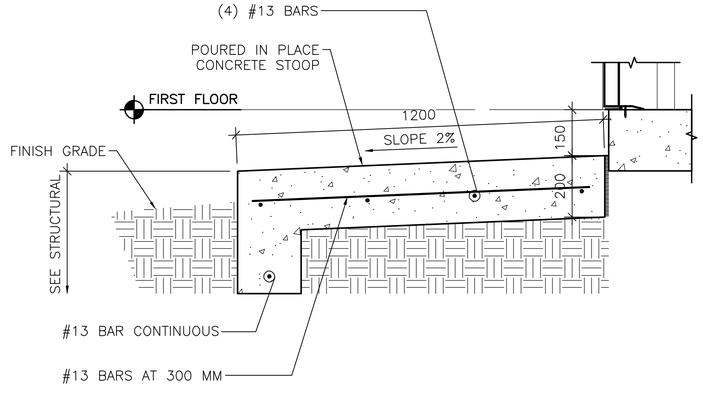


4 A-503 **DOOR STOOP DETAIL**

SCALE: 1:10

LINEAR DIMENSIONS SHOWN ARE IN MILLIMETERS (MM), UNLESS OTHERWISE NOTED

0 200 400

SCALE: 1:10

APPROVED:

A/E DESIGNER OF RECORD

SEAL:

STATE OF SOUTH CAROLINA
KEVIN R. CHAFIN
N. Charleston, SC
6374
REGISTERED ARCHITECT

US ARMY CORPS OF ENGINEERS
AFGHANISTAN ENGINEER DISTRICT

| Mark | Description | Date | Appr. |
|---|---|---|---|
| | | | |

| Mark | Description | Date | Appr. |
|---|---|---|---|
| | | | |

U.S. ARMY CORPS OF ENGINEERS
AFGHANISTAN ENGINEER DISTRICT
APO AE 96338

*Michael Baker Jr., Inc*
*A unit of Michael Baker Corporation*
Airside Business Park
100 Airside Drive
Moon Township, PA 15108
www.mbakercorp.com

Designed by: KRC | Ckd by: NLJ
Dwn by: EBB | Reviewed by: LHM
Submitted by: BAKER

Date: 2/23/10
Design file no.
Drawing code:
File name: ANAHQA-503DT
Plot date: 2/23/2010
Plot scale: x:x

Rev: 0

AFGHAN NATIONAL ARMY
REGIONAL MILITARY TRAINING CENTER
STANDARD DESIGN

RMTC HEADQUARTERS BUILDING

STOOP DETAILS

Sheet reference number:
A-503

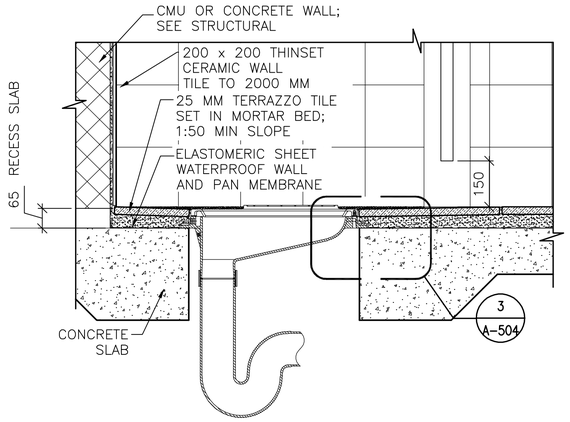


1 A-504 **LATRINE DETAIL**
SCALE: 1:10

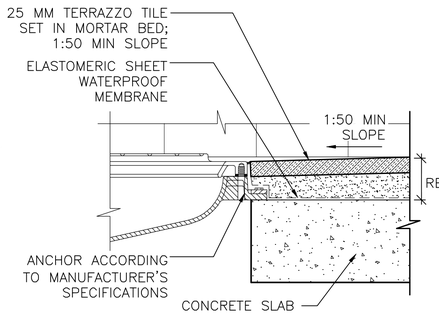


3 A-504 **MOUNTING DETAIL**
SCALE: 1:5

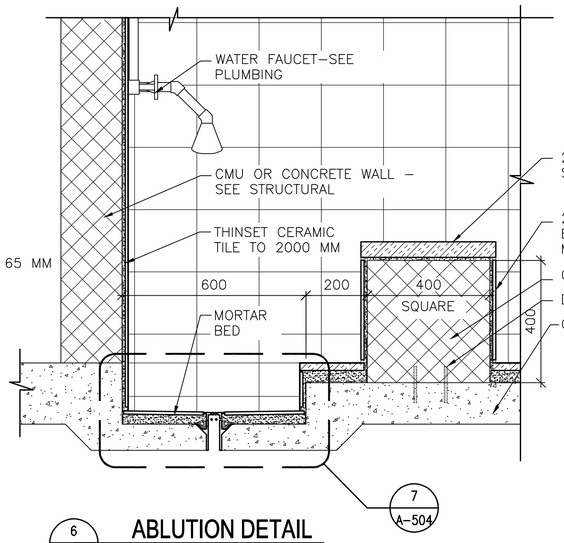


6 A-504 **ABLUTION DETAIL**
SCALE: 1:10

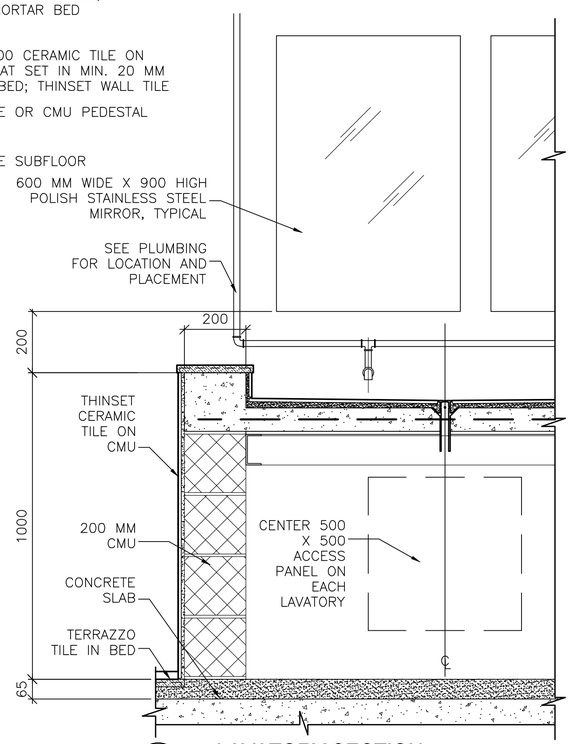


9 A-504 **LAVATORY SECTION**
SCALE: 1:10

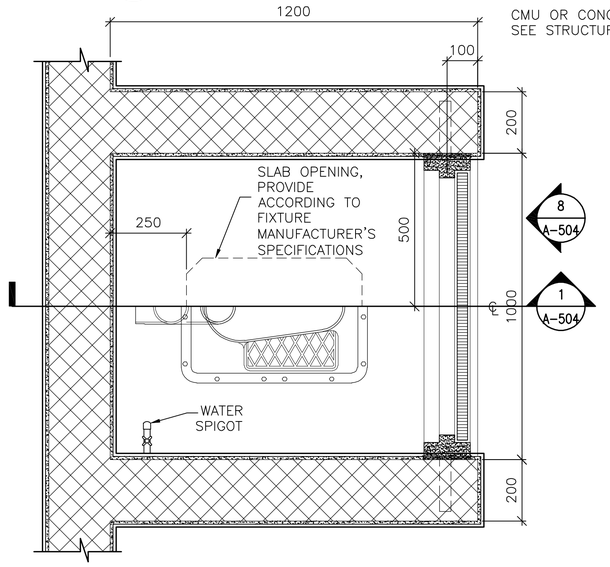


2 A-504 **TOILET DETAIL**
SCALE: 1:10

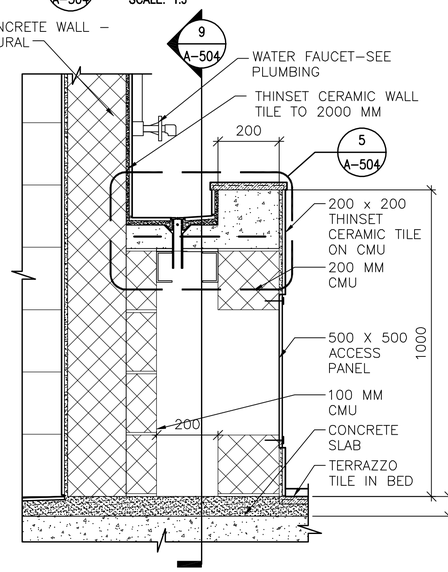


4 A-504 **LAVATORY SECTION**
SCALE: 1:10

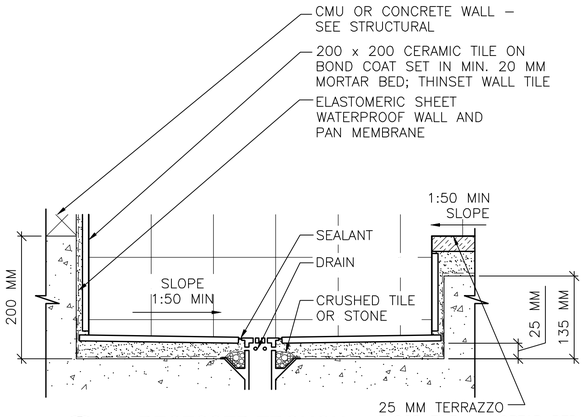


7 A-504 **RECESSED TROUGH**
SCALE: 1:5

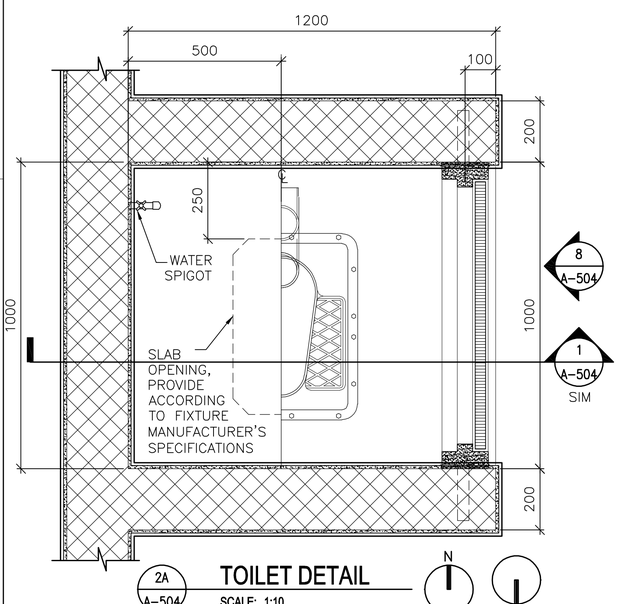


2A A-504 **TOILET DETAIL**
SCALE: 1:10

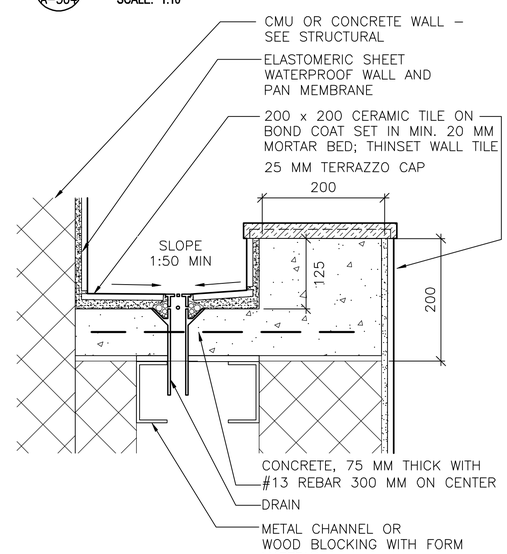


5 A-504 **LAVATORY DETAIL**
SCALE: 1:5

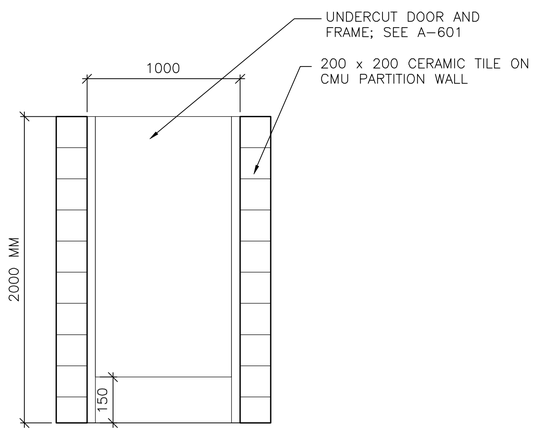


8 A-504 **TOILET PARTITION DOOR ELEVATION**
SCALE: 1:20

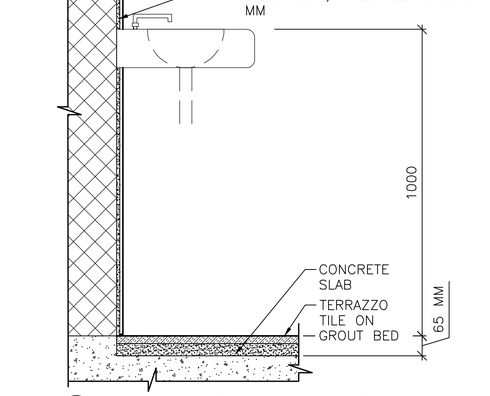


10 A-504 **WALL MOUNTED LAVATORY**
SCALE: 1:10

LINEAR DIMENSIONS SHOWN ARE IN MILLIMETERS (MM), UNLESS OTHERWISE NOTED

0 100 200
SCALE: 1:5

0 200 400
SCALE: 1:10

0 400 800
SCALE: 1:20

APPROVED:

A/E DESIGNER OF RECORD

SEAL:

STATE OF SOUTH CAROLINA
KEVIN R. CHAFIN
N. Charleston, SC
8374
REGISTERED ARCHITECT

US ARMY CORPS OF ENGINEERS
AFGHANISTAN ENGINEER DISTRICT

| Mark | Description | Date | Appr. |
|---|---|---|---|

| | |
|---|---|
| Rev: | 0 |
| Date: | 2/23/10 |
| Design file no. | |
| Drawing code: | |
| Ckd by: | NLJ |
| File name: | ANHQA-5407 |
| Plot date: | 2/23/2010 |
| Plot scale: | x:x |

| | |
|---|---|
| Designed by: | KRC |
| Dwn by: | EBB |
| Ckd by: | NLJ |
| Reviewed by: | LHM |
| Submitted by: | BAKER |

U.S. ARMY CORPS OF ENGINEERS
AFGHANISTAN ENGINEER DISTRICT
APO AE 96338

*Michael Baker Jr., Inc*
*A unit of Michael Baker Corporation*
Airside Business Park
100 Airside Drive
Moon Township, PA 15108
www.mbakercorp.com

AFGHAN NATIONAL ARMY
REGIONAL MILITARY TRAINING CENTER
STANDARD DESIGN

RMTC HEADQUARTERS BUILDING

TOILET, LAVATORY & ABLUTION DETAILS

Sheet reference number:
A–504

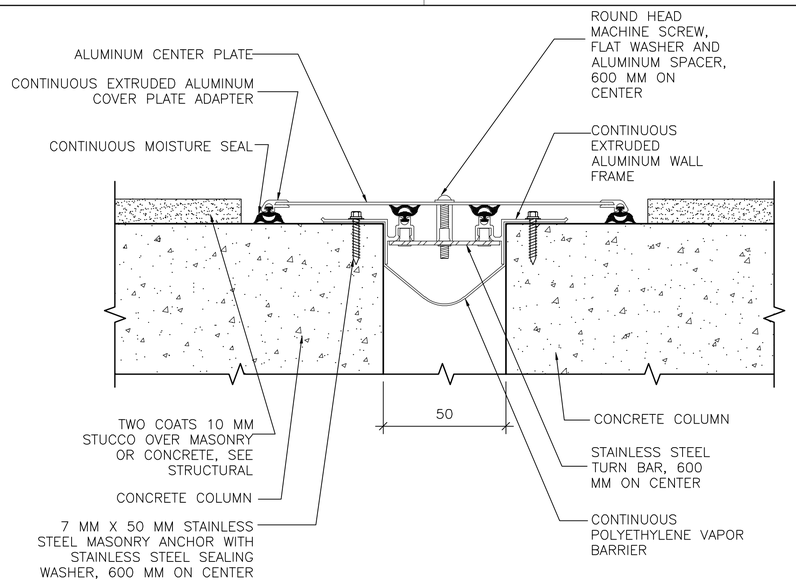


1 A–506 **EXTERIOR ISOLATION JOINT COVER**

SCALE: NTS

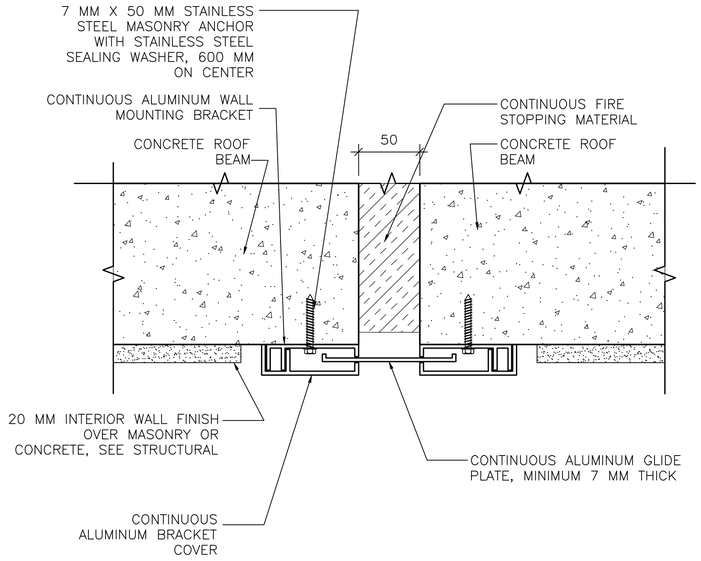


3 A–506 **CEILING ISOLATION JOINT COVER**

SCALE: NTS

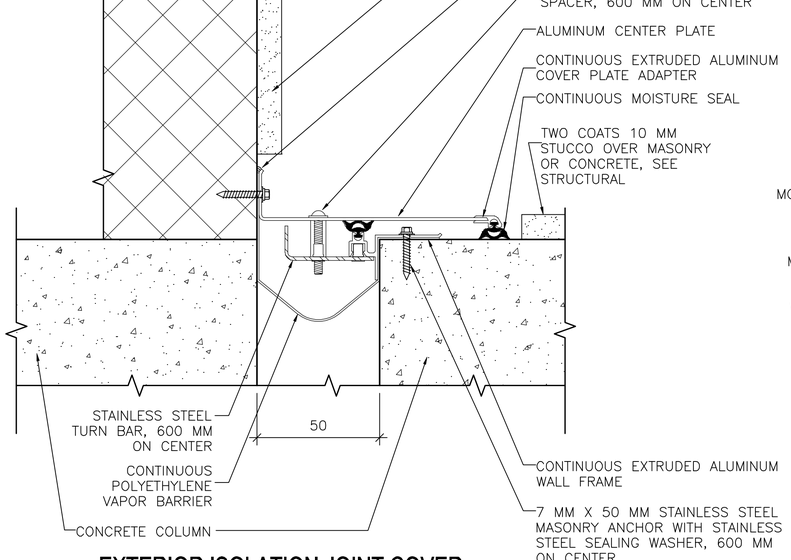


2 A–506 **EXTERIOR ISOLATION JOINT COVER AT INSIDE CORNER**

SCALE: NTS

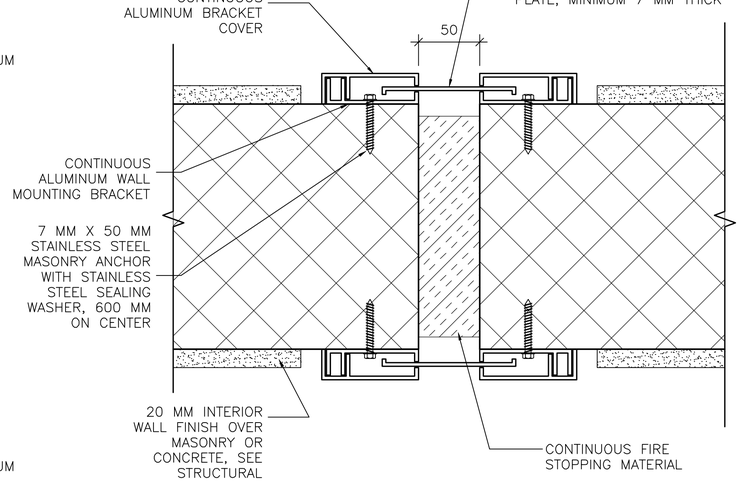


4 A–506 **INTERIOR ISOLATION JOINT COVER**

SCALE: NTS

LINEAR DIMENSIONS SHOWN ARE IN MILLIMETERS (MM), UNLESS OTHERWISE NOTED

APPROVED:

A/E DESIGNER OF RECORD

SEAL:

STATE OF SOUTH CAROLINA
KEVIN R. CHAFIN
N. Charleston, SC 6374
REGISTERED ARCHITECT

US ARMY CORPS OF ENGINEERS
AFGHANISTAN ENGINEER DISTRICT

| Mark | Description | Date | Appr. |
|---|---|---|---|
| | | | |

| Mark | Description | Date | Appr. |
|---|---|---|---|
| | | | |

Rev: 0
Date: 2/23/10
Design file no.
Drawing code:
File name: AAHQA-50507
Plot date: 2/23/2010
Plot scale: x:x

| Designed by: KRC | Ckd by: NLJ |
|---|---|
| Dwn by: EBB | Reviewed by: LHM |
| Submitted by: BAKER | |

U.S. ARMY CORPS OF ENGINEERS
AFGHANISTAN ENGINEER DISTRICT
APO AE 96338

*Michael Baker Jr., Inc*
*A unit of Michael Baker Corporation*
Airside Business Park
100 Airside Drive
Moon Township, PA 15108
www.mbakercorp.com

AFGHAN NATIONAL ARMY
REGIONAL MILITARY TRAINING CENTER
STANDARD DESIGN

RMTC HEADQUARTERS BUILDING

ISOLATION JOINT DETAILS

Sheet reference number:
A–505

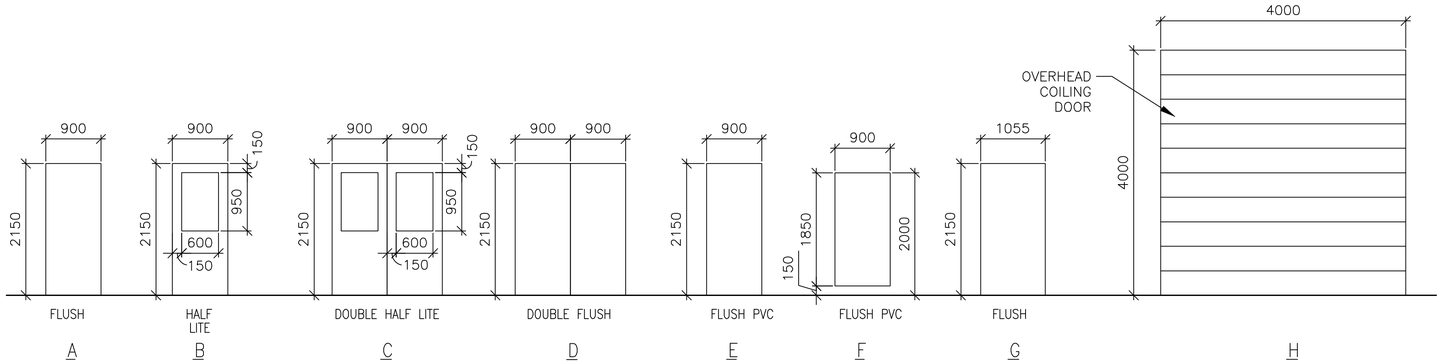


1 A-601 **DOOR TYPES**
SCALE: 1:50

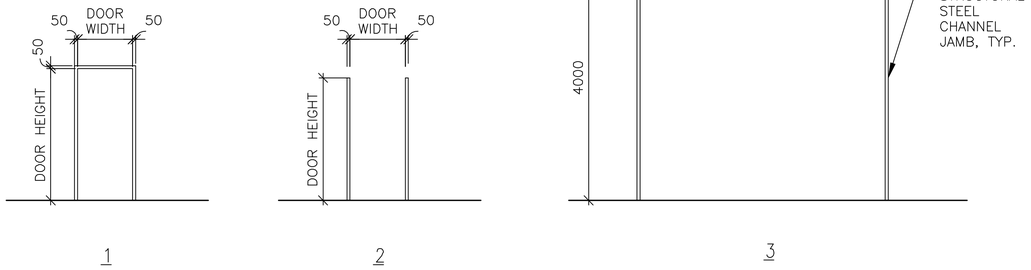


2 A-601 **FRAME TYPES**
SCALE: 1:50

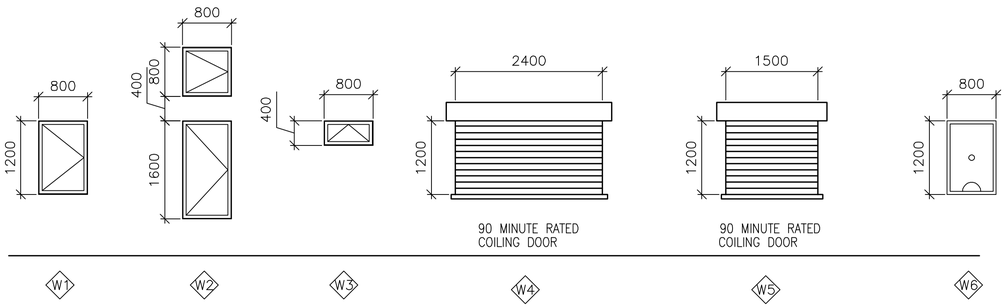


3 A-601 **WINDOW TYPES**
SCALE: 1:50

## WINDOW TYPE NOTES:

1. ALL EXTERIOR WINDOWS SHALL BE ALUMINUM WITH INSECT SCREENS. WINDOWS SHALL BE COMMERCIAL GRADE.
2. ALL EXTERIOR WINDOWS SHALL BE OPERABLE.

4 A-601 **DOOR TAG**
SCALE: NTS




5 A-601 **RATED DOOR TAG**
SCALE: NTS

## DOOR TAG NOTES:

1. THE DOOR TAG INDICATES THE DOOR TYPE, FRAME TYPE AND HARDWARE SET FOR EACH DOOR.
2. THE DOOR TAG FOR RATED DOORS INCLUDES THE RATING OF THE DOOR IN MINUTES.

## EXTERIOR DOOR HARDWARE TYPES:

HW-1 1-1/2 PR HINGES, A5112 114 X 114
1 EA RIM EXIT DEVICE, TYPE 1
1 EA CYLINDER. E09221A, GRADE 1
1 EA OVERHEAD CLOSER, C02061, LOW RESISTANCE
1 EA THRESHOLD, J32130
3 EA DOOR SILENCERS, L03011

HW-2 1-1/2 PR HINGES, A5112 114 X 114
1 EA LOCKSET, F13 ENTRY LOCK W/LEVER HANDLES, GRADE 1
1 EA OVERHEAD CLOSER, C02061, LOW RESISTANCE
1 EA THRESHOLD, J32130
3 EA DOOR SILENCERS, L03011

HW-3 3 PR HINGES, A5112 114 X 114
2 EA RIM EXIT DEVICE, TYPE 1
2 EA CYLINDER. GRADE 1
2 EA OVERHEAD CLOSER, C02061, LOW RESISTANCE
1 EA DOOR COORDINATOR, TYPE 21
1 EA ASTRAGAL
1 EA THRESHOLD, J32130
2 EA DOOR SILENCERS, L03011

HW-4 3 PR HINGES, A5112 114 X 114
1 EA LOCKSET W/LEVER HANDLES. GRADE 1, F13
1 EA OVERHEAD CLOSER, C02061, LOW RESISTANCE
2 EA MAGNETIC HOLDER PIN, ATTACHED TO DOOR LEAF
2 EA MAGNETIC HOLDER RECEIVER, ATTACHED TO STOOP
2 EA LEVER EXTENSION FLUSH BOLTS, L04081
1 EA ASTRAGAL
1 EA THRESHOLD, J32130
2 EA DOOR SILENCERS, L03011

## DOOR AND HARDWARE NOTES:

1. INTERIOR AND EXTERIOR METAL DOORS AND FRAME COLORS SHALL MATCH ADJACENT WALL COLORS AS SELECTED BY THE CONTRACTING OFFICER.
2. FRAMES, EXCEPT FIRE-RATED FRAMES, SHALL BE MOUNTED AND ADJUSTED IN ACCORDANCE WITH MANUFACTURER'S INSTRUCTIONS. FRAMES SHALL BE FASTENED WITH MINIMUM OF THREE ANCHORS PER JAMB AT EQUAL INTERVALS.
3. DIMENSIONS SHOWN ON DOOR TYPES DETAIL ARE BASED UPON MODULAR MASONRY (OR ROUGH OPENING), HEIGHT OF 2200 MM FOR STANDARD PERSONNEL DOORS. CONTRACTOR SHALL COORDINATE WITH DOOR SUPPLIER TO ENSURE THAT DIMENSIONS OF DOORS AND FRAMES PROVIDED ARE COMPATIBLE WITH DOOR OPENING DIMENSIONS.
4. HARDWARE SHALL BE HEAVY DUTY, COMMERCIAL GRADE, STAINLESS STEEL WITH A SATIN OR BRUSHED FINISH.
5. HARDWARE TYPES INCLUDE BUILDERS HARDWARE MANUFACTURERS ASSOCIATION (BMHA) NUMBER.
6. DOORS IN 2 HOUR RATED PARTITIONS SHALL BE 1.5 HOUR (90 MINUTE) RATED DOORS IN ACCORDANCE WITH NFPA 101, TABLE 8.3.4.2.
7. DOORS AT STAIR ENCLOSURES SHALL BE 1 HOUR (60 MINUTE) RATED AT 1 HOUR WALL IN ACCORDANCE WITH NFPA 101, TABLE 8.3.4.2.
8. DOORS IN 1 HOUR RATED WALLS SHALL BE 3/4 HOUR (45 MINUTE) RATED DOORS IN ACCORDANCE WITH NFPA 101, TABLE 8.3.4.2.
9. DOORS IN 1 HOUR RATED CORRIDOR WALLS SHALL BE 1/3 HOUR (20 MINUTE) IN ACCORDANCE WITH NFPA 101, TABLE 8.3.4.2.
10. PROVIDE DOOR STOPS TO PROTECT WALLS ON LOCATIONS WHERE DOOR SWING WILL STRIKE WALL.

THIS SHEET IS STANDARD AND IS INCLUSIVE OF ALL THE DOOR/ WINDOW/ HARDWARE TYPES FOR THE ENTIRE RMTC CONTRACT. NOT ALL DOOR/ WINDOW/ HARDWARE TYPES ARE USED FOR ANY PARTICULAR BUILDING DESIGN. CONTRACTOR SHALL REFER TO THE FLOOR PLAN FOR THE TYPES BEING USED.

## INTERIOR DOOR HARDWARE TYPES:

HW-5 1-1/2 PR HINGES, A8133 114 X 114
1 EA LOCKSET W/LEVER HANDLES, F08, GRADE 1
1 EA WALL STOP, L02101 OR L02161
3 EA DOOR SILENCERS, L03011

HW-6 1-1/2 PR HINGES, A8112 114 X 114
1 EA LOCKSET W/LEVER HANDLES, F08, GRADE 1
1 EA WALL STOP, L02101 OR L02161
1 EA OVERHEAD CLOSER, C02061, LOW RESISTANCE
3 EA DOOR SILENCERS, L03011

HW-7 1-1/2 PR HINGES, A8133
1 EA LOCKSET W/LEVER HANDLES, F13 GRADE 1
1 EA WALL STOP, L02101 OR L02161
2 EA MOP PLATE, J103
3 EA DOOR SILENCERS, L03011

HW-8 1-1/2 PR HINGES, A8112
1 EA LOCKSET W/LEVER HANDLES, F13 GRADE 1
1 EA WALL STOP, L02101 OR L02161
2 EA MOP PLATE, J103
1 EA OVERHEAD CLOSER, C02061, LOW RESISTANCE
3 EA DOOR SILENCERS, L03011

HW-9 1-1/2 PR HINGES, A5112 114 X 114
1 EA RIM EXIT DEVICE, TYPE 1
1 EA CYLINDER. E09221A, GRADE 1
1 EA OVERHEAD CLOSER, C02061, LOW RESISTANCE
3 EA DOOR SILENCERS, L03011

HW-10 3 PR HINGES, A5112 114 X 114
1 EA LOCKSET W/LEVER HANDLES. GRADE 1, F13
2 EA LEVER EXTENSION FLUSH BOLTS, L04081
1 EA ASTRAGAL
2 EA DOOR SILENCERS, L03011

HW-11 1-1/2 PR HINGES, A8112 114 X 114
1 EA LOCKSET W/LEVER HANDLES, F13, GRADE 1
1 EA WALL STOP, L02101 OR L02161
1 EA OVERHEAD CLOSER, C02061, LOW RESISTANCE
3 EA DOOR SILENCERS, L03011
1 EA ROBE HOOK

HW-12 1-1/2 PR HINGES, A8133
1 EA LATCHSET W/LEVER HANDLES, F76 GRADE 1
1 EA WALL STOP, L02101 OR L02161
2 EA MOP PLATE, J103
3 EA DOOR SILENCERS, L03011
1 EA ROBE HOOK

HW-13 3 PR HINGES, A5112 114 X 114
1 EA LOCKSET W/LEVER HANDLES. GRADE 1, F13
1 EA OVERHEAD CLOSER, C02061, LOW RESISTANCE
2 EA LEVER EXTENSION FLUSH BOLTS, L04081
1 EA ASTRAGAL
2 EA DOOR SILENCERS, L03011

HW-14 3 PR HINGES, A5112 114 X 114
2 EA RIM EXIT DEVICE, TYPE 1
2 EA CYLINDER. GRADE 1
2 EA OVERHEAD CLOSER, C02061, LOW RESISTANCE
1 EA DOOR COORDINATOR, TYPE 21
1 EA ASTRAGAL
2 EA DOOR SILENCERS, L03011

APPROVED:

A/E DESIGNER OF RECORD

SEAL:

STATE OF SOUTH CAROLINA
KEVIN R. CHAFIN
N. Charleston, SC
6374
REGISTERED ARCHITECT

US ARMY CORPS OF ENGINEERS
AFGHANISTAN ENGINEER DISTRICT

| Mark | Description | Date | Appr. |
|---|---|---|---|
| | | | |

Date: 2/23/10
Design file no.
Drawing code:
Rev: 0
File name: ANAHQA-601SCH
Plot date: 2/23/2010
Plot scale: X:X
Designed by: KRC
Dwn by: EBB
Ckd by: NLJ
Reviewed by: LHM
Submitted by:
BAKER

U.S. ARMY CORPS OF ENGINEERS
AFGHANISTAN ENGINEER DISTRICT
APO AE 96338

*Michael Baker Jr., Inc.*
*A unit of Michael Baker Corporation*
Airside Business Park
100 Airside Drive
Moon Township, PA 15108
www.mbakercorp.com

AFGHAN NATIONAL ARMY
REGIONAL MILITARY TRAINING CENTER
STANDARD DESIGN

RMTC HEADQUARTERS BUILDING

WINDOW AND DOOR SCHEDULES

Sheet reference number:
A-601

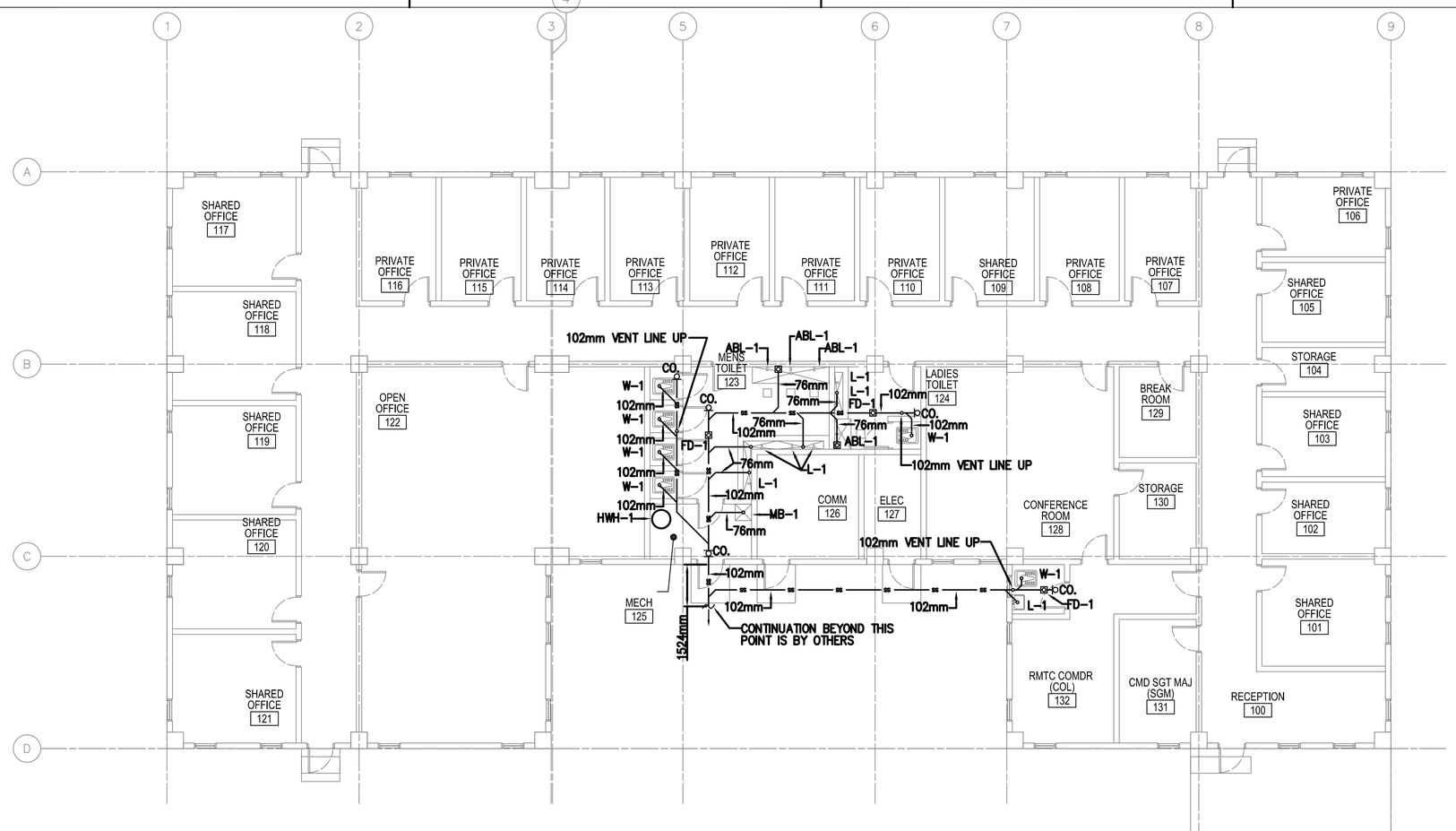


1 P-101 RMTC HEADQUARTERS FLOOR PLAN - PLUMBING (SANITARY)

SCALE: 1:100

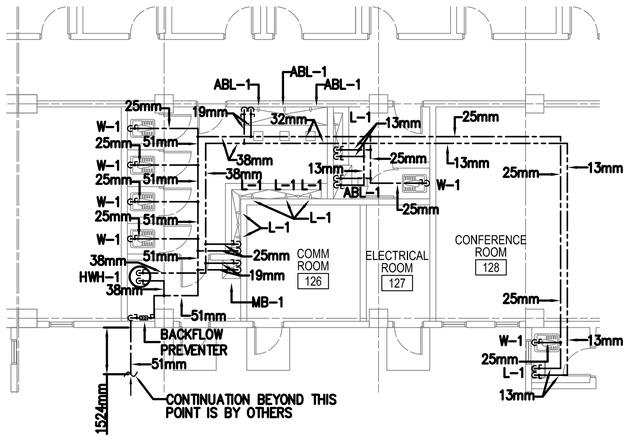


2 P-101 RMTC HEADQUARTERS FLOOR PLAN - PLUMBING (HOT AND COLD WATER)

SCALE: 1:100

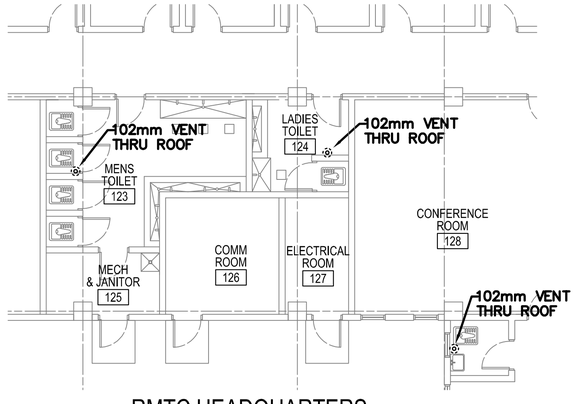


3 P-101 RMTC HEADQUARTERS FLOOR PLAN - PLUMBING (VENT PIPING)

SCALE: 1:100

## FLOOR PLAN NOTES:

1. DO NOT SCALE DRAWINGS – ALL DIMENSIONS AND CONDITIONS SHALL BE CHECKED AND VERIFIED BY THE CONTRACTOR AT THE SITE.
2. ALL WORK PERFORMED ON THIS BUILDING SHALL BE IN COMPLIANCE WITH ALL PERTINENT CODES, RULES, ORDINANCES AND REGULATIONS OF THE GOVERNING AUTHORITIES.
3. ALL WORK PERFORMED UNDER AND IN CONNECTION WITH THESE DRAWINGS AND SPECIFICATIONS SHALL BE IN STRICT COMPLIANCE WITH THE LATEST SAFETY AND HEALTH STANDARDS.
4. REPORT ANY DISCREPANCIES FOUND IN THE PLUMBING DRAWINGS AND/OR IN THE SPECIFICATIONS DURING THE BIDDING PROCESS FOR CLARIFICATION BY THE ENGINEER.
5. ALL EASTERN STYLE WATER CLOSETS IN THIS FACILITY ARE TO HAVE THE FIXTURE DESIGNATION OF W-1. EACH FIXTURE SHALL HAVE A 25mm (1 INCH) COLD WATER LINE EXTENDED TO IT AND THEN BE REDUCED TO 13mm (1/2 INCH) FOR A FINAL CONNECTION TO THE FLUSH TANK AND A 102mm (4) INCH SANITARY CONNECTION.
6. ALL LAV FIXTURES IN THIS FACILITY ARE TO HAVE THE FIXTURE DESIGNATION OF L-1. EACH FIXTURE SHALL HAVE A 13mm (1/2 INCH) COLD WATER, 13mm (1/2 INCH) HOT WATER CONNECTION AND A 76mm (3 INCH) SANITARY CONNECTION.
7. ALL ABLUTION FIXTURES IN THIS FACILITY ARE TO HAVE THE FIXTURE DESIGNATION OF ABL-1. EACH FIXTURE SHALL HAVE A 13mm (1/2 INCH) COLD WATER, 13mm (1/2 INCH) HOT WATER CONNECTION AND A 76mm (3 INCH) SANITARY CONNECTION.
8. REFER TO SHEET P501 FOR DETAILS AND SYMBOLS.
9. ALL WATER, SANITARY AND VENT LINES TO BE EXPOSED. RUN LINES TIGHT TO CEILING AND WALL.

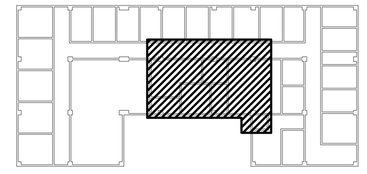

## KEY PLAN:

## PLUMBING SYMBOLS

- SS — SANITARY SEWER PIPING (BELOW GROUND)
- SS — SANITARY SEWER PIPING (ABOVE GROUND)
- VENT PIPING (V)
- COLD WATER PIPING (CW)
- HOT WATER PIPING (HW)
- BALL VALVE
- BACKFLOW PREVENTER
- OR — CLEANOUT (CO.)
- ROOF PENETRATION

LINEAR DIMENSIONS SHOWN ARE IN MILLIMETERS (MM), UNLESS OTHERWISE NOTED

0 2000 4000
SCALE: 1:100

APPROVED:

A/E DESIGNER OF RECORD

SEAL:

COMMONWEALTH OF PENNSYLVANIA
REGISTERED PROFESSIONAL
MATTHEW R. SOTOSKY
ENGINEER
065576-E

US ARMY CORPS OF ENGINEERS
AFGHANISTAN ENGINEER DISTRICT

| Mark | Description | Date | Appr. |
|---|---|---|---|

Rev: 0
Date: 02/23/10
Design file no.
Drawing code:
File name: ANAHQPL-101XXX
Plot date: 02/25/2010
Plot scale: 1:50

Designed by: RMH
Dwn by: RMH
Ckd by: CJM
Reviewed by:
Submitted by: BAKER

U.S. ARMY CORPS OF ENGINEERS
AFGHANISTAN ENGINEER DISTRICT
APO AE 96338

*Michael Baker Jr., Inc*
*A unit of Michael Baker Corporation*
Airside Business Park
100 Airside Drive
Moon Township, PA 15108
www.mbakercorp.com

AFGHAN NATIONAL ARMY
REGIONAL MILITARY TRAINING CENTER
STANDARD DESIGN

RMTC HEADQUARTERS BUILDING
FLOOR PLAN PLUMBING

Sheet reference number:
P-101

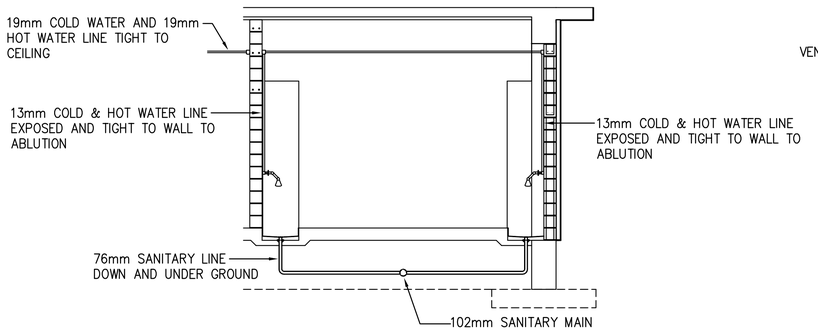


## TYPICAL ABLUTION SANITARY & WATER INSTALLATION SCHEMATIC

SCALE: N.T.S.

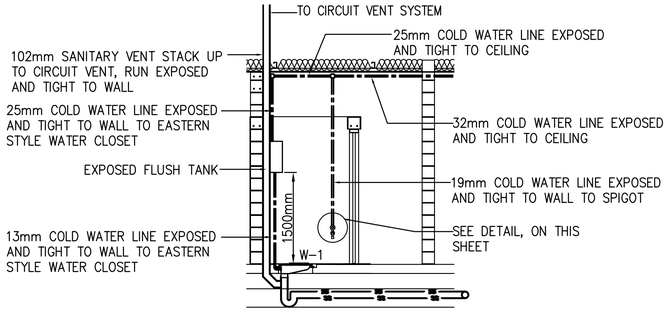


## TYPICAL EASTERN STYLE WATER CLOSET SANITARY & WATER INSTALLATION SCHEMATIC

SCALE: N.T.S.

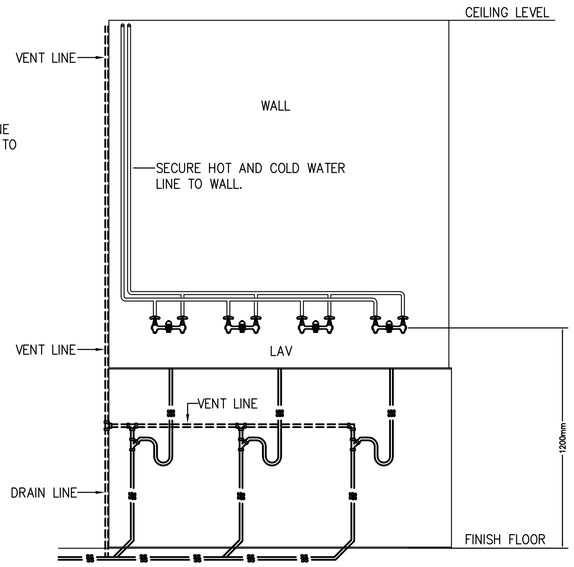


## LAVATORY ELEVATION PLAN - PLUMBING

SCALE: N.T.S.

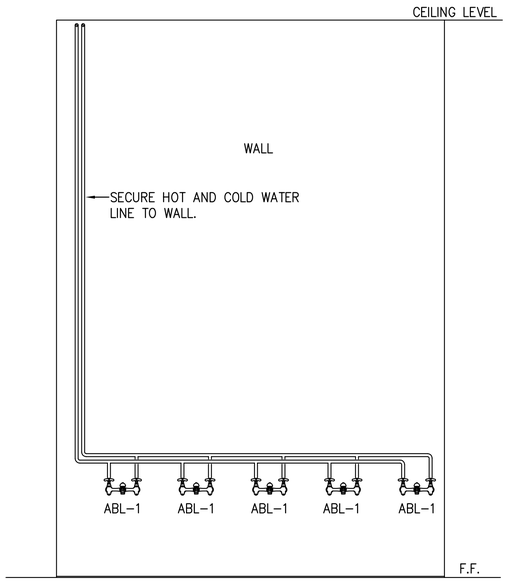


## TYPICAL ABLUTION ELEVATION PLUMBING PLAN - WATER INSTALLATION SCHEMATIC

SCALE: N.T.S.

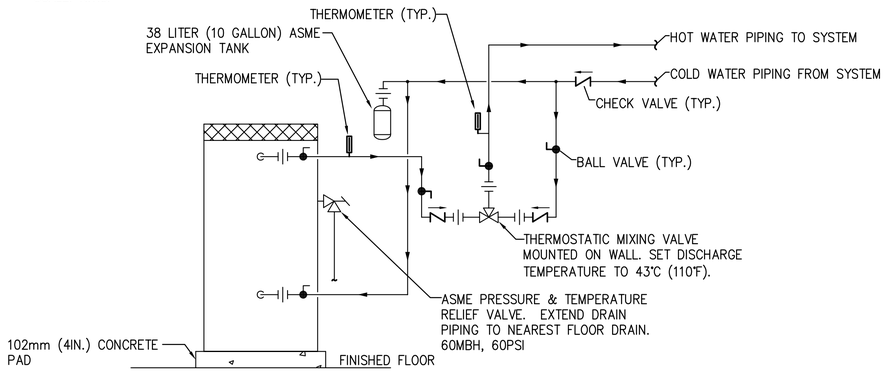


## ELECTRIC WATER HEATER PIPING SCHEMATIC

SCALE: N.T.S.

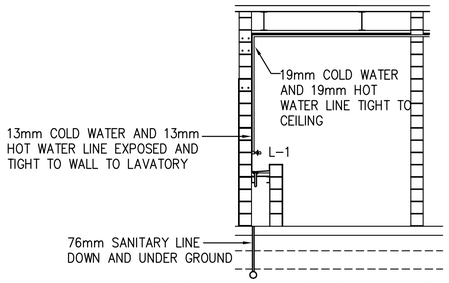


## TYPICAL LAVATORY SANITARY & WATER INSTALLATION SCHEMATIC

SCALE: N.T.S.

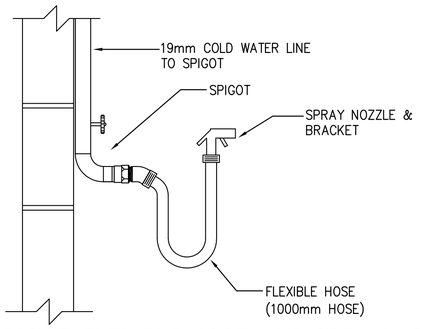


## TYPICAL DETAIL - SPIGOT, FLEXIBLE HOSE, AND SPRAY NOZZLE

SCALE: N.T.S.

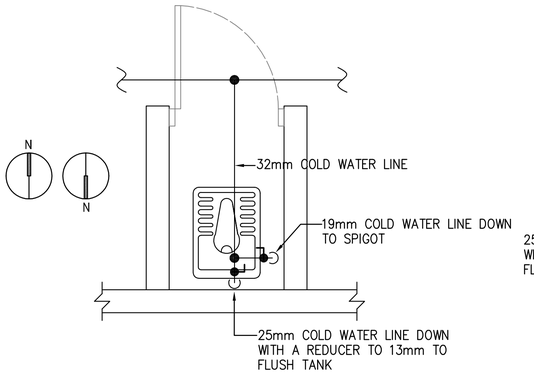


## TYPICAL EASTERN STYLE WATER CLOSET WITH SPIGOT WATER PIPING DETAIL

SCALE: N.T.S.

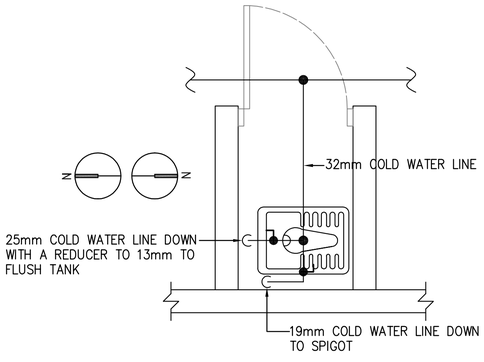


## TYPICAL EASTERN STYLE WATER CLOSET WITH SPIGOT WATER PIPING DETAIL

SCALE: N.T.S.

US ARMY CORPS OF ENGINEERS
AFGHANISTAN ENGINEER DISTRICT

| Mark | Description | Date | Appr. |
|---|---|---|---|
| | | | |

| Rev: | Date: | Drawing code: | File name: ANAHQPL-501XXX |
|---|---|---|---|
| 0 | 02/23/10 | | Plot date: 02/26/2010 |
| | Design file no. | | Plot scale:1:100 |

Designed by: RMH | Dwn by: RMH | Ckd by: CJM | Reviewed by: | Submitted by: MRS

U.S. ARMY CORPS OF ENGINEERS
AFGHANISTAN ENGINEER DISTRICT
APO AE 96338

*Michael Baker Jr., Inc*
*A unit of Michael Baker Corporation*
Airside Business Park
100 Airside Drive
Moon Township, PA 15108
www.mbakercorp.com

AFGHAN NATIONAL ARMY
REGIONAL MILITARY TRAINING CENTER
STANDARD DESIGN

RMTC HEADQUARTERS BUILDING
PLUMBING DETAILS

APPROVED:

A/E DESIGNER OF RECORD

SEAL:

COMMONWEALTH OF PENNSYLVANIA
REGISTERED PROFESSIONAL
MATTHEW R. SOTOSKY
ENGINEER
065076-E

Sheet reference number:
P-501

## FIXTURE LIST

| TYPE | ITEM | SOIL & WASTE | VENT | COLD WATER | HOT WATER | REMARKS | REMARKS 2 |
|---|---|---|---|---|---|---|---|
| W-1 | EASTERN STYLE WATER CLOSET | 102mm | 51mm | 25mm | ------ | FLUSH VALVE | LOW FLOW EFFICIENT TYPE |
| L-1 | TROUGH FIXTURE | 38mm | 38mm | 13mm | 13mm | FABRICATED IN FIELD | LOW FLOW EFFICIENT TYPE |
| ABL-1 | ABLUTION | FLOOR DRAIN | ------ | 13mm | 13mm | FABRICATED IN FIELD | ---------- |
| HWH-1 | WATER HEATER | --- | --- | SEE DWG. | SEE DWG. | 151 LITER ELECTRIC WATER HEATER, 380/3ø, 9KW | ---------- |

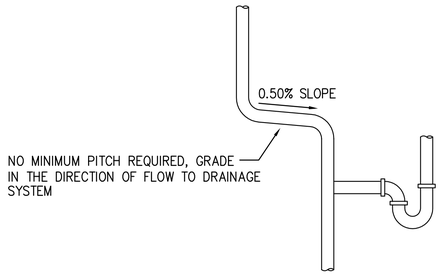


### TYPICAL VENT GRADE DETAILS
SCALE: N.T.S.

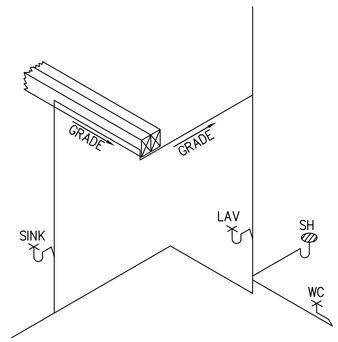


### TYPICAL VENT GRADE DETAILS
SCALE: N.T.S.

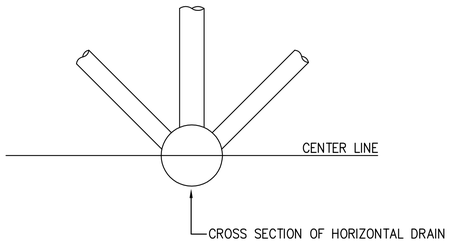


### ACCEPTABLE VENT CONNECTIONS TO HORIZONTAL DRAIN - DETAIL
SCALE: N.T.S.

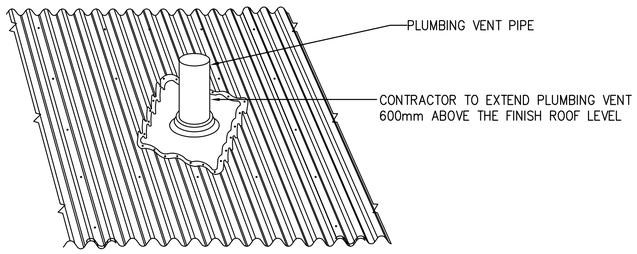


### PLUMBING VENT THRU ROOF DETAIL
SCALE: NTS

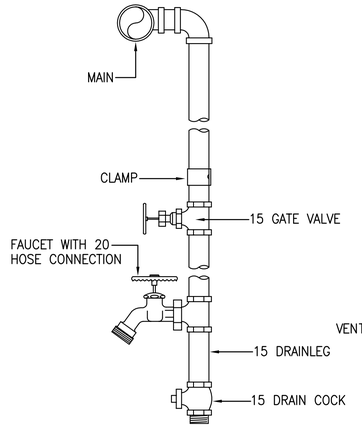


### TYPICAL WATER DROP DETAIL
SCALE: N.T.S.

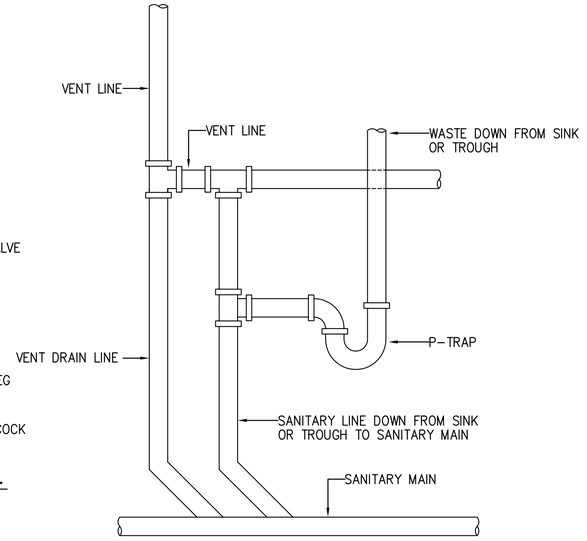


### TYPICAL LAVATORY/LAUNDRY VENT DETAIL
SCALE: N.T.S.

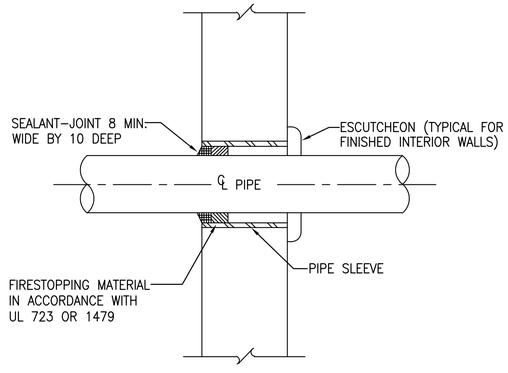


### TYPICAL WALL PENETRATION DETAIL
SCALE: N.T.S.

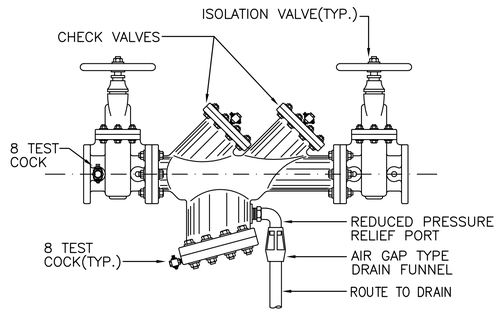


### TYPICAL BACKFLOW PREVENTER DETAIL
SCALE: N.T.S.

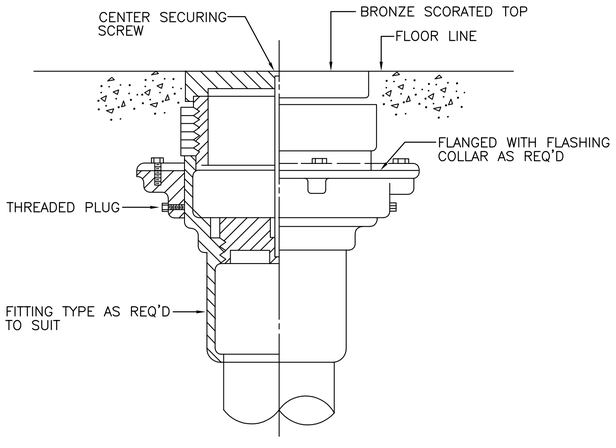


### TYPICAL FLOOR CLEANOUT DETAIL
SCALE: N.T.S.

APPROVED:

A/E DESIGNER OF RECORD

SEAL:

COMMONWEALTH OF PENNSYLVANIA
REGISTERED PROFESSIONAL
MATTHEW R. SOTOSKY
ENGINEER
065570-E

US ARMY CORPS OF ENGINEERS
AFGHANISTAN ENGINEER DISTRICT

| Mark | Description | Date | Appr. |
|---|---|---|---|
| | | | |

Rev: 0
Date: 02/23/10
Design file no.
Drawing code:
File name: ANAHQPI-502XXX
Plot date: 02/09/2010
Plot scale: 1:100

Designed by: RMH
Dwn by: RMH
Ckd by: CJM
Reviewed by:
Submitted by: MRS

U.S. ARMY CORPS OF ENGINEERS
AFGHANISTAN ENGINEER DISTRICT
APO AE 96338

Michael Baker Jr., Inc
A unit of Michael Baker Corporation
Airside Business Park
100 Airside Drive
Moon Township, PA 15108
www.mbakercorp.com

AFGHAN NATIONAL ARMY
REGIONAL MILITARY TRAINING CENTER
STANDARD DESIGN

RMTC HEADQUARTERS BUILDING

PLUMBING DETAILS

Sheet reference number:
P-502

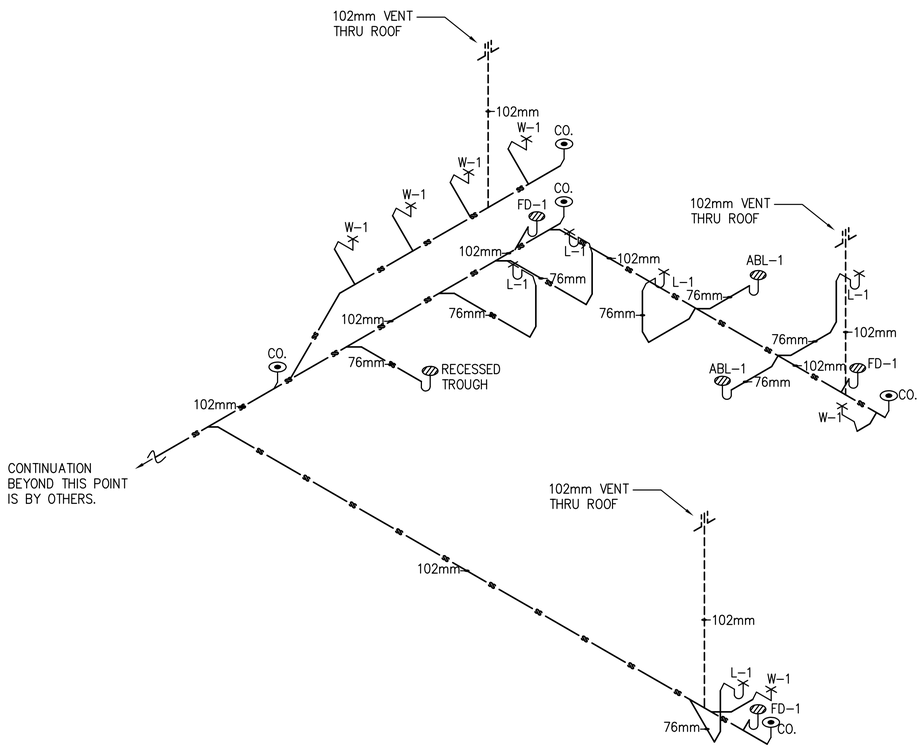


1 P-901 HEADQUARTERS DRAINAGE ISOMETRIC

SCALE: N.T.S.

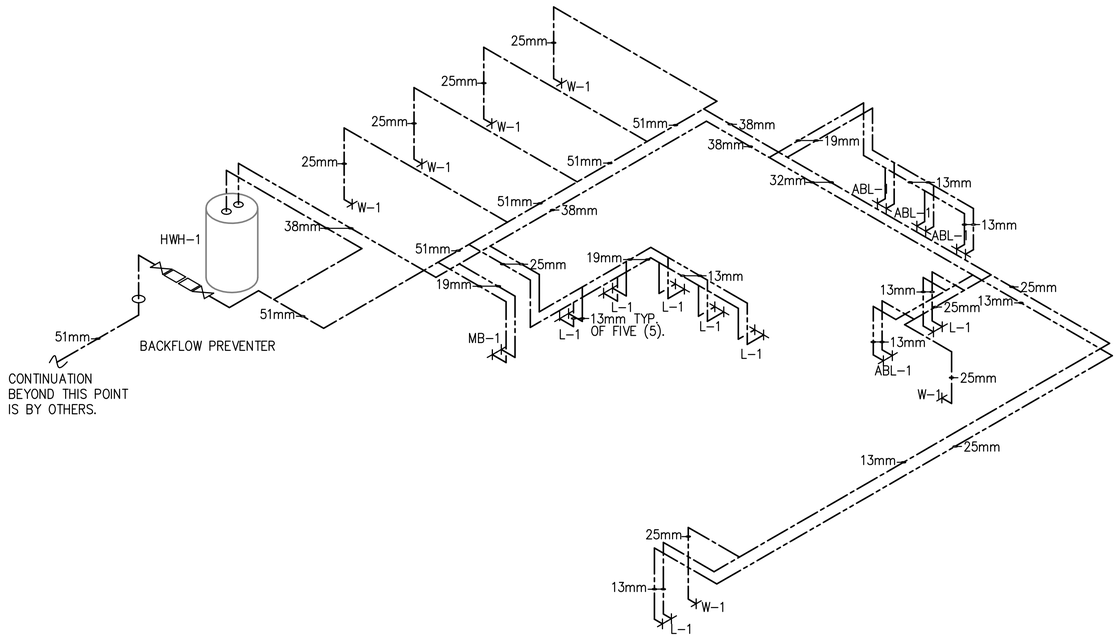


2 P-901 HEADQUARTERS HOT AND COLD WATER ISOMETRIC

SCALE: N.T.S.

GENERAL PLUMBING NOTES:

1. CONTRACTOR TO REFER TO ARCHITECTURAL DRAWINGS FOR DETAIL OF VENT THRU AND RESPONSIBILITY OF VENT THRU ROOF.

## PLUMBING SYMBOLS

- SANITARY SEWER PIPING (BELOW GROUND)
- SANITARY SEWER PIPING (ABOVE GROUND)
- VENT PIPING (V)
- COLD WATER PIPING (CW)
- HOT WATER PIPING (HW)
- BALL VALVE
- BACKFLOW PREVENTER
- CLEANOUT (CO.) — OR
- ROOF PENETRATION

APPROVED:

A/E DESIGNER OF RECORD

SEAL:

COMMONWEALTH OF PENNSYLVANIA REGISTERED PROFESSIONAL MATTHEW R. SOTOSKY ENGINEER 046570-E

US ARMY CORPS OF ENGINEERS
AFGHANISTAN ENGINEER DISTRICT

| Mark | Description | Date | Appr. |
|---|---|---|---|

Date: 02/23/10 | Rev: 0
Designed by: RMH | Drawing code:
Dwn by: RMH | Ckd by: CJM | Reviewed by:
File name: ANAHQPL-901XXX
Plot date: 02/09/2010
Plot scale: N.T.S.
Submitted by: BAKER

U.S. ARMY CORPS OF ENGINEERS
AFGHANISTAN ENGINEER DISTRICT
APO AE 96338

Michael Baker Jr., Inc
A unit of Michael Baker Corporation
Airside Business Park
100 Airside Drive
Moon Township, PA 15108
www.mbakercorp.com

AFGHAN NATIONAL ARMY
REGIONAL MILITARY TRAINING CENTER
STANDARD DESIGN

RMTC HEADQUARTERS BUILDING
PLUMBING ISOMETRICS

Sheet reference number:
P-901

## SPLIT SYSTEM HEAT PUMP UNIT SCHEDULE

INDOOR UNIT

| | CMS | COOLING COIL DATA E.A.T. °C DB | WB | kW | EER | HEATING kW | ELECT. CHAR. | FLA AMP. | FUSE RATING | WEIGHT (kg) |
|---|---|---|---|---|---|---|---|---|---|---|
| HP-1 | 0.175 | 35 | 21 | 2.5 | 3.25 | 2.62 | 220/1/50 | 0.30 | 6 | 9 |
| HP-2 | 0.213 | 35 | 21 | 4.95 | 2.81 | 4.30 | 220/1/50 | 0.30 | 6 | 16 |
| HP-3 | 0.213 | 35 | 21 | 4.95 | 2.81 | 4.30 | 220/1/50 | 0.30 | 6 | 16 |
| HP-4 | 0.175 | 35 | 21 | 2.5 | 3.25 | 2.62 | 220/1/50 | 0.30 | 6 | 9 |
| HP-5 | 0.175 | 35 | 21 | 2.5 | 3.25 | 2.62 | 220/1/50 | 0.30 | 6 | 9 |

OUTDOOR UNIT

| | ELECTRICAL CHAR. | STARTING CURRENT (AMP) | RUNNING CURRENT HEAT/COOL | FUSE RATING | SYSTEM POWER INPUT (kW) HEAT/COOL | WEIGHT (kg) |
|---|---|---|---|---|---|---|
| HP-1 | 220/1/50 | 4.2 | 4.2/3.7 | 16 | 0.801/0.616 | 25 |
| HP-2 | 220/1/50 | 37.0 | 7.23/7.93 | 16 | 1.465/1.424 | 47 |
| HP-3 | 220/1/50 | 37.0 | 7.23/7.93 | 16 | 1.465/1.424 | 47 |
| HP-4 | 220/1/50 | 4.2 | 4.2/3.7 | 16 | 0.801/0.616 | 25 |
| HP-5 | 220/1/50 | 4.2 | 4.2/3.7 | 16 | 0.801/0.616 | 25 |

## ELECTRIC UNIT HEATER SCHEDULE

| NO. | CMS | KW | FINAL AIR TEMP. °C | ELECT. CHAR. | MOUNTING |
|---|---|---|---|---|---|
| EH-2 | 0.200 | 2.6 | 38 | 380/1/50 | WALL HUNG |
| EH-4 | 0.200 | 4 | 38 | 380/1/50 | WALL HUNG |
| EH-5 | 0.200 | 5 | 38 | 380/1/50 | WALL HUNG |

NOTES:
1. UNIT HEATERS SHALL HAVE TAMPER PROOF INTEGRAL STATS.
2. COORDINATE LOCATION AND ORIENTATION IN FIELD.

## EXHAUST FAN SCHEDULE

| NO. | TYPE | FAN CMS | DRIVE | HP | SP mmH20 | ELECTRICAL DATA | SWITCH |
|---|---|---|---|---|---|---|---|
| EF-1 | WALL | 0.140 | DIRECT | FRACT | 9.5 | 220/1/50 | @ WALL |
| EF-2 | INLINE | 0.035 | DIRECT | FRACT | 13 | 220/1/50 | @ WALL |
| EF-3 | WALL | 0.035 | DIRECT | FRACT | 9.5 | 220/1/50 | W/ STAT |
| EF-4 | WALL | 0.035 | DIRECT | FRACT | 9.5 | 220/1/50 | @ WALL |
| EF-5 | INLINE | 0.035 | DIRECT | FRACT | 13 | 220/1/50 | W/ STAT |
| EF-6 | INLINE | 0.035 | DIRECT | FRACT | 13 | 220/1/50 | @ WALL |
| EF-7 | WALL | 0.035 | DIRECT | FRACT | 9.5 | 220/1/50 | W/ STAT |

NOTE:
1. FANS SHALL HAVE SPRING OPERATED BACK DRAFT DAMPER.

## CEILING FAN

| NO. | BLADE SIZE mm | IN | VOLTAGE | SWITCH | REMARKS |
|---|---|---|---|---|---|
| CF-1 | 1320 | 52 | 220/1/50 | @ WALL | 3 SPEED REVERSIBLE MOTOR |

NOTES:
1. INSTALL FANS 2.5M AFF.
2. PROVIDE WITH OUT LIGHT FIXTURE.
3. PROVIDE WITH REMOTE MOUNTED ON-OFF SWITCH SHOWN ON ELECTRICAL DRAWINGS.

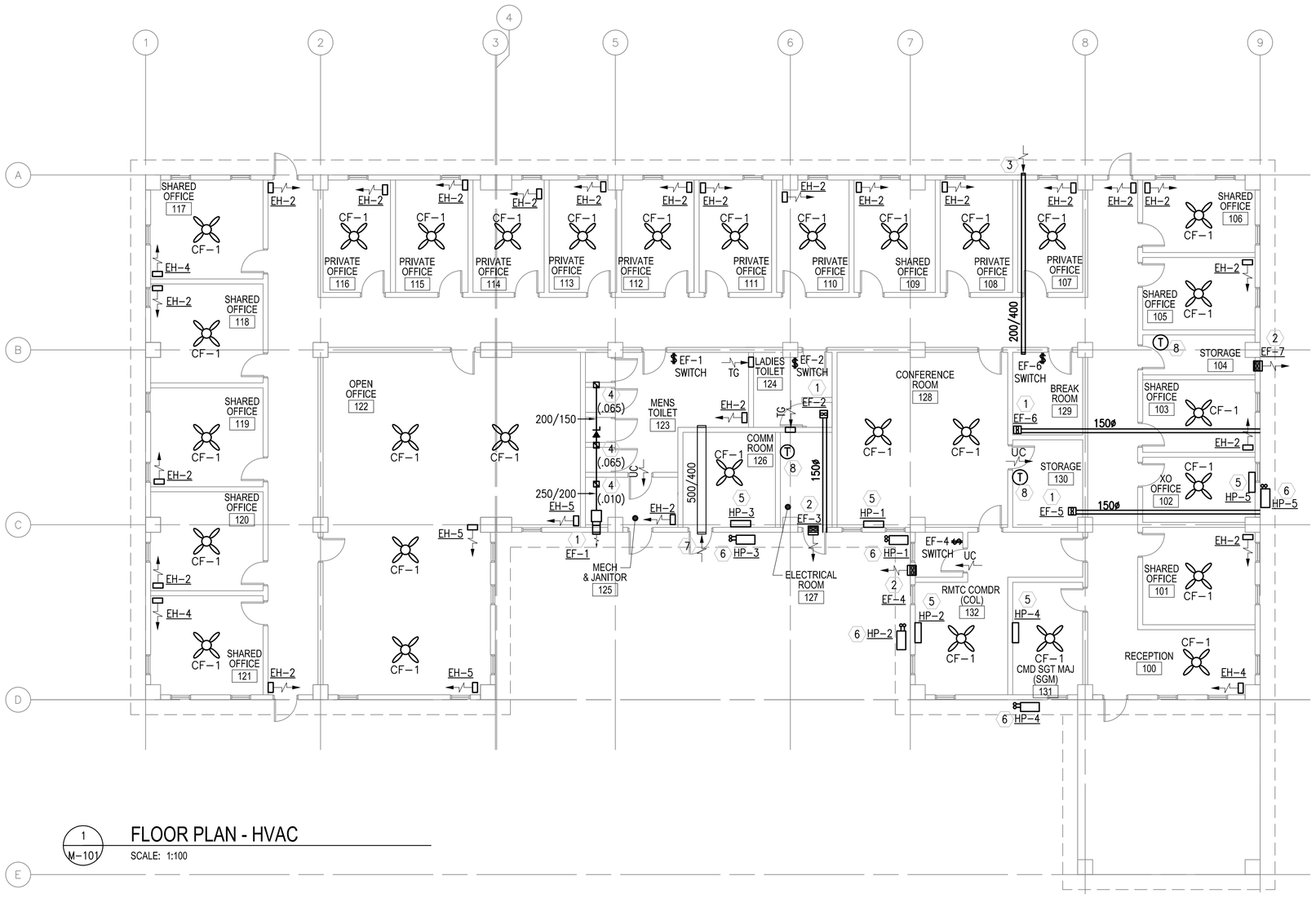


1 M-101 FLOOR PLAN - HVAC
SCALE: 1:100

LINEAR DIMENSIONS SHOWN ARE IN MILLIMETERS (MM), UNLESS OTHERWISE NOTED

0 2000 4000
SCALE: 1:100

## GENERAL NOTES:

1. DO NOT SCALE DRAWINGS – ALL DIMENSIONS AND CONDITIONS SHALL BE CHECKED AND VERIFIED BY THE CONTRACTOR AT THE SITE.
2. ALL WORK PERFORMED ON THIS BUILDING SHALL BE IN COMPLIANCE WITH ALL PERTINENT CODES, RULES, ORDINANCES AND REGULATIONS OF THE GOVERNING AUTHORITIES.
3. ALL WORK PERFORMED UNDER AND IN CONNECTION WITH THESE DRAWINGS AND SPECIFICATIONS SHALL BE IN STRICT COMPLIANCE WITH THE LATEST SAFETY AND HEALTH STANDARDS.

## SYMBOLS:

- (X) KEY NOTE
- (0.050) AIR VOLUME IN CUBIC METERS PER SECOND (CMS)
- ¬ VOLUME DAMPER
- (T) THERMOSTAT WITH LOCKING COVER
- UC DOOR UNDERCUT
- TG 200x400 (8X16) TRANSFER GRILLE
- $ SINGLE POLE SWITCH – 20A RATED

## ABBREVIATIONS:

| | |
|---|---|
| AFF | ABOVE FINISH FLOOR |
| CF | CEILING FANS |
| CMS | CUBIC METERS PER SECOND |
| EF | EXHAUST FAN |
| STATS | THERMOSTATS |

## KEY NOTE:

1. INLINE EXHAUST FAN DUCTED TO WALL CAP WITH LOW LEAKAGE GRAVITY BACK-DRAFT DAMPER. SECURE FAN TO STRUCTURE.
2. WALL EXHAUST FAN WITH LOW SPRING OPERATED BACK-DRAFT DAMPER. SEE DETAIL ON SHEET M501.
3. 200X400 (8X16) INTAKE LOUVER FOR MAKE UP AIR. PROVIDE WEATHER PROOF LOUVER WITH 50mm (2") WASHABLE FILTER AND SAND TRAP. SEE DETAIL ON SHEET M501. DUCT TO 200x400 (8x16) WALL LOUVER IN BREAK ROOM.
4. 150x150 (6x6) DUCT MOUNTED EXHAUST GRILLE WITH ADJUSTABLE OPPOSED BLADE DAMPERS. BALANCE EACH GRILLE TO CMS IN PARENTHESIS.
5. HEAT PUMP INDOOR UNIT MOUNTED FROM WALL. SEE DETAIL "1" ON SHEET M501.
6. HEAT PUMP OUTDOOR UNIT MOUNTED FROM WALL. SEE DETAIL 4 ON SHEET M501.
7. 500X400 (20X16) INTAKE LOUVER FOR MAKE UP AIR. PROVIDE WEATHER PROOF LOUVER With 50mm (2") WASHABLE FILTER AND SAND TRAP. SEE DETAIL ON SHEET M501. DUCT TO 200x400 (8x16) WALL LOUVER IN BREAK ROOM.
8. THERMOSTAT MOUNTED AS HIGH AS POSSIBLE. INTERLOCK STAT WITH CORRESPONDING EXHAUST FAN, SET FAN TO ENERGIZE ON RISE IN TEMPERATURE ABOVE 25°C (77°F).

APPROVED:

A/E DESIGNER OF RECORD

SEAL:

COMMONWEALTH OF REGISTERED PROFESSIONAL MATTHEW R. SOTOSKY ENGINEER 046576-E PENNSYLVANIA

US ARMY CORPS OF ENGINEERS
AFGHANISTAN ENGINEER DISTRICT

| Mark | Description | Date | Appr. |
|---|---|---|---|
| | | | |

U.S. ARMY CORPS OF ENGINEERS
AFGHANISTAN ENGINEER DISTRICT
APO AE 96338


Michael Baker Jr., Inc
A unit of Michael Baker Corporation
Airside Business Park
100 Airside Drive
Moon Township, PA 15108
www.mbakercorp.com


| Rev: | Date: | Designed by: | Drawn by: | Reviewed by: | Submitted by: |
|---|---|---|---|---|---|
| 0 | 02/23/10 | RML | JJN | MRS | BAKER |

| Design file no. | Ckd by: | Drawing code: | File name: ANAHQMH-101XXX |
|---|---|---|---|
| | CJM | | Plot date: 02/26/2010 |
| | | | Plot scale: 1:100 |

AFGHAN NATIONAL ARMY
REGIONAL MILITARY TRAINING CENTER
STANDARD DESIGN

RMTC HEADQUARTERS BUILDING

HVAC FLOOR PLANS & SCHEDULES

Sheet reference number:
M-101

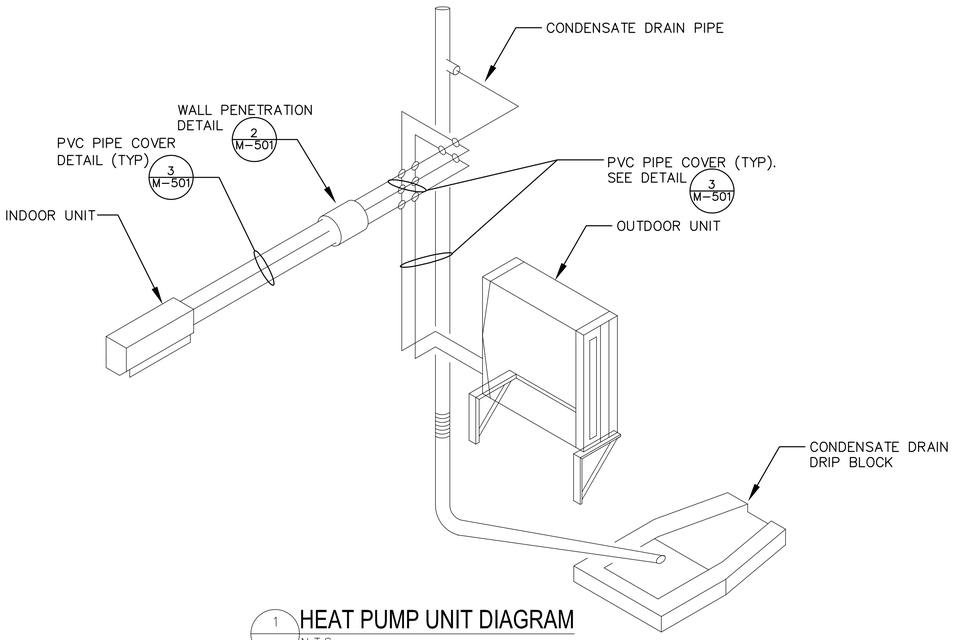


1 M-501 HEAT PUMP UNIT DIAGRAM N.T.S.

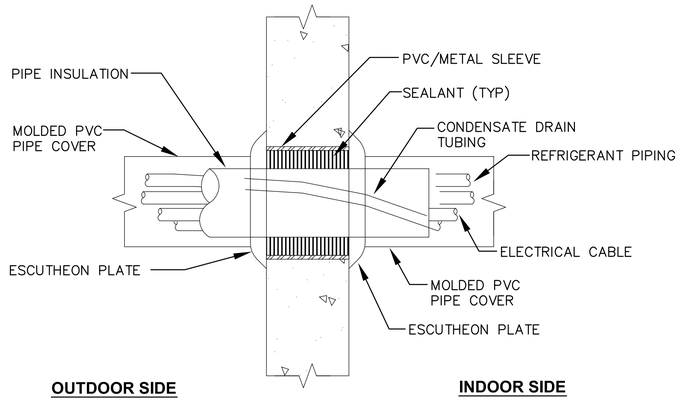


2 M-501 WALL PENETRATION DETAIL N.T.S.

NOTE:
DRILL HOLE AT WALL SO THAT THE OUTER EDGE IS LOWER TO ALLOW CONDENSATE DRAIN WATER TO FLOW OUTWARD.

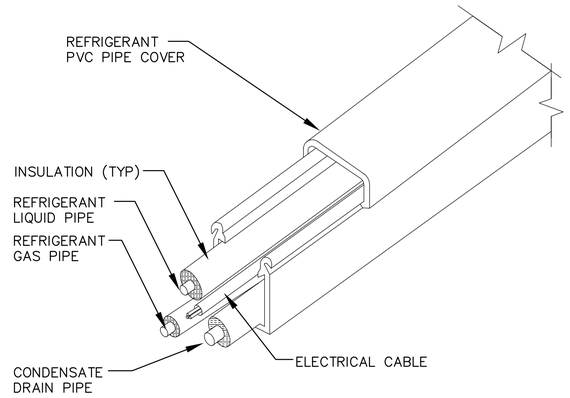


3 M-501 PVC PIPE COVER DETAIL N.T.S.

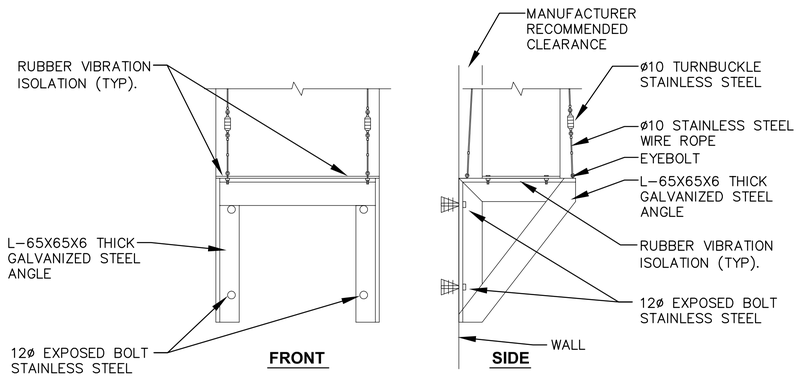


4 M-501 OUTDOOR UNIT SUPPORT N.T.S.

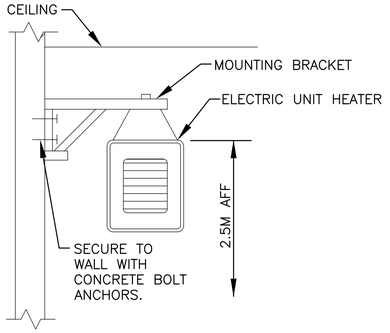


5 M-501 ELECTRIC UNIT HEATER MOUNTING DETAIL N.T.S.

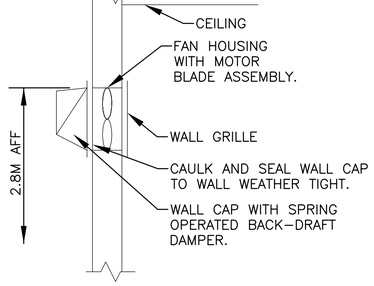


6 M-501 WALL EXHAUST FAN DETAIL N.T.S.

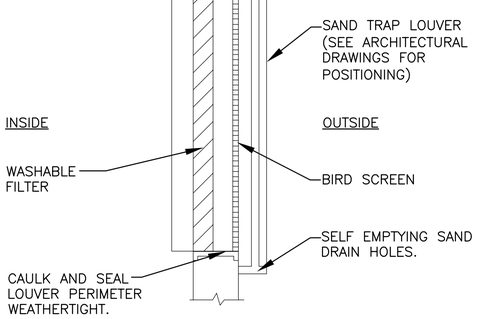


7 M-501 FILTERED SAND TRAP LOUVER N.T.S.

US ARMY CORPS OF ENGINEERS
AFGHANISTAN ENGINEER DISTRICT

| Mark | Description | Date | Appr. |
|---|---|---|---|
| | | | |

| | |
|---|---|
| Rev: | 0 |
| Date: | 02/23/10 |
| Design file no. | ANAHQMH-501XX |
| Drawing code: | 02/08/2010 |
| | 1:100 |
| File name: | ANAHQMH-501XX |
| Plot date: | 02/08/2010 |
| Plot scale: | 1:100 |

| | |
|---|---|
| Designed by: | RML |
| Dwn by: | JJN |
| Ckd by: | CJM |
| Reviewed by: | MRS |
| Submitted by: | BAKER |

U.S. ARMY CORPS OF ENGINEERS
AFGHANISTAN ENGINEER DISTRICT
APO AE 96338

Michael Baker Jr., Inc
A unit of Michael Baker Corporation
Airside Business Park
100 Airside Drive
Moon Township, PA 15108
www.mbakercorp.com

AFGHAN NATIONAL ARMY
REGIONAL MILITARY TRAINING CENTER
STANDARD DESIGN

RMTC HEADQUARTERS BUILDING
HVAC DETAILS

APPROVED:

A/E DESIGNER OF RECORD

SEAL:

COMMONWEALTH OF PENNSYLVANIA
REGISTERED PROFESSIONAL ENGINEER
MATTHEW R. SOTOSKY
046576-E

Sheet reference number:
M-501

## POWER

- DISTRIBUTION PANELBOARD
- NEW PANELBOARD – SURFACE
- NEW PANELBOARD – RECESSED
- (G) GENERATOR
- TRANSFORMER (DRAWN TO SIZE)
- [J] JUNCTION BOX
- (J) JUNCTION BOX – CEILING
- FUSIBLE SAFETY SWITCH
- (M) MOTOR
- $^{M}$ MOTOR STARTING SWITCH – 220V, 20A RATED UNLESS OTHERWISE NOTED
- ELECTRIC WATER HEATER
- (CF) CEILING FAN – REFER TO SPECIFICATION SECTION 26 20 00

## RECEPTACLES

- DUPLEX 20A TYPE CEE 7/7 "SCHUKO STYLE" UNSWITCHED RECEPTACLE
- GF DUPLEX 20A TYPE CEE 7/7 "SCHUKO STYLE" UNSWITCHED RECEPTACLES – 10mA GROUND FAULT INTERRUPTER TYPE
- WP DUPLEX 20A TYPE CEE 7/7 "SCHUKO STYLE" UNSWITCHED TYPE WITH WEATHERPROOF COVER – 10mA GROUND FAULT INTERRUPTER TYPE
- EXP DUPLEX 20A TYPE CEE 7/7 "SCHUKO STYLE" UNSWITCHED RECEPTACLES – EXPLOSION PROOF
- * INDICATES MOUNT DEVICE ABOVE COUNTERTOP OR AT 1070mm ABOVE FINISHED FLOOR WHERE NO COUNTER IS TO BE INSTALLED.

## LIGHTNING PROTECTION

- AIR TERMINAL 20mm O.D. X 450mm SOLID COPPER, NICKEL PLATED ON ADHESIVE BASE
- EQ EQUIPMENT AIR TERMINAL
- TEST WELL WITH GROUND ROD(S)
- GROUND ROD
- G GROUND PLATE
- MAIN GROUND CONDUCTOR CONCEALED WITHIN CONSTRUCTION
- MAIN GROUND CONDUCTOR EXPOSED ON EXPOSED ON BUILDING EXTERIOR SURFACE
- GROUND CONDUCTOR CAD WELDED TO GROUND CABLE OR EQUIPMENT
- GROUND ROD TRIPOD, SPACED 3 METERS APART.
- LEVEL TO LEVEL CABLE

## LIGHTING

- LIGHTING FIXTURE – SEE FIXTURE SCHEDULE FOR MORE INFORMATION
- EMERGENCY LIGHTING FIXTURE – SEE FIXTURE SCHEDULE FOR MORE INFORMATION
- DOWNLIGHT
- LIGHTING FIXTURE ON NORMAL/EMERGENCY
- WALL MOUNTED LIGHT FIXTURE
- [E] EXIT SIGN – DIRECTIONAL ARROWS AS INDICATED ON DRAWINGS
- REMOTE HEAD FOR BATTERY PACK
- $ SINGLE POLE SWITCH – 20A RATED
- $^{3}$ 3–WAY SWITCH – 20A RATED
- $^{4}$ 4–WAY SWITCH – 20A RATED
- [LC] LIGHTING CONTACTOR
- POLE MOUNTED SITE LIGHTING FIXTURE– NUMBER OF FIXTURES PER POLE AS INDICATED ON DRAWINGS
- EXTERIOR DIRECTIONAL LIGHTING FIXTURE
- a SMALL CASE LETTERS REPRESENTS LAMP(S) / SWITCHES.

## TELECOMMUNICATIONS

- TELEPHONE OUTLET(S) @ 45cm AFF. U.N.O. WITH 20mm RACEWAY TERMINATED TO TELEDATA TERMINAL BOARD.
- DATA OUTLET(S) @ 45cm AFF. U.N.O. WITH 20mm RACEWAY TERMINATED TO TELEDATA TERMINAL BOARD.

## TELECOMMUNICATIONS (CONTINUED)

- COMBINATION TELEPHONE/DATA OUTLET(S) @ 45cm AFF. U.N.O. WITH 27mm RACEWAY TERMINATED TO TELEDATA TERMINAL BOARD.
- W WALL MTD. TELEPHONE OUTLET WITH 20mm RACEWAY TO TELEDATA TERMINAL BOARD.
- (x)T INDICATES NUMBER OF TELEPHONE OUTLET(S) AND ASSOCIATED CABLING
- (x)D INDICATES NUMBER OF DATA OUTLET(S) AND ASSOCIATED CABLING
- (x)TF INDICATES NUMBER OF TELEPHONE OUTLETS AND ASSOCIATED CABLING WITH 1 OUTLET AND CABLE DEDICATED FOR FAX

## SINGLE LINE SYMBOLS

- SWITCH
- BREAKER
- FUSE
- TRANSFORMER
- GROUND
- CONTACT (NORMALLY OPEN)
- CONTACT (NORMALLY CLOSED)
- TRANSFER SWITCH
- CURRENT TRANSFORMER
- INDICATES NEW ELECTRICAL EQUIPMENT
- C INDICATES NEW CONTROL WIRING AND CONDUIT
- EQUIPMENT OUTLINE

## MISCELLANEOUS

- BRANCH CIRCUIT WIRING, SURFACE MOUNTED ON WALLS
- BRANCH CIRCUIT WIRING – 6mm²
- BRANCH CIRCUIT WIRING – UNDER FLOOR
- HOME RUN BACK TO PANEL
- CONDUIT TURNED DOWN
- CONDUIT TURNED UP
- LV LOW VOLTAGE WIRING AND CONDUIT
- INDICATES CONTINUATION OF LINE

## FIRE ALARM

- FACP FIRE ALARM CONTROL PANEL WITH BATTERY BACKUP
- [F] FIRE ALARM PULL STATION

## FIRE ALARM (CONTINUED)

- [F] FIRE ALARM STROBE – WALL MOUNTED
- [F] FIRE ALARM AUDIBLE/STROBE – WALL MOUNTED
- [F] FIRE ALARM HORN/STROBE – WALL MOUNTED
- (S) SMOKE DETECTOR
- (H) HEAT DETECTOR CEILING MOUNTED
- D DUCT DETECTOR – PROVIDED BY EC, INSTALLED BY MC AND CONNECTED BY EC

## DENOTATIONS & ABBREVIATIONS

| | |
|---|---|
| AFF | ABOVE FINISHED FLOOR |
| C | CEILING MOUNTED |
| E | EMERGENCY |
| EC | ELECTRICAL CONTRACTOR |
| EPO | EMERGENCY POWER OFF |
| EXP | EXPLOSION PROOF |
| F | FIRE ALARM |
| FF | FLUSH FLOOR MOUNTED |
| FL | FLUORESCENT |
| FO | FIBER OPTIC |
| FSS | FUSED SAFETY SWITCH |
| GF | GROUND FAULT INTERRUPTER |
| GC | GENERAL CONTRACTOR |
| IG | ISOLATED GROUND |
| K | KEY |
| LV | LOW VOLTAGE |
| M | MOTOR |
| MC | MECHANICAL CONTRACTOR |
| NE | NORMAL/EMERGENCY |
| NFSS | NON–FUSED SAFETY SWITCH |
| PA | PAGING SYSTEM |
| PLC | PLUMBING CONTRACTOR |
| SL | SINGLE LINE |
| T | TELEPHONE |

## DENOTATIONS & ABBREVIATIONS (CONT.)

| | |
|---|---|
| TP | TAMPER PROOF |
| UE | UNDERGROUND ELECTRIC |
| W | WALL MOUNTED |
| WP | WEATHERPROOF WITH GROUND FAULT INTERRUPTION |
| WT | WATER TIGHT |

## GENERAL PROJECT NOTES:

G1. UNLESS OTHERWISE NOTED, PROVIDE ALL EQUIPMENT SHOWN ON THE PLANS. THE ELECTRICAL CONTRACTOR SHALL COORDINATE ALL SYMBOLS SHOWN ON THE PLANS WITH THE SYMBOL LIST. IT SHALL BE THE RESPONSIBILITY OF THE CONTRACTOR TO VERIFY THE INTENT OF ANY SYMBOL THAT IS SHOWN ON THE PLANS AND NOT INDICATED ON THE SYMBOL LIST WITH THE ENGINEER PRIOR TO BID.

G2. THE CONTRACTOR SHALL VERIFY THE LOCATION OF ALL UNDERGROUND UTILITIES WITHIN THE CONSTRUCTION AREA THREE (3) WORKING DAYS NOTICE BEFORE COMMENCING DIGGING. NOTIFY THE LOCAL AUTHORITY HAVING JURISDICTION AND WAIT THE REQUIRED TIME BEFORE COMMENCING TO DIG.

G3. THE CONTRACTOR SHALL COORDINATE CONDUIT RUNS, LIGHTING FIXTURES AND OTHER EQUIPMENT LOCATIONS WITH THE OTHER TRADE CONTRACTORS TO AVOID CONFLICTS.

G4. WHERE VOLTAGES AND FREQUENCIES ON THE DRAWINGS AND IN THE SPECIFICATIONS DIFFER FROM THE LOCAL ONES, ALL WORK SHALL BE PERFORMED USING THE LOCAL VOLTAGES AND FREQUENCIES.

G5. THE MINIMUM WIRE SIZE ON THE PROJECT SHALL BE 4mm². THE MINIMUM CONDUIT SIZE SHALL BE 20mm. THE MINIMUM BREAKER SIZE SHALL BE 20 AMPS.

G6. THE CONTRACTOR SHALL PUT A MAXIMUM OF 6 DUPLEX RECEPTACLES ON A 20A SINGLE POLE CIRCUIT.

G7. WHERE THE 1010 SCOPE REVIEW, 1015 TECHNICAL REVIEW, DRAWINGS, AND SPECIFICATIONS DIFFER FROM AMERICAN CODES OR STANDARDS, THE 1010, 1015, DRAWINGS, AND SPECIFICATIONS SHALL RULE.

G8. ALL CONDUIT AND DEVICES SHALL BE SURFACE MOUNTED UNLESS OTHERWISE INDICATED.

G9. CONTRACTOR SHALL COORDINATE ALL WORK WITH ALL OTHER TRADES TO ENSURE ALL WORK IS COMPLETED IN A PROFESSIONAL, WORKMAN–LIKE MANNER.

APPROVED:

A/E DESIGNER OF RECORD

SEAL:

COMMONWEALTH OF PENNSYLVANIA
REGISTERED PROFESSIONAL
JOSEPH R GAUS
1/29/10
ENGINEER
PE-074251

US ARMY CORPS OF ENGINEERS
AFGHANISTAN ENGINEER DISTRICT

| Mark | Description | Date | Appr. |
|---|---|---|---|
| | | | |

| Mark | Description | Date | Appr. |
|---|---|---|---|
| | | | |

U.S. ARMY CORPS OF ENGINEERS
AFGHANISTAN ENGINEER DISTRICT
APO AE 96338

Michael Baker Jr, Inc
A unit of Michael Baker Corporation
Airside Business Park
100 Airside Drive
Moon Township, PA 15108
www.mbakercorp.com

Designed by: JRG
Dwn by: BJB
Ckd by: JRG
Reviewed by: JRG
Submitted by: BAKER

Date: 2/23/10
Design file no.
Drawing code:
Rev: 0
File name:
Plot date:
Plot scale:

AFGHAN NATIONAL ARMY
REGIONAL MILITARY TRAINING CENTER
STANDARD DESIGN

RMTC HEADQUARTERS BUILDING
# ELECTRICAL SYMBOLS & ABBREVIATIONS

Sheet reference number:
E–001

## GENERAL NOTES:

1. REFER TO DRAWING #E-001 FOR THE ELECTRICAL SYMBOLS LIST.
2. EXIT SIGNS SHALL BE WIRED AHEAD OF ANY LOCAL SWITCHING ON CIRCUITS. SEE WIRING DIAGRAM DETAIL 6, ON DRAWING #E-501.
3. REFER TO DRAWING #E-601 FOR THE LIGHTING FIXTURE SCHEDULE.
4. REFER TO DRAWING #E-501 FOR THE POWER RISER.
5. REFER TO DRAWING #E-602 FOR PANEL SCHEDULES.
6. LIGHT FIXTURES INDICATED AS EMERGENCY SHALL BE PROVIDED WITH A BATTERY BACKUP BALLAST. SEE WIRING DIAGRAM DETAIL 7, ON DRAWING #E-501.

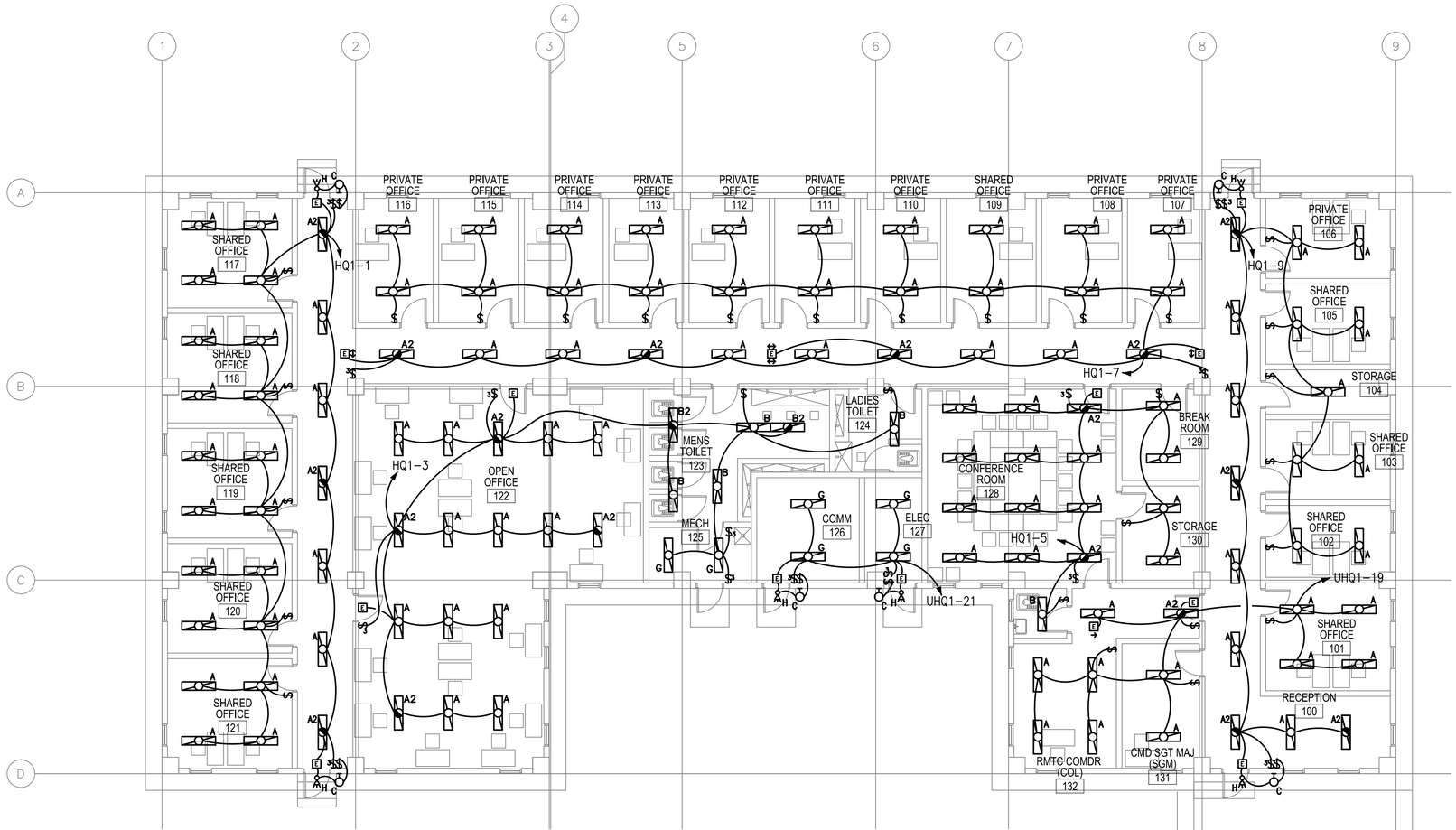


1 / E-101

## RMTC HEADQUARTERS BUILDING (HQ) FLOOR PLAN - LIGHTING

SCALE: 1:100

0 2000 4000

SCALE: 1:100

US ARMY CORPS OF ENGINEERS
AFGHANISTAN ENGINEER DISTRICT

| Mark | Description | Date | Appr. |
|---|---|---|---|
| | | | |

| Mark | Description | Date | Appr. |
|---|---|---|---|
| | | | |

Rev: 0
Date: 2/23/10
Design file no.
Drawing code:
File name:
Plot date:
Plot scale:

Designed by: RAJ
Dwn by: BJB
Ckd by: JRG
Reviewed by: JRG
Submitted by: BAKER

U.S. ARMY CORPS OF ENGINEERS
AFGHANISTAN ENGINEER DISTRICT
APO AE 96338


Michael Baker Jr., Inc.
A unit of Michael Baker Corporation
Airside Business Park
100 Airside Drive
Moon Township, PA 15108
www.mbakercorp.com


AFGHAN NATIONAL ARMY
REGIONAL MILITARY TRAINING CENTER
STANDARD DESIGN

RMTC HEADQUARTERS BUILDING
ELECTRICAL LIGHTING PLAN

APPROVED:

A/E DESIGNER OF RECORD

SEAL:

COMMONWEALTH OF PENNSYLVANIA
REGISTERED PROFESSIONAL ENGINEER
JOSEPH R. GAUS
PE-074251
12/21/10

Sheet reference number:
E-101

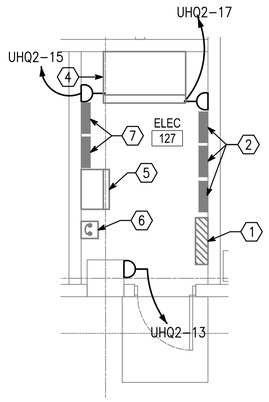


2 / E-102

## RMTC HEADQUARTERS BUILDING
## FLOOR PLAN - ENLARGED ELECTRICAL CLOSET LAYOUT

SCALE: 1:50

## GENERAL NOTES:

1. REFER TO DRAWING #E-001 FOR THE ELECTRICAL SYMBOLS LIST.
2. REFER TO DRAWING #E-501 FOR THE POWER RISER.
3. REFER TO DRAWING #E-602 FOR PANEL SCHEDULES.
4. COORDINATE EXACT MOUNTING LOCATION OF DISCONNECTING MEANS FOR MECHANICAL AND PLUMBING EQUIPMENT IN THE FIELD.
5. FUSIBLE SAFETY SWITCHES THAT ARE NOT OTHERWISE IDENTIFIED SHALL BE 380V, 1P, 30A FUSED SAFETY SWITCHES WITH 20A FUSES.

## NUMBERED NOTES:

(1) PANEL MDP-HQ

(2) PANEL HQ1, HQ2, HQ3

(3) SEE ENLARGED PLAN THIS DRAWING FOR DEVICE LOCATIONS FOR THIS AREA.

(4) 100kVA UPS SYSTEM: 220/380V, 3ø INPUT. ELECTRICAL CONTRACTOR SHALL BE RESPONSIBLE FOR DE-RATING THE UPS BASED ON SITE ALTITUDE AND AMBIENT TEMPERATURE CONDITIONS.

(5) AUTOMATIC TRANSFER SWITCH: 300A/3P, 380V/3ø

(6) SURFACE MOUNTED 220/380V, 3ø, 300A/3P ENCLOSED CIRCUIT BREAKER FOR INCOMING 300A ELECTRICAL SERVICE TO BUILDING.

(7) PANELS UHQ1 & UHQ2

(8) PROVIDE METALLIC RACEWAY POWER POLE TO SERVE WORKSTATIONS IN THIS LOCATION. RECEPTACLES SHALL BE AS INDICATED. RACEWAY SHALL BE DUAL CHANNEL AND SIZED TO CARRY THE DATA CABLING AND DROPS ON DRAWING #E-104 AS WELL AS THE POWER CABLING AND RECEPTACLES SHOWN ON THIS DRAWING.

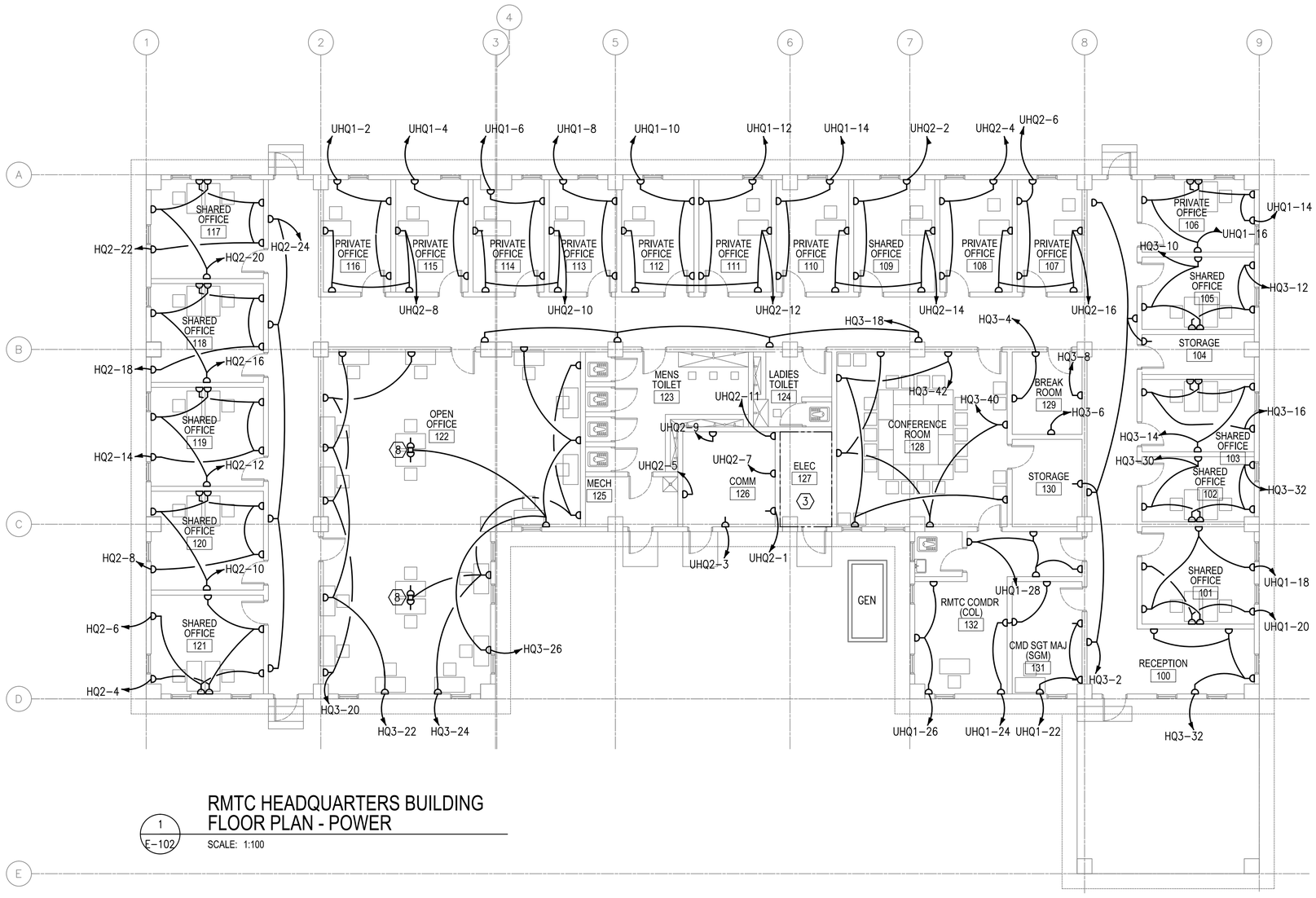


1 / E-102

## RMTC HEADQUARTERS BUILDING
## FLOOR PLAN - POWER

SCALE: 1:100

0 2000 4000
SCALE: 1:100

US ARMY CORPS OF ENGINEERS
AFGHANISTAN ENGINEER DISTRICT

| Mark | Description | Date | Appr. |
|---|---|---|---|

Rev: 0

Date: 2/23/10
Design file no.
Drawing code:
File name:
Plot date:
Plot scale:

Designed by: JRG
Dwn by: BJB
Ckd by: JRG
Reviewed by: JRG
Submitted by: BAKER

U.S. ARMY CORPS OF ENGINEERS
AFGHANISTAN ENGINEER DISTRICT
APO AE 96338


Michael Baker Jr., Inc
A unit of Michael Baker Corporation
Airside Business Park
100 Airside Drive
Moon Township, PA 15108
www.mbakercorp.com


AFGHAN NATIONAL ARMY
REGIONAL MILITARY TRAINING CENTER
STANDARD DESIGN

RMTC HEADQUARTERS BUILDING
ELECTRICAL POWER PLAN

APPROVED:

A/E DESIGNER OF RECORD

SEAL:

COMMONWEALTH OF PENNSYLVANIA
REGISTERED PROFESSIONAL
JOSEPH R. GAUS
ENGINEER
PE-074251

Sheet reference number:
E-102

## GENERAL NOTES:

1. REFER TO DRAWING #E-001 FOR THE ELECTRICAL SYMBOLS LIST.
2. REFER TO DRAWING #E-501 FOR THE POWER RISER.
3. REFER TO DRAWING #E-602 FOR PANEL SCHEDULES.
4. COORDINATE EXACT MOUNTING LOCATION OF DISCONNECTING MEANS FOR MECHANICAL AND PLUMBING EQUIPMENT IN THE FIELD.
5. FUSIBLE SAFETY SWITCHES THAT ARE NOT OTHERWISE IDENTIFIED SHALL BE 380V, 1P, 30A FUSED SAFETY SWITCHES WITH 20A FUSES.

## NUMBERED NOTES:

1. SEE ENLARGED PLAN DRAWING #E-102 FOR DEVICE AND EQUIPMENT LOCATIONS THIS AREA.
2. PROVIDE POWER CONNECTION TO ELECTRIC UNIT HEATER #4. SEE DRAWINGS #E-602 AND #M-101 FOR MORE INFORMATION.
3. PROVIDE POWER CONNECTION TO ELECTRIC UNIT HEATER #2. SEE DRAWINGS #E-602 AND #M-101 FOR MORE INFORMATION.
4. PROVIDE POWER CONNECTION TO EXHAUST FAN #1. SEE DRAWINGS #E-602 AND #M-101 FOR MORE INFORMATION.
5. PROVIDE POWER CONNECTION TO EXHAUST FAN #2. SEE DRAWINGS #E-602 AND #M-101 FOR MORE INFORMATION.
6. CONCRETE EQUIPMENT PAD
7. PROVIDE POWER CONNECTION TO EXHAUST FAN #4. SEE DRAWINGS #E-602 AND #M-101 FOR MORE INFORMATION.
8. PROVIDE POWER CONNECTION TO EXHAUST FAN #5. SEE DRAWINGS #E-602 AND #M-101 FOR MORE INFORMATION.
9. PROVIDE POWER CONNECTION TO EXHAUST FAN #6. SEE DRAWINGS #E-602 AND #M-101 FOR MORE INFORMATION.
10. PROVIDE A 220/380V, 3ø, 50Hz, 150kW GENERATOR ON CONCRETE EQUIPMENT PAD IN A WEATHERPROOF HOUSING. PROVIDE (1) METER CLEARANCE AROUND ALL SIDES OF GEN-SET ENCLOSURE. ELECTRICAL CONTRACTOR SHALL BE RESPONSIBLE FOR DE-RATING THE GENERATOR AND UPS BASED ON SITE ALTITUDE AND AMBIENT TEMPERATURE CONDITIONS. PROVIDE A 50KW LOAD BANK INTEGRAL TO THE WEATHERPROOF GENERATOR ENCLOSURE. IN THE EVENT NORMAL POWER IS LOST TO THE BUILDING WHILE THE GENERATOR IS RUNNING A TEST USING THE LOAD BANK, THE GENERATOR SHALL AUTOMATICALLY END THE TEST AND TRANSFER POWER OVER TO THE BUILDING. THIS ENTIRE OPERATION SHALL TAKE LESS THAN 10 SECONDS.
11. PROVIDE EXTERIOR DOUBLE WALL TANK FOR GENERATOR TO PROVIDE 3 DAYS OF FUEL STORAGE.
12. NEMA 3R, 380V, 3P, 30A FUSED DISCONNECT FUSED AT 20A. SEE PLUMBING DRAWINGS FOR EXACT LOCATION OF WATER HEATER.
13. SEE DRAWING #E-602 FOR WIRE AND CONDUIT SIZE.
14. PROVIDE POWER CONNECTION TO ELECTRIC UNIT HEATER #5. SEE DRAWINGS #E-602 AND #M-101 FOR MORE INFORMATION.
15. PROVIDE POWER CONNECTION TO OUTDOOR UNIT OF SPLIT SYSTEM HEAT PUMP. SEE DRAWINGS #M-101 AND #E-602 FOR MORE INFORMATION.
16. THE DISCONNECTING MEANS FOR THIS PIECE OF EQUIPMENT SHALL BE IN A NEMA 3R ENCLOSURE.
17. PROVIDE POWER CONNECTION TO INDOOR UNIT OF SPLIT SYSTEM HEAT PUMP. SEE DRAWINGS #M-101 AND #E-602 FOR MORE INFORMATION.
18. PROVIDE POWER CONNECTION TO EXHAUST FAN #3. SEE DRAWINGS #E-602 AND #M-101 FOR MORE INFORMATION.
19. PROVIDE POWER CONNECTION TO EXHAUST FAN #7. SEE DRAWINGS #E-602 AND #M-101 FOR MORE INFORMATION.

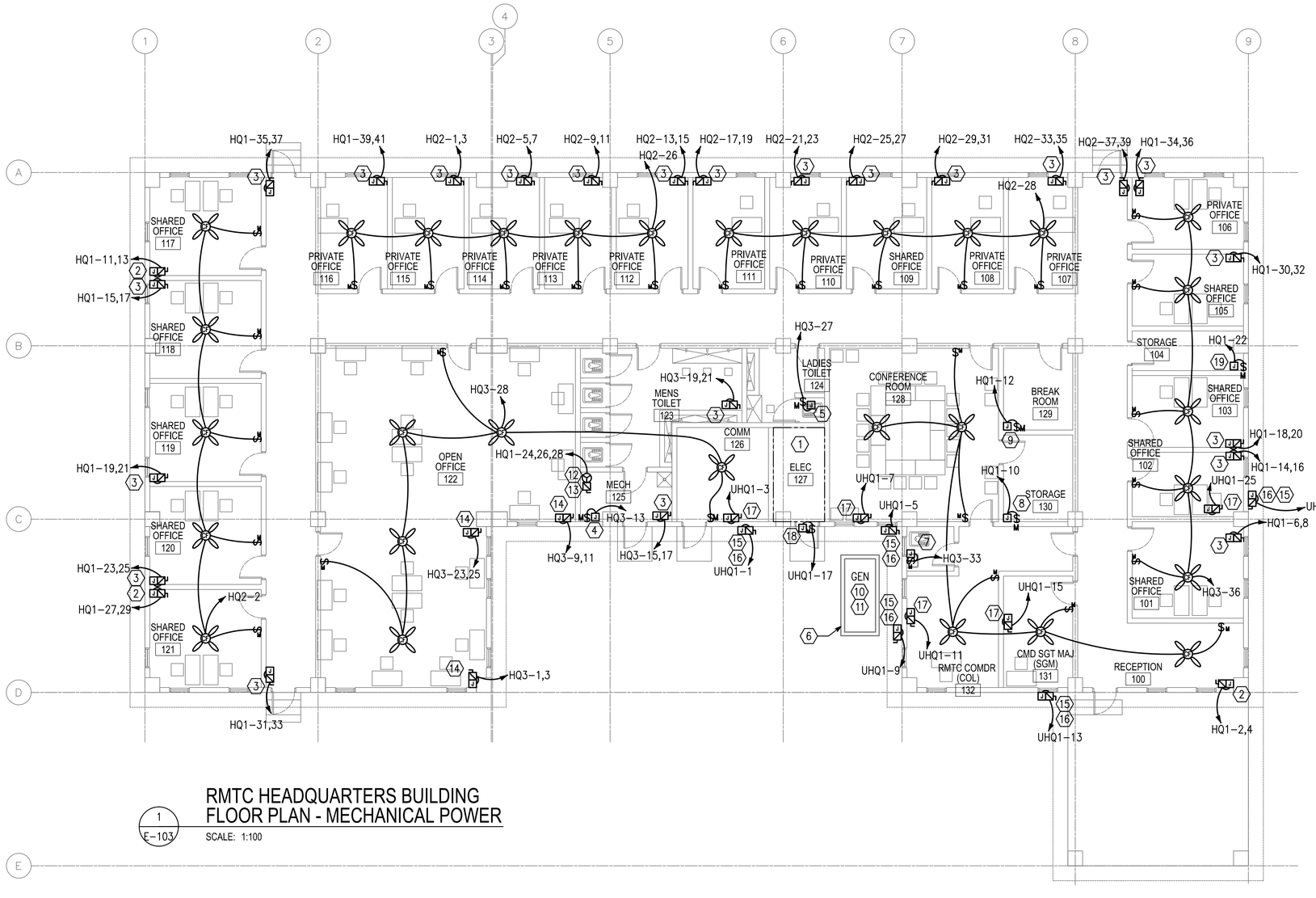


1 E-103

## RMTC HEADQUARTERS BUILDING FLOOR PLAN - MECHANICAL POWER

SCALE: 1:100

0 2000 4000
SCALE: 1:100

APPROVED:

A/E DESIGNER OF RECORD

SEAL:

COMMONWEALTH OF PENNSYLVANIA
REGISTERED PROFESSIONAL
JOSEPH R GAUS
ENGINEER
PE-074251
1/21/10

US ARMY CORPS OF ENGINEERS
AFGHANISTAN ENGINEER DISTRICT

| Mark | Description | Date | Appr. |
|---|---|---|---|
| | | | |

| Mark | Description | Date | Appr. |
|---|---|---|---|
| | | | |

Rev: 0

Date: 2/23/10
Design file no.
Drawing code:
File name:
Plot date:
Plot scale:

Designed by: JRG
Dwn by: BJB
Ckd by: JRG
Reviewed by: JRG
Submitted by: BAKER

U.S. ARMY CORPS OF ENGINEERS
AFGHANISTAN ENGINEER DISTRICT
APO AE 96338

Michael Baker Jr., Inc.
A unit of Michael Baker Corporation
Airside Business Park
100 Airside Drive
Moon Township, PA 15108
www.mbakercorp.com

AFGHAN NATIONAL ARMY
REGIONAL MILITARY TRAINING CENTER
STANDARD DESIGN

RMTC HEADQUARTERS BUILDING
ELECTRICAL MECHANICAL POWER PLAN

Sheet reference number:
E-103

## GENERAL NOTES:

1. REFER TO DRAWING #E-001 FOR THE ELECTRICAL SYMBOLS LIST.
2. REFER TO DRAWING #E-501 FOR THE POWER RISER.
3. REFER TO DRAWING #E-602 FOR PANEL SCHEDULES.
4. COORDINATE EXACT MOUNTING LOCATION OF DISCONNECTING MEANS FOR MECHANICAL AND PLUMBING EQUIPMENT IN THE FIELD.
5. FUSIBLE SAFETY SWITCHES THAT ARE NOT OTHERWISE IDENTIFIED SHALL BE 380V, 1P, 30A FUSED SAFETY SWITCHES WITH 20A FUSES.

## NUMBERED NOTES:

(1) SEE ENLARGED PLAN DRAWING #E-102 FOR DEVICE AND EQUIPMENT LOCATIONS THIS AREA.

(2) INSTALL (4) 50mm CONDUITS PASSING FROM THE COMMUNICATIONS ROOM TO THE ROOF OF THE BUILDING. THE ROOF PENETRATION SHALL HAVE A WEATHERPROOF BOX ON TOP AND SHALL BE FLASHED OR PATCHED AS NECESSARY TO PREVENT WATER LEAKAGE. THE (4) 50mm OR LARGER COMMUNICATION CONDUITS SHALL BE TYPICAL WITH THE FOLLOWING INSTALLATION CRITERIA: MANHOLE OR HAND-HOLE SYSTEMS SHALL HAVE NO MORE THAN 150 METERS BETWEEN ACCESS POINTS. PER NEC CODE, THERE SHALL NOT BE MORE THAN 3 BENDS PER RUN OF CONDUITS. THE RADIUS BENDS SHALL BE BETWEEN 609mm TO 914mm RADIUS BENDS.

(3) PROVIDE METALLIC RACEWAY POWER POLE TO SERVE WORKSTATIONS IN THIS LOCATION. DATA DROPS SHALL BE AS INDICATED. RACEWAY SHALL BE DUAL CHANNEL AND SIZED TO CARRY THE DATA CABLING AND DROPS ON THIS DRAWING AS WELL AS THE POWER CABLING AND RECEPTACLES SHOWN ON DRAWING #E-102.

(4) PROVIDE CONDUIT STUB UP IN THE ROOM FOR INCOMING TELECOMMUNICATIONS SERVICES FROM THE CENTRAL COMMUNICATIONS SYSTEM IN THE GARRISON.

(5) PROVIDE A 1200mm X 2400mm SHEET OF PLYWOOD PAINTED WITH FIRE RESISTANT PAINT FOR MOUNTING TELECOMMUNICATIONS EQUIPMENT.

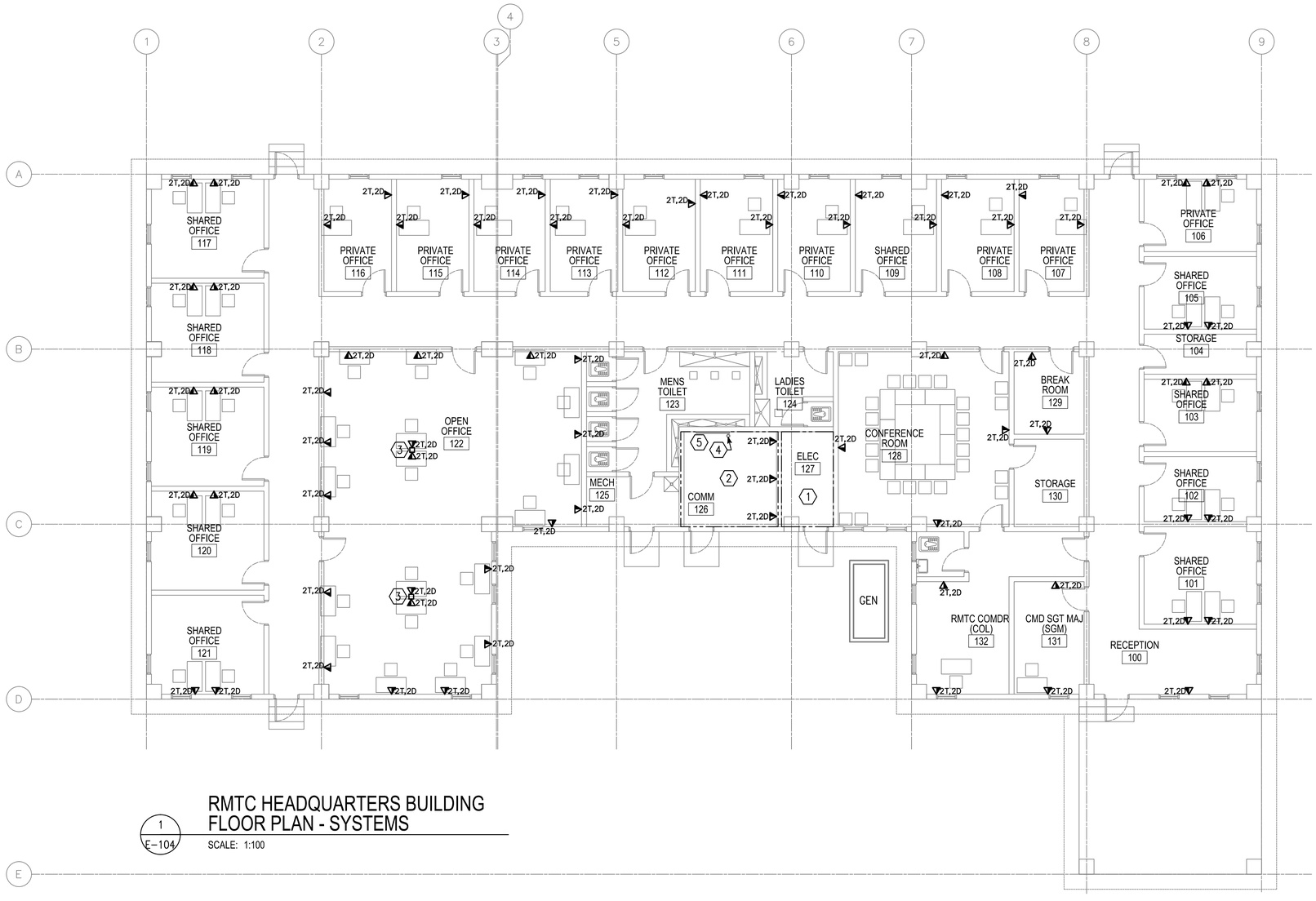


1 / E-104

# RMTC HEADQUARTERS BUILDING FLOOR PLAN - SYSTEMS

SCALE: 1:100

0 2000 4000

SCALE: 1:100

APPROVED:

A/E DESIGNER OF RECORD

SEAL:

COMMONWEALTH OF PENNSYLVANIA REGISTERED PROFESSIONAL ENGINEER JOSEPH R. GAUS 1/14/10 PE-074251

US ARMY CORPS OF ENGINEERS
AFGHANISTAN ENGINEER DISTRICT

| Mark | Description | Date | Appr. |
|---|---|---|---|
| | | | |

| Mark | Description | Date | Appr. |
|---|---|---|---|
| | | | |

Rev: 0
Date: 2/23/10
Design file no.
Drawing code:
File name:
Plot date:
Plot scale:

Designed by: JRG
Dwn. by: BJB
Ckd by: JRG
Reviewed by: JRG
Submitted by: BAKER

U.S. ARMY CORPS OF ENGINEERS
AFGHANISTAN ENGINEER DISTRICT
APO AE 96338


Michael Baker Jr., Inc
A unit of Michael Baker Corporation
Airside Business Park
100 Airside Drive
Moon Township, PA 15108
www.mbakercorp.com


AFGHAN NATIONAL ARMY
REGIONAL MILITARY TRAINING CENTER
STANDARD DESIGN

RMTC HEADQUARTERS BUILDING
ELECTRICAL SYSTEMS PLAN

Sheet reference number:
E-104

## GENERAL NOTES:

1. REFER TO DRAWING #E-001 FOR THE ELECTRICAL SYMBOLS LIST.

## NUMBERED NOTES:

1. (1) 120.0mm² BARE, TINNED, COPPER COUNTERPOISE GROUND 700mm BELOW GRADE.
2. INSTALL DOWN CONDUCTOR IN 25mm SCHEDULE 80 PVC CONDUIT TO 20mm DIAMETER X 3 METERS SOLID COPPER TINNED GROUND ROD. (TYPICAL)
3. CADWELD TO BUILDING STRUCTURE AT 18 METERS ON CENTER AROUND THE ENTIRE PERIMETER OF THE BUILDING. (TYPICAL)
4. 120mm² LIGHTNING PROTECTION CABLE.
5. AIR TERMINAL. TERMINALS SHALL BE PLACED AT A MAXIMUM OF 6M ON CENTER PER NFPA 780 PARA. 4.8.2.1, AND WITHIN 0.6M OF RIDGE ENDS PER NFPA 780 PARA. 4.8 (TYPICAL)
6. 700mm MIN. (TYP) BETWEEN FOUNDATION AND GROUND LOOP.
7. GROUNDING GRID IS LESS THAN OR EQUAL TO 5 OHMS.

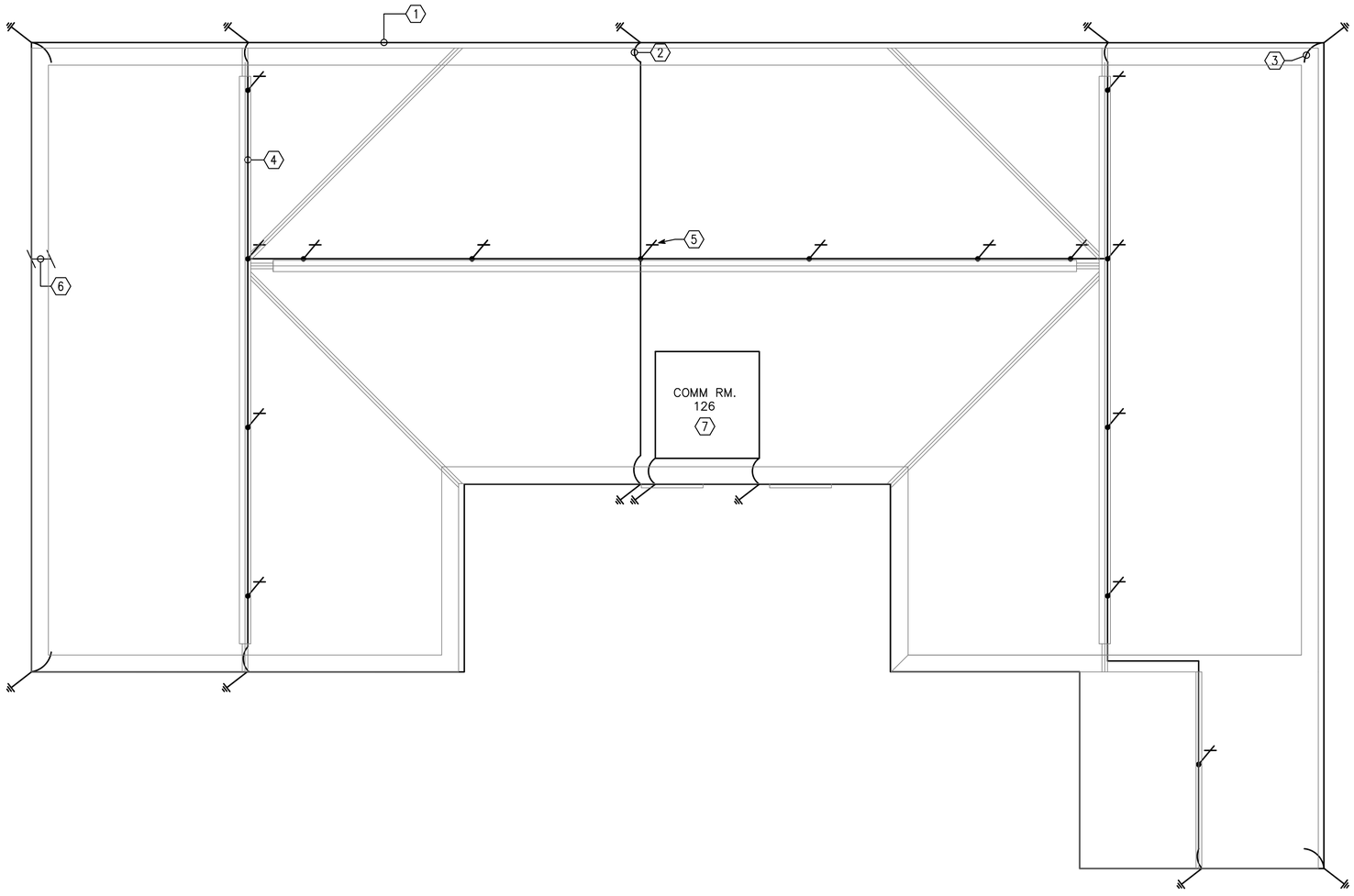


1 / E-105 RMTC HEADQUARTERS BUILDING (HQ) FLOOR PLAN - LIGHTNING PROTECTION

SCALE: 1:100

0 2000 4000

SCALE: 1:100

US ARMY CORPS OF ENGINEERS
AFGHANISTAN ENGINEER DISTRICT

| Mark | Description | Date | Appr. |
|---|---|---|---|
| | | | |

| Mark | Description | Date | Appr. |
|---|---|---|---|
| | | | |

Rev: 0
Date: 2/23/10
Design file no.
Drawing code:
File name:
Plot date:
Plot scale:

Designed by: RAJ
Dwn. by: BJB
Ckd by: JRG
Reviewed by: JRG
Submitted by: BAKER

U.S. ARMY CORPS OF ENGINEERS
AFGHANISTAN ENGINEER DISTRICT
APO AE 96338


Michael Baker Jr., Inc
A unit of Michael Baker Corporation
Airside Business Park
100 Airside Drive
Moon Township, PA 15108
www.mbakercorp.com


AFGHAN NATIONAL ARMY
REGIONAL MILITARY TRAINING CENTER
STANDARD DESIGN

RMTC HEADQUARTERS BUILDING
ELECTRICAL LIGHTNING PROTECTION PLAN

APPROVED:

A/E DESIGNER OF RECORD

SEAL:

COMMONWEALTH OF PENNSYLVANIA
REGISTERED PROFESSIONAL ENGINEER
JOSEPH R. GAUS
2/24/10
PE-074251

Sheet reference number:
E-105

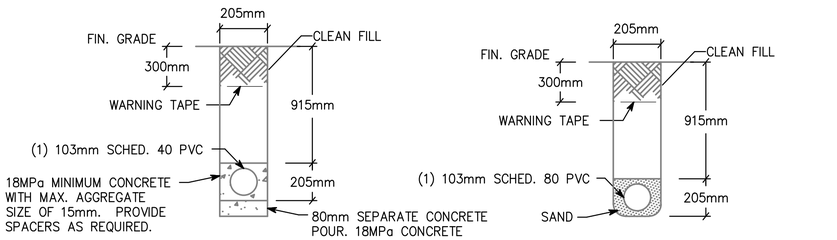


NOTE: PVC CONDUIT SHALL BE DIRECT BURIED SCHEDULE 80 FOR NO TRAFFIC AREAS AND CONCRETE-ENCASED SCHEDULE 40 FOR UNDER ROADWAYS OR TRAFFIC AREAS.

1 E-501 **TYPICAL DUCT BANK DETAILS FOR CONDUIT IN SAND OR CONCRETE**

SCALE: N.T.S.

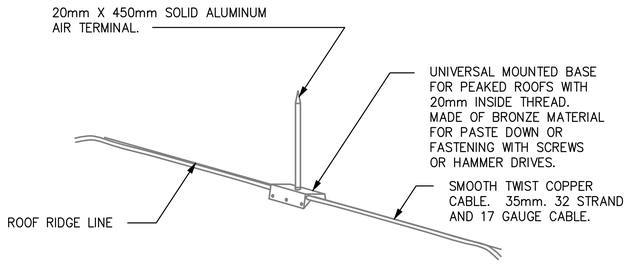


3 E-501 **LIGHTNING PROTECTION AIR TERMINAL DETAIL**

SCALE: N.T.S.

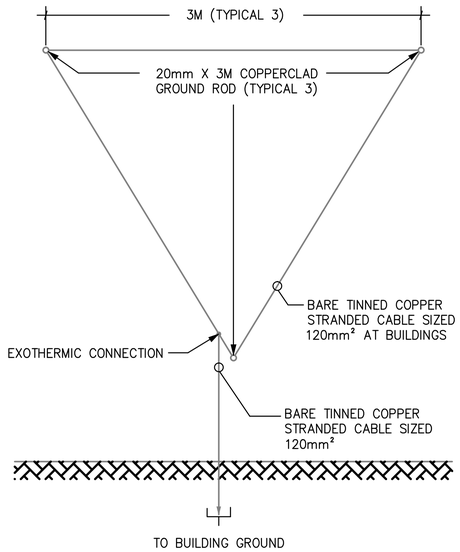


5 E-501 **GROUND TRIPOD SYSTEM DETAIL - PLAN**

SCALE: N.T.S.

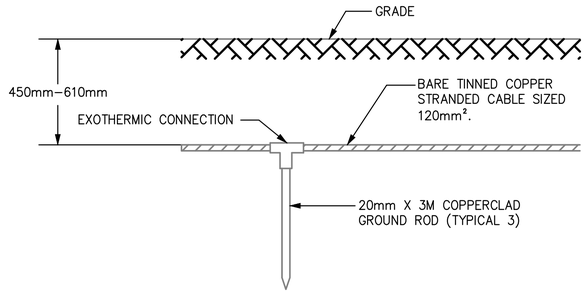


2 E-501 **GROUND TRIPOD SYSTEM DETAIL - ELEVATION**

SCALE: N.T.S.

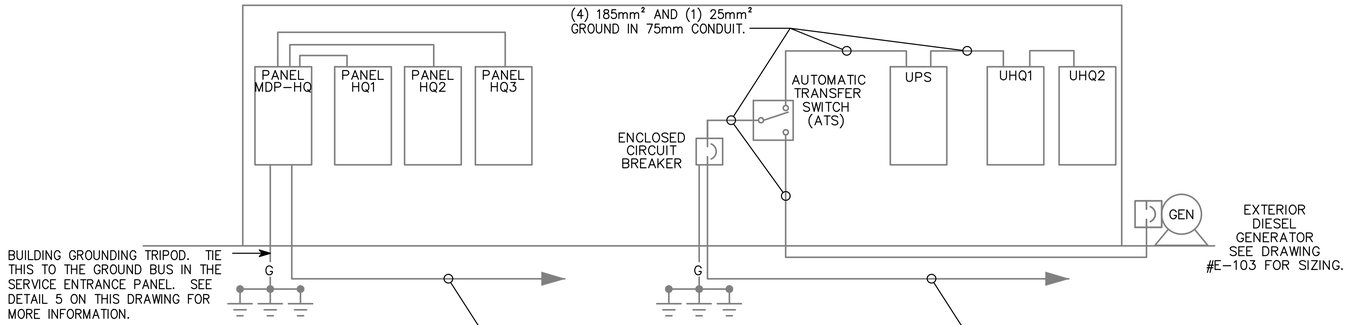


4 E-501 **HEADQUARTERS RISER DIAGRAM**

SCALE: N.T.S.

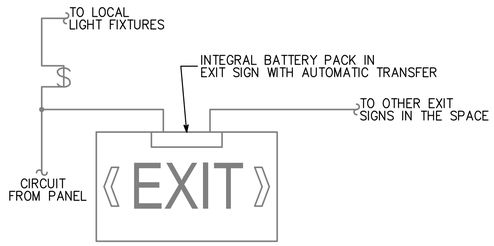


6 E-501 **EXIT SIGN WIRING DIAGRAM**

SCALE: N.T.S.

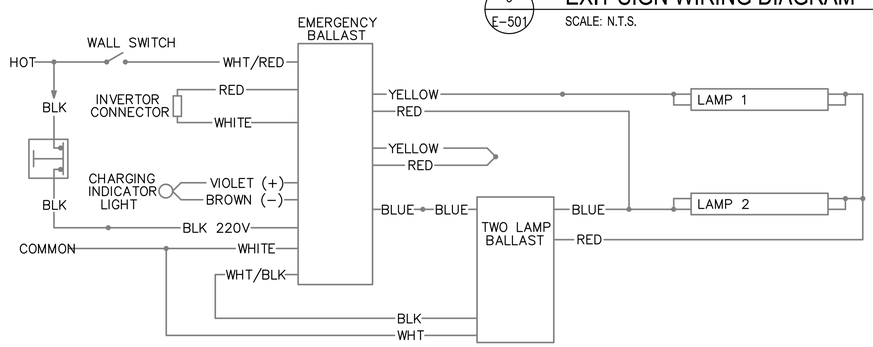


7 E-501 **EMERGENCY FIXTURE WIRING DIAGRAM**

SCALE: N.T.S.

APPROVED:

A/E DESIGNER OF RECORD

SEAL:

COMMONWEALTH OF PENNSYLVANIA REGISTERED PROFESSIONAL JOSEPH R. GAUS ENGINEER PE-074251

US ARMY CORPS OF ENGINEERS
AFGHANISTAN ENGINEER DISTRICT

| Mark | Description | Date | Appr. |
|---|---|---|---|

Rev: 0
Date: 2/23/10
Design file no.
Drawing code:
File name:
Plot date:
Plot scale:

Designed by: RAJ
Dwn. by: BJB
Ckd by: JRG
Reviewed by: JRG
Submitted by: BAKER

U.S. ARMY CORPS OF ENGINEERS
AFGHANISTAN ENGINEER DISTRICT
APO AE 96338

*Michael Baker Jr., Inc*
*A unit of Michael Baker Corporation*
Airside Business Park
100 Airside Drive
Moon Township, PA 15108
www.mbakercorp.com

AFGHAN NATIONAL ARMY
REGIONAL MILITARY TRAINING CENTER
STANDARD DESIGN

RMTC HEADQUARTERS BUILDING
ELECTRICAL DETAILS

Sheet reference number:
E-501

| Ⓐ LARGER OF THE TWO SIZES GIVEN IN THE TABLES BELOW | |
|---|---|
| GROUNDING ELECTRODE CONDUCTOR (BASED ON AIC RATING) | |
| AIC RATING OF SERVICE EQUIPMENT | NECESSARY GROUNDING ELECTRODE CONDUCTOR SIZE |
| 10K | (1) 35mm² |
| 14K | (1) 50mm² |
| 18K | (1) 70mm² |
| 22K | (1) 70mm² |
| 25K | (1) 70mm² |
| 30K | (1) 95mm² |
| 35K | (1) 120mm² |
| 42K | (1) 150mm² |
| 65K | (1) 185mm² |
| 100K | (1) 300mm² |
| 125K | (2) 185mm² |
| 200K | (2) 300mm² |

| GROUNDING ELECTRODE CONDUCTOR (BASED ON NEC TABLE 250.66) | |
|---|---|
| SIZE OF LARGEST UNGROUNDED SERVICE CONDUCTOR OR EQUIVALENT AREA FOR PARALLEL CONDUCTORS | NECESSARY GROUNDING ELECTRODE CONDUCTOR SIZE |
| 350 kcmil OR SMALLER | 35mm² |
| OVER 350 kcmil TO 600 kcmil | 70mm² |
| OVER 600 kcmil TO 1100 kcmil | 70mm² |
| OVER 1100 kcmil | 95mm² |
| NOTE: ALL SIZES ARE BASED ON COPPER CONDUCTORS. | |

| Ⓑ EQUIPMENT GROUNDING CONDUCTOR | |
|---|---|
| RATING OR SETTING OF AUTOMATIC OVERCURRENT DEVICE IN CIRCUIT AHEAD OF EQUIPMENT, CONDUIT, ETC, NOT EXCEEDING (AMPERES) | NECESSARY EQUIPMENT GROUNDING CONDUCTOR SIZE |
| 15 | 2.5mm² |
| 20 | 4.0mm² |
| 30 | 6.0mm² |
| 40 | 6.0mm² |
| 60 | 6.0mm² |
| 100 | 10mm² |
| 200 | 16mm² |
| 300 | 25mm² |
| 400 | 25mm² |
| 500 | 35mm² |
| 600 | 50mm² |
| 800 | 70mm² |
| 1000 | 70mm² |
| 1200 | 95mm² |
| 1600 | 120mm² |
| 2000 | 150mm² |
| 2500 | 185mm² |
| 3000 | 240mm² |
| 4000 | 300mm² |
| 5000 | 400mm² |
| 6000 | 400mm² |
| NOTE: ALL SIZES ARE BASED ON COPPER CONDUCTORS. | |

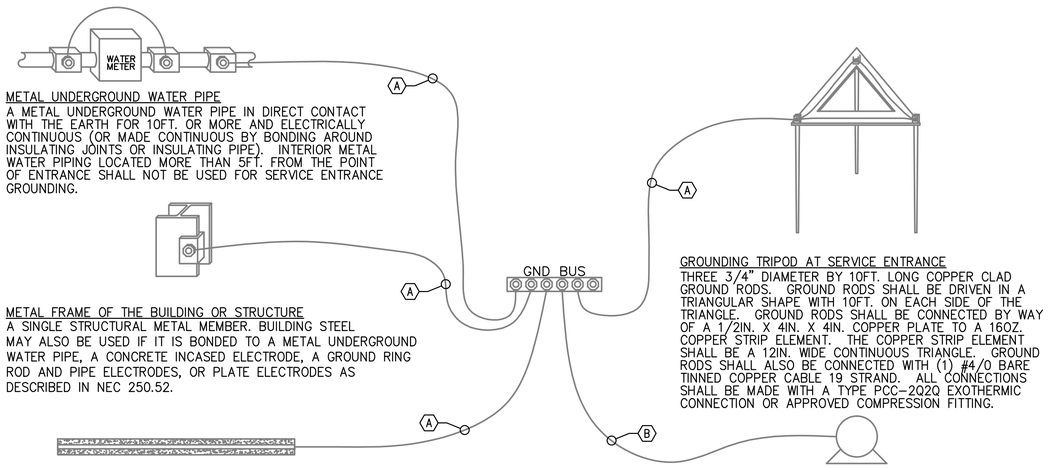


METAL UNDERGROUND WATER PIPE
A METAL UNDERGROUND WATER PIPE IN DIRECT CONTACT WITH THE EARTH FOR 10FT. OR MORE AND ELECTRICALLY CONTINUOUS (OR MADE CONTINUOUS BY BONDING AROUND INSULATING JOINTS OR INSULATING PIPE). INTERIOR METAL WATER PIPING LOCATED MORE THAN 5FT. FROM THE POINT OF ENTRANCE SHALL NOT BE USED FOR SERVICE ENTRANCE GROUNDING.

METAL FRAME OF THE BUILDING OR STRUCTURE
A SINGLE STRUCTURAL METAL MEMBER. BUILDING STEEL MAY ALSO BE USED IF IT IS BONDED TO A METAL UNDERGROUND WATER PIPE, A CONCRETE INCASED ELECTRODE, A GROUND RING ROD AND PIPE ELECTRODES, OR PLATE ELECTRODES AS DESCRIBED IN NEC 250.52.

CONCRETE ENCASED ELECTRODE
AN ELECTRODE ENCASED BY AT LEAST 2IN. OF CONCRETE , LOCATED WITHIN AND NEAR THE BOTTOM OF A CONCRETE FOUNDATION OR FOOTING THAT IS IN DIRECT CONTACT WITH THE EARTH, CONSISTING OF AT LEAST 20FT. OF ONE OR MORE BARE OR ZINC GALVANIZED OR OTHER ELECTRICALLY CONDUCTIVE COATED STEEL REINFORCING BARS OR RODS OF NOT LESS THAN 1/2" DIAMETER OR BARE COPPER CONDUCTOR NOT SMALLER THAN 4AWG.

GROUNDING TRIPOD AT SERVICE ENTRANCE
THREE 3/4" DIAMETER BY 10FT. LONG COPPER CLAD GROUND RODS. GROUND RODS SHALL BE DRIVEN IN A TRIANGULAR SHAPE WITH 10FT. ON EACH SIDE OF THE TRIANGLE. GROUND RODS SHALL BE CONNECTED BY WAY OF A 1/2IN. X 4IN. X 4IN. COPPER PLATE TO A 16OZ. COPPER STRIP ELEMENT. THE COPPER STRIP ELEMENT SHALL BE A 12IN. WIDE CONTINUOUS TRIANGLE. GROUND RODS SHALL ALSO BE CONNECTED WITH (1) #4/0 BARE TINNED COPPER CABLE 19 STRAND. ALL CONNECTIONS SHALL BE MADE WITH A TYPE PCC-2Q2Q EXOTHERMIC CONNECTION OR APPROVED COMPRESSION FITTING.

LOAD OR DOWNSTREAM PANEL
ALL LOADS IN THE BUILDING SHALL HAVE AN EQUIPMENT GROUNDING CONDUCTOR PULLED TO THEM.

1 / E-502 — SERVICE ENTRANCE GROUNDING DETAIL
SCALE: N.T.S.

BOX #-OUTLET

NOTES:
1. CABLE MARKERS-PANDUIT SELF LAMINATING TYPE PSWM. INDICATE THUS. EXAMPLE.
   "001-D1"
   "001-D2"
   "001-V1"
   "015-TV"
   IDENTIFY EACH CABLE SEGMENT AT EACH END.
2. LAMINATED NAMEPLATE-SIMILIAR TO ABOVE-SEE DETAIL.
3. SUBMIT LISTING OF NAMEPLATES FOR APPROVAL.

2 / E-502 — CABLE MARKER DETAIL
SCALE: N.T.S.

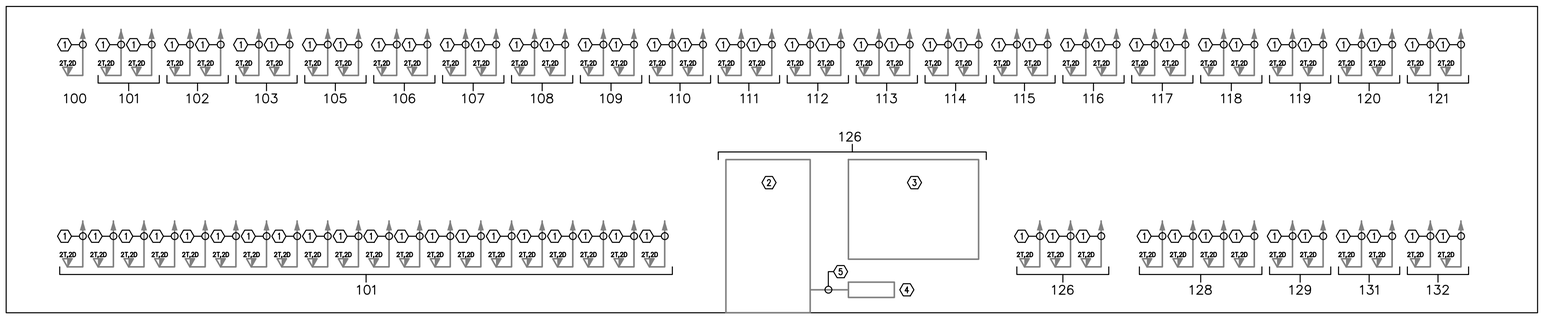


3 / E-502 — COMMUNICATIONS RISER DIAGRAM
SCALE: N.T.S.

RISER NOTES:
1. (2) CAT6 CABLE TO TELEPHONE TERMINAL BOARD & (2) CAT6 CABLE TO DATA RACK.
2. DATA EQUIPMENT RACK. SEE DETAIL THIS SHEET.
3. TELEPHONE TERMINAL BOARD. SEE DETAIL THIS SHEET.
4. COMMUNICATIONS GROUND BAR.
5. #6 GROUND WIRE.

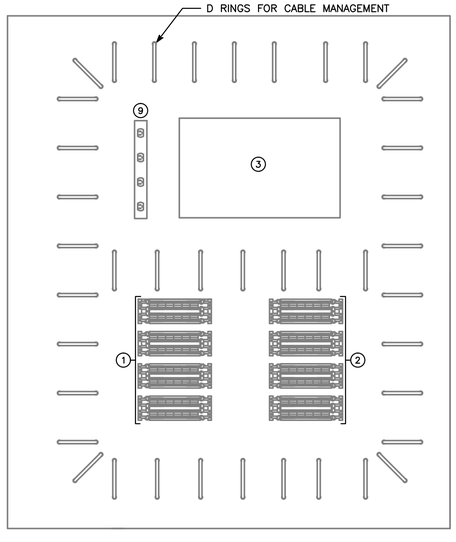


TELEPHONE TERMINAL BOARD

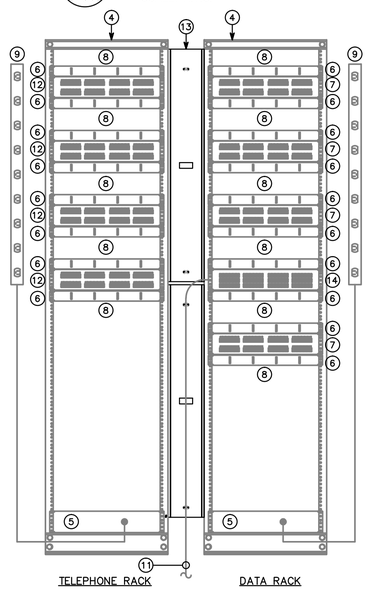

TELEPHONE RACK DATA RACK

4 / E-502 — COMMUNICATION RACK AND TERMINAL BOARD DETAIL
SCALE: N.T.S.

RACK DETAIL NUMBERED NOTES
1. (4) 100 PAIR CAT 3 110 BLOCK FOR TERMINATION OF CAT 3 HIGH PAIR COUNT CABLES FROM OTHER BUILDINGS.
2. (4) 100 PAIR CAT 3 110 BLOCKS FOR CROSS-CONNECTION OF CAT 3 TELEPHONE CABLES. PROVIDE CROSS-CONNECT CABLES TO DISTRIBUTION CABLE BLOCKS AND TO TELEPHONE SWITCH. CROSS-CONNECT EVERY INCOMING PAIR.
3. TELEPHONE ELECTRONICS BY OWNER.
4. 19" WIDE 84" HIGH FOUR POST FLOOR MOUNTED EQUIPMENT RACK. HOFFMAN #E4DR19FM51U OR EQUAL.
5. 2000VA RACKMOUNTED UPS. TRIPP-LITE #SU2200RTXL2UA.
6. HORIZONTAL WIRE MANAGEMENT (1RU). HOFFMAN #ECM19F1U WITH COVER.
7. CAT 6 48 PORT PATCH PANEL.
8. SPACE FOR OWNERS NETWORK ELECTRONICS.
9. 3' PLUG MOLDS WITH RECEPTACLES 4" OC.
10. (1) 100 PAIR CAT 3 110 BLOCK FOR TERMINATION OF DISTRIBUTION TELEPHONE PAIRS FROM THE DEMARK IN ROOM 1201.
11. OUTGOING FIBER OPTIC CABLE. EXTEND INNER DUCT INTO WIRE MANAGEMENT.
12. CAT 6 48 PORT PATCH PANEL FOR HORIZONTAL TELEPHONE CABLES THIS BUILDING.
13. VERTICAL CABLE MANAGEMENT. HOFFMAN #ECC3SF45UB WITH COVER.
14. 72 PORT FIBER OPTIC CABLE TERMINATION PANEL. TERMANATE ALL FIBER OPTIC CABLES IN PANEL WITH CONNECTORS. PROVIDE 10'-0" DUPLEX FIBER OPTIC PATCH CABLES FOR EVERY TERMINATED FIBER PAIR. COORDINATE CONNECTOR TYPES WITH THE OWNER.

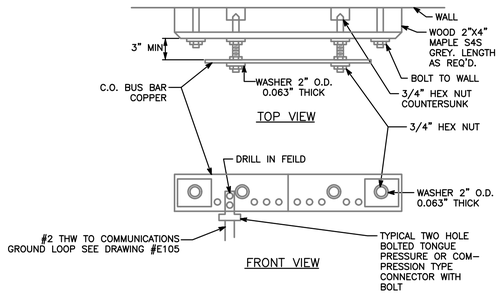


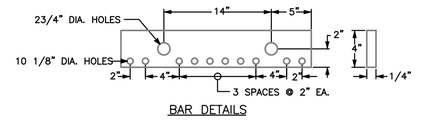


BAR DETAILS

5 / E-502 — COMMUNICATIONS GROUND BAR DETAIL
SCALE: N.T.S.

GENERAL COMMUNICATIONS NOTES:
1. GROUND ALL RACKS CABLE TRAYS AND PROTECTION MODULES PER NEC 250 AND EIA/TIA 607. SEE COMMUNICATIONS GROUNDING BAR DETAIL ABOVE.

APPROVED:

A/E DESIGNER OF RECORD

SEAL:

COMMONWEALTH OF PENNSYLVANIA — REGISTERED PROFESSIONAL ENGINEER — JOSEPH R. GAUS — PE-074251 — 1/23/10

US ARMY CORPS OF ENGINEERS
AFGHANISTAN ENGINEER DISTRICT

| Mark | Description | Date | Appr. |
|---|---|---|---|

Rev: 0
Date: 2/23/10
Design file no.
Drawing code:
File name:
Plot date:
Plot scale:

Designed by: RAJ
Dwn. by: BJB
Ckd by: JRG
Reviewed by: JRG
Submitted by: BAKER

U.S. ARMY CORPS OF ENGINEERS
AFGHANISTAN ENGINEER DISTRICT
APO AE 96338

Michael Baker Jr., Inc
A unit of Michael Baker Corporation
Airside Business Park
100 Airside Drive
Moon Township, PA 15108
www.mbakercorp.com

AFGHAN NATIONAL ARMY
REGIONAL MILITARY TRAINING CENTER
STANDARD DESIGN

RMTC HEADQUARTERS BUILDING
ELECTRICAL DETAILS

Sheet reference number:
E-502

# LIGHT FIXTURE SCHEDULE

| FIXTURE MARK | STYLE NUMBER AND TYPE | NUMBER AND TYPE OF LAMPS | VOLTAGE | MOUNTING | NOTES |
|---|---|---|---|---|---|
| A | PARABOLIC SURFACE/PENDANT MOUNTED 300MM X 1200MM FLUORESCENT FIXTURE WITH ELECTRONIC BALLAST | (2) 32W 3500K | 220V – 1ø 50HZ | SURFACE MOUNTED | FURNISHED WITH ELECTRONIC BALLAST. PARABOLIC LOUVER SHALL BE SPECULAR LENS IRIDESCENCE TYPE. |
| A2 | SAME AS FIXTURE 'A' WITH EMERGENCY BALLAST | (2) 32W 3500K | 220V – 1ø 50HZ | SURFACE MOUNTED | FURNISHED WITH ELECTRONIC BALLAST. PARABOLIC LOUVER SHALL BE SPECULAR LENS IRIDESCENCE TYPE. EMERGENCY BALLAST SELF TEST. |
| B | WET LOCATION WRAP AROUND SURFACE/PENDANT MOUNTED FLUORESCENT FIXTURE WITH PRISMATIC ACRYLIC LENS AND ELECTRONIC BALLAST | (2) 32W 3500K | 220V – 1ø 50HZ | SURFACE MOUNTED | FURNISHED WITH ELECTRONIC BALLAST, VIRGIN ACRYLIC WRAP AROUND LENS. |
| B2 | SAME AS FIXTURE 'B' WITH EMERGENCY BALLAST | (2) 32W 3500K | 220V – 1ø 50HZ | SURFACE MOUNTED | FURNISHED WITH ELECTRONIC BALLAST, VIRGIN ACRYLIC WRAP AROUND LENS. EMERGENCY BALLAST WITH SELF TEST SWITCH. |
| C | INCANDESCENT ONE PIECE W/ APPROVED LENS STABILIZED HIGH IMPACT POLY CARBONATE. | (1) A19 – 100W INCANDESCENT | 220V – 1ø 50HZ | WALL MOUNTED ABOVE EXTERIOR DOORS | |
| G | WRAP AROUND SURFACE/PENDANT MOUNTED FLUORESCENT FIXTURE WITH PRISMATIC ACRYLIC LENS AND ELECTRONIC BALLAST | (2) 32W 3500K | 220V – 1ø 50HZ | SURFACE MOUNTED | FURNISHED WITH ELECTRONIC BALLAST, VIRGIN ACRYLIC WRAP AROUND LENS. |
| G2 | SAME AS FIXTURE 'B' WITH EMERGENCY BALLAST | (2) 32W 3500K | 220V – 1ø 50HZ | SURFACE MOUNTED | FURNISHED WITH ELECTRONIC BALLAST, VIRGIN ACRYLIC WRAP AROUND LENS. EMERGENCY BALLAST WITH SELF TEST SWITCH. |
| H | REMOTE HEAD EXTERIOR LIGHT HEAD POWERED FROM EXIT SIGN BATTERY– 12V DOUBLE HEAD CORROSION RESISTANT WITH UL34 WEATHERPROOF CONSTRUCTION | (2) 12W/12V HALOGEN LAMP | 12V – 1ø 50HZ | EXTERIOR WALL MOUNTED AT TOP OF DOOR HEIGHT | |
| [E] | UNIVERSAL MOUNT ENGINEER GRADE THERMOPLASTIC HOUSING EXIT SIGN WITH LED LAMPS, RED LETTERS 6" IN HEIGHT WITH ARROWS AS INDICATED, WITH 12V CADMIUM BATTERY WITH REMOTE HEAD CAPABILITY | LED LAMPS | 220V – 1ø 50HZ | UNIVERSAL MOUNTING | |

FIXTURE MARK 'A'

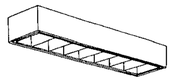

FIXTURE MARK 'B'

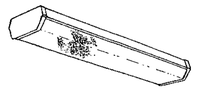

FIXTURE MARK 'C'

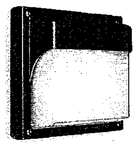

FIXTURE MARK 'G'

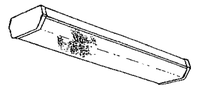

FIXTURE MARK 'H'

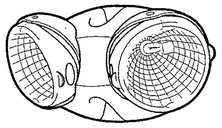

FIXTURE MARK '[E]'

US ARMY CORPS OF ENGINEERS
AFGHANISTAN ENGINEER DISTRICT

| Mark | Description | Date | Appr. |
|---|---|---|---|
| | | | |

| Mark | Description | Date | Appr. |
|---|---|---|---|
| | | | |

Rev: 0

Date: 2/23/10
Design file no.
Drawing code:
File name:
Plot date:
Plot scale:

Designed by: JRG
Dwn. by: BJB
Ckd by: JRG
Reviewed by: JRG
Submitted by: BAKER

U.S. ARMY CORPS OF ENGINEERS
AFGHANISTAN ENGINEER DISTRICT
APO AE 96338


*Michael Baker Jr., Inc*
*A unit of Michael Baker Corporation*
Airside Business Park
100 Airside Drive
Moon Township, PA 15108
www.mbakercorp.com


AFGHAN NATIONAL ARMY
REGIONAL MILITARY TRAINING CENTER
STANDARD DESIGN

RMTC HEADQUARTERS BUILDING
ELECTRICAL LIGHT FIXTURE SCHEDULE

APPROVED:

A/E DESIGNER OF RECORD

SEAL:

COMMONWEALTH OF PENNSYLVANIA
REGISTERED PROFESSIONAL ENGINEER
JOSEPH R. GAUS
PE-074251
1/29/10

Sheet reference number:
E–601

PANELBOARD HQ1 SURFACE MOUNTED
AMP. MAIN LUGS (OR) 150 AMP. MAIN BREAKER W/ 150 AMP. TRIP
CIRCUIT BREAKER TYPE 380/220 VOLTS 3 PHASE 4 WIRE 50 HZ 225 AMP. BUS

| CKT. NO. | TRIP AMPS | NO. POLES | WIRE MM² | GND MM² | CONDUIT MM | LOAD SERVED | LOAD-KVA A0 | LOAD-KVA B0 | LOAD-KVA C0 | LOAD-KVA A0 | LOAD-KVA B0 | LOAD-KVA C0 | LOAD SERVED | CONDUIT MM | GND MM² | WIRE MM² | NO. POLES | TRIP AMPS | CKT. NO. |
|---|---|---|---|---|---|---|---|---|---|---|---|---|---|---|---|---|---|---|---|
| 1 | 20 | 1 | 4.0 | 4.0 | 20 | LIGHTING – RM 117–121, ENTRY | 1.8 | | | 2.0 | | | ELECTRIC HEAT #4 – RM 100 | 20 | 4.0 | 4.0 | 2 | 20 | 2 |
| 3 | 20 | 1 | 4.0 | 4.0 | 20 | LIGHTING – RM 122–125 | | 1.8 | | | 2.0 | | | | | | | | 4 |
| 5 | 20 | 1 | 4.0 | 4.0 | 20 | LIGHTING – RM 128–130 | | | 1.6 | | | 1.3 | ELECTRIC HEAT #2 – RM 101 | 20 | 4.0 | 4.0 | 2 | 20 | 6 |
| 7 | 20 | 1 | 4.0 | 4.0 | 20 | LIGHTING – RM 107–116 | 2.0 | | | 1.3 | | | | | | | | | 8 |
| 9 | 20 | 1 | 4.0 | 4.0 | 20 | LIGHTING – RM 100, 102–106 | | 1.5 | | | 0.5 | | EXHAUST FAN #5 – RM 130 | 20 | 4.0 | 4.0 | 1 | 20 | 10 |
| 11 | 20 | 2 | 4.0 | 4.0 | 20 | ELECTRIC HEAT #4 – RM 117 | | | 2.0 | | | 0.5 | EXHAUST FAN #6 – RM 129 | 20 | 4.0 | 4.0 | 1 | 20 | 12 |
| 13 | | | | | | | 2.0 | | | 1.3 | | | ELECTRIC HEAT #2 – RM 102 | 20 | 4.0 | 4.0 | 2 | 20 | 14 |
| 15 | 20 | 2 | 4.0 | 4.0 | 20 | ELECTRIC HEAT #2 – RM 118 | | 1.3 | | | 1.3 | | | | | | | | 16 |
| 17 | | | | | | | | | 1.3 | | | 1.3 | ELECTRIC HEAT #2 – RM 103 | 20 | 4.0 | 4.0 | 2 | 20 | 18 |
| 19 | 20 | 2 | 4.0 | 4.0 | 20 | ELECTRIC HEAT #2 – RM 119 | 1.3 | | | 1.3 | | | | | | | | | 20 |
| 21 | | | | | | | | 1.3 | | | 0.5 | | EXHAUST FAN #7 – RM 104 | 20 | 4.0 | 4.0 | 2 | 20 | 22 |
| 23 | 20 | 2 | 4.0 | 4.0 | 20 | ELECTRIC HEAT #2 – RM 120 | | | 1.3 | | | 3.0 | WATER HEATER – RM 125 | 20 | 4.0 | 4.0 | 3 | 20 | 24 |
| 25 | | | | | | | 1.3 | | | 3.0 | | | | | | | | | 26 |
| 27 | 20 | 2 | 4.0 | 4.0 | 20 | ELECTRIC HEAT #2 – RM 121 | | 2.0 | | | 3.0 | | | | | | | | 28 |
| 29 | | | | | | | | | 2.0 | | | 1.3 | ELECTRIC HEAT #2 – RM 105 | 20 | 4.0 | 4.0 | 2 | 20 | 30 |
| 31 | 20 | 2 | 4.0 | 4.0 | 20 | ELECTRIC HEAT #2 – ENTRY | 1.3 | | | 1.3 | | | | | | | | | 32 |
| 33 | | | | | | | | 1.3 | | | 1.3 | | ELECTRIC HEAT #2 – RM 106 | 20 | 4.0 | 4.0 | 2 | 20 | 34 |
| 35 | 20 | 2 | 4.0 | 4.0 | 20 | ELECTRIC HEAT #2 – ENTRY | | | 1.3 | | | 1.3 | | | | | | | 36 |
| 37 | | | | | | | 1.3 | | | | | | SPARE | | | | 3 | 20 | 38 |
| 39 | 20 | 2 | 4.0 | 4.0 | 20 | ELECTRIC HEAT #2 – RM 116 | | 1.3 | | | | | | | | | | | 40 |
| 41 | | | | | | | | | 1.3 | | | | | | | | | | 42 |
| | | | | | | | 11.0 | 10.5 | 10.8 | 10.2 | 8.6 | 8.7 | | | | | | | |

TOTAL CONN. LOAD PER PHASE (KVA): A0 21.2 B0 19.1 C0 19.5

TOTAL CONN. LOAD 59.8 KVA. 70 % DEMAND = ESTIMATED DEMAND LOAD 41.86

* MAIN BREAKER SHALL BE 3P EARTH GROUND TYPE

PANELBOARD HQ2 SURFACE MOUNTED
AMP. MAIN LUGS (OR) 100 AMP. MAIN BREAKER W/ 100 AMP. TRIP
CIRCUIT BREAKER TYPE 380/220 VOLTS 3 PHASE 4 WIRE 50 HZ 100 AMP. BUS

| CKT. NO. | TRIP AMPS | NO. POLES | WIRE MM² | GND MM² | CONDUIT MM | LOAD SERVED | LOAD-KVA A0 | LOAD-KVA B0 | LOAD-KVA C0 | LOAD-KVA A0 | LOAD-KVA B0 | LOAD-KVA C0 | LOAD SERVED | CONDUIT MM | GND MM² | WIRE MM² | NO. POLES | TRIP AMPS | CKT. NO. |
|---|---|---|---|---|---|---|---|---|---|---|---|---|---|---|---|---|---|---|---|
| 1 | 20 | 2 | 4.0 | 4.0 | 20 | ELECTRIC HEAT #2 – RM 115 | 1.3 | | | 1.0 | | | CEILING FANS – RM 117–121 | 20 | 4.0 | 4.0 | 1 | 20 | 2 |
| 3 | | | | | | | | 1.3 | | | 0.8 | | RECEPTACLES – RM 121 | 20 | 4.0 | 4.0 | 1 | 20 | 4 |
| 5 | 20 | 2 | 4.0 | 4.0 | 20 | ELECTRIC HEAT #2 – RM 114 | | | 1.3 | | | 0.6 | RECEPTACLES – RM 121 | 20 | 4.0 | 4.0 | 1 | 20 | 6 |
| 7 | | | | | | | 1.3 | | | 0.8 | | | RECEPTACLES – RM 120 | 20 | 4.0 | 4.0 | 1 | 20 | 8 |
| 9 | 20 | 2 | 4.0 | 4.0 | 20 | ELECTRIC HEAT #2 – RM 113 | | 1.3 | | | 0.6 | | RECEPTACLES – RM 120 | 20 | 4.0 | 4.0 | 1 | 20 | 10 |
| 11 | | | | | | | | | 1.3 | | | 0.6 | RECEPTACLES – RM 119 | 20 | 4.0 | 4.0 | 1 | 20 | 12 |
| 13 | 20 | 2 | 4.0 | 4.0 | 20 | ELECTRIC HEAT #2 – RM 112 | 1.3 | | | 0.8 | | | RECEPTACLES – RM 119 | 20 | 4.0 | 4.0 | 1 | 20 | 14 |
| 15 | | | | | | | | 1.3 | | | 0.6 | | RECEPTACLES – RM 118 | 20 | 4.0 | 4.0 | 1 | 20 | 16 |
| 17 | 20 | 2 | 4.0 | 4.0 | 20 | ELECTRIC HEAT #2 – RM 111 | | | 1.3 | | | 0.8 | RECEPTACLES – RM 118 | 20 | 4.0 | 4.0 | 1 | 20 | 18 |
| 19 | | | | | | | 1.3 | | | 0.6 | | | RECEPTACLES – RM 117 | 20 | 4.0 | 4.0 | 1 | 20 | 20 |
| 21 | 20 | 2 | 4.0 | 4.0 | 20 | ELECTRIC HEAT #2 – RM 110 | | 1.3 | | | 0.8 | | RECEPTACLES – RM 117 | 20 | 4.0 | 4.0 | 1 | 20 | 22 |
| 23 | | | | | | | | | 1.3 | | | 0.8 | RECEPTS – CORRIDOR | 20 | 4.0 | 4.0 | 1 | 20 | 24 |
| 25 | 20 | 2 | 4.0 | 4.0 | 20 | ELECTRIC HEAT #2 – RM 109 | 1.3 | | | 1.0 | | | CEILING FANS – RM 112–116 | 20 | 4.0 | 4.0 | 1 | 20 | 26 |
| 27 | | | | | | | | 1.3 | | | 1.0 | | CEILING FANS – RM 107–111 | 20 | 4.0 | 4.0 | 1 | 20 | 28 |
| 29 | 20 | 2 | 4.0 | 4.0 | 20 | ELECTRIC HEAT #2 – RM 108 | | | 1.3 | | | | SPARE | | | | 1 | 20 | 30 |
| 31 | | | | | | | 1.3 | | | | | | SPARE | | | | 1 | 20 | 32 |
| 33 | 20 | 2 | 4.0 | 4.0 | 20 | ELECTRIC HEAT #2 – RM 107 | | 1.3 | | | | | SPARE | | | | 1 | 20 | 34 |
| 35 | | | | | | | | | 1.3 | | | | SPARE | | | | 1 | 20 | 36 |
| 37 | 20 | 2 | 4.0 | 4.0 | 20 | ELECTRIC HEAT #2 – ENTRY | 1.3 | | | | | | SPARE | | | | 1 | 20 | 38 |
| 39 | | | | | | | | 1.3 | | | | | SPARE | | | | 1 | 20 | 40 |
| 41 | 20 | 1 | | | | SPARE | | | | | | | SPARE | | | | 1 | 20 | 42 |
| | | | | | | | 9.1 | 9.1 | 7.8 | 4.2 | 3.8 | 2.8 | | | | | | | |

TOTAL CONN. LOAD PER PHASE (KVA): A0 13.3 B0 12.9 C0 10.6

TOTAL CONN. LOAD 36.8 KVA. 70 % DEMAND = ESTIMATED DEMAND LOAD 25.76

* MAIN BREAKER SHALL BE 3P EARTH GROUND TYPE

PANELBOARD HQ3 SURFACE MOUNTED
AMP. MAIN LUGS (OR) 100 AMP. MAIN BREAKER W/ 100 AMP. TRIP
CIRCUIT BREAKER TYPE 380/220 VOLTS 3 PHASE 4 WIRE 50 HZ 100 AMP. BUS

| CKT. NO. | TRIP AMPS | NO. POLES | WIRE MM² | GND MM² | CONDUIT MM | LOAD SERVED | LOAD-KVA A0 | LOAD-KVA B0 | LOAD-KVA C0 | LOAD-KVA A0 | LOAD-KVA B0 | LOAD-KVA C0 | LOAD SERVED | CONDUIT MM | GND MM² | WIRE MM² | NO. POLES | TRIP AMPS | CKT. NO. |
|---|---|---|---|---|---|---|---|---|---|---|---|---|---|---|---|---|---|---|---|
| 1 | 20 | 2 | 4.0 | 4.0 | 20 | ELECTRIC HEAT #5 – RM 122 | 2.5 | | | 1.2 | | | RECEPTACLES – CORRIDOR | 20 | 4.0 | 4.0 | 1 | 20 | 2 |
| 3 | | | | | | | | 2.5 | | | 0.4 | | RECEPTACLES – RM 129 | 20 | 4.0 | 4.0 | 1 | 20 | 4 |
| 5 | 20 | 2 | | | | SPARE | | | | | | 1.0 | RECEPTACLES – RM 129 | 20 | 4.0 | 4.0 | 1 | 20 | 6 |
| 7 | | | | | | | | | | 1.0 | | | RECEPTACLES – RM 129 | 20 | 4.0 | 4.0 | 1 | 20 | 8 |
| 9 | 20 | 2 | 4.0 | 4.0 | 20 | ELECTRIC HEAT #5 – RM 122 | | 2.5 | | | 0.6 | | RECEPTACLES – RM 105 | 20 | 4.0 | 4.0 | 1 | 20 | 10 |
| 11 | | | | | | | | | 2.5 | | | 0.8 | RECEPTACLES – RM 105 | 20 | 4.0 | 4.0 | 1 | 20 | 12 |
| 13 | 20 | 1 | 4.0 | 4.0 | 20 | EXHAUST FAN #1 – RM 125 | 0.5 | | | 0.6 | | | RECEPTACLES – RM 103 | 20 | 4.0 | 4.0 | 1 | 20 | 14 |
| 15 | 20 | 2 | 4.0 | 4.0 | 20 | ELECTRIC HEAT #2 – RM 125 | | 1.3 | | | 0.6 | | RECEPTACLES – RM 103 | 20 | 4.0 | 4.0 | 1 | 20 | 16 |
| 17 | | | | | | | | | 1.3 | | | 0.8 | RECEPTACLES – CORRIDOR | 20 | 4.0 | 4.0 | 1 | 20 | 18 |
| 19 | 20 | 2 | 4.0 | 4.0 | 20 | ELECTRIC HEAT #2 – RM 123 | 1.3 | | | 0.8 | | | RECEPTACLES – RM 122 | 20 | 4.0 | 4.0 | 1 | 20 | 20 |
| 21 | | | | | | | | 1.3 | | | 0.8 | | RECEPTACLES – RM 122 | 20 | 4.0 | 4.0 | 1 | 20 | 22 |
| 23 | 20 | 2 | 4.0 | 4.0 | 20 | ELECTRIC HEAT #5 – RM 122 | | | 2.5 | | | 0.8 | RECEPTACLES – RM 122 | 20 | 4.0 | 4.0 | 1 | 20 | 24 |
| 25 | | | | | | | 2.5 | | | 0.8 | | | RECEPTACLES – RM 122 | 20 | 4.0 | 4.0 | 1 | 20 | 26 |
| 27 | 20 | 1 | 4.0 | 4.0 | 20 | EXHAUST FAN #2 – RM 124 | | 0.5 | | | 0.6 | | CEILING FANS – RM 122–126 | 20 | 4.0 | 4.0 | 1 | 20 | 28 |
| 29 | 20 | 1 | | | | SPARE | | | | | | 0.6 | RECEPTACLES – RM 102 | 20 | 4.0 | 4.0 | 1 | 20 | 30 |
| 31 | 20 | 1 | | | | SPARE | | | | 0.6 | | | RECEPTACLES – RM 102 | 20 | 4.0 | 4.0 | 1 | 20 | 32 |
| 33 | 20 | 1 | 4.0 | 4.0 | 20 | EXHAUST FAN #4 – RM 132 | | 0.5 | | | 0.8 | | RECEPTACLES – RM 100 | 20 | 4.0 | 4.0 | 1 | 20 | 34 |
| 35 | 20 | 1 | | | | SPARE | | | | | | 1.0 | CEILING FANS – RM 101–106 | 20 | 4.0 | 4.0 | 1 | 20 | 36 |
| 37 | 20 | 1 | | | | SPARE | | | | | | | SPARE | | | | 1 | 20 | 38 |
| 39 | 20 | 1 | | | | SPARE | | | | | 0.8 | | RECEPTACLES – RM 128 | 20 | 4.0 | 4.0 | 1 | 20 | 40 |
| 41 | 20 | 1 | | | | SPARE | | | | | | 0.8 | RECEPTACLES – RM 128 | 20 | 4.0 | 4.0 | 1 | 20 | 42 |
| | | | | | | | 6.8 | 8.6 | 6.3 | 5.0 | 4.8 | 5.8 | | | | | | | |

TOTAL CONN. LOAD PER PHASE (KVA): A0 11.8 B0 13.4 C0 12.1

TOTAL CONN. LOAD 37.3 KVA. 70 % DEMAND = ESTIMATED DEMAND LOAD 26.11

* MAIN BREAKER SHALL BE 3P EARTH GROUND TYPE

PANELBOARD MDP–HQ SURFACE MOUNTED
AMP. MAIN LUGS (OR) 300 AMP. MAIN BREAKER W/ 300 AMP. TRIP
CIRCUIT BREAKER TYPE 380/220 VOLTS 3 PHASE 4 WIRE 50 HZ 300 AMP. BUS

| CKT. NO. | TRIP AMPS | NO. POLES | WIRE MM² | GND MM² | CONDUIT MM | LOAD SERVED | LOAD-KVA A0 | LOAD-KVA B0 | LOAD-KVA C0 | LOAD-KVA A0 | LOAD-KVA B0 | LOAD-KVA C0 | LOAD SERVED | CONDUIT MM | GND MM² | WIRE MM² | NO. POLES | TRIP AMPS | CKT. NO. |
|---|---|---|---|---|---|---|---|---|---|---|---|---|---|---|---|---|---|---|---|
| 1 | | | | | | | 21.2 | | | 13.3 | | | | | | | | | 2 |
| 3 | 150 | 3 | 70.0 | 16.0 | 40 | HQ1 | | 19.1 | | | 12.9 | | HQ2 | 40 | 10.0 | 50.0 | 3 | 100 | 4 |
| 5 | | | | | | | | | 19.5 | | | 10.6 | | | | | | | 6 |
| 7 | | | | | | | 11.8 | | | | | | | | | | | | 8 |
| 9 | 100 | 3 | 50.0 | 10.0 | 40 | HQ3 | | 13.4 | | | | | SPARE | | | | 3 | 100 | 10 |
| 11 | | | | | | | | | 12.1 | | | | | | | | | | 12 |
| 13 | | | | | | | | | | | | | | | | | | | 14 |
| 15 | 225 | 3 | | | | SPARE | | | | | | | SPARE | | | | 3 | 100 | 16 |
| 17 | | | | | | | | | | | | | | | | | | | 18 |
| 19 | | | | | | | | | | | | | | | | | | | 20 |
| 21 | | | | | | SPACE | | | | | | | SPACE | | | | | | 22 |
| 23 | | | | | | | | | | | | | | | | | | | 24 |
| | | | | | | | 33.0 | 32.5 | 31.6 | 13.3 | 12.9 | 10.6 | | | | | | | |

TOTAL CONN. LOAD PER PHASE (KVA): A0 46.3 B0 45.4 C0 42.2

TOTAL CONN. LOAD 133.9 KVA. 70 % DEMAND = ESTIMATED DEMAND LOAD 93.73

* MAIN BREAKER SHALL BE 3P EARTH GROUND TYPE

APPROVED:

A/E DESIGNER OF RECORD

SEAL:

COMMONWEALTH OF PENNSYLVANIA
REGISTERED PROFESSIONAL ENGINEER
JOSEPH R. GAUS
PE-074251
12/21/10

US ARMY CORPS OF ENGINEERS
AFGHANISTAN ENGINEER DISTRICT

| Mark | Description | Date | Appr. |
|---|---|---|---|
| | | | |

Rev: 0
Date: 2/23/10
Design file no.
Drawing code:
File name:
Plot date:
Plot scale:

Designed by: JRG
Dwn by: BJB
Ckd by: JRG
Reviewed by: JRG
Submitted by: BAKER

U.S. ARMY CORPS OF ENGINEERS
AFGHANISTAN ENGINEER DISTRICT
APO AE 96338

Michael Baker Jr., Inc
A unit of Michael Baker Corporation
Airside Business Park
100 Airside Drive
Moon Township, PA 15108
www.mbakercorp.com

AFGHAN NATIONAL ARMY
REGIONAL MILITARY TRAINING CENTER
STANDARD DESIGN

RMTC HEADQUARTERS BUILDING
ELECTRICAL PANEL SCHEDULES

Sheet reference number:
E–602

PANELBOARD UHQ1 SURFACE MOUNTED
AMP. MAIN LUGS (OR) 150 AMP. MAIN BREAKER W/ 150 AMP. TRIP
CIRCUIT BREAKER TYPE 380/220 VOLTS 3 PHASE 4 WIRE 50 HZ 225 AMP. BUS

| CKT. NO. | TRIP AMPS | NO. POLES | WIRE MM² | GND MM² | CONDUIT MM | LOAD SERVED | LOAD-KVA A0 | LOAD-KVA B0 | LOAD-KVA C0 | LOAD-KVA A0 | LOAD-KVA B0 | LOAD-KVA C0 | LOAD SERVED | CONDUIT MM | GND MM² | WIRE MM² | NO. POLES | TRIP AMPS | CKT. NO. |
|---|---|---|---|---|---|---|---|---|---|---|---|---|---|---|---|---|---|---|---|
| 1 | 20 | 1 | 4.0 | 4.0 | 20 | HEAT PUMP #3 – EXTERIOR | 1.0 | | | 1.6 | | | RECEPTACLES – RM 116 | 20 | 4.0 | 4.0 | 1 | 20 | 2 |
| 3 | 30 | 1 | 6.0 | 6.0 | 25 | HEAT PUMP #3 – RM 126 | | 3.4 | | | 0.6 | | RECEPTACLES – RM 115 | 20 | 4.0 | 4.0 | 1 | 20 | 4 |
| 5 | 20 | 1 | 4.0 | 4.0 | 20 | HEAT PUMP #1 – EXTERIOR | | | 1.0 | | | 0.6 | RECEPTACLES – RM 114 | 20 | 4.0 | 4.0 | 1 | 20 | 6 |
| 7 | 20 | 1 | 4.0 | 4.0 | 20 | HEAT PUMP #1 – RM 128 | 2.5 | | | 0.6 | | | RECEPTACLES – RM 113 | 20 | 4.0 | 4.0 | 1 | 20 | 8 |
| 9 | 20 | 1 | 4.0 | 4.0 | 20 | HEAT PUMP #2 – EXTERIOR | | 1.6 | | | 0.6 | | RECEPTACLES – RM 112 | 20 | 4.0 | 4.0 | 1 | 20 | 10 |
| 11 | 40 | 1 | 10.0 | 6.0 | 25 | HEAT PUMP #2 – RM 132 | | | 5.0 | | | 0.6 | RECEPTACLES – RM 111 | 20 | 4.0 | 4.0 | 1 | 20 | 12 |
| 13 | 20 | 1 | 4.0 | 4.0 | 20 | HEAT PUMP #4 – EXTERIOR | 1.0 | | | 0.6 | | | RECEPTACLES – RM 106 | 20 | 4.0 | 4.0 | 1 | 20 | 14 |
| 15 | 20 | 1 | 4.0 | 4.0 | 20 | HEAT PUMP #4 – RM 131 | | 2.5 | | | 0.6 | | RECEPTACLES – RM 106 | 20 | 4.0 | 4.0 | 1 | 20 | 16 |
| 17 | 20 | 1 | 4.0 | 4.0 | 20 | EXHUAST FAN #3 – RM 127 | | | 0.5 | | | 0.6 | RECEPTACLES – RM 101 | 20 | 4.0 | 4.0 | 1 | 20 | 18 |
| 19 | 20 | 1 | 4.0 | 4.0 | 20 | LIGHTING – RM 131, 132 | 0.5 | | | 0.6 | | | RECEPTACLES – RM 101 | 20 | 4.0 | 4.0 | 1 | 20 | 20 |
| 21 | 20 | 1 | 4.0 | 4.0 | 20 | LIGHTING – RM 126, 127 | | 0.5 | | | 0.6 | | RECEPTACLES – RM 131 | 20 | 4.0 | 4.0 | 1 | 20 | 22 |
| 23 | 20 | 1 | 4.0 | 4.0 | 20 | HEAT PUMP #5 – EXTERIOR | | | 1.0 | | | 0.8 | RECEPTACLES – RM 131 | 20 | 4.0 | 4.0 | 1 | 20 | 24 |
| 25 | 20 | 1 | 4.0 | 4.0 | 20 | HEAT PUMP #5 – RM 102 | 2.5 | | | 0.6 | | | RECEPTACLES – RM 132 | 20 | 4.0 | 4.0 | 1 | 20 | 26 |
| 27 | 20 | 1 | | | | SPARE | | | | | 0.8 | | RECEPTACLES – RM 132 | 20 | 4.0 | 4.0 | 1 | 20 | 28 |
| 29 | 20 | 1 | | | | SPARE | | | | | | | SPARE | | | | 1 | 20 | 30 |
| 31 | 20 | 1 | | | | SPARE | | | | | | | SPARE | | | | 1 | 20 | 32 |
| 33 | 20 | 1 | | | | SPARE | | | | | | | SPARE | | | | 1 | 20 | 34 |
| 35 | 20 | 1 | | | | SPARE | | | | | | | SPARE | | | | 1 | 20 | 36 |
| 37 | 20 | 1 | | | | SPARE | | | | 5.0 | | | | | | | | | 38 |
| 39 | 20 | 1 | | | | SPARE | | | | | 5.0 | | UHQ2 | 40 | 6.0 | 16.0 | 3 | 50 | 40 |
| 41 | 20 | 1 | | | | SPARE | | | | | | 4.4 | | | | | | | 42 |
| | | | | | | | 7.5 | 8.0 | 7.5 | 8.0 | 8.2 | 7.0 | | | | | | | |

TOTAL CONN. LOAD PER PHASE (KVA): A0 15.5 B0 16.2 C0 14.5

TOTAL CONN. LOAD 46.2 KVA. 70 % DEMAND = ESTIMATED DEMAND LOAD 32.34

* MAIN BREAKER SHALL BE 3P EARTH GROUND TYPE

PANELBOARD UHQ2 SURFACE MOUNTED
AMP. MAIN LUGS (OR) 50 AMP. MAIN BREAKER W/ 50 AMP. TRIP
CIRCUIT BREAKER TYPE 380/220 VOLTS 3 PHASE 4 WIRE 50 HZ 100 AMP. BUS

| CKT. NO. | TRIP AMPS | NO. POLES | WIRE MM² | GND MM² | CONDUIT MM | LOAD SERVED | LOAD-KVA A0 | LOAD-KVA B0 | LOAD-KVA C0 | LOAD-KVA A0 | LOAD-KVA B0 | LOAD-KVA C0 | LOAD SERVED | CONDUIT MM | GND MM² | WIRE MM² | NO. POLES | TRIP AMPS | CKT. NO. |
|---|---|---|---|---|---|---|---|---|---|---|---|---|---|---|---|---|---|---|---|
| 1 | 20 | 1 | 4.0 | 4.0 | 20 | RECEPTACLES – RM 126 | 1.0 | | | 0.6 | | | RECEPTACLES – RM 109 | 20 | 4.0 | 4.0 | 1 | 20 | 2 |
| 3 | 20 | 1 | 4.0 | 4.0 | 20 | RECEPTACLES – RM 126 | | 1.0 | | | 0.6 | | RECEPTACLES – RM 108 | 20 | 4.0 | 4.0 | 1 | 20 | 4 |
| 5 | 20 | 1 | 4.0 | 4.0 | 20 | RECEPTACLES – RM 126 | | | 1.0 | | | 0.6 | RECEPTACLES – RM 107 | 20 | 4.0 | 4.0 | 1 | 20 | 6 |
| 7 | 20 | 1 | 4.0 | 4.0 | 20 | RECEPTACLES – RM 126 | 1.0 | | | 0.8 | | | RECEPTACLES – RM 115–116 | 20 | 4.0 | 4.0 | 1 | 20 | 8 |
| 9 | 20 | 1 | 4.0 | 4.0 | 20 | RECEPTACLES – RM 126 | | 1.0 | | | 0.8 | | RECEPTACLES – RM 113–114 | 20 | 4.0 | 4.0 | 1 | 20 | 10 |
| 11 | 20 | 1 | 4.0 | 4.0 | 20 | RECEPTACLES – RM 126 | | | 1.0 | | | 0.8 | RECEPTACLES – RM 111–112 | 20 | 4.0 | 4.0 | 1 | 20 | 12 |
| 13 | 20 | 1 | 4.0 | 4.0 | 20 | RECEPTACLES – RM 127 | 1.0 | | | 0.6 | | | RECEPTACLES – RM 109–110 | 20 | 4.0 | 4.0 | 1 | 20 | 14 |
| 15 | 20 | 1 | 4.0 | 4.0 | 20 | RECEPTACLES – RM 127 | | 1.0 | | | 0.6 | | RECEPTACLES – RM 107–108 | 20 | 4.0 | 4.0 | 1 | 20 | 16 |
| 17 | 20 | 1 | 4.0 | 4.0 | 20 | RECEPTACLES – RM 127 | | | 1.0 | | | | SPARE | | | | 1 | 20 | 18 |
| 19 | 20 | 1 | | | | SPARE | | | | | | | SPARE | | | | 1 | 20 | 20 |
| 21 | 20 | 1 | | | | SPARE | | | | | | | SPARE | | | | 1 | 20 | 22 |
| 23 | 20 | 1 | | | | SPARE | | | | | | | SPARE | | | | 1 | 20 | 24 |
| 25 | 20 | 1 | | | | SPARE | | | | | | | SPARE | | | | 1 | 20 | 26 |
| 27 | 20 | 1 | | | | SPARE | | | | | | | SPARE | | | | 1 | 20 | 28 |
| 29 | 20 | 1 | | | | SPARE | | | | | | | SPARE | | | | 1 | 20 | 30 |
| 31 | 20 | 1 | | | | SPARE | | | | | | | SPARE | | | | 1 | 20 | 32 |
| 33 | 20 | 1 | | | | SPARE | | | | | | | SPARE | | | | 1 | 20 | 34 |
| 35 | 20 | 1 | | | | SPARE | | | | | | | SPARE | | | | 1 | 20 | 36 |
| 37 | 20 | 1 | | | | SPARE | | | | | | | SPARE | | | | 1 | 20 | 38 |
| 39 | 20 | 1 | | | | SPARE | | | | | | | SPARE | | | | 1 | 20 | 40 |
| 41 | 20 | 1 | | | | SPARE | | | | | | | SPARE | | | | 1 | 20 | 42 |
| | | | | | | | 3.0 | 3.0 | 3.0 | 2.0 | 2.0 | 1.4 | | | | | | | |

TOTAL CONN. LOAD PER PHASE (KVA): A0 5.0 B0 5.0 C0 4.4

TOTAL CONN. LOAD 14.4 KVA. 70 % DEMAND = ESTIMATED DEMAND LOAD 10.08

* MAIN BREAKER SHALL BE 3P EARTH GROUND TYPE

APPROVED:

A/E DESIGNER OF RECORD

SEAL:

COMMONWEALTH OF PENNSYLVANIA
REGISTERED PROFESSIONAL ENGINEER
JOSEPH R GAUS
PE-074251
12/29/10

US ARMY CORPS OF ENGINEERS
AFGHANISTAN ENGINEER DISTRICT

| Mark | Description | Date | Appr. |
|---|---|---|---|
| | | | |

| Mark | Description | Date | Appr. |
|---|---|---|---|
| | | | |

Rev: 0
Date: 2/23/10
Design file no.
Drawing code:
File name:
Plot date:
Plot scale:

Designed by: JRG
Dwn by: BJB
Ckd by: JRG
Reviewed by: JRG
Submitted by: BAKER

U.S. ARMY CORPS OF ENGINEERS
AFGHANISTAN ENGINEER DISTRICT
APO AE 96338

*Michael Baker Jr., Inc.*
*A unit of Michael Baker Corporation*
Airside Business Park
100 Airside Drive
Moon Township, PA 15108
www.mbakercorp.com

AFGHAN NATIONAL ARMY
REGIONAL MILITARY TRAINING CENTER
STANDARD DESIGN

RMTC HEADQUARTERS BUILDING
ELECTRICAL PANEL SCHEDULES

Sheet reference number:
E–603

# AFGHAN NATIONAL ARMY

## STANDARD BUILDING DESIGN

## ADMIN INSTRUCTORS OFFICE

## 100% FINAL DESIGN SUBMITTAL

### SHEET INDEX


G-001 COVER SHEET

STRUCTURAL

S-001 GENERAL NOTES & DESIGN CRITERIA
S-101 FOUNDATION/SLAB & ROOF FRAMING PLANS
S-401 BUILDING SECTIONS
S-501 FOUNDATION SECTIONS
S-502 FRAMING SECTIONS
S-503 BEAM & COLUMN DETAILS
S-504 BEAM & COLUMN DETAILS
S-601 SCHEDULES
S-701 TYPICAL DETAILS
S-702 TYPICAL DETAILS

ARCHITECTURAL

A-001 LIFE SAFETY PLAN
A-101 FLOOR PLAN
A-102 ROOF PLAN
A-201 ELEVATIONS
A-301 BUILDING SECTIONS
A-401 WALL SECTIONS
A-501 EXTERIOR DETAILS
A-502 HEAD, JAMB, & SILL DETAILS
A-503 STOOP DETAILS
A-601 WINDOW & DOOR SCHEDULES

MECHANICAL

M-101 HVAC FLOOR PLAN, SCHEDULES, & DETAILS

ELECTRICAL

E-001 ELECTRICAL SYMBOLS & ABBREVIATIONS
E-101 ELECTRICAL LIGHTING PLAN
E-102 ELECTRICAL POWER & SYSTEMS PLAN
E-501 ELECTRICAL DETAILS
E-502 ELECTRICAL DETAILS
E-601 ELECTRICAL LIGHT FIXTURE SCHEDULE
E-602 ELECTRICAL PANEL SCHEDULES


US ARMY CORPS OF ENGINEERS
AFGHANISTAN ENGINEER DISTRICT

| Mark | Description | Date | Appr. |
|---|---|---|---|
| | | | |

| Mark | Description | Date | Appr. |
|---|---|---|---|
| | | | |

Date: 2/23/10 | Rev: 0
Design file no.
Drawing code:
File name: ANAADFG-001CS
Plot date: 2/23/2010
Plot scale: X:X

Designed by: KMF/MMY | Ckd by: CWW
Dwn by: RCG | Reviewed by: LHM
Submitted by: BAKER

U.S. ARMY CORPS OF ENGINEERS
AFGHANISTAN ENGINEER DISTRICT
APO AE 96338


*Michael Baker Jr., Inc.*
*A unit of Michael Baker Corporation*
Airside Business Park
100 Airside Drive
Moon Township, PA 15108
www.mbakercorp.com


AFGHAN NATIONAL ARMY
REGIONAL MILITARY TRAINING CENTER
STANDARD DESIGN

ADMIN INSTRUCTORS OFFICE

COVER SHEET

Sheet reference number:
G-001

STRUCTURAL ABBREVIATIONS:

| | |
|---|---|
| ACI | AMERICAN CONCRETE INSTITUTE |
| ADD'L | ADDITIONAL |
| AISC | AMERICAN INSTITUTE OF STEEL CONSTRUCTION |
| AISI | AMERICAN IRON AND STEEL INSTITUTE |
| ASTM | AMERICAN SOCIETY FOR TESTING AND MATERIALS |
| ARCH | ARCHITECTURAL |
| B | BOTTOM |
| BLDG | BUILDING |
| BOTT | BOTTOM |
| ℄ | CENTER LINE |
| CFMRF | COLD FORM METAL ROOF FRAME |
| CFMF | COLD FORM METAL FRAME |
| CFS | COLD FORMED STEEL |
| CIP | CAST-IN-PLACE |
| CIPL | CAST-IN-PLACE LINTEL |
| CJ | CONTROL JOINT |
| CLR | CLEAR |
| CMU | CONCRETE MASONRY UNIT |
| COEFF | COEFFICIENT |
| COL | COLUMN |
| CONC | CONCRETE |
| CONT | CONTINUOUS |
| COORD | COORDINATE |
| CRSI | CONCRETE REINFORCING STEEL INSTITUTE |
| CSJ | CONSTRUCTION JOINT |
| DIA | DIAMETER |
| DIAG | DIAGONAL |
| DIM | DIMENSION |
| DWG | DRAWING |
| DWL | DOWEL |
| EA | EACH |
| EF | EACH FACE |
| ELEC | ELECTRICAL |
| ELEV | ELEVATION |
| EMBED | EMBEDMENT |
| EQUIV | EQUIVALENT |
| ETC | ET CETERA |
| EW | EACH WAY |
| EXP | EXPANSION |
| EXT | EXTERIOR |
| FTG | FOOTING |
| GA | GAUGE |
| GB | GRADE BEAM |
| HORIZ | HORIZONTAL |
| h | HOUR |
| HRS | HOURS |
| IBC | INTERNATIONAL BUILDING CODE |
| ID | INSIDE DIAMETER |
| INFO | INFORMATION |
| INT | INTERIOR |
| kg | KILOGRAM |
| km | KILOMETER |
| kN | KILONEWTON |
| kPa | KILOPASCAL |
| L# | ANGLE (# INDICATES SIZE) |
| LONG | LONGITUDINAL |
| LLV | LONG LEG VERTICAL |
| m | METER |
| MAX | MAXIMUM |
| MECH | MECHANICAL |
| MFG | MANUFACTURER |
| MID | MIDDLE |
| MIN | MINIMUM |
| MISC | MISCELLANEOUS |
| mm | MILLIMETER |
| MPa | MEGAPASCAL |
| MTL | METAL |
| MWFRS | MAIN WIND FORCE RESISTING SYSTEM |
| N | NEWTON |
| N | NORTH |
| N/A | NOT APPLICABLE |
| # | NUMBER SYMBOL FOR REBAR SIZE |
| NTS | NOT TO SCALE |
| OC | ON CENTER |
| OD | OUTSIDE DIAMETER |
| OPNG | OPENING |
| PL or PL | PLATE |
| PRE-ENG | PRE-ENGINEERED |
| RB | ROOF BEAM |
| REINF | REINFORCED |
| REQ'D | REQUIRED |
| SIM | SIMILAR |
| SPECS | SPECIFICATIONS |
| STD | STANDARD |
| STRUCT | STRUCTURAL |
| SW | SHEAR WALL |
| T | TOP |
| T/ | TOP OF |
| T/ELEV | TOP ELEVATION |
| T/SLAB | TOP OF SLAB |
| T&B | TOP AND BOTTOM |
| THK | THICK |
| TYP | TYPICAL |
| UFC | UNIFIED FACILITIES CRITERIA |
| UON | UNLESS OTHERWISE NOTED |
| VERT | VERTICAL |
| W | WIDTH |
| W/ | WITH |

1.0 GENERAL NOTES:

1.1 THIS PROJECT HAS BEEN DESIGNED FOR THE WEIGHTS AND MATERIALS INDICATED ON THE SHEETS AND FOR THE LIVE LOADS INDICATED IN THE DESIGN DATA. IT IS THE CONTRACTOR'S RESPONSIBILITY TO DETERMINE ALLOWABLE CONSTRUCTION LOADS AND TO PROVIDE PROPER DESIGN AND CONSTRUCTION OF FALSEWORK, FORMWORK, STAGING, BRACING, SHEETING AND SHORING, ETC.

1.1 COORDINATE THESE SHEETS WITH THE ARCHITECTURAL, MECHANICAL, ELECTRICAL, PLUMBING, AND CIVIL SHEETS. ALL DIMENSIONS SHOWN ON THE SHEETS ARE MILLIMETERS UNLESS NOTED OTHERWISE.

1.2 THE CONTRACTOR SHALL VERIFY AND COORDINATE ALL FLOOR AND ROOF OPENING SIZES AND LOCATIONS, EQUIPMENT PAD SIZES AND LOCATIONS, ANCHOR BOLT LAYOUTS, ETC WITH EQUIPMENT SELECTED. THE CONTRACTOR SHALL MAKE ANY REQUIRED MODIFICATIONS AT NO ADDITIONAL COST.

1.3 THE CONTRACTOR SHALL REFER TO THE ARCHITECTURAL, MECHANICAL, ELECTRICAL AND PLUMBING SHEETS FOR SLEEVES, CURBS, INSERTS OR OPENINGS, ETC. NOT HEREIN INDICATED.

1.4 WORK NOT INCLUDED ON THE SHEETS BUT IMPLIED TO BE SIMILAR TO THAT SHOWN AT CORRESPONDING PLACES ELSEWHERE ON THE SHEETS SHALL BE REPEATED.

1.5 IN CASE OF CONFLICT BETWEEN THE NOTES, DETAILS AND SPECIFICATIONS THE MOST RIGID REQUIREMENTS SHALL GOVERN.

1.6 SEE ARCHITECTURAL SHEETS FOR LOCATIONS OF MASONRY AND NON-LOAD BEARING PARTITIONS. PROVIDE COMPRESSIBLE FIRESAFING AT TOP OF WALL AS REQUIRED BY ARCHITECTURAL SHEETS.

1.7 COORDINATE FINISHED FLOOR DATUM ELEVATION 0.0m WITH THE CIVIL SHEETS.

2.0 FOUNDATION NOTES

2.1 THE GEOTECHNICAL ANALYSIS FOR THIS PROJECT IS THE RESPONSIBILITY OF THE CONTRACTOR AWARDED THE WORK. AN ASSUMED ALLOWABLE SOIL BEARING VALUE OF 72 kPa HAS BEEN USED IN THE STRUCTURAL ANALYSIS OF THE BUILDING HEREIN AND SHALL BE CONFIRMED AND VERIFIED AS PART OF THE GEOTECHNICAL INVESTIGATION. VALUES WHICH DO NOT MEET THE REQUIREMENTS INDICATED ON THE BASIS OF DESIGN SHEET SHALL BE IMMEDIATELY BROUGHT TO THE ATTENTION OF THE CONTRACTING OFFICER FOR CONSIDERATION AND DETERMINATION ON THE NEXT APPROPRIATE COURSE OF ACTION.

2.2 SEE THE SPECIFICATION FOR ADDITIONAL REQUIREMENTS TO THOSE OUTLINED IN THE GEOTECHNICAL INVESTIGATION FOR EXCAVATION AND PREPARATION OF THE FOUNDATION AND THE SLAB ON GRADE SUBGRADE INCLUDING COMPACTION PROCEDURES.

2.3 EXCAVATIONS FOR FOOTINGS SHALL HAVE THE SIDES AND BOTTOMS TEMPORARILY LINED WITH 0.25mm POLYETHYLENE IF PLACEMENT OF CONCRETE DOES NOT OCCUR WITHIN 24 HRS OF THE EXCAVATION OF THE FOOTING.

2.4 FOUNDATION CONDITIONS NOTED DURING CONSTRUCTION WHICH DIFFER FROM THOSE DESCRIBED IN THE GEOTECHNICAL REPORT SHALL BE REPORTED TO THE GENERAL CONTRACTOR BEFORE FURTHER CONSTRUCTION IS ATTEMPTED. SEE PROJECT SPECIFICATIONS.

2.5 NO FOOTINGS OR SLABS SHALL BE POURED INTO OR AGAINST SUBGRADE CONTAINING FREE WATER, FROST, ICE OR LOOSE MATERIAL. FROST DEPTH ASSUMED TO BE 800mm.

2.6 ALL SLAB-ON-GRADE, TRENCH BOTTOMS AND OTHER ON-GRADE INTERIOR HORIZONTAL SURFACES SHALL BE PLACED OVER A 0.25mm POLYETHYLENE VAPOR RETARDER OVER A 100mm #57 STONE WATER CAPILLARY BARRIER PLACED ON SUBGRADE PROPERLY PREPARED IN ACCORDANCE WITH THE CONTRACT SPECIFICATIONS. (UON)

2.7 PRIOR TO START OF FOUNDATION OR SLAB-ON-GRADE CONSTRUCTION, EXISTING SUBGRADES SHALL BE COMPACTED TO MINIMUM OF 95% MAXIMUM DRY DENSITY OBTAINED THRU ASTM D 1557 MODIFIED PROCTOR TESTING.

2.8 SEE PLUMBING, ELECTRICAL & CIVIL SHEETS FOR REQUIRED UNDERSLAB UTILITIES.

2.9 SEE ARCHITECTURAL SHEETS FOR ALL WATERPROOFING DETAILS AND MATERIALS.

2.10 IF UNDERMINING OF FOOTINGS OCCURS, FILL VOIDS WITH 18 MPa CONCRETE. DO NOT ATTEMPT TO REPLACE AND RE-COMPACT SOIL.

3.0 CONCRETE

3.1 CONCRETE SHALL HAVE THE UNIT WEIGHT OF 2400 kg/m$^3$ AND A MINIMUM COMPRESSIVE STRENGTH (f'c) OF 28 MPa AT 28 DAYS. ALL CONCRETE SHALL HAVE A WATER-CEMENT RATIO OF 0.45. SEE SPECIFICATIONS FOR ADDITIONAL INFORMATION. ENTRAIN AIR TO PRODUCE TOTAL AIR CONTENT ACCORDING TO THE SPECIFICATIONS FOR CONCRETE EXPOSED TO FREEZING TEMPERATURES (EXTERIOR FOOTINGS, SLAB TURNDOWNS, EXTERIOR SLABS AND SLABS-ON-GRADE, EXTERIOR RETAINING WALLS, AND EXTERIOR GRADE BEAMS.)

3.2 NO CALCIUM CHLORIDE SHALL BE USED IN ANY CONCRETE.

3.3 MIXING, TRANSPORTING AND PLACING OF CONCRETE SHALL CONFORM TO ACI 301M-05.

3.4 ALL CONCRETE WORK SHALL CONFORM TO THE REQUIREMENTS OF THE AMERICAN CONCRETE INSTITUTE (ACI) 318M MANUAL (metric), "BUILDING CODE REQUIREMENTS FOR REINFORCED CONCRETE", AND REQUIREMENTS OUTLINED IN THE CONTRACT SPECIFICATIONS. WHEN THERE IS A CONFLICT BETWEEN ACI AND THE SPECIFICATIONS, THE MORE STRINGENT SHALL GOVERN.

3.5 CHAMFER ALL EXPOSED EXTERNAL CORNERS OF CONCRETE WITH 20mm x45 DEGREE CHAMFER UON.

3.6 CONCRETE REINFORCEMENT BARS SHALL CONFORM TO ASTM A615M-96a, GRADE 420 MPa, REINFORCING BARS SHALL NOT BE TACK WELDED, WELDED, HEATED OR CUT, UNLESS INDICATED ON THE CONTRACT DOCUMENTS. ALL LAP SPLICES SHALL BE CLASS "B" UON.

3.7 HORIZONTAL FOOTING AND HORIZONTAL WALL REINFORCEMENT SHALL BE CONTINUOUS AND SHALL HAVE 90 DEGREE BENDS AND EXTENSIONS, OR CORNER BARS OF EQUIVALENT SIZE LAPPED WITH A CLASS B TENSION SPLICE AT CORNERS AND INTERSECTIONS. TOP BAR CRITERIA SHALL APPLY IF 300mm OR MORE OF FRESH CONCRETE IS PLACED BELOW BAR.

3.8 SLABS-ON-GRADE SHALL HAVE CONSTRUCTION JOINTS OR CRACK CONTROL JOINTS AS SHOWN ON THE DRAWINGS. CONSTRUCTION JOINTS CAN BE USED AT CONTROL JOINT LOCATIONS AT CONTRACTORS OPTION. SEE SLAB PLANS & JOINT DETAILS FOR ADDITIONAL INFORMATION. FOR AREAS NOT SHOWN ON DWGS, THE MAXIMUM SPACING OF CONSTRUCTION/ CRACK CONTROL JOINTS SHALL BE 4800mm

3.9 ALL CONCRETE REINFORCEMENT SHALL BE DETAILED, FABRICATED, LABELED, SUPPORTED, AND SPACED IN FORMS AND SECURED IN PLACE IN ACCORDANCE WITH THE PROCEDURES AND REQUIREMENTS OUTLINED IN THE LATEST EDITION OF THE "BUILDING CODE REQUIREMENTS FOR REINFORCED CONCRETE", ACI 318M, AND THE "MANUAL OF STANDARD PRACTICE FOR DETAILING REINFORCED CONCRETE STRUCTURES", ACI 315M, LATEST EDITION. BASED ON IN COUNTRY REINFORCEMENT AVAILABILITY, IT IS THE CONTRACTOR'S OPTION TO ROUND DESIGNATED ODD NUMBERED REINFORCEMENT SIZES UP (1) ONE BAR SIZE.

3.10 ALL DOWELS SHALL MATCH SIZE AND NUMBER OF MAIN REINFORCING, UNLESS NOTED OTHERWISE ON THE SHEETS.

3.11 ADDITIONAL BARS SHALL BE PROVIDED AROUND ALL FLOOR AND WALL OPENINGS AS SHOWN ON THE SHEETS.

3.12 SEE ARCHITECTURAL SHEETS FOR TYPE AND LOCATION OF ALL FLOOR FINISHES.

3.13 THE CONTRACTOR SHALL COORDINATE ADDITIONAL WALL/SLAB OPENINGS NOT SHOWN ON STRUCTURAL SHEETS. SEE MECHANICAL, ELECTRICAL, PLUMBING AND CIVIL SHEETS.

3.14 UNLESS NOTED OTHERWISE, ALL CURBS SHALL BE REINFORCED WITH AT LEAST (1)-#13 CONTINUOUS AND #13 AT 300mm O.C. DOWELS TO STRUCTURE BELOW.

3.15 THE CONTRACTOR SHALL VERIFY ALL OPENINGS, PAD SIZES, AND ANCHOR BOLTS WITH EQUIPMENT SELECTED.

3.16 FOR ALL WALLS & PIERS, PROVIDE DOWELS INTO FOOTING AT EACH VERT REINF BAR, UON DOWEL SIZE SHALL BE SAME AS VERT REINF.

3.17 PROVIDE CONCRETE POUR STOPS OR FORMED AS REQUIRED FOR INSTALLATION OF ALL CONCRETE WORK.

3.18 PROVIDE ADDITIONAL (2)-#13 x 600mm REINFORCING BARS IN SLAB-ON GRADE AT ALL RE-ENTRANT CORNERS. PLACE BARS AT MID-DEPTH OF SLAB WITH A CLEARANCE OF 50mm FROM CORNER UON.

3.19 COLD-WEATHER PLACEMENT: COMPLY WITH ACI 306.1 AND AS FOLLOWS. PROTECT CONCRETE WORK FROM PHYSICAL DAMAGE OR REDUCED STRENGTH THAT COULD BE CAUSED BY FROST, FREEZING ACTIONS, OR LOW TEMPERATURES. SUBMIT A COLD WEATHER CONCRETING PLAN FOR APPROVAL.

3.20 PROVIDE BONDING COMPOUND PER ASTM C 1059-99: SPECIFICATION FOR LATEX AGENTS FOR BONDING FRESH CONCRETE (GROUT) TO HARDENED CONCRETE.

3.21 THE FORMED SURFACES FOR REINFORCED CONCRETE SHALL ACHIEVE A "CLASS A" FINISH WHEN RECEIVING PAINT OR A "CLASS B" FINISH WHEN RECEIVING PLASTER OR TILE AS PER SPECIFICATION SECTION 03 31 00 CAST-IN-PLACE STRUCTURAL CONCRETE.

3.22 AT INTERSECTING GRADE BEAMS AND SHEAR WALLS, PROVIDE CORNER BARS AT INTERSECTIONS WITH SAME QUANTITY, SIZE AND SPACING AS HORIZONTAL BARS WITH LEG LENGTH = 50db.

3.23 REFER TO S-800 SERIES REINFORCING BAR PLACEMENT DRAWINGS DEFINING LENGTHS, BENDS, AND SPACINGS FOR ALL STRUCTURAL CONCRETE. THE S-800 SERIES DRAWING ARE BASED ON THE S-400, S-500, S-600, AND S-700 SERIES DRAWING SCHEDULES, DETAILS, AND DIAGRAMS.

4.0 CONCRETE MASONRY

4.1 MASONRY CONSTRUCTION SHALL CONFORM TO SPECIFICATION FOR MASONRY STRUCTURES (ACI 530.1) UON.

4.2 STRENGTH OF MASONRY MATERIALS SHALL BE AS FOLLOWS:

a. CONCRETE MASONRY UNITS SHALL BE NORMAL WEIGHT, GRADE N, TYPE 1, CONFORMING TO ASTM C-90 AND HAVE A MINIMUM COMPRESSIVE STRENGTH OF 10.4 MPa ON THE NET AREA.

b. MORTAR SHALL CONFORM TO ASTM C-270 TYPE S.

c. GROUT FOR MASONRY SHALL BE NORMAL WEIGHT AND HAVE A MINIMUM COMPRESSIVE STRENGTH OF 14 MPa AT 28 DAYS. GROUT SHALL CONFORM TO ASTM C476M. GROUT LIFTS SHALL NOT EXCEED 1,400mm.

d. REINFORCED MASONRY SHALL HAVE A STRENGTH F'm = 10 MPa. (F'm IS THE COMPRESSIVE STRENGTH OF THE MASONRY AT 28 DAYS AS DETERMINED BY PRISM TESTS).

4.3 ALL VERTICAL REINFORCEMENT FOR CONCRETE MASONRY SHALL BE ASTM A615M-96a, GRADE 420 MPa. ALL SPLICES SHALL BE LAPPED 48 BAR DIAMETERS MINIMUM.

4.4 BOND BEAMS SHALL BE SPACED AT 1200mm OC VERTICALLY. BOND BEAM REINFORCING SHALL BE CONTINUOUS AND PROVIDED AT WALL INTERSECTIONS AND WALL CORNERS (REFERENCE CONCRETE MASONRY NOTE 4.11). ALL BOND BEAM REINFORCING SHALL BE CONTINUOUS AND HAVE STANDARD ACI HOOKS AT EACH END. PROVIDE STANDARD BAR SPLICES AS SPECIFIED. AS AN ALTERNATE TO CMU BOND BEAMS, IT IS THE CONTRACTOR'S OPTION TO PROVIDE 200mm x 200mm CONTINUOUS CAST-IN-PLACE CONCRETE BOND BEAMS WITH (2)-#16 IN LIEU OF CMU BOND BEAMS INDICATED ON THE DRAWINGS.

4.5 SEE TYPICAL DETAILS FOR MINIMUM REINFORCEMENT REQUIREMENTS FOR CMU WALLS. PROVIDE STANDARD BAR SPLICES AS SPECIFIED. ALL VERTICAL REINFORCEMENT EXTENDS FULL HEIGHT OF WALL.

4.6 CMU CELLS THAT REQUIRE VERTICAL REINFORCING BARS AS INDICATED ON THE CONTRACT DRAWINGS AND/OR SPECS SHALL HAVE REINF BARS PLACED IN CENTERS OF CMU CELLS AND CONTINUOUSLY GROUTED UON.

4.7 ALL CMU CELLS, OPEN CAVITIES, AND AIR SPACES OF ALL EXTERIOR WALLS SHALL BE GROUTED TO STOP FRAGMENTS FROM MORTAR BLAST.

4.8 CONTRACTOR SHALL COORDINATE LOCATION OF ALL OPENINGS SEE ARCH, MECH, ELEC, AND PLUMBING SHEETS FOR SIZE AND LOCATION OF OPENINGS.

4.9 MASONRY WALLS SHALL NOT BE BACK FILLED PRIOR TO THE MORTAR AND GROUT ATTAINING THEIR RESPECTIVE MAXIMUM DESIGN STRENGTHS PER SPECIFICATIONS.

4.10 PROVIDE GALVANIZED MORTAR/GROUT SCREEN W/ 3mm MESH WHERE CELLS BELOW ARE NOT GROUTED.

4.11 AT INTERSECTING BOND BEAMS, PROVIDE CORNER BAR FOR EACH HORIZONTAL BAR IN BOND BEAMS AT INTERSECTING WALLS. USE SAME SIZE AND SPACING AS HORIZONTAL BARS WITH LEG LENGTH = 50db.

4.12 THE ALTERNATE TOP OF CMU WALL BRACING DETAIL(S) SHOWN ON S-701 CAN BE UTILIZED AT THE CONTRACTOR'S OPTION IN PLACE OF THE "SLEEVED DOWEL" WALL CONNECTIONS DEPICTED ON S-400 AND S-500 SERIES DRAWINGS. IN ADDITION, ALTERNATE DETAIL(S) SHOW CAST-IN-PLACE WALL BOND BEAMS THAT CAN BE UTILIZED AT THE CONTRACTOR'S OPTION IN PLACE OF THE STANDARD CMU BOND BEAMS CONSTRUCTED OF CMU BLOCKS.

5.0 COLD-FORMED METAL FRAMING

5.1 ALL COLD-FORMED METAL FRAMING MEMBERS SHALL CONFORM TO ASTM A1003M, STRUCTURAL GRADE ST340 (MPa), WITH A GALVANIZED COATING OF Z275 OR BETTER IN ACCORDANCE WITH ASTM A653M.

5.2 ALL COLD-FORMED METAL FRAMING MEMBERS SHALL HAVE THE FOLLOWING MINIMUM PROPERTIES:

a. MINIMUM METAL THICKNESS:
TRACK = 1.37mm;
STUD/OTHER = 1.09mm

b. MINIMUM FLANGE WIDTH:
TRACK = 38mm;
STUD/OTHER = 35mm

c. MINIMUM MEMBER DEPTH:
ALL SECTIONS = 152.2mm

d. PURLIN (HAT CHANNEL)
DEPTHxWIDTH(FLAT TOP)xTHICK = 25mmx42mmx1.59mm

5.3 ALL CONNECTIONS SHALL BE MADE WITH CORROSION RESISTANT (ASTM A153M), SELF-DRILLING, SELF-TAPPING STEEL DRILL SCREWS IN ACCORDANCE WITH ASTM C1513. SCREWS SHALL HAVE A LOW PROFILE HEAD BENEATH ROOF DECK, AND STANDARD HEAD ALL OTHER LOCATIONS.

5.4 FABRICATE COLD FORMED METAL FRAMING AND ACCESSORIES PLUMB, SQUARE AND TRUE TO LINE, WITH CONNECTIONS SECURELY FASTENED ACCORDING TO AISI STANDARD FOR COLD FORMED STEEL FRAMING.

5.5 CUT FRAMING MEMBERS BY SAWING OR SHEATHING, DO NOT TORCH CUT.

5.6 INSTALL FRAMING MEMBERS IN ONE-PIECE LENGTHS UNLESS SPLICE CONNECTIONS ARE INDICATED FOR TRACK OR TENSION MEMBERS

5.7 INSTALL TEMPORARY BRACING AND SUPPORTS TO SECURE FRAMING DURING CONSTRUCTION. MAINTAIN BRACING AND SUPPORTS IN PLACE UNTIL THE STRUCTURE HAS BEEN COMPLETED WITH ALL CONNECTIONS AND PERMANENT BRACING SECURED.

6.0 STRUCTURAL DESIGN CRITERIA

6.1 ALL DESIGNS SHALL CONFORM TO THE PROVISIONS OF THE IBC 2006 AND UFC AS APPLICABLE.

6.2 DESIGN LOADS

6.2.1 DEAD LOADS (PER IBC 2006 & UFC 3-310-01)

| | |
|---|---|
| MECH/ELEC/PLUMBING | 0.20 kPa |
| MISCELLANEOUS | 0.15 kPa |
| COLD-FORMED FRAMING | 0.20 kPa |
| INSULATION | 0.10 kPa |
| METAL ROOF PANEL | 0.14 kPa |
| | 0.79 kPa |
| FLOOR PARTITION ALLOWANCE | 0.96 kPa |

6.2.2 LIVE LOADS (PER IBC 2006 & UFC 3-310-01)

| | |
|---|---|
| ROOF | 1.00 kPa |
| CORRIDOR (2-STORY BLDG ONLY) | 4.80 kPa |
| ALL OTHERS (2-STORY BLDG ONLY) | 2.40 kPa |
| SLAB ON GRADE | 4.80 kPa |

6.2.3 SNOW LOADS (PER IBC 2006 & UFC 3-310-01)

| | |
|---|---|
| GROUND SNOW LOAD (Pg) | 1.2 kPa |
| SNOW IMPORTANCE FACTOR (I) | 1.0 |
| SNOW EXPOSURE FACTOR (Ce) | 1.0 |
| THERMAL FACTOR (Ct) | 1.0 |

6.2.4 WIND LOADS (PER IBC 2006)

| | |
|---|---|
| BASIC WIND SPEED | 137 km/h |
| WIND IMPORTANCE FACTOR | 1.0 |
| WIND EXPOSURE CATEGORY | D |
| DIRECTIONALITY COEFFICIENT (Kd) | 0.85 |
| TOPOGRAPHIC FACTOR (Kzt) | 1.0 |

6.2.5 SEISMIC LOADS (PER IBC 2006 & UFC 3-310-04)

| | |
|---|---|
| OCCUPANCY USE CATEGORY | II |
| SEISMIC IMPORTANCE FACTOR (Ie) | 1.0 |
| SEISMIC SITE CLASS | D |
| $S_s$ = 1.50 (REDUCED FROM 2.40 PER ASCE 7-05, 12.8.1.3 FOR A BUILDING WITHOUT IRREGULARITIES) | |
| $S_1$ = 1.20 | |
| $S_{DS}$ = 1.0 | |
| $S_{D1}$ = 1.20 | |
| SEISMIC DESIGN CATEGORY | E |
| SEISMIC RESISTING SYSTEM: -SPECIAL REINFORCED CONCRETE SHEAR WALL | |
| RESPONSE MODIFICATION FACTOR (R) | 6 |
| RESPONSE COEFFICIENT (Cs) | 0.167 |
| SEISMIC ANALYTICAL PROCEDURE = | EQUIV LATERAL FORCE |
| SEISMIC BASE SHEAR | 595 kN |

APPROVED:

A/E DESIGNER OF RECORD

SEAL:

GEORGIA REGISTERED 4-29-10 No. 27141 PROFESSIONAL ENGINEER CHRISTOPHER W. WHITMORE

US ARMY CORPS OF ENGINEERS
AFGHANISTAN ENGINEER DISTRICT

| Mark | Description | Date | Appr. |
|---|---|---|---|
| | | | |

Date: 2/23/10
Rev: 0
Design file no.
Drawing code:
File name: ANAADFS-001GN
Plot date: 2/23/2010
Plot scale: X:X

Designed by: KMF/MMY
Dwn by: RCG
Ckd by: CWW
Reviewed by: LHM
Submitted by:
BAKER

U.S. ARMY CORPS OF ENGINEERS
AFGHANISTAN ENGINEER DISTRICT
APO AE 96338

*Michael Baker Jr., Inc*
*A unit of Michael Baker Corporation*
Airside Business Park
100 Airside Drive
Moon Township, PA 15108
www.mbakercorp.com

AFGHAN NATIONAL ARMY
REGIONAL MILITARY TRAINING CENTER
STANDARD DESIGN

ADMIN INSTRUCTORS OFFICE

GENERAL NOTES & DESIGN CRITERIA

Sheet reference number:
S-001

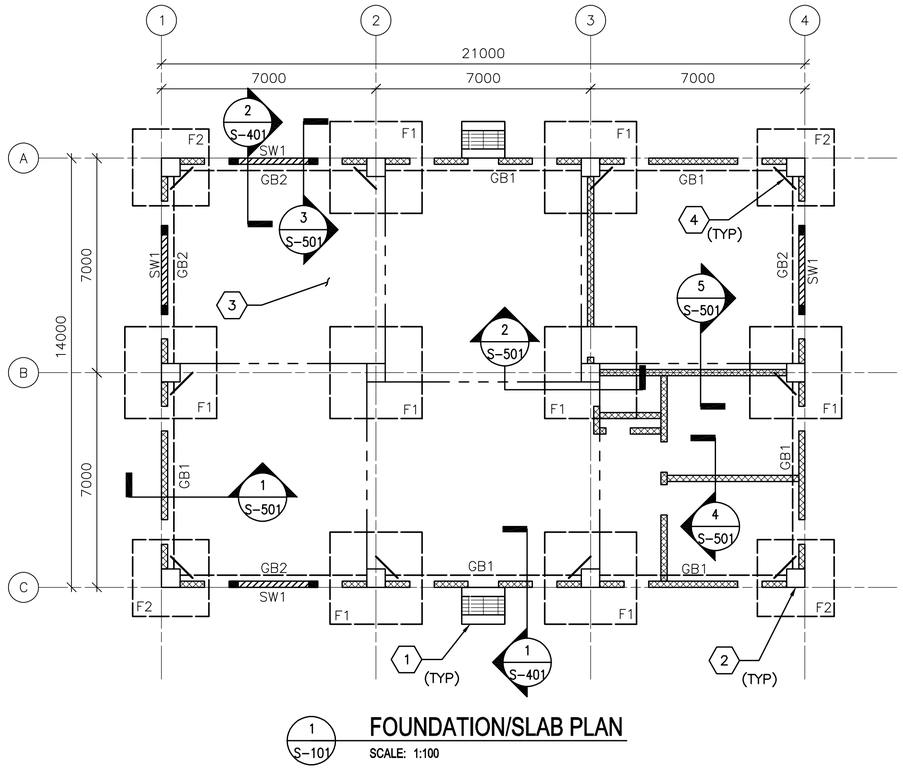


1 S-101 **FOUNDATION/SLAB PLAN**

SCALE: 1:100

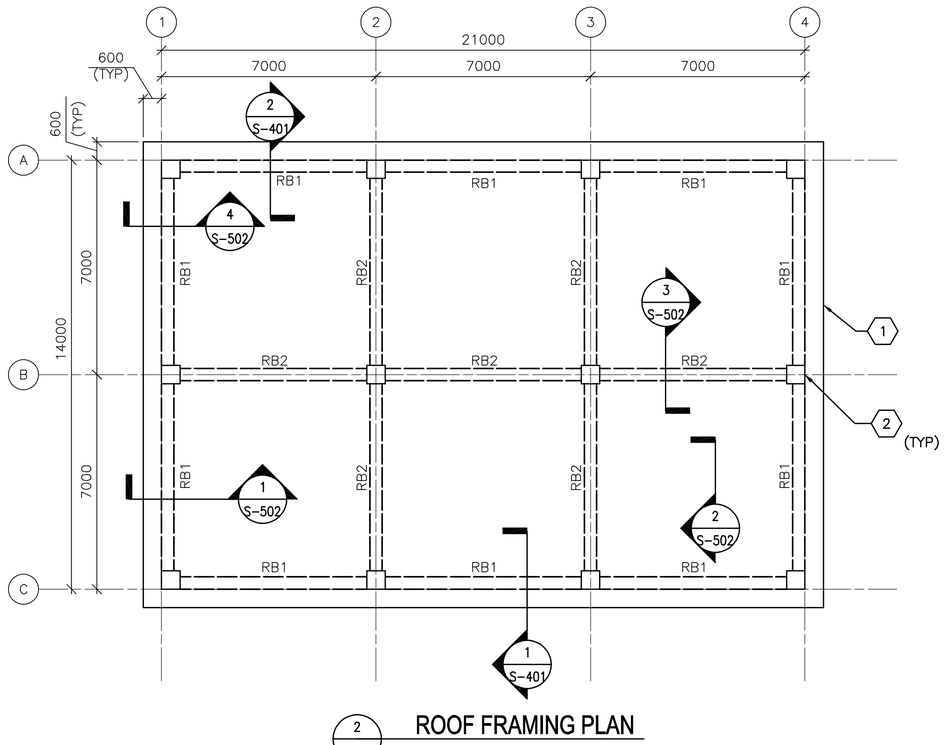


2 S-101 **ROOF FRAMING PLAN**

SCALE: 1:100

## FOUNDATION/SLAB PLAN NOTES:

1. REFER TO SHEET S-001 FOR STRUCTURAL NOTES AND DESIGN CRITERIA.
2. FINISH FIRST FLOOR ELEVATION SHALL BE (DATUM 0.00) ALL PLUS OR MINUS DIMENSIONS INDICATED ON PLAN OR REFERRED TO IN NOTES RELATE TO FINISH FLOOR ELEVATION.
3. SLAB-ON-GRADE IS 150 WITH #13 @ 300 OC EW LOCATED 38 FROM T/SLAB.
4. TOP OF EXTERIOR FOOTINGS SHALL BE -950 UNLESS OTHERWISE INDICATED.
5. TOP OF INTERIOR FOOTINGS WITHOUT GRADE BEAM ABOVE SHALL BE -600.
6. COLUMN FOOTINGS INDICATED BY F# ON PLAN. REFER TO COLUMN FOOTING SCHEDULE ON SHEET S-601.
7. REFER TO COLUMN SCHEDULE ON SHEET S-601.
8. GRADE BEAM INDICATED BY GB# ON PLAN, REFER TO BEAM SCHEDULE ON SHEET S-601.
9. SHEARWALL INDICATED BY SW# ON PLAN, REFER TO SHEARWALL SCHEDULE ON SHEET S-601.
10. SEE TYP EXTERIOR AND INTERIOR CMU WALL REINFORCING DETAILS ON SHEET S-701.
11. SEE MECHANICAL AND ELECTRICAL SHEETS FOR CONCRETE PAD LOCATIONS, SIZES, AND THICKNESS NOT SHOWN. SEE SHEET S-701 FOR DETAILS.
12. THICKENED SLAB UNDER CMU PERIMETER & PARTITION WALLS NOT SHOWN FOR CLARITY.

## FOUNDATION/SLAB PLAN KEY NOTES: (X)

1. CONC SLAB (ENTRANCE)-SEE ARCH DWGS FOR INFORMATION
2. REINF CONC COLUMN
3. REINF CONC SLAB-ON-GRADE
4. (2)-#13 RE-ENTRANT CORNER BARS (TYP) - SEE S-701 FOR INFORMATION

## FOUNDATION/SLAB PLAN LEGEND:

REINF CONC SHEAR WALL

REINF CMU WALL

CONTROL JOINT

## ROOF FRAMING PLAN NOTES:

1. REFER TO SHEETS S-001 FOR STRUCTURAL NOTES AND DESIGN CRITERIA.
2. TOP OF SLAB ELEVATION = 3600 UNLESS NOTED OTHERWISE.
3. ROOF SLAB IS 250 WITH #16 @ 300 OC EW T&B.
4. ROOF BEAM INDICATED BY RB# ON PLAN. REFER TO BEAM SCHEDULE ON SHEET S-601.
5. COORDINATE WITH ARCHITECTURAL SHEETS FOR COLD-FORMED STEEL OVERBUILD FRAMING ABOVE ROOF SLAB.
6. COLD-FORMED METAL OVERBUILD ROOF FRAMING NOT SHOWN FOR CLARITY. SEE OVERBUILD ROOF FRAMING DETAILS AND SECTIONS ON SHEET S-702.
7. CMU PARTITION WALLS (BELOW ROOF SLAB) NOT SHOWN FOR CLARITY.
8. OVERHANG AREAS OF ROOF SLAB CONTAIN ROOF VENT PENETRATIONS. REFERENCE ARCHITECTURAL DRAWINGS FOR INFORMATION.

## ROOF FRAMING KEY NOTES: (X)

1. CONC ROOF SLAB (BELOW ROOF OVERBUILD)
2. REINF CONC COLUMN (BELOW CONC ROOF SLAB)

0 2000 4000

SCALE: 1:100

UNLESS OTHERWISE NOTED, LINEAR DIMENSIONS SHOWN ON DRAWINGS ARE IN MILLIMETERS (mm)

APPROVED:

A/E DESIGNER OF RECORD

SEAL:

GEORGIA REGISTERED 1-27-10 No. 27141 PROFESSIONAL ENGINEER CHRISTOPHER W. WHITMORE

US ARMY CORPS OF ENGINEERS
AFGHANISTAN ENGINEER DISTRICT

| Mark | Description | Date | Appr. | Mark | Description | Date | Appr. |
|---|---|---|---|---|---|---|---|
| | | | | | | | |

Date: 2/23/10
Design file no.
Drawing code:
Rev: 0
File name: ANAIOFS-101FFP
Plot date: 2/23/2010
Plot scale: x:X

Designed by: KMP/ MMY
Dwn by: RCG
Ckd by: CWW
Reviewed by: LHM
Submitted by: BAKER

U.S. ARMY CORPS OF ENGINEERS
AFGHANISTAN ENGINEER DISTRICT
APO AE 96338

*Michael Baker Jr., Inc*
*A unit of Michael Baker Corporation*
Airside Business Park
100 Airside Drive
Moon Township, PA 15108
www.mbakercorp.com

AFGHAN NATIONAL ARMY
REGIONAL MILITARY TRAINING CENTER
STANDARD DESIGN

ADMIN INSTRUCTORS OFFICE

FOUNDATION/SLAB &
ROOF FRAMING PLANS

Sheet reference number:
S-101

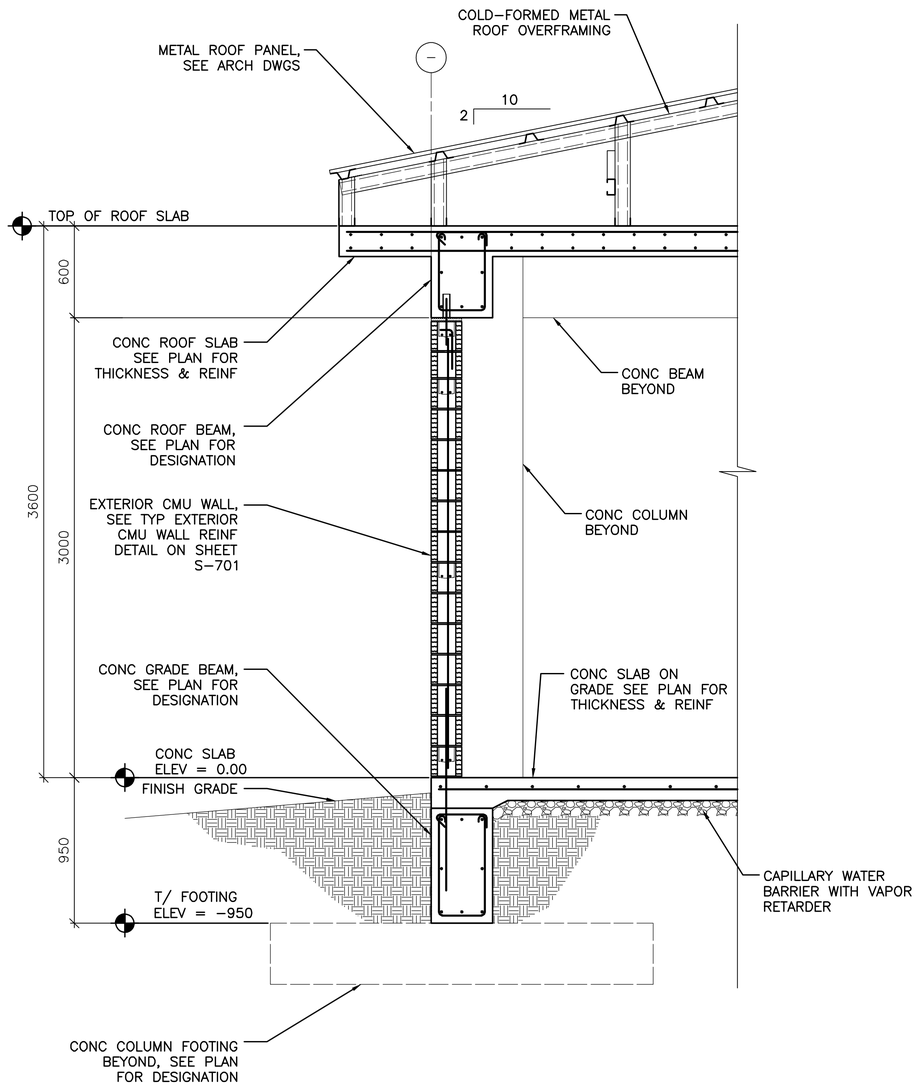


1 S–101 **TYPICAL WALL SECTION AT EXTERIOR MASONRY WALL**

SCALE: 1:20

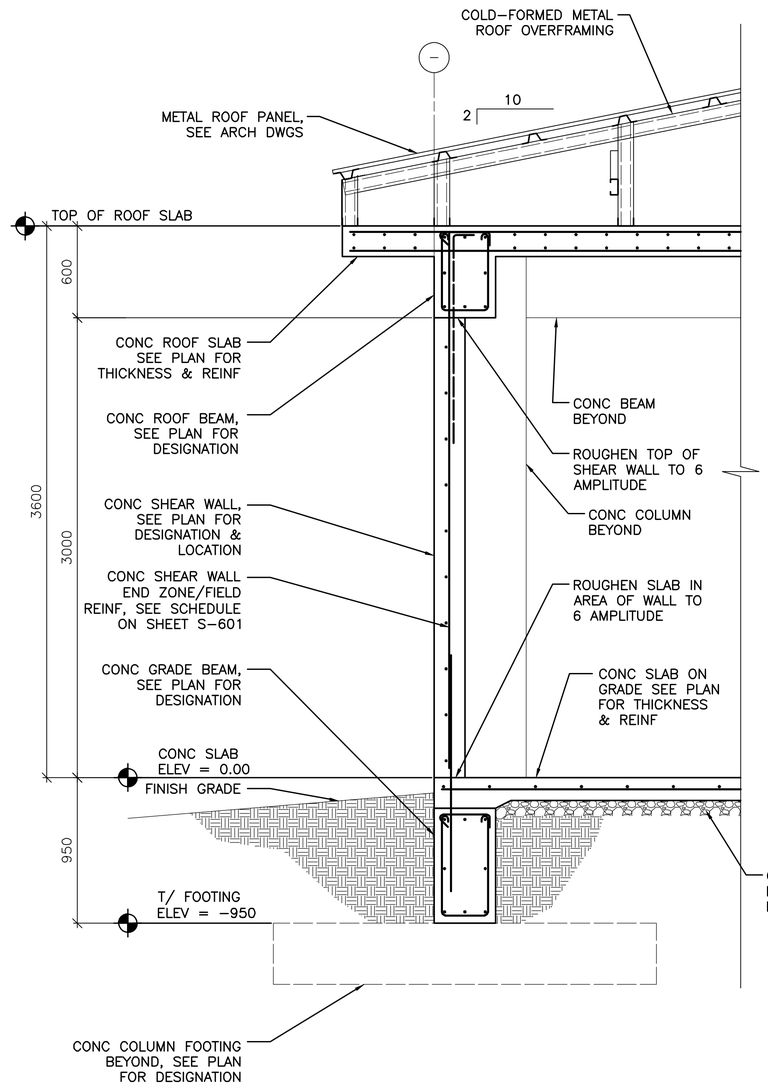


2 S–101 **TYPICAL WALL SECTION AT CONCRETE SHEAR WALL**

SCALE: 1:20

0 400 800

SCALE: 1:20

UNLESS OTHERWISE NOTED, LINEAR DIMENSIONS SHOWN ON DRAWINGS ARE IN MILLIMETERS (mm)

APPROVED:

A/E DESIGNER OF RECORD

SEAL:

GEORGIA REGISTERED 1-19-10 No. 27141 PROFESSIONAL ENGINEER CHRISTOPHER W. WHITMORE

US ARMY CORPS OF ENGINEERS
AFGHANISTAN ENGINEER DISTRICT

| Mark | Description | Date | Appr. |
|---|---|---|---|
| | | | |

Date: 2/23/10
Design file no.
Drawing code:
File name: ANAIOFS-401BS
Plot date: 2/23/2010
Plot scale: x:x

Designed by: KMP/MMY
Dwn by: RCG
Ckd by: CWW
Reviewed by: LHM
Submitted by: BAKER

U.S. ARMY CORPS OF ENGINEERS
AFGHANISTAN ENGINEER DISTRICT
APO AE 96338

*Michael Baker Jr., Inc*
*A unit of Michael Baker Corporation*
Airside Business Park
100 Airside Drive
Moon Township, PA 15108
www.mbakercorp.com

AFGHAN NATIONAL ARMY
REGIONAL MILITARY TRAINING CENTER
STANDARD DESIGN

ADMIN INSTRUCTORS OFFICE

BUILDING SECTIONS

Sheet reference number:
S–401

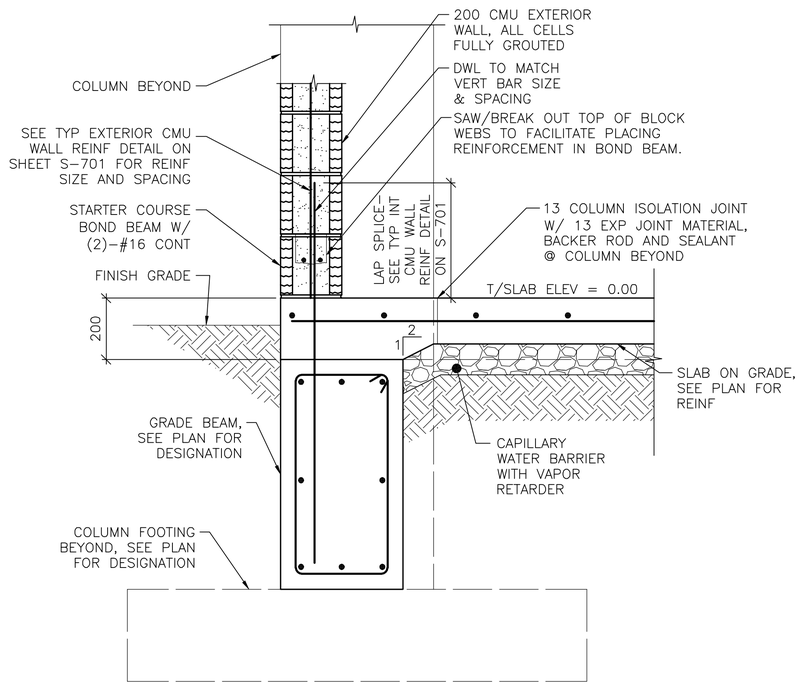


NOTE:
1. SECTION IS SIMILAR FOR INTERIOR CMU PARTITIONS OVER GRADE BEAMS SHOWING THICKENED 200 CONC SLAB AREA.

1 / S-101 **SECTION** SCALE: 1:10

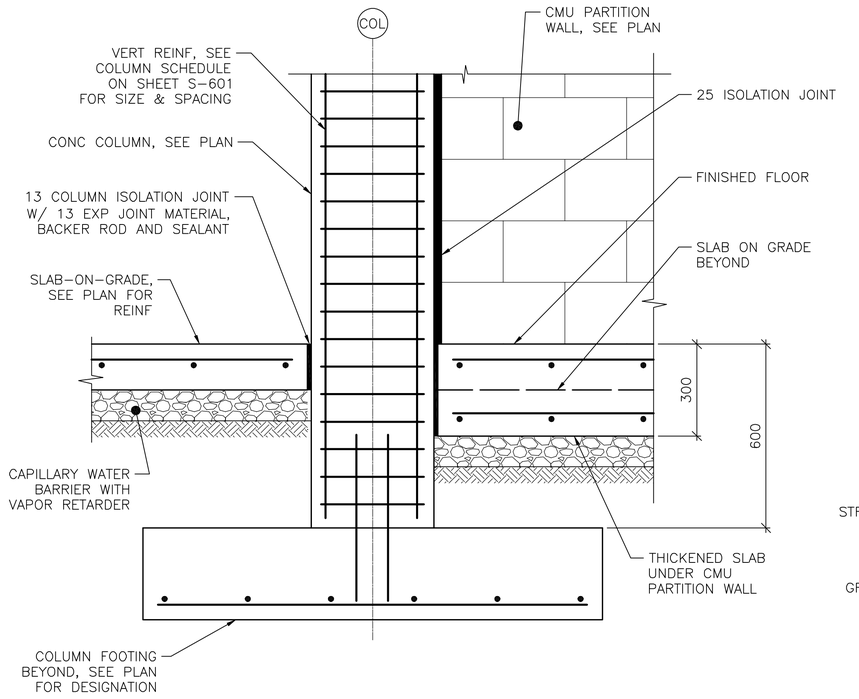


2 / S-101 **SECTION** SCALE: 1:10

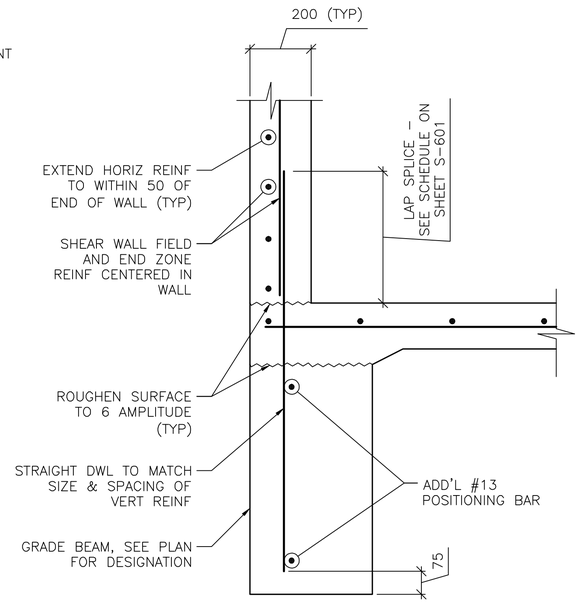


NOTE:
1. SECTION DEPICTS SHEAR WALL TERMINATION ONLY. GRADE BEAM REINFORCING NOT SHOWN FOR CLARITY
2. SEE SHEET S-601 AND SHEET S-702 FOR SCHEDULED FIELD AND END ZONE REINF.

3 / S-101 **SECTION** SCALE: 1:10

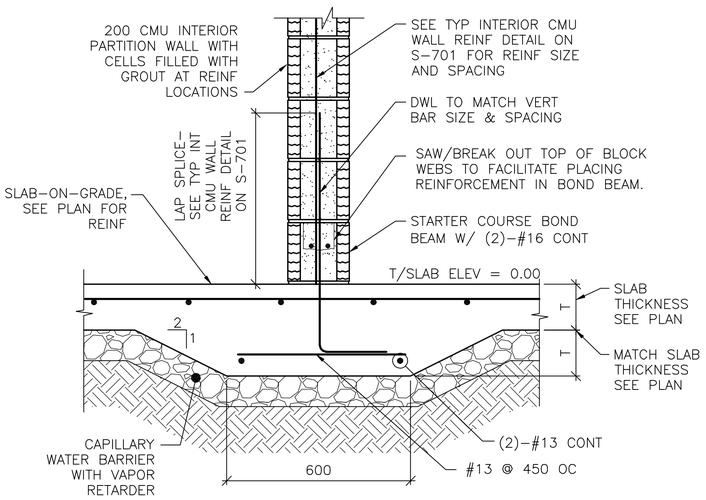


4 / S-101 **SECTION** SCALE: 1:10

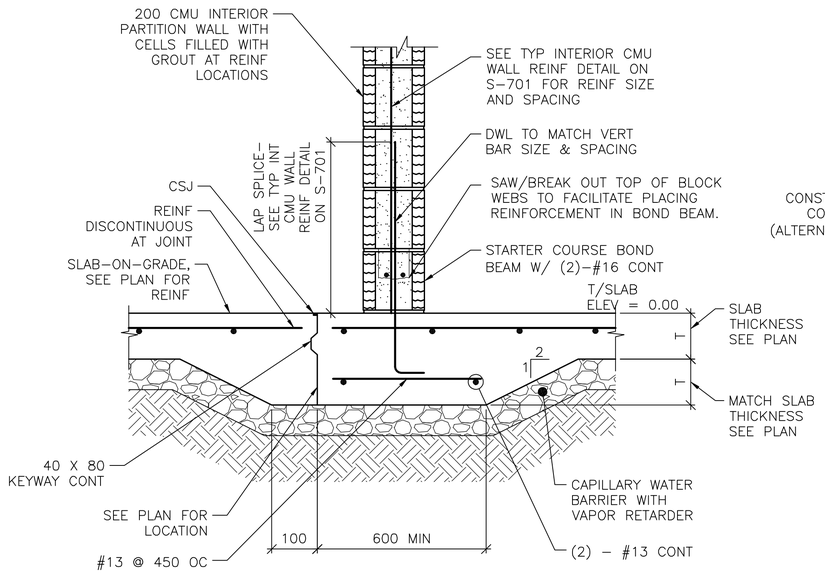


5 / S-101 **SECTION** SCALE: 1:10

NOTE:
1. DETAIL IS APPLICABLE AT CONTROL JOINTS RUNNING PARALLEL TO CMU WALLS AND WITHIN 300 OF FACE OF WALL.

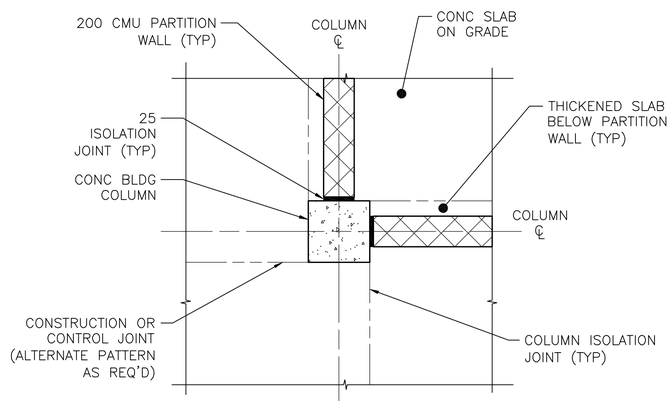


A / S-501 **COLUMN ISOLATION JOINT DETAIL** SCALE: NTS

0 200 400
SCALE: 1:10

UNLESS OTHERWISE NOTED, LINEAR DIMENSIONS SHOWN ON DRAWINGS ARE IN MILLIMETERS (mm)

APPROVED:

A/E DESIGNER OF RECORD

SEAL:

GEORGIA REGISTERED 4-23-10 No. 27141 PROFESSIONAL ENGINEER CHRISTOPHER W. WHITMORE

US ARMY CORPS OF ENGINEERS
AFGHANISTAN ENGINEER DISTRICT

| Mark | Description | Date | Appr. |
|---|---|---|---|
| | | | |

Rev: 0
Date: 2/23/10
Design file no.
Drawing code:
File name: ANAIOFS-501SC
Plot date: 2/23/2010
Plot scale: x:x

Designed by: KCP/MMY
Dwn by: RCG
Ckd by: CWW
Reviewed by: LHM
Submitted by: BAKER

U.S. ARMY CORPS OF ENGINEERS
AFGHANISTAN ENGINEER DISTRICT
APO AE 96338

Michael Baker Jr., Inc
A unit of Michael Baker Corporation
Airside Business Park
100 Airside Drive
Moon Township, PA 15108
www.mbakercorp.com

AFGHAN NATIONAL ARMY
REGIONAL MILITARY TRAINING CENTER
STANDARD DESIGN

ADMIN INSTRUCTORS OFFICE

FOUNDATION SECTIONS

Sheet reference number:
S-501

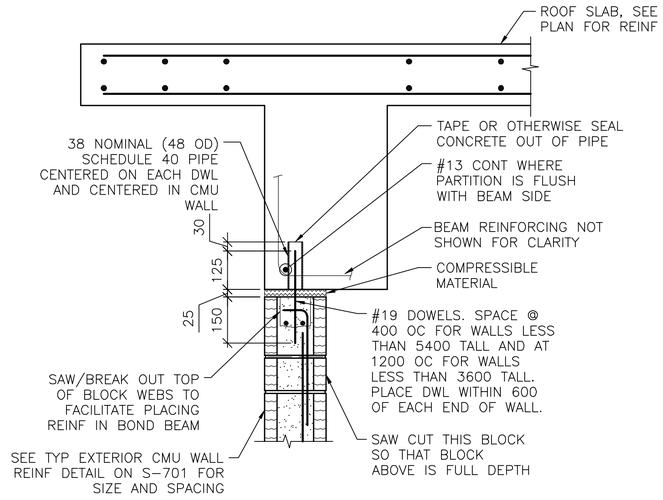


NOTES:
1. EXTEND DOWEL REINF TO 25 CLEAR FROM TOP OF CMU WALL.

1 S-101 **SECTION**
SCALE: 1:10

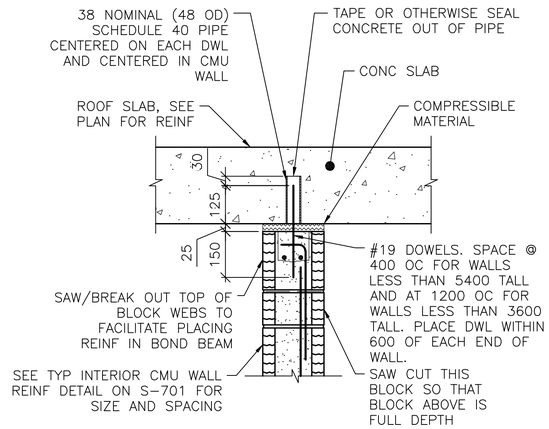


NOTES:
1. EXTEND DOWEL REINF TO 25 CLEAR FROM TOP OF CMU WALL.
2. SLAB REINF NOT SHOWN FOR CLARITY.

2 S-101 **SECTION**
SCALE: 1:10

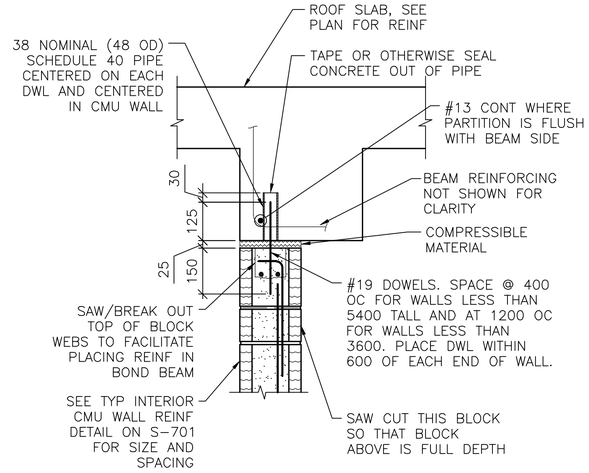


NOTES:
1. EXTEND DOWEL REINF TO 25 CLEAR FROM TOP OF CMU WALL.
2. PARTITION WALL MAY BE CENTERED UNDER THE BEAM OR FLUSH AS SHOWN. SEE PLAN FOR LOCATION.
3. SLAB REINF NOT SHOWN FOR CLARITY.

3 S-101 **SECTION**
SCALE: 1:10

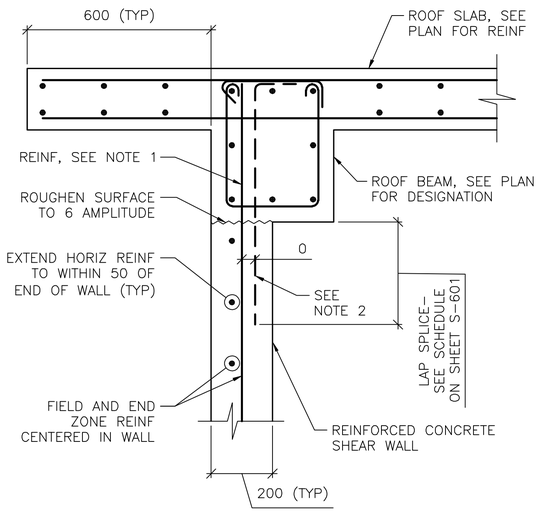


NOTES:
1. TERMINATE "FIELD" VERT REINF & END ZONE REINF @ 50 CLEAR FROM TOP OF ROOF SLAB.
2. WHERE END ZONE REINFORCING CANNOT BE DEVELOPED IN BEAM DEPTH, PROVIDE HOOKED DWLS SAME SIZE & SPACING. PROVIDE TENSION LAP BELOW ROOF BEAM.
3. SEE SHEET S-601 AND SHEET S-702 FOR SCHEDULED FIELD AND END ZONE REINF.

4 S-101 **SECTION**
SCALE: 1:10

0 200 400
SCALE: 1:10

UNLESS OTHERWISE NOTED, LINEAR DIMENSIONS SHOWN ON DRAWINGS ARE IN MILLIMETERS (mm)

APPROVED:

A/E DESIGNER OF RECORD

SEAL:

GEORGIA REGISTERED 2-27-10 No. 27141 PROFESSIONAL ENGINEER CHRISTOPHER W. WHITMORE

US ARMY CORPS OF ENGINEERS
AFGHANISTAN ENGINEER DISTRICT

| Mark | Description | Date | Appr. |
|---|---|---|---|
| | | | |

Date: 2/23/10
Design file no.
Drawing code:
File name: ANAAOFS-6028C
Plot date: 2/23/2010
Plot scale: x:x
Rev: 0

Designed by: KMP/MMY
Drwn by: RCG
Ckd by: CWW
Reviewed by: LHM
Submitted by: BAKER

U.S. ARMY CORPS OF ENGINEERS
AFGHANISTAN ENGINEER DISTRICT
APO AE 96338

*Michael Baker Jr., Inc*
*A unit of Michael Baker Corporation*
Airside Business Park
100 Airside Drive
Moon Township, PA 15108
www.mbakercorp.com

AFGHAN NATIONAL ARMY
REGIONAL MILITARY TRAINING CENTER
STANDARD DESIGN

ADMIN INSTRUCTORS OFFICE

FRAMING SECTIONS

Sheet reference number:
S-502

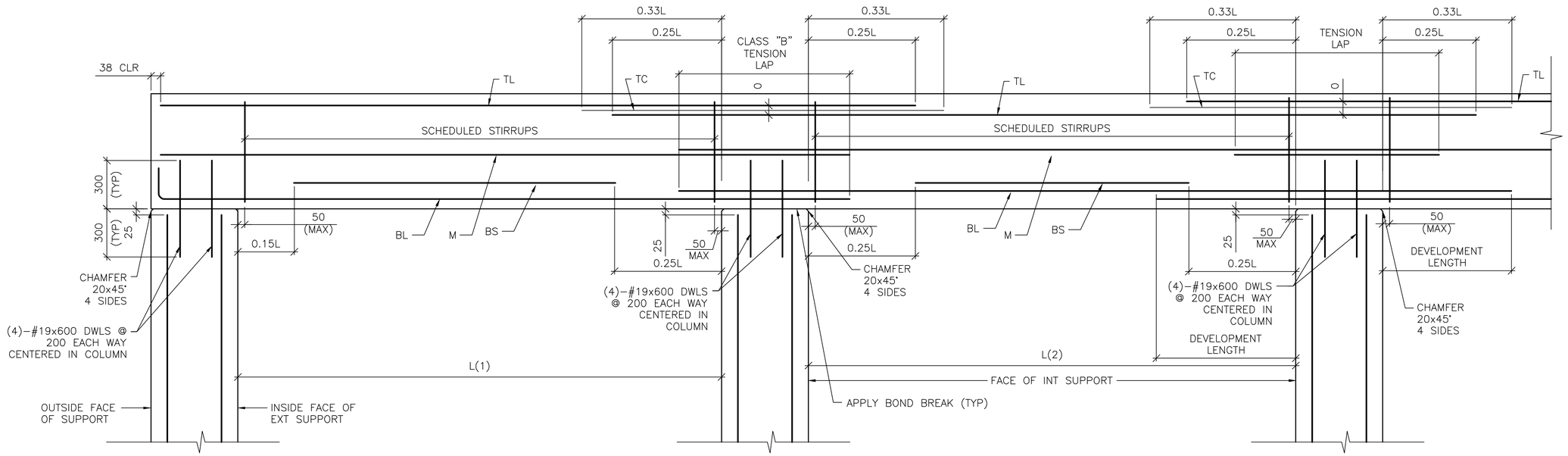


DETAIL NOTE:
1. WORK THIS DETAIL WITH BEAM SCHEDULE ON SHEET S-601.
2. L=GREATEST OF ADJACENT SPANS L(1) OR L(2)
3. ONLY COLUMN CORNER BARS ARE SHOWN

1 / S-503 **ROOF BEAM REINFORCING DETAIL**

SCALE: NTS

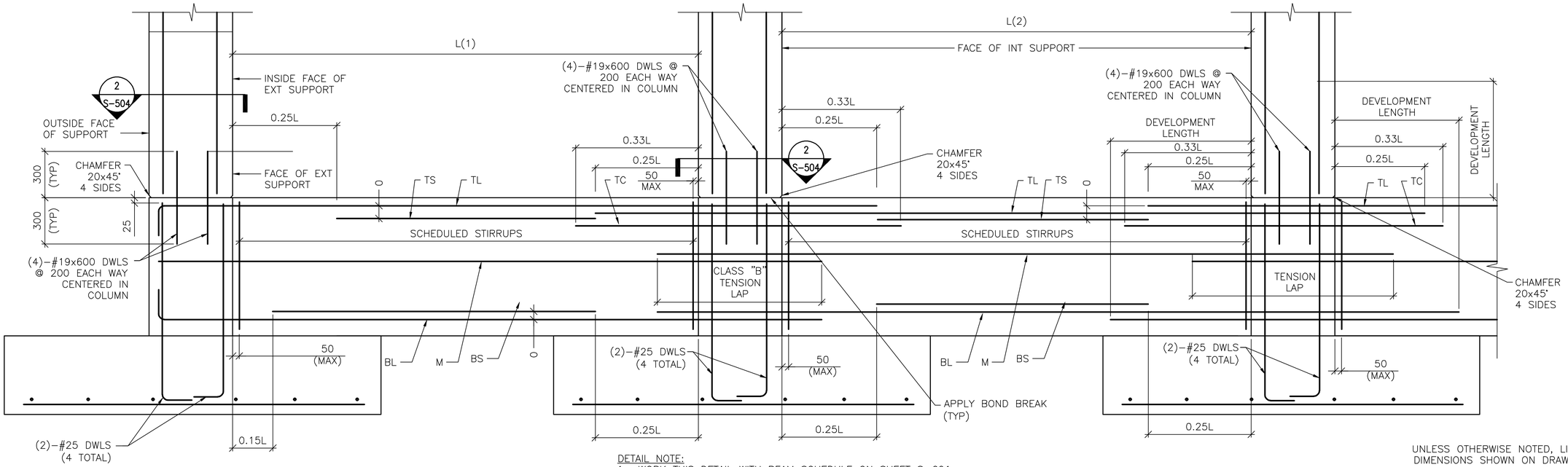


DETAIL NOTE:
1. WORK THIS DETAIL WITH BEAM SCHEDULE ON SHEET S-601.
2. L=GREATEST OF ADJACENT SPANS L(1) OR L(2)
3. ONLY COLUMN CORNER BARS ARE SHOWN.

2 / S-503 **GRADE BEAM REINFORCING DETAIL**

SCALE: NTS

UNLESS OTHERWISE NOTED, LINEAR DIMENSIONS SHOWN ON DRAWINGS ARE IN MILLIMETERS (mm)

APPROVED:

A/E DESIGNER OF RECORD

SEAL:

GEORGIA REGISTERED 1-27-10 No. 27141 PROFESSIONAL ENGINEER CHRISTOPHER W. WHITMORE

US ARMY CORPS OF ENGINEERS
AFGHANISTAN ENGINEER DISTRICT

| Mark | Description | Date | Appr. |
|---|---|---|---|

Rev: 0
Date: 2/23/10
Design file no.
Drawing code: ANAADFS-503DT
Designed by: KMP/MMY
Dwn by: RCG
Ckd by: CWW
Reviewed by: LHM
Submitted by: BAKER
Plot date: 2/23/2010
Plot scale: XX

U.S. ARMY CORPS OF ENGINEERS
AFGHANISTAN ENGINEER DISTRICT
APO AE 96338

*Michael Baker Jr., Inc*
*A unit of Michael Baker Corporation*
Airside Business Park
100 Airside Drive
Moon Township, PA 15108
www.mbakercorp.com

AFGHAN NATIONAL ARMY
REGIONAL MILITARY TRAINING CENTER
STANDARD DESIGN

ADMIN INSTRUCTORS OFFICE

BEAM & COLUMN DETAILS

Sheet reference number:
S-503

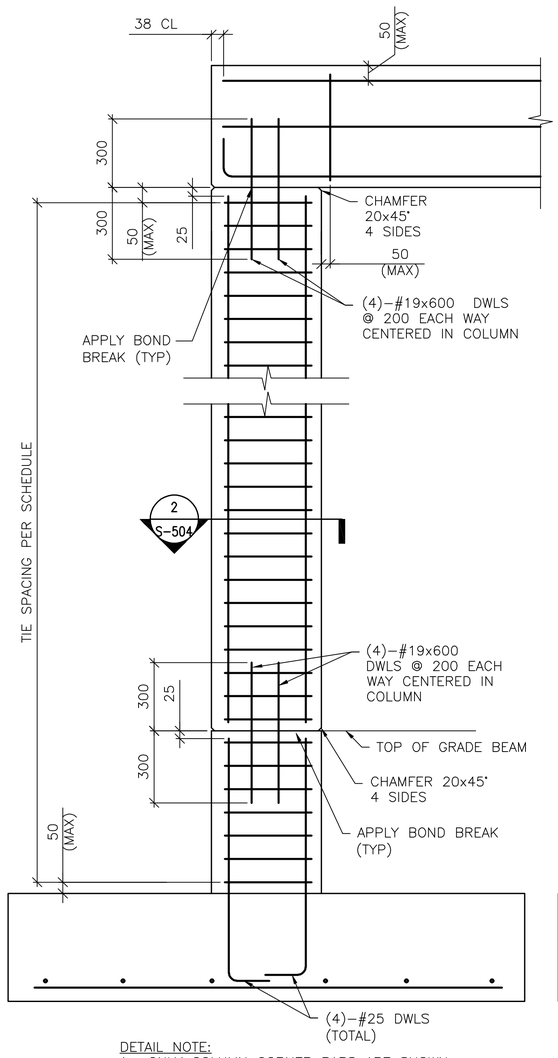


DETAIL NOTE:
1. ONLY COLUMN CORNER BARS ARE SHOWN

## 1 S-504 1-STORY COLUMN REINF DETAILS

SCALE: NTS

(WITH GRADE BEAM)

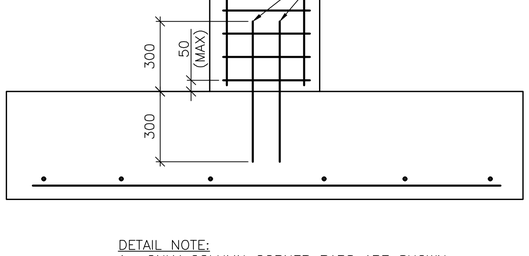


DETAIL NOTE:
1. ONLY COLUMN CORNER BARS ARE SHOWN

## 1 S-504 1-STORY COLUMN REINF DETAILS

SCALE: NTS

(WITHOUT GRADE BEAM)

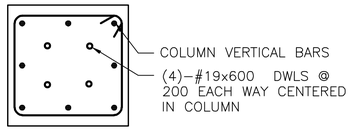


DETAIL NOTE:
1. INTERIOR TIES NOT SHOWN FOR CLARITY. REFER TO DETAIL A THIS SHEET FOR INTERIOR TIE CONFIGURATION.

## 2 S-503 2 S-504 SECTION

SCALE: NTS

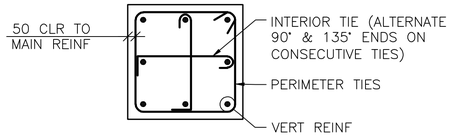


## A S-504 8 BAR COLUMN

SCALE: NTS

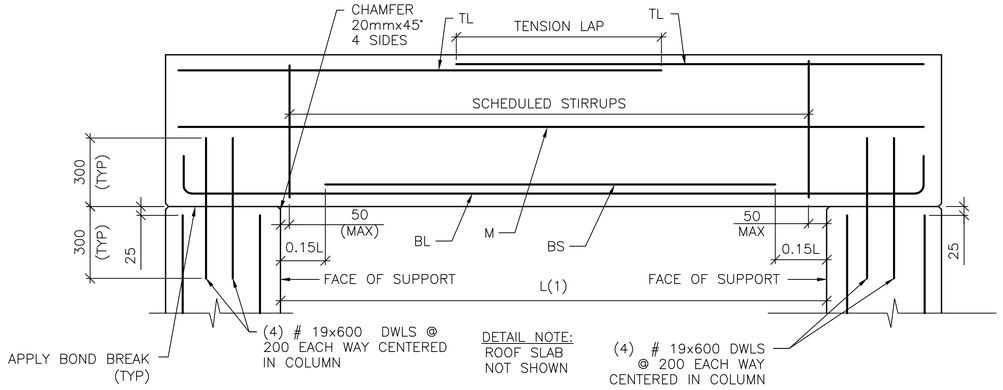


## 3 S-504 SINGLE SPAN ROOF BEAM REINFORCING DETAIL

SCALE: NTS

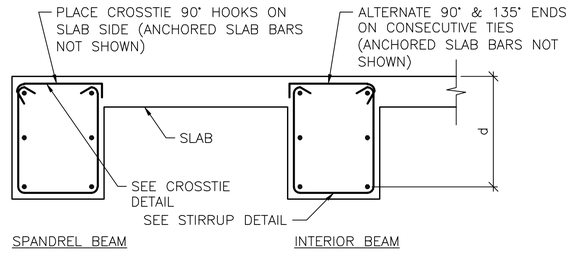


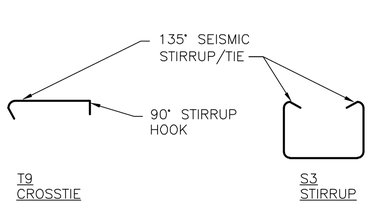


## B S-504 BEAM REINFORCEMENT DETAILS

SCALE: NTS

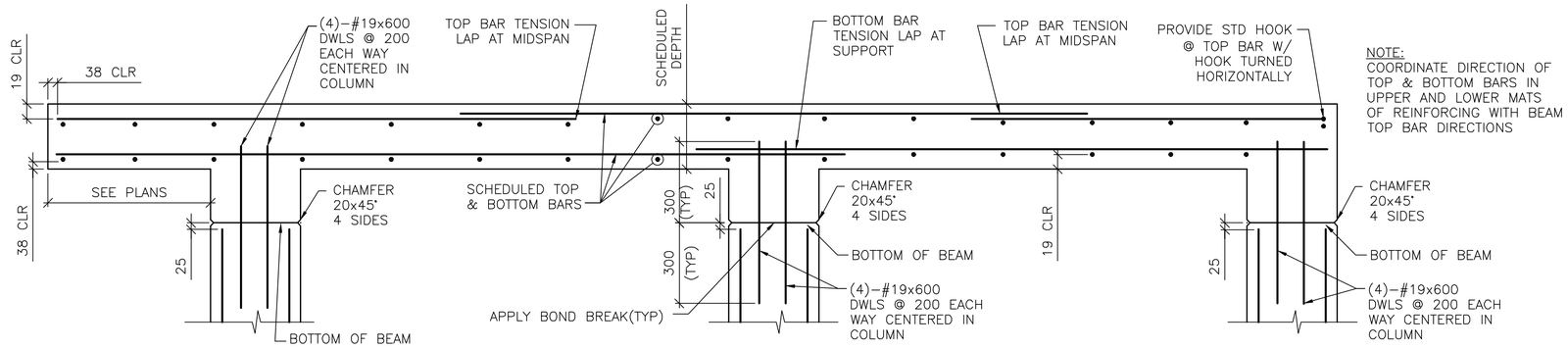


NOTE:
COORDINATE DIRECTION OF TOP & BOTTOM BARS IN UPPER AND LOWER MATS OF REINFORCING WITH BEAM TOP BAR DIRECTIONS

## 4 S-504 FRAMED SLAB REINFORCING DETAIL

SCALE: NTS

UNLESS OTHERWISE NOTED, LINEAR DIMENSIONS SHOWN ARE IN MILLIMETERS (mm)

APPROVED:

A/E DESIGNER OF RECORD

SEAL:

GEORGIA REGISTERED No. 27141 PROFESSIONAL ENGINEER CHRISTOPHER W. WHITMORE

US ARMY CORPS OF ENGINEERS
AFGHANISTAN ENGINEER DISTRICT

| Mark | Description | Date | Appr. |
|---|---|---|---|
| | | | |

| Mark | Description | Date | Appr. |
|---|---|---|---|
| | | | |

Rev: 0
Date: 2/23/10
Design file no.
Drawing code:
File name: ANAADFS-504DT
Plot date: 2/23/2010
Plot scale: X:X

Designed by: KMP/MMY
Dwn by: RCG
Ckd by: CWW
Reviewed by: LHM
Submitted by: BAKER

U.S. ARMY CORPS OF ENGINEERS
AFGHANISTAN ENGINEER DISTRICT
APO AE 96338

*Michael Baker Jr., Inc*
*A unit of Michael Baker Corporation*
Airside Business Park
100 Airside Drive
Moon Township, PA 15108
www.mbakercorp.com

AFGHAN NATIONAL ARMY
REGIONAL MILITARY TRAINING CENTER
STANDARD DESIGN

ADMIN INSTRUCTORS OFFICE

BEAM & COLUMN DETAILS

Sheet reference number:
S-504

# CONCRETE REINFORCEMENT TENSION DEVELOPMENT/LAP SPLICE SCHEDULE

| f'c = 28 MPa | LAP CLASS | UNCOATED BARS | | | |
|---|---|---|---|---|---|
| | | TOP BARS | | OTHER BARS | |
| BAR SIZES | | CASE 1 | CASE 2 | CASE 1 | CASE 2 |
| #10 TO #19 | A | 50 BAR DIA | 74 BAR DIA | 38 BAR DIA | 57 BAR DIA |
| | B | 64 BAR DIA | 96 BAR DIA | 50 BAR DIA | 74 BAR DIA |
| #22 TO #57 | A | 62 BAR DIA | 93 BAR DIA | 48 BAR DIA | 71 BAR DIA |
| | B | 80 BAR DIA | 121 BAR DIA | 62 BAR DIA | 93 BAR DIA |

NOTES:
1. TABULATED TENSION DEVELOPMENT LENGTH VALUES ARE TAKEN FROM CRSI DESIGN HANDBOOK 2008 10TH ED.
2. TENSION DEVELOPMENT & TENSION LAP SPLICE LENGTHS ARE EXPRESSED AS MULTIPLES OF BAR DIAMETERS.
3. TABULATED VALUES ARE BASED ON MINIMUM YIELD STRENGTH OF REINFORCEMENT, fy, OF 420MPa.
4. CONCRETE IS NORMAL WEIGHT (2400Kg/m$^3$) AND 28 DAY COMPRESSIVE STRENGTH = 28MPa.
5. TABULATED VALUES FOR BEAMS & COLUMNS ARE BASED ON TRANSVERSE REINFORCEMENT AND CONCRETE COVER MEETING MINIMUM CODE REQUIREMENTS.
6. CASES 1 & 2, WHICH DEPEND ON THE TYPE OF STRUCTURAL MEMBER, CONCRETE COVER, AND CENTER-TO-CENTER SPACING OF THE BARS ARE DEFINED IN THE TABLE BELOW.
7. LAP SPLICE LENGTHS (MINIMUM 300mm) ARE MULTIPLES OF TENSION DEVELOPMENT LENGTHS: CLASS A = 1.0(TENSION DEVELOPMENT LENGTH) & CLASS B = 1.3(TENSION DEVELOPMENT LENGTH)
8. TOP BARS ARE HORIZONTAL REINFORCEMENT WITH MORE THAN 300mm OF CONCRETE CAST BELOW THE BARS.
9. IT SHALL BE PERMISSIBLE TO CALCULATE WALL AND SLAB REINFORCEMENT TENSION DEVELOPMENT/SPLICE LENGTHS IN ACCORDANCE WITH ACI 12.2.3 OR TABLE 5.3(b) OF CRSI 2008 IN LIEU OF VALUES TABULATED ABOVE.

| | | |
|---|---|---|
| BEAMS, COLUMNS | CASE 1 | CONCRETE COVER AT LEAST 1 BAR DIA AND CENTER-TO-CENTER SPACING AT LEAST 2 BAR DIA |
| | CASE 2 | CONCRETE COVER LESS THAN 1 BAR DIA OR CENTER-TO-CENTER SPACING LESS THAN 2 BAR DIA |
| ALL OTHERS | CASE 1 | CONCRETE COVER AT LEAST 1 BAR DIA AND CENTER-TO-CENTER SPACING AT LEAST 3 BAR DIA |
| | CASE 2 | CONCRETE COVER LESS THAN 1 BAR DIA OR CENTER-TO-CENTER SPACING LESS THAN 3 BAR DIA |

# CONCRETE COVER SCHEDULE

MINIMUM CONCRETE COVER PROTECTION FOR REINFORCEMENT BARS SHALL BE AS LISTED BELOW: (SEE ACI 318M-05, SECTION 7.7 FOR CONDITIONS NOT NOTED). DIMENSIONS FOR BAR PLACEMENT GIVEN IN SECTIONS AND DETAILS SHALL SUPERSEDE MINIMUM COVER REQUIREMENTS GIVEN HERE. DIMENSIONS ARE IN mm. PROVIDE STANDARD BAR CHAIRS AND SUPPORT BARS @1200mm MAXIMUM AS REQUIRED TO MAINTAIN CONCRETE PROTECTION SPECIFIED.

| | | |
|---|---|---|
| FOOTINGS (EARTH FORMED): | | 70 |
| COLUMNS / PIERS (TO TIES) | | 40 |
| GRADE BEAMS OR SLAB TURNED DOWN EDGES: | | |
| TOP | | 40 |
| BOTTOM (EARTH FORMED) | | 70 |
| SIDES (EARTH FORMED) | | 70 |
| SIDES (BOARD FORMED) | #16 BAR & SMALLER | 40 |
| | #19 THRU #36 BAR | 50 |
| ELEVATED BEAMS & SLABS: | | |
| BEAM TIES & STIRRUPS (NOT EXPOSED TO WEATHER) | | 40 |
| BEAM TIES & STIRRUPS (EXPOSED TO WEATHER) | | 50 |
| FLOOR SLABS (NOT EXPOSED TO WEATHER) | | 20 |
| FLOOR SLABS (EXPOSED TO WEATHER) | | |
| #19 & LARGER | | 50 |
| #13 & SMALLER | | 40 |
| ROOF SLAB BARS | | 25 |
| SLABS ON GRADE | | |
| NOT EXPOSED TO WEATHER (FROM TOP) | | 20 |
| EXPOSED TO WEATHER (FROM TOP) | | 40 |
| UTILITY TUNNEL WALLS, RETAINING WALLS AND SHEAR WALLS. (NO SURFACES SHALL BE EARTH FORMED) | | |
| EARTH SIDE AND FRONT SIDE (EXPOSED TO WEATHER) | | |
| #16 BAR AND SMALLER | | 40 |
| #19 THRU #36 BAR | | 50 |

# COLUMN FOOTING SCHEDULE

| MARK | FOOTING SIZE (mm) | | | FOOTING REINFORCING | REMARKS |
|---|---|---|---|---|---|
| | LENGTH | WIDTH | THICKNESS | | |
| F1 | 3000 | 3000 | 300 | (8)-#22 EW BOTT | ----- |
| F2 | 2500 | 2500 | 250 | (7)-#19 EW BOTT | ----- |

# CONCRETE SHEAR WALL SCHEDULE

| MARK | TYPE | WALL LENGTH (L) (mm) | WALL REINFORCEMENT | | REMARKS |
|---|---|---|---|---|---|
| | | | END ZONE | FIELD | |
| SW1 | A | 2900 | (5)-#19 @ 220mm OC | #13 @ 300mm OC | ----- |

NOTES:
1. WORK THIS SCHEDULE WITH SHEAR WALL DETAILS ON SHEETS S-702
2. SEE PLAN FOR LOCATION OF SHEAR WALL(S).
3. VERTICAL "FIELD" BARS MAY BE OMITTED IN LOCATION OF "END ZONE" REINFORCEMENT.
4. WALL FIELD REINF LISTED APPLIES TO VERT & HORIZ BARS.
5. WALL FIELD REINFORCEMENT CENTERED IN WALL.

# STANDARD HOOKS IN TENSION PER (ACI 318M-05)

HOOK DEVELOPMENT LENGTH (mm)

| BAR SIZE | f'c 28 MPa |
|---|---|
| #10 | 180 |
| #13 | 250 |
| #16 | 300 |
| #19 | 380 |
| #22 | 430 |
| #25 | 480 |
| #29 | 560 |
| #32 | 610 |
| #36 | 690 |

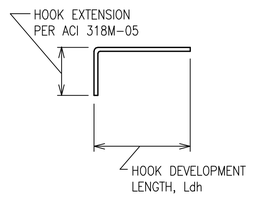


NOTES:
1. CONCRETE IS NORMAL WEIGHT CONCRETE.
2. BAR YIELD STRENGTH, fy = 420 MPa
3. SIDE COVER REQUIREMENTS OF ACI SECT. 12.5.3 ARE ASSUMED TO NOT BE MET.
4. TIE OR STIRRUP REQUIREMENTS OF ACI SECT. 12.5.3 ARE ASSUMED TO NOT BE MET.
5. REDUCTION FOR EXCESS REINFORCEMENT IS NOT TAKEN.
6. HOOK DEVELOPMENT LENGTH IS VALID FOR 180° HOOKS ALSO.

# CMU OR CAST IN PLACE CONC LINTEL SCHEDULE (TYP)

| OPENING TYPE OR SIZE, BEAM LOCATION OR TYPE | MAX SPAN (mm) | LINTEL DEPTH (mm) | REINFORCING BOTTOM |
|---|---|---|---|
| WALL OPENING | 4000 | 600 | (2)-#16 T&B |
| WALL OPENING | 1900 | 400 | (2)-#16 T&B |
| WALL OPENING | 1000 | 400 | (2)-#13 B |
| | | | |
| | | | |
| | | | |
| | | | |
| | | | |
| | | | |
| | | | |

1. STRUCTURAL SHEETS DO NOT INDICATE ALL OPENINGS IN MASONRY WALLS. VERIFY NUMBER, SIZE AND LOCATION OF ALL OPENINGS IN MASONRY WALLS FROM ARCHITECTURAL SHEETS AND APPROVED PLUMBING, MECHANICAL, AND ELECTRICAL SHOP DRAWINGS.
2. PROVIDE 200mm BEARING EA END.
3. FOR HEAD DETAILS REFER TO ARCHITECTURAL SHEETS.
4. REINFORCING SHALL BE ASTM A615M, GRADE 420. GROUT FOR CMU LINTELS SHALL HAVE A MINIMUM COMPRESSIVE STRENGTH OF 14 MPa AT 28 DAYS.
5. CONTRACTOR SHALL SUBMIT FOR APPROVAL SHOP DRAWINGS AND SCHEDULES SHOWING SIZE, SPAN, REINFORCEMENT, DETAILS, LOCATIONS, ETC.

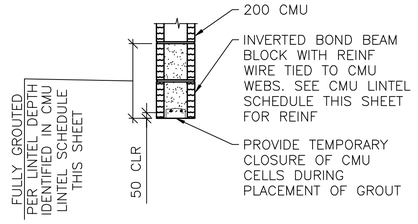


A S-601 **LINTEL DETAIL**
SCALE: NTS

# BEAM SCHEDULE

| MARK | BEAM SIZE (mm) | | BEAM REINFORCING | | | | | | STIRRUPS | | | REMARKS |
|---|---|---|---|---|---|---|---|---|---|---|---|---|
| | DEPTH | WIDTH | BL | BS | TL | TS | TC | M | SIZE | TYPE | SPACING | |
| GRADE BEAMS | | | | | | | | | | | | |
| GB1 | 750 | 400 | (2)-#16 | (1)-#16 | (2)-#16 | --- | --- | --- | #13 | S3 + T9 | d/2 | ----- |
| GB2 | 750 | 400 | (2)-#25 | (1)-#25 | (2)-#25 | --- | --- | --- | #13 | S3 + T9 | d/2 | ----- |
| ROOF BEAMS | | | | | | | | | | | | |
| RB1 | 600 | 400 | (2)-#22 | (1)-#22 | (2)-#19 | --- | --- | --- | #13 | S3 + T9 | d/2 | ----- |
| RB2 | 600 | 400 | (2)-#19 | (1)-#19 | (2)-#19 | --- | --- | --- | #13 | S3 + T9 | d/2 | OMIT "M" BARS IN INTERIOR BEAMS |

NOTES:
1. WORK THIS SCHEDULE WITH BEAM REINFORCING DETAILS ON SHEETS S-503 AND S-504.
2. HOOKS SHOWN ON SECTIONS AND DETAILS SHALL BE 90° STD UON.
3. USE ONLY (1) TC AT BEAM COLUMN INTERSECTION WHERE REQ'D.

# COLUMN SCHEDULE

| DESCRIPTION \ COLUMN MARK | TYP UON | --- | --- | --- |
|---|---|---|---|---|
| TYPE | 8-BAR | --- | --- | --- |
| DIMENSIONS | 600mm SQ | --- | --- | --- |
| VERTICAL REINFORCEMENT | (8)-#25 | --- | --- | --- |
| TIES | #13 @ d/2 | --- | --- | --- |
| TOP OF ROOF ELEVATION | 3600mm | --- | --- | --- |
| TOP OF GRADE BEAM ELEVATION | -200mm | --- | --- | --- |
| TOP OF FOOTING ELEVATION | -950mm | --- | --- | --- |

NOTES:
1. WORK THIS SCHEDULE WITH COLUMN DETAILS ON SHEET S-504.
2. SEE FOOTING SCHEDULE ON THIS SHEET FOR FOOTING INFORMATION.
3. COLUMN TIES: INTERIOR TIES TO MATCH SIZE & SPACING OF PERIMETER TIES.
4. HOOKS SHOWN ON SECTIONS & DETAILS SHALL BE 90° STD UON.

UNLESS OTHERWISE NOTED, LINEAR DIMENSIONS SHOWN ARE IN MILLIMETERS (mm)

APPROVED:

A/E DESIGNER OF RECORD

SEAL:

GEORGIA REGISTERED 3-29-10 No. 27141 PROFESSIONAL ENGINEER CHRISTOPHER W. WHITMORE

US ARMY CORPS OF ENGINEERS
AFGHANISTAN ENGINEER DISTRICT

| Mark | Description | Date | Appr. |
|---|---|---|---|
| | | | |

| Rev. | Date: | Design file no. | Drawing code: | File name: ANAADFS-601SCH |
|---|---|---|---|---|
| 0 | 2/23/10 | | | Plot date: 2/23/2010 |
| | | | | Plot scale: 1:1 |

| Designed by: | Ckd by: | Reviewed by: | Submitted by: |
|---|---|---|---|
| KMP/MMY | CWW | LHM | BAKER |
| Dwn by: RCG | | | |

U.S. ARMY CORPS OF ENGINEERS
AFGHANISTAN ENGINEER DISTRICT
APO AE 96338

*Michael Baker Jr., Inc*
*A unit of Michael Baker Corporation*
Airside Business Park
100 Airside Drive
Moon Township, PA 15108
www.mbakercorp.com

AFGHAN NATIONAL ARMY
REGIONAL MILITARY TRAINING CENTER
STANDARD DESIGN

ADMIN INSTRUCTORS OFFICE

SCHEDULES

Sheet reference number:
S-601

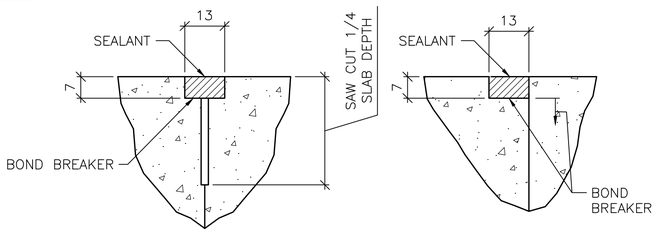


CONTROL JOINT DETAIL

CONSTRUCTION JOINT DETAIL

## TYPICAL CONCRETE SLAB JOINT FINISH DETAILS

1 / S-701 SCALE: NTS

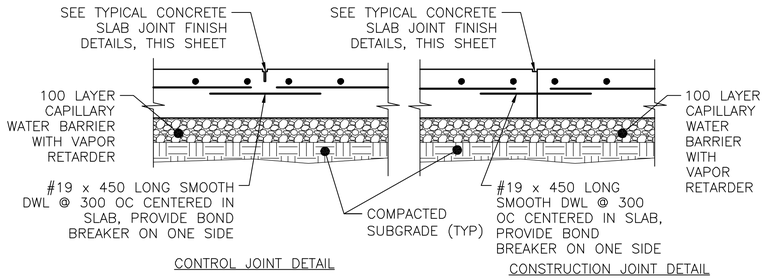


CONTROL JOINT DETAIL

CONSTRUCTION JOINT DETAIL

## TYPICAL SLAB ON GRADE JOINT DETAIL

2 / S-701 SCALE: NTS

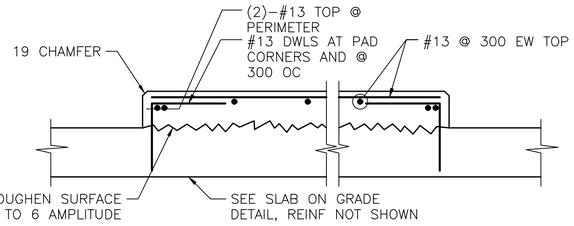


## INTERIOR EQUIPMENT PAD DETAIL

3 / S-701 SCALE: NTS

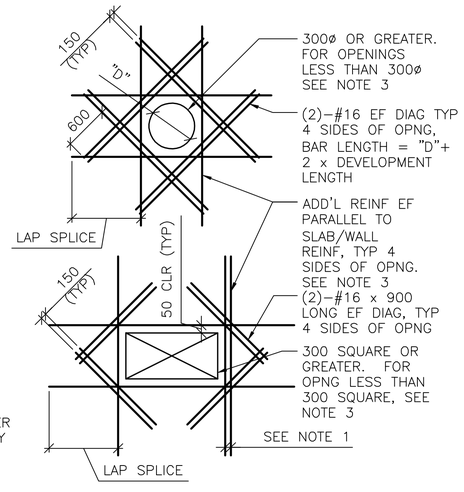


SHEAR WALL/SLAB OPENINGS

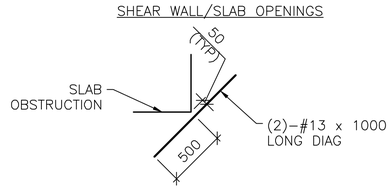


RE–ENTRANT CORNERS

DETAIL NOTES:
1. WHERE MORE THAN ONE ADDITIONAL BAR IS REQUIRED PARALLEL TO THE EXISTING SLAB/WALL REINFORCING THE ADDITIONAL REINFORCING BARS SHALL BE SPACED AT 100 ON CENTER.
2. ADDITIONAL REINFORCING PARALLEL TO THE SLAB/WALL REINFORCING SHALL BE #16 BARS THAT PROVIDE A STEEL AREA ON EACH SIDE OF THE OPENING EQUAL TO 1/2 THE AREA OF THE REINFORCING CUT BY THE OPENING.
3. FOR OPENINGS WITH SIDES OR DIAMETERS LESS THAN 300 SPREAD THE SLAB/WALL REINFORCING TO CLEAR THE OPENING.

## ADD'L CONCRETE REINFORCEMENT DETAILS

4 / S-701 SCALE: NTS

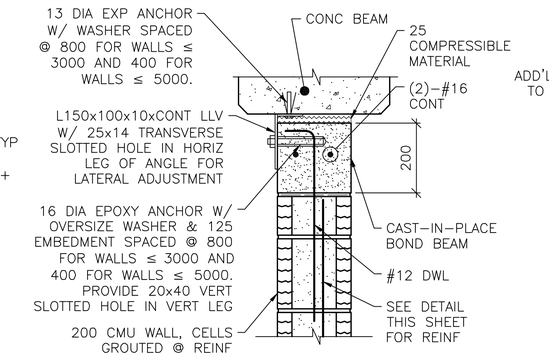


NOTE:
1. AT ANCHOR BOLTS, ADD AN ADDITIONAL 25 COMPRESSIBLE MATERIAL BELOW EXP ANCHOR HEAD.

INTERIOR BEAM

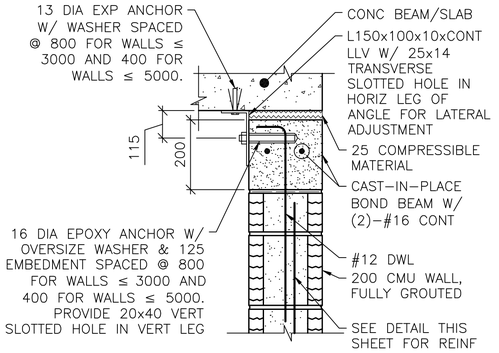


EXTERIOR WALL OR SLAB

NOTES:
1. THIS DETAIL IS AN ALTERNATE TOP OF WALL ANCHORAGE DETAIL TO BE USED AT THE CONTRACTOR'S OPTION IN LIEU OF DETAILS SHOWN ON S–400 & S–500 DRAWINGS.
2. CAST–IN–PLACE BOND BEAM SHOWN AT TOP OF WALL IS ALSO APPLICABLE FOR INTERMEDIATE AND STARTER COURSE BOND BEAMS WITHIN WALL.

## ALTERNATE TOP OF CMU WALL BRACING DETAILS

5 / S-701 SCALE: NTS

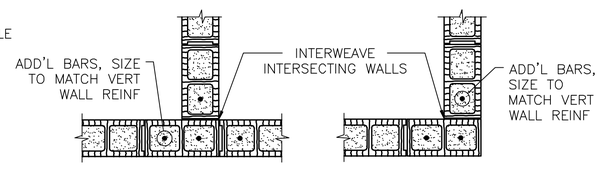


INTERSECTION WALL CORNER

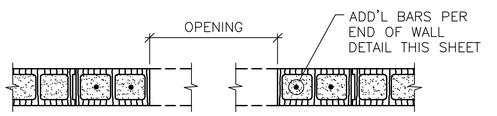


MASONRY OPENING W/ LINTEL

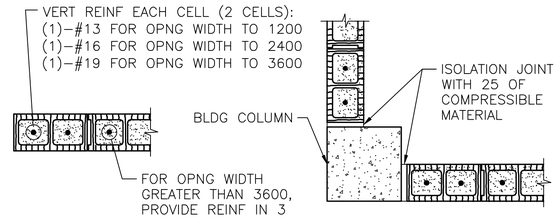


END OF WALL END OF WALL @ COLUMN

NOTES:
1. OPENING WIDTH SHALL NOT EXCEED 3600 FOR THIS TYPE OF JAMB.
2. ALL CELLS FULLY GROUTED AT EXTERIOR WALLS. AT INTERIOR WALLS, ONLY GROUT CELLS CONTAINING REINF.

6 / S-701 **TYP CMU DETAILS** SCALE: NTS

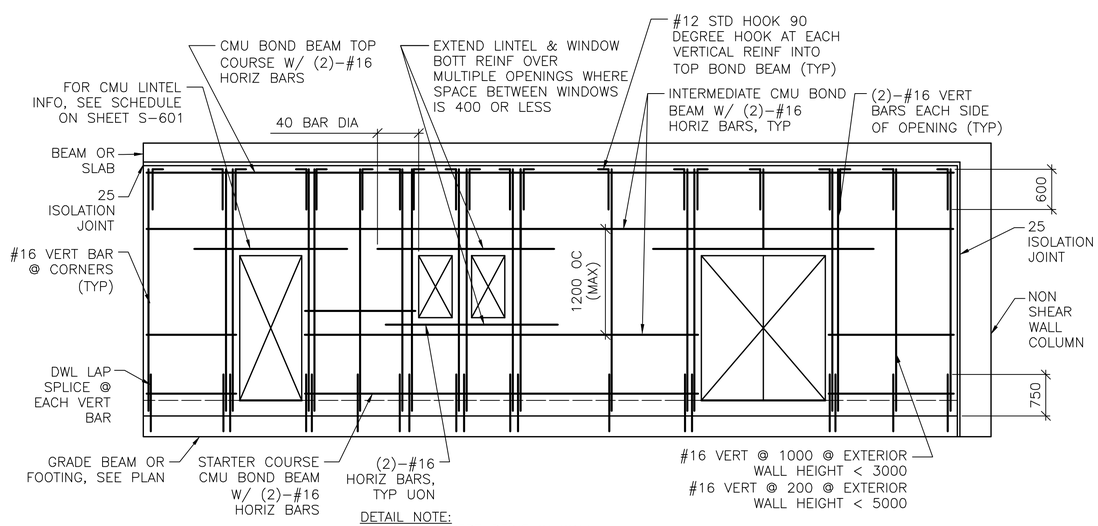


DETAIL NOTE:
1. CENTER VERT REINF IN WALL.
2. GROUT ALL CMU CELLS.
3. REFERENCE ARCH DWGS FOR JOINT INFORMATION
4. DOWELS BETWEEN TOP BOND BEAM AND BEAM/SLAB ABOVE (INCLUDING EMBEDDED PIPE SLEEVE) NOT SHOWN FOR CLARITY. SEE SPECIFIC S–500 SERIES DWGS FOR INFO.
5. FOR INFORMATION ON ALTERNATE CAST–IN–PLACE WALL BOND BEAMS, REFERENCE ALTERNATE TOP OF CMU WALL BRACING DETAILS THIS SHEET.

7 / S-701 **TYP EXTERIOR CMU WALL REINF DETAIL** SCALE: NTS

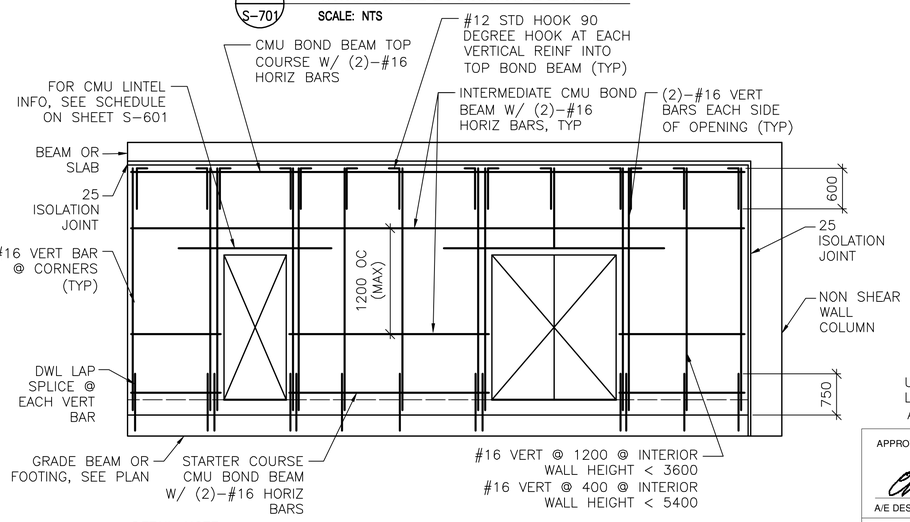


DETAIL NOTE:
1. CENTER VERT REINF IN WALL.
2. GROUT ALL CMU CELLS.
3. REFERENCE ARCH DWGS FOR JOINT INFORMATION
4. DOWELS BETWEEN TOP BOND BEAM AND BEAM/SLAB ABOVE (INCLUDING EMBEDDED PIPE SLEEVE) NOT SHOWN FOR CLARITY. SEE SPECIFIC S–500 SERIES DWGS FOR INFO.
5. FOR INFORMATION ON ALTERNATE CAST–IN–PLACE WALL BOND BEAMS, REFERENCE ALTERNATE TOP OF CMU WALL BRACING DETAILS THIS SHEET.

8 / S-701 **TYP INTERIOR CMU WALL REINF DETAIL** SCALE: NTS

UNLESS OTHERWISE NOTED, LINEAR DIMENSIONS SHOWN ARE IN MILLIMETERS (mm)

APPROVED:

A/E DESIGNER OF RECORD

SEAL:

GEORGIA REGISTERED 1-29-10 No. 27141 PROFESSIONAL ENGINEER CHRISTOPHER W. WHITMORE

US ARMY CORPS OF ENGINEERS
AFGHANISTAN ENGINEER DISTRICT

| Mark | Description | Date | Appr. |
|---|---|---|---|

Date: 2/23/10 | Rev: 0
Design file no.
Drawing code:
File name: ANAADFS7.01TDT
Plot date: 2/23/2010
Plot scale: X:X

Designed by: KMP/MMY | Ckd by: CWW
Dwn by: RCG | Reviewed by: LHM
Submitted by: BAKER

U.S. ARMY CORPS OF ENGINEERS
AFGHANISTAN ENGINEER DISTRICT
APO AE 96338

Michael Baker Jr., Inc
A unit of Michael Baker Corporation
Airside Business Park
100 Airside Drive
Moon Township, PA 15108
www.mbakercorp.com

AFGHAN NATIONAL ARMY
REGIONAL MILITARY TRAINING CENTER
STANDARD DESIGN

ADMIN INSTRUCTORS OFFICE

TYPICAL DETAILS

Sheet reference number: S–701

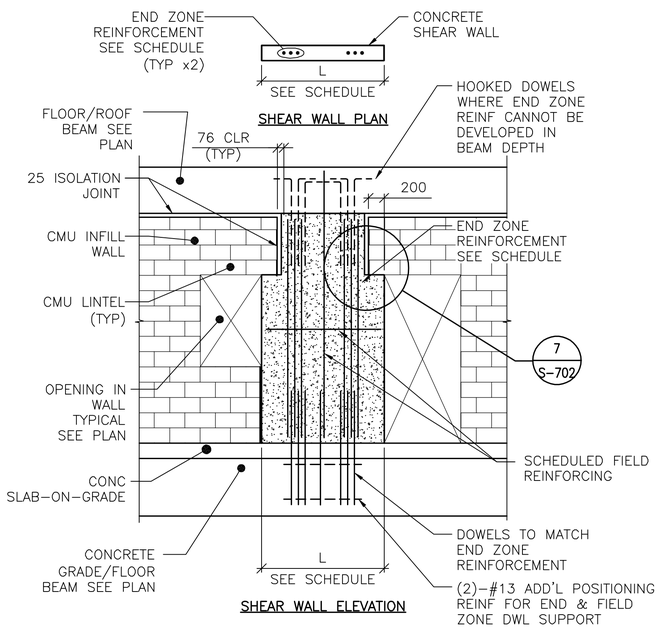


DETAIL NOTES:
1. FIELD REINFORCEMENT IN SHEAR WALL NOT SHOWN FOR CLARITY.
2. FIELD REINFORCEMENT CENTERED IN WALL.
3. MINIMUM CONC CLEAR DISTANCE FOR END ZONE REINF = 76
4. SEE CONC SHEAR WALL SCHEDULE ON SHEET S-601
5. SEE ARCH DWGS FOR JOINT INFORMATION

## 1 S-702 TYPE "A" SHEAR WALL DETAIL

SCALE: NTS

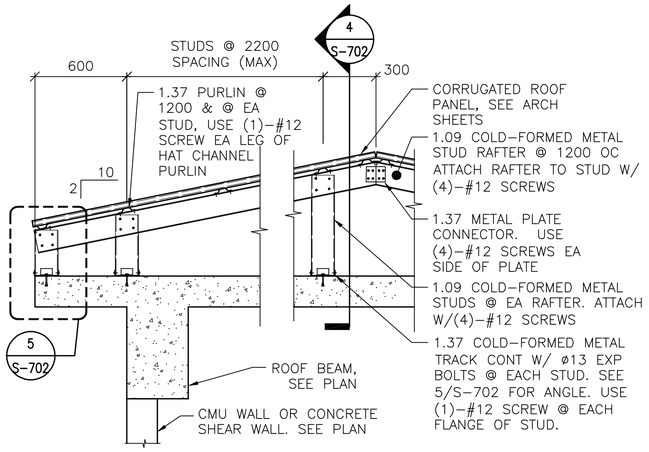


DETAIL NOTES:
1. ALL GABLE END VERTICAL STUDS SHALL BE ORIENTED 90° TO INTERIOR STUDS & SPACED @ 600 OC. GABLE END RAFTER SHALL BE 1.37 METAL TRACK SPANNING CONTINUOUSLY OVER GABLE END STUDS. INSET GIRTS AT GABLE END SHALL BE 1.09 COLD-FORMED METAL STUDS @ 1200 OC ATTACHED VIA 1.37 THICKNESS CLIP ANGLE W/ (2) #12 SCREWS EA LEG.
2. ALL INTERIOR, NON-GABLE END VERTICAL STUDS GREATER THAN 2400 IN LENGTH SHALL BE BACK-TO-BACK W/ #12 SCREWS @ 200 OC STAGGERED.

## 2 S-702 TYPICAL OVERBUILT ROOF FRAMING DETAIL

SCALE: NTS

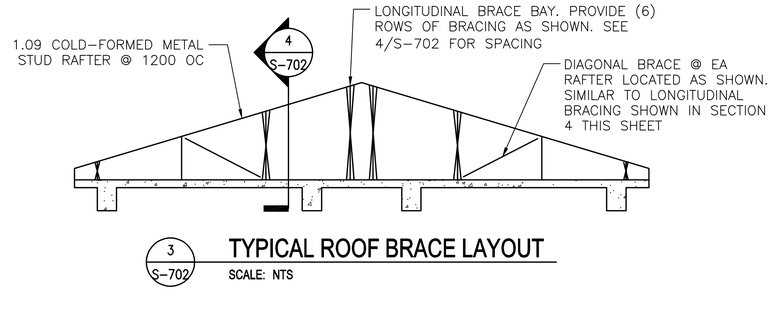


## 3 S-702 TYPICAL ROOF BRACE LAYOUT

SCALE: NTS

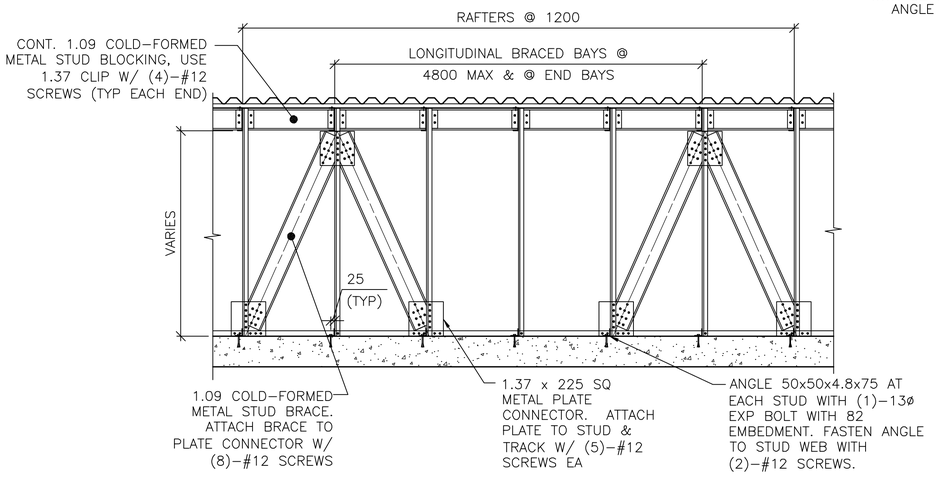


## 4 S-702 SECTION

SCALE: NTS

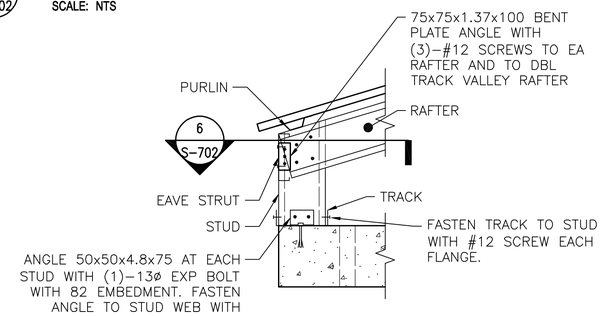


## 5 S-702 DETAIL

SCALE: NTS

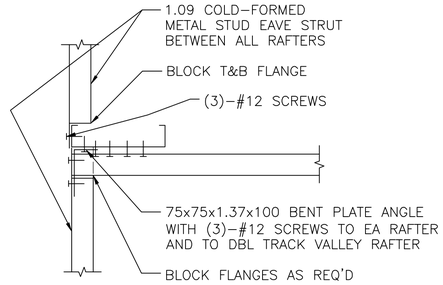


## 6 S-702 SECTION

SCALE: NTS

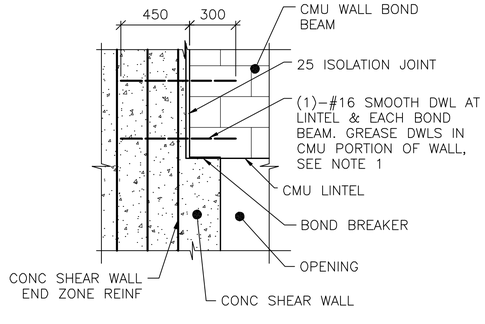


NOTE:
1. TIE SMOOTH DOWEL ROD TO SHEAR WALL END ZONE REINF FOR EACH BOND BEAM AND LINTEL.

## 7 S-702 SECTION

SCALE: NTS

UNLESS OTHERWISE NOTED, LINEAR DIMENSIONS SHOWN ARE IN MILLIMETERS (mm)

APPROVED:

A/E DESIGNER OF RECORD

SEAL:

GEORGIA REGISTERED 2-23-10 No. 27141 PROFESSIONAL ENGINEER CHRISTOPHER W. WHITMORE

US ARMY CORPS OF ENGINEERS
AFGHANISTAN ENGINEER DISTRICT

| Mark | Description | Date | Appr. |
|---|---|---|---|

Date: 2/23/10
Design file no.
Drawing code:
Rev: 0
Designed by: KMP/MMY
Dwn by: RCG
Ckd by: CWW
Reviewed by: LHM
Submitted by: BAKER
File name: ANAIOFS-702TDT
Plot date: 2/23/2010
Plot scale: x:x

U.S. ARMY CORPS OF ENGINEERS
AFGHANISTAN ENGINEER DISTRICT
APO AE 96338

*Michael Baker Jr, Inc*
*A unit of Michael Baker Corporation*
Airside Business Park
100 Airside Drive
Moon Township, PA 15108
www.mbakercorp.com

AFGHAN NATIONAL ARMY
REGIONAL MILITARY TRAINING CENTER
STANDARD DESIGN

ADMIN INSTRUCTORS OFFICE

TYPICAL DETAILS

Sheet reference number:
S-702

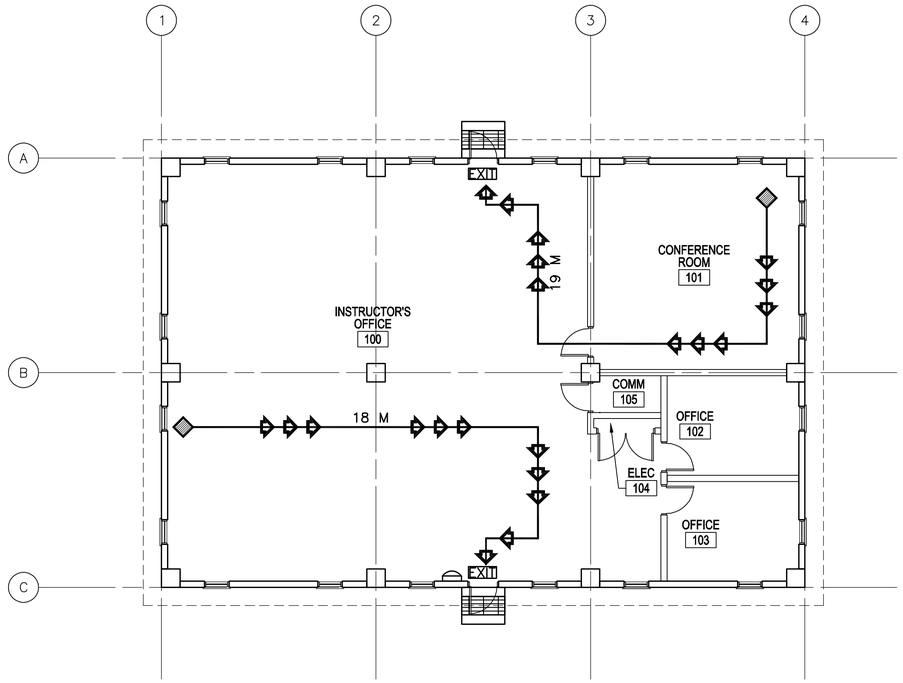


1 A-001 **LIFE SAFETY PLAN**

**SCALE: 1:100**

# CODE ANALYSIS:

1. REFERENCES:
   2006 INTERNATIONAL BUILDING CODE (2006 IBC)
   2006 LIFE SAFETY CODE (2006 NFPA 101)

2. IBC OCCUPANCY CLASSIFICATION:
   GROUP B (BUSINESS NFPA 101 6.1.11 AND CHAPTER 38)

3. TYPE OF CONSTRUCTION (IBC): TYPE II-B (UNPROTECTED/NONSPRINKLERED)

4. IBC TABLE 503: ALLOWABLE HEIGHT AND BUILDING AREAS:
   GROUP B
   ALLOWABLE AREA: 2,137 SM
   ALLOWABLE HEIGHT: 3 STORIES (16 M)

   GROUP B
   PROPOSED AREA: 294 SM
   PROPOSED HEIGHT: 1 STORY (<16 M)

5. IBC TABLE 601 & 602: FIRE RESISTANCE RATING REQUIREMENTS FOR BUILDING ELEMENTS FOR TYPE II-B

| BUILDING ELEMENT | RATING (HOUR) | REFERENCE |
|---|---|---|
| STRUCTURAL FRAME (COLUMNS, GIRDERS & TRUSSES) | 0 | TABLE 601 |
| BEARING WALLS | | |
| EXTERIOR | 0 | TABLE 601 |
| INTERIOR | 0 | TABLE 601 |
| NONBEARING WALLS & PARTITIONS | | |
| INTERIOR | 0 | TABLE 601 |
| FLOOR CONSTRUCTION | 0 | TABLE 601 |
| ROOF CONSTRUCTION | 0 | TABLE 601 |
| EXTERIOR WALL | 0 | TABLE 602 |

6. IBC TABLE 803.5 – INTERIOR WALL AND CEILING FINISH REQUIREMENTS FOR B OCCUPANCY/NONSPRINKLERED

| GROUP | EXIT ENCLOSURES AND EXIT PASSAGEWAY | CORRIDORS | ROOMS AND ENCLOSED SPACES |
|---|---|---|---|
| B | A | B | C |

7. NFPA 101 TABLE 7.3.1.2 – OCCUPANT LOAD
   BUSINESS = 9.3 SM/PERSON BUSINESS PROPOSED = 32 OCCUPANTS

8. NFPA 101 TABLE 7.3.3.1 – EGRESS CAPACITY
   BUSINESS = 5 MM PER OCCUPANT

   REQUIRED: 160 MM (32 OCCUPANTS x 5 MM PER OCCUPANT)
   PROPOSED EGRESS CAPACITY: 900 MM: (2) 900 MM DOORS

9. NFPA 101 PARAGRAPH 38.2.6.2 – EXIT ACCESS TRAVEL DISTANCE (NONSPRINKLERED)
   REQUIRED: 60 METERS
   PROPOSED: 19 METERS

10. NFPA 101 PARAGRAPH 38.3.6.1(1) & (2) – CORRIDORS
    NO RATED CORRIDOR REQUIRED (NONSPRINKLERED):
    (1) ALL EXITS ARE AVAILABLE FROM AN OPEN FLOOR AREA
    (2) SPACE IS OCCUPIED BY A SINGLE TENANT

11. NFPA 101 PARAGRAPH 38.2.4.1 – NUMBER OF EXITS
    BUSINESS REQUIRED: 1 MINIMUM
    BUSINESS PROPOSED: 2 EXITS

## LEGEND:

- DENOTES PATHS OF EXIT TRAVEL
- EXIT — DENOTES DOOR AS AN EMERGENCY EXIT
- DENOTES STARTING POINT FOR TRAVEL DISTANCE
- DENOTES FIRE EXTINGUISHER LOCATIONS

LINEAR DIMENSIONS SHOWN ARE IN MILLIMETERS (MM), UNLESS OTHERWISE NOTED

0 2000 4000
SCALE: 1:100

APPROVED:

A/E DESIGNER OF RECORD

SEAL:

STATE OF SOUTH CAROLINA
KEVIN R. CHAFIN
N. Charleston, SC 6374
REGISTERED ARCHITECT

US ARMY CORPS OF ENGINEERS
AFGHANISTAN ENGINEER DISTRICT

| Mark | Description | Date | Appr. |
|---|---|---|---|

Date: 2/23/10
Design file no.
Drawing code:
File name: ANAADFA-001L0P
Plot date: 2/23/2010
Plot scale: x:x
Rev: 0

Designed by: KRC
Dwn by: EBB
Ckd by: NLJ
Reviewed by: LHM
Submitted by: BAKER

U.S. ARMY CORPS OF ENGINEERS
AFGHANISTAN ENGINEER DISTRICT
APO AE 96338

*Michael Baker Jr., Inc.*
*A unit of Michael Baker Corporation*
Airside Business Park
100 Airside Drive
Moon Township, PA 15108
www.mbakercorp.com

AFGHAN NATIONAL ARMY
REGIONAL MILITARY TRAINING CENTER
STANDARD DESIGN

ADMIN INSTRUCTORS OFFICE

LIFE SAFETY PLAN

Sheet reference number:
A-001

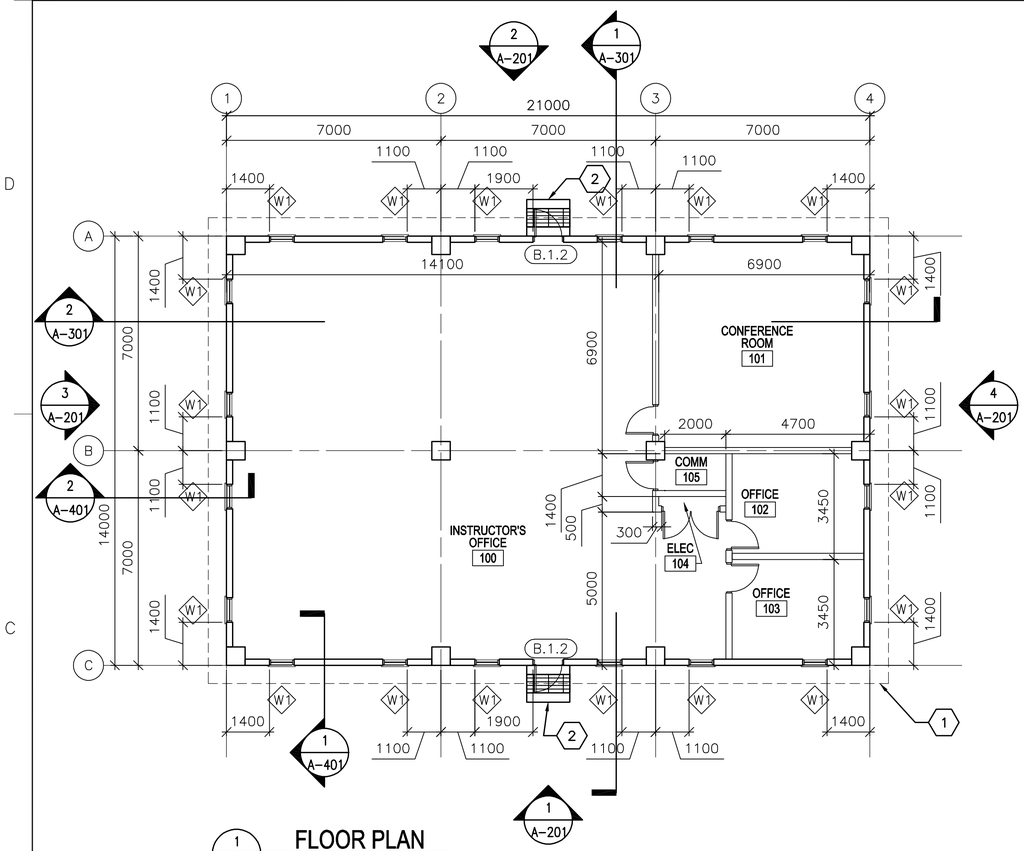


1 A-101 **FLOOR PLAN**

SCALE: 1:100

## GENERAL NOTES:

A. DIMENSIONS ARE SHOWN TO OUTER EDGE OF EXTERIOR STRUCTURAL COLUMNS, STRUCTURAL COLUMN GRID, EDGE OF INTERIOR PARTITIONS, EDGE OF WINDOW OPENINGS, AND TO HINGE SIDE OF DOOR FRAME OPENINGS.

B. HINGE SIDE OF OPENINGS FOR DOORS AND FRAMES SHALL BE LOCATED 200 MM FROM THE ADJACENT WALL OR COLUMN, UNLESS NOTED OTHERWISE.

C. INTERIOR PARTITIONS SHALL BE 200 MM CMU. SEE STRUCTURAL DRAWINGS FOR LOCATION OF CONCRETE SHEAR WALLS.

D. COSMETIC REPAIR OF MINOR DEFECTS: REPAIR OR FILL MORTAR JOINTS AND MINOR DEFECTS, INCLUDING BUT NOT LIMITED TO SPALLS, IN ACCORDANCE WITH MANUFACTURER'S RECOMMENDATIONS AND PRIOR TO COATING APPLICATION. SURFACES TO BE PAINTED SHALL BE CLEAN AND FREE OF FOREIGN MATTER BEFORE APPLICATION OF PAINT. CLEANING SHALL BE SCHEDULED SO THAT DUST AND OTHER CONTAMINANTS WILL NOT FALL ON NEWLY PAINTED SURFACES.

E. CONCRETE, PLASTER AND MASONRY SURFACES SHALL BE ALLOWED TO CURE FOR AT LEAST 30 DAYS BEFORE PAINTING. CONCRETE SLABS-ON-GRADE SHALL BE ALLOWED TO CURE 90 DAYS BEFORE STAINING OR SEALING.

F. DO NOT USE PAINT MATERIALS CONTAINING LEAD CONTENT IN EXCESS OF 0.009 PERCENT OF THE WEIGHT OF THE TOTAL NONVOLATILE CONTENT OF THE PAINT OR THE WEIGHT OF THE DRIED PAINT FILM.

G. DO NOT USE ANY ASBESTOS CONTAINING MATERIALS (ACM) IN PROJECT. ACM IS DEFINED AS 1% OR MORE BY VOLUME.

H. DO NOT USE PAINT MATERIALS CONTAINING MERCURIAL FUNGICIDES.

I. FACTORY PRIMED METAL DOORS AND FRAMES SHALL RECEIVE TWO COATS OF PAINT.

J. FILL REMAINING SPACE AT PENETRATIONS IN FIRE-RATED FLOORS, PARTITIONS AND CEILINGS WITH APPROPRIATE FIRESTOPPING MATERIALS.

K. ALL CEILING FINISHES SHALL BE PAINTED PLASTER APPLIED TO STRUCTURE.

L. ALL WALL FINISHES SHALL BE PAINTED PLASTER APPLIED TO STRUCTURE.

M. ALL FLOOR FINISHES SHALL BE EPOXY SEALED CONCRETE.

N. ALL DOOR FRAMES & HARDWARE TYPES SHALL BE A.1.5 UNLESS NOTED OTHERWISE.

## KEY NOTES:

1. LINE OF ROOF OVERHANG ABOVE.
2. CONCRETE STOOP WITH GRATE – SEE DETAIL 1/A-503

## LEGEND:

XXX — DOOR FRAME AND HARDWARE TYPE, SEE SHEET A-601

A — WINDOW TYPE, SEE SHEET A-601

X — KEY NOTE

## ABBREVIATIONS:

| | |
|---|---|
| ELEC | ELECTRICAL |
| MECH | MECHANICAL |
| JAN | JANITOR |
| CLOS | CLOSET |
| COMM | COMMUNICATIONS |

APPROVED:

A/E DESIGNER OF RECORD

SEAL:

STATE OF SOUTH CAROLINA
KEVIN R. CHAFIN
N. Charleston, SC
6374
REGISTERED ARCHITECT

LINEAR DIMENSIONS SHOWN ARE IN MILLIMETERS (MM), UNLESS OTHERWISE NOTED

0 2000 4000
SCALE: 1:100

US ARMY CORPS OF ENGINEERS
AFGHANISTAN ENGINEER DISTRICT

| Mark | Description | Date | Appr. |
|---|---|---|---|

Rev: 0
Date: 2/23/10
Design file no.
Drawing code:
File name: ANAADFA-101FP
Plot date: 2/23/2010
Plot scale: x:X

Designed by: KRC
Dwn by: EBB
Ckd by: NLJ
Reviewed by: LHM
Submitted by: BAKER

U.S. ARMY CORPS OF ENGINEERS
AFGHANISTAN ENGINEER DISTRICT
APO AE 96338

*Michael Baker Jr., Inc.*
*A unit of Michael Baker Corporation*
Airside Business Park
100 Airside Drive
Moon Township, PA 15108
www.mbakercorp.com

AFGHAN NATIONAL ARMY
REGIONAL MILITARY TRAINING CENTER
STANDARD DESIGN

ADMIN INSTRUCTORS OFFICE

FLOOR PLAN

Sheet reference number:
A-101

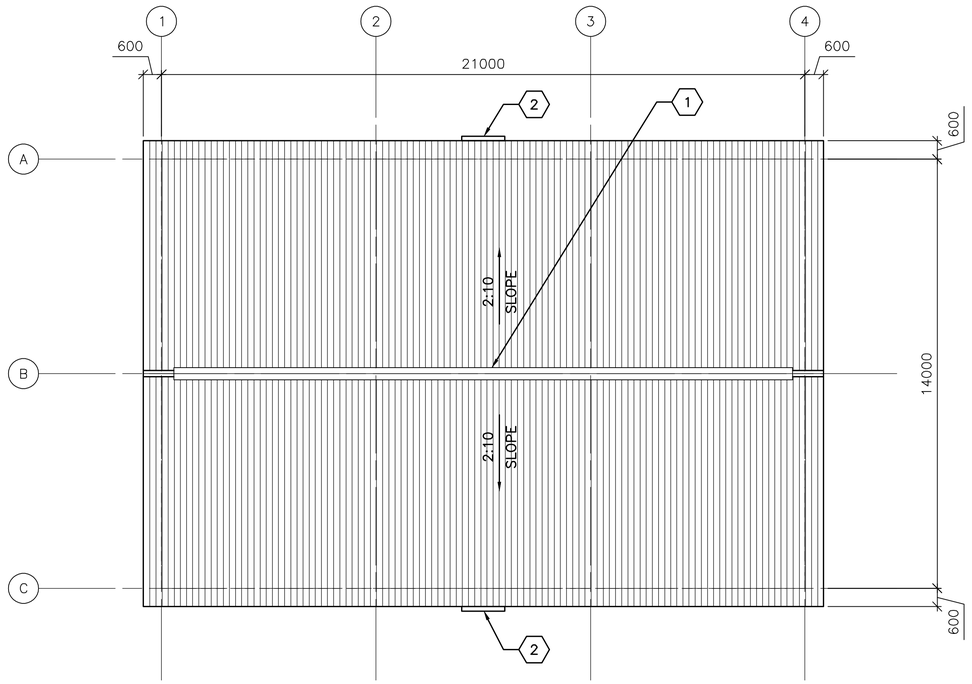


1 A-201 **ROOF PLAN**

SCALE: 1:100

## GENERAL NOTES:

A. THE APPROXIMATE LOCATION OF ROOF DEVICES AND PENETRATIONS ARE SHOWN ON THE ROOF PLAN FOR INFORMATION ONLY. THE CONTRACTOR SHALL BE RESPONSIBLE FOR UNDERSTANDING THE ACTUAL LOCATION OF THESE AND ALL OTHER ITEMS PRIOR TO BEGINNING CONSTRUCTION. COORDINATE ALL ROOF PENETRATIONS WITH STRUCTURAL, MECHANICAL AND PLUMBING WORK.

B. UNLESS OTHERWISE NOTED, NOTES, DETAILS OR FEATURES INDICATED FOR ONE CONDITION SHALL BE APPLICABLE FOR ALL ALIKE AND SIMILAR CONDITIONS.

C. STOCKPILING OF MATERIALS, EQUIPMENT AND ANY OTHER ITEMS ON THE ROOF IS PROHIBITED.

D. ROOFS SHALL BE CORRUGATED METAL ROOF PANELS ON COLD-FORMED METAL FRAMING ON CONCRETE SLAB.

## KEY NOTES: (X)

1. CONTINUOUS METAL RIDGE VENT SEE DETAIL 4/A-501.
2. METAL GUTTER, 1400 MM - SEE DETAIL 1A/A-501.

LINEAR DIMENSIONS SHOWN ARE IN MILLIMETERS (MM), UNLESS OTHERWISE NOTED

0 2000 4000
SCALE: 1:100

APPROVED:

A/E DESIGNER OF RECORD

SEAL:

STATE OF SOUTH CAROLINA
KEVIN R. CHAFIN
N. Charleston, SC
6374
REGISTERED ARCHITECT

US ARMY CORPS OF ENGINEERS
AFGHANISTAN ENGINEER DISTRICT

| Mark | Description | Date | Appr. |
|---|---|---|---|
| | | | |

| Mark | Description | Date | Appr. |
|---|---|---|---|
| | | | |

Date: 2/23/10
Design file no.
Drawing code:
File name: ANAAOFA-1028P
Plot date: 2/23/2010
Plot scale: x:X
Rev: 0

Designed by: KRC
Dwn by: EBB
Ckd by: NLJ
Reviewed by: LHM
Submitted by: BAKER

U.S. ARMY CORPS OF ENGINEERS
AFGHANISTAN ENGINEER DISTRICT
APO AE 96338

*Michael Baker Jr., Inc*
*A unit of Michael Baker Corporation*
Airside Business Park
100 Airside Drive
Moon Township, PA 15108
www.mbakercorp.com

AFGHAN NATIONAL ARMY
REGIONAL MILITARY TRAINING CENTER
STANDARD DESIGN

ADMIN INSTRUCTORS OFFICE

ROOF PLAN

Sheet reference number:
A-102

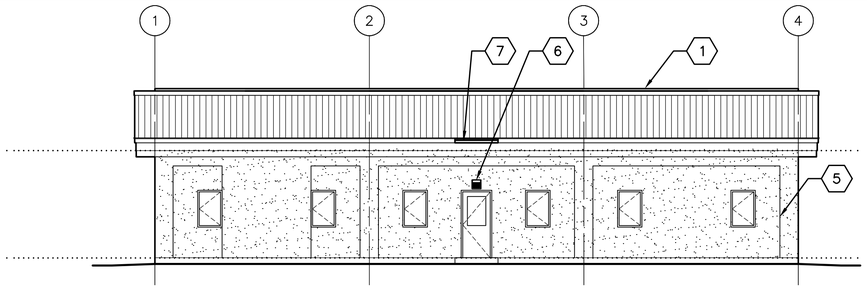


1 A-201 **ELEVATION**

SCALE: 1:100

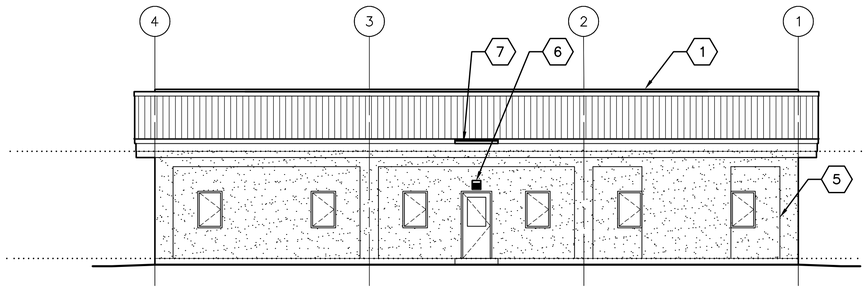


2 A-201 **ELEVATION**

SCALE: 1:100

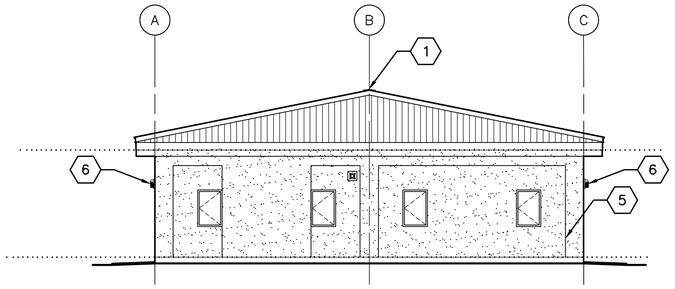


3 A-201 **ELEVATION**

SCALE: 1:100

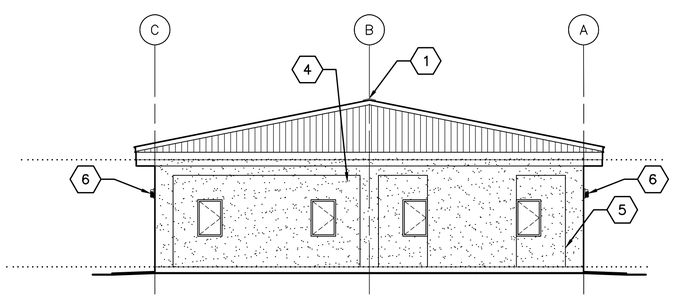


4 A-201 **ELEVATION**

SCALE: 1:100

## GENERAL NOTES:

A. COORDINATE SIZE AND LOCATION OF OPENINGS FOR MECHANICAL ITEMS WITH MECHANICAL DRAWINGS.

B. PROVIDE STRUCTURAL LINTELS AS REQUIRED – SEE STRUCTURAL DRAWINGS

C. ALL EXTERIOR WALL FINISHES SHALL BE STUCCO OVER CMU AND CONCRETE SUBSTRATES. PROVIDE CONTROL JOINTS IN STUCCO WALL FINISH AS NOTED.

D. ROOF SHALL BE CORRUGATED METAL ROOF PANELS ON COLD-FORMED METAL FRAMING ON CONCRETE SLAB.

## KEY NOTES: (X)

1. CONTINUOUS METAL RIDGE VENT – SEE DETAIL 4/A-501.
2. NOT USED
3. EXHAUST FAN, LOCATE TOP OF WALL PENETRATION 2800 MM ABOVE FINISHED FLOOR – SEE MECHANICAL DRAWINGS.
4. NOT USED
5. STUCCO CONTROL JOINT – SEE DETAIL 2A/A-501.
6. EXTERIOR LIGHT – SEE ELECTRICAL.
7. METAL GUTTER, CENTER ON DOOR, 1400 MM – SEE DETAIL 1A/A-501.

LINEAR DIMENSIONS SHOWN ARE IN MILLIMETERS (MM), UNLESS OTHERWISE NOTED

0 2000 4000

SCALE: 1:100

APPROVED:

A/E DESIGNER OF RECORD

SEAL:

STATE OF SOUTH CAROLINA
KEVIN R. CHAFIN
N. Charleston, SC
5374
REGISTERED ARCHITECT

US ARMY CORPS OF ENGINEERS
AFGHANISTAN ENGINEER DISTRICT

| Mark | Description | Date | Appr. |
|---|---|---|---|
| | | | |

| Mark | Description | Date | Appr. |
|---|---|---|---|
| | | | |

Date: 2/23/10
Design file no.
Drawing code:
File name: ANAADFA-2010ELV
Plot date: 2/23/2010
Plot scale: x:x

Designed by: KRC
Dwn by: EBB
Ckd by: NLJ
Reviewed by: LHM
Submitted by: BAKER

U.S. ARMY CORPS OF ENGINEERS
AFGHANISTAN ENGINEER DISTRICT
APO AE 96338

*Michael Baker Jr., Inc*
*A unit of Michael Baker Corporation*
Airside Business Park
100 Airside Drive
Moon Township, PA 15108
www.mbakercorp.com

AFGHAN NATIONAL ARMY
REGIONAL MILITARY TRAINING CENTER
STANDARD DESIGN

ADMIN INSTRUCTORS OFFICE

ELEVATIONS

Sheet reference number:
A-201

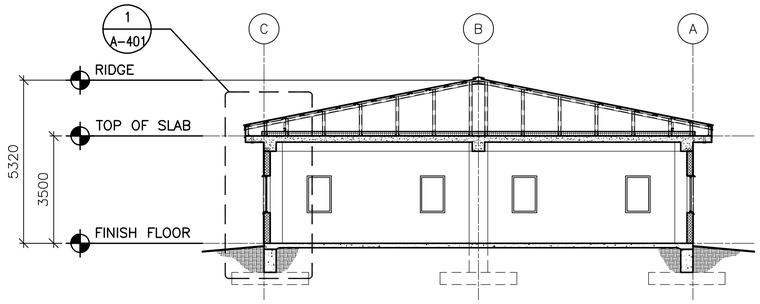


1 A-301 **BUILDING SECTION**

SCALE: 1:100

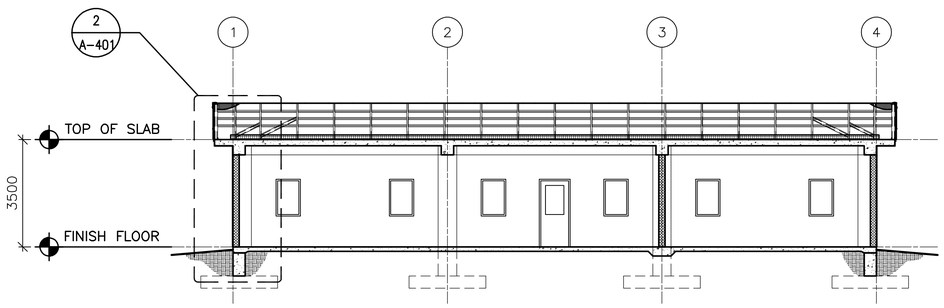


2 A-301 **BUILDING SECTION**

SCALE: 1:100

LINEAR DIMENSIONS SHOWN ARE IN MILLIMETERS (MM), UNLESS OTHERWISE NOTED

0 2000 4000

SCALE: 1:100

APPROVED:

A/E DESIGNER OF RECORD

SEAL:

STATE OF SOUTH CAROLINA
KEVIN R. CHAFIN
N. Charleston, SC
6374
REGISTERED ARCHITECT

US ARMY CORPS OF ENGINEERS
AFGHANISTAN ENGINEER DISTRICT

| Mark | Description | Date | Appr. |
|---|---|---|---|
| | | | |

| Mark | Description | Date | Appr. |
|---|---|---|---|
| | | | |

Date: 2/23/10
Design file no.
Drawing code:
File name: ANAAOFA-301BS
Plot date: 2/23/2010
Plot scale: x:X
Rev: 0

Designed by: KRC
Dwn by: EBB
Ckd by: NLJ
Reviewed by: LHM
Submitted by: BAKER

U.S. ARMY CORPS OF ENGINEERS
AFGHANISTAN ENGINEER DISTRICT
APO AE 96338

*Michael Baker Jr., Inc.*
*A unit of Michael Baker Corporation*
Airside Business Park
100 Airside Drive
Moon Township, PA 15108
www.mbakercorp.com

AFGHAN NATIONAL ARMY
REGIONAL MILITARY TRAINING CENTER
STANDARD DESIGN

ADMIN INSTRUCTORS OFFICE

BUILDING SECTIONS

Sheet reference number:
A-301

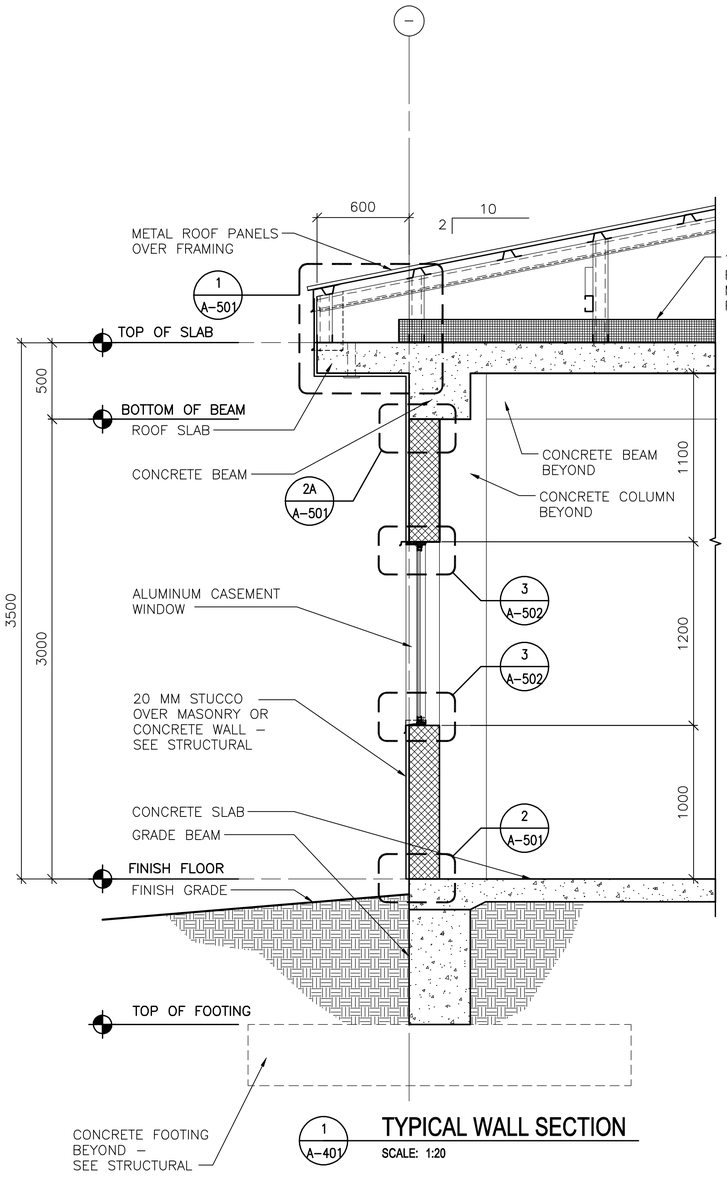


1 A-401 **TYPICAL WALL SECTION**

SCALE: 1:20

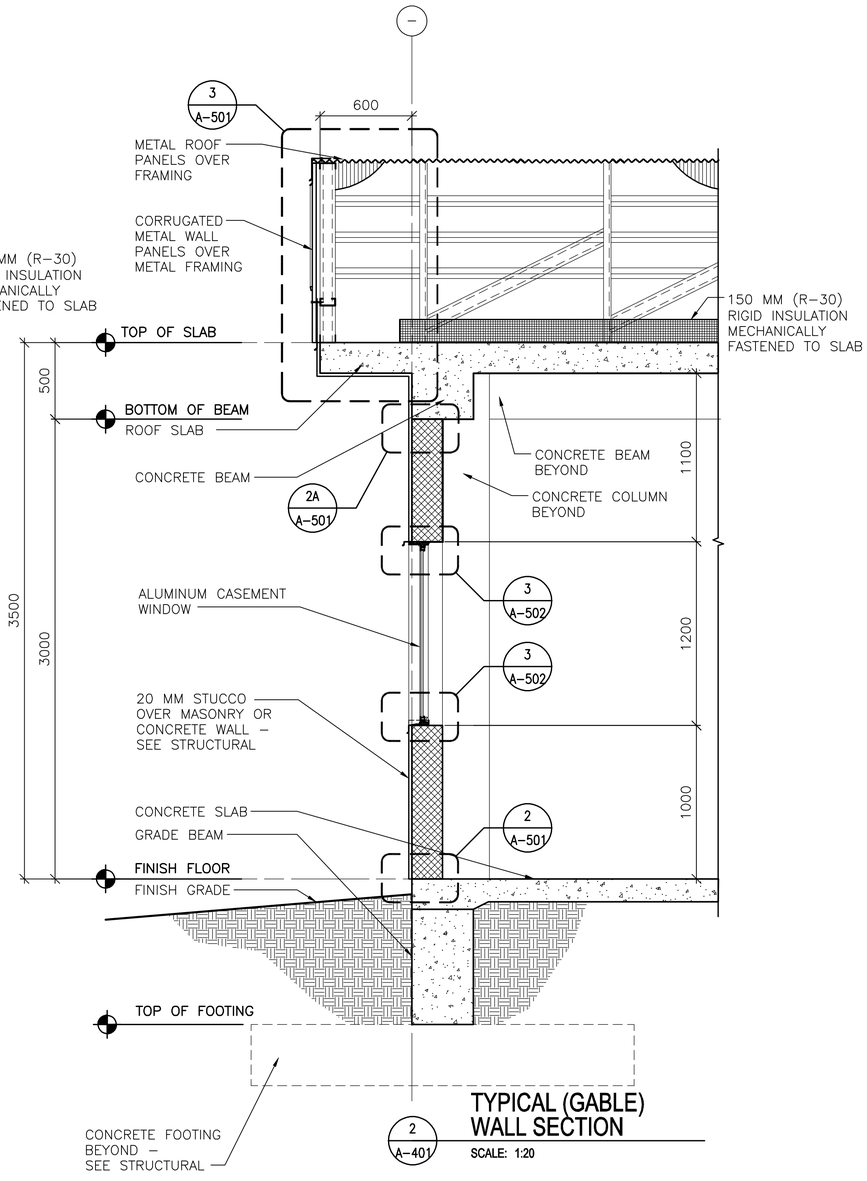


2 A-401 **TYPICAL (GABLE) WALL SECTION**

SCALE: 1:20

LINEAR DIMENSIONS SHOWN ARE IN MILLIMETERS (MM), UNLESS OTHERWISE NOTED

0 400 800

SCALE: 1:20

APPROVED:

A/E DESIGNER OF RECORD

SEAL:

STATE OF SOUTH CAROLINA
KEVIN R. CHAFIN
N. Charleston, SC
6374
REGISTERED ARCHITECT

US ARMY CORPS OF ENGINEERS
AFGHANISTAN ENGINEER DISTRICT

| Mark | Description | Date | Appr. |
|---|---|---|---|

Date: 2/23/10
Design file no.
Drawing code:
Rev: 0
File name: ANAI0FA-A01WS
Plot date: 2/23/2010
Plot scale: x:X

Designed by: KRC
Dwn by: EBB
Ckd by: NLJ
Reviewed by: LHM
Submitted by: BAKER

U.S. ARMY CORPS OF ENGINEERS
AFGHANISTAN ENGINEER DISTRICT
APO AE 96338

*Michael Baker Jr., Inc*
*A unit of Michael Baker Corporation*
Airside Business Park
100 Airside Drive
Moon Township, PA 15108
www.mbakercorp.com

AFGHAN NATIONAL ARMY
REGIONAL MILITARY TRAINING CENTER
STANDARD DESIGN

ADMIN INSTRUCTORS OFFICE

WALL SECTIONS

Sheet reference number:
A-401

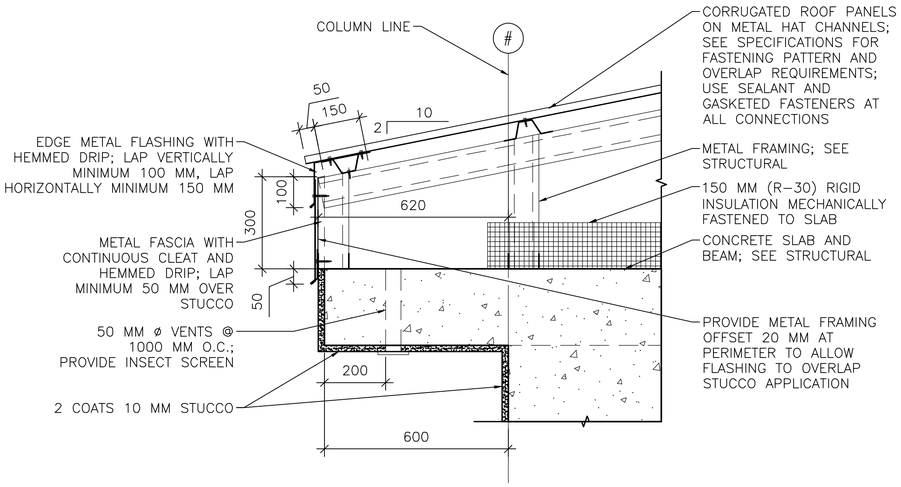


1 A–501 **EAVE DETAIL**
SCALE 1:10

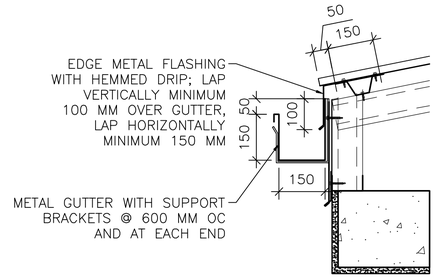


1A A–501 **GUTTER DETAIL**
SCALE 1:10

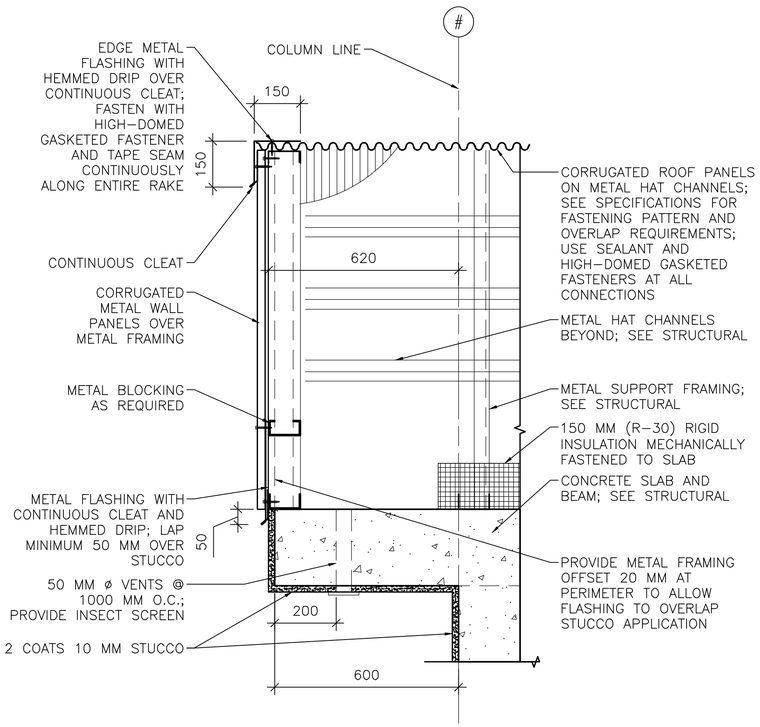


3 A–501 **RAKE/EAVE DETAIL**
SCALE 1:10

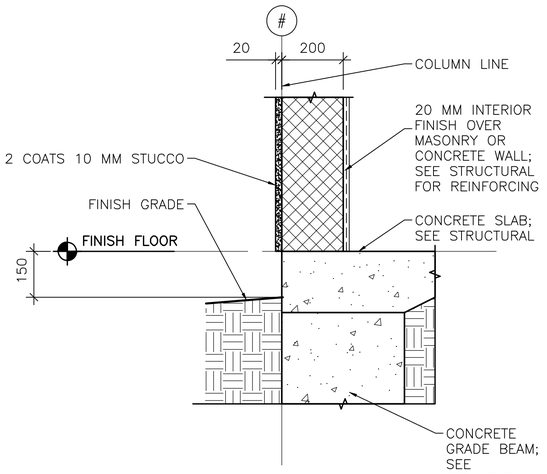


2 A–501 **STUCCO BASE DETAIL**
SCALE 1:10

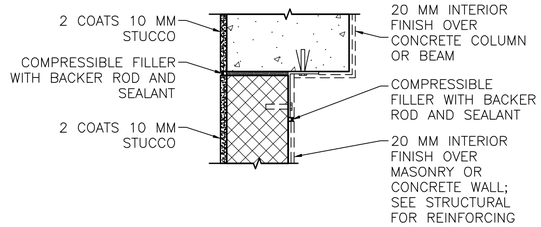


NOTE: DETAIL TYPICAL AT ALL WALL/COLUMN AND WALL/BEAM LOCATIONS, SEE ALTERNATE BRACING DETAIL BELOW 2B/A–501.

2A A–501 **STUCCO JOINT DETAIL**
SCALE 1:10

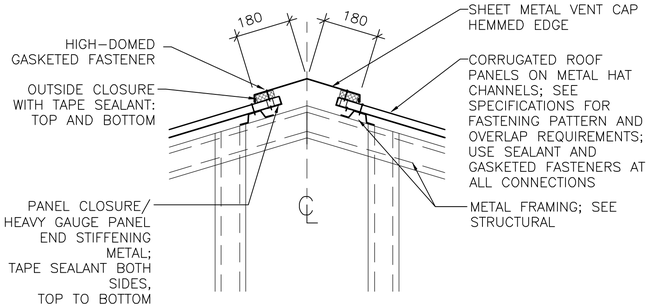


4 A–501 **RIDGE VENT DETAIL**
SCALE 1:10

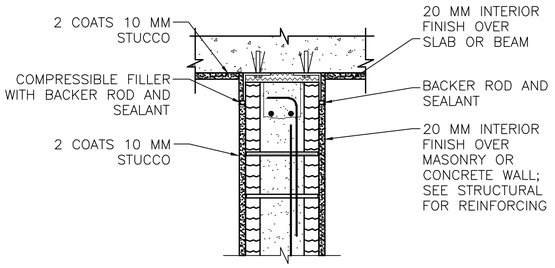


INTERIOR WALL/BEAM

2B A–501 **ALTERNATE BRACING DETAIL**
SCALE 1:10

LINEAR DIMENSIONS SHOWN ARE IN MILLIMETERS (MM), UNLESS OTHERWISE NOTED

0 200 400
SCALE: 1:10

APPROVED:

A/E DESIGNER OF RECORD

SEAL:

STATE OF SOUTH CAROLINA
KEVIN R. CHAFIN
N. Charleston, SC
6374
REGISTERED ARCHITECT

US ARMY CORPS OF ENGINEERS
AFGHANISTAN ENGINEER DISTRICT

| Mark | Description | Date | Appr. |
|---|---|---|---|
| | | | |

Rev: 0
Date: 2/23/10
Design file no.
Drawing code:
File name: ANAAOFA-501DT
Plot date: 2/23/2010
Plot scale: x/x

Designed by: KRC
Drwn by: EBB
Ckd by: NLJ
Reviewed by: LHM
Submitted by: BAKER

U.S. ARMY CORPS OF ENGINEERS
AFGHANISTAN ENGINEER DISTRICT
APO AE 96338

*Michael Baker Jr., Inc*
*A unit of Michael Baker Corporation*
Airside Business Park
100 Airside Drive
Moon Township, PA 15108
www.mbakercorp.com

AFGHAN NATIONAL ARMY
REGIONAL MILITARY TRAINING CENTER
STANDARD DESIGN

ADMIN INSTRUCTORS OFFICE

EXTERIOR DETAILS

Sheet reference number:
A–501

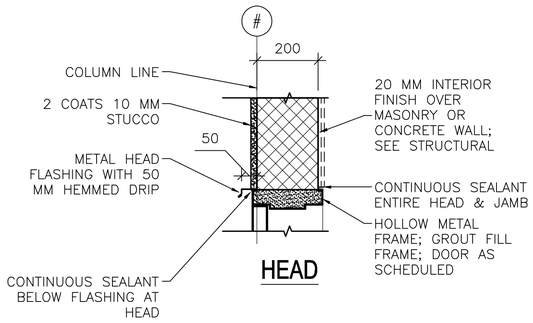


HEAD

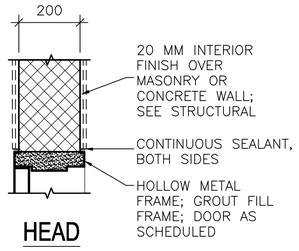


HEAD

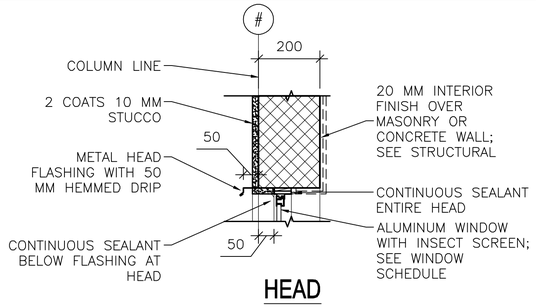


HEAD

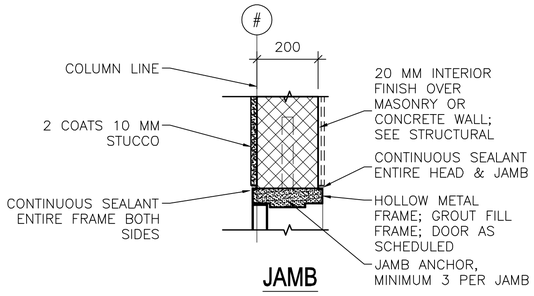


JAMB

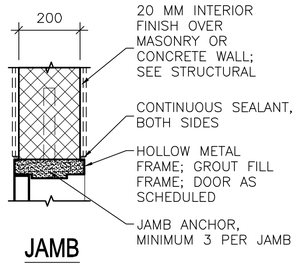


JAMB

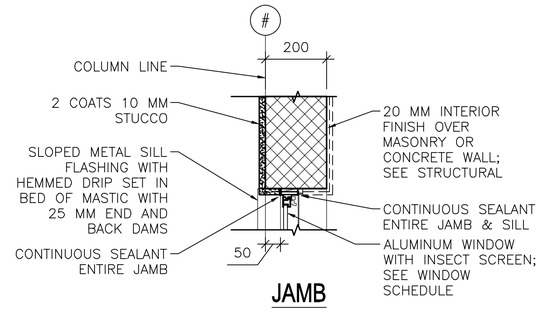


JAMB

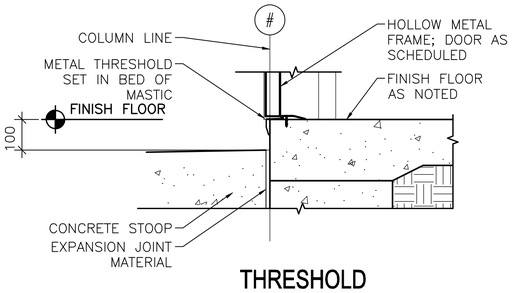


THRESHOLD

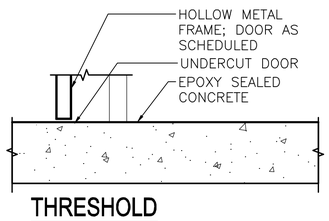


THRESHOLD

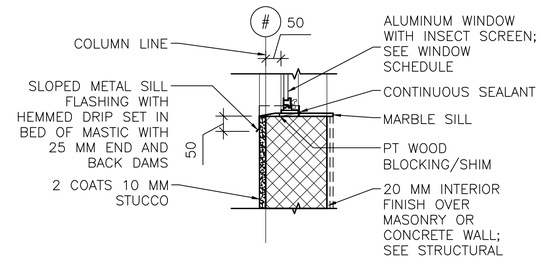


SILL

1 A–502 **EXTERIOR DOOR DETAILS**
SCALE: 1:10

2 A–502 **INTERIOR DOOR DETAILS**
SCALE: 1:10

3 A–502 **EXTERIOR WINDOW DETAILS**
SCALE: 1:10

LINEAR DIMENSIONS SHOWN ARE IN MILLIMETERS (MM), UNLESS OTHERWISE NOTED

0 200 400
SCALE: 1:10

APPROVED:

A/E DESIGNER OF RECORD

SEAL:

STATE OF SOUTH CAROLINA
KEVIN R. CHAFIN
N. Charleston, SC
6374
REGISTERED ARCHITECT

US ARMY CORPS OF ENGINEERS
AFGHANISTAN ENGINEER DISTRICT

| Mark | Description | Date | Appr. |
|---|---|---|---|
| | | | |

| Mark | Description | Date | Appr. |
|---|---|---|---|
| | | | |

Date: 2/23/10
Design file no.
Drawing code:
File name: ANAAOFA-502HJS
Plot date: 2/23/2010
Plot scale: x:x
Rev: 0

Designed by: KRC
Drwn by: EBB
Ckd by: NLJ
Reviewed by: LHM
Submitted by: BAKER

U.S. ARMY CORPS OF ENGINEERS
AFGHANISTAN ENGINEER DISTRICT
APO AE 96338

*Michael Baker Jr., Inc*
*A unit of Michael Baker Corporation*
Airside Business Park
100 Airside Drive
Moon Township, PA 15108
www.mbakercorp.com

AFGHAN NATIONAL ARMY
REGIONAL MILITARY TRAINING CENTER
STANDARD DESIGN

ADMIN INSTRUCTORS OFFICE

HEAD, JAMB & SILL DETAILS

Sheet reference number:
A–502

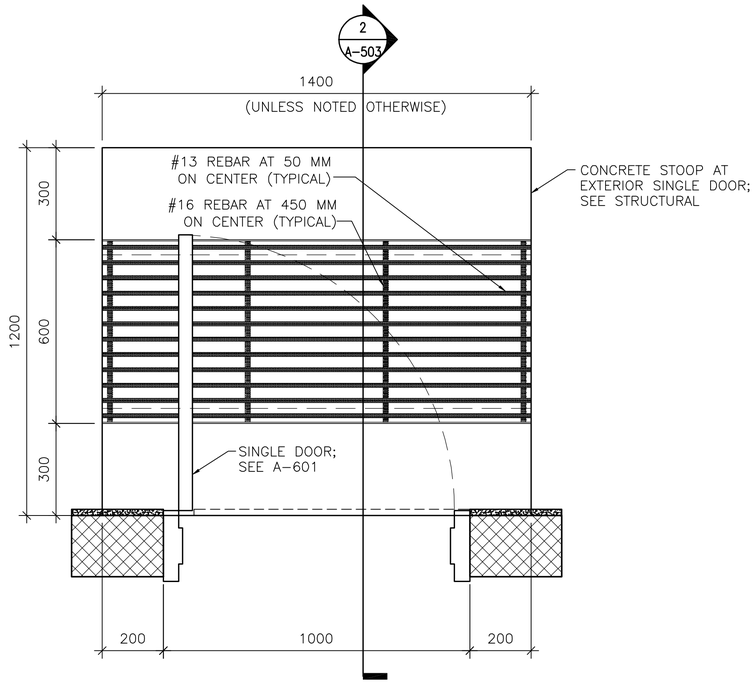


1 A-503 DOOR STOOP PLAN (WITH GRATE)
SCALE: 1:10

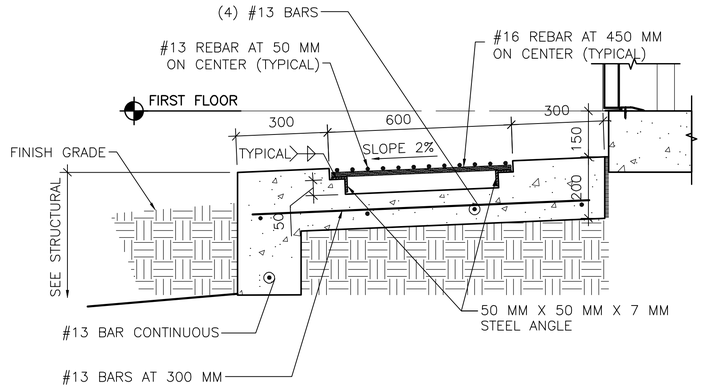


2 A-503 DOOR STOOP DETAIL
SCALE: 1:10

LINEAR DIMENSIONS SHOWN ARE IN MILLIMETERS (MM), UNLESS OTHERWISE NOTED

0 200 400
SCALE: 1:10

APPROVED:

A/E DESIGNER OF RECORD

SEAL:

STATE OF SOUTH CAROLINA
KEVIN R. CHAFIN
N. Charleston, SC
6374
REGISTERED ARCHITECT

US ARMY CORPS OF ENGINEERS
AFGHANISTAN ENGINEER DISTRICT

| Mark | Description | Date | Appr. | Mark | Description | Date | Appr. |
|---|---|---|---|---|---|---|---|

U.S. ARMY CORPS OF ENGINEERS
AFGHANISTAN ENGINEER DISTRICT
APO AE 96338

*Michael Baker Jr., Inc.*
*A unit of Michael Baker Corporation*

Airside Business Park
100 Airside Drive
Moon Township, PA 15108
www.mbakercorp.com

Designed by: KRC
Dwn by: EBB
Ckd by: NLJ
Reviewed by: LHM
Submitted by: BAKER
Date: 2/23/10
Rev: 0
Design file no.
Drawing code:
File name: ANAAIOFA-503DT
Plot date: 2/23/2010
Plot scale: X:X

AFGHAN NATIONAL ARMY
REGIONAL MILITARY TRAINING CENTER
STANDARD DESIGN

ADMIN INSTRUCTORS OFFICE

STOOP DETAILS

Sheet reference number:
A-503

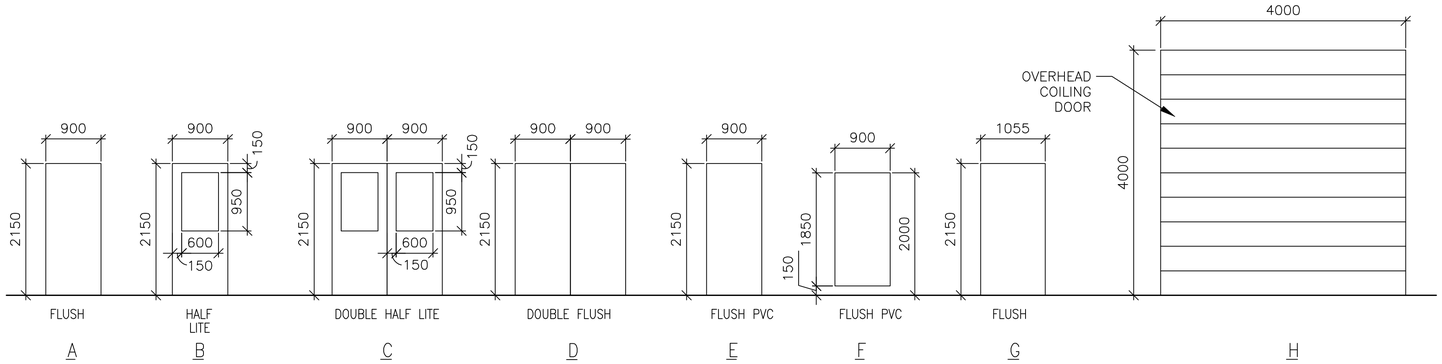


1 A-601 **DOOR TYPES**
SCALE: 1:50

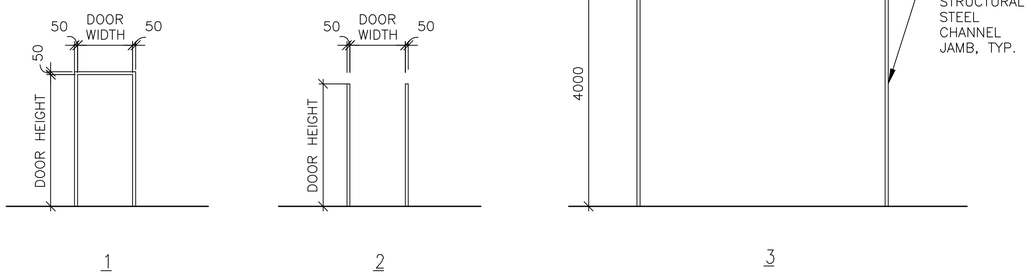


2 A-601 **FRAME TYPES**
SCALE: 1:50

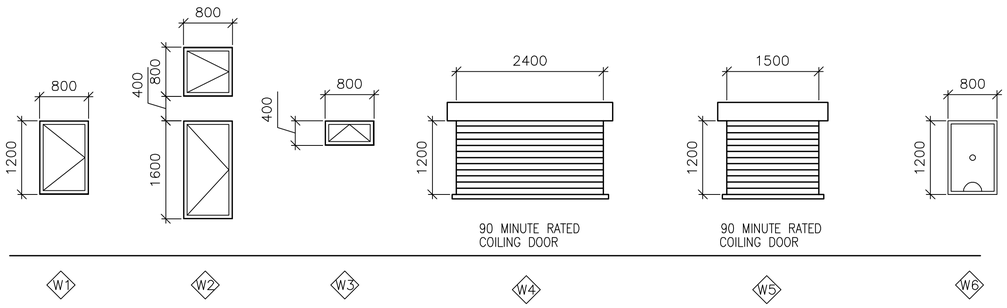


3 A-601 **WINDOW TYPES**
SCALE: 1:50

## WINDOW TYPE NOTES:

1. ALL EXTERIOR WINDOWS SHALL BE ALUMINUM WITH INSECT SCREENS. WINDOWS SHALL BE COMMERCIAL GRADE.
2. ALL EXTERIOR WINDOWS SHALL BE OPERABLE.

4 A-601 **DOOR TAG**
SCALE: NTS




5 A-601 **RATED DOOR TAG**
SCALE: NTS

## DOOR TAG NOTES:

1. THE DOOR TAG INDICATES THE DOOR TYPE, FRAME TYPE AND HARDWARE SET FOR EACH DOOR.
2. THE DOOR TAG FOR RATED DOORS INCLUDES THE RATING OF THE DOOR IN MINUTES.

## EXTERIOR DOOR HARDWARE TYPES:

HW-1 1-1/2 PR HINGES, A5112 114 X 114
1 EA RIM EXIT DEVICE, TYPE 1
1 EA CYLINDER. E09221A, GRADE 1
1 EA OVERHEAD CLOSER, C02061, LOW RESISTANCE
1 EA THRESHOLD, J32130
3 EA DOOR SILENCERS, L03011

HW-2 1-1/2 PR HINGES, A5112 114 X 114
1 EA LOCKSET, F13 ENTRY LOCK W/LEVER HANDLES, GRADE 1
1 EA OVERHEAD CLOSER, C02061, LOW RESISTANCE
1 EA THRESHOLD, J32130
3 EA DOOR SILENCERS, L03011

HW-3 3 PR HINGES, A5112 114 X 114
2 EA RIM EXIT DEVICE, TYPE 1
2 EA CYLINDER. GRADE 1
2 EA OVERHEAD CLOSER, C02061, LOW RESISTANCE
1 EA DOOR COORDINATOR, TYPE 21
1 EA ASTRAGAL
1 EA THRESHOLD, J32130
2 EA DOOR SILENCERS, L03011

HW-4 3 PR HINGES, A5112 114 X 114
1 EA LOCKSET W/LEVER HANDLES. GRADE 1, F13
1 EA OVERHEAD CLOSER, C02061, LOW RESISTANCE
2 EA MAGNETIC HOLDER PIN, ATTACHED TO DOOR LEAF
2 EA MAGNETIC HOLDER RECEIVER, ATTACHED TO STOOP
2 EA LEVER EXTENSION FLUSH BOLTS, L04081
1 EA ASTRAGAL
1 EA THRESHOLD, J32130
2 EA DOOR SILENCERS, L03011

## DOOR AND HARDWARE NOTES:

1. INTERIOR AND EXTERIOR METAL DOORS AND FRAME COLORS SHALL MATCH ADJACENT WALL COLORS AS SELECTED BY THE CONTRACTING OFFICER.
2. FRAMES, EXCEPT FIRE-RATED FRAMES, SHALL BE MOUNTED AND ADJUSTED IN ACCORDANCE WITH MANUFACTURER'S INSTRUCTIONS. FRAMES SHALL BE FASTENED WITH MINIMUM OF THREE ANCHORS PER JAMB AT EQUAL INTERVALS.
3. DIMENSIONS SHOWN ON DOOR TYPES DETAIL ARE BASED UPON MODULAR MASONRY (OR ROUGH OPENING), HEIGHT OF 2200 MM FOR STANDARD PERSONNEL DOORS. CONTRACTOR SHALL COORDINATE WITH DOOR SUPPLIER TO ENSURE THAT DIMENSIONS OF DOORS AND FRAMES PROVIDED ARE COMPATIBLE WITH DOOR OPENING DIMENSIONS.
4. HARDWARE SHALL BE HEAVY DUTY, COMMERCIAL GRADE, STAINLESS STEEL WITH A SATIN OR BRUSHED FINISH.
5. HARDWARE TYPES INCLUDE BUILDERS HARDWARE MANUFACTURERS ASSOCIATION (BMHA) NUMBER.
6. DOORS IN 2 HOUR RATED PARTITIONS SHALL BE 1.5 HOUR (90 MINUTE) RATED DOORS IN ACCORDANCE WITH NFPA 101, TABLE 8.3.4.2.
7. DOORS AT STAIR ENCLOSURES SHALL BE 1 HOUR (60 MINUTE) RATED AT 1 HOUR WALL IN ACCORDANCE WITH NFPA 101, TABLE 8.3.4.2.
8. DOORS IN 1 HOUR RATED WALLS SHALL BE 3/4 HOUR (45 MINUTE) RATED DOORS IN ACCORDANCE WITH NFPA 101, TABLE 8.3.4.2.
9. DOORS IN 1 HOUR RATED CORRIDOR WALLS SHALL BE 1/3 HOUR (20 MINUTE) IN ACCORDANCE WITH NFPA 101, TABLE 8.3.4.2.
10. PROVIDE DOOR STOPS TO PROTECT WALLS ON LOCATIONS WHERE DOOR SWING WILL STRIKE WALL.

THIS SHEET IS STANDARD AND IS INCLUSIVE OF ALL THE DOOR/ WINDOW/ HARDWARE TYPES FOR THE ENTIRE RMTC CONTRACT. NOT ALL DOOR/ WINDOW/ HARDWARE TYPES ARE USED FOR ANY PARTICULAR BUILDING DESIGN. CONTRACTOR SHALL REFER TO THE FLOOR PLAN FOR THE TYPES BEING USED.

## INTERIOR DOOR HARDWARE TYPES:

HW-5 1-1/2 PR HINGES, A8133 114 X 114
1 EA LOCKSET W/LEVER HANDLES, F08, GRADE 1
1 EA WALL STOP, L02101 OR L02161
3 EA DOOR SILENCERS, L03011

HW-6 1-1/2 PR HINGES, A8112 114 X 114
1 EA LOCKSET W/LEVER HANDLES, F08, GRADE 1
1 EA WALL STOP, L02101 OR L02161
1 EA OVERHEAD CLOSER, C02061, LOW RESISTANCE
3 EA DOOR SILENCERS, L03011

HW-7 1-1/2 PR HINGES, A8133
1 EA LOCKSET W/LEVER HANDLES, F13 GRADE 1
1 EA WALL STOP, L02101 OR L02161
2 EA MOP PLATE, J103
3 EA DOOR SILENCERS, L03011

HW-8 1-1/2 PR HINGES, A8112
1 EA LOCKSET W/LEVER HANDLES, F13 GRADE 1
1 EA WALL STOP, L02101 OR L02161
2 EA MOP PLATE, J103
1 EA OVERHEAD CLOSER, C02061, LOW RESISTANCE
3 EA DOOR SILENCERS, L03011

HW-9 1-1/2 PR HINGES, A5112 114 X 114
1 EA RIM EXIT DEVICE, TYPE 1
1 EA CYLINDER. E09221A, GRADE 1
1 EA OVERHEAD CLOSER, C02061, LOW RESISTANCE
3 EA DOOR SILENCERS, L03011

HW-10 3 PR HINGES, A5112 114 X 114
1 EA LOCKSET W/LEVER HANDLES. GRADE 1, F13
2 EA LEVER EXTENSION FLUSH BOLTS, L04081
1 EA ASTRAGAL
2 EA DOOR SILENCERS, L03011

HW-11 1-1/2 PR HINGES, A8112 114 X 114
1 EA LOCKSET W/LEVER HANDLES, F13, GRADE 1
1 EA WALL STOP, L02101 OR L02161
1 EA OVERHEAD CLOSER, C02061, LOW RESISTANCE
3 EA DOOR SILENCERS, L03011
1 EA ROBE HOOK

HW-12 1-1/2 PR HINGES, A8133
1 EA LATCHSET W/LEVER HANDLES, F76 GRADE 1
1 EA WALL STOP, L02101 OR L02161
2 EA MOP PLATE, J103
3 EA DOOR SILENCERS, L03011
1 EA ROBE HOOK

HW-13 3 PR HINGES, A5112 114 X 114
1 EA LOCKSET W/LEVER HANDLES. GRADE 1, F13
1 EA OVERHEAD CLOSER, C02061, LOW RESISTANCE
2 EA LEVER EXTENSION FLUSH BOLTS, L04081
1 EA ASTRAGAL
2 EA DOOR SILENCERS, L03011

HW-14 3 PR HINGES, A5112 114 X 114
2 EA RIM EXIT DEVICE, TYPE 1
2 EA CYLINDER. GRADE 1
2 EA OVERHEAD CLOSER, C02061, LOW RESISTANCE
1 EA DOOR COORDINATOR, TYPE 21
1 EA ASTRAGAL
2 EA DOOR SILENCERS, L03011

APPROVED:
A/E DESIGNER OF RECORD
SEAL:
STATE OF SOUTH CAROLINA
KEVIN R. CHAFIN
N. Charleston, SC
6374
REGISTERED ARCHITECT

US ARMY CORPS OF ENGINEERS
AFGHANISTAN ENGINEER DISTRICT

| Mark | Description | Date | Appr. |
|---|---|---|---|
| | | | |

| Mark | Description | Date | Appr. |
|---|---|---|---|
| | | | |

Date: 2/23/10
Design file no.
Drawing code:
Rev: 0
Designed by: KRC
Dwn by: EBB
Ckd by: NLJ
Reviewed by: LHM
Submitted by: BAKER
File name: ANAOFA-601SCH
Plot date: 2/23/2010
Plot scale: x:x

U.S. ARMY CORPS OF ENGINEERS
AFGHANISTAN ENGINEER DISTRICT
APO AE 96338

*Michael Baker Jr., Inc.*
*A unit of Michael Baker Corporation*
Airside Business Park
100 Airside Drive
Moon Township, PA 15108
www.mbakercorp.com

AFGHAN NATIONAL ARMY
REGIONAL MILITARY TRAINING CENTER
STANDARD DESIGN

ADMIN INSTRUCTORS OFFICE

WINDOW AND DOOR SCHEDULES

Sheet reference number:
A-601

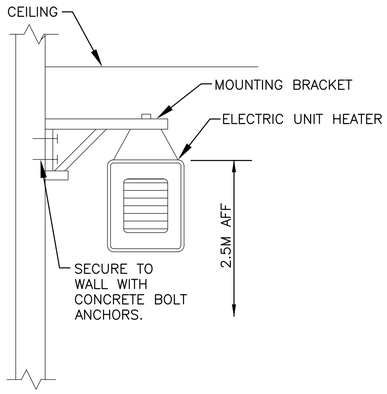


2 / M-101 ELECTRIC UNIT HEATER MOUNTING DETAIL
N.T.S.

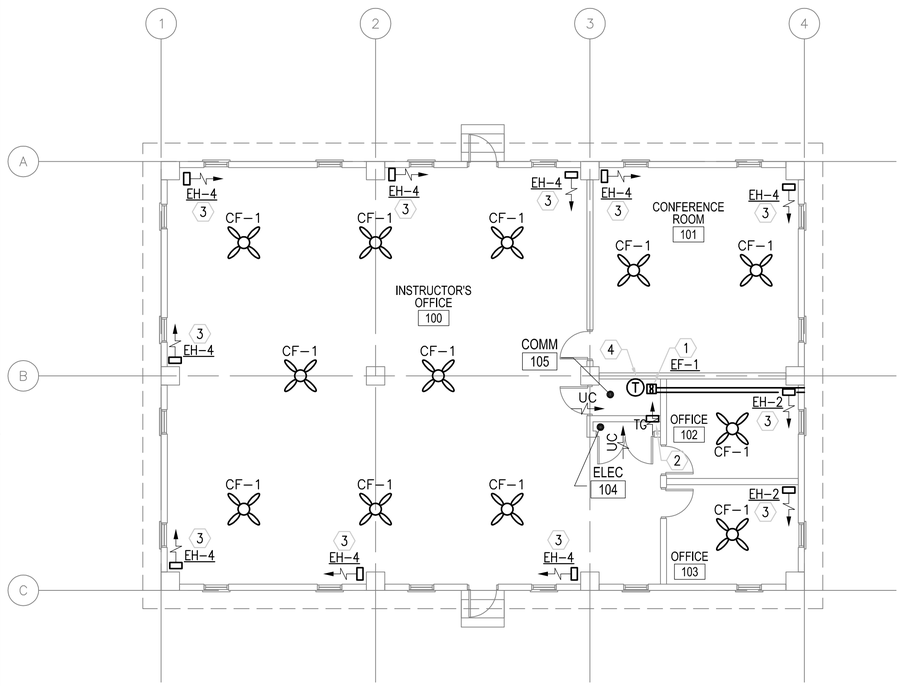


1 / M-101 FLOOR PLAN - HVAC
SCALE: 1:100

## GENERAL NOTES:

1. DO NOT SCALE DRAWINGS – ALL DIMENSIONS AND CONDITIONS SHALL BE CHECKED AND VERIFIED BY THE CONTRACTOR AT THE SITE.
2. ALL WORK PERFORMED ON THIS BUILDING SHALL BE IN COMPLIANCE WITH ALL PERTINENT CODES, RULES, ORDINANCES AND REGULATIONS OF THE GOVERNING AUTHORITIES.
3. ALL WORK PERFORMED UNDER AND IN CONNECTION WITH THESE DRAWINGS AND SPECIFICATIONS SHALL BE IN STRICT COMPLIANCE WITH THE LATEST SAFETY AND HEALTH STANDARDS.

## SYMBOLS:

- (X) KEY NOTE
- (.050) AIR VOLUME IN CUBIC METERS PER SECOND (CMS)
- ¬ VOLUME DAMPER
- (T) THERMOSTAT WITH LOCKING COVER
- UC DOOR UNDERCUT
- TG TRANSFER GRILLE

## ABBREVIATIONS:

| | |
|---|---|
| AFF | ABOVE FINISH FLOOR |
| CF | CEILING FANS |
| CMS | CUBIC METERS PER SECOND |
| STATS | THERMOSTATS |

## KEY NOTE:

1. INLINE EXHAUST FAN DUCTED TO WALL CAP WITH LOW LEAKAGE GRAVITY BACK–DRAFT DAMPER. SECURE FAN TO STRUCTURE.
2. 200x150 (8x6) TRANSFER GRILLE. MOUNT GRILLE 800mm BELOW CEILING. COORDINATE LOCATION IN FIELD WITH OTHER TRADES.
3. UNIT HEATER SECURED FROM WALL. SEE DETAIL THIS SHEET.
8. THERMOSTAT MOUNTED AS HIGH AS POSSIBLE. INTERLOCK STAT WITH CORRESPONDING EXHAUST FAN, SET FAN TO ENERGIZE ON RISE IN TEMPERATURE ABOVE 25°C (77°F).

## ELECTRIC UNIT HEATER SCHEDULE

| NO. | CMS | KW | F.A.T. °C | ELECT. CHAR. | MOUNTING |
|---|---|---|---|---|---|
| EH–2 | 0.200 | 2.6 | 38 | 380/1/50 | WALL HUNG |
| EH–4 | 0.200 | 4 | 38 | 380/1/50 | WALL HUNG |

NOTES:
1. UNIT HEATERS SHALL HAVE TAMPER PROOF INTEGRAL STATS.
2. COORDINATE LOCATION AND ORIENTATION IN FIELD.

## EXHAUST FAN SCHEDULE

| NO. | TYPE | FAN CMS | DRIVE | HP | SP mmH2O | ELECTRICAL DATA | SWITCH |
|---|---|---|---|---|---|---|---|
| EF–1 | INLINE | 0.035 | DIRECT | FRACT | 13 | 220/1/50 | W/ STAT |

NOTE:
1. FANS SHALL HAVE SPRING OPERATED BACK DRAFT DAMPER.

## CEILING FAN

| NO. | BLADE SIZE | | VOLTAGE | SWITCH | REMARKS |
|---|---|---|---|---|---|
| | mm | IN | | | |
| CF–1 | 1320 | 52 | 220/1/50 | @ WALL | 3 SPEED REVERSIBLE MOTOR |

NOTES:
1. INSTALL FANS 2.5M AFF.
2. PROVIDE WITH OUT LIGHT FIXTURE.
3. PROVIDE WITH REMOTE MOUNTED ON–OFF SWITCH SHOWN ON ELECTRICAL DRAWINGS.

LINEAR DIMENSIONS SHOWN ARE IN MILLIMETERS (MM), UNLESS OTHERWISE NOTED

0 2000 4000
SCALE: 1:100

APPROVED:

A/E DESIGNER OF RECORD

SEAL:

COMMONWEALTH OF PENNSYLVANIA REGISTERED PROFESSIONAL ENGINEER MATTHEW R. SOTOSKY 046576-E

US ARMY CORPS OF ENGINEERS
AFGHANISTAN ENGINEER DISTRICT

| Mark | Description | Date | Appr. |
|---|---|---|---|

Designed by: RWL
Drwn by: JJN
Ckd by: CJM
Reviewed by: MRS
Submitted by: BAKER

Date: 02/23/10
Design file no.
Drawing code:
File name: ANAADFMH-101XXX
Plot date: 02/26/2010
Plot scale: 1:100
Rev: 0

U.S. ARMY CORPS OF ENGINEERS
AFGHANISTAN ENGINEER DISTRICT
APO AE 96338

*Michael Baker Jr; Inc*
*A unit of Michael Baker Corporation*
Airside Business Park
100 Airside Drive
Moon Township, PA 15108
www.mbakercorp.com

AFGHAN NATIONAL ARMY
REGIONAL MILITARY TRAINING CENTER
STANDARD DESIGN

ADMIN INSTRUCTORS OFFICE
HVAC – FLOOR PLAN, SCHEDULES AND DETAILS

Sheet reference number:
M–101

## POWER

- DISTRIBUTION PANELBOARD
- NEW PANELBOARD – SURFACE
- NEW PANELBOARD – RECESSED
- (G) GENERATOR
- TRANSFORMER (DRAWN TO SCALE)
- [J] JUNCTION BOX
- (J) JUNCTION BOX – CEILING
- FUSIBLE SAFETY SWITCH
- (M) MOTOR
- $^{M}$ MOTOR STARTING SWITCH – 220V, 20A RATED UNLESS OTHERWISE NOTED.
- ELECTRIC WATER HEATER
- (CF) CEILING FAN – REFER TO SPECIFICATION SECTION 26 20 00

## RECEPTACLES

- DUPLEX 20A TYPE CEE 7/7 "SCHUKO STYLE" UNSWITCHED RECEPTACLE
- $^{GF}$ DUPLEX 20A TYPE CEE 7/7 "SCHUKO STYLE" UNSWITCHED RECEPTACLES – 10mA GROUND FAULT INTERRUPTER TYPE
- $^{WP}$ DUPLEX 20A TYPE CEE 7/7 "SCHUKO STYLE" UNSWITCHED TYPE WITH WEATHERPROOF COVER – 10mA GROUND FAULT INTERRUPTER TYPE
- $^{EXP}$ DUPLEX 20A TYPE CEE 7/7 "SCHUKO STYLE" UNSWITCHED RECEPTACLES – EXPLOSION PROOF
- * INDICATES MOUNT DEVICE ABOVE COUNTERTOP OR AT 1070mm ABOVE FINISHED FLOOR WHERE NO COUNTER IS TO BE INSTALLED.

## LIGHTING

- LIGHTING FIXTURE – SEE FIXTURE SCHEDULE FOR MORE INFORMATION
- EMERGENCY LIGHTING FIXTURE – SEE FIXTURE SCHEDULE FOR MORE INFORMATION
- DOWNLIGHT
- LIGHTING FIXTURE ON NORMAL/EMERGENCY
- WALL MOUNTED LIGHT FIXTURE
- [E] EXIT SIGN – DIRECTIONAL ARROWS AS INDICATED ON DRAWINGS
- REMOTE HEAD FOR BATTERY PACK
- $ SINGLE POLE SWITCH – 20A RATED
- $^{3}$ 3–WAY SWITCH – 20A RATED
- $^{4}$ 4–WAY SWITCH – 20A RATED
- [LC] LIGHTING CONTACTOR
- POLE MOUNTED SITE LIGHTING FIXTURE– NUMBER OF FIXTURES PER POLE AS INDICATED ON DRAWINGS
- EXTERIOR DIRECTIONAL LIGHTING FIXTURE
- a SMALL CASE LETTERS REPRESENTS LAMP(S) / SWITCHES.

## TELECOMMUNICATIONS

- ▼ TELEPHONE OUTLET(S) @ 45cm AFF. U.N.O. WITH 20mm RACEWAY TERMINATED TO TELEDATA TERMINAL BOARD.
- ▽ DATA OUTLET(S) @ 45cm AFF. U.N.O. WITH 20mm RACEWAY TERMINATED TO TELEDATA TERMINAL BOARD.

## TELECOMMUNICATIONS (CONTINUED)

- ▼ COMBINATION TELEPHONE/DATA OUTLET(S) @ 45cm AFF. U.N.O. WITH 27mm RACEWAY TERMINATED TO TELEDATA TERMINAL BOARD.
- W▼ WALL MTD. TELEPHONE OUTLET WITH 20mm RACEWAY TO TELEDATA TERMINAL BOARD.
- (x)T INDICATES NUMBER OF TELEPHONE OUTLET(S) AND ASSOCIATED CABLING
- (x)D INDICATES NUMBER OF DATA OUTLET(S) AND ASSOCIATED CABLING
- (x)TF INDICATES NUMBER OF TELEPHONE OUTLETS AND ASSOCIATED CABLING WITH 1 OUTLET AND CABLE DEDICATED FOR FAX

## SINGLE LINE SYMBOLS

- SWITCH
- BREAKER
- FUSE
- TRANSFORMER
- GROUND
- CONTACT (NORMALLY OPEN)
- CONTACT (NORMALLY CLOSED)
- TRANSFER SWITCH
- CURRENT TRANSFORMER
- INDICATES NEW ELECTRICAL EQUIPMENT
- –C– INDICATES NEW CONTROL WIRING AND CONDUIT
- EQUIPMENT OUTLINE

## MISCELLANEOUS

- BRANCH CIRCUIT WIRING, SURFACE MOUNTED ON WALLS
- BRANCH CIRCUIT WIRING – 6mm²
- BRANCH CIRCUIT WIRING – UNDER FLOOR
- HOME RUN BACK TO PANEL
- CONDUIT TURNED DOWN
- CONDUIT TURNED UP
- –LV– LOW VOLTAGE WIRING AND CONDUIT
- ~ INDICATES CONTINUATION OF LINE

## FIRE ALARM

- [FACP] FIRE ALARM CONTROL PANEL WITH BATTERY BACKUP
- [F] FIRE ALARM PULL STATION

## FIRE ALARM (CONTINUED)

- [F] FIRE ALARM STROBE – WALL MOUNTED
- [F] FIRE ALARM AUDIBLE/STROBE – WALL MOUNTED
- [F] FIRE ALARM HORN/STROBE – WALL MOUNTED
- (S) SMOKE DETECTOR
- (H) HEAT DETECTOR CEILING MOUNTED
- –(D) DUCT DETECTOR – PROVIDED BY EC, INSTALLED BY MC AND CONNECTED BY EC

## DENOTATIONS & ABBREVIATIONS

| | |
|---|---|
| AFF | ABOVE FINISHED FLOOR |
| C | CEILING MOUNTED |
| E | EMERGENCY |
| EC | ELECTRICAL CONTRACTOR |
| EPO | EMERGENCY POWER OFF |
| EXP | EXPLOSION PROOF |
| F | FIRE ALARM |
| FF | FLUSH FLOOR MOUNTED |
| FL | FLUORESCENT |
| FO | FIBER OPTIC |
| FSS | FUSED SAFETY SWITCH |
| GF | GROUND FAULT INTERRUPTER |
| GC | GENERAL CONTRACTOR |
| IG | ISOLATED GROUND |
| K | KEY |
| LV | LOW VOLTAGE |
| M | MOTOR |
| MC | MECHANICAL CONTRACTOR |
| NE | NORMAL/EMERGENCY |
| NFSS | NON–FUSED SAFETY SWITCH |
| PA | PAGING SYSTEM |
| PLC | PLUMBING CONTRACTOR |
| SL | SINGLE LINE |
| T | TELEPHONE |

## DENOTATIONS & ABBREVIATIONS (CONT.)

| | |
|---|---|
| TP | TAMPER PROOF |
| UE | UNDERGROUND ELECTRIC |
| W | WALL MOUNTED |
| WP | WEATHERPROOF WITH GROUND FAULT INTERRUPTION |
| WT | WATER TIGHT |

## GENERAL PROJECT NOTES:

G1. UNLESS OTHERWISE NOTED, PROVIDE ALL EQUIPMENT SHOWN ON THE PLANS. THE ELECTRICAL CONTRACTOR SHALL COORDINATE ALL SYMBOLS SHOWN ON THE PLANS WITH THE SYMBOL LIST. IT SHALL BE THE RESPONSIBILITY OF THE CONTRACTOR TO VERIFY THE INTENT OF ANY SYMBOL THAT IS SHOWN ON THE PLANS AND NOT INDICATED ON THE SYMBOL LIST WITH THE ENGINEER PRIOR TO BID.

G2. THE CONTRACTOR SHALL VERIFY THE LOCATION OF ALL UNDERGROUND UTILITIES WITHIN THE CONSTRUCTION AREA THREE (3) WORKING DAYS NOTICE BEFORE COMMENCING DIGGING. NOTIFY THE LOCAL AUTHORITY HAVING JURISDICTION AND WAIT THE REQUIRED TIME BEFORE COMMENCING TO DIG.

G3. THE CONTRACTOR SHALL COORDINATE CONDUIT RUNS, LIGHTING FIXTURES AND OTHER EQUIPMENT LOCATIONS WITH THE OTHER TRADE CONTRACTORS TO AVOID CONFLICTS.

G4. WHERE VOLTAGES AND FREQUENCIES ON THE DRAWINGS AND IN THE SPECIFICATIONS DIFFER FROM THE LOCAL ONES, ALL WORK SHALL BE PERFORMED USING THE LOCAL VOLTAGES AND FREQUENCIES.

G5. THE MINIMUM WIRE SIZE ON THE PROJECT SHALL BE 4mm². THE MINIMUM CONDUIT SIZE SHALL BE 20mm. THE MINIMUM BREAKER SIZE SHALL BE 20 AMPS.

G6. THE CONTRACTOR SHALL PUT A MAXIMUM OF 6 DUPLEX RECEPTACLES ON A 20A SINGLE POLE CIRCUIT.

G7. WHERE THE 1010 SCOPE REVIEW, 1015 TECHNICAL REVIEW, DRAWINGS, AND SPECIFICATIONS DIFFER FROM AMERICAN CODES OR STANDARDS, THE 1010, 1015, DRAWINGS, AND SPECIFICATIONS SHALL RULE.

G8. ALL CONDUIT AND DEVICES SHALL BE SURFACE MOUNTED UNLESS OTHERWISE INDICATED.

G9. CONTRACTOR SHALL COORDINATE ALL WORK WITH ALL OTHER TRADES TO ENSURE ALL WORK IS COMPLETED IN A PROFESSIONAL, WORKMAN–LIKE MANNER.

APPROVED:

A/E DESIGNER OF RECORD

SEAL:

COMMONWEALTH OF PENNSYLVANIA – REGISTERED PROFESSIONAL ENGINEER – JOSEPH R. GAUS – 1/29/10 – PE-074251

US ARMY CORPS OF ENGINEERS
AFGHANISTAN ENGINEER DISTRICT

| Mark | Description | Date | Appr. |
|---|---|---|---|
| | | | |

| Mark | Description | Date | Appr. |
|---|---|---|---|
| | | | |

Rev: 0
Date: 2/23/10
Design file no.
Drawing code:
File name:
Plot date:
Plot scale:

Designed by: JRG
Dwn. by: BJB
Ckd by: JRG
Reviewed by: JRG
Submitted by: BAKER

U.S. ARMY CORPS OF ENGINEERS
AFGHANISTAN ENGINEER DISTRICT
APO AE 96338

Michael Baker Jr., Inc
A unit of Michael Baker Corporation
Airside Business Park
100 Airside Drive
Moon Township, PA 15108
www.mbakercorp.com

AFGHAN NATIONAL ARMY
REGIONAL MILITARY TRAINING CENTER
STANDARD DESIGN

ADMIN INSTRUCTORS OFFICE
# ELECTRICAL SYMBOLS & ABBREVIATIONS

Sheet reference number:
E–001

## GENERAL NOTES:

1. REFER TO DRAWING #E-001 FOR THE ELECTRICAL SYMBOLS LIST.
2. EXIT SIGNS SHALL BE WIRED AHEAD OF ANY LOCAL SWITCHING ON CIRCUITS. SEE WIRING DIAGRAM DETAIL 6, ON DRAWING #E-501.
3. REFER TO DRAWING #E-601 FOR THE LIGHTING FIXTURE SCHEDULE.
4. REFER TO DRAWING #E-501 FOR THE POWER RISER.
5. REFER TO DRAWING #E-602 FOR PANEL SCHEDULES.
6. LIGHT FIXTURES INDICATED AS EMERGENCY SHALL BE PROVIDED WITH A BATTERY BACKUP BALLAST. SEE WIRING DIAGRAM DETAIL 5, DRAWING #E-501.

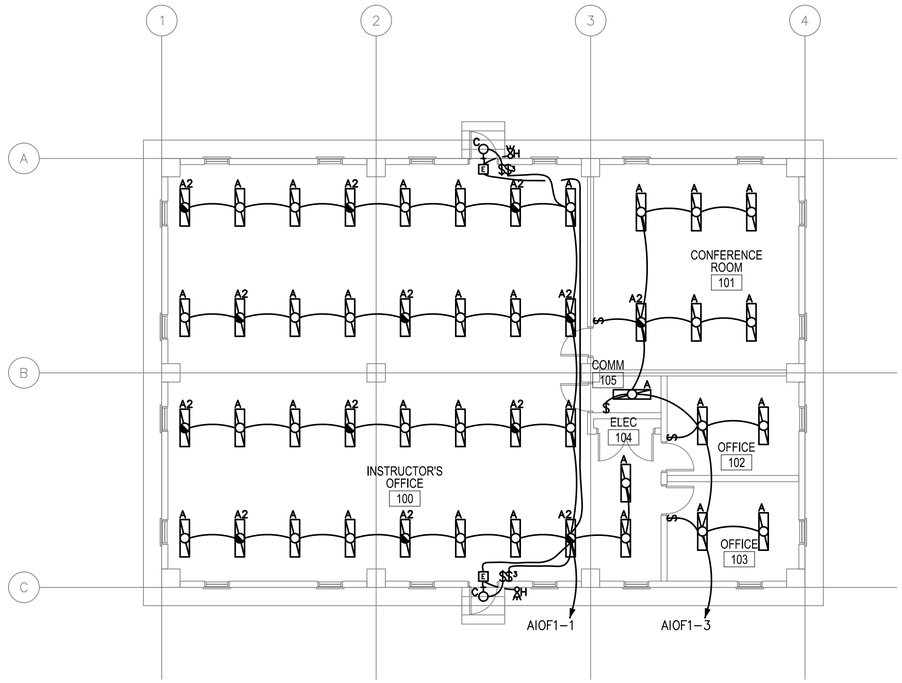


1 / E-101 ADMIN INSTRUCTOR'S OFFICE LIGHTING PLAN

SCALE: 1:100

0 2000 4000

SCALE: 1:100

US ARMY CORPS OF ENGINEERS
AFGHANISTAN ENGINEER DISTRICT

| Mark | Description | Date | Appr. |
|---|---|---|---|
| | | | |

| Mark | Description | Date | Appr. |
|---|---|---|---|
| | | | |

Rev: 0
Date: 2/23/10
Design file no.
Drawing code:
File name:
Plot date:
Plot scale:

Designed by: JRG
Dwn by: BJB
Ckd by: JRG
Reviewed by: JRG
Submitted by: BAKER

U.S. ARMY CORPS OF ENGINEERS
AFGHANISTAN ENGINEER DISTRICT
APO AE 96338

*Michael Baker Jr., Inc*
*A unit of Michael Baker Corporation*
Airside Business Park
100 Airside Drive
Moon Township, PA 15108
www.mbakercorp.com

AFGHAN NATIONAL ARMY
REGIONAL MILITARY TRAINING CENTER
STANDARD DESIGN

ADMIN INSTRUCTORS OFFICE
ELECTRICAL LIGHTING PLAN

APPROVED:

A/E DESIGNER OF RECORD

SEAL:

COMMONWEALTH OF PENNSYLVANIA
REGISTERED PROFESSIONAL
JOSEPH R. GAUS
ENGINEER
PE-074251

Sheet reference number:
E-101

## GENERAL NOTES:

1. REFER TO DRAWING #E-001 FOR THE ELECTRICAL SYMBOLS LIST.
2. REFER TO DRAWING #E-501 FOR THE POWER RISER.
3. REFER TO DRAWING #E-602 FOR PANEL SCHEDULES.
4. COORDINATE EXACT MOUNTING LOCATION OF DISCONNECTING MEANS FOR MECHANICAL AND PLUMBING EQUIPMENT IN THE FIELD.
5. FUSIBLE SAFETY SWITCHES THAT ARE NOT OTHERWISE IDENTIFIED SHALL BE 380V, 1P, 30A FUSED SAFETY SWITCHES WITH 20A FUSES.

## NUMBERED NOTES:

1. PANEL AIOF1.
2. PROVIDE 1200mm X 2400mm SHEET OF PLYWOOD PAINTED WITH FIRE RESISTANT PAINT FOR MOUNTING TELECOMMUNICATIONS EQUIPMENT.
3. PROVIDE CONDUIT STUB UP IN THE ROOM FOR INCOMING TELECOMMUNICATIONS SERVICES FROM THE CENTRAL COMMUNICATIONS SYSTEM IN THE GARRISON.
4. PROVIDE POWER CONNECTION TO EXHAUST FANS. SEE DRAWINGS #M-101 AND #E-602 FOR MORE INFORMATION.
5. PROVIDE POWER CONNECTION TO ELECTRIC UNIT HEATER #2. SEE DRAWINGS #M-101 AND #E-602 FOR MORE INFORMATION.
6. PROVIDE POWER CONNECTION TO ELECTRIC UNIT HEATER #4. SEE DRAWINGS #M-101 AND #E-602 FOR MORE INFORMATION.

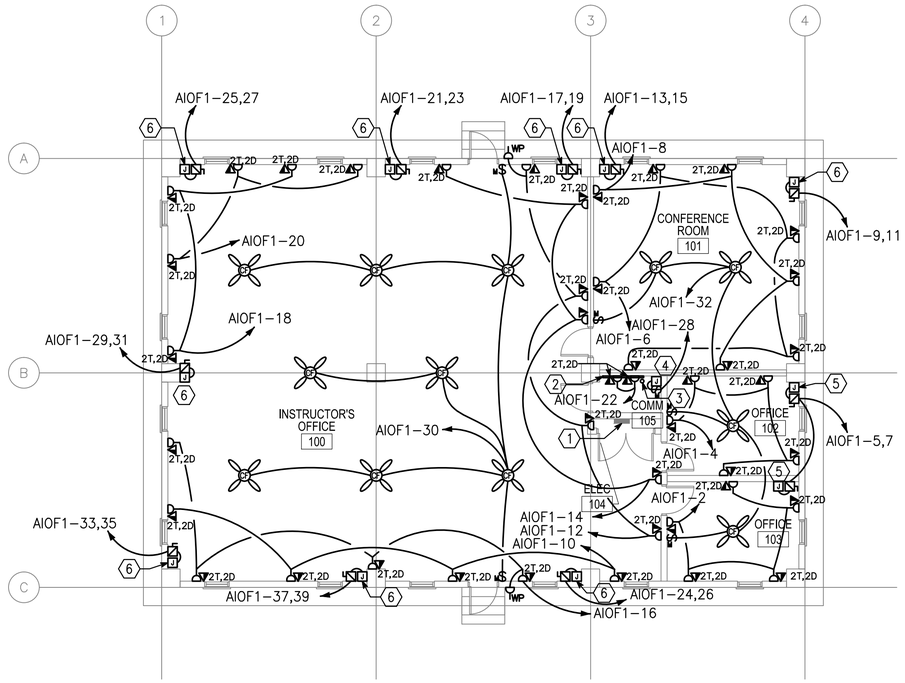


1 / E-102 ADMIN INSTRUCTOR'S OFFICE POWER AND SYSTEMS PLAN

SCALE: 1:100

0 2000 4000

SCALE: 1:100

US ARMY CORPS OF ENGINEERS
AFGHANISTAN ENGINEER DISTRICT

| Mark | Description | Date | Appr. |
|---|---|---|---|
| | | | |

| Mark | Description | Date | Appr. |
|---|---|---|---|
| | | | |

Rev: 0
Date: 2/23/10
Design file no.
Drawing code:
File name:
Plot date:
Plot scale:

Designed by: JRG
Dwn by: BJB
Ckd by: JRG
Reviewed by: JRG
Submitted by: BAKER

U.S. ARMY CORPS OF ENGINEERS
AFGHANISTAN ENGINEER DISTRICT
APO AE 96338


*Michael Baker Jr., Inc*
*A unit of Michael Baker Corporation*
Airside Business Park
100 Airside Drive
Moon Township, PA 15108
www.mbakercorp.com


AFGHAN NATIONAL ARMY
REGIONAL MILITARY TRAINING CENTER
STANDARD DESIGN

ADMIN INSTRUCTORS OFFICE
ELECTRICAL POWER AND SYSTEMS PLAN

APPROVED:

A/E DESIGNER OF RECORD

SEAL:

COMMONWEALTH OF PENNSYLVANIA
REGISTERED PROFESSIONAL
JOSEPH R. GAUS
ENGINEER
PE-074251
2/23/10

Sheet reference number:
E-102

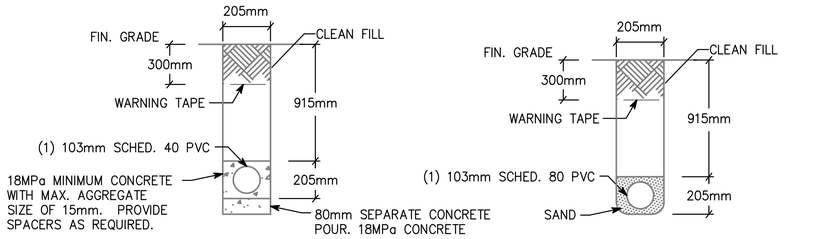


NOTE: PVC CONDUIT SHALL BE DIRECT BURIED SCHEDULE 80 FOR NO TRAFFIC AREAS AND CONCRETE-ENCASED SCHEDULE 40 FOR UNDER ROADWAYS OR TRAFFIC AREAS.

1 / E-501 **TYPICAL DUCT BANK DETAILS FOR CONDUIT IN SAND OR CONCRETE**

SCALE: N.T.S.

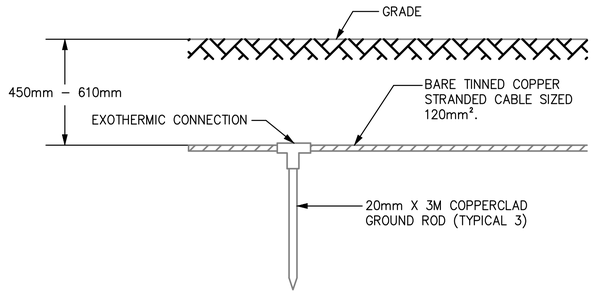


2 / E-501 **GROUND TRIPOD SYSTEM DETAIL - ELEVATION**

SCALE: N.T.S.

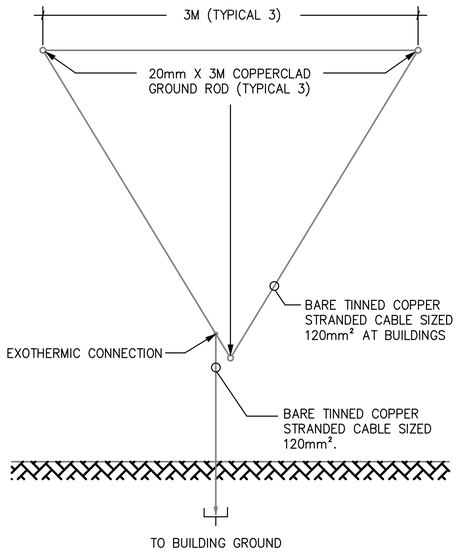


3 / E-501 **GROUND TRIPOD SYSTEM DETAIL - PLAN**

SCALE: N.T.S.

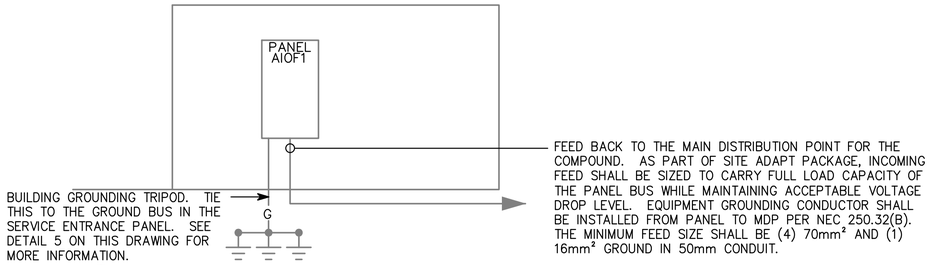


4 / E-501 **ADMIN INSTRUCTORS OFFICE (AIOF) RISER DIAGRAM**

SCALE: N.T.S.

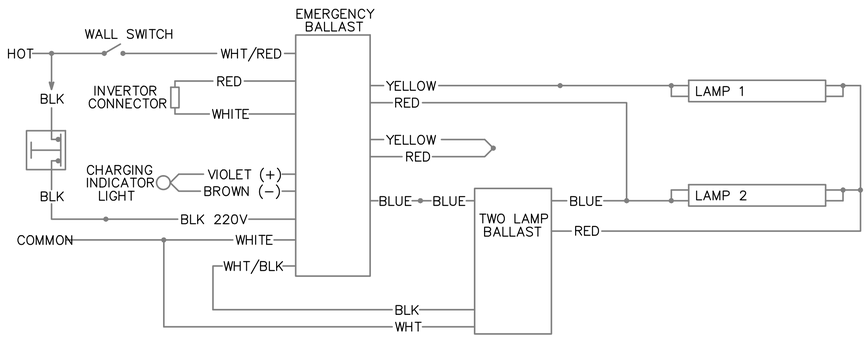


5 / E-501 **EMERGENCY FIXTURE WIRING DIAGRAM**

SCALE: N.T.S.

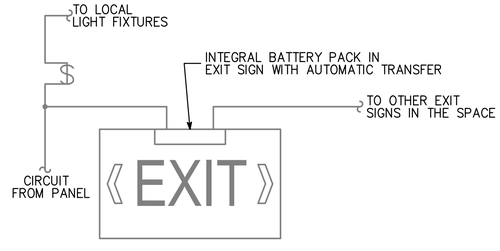


6 / E-501 **EXIT SIGN WIRING DIAGRAM**

SCALE: N.T.S.

APPROVED:

A/E DESIGNER OF RECORD

SEAL:

COMMONWEALTH OF PENNSYLVANIA
REGISTERED PROFESSIONAL
JOSEPH R. GAUS
1/29/10
ENGINEER
PE-074251

US ARMY CORPS OF ENGINEERS
AFGHANISTAN ENGINEER DISTRICT

| Mark | Description | Date | Appr. |
|---|---|---|---|

Rev: 0
Date: 2/23/10
Design file no.
Drawing code:
File name:
Plot date:
Plot scale:

Designed by: JRG
Ckd by: JRG
Dwn by: BJB
Reviewed by: JRG
Submitted by: BAKER

U.S. ARMY CORPS OF ENGINEERS
AFGHANISTAN ENGINEER DISTRICT
APO AE 96338

*Michael Baker Jr., Inc*
*A unit of Michael Baker Corporation*
Airside Business Park
100 Airside Drive
Moon Township, PA 15108
www.mbakercorp.com

AFGHAN NATIONAL ARMY
REGIONAL MILITARY TRAINING CENTER
STANDARD DESIGN

ADMIN INSTRUCTORS OFFICE
ELECTRICAL DETAILS

Sheet reference number:
E-501

| Ⓐ LARGER OF THE TWO SIZES GIVEN IN THE TABLES BELOW | |
|---|---|
| GROUNDING ELECTRODE CONDUCTOR (BASED ON AIC RATING) | |
| AIC RATING OF SERVICE EQUIPMENT | NECESSARY GROUNDING ELECTRODE CONDUCTOR SIZE |
| 10K | (1) 35mm² |
| 14K | (1) 50mm² |
| 18K | (1) 70mm² |
| 22K | (1) 70mm² |
| 25K | (1) 70mm² |
| 30K | (1) 95mm² |
| 35K | (1) 120mm² |
| 42K | (1) 150mm² |
| 65K | (1) 185mm² |
| 100K | (1) 300mm² |
| 125K | (2) 185mm² |
| 200K | (2) 300mm² |
| GROUNDING ELECTRODE CONDUCTOR (BASED ON NEC TABLE 250.66) | |
| SIZE OF LARGEST UNGROUNDED SERVICE CONDUCTOR OR EQUIVALENT AREA FOR PARALLEL CONDUCTORS | NECESSARY GROUNDING ELECTRODE CONDUCTOR SIZE |
| 350 kcmil OR SMALLER | 35mm² |
| OVER 350 kcmil TO 600 kcmil | 70mm² |
| OVER 600 kcmil TO 1100 kcmil | 70mm² |
| OVER 1100 kcmil | 95mm² |
| NOTE: ALL SIZES ARE BASED ON COPPER CONDUCTORS. | |

| Ⓑ EQUIPMENT GROUNDING CONDUCTOR | |
|---|---|
| RATING OR SETTING OF AUTOMATIC OVERCURRENT DEVICE IN CIRCUIT AHEAD OF EQUIPMENT, CONDUIT, ETC, NOT EXCEEDING (AMPERES) | NECESSARY EQUIPMENT GROUNDING CONDUCTOR SIZE |
| 15 | 2.5mm² |
| 20 | 4.0mm² |
| 30 | 6.0mm² |
| 40 | 6.0mm² |
| 60 | 6.0mm² |
| 100 | 10mm² |
| 200 | 16mm² |
| 300 | 25mm² |
| 400 | 25mm² |
| 500 | 35mm² |
| 600 | 50mm² |
| 800 | 70mm² |
| 1000 | 70mm² |
| 1200 | 95mm² |
| 1600 | 120mm² |
| 2000 | 150mm² |
| 2500 | 185mm² |
| 3000 | 240mm² |
| 4000 | 300mm² |
| 5000 | 400mm² |
| 6000 | 400mm² |
| NOTE: ALL SIZES ARE BASED ON COPPER CONDUCTORS. | |

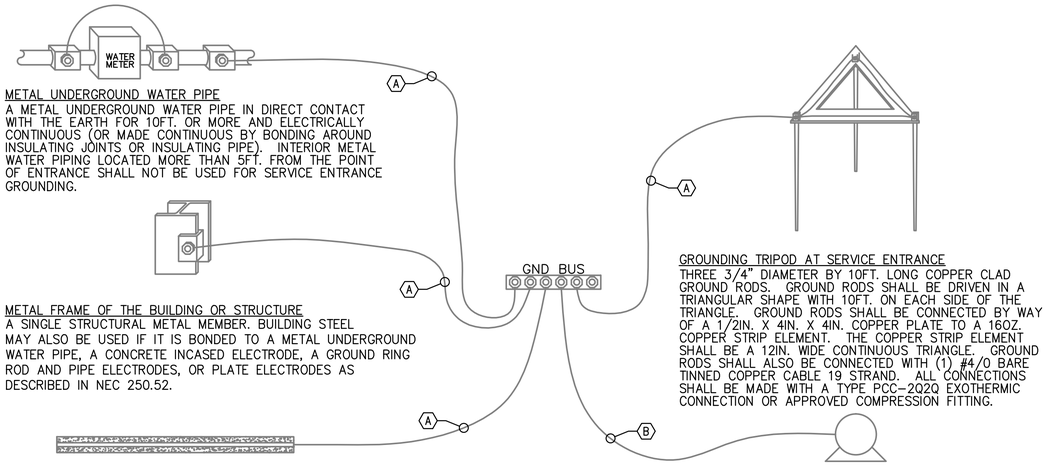


METAL UNDERGROUND WATER PIPE
A METAL UNDERGROUND WATER PIPE IN DIRECT CONTACT WITH THE EARTH FOR 10FT. OR MORE AND ELECTRICALLY CONTINUOUS (OR MADE CONTINUOUS BY BONDING AROUND INSULATING JOINTS OR INSULATING PIPE). INTERIOR METAL WATER PIPING LOCATED MORE THAN 5FT. FROM THE POINT OF ENTRANCE SHALL NOT BE USED FOR SERVICE ENTRANCE GROUNDING.

METAL FRAME OF THE BUILDING OR STRUCTURE
A SINGLE STRUCTURAL METAL MEMBER. BUILDING STEEL MAY ALSO BE USED IF IT IS BONDED TO A METAL UNDERGROUND WATER PIPE, A CONCRETE INCASED ELECTRODE, A GROUND RING ROD AND PIPE ELECTRODES, OR PLATE ELECTRODES AS DESCRIBED IN NEC 250.52.

CONCRETE ENCASED ELECTRODE
AN ELECTRODE ENCASED BY AT LEAST 2IN. OF CONCRETE , LOCATED WITHIN AND NEAR THE BOTTOM OF A CONCRETE FOUNDATION OR FOOTING THAT IS IN DIRECT CONTACT WITH THE EARTH, CONSISTING OF AT LEAST 20FT. OF ONE OR MORE BARE OR ZINC GALVANIZED OR OTHER ELECTRICALLY CONDUCTIVE COATED STEEL REINFORCING BARS OR RODS OF NOT LESS THAN 1/2" DIAMETER OR BARE COPPER CONDUCTOR NOT SMALLER THAN 4AWG.

GROUNDING TRIPOD AT SERVICE ENTRANCE
THREE 3/4" DIAMETER BY 10FT. LONG COPPER CLAD GROUND RODS. GROUND RODS SHALL BE DRIVEN IN A TRIANGULAR SHAPE WITH 10FT. ON EACH SIDE OF THE TRIANGLE. GROUND RODS SHALL BE CONNECTED BY WAY OF A 1/2IN. X 4IN. X 4IN. COPPER PLATE TO A 16OZ. COPPER STRIP ELEMENT. THE COPPER STRIP ELEMENT SHALL BE A 12IN. WIDE CONTINUOUS TRIANGLE. GROUND RODS SHALL ALSO BE CONNECTED WITH (1) #4/0 BARE TINNED COPPER CABLE 19 STRAND. ALL CONNECTIONS SHALL BE MADE WITH A TYPE PCC-2Q2Q EXOTHERMIC CONNECTION OR APPROVED COMPRESSION FITTING.

LOAD OR DOWNSTREAM PANEL
ALL LOADS IN THE BUILDING SHALL HAVE AN EQUIPMENT GROUNDING CONDUCTOR PULLED TO THEM.

1
E-502

# SERVICE ENTRANCE GROUNDING DETAIL

SCALE: N.T.S.

APPROVED:

A/E DESIGNER OF RECORD

SEAL:

COMMONWEALTH OF PENNSYLVANIA
REGISTERED PROFESSIONAL ENGINEER
JOSEPH R GAUS
PE-074251
12/29/10

US ARMY CORPS OF ENGINEERS
AFGHANISTAN ENGINEER DISTRICT

| Mark | Description | Date | Appr. |
|---|---|---|---|
| | | | |

| Mark | Description | Date | Appr. |
|---|---|---|---|
| | | | |

Date: 2/23/10
Design file no.
Drawing code:
File name:
Plot date:
Plot scale:
Rev: 0

Designed by: JRG
Dwn by: BJB
Ckd by: JRG
Reviewed by: JRG
Submitted by: BAKER

U.S. ARMY CORPS OF ENGINEERS
AFGHANISTAN ENGINEER DISTRICT
APO AE 96338

Michael Baker Jr., Inc
A unit of Michael Baker Corporation
Airside Business Park
100 Airside Drive
Moon Township, PA 15108
www.mbakercorp.com

AFGHAN NATIONAL ARMY
REGIONAL MILITARY TRAINING CENTER
STANDARD DESIGN

ADMIN INSTRUCTORS OFFICE
ELECTRICAL DETAILS

Sheet reference number:
E-502

FIXTURE MARK 'A'

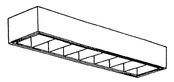

FIXTURE MARK 'C'

FIXTURE MARK 'H'

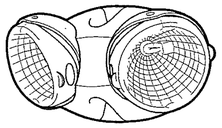

FIXTURE MARK 'E'

# LIGHT FIXTURE SCHEDULE

| FIXTURE MARK | STYLE NUMBER AND TYPE | NUMBER AND TYPE OF LAMPS | VOLTAGE | MOUNTING | NOTES |
|---|---|---|---|---|---|
| A | PARABOLIC SURFACE/PENDANT MOUNTED 300MM X 1200MM FLUORESCENT FIXTURE WITH ELECTRONIC BALLAST | (2) 32W 3500K | 220V – 1ø 50HZ | PENDANT MOUNTED FROM CEILINGS | FURNISHED WITH ELECTRONIC BALLAST. PARABOLIC LOUVER SHALL BE SPECULAR LENS IRIDESCENCE TYPE. |
| A2 | SAME AS FIXTURE 'A' WITH EMERGENCY BALLAST | (2) 32W 3500K | 220V – 1ø 50HZ | PENDANT MOUNTED FROM CEILINGS | FURNISHED WITH ELECTRONIC BALLAST. PARABOLIC LOUVER SHALL BE SPECULAR LENS IRIDESCENCE TYPE. EMERGENCY BALLAST SELF TEST. |
| C | INCANDESCENT ONE PIECE W/ APPROVED LENS STABILIZED HIGH IMPACT POLY CARBONATE. | (1) A19 – 100W INCANDESCENT | 220V – 1ø 50HZ | WALL MOUNTED ABOVE EXTERIOR DOORS | |
| H | REMOTE HEAD EXTERIOR LIGHT HEAD POWERED FROM EXIT SIGN BATTERY– 12V DOUBLE HEAD CORROSION RESISTANT WITH UL34 WEATHERPROOF CONSTRUCTION | (2) 12W/12V HALOGEN LAMP | 12V – 1ø 50HZ | EXTERIOR WALL MOUNTED AT TOP OF DOOR HEIGHT | |
| E | UNIVERSAL MOUNT ENGINEER GRADE THERMOPLASTIC HOUSING EXIT SIGN WITH LED LAMPS, RED LETTERS 6" IN HEIGHT WITH ARROWS AS INDICATED, WITH 12V CADMIUM BATTERY WITH REMOTE HEAD CAPABILITY | LED LAMPS | 220V – 1ø 50HZ | UNIVERSAL MOUNTING | |

APPROVED:

A/E DESIGNER OF RECORD

SEAL:

US ARMY CORPS OF ENGINEERS
AFGHANISTAN ENGINEER DISTRICT

| Mark | Description | Date | Appr. |
|---|---|---|---|
| | | | |

| Mark | Description | Date | Appr. |
|---|---|---|---|
| | | | |

Rev: 0
Date: 2/23/10
Design file no.
Drawing code:
File name:
Plot date:
Plot scale:

Designed by: JRG
Dwn by: BJB
Ckd by: JRG
Reviewed by: JRG
Submitted by: BAKER

U.S. ARMY CORPS OF ENGINEERS
AFGHANISTAN ENGINEER DISTRICT
APO AE 96338

*Michael Baker Jr., Inc*
*A unit of Michael Baker Corporation*
Airside Business Park
100 Airside Drive
Moon Township, PA 15108
www.mbakercorp.com

AFGHAN NATIONAL ARMY
REGIONAL MILITARY TRAINING CENTER
STANDARD DESIGN

ADMIN INSTRUCTORS OFFICE
ELECTRICAL LIGHT FIXTURE SCHEDULE

Sheet reference number:
E–601

PANELBOARD AIOF1 SURFACE MOUNTED

_____ AMP. MAIN LUGS (OR) 150 AMP. MAIN BREAKER W/ 150 AMP. TRIP

CIRCUIT BREAKER TYPE 380/220 VOLTS 3 PHASE 4 WIRE 50 HZ 225 AMP. BUS

| CKT. NO. | TRIP AMPS | NO. POLES | WIRE MM ² | GND MM² | CONDUIT MM | LOAD SERVED | LOAD-KVA A0 | LOAD-KVA B0 | LOAD-KVA C0 | LOAD-KVA A0 | LOAD-KVA B0 | LOAD-KVA C0 | LOAD SERVED | CONDUIT MM | GND MM² | WIRE MM² | NO. POLES | TRIP AMPS | CKT. NO. |
|---|---|---|---|---|---|---|---|---|---|---|---|---|---|---|---|---|---|---|---|
| 1 | 20 | 1 | 4.0 | 4.0 | 20 | LIGHTING – RM 100 | 2.6 | | | 1.0 | | | RECEPTACLES – RM 103 | 20 | 4.0 | 4.0 | 1 | 20 | 2 |
| 3 | 20 | 1 | 4.0 | 4.0 | 20 | LIGHTING – RM 101–105 | | 0.8 | | | 1.0 | | RECEPTACLES – RM 102 | 20 | 4.0 | 4.0 | 1 | 20 | 4 |
| 5 | 20 | 2 | 4.0 | 4.0 | 20 | ELECTRIC HEAT #2 – RM 102,103 | | | 2.6 | | | 1.0 | RECEPTACLES – RM 101 | 20 | 4.0 | 4.0 | 1 | 20 | 6 |
| 7 | | | | | | | 2.6 | | | 0.8 | | | RECEPTACLES – RM 100 | 20 | 4.0 | 4.0 | 1 | 20 | 8 |
| 9 | 20 | 2 | 4.0 | 4.0 | 20 | ELECTRIC HEAT #4 – RM 101 | | 2.0 | | | 0.8 | | RECEPTACLES – RM 100 | 20 | 4.0 | 4.0 | 1 | 20 | 10 |
| 11 | | | | | | | | | 2.0 | | | 1.0 | RECEPTACLES – RM 100 | 20 | 4.0 | 4.0 | 1 | 20 | 12 |
| 13 | 20 | 2 | 4.0 | 4.0 | 20 | ELECTRIC HEAT #4 – RM 101 | 2.0 | | | 0.8 | | | RECEPTACLES – RM 100 | 20 | 4.0 | 4.0 | 1 | 20 | 14 |
| 15 | | | | | | | | 2.0 | | | 1.0 | | RECEPTACLES – RM 100 | 20 | 4.0 | 4.0 | 1 | 20 | 16 |
| 17 | 20 | 2 | 4.0 | 4.0 | 20 | ELECTRIC HEAT #4 – RM 100 | | | 2.0 | | | 0.6 | RECEPTACLES – RM 100 | 20 | 4.0 | 4.0 | 1 | 20 | 18 |
| 19 | | | | | | | 2.0 | | | 0.6 | | | RECEPTACLES – RM 100 | 20 | 4.0 | 4.0 | 1 | 20 | 20 |
| 21 | 20 | 2 | 4.0 | 4.0 | 20 | ELECTRIC HEAT #4 – RM 100 | | 2.0 | | | 0.4 | | RECEPTACLES – RM 105 | 20 | 4.0 | 4.0 | 1 | 20 | 22 |
| 23 | | | | | | | | | 2.0 | | | 2.0 | ELECTRIC HEAT #4 – RM 100 | 20 | 4.0 | 4.0 | 1 | 20 | 24 |
| 25 | 20 | 2 | 4.0 | 4.0 | 20 | ELECTRIC HEAT #4 – RM 100 | 2.0 | | | 2.0 | | | | | | | | | 26 |
| 27 | | | | | | | | 2.0 | | | 0.5 | | EXHAUST FAN – RM 105 | 20 | 4.0 | 4.0 | 1 | 20 | 28 |
| 29 | 20 | 2 | 4.0 | 4.0 | 20 | ELECTRIC HEAT #4 – RM 100 | | | 2.0 | | | 1.2 | CEILING FANS – RM 100 | 20 | 4.0 | 4.0 | 1 | 20 | 30 |
| 31 | | | | | | | 2.0 | | | 0.6 | | | CEILING FANS – RM 101–103 | 20 | 4.0 | 4.0 | 1 | 20 | 32 |
| 33 | 20 | 2 | 4.0 | 4.0 | 20 | ELECTRIC HEAT #4 – RM 100 | | 2.0 | | | | | SPARE | | | | 1 | 20 | 34 |
| 35 | | | | | | | | | 2.0 | | | | SPARE | | | | 1 | 20 | 36 |
| 37 | 20 | 2 | 4.0 | 4.0 | 20 | ELECTRIC HEAT #4 – RM 100 | 2.0 | | | | | | SPARE | | | | 1 | 20 | 38 |
| 39 | | | | | | | | 2.0 | | | | | SPARE | | | | 1 | 20 | 40 |
| 41 | 20 | 1 | | | | SPARE | | | | | | | SPARE | | | | 1 | 20 | 42 |
| | | | | | | | 15.2 | 12.8 | 12.6 | 5.8 | 3.7 | 5.8 | | | | | | | |

TOTAL CONN. LOAD PER PHASE (KVA): A0 21.0 B0 16.5 C0 18.4

TOTAL CONN. LOAD 55.9 KVA. 70 % DEMAND = ESTIMATED DEMAND LOAD 39.13

* MAIN BREAKER SHALL BE 3P EARTH GROUND TYPE

APPROVED:

A/E DESIGNER OF RECORD

SEAL:

COMMONWEALTH OF PENNSYLVANIA
REGISTERED PROFESSIONAL
JOSEPH R GAUS
ENGINEER
PE-074251
12/29/10

US ARMY CORPS OF ENGINEERS
AFGHANISTAN ENGINEER DISTRICT

| Mark | Description | Date | Appr. |
|---|---|---|---|
| | | | |

| Mark | Description | Date | Appr. |
|---|---|---|---|
| | | | |

Rev: 0
Date: 2/23/10
Design file no.
Drawing code:
File name:
Plot date:
Plot scale:

Designed by: JRG
Dwn by: BJB
Ckd by: JRG
Reviewed by: JRG
Submitted by: BAKER

U.S. ARMY CORPS OF ENGINEERS
AFGHANISTAN ENGINEER DISTRICT
APO AE 96338

*Michael Baker Jr., Inc*
*A unit of Michael Baker Corporation*
Airside Business Park
100 Airside Drive
Moon Township, PA 15108
www.mbakercorp.com

AFGHAN NATIONAL ARMY
REGIONAL MILITARY TRAINING CENTER
STANDARD DESIGN

ADMIN INSTRUCTORS OFFICE
ELECTRICAL PANEL SCHEDULES

Sheet reference number:
E–602

# AFGHAN NATIONAL ARMY

## STANDARD BUILDING DESIGN

## ADMIN TRAINING COMPANY

## 100% FINAL DESIGN SUBMITTAL

### SHEET INDEX


G-001 COVER SHEET

STRUCTURAL

S-001 GENERAL NOTES & DESIGN CRITERIA
S-101 FOUNDATION/SLAB & ROOF FRAMING PLANS
S-401 BUILDING SECTIONS
S-501 FOUNDATION SECTIONS
S-502 FRAMING SECTIONS
S-503 BEAM & COLUMN DETAILS
S-504 BEAM & COLUMN DETAILS
S-601 SCHEDULES
S-701 TYPICAL DETAILS
S-702 TYPICAL DETAILS

ARCHITECTURAL

A-001 LIFE SAFETY PLAN
A-101 FLOOR PLAN
A-102 ROOF PLAN
A-201 ELEVATIONS
A-301 BUILDING SECTIONS
A-401 WALL SECTIONS
A-501 EXTERIOR DETAILS
A-502 HEAD, JAMB, & SILL DETAILS
A-503 STOOP DETAILS
A-601 WINDOW & DOOR SCHEDULES

MECHANICAL

M-101 HVAC FLOOR PLAN, SCHEDULES, & DETAILS

ELECTRICAL

E-001 ELECTRICAL SYMBOLS & ABBREVIATIONS
E-101 ELECTRICAL LIGHTING PLAN
E-102 ELECTRICAL POWER & SYSTEMS PLAN
E-501 ELECTRICAL DETAILS
E-502 ELECTRICAL DETAILS
E-601 ELECTRICAL LIGHT FIXTURE AND PANEL SCHEDULES


US ARMY CORPS OF ENGINEERS
AFGHANISTAN ENGINEER DISTRICT

| Mark | Description | Date | Appr. | Mark | Description | Date | Appr. |
|---|---|---|---|---|---|---|---|

Designed by: KMP/MMY
Dwn by: RCG
Ckd by: CWW
Reviewed by: LHM
Submitted by: BAKER
Date: 2/23/10
Rev: 0
Design file no.
Drawing code:
File name: ANAATCOG-001CS
Plot date: 2/23/2010
Plot scale: X:X

U.S. ARMY CORPS OF ENGINEERS
AFGHANISTAN ENGINEER DISTRICT
APO AE 96338

*Michael Baker Jr., Inc*
*A unit of Michael Baker Corporation*
Airside Business Park
100 Airside Drive
Moon Township PA 15108
www.mbakercorp.com

AFGHAN NATIONAL ARMY
REGIONAL MILITARY TRAINING CENTER
STANDARD DESIGN

ADMIN TRAINING COMPANY

COVER SHEET

Sheet reference number:
G-001

STRUCTURAL ABBREVIATIONS:

| | |
|---|---|
| ACI | AMERICAN CONCRETE INSTITUTE |
| ADD'L | ADDITIONAL |
| AISC | AMERICAN INSTITUTE OF STEEL CONSTRUCTION |
| AISI | AMERICAN IRON AND STEEL INSTITUTE |
| ASTM | AMERICAN SOCIETY FOR TESTING AND MATERIALS |
| ARCH | ARCHITECTURAL |
| B | BOTTOM |
| BLDG | BUILDING |
| BOTT | BOTTOM |
| ℄ | CENTER LINE |
| CFMRF | COLD FORM METAL ROOF FRAME |
| CFMF | COLD FORM METAL FRAME |
| CFS | COLD FORMED STEEL |
| CIP | CAST-IN-PLACE |
| CIPL | CAST-IN-PLACE LINTEL |
| CJ | CONTROL JOINT |
| CLR | CLEAR |
| CMU | CONCRETE MASONRY UNIT |
| COEFF | COEFFICIENT |
| COL | COLUMN |
| CONC | CONCRETE |
| CONT | CONTINUOUS |
| COORD | COORDINATE |
| CRSI | CONCRETE REINFORCING STEEL INSTITUTE |
| CSJ | CONSTRUCTION JOINT |
| DIA | DIAMETER |
| DIAG | DIAGONAL |
| DIM | DIMENSION |
| DWG | DRAWING |
| DWL | DOWEL |
| EA | EACH |
| EF | EACH FACE |
| ELEC | ELECTRICAL |
| ELEV | ELEVATION |
| EMBED | EMBEDMENT |
| EQUIV | EQUIVALENT |
| ETC | ET CETERA |
| EW | EACH WAY |
| EXP | EXPANSION |
| EXT | EXTERIOR |
| FTG | FOOTING |
| GA | GAUGE |
| GB | GRADE BEAM |
| HORIZ | HORIZONTAL |
| h | HOUR |
| HRS | HOURS |
| IBC | INTERNATIONAL BUILDING CODE |
| INFO | INFORMATION |
| INT | INTERIOR |
| kg | KILOGRAM |
| km | KILOMETER |
| kN | KILONEWTON |
| kPa | KILOPASCAL |
| L# | ANGLE (# INDICATES SIZE) |
| LONG | LONGITUDINAL |
| LLV | LONG LEG VERTICAL |
| m | METER |
| MAX | MAXIMUM |
| MECH | MECHANICAL |
| MFG | MANUFACTURER |
| MID | MIDDLE |
| MIN | MINIMUM |
| MISC | MISCELLANEOUS |
| mm | MILLIMETER |
| MPa | MEGAPASCAL |
| MTL | METAL |
| MWFRS | MAIN WIND FORCE RESISTING SYSTEM |
| N | NEWTON |
| N | NORTH |
| N/A | NOT APPLICABLE |
| # | NUMBER SYMBOL FOR REBAR SIZE |
| NTS | NOT TO SCALE |
| OC | ON CENTER |
| OPNG | OPENING |
| ℙ or PL | PLATE |
| PRE-ENG | PRE-ENGINEERED |
| REINF | REINFORCED |
| REQ'D | REQUIRED |
| RB | ROOF BEAM |
| SIM | SIMILAR |
| SPECS | SPECIFICATIONS |
| STD | STANDARD |
| STRUCT | STRUCTURAL |
| SW | SHEAR WALL |
| T | TOP |
| T/ | TOP OF |
| T/ELEV | TOP ELEVATION |
| T/SLAB | TOP OF SLAB |
| T&B | TOP AND BOTTOM |
| THK | THICK |
| TYP | TYPICAL |
| UFC | UNIFIED FACILITIES CRITERIA |
| UON | UNLESS OTHERWISE NOTED |
| VERT | VERTICAL |
| W | WIDTH |
| W/ | WITH |

1.0 GENERAL NOTES:

1.1 THIS PROJECT HAS BEEN DESIGNED FOR THE WEIGHTS AND MATERIALS INDICATED ON THE SHEETS AND FOR THE LIVE LOADS INDICATED IN THE DESIGN DATA. IT IS THE CONTRACTOR'S RESPONSIBILITY TO DETERMINE ALLOWABLE CONSTRUCTION LOADS AND TO PROVIDE PROPER DESIGN AND CONSTRUCTION OF FALSEWORK, FORMWORK, STAGING, BRACING, SHEETING AND SHORING, ETC.

1.1 COORDINATE THESE SHEETS WITH THE ARCHITECTURAL, MECHANICAL, ELECTRICAL, PLUMBING, AND CIVIL SHEETS. ALL DIMENSIONS SHOWN ON THE SHEETS ARE MILLIMETERS UNLESS NOTED OTHERWISE.

1.2 THE CONTRACTOR SHALL VERIFY AND COORDINATE ALL FLOOR AND ROOF OPENING SIZES AND LOCATIONS, EQUIPMENT PAD SIZES AND LOCATIONS, ANCHOR BOLT LAYOUTS, ETC WITH EQUIPMENT SELECTED. THE CONTRACTOR SHALL MAKE ANY REQUIRED MODIFICATIONS AT NO ADDITIONAL COST.

1.3 THE CONTRACTOR SHALL REFER TO THE ARCHITECTURAL, MECHANICAL, ELECTRICAL AND PLUMBING SHEETS FOR SLEEVES, CURBS, INSERTS OR OPENINGS, ETC. NOT HEREIN INDICATED.

1.4 WORK NOT INCLUDED ON THE SHEETS BUT IMPLIED TO BE SIMILAR TO THAT SHOWN AT CORRESPONDING PLACES ELSEWHERE ON THE SHEETS SHALL BE REPEATED.

1.5 IN CASE OF CONFLICT BETWEEN THE NOTES, DETAILS AND SPECIFICATIONS THE MOST RIGID REQUIREMENTS SHALL GOVERN.

1.6 SEE ARCHITECTURAL SHEETS FOR LOCATIONS OF MASONRY AND NON-LOAD BEARING PARTITIONS. PROVIDE COMPRESSIBLE FIRESAFING AT TOP OF WALL AS REQUIRED BY ARCHITECTURAL SHEETS.

1.7 COORDINATE FINISHED FLOOR DATUM ELEVATION 0.0m WITH THE CIVIL SHEETS.

2.0 FOUNDATION NOTES

2.1 THE GEOTECHNICAL ANALYSIS FOR THIS PROJECT IS THE RESPONSIBILITY OF THE CONTRACTOR AWARDED THE WORK. AN ASSUMED ALLOWABLE SOIL BEARING VALUE OF 72 kPa HAS BEEN USED IN THE STRUCTURAL ANALYSIS OF THE BUILDING HEREIN AND SHALL BE CONFIRMED AND VERIFIED AS PART OF THE GEOTECHNICAL INVESTIGATION. VALUES WHICH DO NOT MEET THE REQUIREMENTS INDICATED ON THE BASIS OF DESIGN SHEET SHALL BE IMMEDIATELY BROUGHT TO THE ATTENTION OF THE CONTRACTING OFFICER FOR CONSIDERATION AND DETERMINATION ON THE NEXT APPROPRIATE COURSE OF ACTION.

2.2 SEE THE SPECIFICATION FOR ADDITIONAL REQUIREMENTS TO THOSE OUTLINED IN THE GEOTECHNICAL INVESTIGATION FOR EXCAVATION AND PREPARATION OF THE FOUNDATION AND THE SLAB ON GRADE SUBGRADE INCLUDING COMPACTION PROCEDURES.

2.3 EXCAVATIONS FOR FOOTINGS SHALL HAVE THE SIDES AND BOTTOMS TEMPORARILY LINED WITH 0.25mm POLYETHYLENE IF PLACEMENT OF CONCRETE DOES NOT OCCUR WITHIN 24 HRS OF THE EXCAVATION OF THE FOOTING.

2.4 FOUNDATION CONDITIONS NOTED DURING CONSTRUCTION WHICH DIFFER FROM THOSE DESCRIBED IN THE GEOTECHNICAL REPORT SHALL BE REPORTED TO THE GENERAL CONTRACTOR BEFORE FURTHER CONSTRUCTION IS ATTEMPTED. SEE PROJECT SPECIFICATIONS.

2.5 NO FOOTINGS OR SLABS SHALL BE POURED INTO OR AGAINST SUBGRADE CONTAINING FREE WATER, FROST, ICE OR LOOSE MATERIAL. FROST DEPTH ASSUMED TO BE 800mm.

2.6 ALL SLAB-ON-GRADE, TRENCH BOTTOMS AND OTHER ON-GRADE INTERIOR HORIZONTAL SURFACES SHALL BE PLACED OVER A 0.25mm POLYETHYLENE VAPOR RETARDER OVER A 100mm #57 STONE WATER CAPILLARY BARRIER PLACED ON SUBGRADE PROPERLY PREPARED IN ACCORDANCE WITH THE CONTRACT SPECIFICATIONS. (UON)

2.7 PRIOR TO START OF FOUNDATION OR SLAB-ON-GRADE CONSTRUCTION, EXISTING SUBGRADES SHALL BE COMPACTED TO MINIMUM OF 95% MAXIMUM DRY DENSITY OBTAINED THRU ASTM D 1557 MODIFIED PROCTOR TESTING.

2.8 SEE PLUMBING, ELECTRICAL & CIVIL SHEETS FOR REQUIRED UNDERSLAB UTILITIES.

2.9 SEE ARCHITECTURAL SHEETS FOR ALL WATERPROOFING DETAILS AND MATERIALS.

2.10 IF UNDERMINING OF FOOTINGS OCCURS, FILL VOIDS WITH 18 MPa CONCRETE. DO NOT ATTEMPT TO REPLACE AND RE-COMPACT SOIL.

3.0 CONCRETE

3.1 CONCRETE SHALL HAVE THE UNIT WEIGHT OF 2400 kg/m$^3$ AND A MINIMUM COMPRESSIVE STRENGTH (f'c) OF 28 MPa AT 28 DAYS. ALL CONCRETE SHALL HAVE A WATER-CEMENT RATIO OF 0.45. SEE SPECIFICATIONS FOR ADDITIONAL INFORMATION. ENTRAIN AIR TO PRODUCE TOTAL AIR CONTENT ACCORDING TO THE SPECIFICATIONS FOR CONCRETE EXPOSED TO FREEZING TEMPERATURES (EXTERIOR FOOTINGS, SLAB TURNDOWNS, EXTERIOR SLABS AND SLABS-ON-GRADE, EXTERIOR RETAINING WALLS, AND EXTERIOR GRADE BEAMS.)

3.2 NO CALCIUM CHLORIDE SHALL BE USED IN ANY CONCRETE.

3.3 MIXING, TRANSPORTING AND PLACING OF CONCRETE SHALL CONFORM TO ACI 301M-05.

3.4 ALL CONCRETE WORK SHALL CONFORM TO THE REQUIREMENTS OF THE AMERICAN CONCRETE INSTITUTE (ACI) 318M MANUAL (metric), "BUILDING CODE REQUIREMENTS FOR REINFORCED CONCRETE", AND REQUIREMENTS OUTLINED IN THE CONTRACT SPECIFICATIONS. WHEN THERE IS A CONFLICT BETWEEN ACI AND THE SPECIFICATIONS, THE MORE STRINGENT SHALL GOVERN.

3.5 CHAMFER ALL EXPOSED EXTERNAL CORNERS OF CONCRETE WITH 20mm x45 DEGREE CHAMFER UON.

3.6 CONCRETE REINFORCEMENT BARS SHALL CONFORM TO ASTM A615M-96a, GRADE 420 MPa, REINFORCING BARS SHALL NOT BE TACK WELDED, WELDED, HEATED OR CUT, UNLESS INDICATED ON THE CONTRACT DOCUMENTS. ALL LAP SPLICES SHALL BE CLASS "B" UON.

3.7 HORIZONTAL FOOTING AND HORIZONTAL WALL REINFORCEMENT SHALL BE CONTINUOUS AND SHALL HAVE 90 DEGREE BENDS AND EXTENSIONS, OR CORNER BARS OF EQUIVALENT SIZE LAPPED WITH A CLASS B TENSION SPLICE AT CORNERS AND INTERSECTIONS. TOP BAR CRITERIA SHALL APPLY IF 300mm OR MORE OF FRESH CONCRETE IS PLACED BELOW BAR.

3.8 SLABS-ON-GRADE SHALL HAVE CONSTRUCTION JOINTS OR CRACK CONTROL JOINTS AS SHOWN ON THE DRAWINGS. CONSTRUCTION JOINTS CAN BE USED AT CONTROL JOINT LOCATIONS AT CONTRACTORS OPTION. SEE SLAB PLANS & JOINT DETAILS FOR ADDITIONAL INFORMATION. FOR AREAS NOT SHOWN ON DWGS, THE MAXIMUM SPACING OF CONSTRUCTION/ CRACK CONTROL JOINTS SHALL BE 4800mm

3.9 ALL CONCRETE REINFORCEMENT SHALL BE DETAILED, FABRICATED, LABELED, SUPPORTED, AND SPACED IN FORMS AND SECURED IN PLACE IN ACCORDANCE WITH THE PROCEDURES AND REQUIREMENTS OUTLINED IN THE LATEST EDITION OF THE "BUILDING CODE REQUIREMENTS FOR REINFORCED CONCRETE", ACI 318M, AND THE "MANUAL OF STANDARD PRACTICE FOR DETAILING REINFORCED CONCRETE STRUCTURES", ACI 315M, LATEST EDITION. BASED ON IN COUNTRY REINFORCEMENT AVAILABILITY, IT IS THE CONTRACTOR'S OPTION TO ROUND DESIGNATED ODD NUMBERED REINFORCEMENT SIZES UP (1) ONE BAR SIZE.

3.10 ALL DOWELS SHALL MATCH SIZE AND NUMBER OF MAIN REINFORCING, UNLESS NOTED OTHERWISE ON THE SHEETS.

3.11 ADDITIONAL BARS SHALL BE PROVIDED AROUND ALL FLOOR AND WALL OPENINGS AS SHOWN ON THE SHEETS.

3.12 SEE ARCHITECTURAL SHEETS FOR TYPE AND LOCATION OF ALL FLOOR FINISHES.

3.13 THE CONTRACTOR SHALL COORDINATE ADDITIONAL WALL/SLAB OPENINGS NOT SHOWN ON STRUCTURAL SHEETS. SEE MECHANICAL, ELECTRICAL, PLUMBING AND CIVIL SHEETS.

3.14 UNLESS NOTED OTHERWISE, ALL CURBS SHALL BE REINFORCED WITH AT LEAST (1)-#13 CONTINUOUS AND #13 AT 300mm O.C. DOWELS TO STRUCTURE BELOW.

3.15 THE CONTRACTOR SHALL VERIFY ALL OPENINGS, PAD SIZES, AND ANCHOR BOLTS WITH EQUIPMENT SELECTED.

3.16 FOR ALL WALLS & PIERS, PROVIDE DOWELS INTO FOOTING AT EACH VERT REINF BAR, UON DOWEL SIZE SHALL BE SAME AS VERT REINF.

3.17 PROVIDE CONCRETE POUR STOPS OR FORMED AS REQUIRED FOR INSTALLATION OF ALL CONCRETE WORK.

3.18 PROVIDE ADDITIONAL (2)-#13 x 600mm REINFORCING BARS IN SLAB-ON GRADE AT ALL RE-ENTRANT CORNERS. PLACE BARS AT MID-DEPTH OF SLAB WITH A CLEARANCE OF 50mm FROM CORNER UON.

3.19 COLD-WEATHER PLACEMENT: COMPLY WITH ACI 306.1 AND AS FOLLOWS. PROTECT CONCRETE WORK FROM PHYSICAL DAMAGE OR REDUCED STRENGTH THAT COULD BE CAUSED BY FROST, FREEZING ACTIONS, OR LOW TEMPERATURES. SUBMIT A COLD WEATHER CONCRETING PLAN FOR APPROVAL.

3.20 PROVIDE BONDING COMPOUND PER ASTM C 1059-99: SPECIFICATION FOR LATEX AGENTS FOR BONDING FRESH CONCRETE (GROUT) TO HARDENED CONCRETE.

3.21 THE FORMED SURFACES FOR REINFORCED CONCRETE SHALL ACHIEVE A "CLASS A" FINISH WHEN RECEIVING PAINT OR A "CLASS B" FINISH WHEN RECEIVING PLASTER OR TILE AS PER SPECIFICATION SECTION 03 31 00 CAST-IN-PLACE STRUCTURAL CONCRETE.

3.22 AT INTERSECTING GRADE BEAMS AND SHEAR WALLS, PROVIDE CORNER BARS AT INTERSECTIONS WITH SAME QUANTITY, SIZE AND SPACING AS HORIZONTAL BARS WITH LEG LENGTH = 50db.

3.23 REFER TO S-800 SERIES REINFORCING BAR PLACEMENT DRAWINGS DEFINING LENGTHS, BENDS, AND SPACINGS FOR ALL STRUCTURAL CONCRETE. THE S-800 SERIES DRAWING ARE BASED ON THE S-400, S-500, S-600, AND S-700 SERIES DRAWING SCHEDULES, DETAILS, AND DIAGRAMS.

4.0 CONCRETE MASONRY

4.1 MASONRY CONSTRUCTION SHALL CONFORM TO SPECIFICATION FOR MASONRY STRUCTURES (ACI 530.1) UON.

4.2 STRENGTH OF MASONRY MATERIALS SHALL BE AS FOLLOWS:

a. CONCRETE MASONRY UNITS SHALL BE NORMAL WEIGHT, GRADE N, TYPE 1, CONFORMING TO ASTM C-90 AND HAVE A MINIMUM COMPRESSIVE STRENGTH OF 10.4 MPa ON THE NET AREA.

b. MORTAR SHALL CONFORM TO ASTM C-270 TYPE S.

c. GROUT FOR MASONRY SHALL BE NORMAL WEIGHT AND HAVE A MINIMUM COMPRESSIVE STRENGTH OF 14 MPa AT 28 DAYS. GROUT SHALL CONFORM TO ASTM C476M. GROUT LIFTS SHALL NOT EXCEED 1,400mm.

d. REINFORCED MASONRY SHALL HAVE A STRENGTH F'm = 10 MPa. (F'm IS THE COMPRESSIVE STRENGTH OF THE MASONRY AT 28 DAYS AS DETERMINED BY PRISM TESTS).

4.3 ALL VERTICAL REINFORCEMENT FOR CONCRETE MASONRY SHALL BE ASTM A615M-96a, GRADE 420 MPa. ALL SPLICES SHALL BE LAPPED 48 BAR DIAMETERS MINIMUM.

4.4 BOND BEAMS SHALL BE SPACED AT 1200mm OC VERTICALLY. BOND BEAM REINFORCING SHALL BE CONTINUOUS AND PROVIDED AT WALL INTERSECTIONS AND WALL CORNERS (REFERENCE CONCRETE MASONRY NOTE 4.11). ALL BOND BEAM REINFORCING SHALL BE CONTINUOUS AND HAVE STANDARD ACI HOOKS AT EACH END. PROVIDE STANDARD BAR SPLICES AS SPECIFIED. AS AN ALTERNATE TO CMU BOND BEAMS, IT IS THE CONTRACTOR'S OPTION TO PROVIDE 200mm x 200mm CONTINUOUS CAST-IN-PLACE CONCRETE BOND BEAMS WITH (2)-#16 IN LIEU OF CMU BOND BEAMS INDICATED ON THE DRAWINGS.

4.5 SEE TYPICAL DETAILS FOR MINIMUM REINFORCEMENT REQUIREMENTS FOR CMU WALLS. PROVIDE STANDARD BAR SPLICES AS SPECIFIED. ALL VERTICAL REINFORCEMENT EXTENDS FULL HEIGHT OF WALL.

4.6 CMU CELLS THAT REQUIRE VERTICAL REINFORCING BARS AS INDICATED ON THE CONTRACT DRAWINGS AND/OR SPECS SHALL HAVE REINF BARS PLACED IN CENTERS OF CMU CELLS AND CONTINUOUSLY GROUTED UON.

4.7 ALL CMU CELLS, OPEN CAVITIES, AND AIR SPACES OF ALL EXTERIOR WALLS SHALL BE GROUTED TO STOP FRAGMENTS FROM MORTAR BLAST.

4.8 CONTRACTOR SHALL COORDINATE LOCATION OF ALL OPENINGS SEE ARCH, MECH, ELEC, AND PLUMBING SHEETS FOR SIZE AND LOCATION OF OPENINGS.

4.9 MASONRY WALLS SHALL NOT BE BACK FILLED PRIOR TO THE MORTAR AND GROUT ATTAINING THEIR RESPECTIVE MAXIMUM DESIGN STRENGTHS PER SPECIFICATIONS.

4.10 PROVIDE GALVANIZED MORTAR/GROUT SCREEN W/ 3mm MESH WHERE CELLS BELOW ARE NOT GROUTED.

4.11 AT INTERSECTING BOND BEAMS, PROVIDE CORNER BAR FOR EACH HORIZONTAL BAR IN BOND BEAMS AT INTERSECTING WALLS. USE SAME SIZE AND SPACING AS HORIZONTAL BARS WITH LEG LENGTH = 50db.

4.12 THE ALTERNATE TOP OF CMU WALL BRACING DETAIL(S) SHOWN ON S-701 CAN BE UTILIZED AT THE CONTRACTOR'S OPTION IN PLACE OF THE "SLEEVED DOWEL" WALL CONNECTIONS DEPICTED ON S-400 AND S-500 SERIES DRAWINGS. IN ADDITION, ALTERNATE DETAIL(S) SHOW CAST-IN-PLACE WALL BOND BEAMS THAT CAN BE UTILIZED AT THE CONTRACTOR'S OPTION IN PLACE OF THE STANDARD CMU BOND BEAMS CONSTRUCTED OF CMU BLOCKS.

5.0 COLD-FORMED METAL FRAMING

5.1 ALL COLD-FORMED METAL FRAMING MEMBERS SHALL CONFORM TO ASTM A1003M, STRUCTURAL GRADE ST340 (MPa), WITH A GALVANIZED COATING OF Z275 OR BETTER IN ACCORDANCE WITH ASTM A653M.

5.2 ALL COLD-FORMED METAL FRAMING MEMBERS SHALL HAVE THE FOLLOWING MINIMUM PROPERTIES:

a. MINIMUM METAL THICKNESS:
TRACK = 1.37mm;
STUD/OTHER = 1.09mm

b. MINIMUM FLANGE WIDTH:
TRACK = 38mm;
STUD/OTHER = 35mm

c. MINIMUM MEMBER DEPTH:
ALL SECTIONS = 152.2mm

d. PURLIN (HAT CHANNEL)
DEPTHxWIDTH(FLAT TOP)xTHICK = 25mmx42mmx1.59mm

5.3 ALL CONNECTIONS SHALL BE MADE WITH CORROSION RESISTANT (ASTM A153M), SELF-DRILLING, SELF-TAPPING STEEL DRILL SCREWS IN ACCORDANCE WITH ASTM C1513. SCREWS SHALL HAVE A LOW PROFILE HEAD BENEATH ROOF DECK, AND STANDARD HEAD ALL OTHER LOCATIONS.

5.4 FABRICATE COLD FORMED METAL FRAMING AND ACCESSORIES PLUMB, SQUARE AND TRUE TO LINE, WITH CONNECTIONS SECURELY FASTENED ACCORDING TO AISI STANDARD FOR COLD FORMED STEEL FRAMING.

5.5 CUT FRAMING MEMBERS BY SAWING OR SHEATHING, DO NOT TORCH CUT.

5.6 INSTALL FRAMING MEMBERS IN ONE-PIECE LENGTHS UNLESS SPLICE CONNECTIONS ARE INDICATED FOR TRACK OR TENSION MEMBERS

5.7 INSTALL TEMPORARY BRACING AND SUPPORTS TO SECURE FRAMING DURING CONSTRUCTION. MAINTAIN BRACING AND SUPPORTS IN PLACE UNTIL THE STRUCTURE HAS BEEN COMPLETED WITH ALL CONNECTIONS AND PERMANENT BRACING SECURED.

6.0 STRUCTURAL DESIGN CRITERIA

6.1 ALL DESIGNS SHALL CONFORM TO THE PROVISIONS OF THE IBC 2006 AND UFC AS APPLICABLE.

6.2 DESIGN LOADS

6.2.1 DEAD LOADS (PER IBC 2006 & UFC 3-310-01)

| | |
|---|---|
| MECH/ELEC/PLUMBING | 0.20 kPa |
| MISCELLANEOUS | 0.15 kPa |
| COLD-FORMED FRAMING | 0.20 kPa |
| INSULATION | 0.10 kPa |
| METAL ROOF PANEL | 0.14 kPa |
| | 0.79 kPa |
| FLOOR PARTITION ALLOWANCE | 0.96 kPa |

6.2.2 LIVE LOADS (PER IBC 2006 & UFC 3-310-01)

| | |
|---|---|
| ROOF | 1.00 kPa |
| CORRIDOR (2-STORY BLDG ONLY) | 4.80 kPa |
| ALL OTHERS (2-STORY BLDG ONLY) | 2.40 kPa |
| SLAB ON GRADE | 4.80 kPa |

6.2.3 SNOW LOADS (PER IBC 2006 & UFC 3-310-01)

| | |
|---|---|
| GROUND SNOW LOAD (Pg) | 1.2 kPa |
| SNOW IMPORTANCE FACTOR (I) | 1.0 |
| SNOW EXPOSURE FACTOR (Ce) | 1.0 |
| THERMAL FACTOR (Ct) | 1.0 |

6.2.4 WIND LOADS (PER IBC 2006)

| | |
|---|---|
| BASIC WIND SPEED | 137 km/h |
| WIND IMPORTANCE FACTOR | 1.0 |
| WIND EXPOSURE CATEGORY | D |
| DIRECTIONALITY COEFFICIENT (Kd) | 0.85 |
| TOPOGRAPHIC FACTOR (Kzt) | 1.0 |

6.2.5 SEISMIC LOADS (PER IBC 2006 & UFC 3-310-04)

| | |
|---|---|
| OCCUPANCY USE CATEGORY | II |
| SEISMIC IMPORTANCE FACTOR (Ie) | 1.0 |
| SEISMIC SITE CLASS | D |
| $S_s$ = 1.50 (REDUCED FROM 2.40 PER ASCE 7-05, 12.8.1.3 FOR A BUILDING WITHOUT IRREGULARITIES) | |
| $S_1$ = 1.20 | |
| $S_{DS}$ = 1.0 | |
| $S_{D1}$ = 1.20 | |
| SEISMIC DESIGN CATEGORY | E |
| SEISMIC RESISTING SYSTEM: -SPECIAL REINFORCED CONCRETE SHEAR WALL | |
| RESPONSE MODIFICATION FACTOR (R) | 6 |
| RESPONSE COEFFICIENT (Cs) | 0.167 |
| SEISMIC ANALYTICAL PROCEDURE = | EQUIV LATERAL FORCE |
| SEISMIC BASE SHEAR | 690 kN |

APPROVED:

A/E DESIGNER OF RECORD

SEAL:

GEORGIA REGISTERED 1-29-10 No. 27141 PROFESSIONAL ENGINEER CHRISTOPHER W. WHITMORE

US ARMY CORPS OF ENGINEERS
AFGHANISTAN ENGINEER DISTRICT

| Mark | Description | Date | Appr. |
|---|---|---|---|

U.S. ARMY CORPS OF ENGINEERS
AFGHANISTAN ENGINEER DISTRICT
APO AE 96338

Michael Baker Jr., Inc
A unit of Michael Baker Corporation
Airside Business Park
100 Airside Drive
Moon Township, PA 15108
www.mbakercorp.com

Date: 2/23/10
Rev. 0
Design file no.
Drawing code:
File name: ANMTCOS-001SN
Plot date: 2/23/2010
Plot scale: X:X

Designed by: KMF/MMY
Dwn by: RCG
Chkd by: CWW
Reviewed by: LHM
Submitted by:
BAKER

AFGHAN NATIONAL ARMY
REGIONAL MILITARY TRAINING CENTER
STANDARD DESIGN

ADMIN TRAINING COMPANY

GENERAL NOTES & DESIGN CRITERIA

Sheet reference number:
S-001

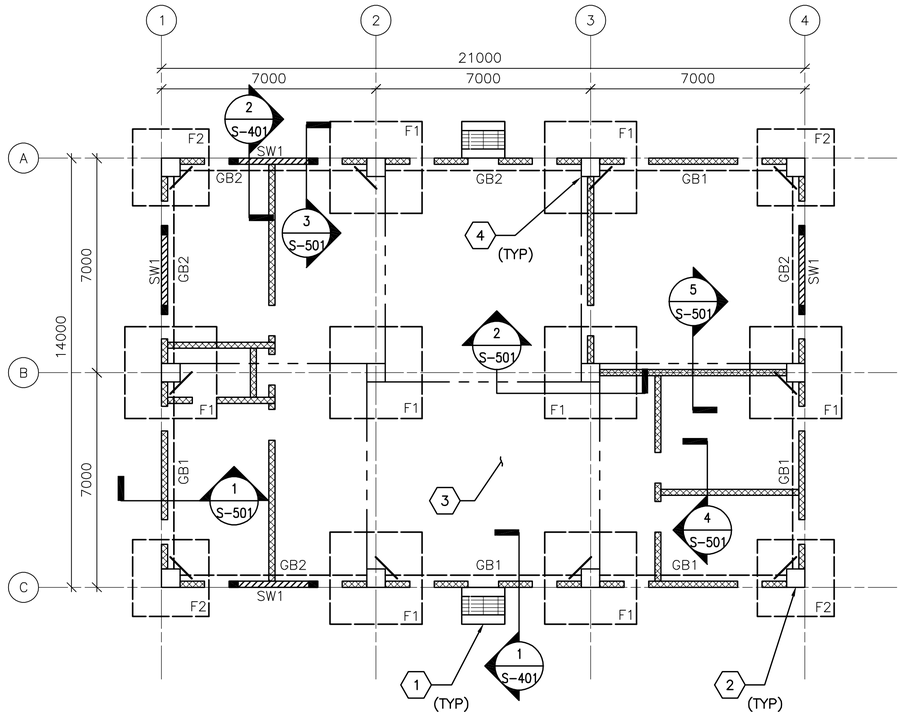


1 S-101 **FOUNDATION/SLAB PLAN**
SCALE: 1:100

## FOUNDATION/SLAB PLAN NOTES:

1. REFER TO SHEET S-001 FOR STRUCTURAL NOTES AND DESIGN CRITERIA.
2. FINISH FIRST FLOOR ELEVATION SHALL BE (DATUM 0.00) ALL PLUS OR MINUS DIMENSIONS INDICATED ON PLAN OR REFERRED TO IN NOTES RELATE TO FINISH FLOOR ELEVATION.
3. SLAB-ON-GRADE IS 150 WITH #13 @ 300 OC EW LOCATED 38 FROM T/SLAB.
4. TOP OF EXTERIOR FOOTINGS SHALL BE -950 UNLESS OTHERWISE INDICATED.
5. TOP OF INTERIOR FOOTINGS WITHOUT GRADE BEAM ABOVE SHALL BE -600.
6. COLUMN FOOTINGS INDICATED BY F# ON PLAN. REFER TO COLUMN FOOTING SCHEDULE ON SHEET S-601.
7. REFER TO COLUMN SCHEDULE ON SHEET S-601.
8. GRADE BEAM INDICATED BY GB# ON PLAN, REFER TO BEAM SCHEDULE ON SHEET S-601.
9. SHEARWALL INDICATED BY SW# ON PLAN, REFER TO SHEARWALL SCHEDULE ON SHEET S-601.
10. SEE TYP EXTERIOR AND INTERIOR CMU WALL REINF DETAIL ON SHEET S-701.
11. SEE MECHANICAL AND ELECTRICAL SHEETS FOR CONCRETE PAD LOCATIONS, SIZES, AND THICKNESS NOT SHOWN. SEE SHEET S-701 FOR DETAILS.
12. THICKENED SLAB UNDER CMU PERIMETER/PARTITION WALLS NOT SHOWN FOR CLARITY.

## FOUNDATION/SLAB PLAN KEY NOTES: (X)

1. CONC SLAB (ENTRANCE)-SEE ARCH DWGS FOR INFORMATION
2. REINF CONC COLUMN
3. REINF CONC SLAB-ON-GRADE
4. (2)-#13 RE-ENTRANT CORNER BARS - SEE S-701 FOR INFORMATION

## FOUNDATION/SLAB PLAN LEGEND:

- REINF CONC SHEAR WALL
- REINF CMU WALL
- CONTROL JOINT

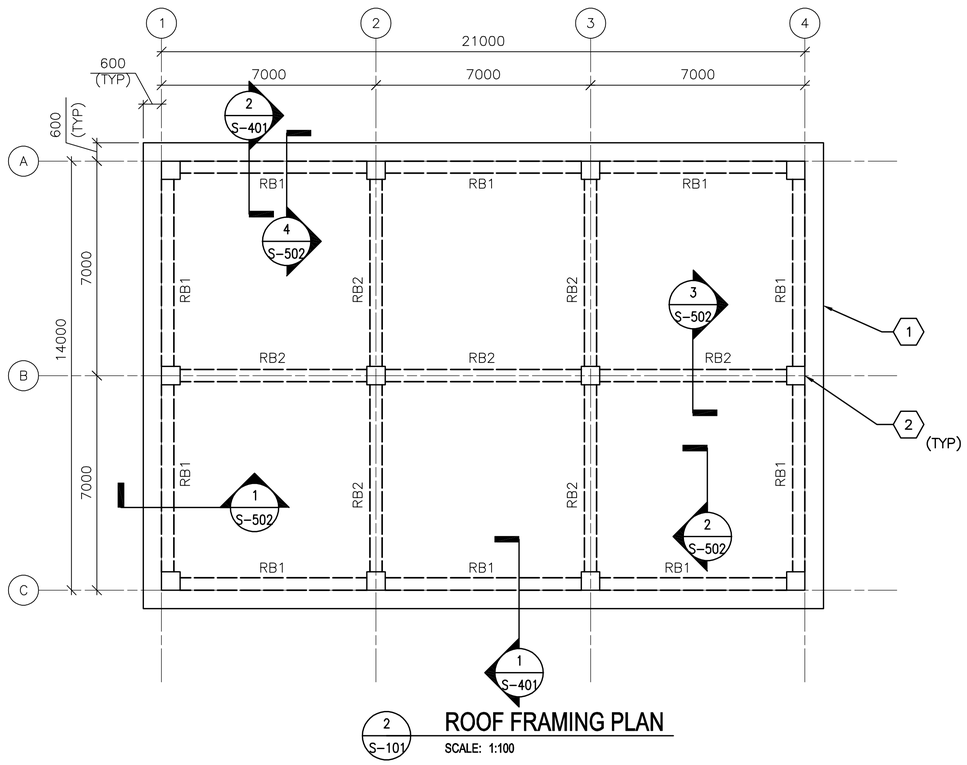


2 S-101 **ROOF FRAMING PLAN**
SCALE: 1:100

## ROOF FRAMING PLAN NOTES:

1. REFER TO SHEETS S-001 FOR STRUCTURAL NOTES AND DESIGN CRITERIA.
2. TOP OF SLAB ELEVATION = 3600 UNLESS NOTED OTHERWISE.
3. ROOF SLAB IS 250 WITH #16 @ 300 OC EW T&B.
4. ROOF BEAM INDICATED BY RB# ON PLAN. REFER TO BEAM SCHEDULE ON SHEET S-601.
5. COORDINATE WITH ARCHITECTURAL SHEETS FOR COLD-FORMED STEEL OVERBUILD FRAMING ABOVE ROOF SLAB.
6. COLD-FORMED METAL OVERBUILD ROOF FRAMING NOT SHOWN FOR CLARITY. SEE OVERBUILD ROOF FRAMING DETAILS AND SECTIONS ON SHEET S-702.
7. CMU PERIMETER/PARTITION WALLS (BELOW ROOF SLAB) NOT SHOWN FOR CLARITY.
8. OVERHANG AREAS OF ROOF SLAB CONTAIN ROOF VENT PENETRATIONS. REFERENCE ARCHITECTURAL DRAWINGS FOR INFORMATION.

## ROOF FRAMING PLAN KEY NOTES: (X)

1. CONC ROOF SLAB (BELOW ROOF OVERBUILD)
2. REINF CONC COLUMN (BELOW CONC ROOF SLAB)

0 2000 4000
SCALE: 1:100

UNLESS OTHERWISE NOTED, LINEAR DIMENSIONS SHOWN ON DRAWINGS ARE IN MILLIMETERS (mm)

APPROVED:

A/E DESIGNER OF RECORD

SEAL:

GEORGIA REGISTERED 2-23-10 No. 27141 PROFESSIONAL ENGINEER CHRISTOPHER W. WHITMORE

US ARMY CORPS OF ENGINEERS
AFGHANISTAN ENGINEER DISTRICT

| Mark | Description | Date | Appr. | Mark | Description | Date | Appr. |
|---|---|---|---|---|---|---|---|
| | | | | | | | |

Rev: 0
Date: 2/23/10
Design file no.
Drawing code:
File name: ANAATCQS-101FFP
Plot date: 2/23/2010
Plot scale: x:x

Designed by: KMF/MMY
Dwn by: RCG
Ckd by: CWW
Reviewed by: LHM
Submitted by: BAKER

U.S. ARMY CORPS OF ENGINEERS
AFGHANISTAN ENGINEER DISTRICT
APO AE 96338

*Michael Baker Jr., Inc.*
*A unit of Michael Baker Corporation*
Airside Business Park
100 Airside Drive
Moon Township, PA 15108
www.mbakercorp.com

AFGHAN NATIONAL ARMY
REGIONAL MILITARY TRAINING CENTER
STANDARD DESIGN

ADMIN TRAINING COMPANY

FOUNDATION/SLAB &
ROOF FRAMING PLANS

Sheet reference number:
S-101

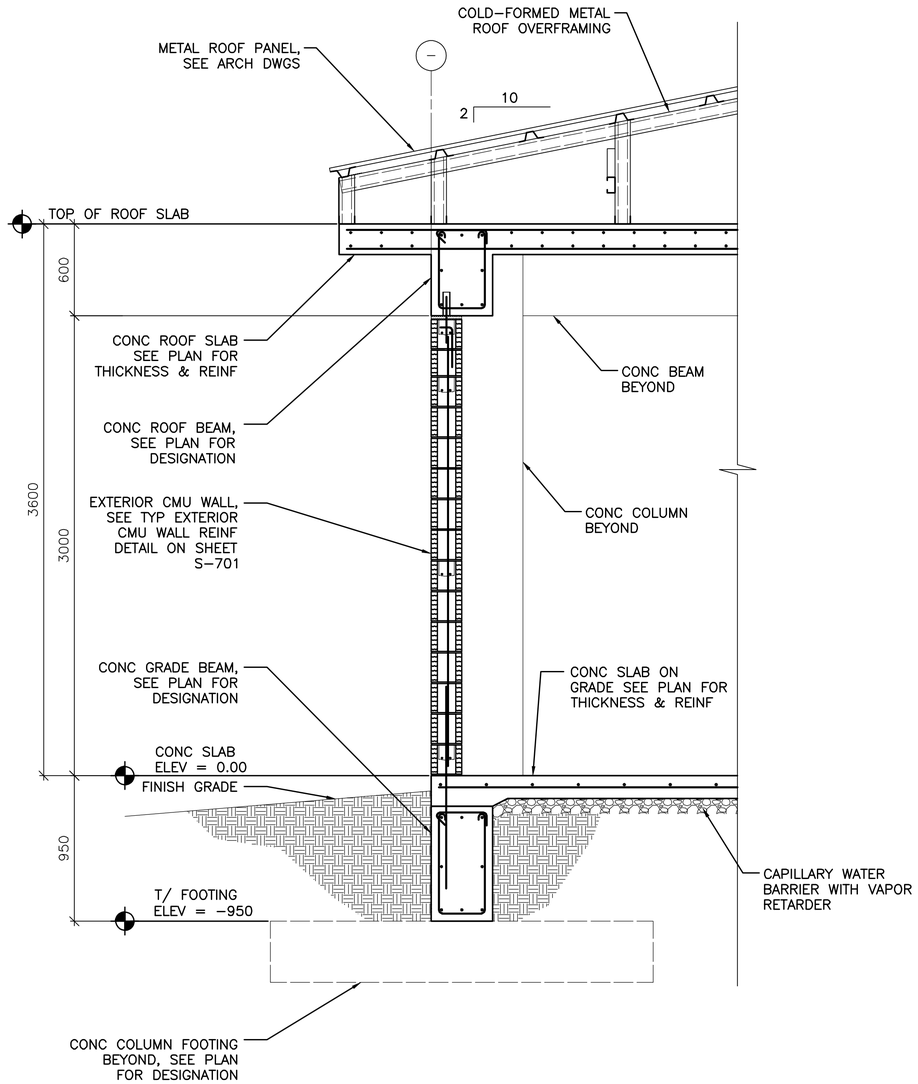


1 S-101 TYPICAL WALL SECTION AT EXTERIOR MASONRY WALL

SCALE: 1:20

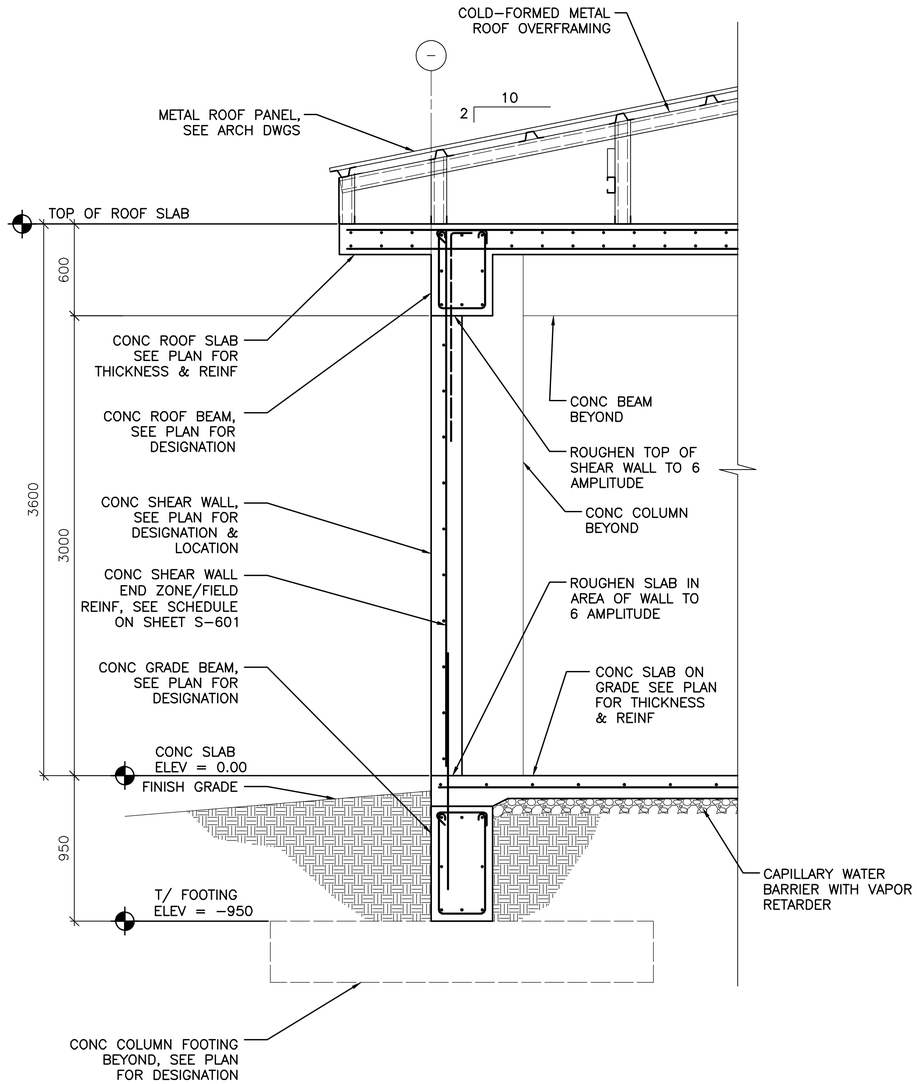


2 S-101 TYPICAL WALL SECTION AT CONCRETE SHEAR WALL

SCALE: 1:20

0 400 800

SCALE: 1:20

UNLESS OTHERWISE NOTED, LINEAR DIMENSIONS SHOWN ON DRAWINGS ARE IN MILLIMETERS (mm)

APPROVED:

A/E DESIGNER OF RECORD

SEAL:

GEORGIA REGISTERED No. 27141 PROFESSIONAL ENGINEER CHRISTOPHER W. WHITMORE 1-29-10

US ARMY CORPS OF ENGINEERS
AFGHANISTAN ENGINEER DISTRICT

| Mark | Description | Date | Appr. | Mark | Description | Date | Appr. |
|---|---|---|---|---|---|---|---|

Designed by: KMP/MMY
Dwn by: RCG
Ckd by: CWW
Reviewed by: LHM
Submitted by: BAKER
Date: 2/23/10
Rev: 0
Design file no.
Drawing code:
File name: ANAATCOS-401BS
Plot date: 2/23/2010
Plot scale: X:X

U.S. ARMY CORPS OF ENGINEERS
AFGHANISTAN ENGINEER DISTRICT
APO AE 96338

Michael Baker Jr., Inc
A unit of Michael Baker Corporation
Airside Business Park
100 Airside Drive
Moon Township PA 15108
www.mbakercorp.com

AFGHAN NATIONAL ARMY
REGIONAL MILITARY TRAINING CENTER
STANDARD DESIGN

ADMIN TRAINING COMPANY

BUILDING SECTIONS

Sheet reference number:
S-401

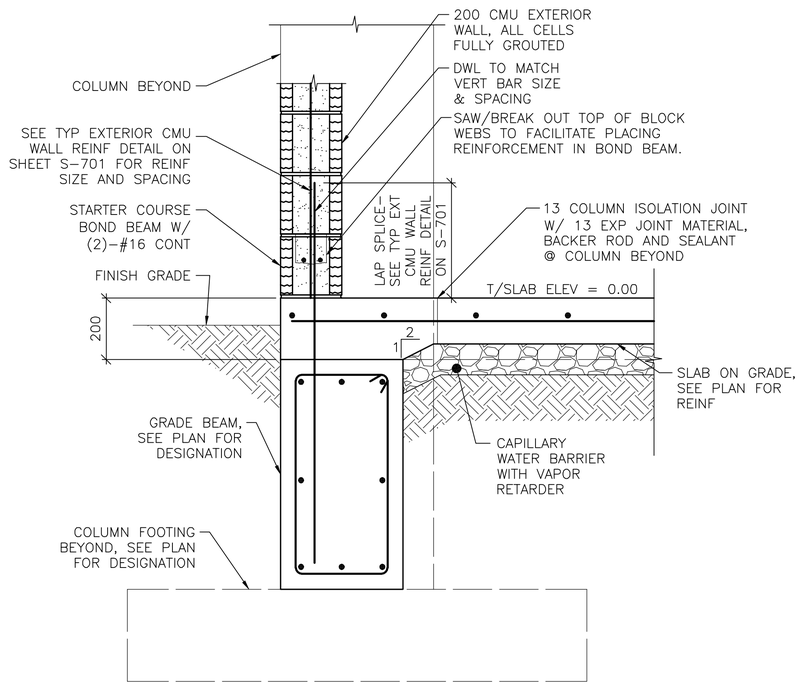


NOTE:
1. SECTION IS SIMILAR FOR INTERIOR CMU PARTITIONS OVER GRADE BEAMS SHOWING THICKENED 200 CONC SLAB AREA.

1 / S-101 **SECTION** SCALE: 1:10

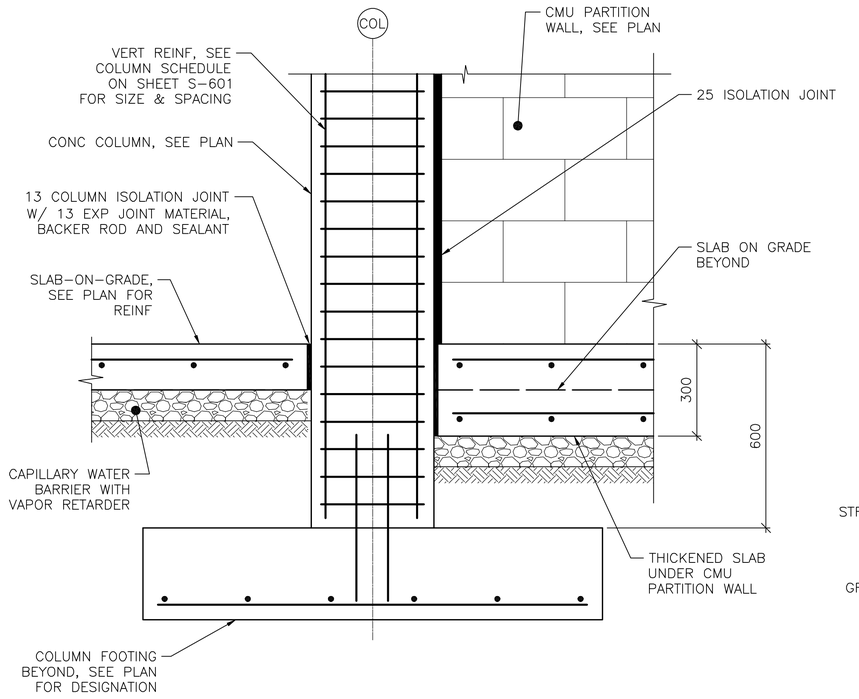


2 / S-101 **SECTION** SCALE: 1:10

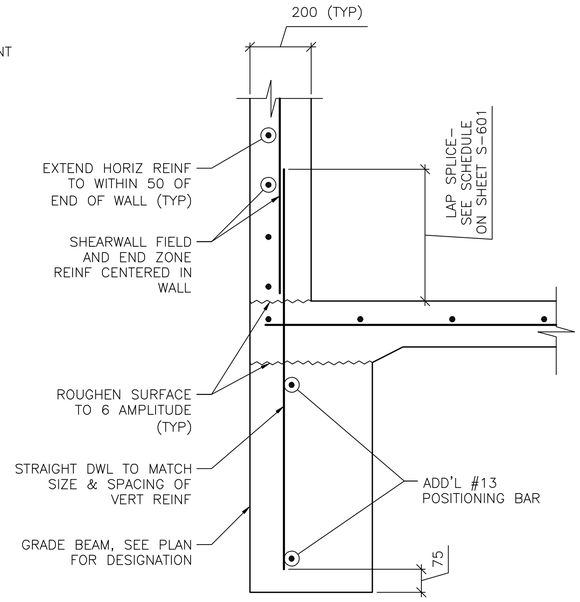


NOTE:
1. SECTION DEPICTS SHEAR WALL TERMINATION ONLY. GRADE BEAM REINFORCING NOT SHOWN FOR CLARITY
2. SEE SHEET S-601 AND SHEET S-702 FOR SCHEDULED FIELD AND END ZONE REINF.

3 / S-101 **SECTION** SCALE: 1:10

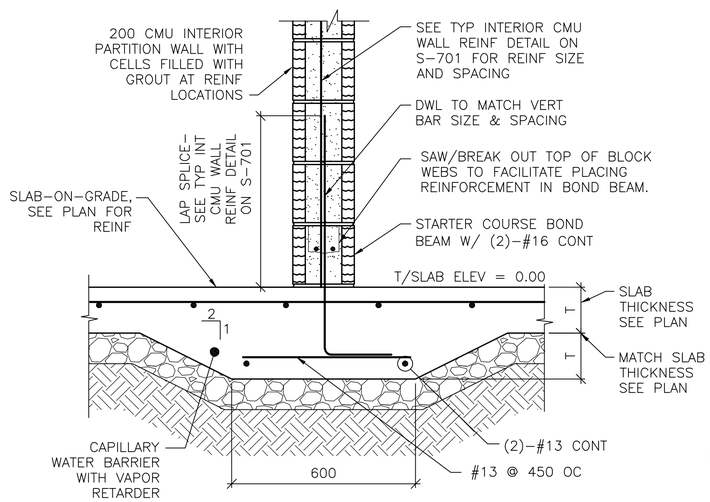


4 / S-101 **SECTION** SCALE: 1:10

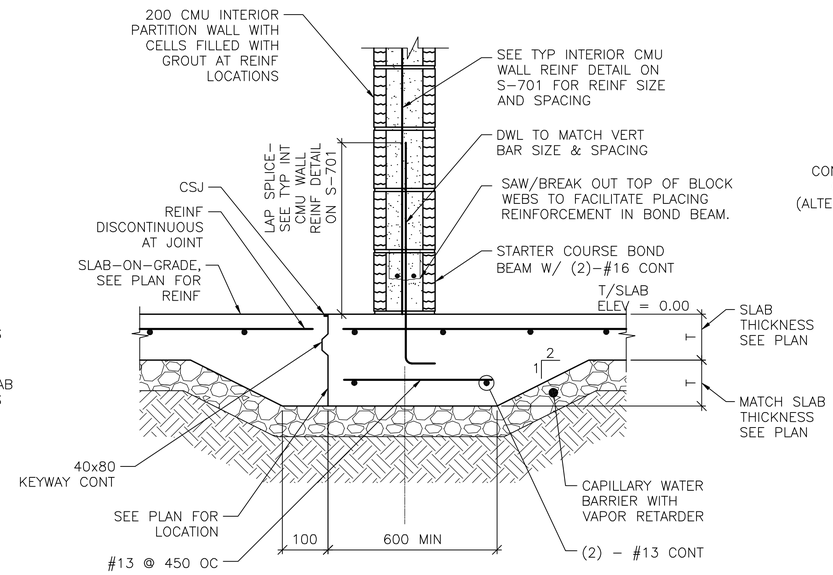


5 / S-101 **SECTION** SCALE: 1:10

NOTE:
1. DETAIL IS APPLICABLE AT CONTROL JOINTS RUNNING PARALLEL TO CMU WALLS AND WITHIN 300 OF FACE OF WALL.

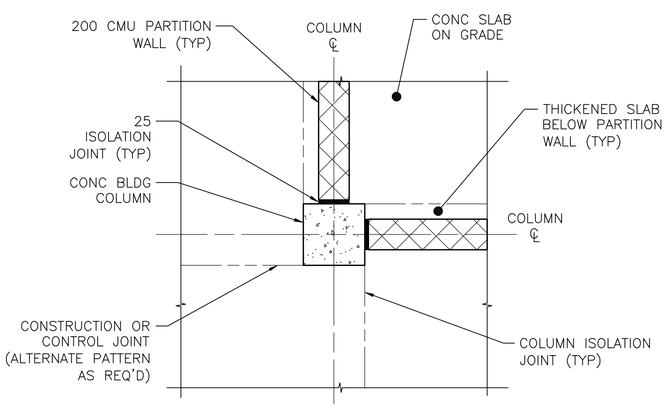


A / S-501 **COLUMN ISOLATION JOINT DETAIL** SCALE: NTS

0 200 400
SCALE: 1:10

UNLESS OTHERWISE NOTED, LINEAR DIMENSIONS SHOWN ON DRAWINGS ARE IN MILLIMETERS (mm)

APPROVED:

A/E DESIGNER OF RECORD

SEAL:

GEORGIA REGISTERED 4-29-10 No. 27141 PROFESSIONAL ENGINEER CHRISTOPHER W. WHITMORE

US ARMY CORPS OF ENGINEERS
AFGHANISTAN ENGINEER DISTRICT

| Mark | Description | Date | Appr. |
|---|---|---|---|
| | | | |

Rev: 0
Date: 2/23/10
Design file no.
Drawing code:
File name: ANAATC08-59150
Plot date: 2/23/2010
Plot scale: x:x

Designed by: KCP/MMY
Dwn by: RCG
Ckd by: CWW
Reviewed by: LHM
Submitted by: BAKER

U.S. ARMY CORPS OF ENGINEERS
AFGHANISTAN ENGINEER DISTRICT
APO AE 96338

Michael Baker Jr., Inc
A unit of Michael Baker Corporation
Airside Business Park
100 Airside Drive
Moon Township, PA 15108
www.mbakercorp.com

AFGHAN NATIONAL ARMY REGIONAL MILITARY TRAINING CENTER STANDARD DESIGN

ADMIN TRAINING COMPANY

FOUNDATION SECTIONS

Sheet reference number:
S-501

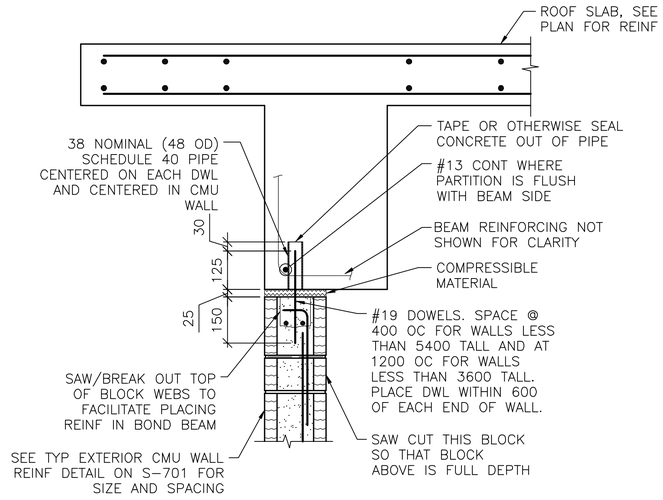


NOTES:
1. EXTEND DOWEL REINF TO 25 CLEAR FROM TOP OF CMU WALL.

1 S-101 **SECTION**
SCALE: 1:10

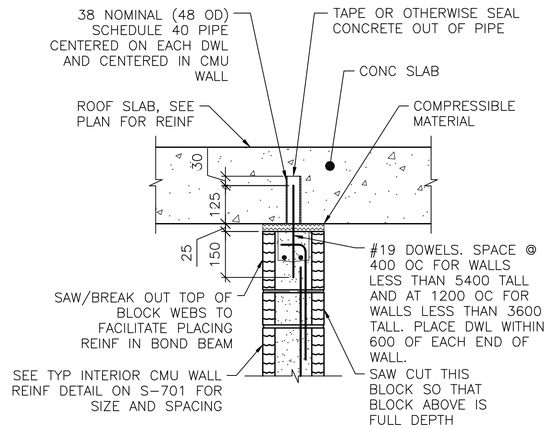


NOTES:
1. EXTEND DOWEL REINF TO 25 CLEAR FROM TOP OF CMU WALL.
2. SLAB REINF NOT SHOWN FOR CLARITY.

2 S-101 **SECTION**
SCALE: 1:10

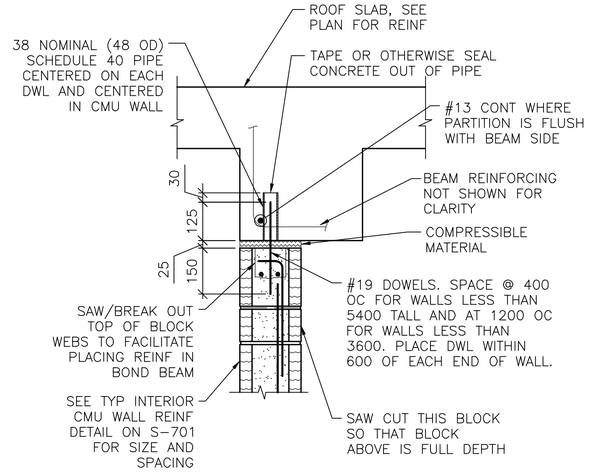


NOTES:
1. EXTEND DOWEL REINF TO 25 CLEAR FROM TOP OF CMU WALL.
2. PARTITION WALL MAY BE CENTERED UNDER THE BEAM OR FLUSH AS SHOWN. SEE PLAN FOR LOCATION.
3. SLAB REINF NOT SHOWN FOR CLARITY.

3 S-101 **SECTION**
SCALE: 1:10

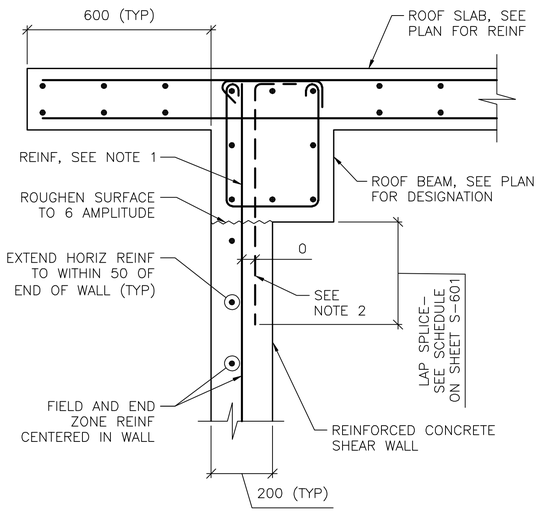


NOTES:
1. TERMINATE "FIELD" VERT REINF & END ZONE REINF @ 50 CLEAR FROM TOP OF ROOF SLAB.
2. WHERE END ZONE REINFORCING CANNOT BE DEVELOPED IN BEAM DEPTH, PROVIDE HOOKED DWLS SAME SIZE & SPACING. PROVIDE TENSION LAP BELOW ROOF BEAM.
3. SEE SHEET S-601 AND SHEET S-702 FOR SCHEDULED FIELD AND END ZONE REINF.

4 S-101 **SECTION**
SCALE: 1:10

0 200 400
SCALE: 1:10

UNLESS OTHERWISE NOTED, LINEAR DIMENSIONS SHOWN ON DRAWINGS ARE IN MILLIMETERS (mm)

APPROVED:

A/E DESIGNER OF RECORD

SEAL:

GEORGIA REGISTERED 2-23-10 No. 27141 PROFESSIONAL ENGINEER CHRISTOPHER W. WHITMORE

US ARMY CORPS OF ENGINEERS
AFGHANISTAN ENGINEER DISTRICT

| Mark | Description | Date | Appr. |
|---|---|---|---|

Date: 2/23/10
Design file no.
Drawing code:
File name: ANAATC08-S025C
Plot date: 2/23/2010
Plot scale: x:x
Rev: 0

Designed by: KMP/MMY
Dwn by: RCG
Ckd by: CWW
Reviewed by: LHM
Submitted by: BAKER

U.S. ARMY CORPS OF ENGINEERS
AFGHANISTAN ENGINEER DISTRICT
APO AE 96338

*Michael Baker Jr., Inc*
*A unit of Michael Baker Corporation*
Airside Business Park
100 Airside Drive
Moon Township, PA 15108
www.mbakercorp.com

AFGHAN NATIONAL ARMY
REGIONAL MILITARY TRAINING CENTER
STANDARD DESIGN

ADMIN TRAINING COMPANY

FRAMING SECTIONS

Sheet reference number:
S-502

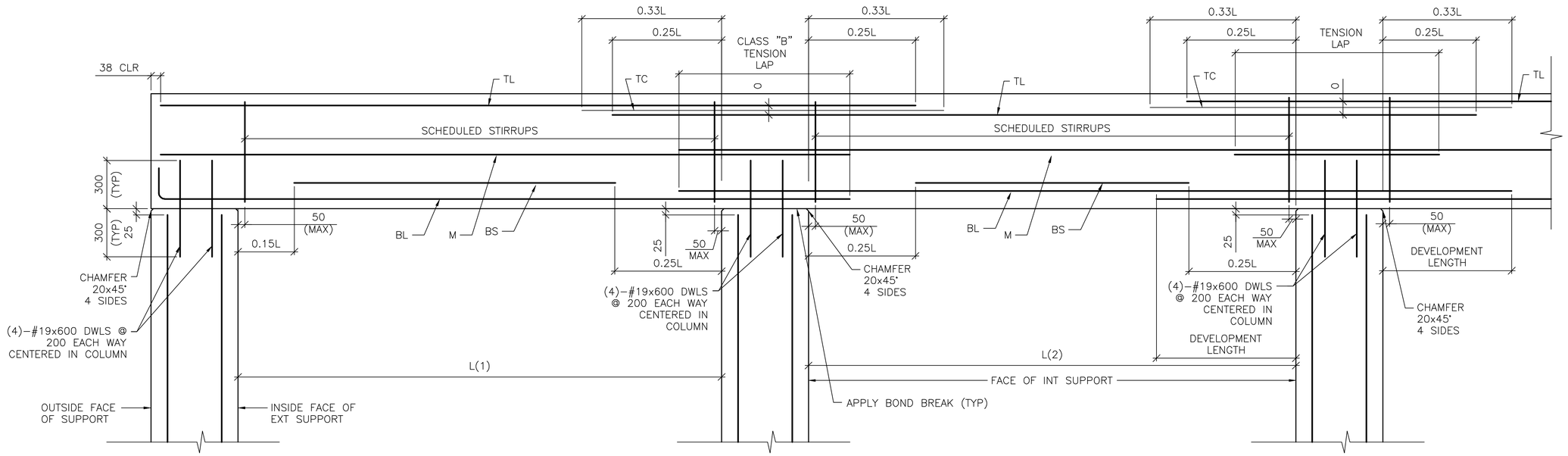


DETAIL NOTE:
1. WORK THIS DETAIL WITH BEAM SCHEDULE ON SHEET S-601.
2. L=GREATEST OF ADJACENT SPANS L(1) OR L(2)
3. ONLY COLUMN CORNER BARS ARE SHOWN

1 / S-503 **ROOF BEAM REINFORCING DETAIL**

**SCALE: NTS**

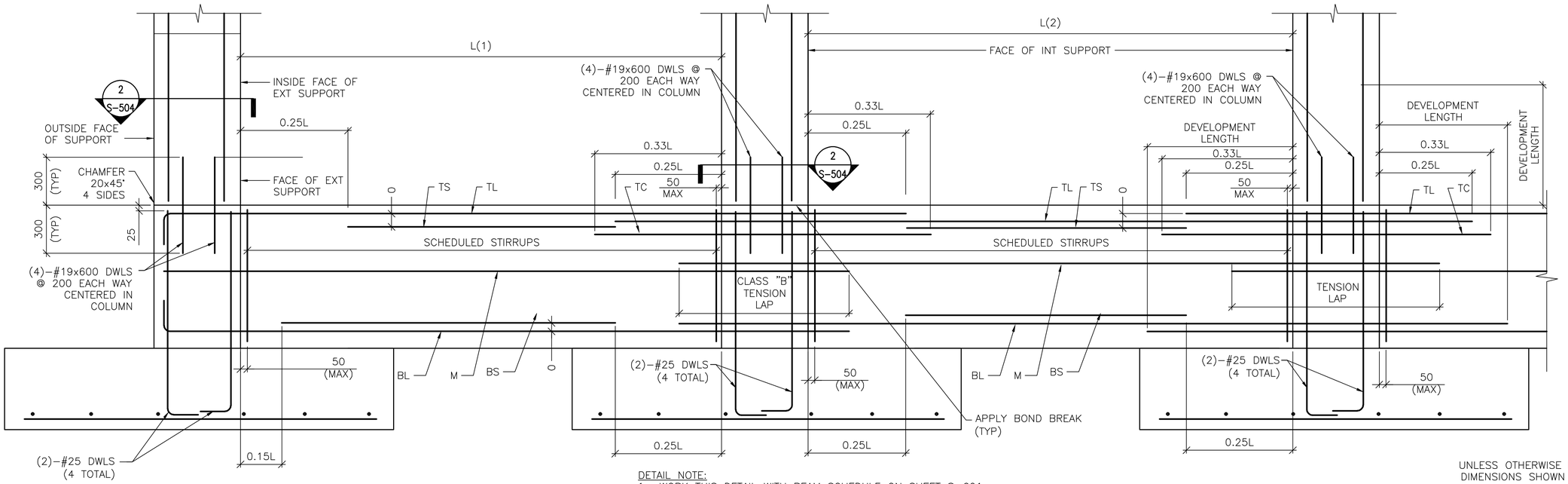


DETAIL NOTE:
1. WORK THIS DETAIL WITH BEAM SCHEDULE ON SHEET S-601.
2. L=GREATEST OF ADJACENT SPANS L(1) OR L(2)
3. ONLY COLUMN CORNER BARS ARE SHOWN.

2 / S-503 **GRADE BEAM REINFORCING DETAIL**

**SCALE: NTS**

UNLESS OTHERWISE NOTED, LINEAR DIMENSIONS SHOWN ON DRAWINGS ARE IN MILLIMETERS (mm)

APPROVED:

A/E DESIGNER OF RECORD

SEAL:

GEORGIA REGISTERED 1-21-10 No. 27141 PROFESSIONAL ENGINEER CHRISTOPHER W. WHITMORE

US ARMY CORPS OF ENGINEERS
AFGHANISTAN ENGINEER DISTRICT

| Mark | Description | Date | Appr. |
|---|---|---|---|
| | | | |

Rev: 0
Date: 2/23/10
Design file no.:
Drawing code: ANAATCOS-S503T
Designed by: KMP/MMY
Dwn by: RCG
Ckd by: CWW
Reviewed by: LHM
Submitted by: BAKER
File name: ANAATCOS-S503T
Plot date: 2/23/2010
Plot scale: XX

U.S. ARMY CORPS OF ENGINEERS
AFGHANISTAN ENGINEER DISTRICT
APO AE 96338

*Michael Baker Jr., Inc*
*A unit of Michael Baker Corporation*
Airside Business Park
100 Airside Drive
Moon Township, PA 15108
www.mbakercorp.com

AFGHAN NATIONAL ARMY
REGIONAL MILITARY TRAINING CENTER
STANDARD DESIGN

ADMIN TRAINING COMPANY

BEAM & COLUMN DETAILS

Sheet reference number:
S-503

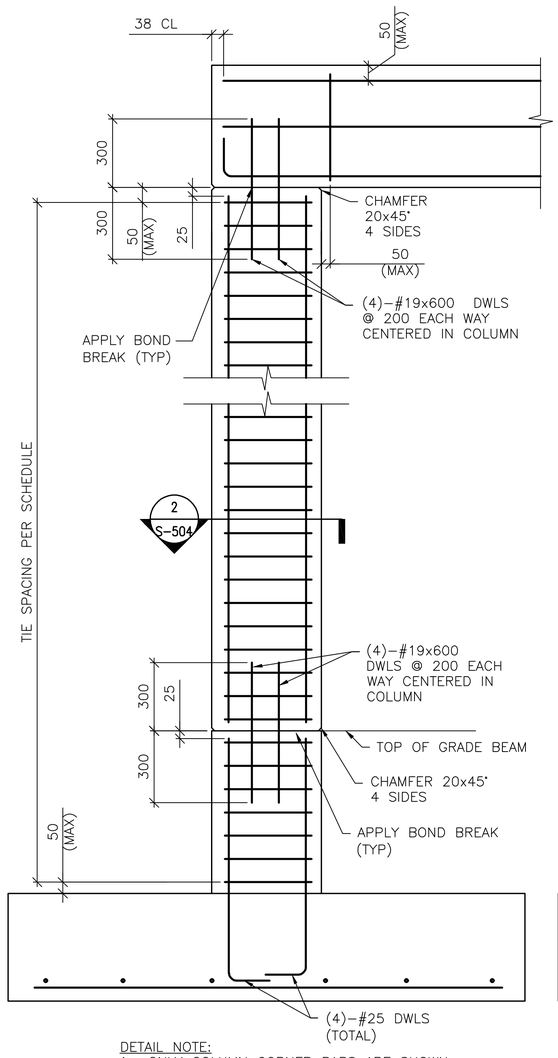


DETAIL NOTE:
1. ONLY COLUMN CORNER BARS ARE SHOWN

1 S–504 **1-STORY COLUMN REINF DETAILS**
SCALE: NTS
(WITH GRADE BEAM)

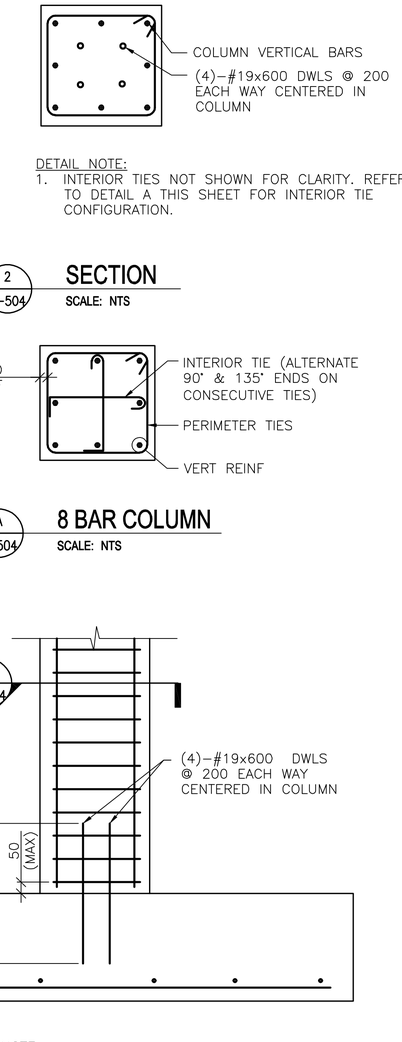


DETAIL NOTE:
1. ONLY COLUMN CORNER BARS ARE SHOWN

1 S–504 **1-STORY COLUMN REINF DETAILS**
SCALE: NTS
(WITHOUT GRADE BEAM)




DETAIL NOTE:
1. INTERIOR TIES NOT SHOWN FOR CLARITY. REFER TO DETAIL A THIS SHEET FOR INTERIOR TIE CONFIGURATION.

2 S–503 2 S–504 **SECTION**
SCALE: NTS

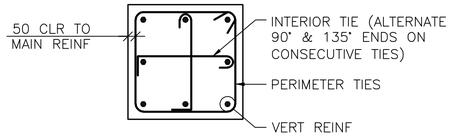


A S–504 **8 BAR COLUMN**
SCALE: NTS

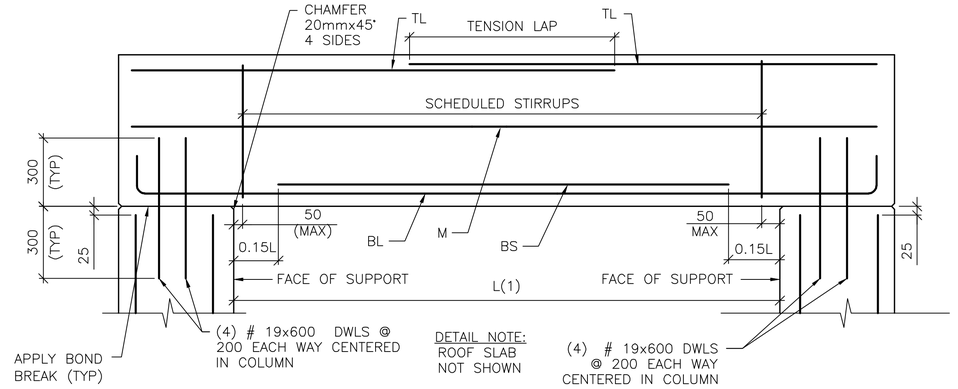


3 S–504 **SINGLE SPAN ROOF BEAM REINFORCING DETAIL**
SCALE: NTS

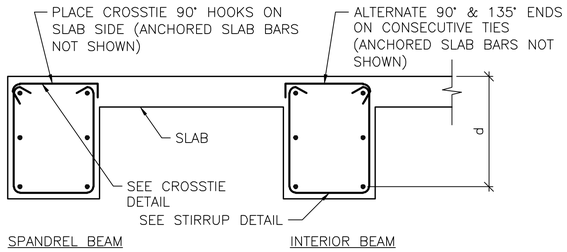


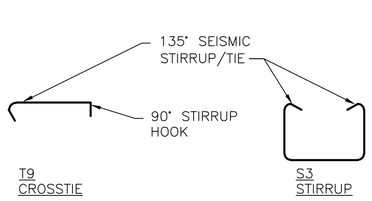


B S–504 **BEAM REINFORCEMENT DETAILS**
SCALE: NTS

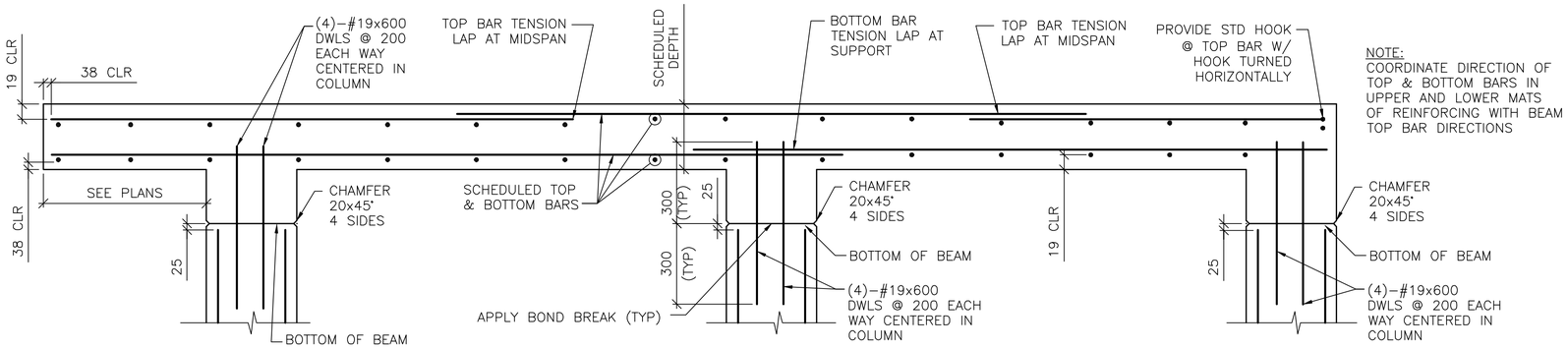


NOTE:
COORDINATE DIRECTION OF TOP & BOTTOM BARS IN UPPER AND LOWER MATS OF REINFORCING WITH BEAM TOP BAR DIRECTIONS

4 S–504 **FRAMED SLAB REINFORCING DETAIL**
SCALE: NTS

UNLESS OTHERWISE NOTED, LINEAR DIMENSIONS SHOWN ARE IN MILLIMETERS (mm)

APPROVED:

A/E DESIGNER OF RECORD

SEAL:

GEORGIA REGISTERED No. 27141 PROFESSIONAL ENGINEER CHRISTOPHER W. WHITMORE
7-23-10

US ARMY CORPS OF ENGINEERS
AFGHANISTAN ENGINEER DISTRICT

| Mark | Description | Date | Appr. |
|---|---|---|---|

Rev: 0
Date: 2/23/10
Design file no.
Drawing code:
File name: ANATCOS-504DT
Plot date: 2/23/2010
Plot scale: X/X
Designed by: KMP/MMY
Dwn by: RCG
Ckd by: CWW
Reviewed by: LHM
Submitted by:
BAKER

U.S. ARMY CORPS OF ENGINEERS
AFGHANISTAN ENGINEER DISTRICT
APO AE 96338

*Michael Baker Jr., Inc*
*A unit of Michael Baker Corporation*
Airside Business Park
100 Airside Drive
Moon Township, PA 15108
www.mbakercorp.com

AFGHAN NATIONAL ARMY
REGIONAL MILITARY TRAINING CENTER
STANDARD DESIGN

ADMIN TRAINING COMPANY

BEAM & COLUMN DETAILS

Sheet reference number:
S–504

# CONCRETE REINFORCEMENT TENSION DEVELOPMENT/LAP SPLICE SCHEDULE

| f'c = 28 MPa | LAP CLASS | UNCOATED BARS | | | |
|---|---|---|---|---|---|
| | | TOP BARS | | OTHER BARS | |
| BAR SIZES | | CASE 1 | CASE 2 | CASE 1 | CASE 2 |
| #10 TO #19 | A | 50 BAR DIA | 74 BAR DIA | 38 BAR DIA | 57 BAR DIA |
| | B | 64 BAR DIA | 96 BAR DIA | 50 BAR DIA | 74 BAR DIA |
| #22 TO #57 | A | 62 BAR DIA | 93 BAR DIA | 48 BAR DIA | 71 BAR DIA |
| | B | 80 BAR DIA | 121 BAR DIA | 62 BAR DIA | 93 BAR DIA |

NOTES:
1. TABULATED TENSION DEVELOPMENT LENGTH VALUES ARE TAKEN FROM CRSI DESIGN HANDBOOK 2008 10TH ED.
2. TENSION DEVELOPMENT & TENSION LAP SPLICE LENGTHS ARE EXPRESSED AS MULTIPLES OF BAR DIAMETERS.
3. TABULATED VALUES ARE BASED ON MINIMUM YIELD STRENGTH OF REINFORCEMENT, fy, OF 420MPa.
4. CONCRETE IS NORMAL WEIGHT (2400Kg/m³) AND 28 DAY COMPRESSIVE STRENGTH = 28MPa.
5. TABULATED VALUES FOR BEAMS & COLUMNS ARE BASED ON TRANSVERSE REINFORCEMENT AND CONCRETE COVER MEETING MINIMUM CODE REQUIREMENTS.
6. CASES 1 & 2, WHICH DEPEND ON THE TYPE OF STRUCTURAL MEMBER, CONCRETE COVER, AND CENTER-TO-CENTER SPACING OF THE BARS ARE DEFINED IN THE TABLE BELOW.
7. LAP SPLICE LENGTHS (MINIMUM 300mm) ARE MULTIPLES OF TENSION DEVELOPMENT LENGTHS: CLASS A = 1.0(TENSION DEVELOPMENT LENGTH) & CLASS B = 1.3(TENSION DEVELOPMENT LENGTH)
8. TOP BARS ARE HORIZONTAL REINFORCEMENT WITH MORE THAN 300mm OF CONCRETE CAST BELOW THE BARS.
9. IT SHALL BE PERMISSIBLE TO CALCULATE WALL AND SLAB REINFORCEMENT TENSION DEVELOPMENT/SPLICE LENGTHS IN ACCORDANCE WITH ACI 12.2.3 OR TABLE 5.3(b) OF CRSI 2008 IN LIEU OF VALUES TABULATED ABOVE.

| | | |
|---|---|---|
| BEAMS, COLUMNS | CASE 1 | CONCRETE COVER AT LEAST 1 BAR DIA AND CENTER-TO-CENTER SPACING AT LEAST 2 BAR DIA |
| | CASE 2 | CONCRETE COVER LESS THAN 1 BAR DIA OR CENTER-TO-CENTER SPACING LESS THAN 2 BAR DIA |
| ALL OTHERS | CASE 1 | CONCRETE COVER AT LEAST 1 BAR DIA AND CENTER-TO-CENTER SPACING AT LEAST 3 BAR DIA |
| | CASE 2 | CONCRETE COVER LESS THAN 1 BAR DIA OR CENTER-TO-CENTER SPACING LESS THAN 3 BAR DIA |

# CONCRETE COVER SCHEDULE

MINIMUM CONCRETE COVER PROTECTION FOR REINFORCEMENT BARS SHALL BE AS LISTED BELOW: (SEE ACI 318M-05, SECTION 7.7 FOR CONDITIONS NOT NOTED). DIMENSIONS FOR BAR PLACEMENT GIVEN IN SECTIONS AND DETAILS SHALL SUPERSEDE MINIMUM COVER REQUIREMENTS GIVEN HERE. DIMENSIONS ARE IN mm. PROVIDE STANDARD BAR CHAIRS AND SUPPORT BARS @1200mm MAXIMUM AS REQUIRED TO MAINTAIN CONCRETE PROTECTION SPECIFIED.

| | | |
|---|---|---|
| FOOTINGS (EARTH FORMED): | | 70 |
| COLUMNS / PIERS (TO TIES) | | 40 |
| GRADE BEAMS OR SLAB TURNED DOWN EDGES: | | |
| TOP | | 40 |
| BOTTOM (EARTH FORMED) | | 70 |
| SIDES (EARTH FORMED) | | 70 |
| SIDES (BOARD FORMED) | #16 BAR & SMALLER | 40 |
| | #19 THRU #36 BAR | 50 |
| ELEVATED BEAMS & SLABS: | | |
| BEAM TIES & STIRRUPS (NOT EXPOSED TO WEATHER) | | 40 |
| BEAM TIES & STIRRUPS (EXPOSED TO WEATHER) | | 50 |
| FLOOR SLABS (NOT EXPOSED TO WEATHER) | | 20 |
| FLOOR SLABS (EXPOSED TO WEATHER) | | |
| #19 & LARGER | | 50 |
| #13 & SMALLER | | 40 |
| ROOF SLAB BARS | | 25 |
| SLABS ON GRADE | | |
| NOT EXPOSED TO WEATHER (FROM TOP) | | 20 |
| EXPOSED TO WEATHER (FROM TOP) | | 40 |
| UTILITY TUNNEL WALLS, RETAINING WALLS AND SHEAR WALLS. (NO SURFACES SHALL BE EARTH FORMED) | | |
| EARTH SIDE AND FRONT SIDE (EXPOSED TO WEATHER) | | |
| #16 BAR AND SMALLER | | 40 |
| #19 THRU #36 BAR | | 50 |

# COLUMN FOOTING SCHEDULE

| MARK | FOOTING SIZE (mm) | | | FOOTING REINFORCING | REMARKS |
|---|---|---|---|---|---|
| | LENGTH | WIDTH | THICKNESS | | |
| F1 | 3000 | 3000 | 300 | (8)-#22 EW BOTT | ----- |
| F2 | 2500 | 2500 | 250 | (7)-#19 EW BOTT | ----- |

# CONCRETE SHEAR WALL SCHEDULE

| MARK | TYPE | WALL LENGTH (L) (mm) | WALL REINFORCEMENT | | REMARKS |
|---|---|---|---|---|---|
| | | | END ZONE | FIELD | |
| SW1 | A | 2900 | (5)-#19 @ 220mm OC | #13 @ 300mm OC | ----- |

NOTES:
1. WORK THIS SCHEDULE WITH SHEAR WALL DETAILS ON SHEETS S-702
2. SEE PLAN FOR LOCATION OF SHEAR WALL(S).
3. VERTICAL "FIELD" BARS MAY BE OMITTED IN LOCATION OF "END ZONE" REINFORCEMENT.
4. WALL FIELD REINF LISTED APPLIES TO VERT & HORIZ BARS.
5. WALL FIELD REINFORCEMENT CENTERED IN WALL.

# STANDARD HOOKS IN TENSION PER (ACI 318M-05)

HOOK DEVELOPMENT LENGTH (mm)

| BAR SIZE | f'c 28 MPa |
|---|---|
| #10 | 180 |
| #13 | 250 |
| #16 | 300 |
| #19 | 380 |
| #22 | 430 |
| #25 | 480 |
| #29 | 560 |
| #32 | 610 |
| #36 | 690 |

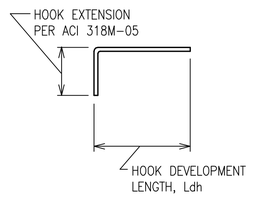


NOTES:
1. CONCRETE IS NORMAL WEIGHT CONCRETE.
2. BAR YIELD STRENGTH, fy = 420 MPa
3. SIDE COVER REQUIREMENTS OF ACI SECT. 12.5.3 ARE ASSUMED TO NOT BE MET.
4. TIE OR STIRRUP REQUIREMENTS OF ACI SECT. 12.5.3 ARE ASSUMED TO NOT BE MET.
5. REDUCTION FOR EXCESS REINFORCEMENT IS NOT TAKEN.
6. HOOK DEVELOPMENT LENGTH IS VALID FOR 180° HOOKS ALSO.

# MASONRY LAP SPLICE SCHEDULE

| BAR SIZE | MINIMUM LAP SPLICE (Ld) FOR CMU REINFORCING |
|---|---|
| #10 | 450 |
| #13 | 600 |
| #16 | 750 |
| #19 | 900 |
| #22 | 1050 |
| #25 | 1200 |

# CMU OR CAST IN PLACE CONC LINTEL SCHEDULE (TYP)

| OPENING TYPE OR SIZE, BEAM LOCATION OR TYPE | MAX SPAN (mm) | LINTEL DEPTH (mm) | REINFORCING BOTTOM |
|---|---|---|---|
| WALL OPENING | 4000 | 600 | (2)-#16 T&B |
| WALL OPENING | 1900 | 400 | (2)-#16 T&B |
| WALL OPENING | 1000 | 400 | (2)-#13 B |

1. STRUCTURAL SHEETS DO NOT INDICATE ALL OPENINGS IN MASONRY WALLS. VERIFY NUMBER, SIZE AND LOCATION OF ALL OPENINGS IN MASONRY WALLS FROM ARCHITECTURAL SHEETS AND APPROVED PLUMBING, MECHANICAL, AND ELECTRICAL SHOP DRAWINGS.
2. PROVIDE 200mm BEARING EA END.
3. FOR HEAD DETAILS REFER TO ARCHITECTURAL SHEETS.
4. REINFORCING SHALL BE ASTM A615M, GRADE 420. GROUT FOR CMU LINTELS SHALL HAVE A MINIMUM COMPRESSIVE STRENGTH OF 14 MPa AT 28 DAYS.
5. CONTRACTOR SHALL SUBMIT FOR APPROVAL SHOP DRAWINGS AND SCHEDULES SHOWING SIZE, SPAN, REINFORCEMENT, DETAILS, LOCATIONS, ETC.

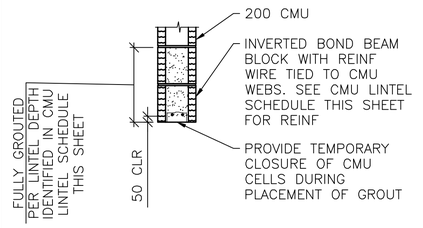


A S-601 **LINTEL DETAIL**
SCALE: NTS

# BEAM SCHEDULE

| MARK | BEAM SIZE (mm) | | BEAM REINFORCING | | | | | | STIRRUPS | | | REMARKS |
|---|---|---|---|---|---|---|---|---|---|---|---|---|
| | DEPTH | WIDTH | BL | BS | TL | TS | TC | M | SIZE | TYPE | SPACING | |
| GRADE BEAMS | | | | | | | | | | | | |
| GB1 | 750 | 400 | (2)-#16 | (1)-#16 | (2)-#16 | --- | --- | --- | #13 | S3 + T9 | d/2 | ----- |
| GB2 | 750 | 400 | (2)-#25 | (1)-#25 | (2)-#25 | --- | --- | --- | #13 | S3 + T9 | d/2 | ----- |
| ROOF BEAMS | | | | | | | | | | | | |
| RB1 | 600 | 400 | (2)-#22 | (1)-#22 | (2)-#19 | --- | --- | --- | #13 | S3 + T9 | d/2 | ----- |
| RB2 | 600 | 400 | (2)-#19 | (1)-#19 | (2)-#19 | --- | --- | --- | #13 | S3 + T9 | d/2 | OMIT "M" BARS IN INTERIOR BEAMS |

NOTES:
1. WORK THIS SCHEDULE WITH BEAM REINFORCING DETAILS ON SHEETS S-503 AND S-504.
2. HOOKS SHOWN ON SECTIONS AND DETAILS SHALL BE 90° STD UON.
3. USE ONLY (1) TC AT BEAM COLUMN INTERSECTION WHERE REQ'D.

# COLUMN SCHEDULE

| DESCRIPTION \ COLUMN MARK | TYP UON | --- | --- | --- |
|---|---|---|---|---|
| TYPE | 8-BAR | --- | --- | --- |
| DIMENSIONS | 600mm SQ | --- | --- | --- |
| VERTICAL REINFORCEMENT | (8)-#25 | --- | --- | --- |
| TIES | #13 @ d/2 | --- | --- | --- |
| TOP OF ROOF ELEVATION | 3600mm | --- | --- | --- |
| TOP OF GRADE BEAM ELEVATION | -200mm | --- | --- | --- |
| TOP OF FOOTING ELEVATION | -950mm | --- | --- | --- |

NOTES:
1. WORK THIS SCHEDULE WITH COLUMN DETAILS ON SHEET S-504.
2. SEE FOOTING SCHEDULE ON THIS SHEET FOR FOOTING INFORMATION.
3. COLUMN TIES: INTERIOR TIES TO MATCH SIZE & SPACING OF PERIMETER TIES.
4. HOOKS SHOWN ON SECTIONS & DETAILS SHALL BE 90° STD UON.

UNLESS OTHERWISE NOTED, LINEAR DIMENSIONS SHOWN ARE IN MILLIMETERS (mm)

APPROVED:

A/E DESIGNER OF RECORD

SEAL:

GEORGIA REGISTERED 1-29-10 No. 27141 PROFESSIONAL ENGINEER CHRISTOPHER W. WHITMORE

US ARMY CORPS OF ENGINEERS
AFGHANISTAN ENGINEER DISTRICT

| Mark | Description | Date | Appr. |
|---|---|---|---|
| | | | |

| Mark | Description | Date | Appr. |
|---|---|---|---|
| | | | |

Rev: 0
Date: 2/23/10
Design file no.
Drawing code:
File name: ANATOOS-601SCH
Plot date: 2/23/2010
Plot scale: X:X

Designed by: KMP/MMY
Drwn by: RCG
Ckd by: CWW
Reviewed by: LHM
Submitted by:

U.S. ARMY CORPS OF ENGINEERS
AFGHANISTAN ENGINEER DISTRICT
APO AE 96338

Michael Baker Jr., Inc
A unit of Michael Baker Corporation
Airside Business Park
100 Airside Drive
Moon Township, PA 15108
www.mbakercorp.com

BAKER

AFGHAN NATIONAL ARMY
REGIONAL MILITARY TRAINING CENTER
STANDARD DESIGN

ADMIN TRAINING COMPANY

SCHEDULES

Sheet reference number:
S-601

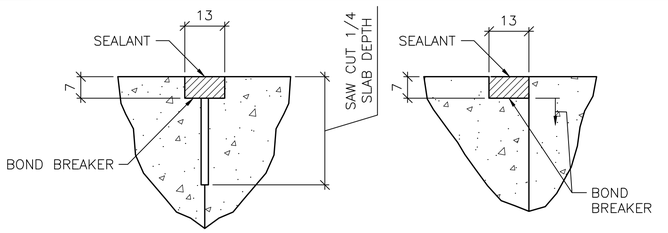


CONTROL JOINT DETAIL

CONSTRUCTION JOINT DETAIL

## 1 S-701 TYPICAL CONCRETE SLAB JOINT FINISH DETAILS

SCALE: NTS

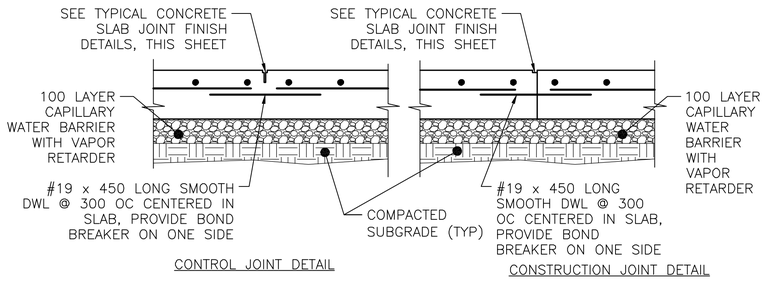


CONTROL JOINT DETAIL

CONSTRUCTION JOINT DETAIL

## 2 S-701 TYPICAL SLAB ON GRADE JOINT DETAIL

SCALE: NTS

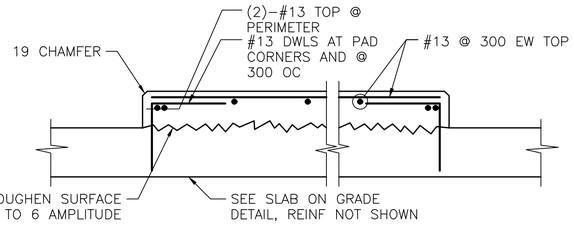


## 3 S-701 INTERIOR EQUIPMENT PAD DETAIL

SCALE: NTS

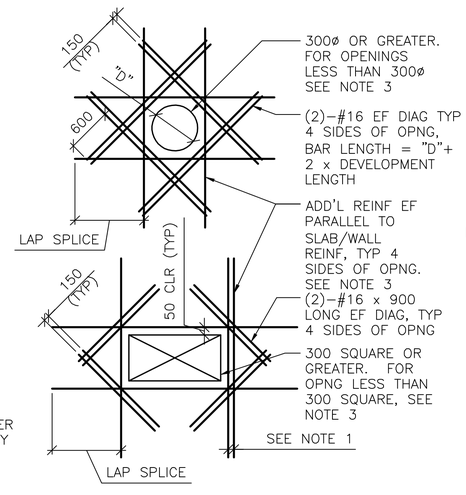


SHEAR WALL/SLAB OPENINGS

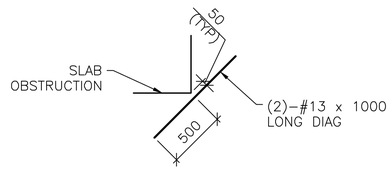


RE-ENTRANT CORNERS

DETAIL NOTES:
1. WHERE MORE THAN ONE ADDITIONAL BAR IS REQUIRED PARALLEL TO THE EXISTING SLAB/WALL REINFORCING THE ADDITIONAL REINFORCING BARS SHALL BE SPACED AT 100 ON CENTER.
2. ADDITIONAL REINFORCING PARALLEL TO THE SLAB/WALL REINFORCING SHALL BE #16 BARS THAT PROVIDE A STEEL AREA ON EACH SIDE OF THE OPENING EQUAL TO 1/2 THE AREA OF THE REINFORCING CUT BY THE OPENING.
3. FOR OPENINGS WITH SIDES OR DIAMETERS LESS THAN 300 SPREAD THE SLAB/WALL REINFORCING TO CLEAR THE OPENING.

## 4 S-701 ADD'L CONCRETE REINFORCEMENT DETAILS

SCALE: NTS

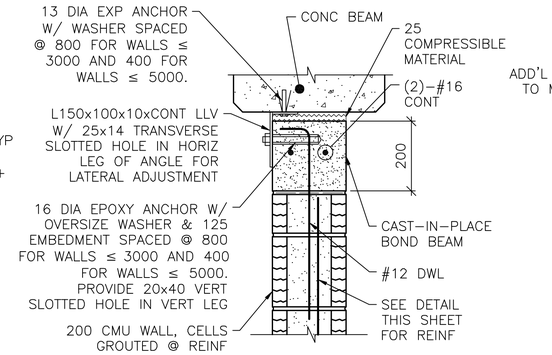


NOTE:
1. AT ANCHOR BOLTS, ADD AN ADDITIONAL 25 COMPRESSIBLE MATERIAL BELOW EXP ANCHOR HEAD.

INTERIOR BEAM

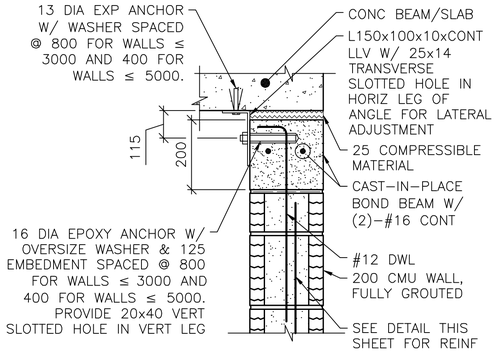


EXTERIOR WALL OR SLAB

NOTES:
1. THIS DETAIL IS AN ALTERNATE TOP OF WALL ANCHORAGE DETAIL TO BE USED AT THE CONTRACTOR'S OPTION IN LIEU OF DETAILS SHOWN ON S-400 & S-500 DRAWINGS.
2. CAST-IN-PLACE BOND BEAM SHOWN AT TOP OF WALL IS ALSO APPLICABLE FOR INTERMEDIATE AND STARTER COURSE BOND BEAMS WITHIN WALL.

## 5 S-701 ALTERNATE TOP OF CMU WALL BRACING DETAILS

SCALE: NTS

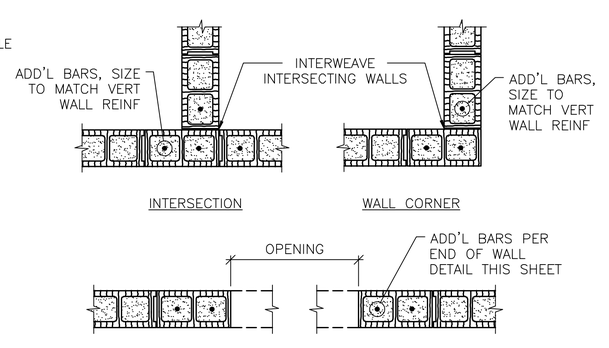


INTERSECTION

WALL CORNER




MASONRY OPENING W/ LINTEL

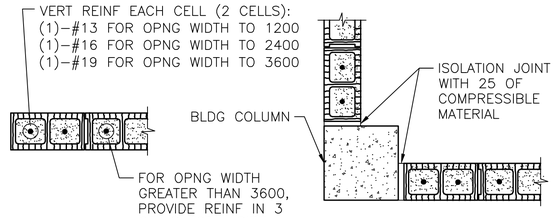


END OF WALL

END OF WALL @ COLUMN

NOTES:
1. OPENING WIDTH SHALL NOT EXCEED 3600 FOR THIS TYPE OF JAMB.
2. ALL CELLS FULLY GROUTED AT EXTERIOR WALLS. AT INTERIOR WALLS, ONLY GROUT CELLS CONTAINING REINF.

## 6 S-701 TYP CMU DETAILS

SCALE: NTS

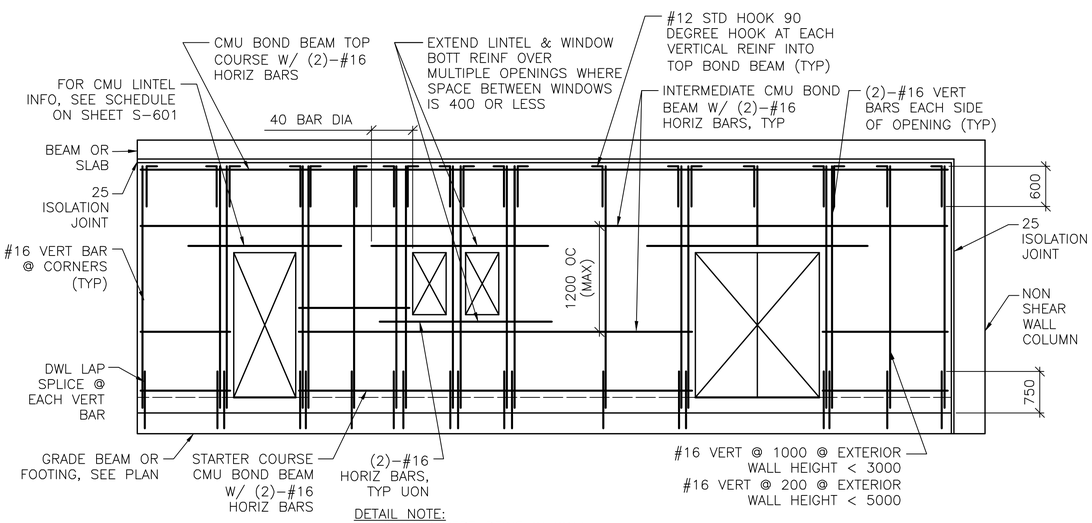


DETAIL NOTE:
1. CENTER VERT REINF IN WALL.
2. GROUT ALL CMU CELLS.
3. REFERENCE ARCH DWGS FOR JOINT INFORMATION
4. DOWELS BETWEEN TOP BOND BEAM AND BEAM/SLAB ABOVE (INCLUDING EMBEDDED PIPE SLEEVE) NOT SHOWN FOR CLARITY. SEE SPECIFIC S-500 SERIES DWGS FOR INFO.
5. FOR INFORMATION ON ALTERNATE CAST-IN-PLACE WALL BOND BEAMS, REFERENCE ALTERNATE TOP OF CMU WALL BRACING DETAILS THIS SHEET.

## 7 S-701 TYP EXTERIOR CMU WALL REINF DETAIL

SCALE: NTS

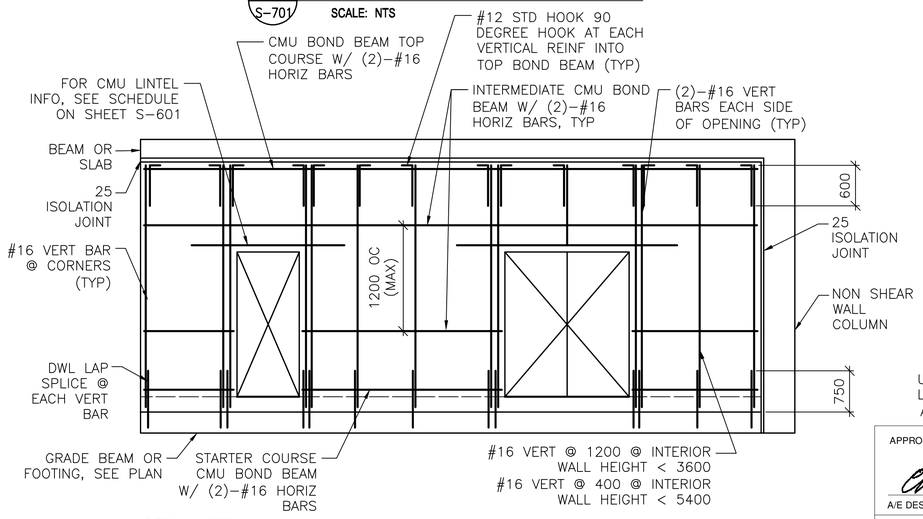


DETAIL NOTE:
1. CENTER VERT REINF IN WALL.
2. GROUT ALL CMU CELLS.
3. REFERENCE ARCH DWGS FOR JOINT INFORMATION
4. DOWELS BETWEEN TOP BOND BEAM AND BEAM/SLAB ABOVE (INCLUDING EMBEDDED PIPE SLEEVE) NOT SHOWN FOR CLARITY. SEE SPECIFIC S-500 SERIES DWGS FOR INFO.
5. FOR INFORMATION ON ALTERNATE CAST-IN-PLACE WALL BOND BEAMS, REFERENCE ALTERNATE TOP OF CMU WALL BRACING DETAILS THIS SHEET.

## 8 S-701 TYP INTERIOR CMU WALL REINF DETAIL

SCALE: NTS

UNLESS OTHERWISE NOTED, LINEAR DIMENSIONS SHOWN ARE IN MILLIMETERS (mm)

APPROVED:

A/E DESIGNER OF RECORD

SEAL:

GEORGIA REGISTERED 1-29-10 No. 27141 PROFESSIONAL ENGINEER CHRISTOPHER W. WHITMORE

US ARMY CORPS OF ENGINEERS
AFGHANISTAN ENGINEER DISTRICT

| Mark | Description | Date | Appr. |
|---|---|---|---|

Rev: 0
Date: 2/23/10
Design file no.
Drawing code:
File name: ANAATCOS-701DT
Plot date: 2/23/2010
Plot scale: X:X

Designed by: KMP/MMY
Dwn by: RCG
Ckd by: CWW
Reviewed by: LHM
Submitted by:
BAKER

U.S. ARMY CORPS OF ENGINEERS
AFGHANISTAN ENGINEER DISTRICT
APO AE 96338

Michael Baker Jr., Inc
A unit of Michael Baker Corporation
Airside Business Park
100 Airside Drive
Moon Township, PA 15108
www.mbakercorp.com

AFGHAN NATIONAL ARMY REGIONAL MILITARY TRAINING CENTER STANDARD DESIGN

ADMIN TRAINING COMPANY

TYPICAL DETAILS

Sheet reference number:
S-701

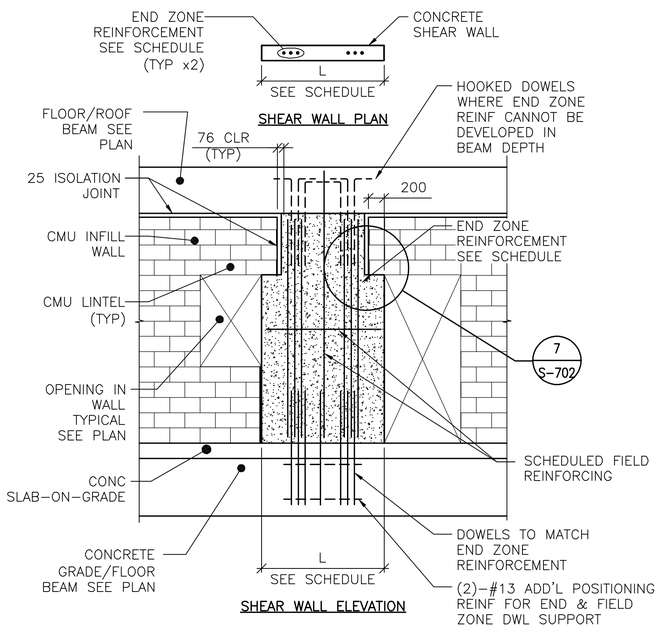


DETAIL NOTES:
1. FIELD REINFORCEMENT IN SHEAR WALL NOT SHOWN FOR CLARITY.
2. FIELD REINFORCEMENT CENTERED IN WALL.
3. MINIMUM CONC CLEAR DISTANCE FOR END ZONE REINF = 76
4. SEE CONC SHEAR WALL SCHEDULE ON SHEET S-601
5. SEE ARCH DWGS FOR JOINT INFORMATION

## 1 S-702 TYPE "A" SHEAR WALL DETAIL
SCALE: NTS

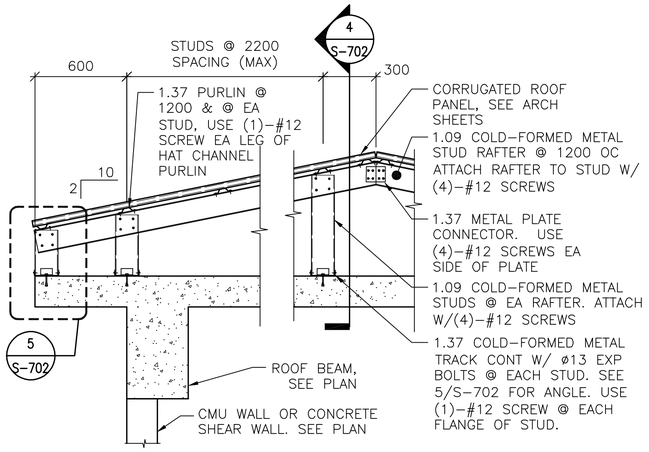


DETAIL NOTES:
1. ALL GABLE END VERTICAL STUDS SHALL BE ORIENTED 90° TO INTERIOR STUDS & SPACED @ 600 OC. GABLE END RAFTER SHALL BE 1.37 METAL TRACK SPANNING CONTINUOUSLY OVER GABLE END STUDS. INSET GIRTS AT GABLE END SHALL BE 1.09 COLD-FORMED METAL STUDS @ 1200 OC ATTACHED VIA 1.37 THICKNESS CLIP ANGLE W/ (2) #12 SCREWS EA LEG.
2. ALL INTERIOR, NON-GABLE END VERTICAL STUDS GREATER THAN 2400 IN LENGTH SHALL BE BACK-TO-BACK W/ #12 SCREWS @ 200 OC STAGGERED.

## 2 S-702 TYPICAL OVERBUILT ROOF FRAMING DETAIL
SCALE: NTS

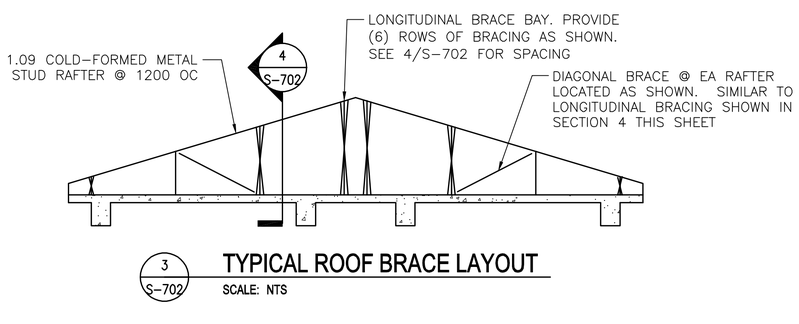


## 3 S-702 TYPICAL ROOF BRACE LAYOUT
SCALE: NTS

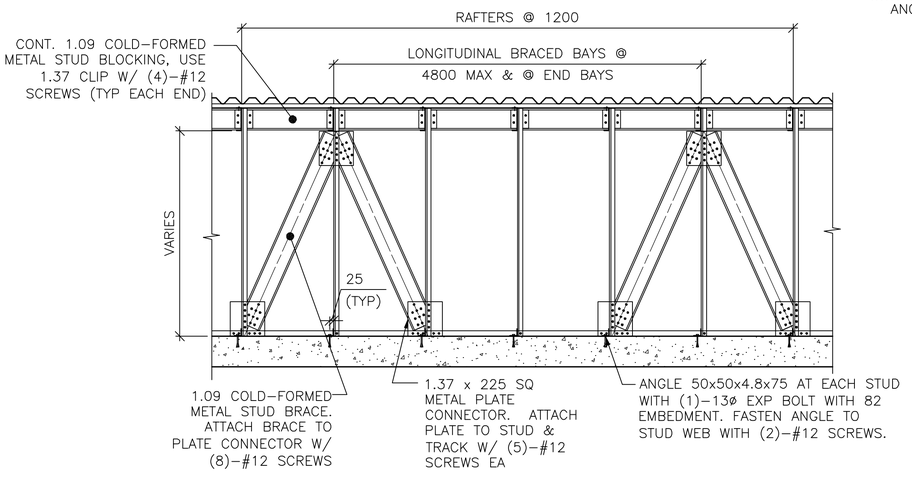


## 4 S-702 SECTION
SCALE: NTS

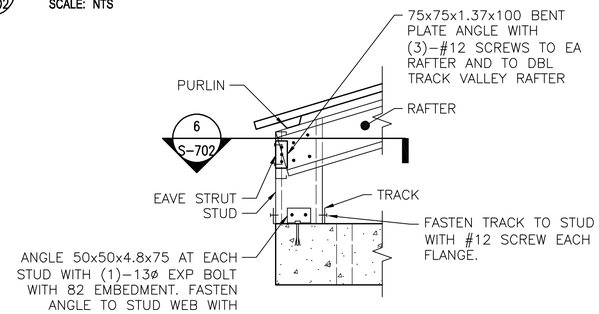


## 5 S-702 DETAIL
SCALE: NTS

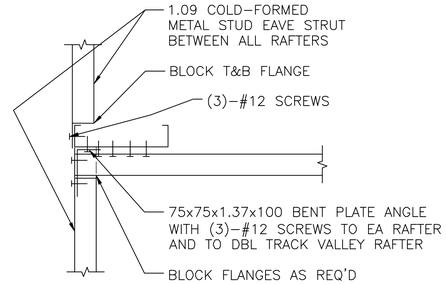


## 6 S-702 SECTION
SCALE: NTS

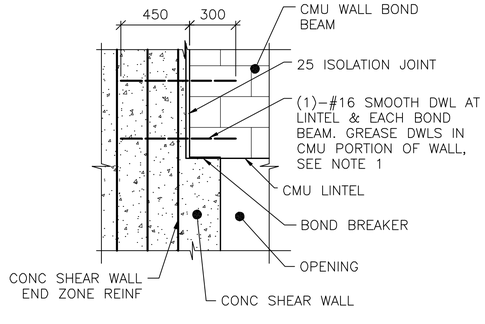


NOTE:
1. TIE SMOOTH DOWEL ROD TO SHEAR WALL END ZONE REINF FOR EACH BOND BEAM AND LINTEL.

## 7 S-702 SECTION
SCALE: NTS

UNLESS OTHERWISE NOTED, LINEAR DIMENSIONS SHOWN ARE IN MILLIMETERS (mm)

APPROVED:

A/E DESIGNER OF RECORD

SEAL:

GEORGIA REGISTERED 29-10 No. 27141 PROFESSIONAL ENGINEER CHRISTOPHER W. WHITMORE

US ARMY CORPS OF ENGINEERS
AFGHANISTAN ENGINEER DISTRICT

| Mark | Description | Date | Appr. |
|---|---|---|---|

Date: 2/23/10
Design file no.
Drawing code:
Rev: 0
Designed by: KMP/MMY
Dwn by: RCG
Ckd by: CWW
Reviewed by: LHM
Submitted by: BAKER
File name: ANAATC08-702TDT
Plot date: 2/23/2010
Plot scale: x:x

U.S. ARMY CORPS OF ENGINEERS
AFGHANISTAN ENGINEER DISTRICT
APO AE 96338

*Michael Baker Jr, Inc*
*A unit of Michael Baker Corporation*
Airside Business Park
100 Airside Drive
Moon Township, PA 15108
www.mbakercorp.com

AFGHAN NATIONAL ARMY
REGIONAL MILITARY TRAINING CENTER
STANDARD DESIGN

ADMIN TRAINING COMPANY

TYPICAL DETAILS

Sheet reference number:
S-702

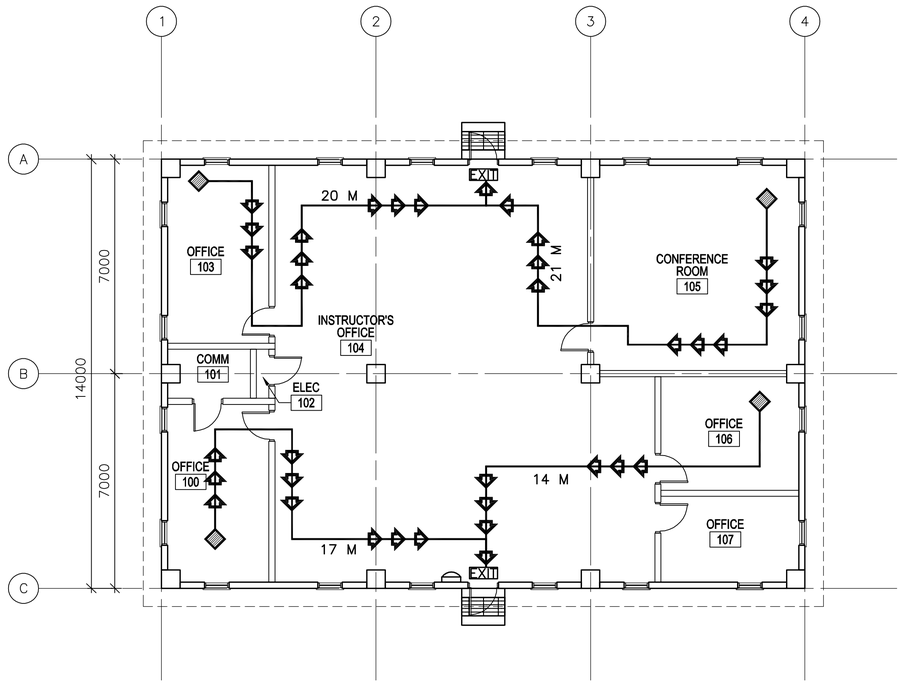


1
A–001

## LIFE SAFETY PLAN

SCALE: 1:100

## CODE ANALYSIS:

1. REFERENCES:
   2006 INTERNATIONAL BUILDING CODE (2006 IBC)
   2006 LIFE SAFETY CODE (2006 NFPA 101)

2. IBC OCCUPANCY CLASSIFICATION:
   GROUP B (BUSINESS NFPA 101 6.1.11 AND CHAPTER 38)

3. TYPE OF CONSTRUCTION (IBC): TYPE II–B (UNPROTECTED/NONSPRINKLERED)

4. IBC TABLE 503: ALLOWABLE HEIGHT AND BUILDING AREAS:
   GROUP B
   ALLOWABLE AREA: 2,137 SM
   ALLOWABLE HEIGHT: 3 STORIES (16 M)

   GROUP B
   PROPOSED AREA: 294 SM
   PROPOSED HEIGHT: 1 STORY (<16 M)

5. IBC TABLE 601 & 602: FIRE RESISTANCE RATING REQUIREMENTS FOR BUILDING ELEMENTS FOR TYPE II–B

| BUILDING ELEMENT | RATING (HOUR) | REFERENCE |
|---|---|---|
| STRUCTURAL FRAME (COLUMNS, GIRDERS & TRUSSES) | 0 | TABLE 601 |
| BEARING WALLS | | |
| EXTERIOR | 0 | TABLE 601 |
| INTERIOR | 0 | TABLE 601 |
| NONBEARING WALLS & PARTITIONS | | |
| INTERIOR | 0 | TABLE 601 |
| FLOOR CONSTRUCTION | 0 | TABLE 601 |
| ROOF CONSTRUCTION | 0 | TABLE 601 |
| EXTERIOR WALL | 0 | TABLE 602 |

6. IBC TABLE 803.5 – INTERIOR WALL AND CEILING FINISH REQUIREMENTS FOR B OCCUPANCY/NONSPRINKLERED

| GROUP | EXIT ENCLOSURES AND EXIT PASSAGEWAY | CORRIDORS | ROOMS AND ENCLOSED SPACES |
|---|---|---|---|
| B | A | B | C |

7. NFPA 101 TABLE 7.3.1.2 – OCCUPANT LOAD
   BUSINESS = 9.3 SM/PERSON BUSINESS PROPOSED = 32 OCCUPANTS

8. NFPA 101 TABLE 7.3.3.1 – EGRESS CAPACITY
   BUSINESS = 5 MM PER OCCUPANT

   REQUIRED: 160 MM (32 OCCUPANTS x 5 MM PER OCCUPANT)
   PROPOSED EGRESS CAPACITY: 900 MM: (2) 900 MM DOORS

9. NFPA 101 PARAGRAPH 38.2.6.2 – EXIT ACCESS TRAVEL DISTANCE (NONSPRINKLERED)
   REQUIRED: 60 METERS
   PROPOSED: 23 METERS

10. NFPA 101 PARAGRAPH 38.3.6.1(1) & (2) – CORRIDORS
    NO RATED CORRIDOR REQUIRED (NONSPRINKLERED):
    (1) ALL EXITS ARE AVAILABLE FROM AN OPEN FLOOR AREA
    (2) SPACE IS OCCUPIED BY A SINGLE TENANT

11. NFPA 101 PARAGRAPH 38.2.4.1 – NUMBER OF EXITS
    BUSINESS REQUIRED: 1 MINIMUM
    BUSINESS PROPOSED: 2 EXITS

## LEGEND:

- DENOTES PATHS OF EXIT TRAVEL
- EXIT — DENOTES DOOR AS AN EMERGENCY EXIT
- DENOTES STARTING POINT FOR TRAVEL DISTANCE
- DENOTES FIRE EXTINGUISHER LOCATIONS

LINEAR DIMENSIONS SHOWN ARE IN MILLIMETERS (MM), UNLESS OTHERWISE NOTED

0 2000 4000
SCALE: 1:100

APPROVED:

A/E DESIGNER OF RECORD

SEAL:

STATE OF SOUTH CAROLINA
KEVIN R. CHAFIN
N. Charleston, SC
6374
REGISTERED ARCHITECT

US ARMY CORPS OF ENGINEERS
AFGHANISTAN ENGINEER DISTRICT

| Mark | Description | Date | Appr. |
|---|---|---|---|

Rev: 0
Date: 2/23/10
Design file no.
Drawing code:
File name: ANAATCOA-001LSP
Plot date: 2/23/2010
Plot scale:

Designed by: KRC
Dwn by: KJG
Ckd by: NLJ
Reviewed by: LHM
Submitted by:
BAKER

U.S. ARMY CORPS OF ENGINEERS
AFGHANISTAN ENGINEER DISTRICT
APO AE 96338

*Michael Baker Jr., Inc*
*A unit of Michael Baker Corporation*
Airside Business Park
100 Airside Drive
Moon Township, PA 15108
www.mbakercorp.com

AFGHAN NATIONAL ARMY
REGIONAL MILITARY TRAINING CENTER
STANDARD DESIGN

ADMIN TRAINING COMPANY

LIFE SAFETY PLAN

Sheet reference number:
A–001

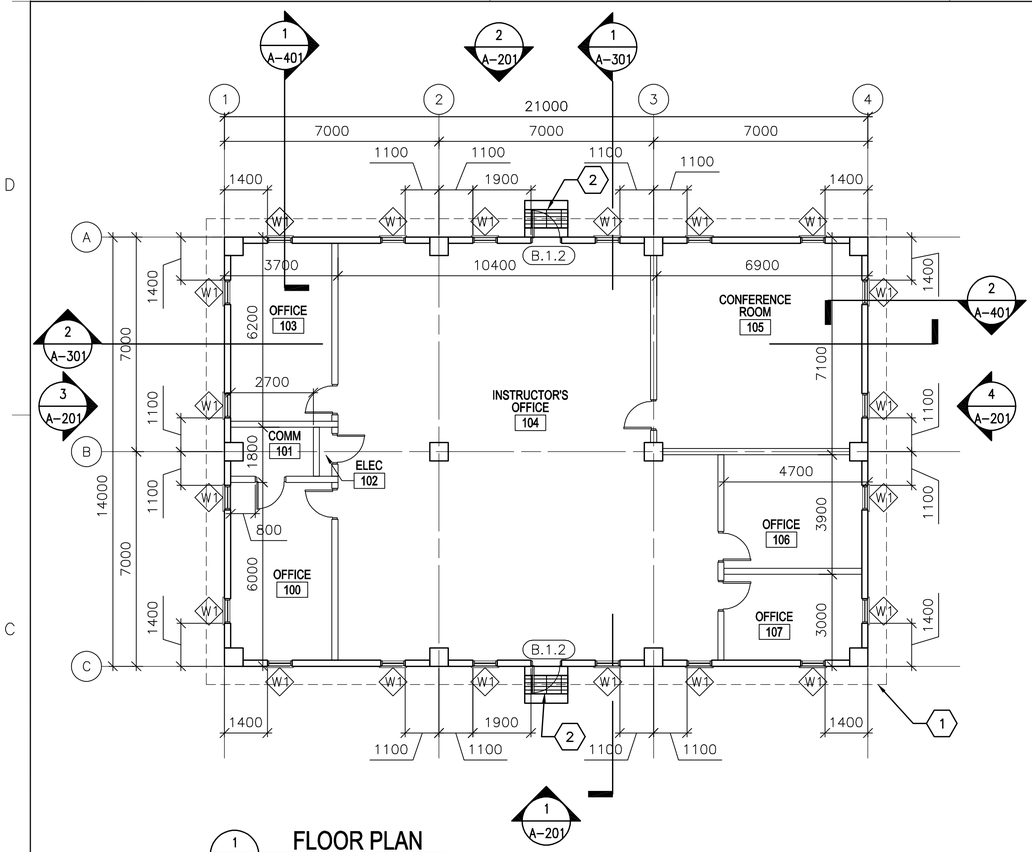


1 A-101 **FLOOR PLAN**

SCALE: 1:100

## GENERAL NOTES:

A. DIMENSIONS ARE SHOWN TO OUTER EDGE OF EXTERIOR STRUCTURAL COLUMNS, STRUCTURAL COLUMN GRID, EDGE OF INTERIOR PARTITIONS, EDGE OF WINDOW OPENINGS, AND TO HINGE SIDE OF DOOR FRAME OPENINGS.

B. HINGE SIDE OF OPENINGS FOR DOORS AND FRAMES SHALL BE LOCATED 200 MM FROM THE ADJACENT WALL OR COLUMN, UNLESS NOTED OTHERWISE.

C. INTERIOR PARTITIONS SHALL BE 200 MM CMU. SEE STRUCTURAL DRAWINGS FOR LOCATION OF CONCRETE SHEAR WALLS.

D. COSMETIC REPAIR OF MINOR DEFECTS: REPAIR OR FILL MORTAR JOINTS AND MINOR DEFECTS, INCLUDING BUT NOT LIMITED TO SPALLS, IN ACCORDANCE WITH MANUFACTURER'S RECOMMENDATIONS AND PRIOR TO COATING APPLICATION. SURFACES TO BE PAINTED SHALL BE CLEAN AND FREE OF FOREIGN MATTER BEFORE APPLICATION OF PAINT. CLEANING SHALL BE SCHEDULED SO THAT DUST AND OTHER CONTAMINANTS WILL NOT FALL ON NEWLY PAINTED SURFACES.

E. INTERIOR CONCRETE, PLASTER AND MASONRY SURFACES SHALL BE ALLOWED TO CURE FOR AT LEAST 30 DAYS BEFORE PAINTING. CONCRETE SLABS–ON–GRADE SHALL BE ALLOWED TO CURE 90 DAYS BEFORE STAINING OR SEALING.

F. DO NOT USE PAINT MATERIALS CONTAINING LEAD CONTENT IN EXCESS OF 0.009 PERCENT OF THE WEIGHT OF THE TOTAL NONVOLATILE CONTENT OF THE PAINT OR THE WEIGHT OF THE DRIED PAINT FILM.

G. DO NOT USE ANY ASBESTOS CONTAINING MATERIALS (ACM) IN PROJECT. ACM IS DEFINED AS 1% OR MORE BY VOLUME.

H. DO NOT USE PAINT MATERIALS CONTAINING MERCURIAL FUNGICIDES.

I. FACTORY PRIMED METAL DOORS AND FRAMES SHALL RECEIVE TWO COATS OF PAINT.

J. FILL REMAINING SPACE AT PENETRATIONS IN FIRE–RATED FLOORS, PARTITIONS AND CEILINGS WITH APPROPRIATE FIRESTOPPING MATERIALS.

K. ALL CEILING FINISHES SHALL BE PAINTED PLASTER APPLIED TO STRUCTURE.

L. ALL WALL FINISHES SHALL BE PAINTED PLASTER APPLIED TO STRUCTURE.

M. ALL FLOOR FINISHES SHALL BE EPOXY SEALED CONCRETE.

N. ALL DOOR FRAME & HARDWARE TYPES SHALL BE A.1.5 UNLESS NOTED OTHERWISE.

## KEY NOTES: (X)

1. LINE OF ROOF OVERHANG ABOVE.
2. CONCRETE STOOP WITH GRATE – SEE DETAIL 1/A–503.

## LEGEND:

(XXX) DOOR FRAME AND HARDWARE TYPE, SEE SHEET A–601

(A) WINDOW TYPE, SEE SHEET A–601

(X) KEY NOTE

## ABBREVIATIONS:

| | |
|---|---|
| ELEC | ELECTRICAL |
| MECH | MECHANICAL |
| JAN | JANITOR |
| CLOS | CLOSET |
| COMM | COMMUNICATIONS |

APPROVED:

A/E DESIGNER OF RECORD

SEAL:

STATE OF SOUTH CAROLINA
KEVIN R. CHAFIN
N. Charleston, SC
6374
REGISTERED ARCHITECT

LINEAR DIMENSIONS SHOWN ARE IN MILLIMETERS (MM), UNLESS OTHERWISE NOTED

0 2000 4000
SCALE: 1:100

US ARMY CORPS OF ENGINEERS
AFGHANISTAN ENGINEER DISTRICT

| Mark | Description | Date | Appr. |
|---|---|---|---|

Date: 2/08/10
Design file no.
Drawing code:
File name: ANAATCOA-101FP
Plot date: 2/23/2010
Plot scale:
Rev: 0

Designed by: KRC
Dwn by: KJG
Ckd by: NLJ
Reviewed by: LHM
Submitted by: BAKER

U.S. ARMY CORPS OF ENGINEERS
AFGHANISTAN ENGINEER DISTRICT
APO AE 96338

*Michael Baker Jr., Inc.*
*A unit of Michael Baker Corporation*
Airside Business Park
100 Airside Drive
Moon Township, PA 15108
www.mbakercorp.com

AFGHAN NATIONAL ARMY
REGIONAL MILITARY TRAINING CENTER
STANDARD DESIGN

ADMIN TRAINING COMPANY

FLOOR PLAN

Sheet reference number:
A–101

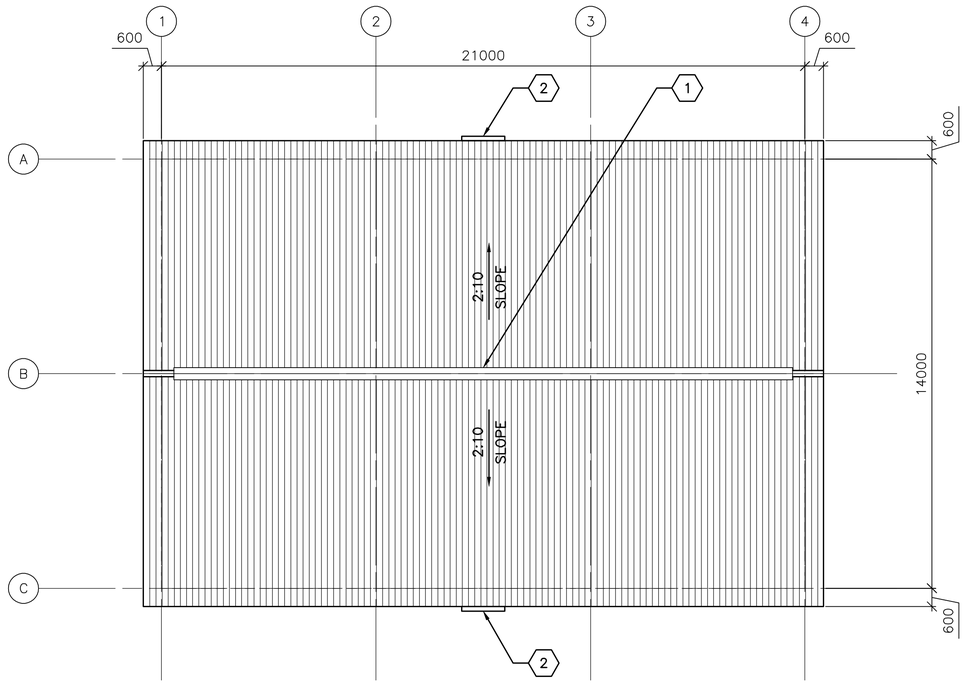


1 / A-102 **ROOF PLAN**

SCALE: 1:100

## GENERAL NOTES:

A. THE APPROXIMATE LOCATION OF ROOF DEVICES AND PENETRATIONS ARE SHOWN ON THE ROOF PLAN FOR INFORMATION ONLY. THE CONTRACTOR SHALL BE RESPONSIBLE FOR UNDERSTANDING THE ACTUAL LOCATION OF THESE AND ALL OTHER ITEMS PRIOR TO BEGINNING CONSTRUCTION. COORDINATE ALL ROOF PENETRATIONS WITH STRUCTURAL, MECHANICAL AND PLUMBING WORK.

B. UNLESS OTHERWISE NOTED, NOTES, DETAILS OR FEATURES INDICATED FOR ONE CONDITION SHALL BE APPLICABLE FOR ALL ALIKE AND SIMILAR CONDITIONS.

C. STOCKPILING OF MATERIALS, EQUIPMENT AND ANY OTHER ITEMS ON THE ROOF IS PROHIBITED.

D. ROOFS SHALL BE CORRUGATED METAL ROOF PANELS ON COLD-FORMED METAL FRAMING ON CONCRETE SLAB.

## KEY NOTES: (X)

1. CONTINUOUS METAL RIDGE VENT SEE DETAIL 4/A-501.
2. METAL GUTTER, 1400 MM - SEE DETAIL 1A/A-501.

LINEAR DIMENSIONS SHOWN ARE IN MILLIMETERS (MM), UNLESS OTHERWISE NOTED

0 2000 4000
SCALE: 1:100

APPROVED:

A/E DESIGNER OF RECORD

SEAL:

STATE OF SOUTH CAROLINA
KEVIN R. CHAFIN
N. Charleston, SC
6374
REGISTERED ARCHITECT

US ARMY CORPS OF ENGINEERS
AFGHANISTAN ENGINEER DISTRICT

| Mark | Description | Date | Appr. |
|---|---|---|---|
| | | | |

| Mark | Description | Date | Appr. |
|---|---|---|---|
| | | | |

Rev: 0
Date: 2/23/10
Design file no.
Drawing code:
File name: ANAATCOA-1025P
Plot date: 2/23/2010
Plot scale:

Designed by: KRC
Dwn by: KJG
Ckd by: NLJ
Reviewed by: LHM
Submitted by: BAKER

U.S. ARMY CORPS OF ENGINEERS
AFGHANISTAN ENGINEER DISTRICT
APO AE 96338

*Michael Baker Jr., Inc*
*A unit of Michael Baker Corporation*
Airside Business Park
100 Airside Drive
Moon Township, PA 15108
www.mbakercorp.com

AFGHAN NATIONAL ARMY
REGIONAL MILITARY TRAINING CENTER
STANDARD DESIGN

ADMIN TRAINING COMPANY

ROOF PLAN

Sheet reference number:
A-102

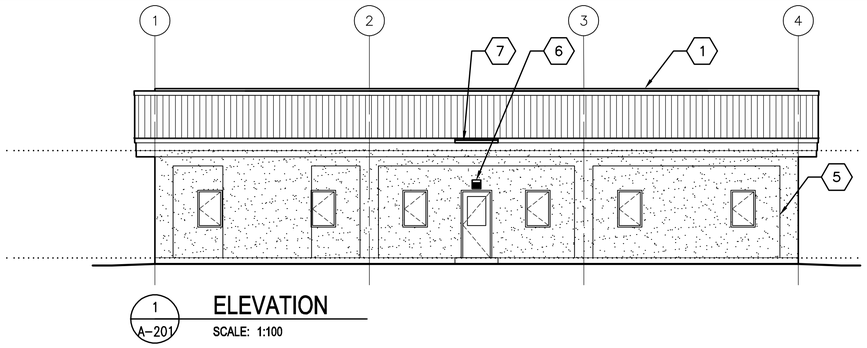


1 A–201 **ELEVATION**

SCALE: 1:100

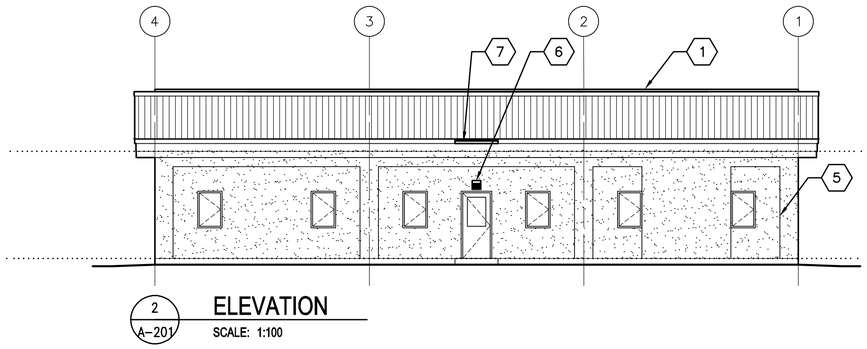


2 A–201 **ELEVATION**

SCALE: 1:100

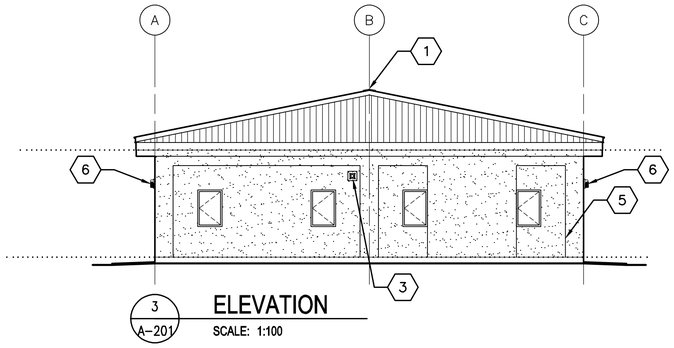


3 A–201 **ELEVATION**

SCALE: 1:100

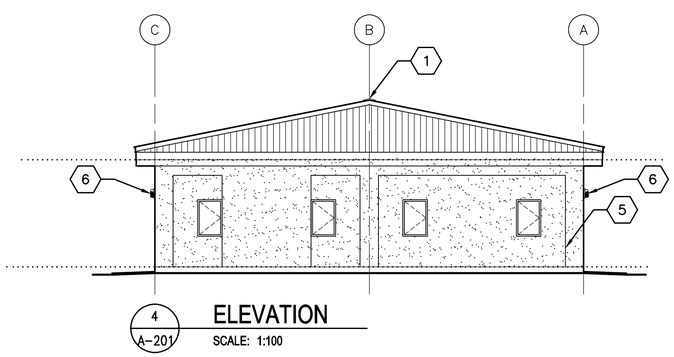


4 A–201 **ELEVATION**

SCALE: 1:100

## GENERAL NOTES:

A. COORDINATE SIZE AND LOCATION OF OPENINGS FOR MECHANICAL ITEMS WITH MECHANICAL DRAWINGS.

B. PROVIDE STRUCTURAL LINTELS AS REQUIRED – SEE STRUCTURAL DRAWINGS.

C. ALL EXTERIOR WALL FINISHES SHALL BE STUCCO OVER CMU AND CONCRETE SUBSTRATES. PROVIDE CONTROL JOINTS IN STUCCO WALL FINISH AS NOTED.

D. ROOF SHALL BE CORRUGATED METAL ROOF PANELS ON COLD–FORMED METAL FRAMING ON CONCRETE SLAB.

## KEY NOTES: (X)

1. CONTINUOUS METAL RIDGE VENT – SEE DETAIL 4/A–501.
2. NOT USED
3. EXHAUST FAN, LOCATE TOP OF WALL PENETRATION 2800 MM ABOVE FINISHED FLOOR – SEE MECHANICAL DRAWINGS.
4. NOT USED
5. STUCCO CONTROL JOINT – SEE DETAIL 2A/A–501.
6. EXTERIOR LIGHT – SEE ELECTRICAL.
7. METAL GUTTER, CENTER ON DOOR, 1400 MM – SEE DETAIL 1A/A–501.

LINEAR DIMENSIONS SHOWN ARE IN MILLIMETERS (MM), UNLESS OTHERWISE NOTED

0 2000 4000

SCALE: 1:100

APPROVED:

A/E DESIGNER OF RECORD

SEAL:

STATE OF SOUTH CAROLINA
KEVIN R. CHAFIN
N. Charleston, SC
6374
REGISTERED ARCHITECT

US ARMY CORPS OF ENGINEERS
AFGHANISTAN ENGINEER DISTRICT

| Mark | Description | Date | Appr. |
|---|---|---|---|
| | | | |

| Mark | Description | Date | Appr. |
|---|---|---|---|
| | | | |

Date: 2/23/10
Design file no.
Drawing code:
File name: ANAATCOA-201ELV
Plot date: 2/23/2010
Plot scale:

Designed by: KRC
Dwn by: KJG
Ckd by: NLJ
Reviewed by: LHM
Submitted by: BAKER

U.S. ARMY CORPS OF ENGINEERS
AFGHANISTAN ENGINEER DISTRICT
APO AE 96338

*Michael Baker Jr., Inc*
*A unit of Michael Baker Corporation*
Airside Business Park
100 Airside Drive
Moon Township, PA 15108
www.mbakercorp.com

AFGHAN NATIONAL ARMY
REGIONAL MILITARY TRAINING CENTER
STANDARD DESIGN

ADMIN TRAINING COMPANY

ELEVATIONS

Sheet reference number:
A–201

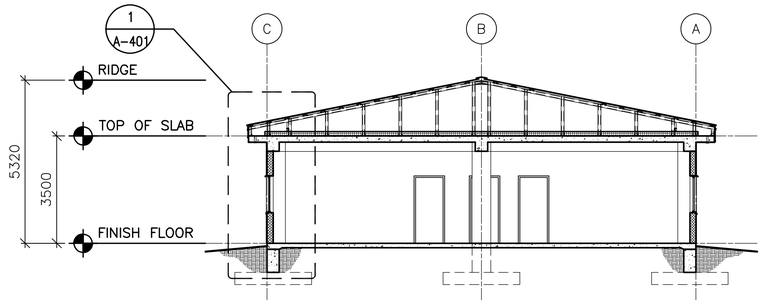


1 A-301 **BUILDING SECTION**
SCALE: 1:100

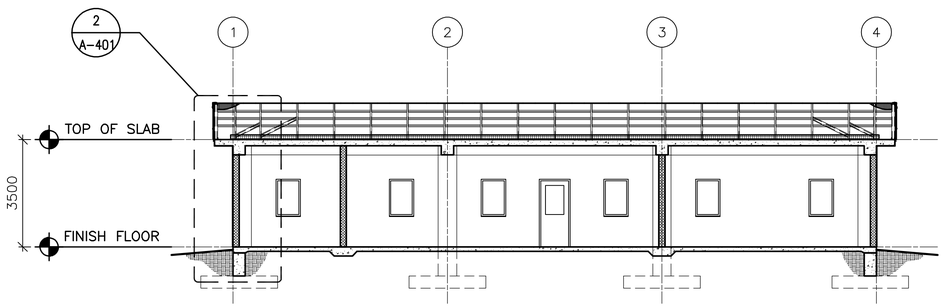


2 A-301 **BUILDING SECTION**
SCALE: 1:100

LINEAR DIMENSIONS SHOWN ARE IN MILLIMETERS (MM), UNLESS OTHERWISE NOTED

0 2000 4000
SCALE: 1:100

APPROVED:

A/E DESIGNER OF RECORD

SEAL:

STATE OF SOUTH CAROLINA
KEVIN R. CHAFIN
N. Charleston, SC
6374
REGISTERED ARCHITECT

US ARMY CORPS OF ENGINEERS
AFGHANISTAN ENGINEER DISTRICT

| Mark | Description | Date | Appr. |
|---|---|---|---|
| | | | |

| Mark | Description | Date | Appr. |
|---|---|---|---|
| | | | |

Rev: 0
Date: 2/23/10
Design file no.
Drawing code:
File name: ANAATCOA-3015S
Plot date: 2/23/2010
Plot scale:

Designed by: KRC
Dwn by: KJG
Ckd by: NLJ
Reviewed by: LHM
Submitted by: BAKER

U.S. ARMY CORPS OF ENGINEERS
AFGHANISTAN ENGINEER DISTRICT
APO AE 96338

*Michael Baker Jr., Inc.*
*A unit of Michael Baker Corporation*
Airside Business Park
100 Airside Drive
Moon Township, PA 15108
www.mbakercorp.com

AFGHAN NATIONAL ARMY
REGIONAL MILITARY TRAINING CENTER
STANDARD DESIGN

ADMIN TRAINING COMPANY

BUILDING SECTIONS

Sheet reference number:
A-301

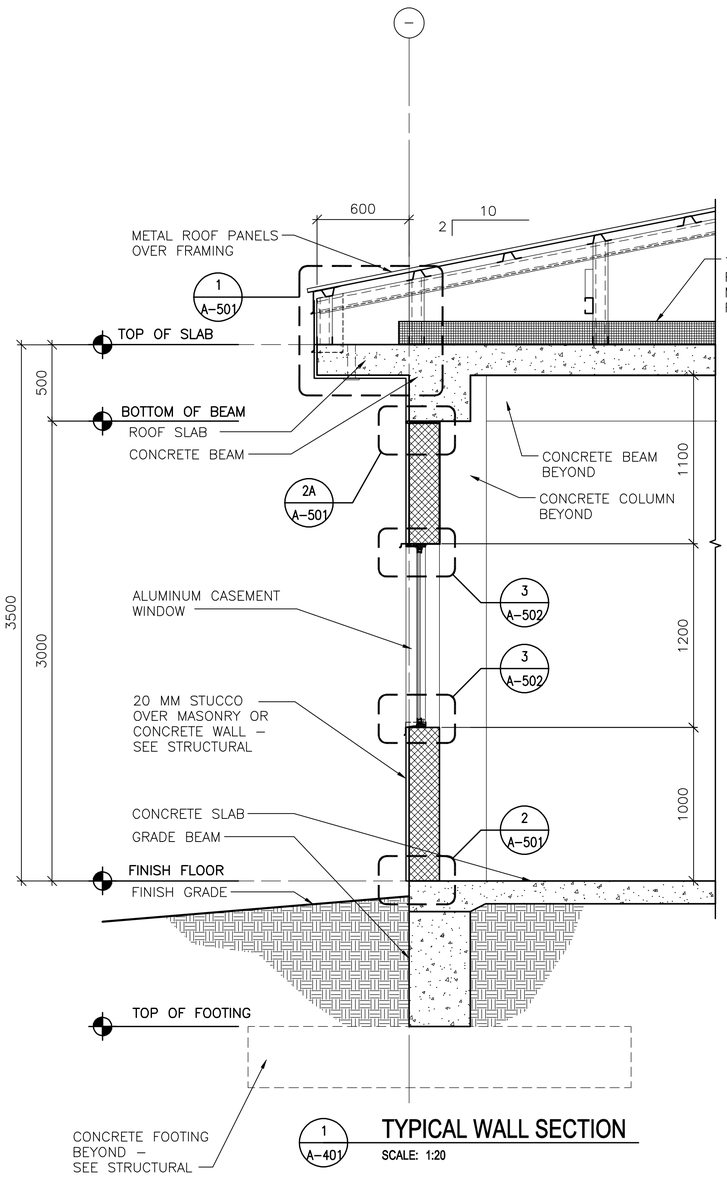


1 A-401 **TYPICAL WALL SECTION**

SCALE: 1:20

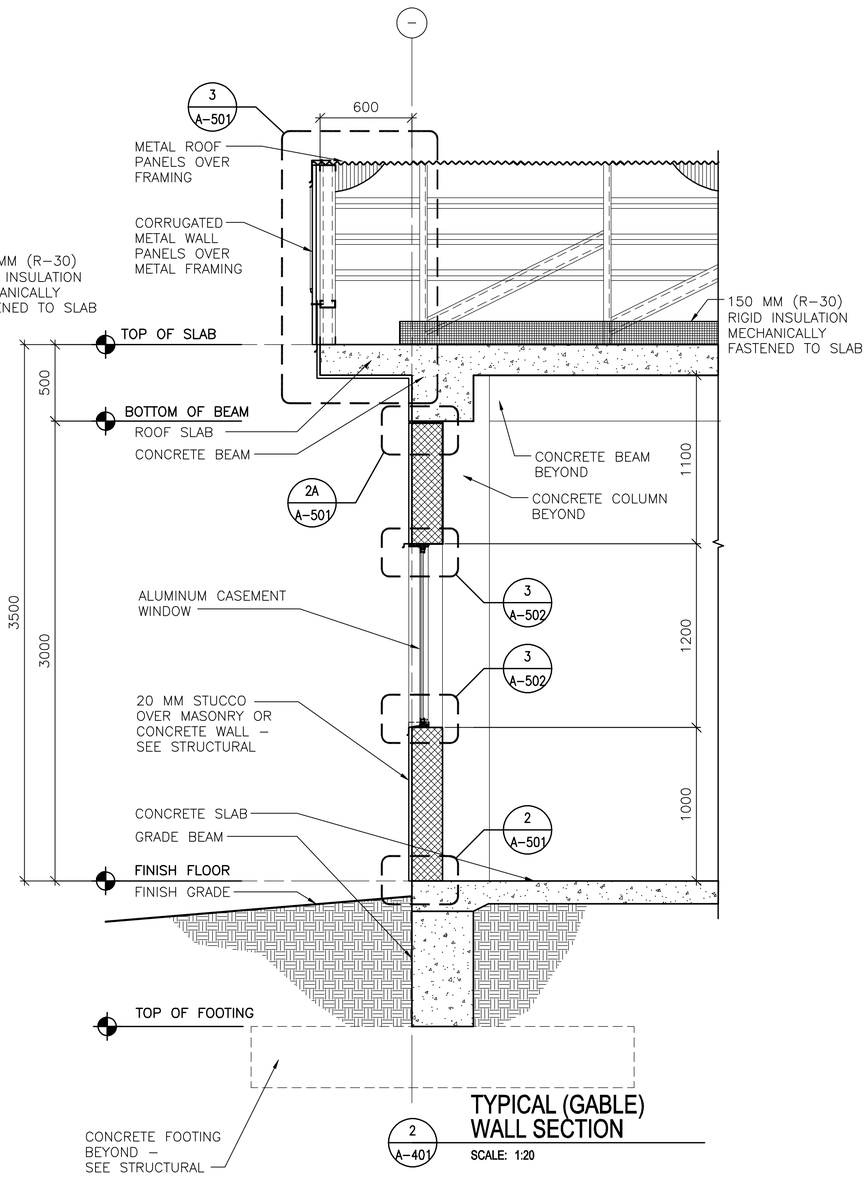


2 A-401 **TYPICAL (GABLE) WALL SECTION**

SCALE: 1:20

LINEAR DIMENSIONS SHOWN ARE IN MILLIMETERS (MM), UNLESS OTHERWISE NOTED

0 400 800

SCALE: 1:20

APPROVED:

A/E DESIGNER OF RECORD

SEAL:

STATE OF SOUTH CAROLINA
KEVIN R. CHAFIN
N. Charleston, SC
6374
REGISTERED ARCHITECT

US ARMY CORPS OF ENGINEERS
AFGHANISTAN ENGINEER DISTRICT

| Mark | Description | Date | Appr. |
|---|---|---|---|

Date: 2/23/10
Design file no.
Drawing code:
Rev: 0
File name: ANAATCOA-401WS
Plot date: 2/23/2010
Plot scale:

Designed by: KRC
Dwn by: KJG
Ckd by: NLJ
Reviewed by: LHM
Submitted by: BAKER

U.S. ARMY CORPS OF ENGINEERS
AFGHANISTAN ENGINEER DISTRICT
APO AE 96338

*Michael Baker Jr., Inc*
*A unit of Michael Baker Corporation*
Airside Business Park
100 Airside Drive
Moon Township, PA 15108
www.mbakercorp.com

AFGHAN NATIONAL ARMY
REGIONAL MILITARY TRAINING CENTER
STANDARD DESIGN

ADMIN TRAINING COMPANY

WALL SECTIONS

Sheet reference number:
A-401

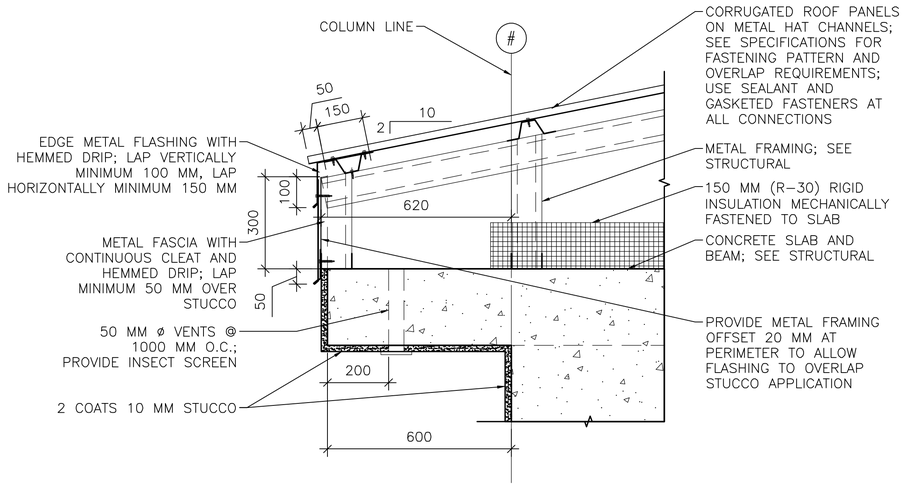


1 A–501 **EAVE DETAIL**
SCALE 1:10

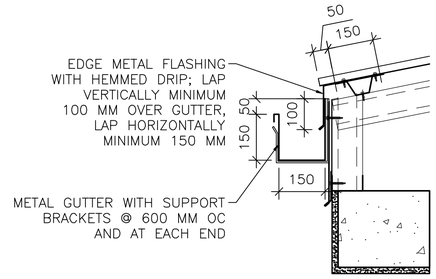


1A A–501 **GUTTER DETAIL**
SCALE 1:10

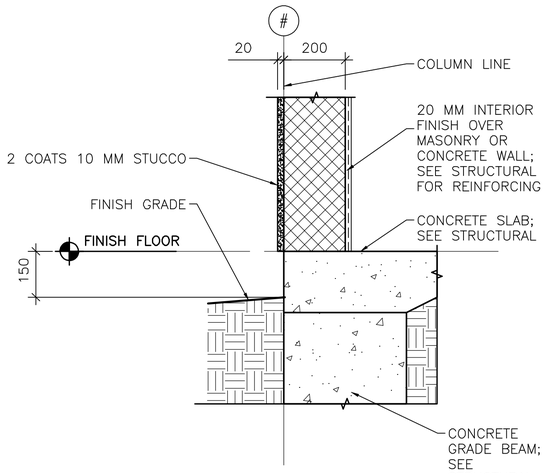


2 A–501 **STUCCO BASE DETAIL**
SCALE 1:10

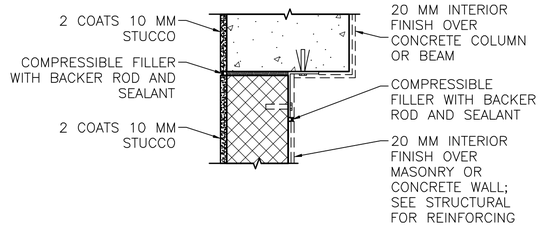


NOTE: DETAIL TYPICAL AT ALL WALL/COLUMN AND WALL/BEAM LOCATIONS, SEE ALTERNATE BRACING DETAIL BELOW 2B/A–501.

2A A–501 **STUCCO JOINT DETAIL**
SCALE 1:10

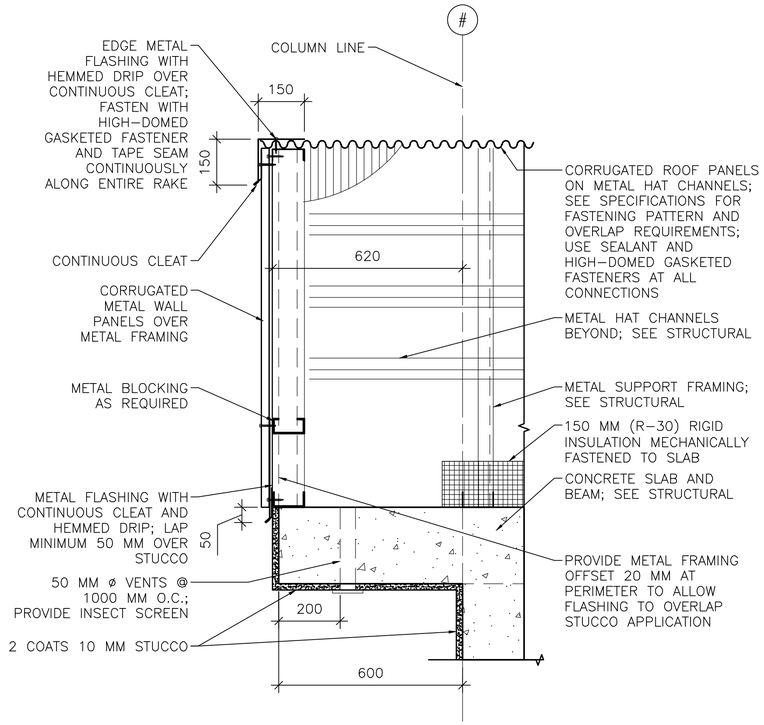


3 A–501 **RAKE/EAVE DETAIL**
SCALE 1:10

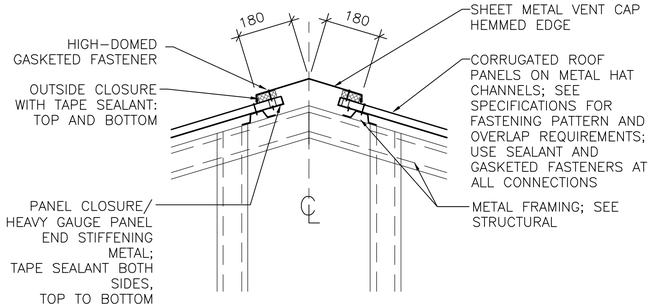


4 A–501 **RIDGE VENT DETAIL**
SCALE 1:10

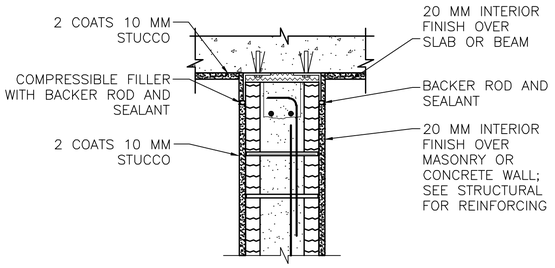


INTERIOR WALL/BEAM

2B A–501 **ALTERNATE BRACING DETAIL**
SCALE 1:10

LINEAR DIMENSIONS SHOWN ARE IN MILLIMETERS (MM), UNLESS OTHERWISE NOTED

0 200 400
SCALE: 1:10

APPROVED:

A/E DESIGNER OF RECORD

SEAL:

STATE OF SOUTH CAROLINA
KEVIN R. CHAFIN
N. Charleston, SC
6374
REGISTERED ARCHITECT

US ARMY CORPS OF ENGINEERS
AFGHANISTAN ENGINEER DISTRICT

| Mark | Description | Date | Appr. |
|---|---|---|---|

| Rev: 0 | Date: 2/23/10 | Drawing code: | File name: ANAATCOA-501DT |
|---|---|---|---|
| | Design file no. | | Plot date: 2/23/2010 |
| | | | Plot scale: |

| Designed by: KRC | Ckd by: NLJ |
|---|---|
| Drwn by: KJG | Reviewed by: LHM |
| | Submitted by: BAKER |

U.S. ARMY CORPS OF ENGINEERS
AFGHANISTAN ENGINEER DISTRICT
APO AE 96338

*Michael Baker Jr., Inc*
*A unit of Michael Baker Corporation*
Airside Business Park
100 Airside Drive
Moon Township, PA 15108
www.mbakercorp.com

AFGHAN NATIONAL ARMY
REGIONAL MILITARY TRAINING CENTER
STANDARD DESIGN

ADMIN TRAINING COMPANY

EXTERIOR DETAILS

Sheet reference number:
A–501

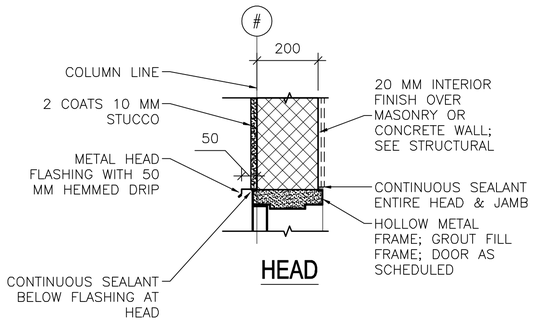


HEAD

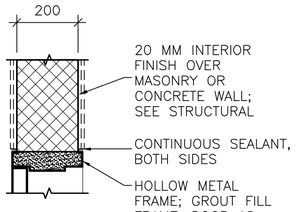


HEAD

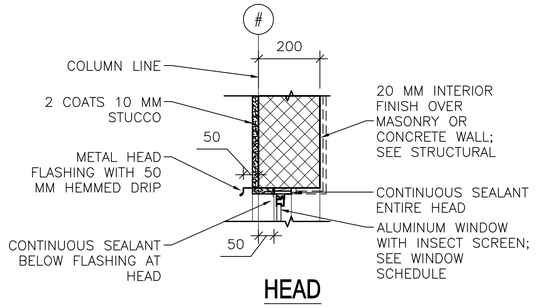


HEAD

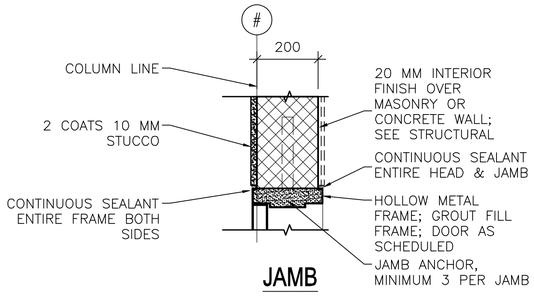


JAMB

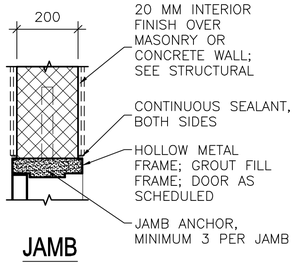


JAMB

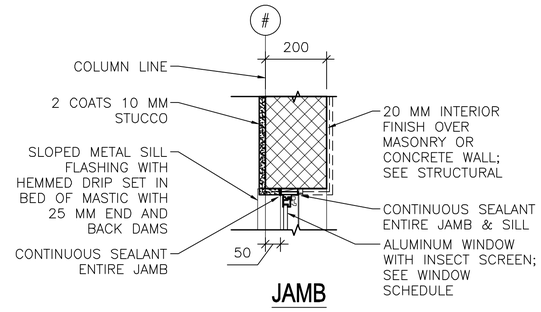


JAMB

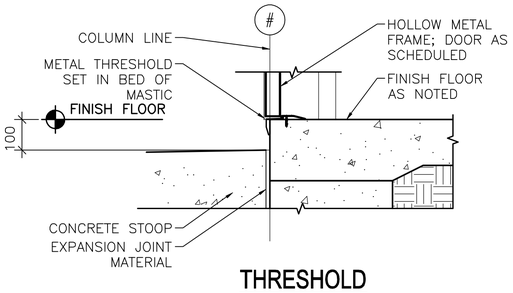


THRESHOLD

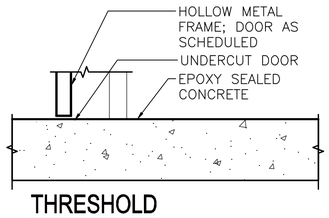


THRESHOLD

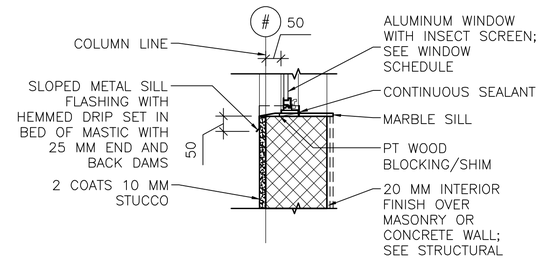


SILL

1 A–502 **EXTERIOR DOOR DETAILS**
SCALE: 1:10

2 A–502 **INTERIOR DOOR DETAILS**
SCALE: 1:10

3 A–502 **EXTERIOR WINDOW DETAILS**
SCALE: 1:10

LINEAR DIMENSIONS SHOWN ARE IN MILLIMETERS (MM), UNLESS OTHERWISE NOTED

0 200 400
SCALE: 1:10

APPROVED:

A/E DESIGNER OF RECORD

SEAL:

STATE OF SOUTH CAROLINA
KEVIN R. CHAFIN
N. Charleston, SC
6374
REGISTERED ARCHITECT

US ARMY CORPS OF ENGINEERS
AFGHANISTAN ENGINEER DISTRICT

| Mark | Description | Date | Appr. |
|---|---|---|---|

| Mark | Description | Date | Appr. |
|---|---|---|---|

Date: 2/23/10
Design file no.
Drawing code:
File name: ANAATCOA-502HAS
Plot date: 2/23/2010
Plot scale:

Designed by: KRC
Drwn by: KJG
Ckd by: NLJ
Reviewed by: LHM
Submitted by: BAKER

U.S. ARMY CORPS OF ENGINEERS
AFGHANISTAN ENGINEER DISTRICT
APO AE 96338

*Michael Baker Jr., Inc*
*A unit of Michael Baker Corporation*
Airside Business Park
100 Airside Drive
Moon Township, PA 15108
www.mbakercorp.com

AFGHAN NATIONAL ARMY
REGIONAL MILITARY TRAINING CENTER
STANDARD DESIGN

ADMIN TRAINING COMPANY

HEAD, JAMB & SILL DETAILS

Sheet reference number:
A–502

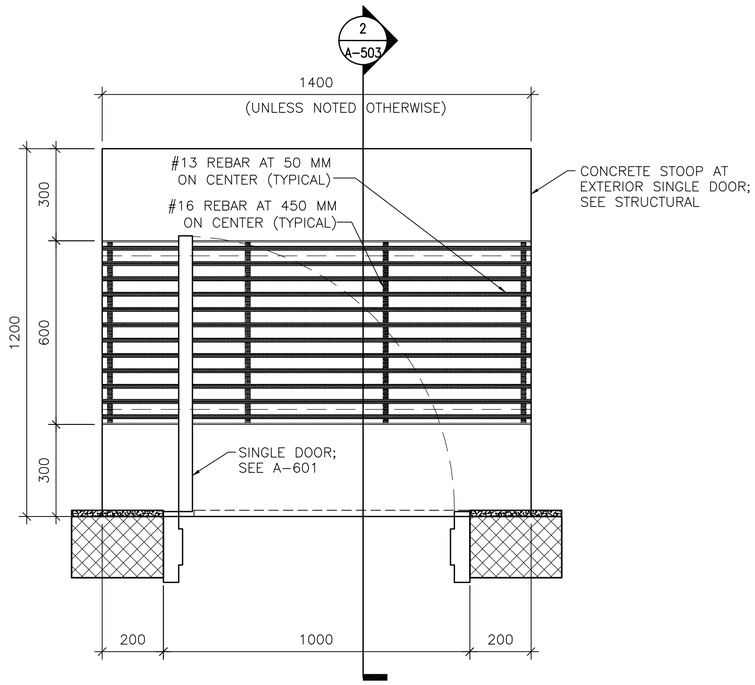


1 A-503 **DOOR STOOP PLAN (WITH GRATE)**

SCALE: 1:10

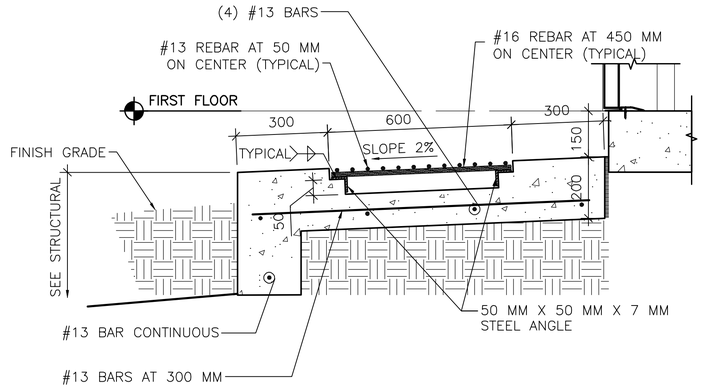


2 A-503 **DOOR STOOP DETAIL**

SCALE: 1:10

LINEAR DIMENSIONS SHOWN ARE IN MILLIMETERS (MM), UNLESS OTHERWISE NOTED

0 200 400
SCALE: 1:10

APPROVED:

A/E DESIGNER OF RECORD

SEAL:

STATE OF SOUTH CAROLINA
KEVIN R. CHAFIN
N. Charleston, SC
6374
REGISTERED ARCHITECT

US ARMY CORPS OF ENGINEERS
AFGHANISTAN ENGINEER DISTRICT

| Mark | Description | Date | Appr. |
|---|---|---|---|
| | | | |

| Mark | Description | Date | Appr. |
|---|---|---|---|
| | | | |

Rev: 0
Date: 2/23/10
Design file no.
Drawing code:
File name: ANAATCOA-S535T
Plot date: 2/23/2010
Plot scale:

Designed by: KRC
Dwn by: KJG
Ckd by: NLJ
Reviewed by: LHM
Submitted by: BAKER

U.S. ARMY CORPS OF ENGINEERS
AFGHANISTAN ENGINEER DISTRICT
APO AE 96338

*Michael Baker Jr., Inc.*
*A unit of Michael Baker Corporation*
Airside Business Park
100 Airside Drive
Moon Township, PA 15108
www.mbakercorp.com

AFGHAN NATIONAL ARMY
REGIONAL MILITARY TRAINING CENTER
STANDARD DESIGN

ADMIN TRAINING COMPANY

STOOP DETAILS

Sheet reference number:
A-503

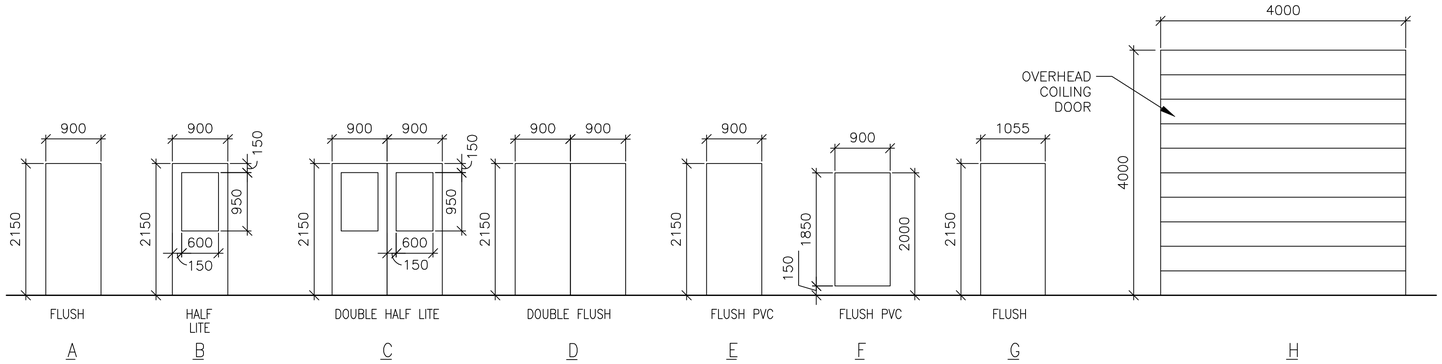


## 1 A-601 DOOR TYPES

SCALE: 1:50

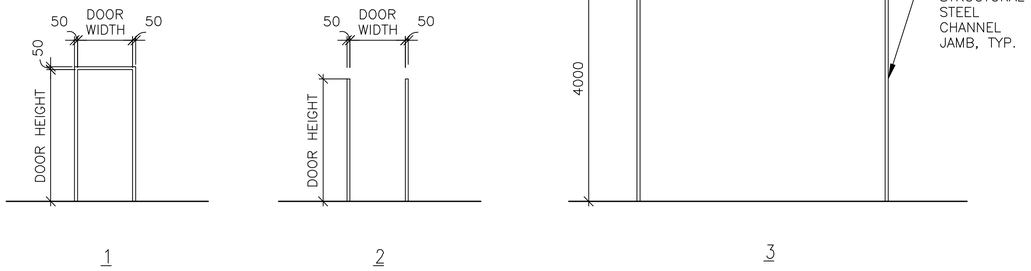


## 2 A-601 FRAME TYPES

SCALE: 1:50

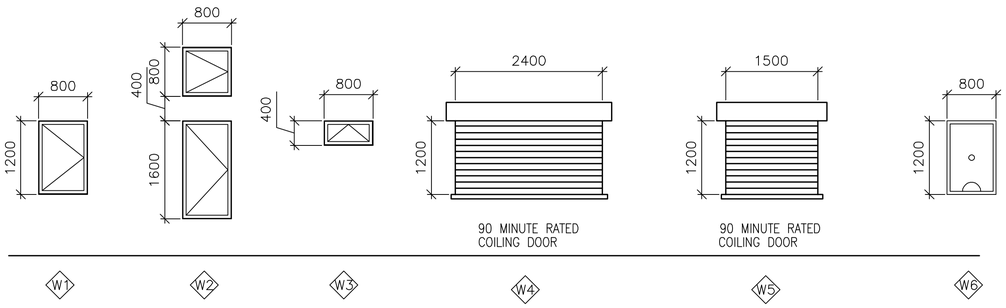


## 3 A-601 WINDOW TYPES

SCALE: 1:50

## WINDOW TYPE NOTES:

1. ALL EXTERIOR WINDOWS SHALL BE ALUMINUM WITH INSECT SCREENS. WINDOWS SHALL BE COMMERCIAL GRADE.
2. ALL EXTERIOR WINDOWS SHALL BE OPERABLE.

## 4 A-601 DOOR TAG

SCALE: NTS




## 5 A-601 RATED DOOR TAG

SCALE: NTS

## DOOR TAG NOTES:

1. THE DOOR TAG INDICATES THE DOOR TYPE, FRAME TYPE AND HARDWARE SET FOR EACH DOOR.
2. THE DOOR TAG FOR RATED DOORS INCLUDES THE RATING OF THE DOOR IN MINUTES.

## EXTERIOR DOOR HARDWARE TYPES:

HW-1 1-1/2 PR HINGES, A5112 114 X 114
1 EA RIM EXIT DEVICE, TYPE 1
1 EA CYLINDER. E09221A, GRADE 1
1 EA OVERHEAD CLOSER, C02061, LOW RESISTANCE
1 EA THRESHOLD, J32130
3 EA DOOR SILENCERS, L03011

HW-2 1-1/2 PR HINGES, A5112 114 X 114
1 EA LOCKSET, F13 ENTRY LOCK W/LEVER HANDLES, GRADE 1
1 EA OVERHEAD CLOSER, C02061, LOW RESISTANCE
1 EA THRESHOLD, J32130
3 EA DOOR SILENCERS, L03011

HW-3 3 PR HINGES, A5112 114 X 114
2 EA RIM EXIT DEVICE, TYPE 1
2 EA CYLINDER. GRADE 1
2 EA OVERHEAD CLOSER, C02061, LOW RESISTANCE
1 EA DOOR COORDINATOR, TYPE 21
1 EA ASTRAGAL
1 EA THRESHOLD, J32130
2 EA DOOR SILENCERS, L03011

HW-4 3 PR HINGES, A5112 114 X 114
1 EA LOCKSET W/LEVER HANDLES. GRADE 1, F13
1 EA OVERHEAD CLOSER, C02061, LOW RESISTANCE
2 EA MAGNETIC HOLDER PIN, ATTACHED TO DOOR LEAF
2 EA MAGNETIC HOLDER RECEIVER, ATTACHED TO STOOP
2 EA LEVER EXTENSION FLUSH BOLTS, L04081
1 EA ASTRAGAL
1 EA THRESHOLD, J32130
2 EA DOOR SILENCERS, L03011

## DOOR AND HARDWARE NOTES:

1. INTERIOR AND EXTERIOR METAL DOORS AND FRAME COLORS SHALL MATCH ADJACENT WALL COLORS AS SELECTED BY THE CONTRACTING OFFICER.
2. FRAMES, EXCEPT FIRE-RATED FRAMES, SHALL BE MOUNTED AND ADJUSTED IN ACCORDANCE WITH MANUFACTURER'S INSTRUCTIONS. FRAMES SHALL BE FASTENED WITH MINIMUM OF THREE ANCHORS PER JAMB AT EQUAL INTERVALS.
3. DIMENSIONS SHOWN ON DOOR TYPES DETAIL ARE BASED UPON MODULAR MASONRY (OR ROUGH OPENING), HEIGHT OF 2200 MM FOR STANDARD PERSONNEL DOORS. CONTRACTOR SHALL COORDINATE WITH DOOR SUPPLIER TO ENSURE THAT DIMENSIONS OF DOORS AND FRAMES PROVIDED ARE COMPATIBLE WITH DOOR OPENING DIMENSIONS.
4. HARDWARE SHALL BE HEAVY DUTY, COMMERCIAL GRADE, STAINLESS STEEL WITH A SATIN OR BRUSHED FINISH.
5. HARDWARE TYPES INCLUDE BUILDERS HARDWARE MANUFACTURERS ASSOCIATION (BMHA) NUMBER.
6. DOORS IN 2 HOUR RATED PARTITIONS SHALL BE 1.5 HOUR (90 MINUTE) RATED DOORS IN ACCORDANCE WITH NFPA 101, TABLE 8.3.4.2.
7. DOORS AT STAIR ENCLOSURES SHALL BE 1 HOUR (60 MINUTE) RATED AT 1 HOUR WALL IN ACCORDANCE WITH NFPA 101, TABLE 8.3.4.2.
8. DOORS IN 1 HOUR RATED WALLS SHALL BE 3/4 HOUR (45 MINUTE) RATED DOORS IN ACCORDANCE WITH NFPA 101, TABLE 8.3.4.2.
9. DOORS IN 1 HOUR RATED CORRIDOR WALLS SHALL BE 1/3 HOUR (20 MINUTE) IN ACCORDANCE WITH NFPA 101, TABLE 8.3.4.2.
10. PROVIDE DOOR STOPS TO PROTECT WALLS ON LOCATIONS WHERE DOOR SWING WILL STRIKE WALL.

THIS SHEET IS STANDARD AND IS INCLUSIVE OF ALL THE DOOR/ WINDOW/ HARDWARE TYPES FOR THE ENTIRE RMTC CONTRACT. NOT ALL DOOR/ WINDOW/ HARDWARE TYPES ARE USED FOR ANY PARTICULAR BUILDING DESIGN. CONTRACTOR SHALL REFER TO THE FLOOR PLAN FOR THE TYPES BEING USED.

## INTERIOR DOOR HARDWARE TYPES:

HW-5 1-1/2 PR HINGES, A8133 114 X 114
1 EA LOCKSET W/LEVER HANDLES, F08, GRADE 1
1 EA WALL STOP, L02101 OR L02161
3 EA DOOR SILENCERS, L03011

HW-6 1-1/2 PR HINGES, A8112 114 X 114
1 EA LOCKSET W/LEVER HANDLES, F08, GRADE 1
1 EA WALL STOP, L02101 OR L02161
1 EA OVERHEAD CLOSER, C02061, LOW RESISTANCE
3 EA DOOR SILENCERS, L03011

HW-7 1-1/2 PR HINGES, A8133
1 EA LOCKSET W/LEVER HANDLES, F13 GRADE 1
1 EA WALL STOP, L02101 OR L02161
2 EA MOP PLATE, J103
3 EA DOOR SILENCERS, L03011

HW-8 1-1/2 PR HINGES, A8112
1 EA LOCKSET W/LEVER HANDLES, F13 GRADE 1
1 EA WALL STOP, L02101 OR L02161
2 EA MOP PLATE, J103
1 EA OVERHEAD CLOSER, C02061, LOW RESISTANCE
3 EA DOOR SILENCERS, L03011

HW-9 1-1/2 PR HINGES, A5112 114 X 114
1 EA RIM EXIT DEVICE, TYPE 1
1 EA CYLINDER. E09221A, GRADE 1
1 EA OVERHEAD CLOSER, C02061, LOW RESISTANCE
3 EA DOOR SILENCERS, L03011

HW-10 3 PR HINGES, A5112 114 X 114
1 EA LOCKSET W/LEVER HANDLES. GRADE 1, F13
2 EA LEVER EXTENSION FLUSH BOLTS, L04081
1 EA ASTRAGAL
2 EA DOOR SILENCERS, L03011

HW-11 1-1/2 PR HINGES, A8112 114 X 114
1 EA LOCKSET W/LEVER HANDLES, F13, GRADE 1
1 EA WALL STOP, L02101 OR L02161
1 EA OVERHEAD CLOSER, C02061, LOW RESISTANCE
3 EA DOOR SILENCERS, L03011
1 EA ROBE HOOK

HW-12 1-1/2 PR HINGES, A8133
1 EA LATCHSET W/LEVER HANDLES, F76 GRADE 1
1 EA WALL STOP, L02101 OR L02161
2 EA MOP PLATE, J103
3 EA DOOR SILENCERS, L03011
1 EA ROBE HOOK

HW-13 3 PR HINGES, A5112 114 X 114
1 EA LOCKSET W/LEVER HANDLES. GRADE 1, F13
1 EA OVERHEAD CLOSER, C02061, LOW RESISTANCE
2 EA LEVER EXTENSION FLUSH BOLTS, L04081
1 EA ASTRAGAL
2 EA DOOR SILENCERS, L03011

HW-14 3 PR HINGES, A5112 114 X 114
2 EA RIM EXIT DEVICE, TYPE 1
2 EA CYLINDER. GRADE 1
2 EA OVERHEAD CLOSER, C02061, LOW RESISTANCE
1 EA DOOR COORDINATOR, TYPE 21
1 EA ASTRAGAL
2 EA DOOR SILENCERS, L03011

APPROVED:

A/E DESIGNER OF RECORD

SEAL:

STATE OF SOUTH CAROLINA
KEVIN R. CHAFIN
N. Charleston, SC
6374
REGISTERED ARCHITECT

US ARMY CORPS OF ENGINEERS
AFGHANISTAN ENGINEER DISTRICT

| Mark | Description | Date | Appr. |
|---|---|---|---|

Rev: 0
Date: 2/23/10
Design file no.
Drawing code:
File name: ANAATCOA401SCH
Plot date: 2/23/2010
Plot scale:

Designed by: KRC
Dwn by: KJG
Ckd by: NLJ
Reviewed by: LHM
Submitted by: BAKER

U.S. ARMY CORPS OF ENGINEERS
AFGHANISTAN ENGINEER DISTRICT
APO AE 96338

*Michael Baker Jr., Inc.*
*A unit of Michael Baker Corporation*
Airside Business Park
100 Airside Drive
Moon Township, PA 15108
www.mbakercorp.com

AFGHAN NATIONAL ARMY
REGIONAL MILITARY TRAINING CENTER
STANDARD DESIGN

ADMIN TRAINING COMPANY

WINDOW AND DOOR SCHEDULES

Sheet reference number:
A-601

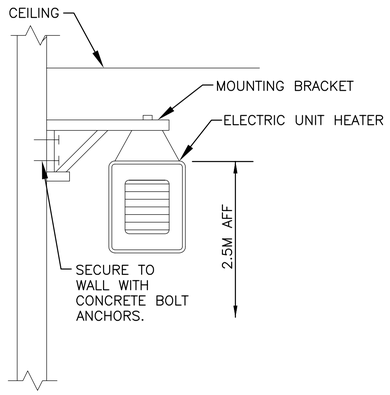


2 / M-101 ELECTRIC UNIT HEATER MOUNTING DETAIL
N.T.S.

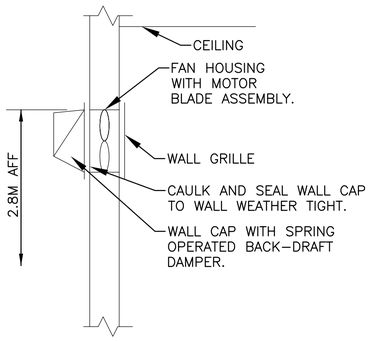


3 / M-101 EXHAUST FAN DETAIL
N.T.S.

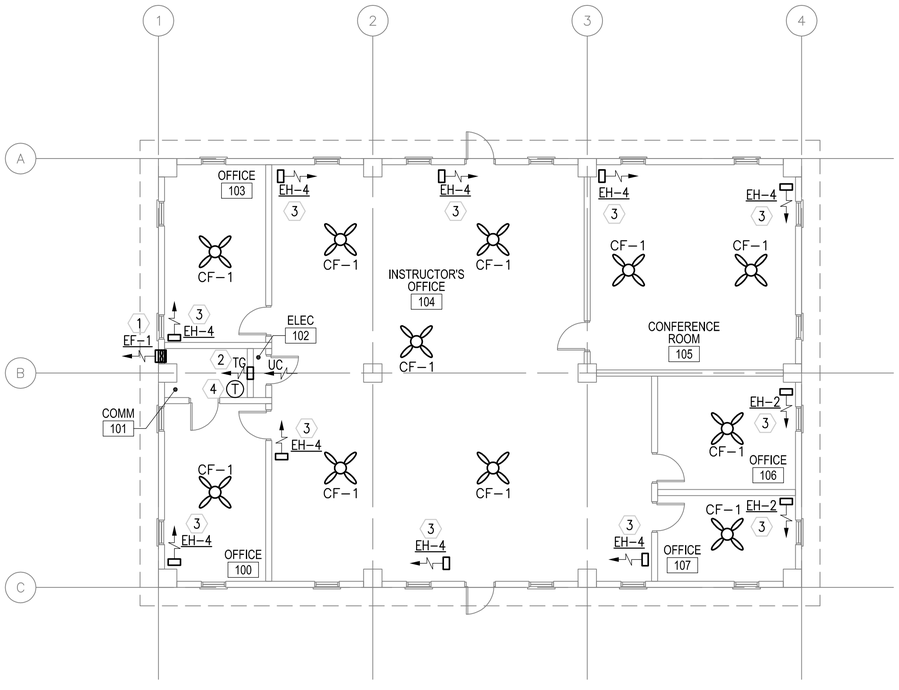


1 / M-101 FLOOR PLAN - HVAC
SCALE: 1:100

## GENERAL NOTES:

1. DO NOT SCALE DRAWINGS – ALL DIMENSIONS AND CONDITIONS SHALL BE CHECKED AND VERIFIED BY THE CONTRACTOR AT THE SITE.
2. ALL WORK PERFORMED ON THIS BUILDING SHALL BE IN COMPLIANCE WITH ALL PERTINENT CODES, RULES, ORDINANCES AND REGULATIONS OF THE GOVERNING AUTHORITIES.
3. ALL WORK PERFORMED UNDER AND IN CONNECTION WITH THESE DRAWINGS AND SPECIFICATIONS SHALL BE IN STRICT COMPLIANCE WITH THE LATEST SAFETY AND HEALTH STANDARDS.

## SYMBOLS:

- (X) KEY NOTE
- (.050) AIR VOLUME IN CUBIC METERS PER SECOND (CMS)
- ¬ VOLUME DAMPER
- (T) THERMOSTAT WITH LOCKING COVER
- UC DOOR UNDERCUT
- TG TRANSFER GRILLE

## ABBREVIATIONS:

| | |
|---|---|
| AFF | ABOVE FINISH FLOOR |
| CF | CEILING FANS |
| CMS | CUBIC METERS PER SECOND |
| STATS | THERMOSTATS |

## KEY NOTE:

1. WALL EXHAUST FAN WITH SPRING OPERATED BACK-DRAFT DAMPER.
2. 200x150 (8x6) TRANSFER GRILLE. MOUNT GRILLE 800mm BELOW CEILING. COORDINATE LOCATION IN FIELD WITH OTHER TRADES.
3. UNIT HEATER SECURED FROM WALL. SEE DETAIL THIS SHEET.
4. THERMOSTAT MOUNTED AS HIGH AS POSSIBLE. INTERLOCK STAT WITH CORRESPONDING EXHAUST FAN, SET FAN TO ENERGIZE ON RISE IN TEMPERATURE ABOVE 25°C (77°F).

## ELECTRIC UNIT HEATER SCHEDULE

| NO. | CMS | KW | F.A.T. °C | ELECT. CHAR. | MOUNTING |
|---|---|---|---|---|---|
| EH-2 | 0.200 | 2.6 | 38 | 380/1/50 | WALL HUNG |
| EH-4 | 0.200 | 4 | 38 | 380/1/50 | WALL HUNG |

NOTES:
1. UNIT HEATERS SHALL HAVE TAMPER PROOF INTEGRAL STATS.
2. COORDINATE LOCATION AND ORIENTATION IN FIELD

## EXHAUST FAN SCHEDULE

| NO. | TYPE | FAN CMS | DRIVE | HP | SP mmH2O | ELECTRICAL DATA | SWITCH |
|---|---|---|---|---|---|---|---|
| EF-1 | WALL | 0.035 | DIRECT | FRACT | 13 | 220/1/50 | W/ STAT |

NOTE:
1. FANS SHALL HAVE SPRING OPERATED BACK DRAFT DAMPER.

## CEILING FAN

| NO. | BLADE SIZE mm | BLADE SIZE IN | VOLTAGE | SWITCH | REMARKS |
|---|---|---|---|---|---|
| CF-1 | 1320 | 52 | 220/1/50 | @ WALL | 3 SPEED REVERSIBLE MOTOR |

NOTES:
1. INSTALL FANS 2.5M AFF.
2. PROVIDE WITH OUT LIGHT FIXTURE.
3. PROVIDE WITH REMOTE MOUNTED ON-OFF SWITCH SHOWN ON ELECTRICAL DRAWINGS.

LINEAR DIMENSIONS SHOWN ARE IN MILLIMETERS (MM), UNLESS OTHERWISE NOTED

0 2000 4000
SCALE: 1:100

APPROVED:

A/E DESIGNER OF RECORD

SEAL:

COMMONWEALTH OF PENNSYLVANIA REGISTERED PROFESSIONAL MATTHEW R. SOTOSKY ENGINEER 065576-E

US ARMY CORPS OF ENGINEERS
AFGHANISTAN ENGINEER DISTRICT

| Mark | Description | Date | Appr. |
|---|---|---|---|

Date: 02/23/10
Design file no.
Drawing code:
File name: ANAATCOMH-101XXX
Plot date: 02/09/2010
Plot scale: 1:100
Rev: 0

Designed by: RWL
Dwn by: JJN
Ckd by: CJM
Reviewed by: MRS
Submitted by: BAKER

U.S. ARMY CORPS OF ENGINEERS
AFGHANISTAN ENGINEER DISTRICT
APO AE 96338

Michael Baker Jr., Inc.
A unit of Michael Baker Corporation
Airside Business Park
100 Airside Drive
Moon Township, PA 15108
www.mbakercorp.com

AFGHAN NATIONAL ARMY
REGIONAL MILITARY TRAINING CENTER
STANDARD DESIGN

ADMIN TRAINING COMPANY
HVAC – FLOOR PLAN, SCHEDULES AND DETAILS

Sheet reference number:
M-101

## POWER

- DISTRIBUTION PANELBOARD
- NEW PANELBOARD – SURFACE
- NEW PANELBOARD – RECESSED
- (G) GENERATOR
- TRANSFORMER (DRAWN TO SCALE)
- [J] JUNCTION BOX
- (J) JUNCTION BOX – CEILING
- FUSIBLE SAFETY SWITCH
- (M) MOTOR
- $^{M}$ MOTOR STARTING SWITCH – 220V, 20A RATED UNLESS OTHERWISE STATED
- ELECTRIC WATER HEATER
- (CF) CEILING FAN – REFER TO SPECIFICATION SECTION 26 20 00

## RECEPTACLES

- DUPLEX 20A TYPE CEE 7/7 "SCHUKO STYLE" UNSWITCHED RECEPTACLE
- $_{GF}$ DUPLEX 20A TYPE CEE 7/7 "SCHUKO STYLE" UNSWITCHED RECEPTACLES – 10mA GROUND FAULT INTERRUPTER TYPE
- $_{WP}$ DUPLEX 20A TYPE CEE 7/7 "SCHUKO STYLE" UNSWITCHED TYPE WITH WEATHERPROOF COVER – 10mA GROUND FAULT INTERRUPTER TYPE
- $_{EXP}$ DUPLEX 20A TYPE CEE 7/7 "SCHUKO STYLE" UNSWITCHED RECEPTACLES – EXPLOSION PROOF
- * INDICATES MOUNT DEVICE ABOVE COUNTERTOP OR AT 1070mm ABOVE FINISHED FLOOR WHERE NO COUNTER IS TO BE INSTALLED.

## LIGHTING

- LIGHTING FIXTURE – SEE FIXTURE SCHEDULE FOR MORE INFORMATION
- EMERGENCY LIGHTING FIXTURE – SEE FIXTURE SCHEDULE FOR MORE INFORMATION
- DOWNLIGHT
- LIGHTING FIXTURE ON NORMAL/EMERGENCY
- WALL MOUNTED LIGHT FIXTURE
- [E] EXIT SIGN – DIRECTIONAL ARROWS AS INDICATED ON DRAWINGS
- REMOTE HEAD FOR BATTERY PACK
- $ SINGLE POLE SWITCH – 20A RATED
- $^{3}$ 3–WAY SWITCH – 20A RATED
- $^{4}$ 4–WAY SWITCH – 20A RATED
- [LC] LIGHTING CONTACTOR
- POLE MOUNTED SITE LIGHTING FIXTURE– NUMBER OF FIXTURES PER POLE AS INDICATED ON DRAWINGS
- EXTERIOR DIRECTIONAL LIGHTING FIXTURE
- a SMALL CASE LETTERS REPRESENTS LAMP(S) / SWITCHES.

## TELECOMMUNICATIONS

- ▼ TELEPHONE OUTLET(S) @ 45cm AFF. U.N.O. WITH 20mm RACEWAY TERMINATED TO TELEDATA TERMINAL BOARD.
- ▽ DATA OUTLET(S) @ 45cm AFF. U.N.O. WITH 20mm RACEWAY TERMINATED TO TELEDATA TERMINAL BOARD.

## TELECOMMUNICATIONS (CONTINUED)

- ▼ COMBINATION TELEPHONE/DATA OUTLET(S) @ 45cm AFF. U.N.O. WITH 27mm RACEWAY TERMINATED TO TELEDATA TERMINAL BOARD.
- $^{W}$▼ WALL MTD. TELEPHONE OUTLET WITH 20mm RACEWAY TO TELEDATA TERMINAL BOARD.
- (x)T INDICATES NUMBER OF TELEPHONE OUTLET(S) AND ASSOCIATED CABLING
- (x)D INDICATES NUMBER OF DATA OUTLET(S) AND ASSOCIATED CABLING
- (x)TF INDICATES NUMBER OF TELEPHONE OUTLETS AND ASSOCIATED CABLING WITH 1 OUTLET AND CABLE DEDICATED FOR FAX

## SINGLE LINE SYMBOLS

- SWITCH
- BREAKER
- FUSE
- TRANSFORMER
- GROUND
- CONTACT (NORMALLY OPEN)
- CONTACT (NORMALLY CLOSED)
- TRANSFER SWITCH
- CURRENT TRANSFORMER
- INDICATES NEW ELECTRICAL EQUIPMENT
- C INDICATES NEW CONTROL WIRING AND CONDUIT
- EQUIPMENT OUTLINE

## MISCELLANEOUS

- BRANCH CIRCUIT WIRING, SURFACE MOUNTED ON WALLS
- BRANCH CIRCUIT WIRING – 6mm²
- BRANCH CIRCUIT WIRING – UNDER FLOOR
- HOME RUN BACK TO PANEL
- CONDUIT TURNED DOWN
- CONDUIT TURNED UP
- LV LOW VOLTAGE WIRING AND CONDUIT
- ~ INDICATES CONTINUATION OF LINE

## FIRE ALARM

- [FACP] FIRE ALARM CONTROL PANEL WITH BATTERY BACKUP
- [F] FIRE ALARM PULL STATION

## FIRE ALARM (CONTINUED)

- [F] FIRE ALARM STROBE – WALL MOUNTED
- [F] FIRE ALARM AUDIBLE/STROBE – WALL MOUNTED
- [F] FIRE ALARM HORN/STROBE – WALL MOUNTED
- (S) SMOKE DETECTOR
- (H) HEAT DETECTOR CEILING MOUNTED
- (D) DUCT DETECTOR – PROVIDED BY EC, INSTALLED BY MC AND CONNECTED BY EC

## DENOTATIONS & ABBREVIATIONS

| | |
|---|---|
| AFF | ABOVE FINISHED FLOOR |
| C | CEILING MOUNTED |
| E | EMERGENCY |
| EC | ELECTRICAL CONTRACTOR |
| EPO | EMERGENCY POWER OFF |
| EXP | EXPLOSION PROOF |
| F | FIRE ALARM |
| FF | FLUSH FLOOR MOUNTED |
| FL | FLUORESCENT |
| FO | FIBER OPTIC |
| FSS | FUSED SAFETY SWITCH |
| GF | GROUND FAULT INTERRUPTER |
| GC | GENERAL CONTRACTOR |
| IG | ISOLATED GROUND |
| K | KEY |
| LV | LOW VOLTAGE |
| M | MOTOR |
| MC | MECHANICAL CONTRACTOR |
| NE | NORMAL/EMERGENCY |
| NFSS | NON–FUSED SAFETY SWITCH |
| PA | PAGING SYSTEM |
| PLC | PLUMBING CONTRACTOR |
| SL | SINGLE LINE |
| T | TELEPHONE |

## DENOTATIONS & ABBREVIATIONS (CONT.)

| | |
|---|---|
| TP | TAMPER PROOF |
| UE | UNDERGROUND ELECTRIC |
| W | WALL MOUNTED |
| WP | WEATHERPROOF WITH GROUND FAULT INTERRUPTION |
| WT | WATER TIGHT |

## GENERAL PROJECT NOTES:

G1. UNLESS OTHERWISE NOTED, PROVIDE ALL EQUIPMENT SHOWN ON THE PLANS. THE ELECTRICAL CONTRACTOR SHALL COORDINATE ALL SYMBOLS SHOWN ON THE PLANS WITH THE SYMBOL LIST. IT SHALL BE THE RESPONSIBILITY OF THE CONTRACTOR TO VERIFY THE INTENT OF ANY SYMBOL THAT IS SHOWN ON THE PLANS AND NOT INDICATED ON THE SYMBOL LIST WITH THE ENGINEER PRIOR TO BID.

G2. THE CONTRACTOR SHALL VERIFY THE LOCATION OF ALL UNDERGROUND UTILITIES WITHIN THE CONSTRUCTION AREA THREE (3) WORKING DAYS NOTICE BEFORE COMMENCING DIGGING. NOTIFY THE LOCAL AUTHORITY HAVING JURISDICTION AND WAIT THE REQUIRED TIME BEFORE COMMENCING TO DIG.

G3. THE CONTRACTOR SHALL COORDINATE CONDUIT RUNS, LIGHTING FIXTURES AND OTHER EQUIPMENT LOCATIONS WITH THE OTHER TRADE CONTRACTORS TO AVOID CONFLICTS.

G4. WHERE VOLTAGES AND FREQUENCIES ON THE DRAWINGS AND IN THE SPECIFICATIONS DIFFER FROM THE LOCAL ONES, ALL WORK SHALL BE PERFORMED USING THE LOCAL VOLTAGES AND FREQUENCIES.

G5. THE MINIMUM WIRE SIZE ON THE PROJECT SHALL BE 4mm². THE MINIMUM CONDUIT SIZE SHALL BE 20mm. THE MINIMUM BREAKER SIZE SHALL BE 20 AMPS.

G6. THE CONTRACTOR SHALL PUT A MAXIMUM OF 6 DUPLEX RECEPTACLES ON A 20A SINGLE POLE CIRCUIT.

G7. WHERE THE 1010 SCOPE REVIEW, 1015 TECHNICAL REVIEW, DRAWINGS, AND SPECIFICATIONS DIFFER FROM AMERICAN CODES OR STANDARDS, THE 1010, 1015, DRAWINGS, AND SPECIFICATIONS SHALL RULE.

G8. ALL CONDUIT AND DEVICES SHALL BE SURFACE MOUNTED UNLESS OTHERWISE INDICATED.

G9. CONTRACTOR SHALL COORDINATE ALL WORK WITH ALL OTHER TRADES TO ENSURE ALL WORK IS COMPLETED IN A PROFESSIONAL, WORKMAN–LIKE MANNER.

APPROVED:

A/E DESIGNER OF RECORD

SEAL:

COMMONWEALTH OF PENNSYLVANIA
REGISTERED PROFESSIONAL ENGINEER
JOSEPH R. GAUS
1/29/10
PE-074251

US ARMY CORPS OF ENGINEERS
AFGHANISTAN ENGINEER DISTRICT

| Mark | Description | Date | Appr. |
|---|---|---|---|
| | | | |

Rev: 0
Date: 2/23/10
Design file no.
Drawing code:
File name:
Plot date:
Plot scale:

Designed by:
Dwn. by: BJB
Ckd by: JRG
Reviewed by: JRG
Submitted by: BAKER

U.S. ARMY CORPS OF ENGINEERS
AFGHANISTAN ENGINEER DISTRICT
APO AE 96338

*Michael Baker Jr., Inc*
*A unit of Michael Baker Corporation*
Airside Business Park
100 Airside Drive
Moon Township, PA 15108
www.mbakercorp.com

AFGHAN NATIONAL ARMY
REGIONAL MILITARY TRAINING CENTER
STANDARD DESIGN

ADMIN TRAINING COMPANY

# ELECTRICAL SYMBOLS & ABBREVIATIONS

Sheet reference number:
E–001

## GENERAL NOTES:

1. REFER TO DRAWING #E-001 FOR THE ELECTRICAL SYMBOLS LIST.
2. EXIT SIGNS SHALL BE WIRED AHEAD OF ANY LOCAL SWITCHING ON CIRCUITS. SEE WIRING DIAGRAM DETAIL 5, DRAWING #E-501.
3. REFER TO DRAWING #E-601 FOR THE LIGHTING FIXTURE SCHEDULE.
4. REFER TO DRAWING #E-501 FOR THE POWER RISER.
5. REFER TO DRAWING #E-601 FOR PANEL SCHEDULES.
6. LIGHT FIXTURES INDICATED AS EMERGENCY SHALL BE PROVIDED WITH A BATTERY BACKUP BALLAST. SEE WIRING DIAGRAM DETAIL 6, DRAWING #E-501.

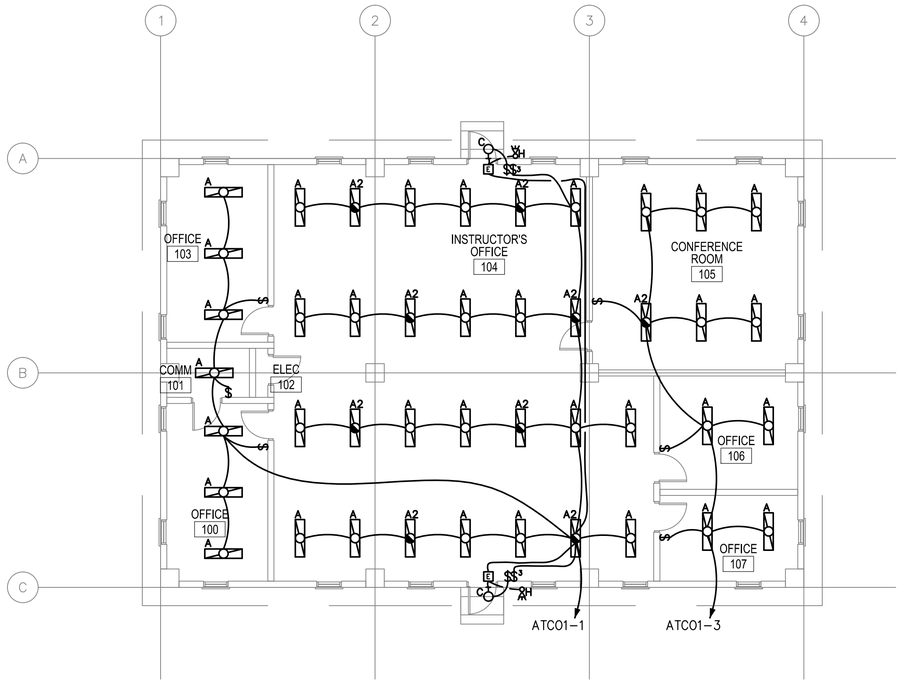


1 E-101

## ADMIN TRAINING COMPANY LIGHTING PLAN

SCALE: 1:50

0 2000 4000

SCALE: 1:100

APPROVED:

A/E DESIGNER OF RECORD

SEAL:

COMMONWEALTH OF PENNSYLVANIA
REGISTERED PROFESSIONAL
JOSEPH R. GAUS
ENGINEER
PE-074251

US ARMY CORPS OF ENGINEERS
AFGHANISTAN ENGINEER DISTRICT

| Mark | Description | Date | Appr. |
|---|---|---|---|
| | | | |

| Mark | Description | Date | Appr. |
|---|---|---|---|
| | | | |

Rev: 0
Date: 2/23/10
Design file no.
Drawing code:
File name:
Plot date:
Plot scale:

Designed by: JRG
Dwn by: BJB
Ckd by: JRG
Reviewed by: JRG
Submitted by: BAKER

U.S. ARMY CORPS OF ENGINEERS
AFGHANISTAN ENGINEER DISTRICT
APO AE 96338


Michael Baker Jr., Inc
A unit of Michael Baker Corporation
Airside Business Park
100 Airside Drive
Moon Township, PA 15108
www.mbakercorp.com


AFGHAN NATIONAL ARMY
REGIONAL MILITARY TRAINING CENTER
STANDARD DESIGN

ADMIN TRAINING COMPANY
ELECTRICAL LIGHTING PLAN

Sheet reference number:
E-101

## GENERAL NOTES:

1. REFER TO DRAWING #E-001 FOR THE ELECTRICAL SYMBOLS LIST.
2. REFER TO DRAWING #E-501 FOR THE POWER RISER.
3. REFER TO DRAWING #E-601 FOR PANEL SCHEDULES.
4. COORDINATE EXACT MOUNTING LOCATION OF DISCONNECTING MEANS FOR MECHANICAL AND PLUMBING EQUIPMENT IN THE FIELD.
5. FUSIBLE SAFETY SWITCHES THAT ARE NOT OTHERWISE IDENTIFIED SHALL BE 380V, 1P, 30A FUSED SAFETY SWITCHES WITH 20A FUSES.

## NUMBERED NOTES:

(1) PANEL ATC01.

(2) PROVIDE A 1200mm X 2400mm SHEET OF PLYWOOD PAINTED WITH FIRE RESISTANT PAINT FOR MOUNTING TELECOMMUNICATIONS EQUIPMENT.

(3) PROVIDE CONDUIT STUB UP IN THE ROOM FOR INCOMING TELECOMMUNICATIONS SERVICES FROM THE CENTRAL COMMUNICATIONS SYSTEM IN THE GARRISON.

(4) PROVIDE POWER CONNECTION TO EXHAUST FANS. SEE DRAWINGS #M-101 AND #E-601 FOR MORE INFORMATION.

(5) PROVIDE POWER CONNECTION TO ELECTRIC UNIT HEATER #2. SEE DRAWINGS #M-101 AND #E-601 FOR MORE INFORMATION.

(6) PROVIDE POWER CONNECTION TO ELECTRIC UNIT HEATER #4. SEE DRAWINGS #M-101 AND #E-601 FOR MORE INFORMATION.

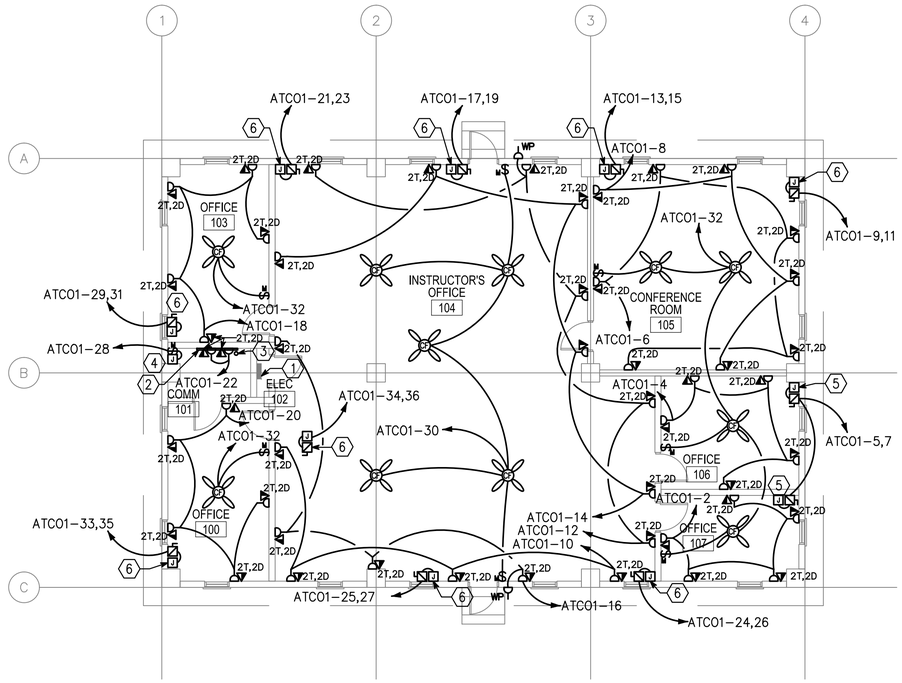


1 E-102

ADMIN TRAINING COMPANY
POWER AND SYSTEMS PLAN

SCALE: 1:100

0 2000 4000

SCALE: 1:100

APPROVED:

A/E DESIGNER OF RECORD

SEAL:

COMMONWEALTH OF PENNSYLVANIA
REGISTERED PROFESSIONAL
JOSEPH R. GAUS
ENGINEER
PE-074251
1/23/10

US ARMY CORPS OF ENGINEERS
AFGHANISTAN ENGINEER DISTRICT

| Mark | Description | Date | Appr. |
|---|---|---|---|
| | | | |

| Mark | Description | Date | Appr. |
|---|---|---|---|
| | | | |

Rev: 0
Date: 2/23/10
Design file no.
Drawing code:
File name:
Plot date:
Plot scale:

Designed by: JRG
Dwn by: BJB
Ckd by: JRG
Reviewed by: JRG
Submitted by: BAKER

U.S. ARMY CORPS OF ENGINEERS
AFGHANISTAN ENGINEER DISTRICT
APO AE 96338

*Michael Baker Jr., Inc*
*A unit of Michael Baker Corporation*
Airside Business Park
100 Airside Drive
Moon Township, PA 15108
www.mbakercorp.com

AFGHAN NATIONAL ARMY
REGIONAL MILITARY TRAINING CENTER
STANDARD DESIGN

ADMIN TRAINING COMPANY
ELECTRICAL POWER AND SYSTEMS PLAN

Sheet reference number:
E-102

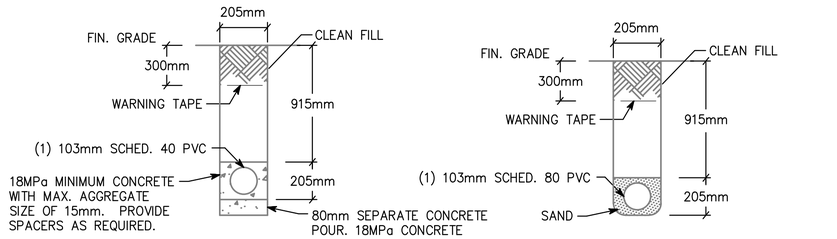


NOTE: PVC CONDUIT SHALL BE DIRECT BURIED SCHEDULE 80 FOR NO TRAFFIC AREAS AND CONCRETE-ENCASED SCHEDULE 40 FOR UNDER ROADWAYS OR TRAFFIC AREAS.

1 / E-501 **TYPICAL DUCT BANK DETAILS FOR CONDUIT IN SAND OR CONCRETE**

SCALE: N.T.S.

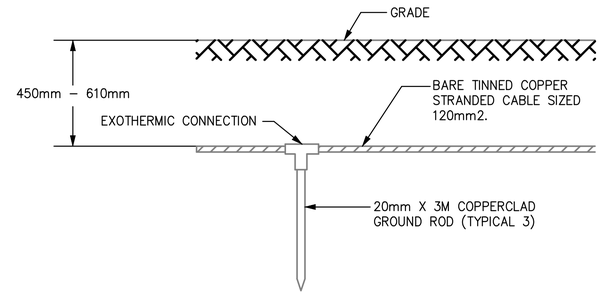


2 / E-501 **GROUND TRIPOD SYSTEM DETAIL - ELEVATION**

SCALE: N.T.S.

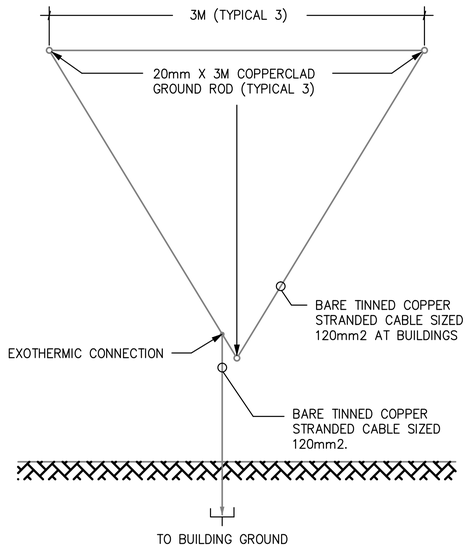


3 / E-501 **GROUND TRIPOD SYSTEM DETAIL - PLAN**

SCALE: N.T.S.

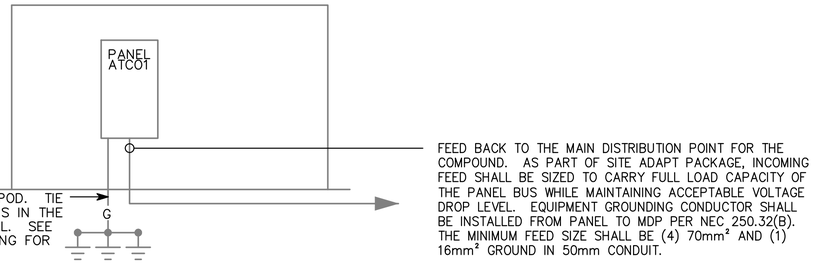


4 / E-501 **ATCO RISER DIAGRAM**

SCALE: N.T.S.

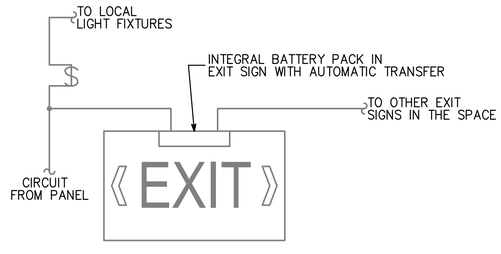


5 / E-501 **EXIT SIGN WIRING DIAGRAM**

SCALE: N.T.S.

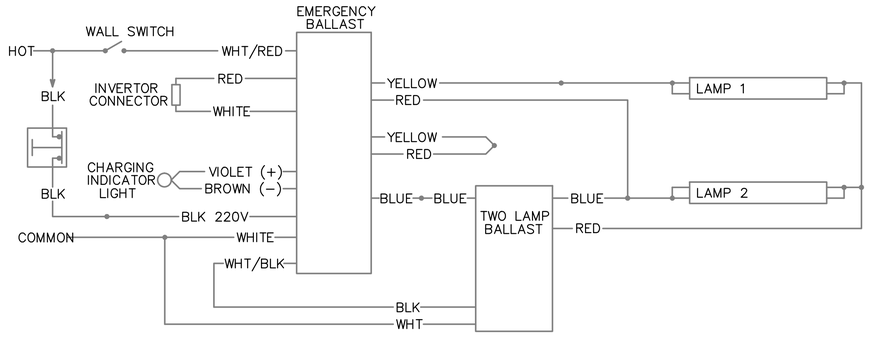


6 / E-501 **EMERGENCY FIXTURE WIRING DIAGRAM**

SCALE: N.T.S.

APPROVED:

A/E DESIGNER OF RECORD

SEAL:

COMMONWEALTH OF PENNSYLVANIA
REGISTERED PROFESSIONAL
JOSEPH R GAUS
11/29/10
ENGINEER
PE-074251

US ARMY CORPS OF ENGINEERS
AFGHANISTAN ENGINEER DISTRICT

| Mark | Description | Date | Appr. |
|---|---|---|---|

Rev: 0
Date: 2/23/10
Design file no.
Drawing code:
File name:
Plot date:
Plot scale:
Designed by: JRG
Ckd by: JRG
Dwn by: BJB
Reviewed by: JRG
Submitted by: BAKER

U.S. ARMY CORPS OF ENGINEERS
AFGHANISTAN ENGINEER DISTRICT
APO AE 96338

Michael Baker Jr., Inc.
A unit of Michael Baker Corporation
Airside Business Park
100 Airside Drive
Moon Township, PA 15108
www.mbakercorp.com

AFGHAN NATIONAL ARMY
REGIONAL MILITARY TRAINING CENTER
STANDARD DESIGN

ADMIN TRAINING COMPANY
ELECTRICAL DETAILS

Sheet reference number:
E-501

| Ⓐ LARGER OF THE TWO SIZES GIVEN IN THE TABLES BELOW | |
|---|---|
| GROUNDING ELECTRODE CONDUCTOR (BASED ON AIC RATING) | |
| AIC RATING OF SERVICE EQUIPMENT | NECESSARY GROUNDING ELECTRODE CONDUCTOR SIZE |
| 10K | (1) 35mm² |
| 14K | (1) 50mm² |
| 18K | (1) 70mm² |
| 22K | (1) 70mm² |
| 25K | (1) 70mm² |
| 30K | (1) 95mm² |
| 35K | (1) 120mm² |
| 42K | (1) 150mm² |
| 65K | (1) 185mm² |
| 100K | (1) 300mm² |
| 125K | (2) 185mm² |
| 200K | (2) 300mm² |
| GROUNDING ELECTRODE CONDUCTOR (BASED ON NEC TABLE 250.66) | |
| SIZE OF LARGEST UNGROUNDED SERVICE CONDUCTOR OR EQUIVALENT AREA FOR PARALLEL CONDUCTORS | NECESSARY GROUNDING ELECTRODE CONDUCTOR SIZE |
| 350 kcmil OR SMALLER | 35mm² |
| OVER 350 kcmil TO 600 kcmil | 70mm² |
| OVER 600 kcmil TO 1100 kcmil | 70mm² |
| OVER 1100 kcmil | 95mm² |
| NOTE: ALL SIZES ARE BASED ON COPPER CONDUCTORS. | |

| Ⓑ EQUIPMENT GROUNDING CONDUCTOR | |
|---|---|
| RATING OR SETTING OF AUTOMATIC OVERCURRENT DEVICE IN CIRCUIT AHEAD OF EQUIPMENT, CONDUIT, ETC, NOT EXCEEDING (AMPERES) | NECESSARY EQUIPMENT GROUNDING CONDUCTOR SIZE |
| 15 | 2.5mm² |
| 20 | 4.0mm² |
| 30 | 6.0mm² |
| 40 | 6.0mm² |
| 60 | 6.0mm² |
| 100 | 10mm² |
| 200 | 16mm² |
| 300 | 25mm² |
| 400 | 25mm² |
| 500 | 35mm² |
| 600 | 50mm² |
| 800 | 70mm² |
| 1000 | 70mm² |
| 1200 | 95mm² |
| 1600 | 120mm² |
| 2000 | 150mm² |
| 2500 | 185mm² |
| 3000 | 240mm² |
| 4000 | 300mm² |
| 5000 | 400mm² |
| 6000 | 400mm² |
| NOTE: ALL SIZES ARE BASED ON COPPER CONDUCTORS. | |

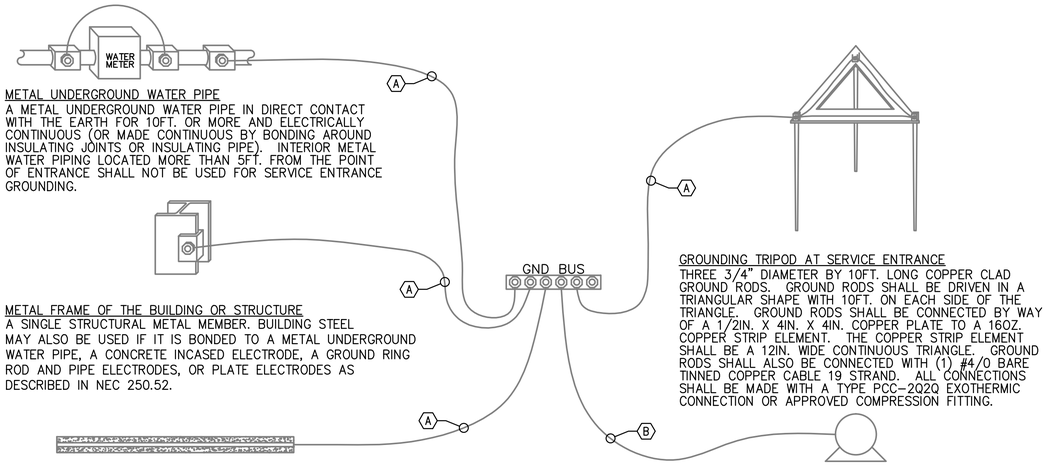


METAL UNDERGROUND WATER PIPE
A METAL UNDERGROUND WATER PIPE IN DIRECT CONTACT WITH THE EARTH FOR 10FT. OR MORE AND ELECTRICALLY CONTINUOUS (OR MADE CONTINUOUS BY BONDING AROUND INSULATING JOINTS OR INSULATING PIPE). INTERIOR METAL WATER PIPING LOCATED MORE THAN 5FT. FROM THE POINT OF ENTRANCE SHALL NOT BE USED FOR SERVICE ENTRANCE GROUNDING.

METAL FRAME OF THE BUILDING OR STRUCTURE
A SINGLE STRUCTURAL METAL MEMBER. BUILDING STEEL MAY ALSO BE USED IF IT IS BONDED TO A METAL UNDERGROUND WATER PIPE, A CONCRETE INCASED ELECTRODE, A GROUND RING ROD AND PIPE ELECTRODES, OR PLATE ELECTRODES AS DESCRIBED IN NEC 250.52.

CONCRETE ENCASED ELECTRODE
AN ELECTRODE ENCASED BY AT LEAST 2IN. OF CONCRETE , LOCATED WITHIN AND NEAR THE BOTTOM OF A CONCRETE FOUNDATION OR FOOTING THAT IS IN DIRECT CONTACT WITH THE EARTH, CONSISTING OF AT LEAST 20FT. OF ONE OR MORE BARE OR ZINC GALVANIZED OR OTHER ELECTRICALLY CONDUCTIVE COATED STEEL REINFORCING BARS OR RODS OF NOT LESS THAN 1/2" DIAMETER OR BARE COPPER CONDUCTOR NOT SMALLER THAN 4AWG.

GROUNDING TRIPOD AT SERVICE ENTRANCE
THREE 3/4" DIAMETER BY 10FT. LONG COPPER CLAD GROUND RODS. GROUND RODS SHALL BE DRIVEN IN A TRIANGULAR SHAPE WITH 10FT. ON EACH SIDE OF THE TRIANGLE. GROUND RODS SHALL BE CONNECTED BY WAY OF A 1/2IN. X 4IN. X 4IN. COPPER PLATE TO A 16OZ. COPPER STRIP ELEMENT. THE COPPER STRIP ELEMENT SHALL BE A 12IN. WIDE CONTINUOUS TRIANGLE. GROUND RODS SHALL ALSO BE CONNECTED WITH (1) #4/0 BARE TINNED COPPER CABLE 19 STRAND. ALL CONNECTIONS SHALL BE MADE WITH A TYPE PCC-2Q2Q EXOTHERMIC CONNECTION OR APPROVED COMPRESSION FITTING.

LOAD OR DOWNSTREAM PANEL
ALL LOADS IN THE BUILDING SHALL HAVE AN EQUIPMENT GROUNDING CONDUCTOR PULLED TO THEM.

1 / E-502 SERVICE ENTRANCE GROUNDING DETAIL

SCALE: N.T.S.

APPROVED:

A/E DESIGNER OF RECORD

SEAL:

COMMONWEALTH OF PENNSYLVANIA
REGISTERED PROFESSIONAL ENGINEER
JOSEPH R GAUS
PE-074251
12/29/10

US ARMY CORPS OF ENGINEERS
AFGHANISTAN ENGINEER DISTRICT

| Mark | Description | Date | Appr. |
|---|---|---|---|
| | | | |

| Mark | Description | Date | Appr. |
|---|---|---|---|
| | | | |

Rev: 0
Date: 2/23/10
Design file no.
Drawing code:
File name:
Plot date:
Plot scale:

Designed by: JRG
Dwn by: BJB
Ckd by: JRG
Reviewed by: JRG
Submitted by: BAKER

U.S. ARMY CORPS OF ENGINEERS
AFGHANISTAN ENGINEER DISTRICT
APO AE 96338

*Michael Baker Jr., Inc.*
*A unit of Michael Baker Corporation*
Airside Business Park
100 Airside Drive
Moon Township, PA 15108
www.mbakercorp.com

AFGHAN NATIONAL ARMY
REGIONAL MILITARY TRAINING CENTER
STANDARD DESIGN

ADMIN TRAINING COMPANY
ELECTRICAL DETAILS

Sheet reference number:
E-502

FIXTURE MARK 'A' & 'A2'

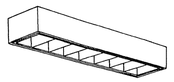

FIXTURE MARK 'C'

FIXTURE MARK 'H'

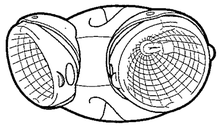

FIXTURE MARK '[E]'

# LIGHT FIXTURE SCHEDULE

| FIXTURE MARK | STYLE NUMBER AND TYPE | NUMBER AND TYPE OF LAMPS | VOLTAGE | MOUNTING | NOTES |
|---|---|---|---|---|---|
| A | PARABOLIC SURFACE/PENDANT MOUNTED 300MM X 1200MM FLUORESCENT FIXTURE WITH ELECTRONIC BALLAST | (2) 32W 3500K | 220V – 1ø 50HZ | PENDANT MOUNTED FROM CEILINGS | FURNISHED WITH ELECTRONIC BALLAST. PARABOLIC LOUVER SHALL BE SPECULAR LENS IRIDESCENCE TYPE. |
| A2 | SAME AS FIXTURE 'A' WITH EMERGENCY BALLAST | (2) 32W 3500K | 220V – 1ø 50HZ | PENDANT MOUNTED FROM CEILINGS | FURNISHED WITH ELECTRONIC BALLAST. PARABOLIC LOUVER SHALL BE SPECULAR LENS IRIDESCENCE TYPE. EMERGENCY BALLAST SELF TEST. |
| C | INCANDESCENT ONE PIECE W/ APPROVED LENS STABILIZED HIGH IMPACT POLY CARBONATE. | (1) A19 – 100W INCANDESCENT | 220V – 1ø 50HZ | WALL MOUNTED ABOVE EXTERIOR DOORS | |
| H | REMOTE HEAD EXTERIOR LIGHT HEAD POWERED FROM EXIT SIGN BATTERY– 12V DOUBLE HEAD CORROSION RESISTANT WITH UL34 WEATHERPROOF CONSTRUCTION | (2) 12W/12V HALOGEN LAMP | 12V – 1ø 50HZ | EXTERIOR WALL MOUNTED AT TOP OF DOOR HEIGHT | |
| [E] | UNIVERSAL MOUNT ENGINEER GRADE THERMOPLASTIC HOUSING EXIT SIGN WITH LED LAMPS, RED LETTERS 6" IN HEIGHT WITH ARROWS AS INDICATED, WITH 12V CADMIUM BATTERY WITH REMOTE HEAD CAPABILITY | LED LAMPS | 220V – 1ø 50HZ | UNIVERSAL MOUNTING | |
| | | | | | |

PANELBOARD ATC01 SURFACE MOUNTED
____ AMP. MAIN LUGS (OR) 150 AMP. MAIN BREAKER W/ 150 AMP. TRIP
CIRCUIT BREAKER TYPE 380/220 VOLTS 3 PHASE 4 WIRE 50 HZ 225 AMP. BUS

| CKT. NO. | TRIP AMPS | NO. POLES | WIRE MM² | GND MM² | CONDUIT MM | LOAD SERVED | LOAD-KVA A0 | LOAD-KVA B0 | LOAD-KVA C0 | LOAD-KVA A0 | LOAD-KVA B0 | LOAD-KVA C0 | LOAD SERVED | CONDUIT MM | GND MM² | WIRE MM² | NO. POLES | TRIP AMPS | CKT. NO. |
|---|---|---|---|---|---|---|---|---|---|---|---|---|---|---|---|---|---|---|---|
| 1 | 20 | 1 | 4.0 | 4.0 | 20 | LIGHTING – RM 100–104 | 2.6 | | | 1.0 | | | RECEPTACLES – RM 107 | 20 | 4.0 | 4.0 | 1 | 20 | 2 |
| 3 | 20 | 1 | 4.0 | 4.0 | 20 | LIGHTING – RM 105–107 | | 0.7 | | | 1.0 | | RECEPTACLES – RM 106 | 20 | 4.0 | 4.0 | 1 | 20 | 4 |
| 5 | 20 | 2 | 4.0 | 4.0 | 20 | ELECTRIC HEAT #2 – RM 106,107 | | | 2.6 | | | 1.0 | RECEPTACLES – RM 106 | 20 | 4.0 | 4.0 | 1 | 20 | 6 |
| 7 | | | | | | | 2.6 | | | 0.8 | | | RECEPTACLES – RM 106 | 20 | 4.0 | 4.0 | 1 | 20 | 8 |
| 9 | 20 | 2 | 4.0 | 4.0 | 20 | ELECTRIC HEAT #4 – RM 105 | | 2.0 | | | 0.8 | | RECEPTACLES – RM 104 | 20 | 4.0 | 4.0 | 1 | 20 | 10 |
| 11 | | | | | | | | | 2.0 | | | 1.2 | RECEPTACLES – RM 104 | 20 | 4.0 | 4.0 | 1 | 20 | 12 |
| 13 | 20 | 2 | 4.0 | 4.0 | 20 | ELECTRIC HEAT #4 – RM 105 | 2.0 | | | 1.0 | | | RECEPTACLES – RM 104 | 20 | 4.0 | 4.0 | 1 | 20 | 14 |
| 15 | | | | | | | | 2.0 | | | 1.0 | | RECEPTACLES – RM 104 | 20 | 4.0 | 4.0 | 1 | 20 | 16 |
| 17 | 20 | 2 | 4.0 | 4.0 | 20 | ELECTRIC HEAT #4 – RM 104 | | | 2.0 | | | 1.0 | RECEPTACLES – RM 103 | 20 | 4.0 | 4.0 | 1 | 20 | 18 |
| 19 | | | | | | | 2.0 | | | 1.0 | | | RECEPTACLES – RM 106 | 20 | 4.0 | 4.0 | 1 | 20 | 20 |
| 21 | 20 | 2 | 4.0 | 4.0 | 20 | ELECTRIC HEAT #4 – RM 104 | | 2.0 | | | 0.4 | | RECEPTACLES – RM 101 | 20 | 4.0 | 4.0 | 1 | 20 | 22 |
| 23 | | | | | | | | | 2.0 | | | 2.0 | ELECTRIC HEAT #4 – RM 104 | 20 | 4.0 | 4.0 | 2 | 20 | 24 |
| 25 | 20 | 2 | 4.0 | 4.0 | 20 | ELECTRIC HEAT #4 – RM 104 | 2.0 | | | 2.0 | | | | | | | | | 26 |
| 27 | | | | | | | | 2.0 | | | 0.5 | | EXHAUST FAN – RM 105 | 20 | 4.0 | 4.0 | 1 | 20 | 28 |
| 29 | 20 | 2 | 4.0 | 4.0 | 20 | ELECTRIC HEAT #4 – RM 103 | | | 2.0 | | | 1.0 | CEILING FANS – RM 104 | 20 | 4.0 | 4.0 | 1 | 20 | 30 |
| 31 | | | | | | | 2.0 | | | 1.0 | | | CEILING FANS – RM 105–107 | 20 | 4.0 | 4.0 | 1 | 20 | 32 |
| 33 | 20 | 2 | 4.0 | 4.0 | 20 | ELECTRIC HEAT #4 – RM 106 | | 2.0 | | | 2.0 | | ELECTRIC HEAT #4 – RM 104 | 20 | 4.0 | 4.0 | 2 | 20 | 34 |
| 35 | | | | | | | | | 2.0 | | | 2.0 | | | | | | | 36 |
| 37 | 20 | 1 | | | | SPARE | | | | | | | SPARE | | | | 1 | 20 | 38 |
| 39 | 20 | 1 | | | | SPARE | | | | | | | SPARE | | | | 1 | 20 | 40 |
| 41 | 20 | 1 | | | | SPARE | | | | | | | SPARE | | | | 1 | 20 | 42 |
| | | | | | | | 13.2 | 10.7 | 12.6 | 6.8 | 5.7 | 8.2 | | | | | | | |

TOTAL CONN. LOAD PER PHASE (KVA): A0 20.0 B0 16.4 C0 20.8

TOTAL CONN. LOAD 57.2 KVA. 70 % DEMAND = ESTIMATED DEMAND LOAD 40.0

* MAIN BREAKER SHALL BE 3P EARTH GROUND TYPE

APPROVED:

A/E DESIGNER OF RECORD

SEAL:

COMMONWEALTH OF PENNSYLVANIA
REGISTERED PROFESSIONAL ENGINEER
JOSEPH R. GAUS
PE-074251
1/29/10

US ARMY CORPS OF ENGINEERS
AFGHANISTAN ENGINEER DISTRICT

| Mark | Description | Date | Appr. |
|---|---|---|---|
| | | | |

| Mark | Description | Date | Appr. |
|---|---|---|---|
| | | | |

Rev: 0
Date: 2/23/10
Design file no.
Drawing code:
File name:
Plot date:
Plot scale:

Designed by: JRG
Dwn by: BJB
Ckd by: JRG
Reviewed by: JRG
Submitted by: BAKER

U.S. ARMY CORPS OF ENGINEERS
AFGHANISTAN ENGINEER DISTRICT
APO AE 96338

Michael Baker Jr; Inc
A unit of Michael Baker Corporation
Airside Business Park
100 Airside Drive
Moon Township, PA 15108
www.mbakercorp.com

AFGHAN NATIONAL ARMY
REGIONAL MILITARY TRAINING CENTER
STANDARD DESIGN

ADMIN TRAINING COMPANY
ELECTRICAL LIGHT FIXTURE AND PANEL SCHEDULES

Sheet reference number:
E–601

# AFGHAN NATIONAL ARMY

## STANDARD BUILDING DESIGN

## MEDICAL CLINIC

## 100% FINAL DESIGN SUBMITTAL

### SHEET INDEX


G-001 COVER SHEET

STRUCTURAL

S-001 GENERAL NOTES & DESIGN CRITERIA
S-101 FOUNDATION/SLAB & ROOF FRAMING PLANS
S-401 BUILDING SECTIONS
S-402 ENLARGED LATRINE SLAB PLAN
S-501 FOUNDATION SECTIONS
S-502 FRAMING SECTIONS
S-503 BEAM & COLUMN DETAILS
S-504 BEAM & COLUMN DETAILS
S-601 SCHEDULES
S-701 TYPICAL DETAILS
S-702 TYPICAL DETAILS

ARCHITECTURAL

A-001 LIFE SAFETY PLAN
A-101 FLOOR PLAN
A-102 ROOF PLAN
A-201 ELEVATIONS
A-301 BUILDING SECTIONS
A-401 WALL SECTIONS
A-501 EXTERIOR DETAILS
A-502 HEAD, JAMB, & SILL DETAILS
A-503 STOOP DETAILS
A-504 TOILET & LAVATORY DETAILS
A-601 WINDOW & DOOR SCHEDULES

MECHANICAL

P-101 FLOOR PLAN-PLUMBING
P-501 PLUMBING DETAILS
P-502 PLUMBING DETAILS
P-901 PLUMBING ISOMETRIC

M-101 HVAC FLOOR PLAN, SCHEDULES, & DETAILS

ELECTRICAL

E-001 ELECTRICAL SYMBOLS & ABBREVIATIONS
E-101 ELECTRICAL LIGHTING PLAN
E-102 ELECTRICAL POWER & SYSTEMS PLAN
E-103 ELECTRICAL LIGHTNING PROTECTION PLAN
E-501 ELECTRICAL DETAILS
E-502 ELECTRICAL DETAILS
E-601 ELECTRICAL LIGHT FIXTURE SCHEDULE
E-602 ELECTRICAL PANEL SCHEDULES


US ARMY CORPS OF ENGINEERS
AFGHANISTAN ENGINEER DISTRICT

| Mark | Description | Date | Appr. | Mark | Description | Date | Appr. |
|---|---|---|---|---|---|---|---|
| | | | | | | | |

Date: 2/23/10 | Rev: 0
Design file no.:
Drawing code:
File name: ANAMEDG001CS
Plot date: 2/23/2010
Plot scale: X:X

Designed by: KMF/MMY | Chkd by: CWW
Dwn by: RCG | Reviewed by: LHM
Submitted by: BAKER

U.S. ARMY CORPS OF ENGINEERS
AFGHANISTAN ENGINEER DISTRICT
APO AE 96338


*Michael Baker Jr., Inc.*
*A unit of Michael Baker Corporation*
Airside Business Park
100 Airside Drive
Moon Township, PA 15108
www.mbakercorp.com


AFGHAN NATIONAL ARMY
REGIONAL MILITARY TRAINING CENTER
STANDARD DESIGN

MEDICAL CLINIC

COVER SHEET

Sheet reference number:
G-001

STRUCTURAL ABBREVIATIONS:

| | |
|---|---|
| ACI | AMERICAN CONCRETE INSTITUTE |
| ADD'L | ADDITIONAL |
| AISC | AMERICAN INSTITUTE OF STEEL CONSTRUCTION |
| AISI | AMERICAN IRON AND STEEL INSTITUTE |
| ASTM | AMERICAN SOCIETY FOR TESTING AND MATERIALS |
| ARCH | ARCHITECTURAL |
| B | BOTTOM |
| BLDG | BUILDING |
| BOTT | BOTTOM |
| ℄ | CENTER LINE |
| CFMRF | COLD FORM METAL ROOF FRAME |
| CFMF | COLD FORM METAL FRAME |
| CFS | COLD FORMED STEEL |
| CIP | CAST-IN-PLACE |
| CIPL | CAST-IN-PLACE LINTEL |
| CJ | CONTROL JOINT |
| CLR | CLEAR |
| CMU | CONCRETE MASONRY UNIT |
| COEFF | COEFFICIENT |
| COL | COLUMN |
| CONC | CONCRETE |
| CONT | CONTINUOUS |
| COORD | COORDINATE |
| CRSI | CONCRETE REINFORCING STEEL INSTITUTE |
| CSJ | CONSTRUCTION JOINT |
| DIA | DIAMETER |
| DIAG | DIAGONAL |
| DIM | DIMENSION |
| DWG | DRAWING |
| DWL | DOWEL |
| EA | EACH |
| EF | EACH FACE |
| ELEC | ELECTRICAL |
| ELEV | ELEVATION |
| EMBED | EMBEDMENT |
| EQUIV | EQUIVALENT |
| ETC | ET CETERA |
| EW | EACH WAY |
| EXP | EXPANSION |
| EXT | EXTERIOR |
| FTG | FOOTING |
| GA | GAUGE |
| GB | GRADE BEAM |
| HORIZ | HORIZONTAL |
| h | HOUR |
| HRS | HOURS |
| IBC | INTERNATIONAL BUILDING CODE |
| INFO | INFORMATION |
| INT | INTERIOR |
| kg | KILOGRAM |
| km | KILOMETER |
| kN | KILONEWTON |
| kPa | KILOPASCAL |
| L# | ANGLE (# INDICATES SIZE) |
| LONG | LONGITUDINAL |
| LLV | LONG LEG VERTICAL |
| m | METER |
| MAX | MAXIMUM |
| MECH | MECHANICAL |
| MFG | MANUFACTURER |
| MID | MIDDLE |
| MIN | MINIMUM |
| MISC | MISCELLANEOUS |
| mm | MILLIMETER |
| MPa | MEGAPASCAL |
| MTL | METAL |
| MWFRS | MAIN WIND FORCE RESISTING SYSTEM |
| N | NEWTON |
| N | NORTH |
| N/A | NOT APPLICABLE |
| # | NUMBER SYMBOL FOR REBAR SIZE |
| NTS | NOT TO SCALE |
| OC | ON CENTER |
| OD | OUTSIDE DIAMETER |
| OPNG | OPENING |
| P or PL | PLATE |
| PRE-ENG | PRE-ENGINEERED |
| RB | ROOF BEAM |
| REINF | REINFORCED |
| REQ'D | REQUIRED |
| SIM | SIMILAR |
| SPECS | SPECIFICATIONS |
| STD | STANDARD |
| STRUCT | STRUCTURAL |
| SW | SHEAR WALL |
| T | TOP |
| T/ | TOP OF |
| T/ELEV | TOP ELEVATION |
| T/SLAB | TOP OF SLAB |
| T&B | TOP AND BOTTOM |
| THK | THICK |
| TYP | TYPICAL |
| UFC | UNIFIED FACILITIES CRITERIA |
| UON | UNLESS OTHERWISE NOTED |
| VERT | VERTICAL |
| W | WIDTH |
| W/ | WITH |

1.0 GENERAL NOTES:

1.1 THIS PROJECT HAS BEEN DESIGNED FOR THE WEIGHTS AND MATERIALS INDICATED ON THE SHEETS AND FOR THE LIVE LOADS INDICATED IN THE DESIGN DATA. IT IS THE CONTRACTOR'S RESPONSIBILITY TO DETERMINE ALLOWABLE CONSTRUCTION LOADS AND TO PROVIDE PROPER DESIGN AND CONSTRUCTION OF FALSEWORK, FORMWORK, STAGING, BRACING, SHEETING AND SHORING, ETC.

1.1 COORDINATE THESE SHEETS WITH THE ARCHITECTURAL, MECHANICAL, ELECTRICAL, PLUMBING, AND CIVIL SHEETS. ALL DIMENSIONS SHOWN ON THE SHEETS ARE MILLIMETERS UNLESS NOTED OTHERWISE.

1.2 THE CONTRACTOR SHALL VERIFY AND COORDINATE ALL FLOOR AND ROOF OPENING SIZES AND LOCATIONS, EQUIPMENT PAD SIZES AND LOCATIONS, ANCHOR BOLT LAYOUTS, ETC WITH EQUIPMENT SELECTED. THE CONTRACTOR SHALL MAKE ANY REQUIRED MODIFICATIONS AT NO ADDITIONAL COST.

1.3 THE CONTRACTOR SHALL REFER TO THE ARCHITECTURAL, MECHANICAL, ELECTRICAL AND PLUMBING SHEETS FOR SLEEVES, CURBS, INSERTS OR OPENINGS, ETC. NOT HEREIN INDICATED.

1.4 WORK NOT INCLUDED ON THE SHEETS BUT IMPLIED TO BE SIMILAR TO THAT SHOWN AT CORRESPONDING PLACES ELSEWHERE ON THE SHEETS SHALL BE REPEATED.

1.5 IN CASE OF CONFLICT BETWEEN THE NOTES, DETAILS AND SPECIFICATIONS THE MOST RIGID REQUIREMENTS SHALL GOVERN.

1.6 SEE ARCHITECTURAL SHEETS FOR LOCATIONS OF MASONRY AND NON-LOAD BEARING PARTITIONS. PROVIDE COMPRESSIBLE FIRESAFING AT TOP OF WALL AS REQUIRED BY ARCHITECTURAL SHEETS.

1.7 COORDINATE FINISHED FLOOR DATUM ELEVATION 0.0m WITH THE CIVIL SHEETS.

2.0 FOUNDATION NOTES

2.1 THE GEOTECHNICAL ANALYSIS FOR THIS PROJECT IS THE RESPONSIBILITY OF THE CONTRACTOR AWARDED THE WORK. AN ASSUMED ALLOWABLE SOIL BEARING VALUE OF 72 kPa HAS BEEN USED IN THE STRUCTURAL ANALYSIS OF THE BUILDING HEREIN AND SHALL BE CONFIRMED AND VERIFIED AS PART OF THE GEOTECHNICAL INVESTIGATION. VALUES WHICH DO NOT MEET THE REQUIREMENTS INDICATED ON THE BASIS OF DESIGN SHEET SHALL BE IMMEDIATELY BROUGHT TO THE ATTENTION OF THE CONTRACTING OFFICER FOR CONSIDERATION AND DETERMINATION ON THE NEXT APPROPRIATE COURSE OF ACTION.

2.2 SEE THE SPECIFICATION FOR ADDITIONAL REQUIREMENTS TO THOSE OUTLINED IN THE GEOTECHNICAL INVESTIGATION FOR EXCAVATION AND PREPARATION OF THE FOUNDATION AND THE SLAB ON GRADE SUBGRADE INCLUDING COMPACTION PROCEDURES.

2.3 EXCAVATIONS FOR FOOTINGS SHALL HAVE THE SIDES AND BOTTOMS TEMPORARILY LINED WITH 0.25mm POLYETHYLENE IF PLACEMENT OF CONCRETE DOES NOT OCCUR WITHIN 24 HRS OF THE EXCAVATION OF THE FOOTING.

2.4 FOUNDATION CONDITIONS NOTED DURING CONSTRUCTION WHICH DIFFER FROM THOSE DESCRIBED IN THE GEOTECHNICAL REPORT SHALL BE REPORTED TO THE GENERAL CONTRACTOR BEFORE FURTHER CONSTRUCTION IS ATTEMPTED. SEE PROJECT SPECIFICATIONS.

2.5 NO FOOTINGS OR SLABS SHALL BE POURED INTO OR AGAINST SUBGRADE CONTAINING FREE WATER, FROST, ICE OR LOOSE MATERIAL. FROST DEPTH ASSUMED TO BE 800mm.

2.6 ALL SLAB-ON-GRADE, TRENCH BOTTOMS AND OTHER ON-GRADE INTERIOR HORIZONTAL SURFACES SHALL BE PLACED OVER A 0.25mm POLYETHYLENE VAPOR RETARDER OVER A 100mm #57 STONE WATER CAPILLARY BARRIER PLACED ON SUBGRADE PROPERLY PREPARED IN ACCORDANCE WITH THE CONTRACT SPECIFICATIONS. (UON)

2.7 PRIOR TO START OF FOUNDATION OR SLAB-ON-GRADE CONSTRUCTION, EXISTING SUBGRADES SHALL BE COMPACTED TO MINIMUM OF 95% MAXIMUM DRY DENSITY OBTAINED THRU ASTM D 1557 MODIFIED PROCTOR TESTING.

2.8 SEE PLUMBING, ELECTRICAL & CIVIL SHEETS FOR REQUIRED UNDERSLAB UTILITIES.

2.9 SEE ARCHITECTURAL SHEETS FOR ALL WATERPROOFING DETAILS AND MATERIALS.

2.10 IF UNDERMINING OF FOOTINGS OCCURS, FILL VOIDS WITH 18 MPa CONCRETE. DO NOT ATTEMPT TO REPLACE AND RE-COMPACT SOIL.

3.0 CONCRETE

3.1 CONCRETE SHALL HAVE THE UNIT WEIGHT OF 2400 kg/m$^3$ AND A MINIMUM COMPRESSIVE STRENGTH (f'c) OF 28 MPa AT 28 DAYS. ALL CONCRETE SHALL HAVE A WATER-CEMENT RATIO OF 0.45. SEE SPECIFICATIONS FOR ADDITIONAL INFORMATION. ENTRAIN AIR TO PRODUCE TOTAL AIR CONTENT ACCORDING TO THE SPECIFICATIONS FOR CONCRETE EXPOSED TO FREEZING TEMPERATURES (EXTERIOR FOOTINGS, SLAB TURNDOWNS, EXTERIOR SLABS AND SLABS-ON-GRADE, EXTERIOR RETAINING WALLS, AND EXTERIOR GRADE BEAMS.)

3.2 NO CALCIUM CHLORIDE SHALL BE USED IN ANY CONCRETE.

3.3 MIXING, TRANSPORTING AND PLACING OF CONCRETE SHALL CONFORM TO ACI 301M-05.

3.4 ALL CONCRETE WORK SHALL CONFORM TO THE REQUIREMENTS OF THE AMERICAN CONCRETE INSTITUTE (ACI) 318M MANUAL (metric), "BUILDING CODE REQUIREMENTS FOR REINFORCED CONCRETE", AND REQUIREMENTS OUTLINED IN THE CONTRACT SPECIFICATIONS. WHEN THERE IS A CONFLICT BETWEEN ACI AND THE SPECIFICATIONS, THE MORE STRINGENT SHALL GOVERN.

3.5 CHAMFER ALL EXPOSED EXTERNAL CORNERS OF CONCRETE WITH 20mm x45 DEGREE CHAMFER UON.

3.6 CONCRETE REINFORCEMENT BARS SHALL CONFORM TO ASTM A615M-96a, GRADE 420 MPa, REINFORCING BARS SHALL NOT BE TACK WELDED, WELDED, HEATED OR CUT, UNLESS INDICATED ON THE CONTRACT DOCUMENTS. ALL LAP SPLICES SHALL BE CLASS "B" UON.

3.7 HORIZONTAL FOOTING AND HORIZONTAL WALL REINFORCEMENT SHALL BE CONTINUOUS AND SHALL HAVE 90 DEGREE BENDS AND EXTENSIONS, OR CORNER BARS OF EQUIVALENT SIZE LAPPED WITH A CLASS B TENSION SPLICE AT CORNERS AND INTERSECTIONS. TOP BAR CRITERIA SHALL APPLY IF 300mm OR MORE OF FRESH CONCRETE IS PLACED BELOW BAR.

3.8 SLABS-ON-GRADE SHALL HAVE CONSTRUCTION JOINTS OR CRACK CONTROL JOINTS AS SHOWN ON THE DRAWINGS. CONSTRUCTION JOINTS CAN BE USED AT CONTROL JOINT LOCATIONS AT CONTRACTORS OPTION. SEE SLAB PLANS & JOINT DETAILS FOR ADDITIONAL INFORMATION. FOR AREAS NOT SHOWN ON DWGS, THE MAXIMUM SPACING OF CONSTRUCTION/ CRACK CONTROL JOINTS SHALL BE 4800mm

3.9 ALL CONCRETE REINFORCEMENT SHALL BE DETAILED, FABRICATED, LABELED, SUPPORTED, AND SPACED IN FORMS AND SECURED IN PLACE IN ACCORDANCE WITH THE PROCEDURES AND REQUIREMENTS OUTLINED IN THE LATEST EDITION OF THE "BUILDING CODE REQUIREMENTS FOR REINFORCED CONCRETE", ACI 318M, AND THE "MANUAL OF STANDARD PRACTICE FOR DETAILING REINFORCED CONCRETE STRUCTURES", ACI 315M, LATEST EDITION. BASED ON IN COUNTRY REINFORCEMENT AVAILABILITY, IT IS THE CONTRACTOR'S OPTION TO ROUND DESIGNATED ODD NUMBERED REINFORCEMENT SIZES UP (1) ONE BAR SIZE.

3.10 ALL DOWELS SHALL MATCH SIZE AND NUMBER OF MAIN REINFORCING, UNLESS NOTED OTHERWISE ON THE SHEETS.

3.11 ADDITIONAL BARS SHALL BE PROVIDED AROUND ALL FLOOR AND WALL OPENINGS AS SHOWN ON THE SHEETS.

3.12 SEE ARCHITECTURAL SHEETS FOR TYPE AND LOCATION OF ALL FLOOR FINISHES.

3.13 THE CONTRACTOR SHALL COORDINATE ADDITIONAL WALL/SLAB OPENINGS NOT SHOWN ON STRUCTURAL SHEETS. SEE MECHANICAL, ELECTRICAL, PLUMBING AND CIVIL SHEETS.

3.14 UNLESS NOTED OTHERWISE, ALL CURBS SHALL BE REINFORCED WITH AT LEAST (1)-#13 CONTINUOUS AND #13 AT 300mm O.C. DOWELS TO STRUCTURE BELOW.

3.15 THE CONTRACTOR SHALL VERIFY ALL OPENINGS, PAD SIZES, AND ANCHOR BOLTS WITH EQUIPMENT SELECTED.

3.16 FOR ALL WALLS & PIERS, PROVIDE DOWELS INTO FOOTING AT EACH VERT REINF BAR, UON DOWEL SIZE SHALL BE SAME AS VERT REINF.

3.17 PROVIDE CONCRETE POUR STOPS OR FORMED AS REQUIRED FOR INSTALLATION OF ALL CONCRETE WORK.

3.18 PROVIDE ADDITIONAL (2)-#13 x 600mm REINFORCING BARS IN SLAB-ON GRADE AT ALL RE-ENTRANT CORNERS. PLACE BARS AT MID-DEPTH OF SLAB WITH A CLEARANCE OF 50mm FROM CORNER UON.

3.19 COLD-WEATHER PLACEMENT: COMPLY WITH ACI 306.1 AND AS FOLLOWS. PROTECT CONCRETE WORK FROM PHYSICAL DAMAGE OR REDUCED STRENGTH THAT COULD BE CAUSED BY FROST, FREEZING ACTIONS, OR LOW TEMPERATURES. SUBMIT A COLD WEATHER CONCRETING PLAN FOR APPROVAL.

3.20 PROVIDE BONDING COMPOUND PER ASTM C 1059-99: SPECIFICATION FOR LATEX AGENTS FOR BONDING FRESH CONCRETE (GROUT) TO HARDENED CONCRETE.

3.21 THE FORMED SURFACES FOR REINFORCED CONCRETE SHALL ACHIEVE A "CLASS A" FINISH WHEN RECEIVING PAINT OR A "CLASS B" FINISH WHEN RECEIVING PLASTER OR TILE AS PER SPECIFICATION SECTION 03 31 00 CAST-IN-PLACE STRUCTURAL CONCRETE.

3.22 AT INTERSECTING GRADE BEAMS AND SHEAR WALLS, PROVIDE CORNER BARS AT INTERSECTIONS WITH SAME QUANTITY, SIZE AND SPACING AS HORIZONTAL BARS WITH LEG LENGTH = 50db.

3.23 REFER TO S-800 SERIES REINFORCING BAR PLACEMENT DRAWINGS DEFINING LENGTHS, BENDS, AND SPACINGS FOR ALL STRUCTURAL CONCRETE. THE S-800 SERIES DRAWING ARE BASED ON THE S-400, S-500, S-600, AND S-700 SERIES DRAWING SCHEDULES, DETAILS, AND DIAGRAMS.

4.0 CONCRETE MASONRY

4.1 MASONRY CONSTRUCTION SHALL CONFORM TO SPECIFICATION FOR MASONRY STRUCTURES (ACI 530.1) UON.

4.2 STRENGTH OF MASONRY MATERIALS SHALL BE AS FOLLOWS:

a. CONCRETE MASONRY UNITS SHALL BE NORMAL WEIGHT, GRADE N, TYPE 1, CONFORMING TO ASTM C-90 AND HAVE A MINIMUM COMPRESSIVE STRENGTH OF 10.4 MPa ON THE NET AREA.
b. MORTAR SHALL CONFORM TO ASTM C-270 TYPE S.
c. GROUT FOR MASONRY SHALL BE NORMAL WEIGHT AND HAVE A MINIMUM COMPRESSIVE STRENGTH OF 14 MPa AT 28 DAYS. GROUT SHALL CONFORM TO ASTM C476M. GROUT LIFTS SHALL NOT EXCEED 1,400mm.
d. REINFORCED MASONRY SHALL HAVE A STRENGTH F'm = 10 MPa. (F'm IS THE COMPRESSIVE STRENGTH OF THE MASONRY AT 28 DAYS AS DETERMINED BY PRISM TESTS).

4.3 ALL VERTICAL REINFORCEMENT FOR CONCRETE MASONRY SHALL BE ASTM A615M-96a, GRADE 420 MPa. ALL SPLICES SHALL BE LAPPED 48 BAR DIAMETERS MINIMUM.

4.4 BOND BEAMS SHALL BE SPACED AT 1200mm OC VERTICALLY. BOND BEAM REINFORCING SHALL BE CONTINUOUS AND PROVIDED AT WALL INTERSECTIONS AND WALL CORNERS (REFERENCE CONCRETE MASONRY NOTE 4.11). ALL BOND BEAM REINFORCING SHALL BE CONTINUOUS AND HAVE STANDARD ACI HOOKS AT EACH END. PROVIDE STANDARD BAR SPLICES AS SPECIFIED. AS AN ALTERNATE TO CMU BOND BEAMS, IT IS THE CONTRACTOR'S OPTION TO PROVIDE 200mm x 200mm CONTINUOUS CAST-IN-PLACE CONCRETE BOND BEAMS WITH (2)-#16 IN LIEU OF CMU BOND BEAMS INDICATED ON THE DRAWINGS.

4.5 SEE TYPICAL DETAILS FOR MINIMUM REINFORCEMENT REQUIREMENTS FOR CMU WALLS. PROVIDE STANDARD BAR SPLICES AS SPECIFIED. ALL VERTICAL REINFORCEMENT EXTENDS FULL HEIGHT OF WALL.

4.6 CMU CELLS THAT REQUIRE VERTICAL REINFORCING BARS AS INDICATED ON THE CONTRACT DRAWINGS AND/OR SPECS SHALL HAVE REINF BARS PLACED IN CENTERS OF CMU CELLS AND CONTINUOUSLY GROUTED UON.

4.7 ALL CMU CELLS, OPEN CAVITIES, AND AIR SPACES OF ALL EXTERIOR WALLS SHALL BE GROUTED TO STOP FRAGMENTS FROM MORTAR BLAST.

4.8 CONTRACTOR SHALL COORDINATE LOCATION OF ALL OPENINGS SEE ARCH, MECH, ELEC, AND PLUMBING SHEETS FOR SIZE AND LOCATION OF OPENINGS.

4.9 MASONRY WALLS SHALL NOT BE BACK FILLED PRIOR TO THE MORTAR AND GROUT ATTAINING THEIR RESPECTIVE MAXIMUM DESIGN STRENGTHS PER SPECIFICATIONS.

4.10 PROVIDE GALVANIZED MORTAR/GROUT SCREEN W/ 3mm MESH WHERE CELLS BELOW ARE NOT GROUTED.

4.11 AT INTERSECTING BOND BEAMS, PROVIDE CORNER BAR FOR EACH HORIZONTAL BAR IN BOND BEAMS AT INTERSECTING WALLS. USE SAME SIZE AND SPACING AS HORIZONTAL BARS WITH LEG LENGTH = 50db.

4.12 THE ALTERNATE CMU BRACE DETAILS SHOWN ON S-701 CAN BE UTILIZED AT THE CONTRACTOR'S OPTION IN PLACE OF THE "FLOATING PIN" WALL BRACE CONNECTIONS AT TOP OF CMU WALLS DEPICTED ON S-400 AND S-500 SERIES DRAWINGS THESE ALTERNATE DETAILS ALSO SHOW ALTERNATE CAST-IN-PLACE WALL BOND BEAMS THAT CAN BE UTILIZED AT THE CONTRACTOR'S OPTION IN PLACE OF THE STANDARD CMU BOND BEAMS CONSTRUCTED OF CMU BLOCKS.

5.0 COLD-FORMED METAL FRAMING

5.1 ALL COLD-FORMED METAL FRAMING MEMBERS SHALL CONFORM TO ASTM A1003M, STRUCTURAL GRADE ST340 (MPa), WITH A GALVANIZED COATING OF Z275 OR BETTER IN ACCORDANCE WITH ASTM A653M.

5.2 ALL COLD-FORMED METAL FRAMING MEMBERS SHALL HAVE THE FOLLOWING MINIMUM PROPERTIES:

a. MINIMUM METAL THICKNESS:
TRACK = 1.37mm;
STUD/OTHER = 1.09mm
b. MINIMUM FLANGE WIDTH:
TRACK = 38mm;
STUD/OTHER = 35mm
c. MINIMUM MEMBER DEPTH:
ALL SECTIONS = 152.2mm
d. PURLIN (HAT CHANNEL)
DEPTHxWIDTH(FLAT TOP)xTHICK = 25mmx42mmx1.59mm

5.3 ALL CONNECTIONS SHALL BE MADE WITH CORROSION RESISTANT (ASTM A153M), SELF-DRILLING, SELF-TAPPING STEEL DRILL SCREWS IN ACCORDANCE WITH ASTM C1513. SCREWS SHALL HAVE A LOW PROFILE HEAD BENEATH ROOF DECK, AND STANDARD HEAD ALL OTHER LOCATIONS.

5.4 FABRICATE COLD FORMED METAL FRAMING AND ACCESSORIES PLUMB, SQUARE AND TRUE TO LINE, WITH CONNECTIONS SECURELY FASTENED ACCORDING TO AISI STANDARD FOR COLD FORMED STEEL FRAMING.

5.5 CUT FRAMING MEMBERS BY SAWING OR SHEATHING, DO NOT TORCH CUT.

5.6 INSTALL FRAMING MEMBERS IN ONE-PIECE LENGTHS UNLESS SPLICE CONNECTIONS ARE INDICATED FOR TRACK OR TENSION MEMBERS

5.7 INSTALL TEMPORARY BRACING AND SUPPORTS TO SECURE FRAMING DURING CONSTRUCTION. MAINTAIN BRACING AND SUPPORTS IN PLACE UNTIL THE STRUCTURE HAS BEEN COMPLETED WITH ALL CONNECTIONS AND PERMANENT BRACING SECURED.

6.0 STRUCTURAL DESIGN CRITERIA

6.1 ALL DESIGNS SHALL CONFORM TO THE PROVISIONS OF THE IBC 2006 AND UFC AS APPLICABLE.

6.2 DESIGN LOADS

6.2.1 DEAD LOADS (PER IBC 2006 & UFC 3-310-01)

| | |
|---|---|
| MECH/ELEC/PLUMBING | 0.20 kPa |
| MISCELLANEOUS | 0.15 kPa |
| COLD-FORMED FRAMING | 0.20 kPa |
| INSULATION | 0.10 kPa |
| METAL ROOF PANEL | 0.14 kPa |
| | 0.79 kPa |
| FLOOR PARTITION ALLOWANCE | 0.96 kPa |

6.2.2 LIVE LOADS (PER IBC 2006 & UFC 3-310-01)

| | |
|---|---|
| ROOF | 1.00 kPa |
| CORRIDOR (2-STORY BLDG ONLY) | 4.80 kPa |
| ALL OTHERS (2-STORY BLDG ONLY) | 2.40 kPa |
| SLAB ON GRADE | 4.80 kPa |

6.2.3 SNOW LOADS (PER IBC 2006 & UFC 3-310-01)

| | |
|---|---|
| GROUND SNOW LOAD (Pg) | 1.2 kPa |
| SNOW IMPORTANCE FACTOR (I) | 1.0 |
| SNOW EXPOSURE FACTOR (Ce) | 1.0 |
| THERMAL FACTOR (Ct) | 1.0 |

6.2.4 WIND LOADS (PER IBC 2006)

| | |
|---|---|
| BASIC WIND SPEED | 137 km/h |
| WIND IMPORTANCE FACTOR | 1.0 |
| WIND EXPOSURE CATEGORY | D |
| DIRECTIONALITY COEFFICIENT (Kd) | 0.85 |
| TOPOGRAPHIC FACTOR (Kzt) | 1.0 |

6.2.5 SEISMIC LOADS (PER IBC 2006 & UFC 3-310-04)

| | |
|---|---|
| OCCUPANCY USE CATEGORY | II |
| SEISMIC IMPORTANCE FACTOR (Ie) | 1.0 |
| SEISMIC SITE CLASS | D |
| $S_s$ = 1.50 (REDUCED FROM 2.40 PER ASCE 7-05, 12.8.1.3 FOR A BUILDING WITHOUT IRREGULARITIES) | |
| $S_1$ = 1.20 | |
| $S_{DS}$ = 1.00 | |
| $S_{D1}$ = 1.20 | |
| SEISMIC DESIGN CATEGORY | E |
| SEISMIC RESISTING SYSTEM: -SPECIAL REINFORCED CONCRETE SHEAR WALL | |
| RESPONSE MODIFICATION FACTOR (R) | 6 |
| RESPONSE COEFFICIENT (Cs) | 0.167 |
| SEISMIC ANALYTICAL PROCEDURE = | EQUIV LATERAL FORCE |
| SEISMIC BASE SHEAR | 815 kN |

APPROVED:

A/E DESIGNER OF RECORD

SEAL:

GEORGIA REGISTERED 1-27-10 No. 27141 PROFESSIONAL ENGINEER CHRISTOPHER W WHITMORE

US ARMY CORPS OF ENGINEERS
AFGHANISTAN ENGINEER DISTRICT

| Mark | Description | Date | Appr. |
|---|---|---|---|

Date: 2/23/10 | Rev. 0
Design file no.
Drawing code:
File name: ANAMEDS-001GN
Plot date: 2/23/2010
Plot scale: X:X

Designed by: KMP/MMY | Ckd by: CWW
Dwn by: RCG | Reviewed by: LHM
Submitted by: BAKER

U.S. ARMY CORPS OF ENGINEERS
AFGHANISTAN ENGINEER DISTRICT
APO AE 96338

*Michael Baker Jr., Inc*
*A unit of Michael Baker Corporation*
Airside Business Park
100 Airside Drive
Moon Township, PA 15108
www.mbakercorp.com

AFGHAN NATIONAL ARMY
REGIONAL MILITARY TRAINING CENTER
STANDARD DESIGN

MEDICAL CLINIC

GENERAL NOTES & DESIGN CRITERIA

Sheet reference number:
S-001

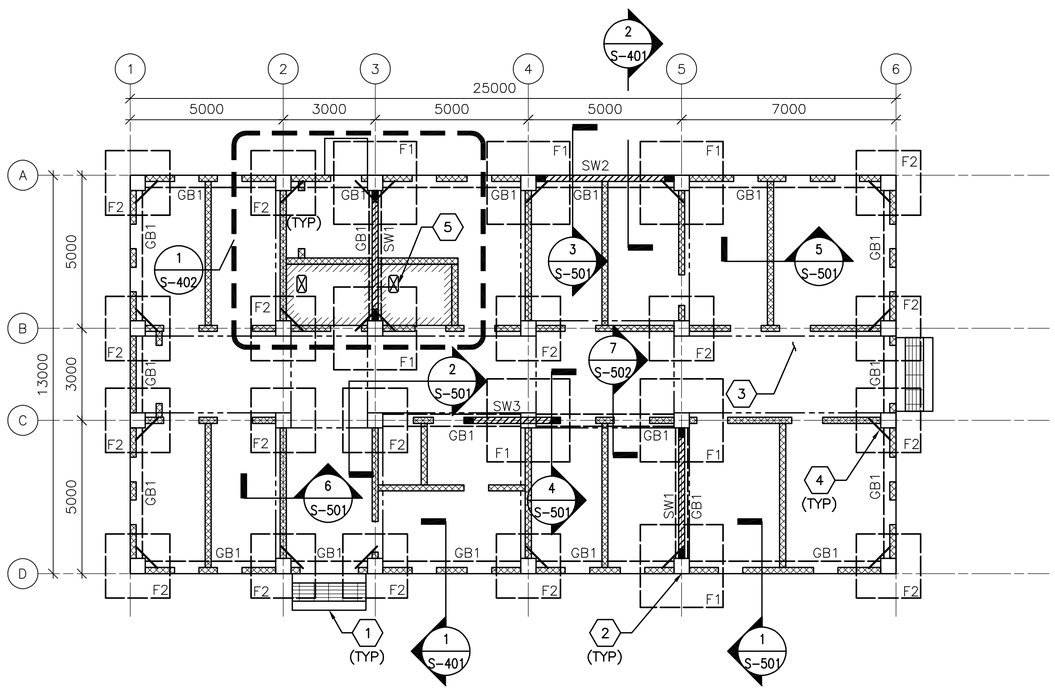


1 S-101 **FOUNDATION/SLAB PLAN**

SCALE: 1:100

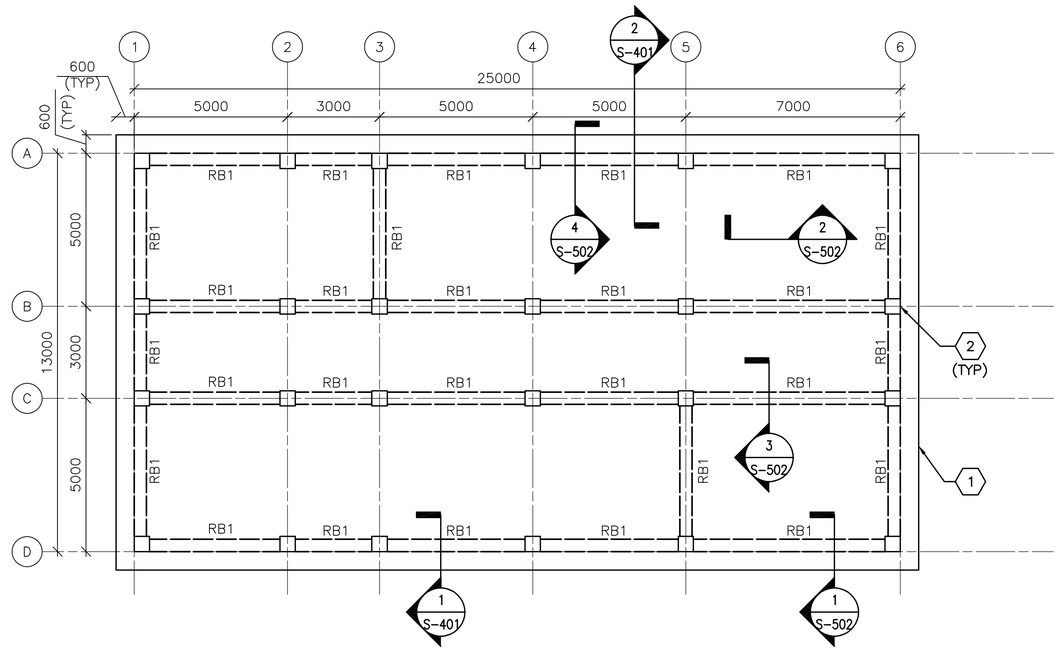


2 S-101 **ROOF FRAMING PLAN**

SCALE: 1:100

## FOUNDATION/SLAB PLAN NOTES:

1. REFER TO SHEET S-001 FOR STRUCTURAL NOTES AND DESIGN CRITERIA.
2. FINISH FIRST FLOOR ELEVATION SHALL BE (DATUM 0.00MM) ALL PLUS OR MINUS DIMENSIONS INDICATED ON PLAN OR REFERRED TO IN NOTES RELATE TO FINISH FIRST FLOOR ELEVATION.
3. SLAB-ON-GRADE IS 150 WITH #13 @ 300 OC EW LOCATED 38 FROM T/SLAB UON.
4. TOP OF EXTERIOR FOOTINGS SHALL BE -950 UNLESS OTHERWISE INDICATED.
5. TOP OF INTERIOR FOOTINGS WITHOUT GRADE BEAM ABOVE SHALL BE -600.
6. TOP OF INTERIOR FOOTINGS WITH GRADE BEAM ABOVE SHALL BE -950.
7. COLUMN FOOTINGS INDICATED BY F# ON PLAN. REFER TO COLUMN FOOTING SCHEDULE ON SHEET S-601.
8. REFER TO COLUMN SCHEDULE ON SHEET S-601.
9. GRADE BEAM INDICATED BY GB# ON PLAN, REFER TO BEAM SCHEDULE ON SHEET S-601.
10. SHEARWALL INDICATED BY SW# ON PLAN, REFER TO SHEARWALL SCHEDULE ON SHEET S-601.
11. FOR CMU REINFORCEMENT, SEE TYP EXTERIOR & INTERIOR CMU WALL REINF DETAILS ON S-701.
12. SEE MECHANICAL AND ELECTRICAL SHEETS FOR CONCRETE PAD LOCATIONS, SIZES, AND THICKNESS NOT SHOWN. SEE SHEET S-701 FOR DETAILS.
13. THICKENED SLAB UNDER CMU PERIMETER/PARTITION WALLS NOT SHOWN FOR CLARITY.

## FOUNDATION/SLAB PLAN KEY NOTES: (X)

1. CONC SLAB (ENTRANCE)-SEE ARCH DWGS FOR INFORMATION
2. REINF CONC COLUMN
3. REINF CONC SLAB-ON-GRADE
4. (2)-#13 @ RE-ENTRANT CORNERS - SEE S-701 FOR INFORMATION
5. SLAB OPENING - COORDINATE W/ ARCH AND PLUMBING DWGS
6. NOT USED

## FOUNDATION/SLAB PLAN LEGEND:

- REINF CONC SHEAR WALL
- REINF CMU WALL
- CONTROL JOINT
- INDICATES DROP SLAB 65 BELOW FIN FLR
- SLAB OPENING

## ROOF FRAMING PLAN NOTES:

1. REFER TO SHEETS S-001 FOR STRUCTURAL NOTES AND DESIGN CRITERIA.
2. TOP OF SLAB ELEVATION = 3600 UNLESS NOTED OTHERWISE.
3. ROOF SLAB IS 200 WITH #13 @ 300 OC EW T&B.
4. ROOF BEAM INDICATED BY RB# ON PLAN. REFER TO BEAM SCHEDULE ON SHEET S-601.
5. COORDINATE WITH ARCHITECTURAL SHEETS FOR COLD-FORMED STEEL OVERBUILD FRAMING ABOVE ROOF SLAB.
6. COLD-FORMED METAL OVERBUILD ROOF FRAMING NOT SHOWN FOR CLARITY. SEE OVERBUILD ROOF FRAMING DETAILS AND SECTIONS ON SHEET S-702.
7. CMU PARTITION WALLS (BELOW ROOF SLAB) NOT SHOWN FOR CLARITY.
8. OVERHANG AREAS OF ROOF SLAB CONTAIN ROOF VENT PENETRATIONS. REFERENCE ARCHITECTURAL DRAWINGS FOR INFORMATION.

## ROOF FRAMING PLAN KEY NOTES: (X)

1. CONC ROOF SLAB (BELOW ROOF OVERBUILD)
2. REINF CONC COLUMN (BELOW CONC ROOF SLAB)

0 2000 4000
SCALE: 1:100

UNLESS OTHERWISE NOTED, LINEAR DIMENSIONS SHOWN ON DRAWINGS ARE IN MILLIMETERS (mm)

APPROVED:

A/E DESIGNER OF RECORD

SEAL:

GEORGIA REGISTERED 2-23-10 No. 27141 PROFESSIONAL ENGINEER CHRISTOPHER W. WHITMORE

US ARMY CORPS OF ENGINEERS
AFGHANISTAN ENGINEER DISTRICT

| No. | Description | Date | Appr. |
|---|---|---|---|
| | | | |

Rev: 0
Date: 2/23/10
Design file no.
Drawing code:
File name: ANAMEDS-101FFP
Plot date: 2/23/2010
Plot scale: x:x

Designed by: KMP/MMY
Dwn by: RCG
Ckd by: CWW
Reviewed by: LHM
Submitted by: BAKER

U.S. ARMY CORPS OF ENGINEERS
AFGHANISTAN ENGINEER DISTRICT
APO AE 96338

Michael Baker Jr., Inc
A unit of Michael Baker Corporation
Airside Business Park
100 Airside Drive
Moon Township, PA 15108
www.mbakercorp.com

AFGHAN NATIONAL ARMY
REGIONAL MILITARY TRAINING CENTER
STANDARD DESIGN

MEDICAL CLINIC

FOUNDATION/SLAB & ROOF FRAMING PLANS

Sheet reference number:
S-101

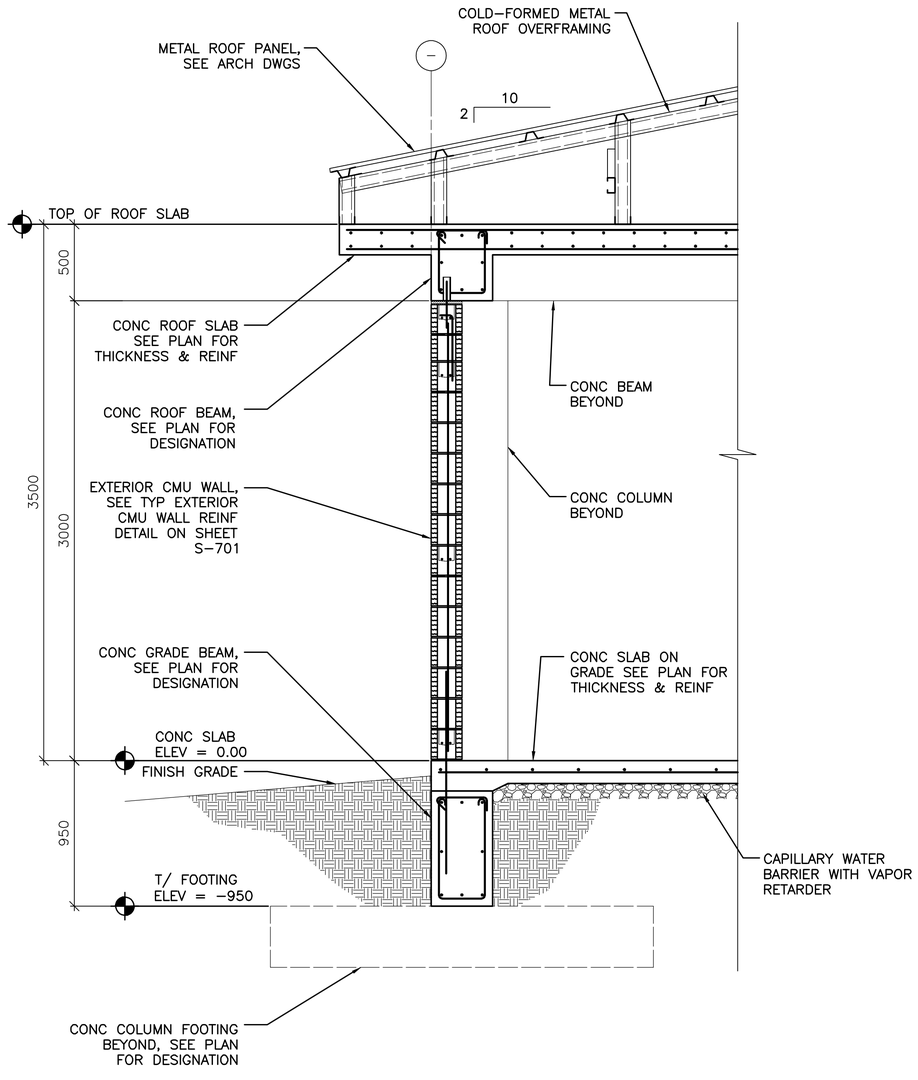


1 S–101 **TYPICAL WALL SECTION AT EXTERIOR MASONRY WALL**

SCALE: 1:20

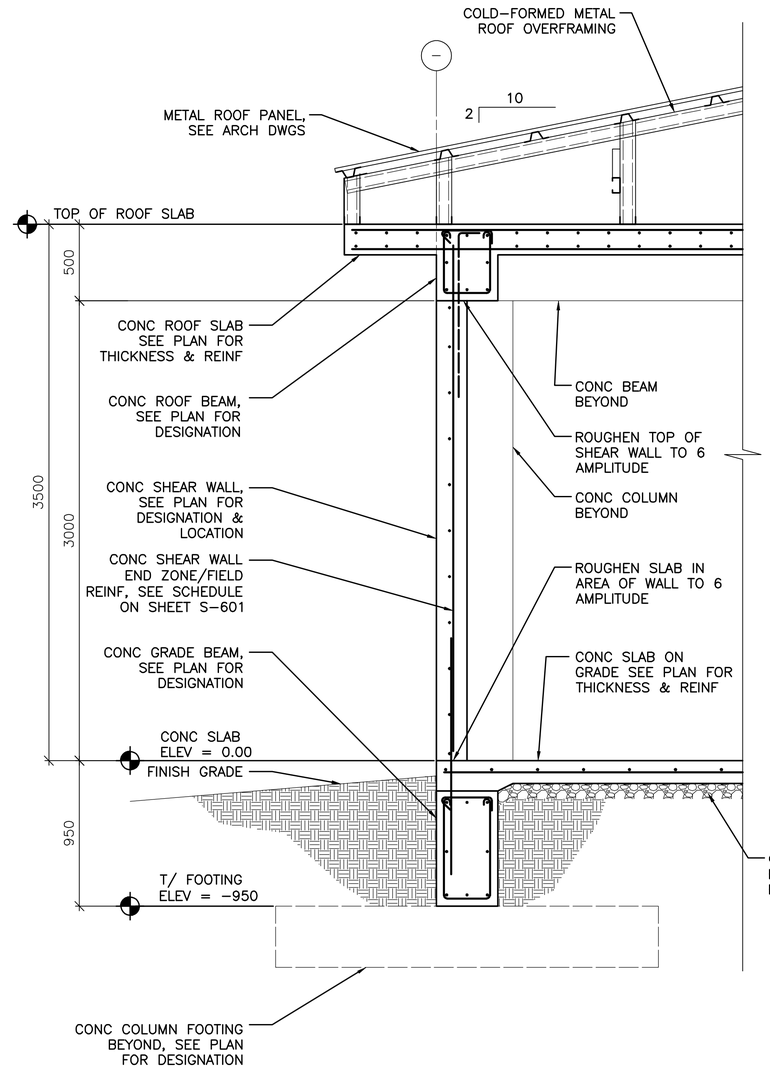


2 S–101 **TYPICAL WALL SECTION AT CONCRETE SHEAR WALL**

SCALE: 1:20

0 400 800

SCALE: 1:20

UNLESS OTHERWISE NOTED, LINEAR DIMENSIONS SHOWN ON DRAWINGS ARE IN MILLIMETERS (mm)

APPROVED:

A/E DESIGNER OF RECORD

SEAL:

GEORGIA REGISTERED 1-27-10 No. 27141 PROFESSIONAL ENGINEER CHRISTOPHER W. WHITMORE

US ARMY CORPS OF ENGINEERS
AFGHANISTAN ENGINEER DISTRICT

| Mark | Description | Date | Appr. | Mark | Description | Date | Appr. |
|---|---|---|---|---|---|---|---|
| | | | | | | | |

Date: 2/23/10 Rev: 0
Design file no.
Drawing code:
File name: ANAMEB5-40188
Plot date: 2/23/2010
Plot scale: x:x

Designed by: KMP/MMY
Ckd by: CWW
Dwn by: RCG
Reviewed by: LHM
Submitted by: BAKER

U.S. ARMY CORPS OF ENGINEERS
AFGHANISTAN ENGINEER DISTRICT
APO AE 96338

*Michael Baker Jr., Inc*
*A unit of Michael Baker Corporation*
Airside Business Park
100 Airside Drive
Moon Township, PA 15108
www.mbakercorp.com

AFGHAN NATIONAL ARMY
REGIONAL MILITARY TRAINING CENTER
STANDARD DESIGN

MEDICAL CLINIC

BUILDING SECTIONS

Sheet reference number:
S–401

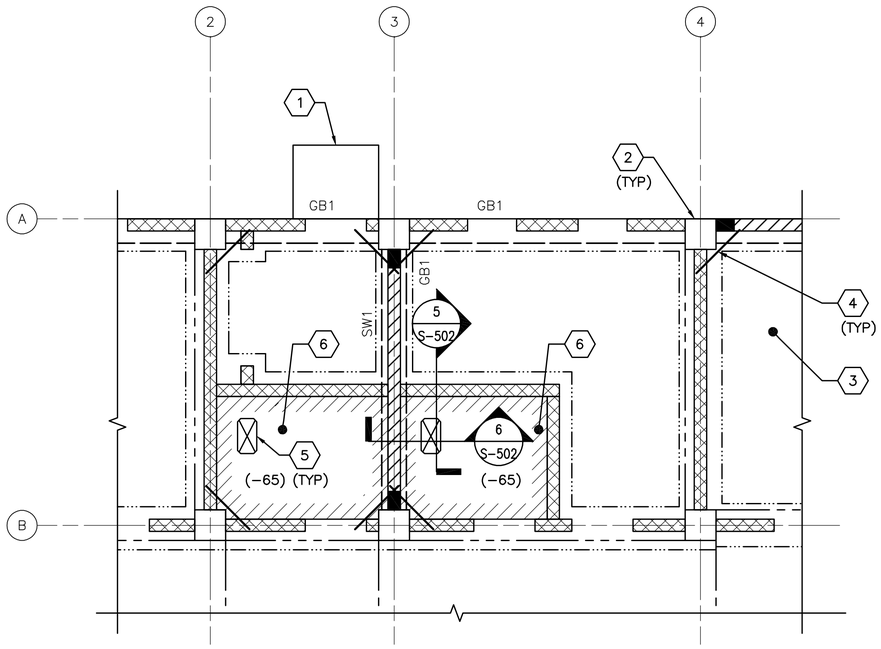


1 S-101 **ENLARGED LATRINE SLAB PLAN**

SCALE: 1:50

## ENLARGED PLAN NOTES:

1. REFER TO SHEET S-001 FOR STRUCTURAL NOTES AND DESIGN CRITERIA.
2. FINISH FIRST FLOOR ELEVATION SHALL BE (DATUM 0.00MM) ALL PLUS OR MINUS DIMENSIONS INDICATED ON PLAN OR REFERRED TO IN NOTES RELATE TO FINISH FIRST FLOOR ELEVATION.
3. SLAB-ON-GRADE IS 150 WITH #13 @ 300 OC EW LOCATED 38 FROM T/SLAB UON. WHERE NOTED, 300 SLAB-ON-GRADE SHALL BE REINFORCED W/ #13 @300 OC EW T&B.
4. REFER TO FOUNDATION/SLAB PLAN ON SHEET S-101 FOR COLUMN DESIGNATION AND COLUMN SCHEDULE ON SHEET S-601.
5. REFER TO FOUNDATION/SLAB PLAN ON SHEET S-101 FOR SHEARWALL DESIGNATION AND SHEARWALL SCHEDULE ON SHEET S-601.
6. REFER TO FOUNDATION/SLAB PLAN ON SHEET S-101 FOR GRADE BEAM DESIGNATION AND GRADE BEAM SCHEDULE ON SHEET S-601.
7. SEE TYP EXTERIOR AND INTERIOR CMU WALL REINFORCING DETAILS ON SHEET S-701.

## ENLARGED PLAN KEYNOTES: (X)

1. CONC SLAB (ENTRANCE) - SEE ARCH DWGS FOR INFORMATION
2. REINF CONC COLUMN
3. REINF CONC SLAB-ON-GRADE
4. (2)-#13 @ RE-ENTRANT CORNERS - SEE S-701 FOR INFORMATION
5. SLAB OPENING - COORDINATE W/ ARCH AND PLUMBING DWGS
6. 300 SLAB-ON-GRADE

## PLAN LEGEND:

- REINF CONC SHEAR WALL
- REINF CMU WALL
- CONTROL JOINT
- INDICATES DROP SLAB 65 BELOW FINISH FLOOR
- SLAB OPENING
- OUTLINE OF THICKENED SLAB AREAS
- GRADE BEAM

0 1000 2000
SCALE: 1:50

UNLESS OTHERWISE NOTED, LINEAR DIMENSIONS SHOWN ON DRAWINGS ARE IN MILLIMETERS (mm)

APPROVED:

A/E DESIGNER OF RECORD

SEAL:

GEORGIA REGISTERED 1-24-10 No. 27141 PROFESSIONAL ENGINEER CHRISTOPHER W. WHITMORE

US ARMY CORPS OF ENGINEERS
AFGHANISTAN ENGINEER DISTRICT

| Mark | Description | Date | Appr. |
|---|---|---|---|
| | | | |

Date: 2/23/10
Design file no.
Drawing code:
Rev: 0
File name: ANAMEDS-402EP
Plot date: 2/23/2010
Plot scale: x:X

Designed by: KMF/MMY
Dwn by: RCG
Ckd by: CWW
Reviewed by: LHM
Submitted by: BAKER

U.S. ARMY CORPS OF ENGINEERS
AFGHANISTAN ENGINEER DISTRICT
APO AE 96338

*Michael Baker Jr., Inc.*
*A unit of Michael Baker Corporation*
Airside Business Park
100 Airside Drive
Moon Township, PA 15108
www.mbakercorp.com

AFGHAN NATIONAL ARMY
REGIONAL MILITARY TRAINING CENTER
STANDARD DESIGN

MEDICAL CLINIC

ENLARGED LATRINE SLAB PLAN

Sheet reference number:
S-402

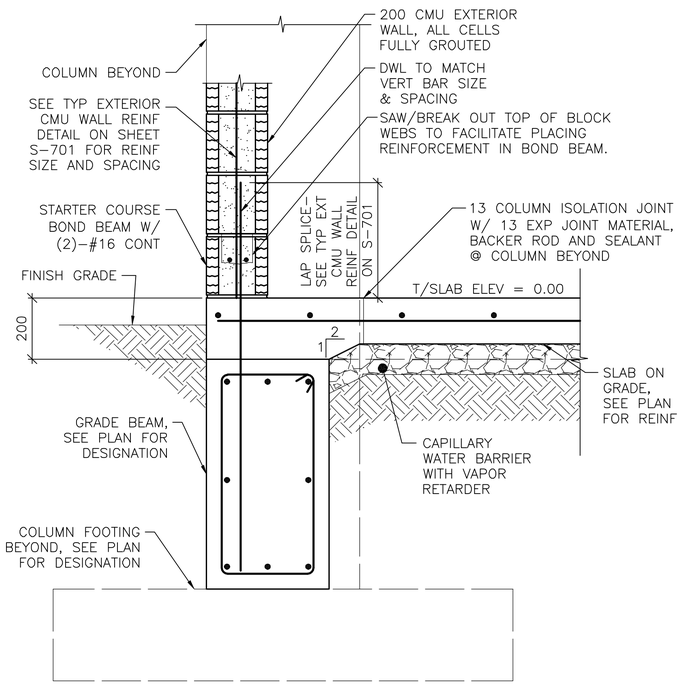


NOTE:
1. SECTION IS SIMILAR FOR INTERIOR CMU PARTITIONS OVER GRADE BEAMS SHOWING THICKENED 200 CONC SLAB AREA.

1 S-101 **SECTION** SCALE: 1:10

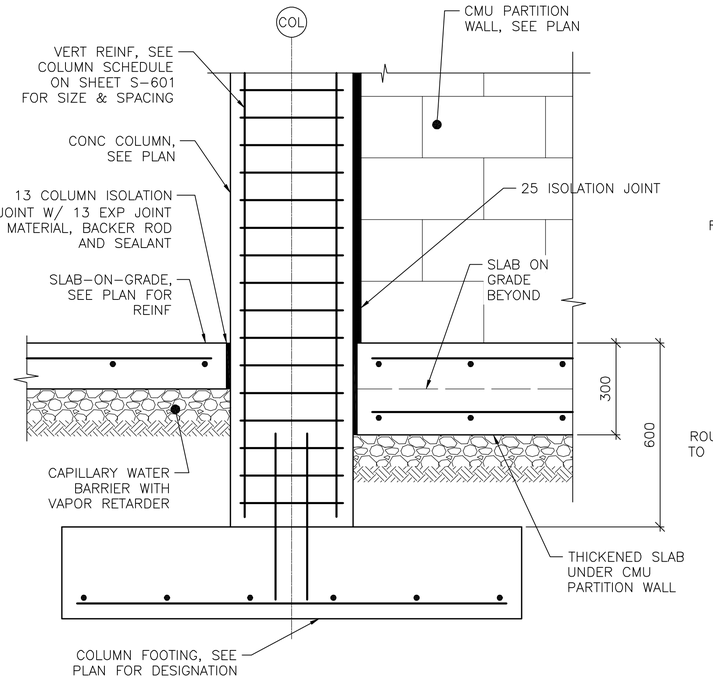


2 S-101 **SECTION** SCALE: 1:10

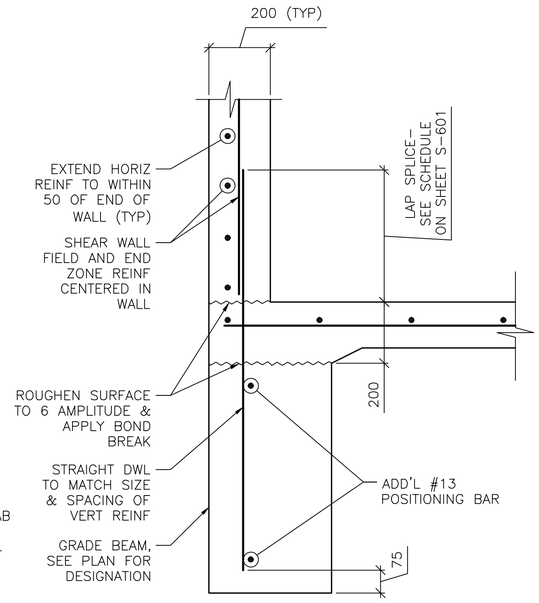


NOTES:
1. SECTION DEPICTS SHEAR WALL TERMINATION ONLY. GRADE BEAM REINFORCING NOT SHOWN FOR CLARITY
2. SEE SHEET S-601 AND SHEET S-702 FOR SCHEDULED FIELD AND END ZONE REINF.

3 S-101 **SECTION** SCALE: 1:10

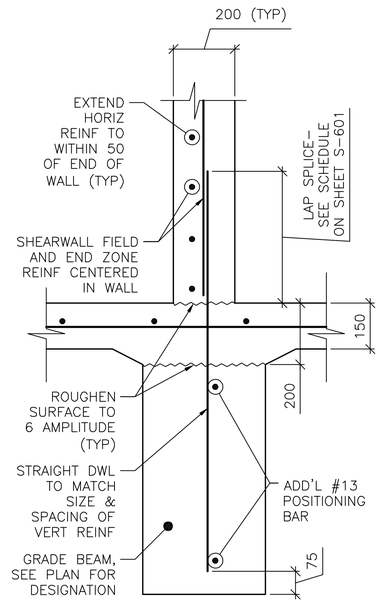


NOTE:
1. SECTION DEPICTS SHEAR WALL TERMINATION ONLY. GRADE BEAM REINFORCING NOT SHOWN FOR CLARITY
2. SEE SHEET S-601 AND SHEET S-702 FOR SCHEDULED FIELD AND END ZONE REINF.

4 S-101 **SECTION** SCALE: 1:10

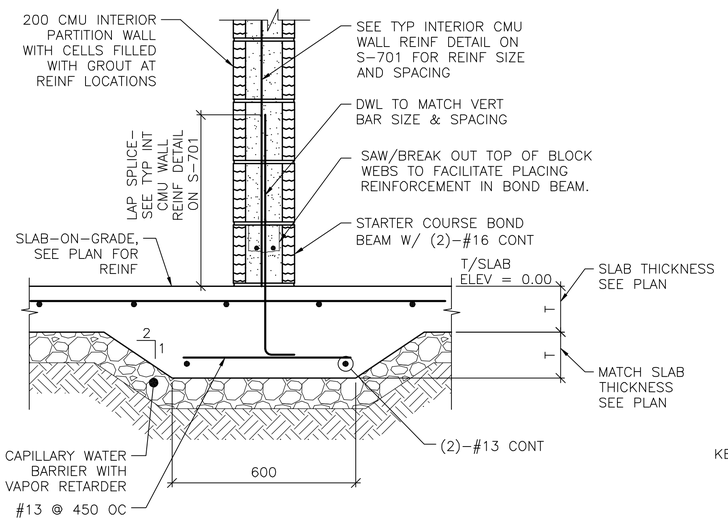


5 S-101 **SECTION** SCALE: 1:10

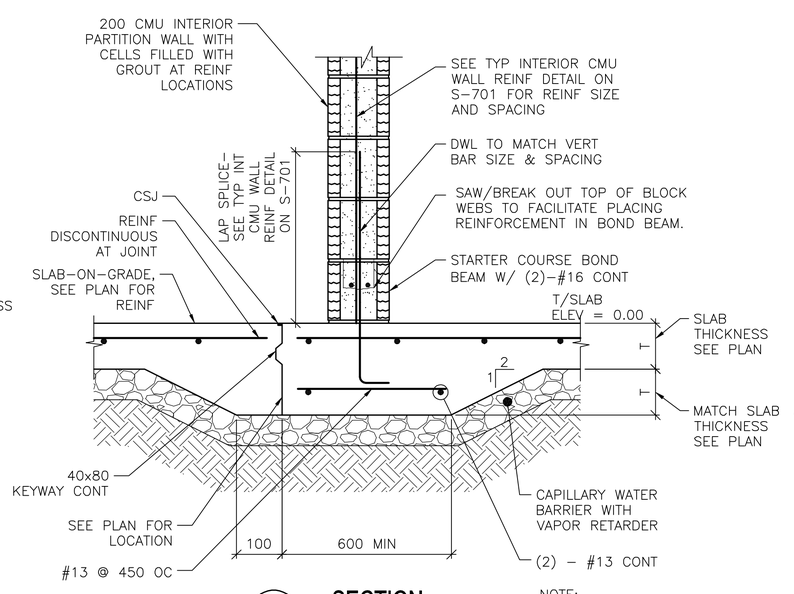


6 S-101 **SECTION** SCALE: 1:10

NOTE:
1. DETAIL IS APPLICABLE AT CONTROL JOINTS RUNNING PARALLEL TO CMU WALLS AND WITHIN 300 OF FACE OF WALL.

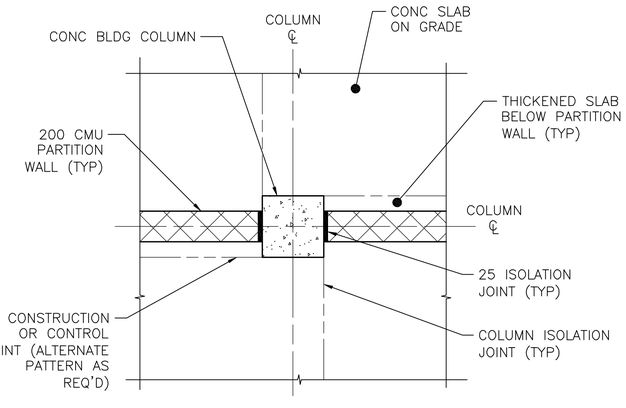


A S-501 **COLUMN ISOLATION JOINT DETAIL** SCALE: NTS

0 200 400
SCALE: 1:10

UNLESS OTHERWISE NOTED, LINEAR DIMENSIONS SHOWN ON DRAWINGS ARE IN MILLIMETERS (mm)

APPROVED:

A/E DESIGNER OF RECORD

SEAL:

GEORGIA REGISTERED 12-12-10 No. 27141 PROFESSIONAL ENGINEER CHRISTOPHER W. WHITMORE

US ARMY CORPS OF ENGINEERS
AFGHANISTAN ENGINEER DISTRICT

| Mark | Description | Date | Appr. |
|---|---|---|---|

Rev: 0
Date: 2/23/10
Design file no.
Drawing code:
File name: ANAMEMS-50156
Plot date: 2/23/2010
Plot scale: x:x

Designed by: KMP/MMY
Dwn by: RCG
Ckd by: CWW
Reviewed by: LHM
Submitted by: BAKER

U.S. ARMY CORPS OF ENGINEERS
AFGHANISTAN ENGINEER DISTRICT
APO AE 96338


Michael Baker Jr., Inc
A unit of Michael Baker Corporation
Airside Business Park
100 Airside Drive
Moon Township, PA 15108
www.mbakercorp.com


AFGHAN NATIONAL ARMY
REGIONAL MILITARY TRAINING CENTER
STANDARD DESIGN

MEDICAL CLINIC

FOUNDATION SECTIONS

Sheet reference number:
S-501

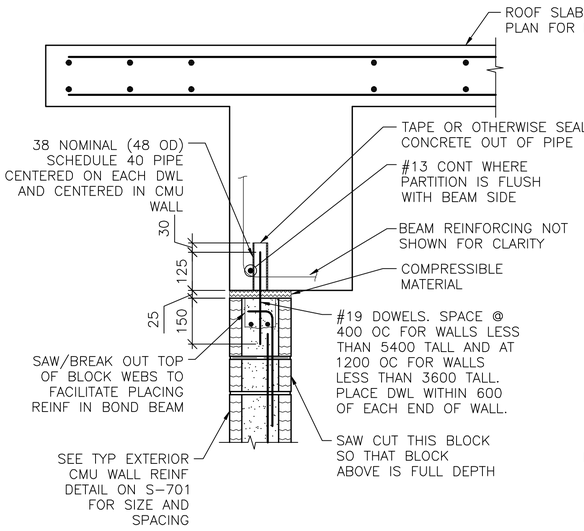


NOTES:
1. EXTEND DOWEL REINF TO 25 CLEAR FROM TOP OF CMU WALL.

1 S-101 **SECTION**
SCALE: 1:10

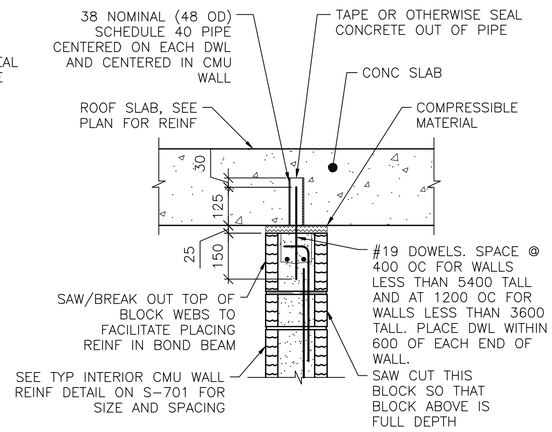


NOTES:
1. EXTEND DOWEL REINF TO 25 CLEAR FROM TOP OF CMU WALL.
2. SLAB REINF NOT SHOWN FOR CLARITY.

2 S-101 **SECTION**
SCALE: 1:10

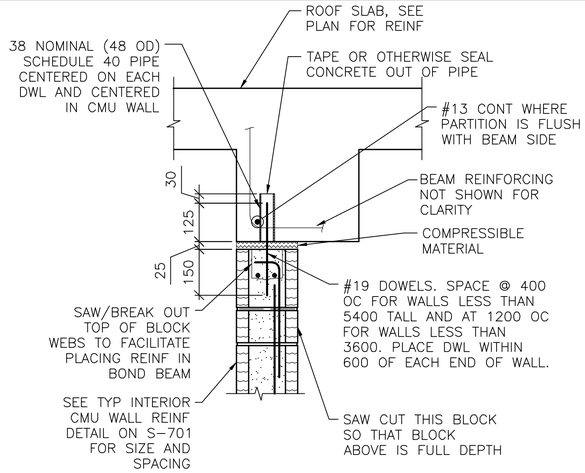


NOTES:
1. EXTEND DOWEL REINF TO 25 CLEAR FROM TOP OF CMU WALL.
2. PARTITION WALL MAY BE CENTERED UNDER THE BEAM OR FLUSH AS SHOWN. SEE PLAN FOR LOCATION.
3. SLAB REINF NOT SHOWN FOR CLARITY.

3 S-101 **SECTION**
SCALE: 1:10

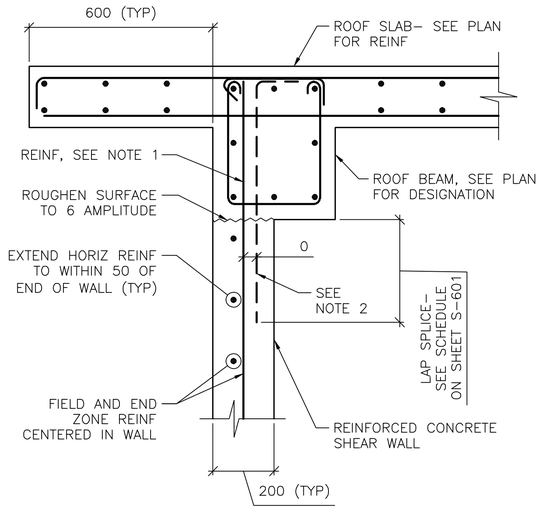


NOTES:
1. TERMINATE "FIELD" VERT REINF & END ZONE REINF @ 50 CLEAR FROM TOP OF ROOF SLAB.
2. WHERE END ZONE REINFORCING CANNOT BE DEVELOPED IN BEAM DEPTH, PROVIDE HOOKED DWLS SAME SIZE & SPACING. PROVIDE TENSION LAP BELOW ROOF BEAM.
3. SEE SHEET S-601 AND SHEET S-702 FOR SCHEDULED FIELD AND END ZONE REINF.

4 S-101 **SECTION**
SCALE: 1:10

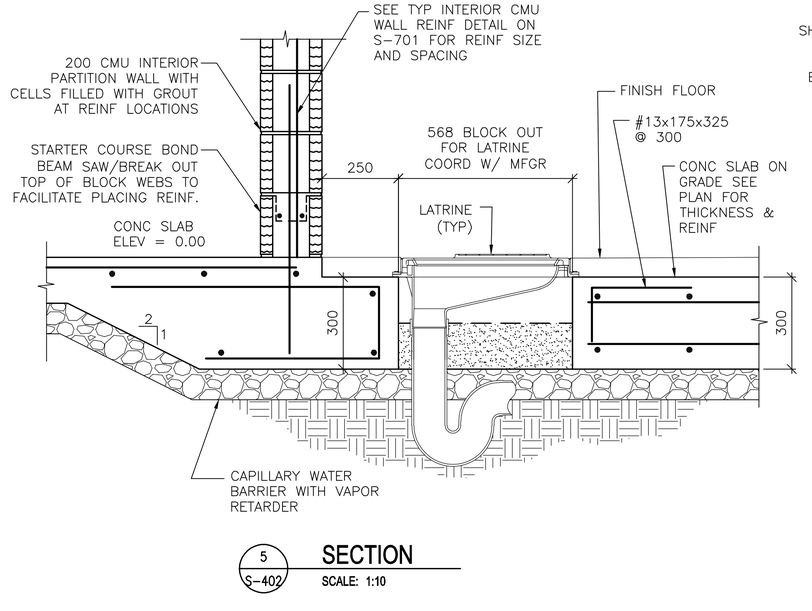


5 S-402 **SECTION**
SCALE: 1:10

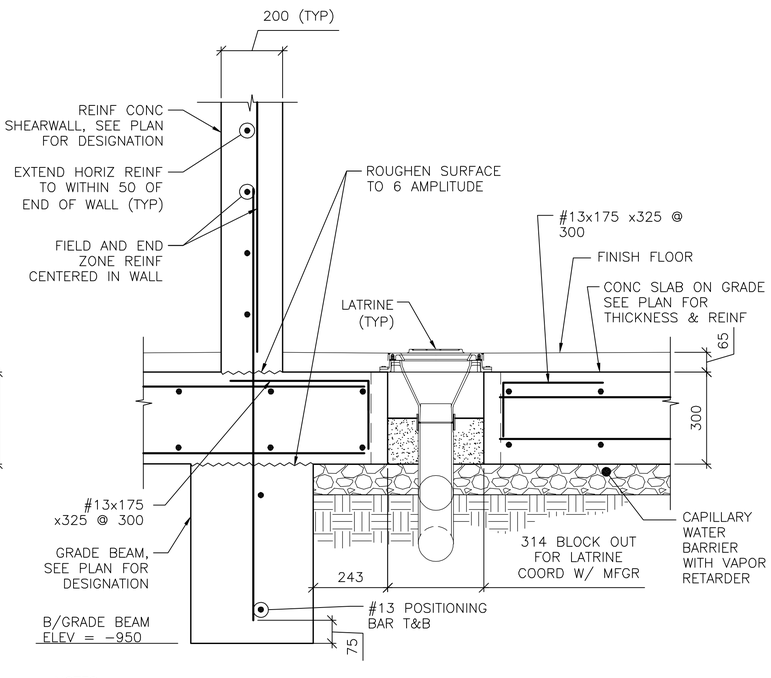


NOTES:
1. SECTION DEPICTS SHEAR WALL TERMINATION ONLY. GRADE BEAM REINFORCING NOT SHOWN FOR CLARITY
2. SEE SHEET S-601 AND SHEET S-702 FOR SCHEDULED FIELD AND END ZONE REINF.
3. FOOTING BEYOND NOT SHOWN FOR CLARITY.

6 S-402 **SECTION**
SCALE: 1:10

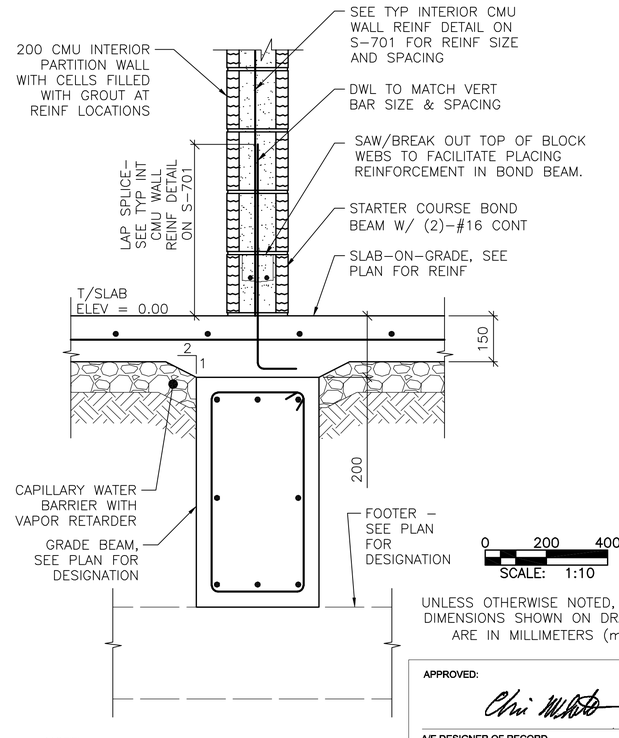


UNLESS OTHERWISE NOTED, LINEAR DIMENSIONS SHOWN ON DRAWINGS ARE IN MILLIMETERS (mm)

NOTE:
1. SECTION DEPICTS SHEAR WALL TERMINATION ONLY. GRADE BEAM REINFORCING NOT SHOWN FOR CLARITY
2. SEE SHEET S-601 AND SHEET S-702 FOR SCHEDULED FIELD AND END ZONE REINF.

7 S-101 **SECTION**
SCALE: 1:10

APPROVED:

A/E DESIGNER OF RECORD

SEAL:

GEORGIA REGISTERED 3-19-10 No. 27141 PROFESSIONAL ENGINEER CHRISTOPHER W. WHITMORE

US ARMY CORPS OF ENGINEERS
AFGHANISTAN ENGINEER DISTRICT

| Mark | Description | Date | Appr. |
|---|---|---|---|

U.S. ARMY CORPS OF ENGINEERS
AFGHANISTAN ENGINEER DISTRICT
APO AE 96338

Michael Baker Jr., Inc
A unit of Michael Baker Corporation
Airside Business Park
100 Airside Drive
Moon Township, PA 15108
www.mbakercorp.com

Designed by: KMP/MMY
Drawn by: RCG
Checked by: CWW
Reviewed by: LHM
Submitted by: BAKER

Date: 2/23/10
Design file no.
Drawing code:
File name: ANAMEMS-6023C
Plot date: 2/23/2010
Plot scale: X:X
Rev: 0

AFGHAN NATIONAL ARMY
REGIONAL MILITARY TRAINING CENTER
STANDARD DESIGN

MEDICAL CLINIC

FRAMING SECTIONS

Sheet reference number:
S–502

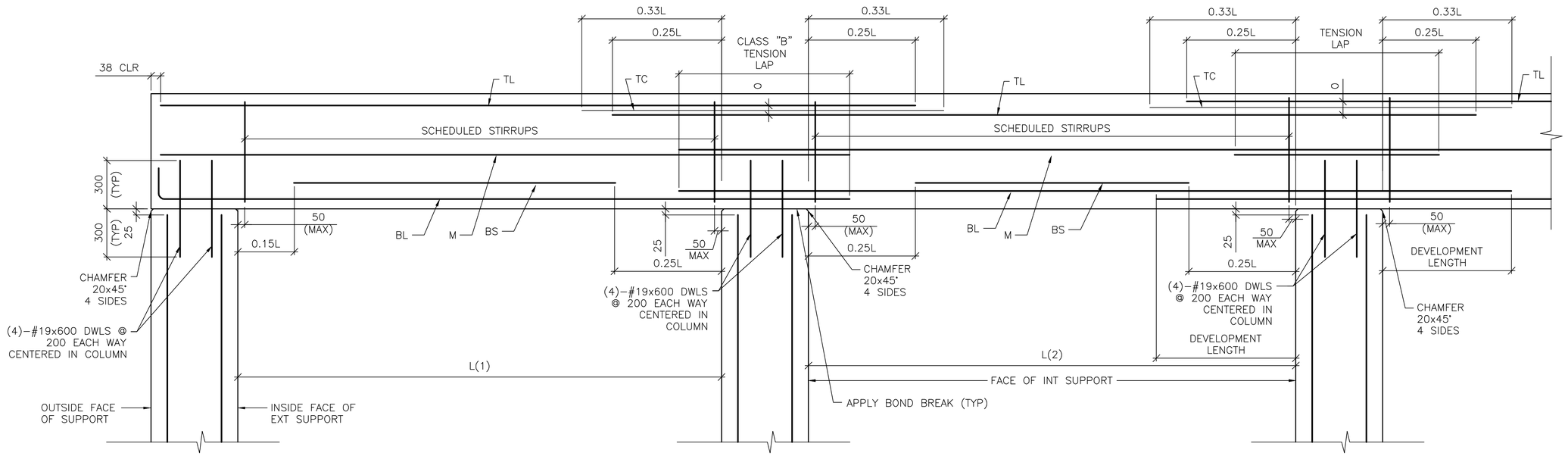


DETAIL NOTE:
1. WORK THIS DETAIL WITH BEAM SCHEDULE ON SHEET S-601.
2. L=GREATEST OF ADJACENT SPANS L(1) OR L(2)
3. ONLY COLUMN CORNER BARS ARE SHOWN

1 / S-503 **ROOF BEAM REINFORCING DETAIL**

SCALE: NTS

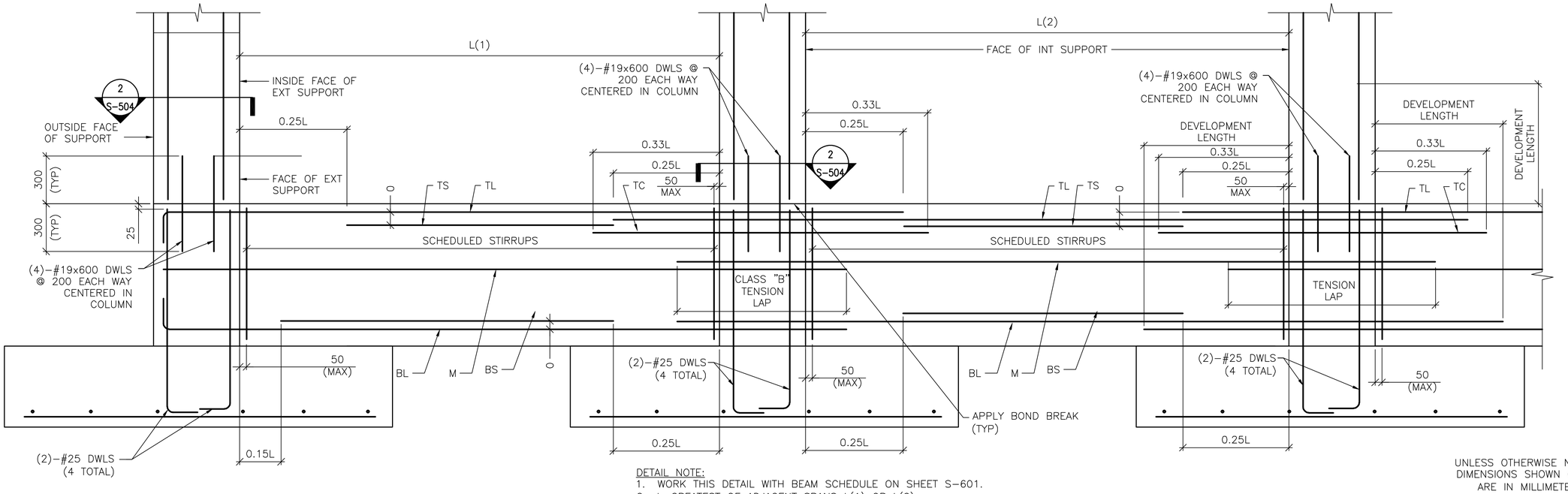


DETAIL NOTE:
1. WORK THIS DETAIL WITH BEAM SCHEDULE ON SHEET S-601.
2. L=GREATEST OF ADJACENT SPANS L(1) OR L(2)
3. ONLY COLUMN CORNER BARS ARE SHOWN.

2 / S-503 **GRADE BEAM REINFORCING DETAIL**

SCALE: NTS

UNLESS OTHERWISE NOTED, LINEAR DIMENSIONS SHOWN ON DRAWINGS ARE IN MILLIMETERS (mm)

APPROVED:

A/E DESIGNER OF RECORD

SEAL:

GEORGIA REGISTERED 2-27-10 No. 27141 PROFESSIONAL ENGINEER CHRISTOPHER W. WHITMORE

US ARMY CORPS OF ENGINEERS
AFGHANISTAN ENGINEER DISTRICT

| Mark | Description | Date | Appr. |
|---|---|---|---|

Rev. 0
Date: 2/23/10
Design file no.
Drawing code:
Designed by: KMP/MMY
Dwn by: RCG
Ckd by: CWW
Reviewed by: LHM
Submitted by:
File name: ANAMEDS-503DT
Plot date: 2/23/2010
Plot scale: X:X

U.S. ARMY CORPS OF ENGINEERS
AFGHANISTAN ENGINEER DISTRICT
APO AE 96338

Michael Baker Jr., Inc
A unit of Michael Baker Corporation
Airside Business Park
100 Airside Drive
Moon Township, PA 15108
www.mbakercorp.com

BAKER

AFGHAN NATIONAL ARMY
REGIONAL MILITARY TRAINING CENTER
STANDARD DESIGN

MEDICAL CLINIC

BEAM & COLUMN DETAILS

Sheet reference number:
S-503

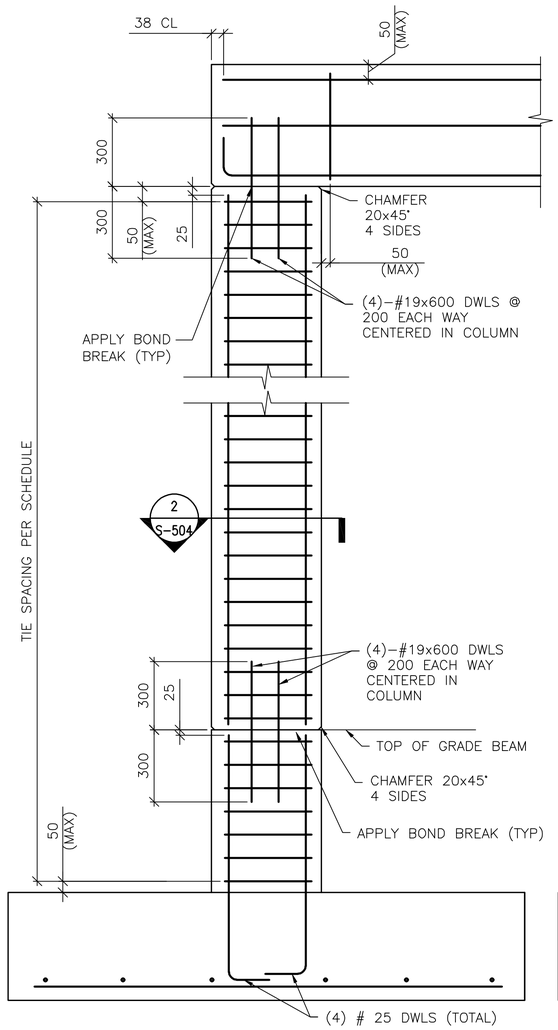


(WITH GRADE BEAM)

## 1-STORY COLUMN REINF DETAILS

1 / S-504 SCALE: NTS

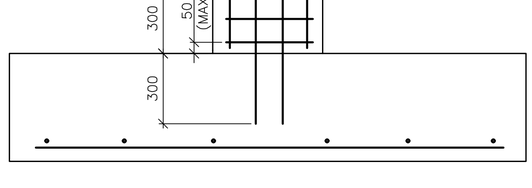


(WITHOUT GRADE BEAM)

## 1-STORY COLUMN REINF DETAILS

1 / S-504 SCALE: NTS

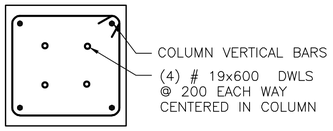


## SECTION

2 / S-503 2 / S-504 SCALE: NTS

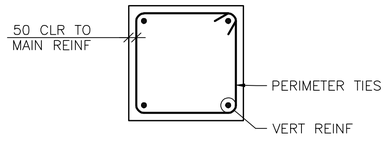


## 4 BAR COLUMN

A / S-504 SCALE: NTS

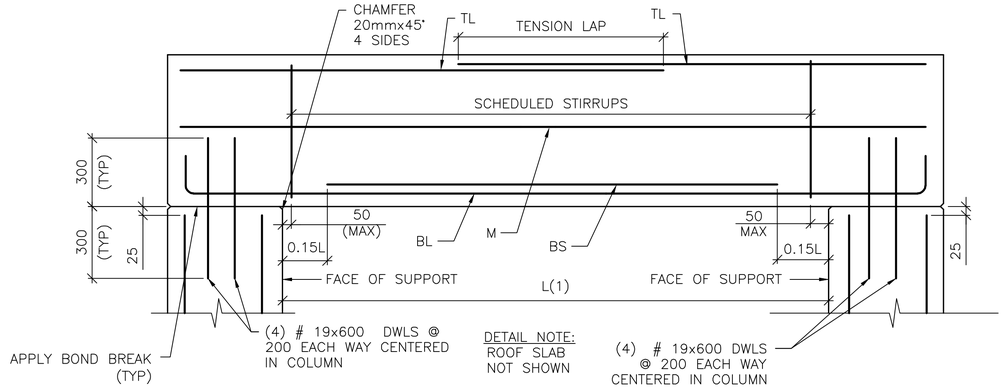


## SINGLE SPAN ROOF BEAM REINFORCING DETAIL

3 / S-504 SCALE: NTS

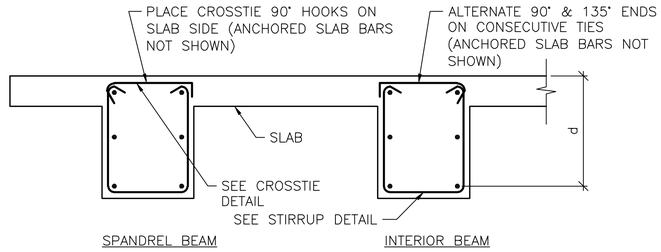


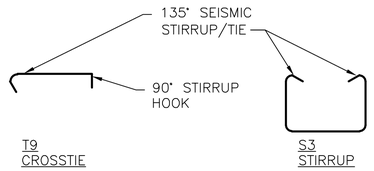


## BEAM REINFORCEMENT DETAILS

B / S-504 SCALE: NTS

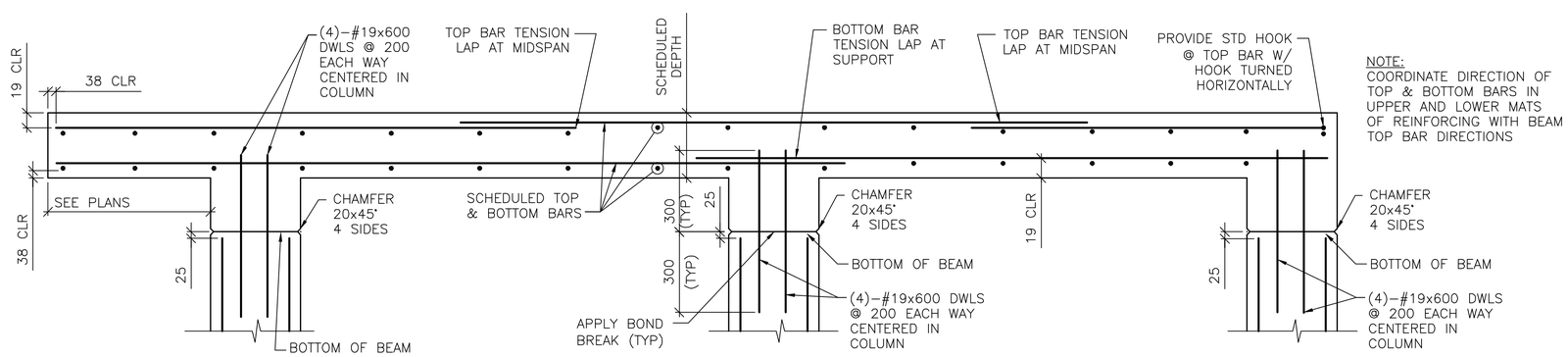


## FRAMED SLAB REINFORCING DETAIL

4 / S-504 SCALE: NTS

UNLESS OTHERWISE NOTED, LINEAR DIMENSIONS SHOWN ARE IN MILLIMETERS (mm)

APPROVED:

A/E DESIGNER OF RECORD

SEAL:

GEORGIA REGISTERED PROFESSIONAL ENGINEER CHRISTOPHER W. WHITMORE No. 27141 FL-29-10

US ARMY CORPS OF ENGINEERS
AFGHANISTAN ENGINEER DISTRICT

| Mark | Description | Date | Appr. |
|---|---|---|---|

| Mark | Description | Date | Appr. |
|---|---|---|---|

Rev: 0
Date: 2/23/10
Design file no.
Drawing code:
File name: ANAMERS-504DT
Plot date: 2/23/2010
Plot scale: X:X

Designed by: KMP/ MMY
Dwn by: RCG
Ckd by: CWW
Reviewed by: LHM
Submitted by: BAKER

U.S. ARMY CORPS OF ENGINEERS
AFGHANISTAN ENGINEER DISTRICT
APO AE 96338

*Michael Baker Jr., Inc*
*A unit of Michael Baker Corporation*
Airside Business Park
100 Airside Drive
Moon Township, PA 15108
www.mbakercorp.com

AFGHAN NATIONAL ARMY
REGIONAL MILITARY TRAINING CENTER
STANDARD DESIGN

MEDICAL CLINIC

BEAM & COLUMN DETAILS

Sheet reference number:
S-504

## CONCRETE REINFORCEMENT TENSION DEVELOPMENT/LAP SPLICE SCHEDULE

| f'c = 28 MPa | LAP CLASS | UNCOATED BARS | | | |
|---|---|---|---|---|---|
| | | TOP BARS | | OTHER BARS | |
| BAR SIZES | | CASE 1 | CASE 2 | CASE 1 | CASE 2 |
| #10 TO #19 | A | 50 BAR DIA | 74 BAR DIA | 38 BAR DIA | 57 BAR DIA |
| | B | 64 BAR DIA | 96 BAR DIA | 50 BAR DIA | 74 BAR DIA |
| #22 TO #57 | A | 62 BAR DIA | 93 BAR DIA | 48 BAR DIA | 71 BAR DIA |
| | B | 80 BAR DIA | 121 BAR DIA | 62 BAR DIA | 93 BAR DIA |

NOTES:
1. TABULATED TENSION DEVELOPMENT LENGTH VALUES ARE TAKEN FROM CRSI DESIGN HANDBOOK 2008 10TH ED.
2. TENSION DEVELOPMENT & TENSION LAP SPLICE LENGTHS ARE EXPRESSED AS MULTIPLES OF BAR DIAMETERS.
3. TABULATED VALUES ARE BASED ON MINIMUM YIELD STRENGTH OF REINFORCEMENT, fy, OF 420MPa.
4. CONCRETE IS NORMAL WEIGHT (2400Kg/$m^3$) AND 28 DAY COMPRESSIVE STRENGTH = 28MPa.
5. TABULATED VALUES FOR BEAMS & COLUMNS ARE BASED ON TRANSVERSE REINFORCEMENT AND CONCRETE COVER MEETING MINIMUM CODE REQUIREMENTS.
6. CASES 1 & 2, WHICH DEPEND ON THE TYPE OF STRUCTURAL MEMBER, CONCRETE COVER, AND CENTER-TO-CENTER SPACING OF THE BARS ARE DEFINED IN THE TABLE BELOW.
7. LAP SPLICE LENGTHS (MINIMUM 300mm) ARE MULTIPLES OF TENSION DEVELOPMENT LENGTHS: CLASS A = 1.0(TENSION DEVELOPMENT LENGTH) & CLASS B = 1.3(TENSION DEVELOPMENT LENGTH)
8. TOP BARS ARE HORIZONTAL REINFORCEMENT WITH MORE THAN 300mm OF CONCRETE CAST BELOW THE BARS.
9. IT SHALL BE PERMISSIBLE TO CALCULATE WALL AND SLAB REINFORCEMENT TENSION DEVELOPMENT/SPLICE LENGTHS IN ACCORDANCE WITH ACI 12.2.3 OR TABLE 5.3(b) OF CRSI 2008 IN LIEU OF VALUES TABULATED ABOVE.

| | | |
|---|---|---|
| BEAMS, COLUMNS | CASE 1 | CONCRETE COVER AT LEAST 1 BAR DIA AND CENTER-TO-CENTER SPACING AT LEAST 2 BAR DIA |
| | CASE 2 | CONCRETE COVER LESS THAN 1 BAR DIA OR CENTER-TO-CENTER SPACING LESS THAN 2 BAR DIA |
| ALL OTHERS | CASE 1 | CONCRETE COVER AT LEAST 1 BAR DIA AND CENTER-TO-CENTER SPACING AT LEAST 3 BAR DIA |
| | CASE 2 | CONCRETE COVER LESS THAN 1 BAR DIA OR CENTER-TO-CENTER SPACING LESS THAN 3 BAR DIA |

## CONCRETE COVER SCHEDULE

MINIMUM CONCRETE COVER PROTECTION FOR REINFORCEMENT BARS SHALL BE AS LISTED BELOW: (SEE ACI 318M-05, SECTION 7.7 FOR CONDITIONS NOT NOTED). DIMENSIONS FOR BAR PLACEMENT GIVEN IN SECTIONS AND DETAILS SHALL SUPERSEDE MINIMUM COVER REQUIREMENTS GIVEN HERE. DIMENSIONS ARE IN mm. PROVIDE STANDARD BAR CHAIRS AND SUPPORT BARS @1200mm MAXIMUM AS REQUIRED TO MAINTAIN CONCRETE PROTECTION SPECIFIED.

| | | |
|---|---|---|
| FOOTINGS (EARTH FORMED): | | 70 |
| COLUMNS / PIERS (TO TIES) | | 40 |
| GRADE BEAMS OR SLAB TURNED DOWN EDGES: | | |
| TOP | | 40 |
| BOTTOM (EARTH FORMED) | | 70 |
| SIDES (EARTH FORMED) | | 70 |
| SIDES (BOARD FORMED) | #16 BAR & SMALLER | 40 |
| | #19 THRU #36 BAR | 50 |
| ELEVATED BEAMS & SLABS: | | |
| BEAM TIES & STIRRUPS (NOT EXPOSED TO WEATHER) | | 40 |
| BEAM TIES & STIRRUPS (EXPOSED TO WEATHER) | | 50 |
| FLOOR SLABS (NOT EXPOSED TO WEATHER) | | 20 |
| FLOOR SLABS (EXPOSED TO WEATHER) | | |
| #19 & LARGER | | 50 |
| #13 & SMALLER | | 40 |
| ROOF SLAB BARS | | 25 |
| SLABS ON GRADE | | |
| NOT EXPOSED TO WEATHER (FROM TOP) | | 20 |
| EXPOSED TO WEATHER (FROM TOP) | | 40 |
| UTILITY TUNNEL WALLS, RETAINING WALLS AND SHEAR WALLS. (NO SURFACES SHALL BE EARTH FORMED) | | |
| EARTH SIDE AND FRONT SIDE (EXPOSED TO WEATHER) | | |
| #16 BAR AND SMALLER | | 40 |
| #19 THRU #36 BAR | | 50 |

## COLUMN FOOTING SCHEDULE

| MARK | FOOTING SIZE (mm) | | | FOOTING REINFORCING | REMARKS |
|---|---|---|---|---|---|
| | LENGTH | WIDTH | THICKNESS | | |
| F1 | 2700 | 2700 | 300 | (8)-#19 EW BOTT | ----- |
| F2 | 2100 | 2100 | 300 | (5)-#19 EW BOTT | ----- |

## CONCRETE SHEAR WALL SCHEDULE

| MARK | TYPE | WALL LENGTH (L) (mm) | WALL REINFORCEMENT | | REMARKS |
|---|---|---|---|---|---|
| | | | END ZONE | FIELD | |
| SW1 | C | 4250 | (5)-#19 @ 225mm OC | #13 @ 300 mm OC | ----- |
| SW2 | C | 4500 | (8)-#22 @ 300mm OC | #13 @ 300mm OC | ----- |
| SW3 | D | 3145 | (5)-#22 @ 300mm OC | #13 @ 300mm OC | ----- |

NOTES:
1. WORK THIS SCHEDULE WITH SHEAR WALL DETAILS ON SHEETS S-702
2. SEE PLAN FOR LOCATION OF SHEAR WALL(S).
3. WALL "FIELD" REINFORCEMENT LISTED APPLIES TO VERTICAL & HORIZONTAL BARS.
4. WALL "FIELD" REINFORCEMENT SHOULD BE CENTERED IN WALL.
5. VERTICAL "FIELD" BARS MAY BE OMITTED IN LOCATION OF "END ZONE" REINFORCEMENT.

## STANDARD HOOKS IN TENSION PER (ACI 318M-05)

HOOK DEVELOPMENT LENGTH (mm)

| BAR SIZE | f'c 28 MPa |
|---|---|
| #10 | 180 |
| #13 | 250 |
| #16 | 300 |
| #19 | 380 |
| #22 | 430 |
| #25 | 480 |
| #29 | 560 |
| #32 | 610 |
| #36 | 690 |

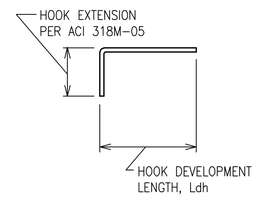


NOTES:
1. CONCRETE IS NORMAL WEIGHT CONCRETE.
2. BAR YIELD STRENGTH, fy = 420 MPa
3. SIDE COVER REQUIREMENTS OF ACI SECT. 12.5.3 ARE ASSUMED TO NOT BE MET.
4. TIE OR STIRRUP REQUIREMENTS OF ACI SECT. 12.5.3 ARE ASSUMED TO NOT BE MET.
5. REDUCTION FOR EXCESS REINFORCEMENT IS NOT TAKEN.
6. HOOK DEVELOPMENT LENGTH IS VALID FOR 180° HOOKS ALSO.

## CMU OR CAST IN PLACE CONC LINTEL SCHEDULE (TYP)

| OPENING TYPE OR SIZE, BEAM LOCATION OR TYPE | MAX SPAN (mm) | LINTEL DEPTH (mm) | REINFORCING BOTTOM |
|---|---|---|---|
| WALL OPENING | 4000 | 600 | (2)-#16 T&B |
| WALL OPENING | 1900 | 400 | (2)-#16 T&B |
| WALL OPENING | 1000 | 400 | (2)-#13 B |

1. STRUCTURAL SHEETS DO NOT INDICATE ALL OPENINGS IN MASONRY WALLS. VERIFY NUMBER, SIZE AND LOCATION OF ALL OPENINGS IN MASONRY WALLS FROM ARCHITECTURAL SHEETS AND APPROVED PLUMBING, MECHANICAL, AND ELECTRICAL SHOP DRAWINGS.
2. PROVIDE 200mm BEARING EA END.
3. FOR HEAD DETAILS REFER TO ARCHITECTURAL SHEETS.
4. REINFORCING SHALL BE ASTM A615M, GRADE 420. GROUT FOR CMU LINTELS SHALL HAVE A MINIMUM COMPRESSIVE STRENGTH OF 14 MPa AT 28 DAYS.
5. CONTRACTOR SHALL SUBMIT FOR APPROVAL SHOP DRAWINGS AND SCHEDULES SHOWING SIZE, SPAN, REINFORCEMENT, DETAILS, LOCATIONS, ETC.

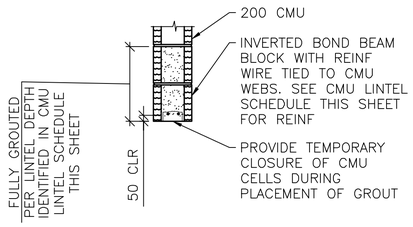


A / S-601 **LINTEL DETAIL**
SCALE: NTS

## BEAM SCHEDULE

| MARK | BEAM SIZE (mm) | | BEAM REINFORCING | | | | | | STIRRUPS | | | REMARKS |
|---|---|---|---|---|---|---|---|---|---|---|---|---|
| | DEPTH | WIDTH | BL | BS | TL | TS | TC | M | SIZE | TYPE | SPACING | |
| GRADE BEAMS | | | | | | | | | | | | |
| GB1 | 750/585 | 400 | (2)-#19 | (1)-#19 | (2)-#19 | --- | --- | --- | #13 | S3+T9 | d/2 | LOWER TOP @ LATRINES BETWEEN A3-B3 |
| ROOF BEAMS | | | | | | | | | | | | |
| RB1 | 600 | 400 | (2)-#19 | (1)-#19 | (2)-#16 | --- | --- | --- | #13 | S3+T9 | d/2 | ----- |

NOTES:
1. WORK THIS SCHEDULE WITH BEAM REINFORCING DETAILS ON SHEETS S-503 AND S-504.
2. HOOKS SHOWN ON SECTIONS AND DETAILS SHALL BE 90° STD UON.
3. USE ONLY (1) TC AT BEAM COLUMN INTERSECTION WHERE REQ'D.

## COLUMN SCHEDULE

| COLUMN MARK / DESCRIPTION | TYP UON | --- | --- | --- |
|---|---|---|---|---|
| TYPE | 4-BAR | --- | --- | --- |
| DIMENSION | 500mm SQ. | --- | --- | --- |
| VERTICAL REINFORCEMENT | (4)-#29 | --- | --- | --- |
| TIES | #13 @ d/2 | --- | --- | --- |
| TOP OF ROOF ELEVATION | 3600mm | --- | --- | --- |
| TOP OF GRADE BEAM ELEVATION | -200mm | --- | --- | --- |
| TOP OF FOOTING ELEVATION | -950mm | --- | --- | --- |

NOTES:
1. WORK THIS SCHEDULE WITH COLUMN DETAILS ON SHEET S-504.
2. SEE FOOTING SCHEDULE ON THIS SHEET FOR FOOTING INFORMATION.
3. COLUMN TIES: INTERIOR TIES TO MATCH SIZE & SPACING OF PERIMETER TIES.
4. HOOKS SHOWN ON SECTIONS & DETAILS SHALL BE 90° STD UON.

UNLESS OTHERWISE NOTED, LINEAR DIMENSIONS SHOWN ARE IN MILLIMETERS (mm)

APPROVED:

A/E DESIGNER OF RECORD

SEAL:

GEORGIA REGISTERED 3-23-10 No. 27141 PROFESSIONAL ENGINEER CHRISTOPHER W. WHITMORE

US ARMY CORPS OF ENGINEERS
AFGHANISTAN ENGINEER DISTRICT

| Mark | Description | Date | Appr. |
|---|---|---|---|
| | | | |

| Mark | Description | Date | Appr. |
|---|---|---|---|
| | | | |

U.S. ARMY CORPS OF ENGINEERS
AFGHANISTAN ENGINEER DISTRICT
APO AE 96338

*Michael Baker Jr., Inc*
*A unit of Michael Baker Corporation*
Airside Business Park
100 Airside Drive
Moon Township, PA 15108
www.mbakercorp.com

Rev. 0
Date: 2/23/10
Design file no.
Drawing code:
File name: ANAMEDS-601SCH
Plot date: 2/23/2010
Plot scale: X:X

Designed by: KMP/MMY
Dwn by: RCG
Ckd by: CWW
Reviewed by: LHM
Submitted by: BAKER

AFGHAN NATIONAL ARMY
REGIONAL MILITARY TRAINING CENTER
STANDARD DESIGN

MEDICAL CLINIC

SCHEDULES

Sheet reference number:
S-601

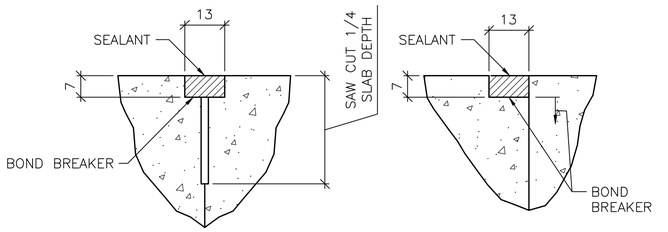


CONTROL JOINT DETAIL

CONSTRUCTION JOINT DETAIL

## TYPICAL CONCRETE SLAB JOINT FINISH DETAILS

1 / S-701 SCALE: NTS

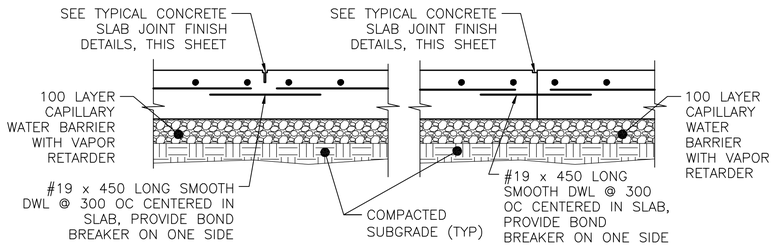


CONTROL JOINT DETAIL

CONSTRUCTION JOINT DETAIL

## TYPICAL SLAB ON GRADE JOINT DETAIL

2 / S-701 SCALE: NTS

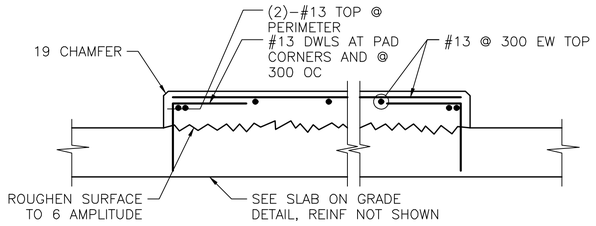


## INTERIOR EQUIPMENT PAD DETAIL

3 / S-701 SCALE: NTS

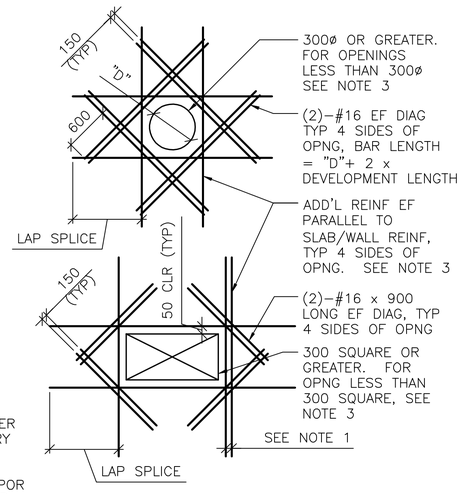


SHEAR WALL/SLAB OPENINGS

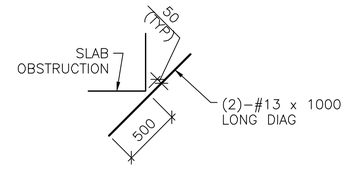


RE–ENTRANT CORNERS

DETAIL NOTES:
1. WHERE MORE THAN ONE ADDITIONAL BAR IS REQUIRED PARALLEL TO THE EXISTING SLAB/WALL REINFORCING THE ADDITIONAL REINFORCING BARS SHALL BE SPACED AT 100 ON CENTER.
2. ADDITIONAL REINFORCING PARALLEL TO THE SLAB/WALL REINFORCING SHALL BE #16 BARS THAT PROVIDE A STEEL AREA ON EACH SIDE OF THE OPENING EQUAL TO 1/2 THE AREA OF THE REINFORCING CUT BY THE OPENING.
3. FOR OPENINGS WITH SIDES OR DIAMETERS LESS THAN 300 SPREAD THE SLAB/WALL REINFORCING TO CLEAR THE OPENING.

## ADD'L CONCRETE REINFORCEMENT DETAILS

4 / S-701 SCALE: NTS

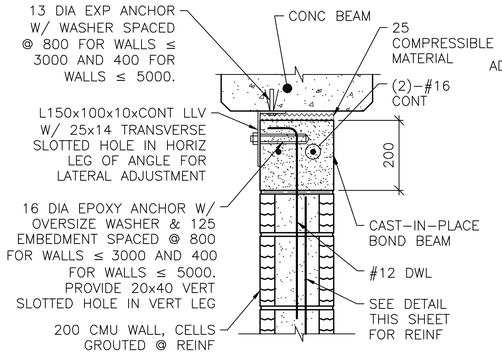


NOTE:
1. AT ANCHOR BOLTS, ADD AN ADDITIONAL 25 COMPRESSIBLE MATERIAL BELOW EXP ANCHOR HEAD.

INTERIOR BEAM

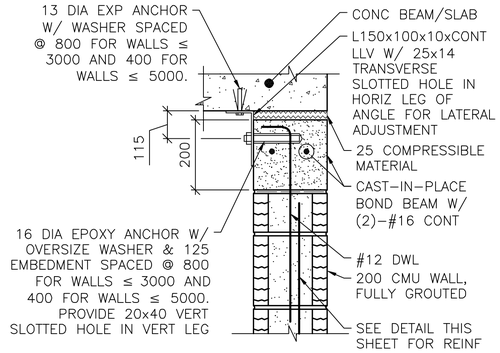


EXTERIOR WALL OR SLAB

NOTES:
1. THIS DETAIL IS AN ALTERNATE TOP OF WALL ANCHORAGE DETAIL TO BE USED AT THE CONTRACTOR'S OPTION IN LIEU OF DETAILS SHOWN ON S–400 & S–500 DRAWINGS.
2. CAST–IN–PLACE BOND BEAM SHOWN AT TOP OF WALL IS ALSO APPLICABLE FOR INTERMEDIATE AND STARTER COURSE BOND BEAMS WITHIN WALL.

## ALTERNATE TOP OF CMU WALL BRACING DETAILS

5 / S-701 SCALE: NTS

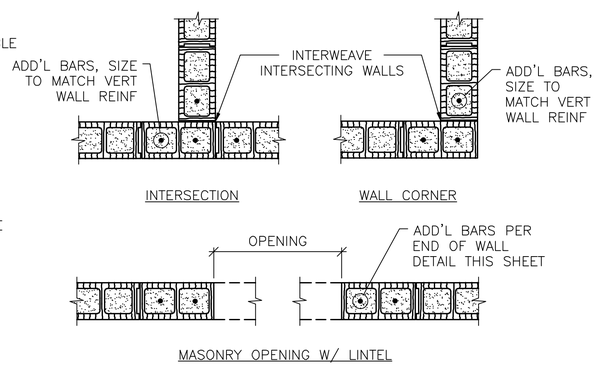


INTERSECTION

WALL CORNER




MASONRY OPENING W/ LINTEL

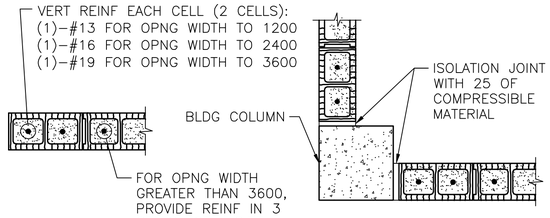


END OF WALL

END OF WALL @ COLUMN

NOTES:
1. OPENING WIDTH SHALL NOT EXCEED 3600 FOR THIS TYPE OF JAMB.
2. ALL CELLS FULLY GROUTED AT EXTERIOR WALLS. AT INTERIOR WALLS, ONLY GROUT CELLS CONTAINING REINF.

## TYP CMU DETAILS

6 / S-701 SCALE: NTS

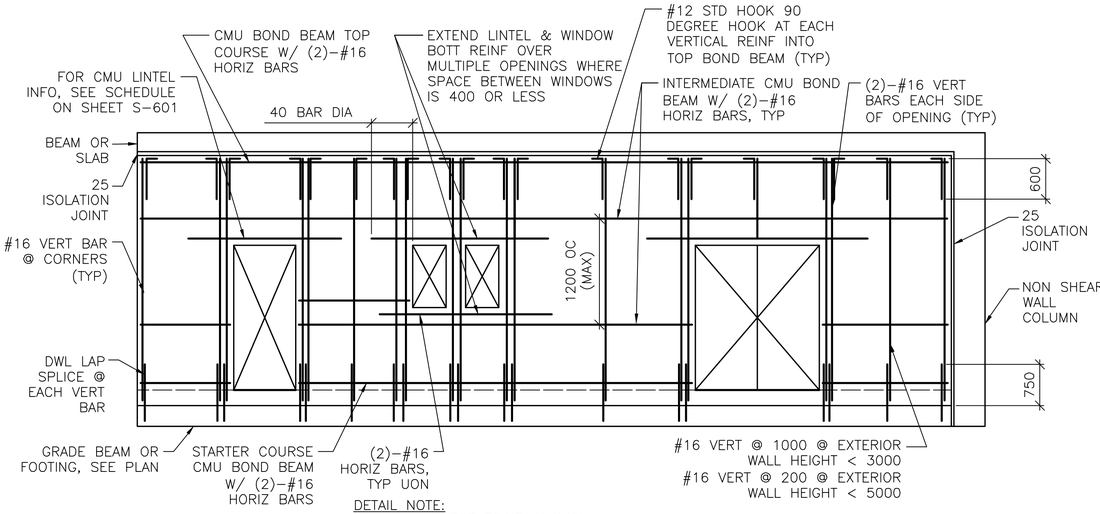


DETAIL NOTE:
1. CENTER VERT REINF IN WALL.
2. GROUT ALL CMU CELLS.
3. REFERENCE ARCH DWGS FOR JOINT INFORMATION
4. DOWELS BETWEEN TOP BOND BEAM AND BEAM/SLAB ABOVE (INCLUDING EMBEDDED PIPE SLEEVE) NOT SHOWN FOR CLARITY. SEE SPECIFIC S–500 SERIES DWGS FOR INFO.
5. FOR INFORMATION ON ALTERNATE CAST–IN–PLACE WALL BOND BEAMS, REFERENCE ALTERNATE TOP OF CMU WALL BRACING DETAILS THIS SHEET.

## TYP EXTERIOR CMU WALL REINF DETAIL

7 / S-701 SCALE: NTS

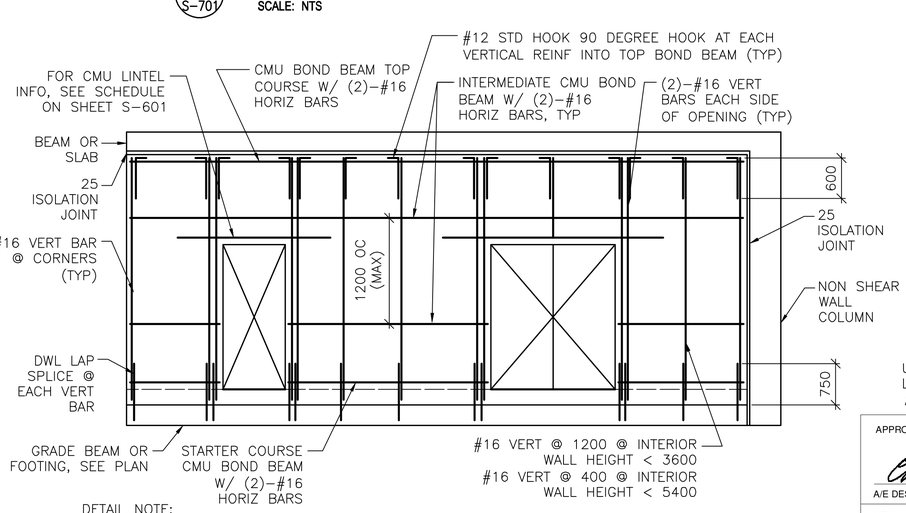


DETAIL NOTE:
1. CENTER VERT REINF IN WALL.
2. GROUT ALL CMU CELLS.
3. REFERENCE ARCH DWGS FOR JOINT INFORMATION
4. DOWELS BETWEEN TOP BOND BEAM AND BEAM/SLAB ABOVE (INCLUDING EMBEDDED PIPE SLEEVE) NOT SHOWN FOR CLARITY. SEE SPECIFIC S–500 SERIES DWGS FOR INFO.
5. FOR INFORMATION ON ALTERNATE CAST–IN–PLACE WALL BOND BEAMS, REFERENCE ALTERNATE TOP OF CMU WALL BRACING DETAILS THIS SHEET.

## TYP INTERIOR CMU WALL REINF DETAIL

8 / S-701 SCALE: NTS

UNLESS OTHERWISE NOTED, LINEAR DIMENSIONS SHOWN ARE IN MILLIMETERS (mm)

APPROVED:

A/E DESIGNER OF RECORD .

SEAL: .

GEORGIA REGISTERED 1-29-10 No. 27141 PROFESSIONAL ENGINEER CHRISTOPHER W. WHITMORE

US ARMY CORPS OF ENGINEERS
AFGHANISTAN ENGINEER DISTRICT

| Mark | Description | Date | Appr. |
|---|---|---|---|

Designed by: KMP/MMY
Drawn by: RCG
Ckd by: CWW
Reviewed by: LHM
Submitted by: BAKER
Date: 2/23/10
Design file no.
Drawing code:
File name: ANAMERS-701.TDT
Plot date: 2/23/2010
Plot scale: X:X
Rev: 0

U.S. ARMY CORPS OF ENGINEERS
AFGHANISTAN ENGINEER DISTRICT
APO AE 96338

Michael Baker Jr., Inc
A unit of Michael Baker Corporation
Airside Business Park
100 Airside Drive
Moon Township, PA 15108
www.mbakercorp.com

AFGHAN NATIONAL ARMY
REGIONAL MILITARY TRAINING CENTER
STANDARD DESIGN

MEDICAL CLINIC

TYPICAL DETAILS

Sheet reference number:
S–701

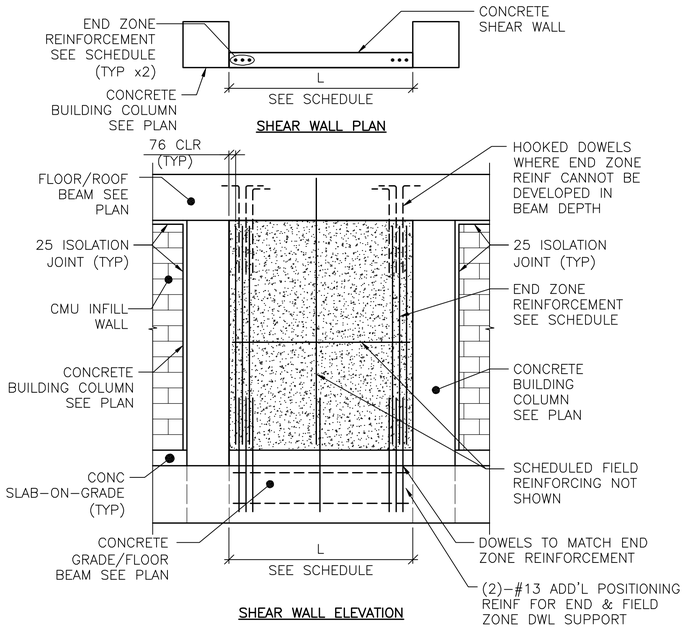


DETAIL NOTES:
1. FIELD REINFORCEMENT IN SHEAR WALL NOT COMPLETELY SHOWN FOR CLARITY.
2. FIELD REINFORCEMENT CENTERED IN WALL.
3. MINIMUM CONC CLEAR DISTANCE FOR END ZONE REINF = 76
4. SEE CONC SHEAR WALL SCHEDULE ON SHEET S-601
5. SEE ARCH DWGS FOR ISOLATION JOINT INFORMATION

## 1/S-702 TYPE "C" SHEAR WALL DETAIL
SCALE: NTS

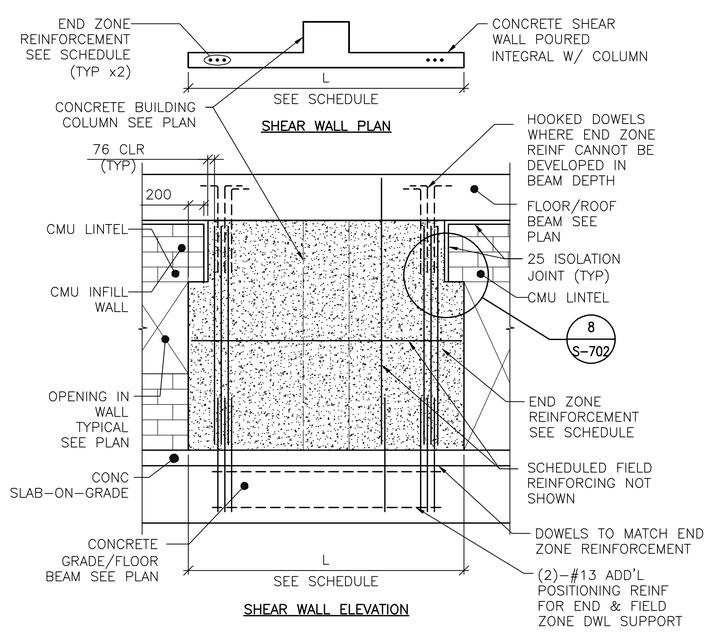


DETAIL NOTES:
1. FIELD REINFORCEMENT IN SHEAR WALL NOT COMPLETELY SHOWN FOR CLARITY.
2. FIELD REINFORCEMENT CENTERED IN WALL.
3. MINIMUM CONC CLEAR DISTANCE FOR END ZONE REINF = 76
4. SEE CONC SHEAR WALL SCHEDULE ON SHEET S-601
5. SEE ARCH DWGS FOR ISOLATION JOINT INFORMATION

## 2/S-702 TYPE "D" SHEAR WALL DETAIL
SCALE: NTS

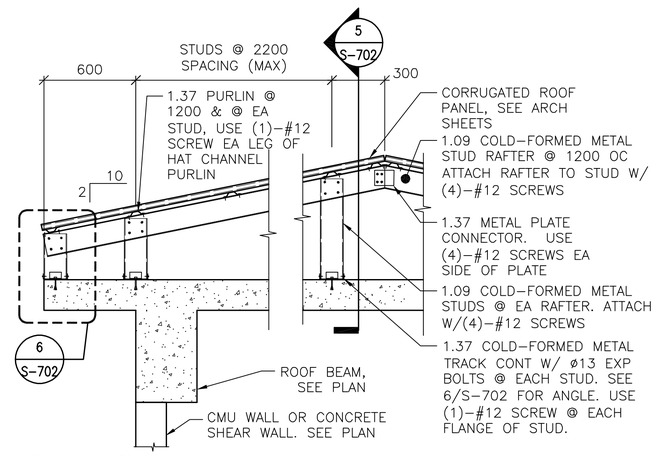


DETAIL NOTES:
1. ALL GABLE END VERTICAL STUDS SHALL BE ORIENTED 90° TO INTERIOR STUDS & SPACED @ 600 OC. GABLE END RAFTER SHALL BE 1.37 METAL TRACK SPANNING CONTINUOUSLY OVER GABLE END STUDS. INSET GIRTS AT GABLE END SHALL BE 1.09 COLD-FORMED METAL STUDS @ 1200 OC ATTACHED VIA 1.37 THICKNESS CLIP ANGLE W/ (2) #12 SCREWS EA LEG.
2. ALL INTERIOR, NON-GABLE END VERTICAL STUDS GREATER THAN 2400 IN LENGTH SHALL BE BACK-TO-BACK W/ #12 SCREWS @ 200 OC STAGGERED.

## 3/S-702 TYPICAL OVERBUILT ROOF FRAMING DETAIL
SCALE: NTS

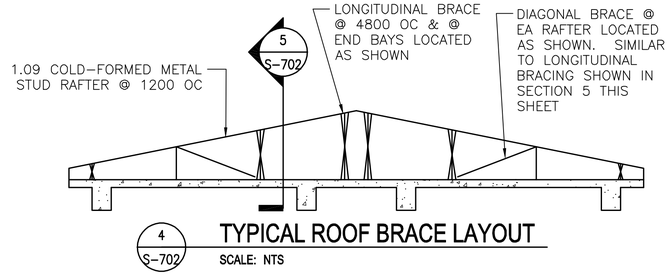


## 4/S-702 TYPICAL ROOF BRACE LAYOUT
SCALE: NTS

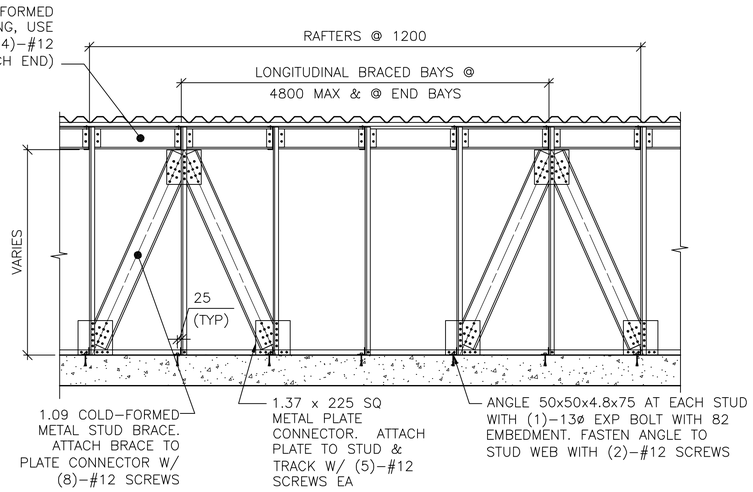


## 5/S-702 SECTION
SCALE: NTS

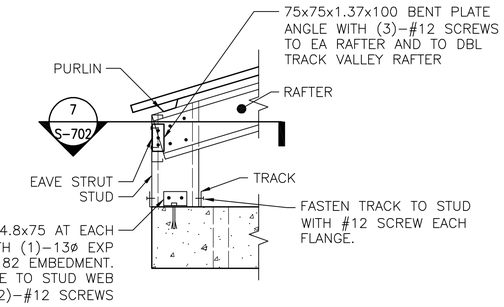


## 6/S-702 DETAIL
SCALE: NTS

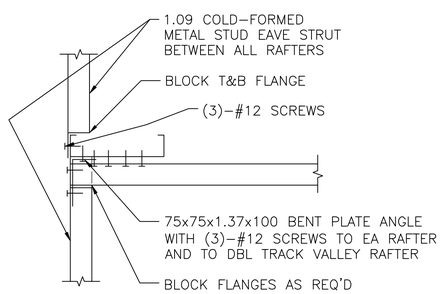


## 7/S-702 SECTION
SCALE: NTS

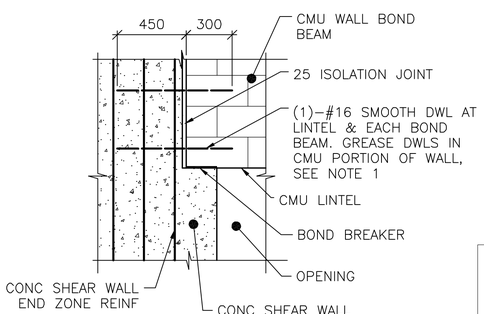


NOTE:
1. TIE SMOOTH DOWEL ROD TO SHEAR WALL END ZONE REINF FOR EACH BOND BEAM AND LINTEL.

## 8/S-702 SECTION
SCALE: NTS

UNLESS OTHERWISE NOTED, LINEAR DIMENSIONS SHOWN ARE IN MILLIMETERS (mm)

APPROVED:

A/E DESIGNER OF RECORD

SEAL:

GEORGIA REGISTERED 1-29-10 No. 27141 PROFESSIONAL ENGINEER CHRISTOPHER W. WHITMORE

US ARMY CORPS OF ENGINEERS
AFGHANISTAN ENGINEER DISTRICT

| Mark | Description | Date | Appr. |
|---|---|---|---|
| | | | |

Rev: 0
Date: 2/23/10
Design file no.
Drawing code:
File name: ANAMEBS-702TDT
Plot date: 2/23/2010
Plot scale: x:x

Designed by: KMP/MMY
Drn by: RCG
Ckd by: CWW
Reviewed by: LHM
Submitted by: BAKER

U.S. ARMY CORPS OF ENGINEERS
AFGHANISTAN ENGINEER DISTRICT
APO AE 96338

Michael Baker Jr., Inc
A unit of Michael Baker Corporation
Airside Business Park
100 Airside Drive
Moon Township, PA 15108
www.mbakercorp.com

AFGHAN NATIONAL ARMY
REGIONAL MILITARY TRAINING CENTER
STANDARD DESIGN

MEDICAL CLINIC

TYPICAL DETAILS

Sheet reference number:
S-702

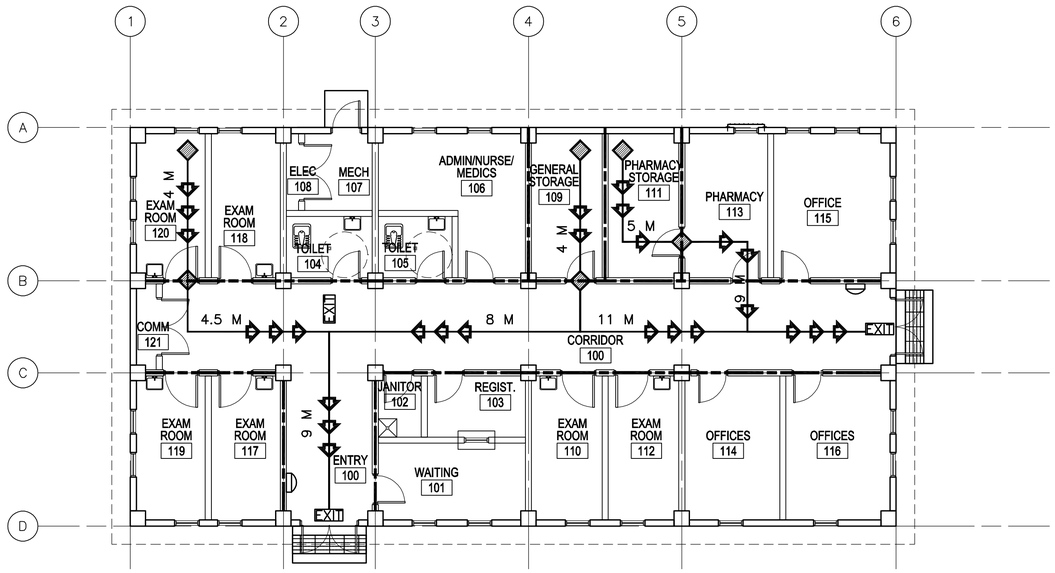


1 A-001 **LIFE SAFETY PLAN**

SCALE: 1:100

# CODE ANALYSIS:

1. REFERENCES:
   2006 INTERNATIONAL BUILDING CODE (2006 IBC)
   2006 LIFE SAFETY CODE (2006 NFPA 101)

2. IBC OCCUPANCY CLASSIFICATION:
   GROUP B (AMBULATORY HEALTH CARE NFPA 101 6.1.11 AND CHAPTER 20)
   (AND BUSINESS CHAPTER 38 BY REFERENCE)

3. TYPE OF CONSTRUCTION (IBC): TYPE II–B (UNPROTECTED/NONSPRINKLERED)

4. IBC TABLE 503: ALLOWABLE HEIGHT AND BUILDING AREAS:
   GROUP B
   ALLOWABLE AREA: 2,137 SM
   ALLOWABLE HEIGHT: 3 STORIES (18 M)

   GROUP B
   PROPOSED AREA: 325 SM
   PROPOSED HEIGHT: 1 STORY (<16 M)

5. IBC TABLE 601 & 602: FIRE RESISTANCE RATING REQUIREMENTS FOR BUILDING ELEMENTS FOR TYPE II–B

| BUILDING ELEMENT | RATING (HOUR) | REFERENCE |
|---|---|---|
| STRUCTURAL FRAME (COLUMNS, GIRDERS & TRUSSES) | 0 | TABLE 601 |
| BEARING WALLS | | |
| EXTERIOR | 0 | TABLE 601 |
| INTERIOR | 0 | TABLE 601 |
| NONBEARING WALLS & PARTITIONS | | |
| INTERIOR | 0 | TABLE 601 |
| FLOOR CONSTRUCTION | 0 | TABLE 601 |
| ROOF CONSTRUCTION | 0 | TABLE 601 |
| EXTERIOR WALL | 0 | TABLE 602 |

6. IBC TABLE 803.5 – INTERIOR WALL AND CEILING FINISH REQUIREMENTS FOR B OCCUPANCY/NONSPRINKLERED

| GROUP | EXIT ENCLOSURES AND EXIT PASSAGEWAY | CORRIDORS | ROOMS AND ENCLOSED SPACES |
|---|---|---|---|
| B | A | B | C |

7. NFPA 101 TABLE 7.3.1.2 – OCCUPANT LOAD
   BUSINESS = 9.3 SM/PERSON BUSINESS PROPOSED = 35 OCCUPANTS

8. NFPA 101 TABLE 7.3.3.1 – EGRESS CAPACITY
   BUSINESS = 5 MM PER OCCUPANT

   REQUIRED: 175 MM (35 OCCUPANTS x 5 MM PER OCCUPANT)
   PROPOSED EGRESS CAPACITY: 3600 MM: (2) 900 MM DOUBLE DOORS

9. NFPA 101 PARAGRAPH 20.2.6.2 – EXIT ACCESS TRAVEL DISTANCE (NONSPRINKLERED)
   REQUIRED: 30 METERS
   PROPOSED: 17 METERS

10. NFPA 101 PARAGRAPH 20.3.6 – CORRIDORS –SEE PARAGRAPH 38.3.6:
    REQUIRED RATING: 1 HOUR
    PROVIDED RATING: 1 HOUR
    DOORS SHALL BE 20 MINUTE IN ACCORDANCE WITH TABLE 8.3.4.2.

11. NFPA 101 PARAGRAPH 20.2.3.2 – CORRIDOR WIDTH NOT LESS THAN 1120"
    PROVIDED: (2900) MM

12. NFPA 101 PARAGRAPH 20.2.5 – ARRANGEMENT OF MEANS OF EGRESS – 38.2.5
    DEAD END CORRIDORS: 38.2.5.2
    BUSINESS: PERMITTED: 6 METERS
    PROPOSED: 4.5 M DEAD END CORRIDOR

13. NFPA 101 PARAGRAPH 20.2.4.1 – NUMBER OF EXITS
    BUSINESS REQUIRED: 2 MINIMUM
    BUSINESS PROPOSED: 2 EXITS

14. NFPA 101 PARAGRAPH 20.3.2 – PROTECTION FROM HAZARDS – SEE 38.3.2
    38.3.2.1 & 8.7.1.1 (1):
    REQUIRED SEPARATION AT GENERAL STORAGE: 1 HOUR WALL AND 45 MINUTE DOOR
    PROVIDED: 1 HOUR WALL AND 45 MINUTE DOOR

## LEGEND:

- DENOTES PATHS OF EXIT TRAVEL
- EXIT — DENOTES DOOR AS AN EMERGENCY EXIT
- DENOTES STARTING POINT FOR TRAVEL DISTANCE
- DENOTES FIRE EXTINGUISHER LOCATIONS
- (1) HOUR RATED WALL
- (2) HOUR RATED WALL
- (3) HOUR RATED WALL

LINEAR DIMENSIONS SHOWN ARE IN MILLIMETERS (MM), UNLESS OTHERWISE NOTED

0 2000 4000
SCALE: 1:100

APPROVED:

A/E DESIGNER OF RECORD

SEAL:

STATE OF SOUTH CAROLINA
KEVIN R. CHAFIN
N. Charleston, SC
6374
REGISTERED ARCHITECT

US ARMY CORPS OF ENGINEERS
AFGHANISTAN ENGINEER DISTRICT

| Mark | Description | Date | Appr. |
|---|---|---|---|

Rev: 0
Date: 2/23/10
Design file no.
Drawing code:
File name: ANAMEDA-001LSP
Plot date: 2/23/2010
Plot scale:

Designed by: KRC
Dwn by: KJG
Ckd by: NLJ
Reviewed by: LHM
Submitted by: BAKER

U.S. ARMY CORPS OF ENGINEERS
AFGHANISTAN ENGINEER DISTRICT
APO AE 96338

*Michael Baker Jr., Inc.*
*A unit of Michael Baker Corporation*
Airside Business Park
100 Airside Drive
Moon Township, PA 15108
www.mbakercorp.com

AFGHAN NATIONAL ARMY
REGIONAL MILITARY TRAINING CENTER
STANDARD DESIGN

MEDICAL CLINIC

LIFE SAFETY PLAN

Sheet reference number:
A–001

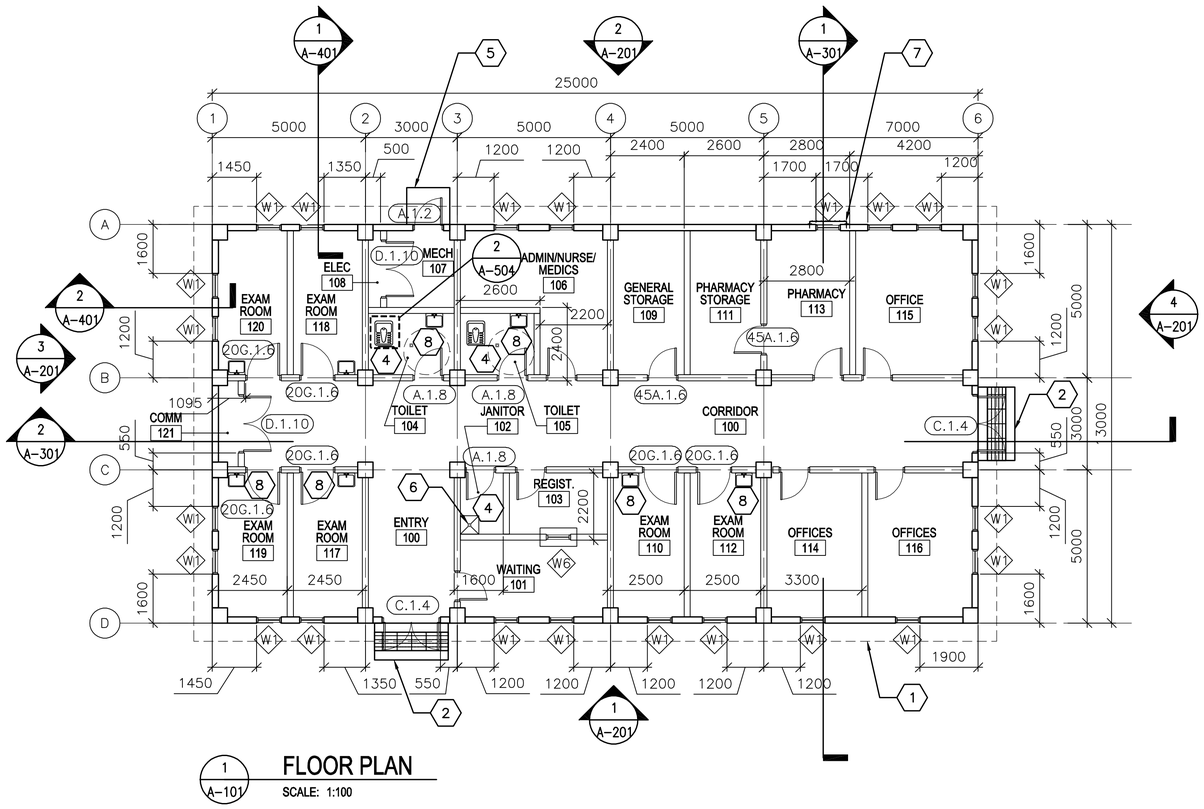


1 A-101 **FLOOR PLAN**

SCALE: 1:100

## GENERAL NOTES:

A. DIMENSIONS ARE SHOWN TO OUTER EDGE OF EXTERIOR STRUCTURAL COLUMNS, STRUCTURAL COLUMN GRID, EDGE OF INTERIOR PARTITIONS, EDGE OF WINDOW OPENINGS, AND TO HINGE SIDE OF DOOR FRAME OPENINGS.

B. HINGED SIDE OF OPENINGS FOR DOORS AND FRAMES SHALL BE LOCATED 200 MM FROM ADJACENT WALL OR COLUMN, UNLESS NOTED OTHERWISE.

C. INTERIOR PARTITIONS SHALL BE 200 MM CMU. SEE STRUCTURAL DRAWINGS FOR LOCATION OF CONCRETE SHEAR WALLS.

D. COSMETIC REPAIR OF MINOR DEFECTS: REPAIR OR FILL MORTAR JOINTS AND MINOR DEFECTS, INCLUDING BUT NOT LIMITED TO SPALLS, IN ACCORDANCE WITH MANUFACTURER'S RECOMMENDATIONS AND PRIOR TO COATING APPLICATION. SURFACES TO BE PAINTED SHALL BE CLEAN AND FREE OF FOREIGN MATTER BEFORE APPLICATION OF PAINT. CLEANING SHALL BE SCHEDULED SO THAT DUST AND OTHER CONTAMINANTS WILL NOT FALL ON NEWLY PAINTED SURFACES.

E. CONCRETE, PLASTER AND MASONRY SURFACES SHALL BE ALLOWED TO CURE FOR AT LEAST 30 DAYS BEFORE PAINTING. CONCRETE SLABS–ON–GRADE SHALL BE ALLOWED TO CURE 90 DAYS BEFORE STAINING OR SEALING.

F. DO NOT USE PAINT MATERIALS CONTAINING LEAD CONTENT IN EXCESS OF 0.009 PERCENT OF THE WEIGHT OF THE TOTAL NONVOLATILE CONTENT OF THE PAINT OR THE WEIGHT OF THE DRIED PAINT FILM.

G. DO NOT USE ANY ASBESTOS CONTAINING MATERIALS (ACM) IN PROJECT. ACM IS DEFINED AS 1% OR MORE BY VOLUME

H. DO NOT USE PAINT MATERIALS CONTAINING MERCURIAL FUNGICIDES.

I. FACTORY PRIMED METAL DOORS AND FRAMES SHALL RECEIVE TWO COATS OF PAINT.

J. FILL REMAINING SPACE AT PENETRATIONS IN FIRE–RATED FLOORS, PARTITIONS AND CEILINGS WITH APPROPRIATE FIRESTOPPING MATERIALS.

K. ALL CEILING FINISHES SHALL BE PAINTED PLASTER APPLIED TO STRUCTURE.

L. ALL WALL FINISHES SHALL BE PAINTED PLASTER APPLIED TO STRUCTURE, UNLESS NOTED OTHERWISE.

M. ALL FLOOR FINISHES SHALL BE TERRAZZO, UNLESS NOTED OTHERWISE.

N. ALL DOOR FRAME & HARDWARE TYPES SHALL BE 20A.1.6 UNLESS NOTED OTHERWISE.

## KEY NOTES: (X)

1. LINE OF ROOF OVERHANG ABOVE.
2. CONCRETE STOOP WITH GRATE – SEE DETAIL 1/A–503.
3. NOT USED
4. TERRAZZO FLOOR TILE AND CERAMIC WALL TILE TO 2000 MM ABOVE FINISHED FLOOR
5. CONCRETE STOOP – SEE DETAIL 3/A–503.
6. 600 MM X 600 MM RECESSED TROUGH – SEE DETAIL 5/A–504.
7. SECURITY BARS – SEE DETAIL 5/A–502
8. PROVIDE POLISHED STAINLESS STEEL MIRROR 600 x 900 ABOVE LAVATORY.

## LEGEND:

(XXX) DOOR FRAME AND HARDWARE TYPE TYPE, SEE SHEET A–601

(A) WINDOW TYPE, SEE SHEET A–601

(X) KEY NOTE

## ABBREVIATIONS:

| | |
|---|---|
| COMM | COMMUNICATIONS |
| ELEC | ELECTRICAL |
| MECH | MECHANICAL |
| JAN | JANITOR |
| CLOS | CLOSET |

APPROVED:

A/E DESIGNER OF RECORD

SEAL:

STATE OF SOUTH CAROLINA
KEVIN R. CHAFIN
N. Charleston, SC
6374
REGISTERED ARCHITECT

LINEAR DIMENSIONS SHOWN ARE IN MILLIMETERS (MM), UNLESS OTHERWISE NOTED

0 2000 4000
SCALE: 1:100

US ARMY CORPS OF ENGINEERS
AFGHANISTAN ENGINEER DISTRICT

| Mark | Description | Date | Appr. |
|---|---|---|---|
| | | | |
| | | | |
| | | | |
| | | | |
| | | | |
| | | | |

Date: 2/23/10
Design file no.
Drawing code:
File name: ANAMEDA-101FP
Plot date: 2/23/2010
Plot scale: x:x
Rev. 0

Designed by: KRC
Dwn by: KJG
Ckd by: NLJ
Reviewed by: LHM
Submitted by: BAKER

U.S. ARMY CORPS OF ENGINEERS
AFGHANISTAN ENGINEER DISTRICT
APO AE 96338

*Michael Baker Jr., Inc.*
*A unit of Michael Baker Corporation*
Airside Business Park
100 Airside Drive
Moon Township, PA 15108
www.mbakercorp.com

AFGHAN NATIONAL ARMY
REGIONAL MILITARY TRAINING CENTER
STANDARD DESIGN

MEDICAL CLINIC

FLOOR PLAN

Sheet reference number:
A–101

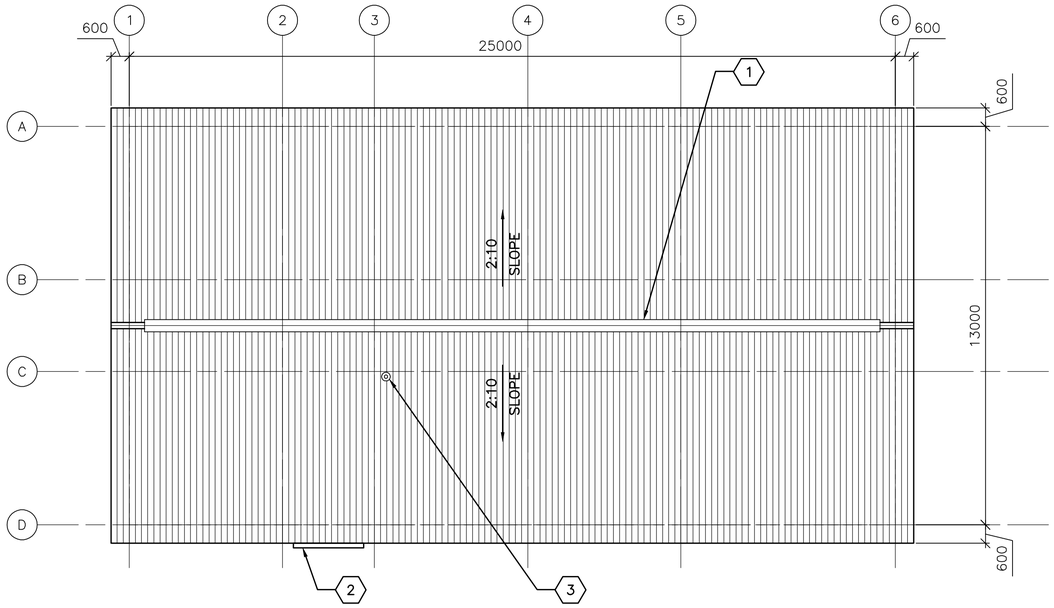


1 / A–102 **ROOF PLAN**

SCALE: 1:100

## GENERAL NOTES:

A. THE APPROXIMATE LOCATION OF ROOF DEVICES AND PENETRATIONS ARE SHOWN ON THE ROOF PLAN FOR INFORMATION ONLY. THE CONTRACTOR SHALL BE RESPONSIBLE FOR UNDERSTANDING THE ACTUAL LOCATION OF THESE AND ALL OTHER ITEMS PRIOR TO BEGINNING CONSTRUCTION. COORDINATE ALL ROOF PENETRATIONS WITH STRUCTURAL, MECHANICAL AND PLUMBING WORK.

B. PLUMBING VENT PENETRATIONS SHALL TERMINATE 300 MM MINIMUM ABOVE THE ROOF.

C. UNLESS OTHERWISE NOTED, NOTES, DETAILS OR FEATURES INDICATED FOR ONE CONDITION SHALL BE APPLICABLE FOR ALL ALIKE AND SIMILAR CONDITIONS.

D. STOCKPILING OF MATERIALS, EQUIPMENT AND ANY OTHER ITEMS ON THE ROOF IS PROHIBITED.

E. ROOFS SHALL BE CORRUGATED METAL ROOF PANELS ON COLD–FORMED METAL FRAMING ON CONCRETE SLAB.

## KEY NOTES: (X)

1. CONTINUOUS METAL RIDGE VENT SEE DETAIL 4/A–501.
2. METAL GUTTER, CENTER ON DOOR, 2300 MM – SEE DETAIL 1A/A–501.
3. PLUMBING VENT – SEE DETAIL 5/A–501.

LINEAR DIMENSIONS SHOWN ARE IN MILLIMETERS (MM), UNLESS OTHERWISE NOTED

0 2000 4000
SCALE: 1:100

APPROVED:

A/E DESIGNER OF RECORD

SEAL:

STATE OF SOUTH CAROLINA
KEVIN R. CHAFIN
N. Charleston, SC
6374
REGISTERED ARCHITECT

US ARMY CORPS OF ENGINEERS
AFGHANISTAN ENGINEER DISTRICT

| Mark | Description | Date | Appr. |
|---|---|---|---|
| | | | |

| Mark | Description | Date | Appr. |
|---|---|---|---|
| | | | |

Date: 2/23/10
Design file no.
Drawing code:
Rev: 0
File name: ANAMEDA-1028P
Plot date: 2/23/2010
Plot scale: x:X

Designed by: KRC
Dwn by: KJG
Ckd by: NLJ
Reviewed by: LHM
Submitted by: BAKER

U.S. ARMY CORPS OF ENGINEERS
AFGHANISTAN ENGINEER DISTRICT
APO AE 96338

*Michael Baker Jr., Inc*
*A unit of Michael Baker Corporation*
Airside Business Park
100 Airside Drive
Moon Township, PA 15108
www.mbakercorp.com

AFGHAN NATIONAL ARMY
REGIONAL MILITARY TRAINING CENTER
STANDARD DESIGN

MEDICAL CLINIC

ROOF PLAN

Sheet reference number:
A–102

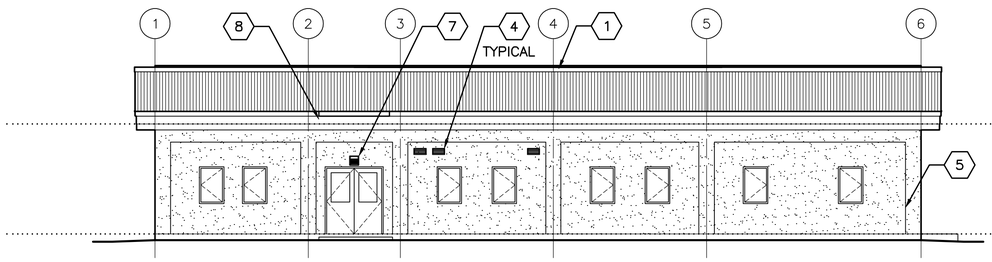


1 A–201 **ELEVATION**
SCALE: 1:100

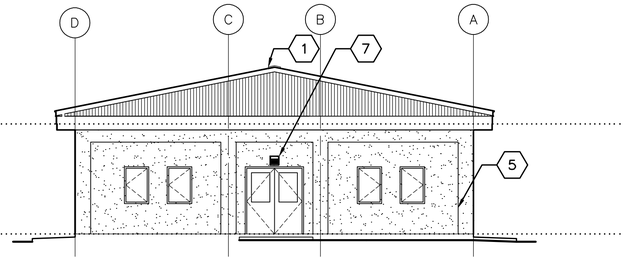


4 A–201 **ELEVATION**
SCALE: 1:100

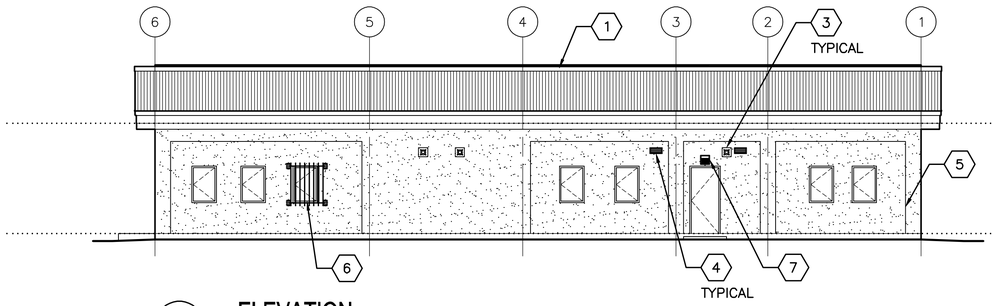


2 A–201 **ELEVATION**
SCALE: 1:100

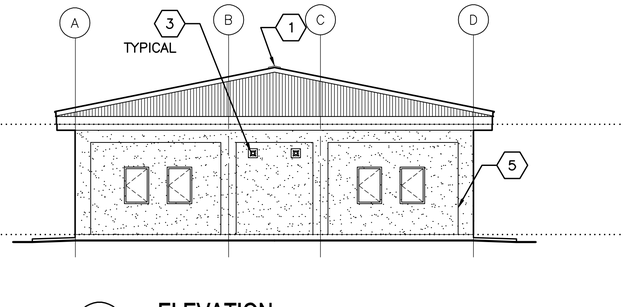


3 A–201 **ELEVATION**
SCALE: 1:100

## GENERAL NOTES:

A. COORDINATE SIZE AND LOCATION OF OPENINGS FOR MECHANICAL ITEMS WITH MECHANICAL DRAWINGS.

B. PROVIDE STRUCTURAL LINTELS AS REQUIRED – SEE STRUCTURAL DRAWINGS.

C. ALL EXTERIOR WALL FINISHES SHALL BE STUCCO OVER CMU AND CONCRETE SUBSTRATES. PROVIDE CONTROL JOINTS IN STUCCO WALL FINISH AS NOTED.

D. ROOF SHALL BE CORRUGATED METAL ROOF PANELS ON COLD–FORMED METAL FRAMING ON CONCRETE SLAB.

## KEY NOTES: (X)

1. CONTINUOUS METAL RIDGE VENT – SEE DETAIL 4/A–501.
2. NOT USED.
3. EXHAUST FAN, LOCATE TOP OF WALL PENETRATION 2800 MM ABOVE FINISHED FLOOR – SEE MECHANICAL DRAWINGS.
4. EXHAUST FAN WITH WALL GRILL, LOCATE TOP OF WALL PENETRATION 2800 MM ABOVE FINISHED FLOOR – SEE MECHANICAL DRAWINGS.
5. STUCCO CONTROL JOINT – SEE DETAIL 2A/A–501.
6. SECURITY BARS, SEE DETAIL 5/A–502.
7. EXTERIOR LIGHT FIXTURE – SEE ELECTRICAL
8. METAL GUTTER, CENTER ON DOOR, 2300 MM – SEE DETAIL 1A/A–501.

LINEAR DIMENSIONS SHOWN ARE IN MILLIMETERS (MM), UNLESS OTHERWISE NOTED

0 2000 4000
SCALE: 1:100

APPROVED:

A/E DESIGNER OF RECORD

SEAL:

STATE OF SOUTH CAROLINA
KEVIN R. CHAFIN
N. Charleston, SC
6374
REGISTERED ARCHITECT

US ARMY CORPS OF ENGINEERS
AFGHANISTAN ENGINEER DISTRICT

| Mark | Description | Date | Appr. |
|---|---|---|---|
| | | | |

| Mark | Description | Date | Appr. |
|---|---|---|---|
| | | | |

Date: 2/23/10
Rev: 0
Design file no.
Drawing code:
File name: ANAMEDA-201ELV
Plot date: 2/23/2010
Plot scale: x:x

Designed by: KRC
Dwn by: KJG
Ckd by: NLJ
Reviewed by: LHM
Submitted by: BAKER

U.S. ARMY CORPS OF ENGINEERS
AFGHANISTAN ENGINEER DISTRICT
APO AE 96338

*Michael Baker Jr., Inc*
*A unit of Michael Baker Corporation*
Airside Business Park
100 Airside Drive
Moon Township, PA 15108
www.mbakercorp.com

AFGHAN NATIONAL ARMY
REGIONAL MILITARY TRAINING CENTER
STANDARD DESIGN

MEDICAL CLINIC

ELEVATIONS

Sheet reference number:
A–201

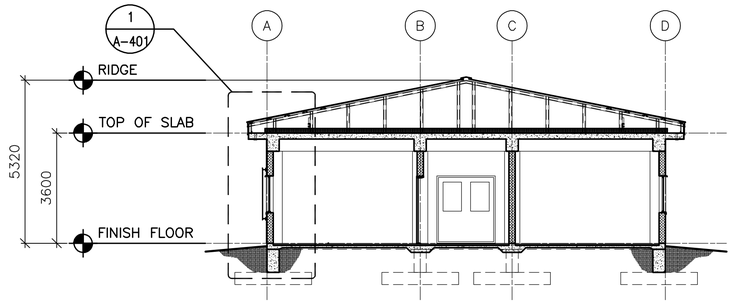


1 A-301 **BUILDING SECTION**

SCALE: 1:50

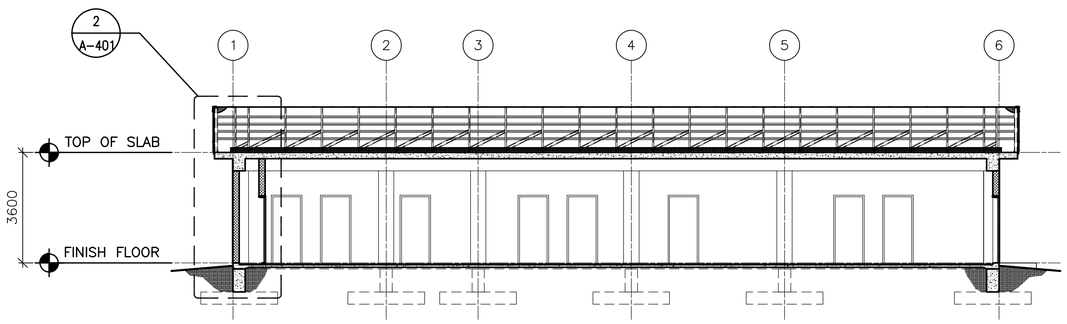


2 A-301 **BUILDING SECTION**

SCALE: 1:50

LINEAR DIMENSIONS SHOWN ARE IN MILLIMETERS (MM), UNLESS OTHERWISE NOTED

0 2000 4000

SCALE: 1:100

APPROVED:

A/E DESIGNER OF RECORD

SEAL:

STATE OF SOUTH CAROLINA
KEVIN R. CHAFIN
N. Charleston, SC
6374
REGISTERED ARCHITECT

US ARMY CORPS OF ENGINEERS
AFGHANISTAN ENGINEER DISTRICT

| Mark | Description | Date | Appr. |
|---|---|---|---|
| | | | |

| Mark | Description | Date | Appr. |
|---|---|---|---|
| | | | |

Rev: 0
Date: 2/23/10
Design file no.
Drawing code:
File name: ANAMEDA-301BS
Plot date: 2/23/2010
Plot scale: x:X

Designed by: KRC
Dwn by: KJG
Ckd by: NLJ
Reviewed by: LHM
Submitted by: BAKER

U.S. ARMY CORPS OF ENGINEERS
AFGHANISTAN ENGINEER DISTRICT
APO AE 96338

*Michael Baker Jr., Inc.*
*A unit of Michael Baker Corporation*
Airside Business Park
100 Airside Drive
Moon Township, PA 15108
www.mbakercorp.com

AFGHAN NATIONAL ARMY
REGIONAL MILITARY TRAINING CENTER
STANDARD DESIGN

MEDICAL CLINIC

BUILDING SECTIONS

Sheet reference number:
A-301

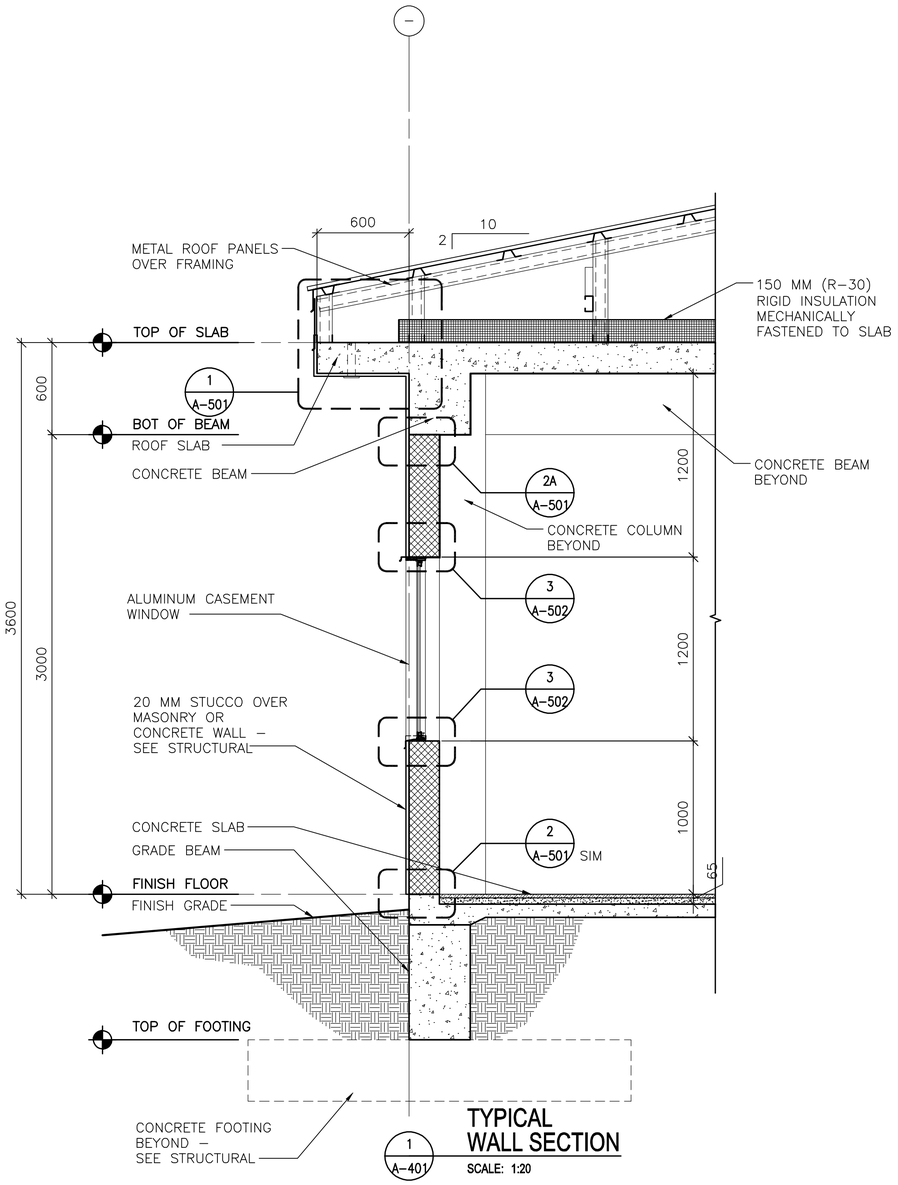


1 A-401 **TYPICAL WALL SECTION**

SCALE: 1:20

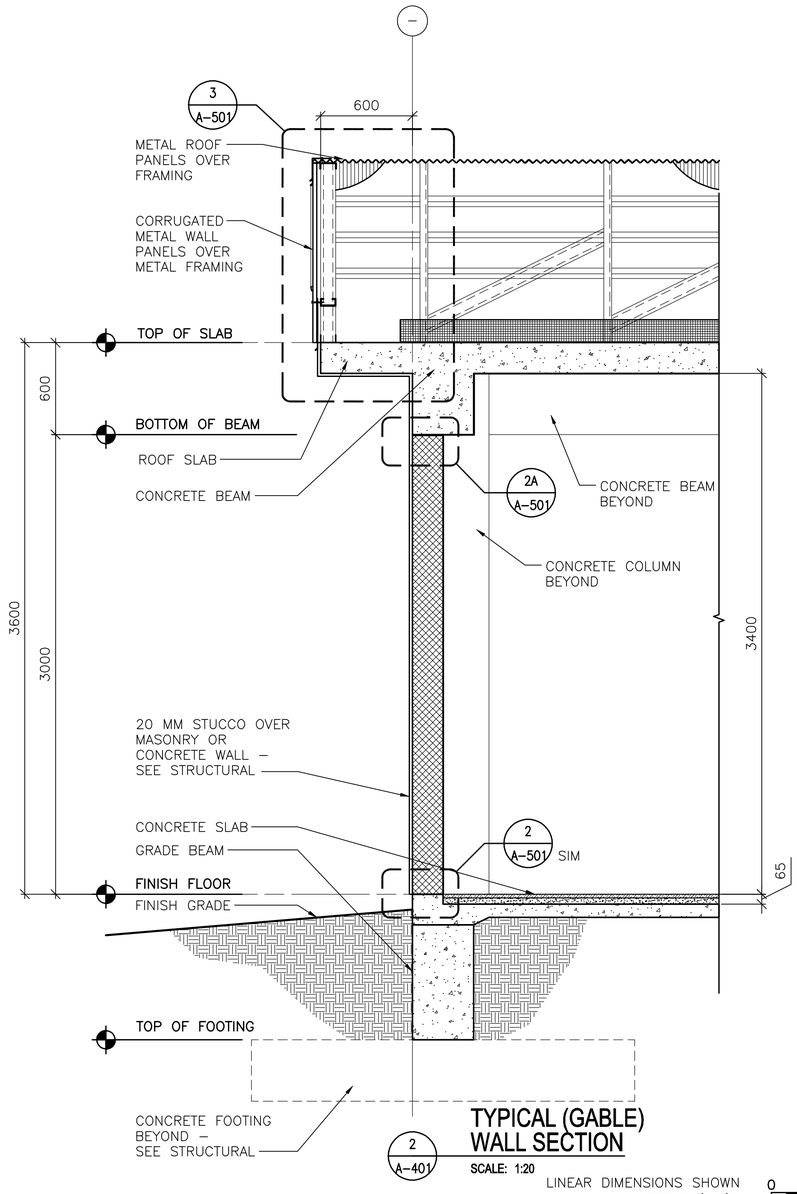


2 A-401 **TYPICAL (GABLE) WALL SECTION**

SCALE: 1:20

LINEAR DIMENSIONS SHOWN ARE IN MILLIMETERS (MM), UNLESS OTHERWISE NOTED

0 400 800

SCALE: 1:20

APPROVED:

A/E DESIGNER OF RECORD

SEAL:

STATE OF SOUTH CAROLINA
KEVIN R. CHAFIN
N. Charleston, SC
6374
REGISTERED ARCHITECT

US ARMY CORPS OF ENGINEERS
AFGHANISTAN ENGINEER DISTRICT

| Mark | Description | Date | Appr. |
|---|---|---|---|
| | | | |

| Mark | Description | Date | Appr. |
|---|---|---|---|
| | | | |

Rev: 0
Date: 2/23/10
Design file no.
Drawing code:
File name: ANAMEDA-401WS
Plot date: 2/23/2010
Plot scale: x:x

Designed by: KRC
Dwn by: KJG
Ckd by: NLJ
Reviewed by: LHM
Submitted by: BAKER

U.S. ARMY CORPS OF ENGINEERS
AFGHANISTAN ENGINEER DISTRICT
APO AE 96338

*Michael Baker Jr., Inc*
*A unit of Michael Baker Corporation*
Airside Business Park
100 Airside Drive
Moon Township, PA 15108
www.mbakercorp.com

AFGHAN NATIONAL ARMY
REGIONAL MILITARY TRAINING CENTER
STANDARD DESIGN

MEDICAL CLINIC

WALL SECTIONS

Sheet reference number:
A-401

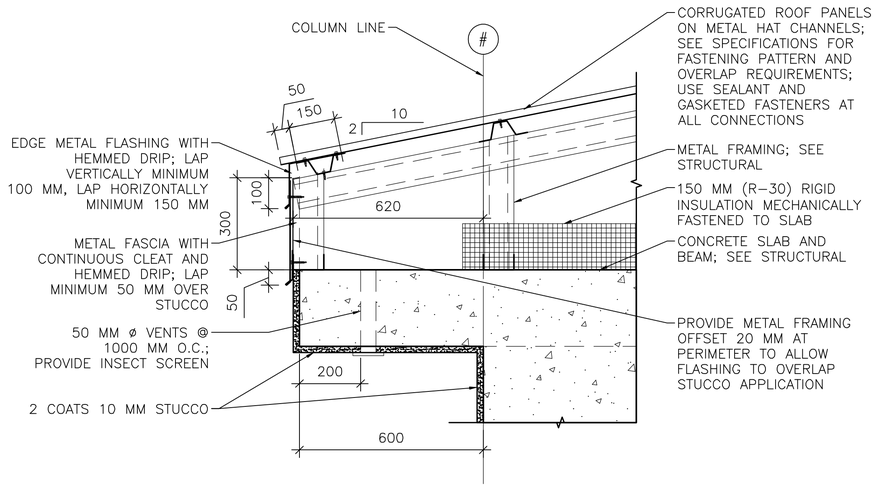


1 A-501 **EAVE DETAIL**
SCALE: 1:10

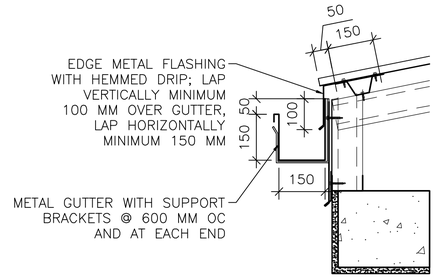


1A A-501 **GUTTER DETAIL**
SCALE: 1:10

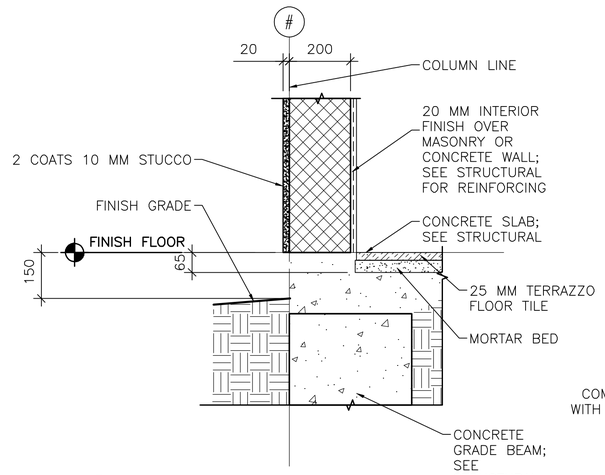


2 A-501 **STUCCO BASE DETAIL**
SCALE: 1:10

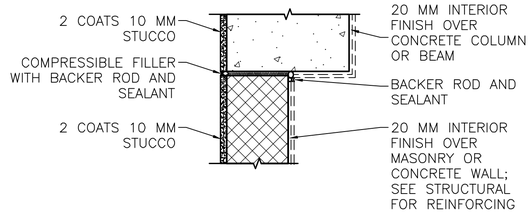


NOTE: DETAIL TYPICAL AT ALL WALL/COLUMN AND WALL/BEAM LOCATIONS, ALTERNATE BRACING DETAIL BELOW 2B/A-501.

2A A-501 **STUCCO JOINT DETAIL**
SCALE: 1:10

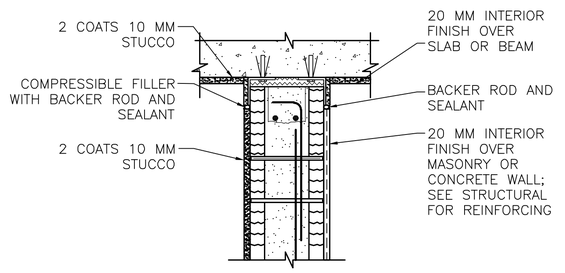


INTERIOR WALL/BEAM

2B A-501 **ALTERNATE BRACING DETAIL**
SCALE: 1:10

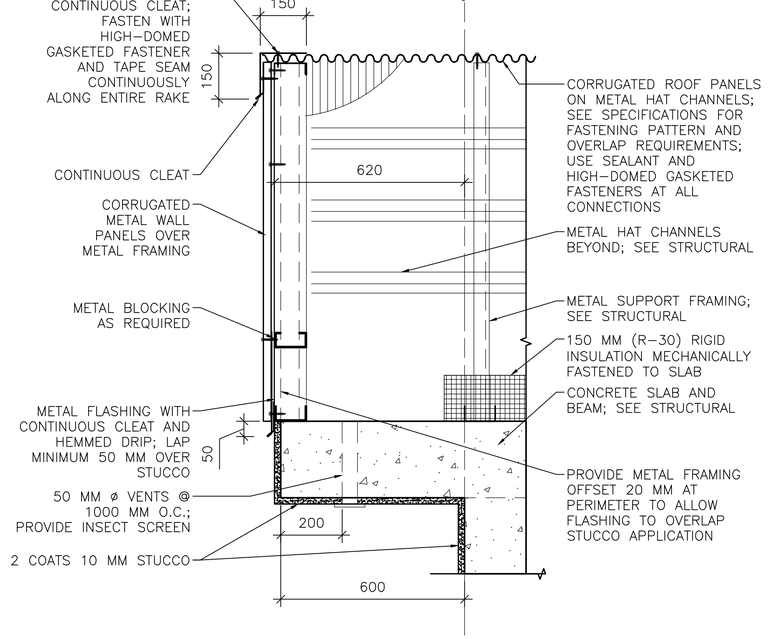


3 A-501 **RAKE/EAVE DETAIL**
SCALE: 1:10

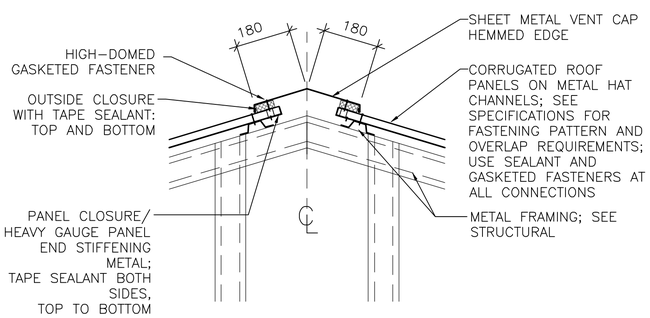


4 A-501 **RIDGE VENT DETAIL**
SCALE: 1:10

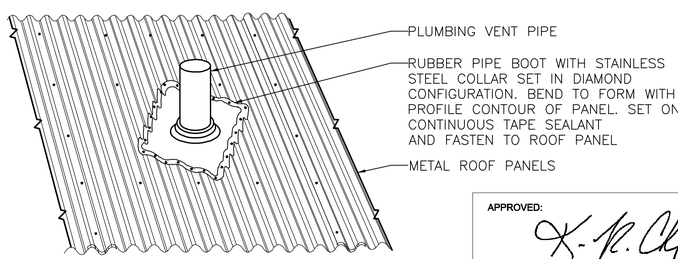


5 A-501 **PLUMBING VENT DETAIL**
SCALE: NTS

LINEAR DIMENSIONS SHOWN ARE IN MILLIMETERS (MM), UNLESS OTHERWISE NOTED

0 200 400
SCALE: 1:10

APPROVED:

A/E DESIGNER OF RECORD

SEAL:

KEVIN R. CHAFIN
N. Charleston, SC
6374
STATE OF SOUTH CAROLINA
REGISTERED ARCHITECT

US ARMY CORPS OF ENGINEERS
AFGHANISTAN ENGINEER DISTRICT

| Mark | Description | Date | Appr. |
|---|---|---|---|
| | | | |

Date: 2/23/10
Design file no.
Drawing code:
Rev: 0

Designed by: KRC
Dwn by: KJG
Ckd by: NLJ
Reviewed by: LHM
Submitted by: BAKER

File name: ANAMEDA-501DT
Plot date: 2/23/2010
Plot scale: x:x

U.S. ARMY CORPS OF ENGINEERS
AFGHANISTAN ENGINEER DISTRICT
APO AE 96338

*Michael Baker Jr., Inc*
*A unit of Michael Baker Corporation*
Airside Business Park
100 Airside Drive
Moon Township, PA 15108
www.mbakercorp.com

AFGHAN NATIONAL ARMY
REGIONAL MILITARY TRAINING CENTER
STANDARD DESIGN

MEDICAL CLINIC

EXTERIOR DETAILS

Sheet reference number:
A-501

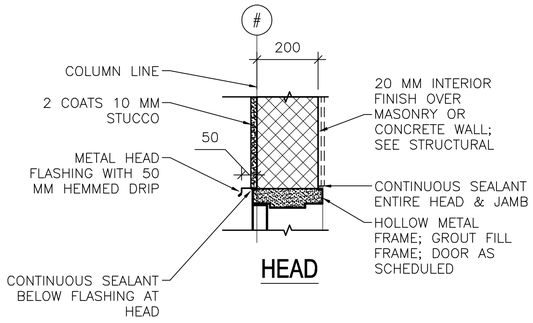


HEAD

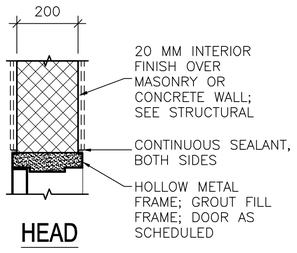


HEAD

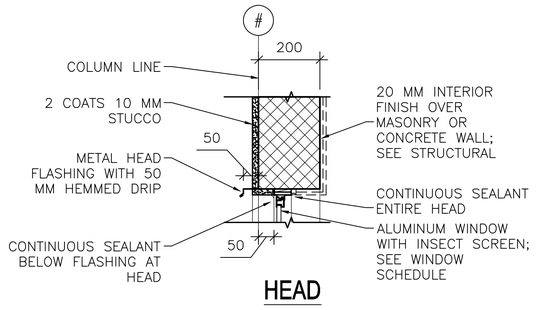


HEAD

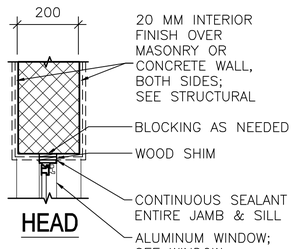


HEAD

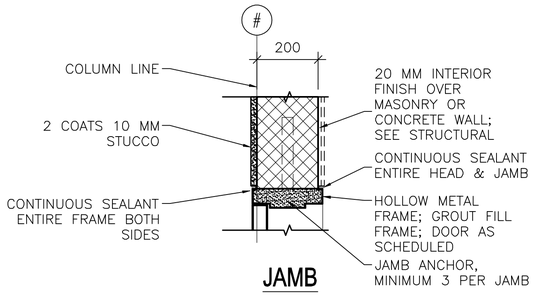


JAMB

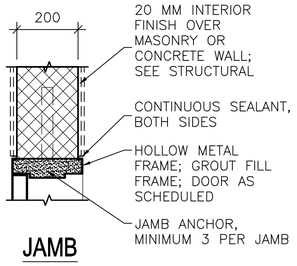


JAMB

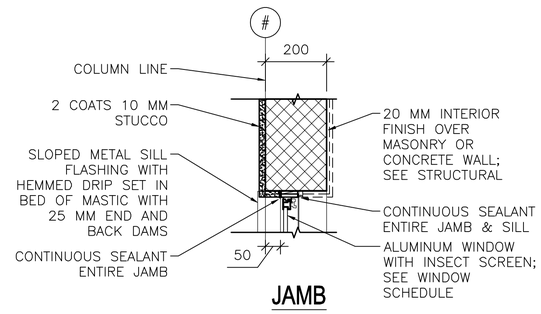


JAMB

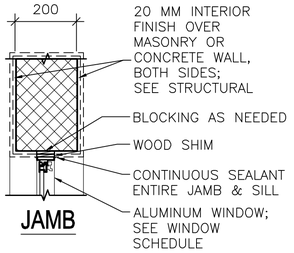


JAMB

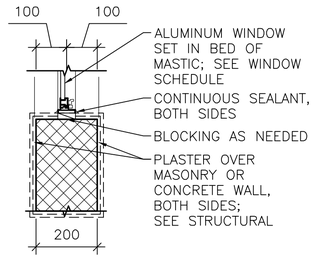


SILL

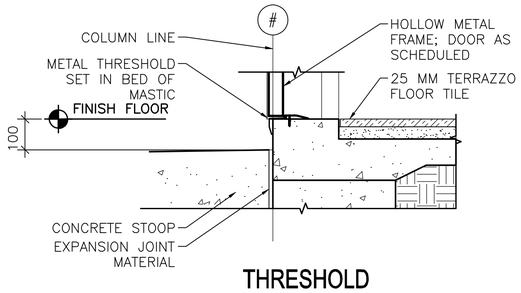


THRESHOLD

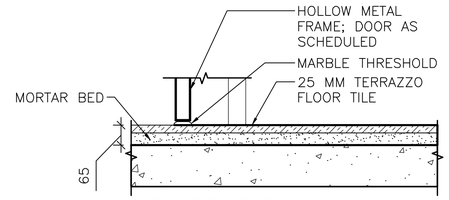


THRESHOLD

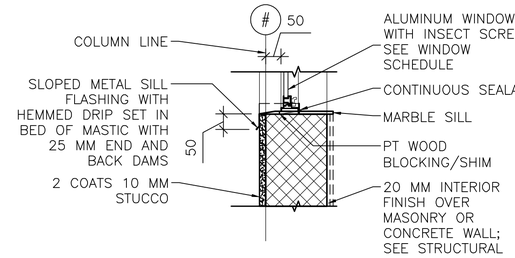


SILL

4 A–502 **INTERIOR WINDOW DETAILS**
SCALE: 1:10

1 A–502 **EXTERIOR DOOR DETAILS**
SCALE: 1:10

2 A–502 **INTERIOR DOOR DETAILS**
SCALE: 1:10

3 A–502 **EXTERIOR WINDOW DETAILS**
SCALE: 1:10

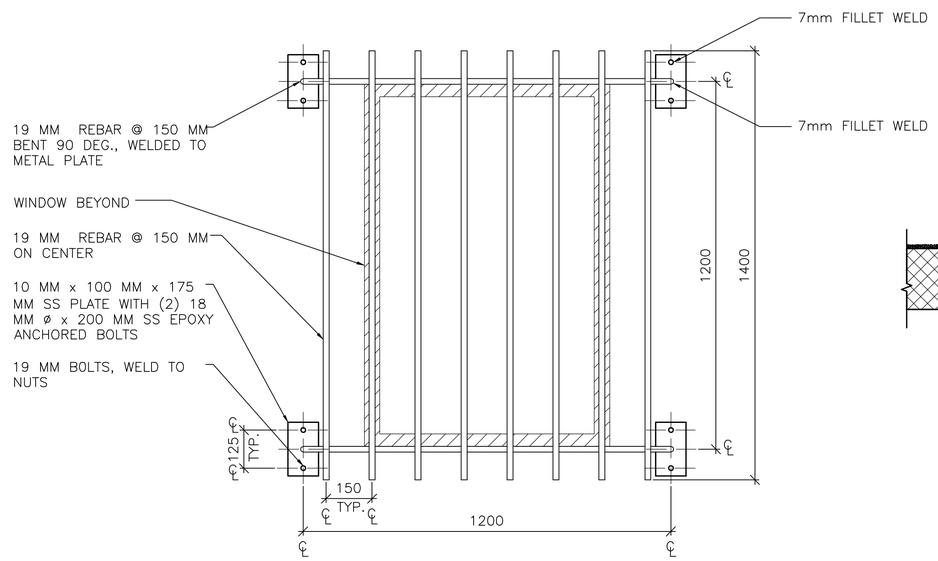


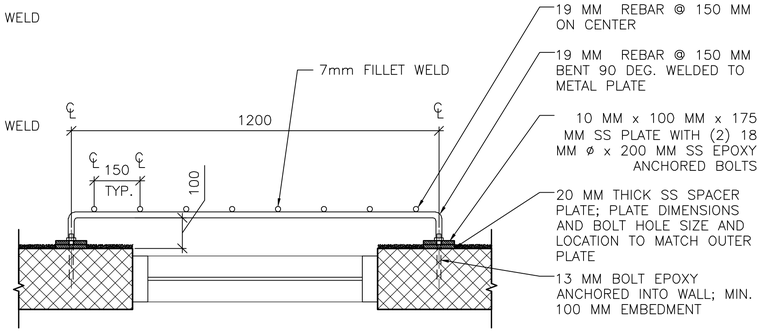


5 A–502 **SECURITY BAR DETAIL**
SCALE: 1:10

LINEAR DIMENSIONS SHOWN ARE IN MILLIMETERS (MM), UNLESS OTHERWISE NOTED

0 200 400
SCALE: 1:10

APPROVED:

A/E DESIGNER OF RECORD

SEAL:

STATE OF SOUTH CAROLINA
KEVIN R. CHAFIN
N. Charleston, SC
6374
REGISTERED ARCHITECT

US ARMY CORPS OF ENGINEERS
AFGHANISTAN ENGINEER DISTRICT

| Mark | Description | Date | Appr. |
|---|---|---|---|
| | | | |

Date: 2/23/10
Design file no.
Drawing code:
Rev: 0
Designed by: KRC
Drwn by: KJG
Ckd by: NLJ
Reviewed by: LHM
Submitted by: BAKER
File name: ANAMEDA-502HAS
Plot date: 2/23/2010
Plot scale: x:x

U.S. ARMY CORPS OF ENGINEERS
AFGHANISTAN ENGINEER DISTRICT
APO AE 96338

*Michael Baker Jr., Inc*
*A unit of Michael Baker Corporation*
Airside Business Park
100 Airside Drive
Moon Township, PA 15108
www.mbakercorp.com

AFGHAN NATIONAL ARMY
REGIONAL MILITARY TRAINING CENTER
STANDARD DESIGN

MEDICAL CLINIC

HEAD, JAMB & SILL DETAILS

Sheet reference number:
A–502

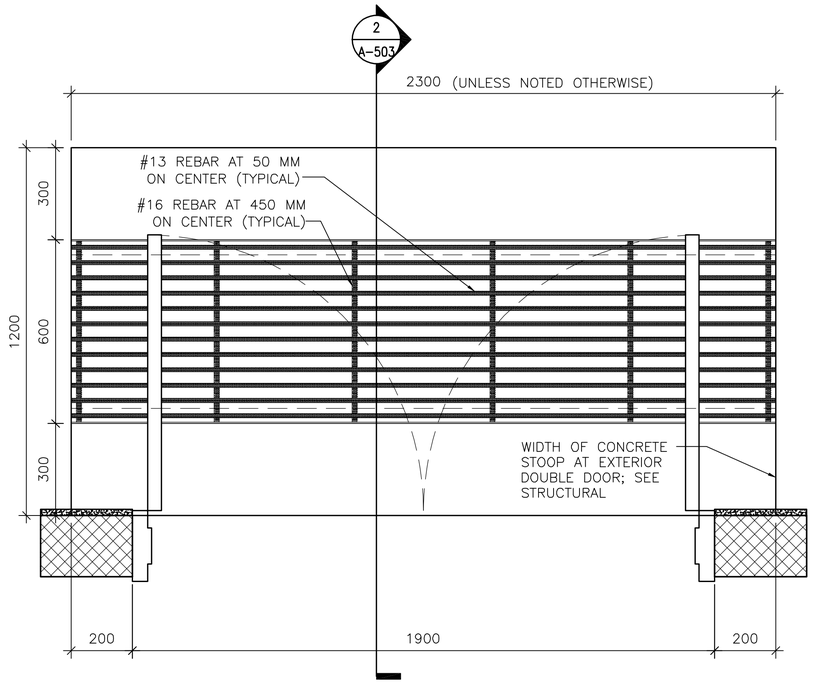


1 A-503 **DOOR STOOP PLAN (WITH GRATE)**

SCALE: 1:10

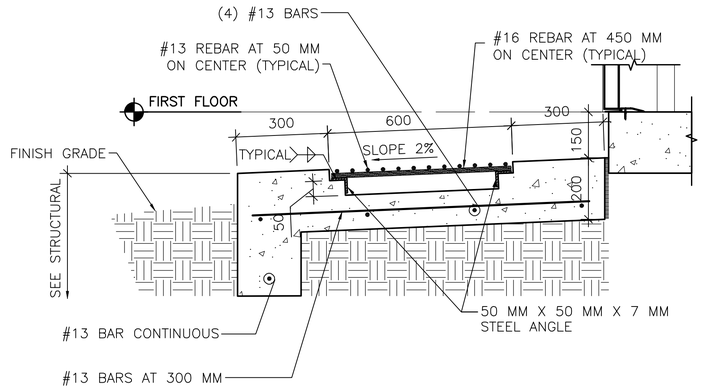


2 A-503 **DOOR STOOP DETAIL**

SCALE: 1:10

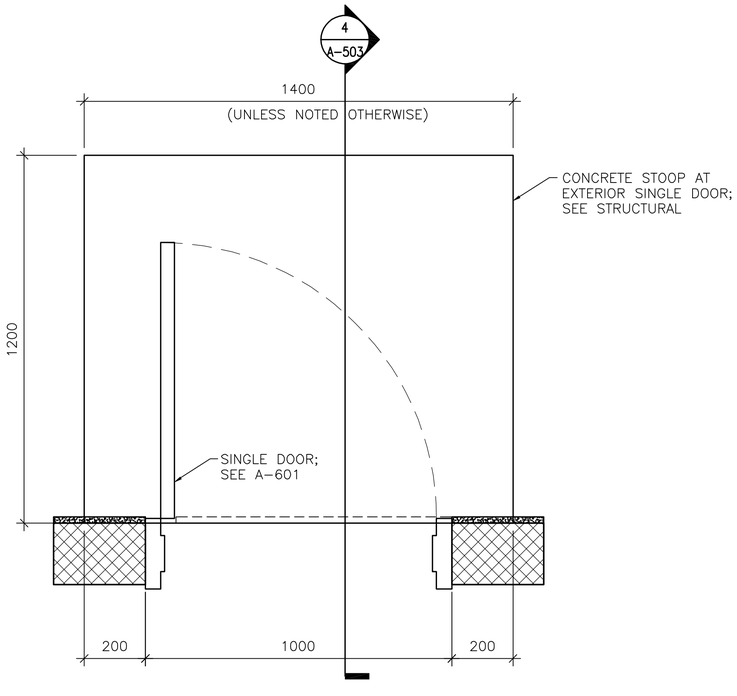


3 A-503 **DOOR STOOP PLAN (WITHOUT GRATE)**

SCALE: 1:10

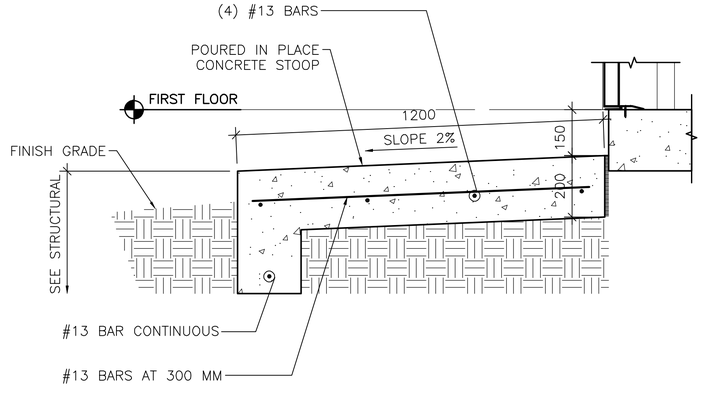


4 A-503 **DOOR STOOP DETAIL**

SCALE: 1:10

LINEAR DIMENSIONS SHOWN ARE IN MILLIMETERS (MM), UNLESS OTHERWISE NOTED

0 200 400

SCALE: 1:10

APPROVED:

A/E DESIGNER OF RECORD

SEAL:

STATE OF SOUTH CAROLINA
KEVIN R. CHAFIN
N. Charleston, SC
6374
REGISTERED ARCHITECT

US ARMY CORPS OF ENGINEERS
AFGHANISTAN ENGINEER DISTRICT

| Mark | Description | Date | Appr. |
|---|---|---|---|
| | | | |

| Mark | Description | Date | Appr. |
|---|---|---|---|
| | | | |

Rev: 0

Date: 2/23/10
Design file no.
Drawing code:
File name: ANAMEDA-5938T
Plot date: 2/23/2010
Plot scale: x:x

Designed by: KRC
Dwn by: KJG
Chkd by: NLJ
Reviewed by: LHM
Submitted by: BAKER

U.S. ARMY CORPS OF ENGINEERS
AFGHANISTAN ENGINEER DISTRICT
APO AE 96338

*Michael Baker Jr., Inc*
*A unit of Michael Baker Corporation*
Airside Business Park
100 Airside Drive
Moon Township, PA 15108
www.mbakercorp.com

AFGHAN NATIONAL ARMY
REGIONAL MILITARY TRAINING CENTER
STANDARD DESIGN

MEDICAL CLINIC

STOOP DETAILS

Sheet reference number:
A-503

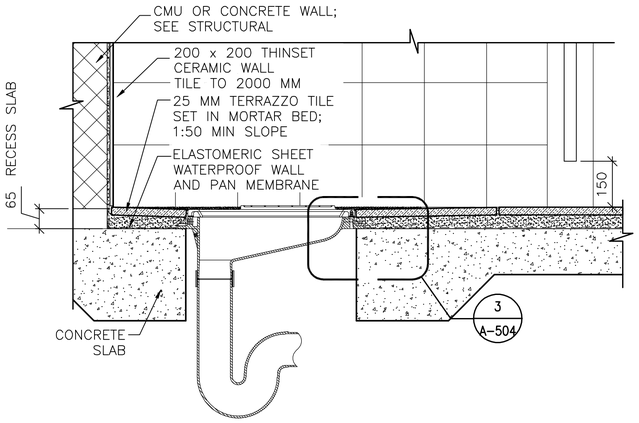


1 A-504 **LATRINE DETAIL**
SCALE: 1:10

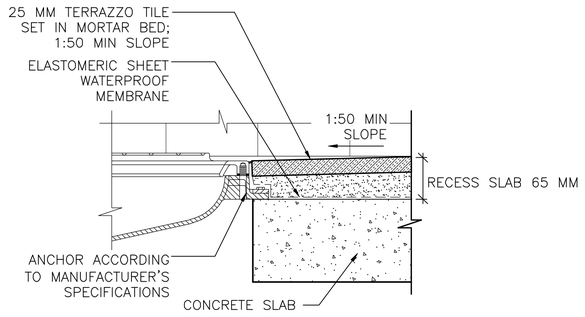


3 A-504 **MOUNTING DETAIL**
SCALE: 1:5

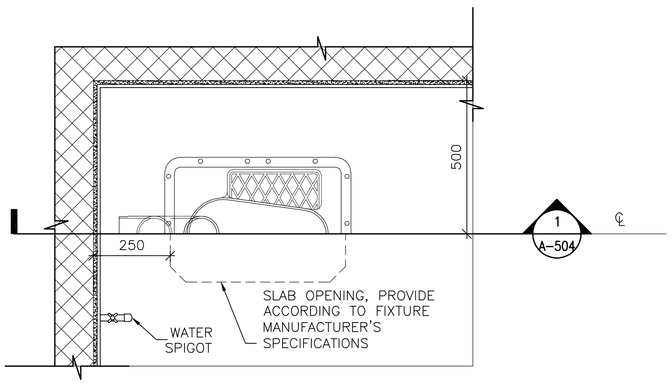


2 A-504 **TOILET DETAIL**
SCALE: 1:10

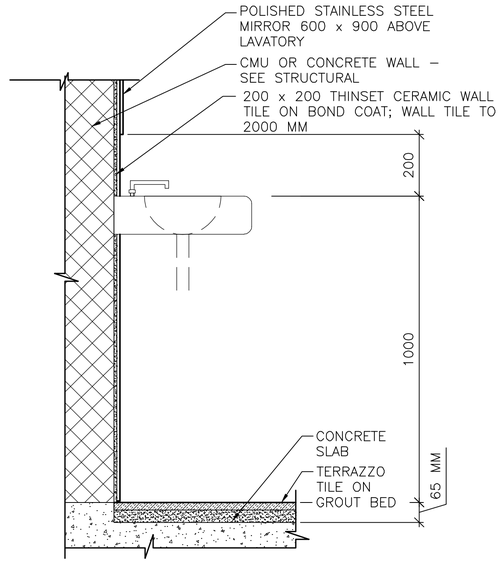


4 A-504 **WALL MOUNTED LAVATORY**
SCALE: 1:10

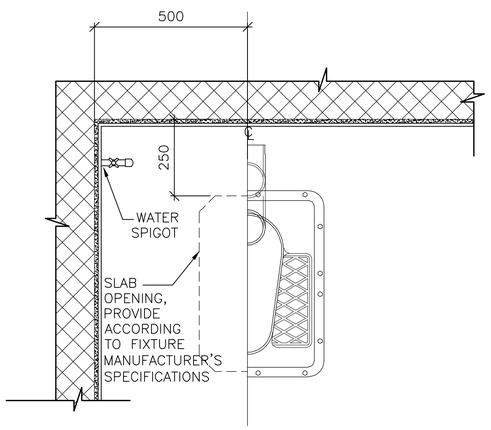


2A A-504 **TOILET DETAIL**
SCALE: 1:10

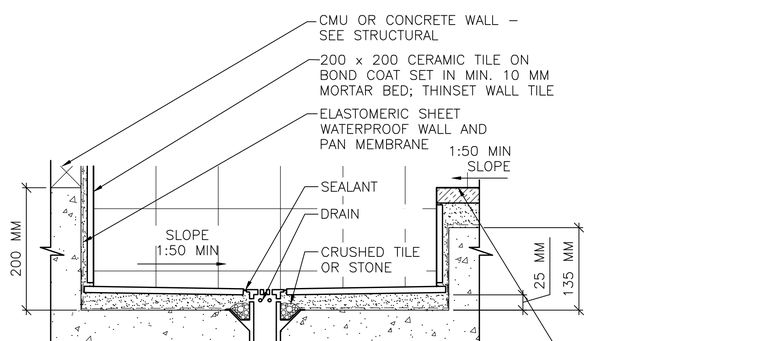


5 A-504 **RECESSED TROUGH**
SCALE: 1:5

LINEAR DIMENSIONS SHOWN ARE IN MILLIMETERS (MM), UNLESS OTHERWISE NOTED

0 100 200
SCALE: 1:5

0 200 400
SCALE: 1:10

APPROVED:

A/E DESIGNER OF RECORD

SEAL:

STATE OF SOUTH CAROLINA
KEVIN R. CHAFIN
N. Charleston, SC
8374
REGISTERED ARCHITECT

US ARMY CORPS OF ENGINEERS
AFGHANISTAN ENGINEER DISTRICT

| Mark | Description | Date | Appr. |
|---|---|---|---|
| | | | |

| Mark | Description | Date | Appr. |
|---|---|---|---|
| | | | |

Designed by: KRC | Date: 2/23/10 | Rev: 0
Dwn by: KJG | Ckd by: NLJ | Design file no.
Reviewed by: LHM | Drawing code:
Submitted by: BAKER | File name: ANAMEDA-504DT | Plot date: 2/23/2010 | Plot scale: x:X

U.S. ARMY CORPS OF ENGINEERS
AFGHANISTAN ENGINEER DISTRICT
APO AE 96338

*Michael Baker Jr., Inc*
*A unit of Michael Baker Corporation*
Airside Business Park
100 Airside Drive
Moon Township, PA 15108
www.mbakercorp.com

AFGHAN NATIONAL ARMY
REGIONAL MILITARY TRAINING CENTER
STANDARD DESIGN

MEDICAL CLINIC

TOILET & LAVATORY DETAILS

Sheet reference number:
A-504

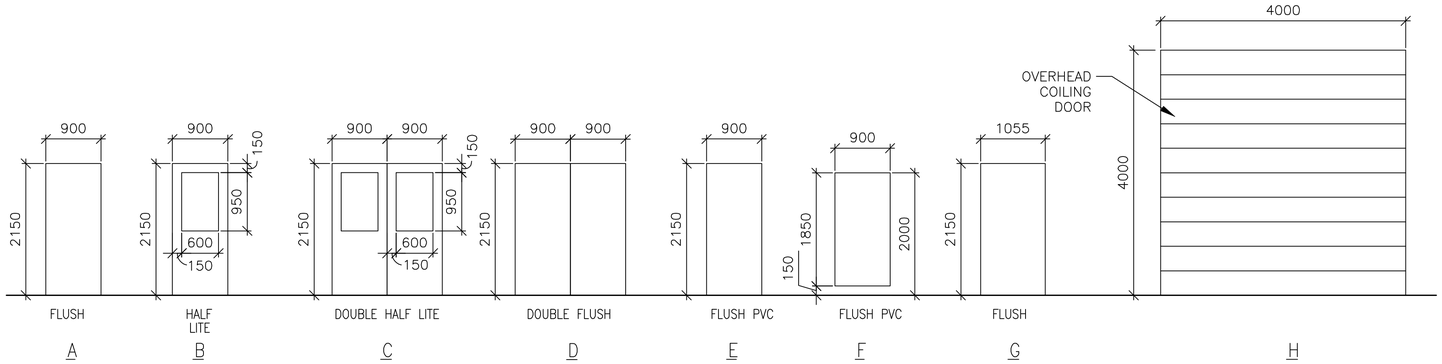


## 1 A-601 DOOR TYPES

SCALE: 1:50

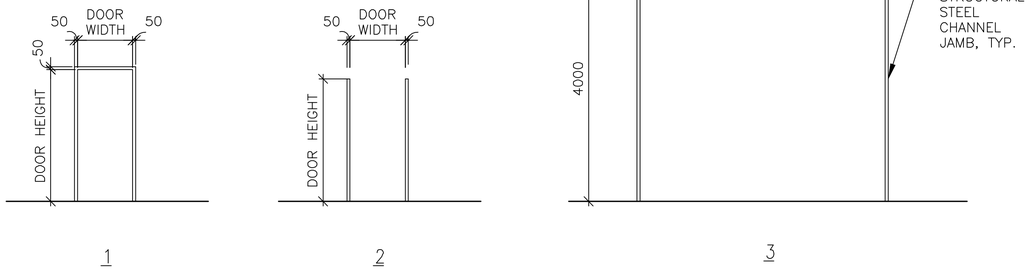


## 2 A-601 FRAME TYPES

SCALE: 1:50

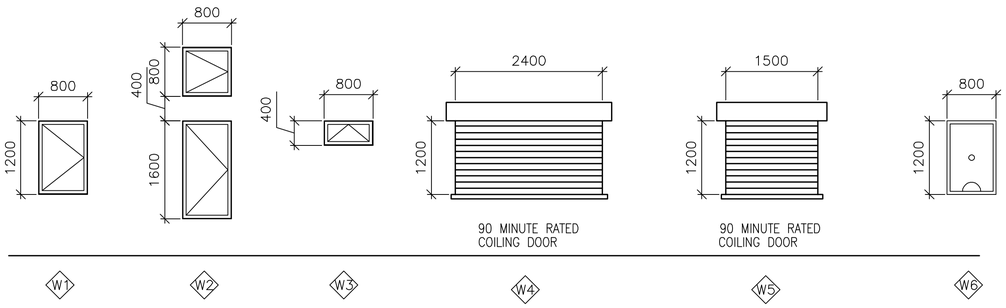


## 3 A-601 WINDOW TYPES

SCALE: 1:50

## WINDOW TYPE NOTES:

1. ALL EXTERIOR WINDOWS SHALL BE ALUMINUM WITH INSECT SCREENS. WINDOWS SHALL BE COMMERCIAL GRADE.
2. ALL EXTERIOR WINDOWS SHALL BE OPERABLE.

## 4 A-601 DOOR TAG

SCALE: NTS




## 5 A-601 RATED DOOR TAG

SCALE: NTS

## DOOR TAG NOTES:

1. THE DOOR TAG INDICATES THE DOOR TYPE, FRAME TYPE AND HARDWARE SET FOR EACH DOOR.
2. THE DOOR TAG FOR RATED DOORS INCLUDES THE RATING OF THE DOOR IN MINUTES.

## EXTERIOR DOOR HARDWARE TYPES:

HW-1 1-1/2 PR HINGES, A5112 114 X 114
1 EA RIM EXIT DEVICE, TYPE 1
1 EA CYLINDER. E09221A, GRADE 1
1 EA OVERHEAD CLOSER, C02061, LOW RESISTANCE
1 EA THRESHOLD, J32130
3 EA DOOR SILENCERS, L03011

HW-2 1-1/2 PR HINGES, A5112 114 X 114
1 EA LOCKSET, F13 ENTRY LOCK W/LEVER HANDLES, GRADE 1
1 EA OVERHEAD CLOSER, C02061, LOW RESISTANCE
1 EA THRESHOLD, J32130
3 EA DOOR SILENCERS, L03011

HW-3 3 PR HINGES, A5112 114 X 114
2 EA RIM EXIT DEVICE, TYPE 1
2 EA CYLINDER. GRADE 1
2 EA OVERHEAD CLOSER, C02061, LOW RESISTANCE
1 EA DOOR COORDINATOR, TYPE 21
1 EA ASTRAGAL
1 EA THRESHOLD, J32130
2 EA DOOR SILENCERS, L03011

HW-4 3 PR HINGES, A5112 114 X 114
1 EA LOCKSET W/LEVER HANDLES. GRADE 1, F13
1 EA OVERHEAD CLOSER, C02061, LOW RESISTANCE
2 EA MAGNETIC HOLDER PIN, ATTACHED TO DOOR LEAF
2 EA MAGNETIC HOLDER RECEIVER, ATTACHED TO STOOP
2 EA LEVER EXTENSION FLUSH BOLTS, L04081
1 EA ASTRAGAL
1 EA THRESHOLD, J32130
2 EA DOOR SILENCERS, L03011

## DOOR AND HARDWARE NOTES:

1. INTERIOR AND EXTERIOR METAL DOORS AND FRAME COLORS SHALL MATCH ADJACENT WALL COLORS AS SELECTED BY THE CONTRACTING OFFICER.
2. FRAMES, EXCEPT FIRE-RATED FRAMES, SHALL BE MOUNTED AND ADJUSTED IN ACCORDANCE WITH MANUFACTURER'S INSTRUCTIONS. FRAMES SHALL BE FASTENED WITH MINIMUM OF THREE ANCHORS PER JAMB AT EQUAL INTERVALS.
3. DIMENSIONS SHOWN ON DOOR TYPES DETAIL ARE BASED UPON MODULAR MASONRY (OR ROUGH OPENING), HEIGHT OF 2200 MM FOR STANDARD PERSONNEL DOORS. CONTRACTOR SHALL COORDINATE WITH DOOR SUPPLIER TO ENSURE THAT DIMENSIONS OF DOORS AND FRAMES PROVIDED ARE COMPATIBLE WITH DOOR OPENING DIMENSIONS.
4. HARDWARE SHALL BE HEAVY DUTY, COMMERCIAL GRADE, STAINLESS STEEL WITH A SATIN OR BRUSHED FINISH.
5. HARDWARE TYPES INCLUDE BUILDERS HARDWARE MANUFACTURERS ASSOCIATION (BMHA) NUMBER.
6. DOORS IN 2 HOUR RATED PARTITIONS SHALL BE 1.5 HOUR (90 MINUTE) RATED DOORS IN ACCORDANCE WITH NFPA 101, TABLE 8.3.4.2.
7. DOORS AT STAIR ENCLOSURES SHALL BE 1 HOUR (60 MINUTE) RATED AT 1 HOUR WALL IN ACCORDANCE WITH NFPA 101, TABLE 8.3.4.2.
8. DOORS IN 1 HOUR RATED WALLS SHALL BE 3/4 HOUR (45 MINUTE) RATED DOORS IN ACCORDANCE WITH NFPA 101, TABLE 8.3.4.2.
9. DOORS IN 1 HOUR RATED CORRIDOR WALLS SHALL BE 1/3 HOUR (20 MINUTE) IN ACCORDANCE WITH NFPA 101, TABLE 8.3.4.2.
10. PROVIDE DOOR STOPS TO PROTECT WALLS ON LOCATIONS WHERE DOOR SWING WILL STRIKE WALL.

THIS SHEET IS STANDARD AND IS INCLUSIVE OF ALL THE DOOR/ WINDOW/ HARDWARE TYPES FOR THE ENTIRE RMTC CONTRACT. NOT ALL DOOR/ WINDOW/ HARDWARE TYPES ARE USED FOR ANY PARTICULAR BUILDING DESIGN. CONTRACTOR SHALL REFER TO THE FLOOR PLAN FOR THE TYPES BEING USED.

## INTERIOR DOOR HARDWARE TYPES:

HW-5 1-1/2 PR HINGES, A8133 114 X 114
1 EA LOCKSET W/LEVER HANDLES, F08, GRADE 1
1 EA WALL STOP, L02101 OR L02161
3 EA DOOR SILENCERS, L03011

HW-6 1-1/2 PR HINGES, A8112 114 X 114
1 EA LOCKSET W/LEVER HANDLES, F08, GRADE 1
1 EA WALL STOP, L02101 OR L02161
1 EA OVERHEAD CLOSER, C02061, LOW RESISTANCE
3 EA DOOR SILENCERS, L03011

HW-7 1-1/2 PR HINGES, A8133
1 EA LOCKSET W/LEVER HANDLES, F13 GRADE 1
1 EA WALL STOP, L02101 OR L02161
2 EA MOP PLATE, J103
3 EA DOOR SILENCERS, L03011

HW-8 1-1/2 PR HINGES, A8112
1 EA LOCKSET W/LEVER HANDLES, F13 GRADE 1
1 EA WALL STOP, L02101 OR L02161
2 EA MOP PLATE, J103
1 EA OVERHEAD CLOSER, C02061, LOW RESISTANCE
3 EA DOOR SILENCERS, L03011

HW-9 1-1/2 PR HINGES, A5112 114 X 114
1 EA RIM EXIT DEVICE, TYPE 1
1 EA CYLINDER. E09221A, GRADE 1
1 EA OVERHEAD CLOSER, C02061, LOW RESISTANCE
3 EA DOOR SILENCERS, L03011

HW-10 3 PR HINGES, A5112 114 X 114
1 EA LOCKSET W/LEVER HANDLES. GRADE 1, F13
2 EA LEVER EXTENSION FLUSH BOLTS, L04081
1 EA ASTRAGAL
2 EA DOOR SILENCERS, L03011

HW-11 1-1/2 PR HINGES, A8112 114 X 114
1 EA LOCKSET W/LEVER HANDLES, F13, GRADE 1
1 EA WALL STOP, L02101 OR L02161
1 EA OVERHEAD CLOSER, C02061, LOW RESISTANCE
3 EA DOOR SILENCERS, L03011
1 EA ROBE HOOK

HW-12 1-1/2 PR HINGES, A8133
1 EA LATCHSET W/LEVER HANDLES, F76 GRADE 1
1 EA WALL STOP, L02101 OR L02161
2 EA MOP PLATE, J103
3 EA DOOR SILENCERS, L03011
1 EA ROBE HOOK

HW-13 3 PR HINGES, A5112 114 X 114
1 EA LOCKSET W/LEVER HANDLES. GRADE 1, F13
1 EA OVERHEAD CLOSER, C02061, LOW RESISTANCE
2 EA LEVER EXTENSION FLUSH BOLTS, L04081
1 EA ASTRAGAL
2 EA DOOR SILENCERS, L03011

HW-14 3 PR HINGES, A5112 114 X 114
2 EA RIM EXIT DEVICE, TYPE 1
2 EA CYLINDER. GRADE 1
2 EA OVERHEAD CLOSER, C02061, LOW RESISTANCE
1 EA DOOR COORDINATOR, TYPE 21
1 EA ASTRAGAL
2 EA DOOR SILENCERS, L03011

APPROVED:

A/E DESIGNER OF RECORD

SEAL:

STATE OF SOUTH CAROLINA
KEVIN R. CHAFIN
N. Charleston, SC
6374
REGISTERED ARCHITECT

US ARMY CORPS OF ENGINEERS
AFGHANISTAN ENGINEER DISTRICT

| Mark | Description | Date | Appr. |
|---|---|---|---|

Date: 2/23/10
Design file no.
Drawing code:
Rev: 0
File name: ANAMEDA-601SCH
Plot date: 2/23/2010
Plot scale: X:X

Designed by: KRC
Dwn by: KJG
Ckd by: NLJ
Reviewed by: LHM
Submitted by: BAKER

U.S. ARMY CORPS OF ENGINEERS
AFGHANISTAN ENGINEER DISTRICT
APO AE 96338

*Michael Baker Jr., Inc.*
*A unit of Michael Baker Corporation*
Airside Business Park
100 Airside Drive
Moon Township, PA 15108
www.mbakercorp.com

AFGHAN NATIONAL ARMY
REGIONAL MILITARY TRAINING CENTER
STANDARD DESIGN

MEDICAL CLINIC

WINDOW AND DOOR SCHEDULES

Sheet reference number:
A-601

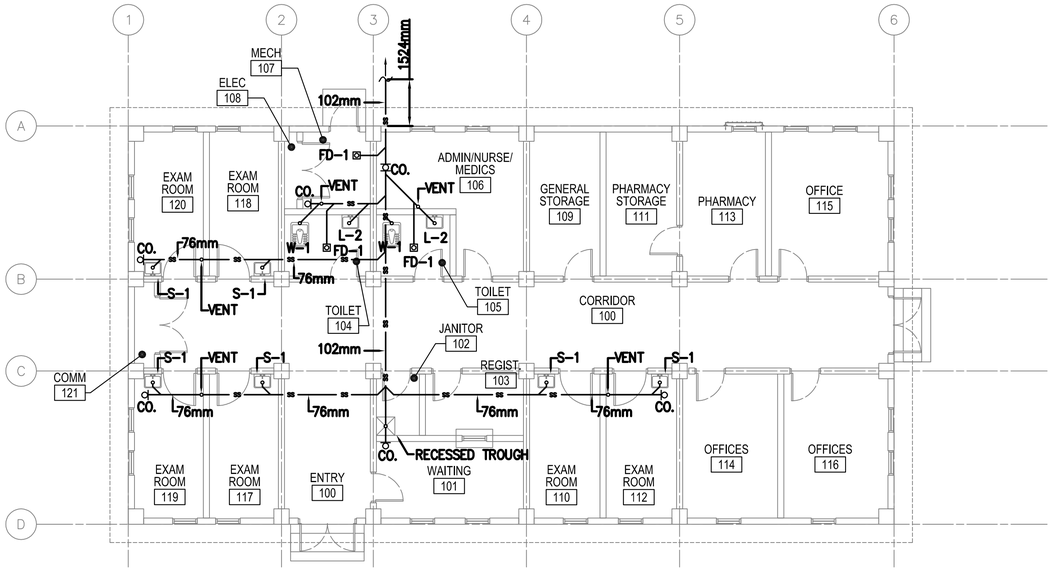


1 P-101 MEDICAL CLINIC - PLUMBING (SANITARY)

SCALE: 1:100

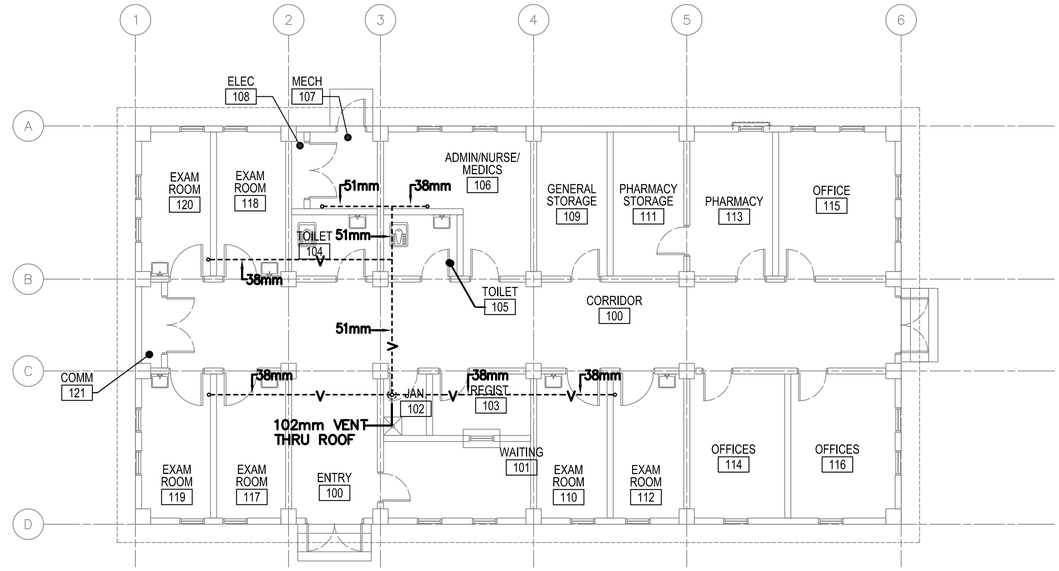


2 P-101 MEDICAL CLINIC - PLUMBING (VENT PIPING)

SCALE: 1:100

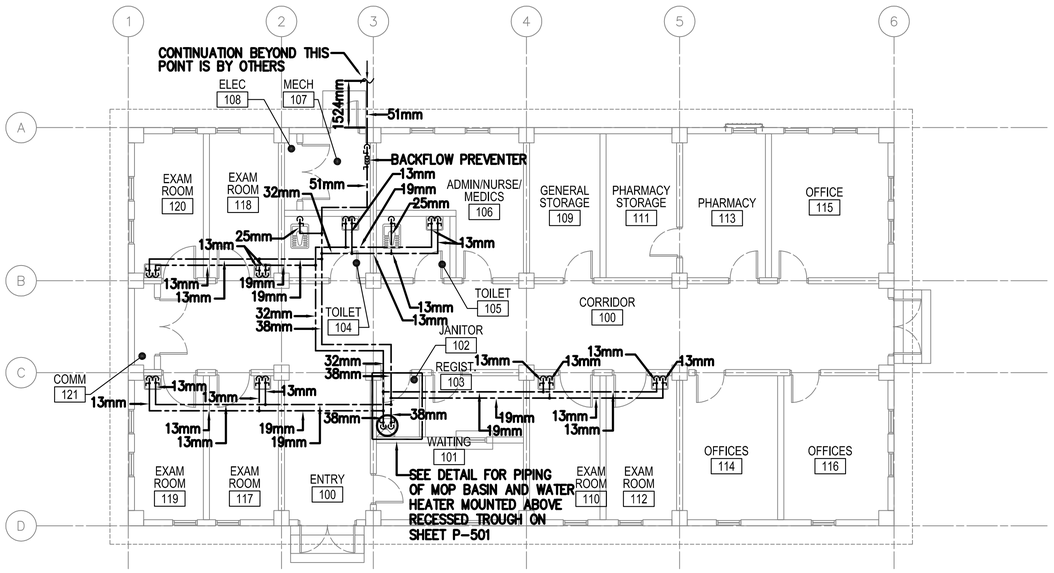


3 P-101 MEDICAL CLINIC - PLUMBING (HOT & COLD WATER)

SCALE: 1:100

## FLOOR PLAN NOTES:

1. DO NOT SCALE DRAWINGS – ALL DIMENSIONS AND CONDITIONS SHALL BE CHECKED AND VERIFIED BY THE CONTRACTOR AT THE SITE.
2. ALL WORK PERFORMED ON THIS BUILDING SHALL BE IN COMPLIANCE WITH ALL PERTINENT CODES, RULES, ORDINANCES AND REGULATIONS OF THE GOVERNING AUTHORITIES.
3. ALL WORK PERFORMED UNDER AND IN CONNECTION WITH THESE DRAWINGS AND SPECIFICATIONS SHALL BE IN STRICT COMPLIANCE WITH THE LATEST SAFETY AND HEALTH STANDARDS.
4. REPORT ANY DISCREPANCIES FOUND IN THE PLUMBING DRAWINGS AND/OR IN THE SPECIFICATIONS DURING THE BIDDING PROCESS FOR CLARIFICATION BY THE ENGINEER.
5. ALL EASTERN STYLE WATER CLOSETS IN THIS FACILITY ARE TO HAVE THE FIXTURE DESIGNATION OF W-1. EACH FIXTURE SHALL HAVE A 25mm (1 INCH) COLD WATER LINE EXTENDED TO IT AND THEN BE REDUCED TO 13mm (1/2 INCH) FOR A FINAL CONNECTION TO THE FLUSH TANK AND A 102mm (4) INCH SANITARY CONNECTION.
6. ALL LAV FIXTURES IN THIS FACILITY ARE TO HAVE THE FIXTURE DESIGNATION OF L-2. EACH FIXTURE SHALL HAVE A 13mm (1/2 INCH) COLD WATER, 13mm (1/2 INCH) HOT WATER CONNECTION AND A 76mm (3 INCH) SANITARY CONNECTION.
7. ALL SINK FIXTURES IN THIS FACILITY ARE TO HAVE THE FIXTURE DESIGNATION OF S-1. EACH FIXTURE SHALL HAVE A 13mm (1/2 INCH) COLD WATER, 13mm (1/2 INCH) HOT WATER CONNECTION AND A 76mm (3 INCH) SANITARY CONNECTION.
8. REFER TO SHEET P501 FOR DETAILS AND SYMBOLS.
9. ALL WATER, SANITARY AND VENT LINES TO BE EXPOSED. RUN LINES TIGHT TO CEILING AND WALL.

## PLUMBING SYMBOLS

- SS — SANITARY SEWER PIPING (BELOW GROUND)
- SS — SANITARY SEWER PIPING (ABOVE GROUND)
- VENT PIPING (V)
- COLD WATER PIPING (CW)
- HOT WATER PIPING (HW)
- BALL VALVE
- BACKFLOW PREVENTER
- OR — CLEANOUT (CO.)
- ROOF PENETRATION

LINEAR DIMENSIONS SHOWN ARE IN MILLIMETERS (MM), UNLESS OTHERWISE NOTED

0 2000 4000
SCALE: 1:100

APPROVED:

A/E DESIGNER OF RECORD

SEAL:

US ARMY CORPS OF ENGINEERS
AFGHANISTAN ENGINEER DISTRICT

| Mark | Description | Date | Appr. |
|---|---|---|---|

Rev: 0
Date: 02/23/10
Design file no.
Drawing code:
File name: ANAMEDPL-I101XXX
Plot date: 02/26/2010
Plot scale: 1:50

Designed by: RMH
Dwn by: RMH
Ckd by: CJM
Reviewed by:
Submitted by: BAKER

U.S. ARMY CORPS OF ENGINEERS
AFGHANISTAN ENGINEER DISTRICT
APO AE 96338

*Michael Baker Jr., Inc.*
*A unit of Michael Baker Corporation*
Airside Business Park
100 Airside Drive
Moon Township, PA 15108
www.mbakercorp.com

AFGHAN NATIONAL ARMY
REGIONAL MILITARY TRAINING CENTER
STANDARD DESIGN

MEDICAL CLINIC
FLOOR PLAN – PLUMBING

Sheet reference number:
P-101

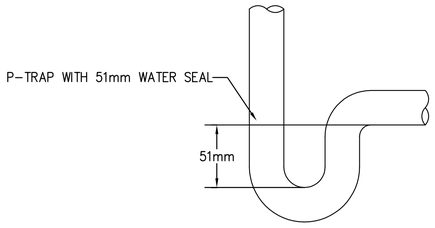


## TYPICAL P-TRAP DETAIL WITH 51mm WATER SEAL

SCALE: N.T.S.

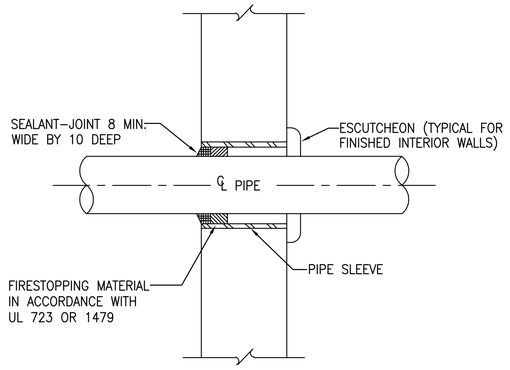


## TYPICAL WALL PENETRATION DETAIL

SCALE: N.T.S.

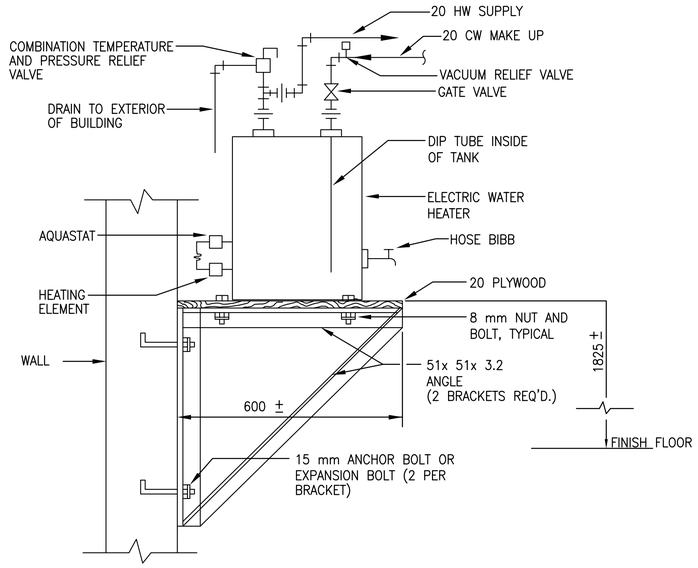


## WALL MOUNTED ELECTRIC WATER HEATER DETAIL

SCALE: N.T.S.

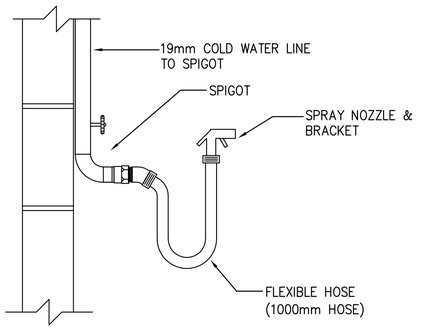


## TYPICAL DETAIL - SPIGOT, FLEXIBLE HOSE, AND SPRAY NOZZLE

SCALE: N.T.S.

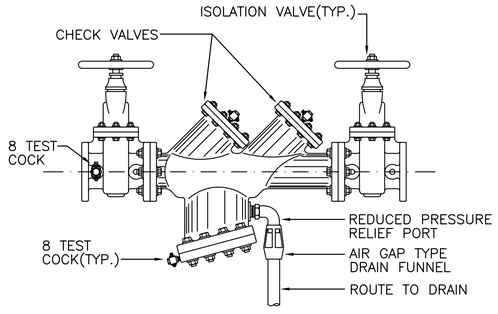


## TYPICAL BACKFLOW PREVENTER DETAIL

SCALE: N.T.S.

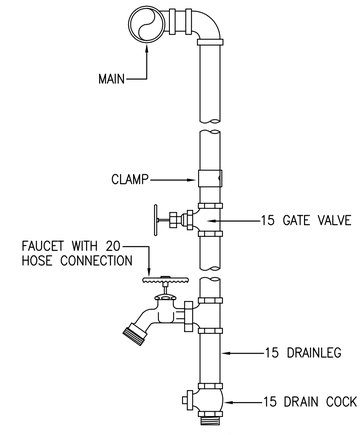


## TYPICAL WATER DROP DETAIL

SCALE: N.T.S.

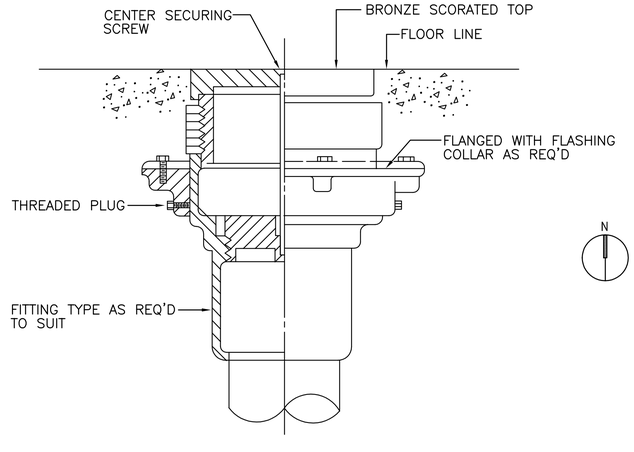


## TYPICAL FLOOR CLEANOUT DETAIL

SCALE: N.T.S.

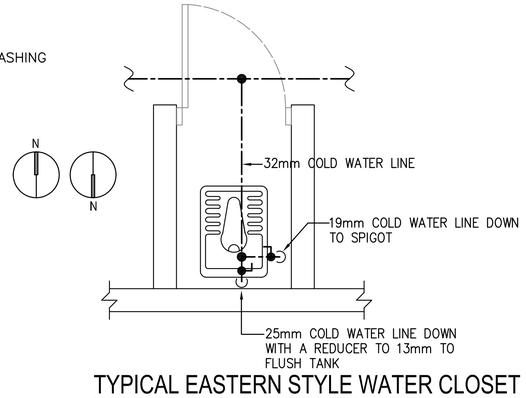


## TYPICAL EASTERN STYLE WATER CLOSET WITH SPIGOT WATER PIPING DETAIL

SCALE: N.T.S.

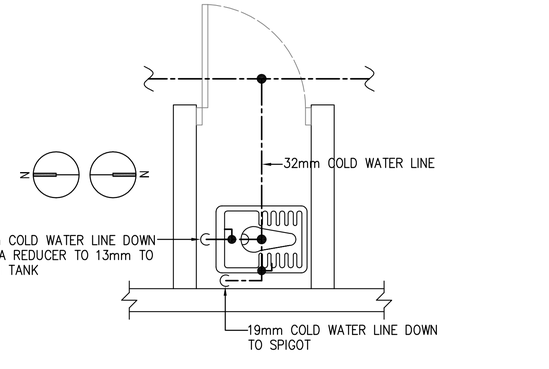


## TYPICAL EASTERN STYLE WATER CLOSET WITH SPIGOT WATER PIPING DETAIL

SCALE: N.T.S.

APPROVED:

A/E DESIGNER OF RECORD

SEAL:

COMMONWEALTH OF PENNSYLVANIA
REGISTERED PROFESSIONAL
MATTHEW R. SOTOSKY
ENGINEER
065578-E

US ARMY CORPS OF ENGINEERS
AFGHANISTAN ENGINEER DISTRICT

| Mark | Description | Date | Appr. |
|---|---|---|---|

Rev: 0
Date: 02/23/10
Design file no.
Drawing code:
File name: ANAMEDPL-001XXX
Plot date: 02/26/2010
Plot scale: N.T.S.

Designed by: RMH
Drwn by: RMH
Ckd by: CJM
Reviewed by:
Submitted by: BAKER

U.S. ARMY CORPS OF ENGINEERS
AFGHANISTAN ENGINEER DISTRICT
APO AE 96338

*Michael Baker Jr., Inc*
*A unit of Michael Baker Corporation*
Airside Business Park
100 Airside Drive
Moon Township, PA 15108
www.mbakercorp.com

AFGHAN NATIONAL ARMY
REGIONAL MILITARY TRAINING CENTER
STANDARD DESIGN

MEDICAL CLINIC
PLUMBING DETAILS

Sheet reference number:
P-501

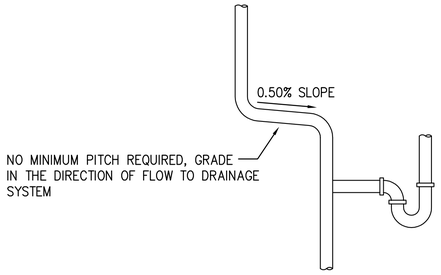


## TYPICAL VENT GRADE DETAILS

SCALE: N.T.S.

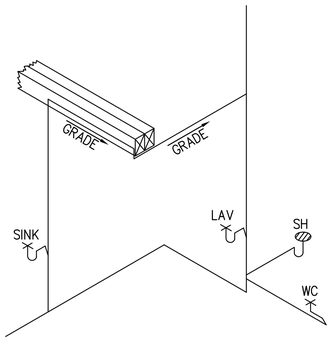


## TYPICAL VENT GRADE DETAILS

SCALE: N.T.S.

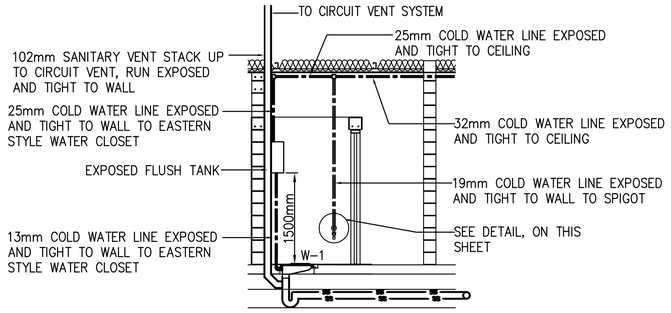


## TYPICAL EASTERN STYLE WATER CLOSET SANITARY & WATER INSTALLATION SCHEMATIC

SCALE: N.T.S.

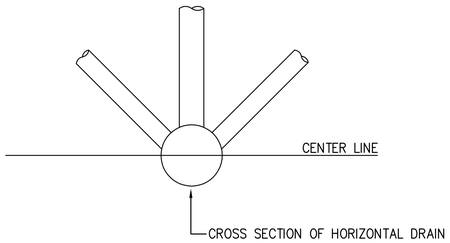


## ACCEPTABLE VENT CONNECTIONS TO HORIZONTAL DRAIN - DETAIL

SCALE: N.T.S.

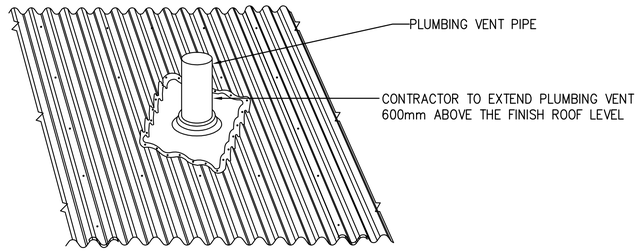


## PLUMBING VENT THRU ROOF DETAIL

SCALE: NTS

## FIXTURE LIST

| TYPE | ITEM | SOIL & WASTE | VENT | COLD WATER | HOT WATER | REMARKS | REMARKS 2 |
|---|---|---|---|---|---|---|---|
| W-1 | EASTERN STYLE WATER CLOSET | 102mm | 51mm | 13mm | ------ | FLUSH TANK | LOW FLOW EFFICIENT TYPE |
| L-2 | WALL HUNG LAV FIXTURE | 38mm | 38mm | 13mm | 13mm | ------- | LOW FLOW EFFICIENT TYPE |
| S-1 | WALL HUNG SINK | 38mm | 38mm | 13mm | 13mm | ------- | LOW FLOW EFFICIENT TYPE |

US ARMY CORPS OF ENGINEERS
AFGHANISTAN ENGINEER DISTRICT

| Mark | Description | Date | Appr. |
|---|---|---|---|

Date: 02/23/10 | Rev: 0
Design file no.
Drawing code:
File name: ANAMEDPL-502XXX
Plot date: 02/26/2010
Plot scale: N.T.S.

Designed by: RMH | Dwn. by: RMH | Ckd by: CJM
Reviewed by:
Submitted by: BAKER

U.S. ARMY CORPS OF ENGINEERS
AFGHANISTAN ENGINEER DISTRICT
APO AE 96338

Michael Baker Jr., Inc
A unit of Michael Baker Corporation
Airside Business Park
100 Airside Drive
Moon Township, PA 15108
www.mbakercorp.com

APPROVED:

A/E DESIGNER OF RECORD

SEAL:

COMMONWEALTH OF PENNSYLVANIA
REGISTERED PROFESSIONAL
MATTHEW R. SOTOSKY
ENGINEER
065570-E

AFGHAN NATIONAL ARMY
REGIONAL MILITARY TRAINING CENTER
STANDARD DESIGN

MEDICAL CLINIC
PLUMBING DETAILS

Sheet reference number:
P-502

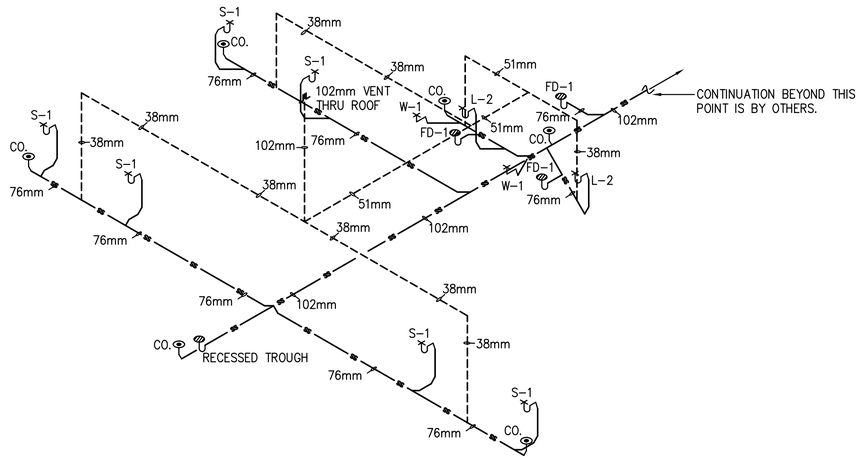


1 P-901 **MEDICAL CLINIC DRAINAGE ISOMETRIC**

SCALE: N.T.S.

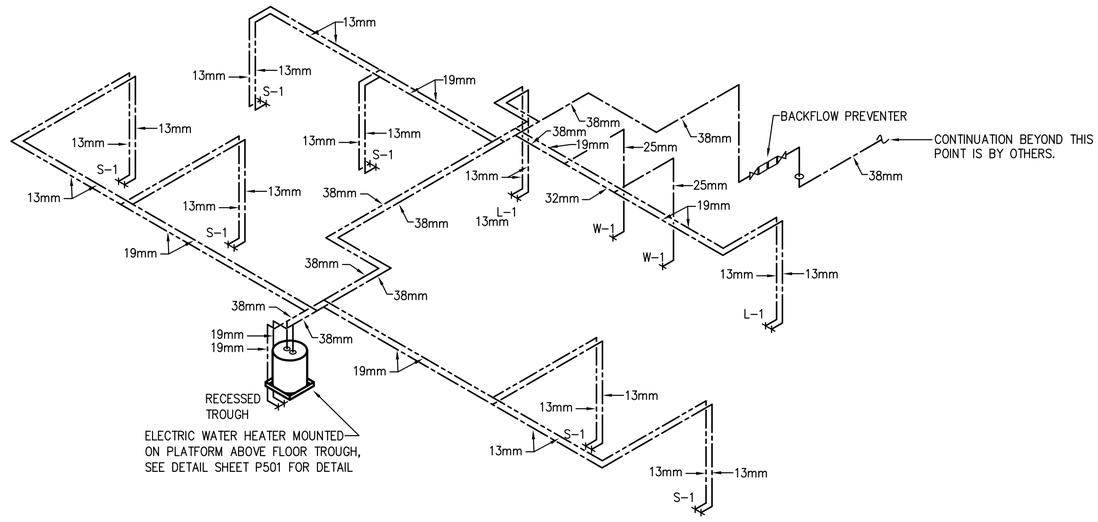


2 P-901 **MEDICAL CLINIC HOT AND COLD WATER ISOMETRIC**

SCALE: N.T.S.

FLOOR PLAN NOTES:

1. DO NOT SCALE DRAWINGS – ALL DIMENSIONS AND CONDITIONS SHALL BE CHECKED AND VERIFIED BY THE CONTRACTOR AT THE SITE.
2. ALL WORK PERFORMED ON THIS BUILDING SHALL BE IN COMPLIANCE WITH ALL PERTINENT CODES, RULES, ORDINANCES AND REGULATIONS OF THE GOVERNING AUTHORITIES.
3. ALL WORK PERFORMED UNDER AND IN CONNECTION WITH THESE DRAWINGS AND SPECIFICATIONS SHALL BE IN STRICT COMPLIANCE WITH THE LATEST SAFETY AND HEALTH STANDARDS.
4. REPORT ANY DISCREPANCIES FOUND IN THE PLUMBING DRAWINGS AND/OR IN THE SPECIFICATIONS DURING THE BIDDING PROCESS FOR CLARIFICATION BY THE ENGINEER.
5. ALL EASTERN STYLE WATER CLOSETS IN THIS FACILITY ARE TO HAVE THE FIXTURE DESIGNATION OF W-1. EACH FIXTURE SHALL HAVE A 25mm (1 INCH) COLD WATER LINE EXTENDED TO IT AND THEN BE REDUCED TO 13mm (1/2 INCH) FOR A FINAL CONNECTION TO THE FLUSH TANK AND A 102mm (4) INCH SANITARY CONNECTION.
6. ALL LAV FIXTURES IN THIS FACILITY ARE TO HAVE THE FIXTURE DESIGNATION OF L-2. EACH FIXTURE SHALL HAVE A 13mm (1/2 INCH) COLD WATER, 13mm (1/2 INCH) HOT WATER CONNECTION AND A 76mm (3 INCH) SANITARY CONNECTION.
7. ALL SINK FIXTURES IN THIS FACILITY ARE TO HAVE THE FIXTURE DESIGNATION OF S-1. EACH FIXTURE SHALL HAVE A 13mm (1/2 INCH) COLD WATER, 13mm (1/2 INCH) HOT WATER CONNECTION AND A 76mm (3 INCH) SANITARY CONNECTION.
8. REFER TO SHEET P501 FOR DETAILS AND SYMBOLS.
9. ALL WATER, SANITARY AND VENT LINES TO BE EXPOSED. RUN LINES TIGHT TO CEILING AND WALL.

## PLUMBING SYMBOLS

- SANITARY SEWER PIPING (BELOW GROUND)
- SANITARY SEWER PIPING (ABOVE GROUND)
- VENT PIPING (V)
- COLD WATER PIPING (CW)
- HOT WATER PIPING (HW)
- BALL VALVE
- BACKFLOW PREVENTER
- CLEANOUT (CO.) (OR)
- ROOF PENETRATION

APPROVED:

A/E DESIGNER OF RECORD

SEAL:

COMMONWEALTH OF PENNSYLVANIA REGISTERED PROFESSIONAL MATTHEW R. SOTOSKY ENGINEER 046576-E

US ARMY CORPS OF ENGINEERS
AFGHANISTAN ENGINEER DISTRICT

| Mark | Description | Date | Appr. |
|---|---|---|---|
| | | | |

Designed by: RMH | Ckd by: CJM | Date: 02/23/10 | Rev: 0
Dwn by: RMH | Reviewed by: | Design file no. | Drawing code:
Submitted by: BAKER | File name: ANAMEDPL-p01XXX | Plot date: 02/26/2010 | Plot scale: N.T.S.

U.S. ARMY CORPS OF ENGINEERS
AFGHANISTAN ENGINEER DISTRICT
APO AE 96338

*Michael Baker Jr., Inc*
*A unit of Michael Baker Corporation*
Airside Business Park
100 Airside Drive
Moon Township, PA 15108
www.mbakercorp.com

AFGHAN NATIONAL ARMY
REGIONAL MILITARY TRAINING CENTER
STANDARD DESIGN

MEDICAL CLINIC
PLUMBING ISOMETRICS

Sheet reference number:
P-901

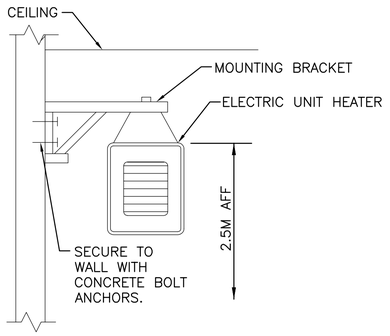


1 M-101 N.T.S.

## ELECTRIC UNIT HEATER MOUNTING DETAIL

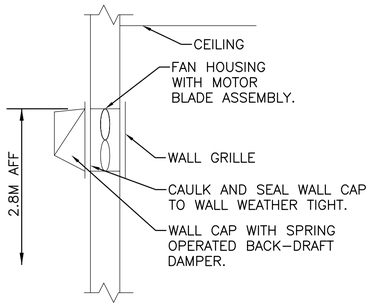


2 M-101 N.T.S.

## WALL EXHAUST FAN DETAIL

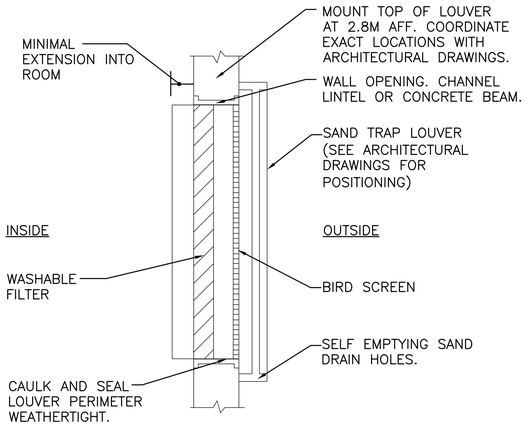


3 M-101 N.T.S.

## FILTERED SAND TRAP LOUVER

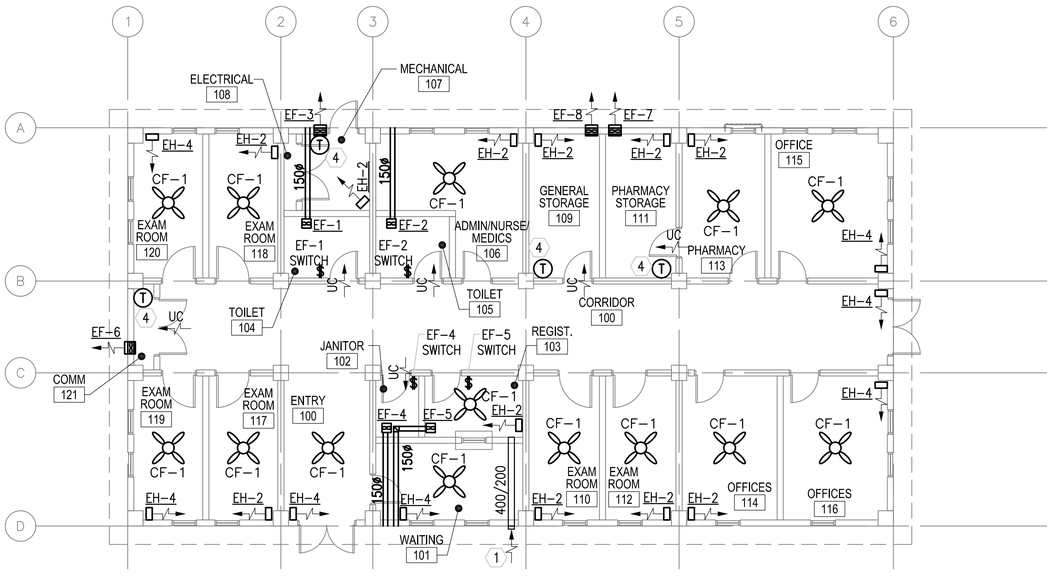


1 M-101 SCALE: 1:100

## FLOOR PLAN - HVAC

### EXHAUST FAN SCHEDULE

| NO. | TYPE | FAN CMS | DRIVE | HP | SP mmH2O | ELECTRICAL DATA | SWITCH |
|---|---|---|---|---|---|---|---|
| EF-1 | INLINE | 0.050 | DIRECT | FRACT | 13 | 220/1/50 | @ WALL |
| EF-2 | INLINE | 0.050 | DIRECT | FRACT | 13 | 220/1/50 | @ WALL |
| EF-3 | WALL | 0.035 | DIRECT | FRACT | 9.5 | 220/1/50 | W/ STAT |
| EF-4 | INLINE | 0.035 | DIRECT | FRACT | 13 | 220/1/50 | @ WALL |
| EF-5 | INLINE | 0.035 | DIRECT | FRACT | 13 | 220/1/50 | @ WALL |
| EF-6 | WALL | 0.035 | DIRECT | FRACT | 9.5 | 220/1/50 | W/ STAT |
| EF-7 | WALL | 0.035 | DIRECT | FRACT | 9.5 | 220/1/50 | W/ STAT |
| EF-8 | WALL | 0.035 | DIRECT | FRACT | 9.5 | 220/1/50 | W/ STAT |

NOTES:
1. FANS SHALL HAVE LOW LEAKAGE GRAVITY LOUVER.

### ELECTRIC UNIT HEATER SCHEDULE

| NO. | CMS | KW | F.A.T. °C | ELECT. CHAR. | MOUNTING |
|---|---|---|---|---|---|
| EH-2 | 0.200 | 2.6 | 38 | 380/1/50 | WALL HUNG |
| EH-4 | 0.200 | 4 | 38 | 380/1/50 | WALL HUNG |

NOTES:
1. UNIT HEATERS SHALL HAVE TAMPER PROOF INTEGRAL STATS.
2. COORDINATE LOCATION AND ORIENTATION IN FIELD.

### CEILING FAN

| NO. | BLADE SIZE mm | BLADE SIZE IN | VOLTAGE | SWITCH | REMARKS |
|---|---|---|---|---|---|
| CF-1 | 1320 | 52 | 220/1/50 | @ WALL | 3 SPEED REVERSIBLE MOTOR |

NOTES:
1. INSTALL FANS 2.5M AFF.
2. PROVIDE WITH OUT LIGHT FIXTURE.
3. PROVIDE WITH REMOTE MOUNTED ON-OFF SWITCH SHOWN ON ELECTRICAL DRAWINGS.

## GENERAL NOTES:

1. DO NOT SCALE DRAWINGS – ALL DIMENSIONS AND CONDITIONS SHALL BE CHECKED AND VERIFIED BY THE CONTRACTOR AT THE SITE.
2. ALL WORK PERFORMED ON THIS BUILDING SHALL BE IN COMPLIANCE WITH ALL PERTINENT CODES, RULES, ORDINANCES AND REGULATIONS OF THE GOVERNING AUTHORITIES.
3. ALL WORK PERFORMED UNDER AND IN CONNECTION WITH THESE DRAWINGS AND SPECIFICATIONS SHALL BE IN STRICT COMPLIANCE WITH THE LATEST SAFETY AND HEALTH STANDARDS.

## SYMBOLS:

- (X) KEY NOTE
- (0.050) AIR VOLUME IN CUBIC METERS PER SECOND (CMS)
- UC DOOR UNDERCUT
- TG 400x200 (16x8) TRANSFER GRILLE
- $ SINGLE POLE SWITCH – 20A RATED
- $3 3 WAY SWITCH – 20A RATED

## ABBREVIATIONS:

| | |
|---|---|
| AFF | ABOVE FINISH FLOOR |
| CF | CEILING FANS |
| CMS | CUBIC METERS PER SECOND |
| EC | ELECTRICAL CONTRACTOR |
| STATS | THERMOSTATS |

## KEY NOTE:

1. 400x200 (16x8) INTAKE LOUVER WITH BACK-DRAFT DAMPER PROVIDE WEATHER PROOF LOUVER W/0.05mm (2") WASHABLE FILTER AND SAND TRAP. SEE DETAIL 4 THIS SHEET.
2. ELECTRIC UNIT HEATER SECURED TO WALL. SEE DETAIL 2 THIS SHEET.
3. WALL EXHAUST FAN WITH LOW SPRING OPERATED BACK-DRAFT DAMPER. SEE DETAIL 3 THIS SHEET.
4. THERMOSTAT MOUNTED AS HIGH AS POSSIBLE. INTERLOCK STAT WITH CORRESPONDING EXHAUST FAN, SET FAN TO ENERGIZE ON RISE IN TEMPERATURE ABOVE 25°C (77°F).

LINEAR DIMENSIONS SHOWN ARE IN MILLIMETERS (MM), UNLESS OTHERWISE NOTED

0 2000 4000
SCALE: 1:100

APPROVED:

A/E DESIGNER OF RECORD

SEAL:

COMMONWEALTH OF PENNSYLVANIA REGISTERED PROFESSIONAL MATTHEW R. SOTOSKY ENGINEER 046576-E

US ARMY CORPS OF ENGINEERS
AFGHANISTAN ENGINEER DISTRICT

| Mark | Description | Date | Appr. |
|---|---|---|---|
| | | | |

| Mark | Description | Date | Appr. |
|---|---|---|---|
| | | | |

Rev: 0
Date: 02/23/10
Design file no.
Drawing code:
File name: ANAMEMM-101XXX
Plot date: 02/02/2010
Plot scale: 1:100

Designed by: RML
Dwn by: JJN
Ckd by: CJM
Reviewed by: MRS
Submitted by: BAKER

U.S. ARMY CORPS OF ENGINEERS
AFGHANISTAN ENGINEER DISTRICT
APO AE 96338

Michael Baker Jr., Inc
A unit of Michael Baker Corporation
Airside Business Park
100 Airside Drive
Moon Township, PA 15108
www.mbakercorp.com

AFGHAN NATIONAL ARMY
REGIONAL MILITARY TRAINING CENTER
STANDARD DESIGN

MEDICAL CLINIC

HVAC – FLOOR PLAN, SCHEDULES AND DETAILS

Sheet reference number:
M-101

## POWER

- DISTRIBUTION PANELBOARD
- NEW PANELBOARD – SURFACE
- NEW PANELBOARD – RECESSED
- (G) GENERATOR
- TRANSFORMER (DRAWN TO SCALE)
- [J] JUNCTION BOX
- (J) JUNCTION BOX – CEILING
- FUSIBLE SAFETY SWITCH
- (M) MOTOR
- $^{M}$ MOTOR STARTING SWITCH – 220V, 20A RATED UNLESS OTHERWISE NOTED
- ELECTRIC WATER HEATER
- (CF) CEILING FAN – REFER TO SPECIFICATION SECTION 26 20 00

## RECEPTACLES

- DUPLEX 20A TYPE CEE 7/7 "SCHUKO STYLE" UNSWITCHED RECEPTACLE
- GF DUPLEX 20A TYPE CEE 7/7 "SCHUKO STYLE" UNSWITCHED RECEPTACLES – 10mA GROUND FAULT INTERRUPTER TYPE
- WP DUPLEX 20A TYPE CEE 7/7 "SCHUKO STYLE" UNSWITCHED TYPE WITH WEATHERPROOF COVER – 10mA GROUND FAULT INTERRUPTER TYPE
- EXP DUPLEX 20A TYPE CEE 7/7 "SCHUKO STYLE" UNSWITCHED RECEPTACLES – EXPLOSION PROOF
- * INDICATES MOUNT DEVICE ABOVE COUNTERTOP OR AT 1070mm ABOVE FINISHED FLOOR WHERE NO COUNTER IS TO BE INSTALLED.

## LIGHTING

- LIGHTING FIXTURE – SEE FIXTURE SCHEDULE FOR MORE INFORMATION
- EMERGENCY LIGHTING FIXTURE – SEE FIXTURE SCHEDULE FOR MORE INFORMATION
- DOWNLIGHT
- LIGHTING FIXTURE ON NORMAL/EMERGENCY
- WALL MOUNTED LIGHT FIXTURE
- [E] EXIT SIGN – DIRECTIONAL ARROWS AS INDICATED ON DRAWINGS
- REMOTE HEAD FOR BATTERY PACK
- $ SINGLE POLE SWITCH – 20A RATED
- $^{3}$ 3–WAY SWITCH – 20A RATED
- $^{4}$ 4–WAY SWITCH – 20A RATED
- LC LIGHTING CONTACTOR
- POLE MOUNTED SITE LIGHTING FIXTURE– NUMBER OF FIXTURES PER POLE AS INDICATED ON DRAWINGS
- EXTERIOR DIRECTIONAL LIGHTING FIXTURE
- a SMALL CASE LETTERS REPRESENTS LAMP(S) / SWITCHES.

## TELECOMMUNICATIONS

- TELEPHONE OUTLET(S) @ 45cm AFF. U.N.O. WITH 20mm RACEWAY TERMINATED TO TELEDATA TERMINAL BOARD.
- DATA OUTLET(S) @ 45cm AFF. U.N.O. WITH 20mm RACEWAY TERMINATED TO TELEDATA TERMINAL BOARD.

## LIGHTNING PROTECTION

- AIR TERMINAL 20mm O.D. X 450mm SOLID COPPER, NICKEL PLATED ON ADHESIVE BASE
- EQ EQUIPMENT AIR TERMINAL
- TEST WELL WITH GROUND ROD(S)
- GROUND ROD
- [G] GROUND PLATE
- MAIN GROUND CONDUCTOR CONCEALED WITHIN CONSTRUCTION
- MAIN GROUND CONDUCTOR EXPOSED ON EXPOSED ON BUILDING EXTERIOR SURFACE
- GROUND CONDUCTOR CAD WELDED TO GROUND CABLE OR EQUIPMENT
- GROUND ROD TRIPOD, SPACED 3 METERS APART.
- LEVEL TO LEVEL CABLE

## TELECOMMUNICATIONS (CONTINUED)

- COMBINATION TELEPHONE/DATA OUTLET(S) @ 45cm AFF. U.N.O. WITH 27mm RACEWAY TERMINATED TO TELEDATA TERMINAL BOARD.
- W WALL MTD. TELEPHONE OUTLET WITH 20mm RACEWAY TO TELEDATA TERMINAL BOARD.
- (x)T INDICATES NUMBER OF TELEPHONE OUTLET(S) AND ASSOCIATED CABLING
- (x)D INDICATES NUMBER OF DATA OUTLET(S) AND ASSOCIATED CABLING
- (x)TF INDICATES NUMBER OF TELEPHONE OUTLETS AND ASSOCIATED CABLING WITH 1 OUTLET AND CABLE DEDICATED FOR FAX

## SINGLE LINE SYMBOLS

- SWITCH
- BREAKER
- FUSE
- TRANSFORMER
- GROUND
- CONTACT (NORMALLY OPEN)
- CONTACT (NORMALLY CLOSED)
- TRANSFER SWITCH
- CURRENT TRANSFORMER
- INDICATES NEW ELECTRICAL EQUIPMENT
- C INDICATES NEW CONTROL WIRING AND CONDUIT
- EQUIPMENT OUTLINE

## MISCELLANEOUS

- BRANCH CIRCUIT WIRING, SURFACE MOUNTED ON WALLS
- BRANCH CIRCUIT WIRING – 6mm²
- BRANCH CIRCUIT WIRING – UNDER FLOOR
- HOME RUN BACK TO PANEL
- CONDUIT TURNED DOWN
- CONDUIT TURNED UP
- LV LOW VOLTAGE WIRING AND CONDUIT
- INDICATES CONTINUATION OF LINE

## FIRE ALARM

- FACP FIRE ALARM CONTROL PANEL WITH BATTERY BACKUP
- F FIRE ALARM PULL STATION

## FIRE ALARM (CONTINUED)

- F FIRE ALARM STROBE – WALL MOUNTED
- F FIRE ALARM AUDIBLE/STROBE – WALL MOUNTED
- F FIRE ALARM HORN/STROBE – WALL MOUNTED
- S SMOKE DETECTOR
- H HEAT DETECTOR CEILING MOUNTED
- D DUCT DETECTOR – PROVIDED BY EC, INSTALLED BY MC AND CONNECTED BY EC

## DENOTATIONS & ABBREVIATIONS

| | |
|---|---|
| AFF | ABOVE FINISHED FLOOR |
| C | CEILING MOUNTED |
| E | EMERGENCY |
| EC | ELECTRICAL CONTRACTOR |
| EPO | EMERGENCY POWER OFF |
| EXP | EXPLOSION PROOF |
| F | FIRE ALARM |
| FF | FLUSH FLOOR MOUNTED |
| FL | FLUORESCENT |
| FO | FIBER OPTIC |
| FSS | FUSED SAFETY SWITCH |
| GF | GROUND FAULT INTERRUPTER |
| GC | GENERAL CONTRACTOR |
| IG | ISOLATED GROUND |
| K | KEY |
| LV | LOW VOLTAGE |
| M | MOTOR |
| MC | MECHANICAL CONTRACTOR |
| NE | NORMAL/EMERGENCY |
| NFSS | NON–FUSED SAFETY SWITCH |
| PA | PAGING SYSTEM |
| PLC | PLUMBING CONTRACTOR |
| SL | SINGLE LINE |
| T | TELEPHONE |

## DENOTATIONS & ABBREVIATIONS (CONT.)

| | |
|---|---|
| TP | TAMPER PROOF |
| UE | UNDERGROUND ELECTRIC |
| W | WALL MOUNTED |
| WP | WEATHERPROOF WITH GROUND FAULT INTERRUPTION |
| WT | WATER TIGHT |

## GENERAL PROJECT NOTES:

G1. UNLESS OTHERWISE NOTED, PROVIDE ALL EQUIPMENT SHOWN ON THE PLANS. THE ELECTRICAL CONTRACTOR SHALL COORDINATE ALL SYMBOLS SHOWN ON THE PLANS WITH THE SYMBOL LIST. IT SHALL BE THE RESPONSIBILITY OF THE CONTRACTOR TO VERIFY THE INTENT OF ANY SYMBOL THAT IS SHOWN ON THE PLANS AND NOT INDICATED ON THE SYMBOL LIST WITH THE ENGINEER PRIOR TO BID.

G2. THE CONTRACTOR SHALL VERIFY THE LOCATION OF ALL UNDERGROUND UTILITIES WITHIN THE CONSTRUCTION AREA THREE (3) WORKING DAYS NOTICE BEFORE COMMENCING DIGGING. NOTIFY THE LOCAL AUTHORITY HAVING JURISDICTION AND WAIT THE REQUIRED TIME BEFORE COMMENCING TO DIG.

G3. THE CONTRACTOR SHALL COORDINATE CONDUIT RUNS, LIGHTING FIXTURES AND OTHER EQUIPMENT LOCATIONS WITH THE OTHER TRADE CONTRACTORS TO AVOID CONFLICTS.

G4. WHERE VOLTAGES AND FREQUENCIES ON THE DRAWINGS AND IN THE SPECIFICATIONS DIFFER FROM THE LOCAL ONES, ALL WORK SHALL BE PERFORMED USING THE LOCAL VOLTAGES AND FREQUENCIES.

G5. THE MINIMUM WIRE SIZE ON THE PROJECT SHALL BE 4mm². THE MINIMUM CONDUIT SIZE SHALL BE 20mm. THE MINIMUM BREAKER SIZE SHALL BE 20 AMPS.

G6. THE CONTRACTOR SHALL PUT A MAXIMUM OF 6 DUPLEX RECEPTACLES ON A 20A SINGLE POLE CIRCUIT.

G7. WHERE THE 1010 SCOPE REVIEW, 1015 TECHNICAL REVIEW, DRAWINGS, AND SPECIFICATIONS DIFFER FROM AMERICAN CODES OR STANDARDS, THE 1010, 1015, DRAWINGS, AND SPECIFICATIONS SHALL RULE.

G8. ALL CONDUIT AND DEVICES SHALL BE SURFACE MOUNTED UNLESS OTHERWISE INDICATED.

G9. CONTRACTOR SHALL COORDINATE ALL WORK WITH ALL OTHER TRADES TO ENSURE ALL WORK IS COMPLETED IN A PROFESSIONAL, WORKMAN–LIKE MANNER.

APPROVED:

A/E DESIGNER OF RECORD

SEAL:

COMMONWEALTH OF PENNSYLVANIA – REGISTERED PROFESSIONAL ENGINEER – JOSEPH R. GAUS – 1/29/10 – PE-074251

US ARMY CORPS OF ENGINEERS
AFGHANISTAN ENGINEER DISTRICT

| Mark | Description | Date | Appr. |
|---|---|---|---|
| | | | |

Rev: 0
Date: 2/23/10
Designed by: RAJ
Dwn. by: BJB
Ckd by: JRG
Reviewed by: JRG
Submitted by: BAKER
Design file no.
Drawing code:
File name:
Plot date:
Plot scale:

U.S. ARMY CORPS OF ENGINEERS
AFGHANISTAN ENGINEER DISTRICT
APO AE 96338

*Michael Baker Jr., Inc*
*A unit of Michael Baker Corporation*
Airside Business Park
100 Airside Drive
Moon Township, PA 15108
www.mbakercorp.com

AFGHAN NATIONAL ARMY
REGIONAL MILITARY TRAINING CENTER
STANDARD DESIGN

MEDICAL CLINIC

ELECTRICAL SYMBOLS & ABBREVIATIONS

Sheet reference number:
E–001

## GENERAL NOTES:

1. REFER TO DRAWING #E-001 FOR THE ELECTRICAL SYMBOLS LIST.
2. EXIT SIGNS SHALL BE WIRED AHEAD OF ANY LOCAL SWITCHING ON CIRCUITS.
3. REFER TO DRAWING #E-601 FOR THE LIGHTING FIXTURE SCHEDULE.
4. REFER TO DRAWING #E-501 FOR THE POWER RISER.
5. REFER TO DRAWING #E-602 FOR PANEL SCHEDULES.
6. LIGHT FIXTURES INDICATED AS EMERGENCY SHALL BE PROVIDED WITH A BATTERY BACKUP BALLAST. SEE WIRING DIAGRAM 8, DRAWING #E-501.

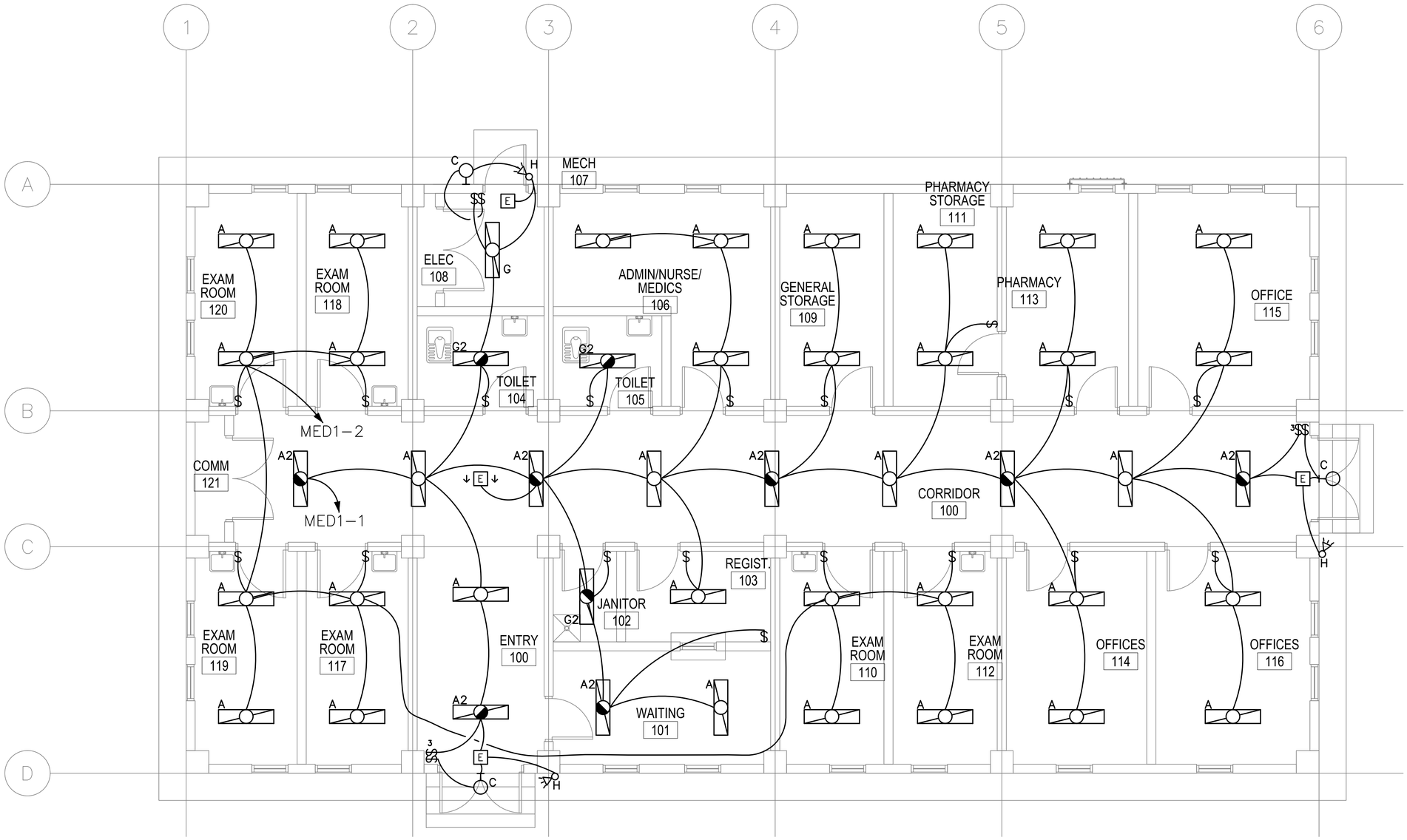


1 / E-101 MEDICAL CLINIC-LIGHTING PLAN

SCALE: 1:50

0 1000 2000

SCALE: 1:50

US ARMY CORPS OF ENGINEERS
AFGHANISTAN ENGINEER DISTRICT

| Mark | Description | Date | Appr. |
|---|---|---|---|
| | | | |

| Mark | Description | Date | Appr. |
|---|---|---|---|
| | | | |

U.S. ARMY CORPS OF ENGINEERS
AFGHANISTAN ENGINEER DISTRICT
APO AE 96338


Michael Baker Jr., Inc.
A unit of Michael Baker Corporation
Airside Business Park
100 Airside Drive
Moon Township, PA 15108
www.mbakercorp.com


| | |
|---|---|
| Designed by: JRG | Date: 2/23/10 |
| Dwn by: BJB | Design file no. |
| Ckd by: JRG | Drawing code: |
| Reviewed by: JRG | File name: |
| Submitted by: BAKER | Plot date: Plot scale: |

Rev: 0

AFGHAN NATIONAL ARMY
REGIONAL MILITARY TRAINING CENTER
STANDARD DESIGN

MEDICAL CLINIC
ELECTRICAL LIGHTING PLAN

APPROVED:

A/E DESIGNER OF RECORD

SEAL:

COMMONWEALTH OF PENNSYLVANIA
REGISTERED PROFESSIONAL
JOSEPH R. GAUS
ENGINEER
PE-074251
12/23/10

Sheet reference number:
E-101

## GENERAL NOTES:

1. REFER TO DRAWING #E-001 FOR THE ELECTRICAL SYMBOLS LIST.
2. REFER TO DRAWING #E-501 FOR THE POWER RISER.
3. REFER TO DRAWING #E-602 FOR PANEL SCHEDULES.
4. COORDINATE EXACT MOUNTING LOCATION OF DISCONNECTING MEANS FOR MECHANICAL AND PLUMBING EQUIPMENT IN THE FIELD.
5. FUSIBLE SAFETY SWITCHES THAT ARE NOT OTHERWISE IDENTIFIED SHALL BE 380V, 1P, 30A FUSED SAFETY SWITCHES WITH 20A FUSES.

## NUMBERED NOTES:

1. PANEL MED1.
2. PANEL MED2.
3. PROVIDE A 1200mm X 2400mm SHEET OF PLYWOOD PAINTED WITH FIRE RESISTANT PAINT FOR MOUNTING TELECOMMUNICATIONS EQUIPMENT.
4. PROVIDE CONDUIT STUB UP IN THE ROOM FOR INCOMING TELECOMMUNICATIONS SERVICES FROM THE CENTRAL COMMUNICATIONS SYSTEM IN THE GARRISON.
5. PROVIDE POWER CONNECTION TO EXHAUST FANS. SEE DRAWINGS #M-101 AND #E-602 FOR MORE INFORMATION.
6. PROVIDE POWER CONNECTION TO ELECTRIC UNIT HEATER #2. SEE DRAWINGS #M-101 AND #E-602 FOR MORE INFORMATION.
7. PROVIDE POWER CONNECTION TO ELECTRIC UNIT HEATER #4. SEE DRAWINGS #M-101 AND #E-602 FOR MORE INFORMATION.
8. NEMA 3R, 380V, 3P, 30A FUSED DISCONNECT FUSED AT 20A. SEE PLUMBING DRAWINGS FOR EXACT LOCATION OF WATER HEATER.
9. SEE DRAWING E-602 FOR WIRE AND CONDUIT SIZE.

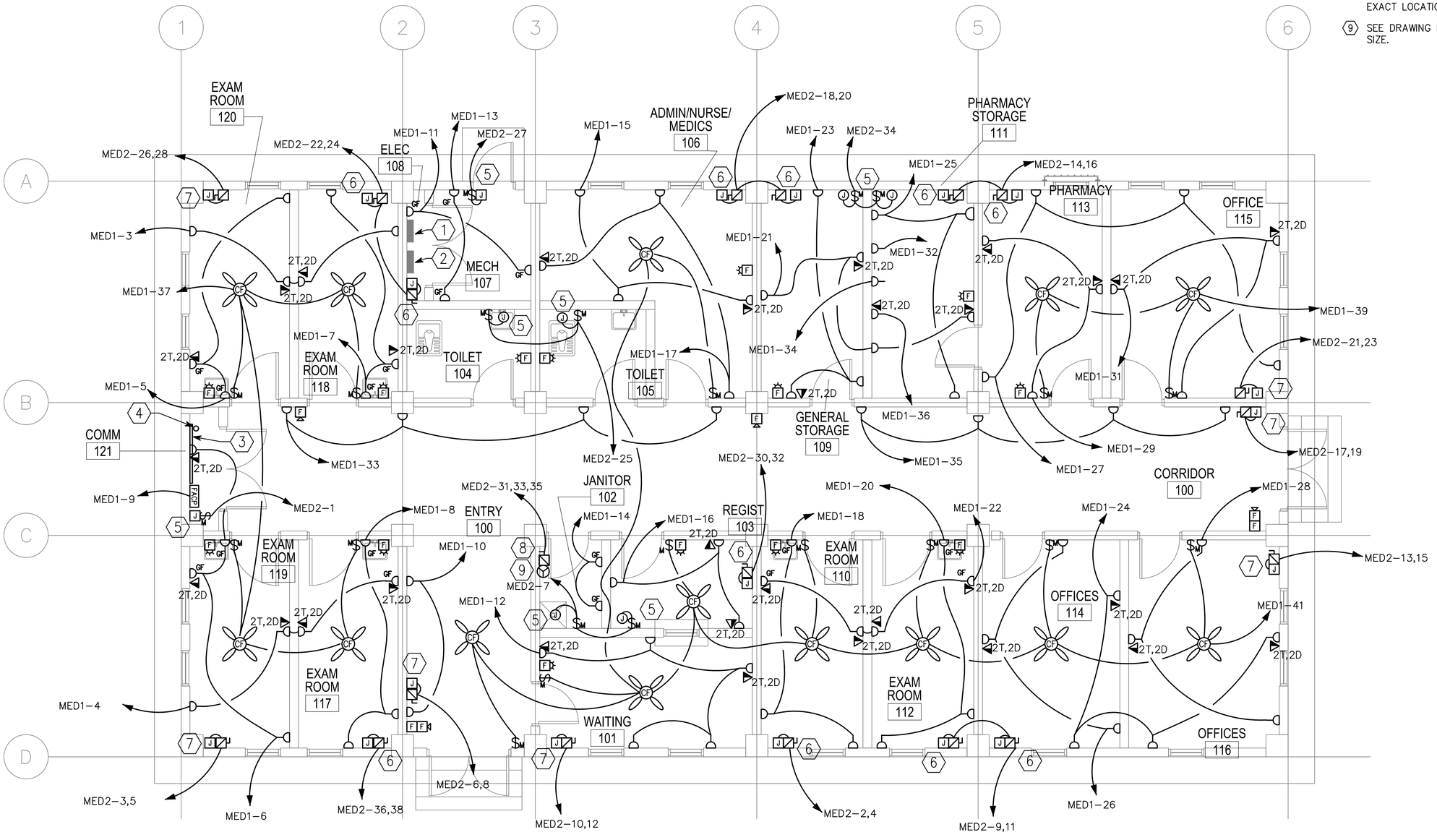


1 E-102 MEDICAL CLINIC- POWER AND SYSTEMS PLAN

SCALE: 1:50

0 1000 2000

SCALE: 1:50

APPROVED:

A/E DESIGNER OF RECORD

SEAL:

COMMONWEALTH OF PENNSYLVANIA REGISTERED PROFESSIONAL ENGINEER JOSEPH R. GAUS PE-074251 11/19/10

US ARMY CORPS OF ENGINEERS
AFGHANISTAN ENGINEER DISTRICT

| Mark | Description | Date | Appr |
|---|---|---|---|
| | | | |

| Mark | Description | Date | Appr |
|---|---|---|---|
| | | | |

Rev: 0
Date: 2/23/10
Design file no.
Drawing code:
File name:
Plot date:
Plot scale:

Designed by: JRG
Drwn by: BJB
Ckd by: JRG
Reviewed by: JRG
Submitted by: BAKER

U.S. ARMY CORPS OF ENGINEERS
AFGHANISTAN ENGINEER DISTRICT
APO AE 96338

*Michael Baker Jr., Inc*
*A unit of Michael Baker Corporation*
Airside Business Park
100 Airside Drive
Moon Township, PA 15108
www.mbakercorp.com

AFGHAN NATIONAL ARMY
REGIONAL MILITARY TRAINING CENTER
STANDARD DESIGN

MEDICAL CLINIC
ELECTRICAL POWER AND SYSTEMS PLAN

Sheet reference number:
E-102

## GENERAL NOTES:

1. REFER TO DRAWING #E-001 FOR THE ELECTRICAL SYMBOLS LIST.

## NUMBERED NOTES:

1. (1) 120.0mm² BARE, TINNED, COPPER COUNTERPOISE GROUND 700mm BELOW GRADE.
2. INSTALL DOWN CONDUCTOR IN 25mm SCHEDULE 80 PVC CONDUIT TO 20mm DIAMETER X 3 METERS SOLID COPPER TINNED GROUND ROD. (TYPICAL)
3. CADWELD TO BUILDING STRUCTURE AT 18 METERS ON CENTER AROUND THE ENTIRE PERIMETER OF THE BUILDING. (TYPICAL)
4. 120mm² LIGHTNING PROTECTION CABLE.
5. AIR TERMINAL. TERMINALS SHALL BE PLACED AT A MAXIMUM OF 6M ON CENTER PER NFPA 780 PARA. 4.8.2.1, AND WITHIN 0.6M OF RIDGE ENDS PER NFPA 780 PARA 4.8 (TYPICAL)
6. 700mm MIN. (TYP) BETWEEN FOUNDATION AND GROUND LOOP.

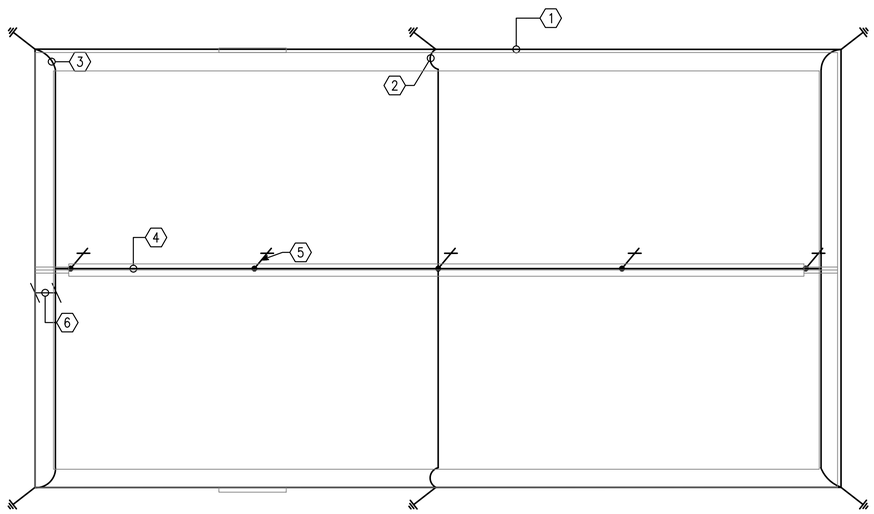


1 / E-301 MEDICAL CLINIC-LIGHTNING PROTECTION

SCALE: 1:100

0 2000 4000

SCALE: 1:100

APPROVED:

A/E DESIGNER OF RECORD

SEAL:

COMMONWEALTH OF PENNSYLVANIA
REGISTERED PROFESSIONAL ENGINEER
JOSEPH R GAUS
PE-074251
1/29/10

US ARMY CORPS OF ENGINEERS
AFGHANISTAN ENGINEER DISTRICT

| Mark | Description | Date | Appr. |
|---|---|---|---|
| | | | |

| Mark | Description | Date | Appr. |
|---|---|---|---|
| | | | |

Rev: 0
Date: 2/23/10
Design file no.
Drawing code:
File name:
Plot date:
Plot scale:

Designed by: JRG
Dwn by: BJB
Ckd by: JRG
Reviewed by: JRG
Submitted by: BAKER

U.S. ARMY CORPS OF ENGINEERS
AFGHANISTAN ENGINEER DISTRICT
APO AE 96338


Michael Baker Jr., Inc.
A unit of Michael Baker Corporation
Airside Business Park
100 Airside Drive
Moon Township, PA 15108
www.mbakercorp.com


AFGHAN NATIONAL ARMY
REGIONAL MILITARY TRAINING CENTER
STANDARD DESIGN

MEDICAL CLINIC

# ELECTRICAL LIGHTNING PROTECTION PLAN

Sheet reference number:
E-103

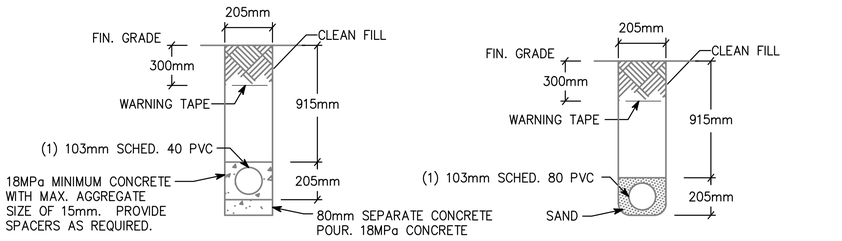


NOTE: PVC CONDUIT SHALL BE DIRECT BURIED SCHEDULE 80 FOR NO TRAFFIC AREAS AND CONCRETE-ENCASED SCHEDULE 40 FOR UNDER ROADWAYS OR TRAFFIC AREAS.

1 / E-501 **TYPICAL DUCT BANK DETAILS FOR CONDUIT IN SAND OR CONCRETE**

SCALE: N.T.S.

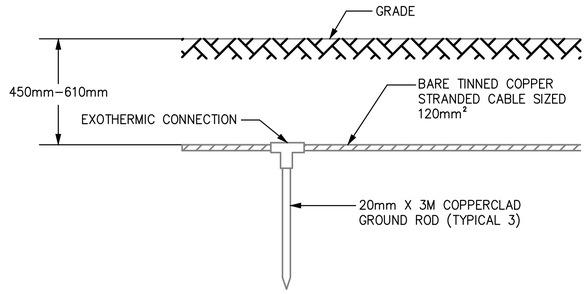


2 / E-501 **GROUND TRIPOD SYSTEM DETAIL - ELEVATION**

SCALE: N.T.S.

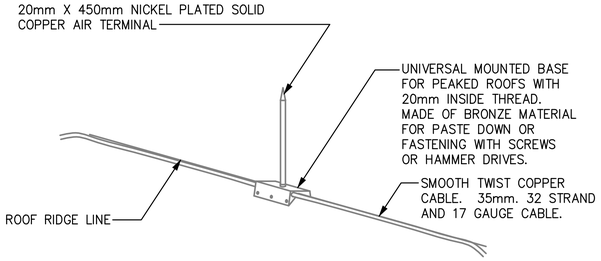


3 / E-501 **LIGHTNING PROTECTION AIR TERMINAL DETAIL**

SCALE: N.T.S.

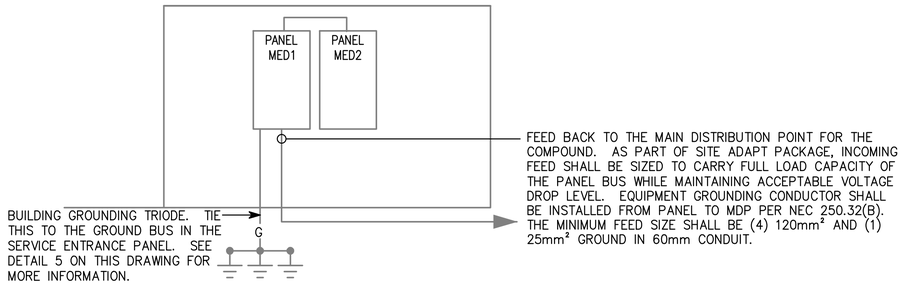


4 / E-501 **MED RISER DIAGRAM**

SCALE: N.T.S.

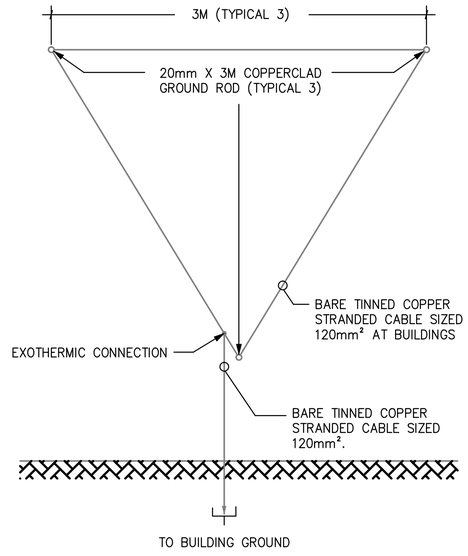


5 / E-501 **GROUND TRIPOD SYSTEM DETAIL - PLAN**

SCALE: N.T.S.

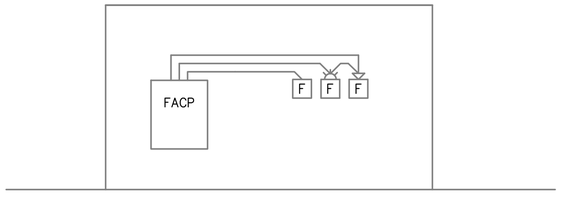


6 / E-501 **TYPICAL ONE STORY FIRE ALARM RISER**

SCALE: N.T.S.

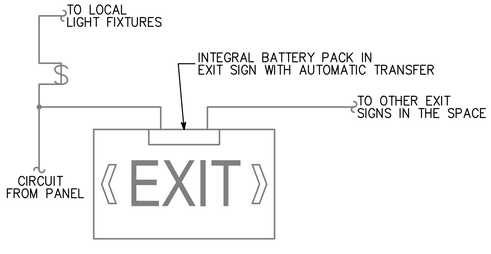


7 / E-501 **EXIT SIGN WIRING DIAGRAM**

SCALE: N.T.S.

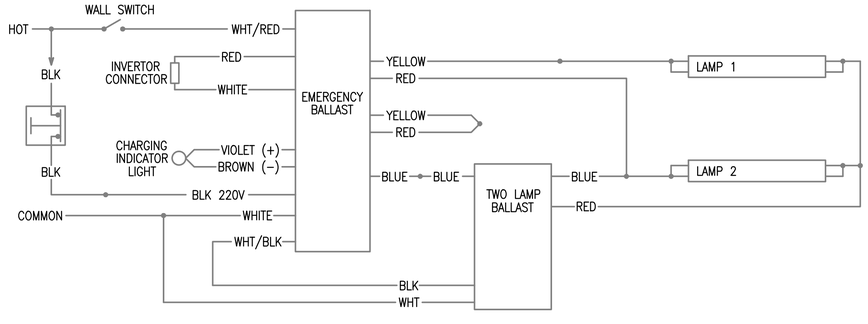


8 / E-501 **EMERGENCY FIXTURE WIRING DIAGRAM**

SCALE: N.T.S.

APPROVED:

A/E DESIGNER OF RECORD

SEAL:

COMMONWEALTH OF PENNSYLVANIA
REGISTERED PROFESSIONAL
JOSEPH R. GAUS
ENGINEER
PE-074251
1/29/10

US ARMY CORPS OF ENGINEERS
AFGHANISTAN ENGINEER DISTRICT

| Mark | Description | Date | Appr. |
|---|---|---|---|
| | | | |

Rev: 0
Date: 2/23/10
Design file no.
Drawing code:
File name:
Plot date:
Plot scale:

Designed by: JRG
Drawn by: BJB
Ckd by: JRG
Reviewed by: JRG
Submitted by: BAKER

U.S. ARMY CORPS OF ENGINEERS
AFGHANISTAN ENGINEER DISTRICT
APO AE 96338

*Michael Baker Jr., Inc*
*A unit of Michael Baker Corporation*
Airside Business Park
100 Airside Drive
Moon Township, PA 15108
www.mbakercorp.com

AFGHAN NATIONAL ARMY
REGIONAL MILITARY TRAINING CENTER
STANDARD DESIGN

MEDICAL CLINIC

ELECTRICAL DETAILS

Sheet reference number:
E-501

| Ⓐ LARGER OF THE TWO SIZES GIVEN IN THE TABLES BELOW | |
|---|---|
| GROUNDING ELECTRODE CONDUCTOR (BASED ON AIC RATING) | |
| AIC RATING OF SERVICE EQUIPMENT | NECESSARY GROUNDING ELECTRODE CONDUCTOR SIZE |
| 10K | (1) 35mm² |
| 14K | (1) 50mm² |
| 18K | (1) 70mm² |
| 22K | (1) 70mm² |
| 25K | (1) 70mm² |
| 30K | (1) 95mm² |
| 35K | (1) 120mm² |
| 42K | (1) 150mm² |
| 65K | (1) 185mm² |
| 100K | (1) 300mm² |
| 125K | (2) 185mm² |
| 200K | (2) 300mm² |
| GROUNDING ELECTRODE CONDUCTOR (BASED ON NEC TABLE 250.66) | |
| SIZE OF LARGEST UNGROUNDED SERVICE CONDUCTOR OR EQUIVALENT AREA FOR PARALLEL CONDUCTORS | NECESSARY GROUNDING ELECTRODE CONDUCTOR SIZE |
| 350 kcmil OR SMALLER | 35mm² |
| OVER 350 kcmil TO 600 kcmil | 70mm² |
| OVER 600 kcmil TO 1100 kcmil | 70mm² |
| OVER 1100 kcmil | 95mm² |
| NOTE: ALL SIZES ARE BASED ON COPPER CONDUCTORS. | |

| Ⓑ EQUIPMENT GROUNDING CONDUCTOR | |
|---|---|
| RATING OR SETTING OF AUTOMATIC OVERCURRENT DEVICE IN CIRCUIT AHEAD OF EQUIPMENT, CONDUIT, ETC, NOT EXCEEDING (AMPERES) | NECESSARY EQUIPMENT GROUNDING CONDUCTOR SIZE |
| 15 | 2.5mm² |
| 20 | 4.0mm² |
| 30 | 6.0mm² |
| 40 | 6.0mm² |
| 60 | 6.0mm² |
| 100 | 10mm² |
| 200 | 16mm² |
| 300 | 25mm² |
| 400 | 25mm² |
| 500 | 35mm² |
| 600 | 50mm² |
| 800 | 70mm² |
| 1000 | 70mm² |
| 1200 | 95mm² |
| 1600 | 120mm² |
| 2000 | 150mm² |
| 2500 | 185mm² |
| 3000 | 240mm² |
| 4000 | 300mm² |
| 5000 | 400mm² |
| 6000 | 400mm² |
| NOTE: ALL SIZES ARE BASED ON COPPER CONDUCTORS. | |

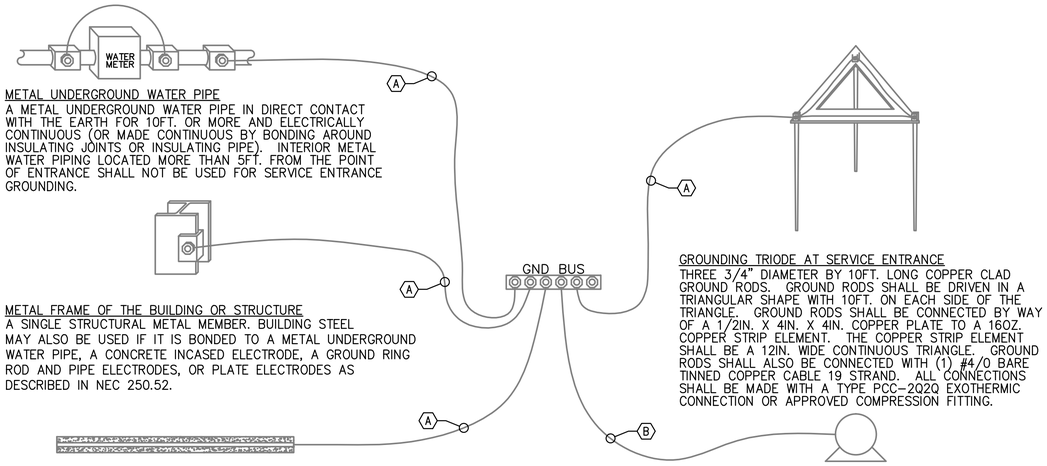


METAL UNDERGROUND WATER PIPE
A METAL UNDERGROUND WATER PIPE IN DIRECT CONTACT WITH THE EARTH FOR 10FT. OR MORE AND ELECTRICALLY CONTINUOUS (OR MADE CONTINUOUS BY BONDING AROUND INSULATING JOINTS OR INSULATING PIPE). INTERIOR METAL WATER PIPING LOCATED MORE THAN 5FT. FROM THE POINT OF ENTRANCE SHALL NOT BE USED FOR SERVICE ENTRANCE GROUNDING.

METAL FRAME OF THE BUILDING OR STRUCTURE
A SINGLE STRUCTURAL METAL MEMBER. BUILDING STEEL MAY ALSO BE USED IF IT IS BONDED TO A METAL UNDERGROUND WATER PIPE, A CONCRETE INCASED ELECTRODE, A GROUND RING ROD AND PIPE ELECTRODES, OR PLATE ELECTRODES AS DESCRIBED IN NEC 250.52.

CONCRETE ENCASED ELECTRODE
AN ELECTRODE ENCASED BY AT LEAST 2IN. OF CONCRETE , LOCATED WITHIN AND NEAR THE BOTTOM OF A CONCRETE FOUNDATION OR FOOTING THAT IS IN DIRECT CONTACT WITH THE EARTH, CONSISTING OF AT LEAST 20FT. OF ONE OR MORE BARE OR ZINC GALVANIZED OR OTHER ELECTRICALLY CONDUCTIVE COATED STEEL REINFORCING BARS OR RODS OF NOT LESS THAN 1/2" DIAMETER OR BARE COPPER CONDUCTOR NOT SMALLER THAN 4AWG.

GROUNDING TRIODE AT SERVICE ENTRANCE
THREE 3/4" DIAMETER BY 10FT. LONG COPPER CLAD GROUND RODS. GROUND RODS SHALL BE DRIVEN IN A TRIANGULAR SHAPE WITH 10FT. ON EACH SIDE OF THE TRIANGLE. GROUND RODS SHALL BE CONNECTED BY WAY OF A 1/2IN. X 4IN. X 4IN. COPPER PLATE TO A 16OZ. COPPER STRIP ELEMENT. THE COPPER STRIP ELEMENT SHALL BE A 12IN. WIDE CONTINUOUS TRIANGLE. GROUND RODS SHALL ALSO BE CONNECTED WITH (1) #4/0 BARE TINNED COPPER CABLE 19 STRAND. ALL CONNECTIONS SHALL BE MADE WITH A TYPE PCC-2Q2Q EXOTHERMIC CONNECTION OR APPROVED COMPRESSION FITTING.

LOAD OR DOWNSTREAM PANEL
ALL LOADS IN THE BUILDING SHALL HAVE AN EQUIPMENT GROUNDING CONDUCTOR PULLED TO THEM.

1
E-502

## SERVICE ENTRANCE GROUNDING DETAIL

SCALE: N.T.S.

APPROVED:

A/E DESIGNER OF RECORD

SEAL:

COMMONWEALTH OF PENNSYLVANIA
REGISTERED PROFESSIONAL
JOSEPH R GAUS
ENGINEER
PE-074251
12/29/10

US ARMY CORPS OF ENGINEERS
AFGHANISTAN ENGINEER DISTRICT

| Mark | Description | Date | Appr. |
|---|---|---|---|
| | | | |

| Mark | Description | Date | Appr. |
|---|---|---|---|
| | | | |

Rev: 0
Date: 2/23/10
Design file no.
Drawing code:
File name:
Plot date:
Plot scale:

Designed by: JRG
Dwn by: BJB
Ckd by: JRG
Reviewed by: JRG
Submitted by: BAKER

U.S. ARMY CORPS OF ENGINEERS
AFGHANISTAN ENGINEER DISTRICT
APO AE 96338

*Michael Baker Jr., Inc*
*A unit of Michael Baker Corporation*
Airside Business Park
100 Airside Drive
Moon Township, PA 15108
www.mbakercorp.com

AFGHAN NATIONAL ARMY
REGIONAL MILITARY TRAINING CENTER
STANDARD DESIGN

MEDICAL CLINIC

ELECTRICAL DETAILS

Sheet reference number:
E-502

# LIGHT FIXTURE SCHEDULE

| FIXTURE MARK | STYLE NUMBER AND TYPE | NUMBER AND TYPE OF LAMPS | VOLTAGE | MOUNTING | NOTES |
|---|---|---|---|---|---|
| A | PARABOLIC SURFACE/PENDANT MOUNTED 300MM X 1200MM FLUORESCENT FIXTURE WITH ELECTRONIC BALLAST | (2) 32W 3500K | 220V – 1ø 50HZ | SURFACE MOUNTED | FURNISHED WITH ELECTRONIC BALLAST. PARABOLIC LOUVER SHALL BE SPECULAR LENS IRADESCENCE TYPE. |
| A2 | SAME AS FIXTURE 'A' WITH EMERGENCY BALLAST | (2) 32W 3500K | 220V – 1ø 50HZ | SURFACE MOUNTED | FURNISHED WITH ELECTRONIC BALLAST. PARABOLIC LOUVER SHALL BE SPECULAR LENS IRADESCENCE TYPE. EMERGENCY BALLAST SELF TEST. |
| C | INCANDESCENT ONE PIECE W/ APPROVED LENS STABILIZED HIGH IMPACT POLY CARBONATE. | (1) A19 – 100W INCANDESCENT | 220V – 1ø 50HZ | WALL MOUNTED ABOVE EXTERIOR DOORS | |
| G | WRAP AROUND SURFACE/PENDANT MOUNTED FLUORESCENT FIXTURE WITH PRISMATIC ACRYLIC LENS AND ELECTRONIC BALLAST | (2) 32W 3500K | 220V – 1ø 50HZ | SURFACE MOUNTED | FURNISHED WITH ELECTRONIC BALLAST, VIRGIN ACRYLIC WRAP AROUND LENS. |
| G2 | SAME AS FIXTURE 'G' WITH EMERGENCY BALLAST | (2) 32W 3500K | 220V – 1ø 50HZ | SURFACE MOUNTED | FURNISHED WITH ELECTRONIC BALLAST, VIRGIN ACRYLIC WRAP AROUND LENS. EMERGENCY BALLAST WITH SELF TEST SWITCH. |
| H | REMOTE HEAD EXTERIOR LIGHT HEAD POWERED FROM EXIT SIGN BATTERY– 12V DOUBLE HEAD CORROSION RESISTANT WITH UL34 WEATHERPROOF CONSTRUCTION | (2) 12W/12V HALOGEN LAMP | 12V – 1ø 50HZ | EXTERIOR WALL MOUNTED AT TOP OF DOOR HEIGHT | |
| [E] | UNIVERSAL MOUNT ENGINEER GRADE THERMOPLASTIC HOUSING EXIT SIGN WITH LED LAMPS, RED LETTERS 6" IN HEIGHT WITH ARROWS AS INDICATED, WITH 12V CADMIUM BATTERY WITH REMOTE HEAD CAPABILITY | LED LAMPS | 220V – 1ø 50HZ | UNIVERSAL MOUNTING | |

FIXTURE MARK 'A'

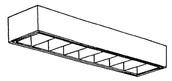

FIXTURE MARK 'C'

FIXTURE MARK 'G'

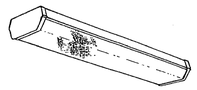

FIXTURE MARK 'H'

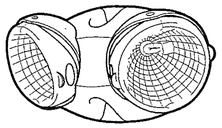

FIXTURE MARK '[E]'

APPROVED:

A/E DESIGNER OF RECORD

SEAL:

US ARMY CORPS OF ENGINEERS
AFGHANISTAN ENGINEER DISTRICT

| Mark | Description | Date | Appr. |
|---|---|---|---|
| | | | |

| Mark | Description | Date | Appr. |
|---|---|---|---|
| | | | |

Rev: 0
Date: 2/23/10
Design file no.
Drawing code:
File name:
Plot date:
Plot scale:

Designed by: JRG
Dwn by: BJB
Ckd by: JRG
Reviewed by: JRG
Submitted by: BAKER

U.S. ARMY CORPS OF ENGINEERS
AFGHANISTAN ENGINEER DISTRICT
APO AE 96338

*Michael Baker Jr., Inc*
*A unit of Michael Baker Corporation*
Airside Business Park
100 Airside Drive
Moon Township, PA 15108
www.mbakercorp.com

AFGHAN NATIONAL ARMY
REGIONAL MILITARY TRAINING CENTER
STANDARD DESIGN

MEDICAL CLINIC
ELECTRICAL LIGHT FIXTURE SCHEDULE

Sheet reference number:
E–601

PANELBOARD MED1 SURFACE MOUNTED
AMP. MAIN LUGS (OR) 225 AMP. MAIN BREAKER W/ 225 AMP. TRIP
CIRCUIT BREAKER TYPE 380/220 VOLTS 3 PHASE 4 WIRE 50 HZ 225 AMP. BUS

| CKT. NO. | TRIP AMPS | NO. POLES | WIRE MM² | GND MM² | CONDUIT MM | LOAD SERVED | LOAD-KVA A0 | LOAD-KVA B0 | LOAD-KVA C0 | LOAD-KVA A0 | LOAD-KVA B0 | LOAD-KVA C0 | LOAD SERVED | CONDUIT MM | GND MM² | WIRE MM² | NO. POLES | TRIP AMPS | CKT. NO. |
|---|---|---|---|---|---|---|---|---|---|---|---|---|---|---|---|---|---|---|---|
| 1 | 20 | 1 | 4.0 | 4.0 | 20 | LTNG – RM 100–107, 109, 111–116 | 2.6 | | | 0.8 | | | LTNG – RM 110–112, 117–120 | 20 | 4.0 | 4.0 | 1 | 20 | 2 |
| 3 | 20 | 1 | 4.0 | 4.0 | 20 | RECEPTACLES – RM 118,120 | | 0.8 | | | 0.8 | | RECEPTACLES – RM 117,119 | 20 | 4.0 | 4.0 | 1 | 20 | 4 |
| 5 | 20 | 1 | 4.0 | 4.0 | 20 | RECEPTACLES – RM 120 | | | 0.6 | | | 0.6 | RECEPTACLES – RM 119 | 20 | 4.0 | 4.0 | 1 | 20 | 6 |
| 7 | 20 | 1 | 4.0 | 4.0 | 20 | RECEPTACLES – RM 118 | 0.6 | | | 0.6 | | | RECEPTACLES – RM 117 | 20 | 4.0 | 4.0 | 1 | 20 | 8 |
| 9 | 20 | 1 | 4.0 | 4.0 | 20 | FACP – RM 121 | | 0.5 | | | 0.4 | | RECEPTACLES – RM 100 | 20 | 4.0 | 4.0 | 1 | 20 | 10 |
| 11 | 20 | 1 | 4.0 | 4.0 | 20 | RECEPTACLES – RM 107 | | | 0.4 | | | 1.2 | RECEPTACLES – RM 101 | 20 | 4.0 | 4.0 | 1 | 20 | 12 |
| 13 | 20 | 1 | 4.0 | 4.0 | 20 | RECEPTACLES – RM 107 | 0.4 | | | 0.4 | | | RECEPTACLES – RM 102 | 20 | 4.0 | 4.0 | 1 | 20 | 14 |
| 15 | 20 | 1 | 4.0 | 4.0 | 20 | RECEPTACLES – RM 106 | | 0.6 | | | 0.6 | | RECEPTACLES – RM 103 | 20 | 4.0 | 4.0 | 1 | 20 | 16 |
| 17 | 20 | 1 | 4.0 | 4.0 | 20 | RECEPTACLES – RM 106 | | | 0.6 | | | 0.6 | RECEPTACLES – RM 110 | 20 | 4.0 | 4.0 | 1 | 20 | 18 |
| 19 | 20 | 1 | | | | SPARE | | | | 0.6 | | | RECEPTACLES – RM 112 | 20 | 4.0 | 4.0 | 1 | 20 | 20 |
| 21 | 20 | 1 | 4.0 | 4.0 | 20 | RECEPTACLES – RM 109,111 | | 0.8 | | | 0.8 | | RECEPTACLES – RM 110,112 | 20 | 4.0 | 4.0 | 1 | 20 | 22 |
| 23 | 20 | 1 | 4.0 | 4.0 | 20 | RECEPTACLES – RM 109 | | | 0.6 | | | 0.8 | RECEPTACLES – RM 114 | 20 | 4.0 | 4.0 | 1 | 20 | 24 |
| 25 | 20 | 1 | 4.0 | 4.0 | 20 | RECEPTACLES –RM 111 | 0.6 | | | 0.6 | | | RECEPTACLES – RM 114 | 20 | 4.0 | 4.0 | 1 | 20 | 26 |
| 27 | 20 | 1 | 4.0 | 4.0 | 20 | RECEPTACLES – RM 113,115 | | 0.8 | | | 0.6 | | RECEPTACLES – RM 116 | 20 | 4.0 | 4.0 | 1 | 20 | 28 |
| 29 | 20 | 1 | 4.0 | 4.0 | 20 | RECEPTACLES – RM 113 | | | 0.4 | | | | SPARE | 20 | 4.0 | 4.0 | 1 | 20 | 30 |
| 31 | 20 | 1 | 4.0 | 4.0 | 20 | RECEPTACLES – RM 115 | 0.6 | | | 1.0 | | | REFRIGERATOR – RM 111 | 20 | 4.0 | 4.0 | 1 | 20 | 32 |
| 33 | 20 | 1 | 4.0 | 4.0 | 20 | RECEPTACLES – RM 100 | | 0.8 | | | 1.0 | | REFRIGERATOR – RM 111 | 20 | 4.0 | 4.0 | 1 | 20 | 34 |
| 35 | 20 | 1 | 4.0 | 4.0 | 20 | RECEPTACLES – RM 100 | | | 0.8 | | | 1.0 | REFRIGERATOR – RM 111 | 20 | 4.0 | 4.0 | 1 | 20 | 36 |
| 37 | 20 | 1 | 4.0 | 4.0 | 20 | CEILING FANS – RM 117–120 | 0.8 | | | 21.6 | | | PANEL – MED2 | 50 | 16.0 | 70.0 | 3 | 175 | 38 |
| 39 | 20 | 1 | 4.0 | 4.0 | 20 | CEILING FANS – RM 113,115 | | 0.8 | | | 22.6 | | | | | | | | 40 |
| 41 | 20 | 1 | 4.0 | 4.0 | 20 | CLNG FANS – RM 110–116,100,103,106 | | | 0.8 | | | 22.4 | | | | | | | 42 |
| | | | | | | | 5.6 | 5.1 | 4.2 | 25.6 | 26.8 | 26.6 | | | | | | | |

TOTAL CONN. LOAD PER PHASE (KVA): A0 31.2 B0 31.9 C0 30.8

TOTAL CONN. LOAD 93.9 KVA. 70 % DEMAND = ESTIMATED DEMAND LOAD 65.73

* MAIN BREAKER SHALL BE 3P EARTH GROUND TYPE

PANELBOARD MED2 SURFACE MOUNTED
AMP. MAIN LUGS (OR) 175 AMP. MAIN BREAKER W/ 175 AMP. TRIP
CIRCUIT BREAKER TYPE 380/220 VOLTS 3 PHASE 4 WIRE 50 HZ 225 AMP. BUS

| CKT. NO. | TRIP AMPS | NO. POLES | WIRE MM² | GND MM² | CONDUIT MM | LOAD SERVED | LOAD-KVA A0 | LOAD-KVA B0 | LOAD-KVA C0 | LOAD-KVA A0 | LOAD-KVA B0 | LOAD-KVA C0 | LOAD SERVED | CONDUIT MM | GND MM² | WIRE MM² | NO. POLES | TRIP AMPS | CKT. NO. |
|---|---|---|---|---|---|---|---|---|---|---|---|---|---|---|---|---|---|---|---|
| 1 | 20 | 1 | 4.0 | 4.0 | 20 | EXHAUST FAN #6 – RM 121 | 0.5 | | | 1.3 | | | ELECTRIC HEAT #2 – RM 110 | 20 | 4.0 | 4.0 | 2 | 20 | 2 |
| 3 | 20 | 1 | 4.0 | 4.0 | 20 | ELECTRIC HEAT #4 – RM 119 | | 2.0 | | | 1.3 | | | | | | | | 4 |
| 5 | | | | | | | | | 2.0 | | | 2.0 | ELECTRIC HEAT #4 – RM 100 | 20 | 4.0 | 4.0 | 2 | 20 | 6 |
| 7 | 20 | 1 | 4.0 | 4.0 | 20 | EXHAUST FANS #4,#5 – RM 102,103 | 1.0 | | | 2.0 | | | | | | | | | 8 |
| 9 | 20 | 1 | 4.0 | 4.0 | 20 | ELECTRIC HEAT #2 – RM 112,114 | | 2.6 | | | 2.0 | | ELECTRIC HEAT #4 – RM 101 | 20 | 4.0 | 4.0 | 2 | 20 | 10 |
| 11 | | | | | | | | | 2.6 | | | 2.0 | | | | | | | 12 |
| 13 | 20 | 1 | 4.0 | 4.0 | 20 | ELECTRIC HEAT #4 – RM 116 | 2.0 | | | 2.6 | | | ELECTRIC HEAT #2 – RM 111,113 | 20 | 4.0 | 4.0 | 2 | 20 | 14 |
| 15 | | | | | | | | 2.0 | | | 2.6 | | | | | | | | 16 |
| 17 | 20 | 1 | 4.0 | 4.0 | 20 | ELECTRIC HEAT #4 – RM 100 | | | 2.0 | | | 2.6 | ELECTRIC HEAT #2 – RM 106,109 | 20 | 4.0 | 4.0 | 2 | 20 | 18 |
| 19 | | | | | | | 2.0 | | | 2.6 | | | | | | | | | 20 |
| 21 | 20 | 1 | 4.0 | 4.0 | 20 | ELECTRIC HEAT #4 – RM 115 | | 2.0 | | | 2.6 | | ELECTRIC HEAT #2 – RM 108,118 | 20 | 4.0 | 4.0 | 2 | 20 | 22 |
| 23 | | | | | | | | | 2.0 | | | 2.6 | | | | | | | 24 |
| 25 | 20 | 1 | 4.0 | 4.0 | 20 | EXHAUST FANS #1,#2 – RM 104,105 | 1.0 | | | 2.0 | | | ELECTRIC HEAT #4 – RM 120 | 20 | 4.0 | 4.0 | 2 | 20 | 26 |
| 27 | 20 | 1 | 4.0 | 4.0 | 20 | EXHAUST FAN #3 – RM 107 | | 0.5 | | | 2.0 | | | | | | | | 28 |
| 29 | 20 | 1 | | | | SPARE | | | | | | 1.3 | ELECTRIC HEAT #2 – RM 103 | 20 | 4.0 | 4.0 | 2 | 20 | 30 |
| 31 | 20 | 3 | 4.0 | 4.0 | 20 | WATER HEATER – RM 102 | 2.0 | | | 1.3 | | | | | | | | | 32 |
| 33 | | | | | | | | 2.0 | | | 1.0 | | EXHAUST FANS #7,#8 – RM 109,111 | 20 | 4.0 | 4.0 | 1 | 20 | 34 |
| 35 | | | | | | | | | 2.0 | | | 1.3 | ELECTRIC HEAT #2 – RM 117 | 20 | 4.0 | 4.0 | 2 | 20 | 36 |
| 37 | 20 | 1 | | | | SPARE | | | | 1.3 | | | SPARE | | | | 1 | 20 | 38 |
| 39 | 20 | 1 | | | | SPARE | | | | | | | SPARE | | | | 1 | 20 | 40 |
| 41 | 20 | 1 | | | | SPARE | | | | | | | SPARE | | | | 1 | 20 | 42 |
| | | | | | | | 8.5 | 11.1 | 10.6 | 13.1 | 11.5 | 11.8 | | | | | | | |

TOTAL CONN. LOAD PER PHASE (KVA): A0 21.6 B0 22.6 C0 22.4

TOTAL CONN. LOAD 66.6 KVA. 70 % DEMAND = ESTIMATED DEMAND LOAD 46.62

APPROVED:

A/E DESIGNER OF RECORD

SEAL:

COMMONWEALTH OF PENNSYLVANIA
REGISTERED PROFESSIONAL ENGINEER
JOSEPH R GAUS
PE-074251
12/29/10

US ARMY CORPS OF ENGINEERS
AFGHANISTAN ENGINEER DISTRICT

| Mark | Description | Date | Appr. |
|---|---|---|---|
| | | | |

Rev: 0
Date: 2/23/10
Design file no.
Drawing code:
File name:
Plot date:
Plot scale:

Designed by: JRG
Dwn by: BJB
Ckd by: JRG
Reviewed by: JRG
Submitted by: BAKER

U.S. ARMY CORPS OF ENGINEERS
AFGHANISTAN ENGINEER DISTRICT
APO AE 96338

Michael Baker Jr., Inc.
A unit of Michael Baker Corporation
Airside Business Park
100 Airside Drive
Moon Township, PA 15108
www.mbakercorp.com

AFGHAN NATIONAL ARMY
REGIONAL MILITARY TRAINING CENTER
STANDARD DESIGN

MEDICAL CLINIC
ELECTRICAL PANEL SCHEDULES

Sheet reference number:
E–602

# AFGHAN NATIONAL ARMY

## STANDARD BUILDING DESIGN

## PX/FINANCE OFFICE

## 100% FINAL DESIGN SUBMITTAL

### SHEET INDEX


G-001 COVER SHEET

STRUCTURAL

| | |
|---|---|
| S-001 | GENERAL NOTES & DESIGN CRITERIA |
| S-101 | FOUNDATION/SLAB & ROOF FRAMING PLANS |
| S-401 | BUILDING SECTIONS |
| S-501 | FOUNDATION & FRAMING SECTIONS |
| S-502 | BEAM & COLUMN DETAILS |
| S-503 | BEAM & COLUMN DETAILS |
| S-601 | SCHEDULES |
| S-701 | TYPICAL DETAILS |
| S-702 | TYPICAL DETAILS |

ARCHITECTURAL

| | |
|---|---|
| A-001 | LIFE SAFETY PLAN |
| A-101 | FLOOR PLAN |
| A-102 | ROOF PLAN |
| A-201 | ELEVATIONS |
| A-301 | BUILDING SECTIONS |
| A-401 | WALL SECTIONS |
| A-501 | EXTERIOR DETAILS |
| A-502 | HEAD, JAMB, & SILL DETAILS |
| A-503 | STOOP DETAILS |
| A-601 | WINDOW & DOOR SCHEDULES |

MECHANICAL

| | |
|---|---|
| M-101 | HVAC FLOOR PLAN SCHEDULES & DETAILS |

ELECTRICAL

| | |
|---|---|
| E-001 | ELECTRICAL SYMBOLS & ABBREVIATIONS |
| E-101 | ELECTRICAL LIGHTING PLAN |
| E-102 | ELECTRICAL POWER & SYSTEMS PLAN |
| E-501 | ELECTRICAL DETAILS |
| E-502 | ELECTRICAL DETAILS |
| E-601 | ELECTRICAL LIGHT FIXTURE SCHEDULE |
| E-602 | ELECTRICAL PANEL SCHEDULES |


US ARMY CORPS OF ENGINEERS
AFGHANISTAN ENGINEER DISTRICT

| Mark | Description | Date | Appr. |
|---|---|---|---|
| | | | |

| Mark | Description | Date | Appr. |
|---|---|---|---|
| | | | |

Date: 2/23/10
Design file no.
Drawing code:
File name: ANAPXFOG-001CS
Plot date: 2/23/2010
Plot scale: X:X

Rev: 0

Designed by: KRC
Dwn by: KJG
Ckd by: NLJ
Reviewed by: LHM
Submitted by: BAKER

U.S. ARMY CORPS OF ENGINEERS
AFGHANISTAN ENGINEER DISTRICT
APO AE 96338


*Michael Baker Jr., Inc.*
*A unit of Michael Baker Corporation*
Airside Business Park
100 Airside Drive
Moon Township, PA 15108
www.mbakercorp.com


AFGHAN NATIONAL ARMY
REGIONAL MILITARY TRAINING CENTER
STANDARD DESIGN

PX/FINANCE OFFICE

COVER SHEET

Sheet reference number:
G-001

STRUCTURAL ABBREVIATIONS:

| | |
|---|---|
| ACI | AMERICAN CONCRETE INSTITUTE |
| ADD'L | ADDITIONAL |
| AISC | AMERICAN INSTITUTE OF STEEL CONSTRUCTION |
| AISI | AMERICAN IRON AND STEEL INSTITUTE |
| ASTM | AMERICAN SOCIETY FOR TESTING AND MATERIALS |
| ARCH | ARCHITECTURAL |
| B | BOTTOM |
| BLDG | BUILDING |
| BOTT | BOTTOM |
| ℄ | CENTER LINE |
| CFMRF | COLD FORM METAL ROOF FRAME |
| CFMF | COLD FORM METAL FRAME |
| CFS | COLD FORMED STEEL |
| CIP | CAST-IN-PLACE |
| CIPL | CAST-IN-PLACE LINTEL |
| CJ | CONTROL JOINT |
| CLR | CLEAR |
| CMU | CONCRETE MASONRY UNIT |
| COEFF | COEFFICIENT |
| COL | COLUMN |
| CONC | CONCRETE |
| CONT | CONTINUOUS |
| COORD | COORDINATE |
| CRSI | CONCRETE REINFORCING STEEL INSTITUTE |
| CSJ | CONSTRUCTION JOINT |
| DIA | DIAMETER |
| DIAG | DIAGONAL |
| DIM | DIMENSION |
| DWG | DRAWING |
| DWL | DOWEL |
| EA | EACH |
| EF | EACH FACE |
| ELEC | ELECTRICAL |
| ELEV | ELEVATION |
| EMBED | EMBEDMENT |
| EQUIV | EQUIVALENT |
| ETC | ET CETERA |
| EW | EACH WAY |
| EXP | EXPANSION |
| EXT | EXTERIOR |
| FTG | FOOTING |
| GA | GAUGE |
| GB | GRADE BEAM |
| HORIZ | HORIZONTAL |
| h | HOUR |
| HRS | HOURS |
| IBC | INTERNATIONAL BUILDING CODE |
| INFO | INFORMATION |
| INT | INTERIOR |
| kg | KILOGRAM |
| km | KILOMETER |
| kN | KILONEWTON |
| kPa | KILOPASCAL |
| L# | ANGLE (# INDICATES SIZE) |
| LONG | LONGITUDINAL |
| LLV | LONG LEG VERTICAL |
| m | METER |
| MAX | MAXIMUM |
| MECH | MECHANICAL |
| MFG | MANUFACTURER |
| MID | MIDDLE |
| MIN | MINIMUM |
| MISC | MISCELLANEOUS |
| mm | MILLIMETER |
| MPa | MEGAPASCAL |
| MTL | METAL |
| MWFRS | MAIN WIND FORCE RESISTING SYSTEM |
| N | NEWTON |
| N | NORTH |
| N/A | NOT APPLICABLE |
| # | NUMBER SYMBOL FOR REBAR SIZE |
| NTS | NOT TO SCALE |
| OC | ON CENTER |
| OD | OUTSIDE DIAMETER |
| OPNG | OPENING |
| P or PL | PLATE |
| PRE-ENG | PRE-ENGINEERED |
| RB | ROOF BEAM |
| REINF | REINFORCED |
| REQ'D | REQUIRED |
| SIM | SIMILAR |
| SPECS | SPECIFICATIONS |
| STD | STANDARD |
| STRUCT | STRUCTURAL |
| SW | SHEAR WALL |
| T | TOP |
| T/ | TOP OF |
| T/ELEV | TOP ELEVATION |
| T/SLAB | TOP OF SLAB |
| T&B | TOP AND BOTTOM |
| THK | THICK |
| TYP | TYPICAL |
| UFC | UNIFIED FACILITIES CRITERIA |
| UON | UNLESS OTHERWISE NOTED |
| VERT | VERTICAL |
| W | WIDTH |
| W/ | WITH |

1.0 GENERAL NOTES:

1.1 THIS PROJECT HAS BEEN DESIGNED FOR THE WEIGHTS AND MATERIALS INDICATED ON THE SHEETS AND FOR THE LIVE LOADS INDICATED IN THE DESIGN DATA. IT IS THE CONTRACTOR'S RESPONSIBILITY TO DETERMINE ALLOWABLE CONSTRUCTION LOADS AND TO PROVIDE PROPER DESIGN AND CONSTRUCTION OF FALSEWORK, FORMWORK, STAGING, BRACING, SHEETING AND SHORING, ETC.

1.1 COORDINATE THESE SHEETS WITH THE ARCHITECTURAL, MECHANICAL, ELECTRICAL, PLUMBING, AND CIVIL SHEETS. ALL DIMENSIONS SHOWN ON THE SHEETS ARE MILLIMETERS UNLESS NOTED OTHERWISE.

1.2 THE CONTRACTOR SHALL VERIFY AND COORDINATE ALL FLOOR AND ROOF OPENING SIZES AND LOCATIONS, EQUIPMENT PAD SIZES AND LOCATIONS, ANCHOR BOLT LAYOUTS, ETC WITH EQUIPMENT SELECTED. THE CONTRACTOR SHALL MAKE ANY REQUIRED MODIFICATIONS AT NO ADDITIONAL COST.

1.3 THE CONTRACTOR SHALL REFER TO THE ARCHITECTURAL, MECHANICAL, ELECTRICAL AND PLUMBING SHEETS FOR SLEEVES, CURBS, INSERTS OR OPENINGS, ETC. NOT HEREIN INDICATED.

1.4 WORK NOT INCLUDED ON THE SHEETS BUT IMPLIED TO BE SIMILAR TO THAT SHOWN AT CORRESPONDING PLACES ELSEWHERE ON THE SHEETS SHALL BE REPEATED.

1.5 IN CASE OF CONFLICT BETWEEN THE NOTES, DETAILS AND SPECIFICATIONS THE MOST RIGID REQUIREMENTS SHALL GOVERN.

1.6 SEE ARCHITECTURAL SHEETS FOR LOCATIONS OF MASONRY AND NON-LOAD BEARING PARTITIONS. PROVIDE COMPRESSIBLE FIRESAFING AT TOP OF WALL AS REQUIRED BY ARCHITECTURAL SHEETS.

1.7 COORDINATE FINISHED FLOOR DATUM ELEVATION 0.0m WITH THE CIVIL SHEETS.

2.0 FOUNDATION NOTES

2.1 THE GEOTECHNICAL ANALYSIS FOR THIS PROJECT IS THE RESPONSIBILITY OF THE CONTRACTOR AWARDED THE WORK. AN ASSUMED ALLOWABLE SOIL BEARING VALUE OF 72 kPa HAS BEEN USED IN THE STRUCTURAL ANALYSIS OF THE BUILDING HEREIN AND SHALL BE CONFIRMED AND VERIFIED AS PART OF THE GEOTECHNICAL INVESTIGATION. VALUES WHICH DO NOT MEET THE REQUIREMENTS INDICATED ON THE BASIS OF DESIGN SHEET SHALL BE IMMEDIATELY BROUGHT TO THE ATTENTION OF THE CONTRACTING OFFICER FOR CONSIDERATION AND DETERMINATION ON THE NEXT APPROPRIATE COURSE OF ACTION.

2.2 SEE THE SPECIFICATION FOR ADDITIONAL REQUIREMENTS TO THOSE OUTLINED IN THE GEOTECHNICAL INVESTIGATION FOR EXCAVATION AND PREPARATION OF THE FOUNDATION AND THE SLAB ON GRADE SUBGRADE INCLUDING COMPACTION PROCEDURES.

2.3 EXCAVATIONS FOR FOOTINGS SHALL HAVE THE SIDES AND BOTTOMS TEMPORARILY LINED WITH 0.25mm POLYETHYLENE IF PLACEMENT OF CONCRETE DOES NOT OCCUR WITHIN 24 HRS OF THE EXCAVATION OF THE FOOTING.

2.4 FOUNDATION CONDITIONS NOTED DURING CONSTRUCTION WHICH DIFFER FROM THOSE DESCRIBED IN THE GEOTECHNICAL REPORT SHALL BE REPORTED TO THE GENERAL CONTRACTOR BEFORE FURTHER CONSTRUCTION IS ATTEMPTED. SEE PROJECT SPECIFICATIONS.

2.5 NO FOOTINGS OR SLABS SHALL BE POURED INTO OR AGAINST SUBGRADE CONTAINING FREE WATER, FROST, ICE OR LOOSE MATERIAL. FROST DEPTH ASSUMED TO BE 800mm.

2.6 ALL SLAB-ON-GRADE, TRENCH BOTTOMS AND OTHER ON-GRADE INTERIOR HORIZONTAL SURFACES SHALL BE PLACED OVER A 0.25mm POLYETHYLENE VAPOR RETARDER OVER A 100mm #57 STONE WATER CAPILLARY BARRIER PLACED ON SUBGRADE PROPERLY PREPARED IN ACCORDANCE WITH THE CONTRACT SPECIFICATIONS. (UON)

2.7 PRIOR TO START OF FOUNDATION OR SLAB-ON-GRADE CONSTRUCTION, EXISTING SUBGRADES SHALL BE COMPACTED TO MINIMUM OF 95% MAXIMUM DRY DENSITY OBTAINED THRU ASTM D 1557 MODIFIED PROCTOR TESTING.

2.8 SEE PLUMBING, ELECTRICAL & CIVIL SHEETS FOR REQUIRED UNDERSLAB UTILITIES.

2.9 SEE ARCHITECTURAL SHEETS FOR ALL WATERPROOFING DETAILS AND MATERIALS.

2.10 IF UNDERMINING OF FOOTINGS OCCURS, FILL VOIDS WITH 18 MPa CONCRETE. DO NOT ATTEMPT TO REPLACE AND RE-COMPACT SOIL.

3.0 CONCRETE

3.1 CONCRETE SHALL HAVE THE UNIT WEIGHT OF 2400 kg/m$^3$ AND A MINIMUM COMPRESSIVE STRENGTH (f'c) OF 28 MPa AT 28 DAYS. ALL CONCRETE SHALL HAVE A WATER-CEMENT RATIO OF 0.45. SEE SPECIFICATIONS FOR ADDITIONAL INFORMATION. ENTRAIN AIR TO PRODUCE TOTAL AIR CONTENT ACCORDING TO THE SPECIFICATIONS FOR CONCRETE EXPOSED TO FREEZING TEMPERATURES (EXTERIOR FOOTINGS, SLAB TURNDOWNS, EXTERIOR SLABS AND SLABS-ON-GRADE, EXTERIOR RETAINING WALLS, AND EXTERIOR GRADE BEAMS.)

3.2 NO CALCIUM CHLORIDE SHALL BE USED IN ANY CONCRETE.

3.3 MIXING, TRANSPORTING AND PLACING OF CONCRETE SHALL CONFORM TO ACI 301M-05.

3.4 ALL CONCRETE WORK SHALL CONFORM TO THE REQUIREMENTS OF THE AMERICAN CONCRETE INSTITUTE (ACI) 318M MANUAL (metric), "BUILDING CODE REQUIREMENTS FOR REINFORCED CONCRETE", AND REQUIREMENTS OUTLINED IN THE CONTRACT SPECIFICATIONS. WHEN THERE IS A CONFLICT BETWEEN ACI AND THE SPECIFICATIONS, THE MORE STRINGENT SHALL GOVERN.

3.5 CHAMFER ALL EXPOSED EXTERNAL CORNERS OF CONCRETE WITH 20mm x45 DEGREE CHAMFER UON.

3.6 CONCRETE REINFORCEMENT BARS SHALL CONFORM TO ASTM A615M-96a, GRADE 420 MPa, REINFORCING BARS SHALL NOT BE TACK WELDED, WELDED, HEATED OR CUT, UNLESS INDICATED ON THE CONTRACT DOCUMENTS. ALL LAP SPLICES SHALL BE CLASS "B" UON.

3.7 HORIZONTAL FOOTING AND HORIZONTAL WALL REINFORCEMENT SHALL BE CONTINUOUS AND SHALL HAVE 90 DEGREE BENDS AND EXTENSIONS, OR CORNER BARS OF EQUIVALENT SIZE LAPPED WITH A CLASS B TENSION SPLICE AT CORNERS AND INTERSECTIONS. TOP BAR CRITERIA SHALL APPLY IF 300mm OR MORE OF FRESH CONCRETE IS PLACED BELOW BAR.

3.8 SLABS-ON-GRADE SHALL HAVE CONSTRUCTION JOINTS OR CRACK CONTROL JOINTS AS SHOWN ON THE DRAWINGS. CONSTRUCTION JOINTS CAN BE USED AT CONTROL JOINT LOCATIONS AT CONTRACTORS OPTION. SEE SLAB PLANS & JOINT DETAILS FOR ADDITIONAL INFORMATION. FOR AREAS NOT SHOWN ON DWGS, THE MAXIMUM SPACING OF CONSTRUCTION/ CRACK CONTROL JOINTS SHALL BE 4800mm

3.9 ALL CONCRETE REINFORCEMENT SHALL BE DETAILED, FABRICATED, LABELED, SUPPORTED, AND SPACED IN FORMS AND SECURED IN PLACE IN ACCORDANCE WITH THE PROCEDURES AND REQUIREMENTS OUTLINED IN THE LATEST EDITION OF THE "BUILDING CODE REQUIREMENTS FOR REINFORCED CONCRETE", ACI 318M, AND THE "MANUAL OF STANDARD PRACTICE FOR DETAILING REINFORCED CONCRETE STRUCTURES", ACI 315M, LATEST EDITION. BASED ON IN COUNTRY REINFORCEMENT AVAILABILITY, IT IS THE CONTRACTOR'S OPTION TO ROUND DESIGNATED ODD NUMBERED REINFORCEMENT SIZES UP (1) ONE BAR SIZE.

3.10 ALL DOWELS SHALL MATCH SIZE AND NUMBER OF MAIN REINFORCING, UNLESS NOTED OTHERWISE ON THE SHEETS.

3.11 ADDITIONAL BARS SHALL BE PROVIDED AROUND ALL FLOOR AND WALL OPENINGS AS SHOWN ON THE SHEETS.

3.12 SEE ARCHITECTURAL SHEETS FOR TYPE AND LOCATION OF ALL FLOOR FINISHES.

3.13 THE CONTRACTOR SHALL COORDINATE ADDITIONAL WALL/SLAB OPENINGS NOT SHOWN ON STRUCTURAL SHEETS. SEE MECHANICAL, ELECTRICAL, PLUMBING AND CIVIL SHEETS.

3.14 UNLESS NOTED OTHERWISE, ALL CURBS SHALL BE REINFORCED WITH AT LEAST (1)-#13 CONTINUOUS AND #13 AT 300mm O.C. DOWELS TO STRUCTURE BELOW.

3.15 THE CONTRACTOR SHALL VERIFY ALL OPENINGS, PAD SIZES, AND ANCHOR BOLTS WITH EQUIPMENT SELECTED.

3.16 FOR ALL WALLS & PIERS, PROVIDE DOWELS INTO FOOTING AT EACH VERT REINF BAR, UON DOWEL SIZE SHALL BE SAME AS VERT REINF.

3.17 PROVIDE CONCRETE POUR STOPS OR FORMED AS REQUIRED FOR INSTALLATION OF ALL CONCRETE WORK.

3.18 PROVIDE ADDITIONAL (2)-#13 x 600mm REINFORCING BARS IN SLAB-ON GRADE AT ALL RE-ENTRANT CORNERS. PLACE BARS AT MID-DEPTH OF SLAB WITH A CLEARANCE OF 50mm FROM CORNER UON.

3.19 COLD-WEATHER PLACEMENT: COMPLY WITH ACI 306.1 AND AS FOLLOWS. PROTECT CONCRETE WORK FROM PHYSICAL DAMAGE OR REDUCED STRENGTH THAT COULD BE CAUSED BY FROST, FREEZING ACTIONS, OR LOW TEMPERATURES. SUBMIT A COLD WEATHER CONCRETING PLAN FOR APPROVAL.

3.20 PROVIDE BONDING COMPOUND PER ASTM C 1059-99: SPECIFICATION FOR LATEX AGENTS FOR BONDING FRESH CONCRETE (GROUT) TO HARDENED CONCRETE.

3.21 THE FORMED SURFACES FOR REINFORCED CONCRETE SHALL ACHIEVE A "CLASS A" FINISH WHEN RECEIVING PAINT OR A "CLASS B" FINISH WHEN RECEIVING PLASTER OR TILE AS PER SPECIFICATION SECTION 03 31 00 CAST-IN-PLACE STRUCTURAL CONCRETE.

3.22 AT INTERSECTING GRADE BEAMS AND SHEAR WALLS, PROVIDE CORNER BARS AT INTERSECTIONS WITH SAME QUANTITY, SIZE AND SPACING AS HORIZONTAL BARS WITH LEG LENGTH = 50db.

3.23 REFER TO S-800 SERIES REINFORCING BAR PLACEMENT DRAWINGS DEFINING LENGTHS, BENDS, AND SPACINGS FOR ALL STRUCTURAL CONCRETE. THE S-800 SERIES DRAWING ARE BASED ON THE S-400, S-500, S-600, AND S-700 SERIES DRAWING SCHEDULES, DETAILS, AND DIAGRAMS.

4.0 CONCRETE MASONRY

4.1 MASONRY CONSTRUCTION SHALL CONFORM TO SPECIFICATION FOR MASONRY STRUCTURES (ACI 530.1) UON.

4.2 STRENGTH OF MASONRY MATERIALS SHALL BE AS FOLLOWS:

a. CONCRETE MASONRY UNITS SHALL BE NORMAL WEIGHT, GRADE N, TYPE 1, CONFORMING TO ASTM C-90 AND HAVE A MINIMUM COMPRESSIVE STRENGTH OF 10.4 MPa ON THE NET AREA.
b. MORTAR SHALL CONFORM TO ASTM C-270 TYPE S.
c. GROUT FOR MASONRY SHALL BE NORMAL WEIGHT AND HAVE A MINIMUM COMPRESSIVE STRENGTH OF 14 MPa AT 28 DAYS. GROUT SHALL CONFORM TO ASTM C476M. GROUT LIFTS SHALL NOT EXCEED 1,400mm.
d. REINFORCED MASONRY SHALL HAVE A STRENGTH F'm = 10 MPa. (F'm IS THE COMPRESSIVE STRENGTH OF THE MASONRY AT 28 DAYS AS DETERMINED BY PRISM TESTS).

4.3 ALL VERTICAL REINFORCEMENT FOR CONCRETE MASONRY SHALL BE ASTM A615M-96a, GRADE 420 MPa. ALL SPLICES SHALL BE LAPPED 48 BAR DIAMETERS MINIMUM.

4.4 BOND BEAMS SHALL BE SPACED AT 1200mm OC VERTICALLY. BOND BEAM REINFORCING SHALL BE CONTINUOUS AND PROVIDED AT WALL INTERSECTIONS AND WALL CORNERS (REFERENCE CONCRETE MASONRY NOTE 4.11). ALL BOND BEAM REINFORCING SHALL BE CONTINUOUS AND HAVE STANDARD ACI HOOKS AT EACH END. PROVIDE STANDARD BAR SPLICES AS SPECIFIED. AS AN ALTERNATE TO CMU BOND BEAMS, IT IS THE CONTRACTOR'S OPTION TO PROVIDE 200mm x 200mm CONTINUOUS CAST-IN-PLACE CONCRETE BOND BEAMS WITH (2)-#16 IN LIEU OF CMU BOND BEAMS INDICATED ON THE DRAWINGS.

4.5 SEE TYPICAL DETAILS FOR MINIMUM REINFORCEMENT REQUIREMENTS FOR CMU WALLS. PROVIDE STANDARD BAR SPLICES AS SPECIFIED. ALL VERTICAL REINFORCEMENT EXTENDS FULL HEIGHT OF WALL.

4.6 CMU CELLS THAT REQUIRE VERTICAL REINFORCING BARS AS INDICATED ON THE CONTRACT DRAWINGS AND/OR SPECS SHALL HAVE REINF BARS PLACED IN CENTERS OF CMU CELLS AND CONTINUOUSLY GROUTED UON.

4.7 ALL CMU CELLS, OPEN CAVITIES, AND AIR SPACES OF ALL EXTERIOR WALLS SHALL BE GROUTED TO STOP FRAGMENTS FROM MORTAR BLAST.

4.8 CONTRACTOR SHALL COORDINATE LOCATION OF ALL OPENINGS SEE ARCH, MECH, ELEC, AND PLUMBING SHEETS FOR SIZE AND LOCATION OF OPENINGS.

4.9 MASONRY WALLS SHALL NOT BE BACK FILLED PRIOR TO THE MORTAR AND GROUT ATTAINING THEIR RESPECTIVE MAXIMUM DESIGN STRENGTHS PER SPECIFICATIONS.

4.10 PROVIDE GALVANIZED MORTAR/GROUT SCREEN W/ 3mm MESH WHERE CELLS BELOW ARE NOT GROUTED.

4.11 AT INTERSECTING BOND BEAMS, PROVIDE CORNER BAR FOR EACH HORIZONTAL BAR IN BOND BEAMS AT INTERSECTING WALLS. USE SAME SIZE AND SPACING AS HORIZONTAL BARS WITH LEG LENGTH = 50db.

4.12 THE ALTERNATE CMU BRACE DETAILS SHOWN ON S-701 CAN BE UTILIZED AT THE CONTRACTOR'S OPTION IN PLACE OF THE "FLOATING PIN" WALL BRACE CONNECTIONS AT TOP OF CMU WALLS DEPICTED ON S-400 AND S-500 SERIES DRAWINGS THESE ALTERNATE DETAILS ALSO SHOW ALTERNATE CAST-IN-PLACE WALL BOND BEAMS THAT CAN BE UTILIZED AT THE CONTRACTOR'S OPTION IN PLACE OF THE STANDARD CMU BOND BEAMS CONSTRUCTED OF CMU BLOCKS.

5.0 COLD-FORMED METAL FRAMING

5.1 ALL COLD-FORMED METAL FRAMING MEMBERS SHALL CONFORM TO ASTM A1003M, STRUCTURAL GRADE ST340 (MPa), WITH A GALVANIZED COATING OF Z275 OR BETTER IN ACCORDANCE WITH ASTM A653M.

5.2 ALL COLD-FORMED METAL FRAMING MEMBERS SHALL HAVE THE FOLLOWING MINIMUM PROPERTIES:

a. MINIMUM METAL THICKNESS:
TRACK = 1.37mm;
STUD/OTHER = 1.09mm
b. MINIMUM FLANGE WIDTH:
TRACK = 38mm;
STUD/OTHER = 35mm
c. MINIMUM MEMBER DEPTH:
ALL SECTIONS = 152.2mm
d. PURLIN (HAT CHANNEL)
DEPTHxWIDTH(FLAT TOP)xTHICK = 25mmx42mmx1.59mm

5.3 ALL CONNECTIONS SHALL BE MADE WITH CORROSION RESISTANT (ASTM A153M), SELF-DRILLING, SELF-TAPPING STEEL DRILL SCREWS IN ACCORDANCE WITH ASTM C1513. SCREWS SHALL HAVE A LOW PROFILE HEAD BENEATH ROOF DECK, AND STANDARD HEAD ALL OTHER LOCATIONS.

5.4 FABRICATE COLD FORMED METAL FRAMING AND ACCESSORIES PLUMB, SQUARE AND TRUE TO LINE, WITH CONNECTIONS SECURELY FASTENED ACCORDING TO AISI STANDARD FOR COLD FORMED STEEL FRAMING.

5.5 CUT FRAMING MEMBERS BY SAWING OR SHEATHING, DO NOT TORCH CUT.

5.6 INSTALL FRAMING MEMBERS IN ONE-PIECE LENGTHS UNLESS SPLICE CONNECTIONS ARE INDICATED FOR TRACK OR TENSION MEMBERS

5.7 INSTALL TEMPORARY BRACING AND SUPPORTS TO SECURE FRAMING DURING CONSTRUCTION. MAINTAIN BRACING AND SUPPORTS IN PLACE UNTIL THE STRUCTURE HAS BEEN COMPLETED WITH ALL CONNECTIONS AND PERMANENT BRACING SECURED.

6.0 STRUCTURAL DESIGN CRITERIA

6.1 ALL DESIGNS SHALL CONFORM TO THE PROVISIONS OF THE IBC 2006 AND UFC AS APPLICABLE.

6.2 DESIGN LOADS

6.2.1 DEAD LOADS (PER IBC 2006 & UFC 3-310-01)

| | |
|---|---|
| MECH/ELEC/PLUMBING | 0.20 kPa |
| MISCELLANEOUS | 0.15 kPa |
| COLD-FORMED FRAMING | 0.20 kPa |
| INSULATION | 0.10 kPa |
| METAL ROOF PANEL | 0.14 kPa |
| | 0.79 kPa |
| FLOOR PARTITION ALLOWANCE | 0.96 kPa |

6.2.2 LIVE LOADS (PER IBC 2006 & UFC 3-310-01)

| | |
|---|---|
| ROOF | 1.00 kPa |
| CORRIDOR (2-STORY BLDG ONLY) | 4.80 kPa |
| ALL OTHERS (2-STORY BLDG ONLY) | 2.40 kPa |
| SLAB ON GRADE | 4.80 kPa |

6.2.3 SNOW LOADS (PER IBC 2006 & UFC 3-310-01)

| | |
|---|---|
| GROUND SNOW LOAD (Pg) | 1.2 kPa |
| SNOW IMPORTANCE FACTOR (I) | 1.0 |
| SNOW EXPOSURE FACTOR (Ce) | 1.0 |
| THERMAL FACTOR (Ct) | 1.0 |

6.2.4 WIND LOADS (PER IBC 2006)

| | |
|---|---|
| BASIC WIND SPEED | 137 km/h |
| WIND IMPORTANCE FACTOR | 1.0 |
| WIND EXPOSURE CATEGORY | D |
| DIRECTIONALITY COEFFICIENT (Kd) | 0.85 |
| TOPOGRAPHIC FACTOR (Kzt) | 1.0 |

6.2.5 SEISMIC LOADS (PER IBC 2006 & UFC 3-310-04)

| | |
|---|---|
| OCCUPANCY USE CATEGORY | II |
| SEISMIC IMPORTANCE FACTOR (Ie) | 1.0 |
| SEISMIC SITE CLASS | D |
| $S_s$ = 1.50 (REDUCED FROM 2.40 PER ASCE 7-05, 12.8.1.3 FOR A BUILDING WITHOUT IRREGULARITIES) | |
| $S_1$ = 1.20 | |
| $S_{DS}$ = 1.00 | |
| $S_{D1}$ = 1.20 | |
| SEISMIC DESIGN CATEGORY | E |
| SEISMIC RESISTING SYSTEM: -SPECIAL REINFORCED CONCRETE SHEAR WALL | |
| RESPONSE MODIFICATION FACTOR (R) | 6 |
| RESPONSE COEFFICIENT (Cs) | 0.167 |
| SEISMIC ANALYTICAL PROCEDURE = | EQUIV LATERAL FORCE |
| SEISMIC BASE SHEAR | 320 kN |

APPROVED:

A/E DESIGNER OF RECORD

SEAL:

GEORGIA REGISTERED 1-27-10 No. 27141 PROFESSIONAL ENGINEER CHRISTOPHER W. WHITMORE

US ARMY CORPS OF ENGINEERS
AFGHANISTAN ENGINEER DISTRICT

| Mark | Description | Date | Appr. |
|---|---|---|---|

Date: 2/23/10
Design file no.
Rev. 0
Drawing code:
File name: ANAPXFOS-001SN
Plot date: 2/23/2010
Plot scale: X/X

Designed by: KMP/MMY
Dwn by: RCG
Ckd by: CWW
Reviewed by: LHM
Submitted by: BAKER

U.S. ARMY CORPS OF ENGINEERS
AFGHANISTAN ENGINEER DISTRICT
APO AE 96338

*Michael Baker Jr., Inc*
*A unit of Michael Baker Corporation*
Airside Business Park
100 Airside Drive
Moon Township, PA 15108
www.mbakercorp.com

AFGHAN NATIONAL ARMY
REGIONAL MILITARY TRAINING CENTER
STANDARD DESIGN

PX/FINANCE OFFICE

GENERAL NOTES & DESIGN CRITERIA

Sheet reference number:
S-001

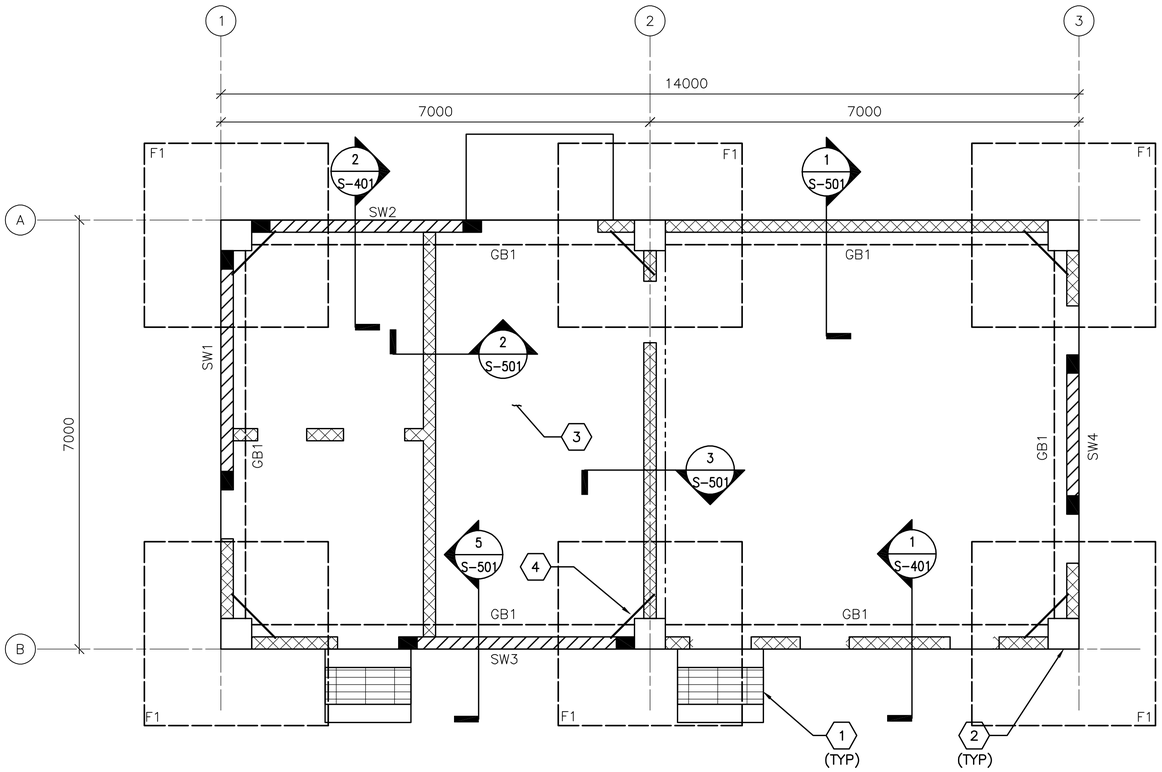


1 S-101 **FOUNDATION/SLAB PLAN**

SCALE: 1:50

## FOUNDATION/SLAB PLAN NOTES:

1. REFER TO SHEET S-001 FOR STRUCTURAL NOTES AND DESIGN CRITERIA.
2. FINISH FIRST FLOOR ELEVATION SHALL BE (DATUM 0.00) ALL PLUS OR MINUS DIMENSIONS INDICATED ON PLAN OR REFERRED TO IN NOTES RELATE TO FINISH FIRST FLOOR ELEVATION.
3. SLAB-ON-GRADE IS 150 WITH #13 @ 300 OC EW LOCATED 38 FROM T/SLAB.
4. TOP OF EXTERIOR FOOTINGS SHALL BE -950 UNLESS OTHERWISE INDICATED.
5. COLUMN FOOTINGS INDICATED BY F# ON PLAN. REFER TO COLUMN FOOTING SCHEDULE ON SHEET S-601.
6. REFER TO COLUMN SCHEDULE ON SHEET S-601.
7. GRADE BEAM INDICATED BY GB# ON PLAN, REFER TO BEAM SCHEDULE ON SHEET S-601.
8. SHEARWALL INDICATED BY SW# ON PLAN, REFER TO SHEARWALL SCHEDULE ON SHEET S-601.
9. SEE TYP EXTERIOR AND INTERIOR CMU WALL REINF DETAILS ON SHEET S-701.
10. SEE MECHANICAL AND ELECTRICAL SHEETS FOR CONCRETE PAD LOCATIONS, SIZES, AND THICKNESS NOT SHOWN. SEE SHEET S-701 FOR DETAILS.
11. THICKENED SLAB UNDER CMU WALLS NOT SHOWN FOR CLARITY.

## FOUNDATION/SLAB PLAN KEY NOTES: (X)

1. CONC PAD (ENTRANCE)-SEE ARCH DWGS FOR INFORMATION
2. REINF CONC COLUMN
3. REINF CONC SLAB-ON-GRADE
4. (2)-#13 @ RE-ENTRANT CORNERS - SEE S-701 FOR INFORMATION

## FOUNDATION/SLAB PLAN LEGEND:

REINF CONC SHEAR WALL

REINF CMU WALL

CONTROL JOINT

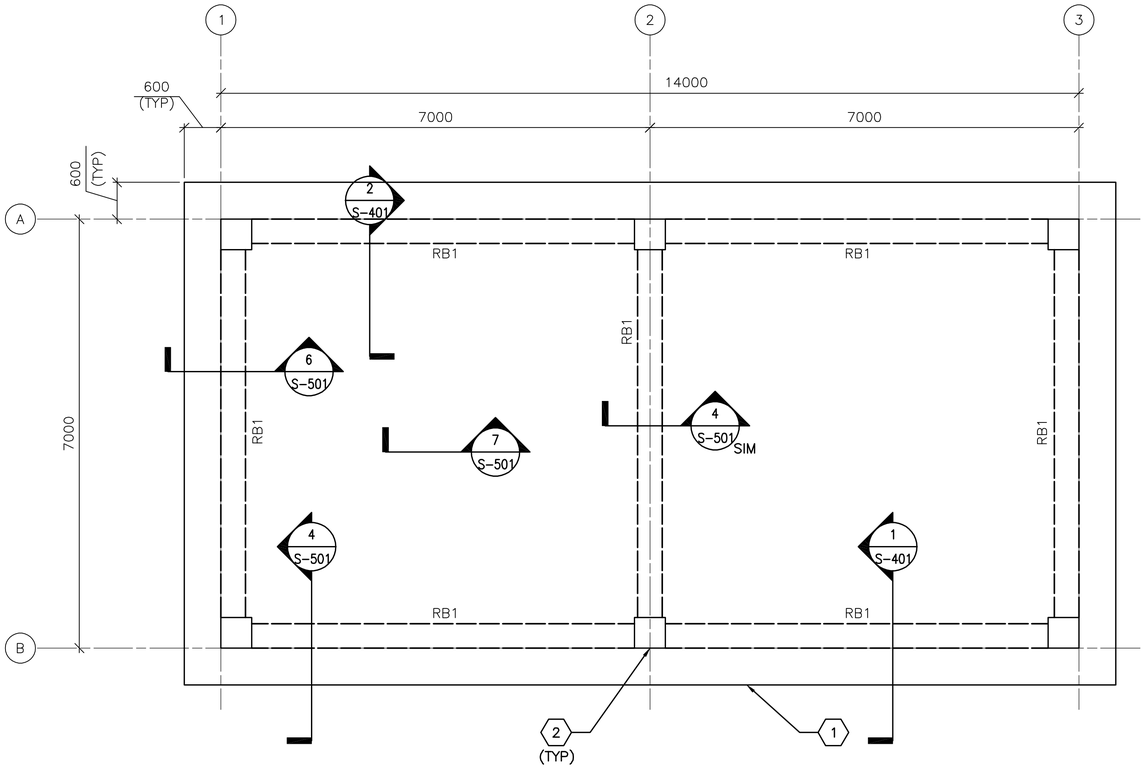


2 S-101 **ROOF FRAMING PLAN**

SCALE: 1:50

## ROOF FRAMING PLAN NOTES:

1. REFER TO SHEETS S-001 FOR STRUCTURAL NOTES AND DESIGN CRITERIA.
2. TOP OF SLAB ELEVATION = 3500 UNLESS NOTED OTHERWISE.
3. ROOF SLAB IS 250 WITH #16 @ 300 OC EW T&B.
4. ROOF BEAM INDICATED BY RB# ON PLAN. REFER TO BEAM SCHEDULE ON SHEET S-601.
5. COORDINATE WITH ARCHITECTURAL SHEETS FOR COLD-FORMED STEEL OVERBUILD FRAMING ABOVE ROOF SLAB.
6. COLD-FORMED METAL OVERBUILD ROOF FRAMING NOT SHOWN FOR CLARITY. SEE OVERBUILD ROOF FRAMING DETAILS AND SECTIONS ON SHEET S-702.
7. CMU PARTITION WALLS (BELOW ROOF SLAB) NOT SHOWN FOR CLARITY.
8. OVERHANG AREAS OF ROOF SLAB CONTAIN ROOF VENT PENETRATIONS. REFERENCE ARCHITECTURAL DRAWINGS FOR INFORMATION.

## ROOF FRAMING PLAN KEY NOTES: (X)

1. CONC ROOF SLAB (BELOW ROOF OVERBUILD)
2. REINF CONC COLUMN (BELOW CONC ROOF SLAB)

0 1000 2000

SCALE: 1:50

UNLESS OTHERWISE NOTED, LINEAR DIMENSIONS SHOWN ON DRAWINGS ARE IN MILLIMETERS (mm)

APPROVED:

A/E DESIGNER OF RECORD

SEAL:

GEORGIA REGISTERED 7-23-10 No. 27141 PROFESSIONAL ENGINEER CHRISTOPHER W. WHITMORE

US ARMY CORPS OF ENGINEERS
AFGHANISTAN ENGINEER DISTRICT

| Mark | Description | Date | Appr. |
|---|---|---|---|
| | | | |

Rev: 0
Date: 2/23/10
Design file no.
Drawing code:
File name: ANAPXFOS-101FFP
Plot date: 2/23/2010
Plot scale: x:x

Designed by: KMF/MMY
Dwn by: RCG
Ckd by: CWW
Reviewed by: LHM
Submitted by: BAKER

U.S. ARMY CORPS OF ENGINEERS
AFGHANISTAN ENGINEER DISTRICT
APO AE 96338

*Michael Baker Jr., Inc.*
*A unit of Michael Baker Corporation*
Airside Business Park
100 Airside Drive
Moon Township, PA 15108
www.mbakercorp.com

AFGHAN NATIONAL ARMY
REGIONAL MILITARY TRAINING CENTER
STANDARD DESIGN

PX/FINANCE OFFICE

FOUNDATION/SLAB &
ROOF FRAMING PLANS

Sheet reference number:
S-101

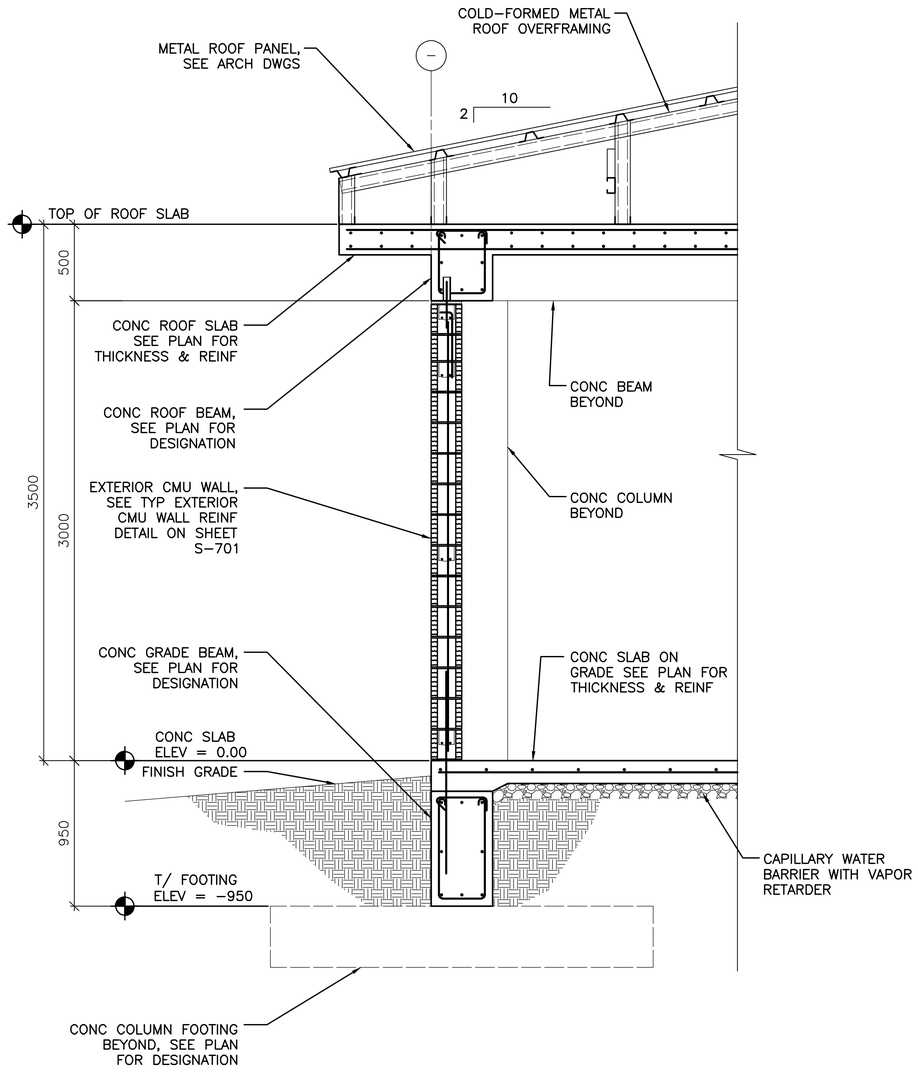


1 S–101 **TYPICAL WALL SECTION AT EXTERIOR MASONRY WALL**

SCALE: 1:20

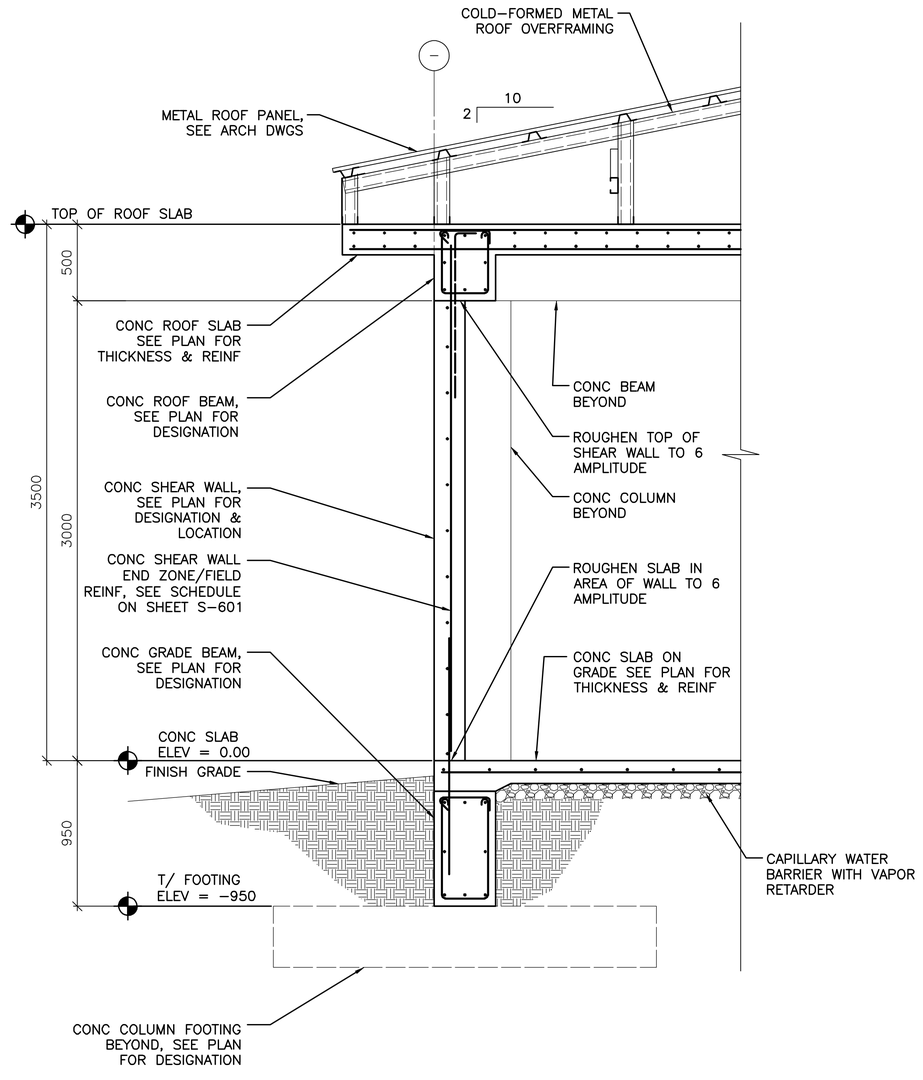


2 S–101 **TYPICAL WALL SECTION AT CONCRETE SHEAR WALL**

SCALE: 1:20

0 400 800

SCALE: 1:20

UNLESS OTHERWISE NOTED, LINEAR DIMENSIONS SHOWN ON DRAWINGS ARE IN MILLIMETERS (mm)

APPROVED:

A/E DESIGNER OF RECORD

SEAL:

GEORGIA REGISTERED 1-29-10 No. 27141 PROFESSIONAL ENGINEER CHRISTOPHER W. WHITMORE

US ARMY CORPS OF ENGINEERS
AFGHANISTAN ENGINEER DISTRICT

| Mark | Description | Date | Appr. |
|---|---|---|---|

Date: 2/23/10
Design file no.
Drawing code:
Rev: 0
File name: ANAPXFO3-401BS
Plot date: 2/23/2010
Plot scale: x:x

Designed by: KMP/MMY
Dwn by: RCG
Ckd by: CWW
Reviewed by: LHM
Submitted by: BAKER

U.S. ARMY CORPS OF ENGINEERS
AFGHANISTAN ENGINEER DISTRICT
APO AE 96338

*Michael Baker Jr., Inc*
*A unit of Michael Baker Corporation*
Airside Business Park
100 Airside Drive
Moon Township, PA 15108
www.mbakercorp.com

AFGHAN NATIONAL ARMY
REGIONAL MILITARY TRAINING CENTER
STANDARD DESIGN

PX/FINANCE OFFICE

BUILDING SECTIONS

Sheet reference number:
S–401

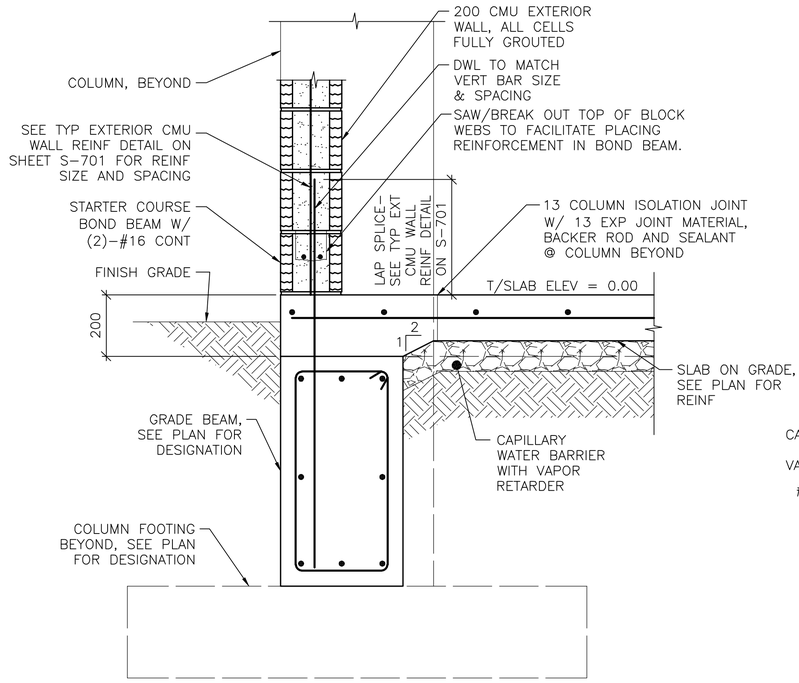


NOTE:
1. SECTION IS SIMILAR FOR INTERIOR CMU PARTITIONS OVER GRADE BEAMS SHOWING THICKENED 200 CONC SLAB AREA.

1 / S-101 **SECTION** SCALE: 1:10

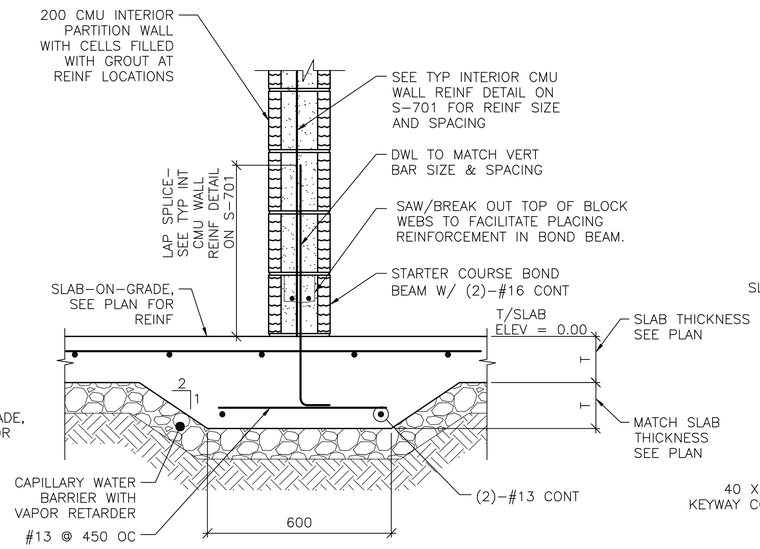


2 / S-101 **SECTION** SCALE: 1:10

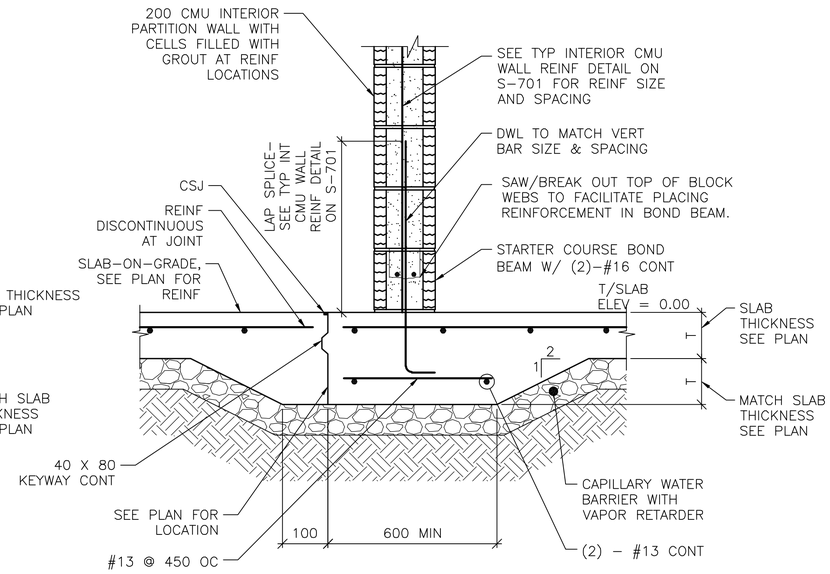


NOTE:
1. DETAIL IS APPLICABLE AT CONTROL JOINTS RUNNING PARALLEL TO CMU WALLS AND WITHIN 300 OF FACE OF WALL.

3 / S-101 **SECTION** SCALE: 1:10

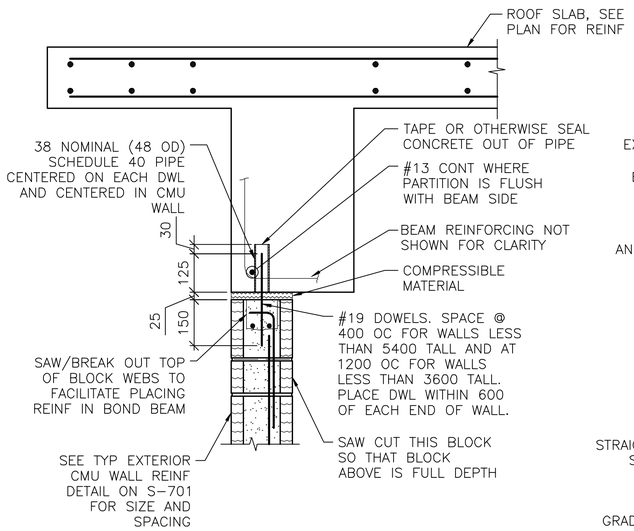


NOTES:
1. EXTEND DOWEL REINF TO 25 CLEAR FROM TOP OF CMU WALL.
2. SIM IS AT INTERIOR BEAM LOCATION.
3. LOCATION OF PARTITION WALLS VARIES FROM DEPICTED VIEW.

4 / S-101 4 / S-101 SIM **SECTION** SCALE: 1:10

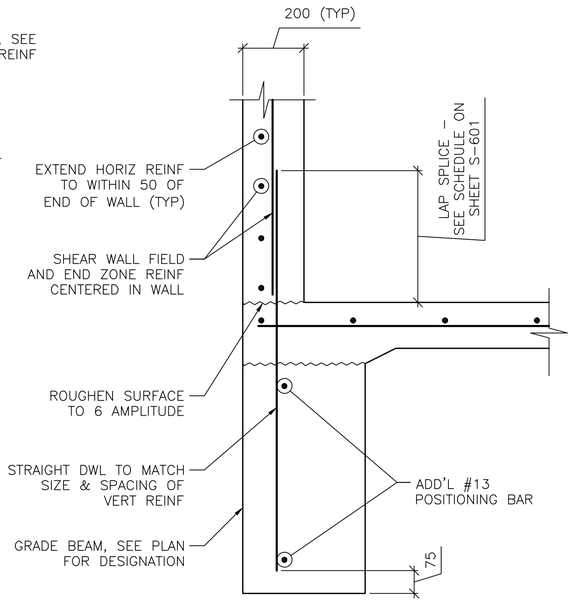


NOTES:
1. SECTION DEPICTS SHEAR WALL TERMINATION ONLY. GRADE BEAM REINFORCING NOT SHOWN FOR CLARITY
2. SEE SHEET S-601 AND SHEET S-702 FOR SCHEDULED FIELD AND END ZONE REINF.

5 / S-101 **SECTION** SCALE: 1:10

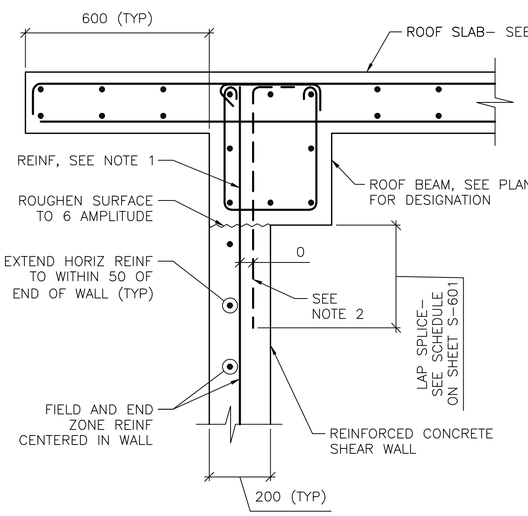


NOTES:
1. TERMINATE "FIELD" VERT REINF & END ZONE REINF @ 50 CLEAR FROM TOP OF ROOF SLAB.
2. WHERE END ZONE REINFORCING CANNOT BE DEVELOPED IN BEAM DEPTH, PROVIDE HOOKED DWLS SAME SIZE & SPACING. PROVIDE TENSION LAP BELOW ROOF BEAM.
3. SEE SHEET S-601 AND SHEET S-702 FOR SCHEDULED FIELD AND END ZONE REINF.

6 / S-101 **SECTION** SCALE: 1:10

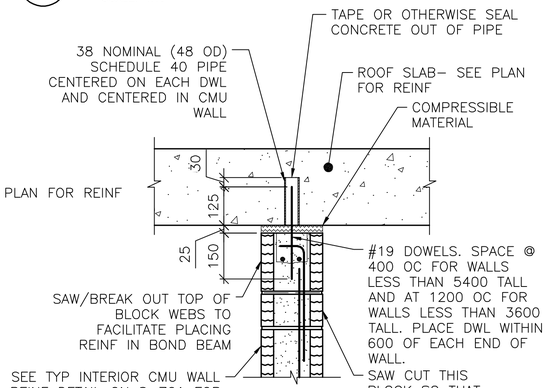


NOTES:
1. EXTEND DOWEL REINF TO 25 CLEAR FROM TOP OF CMU WALL.
2. SLAB REINF NOT SHOWN FOR CLARITY.

7 / S-101 **SECTION** SCALE: 1:10

0 200 400
SCALE: 1:10

UNLESS OTHERWISE NOTED, LINEAR DIMENSIONS SHOWN ON DRAWINGS ARE IN MILLIMETERS (mm)

APPROVED:

A/E DESIGNER OF RECORD

SEAL:

GEORGIA REGISTERED 3-29-10 No. 27141 PROFESSIONAL ENGINEER CHRISTOPHER W. WHITMORE

US ARMY CORPS OF ENGINEERS
AFGHANISTAN ENGINEER DISTRICT

| Mark | Description | Date | Appr. |
|---|---|---|---|

Rev: 0
Date: 2/23/10
Design file no.
Drawing code:
File name: ANAPXFOS-S01SC
Plot date: 2/23/2010
Plot scale: x:x

Designed by: KMP/MMY
Dwn by: RCG
Ckd by: CWW
Reviewed by: LHM
Submitted by:
BAKER

U.S. ARMY CORPS OF ENGINEERS
AFGHANISTAN ENGINEER DISTRICT
APO AE 96338

*Michael Baker Jr., Inc*
*A unit of Michael Baker Corporation*
Airside Business Park
100 Airside Drive
Moon Township, PA 15108
www.mbakercorp.com

AFGHAN NATIONAL ARMY
REGIONAL MILITARY TRAINING CENTER
STANDARD DESIGN

PX/FINANCE OFFICE

FOUNDATION & FRAMING SECTIONS

Sheet reference number:
S-501

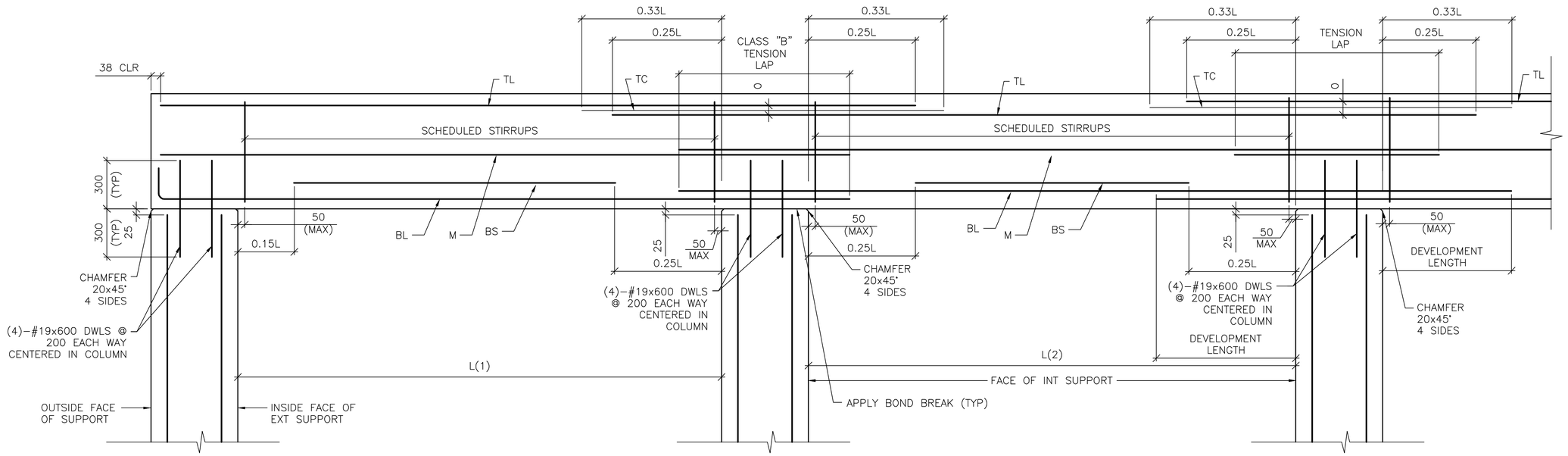


DETAIL NOTE:
1. WORK THIS DETAIL WITH BEAM SCHEDULE ON SHEET S-601.
2. L=GREATEST OF ADJACENT SPANS L(1) OR L(2)
3. ONLY COLUMN CORNER BARS ARE SHOWN

1 / S-502 **ROOF BEAM REINFORCING DETAIL**

SCALE: NTS

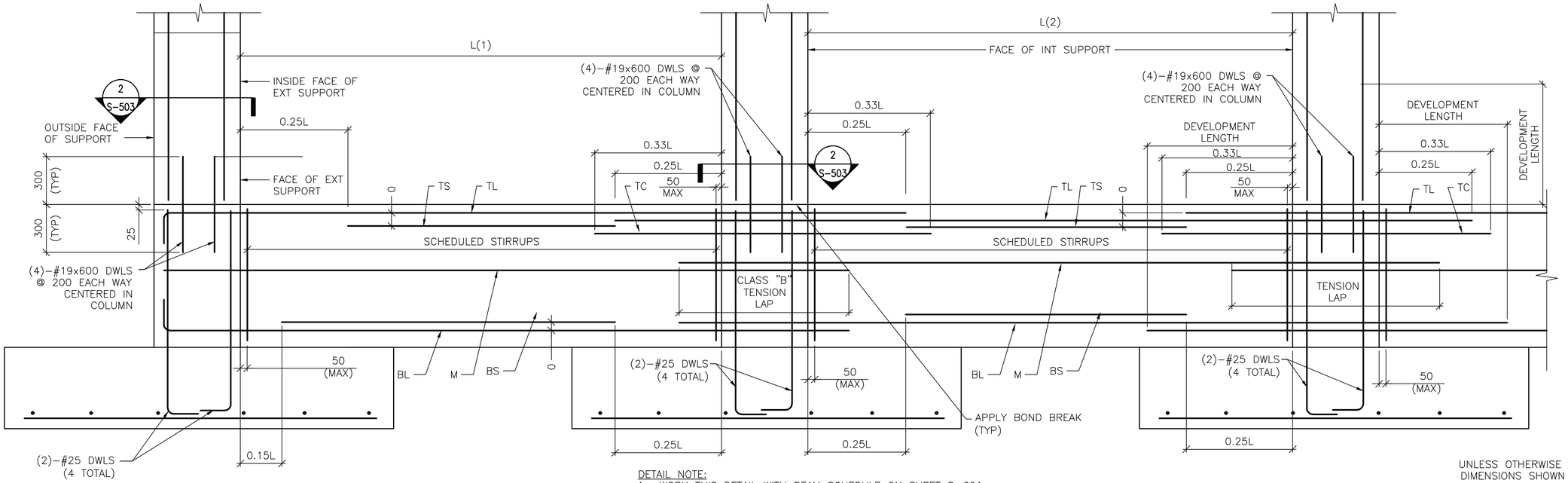


DETAIL NOTE:
1. WORK THIS DETAIL WITH BEAM SCHEDULE ON SHEET S-601.
2. L=GREATEST OF ADJACENT SPANS L(1) OR L(2)
3. ONLY COLUMN CORNER BARS ARE SHOWN.

2 / S-502 **GRADE BEAM REINFORCING DETAIL**

SCALE: NTS

UNLESS OTHERWISE NOTED, LINEAR DIMENSIONS SHOWN ON DRAWINGS ARE IN MILLIMETERS (mm)

APPROVED:

A/E DESIGNER OF RECORD

SEAL:

GEORGIA REGISTERED 2-23-10 No. 27141 PROFESSIONAL ENGINEER CHRISTOPHER W. WHITMORE

US ARMY CORPS OF ENGINEERS
AFGHANISTAN ENGINEER DISTRICT

| Mark | Description | Date | Appr. |
|---|---|---|---|
| | | | |

Rev: 0
Date: 2/23/10
Design file no.
Drawing code: ANAPXFOS-S020T
Designed by: KMP/MMY
Dwn by: RCG
Ckd by: CWW
Reviewed by: LHM
Submitted by:
File name:
Plot date: 2/23/2010
Plot scale: X:X

U.S. ARMY CORPS OF ENGINEERS
AFGHANISTAN ENGINEER DISTRICT
APO AE 96338

*Michael Baker Jr., Inc*
*A unit of Michael Baker Corporation*
Airside Business Park
100 Airside Drive
Moon Township, PA 15108
www.mbakercorp.com

BAKER

AFGHAN NATIONAL ARMY
REGIONAL MILITARY TRAINING CENTER
STANDARD DESIGN

PX/FINANCE OFFICE

BEAM & COLUMN DETAILS

Sheet reference number:
S-502

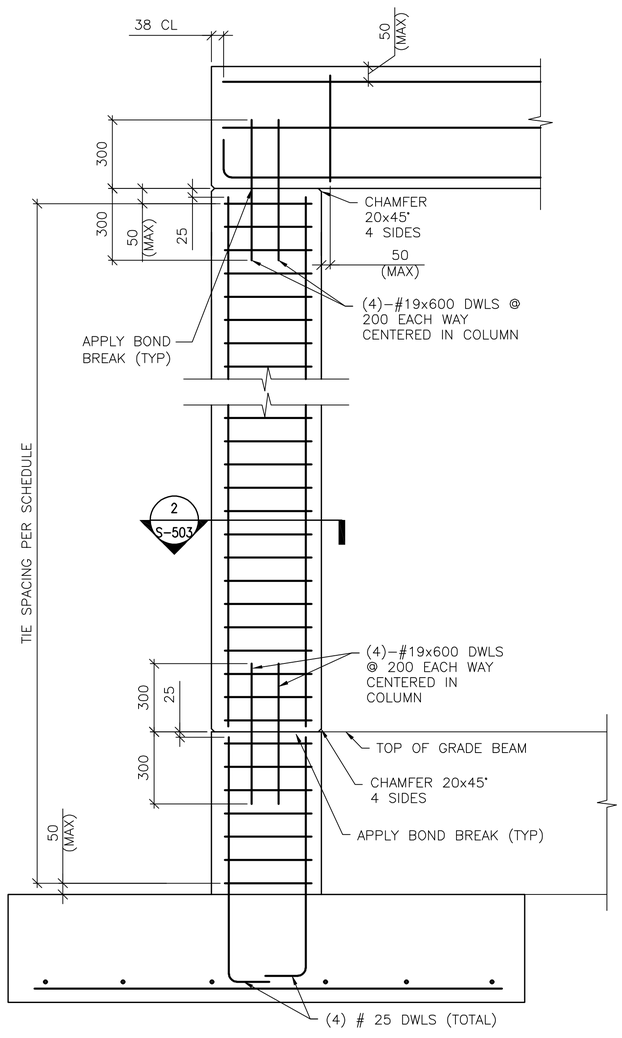


1 S–503 **1-STORY COLUMN REINF DETAILS**
SCALE: NTS

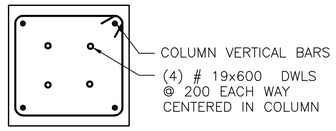


2 S–502 2 S–503 **SECTION**
SCALE: NTS

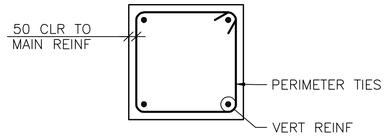


A S–503 **4 BAR COLUMN**
SCALE: NTS

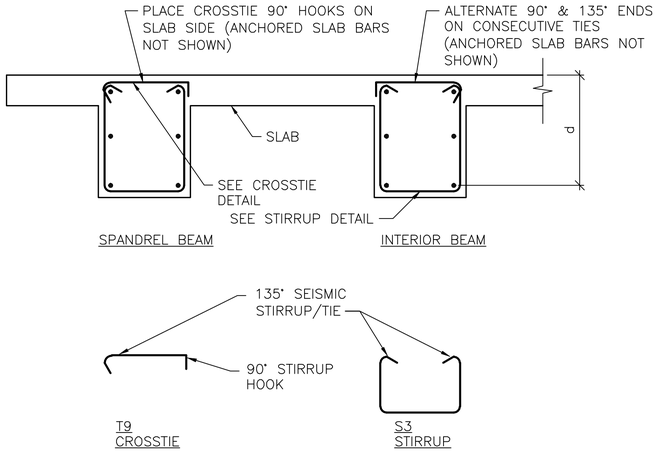


B S–503 **BEAM REINFORCEMENT DETAILS**
SCALE: NTS

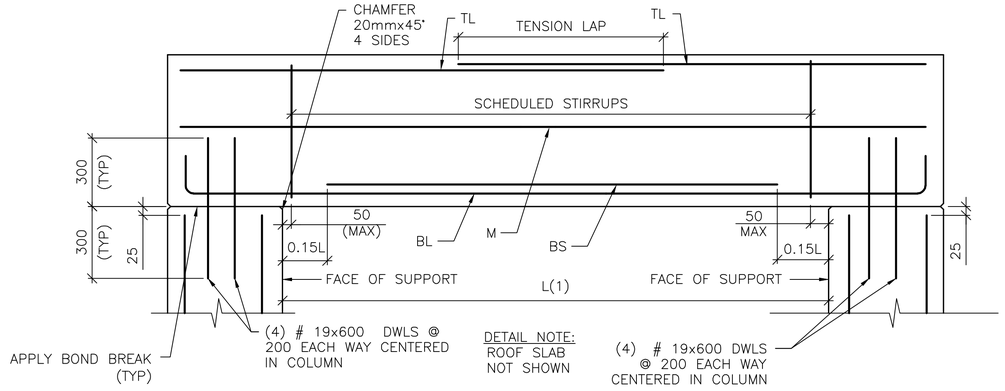


3 S–503 **SINGLE SPAN ROOF BEAM REINFORCING DETAIL**
SCALE: NTS

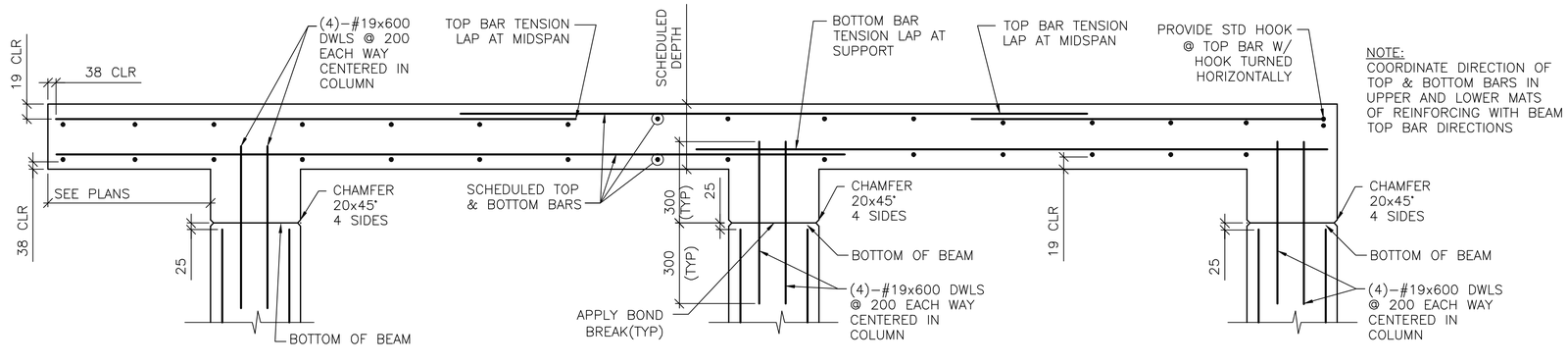


4 S–503 **FRAMED SLAB REINFORCING DETAIL**
SCALE: NTS

UNLESS OTHERWISE NOTED, LINEAR DIMENSIONS SHOWN ON DRAWINGS ARE IN MILLIMETERS (mm)

APPROVED:

A/E DESIGNER OF RECORD

SEAL:

GEORGIA REGISTERED 12-19 No. 87141 PROFESSIONAL ENGINEER CHRISTOPHER W. WHITMORE

US ARMY CORPS OF ENGINEERS
AFGHANISTAN ENGINEER DISTRICT

| Mark | Description | Date | Appr. |
|---|---|---|---|

Date: 2/23/10
Design file no.
Rev: 0
Drawing code:
File name: ANAPXFO5-S030T
Plot date: 2/23/2010
Plot scale: x:x

Designed by: KMP/MMY
Dwn by: RCG
Ckd by: CWW
Reviewed by: LHM
Submitted by:
BAKER

U.S. ARMY CORPS OF ENGINEERS
AFGHANISTAN ENGINEER DISTRICT
APO AE 96338

*Michael Baker Jr., Inc.*
*A unit of Michael Baker Corporation*
Airside Business Park
100 Airside Drive
Moon Township, PA 15108
www.mbakercorp.com

AFGHAN NATIONAL ARMY
REGIONAL MILITARY TRAINING CENTER
STANDARD DESIGN

PX/FINANCE OFFICE

BEAM & COLUMN DETAILS

Sheet reference number:
S–503

# CONCRETE REINFORCEMENT TENSION DEVELOPMENT/LAP SPLICE SCHEDULE

| f'c = 28 MPa | LAP CLASS | UNCOATED BARS | | | |
|---|---|---|---|---|---|
| | | TOP BARS | | OTHER BARS | |
| BAR SIZES | | CASE 1 | CASE 2 | CASE 1 | CASE 2 |
| #10 TO #19 | A | 50 BAR DIA | 74 BAR DIA | 38 BAR DIA | 57 BAR DIA |
| | B | 64 BAR DIA | 96 BAR DIA | 50 BAR DIA | 74 BAR DIA |
| #22 TO #57 | A | 62 BAR DIA | 93 BAR DIA | 48 BAR DIA | 71 BAR DIA |
| | B | 80 BAR DIA | 121 BAR DIA | 62 BAR DIA | 93 BAR DIA |

NOTES:
1. TABULATED TENSION DEVELOPMENT LENGTH VALUES ARE TAKEN FROM CRSI DESIGN HANDBOOK 2008 10TH ED.
2. TENSION DEVELOPMENT & TENSION LAP SPLICE LENGTHS ARE EXPRESSED AS MULTIPLES OF BAR DIAMETERS.
3. TABULATED VALUES ARE BASED ON MINIMUM YIELD STRENGTH OF REINFORCEMENT, fy, OF 420MPa.
4. CONCRETE IS NORMAL WEIGHT (2400Kg/m$^3$) AND 28 DAY COMPRESSIVE STRENGTH = 28MPa.
5. TABULATED VALUES FOR BEAMS & COLUMNS ARE BASED ON TRANSVERSE REINFORCEMENT AND CONCRETE COVER MEETING MINIMUM CODE REQUIREMENTS.
6. CASES 1 & 2, WHICH DEPEND ON THE TYPE OF STRUCTURAL MEMBER, CONCRETE COVER, AND CENTER-TO-CENTER SPACING OF THE BARS ARE DEFINED IN THE TABLE BELOW.
7. LAP SPLICE LENGTHS (MINIMUM 300mm) ARE MULTIPLES OF TENSION DEVELOPMENT LENGTHS: CLASS A = 1.0(TENSION DEVELOPMENT LENGTH) & CLASS B = 1.3(TENSION DEVELOPMENT LENGTH)
8. TOP BARS ARE HORIZONTAL REINFORCEMENT WITH MORE THAN 300mm OF CONCRETE CAST BELOW THE BARS.
9. IT SHALL BE PERMISSIBLE TO CALCULATE WALL AND SLAB REINFORCEMENT TENSION DEVELOPMENT/SPLICE LENGTHS IN ACCORDANCE WITH ACI 12.2.3 OR TABLE 5.3(b) OF CRSI 2008 IN LIEU OF VALUES TABULATED ABOVE.

| | | |
|---|---|---|
| BEAMS, COLUMNS | CASE 1 | CONCRETE COVER AT LEAST 1 BAR DIA AND CENTER-TO-CENTER SPACING AT LEAST 2 BAR DIA |
| | CASE 2 | CONCRETE COVER LESS THAN 1 BAR DIA OR CENTER-TO-CENTER SPACING LESS THAN 2 BAR DIA |
| ALL OTHERS | CASE 1 | CONCRETE COVER AT LEAST 1 BAR DIA AND CENTER-TO-CENTER SPACING AT LEAST 3 BAR DIA |
| | CASE 2 | CONCRETE COVER LESS THAN 1 BAR DIA OR CENTER-TO-CENTER SPACING LESS THAN 3 BAR DIA |

# CONCRETE COVER SCHEDULE

MINIMUM CONCRETE COVER PROTECTION FOR REINFORCEMENT BARS SHALL BE AS LISTED BELOW: (SEE ACI 318M-05, SECTION 7.7 FOR CONDITIONS NOT NOTED). DIMENSIONS FOR BAR PLACEMENT GIVEN IN SECTIONS AND DETAILS SHALL SUPERSEDE MINIMUM COVER REQUIREMENTS GIVEN HERE. DIMENSIONS ARE IN mm. PROVIDE STANDARD BAR CHAIRS AND SUPPORT BARS @1200mm MAXIMUM AS REQUIRED TO MAINTAIN CONCRETE PROTECTION SPECIFIED.

| | | |
|---|---|---|
| FOOTINGS (EARTH FORMED): | | 70 |
| COLUMNS / PIERS (TO TIES) | | 40 |
| GRADE BEAMS OR SLAB TURNED DOWN EDGES: | | |
| TOP | | 40 |
| BOTTOM (EARTH FORMED) | | 70 |
| SIDES (EARTH FORMED) | | 70 |
| SIDES (BOARD FORMED) | #16 BAR & SMALLER | 40 |
| | #19 THRU #36 BAR | 50 |
| ELEVATED BEAMS & SLABS: | | |
| BEAM TIES & STIRRUPS (NOT EXPOSED TO WEATHER) | | 40 |
| BEAM TIES & STIRRUPS (EXPOSED TO WEATHER) | | 50 |
| FLOOR SLABS (NOT EXPOSED TO WEATHER) | | 20 |
| FLOOR SLABS (EXPOSED TO WEATHER) | | |
| #19 & LARGER | | 50 |
| #13 & SMALLER | | 40 |
| ROOF SLAB BARS | | 25 |
| SLABS ON GRADE | | |
| NOT EXPOSED TO WEATHER (FROM TOP) | | 20 |
| EXPOSED TO WEATHER (FROM TOP) | | 40 |
| UTILITY TUNNEL WALLS, RETAINING WALLS AND SHEAR WALLS. (NO SURFACES SHALL BE EARTH FORMED) | | |
| EARTH SIDE AND FRONT SIDE (EXPOSED TO WEATHER) | | |
| #16 BAR AND SMALLER | | 40 |
| #19 THRU #36 BAR | | 50 |

# COLUMN FOOTING SCHEDULE

| MARK | FOOTING SIZE (mm) | | | FOOTING REINFORCING | REMARKS |
|---|---|---|---|---|---|
| | LENGTH | WIDTH | THICKNESS | | |
| F1 | 3000 | 3000 | 350 | (8)-#19 EW BOTT | ----- |

# CONCRETE SHEAR WALL SCHEDULE

| MARK | TYPE | WALL LENGTH (L) (mm) | WALL REINFORCEMENT | | REMARKS |
|---|---|---|---|---|---|
| | | | END ZONE | FIELD | |
| SW1 | B | 3900 | (2)-#16 @ 150mm OC | #13 @ 250mm OC | ----- |
| SW2 | B | 3750 | (6)-#22 @ 300mm OC | #13 @ 250mm OC | ----- |
| SW3 | B | 3850 | (6)-#22 @ 300mm OC | #13 @ 250mm OC | ----- |
| SW4 | A | 2600 | (4)-#22 @ 300mm OC | #13 @ 250mm OC | ----- |

NOTES:
1. WORK THIS SCHEDULE WITH SHEAR WALL DETAILS ON SHEETS S-702
2. SEE PLAN FOR LOCATION OF SHEAR WALL(S).
3. WALL "FIELD" REINFORCEMENT LISTED APPLIES TO VERTICAL & HORIZONTAL BARS.
4. WALL "FIELD" REINFORCEMENT SHOULD BE CENTERED IN WALL.
5. VERTICAL "FIELD" BARS MAY BE OMITTED IN LOCATION OF "END ZONE" REINFORCEMENT.

# STANDARD HOOKS IN TENSION PER (ACI 318M-05)

HOOK DEVELOPMENT LENGTH (mm)

| BAR SIZE | f'c 28 MPa |
|---|---|
| #10 | 180 |
| #13 | 250 |
| #16 | 300 |
| #19 | 380 |
| #22 | 430 |
| #25 | 480 |
| #29 | 560 |
| #32 | 610 |
| #36 | 690 |

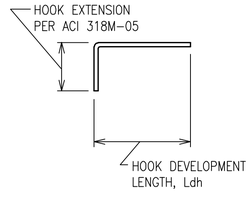


NOTES:
1. CONCRETE IS NORMAL WEIGHT CONCRETE.
2. BAR YIELD STRENGTH, fy = 420 MPa
3. SIDE COVER REQUIREMENTS OF ACI SECT. 12.5.3 ARE ASSUMED TO NOT BE MET.
4. TIE OR STIRRUP REQUIREMENTS OF ACI SECT. 12.5.3 ARE ASSUMED TO NOT BE MET.
5. REDUCTION FOR EXCESS REINFORCEMENT IS NOT TAKEN.
6. HOOK DEVELOPMENT LENGTH IS VALID FOR 180° HOOKS ALSO.

# CMU OR CAST IN PLACE CONC LINTEL SCHEDULE (TYP)

| OPENING TYPE OR SIZE, BEAM LOCATION OR TYPE | MAX SPAN (mm) | LINTEL DEPTH (mm) | REINFORCING BOTTOM |
|---|---|---|---|
| WALL OPENING | 4000 | 600 | (2)-#16 T&B |
| WALL OPENING | 1900 | 400 | (2)-#16 T&B |
| WALL OPENING | 1000 | 400 | (2)-#13 B |
| | | | |
| | | | |
| | | | |
| | | | |
| | | | |
| | | | |
| | | | |

1. STRUCTURAL SHEETS DO NOT INDICATE ALL OPENINGS IN MASONRY WALLS. VERIFY NUMBER, SIZE AND LOCATION OF ALL OPENINGS IN MASONRY WALLS FROM ARCHITECTURAL SHEETS AND APPROVED PLUMBING, MECHANICAL, AND ELECTRICAL SHOP DRAWINGS.
2. PROVIDE 200mm BEARING EA END.
3. FOR HEAD DETAILS REFER TO ARCHITECTURAL SHEETS.
4. REINFORCING SHALL BE ASTM A615M, GRADE 420. GROUT FOR CMU LINTELS SHALL HAVE A MINIMUM COMPRESSIVE STRENGTH OF 14 MPa AT 28 DAYS.
5. CONTRACTOR SHALL SUBMIT FOR APPROVAL SHOP DRAWINGS AND SCHEDULES SHOWING SIZE, SPAN, REINFORCEMENT, DETAILS, LOCATIONS, ETC.

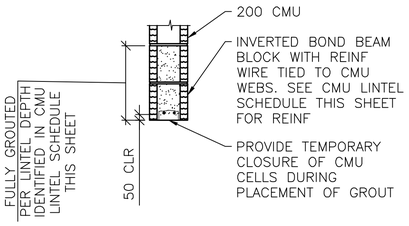


A S-601 **LINTEL DETAIL**
SCALE: NTS

# BEAM SCHEDULE

| MARK | BEAM SIZE (mm) | | BEAM REINFORCING | | | | | | STIRRUPS | | | REMARKS |
|---|---|---|---|---|---|---|---|---|---|---|---|---|
| | DEPTH | WIDTH | BL | BS | TL | TS | TC | M | SIZE | TYPE | SPACING | |
| GRADE BEAMS | | | | | | | | | | | | |
| GB1 | 750 | 400 | (2)-#29 | (1)-#29 | (2)-#25 | --- | --- | #19 EF | #13 | S3 +T9 | d/2 | ----- |
| ROOF BEAMS | | | | | | | | | | | | |
| RB1 | 500 | 400 | (2)-#22 | (1)-#22 | (2)-#25 | --- | --- | --- | #13 | S3 +T9 | d/2 | ----- |

NOTES:
1. WORK THIS SCHEDULE WITH BEAM REINFORCING DETAILS ON SHEETS S-503.
2. HOOKS SHOWN ON SECTIONS AND DETAILS SHALL BE 90° STD UON.
3. USE ONLY (1) TC AT BEAM COLUMN INTERSECTION WHERE REQ'D.

# COLUMN SCHEDULE

| DESCRIPTION \ COLUMN MARK | TYP UON | --- | --- | --- |
|---|---|---|---|---|
| TYPE | 4-BAR | --- | --- | --- |
| DIMENSIONS | 500mm SQ | --- | --- | --- |
| VERTICAL REINFORCEMENT | (4)-#29 | --- | --- | --- |
| TIES | #13 @ d/2 | --- | --- | --- |
| TOP OF ROOF ELEVATION | 3500mm | --- | --- | --- |
| TOP OF GRADE BEAM ELEVATION | -200mm | --- | --- | --- |
| TOP OF FOOTING ELEVATION | -950mm | --- | --- | --- |

NOTES:
1. WORK THIS SCHEDULE WITH COLUMN DETAILS ON SHEET S-504.
2. SEE FOOTING SCHEDULE ON THIS SHEET FOR FOOTING INFORMATION.
3. COLUMN TIES: INTERIOR TIES TO MATCH SIZE & SPACING OF PERIMETER TIES.
4. HOOKS SHOWN ON SECTIONS & DETAILS SHALL BE 90° STD UON.

UNLESS OTHERWISE NOTED, LINEAR DIMENSIONS SHOWN ARE IN MILLIMETERS (mm)

APPROVED:

A/E DESIGNER OF RECORD

SEAL:

GEORGIA REGISTERED 1-29-10 No. 27141 PROFESSIONAL ENGINEER CHRISTOPHER W. WHITMORE

US ARMY CORPS OF ENGINEERS
AFGHANISTAN ENGINEER DISTRICT

| Mark | Description | Date | Appr. |
|---|---|---|---|
| | | | |

| Mark | Description | Date | Appr. |
|---|---|---|---|
| | | | |

U.S. ARMY CORPS OF ENGINEERS
AFGHANISTAN ENGINEER DISTRICT
APO AE 96338

*Michael Baker Jr., Inc*
*A unit of Michael Baker Corporation*
Airside Business Park
100 Airside Drive
Moon Township, PA 15108
www.mbakercorp.com

Designed by: KMP/MMY
Dwn by: RCG
Ckd by: CWW
Reviewed by: LHM
Submitted by: BAKER

Rev. 0
Date: 2/23/10
Design file no.
Drawing code:
File name: ANAPXFOS-601SCH
Plot date: 2/23/2010
Plot scale: XX

AFGHAN NATIONAL ARMY
REGIONAL MILITARY TRAINING CENTER
STANDARD DESIGN

PX/FINANCE OFFICE

SCHEDULES

Sheet reference number:
S-601

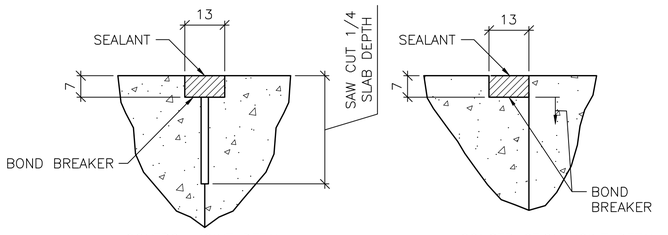


CONTROL JOINT DETAIL

CONSTRUCTION JOINT DETAIL

## TYPICAL CONCRETE SLAB JOINT FINISH DETAILS

1 / S-701 SCALE: NTS

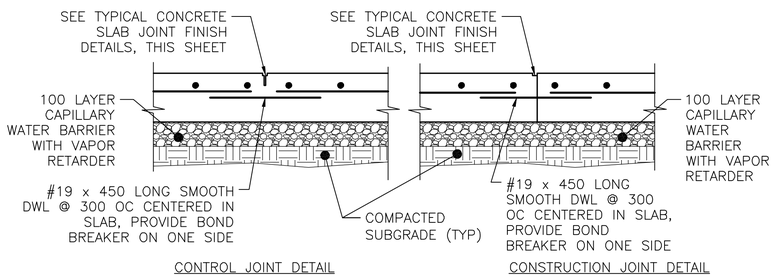


CONTROL JOINT DETAIL

CONSTRUCTION JOINT DETAIL

## TYPICAL SLAB ON GRADE JOINT DETAIL

2 / S-701 SCALE: NTS

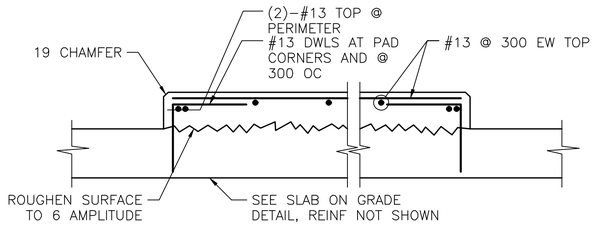


## INTERIOR EQUIPMENT PAD DETAIL

3 / S-701 SCALE: NTS

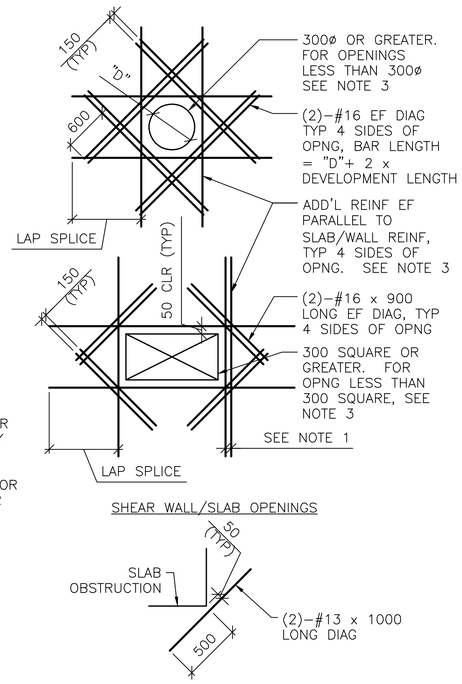


SHEAR WALL/SLAB OPENINGS




RE–ENTRANT CORNERS

DETAIL NOTES:
1. WHERE MORE THAN ONE ADDITIONAL BAR IS REQUIRED PARALLEL TO THE EXISTING SLAB/WALL REINFORCING THE ADDITIONAL REINFORCING BARS SHALL BE SPACED AT 100 ON CENTER.
2. ADDITIONAL REINFORCING PARALLEL TO THE SLAB/WALL REINFORCING SHALL BE #16 BARS THAT PROVIDE A STEEL AREA ON EACH SIDE OF THE OPENING EQUAL TO 1/2 THE AREA OF THE REINFORCING CUT BY THE OPENING.
3. FOR OPENINGS WITH SIDES OR DIAMETERS LESS THAN 300 SPREAD THE SLAB/WALL REINFORCING TO CLEAR THE OPENING.

## ADD'L CONCRETE REINFORCEMENT DETAILS

4 / S-701 SCALE: NTS

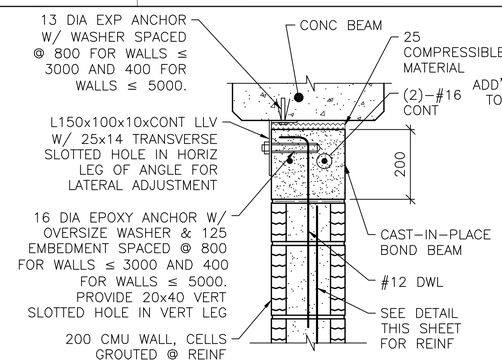


NOTE:
1. AT ANCHOR BOLTS, ADD AN ADDITIONAL 25 COMPRESSIBLE MATERIAL BELOW EXP ANCHOR HEAD.

INTERIOR BEAM

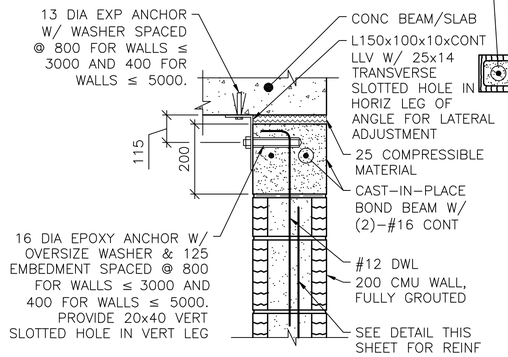


EXTERIOR WALL OR SLAB

NOTES:
1. THIS DETAIL IS AN ALTERNATE TOP OF WALL ANCHORAGE DETAIL TO BE USED AT THE CONTRACTOR'S OPTION IN LIEU OF DETAILS SHOWN ON S–400 & S–500 DRAWINGS.
2. CAST–IN–PLACE BOND BEAM SHOWN AT TOP OF WALL IS ALSO APPLICABLE FOR INTERMEDIATE AND STARTER COURSE BOND BEAMS WITHIN WALL.

## ALTERNATE TOP OF CMU WALL BRACING DETAILS

5 / S-701 SCALE: NTS

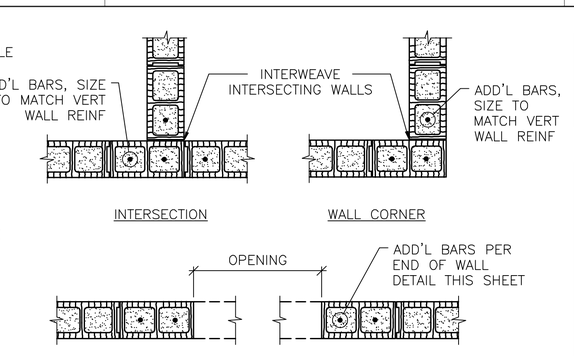





MASONRY OPENING W/ LINTEL

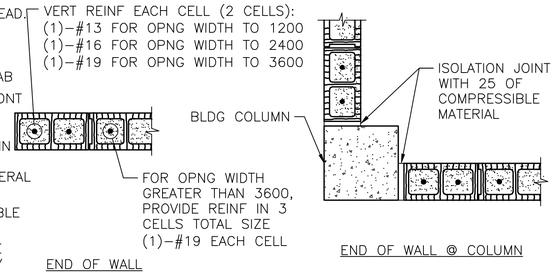


END OF WALL

END OF WALL @ COLUMN

NOTES:
1. OPENING WIDTH SHALL NOT EXCEED 3600 FOR THIS TYPE OF JAMB.
2. ALL CELLS FULLY GROUTED AT EXTERIOR WALLS. AT INTERIOR WALLS, ONLY GROUT CELLS CONTAINING REINF.

## TYP CMU DETAILS

6 / S-701 SCALE: NTS

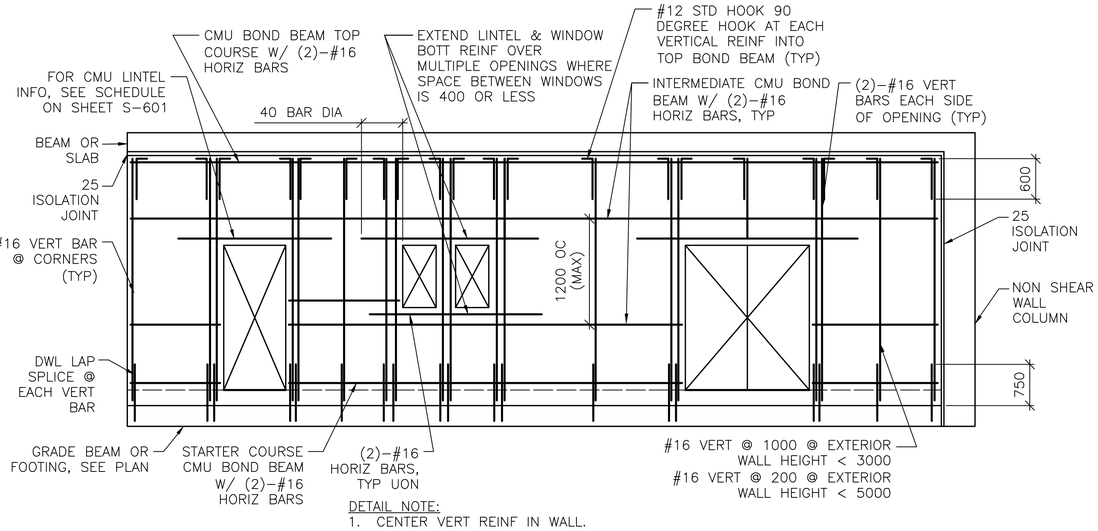


DETAIL NOTE:
1. CENTER VERT REINF IN WALL.
2. GROUT ALL CMU CELLS.
3. REFERENCE ARCH DWGS FOR JOINT INFORMATION
4. DOWELS BETWEEN TOP BOND BEAM AND BEAM/SLAB ABOVE (INCLUDING EMBEDDED PIPE SLEEVE) NOT SHOWN FOR CLARITY. SEE SPECIFIC S–500 SERIES DWGS FOR INFO.
5. FOR INFORMATION ON ALTERNATE CAST–IN–PLACE WALL BOND BEAMS, REFERENCE ALTERNATE TOP OF CMU WALL BRACING DETAILS THIS SHEET.

## TYP EXTERIOR CMU WALL REINF DETAIL

7 / S-701 SCALE: NTS

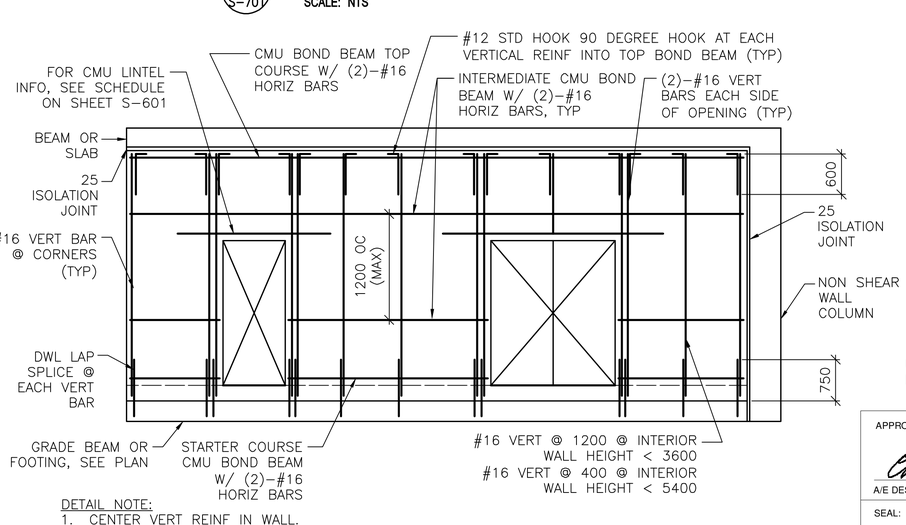


DETAIL NOTE:
1. CENTER VERT REINF IN WALL.
2. GROUT ALL CMU CELLS.
3. REFERENCE ARCH DWGS FOR JOINT INFORMATION
4. DOWELS BETWEEN TOP BOND BEAM AND BEAM/SLAB ABOVE (INCLUDING EMBEDDED PIPE SLEEVE) NOT SHOWN FOR CLARITY. SEE SPECIFIC S–500 SERIES DWGS FOR INFO.
5. FOR INFORMATION ON ALTERNATE CAST–IN–PLACE WALL BOND BEAMS, REFERENCE ALTERNATE TOP OF CMU WALL BRACING DETAILS THIS SHEET.

## TYP INTERIOR CMU WALL REINF DETAIL

8 / S-701 SCALE: NTS

UNLESS OTHERWISE NOTED, LINEAR DIMENSIONS SHOWN ARE IN MILLIMETERS (mm)

APPROVED:

A/E DESIGNER OF RECORD .

SEAL:

GEORGIA REGISTERED 1-27-10 No. 27141 PROFESSIONAL ENGINEER CHRISTOPHER W. WHITMORE

US ARMY CORPS OF ENGINEERS
AFGHANISTAN ENGINEER DISTRICT

| Mark | Description | Date | Appr. |
|---|---|---|---|

Rev: 0
Date: 2/23/10
Design file no.
Drawing code:
File name: ANAFXFD6-701DT
Plot date: 2/23/2010
Plot scale: X:X

Designed by: KMP/MMY
Dwn by: RCG
Ckd by: CWW
Reviewed by: LHM
Submitted by:

U.S. ARMY CORPS OF ENGINEERS
AFGHANISTAN ENGINEER DISTRICT
APO AE 96338

Michael Baker Jr., Inc.
A unit of Michael Baker Corporation
Airside Business Park
100 Airside Drive
Moon Township, PA 15108
www.mbakercorp.com

BAKER

AFGHAN NATIONAL ARMY
REGIONAL MILITARY TRAINING CENTER
STANDARD DESIGN

PX/FINANCE OFFICE

TYPICAL DETAILS

Sheet reference number:
S–701

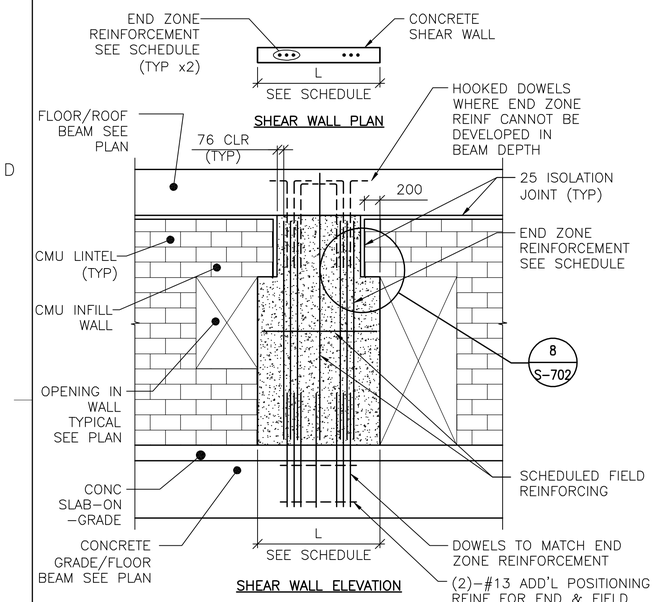


DETAIL NOTES:
1. FIELD REINFORCEMENT IN SHEAR WALL NOT COMPLETELY SHOWN FOR CLARITY.
2. FIELD REINFORCEMENT CENTERED IN WALL.
3. MINIMUM CONC CLEAR DISTANCE FOR END ZONE REINF = 76
4. SEE CONC SHEAR WALL SCHEDULE ON SHEET S-601
5. SEE ARCH DWGS FOR ISOLATION JOINT INFORMATION

## 1 S-702 TYPE "A" SHEAR WALL DETAIL
SCALE: NTS

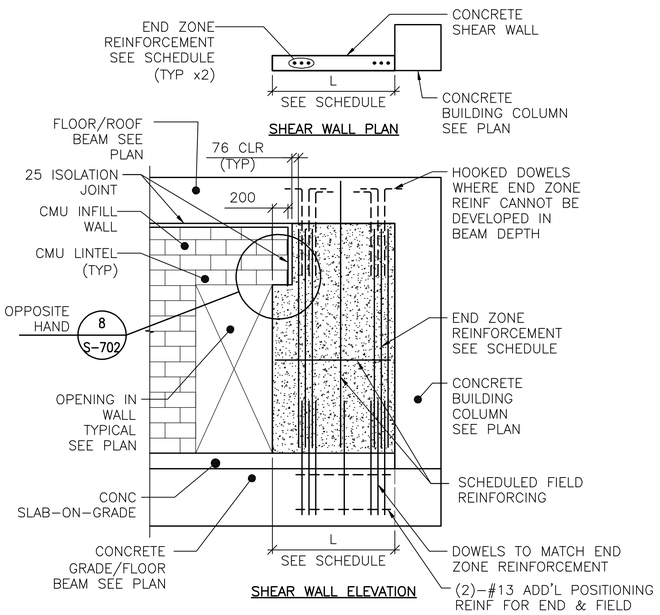


DETAIL NOTES:
1. FIELD REINFORCEMENT IN SHEAR WALL NOT COMPLETELY SHOWN FOR CLARITY.
2. FIELD REINFORCEMENT CENTERED IN WALL.
3. MINIMUM CONC CLEAR DISTANCE FOR END ZONE REINF = 76
4. SEE CONC SHEAR WALL SCHEDULE ON SHEET S-601
5. SEE ARCH DWGS FOR ISOLATION JOINT INFORMATION

## 2 S-702 TYPE "B" SHEAR WALL DETAIL
SCALE: NTS

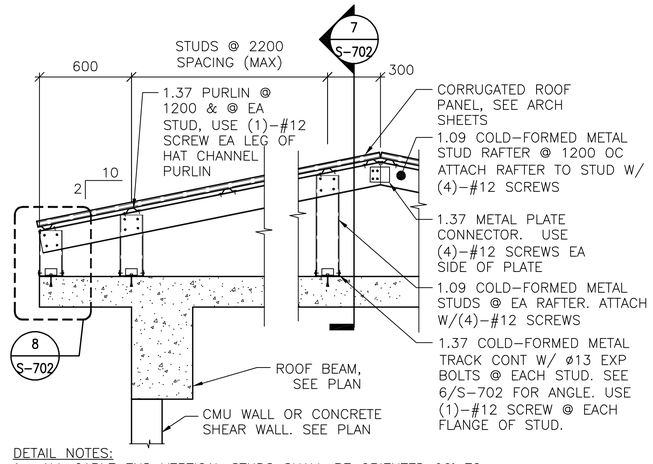


DETAIL NOTES:
1. ALL GABLE END VERTICAL STUDS SHALL BE ORIENTED 90° TO INTERIOR STUDS & SPACED @ 600 OC. GABLE END RAFTER SHALL BE 1.37 METAL TRACK SPANNING CONTINUOUSLY OVER GABLE END STUDS. INSET GIRTS AT GABLE END SHALL BE 1.09 COLD-FORMED METAL STUDS @ 1200 OC ATTACHED VIA 1.37 THICKNESS CLIP ANGLE W/ (2) #12 SCREWS EA LEG.
2. ALL INTERIOR, NON-GABLE END VERTICAL STUDS GREATER THAN 2400 IN LENGTH SHALL BE BACK-TO-BACK W/ #12 SCREWS @ 200 OC STAGGERED.

## 3 S-702 TYPICAL OVERBUILT ROOF FRAMING DETAIL
SCALE: NTS

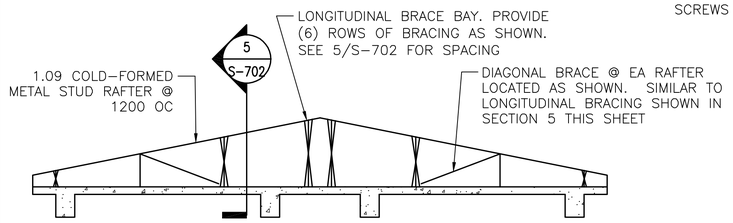


## 4 S-702 TYPICAL ROOF BRACE LAYOUT
SCALE: NTS

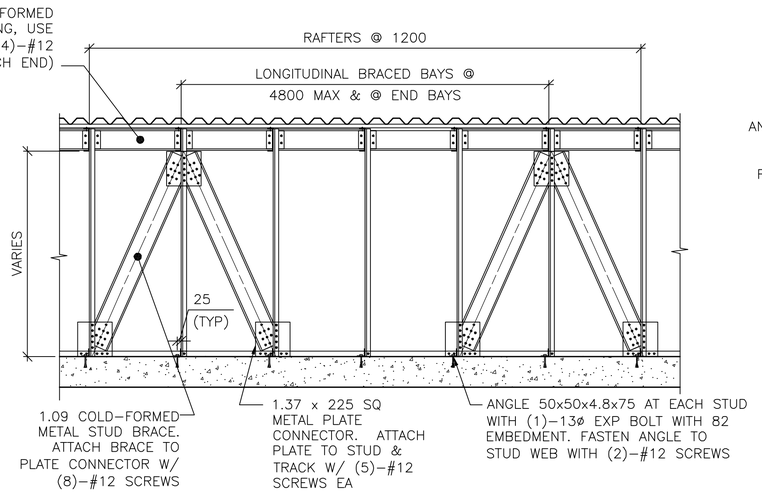


## 5 S-702 SECTION
SCALE: NTS

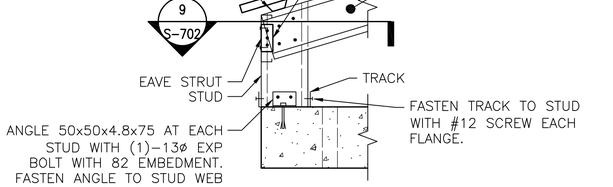


## 6 S-702 DETAIL
SCALE: NTS

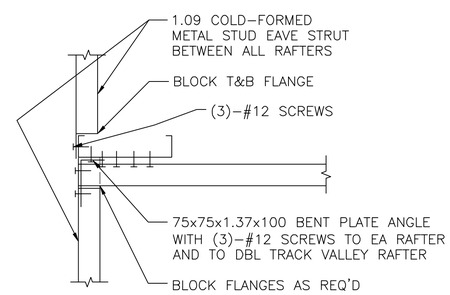


## 7 S-702 SECTION
SCALE: NTS

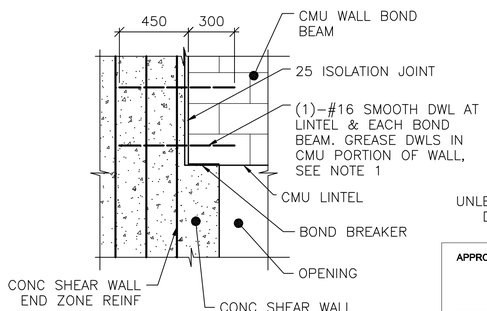


NOTE:
1. TIE SMOOTH DOWEL ROD TO SHEAR WALL END ZONE REINF FOR EACH BOND BEAM AND LINTEL.

## 8 S-702 SECTION
SCALE: NTS

UNLESS OTHERWISE NOTED, LINEAR DIMENSIONS SHOWN ARE IN MILLIMETERS (mm)

APPROVED:

A/E DESIGNER OF RECORD

SEAL:

GEORGIA REGISTERED 4-29-10 No. 27141 PROFESSIONAL ENGINEER CHRISTOPHER W. WHITMORE

US ARMY CORPS OF ENGINEERS
AFGHANISTAN ENGINEER DISTRICT

| Mark | Description | Date | Appr. |
|---|---|---|---|

Date: 2/23/10
Design file no.
Drawing code:
Rev: 0
File name: ANAPXFOS-702TOT
Plot date: 2/23/2010
Plot scale: x:x

Designed by: KMF/MMY
Dwn by: RCG
Ckd by: CWW
Reviewed by: LHM
Submitted by: BAKER

U.S. ARMY CORPS OF ENGINEERS
AFGHANISTAN ENGINEER DISTRICT
APO AE 96338

Michael Baker Jr., Inc
A unit of Michael Baker Corporation
Airside Business Park
100 Airside Drive
Moon Township, PA 15108
www.mbakercorp.com

AFGHAN NATIONAL ARMY
REGIONAL MILITARY TRAINING CENTER
STANDARD DESIGN

PX/FINANCE OFFICE

TYPICAL DETAILS

Sheet reference number:
S-702

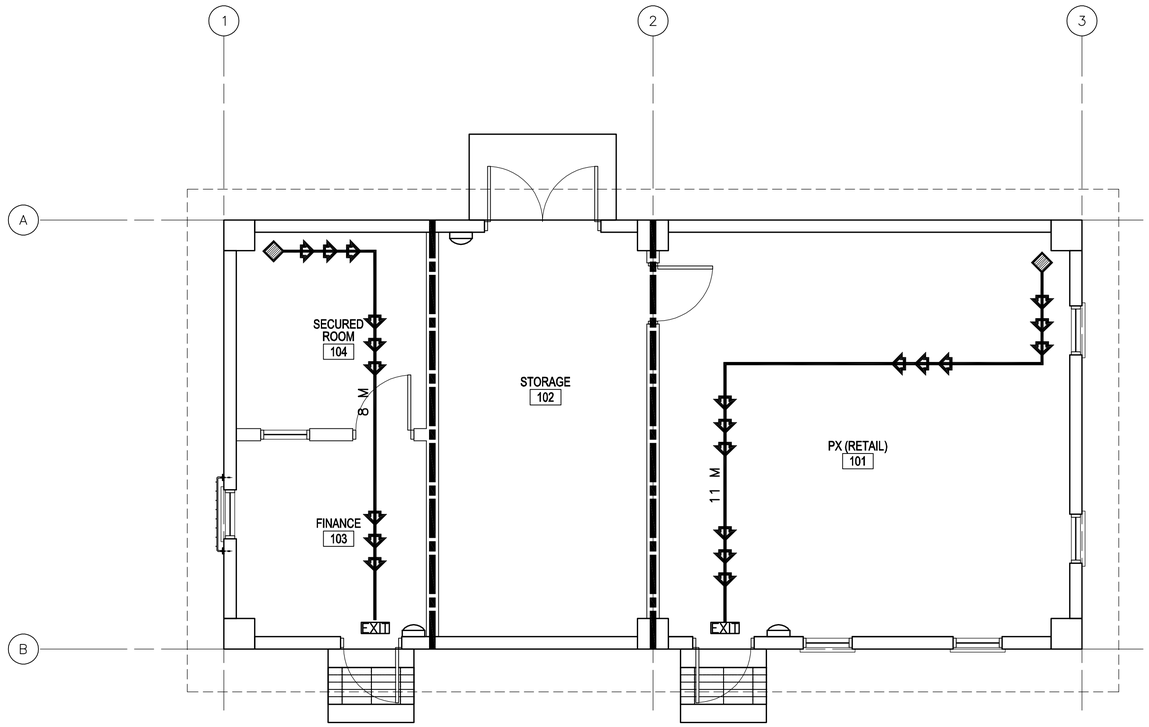


1 A–101 **LIFE SAFETY PLAN**

SCALE: 1:50

## CODE ANALYSIS:

1. REFERENCES:
   2006 INTERNATIONAL BUILDING CODE (2006 IBC)
   2006 LIFE SAFETY CODE (2006 NFPA 101)

2. IBC OCCUPANCY CLASSIFICATION:
   GROUP B (BUSINESS NFPA 101 6.1.11 AND CHAPTER 38)

3. TYPE OF CONSTRUCTION (IBC): TYPE II–B (UNPROTECTED/NONSPRINKLERED)

4. IBC TABLE 503: ALLOWABLE HEIGHT AND BUILDING AREAS:
   GROUP B
   ALLOWABLE AREA: 2,137 SM
   ALLOWABLE HEIGHT: 3 STORIES (16 M)

   GROUP B
   PROPOSED AREA: 98 SM
   PROPOSED HEIGHT: 1 STORY (<16 M)

5. IBC TABLE 601 & 602: FIRE RESISTANCE RATING REQUIREMENTS FOR BUILDING ELEMENTS FOR TYPE II–B

| BUILDING ELEMENT | RATING (HOUR) | REFERENCE |
|---|---|---|
| STRUCTURAL FRAME (COLUMNS, GIRDERS & TRUSSES) | 0 | TABLE 601 |
| BEARING WALLS | | |
| EXTERIOR | 0 | TABLE 601 |
| INTERIOR | 0 | TABLE 601 |
| NONBEARING WALLS & PARTITIONS | | |
| INTERIOR | 0 | TABLE 601 |
| FLOOR CONSTRUCTION | 0 | TABLE 601 |
| ROOF CONSTRUCTION | 0 | TABLE 601 |
| EXTERIOR WALL | 0 | TABLE 602 |

6. IBC TABLE 803.5 – INTERIOR WALL AND CEILING FINISH REQUIREMENTS FOR B OCCUPANCY/NONSPRINKLERED

| GROUP | EXIT ENCLOSURES AND EXIT PASSAGEWAY | CORRIDORS | ROOMS AND ENCLOSED SPACES |
|---|---|---|---|
| B | A | B | C |

7. NFPA 101 TABLE 7.3.1.2 – OCCUPANT LOAD
   BUSINESS = 9.3 SM/PERSON BUSINESS PROPOSED = 11 OCCUPANTS

8. NFPA 101 TABLE 7.3.3.1 – EGRESS CAPACITY
   BUSINESS = 5 MM PER OCCUPANT

   REQUIRED: 55 MM (11 OCCUPANTS x 5 MM PER OCCUPANT)
   PROPOSED EGRESS CAPACITY: 900 MM: (1) 900 MM DOOR

9. NFPA 101 PARAGRAPH 38.2.6.2 – EXIT ACCESS TRAVEL DISTANCE (NONSPRINKLERED)
   REQUIRED: 60 METERS
   PROPOSED: 11 METERS

10. NFPA 101 PARAGRAPH 38.3.6.1(1) & (2) – CORRIDORS
    NO RATED CORRIDOR REQUIRED (NONSPRINKLERED):
    (1) ALL EXITS ARE AVAILABLE FROM AN OPEN FLOOR AREA
    (2) SPACE IS OCCUPIED BY A SINGLE TENANT

11. NFPA 101 PARAGRAPH 38.2.4.3 – SINGLE EXIT PERMITTED
    BUSINESS REQUIRED: 1 MINIMUM
    BUSINESS PROPOSED: 1 EXIT

12. NFPA 101 PARAGRAPH 38.3.2.1 & 8.7.1.1 (1) – PROTECTION FROM HAZARDS
    REQUIRED SEPARATION AT GENERAL STORAGE: 1 HOUR WALL AND 45 MINUTE DOOR
    PROVIDED: 1 HOUR WALL AND 45 MINUTE DOOR

## LEGEND:

- DENOTES PATHS OF EXIT TRAVEL
- EXIT — DENOTES DOOR AS AN EMERGENCY EXIT
- DENOTES STARTING POINT FOR TRAVEL DISTANCE
- DENOTES FIRE EXTINGUISHER LOCATIONS
- (1) HOUR RATED WALL
- (2) HOUR RATED WALL
- (3) HOUR RATED WALL

LINEAR DIMENSIONS SHOWN ARE IN MILLIMETERS (MM), UNLESS OTHERWISE NOTED

0 1000 2000
SCALE: 1:50

APPROVED:

A/E DESIGNER OF RECORD

SEAL:

STATE OF SOUTH CAROLINA
KEVIN R. CHAFIN
N. Charleston, SC
6374
REGISTERED ARCHITECT

US ARMY CORPS OF ENGINEERS
AFGHANISTAN ENGINEER DISTRICT

| Mark | Description | Date | Appr. |
|---|---|---|---|
| | | | |

Rev: 0
Date: 2/23/10
Design file no.
Drawing code:
File name: ANAPXFOA-001LSP
Plot date: 2/23/2010
Plot scale: x:X

Designed by: KRC
Dwn by: KJG
Ckd by: NLJ
Reviewed by: LHM
Submitted by: BAKER

U.S. ARMY CORPS OF ENGINEERS
AFGHANISTAN ENGINEER DISTRICT
APO AE 96338

*Michael Baker Jr., Inc*
*A unit of Michael Baker Corporation*
Airside Business Park
100 Airside Drive
Moon Township, PA 15108
www.mbakercorp.com

AFGHAN NATIONAL ARMY
REGIONAL MILITARY TRAINING CENTER
STANDARD DESIGN

PX/FINANCE OFFICE

LIFE SAFETY PLAN

Sheet reference number:
A–001

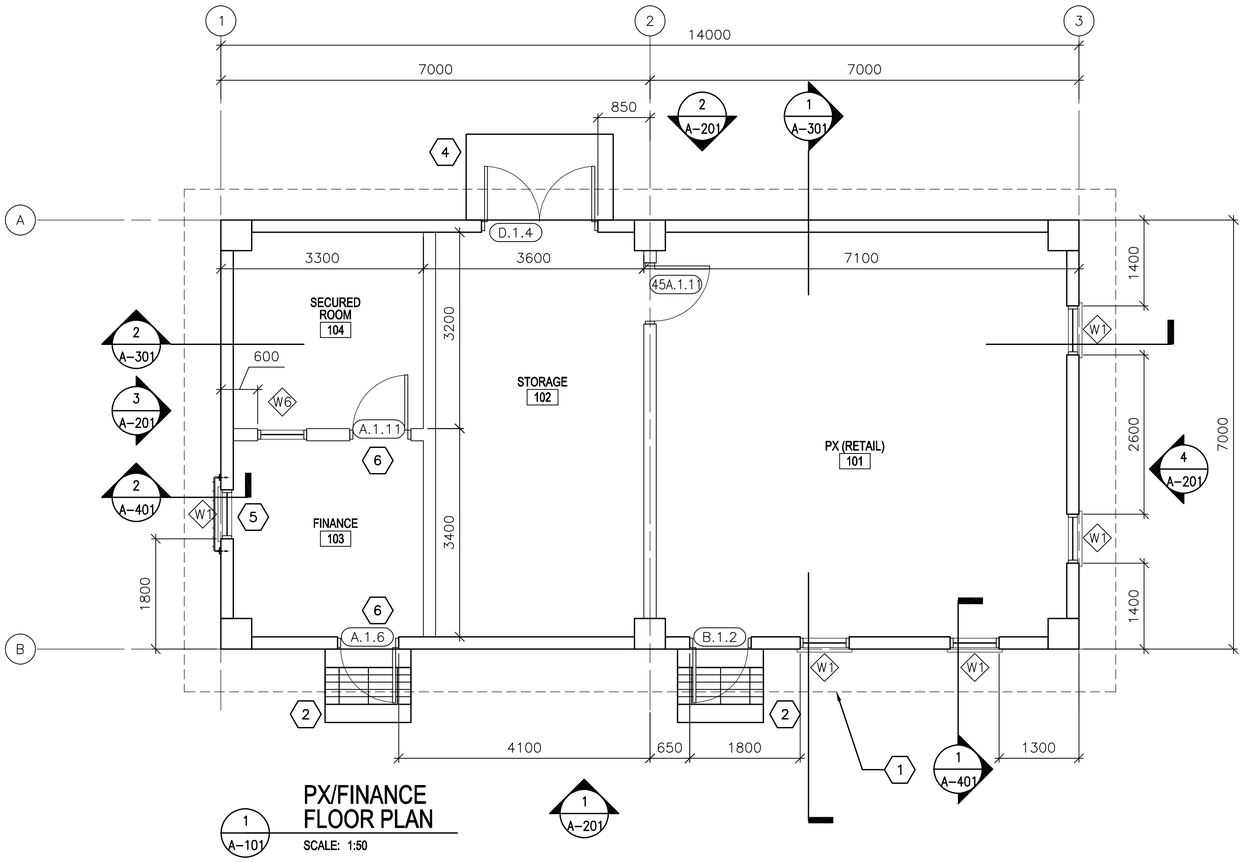


## GENERAL NOTES:

A. DIMENSIONS ARE SHOWN TO OUTER EDGE OF EXTERIOR STRUCTURAL COLUMNS, STRUCTURAL COLUMN GRID, EDGE OF INTERIOR PARTITIONS, EDGE OF WINDOW OPENINGS, AND TO HINGE SIDE OF DOOR FRAME OPENINGS.

B. HINGE SIDE OF OPENINGS FOR DOORS AND FRAMES SHALL BE LOCATED 200 MM FROM THE ADJACENT WALL OR COLUMN, UNLESS NOTED OTHERWISE.

C. INTERIOR PARTITIONS SHALL BE 200 MM CMU. SEE STRUCTURAL DRAWINGS FOR LOCATION OF CONCRETE SHEAR WALLS.

D. COSMETIC REPAIR OF MINOR DEFECTS: REPAIR OR FILL MORTAR JOINTS AND MINOR DEFECTS, INCLUDING BUT NOT LIMITED TO SPALLS, IN ACCORDANCE WITH MANUFACTURER'S RECOMMENDATIONS AND PRIOR TO COATING APPLICATION. SURFACES TO BE PAINTED SHALL BE CLEAN AND FREE OF FOREIGN MATTER BEFORE APPLICATION OF PAINT. CLEANING SHALL BE SCHEDULED SO THAT DUST AND OTHER CONTAMINANTS WILL NOT FALL ON NEWLY PAINTED SURFACES.

E. CONCRETE, PLASTER AND MASONRY SURFACES SHALL BE ALLOWED TO CURE FOR AT LEAST 30 DAYS BEFORE PAINTING. CONCRETE SLABS–ON–GRADE SHALL BE ALLOWED TO CURE 90 DAYS BEFORE STAINING OR SEALING.

F. DO NOT USE PAINT MATERIALS CONTAINING LEAD CONTENT IN EXCESS OF 0.009 PERCENT OF THE WEIGHT OF THE TOTAL NONVOLATILE CONTENT OF THE PAINT OR THE WEIGHT OF THE DRIED PAINT FILM.

G. DO NOT USE ANY ASBESTOS CONTAINING MATERIALS (ACM) IN PROJECT. ACM IS DEFINED AS 1% OR MORE BY VOLUME

H. DO NOT USE PAINT MATERIALS CONTAINING MERCURIAL FUNGICIDES.

I. FACTORY PRIMED METAL DOORS AND FRAMES SHALL RECEIVE TWO COATS OF PAINT.

J. FILL REMAINING SPACE AT PENETRATIONS IN FIRE–RATED FLOORS, PARTITIONS AND CEILINGS WITH APPROPRIATE FIRESTOPPING MATERIALS.

K. ALL CEILING FINISHES SHALL BE PAINTED PLASTER APPLIED TO STRUCTURE.

L. ALL WALL FINISHES SHALL BE PAINTED PLASTER APPLIED TO STRUCTURE, UNLESS NOTED OTHERWISE.

M. ALL FLOOR FINISHES SHALL BE EPOXY SEALED CONCRETE, UNLESS NOTED OTHERWISE.

## KEY NOTES: (X)

1. LINE OF ROOF OVERHANG ABOVE.
2. CONCRETE STOOP WITH GRATE – SEE DETAIL 1/A–503.
3. FLOOR DRAIN LOCATIONS – SEE PLUMBING DRAWINGS.
4. CONCRETE STOOP – SEE DETAIL 3/A–503.
5. SECURITY BARS – SEE DETAIL 5/A–502.
6. DOOR SHALL BE MAXIMUM DUTY.

## LEGEND:

(XXX) DOOR FRAME AND HARDWARE TYPE, SEE SHEET A–601

⟨A⟩ WINDOW TYPE, SEE SHEET A–601

⟨X⟩ KEY NOTE

## ABBREVIATIONS:

| | |
|---|---|
| ELEC | ELECTRICAL |
| MECH | MECHANICAL |
| JAN | JANITOR |
| CLOS | CLOSET |
| COMM | COMMUNICATIONS |

APPROVED:

A/E DESIGNER OF RECORD

SEAL:

LINEAR DIMENSIONS SHOWN ARE IN MILLIMETERS (MM), UNLESS OTHERWISE NOTED

0 1000 2000
SCALE: 1:50

US ARMY CORPS OF ENGINEERS
AFGHANISTAN ENGINEER DISTRICT

| Mark | Description | Date | Appr. |
|---|---|---|---|

| Rev: 0 | Designed by: KRC | Drawn by: KJG | Ckd by: NLJ | Reviewed by: LHM | Submitted by: BAKER |
|---|---|---|---|---|---|
| Date: 2/23/10 | | | | | |
| Design file no. | | | | | |
| Drawing code: | | | | | |
| File name: ANAPXFOA-101FP | | | | | |
| Plot date: 2/23/2010 | | | | | |
| Plot scale: x:X | | | | | |

U.S. ARMY CORPS OF ENGINEERS
AFGHANISTAN ENGINEER DISTRICT
APO AE 96338

*Michael Baker Jr., Inc.*
*A unit of Michael Baker Corporation*
Airside Business Park
100 Airside Drive
Moon Township, PA 15108
www.mbakercorp.com

AFGHAN NATIONAL ARMY
REGIONAL MILITARY TRAINING CENTER
STANDARD DESIGN

PX/FINANCE OFFICE

FLOOR PLAN

Sheet reference number:
A–101

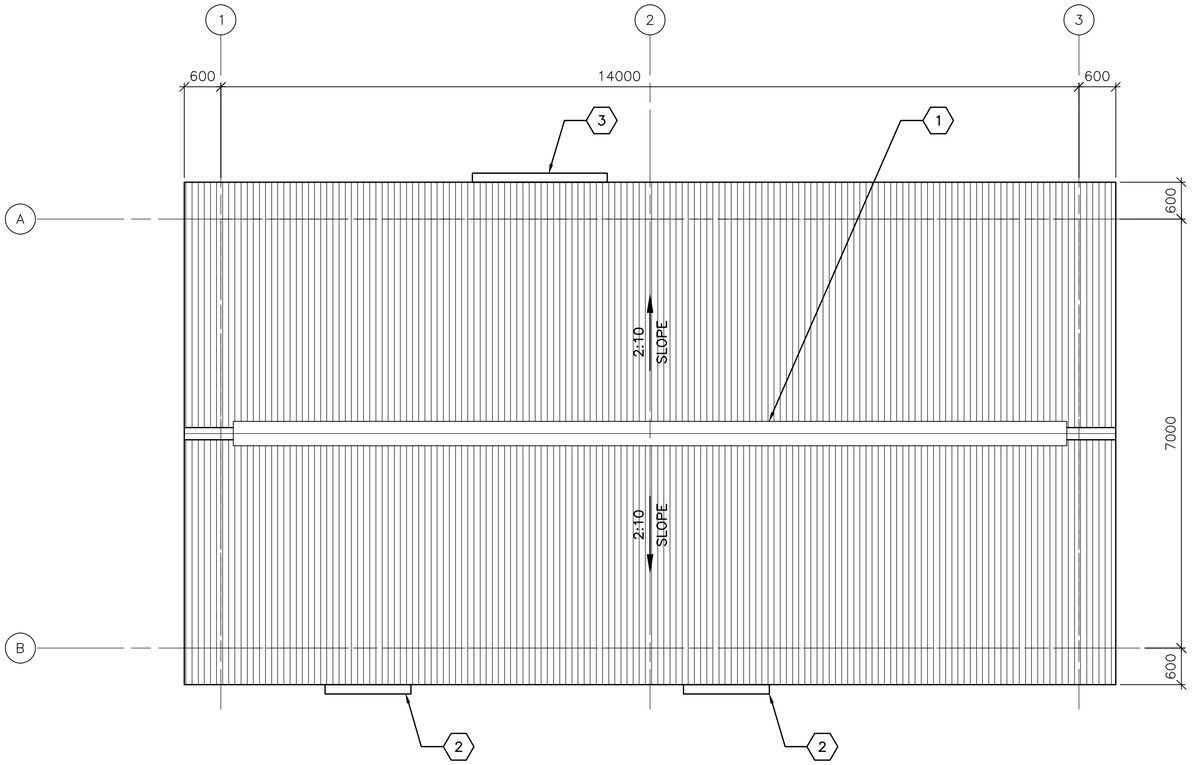


1 A–102 **ROOF PLAN**

SCALE: 1:50

## GENERAL NOTES:

A. THE APPROXIMATE LOCATION OF ROOF DEVICES AND PENETRATIONS ARE SHOWN ON THE ROOF PLAN FOR INFORMATION ONLY. THE CONTRACTOR SHALL BE RESPONSIBLE FOR UNDERSTANDING THE ACTUAL LOCATION OF THESE AND ALL OTHER ITEMS PRIOR TO BEGINNING CONSTRUCTION. COORDINATE ALL ROOF PENETRATIONS WITH STRUCTURAL, MECHANICAL AND PLUMBING WORK.

B. UNLESS OTHERWISE NOTED, NOTES, DETAILS OR FEATURES INDICATED FOR ONE CONDITION SHALL BE APPLICABLE FOR ALL ALIKE AND SIMILAR CONDITIONS.

C. STOCKPILING OF MATERIALS, EQUIPMENT AND ANY OTHER ITEMS ON THE ROOF IS PROHIBITED.

D. ROOFS SHALL BE CORRUGATED METAL ROOF PANELS ON COLD–FORMED METAL FRAMING ON CONCRETE SLAB.

## KEY NOTES: (X)

1. CONTINUOUS METAL RIDGE VENT SEE DETAIL 4/A–501.
2. METAL GUTTER 1400 MM, CENTER ON DOOR – SEE DETAIL 1A/A–501.
3. METAL GUTTER 2300 MM, CENTER ON DOOR – SEE DETAIL 1A/A–501.

LINEAR DIMENSIONS SHOWN ARE IN MILLIMETERS (MM), UNLESS OTHERWISE NOTED

0 1000 2000
SCALE: 1:50

APPROVED:

A/E DESIGNER OF RECORD

SEAL:

STATE OF SOUTH CAROLINA
KEVIN R. CHAFIN
N. Charleston, SC
6374
REGISTERED ARCHITECT

US ARMY CORPS OF ENGINEERS
AFGHANISTAN ENGINEER DISTRICT

| Mark | Description | Date | Appr. |
|---|---|---|---|
| | | | |

| Mark | Description | Date | Appr. |
|---|---|---|---|
| | | | |

Rev: 0
Date: 2/23/10
Design file no.
Drawing code:
File name: ANAPXFOA-1025P
Plot date: 2/23/2010
Plot scale: x:X
Designed by: KRC
Dwn by: KJC
Ckd by: NLJ
Reviewed by: LHM
Submitted by: BAKER

U.S. ARMY CORPS OF ENGINEERS
AFGHANISTAN ENGINEER DISTRICT
APO AE 96338

*Michael Baker Jr., Inc*
*A unit of Michael Baker Corporation*
Airside Business Park
100 Airside Drive
Moon Township, PA 15108
www.mbakercorp.com

AFGHAN NATIONAL ARMY
REGIONAL MILITARY TRAINING CENTER
STANDARD DESIGN

PX/FINANCE OFFICE

ROOF PLAN

Sheet reference number:
A–102

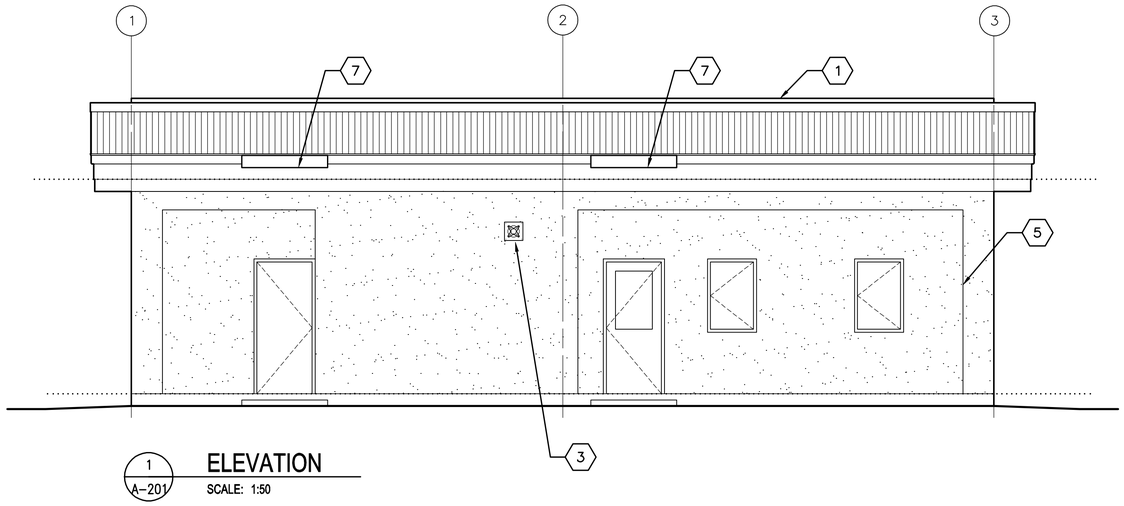


1 A–201 **ELEVATION**
SCALE: 1:50

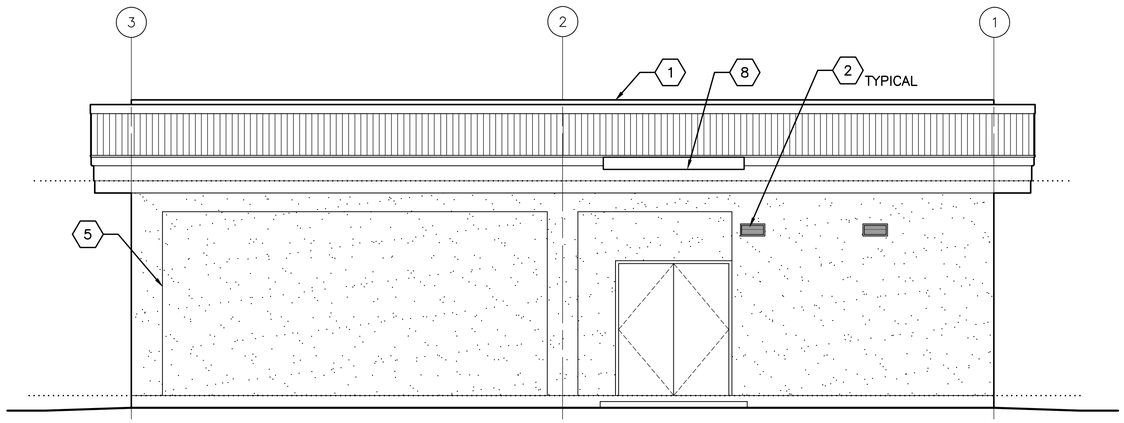


2 A–201 **ELEVATION**
SCALE: 1:50

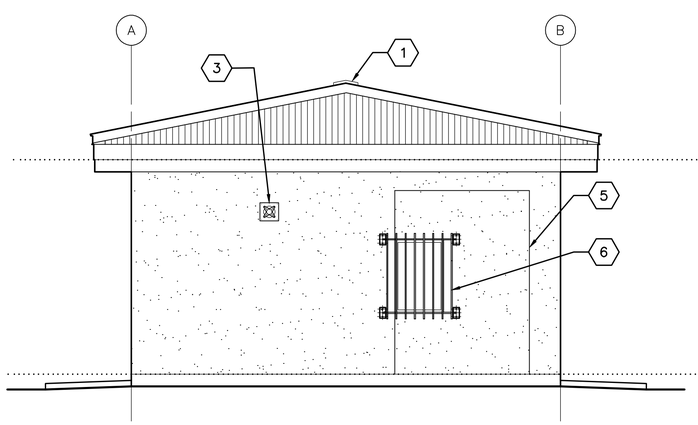


3 A–201 **ELEVATION**
SCALE: 1:50

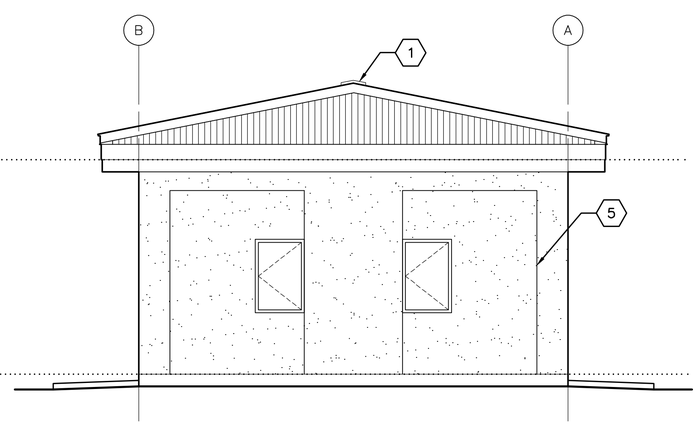


4 A–201 **ELEVATION**
SCALE: 1:50

## GENERAL NOTES:

A. COORDINATE SIZE AND LOCATION OF OPENINGS FOR MECHANICAL ITEMS WITH MECHANICAL DRAWINGS.

B. PROVIDE STRUCTURAL LINTELS AS REQUIRED – SEE STRUCTURAL DRAWINGS

C. ALL EXTERIOR WALL FINISHES SHALL BE STUCCO OVER CMU AND CONCRETE SUBSTRATES. PROVIDE CONTROL JOINTS IN STUCCO WALL FINISH AS NOTED.

D. ROOF SHALL BE CORRUGATED METAL ROOF PANELS ON COLD–FORMED METAL FRAMING ON CONCRETE SLAB.

## KEY NOTES: (X)

1. CONTINUOUS METAL RIDGE VENT – SEE DETAIL 4/A–501.
2. LOUVER, LOCATE TOP OF WALL PENETRATION 2800 MM ABOVE FINISHED FLOOR – SEE MECHANICAL DRAWINGS.
3. EXHAUST FAN, LOCATE TOP OF WALL PENETRATION 2800 MM ABOVE FINISHED FLOOR – SEE MECHANICAL DRAWINGS
4. NOT USED
5. STUCCO CONTROL JOINT, SEE DETAIL 2A/A–501.
6. SECURITY BARS, SEE DETAIL 5/A–502.
7. METAL GUTTER 1400 MM, CENTER ON DOOR – SEE DETAIL 1A/A–501.
8. METAL GUTTER 2300 MM, CENTER ON DOOR – SEE DETAIL 1A/A–501.

APPROVED:

A/E DESIGNER OF RECORD

SEAL:

STATE OF SOUTH CAROLINA
KEVIN R. CHAFIN
N. Charleston, SC
6374
REGISTERED ARCHITECT

0 1000 2000
SCALE: 1:50

US ARMY CORPS OF ENGINEERS
AFGHANISTAN ENGINEER DISTRICT

| Mark | Description | Date | Appr. |
|---|---|---|---|
| | | | |

| Mark | Description | Date | Appr. |
|---|---|---|---|
| | | | |

U.S. ARMY CORPS OF ENGINEERS
AFGHANISTAN ENGINEER DISTRICT
APO AE 96338

*Michael Baker Jr., Inc*
*A unit of Michael Baker Corporation*
Airside Business Park
100 Airside Drive
Moon Township, PA 15108
www.mbakercorp.com

Designed by: KRC | Ckd by: NLJ
Dwn by: KJG | Reviewed by: LHM
Submitted by: BAKER

Date: 2/23/10
Design file no.
Drawing code:
File name: ANAPXFOA-001ELV
Plot date: 2/23/2010
Plot scale: x:x

Rev: 0

AFGHAN NATIONAL ARMY
REGIONAL MILITARY TRAINING CENTER
STANDARD DESIGN

PX/FINANCE OFFICE

ELEVATIONS

Sheet reference number:
A–201

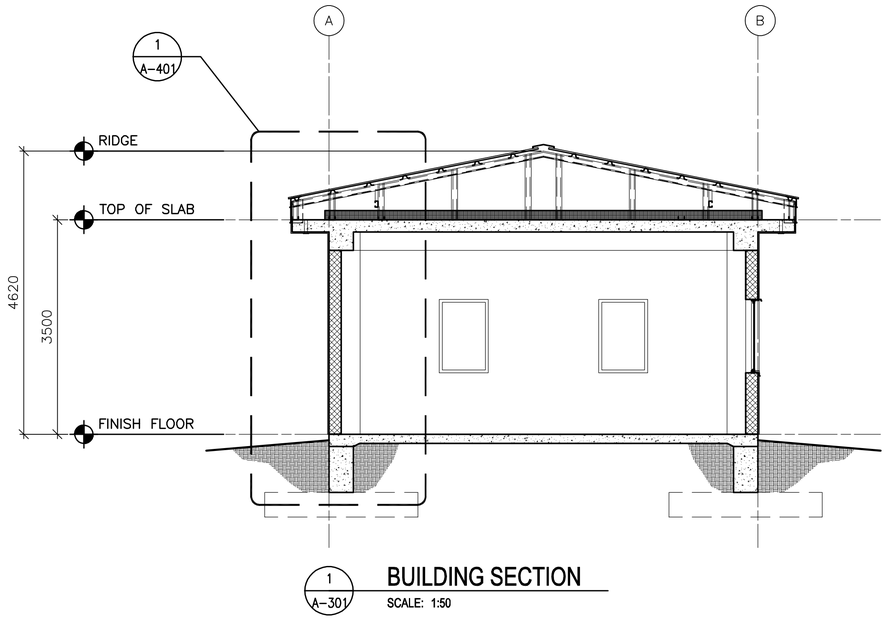


1 A-301 **BUILDING SECTION**
SCALE: 1:50

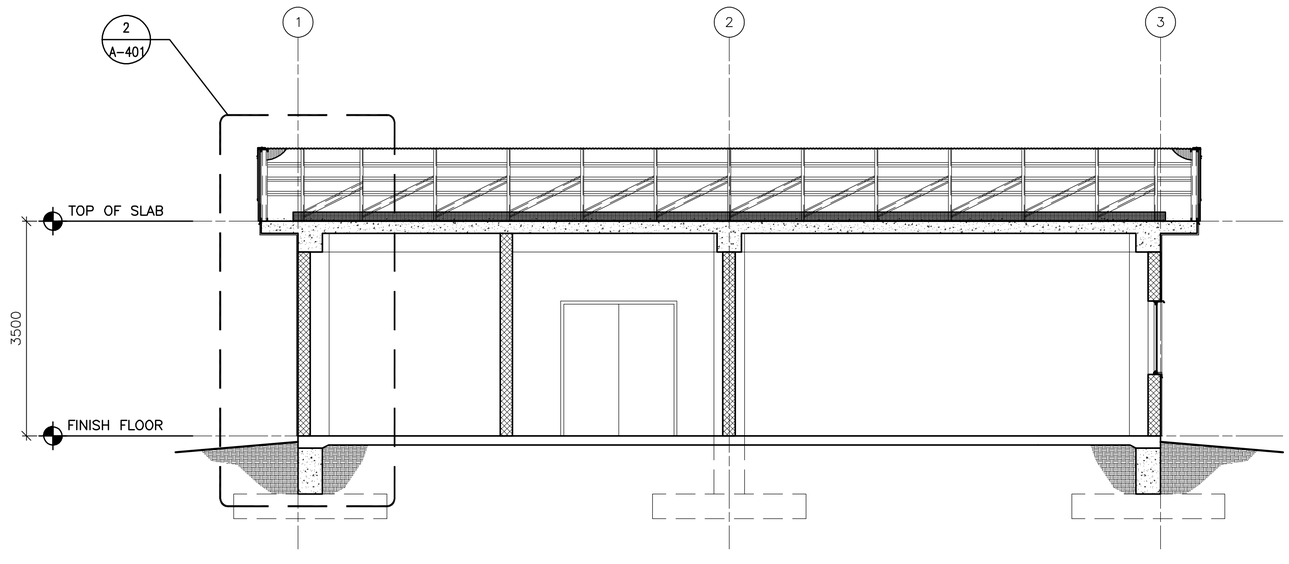


2 A-301 **BUILDING SECTION**
SCALE: 1:50

LINEAR DIMENSIONS SHOWN ARE IN MILLIMETERS (MM), UNLESS OTHERWISE NOTED

0 1000 2000
SCALE: 1:50

APPROVED:

A/E DESIGNER OF RECORD

SEAL:

STATE OF SOUTH CAROLINA
KEVIN R. CHARN
N. Charleston, SC
6374
REGISTERED ARCHITECT

US ARMY CORPS OF ENGINEERS
AFGHANISTAN ENGINEER DISTRICT

| Mark | Description | Date | Appr. |
|---|---|---|---|
| | | | |

| Mark | Description | Date | Appr. |
|---|---|---|---|
| | | | |

Date: 2/23/10
Design file no.
Drawing code:
File name: ANAPXFOA-301BS
Plot date: 2/23/2010
Plot scale: x:X

Designed by: KRC
Dwn by: KJG
Ckd by: NLJ
Reviewed by: LHM
Submitted by: BAKER

U.S. ARMY CORPS OF ENGINEERS
AFGHANISTAN ENGINEER DISTRICT
APO AE 96338

*Michael Baker Jr., Inc*
*A unit of Michael Baker Corporation*
Airside Business Park
100 Airside Drive
Moon Township, PA 15108
www.mbakercorp.com

AFGHAN NATIONAL ARMY
REGIONAL MILITARY TRAINING CENTER
STANDARD DESIGN

PX/FINANCE OFFICE

BUILDING SECTIONS

Sheet reference number:
A-301

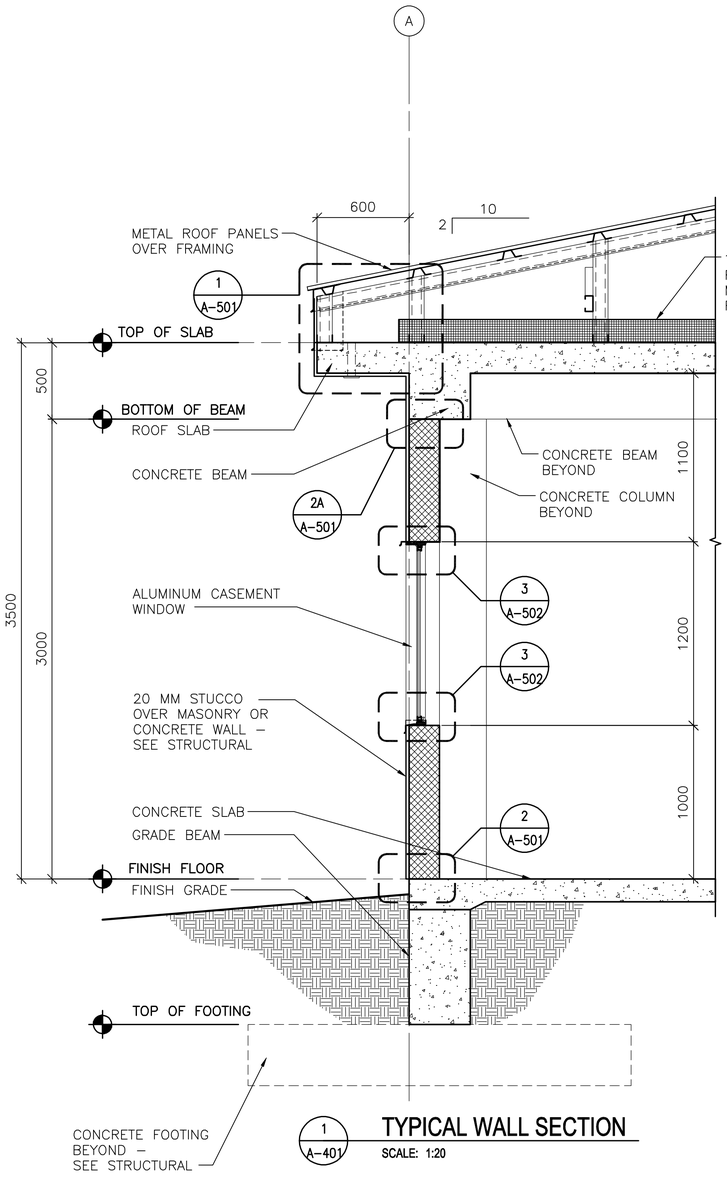


1 A-401 **TYPICAL WALL SECTION**

SCALE: 1:20

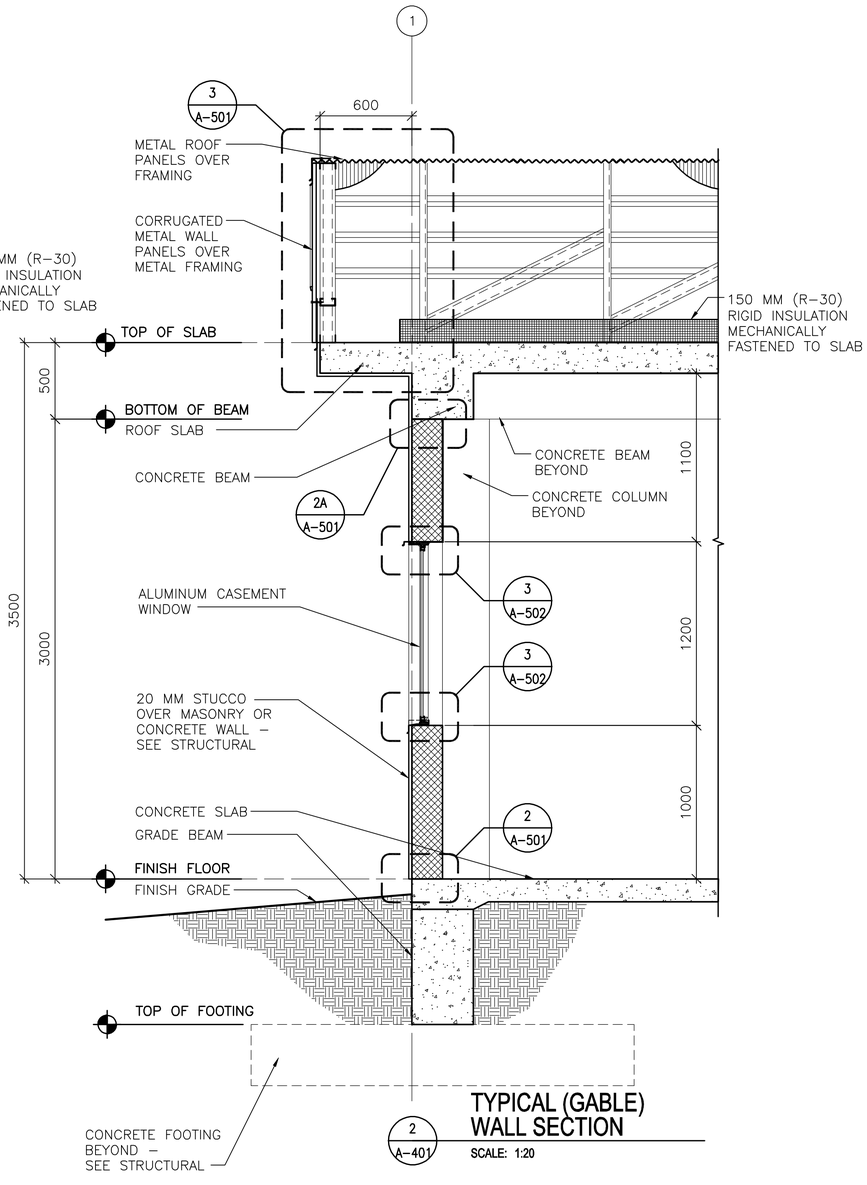


2 A-401 **TYPICAL (GABLE) WALL SECTION**

SCALE: 1:20

LINEAR DIMENSIONS SHOWN ARE IN MILLIMETERS (MM), UNLESS OTHERWISE NOTED

0 400 800

SCALE: 1:20

APPROVED:

A/E DESIGNER OF RECORD

SEAL:

STATE OF SOUTH CAROLINA
KEVIN R. CHAFIN
N. Charleston, SC
6374
REGISTERED ARCHITECT

US ARMY CORPS OF ENGINEERS
AFGHANISTAN ENGINEER DISTRICT

| Mark | Description | Date | Appr. |
|---|---|---|---|
| | | | |

Date: 2/23/10
Design file no.
Drawing code:
Rev: 0
File name: ANAFXFOA-401W3
Plot date: 2/23/2010
Plot scale: x:X

Designed by: KRC
Dwn by: KJC
Ckd by: NLJ
Reviewed by: LHM
Submitted by: BAKER

U.S. ARMY CORPS OF ENGINEERS
AFGHANISTAN ENGINEER DISTRICT
APO AE 96338

*Michael Baker Jr., Inc*
*A unit of Michael Baker Corporation*
Airside Business Park
100 Airside Drive
Moon Township, PA 15108
www.mbakercorp.com

AFGHAN NATIONAL ARMY
REGIONAL MILITARY TRAINING CENTER
STANDARD DESIGN

PX/FINANCE OFFICE

WALL SECTIONS

Sheet reference number:
A-401

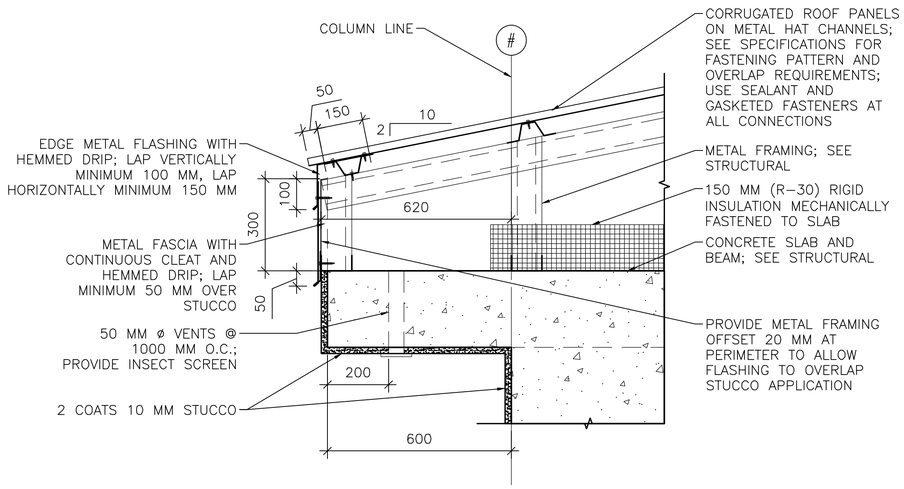


1 A–501 **EAVE DETAIL**
SCALE 1:10

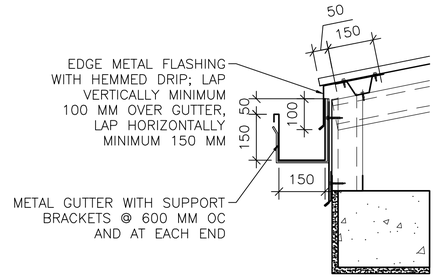


1A A–501 **GUTTER DETAIL**
SCALE 1:10

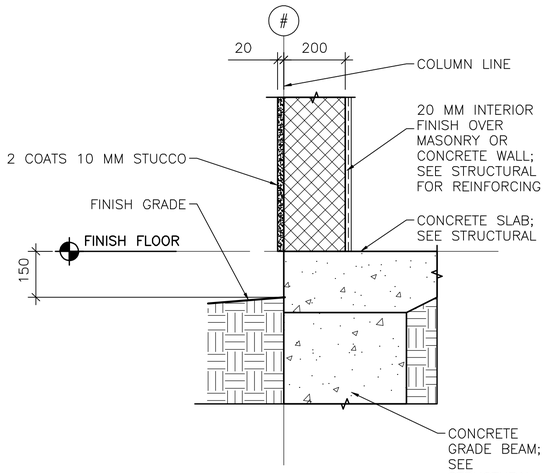


2 A–501 **STUCCO BASE DETAIL**
SCALE 1:10

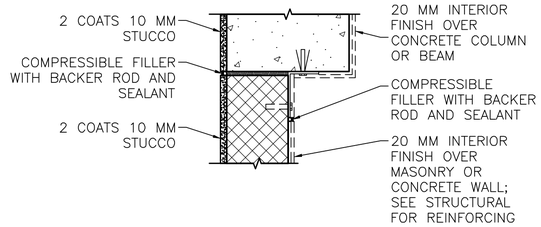


NOTE: DETAIL TYPICAL AT ALL WALL/COLUMN AND WALL/BEAM LOCATIONS, SEE ALTERNATE BRACING DETAIL BELOW 2B/A–501.

2A A–501 **STUCCO JOINT DETAIL**
SCALE 1:10

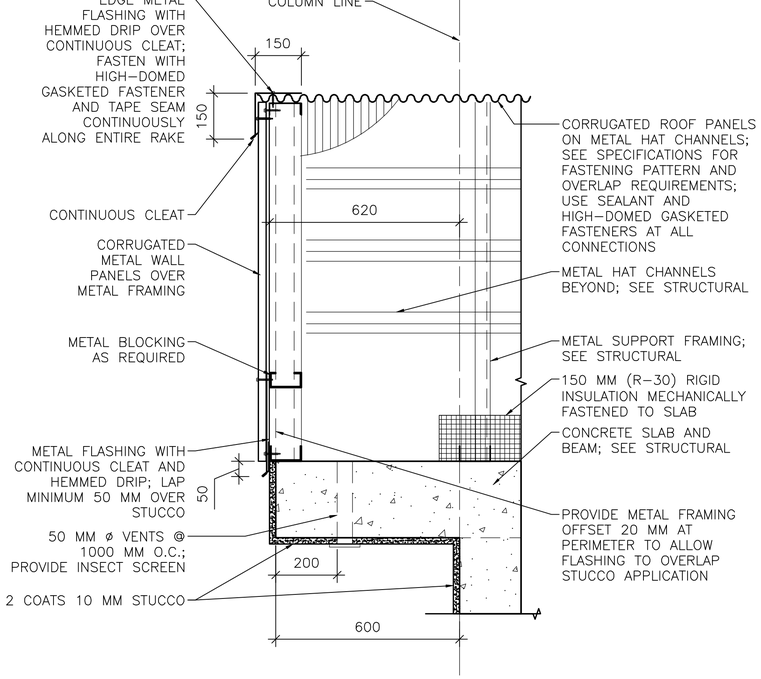


3 A–501 **RAKE/EAVE DETAIL**
SCALE 1:10

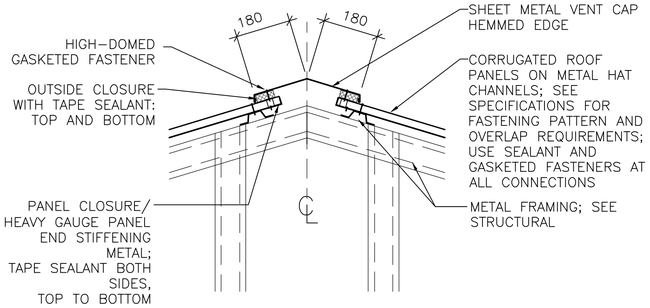


4 A–501 **RIDGE VENT DETAIL**
SCALE 1:10

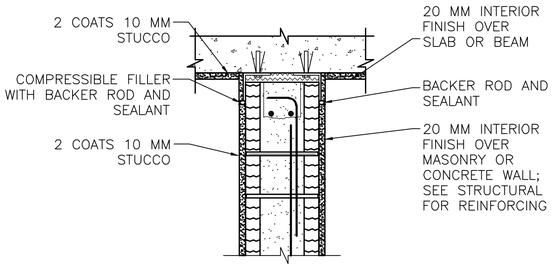


INTERIOR WALL/BEAM

2B A–501 **ALTERNATE BRACING DETAIL**
SCALE 1:10

LINEAR DIMENSIONS SHOWN ARE IN MILLIMETERS (MM), UNLESS OTHERWISE NOTED

0 200 400
SCALE: 1:10

APPROVED:

A/E DESIGNER OF RECORD

SEAL:

STATE OF SOUTH CAROLINA
KEVIN R. CHARIN
N. Charleston, SC
6374
REGISTERED ARCHITECT

US ARMY CORPS OF ENGINEERS
AFGHANISTAN ENGINEER DISTRICT

| Mark | Description | Date | Appr. |
|---|---|---|---|
| | | | |

| Rev: 0 | Date: 2/23/10 | Drawing code: | File name: ANAPXFOA-60107 |
|---|---|---|---|
| | Design file no. | | Plot date: 2/23/2010 |
| | | | Plot scale: x:x |

| Designed by: KRC | Drwn by: KJG | Ckd by: NLJ |
|---|---|---|
| Reviewed by: LHM | Submitted by: | BAKER |

U.S. ARMY CORPS OF ENGINEERS
AFGHANISTAN ENGINEER DISTRICT
APO AE 96338


Michael Baker Jr., Inc
A unit of Michael Baker Corporation
Airside Business Park
100 Airside Drive
Moon Township, PA 15108
www.mbakercorp.com


AFGHAN NATIONAL ARMY
REGIONAL MILITARY TRAINING CENTER
STANDARD DESIGN

PX/FINANCE OFFICE

EXTERIOR DETAILS

Sheet reference number:
A–501

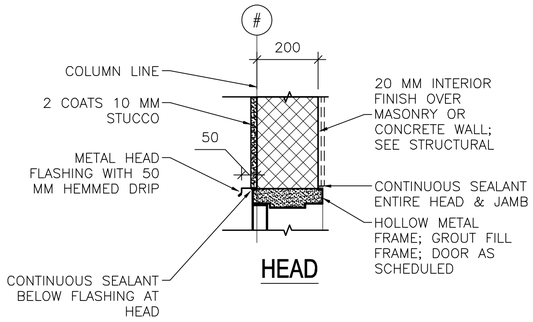


HEAD

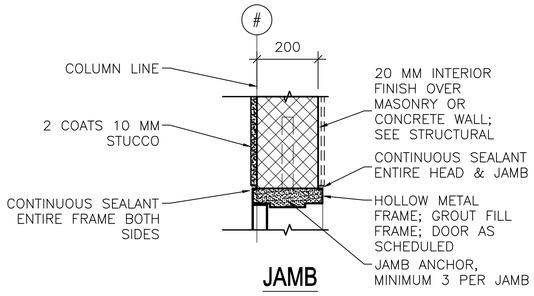


JAMB

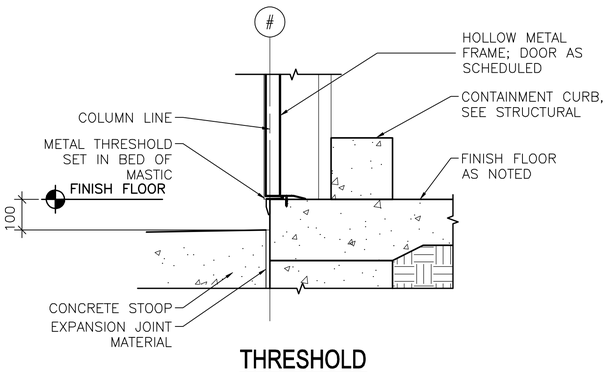


THRESHOLD

1 / A-502 **EXTERIOR DOOR DETAILS**

SCALE: 1:10

LINEAR DIMENSIONS SHOWN ARE IN MILLIMETERS (MM), UNLESS OTHERWISE NOTED

0 200 400

SCALE: 1:10

APPROVED:

A/E DESIGNER OF RECORD

SEAL:

STATE OF SOUTH CAROLINA
KEVIN R. CHAFIN
N. Charleston, SC
6374
REGISTERED ARCHITECT

US ARMY CORPS OF ENGINEERS
AFGHANISTAN ENGINEER DISTRICT

| Mark | Description | Date | Appr. | Mark | Description | Date | Appr. |
|---|---|---|---|---|---|---|---|

U.S. ARMY CORPS OF ENGINEERS
AFGHANISTAN ENGINEER DISTRICT
APO AE 96338

*Michael Baker Jr., Inc*
*A unit of Michael Baker Corporation*
Airside Business Park
100 Airside Drive
Moon Township PA 15108
www.mbakercorp.com

Designed by: KRC
Dwn by: KJG
Ckd by: NLJ
Reviewed by: LHM
Submitted by: BAKER
Date: 2/23/10
Rev: 0
Design file no.
Drawing code:
File name: ANAPXFOA-502H.JS
Plot date: 2/23/2010
Plot scale: X:X

AFGHAN NATIONAL ARMY
REGIONAL MILITARY TRAINING CENTER
STANDARD DESIGN

PX/FINANCE OFFICE

HEAD, JAMB & SILL DETAILS

Sheet reference number:
A-502

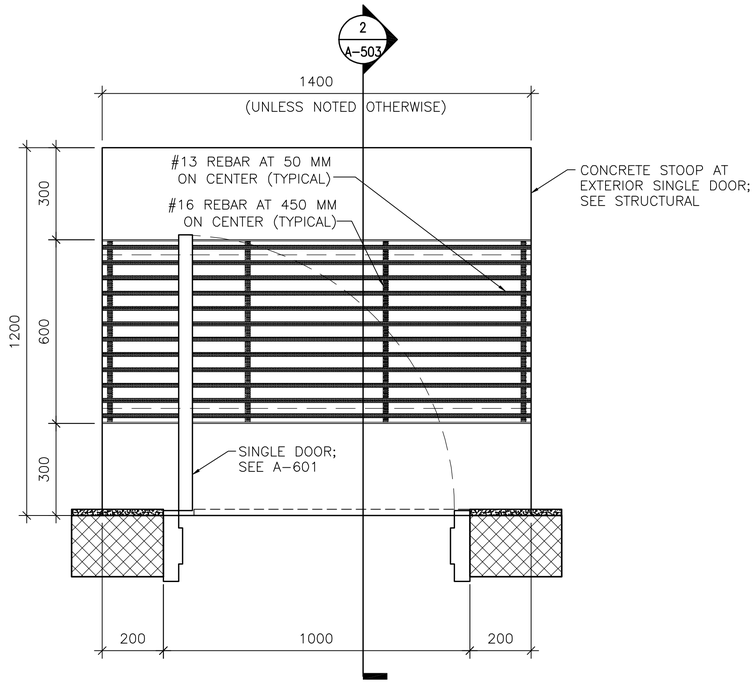


1 A-503 **DOOR STOOP PLAN (WITH GRATE)**

SCALE: 1:10

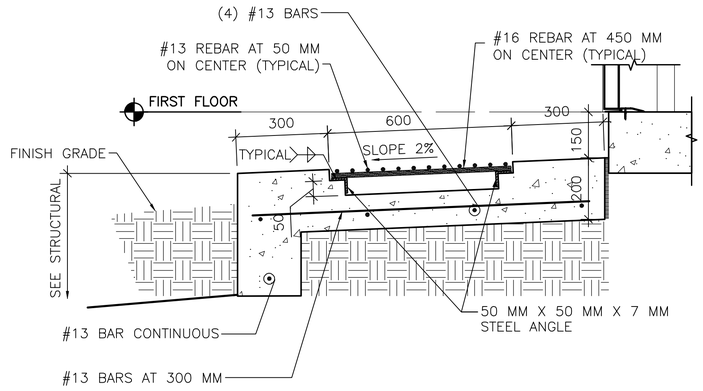


2 A-503 **DOOR STOOP DETAIL**

SCALE: 1:10

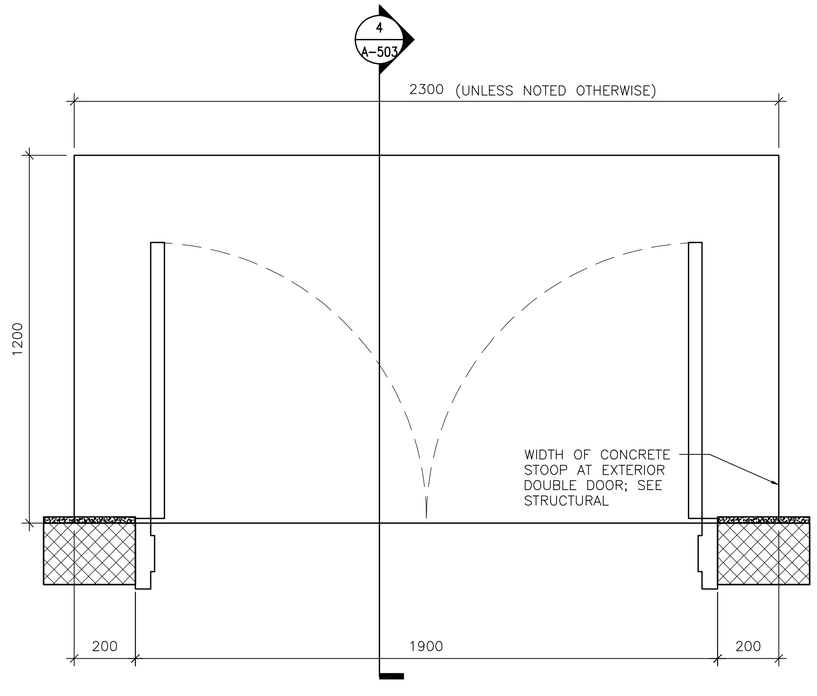


3 A-503 **DOOR STOOP PLAN (WITHOUT GRATE)**

SCALE: 1:10

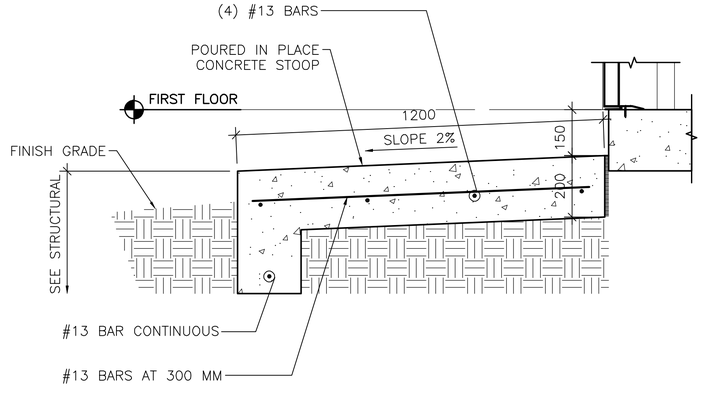


4 A-503 **DOOR STOOP DETAIL**

SCALE: 1:10

LINEAR DIMENSIONS SHOWN ARE IN MILLIMETERS (MM), UNLESS OTHERWISE NOTED

0 200 400

SCALE: 1:10

APPROVED:

A/E DESIGNER OF RECORD

SEAL:

STATE OF SOUTH CAROLINA
KEVIN R. CHAFIN
N. Charleston, SC
6374
REGISTERED ARCHITECT

US ARMY CORPS OF ENGINEERS
AFGHANISTAN ENGINEER DISTRICT

| Mark | Description | Date | Appr. |
|---|---|---|---|
| | | | |

| Mark | Description | Date | Appr. |
|---|---|---|---|
| | | | |

Date: 2/23/10
Design file no.
Drawing code:
File name: ANAPXFOA-S53DT
Plot date: 2/23/2010
Plot scale: x:x

Designed by: KRC
Drwn by: KJG
Ckd by: NLJ
Reviewed by: LHM
Submitted by: BAKER

U.S. ARMY CORPS OF ENGINEERS
AFGHANISTAN ENGINEER DISTRICT
APO AE 96338

Michael Baker Jr., Inc
A unit of Michael Baker Corporation
Airside Business Park
100 Airside Drive
Moon Township, PA 15108
www.mbakercorp.com

AFGHAN NATIONAL ARMY
REGIONAL MILITARY TRAINING CENTER
STANDARD DESIGN

PX/FINANCE OFFICE

STOOP DETAILS

Sheet reference number:
A-503

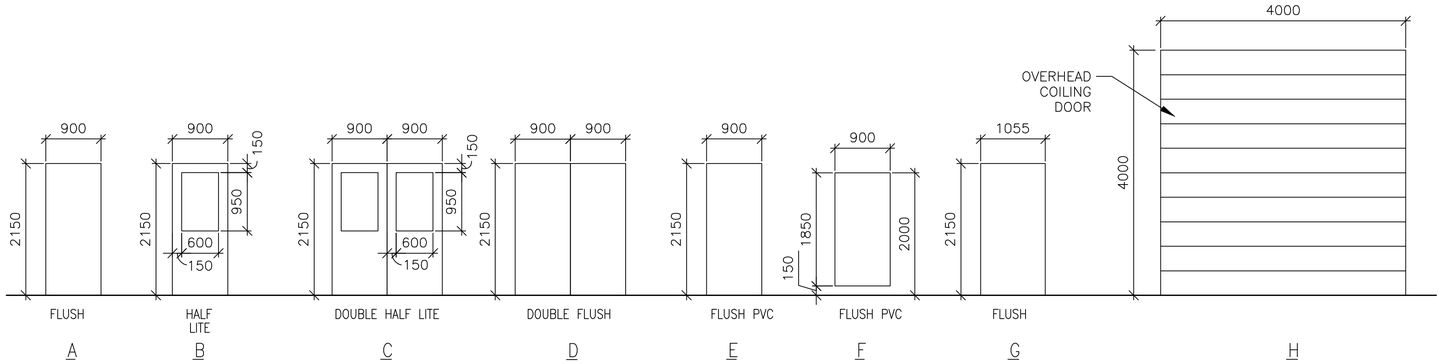


1 A-601 **DOOR TYPES**
SCALE: 1:50

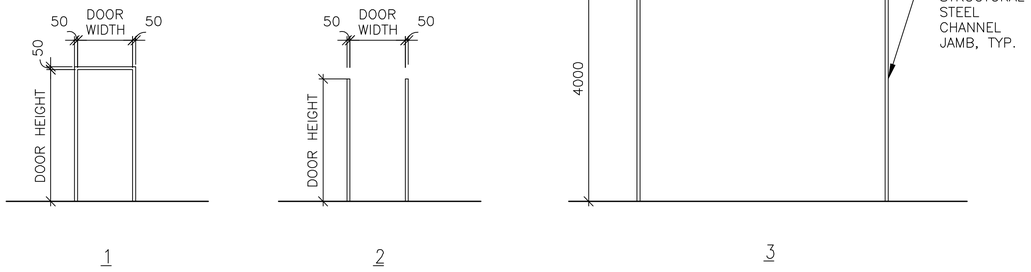


2 A-601 **FRAME TYPES**
SCALE: 1:50

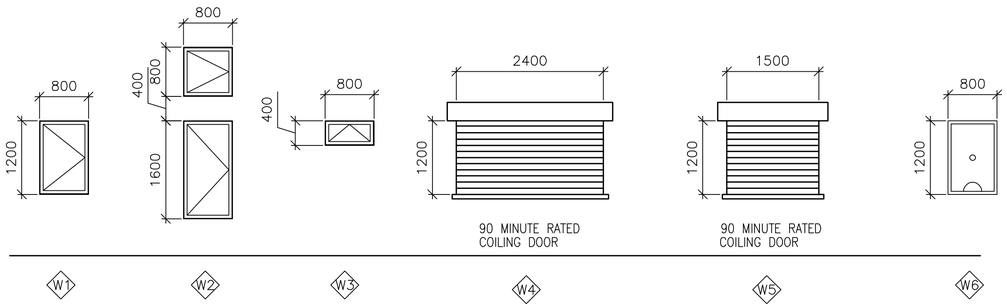


3 A-601 **WINDOW TYPES**
SCALE: 1:50

## WINDOW TYPE NOTES:

1. ALL EXTERIOR WINDOWS SHALL BE ALUMINUM WITH INSECT SCREENS. WINDOWS SHALL BE COMMERCIAL GRADE.
2. ALL EXTERIOR WINDOWS SHALL BE OPERABLE.

4 A-601 **DOOR TAG**
SCALE: NTS




5 A-601 **RATED DOOR TAG**
SCALE: NTS

## DOOR TAG NOTES:

1. THE DOOR TAG INDICATES THE DOOR TYPE, FRAME TYPE AND HARDWARE SET FOR EACH DOOR.
2. THE DOOR TAG FOR RATED DOORS INCLUDES THE RATING OF THE DOOR IN MINUTES.

## EXTERIOR DOOR HARDWARE TYPES:

HW-1 1-1/2 PR HINGES, A5112 114 X 114
1 EA RIM EXIT DEVICE, TYPE 1
1 EA CYLINDER. E09221A, GRADE 1
1 EA OVERHEAD CLOSER, C02061, LOW RESISTANCE
1 EA THRESHOLD, J32130
3 EA DOOR SILENCERS, L03011

HW-2 1-1/2 PR HINGES, A5112 114 X 114
1 EA LOCKSET, F13 ENTRY LOCK W/LEVER HANDLES, GRADE 1
1 EA OVERHEAD CLOSER, C02061, LOW RESISTANCE
1 EA THRESHOLD, J32130
3 EA DOOR SILENCERS, L03011

HW-3 3 PR HINGES, A5112 114 X 114
2 EA RIM EXIT DEVICE, TYPE 1
2 EA CYLINDER. GRADE 1
2 EA OVERHEAD CLOSER, C02061, LOW RESISTANCE
1 EA DOOR COORDINATOR, TYPE 21
1 EA ASTRAGAL
1 EA THRESHOLD, J32130
2 EA DOOR SILENCERS, L03011

HW-4 3 PR HINGES, A5112 114 X 114
1 EA LOCKSET W/LEVER HANDLES. GRADE 1, F13
1 EA OVERHEAD CLOSER, C02061, LOW RESISTANCE
2 EA MAGNETIC HOLDER PIN, ATTACHED TO DOOR LEAF
2 EA MAGNETIC HOLDER RECEIVER, ATTACHED TO STOOP
2 EA LEVER EXTENSION FLUSH BOLTS, L04081
1 EA ASTRAGAL
1 EA THRESHOLD, J32130
2 EA DOOR SILENCERS, L03011

## DOOR AND HARDWARE NOTES:

1. INTERIOR AND EXTERIOR METAL DOORS AND FRAME COLORS SHALL MATCH ADJACENT WALL COLORS AS SELECTED BY THE CONTRACTING OFFICER.
2. FRAMES, EXCEPT FIRE-RATED FRAMES, SHALL BE MOUNTED AND ADJUSTED IN ACCORDANCE WITH MANUFACTURER'S INSTRUCTIONS. FRAMES SHALL BE FASTENED WITH MINIMUM OF THREE ANCHORS PER JAMB AT EQUAL INTERVALS.
3. DIMENSIONS SHOWN ON DOOR TYPES DETAIL ARE BASED UPON MODULAR MASONRY (OR ROUGH OPENING), HEIGHT OF 2200 MM FOR STANDARD PERSONNEL DOORS. CONTRACTOR SHALL COORDINATE WITH DOOR SUPPLIER TO ENSURE THAT DIMENSIONS OF DOORS AND FRAMES PROVIDED ARE COMPATIBLE WITH DOOR OPENING DIMENSIONS.
4. HARDWARE SHALL BE HEAVY DUTY, COMMERCIAL GRADE, STAINLESS STEEL WITH A SATIN OR BRUSHED FINISH.
5. HARDWARE TYPES INCLUDE BUILDERS HARDWARE MANUFACTURERS ASSOCIATION (BMHA) NUMBER.
6. DOORS IN 2 HOUR RATED PARTITIONS SHALL BE 1.5 HOUR (90 MINUTE) RATED DOORS IN ACCORDANCE WITH NFPA 101, TABLE 8.3.4.2.
7. DOORS AT STAIR ENCLOSURES SHALL BE 1 HOUR (60 MINUTE) RATED AT 1 HOUR WALL IN ACCORDANCE WITH NFPA 101, TABLE 8.3.4.2.
8. DOORS IN 1 HOUR RATED WALLS SHALL BE 3/4 HOUR (45 MINUTE) RATED DOORS IN ACCORDANCE WITH NFPA 101, TABLE 8.3.4.2.
9. DOORS IN 1 HOUR RATED CORRIDOR WALLS SHALL BE 1/3 HOUR (20 MINUTE) IN ACCORDANCE WITH NFPA 101, TABLE 8.3.4.2.
10. PROVIDE DOOR STOPS TO PROTECT WALLS ON LOCATIONS WHERE DOOR SWING WILL STRIKE WALL.

THIS SHEET IS STANDARD AND IS INCLUSIVE OF ALL THE DOOR/ WINDOW/ HARDWARE TYPES FOR THE ENTIRE RMTC CONTRACT. NOT ALL DOOR/ WINDOW/ HARDWARE TYPES ARE USED FOR ANY PARTICULAR BUILDING DESIGN. CONTRACTOR SHALL REFER TO THE FLOOR PLAN FOR THE TYPES BEING USED.

## INTERIOR DOOR HARDWARE TYPES:

HW-5 1-1/2 PR HINGES, A8133 114 X 114
1 EA LOCKSET W/LEVER HANDLES, F08, GRADE 1
1 EA WALL STOP, L02101 OR L02161
3 EA DOOR SILENCERS, L03011

HW-6 1-1/2 PR HINGES, A8112 114 X 114
1 EA LOCKSET W/LEVER HANDLES, F08, GRADE 1
1 EA WALL STOP, L02101 OR L02161
1 EA OVERHEAD CLOSER, C02061, LOW RESISTANCE
3 EA DOOR SILENCERS, L03011

HW-7 1-1/2 PR HINGES, A8133
1 EA LOCKSET W/LEVER HANDLES, F13 GRADE 1
1 EA WALL STOP, L02101 OR L02161
2 EA MOP PLATE, J103
3 EA DOOR SILENCERS, L03011

HW-8 1-1/2 PR HINGES, A8112
1 EA LOCKSET W/LEVER HANDLES, F13 GRADE 1
1 EA WALL STOP, L02101 OR L02161
2 EA MOP PLATE, J103
1 EA OVERHEAD CLOSER, C02061, LOW RESISTANCE
3 EA DOOR SILENCERS, L03011

HW-9 1-1/2 PR HINGES, A5112 114 X 114
1 EA RIM EXIT DEVICE, TYPE 1
1 EA CYLINDER. E09221A, GRADE 1
1 EA OVERHEAD CLOSER, C02061, LOW RESISTANCE
3 EA DOOR SILENCERS, L03011

HW-10 3 PR HINGES, A5112 114 X 114
1 EA LOCKSET W/LEVER HANDLES. GRADE 1, F13
2 EA LEVER EXTENSION FLUSH BOLTS, L04081
1 EA ASTRAGAL
2 EA DOOR SILENCERS, L03011

HW-11 1-1/2 PR HINGES, A8112 114 X 114
1 EA LOCKSET W/LEVER HANDLES, F13, GRADE 1
1 EA WALL STOP, L02101 OR L02161
1 EA OVERHEAD CLOSER, C02061, LOW RESISTANCE
3 EA DOOR SILENCERS, L03011
1 EA ROBE HOOK

HW-12 1-1/2 PR HINGES, A8133
1 EA LATCHSET W/LEVER HANDLES, F76 GRADE 1
1 EA WALL STOP, L02101 OR L02161
2 EA MOP PLATE, J103
3 EA DOOR SILENCERS, L03011
1 EA ROBE HOOK

HW-13 3 PR HINGES, A5112 114 X 114
1 EA LOCKSET W/LEVER HANDLES. GRADE 1, F13
1 EA OVERHEAD CLOSER, C02061, LOW RESISTANCE
2 EA LEVER EXTENSION FLUSH BOLTS, L04081
1 EA ASTRAGAL
2 EA DOOR SILENCERS, L03011

HW-14 3 PR HINGES, A5112 114 X 114
2 EA RIM EXIT DEVICE, TYPE 1
2 EA CYLINDER. GRADE 1
2 EA OVERHEAD CLOSER, C02061, LOW RESISTANCE
1 EA DOOR COORDINATOR, TYPE 21
1 EA ASTRAGAL
2 EA DOOR SILENCERS, L03011

APPROVED:

A/E DESIGNER OF RECORD

SEAL:

STATE OF SOUTH CAROLINA
KEVIN R. CHAFIN
N. Charleston, SC
6374
REGISTERED ARCHITECT

US ARMY CORPS OF ENGINEERS
AFGHANISTAN ENGINEER DISTRICT

| Mark | Description | Date | Appr. |
|---|---|---|---|
| | | | |

Rev: 0
Date: 2/23/10
Design file no.
Drawing code:
File name: ANAFXEOA-601SCH
Plot date: 2/23/2010
Plot scale: X:X
Designed by: KRC
Dwn by: KJG
Ckd by: NLJ
Reviewed by: LHM
Submitted by:
BAKER

U.S. ARMY CORPS OF ENGINEERS
AFGHANISTAN ENGINEER DISTRICT
APO AE 96338

*Michael Baker Jr., Inc.*
*A unit of Michael Baker Corporation*
Airside Business Park
100 Airside Drive
Moon Township, PA 15108
www.mbakercorp.com

AFGHAN NATIONAL ARMY
REGIONAL MILITARY TRAINING CENTER
STANDARD DESIGN

PX/FINANCE OFFICE

WINDOW AND DOOR SCHEDULES

Sheet reference number:
A-601

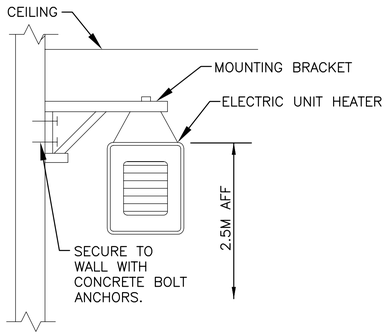


2 M-101 ELECTRIC UNIT HEATER MOUNTING DETAIL
N.T.S.

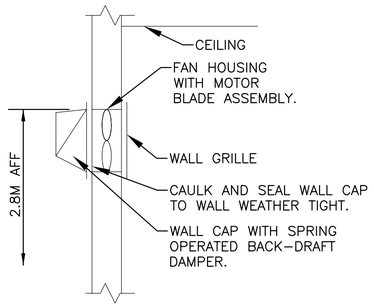


3 M-101 WALL EXHAUST FAN DETAIL
N.T.S.

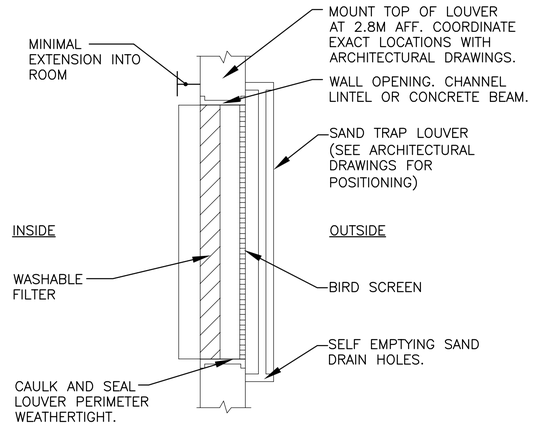


4 M-101 FILTERED SAND TRAP LOUVER
N.T.S.

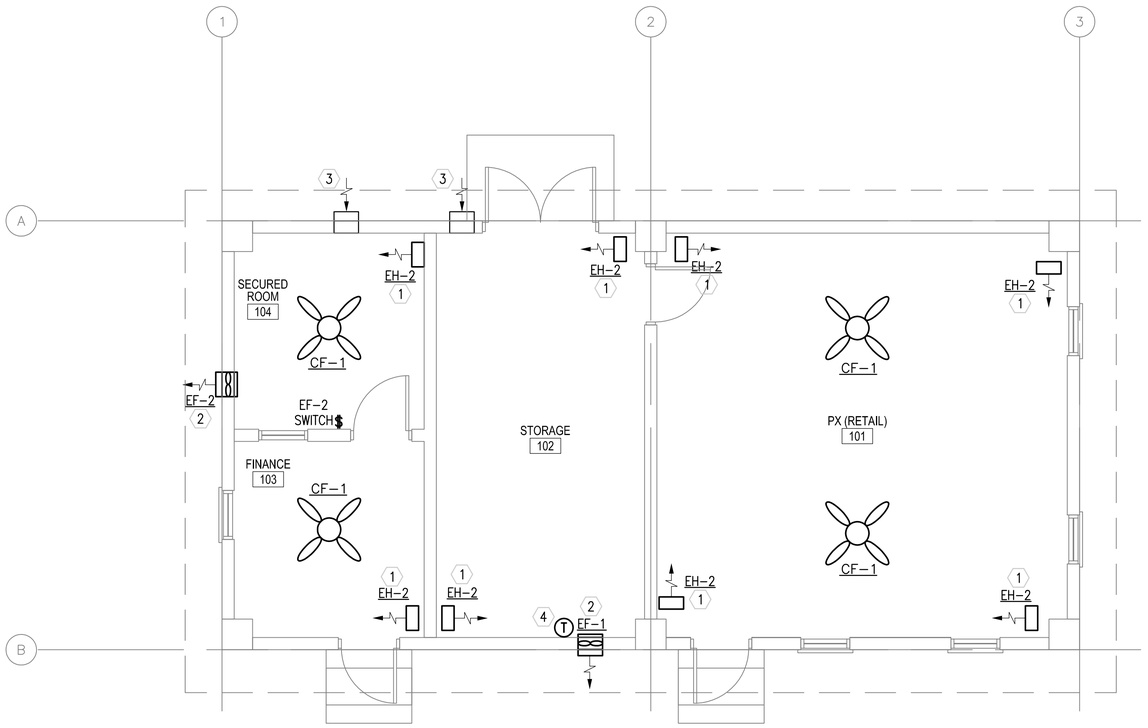


1 M-101 FLOOR PLAN - HVAC
SCALE: 1:50

## GENERAL NOTES:

1. DO NOT SCALE DRAWINGS – ALL DIMENSIONS AND CONDITIONS SHALL BE CHECKED AND VERIFIED BY THE CONTRACTOR AT THE SITE.
2. ALL WORK PERFORMED ON THIS BUILDING SHALL BE IN COMPLIANCE WITH ALL PERTINENT CODES, RULES, ORDINANCES AND REGULATIONS OF THE GOVERNING AUTHORITIES.
3. ALL WORK PERFORMED UNDER AND IN CONNECTION WITH THESE DRAWINGS AND SPECIFICATIONS SHALL BE IN STRICT COMPLIANCE WITH THE LATEST SAFETY AND HEALTH STANDARDS.

## SYMBOLS:

- ⟨X⟩ KEY NOTE
- (0.050) AIR VOLUME IN CUBIC METERS PER SECOND (CMS)
- $ SINGLE POLE SWITCH – 20A RATED

## ABBREVIATIONS:

| | |
|---|---|
| AFF | ABOVE FINISH FLOOR |
| CF | CEILING FANS |
| CMS | CUBIC METERS PER SECOND |
| EC | ELECTRICAL CONTRACTOR |
| STATS | THERMOSTATS |

## KEY NOTE:

1. UNIT HEATER SECURED FROM WALL. SEE DETAIL THIS SHEET.
2. WALL EXHAUST FAN WITH LOW SPRING OPERATED BACK-DRAFT DAMPER. SEE DETAIL 3 THIS SHEET.
3. 406x200 (16x8) INTAKE LOUVER. PROVIDE WEATHER PROOF LOUVER W/0.05mm (2") WASHABLE FILTER AND SAND TRAP. SEE DETAIL 4 THIS SHEET.
4. THERMOSTAT MOUNTED AS HIGH AS POSSIBLE. INTERLOCK STAT WITH CORRESPONDING EXHAUST FAN, SET FAN TO ENERGIZE ON RISE IN TEMPERATURE ABOVE 25°C (77°F).

## EXHAUST FAN SCHEDULE

| NO. | TYPE | FAN CMS | DRIVE | HP | SP mmH20 | ELECTRICAL DATA | SWITCH |
|---|---|---|---|---|---|---|---|
| EF-1 | WALL | 0.035 | DIRECT | FRACT | 13 | 220/1/50 | W/ STAT |
| EF-2 | WALL | 0.035 | DIRECT | FRACT | 13 | 220/1/50 | @ WALL |

NOTES:
1. FANS SHALL HAVE LOW LEAKAGE GRAVITY LOUVER.

## ELECTRIC UNIT HEATER SCHEDULE

| NO. | CMS | KW | F.A.T. °C | ELECT. CHAR. | MOUNTING |
|---|---|---|---|---|---|
| EH-2 | 0.200 | 2.6 | 38 | 380/1/50 | WALL HUNG |

NOTES:
1. UNIT HEATERS SHALL HAVE TAMPER PROOF INTEGRAL STATS.
2. FINAL ELECTRICAL CONNECTIONS BY EC.
3. COORDINATE LOCATION AND ORIENTATION IN FIELD.

## CEILING FAN

| NO. | BLADE SIZE mm | BLADE SIZE IN | VOLTAGE | SWITCH | REMARKS |
|---|---|---|---|---|---|
| CF-1 | 1320 | 52 | 220/1/50 | @ WALL | 3 SPEED REVERSIBLE MOTOR |

NOTES:
1. INSTALL FANS 2.5M AFF.
2. PROVIDE WITH OUT LIGHT FIXTURE.
3. PROVIDE WITH REMOTE MOUNTED ON-OFF SWITCH SHOWN ON ELECTRICAL DRAWINGS.

LINEAR DIMENSIONS SHOWN ARE IN MILLIMETERS (MM), UNLESS OTHERWISE NOTED

0 1000 2000
SCALE: 1:50

APPROVED:

A/E DESIGNER OF RECORD

SEAL:

COMMONWEALTH OF PENNSYLVANIA REGISTERED PROFESSIONAL ENGINEER MATTHEW R. SOTOSKY 046576-E

US ARMY CORPS OF ENGINEERS
AFGHANISTAN ENGINEER DISTRICT

| Mark | Description | Date | Appr. |
|---|---|---|---|
| | | | |

Date: 02/23/10
Design file no.
Drawing code:
File name: ANAPXFOMH-101XX
Plot date: 02/09/2010
Plot scale: 1:50
Rev: 0

Designed by: RML
Dwn by: JJN
Ckd by: CJM
Reviewed by: MRS
Submitted by: BAKER

U.S. ARMY CORPS OF ENGINEERS
AFGHANISTAN ENGINEER DISTRICT
APO AE 96338

Michael Baker Jr., Inc
A unit of Michael Baker Corporation
Airside Business Park
100 Airside Drive
Moon Township, PA 15108
www.mbakercorp.com

AFGHAN NATIONAL ARMY
REGIONAL MILITARY TRAINING CENTER
STANDARD DESIGN

PX/FINANCE OFFICE
HVAC – FLOOR PLAN, SCHEDULES AND DETAILS

Sheet reference number:
M-101

## POWER

- DISTRIBUTION PANELBOARD
- NEW PANELBOARD – SURFACE
- NEW PANELBOARD – RECESSED
- (G) GENERATOR
- TRANSFORMER (DRAWN TO SCALE)
- [J] JUNCTION BOX
- (J) JUNCTION BOX – CEILING
- FUSIBLE SAFETY SWITCH
- (M) MOTOR
- $^{M}$ MOTOR STARTING SWITCH – 220V, 20A RATED UNLESS OTHERWISE NOTED
- ELECTRIC WATER HEATER
- (CF) CEILING FAN – REFER TO SPECIFICATION SECTION 26 20 00

## RECEPTACLES

- DUPLEX 20A TYPE CEE 7/7 "SCHUKO STYLE" UNSWITCHED RECEPTACLE
- GF DUPLEX 20A TYPE CEE 7/7 "SCHUKO STYLE" UNSWITCHED RECEPTACLES – 10mA GROUND FAULT INTERRUPTER TYPE
- WP DUPLEX 20A TYPE CEE 7/7 "SCHUKO STYLE" UNSWITCHED TYPE WITH WEATHERPROOF COVER – 10mA GROUND FAULT INTERRUPTER TYPE
- EXP DUPLEX 20A TYPE CEE 7/7 "SCHUKO STYLE" UNSWITCHED RECEPTACLES – EXPLOSION PROOF
- * INDICATES MOUNT DEVICE ABOVE COUNTERTOP OR AT 1070mm ABOVE FINISHED FLOOR WHERE NO COUNTER IS TO BE INSTALLED.

## LIGHTING

- LIGHTING FIXTURE – SEE FIXTURE SCHEDULE FOR MORE INFORMATION
- EMERGENCY LIGHTING FIXTURE – SEE FIXTURE SCHEDULE FOR MORE INFORMATION
- DOWNLIGHT
- LIGHTING FIXTURE ON NORMAL/EMERGENCY
- WALL MOUNTED LIGHT FIXTURE
- [E] EXIT SIGN – DIRECTIONAL ARROWS AS INDICATED ON DRAWINGS
- REMOTE HEAD FOR BATTERY PACK
- $ SINGLE POLE SWITCH – 20A RATED
- $^{3}$ 3–WAY SWITCH – 20A RATED
- $^{4}$ 4–WAY SWITCH – 20A RATED
- [LC] LIGHTING CONTACTOR
- POLE MOUNTED SITE LIGHTING FIXTURE– NUMBER OF FIXTURES PER POLE AS INDICATED ON DRAWINGS
- EXTERIOR DIRECTIONAL LIGHTING FIXTURE
- SMALL CASE LETTERS REPRESENTS LAMP(S) / SWITCHES.

## TELECOMMUNICATIONS

- ▼ TELEPHONE OUTLET(S) @ 45cm AFF. U.N.O. WITH 20mm RACEWAY TERMINATED TO TELEDATA TERMINAL BOARD.
- ▽ DATA OUTLET(S) @ 45cm AFF. U.N.O. WITH 20mm RACEWAY TERMINATED TO TELEDATA TERMINAL BOARD.

## TELECOMMUNICATIONS (CONTINUED)

- COMBINATION TELEPHONE/DATA OUTLET(S) @ 45cm AFF. U.N.O. WITH 27mm RACEWAY TERMINATED TO TELEDATA TERMINAL BOARD.
- WALL MTD. TELEPHONE OUTLET WITH 20mm RACEWAY TO TELEDATA TERMINAL BOARD.
- (x)T INDICATES NUMBER OF TELEPHONE OUTLET(S) AND ASSOCIATED CABLING
- (x)D INDICATES NUMBER OF DATA OUTLET(S) AND ASSOCIATED CABLING
- (x)TF INDICATES NUMBER OF TELEPHONE OUTLETS AND ASSOCIATED CABLING WITH 1 OUTLET AND CABLE DEDICATED FOR FAX

## SINGLE LINE SYMBOLS

- SWITCH
- BREAKER
- FUSE
- TRANSFORMER
- GROUND
- CONTACT (NORMALLY OPEN)
- CONTACT (NORMALLY CLOSED)
- TRANSFER SWITCH
- CURRENT TRANSFORMER
- INDICATES NEW ELECTRICAL EQUIPMENT
- –C– INDICATES NEW CONTROL WIRING AND CONDUIT
- EQUIPMENT OUTLINE

## MISCELLANEOUS

- BRANCH CIRCUIT WIRING, SURFACE MOUNTED ON WALLS
- BRANCH CIRCUIT WIRING – 6mm²
- BRANCH CIRCUIT WIRING – UNDER FLOOR
- HOME RUN BACK TO PANEL
- CONDUIT TURNED DOWN
- CONDUIT TURNED UP
- –LV– LOW VOLTAGE WIRING AND CONDUIT
- ~ INDICATES CONTINUATION OF LINE

## FIRE ALARM

- [FACP] FIRE ALARM CONTROL PANEL WITH BATTERY BACKUP
- [F] FIRE ALARM PULL STATION

## FIRE ALARM (CONTINUED)

- [F] FIRE ALARM STROBE – WALL MOUNTED
- [F] FIRE ALARM AUDIBLE/STROBE – WALL MOUNTED
- [F] FIRE ALARM HORN/STROBE – WALL MOUNTED
- (S) SMOKE DETECTOR
- (H) HEAT DETECTOR CEILING MOUNTED
- –(D)– DUCT DETECTOR – PROVIDED BY EC, INSTALLED BY MC AND CONNECTED BY EC

## DENOTATIONS & ABBREVIATIONS

| | |
|---|---|
| AFF | ABOVE FINISHED FLOOR |
| C | CEILING MOUNTED |
| E | EMERGENCY |
| EC | ELECTRICAL CONTRACTOR |
| EPO | EMERGENCY POWER OFF |
| EXP | EXPLOSION PROOF |
| F | FIRE ALARM |
| FF | FLUSH FLOOR MOUNTED |
| FL | FLUORESCENT |
| FO | FIBER OPTIC |
| FSS | FUSED SAFETY SWITCH |
| GF | GROUND FAULT INTERRUPTER |
| GC | GENERAL CONTRACTOR |
| IG | ISOLATED GROUND |
| K | KEY |
| LV | LOW VOLTAGE |
| M | MOTOR |
| MC | MECHANICAL CONTRACTOR |
| NE | NORMAL/EMERGENCY |
| NFSS | NON–FUSED SAFETY SWITCH |
| PA | PAGING SYSTEM |
| PLC | PLUMBING CONTRACTOR |
| SL | SINGLE LINE |
| T | TELEPHONE |

## DENOTATIONS & ABBREVIATIONS (CONT.)

| | |
|---|---|
| TP | TAMPER PROOF |
| UE | UNDERGROUND ELECTRIC |
| W | WALL MOUNTED |
| WP | WEATHERPROOF WITH GROUND FAULT INTERRUPTION |
| WT | WATER TIGHT |

## GENERAL PROJECT NOTES:

G1. UNLESS OTHERWISE NOTED, PROVIDE ALL EQUIPMENT SHOWN ON THE PLANS. THE ELECTRICAL CONTRACTOR SHALL COORDINATE ALL SYMBOLS SHOWN ON THE PLANS WITH THE SYMBOL LIST. IT SHALL BE THE RESPONSIBILITY OF THE CONTRACTOR TO VERIFY THE INTENT OF ANY SYMBOL THAT IS SHOWN ON THE PLANS AND NOT INDICATED ON THE SYMBOL LIST WITH THE ENGINEER PRIOR TO BID.

G2. THE CONTRACTOR SHALL VERIFY THE LOCATION OF ALL UNDERGROUND UTILITIES WITHIN THE CONSTRUCTION AREA THREE (3) WORKING DAYS NOTICE BEFORE COMMENCING DIGGING. NOTIFY THE LOCAL AUTHORITY HAVING JURISDICTION AND WAIT THE REQUIRED TIME BEFORE COMMENCING TO DIG.

G3. THE CONTRACTOR SHALL COORDINATE CONDUIT RUNS, LIGHTING FIXTURES AND OTHER EQUIPMENT LOCATIONS WITH THE OTHER TRADE CONTRACTORS TO AVOID CONFLICTS.

G4. WHERE VOLTAGES AND FREQUENCIES ON THE DRAWINGS AND IN THE SPECIFICATIONS DIFFER FROM THE LOCAL ONES, ALL WORK SHALL BE PERFORMED USING THE LOCAL VOLTAGES AND FREQUENCIES.

G5. THE MINIMUM WIRE SIZE ON THE PROJECT SHALL BE 4mm². THE MINIMUM CONDUIT SIZE SHALL BE 20mm. THE MINIMUM BREAKER SIZE SHALL BE 20 AMPS.

G6. THE CONTRACTOR SHALL PUT A MAXIMUM OF 6 DUPLEX RECEPTACLES ON A 20A SINGLE POLE CIRCUIT.

G7. WHERE THE 1010 SCOPE REVIEW, 1015 TECHNICAL REVIEW, DRAWINGS, AND SPECIFICATIONS DIFFER FROM AMERICAN CODES OR STANDARDS, THE 1010, 1015, DRAWINGS, AND SPECIFICATIONS SHALL RULE.

G8. ALL CONDUIT AND DEVICES SHALL BE SURFACE MOUNTED UNLESS OTHERWISE INDICATED.

G9. CONTRACTOR SHALL COORDINATE ALL WORK WITH ALL OTHER TRADES TO ENSURE ALL WORK IS COMPLETED IN A PROFESSIONAL, WORKMAN–LIKE MANNER.

APPROVED:

A/E DESIGNER OF RECORD

SEAL:

COMMONWEALTH OF PENNSYLVANIA
REGISTERED PROFESSIONAL ENGINEER
JOSEPH R. GAUS
PE-074251
1/29/10

US ARMY CORPS OF ENGINEERS
AFGHANISTAN ENGINEER DISTRICT

| Mark | Description | Date | Appr. |
|---|---|---|---|
| | | | |

| Mark | Description | Date | Appr. |
|---|---|---|---|
| | | | |

Rev: 0
Date: 2/23/10
Design file no.
Drawing code:
File name:
Plot date:
Plot scale:

Designed by: JRG
Dwn. by: BJB
Ckd by: JRG
Reviewed by: JRG
Submitted by: BAKER

U.S. ARMY CORPS OF ENGINEERS
AFGHANISTAN ENGINEER DISTRICT
APO AE 96338

*Michael Baker Jr., Inc*
*A unit of Michael Baker Corporation*
Airside Business Park
100 Airside Drive
Moon Township, PA 15108
www.mbakercorp.com

AFGHAN NATIONAL ARMY
REGIONAL MILITARY TRAINING CENTER
STANDARD DESIGN

PX/FINANCE OFFICE

# ELECTRICAL SYMBOLS & ABBREVIATIONS

Sheet reference number:
E–001

## GENERAL NOTES:

1. REFER TO DRAWING #E-001 FOR THE ELECTRICAL SYMBOLS LIST.
2. EXIT SIGNS SHALL BE WIRED AHEAD OF ANY LOCAL SWITCHING ON CIRCUITS. SEE WIRING DIAGRAM DETAIL 6, ON DRAWING #E-501.
3. REFER TO DRAWING #E-601 FOR THE LIGHTING FIXTURE SCHEDULE.
4. REFER TO DRAWING #E-501 FOR THE POWER RISER.
5. REFER TO DRAWING #E-602 FOR PANEL SCHEDULES.
6. LIGHT FIXTURES INDICATED AS EMERGENCY SHALL BE PROVIDED WITH A BATTERY BACKUP BALLAST. SEE WIRING DIAGRAM DETAIL 5, ON DRAWING #E-501.
7. LIGHT FIXTURE LOCATIONS SHALL BE COORDINATED WITH THE CEILING FANS PRIOR TO INSTALLATION. LIGHT FIXTURES SHALL HAVE PRIORITY OVER CEILING FAN LOCATIONS.

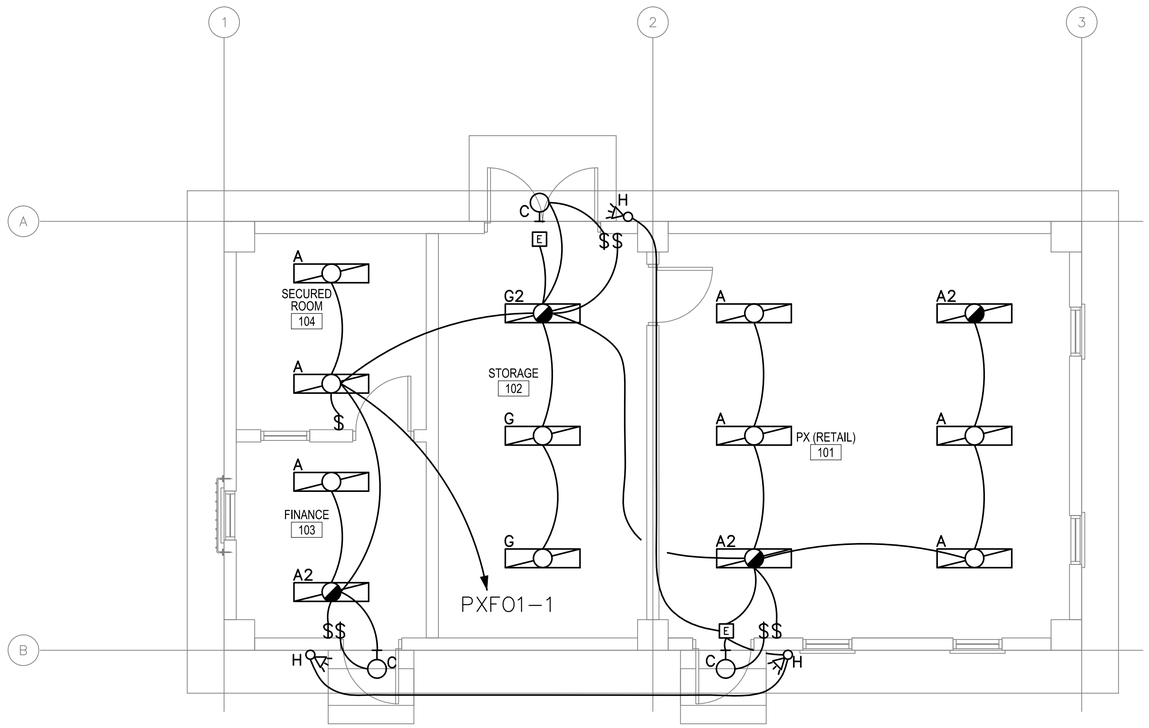


1 E-101
PX/FINANCE
FLOOR PLAN - LIGHTING
SCALE: 1:50

0 1000 2000
SCALE: 1:50

US ARMY CORPS OF ENGINEERS
AFGHANISTAN ENGINEER DISTRICT

| Mark | Description | Date | Appr. | Mark | Description | Date | Appr. |
|---|---|---|---|---|---|---|---|
| | | | | | | | |

Designed by: JRG
Dwn by: BJB
Ckd by: JRG
Reviewed by: JRG
Submitted by: BAKER
Date: 2/23/10
Design file no.
Drawing code:
File name:
Plot date:
Plot scale:

U.S. ARMY CORPS OF ENGINEERS
AFGHANISTAN ENGINEER DISTRICT
APO AE 96338


Michael Baker Jr., Inc
A unit of Michael Baker Corporation
Airside Business Park
100 Airside Drive
Moon Township, PA 15108
www.mbakercorp.com


AFGHAN NATIONAL ARMY
REGIONAL MILITARY TRAINING CENTER
STANDARD DESIGN

PX/FINANCE OFFICE

ELECTRICAL LIGHTING PLAN

APPROVED:

A/E DESIGNER OF RECORD

SEAL:

COMMONWEALTH OF PENNSYLVANIA
REGISTERED PROFESSIONAL
JOSEPH R. GAUS
ENGINEER
PE-074251

Sheet reference number:
E-101

## GENERAL NOTES:

1. REFER TO DRAWING #E-001 FOR THE ELECTRICAL SYMBOLS LIST.
2. REFER TO DRAWING #E-501 FOR THE POWER RISER.
3. REFER TO DRAWING #E-602 FOR PANEL SCHEDULES.
4. COORDINATE EXACT MOUNTING LOCATION OF DISCONNECTING MEANS FOR MECHANICAL AND PLUMBING EQUIPMENT IN THE FIELD.
5. FUSIBLE SAFETY SWITCHES THAT ARE NOT OTHERWISE IDENTIFIED SHALL BE 380V, 1P, 30A FUSED SAFETY SWITCHES WITH 20A FUSES.

## NUMBERED NOTES:

1. PANEL PXF01.
2. PROVIDE PLYWOOD PAINTED WITH FIRE RESISTANT PAINT FOR MOUNTING TELECOMMUNICATIONS EQUIPMENT.
3. PROVIDE CONDUIT STUB UP IN THE ROOM FOR INCOMING TELECOMMUNICATIONS SERVICES FROM THE CENTRAL COMMUNICATIONS SYSTEM IN THE GARRISON.
4. PROVIDE POWER CONNECTION TO EXHAUST FANS. SEE DRAWINGS #M-101 AND #E-602 FOR MORE INFORMATION.
5. PROVIDE POWER CONNECTION TO ELECTRIC UNIT HEATER #2. SEE DRAWINGS #M-101 AND #E-602 FOR MORE INFORMATION.
6. PROVIDE POWER CONNECTION TO MOTOR OPERATED DAMPER. SEE DRAWINGS #M-101 AND #E-602 FOR MORE INFORMATION.

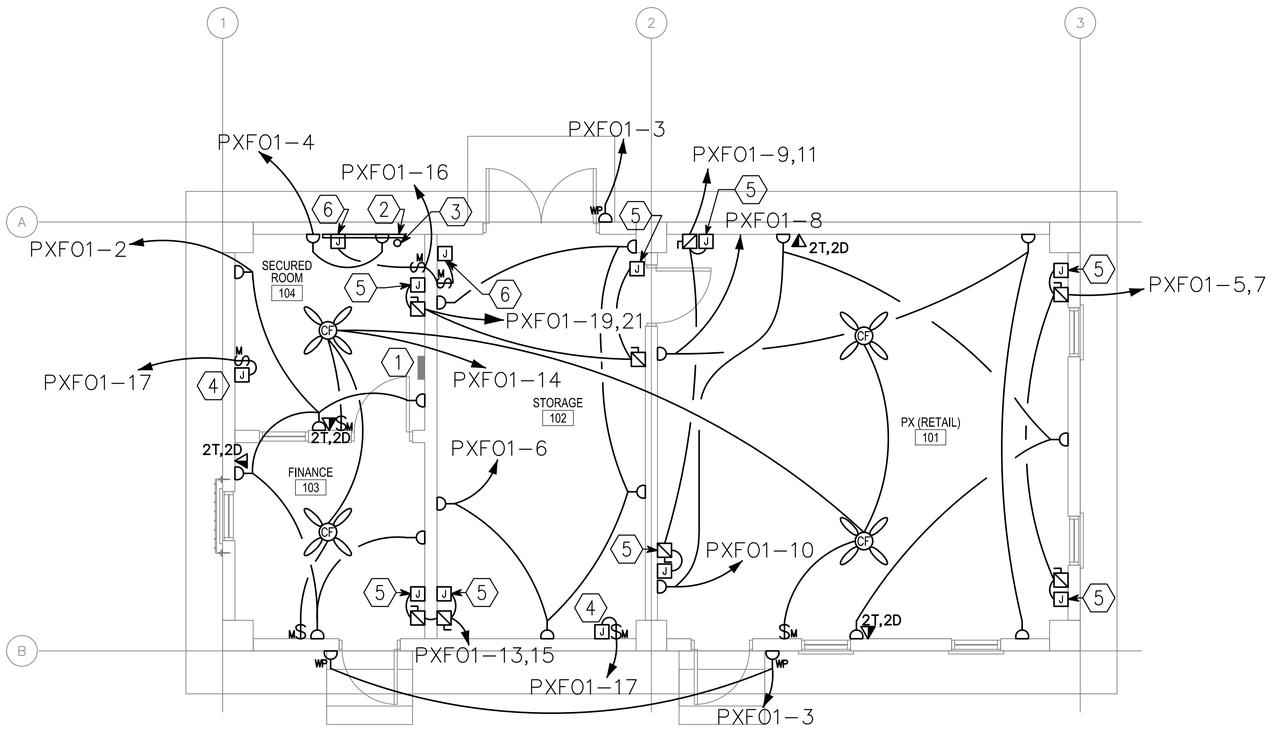


1 / E-102 PX/FINANCE FLOOR PLAN - POWER & SYSTEMS

SCALE: 1:50

0 1000 2000

SCALE: 1:50

US ARMY CORPS OF ENGINEERS
AFGHANISTAN ENGINEER DISTRICT

| Mark | Description | Date | Appr. |
|---|---|---|---|
| | | | |

| Mark | Description | Date | Appr. |
|---|---|---|---|
| | | | |

Rev: 0
Date: 2/23/10
Design file no.
Drawing code:
File name:
Plot date:
Plot scale:

Designed by: JRG
Dwn by: BJB
Ckd by: JRG
Reviewed by: JRG
Submitted by: BAKER

U.S. ARMY CORPS OF ENGINEERS
AFGHANISTAN ENGINEER DISTRICT
APO AE 96338

*Michael Baker Jr., Inc*
*A unit of Michael Baker Corporation*
Airside Business Park
100 Airside Drive
Moon Township, PA 15108
www.mbakercorp.com

AFGHAN NATIONAL ARMY
REGIONAL MILITARY TRAINING CENTER
STANDARD DESIGN

PX/FINANCE OFFICE
ELECTRICAL POWER AND SYSTEMS PLAN

APPROVED:

A/E DESIGNER OF RECORD

SEAL:

COMMONWEALTH OF PENNSYLVANIA
REGISTERED PROFESSIONAL
JOSEPH R. GAUS
ENGINEER
PE-074251

Sheet reference number:
E-102

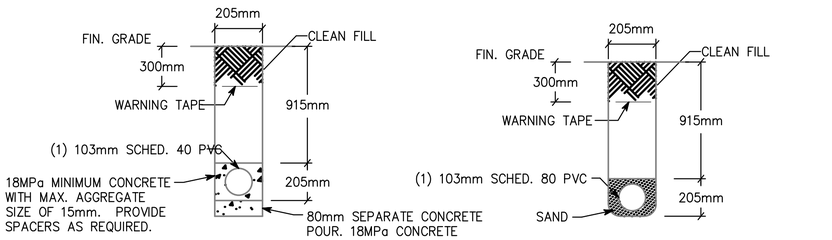


NOTE: PVC CONDUIT SHALL BE DIRECT BURIED SCHEDULE 80 FOR NO TRAFFIC AREAS AND CONCRETE-ENCASED SCHEDULE 40 FOR UNDER ROADWAYS OR TRAFFIC AREAS.

1 / E-501 **TYPICAL DUCT BANK DETAILS FOR CONDUIT IN SAND OR CONCRETE**

SCALE: N.T.S.

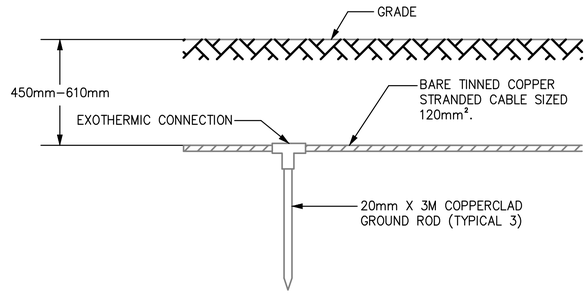


2 / E-501 **GROUND TRIPOD SYSTEM DETAIL - ELEVATION**

SCALE: N.T.S.

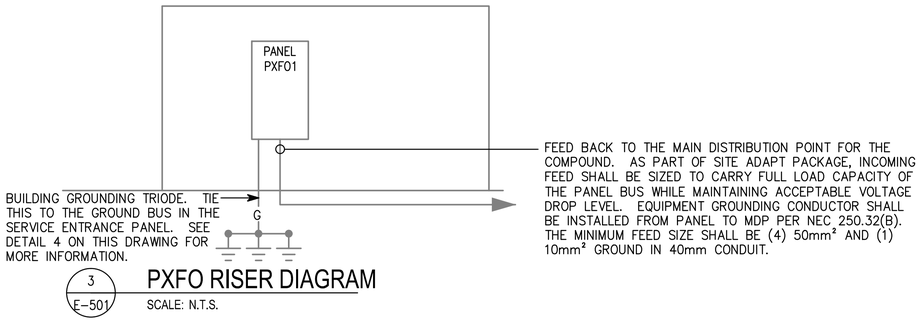


3 / E-501 **PXFO RISER DIAGRAM**

SCALE: N.T.S.

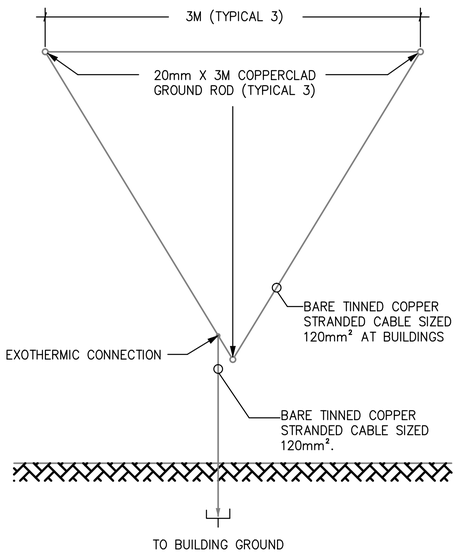


4 / E-501 **GROUND TRIPOD SYSTEM DETAIL - PLAN**

SCALE: N.T.S.

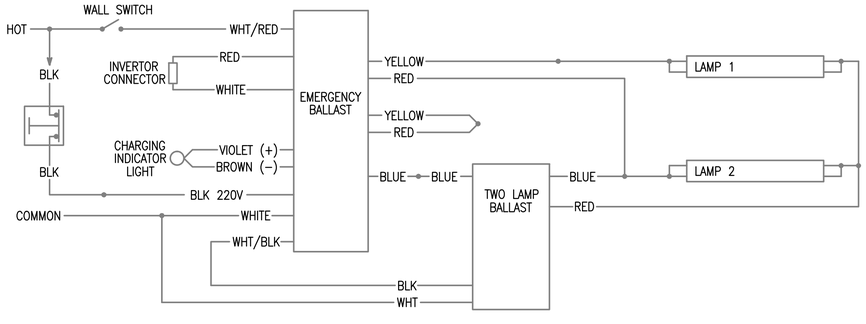


5 / E-501 **EMERGENCY FIXTURE WIRING DIAGRAM**

SCALE: N.T.S.

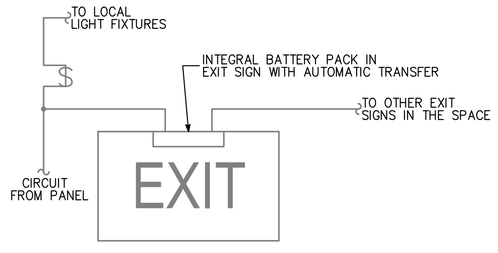


6 / E-501 **EXIT SIGN WIRING DIAGRAM**

SCALE: N.T.S.

APPROVED:

A/E DESIGNER OF RECORD

SEAL:

COMMONWEALTH OF PENNSYLVANIA
REGISTERED PROFESSIONAL ENGINEER
JOSEPH R. GAUS
1/29/10
PE-074251

US ARMY CORPS OF ENGINEERS
AFGHANISTAN ENGINEER DISTRICT

| Mark | Description | Date | Appr. |
|---|---|---|---|
| | | | |

| Mark | Description | Date | Appr. |
|---|---|---|---|
| | | | |

Rev: 0
Date: 2/23/10
Design file no.
Drawing code:
File name:
Plot date:
Plot scale:

Designed by: JRG
Dwn. by: BJB
Ckd by: JRG
Reviewed by: JRG
Submitted by: BAKER

U.S. ARMY CORPS OF ENGINEERS
AFGHANISTAN ENGINEER DISTRICT
APO AE 96338

*Michael Baker Jr., Inc*
*A unit of Michael Baker Corporation*
Airside Business Park
100 Airside Drive
Moon Township, PA 15108
www.mbakercorp.com

AFGHAN NATIONAL ARMY
REGIONAL MILITARY TRAINING CENTER
STANDARD DESIGN

PX/FINANCE OFFICE
ELECTRICAL DETAILS

Sheet reference number:
E-501

| Ⓐ LARGER OF THE TWO SIZES GIVEN IN THE TABLES BELOW | |
|---|---|
| GROUNDING ELECTRODE CONDUCTOR (BASED ON AIC RATING) | |
| AIC RATING OF SERVICE EQUIPMENT | NECESSARY GROUNDING ELECTRODE CONDUCTOR SIZE |
| 10K | (1) 35mm² |
| 14K | (1) 50mm² |
| 18K | (1) 70mm² |
| 22K | (1) 70mm² |
| 25K | (1) 70mm² |
| 30K | (1) 95mm² |
| 35K | (1) 120mm² |
| 42K | (1) 150mm² |
| 65K | (1) 185mm² |
| 100K | (1) 300mm² |
| 125K | (2) 185mm² |
| 200K | (2) 300mm² |

| GROUNDING ELECTRODE CONDUCTOR (BASED ON NEC TABLE 250.66) | |
|---|---|
| SIZE OF LARGEST UNGROUNDED SERVICE CONDUCTOR OR EQUIVALENT AREA FOR PARALLEL CONDUCTORS | NECESSARY GROUNDING ELECTRODE CONDUCTOR SIZE |
| 350 kcmil OR SMALLER | 35mm² |
| OVER 350 kcmil TO 600 kcmil | 70mm² |
| OVER 600 kcmil TO 1100 kcmil | 70mm² |
| OVER 1100 kcmil | 95mm² |
| NOTE: ALL SIZES ARE BASED ON COPPER CONDUCTORS. | |

| Ⓑ EQUIPMENT GROUNDING CONDUCTOR | |
|---|---|
| RATING OR SETTING OF AUTOMATIC OVERCURRENT DEVICE IN CIRCUIT AHEAD OF EQUIPMENT, CONDUIT, ETC, NOT EXCEEDING (AMPERES) | NECESSARY EQUIPMENT GROUNDING CONDUCTOR SIZE |
| 15 | 2.5mm² |
| 20 | 4.0mm² |
| 30 | 6.0mm² |
| 40 | 6.0mm² |
| 60 | 6.0mm² |
| 100 | 10mm² |
| 200 | 16mm² |
| 300 | 25mm² |
| 400 | 25mm² |
| 500 | 35mm² |
| 600 | 50mm² |
| 800 | 70mm² |
| 1000 | 70mm² |
| 1200 | 95mm² |
| 1600 | 120mm² |
| 2000 | 150mm² |
| 2500 | 185mm² |
| 3000 | 240mm² |
| 4000 | 300mm² |
| 5000 | 400mm² |
| 6000 | 400mm² |
| NOTE: ALL SIZES ARE BASED ON COPPER CONDUCTORS. | |

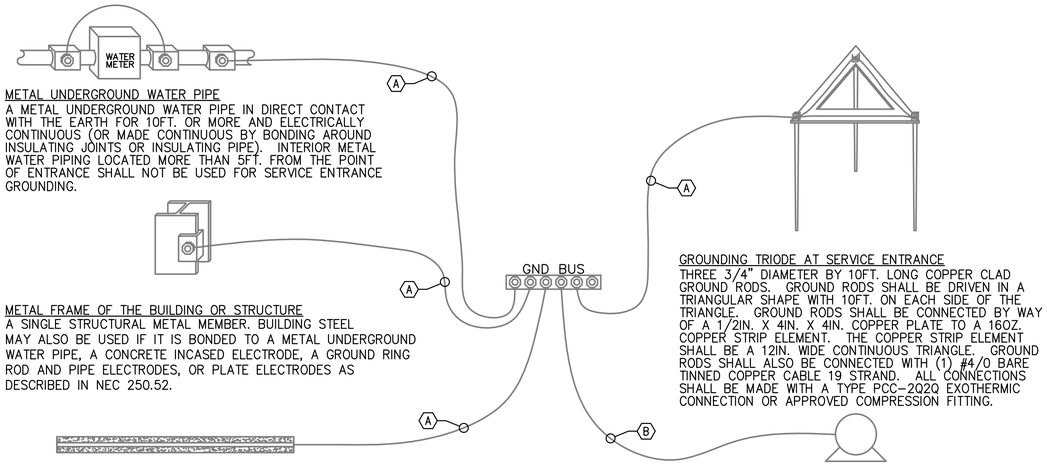


METAL UNDERGROUND WATER PIPE
A METAL UNDERGROUND WATER PIPE IN DIRECT CONTACT WITH THE EARTH FOR 10FT. OR MORE AND ELECTRICALLY CONTINUOUS (OR MADE CONTINUOUS BY BONDING AROUND INSULATING JOINTS OR INSULATING PIPE). INTERIOR METAL WATER PIPING LOCATED MORE THAN 5FT. FROM THE POINT OF ENTRANCE SHALL NOT BE USED FOR SERVICE ENTRANCE GROUNDING.

METAL FRAME OF THE BUILDING OR STRUCTURE
A SINGLE STRUCTURAL METAL MEMBER. BUILDING STEEL MAY ALSO BE USED IF IT IS BONDED TO A METAL UNDERGROUND WATER PIPE, A CONCRETE INCASED ELECTRODE, A GROUND RING ROD AND PIPE ELECTRODES, OR PLATE ELECTRODES AS DESCRIBED IN NEC 250.52.

CONCRETE ENCASED ELECTRODE
AN ELECTRODE ENCASED BY AT LEAST 2IN. OF CONCRETE , LOCATED WITHIN AND NEAR THE BOTTOM OF A CONCRETE FOUNDATION OR FOOTING THAT IS IN DIRECT CONTACT WITH THE EARTH, CONSISTING OF AT LEAST 20FT. OF ONE OR MORE BARE OR ZINC GALVANIZED OR OTHER ELECTRICALLY CONDUCTIVE COATED STEEL REINFORCING BARS OR RODS OF NOT LESS THAN 1/2" DIAMETER OR BARE COPPER CONDUCTOR NOT SMALLER THAN 4AWG.

GROUNDING TRIODE AT SERVICE ENTRANCE
THREE 3/4" DIAMETER BY 10FT. LONG COPPER CLAD GROUND RODS. GROUND RODS SHALL BE DRIVEN IN A TRIANGULAR SHAPE WITH 10FT. ON EACH SIDE OF THE TRIANGLE. GROUND RODS SHALL BE CONNECTED BY WAY OF A 1/2IN. X 4IN. X 4IN. COPPER PLATE TO A 16OZ. COPPER STRIP ELEMENT. THE COPPER STRIP ELEMENT SHALL BE A 12IN. WIDE CONTINUOUS TRIANGLE. GROUND RODS SHALL ALSO BE CONNECTED WITH (1) #4/0 BARE TINNED COPPER CABLE 19 STRAND. ALL CONNECTIONS SHALL BE MADE WITH A TYPE PCC-2Q2Q EXOTHERMIC CONNECTION OR APPROVED COMPRESSION FITTING.

LOAD OR DOWNSTREAM PANEL
ALL LOADS IN THE BUILDING SHALL HAVE AN EQUIPMENT GROUNDING CONDUCTOR PULLED TO THEM.

1
E-502

# SERVICE ENTRANCE GROUNDING DETAIL

SCALE: N.T.S.

APPROVED:

A/E DESIGNER OF RECORD

SEAL:

COMMONWEALTH OF PENNSYLVANIA
REGISTERED PROFESSIONAL
JOSEPH R GAUS
ENGINEER
PE-074251
12/29/10

US ARMY CORPS OF ENGINEERS
AFGHANISTAN ENGINEER DISTRICT

| Mark | Description | Date | Appr. |
|---|---|---|---|
| | | | |

| Mark | Description | Date | Appr. |
|---|---|---|---|
| | | | |

Rev: 0
Date: 2/23/10
Design file no.
Drawing code:
File name:
Plot date:
Plot scale:

Designed by: JRG
Dwn by: BJB
Ckd by: JRG
Reviewed by: JRG
Submitted by: BAKER

U.S. ARMY CORPS OF ENGINEERS
AFGHANISTAN ENGINEER DISTRICT
APO AE 96338

*Michael Baker Jr., Inc.*
*A unit of Michael Baker Corporation*
Airside Business Park
100 Airside Drive
Moon Township, PA 15108
www.mbakercorp.com

AFGHAN NATIONAL ARMY
REGIONAL MILITARY TRAINING CENTER
STANDARD DESIGN

PX/FINANCE OFFICE

ELECTRICAL DETAILS

Sheet reference number:
E-502

# LIGHT FIXTURE SCHEDULE

| FIXTURE MARK | STYLE NUMBER AND TYPE | NUMBER AND TYPE OF LAMPS | VOLTAGE | MOUNTING | NOTES |
|---|---|---|---|---|---|
| A | PARABOLIC SURFACE/PENDANT MOUNTED 300MM X 1200MM FLUORESCENT FIXTURE WITH ELECTRONIC BALLAST | (2) 32W 3500K | 220V – 1ø 50HZ | SURFACE MOUNTED | FURNISHED WITH ELECTRONIC BALLAST. PARABOLIC LOUVER SHALL BE SPECULAR LENS IRADESCENCE TYPE. |
| A2 | SAME AS FIXTURE 'A' WITH EMERGENCY BALLAST | (2) 32W 3500K | 220V – 1ø 50HZ | SURFACE MOUNTED | FURNISHED WITH ELECTRONIC BALLAST. PARABOLIC LOUVER SHALL BE SPECULAR LENS IRADESCENCE TYPE. EMERGENCY BALLAST SELF TEST. |
| C | INCANDESCENT ONE PIECE W/ APPROVED LENS STABILIZED HIGH IMPACT POLY CARBONATE. | (1) A19 – 100W INCANDESCENT | 220V – 1ø 50HZ | WALL MOUNTED ABOVE EXTERIOR DOORS | |
| G | WRAP AROUND SURFACE/PENDANT MOUNTED FLUORESCENT FIXTURE WITH PRISMATIC ACRYLIC LENS AND ELECTRONIC BALLAST | (2) 32W 3500K | 220V – 1ø 50HZ | SURFACE MOUNTED | FURNISHED WITH ELECTRONIC BALLAST, VIRGIN ACRYLIC WRAP AROUND LENS. |
| G2 | SAME AS FIXTURE 'G' WITH EMERGENCY BALLAST | (2) 32W 3500K | 220V – 1ø 50HZ | SURFACE MOUNTED | FURNISHED WITH ELECTRONIC BALLAST, VIRGIN ACRYLIC WRAP AROUND LENS. EMERGENCY BALLAST WITH SELF TEST SWITCH. |
| H | REMOTE HEAD EXTERIOR LIGHT HEAD POWERED FROM EXIT SIGN BATTERY– 12V DOUBLE HEAD CORROSION RESISTANT WITH UL34 WEATHERPROOF CONSTRUCTION | (2) 12W/12V HALOGEN LAMP | 12V – 1ø 50HZ | EXTERIOR WALL MOUNTED AT TOP OF DOOR HEIGHT | |
| [E] | UNIVERSAL MOUNT ENGINEER GRADE THERMOPLASTIC HOUSING EXIT SIGN WITH LED LAMPS, RED LETTERS 6" IN HEIGHT WITH ARROWS AS INDICATED, WITH 12V CADMIUM BATTERY WITH REMOTE HEAD CAPABILITY | LED LAMPS | 220V – 1ø 50HZ | UNIVERSAL MOUNTING | |

FIXTURE MARK 'A'

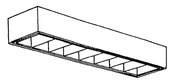

FIXTURE MARK 'C'

FIXTURE MARK 'G'

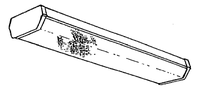

FIXTURE MARK 'H'

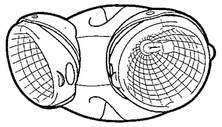

FIXTURE MARK '[E]'

APPROVED:

A/E DESIGNER OF RECORD

SEAL:

COMMONWEALTH OF PENNSYLVANIA
REGISTERED PROFESSIONAL
JOSEPH R GAUS
ENGINEER
PE-074251
12/29/10

US ARMY CORPS OF ENGINEERS
AFGHANISTAN ENGINEER DISTRICT

| Mark | Description | Date | Appr. |
|---|---|---|---|
| | | | |

| Mark | Description | Date | Appr. |
|---|---|---|---|
| | | | |

Rev: 0
Date: 2/23/10
Design file no.
Drawing code:
File name:
Plot date:
Plot scale:

Designed by: JRG
Dwn by: BJB
Ckd by: JRG
Reviewed by: JRG
Submitted by: BAKER

U.S. ARMY CORPS OF ENGINEERS
AFGHANISTAN ENGINEER DISTRICT
APO AE 96338

*Michael Baker Jr., Inc*
*A unit of Michael Baker Corporation*
Airside Business Park
100 Airside Drive
Moon Township, PA 15108
www.mbakercorp.com

AFGHAN NATIONAL ARMY
REGIONAL MILITARY TRAINING CENTER
STANDARD DESIGN

PX/FINANCE OFFICE

ELECTRICAL LIGHT FIXTURE SCHEDULE

Sheet reference number:
E–601

PANELBOARD PXF01 SURFACE MOUNTED
____ AMP. MAIN LUGS (OR) 100 AMP. MAIN BREAKER W/ 100 AMP. TRIP
CIRCUIT BREAKER TYPE 380/220 VOLTS 3 PHASE 4 WIRE 50 HZ 100 AMP. BUS

| CKT. NO. | TRIP AMPS | NO. POLES | WIRE MM² | GND MM² | CONDUIT MM | LOAD SERVED | LOAD-KVA A0 | LOAD-KVA B0 | LOAD-KVA C0 | LOAD-KVA A0 | LOAD-KVA B0 | LOAD-KVA C0 | LOAD SERVED | CONDUIT MM | GND MM² | WIRE MM² | NO. POLES | TRIP AMPS | CKT. NO. |
|---|---|---|---|---|---|---|---|---|---|---|---|---|---|---|---|---|---|---|---|
| 1 | 20 | 1 | 4.0 | 4.0 | 20 | LIGHTING – RM 101–104 | 1.3 | | | 1.2 | | | RECEPTACLES – RM 103,104 | 20 | 4.0 | 4.0 | 1 | 20 | 2 |
| 3 | 20 | 1 | 4.0 | 4.0 | 20 | RECEPTACLES – EXTERIOR | | 0.6 | | | 0.4 | | RECEPTACLES – RM 104 | 20 | 4.0 | 4.0 | 1 | 20 | 4 |
| 5 | 20 | 2 | 4.0 | 4.0 | 20 | ELECTRIC HEAT #2 – RM 101 | | | 2.6 | | | 1.0 | RECEPTACLES – RM 102 | 20 | 4.0 | 4.0 | 1 | 20 | 6 |
| 7 | | | | | | | 2.6 | | | 0.6 | | | RECEPTACLES – RM 101 | 20 | 4.0 | 4.0 | 1 | 20 | 8 |
| 9 | 20 | 2 | 4.0 | 4.0 | 20 | ELECTRIC HEAT #2 – RM 101 | | 2.6 | | | 0.8 | | RECEPTACLES – RM 101 | 20 | 4.0 | 4.0 | 1 | 20 | 10 |
| 11 | | | | | | | | | 2.6 | | | | SPARE | | | | 1 | 20 | 12 |
| 13 | 20 | 2 | 4.0 | 4.0 | 20 | ELECTRIC HEAT #2 – RM 102,104 | 2.6 | | | 0.8 | | | CEILING FANS – RM 101,103,104 | 20 | 4.0 | 4.0 | 1 | 20 | 14 |
| 15 | | | | | | | | 2.6 | | | 0.5 | | DAMPERS – RM 102,104 | 20 | 4.0 | 4.0 | 1 | 20 | 16 |
| 17 | 20 | 1 | 4.0 | 4.0 | 20 | EXHAUST FANS #1,#2 – RM 102,104 | | | 1.0 | | | | SPARE | | | | 1 | 20 | 18 |
| 19 | 20 | 2 | 4.0 | 4.0 | 20 | ELECTRIC HEAT #2 – RM 102,104 | 2.6 | | | | | | SPARE | | | | 1 | 20 | 20 |
| 21 | | | | | | | | 2.6 | | | | | SPARE | | | | 1 | 20 | 22 |
| 23 | 20 | 1 | | | | SPARE | | | | | | | SPARE | | | | 1 | 20 | 24 |
| 25 | 20 | 1 | | | | SPARE | | | | | | | SPARE | | | | 1 | 20 | 26 |
| 27 | 20 | 1 | | | | SPARE | | | | | | | SPARE | | | | 1 | 20 | 28 |
| 29 | 20 | 1 | | | | SPARE | | | | | | | SPARE | | | | 1 | 20 | 30 |
| 31 | 20 | 1 | | | | SPARE | | | | | | | SPARE | | | | 1 | 20 | 32 |
| 33 | 20 | 1 | | | | SPARE | | | | | | | SPARE | | | | 1 | 20 | 34 |
| 35 | 20 | 1 | | | | SPARE | | | | | | | SPARE | | | | 1 | 20 | 36 |
| 37 | 20 | 1 | | | | SPARE | | | | | | | SPARE | | | | 1 | 20 | 38 |
| 39 | 20 | 1 | | | | SPARE | | | | | | | SPARE | | | | 1 | 20 | 40 |
| 41 | 20 | 1 | | | | SPARE | | | | | | | SPARE | | | | 1 | 20 | 42 |
| | | | | | | | 9.1 | 8.4 | 6.2 | 2.6 | 1.7 | 1.0 | | | | | | | |

TOTAL CONN. LOAD PER PHASE (KVA): A0 11.7 B0 10.1 C0 7.2

TOTAL CONN. LOAD 29.0 KVA. 70 % DEMAND = ESTIMATED DEMAND LOAD 20.3

* MAIN BREAKER SHALL BE 3P EARTH GROUND TYPE

APPROVED:

A/E DESIGNER OF RECORD

SEAL:

COMMONWEALTH OF PENNSYLVANIA
REGISTERED PROFESSIONAL
JOSEPH R. GAUS
1/29/10
ENGINEER
PE-074251

US ARMY CORPS OF ENGINEERS
AFGHANISTAN ENGINEER DISTRICT

| Mark | Description | Date | Appr. |
|---|---|---|---|

| Mark | Description | Date | Appr. |
|---|---|---|---|

Date: 2/23/10
Rev: 0
Design file no.
Drawing code:
File name:
Plot date:
Plot scale:

Designed by: JRG
Dwn by: BJB
Ckd by: JRG
Reviewed by: JRG
Submitted by: BAKER

U.S. ARMY CORPS OF ENGINEERS
AFGHANISTAN ENGINEER DISTRICT
APO AE 96338

*Michael Baker Jr., Inc*
*A unit of Michael Baker Corporation*
Airside Business Park
100 Airside Drive
Moon Township PA 15108
www.mbakercorp.com

AFGHAN NATIONAL ARMY
REGIONAL MILITARY TRAINING CENTER
STANDARD DESIGN

PX/FINANCE OFFICE
ELECTRICAL PANEL SCHEDULES

Sheet reference number:
E-602

# AFGHAN NATIONAL ARMY

## STANDARD BUILDING DESIGN

## BOQ OFFICER BARRACKS

## 100% FINAL DESIGN SUBMITTAL

### SHEET INDEX


G-001 COVER SHEET

STRUCTURAL

S-001 GENERAL NOTES & DESIGN CRITERIA
S-101 FOUNDATION/SLAB PLAN
S-102 ROOF FRAMING PLAN
S-401 BUILDING SECTIONS
S-402 ENLARGED LATRINE SLAB PLAN
S-501 FOUNDATION SECTIONS
S-502 FOUNDATION & FRAMING SECTIONS
S-503 BEAM & COLUMN DETAILS
S-504 BEAM & COLUMN DETAILS
S-505 MISCELLANEOUS SECTIONS
S-601 SCHEDULES
S-701 TYPICAL DETAILS
S-702 TYPICAL DETAILS

ARCHITECTURAL

A-001 LIFE SAFETY PLAN
A-101 FLOOR PLAN
A-102 ROOF PLAN
A-201 ELEVATIONS
A-301 BUILDING SECTIONS
A-401 WALL SECTIONS
A-402 ENLARGED PLAN
A-501 EXTERIOR DETAILS
A-502 HEAD, JAMB, & SILL DETAILS
A-503 STOOP DETAILS
A-504 TOILET, LAVATORY, & ABLUTION DETAILS
A-505 SHOWER DETAILS
A-506 ISOLATION JOINT DETAILS
A-601 WINDOW & DOOR SCHEDULES

MECHANICAL

P-101 FLOOR PLAN-PLUMBING
P-501 PLUMBING DETAILS
P-502 PLUMBING DETAILS
P-503 PLUMBING DETAILS
P-901 PLUMBING ISOMETRICS

M-101 HVAC FLOOR PLAN SCHEDULES & DETAILS

ELECTRICAL

E-001 ELECTRICAL SYMBOLS & ABBREVIATIONS
E-101 ELECTRICAL LIGHTING PLAN
E-102 ELECTRICAL POWER & SYSTEMS PLAN
E-103 ELECTRICAL LIGHTNING PROTECTION
E-501 ELECTRICAL DETAILS
E-502 ELECTRICAL DETAILS
E-601 ELECTRICAL LIGHT FIXTURE SCHEDULE
E-602 ELECTRICAL PANEL SCHEDULES


US ARMY CORPS OF ENGINEERS
AFGHANISTAN ENGINEER DISTRICT

| Mark | Description | Date | Appr. |
|---|---|---|---|
| | | | |

| Mark | Description | Date | Appr. |
|---|---|---|---|
| | | | |

Date: 2/23/10 | Rev: 0
Design file no.
Drawing code:
File name: ANABOQG001CS
Plot date: 2/23/2010
Plot scale: X:X

Designed by: KMF/MMY | Ckd by: CWW
Dwn by: RCG | Reviewed by: LHM
Submitted by: BAKER

U.S. ARMY CORPS OF ENGINEERS
AFGHANISTAN ENGINEER DISTRICT
APO AE 96338


Michael Baker Jr., Inc.
A unit of Michael Baker Corporation
Airside Business Park
100 Airside Drive
Moon Township, PA 15108
www.mbakercorp.com


AFGHAN NATIONAL ARMY
REGIONAL MILITARY TRAINING CENTER
STANDARD DESIGN

BOQ OFFICER BARRACKS

COVER SHEET

Sheet reference number:
G-001

1 | 2 | 3 | 4 | 5

## STRUCTURAL ABBREVIATIONS:

| | |
|---|---|
| ACI | AMERICAN CONCRETE INSTITUTE |
| ADD'L | ADDITIONAL |
| AISC | AMERICAN INSTITUTE OF STEEL CONSTRUCTION |
| AISI | AMERICAN IRON AND STEEL INSTITUTE |
| ASTM | AMERICAN SOCIETY FOR TESTING AND MATERIALS |
| ARCH | ARCHITECTURAL |
| B | BOTTOM |
| BLDG | BUILDING |
| BOTT | BOTTOM |
| ℄ | CENTER LINE |
| CFMRF | COLD FORM METAL ROOF FRAME |
| CFMF | COLD FORM METAL FRAME |
| CFS | COLD FORMED STEEL |
| CIP | CAST–IN–PLACE |
| CIPL | CAST–IN–PLACE LINTEL |
| CJ | CONTROL JOINT |
| CLR | CLEAR |
| CMU | CONCRETE MASONRY UNIT |
| COEFF | COEFFICIENT |
| COL | COLUMN |
| CONC | CONCRETE |
| CONT | CONTINUOUS |
| COORD | COORDINATE |
| CRSI | CONCRETE REINFORCING STEEL INSTITUTE |
| CSJ | CONSTRUCTION JOINT |
| DIA | DIAMETER |
| DIAG | DIAGONAL |
| DIM | DIMENSION |
| DWG | DRAWING |
| DWL | DOWEL |
| EA | EACH |
| EF | EACH FACE |
| ELEC | ELECTRICAL |
| ELEV | ELEVATION |
| EMBED | EMBEDMENT |
| EQUIV | EQUIVALENT |
| ETC | ET CETERA |
| EW | EACH WAY |
| EXP | EXPANSION |
| EXT | EXTERIOR |
| FTG | FOOTING |
| GA | GAUGE |
| GB | GRADE BEAM |
| HORIZ | HORIZONTAL |
| h | HOUR |
| HRS | HOURS |
| IBC | INTERNATIONAL BUILDING CODE |
| INFO | INFORMATION |
| INT | INTERIOR |
| kg | KILOGRAM |
| km | KILOMETER |
| kN | KILONEWTON |
| kPa | KILOPASCAL |
| L# | ANGLE (# INDICATES SIZE) |
| LONG | LONGITUDINAL |
| LLV | LONG LEG VERTICAL |
| m | METER |
| MAX | MAXIMUM |
| MECH | MECHANICAL |
| MFG | MANUFACTURER |
| MID | MIDDLE |
| MIN | MINIMUM |
| MISC | MISCELLANEOUS |
| mm | MILLIMETER |
| MPa | MEGAPASCAL |
| MTL | METAL |
| MWFRS | MAIN WIND FORCE RESISTING SYSTEM |
| N | NEWTON |
| N | NORTH |
| N/A | NOT APPLICABLE |
| # | NUMBER SYMBOL FOR REBAR SIZE |
| NTS | NOT TO SCALE |
| OC | ON CENTER |
| OD | OUTSIDE DIAMETER |
| OPNG | OPENING |
| PL or PL | PLATE |
| PRE–ENG | PRE–ENGINEERED |
| RB | ROOF BEAM |
| REINF | REINFORCED |
| REQ'D | REQUIRED |
| SIM | SIMILAR |
| SPECS | SPECIFICATIONS |
| STD | STANDARD |
| STRUCT | STRUCTURAL |
| SW | SHEAR WALL |
| T | TOP |
| T/ | TOP OF |
| T/ELEV | TOP ELEVATION |
| T/SLAB | TOP OF SLAB |
| T&B | TOP AND BOTTOM |
| THK | THICK |
| TYP | TYPICAL |
| UFC | UNIFIED FACILITIES CRITERIA |
| UON | UNLESS OTHERWISE NOTED |
| VERT | VERTICAL |
| W | WIDTH |
| W/ | WITH |

## 1.0 GENERAL NOTES:

1.1 THIS PROJECT HAS BEEN DESIGNED FOR THE WEIGHTS AND MATERIALS INDICATED ON THE SHEETS AND FOR THE LIVE LOADS INDICATED IN THE DESIGN DATA. IT IS THE CONTRACTOR'S RESPONSIBILITY TO DETERMINE ALLOWABLE CONSTRUCTION LOADS AND TO PROVIDE PROPER DESIGN AND CONSTRUCTION OF FALSEWORK, FORMWORK, STAGING, BRACING, SHEETING AND SHORING, ETC.

1.1 COORDINATE THESE SHEETS WITH THE ARCHITECTURAL, MECHANICAL, ELECTRICAL, PLUMBING, AND CIVIL SHEETS. ALL DIMENSIONS SHOWN ON THE SHEETS ARE MILLIMETERS UNLESS NOTED OTHERWISE.

1.2 THE CONTRACTOR SHALL VERIFY AND COORDINATE ALL FLOOR AND ROOF OPENING SIZES AND LOCATIONS, EQUIPMENT PAD SIZES AND LOCATIONS, ANCHOR BOLT LAYOUTS, ETC WITH EQUIPMENT SELECTED. THE CONTRACTOR SHALL MAKE ANY REQUIRED MODIFICATIONS AT NO ADDITIONAL COST.

1.3 THE CONTRACTOR SHALL REFER TO THE ARCHITECTURAL, MECHANICAL, ELECTRICAL AND PLUMBING SHEETS FOR SLEEVES, CURBS, INSERTS OR OPENINGS, ETC. NOT HEREIN INDICATED.

1.4 WORK NOT INCLUDED ON THE SHEETS BUT IMPLIED TO BE SIMILAR TO THAT SHOWN AT CORRESPONDING PLACES ELSEWHERE ON THE SHEETS SHALL BE REPEATED.

1.5 IN CASE OF CONFLICT BETWEEN THE NOTES, DETAILS AND SPECIFICATIONS THE MOST RIGID REQUIREMENTS SHALL GOVERN.

1.6 SEE ARCHITECTURAL SHEETS FOR LOCATIONS OF MASONRY AND NON–LOAD BEARING PARTITIONS. PROVIDE COMPRESSIBLE FIRESAFING AT TOP OF WALL AS REQUIRED BY ARCHITECTURAL SHEETS.

1.7 COORDINATE FINISHED FLOOR DATUM ELEVATION 0.0m WITH THE CIVIL SHEETS.

## 2.0 FOUNDATION NOTES

2.1 THE GEOTECHNICAL ANALYSIS FOR THIS PROJECT IS THE RESPONSIBILITY OF THE CONTRACTOR AWARDED THE WORK. AN ASSUMED ALLOWABLE SOIL BEARING VALUE OF 72 kPa HAS BEEN USED IN THE STRUCTURAL ANALYSIS OF THE BUILDING HEREIN AND SHALL BE CONFIRMED AND VERIFIED AS PART OF THE GEOTECHNICAL INVESTIGATION. VALUES WHICH DO NOT MEET THE REQUIREMENTS INDICATED ON THE BASIS OF DESIGN SHEET SHALL BE IMMEDIATELY BROUGHT TO THE ATTENTION OF THE CONTRACTING OFFICER FOR CONSIDERATION AND DETERMINATION ON THE NEXT APPROPRIATE COURSE OF ACTION.

2.2 SEE THE SPECIFICATION FOR ADDITIONAL REQUIREMENTS TO THOSE OUTLINED IN THE GEOTECHNICAL INVESTIGATION FOR EXCAVATION AND PREPARATION OF THE FOUNDATION AND THE SLAB ON GRADE SUBGRADE INCLUDING COMPACTION PROCEDURES.

2.3 EXCAVATIONS FOR FOOTINGS SHALL HAVE THE SIDES AND BOTTOMS TEMPORARILY LINED WITH 0.25mm POLYETHYLENE IF PLACEMENT OF CONCRETE DOES NOT OCCUR WITHIN 24 HRS OF THE EXCAVATION OF THE FOOTING.

2.4 FOUNDATION CONDITIONS NOTED DURING CONSTRUCTION WHICH DIFFER FROM THOSE DESCRIBED IN THE GEOTECHNICAL REPORT SHALL BE REPORTED TO THE GENERAL CONTRACTOR BEFORE FURTHER CONSTRUCTION IS ATTEMPTED. SEE PROJECT SPECIFICATIONS.

2.5 NO FOOTINGS OR SLABS SHALL BE POURED INTO OR AGAINST SUBGRADE CONTAINING FREE WATER, FROST, ICE OR LOOSE MATERIAL. FROST DEPTH ASSUMED TO BE 800mm.

2.6 ALL SLAB–ON–GRADE, TRENCH BOTTOMS AND OTHER ON–GRADE INTERIOR HORIZONTAL SURFACES SHALL BE PLACED OVER A 0.25mm POLYETHYLENE VAPOR RETARDER OVER A 100mm #57 STONE WATER CAPILLARY BARRIER PLACED ON SUBGRADE PROPERLY PREPARED IN ACCORDANCE WITH THE CONTRACT SPECIFICATIONS. (UON)

2.7 PRIOR TO START OF FOUNDATION OR SLAB–ON–GRADE CONSTRUCTION, EXISTING SUBGRADES SHALL BE COMPACTED TO MINIMUM OF 95% MAXIMUM DRY DENSITY OBTAINED THRU ASTM D 1557 MODIFIED PROCTOR TESTING.

2.8 SEE PLUMBING, ELECTRICAL & CIVIL SHEETS FOR REQUIRED UNDERSLAB UTILITIES.

2.9 SEE ARCHITECTURAL SHEETS FOR ALL WATERPROOFING DETAILS AND MATERIALS.

2.10 IF UNDERMINING OF FOOTINGS OCCURS, FILL VOIDS WITH 18 MPa CONCRETE. DO NOT ATTEMPT TO REPLACE AND RE–COMPACT SOIL.

## 3.0 CONCRETE

3.1 CONCRETE SHALL HAVE THE UNIT WEIGHT OF 2400 $kg/m^3$ AND A MINIMUM COMPRESSIVE STRENGTH (f'c) OF 28 MPa AT 28 DAYS. ALL CONCRETE SHALL HAVE A WATER–CEMENT RATIO OF 0.45. SEE SPECIFICATIONS FOR ADDITIONAL INFORMATION. ENTRAIN AIR TO PRODUCE TOTAL AIR CONTENT ACCORDING TO THE SPECIFICATIONS FOR CONCRETE EXPOSED TO FREEZING TEMPERATURES (EXTERIOR FOOTINGS, SLAB TURNDOWNS, EXTERIOR SLABS AND SLABS–ON–GRADE, EXTERIOR RETAINING WALLS, AND EXTERIOR GRADE BEAMS.)

3.2 NO CALCIUM CHLORIDE SHALL BE USED IN ANY CONCRETE.

3.3 MIXING, TRANSPORTING AND PLACING OF CONCRETE SHALL CONFORM TO ACI 301M–05.

3.4 ALL CONCRETE WORK SHALL CONFORM TO THE REQUIREMENTS OF THE AMERICAN CONCRETE INSTITUTE (ACI) 318M MANUAL (metric), "BUILDING CODE REQUIREMENTS FOR REINFORCED CONCRETE", AND REQUIREMENTS OUTLINED IN THE CONTRACT SPECIFICATIONS. WHEN THERE IS A CONFLICT BETWEEN ACI AND THE SPECIFICATIONS, THE MORE STRINGENT SHALL GOVERN.

3.5 CHAMFER ALL EXPOSED EXTERNAL CORNERS OF CONCRETE WITH 20mm x45 DEGREE CHAMFER UON.

3.6 CONCRETE REINFORCEMENT BARS SHALL CONFORM TO ASTM A615M–96a, GRADE 420 MPa, REINFORCING BARS SHALL NOT BE TACK WELDED, WELDED, HEATED OR CUT, UNLESS INDICATED ON THE CONTRACT DOCUMENTS. ALL LAP SPLICES SHALL BE CLASS "B" UON.

3.7 HORIZONTAL FOOTING AND HORIZONTAL WALL REINFORCEMENT SHALL BE CONTINUOUS AND SHALL HAVE 90 DEGREE BENDS AND EXTENSIONS, OR CORNER BARS OF EQUIVALENT SIZE LAPPED WITH A CLASS B TENSION SPLICE AT CORNERS AND INTERSECTIONS. TOP BAR CRITERIA SHALL APPLY IF 300mm OR MORE OF FRESH CONCRETE IS PLACED BELOW BAR.

3.8 SLABS–ON–GRADE SHALL HAVE CONSTRUCTION JOINTS OR CRACK CONTROL JOINTS AS SHOWN ON THE DRAWINGS. CONSTRUCTION JOINTS CAN BE USED AT CONTROL JOINT LOCATIONS AT CONTRACTORS OPTION. SEE SLAB PLANS & JOINT DETAILS FOR ADDITIONAL INFORMATION. FOR AREAS NOT SHOWN ON DWGS, THE MAXIMUM SPACING OF CONSTRUCTION/ CRACK CONTROL JOINTS SHALL BE 4800mm

3.9 ALL CONCRETE REINFORCEMENT SHALL BE DETAILED, FABRICATED, LABELED, SUPPORTED, AND SPACED IN FORMS AND SECURED IN PLACE IN ACCORDANCE WITH THE PROCEDURES AND REQUIREMENTS OUTLINED IN THE LATEST EDITION OF THE "BUILDING CODE REQUIREMENTS FOR REINFORCED CONCRETE", ACI 318M, AND THE "MANUAL OF STANDARD PRACTICE FOR DETAILING REINFORCED CONCRETE STRUCTURES", ACI 315M, LATEST EDITION. BASED ON IN COUNTRY REINFORCEMENT AVAILABILITY, IT IS THE CONTRACTOR'S OPTION TO ROUND DESIGNATED ODD NUMBERED REINFORCEMENT SIZES UP (1) ONE BAR SIZE.

3.10 ALL DOWELS SHALL MATCH SIZE AND NUMBER OF MAIN REINFORCING, UNLESS NOTED OTHERWISE ON THE SHEETS.

3.11 ADDITIONAL BARS SHALL BE PROVIDED AROUND ALL FLOOR AND WALL OPENINGS AS SHOWN ON THE SHEETS.

3.12 SEE ARCHITECTURAL SHEETS FOR TYPE AND LOCATION OF ALL FLOOR FINISHES.

3.13 THE CONTRACTOR SHALL COORDINATE ADDITIONAL WALL/SLAB OPENINGS NOT SHOWN ON STRUCTURAL SHEETS. SEE MECHANICAL, ELECTRICAL, PLUMBING AND CIVIL SHEETS.

3.14 UNLESS NOTED OTHERWISE, ALL CURBS SHALL BE REINFORCED WITH AT LEAST (1)–#13 CONTINUOUS AND #13 AT 300mm O.C. DOWELS TO STRUCTURE BELOW.

3.15 THE CONTRACTOR SHALL VERIFY ALL OPENINGS, PAD SIZES, AND ANCHOR BOLTS WITH EQUIPMENT SELECTED.

3.16 FOR ALL WALLS & PIERS, PROVIDE DOWELS INTO FOOTING AT EACH VERT REINF BAR, UON DOWEL SIZE SHALL BE SAME AS VERT REINF.

3.17 PROVIDE CONCRETE POUR STOPS OR FORMED AS REQUIRED FOR INSTALLATION OF ALL CONCRETE WORK.

3.18 PROVIDE ADDITIONAL (2)–#13 x 600mm REINFORCING BARS IN SLAB–ON GRADE AT ALL RE–ENTRANT CORNERS. PLACE BARS AT MID–DEPTH OF SLAB WITH A CLEARANCE OF 50mm FROM CORNER UON.

3.19 COLD–WEATHER PLACEMENT: COMPLY WITH ACI 306.1 AND AS FOLLOWS. PROTECT CONCRETE WORK FROM PHYSICAL DAMAGE OR REDUCED STRENGTH THAT COULD BE CAUSED BY FROST, FREEZING ACTIONS, OR LOW TEMPERATURES. SUBMIT A COLD WEATHER CONCRETING PLAN FOR APPROVAL.

3.20 PROVIDE BONDING COMPOUND PER ASTM C 1059–99: SPECIFICATION FOR LATEX AGENTS FOR BONDING FRESH CONCRETE (GROUT) TO HARDENED CONCRETE.

3.21 THE FORMED SURFACES FOR REINFORCED CONCRETE SHALL ACHIEVE A "CLASS A" FINISH WHEN RECEIVING PAINT OR A "CLASS B" FINISH WHEN RECEIVING PLASTER OR TILE AS PER SPECIFICATION SECTION 03 31 00 CAST–IN–PLACE STRUCTURAL CONCRETE.

3.22 AT INTERSECTING GRADE BEAMS AND SHEAR WALLS, PROVIDE CORNER BARS AT INTERSECTIONS WITH SAME QUANTITY, SIZE AND SPACING AS HORIZONTAL BARS WITH LEG LENGTH = 50db.

3.23 REFER TO S–800 SERIES REINFORCING BAR PLACEMENT DRAWINGS DEFINING LENGTHS, BENDS, AND SPACINGS FOR ALL STRUCTURAL CONCRETE. THE S–800 SERIES DRAWING ARE BASED ON THE S–400, S–500, S–600, AND S–700 SERIES DRAWING SCHEDULES, DETAILS, AND DIAGRAMS.

## 4.0 CONCRETE MASONRY

4.1 MASONRY CONSTRUCTION SHALL CONFORM TO SPECIFICATION FOR MASONRY STRUCTURES (ACI 530.1) UON.

4.2 STRENGTH OF MASONRY MATERIALS SHALL BE AS FOLLOWS:

a. CONCRETE MASONRY UNITS SHALL BE NORMAL WEIGHT, GRADE N, TYPE 1, CONFORMING TO ASTM C–90 AND HAVE A MINIMUM COMPRESSIVE STRENGTH OF 10.4 MPa ON THE NET AREA.

b. MORTAR SHALL CONFORM TO ASTM C–270 TYPE S.

c. GROUT FOR MASONRY SHALL BE NORMAL WEIGHT AND HAVE A MINIMUM COMPRESSIVE STRENGTH OF 14 MPa AT 28 DAYS. GROUT SHALL CONFORM TO ASTM C476M. GROUT LIFTS SHALL NOT EXCEED 1,400mm.

d. REINFORCED MASONRY SHALL HAVE A STRENGTH F'm = 10 MPa. (F'm IS THE COMPRESSIVE STRENGTH OF THE MASONRY AT 28 DAYS AS DETERMINED BY PRISM TESTS).

4.3 ALL VERTICAL REINFORCEMENT FOR CONCRETE MASONRY SHALL BE ASTM A615M–96a, GRADE 420 MPa. ALL SPLICES SHALL BE LAPPED 48 BAR DIAMETERS MINIMUM.

4.4 BOND BEAMS SHALL BE SPACED AT 1200mm OC VERTICALLY. BOND BEAM REINFORCING SHALL BE CONTINUOUS AND PROVIDED AT WALL INTERSECTIONS AND WALL CORNERS (REFERENCE CONCRETE MASONRY NOTE 4.11). ALL BOND BEAM REINFORCING SHALL BE CONTINUOUS AND HAVE STANDARD ACI HOOKS AT EACH END. PROVIDE STANDARD BAR SPLICES AS SPECIFIED. AS AN ALTERNATE TO CMU BOND BEAMS, IT IS THE CONTRACTOR'S OPTION TO PROVIDE 200mm x 200mm CONTINUOUS CAST–IN–PLACE CONCRETE BOND BEAMS WITH (2)–#16 IN LIEU OF CMU BOND BEAMS INDICATED ON THE DRAWINGS.

4.5 SEE TYPICAL DETAILS FOR MINIMUM REINFORCEMENT REQUIREMENTS FOR CMU WALLS. PROVIDE STANDARD BAR SPLICES AS SPECIFIED. ALL VERTICAL REINFORCEMENT EXTENDS FULL HEIGHT OF WALL.

4.6 CMU CELLS THAT REQUIRE VERTICAL REINFORCING BARS AS INDICATED ON THE CONTRACT DRAWINGS AND/OR SPECS SHALL HAVE REINF BARS PLACED IN CENTERS OF CMU CELLS AND CONTINUOUSLY GROUTED UON.

4.7 ALL CMU CELLS, OPEN CAVITIES, AND AIR SPACES OF ALL EXTERIOR WALLS SHALL BE GROUTED TO STOP FRAGMENTS FROM MORTAR BLAST.

4.8 CONTRACTOR SHALL COORDINATE LOCATION OF ALL OPENINGS SEE ARCH, MECH, ELEC, AND PLUMBING SHEETS FOR SIZE AND LOCATION OF OPENINGS.

4.9 MASONRY WALLS SHALL NOT BE BACK FILLED PRIOR TO THE MORTAR AND GROUT ATTAINING THEIR RESPECTIVE MAXIMUM DESIGN STRENGTHS PER SPECIFICATIONS.

4.10 PROVIDE GALVANIZED MORTAR/GROUT SCREEN W/ 3mm MESH WHERE CELLS BELOW ARE NOT GROUTED.

4.11 AT INTERSECTING BOND BEAMS, PROVIDE CORNER BAR FOR EACH HORIZONTAL BAR IN BOND BEAMS AT INTERSECTING WALLS. USE SAME SIZE AND SPACING AS HORIZONTAL BARS WITH LEG LENGTH = 50db.

4.12 THE ALTERNATE TOP OF CMU WALL BRACING DETAIL(S) SHOWN ON S–701 CAN BE UTILIZED AT THE CONTRACTOR'S OPTION IN PLACE OF THE "SLEEVED DOWEL" WALL CONNECTIONS DEPICTED ON S–400 AND S–500 SERIES DRAWINGS. IN ADDITION, ALTERNATE DETAIL(S) SHOW CAST–IN–PLACE WALL BOND BEAMS THAT CAN BE UTILIZED AT THE CONTRACTOR'S OPTION IN PLACE OF THE STANDARD CMU BOND BEAMS CONSTRUCTED OF CMU BLOCKS.

## 5.0 COLD–FORMED METAL FRAMING

5.1 ALL COLD–FORMED METAL FRAMING MEMBERS SHALL CONFORM TO ASTM A1003M, STRUCTURAL GRADE ST340 (MPa), WITH A GALVANIZED COATING OF Z275 OR BETTER IN ACCORDANCE WITH ASTM A653M.

5.2 ALL COLD–FORMED METAL FRAMING MEMBERS SHALL HAVE THE FOLLOWING MINIMUM PROPERTIES:

a. MINIMUM METAL THICKNESS:
TRACK = 1.37mm;
STUD/OTHER = 1.09mm

b. MINIMUM FLANGE WIDTH:
TRACK = 38mm;
STUD/OTHER = 35mm

c. MINIMUM MEMBER DEPTH:
ALL SECTIONS = 152.2mm

d. PURLIN (HAT CHANNEL)
DEPTHxWIDTH(FLAT TOP)xTHICK = 25mmx42mmx1.59mm

5.3 ALL CONNECTIONS SHALL BE MADE WITH CORROSION RESISTANT (ASTM A153M), SELF–DRILLING, SELF–TAPPING STEEL DRILL SCREWS IN ACCORDANCE WITH ASTM C1513. SCREWS SHALL HAVE A LOW PROFILE HEAD BENEATH ROOF DECK, AND STANDARD HEAD ALL OTHER LOCATIONS.

5.4 FABRICATE COLD FORMED METAL FRAMING AND ACCESSORIES PLUMB, SQUARE AND TRUE TO LINE, WITH CONNECTIONS SECURELY FASTENED ACCORDING TO AISI STANDARD FOR COLD FORMED STEEL FRAMING.

5.5 CUT FRAMING MEMBERS BY SAWING OR SHEATHING, DO NOT TORCH CUT.

5.6 INSTALL FRAMING MEMBERS IN ONE–PIECE LENGTHS UNLESS SPLICE CONNECTIONS ARE INDICATED FOR TRACK OR TENSION MEMBERS

5.7 INSTALL TEMPORARY BRACING AND SUPPORTS TO SECURE FRAMING DURING CONSTRUCTION. MAINTAIN BRACING AND SUPPORTS IN PLACE UNTIL THE STRUCTURE HAS BEEN COMPLETED WITH ALL CONNECTIONS AND PERMANENT BRACING SECURED.

## 6.0 STRUCTURAL DESIGN CRITERIA

6.1 ALL DESIGNS SHALL CONFORM TO THE PROVISIONS OF THE IBC 2006 AND UFC AS APPLICABLE.

6.2 DESIGN LOADS

6.2.1 DEAD LOADS (PER IBC 2006 & UFC 3–310–01)

| | |
|---|---|
| MECH/ELEC/PLUMBING | 0.20 kPa |
| MISCELLANEOUS | 0.15 kPa |
| COLD–FORMED FRAMING | 0.20 kPa |
| INSULATION | 0.10 kPa |
| METAL ROOF PANEL | 0.14 kPa |
| | 0.79 kPa |
| FLOOR PARTITION ALLOWANCE | 0.96 kPa |

6.2.2 LIVE LOADS (PER IBC 2006 & UFC 3–310–01)

| | |
|---|---|
| ROOF | 1.00 kPa |
| CORRIDOR (2–STORY BLDG ONLY) | 4.80 kPa |
| ALL OTHERS (2–STORY BLDG ONLY) | 2.40 kPa |
| SLAB ON GRADE | 4.80 kPa |

6.2.3 SNOW LOADS (PER IBC 2006 & UFC 3–310–01)

| | |
|---|---|
| GROUND SNOW LOAD (Pg) | 1.2 kPa |
| SNOW IMPORTANCE FACTOR (I) | 1.0 |
| SNOW EXPOSURE FACTOR (Ce) | 1.0 |
| THERMAL FACTOR (Ct) | 1.0 |

6.2.4 WIND LOADS (PER IBC 2006)

| | |
|---|---|
| BASIC WIND SPEED | 137 km/h |
| WIND IMPORTANCE FACTOR | 1.0 |
| WIND EXPOSURE CATEGORY | D |
| DIRECTIONALITY COEFFICIENT (Kd) | 0.85 |
| TOPOGRAPHIC FACTOR (Kzt) | 1.0 |

6.2.5 SEISMIC LOADS (PER IBC 2006 & UFC 3–310–04)

OCCUPANCY USE CATEGORY — II
SEISMIC IMPORTANCE FACTOR (Ie) — 1.0
SEISMIC SITE CLASS — D
$S_s$ = 2.40 (FOR IRREGULAR PORTION OF BLDG – COLUMN LINES 1 THRU 5)
$S_S$ = 1.50 (REDUCED FROM 2.40 PER ASCE 7–05, 12.8.1.3 FOR A BUILDING WITHOUT IRREGULARITIES – COLUMN LINES 6 THRU 11)
$S_1$ = 1.20
$S_{DS}$ = 1.00 WHEN $S_s$ = 1.50
$S_{DS}$ = 1.60 WHEN $S_s$ = 2.40
$S_{D1}$ = 1.20
SEISMIC DESIGN CATEGORY — E
SEISMIC RESISTING SYSTEM:
–SPECIAL REINFORCED CONCRETE SHEAR WALL
RESPONSE MODIFICATION FACTOR (R) — 6
RESPONSE COEFFICIENT (Cs) – IRREGULAR — 0.267
RESPONSE COEFFICIENT (Cs) – REGULAR — 0.167
SEISMIC ANALYTICAL PROCEDURE = EQUIV LATERAL FORCE
SEISMIC BASE SHEAR – IRREGULAR — 1870 kN
SEISMIC BASE SHEAR – REGULAR — 740 kN

APPROVED:
A/E DESIGNER OF RECORD

SEAL:
GEORGIA REGISTERED 1-29-10 No. 27141 PROFESSIONAL ENGINEER CHRISTOPHER W. WHITMORE

US ARMY CORPS OF ENGINEERS
AFGHANISTAN ENGINEER DISTRICT

| Mark | Description | Date | Appr. |
|---|---|---|---|
| | | | |

| Mark | Description | Date | Appr. |
|---|---|---|---|
| | | | |

Designed by: KMP/MMY
Dwn by: RCG
Ckd by: CWW
Reviewed by: LHM
Submitted by: BAKER
Date: 2/23/10
Rev: 0
Design file no.
Drawing code:
File name: ANABOQS-001GN
Plot date: 2/23/2010
Plot scale: X:X

U.S. ARMY CORPS OF ENGINEERS
AFGHANISTAN ENGINEER DISTRICT
APO AE 96338

*Michael Baker Jr., Inc*
*A unit of Michael Baker Corporation*
Airside Business Park
100 Airside Drive
Moon Township PA 15108
www.mbakercorp.com

AFGHAN NATIONAL ARMY
REGIONAL MILITARY TRAINING CENTER
STANDARD DESIGN

BOQ OFFICER BARRACKS

GENERAL NOTES & DESIGN CRITERIA

Sheet reference number:
S–001

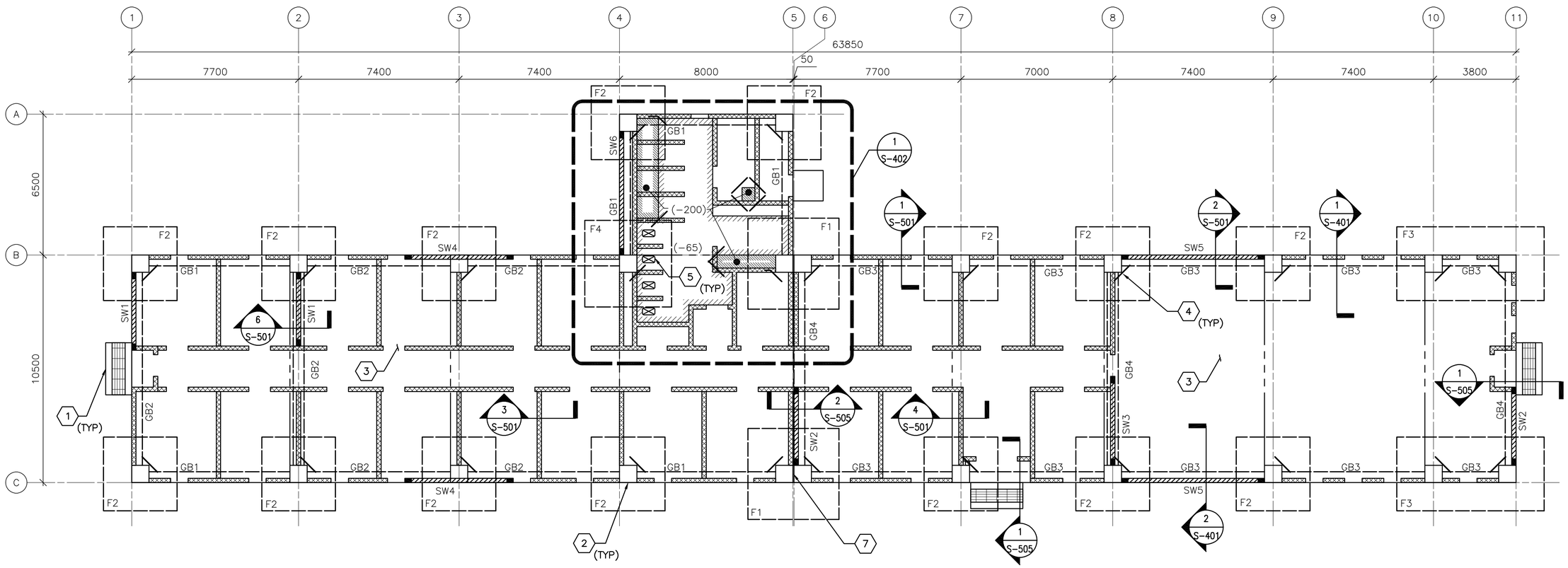


## 1 S-101 FOUNDATION/SLAB PLAN

SCALE: 1:100

## FOUNDATION/SLAB PLAN NOTES:

1. REFER TO SHEET S−001 FOR STRUCTURAL NOTES AND DESIGN CRITERIA.
2. FINISH FIRST FLOOR ELEVATION SHALL BE (DATUM 0.00) ALL PLUS OR MINUS DIMENSIONS INDICATED ON PLAN OR REFERRED TO IN NOTES RELATE TO FINISH FIRST FLOOR ELEVATION.
3. SLAB−ON−GRADE IS 150 WITH #13 @ 300 OC EW LOCATED 38 FROM T/SLAB UON. WHERE NOTED 300 SLAB−ON−GRADE SHALL BE REINFORCED W/ #13 @ 300 OC EW T&B.
4. TOP OF EXTERIOR FOOTINGS SHALL BE −950 UNLESS OTHERWISE INDICATED.
5. SPREAD FOOTINGS INDICATED BY F# ON PLAN. REFER TO SPREAD FOOTING SCHEDULE ON SHEET S−601.
6. REFER TO COLUMN SCHEDULE ON SHEET S−601.
7. GRADE BEAM INDICATED BY GB# ON PLAN, REFER TO BEAM SCHEDULE ON SHEET S−601.
8. SHEARWALL INDICATED BY SW# ON PLAN, REFER TO SHEARWALL SCHEDULE ON SHEET S−601.
9. SEE TYP EXTERIOR AND INTERIOR CMU WALL REINF DETAILS ON SHEET S−701.
10. SEE MECHANICAL AND ELECTRICAL SHEETS FOR CONCRETE PAD LOCATIONS, SIZES, AND THICKNESS NOT SHOWN. SEE SHEET S−701 FOR DETAILS.
11. THICKENED SLAB UNDER PERIMETER/PARTITION CMU WALLS NOT SHOWN FOR CLARITY.

## FOUNDATION/SLAB PLAN KEY NOTES: (X)

1. CONC PAD (ENTRANCE) − SEE ARCH DWGS FOR INFORMATION
2. REINF CONC COLUMN
3. REINF CONC SLAB−ON−GRADE
4. (2)−#13 RE−ENTRANT CORNER BARS − SEE S−701 FOR INFORMATION
5. SLAB OPENING − COORDINATE W/ ARCH AND PLUMB DWGS.
6. NOT USED
7. 50 ISOLATION JOINT BETWEEN STRUCTURES LOCATED ABOVE FIRST FLOOR SLAB−ON−GRADE

## FOUNDATION/SLAB PLAN LEGEND:

- REINF CONC SHEAR WALL
- REINF CMU WALL
- CONTROL JOINT
- INDICATES DROP SLAB 65 BELOW FINISH FLOOR
- INDICATES DROP SLAB 200 BELOW FINISH FLOOR
- SLAB OPENING

0 2000 4000
SCALE: 1:100

UNLESS OTHERWISE NOTED, LINEAR DIMENSIONS SHOWN ON DRAWINGS ARE IN MILLIMETERS (mm)

APPROVED:

A/E DESIGNER OF RECORD

SEAL:

GEORGIA REGISTERED 1-27-10 No. 27141 PROFESSIONAL ENGINEER CHRISTOPHER W. WHITMORE

US ARMY CORPS OF ENGINEERS
AFGHANISTAN ENGINEER DISTRICT

| Mark | Description | Date | Appr. |
|---|---|---|---|
| | | | |

Rev: 0
Date: 2/23/10
Design file no.
Drawing code:
File name: ANABOQS-101FNP
Plot date: 2/23/2010
Plot scale: X:X

Designed by: KMF/MMY
Dwn by: RCG
Ckd by: CWW
Reviewed by: LHM
Submitted by: BAKER

U.S. ARMY CORPS OF ENGINEERS
AFGHANISTAN ENGINEER DISTRICT
APO AE 96338

*Michael Baker Jr., Inc.*
*A unit of Michael Baker Corporation*
Airside Business Park
100 Airside Drive
Moon Township, PA 15108
www.mbakercorp.com

AFGHAN NATIONAL ARMY
REGIONAL MILITARY TRAINING CENTER
STANDARD DESIGN

BOQ OFFICER BARRACKS

FOUNDATION/SLAB PLAN

Sheet reference number:
S−101

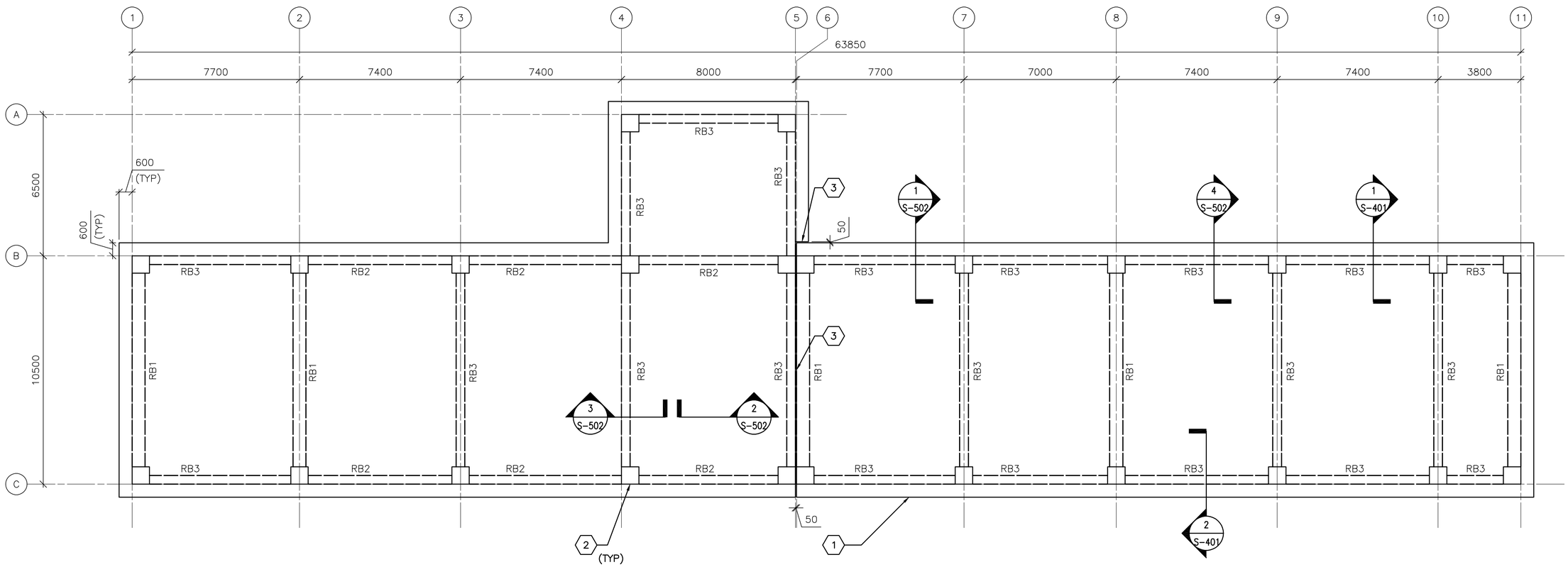


1 S-102

# ROOF FRAMING PLAN

SCALE: 1:100

## ROOF FRAMING PLAN NOTES:

1. REFER TO SHEETS S-001 FOR STRUCTURAL NOTES AND DESIGN CRITERIA.
2. TOP OF SLAB ELEVATION = 3800 UNLESS NOTED OTHERWISE.
3. ROOF SLAB IS 300 WITH #19 @ 300 OC EW T&B.
4. ROOF BEAM INDICATED BY RB# ON PLAN. REFER TO BEAM SCHEDULE ON SHEET S-601
5. COORDINATE WITH ARCHITECTURAL SHEETS FOR COLD-FORMED STEEL OVERBUILD FRAMING ABOVE ROOF SLAB.
6. COLD-FORMED METAL OVERBUILD ROOF FRAMING NOT SHOWN FOR CLARITY. SEE OVERBUILD ROOF FRAMING DETAILS AND SECTIONS ON SHEET S-702.
7. CMU PARTITION WALLS (BELOW ROOF SLAB) NOT SHOWN FOR CLARITY.
8. OVERHANG AREAS OF ROOF SLAB CONTAIN ROOF VENT PENETRATIONS. REFERENCE ARCHITECTURAL DRAWINGS FOR INFORMATION.
9. DISCONTINUE ALL ROOF FRAMING AT BUILDING EXPANSION JOINT. REFER TO ARCHITECTURAL SHEETS FOR COLD-FORMED ROOF OVERBUILD FRAMING EXPANSION JOINT DETAIL.

## ROOF FRAMING PLAN KEY NOTES: (X)

1. CONC ROOF SLAB (BELOW ROOF OVERBUILD)
2. REINF CONC COLUMN (BELOW CONC ROOF SLAB)
3. 50 ISOLATION JOINT BETWEEN STRUCTURES LOCATED ABOVE FIRST FLOOR SLAB-ON-GRADE

0 2000 4000
SCALE: 1:100

UNLESS OTHERWISE NOTED, LINEAR DIMENSIONS SHOWN ON DRAWINGS ARE IN MILLIMETERS (mm)

APPROVED:

A/E DESIGNER OF RECORD

SEAL:

GEORGIA REGISTERED 1-27-10 No. 27141 PROFESSIONAL ENGINEER CHRISTOPHER W. WHITMORE

US ARMY CORPS OF ENGINEERS
AFGHANISTAN ENGINEER DISTRICT

| Mark | Description | Date | Appr. |
|---|---|---|---|

Rev: 0
Date: 2/23/10
Design file no.
Drawing code:
File name: ANABOQS-102FRP
Plot date: 2/23/2010
Plot scale: x:X

Designed by: KMF/MMY
Dwn by: RCG
Ckd by: CWW
Reviewed by: LHM
Submitted by: BAKER

U.S. ARMY CORPS OF ENGINEERS
AFGHANISTAN ENGINEER DISTRICT
APO AE 96338

*Michael Baker Jr., Inc.*
*A unit of Michael Baker Corporation*
Airside Business Park
100 Airside Drive
Moon Township, PA 15108
www.mbakercorp.com

AFGHAN NATIONAL ARMY
REGIONAL MILITARY TRAINING CENTER
STANDARD DESIGN

BOQ OFFICER BARRACKS

ROOF FRAMING PLAN

Sheet reference number:
S-102

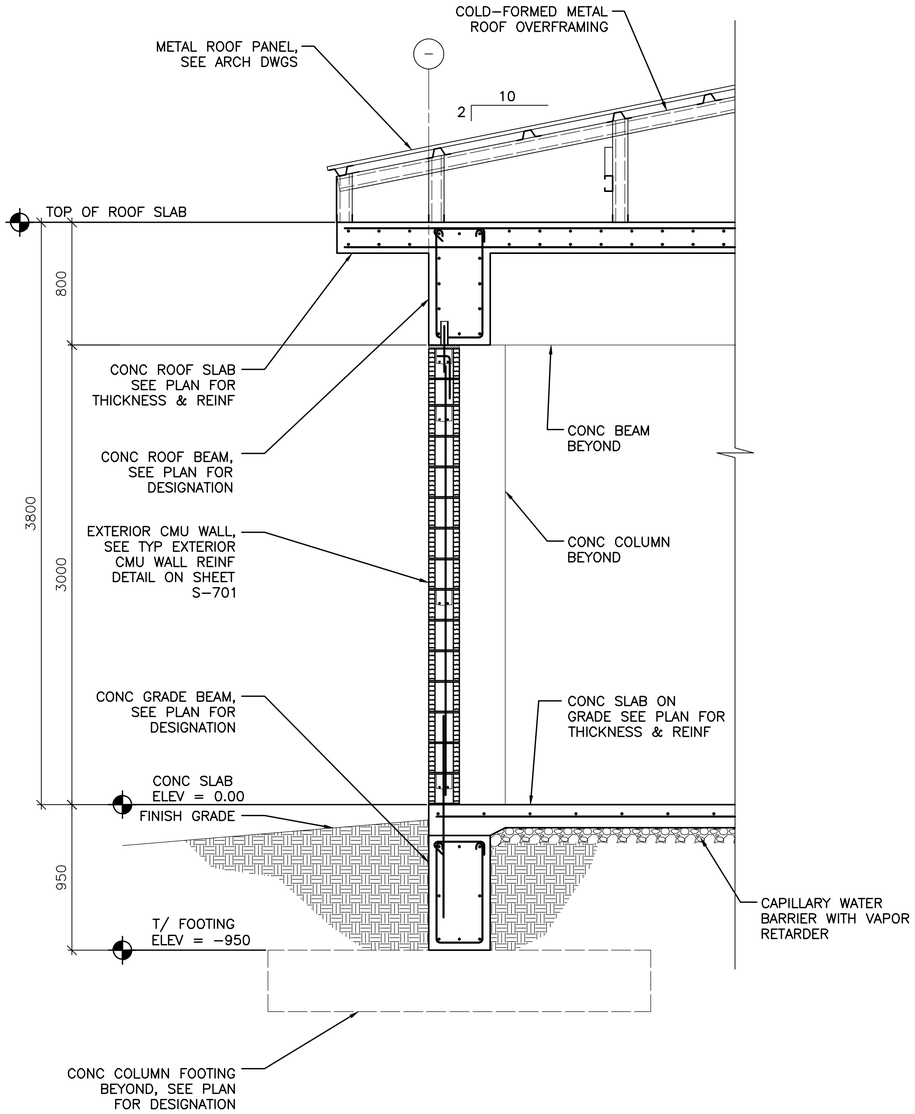


1 S–101 / 1 S–102

## TYPICAL WALL SECTION AT EXTERIOR MASONRY WALL

SCALE: 1:20

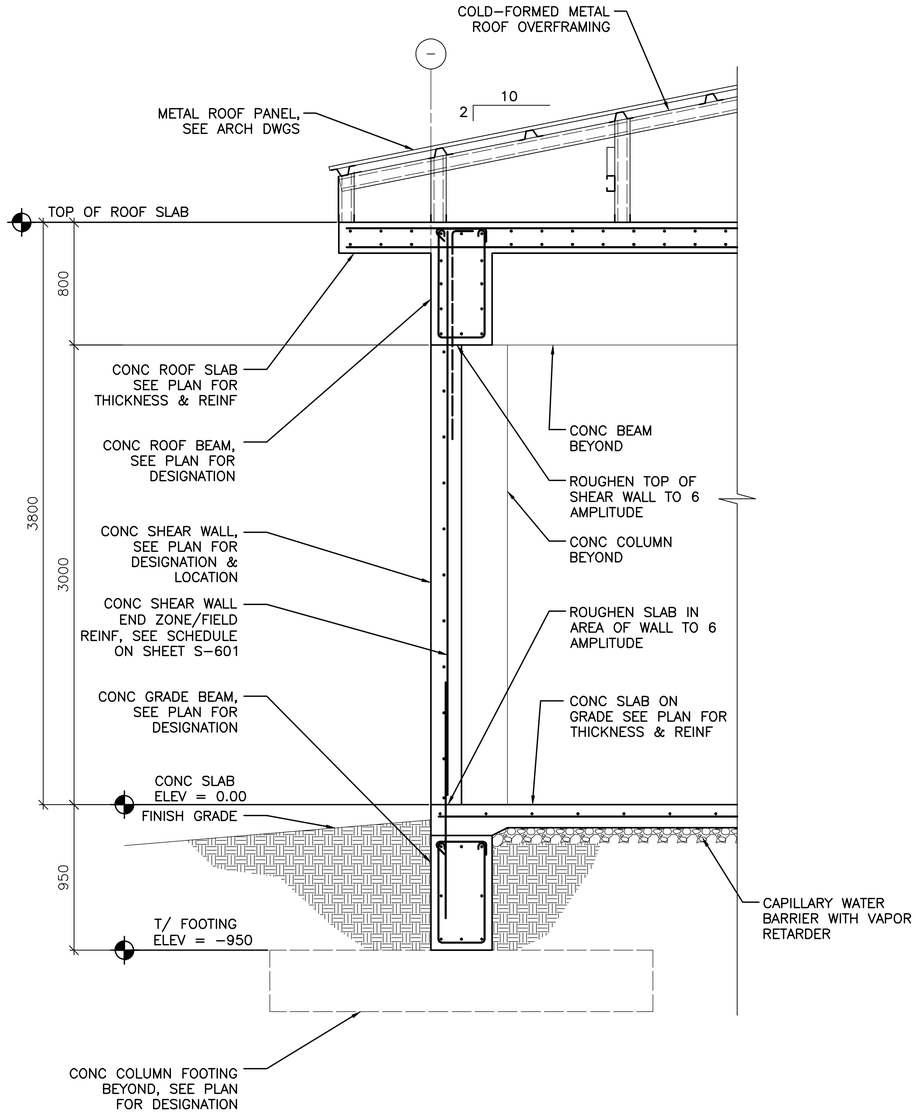


2 S–101 / 2 S–102

## TYPICAL WALL SECTION AT CONCRETE SHEAR WALL

SCALE: 1:20

0 400 800

SCALE: 1:20

UNLESS OTHERWISE NOTED, LINEAR DIMENSIONS SHOWN ON DRAWINGS ARE IN MILLIMETERS (mm)

APPROVED:

A/E DESIGNER OF RECORD

SEAL:

GEORGIA REGISTERED 1-29-10 No. 27141 PROFESSIONAL ENGINEER CHRISTOPHER W. WHITMORE

US ARMY CORPS OF ENGINEERS
AFGHANISTAN ENGINEER DISTRICT

| Mark | Description | Date | Appr. |
|---|---|---|---|
| | | | |

Date: 2/23/10 | Rev: 0
Design file no.
Drawing code:
File name: ANABOQS-401BS
Plot date: 2/23/2010
Plot scale: x:x

Designed by: KMF/MMY | Ckd by: CWW
Dwn by: RCG | Reviewed by: LHM
Submitted by: BAKER

U.S. ARMY CORPS OF ENGINEERS
AFGHANISTAN ENGINEER DISTRICT
APO AE 96338

*Michael Baker Jr., Inc.*
*A unit of Michael Baker Corporation*
Airside Business Park
100 Airside Drive
Moon Township, PA 15108
www.mbakercorp.com

AFGHAN NATIONAL ARMY
REGIONAL MILITARY TRAINING CENTER
STANDARD DESIGN

BOQ OFFICER BARRACKS

BUILDING SECTIONS

Sheet reference number:
S–401

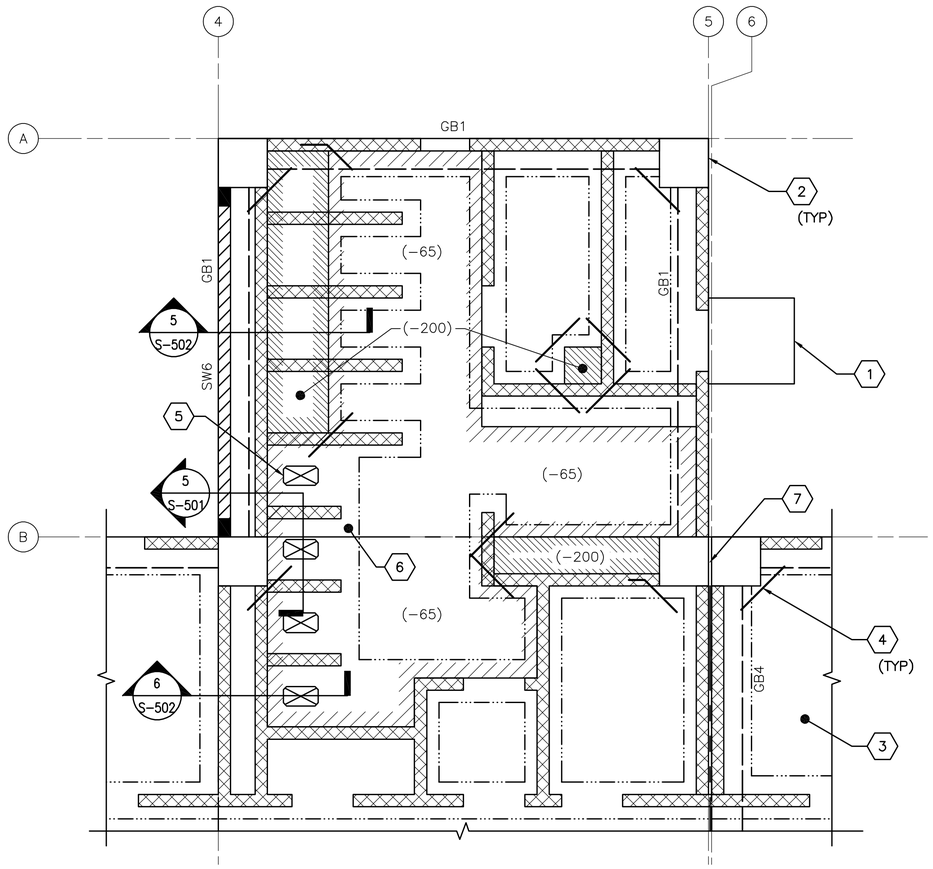


1 S–101 **ENLARGED LATRINE SLAB PLAN**

SCALE: 1:50

## ENLARGED PLAN NOTES:

1. REFER TO SHEET S–001 FOR STRUCTURAL NOTES AND DESIGN CRITERIA.
2. FINISH FIRST FLOOR ELEVATION SHALL BE (DATUM 0.00MM) ALL PLUS OR MINUS DIMENSIONS INDICATED ON PLAN OR REFERRED TO IN NOTES RELATE TO FINISH FIRST FLOOR ELEVATION.
3. SLAB–ON–GRADE IS 150 WITH #13 @ 300 OC EW LOCATED 38 FROM T/SLAB UON. WHERE NOTED, 300 SLAB–ON–GRADE SHALL BE REINFORCED W/ #13 @300 OC EW T&B.
4. REFER TO FOUNDATION/SLAB PLAN ON SHEET S–101 FOR COLUMN DESIGNATION AND COLUMN SCHEDULE ON SHEET S–601.
5. REFER TO FOUNDATION/SLAB PLAN ON SHEET S–101 FOR SHEARWALL DESIGNATION AND SHEARWALL SCHEDULE ON SHEET S–601.
6. REFER TO FOUNDATION/SLAB PLAN ON SHEET S–101 FOR GRADE BEAM DESIGNATION AND GRADE BEAM SCHEDULE ON SHEET S–601.
7. SEE TYP EXTERIOR AND INTERIOR CMU WALL REINFORCING DETAILS ON SHEET S–701.

## ENLARGED PLAN KEYNOTES: (X)

1. CONC PAD (ENTRANCE) – SEE ARCH DWGS FOR INFORMATION
2. REINF CONC COLUMN
3. REINF CONC SLAB–ON–GRADE
4. (2)–#13 RE–ENTRANT CORNER BARS – SEE S–701 FOR INFORMATION
5. SLAB OPENING – COORDINATE W/ ARCH AND PLUMBING DWGS.
6. 300 SLAB–ON–GRADE
7. 50 ISOLATION JOINT BETWEEN STRUCTURES LOCATED ABOVE FIRST FLOOR SLAB–ON–GRADE

## PLAN LEGEND:

- REINF CONC SHEAR WALL
- REINF CMU WALL
- CONTROL JOINT
- INDICATES DROP SLAB 65 BELOW FINISH FLOOR
- INDICATES DROP SLAB 200 BELOW FINISH FLOOR
- SLAB OPENING
- OUTLINE OF THICKENED SLAB AREAS
- GRADE BEAM

0 1000 2000

SCALE: 1:50

UNLESS OTHERWISE NOTED, LINEAR DIMENSIONS SHOWN ON DRAWINGS ARE IN MILLIMETERS (mm)

APPROVED:

A/E DESIGNER OF RECORD

SEAL:

GEORGIA REGISTERED 1-29-10 No. 27141 PROFESSIONAL ENGINEER CHRISTOPHER W. WHITMORE

US ARMY CORPS OF ENGINEERS
AFGHANISTAN ENGINEER DISTRICT

| Mark | Description | Date | Appr. | Mark | Description | Date | Appr. |
|---|---|---|---|---|---|---|---|
| | | | | | | | |

U.S. ARMY CORPS OF ENGINEERS
AFGHANISTAN ENGINEER DISTRICT
APO AE 96338

*Michael Baker Jr., Inc*
*A unit of Michael Baker Corporation*
Airside Business Park
100 Airside Drive
Moon Township, PA 15108
www.mbakercorp.com

Designed by: KMP/MMY
Dwn by: RCG
Ckd by: CWW
Reviewed by: LHM
Submitted by: BAKER

Date: 2/23/10
Design file no.
Drawing code:
File name: ANABOQS-402SP
Plot date: 2/23/2010
Plot scale: X:X
Rev: 0

AFGHAN NATIONAL ARMY
REGIONAL MILITARY TRAINING CENTER
STANDARD DESIGN

BOQ OFFICER BARRACKS

ENLARGED LATRINE SLAB PLAN

Sheet reference number:
S–402

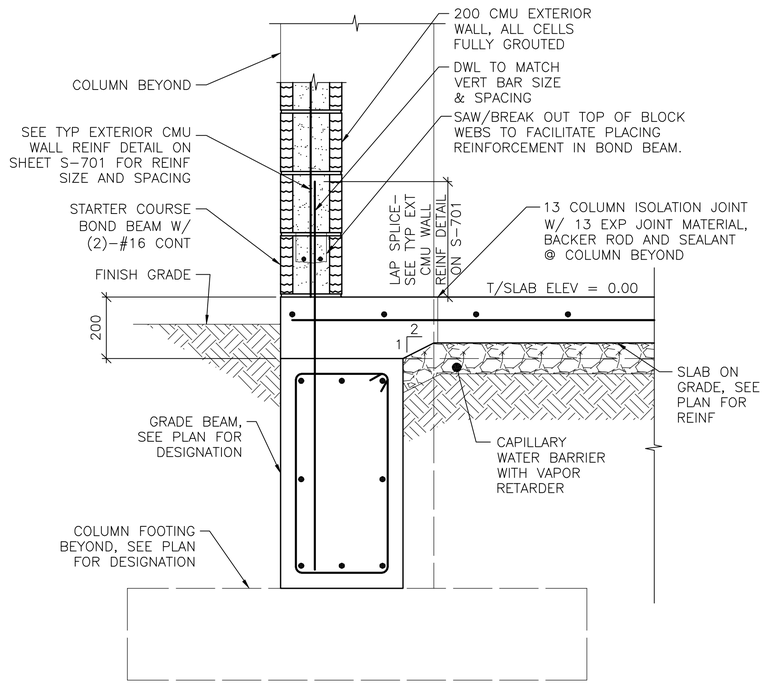


NOTE:
1. SECTION IS SIMILAR FOR INTERIOR CMU PARTITIONS OVER GRADE BEAMS SHOWING THICKENED 200 CONC SLAB AREA.

1 S-101 **SECTION** SCALE: 1:10

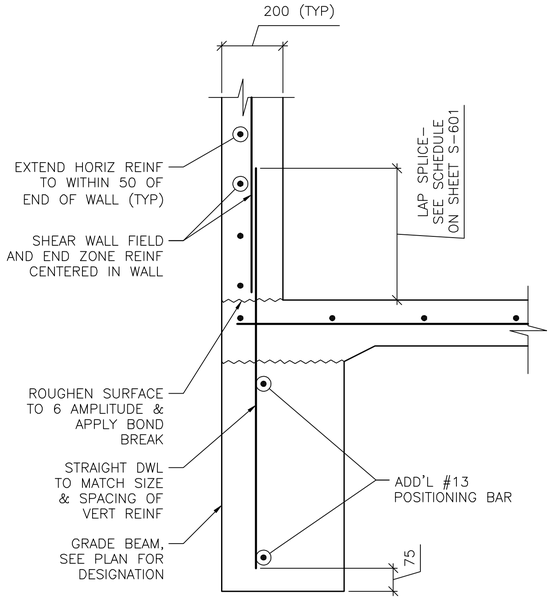


NOTE:
1. SECTION DEPICTS SHEAR WALL TERMINATION ONLY. GRADE BEAM REINFORCING NOT SHOWN FOR CLARITY.
2. SEE SHEET S-601 AND SHEET S-702 FOR SCHEDULED FIELD AND END ZONE REINF.

2 S-101 **SECTION** SCALE: 1:10

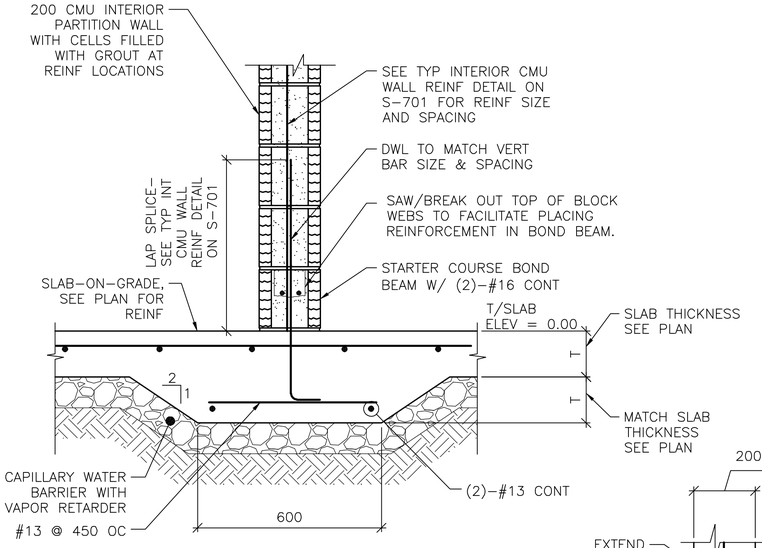


3 S-101 **SECTION** SCALE: 1:10

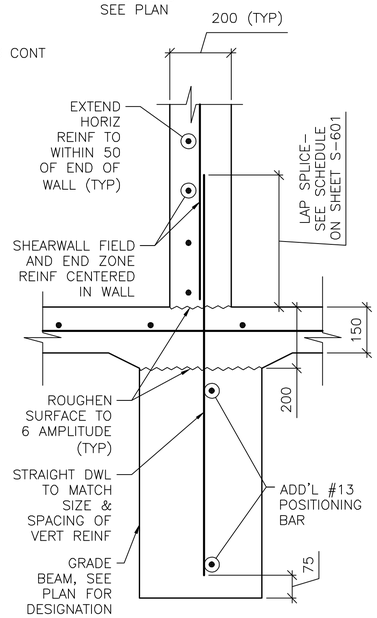


NOTE:
1. SECTION DEPICTS SHEAR WALL TERMINATION ONLY. GRADE BEAM REINFORCING NOT SHOWN FOR CLARITY
2. SEE SHEET S-601 AND SHEET S-702 FOR SCHEDULED FIELD AND END ZONE REINF.

6 S-101 **SECTION** SCALE: 1:10

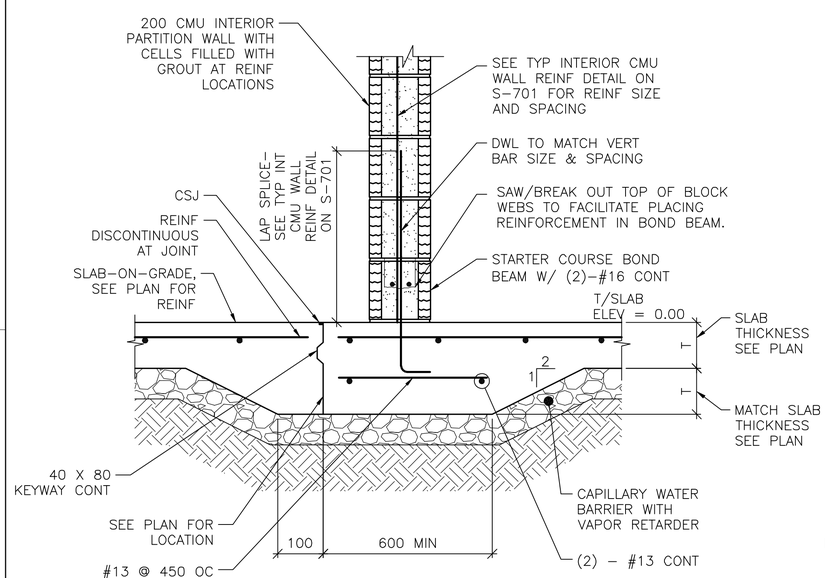


NOTE:
1. DETAIL IS APPLICABLE AT CONTROL JOINTS RUNNING PARALLEL TO CMU WALLS AND WITHIN 300 OF FACE OF WALL.

4 S-101 **SECTION** SCALE: 1:10

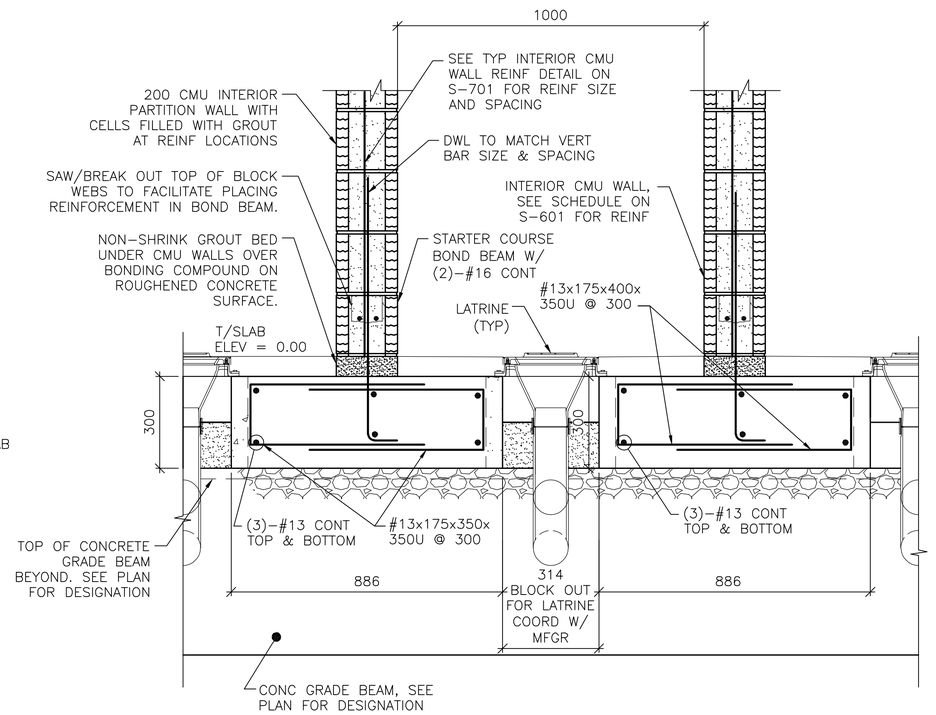


5 S-403 **SECTION** SCALE: 1:10

UNLESS OTHERWISE NOTED, LINEAR DIMENSIONS SHOWN ON DRAWINGS ARE IN MILLIMETERS (mm)

0 200 400
SCALE: 1:10

APPROVED:

A/E DESIGNER OF RECORD

SEAL:

GEORGIA REGISTERED 2-23-10 No. 27141 PROFESSIONAL ENGINEER CHRISTOPHER W. WHITMORE

US ARMY CORPS OF ENGINEERS
AFGHANISTAN ENGINEER DISTRICT

| Mark | Description | Date | Appr. | Mark | Description | Date | Appr. |
|---|---|---|---|---|---|---|---|
| | | | | | | | |

Rev: 0
Date: 2/23/10
Design file no.
Drawing code:
File name: ANABOQS-501SC
Plot date: 2/23/2010
Plot scale: XX

Designed by: KMP/MMY
Dwn by: RCG
Ckd by: CWW
Reviewed by: LHM
Submitted by: BAKER

U.S. ARMY CORPS OF ENGINEERS
AFGHANISTAN ENGINEER DISTRICT
APO AE 96338

Michael Baker Jr., Inc
A unit of Michael Baker Corporation
Airside Business Park
100 Airport Drive
Moon Township, PA 15108
www.mbakercorp.com

AFGHAN NATIONAL ARMY
REGIONAL MILITARY TRAINING CENTER
STANDARD DESIGN

BOQ OFFICER BARRACKS

FOUNDATION SECTIONS

Sheet reference number:
S-501

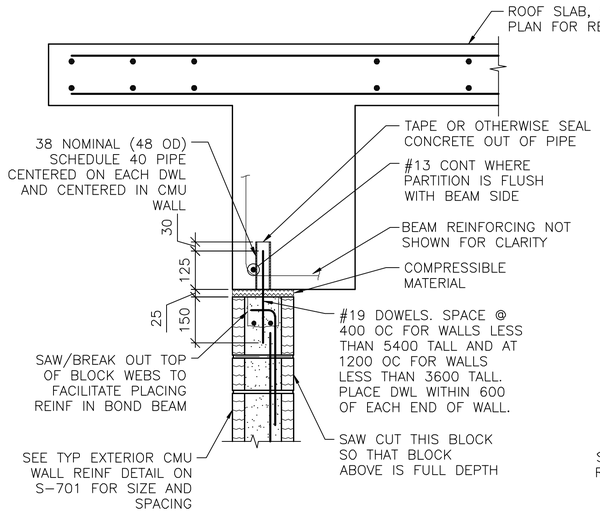


NOTES:
1. EXTEND DOWEL REINF TO 25 CLEAR FROM TOP OF CMU WALL.

1 S-102 **SECTION**
SCALE: 1:10

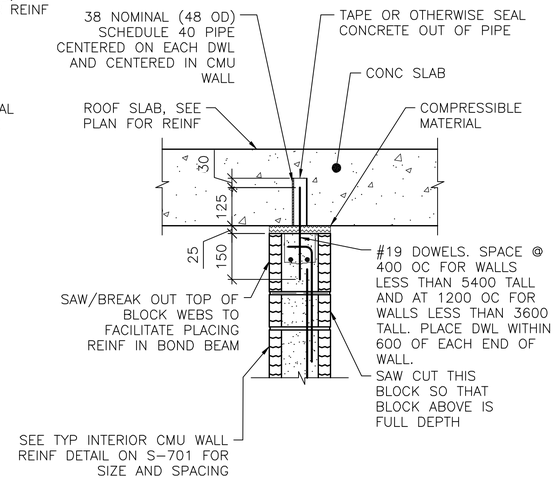


NOTES:
1. EXTEND DOWEL REINF TO 25 CLEAR FROM TOP OF CMU WALL.
2. SLAB REINF NOT SHOWN FOR CLARITY.

2 S-102 **SECTION**
SCALE: 1:10

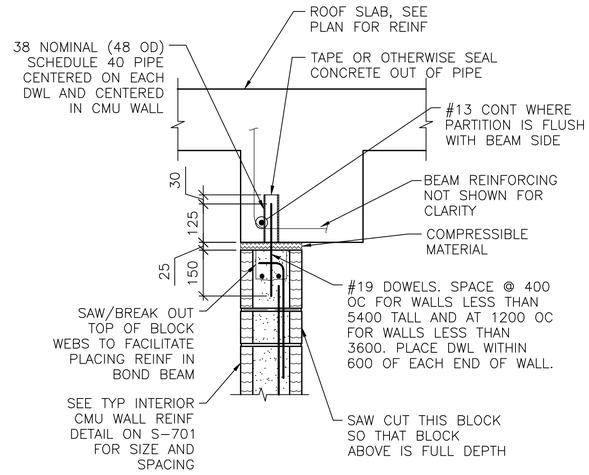


NOTES:
1. EXTEND DOWEL REINF TO 25 CLEAR FROM TOP OF CMU WALL.
2. PARTITION WALL MAY BE CENTERED UNDER THE BEAM OR FLUSH AS SHOWN. SEE PLAN FOR LOCATION.
3. SLAB REINF NOT SHOWN FOR CLARITY.

3 S-102 **SECTION**
SCALE: 1:10

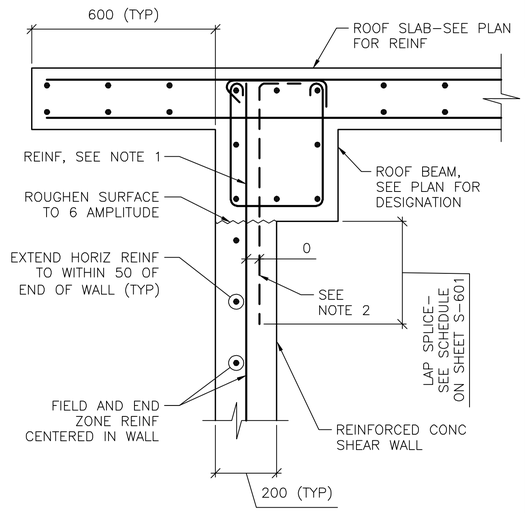


NOTES:
1. TERMINATE "FIELD" VERT REINF & END ZONE REINF @ 50 CLEAR FROM TOP OF ROOF SLAB.
2. WHERE END ZONE REINFORCING CANNOT BE DEVELOPED IN BEAM DEPTH, PROVIDE HOOKED DWLS SAME SIZE & SPACING. PROVIDE TENSION LAP BELOW ROOF BEAM.
3. SEE SHEET S-601 AND SHEET S-702 FOR SCHEDULED FIELD AND END ZONE REINF.

4 S-102 **SECTION**
SCALE: 1:10

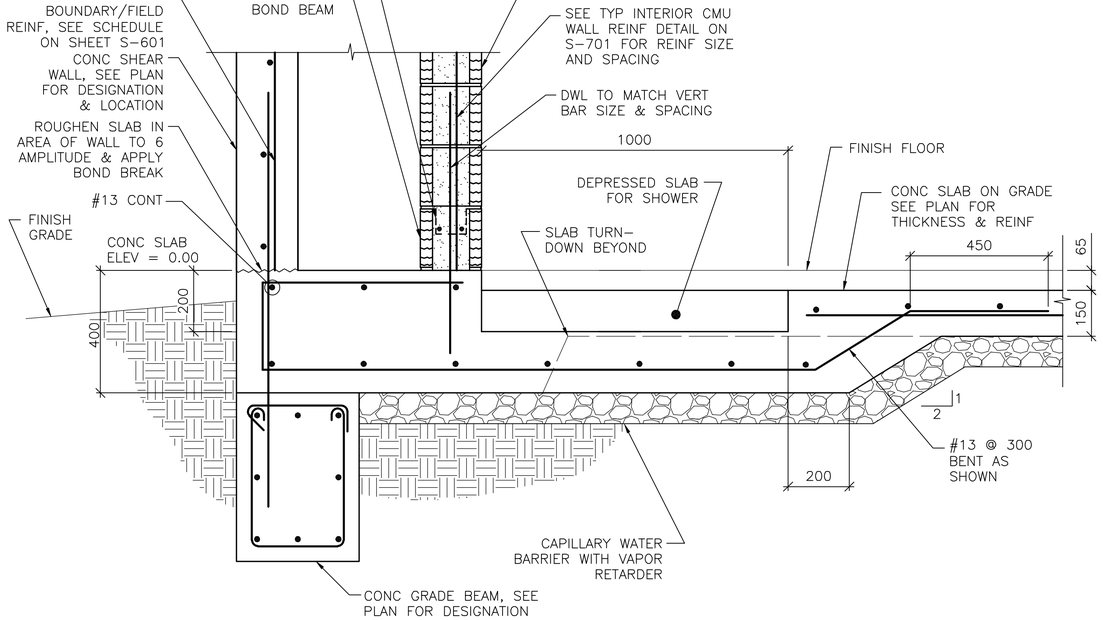


5 S-402 **SECTION**
SCALE: 1:10

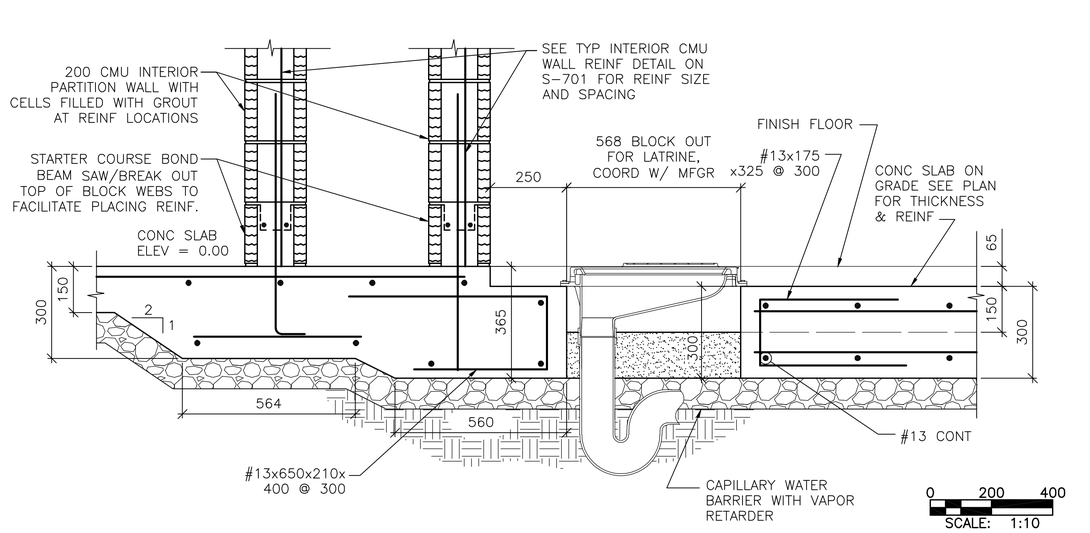


6 S-402 **SECTION**
SCALE: 1:10

0 200 400
SCALE: 1:10

UNLESS OTHERWISE NOTED, LINEAR DIMENSIONS SHOWN ON DRAWINGS ARE IN MILLIMETERS (mm)

APPROVED:

A/E DESIGNER OF RECORD

SEAL:

GEORGIA REGISTERED 1-21-10 No. 027141 PROFESSIONAL ENGINEER CHRISTOPHER W. WHITMORE

US ARMY CORPS OF ENGINEERS
AFGHANISTAN ENGINEER DISTRICT

| Mark | Description | Date | Appr. |
|---|---|---|---|

Rev: 0
Date: 2/23/10
Design file no.
Drawing code:
File name: ANABOQS-S025C
Plot date: 2/23/2010
Plot scale: X:X

Designed by: KMF/MMY
Dwn by: RCG
Ckd by: CWW
Reviewed by: LHM
Submitted by: BAKER

U.S. ARMY CORPS OF ENGINEERS
AFGHANISTAN ENGINEER DISTRICT
APO AE 96338

*Michael Baker Jr., Inc.*
*A unit of Michael Baker Corporation*
Airside Business Park
100 Airside Drive
Moon Township, PA 15108
www.mbakercorp.com

AFGHAN NATIONAL ARMY
REGIONAL MILITARY TRAINING CENTER
STANDARD DESIGN

BOQ OFFICER BARRACKS

FOUNDATION & FRAMING SECTIONS

Sheet reference number:
S-502

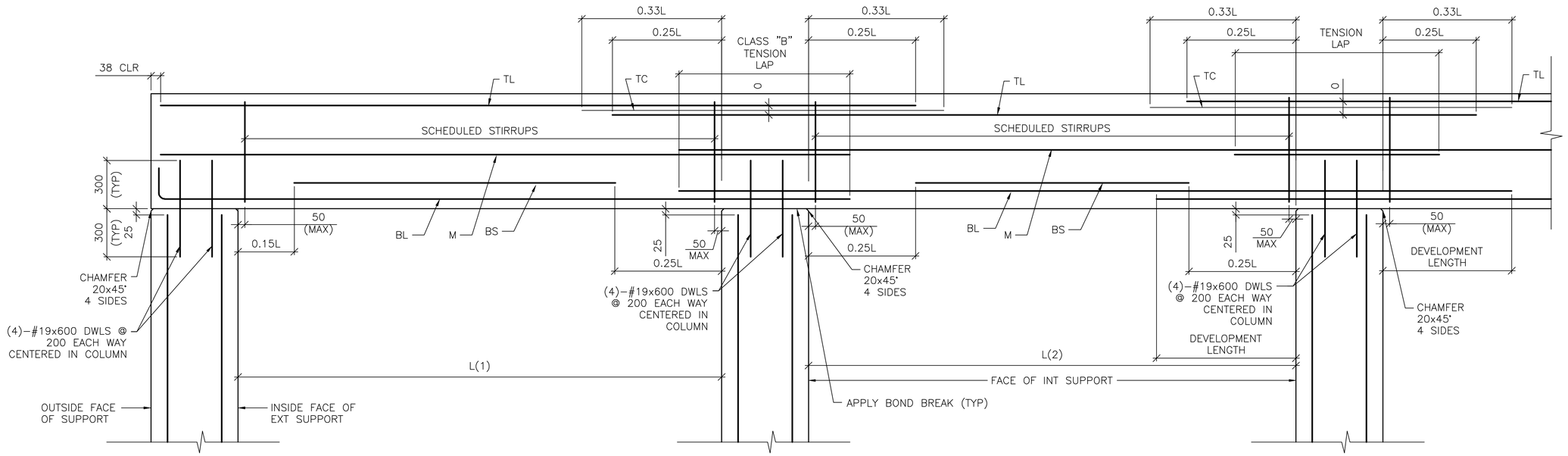


DETAIL NOTE:
1. WORK THIS DETAIL WITH BEAM SCHEDULE ON SHEET S-601.
2. L=GREATEST OF ADJACENT SPANS L(1) OR L(2)
3. ONLY COLUMN CORNER BARS ARE SHOWN

1 / S-503 **ROOF BEAM REINFORCING DETAIL**

SCALE: NTS

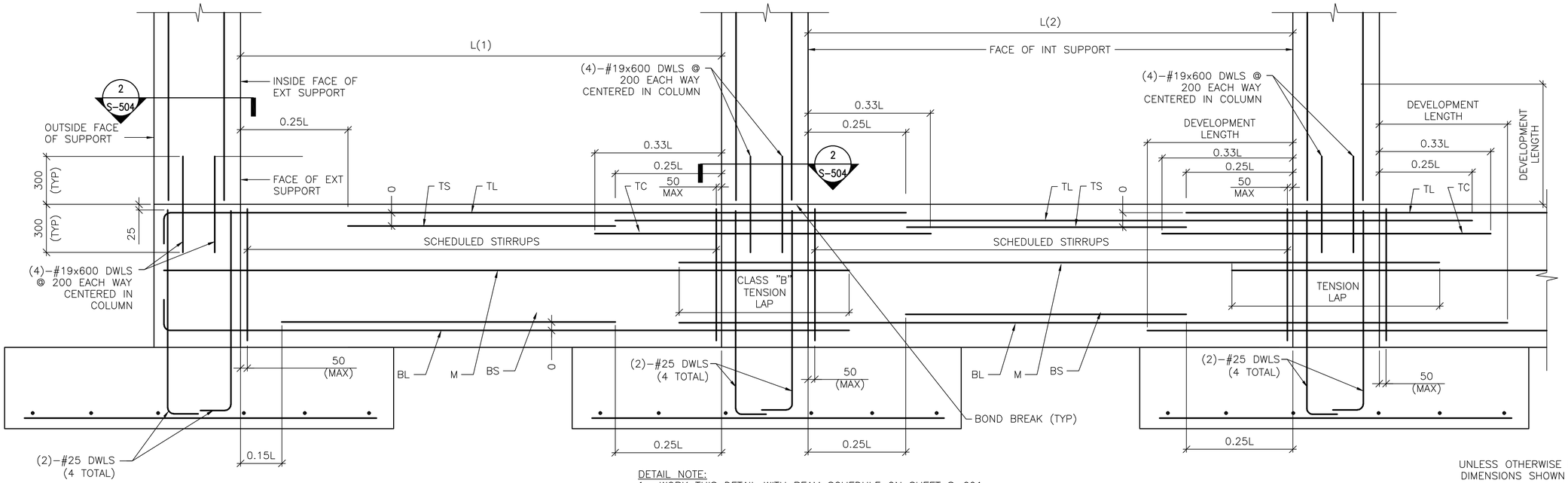


DETAIL NOTE:
1. WORK THIS DETAIL WITH BEAM SCHEDULE ON SHEET S-601.
2. L=GREATEST OF ADJACENT SPANS L(1) OR L(2)
3. ONLY COLUMN CORNER BARS ARE SHOWN.

2 / S-503 **GRADE BEAM REINFORCING DETAIL**

SCALE: NTS

UNLESS OTHERWISE NOTED, LINEAR DIMENSIONS SHOWN ON DRAWINGS ARE IN MILLIMETERS (mm)

APPROVED:

A/E DESIGNER OF RECORD

SEAL:

GEORGIA REGISTERED 1-29-10 No. 27141 PROFESSIONAL ENGINEER CHRISTOPHER W. WHITMORE

US ARMY CORPS OF ENGINEERS
AFGHANISTAN ENGINEER DISTRICT

| Mark | Description | Date | Appr. |
|---|---|---|---|

Rev: 0
Date: 2/23/10
Design file no.
Drawing code: ANABOQS-503DT
Plot date: 2/23/2010
Plot scale: X:X
Designed by: KMP/MMY
Dwn by: RCG
Ckd by: CWW
Reviewed by: LHM
Submitted by: BAKER

U.S. ARMY CORPS OF ENGINEERS
AFGHANISTAN ENGINEER DISTRICT
APO AE 96338

*Michael Baker Jr., Inc*
*A unit of Michael Baker Corporation*
Airside Business Park
100 Airside Drive
Moon Township, PA 15108
www.mbakercorp.com

AFGHAN NATIONAL ARMY
REGIONAL MILITARY TRAINING CENTER
STANDARD DESIGN

BOQ OFFICER BARRACKS

BEAM & COLUMN DETAILS

Sheet reference number:
S-503

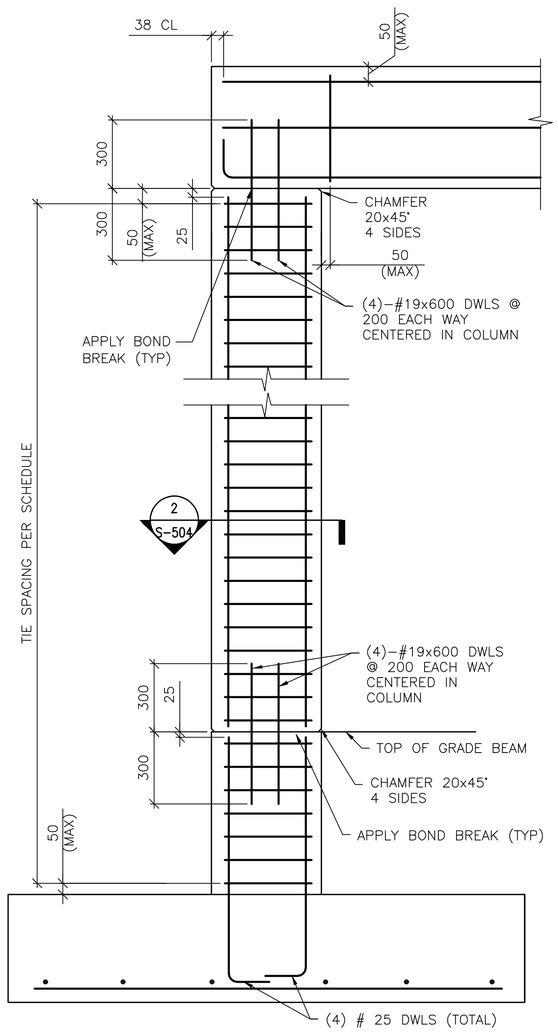


DETAIL NOTE:
1. ONLY COLUMN CORNER BARS ARE SHOWN

1 S–504 **1-STORY COLUMN REINF DETAILS**
SCALE: NTS
(WITH GRADE BEAM)

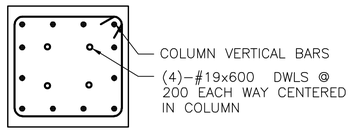


DETAIL NOTE:
1. INTERIOR TIES NOT SHOWN FOR CLARITY. REFER TO DETAIL A THIS SHEET FOR INTERIOR TIE CONFIGURATION.

2 S–503 2 S–504 **SECTION**
SCALE: NTS

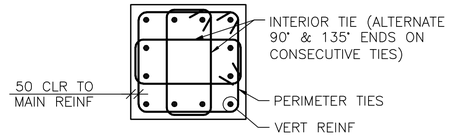


A S–504 **12 BAR COLUMN**
SCALE: NTS

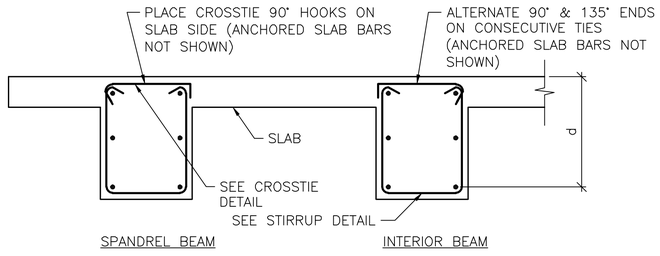


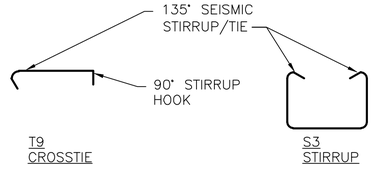


B S–504 **BEAM REINFORCEMENT DETAILS**
SCALE: NTS

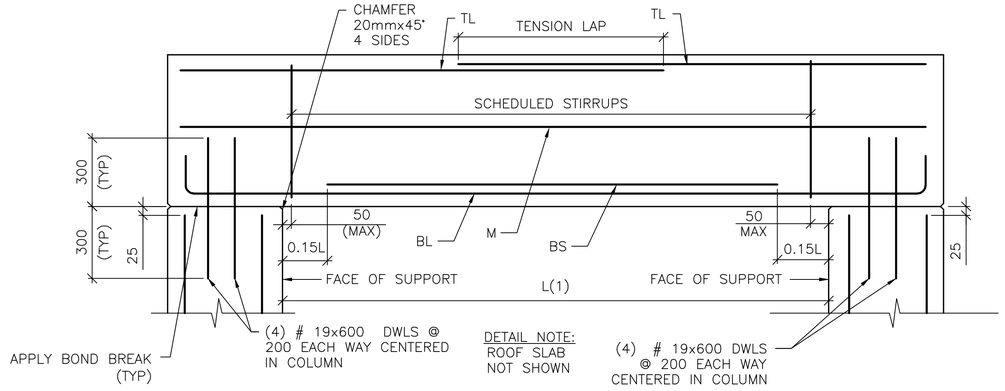


3 S–504 **SINGLE SPAN ROOF BEAM REINFORCING DETAIL**
SCALE: NTS

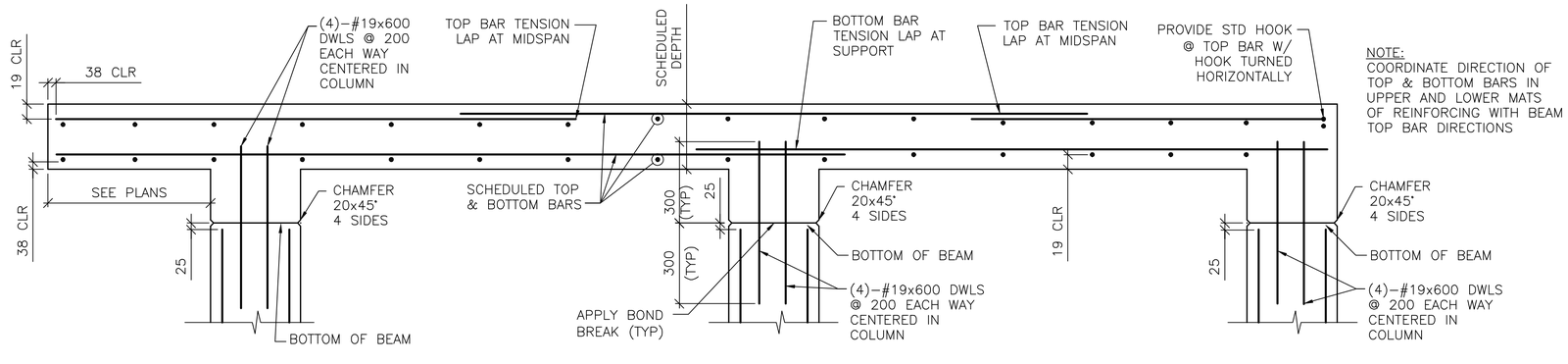


4 S–504 **FRAMED SLAB REINFORCING DETAIL**
SCALE: NTS

UNLESS OTHERWISE NOTED, LINEAR DIMENSIONS SHOWN ARE IN MILLIMETERS (mm)

APPROVED:

A/E DESIGNER OF RECORD

SEAL:

GEORGIA REGISTERED 4-29-10 No. 27141 PROFESSIONAL ENGINEER CHRISTOPHER W. WHITMORE

US ARMY CORPS OF ENGINEERS
AFGHANISTAN ENGINEER DISTRICT

| Mark | Description | Date | Appr. |
|---|---|---|---|

Rev: 0
Date: 2/23/10
Design file no.
Drawing code:
File name: ANABOQS-504DT
Plot date: 2/23/2010
Plot scale: X:X
Designed by: KMP/MMY
Dwn by: RCG
Ckd by: CWW
Reviewed by: LHM
Submitted by:
BAKER

U.S. ARMY CORPS OF ENGINEERS
AFGHANISTAN ENGINEER DISTRICT
APO AE 96338

Michael Baker Jr., Inc.
A unit of Michael Baker Corporation
Airside Business Park
100 Airside Drive
Moon Township, PA 15108
www.mbakercorp.com

AFGHAN NATIONAL ARMY
REGIONAL MILITARY TRAINING CENTER
STANDARD DESIGN

BOQ OFFICER BARRACKS

BEAM & COLUMN DETAILS

Sheet reference number:
S–504

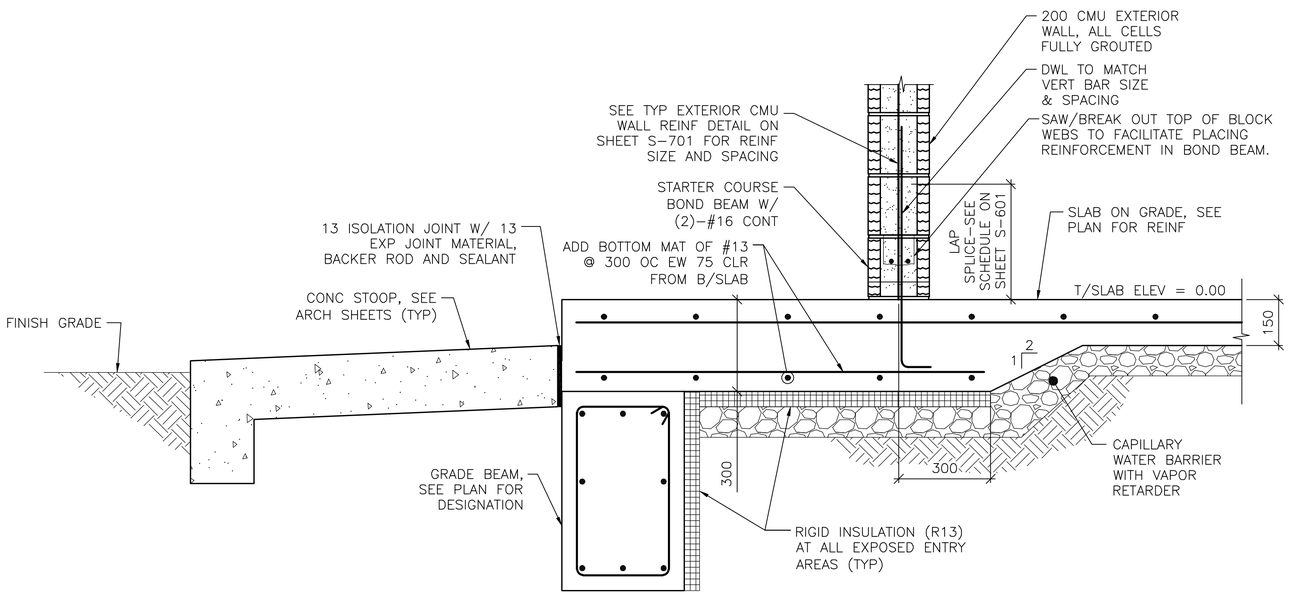


1 S-101 **SECTION**

SCALE: 1:10

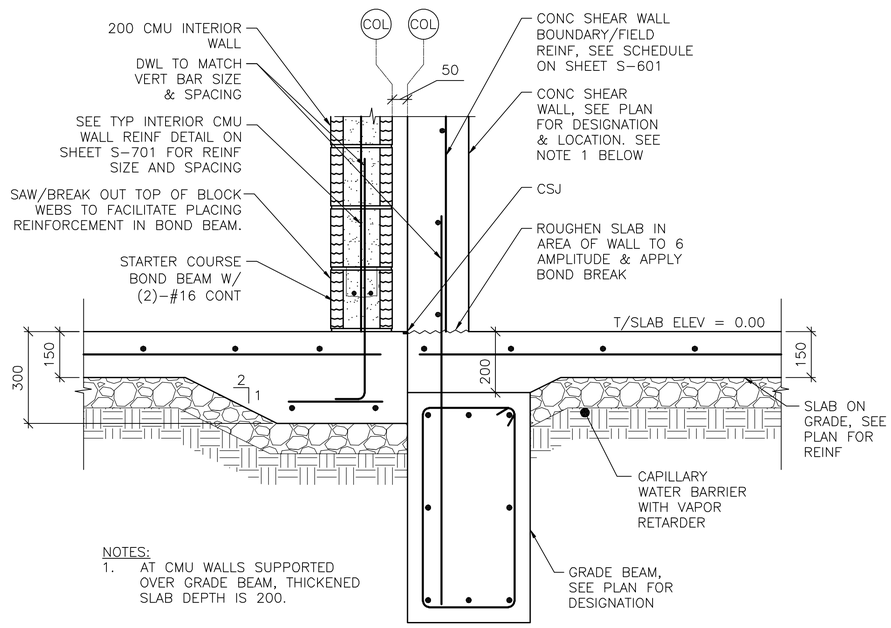


NOTES:
1. AT CMU WALLS SUPPORTED OVER GRADE BEAM, THICKENED SLAB DEPTH IS 200.

2 S-101 **SECTION**

SCALE: 1:10

0 200 400
SCALE: 1:10

UNLESS OTHERWISE NOTED, LINEAR DIMENSIONS SHOWN ON DRAWINGS ARE IN MILLIMETERS (mm)

APPROVED:

A/E DESIGNER OF RECORD

SEAL:

GEORGIA REGISTERED 2-22-10 No. 27141 PROFESSIONAL ENGINEER CHRISTOPHER W. WHITMORE

US ARMY CORPS OF ENGINEERS
AFGHANISTAN ENGINEER DISTRICT

| Mark | Description | Date | Appr. |
|---|---|---|---|
| | | | |

Date: 2/23/10 | Rev: 0
Design file no.
Drawing code:
File name: ANABOQS-S05SC
Plot date: 2/23/2010
Plot scale: x:x

Designed by: KMF/MMY | Ckd by: CWW
Dwn by: RCG | Reviewed by: LHM
Submitted by: BAKER

U.S. ARMY CORPS OF ENGINEERS
AFGHANISTAN ENGINEER DISTRICT
APO AE 96338

*Michael Baker Jr., Inc.*
*A unit of Michael Baker Corporation*
Airside Business Park
100 Airside Drive
Moon Township, PA 15108
www.mbakercorp.com

AFGHAN NATIONAL ARMY
REGIONAL MILITARY TRAINING CENTER
STANDARD DESIGN

BOQ OFFICER BARRACKS

MISCELLANEOUS SECTIONS

Sheet reference number:
S-505

# CONCRETE REINFORCEMENT TENSION DEVELOPMENT/LAP SPLICE SCHEDULE

| f'c = 28 MPa | LAP CLASS | UNCOATED BARS | | | |
|---|---|---|---|---|---|
| | | TOP BARS | | OTHER BARS | |
| BAR SIZES | | CASE 1 | CASE 2 | CASE 1 | CASE 2 |
| #10 TO #19 | A | 50 BAR DIA | 74 BAR DIA | 38 BAR DIA | 57 BAR DIA |
| | B | 64 BAR DIA | 96 BAR DIA | 50 BAR DIA | 74 BAR DIA |
| #22 TO #57 | A | 62 BAR DIA | 93 BAR DIA | 48 BAR DIA | 71 BAR DIA |
| | B | 80 BAR DIA | 121 BAR DIA | 62 BAR DIA | 93 BAR DIA |

NOTES:
1. TABULATED TENSION DEVELOPMENT LENGTH VALUES ARE TAKEN FROM CRSI DESIGN HANDBOOK 2008 10TH ED.
2. TENSION DEVELOPMENT & TENSION LAP SPLICE LENGTHS ARE EXPRESSED AS MULTIPLES OF BAR DIAMETERS.
3. TABULATED VALUES ARE BASED ON MINIMUM YIELD STRENGTH OF REINFORCEMENT, fy, OF 420MPa.
4. CONCRETE IS NORMAL WEIGHT (2400Kg/$m^3$) AND 28 DAY COMPRESSIVE STRENGTH = 28MPa.
5. TABULATED VALUES FOR BEAMS & COLUMNS ARE BASED ON TRANSVERSE REINFORCEMENT AND CONCRETE COVER MEETING MINIMUM CODE REQUIREMENTS.
6. CASES 1 & 2, WHICH DEPEND ON THE TYPE OF STRUCTURAL MEMBER, CONCRETE COVER, AND CENTER-TO-CENTER SPACING OF THE BARS ARE DEFINED IN THE TABLE BELOW.
7. LAP SPLICE LENGTHS (MINIMUM 300mm) ARE MULTIPLES OF TENSION DEVELOPMENT LENGTHS: CLASS A = 1.0(TENSION DEVELOPMENT LENGTH) & CLASS B = 1.3(TENSION DEVELOPMENT LENGTH)
8. TOP BARS ARE HORIZONTAL REINFORCEMENT WITH MORE THAN 300mm OF CONCRETE CAST BELOW THE BARS.
9. IT SHALL BE PERMISSIBLE TO CALCULATE WALL AND SLAB REINFORCEMENT TENSION DEVELOPMENT/SPLICE LENGTHS IN ACCORDANCE WITH ACI 12.2.3 OR TABLE 5.3(b) OF CRSI 2008 IN LIEU OF VALUES TABULATED ABOVE.

| | | |
|---|---|---|
| BEAMS, COLUMNS | CASE 1 | CONCRETE COVER AT LEAST 1 BAR DIA AND CENTER-TO-CENTER SPACING AT LEAST 2 BAR DIA |
| | CASE 2 | CONCRETE COVER LESS THAN 1 BAR DIA OR CENTER-TO-CENTER SPACING LESS THAN 2 BAR DIA |
| ALL OTHERS | CASE 1 | CONCRETE COVER AT LEAST 1 BAR DIA AND CENTER-TO-CENTER SPACING AT LEAST 3 BAR DIA |
| | CASE 2 | CONCRETE COVER LESS THAN 1 BAR DIA OR CENTER-TO-CENTER SPACING LESS THAN 3 BAR DIA |

# CONCRETE COVER SCHEDULE

MINIMUM CONCRETE COVER PROTECTION FOR REINFORCEMENT BARS SHALL BE AS LISTED BELOW: (SEE ACI 318M-05, SECTION 7.7 FOR CONDITIONS NOT NOTED). DIMENSIONS FOR BAR PLACEMENT GIVEN IN SECTIONS AND DETAILS SHALL SUPERSEDE MINIMUM COVER REQUIREMENTS GIVEN HERE. DIMENSIONS ARE IN mm. PROVIDE STANDARD BAR CHAIRS AND SUPPORT BARS @1200mm MAXIMUM AS REQUIRED TO MAINTAIN CONCRETE PROTECTION SPECIFIED.

| | | |
|---|---|---|
| FOOTINGS (EARTH FORMED): | | 70 |
| COLUMNS / PIERS (TO TIES) | | 40 |
| GRADE BEAMS OR SLAB TURNED DOWN EDGES: | | |
| TOP | | 40 |
| BOTTOM (EARTH FORMED) | | 70 |
| SIDES (EARTH FORMED) | | 70 |
| SIDES (BOARD FORMED) | #16 BAR & SMALLER | 40 |
| | #19 THRU #36 BAR | 50 |
| ELEVATED BEAMS & SLABS: | | |
| BEAM TIES & STIRRUPS (NOT EXPOSED TO WEATHER) | | 40 |
| BEAM TIES & STIRRUPS (EXPOSED TO WEATHER) | | 50 |
| FLOOR SLABS (NOT EXPOSED TO WEATHER) | | 20 |
| FLOOR SLABS (EXPOSED TO WEATHER) | | |
| #19 & LARGER | | 50 |
| #13 & SMALLER | | 40 |
| ROOF SLAB BARS | | 25 |
| SLABS ON GRADE | | |
| NOT EXPOSED TO WEATHER (FROM TOP) | | 20 |
| EXPOSED TO WEATHER (FROM TOP) | | 40 |
| UTILITY TUNNEL WALLS, RETAINING WALLS AND SHEAR WALLS. (NO SURFACES SHALL BE EARTH FORMED) | | |
| EARTH SIDE AND FRONT SIDE (EXPOSED TO WEATHER) | | |
| #16 BAR AND SMALLER | | 40 |
| #19 THRU #36 BAR | | 50 |

# COLUMN FOOTING SCHEDULE

| MARK | FOOTING SIZE (mm) | | | FOOTING REINFORCING | REMARKS |
|---|---|---|---|---|---|
| | LENGTH | WIDTH | THICKNESS | | |
| F1 | 4200 | 4200 | 350 | (14)-#25 EW BOTT | ----- |
| F2 | 3800 | 3800 | 300 | (10)-#25 EW BOTT | ----- |
| F3 | 6000 | 3100 | 300 | (20)-#25 SHORT, BOTT<br>(11)-#25 LONG, BOTT | ----- |
| F4 | 5200 | 5200 | 450 | (14)-#29 EW BOTT | ----- |
| F5 | 4200 | 4200 | 350 | (12)-#25 EW BOTT | ----- |

# CONCRETE SHEAR WALL SCHEDULE

| MARK | TYPE | WALL LENGTH (L) (mm) | WALL REINFORCEMENT | | REMARKS |
|---|---|---|---|---|---|
| | | | END ZONE | FIELD | |
| SW1 | B | 3600 | (7)-#16 @ 150mm OC | #13 @ 300mm OC | ----- |
| SW2 | B | 3600 | (6)-#16 @ 150mm OC | #13 @ 300mm OC | ----- |
| SW3 | B | 4100 | (6)-#16 @ 150mm OC | #13 @ 300mm OC | ----- |
| SW4 | D | 5000 | (8)-#19 @ 220mm OC | #13 @ 300mm OC | ----- |
| SW5 | C | 6600 | (4)-#16 @ 150mm OC | #13 @ 300mm OC | ----- |
| SW6 | C | 5700 | (7)-#19 @ 220mm OC | #13 @ 300mm OC | ----- |

NOTES:
1. WORK THIS SCHEDULE WITH SHEAR WALL DETAILS ON SHEETS S-702
2. SEE PLAN FOR LOCATION OF SHEAR WALL(S).
3. VERTICAL "FIELD" BARS MAY BE OMITTED IN LOCATION OF "END ZONE" REINFORCEMENT.
4. WALL FIELD REINF LISTED APPLIES TO VERT & HORIZ BARS.
5. WALL FIELD REINFORCEMENT CENTERED IN WALL.

# STANDARD HOOKS IN TENSION PER (ACI 318M-05)

| HOOK DEVELOPMENT LENGTH (mm) | |
|---|---|
| BAR SIZE | f'c 28 MPa |
| #10 | 180 |
| #13 | 250 |
| #16 | 300 |
| #19 | 380 |
| #22 | 430 |
| #25 | 480 |
| #29 | 560 |
| #32 | 610 |
| #36 | 690 |

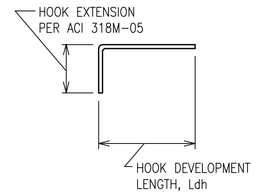


NOTES:
1. CONCRETE IS NORMAL WEIGHT CONCRETE.
2. BAR YIELD STRENGTH, fy = 420 MPa
3. SIDE COVER REQUIREMENTS OF ACI SECT. 12.5.3 ARE ASSUMED TO NOT BE MET.
4. TIE OR STIRRUP REQUIREMENTS OF ACI SECT. 12.5.3 ARE ASSUMED TO NOT BE MET.
5. REDUCTION FOR EXCESS REINFORCEMENT IS NOT TAKEN.
6. HOOK DEVELOPMENT LENGTH IS VALID FOR 180° HOOKS ALSO.

# CMU OR CAST IN PLACE CONC LINTEL SCHEDULE (TYP)

| OPENING TYPE OR SIZE, BEAM LOCATION OR TYPE | MAX SPAN (mm) | LINTEL DEPTH (mm) | REINFORCING BOTTOM |
|---|---|---|---|
| WALL OPENING | 4000 | 600 | (2)-#16 T&B |
| WALL OPENING | 1900 | 400 | (2)-#16 T&B |
| WALL OPENING | 1000 | 400 | (2)-#13 B |
| | | | |
| | | | |
| | | | |
| | | | |
| | | | |
| | | | |

1. STRUCTURAL SHEETS DO NOT INDICATE ALL OPENINGS IN MASONRY WALLS. VERIFY NUMBER, SIZE AND LOCATION OF ALL OPENINGS IN MASONRY WALLS FROM ARCHITECTURAL SHEETS AND APPROVED PLUMBING, MECHANICAL, AND ELECTRICAL SHOP DRAWINGS.
2. PROVIDE 200mm BEARING EA END.
3. FOR HEAD DETAILS REFER TO ARCHITECTURAL SHEETS.
4. REINFORCING SHALL BE ASTM A615M, GRADE 420. GROUT FOR CMU LINTELS SHALL HAVE A MINIMUM COMPRESSIVE STRENGTH OF 14 MPa AT 28 DAYS.
5. CONTRACTOR SHALL SUBMIT FOR APPROVAL SHOP DRAWINGS AND SCHEDULES SHOWING SIZE, SPAN, REINFORCEMENT, DETAILS, LOCATIONS, ETC.

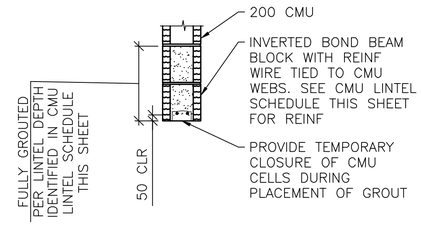


A S-601 **LINTEL DETAIL**
SCALE: NTS

# BEAM SCHEDULE

| MARK | BEAM SIZE (mm) | | BEAM REINFORCING | | | | | | STIRRUPS | | | REMARKS |
|---|---|---|---|---|---|---|---|---|---|---|---|---|
| | DEPTH | WIDTH | BL | BS | TL | TS | TC | M | SIZE | TYPE | SPACING | ----- |
| GRADE BEAMS | | | | | | | | | | | | |
| GB1 | 750/550 /735 | 400 | (2)-#25 | (1)-#25 | (2)-#22 | --- | --- | --- | #13 | S3 +T9 | d/2 | LOWER TOP TO 735 BETWEEN A5-B5; TO 550 BETWEEN A4-B4 & A4-A5 |
| GB2 | 750/650 | 400 | (3)-#29 | (2)-#29 | (2)-#25 | --- | --- | (2)-#13 | #13 | S3 +T9 | d/2 | LOWER TOP BETWEEN B1-C1 |
| GB3 | 750 | 400 | (2)-#22 | (1)-#22 | (2)-#19 | --- | --- | (2)-#22 | #13 | S3 +T9 | d/2 | ----- |
| GB4 | 750/650 | 400 | (3)-#29 | (3)-#29 | (2)-#19 | --- | --- | --- | #13 | S3 +T9 | d/2 | LOWER TOP BETWEEN B11-C11 |
| ROOF BEAMS | | | | | | | | | | | | |
| RB1 | 800 | 600 | (3)-#29 | (4)-#29 | (2)-#22 | --- | --- | --- | #13 | S3 +T9 | d/2 | ----- |
| RB2 | 800 | 400 | (3)-#29 | (2)-#29 | (2)-#29 | --- | --- | --- | #13 | S3 +T9 | d/2 | ----- |
| RB3 | 800 | 400 | (3)-#29 | (2)-#29 | (2)-#25 | --- | --- | --- | #13 | S3 +T9 | d/2 | ----- |

NOTES:
1. WORK THIS SCHEDULE WITH BEAM REINFORCING DETAILS ON SHEETS S-503 AND S-504.
2. HOOKS SHOWN ON SECTIONS AND DETAILS SHALL BE 90° STD UON.
3. USE ONLY (1) TC AT BEAM COLUMN INTERSECTION WHERE REQ'D.

# COLUMN SCHEDULE

| DESCRIPTION \ COLUMN MARK | TYP UON | --- | --- | --- |
|---|---|---|---|---|
| TYPE | 12-BAR | --- | --- | --- |
| DIMENSION | 800mm SQ. | --- | --- | --- |
| VERTICAL REINFORCEMENT | (12)-#29 | --- | --- | --- |
| TIES | #13 @ d/2 | --- | --- | --- |
| TOP OF ROOF ELEVATION | 3800mm | --- | --- | --- |
| TOP OF GRADE BEAM ELEVATION | -200mm | --- | --- | --- |
| TOP OF FOOTING ELEVATION | -950mm | --- | --- | --- |

NOTES:
1. WORK THIS SCHEDULE WITH COLUMN DETAILS ON SHEET S-504.
2. SEE FOOTING SCHEDULE ON THIS SHEET FOR FOOTING INFORMATION.
3. COLUMN TIES: INTERIOR TIES TO MATCH SIZE & SPACING OF PERIMETER TIES.
4. HOOKS SHOWN ON SECTIONS & DETAILS SHALL BE 90° STD UON.

UNLESS OTHERWISE NOTED, LINEAR DIMENSIONS SHOWN ARE IN MILLIMETERS (mm)

APPROVED:

A/E DESIGNER OF RECORD

SEAL:

GEORGIA REGISTERED 1-27-10 No. 27141 PROFESSIONAL ENGINEER CHRISTOPHER W. WHITMORE

US ARMY CORPS OF ENGINEERS
AFGHANISTAN ENGINEER DISTRICT

| Mark | Description | Date | Appr. |
|---|---|---|---|

| Mark | Description | Date | Appr. |
|---|---|---|---|

Rev: 0
Date: 2/23/10
Design file no.
Drawing code:
File name: ANABOQS-601SCH
Plot date: 2/23/2010
Plot scale: XX

Designed by: KMP/MMY
Drwn by: RCG
Ckd by: CWW
Reviewed by: LHM
Submitted by: BAKER

U.S. ARMY CORPS OF ENGINEERS
AFGHANISTAN ENGINEER DISTRICT
APO AE 96338

*Michael Baker Jr., Inc.*
*A unit of Michael Baker Corporation*
Airside Business Park
100 Airside Drive
Moon Township, PA 15108
www.mbakercorp.com

AFGHAN NATIONAL ARMY
REGIONAL MILITARY TRAINING CENTER
STANDARD DESIGN

BOQ OFFICER BARRACKS

SCHEDULES

Sheet reference number:
S-601

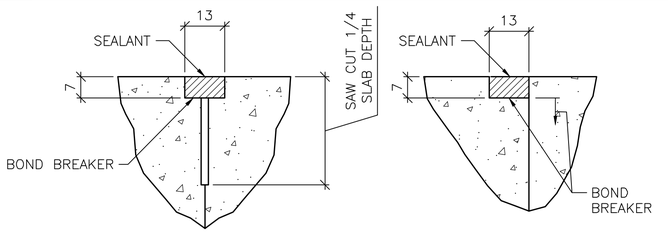


CONTROL JOINT DETAIL

CONSTRUCTION JOINT DETAIL

## 1 S-701 TYPICAL CONCRETE SLAB JOINT FINISH DETAILS

SCALE: NTS

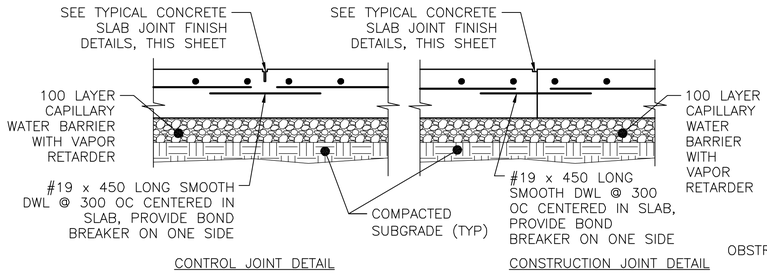


CONTROL JOINT DETAIL

CONSTRUCTION JOINT DETAIL

## 2 S-701 TYPICAL SLAB ON GRADE JOINT DETAIL

SCALE: NTS




## 3 S-701 INTERIOR EQUIPMENT PAD DETAIL

SCALE: NTS

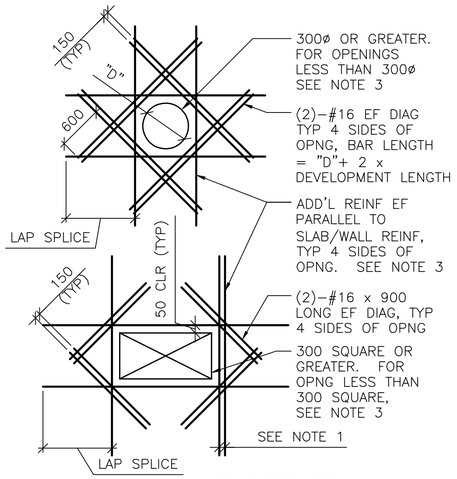


SHEAR WALL/SLAB OPENINGS

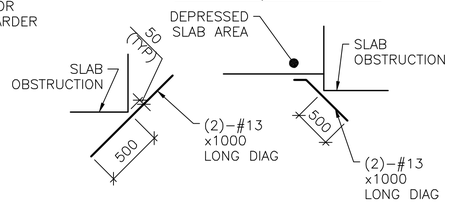


RE-ENTRANT CORNERS

DETAIL NOTES:

1. WHERE MORE THAN ONE ADDITIONAL BAR IS REQUIRED PARALLEL TO THE EXISTING SLAB/WALL REINFORCING THE ADDITIONAL REINFORCING BARS SHALL BE SPACED AT 100 ON CENTER.
2. ADDITIONAL REINFORCING PARALLEL TO THE SLAB/WALL REINFORCING SHALL BE #16 BARS THAT PROVIDE A STEEL AREA ON EACH SIDE OF THE OPENING EQUAL TO 1/2 THE AREA OF THE REINFORCING CUT BY THE OPENING.
3. FOR OPENINGS WITH SIDES OR DIAMETERS LESS THAN 300 SPREAD THE SLAB/WALL REINFORCING TO CLEAR THE OPENING.

## 4 S-701 ADD'L CONCRETE REINFORCEMENT DETAILS

SCALE: NTS

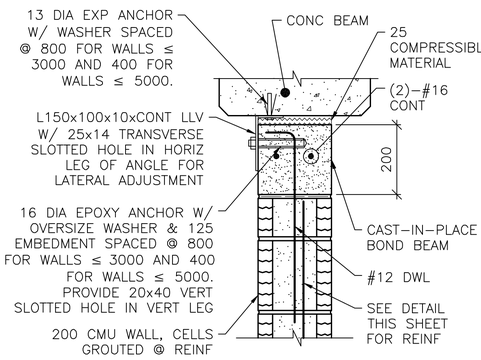


NOTE:

1. AT ANCHOR BOLTS, ADD AN ADDITIONAL 25 COMPRESSIBLE MATERIAL BELOW EXP ANCHOR HEAD.

INTERIOR BEAM

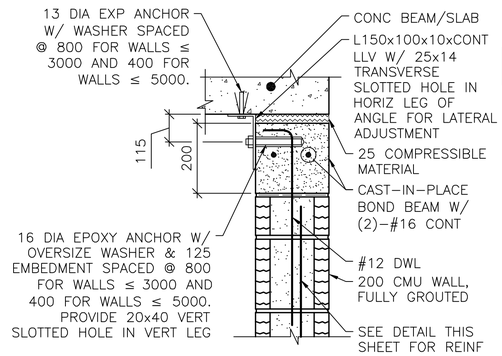


EXTERIOR WALL OR SLAB

NOTES:

1. THIS DETAIL IS AN ALTERNATE TOP OF WALL ANCHORAGE DETAIL TO BE USED AT THE CONTRACTOR'S OPTION IN LIEU OF DETAILS SHOWN ON S-400 & S-500 DRAWINGS.
2. CAST-IN-PLACE BOND BEAM SHOWN AT TOP OF WALL IS ALSO APPLICABLE FOR INTERMEDIATE AND STARTER COURSE BOND BEAMS WITHIN WALL.

## 5 S-701 ALTERNATE TOP OF CMU WALL BRACING DETAILS

SCALE: NTS

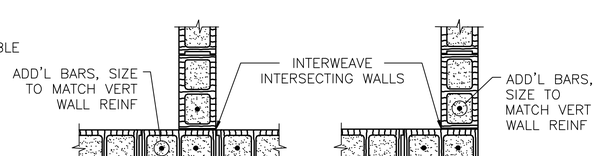


INTERSECTION

WALL CORNER

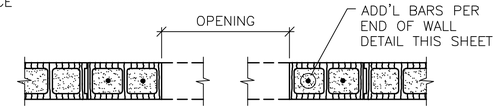


MASONRY OPENING W/ LINTEL

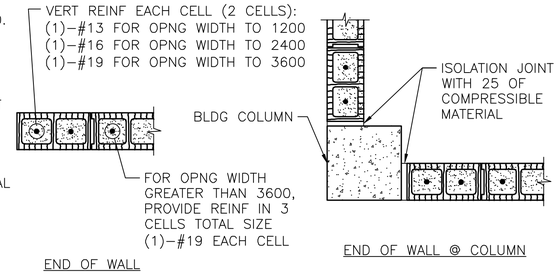


END OF WALL

END OF WALL @ COLUMN

NOTES:

1. OPENING WIDTH SHALL NOT EXCEED 3600 FOR THIS TYPE OF JAMB.
2. ALL CELLS FULLY GROUTED AT EXTERIOR WALLS. AT INTERIOR WALLS, ONLY GROUT CELLS CONTAINING REINF.

## 6 S-701 TYP CMU DETAILS

SCALE: NTS

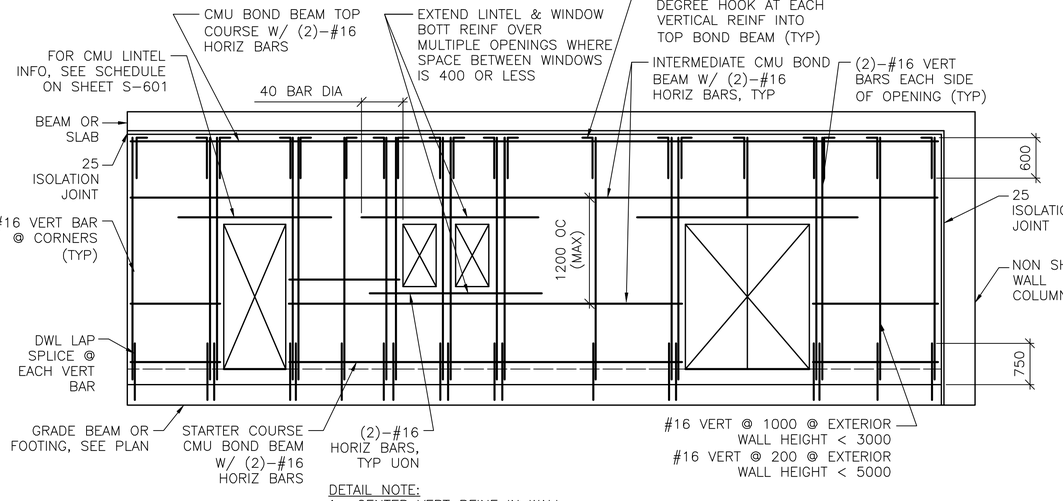


DETAIL NOTE:

1. CENTER VERT REINF IN WALL.
2. GROUT ALL CMU CELLS.
3. REFERENCE ARCH DWGS FOR JOINT INFORMATION
4. DOWELS BETWEEN TOP BOND BEAM AND BEAM/SLAB ABOVE (INCLUDING EMBEDDED PIPE SLEEVE) NOT SHOWN FOR CLARITY. SEE SPECIFIC S-500 SERIES DWGS FOR INFO.
5. FOR INFORMATION ON ALTERNATE CAST-IN-PLACE WALL BOND BEAMS, REFERENCE ALTERNATE TOP OF CMU WALL BRACING DETAILS THIS SHEET.

## 7 S-701 TYP EXTERIOR CMU WALL REINF DETAIL

SCALE: NTS

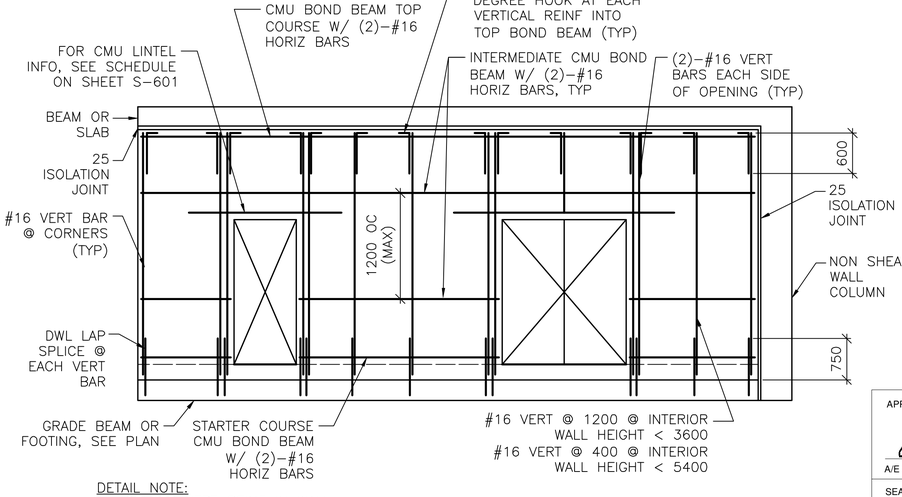


DETAIL NOTE:

1. CENTER VERT REINF IN WALL.
2. GROUT ALL CMU CELLS.
3. REFERENCE ARCH DWGS FOR JOINT INFORMATION
4. DOWELS BETWEEN TOP BOND BEAM AND BEAM/SLAB ABOVE (INCLUDING EMBEDDED PIPE SLEEVE) NOT SHOWN FOR CLARITY. SEE SPECIFIC S-500 SERIES DWGS FOR INFO.
5. FOR INFORMATION ON ALTERNATE CAST-IN-PLACE WALL BOND BEAMS, REFERENCE ALTERNATE TOP OF CMU WALL BRACING DETAILS THIS SHEET.

## 8 S-701 TYP INTERIOR CMU WALL REINF DETAIL

SCALE: NTS

UNLESS OTHERWISE NOTED, LINEAR DIMENSIONS SHOWN ARE IN MILLIMETERS (mm)

APPROVED:

A/E DESIGNER OF RECORD

SEAL:

GEORGIA REGISTERED 1-27-10 No. 27141 PROFESSIONAL ENGINEER CHRISTOPHER W. WHITMORE

US ARMY CORPS OF ENGINEERS
AFGHANISTAN ENGINEER DISTRICT

| Mark | Description | Date | Appr. |
|---|---|---|---|

U.S. ARMY CORPS OF ENGINEERS
AFGHANISTAN ENGINEER DISTRICT
APO AE 96338

Michael Baker Jr., Inc
A unit of Michael Baker Corporation
Airside Business Park
100 Airside Drive
Moon Township, PA 15108
www.mbakercorp.com

Designed by: KMP/MMY
Dwn by: RCG
Ckd by: CWW
Reviewed by: LHM
Submitted by: BAKER

Date: 2/23/10
Design file no.
Drawing code:
File name: AMABOQS-701DT
Plot date: 2/23/2010
Plot scale: XX
Rev. 0

AFGHAN NATIONAL ARMY
REGIONAL MILITARY TRAINING CENTER
STANDARD DESIGN

BOQ OFFICER BARRACKS

TYPICAL DETAILS

Sheet reference number:
S-701

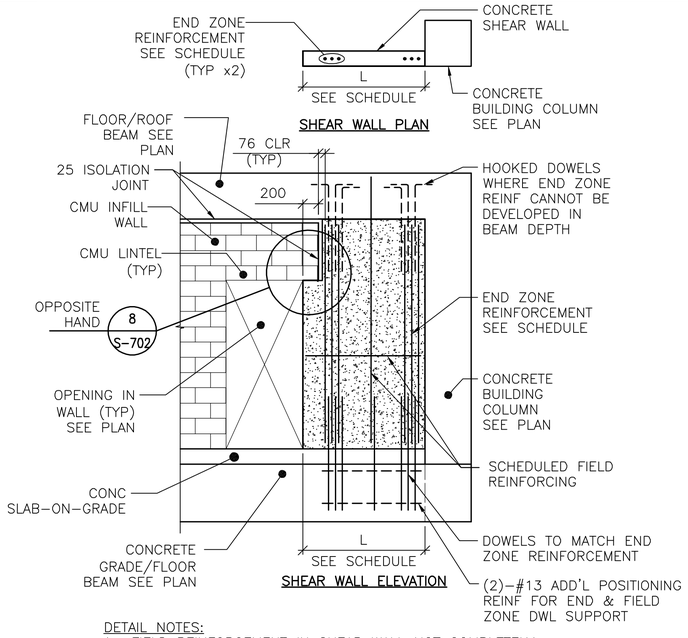


DETAIL NOTES:
1. FIELD REINFORCEMENT IN SHEAR WALL NOT COMPLETELY SHOWN FOR CLARITY.
2. FIELD REINFORCEMENT CENTERED IN WALL.
3. MINIMUM CONC CLEAR DISTANCE FOR END ZONE REINF = 76
4. SEE CONC SHEAR WALL SCHEDULE ON SHEET S-601
5. SEE ARCH DWGS FOR ISOLATION JOINT INFORMATION

## TYPE "B" SHEAR WALL DETAIL

1 / S-702 — SCALE: NTS

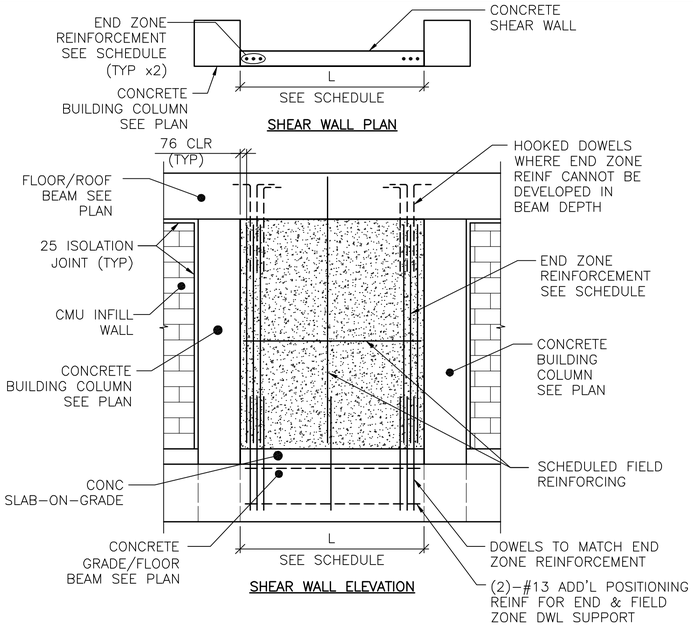


DETAIL NOTES:
1. FIELD REINFORCEMENT IN SHEAR WALL NOT COMPLETELY SHOWN FOR CLARITY.
2. FIELD REINFORCEMENT CENTERED IN WALL.
3. MINIMUM CONC CLEAR DISTANCE FOR END ZONE REINF = 76
4. SEE CONC SHEAR WALL SCHEDULE ON SHEET S-601
5. SEE ARCH DWGS FOR ISOLATION JOINT INFORMATION

## TYPE "C" SHEAR WALL DETAIL

2 / S-702 — SCALE: NTS

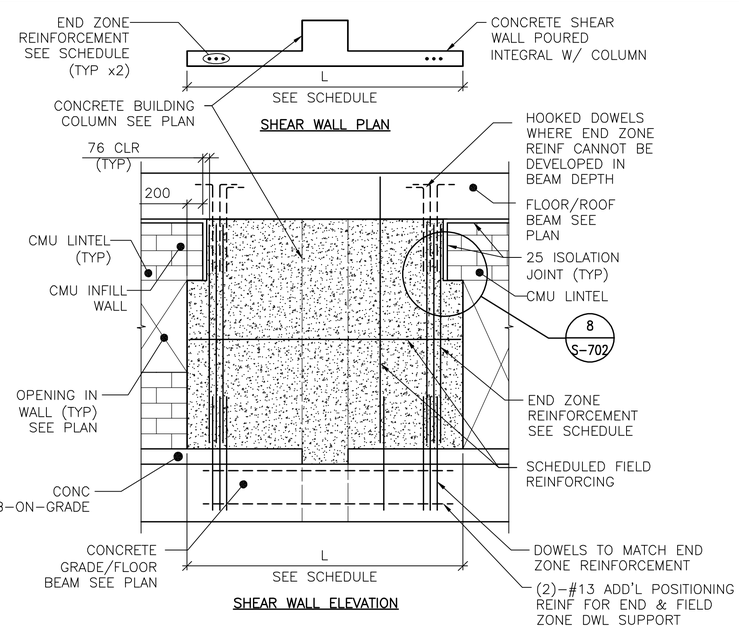


DETAIL NOTES:
1. FIELD REINFORCEMENT IN SHEAR WALL NOT COMPLETELY SHOWN FOR CLARITY.
2. FIELD REINFORCEMENT CENTERED IN WALL.
3. MINIMUM CONC CLEAR DISTANCE FOR END ZONE REINF = 76
4. SEE CONC SHEAR WALL SCHEDULE ON SHEET S-601
5. SEE ARCH DWGS FOR ISOLATION JOINT INFORMATION

## TYPE "D" SHEAR WALL DETAIL

3 / S-702 — SCALE: NTS

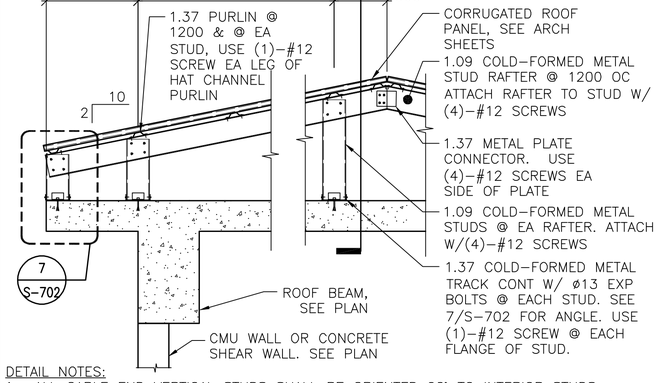


DETAIL NOTES:
1. ALL GABLE END VERTICAL STUDS SHALL BE ORIENTED 90° TO INTERIOR STUDS & SPACED @ 600 OC. GABLE END RAFTER SHALL BE 1.37 METAL TRACK SPANNING CONTINUOUSLY OVER GABLE END STUDS. INSET GIRTS AT GABLE END SHALL BE 1.09 COLD-FORMED METAL STUDS @ 1200 OC ATTACHED VIA 1.37 THICKNESS CLIP ANGLE W/ (2) #12 SCREWS EA LEG.
2. ALL INTERIOR, NON-GABLE END VERTICAL STUDS GREATER THAN 2400 IN LENGTH SHALL BE BACK-TO-BACK W/ #12 SCREWS @ 200 OC STAGGERED.

## TYPICAL OVERBUILT ROOF FRAMING DETAIL

4 / S-702 — SCALE: NTS

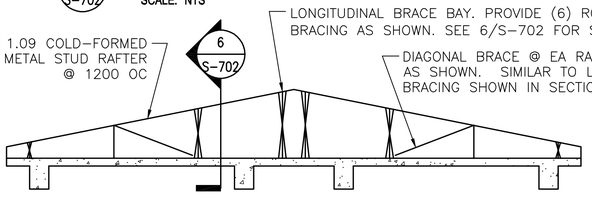


## TYPICAL ROOF BRACE LAYOUT

5 / S-702 — SCALE: NTS

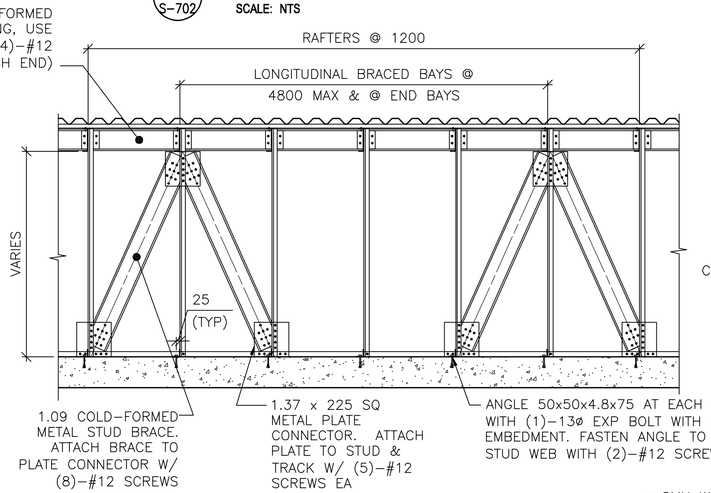


## SECTION

6 / S-702 — SCALE: NTS

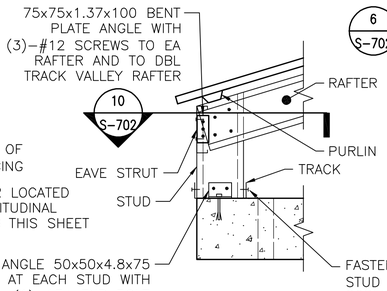


## DETAIL

7 / S-702 — SCALE: NTS

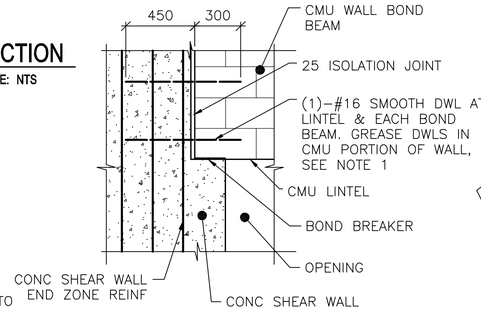


NOTE:
1. TIE SMOOTH DOWEL ROD TO SHEAR WALL END ZONE REINF FOR EACH BOND BEAM AND LINTEL.

## SECTION

8 / S-702 — SCALE: NTS

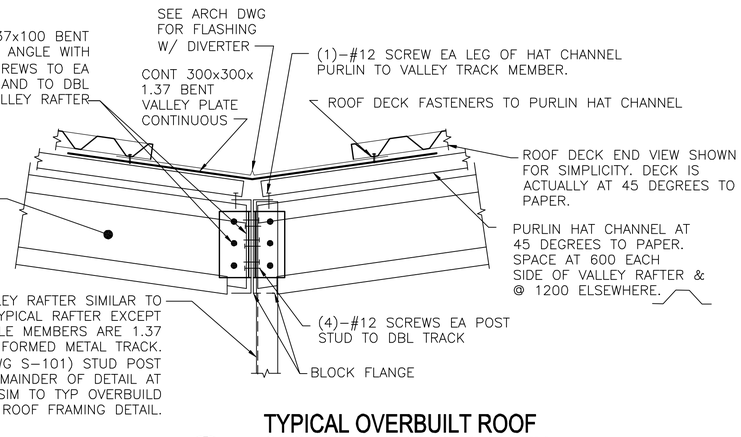


## TYPICAL OVERBUILT ROOF SECTION THROUGH VALLEY

9 / S-702 — SCALE: NTS

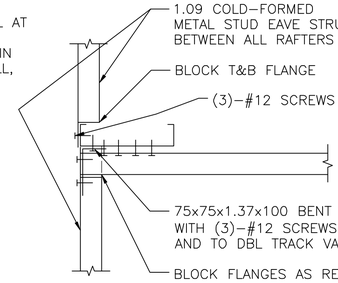


## SECTION

10 / S-702 — SCALE: NTS

UNLESS OTHERWISE NOTED, LINEAR DIMENSIONS SHOWN ARE IN MILLIMETERS (mm)

APPROVED:

A/E DESIGNER OF RECORD

SEAL:

GEORGIA REGISTERED 1-29-10 No. 27141 PROFESSIONAL ENGINEER CHRISTOPHER W. WHITMORE

US ARMY CORPS OF ENGINEERS
AFGHANISTAN ENGINEER DISTRICT

| Mark | Description | Date | Appr. |
|---|---|---|---|
| | | | |

| Rev: 0 | Date: 2/23/10 | Designed by: KMP/MMY | Drawn by: RCG | Reviewed by: LHM | Submitted by: BAKER |
|---|---|---|---|---|---|
| | Design file no. | | Ckd by: CWW | | |
| | Drawing code: | | | | |
| | File name: ANABOQS-702TDT | | | | |
| | Plot date: 2/23/2010 | | | | |
| | Plot scale: X:X | | | | |

U.S. ARMY CORPS OF ENGINEERS
AFGHANISTAN ENGINEER DISTRICT
APO AE 96338

Michael Baker Jr., Inc
A unit of Michael Baker Corporation
Airside Business Park
100 Airside Drive
Moon Township, PA 15108
www.mbakercorp.com

AFGHAN NATIONAL ARMY
REGIONAL MILITARY TRAINING CENTER
STANDARD DESIGN

BOQ OFFICER BARRACKS

TYPICAL DETAILS

Sheet reference number:
S-702

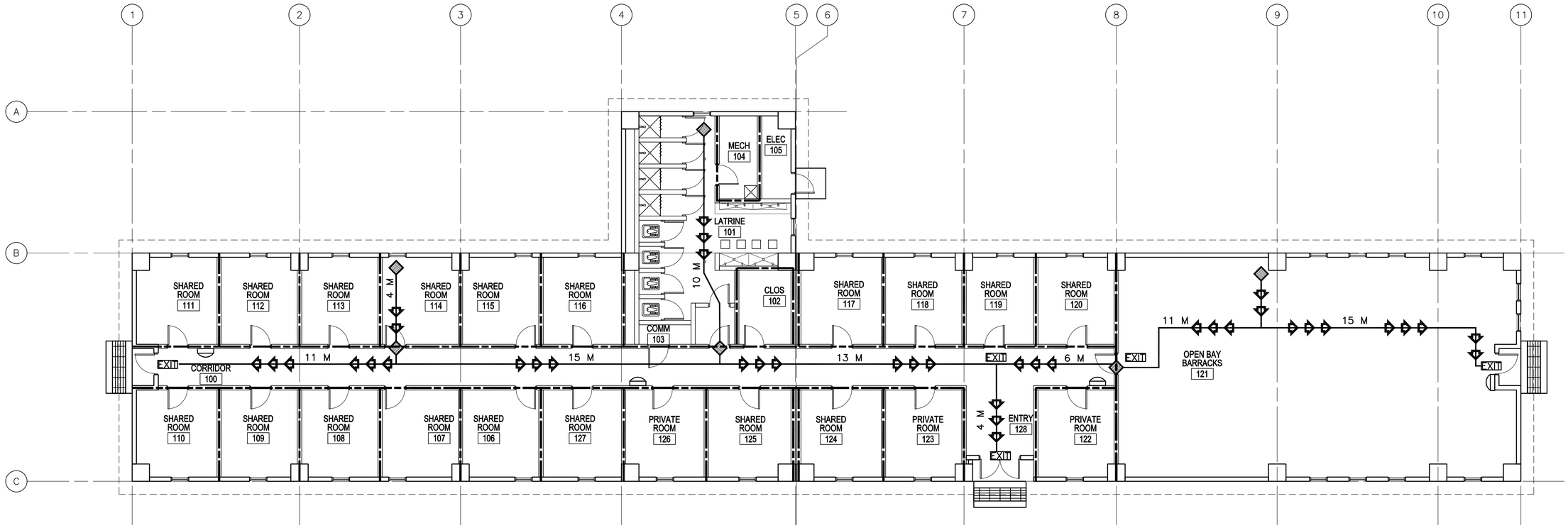


1 / A-001 **LIFE SAFETY PLAN**
SCALE: 1:100

## CODE ANALYSIS:

1. REFERENCES:
2006 INTERNATIONAL BUILDING CODE (2006 IBC)
2006 LIFE SAFETY CODE (2006 NFPA 101)

2. IBC OCCUPANCY CLASSIFICATION:
GROUP R-2 (NEW HOTELS AND DORMITORIES NFPA 101 6.1.8 AND CHAPTER 28)

3. TYPE OF CONSTRUCTION (IBC): TYPE II-B (UNPROTECTED/NONSPRINKLERED)

4. IBC TABLE 503: ALLOWABLE HEIGHT AND BUILDING AREAS:
GROUP R-2
ALLOWABLE AREA: 1486 SM
ALLOWABLE HEIGHT: 4 STORIES (16 M)

GROUP R-2
PROPOSED AREA: 723 SM
PROPOSED HEIGHT: 1 STORY (<16 M)

5. IBC TABLE 601 & 602: FIRE RESISTANCE RATING REQUIREMENTS FOR BUILDING ELEMENTS FOR TYPE II-B

| BUILDING ELEMENT | RATING (HOUR) | REFERENCE |
|---|---|---|
| STRUCTURAL FRAME (COLUMNS, GIRDERS & TRUSSES) | 0 | TABLE 601 |
| BEARING WALLS | | |
| EXTERIOR | 0 | TABLE 601 |
| INTERIOR | 0 | TABLE 601 |
| NONBEARING WALLS & PARTITIONS | | |
| INTERIOR | 0 | TABLE 601 |
| FLOOR CONSTRUCTION | 0 | TABLE 601 |
| ROOF CONSTRUCTION | 0 | TABLE 601 |
| EXTERIOR WALL | 0 | TABLE 602 |

6. IBC TABLE 803.5 – INTERIOR WALL AND CEILING FINISH REQUIREMENTS FOR R-2 OCCUPANCY/NONSPRINKLERED

| GROUP | EXIT ENCLOSURES AND EXIT PASSAGEWAY | CORRIDORS | ROOMS AND ENCLOSED SPACES |
|---|---|---|---|
| R-2 | B | B | C |

7. NFPA 101 TABLE 7.3.1.2 – OCCUPANT LOAD
HOTELS AND DORMITORIES = 18.6 SM/PERSON CALCULATED = 39 OCCUPANTS
ACTUAL = 61 OCCUPANTS

8. NFPA 101 TABLE 7.3.3.1 – EGRESS CAPACITY
HOTELS AND DORMITORIES = 5 MM PER OCCUPANT

MINIMUM REQUIRED: 305 MM (61 OCCUPANTS x 5 MM PER OCCUPANT)
PROPOSED EGRESS CAPACITY: 3600 MM: (4) 900 MM DOORS

9. NFPA 101 PARAGRAPH 28.2.6 – EXIT ACCESS TRAVEL DISTANCE
MAXIMUM ALLOWED WITHIN ROOM OR SUITE TO CORRIDOR: 23 METERS
MAXIMUM ALLOWED CORRIDOR DOOR OF ANY ROOM OR SUITE TO NEAREST EXIT: 30 METERS

PROPOSED WITHIN ROOM OR SUITE TO CORRIDOR: 4 METERS MOST ROOMS, 15 METERS ROOM 121
PROPOSED CORRIDOR DOOR OF ANY ROOM OR SUITE TO NEAREST EXIT: 26 METERS

STORAGE ROOMS: 1 HOUR SEPARATION REQUIRED.

10. NFPA 101 PARAGRAPH 28.3.6.1.2 – CORRIDOR FIRE-RESISTANCE RATING (HOUR)
REQUIRED: WALLS NOT LESS THAN ONE HOUR FIRE RESISTANCE RATING
PROPOSED: 1 HOUR RATING.

11. NFPA 101 PARAGRAPH 28.3.6.2 & TABLE 8.3.4.2 – DOORS INTO EXIT ACCESS CORRIDORS
REQUIRED MINIMUM: 20 MINUTE FIRE PROTECTION RATING
PROPOSED: 20 MINUTE DOORS

12. NFPA 101 PARAGRAPH 28.2.3.3 – CORRIDOR WIDTH
REQUIRED: SUFFICIENT FOR OCCUPANT LOAD, BUT NOT LESS THAN 1120 MM
CALCULATED WIDTH REQUIRED PER OCCUPANT LOAD: 305 MM (61 OCCUPANTS X 5 MM)
PROVIDED: 1700 MM

13. NFPA 101 PARAGRAPH 28.2.5.3 – COMMON PATH OF TRAVEL
MAXIMUM ALLOWED: 10.7 METERS
PROVIDED: 6 METERS

14. NFPA 101 PARAGRAPH 28.2.5.5 – DEAD END CORRIDORS
PERMITTED: 10.7 METERS
PROPOSED: 6 METERS

15. NFPA 101 PARAGRAPH 28.2.4.1 AND 7.4.1.1 – MINIMUM NUMBER OF EXITS
REQUIRED: 2 MINIMUM
PROPOSED: 3 EXITS

16. NFPA 101 PARAGRAPH 28.2.1.2 & 24.2 – SECONDARY MEANS OF ESCAPE
ONE OF THE FOLLOWING REQUIRED:
1)DOOR, SIMILAR TO PRIMARY, BUT REMOTE FROM PRIMARY
2) OPERABLE WINDOW, 0.53 SM, NOT LESS THAN 510 MM WIDE, 610 MM HIGH, NOT MORE THAN 1120 MM AFF, WITHIN 6100 MM OF GRADE
PROVIDED: OPERABLE WINDOWS, 0.96 SM EACH PER SLEEPING ROOM

17. NFPA 101 PARAGRAPH 24.2.2.4 – TWO PRIMARY MEANS OF ESCAPE
AREA WITH DWELLING UNIT EXCEEDS 185 SM PER STORY
ALLOWED AREA PER STORY WITHIN DWELLING UNIT: 185 SM
PROVIDED AREA WITHIN DWELLING UNIT: 195 SM WITHIN ROOM 121
REQUIRED PRIMARY EXITS: 2
PROVIDED PRIMARY EXITS: 2

18. NFPA 101 PARAGRAPH 28.3.7.1 – SUBDIVISION OF BUILDING SPACES – NONSPRINKLERED
REQUIRED: EACH GUEST ROOM OR DORMITORY ROOM SHALL BE SEPARATED FROM OTHER GUEST OR DORMITORY ROOMS BY FIRE BARRIERS HAVING FIRE RESISTANCE RATING OF NOT LESS THAN 1 HOUR
PROVIDED: 1 HOUR SEPARATION

19. HAZARDOUS AREA PROTECTION TABLE 28.3.2.2.2
STORAGE ROOMS: 1 HOUR SEPARATION REQUIRED

20. NFPA 101 A.3.3.53 DORMITORY: ROOMS WITHIN DORMITORIES INTENDED FOR THE USE OF INDIVIDUALS FOR COMBINED LIVING AND SLEEPING PURPOSES ARE GUEST ROOMS OR GUEST SUITES. EXAMPLES OF DORMITORIES ARE COLLEGE DORMITORIES, FRATERNITY AND SORORITY HOUSES AND MILITARY BARRACKS.

21. NFPA 101 28.3.5.2 EXTINGUISHMENT REQUIREMENTS: AUTOMATIC SPRINKLER PROTECTION REQUIRED UNLESS SLEEPING ROOMS HAVE DOORS DIRECTLY TO OUTSIDE.
DUE TO AUSTERE DESIGN CRITERIA, THE GOVERNMENT HAS A FIRE PROTECTION WAIVER FOR THIS REQUIREMENT.

## LEGEND:

- DENOTES PATHS OF EXIT TRAVEL
- EXIT DENOTES DOOR AS AN EMERGENCY EXIT
- DENOTES STARTING POINT FOR TRAVEL DISTANCE
- DENOTES FIRE EXTINGUISHER LOCATIONS
- (1) HOUR RATED WALL
- (2) HOUR RATED WALL
- (3) HOUR RATED WALL

LINEAR DIMENSIONS SHOWN ARE IN MILLIMETERS (MM), UNLESS OTHERWISE NOTED

0 2000 4000
SCALE: 1:100

APPROVED:

A/E DESIGNER OF RECORD

SEAL:

STATE OF SOUTH CAROLINA
KEVIN R. CHAFIN
N. Charleston, SC
6374
REGISTERED ARCHITECT

US ARMY CORPS OF ENGINEERS
AFGHANISTAN ENGINEER DISTRICT

| Mark | Description | Date | Appr. |
|---|---|---|---|
| | | | |

Date: 2/23/10
Design file no.
Drawing code:
Rev: 0

Designed by: KRC
Dwn by: KJG
Ckd by: NLJ
Reviewed by: LHM
Submitted by: BAKER

File name: ANABOQA-001LSP
Plot date: 2/23/2010
Plot scale: x:x

U.S. ARMY CORPS OF ENGINEERS
AFGHANISTAN ENGINEER DISTRICT
APO AE 96338

*Michael Baker Jr., Inc*
*A unit of Michael Baker Corporation*
Airside Business Park
100 Airside Drive
Moon Township, PA 15108
www.mbakercorp.com

AFGHAN NATIONAL ARMY
REGIONAL MILITARY TRAINING CENTER
STANDARD DESIGN

BOQ OFFICER BARRACKS

LIFE SAFETY PLAN

Sheet reference number:
A-001

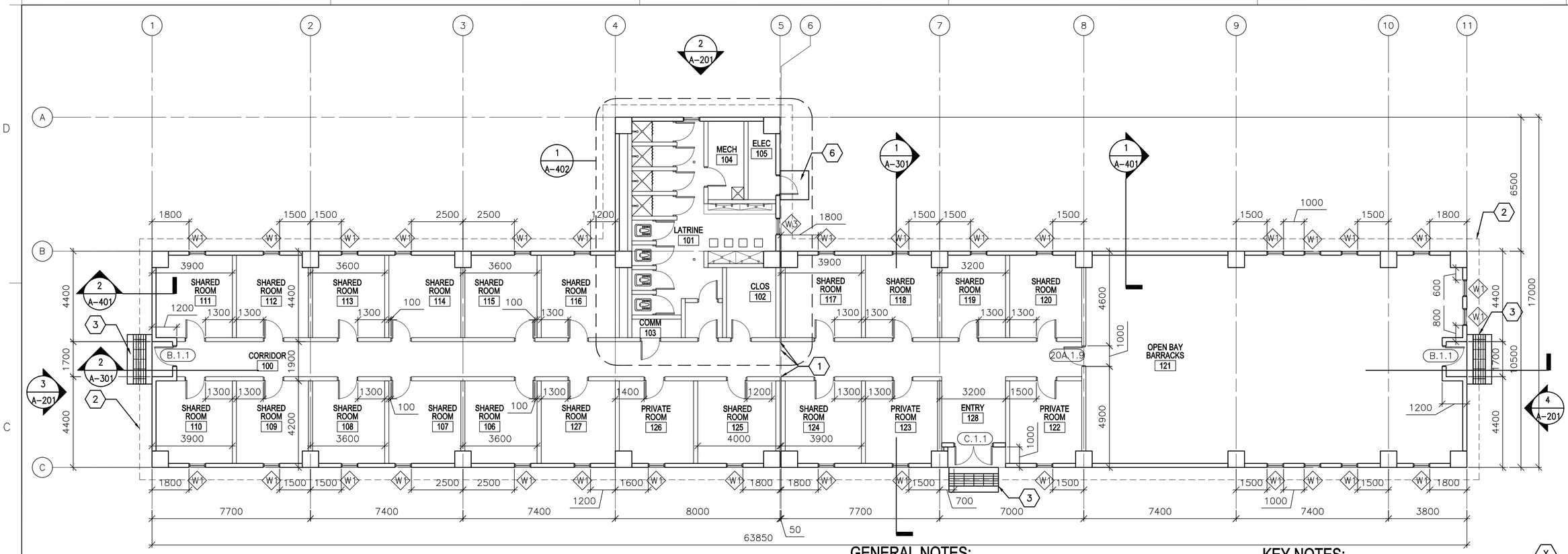


1 / A-101 **FLOOR PLAN**

SCALE: 1:100

1 / A-201

## GENERAL NOTES:

A. DIMENSIONS ARE SHOWN TO OUTER EDGE OF EXTERIOR STRUCTURAL COLUMNS, STRUCTURAL COLUMN GRID, EDGE OF INTERIOR PARTITIONS, EDGE OF WINDOW OPENINGS, AND TO HINGE SIDE OF DOOR FRAME OPENINGS.

B. HINGE SIDE OF OPENINGS FOR DOORS AND FRAMES SHALL BE LOCATED 200 MM FROM THE ADJACENT WALL OR COLUMN, UNLESS NOTED OTHERWISE.

C. INTERIOR PARTITIONS SHALL BE 200 MM CMU, UNLESS NOTED OTHERWISE.

D. COSMETIC REPAIR OF MINOR DEFECTS: REPAIR OR FILL MORTAR JOINTS AND MINOR DEFECTS, INCLUDING BUT NOT LIMITED TO SPALLS, IN ACCORDANCE WITH MANUFACTURER'S RECOMMENDATIONS AND PRIOR TO COATING APPLICATION. SURFACES TO BE PAINTED SHALL BE CLEAN AND FREE OF FOREIGN MATTER BEFORE APPLICATION OF PAINT. CLEANING SHALL BE SCHEDULED SO THAT DUST AND OTHER CONTAMINANTS WILL NOT FALL ON NEWLY PAINTED SURFACES.

E. CONCRETE, PLASTER AND MASONRY SURFACES SHALL BE ALLOWED TO CURE FOR AT LEAST 30 DAYS BEFORE PAINTING. CONCRETE SLABS-ON-GRADE SHALL BE ALLOWED TO CURE 90 DAYS BEFORE STAINING OR SEALING.

F. DO NOT USE PAINT MATERIALS CONTAINING LEAD CONTENT IN EXCESS OF 0.009 PERCENT OF THE WEIGHT OF THE TOTAL NONVOLATILE CONTENT OF THE PAINT OR THE WEIGHT OF THE DRIED PAINT FILM.

G. DO NOT USE ANY ASBESTOS CONTAINING MATERIALS (ACM) IN PROJECT. ACM IS DEFINED AS 1% OR MORE BY VOLUME.

H. DO NOT USE PAINT MATERIALS CONTAINING MERCURIAL FUNGICIDES.

I. FACTORY PRIMED METAL DOORS AND FRAMES SHALL RECEIVE TWO COATS OF PAINT.

J. FILL REMAINING SPACE AT PENETRATIONS IN FIRE-RATED FLOORS, PARTITIONS AND CEILINGS WITH APPROPRIATE FIRESTOPPING MATERIALS.

K. ALL CEILING FINISHES SHALL BE PAINTED PLASTER APPLIED TO STRUCTURE.

L. ALL WALL FINISHES SHALL BE PAINTED PLASTER APPLIED TO STRUCTURE UNLESS OTHERWISE NOTED.

M. ALL FLOOR FINISHES SHALL BE SEALED CONCRETE, UNLESS NOTED OTHERWISE.

N. PROVIDE TILE FINISHES AS INDICATED IN DETAILS & KEY NOTES.

O. ALL DOOR, FRAME AND HARDWARE TYPES SHALL BE 20A.1.11 UNLESS NOTED OTHERWISE.

P. TOILET STALL DOORS SHALL BE F.2.12

Q. SHOWER STALL DOOR, FRAME AND HARDWARE TYPE SHALL BE E.1.12.

R. PROVIDE POLISHED STAINLESS STEEL MIRROR 600 X 900 ABOVE EVERY LAVATORY FAUCET.

## KEY NOTES: (X)

1. ISOLATION JOINT COVER– SEE SHEET A-506.
2. LINE OF ROOF OVERHANG ABOVE.
3. CONCRETE STOOP WITH GRATE – SEE DETAIL 1/A-503.
4. NOT USED.
5. NOT USED.
6. CONCRETE STOOP – SEE DETAIL 3/A-503.

## LEGEND:

(XXX) DOOR FRAME AND HARDWARE TYPE, SEE SHEET A-601

(A) WINDOW TYPE, SEE SHEET A-601

(X) KEY NOTE

## ABBREVIATIONS:

| | |
|---|---|
| COMM | COMMUNICATIONS |
| ELEC | ELECTRICAL |
| MECH | MECHANICAL |
| JAN | JANITOR |
| CLOS | CLOSET |

LINEAR DIMENSIONS SHOWN ARE IN MILLIMETERS (MM), UNLESS OTHERWISE NOTED

0 2000 4000

SCALE: 1:100

APPROVED:

A/E DESIGNER OF RECORD

SEAL:

STATE OF SOUTH CAROLINA
KEVIN R. CHAFIN
N. Charleston, SC
6374
REGISTERED ARCHITECT

US ARMY CORPS OF ENGINEERS
AFGHANISTAN ENGINEER DISTRICT

| Mark | Description | Date | Appr. |
|---|---|---|---|

Rev: 0
Date: 2/23/10
Design file no.
Drawing code:
File name: ANABOQA-101FP
Plot date: 2/23/2010
Plot scale: X:X

Designed by: KRC
Dwn by: KJG
Ckd by: NLJ
Reviewed by: LHM
Submitted by: BAKER

U.S. ARMY CORPS OF ENGINEERS
AFGHANISTAN ENGINEER DISTRICT
APO AE 96338

Michael Baker Jr., Inc
A unit of Michael Baker Corporation
Airside Business Park
100 Airside Drive
Moon Township, PA 15108
www.mbakercorp.com

AFGHAN NATIONAL ARMY
REGIONAL MILITARY TRAINING CENTER
STANDARD DESIGN

BOQ OFFICER BARRACKS

FLOOR PLAN

Sheet reference number:
A-101

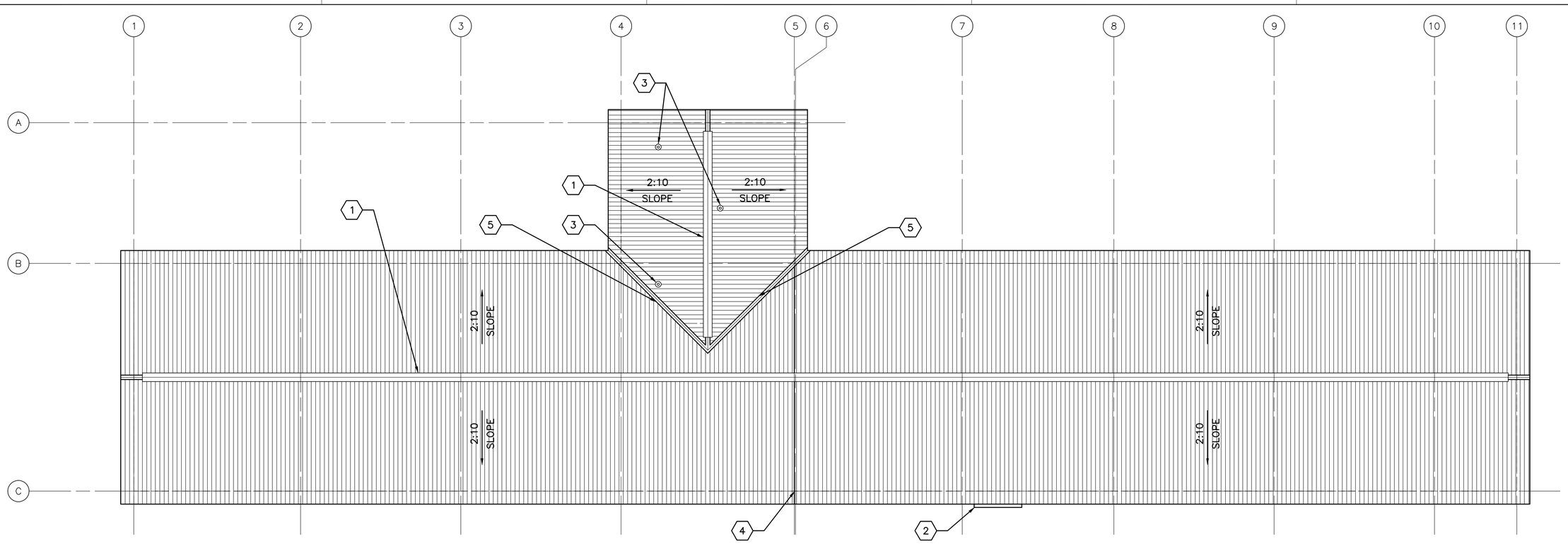


1 A–102 **ROOF PLAN**

SCALE: 1:100

## GENERAL NOTES:

A. THE APPROXIMATE LOCATION OF ROOF DEVICES AND PENETRATIONS ARE SHOWN ON THE ROOF PLAN FOR INFORMATION ONLY. THE CONTRACTOR SHALL BE RESPONSIBLE FOR UNDERSTANDING THE ACTUAL LOCATION OF THESE AND ALL OTHER ITEMS PRIOR TO BEGINNING CONSTRUCTION. COORDINATE ALL ROOF PENETRATIONS WITH STRUCTURAL, MECHANICAL AND PLUMBING WORK.

B. PLUMBING VENT PENETRATIONS SHALL TERMINATE 300 MM MINIMUM ABOVE THE ROOF.

C. UNLESS OTHERWISE NOTED, NOTES, DETAILS OR FEATURES INDICATED FOR ONE CONDITION SHALL BE APPLICABLE FOR ALL ALIKE AND SIMILAR CONDITIONS.

D. STOCKPILING OF MATERIALS, EQUIPMENT AND ANY OTHER ITEMS ON THE ROOF IS PROHIBITED.

E. ROOFS SHALL BE CORRUGATED METAL ROOF PANELS ON COLD–FORMED METAL FRAMING ON CONCRETE SLAB.

## KEY NOTES: (X)

1. CONTINUOUS METAL RIDGE VENT SEE DETAIL 4/A–501.
2. METAL GUTTER, CENTER ON DOOR, 2300 MM – SEE DETAIL 1A/A–501.
3. PLUMBING VENT – SEE DETAIL 5/A–501.
4. ROOF EXPANSION JOINT – SEE DETAIL 4A/A–501.
5. VALLEY – SEE DETAIL 6/A–501.

LINEAR DIMENSIONS SHOWN ARE IN MILLIMETERS (MM), UNLESS OTHERWISE NOTED

0 2000 4000
SCALE: 1:100

APPROVED:

A/E DESIGNER OF RECORD

SEAL:

STATE OF SOUTH CAROLINA
KEVIN R. CHAFIN
N. Charleston, SC
6374
REGISTERED ARCHITECT

US ARMY CORPS OF ENGINEERS
AFGHANISTAN ENGINEER DISTRICT

| Mark | Description | Date | Appr. | Mark | Description | Date | Appr. |
|---|---|---|---|---|---|---|---|
| | | | | | | | |

Rev: 0
Date: 2/23/10
Design file no.
Drawing code:
File name: ANABOQA-1028P
Plot date: 2/23/2010
Plot scale: X:X

Designed by: KRC
Dwn by: KJG
Ckd by: NLJ
Reviewed by: LHM
Submitted by: BAKER

U.S. ARMY CORPS OF ENGINEERS
AFGHANISTAN ENGINEER DISTRICT
APO AE 96338

*Michael Baker Jr., Inc*
*A unit of Michael Baker Corporation*
Airside Business Park
100 Airside Drive
Moon Township, PA 15108
www.mbakercorp.com

AFGHAN NATIONAL ARMY
REGIONAL MILITARY TRAINING CENTER
STANDARD DESIGN

BOQ OFFICER BARRACKS

ROOF PLAN

Sheet reference number:
A–102

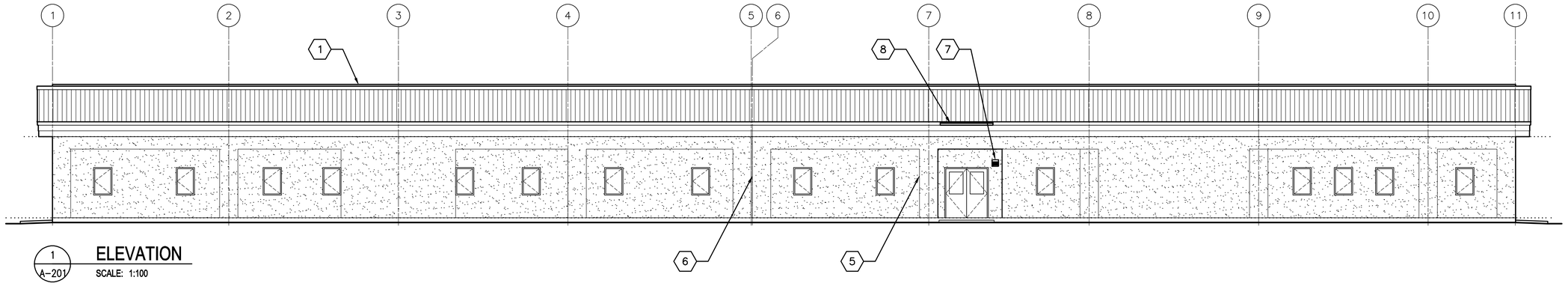


1 A–201 **ELEVATION**
SCALE: 1:100

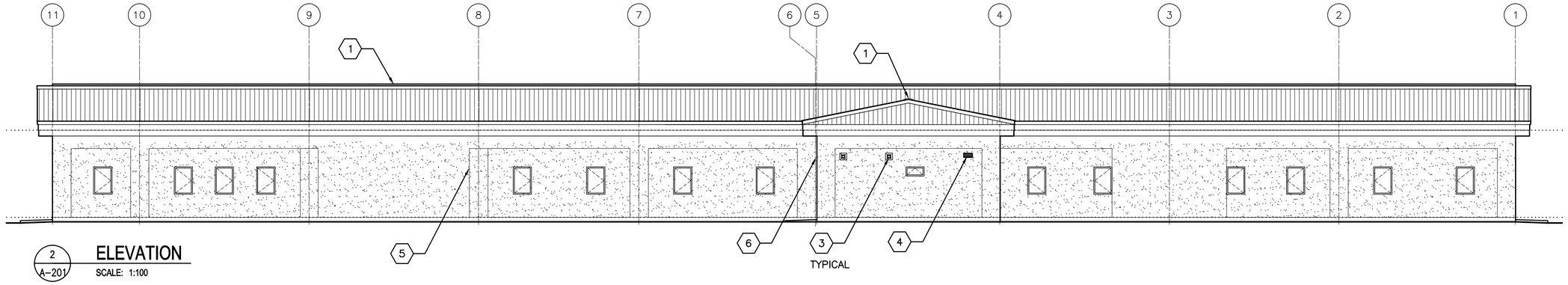


2 A–201 **ELEVATION**
SCALE: 1:100

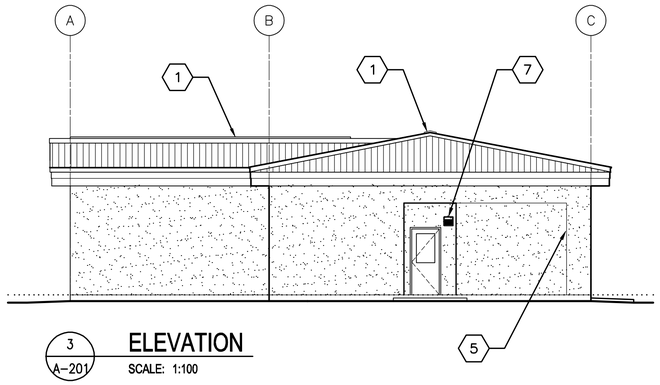


3 A–201 **ELEVATION**
SCALE: 1:100

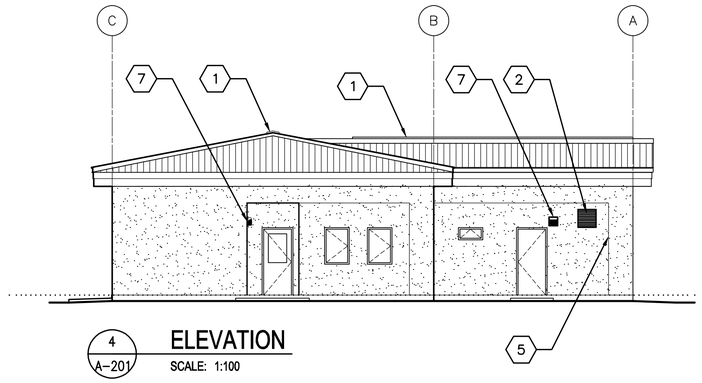


4 A–201 **ELEVATION**
SCALE: 1:100

## GENERAL NOTES:

A. COORDINATE SIZE AND LOCATION OF OPENINGS FOR MECHANICAL ITEMS WITH MECHANICAL DRAWINGS.

B. PROVIDE STRUCTURAL LINTELS AS REQUIRED – SEE STRUCTURAL DRAWINGS

C. ALL EXTERIOR WALL FINISHES SHALL BE STUCCO OVER CMU AND CONCRETE SUBSTRATES. PROVIDE CONTROL JOINTS IN STUCCO WALL FINISH AS NOTED.

D. ROOF SHALL BE CORRUGATED METAL ROOF PANELS ON COLD–FORMED METAL FRAMING ON CONCRETE SLAB.

## KEY NOTES: (X)

1. CONTINUOUS METAL RIDGE VENT – SEE DETAIL 4/A–501.
2. LOUVER, LOCATE TOP OF WALL PENETRATION 2800 MM ABOVE FINISHED FLOOR – SEE MECHANICAL DRAWINGS.
3. EXHAUST FAN, LOCATE TOP OF WALL PENETRATION 2800 MM ABOVE FINISHED FLOOR – SEE MECHANICAL DRAWINGS.
4. EXHAUST FAN WITH WALL GRILL, LOCATE TOP OF WALL PENETRATION 2800 MM ABOVE FINISHED FLOOR – SEE MECHANICAL DRAWINGS.
5. STUCCO CONTROL JOINT – SEE DETAIL 2A/A–501.
6. EXPANSION JOINT COVER – SEE SHEET A–506
7. EXTERIOR LIGHT FIXTURE – SEE ELECTRICAL.
8. METAL GUTTER, CENTER ON DOOR, 2300 MM – SEE DETAIL 1A/A–501.

LINEAR DIMENSIONS SHOWN ARE IN MILLIMETERS (MM), UNLESS OTHERWISE NOTED

0 2000 4000
SCALE: 1:100

APPROVED:

A/E DESIGNER OF RECORD

SEAL:

STATE OF SOUTH CAROLINA
KEVIN R. CHAFIN
N. Charleston, SC
6374
REGISTERED ARCHITECT

US ARMY CORPS OF ENGINEERS
AFGHANISTAN ENGINEER DISTRICT

| Mark | Description | Date | Appr. |
|---|---|---|---|
| | | | |

| Mark | Description | Date | Appr. |
|---|---|---|---|
| | | | |

Rev: 0
Date: 2/23/10
Design file no.
Drawing code:
File name: ANABOQA-201ELV
Plot date: 2/23/2010
Plot scale: x:x

Designed by: KRC
Dwn by: KJG
Ckd by: NLJ
Reviewed by: LHM
Submitted by: BAKER

U.S. ARMY CORPS OF ENGINEERS
AFGHANISTAN ENGINEER DISTRICT
APO AE 96338

*Michael Baker Jr., Inc*
*A unit of Michael Baker Corporation*
Airside Business Park
100 Airside Drive
Moon Township, PA 15108
www.mbakercorp.com

AFGHAN NATIONAL ARMY
REGIONAL MILITARY TRAINING CENTER
STANDARD DESIGN

BOQ OFFICER BARRACKS

ELEVATIONS

Sheet reference number:
A–201

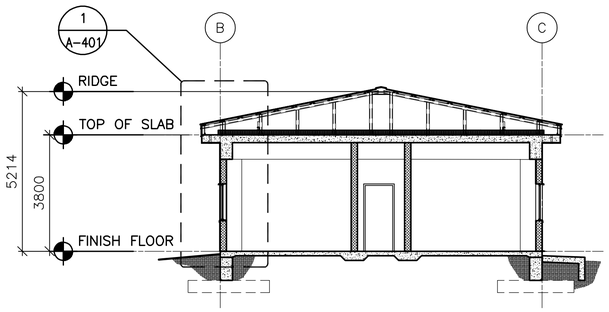


1 A-301 **SECTION**
SCALE: 1:100

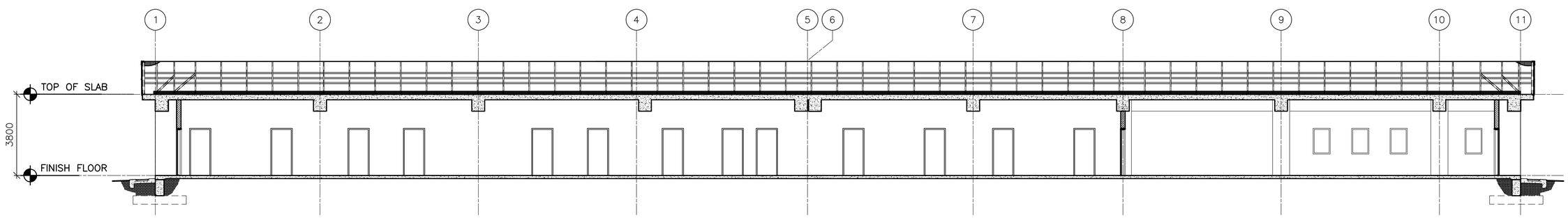


2 A-301 **SECTION**
SCALE: 1:100

APPROVED:

A/E DESIGNER OF RECORD

SEAL:

STATE OF SOUTH CAROLINA
KEVIN R. CHAFIN
N. Charleston, SC
6374
REGISTERED ARCHITECT

LINEAR DIMENSIONS SHOWN ARE IN MILLIMETERS (MM), UNLESS OTHERWISE NOTED

0 2000 4000
SCALE: 1:100

US ARMY CORPS OF ENGINEERS
AFGHANISTAN ENGINEER DISTRICT

| Mark | Description | Date | Appr. |
|---|---|---|---|
| | | | |

Date: 2/23/10
Design file no.
Drawing code:
File name: ANABOQA-30185
Plot date: 2/23/2010
Plot scale: x:X
Rev: 0

Designed by: KRC
Dwn by: KJG
Ckd by: NLJ
Reviewed by: LHM
Submitted by: BAKER

U.S. ARMY CORPS OF ENGINEERS
AFGHANISTAN ENGINEER DISTRICT
APO AE 96338

*Michael Baker Jr., Inc.*
*A unit of Michael Baker Corporation*
Airside Business Park
100 Airside Drive
Moon Township, PA 15108
www.mbakercorp.com

AFGHAN NATIONAL ARMY
REGIONAL MILITARY TRAINING CENTER
STANDARD DESIGN

BOQ OFFICER BARRACKS

BUILDING SECTIONS

Sheet reference number:
A-301

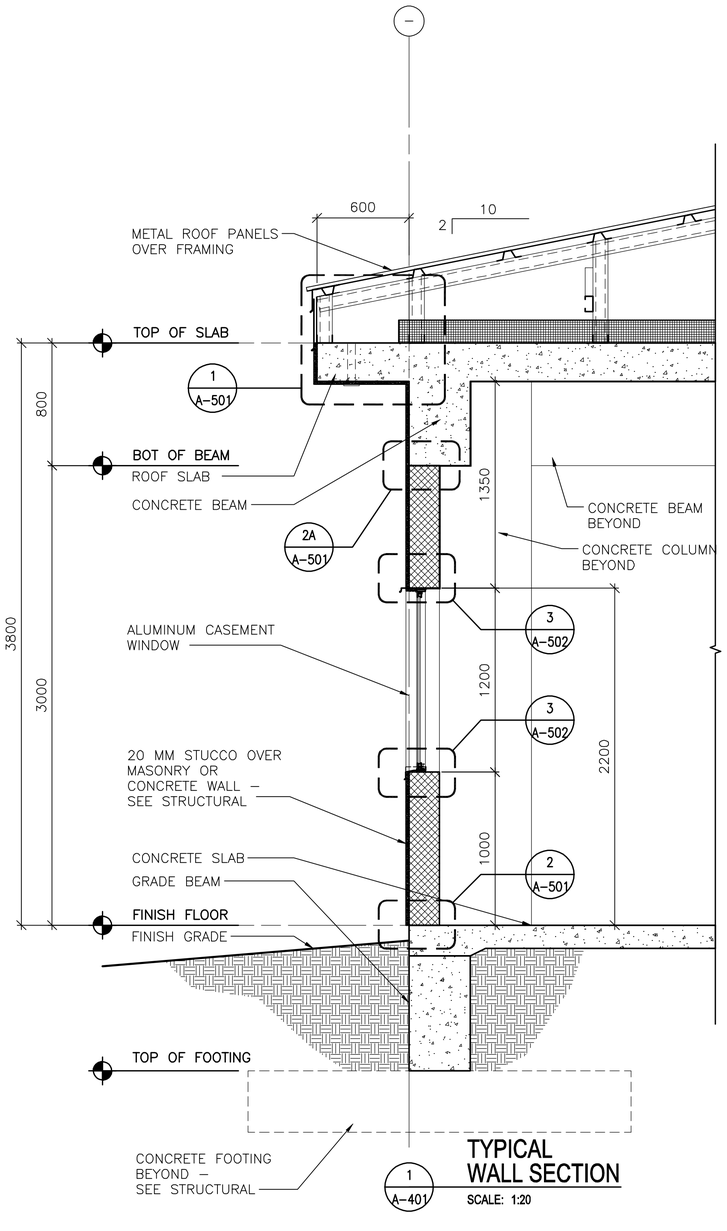


## TYPICAL WALL SECTION

SCALE: 1:20

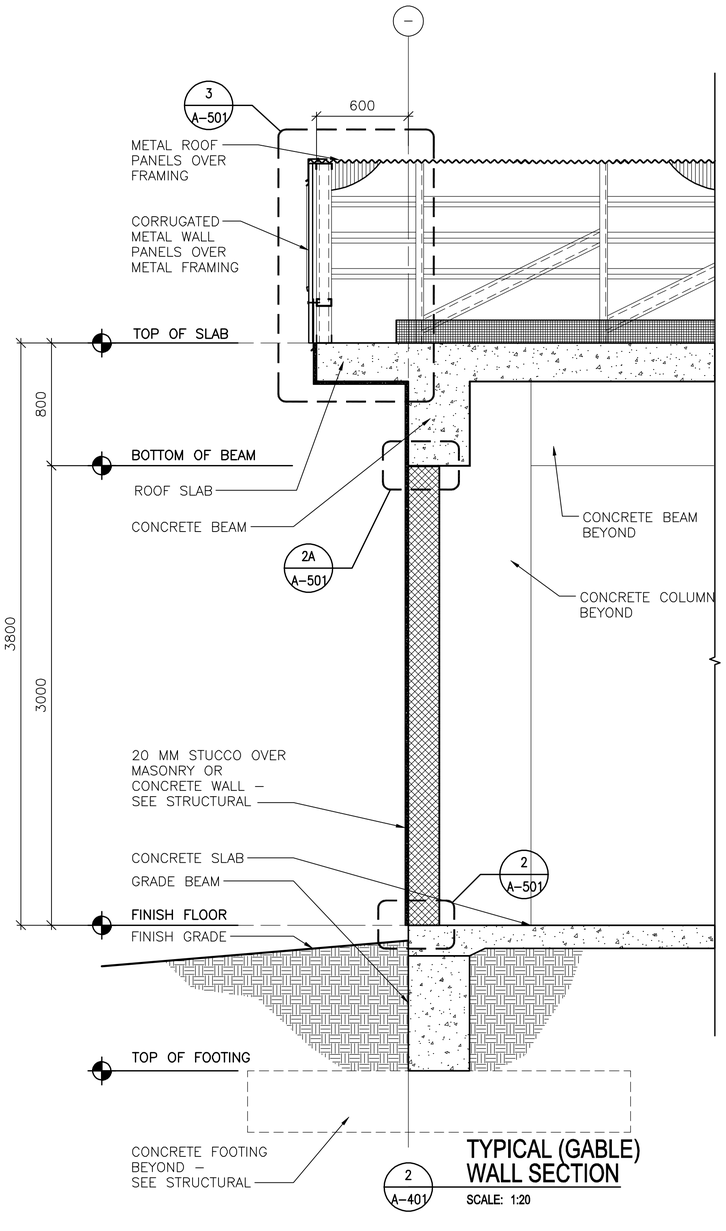


## TYPICAL (GABLE) WALL SECTION

SCALE: 1:20

0 400 800

SCALE: 1:20

LINEAR DIMENSIONS SHOWN ARE IN MILLIMETERS (MM), UNLESS OTHERWISE NOTED

APPROVED:

A/E DESIGNER OF RECORD

SEAL:

STATE OF SOUTH CAROLINA
KEVIN R. CHAFIN
N. Charleston, SC
6374
REGISTERED ARCHITECT

US ARMY CORPS OF ENGINEERS
AFGHANISTAN ENGINEER DISTRICT

| Mark | Description | Date | Appr. |
|---|---|---|---|
| | | | |

| Mark | Description | Date | Appr. |
|---|---|---|---|
| | | | |

Date: 2/23/10
Design file no.
Drawing code:
File name: ANABOQA-401WS
Plot date: 2/23/2010
Plot scale: x:x
Rev: 0

Designed by: KRC
Dwn by: KJG
Ckd by: NLJ
Reviewed by: LHM
Submitted by: BAKER

U.S. ARMY CORPS OF ENGINEERS
AFGHANISTAN ENGINEER DISTRICT
APO AE 96338

*Michael Baker Jr., Inc.*
*A unit of Michael Baker Corporation*
Airside Business Park
100 Airside Drive
Moon Township, PA 15108
www.mbakercorp.com

AFGHAN NATIONAL ARMY
REGIONAL MILITARY TRAINING CENTER
STANDARD DESIGN

BOQ OFFICER BARRACKS

WALL SECTIONS

Sheet reference number:
A-401

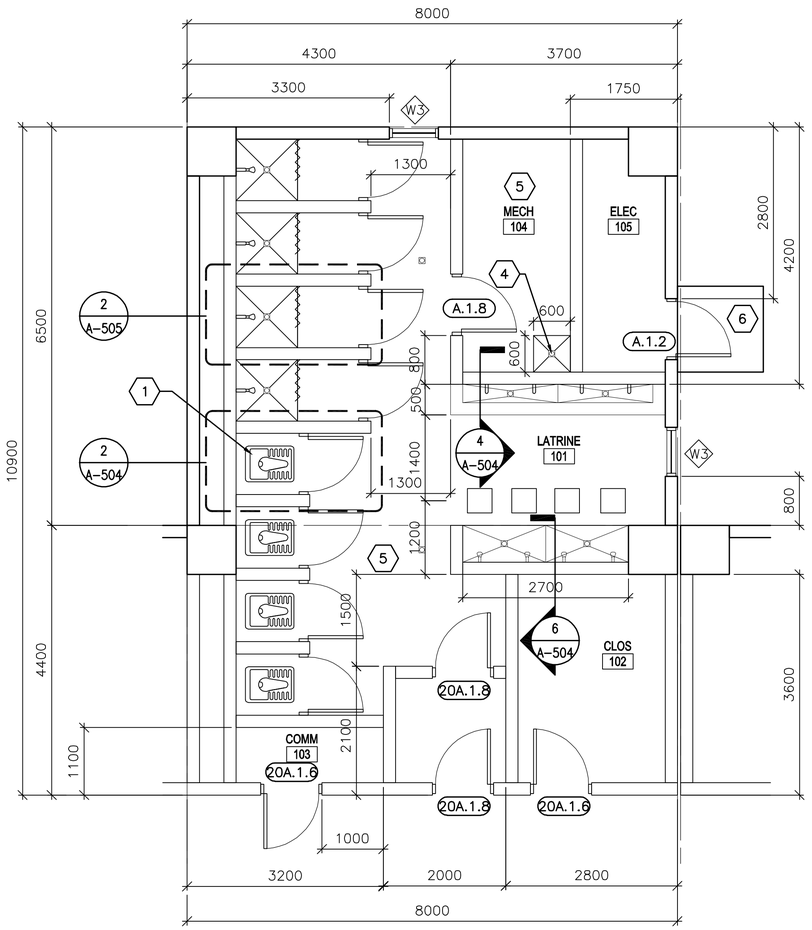


1 / A-402 **ENLARGED PLAN**

SCALE: 1:50

## GENERAL NOTES:

A. DIMENSIONS ARE SHOWN TO OUTER EDGE OF EXTERIOR STRUCTURAL COLUMNS, STRUCTURAL COLUMN GRID, EDGE OF INTERIOR PARTITIONS, EDGE OF WINDOW OPENINGS, AND TO HINGE SIDE OF DOOR FRAME OPENINGS.

B. HINGE SIDE OF OPENINGS FOR DOORS AND FRAMES SHALL BE LOCATED 200 MM FROM THE ADJACENT WALL OR COLUMN, UNLESS NOTED OTHERWISE.

C. INTERIOR PARTITIONS SHALL BE 200 MM CMU, UNLESS NOTED OTHERWISE.

D. COSMETIC REPAIR OF MINOR DEFECTS: REPAIR OR FILL MORTAR JOINTS AND MINOR DEFECTS, INCLUDING BUT NOT LIMITED TO SPALLS, IN ACCORDANCE WITH MANUFACTURER'S RECOMMENDATIONS AND PRIOR TO COATING APPLICATION. SURFACES TO BE PAINTED SHALL BE CLEAN AND FREE OF FOREIGN MATTER BEFORE APPLICATION OF PAINT. CLEANING SHALL BE SCHEDULED SO THAT DUST AND OTHER CONTAMINANTS WILL NOT FALL ON NEWLY PAINTED SURFACES.

E. CONCRETE, PLASTER AND MASONRY SURFACES SHALL BE ALLOWED TO CURE FOR AT LEAST 30 DAYS BEFORE PAINTING. CONCRETE SLABS-ON-GRADE SHALL BE ALLOWED TO CURE 90 DAYS BEFORE STAINING OR SEALING.

F. DO NOT USE PAINT MATERIALS CONTAINING LEAD CONTENT IN EXCESS OF 0.009 PERCENT OF THE WEIGHT OF THE TOTAL NONVOLATILE CONTENT OF THE PAINT OR THE WEIGHT OF THE DRIED PAINT FILM.

G. DO NOT USE ANY ASBESTOS CONTAINING MATERIALS (ACM) IN PROJECT. ACM IS DEFINED AS 1% OR MORE BY VOLUME.

H. DO NOT USE PAINT MATERIALS CONTAINING MERCURIAL FUNGICIDES.

I. FACTORY PRIMED METAL DOORS AND FRAMES SHALL RECEIVE TWO COATS OF PAINT.

J. FILL REMAINING SPACE AT PENETRATIONS IN FIRE-RATED FLOORS, PARTITIONS AND CEILINGS WITH APPROPRIATE FIRESTOPPING MATERIALS.

K. ALL CEILING FINISHES SHALL BE PAINTED PLASTER APPLIED TO STRUCTURE.

L. ALL WALL FINISHES SHALL BE PAINTED PLASTER APPLIED TO STRUCTURE UNLESS OTHERWISE NOTED.

M. ALL FLOOR FINISHES SHALL BE SEALED CONCRETE, UNLESS NOTED OTHERWISE.

N. PROVIDE TILE FINISHES AS INDICATED IN Details & KEY NOTES.

O. ALL DOOR, FRAME AND HARDWARE TYPES SHALL BE 20A.1.11 UNLESS NOTED OTHERWISE.

P. TOILET STALL DOORS SHALL BE F.2.12

Q. SHOWER STALL DOOR, FRAME AND HARDWARE TYPE SHALL BE E.1.12

R. PROVIDE POLISHED STAINLESS MIRROR 600 X 900 ABOVE EVERY LAVATORY FAUCET

## KEY NOTES: (X)

1. TYPICAL TOILET STALL LAYOUT – SEE DETAIL 2/A-504.
2. NOT USED
3. NOT USED
4. RECESSED TROUGH – SEE DETAIL 7/A-504.
5. TERRAZZO FLOOR TILE AND CERAMIC WALL TILE TO 2000 MM ABOVE FINISHED FLOOR UNLESS OTHERWISE NOTED.
6. CONCRETE STOOP – SEE DETAIL 3/A-503.

## LEGEND:

(XXX) DOOR FRAME AND HARDWARE TYPE, SEE SHEET A-601

(A) WINDOW TYPE, SEE SHEET A-601

(X) KEY NOTE

## ABBREVIATIONS:

| | |
|---|---|
| COMM | COMMUNICATIONS |
| ELEC | ELECTRICAL |
| MECH | MECHANICAL |
| JAN | JANITOR |
| CLOS | CLOSET |

LINEAR DIMENSIONS SHOWN ARE IN MILLIMETERS (MM), UNLESS OTHERWISE NOTED

0 1000 2000
SCALE: 1:50

APPROVED:

A/E DESIGNER OF RECORD

SEAL:

STATE OF SOUTH CAROLINA
KEVIN R. CHAFIN
N. Charleston, SC
6374
REGISTERED ARCHITECT

US ARMY CORPS OF ENGINEERS
AFGHANISTAN ENGINEER DISTRICT

| Mark | Description | Date | Appr. |
|---|---|---|---|

| Mark | Description | Date | Appr. |
|---|---|---|---|

Rev. 0

Date: 2/23/10
Design file no.
Drawing code:

Designed by: KRC
Dwn by: KJC
Ckd by: NLJ
Reviewed by: LHM
Submitted by: BAKER

File name: ANABOQA-602EP
Plot date: 2/23/2010
Plot scale: X:X

U.S. ARMY CORPS OF ENGINEERS
AFGHANISTAN ENGINEER DISTRICT
APO AE 96338

*Michael Baker Jr., Inc*
*A unit of Michael Baker Corporation*
Airside Business Park
100 Airside Drive
Moon Township, PA 15108
www.mbakercorp.com

AFGHAN NATIONAL ARMY
REGIONAL MILITARY TRAINING CENTER
STANDARD DESIGN

BOQ OFFICER BARRACKS

ENLARGED PLAN

Sheet reference number:
A-402

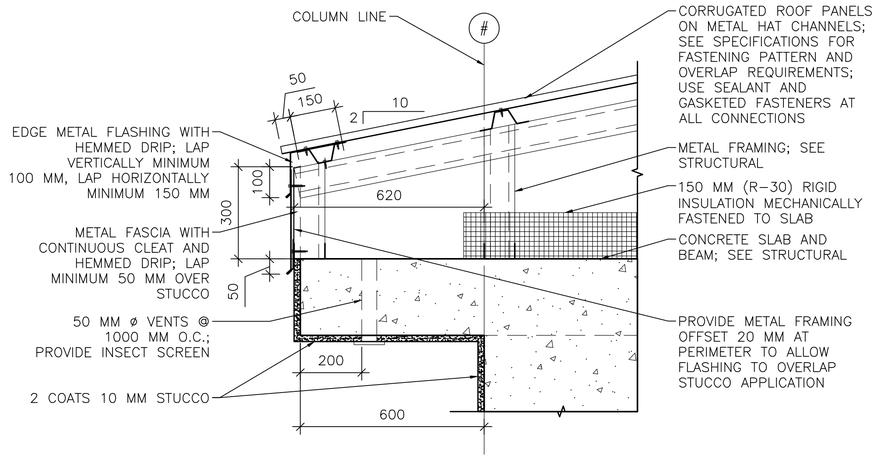


1 A-501 **EAVE DETAIL**
SCALE: 1:10

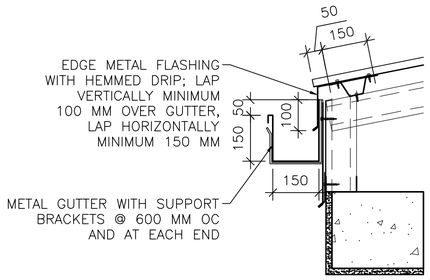


1A A-501 **GUTTER DETAIL**
SCALE: 1:10

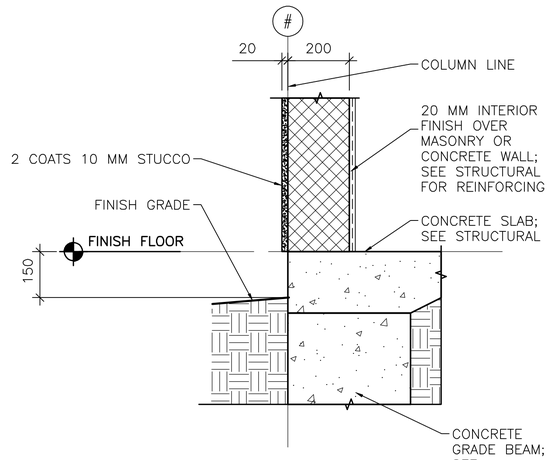


2 A-501 **STUCCO BASE DETAIL**
SCALE: 1:10

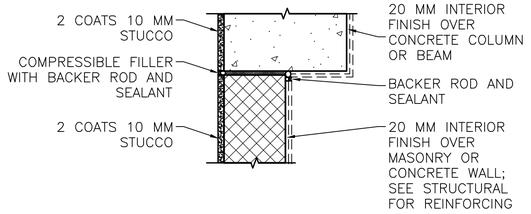


NOTE: DETAIL TYPICAL AT ALL WALL/COLUMN AND WALL/BEAM LOCATIONS, SEE ALTERNATE BRACING DETAIL BELOW 2B/A-501.

2A A-501 **STUCCO JOINT DETAIL**
SCALE: 1:10

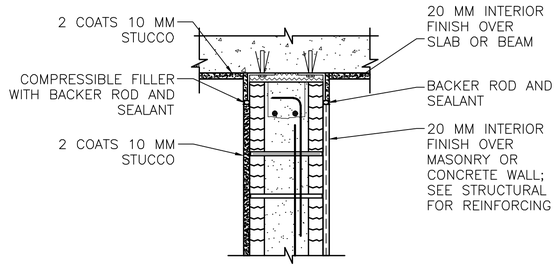


INTERIOR WALL/BEAM

2B A-501 **ALTERNATE BRACING DETAIL**
SCALE: 1:10

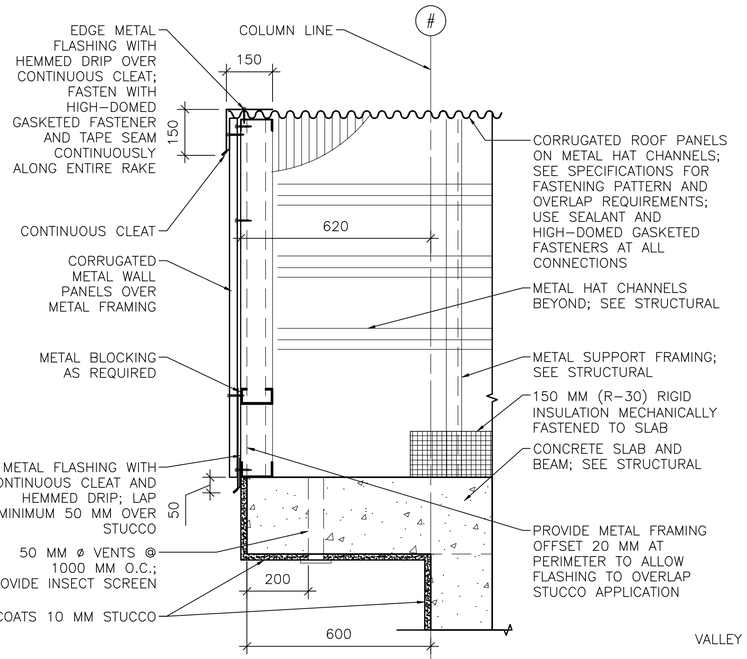


3 A-501 **RAKE/EAVE DETAIL**
SCALE: 1:10

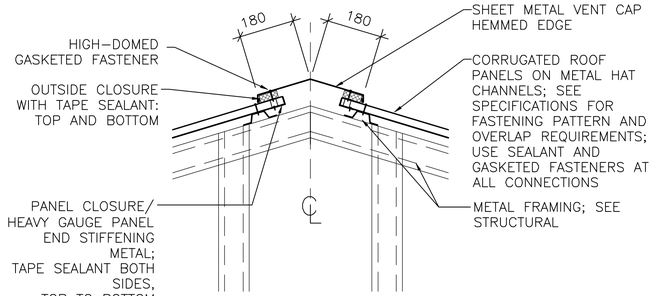


4 A-501 **RIDGE VENT DETAIL**
SCALE: 1:10

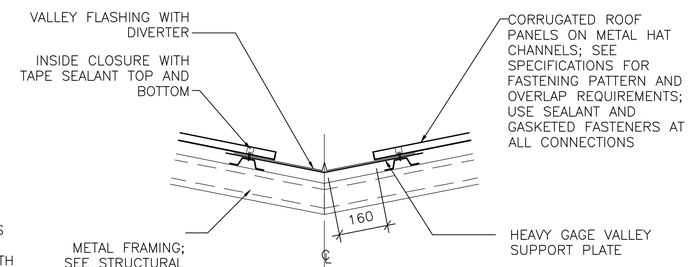


6 A-501 **VALLEY DETAIL**
SCALE: 1:10

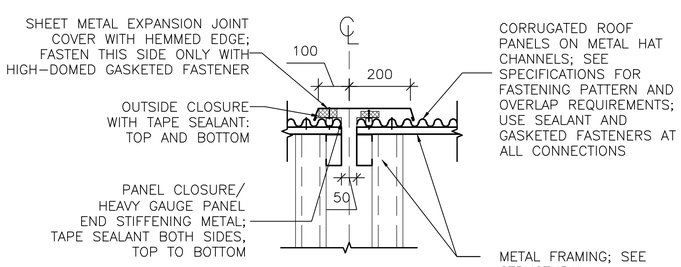


4A A-501 **ROOF EXPANSION JOINT DETAIL**
SCALE: 1:10

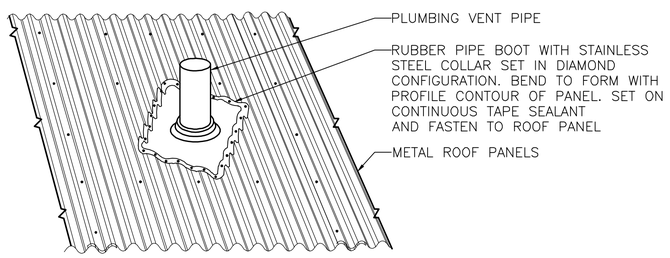


5 A-501 **PLUMBING VENT DETAIL**
SCALE: NTS

LINEAR DIMENSIONS SHOWN ARE IN MILLIMETERS (MM), UNLESS OTHERWISE NOTED

0 200 400
SCALE: 1:10

APPROVED:

A/E DESIGNER OF RECORD

SEAL:

STATE OF SOUTH CAROLINA
KEVIN R. CHAFIN
N. Charleston, SC
6374
REGISTERED ARCHITECT

US ARMY CORPS OF ENGINEERS
AFGHANISTAN ENGINEER DISTRICT

| Mark | Description | Date | Appr. |
|---|---|---|---|
| | | | |

Designed by: KRC
Dwn by: KJG
Ckd by: NLJ
Reviewed by: LHM
Submitted by: BAKER
Date: 2/23/10
Design file no.
Drawing code:
File name: ANABOQA-501DT
Plot date: 2/23/2010
Plot scale: x:x
Rev: 0

U.S. ARMY CORPS OF ENGINEERS
AFGHANISTAN ENGINEER DISTRICT
APO AE 96338

Michael Baker Jr., Inc
A unit of Michael Baker Corporation
Airside Business Park
100 Airside Drive
Moon Township, PA 15108
www.mbakercorp.com

AFGHAN NATIONAL ARMY
REGIONAL MILITARY TRAINING CENTER
STANDARD DESIGN

BOQ OFFICER BARRACKS

EXTERIOR DETAILS

Sheet reference number:
A-501

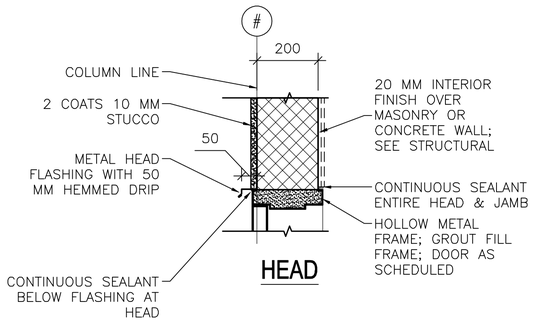


HEAD

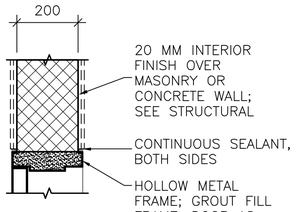


HEAD

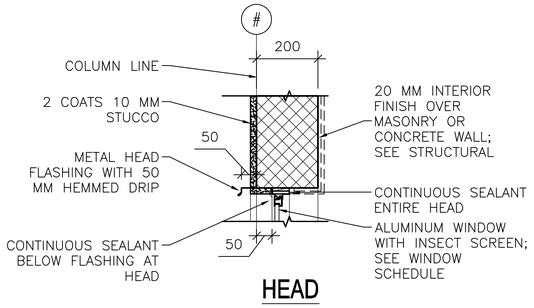


HEAD

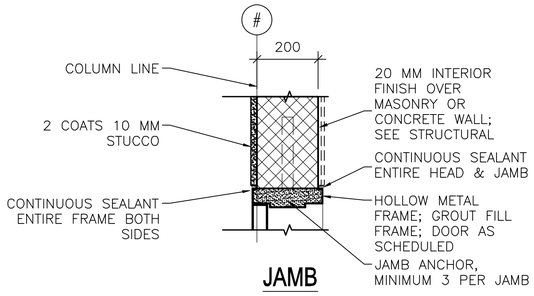


JAMB

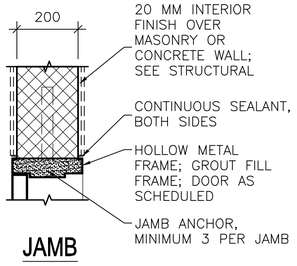


JAMB

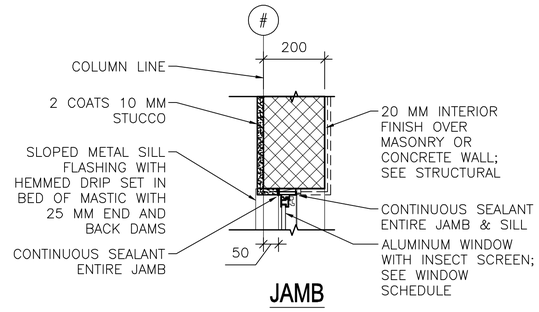


JAMB




THRESHOLD

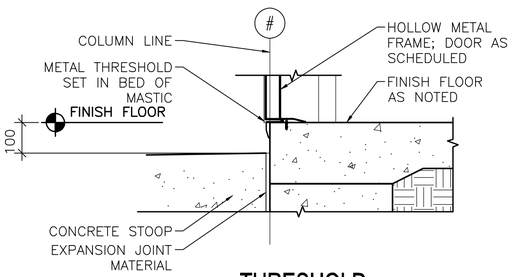


THRESHOLD

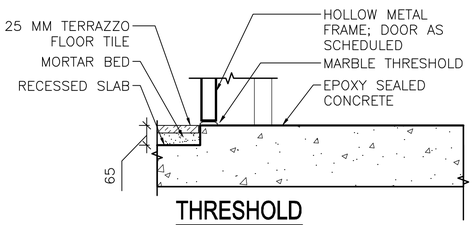


THRESHOLD

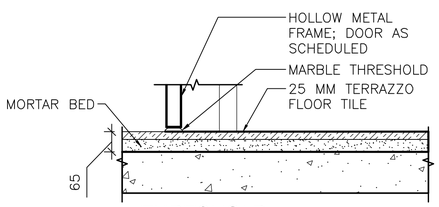


THRESHOLD

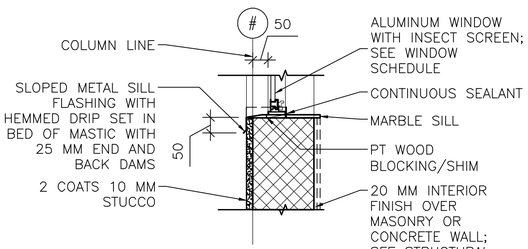


SILL

1 A–502 **EXTERIOR DOOR DETAILS**
SCALE: 1:10

2 A–502 **INTERIOR DOOR DETAILS**
SCALE: 1:10

3 A–502 **EXTERIOR WINDOW DETAILS**
SCALE: 1:10

LINEAR DIMENSIONS SHOWN ARE IN MILLIMETERS (MM), UNLESS OTHERWISE NOTED

0 200 400
SCALE: 1:10

APPROVED:

A/E DESIGNER OF RECORD

SEAL:

STATE OF SOUTH CAROLINA
KEVIN R. CHAFIN
N. Charleston, SC
6374
REGISTERED ARCHITECT

US ARMY CORPS OF ENGINEERS
AFGHANISTAN ENGINEER DISTRICT

| Mark | Description | Date | Appr. |
|---|---|---|---|
| | | | |
| | | | |
| | | | |
| | | | |
| | | | |
| | | | |

U.S. ARMY CORPS OF ENGINEERS
AFGHANISTAN ENGINEER DISTRICT
APO AE 96338

*Michael Baker Jr., Inc*
*A unit of Michael Baker Corporation*
Airside Business Park
100 Airside Drive
Moon Township, PA 15108
www.mbakercorp.com

Designed by: KRC
Dwn by: KJG
Ckd by: NLJ
Reviewed by: LHM
Submitted by: BAKER

Date: 2/23/10
Design file no.
Drawing code:
File name: ANABOQA-502HS
Plot date: 2/23/2010
Plot scale: x:x
Rev: 0

AFGHAN NATIONAL ARMY
REGIONAL MILITARY TRAINING CENTER
STANDARD DESIGN

BOQ OFFICER BARRACKS

HEAD, JAMB & SILL DETAILS

Sheet reference number:
A–502

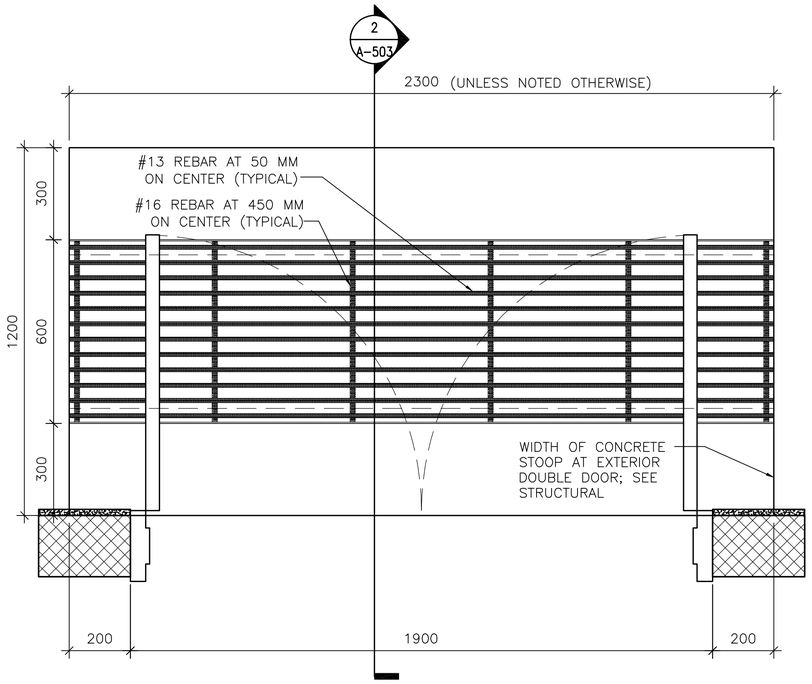


1 A-503 **DOOR STOOP PLAN (WITH GRATE)**

SCALE: 1:10

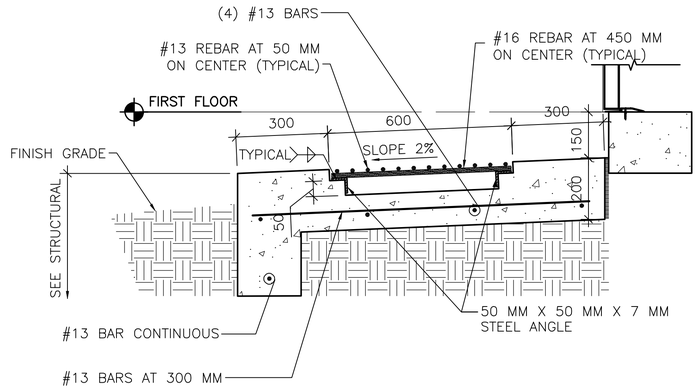


2 A-503 **DOOR STOOP DETAIL**

SCALE: 1:10

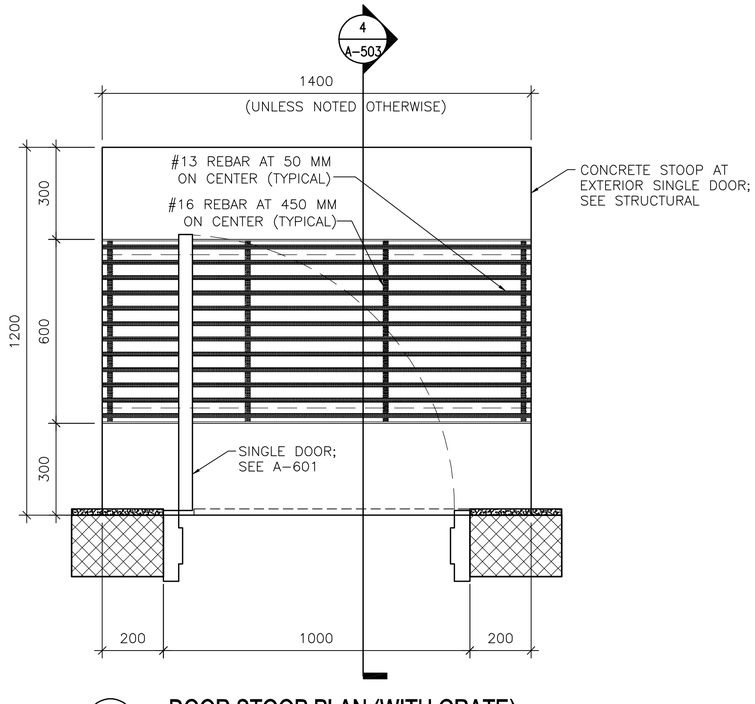


3 A-503 **DOOR STOOP PLAN (WITH GRATE)**

SCALE: 1:10

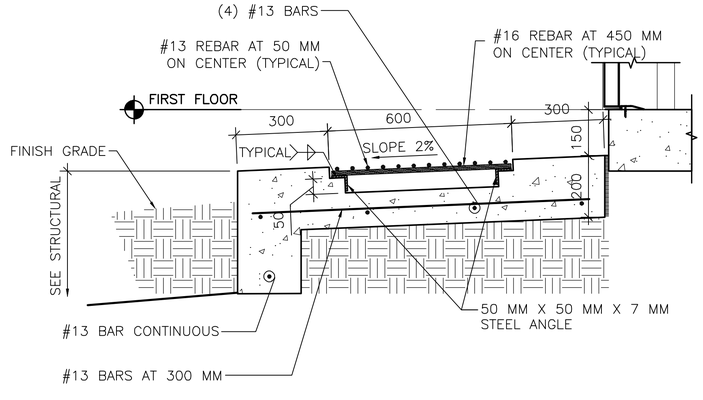


4 A-503 **DOOR STOOP DETAIL**

SCALE: 1:10

APPROVED:

A/E DESIGNER OF RECORD

SEAL:

STATE OF SOUTH CAROLINA
KEVIN R. CHAFIN
N. Charleston, SC
6374
REGISTERED ARCHITECT

US ARMY CORPS OF ENGINEERS
AFGHANISTAN ENGINEER DISTRICT

| Mark | Description | Date | Appr. |
|---|---|---|---|
| | | | |

| Mark | Description | Date | Appr. |
|---|---|---|---|
| | | | |

Date: 2/23/10
Design file no.
Drawing code:
File name: ANABOQA-503DT
Plot date: 2/23/2010
Plot scale: X:X

Designed by: KRC
Dwn by: KJG
Ckd by: NLJ
Reviewed by: LHM
Submitted by: BAKER

U.S. ARMY CORPS OF ENGINEERS
AFGHANISTAN ENGINEER DISTRICT
APO AE 96338

*Michael Baker Jr., Inc*
*A unit of Michael Baker Corporation*
Airside Business Park
100 Airside Drive
Moon Township, PA 15108
www.mbakercorp.com

AFGHAN NATIONAL ARMY
REGIONAL MILITARY TRAINING CENTER
STANDARD DESIGN

BOQ OFFICER BARRACKS

STOOP DETAILS

Sheet reference number:
A-503

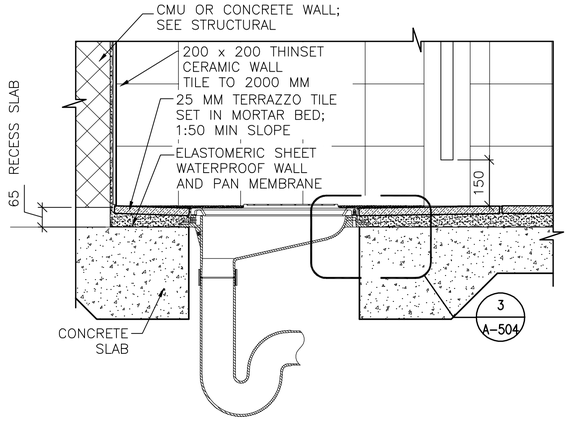


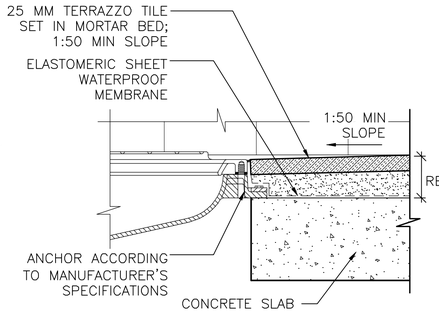


1 A-504 **LATRINE DETAIL**
**SCALE: 1:10**

3 A-504 **MOUNTING DETAIL**
**SCALE: 1:5**

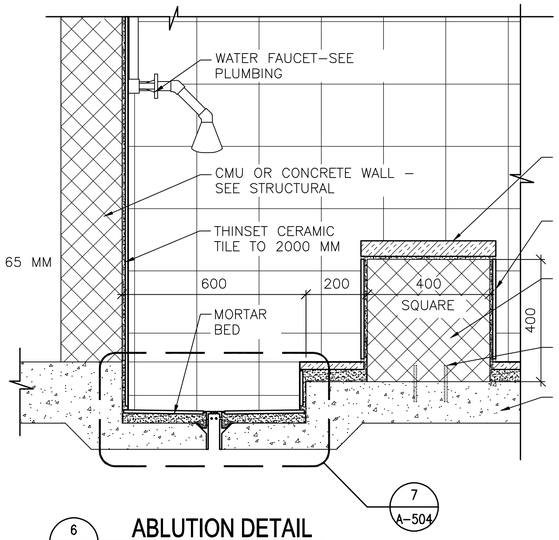


6 A-504 **ABLUTION DETAIL**
**SCALE: 1:10**

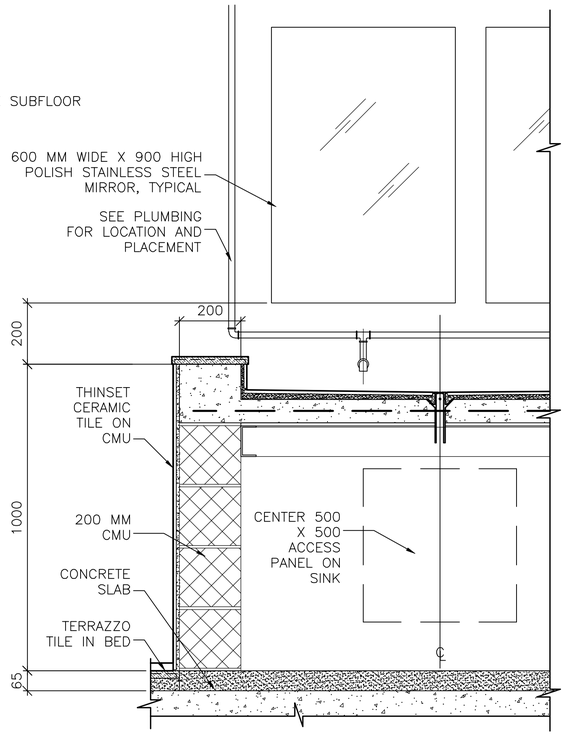


9 A-504 **LAVATORY SECTION**
**SCALE: 1:10**

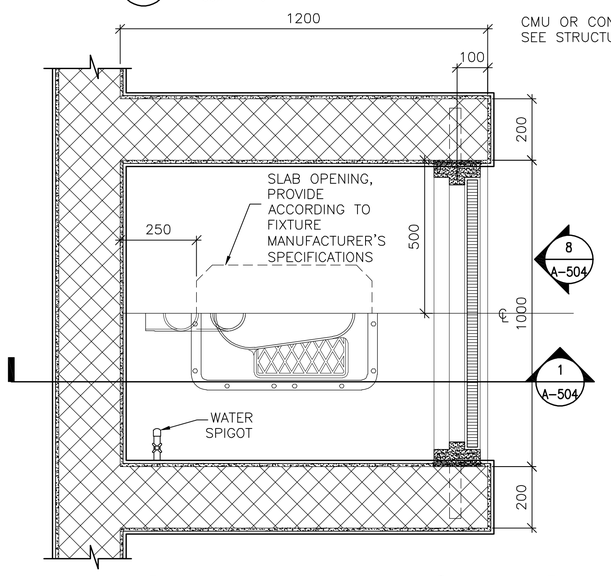


2 A-504 **TOILET DETAIL**
**SCALE: 1:10**

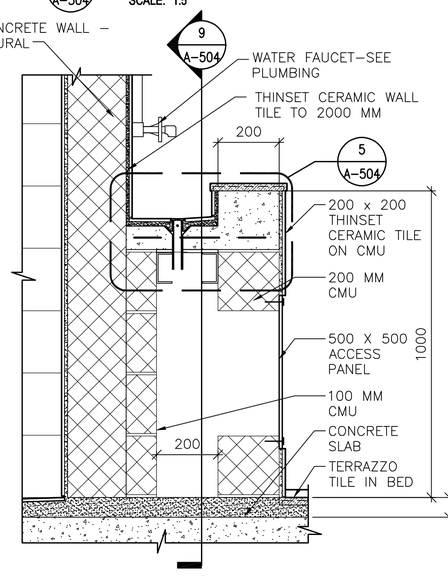


4 A-504 **LAVATORY SECTION**
**SCALE: 1:10**

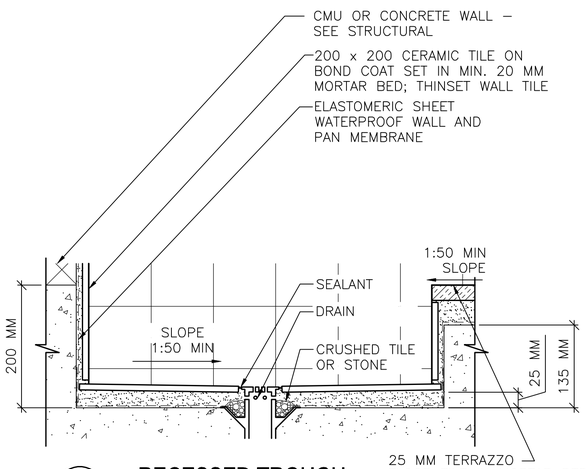


7 A-504 **RECESSED TROUGH**
**SCALE: 1:5**

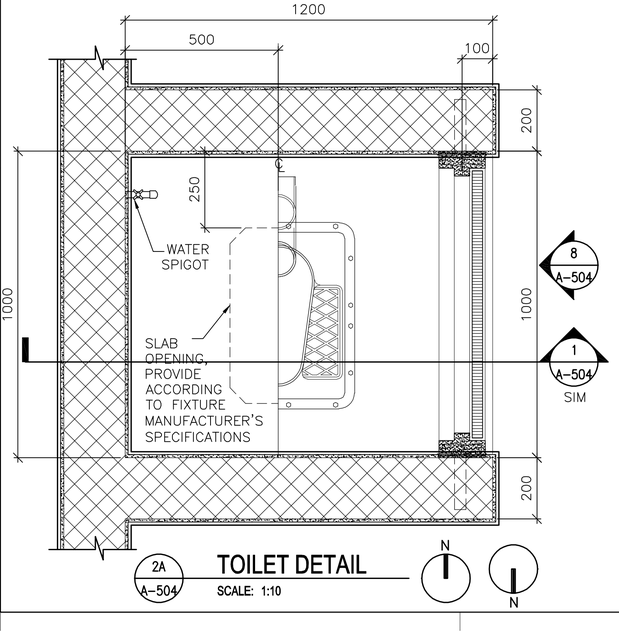


2A A-504 **TOILET DETAIL**
**SCALE: 1:10**

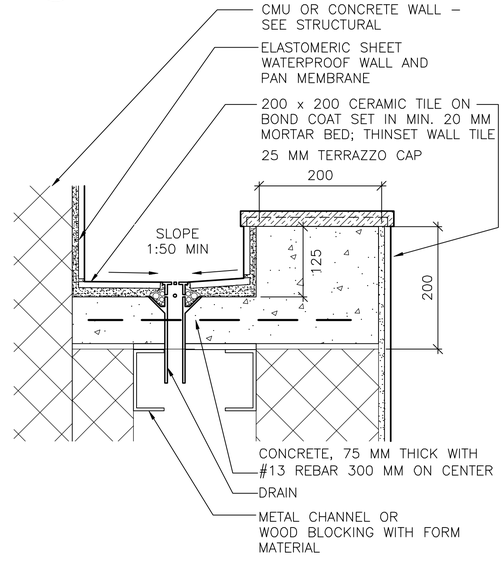


5 A-504 **LAVATORY DETAIL**
**SCALE: 1:5**

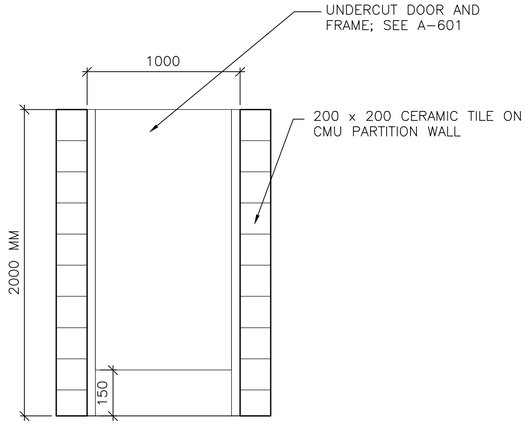


8 A-504 **TOILET PARTITION DOOR ELEVATION**
**SCALE: 1:20**

LINEAR DIMENSIONS SHOWN ARE IN MILLIMETERS (MM), UNLESS OTHERWISE NOTED

0 100 200
SCALE: 1:5

0 200 400
SCALE: 1:10

0 400 800
SCALE: 1:20

APPROVED:

A/E DESIGNER OF RECORD

SEAL:

STATE OF SOUTH CAROLINA
KEVIN R. CHAFIN
N. Charleston, SC
6374
REGISTERED ARCHITECT

US ARMY CORPS OF ENGINEERS
AFGHANISTAN ENGINEER DISTRICT

| Mark | Description | Date | Appr. |
|---|---|---|---|

Rev: 0
Date: 2/23/10
Design file no.
Drawing code:
File name: ANABOQA-504DT
Plot date: 2/23/2010
Plot scale: x:x

Designed by: KRC
Dwn by: KJG | Ckd by: NLJ
Reviewed by: LHM
Submitted by: BAKER

U.S. ARMY CORPS OF ENGINEERS
AFGHANISTAN ENGINEER DISTRICT
APO AE 96338

*Michael Baker Jr., Inc*
*A unit of Michael Baker Corporation*
Airside Business Park
100 Airside Drive
Moon Township, PA 15108
www.mbakercorp.com

AFGHAN NATIONAL ARMY
REGIONAL MILITARY TRAINING CENTER
STANDARD DESIGN

BOQ OFFICER BARRACKS

TOILET, LAVATORY & ABLUTION DETAILS

Sheet reference number:
A-504

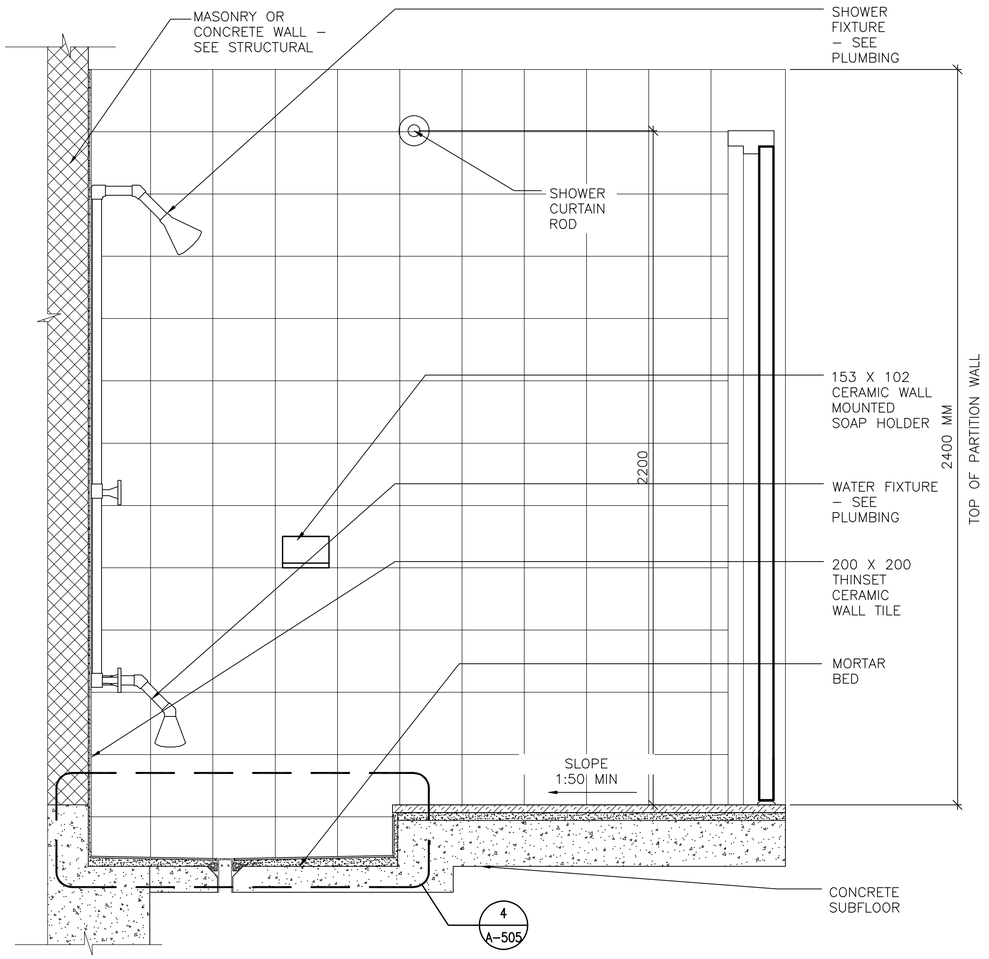


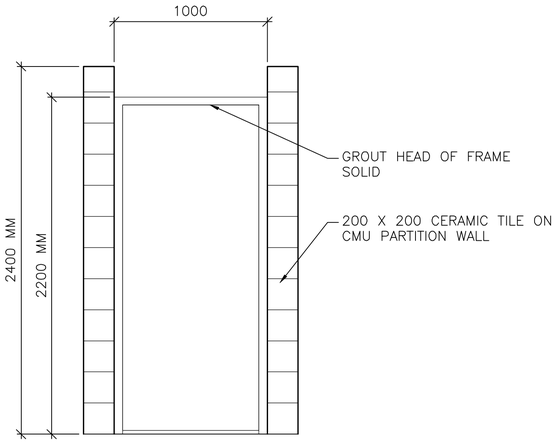


3 A–505 **SHOWER PARTITION DOOR ELEVATION**

SCALE: 1:20

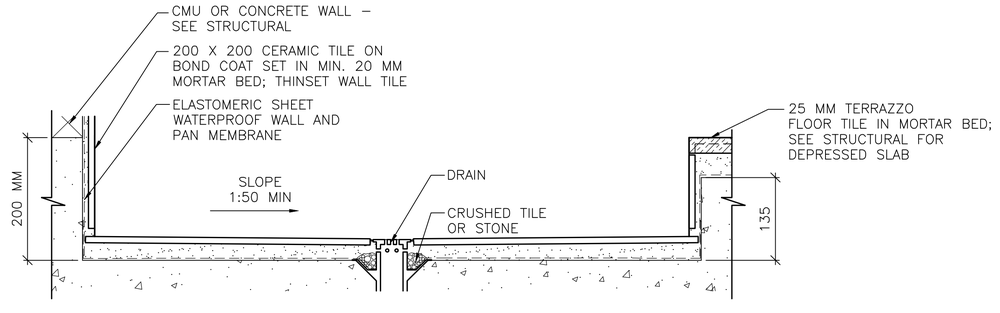


4 A–505 **SHOWER RECESS**

SCALE: 1:5

1 A–505 **SHOWER DETAIL**

SCALE: 1:10

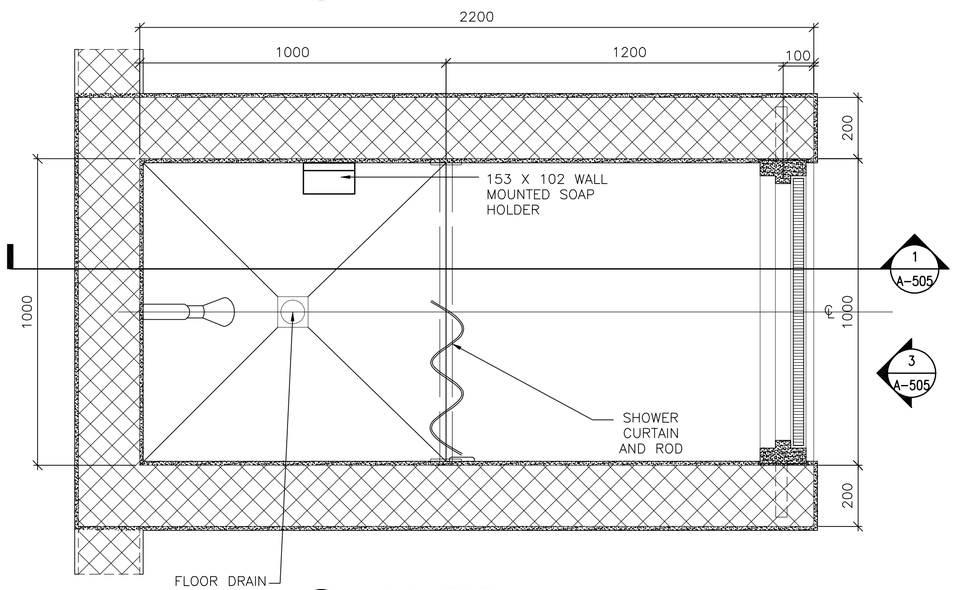


2 A–505 **SHOWER PLAN**

SCALE: 1:10

0 100 200
SCALE: 1:5

0 200 400
SCALE: 1:10

0 400 800
SCALE: 1:20

LINEAR DIMENSIONS SHOWN ARE IN MILLIMETERS (MM), UNLESS OTHERWISE NOTED

APPROVED:

A/E DESIGNER OF RECORD

SEAL:

STATE OF SOUTH CAROLINA
KEVIN R. CHAFIN
N. Charleston, SC
6374
REGISTERED ARCHITECT

US ARMY CORPS OF ENGINEERS
AFGHANISTAN ENGINEER DISTRICT

| Mark | Description | Date | Appr. | Mark | Description | Date | Appr. |
|---|---|---|---|---|---|---|---|
| | | | | | | | |

Designed by: KRC
Dwn by: KJG
Ckd by: NLJ
Reviewed by: LHM
Submitted by: BAKER
Date: 2/23/10
Design file no.
Drawing code:
File name: ANABOQA-505ST
Plot date: 2/23/2010
Plot scale: x:x
Rev: 0

U.S. ARMY CORPS OF ENGINEERS
AFGHANISTAN ENGINEER DISTRICT
APO AE 96338

*Michael Baker Jr., Inc*
*A unit of Michael Baker Corporation*
Airside Business Park
100 Airside Drive
Moon Township, PA 15108
www.mbakercorp.com

AFGHAN NATIONAL ARMY
REGIONAL MILITARY TRAINING CENTER
STANDARD DESIGN

BOQ OFFICER BARRACKS

SHOWER DETAILS

Sheet reference number:
A–505

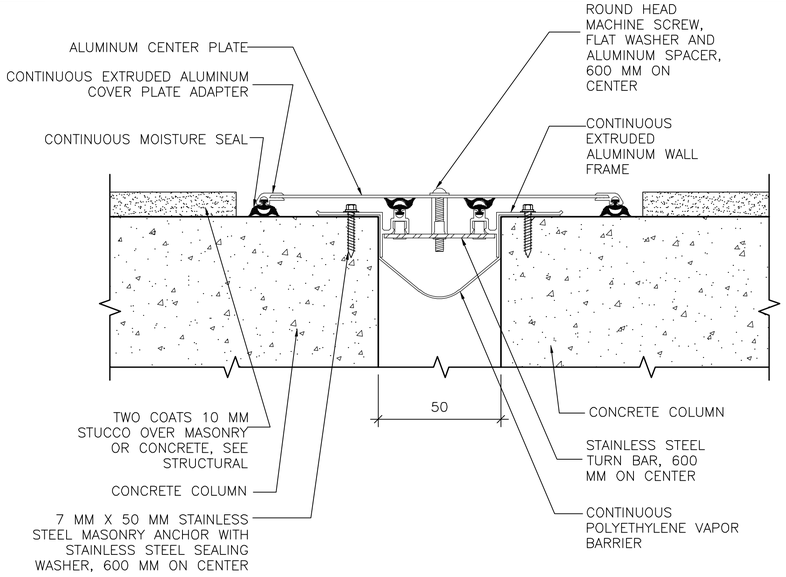


1 A–506

## EXTERIOR ISOLATION JOINT COVER

SCALE: NTS

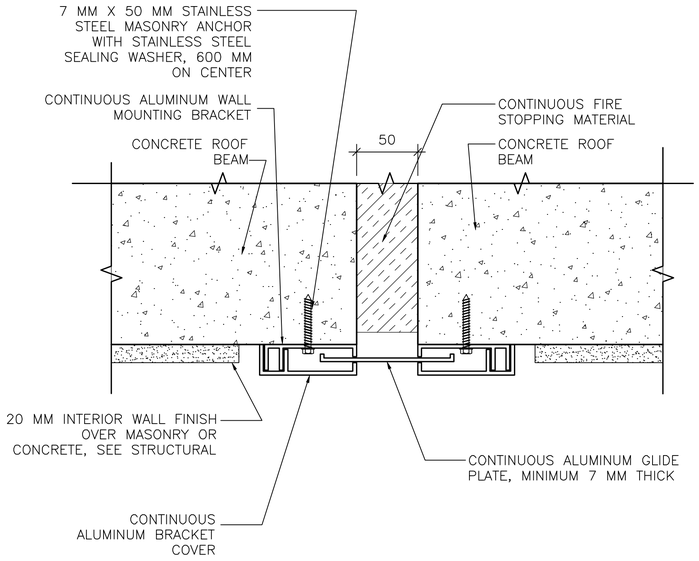


3 A–506

## CEILING ISOLATION JOINT COVER

SCALE: NTS

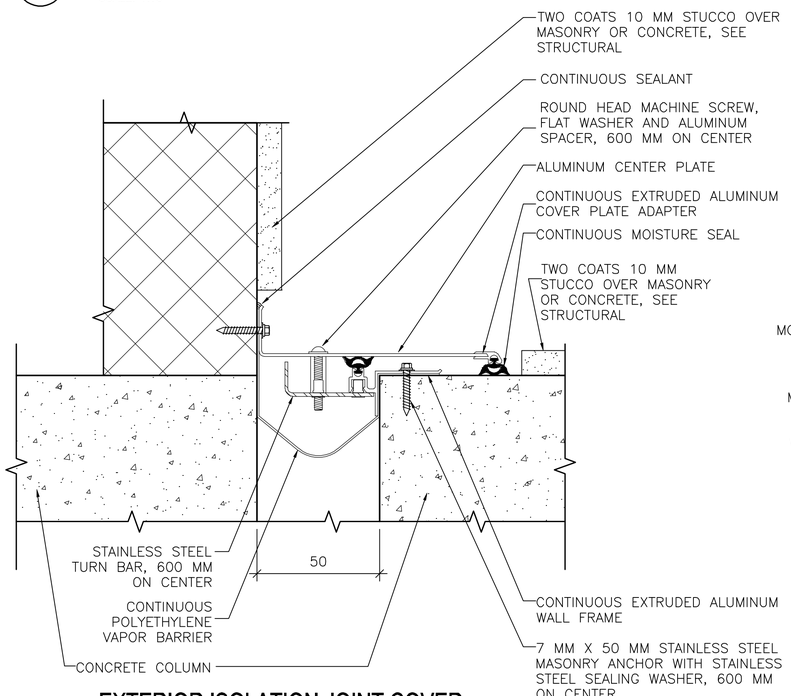


## EXTERIOR ISOLATION JOINT COVER AT INSIDE CORNER

2 A–506

SCALE: NTS

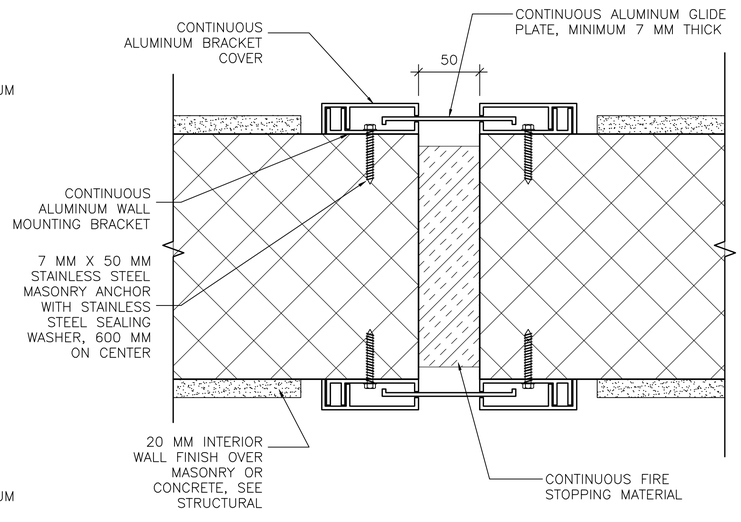


## INTERIOR ISOLATION JOINT COVER

4 A–506

SCALE: NTS

LINEAR DIMENSIONS SHOWN ARE IN MILLIMETERS (MM), UNLESS OTHERWISE NOTED

APPROVED:

A/E DESIGNER OF RECORD

SEAL:

STATE OF SOUTH CAROLINA
KEVIN R. CHAFIN
N. Charleston, SC
6374
REGISTERED ARCHITECT

US ARMY CORPS OF ENGINEERS
AFGHANISTAN ENGINEER DISTRICT

| Mark | Description | Date | Appr. |
|---|---|---|---|
| | | | |

| Mark | Description | Date | Appr. |
|---|---|---|---|
| | | | |

Rev: 0
Date: 2/23/10
Design file no.
Drawing code:
File name: ANABOQA-50507
Plot date: 2/23/2010
Plot scale: x:x

| Designed by: | Drwn by: | Ckd by: |
|---|---|---|
| KRC | KJG | NLJ |

Reviewed by: LHM
Submitted by: BAKER

U.S. ARMY CORPS OF ENGINEERS
AFGHANISTAN ENGINEER DISTRICT
APO AE 96338

*Michael Baker Jr., Inc*
*A unit of Michael Baker Corporation*
Airside Business Park
100 Airside Drive
Moon Township, PA 15108
www.mbakercorp.com

AFGHAN NATIONAL ARMY
REGIONAL MILITARY TRAINING CENTER
STANDARD DESIGN

BOQ OFFICER BARRACKS

ISOLATION JOINT DETAILS

Sheet reference number:
A–506

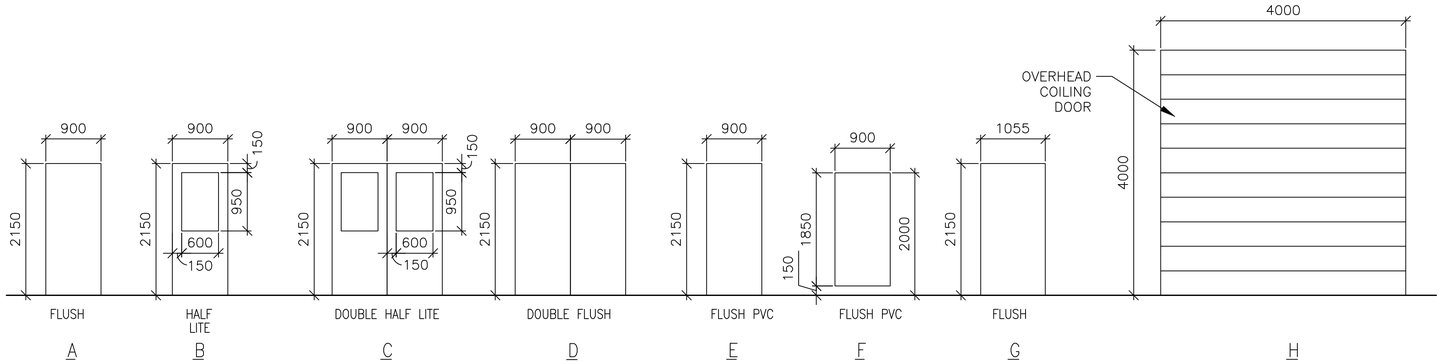


1 A-601 **DOOR TYPES**
SCALE: 1:50

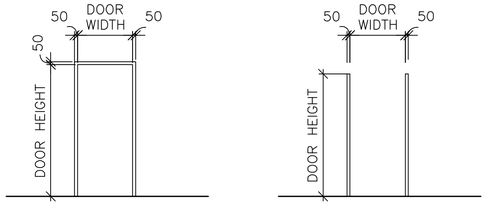


1




2

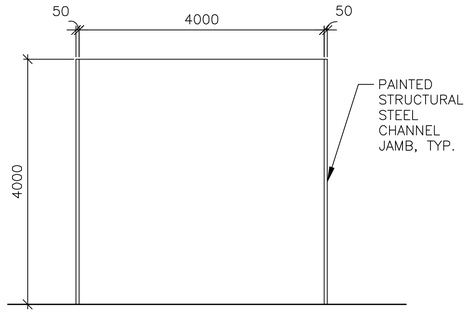


3

2 A-601 **FRAME TYPES**
SCALE: 1:50

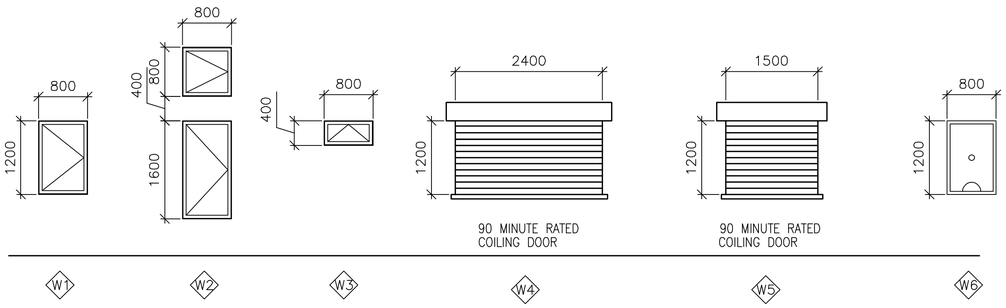


3 A-601 **WINDOW TYPES**
SCALE: 1:50

## WINDOW TYPE NOTES:

1. ALL EXTERIOR WINDOWS SHALL BE ALUMINUM WITH INSECT SCREENS. WINDOWS SHALL BE COMMERCIAL GRADE.
2. ALL EXTERIOR WINDOWS SHALL BE OPERABLE.

4 A-601 **DOOR TAG**
SCALE: NTS




5 A-601 **RATED DOOR TAG**
SCALE: NTS

## DOOR TAG NOTES:

1. THE DOOR TAG INDICATES THE DOOR TYPE, FRAME TYPE AND HARDWARE SET FOR EACH DOOR.
2. THE DOOR TAG FOR RATED DOORS INCLUDES THE RATING OF THE DOOR IN MINUTES.

## EXTERIOR DOOR HARDWARE TYPES:

HW-1 1-1/2 PR HINGES, A5112 114 X 114
1 EA RIM EXIT DEVICE, TYPE 1
1 EA CYLINDER. E09221A, GRADE 1
1 EA OVERHEAD CLOSER, C02061, LOW RESISTANCE
1 EA THRESHOLD, J32130
3 EA DOOR SILENCERS, L03011

HW-2 1-1/2 PR HINGES, A5112 114 X 114
1 EA LOCKSET, F13 ENTRY LOCK W/LEVER HANDLES, GRADE 1
1 EA OVERHEAD CLOSER, C02061, LOW RESISTANCE
1 EA THRESHOLD, J32130
3 EA DOOR SILENCERS, L03011

HW-3 3 PR HINGES, A5112 114 X 114
2 EA RIM EXIT DEVICE, TYPE 1
2 EA CYLINDER. GRADE 1
2 EA OVERHEAD CLOSER, C02061, LOW RESISTANCE
1 EA DOOR COORDINATOR, TYPE 21
1 EA ASTRAGAL
1 EA THRESHOLD, J32130
2 EA DOOR SILENCERS, L03011

HW-4 3 PR HINGES, A5112 114 X 114
1 EA LOCKSET W/LEVER HANDLES. GRADE 1, F13
1 EA OVERHEAD CLOSER, C02061, LOW RESISTANCE
2 EA MAGNETIC HOLDER PIN, ATTACHED TO DOOR LEAF
2 EA MAGNETIC HOLDER RECEIVER, ATTACHED TO STOOP
2 EA LEVER EXTENSION FLUSH BOLTS, L04081
1 EA ASTRAGAL
1 EA THRESHOLD, J32130
2 EA DOOR SILENCERS, L03011

## DOOR AND HARDWARE NOTES:

1. INTERIOR AND EXTERIOR METAL DOORS AND FRAME COLORS SHALL MATCH ADJACENT WALL COLORS AS SELECTED BY THE CONTRACTING OFFICER.
2. FRAMES, EXCEPT FIRE-RATED FRAMES, SHALL BE MOUNTED AND ADJUSTED IN ACCORDANCE WITH MANUFACTURER'S INSTRUCTIONS. FRAMES SHALL BE FASTENED WITH MINIMUM OF THREE ANCHORS PER JAMB AT EQUAL INTERVALS.
3. DIMENSIONS SHOWN ON DOOR TYPES DETAIL ARE BASED UPON MODULAR MASONRY (OR ROUGH OPENING), HEIGHT OF 2200 MM FOR STANDARD PERSONNEL DOORS. CONTRACTOR SHALL COORDINATE WITH DOOR SUPPLIER TO ENSURE THAT DIMENSIONS OF DOORS AND FRAMES PROVIDED ARE COMPATIBLE WITH DOOR OPENING DIMENSIONS.
4. HARDWARE SHALL BE HEAVY DUTY, COMMERCIAL GRADE, STAINLESS STEEL WITH A SATIN OR BRUSHED FINISH.
5. HARDWARE TYPES INCLUDE BUILDERS HARDWARE MANUFACTURERS ASSOCIATION (BMHA) NUMBER.
6. DOORS IN 2 HOUR RATED PARTITIONS SHALL BE 1.5 HOUR (90 MINUTE) RATED DOORS IN ACCORDANCE WITH NFPA 101, TABLE 8.3.4.2.
7. DOORS AT STAIR ENCLOSURES SHALL BE 1 HOUR (60 MINUTE) RATED AT 1 HOUR WALL IN ACCORDANCE WITH NFPA 101, TABLE 8.3.4.2.
8. DOORS IN 1 HOUR RATED WALLS SHALL BE 3/4 HOUR (45 MINUTE) RATED DOORS IN ACCORDANCE WITH NFPA 101, TABLE 8.3.4.2.
9. DOORS IN 1 HOUR RATED CORRIDOR WALLS SHALL BE 1/3 HOUR (20 MINUTE) IN ACCORDANCE WITH NFPA 101, TABLE 8.3.4.2.
10. PROVIDE DOOR STOPS TO PROTECT WALLS ON LOCATIONS WHERE DOOR SWING WILL STRIKE WALL.

THIS SHEET IS STANDARD AND IS INCLUSIVE OF ALL THE DOOR/ WINDOW/ HARDWARE TYPES FOR THE ENTIRE RMTC CONTRACT. NOT ALL DOOR/ WINDOW/ HARDWARE TYPES ARE USED FOR ANY PARTICULAR BUILDING DESIGN. CONTRACTOR SHALL REFER TO THE FLOOR PLAN FOR THE TYPES BEING USED.

## INTERIOR DOOR HARDWARE TYPES:

HW-5 1-1/2 PR HINGES, A8133 114 X 114
1 EA LOCKSET W/LEVER HANDLES, F08, GRADE 1
1 EA WALL STOP, L02101 OR L02161
3 EA DOOR SILENCERS, L03011

HW-6 1-1/2 PR HINGES, A8112 114 X 114
1 EA LOCKSET W/LEVER HANDLES, F08, GRADE 1
1 EA WALL STOP, L02101 OR L02161
1 EA OVERHEAD CLOSER, C02061, LOW RESISTANCE
3 EA DOOR SILENCERS, L03011

HW-7 1-1/2 PR HINGES, A8133
1 EA LOCKSET W/LEVER HANDLES, F13 GRADE 1
1 EA WALL STOP, L02101 OR L02161
2 EA MOP PLATE, J103
3 EA DOOR SILENCERS, L03011

HW-8 1-1/2 PR HINGES, A8112
1 EA LOCKSET W/LEVER HANDLES, F13 GRADE 1
1 EA WALL STOP, L02101 OR L02161
2 EA MOP PLATE, J103
1 EA OVERHEAD CLOSER, C02061, LOW RESISTANCE
3 EA DOOR SILENCERS, L03011

HW-9 1-1/2 PR HINGES, A5112 114 X 114
1 EA RIM EXIT DEVICE, TYPE 1
1 EA CYLINDER. E09221A, GRADE 1
1 EA OVERHEAD CLOSER, C02061, LOW RESISTANCE
3 EA DOOR SILENCERS, L03011

HW-10 3 PR HINGES, A5112 114 X 114
1 EA LOCKSET W/LEVER HANDLES. GRADE 1, F13
2 EA LEVER EXTENSION FLUSH BOLTS, L04081
1 EA ASTRAGAL
2 EA DOOR SILENCERS, L03011

HW-11 1-1/2 PR HINGES, A8112 114 X 114
1 EA LOCKSET W/LEVER HANDLES, F13, GRADE 1
1 EA WALL STOP, L02101 OR L02161
1 EA OVERHEAD CLOSER, C02061, LOW RESISTANCE
3 EA DOOR SILENCERS, L03011
1 EA ROBE HOOK

HW-12 1-1/2 PR HINGES, A8133
1 EA LATCHSET W/LEVER HANDLES, F76 GRADE 1
1 EA WALL STOP, L02101 OR L02161
2 EA MOP PLATE, J103
3 EA DOOR SILENCERS, L03011
1 EA ROBE HOOK

HW-13 3 PR HINGES, A5112 114 X 114
1 EA LOCKSET W/LEVER HANDLES. GRADE 1, F13
1 EA OVERHEAD CLOSER, C02061, LOW RESISTANCE
2 EA LEVER EXTENSION FLUSH BOLTS, L04081
1 EA ASTRAGAL
2 EA DOOR SILENCERS, L03011

HW-14 3 PR HINGES, A5112 114 X 114
2 EA RIM EXIT DEVICE, TYPE 1
2 EA CYLINDER. GRADE 1
2 EA OVERHEAD CLOSER, C02061, LOW RESISTANCE
1 EA DOOR COORDINATOR, TYPE 21
1 EA ASTRAGAL
2 EA DOOR SILENCERS, L03011

APPROVED:

A/E DESIGNER OF RECORD

SEAL:

STATE OF SOUTH CAROLINA
KEVIN R. CHAFIN
N. Charleston, SC
6374
REGISTERED ARCHITECT

US ARMY CORPS OF ENGINEERS
AFGHANISTAN ENGINEER DISTRICT

| Mark | Description | Date | Appr. |
|---|---|---|---|
| | | | |

Date: 2/23/10
Design file no.
Drawing code:
Rev: 0
Designed by: KRC
Dwn by: KJG
Ckd by: NLJ
Reviewed by: LHM
Submitted by:
File name: ANABOQA-601SCH
Plot date: 2/23/2010
Plot scale: x:x
U.S. ARMY CORPS OF ENGINEERS
AFGHANISTAN ENGINEER DISTRICT
APO AE 96338
Michael Baker Jr., Inc.
A unit of Michael Baker Corporation
Airside Business Park
100 Airside Drive
Moon Township, PA 15108
www.mbakercorp.com
BAKER

AFGHAN NATIONAL ARMY
REGIONAL MILITARY TRAINING CENTER
STANDARD DESIGN

BOQ OFFICER BARRACKS

WINDOW AND DOOR SCHEDULES

Sheet reference number:
A-601

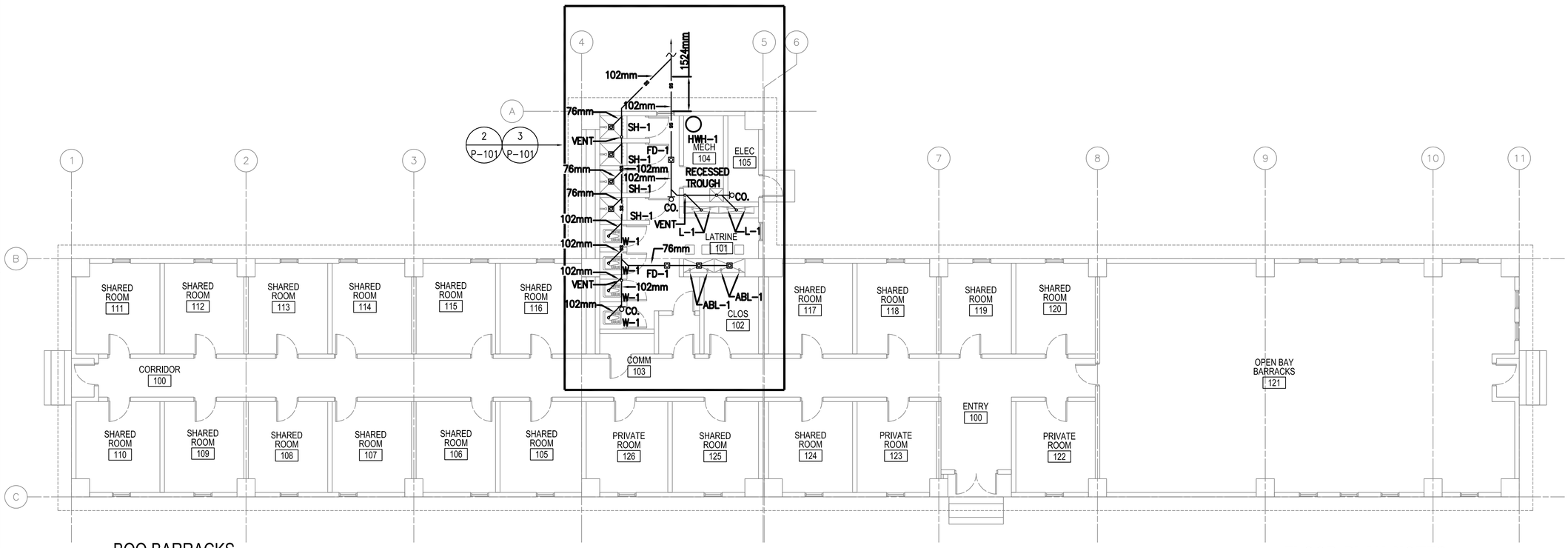


1 P-101

## BOQ BARRACKS
## FLOOR PLAN - PLUMBING (SANITARY)

SCALE: 1:100

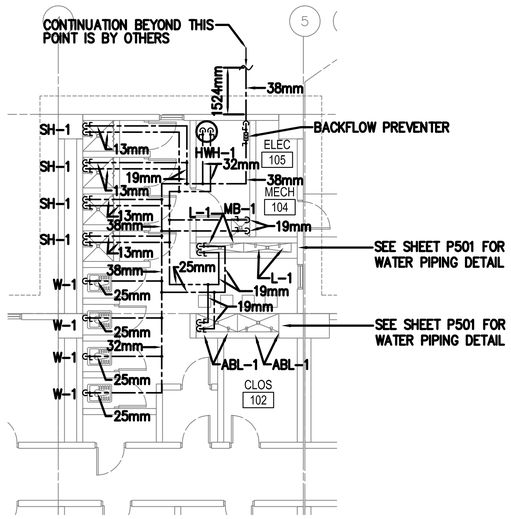


2 P-101

## PARTIAL BOQ BARRACKS
## FLOOR PLAN - PLUMBING (HOT AND COLD WATER)

SCALE: 1:100

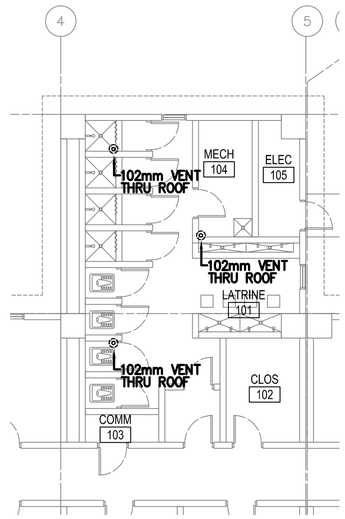


3 P-101

## PARTIAL BOQ BARRACKS
## FLOOR PLAN - PLUMBING (VENT PIPING)

SCALE: 1:100

## FLOOR PLAN NOTES:

1. DO NOT SCALE DRAWINGS – ALL DIMENSIONS AND CONDITIONS SHALL BE CHECKED AND VERIFIED BY THE CONTRACTOR AT THE SITE.
2. ALL WORK PERFORMED ON THIS BUILDING SHALL BE IN COMPLIANCE WITH ALL PERTINENT CODES, RULES, ORDINANCES AND REGULATIONS OF THE GOVERNING AUTHORITIES.
3. ALL WORK PERFORMED UNDER AND IN CONNECTION WITH THESE DRAWINGS AND SPECIFICATIONS SHALL BE IN STRICT COMPLIANCE WITH THE LATEST SAFETY AND HEALTH STANDARDS.
4. REPORT ANY DISCREPANCIES FOUND IN THE PLUMBING DRAWINGS AND/OR IN THE SPECIFICATIONS DURING THE BIDDING PROCESS FOR CLARIFICATION BY THE ENGINEER.
5. ALL EASTERN STYLE WATER CLOSETS IN THIS FACILITY ARE TO HAVE THE FIXTURE DESIGNATION OF W-1. EACH FIXTURE SHALL HAVE A 25mm (1 INCH) COLD WATER LINE EXTENDED TO IT AND THEN BE REDUCED TO 13mm (1/2 INCH) FOR A FINAL CONNECTION TO THE FLUSH TANK AND A 102mm (4) INCH SANITARY CONNECTION.
6. ALL LAV FIXTURES IN THIS FACILITY ARE TO HAVE THE FIXTURE DESIGNATION OF L-1. EACH FIXTURE SHALL HAVE A 13mm (1/2 INCH) COLD WATER, 13mm (1/2 INCH) HOT WATER CONNECTION AND A 76mm (3 INCH) SANITARY CONNECTION.
7. ALL ABLUTION FIXTURES IN THIS FACILITY ARE TO HAVE THE FIXTURE DESIGNATION OF ABL-1. EACH FIXTURE SHALL HAVE A 13mm (1/2 INCH) COLD WATER, 13mm (1/2 INCH) HOT WATER CONNECTION AND A 76mm (3 INCH) SANITARY CONNECTION.
8. REFER TO SHEET P501, P502, AND P503 FOR DETAILS AND SYMBOLS.
9. ALL WATER, SANITARY AND VENT LINES TO BE EXPOSED. RUN LINES TIGHT TO CEILING AND WALL.

## PLUMBING SYMBOLS

- SANITARY SEWER PIPING (BELOW GROUND)
- SANITARY SEWER PIPING (ABOVE GROUND)
- VENT PIPING (V)
- COLD WATER PIPING (CW)
- HOT WATER PIPING (HW)
- BALL VALVE
- BACKFLOW PREVENTER
- CLEANOUT (CO.) — OR
- ROOF PENETRATION

LINEAR DIMENSIONS SHOWN ARE IN MILLIMETERS (MM), UNLESS OTHERWISE NOTED

0 2000 4000
SCALE: 1:100

APPROVED:

A/E DESIGNER OF RECORD

SEAL:

COMMONWEALTH OF PENNSYLVANIA
REGISTERED PROFESSIONAL
MATTHEW R. SOTOSKY
ENGINEER
065576-E

US ARMY CORPS OF ENGINEERS
AFGHANISTAN ENGINEER DISTRICT

| Mark | Description | Date | Appr. |
|---|---|---|---|

Rev: 0
Date: 02/23/10
Design file no.
Drawing code:
File name: ANABOOPL-101XXX
Plot date: 02/09/2010
Plot scale: 1:50

Designed by: RMH
Dwn. by: RMH
Ckd by: CJM
Reviewed by:
Submitted by: BAKER

U.S. ARMY CORPS OF ENGINEERS
AFGHANISTAN ENGINEER DISTRICT
APO AE 96338

*Michael Baker Jr., Inc*
*A unit of Michael Baker Corporation*
Airside Business Park
100 Airside Drive
Moon Township, PA 15108
www.mbakercorp.com

AFGHAN NATIONAL ARMY
REGIONAL MILITARY TRAINING CENTER
STANDARD DESIGN

BOQ OFFICER BARRACKS
FLOOR PLAN – PLUMBING

Sheet reference number:
P–101

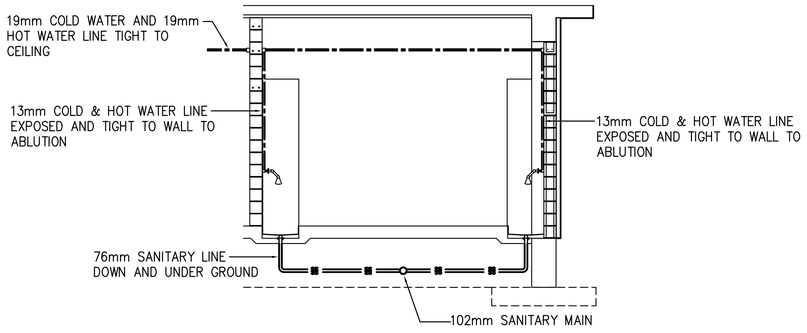


## TYPICAL ABLUTION SANITARY & WATER INSTALLATION SCHEMATIC

SCALE: N.T.S.

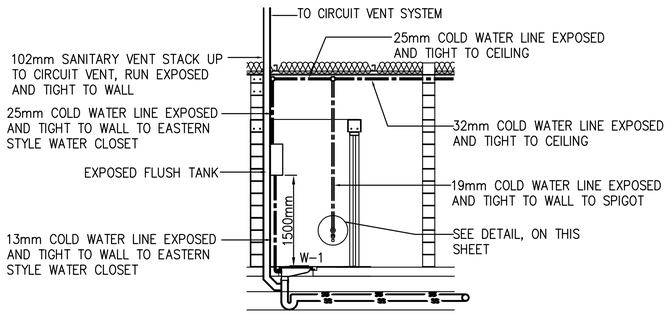


## TYPICAL EASTERN STYLE WATER CLOSET SANITARY & WATER INSTALLATION SCHEMATIC

SCALE: N.T.S.

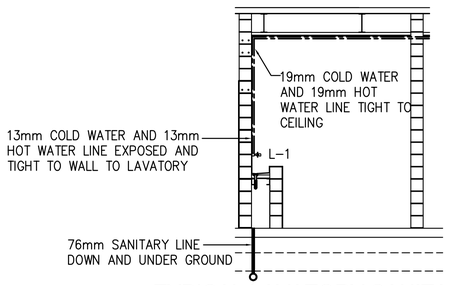


## TYPICAL LAVATORY SANITARY & WATER INSTALLATION SCHEMATIC

SCALE: N.T.S.

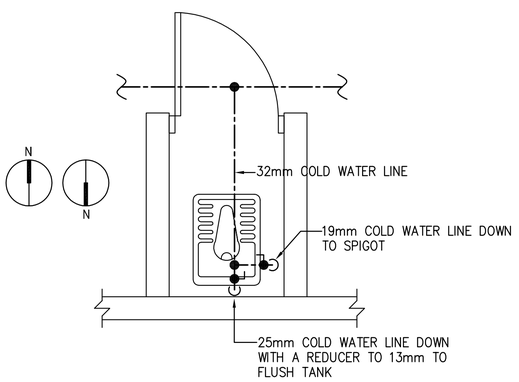


## TYPICAL EASTERN STYLE WATER CLOSET WITH SPIGOT WATER PIPING DETAIL

SCALE: N.T.S.

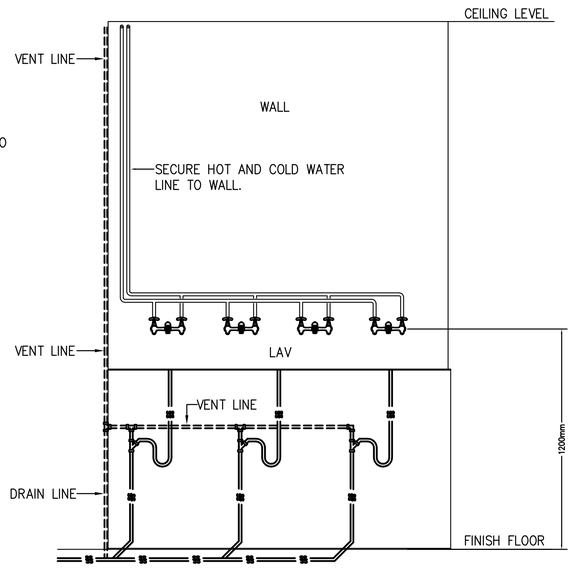


## LAVATORY ELEVATION PLAN - PLUMBING

SCALE: N.T.S.

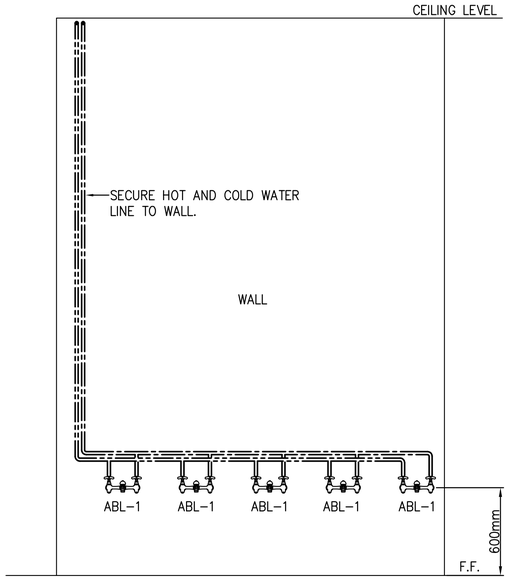


## TYPICAL ABLUTION ELEVATION PLUMBING PLAN - WATER INSTALLATION SCHEMATIC

SCALE: N.T.S.

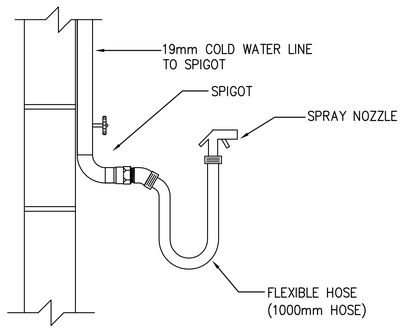


## TYPICAL DETAIL - SPIGOT, FLEXIBLE HOSE, AND SPRAY NOZZLE

SCALE: N.T.S.

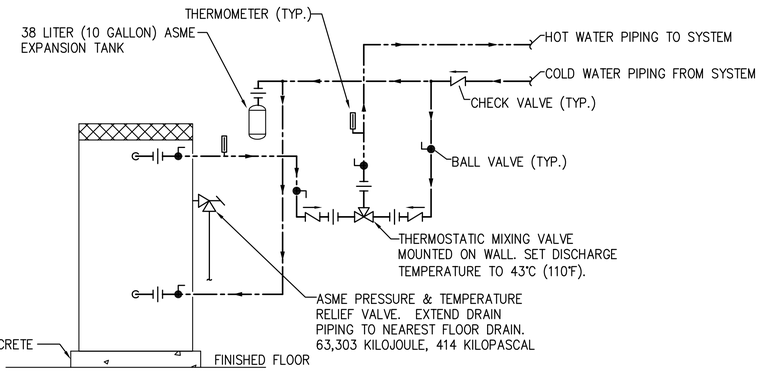


## ELECTRIC WATER HEATER PIPING SCHEMATIC

SCALE: N.T.S.




## TYPICAL EASTERN STYLE WATER CLOSET WITH SPIGOT WATER PIPING DETAIL

SCALE: N.T.S.

## GENERAL PLUMBING NOTES:

1. ALL SANITARY PIPING SHALL BE BELOW FLOOR, AND ALL WATER, AND VENT PIPING SHALL BE TIGHT TO CEILING, UNLESS OTHERWISE NOTED.

2. CONTRACTOR SHALL COORDINATE PLUMBING WORK WITH THE WORK OF ALL OTHER TRADES. VERIFY THE LOCATIONS OF ALL UTILITIES AT THE SITE PRIOR TO THE START OF ANY PLUMBING WORK.

3. COORDINATE ALL ACCESS PANEL LOCATIONS WITH THE ARCHITECT AND GENERAL CONTRACTOR.

4. ALL SANITARY PIPING BELOW SLAB SHALL BE A MINIMUM OF 51mm, UNLESS OTHERWISE NOTED OR AS REQUIRED BY THE LOCAL AUTHORITY HAVING JURISDICTION.

5. ALL SANITARY BRANCH LINES SHALL BE SLOPED AT 6mm PER 305mm, AND ALL MAIN LINES SHALL BE SLOPED AT 3mm PER 305mm, UNLESS OTHERWISE NOTED OR AS REQUIRED BY THE LOCAL AUTHORITY HAVING JURISDICTION.

6. THE CONTRACTOR SHALL BE RESPONSIBLE FOR COORDINATION WITH ALL UTILITY AUTHORITIES FOR INSTALLATION REQUIREMENTS, REGULATIONS, FEES, PERMITS, AND APPROVALS BEFORE THE START OF CONSTRUCTION.

7. THE CONTRACTOR SHALL ROUGH-IN AND CONNECT ALL EQUIPMENT REQUIRING WATER, WASTE, AND/OR VENT WHETHER OR NOT FURNISHED UNDER THIS CONTRACT. THE CONTRACTOR SHALL ALSO FURNISH AND INSTALL ALL NECESSARY PIPE, FITTINGS, VALVES, TRAPS, ETC., REQUIRED FOR A COMPLETE INSTALLATION, LEAVING SAME READY FOR SERVICE.

APPROVED:

A/E DESIGNER OF RECORD

SEAL:

COMMONWEALTH OF PENNSYLVANIA REGISTERED PROFESSIONAL MATTHEW R. SOTOSKY ENGINEER 065576-E

US ARMY CORPS OF ENGINEERS
AFGHANISTAN ENGINEER DISTRICT

| Mark | Description | Date | Appr. |
|---|---|---|---|
| | | | |

| Mark | Description | Date | Appr. |
|---|---|---|---|
| | | | |

Rev: 0
Date: 02/23/10
Design file no.
Drawing code:
File name: ANABSOPL-GN1XXX
Plot date: 02/26/2010
Plot scale:1:100

Designed by: RMH
Drawn by: RMH
Ckd by: CJM
Reviewed by:
Submitted by: MRS

U.S. ARMY CORPS OF ENGINEERS
AFGHANISTAN ENGINEER DISTRICT
APO AE 96338

*Michael Baker Jr., Inc*
*A unit of Michael Baker Corporation*
Airside Business Park
100 Airside Drive
Moon Township, PA 15108
www.mbakercorp.com

AFGHAN NATIONAL ARMY
REGIONAL MILITARY TRAINING CENTER
STANDARD DESIGN

BOQ OFFICER BARRACKS
PLUMBING DETAILS

Sheet reference number:
P-501

## FIXTURE LIST

| TYPE | ITEM | SOIL & WASTE | VENT | COLD WATER | HOT WATER | REMARKS | REMARKS 2 |
|---|---|---|---|---|---|---|---|
| W-1 | EASTERN STYLE WATER CLOSET | 102mm | 51mm | 13mm | ------ | FLUSH TANK | LOW FLOW EFFICIENT TYPE |
| L-1 | TROUGH FIXTURE | 38mm | 38mm | 13mm | 13mm | FABRICATED IN FIELD | LOW FLOW EFFICIENT TYPE |
| ABL-1 | ABLUTION | FLOOR DRAIN | ------ | 13mm | 13mm | FABRICATED IN FIELD | ---------- |
| HWH-1 | WATER HEATER | --- | --- | SEE DWG. | SEE DWG. | 151 LITER ELECTRIC WATER HEATER, 380/3ø, 9KW | ---------- |
| SH-1 | SHOWER | 76mm | --- | 13mm | 13mm | DRAIN AND SHOWER CONTROLS | ---------- |

## GENERAL PLUMBING NOTES:

1. ALL SANITARY PIPING SHALL BE BELOW FLOOR, AND ALL WATER, AND VENT PIPING SHALL BE TIGHT TO CEILING, UNLESS OTHERWISE NOTED.

2. PLUMBING CONTRACTOR SHALL COORDINATE PLUMBING WORK WITH THE WORK OF ALL OTHER TRADES. VERIFY THE LOCATIONS OF ALL UTILITIES AT THE SITE PRIOR TO THE START OF ANY PLUMBING WORK.

3. ALL SANITARY PIPING BELOW SLAB SHALL BE A MINIMUM OF 51mm, UNLESS OTHERWISE NOTED OR AS REQUIRED BY THE LOCAL AUTHORITY HAVING JURISDICTION.

4. ALL SANITARY BRANCH LINES SHALL BE SLOPED AT 6mm PER 305mm, AND ALL MAIN LINES SHALL BE SLOPED AT 3mm PER 305mm, UNLESS OTHERWISE NOTED OR AS REQUIRED BY THE LOCAL AUTHORITY HAVING JURISDICTION.

5. THE CONTRACTOR SHALL BE RESPONSIBLE FOR COORDINATION WITH ALL UTILITY AUTHORITIES FOR INSTALLATION REQUIREMENTS, REGULATIONS, FEES, PERMITS, AND APPROVALS BEFORE THE START OF CONSTRUCTION.

6. THE CONTRACTOR SHALL ROUGH-IN AND CONNECT ALL EQUIPMENT REQUIRING WATER, WASTE, AND/OR VENT WHETHER OR NOT FURNISHED UNDER THIS CONTRACT. THE CONTRACTOR SHALL ALSO FURNISH AND INSTALL ALL NECESSARY PIPE, FITTINGS, VALVES, TRAPS, ETC., REQUIRED FOR A COMPLETE INSTALLATION, LEAVING SAME READY FOR SERVICE.

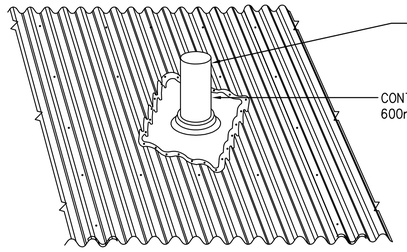


PLUMBING VENT THRU ROOF DETAIL

SCALE: NTS

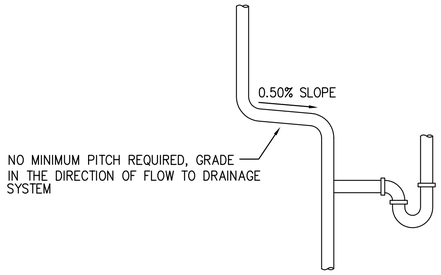


TYPICAL VENT GRADE DETAILS

SCALE: N.T.S.

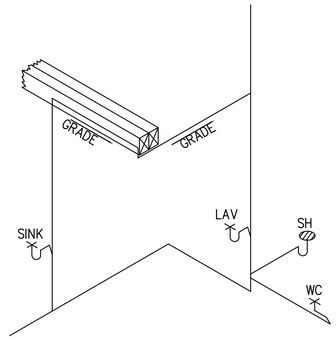


TYPICAL VENT GRADE DETAILS

SCALE: N.T.S.

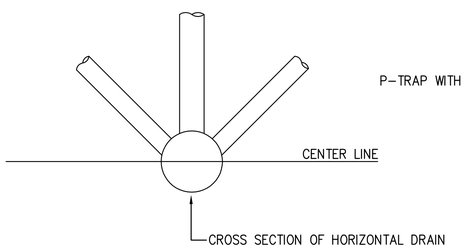


ACCEPTABLE VENT CONNECTIONS TO HORIZONTAL DRAIN - DETAIL

SCALE: N.T.S.

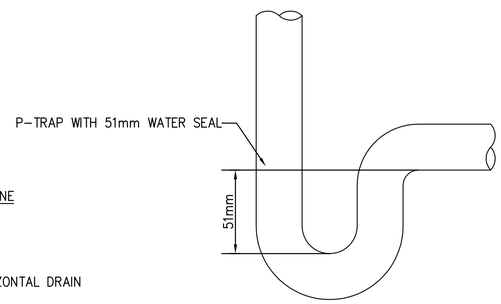


P-TRAP WITH 51mm WATER SEAL DETAIL

SCALE: N.T.S.

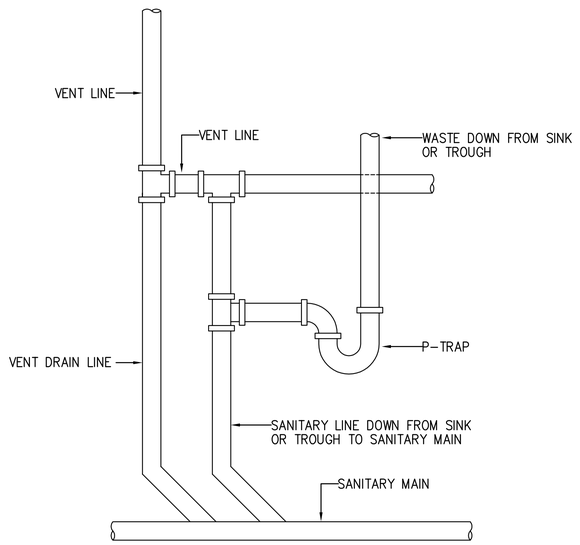


TYPICAL LAVATORY/LAUNDRY VENT DETAIL

SCALE: N.T.S.

APPROVED:

A/E DESIGNER OF RECORD

SEAL:

COMMONWEALTH OF PENNSYLVANIA REGISTERED PROFESSIONAL MATTHEW R. SOTOSKY ENGINEER 065576-E

US ARMY CORPS OF ENGINEERS
AFGHANISTAN ENGINEER DISTRICT

| Mark | Description | Date | Appr. |
|---|---|---|---|
| | | | |

| Mark | Description | Date | Appr. |
|---|---|---|---|
| | | | |

Rev: 0
Date: 02/23/10
Design file no.
Drawing code:
File name: ANABOOPL-P502XXX
Plot date: 02/26/2010
Plot scale: 1:100

Designed by: RMH
Dwn by: RMH
Ckd by: CJM
Reviewed by:
Submitted by: MRS

U.S. ARMY CORPS OF ENGINEERS
AFGHANISTAN ENGINEER DISTRICT
APO AE 96338

*Michael Baker Jr., Inc*
*A unit of Michael Baker Corporation*
Airside Business Park
100 Airside Drive
Moon Township, PA 15108
www.mbakercorp.com

AFGHAN NATIONAL ARMY
REGIONAL MILITARY TRAINING CENTER
STANDARD DESIGN

BOQ OFFICER BARRACKS
PLUMBING DETAILS

Sheet reference number:
P-502

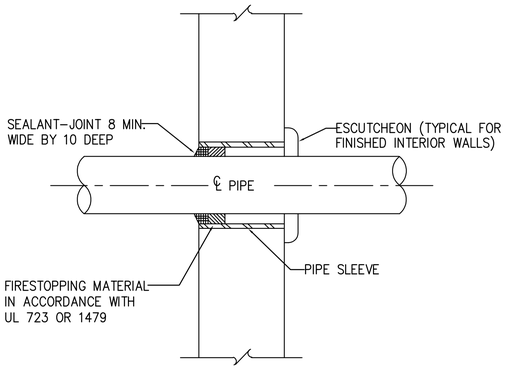


## TYPICAL WALL PENETRATION DETAIL

SCALE: N.T.S.

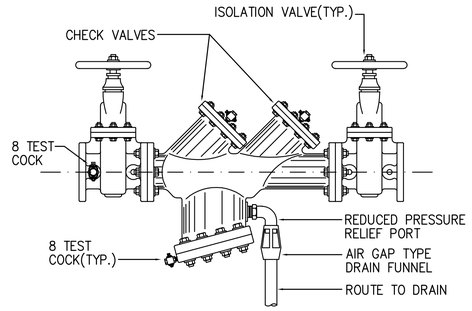


## TYPICAL BACKFLOW PREVENTER DETAIL

SCALE: N.T.S.

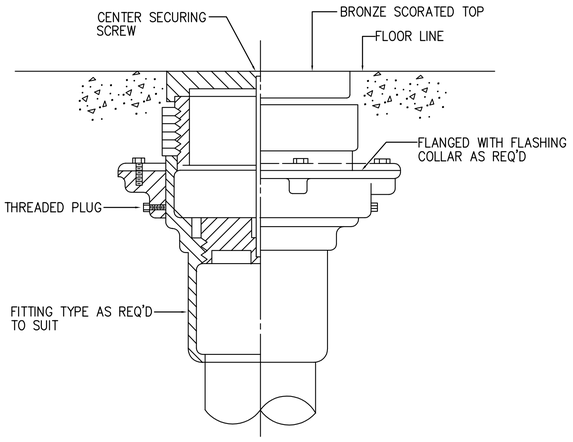


## TYPICAL FLOOR CLEANOUT DETAIL

SCALE: N.T.S.

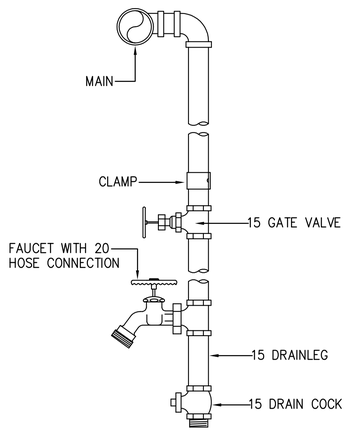


## TYPICAL WATER DROP DETAIL

SCALE: N.T.S.

US ARMY CORPS OF ENGINEERS
AFGHANISTAN ENGINEER DISTRICT

| Mark | Description | Date | Appr. |
|---|---|---|---|

| Mark | Description | Date | Appr. |
|---|---|---|---|

Rev: 0
Date: 02/23/10
Design file no.
Drawing code:
File name: ANABOOPL-P503XXX
Plot date: 02/09/2010
Plot scale:1:100

Designed by: RMH
Dwn by: RMH
Ckd by: CJM
Reviewed by:
Submitted by: MRS

U.S. ARMY CORPS OF ENGINEERS
AFGHANISTAN ENGINEER DISTRICT
APO AE 96338

Michael Baker Jr., Inc
A unit of Michael Baker Corporation
Airside Business Park
100 Airside Drive
Moon Township, PA 15108
www.mbakercorp.com

APPROVED:

A/E DESIGNER OF RECORD

SEAL:

COMMONWEALTH OF PENNSYLVANIA
REGISTERED PROFESSIONAL
MATTHEW R. SOTOSKY
ENGINEER
046570-E

AFGHAN NATIONAL ARMY
REGIONAL MILITARY TRAINING CENTER
STANDARD DESIGN

BOQ OFFICER BARRACKS
PLUMBING DETAILS

Sheet reference number:
P–503

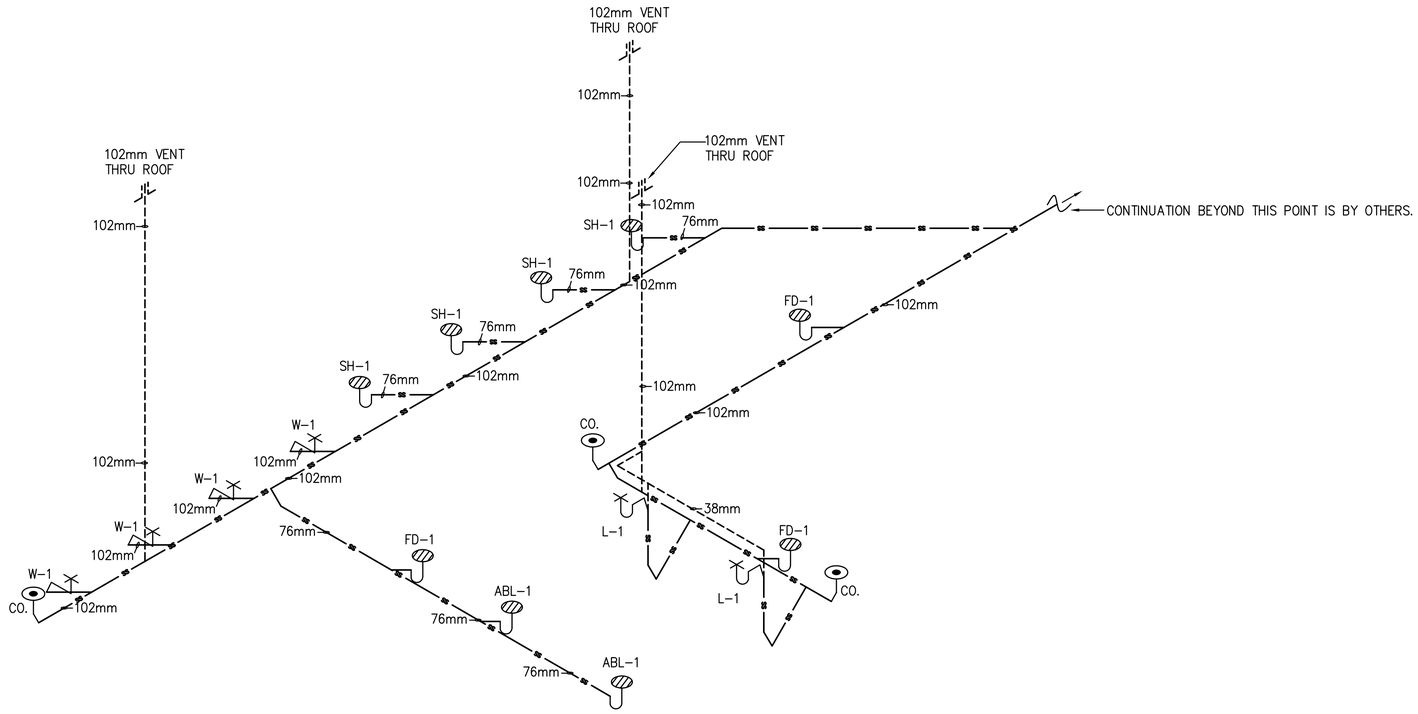


1 P-901 BOQ DRAINAGE ISOMETRIC

SCALE: N.T.S.

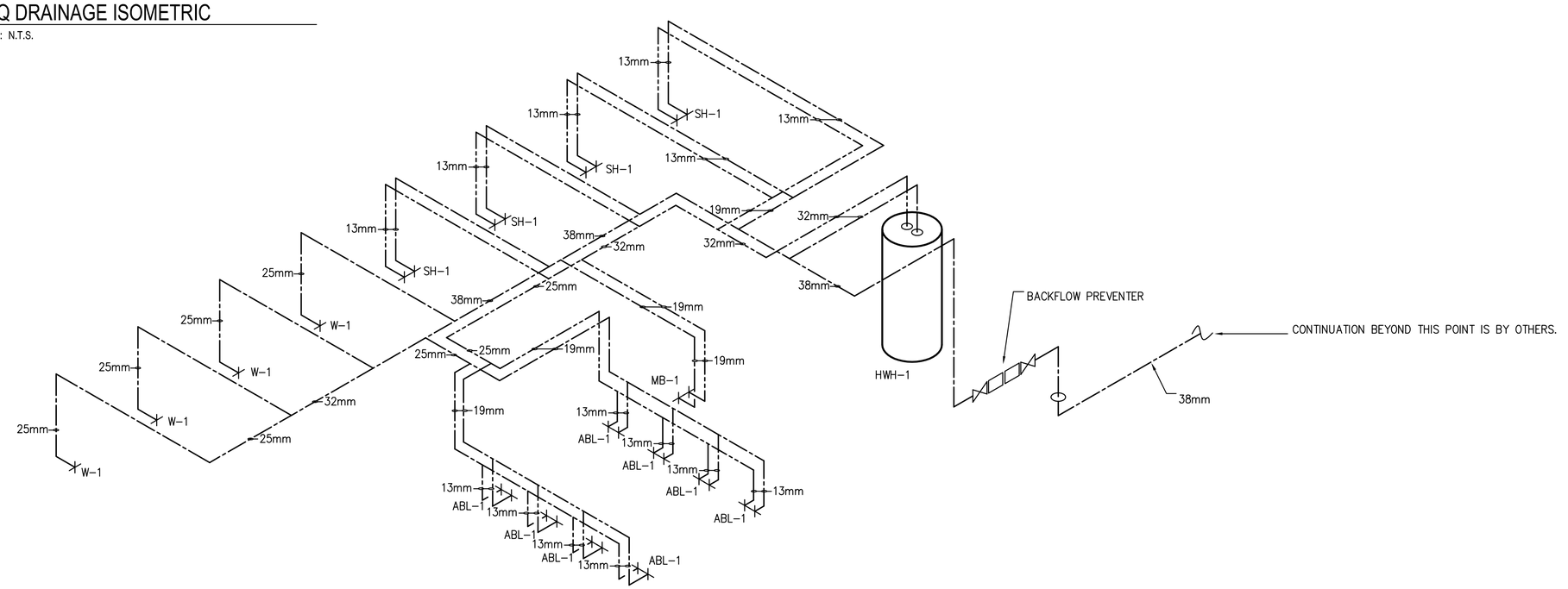


2 P-901 BOQ HOT AND COLD WATER ISOMETRIC

SCALE: N.T.S.

## PLUMBING SYMBOLS

- SANITARY SEWER PIPING (BELOW GROUND)
- SANITARY SEWER PIPING (ABOVE GROUND)
- VENT PIPING (V)
- COLD WATER PIPING (CW)
- HOT WATER PIPING (HW)
- BALL VALVE
- BACKFLOW PREVENTER
- OR CLEANOUT (CO.)
- ROOF PENETRATION

US ARMY CORPS OF ENGINEERS
AFGHANISTAN ENGINEER DISTRICT

| Mark | Description | Date | Appr. | Mark | Description | Date | Appr. |
|---|---|---|---|---|---|---|---|

Designed by: RMH
Dwn by: RMH
Ckd by: CJM
Reviewed by:
Submitted by: BAKER
Date: 02/23/10
Rev: 0
Design file no.
Drawing code:
File name: ANABOQPL-901XXX
Plot date: 02/08/2010
Plot scale: N.T.S.

U.S. ARMY CORPS OF ENGINEERS
AFGHANISTAN ENGINEER DISTRICT
APO AE 96338

Michael Baker Jr., Inc
A unit of Michael Baker Corporation
Airside Business Park
100 Airside Drive
Moon Township, PA 15108
www.mbakercorp.com

AFGHAN NATIONAL ARMY
REGIONAL MILITARY TRAINING CENTER
STANDARD DESIGN

BOQ OFFICER BARRACKS
PLUMBING ISOMETRICS

APPROVED:

A/E DESIGNER OF RECORD

SEAL:

COMMONWEALTH OF PENNSYLVANIA
REGISTERED PROFESSIONAL
MATTHEW R. SOTOSKY
ENGINEER
046576-E

Sheet reference number:
P-901

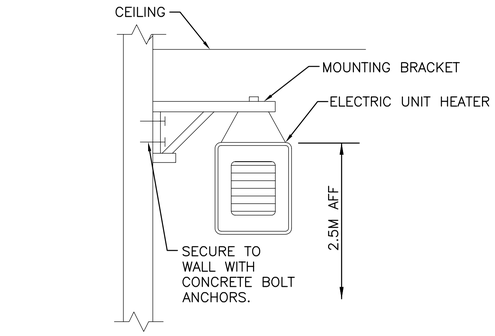


2 M-101 N.T.S. ELECTRIC UNIT HEATER MOUNTING DETAIL

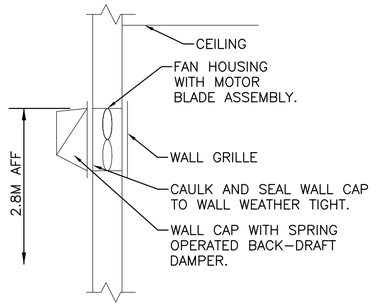


3 M-101 N.T.S. WALL EXHAUST FAN DETAIL

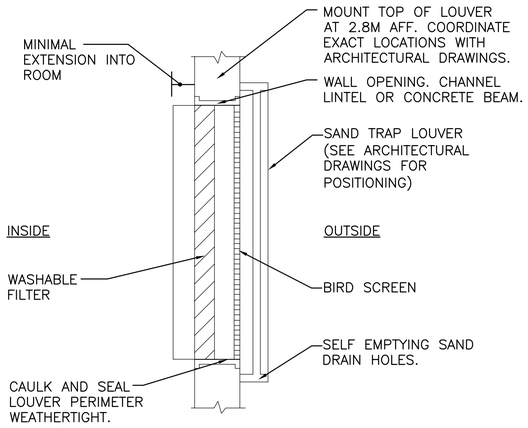


4 M-101 N.T.S. FILTERED SAND TRAP LOUVER

## GENERAL NOTES:

1. DO NOT SCALE DRAWINGS – ALL DIMENSIONS AND CONDITIONS SHALL BE CHECKED AND VERIFIED BY THE CONTRACTOR AT THE SITE.
2. ALL WORK PERFORMED ON THIS BUILDING SHALL BE IN COMPLIANCE WITH ALL PERTINENT CODES, RULES, ORDINANCES AND REGULATIONS OF THE GOVERNING AUTHORITIES.
3. ALL WORK PERFORMED UNDER AND IN CONNECTION WITH THESE DRAWINGS AND SPECIFICATIONS SHALL BE IN STRICT COMPLIANCE WITH THE LATEST SAFETY AND HEALTH STANDARDS.

## SYMBOLS:

- (X) KEY NOTE
- (0.050) AIR VOLUME IN CUBIC METERS PER SECOND (CMS)
- UC DOOR UNDERCUT
- TG 200x400 (8x16) TRANSFER GRILLE
- $ SINGLE POLE SWITCH – 20A RATED

## ABBREVIATIONS:

| | |
|---|---|
| AFF | ABOVE FINISH FLOOR |
| CF | CEILING FANS |
| CMS | CUBIC METERS PER SECOND |
| STATS | THERMOSTATS |

## KEY NOTE:

1. INLINE EXHAUST FAN DUCTED TO WALL CAP. SECURE FAN TO STRUCTURE ABOVE AND INTERLOCK WITH MAKE UP AIR HEATER.
2. ELECTRIC MAKE UP AIR HEATER SECURED TO STRUCTURE ABOVE. BLOWER SHALL BE SET TO ENERGIZE WITH EXHAUST FAN EF-1 & WITH STAT, HEAT SHALL BE CONTROLLED BY THERMOSTAT.
3. WALL EXHAUST FAN WITH LOW SPRING OPERATED BACK-DRAFT DAMPER. SEE DETAIL 3 THIS SHEET.
4. 600X600 (24X24) INTAKE LOUVER FOR MAKE UP AIR UNIT. PROVIDE WEATHER PROOF LOUVER WITH 50mm (2") WASHABLE FILTER AND SAND TRAP.
5. 200x150 (8x6) ALUMINUM DUCT MOUNTED SUPPLY GRILLE WITH ADJUSTABLE OPPOSED BLADE DAMPERS. BALANCE EACH GRILLE TO 0.070 CMS.
6. 150x150 (6x6) ALUMINUM DUCT MOUNTED EXHAUST GRILLE WITH ADJUSTABLE OPPOSED BLADE DAMPERS. BALANCE EACH GRILLE TO 0.075 CMS.
7. 150x150 (6x6) ALUMINUM WALL MOUNTED EXHAUST GRILLE WITH ADJUSTABLE OPPOSED BLADE DAMPERS. BALANCE GRILLE TO 0.030 CMS.
8. THERMOSTAT MOUNTED AS HIGH AS POSSIBLE. INTERLOCK STAT WITH CORRESPONDING EXHAUST FAN, SET FAN TO ENERGIZE ON RISE IN TEMPERATURE ABOVE 25°C (77°F).

## EXHAUST FAN SCHEDULE

| NO. | TYPE | FAN CMS | DRIVE | HP | SP mmH20 | ELECTRICAL DATA | SWITCH |
|---|---|---|---|---|---|---|---|
| EF-1 | WALL | 0.330 | DIRECT | 1/6 | 13 | 220/1/50 | @ WALL |
| EF-2 | WALL | 0.035 | DIRECT | FRACT | 9.5 | 220/1/50 | @ WALL |
| EF-3 | WALL | 0.035 | DIRECT | FRACT | 9.5 | 220/1/50 | W/ STAT |

NOTES:
1. FANS SHALL HAVE LOW LEAKAGE GRAVITY LOUVER.

## MAKE UP AIR HEATERS

| NO. | BLOWER CMS | FUSE | KW | MIN. TEMP RISE °C | SP mmH20 | ELECTRICAL DATA | CONTROL |
|---|---|---|---|---|---|---|---|
| MUA-1 | 0.280 | 60 | 10 | 20 | 13 | 220/1/50 | REMOTE |

NOTES:
1. PROVIDE REMOTE MOUNTED THERMOSTAT WITH LOCKING COVER.
2. INTERLOCK BLOWER OPERATION WITH EXHAUST FANS EF-1 & STAT.
3. PROVIDE AIR SENSING SWITCH FOR HEATING OPERATION.

## ELECTRIC UNIT HEATER SCHEDULE

| NO. | CMS | KW | F.A.T. °C | ELECT. CHAR. | MOUNTING |
|---|---|---|---|---|---|
| EH-2 | 0.200 | 2.6 | 38 | 380/1/50 | WALL HUNG |

NOTES:
1. UNIT HEATERS SHALL HAVE TAMPER PROOF INTEGRAL STATS.
2. COORDINATE LOCATION AND ORIENTATION IN FIELD.

## CEILING FAN

| NO. | BLADE SIZE mm | BLADE SIZE IN | VOLTAGE | SWITCH | REMARKS |
|---|---|---|---|---|---|
| CF-1 | 1320 | 52 | 220/1/50 | @ WALL | 3 SPEED REVERSIBLE MOTOR |

NOTES:
1. INSTALL FANS 2.5M AFF.
2. PROVIDE WITH OUT LIGHT FIXTURE.
3. PROVIDE WITH REMOTE MOUNTED ON-OFF SWITCH SHOWN ON ELECTRICAL DRAWINGS.

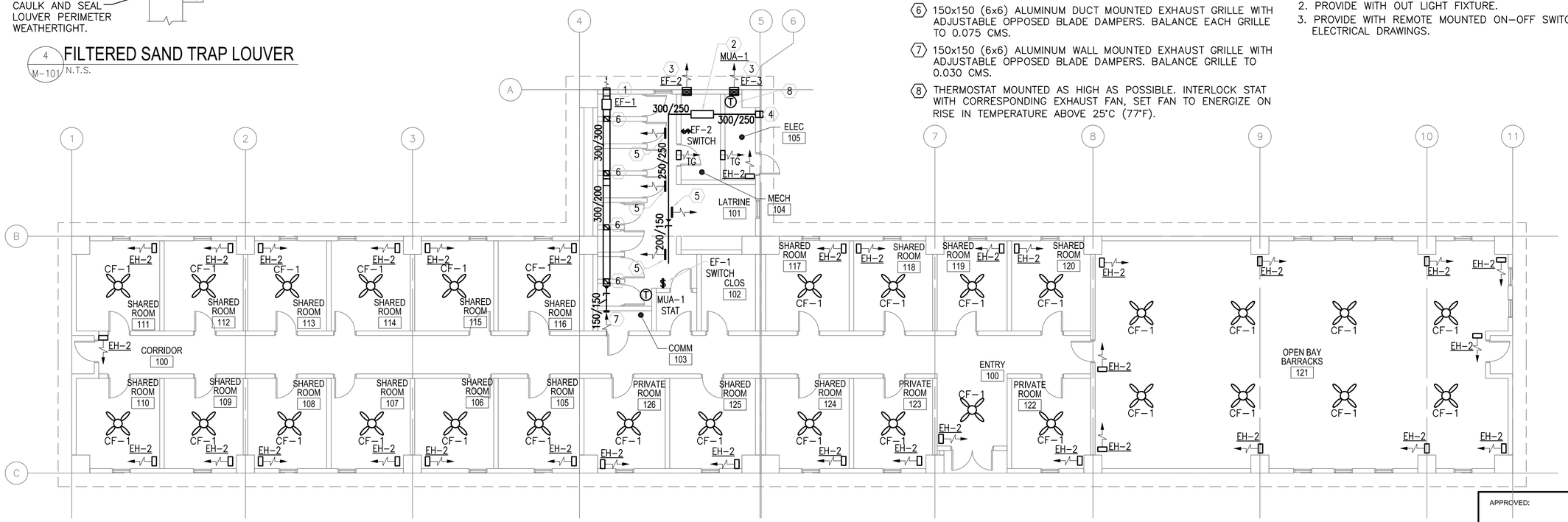


1 M-101 FLOOR PLAN - HVAC
SCALE: 1:100

LINEAR DIMENSIONS SHOWN ARE IN MILLIMETERS (MM), UNLESS OTHERWISE NOTED

0 2000 4000
SCALE: 1:100

APPROVED:

A/E DESIGNER OF RECORD

SEAL:

COMMONWEALTH OF PENNSYLVANIA REGISTERED PROFESSIONAL MATTHEW R. SOTOSKY ENGINEER 045576-E

US ARMY CORPS OF ENGINEERS
AFGHANISTAN ENGINEER DISTRICT

| Mark | Description | Date | Appr. |
|---|---|---|---|

Rev: 0
Date: 02/23/10
Design file no.
Drawing code:
File name: ANABOQMH-101XXX
Plot date: 02/09/2010
Plot scale: 1:100

Designed by: RML
Drwn by: JJN
Ckd by: CJM
Reviewed by: MRS
Submitted by: BAKER

U.S. ARMY CORPS OF ENGINEERS
AFGHANISTAN ENGINEER DISTRICT
APO AE 96338

Michael Baker Jr., Inc
A unit of Michael Baker Corporation
Airside Business Park
100 Airside Drive
Moon Township, PA 15108
www.mbakercorp.com

AFGHAN NATIONAL ARMY
REGIONAL MILITARY TRAINING CENTER
STANDARD DESIGN

BOQ OFFICER BARRACKS
HVAC – FLOOR PLAN, SCHEDULES AND DETAILS

Sheet reference number:
M-101

## POWER

- DISTRIBUTION PANELBOARD
- NEW PANELBOARD – SURFACE
- NEW PANELBOARD – RECESSED
- (G) GENERATOR
- TRANSFORMER (DRAWN TO SCALE)
- [J] JUNCTION BOX
- (J) JUNCTION BOX – CEILING
- FUSIBLE SAFETY SWITCH
- (M) MOTOR
- $^{M}$ MOTOR STARTING SWITCH – 220V, 20A RATED UNLESS OTHERWISE NOTED
- ELECTRIC WATER HEATER
- (CF) CEILING FAN – REFER TO SPECIFICATION SECTION 26 20 00

## RECEPTACLES

- DUPLEX 20A TYPE CEE 7/7 "SCHUKO STYLE" UNSWITCHED RECEPTACLE
- GF DUPLEX 20A TYPE CEE 7/7 "SCHUKO STYLE" UNSWITCHED RECEPTACLES – 10mA GROUND FAULT INTERRUPTER TYPE
- WP DUPLEX 20A TYPE CEE 7/7 "SCHUKO STYLE" UNSWITCHED TYPE WITH WEATHERPROOF COVER – 10mA GROUND FAULT INTERRUPTER TYPE
- EXP DUPLEX 20A TYPE CEE 7/7 "SCHUKO STYLE" UNSWITCHED RECEPTACLES – EXPLOSION PROOF
- * INDICATES MOUNT DEVICE ABOVE COUNTERTOP OR AT 1070mm ABOVE FINISHED FLOOR WHERE NO COUNTER IS TO BE INSTALLED.

## LIGHTNING PROTECTION

- AIR TERMINAL 20mm O.D. X 450mm SOLID COPPER, NICKEL PLATED ON ADHESIVE BASE
- EQ EQUIPMENT AIR TERMINAL
- TEST WELL WITH GROUND ROD(S)
- GROUND ROD
- [G] GROUND PLATE
- MAIN GROUND CONDUCTER CONCEALED WITHIN CONSTRUCTION
- MAIN GROUND CONDUCTOR EXPOSED ON EXPOSED ON BUILDING EXTERIOR SURFACE
- GROUND CONDUCTOR CAD WELDED TO GROUND CABLE OR EQUIPMENT
- GROUND ROD TRIPOD, SPACED 3 METERS APART.
- LEVEL TO LEVEL CABLE

## LIGHTING

- LIGHTING FIXTURE – SEE FIXTURE SCHEDULE FOR MORE INFORMATION
- EMERGENCY LIGHTING FIXTURE – SEE FIXTURE SCHEDULE FOR MORE INFORMATION
- DOWNLIGHT
- LIGHTING FIXTURE ON NORMAL/EMERGENCY
- WALL MOUNTED LIGHT FIXTURE
- [E] EXIT SIGN – DIRECTIONAL ARROWS AS INDICATED ON DRAWINGS
- REMOTE HEAD FOR BATTERY PACK
- $ SINGLE POLE SWITCH – 20A RATED
- $^{3}$ 3–WAY SWITCH – 20A RATED
- $^{4}$ 4–WAY SWITCH – 20A RATED
- [LC] LIGHTING CONTACTOR
- POLE MOUNTED SITE LIGHTING FIXTURE– NUMBER OF FIXTURES PER POLE AS INDICATED ON DRAWINGS
- EXTERIOR DIRECTIONAL LIGHTING FIXTURE
- a SMALL CASE LETTERS REPRESENTS LAMP(S) / SWITCHES.

## TELECOMMUNICATIONS

- TELEPHONE OUTLET(S) @ 45cm AFF. U.N.O. WITH 20mm RACEWAY TERMINATED TO TELEDATA TERMINAL BOARD.
- DATA OUTLET(S) @ 45cm AFF. U.N.O. WITH 20mm RACEWAY TERMINATED TO TELEDATA TERMINAL BOARD.

## TELECOMMUNICATIONS (CONTINUED)

- COMBINATION TELEPHONE/DATA OUTLET(S) @ 45cm AFF. U.N.O. WITH 27mm RACEWAY TERMINATED TO TELEDATA TERMINAL BOARD.
- W WALL MTD. TELEPHONE OUTLET WITH 20mm RACEWAY TO TELEDATA TERMINAL BOARD.
- (x)T INDICATES NUMBER OF TELEPHONE OUTLET(S) AND ASSOCIATED CABLING
- (x)D INDICATES NUMBER OF DATA OUTLET(S) AND ASSOCIATED CABLING
- (x)TF INDICATES NUMBER OF TELEPHONE OUTLETS AND ASSOCIATED CABLING WITH 1 OUTLET AND CABLE DEDICATED FOR FAX

## SINGLE LINE SYMBOLS

- SWITCH
- BREAKER
- FUSE
- TRANSFORMER
- GROUND
- CONTACT (NORMALLY OPEN)
- CONTACT (NORMALLY CLOSED)
- TRANSFER SWITCH
- CURRENT TRANSFORMER
- INDICATES NEW ELECTRICAL EQUIPMENT
- C INDICATES NEW CONTROL WIRING AND CONDUIT
- EQUIPMENT OUTLINE

## MISCELLANEOUS

- BRANCH CIRCUIT WIRING, SURFACE MOUNTED ON WALLS
- BRANCH CIRCUIT WIRING – 6mm$^{2}$
- BRANCH CIRCUIT WIRING – UNDER FLOOR
- HOME RUN BACK TO PANEL
- CONDUIT TURNED DOWN
- CONDUIT TURNED UP
- LV LOW VOLTAGE WIRING AND CONDUIT
- INDICATES CONTINUATION OF LINE

## FIRE ALARM

- FACP FIRE ALARM CONTROL PANEL WITH BATTERY BACKUP
- [F] FIRE ALARM PULL STATION

## FIRE ALARM (CONTINUED)

- [F] FIRE ALARM STROBE – WALL MOUNTED
- [F] FIRE ALARM AUDIBLE/STROBE – WALL MOUNTED
- [F] FIRE ALARM HORN/STROBE – WALL MOUNTED
- (S) SMOKE DETECTOR
- (H) HEAT DETECTOR CEILING MOUNTED
- (D) DUCT DETECTOR – PROVIDED BY EC, INSTALLED BY MC AND CONNECTED BY EC

## DENOTATIONS & ABBREVIATIONS

| | |
|---|---|
| AFF | ABOVE FINISHED FLOOR |
| C | CEILING MOUNTED |
| E | EMERGENCY |
| EC | ELECTRICAL CONTRACTOR |
| EPO | EMERGENCY POWER OFF |
| EXP | EXPLOSION PROOF |
| F | FIRE ALARM |
| FF | FLUSH FLOOR MOUNTED |
| FL | FLUORESCENT |
| FO | FIBER OPTIC |
| FSS | FUSED SAFETY SWITCH |
| GF | GROUND FAULT INTERRUPTER |
| GC | GENERAL CONTRACTOR |
| IG | ISOLATED GROUND |
| K | KEY |
| LV | LOW VOLTAGE |
| M | MOTOR |
| MC | MECHANICAL CONTRACTOR |
| NE | NORMAL/EMERGENCY |
| NFSS | NON–FUSED SAFETY SWITCH |
| PA | PAGING SYSTEM |
| PLC | PLUMBING CONTRACTOR |
| SL | SINGLE LINE |
| T | TELEPHONE |

## DENOTATIONS & ABBREVIATIONS (CONT.)

| | |
|---|---|
| TP | TAMPER PROOF |
| UE | UNDERGROUND ELECTRIC |
| W | WALL MOUNTED |
| WP | WEATHERPROOF WITH GROUND FAULT INTERRUPTION |
| WT | WATER TIGHT |

## GENERAL PROJECT NOTES:

G1. UNLESS OTHERWISE NOTED, PROVIDE ALL EQUIPMENT SHOWN ON THE PLANS. THE ELECTRICAL CONTRACTOR SHALL COORDINATE ALL SYMBOLS SHOWN ON THE PLANS WITH THE SYMBOL LIST. IT SHALL BE THE RESPONSIBILITY OF THE CONTRACTOR TO VERIFY THE INTENT OF ANY SYMBOL THAT IS SHOWN ON THE PLANS AND NOT INDICATED ON THE SYMBOL LIST WITH THE ENGINEER PRIOR TO BID.

G2. THE CONTRACTOR SHALL VERIFY THE LOCATION OF ALL UNDERGROUND UTILITIES WITHIN THE CONSTRUCTION AREA THREE (3) WORKING DAYS NOTICE BEFORE COMMENCING DIGGING. NOTIFY THE LOCAL AUTHORITY HAVING JURISDICTION AND WAIT THE REQUIRED TIME BEFORE COMMENCING TO DIG.

G3. THE CONTRACTOR SHALL COORDINATE CONDUIT RUNS, LIGHTING FIXTURES AND OTHER EQUIPMENT LOCATIONS WITH THE OTHER TRADE CONTRACTORS TO AVOID CONFLICTS.

G4. WHERE VOLTAGES AND FREQUENCIES ON THE DRAWINGS AND IN THE SPECIFICATIONS DIFFER FROM THE LOCAL ONES, ALL WORK SHALL BE PERFORMED USING THE LOCAL VOLTAGES AND FREQUENCIES.

G5. THE MINIMUM WIRE SIZE ON THE PROJECT SHALL BE 4mm$^{2}$. THE MINIMUM CONDUIT SIZE SHALL BE 20mm. THE MINIMUM BREAKER SIZE SHALL BE 20 AMPS.

G6. THE CONTRACTOR SHALL PUT A MAXIMUM OF 6 DUPLEX RECEPTACLES ON A 20A SINGLE POLE CIRCUIT.

G7. WHERE THE 1010 SCOPE REVIEW, 1015 TECHNICAL REVIEW, DRAWINGS, AND SPECIFICATIONS DIFFER FROM AMERICAN CODES OR STANDARDS, THE 1010, 1015, DRAWINGS, AND SPECIFICATIONS SHALL RULE.

G8. ALL CONDUIT AND DEVICES SHALL BE SURFACE MOUNTED UNLESS OTHERWISE INDICATED.

G9. CONTRACTOR SHALL COORDINATE ALL WORK WITH ALL OTHER TRADES TO ENSURE ALL WORK IS COMPLETED IN A PROFESSIONAL, WORKMAN–LIKE MANNER.

APPROVED:

A/E DESIGNER OF RECORD

SEAL:

COMMONWEALTH OF PENNSYLVANIA REGISTERED PROFESSIONAL JOSEPH R GAUS ENGINEER PE-074251 1/29/10

US ARMY CORPS OF ENGINEERS
AFGHANISTAN ENGINEER DISTRICT

| Mark | Description | Date | Appr. |
|---|---|---|---|
| | | | |

Rev: 0
Date: 2/23/10
Design file no.
Drawing code:
File name:
Plot date:
Plot scale:

Designed by: RAJ
Dwn by: BJB
Ckd by: JRG
Reviewed by: JRG
Submitted by: BAKER

U.S. ARMY CORPS OF ENGINEERS
AFGHANISTAN ENGINEER DISTRICT
APO AE 96338

*Michael Baker Jr., Inc*
*A unit of Michael Baker Corporation*
Airside Business Park
100 Airside Drive
Moon Township, PA 15108
www.mbakercorp.com

AFGHAN NATIONAL ARMY
REGIONAL MILITARY TRAINING CENTER
STANDARD DESIGN

BOQ OFFICER BARRACKS
ELECTRICAL SYMBOLS & ABBREVIATIONS

Sheet reference number:
E–001

## GENERAL NOTES:

1. REFER TO DRAWING #E-001 FOR THE ELECTRICAL SYMBOLS LIST.
2. EXIT SIGNS SHALL BE WIRED AHEAD OF ANY LOCAL SWITCHING ON CIRCUITS. SEE WIRING DIAGRAM DETAIL 8, DRAWING #E-501.
3. REFER TO DRAWING #E-601 FOR THE LIGHTING FIXTURE SCHEDULE.
4. REFER TO DRAWING #E-501 FOR THE POWER RISER.
5. REFER TO DRAWING #E-602 FOR PANEL SCHEDULES.
6. LIGHT FIXTURES INDICATED AS EMERGENCY SHALL BE PROVIDED WITH A BATTERY BACKUP BALLAST. SEE WIRING DIAGRAM DETAIL 7, DRAWING #E-501.

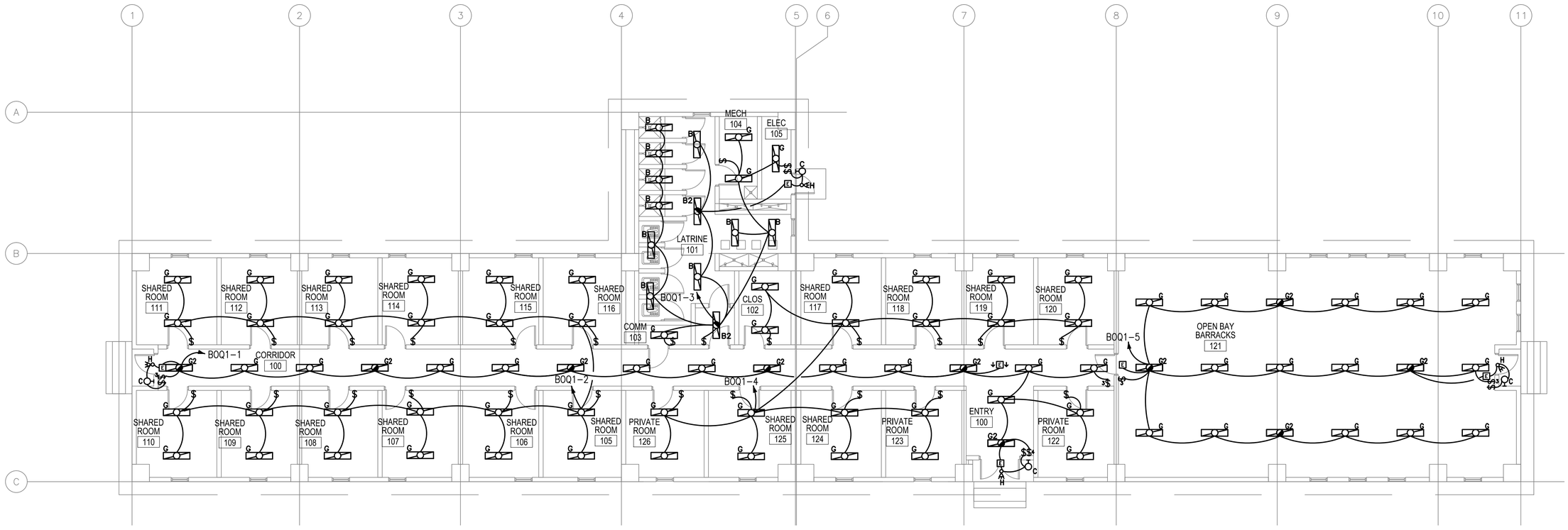


1 / E-101

# OFFICER BARRACKS (BOQ) FLOOR PLAN - LIGHTING

SCALE: 1:100

0 2000 4000
SCALE: 1:100

APPROVED:

A/E DESIGNER OF RECORD

SEAL:

COMMONWEALTH OF PENNSYLVANIA
REGISTERED PROFESSIONAL
JOSEPH R. GAUS
ENGINEER
PE-074251
1/14/10

US ARMY CORPS OF ENGINEERS
AFGHANISTAN ENGINEER DISTRICT

| Mark | Description | Date | Appr. |
|---|---|---|---|
| | | | |

| Mark | Description | Date | Appr. |
|---|---|---|---|
| | | | |

Rev: 0
Date: 2/23/10
Design file no.
Drawing code:
File name:
Plot date:
Plot scale:

Designed by: RAJ
Dwn. by: BJB
Ckd by: JRG
Reviewed by: JRG
Submitted by: BAKER

U.S. ARMY CORPS OF ENGINEERS
AFGHANISTAN ENGINEER DISTRICT
APO AE 96338


Michael Baker Jr., Inc
A unit of Michael Baker Corporation
Airside Business Park
100 Airside Drive
Moon Township, PA 15108
www.mbakercorp.com


AFGHAN NATIONAL ARMY
REGIONAL MILITARY TRAINING CENTER
STANDARD DESIGN

BOQ OFFICER BARRACKS
ELECTRICAL LIGHTING PLAN

Sheet reference number:
E-101

## GENERAL NOTES:

1. REFER TO DRAWING #E-001 FOR THE ELECTRICAL SYMBOLS LIST.
2. REFER TO DRAWING #E-501 FOR THE POWER RISER.
3. REFER TO DRAWING #E-602 FOR PANEL SCHEDULES.
4. COORDINATE EXACT MOUNTING LOCATION OF DISCONNECTING MEANS FOR MECHANICAL AND PLUMBING EQUIPMENT IN THE FIELD.
5. FUSIBLE SAFETY SWITCHES THAT ARE NOT OTHERWISE IDENTIFIED SHALL BE 380V, 1P, 30A FUSED SAFETY SWITCHES WITH 20A FUSES.

## NUMBERED NOTES:

(1) PROVIDE POWER CONNECTION TO MAKE-UP AIR UNIT #1. SEE DRAWINGS #E-602 AND #M-101 FOR MORE INFORMATION.

(2) SEE DRAWING #E-602 FOR WIRE AND CONDUIT SIZE.

(3) PROVIDE POWER CONNECTION TO ELECTRIC UNIT HEATER #2. SEE DRAWINGS #E-602 AND #M-101 FOR MORE INFORMATION.

(4) PROVIDE POWER CONNECTION TO EXHAUST FAN #1. SEE DRAWINGS #E-602 AND #M-101 FOR MORE INFORMATION.

(5) PROVIDE POWER CONNECTION TO EXHAUST FAN #2. SEE DRAWINGS #E-602 AND #M-101 FOR MORE INFORMATION.

(6) PROVIDE POWER CONNECTION TO EXHAUST FAN #3. SEE DRAWINGS #E-602 AND #M-101 FOR MORE INFORMATION.

(7) PANEL BOQ1, BOQ2, & BOQ3

(8) NEMA 3R, 380V, 3P, 30A FUSED DISCONNECT FUSED AT 30A. SEE PLUMBING DRAWINGS FOR EXACT LOCATION OF WATER HEATER.

(9) PROVIDE A 1,200mm X 2,400mm PIECE OF PLYWOOD PAINTED WITH FIRE RESISTANT PAINT FOR MOUNTING TELECOMMUNICATIONS EQUIPMENT.

(10) PROVIDE CONDUIT STUB UP IN THE ROOM FOR INCOMMING TELECOMMUNICATIONS SERVICES FROM THE CENTRAL COMMUNICATIONS SYSTEM IN THE GARRISON.

(11) PROVIDE 220V, 1ø, 60A MOTOR SNAP SWITCH IN NEMA 3R ENCLOSURE.

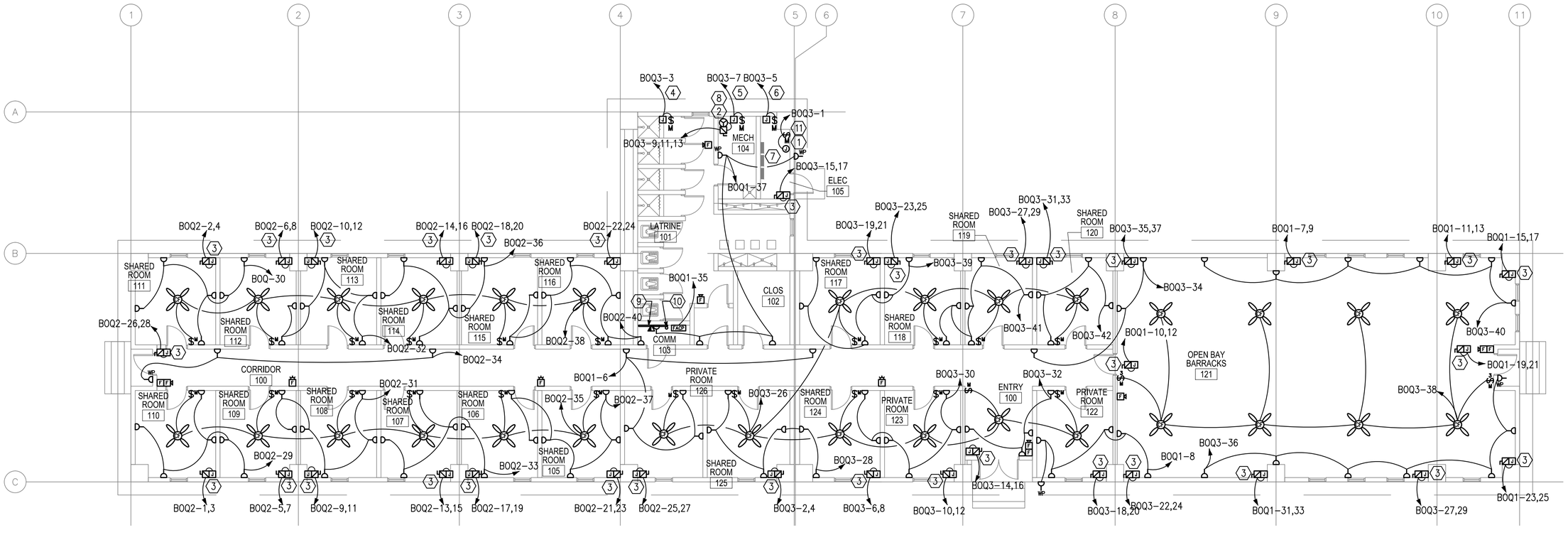


1 / E-102 OFFICER BARRACKS (BOQ) FLOOR PLAN - POWER & SYSTEMS

SCALE: 1:100

0 2000 4000

SCALE: 1:100

APPROVED:

A/E DESIGNER OF RECORD

SEAL:

COMMONWEALTH OF PENNSYLVANIA
REGISTERED PROFESSIONAL
JOSEPH R GAUS
1/29/10
ENGINEER
PE-074251

US ARMY CORPS OF ENGINEERS
AFGHANISTAN ENGINEER DISTRICT

| Mark | Description | Date | Appr. |
|---|---|---|---|
| | | | |

| Mark | Description | Date | Appr. |
|---|---|---|---|
| | | | |

Rev: 0

Date: 2/23/10
Design file no.
Drawing code:
File name:
Plot date:
Plot scale:

Designed by: RAJ
Drawn by: BJB
Ckd by: JRG
Reviewed by: JRG
Submitted by: BAKER

U.S. ARMY CORPS OF ENGINEERS
AFGHANISTAN ENGINEER DISTRICT
APO AE 96338

Michael Baker Jr., Inc
A unit of Michael Baker Corporation
Airside Business Park
100 Airside Drive
Moon Township, PA 15108
www.mbakercorp.com

AFGHAN NATIONAL ARMY
REGIONAL MILITARY TRAINING CENTER
STANDARD DESIGN

BOQ OFFICER BARRACKS
ELECTRICAL POWER & SYSTEMS PLAN

Sheet reference number:
E-102

## GENERAL NOTES:

1. REFER TO DRAWING #E-001 FOR THE ELECTRICAL SYMBOLS LIST.

## NUMBERED NOTES:

1. (1) 120.0mm² BARE, TINNED, COPPER COUNTERPOISE GROUND 700mm BELOW GRADE.
2. INSTALL DOWN CONDUCTOR IN 25mm SCHEDULE 80 PVC CONDUIT TO 20mm DIAMETER X 3 METERS SOLID COPPER TINNED GROUND ROD. (TYPICAL)
3. CADWELD TO BUILDING STRUCTURE AT 18 METERS ON CENTER AROUND THE ENTIRE PERIMETER OF THE BUILDING. (TYPICAL)
4. 120mm² LIGHTNING PROTECTION CABLE.
5. AIR TERMINAL. TERMINALS SHALL BE PLACED AT A MAXIMUM OF 6M ON CENTER PER NFPA 780 PARA. 4.8.2.1, AND WITHIN 0.6M OF RIDGE ENDS PER NFPA 780 PARA. 4.8 (TYPICAL)
6. 700mm MIN. (TYP) BETWEEN FOUNDATION AND GROUND LOOP.

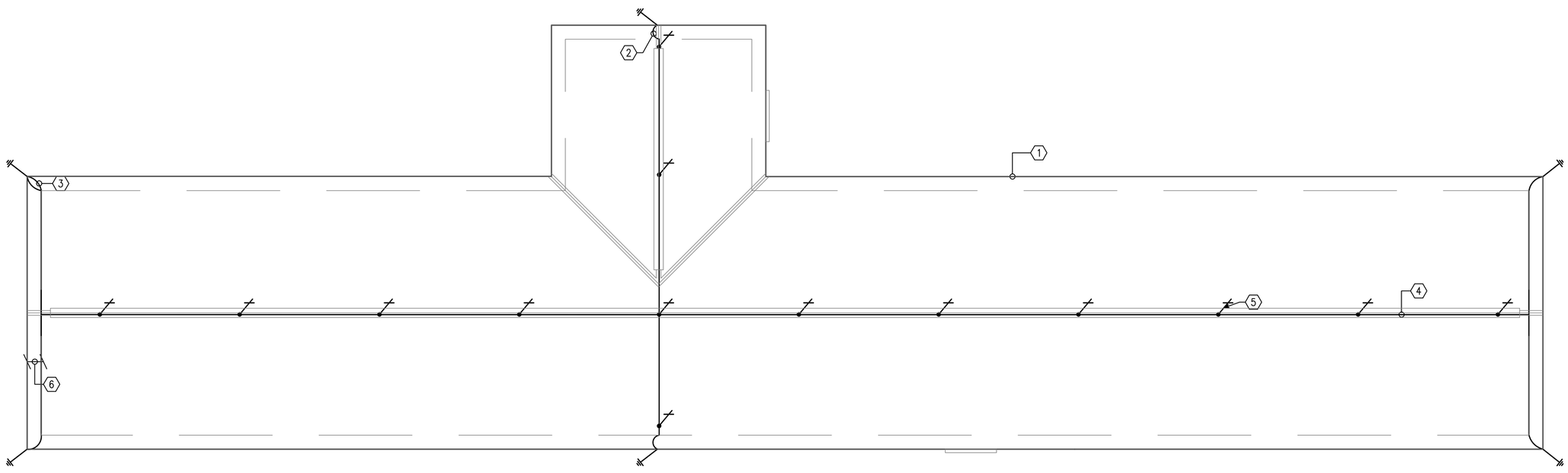


1 / E-103

## OFFICER BARRACKS (BOQ)
## FLOOR PLAN - LIGHTNING PROTECTION

SCALE: 1:100

0 2000 4000
SCALE: 1:100

APPROVED:

A/E DESIGNER OF RECORD

SEAL:

COMMONWEALTH OF PENNSYLVANIA
REGISTERED PROFESSIONAL ENGINEER
JOSEPH R. GAUS
PE-074251
1/24/10

US ARMY CORPS OF ENGINEERS
AFGHANISTAN ENGINEER DISTRICT

| Mark | Description | Date | Appr. |
|---|---|---|---|
| | | | |

| Mark | Description | Date | Appr. |
|---|---|---|---|
| | | | |

Rev: 0
Date: 2/23/10
Design file no.
Drawing code:
File name:
Plot date:
Plot scale:

Designed by: RAJ
Dwn. by: BJB
Ckd by: JRG
Reviewed by: JRG
Submitted by: BAKER

U.S. ARMY CORPS OF ENGINEERS
AFGHANISTAN ENGINEER DISTRICT
APO AE 96338


*Michael Baker Jr., Inc*
*A unit of Michael Baker Corporation*
Airside Business Park
100 Airside Drive
Moon Township, PA 15108
www.mbakercorp.com


AFGHAN NATIONAL ARMY
REGIONAL MILITARY TRAINING CENTER
STANDARD DESIGN

BOQ OFFICER BARRACKS
ELECTRICAL LIGHTNING PROTECTION PLAN

Sheet reference number:
E-103

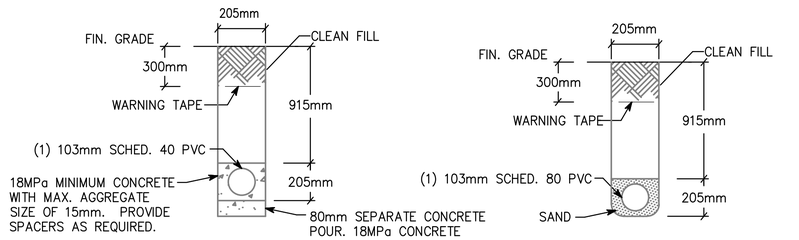


NOTE: PVC CONDUIT SHALL BE DIRECT BURIED SCHEDULE 80 FOR NO TRAFFIC AREAS AND CONCRETE-ENCASED SCHEDULE 40 FOR UNDER ROADWAYS OR TRAFFIC AREAS.

1 / E-501 **TYPICAL DUCT BANK DETAILS FOR CONDUIT IN SAND OR CONCRETE**

SCALE: N.T.S.

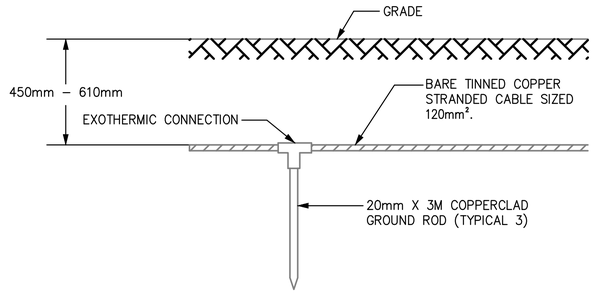


2 / E-501 **GROUND TRIPOD SYSTEM DETAIL - ELEVATION**

SCALE: N.T.S.

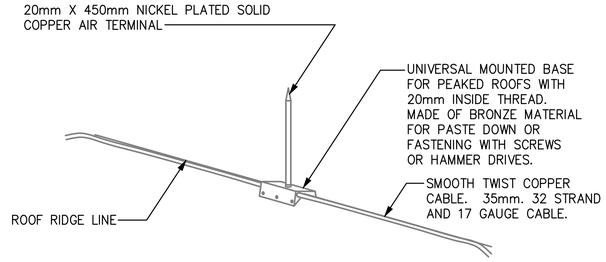


3 / E-501 **LIGHTNING PROTECTION AIR TERMINAL DETAIL**

SCALE: N.T.S.

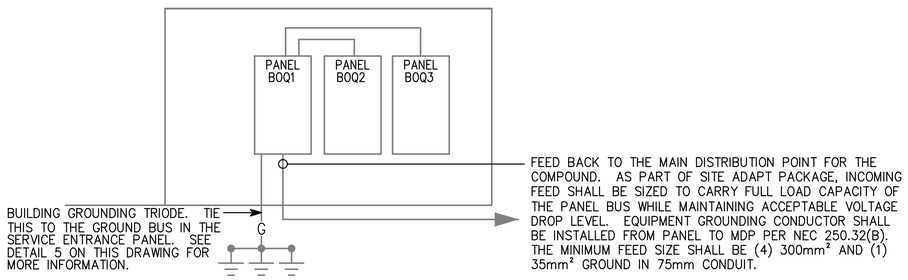


4 / E-501 **BOQ RISER DIAGRAM**

SCALE: N.T.S.

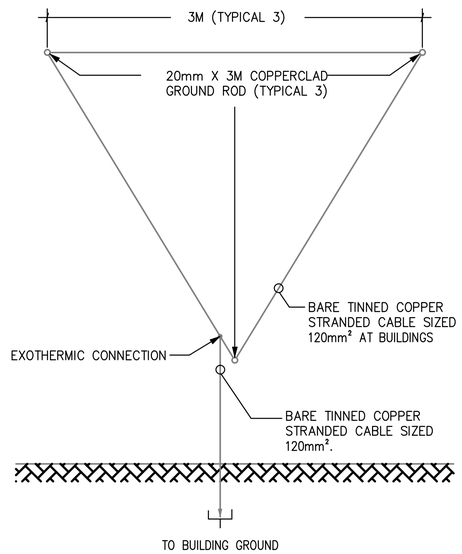


5 / E-501 **GROUND TRIPOD SYSTEM DETAIL - PLAN**

SCALE: N.T.S.

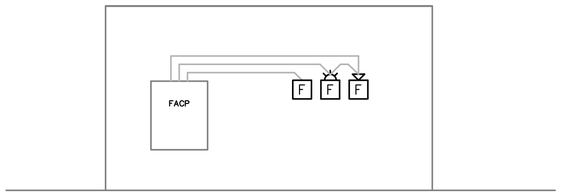


6 / E-501 **TYPICAL ONE STORY FIRE ALARM RISER**

SCALE: N.T.S.

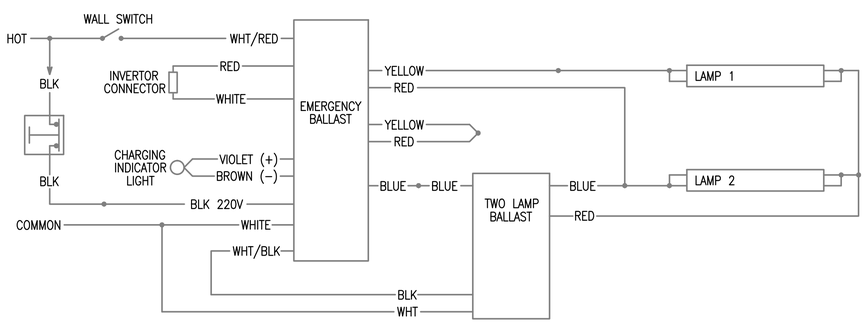


7 / E-501 **EMERGENCY FIXTURE WIRING DIAGRAM**

SCALE: N.T.S.

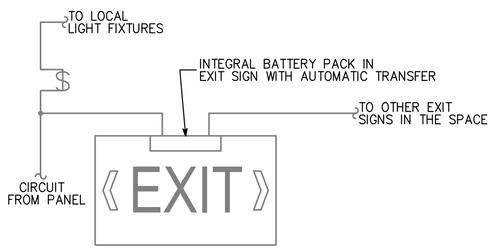


8 / E-501 **EXIT SIGN WIRING DIAGRAM**

SCALE: N.T.S.

APPROVED:

A/E DESIGNER OF RECORD

SEAL:

COMMONWEALTH OF PENNSYLVANIA
REGISTERED PROFESSIONAL
JOSEPH R. GAUS
ENGINEER
PE-074251
12/21/12

US ARMY CORPS OF ENGINEERS
AFGHANISTAN ENGINEER DISTRICT

| Mark | Description | Date | Appr. |
|---|---|---|---|
| | | | |

Rev: 0
Date: 2/23/10
Design file no.
Drawing code:
File name:
Plot date:
Plot scale:

Designed by: RAJ
Dwn by: BJB
Ckd by: JRG
Reviewed by: JRG
Submitted by: BAKER

U.S. ARMY CORPS OF ENGINEERS
AFGHANISTAN ENGINEER DISTRICT
APO AE 96338

*Michael Baker Jr., Inc*
*A unit of Michael Baker Corporation*
Airside Business Park
100 Airside Drive
Moon Township, PA 15108
www.mbakercorp.com

AFGHAN NATIONAL ARMY
REGIONAL MILITARY TRAINING CENTER
STANDARD DESIGN

BOQ OFFICER BARRACKS
ELECTRICAL DETAILS

Sheet reference number:
E-501

| Ⓐ LARGER OF THE TWO SIZES GIVEN IN THE TABLES BELOW | |
|---|---|
| GROUNDING ELECTRODE CONDUCTOR (BASED ON AIC RATING) | |
| AIC RATING OF SERVICE EQUIPMENT | NECESSARY GROUNDING ELECTRODE CONDUCTOR SIZE |
| 10K | (1) 35mm² |
| 14K | (1) 50mm² |
| 18K | (1) 70mm² |
| 22K | (1) 70mm² |
| 25K | (1) 70mm² |
| 30K | (1) 95mm² |
| 35K | (1) 120mm² |
| 42K | (1) 150mm² |
| 65K | (1) 185mm² |
| 100K | (1) 300mm² |
| 125K | (2) 185mm² |
| 200K | (2) 300mm² |

| GROUNDING ELECTRODE CONDUCTOR (BASED ON NEC TABLE 250.66) | |
|---|---|
| SIZE OF LARGEST UNGROUNDED SERVICE CONDUCTOR OR EQUIVALENT AREA FOR PARALLEL CONDUCTORS | NECESSARY GROUNDING ELECTRODE CONDUCTOR SIZE |
| 350 kcmil OR SMALLER | 35mm² |
| OVER 350 kcmil TO 600 kcmil | 70mm² |
| OVER 600 kcmil TO 1100 kcmil | 70mm² |
| OVER 1100 kcmil | 95mm² |

NOTE: ALL SIZES ARE BASED ON COPPER CONDUCTORS.

| Ⓑ EQUIPMENT GROUNDING CONDUCTOR | |
|---|---|
| RATING OR SETTING OF AUTOMATIC OVERCURRENT DEVICE IN CIRCUIT AHEAD OF EQUIPMENT, CONDUIT, ETC, NOT EXCEEDING (AMPERES) | NECESSARY EQUIPMENT GROUNDING CONDUCTOR SIZE |
| 15 | 2.5mm² |
| 20 | 4.0mm² |
| 30 | 6.0mm² |
| 40 | 6.0mm² |
| 60 | 6.0mm² |
| 100 | 10mm² |
| 200 | 16mm² |
| 300 | 25mm² |
| 400 | 25mm² |
| 500 | 35mm² |
| 600 | 50mm² |
| 800 | 70mm² |
| 1000 | 70mm² |
| 1200 | 95mm² |
| 1600 | 120mm² |
| 2000 | 150mm² |
| 2500 | 185mm² |
| 3000 | 240mm² |
| 4000 | 300mm² |
| 5000 | 400mm² |
| 6000 | 400mm² |

NOTE: ALL SIZES ARE BASED ON COPPER CONDUCTORS.

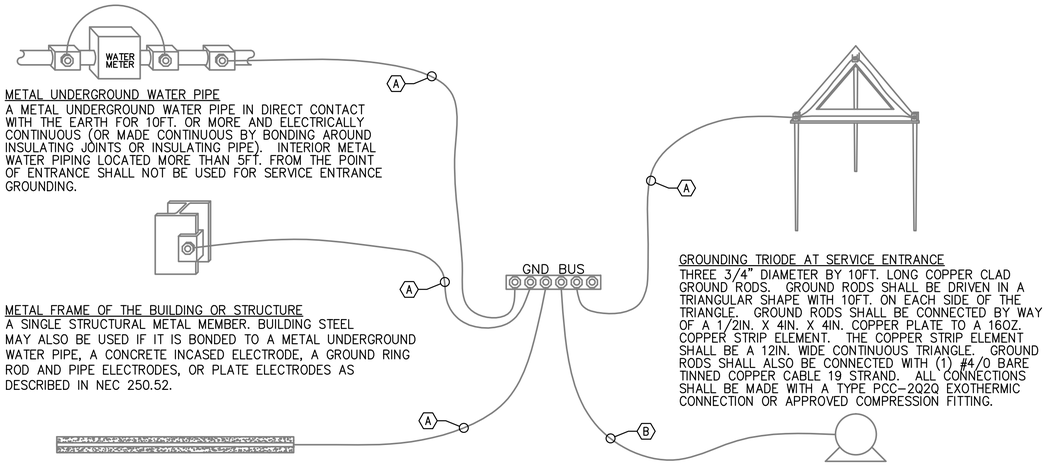


METAL UNDERGROUND WATER PIPE
A METAL UNDERGROUND WATER PIPE IN DIRECT CONTACT WITH THE EARTH FOR 10FT. OR MORE AND ELECTRICALLY CONTINUOUS (OR MADE CONTINUOUS BY BONDING AROUND INSULATING JOINTS OR INSULATING PIPE). INTERIOR METAL WATER PIPING LOCATED MORE THAN 5FT. FROM THE POINT OF ENTRANCE SHALL NOT BE USED FOR SERVICE ENTRANCE GROUNDING.

METAL FRAME OF THE BUILDING OR STRUCTURE
A SINGLE STRUCTURAL METAL MEMBER. BUILDING STEEL MAY ALSO BE USED IF IT IS BONDED TO A METAL UNDERGROUND WATER PIPE, A CONCRETE INCASED ELECTRODE, A GROUND RING ROD AND PIPE ELECTRODES, OR PLATE ELECTRODES AS DESCRIBED IN NEC 250.52.

CONCRETE ENCASED ELECTRODE
AN ELECTRODE ENCASED BY AT LEAST 2IN. OF CONCRETE , LOCATED WITHIN AND NEAR THE BOTTOM OF A CONCRETE FOUNDATION OR FOOTING THAT IS IN DIRECT CONTACT WITH THE EARTH, CONSISTING OF AT LEAST 20FT. OF ONE OR MORE BARE OR ZINC GALVANIZED OR OTHER ELECTRICALLY CONDUCTIVE COATED STEEL REINFORCING BARS OR RODS OF NOT LESS THAN 1/2" DIAMETER OR BARE COPPER CONDUCTOR NOT SMALLER THAN 4AWG.

GROUNDING TRIODE AT SERVICE ENTRANCE
THREE 3/4" DIAMETER BY 10FT. LONG COPPER CLAD GROUND RODS. GROUND RODS SHALL BE DRIVEN IN A TRIANGULAR SHAPE WITH 10FT. ON EACH SIDE OF THE TRIANGLE. GROUND RODS SHALL BE CONNECTED BY WAY OF A 1/2IN. X 4IN. X 4IN. COPPER PLATE TO A 16OZ. COPPER STRIP ELEMENT. THE COPPER STRIP ELEMENT SHALL BE A 12IN. WIDE CONTINUOUS TRIANGLE. GROUND RODS SHALL ALSO BE CONNECTED WITH (1) #4/0 BARE TINNED COPPER CABLE 19 STRAND. ALL CONNECTIONS SHALL BE MADE WITH A TYPE PCC-2Q2Q EXOTHERMIC CONNECTION OR APPROVED COMPRESSION FITTING.

LOAD OR DOWNSTREAM PANEL
ALL LOADS IN THE BUILDING SHALL HAVE AN EQUIPMENT GROUNDING CONDUCTOR PULLED TO THEM.

1
E-502

## SERVICE ENTRANCE GROUNDING DETAIL

SCALE: N.T.S.

APPROVED:

A/E DESIGNER OF RECORD

SEAL:

COMMONWEALTH OF PENNSYLVANIA
REGISTERED PROFESSIONAL
JOSEPH R GAUS
ENGINEER
PE-074251
1/29/10

US ARMY CORPS OF ENGINEERS
AFGHANISTAN ENGINEER DISTRICT

| Mark | Description | Date | Appr. |
|---|---|---|---|
| | | | |

Designed by: RAJ
Dwn by: BJB
Ckd by: JRG
Reviewed by: JRG
Submitted by: BAKER
Date: 2/23/10
Design file no.
Drawing code:
File name:
Plot date:
Plot scale:
Rev: 0

U.S. ARMY CORPS OF ENGINEERS
AFGHANISTAN ENGINEER DISTRICT
APO AE 96338

*Michael Baker Jr., Inc*
*A unit of Michael Baker Corporation*
Airside Business Park
100 Airside Drive
Moon Township, PA 15108
www.mbakercorp.com

AFGHAN NATIONAL ARMY
REGIONAL MILITARY TRAINING CENTER
STANDARD DESIGN

BOQ OFFICER BARRACKS
ELECTRICAL DETAILS

Sheet reference number:
E-502

FIXTURE MARK 'B'

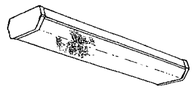

FIXTURE MARK 'C'

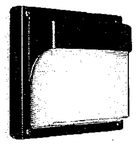

FIXTURE MARK 'G'

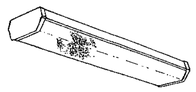

FIXTURE MARK 'H'

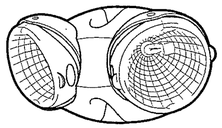

FIXTURE MARK '[E]'

# LIGHT FIXTURE SCHEDULE

| FIXTURE MARK | STYLE NUMBER AND TYPE | NUMBER AND TYPE OF LAMPS | VOLTAGE | MOUNTING | NOTES |
|---|---|---|---|---|---|
| B | WET LOCATION WRAP AROUND SURFACE/PENDANT MOUNTED FLUORESCENT FIXTURE WITH PRISMATIC ACRYLIC LENS AND ELECTRONIC BALLAST | (2) 32W 3500K | 220V – 1ø 50HZ | SURFACE MOUNTED | FURNISHED WITH ELECTRONIC BALLAST, VIRGIN ACRYLIC WRAP AROUND LENS. |
| B2 | SAME AS FIXTURE 'B' WITH EMERGENCY BALLAST | (2) 32W 3500K | 220V – 1ø 50HZ | SURFACE MOUNTED | FURNISHED WITH ELECTRONIC BALLAST, VIRGIN ACRYLIC WRAP AROUND LENS. EMERGENCY BALLAST WITH SELF TEST SWITCH. |
| C | INCANDESCENT ONE PIECE W/ APPROVED LENS STABILIZED HIGH IMPACT POLY CARBONATE. | (1) A19 – 100W INCANDESCENT | 220V – 1ø 50HZ | WALL MOUNTED ABOVE EXTERIOR DOORS | |
| G | WRAP AROUND SURFACE/PENDANT MOUNTED FLUORESCENT FIXTURE WITH PRISMATIC ACRYLIC LENS AND ELECTRONIC BALLAST | (2) 32W 3500K | 220V – 1ø 50HZ | SURFACE MOUNTED | FURNISHED WITH ELECTRONIC BALLAST, VIRGIN ACRYLIC WRAP AROUND LENS. |
| G2 | SAME AS FIXTURE 'G' WITH EMERGENCY BALLAST | (2) 32W 3500K | 220V – 1ø 50HZ | SURFACE MOUNTED | FURNISHED WITH ELECTRONIC BALLAST, VIRGIN ACRYLIC WRAP AROUND LENS. EMERGENCY BALLAST WITH SELF TEST SWITCH. |
| H | REMOTE HEAD EXTERIOR LIGHT HEAD POWERED FROM EXIT SIGN BATTERY– 12V DOUBLE HEAD CORROSION RESISTANT WITH UL34 WEATHERPROOF CONSTRUCTION | (2) 12W/12V HALOGEN LAMP | 12V – 1ø 50HZ | EXTERIOR WALL MOUNTED AT TOP OF DOOR HEIGHT | |
| [E] | UNIVERSAL MOUNT ENGINEER GRADE THERMOPLASTIC HOUSING EXIT SIGN WITH LED LAMPS, RED LETTERS 6" IN HEIGHT WITH ARROWS AS INDICATED, WITH 12V CADMIUM BATTERY WITH REMOTE HEAD CAPABILITY | LED LAMPS | 220V – 1ø 50HZ | UNIVERSAL MOUNTING | |

APPROVED:

A/E DESIGNER OF RECORD

SEAL:

COMMONWEALTH OF PENNSYLVANIA
REGISTERED PROFESSIONAL ENGINEER
JOSEPH R. GAUS
PE-074251
11/29/10

US ARMY CORPS OF ENGINEERS
AFGHANISTAN ENGINEER DISTRICT

| Mark | Description | Date | Appr. |
|---|---|---|---|
| | | | |

| Mark | Description | Date | Appr. |
|---|---|---|---|
| | | | |

Rev: 0
Date: 2/23/10
Design file no.
Drawing code:
File name:
Plot date:
Plot scale:

Designed by: RAJ
Dwn. by: BJB
Ckd by: JRG
Reviewed by: JRG
Submitted by: BAKER

U.S. ARMY CORPS OF ENGINEERS
AFGHANISTAN ENGINEER DISTRICT
APO AE 96338

*Michael Baker Jr., Inc*
*A unit of Michael Baker Corporation*
Airside Business Park
100 Airside Drive
Moon Township, PA 15108
www.mbakercorp.com

AFGHAN NATIONAL ARMY
REGIONAL MILITARY TRAINING CENTER
STANDARD DESIGN

BOQ OFFICER BARRACKS
ELECTRICAL LIGHT FIXTURE SCHEDULE

Sheet reference number:
E–601

PANELBOARD BOQ1 SURFACE MOUNTED
400 AMP. MAIN LUGS (OR) 400 AMP. MAIN BREAKER W/ 400 AMP. TRIP
CIRCUIT BREAKER TYPE 380/220 VOLTS 3 PHASE 4 WIRE 50 HZ 400 AMP. BUS

| CKT. NO. | TRIP AMPS | NO. POLES | WIRE MM² | GND MM² | CONDUIT MM | LOAD SERVED | LOAD-KVA A0 | LOAD-KVA B0 | LOAD-KVA C0 | LOAD-KVA A0 | LOAD-KVA B0 | LOAD-KVA C0 | LOAD SERVED | CONDUIT MM | GND MM² | WIRE MM² | NO. POLES | TRIP AMPS | CKT. NO. |
|---|---|---|---|---|---|---|---|---|---|---|---|---|---|---|---|---|---|---|---|
| 1 | 20 | 1 | 4.0 | 4.0 | 20 | LIGHTING – RM 100,122 | 1.1 | | | 1.6 | | | LIGHTING – RM 105–116 | 20 | 4.0 | 4.0 | 1 | 20 | 2 |
| 3 | 20 | 1 | 4.0 | 4.0 | 20 | LIGHTING – RM 101, 104, 105 | | 0.9 | | | 1.2 | | LTNG – RM 102,117–120,123–126 | 20 | 4.0 | 4.0 | 1 | 20 | 4 |
| 5 | 20 | 1 | 4.0 | 4.0 | 20 | LIGHTING – RM 121 | | | 1.2 | | | 1.0 | RECEPTACLES – RM 100, 126 | 20 | 4.0 | 4.0 | 1 | 20 | 6 |
| 7 | 20 | 2 | 4.0 | 4.0 | 20 | ELECTRIC HEAT #2 – RM 121 | 1.3 | | | 1.0 | | | RECEPTACLES – EXT., RM 121,122 | 20 | 4.0 | 4.0 | 1 | 20 | 8 |
| 9 | | | | | | | | 1.3 | | | 1.3 | | ELECTRIC HEAT #2 – RM 121 | 20 | 4.0 | 4.0 | 2 | 20 | 10 |
| 11 | 20 | 2 | 4.0 | 4.0 | 20 | ELECTRIC HEAT #2 – RM 121 | | | 1.3 | | | 1.3 | | | | | | | | 12 |
| 13 | | | | | | | 1.3 | | | | | | SPARE | | | | 1 | 20 | 14 |
| 15 | 20 | 2 | 4.0 | 4.0 | 20 | ELECTRIC HEAT #2 – RM 121 | | 1.3 | | | | | SPARE | | | | 1 | 20 | 16 |
| 17 | | | | | | | | | 1.3 | | | | SPARE | | | | 1 | 20 | 18 |
| 19 | 20 | 2 | 4.0 | 4.0 | 20 | ELECTRIC HEAT #2 – RM 121 | 1.3 | | | | | | SPARE | | | | 1 | 20 | 20 |
| 21 | | | | | | | | 1.3 | | | | | SPARE | | | | 1 | 20 | 22 |
| 23 | 20 | 2 | 4.0 | 4.0 | 20 | ELECTRIC HEAT #2 – RM 121 | | | 1.3 | | | | SPARE | | | | 1 | 20 | 24 |
| 25 | | | | | | | 1.3 | | | | | | SPARE | | | | 1 | 20 | 26 |
| 27 | 20 | 2 | 4.0 | 4.0 | 20 | ELECTRIC HEAT #2 – RM 121 | | 1.3 | | | | | SPARE | | | | 1 | 20 | 28 |
| 29 | | | | | | | | | 1.3 | | | | SPARE | | | | 1 | 20 | 30 |
| 31 | 20 | 2 | 4.0 | 4.0 | 20 | ELECTRIC HEAT #2 – RM 121 | 1.3 | | | 30.1 | | | | | | | | | 32 |
| 33 | | | | | | | | 1.3 | | | 20.7 | | PANEL 'BOQ3' | 50 | 16.0 | 70.0 | 3 | 175 | 34 |
| 35 | 20 | 1 | 4.0 | 4.0 | 20 | FACP – RM 103 | | | 0.5 | | | 20.7 | | | | | | | 36 |
| 37 | 20 | 1 | 4.0 | 4.0 | 20 | RECEPTACLES – 100,102,104,EXT | 1.0 | | | 18.1 | | | | | | | | | 38 |
| 39 | 20 | 1 | | | | SPARE | | | | | 16.4 | | PANEL 'BOQ2' | 40 | 16.0 | 50.0 | 3 | 125 | 40 |
| 41 | 20 | 1 | | | | SPARE | | | | | | 15.5 | | | | | | | 42 |
| | | | | | | | 8.6 | 7.4 | 6.9 | 50.8 | 39.6 | 38.5 | | | | | | | |

TOTAL CONN. LOAD PER PHASE (KVA): AO 59.4 BO 47.0 CO 45.4

TOTAL CONN. LOAD 151.8 KVA. 70 % DEMAND = ESTIMATED DEMAND LOAD 106.26

* MAIN BREAKER SHALL BE 3P EARTH GROUND TYPE

PANELBOARD BOQ2 SURFACE MOUNTED
400 AMP. MAIN LUGS (OR) AMP. MAIN BREAKER W/ AMP. TRIP
CIRCUIT BREAKER TYPE 380/220 VOLTS 3 PHASE 4 WIRE 50 HZ 400 AMP. BUS

| CKT. NO. | TRIP AMPS | NO. POLES | WIRE MM² | GND MM² | CONDUIT MM | LOAD SERVED | LOAD-KVA A0 | LOAD-KVA B0 | LOAD-KVA C0 | LOAD-KVA A0 | LOAD-KVA B0 | LOAD-KVA C0 | LOAD SERVED | CONDUIT MM | GND MM² | WIRE MM² | NO. POLES | TRIP AMPS | CKT. NO. |
|---|---|---|---|---|---|---|---|---|---|---|---|---|---|---|---|---|---|---|---|
| 1 | 20 | 2 | 4.0 | 4.0 | 20 | ELECTRIC HEAT #2 – RM 110 | 1.3 | | | 1.3 | | | ELECTRIC HEAT #2 – RM 111 | 20 | 4.0 | 4.0 | 2 | 20 | 2 |
| 3 | | | | | | | | 1.3 | | | 1.3 | | | | | | | | 4 |
| 5 | 20 | 2 | 4.0 | 4.0 | 20 | ELECTRIC HEAT #2 – RM 109 | | | 1.3 | | | 1.3 | ELECTRIC HEAT #2 – RM 112 | 20 | 4.0 | 4.0 | 2 | 20 | 6 |
| 7 | | | | | | | 1.3 | | | 1.3 | | | | | | | | | 8 |
| 9 | 20 | 2 | 4.0 | 4.0 | 20 | ELECTRIC HEAT #2 – RM 108 | | 1.3 | | | 1.3 | | ELECTRIC HEAT #2 – RM 113 | 20 | 4.0 | 4.0 | 2 | 20 | 10 |
| 11 | | | | | | | | | 1.3 | | | 1.3 | | | | | | | 12 |
| 13 | 20 | 2 | 4.0 | 4.0 | 20 | ELECTRIC HEAT #2 – RM 107 | 1.3 | | | 1.3 | | | ELECTRIC HEAT #2 – RM 114 | 20 | 4.0 | 4.0 | 2 | 20 | 14 |
| 15 | | | | | | | | 1.3 | | | 1.3 | | | | | | | | 16 |
| 17 | 20 | 2 | 4.0 | 4.0 | 20 | ELECTRIC HEAT #2 – RM 106 | | | 1.3 | | | 1.3 | ELECTRIC HEAT #2 – RM 115 | 20 | 4.0 | 4.0 | 2 | 20 | 18 |
| 19 | | | | | | | 1.3 | | | 1.3 | | | | | | | | | 20 |
| 21 | 20 | 2 | 4.0 | 4.0 | 20 | ELECTRIC HEAT #2 – RM 105 | | 1.3 | | | 1.3 | | ELECTRIC HEAT #2 – RM 116 | 20 | 4.0 | 4.0 | 2 | 20 | 22 |
| 23 | | | | | | | | | 1.3 | | | 1.3 | | | | | | | 24 |
| 25 | 20 | 2 | 4.0 | 4.0 | 20 | ELECTRIC HEAT #2 – RM 126 | 1.3 | | | 1.3 | | | ELECTRIC HEAT #2 – RM 100 | 20 | 4.0 | 4.0 | 2 | 20 | 26 |
| 27 | | | | | | | | 1.3 | | | 1.3 | | | | | | | | 28 |
| 29 | 20 | 1 | 4.0 | 4.0 | 20 | RECEPTACLES – RM 109,110 | | | 1.2 | | | 1.2 | RECEPTACLES – RM 111,,112 | 20 | 4.0 | 4.0 | 1 | 20 | 30 |
| 31 | 20 | 1 | 4.0 | 4.0 | 20 | RECEPTACLES – RM 108 | 1.2 | | | 1.2 | | | RECEPTACLES – RM 112,113 | 20 | 4.0 | 4.0 | 1 | 20 | 32 |
| 33 | 20 | 1 | 4.0 | 4.0 | 20 | RECEPTACLES – RM 106,107 | | 1.2 | | | 1.0 | | RECEPTACLES – RM 100, EXT. | 20 | 4.0 | 4.0 | 1 | 20 | 34 |
| 35 | 20 | 1 | 4.0 | 4.0 | 20 | CEILING FANS – RM 105–110 | | | 1.5 | | | 1.2 | RECEPTACLES – RM 114,115 | 20 | 4.0 | 4.0 | 1 | 20 | 36 |
| 37 | 20 | 1 | 4.0 | 4.0 | 20 | RECEPTACLES – RM 105,106 | 1.2 | | | 1.5 | | | CEILING FANS – RM 111–116 | 20 | 4.0 | 4.0 | 1 | 20 | 38 |
| 39 | 20 | 1 | | | | SPARE | | | | | | 1.2 | RECEPTACLES – RM 115,116 | 20 | 4.0 | 4.0 | 1 | 20 | 40 |
| 41 | 20 | 1 | | | | SPARE | | | | | | | SPARE | 20 | 4.0 | 4.0 | 1 | 20 | 42 |
| | | | | | | | 8.9 | 7.7 | 7.9 | 9.2 | 8.7 | 7.6 | | | | | | | |

TOTAL CONN. LOAD PER PHASE (KVA): AO 18.1 BO 16.4 CO 15.5

TOTAL CONN. LOAD 50 KVA. 70 % DEMAND = ESTIMATED DEMAND LOAD 35

* MAIN BREAKER SHALL BE 3P EARTH GROUND TYPE

PANELBOARD BOQ3 SURFACE MOUNTED
400 AMP. MAIN LUGS (OR) 175 AMP. MAIN BREAKER W/ 175 AMP. TRIP
CIRCUIT BREAKER TYPE 380/220 VOLTS 3 PHASE 4 WIRE 50 HZ 225 AMP. BUS

| CKT. NO. | TRIP AMPS | NO. POLES | WIRE MM² | GND MM² | CONDUIT MM | LOAD SERVED | LOAD-KVA A0 | LOAD-KVA B0 | LOAD-KVA C0 | LOAD-KVA A0 | LOAD-KVA B0 | LOAD-KVA C0 | LOAD SERVED | CONDUIT MM | GND MM² | WIRE MM² | NO. POLES | TRIP AMPS | CKT. NO. |
|---|---|---|---|---|---|---|---|---|---|---|---|---|---|---|---|---|---|---|---|
| 1 | 60 | 1 | 25.0 | 6.0 | 25 | MAKE UP AIR #1 – RM 105 | 10.0 | | | 1.3 | | | ELECTRIC HEAT #2 – RM 125 | 20 | 4.0 | 4.0 | 2 | 20 | 2 |
| 3 | 20 | 1 | 4.0 | 4.0 | 20 | EXHAUST FAN #1 – RM 101 | | 0.5 | | | 1.3 | | | | | | | | 4 |
| 5 | 20 | 1 | 4.0 | 4.0 | 20 | EXHAUST FAN #3 – RM 105 | | | 0.5 | | | 1.3 | ELECTRIC HEAT #2 – RM 124 | 20 | 4.0 | 4.0 | 2 | 20 | 6 |
| 7 | 20 | 1 | 4.0 | 4.0 | 20 | EXHAUST FAN #2 – RM 104 | 0.5 | | | 1.3 | | | | | | | | | 8 |
| 9 | | | | | | | | 5.0 | | | 1.3 | | ELECTRIC HEAT #2 – RM 123 | 20 | 4.0 | 4.0 | 2 | 20 | 10 |
| 11 | 30 | 3 | 6.0 | 6.0 | 20 | WATER HEATER – RM 104 | | | 5.0 | | | 1.3 | | | | | | | 12 |
| 13 | | | | | | | 5.0 | | | 1.3 | | | ELECTRIC HEAT #2 – RM 100 | 20 | 4.0 | 4.0 | 2 | 20 | 14 |
| 15 | 20 | 2 | 4.0 | 4.0 | 20 | ELECTRIC HEAT #2 – RM 105 | | 1.3 | | | 1.3 | | | | | | | | 16 |
| 17 | | | | | | | | | 1.3 | | | 1.3 | ELECTRIC HEAT #2 – RM 122 | 20 | 4.0 | 4.0 | 2 | 20 | 18 |
| 19 | 20 | 2 | 4.0 | 4.0 | 20 | ELECTRIC HEAT #2 – RM 117 | 1.3 | | | 1.3 | | | | | | | | | 20 |
| 21 | | | | | | | | 1.3 | | | 1.3 | | ELECTRIC HEAT #2 – RM 121 | 20 | 4.0 | 4.0 | 2 | 20 | 22 |
| 23 | 20 | 2 | 4.0 | 4.0 | 20 | ELECTRIC HEAT #2 – RM 118 | | | 1.3 | | | 1.3 | | | | | | | 24 |
| 25 | | | | | | | 1.3 | | | 1.5 | | | CEILING FANS – RM 122–125, 117–120 | 20 | 4.0 | 4.0 | 1 | 20 | 26 |
| 27 | 20 | 2 | 4.0 | 4.0 | 20 | ELECTRIC HEAT #2 – RM 119 | | 1.3 | | | 1.2 | | RECEPTACLES – RM 125, 125 | 20 | 4.0 | 4.0 | 1 | 20 | 28 |
| 29 | | | | | | | | | 1.3 | | | 1.2 | RECEPTACLES – RM 123, 124 | 20 | 4.0 | 4.0 | 1 | 20 | 30 |
| 31 | 20 | 2 | 4.0 | 4.0 | 20 | ELECTRIC HEAT #2 – RM 120 | 1.3 | | | 1.2 | | | RECEPTACLES – RM 100, 122 | 20 | 4.0 | 4.0 | 1 | 20 | 32 |
| 33 | | | | | | | | 1.3 | | | 1.2 | | RECEPTACLES – RM 121 | 20 | 4.0 | 4.0 | 1 | 20 | 34 |
| 35 | 20 | 2 | 4.0 | 4.0 | 20 | ELECTRIC HEAT #2 – RM 121 | | | 1.3 | | | 1.2 | RECEPTACLES – RM 121 | 20 | 4.0 | 4.0 | 1 | 20 | 36 |
| 37 | | | | | | | 1.3 | | | 1.5 | | | CEILING FANS – RM 121 | 20 | 4.0 | 4.0 | 1 | 20 | 38 |
| 39 | 20 | 1 | 4.0 | 4.0 | 20 | RECEPTACLES – RM 117, 118 | | 1.2 | | | 1.2 | | RECEPTACLES – RM 121 | 20 | 4.0 | 4.0 | 1 | 20 | 40 |
| 41 | 20 | 1 | 4.0 | 4.0 | 20 | RECEPTACLES – RM 118, 119 | | | 1.2 | | | 1.2 | RECEPTACLES – RM 120 | 20 | 4.0 | 4.0 | 1 | 20 | 42 |
| | | | | | | | 20.7 | 11.9 | 11.9 | 9.4 | 8.8 | 8.8 | | | | | | | |

TOTAL CONN. LOAD PER PHASE (KVA): AO 30.1 BO 20.7 CO 20.7

TOTAL CONN. LOAD 71.5 KVA. 63 % DEMAND = ESTIMATED DEMAND LOAD 50.05

* MAIN BREAKER SHALL BE 3P EARTH GROUND TYPE

US ARMY CORPS OF ENGINEERS
AFGHANISTAN ENGINEER DISTRICT

| Mark | Description | Date | Appr. |
|---|---|---|---|
| | | | |

| Mark | Description | Date | Appr. |
|---|---|---|---|
| | | | |

Rev: 0
Date: 2/23/10
Design file no.
Drawing code:
File name:
Plot date:
Plot scale:

Designed by: RAJ
Dwn by: BJB
Ckd by: JRG
Reviewed by: JRG
Submitted by: BAKER

U.S. ARMY CORPS OF ENGINEERS
AFGHANISTAN ENGINEER DISTRICT
APO AE 96338

*Michael Baker Jr., Inc*
*A unit of Michael Baker Corporation*
Airside Business Park
100 Airside Drive
Moon Township, PA 15108
www.mbakercorp.com

AFGHAN NATIONAL ARMY
REGIONAL MILITARY TRAINING CENTER
STANDARD DESIGN

BOQ OFFICER BARRACKS
ELECTRICAL PANEL SCHEDULES

APPROVED:

A/E DESIGNER OF RECORD

SEAL:

COMMONWEALTH OF PENNSYLVANIA
REGISTERED PROFESSIONAL
JOSEPH R. GAUS
ENGINEER
PE-074251

Sheet reference number:
E–602

# AFGHAN NATIONAL ARMY

## STANDARD BUILDING DESIGN

## SUPPORT STAFF BARRACKS

## 100% FINAL DESIGN SUBMITTAL

### SHEET INDEX


G-001 COVER SHEET

STRUCTURAL

S-001 GENERAL NOTES & DESIGN CRITERIA
S-101 FOUNDATION/SLAB PLAN
S-102 ROOF FRAMING PLAN
S-401 BUILDING SECTIONS
S-402 ENLARGED LATRINE SLAB PLAN
S-501 FOUNDATION SECTIONS
S-502 FOUNDATION & FRAMING SECTIONS
S-503 BEAM & COLUMN DETAILS
S-504 BEAM & COLUMN DETAILS
S-505 MISCELLANEOUS SECTIONS
S-601 SCHEDULES
S-701 TYPICAL DETAILS
S-702 TYPICAL DETAILS

ARCHITECTURAL

A-001 LIFE SAFETY PLAN
A-101 FLOOR PLAN
A-102 ROOF PLAN
A-201 ELEVATIONS
A-301 BUILDING SECTIONS
A-401 WALL SECTIONS
A-402 ENLARGED PLAN
A-501 EXTERIOR DETAILS
A-502 HEAD, JAMB, & SILL DETAILS
A-503 STOOP DETAILS
A-504 TOILET, LAVATORY, & ABLUTION DETAILS
A-505 SHOWER DETAILS
A-506 ISOLATION JOINT DETAILS
A-601 WINDOW & DOOR SCHEDULES

MECHANICAL

P-101 FLOOR PLAN-PLUMBING
P-501 PLUMBING DETAILS
P-502 PLUMBING DETAILS
P-503 PLUMBING DETAILS
P-901 PLUMBING ISOMETRICS

M-101 HVAC FLOOR PLAN SCHEDULES & DETAILS

ELECTRICAL

E-001 ELECTRICAL SYMBOLS & ABBREVIATIONS
E-101 ELECTRICAL LIGHTING PLAN
E-102 ELECTRICAL POWER & SYSTEMS PLAN
E-103 ELECTRICAL LIGHTNING PROTECTION
E-501 ELECTRICAL DETAILS
E-502 ELECTRICAL DETAILS
E-601 ELECTRICAL LIGHT FIXTURE SCHEDULE
E-602 ELECTRICAL PANEL SCHEDULES


US ARMY CORPS OF ENGINEERS
AFGHANISTAN ENGINEER DISTRICT

| Mark | Description | Date | Appr. |
|---|---|---|---|
| | | | |

| Mark | Description | Date | Appr. |
|---|---|---|---|
| | | | |

Date: 2/23/10
Rev: 0
Design file no.
Drawing code:
File name: ANABSSBG001CS
Plot date: 2/23/2010
Plot scale: X:X

Designed by: KMF/MMY
Drwn by: RCG
Ckd by: CWW
Reviewed by: LHM
Submitted by: BAKER

U.S. ARMY CORPS OF ENGINEERS
AFGHANISTAN ENGINEER DISTRICT
APO AE 96338


*Michael Baker Jr., Inc.*
*A unit of Michael Baker Corporation*
Airside Business Park
100 Airside Drive
Moon Township, PA 15108
www.mbakercorp.com


AFGHAN NATIONAL ARMY
REGIONAL MILITARY TRAINING CENTER
STANDARD DESIGN

SUPPORT STAFF BARRACKS

COVER SHEET

Sheet reference number:
G-001

STRUCTURAL ABBREVIATIONS:

| | |
|---|---|
| ACI | AMERICAN CONCRETE INSTITUTE |
| ADD'L | ADDITIONAL |
| AISC | AMERICAN INSTITUTE OF STEEL CONSTRUCTION |
| AISI | AMERICAN IRON AND STEEL INSTITUTE |
| ASTM | AMERICAN SOCIETY FOR TESTING AND MATERIALS |
| ARCH | ARCHITECTURAL |
| B | BOTTOM |
| BLDG | BUILDING |
| BOTT | BOTTOM |
| ℄ | CENTER LINE |
| CFMRF | COLD FORM METAL ROOF FRAME |
| CFMF | COLD FORM METAL FRAME |
| CFS | COLD FORMED STEEL |
| CIP | CAST-IN-PLACE |
| CIPL | CAST-IN-PLACE LINTEL |
| CJ | CONTROL JOINT |
| CLR | CLEAR |
| CMU | CONCRETE MASONRY UNIT |
| COEFF | COEFFICIENT |
| COL | COLUMN |
| CONC | CONCRETE |
| CONT | CONTINUOUS |
| COORD | COORDINATE |
| CRSI | CONCRETE REINFORCING STEEL INSTITUTE |
| CSJ | CONSTRUCTION JOINT |
| DIA | DIAMETER |
| DIAG | DIAGONAL |
| DIM | DIMENSION |
| DWG | DRAWING |
| DWL | DOWEL |
| EA | EACH |
| EF | EACH FACE |
| ELEC | ELECTRICAL |
| ELEV | ELEVATION |
| EMBED | EMBEDMENT |
| EQUIV | EQUIVALENT |
| ETC | ET CETERA |
| EW | EACH WAY |
| EXP | EXPANSION |
| EXT | EXTERIOR |
| FTG | FOOTING |
| GA | GAUGE |
| GB | GRADE BEAM |
| HORIZ | HORIZONTAL |
| h | HOUR |
| HRS | HOURS |
| IBC | INTERNATIONAL BUILDING CODE |
| ID | INSIDE DIAMETER |
| INFO | INFORMATION |
| INT | INTERIOR |
| kg | KILOGRAM |
| km | KILOMETER |
| kN | KILONEWTON |
| kPa | KILOPASCAL |
| L# | ANGLE (# INDICATES SIZE) |
| LONG | LONGITUDINAL |
| LLV | LONG LEG VERTICAL |
| m | METER |
| MAX | MAXIMUM |
| MECH | MECHANICAL |
| MFG | MANUFACTURER |
| MID | MIDDLE |
| MIN | MINIMUM |
| MISC | MISCELLANEOUS |
| mm | MILLIMETER |
| MPa | MEGAPASCAL |
| MTL | METAL |
| MWFRS | MAIN WIND FORCE RESISTING SYSTEM |
| N | NEWTON |
| N | NORTH |
| N/A | NOT APPLICABLE |
| # | NUMBER SYMBOL FOR REBAR SIZE |
| NTS | NOT TO SCALE |
| OC | ON CENTER |
| OD | OUTSIDE DIAMETER |
| OPNG | OPENING |
| PL or PL | PLATE |
| PRE-ENG | PRE-ENGINEERED |
| RB | ROOF BEAM |
| REINF | REINFORCED |
| REQ'D | REQUIRED |
| SIM | SIMILAR |
| SPECS | SPECIFICATIONS |
| STD | STANDARD |
| STRUCT | STRUCTURAL |
| SW | SHEAR WALL |
| T | TOP |
| T/ | TOP OF |
| T/ELEV | TOP ELEVATION |
| T/SLAB | TOP OF SLAB |
| T&B | TOP AND BOTTOM |
| THK | THICK |
| TYP | TYPICAL |
| UFC | UNIFIED FACILITIES CRITERIA |
| UON | UNLESS OTHERWISE NOTED |
| VERT | VERTICAL |
| W | WIDTH |
| W/ | WITH |

1.0 GENERAL NOTES:

1.1 THIS PROJECT HAS BEEN DESIGNED FOR THE WEIGHTS AND MATERIALS INDICATED ON THE SHEETS AND FOR THE LIVE LOADS INDICATED IN THE DESIGN DATA. IT IS THE CONTRACTOR'S RESPONSIBILITY TO DETERMINE ALLOWABLE CONSTRUCTION LOADS AND TO PROVIDE PROPER DESIGN AND CONSTRUCTION OF FALSEWORK, FORMWORK, STAGING, BRACING, SHEETING AND SHORING, ETC.

1.1 COORDINATE THESE SHEETS WITH THE ARCHITECTURAL, MECHANICAL, ELECTRICAL, PLUMBING, AND CIVIL SHEETS. ALL DIMENSIONS SHOWN ON THE SHEETS ARE MILLIMETERS UNLESS NOTED OTHERWISE.

1.2 THE CONTRACTOR SHALL VERIFY AND COORDINATE ALL FLOOR AND ROOF OPENING SIZES AND LOCATIONS, EQUIPMENT PAD SIZES AND LOCATIONS, ANCHOR BOLT LAYOUTS, ETC WITH EQUIPMENT SELECTED. THE CONTRACTOR SHALL MAKE ANY REQUIRED MODIFICATIONS AT NO ADDITIONAL COST.

1.3 THE CONTRACTOR SHALL REFER TO THE ARCHITECTURAL, MECHANICAL, ELECTRICAL AND PLUMBING SHEETS FOR SLEEVES, CURBS, INSERTS OR OPENINGS, ETC. NOT HEREIN INDICATED.

1.4 WORK NOT INCLUDED ON THE SHEETS BUT IMPLIED TO BE SIMILAR TO THAT SHOWN AT CORRESPONDING PLACES ELSEWHERE ON THE SHEETS SHALL BE REPEATED.

1.5 IN CASE OF CONFLICT BETWEEN THE NOTES, DETAILS AND SPECIFICATIONS THE MOST RIGID REQUIREMENTS SHALL GOVERN.

1.6 SEE ARCHITECTURAL SHEETS FOR LOCATIONS OF MASONRY AND NON-LOAD BEARING PARTITIONS. PROVIDE COMPRESSIBLE FIRESAFING AT TOP OF WALL AS REQUIRED BY ARCHITECTURAL SHEETS.

1.7 COORDINATE FINISHED FLOOR DATUM ELEVATION 0.0m WITH THE CIVIL SHEETS.

2.0 FOUNDATION NOTES

2.1 THE GEOTECHNICAL ANALYSIS FOR THIS PROJECT IS THE RESPONSIBILITY OF THE CONTRACTOR AWARDED THE WORK. AN ASSUMED ALLOWABLE SOIL BEARING VALUE OF 72 kPa HAS BEEN USED IN THE STRUCTURAL ANALYSIS OF THE BUILDING HEREIN AND SHALL BE CONFIRMED AND VERIFIED AS PART OF THE GEOTECHNICAL INVESTIGATION. VALUES WHICH DO NOT MEET THE REQUIREMENTS INDICATED ON THE BASIS OF DESIGN SHEET SHALL BE IMMEDIATELY BROUGHT TO THE ATTENTION OF THE CONTRACTING OFFICER FOR CONSIDERATION AND DETERMINATION ON THE NEXT APPROPRIATE COURSE OF ACTION.

2.2 SEE THE SPECIFICATION FOR ADDITIONAL REQUIREMENTS TO THOSE OUTLINED IN THE GEOTECHNICAL INVESTIGATION FOR EXCAVATION AND PREPARATION OF THE FOUNDATION AND THE SLAB ON GRADE SUBGRADE INCLUDING COMPACTION PROCEDURES.

2.3 EXCAVATIONS FOR FOOTINGS SHALL HAVE THE SIDES AND BOTTOMS TEMPORARILY LINED WITH 0.25mm POLYETHYLENE IF PLACEMENT OF CONCRETE DOES NOT OCCUR WITHIN 24 HRS OF THE EXCAVATION OF THE FOOTING.

2.4 FOUNDATION CONDITIONS NOTED DURING CONSTRUCTION WHICH DIFFER FROM THOSE DESCRIBED IN THE GEOTECHNICAL REPORT SHALL BE REPORTED TO THE GENERAL CONTRACTOR BEFORE FURTHER CONSTRUCTION IS ATTEMPTED. SEE PROJECT SPECIFICATIONS.

2.5 NO FOOTINGS OR SLABS SHALL BE POURED INTO OR AGAINST SUBGRADE CONTAINING FREE WATER, FROST, ICE OR LOOSE MATERIAL. FROST DEPTH ASSUMED TO BE 800mm.

2.6 ALL SLAB-ON-GRADE, TRENCH BOTTOMS AND OTHER ON-GRADE INTERIOR HORIZONTAL SURFACES SHALL BE PLACED OVER A 0.25mm POLYETHYLENE VAPOR RETARDER OVER A 100mm #57 STONE WATER CAPILLARY BARRIER PLACED ON SUBGRADE PROPERLY PREPARED IN ACCORDANCE WITH THE CONTRACT SPECIFICATIONS. (UON)

2.7 PRIOR TO START OF FOUNDATION OR SLAB-ON-GRADE CONSTRUCTION, EXISTING SUBGRADES SHALL BE COMPACTED TO MINIMUM OF 95% MAXIMUM DRY DENSITY OBTAINED THRU ASTM D 1557 MODIFIED PROCTOR TESTING.

2.8 SEE PLUMBING, ELECTRICAL & CIVIL SHEETS FOR REQUIRED UNDERSLAB UTILITIES.

2.9 SEE ARCHITECTURAL SHEETS FOR ALL WATERPROOFING DETAILS AND MATERIALS.

2.10 IF UNDERMINING OF FOOTINGS OCCURS, FILL VOIDS WITH 18 MPa CONCRETE. DO NOT ATTEMPT TO REPLACE AND RE-COMPACT SOIL.

3.0 CONCRETE

3.1 CONCRETE SHALL HAVE THE UNIT WEIGHT OF 2400 kg/m$^3$ AND A MINIMUM COMPRESSIVE STRENGTH (f'c) OF 28 MPa AT 28 DAYS. ALL CONCRETE SHALL HAVE A WATER-CEMENT RATIO OF 0.45. SEE SPECIFICATIONS FOR ADDITIONAL INFORMATION. ENTRAIN AIR TO PRODUCE TOTAL AIR CONTENT ACCORDING TO THE SPECIFICATIONS FOR CONCRETE EXPOSED TO FREEZING TEMPERATURES (EXTERIOR FOOTINGS, SLAB TURNDOWNS, EXTERIOR SLABS AND SLABS-ON-GRADE, EXTERIOR RETAINING WALLS, AND EXTERIOR GRADE BEAMS.)

3.2 NO CALCIUM CHLORIDE SHALL BE USED IN ANY CONCRETE.

3.3 MIXING, TRANSPORTING AND PLACING OF CONCRETE SHALL CONFORM TO ACI 301M-05.

3.4 ALL CONCRETE WORK SHALL CONFORM TO THE REQUIREMENTS OF THE AMERICAN CONCRETE INSTITUTE (ACI) 318M MANUAL (metric), "BUILDING CODE REQUIREMENTS FOR REINFORCED CONCRETE", AND REQUIREMENTS OUTLINED IN THE CONTRACT SPECIFICATIONS. WHEN THERE IS A CONFLICT BETWEEN ACI AND THE SPECIFICATIONS, THE MORE STRINGENT SHALL GOVERN.

3.5 CHAMFER ALL EXPOSED EXTERNAL CORNERS OF CONCRETE WITH 20mm x45 DEGREE CHAMFER UON.

3.6 CONCRETE REINFORCEMENT BARS SHALL CONFORM TO ASTM A615M-96a, GRADE 420 MPa, REINFORCING BARS SHALL NOT BE TACK WELDED, WELDED, HEATED OR CUT, UNLESS INDICATED ON THE CONTRACT DOCUMENTS. ALL LAP SPLICES SHALL BE CLASS "B" UON.

3.7 HORIZONTAL FOOTING AND HORIZONTAL WALL REINFORCEMENT SHALL BE CONTINUOUS AND SHALL HAVE 90 DEGREE BENDS AND EXTENSIONS, OR CORNER BARS OF EQUIVALENT SIZE LAPPED WITH A CLASS B TENSION SPLICE AT CORNERS AND INTERSECTIONS. TOP BAR CRITERIA SHALL APPLY IF 300mm OR MORE OF FRESH CONCRETE IS PLACED BELOW BAR.

3.8 SLABS-ON-GRADE SHALL HAVE CONSTRUCTION JOINTS OR CRACK CONTROL JOINTS AS SHOWN ON THE DRAWINGS. CONSTRUCTION JOINTS CAN BE USED AT CONTROL JOINT LOCATIONS AT CONTRACTORS OPTION. SEE SLAB PLANS & JOINT DETAILS FOR ADDITIONAL INFORMATION. FOR AREAS NOT SHOWN ON DWGS, THE MAXIMUM SPACING OF CONSTRUCTION/ CRACK CONTROL JOINTS SHALL BE 4800mm

3.9 ALL CONCRETE REINFORCEMENT SHALL BE DETAILED, FABRICATED, LABELED, SUPPORTED, AND SPACED IN FORMS AND SECURED IN PLACE IN ACCORDANCE WITH THE PROCEDURES AND REQUIREMENTS OUTLINED IN THE LATEST EDITION OF THE "BUILDING CODE REQUIREMENTS FOR REINFORCED CONCRETE", ACI 318M, AND THE "MANUAL OF STANDARD PRACTICE FOR DETAILING REINFORCED CONCRETE STRUCTURES", ACI 315M, LATEST EDITION. BASED ON IN COUNTRY REINFORCEMENT AVAILABILITY, IT IS THE CONTRACTOR'S OPTION TO ROUND DESIGNATED ODD NUMBERED REINFORCEMENT SIZES UP (1) ONE BAR SIZE.

3.10 ALL DOWELS SHALL MATCH SIZE AND NUMBER OF MAIN REINFORCING, UNLESS NOTED OTHERWISE ON THE SHEETS.

3.11 ADDITIONAL BARS SHALL BE PROVIDED AROUND ALL FLOOR AND WALL OPENINGS AS SHOWN ON THE SHEETS.

3.12 SEE ARCHITECTURAL SHEETS FOR TYPE AND LOCATION OF ALL FLOOR FINISHES.

3.13 THE CONTRACTOR SHALL COORDINATE ADDITIONAL WALL/SLAB OPENINGS NOT SHOWN ON STRUCTURAL SHEETS. SEE MECHANICAL, ELECTRICAL, PLUMBING AND CIVIL SHEETS.

3.14 UNLESS NOTED OTHERWISE, ALL CURBS SHALL BE REINFORCED WITH AT LEAST (1)-#13 CONTINUOUS AND #13 AT 300mm O.C. DOWELS TO STRUCTURE BELOW.

3.15 THE CONTRACTOR SHALL VERIFY ALL OPENINGS, PAD SIZES, AND ANCHOR BOLTS WITH EQUIPMENT SELECTED.

3.16 FOR ALL WALLS & PIERS, PROVIDE DOWELS INTO FOOTING AT EACH VERT REINF BAR, UON DOWEL SIZE SHALL BE SAME AS VERT REINF.

3.17 PROVIDE CONCRETE POUR STOPS OR FORMED AS REQUIRED FOR INSTALLATION OF ALL CONCRETE WORK.

3.18 PROVIDE ADDITIONAL (2)-#13 x 600mm REINFORCING BARS IN SLAB-ON GRADE AT ALL RE-ENTRANT CORNERS. PLACE BARS AT MID-DEPTH OF SLAB WITH A CLEARANCE OF 50mm FROM CORNER UON.

3.19 COLD-WEATHER PLACEMENT: COMPLY WITH ACI 306.1 AND AS FOLLOWS. PROTECT CONCRETE WORK FROM PHYSICAL DAMAGE OR REDUCED STRENGTH THAT COULD BE CAUSED BY FROST, FREEZING ACTIONS, OR LOW TEMPERATURES. SUBMIT A COLD WEATHER CONCRETING PLAN FOR APPROVAL.

3.20 PROVIDE BONDING COMPOUND PER ASTM C 1059-99: SPECIFICATION FOR LATEX AGENTS FOR BONDING FRESH CONCRETE (GROUT) TO HARDENED CONCRETE.

3.21 THE FORMED SURFACES FOR REINFORCED CONCRETE SHALL ACHIEVE A "CLASS A" FINISH WHEN RECEIVING PAINT OR A "CLASS B" FINISH WHEN RECEIVING PLASTER OR TILE AS PER SPECIFICATION SECTION 03 31 00 CAST-IN-PLACE STRUCTURAL CONCRETE.

3.22 AT INTERSECTING GRADE BEAMS AND SHEAR WALLS, PROVIDE CORNER BARS AT INTERSECTIONS WITH SAME QUANTITY, SIZE AND SPACING AS HORIZONTAL BARS WITH LEG LENGTH = 50db.

3.23 REFER TO S-800 SERIES REINFORCING BAR PLACEMENT DRAWINGS DEFINING LENGTHS, BENDS, AND SPACINGS FOR ALL STRUCTURAL CONCRETE. THE S-800 SERIES DRAWING ARE BASED ON THE S-400, S-500, S-600, AND S-700 SERIES DRAWING SCHEDULES, DETAILS, AND DIAGRAMS.

4.0 CONCRETE MASONRY

4.1 MASONRY CONSTRUCTION SHALL CONFORM TO SPECIFICATION FOR MASONRY STRUCTURES (ACI 530.1) UON.

4.2 STRENGTH OF MASONRY MATERIALS SHALL BE AS FOLLOWS:

a. CONCRETE MASONRY UNITS SHALL BE NORMAL WEIGHT, GRADE N, TYPE 1, CONFORMING TO ASTM C-90 AND HAVE A MINIMUM COMPRESSIVE STRENGTH OF 10.4 MPa ON THE NET AREA.

b. MORTAR SHALL CONFORM TO ASTM C-270 TYPE S.

c. GROUT FOR MASONRY SHALL BE NORMAL WEIGHT AND HAVE A MINIMUM COMPRESSIVE STRENGTH OF 14 MPa AT 28 DAYS. GROUT SHALL CONFORM TO ASTM C476M. GROUT LIFTS SHALL NOT EXCEED 1,400mm.

d. REINFORCED MASONRY SHALL HAVE A STRENGTH F'm = 10 MPa. (F'm IS THE COMPRESSIVE STRENGTH OF THE MASONRY AT 28 DAYS AS DETERMINED BY PRISM TESTS).

4.3 ALL VERTICAL REINFORCEMENT FOR CONCRETE MASONRY SHALL BE ASTM A615M-96a, GRADE 420 MPa. ALL SPLICES SHALL BE LAPPED 48 BAR DIAMETERS MINIMUM.

4.4 BOND BEAMS SHALL BE SPACED AT 1200mm OC VERTICALLY. BOND BEAM REINFORCING SHALL BE CONTINUOUS AND PROVIDED AT WALL INTERSECTIONS AND WALL CORNERS (REFERENCE CONCRETE MASONRY NOTE 4.11). ALL BOND BEAM REINFORCING SHALL BE CONTINUOUS AND HAVE STANDARD ACI HOOKS AT EACH END. PROVIDE STANDARD BAR SPLICES AS SPECIFIED. AS AN ALTERNATE TO CMU BOND BEAMS, IT IS THE CONTRACTOR'S OPTION TO PROVIDE 200mm x 200mm CONTINUOUS CAST-IN-PLACE CONCRETE BOND BEAMS WITH (2)-#16 IN LIEU OF CMU BOND BEAMS INDICATED ON THE DRAWINGS.

4.5 SEE TYPICAL DETAILS FOR MINIMUM REINFORCEMENT REQUIREMENTS FOR CMU WALLS. PROVIDE STANDARD BAR SPLICES AS SPECIFIED. ALL VERTICAL REINFORCEMENT EXTENDS FULL HEIGHT OF WALL.

4.6 CMU CELLS THAT REQUIRE VERTICAL REINFORCING BARS AS INDICATED ON THE CONTRACT DRAWINGS AND/OR SPECS SHALL HAVE REINF BARS PLACED IN CENTERS OF CMU CELLS AND CONTINUOUSLY GROUTED UON.

4.7 ALL CMU CELLS, OPEN CAVITIES, AND AIR SPACES OF ALL EXTERIOR WALLS SHALL BE GROUTED TO STOP FRAGMENTS FROM MORTAR BLAST.

4.8 CONTRACTOR SHALL COORDINATE LOCATION OF ALL OPENINGS SEE ARCH, MECH, ELEC, AND PLUMBING SHEETS FOR SIZE AND LOCATION OF OPENINGS.

4.9 MASONRY WALLS SHALL NOT BE BACK FILLED PRIOR TO THE MORTAR AND GROUT ATTAINING THEIR RESPECTIVE MAXIMUM DESIGN STRENGTHS PER SPECIFICATIONS.

4.10 PROVIDE GALVANIZED MORTAR/GROUT SCREEN W/ 3mm MESH WHERE CELLS BELOW ARE NOT GROUTED.

4.11 AT INTERSECTING BOND BEAMS, PROVIDE CORNER BAR FOR EACH HORIZONTAL BAR IN BOND BEAMS AT INTERSECTING WALLS. USE SAME SIZE AND SPACING AS HORIZONTAL BARS WITH LEG LENGTH = 50db.

4.12 THE ALTERNATE TOP OF CMU WALL BRACING DETAIL(S) SHOWN ON S-701 CAN BE UTILIZED AT THE CONTRACTOR'S OPTION IN PLACE OF THE "SLEEVED DOWEL" WALL CONNECTIONS DEPICTED ON S-400 AND S-500 SERIES DRAWINGS. IN ADDITION, ALTERNATE DETAIL(S) SHOW CAST-IN-PLACE WALL BOND BEAMS THAT CAN BE UTILIZED AT THE CONTRACTOR'S OPTION IN PLACE OF THE STANDARD CMU BOND BEAMS CONSTRUCTED OF CMU BLOCKS.

5.0 COLD-FORMED METAL FRAMING

5.1 ALL COLD-FORMED METAL FRAMING MEMBERS SHALL CONFORM TO ASTM A1003M, STRUCTURAL GRADE ST340 (MPa), WITH A GALVANIZED COATING OF Z275 OR BETTER IN ACCORDANCE WITH ASTM A653M.

5.2 ALL COLD-FORMED METAL FRAMING MEMBERS SHALL HAVE THE FOLLOWING MINIMUM PROPERTIES:

a. MINIMUM METAL THICKNESS:
TRACK = 1.37mm;
STUD/OTHER = 1.09mm

b. MINIMUM FLANGE WIDTH:
TRACK = 38mm;
STUD/OTHER = 35mm

c. MINIMUM MEMBER DEPTH:
ALL SECTIONS = 152.2mm

d. PURLIN (HAT CHANNEL)
DEPTHxWIDTH(FLAT TOP)xTHICK = 25mmx42mmx1.59mm

5.3 ALL CONNECTIONS SHALL BE MADE WITH CORROSION RESISTANT (ASTM A153M), SELF-DRILLING, SELF-TAPPING STEEL DRILL SCREWS IN ACCORDANCE WITH ASTM C1513. SCREWS SHALL HAVE A LOW PROFILE HEAD BENEATH ROOF DECK, AND STANDARD HEAD ALL OTHER LOCATIONS.

5.4 FABRICATE COLD FORMED METAL FRAMING AND ACCESSORIES PLUMB, SQUARE AND TRUE TO LINE, WITH CONNECTIONS SECURELY FASTENED ACCORDING TO AISI STANDARD FOR COLD FORMED STEEL FRAMING.

5.5 CUT FRAMING MEMBERS BY SAWING OR SHEATHING, DO NOT TORCH CUT.

5.6 INSTALL FRAMING MEMBERS IN ONE-PIECE LENGTHS UNLESS SPLICE CONNECTIONS ARE INDICATED FOR TRACK OR TENSION MEMBERS

5.7 INSTALL TEMPORARY BRACING AND SUPPORTS TO SECURE FRAMING DURING CONSTRUCTION. MAINTAIN BRACING AND SUPPORTS IN PLACE UNTIL THE STRUCTURE HAS BEEN COMPLETED WITH ALL CONNECTIONS AND PERMANENT BRACING SECURED.

6.0 STRUCTURAL DESIGN CRITERIA

6.1 ALL DESIGNS SHALL CONFORM TO THE PROVISIONS OF THE IBC 2006 AND UFC AS APPLICABLE.

6.2 DESIGN LOADS

6.2.1 DEAD LOADS (PER IBC 2006 & UFC 3-310-01)

| | |
|---|---|
| MECH/ELEC/PLUMBING | 0.20 kPa |
| MISCELLANEOUS | 0.15 kPa |
| COLD-FORMED FRAMING | 0.20 kPa |
| INSULATION | 0.10 kPa |
| METAL ROOF PANEL | 0.14 kPa |
| | 0.79 kPa |
| FLOOR PARTITION ALLOWANCE | 0.96 kPa |

6.2.2 LIVE LOADS (PER IBC 2006 & UFC 3-310-01)

| | |
|---|---|
| ROOF | 1.00 kPa |
| CORRIDOR (2-STORY BLDG ONLY) | 4.80 kPa |
| ALL OTHERS (2-STORY BLDG ONLY) | 2.40 kPa |
| SLAB ON GRADE | 4.80 kPa |

6.2.3 SNOW LOADS (PER IBC 2006 & UFC 3-310-01)

| | |
|---|---|
| GROUND SNOW LOAD (Pg) | 1.2 kPa |
| SNOW IMPORTANCE FACTOR (I) | 1.0 |
| SNOW EXPOSURE FACTOR (Ce) | 1.0 |
| THERMAL FACTOR (Ct) | 1.0 |

6.2.4 WIND LOADS (PER IBC 2006)

| | |
|---|---|
| BASIC WIND SPEED | 137 km/h |
| WIND IMPORTANCE FACTOR | 1.0 |
| WIND EXPOSURE CATEGORY | D |
| DIRECTIONALITY COEFFICIENT (Kd) | 0.85 |
| TOPOGRAPHIC FACTOR (Kzt) | 1.0 |

6.2.5 SEISMIC LOADS (PER IBC 2006 & UFC 3-310-04)

| | |
|---|---|
| OCCUPANCY USE CATEGORY | II |
| SEISMIC IMPORTANCE FACTOR (Ie) | 1.0 |
| SEISMIC SITE CLASS | D |

$S_s$ = 2.40 (FOR IRREGULAR PORTION OF BUILDING – COLUMN LINES 1-4)

$S_s$ = 1.50 (REDUCED FROM 2.40 PER ASCE 7-05,12.81.3. FOR A BUILDING WITHOUT IRREGULARITIES – COLUMN LINES 5-9.)

$S_1$ = 1.20
$S_{DS}$ = 1.00 WHEN $S_s$ = 1.5
$S_{DS}$ = 1.60 WHEN $S_s$ = 2.4
$S_{D1}$ = 1.20

| | |
|---|---|
| SEISMIC DESIGN CATEGORY | E |
| SEISMIC RESISTING SYSTEM: –SPECIAL REINFORCED CONCRETE SHEAR WALL | |
| RESPONSE MODIFICATION FACTOR (R) | 6 |
| RESPONSE COEFFICIENT (Cs) – REGULAR PORTION | 0.167 |
| RESPONSE COEFFICIENT (Cs) – IRREGULAR PORTION | 0.267 |
| SEISMIC ANALYTICAL PROCEDURE = | EQUIV LATERAL FORCE |
| SEISMIC BASE SHEAR: | |
| REGULAR PORTION = | 765 kN |
| IRREGULAR PORTION = | 1310 kN |

APPROVED:

A/E DESIGNER OF RECORD .

SEAL:

GEORGIA REGISTERED 7-29-10 No. 27141 PROFESSIONAL ENGINEER CHRISTOPHER W. WHITMORE

US ARMY CORPS OF ENGINEERS
AFGHANISTAN ENGINEER DISTRICT

| Mark | Description | Date | Appr. |
|---|---|---|---|

Date: 2/23/10 | Rev: 0
Design file no.
Drawing code:
File name: ANABSSBS-001GN
Plot date: 2/23/2010
Plot scale: X:X

Designed by: KMP/MMY | Dwn by: RCG | Ckd by: CWW
Reviewed by: LHM
Submitted by: BAKER

U.S. ARMY CORPS OF ENGINEERS
AFGHANISTAN ENGINEER DISTRICT
APO AE 96338

Michael Baker Jr., Inc.
A unit of Michael Baker Corporation
Airside Business Park
100 Airside Drive
Moon Township, PA 15108
www.mbakercorp.com

AFGHAN NATIONAL ARMY
REGIONAL MILITARY TRAINING CENTER
STANDARD DESIGN

SUPPORT STAFF BARRACKS

GENERAL NOTES & DESIGN CRITERIA

Sheet reference number:
S-001

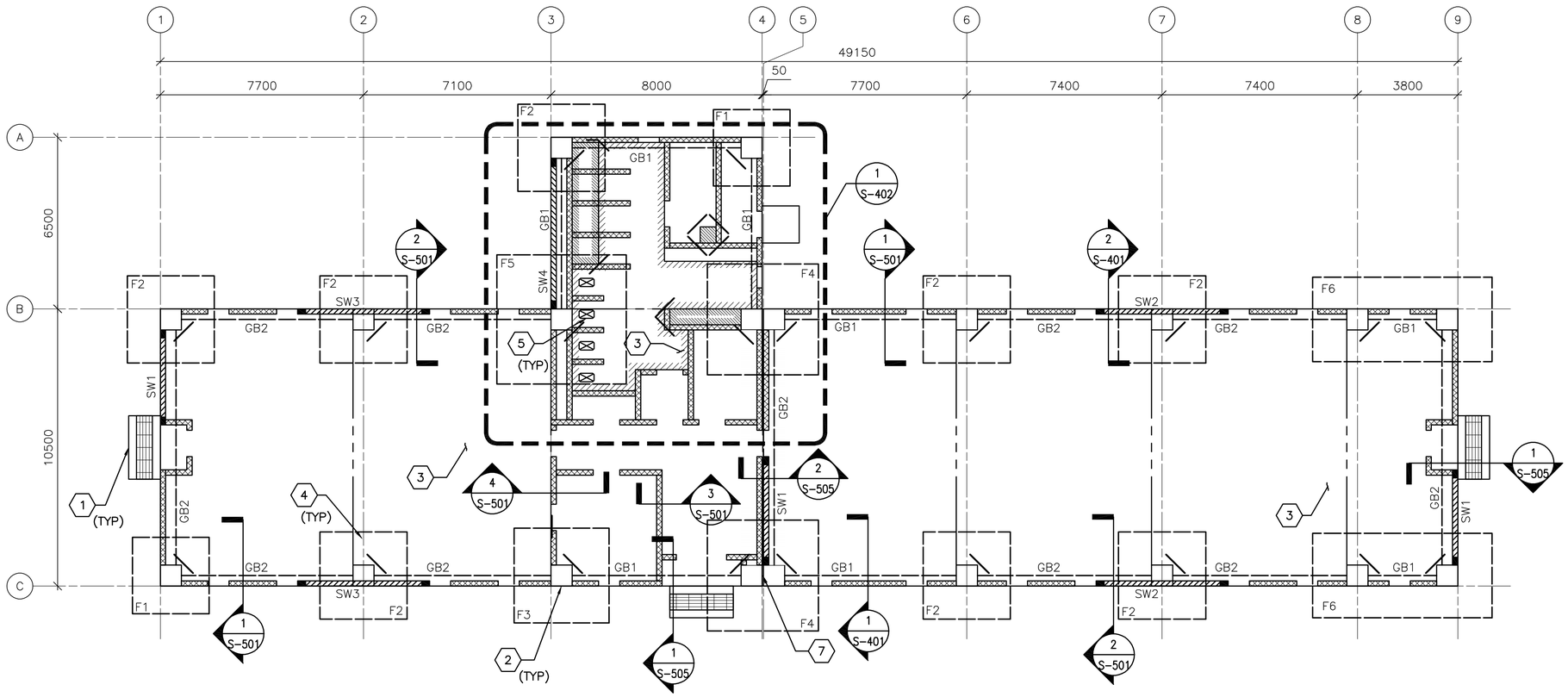


## 1 S-101 FOUNDATION/SLAB PLAN

SCALE: 1:100

## FOUNDATION/SLAB PLAN NOTES:

1. REFER TO SHEET S-001 FOR STRUCTURAL NOTES AND DESIGN CRITERIA.
2. FINISH FIRST FLOOR ELEVATION SHALL BE (DATUM 0.00) ALL PLUS OR MINUS DIMENSIONS INDICATED ON PLAN OR REFERRED TO IN NOTES RELATE TO FINISH FIRST FLOOR ELEVATION.
3. SLAB-ON-GRADE IS 150 WITH #13 @ 300 OC EW LOCATED 38 FROM T/SLAB. UON. WHERE NOTED, 300 SLAB-ON-GRADE SHALL BE REINFORCED W/ #13@300 OC EW T&B.
4. TOP OF EXTERIOR FOOTINGS SHALL BE -950 UNLESS OTHERWISE INDICATED
5. COLUMN FOOTINGS INDICATED BY F# ON PLAN. REFER TO COLUMN FOOTING SCHEDULE ON SHEET S-601.
6. REFER TO COLUMN SCHEDULE ON SHEET S-601.
7. GRADE BEAM INDICATED BY GB# ON PLAN, REFER TO BEAM SCHEDULE ON SHEET S-601.
8. SHEARWALL INDICATED BY SW# ON PLAN, REFER TO SHEARWALL SCHEDULE ON SHEET S-601.
9. SEE TYPICAL EXTERIOR AND INTERIOR CMU WALL REINF DETAILS ON SHEET S-701.
10. SEE MECHANICAL AND ELECTRICAL SHEETS FOR CONCRETE PAD LOCATIONS, SIZES, AND THICKNESS NOT SHOWN. SEE SHEET S-701 FOR DETAILS.
11. THICKENED SLAB UNDER CMU PERIMETER/PARTITION WALLS NOT SHOWN FOR CLARITY.

## FOUNDATION/SLAB PLAN KEY NOTES: (X)

1. CONC PAD (ENTRANCE) - SEE ARCH DWGS FOR INFORMATION
2. REINF CONC COLUMN
3. REINF CONC SLAB-ON-GRADE
4. (2)-#13 @ RE-ENTRANT CORNERS - SEE S-701 FOR INFORMATION
5. SLAB OPENING - COORD W/ ARCH AND PLUMBING DWGS
6. NOT USED
7. 50 ISOLATION JOINT BETWEEN STRUCTURES LOCATED ABOVE FIRST FLOOR SLAB-ON-GRADE

## FOUNDATION/SLAB PLAN LEGEND:

- REINF CONC SHEAR WALL
- REINF CMU WALL
- CONTROL JOINT
- INDICATES DROP SLAB 65 BELOW FINISH FLOOR
- INDICATES DROP SLAB 200 BELOW FINISH FLOOR
- SLAB OPENING

0 2000 4000
SCALE: 1:100

UNLESS OTHERWISE NOTED, LINEAR DIMENSIONS SHOWN ON DRAWINGS ARE IN MILLIMETERS (mm)

APPROVED:

A/E DESIGNER OF RECORD

SEAL:

GEORGIA REGISTERED 1-29-10 No. 27141 PROFESSIONAL ENGINEER CHRISTOPHER W. WHITMORE

US ARMY CORPS OF ENGINEERS
AFGHANISTAN ENGINEER DISTRICT

| Mark | Description | Date | Appr. |
|---|---|---|---|

Date: 2/23/10
Design file no.
Drawing code:
Rev: 0
File name: ANABSBS-101FNP
Plot date: 2/23/2010
Plot scale: x:x

Designed by: KMF/MMY
Dwn by: RCG
Ckd by: CWW
Reviewed by: LHM
Submitted by: BAKER

U.S. ARMY CORPS OF ENGINEERS
AFGHANISTAN ENGINEER DISTRICT
APO AE 96338

*Michael Baker Jr., Inc.*
*A unit of Michael Baker Corporation*
Airside Business Park
100 Airside Drive
Moon Township, PA 15108
www.mbakercorp.com

AFGHAN NATIONAL ARMY
REGIONAL MILITARY TRAINING CENTER
STANDARD DESIGN

SUPPORT STAFF BARRACKS

FOUNDATION/SLAB PLAN

Sheet reference number:
S-101

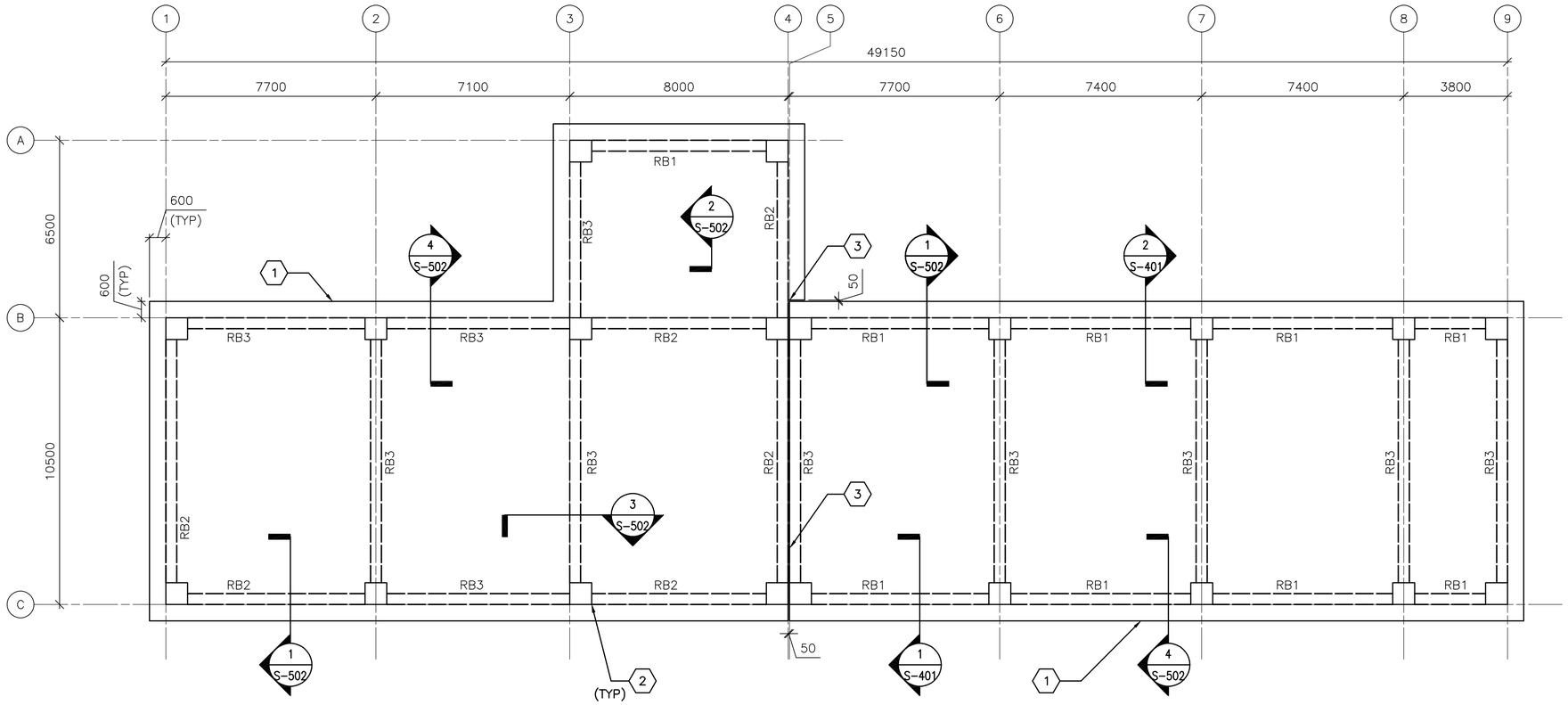


## 1 S-102 ROOF FRAMING PLAN

SCALE: 1:100

## ROOF FRAMING PLAN NOTES:

1. REFER TO SHEETS S-001 FOR STRUCTURAL NOTES AND DESIGN CRITERIA.
2. TOP OF SLAB ELEVATION = 3800 UNLESS NOTED OTHERWISE.
3. ROOF SLAB IS 300 WITH #19 @ 300 OC EW T&B.
4. ROOF BEAM INDICATED BY RB# ON PLAN. REFER TO BEAM SCHEDULE ON SHEET S-601.
5. COORDINATE WITH ARCHITECTURAL SHEETS FOR COLD-FORMED STEEL OVERBUILD FRAMING ABOVE ROOF SLAB.
6. COLD-FORMED METAL OVERBUILD ROOF FRAMING NOT SHOWN FOR CLARITY. SEE OVERBUILD ROOF FRAMING DETAILS AND SECTIONS ON SHEET S-702.
7. CMU PARTITION WALL (BELOW ROOF SLAB) NOT SHOWN FOR CLARITY.
8. DISCONTINUE ALL ROOF FRAMING AT BUILDING EXPANSION JOINT. REFER TO ARCHITECTURAL SHEETS FOR COLD-FORMED ROOF OVERBUILD FRAMING EXPANSION JOINT DETAIL.
9. OVERHANG AREAS OF ROOF SLAB CONTAIN ROOF VENT PENETRATIONS. REFERENCE ARCHITECTURAL DRAWINGS FOR INFORMATION.

## ROOF FRAMING PLAN KEY NOTES: (X)

1. CONC ROOF SLAB (BELOW ROOF OVERBUILD)
2. REINF CONC COLUMN (BELOW CONC ROOF SLAB)
3. 50 ISOLATION JOINT BETWEEN STRUCTURES LOCATED ABOVE FIRST FLOOR SLAB-ON-GRADE

0 2000 4000
SCALE: 1:100

UNLESS OTHERWISE NOTED, LINEAR DIMENSIONS SHOWN ON DRAWINGS ARE IN MILLIMETERS (mm)

APPROVED:

A/E DESIGNER OF RECORD .

SEAL: .

GEORGIA REGISTERED 1-29-10 No. 27141 PROFESSIONAL ENGINEER CHRISTOPHER W. WHITMORE

US ARMY CORPS OF ENGINEERS
AFGHANISTAN ENGINEER DISTRICT

| Mark | Description | Date | Appr. |
|---|---|---|---|

| Mark | Description | Date | Appr. |
|---|---|---|---|

Rev: 0
Date: 2/23/10
Design file no.
Drawing code:
File name: ANABSBS-102FRP
Plot date: 2/23/2010
Plot scale: x:x

Designed by: KMF/MMY
Dwn by: RCG
Ckd by: CWW
Reviewed by: LHM
Submitted by: BAKER

U.S. ARMY CORPS OF ENGINEERS
AFGHANISTAN ENGINEER DISTRICT
APO AE 96338

*Michael Baker Jr., Inc.*
*A unit of Michael Baker Corporation*
Airside Business Park
100 Airside Drive
Moon Township, PA 15108
www.mbakercorp.com

AFGHAN NATIONAL ARMY
REGIONAL MILITARY TRAINING CENTER
STANDARD DESIGN

SUPPORT STAFF BARRACKS

ROOF FRAMING PLAN

Sheet reference number:
S-102

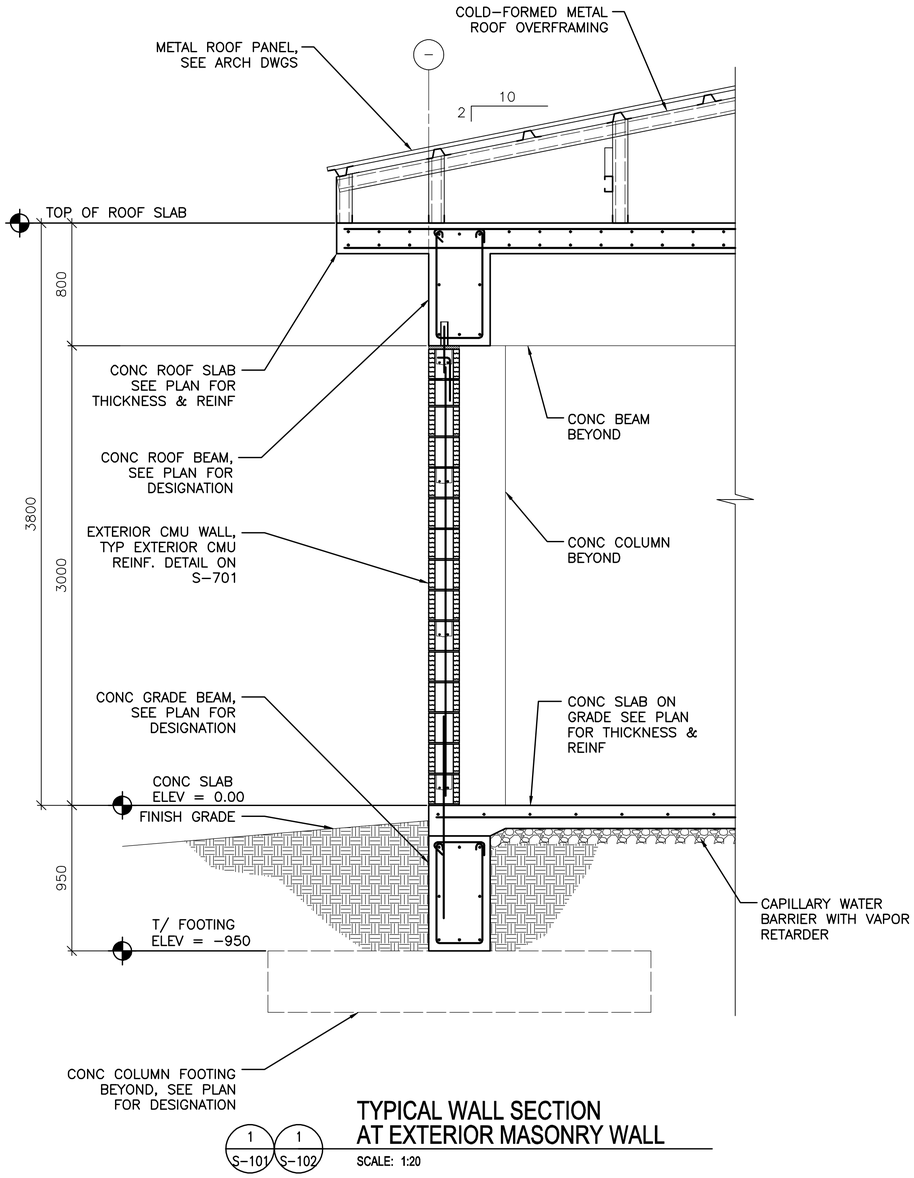


1 S-101 1 S-102

## TYPICAL WALL SECTION AT EXTERIOR MASONRY WALL

SCALE: 1:20

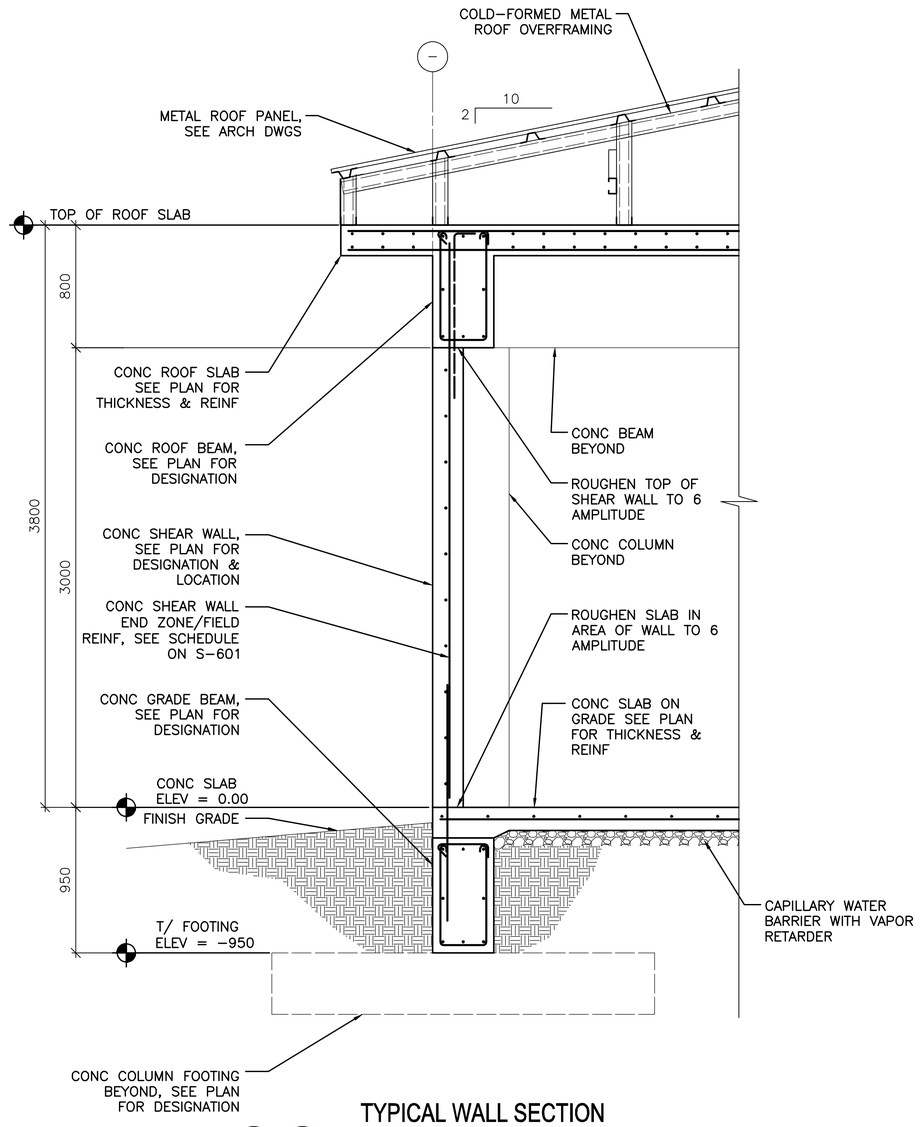


2 S-101 2 S-102

## TYPICAL WALL SECTION AT CONCRETE SHEAR WALL

SCALE: 1:20

0 400 800
SCALE: 1:20

UNLESS OTHERWISE NOTED, LINEAR DIMENSIONS SHOWN ON DRAWINGS ARE IN MILLIMETERS (mm)

APPROVED:

A/E DESIGNER OF RECORD

SEAL:

GEORGIA REGISTERED No. 27141 PROFESSIONAL ENGINEER CHRISTOPHER W. WHITMORE 1-29-10

US ARMY CORPS OF ENGINEERS
AFGHANISTAN ENGINEER DISTRICT

| Mark | Description | Date | Appr. | Mark | Description | Date | Appr. |
|---|---|---|---|---|---|---|---|

Designed by: KMP/MMY
Dwn by: RCG
Ckd by: CWW
Reviewed by: LHM
Submitted by: BAKER
Date: 2/23/10
Rev: 0
Design file no.
Drawing code:
File name: ANABSSBS-401BS
Plot date: 2/23/2010
Plot scale: X:X

U.S. ARMY CORPS OF ENGINEERS
AFGHANISTAN ENGINEER DISTRICT
APO AE 96338

Michael Baker Jr., Inc
A unit of Michael Baker Corporation
Airside Business Park
100 Airside Drive
Moon Township PA 15108
www.mbakercorp.com

AFGHAN NATIONAL ARMY
REGIONAL MILITARY TRAINING CENTER
STANDARD DESIGN

SUPPORT STAFF BARRACKS

BUILDING SECTIONS

Sheet reference number:
S-401

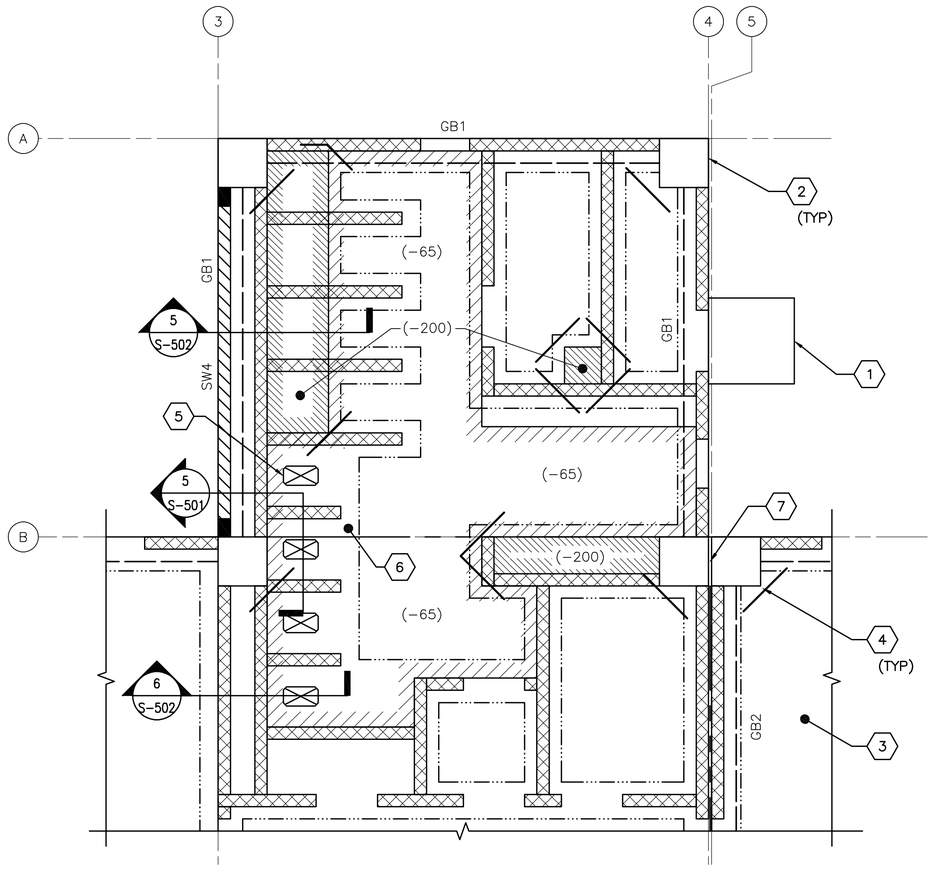


1 S-101 **ENLARGED LATRINE SLAB PLAN**

SCALE: 1:50

## ENLARGED PLAN NOTES:

1. REFER TO SHEET S−001 FOR STRUCTURAL NOTES AND DESIGN CRITERIA.
2. FINISH FIRST FLOOR ELEVATION SHALL BE (DATUM 0.00MM) ALL PLUS OR MINUS DIMENSIONS INDICATED ON PLAN OR REFERRED TO IN NOTES RELATE TO FINISH FIRST FLOOR ELEVATION.
3. SLAB−ON−GRADE IS 150 WITH #13 @ 300 OC EW LOCATED 38 FROM T/SLAB UON. WHERE NOTED, 300 SLAB−ON−GRADE SHALL BE REINFORCED W/ #13 @300 OC EW T&B.
4. REFER TO FOUNDATION/SLAB PLAN ON SHEET S−101 FOR COLUMN DESIGNATION AND COLUMN SCHEDULE ON SHEET S−601.
5. REFER TO FOUNDATION/SLAB PLAN ON SHEET S−101 FOR SHEARWALL DESIGNATION AND SHEARWALL SCHEDULE ON SHEET S−601.
6. REFER TO FOUNDATION/SLAB PLAN ON SHEET S−101 FOR GRADE BEAM DESIGNATION AND GRADE BEAM SCHEDULE ON SHEET S−601.
7. SEE TYP EXTERIOR AND INTERIOR CMU WALL REINFORCING DETAILS ON SHEET S−701.

## ENLARGED PLAN KEYNOTES: (X)

1. CONC PAD (ENTRANCE) − SEE ARCH DWGS FOR INFORMATION
2. REINF CONC COLUMN
3. REINF CONC SLAB−ON−GRADE
4. (2)−#13 RE−ENTRANT CORNER BARS − SEE S−701 FOR INFORMATION
5. SLAB OPENING − COORDINATE W/ ARCH AND PLUMB DWGS.
6. 300 SLAB−ON−GRADE
7. 50 ISOLATION JOINT BETWEEN STRUCTURES LOCATED ABOVE FIRST FLOOR SLAB−ON−GRADE

## PLAN LEGEND:

- REINF CONC SHEAR WALL
- REINF CMU WALL
- CONTROL JOINT
- INDICATES DROP SLAB 65 BELOW FINISH FLOOR
- INDICATES DROP SLAB 200 BELOW FINISH FLOOR
- SLAB OPENING
- OUTLINE OF THICKENED SLAB AREAS
- GRADE BEAM

0 1000 2000

SCALE: 1:50

UNLESS OTHERWISE NOTED, LINEAR DIMENSIONS SHOWN ON DRAWINGS ARE IN MILLIMETERS (mm)

APPROVED:

A/E DESIGNER OF RECORD

SEAL:

GEORGIA REGISTERED 1-29-10 No. 27141 PROFESSIONAL ENGINEER CHRISTOPHER W. WHITMORE

US ARMY CORPS OF ENGINEERS
AFGHANISTAN ENGINEER DISTRICT

| Mark | Description | Date | Appr. | Mark | Description | Date | Appr. |
|---|---|---|---|---|---|---|---|
| | | | | | | | |

U.S. ARMY CORPS OF ENGINEERS
AFGHANISTAN ENGINEER DISTRICT
APO AE 96338

*Michael Baker Jr., Inc*
*A unit of Michael Baker Corporation*
Airside Business Park
100 Airside Drive
Moon Township, PA 15108
www.mbakercorp.com

Designed by: KMP/MMY
Dwn by: RCG
Ckd by: CWW
Reviewed by: LHM
Submitted by: BAKER

Date: 2/23/10
Design file no.
Drawing code:
File name: ANA85383-402EP
Plot date: 2/23/2010
Plot scale: x:X
Rev: 0

AFGHAN NATIONAL ARMY
REGIONAL MILITARY TRAINING CENTER
STANDARD DESIGN

SUPPORT STAFF BARRACKS

ENLARGED LATRINE SLAB PLAN

Sheet reference number:
S−402

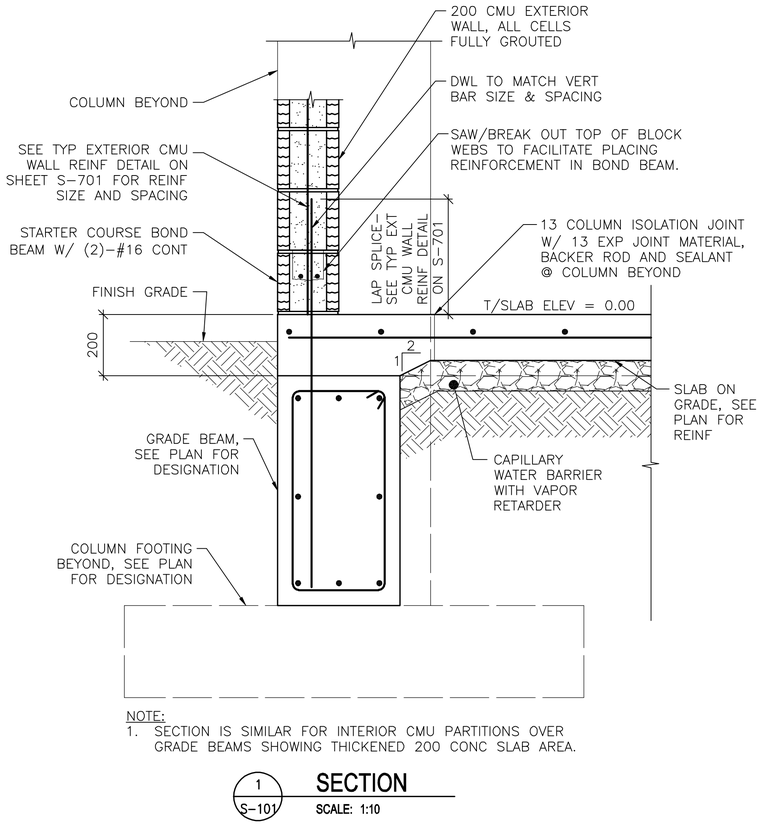


NOTE:
1. SECTION IS SIMILAR FOR INTERIOR CMU PARTITIONS OVER GRADE BEAMS SHOWING THICKENED 200 CONC SLAB AREA.

1 S-101 **SECTION**
SCALE: 1:10

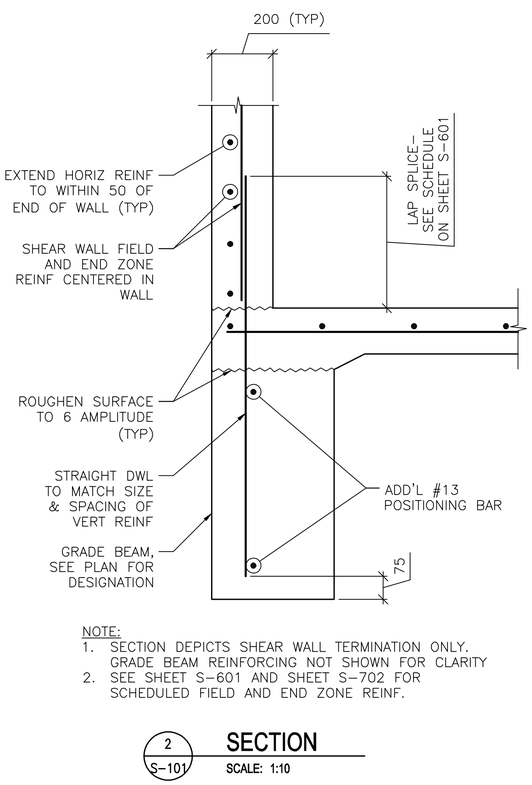


NOTE:
1. SECTION DEPICTS SHEAR WALL TERMINATION ONLY. GRADE BEAM REINFORCING NOT SHOWN FOR CLARITY
2. SEE SHEET S-601 AND SHEET S-702 FOR SCHEDULED FIELD AND END ZONE REINF.

2 S-101 **SECTION**
SCALE: 1:10

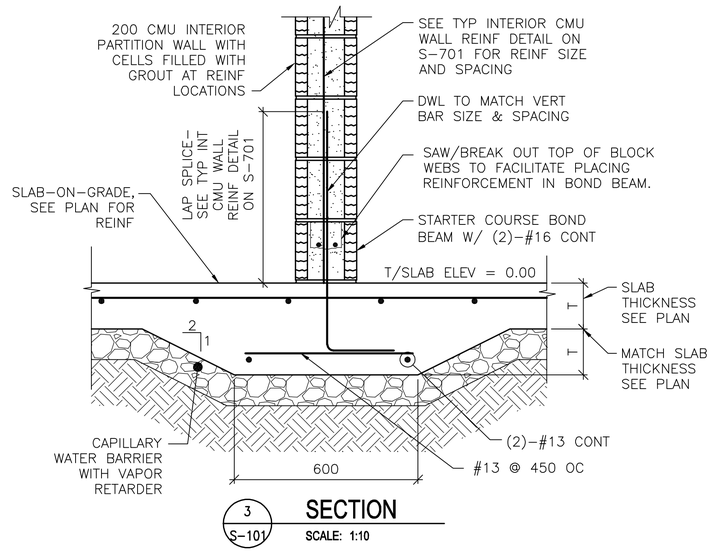


3 S-101 **SECTION**
SCALE: 1:10

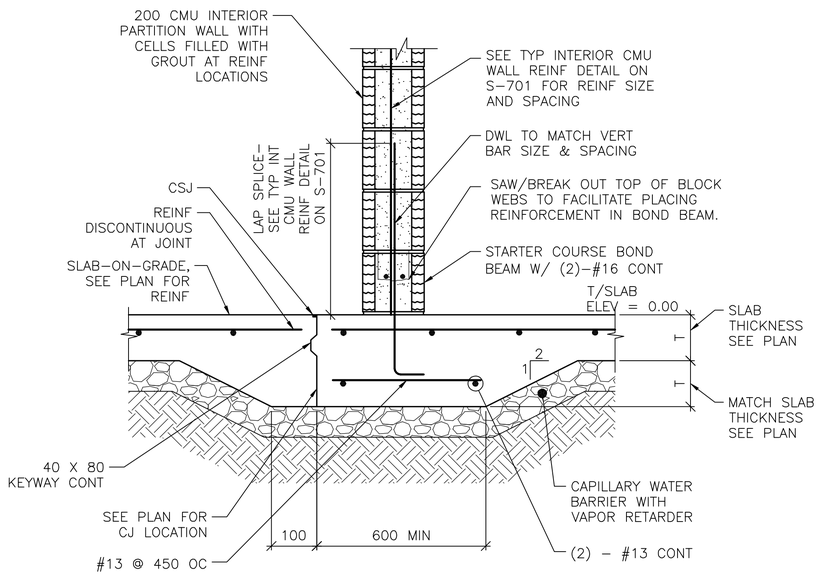


4 S-101 **SECTION**
SCALE: 1:10

NOTE:
1. DETAIL IS APPLICABLE AT CONTROL JOINTS RUNNING PARALLEL TO CMU WALLS AND WITHIN 300 OF FACE OF WALL.

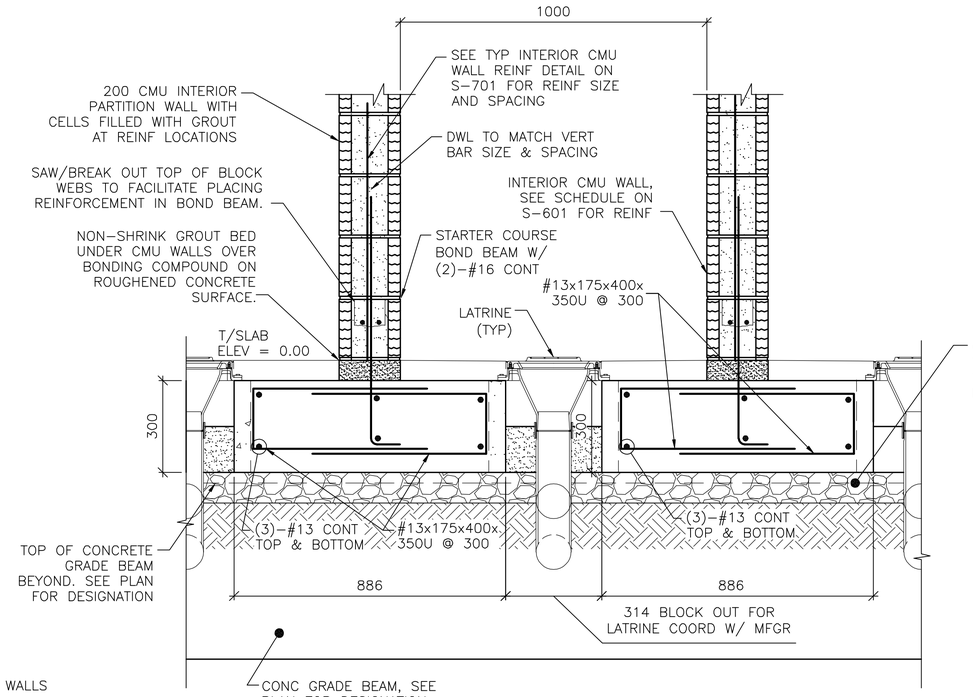


5 S-402 **SECTION**
SCALE: 1:10

0 200 400
SCALE: 1:10

UNLESS OTHERWISE NOTED, LINEAR DIMENSIONS SHOWN ON DRAWINGS ARE IN MILLIMETERS (mm)

APPROVED:

A/E DESIGNER OF RECORD

SEAL:

GEORGIA REGISTERED 1-29-10 No. 27141 PROFESSIONAL ENGINEER CHRISTOPHER W. WHITMORE

US ARMY CORPS OF ENGINEERS
AFGHANISTAN ENGINEER DISTRICT

| Mark | Description | Date | Appr. |
|---|---|---|---|

U.S. ARMY CORPS OF ENGINEERS
AFGHANISTAN ENGINEER DISTRICT
APO AE 96338


Michael Baker Jr., Inc
A unit of Michael Baker Corporation
Airside Business Park
100 Airside Drive
Moon Township, PA 15108
www.mbakercorp.com


| | | | |
|---|---|---|---|
| Designed by: KMP/MMY | | Date: 2/23/10 | Rev: 0 |
| Dwn by: RCG | Ckd by: CWW | Design file no. | Drawing code: |
| Reviewed by: LHM | | File name: ANA85858-50150 | |
| Submitted by: BAKER | | Plot date: 2/23/2010 | Plot scale: x:x |

AFGHAN NATIONAL ARMY
REGIONAL MILITARY TRAINING CENTER
STANDARD DESIGN

SUPPORT STAFF BARRACKS

FOUNDATION SECTIONS

Sheet reference number:
S-501

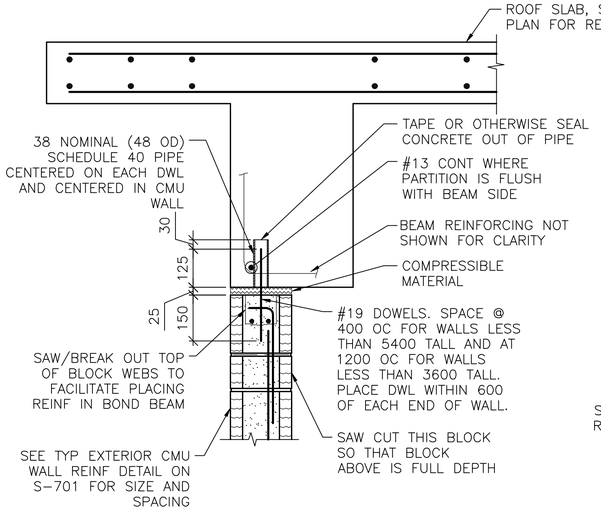


NOTES:
1. EXTEND DOWEL REINF TO 25 CLEAR FROM TOP OF CMU WALL.

1 S-102 **SECTION**
SCALE: 1:10

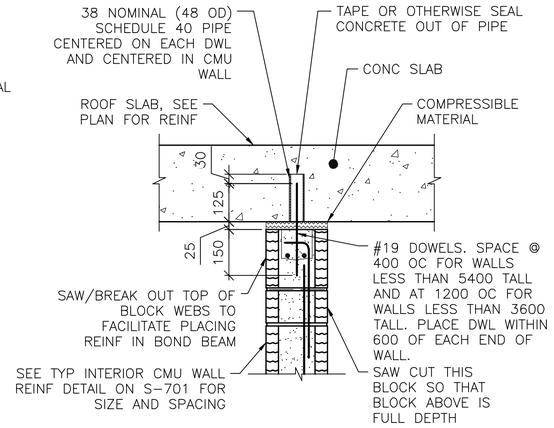


NOTES:
1. EXTEND DOWEL REINF TO 25 CLEAR FROM TOP OF CMU WALL.
2. SLAB REINF NOT SHOWN FOR CLARITY.

2 S-102 **SECTION**
SCALE: 1:10

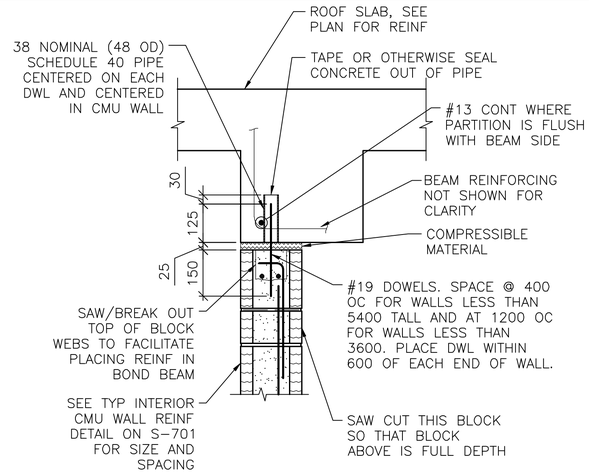


NOTES:
1. EXTEND DOWEL REINF TO 25 CLEAR FROM TOP OF CMU WALL.
2. PARTITION WALL MAY BE CENTERED UNDER THE BEAM OR FLUSH AS SHOWN. SEE PLAN FOR LOCATION.
3. SLAB REINF NOT SHOWN FOR CLARITY.

3 S-102 **SECTION**
SCALE: 1:10

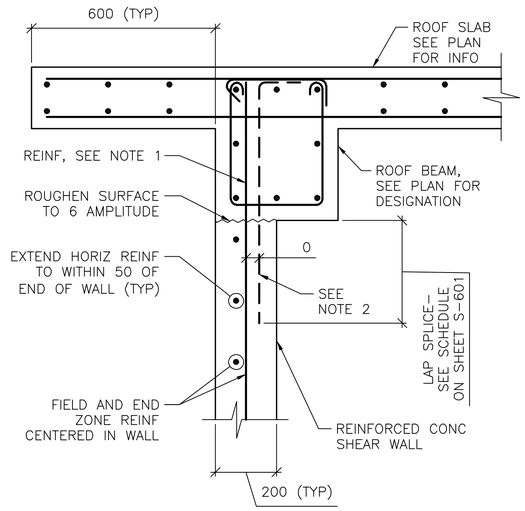


NOTES:
1. TERMINATE "FIELD" VERT REINF & END ZONE REINF @ 50 CLEAR FROM TOP OF ROOF SLAB.
2. WHERE END ZONE REINFORCING CANNOT BE DEVELOPED IN BEAM DEPTH, PROVIDE HOOKED DWLS SAME SIZE & SPACING. PROVIDE TENSION LAP BELOW ROOF BEAM.
3. SEE SHEET S–601 AND SHEET S–702 FOR SCHEDULED FIELD AND END ZONE REINF.

4 S-102 **SECTION**
SCALE: 1:10

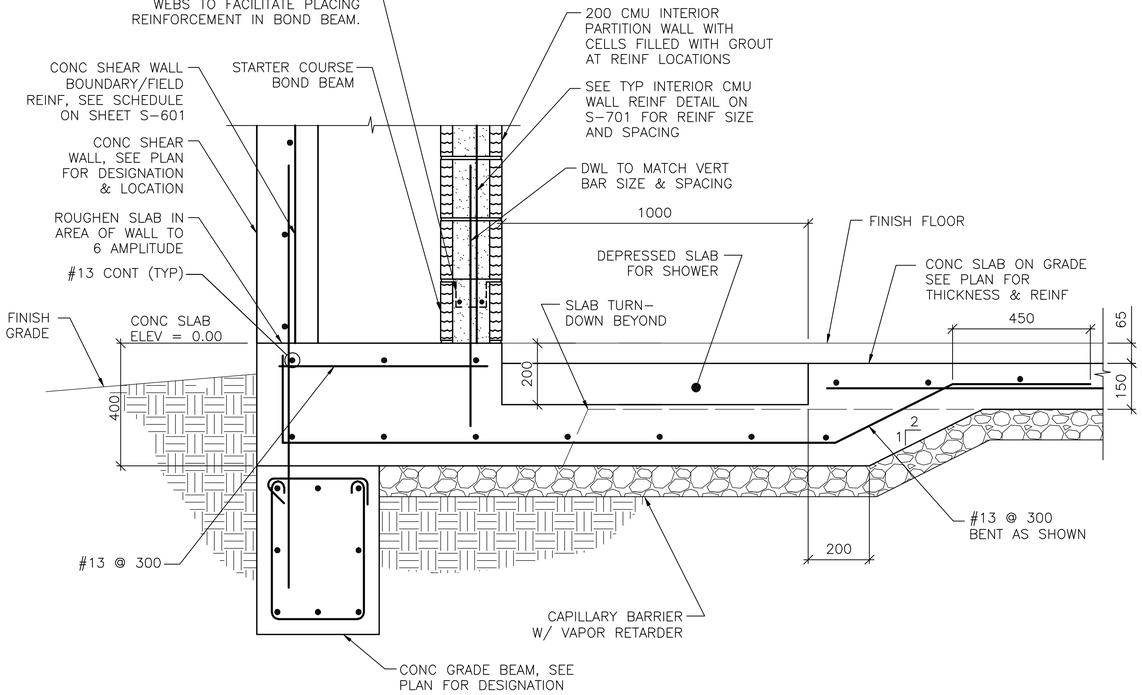


5 S-402 **SECTION**
SCALE: 1:10

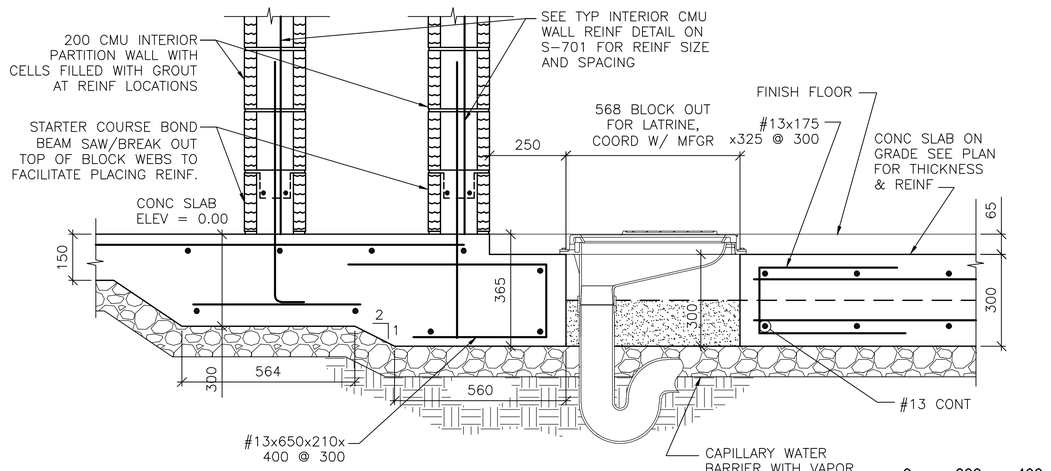


0 200 400
SCALE: 1:10

6 S-402 **SECTION**
SCALE: 1:10

UNLESS OTHERWISE NOTED, LINEAR DIMENSIONS SHOWN ON DRAWINGS ARE IN MILLIMETERS (mM)

APPROVED:

A/E DESIGNER OF RECORD

SEAL:

GEORGIA REGISTERED 2-23-10 No. 27141 PROFESSIONAL ENGINEER CHRISTOPHER W. WHITMORE

US ARMY CORPS OF ENGINEERS
AFGHANISTAN ENGINEER DISTRICT

| Mark | Description | Date | Appr. |
|---|---|---|---|

Rev: 0
Date: 2/23/10
Design file no.
Drawing code:
File name: ANABS8S4-502SC
Plot date: 2/23/2010
Plot scale: x:x

Designed by: KMP/MMY
Dwn by: RCG
Ckd by: CWW
Reviewed by: LHM
Submitted by: BAKER

U.S. ARMY CORPS OF ENGINEERS
AFGHANISTAN ENGINEER DISTRICT
APO AE 96338

Michael Baker Jr., Inc
A unit of Michael Baker Corporation
Airside Business Park
100 Airside Drive
Moon Township, PA 15108
www.mbakercorp.com

AFGHAN NATIONAL ARMY
REGIONAL MILITARY TRAINING CENTER
STANDARD DESIGN

SUPPORT STAFF BARRACKS

FOUNDATION & FRAMING SECTIONS

Sheet reference number:
S–502

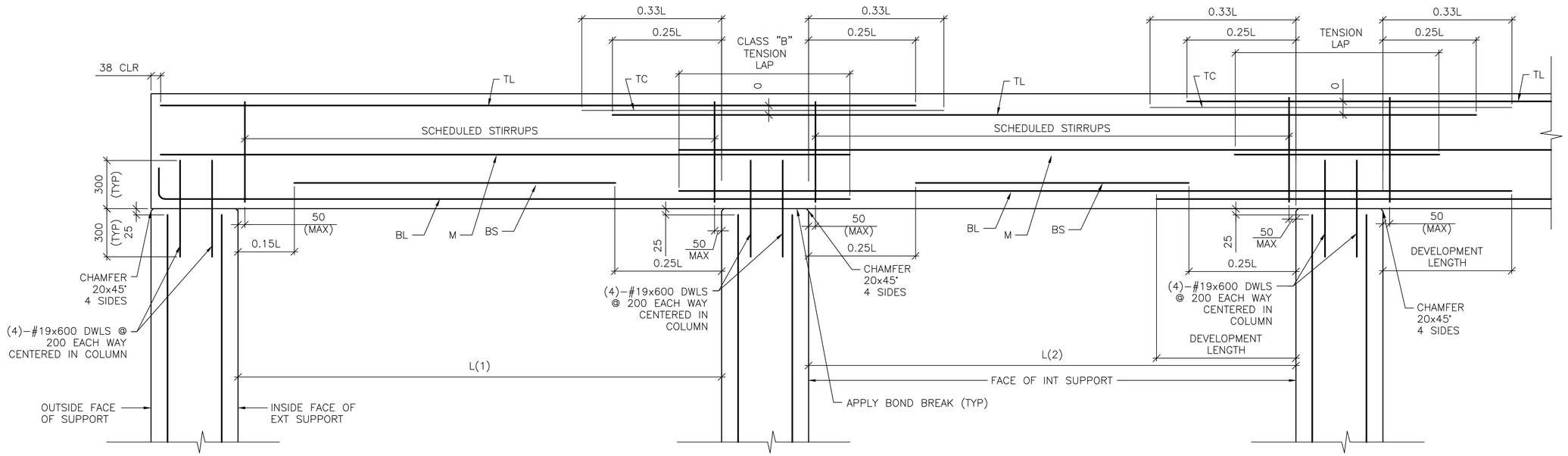


DETAIL NOTE:
1. WORK THIS DETAIL WITH BEAM SCHEDULE ON SHEET S-601.
2. L=GREATEST OF ADJACENT SPANS L(1) OR L(2)
3. ONLY COLUMN CORNER BARS ARE SHOWN

1 / S-503 **ROOF BEAM REINFORCING DETAIL**

**SCALE: NTS**

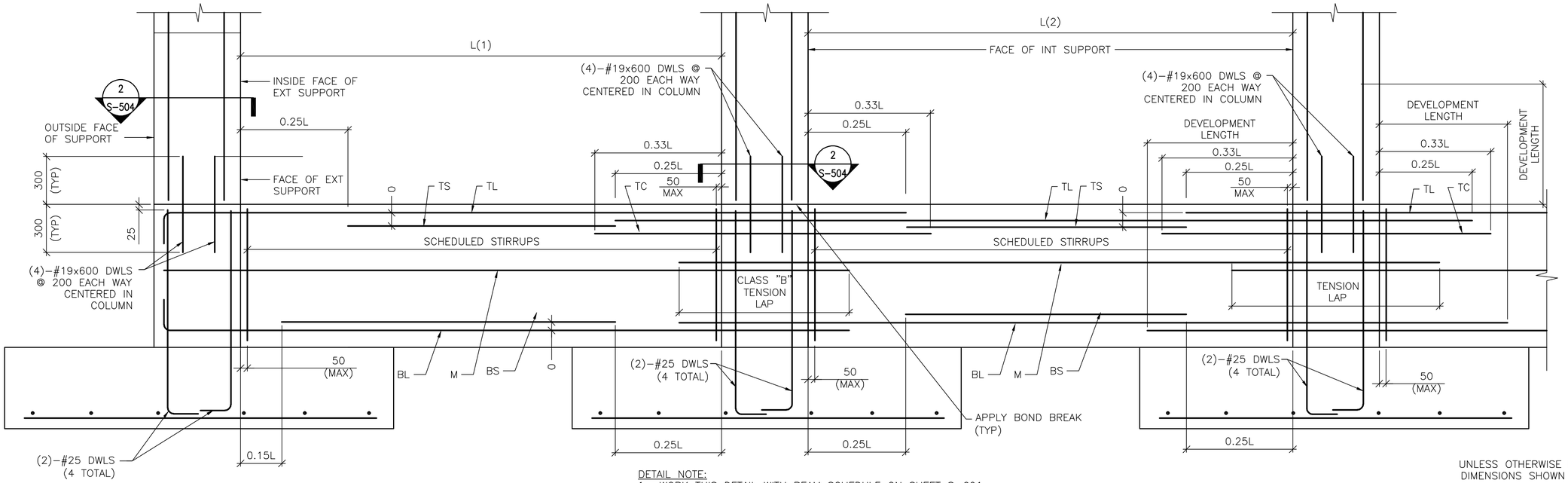


DETAIL NOTE:
1. WORK THIS DETAIL WITH BEAM SCHEDULE ON SHEET S-601.
2. L=GREATEST OF ADJACENT SPANS L(1) OR L(2)
3. ONLY COLUMN CORNER BARS ARE SHOWN.

2 / S-503 **GRADE BEAM REINFORCING DETAIL**

**SCALE: NTS**

UNLESS OTHERWISE NOTED, LINEAR DIMENSIONS SHOWN ON DRAWINGS ARE IN MILLIMETERS (mm)

APPROVED:

A/E DESIGNER OF RECORD

SEAL:

GEORGIA REGISTERED 11-29-10 No. 27141 PROFESSIONAL ENGINEER CHRISTOPHER W. WHITMORE

US ARMY CORPS OF ENGINEERS
AFGHANISTAN ENGINEER DISTRICT

| Mark | Description | Date | Appr. |
|---|---|---|---|
| | | | |

Rev: 0
Date: 2/23/10
Design file no.:
Drawing code:
File name: ANABSSBS-5503T
Plot date: 2/23/2010
Plot scale: XX

Designed by: KMP/MMY
Dwn by: RCG
Ckd by: CWW
Reviewed by: LHM
Submitted by: BAKER

U.S. ARMY CORPS OF ENGINEERS
AFGHANISTAN ENGINEER DISTRICT
APO AE 96338

*Michael Baker Jr., Inc*
*A unit of Michael Baker Corporation*
Airside Business Park
100 Airside Drive
Moon Township, PA 15108
www.mbakercorp.com

AFGHAN NATIONAL ARMY
REGIONAL MILITARY TRAINING CENTER
STANDARD DESIGN

SUPPORT STAFF BARRACKS

BEAM & COLUMN DETAILS

Sheet reference number:
S-503

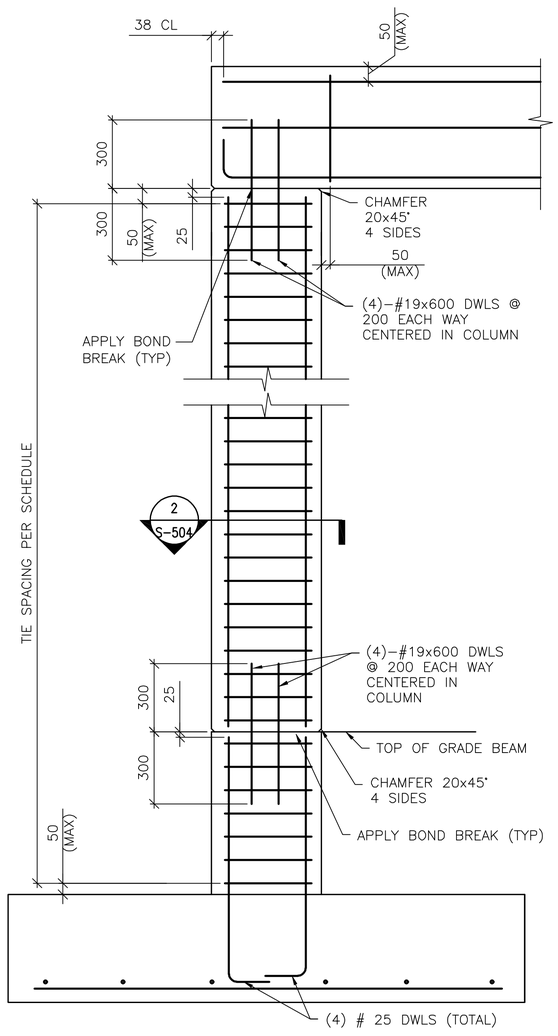


DETAIL NOTE:
1. ONLY COLUMN CORNER BARS ARE SHOWN

1 S–504 **1-STORY COLUMN REINF DETAILS**
SCALE: NTS
(WITH GRADE BEAM)

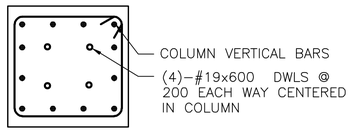


DETAIL NOTE:
1. INTERIOR TIES NOT SHOWN FOR CLARITY. REFER TO DETAIL A THIS SHEET FOR INTERIOR TIE CONFIGURATION.

2 S–503 2 S–504 **SECTION**
SCALE: NTS

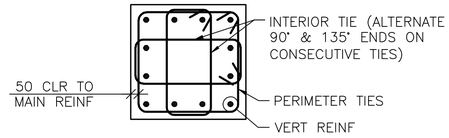


A S–504 **12 BAR COLUMN**
SCALE: NTS

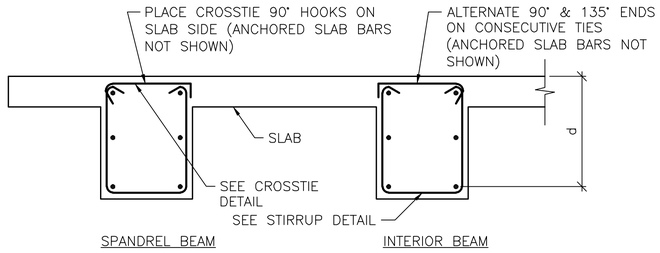


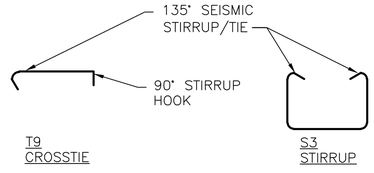


B S–504 **BEAM REINFORCEMENT DETAILS**
SCALE: NTS

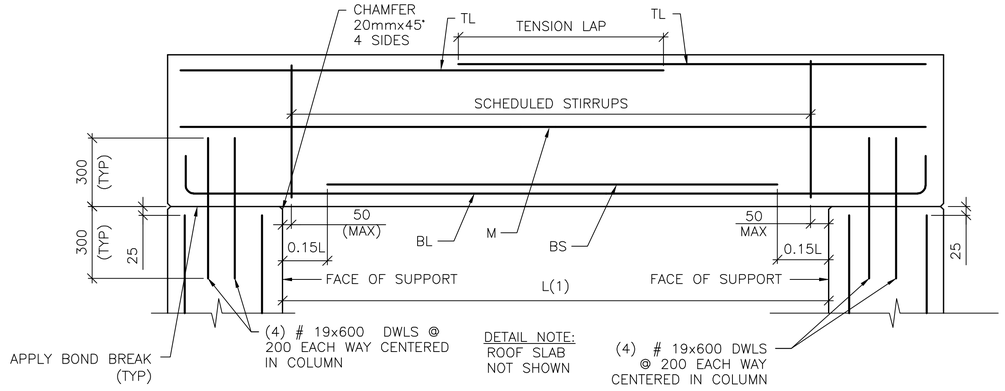


3 S–504 **SINGLE SPAN ROOF BEAM REINFORCING DETAIL**
SCALE: NTS

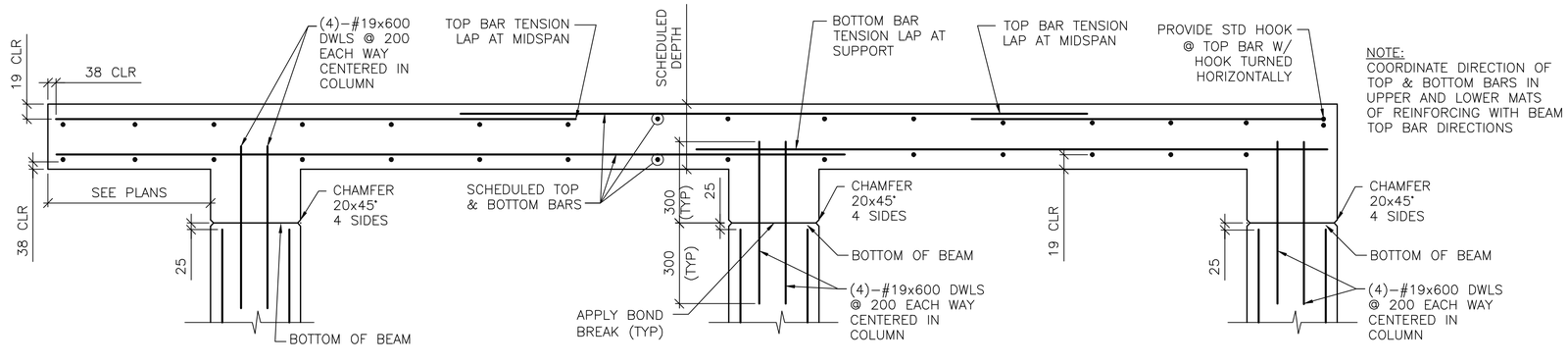


4 S–504 **FRAMED SLAB REINFORCING DETAIL**
SCALE: NTS

UNLESS OTHERWISE NOTED, LINEAR DIMENSIONS SHOWN ON DRAWINGS ARE IN MILLIMETERS (mm)

APPROVED:

A/E DESIGNER OF RECORD

SEAL:

GEORGIA REGISTERED 1-27-10 No. 27141 PROFESSIONAL ENGINEER CHRISTOPHER W. WHITMORE

US ARMY CORPS OF ENGINEERS
AFGHANISTAN ENGINEER DISTRICT

| Mark | Description | Date | Appr. |
|---|---|---|---|
| | | | |

| Mark | Description | Date | Appr. |
|---|---|---|---|
| | | | |

Date: 2/23/10
Design file no.
Drawing code:
Rev: 0
Designed by: KMP/MMY
Dwn by: RCG
Ckd by: CWW
Reviewed by: LHM
Submitted by:
File name: AN8S5B5-S040T
Plot date: 2/23/2010
Plot scale: X:X
BAKER

U.S. ARMY CORPS OF ENGINEERS
AFGHANISTAN ENGINEER DISTRICT
APO AE 96338

*Michael Baker Jr., Inc.*
*A unit of Michael Baker Corporation*
Airside Business Park
100 Airside Drive
Moon Township, PA 15108
www.mbakercorp.com

AFGHAN NATIONAL ARMY
REGIONAL MILITARY TRAINING CENTER
STANDARD DESIGN

SUPPORT STAFF BARRACKS

BEAM & COLUMN DETAILS

Sheet reference number:
S–504

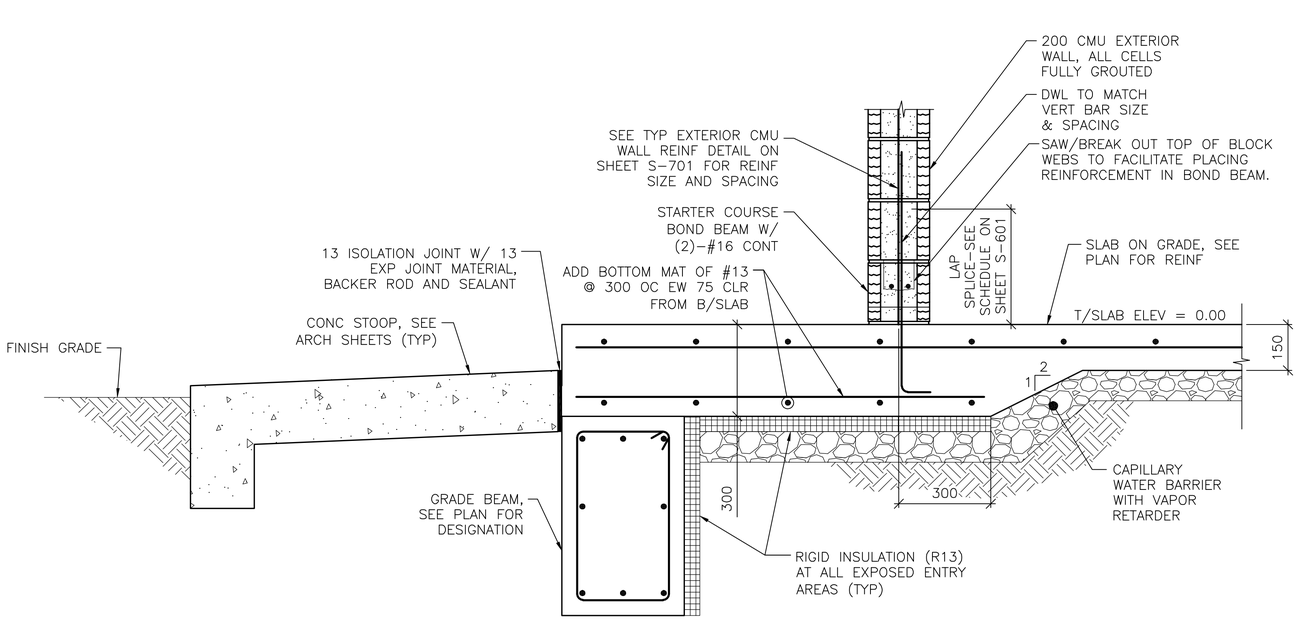


1 S-101 **SECTION**

SCALE: 1:10

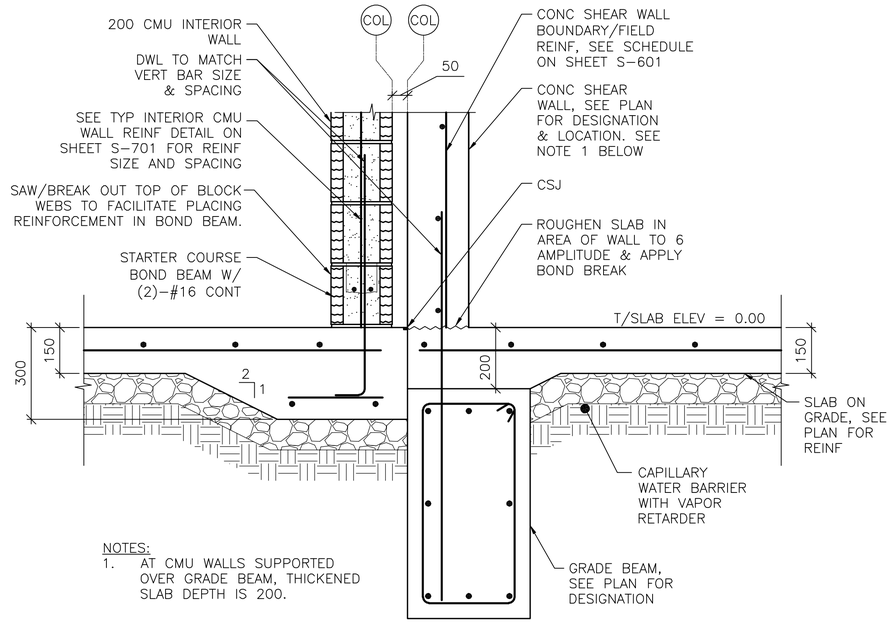


NOTES:
1. AT CMU WALLS SUPPORTED OVER GRADE BEAM, THICKENED SLAB DEPTH IS 200.

2 S-101 **SECTION**

SCALE: 1:10

0 200 400
SCALE: 1:10

UNLESS OTHERWISE NOTED, LINEAR DIMENSIONS SHOWN ON DRAWINGS ARE IN MILLIMETERS (mm)

APPROVED:

A/E DESIGNER OF RECORD

SEAL:

GEORGIA REGISTERED 2-23-10 No. 27141 PROFESSIONAL ENGINEER CHRISTOPHER W. WHITMORE

US ARMY CORPS OF ENGINEERS
AFGHANISTAN ENGINEER DISTRICT

| Mark | Description | Date | Appr. | Mark | Description | Date | Appr. |
|---|---|---|---|---|---|---|---|
| | | | | | | | |

Date: 2/23/10
Design file no.
Drawing code:
Rev: 0
File name: ANABS8SB-S505C
Plot date: 2/23/2010
Plot scale: X:X

Designed by: KMP/MMY
Dwn by: RCG
Ckd by: CWW
Reviewed by: LHM
Submitted by: BAKER

U.S. ARMY CORPS OF ENGINEERS
AFGHANISTAN ENGINEER DISTRICT
APO AE 96338

*Michael Baker Jr., Inc.*
*A unit of Michael Baker Corporation*
Airside Business Park
100 Airside Drive
Moon Township, PA 15108
www.mbakercorp.com

AFGHAN NATIONAL ARMY
REGIONAL MILITARY TRAINING CENTER
STANDARD DESIGN

SUPPORT STAFF BARRACKS

MISCELLANEOUS SECTIONS

Sheet reference number:
S-505

# CONCRETE REINFORCEMENT TENSION DEVELOPMENT/LAP SPLICE SCHEDULE

| f'c = 28 MPa | LAP CLASS | UNCOATED BARS | | | |
|---|---|---|---|---|---|
| | | TOP BARS | | OTHER BARS | |
| BAR SIZES | | CASE 1 | CASE 2 | CASE 1 | CASE 2 |
| #10 TO #19 | A | 50 BAR DIA | 74 BAR DIA | 38 BAR DIA | 57 BAR DIA |
| | B | 64 BAR DIA | 96 BAR DIA | 50 BAR DIA | 74 BAR DIA |
| #22 TO #57 | A | 62 BAR DIA | 93 BAR DIA | 48 BAR DIA | 71 BAR DIA |
| | B | 80 BAR DIA | 121 BAR DIA | 62 BAR DIA | 93 BAR DIA |

NOTES:
1. TABULATED TENSION DEVELOPMENT LENGTH VALUES ARE TAKEN FROM CRSI DESIGN HANDBOOK 2008 10TH ED.
2. TENSION DEVELOPMENT & TENSION LAP SPLICE LENGTHS ARE EXPRESSED AS MULTIPLES OF BAR DIAMETERS.
3. TABULATED VALUES ARE BASED ON MINIMUM YIELD STRENGTH OF REINFORCEMENT, fy, OF 420MPa.
4. CONCRETE IS NORMAL WEIGHT (2400Kg/m³) AND 28 DAY COMPRESSIVE STRENGTH = 28MPa.
5. TABULATED VALUES FOR BEAMS & COLUMNS ARE BASED ON TRANSVERSE REINFORCEMENT AND CONCRETE COVER MEETING MINIMUM CODE REQUIREMENTS.
6. CASES 1 & 2, WHICH DEPEND ON THE TYPE OF STRUCTURAL MEMBER, CONCRETE COVER, AND CENTER-TO-CENTER SPACING OF THE BARS ARE DEFINED IN THE TABLE BELOW.
7. LAP SPLICE LENGTHS (MINIMUM 300mm) ARE MULTIPLES OF TENSION DEVELOPMENT LENGTHS: CLASS A = 1.0(TENSION DEVELOPMENT LENGTH) & CLASS B = 1.3(TENSION DEVELOPMENT LENGTH)
8. TOP BARS ARE HORIZONTAL REINFORCEMENT WITH MORE THAN 300mm OF CONCRETE CAST BELOW THE BARS.
9. IT SHALL BE PERMISSIBLE TO CALCULATE WALL AND SLAB REINFORCEMENT TENSION DEVELOPMENT/SPLICE LENGTHS IN ACCORDANCE WITH ACI 12.2.3 OR TABLE 5.3(b) OF CRSI 2008 IN LIEU OF VALUES TABULATED ABOVE.

| | | |
|---|---|---|
| BEAMS, COLUMNS | CASE 1 | CONCRETE COVER AT LEAST 1 BAR DIA AND CENTER-TO-CENTER SPACING AT LEAST 2 BAR DIA |
| | CASE 2 | CONCRETE COVER LESS THAN 1 BAR DIA OR CENTER-TO-CENTER SPACING LESS THAN 2 BAR DIA |
| ALL OTHERS | CASE 1 | CONCRETE COVER AT LEAST 1 BAR DIA AND CENTER-TO-CENTER SPACING AT LEAST 3 BAR DIA |
| | CASE 2 | CONCRETE COVER LESS THAN 1 BAR DIA OR CENTER-TO-CENTER SPACING LESS THAN 3 BAR DIA |

# CONCRETE COVER SCHEDULE

MINIMUM CONCRETE COVER PROTECTION FOR REINFORCEMENT BARS SHALL BE AS LISTED BELOW: (SEE ACI 318M-05, SECTION 7.7 FOR CONDITIONS NOT NOTED). DIMENSIONS FOR BAR PLACEMENT GIVEN IN SECTIONS AND DETAILS SHALL SUPERSEDE MINIMUM COVER REQUIREMENTS GIVEN HERE. DIMENSIONS ARE IN mm. PROVIDE STANDARD BAR CHAIRS AND SUPPORT BARS @1200mm MAXIMUM AS REQUIRED TO MAINTAIN CONCRETE PROTECTION SPECIFIED.

| | | |
|---|---|---|
| FOOTINGS (EARTH FORMED): | | 70 |
| COLUMNS / PIERS (TO TIES) | | 40 |
| GRADE BEAMS OR SLAB TURNED DOWN EDGES: | | |
| TOP | | 40 |
| BOTTOM (EARTH FORMED) | | 70 |
| SIDES (EARTH FORMED) | | 70 |
| SIDES (BOARD FORMED) | #16 BAR & SMALLER | 40 |
| | #19 THRU #36 BAR | 50 |
| ELEVATED BEAMS & SLABS: | | |
| BEAM TIES & STIRRUPS (NOT EXPOSED TO WEATHER) | | 40 |
| BEAM TIES & STIRRUPS (EXPOSED TO WEATHER) | | 50 |
| FLOOR SLABS (NOT EXPOSED TO WEATHER) | | 20 |
| FLOOR SLABS (EXPOSED TO WEATHER) | | |
| #19 & LARGER | | 50 |
| #13 & SMALLER | | 40 |
| ROOF SLAB BARS | | 25 |
| SLABS ON GRADE | | |
| NOT EXPOSED TO WEATHER (FROM TOP) | | 20 |
| EXPOSED TO WEATHER (FROM TOP) | | 40 |
| UTILITY TUNNEL WALLS, RETAINING WALLS AND SHEAR WALLS. (NO SURFACES SHALL BE EARTH FORMED) | | |
| EARTH SIDE AND FRONT SIDE (EXPOSED TO WEATHER) | | |
| #16 BAR AND SMALLER | | 40 |
| #19 THRU #36 BAR | | 50 |

# COLUMN FOOTING SCHEDULE

| MARK | FOOTING SIZE (mm) | | | FOOTING REINFORCING | REMARKS |
|---|---|---|---|---|---|
| | LENGTH | WIDTH | THICKNESS | | |
| F1 | 2900 | 2900 | 300 | (9)-#19 EW BOTT | ----- |
| F2 | 3300 | 3300 | 300 | (11)-#22 EW BOTT | ----- |
| F3 | 3600 | 3600 | 300 | (12)-#22 EW BOTT | ----- |
| F4 | 4200 | 4200 | 350 | (14)-#25 EW BOTT | ----- |
| F5 | 4900 | 4900 | 450 | (17)-#25 EW BOTT | ----- |
| F6 | 6800 | 3200 | 300 | (23)-#22 SHORT BOTT<br>(11)-#19 LONG BOTT | ----- |

# CONCRETE SHEAR WALL SCHEDULE

| MARK | TYPE | WALL LENGTH (L) (mm) | WALL REINFORCEMENT | | REMARKS |
|---|---|---|---|---|---|
| | | | END ZONE | FIELD | |
| SW1 | B | 3600 | (8)-#16 @ 150mm OC | #13 @ 300mm OC | ----- |
| SW2 | D | 5000 | (4)-#16 @ 150mm OC | #13 @ 300mm OC | ----- |
| SW3 | D | 5000 | (12)-#16 @ 150mm OC | #13 @ 300mm OC | ----- |
| SW4 | C | 5700 | (13)-#16 @ 150mm OC | #13 @ 300mm OC | ----- |

NOTES:
1. WORK THIS SCHEDULE WITH SHEAR WALL DETAILS ON SHEETS S-702
2. SEE PLAN FOR LOCATION OF SHEAR WALL(S).
3. VERTICAL "FIELD" BARS MAY BE OMITTED IN LOCATION OF "END ZONE" REINFORCEMENT.
4. WALL FIELD REINFORCEMENT LISTED APPLIES TO VERTICAL & HORIZONTAL BARS.
5. WALL FIELD REINFORCEMENT SHOULD BE CENTERED IN WALL.

# STANDARD HOOKS IN TENSION PER (ACI 318M-05)

| BAR SIZE | HOOK DEVELOPMENT LENGTH (mm) f'c 28 MPa |
|---|---|
| #10 | 180 |
| #13 | 250 |
| #16 | 300 |
| #19 | 380 |
| #22 | 430 |
| #25 | 480 |
| #29 | 560 |
| #32 | 610 |
| #36 | 690 |

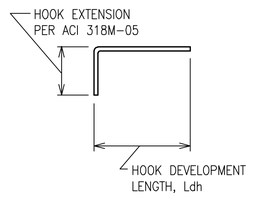


NOTES:
1. CONCRETE IS NORMAL WEIGHT CONCRETE.
2. BAR YIELD STRENGTH, fy = 420 MPa
3. SIDE COVER REQUIREMENTS OF ACI SECT. 12.5.3 ARE ASSUMED TO NOT BE MET.
4. TIE OR STIRRUP REQUIREMENTS OF ACI SECT. 12.5.3 ARE ASSUMED TO NOT BE MET.
5. REDUCTION FOR EXCESS REINFORCEMENT IS NOT TAKEN.
6. HOOK DEVELOPMENT LENGTH IS VALID FOR 180° HOOKS ALSO.

# CMU OR CAST IN PLACE CONC LINTEL SCHEDULE (TYP)

| OPENING TYPE OR SIZE, BEAM LOCATION OR TYPE | MAX SPAN (mm) | LINTEL DEPTH (mm) | REINFORCING BOTTOM |
|---|---|---|---|
| WALL OPENING | 4000 | 600 | (2)-#16 T&B |
| WALL OPENING | 1900 | 400 | (2)-#16 T&B |
| WALL OPENING | 1000 | 400 | (2)-#13 B |
| | | | |
| | | | |
| | | | |
| | | | |
| | | | |
| | | | |
| | | | |

1. STRUCTURAL SHEETS DO NOT INDICATE ALL OPENINGS IN MASONRY WALLS. VERIFY NUMBER, SIZE AND LOCATION OF ALL OPENINGS IN MASONRY WALLS FROM ARCHITECTURAL SHEETS AND APPROVED PLUMBING, MECHANICAL, AND ELECTRICAL SHOP DRAWINGS.
2. PROVIDE 200mm BEARING EA END.
3. FOR HEAD DETAILS REFER TO ARCHITECTURAL SHEETS.
4. REINFORCING SHALL BE ASTM A615M, GRADE 420. GROUT FOR CMU LINTELS SHALL HAVE A MINIMUM COMPRESSIVE STRENGTH OF 14MPa AT 28 DAYS.
5. CONTRACTOR SHALL SUBMIT FOR APPROVAL SHOP DRAWINGS AND SCHEDULES SHOWING SIZE, SPAN, REINFORCEMENT, DETAILS, LOCATIONS, ETC.

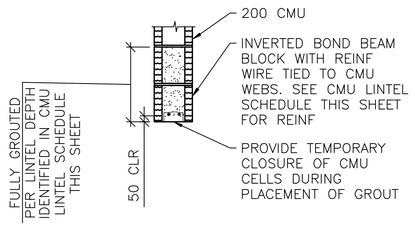


A S-601 **LINTEL DETAILS**
SCALE: NTS

# BEAM SCHEDULE

| MARK | BEAM SIZE (mm) | | BEAM REINFORCING | | | | | | STIRRUPS | | | REMARKS |
|---|---|---|---|---|---|---|---|---|---|---|---|---|
| | DEPTH | WIDTH | BL | BS | T | TS | TC | M | SIZE | TYPE | SPACING | |
| GRADE BEAMS | | | | | | | | | | | | |
| GB1 | 750/550 /735 | 400 | (2)-#16 | --- | (2)-#16 | --- | --- | --- | #13 | S3 + T9 | d/2 | LOWER TOP TO 735 BETWEEN A4-B4; TO 550 BETWEEN A3-A4 & A3-B3 |
| GB2 | 750 | 400 | (2)-#25 | (1)-#25 | (2)-#25 | (1)-#25 | --- | --- | #13 | S3 + T9 | d/2 | ----- |
| ROOF BEAMS | | | | | | | | | | | | |
| RB1 | 800 | 400 | (2)-#22 | (1)-#22 | (2)-#19 | --- | --- | --- | #13 | S3 + T9 | d/2 | ----- |
| RB2 | 800 | 400 | (2)-#25 | (1)-#25 | (2)-#22 | --- | --- | --- | #13 | S3 + T9 | d/2 | |
| RB3 | 800 | 400 | (3)-#29 | (2)-#29 | (2)-#25 | --- | --- | --- | #13 | S3 + T9 | d/2 | |

NOTES:
1. WORK THIS SCHEDULE WITH BEAM REINFORCING DETAILS ON SHEETS S-503 AND S-504.
2. HOOKS SHOWN ON SECTIONS AND DETAILS SHALL BE 90° STD UON.
3. USE ONLY (1) TS AT BEAM COLUMN INTERSECTION WHERE REQ'D.

# COLUMN SCHEDULE

| COLUMN MARK / DESCRIPTION | TYP UON | --- | --- | --- |
|---|---|---|---|---|
| TYPE | 12-BAR | --- | --- | --- |
| DIMENSION | 800mm SQ. | --- | --- | --- |
| VERTICAL REINFORCEMENT | (12)-#29 | --- | --- | --- |
| TIES | #13 @ d/2 | --- | --- | --- |
| TOP OF ROOF ELEVATION | 3800mm | --- | --- | --- |
| TOP OF GRADE BEAM ELEVATION | -200mm | --- | --- | --- |
| TOP OF FOOTING ELEVATION | -950mm | --- | --- | --- |

NOTES:
1. WORK THIS SCHEDULE WITH COLUMN DETAILS ON SHEET S-504.
2. SEE FOOTING SCHEDULE ON THIS SHEET FOR FOOTING INFORMATION.
3. COLUMN TIES: INTERIOR TIES TO MATCH SIZE & SPACING OF PERIMETER TIES.
4. HOOKS SHOWN ON SECTIONS & DETAILS SHALL BE 90° STD UON.

UNLESS OTHERWISE NOTED, LINEAR DIMENSIONS SHOWN ARE IN MILLIMETERS (mm)

APPROVED:

A/E DESIGNER OF RECORD

SEAL:

GEORGIA REGISTERED 1-29-10 No. 27141 PROFESSIONAL ENGINEER CHRISTOPHER W. WHITMORE

US ARMY CORPS OF ENGINEERS
AFGHANISTAN ENGINEER DISTRICT

| Mark | Description | Date | Appr. |
|---|---|---|---|
| | | | |

Designed by: KMP/MMY
Dwn by: RCG
Ckd by: CWW
Reviewed by: LHM
Submitted by: BAKER
Date: 2/23/10
Design file no.
Drawing code:
File name: ANABSSBS-601SCH
Plot date: 2/23/2010
Plot scale: X:X
Rev: 0

U.S. ARMY CORPS OF ENGINEERS
AFGHANISTAN ENGINEER DISTRICT
APO AE 96338

Michael Baker Jr., Inc
A unit of Michael Baker Corporation
Airside Business Park
100 Airside Drive
Moon Township, PA 15108
www.mbakercorp.com

AFGHAN NATIONAL ARMY
REGIONAL MILITARY TRAINING CENTER
STANDARD DESIGN

SUPPORT STAFF BARRACKS

SCHEDULES

Sheet reference number:
S-601

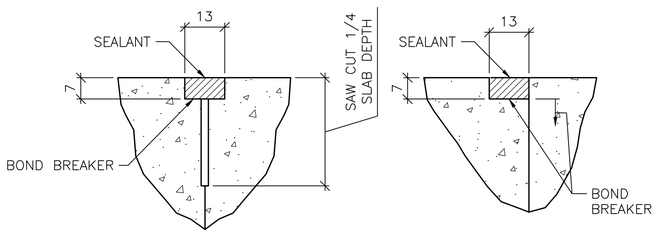


CONTROL JOINT DETAIL

CONSTRUCTION JOINT DETAIL

## 1 S-701 TYPICAL CONCRETE SLAB JOINT FINISH DETAILS

SCALE: NTS

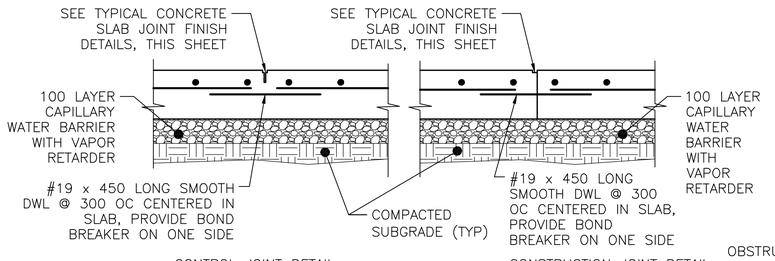


CONTROL JOINT DETAIL

CONSTRUCTION JOINT DETAIL

## 2 S-701 TYPICAL SLAB ON GRADE JOINT DETAIL

SCALE: NTS




## 3 S-701 INTERIOR EQUIPMENT PAD DETAIL

SCALE: NTS

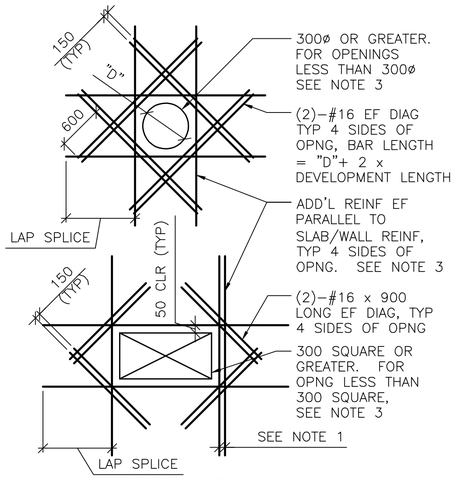


SHEAR WALL/SLAB OPENINGS

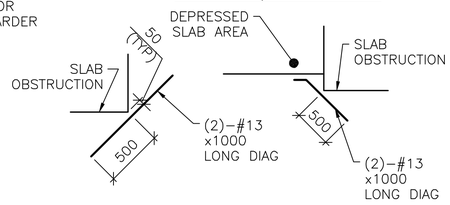


RE-ENTRANT CORNERS

DETAIL NOTES:

1. WHERE MORE THAN ONE ADDITIONAL BAR IS REQUIRED PARALLEL TO THE EXISTING SLAB/WALL REINFORCING THE ADDITIONAL REINFORCING BARS SHALL BE SPACED AT 100 ON CENTER.
2. ADDITIONAL REINFORCING PARALLEL TO THE SLAB/WALL REINFORCING SHALL BE #16 BARS THAT PROVIDE A STEEL AREA ON EACH SIDE OF THE OPENING EQUAL TO 1/2 THE AREA OF THE REINFORCING CUT BY THE OPENING.
3. FOR OPENINGS WITH SIDES OR DIAMETERS LESS THAN 300 SPREAD THE SLAB/WALL REINFORCING TO CLEAR THE OPENING.

## 4 S-701 ADD'L CONCRETE REINFORCEMENT DETAILS

SCALE: NTS

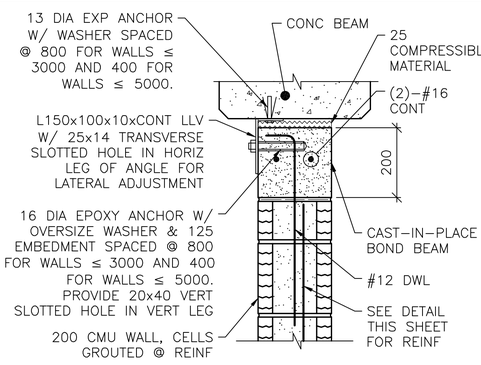


NOTE:

1. AT ANCHOR BOLTS, ADD AN ADDITIONAL 25 COMPRESSIBLE MATERIAL BELOW EXP ANCHOR HEAD.

INTERIOR BEAM

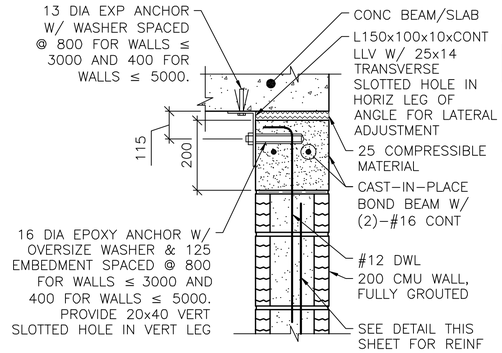


EXTERIOR WALL OR SLAB

NOTES:

1. THIS DETAIL IS AN ALTERNATE TOP OF WALL ANCHORAGE DETAIL TO BE USED AT THE CONTRACTOR'S OPTION IN LIEU OF DETAILS SHOWN ON S-400 & S-500 DRAWINGS.
2. CAST-IN-PLACE BOND BEAM SHOWN AT TOP OF WALL IS ALSO APPLICABLE FOR INTERMEDIATE AND STARTER COURSE BOND BEAMS WITHIN WALL.

## 5 S-701 ALTERNATE TOP OF CMU WALL BRACING DETAILS

SCALE: NTS

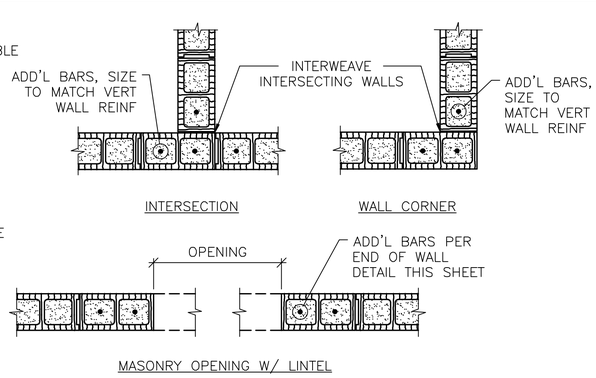


INTERSECTION

WALL CORNER




MASONRY OPENING W/ LINTEL

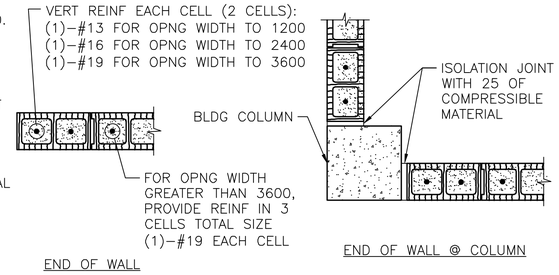


END OF WALL

END OF WALL @ COLUMN

NOTES:

1. OPENING WIDTH SHALL NOT EXCEED 3600 FOR THIS TYPE OF JAMB.
2. ALL CELLS FULLY GROUTED AT EXTERIOR WALLS. AT INTERIOR WALLS, ONLY GROUT CELLS CONTAINING REINF.

## 6 S-701 TYP CMU DETAILS

SCALE: NTS

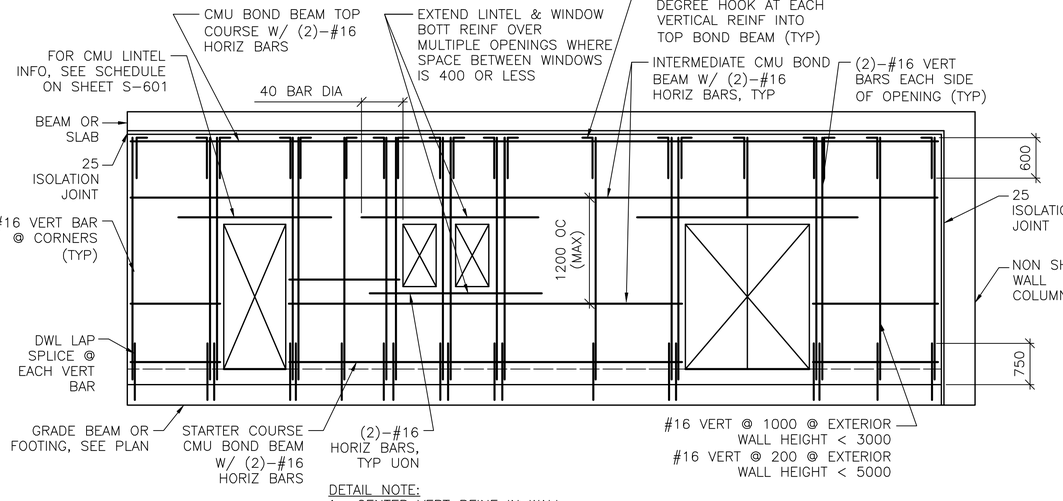


DETAIL NOTE:

1. CENTER VERT REINF IN WALL.
2. GROUT ALL CMU CELLS.
3. REFERENCE ARCH DWGS FOR JOINT INFORMATION
4. DOWELS BETWEEN TOP BOND BEAM AND BEAM/SLAB ABOVE (INCLUDING EMBEDDED PIPE SLEEVE) NOT SHOWN FOR CLARITY. SEE SPECIFIC S-500 SERIES DWGS FOR INFO.
5. FOR INFORMATION ON ALTERNATE CAST-IN-PLACE WALL BOND BEAMS, REFERENCE ALTERNATE TOP OF CMU WALL BRACING DETAILS THIS SHEET.

## 7 S-701 TYP EXTERIOR CMU WALL REINF DETAIL

SCALE: NTS

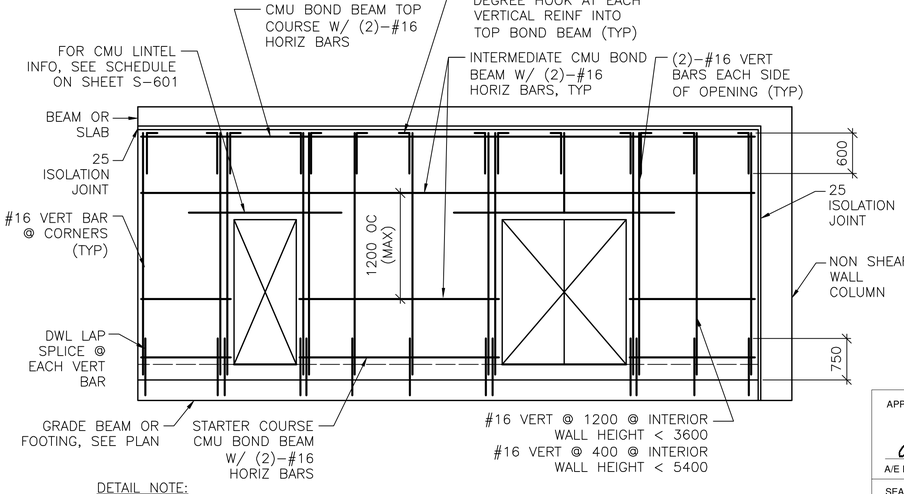


DETAIL NOTE:

1. CENTER VERT REINF IN WALL.
2. GROUT ALL CMU CELLS.
3. REFERENCE ARCH DWGS FOR JOINT INFORMATION
4. DOWELS BETWEEN TOP BOND BEAM AND BEAM/SLAB ABOVE (INCLUDING EMBEDDED PIPE SLEEVE) NOT SHOWN FOR CLARITY. SEE SPECIFIC S-500 SERIES DWGS FOR INFO.
5. FOR INFORMATION ON ALTERNATE CAST-IN-PLACE WALL BOND BEAMS, REFERENCE ALTERNATE TOP OF CMU WALL BRACING DETAILS THIS SHEET.

## 8 S-701 TYP INTERIOR CMU WALL REINF DETAIL

SCALE: NTS

UNLESS OTHERWISE NOTED, LINEAR DIMENSIONS SHOWN ARE IN MILLIMETERS (mm)

APPROVED:

A/E DESIGNER OF RECORD

SEAL:

GEORGIA REGISTERED 1-27-10 No. 27141 PROFESSIONAL ENGINEER CHRISTOPHER W. WHITMORE

US ARMY CORPS OF ENGINEERS
AFGHANISTAN ENGINEER DISTRICT

| Mark | Description | Date | Appr. |
|---|---|---|---|

U.S. ARMY CORPS OF ENGINEERS
AFGHANISTAN ENGINEER DISTRICT
APO AE 96338


Michael Baker Jr., Inc
A unit of Michael Baker Corporation
Airside Business Park
100 Airside Drive
Moon Township, PA 15108
www.mbakercorp.com


Designed by: KMP/MMY
Dwn by: RCG
Ckd by: CWW
Reviewed by: LHM
Submitted by: BAKER

Date: 2/23/10
Design file no.
Drawing code:
File name: AMABSSBS-701DT
Plot date: 2/23/2010
Plot scale: XX
Rev. 0

AFGHAN NATIONAL ARMY
REGIONAL MILITARY TRAINING CENTER
STANDARD DESIGN

SUPPORT STAFF BARRACKS

TYPICAL DETAILS

Sheet reference number:
S-701

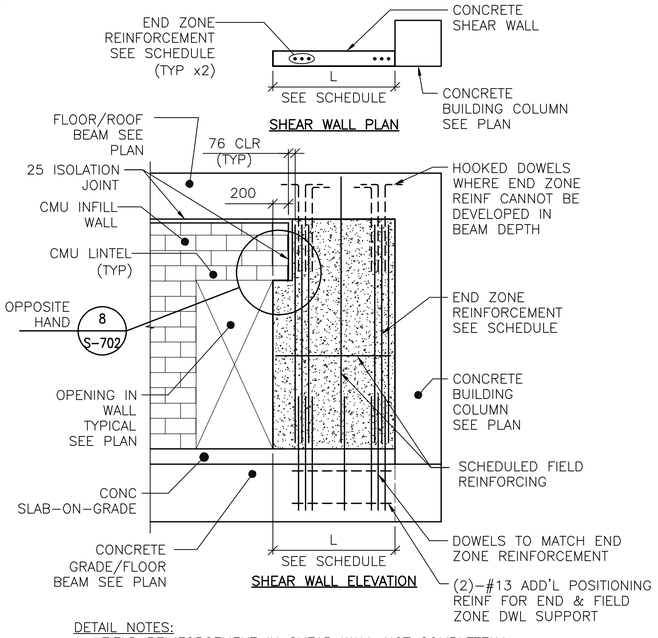


DETAIL NOTES:
1. FIELD REINFORCEMENT IN SHEAR WALL NOT COMPLETELY SHOWN FOR CLARITY.
2. FIELD REINFORCEMENT CENTERED IN WALL.
3. MINIMUM CONC CLEAR DISTANCE FOR END ZONE REINF = 76
4. SEE CONC SHEAR WALL SCHEDULE ON SHEET S-601
5. SEE ARCH DWGS FOR ISOLATION JOINT INFORMATION

## TYPE "B" SHEAR WALL DETAIL

1 / S-702 — SCALE: NTS

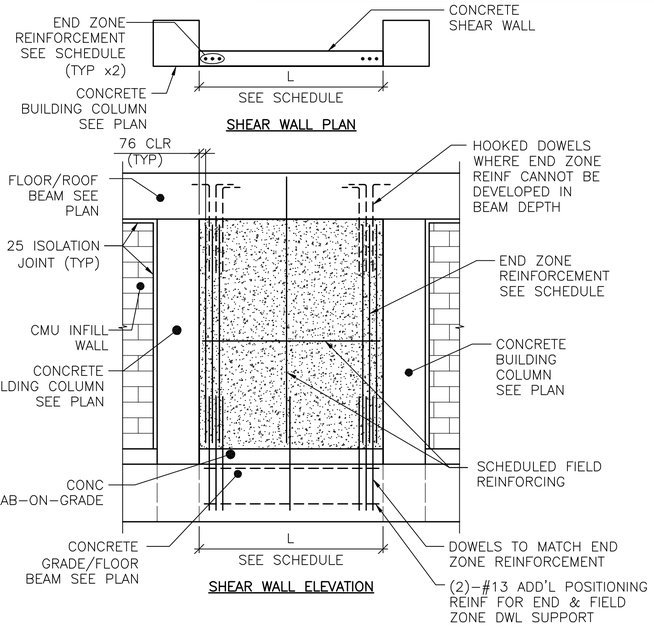


DETAIL NOTES:
1. FIELD REINFORCEMENT IN SHEAR WALL NOT COMPLETELY SHOWN FOR CLARITY.
2. FIELD REINFORCEMENT CENTERED IN WALL.
3. MINIMUM CONC CLEAR DISTANCE FOR END ZONE REINF = 76
4. SEE CONC SHEAR WALL SCHEDULE ON SHEET S-601
5. SEE ARCH DWGS FOR ISOLATION JOINT INFORMATION

## TYPE "C" SHEAR WALL DETAIL

2 / S-702 — SCALE: NTS

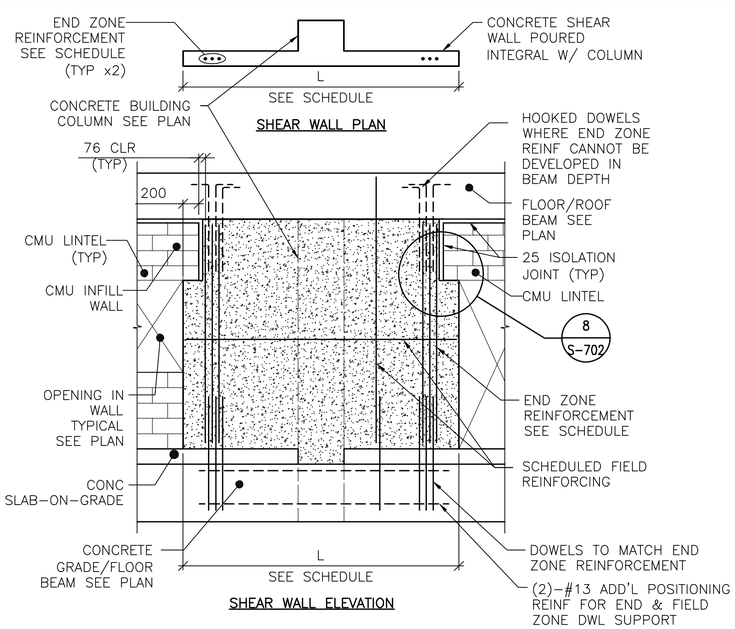


DETAIL NOTES:
1. FIELD REINFORCEMENT IN SHEAR WALL NOT COMPLETELY SHOWN FOR CLARITY.
2. FIELD REINFORCEMENT CENTERED IN WALL.
3. MINIMUM CONC CLEAR DISTANCE FOR END ZONE REINF = 76
4. SEE CONC SHEAR WALL SCHEDULE ON SHEET S-601
5. SEE ARCH DWGS FOR ISOLATION JOINT INFORMATION

## TYPE "D" SHEAR WALL DETAIL

3 / S-702 — SCALE: NTS

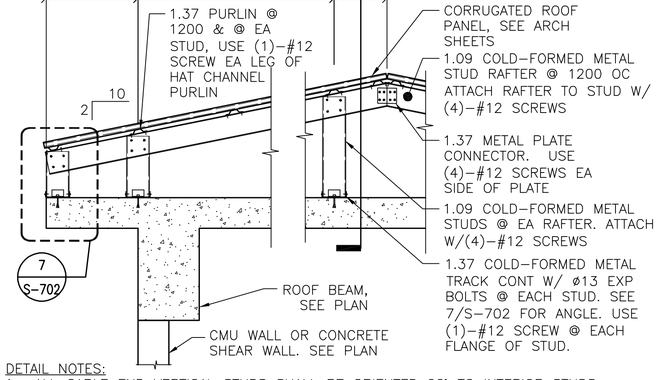


DETAIL NOTES:
1. ALL GABLE END VERTICAL STUDS SHALL BE ORIENTED 90° TO INTERIOR STUDS & SPACED @ 600 OC. GABLE END RAFTER SHALL BE 1.37 METAL TRACK SPANNING CONTINUOUSLY OVER GABLE END STUDS. INSET GIRTS AT GABLE END SHALL BE 1.09 COLD-FORMED METAL STUDS @ 1200 OC ATTACHED VIA 1.37 THICKNESS CLIP ANGLE W/ (2) #12 SCREWS EA LEG.
2. ALL INTERIOR, NON-GABLE END VERTICAL STUDS GREATER THAN 2400 IN LENGTH SHALL BE BACK-TO-BACK W/ #12 SCREWS @ 200 OC STAGGERED.

## TYPICAL OVERBUILT ROOF FRAMING DETAIL

4 / S-702 — SCALE: NTS

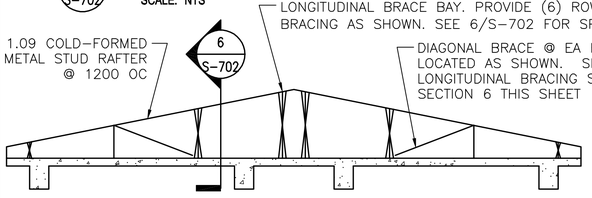


## TYPICAL ROOF BRACE LAYOUT

5 / S-702 — SCALE: NTS

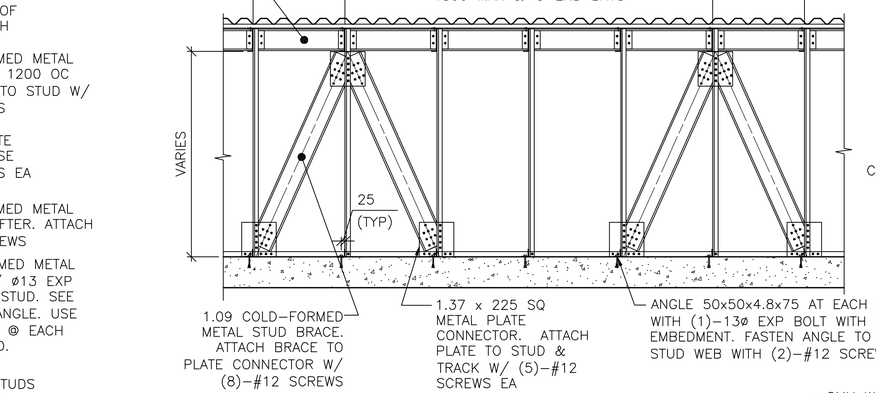


## SECTION

6 / S-702 — SCALE: NTS

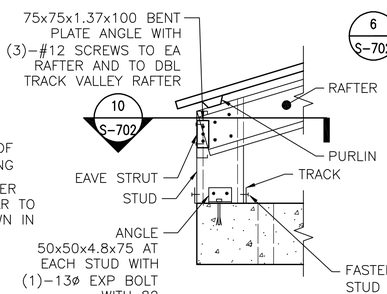


## DETAIL

7 / S-702 — SCALE: NTS

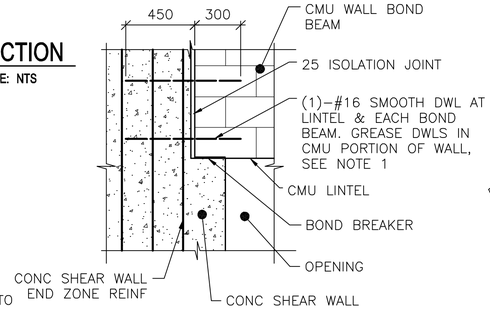


NOTE:
1. TIE SMOOTH DOWEL ROD TO SHEAR WALL END ZONE REINF FOR EACH BOND BEAM AND LINTEL.

## SECTION

8 / S-702 — SCALE: NTS

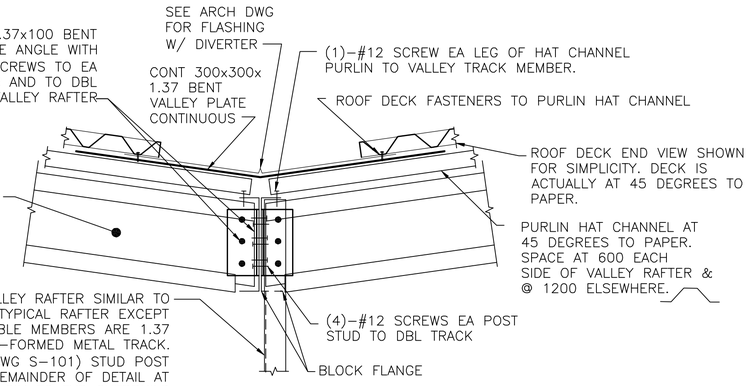


## TYPICAL OVERBUILT ROOF SECTION THROUGH VALLEY

9 / S-702 — SCALE: NTS

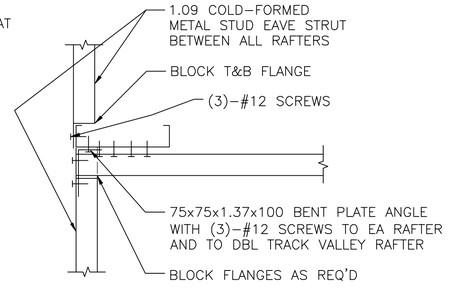


## SECTION

10 / S-702 — SCALE: NTS

UNLESS OTHERWISE NOTED, LINEAR DIMENSIONS SHOWN ARE IN MILLIMETERS (mm)

APPROVED:

A/E DESIGNER OF RECORD

SEAL:

GEORGIA REGISTERED 1-29-10 No. 27141 PROFESSIONAL ENGINEER CHRISTOPHER W. WHITMORE

US ARMY CORPS OF ENGINEERS
AFGHANISTAN ENGINEER DISTRICT

| Mark | Description | Date | Appr. |
|---|---|---|---|
| | | | |

Rev: 0
Date: 2/23/10
Design file no.
Drawing code:
File name: ANABSBS-702TDT
Plot date: 2/23/2010
Plot scale: X:X

| Designed by: KMP/MMY | Dwn by: RCG | Ckd by: CWW |
|---|---|---|
| Reviewed by: LHM | Submitted by: | BAKER |

U.S. ARMY CORPS OF ENGINEERS
AFGHANISTAN ENGINEER DISTRICT
APO AE 96338

Michael Baker Jr., Inc
A unit of Michael Baker Corporation
Airside Business Park
100 Airside Drive
Moon Township, PA 15108
www.mbakercorp.com

AFGHAN NATIONAL ARMY
REGIONAL MILITARY TRAINING CENTER
STANDARD DESIGN

SUPPORT STAFF BARRACKS

TYPICAL DETAILS

Sheet reference number:
S-702

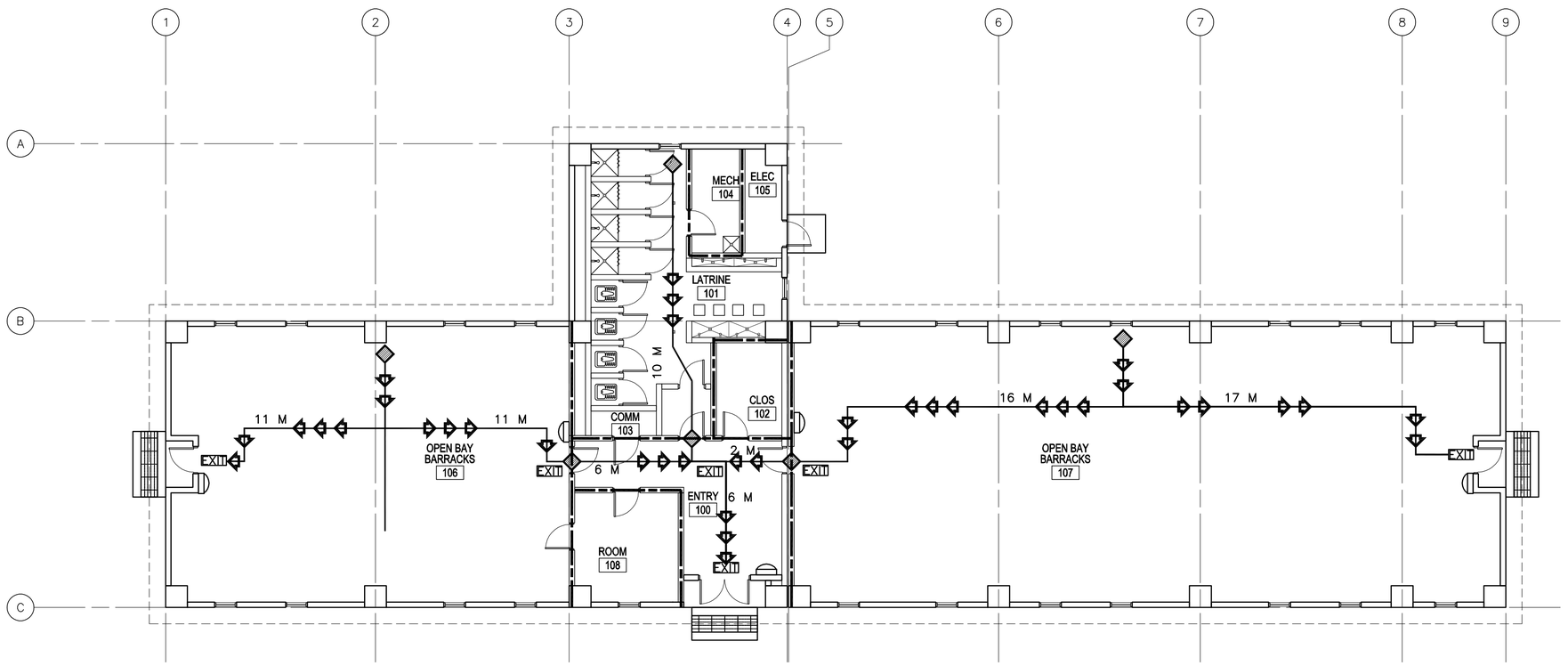


## LEGEND:

- DENOTES PATHS OF EXIT TRAVEL
- EXIT — DENOTES DOOR AS AN EMERGENCY EXIT
- DENOTES STARTING POINT FOR TRAVEL DISTANCE
- DENOTES FIRE EXTINGUISHER LOCATIONS
- (1) HOUR RATED WALL
- (2) HOUR RATED WALL
- (3) HOUR RATED WALL

1 / A-001 **LIFE SAFETY PLAN**
SCALE: 1:100

## CODE ANALYSIS:

1. REFERENCES:
2006 INTERNATIONAL BUILDING CODE (2006 IBC)
2006 LIFE SAFETY CODE (2006 NFPA 101)

2. IBC OCCUPANCY CLASSIFICATION:
GROUP R-2 (NEW HOTELS AND DORMITORIES NFPA 101 6.1.8 AND CHAPTER 28)

3. TYPE OF CONSTRUCTION (IBC): TYPE II-B (UNPROTECTED/NONSPRINKLERED)

4. IBC TABLE 503: ALLOWABLE HEIGHT AND BUILDING AREAS:
GROUP R-2
ALLOWABLE AREA: 1486 SM
ALLOWABLE HEIGHT: 4 STORIES (16 M)

GROUP R-2
PROPOSED AREA: 569 SM
PROPOSED HEIGHT: 1 STORY (<16 M)

5. IBC TABLE 601 & 602: FIRE RESISTANCE RATING REQUIREMENTS FOR BUILDING ELEMENTS FOR TYPE II-B

| BUILDING ELEMENT | RATING (HOUR) | REFERENCE |
|---|---|---|
| STRUCTURAL FRAME (COLUMNS, GIRDERS & TRUSSES) | 0 | TABLE 601 |
| BEARING WALLS | | |
| EXTERIOR | 0 | TABLE 601 |
| INTERIOR | 0 | TABLE 601 |
| NONBEARING WALLS & PARTITIONS | | |
| INTERIOR | 0 | TABLE 601 |
| FLOOR CONSTRUCTION | 0 | TABLE 601 |
| ROOF CONSTRUCTION | 0 | TABLE 601 |
| EXTERIOR WALL | 0 | TABLE 602 |

6. IBC TABLE 803.5 – INTERIOR WALL AND CEILING FINISH REQUIREMENTS FOR R-2 OCCUPANCY/NONSPRINKLERED

| GROUP | EXIT ENCLOSURES AND EXIT PASSAGEWAY | CORRIDORS | ROOMS AND ENCLOSED SPACES |
|---|---|---|---|
| R-2 | B | B | C |

7. NFPA 101 TABLE 7.3.1.2 – OCCUPANT LOAD
HOTELS AND DORMITORIES = 18.6 SM/PERSON CALCULATED = 30 OCCUPANTS
ACTUAL = 45 OCCUPANTS

8. NFPA 101 TABLE 7.3.3.1 – EGRESS CAPACITY
HOTELS AND DORMITORIES = 5 MM PER OCCUPANT

MINIMUM REQUIRED: 225 MM (45 OCCUPANTS x 5 MM PER OCCUPANT)
PROPOSED EGRESS CAPACITY: 3600 MM: (4) 900 MM DOORS

9. NFPA 101 PARAGRAPH 28.2.6 – EXIT ACCESS TRAVEL DISTANCE
MAXIMUM ALLOWED WITHIN ROOM OR SUITE TO CORRIDOR: 23 METERS
MAXIMUM ALLOWED CORRIDOR DOOR OF ANY ROOM OR SUITE TO NEAREST EXIT: 30 METERS

PROPOSED WITHIN ROOM OR SUITE TO CORRIDOR: 17 METERS
PROPOSED CORRIDOR DOOR OF ANY ROOM OR SUITE TO NEAREST EXIT: 11 METERS

10. NFPA 101 PARAGRAPH 28.3.6.1.2 – CORRIDOR FIRE-RESISTANCE RATING (HOUR)
REQUIRED: WALLS NOT LESS THAN ONE HOUR FIRE RESISTANCE RATING
PROPOSED: 1 HOUR RATED WALLS

11. NFPA 101 PARAGRAPH 28.3.6.2 & TABLE 8.3.4.2 – DOORS INTO EXIT ACCESS CORRIDORS
REQUIRED MINIMUM: 20 MINUTE FIRE PROTECTION RATING
PROPOSED: 20 MINUTE DOORS

12. NFPA 101 PARAGRAPH 28.2.3.3 – CORRIDOR WIDTH
REQUIRED: SUFFICIENT FOR OCCUPANT LOAD, BUT NOT LESS THAN 1120 MM
CALCULATED WIDTH REQUIRED PER OCCUPANT LOAD: 225 (45 OCCUPANTS X 5 MM)
PROVIDED: 1700 MM

13. NFPA 101 PARAGRAPH 28.2.5.3 – COMMON PATH OF TRAVEL
MAXIMUM ALLOWED: 10.7 METERS
PROVIDED: 0 METERS

14. NFPA 101 PARAGRAPH 28.2.5.5 – DEAD END CORRIDORS
PERMITTED: 10.7 METERS
PROPOSED: NO DEAD END CORRIDORS

15. NFPA 101 PARAGRAPH 28.2.4.1 AND 7.4.1.1 – MINIMUM NUMBER OF EXITS
REQUIRED: 2 MINIMUM
PROPOSED: 3 EXITS

16. NFPA 101 PARAGRAPH 28.2.1.2 & 24.2 – SECONDARY MEANS OF ESCAPE
ONE OF THE FOLLOWING REQUIRED:
1)DOOR, SIMILAR TO PRIMARY, BUT REMOTE FROM PRIMARY
2) OPERABLE WINDOW, 0.53 SM, NOT LESS THAN 510 MM WIDE, 610 MM HIGH, NOT MORE THAN 1120 MM AFF, WITHIN 6100 MM OF GRADE
PROVIDED: OPERABLE WINDOWS, 0.93 SM EACH, MULTIPLE PER ROOM

17. NFPA 101 PARAGRAPH 24.2.2.4 – TWO PRIMARY MEANS OF ESCAPE
AREA WITH DWELLING UNIT EXCEEDS 185 SM PER STORY
ALLOWED AREA PER STORY WITHIN DWELLING UNIT: 185 SM
PROVIDED AREA WITHIN DWELLING UNIT: (253) SM ROOM 106
REQUIRED PRIMARY EXITS: 2
PROVIDED PRIMARY EXITS: 2

18. NFPA 101 PARAGRAPH 28.3.7.1 – SUBDIVISION OF BUILDING SPACES – NONSPRINKLERED
REQUIRED: EACH GUEST ROOM OR DORMITORY ROOM SHALL BE SEPARATED FROM OTHER GUEST OR DORMITORY ROOMS BY FIRE BARRIERS HAVING FIRE RESISTANCE RATING OF NOT LESS THAN 1 HOUR
PROVIDED: 1 HOUR SEPARATION

19. HAZARDOUS AREA PROTECTION TABLE 28.3.2.2.2
STORAGE ROOMS: 1 HOUR SEPARATION REQUIRED

20. NFPA 101 A.3.3.53 DORMITORY: ROOMS WITHIN DORMITORIES INTENDED FOR THE USE OF INDIVIDUALS FOR COMBINED LIVING AND SLEEPING PURPOSES ARE GUEST ROOMS OR GUEST SUITES. EXAMPLES OF DORMITORIES ARE COLLEGE DORMITORIES, FRATERNITY AND SORORITY HOUSES AND MILITARY BARRACKS.

21. NFPA 101 28.3.5.2 EXTINGUISHMENT REQUIREMENTS: AUTOMATIC SPRINKLER PROTECTION REQUIRED UNLESS SLEEPING ROOMS HAVE DOORS DIRECTLY TO OUTSIDE.
DUE TO AUSTERE DESIGN CRITERIA, THE GOVERNMENT HAS A FIRE PROTECTION WAIVER FOR THIS REQUIREMENT.

LINEAR DIMENSIONS SHOWN ARE IN MILLIMETERS (MM), UNLESS OTHERWISE NOTED

0 2000 4000
SCALE: 1:100

APPROVED:

A/E DESIGNER OF RECORD

SEAL:

STATE OF SOUTH CAROLINA
KEVIN R. CHAFIN
N. Charleston, SC
6374
REGISTERED ARCHITECT

US ARMY CORPS OF ENGINEERS
AFGHANISTAN ENGINEER DISTRICT

| Mark | Description | Date | Appr. |
|---|---|---|---|

| Mark | Description | Date | Appr. |
|---|---|---|---|

Rev: 0
Date: 2/23/10
Design file no.
Drawing code:
File name: ANABSSBA-0011.SP
Plot date: 2/23/2010
Plot scale:

Designed by: KRC
Drwn by: KJG
Ckd by: NLJ
Reviewed by: LHM
Submitted by:
BAKER

U.S. ARMY CORPS OF ENGINEERS
AFGHANISTAN ENGINEER DISTRICT
APO AE 96338

*Michael Baker Jr., Inc.*
*A unit of Michael Baker Corporation*
Airside Business Park
100 Airside Drive
Moon Township, PA 15108
www.mbakercorp.com

AFGHAN NATIONAL ARMY
REGIONAL MILITARY TRAINING CENTER
STANDARD DESIGN

SUPPORT STAFF BARRACKS

LIFE SAFETY PLAN

Sheet reference number:
A-001

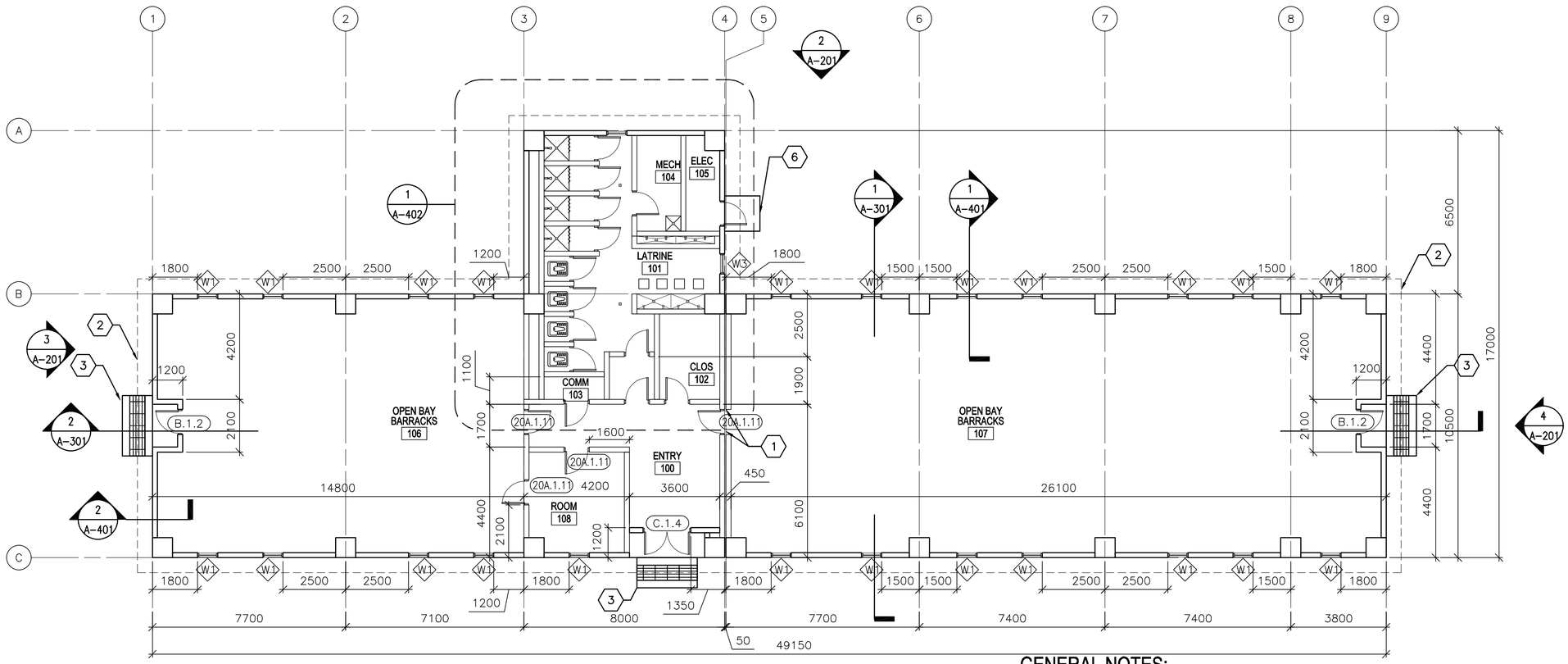


# FLOOR PLAN

SCALE: 1:100

## GENERAL NOTES:

A. DIMENSIONS ARE SHOWN TO OUTER EDGE OF EXTERIOR STRUCTURAL COLUMNS, STRUCTURAL COLUMN GRID, EDGE OF INTERIOR PARTITIONS, EDGE OF WINDOW OPENINGS, AND TO HINGE SIDE OF DOOR FRAME OPENINGS.

B. HINGE SIDE OF OPENINGS FOR DOORS AND FRAMES SHALL BE LOCATED 200 MM FROM THE ADJACENT WALL OR COLUMN, UNLESS NOTED OTHERWISE.

C. INTERIOR PARTITIONS SHALL BE 200 MM CMU, UNLESS NOTED OTHERWISE.

D. COSMETIC REPAIR OF MINOR DEFECTS: REPAIR OR FILL MORTAR JOINTS AND MINOR DEFECTS, INCLUDING BUT NOT LIMITED TO SPALLS, IN ACCORDANCE WITH MANUFACTURER'S RECOMMENDATIONS AND PRIOR TO COATING APPLICATION. SURFACES TO BE PAINTED SHALL BE CLEAN AND FREE OF FOREIGN MATTER BEFORE APPLICATION OF PAINT. CLEANING SHALL BE SCHEDULED SO THAT DUST AND OTHER CONTAMINANTS WILL NOT FALL ON NEWLY PAINTED SURFACES.

E. CONCRETE, PLASTER AND MASONRY SURFACES SHALL BE ALLOWED TO CURE FOR AT LEAST 30 DAYS BEFORE PAINTING. CONCRETE SLABS-ON-GRADE SHALL BE ALLOWED TO CURE 90 DAYS BEFORE STAINING OR SEALING.

F. DO NOT USE PAINT MATERIALS CONTAINING LEAD CONTENT IN EXCESS OF 0.009 PERCENT OF THE WEIGHT OF THE TOTAL NONVOLATILE CONTENT OF THE PAINT OR THE WEIGHT OF THE DRIED PAINT FILM.

G. DO NOT USE ANY ASBESTOS CONTAINING MATERIALS (ACM) IN PROJECT. ACM IS DEFINED AS 1% OR MORE BY VOLUME.

H. DO NOT USE PAINT MATERIALS CONTAINING MERCURIAL FUNGICIDES.

I. FACTORY PRIMED METAL DOORS AND FRAMES SHALL RECEIVE TWO COATS OF PAINT.

J. FILL REMAINING SPACE AT PENETRATIONS IN FIRE-RATED FLOORS, PARTITIONS AND CEILINGS WITH APPROPRIATE FIRESTOPPING MATERIALS.

K. ALL CEILING FINISHES SHALL BE PAINTED PLASTER APPLIED TO STRUCTURE.

L. ALL WALL FINISHES SHALL BE PAINTED PLASTER APPLIED TO STRUCTURE UNLESS OTHERWISE NOTED.

M. ALL FLOOR FINISHES SHALL BE SEALED CONCRETE, UNLESS NOTED OTHERWISE.

N. PROVIDE TILE FINISHES AS INDICATED IN DETAILS AND KEY NOTES.

O. HEIGHT OF ALL TOILET AND SHOWER PARTITIONS SHALL BE 2400 MM ABOVE FINISHED FLOOR.

P. ALL TOILET STALL DOORS SHALL BE F.2.12

Q. SHOWER STALL DOOR, FRAME, AND HARDWARE TYPE SHALL BE E.1.12.

R. PROVIDE POLISHED STAINLESS STEEL MIRROR 600 X 900 ABOVE EVERY LAVATORY FAUCET.

## KEY NOTES:

1. ISOLATION JOINT COVER – SEE SHEET A-506.
2. LINE OF ROOF OVERHANG ABOVE.
3. CONCRETE STOOP WITH GRATE – SEE DETAIL 1/A-503.
4. NOT USED.
5. NOT USED.
6. CONCRETE STOOP – SEE DETAIL 3/A-503.

## LEGEND:

XXX — DOOR FRAME AND HARDWARE TYPE, SEE SHEET A-601

A — WINDOW TYPE, SEE SHEET A-601

X — KEY NOTE

## ABBREVIATIONS:

| | |
|---|---|
| ELEC | ELECTRICAL |
| MECH | MECHANICAL |
| JAN | JANITOR |
| CLOS | CLOSET |
| COMM | COMMUNICATIONS |

LINEAR DIMENSIONS SHOWN ARE IN MILLIMETERS (MM), UNLESS OTHERWISE NOTED

0 2000 4000

SCALE: 1:100

APPROVED:

A/E DESIGNER OF RECORD

SEAL:

STATE OF SOUTH CAROLINA
KEVIN R. CHAFIN
N. Charleston, SC
6374
REGISTERED ARCHITECT

US ARMY CORPS OF ENGINEERS
AFGHANISTAN ENGINEER DISTRICT

| Mark | Description | Date | Appr. |
|---|---|---|---|

Rev: 0
Date: 2/23/10
Design file no.
Drawing code:
File name: ANASSSBA-101FP
Plot date: 2/23/2010
Plot scale: x:X

Designed by: KRC
Dwn by: KJG
Ckd by: NLJ
Reviewed by: LHM
Submitted by: BAKER

U.S. ARMY CORPS OF ENGINEERS
AFGHANISTAN ENGINEER DISTRICT
APO AE 96338

Michael Baker Jr, Inc
A unit of Michael Baker Corporation
Airside Business Park
100 Airside Drive
Moon Township, PA 15108
www.mbakercorp.com

AFGHAN NATIONAL ARMY
REGIONAL MILITARY TRAINING CENTER
STANDARD DESIGN

SUPPORT STAFF BARRACKS

FLOOR PLAN

Sheet reference number:
A-101

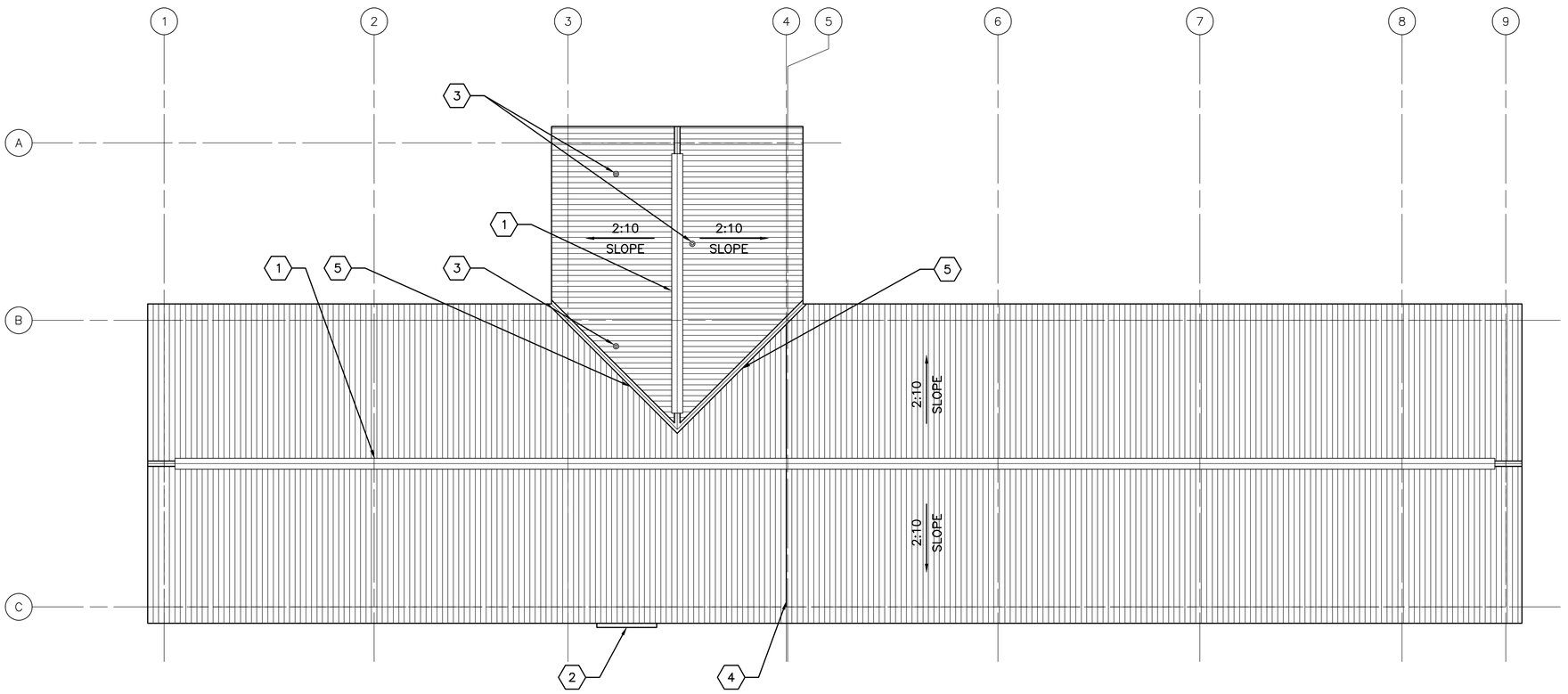


1 A–102 **ROOF PLAN**

SCALE: 1:100

## GENERAL NOTES:

A. THE APPROXIMATE LOCATION OF ROOF DEVICES AND PENETRATIONS ARE SHOWN ON THE ROOF PLAN FOR INFORMATION ONLY. THE CONTRACTOR SHALL BE RESPONSIBLE FOR UNDERSTANDING THE ACTUAL LOCATION OF THESE AND ALL OTHER ITEMS PRIOR TO BEGINNING CONSTRUCTION. COORDINATE ALL ROOF PENETRATIONS WITH STRUCTURAL, MECHANICAL AND PLUMBING WORK.

B. PLUMBING VENT PENETRATIONS SHALL TERMINATE 300 MM MINIMUM ABOVE THE ROOF.

C. UNLESS OTHERWISE NOTED, NOTES, DETAILS OR FEATURES INDICATED FOR ONE CONDITION SHALL BE APPLICABLE FOR ALL ALIKE AND SIMILAR CONDITIONS.

D. STOCKPILING OF MATERIALS, EQUIPMENT AND ANY OTHER ITEMS ON THE ROOF IS PROHIBITED.

E. ROOFS SHALL BE CORRUGATED METAL ROOF PANELS ON COLD–FORMED METAL FRAMING ON CONCRETE SLAB.

## KEY NOTES: (X)

1. CONTINUOUS METAL RIDGE VENT – SEE DETAIL 4/A–501.
2. METAL GUTTER, CENTER ON DOOR, 2300 MM – SEE DETAIL 1A/A–501.
3. PLUMBING VENT – SEE DETAIL 5/A–501.
4. ROOF EXPANSION JOINT – SEE DETAIL 4A/A501.
5. VALLEY – SEE DETAIL 6/A–501.

LINEAR DIMENSIONS SHOWN ARE IN MILLIMETERS (MM), UNLESS OTHERWISE NOTED

0 2000 4000
SCALE: 1:100

APPROVED:

A/E DESIGNER OF RECORD

SEAL:

STATE OF SOUTH CAROLINA
KEVIN R. CHAFIN
N. Charleston, SC
6374
REGISTERED ARCHITECT

US ARMY CORPS OF ENGINEERS
AFGHANISTAN ENGINEER DISTRICT

| Mark | Description | Date | Appr. | Mark | Description | Date | Appr. |
|---|---|---|---|---|---|---|---|
| | | | | | | | |

Date: 2/23/10
Design file no.
Drawing code:
File name: ANABSSBA-102SP
Plot date: 2/23/2010
Plot scale: x:X
Rev: 0

Designed by: KRC
Dwn by: KJG
Ckd by: NLJ
Reviewed by: LHM
Submitted by: BAKER

U.S. ARMY CORPS OF ENGINEERS
AFGHANISTAN ENGINEER DISTRICT
APO AE 96338

*Michael Baker Jr., Inc*
*A unit of Michael Baker Corporation*
Airside Business Park
100 Airside Drive
Moon Township, PA 15108
www.mbakercorp.com

AFGHAN NATIONAL ARMY
REGIONAL MILITARY TRAINING CENTER
STANDARD DESIGN

SUPPORT STAFF BARRACKS

ROOF PLAN

Sheet reference number:
A–102

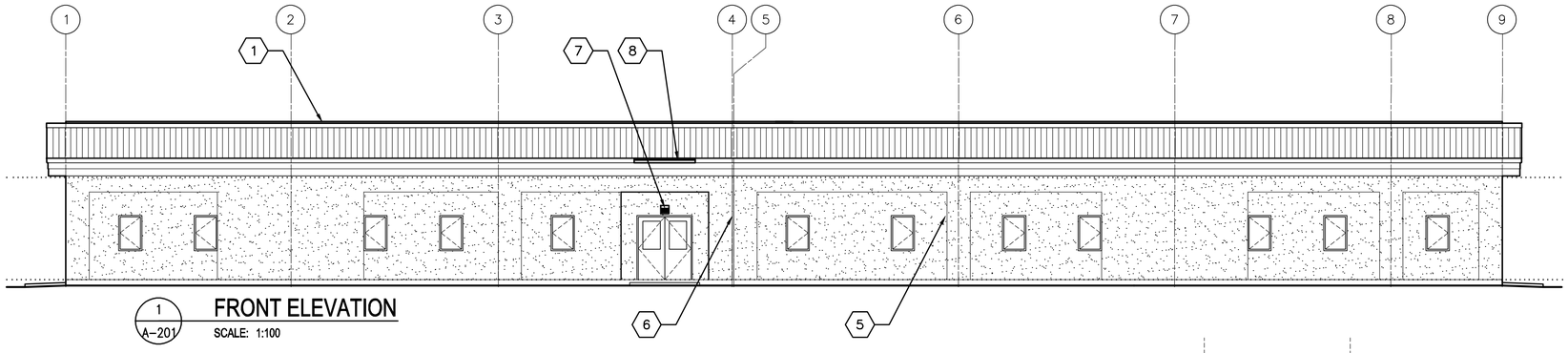


1 A–201 **FRONT ELEVATION**
SCALE: 1:100

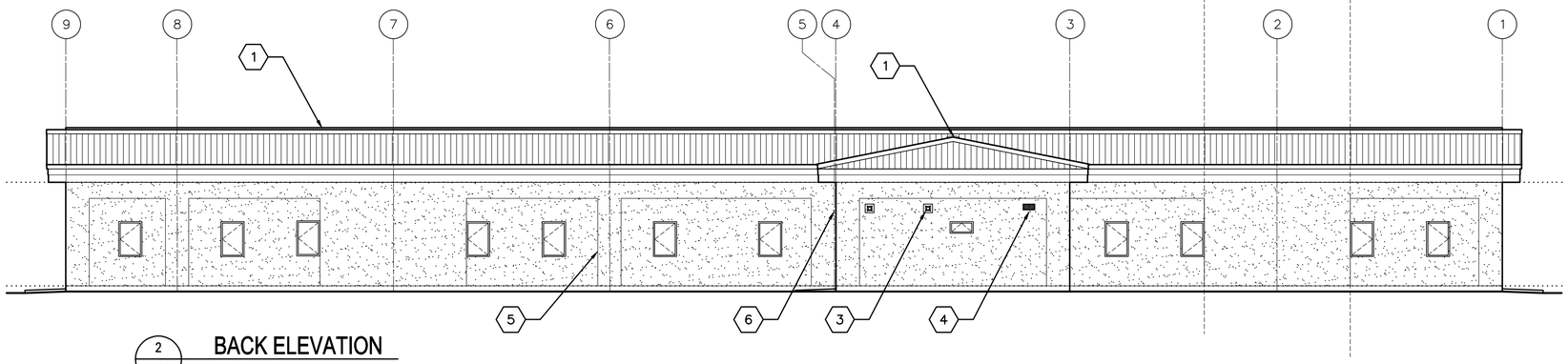


2 A–201 **BACK ELEVATION**
SCALE: 1:100

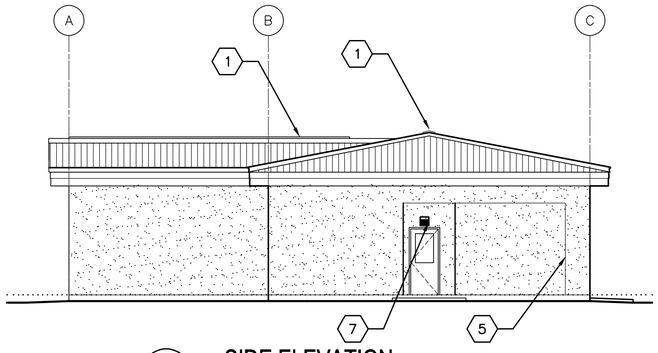


3 A–201 **SIDE ELEVATION**
SCALE: 1:100

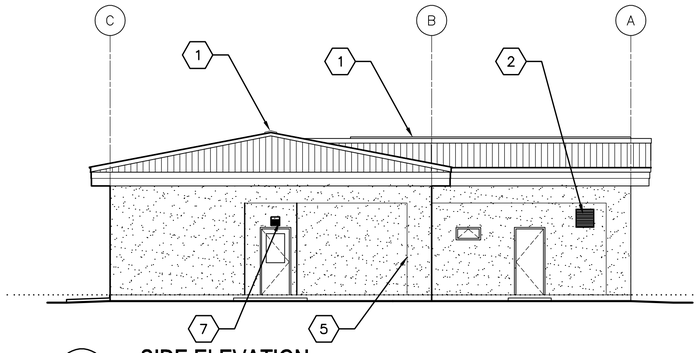


4 A–201 **SIDE ELEVATION**
SCALE: 1:100

## GENERAL NOTES:

A. COORDINATE SIZE AND LOCATION OF OPENINGS FOR MECHANICAL ITEMS WITH MECHANICAL DRAWINGS.

B. PROVIDE STRUCTURAL LINTELS AS REQUIRED – SEE STRUCTURAL DRAWINGS

C. ALL EXTERIOR WALL FINISHES SHALL BE STUCCO OVER CMU AND CONCRETE SUBSTRATES. PROVIDE CONTROL JOINTS IN STUCCO WALL FINISH AS NOTED.

D. ROOF SHALL BE CORRUGATED METAL ROOF PANELS ON COLD–FORMED METAL FRAMING ON CONCRETE SLAB.

## KEY NOTES: (X)

1. CONTINUOUS METAL RIDGE VENT – SEE DETAIL 4/A–501.
2. LOUVER, LOCATE TOP OF WALL PENETRATION 2800 MM ABOVE FINISHED FLOOR – SEE MECHANICAL DRAWINGS.
3. EXHAUST FAN, LOCATE TOP OF WALL PENETRATION 2800 MM ABOVE FINISHED FLOOR – SEE MECHANICAL DRAWINGS.
4. EXHAUST FAN WITH WALL GRILL, LOCATE TOP OF WALL PENETRATION 2800 MM ABOVE FINISHED FLOOR – SEE MECHANICAL DRAWINGS.
5. STUCCO CONTROL JOINT – SEE DETAIL 2A/A–501.
6. EXPANSION JOINT COVER – SEE SHEET 1/A–506.
7. EXTERIOR LIGHT FIXTURE – SEE ELECTRICAL.
8. METAL GUTTER, CENTER ON DOOR, 2300 MM – SEE DETAIL 1A/ A–501

LINEAR DIMENSIONS SHOWN ARE IN MILLIMETERS (MM), UNLESS OTHERWISE NOTED

0 2000 4000
SCALE: 1:100

APPROVED:

A/E DESIGNER OF RECORD

SEAL:

STATE OF SOUTH CAROLINA
KEVIN R. CHAFIN
N. Charleston, SC
6374
REGISTERED ARCHITECT

US ARMY CORPS OF ENGINEERS
AFGHANISTAN ENGINEER DISTRICT

| Mark | Description | Date | Appr. |
|---|---|---|---|
| | | | |

| Mark | Description | Date | Appr. |
|---|---|---|---|
| | | | |

Date: 2/23/10
Design file no.
Drawing code:
File name: ANABSSBA-201ELV
Plot date: 2/23/2010
Plot scale: x:X
Rev: 0

Designed by: KRC
Dwn by: KJG
Ckd by: NLJ
Reviewed by: LHM
Submitted by: BAKER

U.S. ARMY CORPS OF ENGINEERS
AFGHANISTAN ENGINEER DISTRICT
APO AE 96338

*Michael Baker Jr., Inc*
*A unit of Michael Baker Corporation*
Airside Business Park
100 Airside Drive
Moon Township, PA 15108
www.mbakercorp.com

AFGHAN NATIONAL ARMY
REGIONAL MILITARY TRAINING CENTER
STANDARD DESIGN

SUPPORT STAFF BARRACKS

ELEVATIONS

Sheet reference number:
A–201

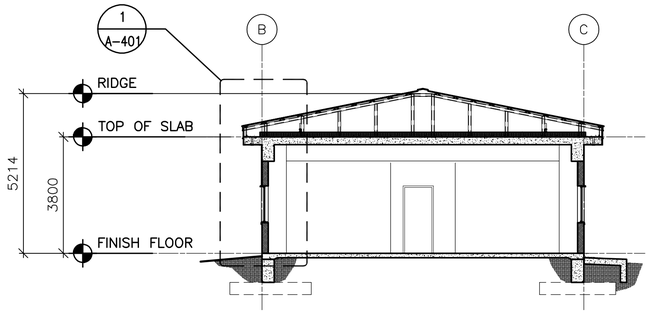


1 A-301 **SECTION**
SCALE: 1:100

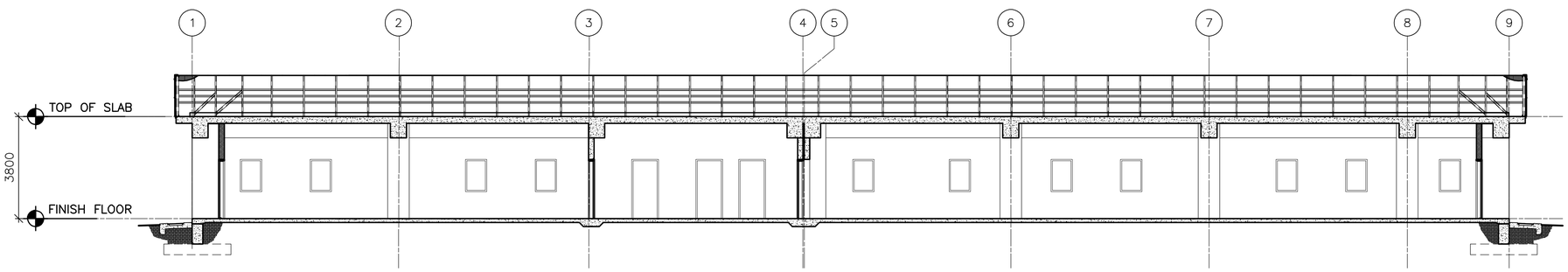


2 A-301 **SECTION**
SCALE: 1:100

LINEAR DIMENSIONS SHOWN ARE IN MILLIMETERS (MM), UNLESS OTHERWISE NOTED

0 2000 4000
SCALE: 1:100

APPROVED:

A/E DESIGNER OF RECORD

SEAL:

STATE OF SOUTH CAROLINA
KEVIN R. CHAFIN
N. Charleston, SC
6374
REGISTERED ARCHITECT

US ARMY CORPS OF ENGINEERS
AFGHANISTAN ENGINEER DISTRICT

| Mark | Description | Date | Appr. |
|---|---|---|---|
| | | | |

| Mark | Description | Date | Appr. |
|---|---|---|---|
| | | | |

Date: 2/23/10
Design file no.
Drawing code:
File name: ANABSSBA-301BS
Plot date: 2/23/2010
Plot scale:
Rev: 0

Designed by: KRC
Dwn by: KJG
Ckd by: NLJ
Reviewed by: LHM
Submitted by: BAKER

U.S. ARMY CORPS OF ENGINEERS
AFGHANISTAN ENGINEER DISTRICT
APO AE 96338

*Michael Baker Jr., Inc.*
*A unit of Michael Baker Corporation*
Airside Business Park
100 Airside Drive
Moon Township, PA 15108
www.mbakercorp.com

AFGHAN NATIONAL ARMY
REGIONAL MILITARY TRAINING CENTER
STANDARD DESIGN

SUPPORT STAFF BARRACKS

BUILDING SECTIONS

Sheet reference number:
A-301

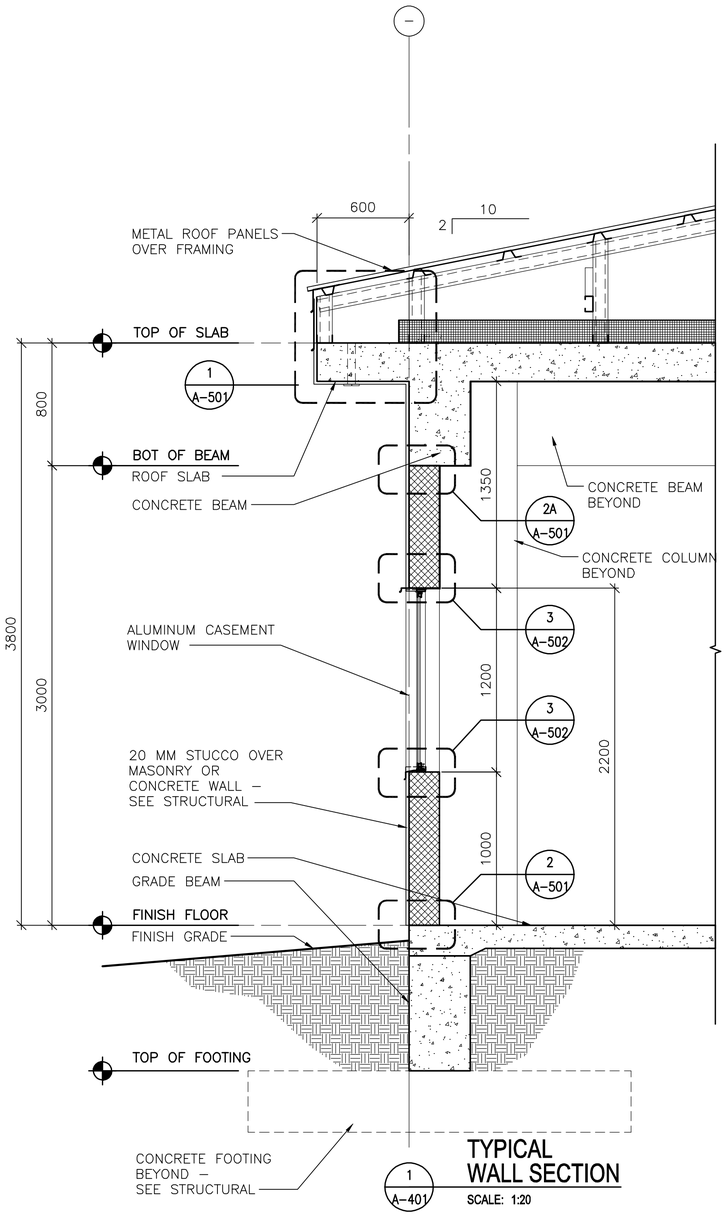


TYPICAL
WALL SECTION

SCALE: 1:20

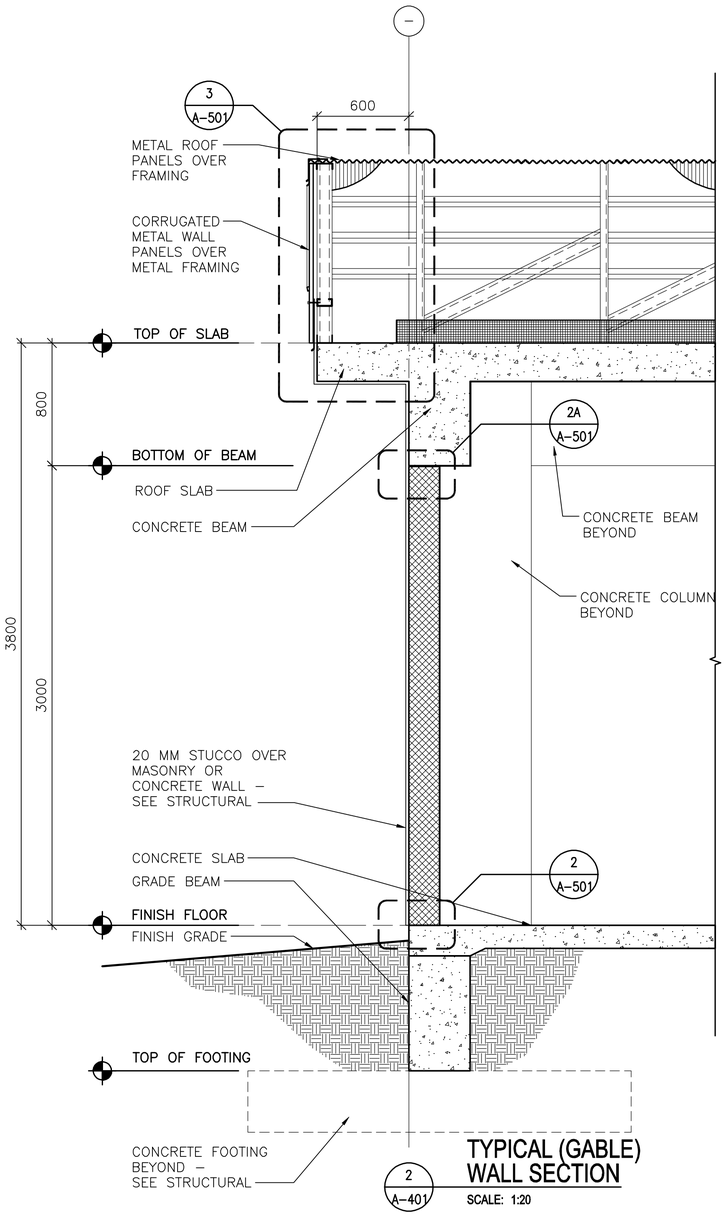


TYPICAL (GABLE)
WALL SECTION

SCALE: 1:20

LINEAR DIMENSIONS SHOWN
ARE IN MILLIMETERS (MM),
UNLESS OTHERWISE NOTED

0 400 800
SCALE: 1:20

APPROVED:

A/E DESIGNER OF RECORD

SEAL:

STATE OF SOUTH CAROLINA
KEVIN R. CHAFIN
N. Charleston, SC
6374
REGISTERED ARCHITECT

US ARMY CORPS
OF ENGINEERS
AFGHANISTAN
ENGINEER DISTRICT

| Mark | Description | Date | Appr. |
|---|---|---|---|
| | | | |

| Mark | Description | Date | Appr. |
|---|---|---|---|
| | | | |

Rev: 0
Date: 2/23/10
Design file no.
Drawing code:
File name: ANABSSBA-401W3
Plot date: 2/23/2010
Plot scale: x:X

Designed by: KRC
Dwn by: KJG
Ckd by: NLJ
Reviewed by: LHM
Submitted by: BAKER

U.S. ARMY CORPS OF ENGINEERS
AFGHANISTAN ENGINEER DISTRICT
APO AE 96338

*Michael Baker Jr., Inc*
*A unit of Michael Baker Corporation*
Airside Business Park
100 Airside Drive
Moon Township, PA 15108
www.mbakercorp.com

AFGHAN NATIONAL ARMY
REGIONAL MILITARY TRAINING CENTER
STANDARD DESIGN

SUPPORT STAFF BARRACKS

WALL SECTIONS

Sheet
reference
number:
A–401

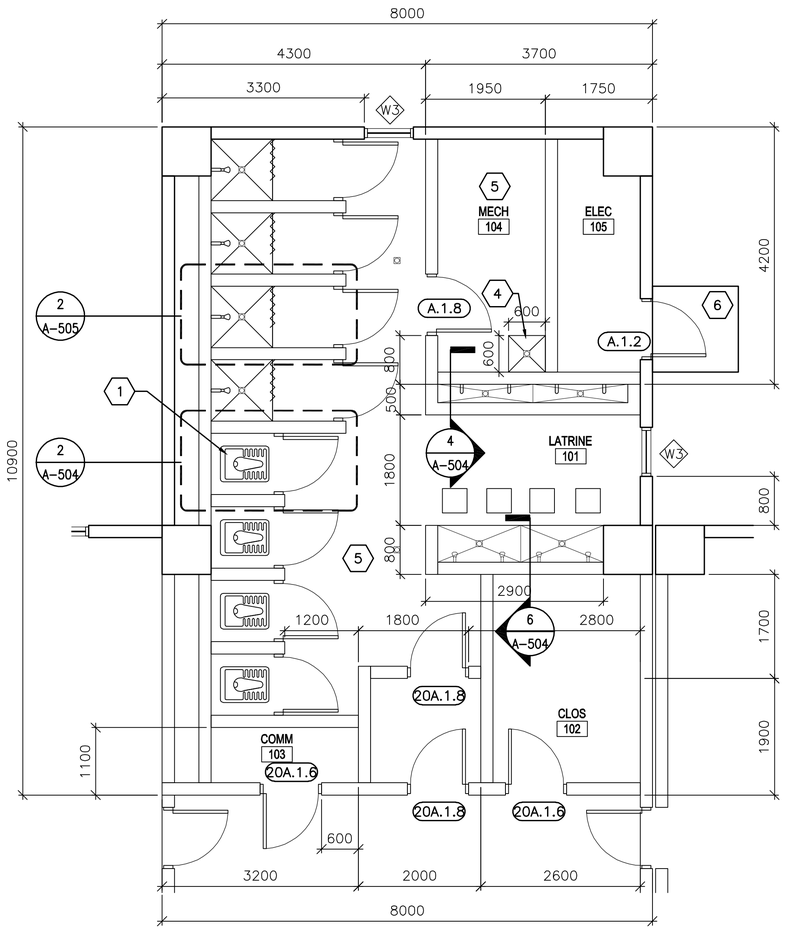


1 A-402 **ENLARGED PLAN**

SCALE: 1:50

## GENERAL NOTES:

A. DIMENSIONS ARE SHOWN TO OUTER EDGE OF EXTERIOR STRUCTURAL COLUMNS, STRUCTURAL COLUMN GRID, EDGE OF INTERIOR PARTITIONS, EDGE OF WINDOW OPENINGS, AND TO HINGE SIDE OF DOOR FRAME OPENINGS.

B. HINGE SIDE OF OPENINGS FOR DOORS AND FRAMES SHALL BE LOCATED 200 MM FROM THE ADJACENT WALL OR COLUMN, UNLESS NOTED OTHERWISE.

C. INTERIOR PARTITIONS SHALL BE 200 MM CMU, UNLESS NOTED OTHERWISE.

D. COSMETIC REPAIR OF MINOR DEFECTS: REPAIR OR FILL MORTAR JOINTS AND MINOR DEFECTS, INCLUDING BUT NOT LIMITED TO SPALLS, IN ACCORDANCE WITH MANUFACTURER'S RECOMMENDATIONS AND PRIOR TO COATING APPLICATION. SURFACES TO BE PAINTED SHALL BE CLEAN AND FREE OF FOREIGN MATTER BEFORE APPLICATION OF PAINT. CLEANING SHALL BE SCHEDULED SO THAT DUST AND OTHER CONTAMINANTS WILL NOT FALL ON NEWLY PAINTED SURFACES.

E. CONCRETE, PLASTER AND MASONRY SURFACES SHALL BE ALLOWED TO CURE FOR AT LEAST 30 DAYS BEFORE PAINTING. CONCRETE SLABS-ON-GRADE SHALL BE ALLOWED TO CURE 90 DAYS BEFORE STAINING OR SEALING.

F. DO NOT USE PAINT MATERIALS CONTAINING LEAD CONTENT IN EXCESS OF 0.009 PERCENT OF THE WEIGHT OF THE TOTAL NONVOLATILE CONTENT OF THE PAINT OR THE WEIGHT OF THE DRIED PAINT FILM.

G. DO NOT USE ANY ASBESTOS CONTAINING MATERIALS (ACM) IN PROJECT. ACM IS DEFINED AS 1% OR MORE BY VOLUME.

H. DO NOT USE PAINT MATERIALS CONTAINING MERCURIAL FUNGICIDES.

I. FACTORY PRIMED METAL DOORS AND FRAMES SHALL RECEIVE TWO COATS OF PAINT.

J. FILL REMAINING SPACE AT PENETRATIONS IN FIRE-RATED FLOORS, PARTITIONS AND CEILINGS WITH APPROPRIATE FIRESTOPPING MATERIALS.

K. ALL CEILING FINISHES SHALL BE PAINTED PLASTER APPLIED TO STRUCTURE.

L. ALL WALL FINISHES SHALL BE PAINTED PLASTER APPLIED TO STRUCTURE UNLESS OTHERWISE NOTED.

M. ALL FLOOR FINISHES SHALL BE SEALED CONCRETE, UNLESS NOTED OTHERWISE.

N. PROVIDE TILE FINISHES AS INDICATED IN DETAILS AND KEY NOTES.

O. HEIGHT OF ALL TOILET AND SHOWER PARTITIONS SHALL BE 2400 MM ABOVE FINISHED FLOOR.

P. ALL TOILET STALL DOORS SHALL BE F.2.12

Q. SHOWER STALL DOOR, FRAME, AND HARDWARE TYPE SHALL BE E.1.12.

R. PROVIDE POLISHED STAINLESS STEEL MIRROR 600 X 900 ABOVE EVERY LAVATORY FAUCET.

## KEY NOTES: (X)

1. TYPICAL TOILET STALL LAYOUT – SEE DETAIL 2/A-504.
2. NOT USED
3. NOT USED
4. RECESSED TROUGH – SEE DETAIL 7/A-505.
5. TERRAZZO FLOOR TILE AND CERAMIC WALL TILE TO 2000 MM ABOVE FINISHED FLOOR UNLESS OTHERWISE NOTED.
6. CONCRETE STOOP – SEE DETAIL 2/A-503.

## LEGEND:

(XXX) DOOR FRAME AND HARDWARE TYPE, SEE SHEET A-601

<A> WINDOW TYPE, SEE SHEET A-601

(X) KEY NOTE

## ABBREVIATIONS:

| | |
|---|---|
| ELEC | ELECTRICAL |
| MECH | MECHANICAL |
| JAN | JANITOR |
| CLOS | CLOSET |
| COMM | COMMUNICATIONS |

LINEAR DIMENSIONS SHOWN ARE IN MILLIMETERS (MM), UNLESS OTHERWISE NOTED

0 1000 2000
SCALE: 1:50

APPROVED:

A/E DESIGNER OF RECORD

SEAL:

STATE OF SOUTH CAROLINA
KEVIN R. CHAFIN
N. Charleston, SC
6374
REGISTERED ARCHITECT

US ARMY CORPS OF ENGINEERS
AFGHANISTAN ENGINEER DISTRICT

| Mark | Description | Date | Appr. |
|---|---|---|---|

| Mark | Description | Date | Appr. |
|---|---|---|---|

U.S. ARMY CORPS OF ENGINEERS
AFGHANISTAN ENGINEER DISTRICT
APO AE 96338

*Michael Baker Jr., Inc*
*A unit of Michael Baker Corporation*
Airside Business Park
100 Airside Drive
Moon Township, PA 15108
www.mbakercorp.com

Designed by: KRC | Ckd by: NLJ
Dwn by: KJG | Reviewed by: LHM
Submitted by: BAKER

Date: 2/23/10
Design file no.
Drawing code:
Rev: 0
File name: ANABSSBA-402EP
Plot date: 2/23/2010
Plot scale: XX

AFGHAN NATIONAL ARMY
REGIONAL MILITARY TRAINING CENTER
STANDARD DESIGN

SUPPORT STAFF BARRACKS

ENLARGED PLAN

Sheet reference number:
A-402

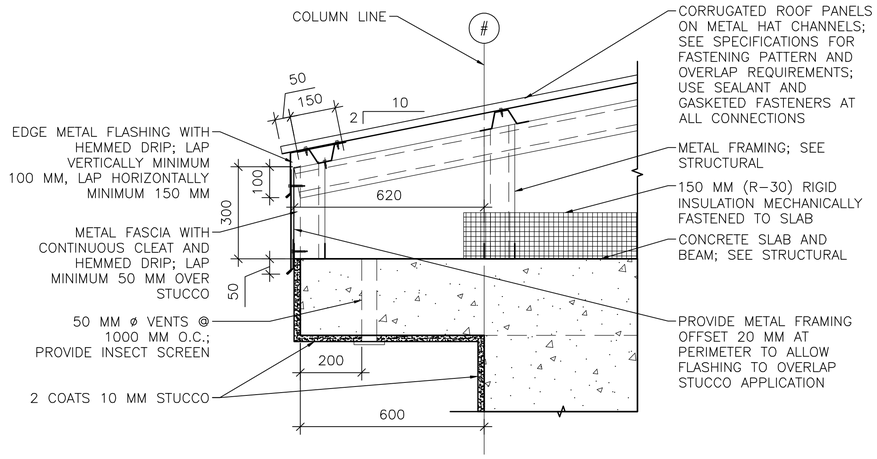


1 A-501 **EAVE DETAIL**
SCALE: 1:10

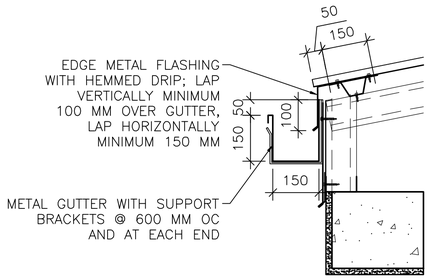


1A A-501 **GUTTER DETAIL**
SCALE: 1:10

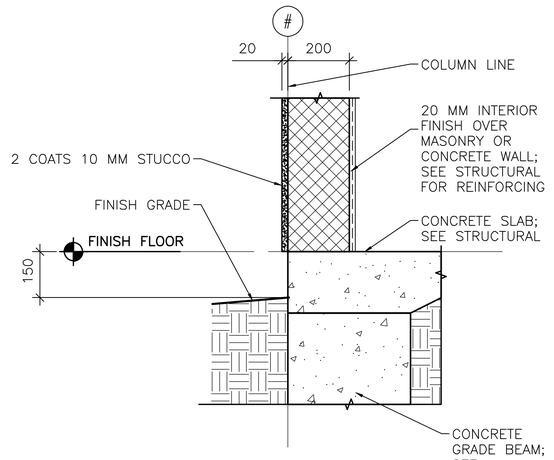


2 A-501 **STUCCO BASE DETAIL**
SCALE: 1:10

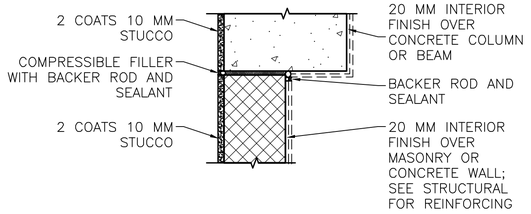


NOTE: DETAIL TYPICAL AT ALL WALL/COLUMN AND WALL/BEAM LOCATIONS, SEE ALTERNATE BRACING DETAIL BELOW 2B/A-501.

2A A-501 **STUCCO JOINT DETAIL**
SCALE: 1:10

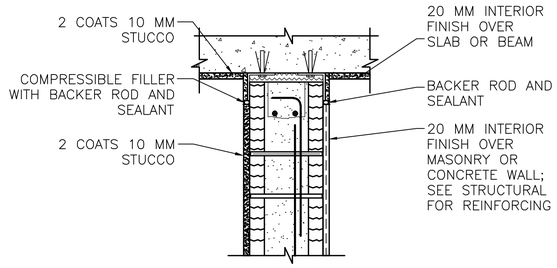


INTERIOR WALL/BEAM

2B A-501 **ALTERNATE BRACING DETAIL**
SCALE: 1:10

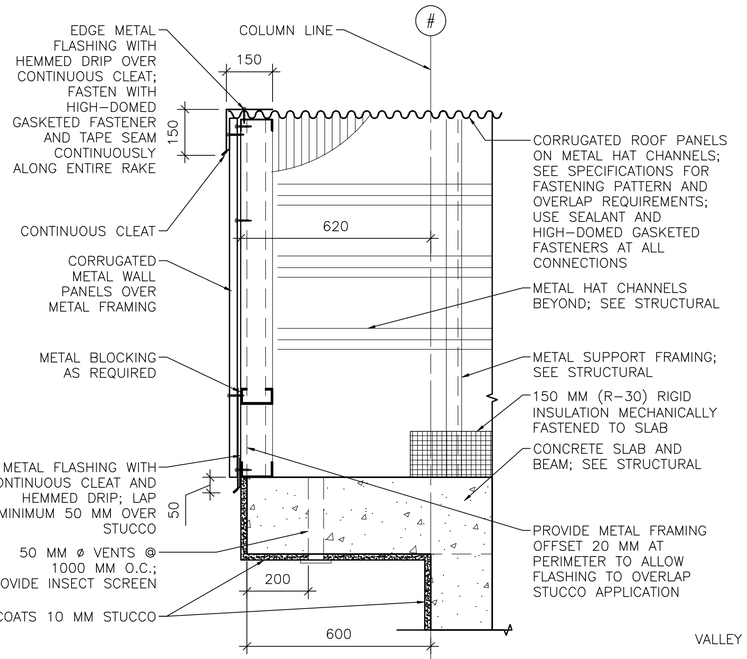


3 A-501 **RAKE/EAVE DETAIL**
SCALE: 1:10

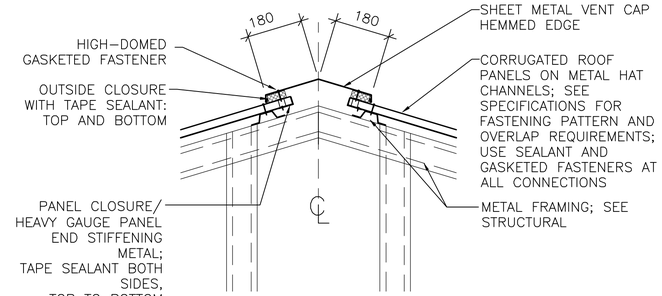


4 A-501 **RIDGE VENT DETAIL**
SCALE: 1:10

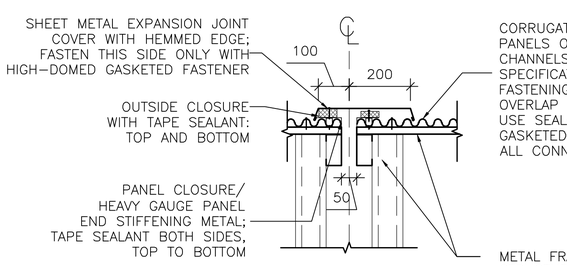


4A A-501 **ROOF EXPANSION JOINT DETAIL**
SCALE: 1:10

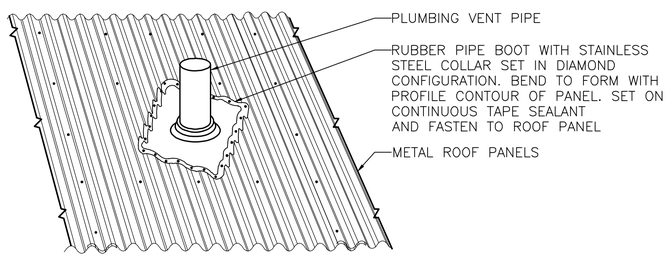


5 A-501 **PLUMBING VENT DETAIL**
SCALE: NTS

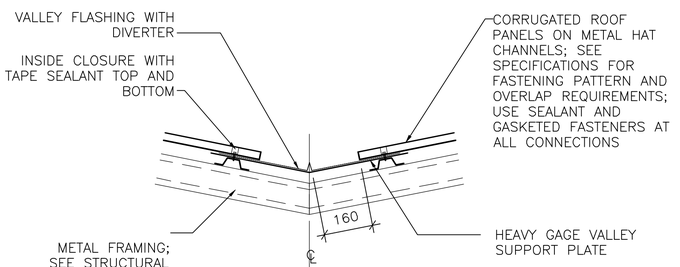


6 A-501 **VALLEY DETAIL**
SCALE: 1:10

LINEAR DIMENSIONS SHOWN ARE IN MILLIMETERS (MM), UNLESS OTHERWISE NOTED

0 200 400
SCALE: 1:10

APPROVED:

A/E DESIGNER OF RECORD

SEAL:

STATE OF SOUTH CAROLINA
KEVIN R. CHARN
N. Charleston, SC
8374
REGISTERED ARCHITECT

US ARMY CORPS OF ENGINEERS
AFGHANISTAN ENGINEER DISTRICT

| Mark | Description | Date | Appr. |
|---|---|---|---|
| | | | |

| Mark | Description | Date | Appr. |
|---|---|---|---|
| | | | |

Designed by: KRC
Drawn by: KJG
Checked by: NLJ
Reviewed by: LHM
Submitted by: BAKER

Date: 2/23/10
Design file no.
Drawing code:
Rev: 0
File name: ANA85SBA-501DT
Plot date: 2/23/2010
Plot scale: x:x

U.S. ARMY CORPS OF ENGINEERS
AFGHANISTAN ENGINEER DISTRICT
APO AE 96338

Michael Baker Jr., Inc
A unit of Michael Baker Corporation
Airside Business Park
100 Airside Drive
Moon Township, PA 15108
www.mbakercorp.com

AFGHAN NATIONAL ARMY
REGIONAL MILITARY TRAINING CENTER
STANDARD DESIGN

SUPPORT STAFF BARRACKS

EXTERIOR DETAILS

Sheet reference number:
A-501

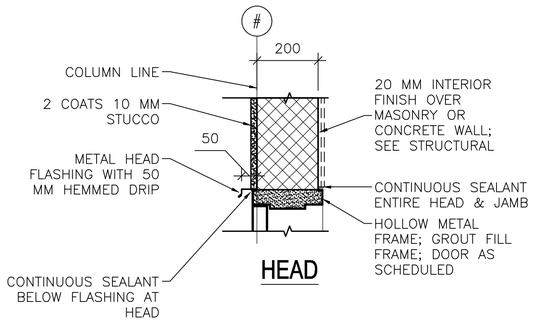


HEAD

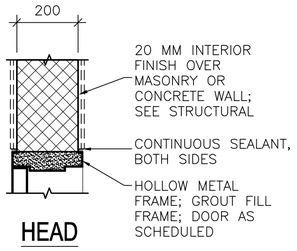


HEAD

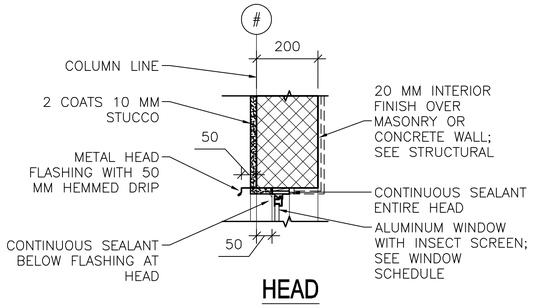


HEAD

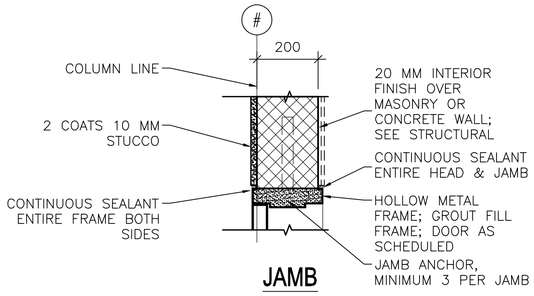


JAMB

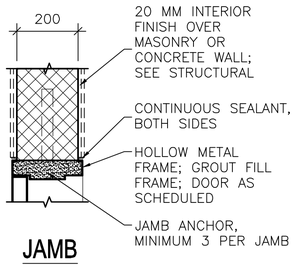


JAMB

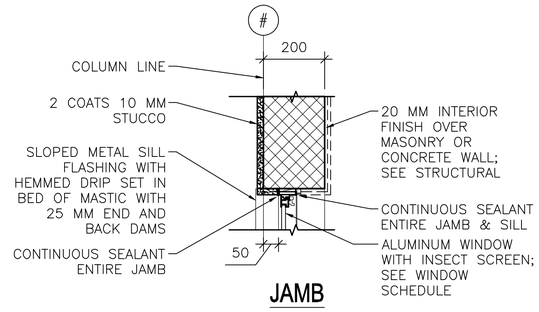


JAMB

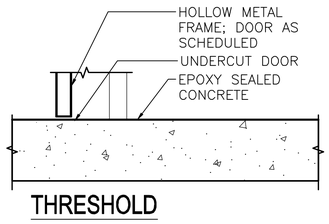


THRESHOLD

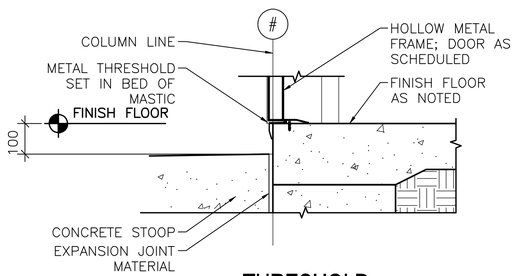


THRESHOLD

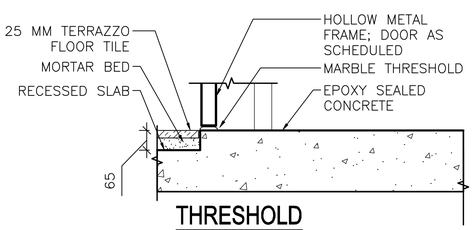


THRESHOLD

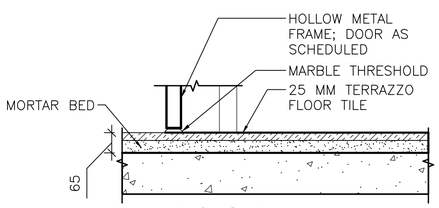


THRESHOLD

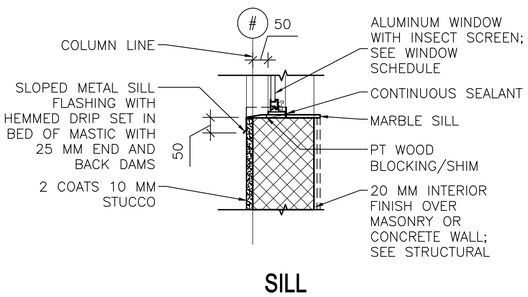


SILL

1 A–502 **EXTERIOR DOOR DETAILS**
SCALE: 1:10

2 A–502 **INTERIOR DOOR DETAILS**
SCALE: 1:10

3 A–502 **EXTERIOR WINDOW DETAILS**
SCALE: 1:10

LINEAR DIMENSIONS SHOWN ARE IN MILLIMETERS (MM), UNLESS OTHERWISE NOTED

0 200 400
SCALE: 1:10

APPROVED:

A/E DESIGNER OF RECORD

SEAL:

STATE OF SOUTH CAROLINA
KEVIN R. CHAFIN
N. Charleston, SC
6374
REGISTERED ARCHITECT

US ARMY CORPS OF ENGINEERS
AFGHANISTAN ENGINEER DISTRICT

| Mark | Description | Date | Appr. |
|---|---|---|---|
| | | | |

| Mark | Description | Date | Appr. |
|---|---|---|---|
| | | | |

Rev: 0
Date: 2/23/10
Design file no.
Drawing code:
File name: ANABSSBA-502HAS
Plot date: 2/23/2010
Plot scale: x:X

Designed by: KRC
Dwn by: KJG
Ckd by: NLJ
Reviewed by: LHM
Submitted by: BAKER

U.S. ARMY CORPS OF ENGINEERS
AFGHANISTAN ENGINEER DISTRICT
APO AE 96338

*Michael Baker Jr., Inc*
*A unit of Michael Baker Corporation*
Airside Business Park
100 Airside Drive
Moon Township, PA 15108
www.mbakercorp.com

AFGHAN NATIONAL ARMY
REGIONAL MILITARY TRAINING CENTER
STANDARD DESIGN

SUPPORT STAFF BARRACKS

HEAD, JAMB & SILL DETAILS

Sheet reference number:
A–502

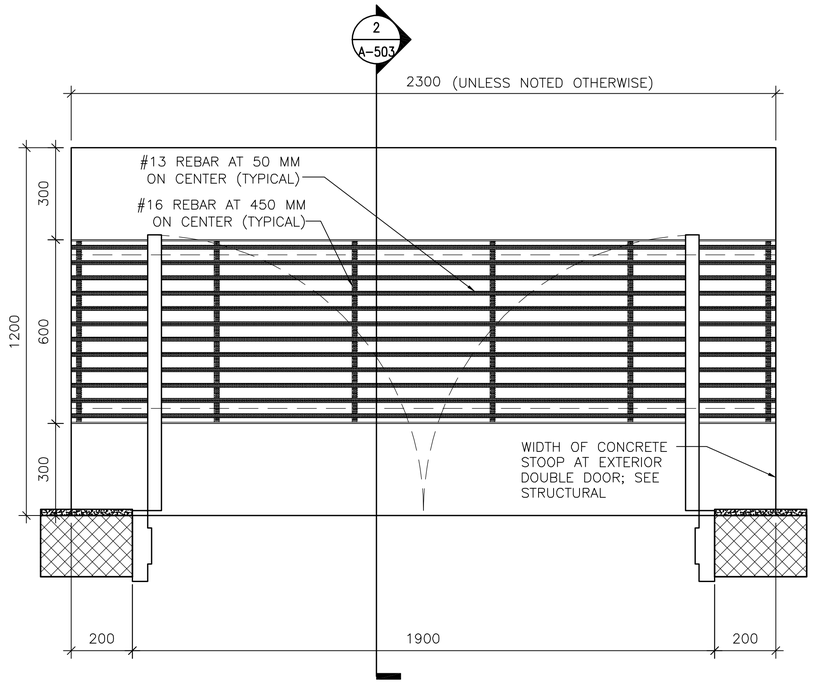


1 A-503 **DOOR STOOP PLAN (WITH GRATE)**

SCALE: 1:10

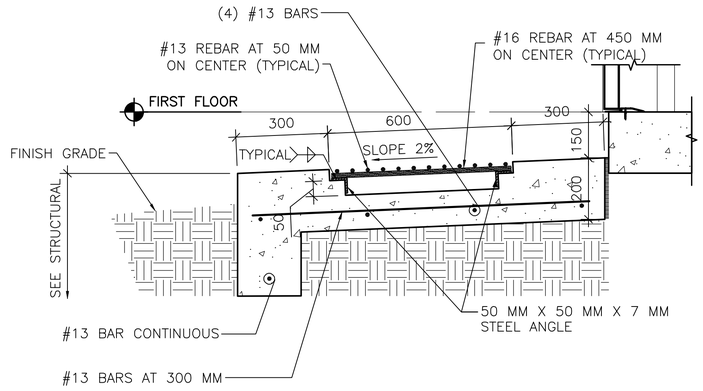


2 A-503 **DOOR STOOP DETAIL**

SCALE: 1:10

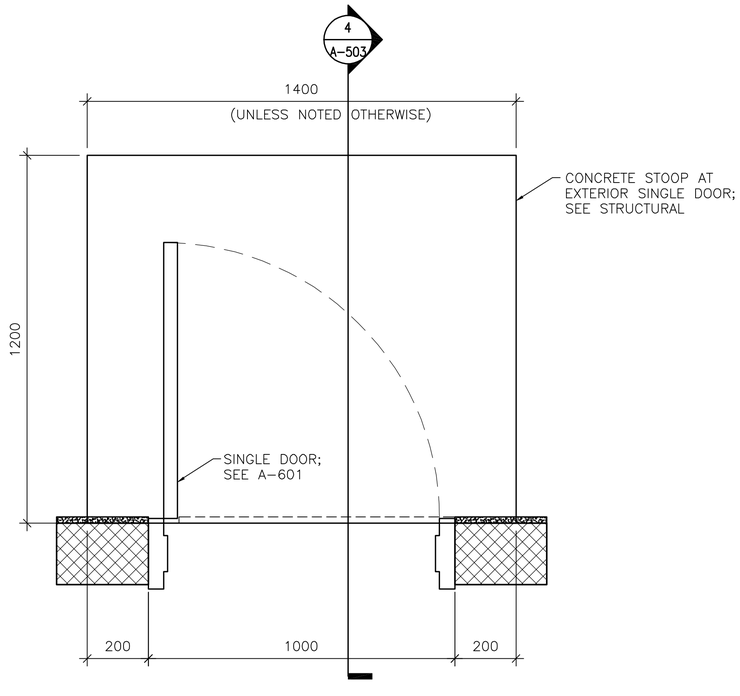


3 A-503 **DOOR STOOP PLAN (WITHOUT GRATE)**

SCALE: 1:10

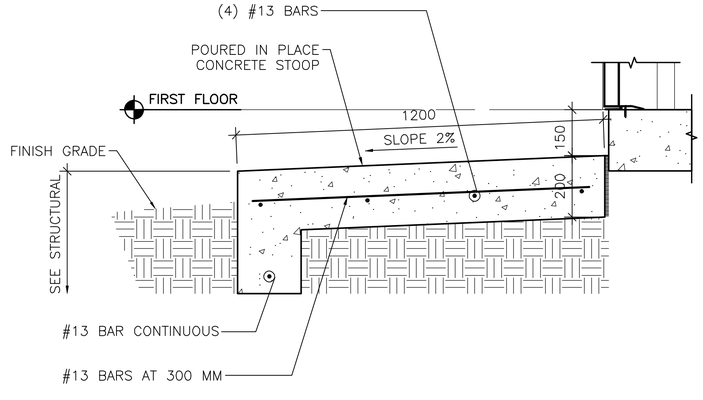


4 A-503 **DOOR STOOP DETAIL**

SCALE: 1:10

LINEAR DIMENSIONS SHOWN ARE IN MILLIMETERS (MM), UNLESS OTHERWISE NOTED

0 200 400

SCALE: 1:10

APPROVED:

A/E DESIGNER OF RECORD

SEAL:

STATE OF SOUTH CAROLINA
KEVIN R. CHAFIN
N. Charleston, SC
6374
REGISTERED ARCHITECT

US ARMY CORPS OF ENGINEERS
AFGHANISTAN ENGINEER DISTRICT

| Mark | Description | Date | Appr. |
|---|---|---|---|
| | | | |

Rev: 0

Date: 2/23/10
Design file no.
Drawing code:
File name: ANABSSBA-503DT
Plot date: 2/23/2010
Plot scale: x:x

Designed by: KRC
Dwn by: KJG
Ckd by: NLJ
Reviewed by: LHM
Submitted by: BAKER

U.S. ARMY CORPS OF ENGINEERS
AFGHANISTAN ENGINEER DISTRICT
APO AE 96338

*Michael Baker Jr., Inc*
*A unit of Michael Baker Corporation*
Airside Business Park
100 Airside Drive
Moon Township, PA 15108
www.mbakercorp.com

AFGHAN NATIONAL ARMY
REGIONAL MILITARY TRAINING CENTER
STANDARD DESIGN

SUPPORT STAFF BARRACKS

STOOP DETAILS

Sheet reference number:
A-503

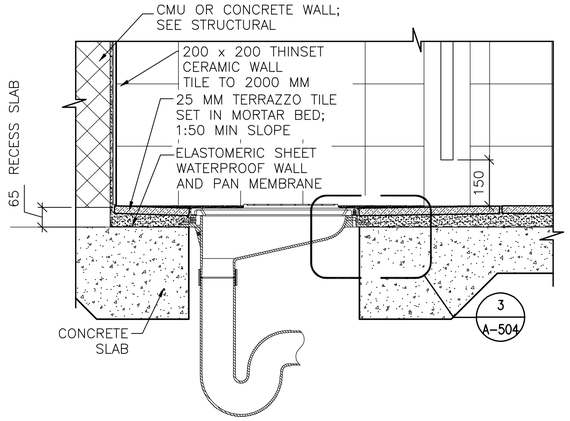


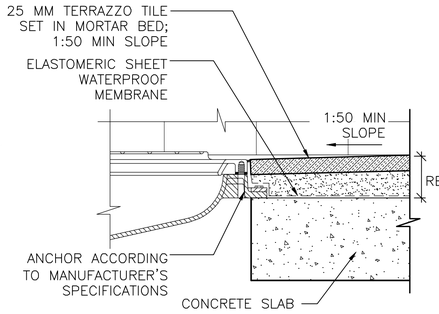


1 A-504 **LATRINE DETAIL**
**SCALE: 1:10**

3 A-504 **MOUNTING DETAIL**
**SCALE: 1:5**

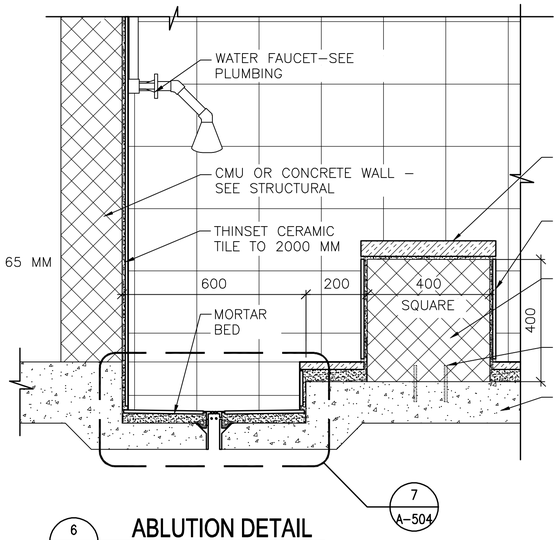


6 A-504 **ABLUTION DETAIL**
**SCALE: 1:10**

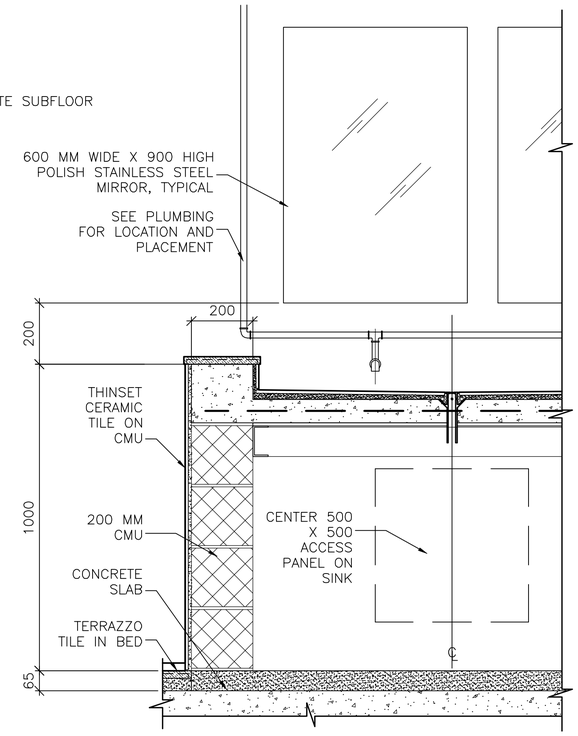


9 A-504 **LAVATORY SECTION**
**SCALE: 1:10**

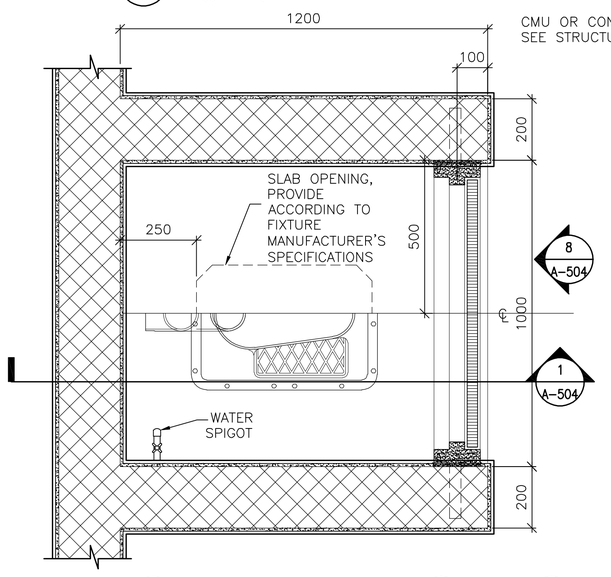


2 A-504 **TOILET DETAIL**
**SCALE: 1:10**

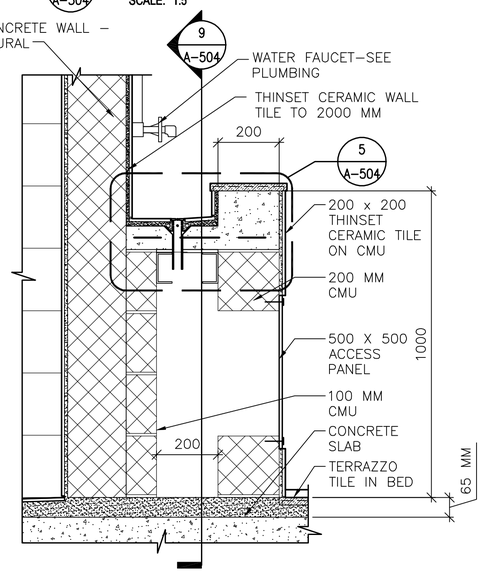


4 A-504 **LAVATORY SECTION**
**SCALE: 1:10**

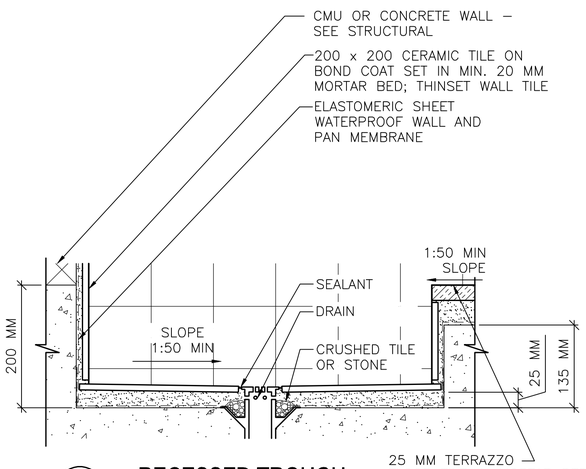


7 A-504 **RECESSED TROUGH**
**SCALE: 1:5**

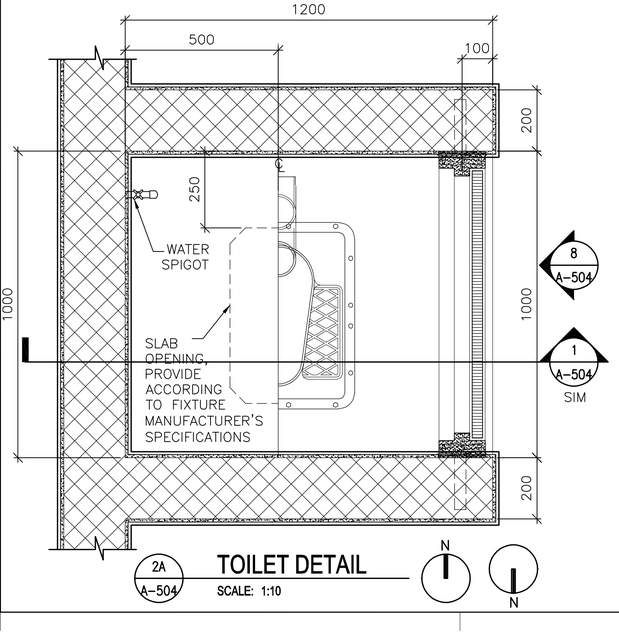


2A A-504 **TOILET DETAIL**
**SCALE: 1:10**

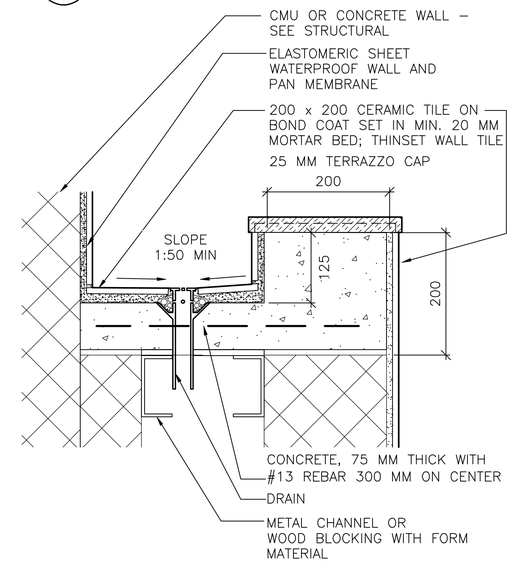


5 A-504 **LAVATORY DETAIL**
**SCALE: 1:5**

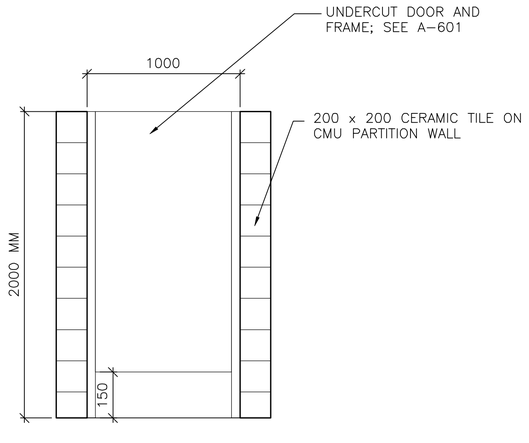


8 A-504 **TOILET PARTITION DOOR ELEVATION**
**SCALE: 1:20**

LINEAR DIMENSIONS SHOWN ARE IN MILLIMETERS (MM), UNLESS OTHERWISE NOTED

0 100 200
SCALE: 1:5

0 200 400
SCALE: 1:10

0 400 800
SCALE: 1:20

APPROVED:

A/E DESIGNER OF RECORD

SEAL:

STATE OF SOUTH CAROLINA
KEVIN R. CHAFIN
N. Charleston, SC
8374
REGISTERED ARCHITECT

US ARMY CORPS OF ENGINEERS
AFGHANISTAN ENGINEER DISTRICT

| Mark | Description | Date | Appr. |
|---|---|---|---|

| Rev: | Date: | Designed by: | Drawn by: | Reviewed by: | Submitted by: |
|---|---|---|---|---|---|
| 0 | 2/23/10 | KRC | KJG | LHM | BAKER |

Design file no.
Drawing code:
File name: ANABSSBA-504DT
Plot date: 2/23/2010
Plot scale: X:X

U.S. ARMY CORPS OF ENGINEERS
AFGHANISTAN ENGINEER DISTRICT
APO AE 96338

*Michael Baker Jr., Inc*
*A unit of Michael Baker Corporation*
Airside Business Park
100 Airside Drive
Moon Township, PA 15108
www.mbakercorp.com

AFGHAN NATIONAL ARMY
REGIONAL MILITARY TRAINING CENTER
STANDARD DESIGN

SUPPORT STAFF BARRACKS

TOILET, LAVATORY & ABLUTION DETAILS

Sheet reference number:
A-504

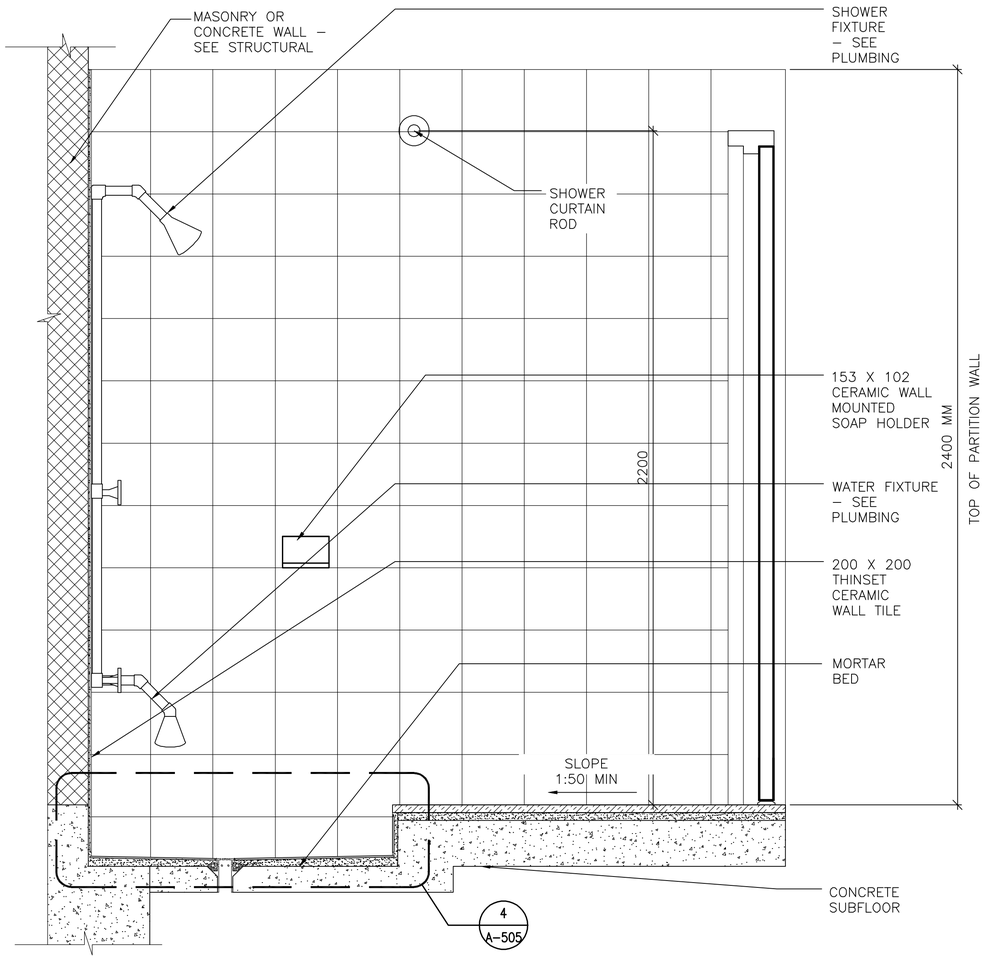


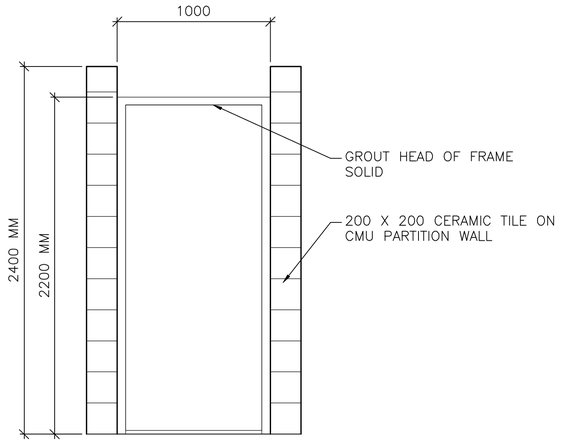


3 A–505 **SHOWER PARTITION DOOR ELEVATION**

SCALE: 1:20

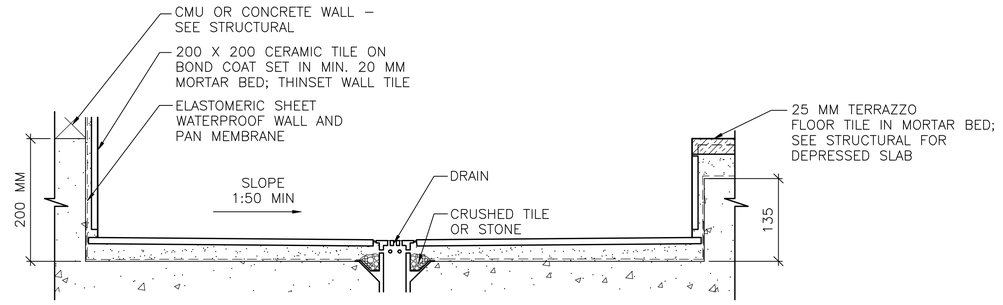


1 A–505 **SHOWER DETAIL**

SCALE: 1:10

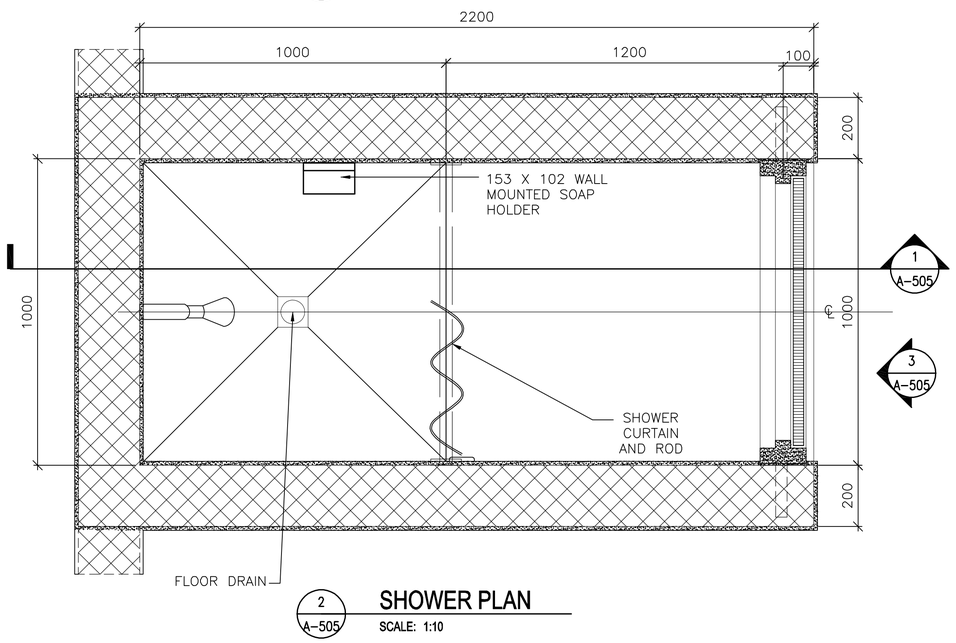


2 A–505 **SHOWER PLAN**

SCALE: 1:10

4 A–505 **SHOWER RECESS**

SCALE: 1:5

0 100 200
SCALE: 1:5

0 200 400
SCALE: 1:10

0 400 800
SCALE: 1:20

LINEAR DIMENSIONS SHOWN ARE IN MILLIMETERS (MM), UNLESS OTHERWISE NOTED

APPROVED:

A/E DESIGNER OF RECORD

SEAL:

STATE OF SOUTH CAROLINA
KEVIN R. CHARN
N. Charleston, SC
8374
REGISTERED ARCHITECT

US ARMY CORPS OF ENGINEERS
AFGHANISTAN ENGINEER DISTRICT

| Mark | Description | Date | Appr. | Mark | Description | Date | Appr. |
|---|---|---|---|---|---|---|---|
| | | | | | | | |

Designed by: KRC
Dwn by: KJG
Ckd by: NLJ
Reviewed by: LHM
Submitted by: BAKER

Rev: 0
Date: 2/23/10
Design file no.
Drawing code:
File name: ANABSSBA-0507
Plot date: 2/23/2010
Plot scale: x:x

U.S. ARMY CORPS OF ENGINEERS
AFGHANISTAN ENGINEER DISTRICT
APO AE 96338

*Michael Baker Jr., Inc*
*A unit of Michael Baker Corporation*
Airside Business Park
100 Airside Drive
Moon Township, PA 15108
www.mbakercorp.com

AFGHAN NATIONAL ARMY
REGIONAL MILITARY TRAINING CENTER
STANDARD DESIGN

SUPPORT STAFF BARRACKS

SHOWER DETAILS

Sheet reference number:
A–505

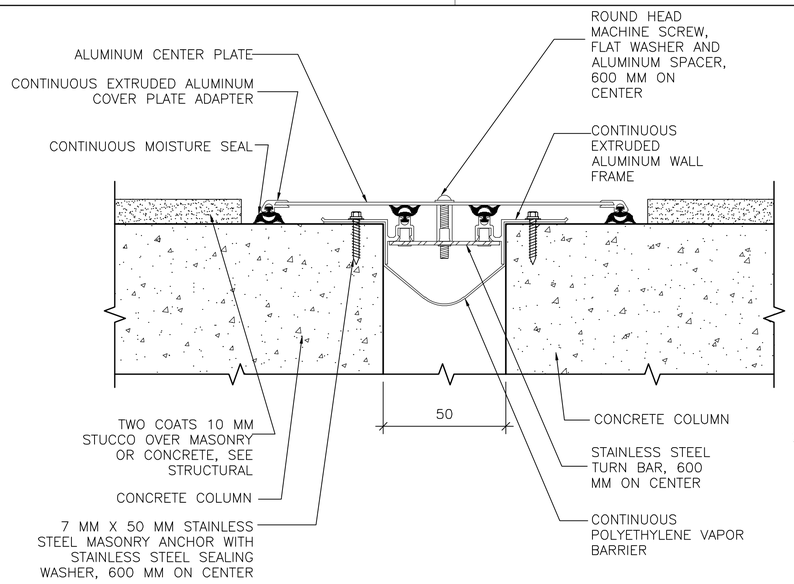


1 A–506 **EXTERIOR ISOLATION JOINT COVER**

SCALE: NTS

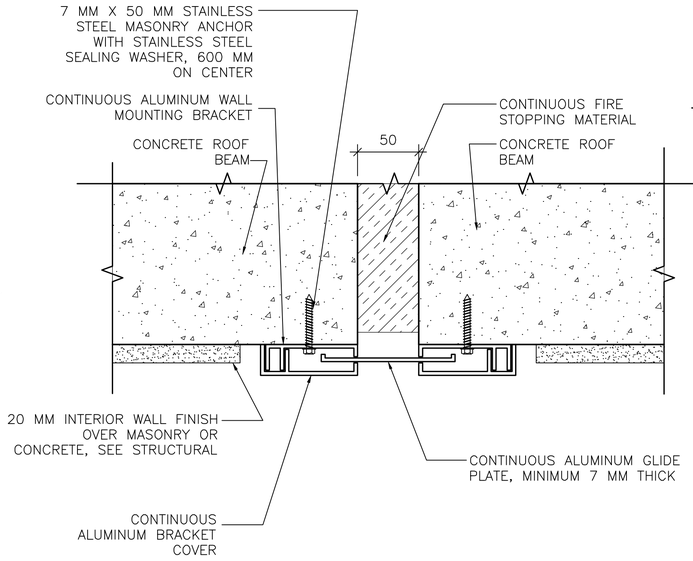


3 A–506 **CEILING ISOLATION JOINT COVER**

SCALE: NTS

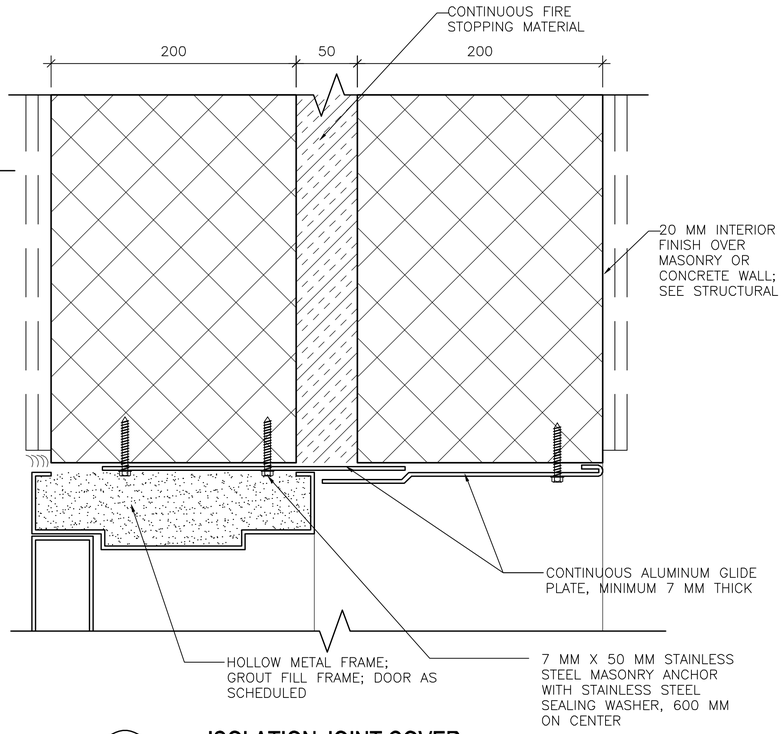


5 A–506 **ISOLATION JOINT COVER**

SCALE: NTS

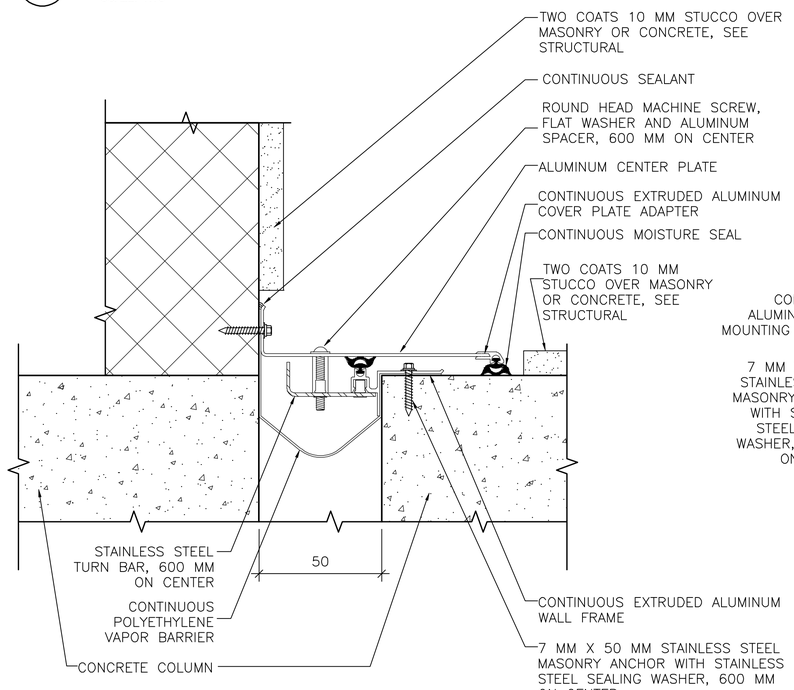


2 A–506 **EXTERIOR ISOLATION JOINT COVER AT INSIDE CORNER**

SCALE: NTS

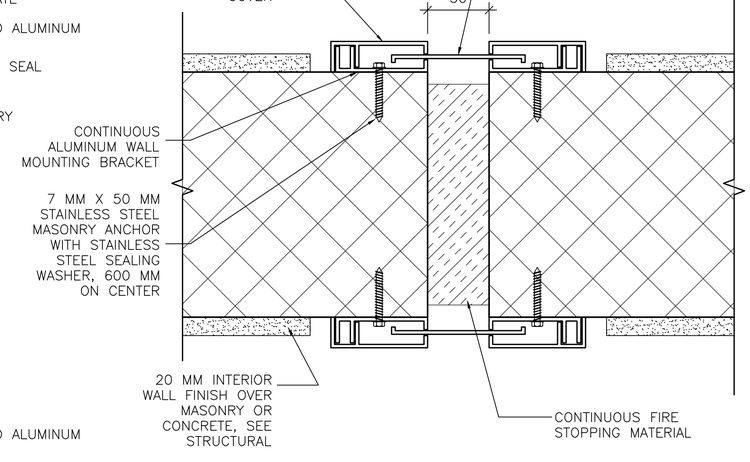


4 A–506 **INTERIOR ISOLATION JOINT COVER**

SCALE: NTS

LINEAR DIMENSIONS SHOWN ARE IN MILLIMETERS (MM), UNLESS OTHERWISE NOTED

APPROVED:

A/E DESIGNER OF RECORD

SEAL:

STATE OF SOUTH CAROLINA
KEVIN R. CHAFIN
N. Charleston, SC
6374
REGISTERED ARCHITECT

US ARMY CORPS OF ENGINEERS
AFGHANISTAN ENGINEER DISTRICT

| Mark | Description | Date | Appr. |
|---|---|---|---|
| | | | |

| Rev. | Date: | Designed by: | Drawing code: | File name: ANABSSBA-506DT |
|---|---|---|---|---|
| 0 | 2/23/10 | KRC | | Plot date: 2/23/2010 |
| | Design file no. | Dwn by: KJG / Ckd by: NLJ | | Plot scale: X/X |
| | | Reviewed by: LHM | | |
| | | Submitted by: BAKER | | |

U.S. ARMY CORPS OF ENGINEERS
AFGHANISTAN ENGINEER DISTRICT
APO AE 96338

*Michael Baker Jr., Inc*
*A unit of Michael Baker Corporation*
Airside Business Park
100 Airside Drive
Moon Township, PA 15108
www.mbakercorp.com

AFGHAN NATIONAL ARMY
REGIONAL MILITARY TRAINING CENTER
STANDARD DESIGN

SUPPORT STAFF BARRACKS

ISOLATION JOINT DETAILS

Sheet reference number:
A–506

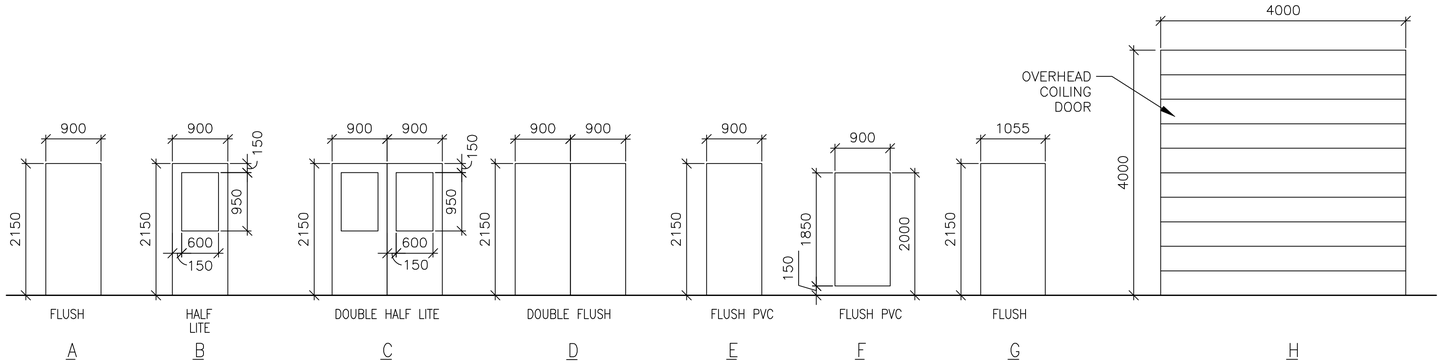


## 1 A-601 DOOR TYPES

SCALE: 1:50

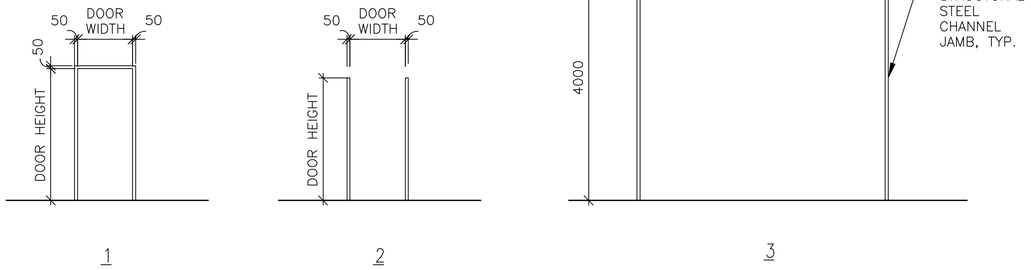


## 2 A-601 FRAME TYPES

SCALE: 1:50

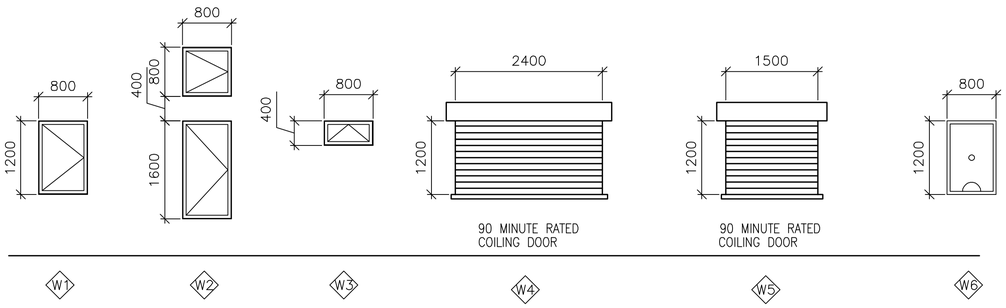


## 3 A-601 WINDOW TYPES

SCALE: 1:50

## WINDOW TYPE NOTES:

1. ALL EXTERIOR WINDOWS SHALL BE ALUMINUM WITH INSECT SCREENS. WINDOWS SHALL BE COMMERCIAL GRADE.
2. ALL EXTERIOR WINDOWS SHALL BE OPERABLE.

## 4 A-601 DOOR TAG

SCALE: NTS




## 5 A-601 RATED DOOR TAG

SCALE: NTS

## DOOR TAG NOTES:

1. THE DOOR TAG INDICATES THE DOOR TYPE, FRAME TYPE AND HARDWARE SET FOR EACH DOOR.
2. THE DOOR TAG FOR RATED DOORS INCLUDES THE RATING OF THE DOOR IN MINUTES.

## EXTERIOR DOOR HARDWARE TYPES:

HW-1 1-1/2 PR HINGES, A5112 114 X 114
1 EA RIM EXIT DEVICE, TYPE 1
1 EA CYLINDER. E09221A, GRADE 1
1 EA OVERHEAD CLOSER, C02061, LOW RESISTANCE
1 EA THRESHOLD, J32130
3 EA DOOR SILENCERS, L03011

HW-2 1-1/2 PR HINGES, A5112 114 X 114
1 EA LOCKSET, F13 ENTRY LOCK W/LEVER HANDLES, GRADE 1
1 EA OVERHEAD CLOSER, C02061, LOW RESISTANCE
1 EA THRESHOLD, J32130
3 EA DOOR SILENCERS, L03011

HW-3 3 PR HINGES, A5112 114 X 114
2 EA RIM EXIT DEVICE, TYPE 1
2 EA CYLINDER. GRADE 1
2 EA OVERHEAD CLOSER, C02061, LOW RESISTANCE
1 EA DOOR COORDINATOR, TYPE 21
1 EA ASTRAGAL
1 EA THRESHOLD, J32130
2 EA DOOR SILENCERS, L03011

HW-4 3 PR HINGES, A5112 114 X 114
1 EA LOCKSET W/LEVER HANDLES. GRADE 1, F13
1 EA OVERHEAD CLOSER, C02061, LOW RESISTANCE
2 EA MAGNETIC HOLDER PIN, ATTACHED TO DOOR LEAF
2 EA MAGNETIC HOLDER RECEIVER, ATTACHED TO STOOP
2 EA LEVER EXTENSION FLUSH BOLTS, L04081
1 EA ASTRAGAL
1 EA THRESHOLD, J32130
2 EA DOOR SILENCERS, L03011

## DOOR AND HARDWARE NOTES:

1. INTERIOR AND EXTERIOR METAL DOORS AND FRAME COLORS SHALL MATCH ADJACENT WALL COLORS AS SELECTED BY THE CONTRACTING OFFICER.
2. FRAMES, EXCEPT FIRE-RATED FRAMES, SHALL BE MOUNTED AND ADJUSTED IN ACCORDANCE WITH MANUFACTURER'S INSTRUCTIONS. FRAMES SHALL BE FASTENED WITH MINIMUM OF THREE ANCHORS PER JAMB AT EQUAL INTERVALS.
3. DIMENSIONS SHOWN ON DOOR TYPES DETAIL ARE BASED UPON MODULAR MASONRY (OR ROUGH OPENING), HEIGHT OF 2200 MM FOR STANDARD PERSONNEL DOORS. CONTRACTOR SHALL COORDINATE WITH DOOR SUPPLIER TO ENSURE THAT DIMENSIONS OF DOORS AND FRAMES PROVIDED ARE COMPATIBLE WITH DOOR OPENING DIMENSIONS.
4. HARDWARE SHALL BE HEAVY DUTY, COMMERCIAL GRADE, STAINLESS STEEL WITH A SATIN OR BRUSHED FINISH.
5. HARDWARE TYPES INCLUDE BUILDERS HARDWARE MANUFACTURERS ASSOCIATION (BMHA) NUMBER.
6. DOORS IN 2 HOUR RATED PARTITIONS SHALL BE 1.5 HOUR (90 MINUTE) RATED DOORS IN ACCORDANCE WITH NFPA 101, TABLE 8.3.4.2.
7. DOORS AT STAIR ENCLOSURES SHALL BE 1 HOUR (60 MINUTE) RATED AT 1 HOUR WALL IN ACCORDANCE WITH NFPA 101, TABLE 8.3.4.2.
8. DOORS IN 1 HOUR RATED WALLS SHALL BE 3/4 HOUR (45 MINUTE) RATED DOORS IN ACCORDANCE WITH NFPA 101, TABLE 8.3.4.2.
9. DOORS IN 1 HOUR RATED CORRIDOR WALLS SHALL BE 1/3 HOUR (20 MINUTE) IN ACCORDANCE WITH NFPA 101, TABLE 8.3.4.2.
10. PROVIDE DOOR STOPS TO PROTECT WALLS ON LOCATIONS WHERE DOOR SWING WILL STRIKE WALL.

THIS SHEET IS STANDARD AND IS INCLUSIVE OF ALL THE DOOR/ WINDOW/ HARDWARE TYPES FOR THE ENTIRE RMTC CONTRACT. NOT ALL DOOR/ WINDOW/ HARDWARE TYPES ARE USED FOR ANY PARTICULAR BUILDING DESIGN. CONTRACTOR SHALL REFER TO THE FLOOR PLAN FOR THE TYPES BEING USED.

## INTERIOR DOOR HARDWARE TYPES:

HW-5 1-1/2 PR HINGES, A8133 114 X 114
1 EA LOCKSET W/LEVER HANDLES, F08, GRADE 1
1 EA WALL STOP, L02101 OR L02161
3 EA DOOR SILENCERS, L03011

HW-6 1-1/2 PR HINGES, A8112 114 X 114
1 EA LOCKSET W/LEVER HANDLES, F08, GRADE 1
1 EA WALL STOP, L02101 OR L02161
1 EA OVERHEAD CLOSER, C02061, LOW RESISTANCE
3 EA DOOR SILENCERS, L03011

HW-7 1-1/2 PR HINGES, A8133
1 EA LOCKSET W/LEVER HANDLES, F13 GRADE 1
1 EA WALL STOP, L02101 OR L02161
2 EA MOP PLATE, J103
3 EA DOOR SILENCERS, L03011

HW-8 1-1/2 PR HINGES, A8112
1 EA LOCKSET W/LEVER HANDLES, F13 GRADE 1
1 EA WALL STOP, L02101 OR L02161
2 EA MOP PLATE, J103
1 EA OVERHEAD CLOSER, C02061, LOW RESISTANCE
3 EA DOOR SILENCERS, L03011

HW-9 1-1/2 PR HINGES, A5112 114 X 114
1 EA RIM EXIT DEVICE, TYPE 1
1 EA CYLINDER. E09221A, GRADE 1
1 EA OVERHEAD CLOSER, C02061, LOW RESISTANCE
3 EA DOOR SILENCERS, L03011

HW-10 3 PR HINGES, A5112 114 X 114
1 EA LOCKSET W/LEVER HANDLES. GRADE 1, F13
2 EA LEVER EXTENSION FLUSH BOLTS, L04081
1 EA ASTRAGAL
2 EA DOOR SILENCERS, L03011

HW-11 1-1/2 PR HINGES, A8112 114 X 114
1 EA LOCKSET W/LEVER HANDLES, F13, GRADE 1
1 EA WALL STOP, L02101 OR L02161
1 EA OVERHEAD CLOSER, C02061, LOW RESISTANCE
3 EA DOOR SILENCERS, L03011
1 EA ROBE HOOK

HW-12 1-1/2 PR HINGES, A8133
1 EA LATCHSET W/LEVER HANDLES, F76 GRADE 1
1 EA WALL STOP, L02101 OR L02161
2 EA MOP PLATE, J103
3 EA DOOR SILENCERS, L03011
1 EA ROBE HOOK

HW-13 3 PR HINGES, A5112 114 X 114
1 EA LOCKSET W/LEVER HANDLES. GRADE 1, F13
1 EA OVERHEAD CLOSER, C02061, LOW RESISTANCE
2 EA LEVER EXTENSION FLUSH BOLTS, L04081
1 EA ASTRAGAL
2 EA DOOR SILENCERS, L03011

HW-14 3 PR HINGES, A5112 114 X 114
2 EA RIM EXIT DEVICE, TYPE 1
2 EA CYLINDER. GRADE 1
2 EA OVERHEAD CLOSER, C02061, LOW RESISTANCE
1 EA DOOR COORDINATOR, TYPE 21
1 EA ASTRAGAL
2 EA DOOR SILENCERS, L03011

APPROVED:

A/E DESIGNER OF RECORD

SEAL:

STATE OF SOUTH CAROLINA
KEVIN R. CHAFIN
N. Charleston, SC 6374
REGISTERED ARCHITECT

US ARMY CORPS OF ENGINEERS
AFGHANISTAN ENGINEER DISTRICT

| Mark | Description | Date | Appr. |
|---|---|---|---|
| | | | |

Rev: 0
Date: 2/23/10
Design file no.
Drawing code:
File name: ANABSSBA-601SCH
Plot date: 2/23/2010
Plot scale: X:X
Designed by: KRC
Dwn by: KJG
Ckd by: NLJ
Reviewed by: LHM
Submitted by:
BAKER

U.S. ARMY CORPS OF ENGINEERS
AFGHANISTAN ENGINEER DISTRICT
APO AE 96338

*Michael Baker Jr., Inc.*
*A unit of Michael Baker Corporation*
Airside Business Park
100 Airside Drive
Moon Township, PA 15108
www.mbakercorp.com

AFGHAN NATIONAL ARMY
REGIONAL MILITARY TRAINING CENTER
STANDARD DESIGN

SUPPORT STAFF BARRACKS

WINDOW AND DOOR SCHEDULES

Sheet reference number:
A-601

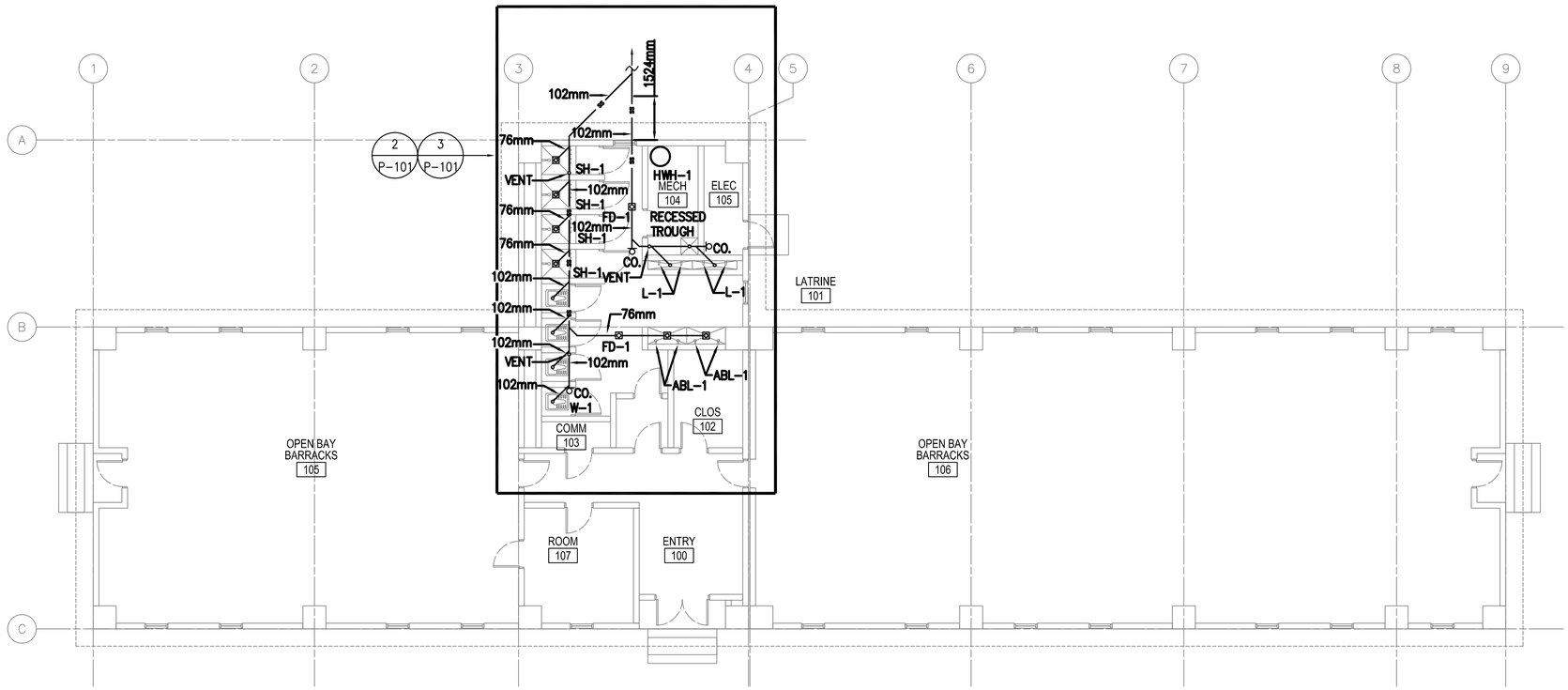


1 / P-101

## SUPPORT BARRACKS
## FLOOR PLAN - PLUMBING (SANITARY)

SCALE: 1:50

## FLOOR PLAN NOTES:

1. DO NOT SCALE DRAWINGS – ALL DIMENSIONS AND CONDITIONS SHALL BE CHECKED AND VERIFIED BY THE CONTRACTOR AT THE SITE.
2. ALL WORK PERFORMED ON THIS BUILDING SHALL BE IN COMPLIANCE WITH ALL PERTINENT CODES, RULES, ORDINANCES AND REGULATIONS OF THE GOVERNING AUTHORITIES.
3. ALL WORK PERFORMED UNDER AND IN CONNECTION WITH THESE DRAWINGS AND SPECIFICATIONS SHALL BE IN STRICT COMPLIANCE WITH THE LATEST SAFETY AND HEALTH STANDARDS.
4. REPORT ANY DISCREPANCIES FOUND IN THE PLUMBING DRAWINGS AND/OR IN THE SPECIFICATIONS DURING THE BIDDING PROCESS FOR CLARIFICATION BY THE ENGINEER.
5. ALL EASTERN STYLE WATER CLOSETS IN THIS FACILITY ARE TO HAVE THE FIXTURE DESIGNATION OF W-1. EACH FIXTURE SHALL HAVE A 25mm (1 INCH) COLD WATER LINE EXTENDED TO IT AND THEN BE REDUCED TO 13mm (1/2 INCH) FOR A FINAL CONNECTION TO THE FLUSH TANK AND A 102mm (4) INCH SANITARY CONNECTION.
6. ALL LAV FIXTURES IN THIS FACILITY ARE TO HAVE THE FIXTURE DESIGNATION OF L-1. EACH FIXTURE SHALL HAVE A 13mm (1/2 INCH) COLD WATER, 13mm (1/2 INCH) HOT WATER CONNECTION AND A 76mm (3 INCH) SANITARY CONNECTION.
7. ALL ABLUTION FIXTURES IN THIS FACILITY ARE TO HAVE THE FIXTURE DESIGNATION OF ABL-1. EACH FIXTURE SHALL HAVE A 13mm (1/2 INCH) COLD WATER, 13mm (1/2 INCH) HOT WATER CONNECTION AND A 76mm (3 INCH) SANITARY CONNECTION.
8. REFER TO SHEET P501, P502, AND P503 FOR DETAILS AND SYMBOLS.
9. ALL WATER, SANITARY AND VENT LINES TO BE EXPOSED. RUN LINES TIGHT TO CEILING AND WALL.

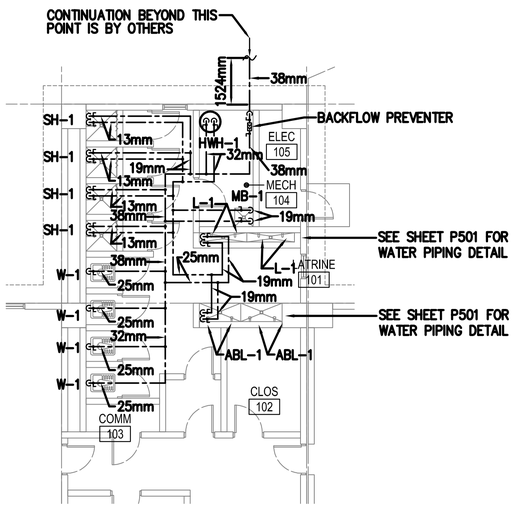


2 / P-101

## PARTIAL SUPPORT BARRACKS
## FLOOR PLAN - PLUMBING (HOT AND COLD WATER)

SCALE: 1:50

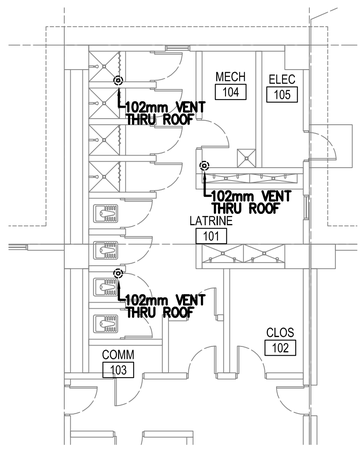


3 / P-101

## PARTIAL SUPPORT BARRACKS
## FLOOR PLAN - PLUMBING (VENT PIPING)

SCALE: 1:50

## PLUMBING SYMBOLS

- SANITARY SEWER PIPING (BELOW GROUND)
- SANITARY SEWER PIPING (ABOVE GROUND)
- VENT PIPING (V)
- COLD WATER PIPING (CW)
- HOT WATER PIPING (HW)
- BALL VALVE
- BACKFLOW PREVENTER
- CLEANOUT (CO.) (OR)
- ROOF PENETRATION

LINEAR DIMENSIONS SHOWN ARE IN MILLIMETERS (MM), UNLESS OTHERWISE NOTED

0 2000 4000
SCALE: 1:100

APPROVED:

A/E DESIGNER OF RECORD

SEAL:

COMMONWEALTH OF PENNSYLVANIA REGISTERED PROFESSIONAL ENGINEER MATTHEW R. SOTOSKY 046576-E

US ARMY CORPS OF ENGINEERS
AFGHANISTAN ENGINEER DISTRICT

| Mark | Description | Date | Appr. |
|---|---|---|---|

Rev: 0
Date: 02/23/10
Design file no.
Drawing code:
File name: ANABSSBPL-101XXX
Plot date: 02/26/2010
Plot scale: 1:50

Designed by: RMH
Dwn by: RMH
Ckd by: CJM
Reviewed by:
Submitted by: BAKER

U.S. ARMY CORPS OF ENGINEERS
AFGHANISTAN ENGINEER DISTRICT
APO AE 96338

Michael Baker Jr., Inc.
A unit of Michael Baker Corporation
Airside Business Park
100 Airside Drive
Moon Township, PA 15108
www.mbakercorp.com

AFGHAN NATIONAL ARMY
REGIONAL MILITARY TRAINING CENTER
STANDARD DESIGN

SUPPORT STAFF BARRACKS
FLOOR PLAN – PLUMBING

Sheet reference number:
P-101

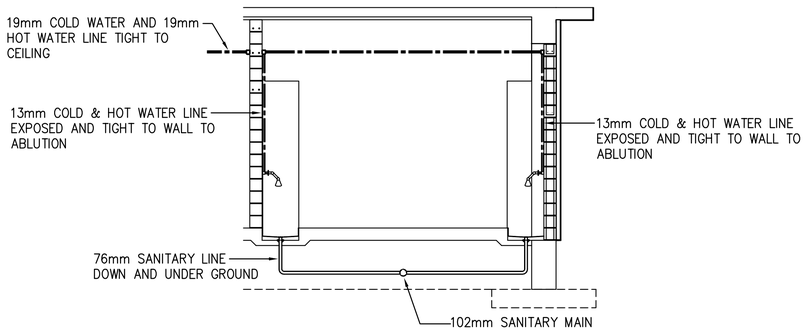


## TYPICAL ABLUTION SANITARY & WATER INSTALLATION SCHEMATIC

SCALE: N.T.S.

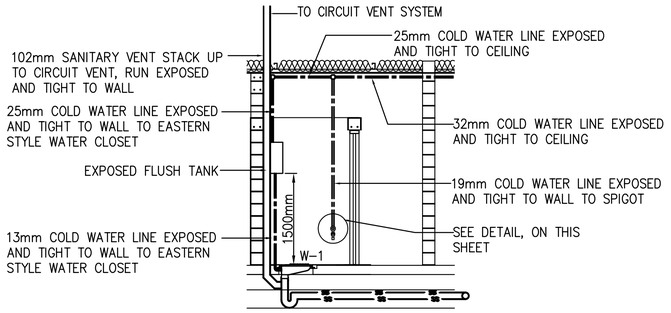


## TYPICAL EASTERN STYLE WATER CLOSET SANITARY & WATER INSTALLATION SCHEMATIC

SCALE: N.T.S.

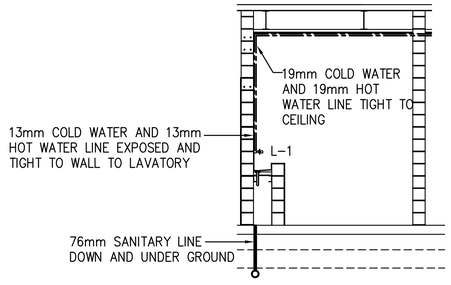


## TYPICAL LAVATORY SANITARY & WATER INSTALLATION SCHEMATIC

SCALE: N.T.S.

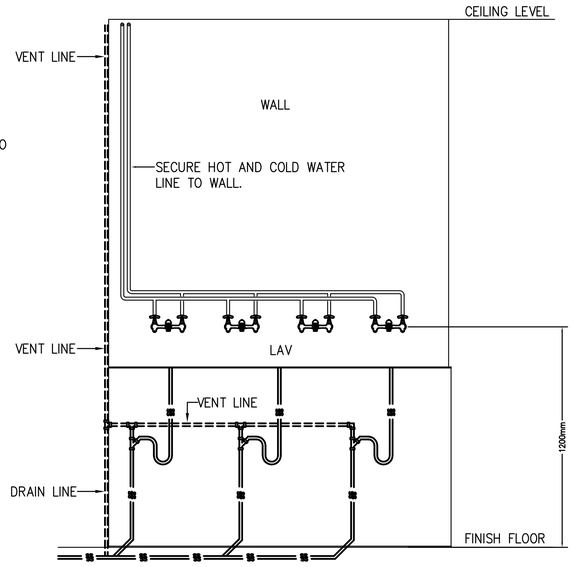


## LAVATORY ELEVATION PLAN - PLUMBING

SCALE: N.T.S.

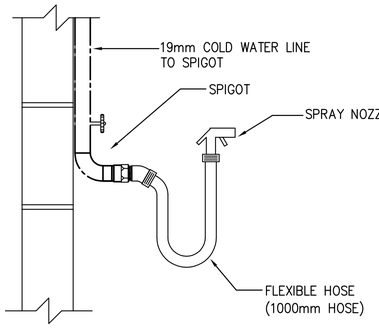


## TYPICAL DETAIL - SPIGOT, FLEXIBLE HOSE, AND SPRAY NOZZLE

SCALE: N.T.S.

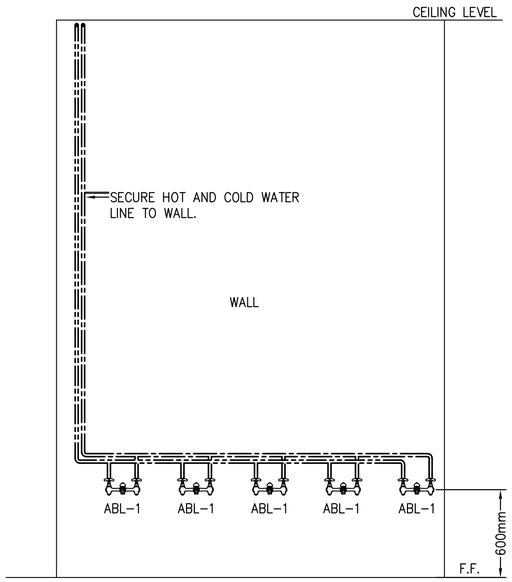


## TYPICAL ABLUTION ELEVATION PLUMBING PLAN - WATER INSTALLATION SCHEMATIC

SCALE: N.T.S.

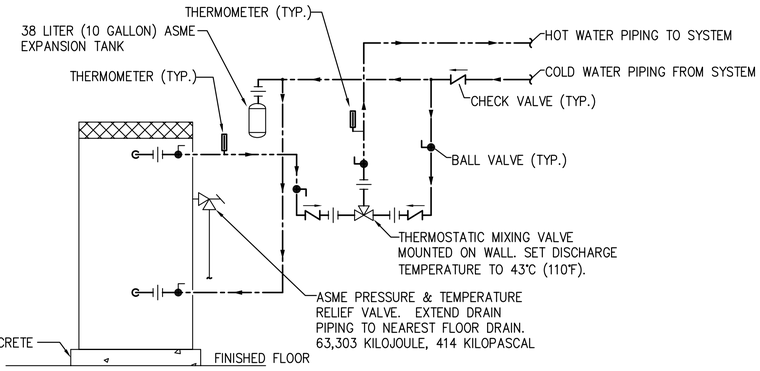


## ELECTRIC WATER HEATER PIPING SCHEMATIC

SCALE: N.T.S.

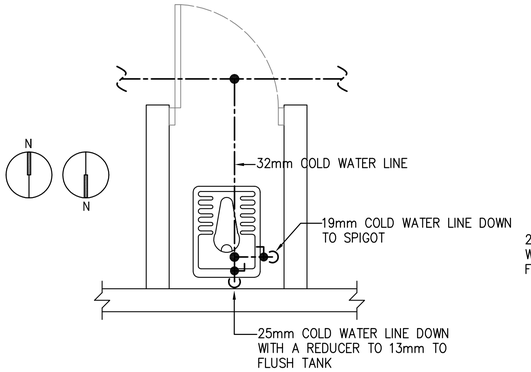


## TYPICAL EASTERN STYLE WATER CLOSET WITH SPIGOT WATER PIPING DETAIL

SCALE: N.T.S.

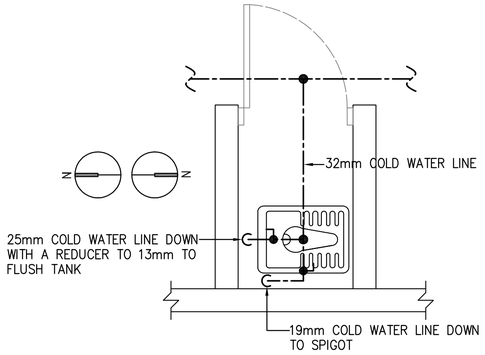


## TYPICAL EASTERN STYLE WATER CLOSET WITH SPIGOT WATER PIPING DETAIL

SCALE: N.T.S.

## GENERAL PLUMBING NOTES:

1. ALL SANITARY PIPING SHALL BE BELOW FLOOR, AND ALL WATER, AND VENT PIPING SHALL BE TIGHT TO CEILING, UNLESS OTHERWISE NOTED.

2. PLUMBING CONTRACTOR SHALL COORDINATE PLUMBING WORK WITH THE WORK OF ALL OTHER TRADES. VERIFY THE LOCATIONS OF ALL UTILITIES AT THE SITE PRIOR TO THE START OF ANY PLUMBING WORK.

3. COORDINATE ALL ACCESS PANEL LOCATIONS WITH THE ARCHITECT AND GENERAL CONTRACTOR.

4. ALL SANITARY PIPING BELOW SLAB SHALL BE A MINIMUM OF 51mm, UNLESS OTHERWISE NOTED OR AS REQUIRED BY THE LOCAL AUTHORITY HAVING JURISDICTION.

5. ALL SANITARY BRANCH LINES SHALL BE SLOPED AT 6mm PER 305mm, AND ALL MAIN LINES SHALL BE SLOPED AT 3mm PER 305mm, UNLESS OTHERWISE NOTED OR AS REQUIRED BY THE LOCAL AUTHORITY HAVING JURISDICTION.

6. THE CONTRACTOR IS RESPONSIBLE FOR COORDINATION WITH ALL UTILITY AUTHORITIES FOR INSTALLATION REQUIREMENTS, REGULATIONS, FEES, PERMITS, AND APPROVALS BEFORE THE START OF CONSTRUCTION.

7. THE CONTRACTOR SHALL ROUGH-IN AND CONNECT ALL EQUIPMENT REQUIRING WATER, WASTE, AND/OR VENT WHETHER OR NOT FURNISHED UNDER THIS CONTRACT. THE CONTRACTOR SHALL ALSO FURNISH AND INSTALL ALL NECESSARY PIPE, FITTINGS, VALVES, TRAPS, ETC., REQUIRED FOR A COMPLETE INSTALLATION, LEAVING SAME READY FOR SERVICE.

APPROVED:

A/E DESIGNER OF RECORD

SEAL:

COMMONWEALTH OF PENNSYLVANIA REGISTERED PROFESSIONAL MATTHEW R. SOTOSKY ENGINEER 065576-E

US ARMY CORPS OF ENGINEERS
AFGHANISTAN ENGINEER DISTRICT

| Mark | Description | Date | Appr. |
|---|---|---|---|
| | | | |

Designed by: RMH
Dwn by: RMH
Ckd by: CJM
Reviewed by:
Submitted by: MRS

Date: 02/23/10
Design file no.
Drawing code:
File name: ANABSSBPL-501XXX
Plot date: 02/09/2010
Plot scale:1:100
Rev: 0

U.S. ARMY CORPS OF ENGINEERS
AFGHANISTAN ENGINEER DISTRICT
APO AE 96338

*Michael Baker Jr., Inc*
*A unit of Michael Baker Corporation*
Airside Business Park
100 Airside Drive
Moon Township, PA 15108
www.mbakercorp.com

AFGHAN NATIONAL ARMY
REGIONAL MILITARY TRAINING CENTER
STANDARD DESIGN

SUPPORT STAFF BARRACKS
PLUMBING DETAILS

Sheet reference number:
P-501

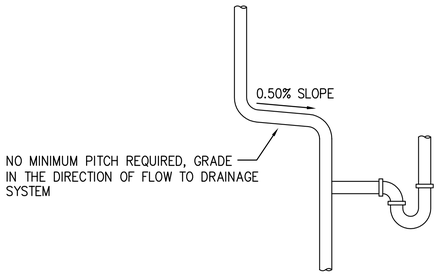


## TYPICAL VENT SLOPE DETAILS

SCALE: N.T.S.

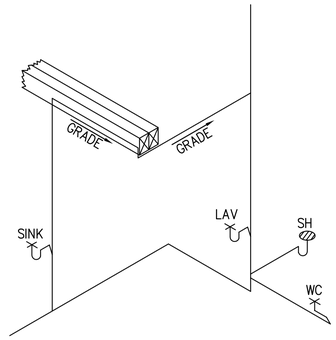


## TYPICAL VENT SLOPE DETAILS

SCALE: N.T.S.

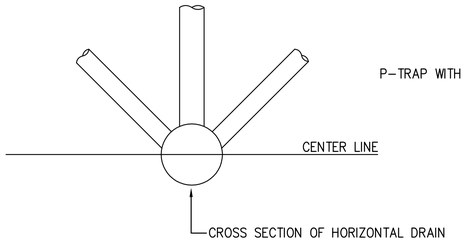


## ACCEPTABLE VENT CONNECTIONS TO HORIZONTAL DRAIN - DETAIL

SCALE: N.T.S.

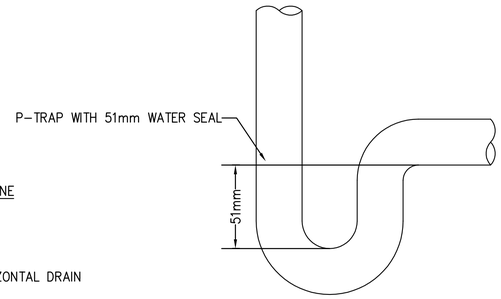


## P-TRAP WITH 51mm WATER SEAL DETAIL

SCALE: N.T.S.

## GENERAL PLUMBING NOTES:

1. ALL SANITARY PIPING SHALL BE BELOW FLOOR, AND ALL WATER, AND VENT PIPING SHALL BE TIGHT TO CEILING, UNLESS OTHERWISE NOTED.

2. PLUMBING CONTRACTOR SHALL COORDINATE PLUMBING WORK WITH THE WORK OF ALL OTHER TRADES. VERIFY THE LOCATIONS OF ALL UTILITIES AT THE SITE PRIOR TO THE START OF ANY PLUMBING WORK.

3. ALL SANITARY PIPING BELOW SLAB SHALL BE A MINIMUM OF 51mm, UNLESS OTHERWISE NOTED OR AS REQUIRED BY THE LOCAL AUTHORITY HAVING JURISDICTION.

4. ALL SANITARY BRANCH LINES SHALL BE SLOPED AT 6mm PER 305mm, AND ALL MAIN LINES SHALL BE SLOPED AT 3mm PER 305mm, UNLESS OTHERWISE NOTED OR AS REQUIRED BY THE LOCAL AUTHORITY HAVING JURISDICTION.

5. THE CONTRACTOR SHALL BE RESPONSIBLE FOR COORDINATION WITH ALL UTILITY AUTHORITIES FOR INSTALLATION REQUIREMENT, REGULATIONS, FEES, PERMITS, AND APPROVALS BEFORE THE START OF CONSTRUCTION.

6. THE CONTRACTOR SHALL ROUGH-IN AND CONNECT ALL EQUIPMENT REQUIRING WATER, WASTE, AND/OR VENT WHETHER OR NOT FURNISHED UNDER THIS CONTRACT. THE CONTRACTOR SHALL ALSO FURNISH AND INSTALL ALL NECESSARY PIPE, FITTINGS, VALVES, TRAPS, ETC., REQUIRED FOR A COMPLETE INSTALLATION, LEAVING SAME READY FOR SERVICE.

## FIXTURE LIST

| TYPE | ITEM | SOIL & WASTE | VENT | COLD WATER | HOT WATER | REMARKS | REMARKS 2 |
|---|---|---|---|---|---|---|---|
| W-1 | EASTERN STYLE WATER CLOSET | 102mm | 51mm | 13mm | ------ | FLUSH TANK | LOW FLOW EFFICIENT TYPE |
| L-1 | TROUGH FIXTURE | 38mm | 38mm | 13mm | 13mm | FABRICATED IN FIELD | LOW FLOW EFFICIENT TYPE |
| ABL-1 | ABLUTION | FLOOR DRAIN | ------ | 13mm | 13mm | FABRICATED IN FIELD | ---------- |
| HWH-1 | WATER HEATER | --- | --- | SEE DWG. | SEE DWG. | 151 LITER ELECTRIC WATER HEATER, 380/3ø, 9KW | ---------- |
| SH-1 | SHOWER | 76mm | --- | 13mm | 13mm | DRAIN AND SHOWER CONTROLS | ---------- |

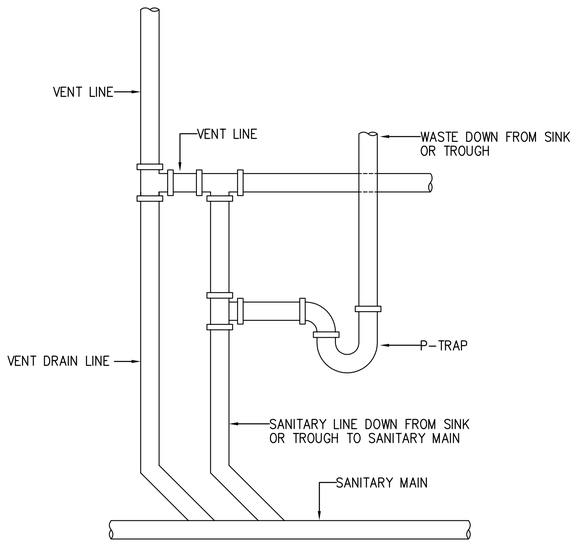


## TYPICAL LAVATORY/LAUNDRY VENT DETAIL

SCALE: N.T.S.

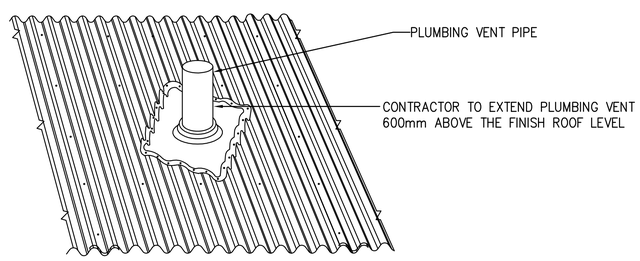


## PLUMBING VENT THRU ROOF DETAIL

SCALE: NTS

APPROVED:

A/E DESIGNER OF RECORD

SEAL:

COMMONWEALTH OF PENNSYLVANIA REGISTERED PROFESSIONAL MATTHEW R. SOTOSKY ENGINEER 046576-E

US ARMY CORPS OF ENGINEERS
AFGHANISTAN ENGINEER DISTRICT

| Mark | Description | Date | Appr. |
|---|---|---|---|
| | | | |

| Mark | Description | Date | Appr. |
|---|---|---|---|
| | | | |

Rev: 0
Date: 02/23/10
Design file no.
Drawing code:
File name: ANABSSBR_502XXX
Plot date: 02/09/2010
Plot scale: 1:100

Designed by: RMH
Dwn by: RMH
Ckd by: CJM
Reviewed by:
Submitted by: MRS

U.S. ARMY CORPS OF ENGINEERS
AFGHANISTAN ENGINEER DISTRICT
APO AE 96338

Michael Baker Jr., Inc
A unit of Michael Baker Corporation
Airside Business Park
100 Airside Drive
Moon Township, PA 15108
www.mbakercorp.com

AFGHAN NATIONAL ARMY
REGIONAL MILITARY TRAINING CENTER
STANDARD DESIGN

SUPPORT STAFF BARRACKS

PLUMBING DETAILS

Sheet reference number:
P-502

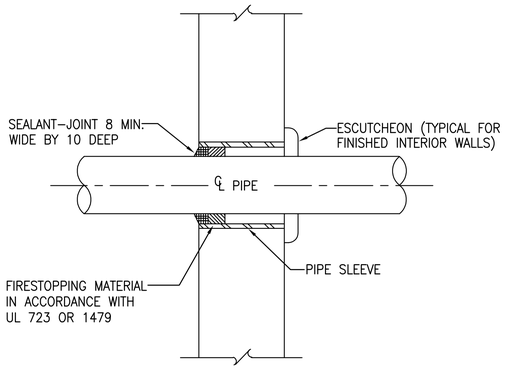


## TYPICAL WALL PENETRATION DETAIL

SCALE: N.T.S.

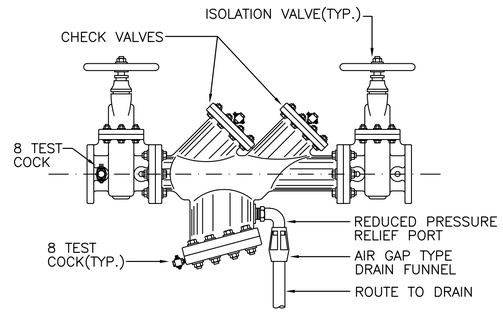


## TYPICAL BACKFLOW PREVENTER DETAIL

SCALE: N.T.S.

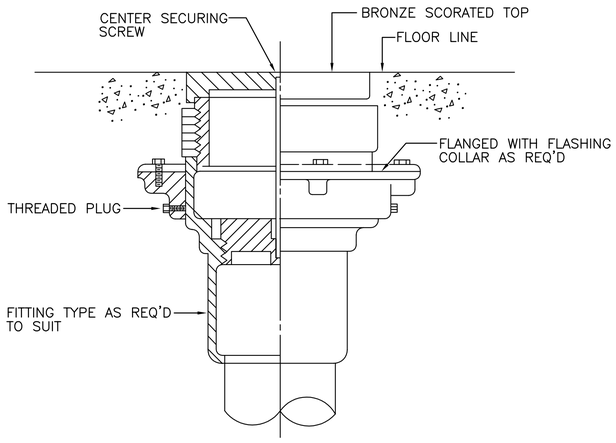


## TYPICAL FLOOR CLEANOUT DETAIL

SCALE: N.T.S.

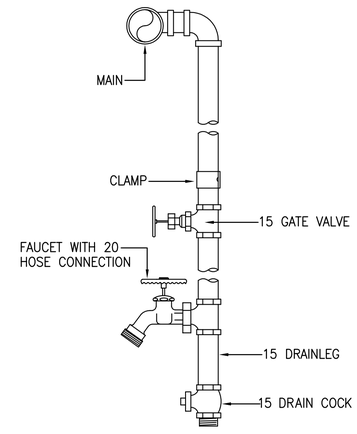


## TYPICAL WATER DROP DETAIL

SCALE: N.T.S.

## PLUMBING SYMBOLS

- SANITARY SEWER PIPING (BELOW GROUND)
- SANITARY SEWER PIPING (ABOVE GROUND)
- VENT PIPING (V)
- COLD WATER PIPING (CW)
- HOT WATER PIPING (HW)
- BALL VALVE
- BACKFLOW PREVENTER
- CLEANOUT (CO.) OR
- ROOF PENETRATION

APPROVED:

A/E DESIGNER OF RECORD

SEAL:

COMMONWEALTH OF PENNSYLVANIA REGISTERED PROFESSIONAL MATTHEW R. SOTOSKY ENGINEER 065576-E

US ARMY CORPS OF ENGINEERS
AFGHANISTAN ENGINEER DISTRICT

| Mark | Description | Date | Appr. |
|---|---|---|---|
| | | | |

| Mark | Description | Date | Appr. |
|---|---|---|---|
| | | | |

Rev: 0
Date: 02/23/10
Design file no.
Drawing code:
File name: ANABSSBR-503XXX
Plot date: 02/09/2010
Plot scale:1:100

Designed by: RMH
Dwn by: RMH
Ckd by: CJM
Reviewed by:
Submitted by: MRS

U.S. ARMY CORPS OF ENGINEERS
AFGHANISTAN ENGINEER DISTRICT
APO AE 96338

Michael Baker Jr., Inc
A unit of Michael Baker Corporation
Airside Business Park
100 Airside Drive
Moon Township, PA 15108
www.mbakercorp.com

AFGHAN NATIONAL ARMY
REGIONAL MILITARY TRAINING CENTER
STANDARD DESIGN

SUPPORT STAFF BARRACKS
PLUMBING DETAILS

Sheet reference number:
P–503

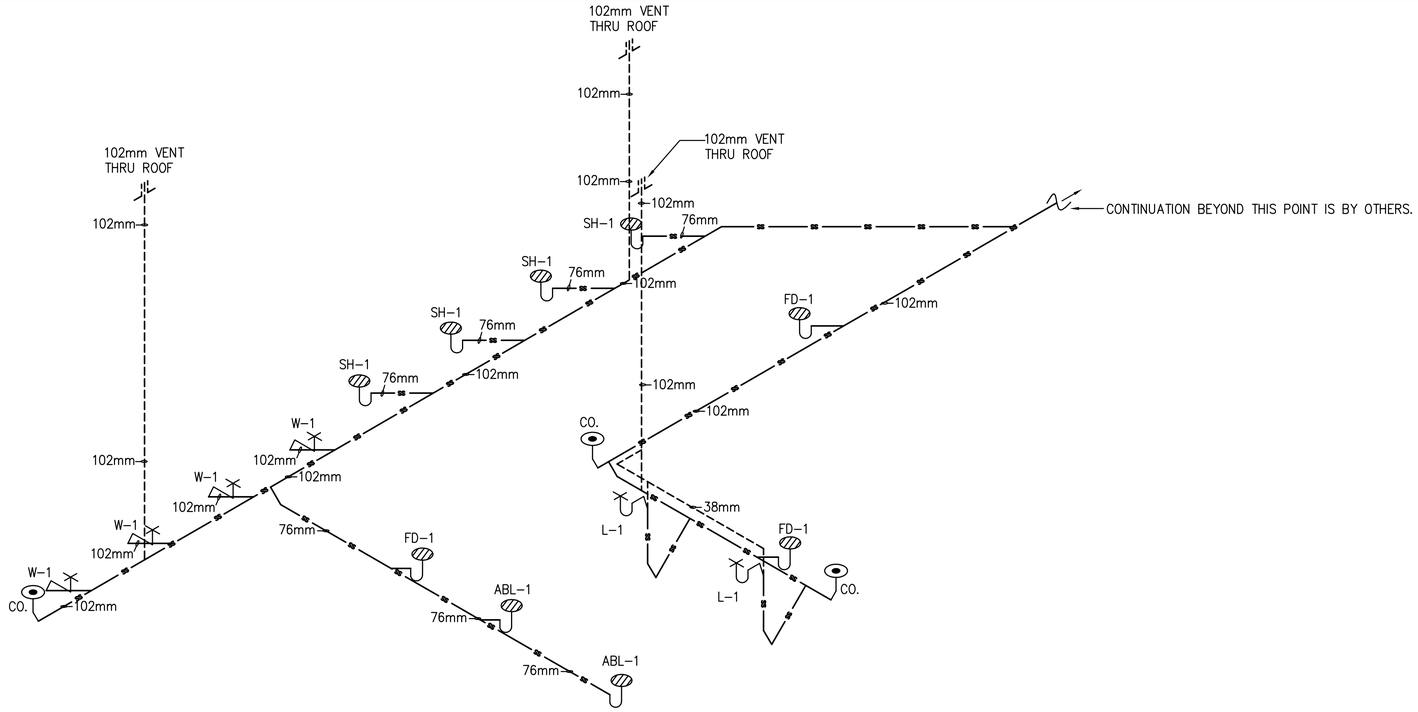


1 P-901 **BSSB DRAINAGE ISOMETRIC**

SCALE: N.T.S.

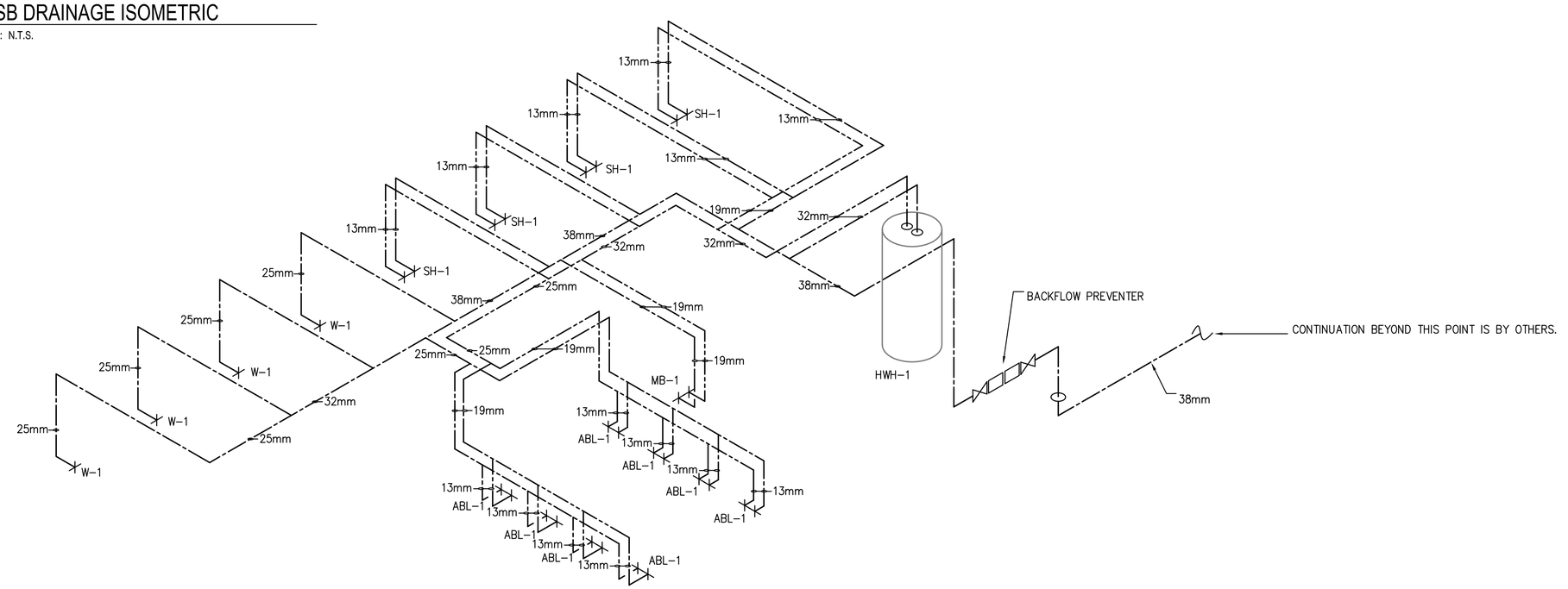


2 P-901 **BSSB HOT AND COLD WATER ISOMETRIC**

SCALE: N.T.S.

## PLUMBING SYMBOLS

- SANITARY SEWER PIPING (BELOW GROUND)
- SANITARY SEWER PIPING (ABOVE GROUND)
- VENT PIPING (V)
- COLD WATER PIPING (CW)
- HOT WATER PIPING (HW)
- BALL VALVE
- BACKFLOW PREVENTER
- CLEANOUT (CO.) — OR
- ROOF PENETRATION

US ARMY CORPS OF ENGINEERS
AFGHANISTAN ENGINEER DISTRICT

| Mark | Description | Date | Appr. |
|---|---|---|---|
| | | | |

| Mark | Description | Date | Appr. |
|---|---|---|---|
| | | | |

Rev: 0
Date: 02/23/10
Design file no.
Drawing code:
File name: ANABSSBPI-p901XXX
Plot date: 02/26/2010
Plot scale: N.T.S.

Designed by: RMH
Dwn by: RMH
Ckd by: CJM
Reviewed by:
Submitted by: BAKER

U.S. ARMY CORPS OF ENGINEERS
AFGHANISTAN ENGINEER DISTRICT
APO AE 96338

*Michael Baker Jr., Inc.*
*A unit of Michael Baker Corporation*
Airside Business Park
100 Airside Drive
Moon Township, PA 15108
www.mbakercorp.com

AFGHAN NATIONAL ARMY
REGIONAL MILITARY TRAINING CENTER
STANDARD DESIGN

SUPPORT STAFF BARRACKS
PLUMBING ISOMETRICS

APPROVED:

A/E DESIGNER OF RECORD

SEAL:

COMMONWEALTH OF PENNSYLVANIA
REGISTERED PROFESSIONAL ENGINEER
MATTHEW R. SOTOSKY
046576-E

Sheet reference number:
P-901

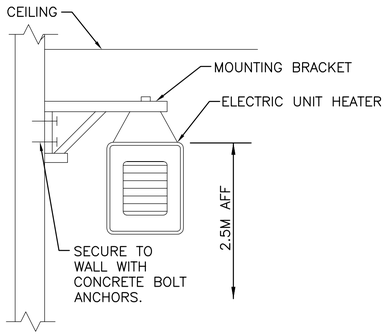


2 M-101 N.T.S.

## ELECTRIC UNIT HEATER MOUNTING DETAIL

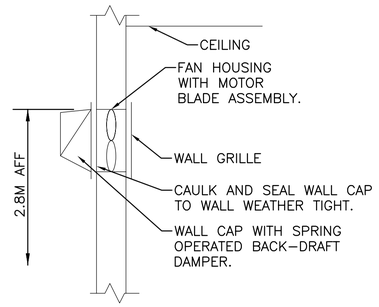


3 M-101 N.T.S.

## WALL EXHAUST FAN DETAIL

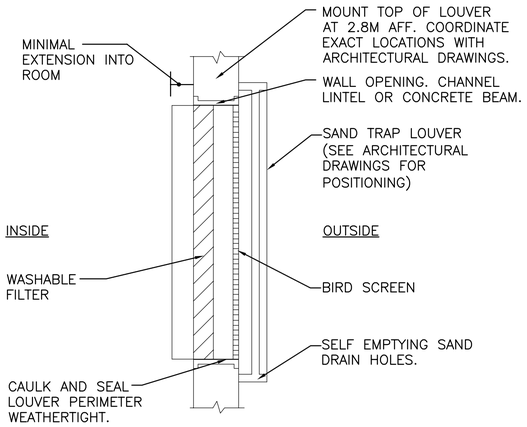


4 M-101 N.T.S.

## FILTERED SAND TRAP LOUVER

## KEY NOTE:

1. INLINE EXHAUST FAN DUCTED TO WALL CAP WITH LOW LEAKAGE GRAVITY BACK-DRAFT DAMPER. SECURE FAN TO STRUCTURE ABOVE AND INTERLOCK WITH MAKE UP AIR HEATER.
2. ELECTRIC MAKE UP AIR HEATER SECURED TO STRUCTURE ABOVE. BLOWER SHALL BE SET TO ENERGIZE WITH EXHAUST FAN EF-1 & STAT, HEAT SHALL BE CONTROLLED BY STAT.
3. WALL EXHAUST FAN WITH LOW SPRING OPERATED BACK-DRAFT DAMPER. SEE DETAIL 3 THIS SHEET.
4. 600X600 (24X24) INTAKE LOUVER FOR MAKE UP AIR UNIT. PROVIDE WEATHER PROOF LOUVER WITH 50mm (2") WASHABLE FILTER AND SAND TRAP.
5. 200x150 (8x6) ALUMINUM DUCT MOUNTED SUPPLY GRILLE WITH ADJUSTABLE OPPOSED BLADE DAMPERS. BALANCE EACH GRILLE TO 0.070 CMS.
6. 150x150 (6x6) ALUMINUM DUCT MOUNTED EXHAUST GRILLE WITH ADJUSTABLE OPPOSED BLADE DAMPERS. BALANCE EACH GRILLE TO 0.075 CMS.
7. 150x150 (6x6) ALUMINUM WALL MOUNTED EXHAUST GRILLE WITH ADJUSTABLE OPPOSED BLADE DAMPERS. BALANCE GRILLE TO 0.030 CMS.
8. THERMOSTAT MOUNTED AS HIGH AS POSSIBLE. INTERLOCK STAT WITH CORRESPONDING EXHAUST FAN, SET FAN TO ENERGIZE ON RISE IN TEMPERATURE ABOVE 25°C (77°F).

## GENERAL NOTES:

1. DO NOT SCALE DRAWINGS – ALL DIMENSIONS AND CONDITIONS SHALL BE CHECKED AND VERIFIED BY THE CONTRACTOR AT THE SITE.
2. ALL WORK PERFORMED ON THIS BUILDING SHALL BE IN COMPLIANCE WITH ALL PERTINENT CODES, RULES, ORDINANCES AND REGULATIONS OF THE GOVERNING AUTHORITIES.
3. ALL WORK PERFORMED UNDER AND IN CONNECTION WITH THESE DRAWINGS AND SPECIFICATIONS SHALL BE IN STRICT COMPLIANCE WITH THE LATEST SAFETY AND HEALTH STANDARDS.

## SYMBOLS:

- (X) KEY NOTE
- (0.050) AIR VOLUME IN CUBIC METERS PER SECOND (CMS)
- UC DOOR UNDERCUT
- TG 200x400 (8x16) TRANSFER GRILLE
- $ SINGLE POLE SWITCH – 20A RATED

## ABBREVIATIONS:

| | |
|---|---|
| AFF | ABOVE FINISH FLOOR |
| CF | CEILING FANS |
| CMS | CUBIC METERS PER SECOND |
| STATS | THERMOSTATS |

### EXHAUST FAN SCHEDULE

| NO. | TYPE | FAN CMS | DRIVE | HP | SP mmH20 | ELECTRICAL DATA | SWITCH |
|---|---|---|---|---|---|---|---|
| EF-1 | WALL | 0.330 | DIRECT | 1/6 | 13 | 220/1/50 | @ WALL |
| EF-2 | WALL | 0.035 | DIRECT | FRACT | 9.5 | 220/1/50 | @ WALL |
| EF-3 | WALL | 0.035 | DIRECT | FRACT | 9.5 | 220/1/50 | W/ STAT |

NOTES:
1. FANS SHALL HAVE LOW LEAKAGE GRAVITY LOUVER.

### MAKE UP AIR HEATERS

| NO. | BLOWER CMS | FUSE | KW | MIN. TEMP RISE °C | SP mmH20 | ELECTRICAL DATA | CONTROL |
|---|---|---|---|---|---|---|---|
| MUA-1 | 0.280 | 60 | 10 | 20 | 13 | 220/1/50 | REMOTE |

NOTES:
1. PROVIDE REMOTE MOUNTED THERMOSTAT WITH LOCKING COVER.
2. INTERLOCK BLOWER OPERATION WITH EXHAUST FANS EF-1 & THERMOSTAT.
3. PROVIDE AIR SENSING SWITCH FOR HEATING OPERATION.

### ELECTRIC UNIT HEATER SCHEDULE

| NO. | CMS | KW | F.A.T. °C | ELECT. CHAR. | MOUNTING |
|---|---|---|---|---|---|
| EH-2 | 0.200 | 2.6 | 38 | 380/1/50 | WALL HUNG |
| EH-4 | 0.200 | 4 | 38 | 380/1/50 | WALL HUNG |

NOTES:
1. UNIT HEATERS SHALL HAVE TAMPER PROOF INTEGRAL STATS.
2. COORDINATE LOCATION AND ORIENTATION IN FIELD.

### CEILING FAN

| NO. | BLADE SIZE mm | BLADE SIZE IN | VOLTAGE SWITCH | REMARKS |
|---|---|---|---|---|
| CF-1 | 1320 | 52 | 220/1/50 @ WALL | 3 SPEED REVERSIBLE MOTOR |

NOTES:
1 INSTALL FANS 2.5M AFF.
2. PROVIDE WITH OUT LIGHT FIXTURE.
3. PROVIDE WITH REMOTE MOUNTED ON-OFF SWITCH SHOWN ON ELECTRICAL DRAWINGS.

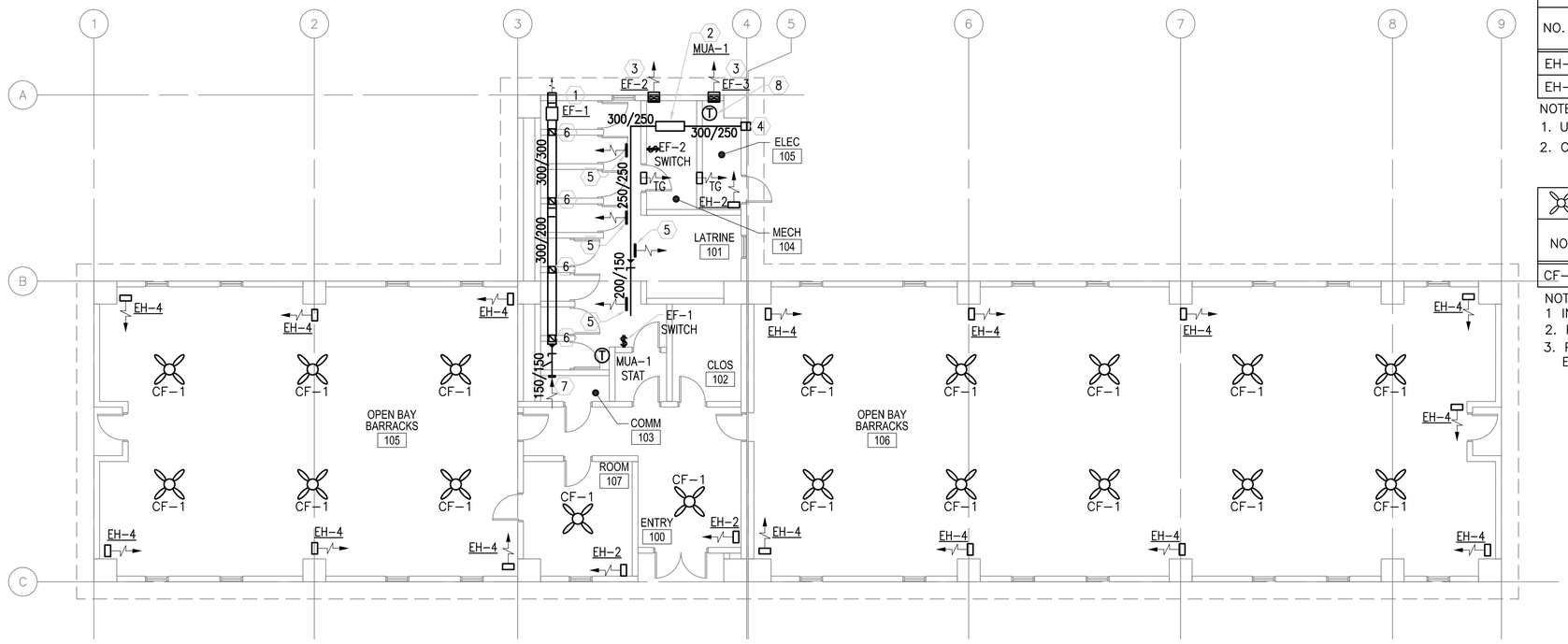


1 M-101 SCALE: 1:100

## FLOOR PLAN - HVAC

LINEAR DIMENSIONS SHOWN ARE IN MILLIMETERS (MM), UNLESS OTHERWISE NOTED

0 2000 4000
SCALE: 1:100

APPROVED:

A/E DESIGNER OF RECORD

SEAL:

COMMONWEALTH OF PENNSYLVANIA REGISTERED PROFESSIONAL MATTHEW R. SOTOSKY ENGINEER 045576-E

US ARMY CORPS OF ENGINEERS
AFGHANISTAN ENGINEER DISTRICT

| Mark | Description | Date | Appr. |
|---|---|---|---|
| | | | |

Designed by: RML
Dwn by: JJN
Ckd by: CJM
Reviewed by: MRS
Submitted by: BAKER

Date: 02/23/10
Design file no.
Rev: 0
Drawing code:
File name: ANABSSBMH-101XX3
Plot date: 02/26/2010
Plot scale: 1:100

U.S. ARMY CORPS OF ENGINEERS
AFGHANISTAN ENGINEER DISTRICT
APO AE 96338

Michael Baker Jr., Inc
A unit of Michael Baker Corporation
Airside Business Park
100 Airside Drive
Moon Township, PA 15108
www.mbakercorp.com

AFGHAN NATIONAL ARMY
REGIONAL MILITARY TRAINING CENTER
STANDARD DESIGN

SUPPORT STAFF BARRACKS
HVAC - FLOOR PLAN, SCHEDULES AND DETAILS

Sheet reference number:
M-101

## POWER

- DISTRIBUTION PANELBOARD
- NEW PANELBOARD – SURFACE
- NEW PANELBOARD – RECESSED
- (G) GENERATOR
- TRANSFORMER (DRAWN TO SCALE)
- [J] JUNCTION BOX
- (J) JUNCTION BOX – CEILING
- FUSIBLE SAFETY SWITCH
- (M) MOTOR
- $^{M}$ MOTOR STARTING SWITCH – 220V, 20A RATED UNLESS OTHERWISE STATED
- ELECTRIC WATER HEATER
- (CF) CEILING FAN – REFER TO SPECIFICATION SECTION 26 20 00

## RECEPTACLES

- DUPLEX 20A TYPE CEE 7/7 "SCHUKO STYLE" UNSWITCHED RECEPTACLE
- GF DUPLEX 20A TYPE CEE 7/7 "SCHUKO STYLE" UNSWITCHED RECEPTACLES – 10mA GROUND FAULT INTERRUPTER TYPE
- WP DUPLEX 20A TYPE CEE 7/7 "SCHUKO STYLE" UNSWITCHED TYPE WITH WEATHERPROOF COVER – 10mA GROUND FAULT INTERRUPTER TYPE
- EXP DUPLEX 20A TYPE CEE 7/7 "SCHUKO STYLE" UNSWITCHED RECEPTACLES – EXPLOSION PROOF
- * INDICATES MOUNT DEVICE ABOVE COUNTERTOP OR AT 1070mm ABOVE FINISHED FLOOR WHERE NO COUNTER IS TO BE INSTALLED.

## LIGHTNING PROTECTION

- AIR TERMINAL 20mm O.D. X 450mm SOLID COPPER, NICKEL PLATED ON ADHESIVE BASE
- EQ EQUIPMENT AIR TERMINAL
- TEST WELL WITH GROUND ROD(S)
- GROUND ROD
- G GROUND PLATE
- MAIN GROUND CONDUCTER CONCEALED WITHIN CONSTRUCTION
- MAIN GROUND CONDUCTOR EXPOSED ON EXPOSED ON BUILDING EXTERIOR SURFACE
- GROUND CONDUCTOR CAD WELDED TO GROUND CABLE OR EQUIPMENT
- GROUND ROD TRIPOD, SPACED 3 METERS APART.
- LEVEL TO LEVEL CABLE

## LIGHTING

- LIGHTING FIXTURE – SEE FIXTURE SCHEDULE FOR MORE INFORMATION
- EMERGENCY LIGHTING FIXTURE – SEE FIXTURE SCHEDULE FOR MORE INFORMATION
- DOWNLIGHT
- LIGHTING FIXTURE ON NORMAL/EMERGENCY
- WALL MOUNTED LIGHT FIXTURE
- [E] EXIT SIGN – DIRECTIONAL ARROWS AS INDICATED ON DRAWINGS
- REMOTE HEAD FOR BATTERY PACK
- $ SINGLE POLE SWITCH – 20A RATED
- $^{3}$ 3–WAY SWITCH – 20A RATED
- $^{4}$ 4–WAY SWITCH – 20A RATED
- [LC] LIGHTING CONTACTOR
- POLE MOUNTED SITE LIGHTING FIXTURE– NUMBER OF FIXTURES PER POLE AS INDICATED ON DRAWINGS
- EXTERIOR DIRECTIONAL LIGHTING FIXTURE
- a SMALL CASE LETTERS REPRESENTS LAMP(S) / SWITCHES.

## TELECOMMUNICATIONS

- TELEPHONE OUTLET(S) @ 45cm AFF. U.N.O. WITH 20mm RACEWAY TERMINATED TO TELEDATA TERMINAL BOARD.
- DATA OUTLET(S) @ 45cm AFF. U.N.O. WITH 20mm RACEWAY TERMINATED TO TELEDATA TERMINAL BOARD.

## TELECOMMUNICATIONS (CONTINUED)

- COMBINATION TELEPHONE/DATA OUTLET(S) @ 45cm AFF. U.N.O. WITH 27mm RACEWAY TERMINATED TO TELEDATA TERMINAL BOARD.
- W WALL MTD. TELEPHONE OUTLET WITH 20mm RACEWAY TO TELEDATA TERMINAL BOARD.
- (x)T INDICATES NUMBER OF TELEPHONE OUTLET(S) AND ASSOCIATED CABLING
- (x)D INDICATES NUMBER OF DATA OUTLET(S) AND ASSOCIATED CABLING
- (x)TF INDICATES NUMBER OF TELEPHONE OUTLETS AND ASSOCIATED CABLING WITH 1 OUTLET AND CABLE DEDICATED FOR FAX

## SINGLE LINE SYMBOLS

- SWITCH
- BREAKER
- FUSE
- TRANSFORMER
- GROUND
- CONTACT (NORMALLY OPEN)
- CONTACT (NORMALLY CLOSED)
- TRANSFER SWITCH
- CURRENT TRANSFORMER
- INDICATES NEW ELECTRICAL EQUIPMENT
- C INDICATES NEW CONTROL WIRING AND CONDUIT
- EQUIPMENT OUTLINE

## MISCELLANEOUS

- BRANCH CIRCUIT WIRING, SURFACE MOUNTED ON WALLS
- BRANCH CIRCUIT WIRING – 6mm$^2$
- BRANCH CIRCUIT WIRING – UNDER FLOOR
- HOME RUN BACK TO PANEL
- CONDUIT TURNED DOWN
- CONDUIT TURNED UP
- LV LOW VOLTAGE WIRING AND CONDUIT
- INDICATES CONTINUATION OF LINE

## FIRE ALARM

- FACP FIRE ALARM CONTROL PANEL WITH BATTERY BACKUP
- F FIRE ALARM PULL STATION

## FIRE ALARM (CONTINUED)

- F FIRE ALARM STROBE – WALL MOUNTED
- F FIRE ALARM AUDIBLE/STROBE – WALL MOUNTED
- F FIRE ALARM HORN/STROBE – WALL MOUNTED
- S SMOKE DETECTOR
- H HEAT DETECTOR CEILING MOUNTED
- D DUCT DETECTOR – PROVIDED BY EC, INSTALLED BY MC AND CONNECTED BY EC

## DENOTATIONS & ABBREVIATIONS

| | |
|---|---|
| AFF | ABOVE FINISHED FLOOR |
| C | CEILING MOUNTED |
| E | EMERGENCY |
| EC | ELECTRICAL CONTRACTOR |
| EPO | EMERGENCY POWER OFF |
| EXP | EXPLOSION PROOF |
| F | FIRE ALARM |
| FF | FLUSH FLOOR MOUNTED |
| FL | FLUORESCENT |
| FO | FIBER OPTIC |
| FSS | FUSED SAFETY SWITCH |
| GF | GROUND FAULT INTERRUPTER |
| GC | GENERAL CONTRACTOR |
| IG | ISOLATED GROUND |
| K | KEY |
| LV | LOW VOLTAGE |
| M | MOTOR |
| MC | MECHANICAL CONTRACTOR |
| NE | NORMAL/EMERGENCY |
| NFSS | NON–FUSED SAFETY SWITCH |
| PA | PAGING SYSTEM |
| PLC | PLUMBING CONTRACTOR |
| SL | SINGLE LINE |
| T | TELEPHONE |

## DENOTATIONS & ABBREVIATIONS (CONT.)

| | |
|---|---|
| TP | TAMPER PROOF |
| UE | UNDERGROUND ELECTRIC |
| W | WALL MOUNTED |
| WP | WEATHERPROOF WITH GROUND FAULT INTERRUPTION |
| WT | WATER TIGHT |

## GENERAL PROJECT NOTES:

G1. UNLESS OTHERWISE NOTED, PROVIDE ALL EQUIPMENT SHOWN ON THE PLANS. THE ELECTRICAL CONTRACTOR SHALL COORDINATE ALL SYMBOLS SHOWN ON THE PLANS WITH THE SYMBOL LIST. IT SHALL BE THE RESPONSIBILITY OF THE CONTRACTOR TO VERIFY THE INTENT OF ANY SYMBOL THAT IS SHOWN ON THE PLANS AND NOT INDICATED ON THE SYMBOL LIST WITH THE ENGINEER PRIOR TO BID.

G2. THE CONTRACTOR SHALL VERIFY THE LOCATION OF ALL UNDERGROUND UTILITIES WITHIN THE CONSTRUCTION AREA THREE (3) WORKING DAYS NOTICE BEFORE COMMENCING DIGGING. NOTIFY THE LOCAL AUTHORITY HAVING JURISDICTION AND WAIT THE REQUIRED TIME BEFORE COMMENCING TO DIG.

G3. THE CONTRACTOR SHALL COORDINATE CONDUIT RUNS, LIGHTING FIXTURES AND OTHER EQUIPMENT LOCATIONS WITH THE OTHER TRADE CONTRACTORS TO AVOID CONFLICTS.

G4. WHERE VOLTAGES AND FREQUENCIES ON THE DRAWINGS AND IN THE SPECIFICATIONS DIFFER FROM THE LOCAL ONES, ALL WORK SHALL BE PERFORMED USING THE LOCAL VOLTAGES AND FREQUENCIES.

G5. THE MINIMUM WIRE SIZE ON THE PROJECT SHALL BE 4mm$^2$. THE MINIMUM CONDUIT SIZE SHALL BE 20mm. THE MINIMUM BREAKER SIZE SHALL BE 20 AMPS.

G6. THE CONTRACTOR SHALL PUT A MAXIMUM OF 6 DUPLEX RECEPTACLES ON A 20A SINGLE POLE CIRCUIT.

G7. WHERE THE 1010 SCOPE REVIEW, 1015 TECHNICAL REVIEW, DRAWINGS, AND SPECIFICATIONS DIFFER FROM AMERICAN CODES OR STANDARDS, THE 1010, 1015, DRAWINGS, AND SPECIFICATIONS SHALL RULE.

G8. ALL CONDUIT AND DEVICES SHALL BE SURFACE MOUNTED UNLESS OTHERWISE INDICATED.

G9. CONTRACTOR SHALL COORDINATE ALL WORK WITH ALL OTHER TRADES TO ENSURE ALL WORK IS COMPLETED IN A PROFESSIONAL, WORKMAN–LIKE MANNER.

APPROVED:

A/E DESIGNER OF RECORD

SEAL:

COMMONWEALTH OF PENNSYLVANIA
REGISTERED PROFESSIONAL
JOSEPH R GAUS
1/29/10
ENGINEER
PE-074251

US ARMY CORPS OF ENGINEERS
AFGHANISTAN ENGINEER DISTRICT

| Mark | Description | Date | Appr. |
|---|---|---|---|
| | | | |

| Mark | Description | Date | Appr. |
|---|---|---|---|
| | | | |

Rev: 0
Date: 2/23/10
Design file no.
Drawing code:
File name:
Plot date:
Plot scale:

Designed by: RAJ
Dwn by: BJB
Ckd by: JRG
Reviewed by: JRG
Submitted by: BAKER

U.S. ARMY CORPS OF ENGINEERS
AFGHANISTAN ENGINEER DISTRICT
APO AE 96338

*Michael Baker Jr, Inc*
*A unit of Michael Baker Corporation*
Airside Business Park
100 Airside Drive
Moon Township, PA 15108
www.mbakercorp.com

AFGHAN NATIONAL ARMY
REGIONAL MILITARY TRAINING CENTER
STANDARD DESIGN

SUPPORT STAFF BARRACKS

# ELECTRICAL SYMBOLS & ABBREVIATIONS

Sheet reference number:
E–001

## GENERAL NOTES:

1. REFER TO DRAWING #E-001 FOR THE ELECTRICAL SYMBOLS LIST.
2. EXIT SIGNS SHALL BE WIRED AHEAD OF ANY LOCAL SWITCHING ON CIRCUITS. SEE WIRING DIAGRAM DETAIL 7, ON DRAWING #E-501.
3. REFER TO DRAWING #E-601 FOR THE LIGHTING FIXTURE SCHEDULE.
4. REFER TO DRAWING #E-501 FOR THE POWER RISER.
5. REFER TO DRAWING #E-602 FOR PANEL SCHEDULES.
6. LIGHT FIXTURES INDICATED AS EMERGENCY SHALL BE PROVIDED WITH A BATTERY BACKUP BALLAST. SEE WIRING DIAGRAM DETAIL 8, ON DRAWING #E-501.

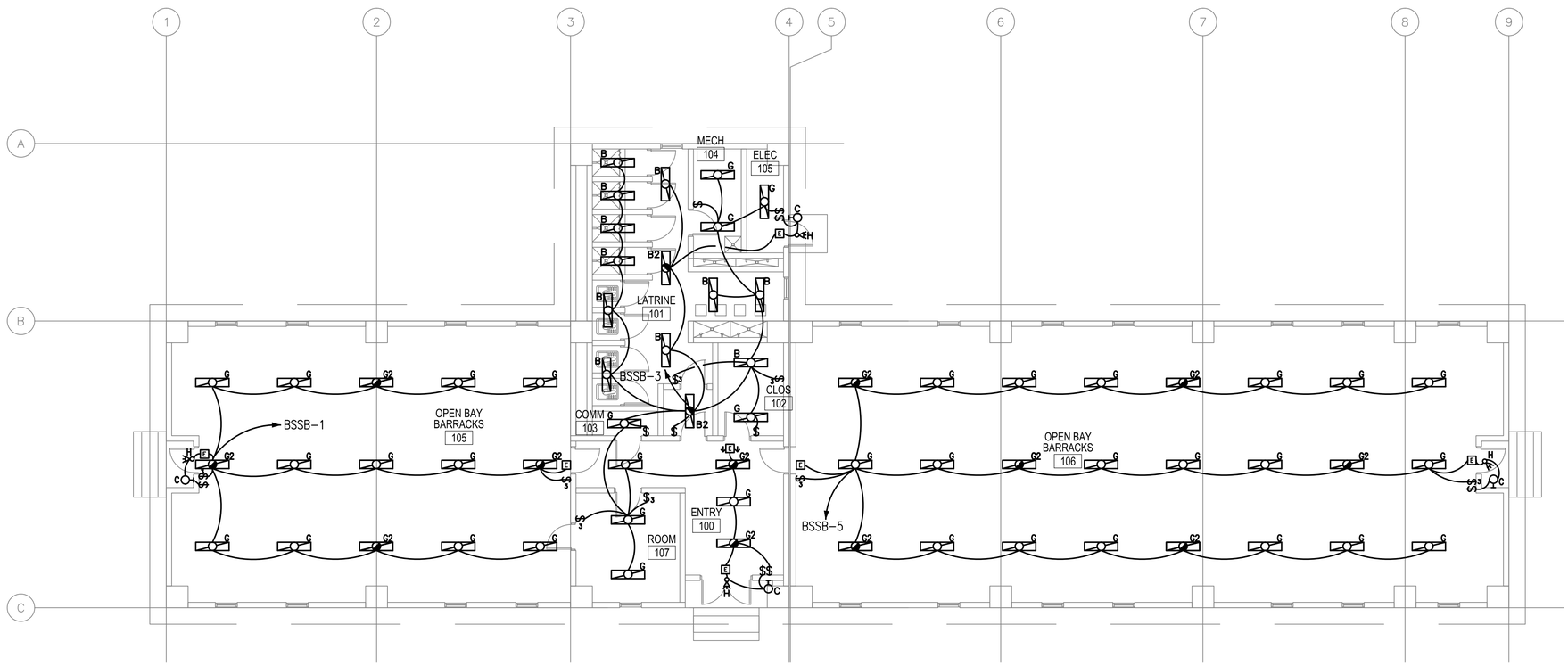


1 E-101 SUPPORT STAFF BARRACKS FLOOR PLAN - LIGHTING

SCALE: 1:100

0 2000 4000

SCALE: 1:100

APPROVED:

A/E DESIGNER OF RECORD

SEAL:

COMMONWEALTH OF PENNSYLVANIA REGISTERED PROFESSIONAL JOSEPH R GAUS ENGINEER PE-074251 1/29/10

US ARMY CORPS OF ENGINEERS
AFGHANISTAN ENGINEER DISTRICT

| Mark | Description | Date | Appr. |
|---|---|---|---|
| | | | |

| Mark | Description | Date | Appr. |
|---|---|---|---|
| | | | |

Rev: 0
Date: 2/23/10
Design file no.
Drawing code:
File name:
Plot date:
Plot scale:

Designed by: RAJ
Dwn by: BJB
Ckd by: JRG
Reviewed by: JRG
Submitted by: BAKER

U.S. ARMY CORPS OF ENGINEERS
AFGHANISTAN ENGINEER DISTRICT
APO AE 96338


Michael Baker Jr., Inc.
A unit of Michael Baker Corporation
Airside Business Park
100 Airside Drive
Moon Township, PA 15108
www.mbakercorp.com


AFGHAN NATIONAL ARMY
REGIONAL MILITARY TRAINING CENTER
STANDARD DESIGN

SUPPORT STAFF BARRACKS

# ELECTRICAL LIGHTING PLAN

Sheet reference number:
E-101

## GENERAL NOTES:

1. REFER TO DRAWING #E-001 FOR THE ELECTRICAL SYMBOLS LIST.
2. REFER TO DRAWING #E-501 FOR THE POWER RISER.
3. REFER TO DRAWING #E-602 FOR PANEL SCHEDULES.
4. COORDINATE EXACT MOUNTING LOCATION OF DISCONNECTING MEANS FOR MECHANICAL AND PLUMBING EQUIPMENT IN THE FIELD.
5. FUSIBLE SAFETY SWITCHES THAT ARE NOT OTHERWISE IDENTIFIED SHALL BE 380V, 1P, 30A FUSED SAFETY SWITCHES WITH 20A FUSES.

## NUMBERED NOTES:

(1) PROVIDE POWER CONNECTION TO MAKE-UP AIR UNIT #1. SEE DRAWINGS #E-602 AND #M-101 FOR MORE INFORMATION.

(2) PROVIDE POWER CONNECTION TO ELECTRIC UNIT HEATER #4. SEE DRAWINGS #E-602 AND #M-101 FOR MORE INFORMATION.

(3) PROVIDE POWER CONNECTION TO ELECTRIC UNIT HEATER #2. SEE DRAWINGS #E-602 AND #M-101 FOR MORE INFORMATION.

(4) PROVIDE POWER CONNECTION TO EXHAUST FAN #1. SEE DRAWINGS #E-602 AND #M-101 FOR MORE INFORMATION.

(5) PROVIDE POWER CONNECTION TO EXHAUST FAN #2. SEE DRAWINGS #E-602 AND #M-101 FOR MORE INFORMATION.

(6) PROVIDE POWER CONNECTION TO EXHAUST FAN #3. SEE DRAWINGS #E-602 AND #M-101 FOR MORE INFORMATION.

(7) PANEL BSSB1 & BSSB2

(8) NEMA 3R, 380V, 3P, 30A FUSED DISCONNECT FUSED AT 30A. SEE PLUMBING DRAWINGS FOR EXACT LOCATION OF WATER HEATER.

(9) SEE DRAWING #E-602 FOR WIRE AND CONDUIT SIZE.

(10) PROVIDE A 1200mm X 2400mm SHEET OF PLYWOOD PAINTED WITH FIRE RESISTANT PAINT FOR MOUNTING TELECOMMUNICATIONS EQUIPMENT.

(11) PROVIDE CONDUIT STUB UP IN THE ROOM FOR INCOMING TELECOMMUNICATIONS SERVICES FROM THE CENTRAL COMMUNICATIONS SYSTEM IN THE GARRISON.

(12) PROVIDE 220V, 1ø, 60A MOTOR SNAP SWITCH IN NEMA 3R ENCLOSURE.

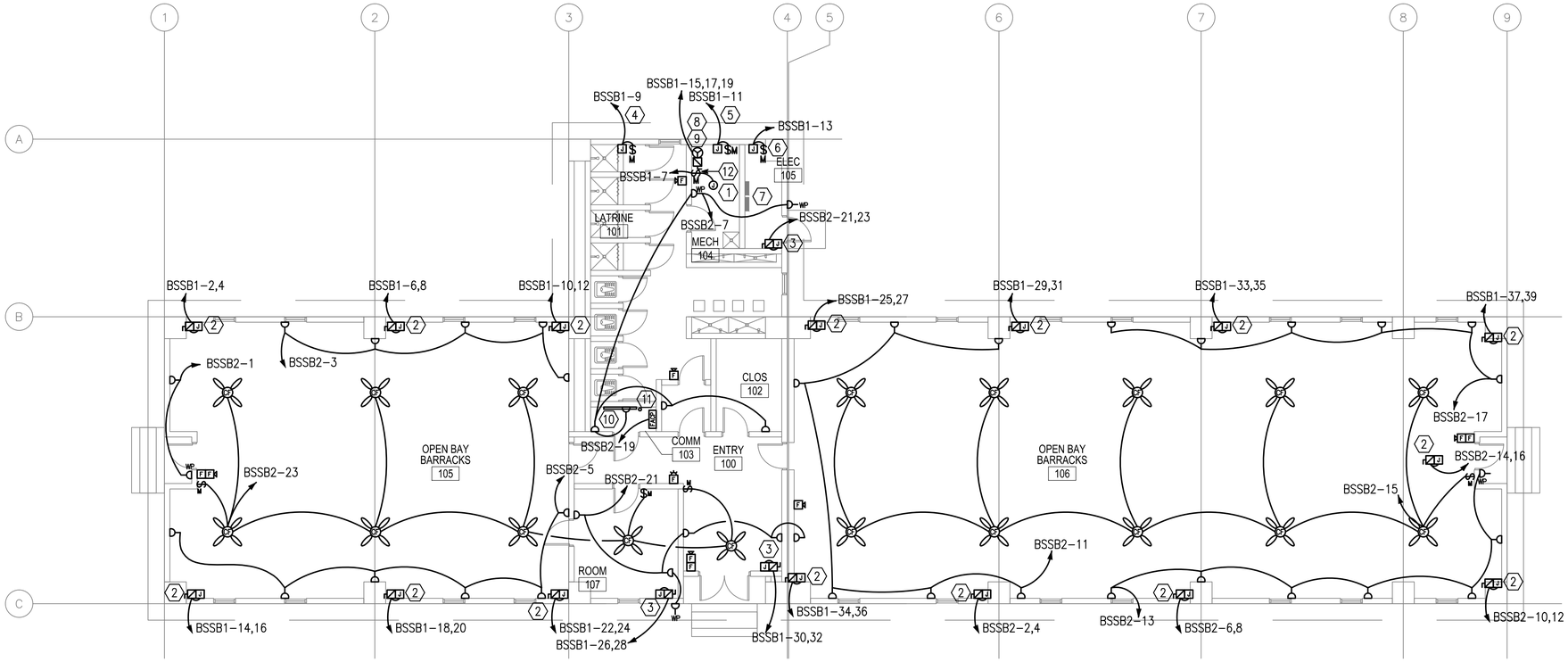


1 E-102

## SUPPORT STAFF BARRACKS FLOOR PLAN - POWER & SYSTEMS

SCALE: 1:100

0 2000 4000

SCALE: 1:100

APPROVED:

A/E DESIGNER OF RECORD

SEAL:

COMMONWEALTH OF PENNSYLVANIA
REGISTERED PROFESSIONAL ENGINEER
JOSEPH R GAUS
PE-074251
1/22/10

US ARMY CORPS OF ENGINEERS
AFGHANISTAN ENGINEER DISTRICT

| Mark | Description | Date | Appr. |
|---|---|---|---|
| | | | |

| Mark | Description | Date | Appr. |
|---|---|---|---|
| | | | |

Rev: 0

Date: 2/23/10

Design file no.

Drawing code:

File name:

Plot date:

Plot scale:

Designed by: RAJ

Dwn by: BJB

Ckd by: JRG

Reviewed by: JRG

Submitted by: BAKER

U.S. ARMY CORPS OF ENGINEERS
AFGHANISTAN ENGINEER DISTRICT
APO AE 96338

*Michael Baker Jr., Inc*
*A unit of Michael Baker Corporation*
Airside Business Park
100 Airside Drive
Moon Township, PA 15108
www.mbakercorp.com

AFGHAN NATIONAL ARMY
REGIONAL MILITARY TRAINING CENTER
STANDARD DESIGN

SUPPORT STAFF BARRACKS
ELECTRICAL POWER & SYSTEMS PLAN

Sheet reference number:
E-102

## GENERAL NOTES:

1. REFER TO DRAWING #E-001 FOR THE ELECTRICAL SYMBOLS LIST.
2. REFER TO DRAWING #E-501 FOR THE POWER RISER.
3. REFER TO DRAWING #E-602 FOR PANEL SCHEDULES.

## NUMBERED NOTES:

1. (1) 120.0mm² BARE, TINNED, COPPER COUNTERPOISE GROUND 700mm BELOW GRADE.
2. INSTALL DOWN CONDUCTOR IN 25mm SCHEDULE 80 PVC CONDUIT TO 20mm DIAMETER X 3 METERS SOLID COPPER TINNED GROUND ROD. (TYPICAL)
3. CADWELD TO BUILDING STRUCTURE AT 18 METERS ON CENTER AROUND THE ENTIRE PERIMETER OF THE BUILDING. (TYPICAL)
4. 120mm² LIGHTNING PROTECTION CABLE.
5. AIR TERMINAL. TERMINALS SHALL BE PLACED AT A MAXIMUM OF 6M ON CENTER PER NFPA 780 PARA. 4.8.2.1, AND WITHIN 0.6M OF RIDGE ENDS PER NFPA 780 PARA. 4.8 (TYPICAL)
6. 700mm MIN. (TYP) BETWEEN FOUNDATION AND GROUND LOOP.

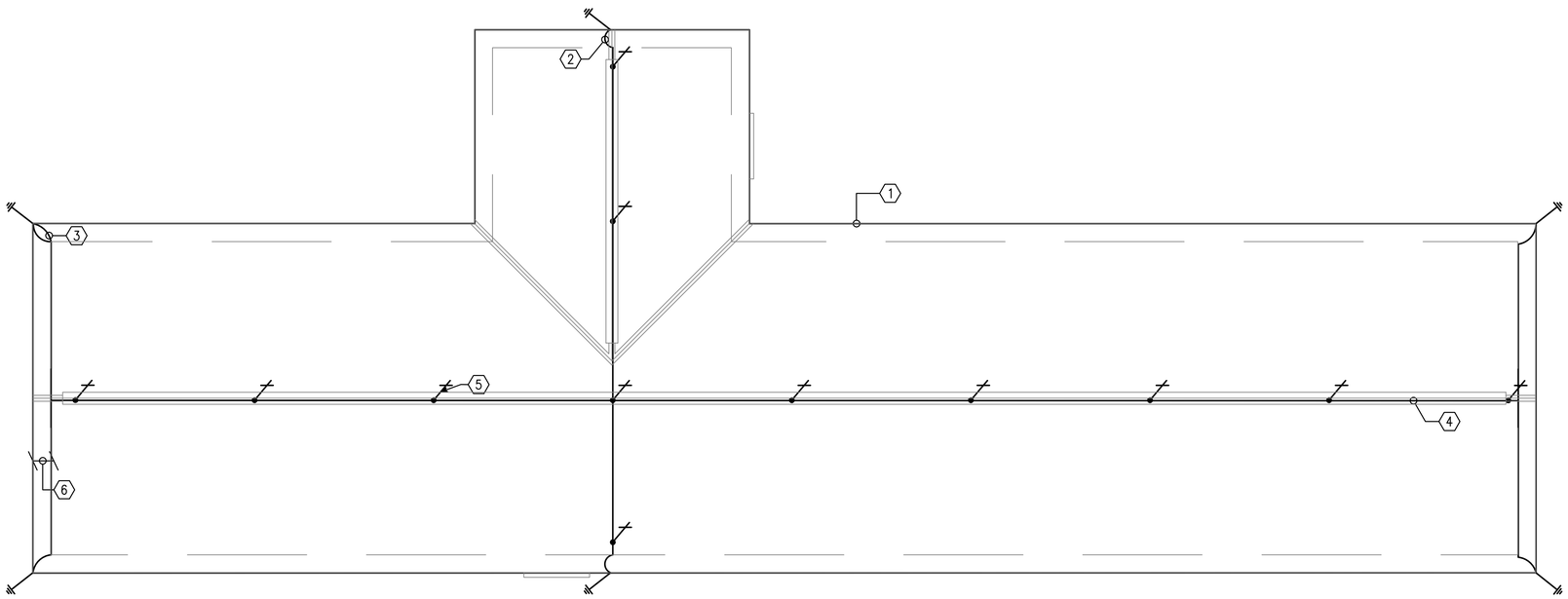


1 / E-103 SUPPORT STAFF BARRACKS FLOOR PLAN - LIGHTNING PROTECTION

SCALE: 1:100

0 2000 4000
SCALE: 1:100

APPROVED:

A/E DESIGNER OF RECORD

SEAL:

COMMONWEALTH OF PENNSYLVANIA
REGISTERED PROFESSIONAL
JOSEPH R GAUS
ENGINEER
PE-074251
1/29/10

US ARMY CORPS OF ENGINEERS
AFGHANISTAN ENGINEER DISTRICT

| Mark | Description | Date | Appr. |
|---|---|---|---|
| | | | |

| Mark | Description | Date | Appr. |
|---|---|---|---|
| | | | |

Rev: 0
Date: 2/23/10
Design file no.
Drawing code:
File name:
Plot date:
Plot scale:

Designed by: RAJ
Dwn by: BJB
Ckd by: JRG
Reviewed by: JRG
Submitted by: BAKER

U.S. ARMY CORPS OF ENGINEERS
AFGHANISTAN ENGINEER DISTRICT
APO AE 96338

*Michael Baker Jr., Inc.*
*A unit of Michael Baker Corporation*
Airside Business Park
100 Airside Drive
Moon Township, PA 15108
www.mbakercorp.com

AFGHAN NATIONAL ARMY
REGIONAL MILITARY TRAINING CENTER
STANDARD DESIGN

SUPPORT STAFF BARRACKS

# ELECTRICAL LIGHTNING PROTECTION PLAN

Sheet reference number:
E-103

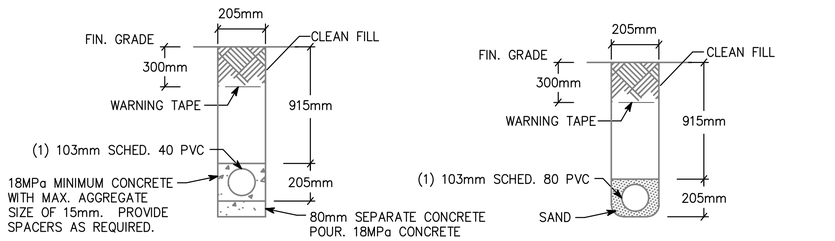


NOTE: PVC CONDUIT SHALL BE DIRECT BURIED SCHEDULE 80 FOR NO TRAFFIC AREAS AND CONCRETE-ENCASED SCHEDULE 40 FOR UNDER ROADWAYS OR TRAFFIC AREAS.

1 E-501 **TYPICAL DUCT BANK DETAILS FOR CONDUIT IN SAND OR CONCRETE**

SCALE: N.T.S.

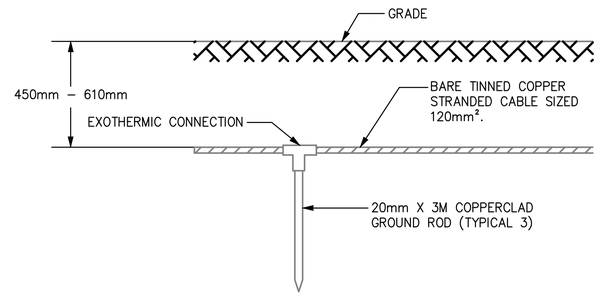


2 E-501 **GROUND TRIPOD SYSTEM DETAIL - ELEVATION**

SCALE: N.T.S.

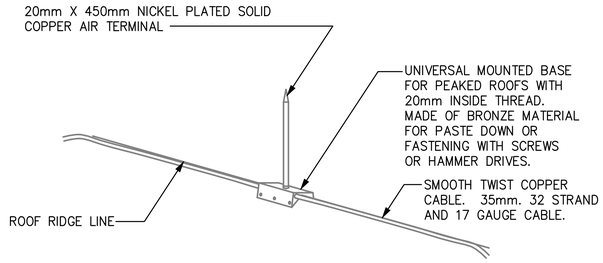


3 E-501 **LIGHTNING PROTECTION AIR TERMINAL DETAIL**

SCALE: N.T.S.

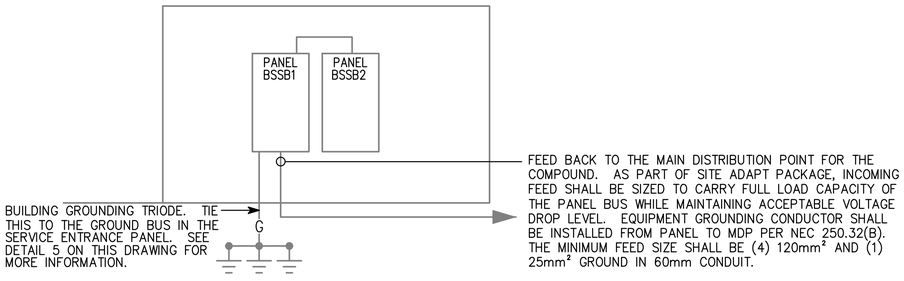


4 E-501 **BSSB RISER DIAGRAM**

SCALE: N.T.S.

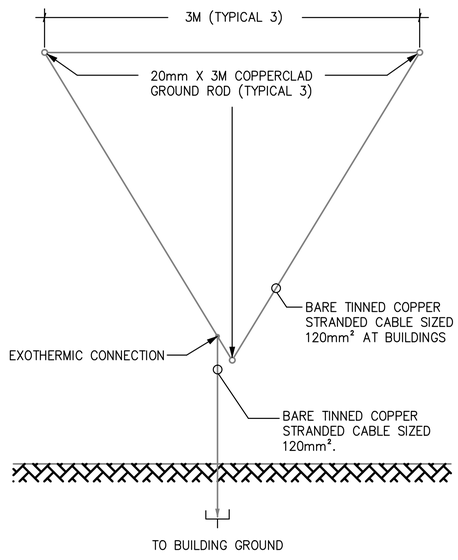


5 E-501 **GROUND TRIPOD SYSTEM DETAIL - PLAN**

SCALE: N.T.S.

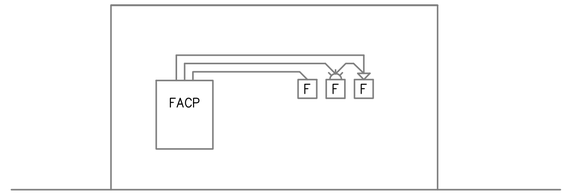


6 E-501 **TYPICAL ONE STORY FIRE ALARM RISER**

SCALE: N.T.S.

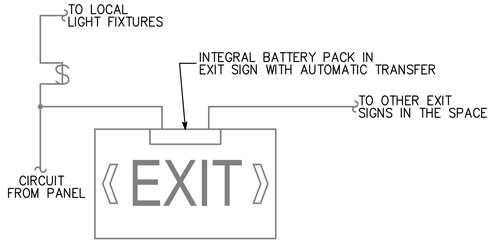


7 E-501 **EXIT SIGN WIRING DIAGRAM**

SCALE: N.T.S.

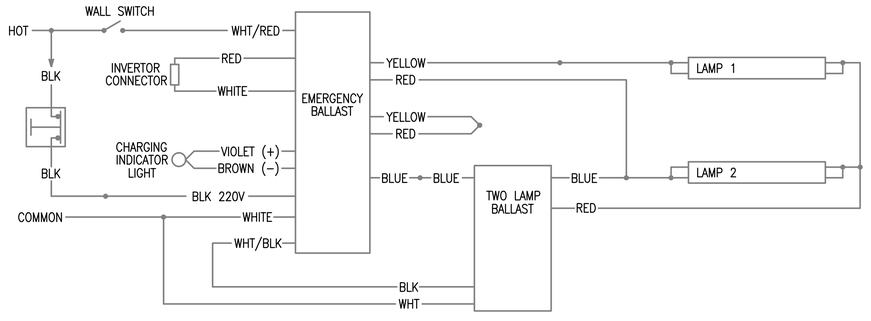


8 E-501 **EMERGENCY FIXTURE WIRING DIAGRAM**

SCALE: N.T.S.

APPROVED:

A/E DESIGNER OF RECORD

SEAL:

COMMONWEALTH OF PENNSYLVANIA REGISTERED PROFESSIONAL JOSEPH R. GAUS 11/24/10 ENGINEER PE-074251

US ARMY CORPS OF ENGINEERS
AFGHANISTAN ENGINEER DISTRICT

| Mark | Description | Date | Appr. |
|---|---|---|---|

| Rev: | 0 |
|---|---|
| Date: | 2/23/10 |
| Design file no. | |
| Drawing code: | |
| File name: | |
| Plot date: | |
| Plot scale: | |

| Designed by: | RAJ |
|---|---|
| Dwn. by: | BJB |
| Ckd by: | JRG |
| Reviewed by: | JRG |
| Submitted by: | BAKER |

U.S. ARMY CORPS OF ENGINEERS
AFGHANISTAN ENGINEER DISTRICT
APO AE 96338

*Michael Baker Jr., Inc*
*A unit of Michael Baker Corporation*
Airside Business Park
100 Airside Drive
Moon Township, PA 15108
www.mbakercorp.com

AFGHAN NATIONAL ARMY
REGIONAL MILITARY TRAINING CENTER
STANDARD DESIGN

SUPPORT STAFF BARRACKS

ELECTRICAL DETAILS

Sheet reference number:
E-501

| Ⓐ LARGER OF THE TWO SIZES GIVEN IN THE TABLES BELOW | |
|---|---|
| GROUNDING ELECTRODE CONDUCTOR (BASED ON AIC RATING) | |
| AIC RATING OF SERVICE EQUIPMENT | NECESSARY GROUNDING ELECTRODE CONDUCTOR SIZE |
| 10K | (1) 35mm² |
| 14K | (1) 50mm² |
| 18K | (1) 70mm² |
| 22K | (1) 70mm² |
| 25K | (1) 70mm² |
| 30K | (1) 95mm² |
| 35K | (1) 120mm² |
| 42K | (1) 150mm² |
| 65K | (1) 185mm² |
| 100K | (1) 300mm² |
| 125K | (2) 185mm² |
| 200K | (2) 300mm² |
| GROUNDING ELECTRODE CONDUCTOR (BASED ON NEC TABLE 250.66) | |
| SIZE OF LARGEST UNGROUNDED SERVICE CONDUCTOR OR EQUIVALENT AREA FOR PARALLEL CONDUCTORS | NECESSARY GROUNDING ELECTRODE CONDUCTOR SIZE |
| 350 kcmil OR SMALLER | 35mm² |
| OVER 350 kcmil TO 600 kcmil | 70mm² |
| OVER 600 kcmil TO 1100 kcmil | 70mm² |
| OVER 1100 kcmil | 95mm² |
| NOTE: ALL SIZES ARE BASED ON COPPER CONDUCTORS. | |

| Ⓑ EQUIPMENT GROUNDING CONDUCTOR | |
|---|---|
| RATING OR SETTING OF AUTOMATIC OVERCURRENT DEVICE IN CIRCUIT AHEAD OF EQUIPMENT, CONDUIT, ETC, NOT EXCEEDING (AMPERES) | NECESSARY EQUIPMENT GROUNDING CONDUCTOR SIZE |
| 15 | 2.5mm² |
| 20 | 4.0mm² |
| 30 | 6.0mm² |
| 40 | 6.0mm² |
| 60 | 6.0mm² |
| 100 | 10mm² |
| 200 | 16mm² |
| 300 | 25mm² |
| 400 | 25mm² |
| 500 | 35mm² |
| 600 | 50mm² |
| 800 | 70mm² |
| 1000 | 70mm² |
| 1200 | 95mm² |
| 1600 | 120mm² |
| 2000 | 150mm² |
| 2500 | 185mm² |
| 3000 | 240mm² |
| 4000 | 300mm² |
| 5000 | 400mm² |
| 6000 | 400mm² |
| NOTE: ALL SIZES ARE BASED ON COPPER CONDUCTORS. | |

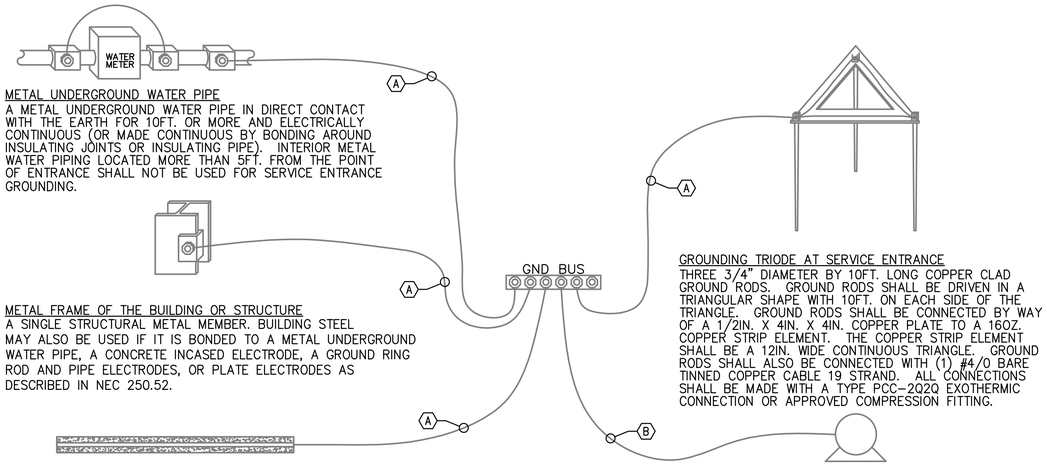


METAL UNDERGROUND WATER PIPE
A METAL UNDERGROUND WATER PIPE IN DIRECT CONTACT WITH THE EARTH FOR 10FT. OR MORE AND ELECTRICALLY CONTINUOUS (OR MADE CONTINUOUS BY BONDING AROUND INSULATING JOINTS OR INSULATING PIPE). INTERIOR METAL WATER PIPING LOCATED MORE THAN 5FT. FROM THE POINT OF ENTRANCE SHALL NOT BE USED FOR SERVICE ENTRANCE GROUNDING.

METAL FRAME OF THE BUILDING OR STRUCTURE
A SINGLE STRUCTURAL METAL MEMBER. BUILDING STEEL MAY ALSO BE USED IF IT IS BONDED TO A METAL UNDERGROUND WATER PIPE, A CONCRETE INCASED ELECTRODE, A GROUND RING ROD AND PIPE ELECTRODES, OR PLATE ELECTRODES AS DESCRIBED IN NEC 250.52.

CONCRETE ENCASED ELECTRODE
AN ELECTRODE ENCASED BY AT LEAST 2IN. OF CONCRETE , LOCATED WITHIN AND NEAR THE BOTTOM OF A CONCRETE FOUNDATION OR FOOTING THAT IS IN DIRECT CONTACT WITH THE EARTH, CONSISTING OF AT LEAST 20FT. OF ONE OR MORE BARE OR ZINC GALVANIZED OR OTHER ELECTRICALLY CONDUCTIVE COATED STEEL REINFORCING BARS OR RODS OF NOT LESS THAN 1/2" DIAMETER OR BARE COPPER CONDUCTOR NOT SMALLER THAN 4AWG.

GROUNDING TRIODE AT SERVICE ENTRANCE
THREE 3/4" DIAMETER BY 10FT. LONG COPPER CLAD GROUND RODS. GROUND RODS SHALL BE DRIVEN IN A TRIANGULAR SHAPE WITH 10FT. ON EACH SIDE OF THE TRIANGLE. GROUND RODS SHALL BE CONNECTED BY WAY OF A 1/2IN. X 4IN. X 4IN. COPPER PLATE TO A 16OZ. COPPER STRIP ELEMENT. THE COPPER STRIP ELEMENT SHALL BE A 12IN. WIDE CONTINUOUS TRIANGLE. GROUND RODS SHALL ALSO BE CONNECTED WITH (1) #4/0 BARE TINNED COPPER CABLE 19 STRAND. ALL CONNECTIONS SHALL BE MADE WITH A TYPE PCC-2Q2Q EXOTHERMIC CONNECTION OR APPROVED COMPRESSION FITTING.

LOAD OR DOWNSTREAM PANEL
ALL LOADS IN THE BUILDING SHALL HAVE AN EQUIPMENT GROUNDING CONDUCTOR PULLED TO THEM.

1
E-502

## SERVICE ENTRANCE GROUNDING DETAIL

SCALE: N.T.S.

APPROVED:

A/E DESIGNER OF RECORD

SEAL:

COMMONWEALTH OF PENNSYLVANIA
REGISTERED PROFESSIONAL
JOSEPH R GAUS
ENGINEER
PE-074251
1/29/10

US ARMY CORPS OF ENGINEERS
AFGHANISTAN ENGINEER DISTRICT

| Mark | Description | Date | Appr. |
|---|---|---|---|
| | | | |

Date: 2/23/10
Design file no.
Drawing code:
File name:
Plot date:
Plot scale:
Rev: 0

Designed by: RAJ
Dwn by: BJB
Ckd by: JRG
Reviewed by: JRG
Submitted by: BAKER

U.S. ARMY CORPS OF ENGINEERS
AFGHANISTAN ENGINEER DISTRICT
APO AE 96338


Michael Baker Jr., Inc
A unit of Michael Baker Corporation
Airside Business Park
100 Airside Drive
Moon Township, PA 15108
www.mbakercorp.com


AFGHAN NATIONAL ARMY
REGIONAL MILITARY TRAINING CENTER
STANDARD DESIGN

SUPPORT STAFF BARRACKS

ELECTRICAL DETAILS

Sheet reference number:
E-502

FIXTURE MARK 'B'

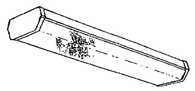

FIXTURE MARK 'C'

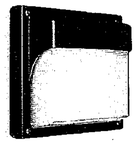

FIXTURE MARK 'G'

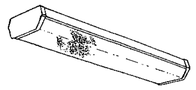

FIXTURE MARK 'H'

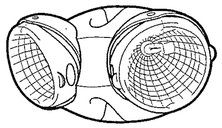

FIXTURE MARK '[E]'

# LIGHT FIXTURE SCHEDULE

| FIXTURE MARK | STYLE NUMBER AND TYPE | NUMBER AND TYPE OF LAMPS | VOLTAGE | MOUNTING | NOTES |
|---|---|---|---|---|---|
| B | WET LOCATION WRAP AROUND SURFACE/PENDANT MOUNTED FLUORESCENT FIXTURE WITH PRISMATIC ACRYLIC LENS AND ELECTRONIC BALLAST | (2) 32W 3500K | 220V – 1ø 50HZ | SURFACE MOUNTED | FURNISHED WITH ELECTRONIC BALLAST, VIRGIN ACRYLIC WRAP AROUND LENS. |
| B2 | SAME AS FIXTURE 'B' WITH EMERGENCY BALLAST | (2) 32W 3500K | 220V – 1ø 50HZ | SURFACE MOUNTED | FURNISHED WITH ELECTRONIC BALLAST, VIRGIN ACRYLIC WRAP AROUND LENS. EMERGENCY BALLAST WITH SELF TEST SWITCH. |
| C | INCANDESCENT ONE PIECE W/ APPROVED LENS STABILIZED HIGH IMPACT POLY CARBONATE. | (1) A19 – 100W INCANDESCENT | 220V – 1ø 50HZ | WALL MOUNTED ABOVE EXTERIOR DOORS | |
| G | WRAP AROUND SURFACE/PENDANT MOUNTED FLUORESCENT FIXTURE WITH PRISMATIC ACRYLIC LENS AND ELECTRONIC BALLAST | (2) 32W 3500K | 220V – 1ø 50HZ | SURFACE MOUNTED | FURNISHED WITH ELECTRONIC BALLAST, VIRGIN ACRYLIC WRAP AROUND LENS. |
| G2 | SAME AS FIXTURE 'G' WITH EMERGENCY BALLAST | (2) 32W 3500K | 220V – 1ø 50HZ | SURFACE MOUNTED | FURNISHED WITH ELECTRONIC BALLAST, VIRGIN ACRYLIC WRAP AROUND LENS. EMERGENCY BALLAST WITH SELF TEST SWITCH. |
| H | REMOTE HEAD EXTERIOR LIGHT HEAD POWERED FROM EXIT SIGN BATTERY– 12V DOUBLE HEAD CORROSION RESISTANT WITH UL34 WEATHERPROOF CONSTRUCTION | (2) 12W/12V HALOGEN LAMP | 12V – 1ø 50HZ | EXTERIOR WALL MOUNTED AT TOP OF DOOR HEIGHT | |
| [E] | UNIVERSAL MOUNT ENGINEER GRADE THERMOPLASTIC HOUSING EXIT SIGN WITH LED LAMPS, RED LETTERS 6" IN HEIGHT WITH ARROWS AS INDICATED, WITH 12V CADMIUM BATTERY WITH REMOTE HEAD CAPABILITY | LED LAMPS | 220V – 1ø 50HZ | UNIVERSAL MOUNTING | |

APPROVED:

A/E DESIGNER OF RECORD

SEAL:

US ARMY CORPS OF ENGINEERS
AFGHANISTAN ENGINEER DISTRICT

| Mark | Description | Date | Appr. |
|---|---|---|---|
| | | | |

| Mark | Description | Date | Appr. |
|---|---|---|---|
| | | | |

Rev: 0
Date: 2/23/10
Design file no.
Drawing code:
File name:
Plot date:
Plot scale:

Designed by: RAJ
Dwn by: BJB
Ckd by: JRG
Reviewed by: JRG
Submitted by: BAKER

U.S. ARMY CORPS OF ENGINEERS
AFGHANISTAN ENGINEER DISTRICT
APO AE 96338

*Michael Baker Jr., Inc*
*A unit of Michael Baker Corporation*
Airside Business Park
100 Airside Drive
Moon Township, PA 15108
www.mbakercorp.com

AFGHAN NATIONAL ARMY
REGIONAL MILITARY TRAINING CENTER
STANDARD DESIGN

SUPPORT STAFF BARRACKS
ELECTRICAL LIGHT FIXTURE SCHEDULE

Sheet reference number:
E–601

PANELBOARD BSSB1 SURFACE MOUNTED
225 AMP. MAIN LUGS (OR) 225 AMP. MAIN BREAKER W/ 225 AMP. TRIP
CIRCUIT BREAKER TYPE 380/220 VOLTS 3 PHASE 4 WIRE 50 HZ 225 AMP. BUS

| CKT. NO. | TRIP AMPS | NO. POLES | WIRE MM ² | GND MM² | CONDUIT MM | LOAD SERVED | LOAD-KVA A0 | LOAD-KVA B0 | LOAD-KVA C0 | LOAD-KVA A0 | LOAD-KVA B0 | LOAD-KVA C0 | LOAD SERVED | CONDUIT MM | GND MM² | WIRE MM² | NO. POLES | TRIP AMPS | CKT. NO. |
|---|---|---|---|---|---|---|---|---|---|---|---|---|---|---|---|---|---|---|---|
| 1 | 20 | 1 | 4.0 | 4.0 | 20 | LIGHTING – RM 106 | 1.0 | | | 2.0 | | | ELECTRIC HEAT #4 – RM 106 | 20 | 4.0 | 4.0 | 2 | 20 | 2 |
| 3 | 20 | 1 | 4.0 | 4.0 | 20 | LIGHTING – RM 100–105, 108 | | 1.3 | | | 2.0 | | | | | | | | 4 |
| 5 | 20 | 1 | 4.0 | 4.0 | 20 | LIGHTING – OPEN RM 107 | | | 1.6 | | | 2.0 | ELECTRIC HEAT #4 – RM 106 | 20 | 4.0 | 4.0 | 2 | 20 | 6 |
| 7 | 60 | 1 | 25.0 | 6.0 | 25 | MAKE UP AIR #1 – RM 104 | 10.0 | | | 2.0 | | | | | | | | | 8 |
| 9 | 20 | 1 | 4.0 | 4.0 | 20 | EXHAUST FAN #1 – RM 101 | | 0.5 | | | 2.0 | | ELECTRIC HEAT #4 – RM 106 | 20 | 4.0 | 4.0 | 2 | 20 | 10 |
| 11 | 20 | 1 | 4.0 | 4.0 | 20 | EXHAUST FAN #2 – RM 104 | | | 0.5 | | | 2.0 | | | | | | | 12 |
| 13 | 20 | 1 | 4.0 | 4.0 | 20 | EXHAUST FAN #3 – RM 105 | 0.5 | | | 2.0 | | | ELECTRIC HEAT #4 – RM 106 | 20 | 4.0 | 4.0 | 2 | 20 | 14 |
| 15 | | | | | | | | 5.0 | | | 2.0 | | | | | | | | 16 |
| 17 | 30 | 3 | 6.0 | 6.0 | 20 | WATER HEATER – RM 104 | | | 5.0 | | | 2.0 | ELECTRIC HEAT #4 – RM 106 | 20 | 4.0 | 4.0 | 2 | 20 | 18 |
| 19 | | | | | | | 5.0 | | | 2.0 | | | | | | | | | 20 |
| 21 | 20 | 2 | 4.0 | 4.0 | 20 | ELECTRIC HEAT #2 – RM 105 | | 1.3 | | | 2.0 | | ELECTRIC HEAT #4 – RM 106 | 20 | 4.0 | 4.0 | 2 | 20 | 22 |
| 23 | | | | | | | | | 1.3 | | | 2.0 | | | | | | | 24 |
| 25 | 20 | 2 | 4.0 | 4.0 | 20 | ELECTRIC HEAT #4 – RM 107 | 2.0 | | | 1.3 | | | ELECTRIC HEAT #2 – RM 108 | 20 | 4.0 | 4.0 | 2 | 20 | 26 |
| 27 | | | | | | | | 2.0 | | | 1.3 | | | | | | | | 28 |
| 29 | 20 | 2 | 4.0 | 4.0 | 20 | ELECTRIC HEAT #4 – RM 107 | | | 2.0 | | | 1.3 | ELECTRIC HEAT #2 – RM 100 | 20 | 4.0 | 4.0 | 2 | 20 | 30 |
| 31 | | | | | | | 2.0 | | | 1.3 | | | | | | | | | 32 |
| 33 | 20 | 2 | 4.0 | 4.0 | 20 | ELECTRIC HEAT #4 – RM 107 | | 2.0 | | | 2.0 | | ELECTRIC HEAT #4 – RM 107 | 20 | 4.0 | 4.0 | 2 | 20 | 34 |
| 35 | | | | | | | | | 2.0 | | | 2.0 | | | | | | | 36 |
| 37 | 20 | 2 | 4.0 | 4.0 | 20 | ELECTRIC HEAT #4 – RM 107 | 2.0 | | | 9.3 | | | | | | | | | 38 |
| 39 | | | | | | | | 2.0 | | | 9.3 | | PANEL BSSB2 | 40 | 16.0 | 50.0 | 3 | 100 | 40 |
| 41 | 20 | 1 | | | | SPARE | | | 9.1 | | | | | | | | | | 42 |
| | | | | | | | 22.5 | 14.1 | 12.4 | 19.9 | 20.6 | 20.4 | | | | | | | |

TOTAL CONN. LOAD PER PHASE (KVA): A0 42.4 B0 34.7 C0 32.8

TOTAL CONN. LOAD 109.0 KVA. 70 % DEMAND = ESTIMATED DEMAND LOAD 76.3

* MAIN BREAKER SHALL BE 3P EARTH GROUND TYPE

PANELBOARD BSSB2 SURFACE MOUNTED
225 AMP. MAIN LUGS (OR) 100 AMP. MAIN BREAKER W/ 100 AMP. TRIP
CIRCUIT BREAKER TYPE 380/220 VOLTS 3 PHASE 4 WIRE 50 HZ 100 AMP. BUS

| CKT. NO. | TRIP AMPS | NO. POLES | WIRE MM ² | GND MM² | CONDUIT MM | LOAD SERVED | LOAD-KVA A0 | LOAD-KVA B0 | LOAD-KVA C0 | LOAD-KVA A0 | LOAD-KVA B0 | LOAD-KVA C0 | LOAD SERVED | CONDUIT MM | GND MM² | WIRE MM² | NO. POLES | TRIP AMPS | CKT. NO. |
|---|---|---|---|---|---|---|---|---|---|---|---|---|---|---|---|---|---|---|---|
| 1 | 20 | 1 | 4.0 | 4.0 | 20 | RECEPTACLES – RM 106 | 0.4 | | | 2.0 | | | ELECTRIC HEAT #4 – RM 107 | 20 | 4.0 | 4.0 | 2 | 20 | 2 |
| 3 | 20 | 1 | 4.0 | 4.0 | 20 | RECEPTACLES – RM 106 | | 1.2 | | | 2.0 | | | | | | | | 4 |
| 5 | 20 | 1 | 4.0 | 4.0 | 20 | RECEPTACLES – RM 106 | | | 1.2 | | | 2.0 | ELECTRIC HEAT #4 – RM 107 | 20 | 4.0 | 4.0 | 2 | 20 | 6 |
| 7 | 20 | 1 | 4.0 | 4.0 | 20 | RECEPTACLES – RM 101–103, EXT. | 1.2 | | | 2.0 | | | | | | | | | 8 |
| 9 | 20 | 1 | | | | SPARE | | | | | 2.0 | | ELECTRIC HEAT #4 – RM 107 | 20 | 4.0 | 4.0 | 2 | 20 | 10 |
| 11 | 20 | 1 | 4.0 | 4.0 | 20 | RECEPTACLES – RM 107 | | | 1.2 | | | 2.0 | | | | | | | 12 |
| 13 | 20 | 1 | 4.0 | 4.0 | 20 | RECEPTACLES – RM 107 | 1.2 | | | 2.0 | | | ELECTRIC HEAT #4 – RM 107 | 20 | 4.0 | 4.0 | 2 | 20 | 14 |
| 15 | 20 | 1 | 4.0 | 4.0 | 20 | RECEPTACLES – RM 107 | | 1.5 | | | 2.0 | | | | | | | | 16 |
| 17 | 20 | 1 | 4.0 | 4.0 | 20 | RECEPTACLES – RM 107 | | | 1.2 | | | | SPARE | | | | 1 | 20 | 18 |
| 19 | 20 | 1 | 4.0 | 4.0 | 20 | FACP – RM 103 | 0.5 | | | | | | SPARE | | | | 1 | 20 | 20 |
| 21 | 20 | 1 | 4.0 | 4.0 | 20 | RECEPTACLES – RM 100,107,108 | | 0.6 | | | | | SPARE | | | | 1 | 20 | 22 |
| 23 | 20 | 1 | 4.0 | 4.0 | 20 | CEILING FAN – RM 100,106,107 | | | 1.5 | | | | SPARE | | | | 1 | 20 | 24 |
| 25 | 20 | 1 | | | | SPARE | | | | | | | SPARE | | | | 1 | 20 | 26 |
| 27 | 20 | 1 | | | | SPARE | | | | | | | SPARE | | | | 1 | 20 | 28 |
| 29 | 20 | 1 | | | | SPARE | | | | | | | SPARE | | | | 1 | 20 | 30 |
| 31 | 20 | 1 | | | | SPARE | | | | | | | SPARE | | | | 1 | 20 | 32 |
| 33 | 20 | 1 | | | | SPARE | | | | | | | SPARE | | | | 1 | 20 | 34 |
| 35 | 20 | 1 | | | | SPARE | | | | | | | SPARE | | | | 1 | 20 | 36 |
| 37 | 20 | 1 | | | | SPARE | | | | | | | SPARE | | | | 1 | 20 | 38 |
| 39 | 20 | 1 | | | | SPARE | | | | | | | SPARE | | | | 1 | 20 | 40 |
| 41 | 20 | 1 | | | | SPARE | | | | | | | SPARE | | | | 1 | 20 | 42 |
| | | | | | | | 3.3 | 3.3 | 5.1 | 6.0 | 6.0 | 4.0 | | | | | | | |

TOTAL CONN. LOAD PER PHASE (KVA): A0 9.3 B0 9.3 C0 9.1

TOTAL CONN. LOAD 27.7 KVA. 70 % DEMAND = ESTIMATED DEMAND LOAD 19.39

* MAIN BREAKER SHALL BE 3P EARTH GROUND TYPE

APPROVED:

A/E DESIGNER OF RECORD

SEAL:

COMMONWEALTH OF PENNSYLVANIA
REGISTERED PROFESSIONAL
JOSEPH R GAUS
ENGINEER
PE-074251
1/29/10

US ARMY CORPS OF ENGINEERS
AFGHANISTAN ENGINEER DISTRICT

| Mark | Description | Date | Appr. |
|---|---|---|---|

Rev: 0
Date: 2/23/10
Design file no.
Drawing code:
File name:
Plot date:
Plot scale:

Designed by: RAJ
Dwn by: BJB
Ckd by: JRG
Reviewed by: JRG
Submitted by: BAKER

U.S. ARMY CORPS OF ENGINEERS
AFGHANISTAN ENGINEER DISTRICT
APO AE 96338

*Michael Baker Jr., Inc.*
*A unit of Michael Baker Corporation*
Airside Business Park
100 Airside Drive
Moon Township, PA 15108
www.mbakercorp.com

AFGHAN NATIONAL ARMY
REGIONAL MILITARY TRAINING CENTER
STANDARD DESIGN

SUPPORT STAFF BARRACKS

# ELECTRICAL PANEL SCHEDULES

Sheet reference number:
E–602

# AFGHAN NATIONAL ARMY

## STANDARD BUILDING DESIGN

## ENLISTED BARRACKS

## 100% FINAL DESIGN SUBMITTAL

### SHEET INDEX


G-001 COVER SHEET

STRUCTURAL

S-001 GENERAL NOTES & DESIGN CRITERIA
S-101 FOUNDATION/SLAB PLAN
S-102 SECOND FLOOR FRAMING PLAN
S-103 ROOF FRAMING PLAN
S-401 BUILDING SECTIONS
S-402 ENLARGED 2ND FLOOR FRAMING PLAN
S-403 ENLARGED LATRINE SLAB PLAN
S-501 FOUNDATION SECTIONS
S-502 FRAMING SECTIONS
S-503 BEAM & COLUMN DETAILS
S-504 BEAM & COLUMN DETAILS
S-505 SECTIONS & DETAILS
S-506 MISCELLANEOUS SECTIONS
S-507 MISCELLANEOUS SECTIONS
S-601 SCHEDULES
S-701 TYPICAL DETAILS
S-702 TYPICAL DETAILS

ARCHITECTURAL

A-001 LIFE SAFETY PLAN
A-101 1ST FLOOR PLAN
A-102 2ND FLOOR PLAN
A-103 ROOF PLAN
A-201 ELEVATIONS
A-301 BUILDING SECTIONS
A-401 WALL SECTIONS
A-402 STAIR PLANS
A-403 STAIR SECTIONS
A-404 STAIR DETAILS
A-405 ENLARGED PLAN
A-501 EXTERIOR DETAILS
A-502 HEAD, JAMB, & SILL DETAILS
A-503 STOOP DETAILS
A-504 CANOPY DETAILS
A-505 TOILET, LAVATORY, & ABLUTION DETAILS
A-506 SHOWER DETAILS
A-507 ISOLATION JOINT DETAILS
A-601 WINDOW & DOOR SCHEDULES

MECHANICAL

P-101 PARTIAL 1ST FLOOR PLAN-PLUMBING
P-102 PARTIAL 2ND FLOOR PLAN-PLUMBING
P-501 PLUMBING DETAILS
P-502 PLUMBING DETAILS
P-503 PLUMBING DETAILS
P-901 DRAINAGE ISOMETRIC
P-902 HOT AND COLD WATER PIPING ISOMETRICS

M-101 HVAC 1ST FLOOR PLAN, SCHEDULES, & DETAILS
M-102 HVAC 2ND FLOOR PLAN, SCHEDULES, & DETAILS
M-501 HVAC DETAILS

ELECTRICAL

E-001 ELECTRICAL SYMBOLS & ABBREVIATIONS
E-101 ELECTRICAL LIGHTING PLAN- 1ST FLOOR PART A
E-102 ELECTRICAL LIGHTING PLAN- 1ST FLOOR PART B
E-103 ELECTRICAL LIGHTING PLAN- 2ND FLOOR PART A
E-104 ELECTRICAL LIGHTING PLAN- 2ND FLOOR PART B
E-105 ELECTRICAL POWER & SYSTEMS PLAN-1ST FLOOR PART A
E-106 ELECTRICAL POWER & SYSTEMS PLAN-1ST FLOOR PART B
E-107 ELECTRICAL POWER & SYSTEMS PLAN-2ND FLOOR PART A
E-108 ELECTRICAL POWER & SYSTEMS PLAN-2ND FLOOR PART B
E-109 ELECTRICAL LIGHTNING PROTECTION PLAN - PART A
E-110 ELECTRICAL LIGHTNING PROTECTION PLAN - PART B
E-501 ELECTRICAL DETAILS
E-502 ELECTRICAL DETAILS
E-601 ELECTRICAL LIGHT FIXTURE SCHEDULE
E-602 ELECTRICAL PANEL SCHEDULES
E-603 ELECTRICAL PANEL SCHEDULES


US ARMY CORPS OF ENGINEERS
AFGHANISTAN ENGINEER DISTRICT

| Mark | Description | Date | Appr. | Mark | Description | Date | Appr. |
|---|---|---|---|---|---|---|---|
| | | | | | | | |

Date: 2/23/10 | Rev: 0
Design file no.:
Drawing code:
File name: ANABENBG.001CS
Plot date: 2/23/2010
Plot scale: X:X

Designed by: KMF/MMY
Dwn by: RCG | Ckd by: CWW
Reviewed by: LHM
Submitted by: BAKER

U.S. ARMY CORPS OF ENGINEERS
AFGHANISTAN ENGINEER DISTRICT
APO AE 96338


Michael Baker Jr., Inc.
A unit of Michael Baker Corporation
Airside Business Park
100 Airside Drive
Moon Township, PA 15108
www.mbakercorp.com


AFGHAN NATIONAL ARMY
REGIONAL MILITARY TRAINING CENTER
STANDARD DESIGN

ENLISTED BARRACKS

COVER SHEET

Sheet reference number:
G-001

STRUCTURAL ABBREVIATIONS:

| | |
|---|---|
| ACI | AMERICAN CONCRETE INSTITUTE |
| ADD'L | ADDITIONAL |
| AISC | AMERICAN INSTITUTE OF STEEL CONSTRUCTION |
| AISI | AMERICAN IRON AND STEEL INSTITUTE |
| ASTM | AMERICAN SOCIETY FOR TESTING AND MATERIALS |
| ARCH | ARCHITECTURAL |
| B | BOTTOM |
| BLDG | BUILDING |
| BOTT | BOTTOM |
| ℄ | CENTER LINE |
| CFMRF | COLD FORM METAL ROOF FRAME |
| CFMF | COLD FORM METAL FRAME |
| CFS | COLD FORMED STEEL |
| CIP | CAST-IN-PLACE |
| CIPL | CAST-IN-PLACE LINTEL |
| CJ | CONTROL JOINT |
| CLR | CLEAR |
| CMU | CONCRETE MASONRY UNIT |
| COEFF | COEFFICIENT |
| COL | COLUMN |
| CONC | CONCRETE |
| CONT | CONTINUOUS |
| COORD | COORDINATE |
| CSJ | CONSTRUCTION JOINT |
| CRSI | CONCRETE REINFORCING STEEL INSTITUTE |
| DIA | DIAMETER |
| DIAG | DIAGONAL |
| DIM | DIMENSION |
| DWG | DRAWING |
| DWL | DOWEL |
| EA | EACH |
| EF | EACH FACE |
| ELEC | ELECTRICAL |
| ELEV | ELEVATION |
| EMBED | EMBEDMENT |
| EQUIV | EQUIVALENT |
| ETC | ET CETERA |
| EW | EACH WAY |
| EXP | EXPANSION |
| EXT | EXTERIOR |
| FTG | FOOTING |
| GA | GAUGE |
| GB | GRADE BEAM |
| HORIZ | HORIZONTAL |
| h | HOUR |
| HRS | HOURS |
| IBC | INTERNATIONAL BUILDING CODE |
| INFO | INFORMATION |
| INT | INTERIOR |
| kg | KILOGRAM |
| km | KILOMETER |
| kN | KILONEWTON |
| kPa | KILOPASCAL |
| Ld | LENGTH OF DEVELOPMENT |
| L# | ANGLE (# INDICATES SIZE) |
| LONG | LONGITUDINAL |
| LLV | LONG LEG VERTICAL |
| m | METER |
| MAX | MAXIMUM |
| MECH | MECHANICAL |
| MFG | MANUFACTURER |
| MID | MIDDLE |
| MIN | MINIMUM |
| MISC | MISCELLANEOUS |
| mm | MILLIMETER |
| MPa | MEGAPASCAL |
| MTL | METAL |
| MWFRS | MAIN WIND FORCE RESISTING SYSTEM |
| N | NEWTON |
| N | NORTH |
| N/A | NOT APPLICABLE |
| # | NUMBER SYMBOL FOR REBAR SIZE |
| NTS | NOT TO SCALE |
| OC | ON CENTER |
| OD | OUTSIDE DIAMETER |
| OPNG | OPENING |
| PL or PL | PLATE |
| PRE-ENG | PRE-ENGINEERED |
| RB | ROOF BEAM |
| REINF | REINFORCED |
| REQ'D | REQUIRED |
| SIM | SIMILAR |
| SPECS | SPECIFICATIONS |
| STD | STANDARD |
| STRUCT | STRUCTURAL |
| SW | SHEAR WALL |
| T | TOP |
| T/ | TOP OF |
| T/ELEV | TOP ELEVATION |
| T/SLAB | TOP OF SLAB |
| T&B | TOP AND BOTTOM |
| THK | THICK |
| TYP | TYPICAL |
| UFC | UNIFIED FACILITIES CRITERIA |
| UON | UNLESS OTHERWISE NOTED |
| VERT | VERTICAL |
| W | WIDTH |
| W/ | WITH |

1.0 GENERAL NOTES:

1.1 THIS PROJECT HAS BEEN DESIGNED FOR THE WEIGHTS AND MATERIALS INDICATED ON THE SHEETS AND FOR THE LIVE LOADS INDICATED IN THE DESIGN DATA. IT IS THE CONTRACTOR'S RESPONSIBILITY TO DETERMINE ALLOWABLE CONSTRUCTION LOADS AND TO PROVIDE PROPER DESIGN AND CONSTRUCTION OF FALSEWORK, FORMWORK, STAGING, BRACING, SHEETING AND SHORING, ETC.

1.1 COORDINATE THESE SHEETS WITH THE ARCHITECTURAL, MECHANICAL, ELECTRICAL, PLUMBING, AND CIVIL SHEETS. ALL DIMENSIONS SHOWN ON THE SHEETS ARE MILLIMETERS UNLESS NOTED OTHERWISE.

1.2 THE CONTRACTOR SHALL VERIFY AND COORDINATE ALL FLOOR AND ROOF OPENING SIZES AND LOCATIONS, EQUIPMENT PAD SIZES AND LOCATIONS, ANCHOR BOLT LAYOUTS, ETC WITH EQUIPMENT SELECTED. THE CONTRACTOR SHALL MAKE ANY REQUIRED MODIFICATIONS AT NO ADDITIONAL COST.

1.3 THE CONTRACTOR SHALL REFER TO THE ARCHITECTURAL, MECHANICAL, ELECTRICAL AND PLUMBING SHEETS FOR SLEEVES, CURBS, INSERTS OR OPENINGS, ETC. NOT HEREIN INDICATED.

1.4 WORK NOT INCLUDED ON THE SHEETS BUT IMPLIED TO BE SIMILAR TO THAT SHOWN AT CORRESPONDING PLACES ELSEWHERE ON THE SHEETS SHALL BE REPEATED.

1.5 IN CASE OF CONFLICT BETWEEN THE NOTES, DETAILS AND SPECIFICATIONS THE MOST RIGID REQUIREMENTS SHALL GOVERN.

1.6 SEE ARCHITECTURAL SHEETS FOR LOCATIONS OF MASONRY AND NON-LOAD BEARING PARTITIONS. PROVIDE COMPRESSIBLE FIRESAFING AT TOP OF WALL AS REQUIRED BY ARCHITECTURAL SHEETS.

1.7 COORDINATE FINISHED FLOOR DATUM ELEVATION 0.0m WITH THE CIVIL SHEETS.

2.0 FOUNDATION NOTES

2.1 THE GEOTECHNICAL ANALYSIS FOR THIS PROJECT IS THE RESPONSIBILITY OF THE CONTRACTOR AWARDED THE WORK. AN ASSUMED ALLOWABLE SOIL BEARING VALUE OF 72 kPa HAS BEEN USED IN THE STRUCTURAL ANALYSIS OF THE BUILDING HEREIN AND SHALL BE CONFIRMED AND VERIFIED AS PART OF THE GEOTECHNICAL INVESTIGATION. VALUES WHICH DO NOT MEET THE REQUIREMENTS INDICATED ON THE BASIS OF DESIGN SHEET SHALL BE IMMEDIATELY BROUGHT TO THE ATTENTION OF THE CONTRACTING OFFICER FOR CONSIDERATION AND DETERMINATION ON THE NEXT APPROPRIATE COURSE OF ACTION.

2.2 SEE THE SPECIFICATION FOR ADDITIONAL REQUIREMENTS TO THOSE OUTLINED IN THE GEOTECHNICAL INVESTIGATION FOR EXCAVATION AND PREPARATION OF THE FOUNDATION AND THE SLAB ON GRADE SUBGRADE INCLUDING COMPACTION PROCEDURES.

2.3 EXCAVATIONS FOR FOOTINGS SHALL HAVE THE SIDES AND BOTTOMS TEMPORARILY LINED WITH 0.25mm POLYETHYLENE IF PLACEMENT OF CONCRETE DOES NOT OCCUR WITHIN 24 HRS OF THE EXCAVATION OF THE FOOTING.

2.4 FOUNDATION CONDITIONS NOTED DURING CONSTRUCTION WHICH DIFFER FROM THOSE DESCRIBED IN THE GEOTECHNICAL REPORT SHALL BE REPORTED TO THE GENERAL CONTRACTOR BEFORE FURTHER CONSTRUCTION IS ATTEMPTED. SEE PROJECT SPECIFICATIONS.

2.5 NO FOOTINGS OR SLABS SHALL BE POURED INTO OR AGAINST SUBGRADE CONTAINING FREE WATER, FROST, ICE OR LOOSE MATERIAL. FROST DEPTH ASSUMED TO BE 800mm.

2.6 ALL SLAB-ON-GRADE, TRENCH BOTTOMS AND OTHER ON-GRADE INTERIOR HORIZONTAL SURFACES SHALL BE PLACED OVER A 0.25mm POLYETHYLENE VAPOR RETARDER OVER A 100mm #57 STONE WATER CAPILLARY BARRIER PLACED ON SUBGRADE PROPERLY PREPARED IN ACCORDANCE WITH THE CONTRACT SPECIFICATIONS. (UON)

2.7 PRIOR TO START OF FOUNDATION OR SLAB-ON-GRADE CONSTRUCTION, EXISTING SUBGRADES SHALL BE COMPACTED TO MINIMUM OF 95% MAXIMUM DRY DENSITY OBTAINED THRU ASTM D 1557 MODIFIED PROCTOR TESTING.

2.8 SEE PLUMBING, ELECTRICAL & CIVIL SHEETS FOR REQUIRED UNDERSLAB UTILITIES.

2.9 SEE ARCHITECTURAL SHEETS FOR ALL WATERPROOFING DETAILS AND MATERIALS.

2.10 IF UNDERMINING OF FOOTINGS OCCURS, FILL VOIDS WITH 18 MPa CONCRETE. DO NOT ATTEMPT TO REPLACE AND RE-COMPACT SOIL.

3.0 CONCRETE

3.1 CONCRETE SHALL HAVE THE UNIT WEIGHT OF 2400 kg/m$^3$ AND A MINIMUM COMPRESSIVE STRENGTH (f'c) OF 28 MPa AT 28 DAYS. ALL CONCRETE SHALL HAVE A WATER-CEMENT RATIO OF 0.45. SEE SPECIFICATIONS FOR ADDITIONAL INFORMATION. ENTRAIN AIR TO PRODUCE TOTAL AIR CONTENT ACCORDING TO THE SPECIFICATIONS FOR CONCRETE EXPOSED TO FREEZING TEMPERATURES (EXTERIOR FOOTINGS, SLAB TURNDOWNS, EXTERIOR SLABS AND SLABS-ON-GRADE, EXTERIOR RETAINING WALLS, AND EXTERIOR GRADE BEAMS.)

3.2 NO CALCIUM CHLORIDE SHALL BE USED IN ANY CONCRETE.

3.3 MIXING, TRANSPORTING AND PLACING OF CONCRETE SHALL CONFORM TO ACI 301M-05.

3.4 ALL CONCRETE WORK SHALL CONFORM TO THE REQUIREMENTS OF THE AMERICAN CONCRETE INSTITUTE (ACI) 318M MANUAL (metric), "BUILDING CODE REQUIREMENTS FOR REINFORCED CONCRETE", AND REQUIREMENTS OUTLINED IN THE CONTRACT SPECIFICATIONS. WHEN THERE IS A CONFLICT BETWEEN ACI AND THE SPECIFICATIONS, THE MORE STRINGENT SHALL GOVERN.

3.5 CHAMFER ALL EXPOSED EXTERNAL CORNERS OF CONCRETE WITH 20mm x45 DEGREE CHAMFER UON.

3.6 CONCRETE REINFORCEMENT BARS SHALL CONFORM TO ASTM A615M-96a, GRADE 420 MPa, REINFORCING BARS SHALL NOT BE TACK WELDED, WELDED, HEATED OR CUT, UNLESS INDICATED ON THE CONTRACT DOCUMENTS. ALL LAP SPLICES SHALL BE CLASS "B" UON.

3.7 HORIZONTAL FOOTING AND HORIZONTAL WALL REINFORCEMENT SHALL BE CONTINUOUS AND SHALL HAVE 90 DEGREE BENDS AND EXTENSIONS, OR CORNER BARS OF EQUIVALENT SIZE LAPPED WITH A CLASS B TENSION SPLICE AT CORNERS AND INTERSECTIONS. TOP BAR CRITERIA SHALL APPLY IF 300mm OR MORE OF FRESH CONCRETE IS PLACED BELOW BAR.

3.8 SLABS-ON-GRADE SHALL HAVE CONSTRUCTION JOINTS OR CRACK CONTROL JOINTS AS SHOWN ON THE DRAWINGS. CONSTRUCTION JOINTS CAN BE USED AT CONTROL JOINT LOCATIONS AT CONTRACTORS OPTION. SEE SLAB PLANS & JOINT DETAILS FOR ADDITIONAL INFORMATION. FOR AREAS NOT SHOWN ON DWGS, THE MAXIMUM SPACING OF CONSTRUCTION/ CRACK CONTROL JOINTS SHALL BE 4800mm

3.9 ALL CONCRETE REINFORCEMENT SHALL BE DETAILED, FABRICATED, LABELED, SUPPORTED, AND SPACED IN FORMS AND SECURED IN PLACE IN ACCORDANCE WITH THE PROCEDURES AND REQUIREMENTS OUTLINED IN THE LATEST EDITION OF THE "BUILDING CODE REQUIREMENTS FOR REINFORCED CONCRETE", ACI 318M, AND THE "MANUAL OF STANDARD PRACTICE FOR DETAILING REINFORCED CONCRETE STRUCTURES", ACI 315M, LATEST EDITION. BASED ON IN COUNTRY REINFORCEMENT AVAILABILITY, IT IS THE CONTRACTOR'S OPTION TO ROUND DESIGNATED ODD NUMBERED REINFORCEMENT SIZES UP (1) ONE BAR SIZE.

3.10 ALL DOWELS SHALL MATCH SIZE AND NUMBER OF MAIN REINFORCING, UNLESS NOTED OTHERWISE ON THE SHEETS.

3.11 ADDITIONAL BARS SHALL BE PROVIDED AROUND ALL FLOOR AND WALL OPENINGS AS SHOWN ON THE SHEETS.

3.12 SEE ARCHITECTURAL SHEETS FOR TYPE AND LOCATION OF ALL FLOOR FINISHES.

3.13 THE CONTRACTOR SHALL COORDINATE ADDITIONAL WALL/SLAB OPENINGS NOT SHOWN ON STRUCTURAL SHEETS. SEE MECHANICAL, ELECTRICAL, PLUMBING AND CIVIL SHEETS.

3.14 UNLESS NOTED OTHERWISE, ALL CURBS SHALL BE REINFORCED WITH AT LEAST (1)-#13 CONTINUOUS AND #13 AT 300mm O.C. DOWELS TO STRUCTURE BELOW.

3.15 THE CONTRACTOR SHALL VERIFY ALL OPENINGS, PAD SIZES, AND ANCHOR BOLTS WITH EQUIPMENT SELECTED.

3.16 FOR ALL WALLS & PIERS, PROVIDE DOWELS INTO FOOTING AT EACH VERT REINF BAR, UON DOWEL SIZE SHALL BE SAME AS VERT REINF.

3.17 PROVIDE CONCRETE POUR STOPS OR FORMED AS REQUIRED FOR INSTALLATION OF ALL CONCRETE WORK.

3.18 PROVIDE ADDITIONAL (2)-#13 x 600mm REINFORCING BARS IN SLAB-ON GRADE AT ALL RE-ENTRANT CORNERS. PLACE BARS AT MID-DEPTH OF SLAB WITH A CLEARANCE OF 50mm FROM CORNER UON.

3.19 COLD-WEATHER PLACEMENT: COMPLY WITH ACI 306.1 AND AS FOLLOWS. PROTECT CONCRETE WORK FROM PHYSICAL DAMAGE OR REDUCED STRENGTH THAT COULD BE CAUSED BY FROST, FREEZING ACTIONS, OR LOW TEMPERATURES. SUBMIT A COLD WEATHER CONCRETING PLAN FOR APPROVAL.

3.20 PROVIDE BONDING COMPOUND PER ASTM C 1059-99: SPECIFICATION FOR LATEX AGENTS FOR BONDING FRESH CONCRETE (GROUT) TO HARDENED CONCRETE.

3.21 THE FORMED SURFACES FOR REINFORCED CONCRETE SHALL ACHIEVE A "CLASS A" FINISH WHEN RECEIVING PAINT OR A "CLASS B" FINISH WHEN RECEIVING PLASTER OR TILE AS PER SPECIFICATION SECTION 03 31 00 CAST-IN-PLACE STRUCTURAL CONCRETE.

3.22 AT INTERSECTING GRADE BEAMS AND SHEAR WALLS, PROVIDE CORNER BARS AT INTERSECTIONS WITH SAME QUANTITY, SIZE AND SPACING AS HORIZONTAL BARS WITH LEG LENGTH = 50db.

3.23 REFER TO S-800 SERIES REINFORCING BAR PLACEMENT DRAWINGS DEFINING LENGTHS, BENDS, AND SPACINGS FOR ALL STRUCTURAL CONCRETE. THE S-800 SERIES DRAWING ARE BASED ON THE S-400, S-500, S-600, AND S-700 SERIES DRAWING SCHEDULES, DETAILS, AND DIAGRAMS.

4.0 CONCRETE MASONRY

4.1 MASONRY CONSTRUCTION SHALL CONFORM TO SPECIFICATION FOR MASONRY STRUCTURES (ACI 530.1) UON.

4.2 STRENGTH OF MASONRY MATERIALS SHALL BE AS FOLLOWS:

a. CONCRETE MASONRY UNITS SHALL BE NORMAL WEIGHT, GRADE N, TYPE 1, CONFORMING TO ASTM C-90 AND HAVE A MINIMUM COMPRESSIVE STRENGTH OF 10.4 MPa ON THE NET AREA.
b. MORTAR SHALL CONFORM TO ASTM C-270 TYPE S.
c. GROUT FOR MASONRY SHALL BE NORMAL WEIGHT AND HAVE A MINIMUM COMPRESSIVE STRENGTH OF 14 MPa AT 28 DAYS. GROUT SHALL CONFORM TO ASTM C476M. GROUT LIFTS SHALL NOT EXCEED 1,400mm.
d. REINFORCED MASONRY SHALL HAVE A STRENGTH F'm = 10 MPa. (F'm IS THE COMPRESSIVE STRENGTH OF THE MASONRY AT 28 DAYS AS DETERMINED BY PRISM TESTS).

4.3 ALL VERTICAL REINFORCEMENT FOR CONCRETE MASONRY SHALL BE ASTM A615M-96a, GRADE 420 MPa. ALL SPLICES SHALL BE LAPPED 48 BAR DIAMETERS MINIMUM.

4.4 BOND BEAMS SHALL BE SPACED AT 1200mm OC VERTICALLY. BOND BEAM REINFORCING SHALL BE CONTINUOUS AND PROVIDED AT WALL INTERSECTIONS AND WALL CORNERS (REFERENCE CONCRETE MASONRY NOTE 4.11). ALL BOND BEAM REINFORCING SHALL BE CONTINUOUS AND HAVE STANDARD ACI HOOKS AT EACH END. PROVIDE STANDARD BAR SPLICES AS SPECIFIED. AS AN ALTERNATE TO CMU BOND BEAMS, IT IS THE CONTRACTOR'S OPTION TO PROVIDE 200mm x 200mm CONTINUOUS CAST-IN-PLACE CONCRETE BOND BEAMS WITH (2)-#16 IN LIEU OF CMU BOND BEAMS INDICATED ON THE DRAWINGS.

4.5 SEE TYPICAL DETAILS FOR MINIMUM REINFORCEMENT REQUIREMENTS FOR CMU WALLS. PROVIDE STANDARD BAR SPLICES AS SPECIFIED. ALL VERTICAL REINFORCEMENT EXTENDS FULL HEIGHT OF WALL.

4.6 CMU CELLS THAT REQUIRE VERTICAL REINFORCING BARS AS INDICATED ON THE CONTRACT DRAWINGS AND/OR SPECS SHALL HAVE REINF BARS PLACED IN CENTERS OF CMU CELLS AND CONTINUOUSLY GROUTED UON.

4.7 ALL CMU CELLS, OPEN CAVITIES, AND AIR SPACES OF ALL EXTERIOR WALLS SHALL BE GROUTED TO STOP FRAGMENTS FROM MORTAR BLAST.

4.8 CONTRACTOR SHALL COORDINATE LOCATION OF ALL OPENINGS SEE ARCH, MECH, ELEC, AND PLUMBING SHEETS FOR SIZE AND LOCATION OF OPENINGS.

4.9 MASONRY WALLS SHALL NOT BE BACK FILLED PRIOR TO THE MORTAR AND GROUT ATTAINING THEIR RESPECTIVE MAXIMUM DESIGN STRENGTHS PER SPECIFICATIONS.

4.10 PROVIDE GALVANIZED MORTAR/GROUT SCREEN W/ 3mm MESH WHERE CELLS BELOW ARE NOT GROUTED.

4.11 AT INTERSECTING BOND BEAMS, PROVIDE CORNER BAR FOR EACH HORIZONTAL BAR IN BOND BEAMS AT INTERSECTING WALLS. USE SAME SIZE AND SPACING AS HORIZONTAL BARS WITH LEG LENGTH = 50db.

4.12 THE ALTERNATE TOP OF CMU WALL BRACING DETAIL(S) SHOWN ON S-701 CAN BE UTILIZED AT THE CONTRACTOR'S OPTION IN PLACE OF THE "SLEEVED DOWEL" WALL CONNECTIONS DEPICTED ON S-400 AND S-500 SERIES DRAWINGS. IN ADDITION, ALTERNATE DETAIL(S) SHOW CAST-IN-PLACE WALL BOND BEAMS THAT CAN BE UTILIZED AT THE CONTRACTOR'S OPTION IN PLACE OF THE STANDARD CMU BOND BEAMS CONSTRUCTED OF CMU BLOCKS.

5.0 COLD-FORMED METAL FRAMING

5.1 ALL COLD-FORMED METAL FRAMING MEMBERS SHALL CONFORM TO ASTM A1003M, STRUCTURAL GRADE ST340 (MPa), WITH A GALVANIZED COATING OF Z275 OR BETTER IN ACCORDANCE WITH ASTM A653M.

5.2 ALL COLD-FORMED METAL FRAMING MEMBERS SHALL HAVE THE FOLLOWING MINIMUM PROPERTIES:

a. MINIMUM METAL THICKNESS:
TRACK = 1.37mm;
STUD/OTHER = 1.09mm
b. MINIMUM FLANGE WIDTH:
TRACK = 38mm;
STUD/OTHER = 35mm
c. MINIMUM MEMBER DEPTH:
ALL SECTIONS = 152.2mm
d. PURLIN (HAT CHANNEL)
DEPTHxWIDTH(FLAT TOP)xTHICK = 25mmx42mmx1.59mm

5.3 ALL CONNECTIONS SHALL BE MADE WITH CORROSION RESISTANT (ASTM A153M), SELF-DRILLING, SELF-TAPPING STEEL DRILL SCREWS IN ACCORDANCE WITH ASTM C1513. SCREWS SHALL HAVE A LOW PROFILE HEAD BENEATH ROOF DECK, AND STANDARD HEAD ALL OTHER LOCATIONS.

5.4 FABRICATE COLD FORMED METAL FRAMING AND ACCESSORIES PLUMB, SQUARE AND TRUE TO LINE, WITH CONNECTIONS SECURELY FASTENED ACCORDING TO AISI STANDARD FOR COLD FORMED STEEL FRAMING.

5.5 CUT FRAMING MEMBERS BY SAWING OR SHEATHING, DO NOT TORCH CUT.

5.6 INSTALL FRAMING MEMBERS IN ONE-PIECE LENGTHS UNLESS SPLICE CONNECTIONS ARE INDICATED FOR TRACK OR TENSION MEMBERS

5.7 INSTALL TEMPORARY BRACING AND SUPPORTS TO SECURE FRAMING DURING CONSTRUCTION. MAINTAIN BRACING AND SUPPORTS IN PLACE UNTIL THE STRUCTURE HAS BEEN COMPLETED WITH ALL CONNECTIONS AND PERMANENT BRACING SECURED.

6.0 STRUCTURAL DESIGN CRITERIA

6.1 ALL DESIGNS SHALL CONFORM TO THE PROVISIONS OF THE IBC 2006 AND UFC AS APPLICABLE.

6.2 DESIGN LOADS

6.2.1 DEAD LOADS (PER IBC 2006 & UFC 3-310-01)

| | |
|---|---|
| MECH/ELEC/PLUMBING | 0.20 kPa |
| MISCELLANEOUS | 0.15 kPa |
| COLD-FORMED FRAMING | 0.20 kPa |
| INSULATION | 0.10 kPa |
| METAL ROOF PANEL | 0.14 kPa |
| | 0.79 kPa |
| FLOOR PARTITION ALLOWANCE | 0.96 kPa |

6.2.2 LIVE LOADS (PER IBC 2006 & UFC 3-310-01)

| | |
|---|---|
| ROOF | 1.00 kPa |
| CORRIDOR (2-STORY BLDG ONLY) | 4.80 kPa |
| ALL OTHERS (2-STORY BLDG ONLY) | 2.40 kPa |
| SLAB ON GRADE | 4.80 kPa |

6.2.3 SNOW LOADS (PER IBC 2006 & UFC 3-310-01)

| | |
|---|---|
| GROUND SNOW LOAD (Pg) | 1.2 kPa |
| SNOW IMPORTANCE FACTOR (I) | 1.0 |
| SNOW EXPOSURE FACTOR (Ce) | 1.0 |
| THERMAL FACTOR (Ct) | 1.0 |

6.2.4 WIND LOADS (PER IBC 2006)

| | |
|---|---|
| BASIC WIND SPEED | 137 km/h |
| WIND IMPORTANCE FACTOR | 1.0 |
| WIND EXPOSURE CATEGORY | D |
| DIRECTIONALITY COEFFICIENT (Kd) | 0.85 |
| TOPOGRAPHIC FACTOR (Kzt) | 1.0 |

6.2.5 SEISMIC LOADS (PER IBC 2006 & UFC 3-310-04)

| | |
|---|---|
| OCCUPANCY USE CATEGORY | II |
| SEISMIC IMPORTANCE FACTOR (Ie) | 1.0 |
| SEISMIC SITE CLASS | D |
| $S_s$ = 2.40 (FOR IRREGULAR PORTION OF BLDG – COLUMNS 8 THRU 17) | |
| $S_S$ = 1.50 (REDUCED FROM 2.40 PER ASCE 7-05, 12.8.1.3 FOR A BUILDING WITHOUT IRREGULARITIES – COLUMNS 1 THRU 7) | |
| $S_1$ = 1.20 | |
| $S_{DS}$ = 1.60 AND 1.00 | |
| $S_{D1}$ = 1.20 | |
| SEISMIC DESIGN CATEGORY | E |
| SEISMIC RESISTING SYSTEM: –SPECIAL REINFORCED CONCRETE SHEAR WALL | |
| RESPONSE MODIFICATION FACTOR (R) | 6 |
| RESPONSE COEFFICIENT (Cs) – IRREGULAR | 0.267 |
| RESPONSE COEFFICIENT (Cs) – REGULAR | 0.167 |
| SEISMIC ANALYTICAL PROCEDURE = | EQUIV LATERAL FORCE |
| SEISMIC BASE SHEAR – IRREGULAR | 4890 kN |
| SEISMIC BASE SHEAR – REGULAR | 1990 kN |

APPROVED:

A/E DESIGNER OF RECORD

SEAL:

GEORGIA REGISTERED No. 27141 PROFESSIONAL ENGINEER CHRISTOPHER W. WHITMORE 2-23-10

US ARMY CORPS OF ENGINEERS
AFGHANISTAN ENGINEER DISTRICT

| Mark | Description | Date | Appr. |
|---|---|---|---|

Date: 2/23/10 Rev: 0
Design file no.
Drawing code:
File name: ANABENBS-001SN
Plot date: 2/23/2010
Plot scale: X:X

Designed by: KMP/MMY
Dwn by: RCG
Ckd by: CWW
Reviewed by: LHM
Submitted by:
BAKER

U.S. ARMY CORPS OF ENGINEERS
AFGHANISTAN ENGINEER DISTRICT
APO AE 96338

Michael Baker Jr., Inc
A unit of Michael Baker Corporation
Airside Business Park
100 Airside Drive
Moon Township, PA 15108
www.mbakercorp.com

AFGHAN NATIONAL ARMY
REGIONAL MILITARY TRAINING CENTER
STANDARD DESIGN

ENLISTED BARRACKS

GENERAL NOTES & DESIGN CRITERIA

Sheet reference number:
S-001

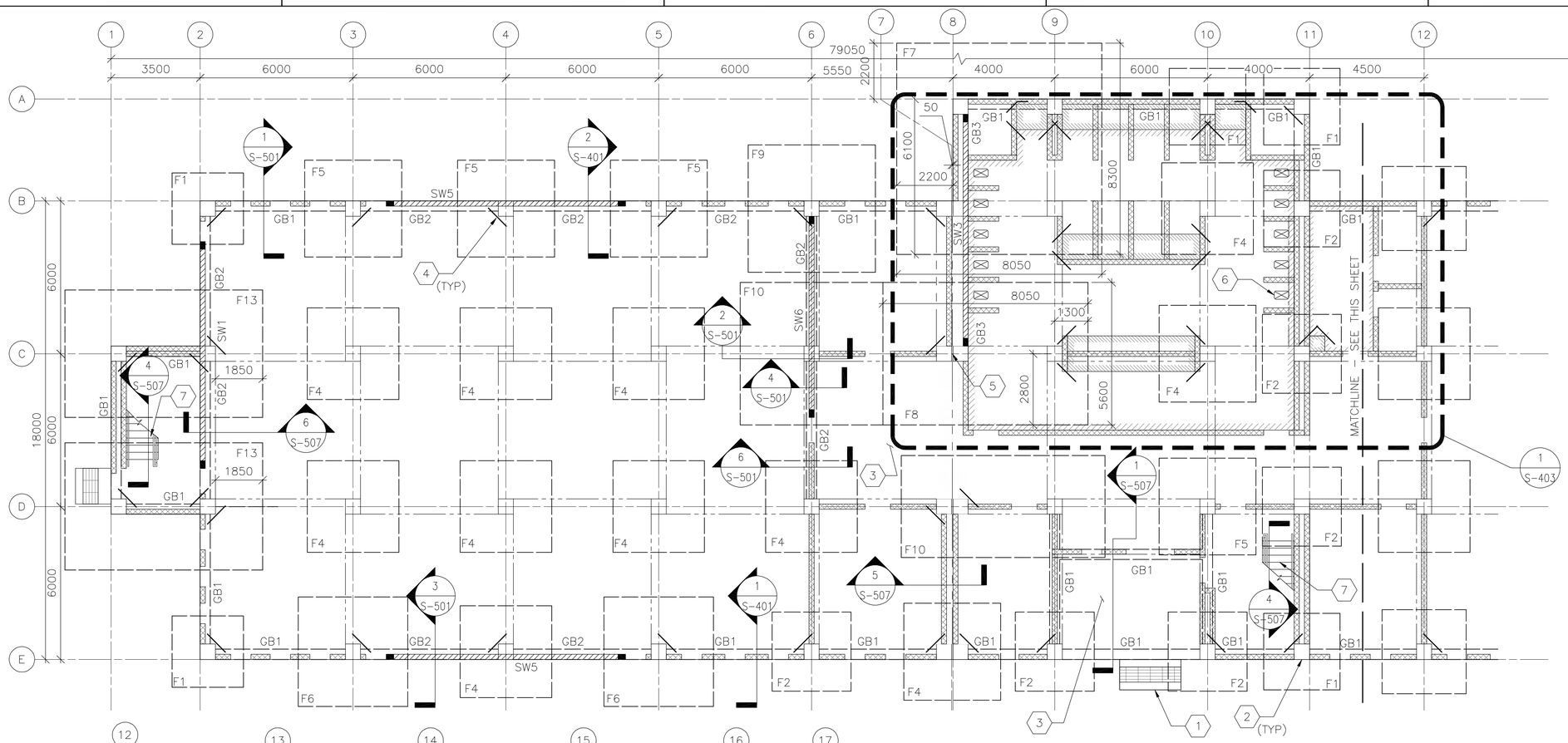


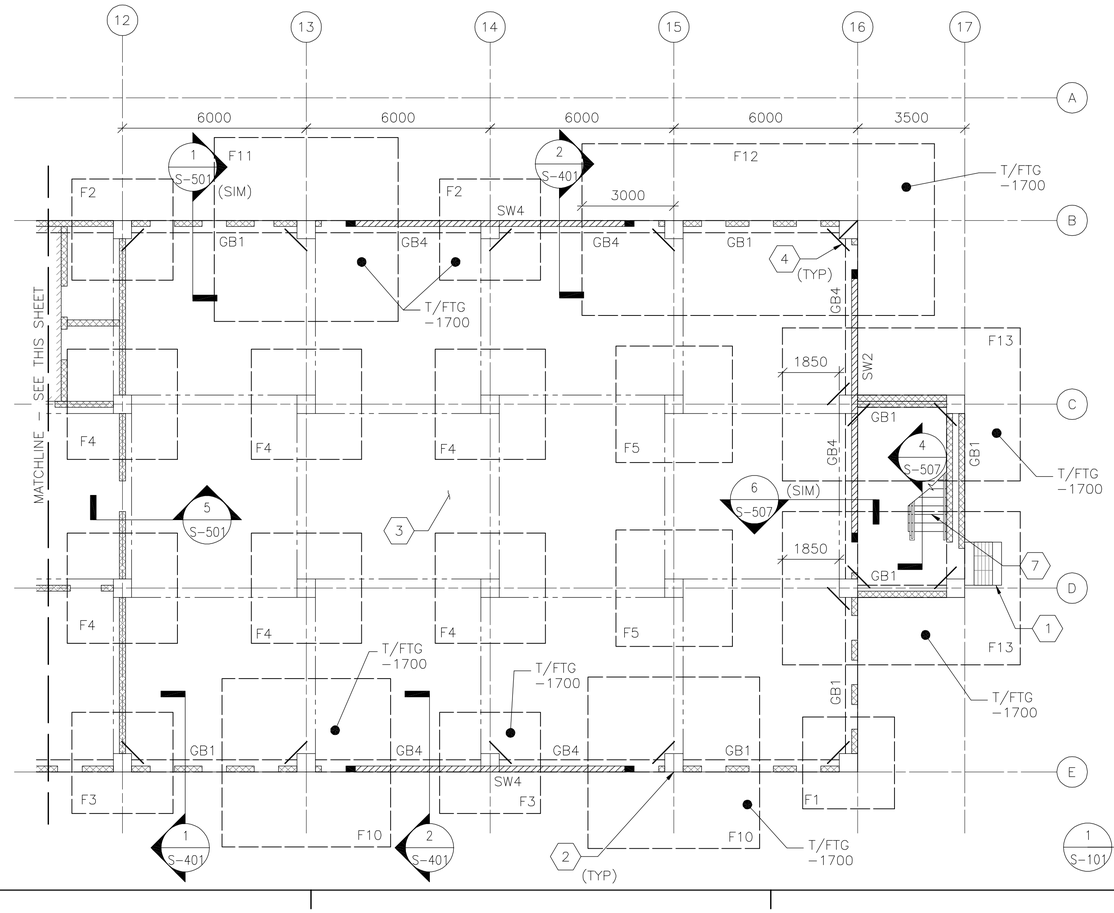


## FOUNDATION/SLAB PLAN NOTES:

1. REFER TO SHEET S–001 FOR STRUCTURAL NOTES AND DESIGN CRITERIA.
2. FINISH FIRST FLOOR ELEVATION SHALL BE (DATUM 0.00) ALL PLUS OR MINUS DIMENSIONS INDICATED ON PLAN OR REFERRED TO IN NOTES RELATE TO FINISH FIRST FLOOR ELEVATION.
3. SLAB–ON–GRADE IS 150 WITH #13 @ 300 OC EW LOCATED 38 FROM T/SLAB UON. WHERE NOTED, 300 SLAB–ON–GRADE SHALL BE REINF W/ #13 @ 300 OC EW T&B.
4. TOP OF EXTERIOR FOOTINGS SHALL BE –950 UNLESS OTHERWISE INDICATED.
5. TOP OF INTERIOR FOOTINGS WITHOUT GRADE BEAM ABOVE SHALL BE –600.
6. TOP OF INTERIOR FOOTINGS WITH GRADE BEAM ABOVE SHALL BE –950.
7. COLUMN FOOTINGS INDICATED BY F# ON PLAN. REFER TO COLUMN FOOTING SCHEDULE ON SHEET S–601.
8. REFER TO COLUMN SCHEDULE ON SHEET S–601.
9. GRADE BEAM INDICATED BY GB# ON PLAN, REFER TO BEAM SCHEDULE ON SHEET S–601.
10. SHEARWALL INDICATED BY SW# ON PLAN, REFER TO SHEARWALL SCHEDULE ON SHEET S–601.
11. SEE TYP EXTERIOR AND INTERIOR CMU WALL REINFORCING DETAILS ON SHEET S–701.
12. SEE MECHANICAL AND ELECTRICAL SHEETS FOR CONCRETE PAD LOCATIONS, SIZES, AND THICKNESS NOT SHOWN. SEE SHEET S–701 FOR DETAILS.
13. THICKENED SLAB UNDER CMU PERIMETER/PARTITION WALLS NOT SHOWN FOR CLARITY.

## FOUNDATION/SLAB PLAN KEY NOTES: (X)

1. CONC PAD (ENTRANCE) – SEE ARCH DWGS FOR INFORMATION
2. REINF CONC COLUMN
3. REINF CONC SLAB–ON–GRADE
4. (2)–#13 @ RE–ENTRANT CORNERS – SEE S–701 FOR INFORMATION
5. 50 ISOLATION JOINT BETWEEN STRUCTURES LOCATED ABOVE FIRST FLOOR SLAB–ON–GRADE
6. OPENING IN SLAB FOR LATRINE. SEE SLAB OPENING DETAIL ON DWG S–701. COORDINATE SIZE WITH MANUFACTURER.
7. CONCRETE STAIR TO SECOND FLOOR
8. NOT USED

## FOUNDATION/SLAB PLAN

1 / S–101

**SCALE: 1:100**

## FOUNDATION/SLAB PLAN LEGEND:

- REINF CONC SHEAR WALL
- REINF CMU WALL
- CONTROL JOINT
- MATCHLINE
- INDICATES DROP SLAB 65 BELOW FINISH FLOOR
- INDICATES DROP SLAB 200 BELOW FINISH FLOOR
- SLAB OPENING

0 2000 4000
SCALE: 1:100

UNLESS OTHERWISE NOTED, LINEAR DIMENSIONS SHOWN ON DRAWINGS ARE IN MILLIMETERS (mm)

APPROVED:

A/E DESIGNER OF RECORD

SEAL:

GEORGIA REGISTERED 2-24-10 No. 27141 PROFESSIONAL ENGINEER CHRISTOPHER W. WHITMORE

US ARMY CORPS OF ENGINEERS
AFGHANISTAN ENGINEER DISTRICT

| Mark | Description | Date | Appr |
|---|---|---|---|
| | | | |
| | | | |
| | | | |
| | | | |
| | | | |

Date: 2/23/10
Design file no.
Drawing code:
File name: ANABENBS-101FNP
Plot date: 2/23/2010
Plot scale: XX
Rev: C

Designed by: KMF/MMY
Dwn by: RCG
Ckd by: CWW
Reviewed by: LHM
Submitted by: BAKER

U.S. ARMY CORPS OF ENGINEERS
AFGHANISTAN ENGINEER DISTRICT
APO AE 96338

Michael Baker Jr., Inc.
A unit of Michael Baker Corporation
Airside Business Park
100 Airside Drive
Moon Township, PA 15108
www.mbakercorp.com

AFGHAN NATIONAL ARMY
REGIONAL MILITARY TRAINING CENTER
STANDARD DESIGN

ENLISTED BARRACKS

FOUNDATION/SLAB PLAN

Sheet reference number:
S–101

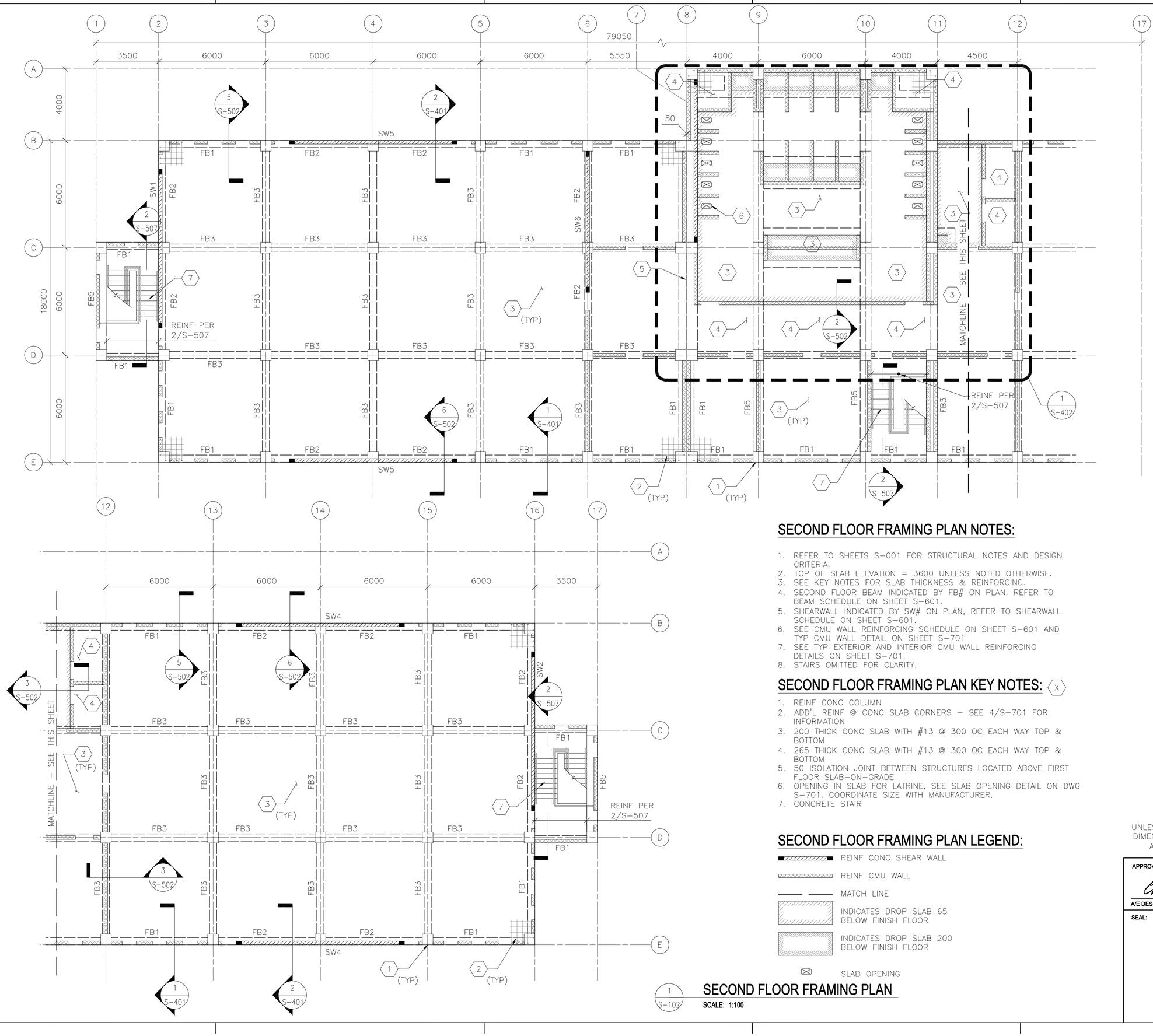


## SECOND FLOOR FRAMING PLAN NOTES:

1. REFER TO SHEETS S-001 FOR STRUCTURAL NOTES AND DESIGN CRITERIA.
2. TOP OF SLAB ELEVATION = 3600 UNLESS NOTED OTHERWISE.
3. SEE KEY NOTES FOR SLAB THICKNESS & REINFORCING.
4. SECOND FLOOR BEAM INDICATED BY FB# ON PLAN. REFER TO BEAM SCHEDULE ON SHEET S-601.
5. SHEARWALL INDICATED BY SW# ON PLAN, REFER TO SHEARWALL SCHEDULE ON SHEET S-601.
6. SEE CMU WALL REINFORCING SCHEDULE ON SHEET S-601 AND TYP CMU WALL DETAIL ON SHEET S-701
7. SEE TYP EXTERIOR AND INTERIOR CMU WALL REINFORCING DETAILS ON SHEET S-701.
8. STAIRS OMITTED FOR CLARITY.

## SECOND FLOOR FRAMING PLAN KEY NOTES: (X)

1. REINF CONC COLUMN
2. ADD'L REINF @ CONC SLAB CORNERS - SEE 4/S-701 FOR INFORMATION
3. 200 THICK CONC SLAB WITH #13 @ 300 OC EACH WAY TOP & BOTTOM
4. 265 THICK CONC SLAB WITH #13 @ 300 OC EACH WAY TOP & BOTTOM
5. 50 ISOLATION JOINT BETWEEN STRUCTURES LOCATED ABOVE FIRST FLOOR SLAB-ON-GRADE
6. OPENING IN SLAB FOR LATRINE. SEE SLAB OPENING DETAIL ON DWG S-701. COORDINATE SIZE WITH MANUFACTURER.
7. CONCRETE STAIR

## SECOND FLOOR FRAMING PLAN LEGEND:

- REINF CONC SHEAR WALL
- REINF CMU WALL
- MATCH LINE
- INDICATES DROP SLAB 65 BELOW FINISH FLOOR
- INDICATES DROP SLAB 200 BELOW FINISH FLOOR
- SLAB OPENING

1 S-102 **SECOND FLOOR FRAMING PLAN**

**SCALE: 1:100**

0 2000 4000

SCALE: 1:100

UNLESS OTHERWISE NOTED, LINEAR DIMENSIONS SHOWN ON DRAWINGS ARE IN MILLIMETERS (mm)

APPROVED:

A/E DESIGNER OF RECORD

SEAL:

GEORGIA REGISTERED 1-29-10 No. 27141 PROFESSIONAL ENGINEER CHRISTOPHER W. WHITMORE

US ARMY CORPS OF ENGINEERS
AFGHANISTAN ENGINEER DISTRICT

| Mark | Description | Date | Appr |
|---|---|---|---|
| | | | |

Designed by: KMP/MMY | Drwn by: RCG | Chkd by: CWW | Reviewed by: LHM | Submitted by: BAKER

U.S. ARMY CORPS OF ENGINEERS
AFGHANISTAN ENGINEER DISTRICT
APO AE 96338


Michael Baker Jr., Inc
A unit of Michael Baker Corporation
Airside Business Park
100 Airside Drive
Moon Township, PA 15108
www.mbakercorp.com


Date: 2/23/10
Design file no.
Drawing code:
File name: ANABENBS-102FRP
Plot date: 2/23/2010
Plot scale: X:X
Rev: C

AFGHAN NATIONAL ARMY
REGIONAL MILITARY TRAINING CENTER
STANDARD DESIGN

ENLISTED BARRACKS

SECOND FLOOR FRAMING PLAN

Sheet reference number:
S-102

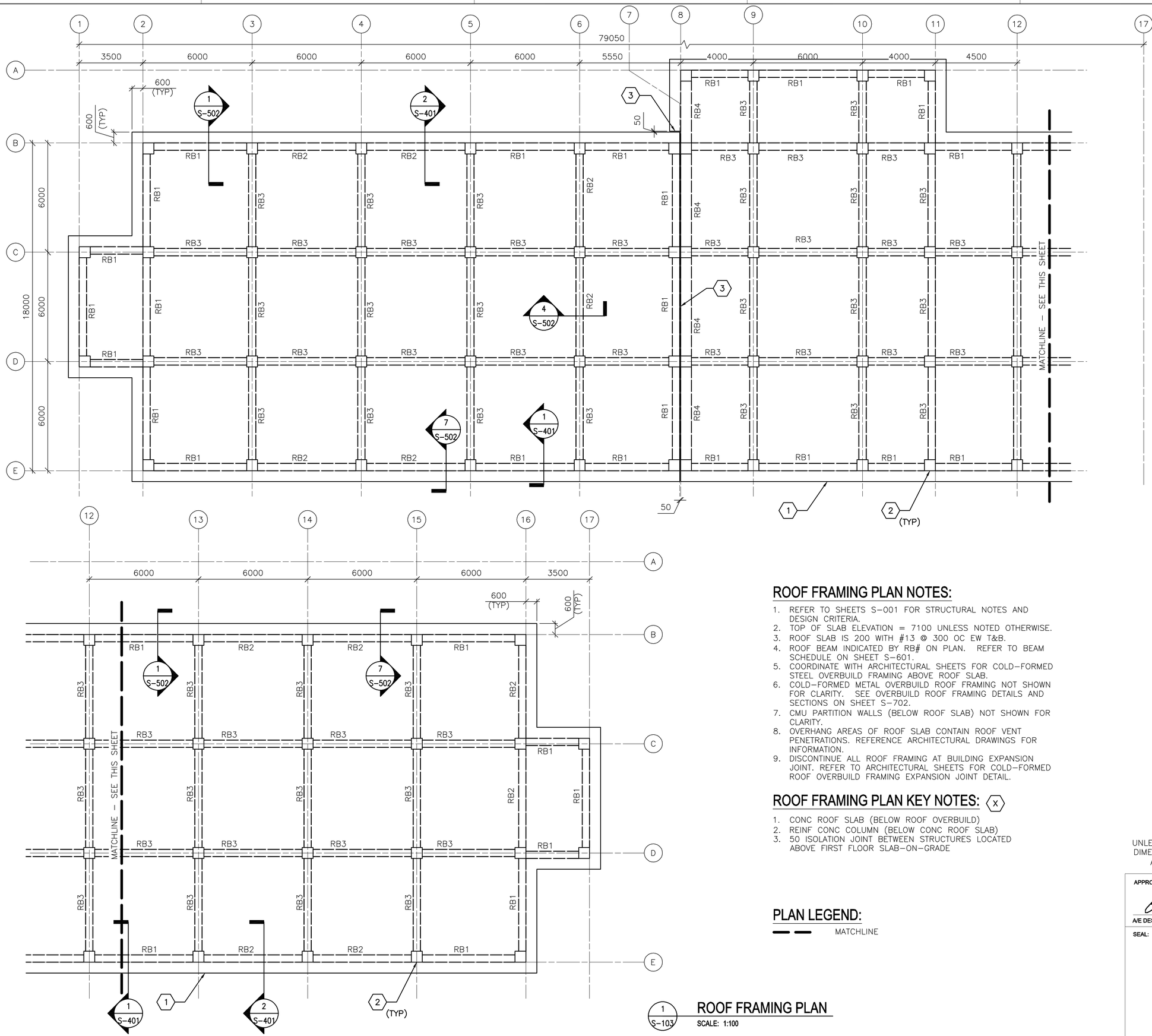





## ROOF FRAMING PLAN NOTES:

1. REFER TO SHEETS S–001 FOR STRUCTURAL NOTES AND DESIGN CRITERIA.
2. TOP OF SLAB ELEVATION = 7100 UNLESS NOTED OTHERWISE.
3. ROOF SLAB IS 200 WITH #13 @ 300 OC EW T&B.
4. ROOF BEAM INDICATED BY RB# ON PLAN. REFER TO BEAM SCHEDULE ON SHEET S–601.
5. COORDINATE WITH ARCHITECTURAL SHEETS FOR COLD–FORMED STEEL OVERBUILD FRAMING ABOVE ROOF SLAB.
6. COLD–FORMED METAL OVERBUILD ROOF FRAMING NOT SHOWN FOR CLARITY. SEE OVERBUILD ROOF FRAMING DETAILS AND SECTIONS ON SHEET S–702.
7. CMU PARTITION WALLS (BELOW ROOF SLAB) NOT SHOWN FOR CLARITY.
8. OVERHANG AREAS OF ROOF SLAB CONTAIN ROOF VENT PENETRATIONS. REFERENCE ARCHITECTURAL DRAWINGS FOR INFORMATION.
9. DISCONTINUE ALL ROOF FRAMING AT BUILDING EXPANSION JOINT. REFER TO ARCHITECTURAL SHEETS FOR COLD–FORMED ROOF OVERBUILD FRAMING EXPANSION JOINT DETAIL.

## ROOF FRAMING PLAN KEY NOTES: (X)

1. CONC ROOF SLAB (BELOW ROOF OVERBUILD)
2. REINF CONC COLUMN (BELOW CONC ROOF SLAB)
3. 50 ISOLATION JOINT BETWEEN STRUCTURES LOCATED ABOVE FIRST FLOOR SLAB–ON–GRADE

## PLAN LEGEND:

MATCHLINE

1 S–103 **ROOF FRAMING PLAN**
SCALE: 1:100

0 2000 4000
SCALE: 1:100

UNLESS OTHERWISE NOTED, LINEAR DIMENSIONS SHOWN ON DRAWINGS ARE IN MILLIMETERS (mm)

APPROVED:

A/E DESIGNER OF RECORD

SEAL:

GEORGIA REGISTERED 1-27-10 No. 27141 PROFESSIONAL ENGINEER CHRISTOPHER W. WHITMORE

US ARMY CORPS OF ENGINEERS
AFGHANISTAN ENGINEER DISTRICT

| Mark | Description | Date | Appr. |
|---|---|---|---|
| | | | |

Date: 2/23/10
Design file no.
Drawing code:
Rev: 0
File name: ANABENBS-103FRP
Plot date: 2/23/2010
Plot scale: x:x

Designed by: KMP/MMY
Dwn by: RCG
Ckd by: CWW
Reviewed by: LHM
Submitted by: BAKER

U.S. ARMY CORPS OF ENGINEERS
AFGHANISTAN ENGINEER DISTRICT
APO AE 96338

*Michael Baker Jr., Inc*
*A unit of Michael Baker Corporation*
Airside Business Park
100 Airside Drive
Moon Township, PA 15108
www.mbakercorp.com

AFGHAN NATIONAL ARMY
REGIONAL MILITARY TRAINING CENTER
STANDARD DESIGN

ENLISTED BARRACKS

ROOF FRAMING PLAN

Sheet reference number:
S–103

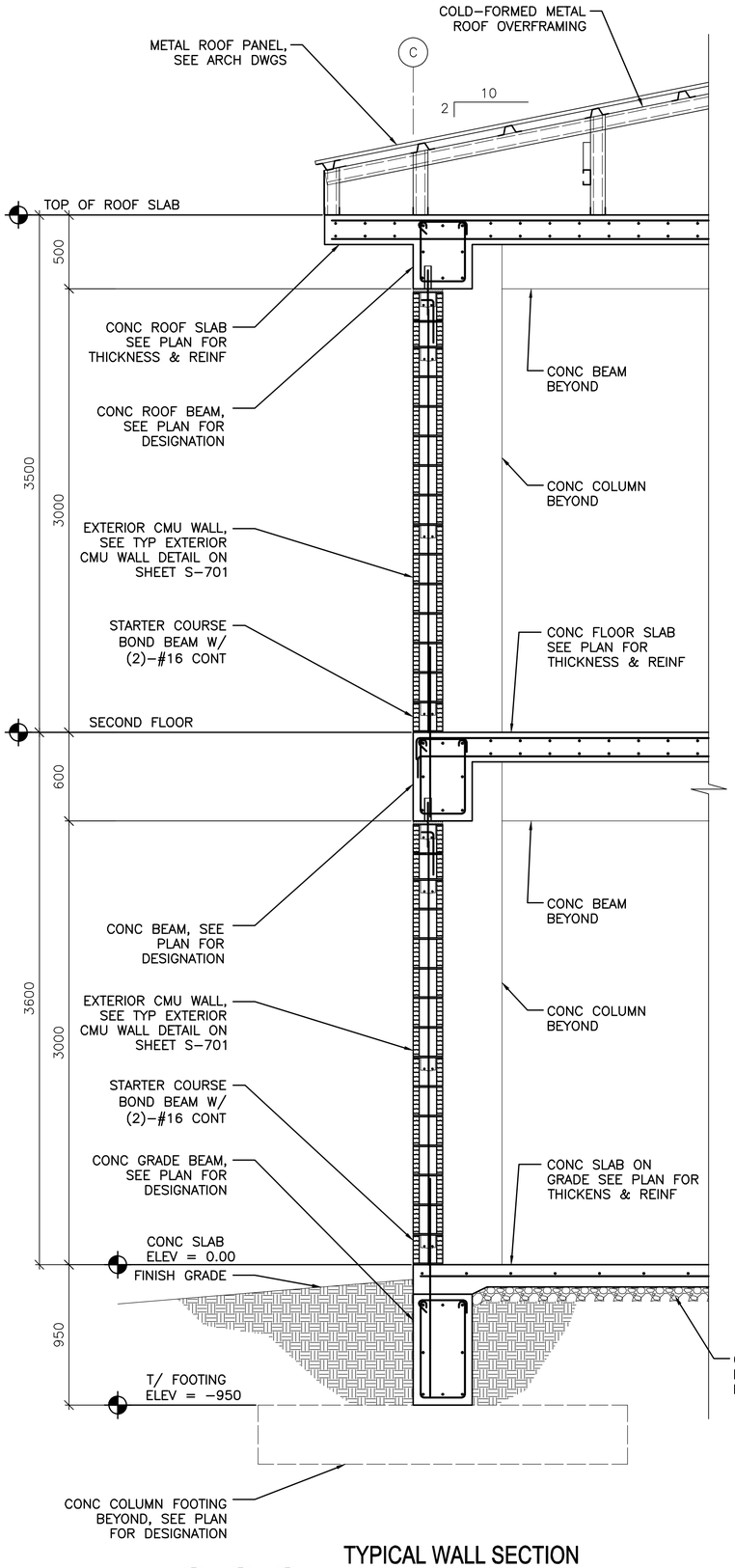


1 S–101 1 S–102 1 S–103

## TYPICAL WALL SECTION AT EXTERIOR MASONRY WALL

SCALE: 1:20

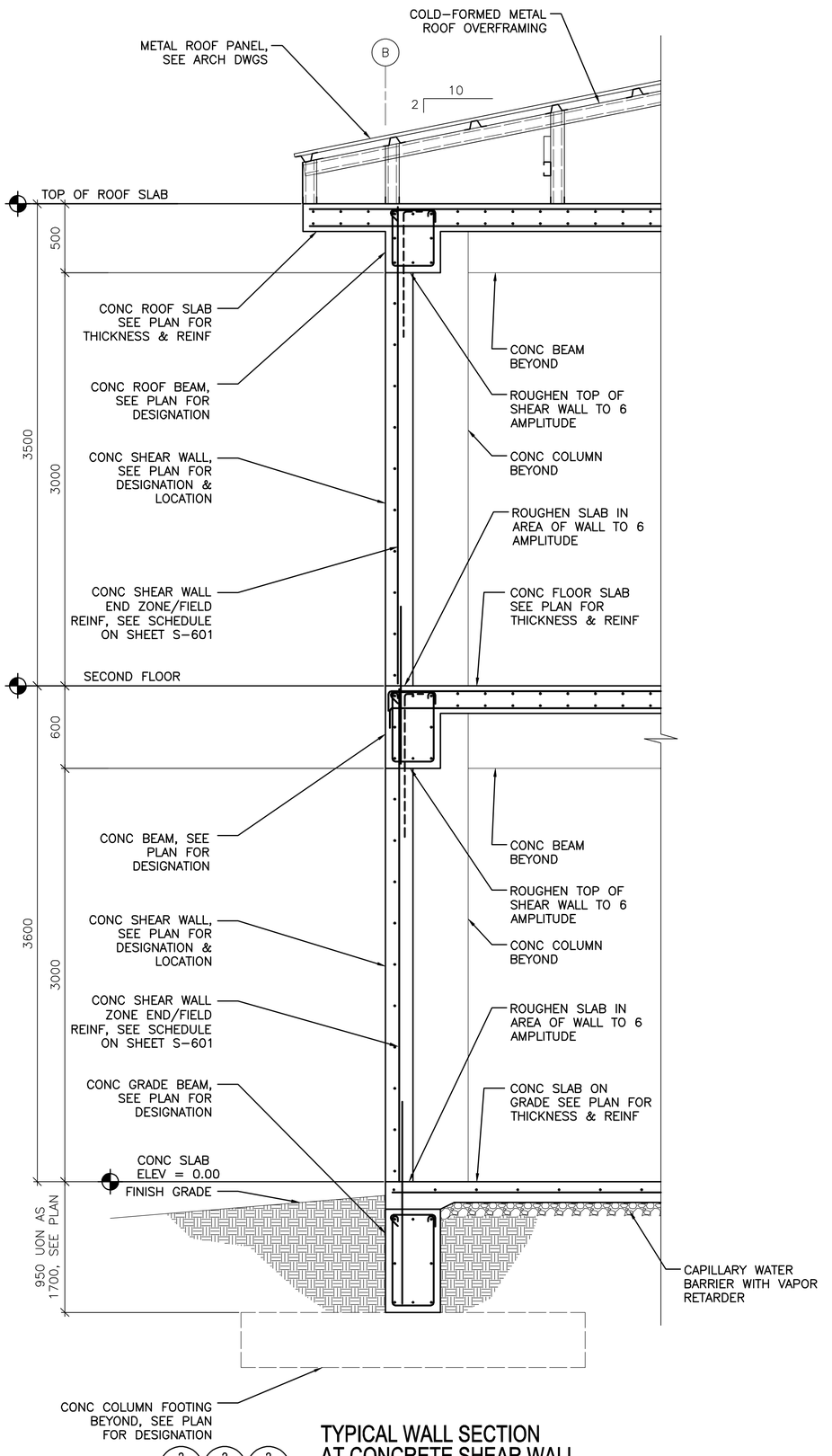


2 S–101 2 S–102 2 S–103

## TYPICAL WALL SECTION AT CONCRETE SHEAR WALL

SCALE: 1:20

0 400 800

SCALE: 1:20

UNLESS OTHERWISE NOTED, LINEAR DIMENSIONS SHOWN ON DRAWINGS ARE IN MILLIMETERS (mm)

APPROVED:

A/E DESIGNER OF RECORD

SEAL:

GEORGIA REGISTERED 2-29-10 No. 27141 PROFESSIONAL ENGINEER CHRISTOPHER W. WHITMORE

US ARMY CORPS OF ENGINEERS
AFGHANISTAN ENGINEER DISTRICT

| Mark | Description | Date | Appr. |
|---|---|---|---|
| | | | |

Rev: 0
Date: 2/23/10
Design file no.
Drawing code:
File name: ANABENBS-401BS
Plot date: 2/23/2010
Plot scale: x:x

Designed by: KMP/MMY
Dwn by: RCG
Ckd by: CWW
Reviewed by: LHM
Submitted by: BAKER

U.S. ARMY CORPS OF ENGINEERS
AFGHANISTAN ENGINEER DISTRICT
APO AE 96338

Michael Baker Jr., Inc
A unit of Michael Baker Corporation
Airside Business Park
100 Airside Drive
Moon Township, PA 15108
www.mbakercorp.com

AFGHAN NATIONAL ARMY
REGIONAL MILITARY TRAINING CENTER
STANDARD DESIGN

ENLISTED BARRACKS

BUILDING SECTIONS

Sheet reference number:
S–401

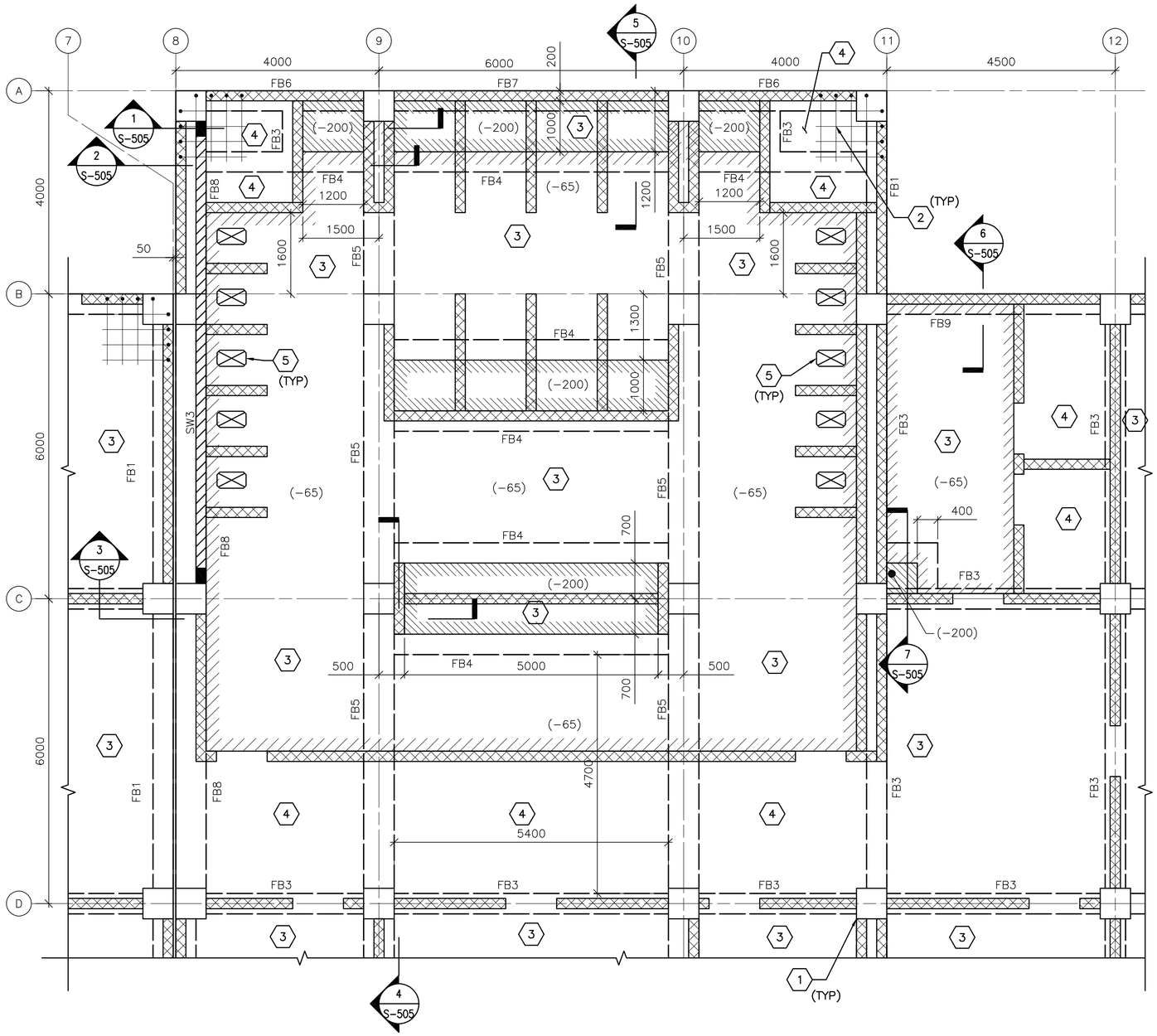


## ENLARGED PORTION OF SECOND FLOOR FRAMING PLAN

1 / S–102

SCALE: 1:50

## SECOND FLOOR FRAMING PLAN NOTES:

1. REFER TO SHEETS S–001 FOR STRUCTURAL NOTES AND DESIGN CRITERIA.
2. TOP OF SLAB ELEVATION = 3600 UNLESS NOTED OTHERWISE.
3. SEE KEY NOTES FOR SLAB THICKNESS & REINFORCING.
4. SECOND FLOOR BEAM INDICATED BY FB# ON PLAN. REFER TO BEAM SCHEDULE ON SHEET S–601.
5. SHEARWALL INDICATED BY SW# ON PLAN, REFER TO SHEARWALL SCHEDULE ON SHEET S–601.
6. SEE TYP EXTERIOR AND INTERIOR CMU WALL REINFORCING DETAILS ON SHEET S–701.
7. SEE ADDITIONAL CONCRETE REINF DETAIL ON SHEET S–701 FOR ADDED REINF @ SLAB OPENINGS.

## SECOND FLOOR FRAMING PLAN KEY NOTES: (X)

1. REINF CONC COLUMN
2. ADD'L REINF @ CONC SLAB CORNERS
3. 200 THICK CONC SLAB WITH #13 @ 300 O.C. EACH WAY TOP & BOTTOM
4. 265 THICK CONC SLAB WITH #13 @ 300 O.C. EACH WAY TOP & BOTTOM
5. OPENING IN CONC SLAB FOR LATRINES. COORDINATE LOCATION WITH ARCH AND PLUMBING DWGS. SEE SLAB OPENING DETAIL ON DWG S–701. COORDINATE SIZE WITH MANUFACTURER.

## PLAN LEGEND:

- REINF CONC SHEAR WALL
- REINF CMU WALL
- INDICATES DROP SLAB 65 BELOW FIN FLOOR
- INDICATES DROP SLAB 200 BELOW FIN FLOOR

0 1000 2000

SCALE: 1:50

UNLESS OTHERWISE NOTED, LINEAR DIMENSIONS SHOWN ON DRAWINGS ARE IN MILLIMETERS (mm)

APPROVED:

A/E DESIGNER OF RECORD

SEAL:

GEORGIA REGISTERED 1-29-10 No. 27141 PROFESSIONAL ENGINEER CHRISTOPHER W. WHITMORE

US ARMY CORPS OF ENGINEERS
AFGHANISTAN ENGINEER DISTRICT

| Mark | Description | Date | Appr. |
|---|---|---|---|
| | | | |

| Designed by: KMP/MMY | Date: 2/23/10 | Rev: 0 |
|---|---|---|
| Dwn by: RCG | Ckd by: CWW | |
| Reviewed by: LHM | Drawing code: | |
| Submitted by: BAKER | Design file no. | |
| | File name: ANABENBS-402EP | |
| | Plot date: 2/23/2010 | |
| | Plot scale: x:x | |

U.S. ARMY CORPS OF ENGINEERS
AFGHANISTAN ENGINEER DISTRICT
APO AE 96338

*Michael Baker Jr., Inc*
*A unit of Michael Baker Corporation*
Airside Business Park
100 Airside Drive
Moon Township, PA 15108
www.mbakercorp.com

AFGHAN NATIONAL ARMY
REGIONAL MILITARY TRAINING CENTER
STANDARD DESIGN

ENLISTED BARRACKS

ENLARGED 2ND FLOOR FRAMING PLAN

Sheet reference number:
S–402

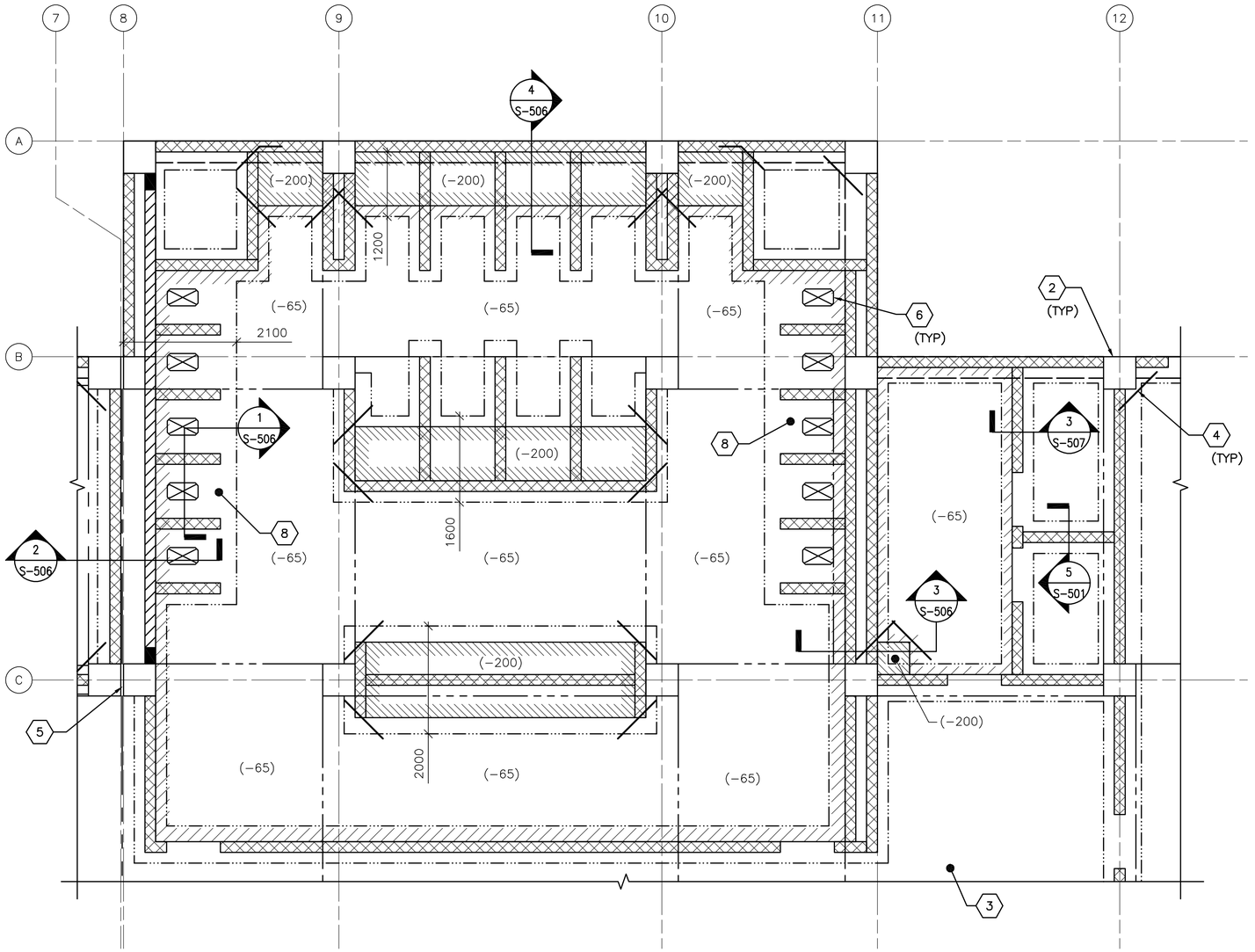


1 S-101 **ENLARGED LATRINE SLAB PLAN**

SCALE: 1:50

## ENLARGED PLAN NOTES:

1. REFER TO SHEET S-001 FOR STRUCTURAL NOTES AND DESIGN CRITERIA.
2. FINISH FIRST FLOOR ELEVATION SHALL BE (DATUM 0.00MM) ALL PLUS OR MINUS DIMENSIONS INDICATED ON PLAN OR REFERRED TO IN NOTES RELATE TO FINISH FIRST FLOOR ELEVATION.
3. SLAB-ON-GRADE IS 150 WITH #13 @ 300 OC EW LOCATED 38 FROM T/SLAB UON. WHERE NOTED, 300 SLAB-ON-GRADE SHALL BE REINFORCED W/ #13 @300 OC EW T&B.
4. REFER TO FOUNDATION/SLAB PLAN ON SHEET S-101 FOR COLUMN DESIGNATION AND COLUMN SCHEDULE ON SHEET S-601.
5. REFER TO FOUNDATION/SLAB PLAN ON SHEET S-101 FOR SHEARWALL DESIGNATION AND SHEARWALL SCHEDULE ON SHEET S-601.
6. REFER TO FOUNDATION/SLAB PLAN ON SHEET S-101 FOR GRADE BEAM DESIGNATION AND GRADE BEAM SCHEDULE ON SHEET S-601.
7. SEE TYP EXTERIOR AND INTERIOR CMU WALL REINFORCING DETAILS ON SHEET S-701.

## ENLARGED PLAN KEYNOTES: (X)

1. NOT USED.
2. REINF CONC COLUMN
3. REINF CONC SLAB-ON-GRADE
4. (2)-#13 @ RE-ENTRANT CORNERS - SEE S-701 FOR INFORMATION
5. 50 ISOLATION JOINT BETWEEN STRUCTURES LOCATED ABOVE FIRST FLOOR SLAB-ON-GRADE
6. OPENING IN SLAB FOR LATRINE. COORDINATE LOCATION WITH ARCH AND PLUMBING DWGS. SEE SLAB OPENING DETAIL ON DWG S-701. COORDINATE SIZE WITH MANUFACTURER.
7. NOT USED.
8. 300 SLAB-ON-GRADE

## PLAN LEGEND:

- REINF CONC SHEAR WALL
- REINF CMU WALL
- CONTROL JOINT
- INDICATES DROP SLAB 65 BELOW FINISH FLOOR
- INDICATES DROP SLAB 200 BELOW FINISH FLOOR
- SLAB OPENING
- OUTLINE OF THICKENED SLAB AREAS
- GRADE BEAM

0 1000 2000
SCALE: 1:50

UNLESS OTHERWISE NOTED, LINEAR DIMENSIONS SHOWN ON DRAWINGS ARE IN MILLIMETERS (mm)

APPROVED:

A/E DESIGNER OF RECORD

SEAL:

GEORGIA REGISTERED 1-29-10 No. 27141 PROFESSIONAL ENGINEER CHRISTOPHER W. WHITMORE

US ARMY CORPS OF ENGINEERS
AFGHANISTAN ENGINEER DISTRICT

| Mark | Description | Date | Appr. |
|---|---|---|---|
| | | | |

Rev: 0
Date: 2/23/10
Design file no.
Drawing code:
File name: ANABENBS-404EP
Plot date: 2/23/2010
Plot scale: x:x

Designed by: KMP/MMY
Dwn by: RCG
Ckd by: CWW
Reviewed by: LHM
Submitted by: BAKER

U.S. ARMY CORPS OF ENGINEERS
AFGHANISTAN ENGINEER DISTRICT
APO AE 96338

Michael Baker Jr., Inc
A unit of Michael Baker Corporation
Airside Business Park
100 Airside Drive
Moon Township, PA 15108
www.mbakercorp.com

AFGHAN NATIONAL ARMY
REGIONAL MILITARY TRAINING CENTER
STANDARD DESIGN

ENLISTED BARRACKS

ENLARGED LATRINE SLAB PLAN

Sheet reference number:
S-403

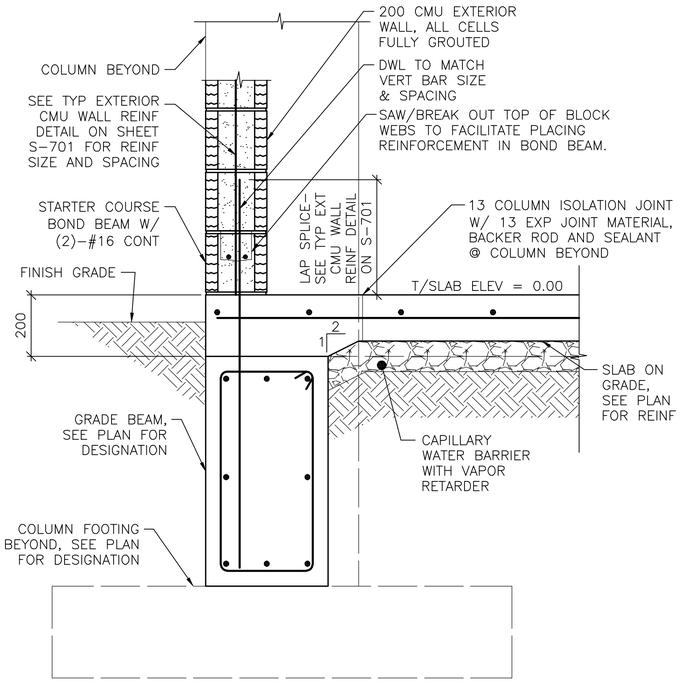


NOTE:
1. SECTION IS SIMILAR FOR INTERIOR CMU PARTITIONS OVER GRADE BEAMS SHOWING THICKENED 200 CONC SLAB AREA.

1 S-101 **SECTION** SCALE: 1:10

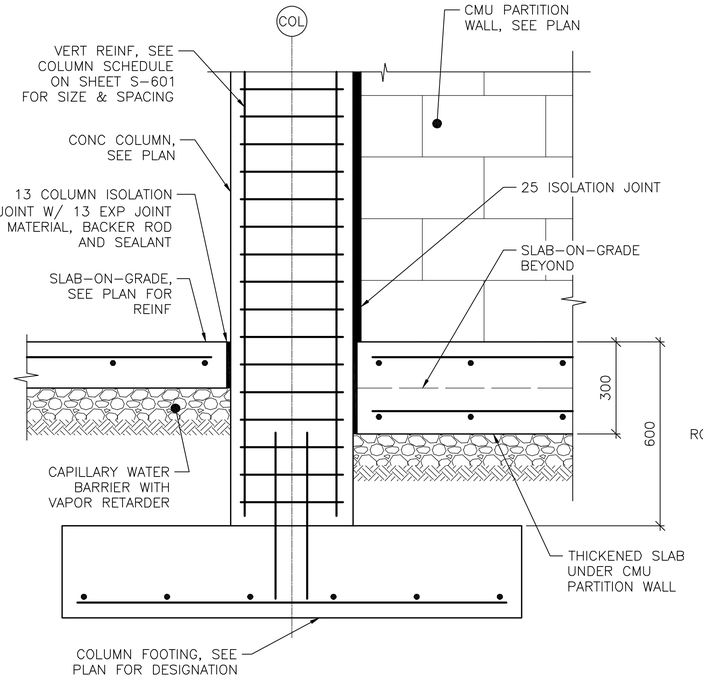


2 S-101 **SECTION** SCALE: 1:10

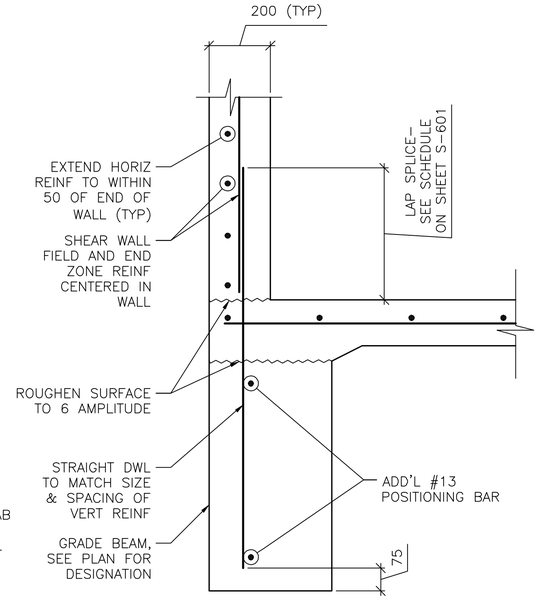


NOTES:
1. SECTION DEPICTS SHEAR WALL TERMINATION ONLY. GRADE BEAM REINFORCING NOT SHOWN FOR CLARITY
2. SEE SHEET S-601 AND SHEET S-702 FOR SCHEDULED FIELD AND END ZONE REINF.

3 S-101 **SECTION** SCALE: 1:10

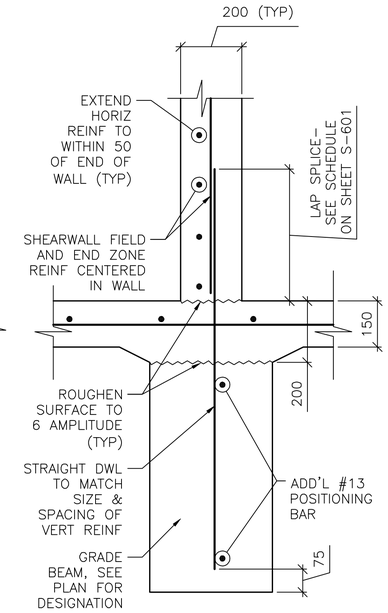


NOTE:
1. SECTION DEPICTS SHEAR WALL TERMINATION ONLY. GRADE BEAM REINFORCING NOT SHOWN FOR CLARITY
2. SEE SHEET S-601 AND SHEET S-702 FOR SCHEDULED FIELD AND END ZONE REINF.

4 S-101 **SECTION** SCALE: 1:10

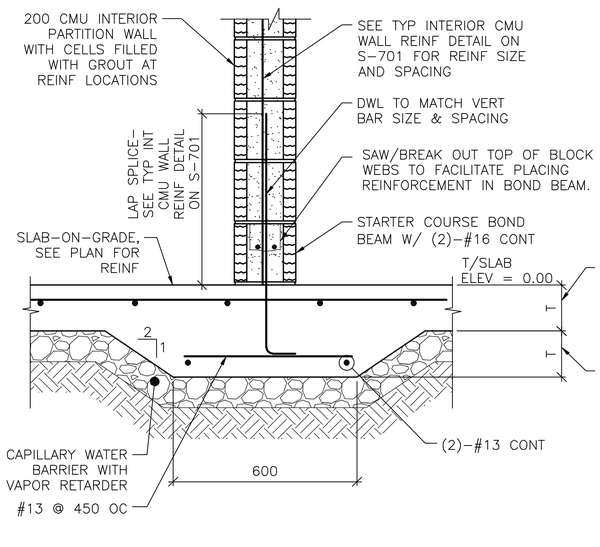


5 S-403 **SECTION** SCALE: 1:10

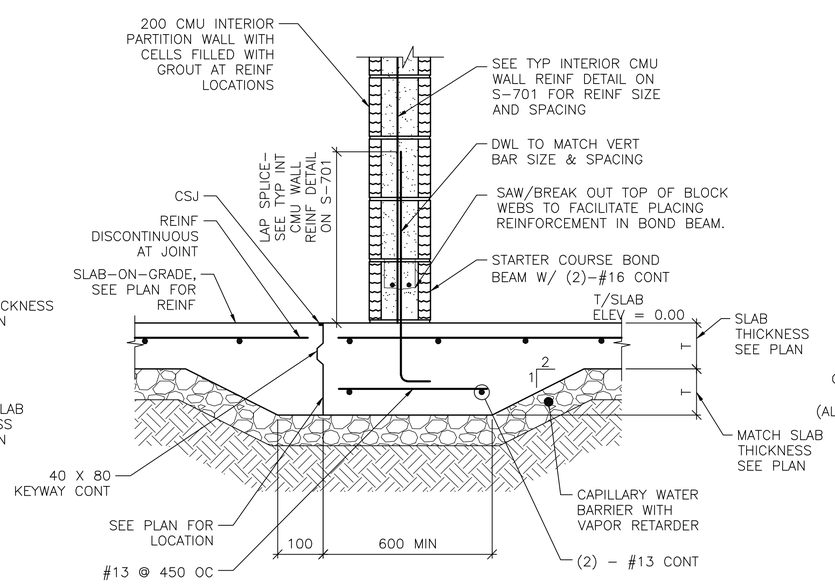


6 S-101 **SECTION** SCALE: 1:10

NOTE:
1. DETAIL IS APPLICABLE AT CONTROL JOINTS RUNNING PARALLEL TO CMU WALLS AND WITHIN 300 OF FACE OF WALL.

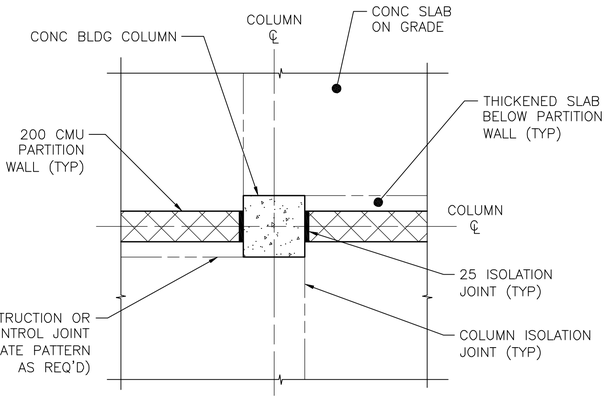


A S-501 **COLUMN ISOLATION JOINT DETAIL** SCALE: NTS

0 200 400
SCALE: 1:10

UNLESS OTHERWISE NOTED, LINEAR DIMENSIONS SHOWN ON DRAWINGS ARE IN MILLIMETERS (mm)

APPROVED:

A/E DESIGNER OF RECORD

SEAL:

GEORGIA REGISTERED 3-22-10 No. 27141 PROFESSIONAL ENGINEER CHRISTOPHER W. WHITMORE

US ARMY CORPS OF ENGINEERS
AFGHANISTAN ENGINEER DISTRICT

| Mark | Description | Date | Appr. |
|---|---|---|---|

Rev: 0
Date: 2/23/10
Design file no.
Drawing code:
File name: ANABENBS-S015C
Plot date: 2/23/2010
Plot scale: x:x

Designed by: KMP/MMY
Dwn by: RCG
Ckd by: CWW
Reviewed by: LHM
Submitted by: BAKER

U.S. ARMY CORPS OF ENGINEERS
AFGHANISTAN ENGINEER DISTRICT
APO AE 96338

*Michael Baker Jr., Inc*
*A unit of Michael Baker Corporation*
Airside Business Park
100 Airside Drive
Moon Township, PA 15108
www.mbakercorp.com

AFGHAN NATIONAL ARMY
REGIONAL MILITARY TRAINING CENTER
STANDARD DESIGN

ENLISTED BARRACKS

FOUNDATION SECTIONS

Sheet reference number:
S-501

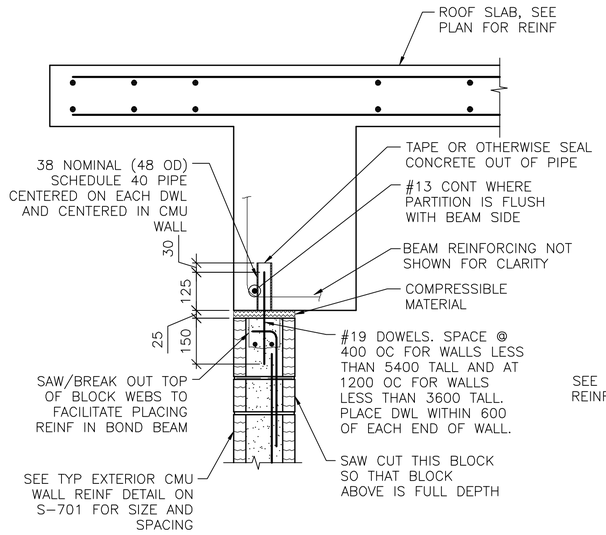


NOTES:
1. EXTEND DOWEL REINF TO 25 CLEAR FROM TOP OF CMU WALL.

1 S-103 **SECTION** SCALE: 1:10

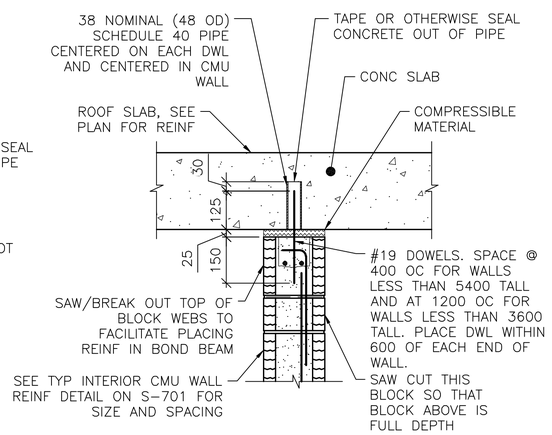


NOTES:
1. EXTEND DOWEL REINF TO 25 CLEAR FROM TOP OF CMU WALL.
2. SLAB REINF NOT SHOWN FOR CLARITY.
3. CMU WALL ABOVE SLAB NOT SHOWN FOR CLARITY.

2 S-102 **SECTION** SCALE: 1:10

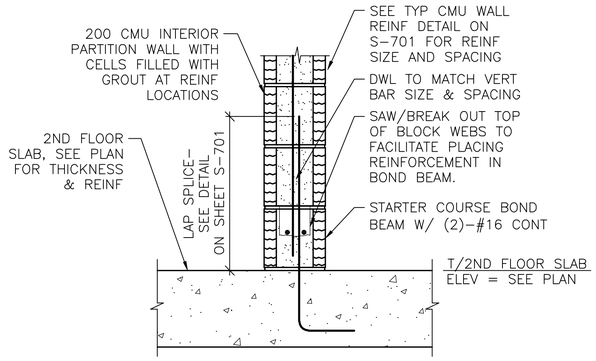


NOTES:
1. SEE PLAN FOR LOCATION OF PARTITION WALLS.
2. SLAB REINF NOT SHOWN FOR CLARITY.

3 S-102 **SECTION** SCALE: 1:10

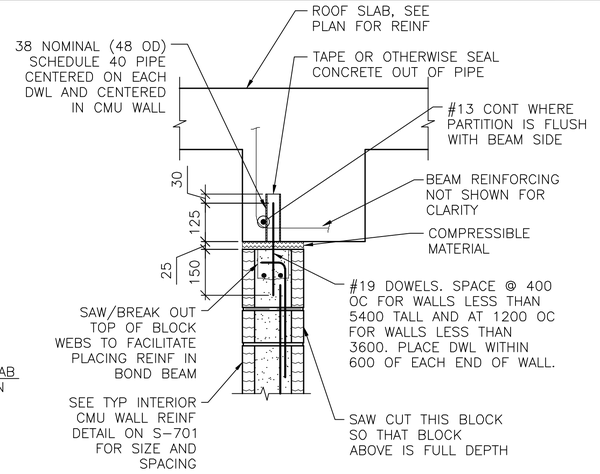


NOTES:
1. EXTEND DOWEL REINF TO 25 CLEAR FROM TOP OF CMU WALL.
2. PARTITION WALL MAY BE CENTERED UNDER THE BEAM OR FLUSH AS SHOWN. SEE PLAN FOR LOCATION.
3. SLAB REINF NOT SHOWN FOR CLARITY.

4 S-103 **SECTION** SCALE: 1:10




NOTES:
1. EXTEND DOWEL REINF TO 25 CLEAR FROM TOP OF CMU WALL.
2. BEAM/SLAB REINF NOT SHOWN FOR CLARITY.

5 S-102 **SECTION** SCALE: 1:10




NOTES:
1. TERMINATE "FIELD" VERT REINF & END ZONE REINF @ 50 CLEAR FROM TOP OF ROOF SLAB.
2. WHERE END ZONE REINFORCING CANNOT BE DEVELOPED IN BEAM DEPTH, PROVIDE HOOKED DWLS SAME SIZE & SPACING. PROVIDE TENSION LAP BELOW ROOF BEAM (TYP AT UPPER AND LOWER SHEAR WALL TERMINATIONS).

6 S-102 **SECTION** SCALE: 1:10

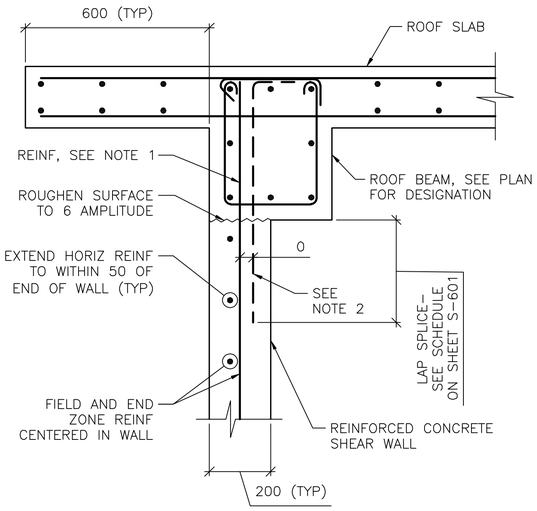


NOTES:
1. TERMINATE "FIELD" VERT REINF & END ZONE REINF @ 50 CLEAR FROM TOP OF ROOF SLAB.
2. WHERE END ZONE REINFORCING CANNOT BE DEVELOPED IN BEAM DEPTH, PROVIDE HOOKED DWLS SAME SIZE & SPACING. PROVIDE TENSION LAP BELOW ROOF BEAM.
3. SEE SHEET S-601 AND SHEET S-702 FOR SCHEDULED FIELD AND END ZONE REINF.

7 S-103 **SECTION** SCALE: 1:10

0 200 400
SCALE: 1:10

UNLESS OTHERWISE NOTED, LINEAR DIMENSIONS SHOWN ON DRAWINGS ARE IN MILLIMETERS (mm)

APPROVED:

A/E DESIGNER OF RECORD

SEAL:

GEORGIA REGISTERED 1-23-10 No. 27141 PROFESSIONAL ENGINEER CHRISTOPHER W. WHITMORE

US ARMY CORPS OF ENGINEERS
AFGHANISTAN ENGINEER DISTRICT

| Mark | Description | Date | Appr. |
|---|---|---|---|
| | | | |

| Rev: 0 | Date: 2/23/10 | Designed by: KMF/MMY | Dwn by: RCG | Reviewed by: LHM | Submitted by: BAKER |
|---|---|---|---|---|---|
| | Design file no. | Chkd by: CWW | Drawing code: | File name: ANABENBS-S025C | Plot date: 2/23/2010 |
| | | | | | Plot scale: X:X |

U.S. ARMY CORPS OF ENGINEERS
AFGHANISTAN ENGINEER DISTRICT
APO AE 96338

*Michael Baker Jr., Inc.*
*A unit of Michael Baker Corporation*
Airside Business Park
100 Airside Drive
Moon Township, PA 15108
www.mbakercorp.com

AFGHAN NATIONAL ARMY
REGIONAL MILITARY TRAINING CENTER
STANDARD DESIGN

ENLISTED BARRACKS

FRAMING SECTIONS

Sheet reference number:
S-502

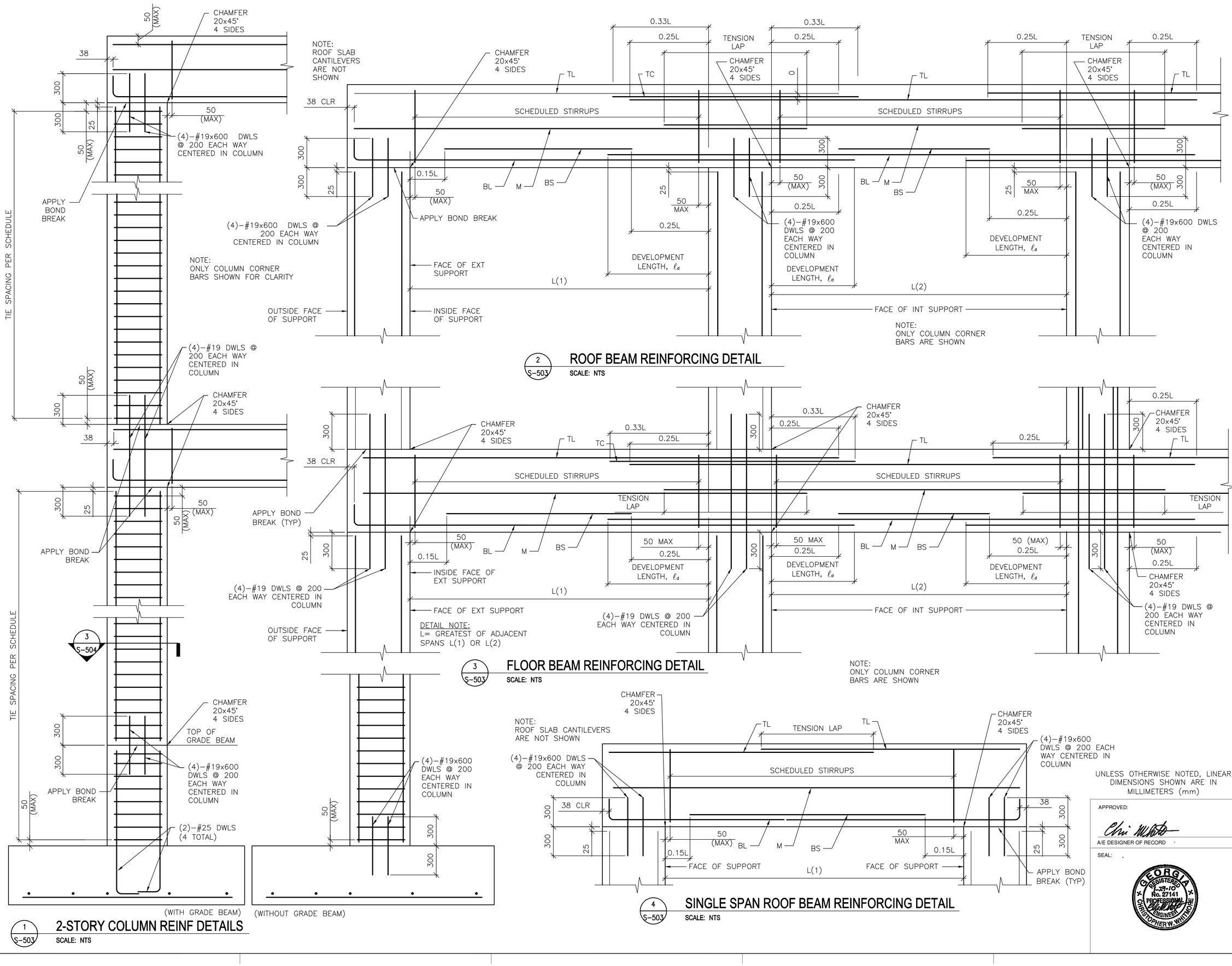


## 2-STORY COLUMN REINF DETAILS

1 S-503 SCALE: NTS

## ROOF BEAM REINFORCING DETAIL

2 S-503 SCALE: NTS

## FLOOR BEAM REINFORCING DETAIL

3 S-503 SCALE: NTS

## SINGLE SPAN ROOF BEAM REINFORCING DETAIL

4 S-503 SCALE: NTS

APPROVED:

A/E DESIGNER OF RECORD

SEAL:

GEORGIA REGISTERED 1-29-10 No. 27141 PROFESSIONAL ENGINEER CHRISTOPHER W. WHITMORE

US ARMY CORPS OF ENGINEERS
AFGHANISTAN ENGINEER DISTRICT

| Mark | Description | Date | Appr. |
|---|---|---|---|

AFGHAN NATIONAL ARMY
REGIONAL MILITARY TRAINING CENTER
STANDARD DESIGN

ENLISTED BARRACKS

BEAM & COLUMN DETAILS

Rev. 0
Date: 2/23/10
Design file no.
Drawing code:
Designed by: KMP/MMY
Drwn by: RCG
Ckd by: CWW
Reviewed by: LHM
Submitted by: BAKER
File name: ANABENR5.93DT
Plot date: 2/23/2010
Plot scale: X:X

U.S. ARMY CORPS OF ENGINEERS
AFGHANISTAN ENGINEER DISTRICT
APO AE 96338

Michael Baker Jr., Inc
A unit of Michael Baker Corporation
Airside Business Park
100 Airside Drive
Moon Township, PA 15108
www.mbakercorp.com

Sheet reference number:
S–503

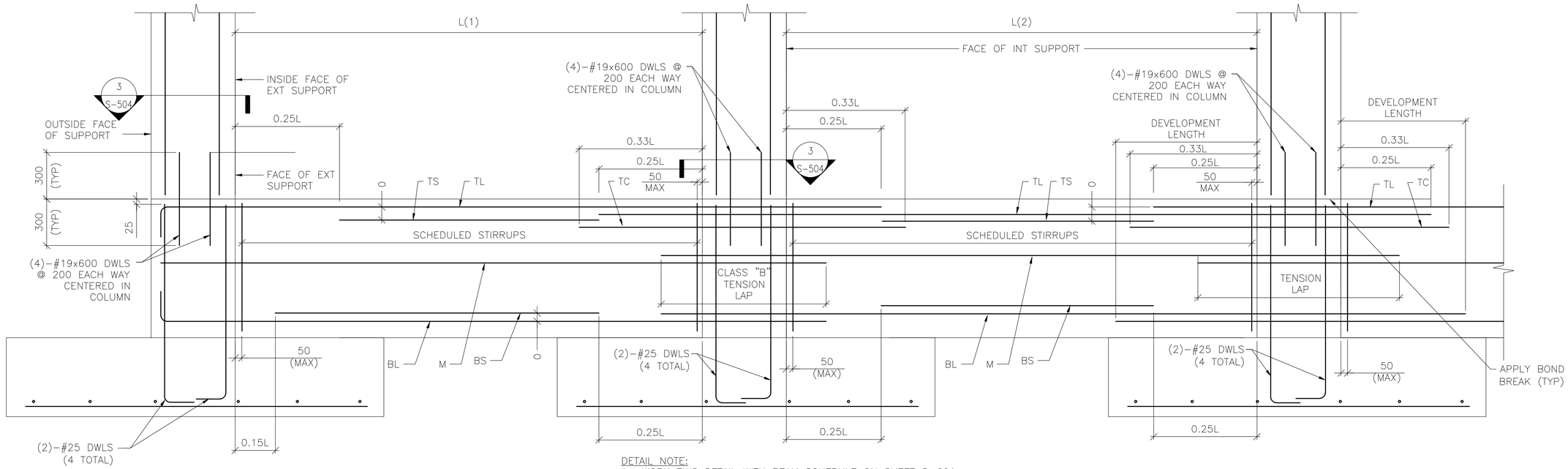


DETAIL NOTE:
1. WORK THIS DETAIL WITH BEAM SCHEDULE ON SHEET S-601.
2. L=GREATEST OF ADJACENT SPANS L(1) OR L(2)
3. ONLY COLUMN CORNER BARS ARE SHOWN.

1 S-504 **GRADE BEAM REINFORCING DETAIL**

**SCALE: NTS**

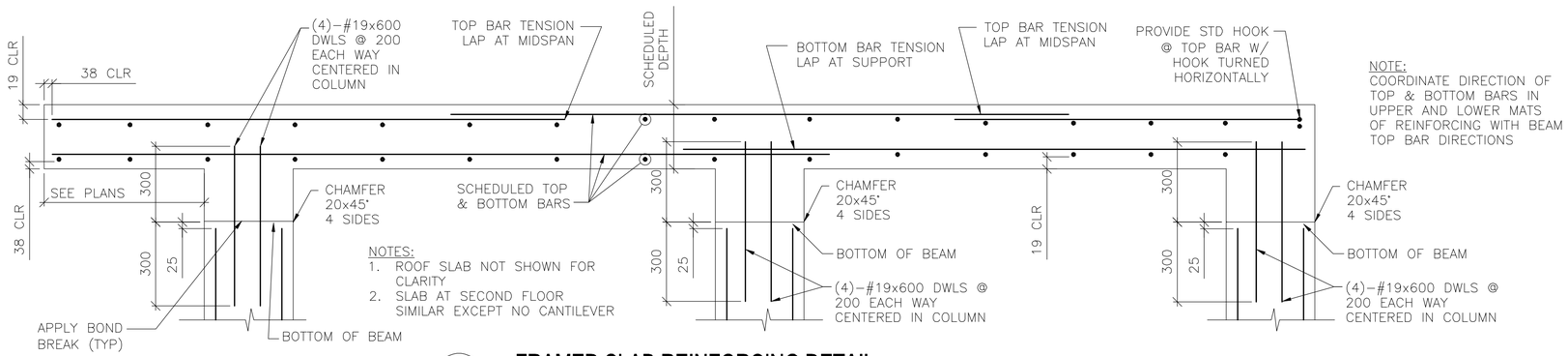


NOTES:
1. ROOF SLAB NOT SHOWN FOR CLARITY
2. SLAB AT SECOND FLOOR SIMILAR EXCEPT NO CANTILEVER

NOTE:
COORDINATE DIRECTION OF TOP & BOTTOM BARS IN UPPER AND LOWER MATS OF REINFORCING WITH BEAM TOP BAR DIRECTIONS

2 S-504 **FRAMED SLAB REINFORCING DETAIL**

**SCALE: NTS**

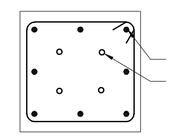


DETAIL NOTE:
1. INTERIOR TIES NOT SHOWN FOR CLARITY. REFER TO DETAILS A & B THIS SHEET FOR INTERIOR TIE CONFIGURATION

3 S-503 3 S-504 **SECTION**

**SCALE: NTS**

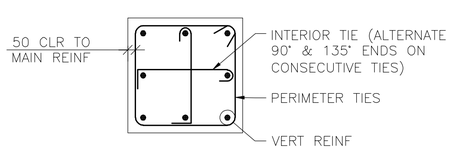


A S-504 **8 BAR COLUMN**

**SCALE: NTS**

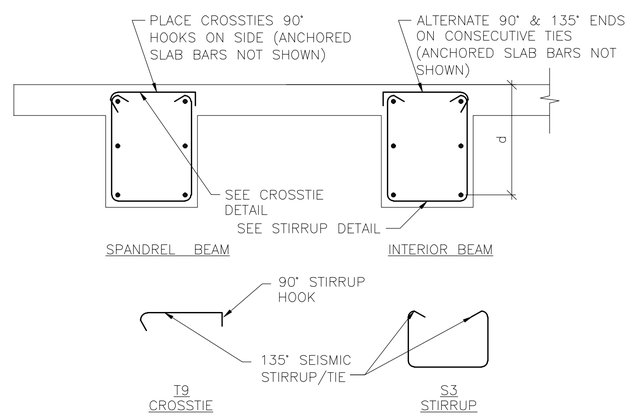


B S-504 **BEAM REINFORCEMENT DETAILS**

**SCALE: NTS**

UNLESS OTHERWISE NOTED, LINEAR DIMENSIONS SHOWN ARE IN MILLIMETERS (mm)

APPROVED:

A/E DESIGNER OF RECORD

SEAL:

GEORGIA REGISTERED 1-27-10 No. 27141 PROFESSIONAL ENGINEER CHRISTOPHER W. WHITMORE

US ARMY CORPS OF ENGINEERS
AFGHANISTAN ENGINEER DISTRICT

| Mark | Description | Date | Appr |
|---|---|---|---|
| | | | |
| | | | |
| | | | |
| | | | |
| | | | |
| | | | |
| | | | |
| | | | |
| | | | |
| | | | |

Rev: 0
Date: 2/23/10
Design file no.
Drawing code:
File name: ANABENBS-504DT
Plot date: 2/23/2010
Plot scale: X:X

Designed by: KMP/MMY
Dwn by: RCG
Ckd by: CWW
Reviewed by: LHM
Submitted by: BAKER

U.S. ARMY CORPS OF ENGINEERS
AFGHANISTAN ENGINEER DISTRICT
APO AE 96338

*Michael Baker Jr., Inc*
*A unit of Michael Baker Corporation*
Airside Business Park
100 Airside Drive
Moon Township, PA 15108
www.mbakercorp.com

AFGHAN NATIONAL ARMY
REGIONAL MILITARY TRAINING CENTER
STANDARD DESIGN

ENLISTED BARRACKS

BEAM & COLUMN DETAILS

Sheet reference number:
S-504

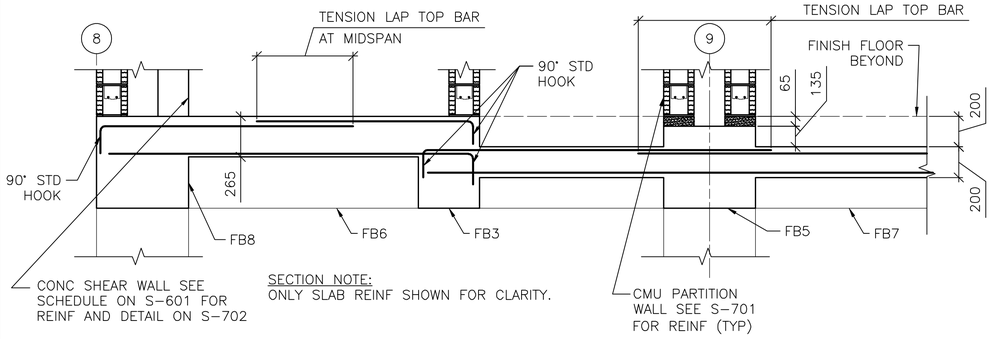


SECTION NOTE:
ONLY SLAB REINF SHOWN FOR CLARITY.

1 S-402 **SECTION**
SCALE: 1:20

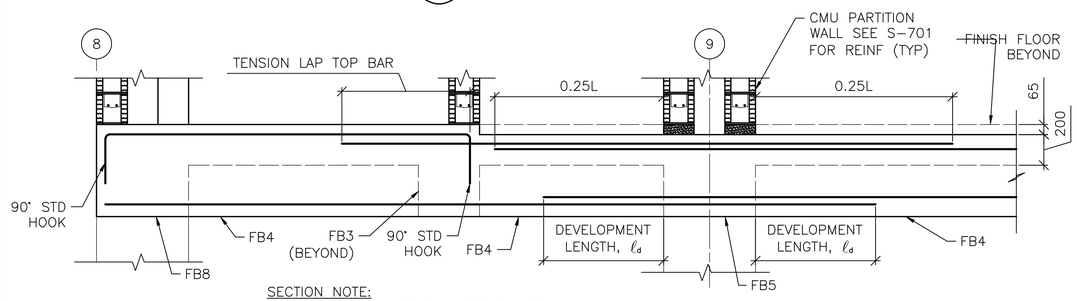


SECTION NOTE:
ONLY BEAM REINF SHOWN FOR CLARITY.

2 S-402 **SECTION**
SCALE: 1:20

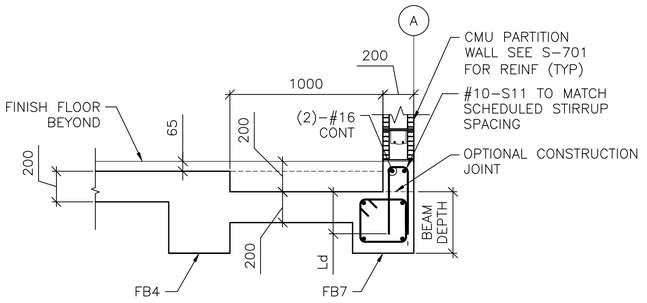


SECTION NOTE:
SLAB REINF NOT SHOWN FOR CLARITY.

5 S-402 **SECTION**
SCALE: 1:10

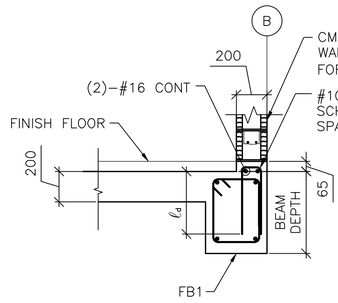


SECTION NOTE:
SLAB REINF NOT SHOWN FOR CLARITY.

6 S-402 **SECTION**
SCALE: 1:10

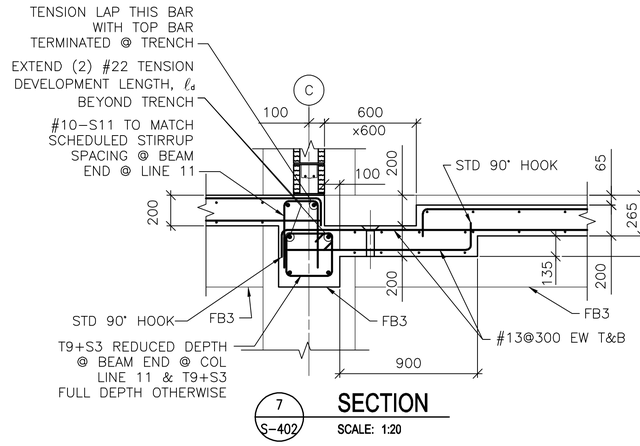


7 S-402 **SECTION**
SCALE: 1:20

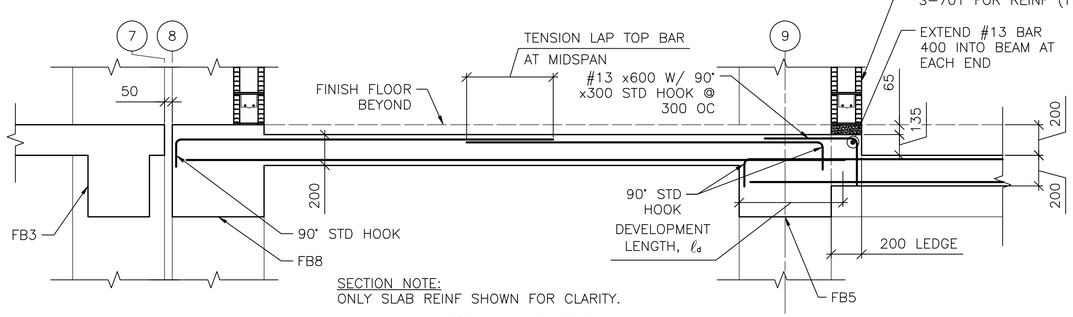


SECTION NOTE:
ONLY SLAB REINF SHOWN FOR CLARITY.

3 S-402 **SECTION**
SCALE: 1:20

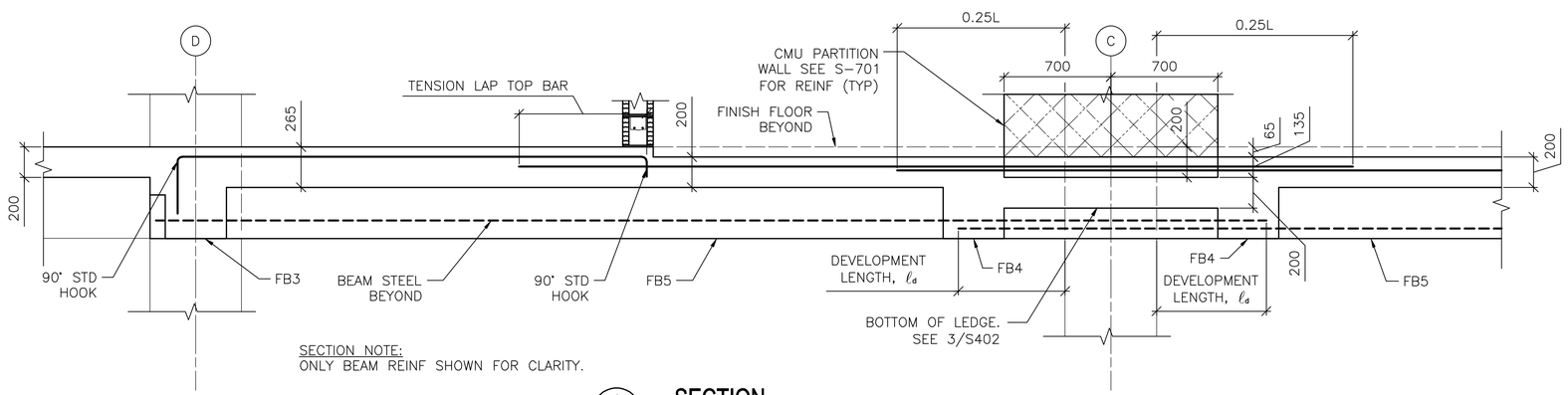


SECTION NOTE:
ONLY BEAM REINF SHOWN FOR CLARITY.

4 S-402 **SECTION**
SCALE: 1:20

0 400 800
SCALE: 1:20

UNLESS OTHERWISE NOTED,
LINEAR DIMENSIONS SHOWN ARE
IN MILLIMETERS (mm)

APPROVED:

A/E DESIGNER OF RECORD .

SEAL: .

GEORGIA REGISTERED 1-29-10 No. 27141 PROFESSIONAL ENGINEER CHRISTOPHER W. WHITMORE

US ARMY CORPS
OF ENGINEERS
AFGHANISTAN
ENGINEER DISTRICT

| Mark | Description | Date | Appr. | Mark | Description | Date | Appr. |
|---|---|---|---|---|---|---|---|
| | | | | | | | |

Rev: 0
Date: 2/23/10
Design file no.
Drawing code:
File name: ANABENBS-S505C
Plot date: 2/23/2010
Plot scale: x/x

Designed by: KMP/MMY
Dwn by: RCG
Ckd by: CWW
Reviewed by: LHM
Submitted by: BAKER

U.S. ARMY CORPS OF ENGINEERS
AFGHANISTAN ENGINEER DISTRICT
APO AE 96338

Michael Baker Jr., Inc
A unit of Michael Baker Corporation
Airside Business Park
100 Airside Drive
Moon Township, PA 15108
www.mbakercorp.com

AFGHAN NATIONAL ARMY
REGIONAL MILITARY TRAINING CENTER
STANDARD DESIGN

ENLISTED BARRACKS

SECTIONS AND DETAILS

Sheet reference number:
S-505

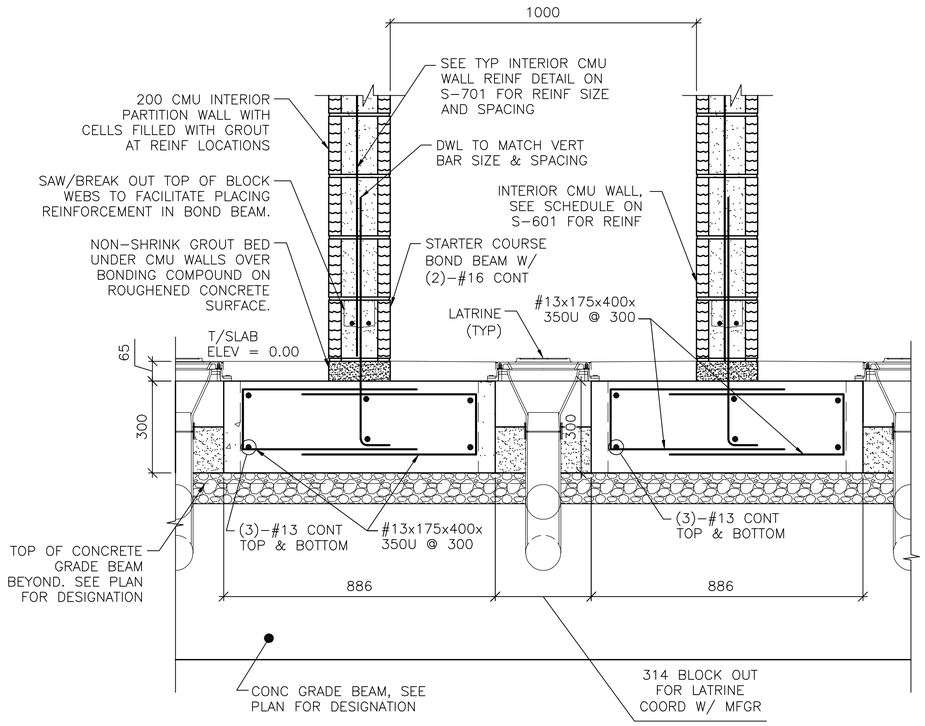


1 S-403 **SECTION**
SCALE: 1:10

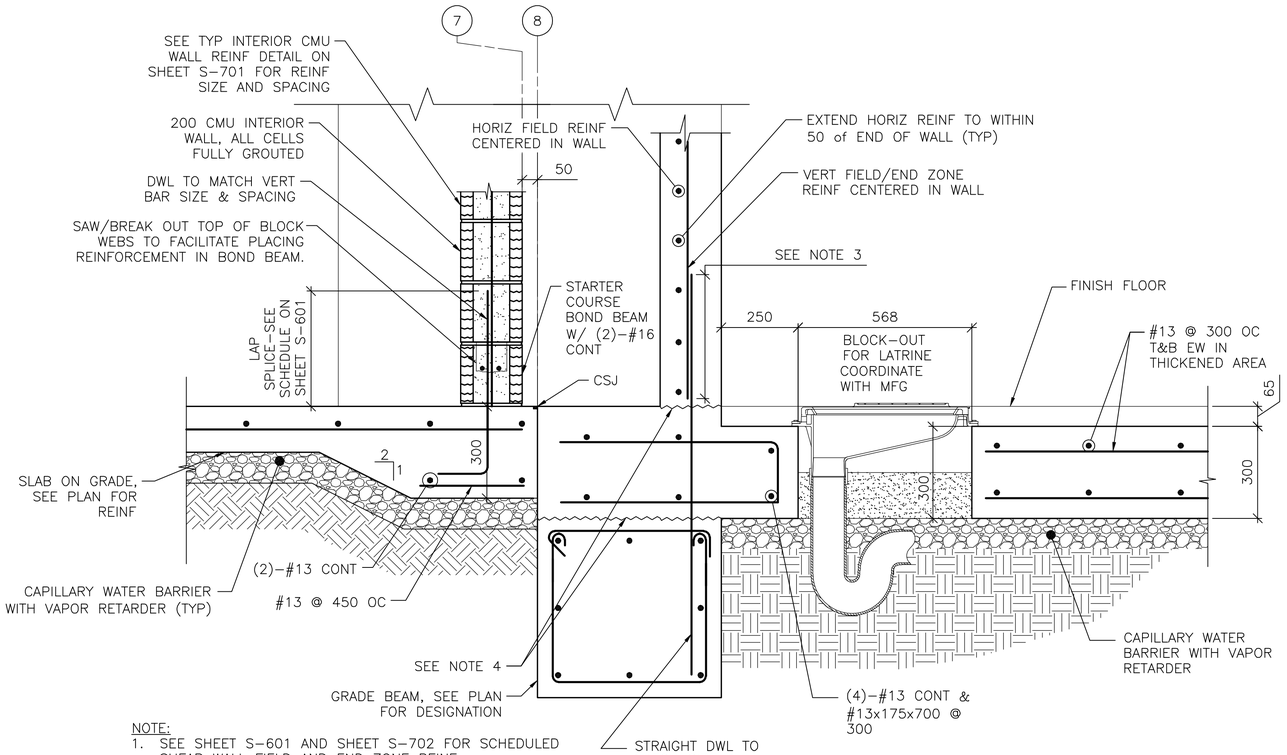


NOTE:
1. SEE SHEET S-601 AND SHEET S-702 FOR SCHEDULED SHEAR WALL FIELD AND END ZONE REINF.
2. STALL PARTITION WALLS NOT SHOWN FOR CLARITY.
3. SEE SCHEDULE ON SHEET S-601 FOR LAP SPLICE DIMS.
4. ROUGHEN SURFACE TO 6 AMPLITUDE.

2 S-403 **SECTION**
SCALE: 1:10

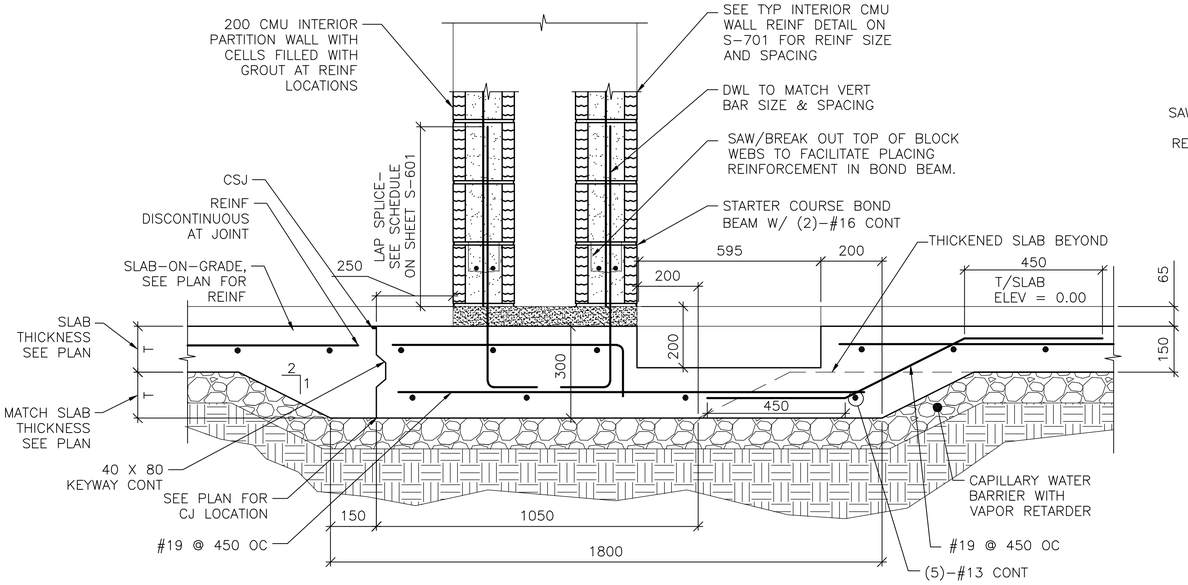


3 S-403 **SECTION**
SCALE: 1:10

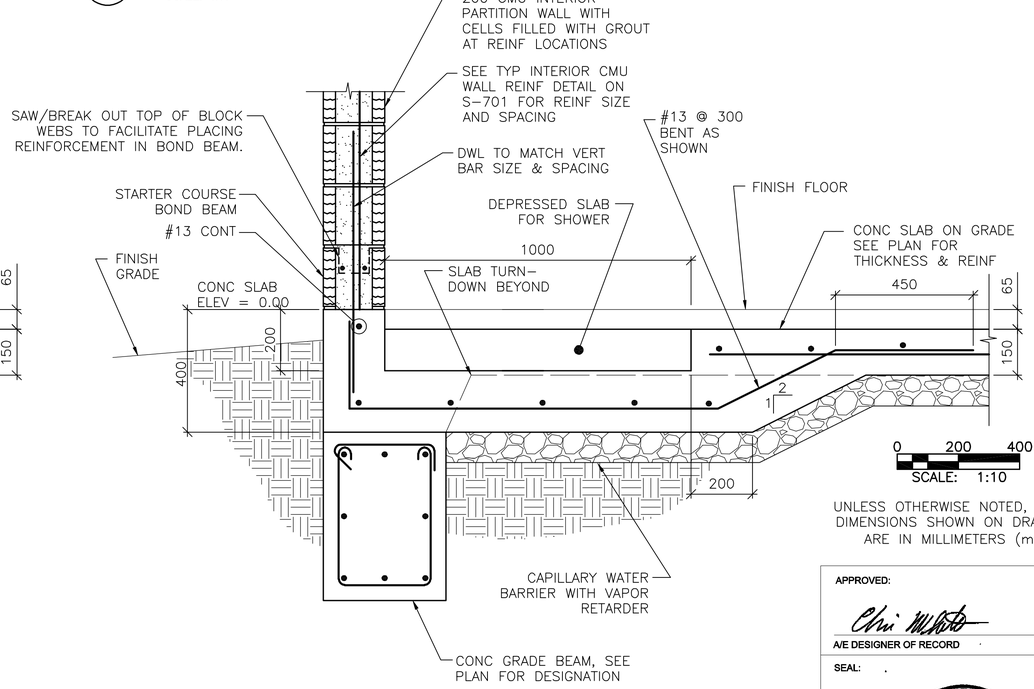


4 S-403 **SECTION**
SCALE: 1:10

UNLESS OTHERWISE NOTED, LINEAR DIMENSIONS SHOWN ON DRAWINGS ARE IN MILLIMETERS (mm)

APPROVED:

A/E DESIGNER OF RECORD

SEAL:

GEORGIA REGISTERED No. 27141 PROFESSIONAL ENGINEER CHRISTOPHER W. WHITMORE 2-23-10

US ARMY CORPS OF ENGINEERS
AFGHANISTAN ENGINEER DISTRICT

| Mark | Description | Date | Appr. |
|---|---|---|---|
| | | | |

Rev: 0
Date: 2/23/10
Design file no.
Drawing code:
File name: ANABENBS-S06SC
Plot date: 2/23/2010
Plot scale: x:x

Designed by: KMP/MMY
Drawn by: RCG
Ckd by: CWW
Reviewed by: LHM
Submitted by: BAKER

U.S. ARMY CORPS OF ENGINEERS
AFGHANISTAN ENGINEER DISTRICT
APO AE 96338

*Michael Baker Jr., Inc*
*A unit of Michael Baker Corporation*
Airside Business Park
100 Airside Drive
Moon Township, PA 15108
www.mbakercorp.com

AFGHAN NATIONAL ARMY
REGIONAL MILITARY TRAINING CENTER
STANDARD DESIGN

ENLISTED BARRACKS

MISCELLANEOUS SECTIONS

Sheet reference number:
S-506

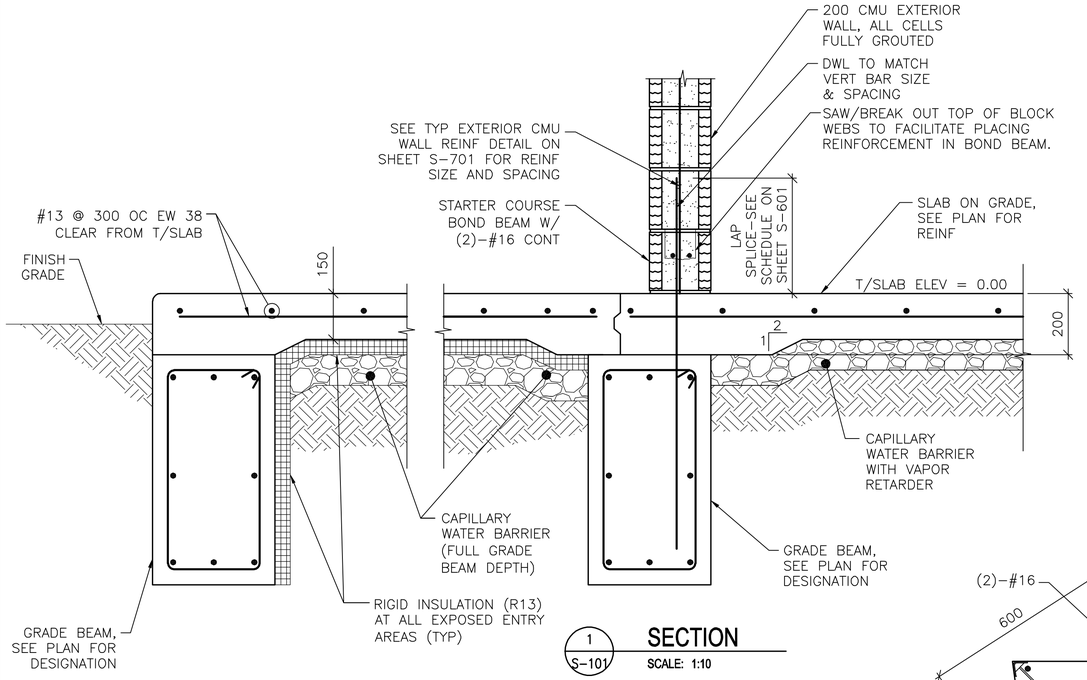


1 S-101 **SECTION**
SCALE: 1:10

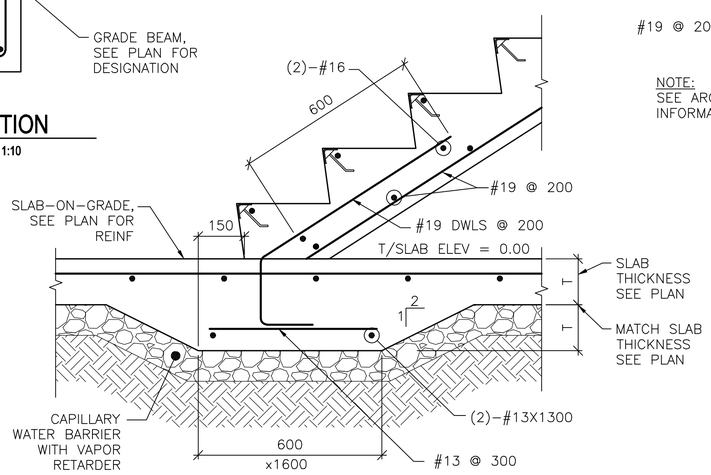


4 A-101 **SECTION**
SCALE: 1:10

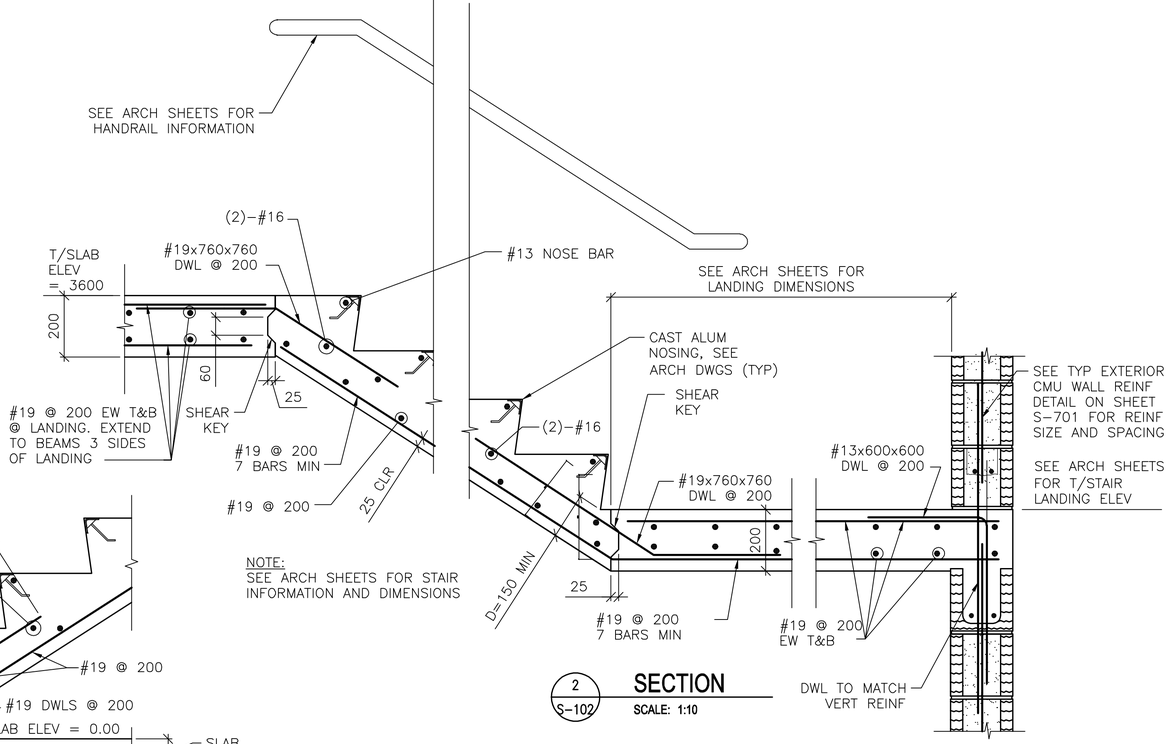


NOTE:
SEE ARCH SHEETS FOR STAIR INFORMATION AND DIMENSIONS

2 S-102 **SECTION**
SCALE: 1:10

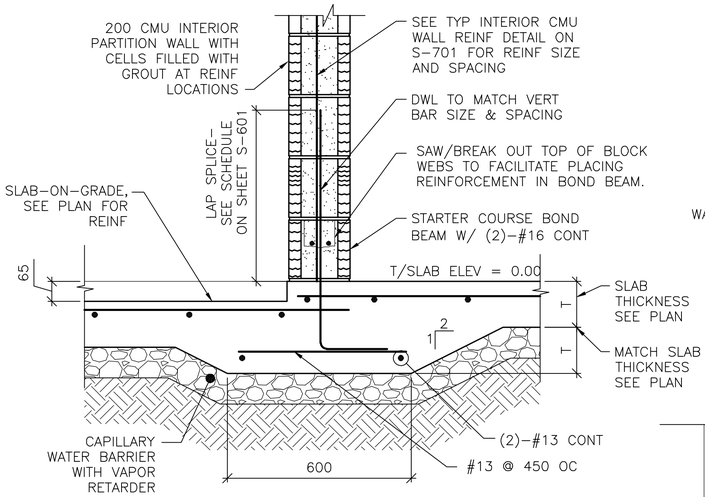


3 S-403 **SECTION**
SCALE: 1:10

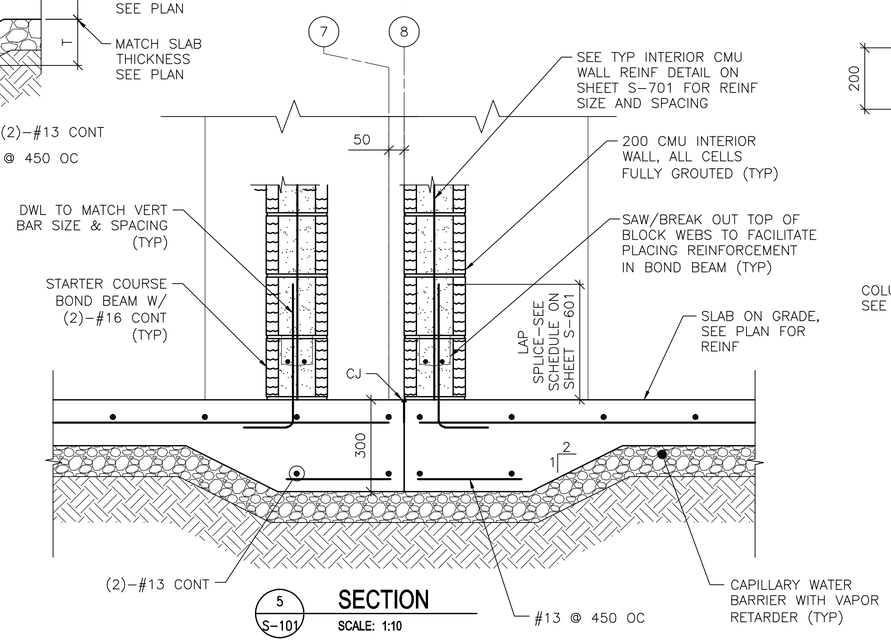


5 S-101 **SECTION**
SCALE: 1:10

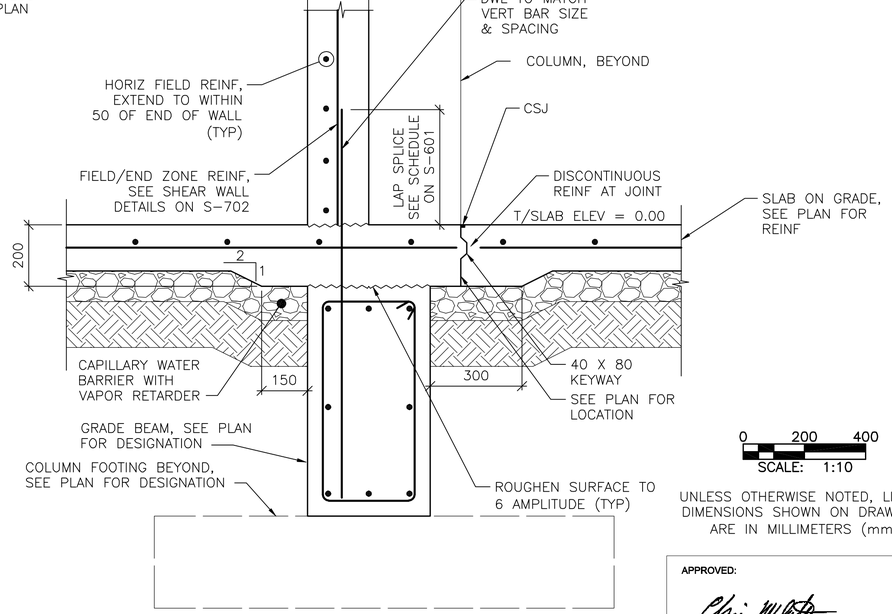


6 S-101 **SECTION**
SCALE: 1:10

0 200 400
SCALE: 1:10

UNLESS OTHERWISE NOTED, LINEAR DIMENSIONS SHOWN ON DRAWINGS ARE IN MILLIMETERS (mm)

APPROVED:

A/E DESIGNER OF RECORD

SEAL:

GEORGIA REGISTERED 2-22-10 No. 27141 PROFESSIONAL ENGINEER CHRISTOPHER W. WHITMORE

US ARMY CORPS OF ENGINEERS
AFGHANISTAN ENGINEER DISTRICT

| Mark | Description | Date | Appr. |
|---|---|---|---|

Rev: 0
Date: 2/23/10
Design file no.
Drawing code:
File name: ANABENBS-S075C
Plot date: 2/23/2010
Plot scale: x:X

Designed by: KMP/MMY
Dwn by: RCG
Ckd by: CWW
Reviewed by: LHM
Submitted by: BAKER

U.S. ARMY CORPS OF ENGINEERS
AFGHANISTAN ENGINEER DISTRICT
APO AE 96338

*Michael Baker Jr., Inc*
*A unit of Michael Baker Corporation*
Airside Business Park
100 Airside Drive
Moon Township, PA 15108
www.mbakercorp.com

AFGHAN NATIONAL ARMY
REGIONAL MILITARY TRAINING CENTER
STANDARD DESIGN

ENLISTED BARRACKS

MISCELLANEOUS SECTIONS

Sheet reference number:
S-507

# CONCRETE REINFORCEMENT TENSION DEVELOPMENT/LAP SPLICE SCHEDULE

| f'c = 28 MPa | LAP CLASS | UNCOATED BARS | | | |
|---|---|---|---|---|---|
| | | TOP BARS | | OTHER BARS | |
| BAR SIZES | | CASE 1 | CASE 2 | CASE 1 | CASE 2 |
| #10 TO #19 | A | 50 BAR DIA | 74 BAR DIA | 38 BAR DIA | 57 BAR DIA |
| | B | 64 BAR DIA | 96 BAR DIA | 50 BAR DIA | 74 BAR DIA |
| #22 TO #57 | A | 62 BAR DIA | 93 BAR DIA | 48 BAR DIA | 71 BAR DIA |
| | B | 80 BAR DIA | 121 BAR DIA | 62 BAR DIA | 93 BAR DIA |

NOTES:
1. TABULATED TENSION DEVELOPMENT LENGTH VALUES ARE TAKEN FROM CRSI DESIGN HANDBOOK 2008 10TH ED.
2. TENSION DEVELOPMENT & TENSION LAP SPLICE LENGTHS ARE EXPRESSED AS MULTIPLES OF BAR DIAMETERS.
3. TABULATED VALUES ARE BASED ON MINIMUM YIELD STRENGTH OF REINFORCEMENT, fy, OF 420MPa.
4. CONCRETE IS NORMAL WEIGHT (2400Kg/m$^3$) AND 28 DAY COMPRESSIVE STRENGTH = 28MPa.
5. TABULATED VALUES FOR BEAMS & COLUMNS ARE BASED ON TRANSVERSE REINFORCEMENT AND CONCRETE COVER MEETING MINIMUM CODE REQUIREMENTS.
6. CASES 1 & 2, WHICH DEPEND ON THE TYPE OF STRUCTURAL MEMBER, CONCRETE COVER, AND CENTER-TO-CENTER SPACING OF THE BARS ARE DEFINED IN THE TABLE BELOW.
7. LAP SPLICE LENGTHS (MINIMUM 300mm) ARE MULTIPLES OF TENSION DEVELOPMENT LENGTHS: CLASS A = 1.0(TENSION DEVELOPMENT LENGTH) & CLASS B = 1.3(TENSION DEVELOPMENT LENGTH)
8. TOP BARS ARE HORIZONTAL REINFORCEMENT WITH MORE THAN 300mm OF CONCRETE CAST BELOW THE BARS.
9. IT SHALL BE PERMISSIBLE TO CALCULATE WALL AND SLAB REINFORCEMENT TENSION DEVELOPMENT/SPLICE LENGTHS IN ACCORDANCE WITH ACI 12.2.3 OR TABLE 5.3(b) OF CRSI 2008 IN LIEU OF VALUES TABULATED ABOVE.

| | | |
|---|---|---|
| BEAMS, COLUMNS | CASE 1 | CONCRETE COVER AT LEAST 1 BAR DIA AND CENTER-TO-CENTER SPACING AT LEAST 2 BAR DIA |
| | CASE 2 | CONCRETE COVER LESS THAN 1 BAR DIA OR CENTER-TO-CENTER SPACING LESS THAN 2 BAR DIA |
| ALL OTHERS | CASE 1 | CONCRETE COVER AT LEAST 1 BAR DIA AND CENTER-TO-CENTER SPACING AT LEAST 3 BAR DIA |
| | CASE 2 | CONCRETE COVER LESS THAN 1 BAR DIA OR CENTER-TO-CENTER SPACING LESS THAN 3 BAR DIA |

# CONCRETE COVER SCHEDULE

MINIMUM CONCRETE COVER PROTECTION FOR REINFORCEMENT BARS SHALL BE AS LISTED BELOW: (SEE ACI 318M-05, SECTION 7.7 FOR CONDITIONS NOT NOTED). DIMENSIONS FOR BAR PLACEMENT GIVEN IN SECTIONS AND DETAILS SHALL SUPERSEDE MINIMUM COVER REQUIREMENTS GIVEN HERE. DIMENSIONS ARE IN mm. PROVIDE STANDARD BAR CHAIRS AND SUPPORT BARS @1200mm MAXIMUM AS REQUIRED TO MAINTAIN CONCRETE PROTECTION SPECIFIED.

| | | |
|---|---|---|
| FOOTINGS (EARTH FORMED): | | 70 |
| COLUMNS / PIERS (TO TIES) | | 40 |
| GRADE BEAMS OR SLAB TURNED DOWN EDGES: | | |
| TOP | | 40 |
| BOTTOM (EARTH FORMED) | | 70 |
| SIDES (EARTH FORMED) | | 70 |
| SIDES (BOARD FORMED) | #16 BAR & SMALLER | 40 |
| | #19 THRU #36 BAR | 50 |
| ELEVATED BEAMS & SLABS: | | |
| BEAM TIES & STIRRUPS (NOT EXPOSED TO WEATHER) | | 40 |
| BEAM TIES & STIRRUPS (EXPOSED TO WEATHER) | | 50 |
| FLOOR SLABS (NOT EXPOSED TO WEATHER) | | 20 |
| FLOOR SLABS (EXPOSED TO WEATHER) | | |
| #19 & LARGER | | 50 |
| #13 & SMALLER | | 40 |
| ROOF SLAB BARS | | 25 |
| SLABS ON GRADE | | |
| NOT EXPOSED TO WEATHER (FROM TOP) | | 20 |
| EXPOSED TO WEATHER (FROM TOP) | | 40 |
| UTILITY TUNNEL WALLS, RETAINING WALLS AND SHEAR WALLS. (NO SURFACES SHALL BE EARTH FORMED) | | |
| EARTH SIDE AND FRONT SIDE (EXPOSED TO WEATHER) | | |
| #16 BAR AND SMALLER | | 40 |
| #19 THRU #36 BAR | | 50 |

# COLUMN FOOTING SCHEDULE

| MARK | FOOTING SIZE (mm) | | | FOOTING REINFORCING |
|---|---|---|---|---|
| | LENGTH | WIDTH | THICKNESS | |
| F1 | 2800 | 2800 | 300 | (10)-#19 EW BOTT |
| F2 | 3100 | 3100 | 325 | (11)-#19 EW BOTT |
| F3 | 3300 | 3300 | 325 | (11)-#22 EW BOTT |
| F4 | 3600 | 3600 | 350 | (12)-#22 EW BOTT |
| F5 | 3800 | 3800 | 400 | (14)-#22 EW BOTT |
| F6 | 4300 | 4300 | 400 | (15)-#22 EW BOTT |
| F7 | 8050 | 8300 | 710 | #22@300 EW T&B |
| F8 | 5600 | 8050 | 710 | #25@300 EW T&B |
| F9 | 5000 | 5000 | 550 | (20)-#22 EW T&B |
| F10 | 5600 | 5600 | 550 | (20)-#25 EW BOTT |
| F11 | 6000 | 6000 | 710 | (20)-#25 EW TOP & BOTTOM |
| F12 | 11700 | 6000 | 710 | (40)-#25 SHORT T&B (20)-#25 LONG T&B |
| F13 | 7800 | 5000 | 550 | (31)-#22 SHORT T&B (20)-#22 LONG T&B |

# CONCRETE SHEAR WALL SCHEDULE

| MARK | TYPE | WALL LENGTH (L) (mm) | WALL REINFORCEMENT | |
|---|---|---|---|---|
| | | | END ZONE | FIELD |
| SW1 | D | 8100 | (6)-#22 @ 300mm OC | #13 @ 300mm OC |
| SW2 | D | 8900 | (14)-#22 @ 300mm OC | #13 @ 300mm OC |
| SW3 | D | 9100 | (15)-#22 @ 300mm OC | #13 @ 300mm OC |
| SW4 | D | 9400 | (15)-#22 @ 300mm OC | #13 @ 300mm OC |
| SW5 | D | 9400 | (6)-#22 @ 300mm OC | #13 @ 300mm OC |
| SW6 | D | 7900 | (9)-#22 @ 300mm OC | #13 @ 300mm OC |

NOTES:
1. WORK THIS SCHEDULE WITH SHEAR WALL DETAILS ON SHEETS S-702
2. SEE PLAN FOR LOCATION OF SHEAR WALL(S).
3. WALL "FIELD" REINFORCEMENT LISTED APPLIES TO VERTICAL & HORIZONTAL BARS.
4. WALL "FIELD" REINFORCEMENT SHOULD BE CENTERED IN WALL.
5. VERTICAL "FIELD" BARS MAY BE OMITTED IN LOCATION OF "END ZONE" REINFORCEMENT.

# STANDARD HOOKS IN TENSION PER (ACI 318M-05)

| HOOK DEVELOPMENT LENGTH (mm) | |
|---|---|
| BAR SIZE | f'c 28 MPa |
| #10 | 180 |
| #13 | 250 |
| #16 | 300 |
| #19 | 380 |
| #22 | 430 |
| #25 | 480 |
| #29 | 560 |
| #32 | 610 |
| #36 | 690 |

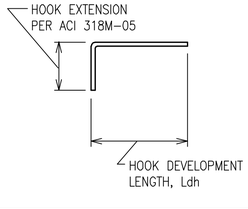


NOTES:
1. CONCRETE IS NORMAL WEIGHT CONCRETE.
2. BAR YIELD STRENGTH, fy = 420 MPa
3. SIDE COVER REQUIREMENTS OF ACI SECT. 12.5.3 ARE ASSUMED TO NOT BE MET.
4. TIE OR STIRRUP REQUIREMENTS OF ACI SECT. 12.5.3 ARE ASSUMED TO NOT BE MET.
5. REDUCTION FOR EXCESS REINFORCEMENT IS NOT TAKEN.
6. HOOK DEVELOPMENT LENGTH IS VALID FOR 180° HOOKS ALSO.

# CMU OR CAST IN PLACE CONC LINTEL SCHEDULE (TYP)

| OPENING TYPE OR SIZE, BEAM LOCATION OR TYPE | MAX SPAN (mm) | LINTEL DEPTH (mm) | REINFORCING BOTTOM |
|---|---|---|---|
| WALL OPENING | 4000 | 600 | (2)-#16 T&B |
| WALL OPENING | 1900 | 400 | (2)-#16 T&B |
| WALL OPENING | 1000 | 400 | (2)-#13 B |

1. STRUCTURAL SHEETS DO NOT INDICATE ALL OPENINGS IN MASONRY WALLS. VERIFY NUMBER, SIZE AND LOCATION OF ALL OPENINGS IN MASONRY WALLS FROM ARCHITECTURAL SHEETS AND APPROVED PLUMBING, MECHANICAL, AND ELECTRICAL SHOP DRAWINGS.
2. PROVIDE 200mm BEARING EA END.
3. FOR HEAD DETAILS REFER TO ARCHITECTURAL SHEETS.
4. REINFORCING SHALL BE ASTM A615M, GRADE 420. GROUT FOR CMU LINTELS SHALL HAVE A MINIMUM COMPRESSIVE STRENGTH OF 14 MPa AT 28 DAYS.
5. CONTRACTOR SHALL SUBMIT FOR APPROVAL SHOP DRAWINGS AND SCHEDULES SHOWING SIZE, SPAN, REIN, DETAILS & LOCATIONS.
6. REFERENCE LINTEL DETAIL ON THIS SHEET.

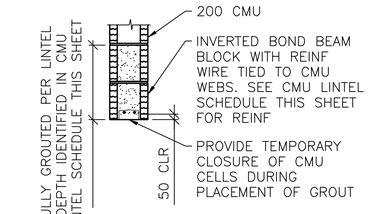


A S-601 **LINTEL DETAIL**
SCALE: NTS

# BEAM SCHEDULE

| MARK | BEAM SIZE (mm) | | BEAM REINFORCING | | | | | | STIRRUPS | | | REMARKS |
|---|---|---|---|---|---|---|---|---|---|---|---|---|
| | DEPTH | WIDTH | BL | BS | TL | TS | TC | M | SIZE | TYPE | SPACING | |
| GRADE BEAMS | | | | | | | | | | | | |
| GB1 | 750/550 | 400 | (2)-#22 | (1)-#22 | (2)-#22 | --- | --- | --- | #13 | S3+T9 | d/2 | LOWER TOP TO 550 @ LATRINES BETWEEN A8-A11 |
| GB2 | 750 | 400 | (4)-#25 | --- | (4)-#25 | --- | --- | (2)-#25 | #13 | S3+T9 | d/2 | ----- |
| GB3 | 750 | 600 | (2)-#22 | (1)-#22 | (2)-#22 | (1)-#22 | (1)-#25 | (2)-#25 | #13 | S3+T9 | d/2 | |
| GB4 | 1500 | 400 | (5)-#29 | (5)-#29 | (8)-#29 | --- | --- | (6)-#16 | #13 | S3+T9 | 250 | TOP & BOTT BARS IN 2 LAYERS |
| FLOOR BEAMS | | | | | | | | | | | | |
| FB1 | 600 | 400 | (3)-#25 | --- | (2)-#25 | --- | --- | --- | #13 | S3+T9+ #10-S-11 | d/2 | ----- |
| FB2 | 600 | 400 | (4)-#25 | --- | (2)-#25 | --- | --- | --- | #13 | S3+T9 | d/2 | |
| FB3 | 600 | 400 | (3)-#22 | --- | (2)-#22 | --- | --- | --- | #13 | S3+T9+ #10-S-11 | d/2 | |
| FB4 | 600/535 | 400 | (2)-#22 | --- | (2)-#22 | --- | --- | --- | #13 | S3+T9 | d/2 | LOWER TOP TO 535 LINE A.3 BETWEEN 8.6 & 10.4 |
| FB5 | 600/535 | 600 | (3)-#25 | --- | (2)-#25 | --- | --- | --- | #13 | S3+T9 | d/2 | LOWER TOP TO 535 LINE 9 & 10 BETWEEN C.5 & A.3 |
| FB6 | 600/400 | 400 | (2)-#22 | --- | (2)-#25 | --- | --- | --- | #13 | S3+T9 | d/2 | LOWER TOP TO 400 LINE A BETWEEN 8.9 & 10.4 |
| FB7 | 600/400 | 400 | (2)-#22 | --- | (2)-#25 | --- | --- | --- | #13 | S3+T9+ #10-S-11 | d/2 | LOWER TOP TO 400 BEWTWEEN 9A-10A |
| FB8 | 600 | 600 | (2)-#22 | --- | (2)-#22 | --- | --- | --- | #13 | S3+T9 | d/2 | ----- |
| FB9 | 600/535 | 400 | (3)-#25 | --- | (2)-#25 | --- | --- | --- | #13 | S3+T9+ #10-S-11 | d/2 | LOWER TOP TO 535 LINE B BETWEEN 11.0 & 11.6 |
| ROOF BEAMS | | | | | | | | | | | | |
| RB1 | 500 | 400 | (2)-#19 | (1)-#19 | (2)-#19 | --- | --- | --- | #13 | S3+T9 | d/2 | ----- |
| RB2 | 500 | 400 | (2)-#25 | (1)-#25 | (2)-#25 | --- | --- | --- | #13 | S3+T9 | d/2 | |
| RB3 | 500 | 400 | (2)-#19 | (1)-#19 | (2)-#16 | --- | --- | --- | #13 | S3+T9 | d/2 | |
| RB4 | 500 | 600 | (2)-#19 | --- | (2)-#19 | --- | --- | --- | #13 | S3+T9 | d/2 | |

NOTES:
1. WORK THIS SCHEDULE WITH BEAM REINFORCING DETAILS ON SHEETS S-503 AND S-504.
2. HOOKS SHOWN ON SECTIONS AND DETAILS SHALL BE 90° STD UON.
3. USE ONLY (1) TC AT BEAM COLUMN INTERSECTION WHERE REQ'D.

# COLUMN SCHEDULE

| DESCRIPTION \ COLUMN MARK | TYP UON | --- | --- | --- |
|---|---|---|---|---|
| TYPE | 8-BAR | --- | --- | --- |
| DIMENSION | 600mm SQ. | --- | --- | --- |
| 1ST STORY VERTICAL REINF | (8)-#25 | --- | --- | --- |
| 2ND STORY VERTICAL REINF | (8)-#25 | --- | --- | --- |
| TIES | #13 @ d/2 | --- | --- | --- |
| TOP OF 2ND FLOOR ELEVATION | 3600mm | --- | --- | --- |
| TOP OF ROOF ELEVATION | 7100mm | --- | --- | --- |
| TOP OF GRADE BEAM ELEVATION | -200mm | --- | --- | --- |
| TOP OF FOOTING ELEVATION | -950mm | --- | --- | --- |

NOTES:
1. WORK THIS SCHEDULE WITH COLUMN DETAILS ON SHEET S-504.
2. SEE FOOTING SCHEDULE ON THIS SHEET FOR FOOTING INFORMATION.
3. COLUMN TIES: INTERIOR TIES TO MATCH SIZE & SPACING OF PERIMETER TIES.
4. HOOKS SHOWN ON SECTIONS & DETAILS SHALL BE 90° STD UON.

UNLESS OTHERWISE NOTED, LINEAR DIMENSIONS SHOWN ON DRAWINGS ARE IN MILLIMETERS (mm)

APPROVED:

A/E DESIGNER OF RECORD

SEAL:

GEORGIA REGISTERED 4-29-10 No. 27141 PROFESSIONAL ENGINEER CHRISTOPHER W. WHITMORE

US ARMY CORPS OF ENGINEERS
AFGHANISTAN ENGINEER DISTRICT

| Mark | Description | Date | Appr. |
|---|---|---|---|
| | | | |

| Mark | Description | Date | Appr. |
|---|---|---|---|
| | | | |

U.S. ARMY CORPS OF ENGINEERS
AFGHANISTAN ENGINEER DISTRICT
APO AE 96338


Michael Baker Jr., Inc
A unit of Michael Baker Corporation
Airside Business Park
100 Airside Drive
Moon Township, PA 15108
www.mbakercorp.com


Designed by: KMP/MMY | Ckd by: CWW
Dwn by: RCG | Reviewed by: LHM
Submitted by: BAKER

Rev. 0
Date: 2/23/10
Design file no.
code:
Drawing code:
File name: ANABENBS-601SCH
Plot date: 2/23/2010
Plot scale: X:X

AFGHAN NATIONAL ARMY
REGIONAL MILITARY TRAINING CENTER
STANDARD DESIGN

ENLISTED BARRACKS

SCHEDULES

Sheet reference number:
S-601

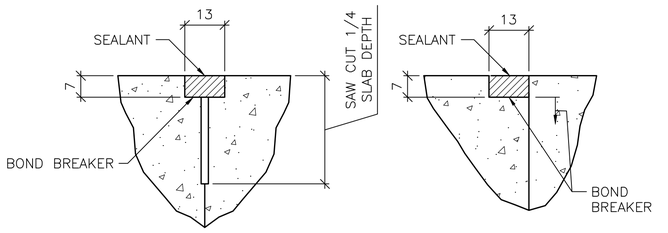


CONTROL JOINT DETAIL

CONSTRUCTION JOINT DETAIL

## TYPICAL CONCRETE SLAB JOINT FINISH DETAILS

1 / S-701 SCALE: NTS

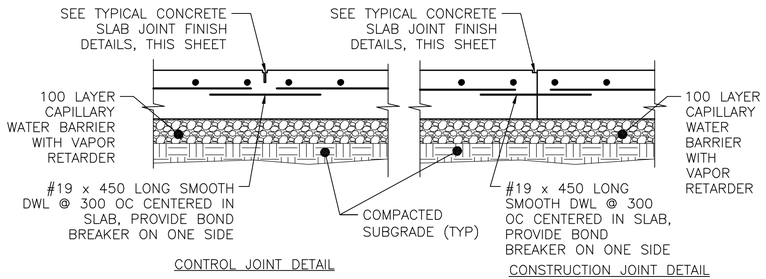


CONTROL JOINT DETAIL

CONSTRUCTION JOINT DETAIL

## TYPICAL SLAB ON GRADE JOINT DETAIL

2 / S-701 SCALE: NTS

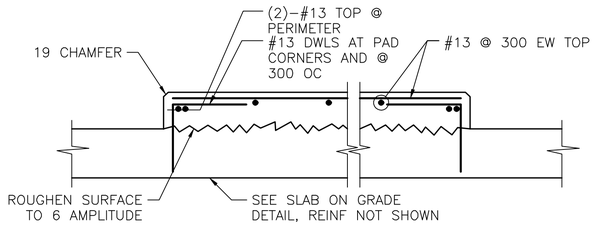


## INTERIOR EQUIPMENT PAD DETAIL

3 / S-701 SCALE: NTS

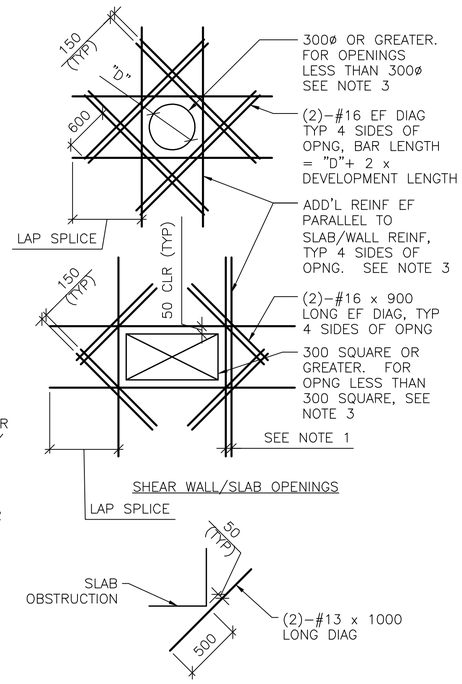


SHEAR WALL/SLAB OPENINGS

RE–ENTRANT CORNERS

DETAIL NOTES:

1. WHERE MORE THAN ONE ADDITIONAL BAR IS REQUIRED PARALLEL TO THE EXISTING SLAB/WALL REINFORCING THE ADDITIONAL REINFORCING BARS SHALL BE SPACED AT 100 ON CENTER.
2. ADDITIONAL REINFORCING PARALLEL TO THE SLAB/WALL REINFORCING SHALL BE #16 BARS THAT PROVIDE A STEEL AREA ON EACH SIDE OF THE OPENING EQUAL TO 1/2 THE AREA OF THE REINFORCING CUT BY THE OPENING.
3. FOR OPENINGS WITH SIDES OR DIAMETERS LESS THAN 300 SPREAD THE SLAB/WALL REINFORCING TO CLEAR THE OPENING.

## ADD'L CONCRETE REINFORCEMENT DETAILS

4 / S-701 SCALE: NTS

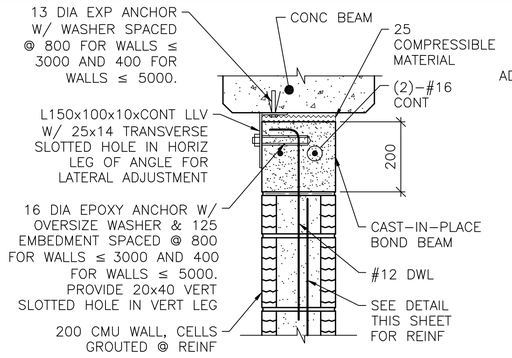


NOTE:
1. AT ANCHOR BOLTS, ADD AN ADDITIONAL 25 COMPRESSIBLE MATERIAL BELOW EXP ANCHOR HEAD.

INTERIOR BEAM

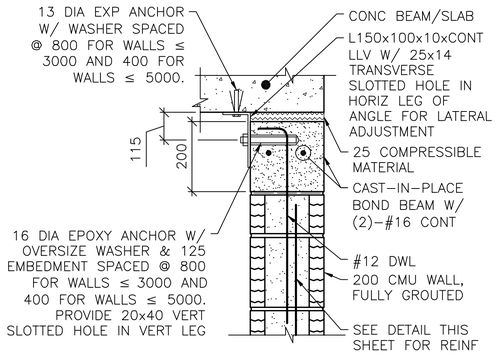


EXTERIOR WALL OR SLAB

NOTES:

1. THIS DETAIL IS AN ALTERNATE TOP OF WALL ANCHORAGE DETAIL TO BE USED AT THE CONTRACTOR'S OPTION IN LIEU OF DETAILS SHOWN ON S–400 & S–500 DRAWINGS.
2. CAST–IN–PLACE BOND BEAM SHOWN AT TOP OF WALL IS ALSO APPLICABLE FOR INTERMEDIATE AND STARTER COURSE BOND BEAMS WITHIN WALL.

## ALTERNATE TOP OF CMU WALL BRACING DETAILS

5 / S-701 SCALE: NTS

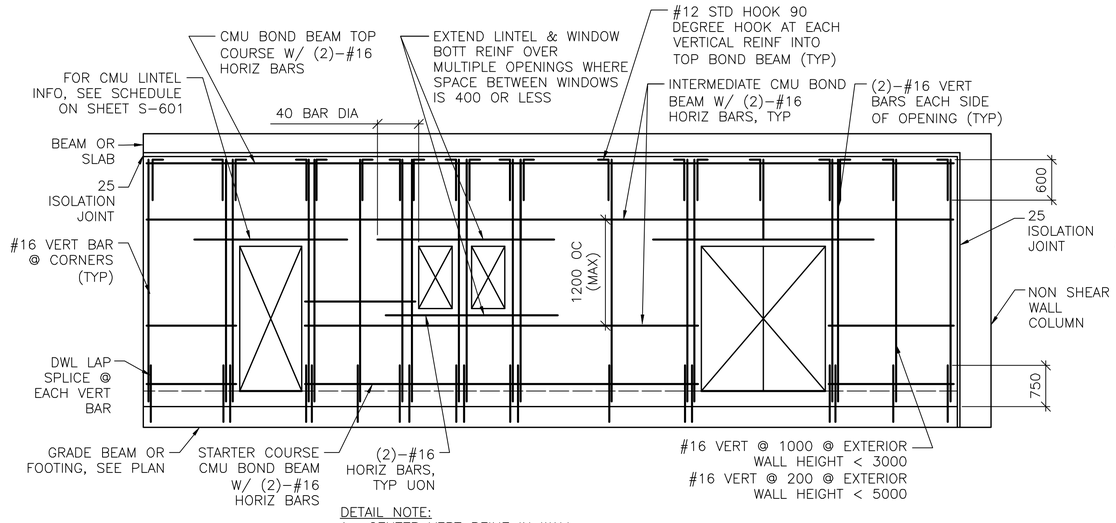


DETAIL NOTE:
1. CENTER VERT REINF IN WALL.
2. GROUT ALL CMU CELLS.
3. REFERENCE ARCH DWGS FOR JOINT INFORMATION
4. DOWELS BETWEEN TOP BOND BEAM AND BEAM/SLAB ABOVE (INCLUDING EMBEDDED PIPE SLEEVE) NOT SHOWN FOR CLARITY. SEE SPECIFIC S–500 SERIES DWGS FOR INFO.
5. FOR INFORMATION ON ALTERNATE CAST–IN–PLACE WALL BOND BEAMS, REFERENCE ALTERNATE TOP OF CMU WALL BRACING DETAILS THIS SHEET.

## TYP EXTERIOR CMU WALL REINF DETAIL

7 / S-701 SCALE: NTS

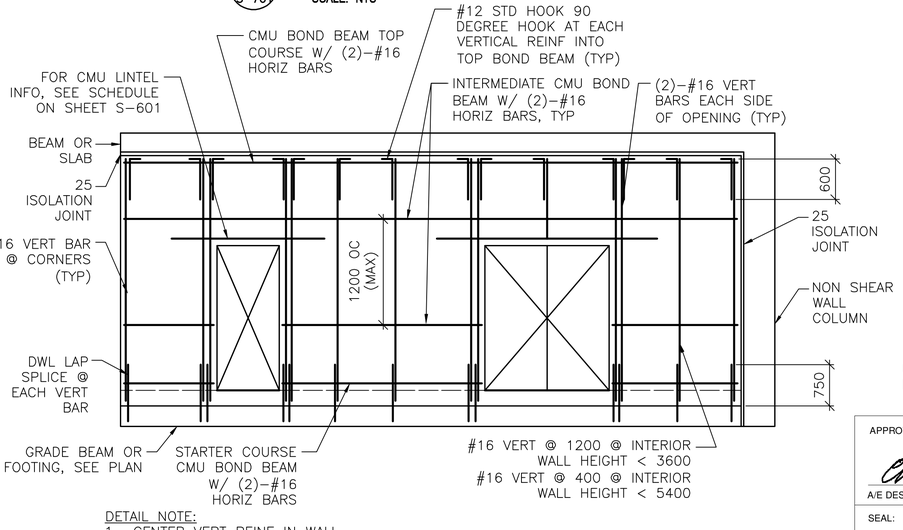


DETAIL NOTE:
1. CENTER VERT REINF IN WALL.
2. GROUT ALL CMU CELLS.
3. REFERENCE ARCH DWGS FOR JOINT INFORMATION
4. DOWELS BETWEEN TOP BOND BEAM AND BEAM/SLAB ABOVE (INCLUDING EMBEDDED PIPE SLEEVE) NOT SHOWN FOR CLARITY. SEE SPECIFIC S–500 SERIES DWGS FOR INFO.
5. FOR INFORMATION ON ALTERNATE CAST–IN–PLACE WALL BOND BEAMS, REFERENCE ALTERNATE TOP OF CMU WALL BRACING DETAILS THIS SHEET.

## TYP INTERIOR CMU WALL REINF DETAIL

8 / S-701 SCALE: NTS

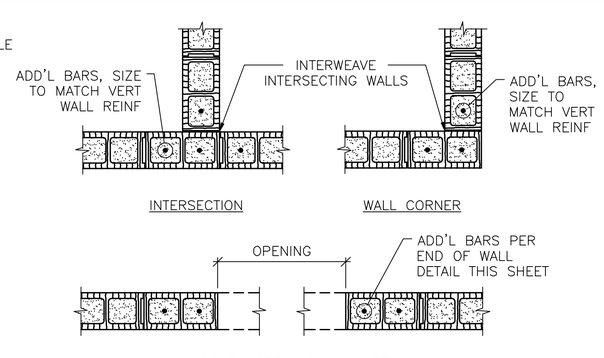


INTERSECTION WALL CORNER




MASONRY OPENING W/ LINTEL

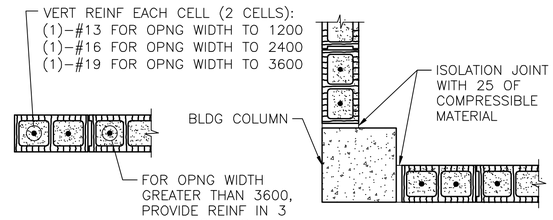


END OF WALL END OF WALL @ COLUMN

NOTES:
1. OPENING WIDTH SHALL NOT EXCEED 3600 FOR THIS TYPE OF JAMB.
2. ALL CELLS FULLY GROUTED AT EXTERIOR WALLS. AT INTERIOR WALLS, ONLY GROUT CELLS CONTAINING REINF.

## TYP CMU DETAILS

6 / S-701 SCALE: NTS

UNLESS OTHERWISE NOTED, LINEAR DIMENSIONS SHOWN ARE IN MILLIMETERS (mm)

APPROVED:

A/E DESIGNER OF RECORD

SEAL:

GEORGIA REGISTERED 1-27-10 No. 27141 PROFESSIONAL ENGINEER CHRISTOPHER W. WHITMORE

US ARMY CORPS OF ENGINEERS
AFGHANISTAN ENGINEER DISTRICT

| Mark | Description | Date | Appr. |
|---|---|---|---|

U.S. ARMY CORPS OF ENGINEERS
AFGHANISTAN ENGINEER DISTRICT
APO AE 96338

Michael Baker Jr., Inc.
A unit of Michael Baker Corporation
Airside Business Park
100 Airside Drive
Moon Township, PA 15108
www.mbakercorp.com

Designed by: KMP/MMY
Drawn by: RCG
Ckd by: CWW
Reviewed by: LHM
Submitted by:
BAKER

Date: 2/23/10
Design file no.
Drawing code:
Rev: 0
File name: ANABENBS-701DT
Plot date: 2/23/2010
Plot scale: x:x

AFGHAN NATIONAL ARMY
REGIONAL MILITARY TRAINING CENTER
STANDARD DESIGN

ENLISTED BARRACKS

TYPICAL DETAILS

Sheet reference number:
S–701

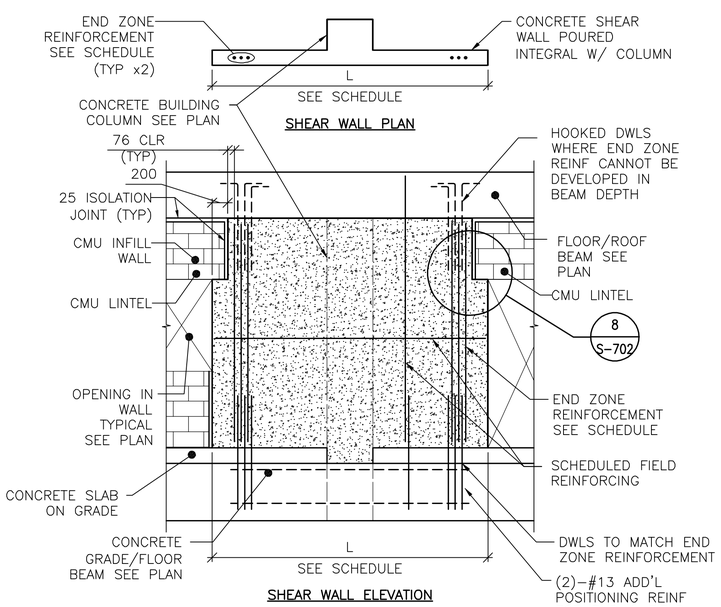


DETAIL NOTES:
1. FIELD REINFORCEMENT IN SHEAR WALL NOT COMPLETELY SHOWN FOR CLARITY.
2. FIELD REINFORCEMENT CENTERED IN WALL.
3. MINIMUM CONC CLEAR DISTANCE FOR END ZONE REINF = 76
4. SEE CONC SHEAR WALL SCHEDULE ON SHEET S-601
5. SEE ARCH DWGS FOR JOINT INFORMATION

## 1 S-702 TYPE "D" SHEAR WALL DETAIL
SCALE: NTS

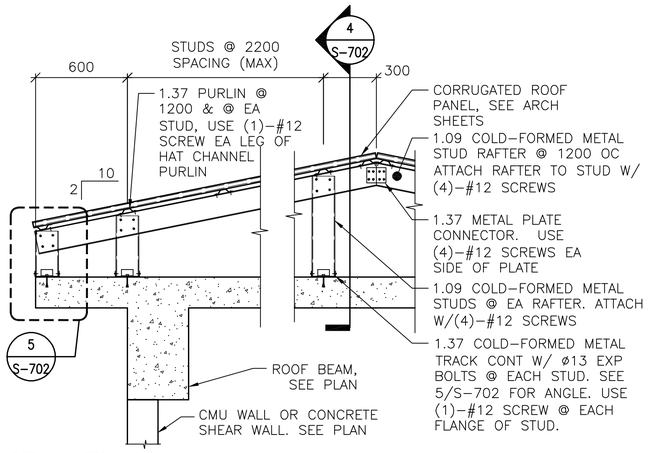


DETAIL NOTES:
1. ALL GABLE END VERTICAL STUDS SHALL BE ORIENTED 90° TO INTERIOR STUDS & SPACED @ 600 OC. GABLE END RAFTER SHALL BE 1.37 METAL TRACK SPANNING CONTINUOUSLY OVER GABLE END STUDS. INSET GIRTS AT GABLE END SHALL BE 1.09 COLD-FORMED METAL STUDS @ 1200 OC ATTACHED VIA 1.37 THICKNESS CLIP ANGLE W/ (2) #12 SCREWS EA LEG.
2. ALL INTERIOR, NON-GABLE END VERTICAL STUDS GREATER THAN 2400 IN LENGTH SHALL BE BACK-TO-BACK W/ #12 SCREWS @ 200 OC STAGGERED.

## 2 S-702 TYPICAL OVERBUILT ROOF FRAMING DETAIL
SCALE: NTS

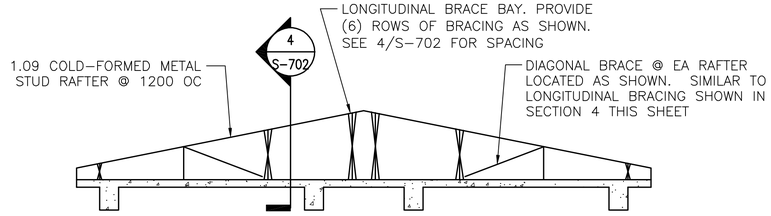


## 3 S-702 TYPICAL ROOF BRACE LAYOUT
SCALE: NTS

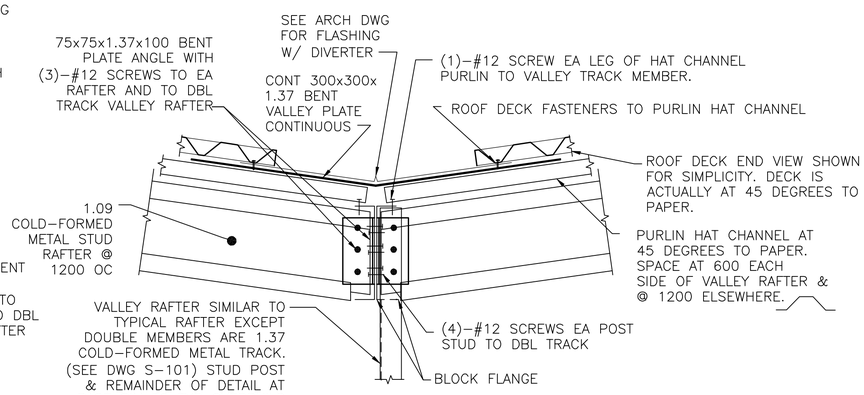


## 6 S-702 TYPICAL OVERBUILT ROOF SECTION THROUGH VALLEY
SCALE: NTS

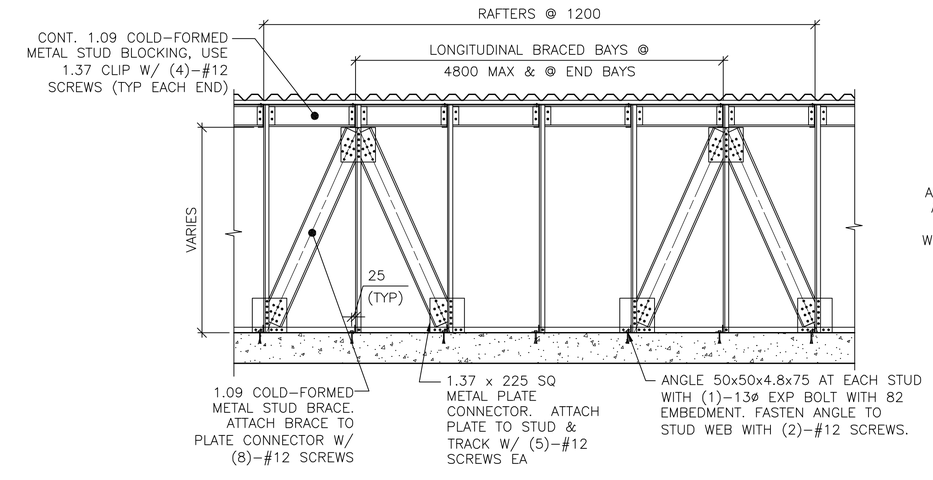


## 4 S-702 SECTION
SCALE: NTS

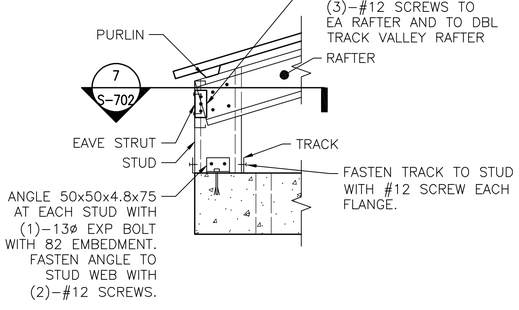


## 5 S-702 DETAIL
SCALE: NTS

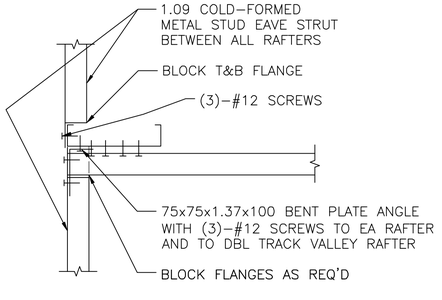


## 7 S-702 SECTION
SCALE: NTS

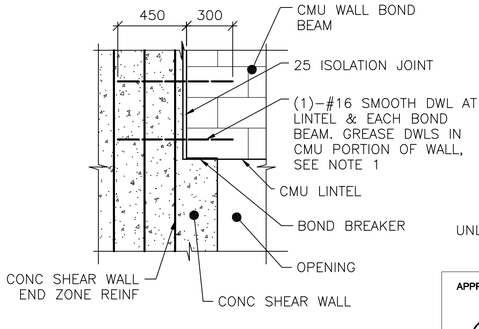


NOTE:
1. TIE SMOOTH DOWEL ROD TO SHEAR WALL END ZONE REINF FOR EACH BOND BEAM AND LINTEL.

## 8 S-702 SECTION
SCALE: NTS

UNLESS OTHERWISE NOTED, LINEAR DIMENSIONS SHOWN ARE IN MILLIMETERS (mm)

APPROVED:

A/E DESIGNER OF RECORD

SEAL:

GEORGIA REGISTERED 1-29-10 No. 27141 PROFESSIONAL ENGINEER CHRISTOPHER W. WHITMORE

US ARMY CORPS OF ENGINEERS
AFGHANISTAN ENGINEER DISTRICT

| Mark | Description | Date | Appr. |
|---|---|---|---|

Date: 2/23/10
Design file no.
Drawing code:
Rev: 0
Designed by: KMP/MMY
Dwn by: RCG
Ckd by: CWW
Reviewed by: LHM
Submitted by: BAKER
File name: ANABENBS-702TOT
Plot date: 2/23/2010
Plot scale: x:x

U.S. ARMY CORPS OF ENGINEERS
AFGHANISTAN ENGINEER DISTRICT
APO AE 96338

Michael Baker Jr., Inc
A unit of Michael Baker Corporation
Airside Business Park
100 Airside Drive
Moon Township, PA 15108
www.mbakercorp.com

AFGHAN NATIONAL ARMY
REGIONAL MILITARY TRAINING CENTER
STANDARD DESIGN

ENLISTED BARRACKS

TYPICAL DETAILS

Sheet reference number:
S-702

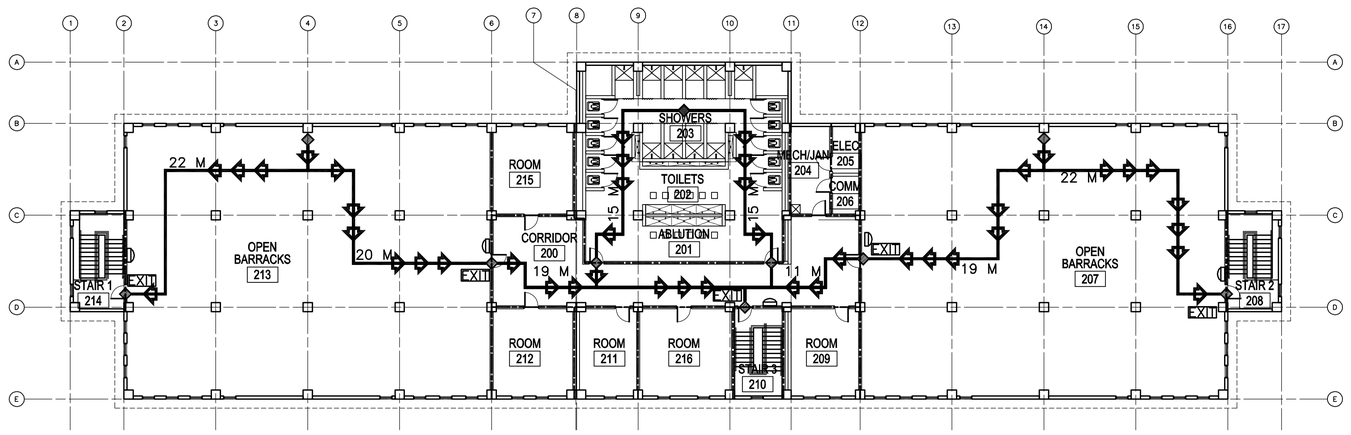


2 A–001 **SECOND FLOOR LIFE SAFETY PLAN**
SCALE: 1:200

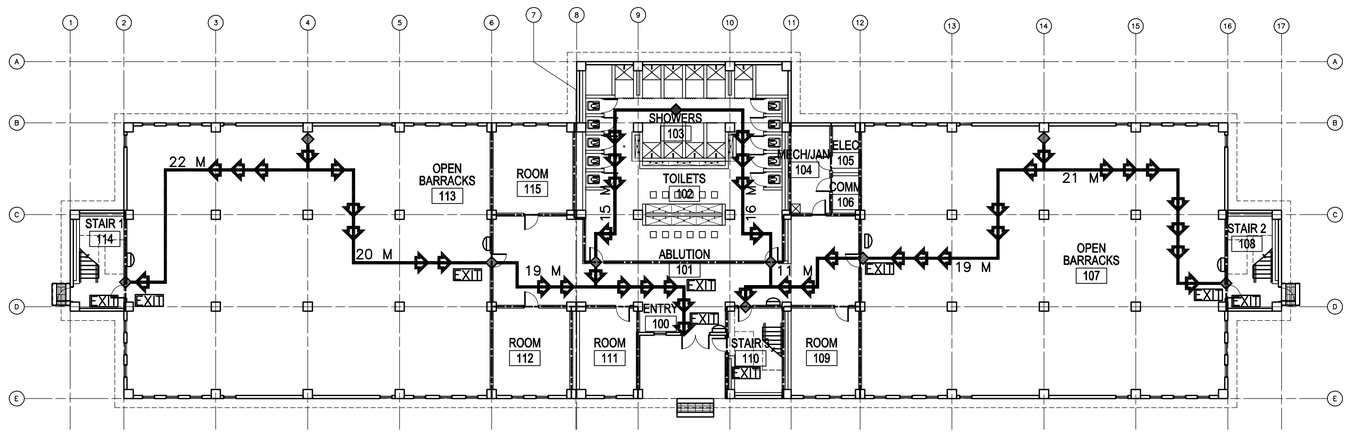


1 A–001 **FIRST FLOOR LIFE SAFETY PLAN**
SCALE: 1:200

## CODE ANALYSIS:

1. REFERENCES:
   2006 INTERNATIONAL BUILDING CODE (2006 IBC)
   2006 LIFE SAFETY CODE (2006 NFPA 101)

2. IBC OCCUPANCY CLASSIFICATION:
   GROUP R–2 (NEW HOTELS AND DORMITORIES NFPA 101 6.1.8 AND CHAPTER 28)

3. TYPE OF CONSTRUCTION (IBC): TYPE I–B (UNPROTECTED/NONSPRINKLERED)

4. IBC TABLE 503: ALLOWABLE HEIGHT AND BUILDING AREAS:
   GROUP R–2
   ALLOWABLE AREA: UL SM
   ALLOWABLE HEIGHT: 11 STORIES (48 M)

   GROUP R–2
   PROPOSED AREA: 3574 SM
   PROPOSED HEIGHT: 2 STORY (<48 M)

   STORAGE ROOMS: 1 HOUR SEPARATION REQUIRED

5. IBC TABLE 601 & 602: FIRE RESISTANCE RATING REQUIREMENTS FOR BUILDING ELEMENTS FOR TYPE I–B

| BUILDING ELEMENT | RATING (HOUR) | REFERENCE |
|---|---|---|
| STRUCTURAL FRAME (COLUMNS, GIRDERS & TRUSSES) | 2 | TABLE 601 |
| BEARING WALLS | | |
| EXTERIOR | 2 | TABLE 601 |
| INTERIOR | 2 | TABLE 601 |
| NONBEARING WALLS & PARTITIONS | | |
| INTERIOR | 0 | TABLE 601 |
| FLOOR CONSTRUCTION | 2 | TABLE 601 |
| ROOF CONSTRUCTION | 1 | TABLE 601 |
| EXTERIOR WALL | 0 | TABLE 602 |

6. IBC TABLE 803.5 – INTERIOR WALL AND CEILING FINISH REQUIREMENTS FOR R–2 OCCUPANCY/NONSPRINKLERED

| GROUP | EXIT ENCLOSURES AND EXIT PASSAGEWAY | CORRIDORS | ROOMS AND ENCLOSED SPACES |
|---|---|---|---|
| R–2 | B | B | C |

7. NFPA 101 TABLE 7.3.1.2 – OCCUPANT LOAD
   HOTELS AND DORMITORIES = 18.6 SM/PERSON CALCULATED = 193 OCCUPANTS
   ACTUAL = 212 OCCUPANTS

8. NFPA 101 TABLE 7.3.3.1 – EGRESS CAPACITY
   HOTELS AND DORMITORIES = 5 MM PER OCCUPANT

   MINIMUM REQUIRED: 1060 MM (212 OCCUPANTS x 5 MM PER OCCUPANT)
   PROPOSED EGRESS CAPACITY: 4500 MM: (3) 900 MM DOORS, (1) 900 MM DOUBLE DOOR

9. NFPA 101 TABLE 7.3.3.1 – STAIR CAPACITY
   HOTELS AND DORMITORIES = 7.6 MM PER OCCUPANT
   MINIMUM REQUIRED: 821 MM (108 OCCUPANTS X 7.6 MM PER OCCUPANT)

   NFPA 101 TABLE 7.2.2.2.1.2 – MINIMUM STAIR WIDTH
   1120 MM, LESS 114 MM PROJECTION FOR HANDRAILS & GUARDRAILS EACH SIDE, 892 MM

   PROVIDED: 892 MM CLEAR WIDTH EACH STAIR

10. NFPA 101 PARAGRAPH 28.2.6 – EXIT ACCESS TRAVEL DISTANCE
    MAXIMUM ALLOWED WITHIN ROOM OR SUITE TO CORRIDOR: 23 METERS
    MAXIMUM ALLOWED CORRIDOR DOOR OF ANY ROOM OR SUITE TO NEAREST EXIT: 30 METERS

    PROPOSED WITHIN ROOM OR SUITE TO CORRIDOR: 22 METERS
    PROPOSED CORRIDOR DOOR OF ANY ROOM OR SUITE TO NEAREST EXIT: 20 METERS

11. NFPA 101 PARAGRAPH 28.3.6.1.2 – CORRIDOR FIRE–RESISTANCE RATING (HOUR)
    REQUIRED: WALLS NOT LESS THAN ONE HOUR FIRE RESISTANCE RATING
    PROPOSED: 1 HOUR WALLS

12. NFPA 101 PARAGRAPH 28.3.6.2 & TABLE 8.3.4.2 – DOORS INTO EXIT ACCESS CORRIDORS
    REQUIRED MINIMUM: 20 MINUTE FIRE PROTECTION RATING
    PROPOSED: 20 MINUTE DOORS

13. NFPA 101 PARAGRAPH 28.2.3.3 – CORRIDOR WIDTH
    REQUIRED: SUFFICIENT FOR OCCUPANT LOAD, BUT NOT LESS THAN 1120 MM
    CALCULATED WIDTH REQUIRED PER OCCUPANT LOAD: 1060 (212 OCCUPANTS X 5 MM)
    PROVIDED: 1700 MM

14. NFPA 101 PARAGRAPH 28.2.5.3 – COMMON PATH OF TRAVEL
    MAXIMUM ALLOWED: 10.7 METERS
    PROVIDED: 0 METERS

15. NFPA 101 PARAGRAPH 28.2.5.5 – DEAD END CORRIDORS
    PERMITTED: 10.7 METERS
    PROPOSED: NO DEAD END CORRIDORS

16. NFPA 101 PARAGRAPH 28.2.4.1 AND 7.4.1.1 – MINIMUM NUMBER OF EXITS
    REQUIRED: 2 MINIMUM
    PROPOSED: 4 EXITS

17. NFPA 101 PARAGRAPH 28.2.1.2 & 24.2 – SECONDARY MEANS OF ESCAPE
    ONE OF THE FOLLOWING REQUIRED:
    1)DOOR, SIMILAR TO PRIMARY, BUT REMOTE FROM PRIMARY
    2) OPERABLE WINDOW, 0.53 SM, NOT LESS THAN 510 MM WIDE, 610 MM HIGH, NOT MORE THAN 1120 MM AFF, WITHIN 6100 MM OF GRADE
    PROVIDED: OPERABLE WINDOWS, 0.93 SM EACH, MULTIPLE PER SLEEPING ROOM

18. NFPA 101 PARAGRAPH 24.2.2.4 – TWO PRIMARY MEANS OF ESCAPE
    AREA WITH DWELLING UNIT EXCEEDS 185 SM PER STORY
    ALLOWED AREA PER STORY WITHIN DWELLING UNIT: 185 SM
    PROVIDED AREA WITHIN DWELLING UNIT: 497 SM
    REQUIRED PRIMARY EXITS: 2
    PROVIDED PRIMARY EXITS: 2

19. NFPA 101 PARAGRAPH 28.3.7.1 – SUBDIVISION OF BUILDING SPACES – NONSPRINKLERED
    REQUIRED: EACH GUEST ROOM OR DORMITORY ROOM SHALL BE SEPARATED FROM OTHER GUEST OR DORMITORY ROOMS BY FIRE BARRIERS HAVING FIRE RESISTANCE RATING OF NOT LESS THAN 1 HOUR
    PROVIDED: 1 HOUR SEPARATION

20. HAZARDOUS AREA PROTECTION TABLE 28.3.2.2.2
    STORAGE ROOMS: 1 HOUR SEPARATION REQUIRED

21. NFPA 101 A.3.3.53 DORMITORY: ROOMS WITHIN DORMITORIES INTENDED FOR THE USE OF INDIVIDUALS FOR COMBINED LIVING AND SLEEPING PURPOSES ARE GUEST ROOMS OR GUEST SUITES. EXAMPLES OF DORMITORIES ARE COLLEGE DORMITORIES, FRATERNITY AND SORORITY HOUSES AND MILITARY BARRACKS.

22. NFPA 101 28.3.5.2 EXTINGUISHMENT REQUIREMENTS: AUTOMATIC SPRINKLER PROTECTION REQUIRED UNLESS SLEEPING ROOMS HAVE DOORS DIRECTLY TO OUTSIDE.
    DUE TO AUSTERE DESIGN CRITERIA, THE GOVERNMENT HAS A FIRE PROTECTION WAIVER FOR THIS REQUIREMENT.

## LEGEND:

- DENOTES PATHS OF EXIT TRAVEL
- EXIT — DENOTES DOOR AS AN EMERGENCY EXIT
- DENOTES STARTING POINT FOR TRAVEL DISTANCE
- DENOTES FIRE EXTINGUISHER LOCATIONS
- (1) HOUR RATED WALL
- (2) HOUR RATED WALL
- (3) HOUR RATED WALL

0 4000 8000
SCALE: 1:200

LINEAR DIMENSIONS SHOWN ARE IN MILLIMETERS (MM), UNLESS OTHERWISE NOTED

APPROVED:

A/E DESIGNER OF RECORD

SEAL:

STATE OF SOUTH CAROLINA
KEVIN R. CHAFIN
N. Charleston, SC
6374
REGISTERED ARCHITECT

US ARMY CORPS OF ENGINEERS
AFGHANISTAN ENGINEER DISTRICT

| Mark | Description | Date | Appr. |
|---|---|---|---|

Designed by: KRC
Drawn by: EBB
Checked by: NLJ
Reviewed by: LHM
Submitted by: BAKER
Rev: 0
Date: 2/23/10
Design file no.
Drawing code:
File name: ANABENSA-A001.SP
Plot date: 2/23/2010
Plot scale: x:x

U.S. ARMY CORPS OF ENGINEERS
AFGHANISTAN ENGINEER DISTRICT
APO AE 96338

*Michael Baker Jr, Inc*
*A unit of Michael Baker Corporation*
Airside Business Park
100 Airside Drive
Moon Township, PA 15108
www.mbakercorp.com

AFGHAN NATIONAL ARMY
REGIONAL MILITARY TRAINING CENTER
STANDARD DESIGN

ENLISTED BARRACKS

LIFE SAFETY PLAN

Sheet reference number:
A–001

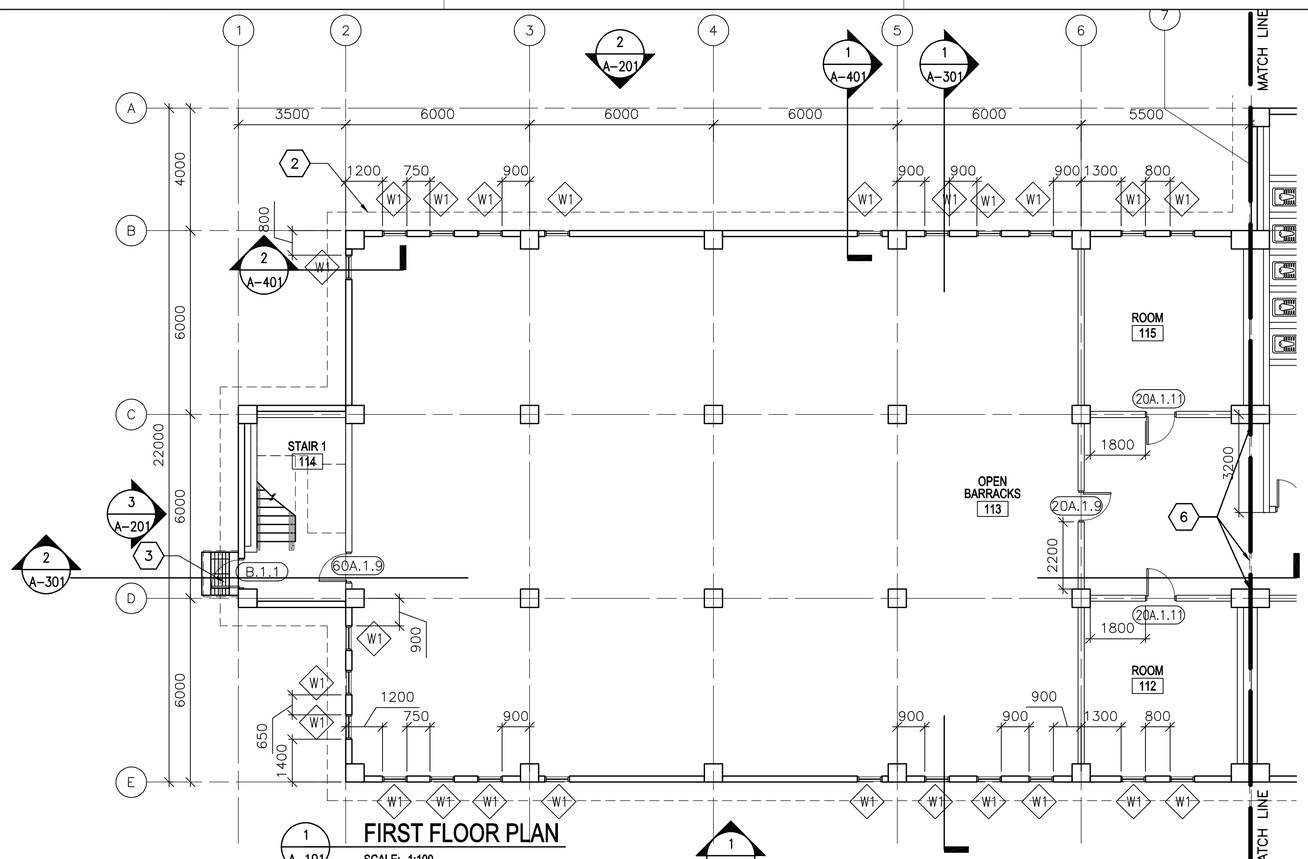


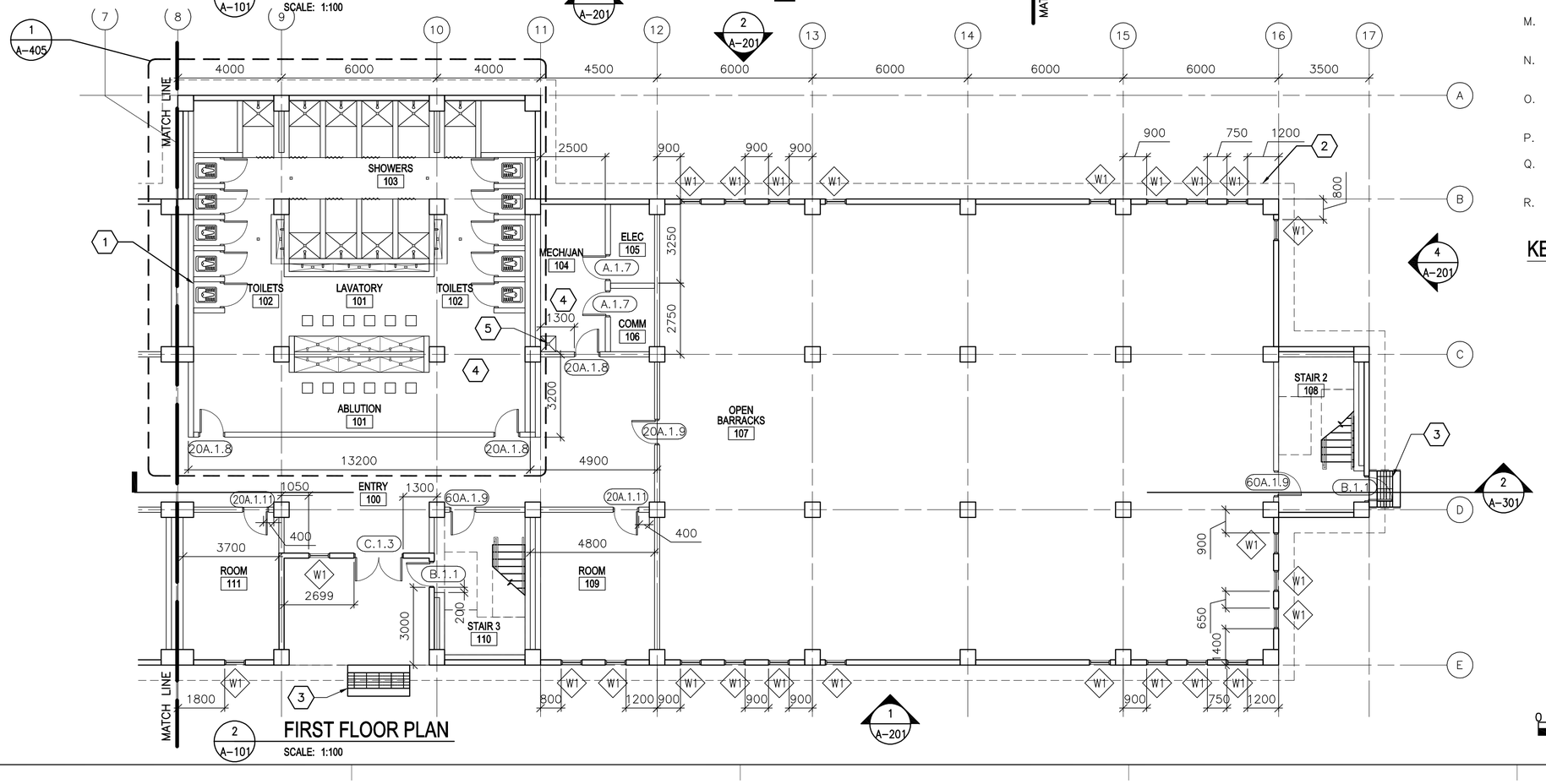


## KEY NOTES:

1. TYPICAL TOILET STALL LAYOUT – SEE DETAIL 2/A–505.
2. LINE OF ROOF OVERHANG ABOVE.
3. CONCRETE STOOP WITH GRATE – SEE DETAIL 1/A–503.
4. TERRAZZO FLOOR TILE AND CERAMIC WALL TILE TO 2000 MM ABOVE FINISHED FLOOR UNLESS OTHERWISE NOTED.
5. RECESSED TROUGH – SEE DETAIL 7/A–505.
6. ISOLATION JOINT COVER – SEE SHEET A–507.

## LEGEND:

- (XXX) DOOR FRAME AND HARDWARE TYPE, SEE SHEET A–601
- ◇ A — WINDOW TYPE, SEE SHEET A–601
- ⬡ X — KEY NOTE

## ABBREVIATIONS:

| | |
|---|---|
| ELEC | ELECTRICAL |
| MECH | MECHANICAL |
| JAN | JANITOR |
| CLOS | CLOSET |
| COMM | COMMUNICATIONS |

## GENERAL NOTES:

A. DIMENSIONS ARE SHOWN TO OUTER EDGE OF EXTERIOR STRUCTURAL COLUMNS, STRUCTURAL COLUMN GRID, EDGE OF INTERIOR PARTITIONS, EDGE OF WINDOW OPENINGS, AND TO HINGE SIDE OF DOOR FRAME OPENINGS.

B. HINGE SIDE OF OPENINGS FOR DOORS AND FRAMES SHALL BE LOCATED 200 MM FROM THE ADJACENT WALL OR COLUMN, UNLESS NOTED OTHERWISE.

C. INTERIOR PARTITIONS SHALL BE 200 MM CMU, UNLESS NOTED OTHERWISE.

D. COSMETIC REPAIR OF MINOR DEFECTS: REPAIR OR FILL MORTAR JOINTS AND MINOR DEFECTS, INCLUDING BUT NOT LIMITED TO SPALLS, IN ACCORDANCE WITH MANUFACTURER'S RECOMMENDATIONS AND PRIOR TO COATING APPLICATION. SURFACES TO BE PAINTED SHALL BE CLEAN AND FREE OF FOREIGN MATTER BEFORE APPLICATION OF PAINT. CLEANING SHALL BE SCHEDULED SO THAT DUST AND OTHER CONTAMINANTS WILL NOT FALL ON NEWLY PAINTED SURFACES.

E. CONCRETE, PLASTER AND MASONRY SURFACES SHALL BE ALLOWED TO CURE FOR AT LEAST 30 DAYS BEFORE PAINTING. CONCRETE SLABS–ON–GRADE SHALL BE ALLOWED TO CURE 90 DAYS BEFORE STAINING OR SEALING.

F. DO NOT USE PAINT MATERIALS CONTAINING LEAD CONTENT IN EXCESS OF 0.009 PERCENT OF THE WEIGHT OF THE TOTAL NONVOLATILE CONTENT OF THE PAINT OR THE WEIGHT OF THE DRIED PAINT FILM.

G. DO NOT USE ANY ASBESTOS CONTAINING MATERIALS (ACM) IN PROJECT. ACM IS DEFINED AS 1% OR MORE BY VOLUME.

H. DO NOT USE PAINT MATERIALS CONTAINING MERCURIAL FUNGICIDES.

I. FACTORY PRIMED METAL DOORS AND FRAMES SHALL RECEIVE TWO COATS OF PAINT.

J. FILL REMAINING SPACE AT PENETRATIONS IN FIRE–RATED FLOORS, PARTITIONS AND CEILINGS WITH APPROPRIATE FIRESTOPPING MATERIALS.

K. ALL CEILING FINISHES SHALL BE PAINTED PLASTER APPLIED TO STRUCTURE.

L. ALL WALL FINISHES SHALL BE PAINTED PLASTER APPLIED TO STRUCTURE UNLESS OTHERWISE NOTED.

M. ALL FLOOR FINISHES SHALL BE SEALED CONCRETE, UNLESS NOTED OTHERWISE.

N. PROVIDE TILE FINISHES AS INDICATED IN Details & KEY NOTES.

O. ALL DOOR, FRAME AND HARDWARE TYPES SHALL BE 20A.1.11 UNLESS NOTED OTHERWISE.

P. TOILET STALL DOORS SHALL BE F.2.12

Q. SHOWER STALL DOOR, FRAME AND HARDWARE TYPE SHALL BE E.1.12

R. PROVIDE POLISHED STAINLESS MIRROR 600 X 900 ABOVE EVERY LAVATORY FAUCET

## KEY PLAN:

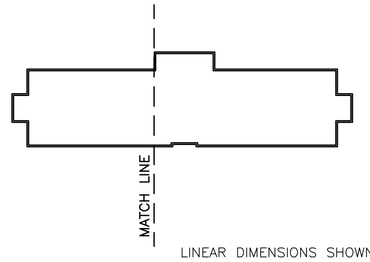


LINEAR DIMENSIONS SHOWN ARE IN MILLIMETERS (MM), UNLESS OTHERWISE NOTED

APPROVED:

A/E DESIGNER OF RECORD

SEAL:

STATE OF SOUTH CAROLINA
KEVIN R. CHAFIN
N. Charleston, SC
6374
REGISTERED ARCHITECT

0 2000 4000
SCALE: 1:100

US ARMY CORPS OF ENGINEERS
AFGHANISTAN ENGINEER DISTRICT

| Mark | Description | Date | Appr. |
|---|---|---|---|

| Mark | Description | Date | Appr. |
|---|---|---|---|

U.S. ARMY CORPS OF ENGINEERS
AFGHANISTAN ENGINEER DISTRICT
APO AE 96338

*Michael Baker Jr., Inc*
*A unit of Michael Baker Corporation*
Airside Business Park
100 Airside Drive
Moon Township, PA 15108
www.mbakercorp.com

Designed by: KRC
Dwn by: EBB
Ckd by: NLJ
Reviewed by: LHM
Submitted by: BAKER

Rev. 0
Date: **2/23/10**
Design file no.
Drawing code:
File name: **ANABENBA-101F1P**
Plot date: **2/23/2010**
Plot scale: x:x

AFGHAN NATIONAL ARMY
REGIONAL MILITARY TRAINING CENTER
STANDARD DESIGN

ENLISTED BARRACKS

FIRST FLOOR PLAN

Sheet reference number:
**A–101**

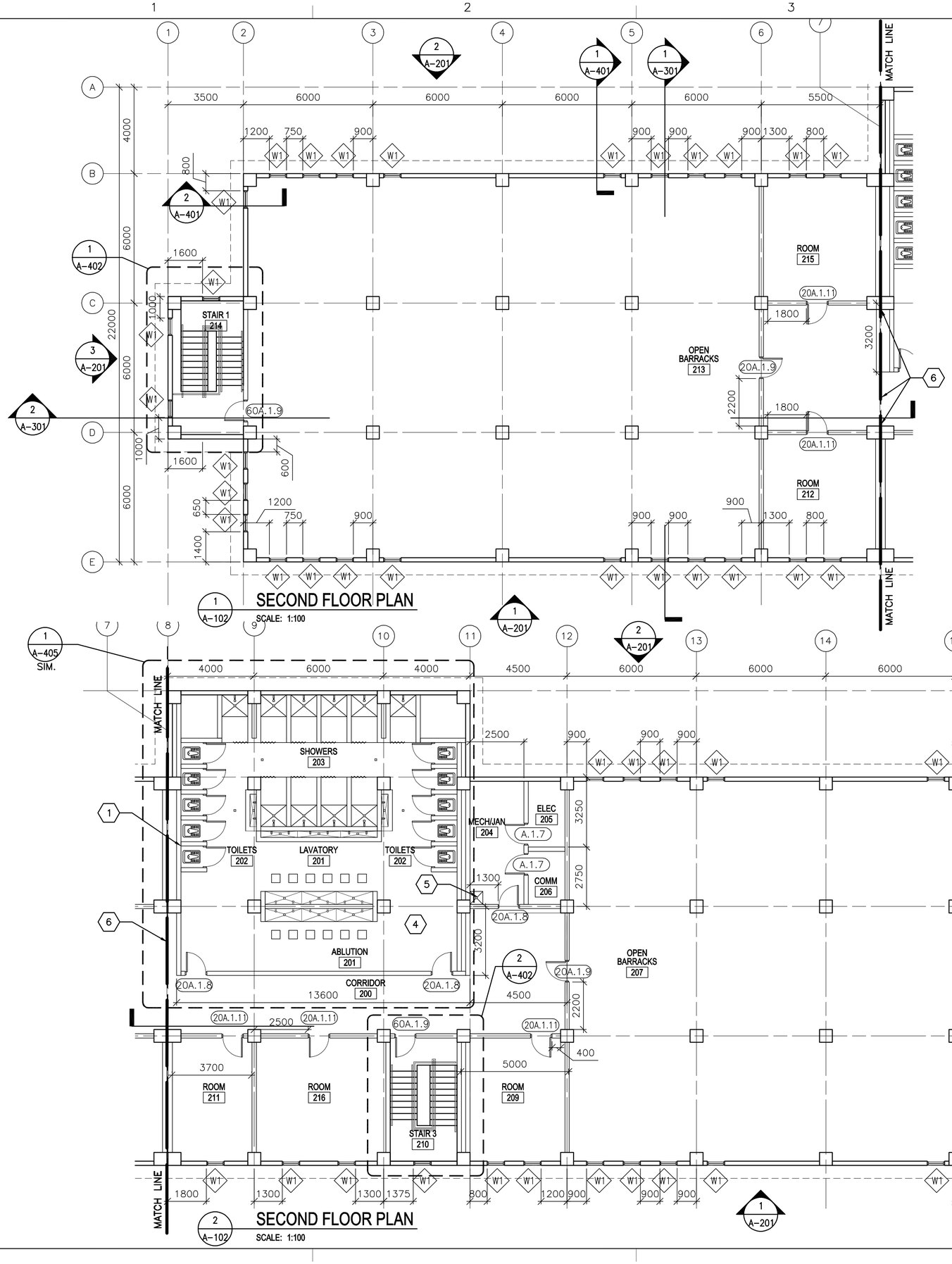





## KEY NOTES:

1. TYPICAL TOILET STALL LAYOUT – SEE DETAIL 2/A–505.
2. LINE OF ROOF OVERHANG ABOVE.
3. NOT USED
4. TERRAZZO FLOOR TILE AND CERAMIC WALL TILE TO 2000 MM ABOVE FINISHED FLOOR.
5. 600 MM X 600 MM RECESSED TROUGH – SEE DETAIL 7/A–505.
6. ISOLATION JOINT COVER– SEE SHEET A–507.

## LEGEND:

- (XXX) DOOR FRAME AND HARDWARE TYPE, SEE SHEET A–601
- ◇ A — WINDOW TYPE, SEE SHEET A–601
- ⬡ X — KEY NOTE

## ABBREVIATIONS:

| | |
|---|---|
| ELEC | ELECTRICAL |
| MECH | MECHANICAL |
| JAN | JANITOR |
| CLOS | CLOSET |
| COMM | COMMUNICATIONS |

## GENERAL NOTES:

A. DIMENSIONS ARE SHOWN TO OUTER EDGE OF EXTERIOR STRUCTURAL COLUMNS, STRUCTURAL COLUMN GRID, EDGE OF INTERIOR PARTITIONS, EDGE OF WINDOW OPENINGS, AND TO HINGE SIDE OF DOOR FRAME OPENINGS.

B. HINGE SIDE OF OPENINGS FOR DOORS AND FRAMES SHALL BE LOCATED 200 MM FROM THE ADJACENT WALL OR COLUMN, UNLESS NOTED OTHERWISE.

C. INTERIOR PARTITIONS SHALL BE 200 MM CMU, UNLESS NOTED OTHERWISE.

D. COSMETIC REPAIR OF MINOR DEFECTS: REPAIR OR FILL MORTAR JOINTS AND MINOR DEFECTS, INCLUDING BUT NOT LIMITED TO SPALLS, IN ACCORDANCE WITH MANUFACTURER'S RECOMMENDATIONS AND PRIOR TO COATING APPLICATION. SURFACES TO BE PAINTED SHALL BE CLEAN AND FREE OF FOREIGN MATTER BEFORE APPLICATION OF PAINT. CLEANING SHALL BE SCHEDULED SO THAT DUST AND OTHER CONTAMINANTS WILL NOT FALL ON NEWLY PAINTED SURFACES.

E. CONCRETE, PLASTER AND MASONRY SURFACES SHALL BE ALLOWED TO CURE FOR AT LEAST 30 DAYS BEFORE PAINTING. CONCRETE SLABS–ON–GRADE SHALL BE ALLOWED TO CURE 90 DAYS BEFORE STAINING OR SEALING.

F. DO NOT USE PAINT MATERIALS CONTAINING LEAD CONTENT IN EXCESS OF 0.009 PERCENT OF THE WEIGHT OF THE TOTAL NONVOLATILE CONTENT OF THE PAINT OR THE WEIGHT OF THE DRIED PAINT FILM.

G. DO NOT USE ANY ASBESTOS CONTAINING MATERIALS (ACM) IN PROJECT. ACM IS DEFINED AS 1% OR MORE BY VOLUME.

H. DO NOT USE PAINT MATERIALS CONTAINING MERCURIAL FUNGICIDES.

I. FACTORY PRIMED METAL DOORS AND FRAMES SHALL RECEIVE TWO COATS OF PAINT.

J. FILL REMAINING SPACE AT PENETRATIONS IN FIRE–RATED FLOORS, PARTITIONS AND CEILINGS WITH APPROPRIATE FIRESTOPPING MATERIALS.

K. ALL CEILING FINISHES SHALL BE PAINTED PLASTER APPLIED TO STRUCTURE.

L. ALL WALL FINISHES SHALL BE PAINTED PLASTER APPLIED TO STRUCTURE UNLESS OTHERWISE NOTED.

M. ALL FLOOR FINISHES SHALL BE SEALED CONCRETE, UNLESS NOTED OTHERWISE.

N. PROVIDE TILE FINISHES AS INDICATED IN Details & KEY NOTES.

O. ALL DOOR, FRAME AND HARDWARE TYPES SHALL BE 20A.1.11 UNLESS NOTED OTHERWISE.

P. TOILET STALL DOORS SHALL BE F.2.12

Q. SHOWER STALL DOOR, FRAME AND HARDWARE TYPE SHALL BE E.1.12

R. PROVIDE POLISHED STAINLESS MIRROR 600 X 900 ABOVE EVERY LAVATORY FAUCET

## KEY PLAN:

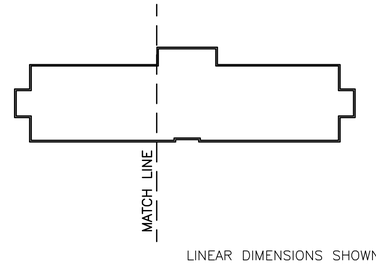


LINEAR DIMENSIONS SHOWN ARE IN MILLIMETERS (MM), UNLESS OTHERWISE NOTED

APPROVED:

A/E DESIGNER OF RECORD

SEAL:

STATE OF SOUTH CAROLINA
KEVIN R. CHAFIN
N. Charleston, SC
6374
REGISTERED ARCHITECT

0 2000 4000
SCALE: 1:100

US ARMY CORPS OF ENGINEERS
AFGHANISTAN ENGINEER DISTRICT

| Mark | Description | Date | Appr. |
|---|---|---|---|
| | | | |

| Mark | Description | Date | Appr. |
|---|---|---|---|
| | | | |

Rev: 0
Date: 2/23/10
Design file no.
Drawing code:
File name: ANABENSA-102F2P
Plot date: 2/23/2010
Plot scale: X:X

Designed by: KRC
Dwn by: EBB
Ckd by: NLJ
Reviewed by: LHM
Submitted by: BAKER

U.S. ARMY CORPS OF ENGINEERS
AFGHANISTAN ENGINEER DISTRICT
APO AE 96338

*Michael Baker Jr., Inc*
*A unit of Michael Baker Corporation*
Airside Business Park
100 Airside Drive
Moon Township, PA 15108
www.mbakercorp.com

AFGHAN NATIONAL ARMY
REGIONAL MILITARY TRAINING CENTER
STANDARD DESIGN

ENLISTED BARRACKS

SECOND FLOOR PLAN

Sheet reference number:
A–102

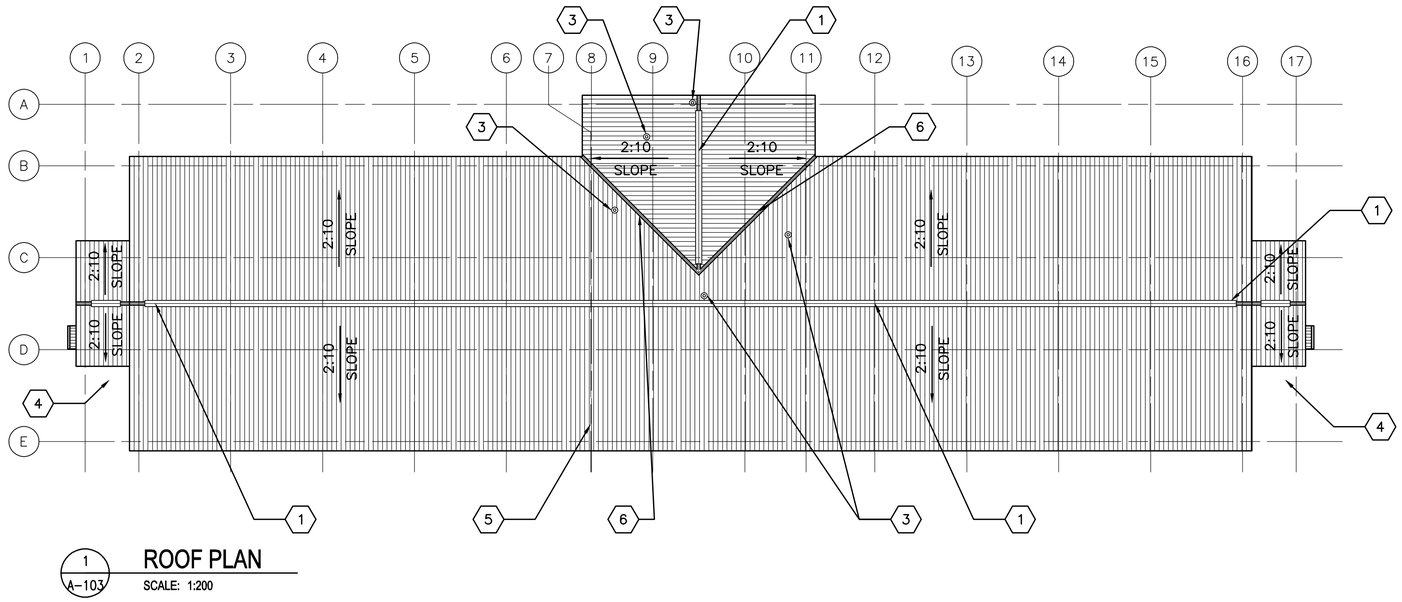


1 A–103 **ROOF PLAN**

SCALE: 1:200

## GENERAL NOTES:

A. THE APPROXIMATE LOCATION OF ROOF DEVICES AND PENETRATIONS ARE SHOWN ON THE ROOF PLAN FOR INFORMATION ONLY. THE CONTRACTOR SHALL BE RESPONSIBLE FOR UNDERSTANDING THE ACTUAL LOCATION OF THESE AND ALL OTHER ITEMS PRIOR TO BEGINNING CONSTRUCTION. COORDINATE ALL ROOF PENETRATIONS WITH STRUCTURAL, MECHANICAL AND PLUMBING WORK.

B. PLUMBING VENT PENETRATIONS SHALL TERMINATE 300 MM MINIMUM ABOVE THE ROOF.

C. UNLESS OTHERWISE NOTED, NOTES, DETAILS OR FEATURES INDICATED FOR ONE CONDITION SHALL BE APPLICABLE FOR ALL ALIKE AND SIMILAR CONDITIONS.

D. STOCKPILING OF MATERIALS, EQUIPMENT AND ANY OTHER ITEMS ON THE ROOF IS PROHIBITED.

E. ROOFS SHALL BE CORRUGATED METAL ROOF PANELS ON COLD–FORMED METAL FRAMING ON CONCRETE SLAB.

## KEY NOTES: (X)

1. CONTINUOUS METAL RIDGE VENT SEE DETAIL 4/A–501.
2. NOT USED
3. PLUMBING VENT – SEE DETAIL 5/A–501.
4. CANOPY – SEE DETAIL 2/A–504.
5. ROOF EXPANSION JOINT – SEE DETAIL 4A/A–501.
6. VALLEY – SEE DETAIL 6/A–501.

LINEAR DIMENSIONS SHOWN ARE IN MILLIMETERS (MM), UNLESS OTHERWISE NOTED

0 4000 8000

SCALE: 1:200

APPROVED:

A/E DESIGNER OF RECORD

SEAL:

STATE OF SOUTH CAROLINA
KEVIN R. CHAFIN
N. Charleston, SC
6374
REGISTERED ARCHITECT

US ARMY CORPS OF ENGINEERS
AFGHANISTAN ENGINEER DISTRICT

| Mark | Description | Date | Appr. |
|---|---|---|---|
| | | | |

| Mark | Description | Date | Appr. |
|---|---|---|---|
| | | | |

Date: 2/23/10
Design file no.
Drawing code:
File name: ANABENSA-103SP
Plot date: 2/23/2010
Plot scale: x:X
Rev: 0

Designed by: KRC
Dwn by: EBB
Ckd by: NLJ
Reviewed by: LHM
Submitted by: BAKER

U.S. ARMY CORPS OF ENGINEERS
AFGHANISTAN ENGINEER DISTRICT
APO AE 96338

*Michael Baker Jr., Inc*
*A unit of Michael Baker Corporation*
Airside Business Park
100 Airside Drive
Moon Township, PA 15108
www.mbakercorp.com

AFGHAN NATIONAL ARMY
REGIONAL MILITARY TRAINING CENTER
STANDARD DESIGN

ENLISTED BARRACKS

ROOF PLAN

Sheet reference number:
A–103

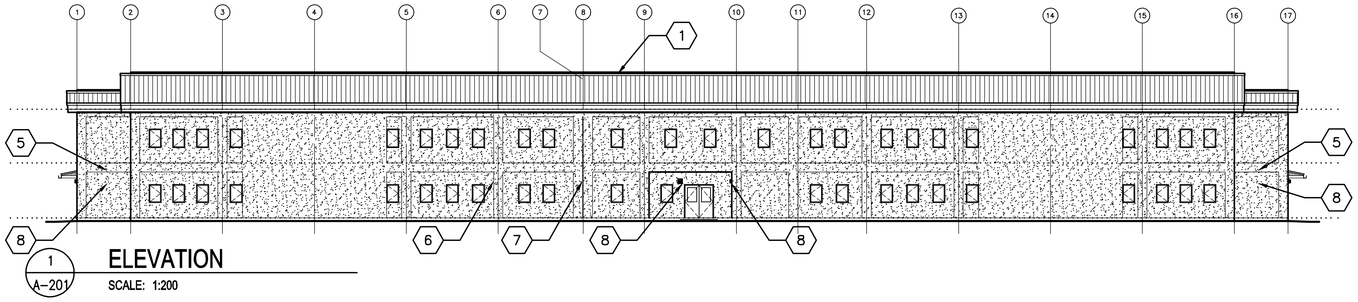


1 A-201 **ELEVATION**

SCALE: 1:200

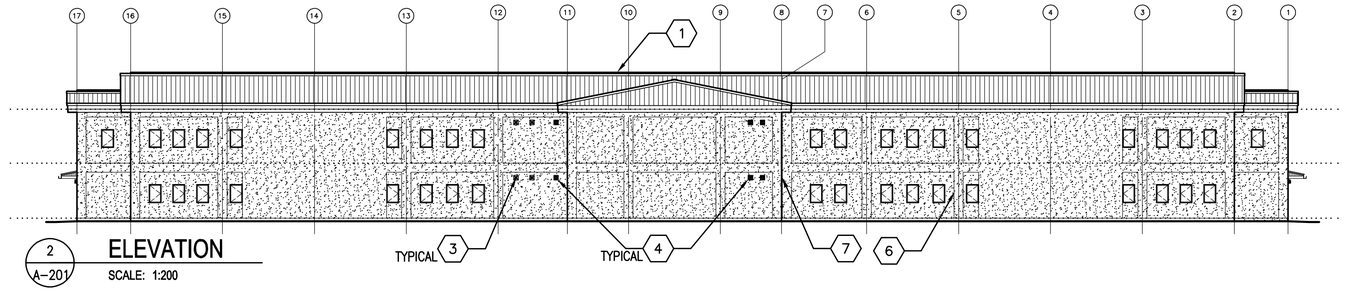


2 A-201 **ELEVATION**

SCALE: 1:200

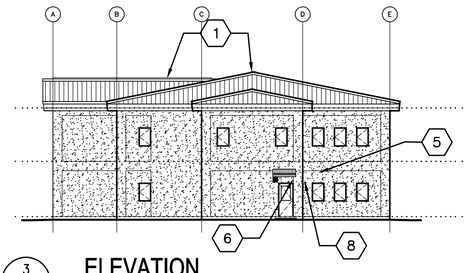


3 A-201 **ELEVATION**

SCALE: 1:200

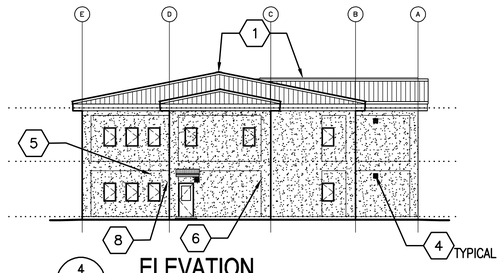


4 A-201 **ELEVATION**

SCALE: 1:200

## GENERAL NOTES:

A. COORDINATE SIZE AND LOCATION OF OPENINGS FOR MECHANICAL ITEMS WITH MECHANICAL DRAWINGS.

B. PROVIDE STRUCTURAL LINTELS AS REQUIRED – SEE STRUCTURAL DRAWINGS

C. ALL EXTERIOR WALL FINISHES SHALL BE STUCCO OVER CMU AND CONCRETE SUBSTRATES. PROVIDE CONTROL JOINTS IN STUCCO WALL FINISH AS NOTED.

D. ROOF SHALL BE CORRUGATED METAL ROOF PANELS ON COLD-FORMED METAL FRAMING ON CONCRETE SLAB.

## KEY NOTES: (X)

1. CONTINUOUS METAL RIDGE VENT – SEE DETAIL 4/A-501.
2. LOUVER, LOCATE TOP OF WALL PENETRATION 2800 MM ABOVE FINISHED FLOOR – SEE MECHANICAL DRAWINGS.
3. EXHAUST FAN, LOCATE TOP OF WALL PENETRATION 2800 MM ABOVE FINISHED FLOOR – SEE MECHANICAL DRAWINGS.
4. WALL GRILL, LOCATE TOP OF WALL PENETRATION 2800 MM ABOVE FINISHED FLOOR – SEE MECHANICAL DRAWINGS.
5. CANOPY – SEE DETAIL 1/A-504.
6. STUCCO CONTROL JOINT – SEE DETAIL 2A/A-501
7. EXPANSION JOINT COVER – SEE SHEET A-507
8. EXTERIOR LIGHT FIXTURE – SEE ELECTRICAL

LINEAR DIMENSIONS SHOWN ARE IN MILLIMETERS (MM), UNLESS OTHERWISE NOTED

APPROVED:

A/E DESIGNER OF RECORD

SEAL:

STATE OF SOUTH CAROLINA
KEVIN R. CHAFIN
N. Charleston, SC
6374
REGISTERED ARCHITECT

0 4000 8000
SCALE: 1:200

US ARMY CORPS OF ENGINEERS
AFGHANISTAN ENGINEER DISTRICT

| Mark | Description | Date | Appr. |
|---|---|---|---|
| | | | |

| Mark | Description | Date | Appr. |
|---|---|---|---|
| | | | |

Date: 2/23/10 Rev: 0
Design file no.
Drawing code:
File name: ANABENSA-201ELV
Plot date: 2/23/2010
Plot scale: x:x

Designed by: KRC
Dwn by: EBB
Ckd by: NLJ
Reviewed by: LHM
Submitted by: BAKER

U.S. ARMY CORPS OF ENGINEERS
AFGHANISTAN ENGINEER DISTRICT
APO AE 96338


Michael Baker Jr., Inc
A unit of Michael Baker Corporation
Airside Business Park
100 Airside Drive
Moon Township, PA 15108
www.mbakercorp.com


AFGHAN NATIONAL ARMY
REGIONAL MILITARY TRAINING CENTER
STANDARD DESIGN

ENLISTED BARRACKS

ELEVATIONS

Sheet reference number:
A-201

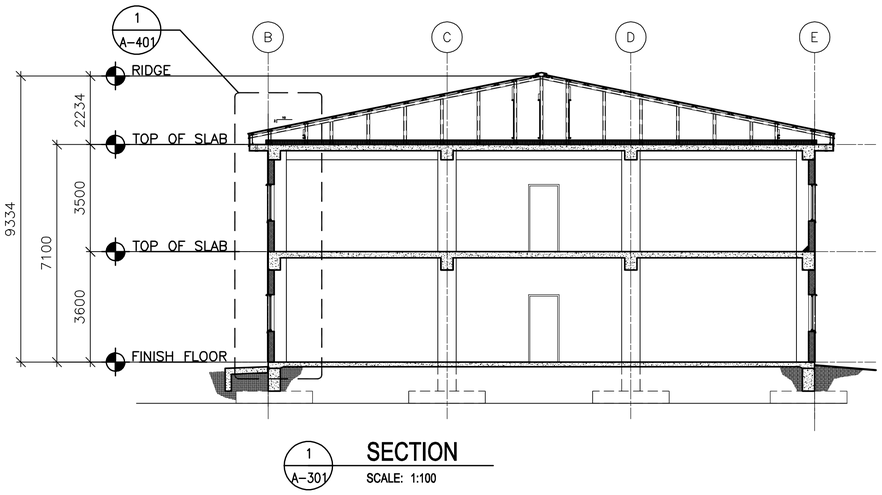


1 A-301 **SECTION**
SCALE: 1:100

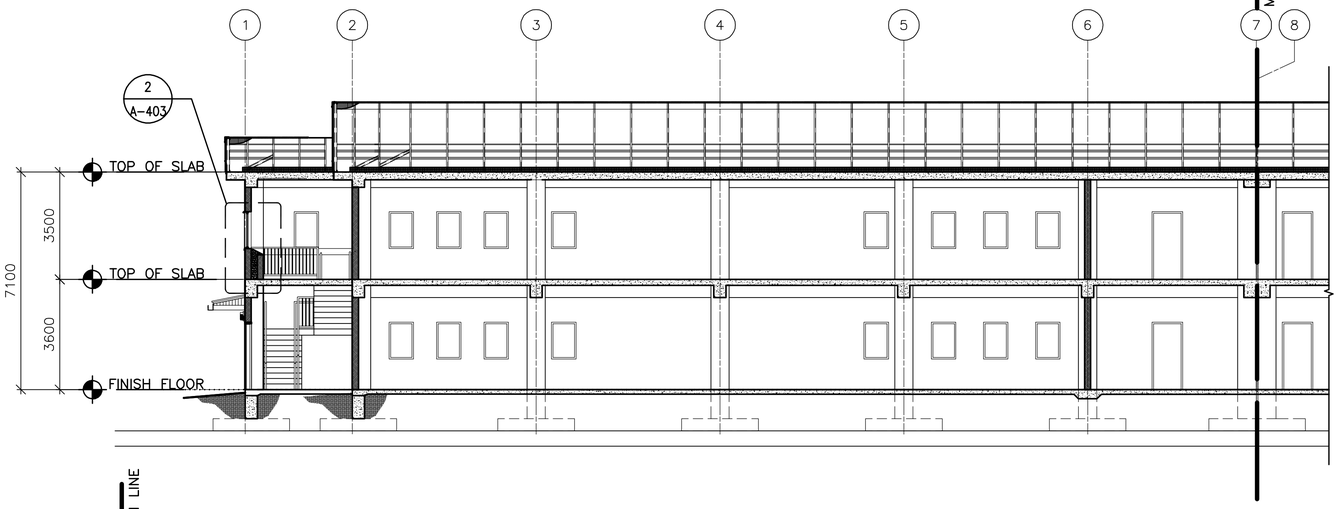


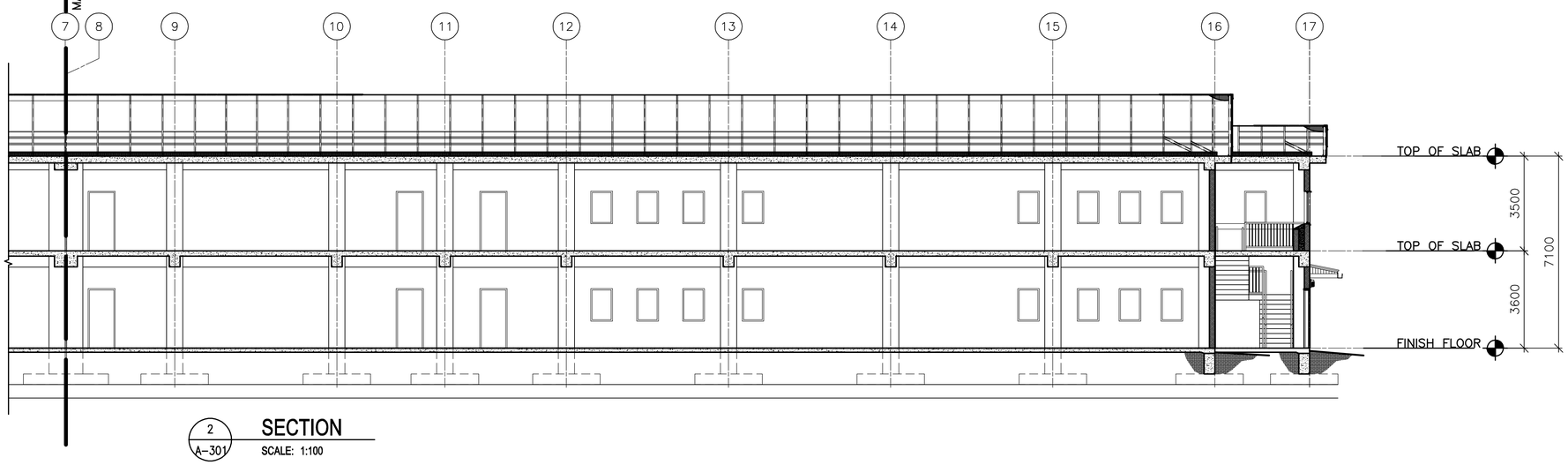


2 A-301 **SECTION**
SCALE: 1:100

0 2000 4000
SCALE: 1:100

APPROVED:

A/E DESIGNER OF RECORD

SEAL:

STATE OF SOUTH CAROLINA
KEVIN R. CHAFIN
N. Charleston, SC
6374
REGISTERED ARCHITECT

US ARMY CORPS OF ENGINEERS
AFGHANISTAN ENGINEER DISTRICT

| Mark | Description | Date | Appr. |
|---|---|---|---|
| | | | |
| | | | |

| Mark | Description | Date | Appr. |
|---|---|---|---|
| | | | |

U.S. ARMY CORPS OF ENGINEERS
AFGHANISTAN ENGINEER DISTRICT
APO AE 96338

*Michael Baker Jr., Inc*
*A unit of Michael Baker Corporation*
Airside Business Park
100 Airside Drive
Moon Township, PA 15108
www.mbakercorp.com

| | |
|---|---|
| Designed by: KRC | Date: 2/23/10 |
| Dwn by: EBB | Ckd by: NLJ |
| Reviewed by: LHM | Drawing code: |
| Submitted by: BAKER | File name: ANABENBA-301BS |
| | Design file no. |
| | Plot date: 2/23/2010 |
| | Plot scale: x:x |
| | Rev: 0 |

AFGHAN NATIONAL ARMY
REGIONAL MILITARY TRAINING CENTER
STANDARD DESIGN

ENLISTED BARRACKS

BUILDING SECTIONS

Sheet reference number:
A-301

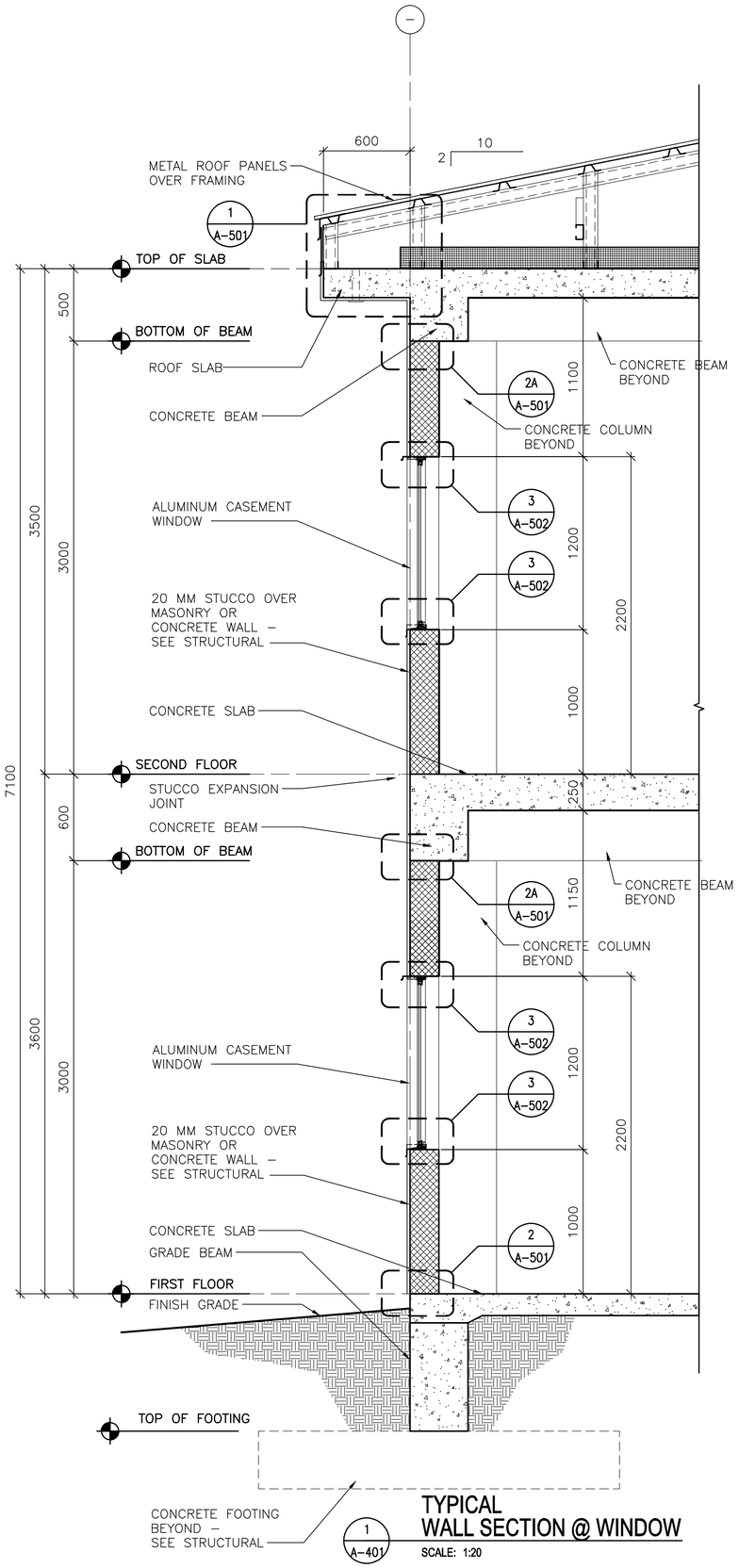


1 A-401 **TYPICAL WALL SECTION @ WINDOW**

SCALE: 1:20

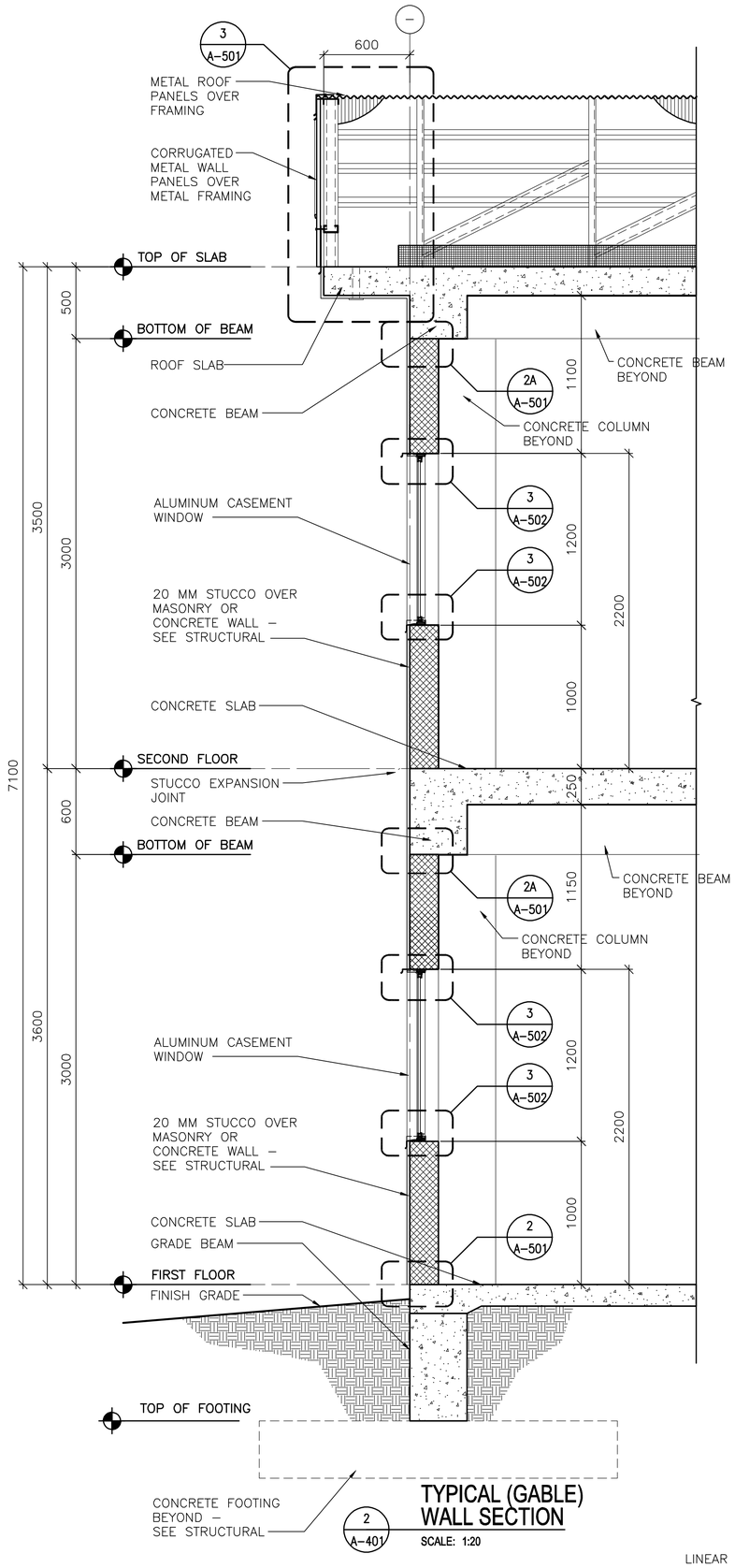


2 A-401 **TYPICAL (GABLE) WALL SECTION**

SCALE: 1:20

LINEAR DIMENSIONS SHOWN ARE IN MILLIMETERS (MM), UNLESS OTHERWISE NOTED

0 400 800

SCALE: 1:20

APPROVED:

A/E DESIGNER OF RECORD

SEAL:

STATE OF SOUTH CAROLINA
KEVIN R. CHARIN
N. Charleston, SC
6374
REGISTERED ARCHITECT

US ARMY CORPS OF ENGINEERS
AFGHANISTAN ENGINEER DISTRICT

| Mark | Description | Date | Appr. | Mark | Description | Date | Appr. |
|---|---|---|---|---|---|---|---|
| | | | | | | | |

Rev: 0

Date: 2/23/10
Design file no.
Drawing code:
File name: mabanba-401WS
Plot date: 2/23/2010
Plot scale: X:X

Designed by: KRC
Dwn by: EBB
Ckd by: NLJ
Reviewed by: LHM
Submitted by: BAKER

U.S. ARMY CORPS OF ENGINEERS
AFGHANISTAN ENGINEER DISTRICT
APO AE 96338

*Michael Baker Jr., Inc*
*A unit of Michael Baker Corporation*
Airside Business Park
100 Airside Drive
Moon Township, PA 15108
www.mbakercorp.com

AFGHAN NATIONAL ARMY
REGIONAL MILITARY TRAINING CENTER
STANDARD DESIGN

ENLISTED BARRACKS

WALL SECTIONS

Sheet reference number:
A-401

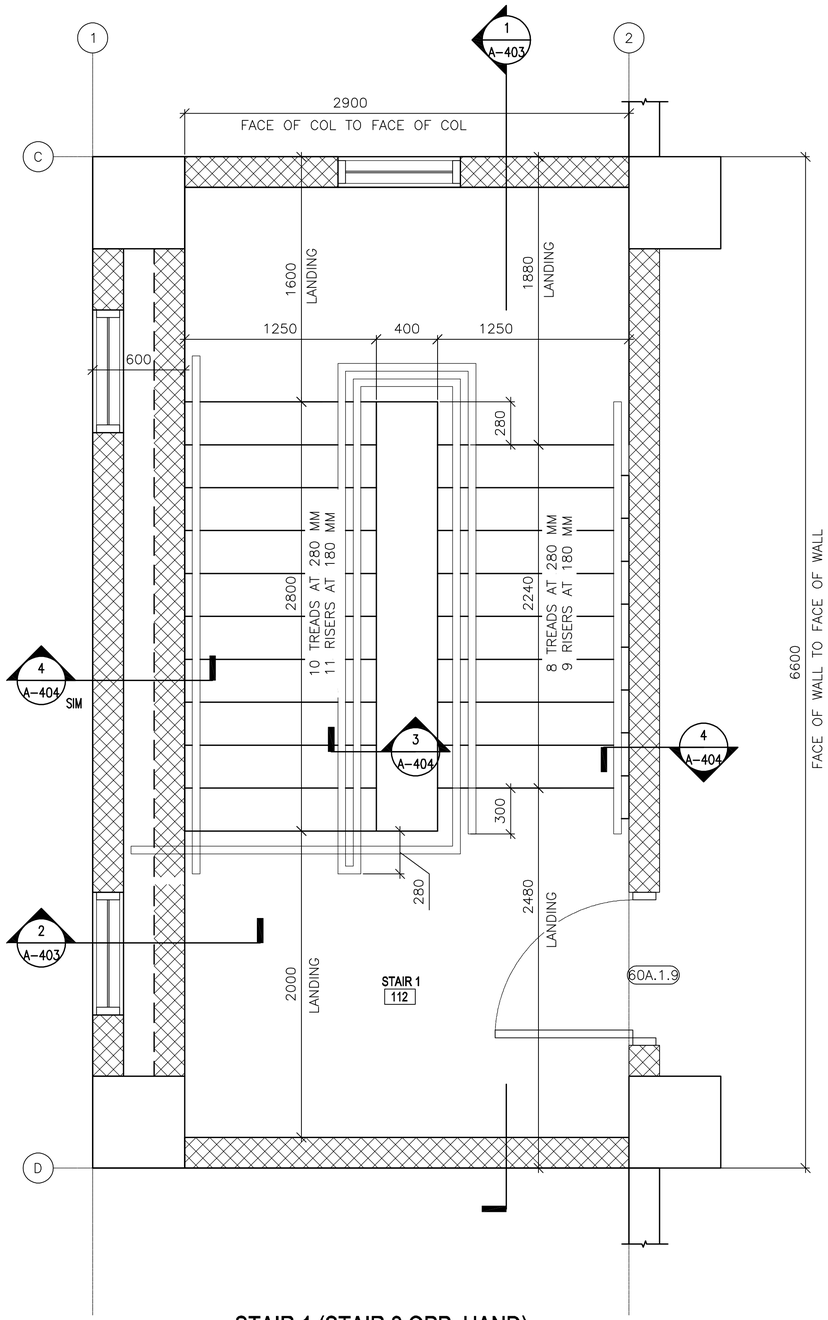


## STAIR 1 (STAIR 2 OPP. HAND) SECOND FLOOR STAIR PLAN

1 / A-402

SCALE: 1:20

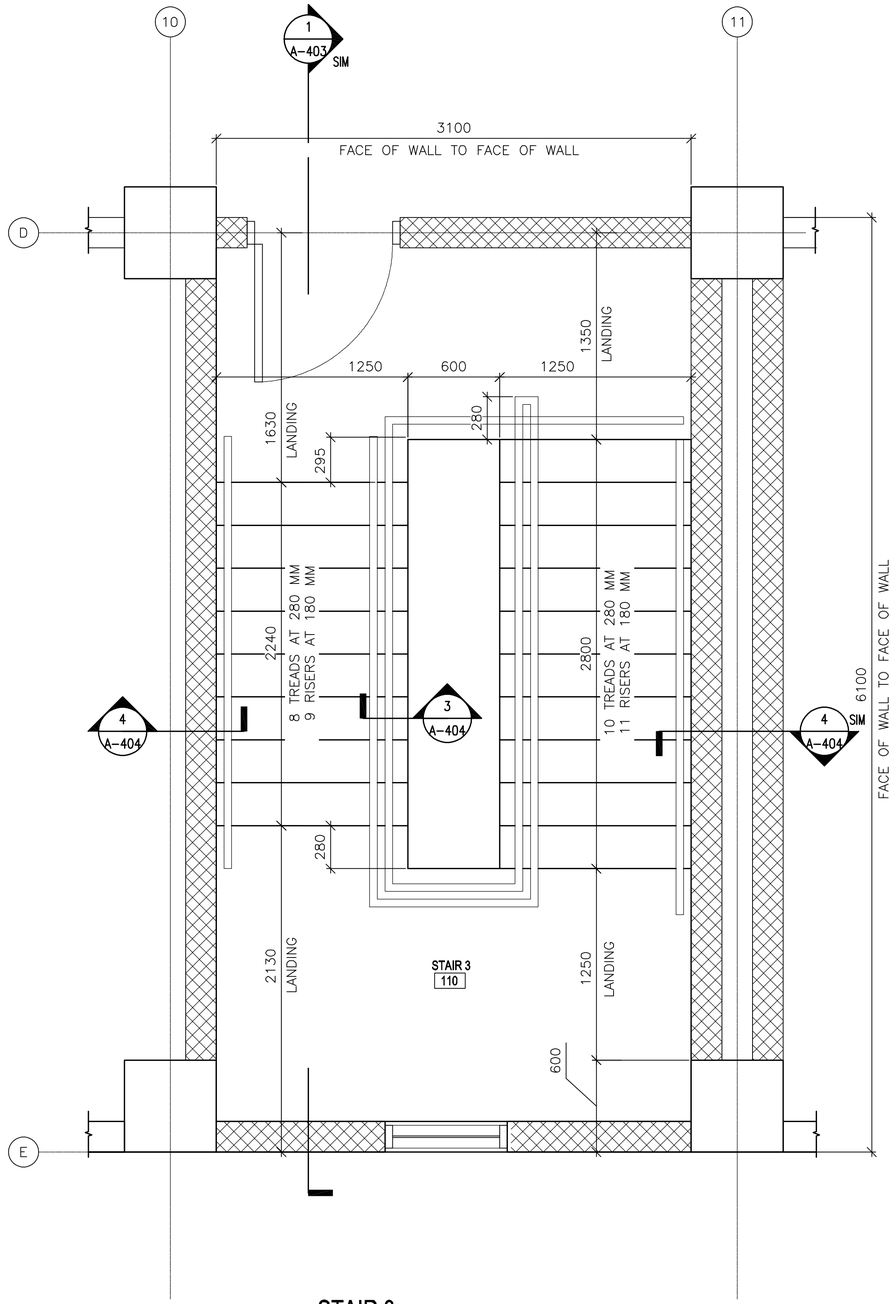


## STAIR 3 SECOND FLOOR STAIR PLAN

2 / A-402

SCALE: 1:20

LINEAR DIMENSIONS SHOWN ARE IN MILLIMETERS (MM), UNLESS OTHERWISE NOTED

0 400 800

SCALE: 1:20

APPROVED:

A/E DESIGNER OF RECORD

SEAL:

STATE OF SOUTH CAROLINA
KEVIN R. CHAFIN
N. Charleston, SC
6374
REGISTERED ARCHITECT

US ARMY CORPS OF ENGINEERS
AFGHANISTAN ENGINEER DISTRICT

| Mark | Description | Date | Appr. | Mark | Description | Date | Appr. |
|---|---|---|---|---|---|---|---|

U.S. ARMY CORPS OF ENGINEERS
AFGHANISTAN ENGINEER DISTRICT
APO AE 96338

Michael Baker Jr., Inc
A unit of Michael Baker Corporation
Airside Business Park
100 Airside Drive
Moon Township, PA 15108
www.mbakercorp.com

Designed by: KRC
Drawn by: EBB
Reviewed by: LHM
Submitted by: BAKER

Date: 2/23/10
Design file no.
Drawing code:
File name: ANABENBA-402STP
Plot date: 2/23/2010
Plot scale: x:x

Rev: 0

AFGHAN NATIONAL ARMY
REGIONAL MILITARY TRAINING CENTER
STANDARD DESIGN

ENLISTED BARRACKS

STAIR PLANS

Sheet reference number:
A-402

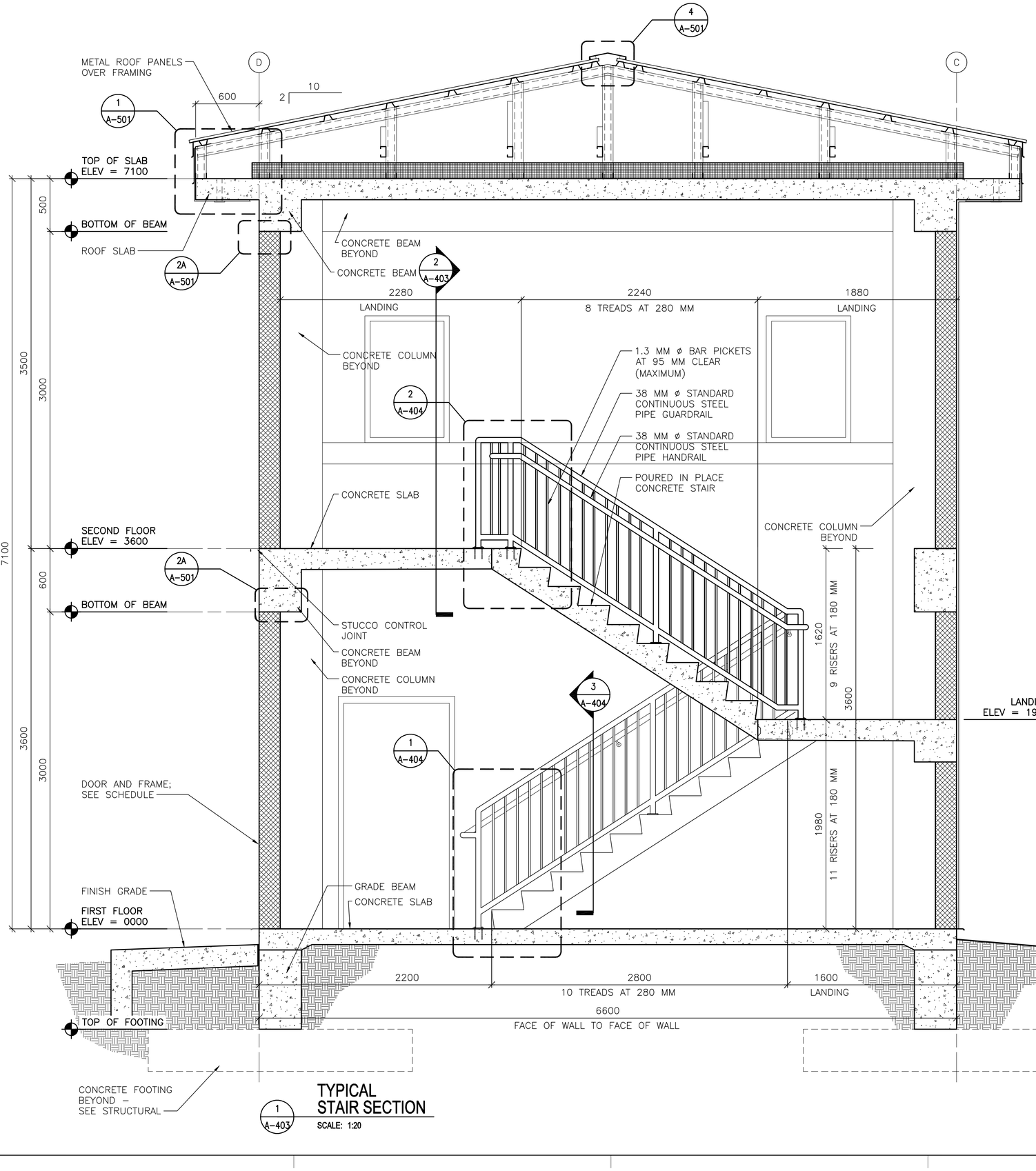


1 A-403 **TYPICAL STAIR SECTION**
SCALE: 1:20

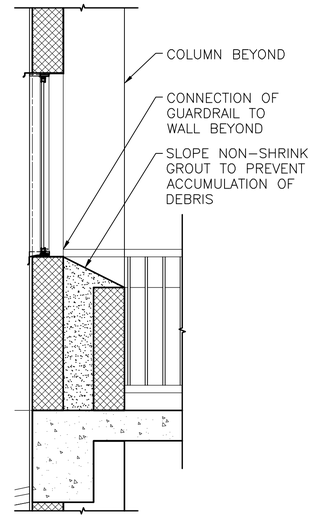


2 A-403 **TYPICAL STAIR SECTION**
SCALE: 1:20

LINEAR DIMENSIONS SHOWN ARE IN MILLIMETERS (MM), UNLESS OTHERWISE NOTED

0 400 800
SCALE: 1:20

APPROVED:

A/E DESIGNER OF RECORD

SEAL:

STATE OF SOUTH CAROLINA
KEVIN R. CHAFIN
N. Charleston, SC
6374
REGISTERED ARCHITECT

US ARMY CORPS OF ENGINEERS
AFGHANISTAN ENGINEER DISTRICT

| Mark | Description | Date | Appr. |
|---|---|---|---|

| | |
|---|---|
| Date: | 2/23/10 |
| Design file no. | |
| Drawing code: | |
| File name: | ANABENBA-403ST3 |
| Plot date: | 2/23/2010 |
| Plot scale: | x:X |
| Rev: | 0 |

| | |
|---|---|
| Designed by: | KRC |
| Drwn by: | EBB |
| Ckd by: | NLJ |
| Reviewed by: | LHM |
| Submitted by: | BAKER |

U.S. ARMY CORPS OF ENGINEERS
AFGHANISTAN ENGINEER DISTRICT
APO AE 96338

*Michael Baker Jr., Inc*
*A unit of Michael Baker Corporation*
Airside Business Park
100 Airside Drive
Moon Township, PA 15108
www.mbakercorp.com

AFGHAN NATIONAL ARMY
REGIONAL MILITARY TRAINING CENTER
STANDARD DESIGN

ENLISTED BARRACKS

STAIR SECTIONS

Sheet reference number:
A–403

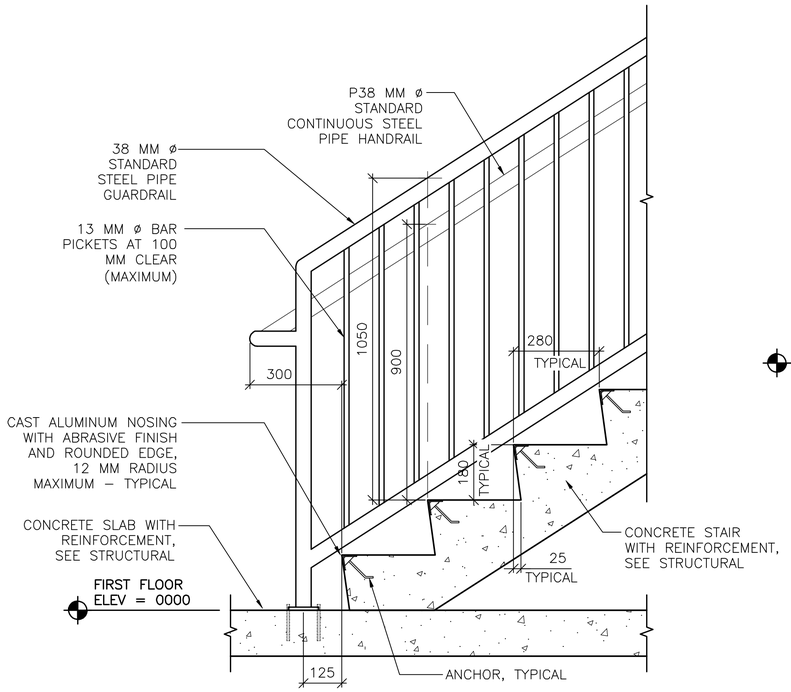


1 A-404 **BOTTOM LANDING DETAIL**
SCALE: 1:10

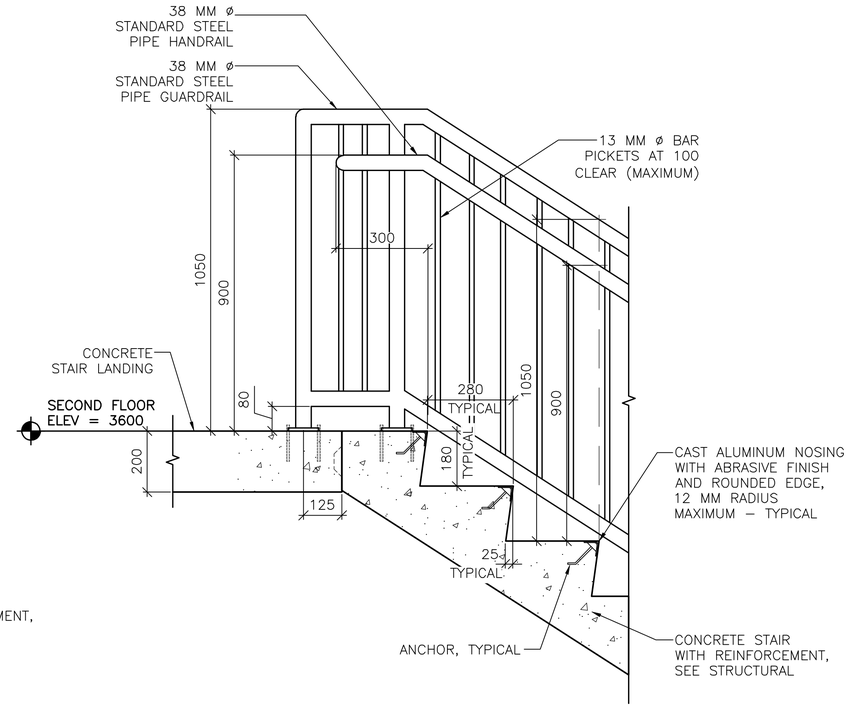


2 A-404 **TOP LANDING DETAIL**
SCALE: 1:10

NOTE:
SIMILAR MOUNTING DETAIL AT GUARDRAILS WITHOUT GRAB BARS

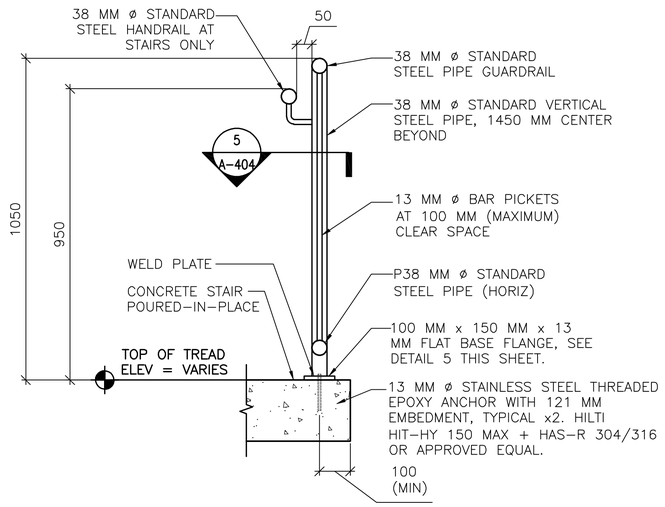


3 A-404 **GUARDRAIL AND HANDRAIL DETAIL**
SCALE: 1:10

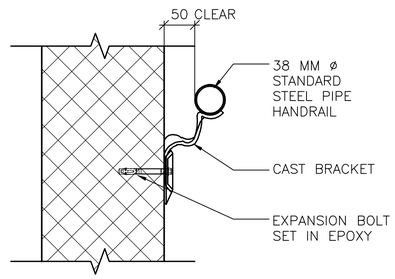


4 A-404 **WALL MOUNTED HANDRAIL DETAIL**
SCALE: 1:10

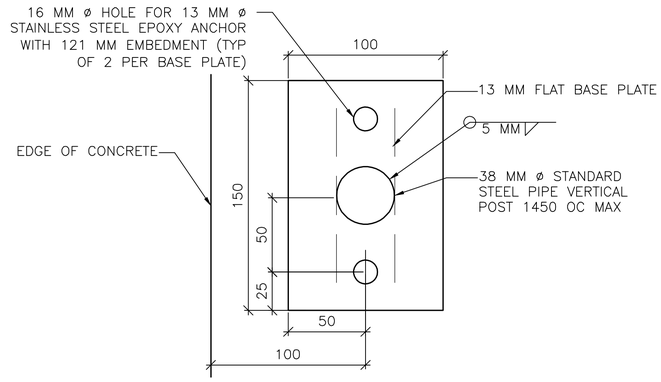


5 A-404 **RAILING BASE PLATE DETAIL**
SCALE: NOT TO SCALE

LINEAR DIMENSIONS SHOWN ARE IN MILLIMETERS (MM), UNLESS OTHERWISE NOTED

0 100 200
SCALE: 1:5

0 200 400
SCALE: 1:10

APPROVED:

A/E DESIGNER OF RECORD

SEAL:

STATE OF SOUTH CAROLINA
KEVIN R. CHAFIN
N. Charleston, SC
6374
REGISTERED ARCHITECT

US ARMY CORPS OF ENGINEERS
AFGHANISTAN ENGINEER DISTRICT

| Mark | Description | Date | Appr. | Mark | Description | Date | Appr. |
|---|---|---|---|---|---|---|---|

Designed by: KRC
Dwn by: EBB
Ckd by: NLJ
Reviewed by: LHM
Submitted by: BAKER
Date: 2/23/10
Rev: 0
Design file no.
Drawing code:
File name: ANABEHBA-404STD
Plot date: 2/23/2010
Plot scale: X:X

U.S. ARMY CORPS OF ENGINEERS
AFGHANISTAN ENGINEER DISTRICT
APO AE 96338

Michael Baker Jr., Inc
A unit of Michael Baker Corporation
Airside Business Park
100 Airside Drive
Moon Township PA 15108
www.mbakercorp.com

AFGHAN NATIONAL ARMY
REGIONAL MILITARY TRAINING CENTER
STANDARD DESIGN

ENLISTED BARRACKS

STAIR DETAILS

Sheet reference number:
A-404

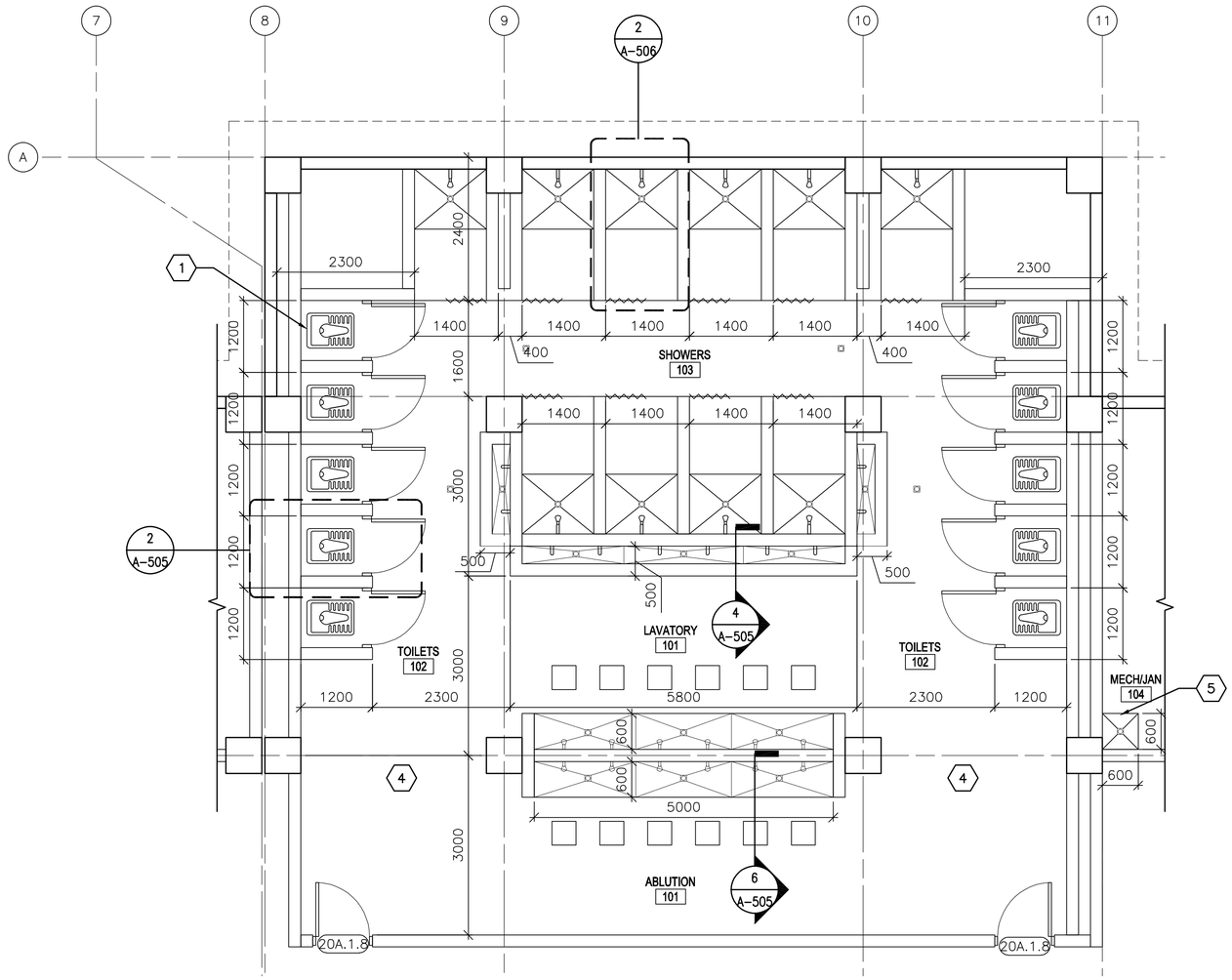


1 A–405 **ENLARGED PLAN**

SCALE: 1:50

## GENERAL NOTES:

A. DIMENSIONS ARE SHOWN TO OUTER EDGE OF EXTERIOR STRUCTURAL COLUMNS, STRUCTURAL COLUMN GRID, EDGE OF INTERIOR PARTITIONS, EDGE OF WINDOW OPENINGS, AND TO HINGE SIDE OF DOOR FRAME OPENINGS.

B. HINGE SIDE OF OPENINGS FOR DOORS AND FRAMES SHALL BE LOCATED 200 MM FROM THE ADJACENT WALL OR COLUMN, UNLESS NOTED OTHERWISE.

C. INTERIOR PARTITIONS SHALL BE 200 MM CMU, UNLESS NOTED OTHERWISE.

D. COSMETIC REPAIR OF MINOR DEFECTS: REPAIR OR FILL MORTAR JOINTS AND MINOR DEFECTS, INCLUDING BUT NOT LIMITED TO SPALLS, IN ACCORDANCE WITH MANUFACTURER'S RECOMMENDATIONS AND PRIOR TO COATING APPLICATION. SURFACES TO BE PAINTED SHALL BE CLEAN AND FREE OF FOREIGN MATTER BEFORE APPLICATION OF PAINT. CLEANING SHALL BE SCHEDULED SO THAT DUST AND OTHER CONTAMINANTS WILL NOT FALL ON NEWLY PAINTED SURFACES.

E. CONCRETE, PLASTER AND MASONRY SURFACES SHALL BE ALLOWED TO CURE FOR AT LEAST 30 DAYS BEFORE PAINTING. CONCRETE SLABS–ON–GRADE SHALL BE ALLOWED TO CURE 90 DAYS BEFORE STAINING OR SEALING.

F. DO NOT USE PAINT MATERIALS CONTAINING LEAD CONTENT IN EXCESS OF 0.009 PERCENT OF THE WEIGHT OF THE TOTAL NONVOLATILE CONTENT OF THE PAINT OR THE WEIGHT OF THE DRIED PAINT FILM.

G. DO NOT USE ANY ASBESTOS CONTAINING MATERIALS (ACM) IN PROJECT. ACM IS DEFINED AS 1% OR MORE BY VOLUME.

H. DO NOT USE PAINT MATERIALS CONTAINING MERCURIAL FUNGICIDES.

I. FACTORY PRIMED METAL DOORS AND FRAMES SHALL RECEIVE TWO COATS OF PAINT.

J. FILL REMAINING SPACE AT PENETRATIONS IN FIRE–RATED FLOORS, PARTITIONS AND CEILINGS WITH APPROPRIATE FIRESTOPPING MATERIALS.

K. ALL CEILING FINISHES SHALL BE PAINTED PLASTER APPLIED TO STRUCTURE.

L. ALL WALL FINISHES SHALL BE PAINTED PLASTER APPLIED TO STRUCTURE UNLESS OTHERWISE NOTED.

M. ALL FLOOR FINISHES SHALL BE SEALED CONCRETE, UNLESS NOTED OTHERWISE.

N. PROVIDE TILE FINISHES AS INDICATED IN Details & KEY NOTES.

O. ALL DOOR, FRAME AND HARDWARE TYPES SHALL BE 20A.1.11 UNLESS NOTED OTHERWISE.

P. TOILET STALL DOORS SHALL BE F.2.12

Q. SHOWER STALL DOOR, FRAME AND HARDWARE TYPE SHALL BE E.1.12

R. PROVIDE POLISHED STAINLESS MIRROR 600 X 900 ABOVE EVERY LAVATORY FAUCET

## KEY NOTES:

(X)

1. TYPICAL TOILET STALL LAYOUT – SEE DETAIL 2/A–505.
2. NOT USED.
3. NOT USED.
4. TERRAZZO FLOOR TILE AND CERAMIC WALL TILE TO 2000 MM ABOVE FINISHED FLOOR UNLESS OTHERWISE NOTED.
5. RECESSED TROUGH – SEE DETAIL 7/A–505.

## LEGEND:

(XXX) DOOR FRAME AND HARDWARE TYPE, SEE SHEET A–601

◇ A — WINDOW TYPE, SEE SHEET A–601

⬡ X — KEY NOTE

## ABBREVIATIONS:

| | |
|---|---|
| ELEC | ELECTRICAL |
| MECH | MECHANICAL |
| JAN | JANITOR |
| CLOS | CLOSET |

LINEAR DIMENSIONS SHOWN ARE IN MILLIMETERS (MM), UNLESS OTHERWISE NOTED

0 1000 2000
SCALE: 1:50

APPROVED:

A/E DESIGNER OF RECORD

SEAL:

STATE OF SOUTH CAROLINA
KEVIN R. CHAFIN
N. Charleston, SC
6374
REGISTERED ARCHITECT

US ARMY CORPS OF ENGINEERS
AFGHANISTAN ENGINEER DISTRICT

| Mark | Description | Date | Appr. |
|---|---|---|---|
| | | | |

| Mark | Description | Date | Appr. |
|---|---|---|---|
| | | | |

Rev: 0
Date: 2/23/10
Design file no.
Drawing code:
File name: ANABENBA-406EP
Plot date: 2/23/2010
Plot scale: x:X

Designed by: KRC
Drwn by: EBB
Ckd by: NLJ
Reviewed by: LHM
Submitted by: BAKER

U.S. ARMY CORPS OF ENGINEERS
AFGHANISTAN ENGINEER DISTRICT
APO AE 96338

*Michael Baker Jr., Inc*
*A unit of Michael Baker Corporation*
Airside Business Park
100 Airside Drive
Moon Township, PA 15108
www.mbakercorp.com

AFGHAN NATIONAL ARMY
REGIONAL MILITARY TRAINING CENTER
STANDARD DESIGN

ENLISTED BARRACKS

ENLARGED PLAN

Sheet reference number:
A–405

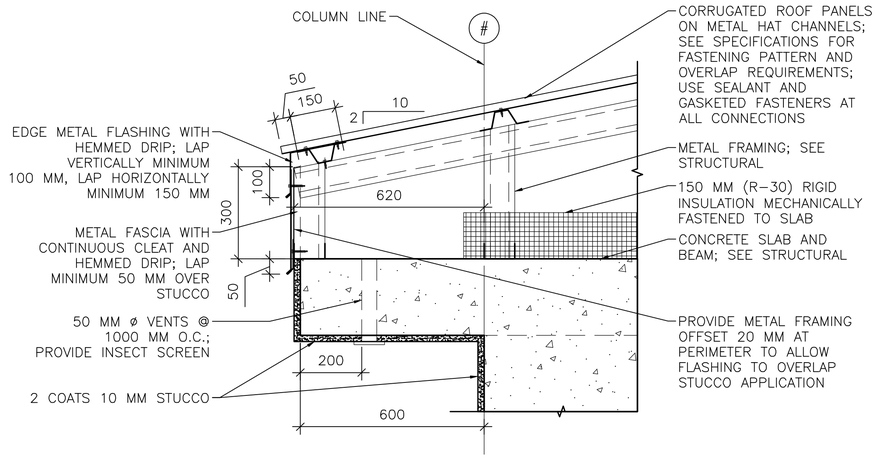


1 A-501 **EAVE DETAIL**
SCALE: 1:10

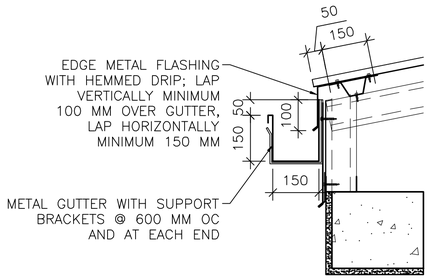


1A A-501 **GUTTER DETAIL**
SCALE: 1:10

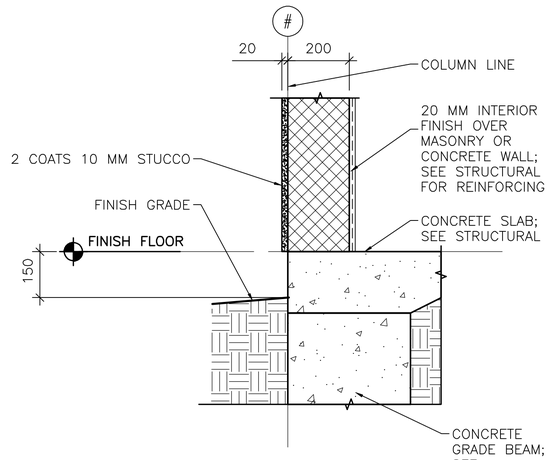


2 A-501 **STUCCO BASE DETAIL**
SCALE: 1:10

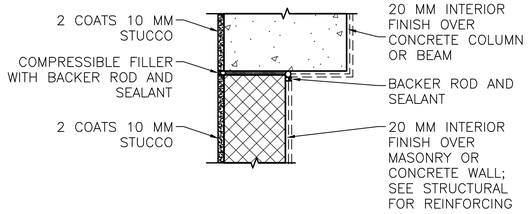


NOTE: DETAIL TYPICAL AT ALL WALL/COLUMN AND WALL/BEAM LOCATIONS, SEE ALTERNATE BRACING DETAIL BELOW 2B/A-501.

2A A-501 **STUCCO JOINT DETAIL**
SCALE: 1:10

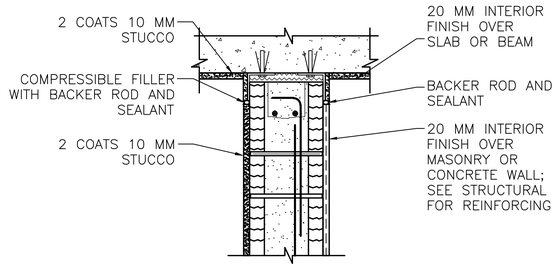


INTERIOR WALL/BEAM

2B A-501 **ALTERNATE BRACING DETAIL**
SCALE: 1:10

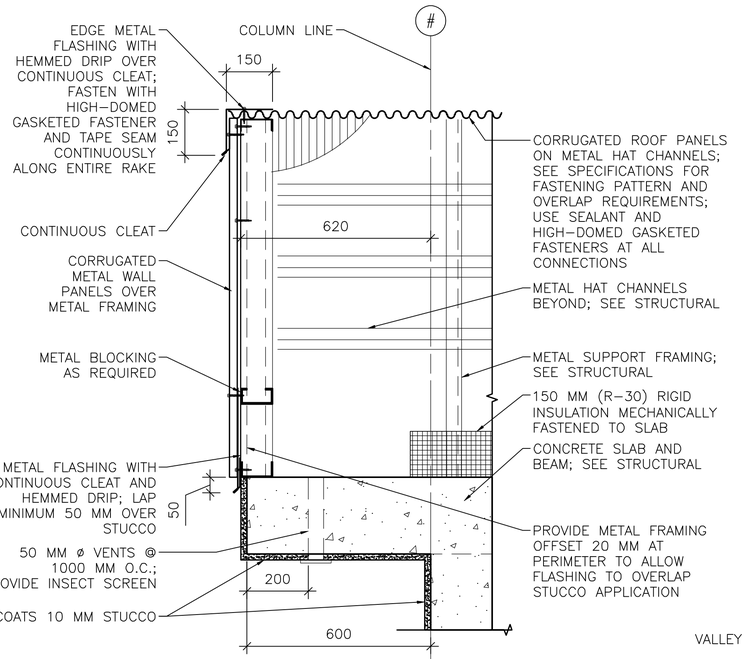


3 A-501 **RAKE/EAVE DETAIL**
SCALE: 1:10

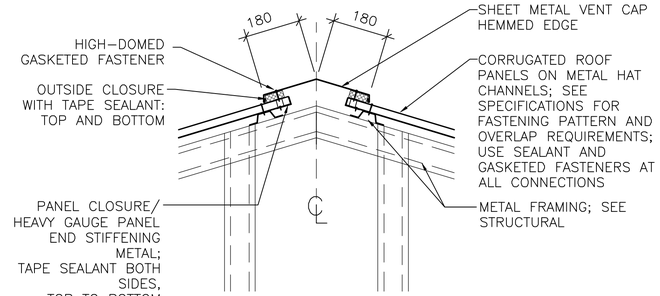


4 A-501 **RIDGE VENT DETAIL**
SCALE: 1:10

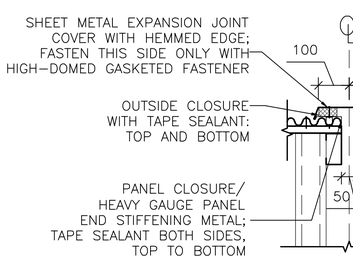


4A A-501 **ROOF EXPANSION JOINT DETAIL**
SCALE: 1:10

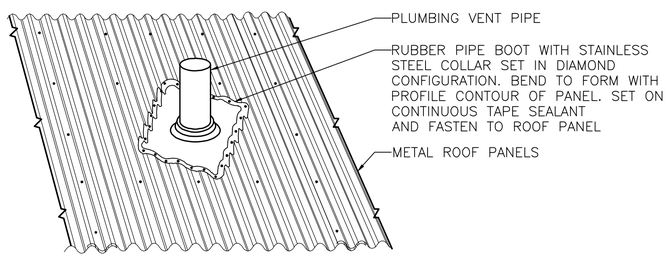


5 A-501 **PLUMBING VENT DETAIL**
SCALE: NTS

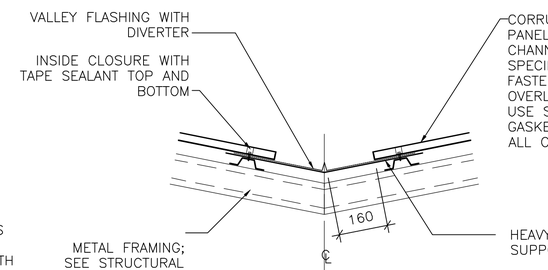


6 A-501 **VALLEY DETAIL**
SCALE: 1:10

LINEAR DIMENSIONS SHOWN ARE IN MILLIMETERS (MM), UNLESS OTHERWISE NOTED

0 200 400
SCALE: 1:10

APPROVED:

A/E DESIGNER OF RECORD

SEAL:

STATE OF SOUTH CAROLINA
KEVIN R. CHAFIN
N. Charleston, SC
6374
REGISTERED ARCHITECT

US ARMY CORPS OF ENGINEERS
AFGHANISTAN ENGINEER DISTRICT

| Mark | Description | Date | Appr. |
|---|---|---|---|

| Mark | Description | Date | Appr. |
|---|---|---|---|

Designed by: KRC
Drwn by: EBB
Ckd by: NLJ
Reviewed by: LHM
Submitted by: BAKER

Date: 2/23/10
Design file no.
Drawing code:
Rev: 0
File name: ANABENSA-501DT
Plot date: 2/23/2010
Plot scale: x:x

U.S. ARMY CORPS OF ENGINEERS
AFGHANISTAN ENGINEER DISTRICT
APO AE 96338

Michael Baker Jr., Inc
A unit of Michael Baker Corporation
Airside Business Park
100 Airside Drive
Moon Township, PA 15108
www.mbakercorp.com

AFGHAN NATIONAL ARMY
REGIONAL MILITARY TRAINING CENTER
STANDARD DESIGN

ENLISTED BARRACKS

EXTERIOR DETAILS

Sheet reference number:
A-501

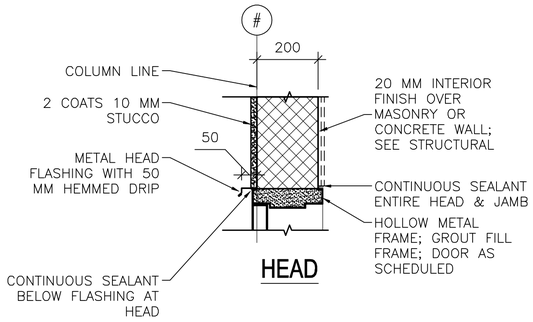


HEAD

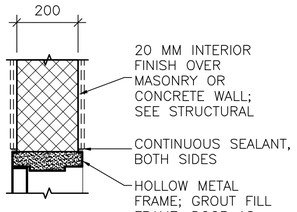


HEAD

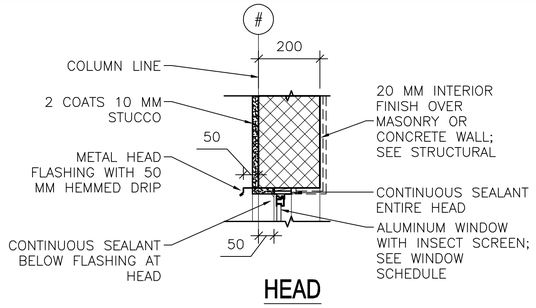


HEAD

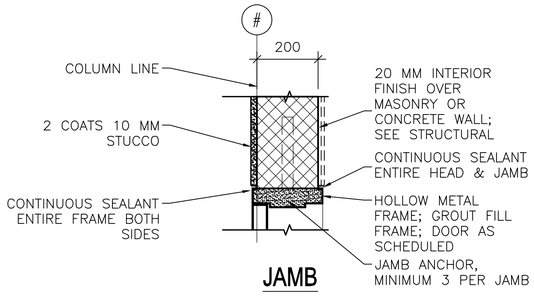


JAMB

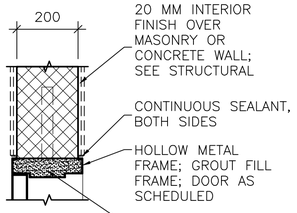


JAMB

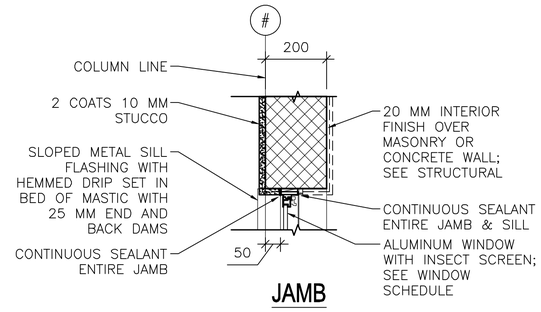


JAMB




THRESHOLD

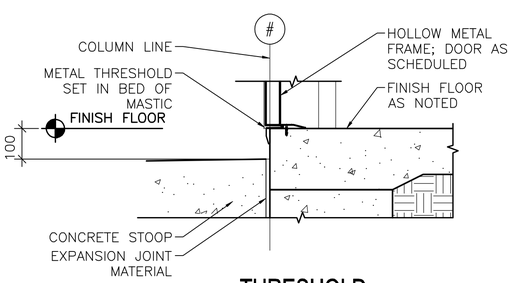


THRESHOLD

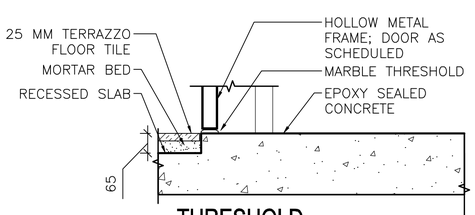


THRESHOLD

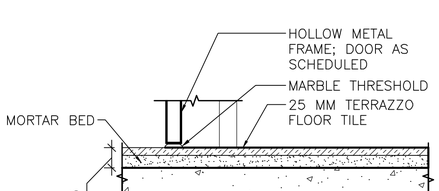


THRESHOLD

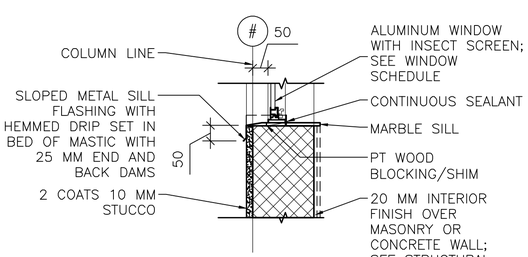


SILL

1 A–502 **EXTERIOR DOOR DETAILS**
SCALE: 1:10

2 A–502 **INTERIOR DOOR DETAILS**
SCALE: 1:10

3 A–502 **EXTERIOR WINDOW DETAILS**
SCALE: 1:10

LINEAR DIMENSIONS SHOWN ARE IN MILLIMETERS (MM), UNLESS OTHERWISE NOTED

0 200 400
SCALE: 1:10

APPROVED:

A/E DESIGNER OF RECORD

SEAL:

STATE OF SOUTH CAROLINA
KEVIN R. CHAFIN
N. Charleston, SC
6374
REGISTERED ARCHITECT

US ARMY CORPS OF ENGINEERS
AFGHANISTAN ENGINEER DISTRICT

| Mark | Description | Date | Appr. |
|---|---|---|---|
| | | | |

| Mark | Description | Date | Appr. |
|---|---|---|---|
| | | | |

U.S. ARMY CORPS OF ENGINEERS
AFGHANISTAN ENGINEER DISTRICT
APO AE 96338

*Michael Baker Jr., Inc*
*A unit of Michael Baker Corporation*
Airside Business Park
100 Airside Drive
Moon Township, PA 15108
www.mbakercorp.com

Designed by: KRC
Drwn by: EBB
Ckkd by: NLJ
Reviewed by: LHM
Submitted by: BAKER

Date: 2/23/10
Design file no.
Drawing code:
File name: ANABENSA-502HJS
Plot date: 2/23/2010
Plot scale: x:x
Rev: 0

AFGHAN NATIONAL ARMY
REGIONAL MILITARY TRAINING CENTER
STANDARD DESIGN

ENLISTED BARRACKS

HEAD, JAMB & SILL DETAILS

Sheet reference number:
A–502

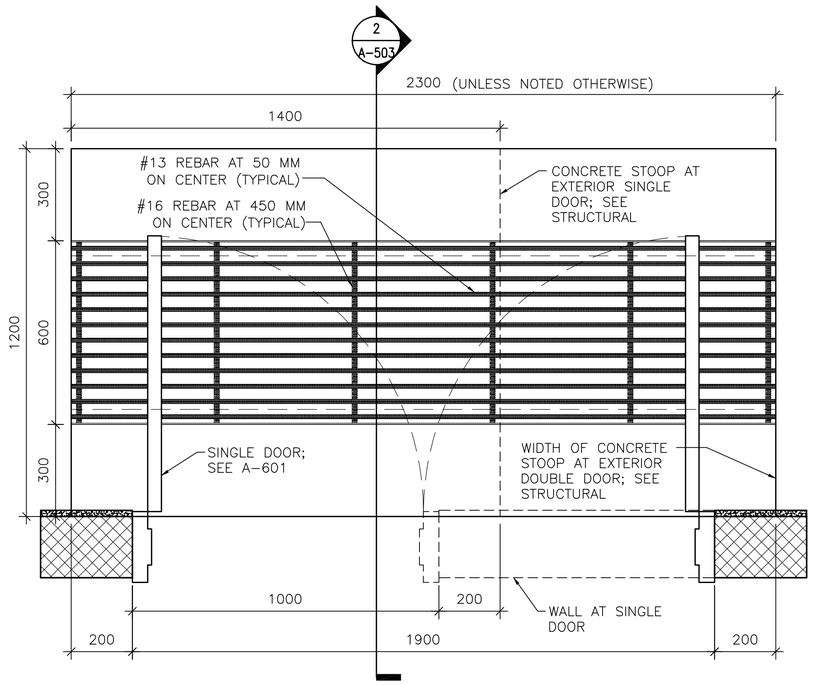


1 A-503 **DOOR STOOP PLAN (WITH GRATE)**

SCALE: 1:10

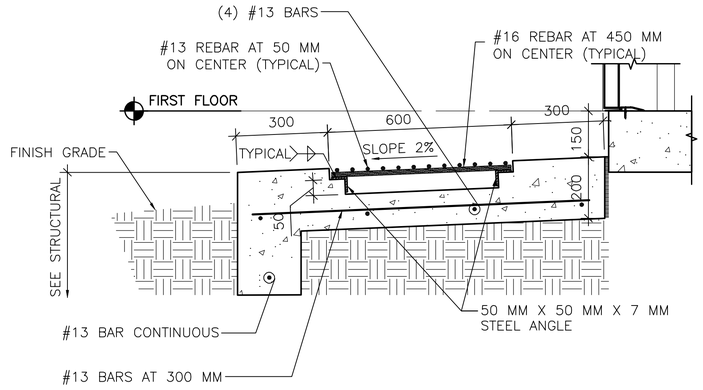


2 A-503 **DOOR STOOP DETAIL**

SCALE: 1:10

LINEAR DIMENSIONS SHOWN ARE IN MILLIMETERS (MM), UNLESS OTHERWISE NOTED

0 200 400
SCALE: 1:10

APPROVED:

A/E DESIGNER OF RECORD

SEAL:

STATE OF SOUTH CAROLINA
KEVIN R. CHARIN
N. Charleston, SC
6374
REGISTERED ARCHITECT

US ARMY CORPS OF ENGINEERS
AFGHANISTAN ENGINEER DISTRICT

| Mark | Description | Date | Appr. |
|---|---|---|---|
| | | | |

| Mark | Description | Date | Appr. |
|---|---|---|---|
| | | | |

Rev: 0
Date: 2/23/10
Design file no.
Drawing code:
File name: ANABENBA-503DT
Plot date: 2/23/2010
Plot scale: x:X

Designed by: KRC
Dwn by: EBB
Ckd by: NLJ
Reviewed by: LHM
Submitted by: BAKER

U.S. ARMY CORPS OF ENGINEERS
AFGHANISTAN ENGINEER DISTRICT
APO AE 96338

*Michael Baker Jr., Inc.*
*A unit of Michael Baker Corporation*
Airside Business Park
100 Airside Drive
Moon Township, PA 15108
www.mbakercorp.com

AFGHAN NATIONAL ARMY
REGIONAL MILITARY TRAINING CENTER
STANDARD DESIGN

ENLISTED BARRACKS

STOOP DETAILS

Sheet reference number:
A-503

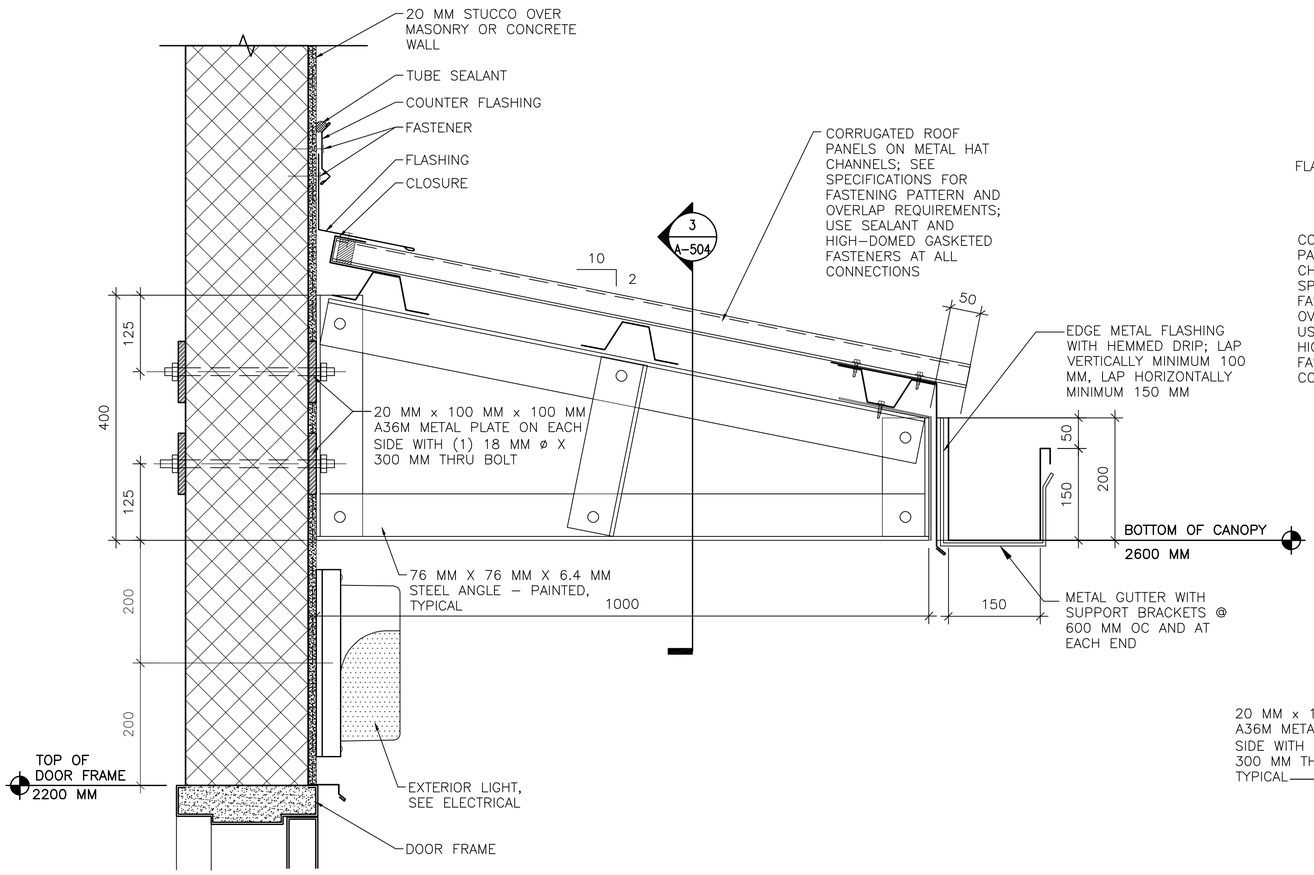


1 A-504 **CANOPY CONNECTION DETAILS**
SCALE: 1:5

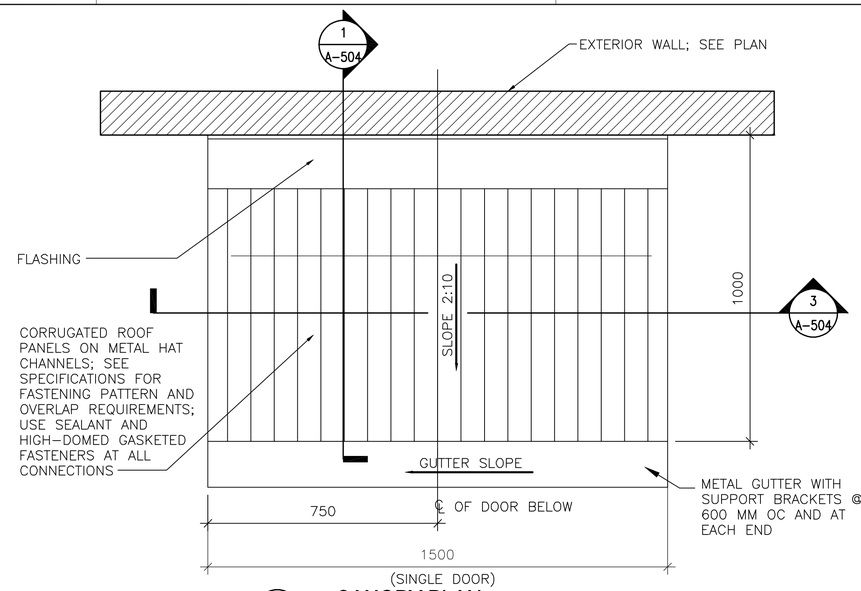


2 A-504 **CANOPY PLAN**
SCALE: 1:10

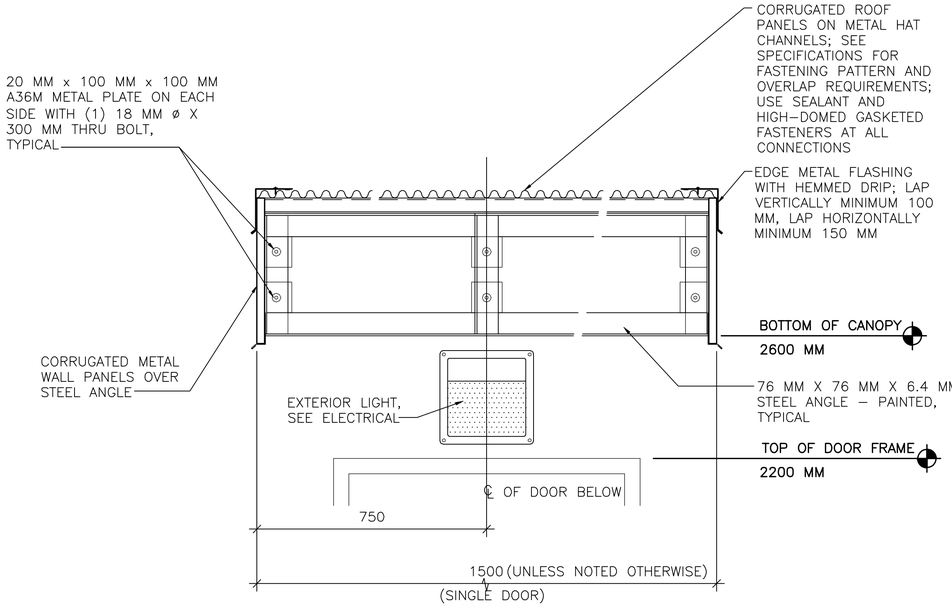


3 A-504 **CANOPY CONNECTION DETAILS**
SCALE: 1:10

## SHEET NOTES:

1. SEE A–101 FOR FLOOR PLANS AND CANOPY LOCATIONS.

APPROVED:

A/E DESIGNER OF RECORD

SEAL:

STATE OF SOUTH CAROLINA
KEVIN R. CHAFIN
N. Charleston, SC
6374
REGISTERED ARCHITECT

LINEAR DIMENSIONS SHOWN ARE IN MILLIMETERS (MM), UNLESS OTHERWISE NOTED

0 100 200
SCALE: 1:5

US ARMY CORPS OF ENGINEERS
AFGHANISTAN ENGINEER DISTRICT

| Mark | Description | Date | Appr. | Mark | Description | Date | Appr. |
|---|---|---|---|---|---|---|---|
| | | | | | | | |

Rev: 0
Date: 2/23/10
Design file no.
Drawing code:
File name: ANABENBA-504DT
Plot date: 2/23/2010
Plot scale: x:x

Designed by: KRC
Dwn by: EBB
Ckd by: NLJ
Reviewed by: LHM
Submitted by: BAKER

U.S. ARMY CORPS OF ENGINEERS
AFGHANISTAN ENGINEER DISTRICT
APO AE 96338

*Michael Baker Jr., Inc*
*A unit of Michael Baker Corporation*
Airside Business Park
100 Airside Drive
Moon Township, PA 15108
www.mbakercorp.com

AFGHAN NATIONAL ARMY
REGIONAL MILITARY TRAINING CENTER
STANDARD DESIGN

ENLISTED BARRACKS

CANOPY DETAILS

Sheet reference number:
A–504

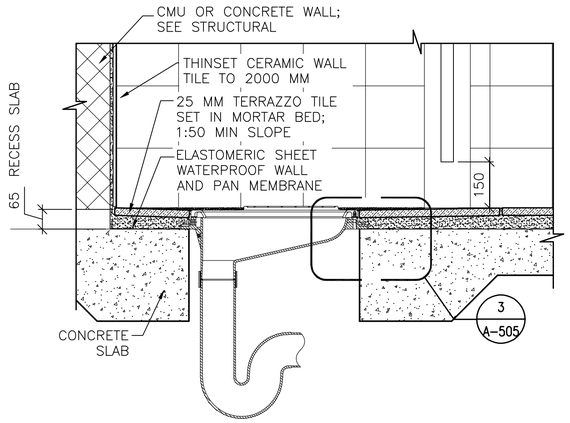


1 A-505 **LATRINE DETAIL**
SCALE: 1:10

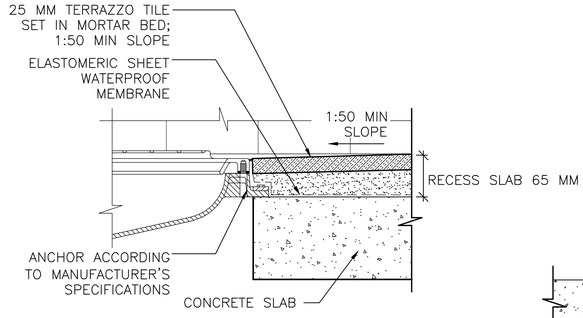


3 A-505 **MOUNTING DETAIL**
SCALE: 1:5

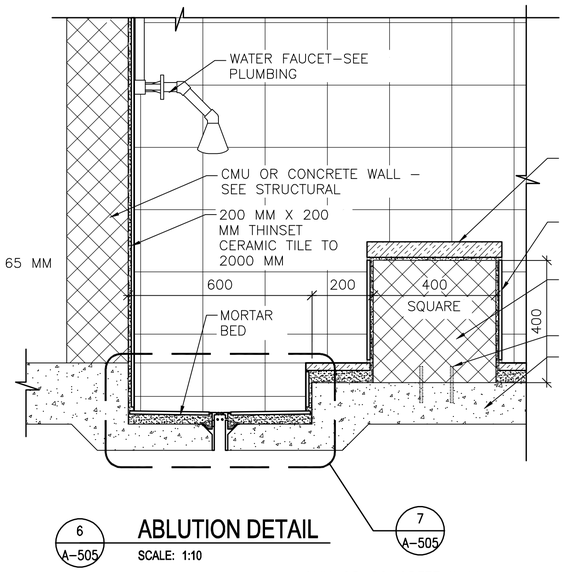


6 A-505 **ABLUTION DETAIL**
SCALE: 1:10

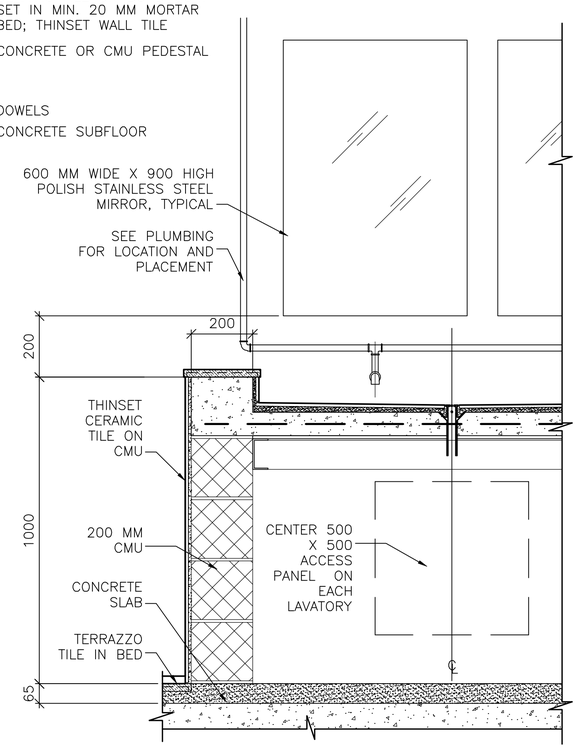


9 A-505 **LAVATORY SECTION**
SCALE: 1:10

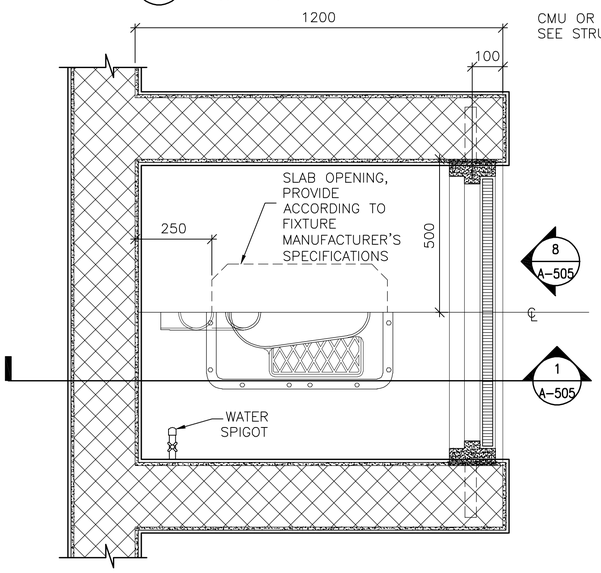


2 A-505 **TOILET DETAIL**
SCALE: 1:10

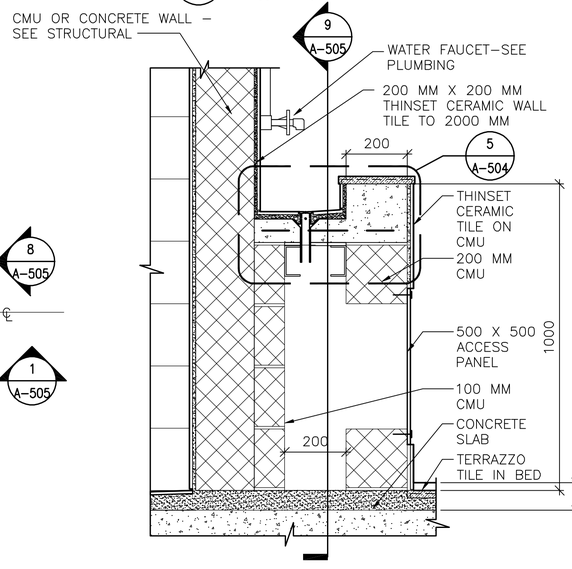


4 A-505 **LAVATORY SECTION**
SCALE: 1:10

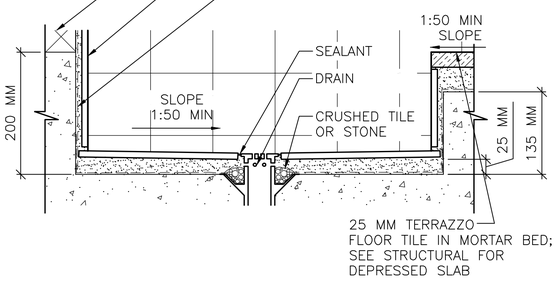


7 A-505 **RECESSED TROUGH**
SCALE: 1:5

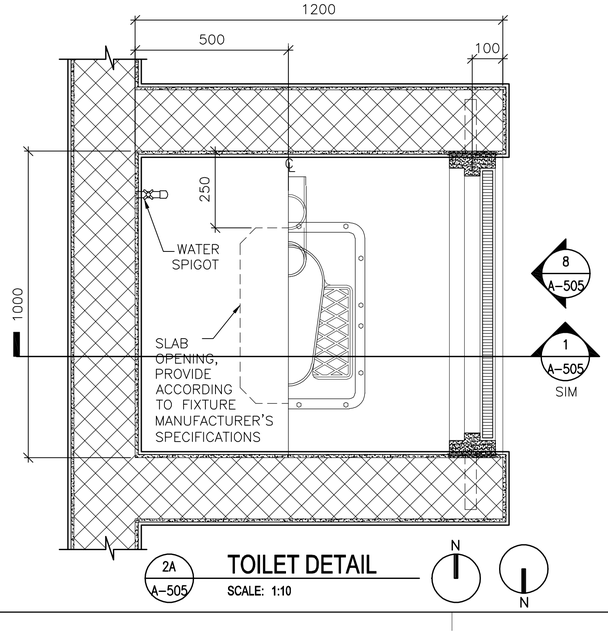


2A A-505 **TOILET DETAIL**
SCALE: 1:10

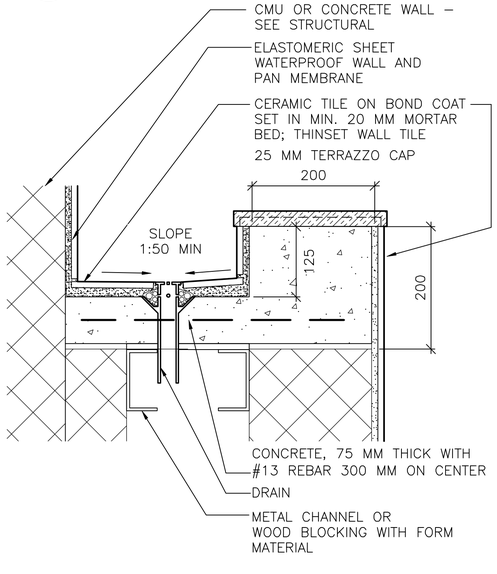


5 A-505 **LAVATORY DETAIL**
SCALE: 1:5

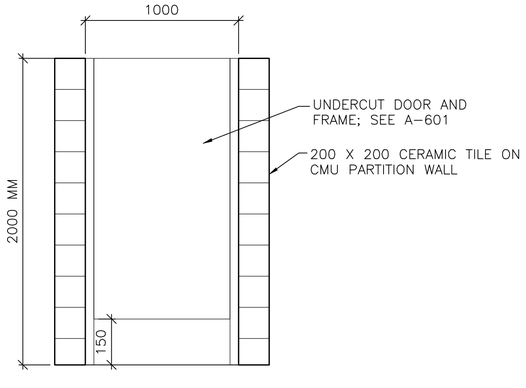


8 A-505 **TOILET PARTITION DOOR ELEVATION**
SCALE: 1:20

LINEAR DIMENSIONS SHOWN ARE IN MILLIMETERS (MM), UNLESS OTHERWISE NOTED

0 100 200
SCALE: 1:5

0 200 400
SCALE: 1:10

0 400 800
SCALE: 1:20

APPROVED:

A/E DESIGNER OF RECORD

SEAL:

STATE OF SOUTH CAROLINA
KEVIN R. CHAFIN
N. Charleston, SC
8374
REGISTERED ARCHITECT

US ARMY CORPS OF ENGINEERS
AFGHANISTAN ENGINEER DISTRICT

| Mark | Description | Date | Appr. | Mark | Description | Date | Appr. |
|---|---|---|---|---|---|---|---|
| | | | | | | | |

Date: 2/23/10
Design file no.
Drawing code:
Rev: 0
File name: ANABENBA-0505T
Plot date: 2/23/2010
Plot scale: x:x

Designed by: KRC
Dwn by: EBB
Ckd by: NLJ
Reviewed by: LHM
Submitted by: BAKER

U.S. ARMY CORPS OF ENGINEERS
AFGHANISTAN ENGINEER DISTRICT
APO AE 96338

*Michael Baker Jr., Inc*
*A unit of Michael Baker Corporation*
Airside Business Park
100 Airside Drive
Moon Township, PA 15108
www.mbakercorp.com

AFGHAN NATIONAL ARMY
REGIONAL MILITARY TRAINING CENTER
STANDARD DESIGN

ENLISTED BARRACKS

TOILET, LAVATORY & ABLUTION DETAILS

Sheet reference number:
A–505

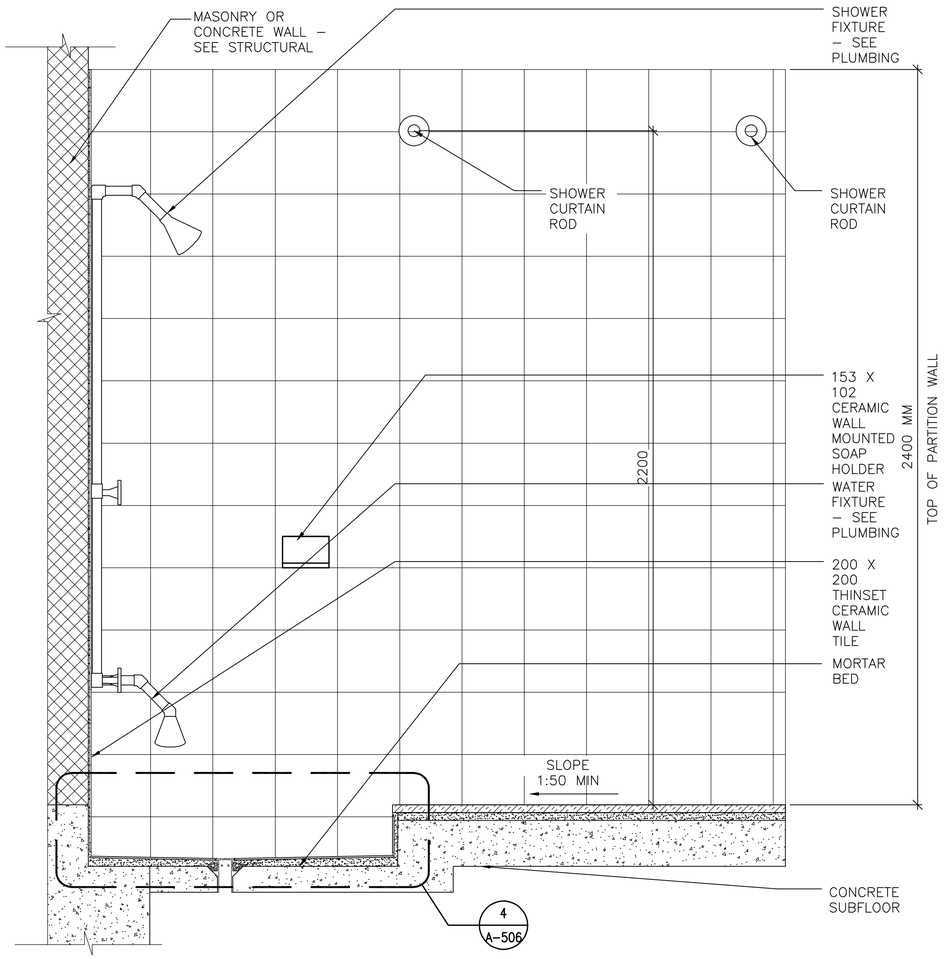


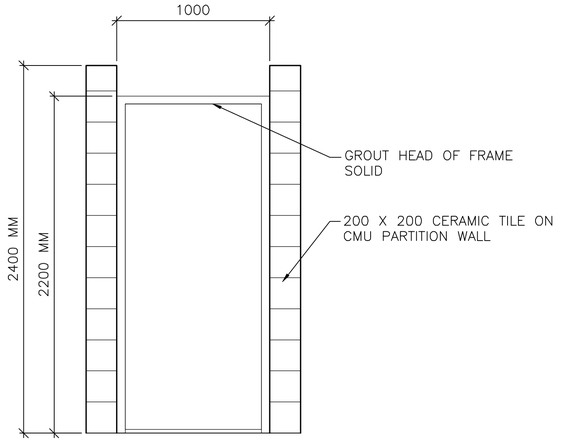


3 A-506

## SHOWER PARTITION DOOR ELEVATION

SCALE: 1:20

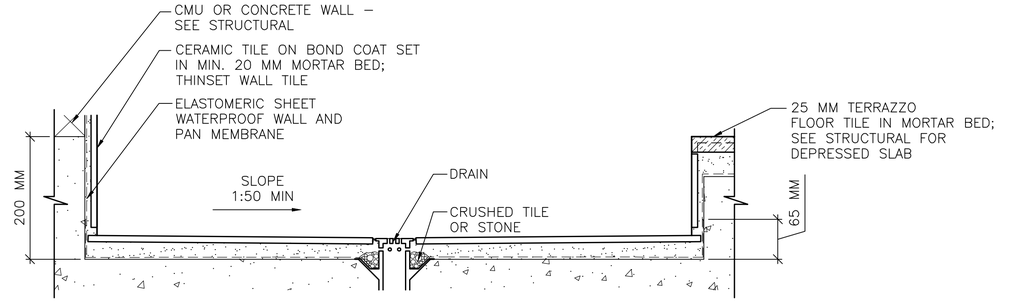


4 A-506

## SHOWER RECESS

SCALE: 1:5

1 A-506

## SHOWER DETAIL

SCALE: 1:10

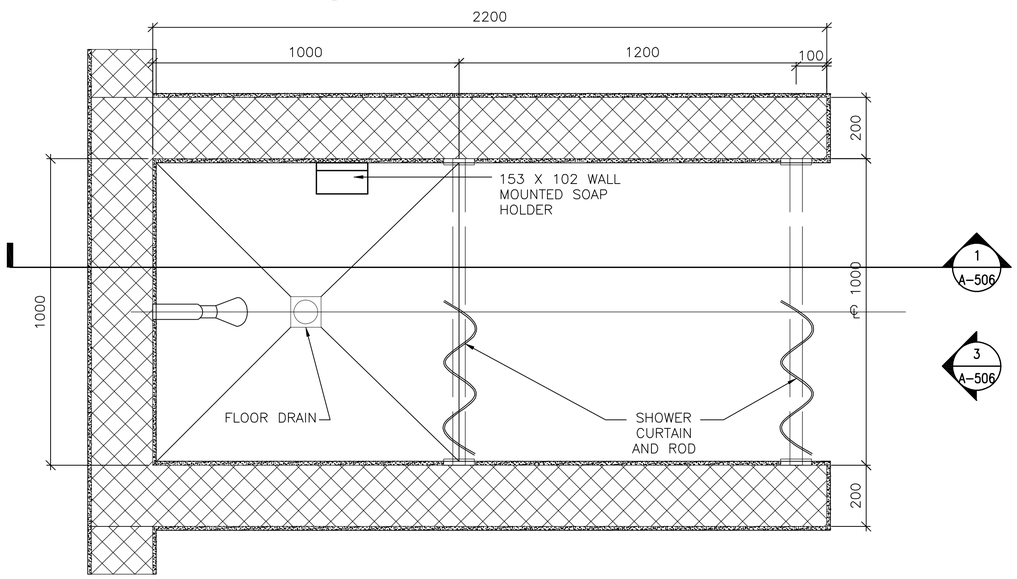


2 A-506

## SHOWER PLAN

SCALE: 1:10

0 100 200
SCALE: 1:5

0 200 400
SCALE: 1:10

0 400 800
SCALE: 1:20

LINEAR DIMENSIONS SHOWN ARE IN MILLIMETERS (MM), UNLESS OTHERWISE NOTED

APPROVED:

A/E DESIGNER OF RECORD

SEAL:

STATE OF SOUTH CAROLINA
KEVIN R. CHARN
N. Charleston, SC
6374
REGISTERED ARCHITECT

US ARMY CORPS OF ENGINEERS
AFGHANISTAN ENGINEER DISTRICT

| Mark | Description | Date | Appr. | Mark | Description | Date | Appr. |
|---|---|---|---|---|---|---|---|
| | | | | | | | |

Designed by: KRC
Drawn by: EBB
Reviewed by: LHM
Submitted by: BAKER
Checked by: NLJ
Date: 2/23/10
Design file no.
Drawing code:
File name: ANABENSA-0507
Plot date: 2/23/2010
Plot scale: x:x
Rev: 0

U.S. ARMY CORPS OF ENGINEERS
AFGHANISTAN ENGINEER DISTRICT
APO AE 96338

*Michael Baker Jr., Inc*
*A unit of Michael Baker Corporation*
Airside Business Park
100 Airside Drive
Moon Township, PA 15108
www.mbakercorp.com

AFGHAN NATIONAL ARMY
REGIONAL MILITARY TRAINING CENTER
STANDARD DESIGN

ENLISTED BARRACKS

SHOWER DETAILS

Sheet reference number:
A-506

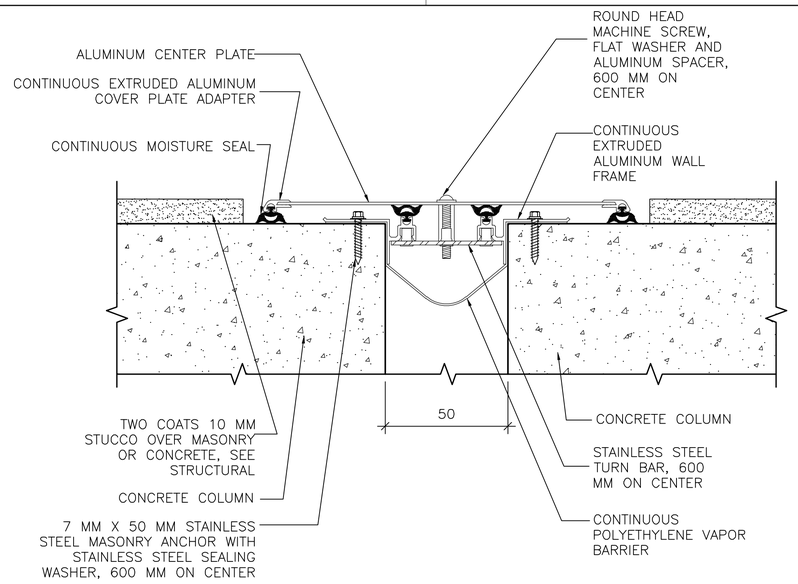


1 A-505 **EXTERIOR ISOLATION JOINT COVER**
SCALE: NTS

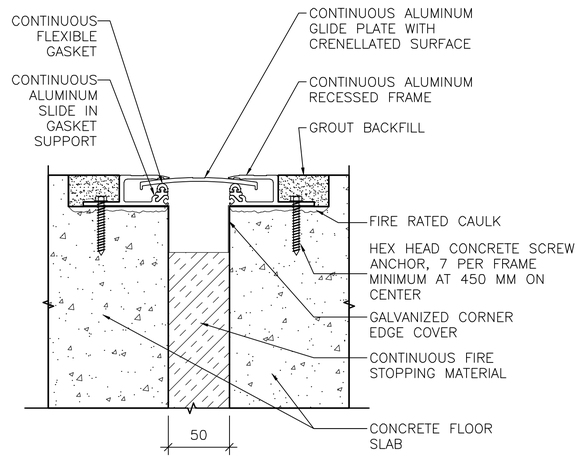


3 A-505 **FLOOR ISOLATION JOINT COVER**
SCALE: NTS

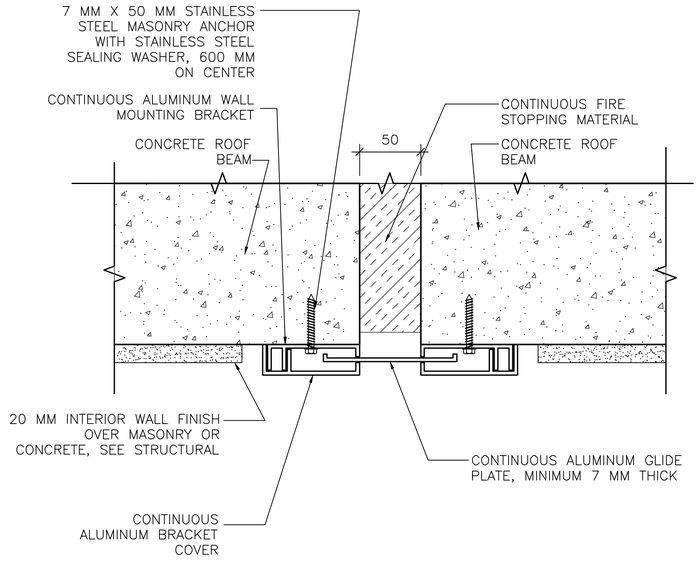


5 A-505 **CEILING ISOLATION JOINT COVER**
SCALE: NTS

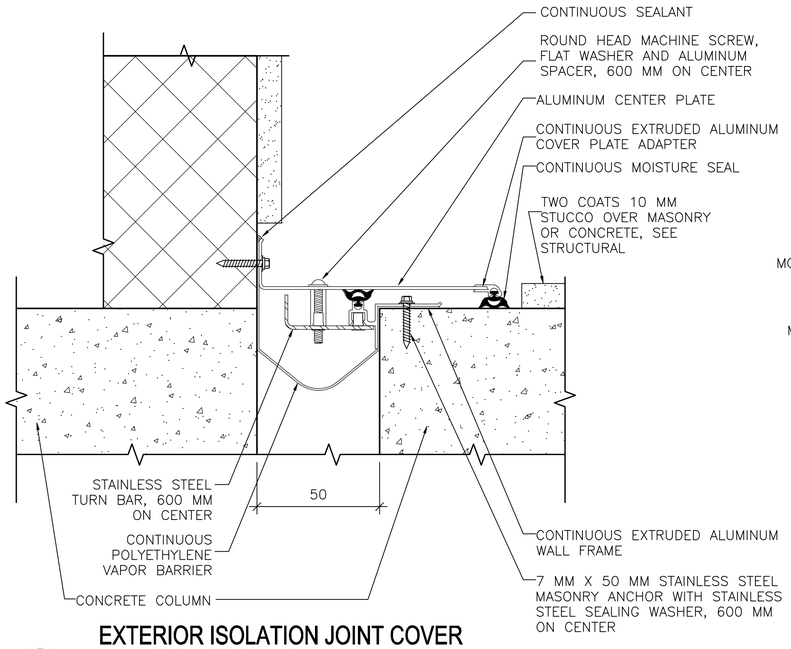


2 A-505 **EXTERIOR ISOLATION JOINT COVER AT INSIDE CORNER**
SCALE: NTS

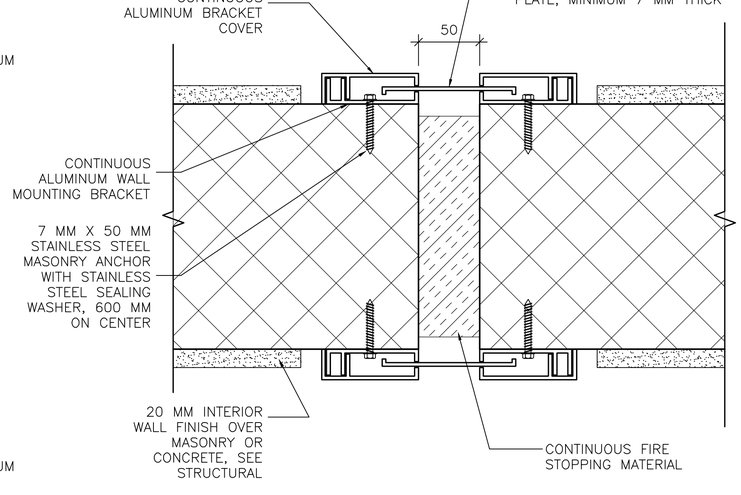


4 A-505 **INTERIOR ISOLATION JOINT COVER**
SCALE: NTS

LINEAR DIMENSIONS SHOWN ARE IN MILLIMETERS (MM), UNLESS OTHERWISE NOTED

APPROVED:
A/E DESIGNER OF RECORD

SEAL:
STATE OF SOUTH CAROLINA
KEVIN R. CHAFIN
N. Charleston, SC
6374
REGISTERED ARCHITECT

US ARMY CORPS OF ENGINEERS
AFGHANISTAN ENGINEER DISTRICT

| Mark | Description | Date | Appr. | Mark | Description | Date | Appr. |
|---|---|---|---|---|---|---|---|

Designed by: KRC
Dwn by: KJG
Ckd by: NLJ
Reviewed by: LHM
Submitted by: BAKER
Date: 2/23/10
Rev: 0
Design file no.
Drawing code:
File name: ANABENBA-507DT
Plot date: 2/23/2010
Plot scale: X:X

U.S. ARMY CORPS OF ENGINEERS
AFGHANISTAN ENGINEER DISTRICT
APO AE 96338

Michael Baker Jr., Inc
A unit of Michael Baker Corporation
Airside Business Park
100 Airside Drive
Moon Township PA 15108
www.mbakercorp.com

AFGHAN NATIONAL ARMY
REGIONAL MILITARY TRAINING CENTER
STANDARD DESIGN

ENLISTED BARRACKS

ISOLATION JOINT DETAILS

Sheet reference number:
A-507

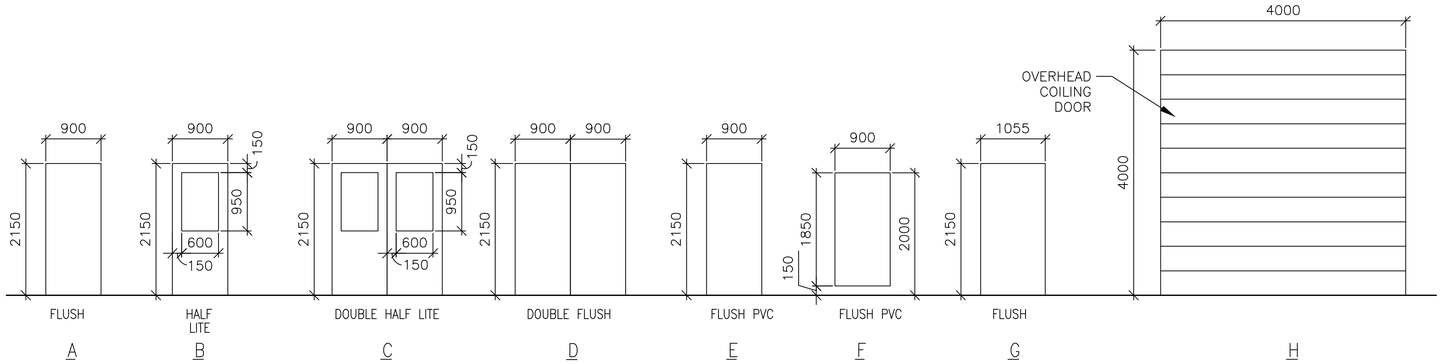


## 1 A-601 DOOR TYPES

SCALE: 1:50

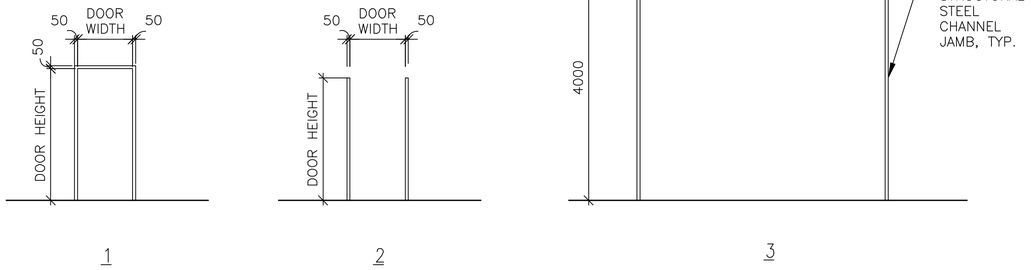


## 2 A-601 FRAME TYPES

SCALE: 1:50

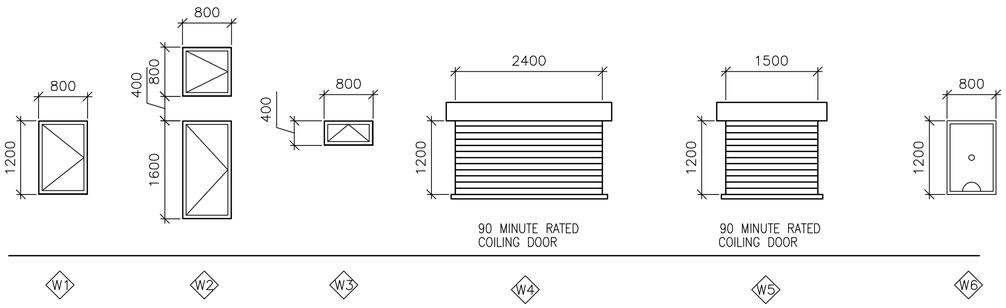


## 3 A-601 WINDOW TYPES

SCALE: 1:50

## WINDOW TYPE NOTES:

1. ALL EXTERIOR WINDOWS SHALL BE ALUMINUM WITH INSECT SCREENS. WINDOWS SHALL BE COMMERCIAL GRADE.
2. ALL EXTERIOR WINDOWS SHALL BE OPERABLE.

## 4 A-601 DOOR TAG

SCALE: NTS




## 5 A-601 RATED DOOR TAG

SCALE: NTS

## DOOR TAG NOTES:

1. THE DOOR TAG INDICATES THE DOOR TYPE, FRAME TYPE AND HARDWARE SET FOR EACH DOOR.
2. THE DOOR TAG FOR RATED DOORS INCLUDES THE RATING OF THE DOOR IN MINUTES.

## EXTERIOR DOOR HARDWARE TYPES:

HW-1 1-1/2 PR HINGES, A5112 114 X 114
1 EA RIM EXIT DEVICE, TYPE 1
1 EA CYLINDER. E09221A, GRADE 1
1 EA OVERHEAD CLOSER, C02061, LOW RESISTANCE
1 EA THRESHOLD, J32130
3 EA DOOR SILENCERS, L03011

HW-2 1-1/2 PR HINGES, A5112 114 X 114
1 EA LOCKSET, F13 ENTRY LOCK W/LEVER HANDLES, GRADE 1
1 EA OVERHEAD CLOSER, C02061, LOW RESISTANCE
1 EA THRESHOLD, J32130
3 EA DOOR SILENCERS, L03011

HW-3 3 PR HINGES, A5112 114 X 114
2 EA RIM EXIT DEVICE, TYPE 1
2 EA CYLINDER. GRADE 1
2 EA OVERHEAD CLOSER, C02061, LOW RESISTANCE
1 EA DOOR COORDINATOR, TYPE 21
1 EA ASTRAGAL
1 EA THRESHOLD, J32130
2 EA DOOR SILENCERS, L03011

HW-4 3 PR HINGES, A5112 114 X 114
1 EA LOCKSET W/LEVER HANDLES. GRADE 1, F13
1 EA OVERHEAD CLOSER, C02061, LOW RESISTANCE
2 EA MAGNETIC HOLDER PIN, ATTACHED TO DOOR LEAF
2 EA MAGNETIC HOLDER RECEIVER, ATTACHED TO STOOP
2 EA LEVER EXTENSION FLUSH BOLTS, L04081
1 EA ASTRAGAL
1 EA THRESHOLD, J32130
2 EA DOOR SILENCERS, L03011

## DOOR AND HARDWARE NOTES:

1. INTERIOR AND EXTERIOR METAL DOORS AND FRAME COLORS SHALL MATCH ADJACENT WALL COLORS AS SELECTED BY THE CONTRACTING OFFICER.
2. FRAMES, EXCEPT FIRE-RATED FRAMES, SHALL BE MOUNTED AND ADJUSTED IN ACCORDANCE WITH MANUFACTURER'S INSTRUCTIONS. FRAMES SHALL BE FASTENED WITH MINIMUM OF THREE ANCHORS PER JAMB AT EQUAL INTERVALS.
3. DIMENSIONS SHOWN ON DOOR TYPES DETAIL ARE BASED UPON MODULAR MASONRY (OR ROUGH OPENING), HEIGHT OF 2200 MM FOR STANDARD PERSONNEL DOORS. CONTRACTOR SHALL COORDINATE WITH DOOR SUPPLIER TO ENSURE THAT DIMENSIONS OF DOORS AND FRAMES PROVIDED ARE COMPATIBLE WITH DOOR OPENING DIMENSIONS.
4. HARDWARE SHALL BE HEAVY DUTY, COMMERCIAL GRADE, STAINLESS STEEL WITH A SATIN OR BRUSHED FINISH.
5. HARDWARE TYPES INCLUDE BUILDERS HARDWARE MANUFACTURERS ASSOCIATION (BMHA) NUMBER.
6. DOORS IN 2 HOUR RATED PARTITIONS SHALL BE 1.5 HOUR (90 MINUTE) RATED DOORS IN ACCORDANCE WITH NFPA 101, TABLE 8.3.4.2.
7. DOORS AT STAIR ENCLOSURES SHALL BE 1 HOUR (60 MINUTE) RATED AT 1 HOUR WALL IN ACCORDANCE WITH NFPA 101, TABLE 8.3.4.2.
8. DOORS IN 1 HOUR RATED WALLS SHALL BE 3/4 HOUR (45 MINUTE) RATED DOORS IN ACCORDANCE WITH NFPA 101, TABLE 8.3.4.2.
9. DOORS IN 1 HOUR RATED CORRIDOR WALLS SHALL BE 1/3 HOUR (20 MINUTE) IN ACCORDANCE WITH NFPA 101, TABLE 8.3.4.2.
10. PROVIDE DOOR STOPS TO PROTECT WALLS ON LOCATIONS WHERE DOOR SWING WILL STRIKE WALL.

THIS SHEET IS STANDARD AND IS INCLUSIVE OF ALL THE DOOR/ WINDOW/ HARDWARE TYPES FOR THE ENTIRE RMTC CONTRACT. NOT ALL DOOR/ WINDOW/ HARDWARE TYPES ARE USED FOR ANY PARTICULAR BUILDING DESIGN. CONTRACTOR SHALL REFER TO THE FLOOR PLAN FOR THE TYPES BEING USED.

## INTERIOR DOOR HARDWARE TYPES:

HW-5 1-1/2 PR HINGES, A8133 114 X 114
1 EA LOCKSET W/LEVER HANDLES, F08, GRADE 1
1 EA WALL STOP, L02101 OR L02161
3 EA DOOR SILENCERS, L03011

HW-6 1-1/2 PR HINGES, A8112 114 X 114
1 EA LOCKSET W/LEVER HANDLES, F08, GRADE 1
1 EA WALL STOP, L02101 OR L02161
1 EA OVERHEAD CLOSER, C02061, LOW RESISTANCE
3 EA DOOR SILENCERS, L03011

HW-7 1-1/2 PR HINGES, A8133
1 EA LOCKSET W/LEVER HANDLES, F13 GRADE 1
1 EA WALL STOP, L02101 OR L02161
2 EA MOP PLATE, J103
3 EA DOOR SILENCERS, L03011

HW-8 1-1/2 PR HINGES, A8112
1 EA LOCKSET W/LEVER HANDLES, F13 GRADE 1
1 EA WALL STOP, L02101 OR L02161
2 EA MOP PLATE, J103
1 EA OVERHEAD CLOSER, C02061, LOW RESISTANCE
3 EA DOOR SILENCERS, L03011

HW-9 1-1/2 PR HINGES, A5112 114 X 114
1 EA RIM EXIT DEVICE, TYPE 1
1 EA CYLINDER. E09221A, GRADE 1
1 EA OVERHEAD CLOSER, C02061, LOW RESISTANCE
3 EA DOOR SILENCERS, L03011

HW-10 3 PR HINGES, A5112 114 X 114
1 EA LOCKSET W/LEVER HANDLES. GRADE 1, F13
2 EA LEVER EXTENSION FLUSH BOLTS, L04081
1 EA ASTRAGAL
2 EA DOOR SILENCERS, L03011

HW-11 1-1/2 PR HINGES, A8112 114 X 114
1 EA LOCKSET W/LEVER HANDLES, F13, GRADE 1
1 EA WALL STOP, L02101 OR L02161
1 EA OVERHEAD CLOSER, C02061, LOW RESISTANCE
3 EA DOOR SILENCERS, L03011
1 EA ROBE HOOK

HW-12 1-1/2 PR HINGES, A8133
1 EA LATCHSET W/LEVER HANDLES, F76 GRADE 1
1 EA WALL STOP, L02101 OR L02161
2 EA MOP PLATE, J103
3 EA DOOR SILENCERS, L03011
1 EA ROBE HOOK

HW-13 3 PR HINGES, A5112 114 X 114
1 EA LOCKSET W/LEVER HANDLES. GRADE 1, F13
1 EA OVERHEAD CLOSER, C02061, LOW RESISTANCE
2 EA LEVER EXTENSION FLUSH BOLTS, L04081
1 EA ASTRAGAL
2 EA DOOR SILENCERS, L03011

HW-14 3 PR HINGES, A5112 114 X 114
2 EA RIM EXIT DEVICE, TYPE 1
2 EA CYLINDER. GRADE 1
2 EA OVERHEAD CLOSER, C02061, LOW RESISTANCE
1 EA DOOR COORDINATOR, TYPE 21
1 EA ASTRAGAL
2 EA DOOR SILENCERS, L03011

APPROVED:

A/E DESIGNER OF RECORD

SEAL:

STATE OF SOUTH CAROLINA
KEVIN R. CHAFIN
N. Charleston, SC 6374
REGISTERED ARCHITECT

US ARMY CORPS OF ENGINEERS
AFGHANISTAN ENGINEER DISTRICT

| Mark | Description | Date | Appr. |
|---|---|---|---|

Date: 2/23/10
Design file no.
Drawing code:
Rev: 0
File name: ANABESA401SCH
Plot date: 2/23/2010
Plot scale: x:x

Designed by: KRC
Dwn by: EBB
Ckd by: NLJ
Reviewed by: LHM
Submitted by: BAKER

U.S. ARMY CORPS OF ENGINEERS
AFGHANISTAN ENGINEER DISTRICT
APO AE 96338

*Michael Baker Jr., Inc.*
*A unit of Michael Baker Corporation*
Airside Business Park
100 Airside Drive
Moon Township, PA 15108
www.mbakercorp.com

AFGHAN NATIONAL ARMY
REGIONAL MILITARY TRAINING CENTER
STANDARD DESIGN

ENLISTED BARRACKS

WINDOW AND DOOR SCHEDULES

Sheet reference number:
A-601

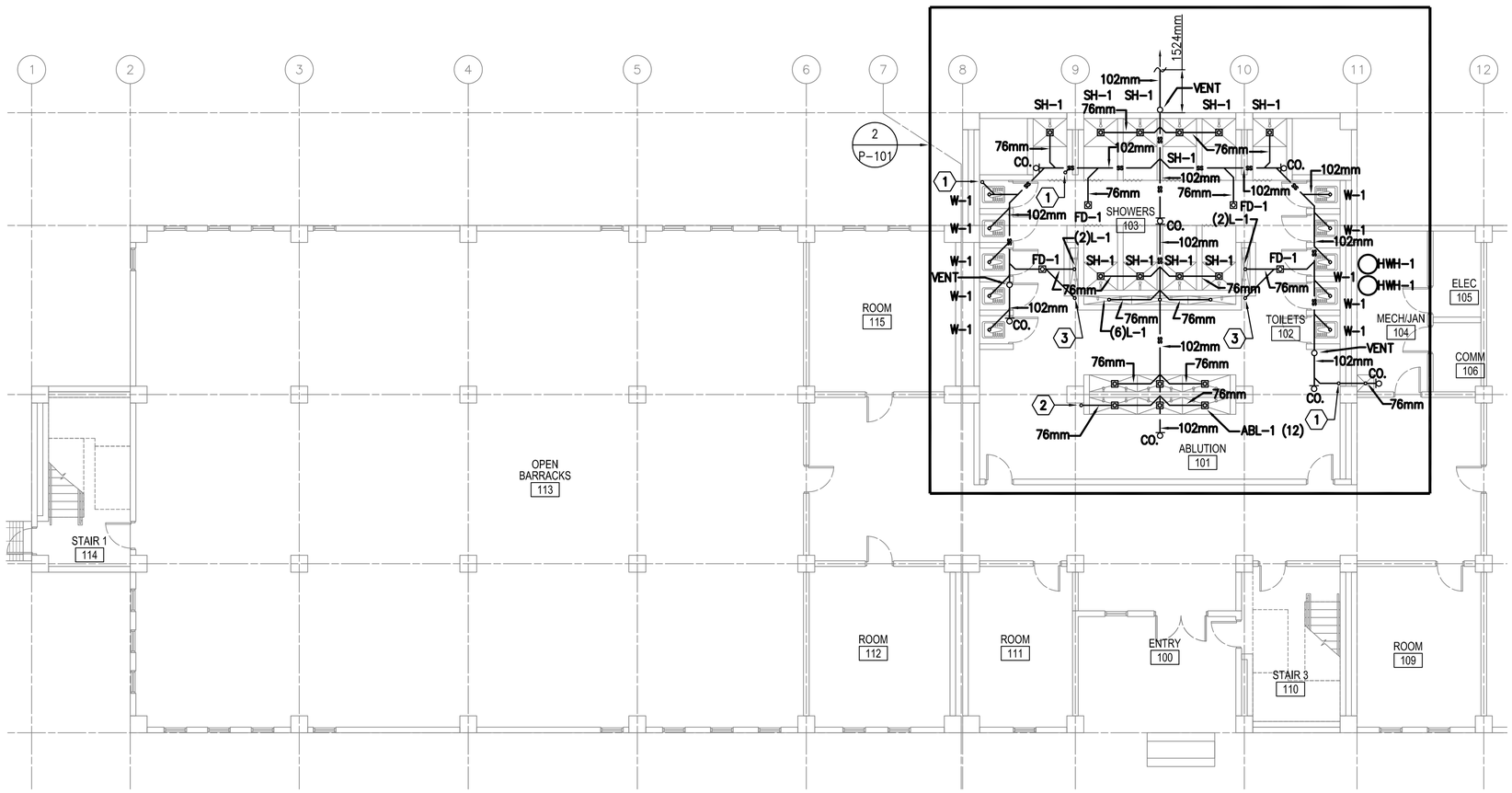


## ENLISTED BARRACKS PARTIAL FIRST FLOOR PLAN - PLUMBING (SANITARY)

1 / P-101

SCALE: 1:100

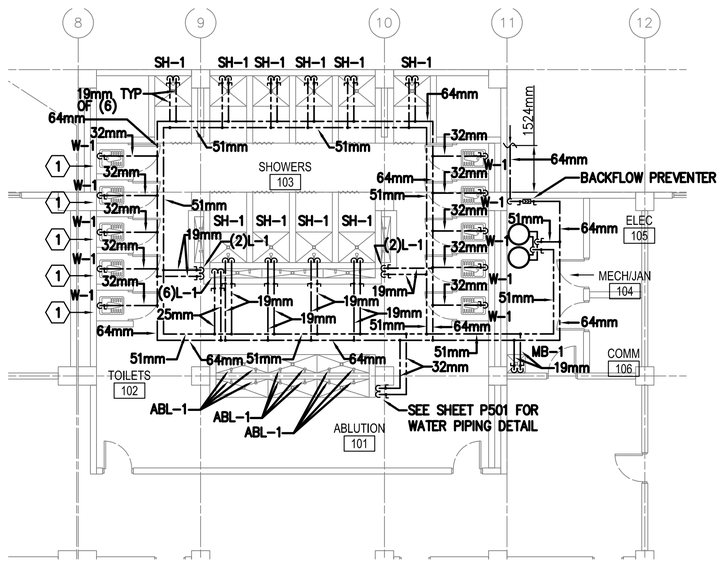


## ENLISTED BARRACKS PARTIAL FIRST FLOOR PLAN - PLUMBING (HOT AND COLD WATER)

2 / P-101

SCALE: 1:100

## WATER KEY NOTES:

1. 25mm COLD WATER LINE UP FROM 1ST FLOOR CEILING SPACE TO SERVICE EASTERN STYLE WATER CLOSET ON 2nd FLOOR.
2. 13mm COLD WATER LINE & 13mm HOT WATER LINE UP FROM 1ST FLOOR CEILING SPACE TO SERVICE TROUGH ON 2nd FLOOR.
3. 13mm COLD WATER LINE & 13mm HOT WATER LINE UP FROM 1ST FLOOR CEILING SPACE TO SERVICE SHOWER ON 2nd FLOOR.
4. 13mm COLD WATER LINE & 13mm HOT WATER LINE UP FROM 1ST FLOOR CEILING SPACE TO SERVICE ABLUTION ON 2nd FLOOR.
5. 19mm COLD WATER LINE & 19mm HOT WATER LINE UP FROM 1ST FLOOR CEILING SPACE TO SERVICE MOP BASIN ON 2nd FLOOR.

## 1ST FLOOR SANITARY KEY NOTES:

1. 102mm SANITARY LINE DOWN FROM 1ST FLOOR CEILING SPACE, EXTEND LINE UNDER GROUND AND CONNECT TO 102mm SANITARY LINE. WITH CLEAN OUT AT BASE.
2. 76mm SANITARY LINE DOWN FROM ABLUTION ON 2nd FLOOR TO 1ST FLOOR, WITH CLEAN OUT AT BASE.
3. 76mm COMBINATION WASTE AND VENT LINE DOWN FROM TROUGH ON 2nd FLOOR TO 1ST FLOOR, WITH CLEAN OUT AT BASE, AND VENT DRAIN LINE FROM TROUGH ON 1ST FLOOR TO SANITARY LINE UNDER FLOOR.

## FLOOR PLAN NOTES:

1. DO NOT SCALE DRAWINGS – ALL DIMENSIONS AND CONDITIONS SHALL BE CHECKED AND VERIFIED BY THE CONTRACTOR AT THE SITE.
2. ALL WORK PERFORMED ON THIS BUILDING SHALL BE IN COMPLIANCE WITH ALL PERTINENT CODES, RULES, ORDINANCES AND REGULATIONS OF THE GOVERNING AUTHORITIES.
3. ALL WORK PERFORMED UNDER AND IN CONNECTION WITH THESE DRAWINGS AND SPECIFICATIONS SHALL BE IN STRICT COMPLIANCE WITH THE LATEST SAFETY AND HEALTH STANDARDS.
4. REPORT ANY DISCREPANCIES FOUND IN THE PLUMBING DRAWINGS AND/OR IN THE SPECIFICATIONS DURING THE BIDDING PROCESS FOR CLARIFICATION BY THE ENGINEER.
5. ALL EASTERN STYLE WATER CLOSETS IN THIS FACILITY ARE TO HAVE THE FIXTURE DESIGNATION OF W-1. EACH FIXTURE SHALL HAVE A 25mm (1 INCH) COLD WATER LINE EXTENDED TO IT AND THEN BE REDUCED TO 13mm (1/2 INCH) FOR A FINAL CONNECTION TO THE FLUSH TANK AND A 102mm (4) INCH SANITARY CONNECTION.
6. ALL LAV FIXTURES IN THIS FACILITY ARE TO HAVE THE FIXTURE DESIGNATION OF L-1. EACH FIXTURE SHALL HAVE A 13mm (1/2 INCH) COLD WATER, 13mm (1/2 INCH) HOT WATER CONNECTION AND A 76mm (3 INCH) SANITARY CONNECTION.
7. ALL ABLUTION FIXTURES IN THIS FACILITY ARE TO HAVE THE FIXTURE DESIGNATION OF ABL-1. EACH FIXTURE SHALL HAVE A 13mm (1/2 INCH) COLD WATER, 13mm (1/2 INCH) HOT WATER CONNECTION.
8. ALL SHOWERS FIXTURES IN THIS FACILITY ARE TO HAVE THE FIXTURE DESIGNATION OF SH-1. EACH FIXTURE SHALL HAVE A 13mm (1/2 INCH) COLD WATER, 13mm (1/2 INCH) HOT WATER CONNECTION.
9. REFER TO SHEET P501 FOR DETAILS AND SYMBOLS.
10. ALL WATER, SANITARY AND VENT LINES TO BE EXPOSED. RUN LINES TIGHT TO CEILING AND WALL.
11. DUE TO COMPLEXITY OF VENTING SYSTEM, VENT PIPING FOR THIS BUILDING IS LOCATED ON THE ISOMETRIC.

## PLUMBING SYMBOLS

- SANITARY SEWER PIPING (BELOW GROUND)
- SANITARY SEWER PIPING (ABOVE GROUND)
- VENT PIPING (V)
- COLD WATER PIPING (CW)
- HOT WATER PIPING (HW)
- BALL VALVE
- BACKFLOW PREVENTER
- CLEANOUT (CO.) OR
- ROOF PENETRATION

LINEAR DIMENSIONS SHOWN ARE IN MILLIMETERS (MM), UNLESS OTHERWISE NOTED

0 2000 4000

SCALE: 1:100

APPROVED:

A/E DESIGNER OF RECORD

SEAL:

COMMONWEALTH OF PENNSYLVANIA REGISTERED PROFESSIONAL MATTHEW R. SOTOSKY ENGINEER 046576-E

US ARMY CORPS OF ENGINEERS
AFGHANISTAN ENGINEER DISTRICT

| Mark | Description | Date | Appr. |
|---|---|---|---|

Rev: 0
Date: 02/23/10
Design file no.
Drawing code:
File name: ANABEN8PL-101XXX
Plot date: 02/09/2010
Plot scale: 1:50

Designed by: RMH
Dwn by: RMH
Ckd by: CJM
Reviewed by:
Submitted by: BAKER

U.S. ARMY CORPS OF ENGINEERS
AFGHANISTAN ENGINEER DISTRICT
APO AE 96338

Michael Baker Jr., Inc
A unit of Michael Baker Corporation
Airside Business Park
100 Airside Drive
Moon Township, PA 15108
www.mbakercorp.com

AFGHAN NATIONAL ARMY
REGIONAL MILITARY TRAINING CENTER
STANDARD DESIGN

ENLISTED BARRACKS
PARTIAL FIRST FLOOR PLAN – PLUMBING

Sheet reference number:
P-101

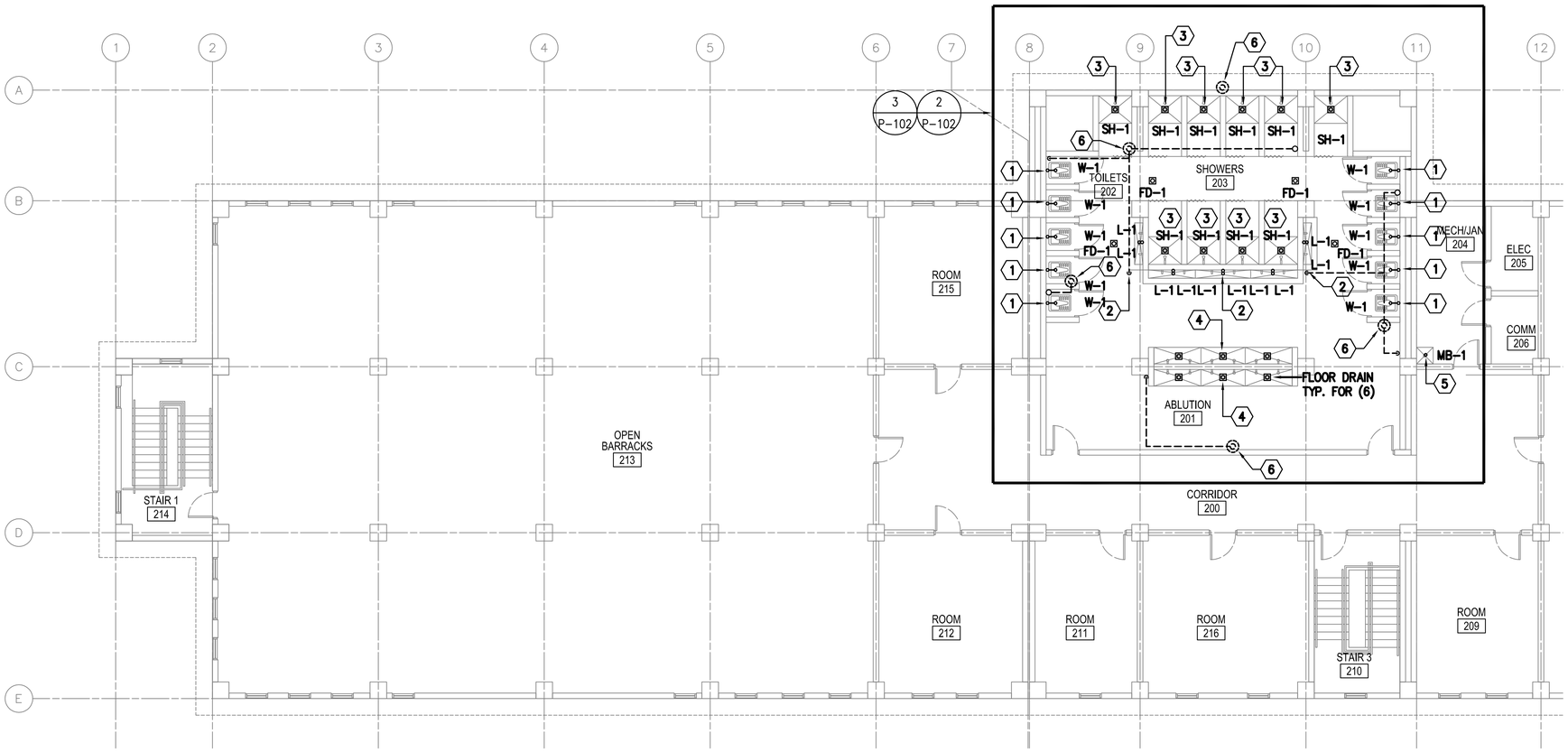


1 P-102 ENLISTED BARRACKS PARTIAL SECOND FLOOR PLAN - PLUMBING (SANITARY)

SCALE: 1:100

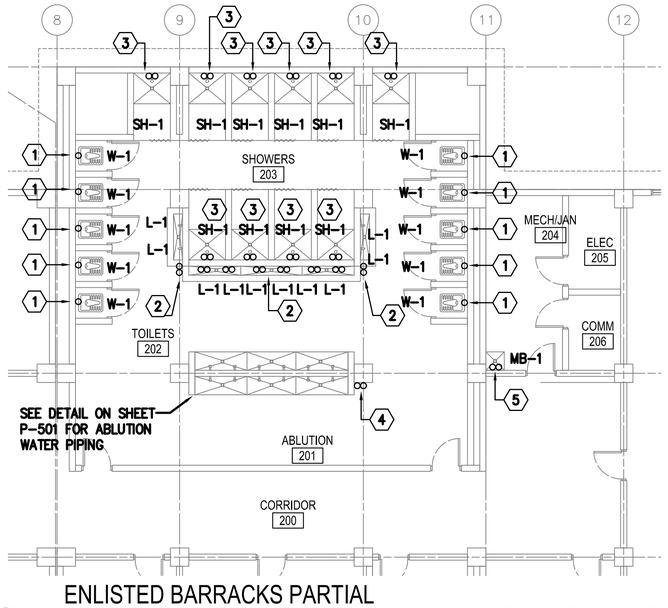


2 P-102 ENLISTED BARRACKS PARTIAL SECOND FLOOR PLAN - PLUMBING (HOT AND COLD WATER)

SCALE: 1:100

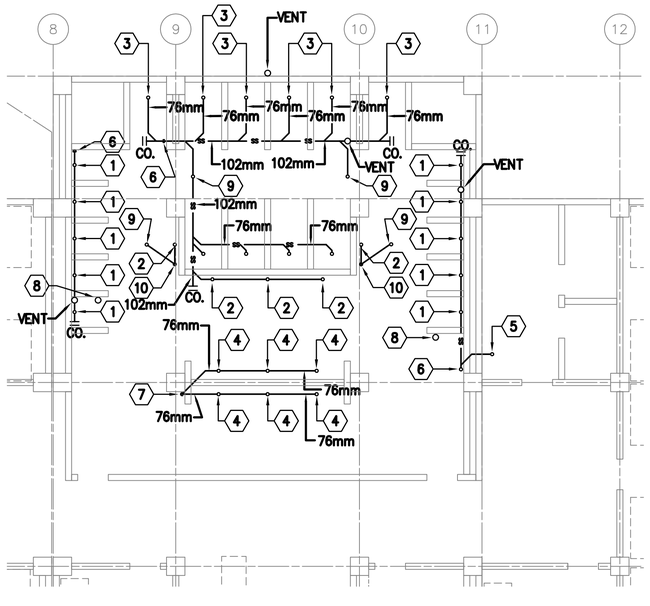


3 P-102 ENLISTED BARRACKS PARTIAL FIRST FLOOR CEILING PLAN - PLUMBING (SANITARY)

SCALE: 1:100

## FLOOR PLAN NOTES:

1. DO NOT SCALE DRAWINGS – ALL DIMENSIONS AND CONDITIONS SHALL BE CHECKED AND VERIFIED BY THE CONTRACTOR AT THE SITE.
2. ALL WORK PERFORMED ON THIS BUILDING SHALL BE IN COMPLIANCE WITH ALL PERTINENT CODES, RULES, ORDINANCES AND REGULATIONS OF THE GOVERNING AUTHORITIES.
3. ALL WORK PERFORMED UNDER AND IN CONNECTION WITH THESE DRAWINGS AND SPECIFICATIONS SHALL BE IN STRICT COMPLIANCE WITH THE LATEST SAFETY AND HEALTH STANDARDS.
4. REPORT ANY DISCREPANCIES FOUND IN THE PLUMBING DRAWINGS AND/OR IN THE SPECIFICATIONS DURING THE BIDDING PROCESS FOR CLARIFICATION BY THE ENGINEER.
5. ALL EASTERN STYLE WATER CLOSETS IN THIS FACILITY ARE TO HAVE THE FIXTURE DESIGNATION OF W–1. EACH FIXTURE SHALL HAVE A 25mm (1 INCH) COLD WATER LINE EXTENDED TO IT AND THEN BE REDUCED TO 13mm (1/2 INCH) FOR A FINAL CONNECTION TO THE FLUSH TANK AND A 102mm (4) INCH SANITARY CONNECTION.
6. ALL LAV FIXTURES IN THIS FACILITY ARE TO HAVE THE FIXTURE DESIGNATION OF L–1. EACH FIXTURE SHALL HAVE A 13mm (1/2 INCH) COLD WATER, 13mm (1/2 INCH) HOT WATER CONNECTION AND A 76mm (3 INCH) SANITARY CONNECTION.
7. ALL SHOWER FIXTURES IN THIS FACILITY ARE TO HAVE THE FIXTURE DESIGNATION OF SH–1. EACH FIXTURE SHALL HAVE A 13mm (1/2 INCH) COLD WATER, 13mm (1/2 INCH) HOT WATER CONNECTION.
8. REFER TO SHEET P501, P502, AND P503 FOR DETAILS AND SYMBOLS.
9. ALL WATER, SANITARY AND VENT LINES TO BE EXPOSED. RUN LINES TIGHT TO CEILING AND WALL.
10. REFER TO SHEET P101 FOR ALL SANITARY AND WATER PIPING ASSOCIATED WITH THIS FLOOR.
11. DUE TO COMPLEXITY OF VENTING SYSTEM, VENT PIPING FOR THIS BUILDING IS LOCATED ON THE ISOMETRIC.
12. CONTRACTOR TO INSTALL A CLEAN–OUT AT THE BASE OF EACH VERTICAL SANITARY STACK.

## WATER KEY NOTES:

1. 25mm COLD WATER LINE UP FROM 1ST FLOOR CEILING SPACE TO SERVICE EASTERN STYLE WATER CLOSET ON 2nd FLOOR.
2. 13mm COLD WATER LINE & 13mm HOT WATER LINE UP FROM 1ST FLOOR CEILING SPACE TO SERVICE TROUGH ON 2nd FLOOR.
3. 13mm COLD WATER LINE & 13mm HOT WATER LINE UP FROM 1ST FLOOR CEILING SPACE TO SERVICE SHOWER ON 2nd FLOOR.
4. 13mm COLD WATER LINE & 13mm HOT WATER LINE UP FROM 1ST FLOOR CEILING SPACE TO SERVICE ABLUTION ON 2nd FLOOR.
5. 19mm COLD WATER LINE & 19mm HOT WATER LINE UP FROM 1ST FLOOR CEILING SPACE TO SERVICE MOP BASIN ON 2nd FLOOR.

## 2ND FLOOR SANITARY KEY NOTES:

1. 102mm SANITARY LINE DOWN FROM EASTERN STYLE WATER CLOSET ON 2nd FLOOR TO 1ST FLOOR CEILING SPACE.
2. 76mm SANITARY LINE DOWN FROM TROUGH ON 2nd FLOOR TO 1ST FLOOR CEILING SPACE.
3. 76mm SANITARY LINE DOWN FROM SHOWER ON 2nd FLOOR TO 1ST FLOOR CEILING SPACE.
4. 76mm SANITARY LINE DOWN FROM ABLUTION FLOOR DRAIN ON 2nd FLOOR TO 1ST FLOOR CEILING SPACE.
5. 76mm SANITARY LINE DOWN FROM MOP BASIN ON 2nd FLOOR TO 1ST FLOOR CEILING SPACE.
6. 102mm VENT UP THRU ROOF, OFFSET VERTICAL VENT THROUGH ROOF TO AVOID ARCHITECTURAL RIDGE VENT.

## 1ST FLOOR CEILING SANITARY KEY NOTES:

1. 102mm SANITARY LINE DOWN FROM EASTERN STYLE WATER CLOSET ON 2nd FLOOR TO 1ST FLOOR CEILING SPACE.
2. 76mm SANITARY LINE DOWN FROM TROUGH ON 2nd FLOOR TO 1ST FLOOR CEILING SPACE.
3. 76mm SANITARY LINE DOWN FROM SHOWER ON 2nd FLOOR TO 1ST FLOOR CEILING SPACE.
4. 76mm SANITARY LINE DOWN FROM ABLUTION FLOOR DRAIN ON 2nd FLOOR TO 1ST FLOOR CEILING SPACE.
5. 76mm SANITARY LINE DOWN FROM MOP BASIN ON 2nd FLOOR TO 1ST FLOOR CEILING SPACE.
6. 102mm SANITARY STACK DOWN FROM 1ST FLOOR CEILING SPACE TO UNDER GROUND.
7. 76mm SANITARY STACK DOWN FROM 1ST FLOOR CEILING SPACE TO UNDER GROUND.
8. 102mm VENT LINE UP TO 2ND FLOOR.
9. 76mm SANITARY LINE DOWN FROM FLOOR DRAIN ON 2ND FLOOR.
10. 76mm COMBINATION WASTE AND VENT LINE DOWN FROM TROUGH ON 2ND FLOOR.

## PLUMBING SYMBOLS

- SANITARY SEWER PIPING (BELOW GROUND)
- SANITARY SEWER PIPING (ABOVE GROUND)
- VENT PIPING (V)
- COLD WATER PIPING (CW)
- HOT WATER PIPING (HW)
- BALL VALVE
- BACKFLOW PREVENTER
- CLEANOUT (CO.)
- ROOF PENETRATION

LINEAR DIMENSIONS SHOWN ARE IN MILLIMETERS (MM), UNLESS OTHERWISE NOTED

SCALE: 1:100

APPROVED:

A/E DESIGNER OF RECORD

SEAL:

COMMONWEALTH OF PENNSYLVANIA REGISTERED PROFESSIONAL MATTHEW R. SOTOSKY ENGINEER 065578-E

US ARMY CORPS OF ENGINEERS
AFGHANISTAN ENGINEER DISTRICT

| Mark | Description | Date | Appr. |
|---|---|---|---|

Rev: 0
Date: 02/23/10
Design file no.
Drawing code:
File name: ANABENBPL-102XXX
Plot date: 02/08/2010
Plot scale: 1:50

Designed by: RMH
Drawn by: RMH
Ckd by: CJM
Reviewed by:
Submitted by: BAKER

U.S. ARMY CORPS OF ENGINEERS
AFGHANISTAN ENGINEER DISTRICT
APO AE 96338

*Michael Baker Jr., Inc*
*A unit of Michael Baker Corporation*
Airside Business Park
100 Airside Drive
Moon Township, PA 15108
www.mbakercorp.com

AFGHAN NATIONAL ARMY
REGIONAL MILITARY TRAINING CENTER
STANDARD DESIGN

ENLISTED BARRACKS
PARTIAL SECOND FLOOR PLAN – PLUMB.

Sheet reference number:
P–102

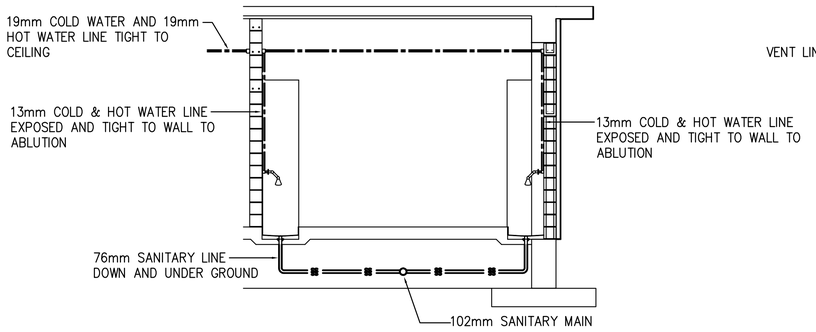


## TYPICAL ABLUTION SANITARY & WATER INSTALLATION SCHEMATIC

SCALE: N.T.S.

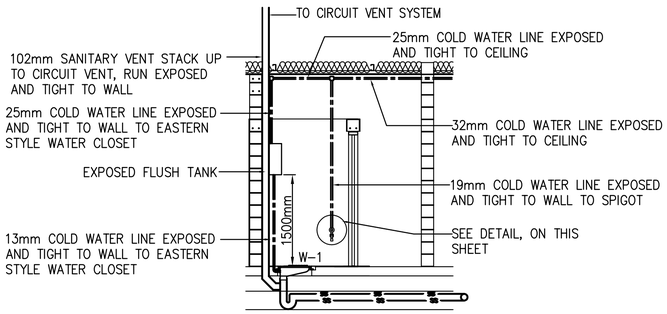


## TYPICAL EASTERN STYLE WATER CLOSET SANITARY & WATER INSTALLATION SCHEMATIC

SCALE: N.T.S.




## TYPICAL LAVATORY SANITARY & WATER INSTALLATION SCHEMATIC

SCALE: N.T.S.

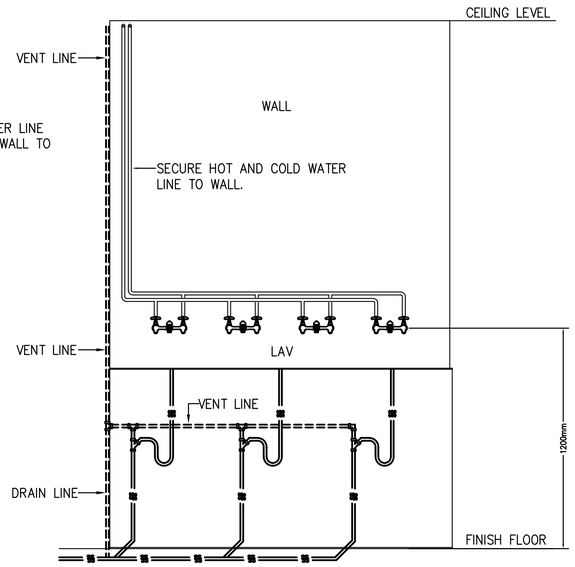


## LAVATORY ELEVATION PLAN - PLUMBING

SCALE: N.T.S.

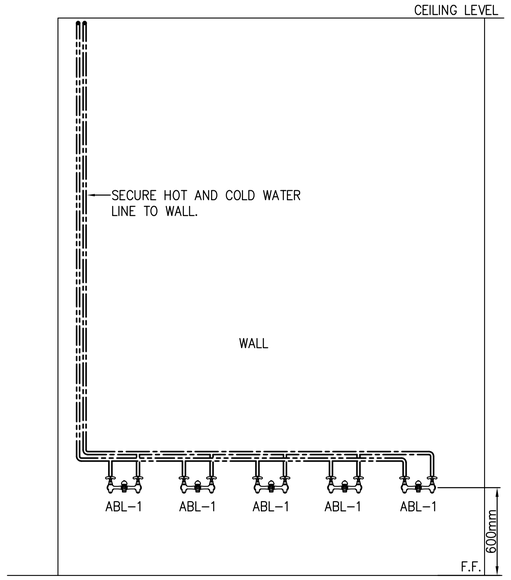


## TYPICAL ABLUTION ELEVATION PLUMBING PLAN - WATER INSTALATION SCHEMATIC

SCALE: N.T.S.

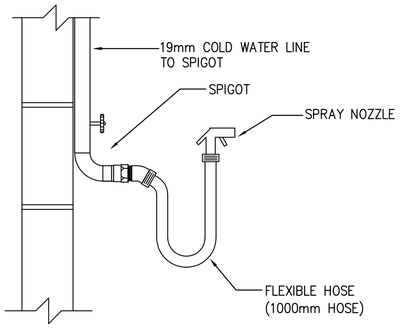


## TYPICAL DETAIL - SPIGOT, FLEXIBLE HOSE, AND SPRAY NOZZLE

SCALE: N.T.S.

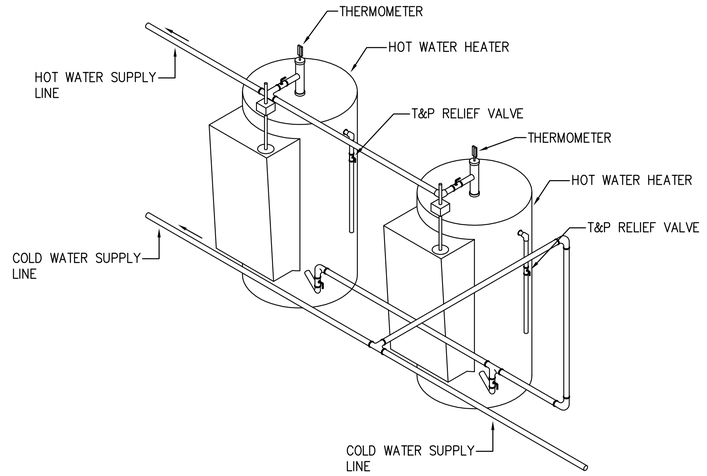


## HOT WATER HEATER SYSTEM DETAIL

SCALE: N.T.S.

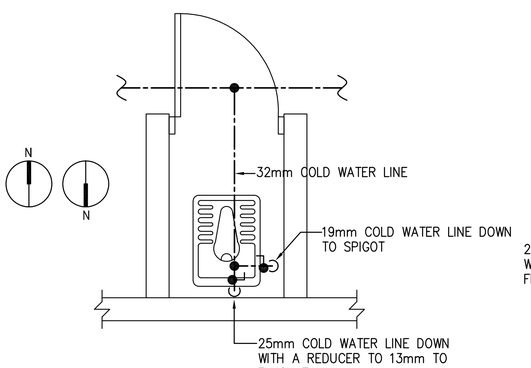


## TYPICAL EASTERN STYLE WATER CLOSET WITH SPIGOT WATER PIPING DETAIL

SCALE: N.T.S.

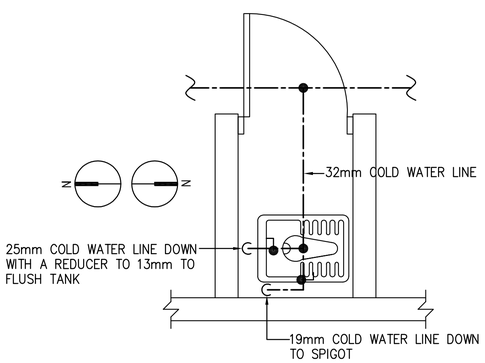


## TYPICAL EASTERN STYLE WATER CLOSET WITH SPIGOT WATER PIPING DETAIL

SCALE: N.T.S.

## GENERAL PLUMBING NOTES:

1. ALL SANITARY PIPING SHALL BE BELOW FLOOR, AND ALL WATER, AND VENT PIPING SHALL BE TIGHT TO CEILING, UNLESS OTHERWISE NOTED.

2. PLUMBING CONTRACTOR SHALL COORDINATE PLUMBING WORK WITH THE WORK OF ALL OTHER TRADES. VERIFY THE LOCATIONS OF ALL UTILITIES AT THE SITE PRIOR TO THE START OF ANY PLUMBING WORK.

3. COORDINATE ALL ACCESS PANEL LOCATIONS WITH THE ARCHITECT AND GENERAL CONTRACTOR.

4. ALL SANITARY PIPING BELOW SLAB SHALL BE A MINIMUM OF 51mm, UNLESS OTHERWISE NOTED OR AS REQUIRED BY THE LOCAL AUTHORITY HAVING JURISDICTION.

5. ALL SANITARY BRANCH LINES SHALL BE SLOPED AT 6mm PER 305mm, AND ALL MAIN LINES SHALL BE SLOPED AT 3mm PER 305mm, UNLESS OTHERWISE NOTED OR AS REQUIRED BY THE LOCAL AUTHORITY HAVING JURISDICTION.

6. THE CONTRACTOR SHALL BE RESPONSIBLE FOR COORDINATION WITH ALL UTILITY AUTHORITIES FOR INSTALLATION REQUIREMENTS, REGULATIONS, FEES, PERMITS, AND APPROVALS BEFORE THE START OF CONSTRUCTION.

7. THE CONTRACTOR SHALL ROUGH-IN AND CONNECT ALL EQUIPMENT REQUIRING WATER, WASTE, AND/OR VENT WHETHER OR NOT FURNISHED UNDER THIS CONTRACT. THE CONTRACTOR SHALL ALSO FURNISH AND INSTALL ALL NECESSARY PIPE, FITTINGS, VALVES, TRAPS, ETC., REQUIRED FOR A COMPLETE INSTALLATION, LEAVING SAME READY FOR SERVICE.

APPROVED:

A/E DESIGNER OF RECORD

SEAL:

COMMONWEALTH OF PENNSYLVANIA REGISTERED PROFESSIONAL MATTHEW R. SOTOSKY ENGINEER 046576-E

US ARMY CORPS OF ENGINEERS
AFGHANISTAN ENGINEER DISTRICT

| Mark | Description | Date | Appr. |
|---|---|---|---|

Rev: 0
Date: 02/23/10
Design file no.
Drawing code:
File name: ANABENBP-501XXX
Plot date: 02/09/2010
Plot scale:1:100

Designed by: RMH
Drwn by: RMH
Ckd by: CJM
Reviewed by:
Submitted by: MRS

U.S. ARMY CORPS OF ENGINEERS
AFGHANISTAN ENGINEER DISTRICT
APO AE 96338

Michael Baker Jr; Inc
A unit of Michael Baker Corporation
Airside Business Park
100 Airside Drive
Moon Township, PA 15108
www.mbakercorp.com

AFGHAN NATIONAL ARMY
REGIONAL MILITARY TRAINING CENTER
STANDARD DESIGN

ENLISTED BARRACKS
PLUMBING DETAILS

Sheet reference number:
P-501

# FIXTURE LIST

| TYPE | ITEM | SOIL & WASTE | VENT | COLD WATER | HOT WATER | REMARKS | REMARKS 2 |
|---|---|---|---|---|---|---|---|
| W-1 | EASTERN STYLE WATER CLOSET | 102mm | 51mm | 13mm | ------- | FLUSH TANK | LOW FLOW EFFICIENT TYPE |
| L-1 | TROUGH FIXTURE | 38mm | 38mm | 13mm | 13mm | FABRICATED IN FIELD | LOW FLOW EFFICIENT TYPE |
| ABL-1 | ABLUTION | FLOOR DRAIN | ------ | 13mm | 13mm | FABRICATED IN FIELD | ---------- |
| HWH-1 | WATER HEATER | --- | --- | SEE DWG. | SEE DWG. | 151 LITER ELECTRIC WATER HEATER, 380/3ø, 9KW | ---------- |
| SH-1 | SHOWER | 76mm | --- | 13mm | 13mm | DRAIN AND SHOWER CONTROLS | ---------- |

## GENERAL PLUMBING NOTES:

1. ALL SANITARY PIPING SHALL BE BELOW FLOOR, AND ALL WATER, AND VENT PIPING SHALL BE TIGHT TO CEILING, UNLESS OTHERWISE NOTED.

2. PLUMBING CONTRACTOR SHALL COORDINATE PLUMBING WORK WITH THE WORK OF ALL OTHER TRADES. VERIFY THE LOCATIONS OF ALL UTILITIES AT THE SITE PRIOR TO THE START OF ANY PLUMBING WORK.

3. ALL SANITARY PIPING BELOW SLAB SHALL BE A MINIMUM OF 51mm, UNLESS OTHERWISE NOTED OR AS REQUIRED BY THE LOCAL AUTHORITY HAVING JURISDICTION.

4. ALL SANITARY BRANCH LINES SHALL BE SLOPED AT 6mm PER 305mm, AND ALL MAIN LINES SHALL BE SLOPED AT 3mm PER 305mm, UNLESS OTHERWISE NOTED OR AS REQUIRED BY THE LOCAL AUTHORITY HAVING JURISDICTION.

5. THE CONTRACTOR SHALL BE RESPONSIBLE FOR COORDINATION WITH ALL UTILITY AUTHORITIES FOR INSTALLATION REQUIREMENTS, REGULATIONS, FEES, PERMITS, AND APPROVALS BEFORE THE START OF CONSTRUCTION.

6. THE CONTRACTOR SHALL ROUGH-IN AND CONNECT ALL EQUIPMENT REQUIRING WATER, WASTE, AND/OR VENT WHETHER OR NOT FURNISHED UNDER THIS CONTRACT. THE CONTRACTOR SHALL ALSO FURNISH AND INSTALL ALL NECESSARY PIPE, FITTINGS, VALVES, TRAPS, ETC., REQUIRED FOR A COMPLETE INSTALLATION, LEAVING SAME READY FOR SERVICE.

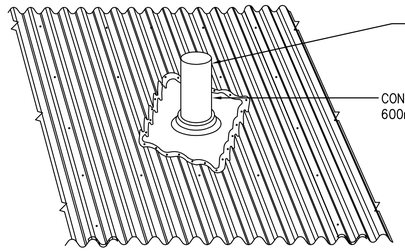


PLUMBING VENT THRU ROOF DETAIL

SCALE: NTS

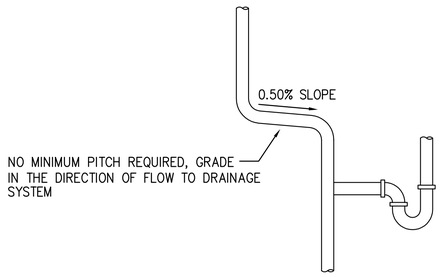


TYPICAL VENT GRADE DETAILS

SCALE: N.T.S.

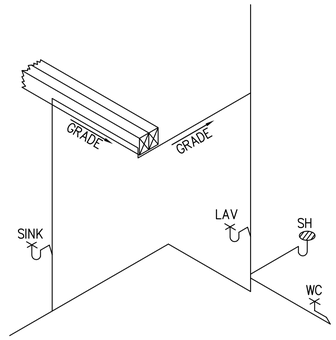


TYPICAL VENT GRADE DETAILS

SCALE: N.T.S.

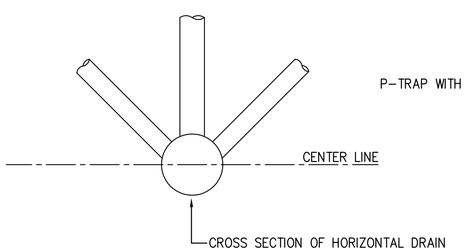


ACCEPTABLE VENT CONNECTIONS TO HORIZONTAL DRAIN - DETAIL

SCALE: N.T.S.

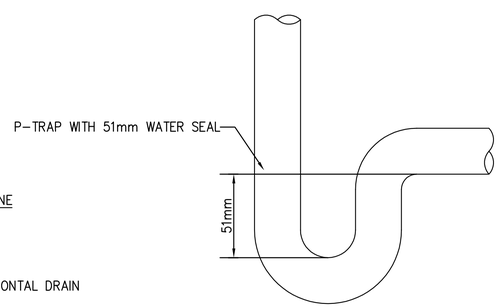


P-TRAP WITH 51mm WATER SEAL DETAIL

SCALE: N.T.S.

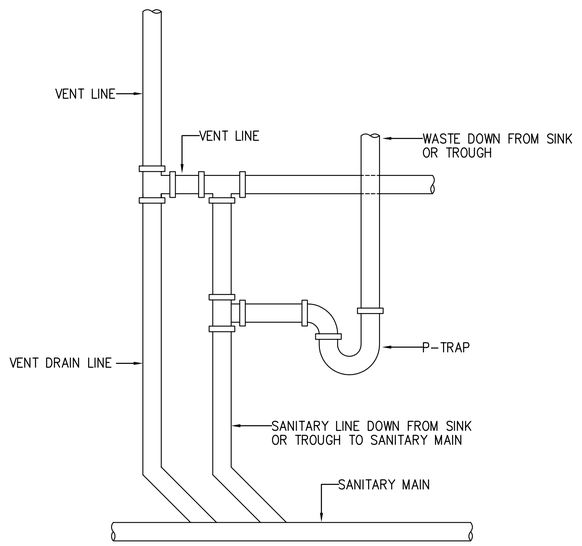


TYPICAL LAVATORY/LAUNDRY VENT DETAIL

SCALE: N.T.S.

APPROVED:

A/E DESIGNER OF RECORD

SEAL:

COMMONWEALTH OF PENNSYLVANIA REGISTERED PROFESSIONAL MATTHEW R. SOTOSKY ENGINEER 046576-E

US ARMY CORPS OF ENGINEERS
AFGHANISTAN ENGINEER DISTRICT

| Mark | Description | Date | Appr. |
|---|---|---|---|

| Rev: 0 | Date: 02/23/10 | Designed by: RMH | Dwn by: RMH | Ckd by: CJM | Reviewed by: | Submitted by: MRS |
|---|---|---|---|---|---|---|

Design file no.

Drawing code:

File name: ANABENBPL-502XXX
Plot date: 02/09/2010
Plot scale: 1:100

U.S. ARMY CORPS OF ENGINEERS
AFGHANISTAN ENGINEER DISTRICT
APO AE 96338

Michael Baker Jr., Inc
A unit of Michael Baker Corporation
Airside Business Park
100 Airside Drive
Moon Township, PA 15108
www.mbakercorp.com

AFGHAN NATIONAL ARMY
REGIONAL MILITARY TRAINING CENTER
STANDARD DESIGN

ENLISTED BARRACKS
PLUMBING DETAILS

Sheet reference number:
P-502

## TYPICAL WALL PENETRATION DETAIL

SCALE: N.T.S.

## TYPICAL BACKFLOW PREVENTER DETAIL

SCALE: N.T.S.

## TYPICAL FLOOR CLEANOUT DETAIL

SCALE: N.T.S.

## TYPICAL WATER DROP DETAIL

SCALE: N.T.S.

APPROVED:

A/E DESIGNER OF RECORD

SEAL:

US ARMY CORPS OF ENGINEERS
AFGHANISTAN ENGINEER DISTRICT

| Mark | Description | Date | Appr. |
|---|---|---|---|

| Mark | Description | Date | Appr. |
|---|---|---|---|

Date: 02/23/10
Rev: 0
Design file no.
Drawing code:
File name: ANABENBPL-503XXX
Plot date: 02/08/2010
Plot scale:1:100

Designed by: RMH
Dwn by: RMH
Ckd by: CJM
Reviewed by:
Submitted by: MRS

U.S. ARMY CORPS OF ENGINEERS
AFGHANISTAN ENGINEER DISTRICT
APO AE 96338

*Michael Baker Jr., Inc*
*A unit of Michael Baker Corporation*
Airside Business Park
100 Airside Drive
Moon Township PA 15108
www.mbakercorp.com

AFGHAN NATIONAL ARMY
REGIONAL MILITARY TRAINING CENTER
STANDARD DESIGN

ENLISTED BARRACKS

PLUMBING DETAILS

Sheet reference number:

P–503

## PLUMBING SYMBOLS

- SANITARY SEWER PIPING (BELOW GROUND)
- SANITARY SEWER PIPING (ABOVE GROUND)
- VENT PIPING (V)
- COLD WATER PIPING (CW)
- HOT WATER PIPING (HW)
- BALL VALVE
- BACKFLOW PREVENTER
- OR — CLEANOUT (CO.)
- ROOF PENETRATION

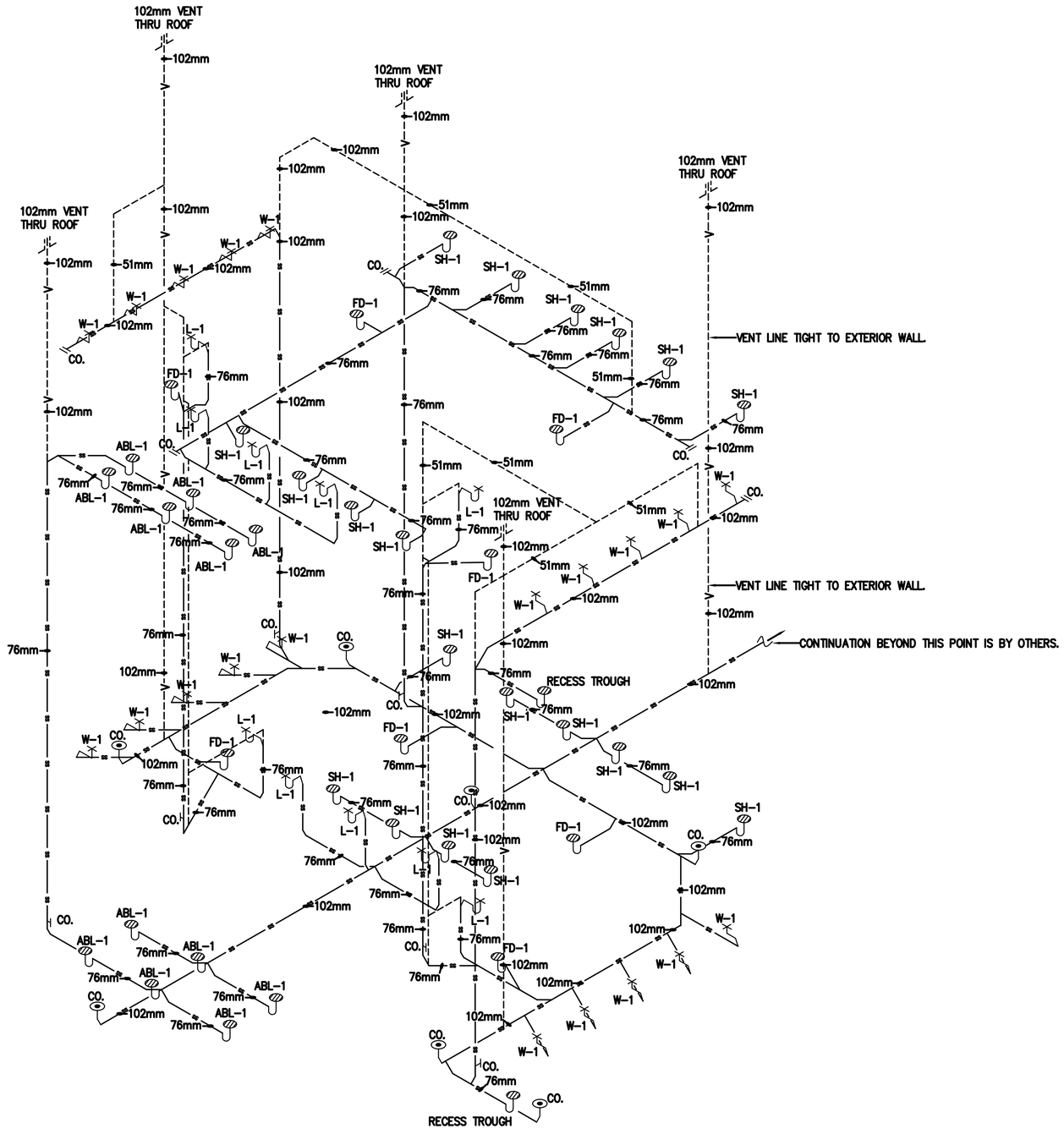


1 / P-901 ENLISTED BARRACKS DRAINAGE ISOMETRIC

SCALE: N.T.S.

US ARMY CORPS OF ENGINEERS
AFGHANISTAN ENGINEER DISTRICT

| Mark | Description | Date | Appr. | Mark | Description | Date | Appr. |
|---|---|---|---|---|---|---|---|

Designed by: RMH
Dwn by: RMH
Ckd by: CJM
Reviewed by:
Submitted by: BAKER
Date: 02/23/10
Rev: 0
Design file no.
Drawing code:
File name: ANABENBPL-901XXX
Plot date: 02/08/2010
Plot scale: N.T.S.

U.S. ARMY CORPS OF ENGINEERS
AFGHANISTAN ENGINEER DISTRICT
APO AE 96338

Michael Baker Jr., Inc
A unit of Michael Baker Corporation
Airside Business Park
100 Airside Drive
Moon Township PA 15108
www.mbakercorp.com

AFGHAN NATIONAL ARMY
REGIONAL MILITARY TRAINING CENTER
STANDARD DESIGN

ENLISTED BARRACKS
DRAINAGE ISOMETRIC

APPROVED:

A/E DESIGNER OF RECORD

SEAL:

COMMONWEALTH OF PENNSYLVANIA
REGISTERED PROFESSIONAL
MATTHEW R. SOTOSKY
ENGINEER
045576-E

Sheet reference number:
P-901

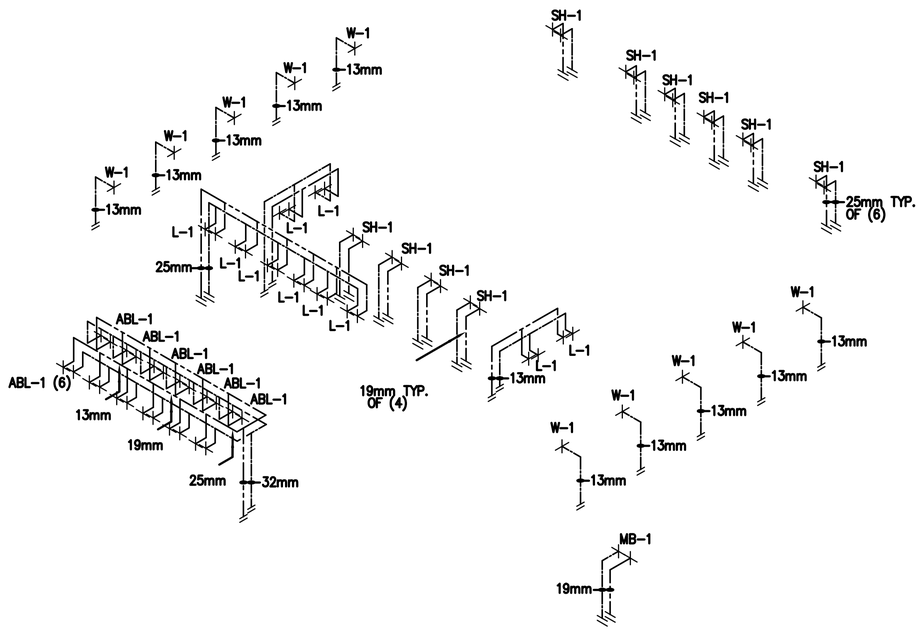


2 P-902 ENLISTED BARRACKS 2ND FLOOR HOT AND COLD WATER ISOMETRIC

SCALE: N.T.S.

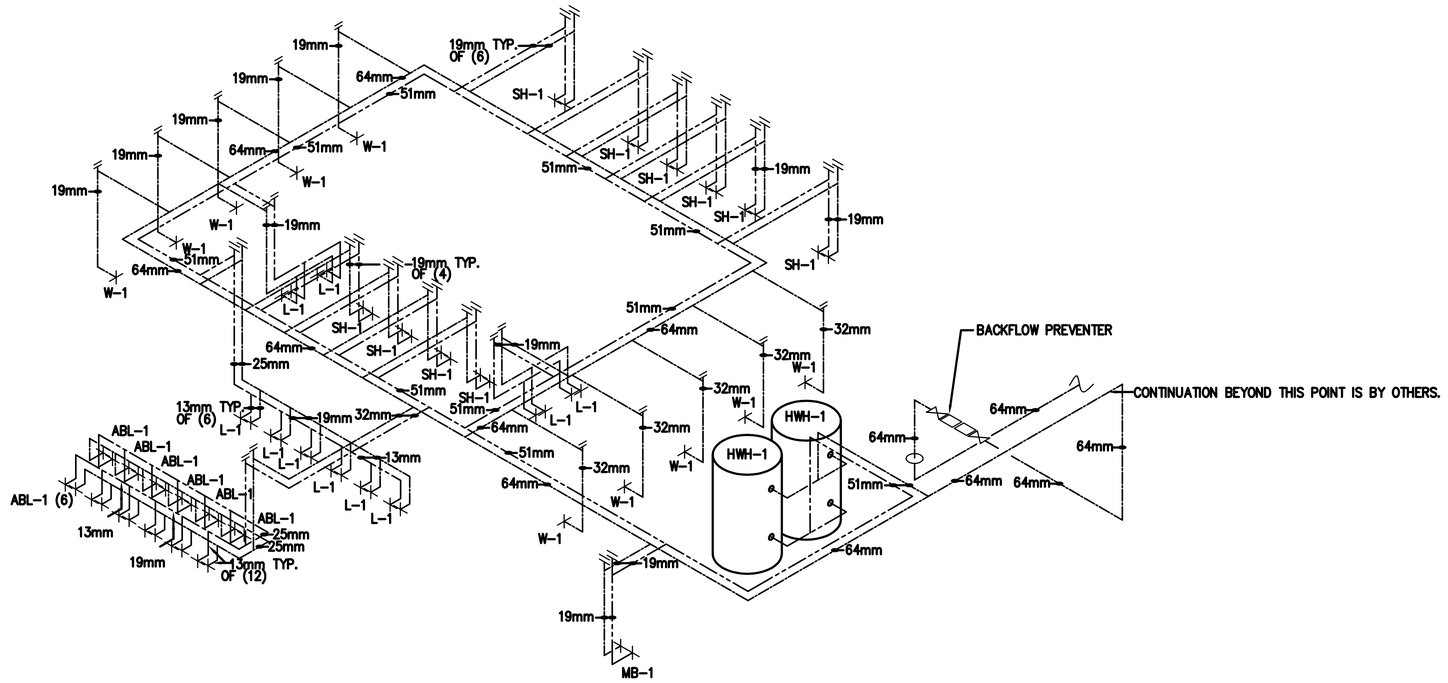


1 P-902 ENLISTED BARRACKS 1ST FLOOR HOT AND COLD WATER ISOMETRIC

SCALE: N.T.S.

## PLUMBING SYMBOLS

- SANITARY SEWER PIPING (BELOW GROUND)
- SANITARY SEWER PIPING (ABOVE GROUND)
- VENT PIPING (V)
- COLD WATER PIPING (CW)
- HOT WATER PIPING (HW)
- BALL VALVE
- BACKFLOW PREVENTER
- OR CLEANOUT (CO.)
- ROOF PENETRATION

US ARMY CORPS OF ENGINEERS
AFGHANISTAN ENGINEER DISTRICT

| Mark | Description | Date | Appr. | Mark | Description | Date | Appr. |
|---|---|---|---|---|---|---|---|

Designed by: RMH
Dwn by: RMH
Ckd by: CJM
Reviewed by:
Submitted by: BAKER
Date: 02/23/10
Rev: 0
Design file no.
Drawing code:
File name: ANABENBPL-902XXX
Plot date: 02/08/2010
Plot scale: N.T.S.

U.S. ARMY CORPS OF ENGINEERS
AFGHANISTAN ENGINEER DISTRICT
APO AE 96338

*Michael Baker Jr., Inc*
*A unit of Michael Baker Corporation*
Airside Business Park
100 Airside Drive
Moon Township, PA 15108
www.mbakercorp.com

AFGHAN NATIONAL ARMY
REGIONAL MILITARY TRAINING CENTER
STANDARD DESIGN

ENLISTED BARRACKS
HOT AND COLD WATER PIPING ISOMETRIC

APPROVED:

A/E DESIGNER OF RECORD

SEAL:

COMMONWEALTH OF PENNSYLVANIA
REGISTERED PROFESSIONAL
MATTHEW R. SOTOSKY
ENGINEER
045576-E

Sheet reference number:
P-902

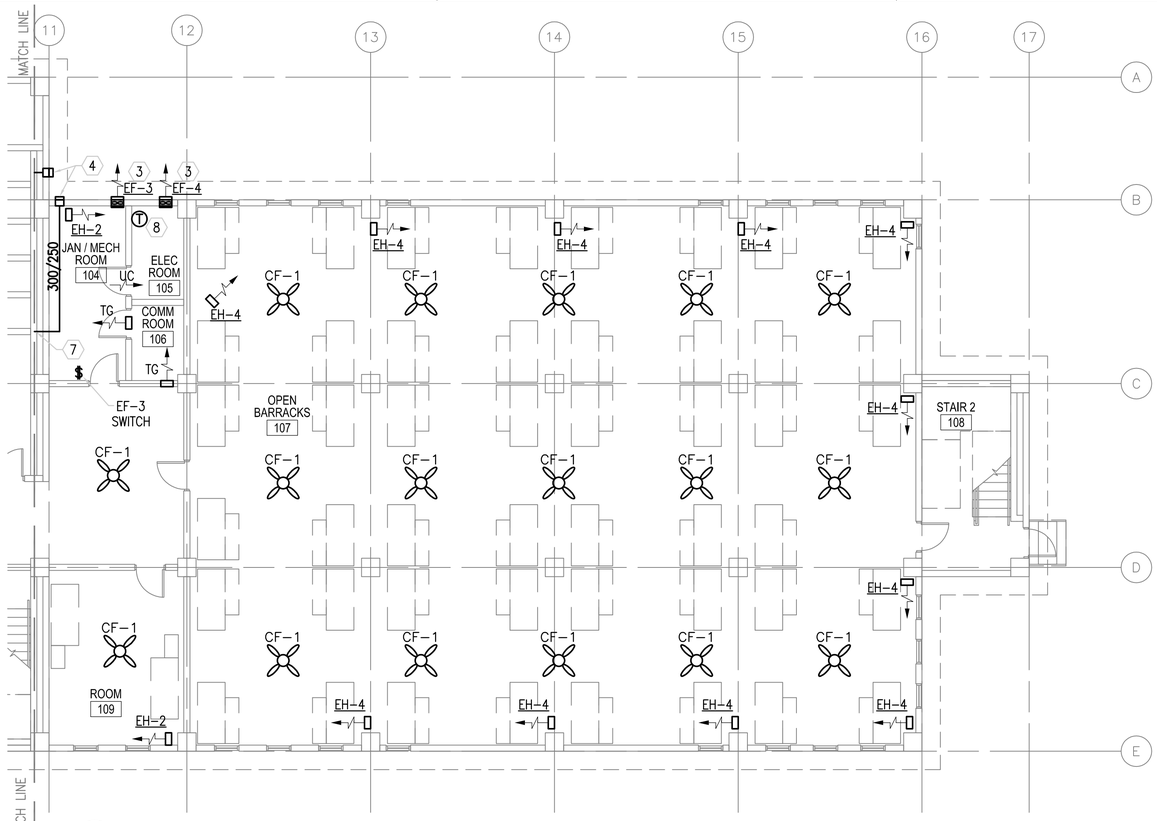


2 M-101

## PARTIAL FIRST FLOOR PLAN - HVAC

SCALE: 1:100

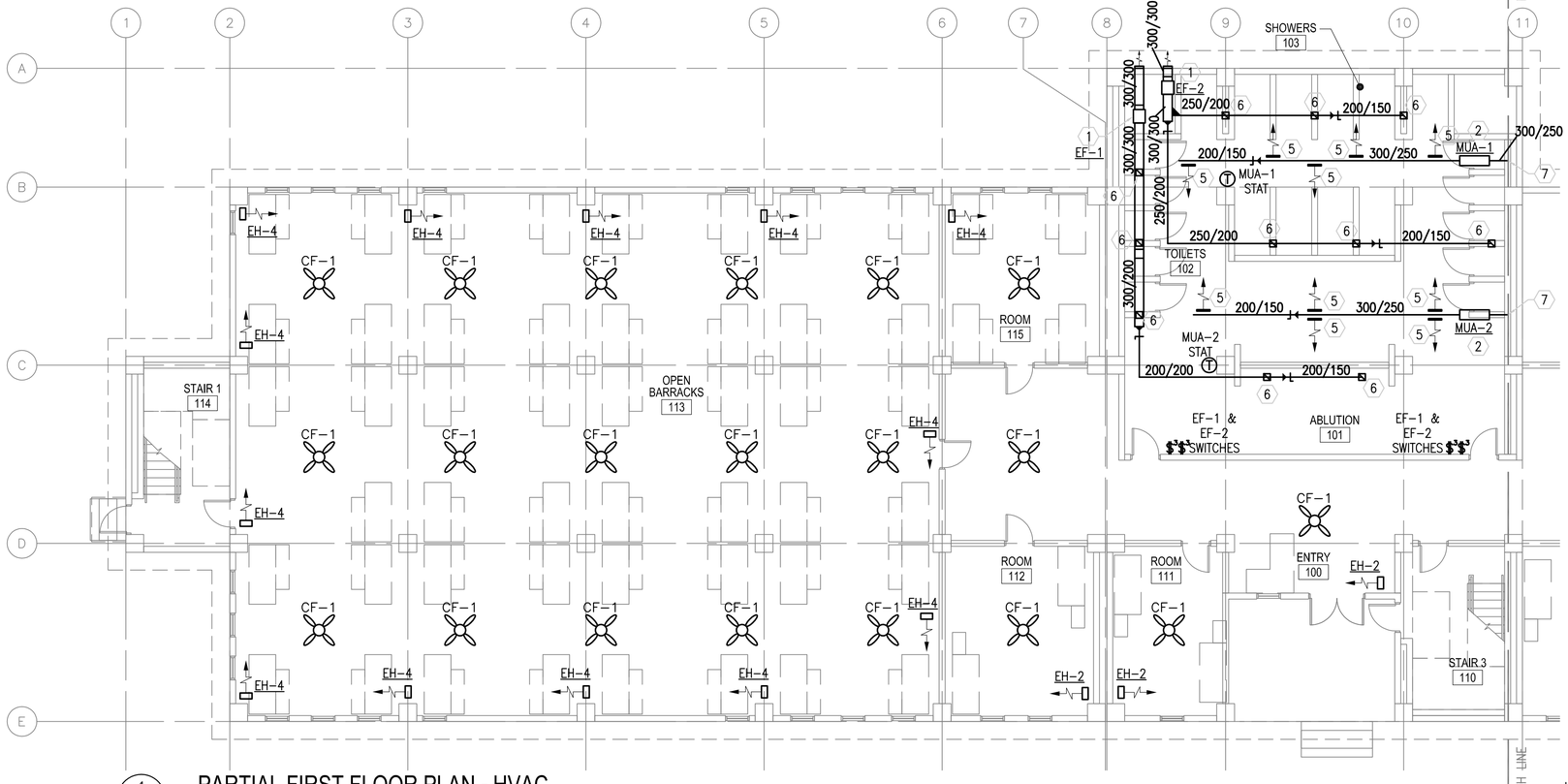


1 M-101

## PARTIAL FIRST FLOOR PLAN - HVAC

SCALE: 1:100

## KEY NOTE:

1. INLINE EXHAUST FAN DUCTED TO WALL CAP WITH LOW LEAKAGE GRAVITY BACK-DRAFT DAMPER. SECURE FAN TO STRUCTURE ABOVE AND INTERLOCK WITH MAKE UP AIR HEATER.
2. ELECTRIC MAKE UP AIR HEATER SECURED TO STRUCTURE ABOVE. BLOWER FOR MUA-1 SHALL BE SET TO ENERGIZE WITH EXHAUST FAN EF-1 & THERMOSTAT, HEAT SHALL BE CONTROLLED BY STAT. BLOWER FOR MUA-2 SHALL BE SET TO ENERGIZE WITH EXHAUST FAN EF-2 & THERMOSTAT, HEAT SHALL BE CONTROLLED BY STAT.
3. WALL EXHAUST FAN WITH LOW SPRING OPERATED BACK-DRAFT DAMPER. SEE DETAIL 3 ON M501.
4. 600X600 (24X24) FOR MAKE UP AIR UNIT. PROVIDE WEATHER PROOF LOUVER WITH 50mm (2") WASHABLE FILTER AND SAND TRAP.
5. 200x150 (8x6) ALUMINUM DUCT MOUNTED SUPPLY GRILLE WITH ADJUSTABLE OPPOSED BLADE DAMPERS. BALANCE EACH GRILLE TO 0.055 CMS.
6. 150x150 (6x6) ALUMINUM DUCT MOUNTED EXHAUST GRILLE WITH ADJUSTABLE OPPOSED BLADE DAMPERS. BALANCE EACH GRILLE TO 0.055 CMS.
7. SEE CONTINUATION THIS SHEET.
8. THERMOSTAT MOUNTED AS HIGH AS POSSIBLE. INTERLOCK STAT WITH CORRESPONDING EXHAUST FAN, SET FAN TO ENERGIZE ON RISE IN TEMPERATURE ABOVE 25°C (77°F).

## GENERAL NOTES:

1. DO NOT SCALE DRAWINGS – ALL DIMENSIONS AND CONDITIONS SHALL BE CHECKED AND VERIFIED BY THE CONTRACTOR AT THE SITE.
2. ALL WORK PERFORMED ON THIS BUILDING SHALL BE IN COMPLIANCE WITH ALL PERTINENT CODES, RULES, ORDINANCES AND REGULATIONS OF THE GOVERNING AUTHORITIES.
3. ALL WORK PERFORMED UNDER AND IN CONNECTION WITH THESE DRAWINGS AND SPECIFICATIONS SHALL BE IN STRICT COMPLIANCE WITH THE LATEST SAFETY AND HEALTH STANDARDS.

## SYMBOLS:

- (X) KEY NOTE
- (0.050) AIR VOLUME IN CUBIC METERS PER SECOND (CMS)
- UC DOOR UNDERCUT
- TG 200x400 (8x16) TRANSFER GRILLE
- $ SINGLE POLE SWITCH – 20A RATED
- $3 3 WAY SWITCH – 20A RATED

## ABBREVIATIONS:

| | |
|---|---|
| AFF | ABOVE FINISH FLOOR |
| CF | CEILING FANS |
| CMS | CUBIC METERS PER SECOND |
| STATS | THERMOSTATS |

## EXHAUST FAN SCHEDULE

| NO. | TYPE | FAN CMS | DRIVE | HP | SP mmH20 | ELECTRICAL DATA | SWITCH |
|---|---|---|---|---|---|---|---|
| EF-1 | WALL | 0.330 | DIRECT | FRACT | 13 | 220/1/50 | @ WALL |
| EF-2 | WALL | 0.330 | DIRECT | FRACT | 13 | 220/1/50 | @ WALL |
| EF-3 | WALL | 0.035 | DIRECT | FRACT | 9.5 | 220/1/50 | @ WALL |
| EF-4 | WALL | 0.035 | DIRECT | FRACT | 9.5 | 220/1/50 | W/ STAT |

NOTES:
1. FANS SHALL HAVE LOW LEAKAGE GRAVITY LOUVER.

## MAKE UP AIR HEATERS

| NO. | BLOWER CMS | FUSE | KW | MIN. TEMP RISE °C | SP mmH20 | ELECTRICAL DATA | CONTROL |
|---|---|---|---|---|---|---|---|
| MUA-1 | 0.280 | 60 | 10 | 20 | 13 | 220/1/50 | REMOTE |
| MUA-2 | 0.280 | 60 | 10 | 20 | 13 | 220/1/50 | REMOTE |

NOTES:
1. PROVIDE REMOTE MOUNTED THERMOSTAT WITH LOCKING COVER.
2. INTERLOCK BLOWER OPERATION WITH EXHAUST FANS EF-1 & STAT.
3. PROVIDE AIR SENSING SWITCH FOR HEATING OPERATION.

## ELECTRIC UNIT HEATER SCHEDULE

| NO. | CMS | KW | F.A.T. °C | ELECT. CHAR. | MOUNTING |
|---|---|---|---|---|---|
| EH-2 | 0.200 | 2.6 | 38 | 380/1/50 | WALL HUNG |
| EH-4 | 0.200 | 4 | 38 | 380/1/50 | WALL HUNG |

NOTES:
1. UNIT HEATERS SHALL HAVE TAMPER PROOF INTEGRAL STATS.
2. COORDINATE LOCATION AND ORIENTATION IN FIELD.

## CEILING FAN

| NO. | BLADE SIZE mm | BLADE SIZE IN | VOLTAGE | SWITCH | REMARKS |
|---|---|---|---|---|---|
| CF-1 | 1320 | 52 | 220/1/50 | @ WALL | 3 SPEED REVERSIBLE MOTOR |

NOTES:
1. INSTALL FANS 2.5M AFF.
2. PROVIDE WITH OUT LIGHT FIXTURE.
3. PROVIDE WITH REMOTE MOUNTED ON-OFF SWITCH SHOWN ON ELECTRICAL DRAWINGS.

LINEAR DIMENSIONS SHOWN ARE IN MILLIMETERS (MM), UNLESS OTHERWISE NOTED

0 2000 4000
SCALE: 1:100

APPROVED:

A/E DESIGNER OF RECORD

SEAL:

COMMONWEALTH OF PENNSYLVANIA
REGISTERED PROFESSIONAL
MATTHEW R. SOTOSKY
ENGINEER
045576-E

US ARMY CORPS OF ENGINEERS
AFGHANISTAN ENGINEER DISTRICT

| Mark | Description | Date | Appr. |
|---|---|---|---|

Date: 02/23/10
Rev: 0
Designed by: RML
Drawn by: JJN
Ckd by: CJM
Reviewed by: MRS
Submitted by: BAKER
Design file no.
Drawing code:
File name: ANABENBMH-101XXX
Plot date: 02/09/2010
Plot scale: 1:100

U.S. ARMY CORPS OF ENGINEERS
AFGHANISTAN ENGINEER DISTRICT
APO AE 96338

Michael Baker Jr., Inc
A unit of Michael Baker Corporation
Airside Business Park
100 Airside Drive
Moon Township, PA 15108
www.mbakercorp.com

AFGHAN NATIONAL ARMY
REGIONAL MILITARY TRAINING CENTER
STANDARD DESIGN

ENLISTED BARRACKS
HVAC – FIRST FLOOR PLAN, AND SCHEDULES

Sheet reference number:
M-101

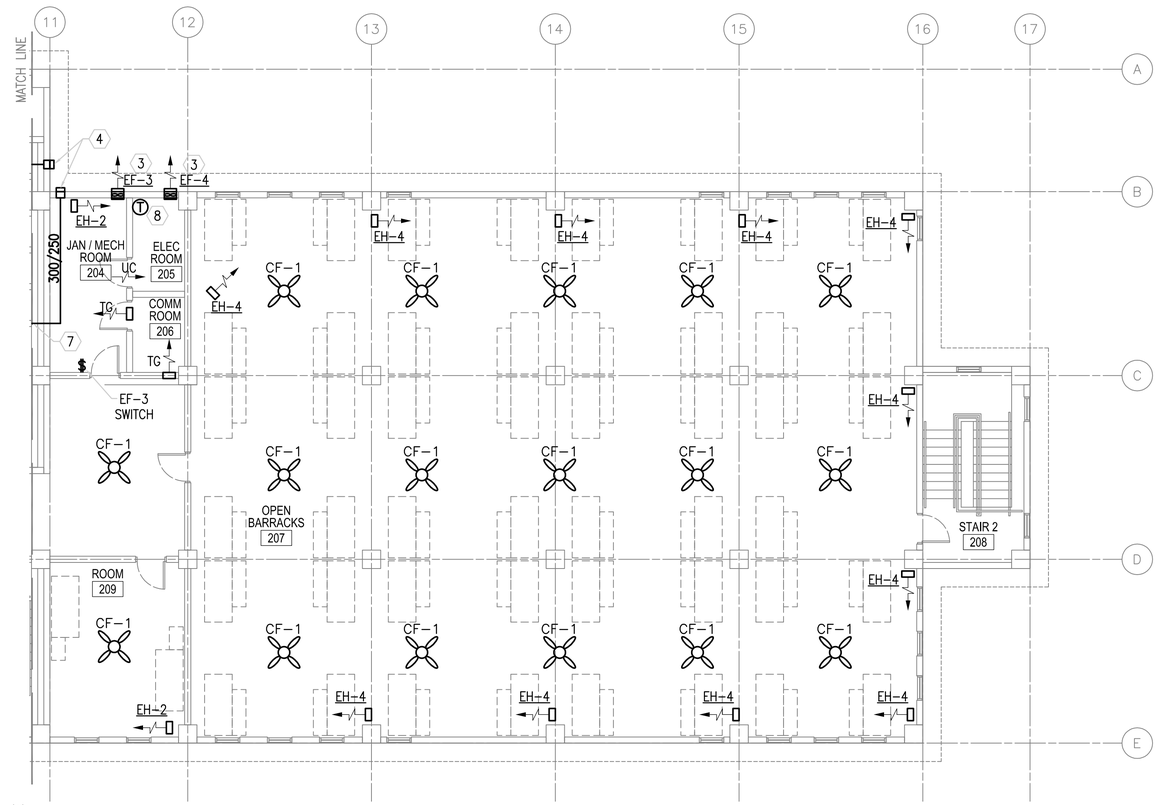


2 M-201

## PARTIAL SECOND FLOOR PLAN - HVAC

SCALE: 1:100

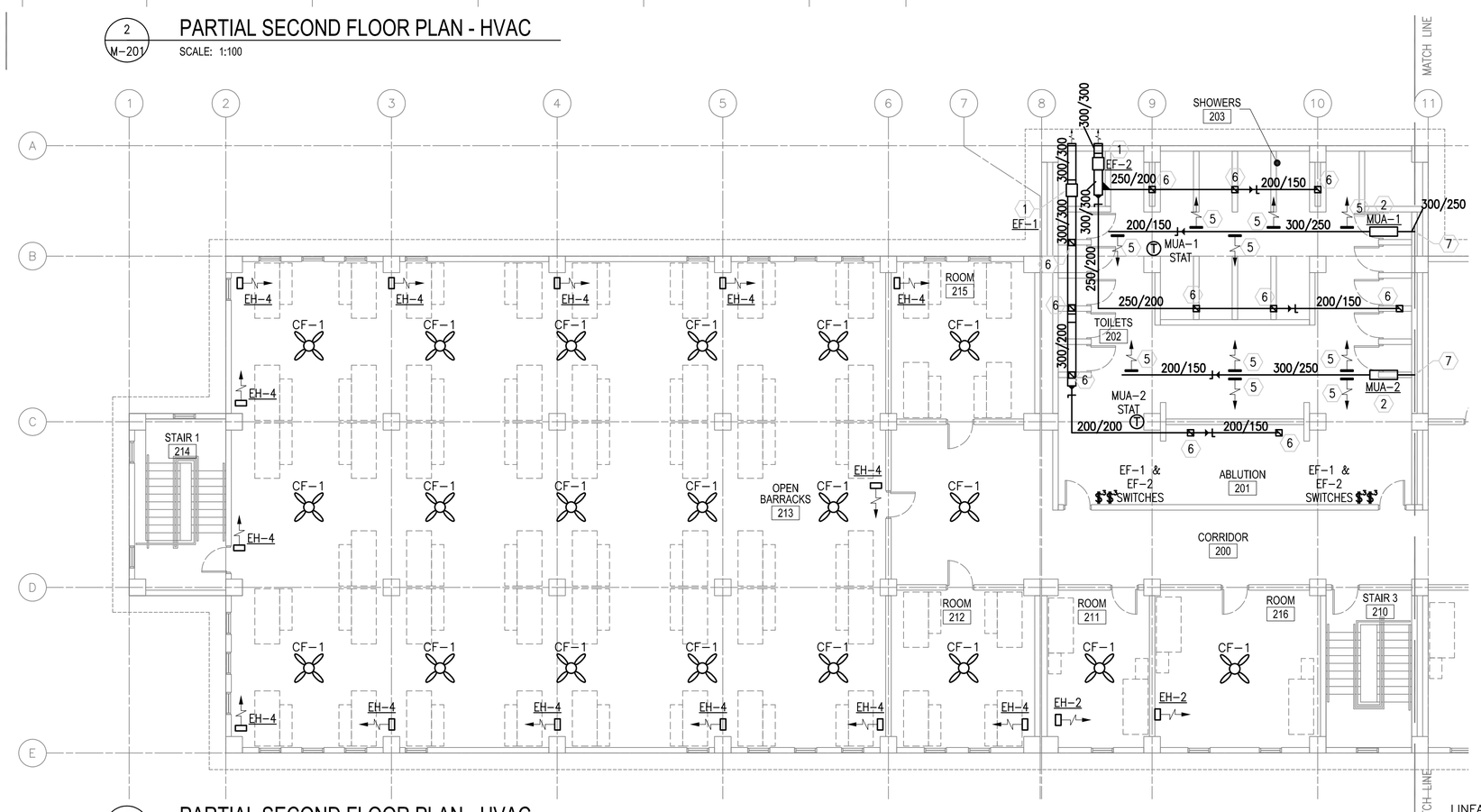


1 M-201

## PARTIAL SECOND FLOOR PLAN - HVAC

SCALE: 1:100

## KEY NOTE:

1. INLINE EXHAUST FAN DUCTED TO WALL CAP WITH LOW LEAKAGE GRAVITY BACK–DRAFT DAMPER. SECURE FAN TO STRUCTURE ABOVE AND INTERLOCK WITH MAKE UP AIR HEATER.
2. ELECTRIC MAKE UP AIR HEATER SECURED TO STRUCTURE ABOVE. BLOWER FOR MUA–1 SHALL BE SET TO ENERGIZE WITH EXHAUST FAN EF–1 & THERMOSTAT, HEAT SHALL BE CONTROLLED BY STAT. BLOWER FOR MUA–2 SHALL BE SET TO ENERGIZE WITH EXHAUST FAN EF–2 & THERMOSTAT, HEAT SHALL BE CONTROLLED BY STAT.
3. WALL EXHAUST FAN WITH LOW SPRING OPERATED BACK–DRAFT DAMPER. SEE DETAIL 3 ON SHEET M501.
4. 600X600 (24X24) INTAKE LOUVER FOR MAKE UP AIR UNIT. PROVIDE WEATHER PROOF LOUVER WITH 50mm (2") WASHABLE FILTER AND SAND TRAP.
5. 200x150 (8x6) ALUMINUM DUCT MOUNTED SUPPLY GRILLE WITH ADJUSTABLE OPPOSED BLADE DAMPERS. BALANCE EACH GRILLE TO 0.055 CMS.
6. 150x150 (6x6) ALUMINUM DUCT MOUNTED EXHAUST GRILLE WITH ADJUSTABLE OPPOSED BLADE DAMPERS. BALANCE EACH GRILLE TO 0.055 CMS.
7. SEE CONTINUATION THIS SHEET.
8. THERMOSTAT MOUNTED AS HIGH AS POSSIBLE. INTERLOCK STAT WITH CORRESPONDING EXHAUST FAN, SET FAN TO ENERGIZE ON RISE IN TEMPERATURE ABOVE 25°C (77°F).

## GENERAL NOTES:

1. DO NOT SCALE DRAWINGS – ALL DIMENSIONS AND CONDITIONS SHALL BE CHECKED AND VERIFIED BY THE CONTRACTOR AT THE SITE.
2. ALL WORK PERFORMED ON THIS BUILDING SHALL BE IN COMPLIANCE WITH ALL PERTINENT CODES, RULES, ORDINANCES AND REGULATIONS OF THE GOVERNING AUTHORITIES.
3. ALL WORK PERFORMED UNDER AND IN CONNECTION WITH THESE DRAWINGS AND SPECIFICATIONS SHALL BE IN STRICT COMPLIANCE WITH THE LATEST SAFETY AND HEALTH STANDARDS.

## SYMBOLS:

- (X) KEY NOTE
- (0.050) AIR VOLUME IN CUBIC METERS PER SECOND (CMS)
- UC DOOR UNDERCUT
- $ SINGLE POLE SWITCH – 20A RATED
- $3 3 WAY SWITCH – 20A RATED

## ABBREVIATIONS:

| | |
|---|---|
| AFF | ABOVE FINISH FLOOR |
| CF | CEILING FANS |
| CMS | CUBIC METERS PER SECOND |
| MOD | MOTOR OPERATED DAMPER |
| STATS | THERMOSTATS |

## EXHAUST FAN SCHEDULE

| NO. | TYPE | FAN CMS | DRIVE | HP | SP mmH20 | ELECTRICAL DATA | SWITCH |
|---|---|---|---|---|---|---|---|
| EF–1 | WALL | 0.330 | DIRECT | FRACT | 13 | 220/1/50 | @ WALL |
| EF–2 | WALL | 0.330 | DIRECT | FRACT | 13 | 220/1/50 | @ WALL |
| EF–3 | WALL | 0.035 | DIRECT | FRACT | 9.5 | 220/1/50 | @ WALL |
| EF–4 | WALL | 0.035 | DIRECT | FRACT | 9.5 | 220/1/50 | W/ STAT |

NOTES:
1. FANS SHALL HAVE LOW LEAKAGE GRAVITY LOUVER.

## MAKE UP AIR HEATERS

| NO. | BLOWER CMS | FUSE | KW | MIN. TEMP RISE °C | SP mmH20 | ELECTRICAL DATA | CONTROL |
|---|---|---|---|---|---|---|---|
| MUA–1 | 0.284 | 60 | 10 | 20 | 13 | 220/1/50 | REMOTE |
| MUA–2 | 0.284 | 60 | 10 | 20 | 13 | 220/1/50 | REMOTE |

NOTES:
1. PROVIDE REMOTE MOUNTED THERMOSTAT WITH LOCKING COVER.
2. INTERLOCK BLOWER OPERATION WITH EXHAUST FANS EF–1 AND THERMOSTAT.
3. PROVIDE AIR SENSING SWITCH FOR HEATING OPERATION.

## ELECTRIC UNIT HEATER SCHEDULE

| NO. | CMS | KW | F.A.T. °C | ELECT. CHAR. | MOUNTING |
|---|---|---|---|---|---|
| EH–2 | 0.200 | 2.6 | 38 | 380/1/50 | WALL HUNG |
| EH–4 | 0.200 | 4 | 38 | 380/1/50 | WALL HUNG |

NOTES:
1. UNIT HEATERS SHALL HAVE TAMPER PROOF INTEGRAL STATS.
2. COORDINATE LOCATION AND ORIENTATION IN FIELD.

## CEILING FAN

| NO. | BLADE SIZE mm | BLADE SIZE IN | VOLTAGE | SWITCH | REMARKS |
|---|---|---|---|---|---|
| CF–1 | 1320 | 52 | 220/1/50 | @ WALL | 3 SPEED REVERSIBLE MOTOR |

NOTES:
1. INSTALL FANS 2.5M AFF.
2. PROVIDE WITH OUT LIGHT FIXTURE.
3. PROVIDE WITH REMOTE MOUNTED ON–OFF SWITCH SHOWN ON ELECTRICAL DRAWINGS.

LINEAR DIMENSIONS SHOWN ARE IN MILLIMETERS (MM), UNLESS OTHERWISE NOTED

0 2000 4000
SCALE: 1:100

APPROVED:

A/E DESIGNER OF RECORD

SEAL:

COMMONWEALTH OF PENNSYLVANIA REGISTERED PROFESSIONAL MATTHEW R. SOTOSKY ENGINEER 045576–E

US ARMY CORPS OF ENGINEERS
AFGHANISTAN ENGINEER DISTRICT

| Mark | Description | Date | Appr. |
|---|---|---|---|

Date: 02/23/10
Rev: 0
Designed by: RML
Dwn by: JJN
Ckd by: CJM
Reviewed by:
Submitted by: BAKER
Design file no.
Drawing code:
File name: ANABENBMH-102XX
Plot date: 02/26/2010
Plot scale: 1:100

U.S. ARMY CORPS OF ENGINEERS
AFGHANISTAN ENGINEER DISTRICT
APO AE 96338

Michael Baker Jr., Inc
A unit of Michael Baker Corporation
Airside Business Park
100 Airside Drive
Moon Township, PA 15108
www.mbakercorp.com

AFGHAN NATIONAL ARMY
REGIONAL MILITARY TRAINING CENTER
STANDARD DESIGN

ENLISTED BARRACKS

HVAC – SECOND FLOOR PLAN, SCHEDULES AND DETAILS

Sheet reference number:
M–102

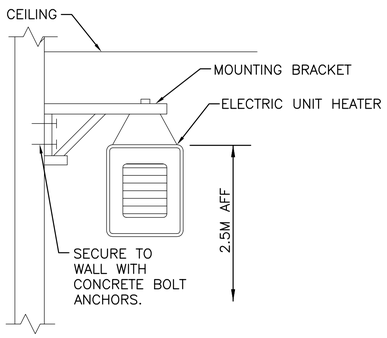


1 M-501 ELECTRIC UNIT HEATER MOUNTING DETAIL
N.T.S.

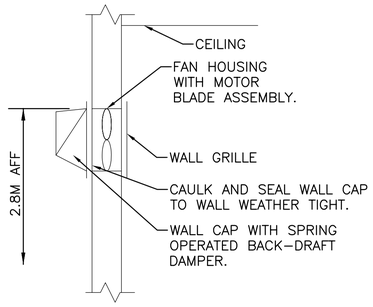


2 M-501 THROUGH THE WALL EXHAUST FAN DETAIL
N.T.S.

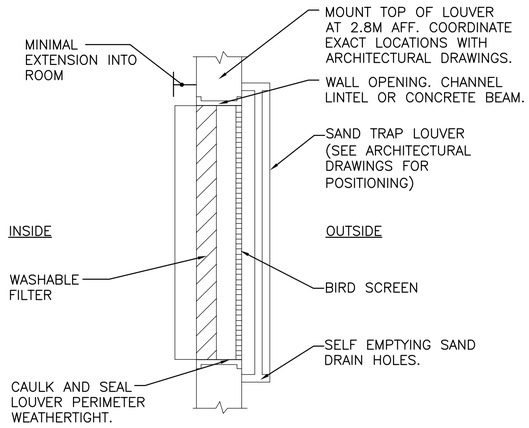


3 M-501 FILTERED SAND TRAP LOUVER
N.T.S.

APPROVED:

A/E DESIGNER OF RECORD

SEAL:

COMMONWEALTH OF PENNSYLVANIA
REGISTERED PROFESSIONAL ENGINEER
MATTHEW R. SOTOSKY
045576-E

US ARMY CORPS OF ENGINEERS
AFGHANISTAN ENGINEER DISTRICT

| Mark | Description | Date | Appr. |
|---|---|---|---|
| | | | |

| Mark | Description | Date | Appr. |
|---|---|---|---|
| | | | |

Date: 02/23/10 Rev: 0
Designed by: RML Ckd by: CJM
Design file no.
Drawing code:
Dwn by: JJN Reviewed by: MRS
File name: ANABENBMH-501XX3
Plot date: 02/09/2010
Plot scale: 1:100
Submitted by: BAKER

U.S. ARMY CORPS OF ENGINEERS
AFGHANISTAN ENGINEER DISTRICT
APO AE 96338

*Michael Baker Jr., Inc*
*A unit of Michael Baker Corporation*
Airside Business Park
100 Airside Drive
Moon Township, PA 15108
www.mbakercorp.com

AFGHAN NATIONAL ARMY
REGIONAL MILITARY TRAINING CENTER
STANDARD DESIGN

ENLISTED BARRACKS

DETAILS

Sheet reference number:
M-501

## POWER

- DISTRIBUTION PANELBOARD
- NEW PANELBOARD – SURFACE
- NEW PANELBOARD – RECESSED
- (G) GENERATOR
- TRANSFORMER (DRAWN TO SIZE)
- [J] JUNCTION BOX
- (J) JUNCTION BOX – CEILING
- FUSIBLE SAFETY SWITCH
- (M) MOTOR
- $^{M}$ MOTOR STARTING SWITCH – 220V, 20A RATED UNLESS OTHERWISE NOTED
- ELECTRIC WATER HEATER
- CEILING FAN – REFER TO SPECIFICATION SECTION 26 20 00

## RECEPTACLES

- DUPLEX 20A TYPE CEE 7/7 "SCHUKO STYLE" UNSWITCHED RECEPTACLE
- GF DUPLEX 20A TYPE CEE 7/7 "SCHUKO STYLE" UNSWITCHED RECEPTACLES – 10mA GROUND FAULT INTERRUPTER TYPE
- WP DUPLEX 20A TYPE CEE 7/7 "SCHUKO STYLE" UNSWITCHED TYPE WITH WEATHERPROOF COVER – 10mA GROUND FAULT INTERRUPTER TYPE
- EXP DUPLEX 20A TYPE CEE 7/7 "SCHUKO STYLE" UNSWITCHED RECEPTACLES – EXPLOSION PROOF
- * INDICATES MOUNT DEVICE ABOVE COUNTERTOP OR AT 1070mm ABOVE FINISHED FLOOR WHERE NO COUNTER IS TO BE INSTALLED.

## LIGHTNING PROTECTION

- AIR TERMINAL 20mm O.D. X 450mm SOLID COPPER, NICKEL PLATED ON ADHESIVE BASE
- EQ EQUIPMENT AIR TERMINAL
- TEST WELL WITH GROUND ROD(S)
- GROUND ROD
- G GROUND PLATE
- MAIN GROUND CONDUCTER CONCEALED WITHIN CONSTRUCTION
- MAIN GROUND CONDUCTOR EXPOSED ON EXPOSED ON BUILDING EXTERIOR SURFACE
- GROUND CONDUCTOR CAD WELDED TO GROUND CABLE OR EQUIPMENT
- GROUND ROD TRIPOD, SPACED 3 METERS APART.
- LEVEL TO LEVEL CABLE

## LIGHTING

- LIGHTING FIXTURE – SEE FIXTURE SCHEDULE FOR MORE INFORMATION
- EMERGENCY LIGHTING FIXTURE – SEE FIXTURE SCHEDULE FOR MORE INFORMATION
- DOWNLIGHT
- LIGHTING FIXTURE ON NORMAL/EMERGENCY
- WALL MOUNTED LIGHT FIXTURE
- [E] EXIT SIGN – DIRECTIONAL ARROWS AS INDICATED ON DRAWINGS
- REMOTE HEAD FOR BATTERY PACK
- $ SINGLE POLE SWITCH – 20A RATED
- $^{3}$ 3–WAY SWITCH – 20A RATED
- $^{4}$ 4–WAY SWITCH – 20A RATED
- [LC] LIGHTING CONTACTOR
- POLE MOUNTED SITE LIGHTING FIXTURE– NUMBER OF FIXTURES PER POLE AS INDICATED ON DRAWINGS
- EXTERIOR DIRECTIONAL LIGHTING FIXTURE
- a SMALL CASE LETTERS REPRESENTS LAMP(S) / SWITCHES.

## TELECOMMUNICATIONS

- ▼ TELEPHONE OUTLET(S) @ 45cm AFF. U.N.O. WITH 20mm RACEWAY TERMINATED TO TELEDATA TERMINAL BOARD.
- ▽ DATA OUTLET(S) @ 45cm AFF. U.N.O. WITH 20mm RACEWAY TERMINATED TO TELEDATA TERMINAL BOARD.

## TELECOMMUNICATIONS (CONTINUED)

- COMBINATION TELEPHONE/DATA OUTLET(S) @ 45cm AFF. U.N.O. WITH 27mm RACEWAY TERMINATED TO TELEDATA TERMINAL AREA.
- WALL MTD. TELEPHONE OUTLET WITH 20mm RACEWAY TO TELEDATA TERMINAL BOARD.
- (x)T INDICATES NUMBER OF TELEPHONE OUTLET(S) AND ASSOCIATED CABLING
- (x)D INDICATES NUMBER OF DATA OUTLET(S) AND ASSOCIATED CABLING
- (x)TF INDICATES NUMBER OF TELEPHONE OUTLETS AND ASSOCIATED CABLING WITH 1 OUTLET AND CABLE DEDICATED FOR FAX

## SINGLE LINE SYMBOLS

- SWITCH
- BREAKER
- FUSE
- TRANSFORMER
- GROUND
- CONTACT (NORMALLY OPEN)
- CONTACT (NORMALLY CLOSED)
- TRANSFER SWITCH
- CURRENT TRANSFORMER
- INDICATES NEW ELECTRICAL EQUIPMENT
- C INDICATES NEW CONTROL WIRING AND CONDUIT
- EQUIPMENT OUTLINE

## MISCELLANEOUS

- BRANCH CIRCUIT WIRING, SURFACE MOUNTED ON WALLS
- BRANCH CIRCUIT WIRING – 6mm²
- BRANCH CIRCUIT WIRING – UNDER FLOOR
- HOME RUN BACK TO PANEL
- CONDUIT TURNED DOWN
- CONDUIT TURNED UP
- LV LOW VOLTAGE WIRING AND CONDUIT
- INDICATES CONTINUATION OF LINE

## FIRE ALARM

- FACP FIRE ALARM CONTROL PANEL WITH BATTERY BACKUP
- F FIRE ALARM PULL STATION

## FIRE ALARM (CONTINUED)

- F FIRE ALARM STROBE – WALL MOUNTED
- F FIRE ALARM AUDIBLE/STROBE – WALL MOUNTED
- F FIRE ALARM HORN/STROBE – WALL MOUNTED
- S SMOKE DETECTOR
- H HEAT DETECTOR CEILING MOUNTED
- D DUCT DETECTOR – PROVIDED BY EC, INSTALLED BY MC AND CONNECTED BY EC

## DENOTATIONS & ABBREVIATIONS

| | |
|---|---|
| AFF | ABOVE FINISHED FLOOR |
| C | CEILING MOUNTED |
| E | EMERGENCY |
| EC | ELECTRICAL CONTRACTOR |
| EPO | EMERGENCY POWER OFF |
| EXP | EXPLOSION PROOF |
| F | FIRE ALARM |
| FF | FLUSH FLOOR MOUNTED |
| FL | FLUORESCENT |
| FO | FIBER OPTIC |
| FSS | FUSED SAFETY SWITCH |
| GF | GROUND FAULT INTERRUPTER |
| GC | GENERAL CONTRACTOR |
| IG | ISOLATED GROUND |
| K | KEY |
| LV | LOW VOLTAGE |
| M | MOTOR |
| MC | MECHANICAL CONTRACTOR |
| NE | NORMAL/EMERGENCY |
| NFSS | NON–FUSED SAFETY SWITCH |
| PA | PAGING SYSTEM |
| PLC | PLUMBING CONTRACTOR |
| SL | SINGLE LINE |
| T | TELEPHONE |

## DENOTATIONS & ABBREVIATIONS (CONT.)

| | |
|---|---|
| TP | TAMPER PROOF |
| UE | UNDERGROUND ELECTRIC |
| W | WALL MOUNTED |
| WP | WEATHERPROOF WITH GROUND FAULT INTERRUPTION |
| WT | WATER TIGHT |

## GENERAL PROJECT NOTES:

G1. UNLESS OTHERWISE NOTED, PROVIDE ALL EQUIPMENT SHOWN ON THE PLANS. THE ELECTRICAL CONTRACTOR SHALL COORDINATE ALL SYMBOLS SHOWN ON THE PLANS WITH THE SYMBOL LIST. IT SHALL BE THE RESPONSIBILITY OF THE CONTRACTOR TO VERIFY THE INTENT OF ANY SYMBOL THAT IS SHOWN ON THE PLANS AND NOT INDICATED ON THE SYMBOL LIST WITH THE ENGINEER PRIOR TO BID.

G2. THE CONTRACTOR SHALL VERIFY THE LOCATION OF ALL UNDERGROUND UTILITIES WITHIN THE CONSTRUCTION AREA THREE (3) WORKING DAYS NOTICE BEFORE COMMENCING DIGGING. NOTIFY THE LOCAL AUTHORITY HAVING JURISDICTION AND WAIT THE REQUIRED TIME BEFORE COMMENCING TO DIG.

G3. THE CONTRACTOR SHALL COORDINATE CONDUIT RUNS, LIGHTING FIXTURES AND OTHER EQUIPMENT LOCATIONS WITH THE OTHER TRADE CONTRACTORS TO AVOID CONFLICTS.

G4. WHERE VOLTAGES AND FREQUENCIES ON THE DRAWINGS AND IN THE SPECIFICATIONS DIFFER FROM THE LOCAL ONES, ALL WORK SHALL BE PERFORMED USING THE LOCAL VOLTAGES AND FREQUENCIES.

G5. THE MINIMUM WIRE SIZE ON THE PROJECT SHALL BE 4mm². THE MINIMUM CONDUIT SIZE SHALL BE 20mm. THE MINIMUM BREAKER SIZE SHALL BE 20 AMPS.

G6. THE CONTRACTOR SHALL PUT A MAXIMUM OF 6 DUPLEX RECEPTACLES ON A 20A SINGLE POLE CIRCUIT.

G7. WHERE THE 1010 SCOPE REVIEW, 1015 TECHNICAL REVIEW, DRAWINGS, AND SPECIFICATIONS DIFFER FROM AMERICAN CODES OR STANDARDS, THE 1010, 1015, DRAWINGS, AND SPECIFICATIONS SHALL RULE.

G8. ALL CONDUIT AND DEVICES SHALL BE SURFACE MOUNTED UNLESS OTHERWISE INDICATED.

G9. CONTRACTOR SHALL COORDINATE ALL WORK WITH ALL OTHER TRADES TO ENSURE ALL WORK IS COMPLETED IN A PROFESSIONAL, WORKMAN–LIKE MANNER.

APPROVED:

A/E DESIGNER OF RECORD

SEAL:

COMMONWEALTH OF PENNSYLVANIA
REGISTERED PROFESSIONAL
JOSEPH R GAUS
ENGINEER
PE-074251
1/29/10

US ARMY CORPS OF ENGINEERS
AFGHANISTAN ENGINEER DISTRICT

| Mark | Description | Date | Appr. |
|---|---|---|---|
| 0 | | | |

Date: 0

Date: 2/23/10
Design file no.

Drawing code:

Designed by: RAJ
Dwn by: BJB
Ckd by: JRG

Reviewed by: JRG

Submitted by: BAKER

File name:
Plot date:
Plot scale:

U.S. ARMY CORPS OF ENGINEERS
AFGHANISTAN ENGINEER DISTRICT
APO AE 96338

*Michael Baker Jr., Inc*
*A unit of Michael Baker Corporation*
Airside Business Park
100 Airside Drive
Moon Township, PA 15108
www.mbakercorp.com

AFGHAN NATIONAL ARMY
REGIONAL MILITARY TRAINING CENTER
STANDARD DESIGN

ENLISTED BARRACKS

# ELECTRICAL SYMBOLS & ABBREVIATIONS

Sheet reference number:
E–001

## GENERAL NOTES:

1. REFER TO DRAWING #E-001 FOR THE ELECTRICAL SYMBOLS LIST.
2. EXIT SIGNS SHALL BE WIRED AHEAD OF ANY LOCAL SWITCHING ON CIRCUITS. SEE WIRING DIAGRAM DETAIL 8, DRAWING # E-501.
3. REFER TO DRAWING #E-601 FOR THE LIGHTING FIXTURE SCHEDULE.
4. REFER TO DRAWING #E-501 FOR THE POWER RISER.
5. REFER TO DRAWING #E-602 FOR PANEL SCHEDULES.
6. LIGHT FIXTURES INDICATED AS EMERGENCY SHALL BE PROVIDED WITH A BATTERY BACKUP BALLAST.

## NUMBERED NOTES:

(1) CIRCUIT SHALL BE CONTINUED TO THE FLOOR ABOVE.




1 E-101 ENLISTED BARRACKS PARTIAL FLOOR PLAN - LIGHTING

SCALE: 1:100

## KEY PLAN:

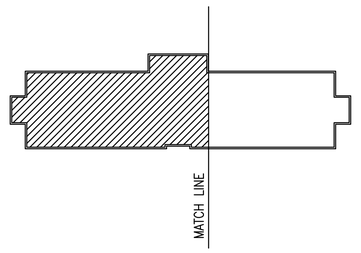


0 2000 4000

SCALE: 1:100

APPROVED:

A/E DESIGNER OF RECORD

SEAL:

COMMONWEALTH OF PENNSYLVANIA
REGISTERED PROFESSIONAL
JOSEPH R GAUS
ENGINEER
PE-074251
1/29/10

US ARMY CORPS OF ENGINEERS
AFGHANISTAN ENGINEER DISTRICT

| Mark | Description | Date | Appr. |
|---|---|---|---|
| | | | |

| Mark | Description | Date | Appr. |
|---|---|---|---|
| | | | |

U.S. ARMY CORPS OF ENGINEERS
AFGHANISTAN ENGINEER DISTRICT
APO AE 96338

*Michael Baker Jr., Inc.*
*A unit of Michael Baker Corporation*
Airside Business Park
100 Airside Drive
Moon Township, PA 15108
www.mbakercorp.com

Designed by: KJR
Dwn by: BJB
Ckd by: JRG
Reviewed by: JRG
Submitted by: BAKER
Date: 2/23/10
Design file no.
Drawing code:
File name:
Plot date:
Plot scale:
Date: 0

AFGHAN NATIONAL ARMY
REGIONAL MILITARY TRAINING CENTER
STANDARD DESIGN

ENLISTED BARRACKS
FIRST FLOOR ELECTRICAL LIGHTING PLAN
PART A

Sheet reference number:
E-101

## GENERAL NOTES:

1. REFER TO DRAWING #E-001 FOR THE ELECTRICAL SYMBOLS LIST.
2. EXIT SIGNS SHALL BE WIRED AHEAD OF ANY LOCAL SWITCHING ON CIRCUITS. SEE WIRING DIAGRAM DETAIL 8, DRAWING #E-501.
3. REFER TO DRAWING #E-601 FOR THE LIGHTING FIXTURE SCHEDULE.
4. REFER TO DRAWING #E-501 FOR THE POWER RISER.
5. REFER TO DRAWING #E-602 FOR PANEL SCHEDULES.
6. LIGHT FIXTURES INDICATED AS EMERGENCY SHALL BE PROVIDED WITH A BATTERY BACKUP BALLAST. SEE WIRING DIAGRAM 7, DRAWING #E-501

## NUMBERED NOTES:

(1) CIRCUIT SHALL BE CONTINUED TO THE FLOOR ABOVE.

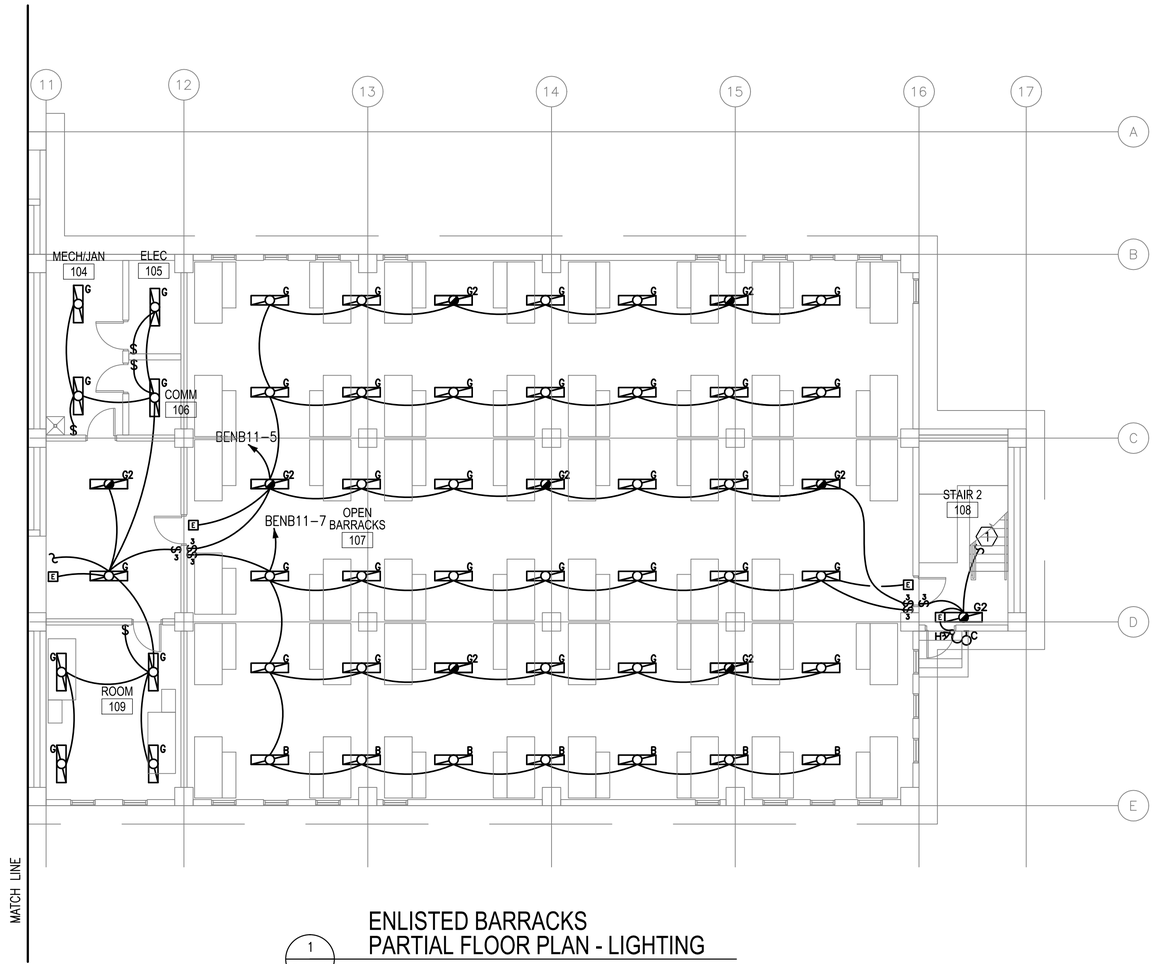


1 / E-102 ENLISTED BARRACKS PARTIAL FLOOR PLAN - LIGHTING

SCALE: 1:100

## KEY PLAN:

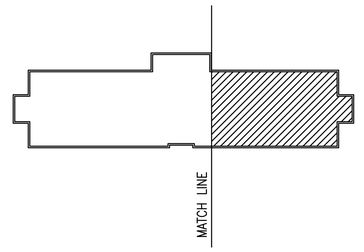


0 2000 4000

SCALE: 1:100

APPROVED:

A/E DESIGNER OF RECORD

SEAL:

COMMONWEALTH OF PENNSYLVANIA
REGISTERED PROFESSIONAL
JOSEPH R GAUS
ENGINEER
PE-074251
1/29/10

US ARMY CORPS OF ENGINEERS
AFGHANISTAN ENGINEER DISTRICT

| Mark | Description | Date | Appr. |
|---|---|---|---|
| | | | |

| Mark | Description | Date | Appr. |
|---|---|---|---|
| | | | |

Date: 0

Date: 2/23/10
Design file no.
Drawing code:
File name:
Plot date:
Plot scale:

Designed by: RAJ
Dwn by: BJB
Ckd by: JRG
Reviewed by: JRG
Submitted by: BAKER

U.S. ARMY CORPS OF ENGINEERS
AFGHANISTAN ENGINEER DISTRICT
APO AE 96338

*Michael Baker Jr., Inc*
*A unit of Michael Baker Corporation*
Airside Business Park
100 Airside Drive
Moon Township, PA 15108
www.mbakercorp.com

AFGHAN NATIONAL ARMY
REGIONAL MILITARY TRAINING CENTER
STANDARD DESIGN

ENLISTED BARRACKS
FIRST FLOOR ELECTRICAL LIGHTING PLAN
PART B

Sheet reference number:
E-102

## GENERAL NOTES:

1. REFER TO DRAWING #E-001 FOR THE ELECTRICAL SYMBOLS LIST.
2. EXIT SIGNS SHALL BE WIRED AHEAD OF ANY LOCAL SWITCHING ON CIRCUITS.
3. REFER TO DRAWING #E-400 FOR THE LIGHTING FIXTURE SCHEDULE.
4. REFER TO DRAWING #E-500 FOR THE POWER RISER.
5. REFER TO DRAWING #E-600 FOR PANEL SCHEDULES.
6. LIGHT FIXTURES INDICATED AS EMERGENCY SHALL BE PROVIDED WITH A BATTERY BACKUP BALLAST.

## NUMBERED NOTES:

(1) CIRCUIT SHALL BE CONTINUED TO THE FLOOR BELOW.

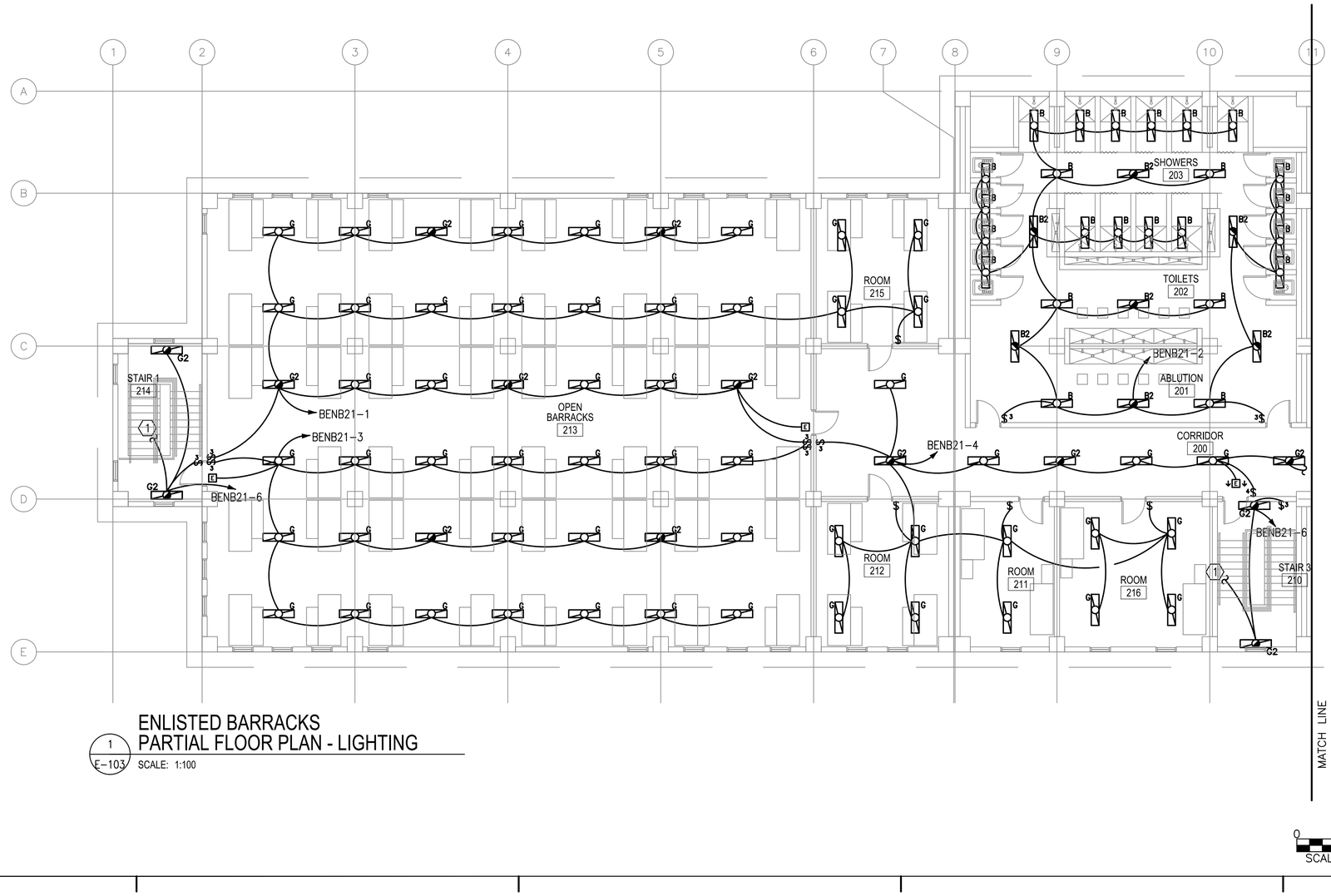


1 E-103 ENLISTED BARRACKS PARTIAL FLOOR PLAN - LIGHTING

SCALE: 1:100

KEY PLAN:

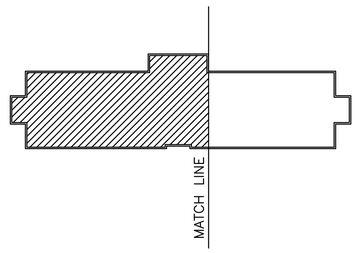


APPROVED:

A/E DESIGNER OF RECORD

SEAL:

COMMONWEALTH OF PENNSYLVANIA
REGISTERED PROFESSIONAL
JOSEPH R GAUS
ENGINEER
PE-074251
12/23/10

US ARMY CORPS OF ENGINEERS
AFGHANISTAN ENGINEER DISTRICT

| Mark | Description | Date | Appr. |
|---|---|---|---|
| | | | |

| Mark | Description | Date | Appr. |
|---|---|---|---|
| | | | |

U.S. ARMY CORPS OF ENGINEERS
AFGHANISTAN ENGINEER DISTRICT
APO AE 96338

*Michael Baker Jr., Inc.*
*A unit of Michael Baker Corporation*
Airside Business Park
100 Airside Drive
Moon Township, PA 15108
www.mbakercorp.com

Designed by: RAJ
Dwn by: BJB
Ckd by: JRG
Reviewed by: JRG
Submitted by: BAKER
Date: 12/23/10
Design file no.
Drawing code:
File name:
Plot date:
Plot scale:

AFGHAN NATIONAL ARMY
REGIONAL MILITARY TRAINING CENTER
STANDARD DESIGN

ENLISTED BARRACKS
SECOND FLOOR ELECTRICAL LIGHTING
PLAN PART A

Sheet reference number:
E-103

## GENERAL NOTES:

1. REFER TO DRAWING #E-001 FOR THE ELECTRICAL SYMBOLS LIST.
2. EXIT SIGNS SHALL BE WIRED AHEAD OF ANY LOCAL SWITCHING ON CIRCUITS. SEE WIRING DIAGRAM 8, DRAWING #E-501.
3. REFER TO DRAWING #E-601 FOR THE LIGHTING FIXTURE SCHEDULE.
4. REFER TO DRAWING #E-501 FOR THE POWER RISER.
5. REFER TO DRAWING #E-602 FOR PANEL SCHEDULES.
6. LIGHT FIXTURES INDICATED AS EMERGENCY SHALL BE PROVIDED WITH A BATTERY BACKUP BALLAST. SEE WIRING DIAGRAM DETAIL 7, DRAWING #E-501.

## NUMBERED NOTES:

(1) CIRCUIT SHALL BE CONTINUED TO THE FLOOR BELOW.

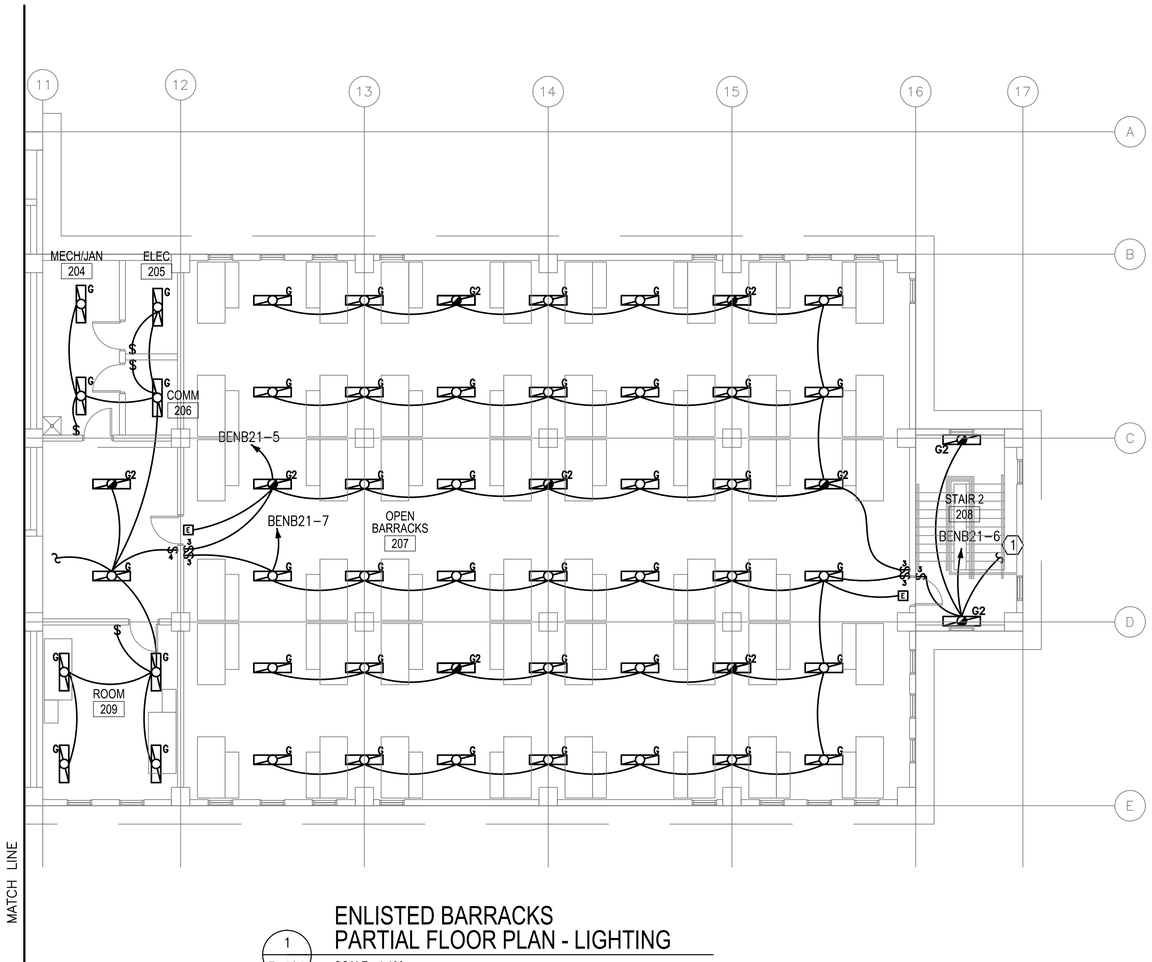


1 / E-104 ENLISTED BARRACKS PARTIAL FLOOR PLAN - LIGHTING

SCALE: 1:100

## KEY PLAN:

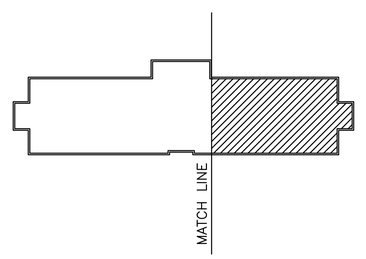


0 2000 4000

SCALE: 1:100

APPROVED:

A/E DESIGNER OF RECORD

SEAL:

COMMONWEALTH OF PENNSYLVANIA
REGISTERED PROFESSIONAL
JOSEPH R. GAUS
ENGINEER
PE-074251

US ARMY CORPS OF ENGINEERS
AFGHANISTAN ENGINEER DISTRICT

| Mark | Description | Date | Appr. |
|---|---|---|---|
| | | | |

| Mark | Description | Date | Appr. |
|---|---|---|---|
| | | | |

Designed by: RAJ
Dwn by: BJB
Ckd by: JRG
Reviewed by: JRG
Submitted by: BAKER
Date: 2/23/10
Design file no. 0
Drawing code:
File name:
Plot date:
Plot scale:

U.S. ARMY CORPS OF ENGINEERS
AFGHANISTAN ENGINEER DISTRICT
APO AE 96338

*Michael Baker Jr., Inc*
*A unit of Michael Baker Corporation*
Airside Business Park
100 Airside Drive
Moon Township, PA 15108
www.mbakercorp.com

AFGHAN NATIONAL ARMY
REGIONAL MILITARY TRAINING CENTER
STANDARD DESIGN

ENLISTED BARRACKS
SECOND FLOOR ELECTRICAL LIGHTING
PLAN PART B

Sheet reference number:
E-104

## GENERAL NOTES:

1. REFER TO DRAWING #E–001 FOR THE ELECTRICAL SYMBOLS LIST.
2. REFER TO DRAWING #E–501 FOR THE POWER RISER.
3. REFER TO DRAWING #E–602 FOR PANEL SCHEDULES.
4. COORDINATE EXACT MOUNTING LOCATION OF DISCONNECTING MEANS FOR MECHANICAL AND PLUMBING EQUIPMENT IN THE FIELD.
5. FUSIBLE SAFETY SWITCHES THAT ARE NOT OTHERWISE IDENTIFIED SHALL BE 380V, 1P, 30A FUSED SAFETY SWITCHES WITH 20A FUSES.
5. CONTRACTOR SHALL COORDINATE FINAL LOCATIONS OF ALL MECHANICAL EQUIPMENT WITH MECHANICAL PLANS PER THIS PACKAGE.

## NUMBERED NOTE:

1. SURFACE MOUNTED ON COLUMN
2. PROVIDE POWER CONNECTION TO ELECTRIC UNIT HEATER #4. SEE DRAWINGS #E–602 AND #M–101 FOR MORE INFORMATION.
3. PROVIDE POWER CONNECTION TO ELECTRIC UNIT HEATER #2. SEE DRAWINGS #E–602 AND #M–101 FOR MORE INFORMATION.
4. PROVIDE POWER CONNECTION TO MAKE–UP AIR UNIT #1. SEE DRAWINGS #E–602 AND #M–101 FOR MORE INFORMATION.
5. PROVIDE POWER CONNECTION TO MAKE–UP AIR UNIT #2. SEE DRAWINGS #E–602 AND #M–101 FOR MORE INFORMATION.
6. PROVIDE POWER CONNECTION TO EXHAUST FANS. SEE DRAWINGS #E–602 AND #M–101 FOR MORE INFORMATION.
7. PROVIDE 220V, 1ø, 60A MOTOR SNAP SWITCH IN NEMA 3R ENCLOSURE.

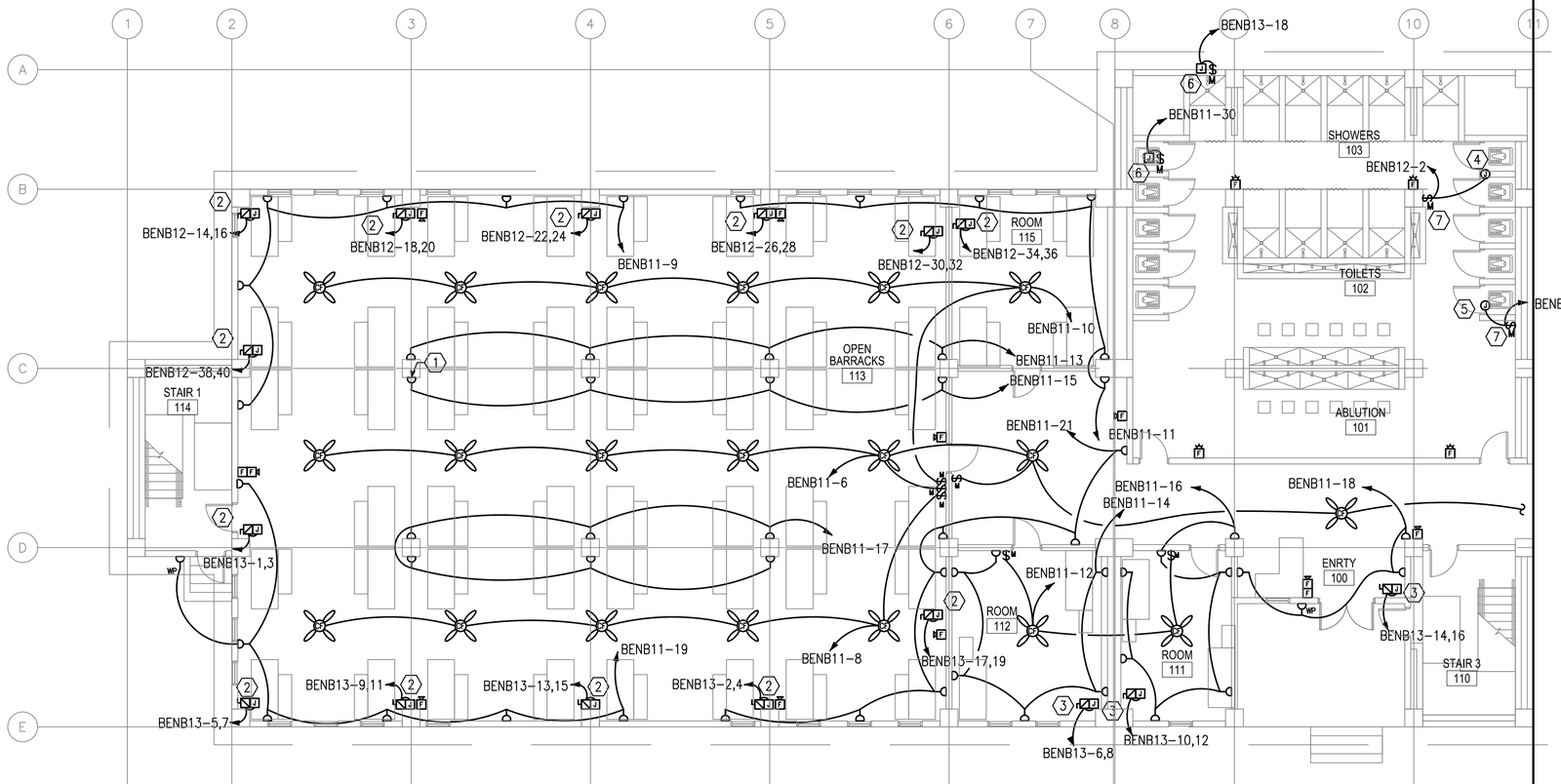


1 E–105 ENLISTED BARRACKS PARTIAL FLOOR PLAN - POWER & SYSTEMS

SCALE: 1:100

KEY PLAN:

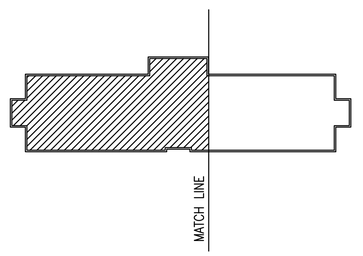


0 2000 4000

SCALE: 1:100

APPROVED:

A/E DESIGNER OF RECORD

SEAL:

COMMONWEALTH OF PENNSYLVANIA
REGISTERED PROFESSIONAL
JOSEPH R GAUS
ENGINEER
PE-074251
12/23/10

US ARMY CORPS OF ENGINEERS
AFGHANISTAN ENGINEER DISTRICT

| Mark | Description | Date | Appr. |
|---|---|---|---|
| | | | |

| Mark | Description | Date | Appr. |
|---|---|---|---|
| | | | |

Designed by: KJR
Dwn by: BJB
Ckd by: JRG
Reviewed by: JRG
Submitted by: BAKER
Date: 12/23/10
Design file no.
Drawing code:
File name:
Plot date:
Plot scale:

U.S. ARMY CORPS OF ENGINEERS
AFGHANISTAN ENGINEER DISTRICT
APO AE 96338

*Michael Baker Jr., Inc.*
*A unit of Michael Baker Corporation*
Airside Business Park
100 Airside Drive
Moon Township, PA 15108
www.mbakercorp.com

AFGHAN NATIONAL ARMY
REGIONAL MILITARY TRAINING CENTER
STANDARD DESIGN

ENLISTED BARRACKS
FIRST FLOOR ELECTRICAL POWER AND SYSTEMS PLAN PART A

Sheet reference number:
E–105

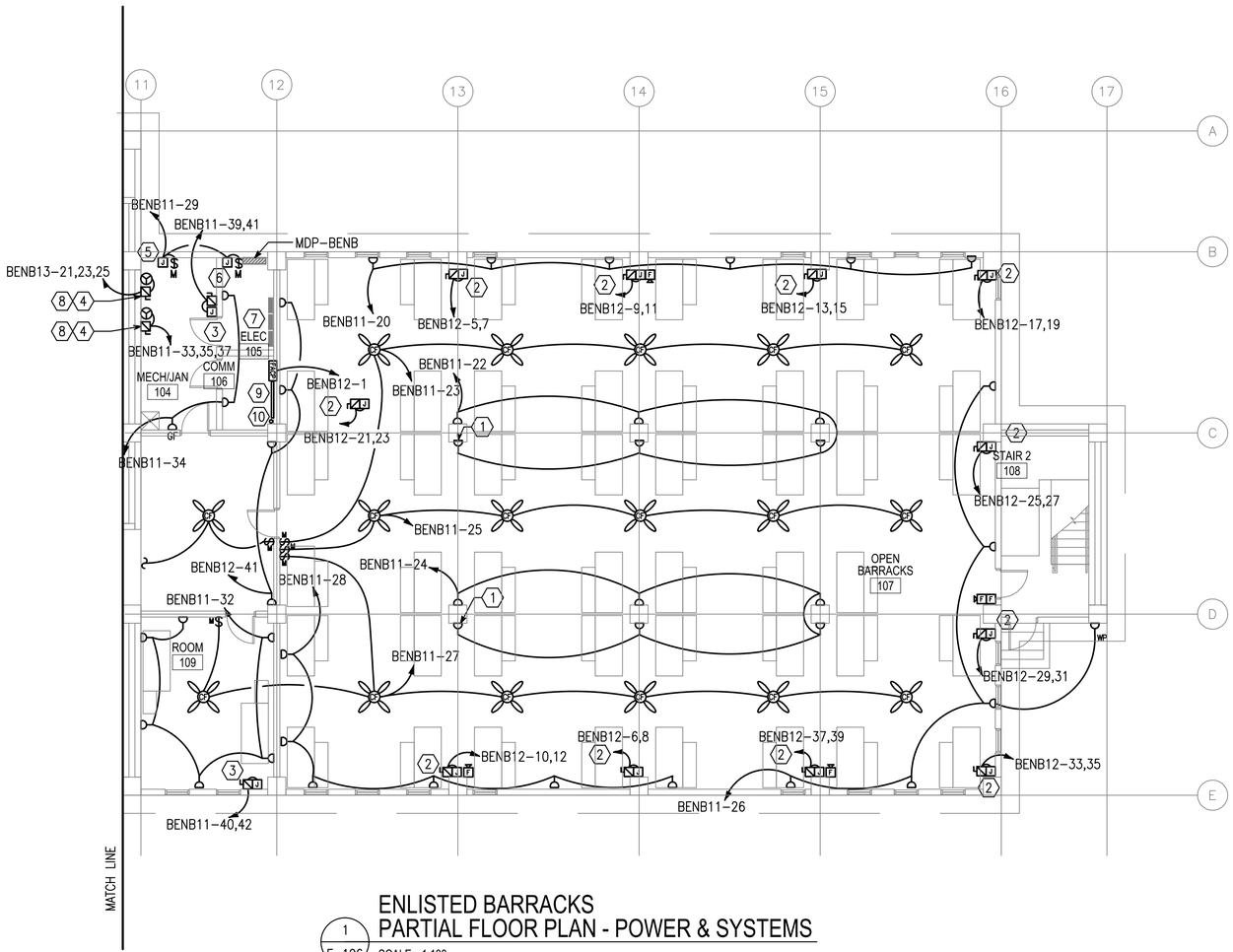


1 E-106 ENLISTED BARRACKS
PARTIAL FLOOR PLAN - POWER & SYSTEMS

SCALE: 1:100

## GENERAL NOTES:

1. REFER TO DRAWING #E-001 FOR THE ELECTRICAL SYMBOLS LIST.
2. REFER TO DRAWING #E-501 FOR THE POWER RISER.
3. REFER TO DRAWING #E-602 FOR PANEL SCHEDULES.
4. COORDINATE EXACT MOUNTING LOCATION OF DISCONNECTING MEANS FOR MECHANICAL AND PLUMBING EQUIPMENT IN THE FIELD.
5. FUSIBLE SAFETY SWITCHES THAT ARE NOT OTHERWISE IDENTIFIED SHALL BE 380V, 1P, 30A FUSED SAFETY SWITCHES WITH 20A FUSES.
6. CONTRACTOR SHALL COORDINATE FINAL LOCATIONS OF ALL MECHANICAL EQUIPMENT WITH MECHANICAL PLANS PER THIS PACKAGE.

## NUMBERED NOTES:

1. SURFACE MOUNTED ON COLUMN
2. PROVIDE POWER CONNECTION TO ELECTRIC UNIT HEATER #4. SEE DRAWINGS #E-602 AND #M-101 FOR MORE INFORMATION.
3. PROVIDE POWER CONNECTION TO ELECTRIC UNIT HEATER #2. SEE DRAWINGS #E-602 AND #M-101 FOR MORE INFORMATION.
4. SEE DRAWING #E-602 FOR WIRE AND CONDUIT SIZE.
5. PROVIDE POWER CONNECTION TO EXHAUST FAN #3. SEE DRAWINGS #E-602 AND #M-101 FOR MORE INFORMATION.
6. PROVIDE POWER CONNECTION TO EXHAUST FAN #4. SEE DRAWINGS #E-602 AND #M-101 FOR MORE INFORMATION.
7. PANEL BENB11, BENB12 AND BENB13.
8. NEMA 3R, 380V, 3P, 60A FUSED DISCONNECT FUSED AT 40A. SEE PLUMBING DRAWINGS FOR EXACT LOCATION OF WATER HEATER.
9. PROVIDE A 1200mm X 2400mm SHEET OF PLYWOOD PAINTED WITH FIRE RESISTANT PAINT FOR MOUNTING TELECOMMUNICATIONS EQUIPMENT.
10. PROVIDE CONDUIT STUB UP IN THE ROOM FOR INCOMING TELECOMMUNICATIONS SERVICES FROM THE CENTRAL COMMUNICATIONS SYSTEM IN THE GARRISON.

## KEY PLAN:

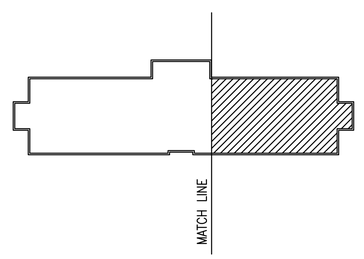


0 2000 4000
SCALE: 1:100

APPROVED:

A/E DESIGNER OF RECORD

SEAL:

COMMONWEALTH OF PENNSYLVANIA
REGISTERED PROFESSIONAL
JOSEPH R. GAUS
ENGINEER
PE-074251

US ARMY CORPS OF ENGINEERS
AFGHANISTAN ENGINEER DISTRICT

| Mark | Description | Date | Appr. |
|---|---|---|---|
| | | | |

| Mark | Description | Date | Appr. |
|---|---|---|---|
| | | | |

Designed by: KJR
Dwn by: BJB
Ckd by: JRG
Reviewed by: JRG
Submitted by: BAKER
Date: 2/23/10
Design file no.
Drawing code:
File name:
Plot date:
Plot scale:

U.S. ARMY CORPS OF ENGINEERS
AFGHANISTAN ENGINEER DISTRICT
APO AE 96338

*Michael Baker Jr., Inc*
*A unit of Michael Baker Corporation*
Airside Business Park
100 Airside Drive
Moon Township, PA 15108
www.mbakercorp.com

AFGHAN NATIONAL ARMY
REGIONAL MILITARY TRAINING CENTER
STANDARD DESIGN

ENLISTED BARRACKS
FIRST FLOOR ELECTRICAL POWER AND SYSTEMS PLAN PART B

Sheet reference number:
E-106

## GENERAL NOTES:

1. REFER TO DRAWING #E-001 FOR THE ELECTRICAL SYMBOLS LIST.
2. REFER TO DRAWING #E-501 FOR THE POWER RISER.
3. REFER TO DRAWING #E-602 FOR PANEL SCHEDULES.
4. COORDINATE EXACT MOUNTING LOCATION OF DISCONNECTING MEANS FOR MECHANICAL AND PLUMBING EQUIPMENT IN THE FIELD.
5. FUSIBLE SAFETY SWITCHES THAT ARE NOT OTHERWISE IDENTIFIED SHALL BE 380V, 1P, 30A FUSED SAFETY SWITCHES WITH 20A FUSES.
6. CONTRACTOR SHALL COORDINATE FINAL LOCATIONS OF ALL MECHANICAL EQUIPMENT WITH MECHANICAL PLANS PER THIS PACKAGE.

## NUMBERED NOTE:

1. SURFACE MOUNTED ON COLUMN
2. PROVIDE POWER CONNECTION TO ELECTRIC UNIT HEATER #4. SEE DRAWINGS #E-602 AND #M-101 FOR MORE INFORMATION.
3. PROVIDE POWER CONNECTION TO ELECTRIC UNIT HEATER #2. SEE DRAWINGS #E-602 AND #M-101 FOR MORE INFORMATION.
4. PROVIDE POWER CONNECTION TO MAKE-UP AIR UNIT #1. SEE DRAWINGS #E-602 AND #M-101 FOR MORE INFORMATION.
5. PROVIDE POWER CONNECTION TO MAKE-UP AIR UNIT #2. SEE DRAWINGS #E-602 AND #M-101 FOR MORE INFORMATION.
6. PROVIDE POWER CONNECTION TO EXHAUST FAN. SEE DRAWINGS #E-602 AND #M-101 FOR MORE INFORMATION.
7. PROVIDE 220V, 1ø, 60A MOTOR SNAP SWITCH IN NEMA 3R ENCLOSURE.

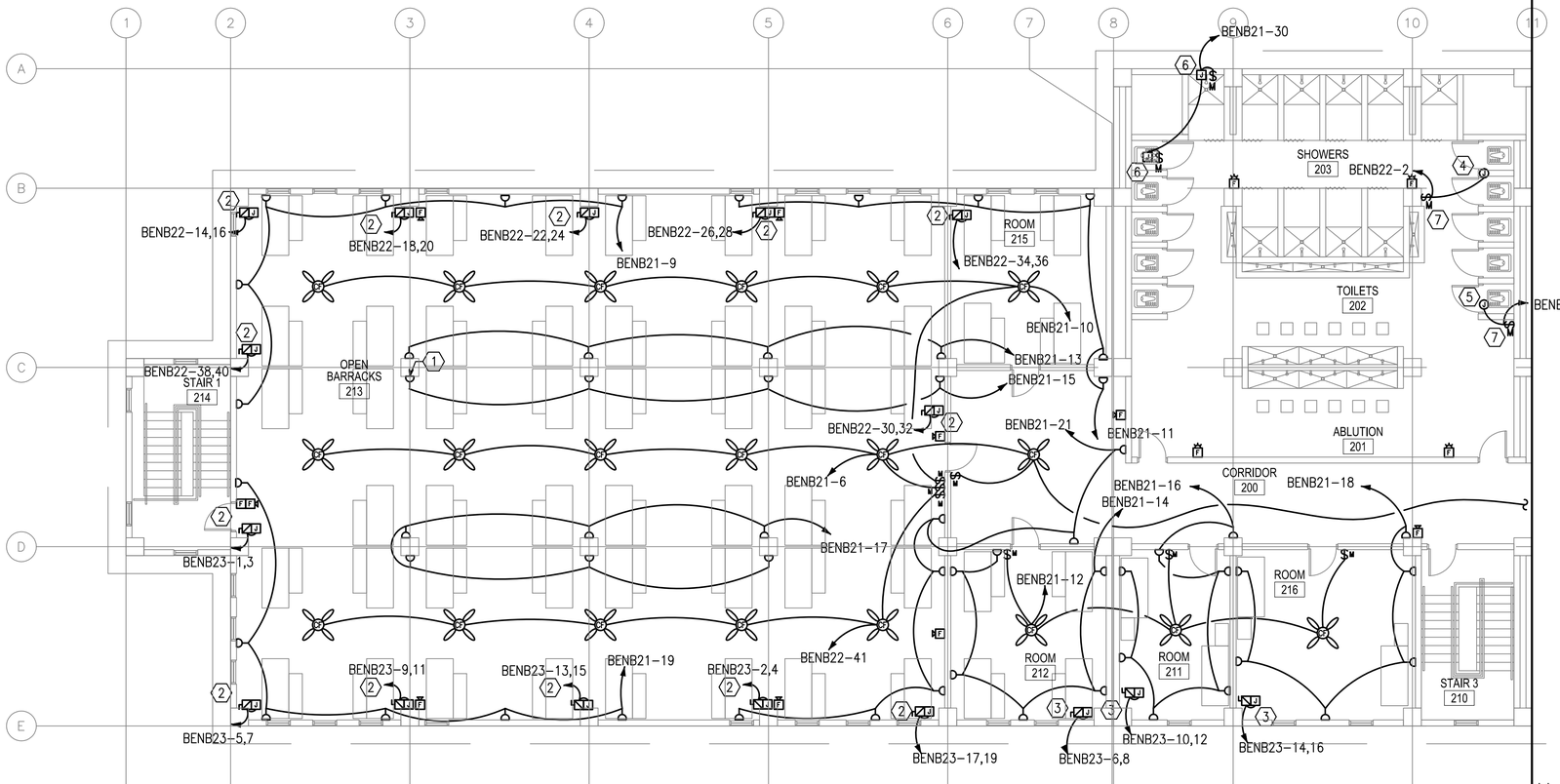


1 / E-107 ENLISTED BARRACKS PARTIAL FLOOR PLAN - POWER & SYSTEMS

SCALE: 1:100

## KEY PLAN:

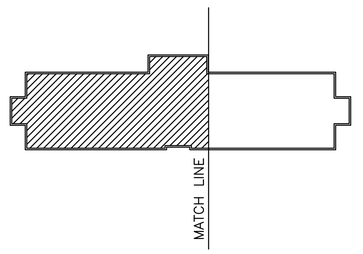


0 2000 4000

SCALE: 1:100

APPROVED:

A/E DESIGNER OF RECORD

SEAL:

COMMONWEALTH OF PENNSYLVANIA
REGISTERED PROFESSIONAL ENGINEER
JOSEPH R. GAUS
PE-074251
1/29/10

US ARMY CORPS OF ENGINEERS
AFGHANISTAN ENGINEER DISTRICT

| Mark | Description | Date | Appr. |
|---|---|---|---|
| | | | |

| Mark | Description | Date | Appr. |
|---|---|---|---|
| | | | |

Date: 0
Date: 2/23/10
Design file no.
Drawing code:
File name:
Plot date:
Plot scale:

Designed by: RAJ
Drwn by: BJB
Ckd by: JRG
Reviewed by: JRG
Submitted by: BAKER

U.S. ARMY CORPS OF ENGINEERS
AFGHANISTAN ENGINEER DISTRICT
APO AE 96338

Michael Baker Jr., Inc
A unit of Michael Baker Corporation
Airside Business Park
100 Airside Drive
Moon Township, PA 15108
www.mbakercorp.com

AFGHAN NATIONAL ARMY
REGIONAL MILITARY TRAINING CENTER
STANDARD DESIGN

ENLISTED BARRACKS
SECOND FLOOR POWER AND SYSTEMS
PLAN PART A

Sheet reference number:
E-107

## GENERAL NOTES:

1. REFER TO DRAWING #E-001 FOR THE ELECTRICAL SYMBOLS LIST.
2. REFER TO DRAWING #E-501 FOR THE POWER RISER.
3. REFER TO DRAWING #E-602 FOR PANEL SCHEDULES.
4. COORDINATE EXACT MOUNTING LOCATION OF DISCONNECTING MEANS FOR MECHANICAL AND PLUMBING EQUIPMENT IN THE FIELD.
5. FUSIBLE SAFETY SWITCHES THAT ARE NOT OTHERWISE IDENTIFIED SHALL BE 380V, 1P, 30A FUSED SAFETY SWITCHES WITH 20A FUSES.
6. CONTRACTOR SHALL COORDINATE FINAL LOCATIONS OF ALL MECHANICAL EQUIPMENT WITH MECHANICAL PLANS PER THIS PACKAGE.

## NUMBERED NOTES:

1. SURFACE MOUNTED ON COLUMN
2. PROVIDE POWER CONNECTION TO ELECTRIC UNIT HEATER #4. SEE DRAWINGS #E-602 AND #M-101 FOR MORE INFORMATION.
3. PROVIDE POWER CONNECTION TO ELECTRIC UNIT HEATER #2. SEE DRAWINGS #E-602 AND #M-101 FOR MORE INFORMATION.
4. PROVIDE POWER CONNECTION TO EXHAUST FAN #3. SEE DRAWINGS #E-602 AND #M-101 FOR MORE INFORMATION.
5. PROVIDE POWER CONNECTION TO EXHAUST FAN #4. SEE DRAWINGS #E-602 AND #M-101 FOR MORE INFORMATION.
6. PANEL BENB21, BENB22, AND BENB23
7. PROVIDE A 1200mm X 2400mm SHEET OF PLYWOOD PAINTED WITH FIRE RESISTANT PAINT FOR MOUNTING TELECOMMUNICATIONS EQUIPMENT.

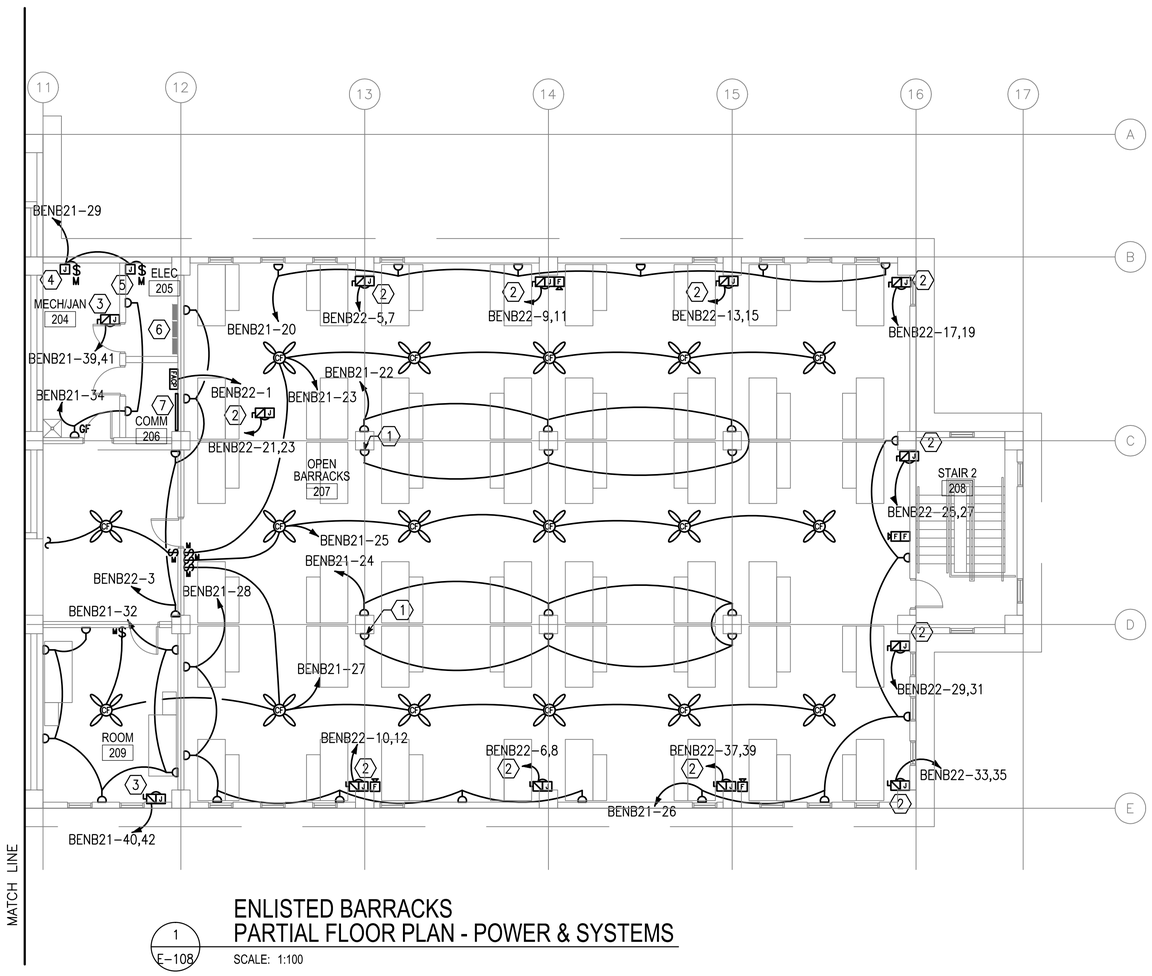


1 / E-108 ENLISTED BARRACKS PARTIAL FLOOR PLAN - POWER & SYSTEMS

SCALE: 1:100

KEY PLAN:

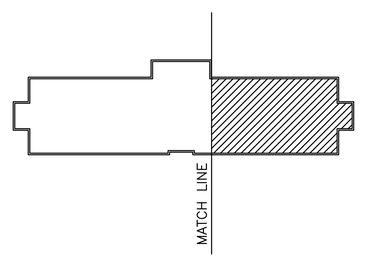


0 2000 4000

SCALE: 1:100

APPROVED:

A/E DESIGNER OF RECORD

SEAL:

COMMONWEALTH OF PENNSYLVANIA
REGISTERED PROFESSIONAL
JOSEPH R. GAUS
ENGINEER
PE-074251

US ARMY CORPS OF ENGINEERS
AFGHANISTAN ENGINEER DISTRICT

| Mark | Description | Date | Appr. |
|---|---|---|---|
| | | | |

| Mark | Description | Date | Appr. |
|---|---|---|---|
| | | | |

Designed by: KJR
Dwn by: BJB
Ckd by: JRG
Reviewed by: JRG
Submitted by: BAKER
Date: 2/23/10
Design file no.
Drawing code:
File name:
Plot date:
Plot scale:

U.S. ARMY CORPS OF ENGINEERS
AFGHANISTAN ENGINEER DISTRICT
APO AE 96338

*Michael Baker Jr., Inc*
*A unit of Michael Baker Corporation*
Airside Business Park
100 Airside Drive
Moon Township, PA 15108
www.mbakercorp.com

AFGHAN NATIONAL ARMY
REGIONAL MILITARY TRAINING CENTER
STANDARD DESIGN

ENLISTED BARRACKS
SECOND FLOOR ELECTRICAL POWER AND SYSTEMS PLAN PART B

Sheet reference number:
E-108

## GENERAL NOTES:

1. REFER TO DRAWING #E-001 FOR THE ELECTRICAL SYMBOLS LIST.

## NUMBERED NOTES:

1. (1) 120.0mm² BARE, TINNED, COPPER COUNTERPOISE GROUND 700mm BELOW GRADE.
2. INSTALL DOWN CONDUCTOR IN 25mm SCHEDULE 80 PVC CONDUIT TO 20mm DIAMETER X 3 METERS SOLID COPPER TINNED GROUND ROD. (TYPICAL)
3. CADWELD TO BUILDING STRUCTURE AT 18 METERS ON CENTER AROUND THE ENTIRE PERIMETER OF THE BUILDING. (TYPICAL)
4. 120mm² LIGHTNING PROTECTION CABLE.
5. AIR TERMINAL. TERMINALS SHALL BE PLACED AT A MAXIMUM OF 6M ON CENTER PER NFPA 780 PARA. 4.8.2.1, AND WITHIN 0.6M OF RIDGE ENDS PER NFPA 780 PARA. 4.8 (TYPICAL)
6. 700mm MIN. (TYP) BETWEEN FOUNDATION AND GROUND LOOP.

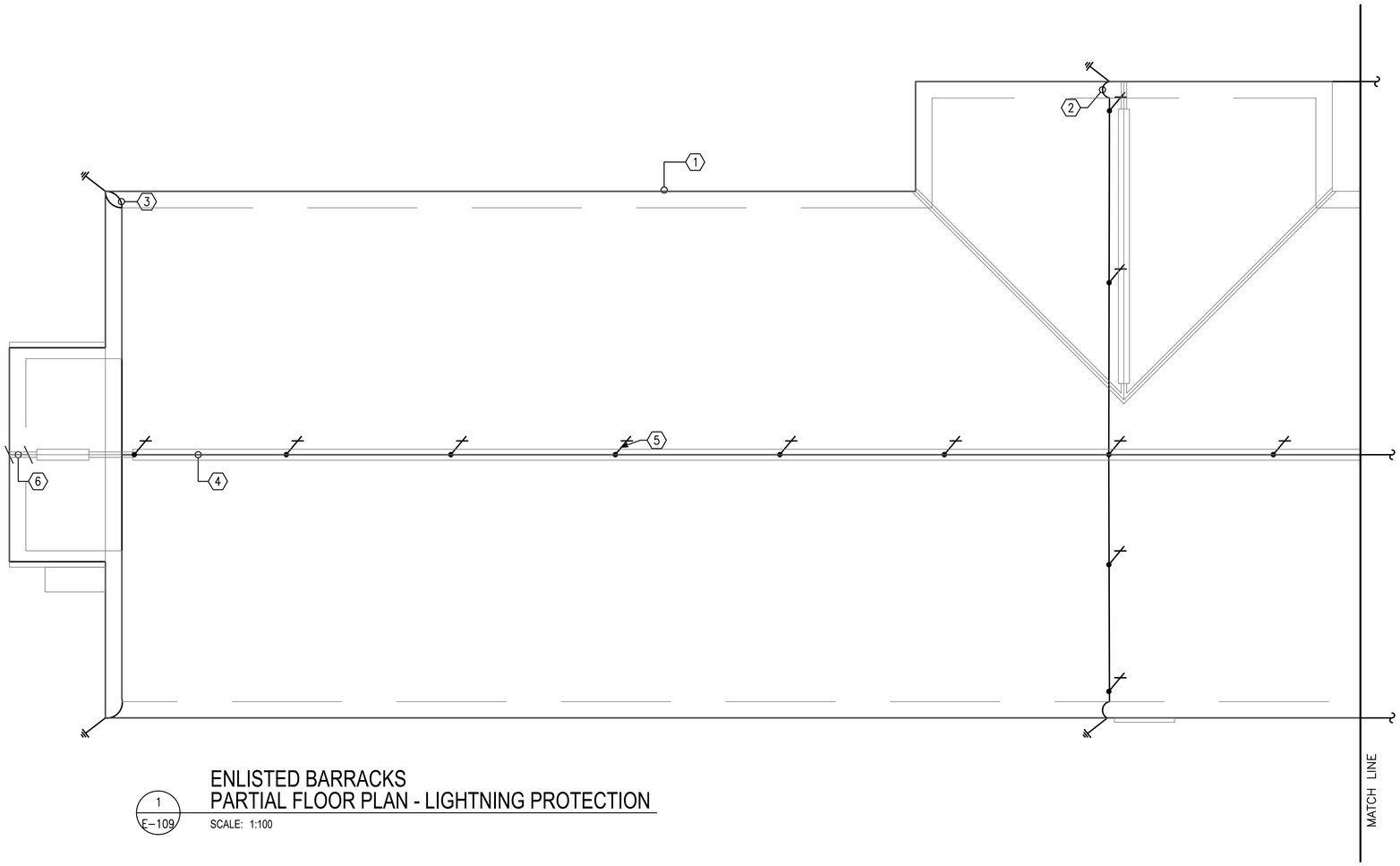


1 / E-109
ENLISTED BARRACKS
PARTIAL FLOOR PLAN - LIGHTNING PROTECTION
SCALE: 1:100

KEY PLAN:

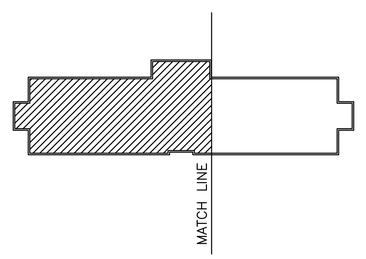


0 2000 4000
SCALE: 1:100

APPROVED:

A/E DESIGNER OF RECORD

SEAL:

COMMONWEALTH OF PENNSYLVANIA
REGISTERED PROFESSIONAL
JOSEPH R. GAUS
ENGINEER
PE-074251

US ARMY CORPS OF ENGINEERS
AFGHANISTAN ENGINEER DISTRICT

| Mark | Description | Date | Appr. |
|---|---|---|---|
| | | | |

| Mark | Description | Date | Appr. |
|---|---|---|---|
| | | | |

U.S. ARMY CORPS OF ENGINEERS
AFGHANISTAN ENGINEER DISTRICT
APO AE 96338

*Michael Baker Jr., Inc*
*A unit of Michael Baker Corporation*
Airside Business Park
100 Airside Drive
Moon Township, PA 15108
www.mbakercorp.com

| | |
|---|---|
| Designed by: RAJ | Date: 2/23/10 |
| Dwn by: BJB | Design file no. |
| Ckd by: JRG | Drawing code: |
| Reviewed by: JRG | File name: |
| Submitted by: BAKER | Plot date: |
| | Plot scale: |

AFGHAN NATIONAL ARMY
REGIONAL MILITARY TRAINING CENTER
STANDARD DESIGN

ENLISTED BARRACKS
ELECTRICAL LIGHTNING PROTECTION PLAN

Sheet reference number:
E-109

## GENERAL NOTES:

1. REFER TO DRAWING #E-001 FOR THE ELECTRICAL SYMBOLS LIST.

## NUMBERED NOTES:

1. (1) 120.0mm² BARE, TINNED, COPPER COUNTERPOISE GROUND 700mm BELOW GRADE.
2. INSTALL DOWN CONDUCTOR IN 25mm SCHEDULE 80 PVC CONDUIT TO 20mm DIAMETER X 3 METERS SOLID COPPER TINNED GROUND ROD. (TYPICAL)
3. CADWELD TO BUILDING STRUCTURE AT 18 METERS ON CENTER AROUND THE ENTIRE PERIMETER OF THE BUILDING. (TYPICAL)
4. 120mm² LIGHTNING PROTECTION CABLE.
5. AIR TERMINAL. TERMINALS SHALL BE PLACED AT A MAXIMUM OF 6M ON CENTER PER NFPA 780 PARA. 4.8.2.1, AND WITHIN 0.6M OF RIDGE ENDS PER NFPA 780 PARA. 4.8 (TYPICAL)
6. 700mm MIN. (TYP) BETWEEN FOUNDATION AND GROUND LOOP.

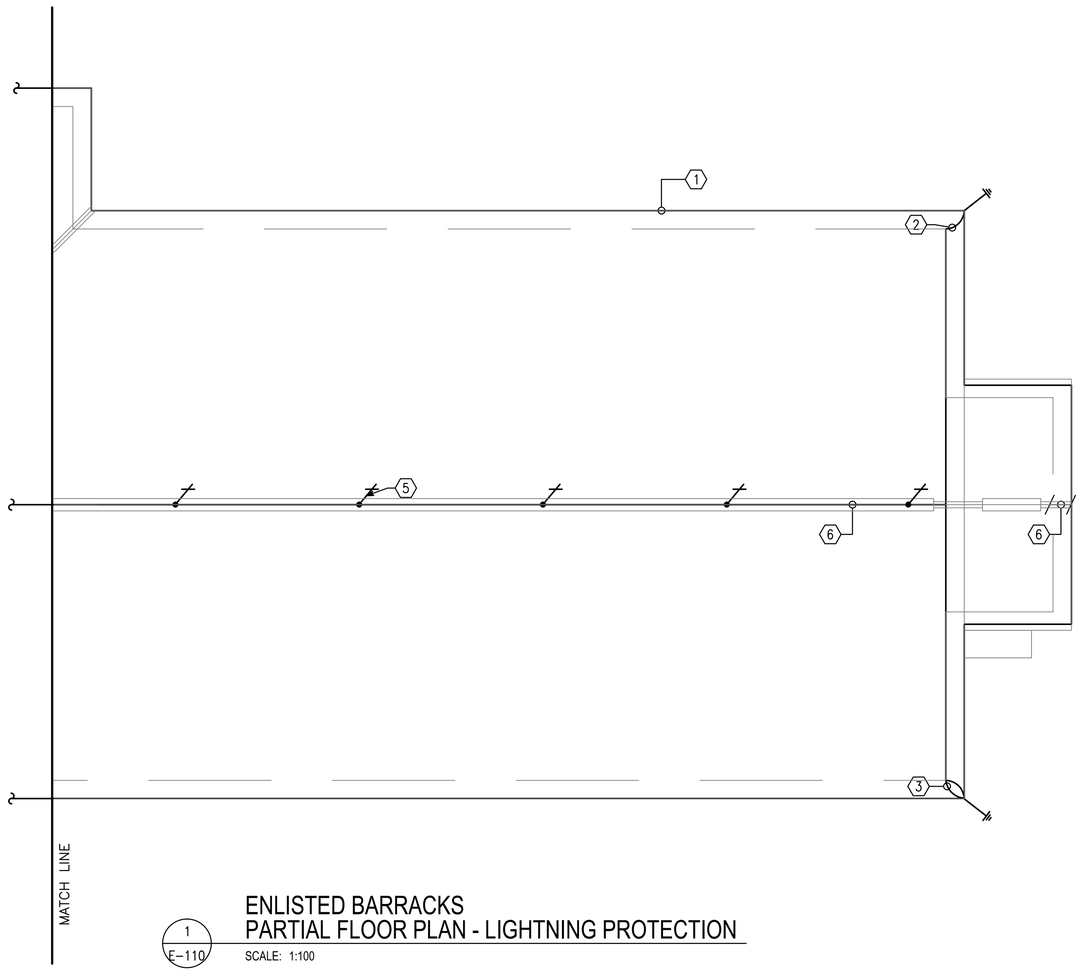


1 / E-110 ENLISTED BARRACKS
PARTIAL FLOOR PLAN - LIGHTNING PROTECTION

SCALE: 1:100

KEY PLAN:

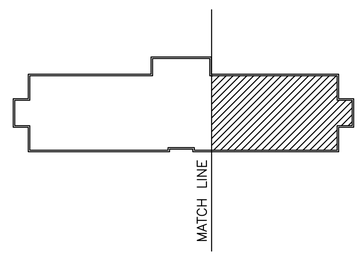


0 2000 4000
SCALE: 1:100

APPROVED:

A/E DESIGNER OF RECORD

SEAL:

COMMONWEALTH OF PENNSYLVANIA
REGISTERED PROFESSIONAL
JOSEPH R GAUS
ENGINEER
PE-074251
12/29/10

US ARMY CORPS OF ENGINEERS
AFGHANISTAN ENGINEER DISTRICT

| Mark | Description | Date | Appr. |
|---|---|---|---|
| | | | |

| Mark | Description | Date | Appr. |
|---|---|---|---|
| | | | |

Date: 0
Date: 2/23/10
Design file no.
Drawing code:
File name:
Plot date:
Plot scale:

Designed by: KJR
Dwn by: BJB
Ckd by: JRG
Reviewed by: JRG
Submitted by: BAKER

U.S. ARMY CORPS OF ENGINEERS
AFGHANISTAN ENGINEER DISTRICT
APO AE 96338

*Michael Baker Jr., Inc.*
*A unit of Michael Baker Corporation*
Airside Business Park
100 Airside Drive
Moon Township, PA 15108
www.mbakercorp.com

AFGHAN NATIONAL ARMY
REGIONAL MILITARY TRAINING CENTER
STANDARD DESIGN

ENLISTED BARRACKS
ELECTRICAL LIGHTNING PROTECTION PLAN

Sheet reference number:
E-110

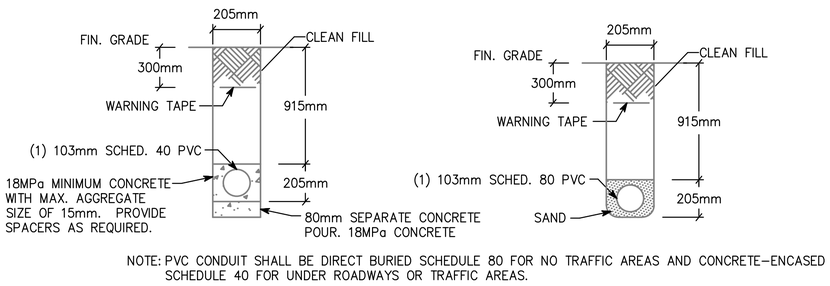


NOTE: PVC CONDUIT SHALL BE DIRECT BURIED SCHEDULE 80 FOR NO TRAFFIC AREAS AND CONCRETE-ENCASED SCHEDULE 40 FOR UNDER ROADWAYS OR TRAFFIC AREAS.

1 E-501 **TYPICAL DUCT BANK DETAILS FOR CONDUIT IN SAND OR CONCRETE**

SCALE: N.T.S.

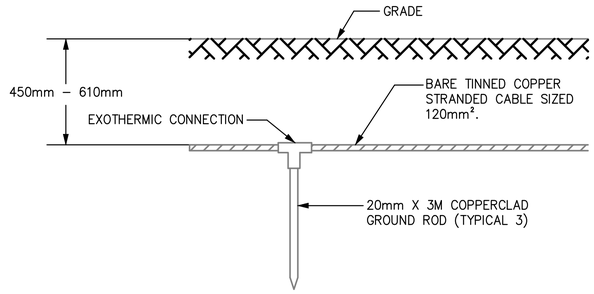


2 E-501 **GROUND TRIPOD SYSTEM DETAIL - ELEVATION**

SCALE: N.T.S.

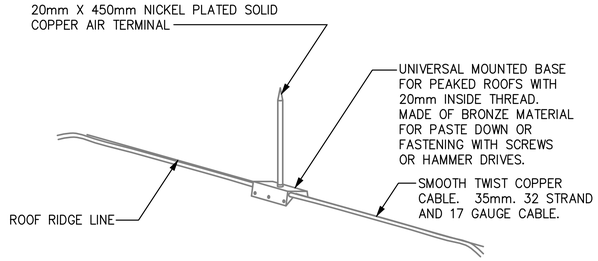


3 E-501 **LIGHTNING PROTECTION AIR TERMINAL DETAIL**

SCALE: N.T.S.

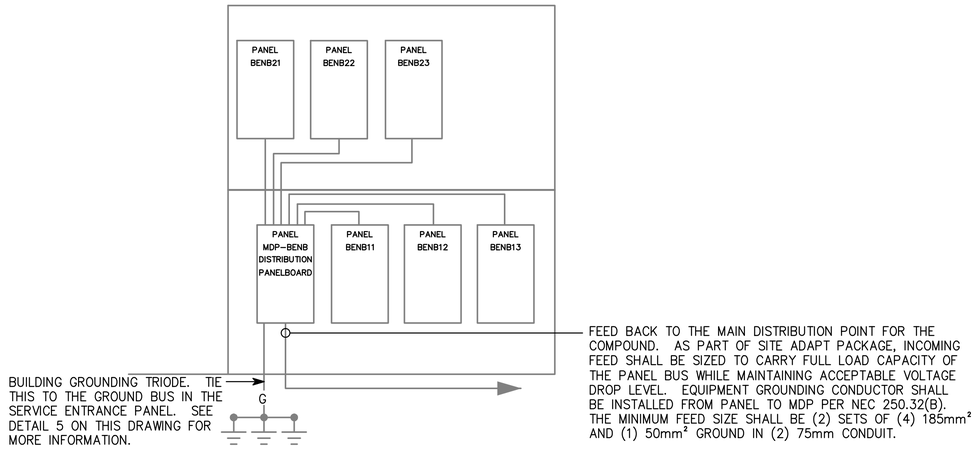


4 E-501 **BENB RISER DIAGRAM**

SCALE: N.T.S.

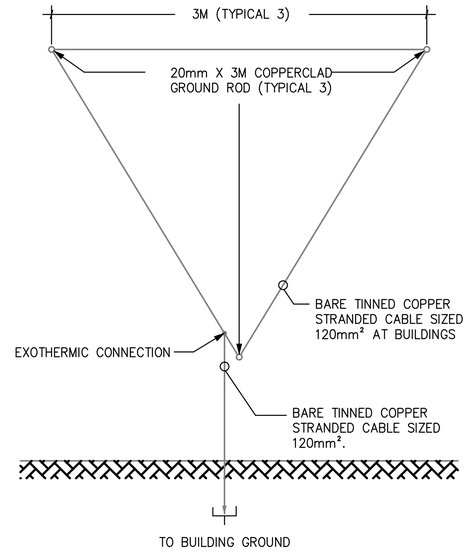


5 E-501 **GROUND TRIPOD SYSTEM DETAIL - PLAN**

SCALE: N.T.S.

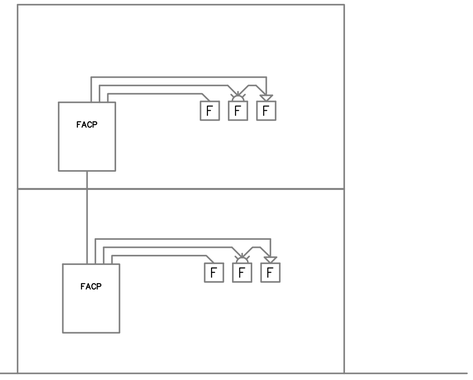


6 E-501 **TYPICAL TWO STORY FIRE ALARM RISER**

SCALE: N.T.S.

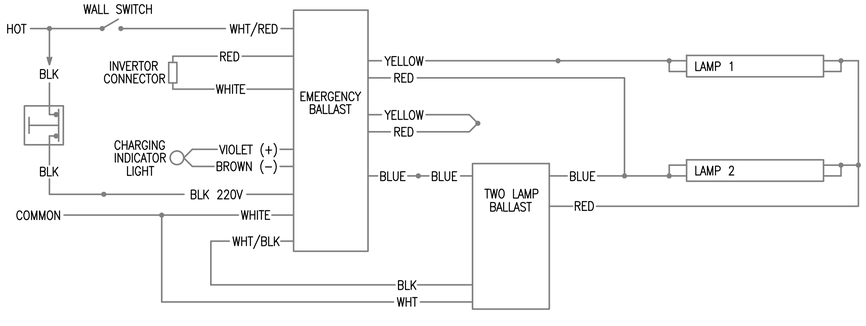


7 E-501 **EMERGENCY FIXTURE WIRING DIAGRAM**

SCALE: N.T.S.

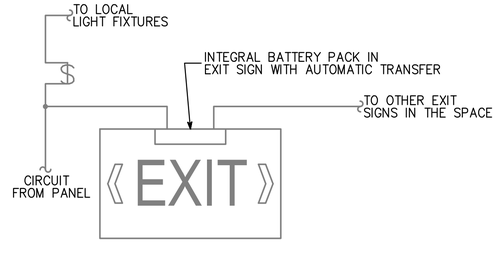


8 E-501 **EXIT SIGN WIRING DIAGRAM**

SCALE: N.T.S.

US ARMY CORPS OF ENGINEERS
AFGHANISTAN ENGINEER DISTRICT

| Mark | Description | Date | Appr. |
|---|---|---|---|
| | | | |

Date: 0
Date: 2/23/10
Design file no.
Drawing code:
File name:
Plot date:
Plot scale:

Designed by: RAJ
Dwn. by: BJB
Ckd by: JRG
Reviewed by: JRG
Submitted by: BAKER

U.S. ARMY CORPS OF ENGINEERS
AFGHANISTAN ENGINEER DISTRICT
APO AE 96338

*Michael Baker Jr., Inc*
*A unit of Michael Baker Corporation*
Airside Business Park
100 Airside Drive
Moon Township, PA 15108
www.mbakercorp.com

AFGHAN NATIONAL ARMY
REGIONAL MILITARY TRAINING CENTER
STANDARD DESIGN

ENLISTED BARRACKS
ELECTRICAL DETAILS

APPROVED:

A/E DESIGNER OF RECORD

SEAL:

COMMONWEALTH OF PENNSYLVANIA
REGISTERED PROFESSIONAL
JOSEPH R GAUS
1/29/10
ENGINEER
PE-074251

Sheet reference number:
E-501

| Ⓐ LARGER OF THE TWO SIZES GIVEN IN THE TABLES BELOW | |
|---|---|
| GROUNDING ELECTRODE CONDUCTOR (BASED ON AIC RATING) | |
| AIC RATING OF SERVICE EQUIPMENT | NECESSARY GROUNDING ELECTRODE CONDUCTOR SIZE |
| 10K | (1) 35mm² |
| 14K | (1) 50mm² |
| 18K | (1) 70mm² |
| 22K | (1) 70mm² |
| 25K | (1) 70mm² |
| 30K | (1) 95mm² |
| 35K | (1) 120mm² |
| 42K | (1) 150mm² |
| 65K | (1) 185mm² |
| 100K | (1) 300mm² |
| 125K | (2) 185mm² |
| 200K | (2) 300mm² |

| GROUNDING ELECTRODE CONDUCTOR (BASED ON NEC TABLE 250.66) | |
|---|---|
| SIZE OF LARGEST UNGROUNDED SERVICE CONDUCTOR OR EQUIVALENT AREA FOR PARALLEL CONDUCTORS | NECESSARY GROUNDING ELECTRODE CONDUCTOR SIZE |
| 350 kcmil OR SMALLER | 35mm² |
| OVER 350 kcmil TO 600 kcmil | 70mm² |
| OVER 600 kcmil TO 1100 kcmil | 70mm² |
| OVER 1100 kcmil | 95mm² |

NOTE: ALL SIZES ARE BASED ON COPPER CONDUCTORS.

| Ⓑ EQUIPMENT GROUNDING CONDUCTOR | |
|---|---|
| RATING OR SETTING OF AUTOMATIC OVERCURRENT DEVICE IN CIRCUIT AHEAD OF EQUIPMENT, CONDUIT, ETC, NOT EXCEEDING (AMPERES) | NECESSARY EQUIPMENT GROUNDING CONDUCTOR SIZE |
| 15 | 2.5mm² |
| 20 | 4.0mm² |
| 30 | 6.0mm² |
| 40 | 6.0mm² |
| 60 | 6.0mm² |
| 100 | 10mm² |
| 200 | 16mm² |
| 300 | 25mm² |
| 400 | 25mm² |
| 500 | 35mm² |
| 600 | 50mm² |
| 800 | 70mm² |
| 1000 | 70mm² |
| 1200 | 95mm² |
| 1600 | 120mm² |
| 2000 | 150mm² |
| 2500 | 185mm² |
| 3000 | 240mm² |
| 4000 | 300mm² |
| 5000 | 400mm² |
| 6000 | 400mm² |

NOTE: ALL SIZES ARE BASED ON COPPER CONDUCTORS.

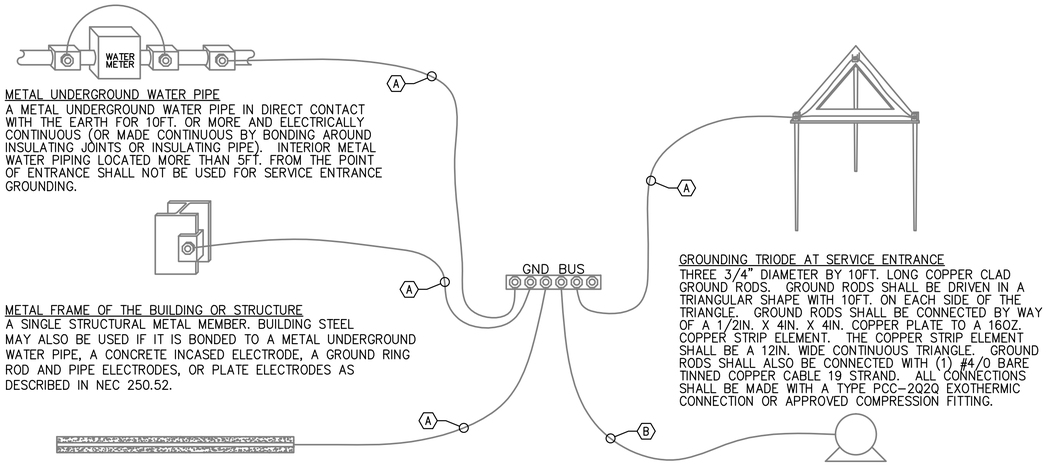


METAL UNDERGROUND WATER PIPE
A METAL UNDERGROUND WATER PIPE IN DIRECT CONTACT WITH THE EARTH FOR 10FT. OR MORE AND ELECTRICALLY CONTINUOUS (OR MADE CONTINUOUS BY BONDING AROUND INSULATING JOINTS OR INSULATING PIPE). INTERIOR METAL WATER PIPING LOCATED MORE THAN 5FT. FROM THE POINT OF ENTRANCE SHALL NOT BE USED FOR SERVICE ENTRANCE GROUNDING.

METAL FRAME OF THE BUILDING OR STRUCTURE
A SINGLE STRUCTURAL METAL MEMBER. BUILDING STEEL MAY ALSO BE USED IF IT IS BONDED TO A METAL UNDERGROUND WATER PIPE, A CONCRETE INCASED ELECTRODE, A GROUND RING ROD AND PIPE ELECTRODES, OR PLATE ELECTRODES AS DESCRIBED IN NEC 250.52.

CONCRETE ENCASED ELECTRODE
AN ELECTRODE ENCASED BY AT LEAST 2IN. OF CONCRETE , LOCATED WITHIN AND NEAR THE BOTTOM OF A CONCRETE FOUNDATION OR FOOTING THAT IS IN DIRECT CONTACT WITH THE EARTH, CONSISTING OF AT LEAST 20FT. OF ONE OR MORE BARE OR ZINC GALVANIZED OR OTHER ELECTRICALLY CONDUCTIVE COATED STEEL REINFORCING BARS OR RODS OF NOT LESS THAN 1/2" DIAMETER OR BARE COPPER CONDUCTOR NOT SMALLER THAN 4AWG.

GROUNDING TRIODE AT SERVICE ENTRANCE
THREE 3/4" DIAMETER BY 10FT. LONG COPPER CLAD GROUND RODS. GROUND RODS SHALL BE DRIVEN IN A TRIANGULAR SHAPE WITH 10FT. ON EACH SIDE OF THE TRIANGLE. GROUND RODS SHALL BE CONNECTED BY WAY OF A 1/2IN. X 4IN. X 4IN. COPPER PLATE TO A 16OZ. COPPER STRIP ELEMENT. THE COPPER STRIP ELEMENT SHALL BE A 12IN. WIDE CONTINUOUS TRIANGLE. GROUND RODS SHALL ALSO BE CONNECTED WITH (1) #4/0 BARE TINNED COPPER CABLE 19 STRAND. ALL CONNECTIONS SHALL BE MADE WITH A TYPE PCC-2Q2Q EXOTHERMIC CONNECTION OR APPROVED COMPRESSION FITTING.

LOAD OR DOWNSTREAM PANEL
ALL LOADS IN THE BUILDING SHALL HAVE AN EQUIPMENT GROUNDING CONDUCTOR PULLED TO THEM.

1 / E-502 SERVICE ENTRANCE GROUNDING DETAIL

SCALE: N.T.S.

APPROVED:

A/E DESIGNER OF RECORD

SEAL:

COMMONWEALTH OF PENNSYLVANIA
REGISTERED PROFESSIONAL ENGINEER
JOSEPH R GAUS
PE-074251
12/29/10

US ARMY CORPS OF ENGINEERS
AFGHANISTAN ENGINEER DISTRICT

| Mark | Description | Date | Appr. |
|---|---|---|---|
| | | | |

| Mark | Description | Date | Appr. |
|---|---|---|---|
| | | | |

Date: 0
Date: 2/23/10
Design file no.
Drawing code:
File name:
Plot date:
Plot scale:

Designed by: RAJ
Dwn by: BJB
Ckd by: JRG
Reviewed by: JRG
Submitted by: BAKER

U.S. ARMY CORPS OF ENGINEERS
AFGHANISTAN ENGINEER DISTRICT
APO AE 96338

*Michael Baker Jr., Inc*
*A unit of Michael Baker Corporation*
Airside Business Park
100 Airside Drive
Moon Township, PA 15108
www.mbakercorp.com

AFGHAN NATIONAL ARMY
REGIONAL MILITARY TRAINING CENTER
STANDARD DESIGN

ENLISTED BARRACKS
ELECTRICAL DETAILS

Sheet reference number:
E-502

FIXTURE MARK 'B'

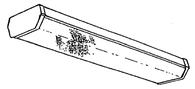

FIXTURE MARK 'C'

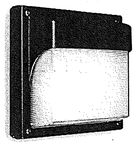

FIXTURE MARK 'G'

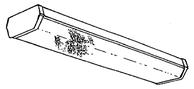

FIXTURE MARK 'H'

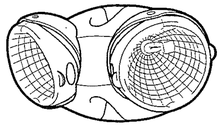

FIXTURE MARK '[E]'

# LIGHT FIXTURE SCHEDULE

| FIXTURE MARK | STYLE NUMBER AND TYPE | NUMBER AND TYPE OF LAMPS | VOLTAGE | MOUNTING | NOTES |
|---|---|---|---|---|---|
| B | WET LOCATION WRAP AROUND SURFACE/PENDANT MOUNTED FLUORESCENT FIXTURE WITH PRISMATIC ACRYLIC LENS AND ELECTRONIC BALLAST | (2) 32W 3500K | 220V – 1ø 50HZ | SURFACE MOUNTED | FURNISHED WITH ELECTRONIC BALLAST, VIRGIN ACRYLIC WRAP AROUND LENS. |
| B2 | SAME AS FIXTURE 'B' WITH EMERGENCY BALLAST | (2) 32W 3500K | 220V – 1ø 50HZ | SURFACE MOUNTED | FURNISHED WITH ELECTRONIC BALLAST, VIRGIN ACRYLIC WRAP AROUND LENS. EMERGENCY BALLAST WITH SELF TEST SWITCH. |
| C | INCANDESCENT ONE PIECE W/ APPROVED LENS STABILIZED HIGH IMPACT POLY CARBONATE. | (1) A19 – 100W INCANDESCENT | 220V – 1ø 50HZ | WALL MOUNTED ABOVE EXTERIOR DOORS | |
| G | WRAP AROUND SURFACE/PENDANT MOUNTED FLUORESCENT FIXTURE WITH PRISMATIC ACRYLIC LENS AND ELECTRONIC BALLAST | (2) 32W 3500K | 220V – 1ø 50HZ | SURFACE MOUNTED | FURNISHED WITH ELECTRONIC BALLAST, VIRGIN ACRYLIC WRAP AROUND LENS. |
| G2 | SAME AS FIXTURE 'G' WITH EMERGENCY BALLAST | (2) 32W 3500K | 220V – 1ø 50HZ | SURFACE MOUNTED | FURNISHED WITH ELECTRONIC BALLAST, VIRGIN ACRYLIC WRAP AROUND LENS. EMERGENCY BALLAST WITH SELF TEST SWITCH. |
| H | REMOTE HEAD EXTERIOR LIGHT HEAD POWERED FROM EXIT SIGN BATTERY– 12V DOUBLE HEAD CORROSION RESISTANT WITH UL34 WEATHERPROOF CONSTRUCTION | (2) 12W/12V HALOGEN LAMP | 12V – 1ø 50HZ | EXTERIOR WALL MOUNTED AT TOP OF DOOR HEIGHT | |
| [E] | UNIVERSAL MOUNT ENGINEER GRADE THERMOPLASTIC HOUSING EXIT SIGN WITH LED LAMPS, RED LETTERS 6" IN HEIGHT WITH ARROWS AS INDICATED, WITH 12V CADMIUM BATTERY WITH REMOTE HEAD CAPABILITY | LED LAMPS | 220V – 1ø 50HZ | UNIVERSAL MOUNTING | |

APPROVED:

A/E DESIGNER OF RECORD

SEAL:

COMMONWEALTH OF PENNSYLVANIA
REGISTERED PROFESSIONAL
JOSEPH R. GAUS
ENGINEER
PE-074251
1/29/10

US ARMY CORPS OF ENGINEERS
AFGHANISTAN ENGINEER DISTRICT

| Mark | Description | Date | Appr. |
|---|---|---|---|
| | | | |

| Mark | Description | Date | Appr. |
|---|---|---|---|
| | | | |

U.S. ARMY CORPS OF ENGINEERS
AFGHANISTAN ENGINEER DISTRICT
APO AE 96338

*Michael Baker Jr., Inc*
*A unit of Michael Baker Corporation*
Airside Business Park
100 Airside Drive
Moon Township, PA 15108
www.mbakercorp.com

| | | | |
|---|---|---|---|
| Designed by: RAJ | Ckd by: JRG | Date: 2/23/10 | Date: 0 |
| Dwn. by: BJB | | Design file no. | |
| Reviewed by: JRG | | Drawing code: | |
| Submitted by: BAKER | | File name: | |
| | | Plot date: | |
| | | Plot scale: | |

AFGHAN NATIONAL ARMY
REGIONAL MILITARY TRAINING CENTER
STANDARD DESIGN

ENLISTED BARRACKS
ELECTRICAL LIGHT FIXTURE SCHEDULE

Sheet reference number:
E–601

PANELBOARD BENB11 SURFACE MOUNTED
AMP. MAIN LUGS (OR) 125 AMP. MAIN BREAKER W/ 125 AMP. TRIP
CIRCUIT BREAKER TYPE 380/220 VOLTS 3 PHASE 4 WIRE 50 HZ 225 AMP. BUS

| CKT. NO. | TRIP AMPS | NO. POLES | WIRE MM² | GND MM² | CONDUIT MM | LOAD SERVED | LOAD-KVA A0 | LOAD-KVA B0 | LOAD-KVA C0 | LOAD-KVA A0 | LOAD-KVA B0 | LOAD-KVA C0 | LOAD SERVED | CONDUIT MM | GND MM² | WIRE MM² | NO. POLES | TRIP AMPS | CKT. NO. |
|---|---|---|---|---|---|---|---|---|---|---|---|---|---|---|---|---|---|---|---|
| 1 | 20 | 1 | 4.0 | 4.0 | 20 | LIGHTING – RM 113–115 | 1.8 | | | 2.2 | | | LIGHTING – RM 101–103 | 20 | 4.0 | 4.0 | 1 | 20 | 2 |
| 3 | 20 | 1 | 4.0 | 4.0 | 20 | LIGHTING – RM 113 | | 1.5 | | | 1.9 | | LIGHTING – RM 100, 104–112 | 20 | 4.0 | 4.0 | 1 | 20 | 4 |
| 5 | 20 | 1 | 4.0 | 4.0 | 20 | LIGHTING – RM 107 | | | 1.5 | | | 1.2 | CEILING FANS – RM 113 | 20 | 4.0 | 4.0 | 1 | 20 | 6 |
| 7 | 20 | 1 | 4.0 | 4.0 | 20 | LIGHTING – RM 107 | 1.5 | | | 1.0 | | | CEILING FANS – RM 113 | 20 | 4.0 | 4.0 | 1 | 20 | 8 |
| 9 | 20 | 1 | 4.0 | 4.0 | 20 | RECEPTACLES – RM 113 | | 1.2 | | | 1.0 | | CEILING FANS – RM 113, 115 | 20 | 4.0 | 4.0 | 1 | 20 | 10 |
| 11 | 20 | 1 | 4.0 | 4.0 | 20 | RECEPTACLES – RM 113 | | | 1.2 | | | 0.4 | CEILING FANS – RM 112 | 20 | 4.0 | 4.0 | 1 | 20 | 12 |
| 13 | 20 | 1 | 4.0 | 4.0 | 20 | RECEPTACLES – RM 113 | 0.8 | | | 1.2 | | | RECEPTACLES – RM 112 | 20 | 4.0 | 4.0 | 1 | 20 | 14 |
| 15 | 20 | 1 | 4.0 | 4.0 | 20 | RECEPTACLES – RM 113 | | 0.8 | | | 1.2 | | RECEPTACLES – RM 111 | 20 | 4.0 | 4.0 | 1 | 20 | 16 |
| 17 | 20 | 1 | 4.0 | 4.0 | 20 | RECEPTACLES – RM 113 | | | 1.2 | | | 1.2 | RECEPTACLES – RM 107 | 20 | 4.0 | 4.0 | 1 | 20 | 18 |
| 19 | 20 | 1 | 4.0 | 4.0 | 20 | RECEPTACLES – RM 113 | 1.4 | | | 1.2 | | | RECEPTACLES – RM 107 | 20 | 4.0 | 4.0 | 1 | 20 | 20 |
| 21 | 20 | 1 | 4.0 | 4.0 | 20 | RECEPTACLES – RM 113 | | 1.4 | | | 1.2 | | RECEPTACLES – RM 107 | 20 | 4.0 | 4.0 | 1 | 20 | 22 |
| 23 | 20 | 1 | 4.0 | 4.0 | 20 | CEILING FANS – RM 107 | | | 1.0 | | | 1.2 | RECEPTACLES – RM 107 | 20 | 4.0 | 4.0 | 1 | 20 | 24 |
| 25 | 20 | 1 | 4.0 | 4.0 | 20 | CEILING FANS – RM 107 | 1.2 | | | 1.2 | | | RECEPTACLES – RM 107 | 20 | 4.0 | 4.0 | 1 | 20 | 26 |
| 27 | 20 | 1 | 4.0 | 4.0 | 20 | CEILING FANS – RM 107, 109 | | 1.2 | | | 1.2 | | RECEPTACLES – RM 107 | 20 | 4.0 | 4.0 | 1 | 20 | 28 |
| 29 | 20 | 1 | 4.0 | 4.0 | 20 | EXHAUST FANS #1, #2 – RM 104 | | | 1.0 | | | 0.5 | EXHAUST FAN #1 – RM 100 | 20 | 4.0 | 4.0 | 1 | 20 | 30 |
| 31 | 20 | 1 | | | | SPARE | | | | 1.2 | | | RECEPTACLES – RM 109 | 20 | 4.0 | 4.0 | 1 | 20 | 32 |
| 33 | 40 | 3 | 10.0 | 6.0 | 25 | WATER HEATER – RM 104 | | 5.0 | | | 0.6 | | RECEPTACLES – RM 104 | 20 | 4.0 | 4.0 | 1 | 20 | 34 |
| 35 | | | | | | | | | 5.0 | | | | SPARE | | | | 2 | 20 | 36 |
| 37 | | | | | | | 5.0 | | | | | | | | | | | | 38 |
| 39 | 20 | 2 | 4.0 | 4.0 | 20 | ELECTRIC HEAT #2 – RM 104 | | 1.3 | | | 1.3 | | ELECTRIC HEAT #2 – RM 109 | 20 | 4.0 | 4.0 | 2 | 20 | 40 |
| 41 | | | | | | | | | 1.3 | | | 1.3 | | | | | | | 42 |
| | | | | | | | 11.7 | 12.4 | 12.2 | 8.0 | 8.4 | 5.8 | | | | | | | |

TOTAL CONN. LOAD PER PHASE (KVA): A0 19.7 B0 20.8 C0 18.0

TOTAL CONN. LOAD 58.5 KVA. 70 % DEMAND = ESTIMATED DEMAND LOAD 40.95

* MAIN BREAKER SHALL BE 3P EARTH GROUND TYPE

PANELBOARD BENB12 SURFACE MOUNTED
AMP. MAIN LUGS (OR) 225 AMP. MAIN BREAKER W/ 225 AMP. TRIP
CIRCUIT BREAKER TYPE 380/220 VOLTS 3 PHASE 4 WIRE 50 HZ 225 AMP. BUS

| CKT. NO. | TRIP AMPS | NO. POLES | WIRE MM² | GND MM² | CONDUIT MM | LOAD SERVED | LOAD-KVA A0 | LOAD-KVA B0 | LOAD-KVA C0 | LOAD-KVA A0 | LOAD-KVA B0 | LOAD-KVA C0 | LOAD SERVED | CONDUIT MM | GND MM² | WIRE MM² | NO. POLES | TRIP AMPS | CKT. NO. |
|---|---|---|---|---|---|---|---|---|---|---|---|---|---|---|---|---|---|---|---|
| 1 | 20 | 1 | 4.0 | 4.0 | 20 | FACP – RM 106 | 0.5 | | | 10.0 | | | MAKE UP AIR #1 – RM 102 | 25 | 6.0 | 25.0 | 1 | 60 | 2 |
| 3 | 20 | 1 | | | | SPARE | | | | | 10.0 | | MAKE UP AIR #2 – RM 102 | 25 | 6.0 | 25.0 | 1 | 60 | 4 |
| 5 | 20 | 2 | 4.0 | 4.0 | 20 | ELECTRIC HEAT #4 – RM 107 | | | 2.0 | | | 2.0 | ELECTRIC HEAT #4 – RM 107 | 20 | 4.0 | 4.0 | 2 | 20 | 6 |
| 7 | | | | | | | 2.0 | | | 2.0 | | | | | | | | | 8 |
| 9 | 20 | 2 | 4.0 | 4.0 | 20 | ELECTRIC HEAT #4 – RM 107 | | 2.0 | | | 2.0 | | ELECTRIC HEAT #4 – RM 107 | 20 | 4.0 | 4.0 | 2 | 20 | 10 |
| 11 | | | | | | | | | 2.0 | | | 2.0 | | | | | | | 12 |
| 13 | 20 | 2 | 4.0 | 4.0 | 20 | ELECTRIC HEAT #4 – RM 107 | 2.0 | | | 2.0 | | | ELECTRIC HEAT #4 – RM 113 | 20 | 4.0 | 4.0 | 2 | 20 | 14 |
| 15 | | | | | | | | 2.0 | | | 2.0 | | | | | | | | 16 |
| 17 | 20 | 2 | 4.0 | 4.0 | 20 | ELECTRIC HEAT #4 – RM 107 | | | 2.0 | | | 2.0 | ELECTRIC HEAT #4 – RM 113 | 20 | 4.0 | 4.0 | 2 | 20 | 18 |
| 19 | | | | | | | 2.0 | | | 2.0 | | | | | | | | | 20 |
| 21 | 20 | 2 | 4.0 | 4.0 | 20 | ELECTRIC HEAT #4 – RM 107 | | 2.0 | | | 2.0 | | ELECTRIC HEAT #4 – RM 113 | 20 | 4.0 | 4.0 | 2 | 20 | 22 |
| 23 | | | | | | | | | 2.0 | | | 2.0 | | | | | | | 24 |
| 25 | 20 | 2 | 4.0 | 4.0 | 20 | ELECTRIC HEAT #4 – RM 107 | 2.0 | | | 2.0 | | | ELECTRIC HEAT #4 – RM 113 | 20 | 4.0 | 4.0 | 2 | 20 | 26 |
| 27 | | | | | | | | 2.0 | | | 2.0 | | | | | | | | 28 |
| 29 | 20 | 2 | 4.0 | 4.0 | 20 | ELECTRIC HEAT #4 – RM 107 | | | 2.0 | | | 2.0 | ELECTRIC HEAT #4 – RM 113 | 20 | 4.0 | 4.0 | 2 | 20 | 30 |
| 31 | | | | | | | 2.0 | | | 2.0 | | | | | | | | | 32 |
| 33 | 20 | 2 | 4.0 | 4.0 | 20 | ELECTRIC HEAT #4 – RM 107 | | 2.0 | | | 2.0 | | ELECTRIC HEAT #4 – RM 115 | 20 | 4.0 | 4.0 | 2 | 20 | 34 |
| 35 | | | | | | | | | 2.0 | | | 2.0 | | | | | | | 36 |
| 37 | 20 | 2 | 4.0 | 4.0 | 20 | ELECTRIC HEAT #4 – RM 107 | 2.0 | | | 2.0 | | | ELECTRIC HEAT #4 – RM 113 | 20 | 4.0 | 4.0 | 2 | 20 | 38 |
| 39 | | | | | | | | 2.0 | | | 2.0 | | | | | | | | 40 |
| 41 | 20 | 1 | | | | RECEPTACLES – RM 107 | | | 0.8 | | | | SPARE | | | | 1 | 20 | 42 |
| | | | | | | | 12.5 | 12.0 | 12.8 | 22.0 | 22.0 | 12.0 | | | | | | | |

TOTAL CONN. LOAD PER PHASE (KVA): A0 34.5 B0 34.0 C0 24.8

TOTAL CONN. LOAD 93.3 KVA. 70 % DEMAND = ESTIMATED DEMAND LOAD 65.3

* MAIN BREAKER SHALL BE 3P EARTH GROUND TYPE

PANELBOARD BENB13 SURFACE MOUNTED
AMP. MAIN LUGS (OR) 100 AMP. MAIN BREAKER W/ 100 AMP. TRIP
CIRCUIT BREAKER TYPE 380/220 VOLTS 3 PHASE 4 WIRE 50 HZ 100 AMP. BUS

| CKT. NO. | TRIP AMPS | NO. POLES | WIRE MM² | GND MM² | CONDUIT MM | LOAD SERVED | LOAD-KVA A0 | LOAD-KVA B0 | LOAD-KVA C0 | LOAD-KVA A0 | LOAD-KVA B0 | LOAD-KVA C0 | LOAD SERVED | CONDUIT MM | GND MM² | WIRE MM² | NO. POLES | TRIP AMPS | CKT. NO. |
|---|---|---|---|---|---|---|---|---|---|---|---|---|---|---|---|---|---|---|---|
| 1 | 20 | 2 | 4.0 | 4.0 | 20 | ELECTRIC HEAT #4 – RM 113 | 2.0 | | | 2.0 | | | ELECTRIC HEAT #4 – RM 113 | 20 | 4.0 | 4.0 | 2 | 20 | 2 |
| 3 | | | | | | | | 2.0 | | | 2.0 | | | | | | | | 4 |
| 5 | 20 | 2 | 4.0 | 4.0 | 20 | ELECTRIC HEAT #4 – RM 113 | | | 2.0 | | | 1.3 | ELECTRIC HEAT #2 – RM 112 | 20 | 4.0 | 4.0 | 2 | 20 | 6 |
| 7 | | | | | | | 2.0 | | | 1.3 | | | | | | | | | 8 |
| 9 | 20 | 2 | 4.0 | 4.0 | 20 | ELECTRIC HEAT #4 – RM 113 | | 2.0 | | | 1.3 | | ELECTRIC HEAT #2 – RM 111 | 20 | 4.0 | 4.0 | 2 | 20 | 10 |
| 11 | | | | | | | | | 2.0 | | | 1.3 | | | | | | | 12 |
| 13 | 20 | 2 | 4.0 | 4.0 | 20 | ELECTRIC HEAT #4 – RM 113 | 2.0 | | | 1.3 | | | ELECTRIC HEAT #2 – RM 100 | 20 | 4.0 | 4.0 | 2 | 20 | 14 |
| 15 | | | | | | | | 2.0 | | | 1.3 | | | | | | | | 16 |
| 17 | 20 | 2 | 4.0 | 4.0 | 20 | ELECTRIC HEAT #4 – RM 113 | | | 2.0 | | | 0.5 | EXHAUST FAN #2 – RM 103 | 20 | 4.0 | 4.0 | 1 | 20 | 18 |
| 19 | | | | | | | 2.0 | | | | | | SPARE | | | | 1 | 20 | 20 |
| 21 | 40 | 3 | 10.0 | 6.0 | 25 | WATER HEATER – RM 104 | | 5.0 | | | | | SPARE | | | | 1 | 20 | 22 |
| 23 | | | | | | | | | 5.0 | | | | SPARE | | | | 1 | 20 | 24 |
| 25 | | | | | | | 5.0 | | | | | | SPARE | | | | 1 | 20 | 26 |
| 27 | 20 | 1 | | | | SPARE | | | | | | | SPARE | | | | 1 | 20 | 28 |
| 29 | 20 | 1 | | | | SPARE | | | | | | | SPARE | | | | 1 | 20 | 30 |
| 31 | 20 | 1 | | | | SPARE | | | | | | | SPARE | | | | 1 | 20 | 32 |
| 33 | 20 | 1 | | | | SPARE | | | | | | | SPARE | | | | 1 | 20 | 34 |
| 35 | 20 | 1 | | | | SPARE | | | | | | | SPARE | | | | 1 | 20 | 36 |
| 37 | 20 | 1 | | | | SPARE | | | | | | | SPARE | | | | 1 | 20 | 38 |
| 39 | 20 | 1 | | | | SPARE | | | | | | | SPARE | | | | 1 | 20 | 40 |
| 41 | 20 | 1 | | | | SPARE | | | | | | | SPARE | | | | 1 | 20 | 42 |
| | | | | | | | 13.0 | 11.0 | 11.0 | 4.6 | 4.6 | 3.1 | | | | | | | |

TOTAL CONN. LOAD PER PHASE (KVA): A0 17.6 B0 15.6 C0 14.1

TOTAL CONN. LOAD 47.3 KVA. 70 % DEMAND = ESTIMATED DEMAND LOAD 33.11

* MAIN BREAKER SHALL BE 3P EARTH GROUND TYPE

PANELBOARD MDP–BENB SURFACE MOUNTED
AMP. MAIN LUGS (OR) 600 AMP. MAIN BREAKER W/ 600 AMP. TRIP
CIRCUIT BREAKER TYPE 380/220 VOLTS 3 PHASE 4 WIRE 50 HZ 600 AMP. BUS

| CKT. NO. | TRIP AMPS | NO. POLES | WIRE MM² | GND MM² | CONDUIT MM | LOAD SERVED | LOAD-KVA A0 | LOAD-KVA B0 | LOAD-KVA C0 | LOAD-KVA A0 | LOAD-KVA B0 | LOAD-KVA C0 | LOAD SERVED | CONDUIT MM | GND MM² | WIRE MM² | NO. POLES | TRIP AMPS | CKT. NO. |
|---|---|---|---|---|---|---|---|---|---|---|---|---|---|---|---|---|---|---|---|
| 1 | | | | | | | 19.7 | | | 34.5 | | | | | | | | | 2 |
| 3 | 125 | 3 | 50.0 | 16.0 | 40 | BENB11 | | 20.8 | | | 34.0 | | BENB12 | 50 | 25.0 | 120.0 | 3 | 225 | 4 |
| 5 | | | | | | | | | 18.0 | | | 24.8 | | | | | | | 6 |
| 7 | | | | | | | 17.6 | | | 14.7 | | | | | | | | | 8 |
| 9 | 100 | 3 | 50.0 | 10.0 | 40 | BENB13 | | 15.6 | | | 15.8 | | BENB21 | 40 | 10.0 | 50.0 | 3 | 100 | 10 |
| 11 | | | | | | | | | 14.1 | | | 13.4 | | | | | | | 12 |
| 13 | | | | | | | 34.5 | | | 12.6 | | | | | | | | | 14 |
| 15 | 225 | 3 | 120.0 | 25.0 | 50 | BENB22 | | 34.6 | | | 9.3 | | BENB23 | 40 | 10.0 | 50.0 | 3 | 100 | 16 |
| 17 | | | | | | | | | 25.2 | | | 8.6 | | | | | | | 18 |
| 19 | | | | | | | | | | | | | | | | | | | 20 |
| 21 | | | | | | SPARE | | | | | | | SPARE | | | | | | 22 |
| 23 | | | | | | | | | | | | | | | | | | | 24 |
| | | | | | | | 71.8 | 71.0 | 57.3 | 61.8 | 59.1 | 46.8 | | | | | | | |

TOTAL CONN. LOAD PER PHASE (KVA): A0 133.6 B0 130.1 C0 104.1

TOTAL CONN. LOAD 367.8 KVA. 70 % DEMAND = ESTIMATED DEMAND LOAD 257.5

* MAIN BREAKER SHALL BE 3P EARTH GROUND TYPE

APPROVED:

A/E DESIGNER OF RECORD

SEAL:

COMMONWEALTH OF PENNSYLVANIA
REGISTERED PROFESSIONAL
JOSEPH R GAUS
ENGINEER
PE-074251
1/29/10

US ARMY CORPS OF ENGINEERS
AFGHANISTAN ENGINEER DISTRICT

| Mark | Description | Date | Appr. |
|---|---|---|---|
| | | | |

Date: 0
Date: 2/23/10
Designed by: RAJ
Dwn by: BJB
Ckd by: JRG
Reviewed by: JRG
Submitted by: BAKER
Design file no.
Drawing code:
File name:
Plot date:
Plot scale:

U.S. ARMY CORPS OF ENGINEERS
AFGHANISTAN ENGINEER DISTRICT
APO AE 96338

Michael Baker Jr., Inc.
A unit of Michael Baker Corporation
Airside Business Park
100 Airside Drive
Moon Township, PA 15108
www.mbakercorp.com

AFGHAN NATIONAL ARMY
REGIONAL MILITARY TRAINING CENTER
STANDARD DESIGN

ENLISTED BARRACKS
ELECTRICAL PANEL SCHEDULES

Sheet reference number:
E–602

PANELBOARD BENB21 SURFACE MOUNTED
AMP. MAIN LUGS (OR) 100 AMP. MAIN BREAKER W/ 100 AMP. TRIP
CIRCUIT BREAKER TYPE 380/220 VOLTS 3 PHASE 4 WIRE 50 HZ 100 AMP. BUS

| CKT. NO. | TRIP AMPS | NO. POLES | WIRE MM² | GND MM² | CONDUIT MM | LOAD SERVED | LOAD-KVA A0 | LOAD-KVA B0 | LOAD-KVA C0 | LOAD-KVA A0 | LOAD-KVA B0 | LOAD-KVA C0 | LOAD SERVED | CONDUIT MM | GND MM² | WIRE MM² | NO. POLES | TRIP AMPS | CKT. NO. |
|---|---|---|---|---|---|---|---|---|---|---|---|---|---|---|---|---|---|---|---|
| 1 | 20 | 1 | 4.0 | 4.0 | 20 | LIGHTING – RM 213 | 1.8 | | | 2.2 | | | LIGHTING – RM 201, 202, 203 | 20 | 4.0 | 4.0 | 1 | 20 | 2 |
| 3 | 20 | 1 | 4.0 | 4.0 | 20 | LIGHTING – RM 213 | | 1.5 | | | 1.9 | | LIGHTING – RM 200–216 | 20 | 4.0 | 4.0 | 1 | 20 | 4 |
| 5 | 20 | 1 | 4.0 | 4.0 | 20 | LIGHTING – RM 207 | | | 1.5 | | | 1.1 | LIGHTING – 208, 210, 214 | 20 | 4.0 | 4.0 | 1 | 20 | 6 |
| 7 | 20 | 1 | 4.0 | 4.0 | 20 | LIGHTING – RM 207 | 1.5 | | | 1.0 | | | CEILING FANS – RM 213 | 20 | 4.0 | 4.0 | 1 | 20 | 8 |
| 9 | 20 | 1 | 4.0 | 4.0 | 20 | RECEPTACLES – RM 213 | | 1.2 | | | 1.0 | | CEILING FANS – RM 213, 215 | 20 | 4.0 | 4.0 | 1 | 20 | 10 |
| 11 | 20 | 1 | 4.0 | 4.0 | 20 | RECEPTACLES – RM 200, 213, 215 | | | 1.2 | | | 0.4 | CLNG. FANS – RM 211, 212, 216 | 20 | 4.0 | 4.0 | 1 | 20 | 12 |
| 13 | 20 | 1 | 4.0 | 4.0 | 20 | RECEPTACLES – RM 213 | 0.8 | | | 1.2 | | | RECEPTACLES – RM 212 | 20 | 4.0 | 4.0 | 1 | 20 | 14 |
| 15 | 20 | 1 | 4.0 | 4.0 | 20 | RECEPTACLES – RM 213 | | 0.8 | | | 1.2 | | RECEPTACLES – RM 211 | 20 | 4.0 | 4.0 | 1 | 20 | 16 |
| 17 | 20 | 1 | 4.0 | 4.0 | 20 | RECEPTACLES – RM 213 | | | 1.2 | | | 1.2 | RECEPTACLES – RM 216 | 20 | 4.0 | 4.0 | 1 | 20 | 18 |
| 19 | 20 | 1 | 4.0 | 4.0 | 20 | RECEPTACLES – RM 213 | 1.4 | | | 1.2 | | | RECEPTACLES – RM 207 | 20 | 4.0 | 4.0 | 1 | 20 | 20 |
| 21 | 20 | 1 | 4.0 | 4.0 | 20 | RECEPTACLES – RM 200, 213 | | 1.4 | | | 1.2 | | RECEPTACLES – RM 207 | 20 | 4.0 | 4.0 | 1 | 20 | 22 |
| 23 | 20 | 1 | 4.0 | 4.0 | 20 | CEILING FANS – RM 207 | | | 1.0 | | | 1.2 | RECEPTACLES – RM 207 | 20 | 4.0 | 4.0 | 1 | 20 | 24 |
| 25 | 20 | 1 | 4.0 | 4.0 | 20 | CEILING FANS – RM 207 | 1.2 | | | 1.2 | | | RECEPTACLES – RM 207 | 20 | 4.0 | 4.0 | 1 | 20 | 26 |
| 27 | 20 | 1 | 4.0 | 4.0 | 20 | CEILING FANS – RM 207 | | 1.2 | | | 1.2 | | RECEPTACLES – RM 207 | 20 | 4.0 | 4.0 | 1 | 20 | 28 |
| 29 | 20 | 1 | 4.0 | 4.0 | 20 | EXHAUST FANS #1, #2 – RM 204 | | | 1.0 | | | 1.0 | EXHAUST FANS #3, #4 – RM 203 | 20 | 4.0 | 4.0 | 1 | 20 | 30 |
| 31 | 20 | 1 | | | | SPARE | | | | 1.2 | | | RECEPTACLES – RM 209 | 20 | 4.0 | 4.0 | 1 | 20 | 32 |
| 33 | 60 | 3 | | | | SPARE | | | | | | 0.6 | RECEPTACLES – RM 204 | 20 | 4.0 | 4.0 | 1 | 20 | 34 |
| 35 | | | | | | | | | | | | | SPARE | | | | 2 | 20 | 36 |
| 37 | | | | | | | | | | | | | | | | | | | 38 |
| 39 | 20 | 2 | 4.0 | 4.0 | 20 | ELECTRIC HEAT #2 – RM 204 | | 1.3 | | | 1.3 | | ELECTRIC HEAT #2 – RM 209 | 20 | 4.0 | 4.0 | 2 | 20 | 40 |
| 41 | | | | | | | | | 1.3 | | | 1.3 | | | | | | | 42 |
| | | | | | | | 6.7 | 7.4 | 7.2 | 8.0 | 8.4 | 6.2 | | | | | | | |

TOTAL CONN. LOAD PER PHASE (KVA): A0 14.7 B0 15.8 C0 13.4

TOTAL CONN. LOAD 43.9 KVA. 70 % DEMAND = ESTIMATED DEMAND LOAD 30.73 SUPPLIED FROM PANEL BENB-MDP

* MAIN BREAKER SHALL BE 3P EARTH GROUND TYPE

PANELBOARD BENB22 SURFACE MOUNTED ASYM. A.I.C. MIN.
AMP. MAIN LUGS (OR) 225 AMP. MAIN BREAKER W/ 225 AMP. TRIP
CIRCUIT BREAKER TYPE 380/220 VOLTS 3 PHASE 4 WIRE 50 HZ 225 AMP. BUS

| CKT. NO. | TRIP AMPS | NO. POLES | WIRE MM² | GND MM² | CONDUIT MM | LOAD SERVED | LOAD-KVA A0 | LOAD-KVA B0 | LOAD-KVA C0 | LOAD-KVA A0 | LOAD-KVA B0 | LOAD-KVA C0 | LOAD SERVED | CONDUIT MM | GND MM² | WIRE MM² | NO. POLES | TRIP AMPS | CKT. NO. |
|---|---|---|---|---|---|---|---|---|---|---|---|---|---|---|---|---|---|---|---|
| 1 | 20 | 1 | 4.0 | 4.0 | 20 | FACP – RM 206 | 0.5 | | | 10.0 | | | MAKE UP AIR #1 – RM 202 | 25 | 6.0 | 25.0 | 1 | 60 | 2 |
| 3 | 20 | 1 | 4.0 | 4.0 | 20 | RECEPTACLES – RM 207 | | 0.6 | | | 10.0 | | MAKE UP AIR #2 – RM 202 | 25 | 6.0 | 25.0 | 1 | 60 | 4 |
| 5 | 20 | 2 | 4.0 | 4.0 | 20 | ELECTRIC HEAT #4 – RM 207 | | | 2.0 | | | 2.0 | ELECTRIC HEAT #4 – RM 207 | 20 | 4.0 | 4.0 | 2 | 20 | 6 |
| 7 | | | | | | | 2.0 | | | 2.0 | | | | | | | | | 8 |
| 9 | 20 | 2 | 4.0 | 4.0 | 20 | ELECTRIC HEAT #4 – RM 207 | | 2.0 | | | 2.0 | | ELECTRIC HEAT #4 – RM 207 | 20 | 4.0 | 4.0 | 2 | 20 | 10 |
| 11 | | | | | | | | | 2.0 | | | 2.0 | | | | | | | 12 |
| 13 | 20 | 2 | 4.0 | 4.0 | 20 | ELECTRIC HEAT #4 – RM 207 | 2.0 | | | 2.0 | | | ELECTRIC HEAT #4 – RM 213 | 20 | 4.0 | 4.0 | 2 | 20 | 14 |
| 15 | | | | | | | | 2.0 | | | 2.0 | | | | | | | | 16 |
| 17 | 20 | 2 | 4.0 | 4.0 | 20 | ELECTRIC HEAT #4 – RM 207 | | | 2.0 | | | 2.0 | ELECTRIC HEAT #4 – RM 213 | 20 | 4.0 | 4.0 | 2 | 20 | 18 |
| 19 | | | | | | | 2.0 | | | 2.0 | | | | | | | | | 20 |
| 21 | 20 | 2 | 4.0 | 4.0 | 20 | ELECTRIC HEAT #4 – RM 207 | | 2.0 | | | 2.0 | | ELECTRIC HEAT #4 – RM 213 | 20 | 4.0 | 4.0 | 2 | 20 | 22 |
| 23 | | | | | | | | | 2.0 | | | 2.0 | | | | | | | 24 |
| 25 | 20 | 2 | 4.0 | 4.0 | 20 | ELECTRIC HEAT #4 – RM 207 | 2.0 | | | 2.0 | | | ELECTRIC HEAT #4 – RM 213 | 20 | 4.0 | 4.0 | 2 | 20 | 26 |
| 27 | | | | | | | | 2.0 | | | 2.0 | | | | | | | | 28 |
| 29 | 20 | 2 | 4.0 | 4.0 | 20 | ELECTRIC HEAT #4 – RM 207 | | | 2.0 | | | 2.0 | ELECTRIC HEAT #4 – RM 213 | 20 | 4.0 | 4.0 | 2 | 20 | 30 |
| 31 | | | | | | | 2.0 | | | 2.0 | | | | | | | | | 32 |
| 33 | 20 | 2 | 4.0 | 4.0 | 20 | ELECTRIC HEAT #4 – RM 207 | | 2.0 | | | 2.0 | | ELECTRIC HEAT #4 – RM 215 | 20 | 4.0 | 4.0 | 2 | 20 | 34 |
| 35 | | | | | | | | | 2.0 | | | 2.0 | | | | | | | 36 |
| 37 | 20 | 2 | 4.0 | 4.0 | 20 | ELECTRIC HEAT #4 – RM 207 | 2.0 | | | 2.0 | | | ELECTRIC HEAT #4 – RM 213 | 20 | 4.0 | 4.0 | 2 | 20 | 38 |
| 39 | | | | | | | | 2.0 | | | 2.0 | | | | | | | | 40 |
| 41 | 20 | 1 | 4.0 | 4.0 | 20 | CEILING FANS – RM 213 | | | 1.2 | | | | SPARE | | | | 1 | 20 | 42 |
| | | | | | | | 12.5 | 12.6 | 13.2 | 22.0 | 22.0 | 12.0 | | | | | | | |

TOTAL CONN. LOAD PER PHASE (KVA): A0 34.5 B0 34.6 C0 25.2

TOTAL CONN. LOAD 94.3 KVA. 70 % DEMAND = ESTIMATED DEMAND LOAD 66 SUPPLIED FROM PANEL BENB-MDP

* MAIN BREAKER SHALL BE 3P EARTH GROUND TYPE

PANELBOARD BENB23 SURFACE MOUNTED ASYM. A.I.C. MIN.
AMP. MAIN LUGS (OR) 100 AMP. MAIN BREAKER W/ 100 AMP. TRIP
CIRCUIT BREAKER TYPE 380/220 VOLTS 3 PHASE 4 WIRE 50 HZ 100 AMP. BUS

| CKT. NO. | TRIP AMPS | NO. POLES | WIRE MM² | GND MM² | CONDUIT MM | LOAD SERVED | LOAD-KVA A0 | LOAD-KVA B0 | LOAD-KVA C0 | LOAD-KVA A0 | LOAD-KVA B0 | LOAD-KVA C0 | LOAD SERVED | CONDUIT MM | GND MM² | WIRE MM² | NO. POLES | TRIP AMPS | CKT. NO. |
|---|---|---|---|---|---|---|---|---|---|---|---|---|---|---|---|---|---|---|---|
| 1 | 20 | 2 | 4.0 | 4.0 | 20 | ELECTRIC HEAT #4 – RM 213 | 2.0 | | | 2.0 | | | ELECTRIC HEAT #4 – RM 213 | 20 | 4.0 | 4.0 | 2 | 20 | 2 |
| 3 | | | | | | | | 2.0 | | | 2.0 | | | | | | | | 4 |
| 5 | 20 | 2 | 4.0 | 4.0 | 20 | ELECTRIC HEAT #4 – RM 213 | | | 2.0 | | | 1.3 | ELECTRIC HEAT #2 – RM 212 | 20 | 4.0 | 4.0 | 2 | 20 | 6 |
| 7 | | | | | | | 2.0 | | | 1.3 | | | | | | | | | 8 |
| 9 | 20 | 2 | 4.0 | 4.0 | 20 | ELECTRIC HEAT #4 – RM 213 | | 2.0 | | | 1.3 | | ELECTRIC HEAT #2 – RM 211 | 20 | 4.0 | 4.0 | 2 | 20 | 10 |
| 11 | | | | | | | | | 2.0 | | | 1.3 | | | | | | | 12 |
| 13 | 20 | 2 | 4.0 | 4.0 | 20 | ELECTRIC HEAT #4 – RM 213 | 2.0 | | | 1.3 | | | ELECTRIC HEAT #2 – RM 216 | 20 | 4.0 | 4.0 | 2 | 20 | 14 |
| 15 | | | | | | | | 2.0 | | | 1.3 | | | | | | | | 16 |
| 17 | 20 | 2 | 4.0 | 4.0 | 20 | ELECTRIC HEAT #4 – RM 213 | | | 2.0 | | | | SPARE | | | | 1 | 20 | 18 |
| 19 | | | | | | | 2.0 | | | | | | SPARE | | | | | | 20 |
| 21 | 20 | 1 | | | | SPARE | | | | | | | SPARE | | | | 1 | 20 | 22 |
| 23 | 20 | 1 | | | | SPARE | | | | | | | SPARE | | | | 1 | 20 | 24 |
| 25 | 20 | 1 | | | | SPARE | | | | | | | SPARE | | | | 1 | 20 | 26 |
| 27 | 20 | 1 | | | | SPARE | | | | | | | SPARE | | | | 1 | 20 | 28 |
| 29 | 20 | 1 | | | | SPARE | | | | | | | SPARE | | | | 1 | 20 | 30 |
| 31 | 20 | 1 | | | | SPARE | | | | | | | SPARE | | | | 1 | 20 | 32 |
| 33 | 20 | 1 | | | | SPARE | | | | | | | SPARE | | | | 1 | 20 | 34 |
| 35 | 20 | 1 | | | | SPARE | | | | | | | SPARE | | | | 1 | 20 | 36 |
| 37 | 20 | 1 | | | | SPARE | | | | | | | SPARE | | | | 1 | 20 | 38 |
| 39 | 20 | 1 | | | | SPARE | | | | | | | SPARE | | | | 1 | 20 | 40 |
| 41 | 20 | 1 | | | | SPARE | | | | | | | SPARE | | | | 1 | 20 | 42 |
| | | | | | | | 8.0 | 6.0 | 6.0 | 4.6 | 4.6 | 2.6 | | | | | | | |

TOTAL CONN. LOAD PER PHASE (KVA): A0 12.6 B0 9.3 C0 8.6

TOTAL CONN. LOAD 30.5 KVA. 70 % DEMAND = ESTIMATED DEMAND LOAD 21.35 SUPPLIED FROM PANEL BENB-MDP

* MAIN BREAKER SHALL BE 3P EARTH GROUND TYPE

APPROVED:

A/E DESIGNER OF RECORD

SEAL:

COMMONWEALTH OF PENNSYLVANIA
REGISTERED PROFESSIONAL ENGINEER
JOSEPH R. GAUS
11/29/10
PE-074251

US ARMY CORPS OF ENGINEERS
AFGHANISTAN ENGINEER DISTRICT

| Mark | Description | Date | Appr. |
|---|---|---|---|

Date: 0
Date: 2/23/10
Design file no.
Drawing code:
Designed by: RAJ
Dwn. by: BJB
Ckd by: JRG
Reviewed by: JRG
Submitted by: BAKER
File name:
Plot date:
Plot scale:

U.S. ARMY CORPS OF ENGINEERS
AFGHANISTAN ENGINEER DISTRICT
APO AE 96338

*Michael Baker Jr., Inc*
*A unit of Michael Baker Corporation*
Airside Business Park
100 Airside Drive
Moon Township, PA 15108
www.mbakercorp.com

AFGHAN NATIONAL ARMY
REGIONAL MILITARY TRAINING CENTER
STANDARD DESIGN

ENLISTED BARRACKS
ELECTRICAL PANEL SCHEDULES

Sheet reference number:
E-603

# AFGHAN NATIONAL ARMY

## STANDARD BUILDING DESIGN

## SENIOR BOQ BARRACKS

## 100% FINAL DESIGN SUBMITTAL

### SHEET INDEX


G-001 COVER SHEET

STRUCTURAL

S-001 GENERAL NOTES & DESIGN CRITERIA
S-101 FOUNDATION/SLAB PLAN
S-102 ROOF FRAMING PLAN
S-401 BUILDING SECTIONS
S-402 ENLARGED LATRINE SLAB PLAN
S-501 FOUNDATION SECTIONS
S-502 FOUNDATION & FRAMING SECTIONS
S-503 BEAM & COLUMN DETAILS
S-504 BEAM & COLUMN DETAILS
S-505 MISCELLANEOUS SECTIONS
S-601 SCHEDULES
S-701 TYPICAL DETAILS
S-702 TYPICAL DETAILS

ARCHITECTURAL

A-001 LIFE SAFETY PLAN
A-101 FLOOR PLAN
A-102 ROOF PLAN
A-201 ELEVATIONS
A-301 BUILDING SECTIONS
A-401 WALL SECTIONS
A-402 ENLARGED PLAN
A-501 EXTERIOR DETAILS
A-502 HEAD, JAMB, & SILL DETAILS
A-503 STOOP DETAILS
A-504 TOILET, LAVATORY, & ABLUTION DETAILS
A-505 SHOWER DETAILS
A-506 ISOLATION JOINT DETAILS
A-601 WINDOW & DOOR SCHEDULES

MECHANICAL

P-101 FLOOR PLAN-PLUMBING
P-501 PLUMBING DETAILS
P-502 PLUMBING DETAILS
P-503 PLUMBING DETAILS
P-901 PLUMBING ISOMETRICS (DRAINAGE & WATER)

M-101 HVAC FLOOR PLAN, SCHEDULES, & DETAILS

ELECTRICAL

E-001 ELECTRICAL SYMBOLS & ABBREVIATIONS
E-101 ELECTRICAL LIGHTING PLAN
E-102 ELECTRICAL POWER & SYSTEMS PLAN
E-103 ELECTRICAL LIGHTNING PROTECTION
E-501 ELECTRICAL DETAILS
E-502 ELECTRICAL DETAILS
E-601 ELECTRICAL LIGHT FIXTURE SCHEDULE
E-602 ELECTRICAL PANEL SCHEDULES


US ARMY CORPS OF ENGINEERS
AFGHANISTAN ENGINEER DISTRICT

| Mark | Description | Date | Appr. |
|---|---|---|---|
| | | | |

| Mark | Description | Date | Appr. |
|---|---|---|---|
| | | | |

Date: 2/23/10
Design file no.
Drawing code:
File name: ANABOQS3.001CS
Plot date: 2/23/2010
Plot scale: X:X

Designed by: KMF/MMY
Dwn by: RCG
Ckd by: CWW
Reviewed by: LHM
Submitted by: BAKER

Rev: 0

U.S. ARMY CORPS OF ENGINEERS
AFGHANISTAN ENGINEER DISTRICT
APO AE 96338


*Michael Baker Jr., Inc.*
*A unit of Michael Baker Corporation*
Airside Business Park
100 Airside Drive
Moon Township, PA 15108
www.mbakercorp.com


AFGHAN NATIONAL ARMY
REGIONAL MILITARY TRAINING CENTER
STANDARD DESIGN

SENIOR BOQ BARRACKS

COVER SHEET

Sheet reference number:
G-001

## STRUCTURAL ABBREVIATIONS:

| | |
|---|---|
| ACI | AMERICAN CONCRETE INSTITUTE |
| ADD'L | ADDITIONAL |
| AISC | AMERICAN INSTITUTE OF STEEL CONSTRUCTION |
| AISI | AMERICAN IRON AND STEEL INSTITUTE |
| ASTM | AMERICAN SOCIETY FOR TESTING AND MATERIALS |
| ARCH | ARCHITECTURAL |
| B | BOTTOM |
| BLDG | BUILDING |
| BOTT | BOTTOM |
| ℄ | CENTER LINE |
| CFMRF | COLD FORM METAL ROOF FRAME |
| CFMF | COLD FORM METAL FRAME |
| CFS | COLD FORMED STEEL |
| CIP | CAST-IN-PLACE |
| CIPL | CAST-IN-PLACE LINTEL |
| CJ | CONTROL JOINT |
| CLR | CLEAR |
| CMU | CONCRETE MASONRY UNIT |
| COEFF | COEFFICIENT |
| COL | COLUMN |
| CONC | CONCRETE |
| CONT | CONTINUOUS |
| COORD | COORDINATE |
| CRSI | CONCRETE REINFORCING STEEL INSTITUTE |
| CSJ | CONSTRUCTION JOINT |
| DIA | DIAMETER |
| DIAG | DIAGONAL |
| DIM | DIMENSION |
| DWG | DRAWING |
| DWL | DOWEL |
| EA | EACH |
| EF | EACH FACE |
| ELEC | ELECTRICAL |
| ELEV | ELEVATION |
| EMBED | EMBEDMENT |
| EQUIV | EQUIVALENT |
| ETC | ET CETERA |
| EW | EACH WAY |
| EXP | EXPANSION |
| EXT | EXTERIOR |
| FTG | FOOTING |
| GA | GAUGE |
| GB | GRADE BEAM |
| HORIZ | HORIZONTAL |
| h | HOUR |
| HRS | HOURS |
| IBC | INTERNATIONAL BUILDING CODE |
| INFO | INFORMATION |
| INT | INTERIOR |
| kg | KILOGRAM |
| km | KILOMETER |
| kN | KILONEWTON |
| kPa | KILOPASCAL |
| L# | ANGLE (# INDICATES SIZE) |
| LONG | LONGITUDINAL |
| LLV | LONG LEG VERTICAL |
| m | METER |
| MAX | MAXIMUM |
| MECH | MECHANICAL |
| MFG | MANUFACTURER |
| MID | MIDDLE |
| MIN | MINIMUM |
| MISC | MISCELLANEOUS |
| mm | MILLIMETER |
| MPa | MEGAPASCAL |
| MTL | METAL |
| MWFRS | MAIN WIND FORCE RESISTING SYSTEM |
| N | NEWTON |
| N | NORTH |
| N/A | NOT APPLICABLE |
| # | NUMBER SYMBOL FOR REBAR SIZE |
| NTS | NOT TO SCALE |
| OC | ON CENTER |
| OPNG | OPENING |
| ℙ or PL | PLATE |
| PRE-ENG | PRE-ENGINEERED |
| RB | ROOF BEAM |
| REINF | REINFORCED |
| REQ'D | REQUIRED |
| SIM | SIMILAR |
| SPECS | SPECIFICATIONS |
| STD | STANDARD |
| STRUCT | STRUCTURAL |
| SW | SHEAR WALL |
| T | TOP |
| T/ | TOP OF |
| T/ELEV | TOP ELEVATION |
| T/SLAB | TOP OF SLAB |
| T&B | TOP AND BOTTOM |
| THK | THICK |
| TYP | TYPICAL |
| UFC | UNIFIED FACILITIES CRITERIA |
| UON | UNLESS OTHERWISE NOTED |
| VERT | VERTICAL |
| W | WIDTH |
| W/ | WITH |

## 1.0 GENERAL NOTES:

1.1 THIS PROJECT HAS BEEN DESIGNED FOR THE WEIGHTS AND MATERIALS INDICATED ON THE SHEETS AND FOR THE LIVE LOADS INDICATED IN THE DESIGN DATA. IT IS THE CONTRACTOR'S RESPONSIBILITY TO DETERMINE ALLOWABLE CONSTRUCTION LOADS AND TO PROVIDE PROPER DESIGN AND CONSTRUCTION OF FALSEWORK, FORMWORK, STAGING, BRACING, SHEETING AND SHORING, ETC.

1.1 COORDINATE THESE SHEETS WITH THE ARCHITECTURAL, MECHANICAL, ELECTRICAL, PLUMBING, AND CIVIL SHEETS. ALL DIMENSIONS SHOWN ON THE SHEETS ARE MILLIMETERS UNLESS NOTED OTHERWISE.

1.2 THE CONTRACTOR SHALL VERIFY AND COORDINATE ALL FLOOR AND ROOF OPENING SIZES AND LOCATIONS, EQUIPMENT PAD SIZES AND LOCATIONS, ANCHOR BOLT LAYOUTS, ETC WITH EQUIPMENT SELECTED. THE CONTRACTOR SHALL MAKE ANY REQUIRED MODIFICATIONS AT NO ADDITIONAL COST.

1.3 THE CONTRACTOR SHALL REFER TO THE ARCHITECTURAL, MECHANICAL, ELECTRICAL AND PLUMBING SHEETS FOR SLEEVES, CURBS, INSERTS OR OPENINGS, ETC. NOT HEREIN INDICATED.

1.4 WORK NOT INCLUDED ON THE SHEETS BUT IMPLIED TO BE SIMILAR TO THAT SHOWN AT CORRESPONDING PLACES ELSEWHERE ON THE SHEETS SHALL BE REPEATED.

1.5 IN CASE OF CONFLICT BETWEEN THE NOTES, DETAILS AND SPECIFICATIONS THE MOST RIGID REQUIREMENTS SHALL GOVERN.

1.6 SEE ARCHITECTURAL SHEETS FOR LOCATIONS OF MASONRY AND NON-LOAD BEARING PARTITIONS. PROVIDE COMPRESSIBLE FIRESAFING AT TOP OF WALL AS REQUIRED BY ARCHITECTURAL SHEETS.

1.7 COORDINATE FINISHED FLOOR DATUM ELEVATION 0.0m WITH THE CIVIL SHEETS.

## 2.0 FOUNDATION NOTES

2.1 THE GEOTECHNICAL ANALYSIS FOR THIS PROJECT IS THE RESPONSIBILITY OF THE CONTRACTOR AWARDED THE WORK. AN ASSUMED ALLOWABLE SOIL BEARING VALUE OF 72 kPa HAS BEEN USED IN THE STRUCTURAL ANALYSIS OF THE BUILDING HEREIN AND SHALL BE CONFIRMED AND VERIFIED AS PART OF THE GEOTECHNICAL INVESTIGATION. VALUES WHICH DO NOT MEET THE REQUIREMENTS INDICATED ON THE BASIS OF DESIGN SHEET SHALL BE IMMEDIATELY BROUGHT TO THE ATTENTION OF THE CONTRACTING OFFICER FOR CONSIDERATION AND DETERMINATION ON THE NEXT APPROPRIATE COURSE OF ACTION.

2.2 SEE THE SPECIFICATION FOR ADDITIONAL REQUIREMENTS TO THOSE OUTLINED IN THE GEOTECHNICAL INVESTIGATION FOR EXCAVATION AND PREPARATION OF THE FOUNDATION AND THE SLAB ON GRADE SUBGRADE INCLUDING COMPACTION PROCEDURES.

2.3 EXCAVATIONS FOR FOOTINGS SHALL HAVE THE SIDES AND BOTTOMS TEMPORARILY LINED WITH 0.25mm POLYETHYLENE IF PLACEMENT OF CONCRETE DOES NOT OCCUR WITHIN 24 HRS OF THE EXCAVATION OF THE FOOTING.

2.4 FOUNDATION CONDITIONS NOTED DURING CONSTRUCTION WHICH DIFFER FROM THOSE DESCRIBED IN THE GEOTECHNICAL REPORT SHALL BE REPORTED TO THE GENERAL CONTRACTOR BEFORE FURTHER CONSTRUCTION IS ATTEMPTED. SEE PROJECT SPECIFICATIONS.

2.5 NO FOOTINGS OR SLABS SHALL BE POURED INTO OR AGAINST SUBGRADE CONTAINING FREE WATER, FROST, ICE OR LOOSE MATERIAL. FROST DEPTH ASSUMED TO BE 800mm.

2.6 ALL SLAB-ON-GRADE, TRENCH BOTTOMS AND OTHER ON-GRADE INTERIOR HORIZONTAL SURFACES SHALL BE PLACED OVER A 0.25mm POLYETHYLENE VAPOR RETARDER OVER A 100mm #57 STONE WATER CAPILLARY BARRIER PLACED ON SUBGRADE PROPERLY PREPARED IN ACCORDANCE WITH THE CONTRACT SPECIFICATIONS. (UON)

2.7 PRIOR TO START OF FOUNDATION OR SLAB-ON-GRADE CONSTRUCTION, EXISTING SUBGRADES SHALL BE COMPACTED TO MINIMUM OF 95% MAXIMUM DRY DENSITY OBTAINED THRU ASTM D 1557 MODIFIED PROCTOR TESTING.

2.8 SEE PLUMBING, ELECTRICAL & CIVIL SHEETS FOR REQUIRED UNDERSLAB UTILITIES.

2.9 SEE ARCHITECTURAL SHEETS FOR ALL WATERPROOFING DETAILS AND MATERIALS.

2.10 IF UNDERMINING OF FOOTINGS OCCURS, FILL VOIDS WITH 18 MPa CONCRETE. DO NOT ATTEMPT TO REPLACE AND RE-COMPACT SOIL.

## 3.0 CONCRETE

3.1 CONCRETE SHALL HAVE THE UNIT WEIGHT OF 2400 $kg/m^3$ AND A MINIMUM COMPRESSIVE STRENGTH (f'c) OF 28 MPa AT 28 DAYS. ALL CONCRETE SHALL HAVE A WATER-CEMENT RATIO OF 0.45. SEE SPECIFICATIONS FOR ADDITIONAL INFORMATION. ENTRAIN AIR TO PRODUCE TOTAL AIR CONTENT ACCORDING TO THE SPECIFICATIONS FOR CONCRETE EXPOSED TO FREEZING TEMPERATURES (EXTERIOR FOOTINGS, SLAB TURNDOWNS, EXTERIOR SLABS AND SLABS-ON-GRADE, EXTERIOR RETAINING WALLS, AND EXTERIOR GRADE BEAMS.)

3.2 NO CALCIUM CHLORIDE SHALL BE USED IN ANY CONCRETE.

3.3 MIXING, TRANSPORTING AND PLACING OF CONCRETE SHALL CONFORM TO ACI 301M-05.

3.4 ALL CONCRETE WORK SHALL CONFORM TO THE REQUIREMENTS OF THE AMERICAN CONCRETE INSTITUTE (ACI) 318M MANUAL (metric), "BUILDING CODE REQUIREMENTS FOR REINFORCED CONCRETE", AND REQUIREMENTS OUTLINED IN THE CONTRACT SPECIFICATIONS. WHEN THERE IS A CONFLICT BETWEEN ACI AND THE SPECIFICATIONS, THE MORE STRINGENT SHALL GOVERN.

3.5 CHAMFER ALL EXPOSED EXTERNAL CORNERS OF CONCRETE WITH 20mm x45 DEGREE CHAMFER UON.

3.6 CONCRETE REINFORCEMENT BARS SHALL CONFORM TO ASTM A615M-96a, GRADE 420 MPa, REINFORCING BARS SHALL NOT BE TACK WELDED, WELDED, HEATED OR CUT, UNLESS INDICATED ON THE CONTRACT DOCUMENTS. ALL LAP SPLICES SHALL BE CLASS "B" UON.

3.7 HORIZONTAL FOOTING AND HORIZONTAL WALL REINFORCEMENT SHALL BE CONTINUOUS AND SHALL HAVE 90 DEGREE BENDS AND EXTENSIONS, OR CORNER BARS OF EQUIVALENT SIZE LAPPED WITH A CLASS B TENSION SPLICE AT CORNERS AND INTERSECTIONS. TOP BAR CRITERIA SHALL APPLY IF 300mm OR MORE OF FRESH CONCRETE IS PLACED BELOW BAR.

3.8 SLABS-ON-GRADE SHALL HAVE CONSTRUCTION JOINTS OR CRACK CONTROL JOINTS AS SHOWN ON THE DRAWINGS. CONSTRUCTION JOINTS CAN BE USED AT CONTROL JOINT LOCATIONS AT CONTRACTORS OPTION. SEE SLAB PLANS & JOINT DETAILS FOR ADDITIONAL INFORMATION. FOR AREAS NOT SHOWN ON DWGS, THE MAXIMUM SPACING OF CONSTRUCTION/ CRACK CONTROL JOINTS SHALL BE 4800mm

3.9 ALL CONCRETE REINFORCEMENT SHALL BE DETAILED, FABRICATED, LABELED, SUPPORTED, AND SPACED IN FORMS AND SECURED IN PLACE IN ACCORDANCE WITH THE PROCEDURES AND REQUIREMENTS OUTLINED IN THE LATEST EDITION OF THE "BUILDING CODE REQUIREMENTS FOR REINFORCED CONCRETE", ACI 318M, AND THE "MANUAL OF STANDARD PRACTICE FOR DETAILING REINFORCED CONCRETE STRUCTURES", ACI 315M, LATEST EDITION. BASED ON IN COUNTRY REINFORCEMENT AVAILABILITY, IT IS THE CONTRACTOR'S OPTION TO ROUND DESIGNATED ODD NUMBERED REINFORCEMENT SIZES UP (1) ONE BAR SIZE.

3.10 ALL DOWELS SHALL MATCH SIZE AND NUMBER OF MAIN REINFORCING, UNLESS NOTED OTHERWISE ON THE SHEETS.

3.11 ADDITIONAL BARS SHALL BE PROVIDED AROUND ALL FLOOR AND WALL OPENINGS AS SHOWN ON THE SHEETS.

3.12 SEE ARCHITECTURAL SHEETS FOR TYPE AND LOCATION OF ALL FLOOR FINISHES.

3.13 THE CONTRACTOR SHALL COORDINATE ADDITIONAL WALL/SLAB OPENINGS NOT SHOWN ON STRUCTURAL SHEETS. SEE MECHANICAL, ELECTRICAL, PLUMBING AND CIVIL SHEETS.

3.14 UNLESS NOTED OTHERWISE, ALL CURBS SHALL BE REINFORCED WITH AT LEAST (1)-#13 CONTINUOUS AND #13 AT 300mm O.C. DOWELS TO STRUCTURE BELOW.

3.15 THE CONTRACTOR SHALL VERIFY ALL OPENINGS, PAD SIZES, AND ANCHOR BOLTS WITH EQUIPMENT SELECTED.

3.16 FOR ALL WALLS & PIERS, PROVIDE DOWELS INTO FOOTING AT EACH VERT REINF BAR, UON DOWEL SIZE SHALL BE SAME AS VERT REINF.

3.17 PROVIDE CONCRETE POUR STOPS OR FORMED AS REQUIRED FOR INSTALLATION OF ALL CONCRETE WORK.

3.18 PROVIDE ADDITIONAL (2)-#13 x 600mm REINFORCING BARS IN SLAB-ON GRADE AT ALL RE-ENTRANT CORNERS. PLACE BARS AT MID-DEPTH OF SLAB WITH A CLEARANCE OF 50mm FROM CORNER UON.

3.19 COLD-WEATHER PLACEMENT: COMPLY WITH ACI 306.1 AND AS FOLLOWS. PROTECT CONCRETE WORK FROM PHYSICAL DAMAGE OR REDUCED STRENGTH THAT COULD BE CAUSED BY FROST, FREEZING ACTIONS, OR LOW TEMPERATURES. SUBMIT A COLD WEATHER CONCRETING PLAN FOR APPROVAL.

3.20 PROVIDE BONDING COMPOUND PER ASTM C 1059-99: SPECIFICATION FOR LATEX AGENTS FOR BONDING FRESH CONCRETE (GROUT) TO HARDENED CONCRETE.

3.21 THE FORMED SURFACES FOR REINFORCED CONCRETE SHALL ACHIEVE A "CLASS A" FINISH WHEN RECEIVING PAINT OR A "CLASS B" FINISH WHEN RECEIVING PLASTER OR TILE AS PER SPECIFICATION SECTION 03 31 00 CAST-IN-PLACE STRUCTURAL CONCRETE.

3.22 AT INTERSECTING GRADE BEAMS AND SHEAR WALLS, PROVIDE CORNER BARS AT INTERSECTIONS WITH SAME QUANTITY, SIZE AND SPACING AS HORIZONTAL BARS WITH LEG LENGTH = 50db.

3.23 REFER TO S-800 SERIES REINFORCING BAR PLACEMENT DRAWINGS DEFINING LENGTHS, BENDS, AND SPACINGS FOR ALL STRUCTURAL CONCRETE. THE S-800 SERIES DRAWING ARE BASED ON THE S-400, S-500, S-600, AND S-700 SERIES DRAWING SCHEDULES, DETAILS, AND DIAGRAMS.

## 4.0 CONCRETE MASONRY

4.1 MASONRY CONSTRUCTION SHALL CONFORM TO SPECIFICATION FOR MASONRY STRUCTURES (ACI 530.1) UON.

4.2 STRENGTH OF MASONRY MATERIALS SHALL BE AS FOLLOWS:

a. CONCRETE MASONRY UNITS SHALL BE NORMAL WEIGHT, GRADE N, TYPE 1, CONFORMING TO ASTM C-90 AND HAVE A MINIMUM COMPRESSIVE STRENGTH OF 10.4 MPa ON THE NET AREA.

b. MORTAR SHALL CONFORM TO ASTM C-270 TYPE S.

c. GROUT FOR MASONRY SHALL BE NORMAL WEIGHT AND HAVE A MINIMUM COMPRESSIVE STRENGTH OF 14 MPa AT 28 DAYS. GROUT SHALL CONFORM TO ASTM C476M. GROUT LIFTS SHALL NOT EXCEED 1,400mm.

d. REINFORCED MASONRY SHALL HAVE A STRENGTH F'm = 10 MPa. (F'm IS THE COMPRESSIVE STRENGTH OF THE MASONRY AT 28 DAYS AS DETERMINED BY PRISM TESTS).

4.3 ALL VERTICAL REINFORCEMENT FOR CONCRETE MASONRY SHALL BE ASTM A615M-96a, GRADE 420 MPa. ALL SPLICES SHALL BE LAPPED 48 BAR DIAMETERS MINIMUM.

4.4 BOND BEAMS SHALL BE SPACED AT 1200mm OC VERTICALLY. BOND BEAM REINFORCING SHALL BE CONTINUOUS AND PROVIDED AT WALL INTERSECTIONS AND WALL CORNERS (REFERENCE CONCRETE MASONRY NOTE 4.11). ALL BOND BEAM REINFORCING SHALL BE CONTINUOUS AND HAVE STANDARD ACI HOOKS AT EACH END. PROVIDE STANDARD BAR SPLICES AS SPECIFIED. AS AN ALTERNATE TO CMU BOND BEAMS, IT IS THE CONTRACTOR'S OPTION TO PROVIDE 200mm x 200mm CONTINUOUS CAST-IN-PLACE CONCRETE BOND BEAMS WITH (2)-#16 IN LIEU OF CMU BOND BEAMS INDICATED ON THE DRAWINGS.

4.5 SEE TYPICAL DETAILS FOR MINIMUM REINFORCEMENT REQUIREMENTS FOR CMU WALLS. PROVIDE STANDARD BAR SPLICES AS SPECIFIED. ALL VERTICAL REINFORCEMENT EXTENDS FULL HEIGHT OF WALL.

4.6 CMU CELLS THAT REQUIRE VERTICAL REINFORCING BARS AS INDICATED ON THE CONTRACT DRAWINGS AND/OR SPECS SHALL HAVE REINF BARS PLACED IN CENTERS OF CMU CELLS AND CONTINUOUSLY GROUTED UON.

4.7 ALL CMU CELLS, OPEN CAVITIES, AND AIR SPACES OF ALL EXTERIOR WALLS SHALL BE GROUTED TO STOP FRAGMENTS FROM MORTAR BLAST.

4.8 CONTRACTOR SHALL COORDINATE LOCATION OF ALL OPENINGS SEE ARCH, MECH, ELEC, AND PLUMBING SHEETS FOR SIZE AND LOCATION OF OPENINGS.

4.9 MASONRY WALLS SHALL NOT BE BACK FILLED PRIOR TO THE MORTAR AND GROUT ATTAINING THEIR RESPECTIVE MAXIMUM DESIGN STRENGTHS PER SPECIFICATIONS.

4.10 PROVIDE GALVANIZED MORTAR/GROUT SCREEN W/ 3mm MESH WHERE CELLS BELOW ARE NOT GROUTED.

4.11 AT INTERSECTING BOND BEAMS, PROVIDE CORNER BAR FOR EACH HORIZONTAL BAR IN BOND BEAMS AT INTERSECTING WALLS. USE SAME SIZE AND SPACING AS HORIZONTAL BARS WITH LEG LENGTH = 50db.

4.12 THE ALTERNATE TOP OF CMU WALL BRACING DETAIL(S) SHOWN ON S-701 CAN BE UTILIZED AT THE CONTRACTOR'S OPTION IN PLACE OF THE "SLEEVED DOWEL" WALL CONNECTIONS DEPICTED ON S-400 AND S-500 SERIES DRAWINGS. IN ADDITION, ALTERNATE DETAIL(S) SHOW CAST-IN-PLACE WALL BOND BEAMS THAT CAN BE UTILIZED AT THE CONTRACTOR'S OPTION IN PLACE OF THE STANDARD CMU BOND BEAMS CONSTRUCTED OF CMU BLOCKS.

## 5.0 COLD-FORMED METAL FRAMING

5.1 ALL COLD-FORMED METAL FRAMING MEMBERS SHALL CONFORM TO ASTM A1003M, STRUCTURAL GRADE ST340 (MPa), WITH A GALVANIZED COATING OF Z275 OR BETTER IN ACCORDANCE WITH ASTM A653M.

5.2 ALL COLD-FORMED METAL FRAMING MEMBERS SHALL HAVE THE FOLLOWING MINIMUM PROPERTIES:

a. MINIMUM METAL THICKNESS:
TRACK = 1.37mm;
STUD/OTHER = 1.09mm

b. MINIMUM FLANGE WIDTH:
TRACK = 38mm;
STUD/OTHER = 35mm

c. MINIMUM MEMBER DEPTH:
ALL SECTIONS = 152.2mm

d. PURLIN (HAT CHANNEL)
DEPTHxWIDTH(FLAT TOP)xTHICK = 25mmx42mmx1.59mm

5.3 ALL CONNECTIONS SHALL BE MADE WITH CORROSION RESISTANT (ASTM A153M), SELF-DRILLING, SELF-TAPPING STEEL DRILL SCREWS IN ACCORDANCE WITH ASTM C1513. SCREWS SHALL HAVE A LOW PROFILE HEAD BENEATH ROOF DECK, AND STANDARD HEAD ALL OTHER LOCATIONS.

5.4 FABRICATE COLD FORMED METAL FRAMING AND ACCESSORIES PLUMB, SQUARE AND TRUE TO LINE, WITH CONNECTIONS SECURELY FASTENED ACCORDING TO AISI STANDARD FOR COLD FORMED STEEL FRAMING.

5.5 CUT FRAMING MEMBERS BY SAWING OR SHEATHING, DO NOT TORCH CUT.

5.6 INSTALL FRAMING MEMBERS IN ONE-PIECE LENGTHS UNLESS SPLICE CONNECTIONS ARE INDICATED FOR TRACK OR TENSION MEMBERS

5.7 INSTALL TEMPORARY BRACING AND SUPPORTS TO SECURE FRAMING DURING CONSTRUCTION. MAINTAIN BRACING AND SUPPORTS IN PLACE UNTIL THE STRUCTURE HAS BEEN COMPLETED WITH ALL CONNECTIONS AND PERMANENT BRACING SECURED.

## 6.0 STRUCTURAL DESIGN CRITERIA

6.1 ALL DESIGNS SHALL CONFORM TO THE PROVISIONS OF THE IBC 2006 AND UFC AS APPLICABLE.

6.2 DESIGN LOADS

6.2.1 DEAD LOADS (PER IBC 2006 & UFC 3-310-01)

| | |
|---|---|
| MECH/ELEC/PLUMBING | 0.20 kPa |
| MISCELLANEOUS | 0.15 kPa |
| COLD-FORMED FRAMING | 0.20 kPa |
| INSULATION | 0.10 kPa |
| METAL ROOF PANEL | 0.14 kPa |
| | 0.79 kPa |
| FLOOR PARTITION ALLOWANCE | 0.96 kPa |

6.2.2 LIVE LOADS (PER IBC 2006 & UFC 3-310-01)

| | |
|---|---|
| ROOF | 1.00 kPa |
| CORRIDOR (2-STORY BLDG ONLY) | 4.80 kPa |
| ALL OTHERS (2-STORY BLDG ONLY) | 2.40 kPa |
| SLAB ON GRADE | 4.80 kPa |

6.2.3 SNOW LOADS (PER IBC 2006 & UFC 3-310-01)

| | |
|---|---|
| GROUND SNOW LOAD (Pg) | 1.2 kPa |
| SNOW IMPORTANCE FACTOR (I) | 1.0 |
| SNOW EXPOSURE FACTOR (Ce) | 1.0 |
| THERMAL FACTOR (Ct) | 1.0 |

6.2.4 WIND LOADS (PER IBC 2006)

| | |
|---|---|
| BASIC WIND SPEED | 137 km/h |
| WIND IMPORTANCE FACTOR | 1.0 |
| WIND EXPOSURE CATEGORY | D |
| DIRECTIONALITY COEFFICIENT (Kd) | 0.85 |
| TOPOGRAPHIC FACTOR (Kzt) | 1.0 |

6.2.5 SEISMIC LOADS (PER IBC 2006 & UFC 3-310-04)

| | |
|---|---|
| OCCUPANCY USE CATEGORY | II |
| SEISMIC IMPORTANCE FACTOR (Ie) | 1.0 |
| SEISMIC SITE CLASS | D |

$S_s$ = 2.40 (FOR IRREGULAR PORTION OF BUILDING – COLUMN LINES 1-4)

$S_s$ = 1.50 (REDUCED FROM 2.40 PER ASCE 7-05,12.81.3. FOR A BUILDING WITHOUT IRREGULARITIES – COLUMN LINES 5-9.)

$S_1$ = 1.20
$S_{DS}$ = 1.00 WHEN $S_s$ = 1.5
$S_{DS}$ = 1.60 WHEN $S_s$ = 2.4
$S_{D1}$ = 1.20

| | |
|---|---|
| SEISMIC DESIGN CATEGORY | E |
| SEISMIC RESISTING SYSTEM: –SPECIAL REINFORCED CONCRETE SHEAR WALL | |
| RESPONSE MODIFICATION FACTOR (R) | 6 |
| RESPONSE COEFFICIENT (Cs) – REGULAR PORTION | 0.167 |
| RESPONSE COEFFICIENT (Cs) – IRREGULAR PORTION | 0.267 |

SEISMIC ANALYTICAL PROCEDURE = EQUIV LATERAL FORCE
SEISMIC BASE SHEAR:
REGULAR PORTION = 820 kN
IRREGULAR PORTION = 1410 kN

APPROVED:

A/E DESIGNER OF RECORD

SEAL:

GEORGIA REGISTERED 1-29-10 No. 27141 PROFESSIONAL ENGINEER CHRISTOPHER W. WHITMORE

US ARMY CORPS OF ENGINEERS
AFGHANISTAN ENGINEER DISTRICT

| Mark | Description | Date | Appr. |
|---|---|---|---|

| Mark | Description | Date | Appr. |
|---|---|---|---|

U.S. ARMY CORPS OF ENGINEERS
AFGHANISTAN ENGINEER DISTRICT
APO AE 96338

*Michael Baker Jr., Inc*
*A unit of Michael Baker Corporation*
Airside Business Park
100 Airside Drive
Moon Township PA 15108
www.mbakercorp.com

Designed by: KMP/MMY
Dwn by: RCG
Ckd by: CWW
Reviewed by: LHM
Submitted by: BAKER
Date: 2/23/10
Rev: 0
Design file no.
Drawing code:
File name: ANABOQSS-001GN
Plot date: 2/23/2010
Plot scale: X:X

AFGHAN NATIONAL ARMY
REGIONAL MILITARY TRAINING CENTER
STANDARD DESIGN

SENIOR BOQ BARRACKS

GENERAL NOTES & DESIGN CRITERIA

Sheet reference number:
S-001

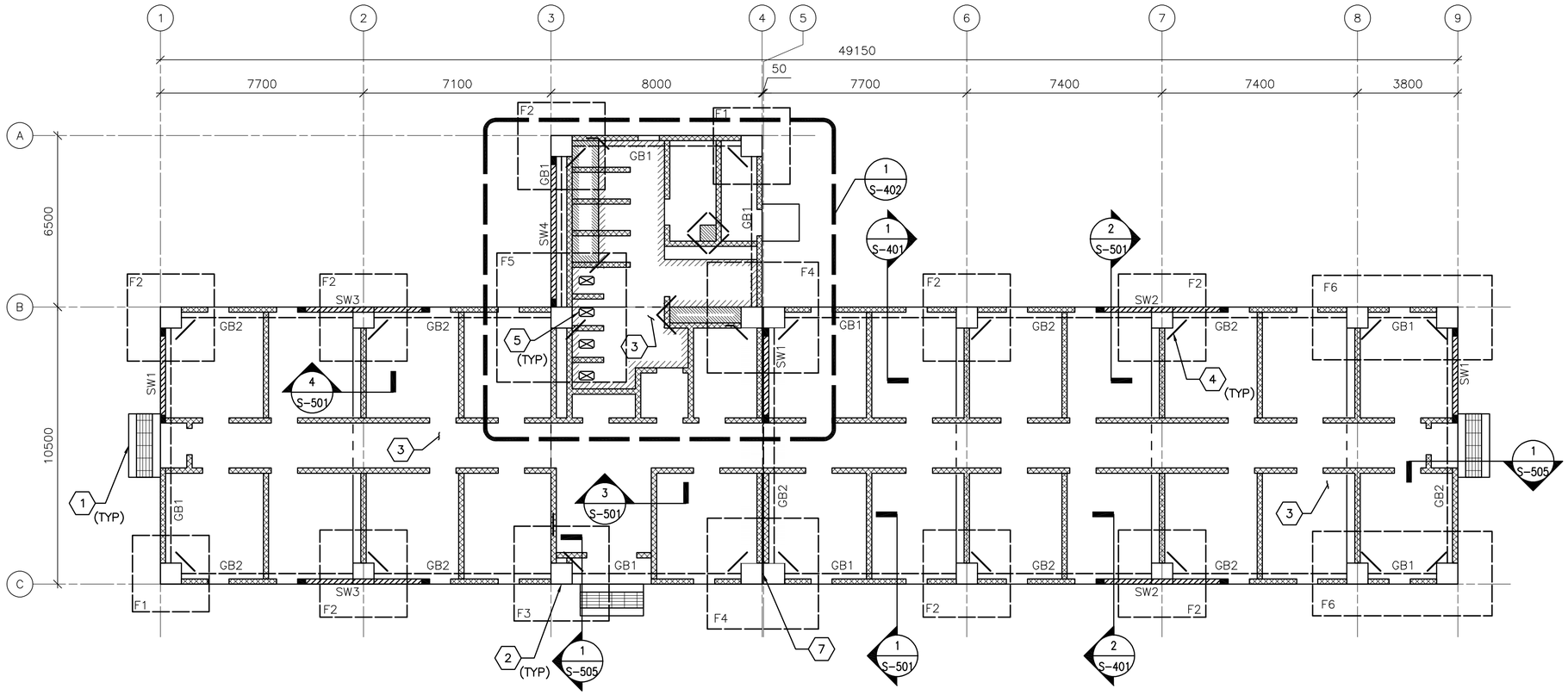


## 1 S-101 FOUNDATION/SLAB PLAN

SCALE: 1:100

## FOUNDATION/SLAB PLAN NOTES:

1. REFER TO SHEET S-001 FOR STRUCTURAL NOTES AND DESIGN CRITERIA.
2. FINISH FIRST FLOOR ELEVATION SHALL BE (DATUM 0.00) ALL PLUS OR MINUS DIMENSIONS INDICATED ON PLAN OR REFERRED TO IN NOTES RELATE TO FINISH FIRST FLOOR ELEVATION.
3. SLAB-ON-GRADE IS 150 WITH #13 @ 300 OC EW LOCATED 38 FROM T/SLAB OUN. WHERE NOTED, 300 SLAB-ON-GRADE SHALL BE REINFORCED W/ #13 @ 300 OC EW T&B
4. TOP OF EXTERIOR FOOTINGS SHALL BE -950 UNLESS OTHERWISE INDICATED.
5. COLUMN FOOTINGS INDICATED BY F# ON PLAN. REFER TO COLUMN FOOTING SCHEDULE ON SHEET S-601.
6. REFER TO COLUMN SCHEDULE ON SHEET S-601.
7. GRADE BEAM INDICATED BY GB# ON PLAN, REFER TO BEAM SCHEDULE ON SHEET S-601.
8. SHEARWALL INDICATED BY SW# ON PLAN, REFER TO SHEARWALL SCHEDULE ON SHEET S-601.
9. SEE TYP EXTERIOR & INTERIOR CMU WALL REINF DETAILS ON SHEET S-701.
10. SEE MECHANICAL AND ELECTRICAL SHEETS FOR CONCRETE PAD LOCATIONS, SIZES, AND THICKNESS NOT SHOWN. SEE SHEET S-701 FOR DETAILS.
11. THICKENED SLAB UNDER CMU PERIMETER/PARTITION WALLS NOT SHOWN FOR CLARITY.

## FOUNDATION/SLAB PLAN KEY NOTES: (X)

1. CONC PAD (ENTRANCE) - SEE ARCH DWGS FOR INFORMATION
2. REINF CONC COLUMN
3. REINF CONC SLAB-ON-GRADE
4. (2)-#13 @ RE-ENTRANT CORNERS - SEE S-701 FOR INFORMATION
5. SLAB OPENING - COORD W/ ARCH AND PLUMBING DWGS
6. NOT USED
7. 50 ISOLATION JOINT BETWEEN STRUCTURES LOCATED ABOVE FIRST FLOOR SLAB-ON-GRADE

## FOUNDATION/SLAB PLAN LEGEND:

- REINF CONC SHEAR WALL
- REINF CMU WALL
- CONTROL JOINT
- INDICATES DROP SLAB 65 BELOW FINISH FLOOR
- INDICATES DROP SLAB 200 BELOW FINISH FLOOR
- SLAB OPENING

0 2000 4000
SCALE: 1:100

UNLESS OTHERWISE NOTED, LINEAR DIMENSIONS SHOWN ON DRAWINGS ARE IN MILLIMETERS (mm)

APPROVED:

A/E DESIGNER OF RECORD

SEAL:

GEORGIA REGISTERED 1-29-10 No. 27141 PROFESSIONAL ENGINEER CHRISTOPHER W. WHITMORE

US ARMY CORPS OF ENGINEERS
AFGHANISTAN ENGINEER DISTRICT

| Mark | Description | Date | Appr. |
|---|---|---|---|

Date: 2/23/10
Design file no.
Drawing code:
Rev: 0
File name: ANABOQSS-101FNP
Plot date: 2/23/2010
Plot scale: x:x

Designed by: KMF/MMY
Dwn by: RCG
Ckd by: CWW
Reviewed by: LHM
Submitted by: BAKER

U.S. ARMY CORPS OF ENGINEERS
AFGHANISTAN ENGINEER DISTRICT
APO AE 96338

*Michael Baker Jr., Inc.*
*A unit of Michael Baker Corporation*
Airside Business Park
100 Airside Drive
Moon Township, PA 15108
www.mbakercorp.com

AFGHAN NATIONAL ARMY
REGIONAL MILITARY TRAINING CENTER
STANDARD DESIGN

SENIOR BOQ BARRACKS

FOUNDATION/SLAB PLAN

Sheet reference number:
S-101

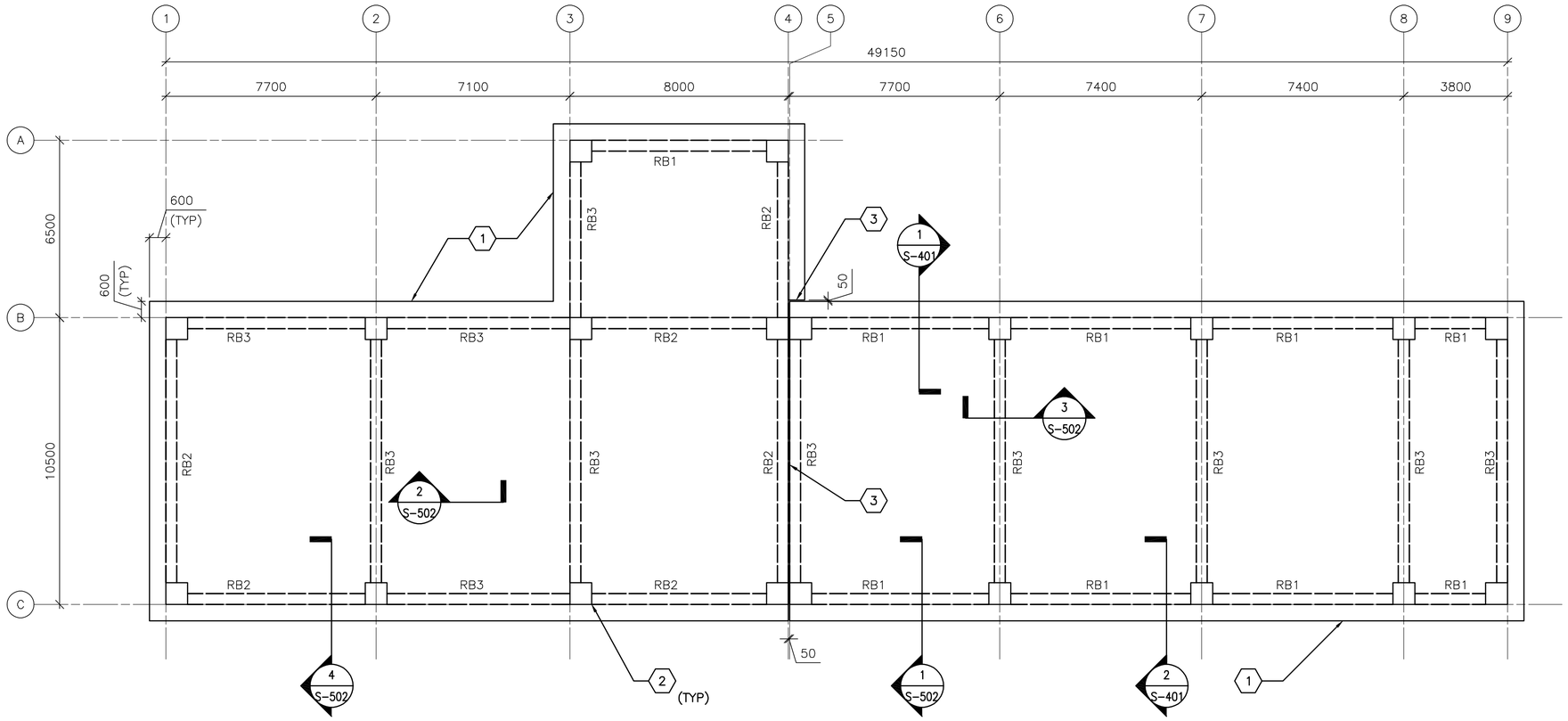


## 1 S-102 ROOF FRAMING PLAN

SCALE: 1:100

## ROOF FRAMING PLAN NOTES:

1. REFER TO SHEETS S-001 FOR STRUCTURAL NOTES AND DESIGN CRITERIA.
2. TOP OF SLAB ELEVATION = 3800 UNLESS NOTED OTHERWISE.
3. ROOF SLAB IS 300 WITH #19 @ 300 OC EW T&B.
4. ROOF BEAM INDICATED BY RB# ON PLAN. REFER TO BEAM SCHEDULE ON SHEET S-601
5. COORDINATE WITH ARCHITECTURAL SHEETS FOR COLD-FORMED STEEL OVERBUILD FRAMING ABOVE ROOF SLAB.
6. COLD-FORMED METAL OVERBUILD ROOF FRAMING NOT SHOWN FOR CLARITY. SEE OVERBUILD ROOF FRAMING DETAILS AND SECTIONS ON SHEET S-702.
7. CMU PARTITION WALLS (BELOW ROOF SLAB) NOT SHOWN FOR CLARITY.
8. OVERHANG AREAS OF ROOF SLAB CONTAIN ROOF VENT PENETRATIONS. REFERENCE ARCHITECTURAL DRAWINGS FOR INFORMATION.
9. DISCONTINUE ALL ROOF FRAMING AT BUILDING EXPANSION JOINT. REFER TO ARCHITECTURAL SHEETS FOR COLD-FORMED ROOF OVERBUILD FRAMING EXPANSION JOINT DETAIL.

## ROOF FRAMING PLAN KEY NOTES: (X)

1. CONC ROOF SLAB (BELOW ROOF OVERBUILD)
2. REINF CONC COLUMN (BELOW CONC ROOF SLAB)
3. 50 ISOLATION JOINT BETWEEN STRUCTURES LOCATED ABOVE FIRST FLOOR SLAB-ON-GRADE

0 2000 4000
SCALE: 1:100

UNLESS OTHERWISE NOTED, LINEAR DIMENSIONS SHOWN ON DRAWINGS ARE IN MILLIMETERS (mm)

APPROVED:

A/E DESIGNER OF RECORD

SEAL:

GEORGIA REGISTERED 2-22-10 No. 27141 PROFESSIONAL ENGINEER CHRISTOPHER W. WHITMORE

US ARMY CORPS OF ENGINEERS
AFGHANISTAN ENGINEER DISTRICT

| Mark | Description | Date | Appr. |
|---|---|---|---|

Rev: 0
Date: 2/23/10
Design file no.
Drawing code:
File name: ANABOQSS-102FRP
Plot date: 2/23/2010
Plot scale: X:X

Designed by: KMP/MMY
Dwn by: RCG
Ckd by: CWW
Reviewed by: LHM
Submitted by: BAKER

U.S. ARMY CORPS OF ENGINEERS
AFGHANISTAN ENGINEER DISTRICT
APO AE 96338

*Michael Baker Jr., Inc.*
*A unit of Michael Baker Corporation*
Airside Business Park
100 Airside Drive
Moon Township, PA 15108
www.mbakercorp.com

AFGHAN NATIONAL ARMY
REGIONAL MILITARY TRAINING CENTER
STANDARD DESIGN

SENIOR BOQ BARRACKS

ROOF FRAMING PLAN

Sheet reference number:
S-102

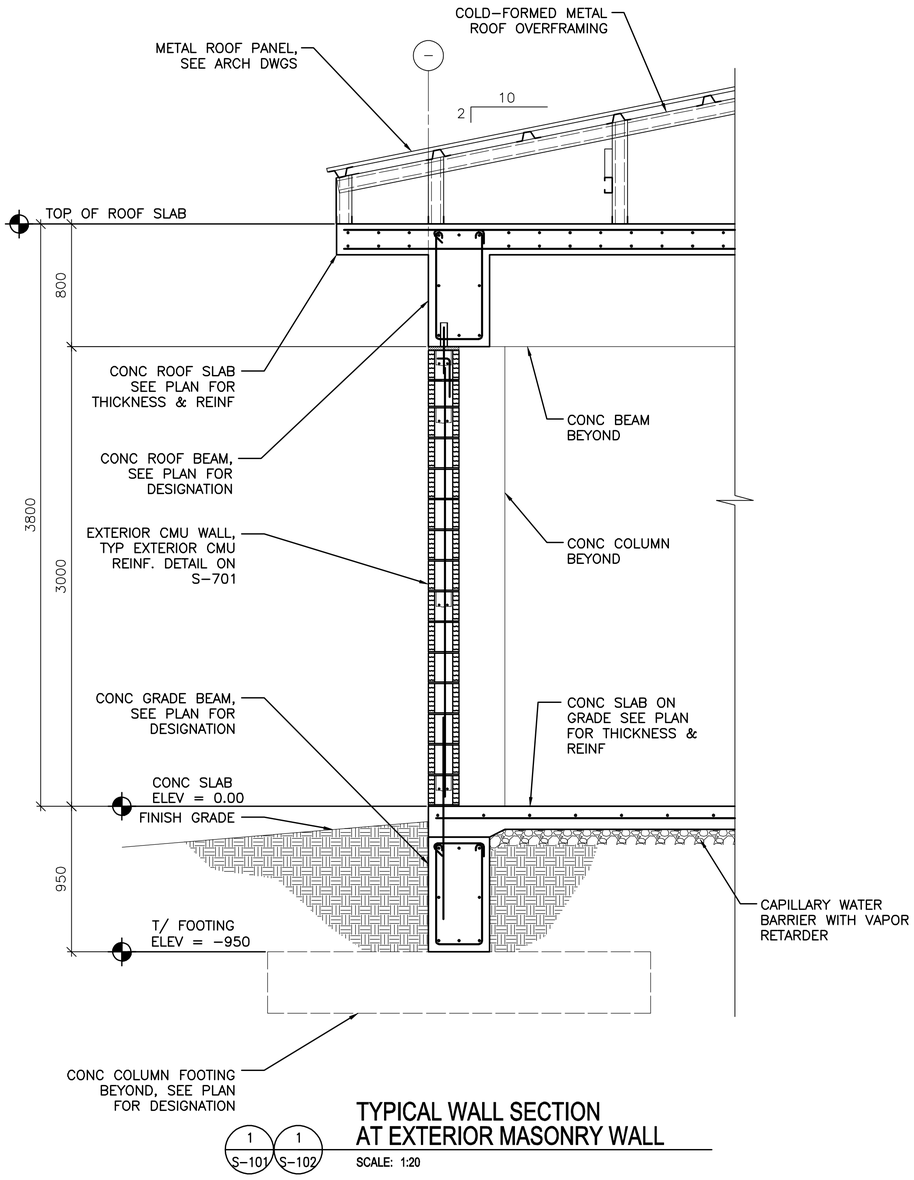


1 S–101 / 1 S–102

## TYPICAL WALL SECTION AT EXTERIOR MASONRY WALL

SCALE: 1:20

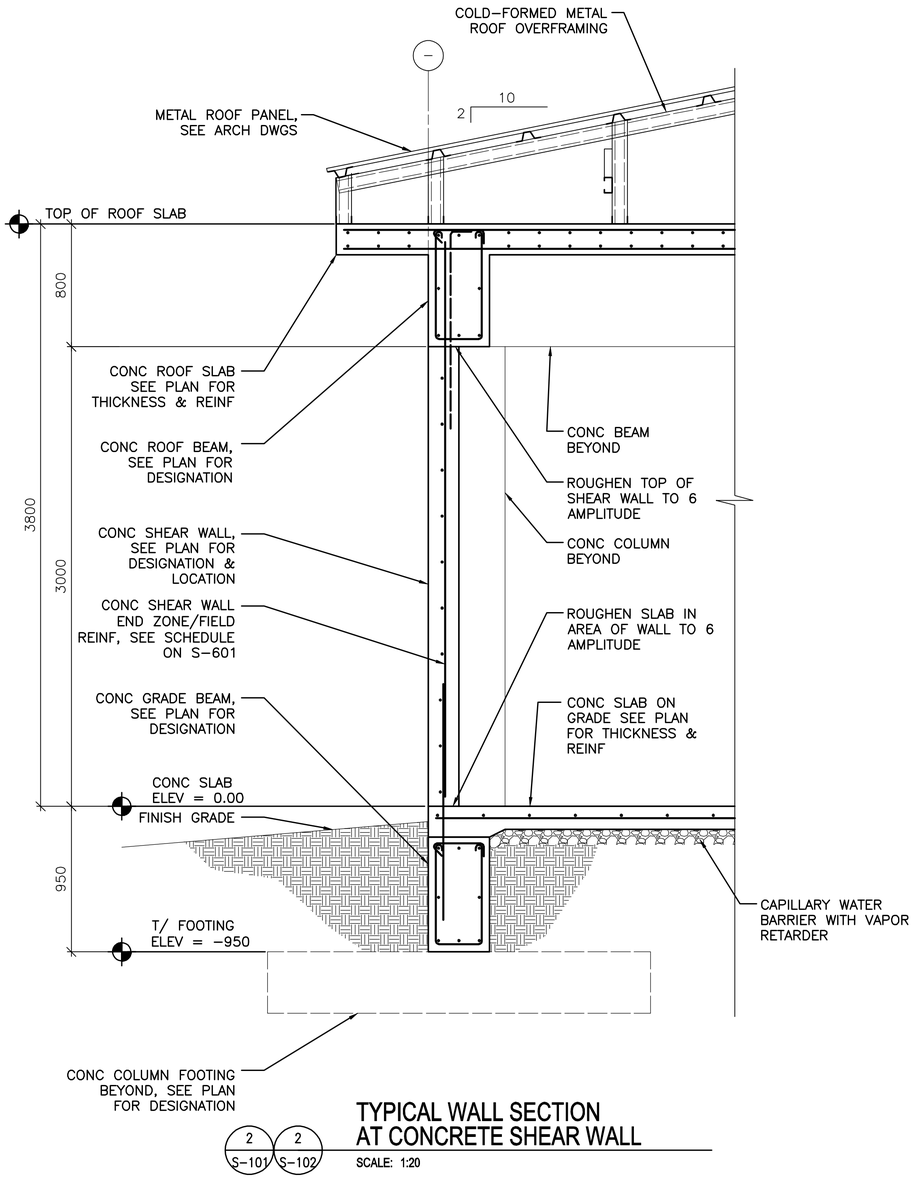


2 S–101 / 2 S–102

## TYPICAL WALL SECTION AT CONCRETE SHEAR WALL

SCALE: 1:20

0 400 800

SCALE: 1:20

UNLESS OTHERWISE NOTED, LINEAR DIMENSIONS SHOWN ON DRAWINGS ARE IN MILLIMETERS (mm)

APPROVED:

A/E DESIGNER OF RECORD

SEAL:

GEORGIA REGISTERED 1-29-10 No. 27141 PROFESSIONAL ENGINEER CHRISTOPHER W. WHITMORE

US ARMY CORPS OF ENGINEERS
AFGHANISTAN ENGINEER DISTRICT

| Mark | Description | Date | Appr. |
|---|---|---|---|
| | | | |

Rev: 0
Date: 2/23/10
Design file no.
Drawing code:
File name: ANABOQS3-40183
Plot date: 2/23/2010
Plot scale: x:x

Designed by: KMP/MMY
Dwn by: RCG
Ckd by: CWW
Reviewed by: LHM
Submitted by: BAKER

U.S. ARMY CORPS OF ENGINEERS
AFGHANISTAN ENGINEER DISTRICT
APO AE 96338

Michael Baker Jr., Inc
A unit of Michael Baker Corporation
Airside Business Park
100 Airside Drive
Moon Township, PA 15108
www.mbakercorp.com

AFGHAN NATIONAL ARMY
REGIONAL MILITARY TRAINING CENTER
STANDARD DESIGN

SENIOR BOQ BARRACKS

BUILDING SECTIONS

Sheet reference number:
S–401

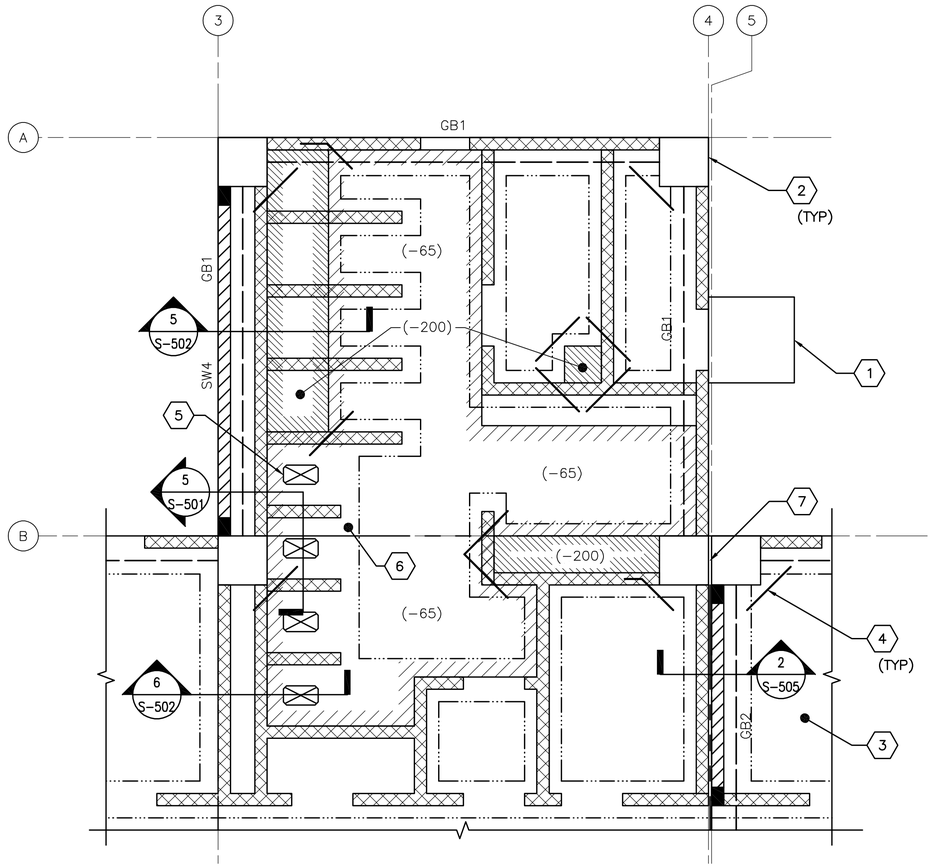


1 / S-101 **ENLARGED LATRINE SLAB PLAN**

SCALE: 1:50

## ENLARGED PLAN NOTES:

1. REFER TO SHEET S−001 FOR STRUCTURAL NOTES AND DESIGN CRITERIA.
2. FINISH FIRST FLOOR ELEVATION SHALL BE (DATUM 0.00MM) ALL PLUS OR MINUS DIMENSIONS INDICATED ON PLAN OR REFERRED TO IN NOTES RELATE TO FINISH FIRST FLOOR ELEVATION.
3. SLAB−ON−GRADE IS 150 WITH #13 @ 300 OC EW LOCATED 38 FROM T/SLAB UON. WHERE NOTED, 300 SLAB−ON−GRADE SHALL BE REINFORCED W/ #13 @300 OC EW T&B.
4. REFER TO FOUNDATION/SLAB PLAN ON SHEET S−101 FOR COLUMN DESIGNATION AND COLUMN SCHEDULE ON SHEET S−601.
5. REFER TO FOUNDATION/SLAB PLAN ON SHEET S−101 FOR SHEARWALL DESIGNATION AND SHEARWALL SCHEDULE ON SHEET S−601.
6. REFER TO FOUNDATION/SLAB PLAN ON SHEET S−101 FOR GRADE BEAM DESIGNATION AND GRADE BEAM SCHEDULE ON SHEET S−601.
7. SEE TYP EXTERIOR AND INTERIOR CMU WALL REINFORCING DETAILS ON SHEET S−701.

## ENLARGED PLAN KEYNOTES: (X)

1. CONC PAD (ENTRANCE) − SEE ARCH DWGS FOR INFORMATION
2. REINF CONC COLUMN
3. REINF CONC SLAB−ON−GRADE
4. (2)−#13 RE−ENTRANT CORNER BARS − SEE S−701 FOR INFORMATION
5. SLAB OPENING − COORDINATE W/ ARCH AND PLUMBING DWGS.
6. 300 SLAB−ON−GRADE
7. 50 ISOLATION JOINT BETWEEN STRUCTURES LOCATED ABOVE FIRST FLOOR SLAB−ON−GRADE

## PLAN LEGEND:

- REINF CONC SHEAR WALL
- REINF CMU WALL
- CONTROL JOINT
- INDICATES DROP SLAB 65 BELOW FINISH FLOOR
- INDICATES DROP SLAB 200 BELOW FINISH FLOOR
- SLAB OPENING
- OUTLINE OF THICKENED SLAB AREAS
- GRADE BEAM

0 1000 2000
SCALE: 1:50

UNLESS OTHERWISE NOTED, LINEAR DIMENSIONS SHOWN ON DRAWINGS ARE IN MILLIMETERS (mm)

APPROVED:

A/E DESIGNER OF RECORD

SEAL:

GEORGIA REGISTERED 1-28-10 No. 27141 PROFESSIONAL ENGINEER CHRISTOPHER W. WHITMORE

US ARMY CORPS OF ENGINEERS
AFGHANISTAN ENGINEER DISTRICT

| Mark | Description | Date | Appr. |
|---|---|---|---|
| | | | |

| Mark | Description | Date | Appr. |
|---|---|---|---|
| | | | |

Rev: 0
Date: 2/23/10
Design file no.
Drawing code:
File name: ANABOQS3-402EP
Plot date: 2/23/2010
Plot scale: x:X

Designed by: KMP/MMY
Dwn by: RCG
Ckd by: CWW
Reviewed by: LHM
Submitted by: BAKER

U.S. ARMY CORPS OF ENGINEERS
AFGHANISTAN ENGINEER DISTRICT
APO AE 96338

*Michael Baker Jr., Inc*
*A unit of Michael Baker Corporation*
Airside Business Park
100 Airside Drive
Moon Township, PA 15108
www.mbakercorp.com

AFGHAN NATIONAL ARMY
REGIONAL MILITARY TRAINING CENTER
STANDARD DESIGN

SENIOR BOQ BARRACKS

ENLARGED LATRINE SLAB PLAN

Sheet reference number:
S−402

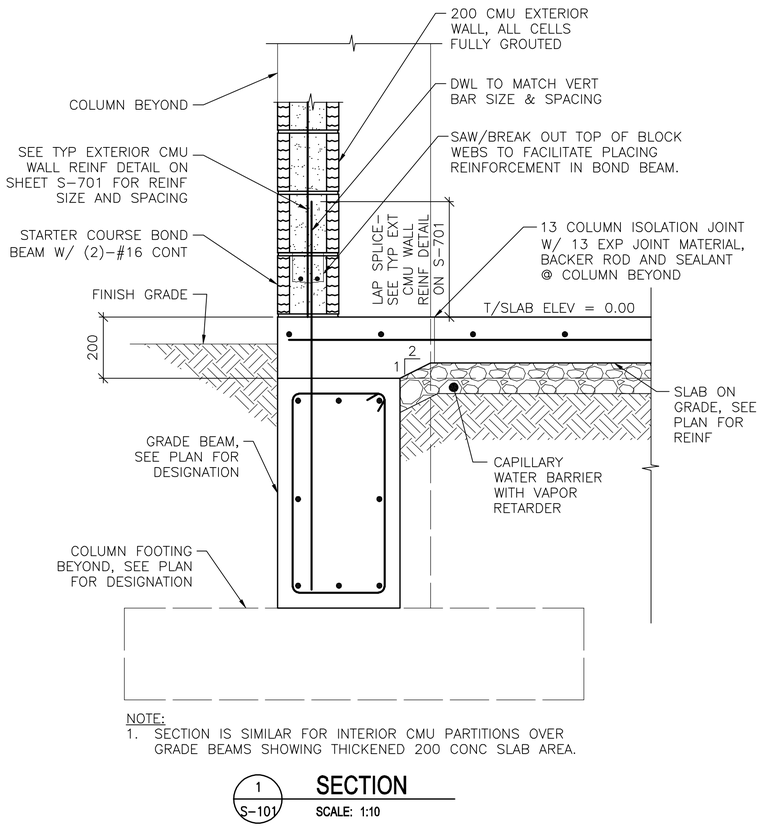


NOTE:
1. SECTION IS SIMILAR FOR INTERIOR CMU PARTITIONS OVER GRADE BEAMS SHOWING THICKENED 200 CONC SLAB AREA.

1 / S-101 **SECTION** SCALE: 1:10

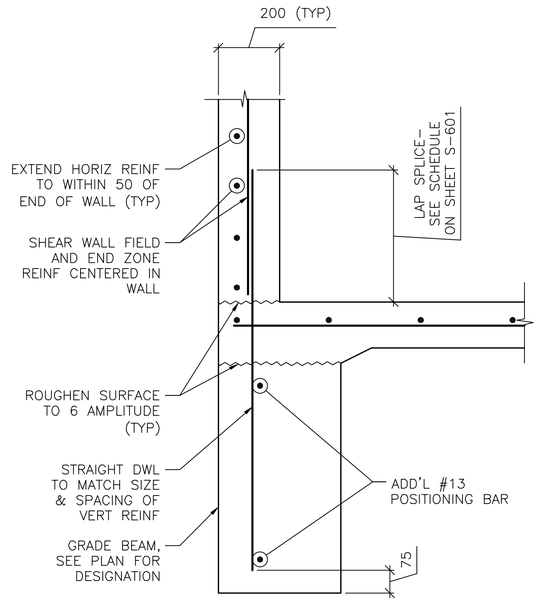


NOTE:
1. SECTION DEPICTS SHEAR WALL TERMINATION ONLY. GRADE BEAM REINFORCING NOT SHOWN FOR CLARITY.
2. SEE SHEET S-601 AND SHEET S-702 FOR SCHEDULED FIELD AND END ZONE REINF.

2 / S-101 **SECTION** SCALE: 1:10

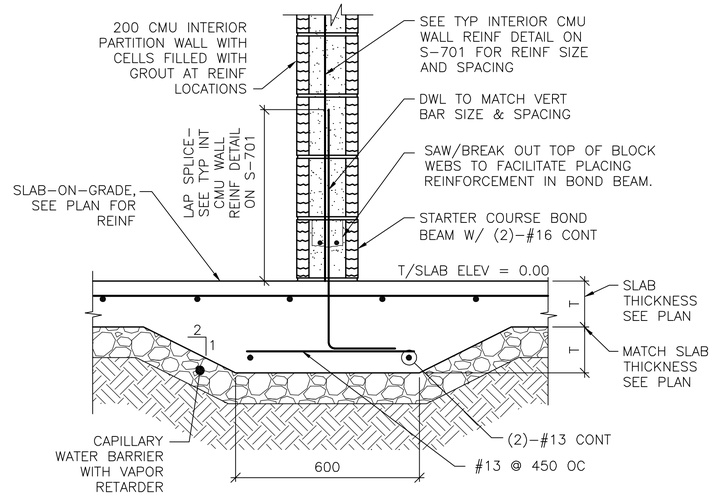


3 / S-101 **SECTION** SCALE: 1:10

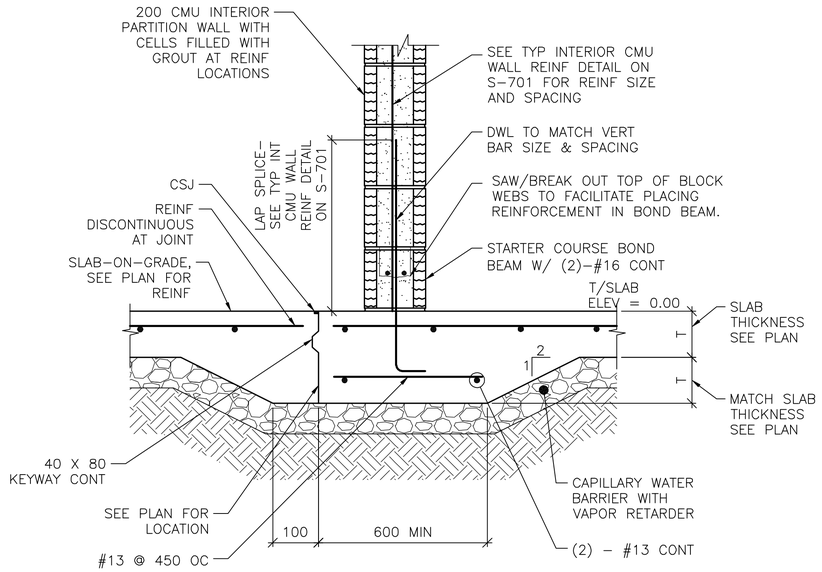


NOTE:
1. DETAIL IS APPLICABLE AT CONTROL JOINTS RUNNING PARALLEL TO CMU WALLS AND WITHIN 300 OF FACE OF WALL.

4 / S-101 **SECTION** SCALE: 1:10

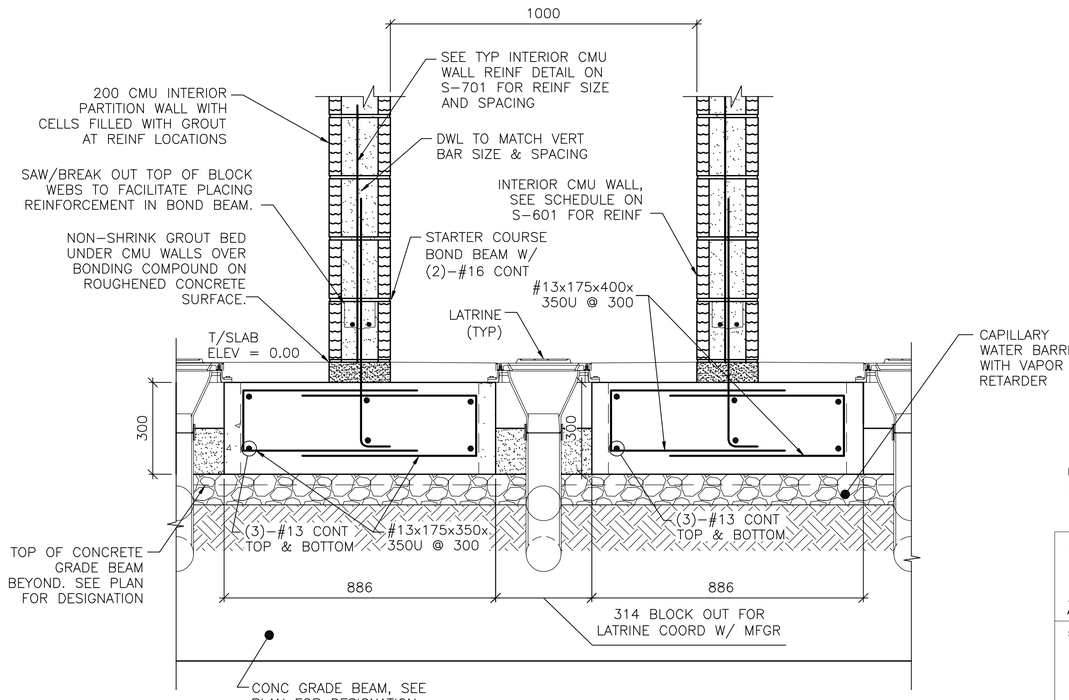


5 / S-402 **SECTION** SCALE: 1:10

0 200 400
SCALE: 1:10

UNLESS OTHERWISE NOTED, LINEAR DIMENSIONS SHOWN ON DRAWINGS ARE IN MILLIMETERS (mm)

APPROVED:

A/E DESIGNER OF RECORD

SEAL:

GEORGIA REGISTERED 3-27-12 No. 27141 PROFESSIONAL ENGINEER CHRISTOPHER W. WHITMORE

US ARMY CORPS OF ENGINEERS
AFGHANISTAN ENGINEER DISTRICT

| Mark | Description | Date | Appr. |
|---|---|---|---|
| | | | |

Rev: 0
Date: 2/23/10
Design file no.
Drawing code:
File name: ANABOQSS-5015C
Plot date: 2/23/2010
Plot scale: x:x

Designed by: KMF/MMY
Dwn by: RCG
Ckd by: CWW
Reviewed by: LHM
Submitted by: BAKER

U.S. ARMY CORPS OF ENGINEERS
AFGHANISTAN ENGINEER DISTRICT
APO AE 96338

*Michael Baker Jr., Inc.*
*A unit of Michael Baker Corporation*
Airside Business Park
100 Airside Drive
Moon Township, PA 15108
www.mbakercorp.com

AFGHAN NATIONAL ARMY
REGIONAL MILITARY TRAINING CENTER
STANDARD DESIGN

SENIOR BOQ BARRACKS

FOUNDATION SECTIONS

Sheet reference number:
S-501

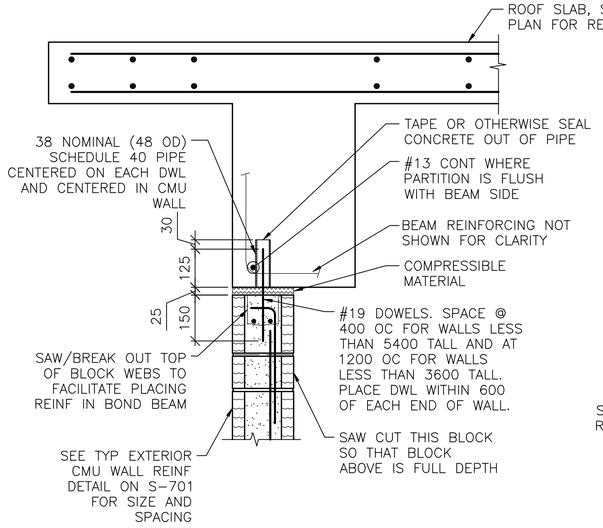


NOTES:
1. EXTEND DOWEL REINF TO 25 CLEAR FROM TOP OF CMU WALL.

1 S-102 **SECTION**
SCALE: 1:10

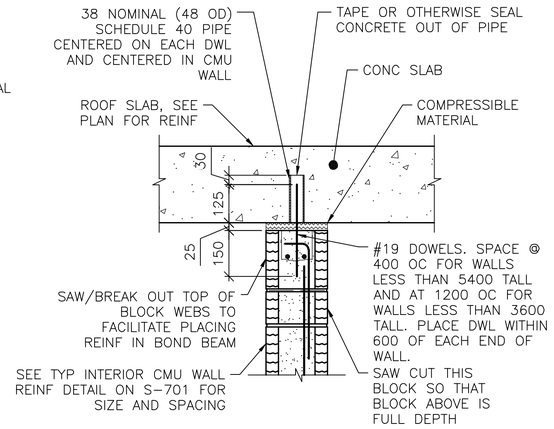


NOTES:
1. EXTEND DOWEL REINF TO 25 CLEAR FROM TOP OF CMU WALL.
2. SLAB REINF NOT SHOWN FOR CLARITY.

2 S-102 **SECTION**
SCALE: 1:10

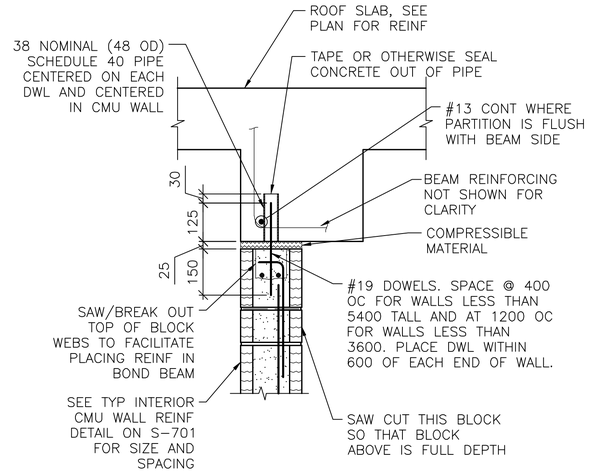


NOTES:
1. EXTEND DOWEL REINF TO 25 CLEAR FROM TOP OF CMU WALL.
2. PARTITION WALL MAY BE CENTERED UNDER THE BEAM OR FLUSH AS SHOWN. SEE PLAN FOR LOCATION.
3. SLAB REINF NOT SHOWN FOR CLARTIY.

3 S-102 **SECTION**
SCALE: 1:10

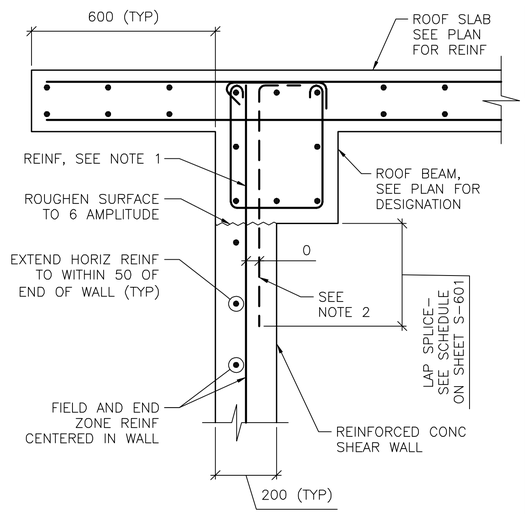


NOTES:
1. TERMINATE "FIELD" VERT REINF & END ZONE REINF @ 50 CLEAR FROM TOP OF ROOF SLAB.
2. WHERE END ZONE REINFORCING CANNOT BE DEVELOPED IN BEAM DEPTH, PROVIDE HOOKED DWLS SAME SIZE & SPACING. PROVIDE TENSION LAP BELOW ROOF BEAM.
3. SEE SHEET S-601 AND SHEET S-702 FOR SCHEDULED FIELD AND END ZONE REINF.

4 S-102 **SECTION**
SCALE: 1:10

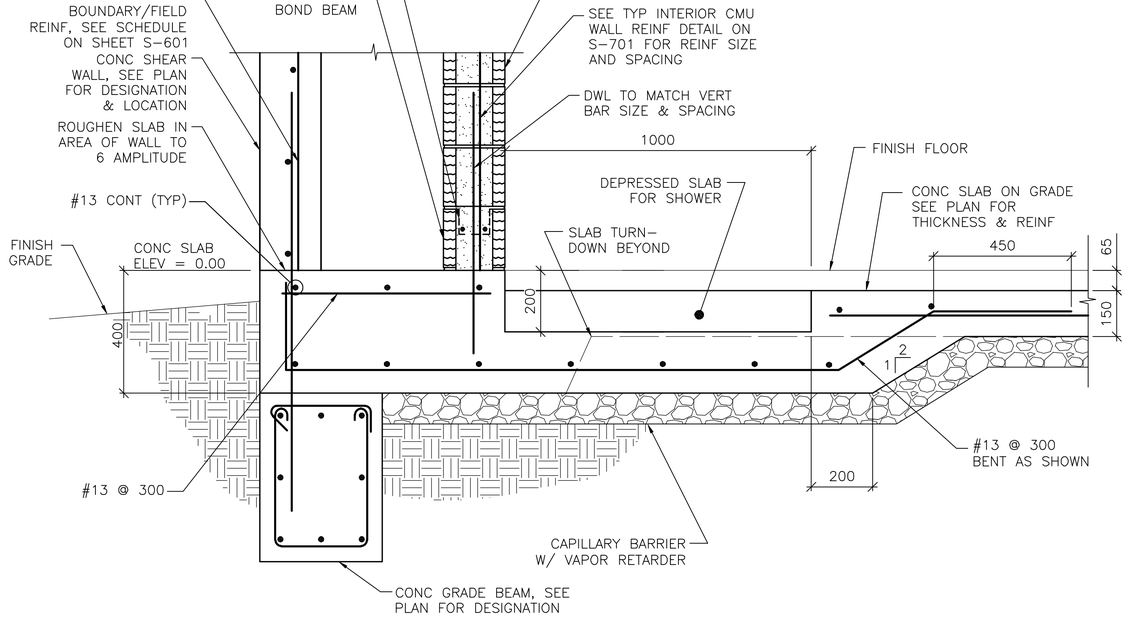


5 S-402 **SECTION**
SCALE: 1:10

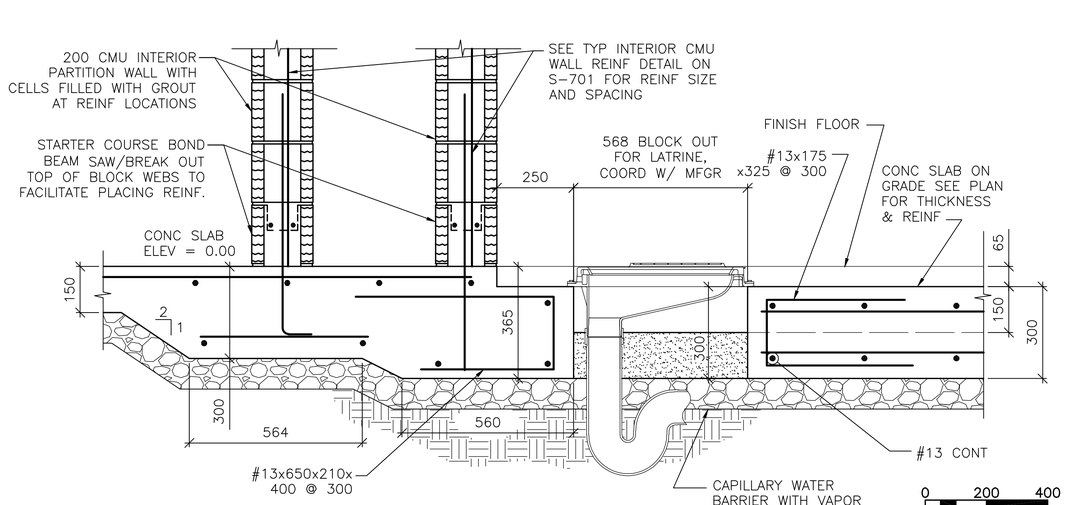


6 S-402 **SECTION**
SCALE: 1:10

UNLESS OTHERWISE NOTED, LINEAR DIMENSIONS SHOWN ON DRAWINGS ARE IN MILLIMETERS (mm)

APPROVED:

A/E DESIGNER OF RECORD

SEAL:

GEORGIA REGISTERED 1-29-10 No. 27141 PROFESSIONAL ENGINEER CHRISTOPHER W. WHITMORE

US ARMY CORPS OF ENGINEERS
AFGHANISTAN ENGINEER DISTRICT

| Mark | Description | Date | Appr. |
|---|---|---|---|
| | | | |

Rev: 0
Date: 2/23/10
Design file no.
Drawing code:
File name: ANABOQS5_S025C
Plot date: 2/23/2010
Plot scale: X:X

Designed by: KMF/MMY
Dwn by: RCG
Ckd by: CWW
Reviewed by: LHM
Submitted by: BAKER

U.S. ARMY CORPS OF ENGINEERS
AFGHANISTAN ENGINEER DISTRICT
APO AE 96338

*Michael Baker Jr., Inc.*
*A unit of Michael Baker Corporation*
Airside Business Park
100 Airside Drive
Moon Township, PA 15108
www.mbakercorp.com

AFGHAN NATIONAL ARMY
REGIONAL MILITARY TRAINING CENTER
STANDARD DESIGN

SENIOR BOQ BARRACKS

FOUNDATION & FRAMING SECTIONS

Sheet reference number:
S-502

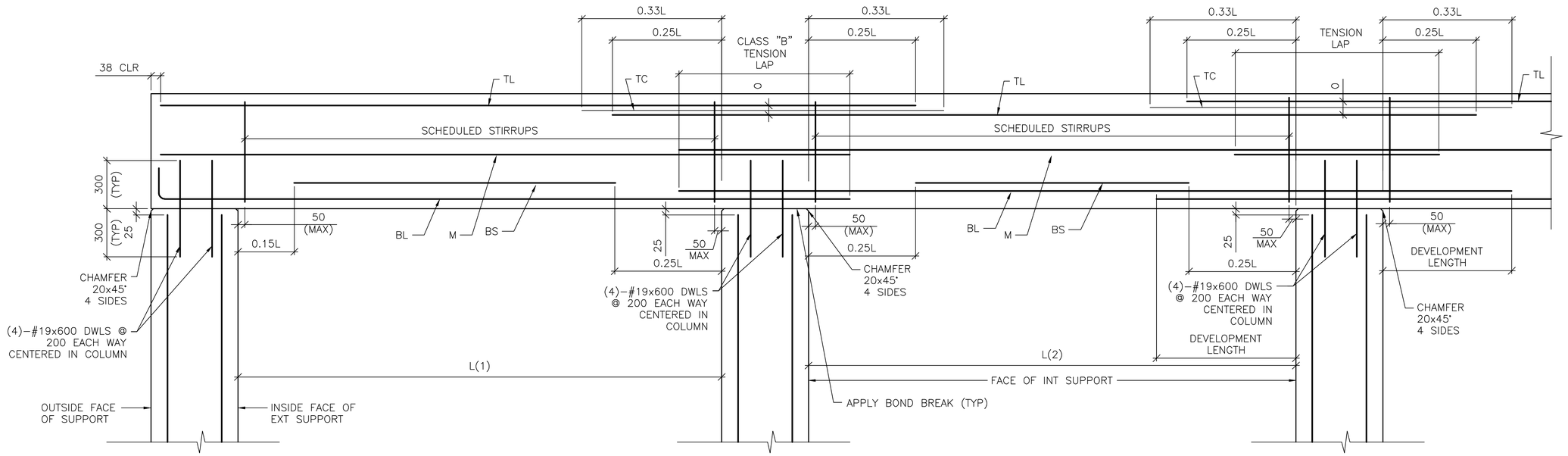


DETAIL NOTE:
1. WORK THIS DETAIL WITH BEAM SCHEDULE ON SHEET S-601.
2. L=GREATEST OF ADJACENT SPANS L(1) OR L(2)
3. ONLY COLUMN CORNER BARS ARE SHOWN

1 / S-503 **ROOF BEAM REINFORCING DETAIL**

**SCALE: NTS**

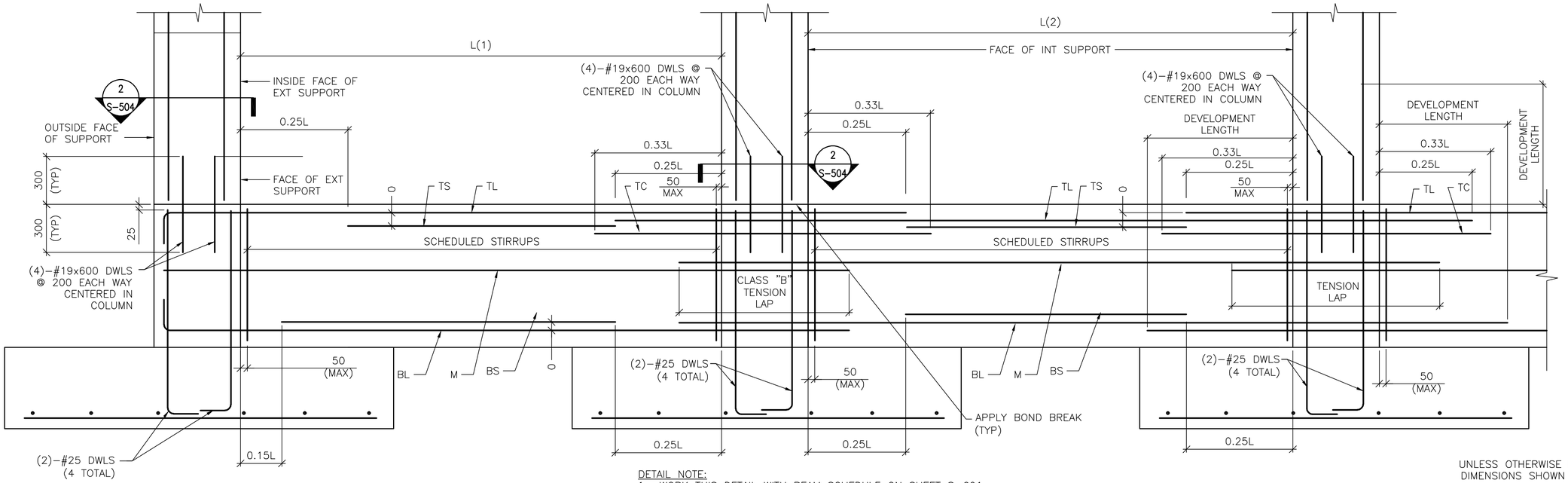


DETAIL NOTE:
1. WORK THIS DETAIL WITH BEAM SCHEDULE ON SHEET S-601.
2. L=GREATEST OF ADJACENT SPANS L(1) OR L(2)
3. ONLY COLUMN CORNER BARS ARE SHOWN.

2 / S-503 **GRADE BEAM REINFORCING DETAIL**

**SCALE: NTS**

UNLESS OTHERWISE NOTED, LINEAR DIMENSIONS SHOWN ON DRAWINGS ARE IN MILLIMETERS (mm)

APPROVED:

A/E DESIGNER OF RECORD

SEAL:

GEORGIA REGISTERED 7-A-10 No. 27141 PROFESSIONAL ENGINEER CHRISTOPHER W. WHITMORE

US ARMY CORPS OF ENGINEERS
AFGHANISTAN ENGINEER DISTRICT

| Mark | Description | Date | Appr. |
|---|---|---|---|
| | | | |

Rev: 0
Date: 2/23/10
Design file no.
Drawing code:
Designed by: KMP/MMY
Dwn by: RCG
Ckd by: CWW
Reviewed by: LHM
Submitted by: BAKER
File name: ANABOQSS_S503T
Plot date: 2/23/2010
Plot scale: XX

U.S. ARMY CORPS OF ENGINEERS
AFGHANISTAN ENGINEER DISTRICT
APO AE 96338

*Michael Baker Jr., Inc*
*A unit of Michael Baker Corporation*
Airside Business Park
100 Airside Drive
Moon Township, PA 15108
www.mbakercorp.com

AFGHAN NATIONAL ARMY
REGIONAL MILITARY TRAINING CENTER
STANDARD DESIGN

SENIOR BOQ BARRACKS

BEAM & COLUMN DETAILS

Sheet reference number:
S-503

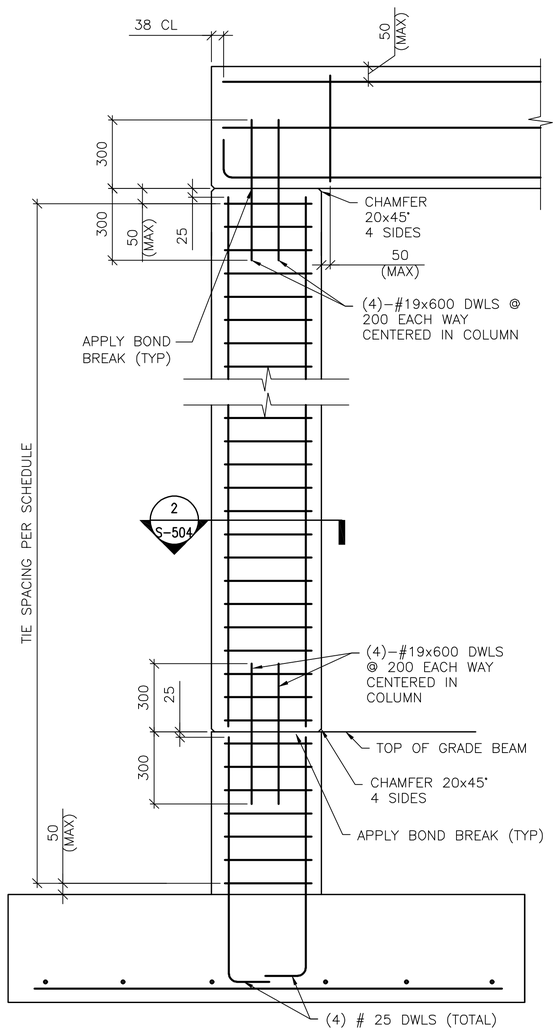


DETAIL NOTE:
1. ONLY COLUMN CORNER BARS ARE SHOWN

## 1-STORY COLUMN REINF DETAILS
1 / S–504
SCALE: NTS
(WITH GRADE BEAM)

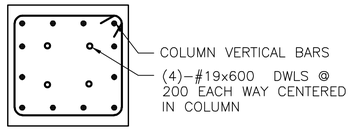


DETAIL NOTE:
1. INTERIOR TIES NOT SHOWN FOR CLARITY. REFER TO DETAIL A THIS SHEET FOR INTERIOR TIE CONFIGURATION.

## SECTION
2 / S–503 — 2 / S–504
SCALE: NTS

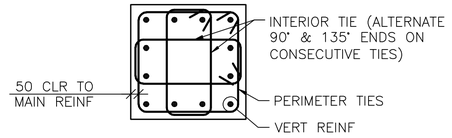


## 12 BAR COLUMN
A / S–504
SCALE: NTS

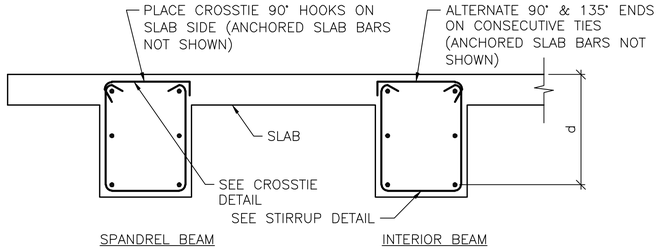


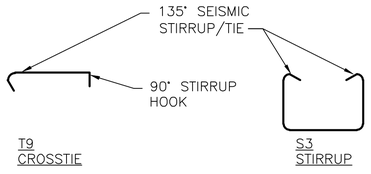


## BEAM REINFORCEMENT DETAILS
B / S–504
SCALE: NTS

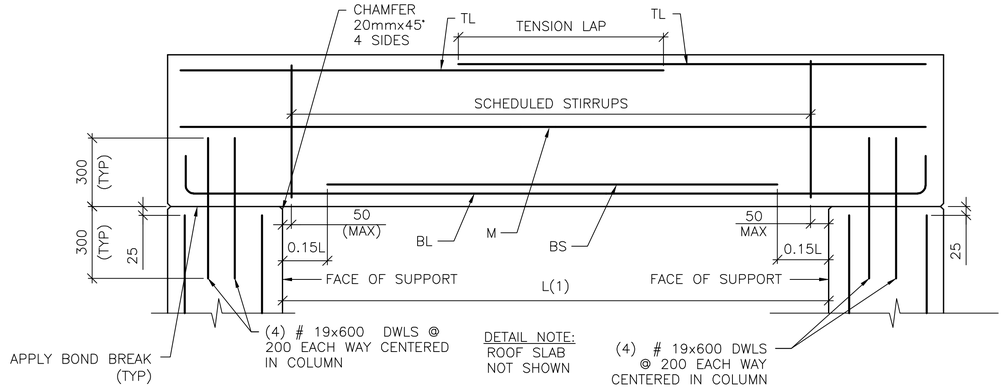


## SINGLE SPAN ROOF BEAM REINFORCING DETAIL
3 / S–504
SCALE: NTS

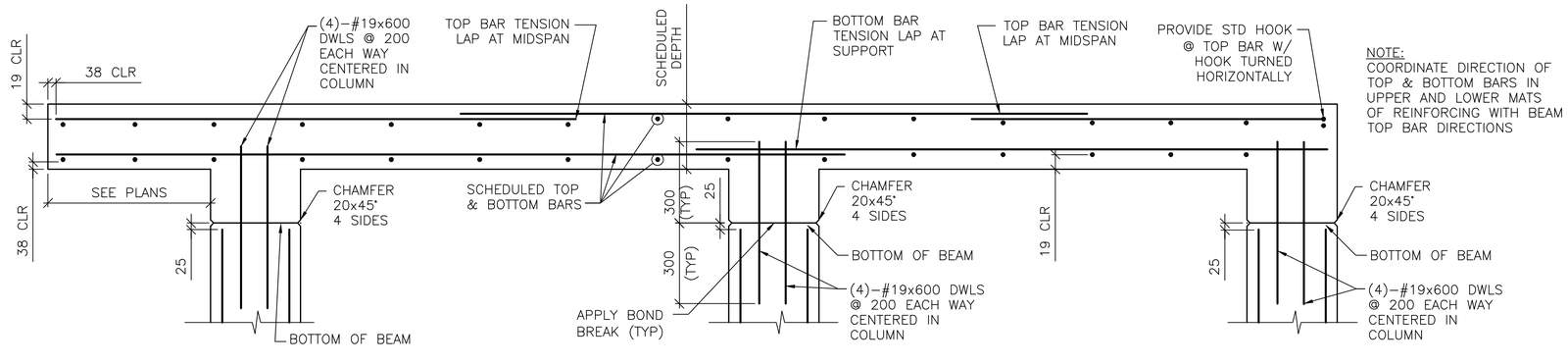


## FRAMED SLAB REINFORCING DETAIL
4 / S–504
SCALE: NTS

UNLESS OTHERWISE NOTED, LINEAR DIMENSIONS SHOWN ON DRAWINGS ARE IN MILLIMETERS (mm)

APPROVED:

A/E DESIGNER OF RECORD

SEAL:

GEORGIA REGISTERED 25-10 No. 27141 PROFESSIONAL ENGINEER CHRISTOPHER W. WHITMORE

US ARMY CORPS OF ENGINEERS
AFGHANISTAN ENGINEER DISTRICT

| Mark | Description | Date | Appr. |
|---|---|---|---|
| | | | |

Date: 2/23/10 | Rev: 0
Design file no.
Drawing code:
Designed by: KMP/MMY
Dwn by: RCG | Ckd by: CWW
Reviewed by: LHM
Submitted by:
File name: ANABOQSS_504DT
Plot date: 2/23/2010
Plot scale: x:x

U.S. ARMY CORPS OF ENGINEERS
AFGHANISTAN ENGINEER DISTRICT
APO AE 96338

Michael Baker Jr., Inc.
A unit of Michael Baker Corporation
Airside Business Park
100 Airside Drive
Moon Township, PA 15108
www.mbakercorp.com

BAKER

AFGHAN NATIONAL ARMY
REGIONAL MILITARY TRAINING CENTER
STANDARD DESIGN

SENIOR BOQ BARRACKS

BEAM & COLUMN DETAILS

Sheet reference number:
S–504

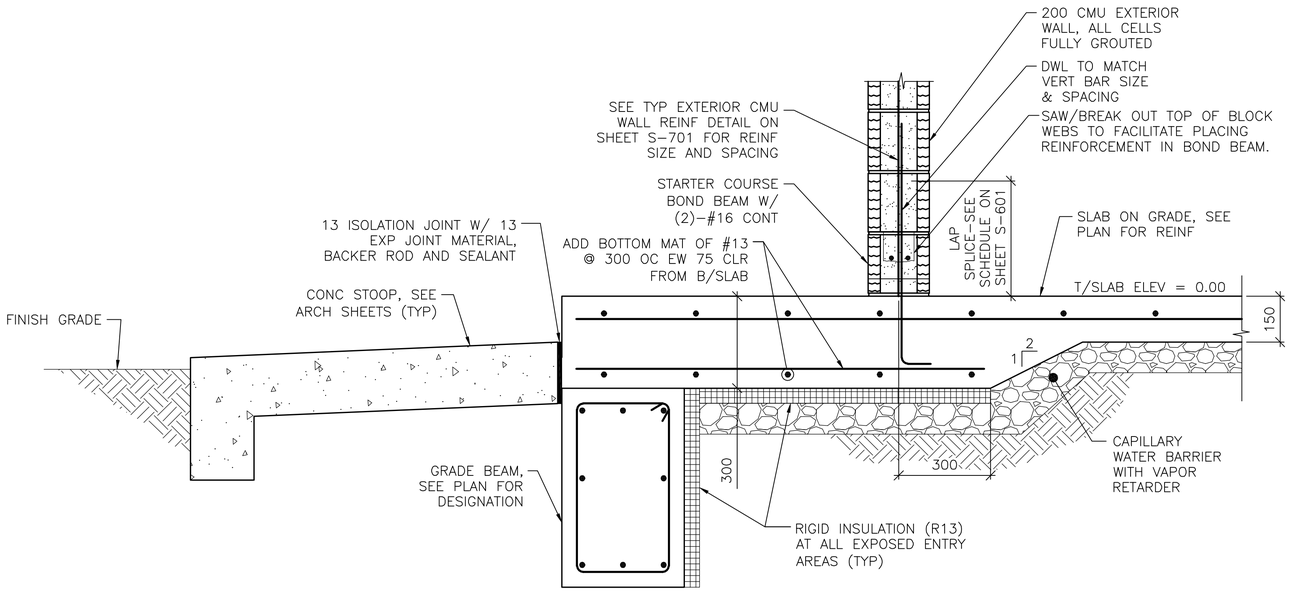


1 S-101 **SECTION**
SCALE: 1:10

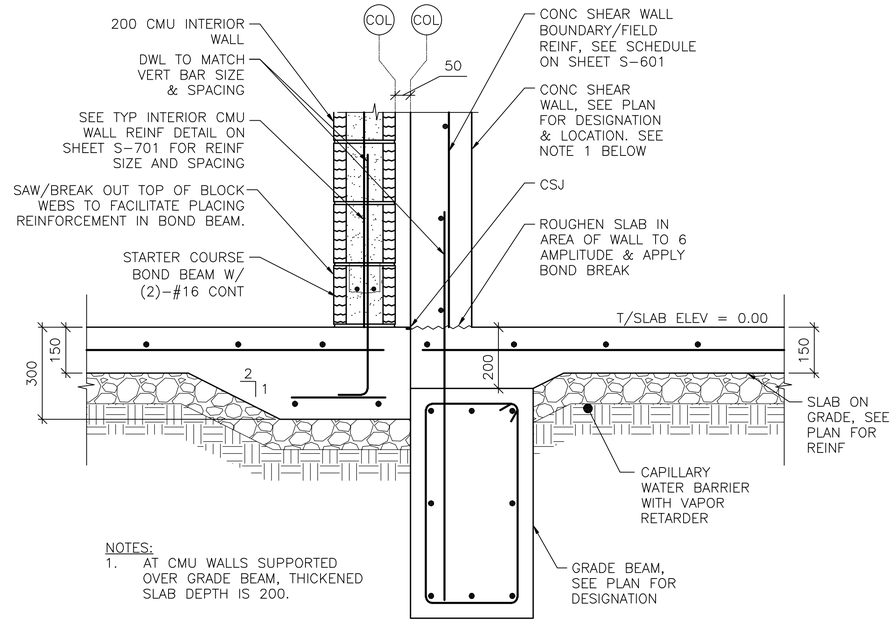


NOTES:
1. AT CMU WALLS SUPPORTED OVER GRADE BEAM, THICKENED SLAB DEPTH IS 200.

2 S-101 **SECTION**
SCALE: 1:10

0 200 400
SCALE: 1:10

UNLESS OTHERWISE NOTED, LINEAR DIMENSIONS SHOWN ON DRAWINGS ARE IN MILLIMETERS (mm)

APPROVED:

A/E DESIGNER OF RECORD

SEAL:

GEORGIA REGISTERED 1-29-10 No. 27141 PROFESSIONAL ENGINEER CHRISTOPHER W. WHITMORE

US ARMY CORPS OF ENGINEERS
AFGHANISTAN ENGINEER DISTRICT

| Mark | Description | Date | Appr. | Mark | Description | Date | Appr. |
|---|---|---|---|---|---|---|---|

U.S. ARMY CORPS OF ENGINEERS
AFGHANISTAN ENGINEER DISTRICT
APO AE 96338

*Michael Baker Jr., Inc*
*A unit of Michael Baker Corporation*
Airside Business Park
100 Airside Drive
Moon Township PA 15108
www.mbakercorp.com

Designed by: KMP/MMY
Dwn by: RCG
Ckd by: CWW
Reviewed by: LHM
Submitted by: BAKER
Date: 2/23/10
Rev: 0
Design file no.
Drawing code:
File name: ANABOQSS-505SC
Plot date: 2/23/2010
Plot scale: X:X

AFGHAN NATIONAL ARMY
REGIONAL MILITARY TRAINING CENTER
STANDARD DESIGN

SENIOR BOQ BARRACKS

MISCELLANEOUS SECTIONS

Sheet reference number:
S-505

# CONCRETE REINFORCEMENT TENSION DEVELOPMENT/LAP SPLICE SCHEDULE

| f'c = 28 MPa | LAP CLASS | UNCOATED BARS | | | |
|---|---|---|---|---|---|
| | | TOP BARS | | OTHER BARS | |
| BAR SIZES | | CASE 1 | CASE 2 | CASE 1 | CASE 2 |
| #10 TO #19 | A | 50 BAR DIA | 74 BAR DIA | 38 BAR DIA | 57 BAR DIA |
| | B | 64 BAR DIA | 96 BAR DIA | 50 BAR DIA | 74 BAR DIA |
| #22 TO #57 | A | 62 BAR DIA | 93 BAR DIA | 48 BAR DIA | 71 BAR DIA |
| | B | 80 BAR DIA | 121 BAR DIA | 62 BAR DIA | 93 BAR DIA |

NOTES:
1. TABULATED TENSION DEVELOPMENT LENGTH VALUES ARE TAKEN FROM CRSI DESIGN HANDBOOK 2008 10TH ED.
2. TENSION DEVELOPMENT & TENSION LAP SPLICE LENGTHS ARE EXPRESSED AS MULTIPLES OF BAR DIAMETERS.
3. TABULATED VALUES ARE BASED ON MINIMUM YIELD STRENGTH OF REINFORCEMENT, fy, OF 420MPa.
4. CONCRETE IS NORMAL WEIGHT (2400Kg/m³) AND 28 DAY COMPRESSIVE STRENGTH = 28MPa.
5. TABULATED VALUES FOR BEAMS & COLUMNS ARE BASED ON TRANSVERSE REINFORCEMENT AND CONCRETE COVER MEETING MINIMUM CODE REQUIREMENTS.
6. CASES 1 & 2, WHICH DEPEND ON THE TYPE OF STRUCTURAL MEMBER, CONCRETE COVER, AND CENTER-TO-CENTER SPACING OF THE BARS ARE DEFINED IN THE TABLE BELOW.
7. LAP SPLICE LENGTHS (MINIMUM 300mm) ARE MULTIPLES OF TENSION DEVELOPMENT LENGTHS: CLASS A = 1.0(TENSION DEVELOPMENT LENGTH) & CLASS B = 1.3(TENSION DEVELOPMENT LENGTH)
8. TOP BARS ARE HORIZONTAL REINFORCEMENT WITH MORE THAN 300mm OF CONCRETE CAST BELOW THE BARS.
9. IT SHALL BE PERMISSIBLE TO CALCULATE WALL AND SLAB REINFORCEMENT TENSION DEVELOPMENT/SPLICE LENGTHS IN ACCORDANCE WITH ACI 12.2.3 OR TABLE 5.3(b) OF CRSI 2008 IN LIEU OF VALUES TABULATED ABOVE.

| | | |
|---|---|---|
| BEAMS, COLUMNS | CASE 1 | CONCRETE COVER AT LEAST 1 BAR DIA AND CENTER-TO-CENTER SPACING AT LEAST 2 BAR DIA |
| | CASE 2 | CONCRETE COVER LESS THAN 1 BAR DIA OR CENTER-TO-CENTER SPACING LESS THAN 2 BAR DIA |
| ALL OTHERS | CASE 1 | CONCRETE COVER AT LEAST 1 BAR DIA AND CENTER-TO-CENTER SPACING AT LEAST 3 BAR DIA |
| | CASE 2 | CONCRETE COVER LESS THAN 1 BAR DIA OR CENTER-TO-CENTER SPACING LESS THAN 3 BAR DIA |

# CONCRETE COVER SCHEDULE

MINIMUM CONCRETE COVER PROTECTION FOR REINFORCEMENT BARS SHALL BE AS LISTED BELOW: (SEE ACI 318M-05, SECTION 7.7 FOR CONDITIONS NOT NOTED). DIMENSIONS FOR BAR PLACEMENT GIVEN IN SECTIONS AND DETAILS SHALL SUPERSEDE MINIMUM COVER REQUIREMENTS GIVEN HERE. DIMENSIONS ARE IN mm. PROVIDE STANDARD BAR CHAIRS AND SUPPORT BARS @1200mm MAXIMUM AS REQUIRED TO MAINTAIN CONCRETE PROTECTION SPECIFIED.

| | | |
|---|---|---|
| FOOTINGS (EARTH FORMED): | | 70 |
| COLUMNS / PIERS (TO TIES) | | 40 |
| GRADE BEAMS OR SLAB TURNED DOWN EDGES: | | |
| TOP | | 40 |
| BOTTOM (EARTH FORMED) | | 70 |
| SIDES (EARTH FORMED) | | 70 |
| SIDES (BOARD FORMED) | #16 BAR & SMALLER | 40 |
| | #19 THRU #36 BAR | 50 |
| ELEVATED BEAMS & SLABS: | | |
| BEAM TIES & STIRRUPS (NOT EXPOSED TO WEATHER) | | 40 |
| BEAM TIES & STIRRUPS (EXPOSED TO WEATHER) | | 50 |
| FLOOR SLABS (NOT EXPOSED TO WEATHER) | | 20 |
| FLOOR SLABS (EXPOSED TO WEATHER) | | |
| #19 & LARGER | | 50 |
| #13 & SMALLER | | 40 |
| ROOF SLAB BARS | | 25 |
| SLABS ON GRADE | | |
| NOT EXPOSED TO WEATHER (FROM TOP) | | 20 |
| EXPOSED TO WEATHER (FROM TOP) | | 40 |
| UTILITY TUNNEL WALLS, RETAINING WALLS AND SHEAR WALLS. (NO SURFACES SHALL BE EARTH FORMED) | | |
| EARTH SIDE AND FRONT SIDE (EXPOSED TO WEATHER) | | |
| #16 BAR AND SMALLER | | 40 |
| #19 THRU #36 BAR | | 50 |

# COLUMN FOOTING SCHEDULE

| MARK | FOOTING SIZE (mm) | | | FOOTING REINFORCING | REMARKS |
|---|---|---|---|---|---|
| | LENGTH | WIDTH | THICKNESS | | |
| F1 | 2900 | 2900 | 300 | (9)-#19 EW BOTT | ----- |
| F2 | 3300 | 3300 | 300 | (11)-#22 EW BOTT | ----- |
| F3 | 3600 | 3600 | 300 | (12)-#22 EW BOTT | ----- |
| F4 | 4200 | 4200 | 350 | (14)-#25 EW BOTT | ----- |
| F5 | 4900 | 4900 | 450 | (17)-#25 EW BOTT | ----- |
| F6 | 6800 | 3200 | 300 | (23)-#22 SHORT BOTT<br>(11)-#19 LONG BOTT | ----- |

# CONCRETE SHEAR WALL SCHEDULE

| MARK | TYPE | WALL LENGTH (L) (mm) | WALL REINFORCEMENT | | REMARKS |
|---|---|---|---|---|---|
| | | | END ZONE | FIELD | |
| SW1 | B | 3600 | (8)-#16 @ 150mm OC | #13 @ 300mm OC | ----- |
| SW2 | D | 5000 | (4)-#16 @ 150mm OC | #13 @ 300mm OC | ----- |
| SW3 | D | 5000 | (12)-#16 @ 150mm OC | #13 @ 300mm OC | ----- |
| SW4 | C | 5700 | (13)-#16 @ 150mm OC | #13 @ 300mm OC | ----- |

NOTES:
1. WORK THIS SCHEDULE WITH SHEAR WALL DETAILS ON SHEETS S-702
2. SEE PLAN FOR LOCATION OF SHEAR WALL(S).
3. VERTICAL "FIELD" BARS MAY BE OMITTED IN LOCATION OF "END ZONE" REINFORCEMENT.
4. WALL FIELD REINF LISTED APPLIES TO VERT & HORIZ BARS.
5. WALL FIELD REINFORCEMENT CENTERED IN WALL.

# STANDARD HOOKS IN TENSION PER (ACI 318M-05)

| HOOK DEVELOPMENT LENGTH (mm) | |
|---|---|
| BAR SIZE | f'c 28 MPa |
| #10 | 180 |
| #13 | 250 |
| #16 | 300 |
| #19 | 380 |
| #22 | 430 |
| #25 | 480 |
| #29 | 560 |
| #32 | 610 |
| #36 | 690 |

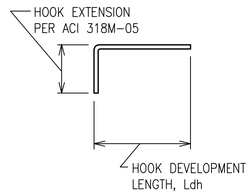


NOTES:
1. CONCRETE IS NORMAL WEIGHT CONCRETE.
2. BAR YIELD STRENGTH, fy = 420 MPa
3. SIDE COVER REQUIREMENTS OF ACI SECT. 12.5.3 ARE ASSUMED TO NOT BE MET.
4. TIE OR STIRRUP REQUIREMENTS OF ACI SECT. 12.5.3 ARE ASSUMED TO NOT BE MET.
5. REDUCTION FOR EXCESS REINFORCEMENT IS NOT TAKEN.
6. HOOK DEVELOPMENT LENGTH IS VALID FOR 180° HOOKS ALSO.

# CMU OR CAST IN PLACE CONC LINTEL SCHEDULE (TYP)

| OPENING TYPE OR SIZE, BEAM LOCATION OR TYPE | MAX SPAN (mm) | LINTEL DEPTH (mm) | REINFORCING BOTTOM |
|---|---|---|---|
| WALL OPENING | 4000 | 600 | (2)-#16 T&B |
| WALL OPENING | 1900 | 400 | (2)-#16 T&B |
| WALL OPENING | 1000 | 400 | (2)-#13 B |
| | | | |
| | | | |
| | | | |
| | | | |
| | | | |
| | | | |
| | | | |

1. STRUCTURAL SHEETS DO NOT INDICATE ALL OPENINGS IN MASONRY WALLS. VERIFY NUMBER, SIZE AND LOCATION OF ALL OPENINGS IN MASONRY WALLS FROM ARCHITECTURAL SHEETS AND APPROVED PLUMBING, MECHANICAL, AND ELECTRICAL SHOP DRAWINGS.
2. PROVIDE 200mm BEARING EA END.
3. FOR HEAD DETAILS REFER TO ARCHITECTURAL SHEETS.
4. REINFORCING SHALL BE ASTM A615M, GRADE 420. GROUT FOR CMU LINTELS SHALL HAVE A MINIMUM COMPRESSIVE STRENGTH OF 14MPa AT 28 DAYS.
5. CONTRACTOR SHALL SUBMIT FOR APPROVAL SHOP DRAWINGS AND SCHEDULES SHOWING SIZE, SPAN, REINFORCEMENT, DETAILS, LOCATIONS, ETC.

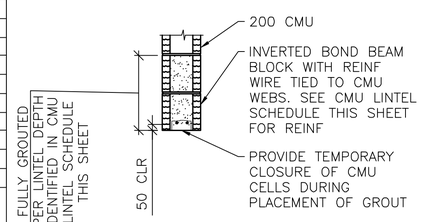


A S-601 **LINTEL DETAIL**
SCALE: NTS

# BEAM SCHEDULE

| MARK | BEAM SIZE (mm) | | BEAM REINFORCING | | | | | | STIRRUPS | | | REMARKS |
|---|---|---|---|---|---|---|---|---|---|---|---|---|
| | DEPTH | WIDTH | BL | BS | T | TS | TC | M | SIZE | TYPE | SPACING | |
| GRADE BEAMS | | | | | | | | | | | | |
| GB1 | 750/550/735 | 400 | (2)-#16 | --- | (2)-#16 | --- | --- | --- | #13 | S3 + T9 | d/2 | LOWER TOP TO 735 BETWEEN A4-B4; TO 550 BETWEEN A3-A4 & A3-B3 |
| GB2 | 750 | 400 | (2)-#25 | (1)-#25 | (2)-#25 | (1)-#25 | --- | --- | #13 | S3 + T9 | d/2 | ----- |
| ROOF BEAMS | | | | | | | | | | | | |
| RB1 | 800 | 400 | (2)-#22 | (1)-#22 | (2)-#19 | --- | --- | --- | #13 | S3 + T9 | d/2 | ----- |
| RB2 | 800 | 400 | (2)-#25 | (1)-#25 | (2)-#22 | --- | --- | --- | #13 | S3 + T9 | d/2 | |
| RB3 | 800 | 400 | (3)-#29 | (2)-#29 | (2)-#25 | --- | --- | --- | #13 | S3 + T9 | d/2 | |

NOTES:
1. WORK THIS SCHEDULE WITH BEAM REINFORCING DETAILS ON SHEETS S-503 AND S-504.
2. HOOKS SHOWN ON SECTIONS AND DETAILS SHALL BE 90° STD UON.
3. USE ONLY (1) TS AT BEAM COLUMN INTERSECTION WHERE REQ'D.

# COLUMN SCHEDULE

| DESCRIPTION \ COLUMN MARK | TYP UON | --- | --- | --- |
|---|---|---|---|---|
| TYPE | 12-BAR | --- | --- | --- |
| DIMENSION | 800mm SQ. | --- | --- | --- |
| VERTICAL REINFORCEMENT | (12)-#29 | --- | --- | --- |
| TIES | #13 @ d/2 | --- | --- | --- |
| TOP OF ROOF ELEVATION | 3800mm | --- | --- | --- |
| TOP OF GRADE BEAM ELEVATION | -200mm | --- | --- | --- |
| TOP OF FOOTING ELEVATION | -950mm | --- | --- | --- |

NOTES:
1. WORK THIS SCHEDULE WITH COLUMN DETAILS ON SHEET S-504.
2. SEE FOOTING SCHEDULE ON THIS SHEET FOR FOOTING INFORMATION.
3. COLUMN TIES: INTERIOR TIES TO MATCH SIZE & SPACING OF PERIMETER TIES.
4. HOOKS SHOWN ON SECTIONS & DETAILS SHALL BE 90° STD UON.

UNLESS OTHERWISE NOTED, LINEAR DIMENSIONS SHOWN ARE IN MILLIMETERS (mm)

APPROVED:

A/E DESIGNER OF RECORD

SEAL:

GEORGIA REGISTERED 1-29-10 No. 27141 PROFESSIONAL ENGINEER CHRISTOPHER W. WHITMORE

US ARMY CORPS OF ENGINEERS
AFGHANISTAN ENGINEER DISTRICT

| Mark | Date | Description |
|---|---|---|
| | | |

Rev. 0
Date: 2/23/10
Design file no.
Drawing code:
Designed by: KMP/MMY
Dwn by: RCG
Ckd by: CWW
Reviewed by: LHM
Submitted by: BAKER
File name: ANABOQSS1SCH
Plot date: 2/23/2010
Plot scale: XX

U.S. ARMY CORPS OF ENGINEERS
AFGHANISTAN ENGINEER DISTRICT
APO AE 96338

Michael Baker Jr., Inc
A unit of Michael Baker Corporation
Airside Business Park
100 Airside Drive
Moon Township, PA 15108
www.mbakercorp.com

AFGHAN NATIONAL ARMY
REGIONAL MILITARY TRAINING CENTER
STANDARD DESIGN

SENIOR BOQ BARRACKS

SCHEDULES

Sheet reference number:
S-601

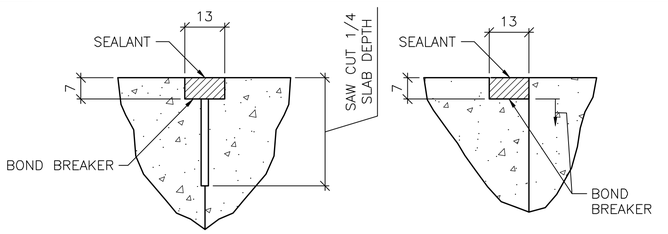


CONTROL JOINT DETAIL

CONSTRUCTION JOINT DETAIL

## 1 S-701 TYPICAL CONCRETE SLAB JOINT FINISH DETAILS

SCALE: NTS

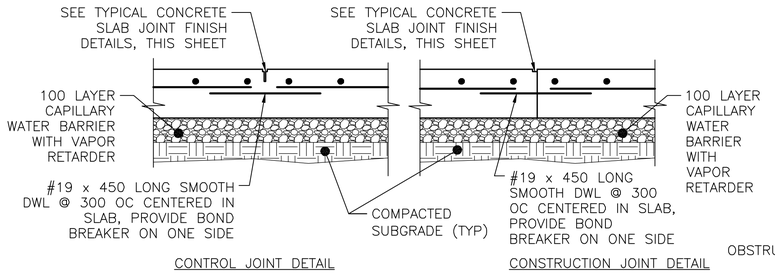


CONTROL JOINT DETAIL

CONSTRUCTION JOINT DETAIL

## 2 S-701 TYPICAL SLAB ON GRADE JOINT DETAIL

SCALE: NTS




## 3 S-701 INTERIOR EQUIPMENT PAD DETAIL

SCALE: NTS

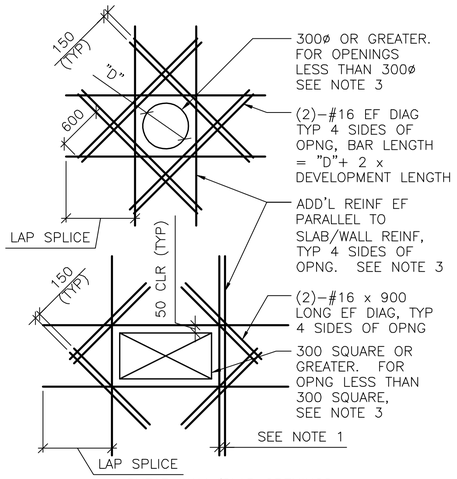


SHEAR WALL/SLAB OPENINGS

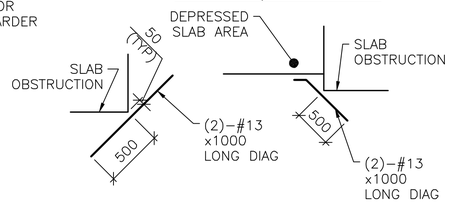


RE-ENTRANT CORNERS

DETAIL NOTES:

1. WHERE MORE THAN ONE ADDITIONAL BAR IS REQUIRED PARALLEL TO THE EXISTING SLAB/WALL REINFORCING THE ADDITIONAL REINFORCING BARS SHALL BE SPACED AT 100 ON CENTER.
2. ADDITIONAL REINFORCING PARALLEL TO THE SLAB/WALL REINFORCING SHALL BE #16 BARS THAT PROVIDE A STEEL AREA ON EACH SIDE OF THE OPENING EQUAL TO 1/2 THE AREA OF THE REINFORCING CUT BY THE OPENING.
3. FOR OPENINGS WITH SIDES OR DIAMETERS LESS THAN 300 SPREAD THE SLAB/WALL REINFORCING TO CLEAR THE OPENING.

## 4 S-701 ADD'L CONCRETE REINFORCEMENT DETAILS

SCALE: NTS

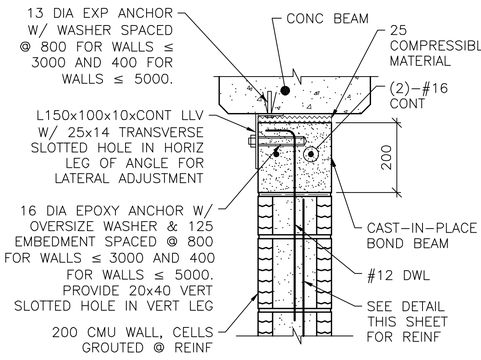


NOTE:

1. AT ANCHOR BOLTS, ADD AN ADDITIONAL 25 COMPRESSIBLE MATERIAL BELOW EXP ANCHOR HEAD.

INTERIOR BEAM

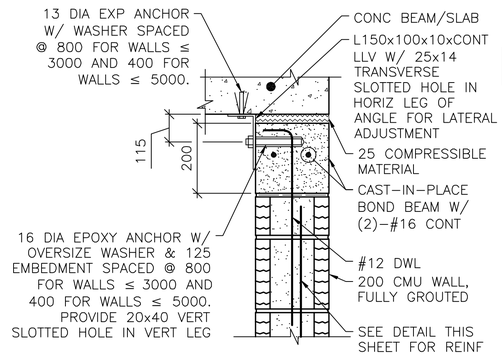


EXTERIOR WALL OR SLAB

NOTES:

1. THIS DETAIL IS AN ALTERNATE TOP OF WALL ANCHORAGE DETAIL TO BE USED AT THE CONTRACTOR'S OPTION IN LIEU OF DETAILS SHOWN ON S-400 & S-500 DRAWINGS.
2. CAST-IN-PLACE BOND BEAM SHOWN AT TOP OF WALL IS ALSO APPLICABLE FOR INTERMEDIATE AND STARTER COURSE BOND BEAMS WITHIN WALL.

## 5 S-701 ALTERNATE TOP OF CMU WALL BRACING DETAILS

SCALE: NTS

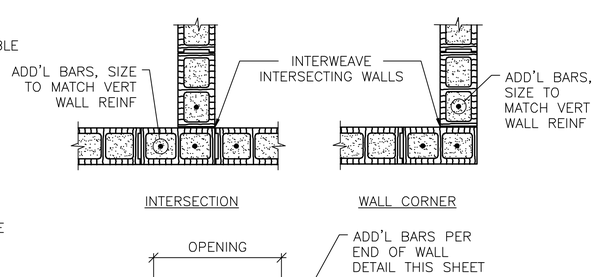


INTERSECTION

WALL CORNER

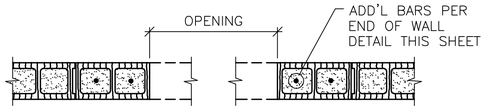


MASONRY OPENING W/ LINTEL

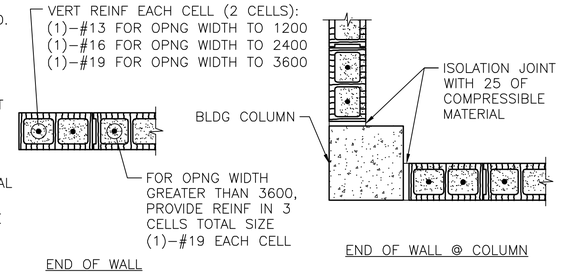


END OF WALL

END OF WALL @ COLUMN

NOTES:

1. OPENING WIDTH SHALL NOT EXCEED 3600 FOR THIS TYPE OF JAMB.
2. ALL CELLS FULLY GROUTED AT EXTERIOR WALLS. AT INTERIOR WALLS, ONLY GROUT CELLS CONTAINING REINF.

## 6 S-701 TYP CMU DETAILS

SCALE: NTS

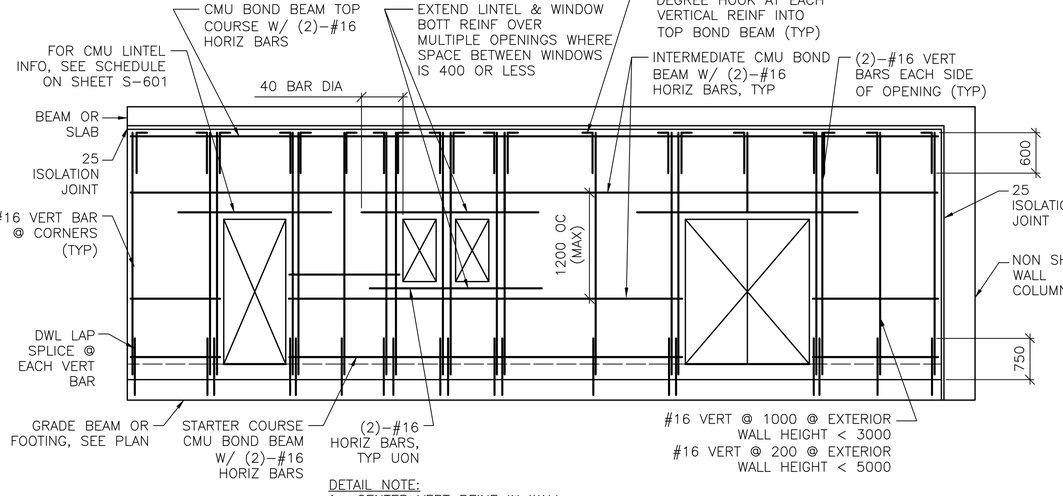


DETAIL NOTE:

1. CENTER VERT REINF IN WALL.
2. GROUT ALL CMU CELLS.
3. REFERENCE ARCH DWGS FOR JOINT INFORMATION
4. DOWELS BETWEEN TOP BOND BEAM AND BEAM/SLAB ABOVE (INCLUDING EMBEDDED PIPE SLEEVE) NOT SHOWN FOR CLARITY. SEE SPECIFIC S-500 SERIES DWGS FOR INFO.
5. FOR INFORMATION ON ALTERNATE CAST-IN-PLACE WALL BOND BEAMS, REFERENCE ALTERNATE TOP OF CMU WALL BRACING DETAILS THIS SHEET.

## 7 S-701 TYP EXTERIOR CMU WALL REINF DETAIL

SCALE: NTS

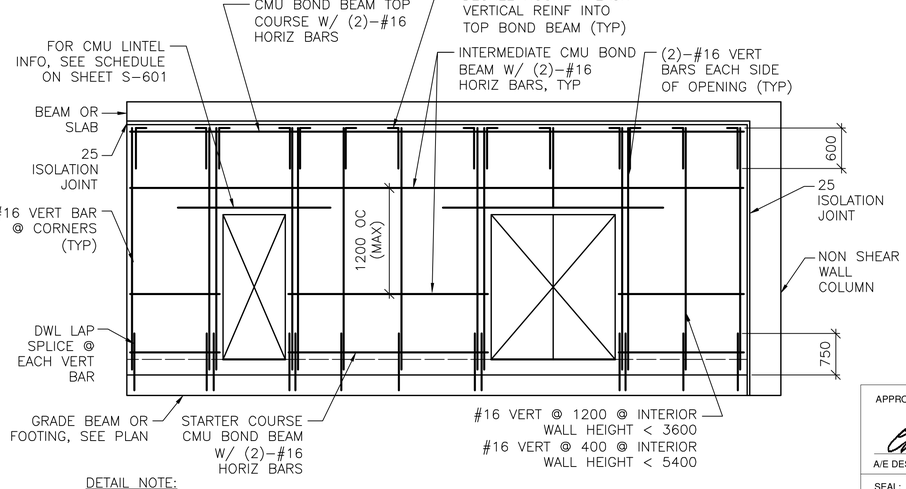


DETAIL NOTE:

1. CENTER VERT REINF IN WALL.
2. GROUT ALL CMU CELLS.
3. REFERENCE ARCH DWGS FOR JOINT INFORMATION
4. DOWELS BETWEEN TOP BOND BEAM AND BEAM/SLAB ABOVE (INCLUDING EMBEDDED PIPE SLEEVE) NOT SHOWN FOR CLARITY. SEE SPECIFIC S-500 SERIES DWGS FOR INFO.
5. FOR INFORMATION ON ALTERNATE CAST-IN-PLACE WALL BOND BEAMS, REFERENCE ALTERNATE TOP OF CMU WALL BRACING DETAILS THIS SHEET.

## 8 S-701 TYP INTERIOR CMU WALL REINF DETAIL

SCALE: NTS

UNLESS OTHERWISE NOTED, LINEAR DIMENSIONS SHOWN ARE IN MILLIMETERS (mm)

APPROVED:

A/E DESIGNER OF RECORD

SEAL:

GEORGIA REGISTERED 1-27-10 No. 27141 PROFESSIONAL ENGINEER CHRISTOPHER W. WHITMORE

US ARMY CORPS OF ENGINEERS
AFGHANISTAN ENGINEER DISTRICT

| Mark | Description | Date | Appr. |
|---|---|---|---|

Rev. 0

Date: 2/23/10
File no.

Drawing code:

Designed by: KMP/MMY
Dwn by: RCG
Ckd by: CWW
Reviewed by: LHM
Submitted by: BAKER

File name: AMABOSS_701101
Plot date: 2/23/2010
Plot scale: XX

U.S. ARMY CORPS OF ENGINEERS
AFGHANISTAN ENGINEER DISTRICT
APO AE 96338

Michael Baker Jr., Inc
A unit of Michael Baker Corporation
Airside Business Park
100 Airside Drive
Moon Township, PA 15108
www.mbakercorp.com

AFGHAN NATIONAL ARMY
REGIONAL MILITARY TRAINING CENTER
STANDARD DESIGN

SENIOR BOO BARRACKS

TYPICAL DETAILS

Sheet reference number:
S-701

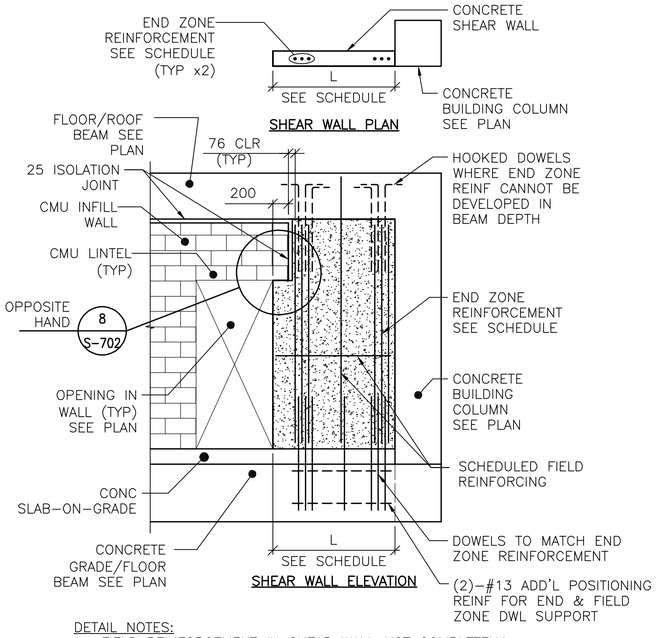


DETAIL NOTES:
1. FIELD REINFORCEMENT IN SHEAR WALL NOT COMPLETELY SHOWN FOR CLARITY.
2. FIELD REINFORCEMENT CENTERED IN WALL.
3. MINIMUM CONC CLEAR DISTANCE FOR END ZONE REINF = 76
4. SEE CONC SHEAR WALL SCHEDULE ON SHEET S-601
5. SEE ARCH DWGS FOR ISOLATION JOINT INFORMATION

## 1 S-702 TYPE "B" SHEAR WALL DETAIL

SCALE: NTS

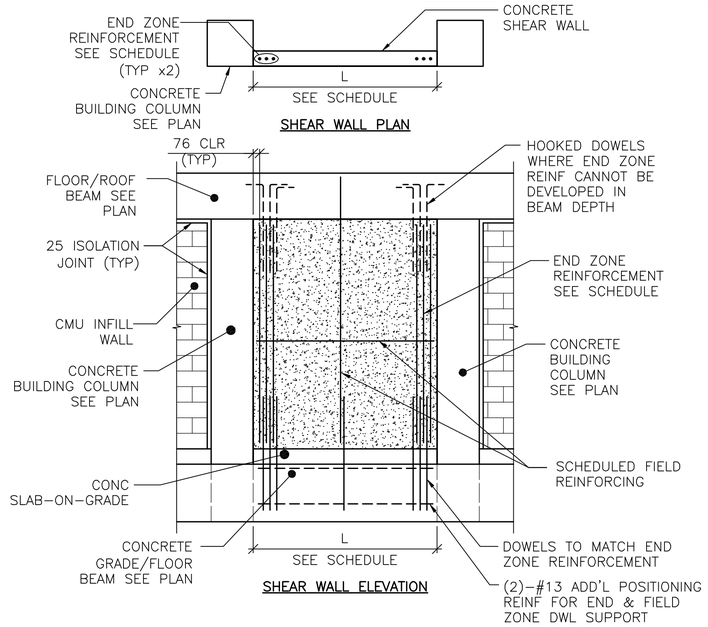


DETAIL NOTES:
1. FIELD REINFORCEMENT IN SHEAR WALL NOT COMPLETELY SHOWN FOR CLARITY.
2. FIELD REINFORCEMENT CENTERED IN WALL.
3. MINIMUM CONC CLEAR DISTANCE FOR END ZONE REINF = 76
4. SEE CONC SHEAR WALL SCHEDULE ON SHEET S-601
5. SEE ARCH DWGS FOR ISOLATION JOINT INFORMATION

## 2 S-702 TYPE "C" SHEAR WALL DETAIL

SCALE: NTS

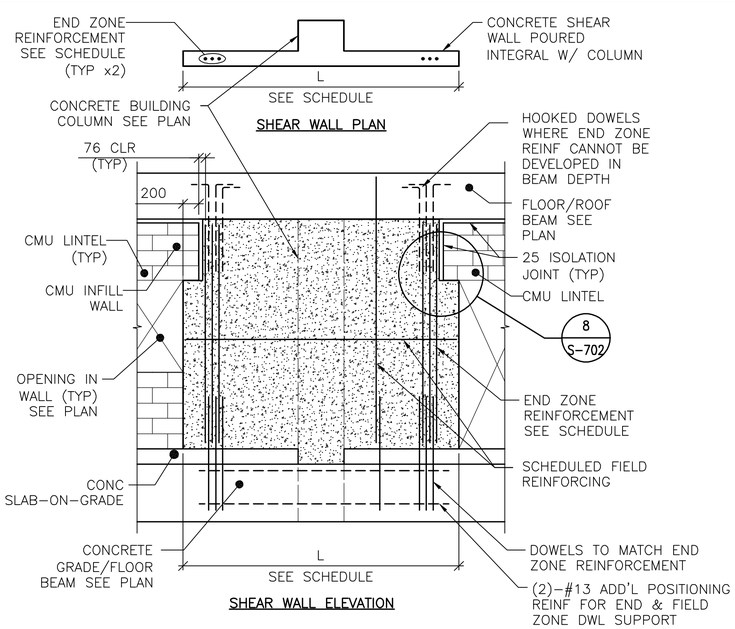


DETAIL NOTES:
1. FIELD REINFORCEMENT IN SHEAR WALL NOT COMPLETELY SHOWN FOR CLARITY.
2. FIELD REINFORCEMENT CENTERED IN WALL.
3. MINIMUM CONC CLEAR DISTANCE FOR END ZONE REINF = 76
4. SEE CONC SHEAR WALL SCHEDULE ON SHEET S-601
5. SEE ARCH DWGS FOR ISOLATION JOINT INFORMATION

## 3 S-702 TYPE "D" SHEAR WALL DETAIL

SCALE: NTS

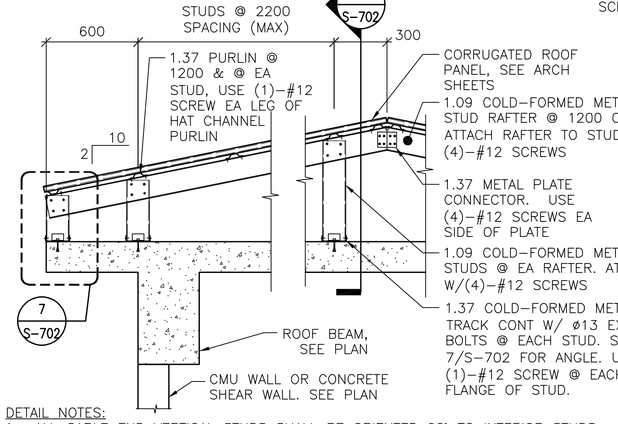


DETAIL NOTES:
1. ALL GABLE END VERTICAL STUDS SHALL BE ORIENTED 90° TO INTERIOR STUDS & SPACED @ 600 OC. GABLE END RAFTER SHALL BE 1.37 METAL TRACK SPANNING CONTINUOUSLY OVER GABLE END STUDS. INSET GIRTS AT GABLE END SHALL BE 1.09 COLD-FORMED METAL STUDS @ 1200 OC ATTACHED VIA 1.37 THICKNESS CLIP ANGLE W/ (2) #12 SCREWS EA LEG.
2. ALL INTERIOR, NON-GABLE END VERTICAL STUDS GREATER THAN 2400 IN LENGTH SHALL BE BACK-TO-BACK W/ #12 SCREWS @ 200 OC STAGGERED.

## 4 S-702 TYPICAL OVERBUILT ROOF FRAMING DETAIL

SCALE: NTS

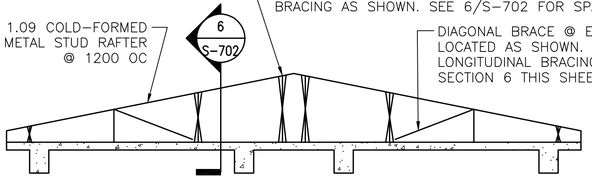


## 5 S-702 TYPICAL ROOF BRACE LAYOUT

SCALE: NTS

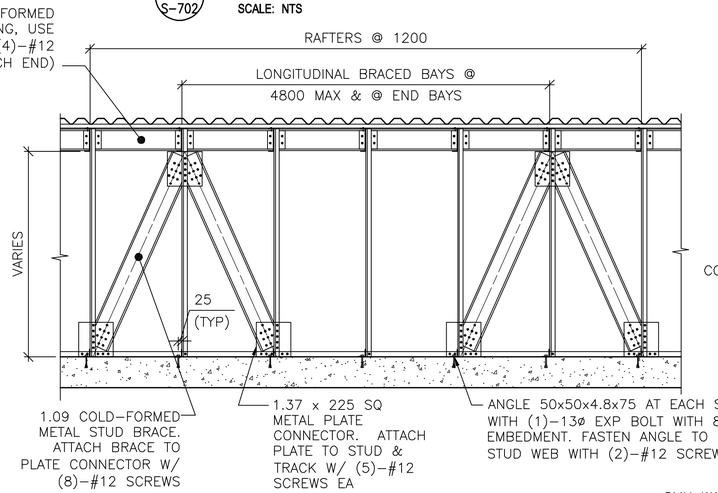


## 6 S-702 SECTION

SCALE: NTS

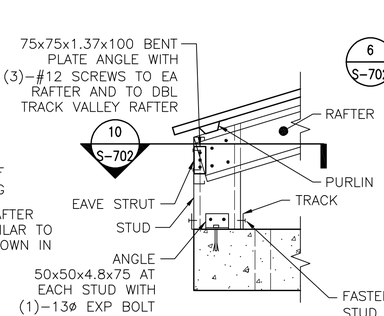


## 7 S-702 DETAIL

SCALE: NTS

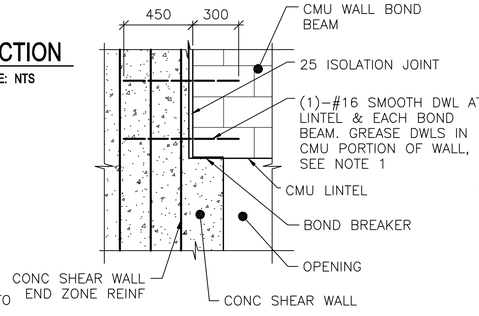


NOTE:
1. TIE SMOOTH DOWEL ROD TO SHEAR WALL END ZONE REINF FOR EACH BOND BEAM AND LINTEL.

## 8 S-702 SECTION

SCALE: NTS

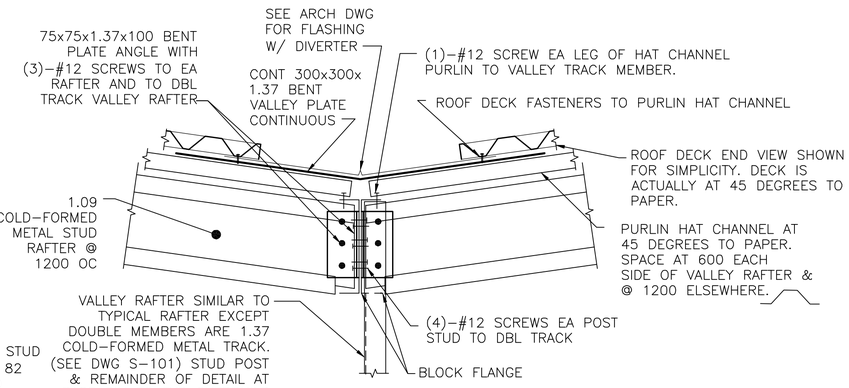


## 9 S-702 TYPICAL OVERBUILT ROOF SECTION THROUGH VALLEY

SCALE: NTS

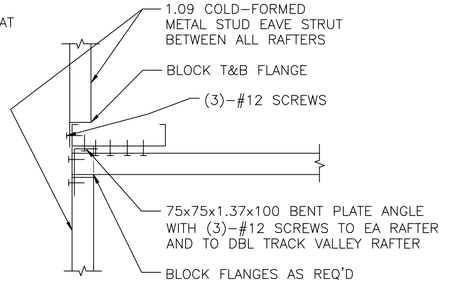


## 10 S-702 SECTION

SCALE: NTS

UNLESS OTHERWISE NOTED, LINEAR DIMENSIONS SHOWN ARE IN MILLIMETERS (mm)

APPROVED:

A/E DESIGNER OF RECORD

SEAL:

GEORGIA REGISTERED 1-29-10 No. 27141 PROFESSIONAL ENGINEER CHRISTOPHER W. WHITMORE

US ARMY CORPS OF ENGINEERS
AFGHANISTAN ENGINEER DISTRICT

| Mark | Description | Date | Appr. |
|---|---|---|---|
| | | | |

| Rev: 0 |
|---|
| Date: 2/23/10 |
| Design file no. |
| Drawing code: |
| Designed by: KMP/MMY |
| Drwn by: RCG / Ckd by: CWW |
| Reviewed by: LHM |
| Submitted by: BAKER |
| File name: ANABOQSS-702TOT |
| Plot date: 2/23/2010 |
| Plot scale: X:X |

U.S. ARMY CORPS OF ENGINEERS
AFGHANISTAN ENGINEER DISTRICT
APO AE 96338

Michael Baker Jr., Inc
A unit of Michael Baker Corporation
Airside Business Park
100 Airside Drive
Moon Township, PA 15108
www.mbakercorp.com

AFGHAN NATIONAL ARMY
REGIONAL MILITARY TRAINING CENTER
STANDARD DESIGN

SENIOR BOQ BARRACKS

TYPICAL DETAILS

Sheet reference number:
S-702

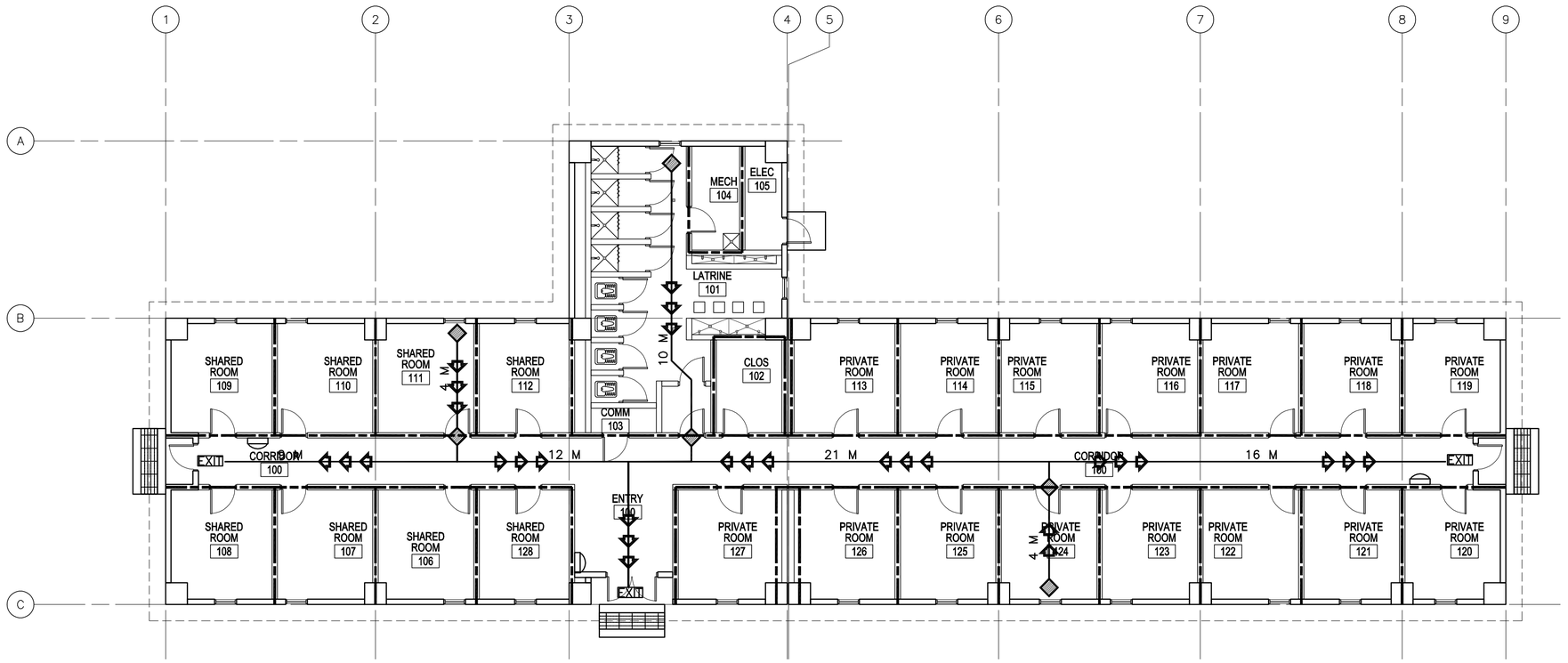


1 A–001 **LIFE SAFETY PLAN**
SCALE: 1:100

## LEGEND:

- DENOTES PATHS OF EXIT TRAVEL
- EXIT — DENOTES DOOR AS AN EMERGENCY EXIT
- DENOTES STARTING POINT FOR TRAVEL DISTANCE
- DENOTES FIRE EXTINGUISHER LOCATIONS
- (1) HOUR RATED WALL
- (2) HOUR RATED WALL
- (3) HOUR RATED WALL

## CODE ANALYSIS:

1. REFERENCES:
2006 INTERNATIONAL BUILDING CODE (2006 IBC)
2006 LIFE SAFETY CODE (2006 NFPA 101)

2. IBC OCCUPANCY CLASSIFICATION:
GROUP R–2 (NEW HOTELS AND DORMITORIES NFPA 101 6.1.8 AND CHAPTER 28)

3. TYPE OF CONSTRUCTION (IBC): TYPE II–B (UNPROTECTED/NONSPRINKLERED)

4. IBC TABLE 503: ALLOWABLE HEIGHT AND BUILDING AREAS:
GROUP R–2
ALLOWABLE AREA: 1486 SM
ALLOWABLE HEIGHT: 4 STORIES (16 M)

GROUP R–2
PROPOSED AREA: 569 SM
PROPOSED HEIGHT: 1 STORY (<16 M)

5. IBC TABLE 601 & 602: FIRE RESISTANCE RATING REQUIREMENTS FOR BUILDING ELEMENTS FOR TYPE II–B

| BUILDING ELEMENT | RATING (HOUR) | REFERENCE |
|---|---|---|
| STRUCTURAL FRAME (COLUMNS, GIRDERS & TRUSSES) | 0 | TABLE 601 |
| BEARING WALLS | | |
| EXTERIOR | 0 | TABLE 601 |
| INTERIOR | 0 | TABLE 601 |
| NONBEARING WALLS & PARTITIONS | | |
| INTERIOR | 0 | TABLE 601 |
| FLOOR CONSTRUCTION | 0 | TABLE 601 |
| ROOF CONSTRUCTION | 0 | TABLE 601 |
| EXTERIOR WALL | 0 | TABLE 602 |

6. IBC TABLE 803.5 – INTERIOR WALL AND CEILING FINISH REQUIREMENTS FOR R–2 OCCUPANCY/NONSPRINKLERED

| GROUP | EXIT ENCLOSURES AND EXIT PASSAGEWAY | CORRIDORS | ROOMS AND ENCLOSED SPACES |
|---|---|---|---|
| R–2 | B | B | C |

7. NFPA 101 TABLE 7.3.1.2 – OCCUPANT LOAD
HOTELS AND DORMITORIES = 18.6 SM/PERSON CALCULATED = 31 OCCUPANTS
ACTUAL = 31 OCCUPANTS

8. NFPA 101 TABLE 7.3.3.1 – EGRESS CAPACITY
HOTELS AND DORMITORIES = 5 MM PER OCCUPANT

MINIMUM REQUIRED: 155 MM (31 OCCUPANTS x 5 MM PER OCCUPANT)
PROPOSED EGRESS CAPACITY: 3600 MM: (4) 900 MM DOORS

9. NFPA 101 PARAGRAPH 28.2.6 – EXIT ACCESS TRAVEL DISTANCE
MAXIMUM ALLOWED WITHIN ROOM OR SUITE TO CORRIDOR: 23 METERS
MAXIMUM ALLOWED CORRIDOR DOOR OF ANY ROOM OR SUITE TO NEAREST EXIT: 30 METERS

PROPOSED WITHIN ROOM OR SUITE TO CORRIDOR: 4 METERS
PROPOSED CORRIDOR DOOR OF ANY ROOM OR SUITE TO NEAREST EXIT: 21 METERS

10. NFPA 101 PARAGRAPH 28.3.6.1.2 – CORRIDOR FIRE–RESISTANCE RATING (HOUR)
REQUIRED: WALLS NOT LESS THAN ONE HOUR FIRE RESISTANCE RATING
PROPOSED: 1 HOUR RATING

11. NFPA 101 PARAGRAPH 28.3.6.2 & TABLE 8.3.4.2 – DOORS INTO EXIT ACCESS CORRIDORS
REQUIRED MINIMUM: 20 MINUTE FIRE PROTECTION RATING
PROPOSED: 20 MINUTE DOORS

12. NFPA 101 PARAGRAPH 28.2.3.3 – CORRIDOR WIDTH
REQUIRED: SUFFICIENT FOR OCCUPANT LOAD, BUT NOT LESS THAN 1120 MM
CALCULATED WIDTH REQUIRED PER OCCUPANT LOAD: 155 MM (31 OCCUPANTS X 5 MM)
PROVIDED: 1700 MM

13. NFPA 101 PARAGRAPH 28.2.5.3 – COMMON PATH OF TRAVEL
MAXIMUM ALLOWED: 10.7 METERS
PROVIDED: 0 M

14. NFPA 101 PARAGRAPH 28.2.5.5 – DEAD END CORRIDORS
PERMITTED: 10.7 METERS
PROPOSED: NO DEAD END CORRIDORS

15. NFPA 101 PARAGRAPH 28.2.4.1 AND 7.4.1.1 – MINIMUM NUMBER OF EXITS
REQUIRED: 2 MINIMUM
PROPOSED: 3 EXITS

16. NFPA 101 PARAGRAPH 28.2.1.2 & 24.2 – SECONDARY MEANS OF ESCAPE
ONE OF THE FOLLOWING REQUIRED:
1)DOOR, SIMILAR TO PRIMARY, BUT REMOTE FROM PRIMARY
2) OPERABLE WINDOW, 0.53 SM, NOT LESS THAN 510 MM WIDE, 610 MM HIGH, NOT MORE THAN 1120 MM AFF, WITHIN 6100 MM OF GRADE
PROVIDED: OPERABLE WINDOWS, 0.93 SM EACH PER SLEEPING ROOM

17. NFPA 101 PARAGRAPH 24.2.2.4 – TWO PRIMARY MEANS OF ESCAPE
AREA WITH DWELLING UNIT EXCEEDS 185 SM PER STORY
ALLOWED AREA PER STORY WITHIN DWELLING UNIT: 185 SM
PROVIDED AREA WITHIN DWELLING UNIT: 14 SM
REQUIRED PRIMARY EXITS: 1
PROVIDED PRIMARY EXITS: 1

18. NFPA 101 PARAGRAPH 28.3.7.1 – SUBDIVISION OF BUILDING SPACES – NONSPRINKLERED
REQUIRED: EACH GUEST ROOM OR DORMITORY ROOM SHALL BE SEPARATED FROM OTHER GUEST OR DORMITORY ROOMS BY FIRE BARRIERS HAVING FIRE RESISTANCE RATED OF NOT LESS THAN 1 HOUR
PROVIDED: 1 HOUR SEPARATION

19. HAZARDOUS AREA PROTECTION TABLE 28.3.2.2.2
STORAGE ROOMS: 1 HOUR SEPARATION REQUIRED

20. NFPA 101 A.3.3.53 DORMITORY: ROOMS WITHIN DORMITORIES INTENDED FOR THE USE OF INDIVIDUALS FOR COMBINED LIVING AND SLEEPING PURPOSES ARE GUEST ROOMS OR GUEST SUITES. EXAMPLES OF DORMITORIES ARE COLLEGE DORMITORIES, FRATERNITY AND SORORITY HOUSES AND MILITARY BARRACKS.

21. NFPA 101 28.3.5.2 EXTINGUISHMENT REQUIREMENTS: AUTOMATIC SPRINKLER PROTECTION REQUIRED UNLESS SLEEPING ROOMS HAVE DOORS DIRECTLY TO OUTSIDE.
DUE TO AUSTERE DESIGN CRITERIA, THE GOVERNMENT HAS A FIRE PROTECTION WAIVER FOR THIS REQUIREMENT.

LINEAR DIMENSIONS SHOWN ARE IN MILLIMETERS (MM), UNLESS OTHERWISE NOTED

0 2000 4000
SCALE: 1:100

APPROVED:

A/E DESIGNER OF RECORD

SEAL:

STATE OF SOUTH CAROLINA
KEVIN R. CHAFIN
N. Charleston, SC
6374
REGISTERED ARCHITECT

US ARMY CORPS OF ENGINEERS
AFGHANISTAN ENGINEER DISTRICT

| Mark | Description | Date | Appr. |
|---|---|---|---|

| Mark | Description | Date | Appr. |
|---|---|---|---|

Rev: 0
Date: 2/23/10
Design file no.
Drawing code:
File name: ANABOQSA-001.SP
Plot date: 2/23/2010
Plot scale: x:x

Designed by: KRC
Dwn by: EBB
Ckd by: NLJ
Reviewed by: LHM
Submitted by: BAKER

U.S. ARMY CORPS OF ENGINEERS
AFGHANISTAN ENGINEER DISTRICT
APO AE 96338

Michael Baker Jr., Inc
A unit of Michael Baker Corporation
Airside Business Park
100 Airside Drive
Moon Township, PA 15108
www.mbakercorp.com

AFGHAN NATIONAL ARMY
REGIONAL MILITARY TRAINING CENTER
STANDARD DESIGN

SENIOR BOQ BARRACKS

LIFE SAFETY PLAN

Sheet reference number:
A–001

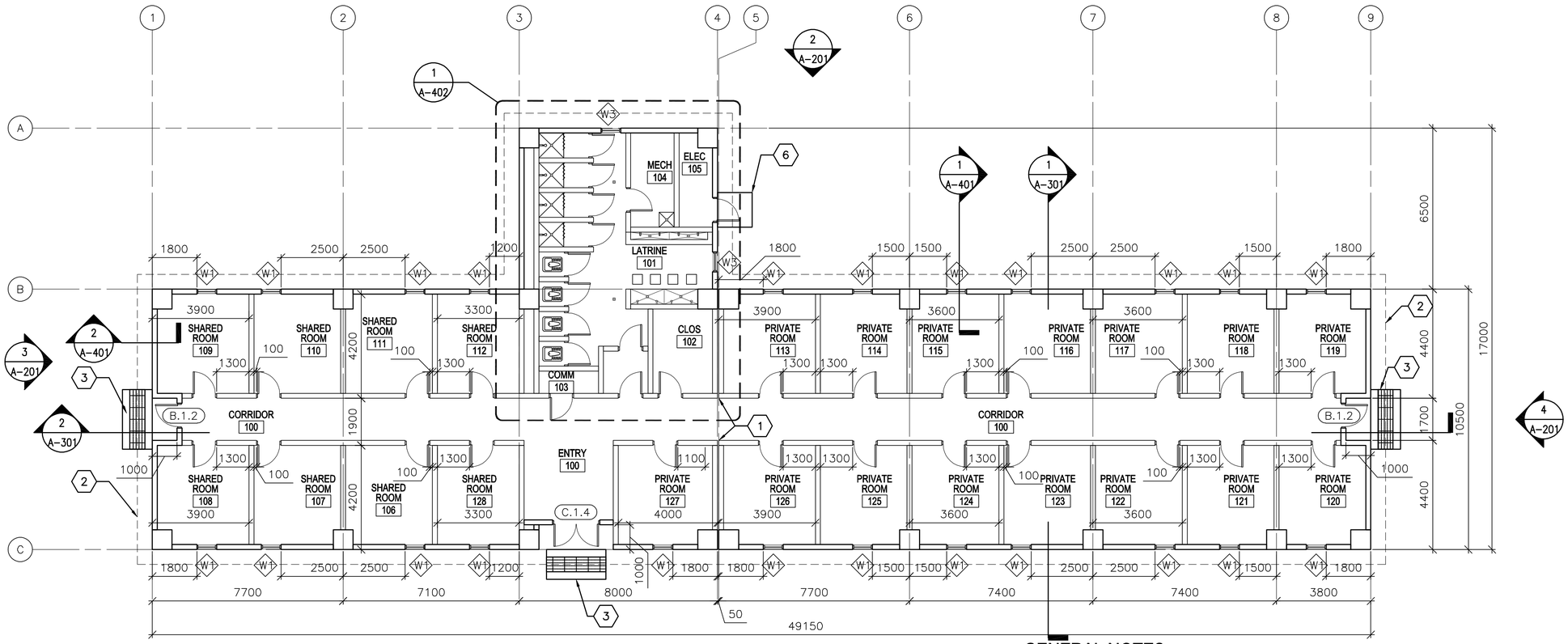


1 A-101 **FLOOR PLAN**
SCALE: 1:100

## GENERAL NOTES:

A. DIMENSIONS ARE SHOWN TO OUTER EDGE OF EXTERIOR STRUCTURAL COLUMNS, STRUCTURAL COLUMN GRID, EDGE OF INTERIOR PARTITIONS, EDGE OF WINDOW OPENINGS, AND TO HINGED SIDE OF DOOR FRAME OPENINGS.

B. OPENINGS FOR DOORS AND FRAMES SHALL BE LOCATED 200 MM FROM THE ADJACENT WALL OR COLUMN, UNLESS NOTED OTHERWISE.

C. INTERIOR PARTITIONS SHALL BE 200 MM CMU, UNLESS NOTED OTHERWISE.

D. COSMETIC REPAIR OF MINOR DEFECTS: REPAIR OR FILL MORTAR JOINTS AND MINOR DEFECTS, INCLUDING BUT NOT LIMITED TO SPALLS, IN ACCORDANCE WITH MANUFACTURER'S RECOMMENDATIONS AND PRIOR TO COATING APPLICATION. SURFACES TO BE PAINTED SHALL BE CLEAN AND FREE OF FOREIGN MATTER BEFORE APPLICATION OF PAINT. CLEANING SHALL BE SCHEDULED SO THAT DUST AND OTHER CONTAMINANTS WILL NOT FALL ON NEWLY PAINTED SURFACES.

E. CONCRETE, PLASTER AND MASONRY SURFACES SHALL BE ALLOWED TO CURE FOR AT LEAST 30 DAYS BEFORE PAINTING. CONCRETE SLABS-ON-GRADE SHALL BE ALLOWED TO CURE 90 DAYS BEFORE STAINING OR SEALING.

F. DO NOT USE PAINT MATERIALS CONTAINING LEAD CONTENT IN EXCESS OF 0.009 PERCENT OF THE WEIGHT OF THE TOTAL NONVOLATILE CONTENT OF THE PAINT OR THE WEIGHT OF THE DRIED PAINT FILM.

G. DO NOT USE ANY ASBESTOS CONTAINING MATERIALS (ACM) IN PROJECT. ACM IS DEFINED AS 1% OR MORE BY VOLUME.

H. DO NOT USE PAINT MATERIALS CONTAINING MERCURIAL FUNGICIDES.

I. FACTORY PRIMED METAL DOORS AND FRAMES SHALL RECEIVE TWO COATS OF PAINT.

J. FILL REMAINING SPACE AT PENETRATIONS IN FIRE-RATED FLOORS, PARTITIONS AND CEILINGS WITH APPROPRIATE FIRESTOPPING MATERIALS.

K. ALL CEILING FINISHES SHALL BE PAINTED PLASTER APPLIED TO STRUCTURE.

L. ALL WALL FINISHES SHALL BE PAINTED PLASTER APPLIED TO STRUCTURE, UNLESS OTHERWISE NOTED.

M. ALL FLOOR FINISHES SHALL BE EPOXY SEALED CONCRETE, UNLESS NOTED OTHERWISE.

N. PROVIDE TILE FINISHES AS INDICATED IN DETAILS AND KEY NOTES.

O. ALL DOOR, FRAME AND HARDWARE TYPES SHALL BE 20A.1.11 UNLESS NOTED OTHERWISE

P. ALL TOILET STALL DOORS SHALL BE F.2.12

Q. SHOWER STALL DOOR, FRAME AND HARDWARE TYPE SHALL BE E.1.12.

R. PROVIDE POLISHED STAINLESS STEEL MIRROR 600 X 900 ABOVE EVERY LAVATORY FAUCET.

## KEY NOTES: (X)

1. ISOLATION JOINT COVER- SEE SHEET A-506.
2. LINE OF ROOF OVERHANG ABOVE.
3. CONCRETE STOOP WITH GRATE - SEE DETAIL 1/A-503.
4. NOT USED.
5. NOT USED.
6. CONCRETE STOOP - SEE DETAIL 3/A-503.

## LEGEND:

(XXX) DOOR FRAME AND HARDWARE TYPE, SEE SHEET A-601

(A) WINDOW TYPE, SEE SHEET A-601

(X) KEY NOTE

## ABBREVIATIONS:

| | |
|---|---|
| COMM | COMMUNICATIONS |
| ELEC | ELECTRICAL |
| MECH | MECHANICAL |
| JAN | JANITOR |
| CLOS | CLOSET |

LINEAR DIMENSIONS SHOWN ARE IN MILLIMETERS (MM), UNLESS OTHERWISE NOTED

0 2000 4000
SCALE: 1:100

APPROVED:

A/E DESIGNER OF RECORD

SEAL:

STATE OF SOUTH CAROLINA
KEVIN R. CHAFIN
N. Charleston, SC
6374
REGISTERED ARCHITECT

US ARMY CORPS OF ENGINEERS
AFGHANISTAN ENGINEER DISTRICT

| Mark | Description | Date | Appr. | Mark | Description | Date | Appr. |
|---|---|---|---|---|---|---|---|
| | | | | | | | |

Designed by: KRC | Ckd by: NLJ
Drawn by: EBB | Reviewed by: LHM
Date: 2/23/10 | Rev: 0
Design file no. | Drawing code:
File name: ANABOQSA-101FP
Plot date: 2/23/2010
Plot scale: X:X
Submitted by: BAKER

U.S. ARMY CORPS OF ENGINEERS
AFGHANISTAN ENGINEER DISTRICT
APO AE 96338

*Michael Baker Jr., Inc*
*A unit of Michael Baker Corporation*
Airside Business Park
100 Airside Drive
Moon Township, PA 15108
www.mbakercorp.com

AFGHAN NATIONAL ARMY
REGIONAL MILITARY TRAINING CENTER
STANDARD DESIGN

SENIOR BOQ BARRACKS

FLOOR PLAN

Sheet reference number:
A-101

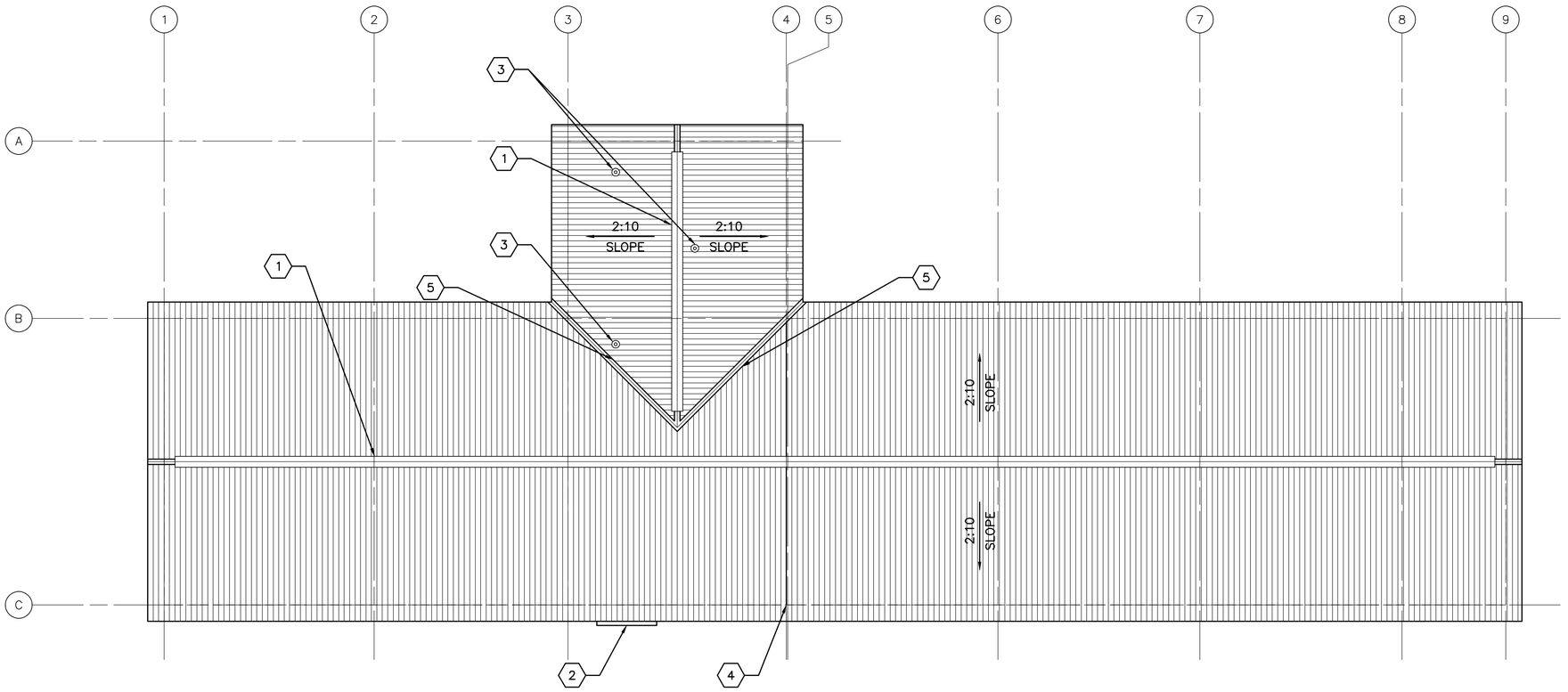


1 / A–102 **ROOF PLAN**

SCALE: 1:100

## GENERAL NOTES:

A. THE APPROXIMATE LOCATION OF ROOF DEVICES AND PENETRATIONS ARE SHOWN ON THE ROOF PLAN FOR INFORMATION ONLY. THE CONTRACTOR SHALL BE RESPONSIBLE FOR UNDERSTANDING THE ACTUAL LOCATION OF THESE AND ALL OTHER ITEMS PRIOR TO BEGINNING CONSTRUCTION. COORDINATE ALL ROOF PENETRATIONS WITH STRUCTURAL, MECHANICAL AND PLUMBING WORK.

B. PLUMBING VENT PENETRATIONS SHALL TERMINATE 300 MM MINIMUM ABOVE THE ROOF.

C. UNLESS OTHERWISE NOTED, NOTES, DETAILS OR FEATURES INDICATED FOR ONE CONDITION SHALL BE APPLICABLE FOR ALL ALIKE AND SIMILAR CONDITIONS.

D. STOCKPILING OF MATERIALS, EQUIPMENT AND ANY OTHER ITEMS ON THE ROOF IS PROHIBITED.

E. ROOFS SHALL BE CORRUGATED METAL ROOF PANELS ON COLD–FORMED METAL FRAMING ON CONCRETE SLAB.

## KEY NOTES: (X)

1. CONTINUOUS METAL RIDGE VENT SEE DETAIL 4/A–501.
2. METAL GUTTER, CENTER ON DOOR, 2300 MM – SEE DETAIL 1A/A–501.
3. PLUMBING VENT – SEE DETAIL 5/A–501.
4. ROOF EXPANSION JOINT – SEE DETAIL 4A/A–501.
5. VALLEY – SEE DETAIL 6/A–501

LINEAR DIMENSIONS SHOWN ARE IN MILLIMETERS (MM), UNLESS OTHERWISE NOTED

0 2000 4000
SCALE: 1:100

APPROVED:

A/E DESIGNER OF RECORD

SEAL:

STATE OF SOUTH CAROLINA
KEVIN R. CHAFIN
N. Charleston, SC
6374
REGISTERED ARCHITECT

US ARMY CORPS OF ENGINEERS
AFGHANISTAN ENGINEER DISTRICT

| Mark | Description | Date | Appr. |
|---|---|---|---|
| | | | |

| Mark | Description | Date | Appr. |
|---|---|---|---|
| | | | |

Date: 2/23/10
Design file no.
Drawing code:
File name: ANABOQSA-102RP
Plot date: 2/23/2010
Plot scale: x:X
Rev: 0

Designed by: KRC
Dwn by: EBB
Ckd by: NLJ
Reviewed by: LHM
Submitted by: BAKER

U.S. ARMY CORPS OF ENGINEERS
AFGHANISTAN ENGINEER DISTRICT
APO AE 96338

Michael Baker Jr., Inc
A unit of Michael Baker Corporation
Airside Business Park
100 Airside Drive
Moon Township, PA 15108
www.mbakercorp.com

AFGHAN NATIONAL ARMY
REGIONAL MILITARY TRAINING CENTER
STANDARD DESIGN

SENIOR BOQ BARRACKS

ROOF PLAN

Sheet reference number:
A–102

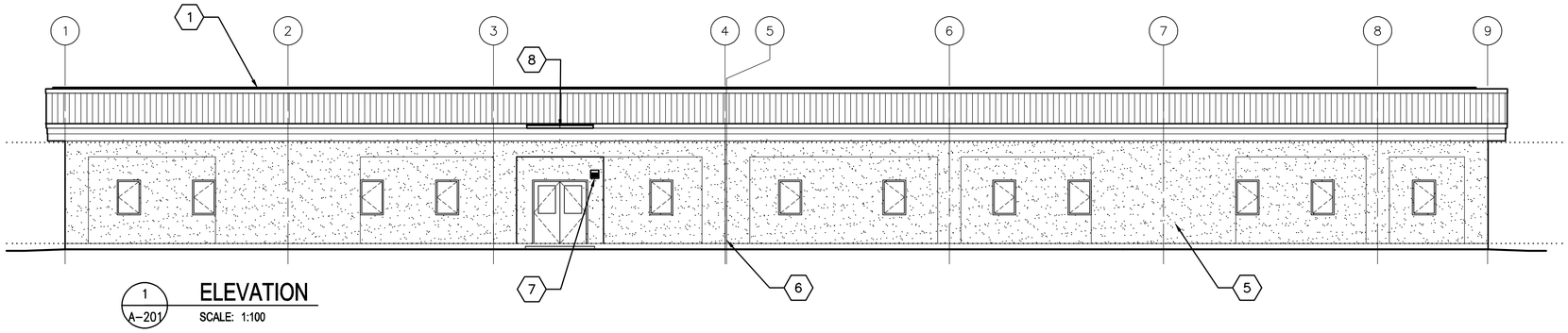


1 A–201 **ELEVATION**
SCALE: 1:100

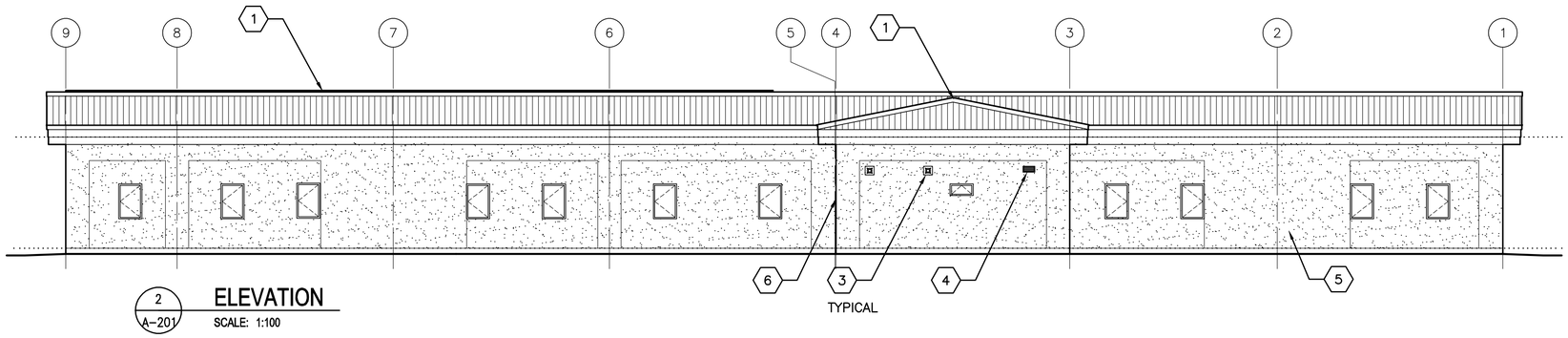


2 A–201 **ELEVATION**
SCALE: 1:100

TYPICAL

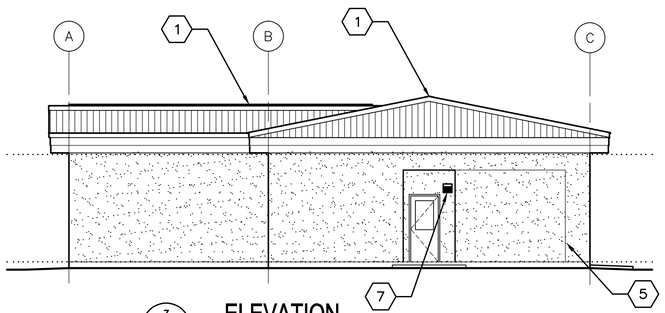


3 A–201 **ELEVATION**
SCALE: 1:100

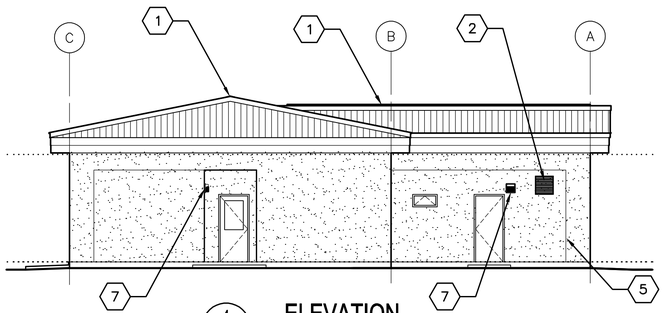


4 A–201 **ELEVATION**
SCALE: 1:100

## GENERAL NOTES:

A. COORDINATE SIZE AND LOCATION OF OPENINGS FOR MECHANICAL ITEMS WITH MECHANICAL DRAWINGS.

B. PROVIDE STRUCTURAL LINTELS AS REQUIRED – SEE STRUCTURAL DRAWINGS

C. ALL EXTERIOR WALL FINISHES SHALL BE STUCCO OVER CMU AND CONCRETE SUBSTRATES. PROVIDE CONTROL JOINTS IN STUCCO WALL FINISH AS NOTED.

D. ROOF SHALL BE CORRUGATED METAL ROOF PANELS ON COLD–FORMED METAL FRAMING ON CONCRETE SLAB.

## KEY NOTES: (X)

1. CONTINUOUS METAL RIDGE VENT – SEE DETAIL 4/A–501.
2. LOUVER, LOCATE TOP OF WALL PENETRATION 2800 MM ABOVE FINISHED FLOOR – SEE MECHANICAL DRAWINGS.
3. EXHAUST FAN, LOCATE TOP OF WALL PENETRATION 2800 MM ABOVE FINISHED FLOOR – SEE MECHANICAL DRAWINGS.
4. EXHAUST FAN WITH WALL GRILL, LOCATE TOP OF WALL PENETRATION 2800 MM ABOVE FINISHED FLOOR – SEE MECHANICAL DRAWINGS.
5. STUCCO CONTROL JOINT – SEE DETAIL 2A/A–501.
6. EXPANSION JOINT COVER – SEE SHEET A–506.
7. EXTERIOR LIGHT FIXTURE – SEE ELECTRICAL.
8. METAL GUTTER, CENTER ON DOOR, 2300 MM – SEE DETAIL 1A/A–501

LINEAR DIMENSIONS SHOWN ARE IN MILLIMETERS (MM), UNLESS OTHERWISE NOTED

0 2000 4000
SCALE: 1:100

APPROVED:

A/E DESIGNER OF RECORD

SEAL:

STATE OF SOUTH CAROLINA
KEVIN R. CHAFIN
N. Charleston, SC
6374
REGISTERED ARCHITECT

US ARMY CORPS OF ENGINEERS
AFGHANISTAN ENGINEER DISTRICT

| Mark | Description | Date | Appr. |
|---|---|---|---|
| | | | |

| Mark | Description | Date | Appr. |
|---|---|---|---|
| | | | |

Rev: 0
Date: 2/23/10
Design file no.
Drawing code:
File name: ANABOQSA-201ELV
Plot date: 2/23/2010
Plot scale: x:X

Designed by: KRC
Dwn by: EBB
Ckd by: NLJ
Reviewed by: LHM
Submitted by: BAKER

U.S. ARMY CORPS OF ENGINEERS
AFGHANISTAN ENGINEER DISTRICT
APO AE 96338

*Michael Baker Jr., Inc*
*A unit of Michael Baker Corporation*
Airside Business Park
100 Airside Drive
Moon Township, PA 15108
www.mbakercorp.com

AFGHAN NATIONAL ARMY
REGIONAL MILITARY TRAINING CENTER
STANDARD DESIGN

SENIOR BOQ BARRACKS

ELEVATIONS

Sheet reference number:
A–201

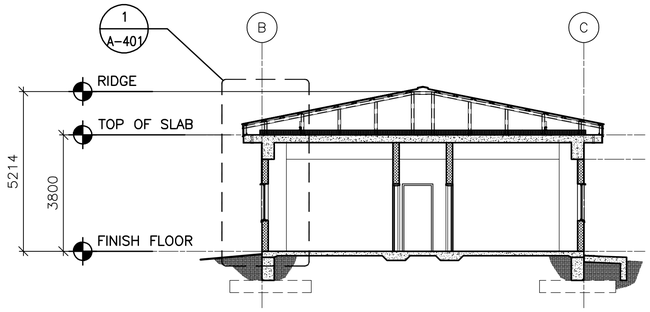


1 A-301 **SECTION**
SCALE: 1:100

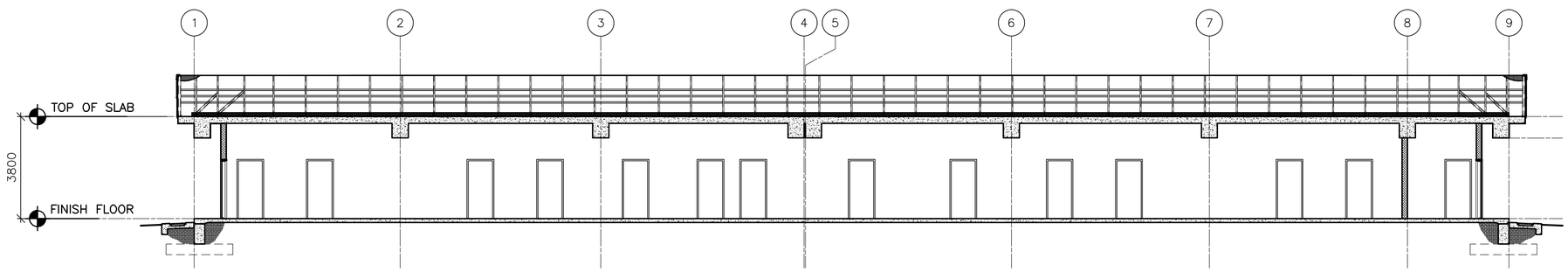


2 A-301 **SECTION**
SCALE: 1:100

LINEAR DIMENSIONS SHOWN ARE IN MILLIMETERS (MM), UNLESS OTHERWISE NOTED

0 2000 4000
SCALE: 1:100

APPROVED:

A/E DESIGNER OF RECORD

SEAL:

STATE OF SOUTH CAROLINA
KEVIN R. CHAFIN
N. Charleston, SC
6374
REGISTERED ARCHITECT

US ARMY CORPS OF ENGINEERS
AFGHANISTAN ENGINEER DISTRICT

| Mark | Description | Date | Appr. | Mark | Description | Date | Appr. |
|---|---|---|---|---|---|---|---|

U.S. ARMY CORPS OF ENGINEERS
AFGHANISTAN ENGINEER DISTRICT
APO AE 96338

Michael Baker Jr., Inc
A unit of Michael Baker Corporation
Airside Business Park
100 Airside Drive
Moon Township PA 15108
www.mbakercorp.com

Designed by: KRC
Dwn by: EBB
Ckd by: NLJ
Reviewed by: LHM
Submitted by: BAKER
Date: 2/23/10
Rev: 0
Design file no.
Drawing code:
File name: ANABOQSa-301BS
Plot date: 2/23/2010
Plot scale: X:X

AFGHAN NATIONAL ARMY
REGIONAL MILITARY TRAINING CENTER
STANDARD DESIGN

SENIOR BOQ BARRACKS

BUILDING SECTIONS

Sheet reference number:
A-301

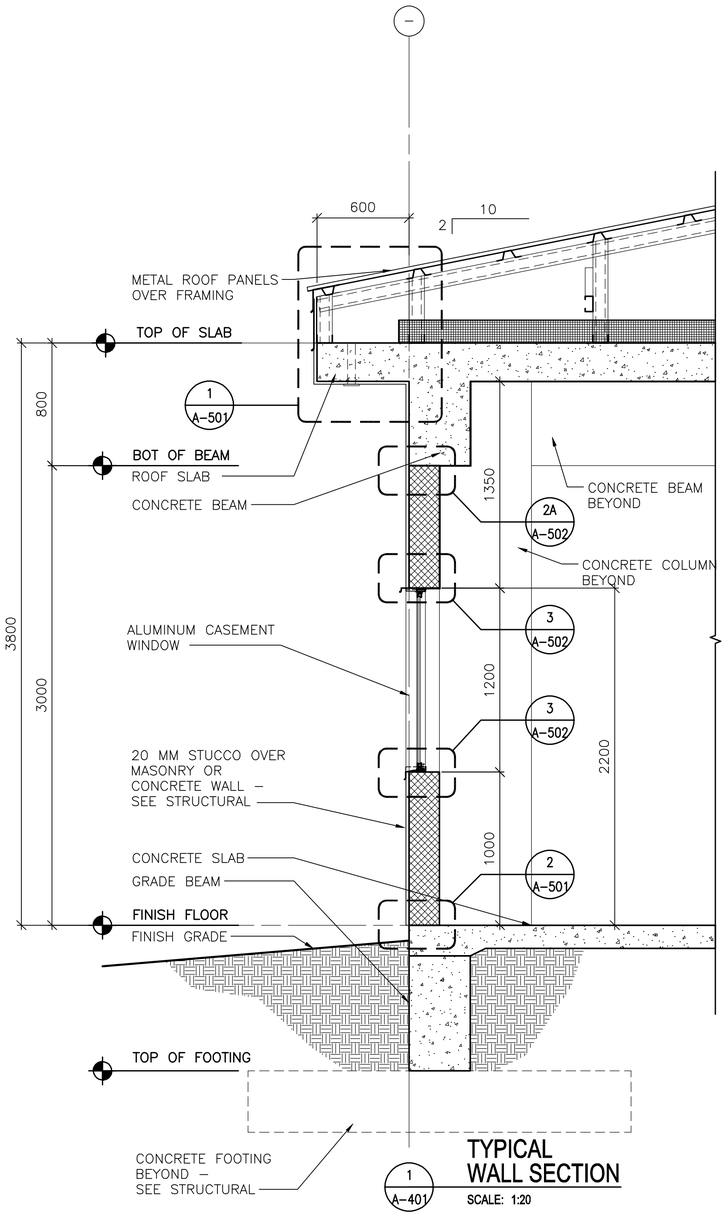


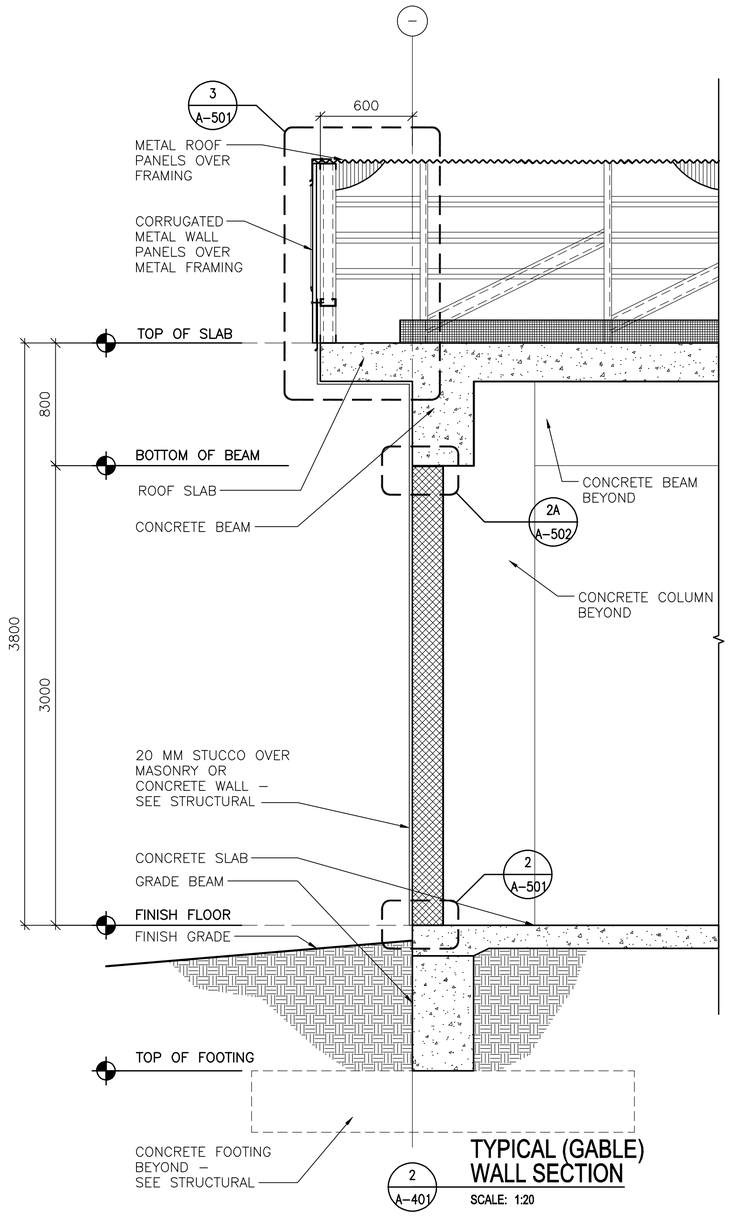


0 400 800
SCALE: 1:20

LINEAR DIMENSIONS SHOWN ARE IN MILLIMETERS (MM), UNLESS OTHERWISE NOTED

APPROVED:

A/E DESIGNER OF RECORD

SEAL:

STATE OF SOUTH CAROLINA
KEVIN R. CHAFIN
N. Charleston, SC
6374
REGISTERED ARCHITECT

US ARMY CORPS OF ENGINEERS
AFGHANISTAN ENGINEER DISTRICT

| Mark | Description | Date | Appr. |
|---|---|---|---|
| | | | |

Date: 2/23/10
Rev: 0
Design file no.
Drawing code:
File name: ANABOQSA-401W3
Plot date: 2/23/2010
Plot scale: x:X

Designed by: KRC
Dwn by: EBB
Ckd by: NLJ
Reviewed by: LHM
Submitted by: BAKER

U.S. ARMY CORPS OF ENGINEERS
AFGHANISTAN ENGINEER DISTRICT
APO AE 96338

*Michael Baker Jr., Inc*
*A unit of Michael Baker Corporation*
Airside Business Park
100 Airside Drive
Moon Township, PA 15108
www.mbakercorp.com

AFGHAN NATIONAL ARMY
REGIONAL MILITARY TRAINING CENTER
STANDARD DESIGN

SENIOR BOQ BARRACKS

WALL SECTIONS

Sheet reference number:
A-401

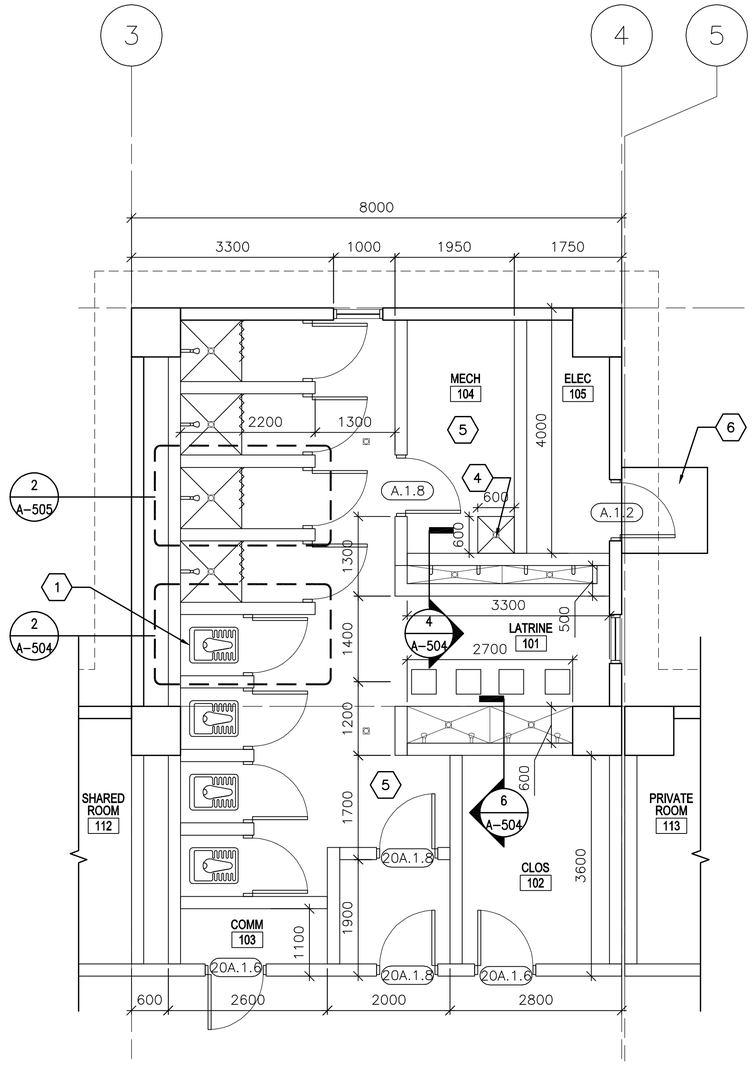


1 / A-402 **ENLARGED PLAN**

SCALE: 1:50

## GENERAL NOTES:

A. DIMENSIONS ARE SHOWN TO OUTER EDGE OF EXTERIOR STRUCTURAL COLUMNS, STRUCTURAL COLUMN GRID, EDGE OF INTERIOR PARTITIONS, EDGE OF WINDOW OPENINGS, AND TO HINGE SIDE OF DOOR FRAME OPENINGS.

B. OPENINGS FOR DOORS AND FRAMES SHALL BE LOCATED 200 MM FROM THE ADJACENT WALL OR COLUMN, UNLESS NOTED OTHERWISE.

C. INTERIOR PARTITIONS SHALL BE 200 MM CMU, UNLESS NOTED OTHERWISE.

D. COSMETIC REPAIR OF MINOR DEFECTS: REPAIR OR FILL MORTAR JOINTS AND MINOR DEFECTS, INCLUDING BUT NOT LIMITED TO SPALLS, IN ACCORDANCE WITH MANUFACTURER'S RECOMMENDATIONS AND PRIOR TO COATING APPLICATION. SURFACES TO BE PAINTED SHALL BE CLEAN AND FREE OF FOREIGN MATTER BEFORE APPLICATION OF PAINT. CLEANING SHALL BE SCHEDULED SO THAT DUST AND OTHER CONTAMINANTS WILL NOT FALL ON NEWLY PAINTED SURFACES.

E. CONCRETE, PLASTER, AND MASONRY SURFACES SHALL BE ALLOWED TO CURE FOR AT LEAST 30 DAYS BEFORE PAINTING. CONCRETE SLABS-ON-GRADE SHALL BE ALLOWED TO CURE 90 DAYS BEFORE STAINING OR SEALING.

F. DO NOT USE PAINT MATERIALS CONTAINING LEAD CONTENT IN EXCESS OF 0.009 PERCENT OF THE WEIGHT OF THE TOTAL NONVOLATILE CONTENT OF THE PAINT OR THE WEIGHT OF THE DRIED PAINT FILM.

G. DO NOT USE ANY ASBESTOS CONTAINING MATERIALS (ACM) IN PROJECT. ACM IS DEFINED AS 1% OR MORE BY VOLUME.

H. DO NOT USE PAINT MATERIALS CONTAINING MERCURIAL FUNGICIDES.

I. FACTORY PRIMED METAL DOORS AND FRAMES SHALL RECEIVE TWO COATS OF PAINT.

J. FILL REMAINING SPACE AT PENETRATIONS IN FIRE-RATED FLOORS, PARTITIONS AND CEILINGS WITH APPROPRIATE FIRESTOPPING MATERIALS.

K. ALL CEILING FINISHES SHALL BE PAINTED PLASTER APPLIED TO STRUCTURE.

L. ALL WALL FINISHES SHALL BE PAINTED PLASTER APPLIED TO STRUCTURE, UNLESS OTHERWISE NOTED.

M. ALL FLOOR FINISHES SHALL BE EPOXY SEALED CONCRETE, UNLESS NOTED OTHERWISE.

N. PROVIDE TILE FINISHES AS INDICATED IN DETAILS AND KEY NOTES.

O. ALL DOOR, FRAME AND HARDWARE TYPES SHALL BE 20A.1.11 UNLESS NOTED OTHERWISE

P. ALL TOILET STALL DOORS SHALL BE F.2.12

Q. SHOWER STALL DOOR, FRAME AND HARDWARE TYPE SHALL BE E.1.12.

R. PROVIDE POLISHED STAINLESS MIRROR 600 X 900 ABOVE EVERY LAVATORY FAUCET

## KEY NOTES: (X)

1. TYPICAL TOILET STALL LAYOUT – SEE DETAIL 2/A-504.
2. NOT USED.
3. NOT USED.
4. RECESSED TROUGH – SEE DETAIL 7/A-504.
5. TERRAZZO FLOOR TILE AND CERAMIC WALL TILE TO 2000 MM ABOVE FINISHED FLOOR UNLESS OTHERWISE NOTED.
6. CONCRETE STOOP – SEE DETAIL 3/A-503.

## LEGEND:

(XXX) DOOR FRAME AND HARDWARE TYPE, SEE SHEET A-601

(A) WINDOW TYPE, SEE SHEET A-601

(X) KEY NOTE

## ABBREVIATIONS:

| | |
|---|---|
| COMM | COMMUNICATIONS |
| ELEC | ELECTRICAL |
| MECH | MECHANICAL |
| JAN | JANITOR |
| CLOS | CLOSET |

LINEAR DIMENSIONS SHOWN ARE IN MILLIMETERS (MM), UNLESS OTHERWISE NOTED

0 1000 2000
SCALE: 1:50

APPROVED:

A/E DESIGNER OF RECORD

SEAL:

STATE OF SOUTH CAROLINA
KEVIN R. CHAFIN
N. Charleston, SC
6374
REGISTERED ARCHITECT

US ARMY CORPS OF ENGINEERS
AFGHANISTAN ENGINEER DISTRICT

| Mark | Description | Date | Appr. |
|---|---|---|---|

| Rev: 0 | Date: 2/23/10 | Design file no. | Drawing code: | File name: ANABOQSA-402EP |
|---|---|---|---|---|
| | | | | Plot date: 2/23/2010 |
| | | | | Plot scale: XX |

| Designed by: KRC | Ckd by: NLJ |
|---|---|
| Dwn by: EBB | Reviewed by: LHM |
| | Submitted by: BAKER |

U.S. ARMY CORPS OF ENGINEERS
AFGHANISTAN ENGINEER DISTRICT
APO AE 96338

*Michael Baker Jr., Inc*
*A unit of Michael Baker Corporation*
Airside Business Park
100 Airside Drive
Moon Township, PA 15108
www.mbakercorp.com

AFGHAN NATIONAL ARMY
REGIONAL MILITARY TRAINING CENTER
STANDARD DESIGN

SENIOR BOQ BARRACKS

ENLARGED PLAN

Sheet reference number:
A-402

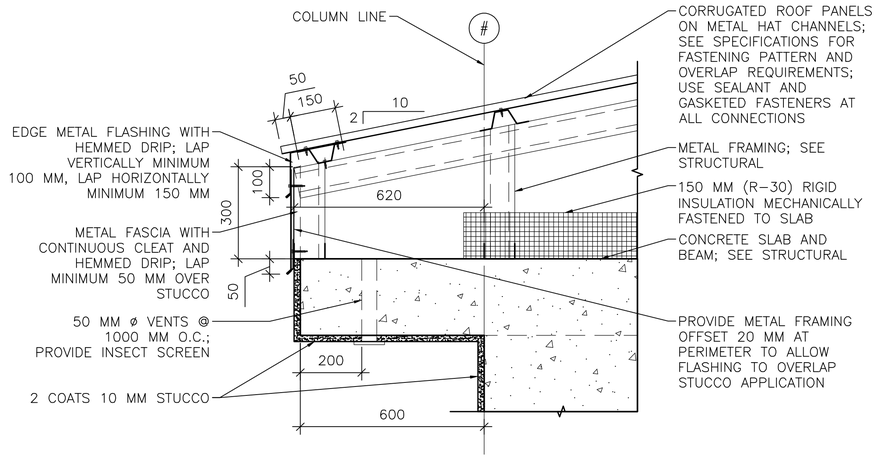


1 A-501 **EAVE DETAIL**
SCALE: 1:10

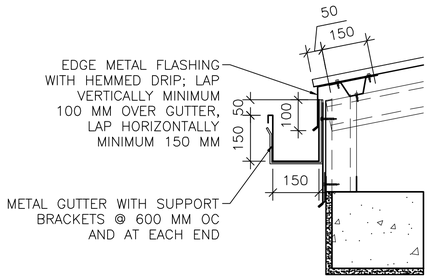


1A A-501 **GUTTER DETAIL**
SCALE: 1:10

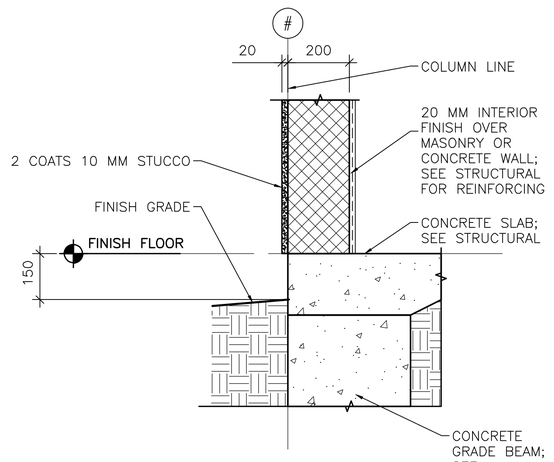


2 A-501 **STUCCO BASE DETAIL**
SCALE: 1:10

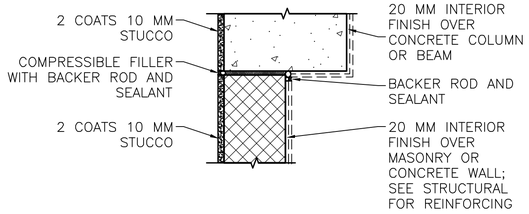


NOTE: DETAIL TYPICAL AT ALL WALL/COLUMN AND WALL/BEAM LOCATIONS, SEE ALTERNATE BRACING DETAIL BELOW 2B/A-501.

2A A-501 **STUCCO JOINT DETAIL**
SCALE: 1:10

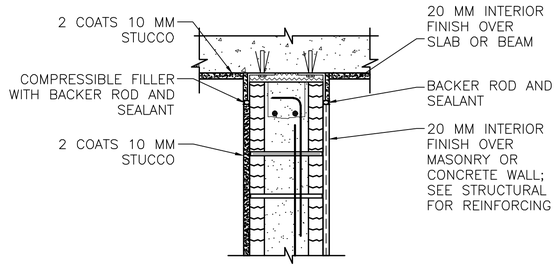


2B A-501 **ALTERNATE BRACING DETAIL**
SCALE: 1:10

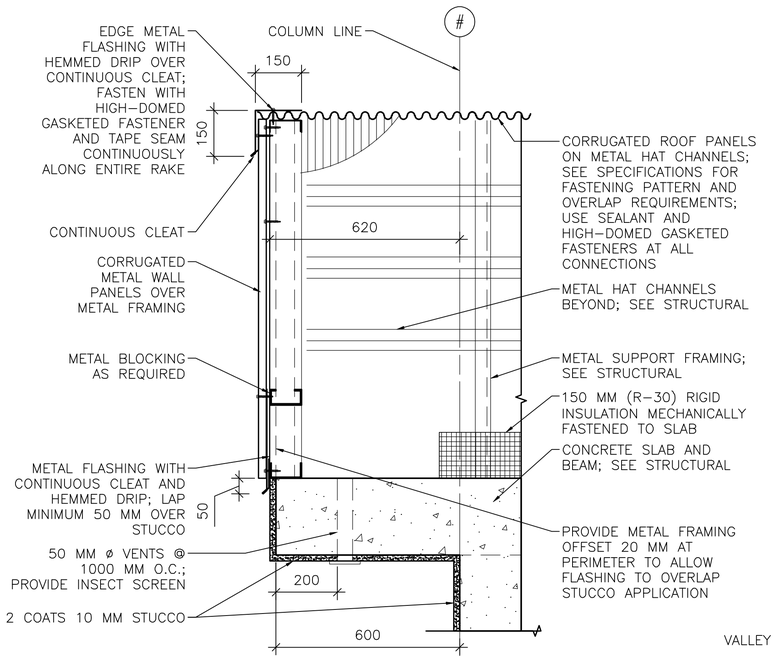


3 A-501 **RAKE/EAVE DETAIL**
SCALE: 1:10

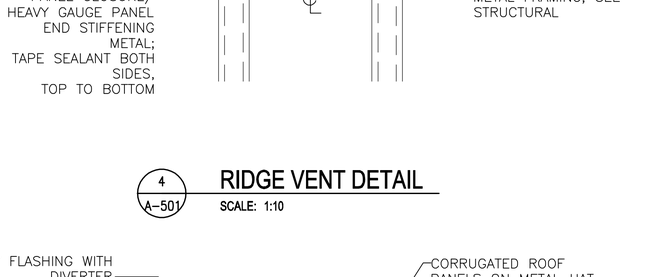


4 A-501 **RIDGE VENT DETAIL**
SCALE: 1:10

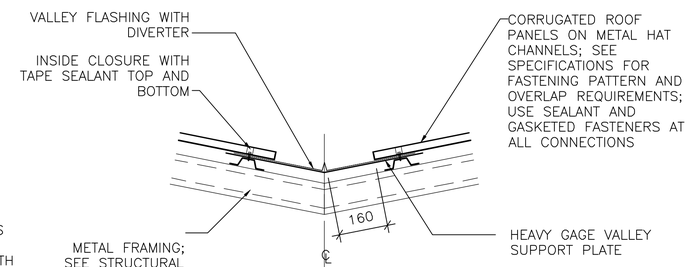


6 A-501 **VALLEY DETAIL**
SCALE: 1:10

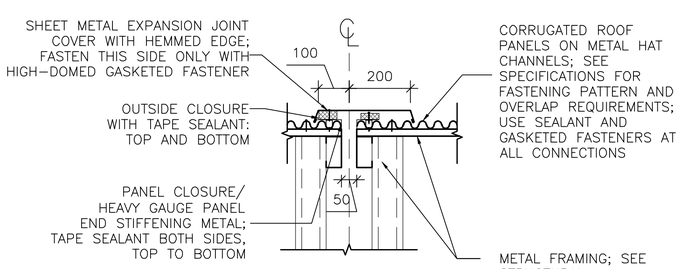


4A A-501 **ROOF EXPANSION JOINT DETAIL**
SCALE: 1:10

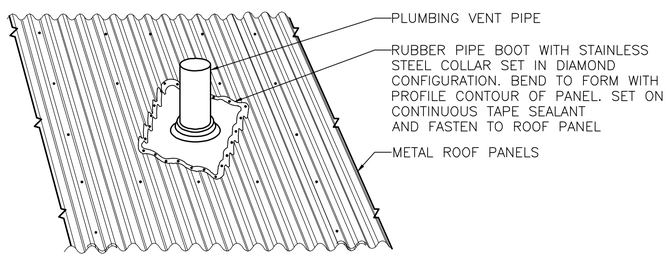


5 A-501 **PLUMBING VENT DETAIL**
SCALE: NTS

LINEAR DIMENSIONS SHOWN ARE IN MILLIMETERS (MM), UNLESS OTHERWISE NOTED

0 200 400
SCALE: 1:10

APPROVED:

A/E DESIGNER OF RECORD

SEAL:

STATE OF SOUTH CAROLINA
KEVIN R. CHAFIN
N. Charleston, SC
8374
REGISTERED ARCHITECT

US ARMY CORPS OF ENGINEERS
AFGHANISTAN ENGINEER DISTRICT

| Mark | Description | Date | Appr. |
|---|---|---|---|
| | | | |

| Mark | Description | Date | Appr. |
|---|---|---|---|
| | | | |

Designed by: KRC
Drwn by: EBB
Ckd by: NLJ
Reviewed by: LHM
Submitted by: BAKER

Date: 2/23/10
Design file no.
Drawing code:
Rev: 0
File name: ANABOQSA-5010T
Plot date: 2/23/2010
Plot scale: x:x

U.S. ARMY CORPS OF ENGINEERS
AFGHANISTAN ENGINEER DISTRICT
APO AE 96338

Michael Baker Jr., Inc
A unit of Michael Baker Corporation
Airside Business Park
100 Airside Drive
Moon Township, PA 15108
www.mbakercorp.com

AFGHAN NATIONAL ARMY
REGIONAL MILITARY TRAINING CENTER
STANDARD DESIGN

SENIOR BOQ BARRACKS

EXTERIOR DETAILS

Sheet reference number:
A-501

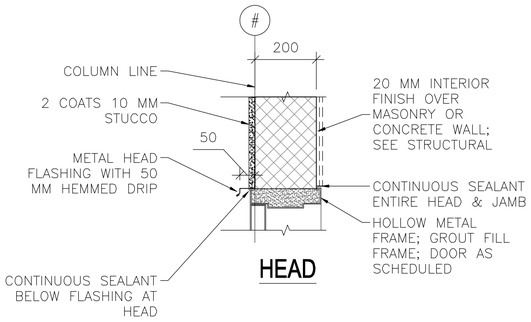


HEAD

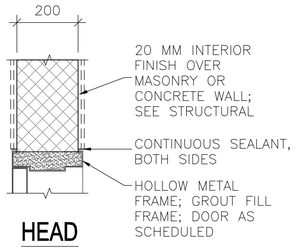


HEAD

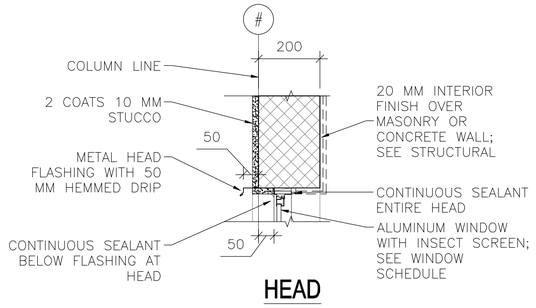


HEAD

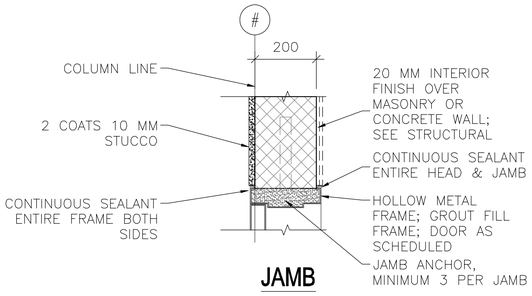


JAMB

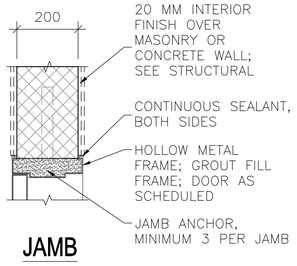


JAMB

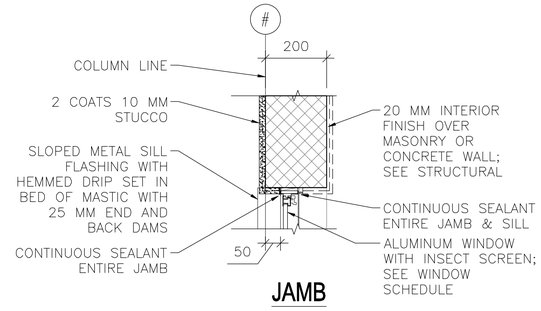


JAMB

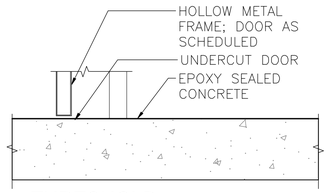


THRESHOLD

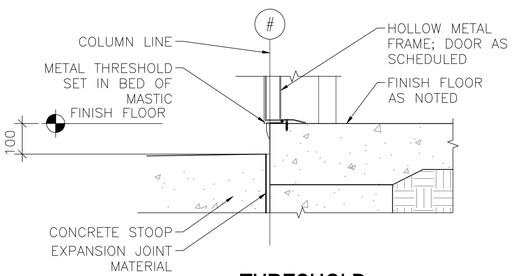


THRESHOLD

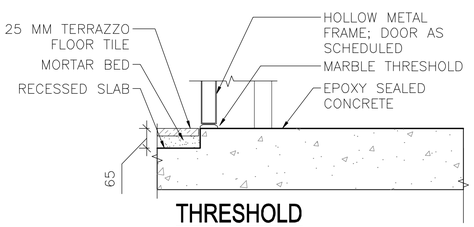


THRESHOLD

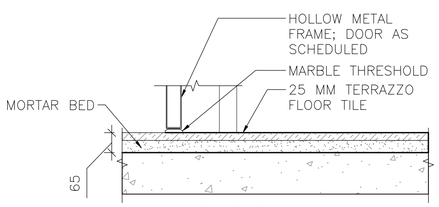


THRESHOLD

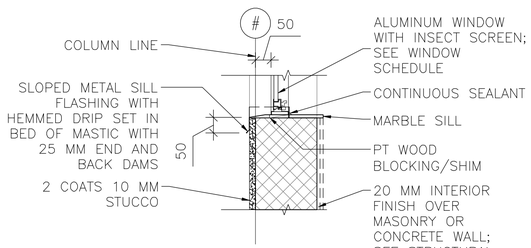


SILL

1 A-502 **EXTERIOR DOOR DETAILS**
SCALE: 1:10

2 A-502 **INTERIOR DOOR DETAILS**
SCALE: 1:10

3 A-502 **EXTERIOR WINDOW DETAILS**
SCALE: 1:10

LINEAR DIMENSIONS SHOWN ARE IN MILLIMETERS (MM), UNLESS OTHERWISE NOTED

0 200 400
SCALE: 1:10

APPROVED:

A/E DESIGNER OF RECORD

SEAL:

STATE OF SOUTH CAROLINA
KEVIN R. CHAFIN
N. Charleston, SC
6374
REGISTERED ARCHITECT

US ARMY CORPS OF ENGINEERS
AFGHANISTAN ENGINEER DISTRICT

| Mark | Description | Date | Appr |
|---|---|---|---|
| | | | |
| | | | |
| | | | |
| | | | |
| | | | |
| | | | |
| | | | |

Rev: C
Date: 2/23/10
Design file no.
Drawing code:
File name: ANABOQSA-502HJS
Plot date: 2/23/2010
Plot scale: X:X

Designed by: KRC
Dwn by: EBB
Ckd by: NLJ
Reviewed by: LHM
Submitted by: BAKER

U.S. ARMY CORPS OF ENGINEERS
AFGHANISTAN ENGINEER DISTRICT
APO AE 96338

*Michael Baker Jr., Inc*
*A unit of Michael Baker Corporation*
Airside Business Park
100 Airside Drive
Moon Township, PA 15108
www.mbakercorp.com

AFGHAN NATIONAL ARMY
REGIONAL MILITARY TRAINING CENTER
STANDARD DESIGN

SENIOR BOQ BARRACKS

HEAD, JAMB & SILL DETAILS

Sheet reference number:
A-502

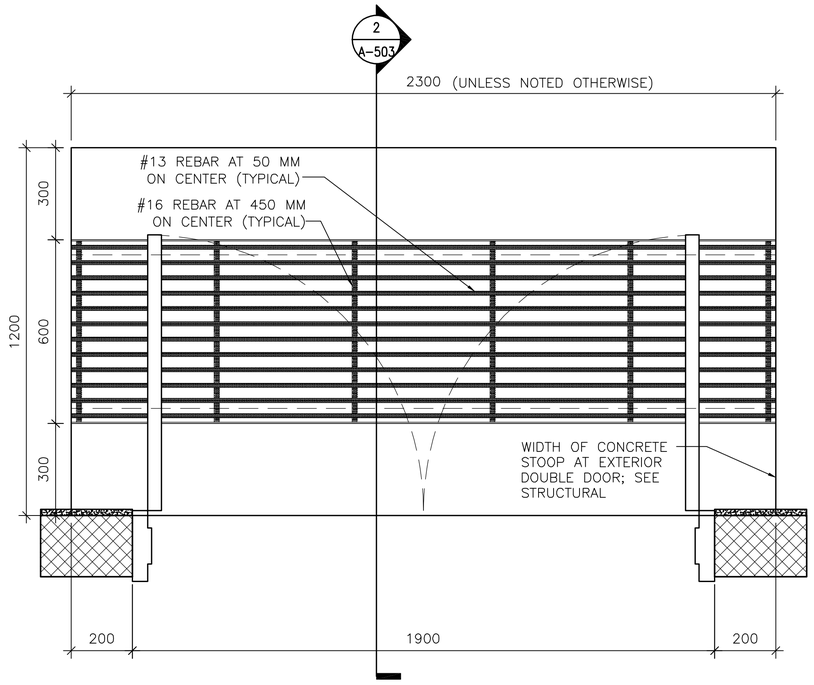


1 A-503 **DOOR STOOP PLAN (WITH GRATE)**

SCALE: 1:10

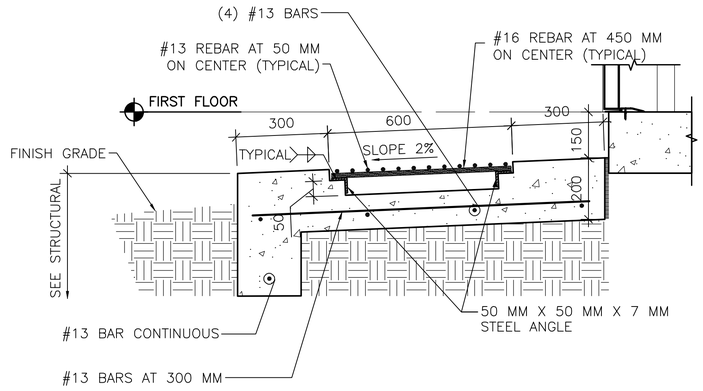


2 A-503 **DOOR STOOP DETAIL**

SCALE: 1:10

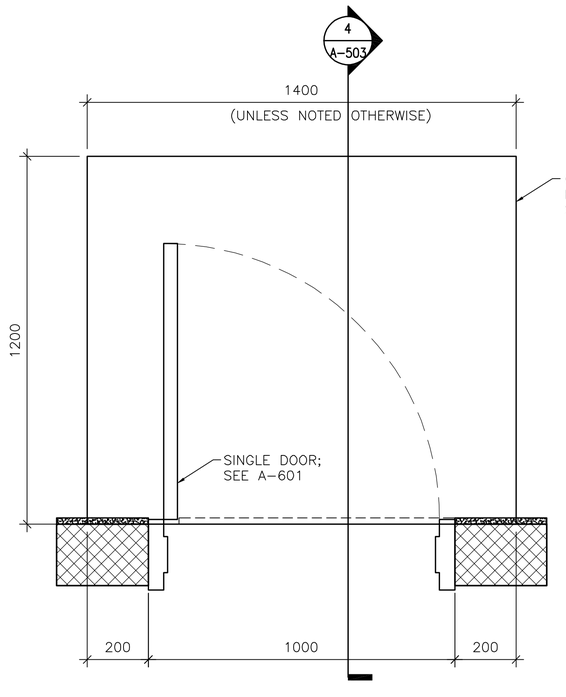


3 A-503 **DOOR STOOP PLAN (WITHOUT GRATE)**

SCALE: 1:10

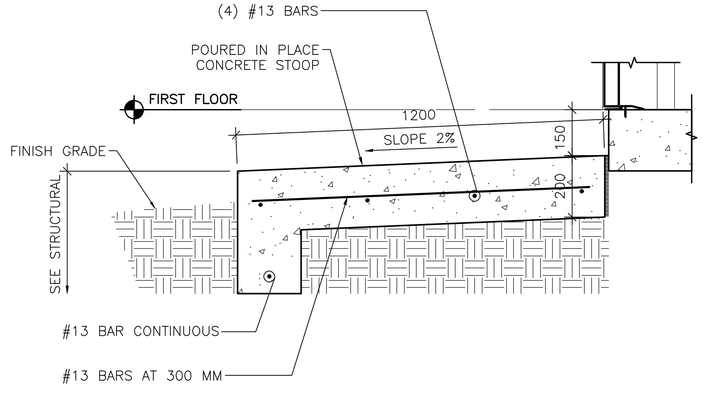


4 A-503 **DOOR STOOP DETAIL**

SCALE: 1:10

LINEAR DIMENSIONS SHOWN ARE IN MILLIMETERS (MM), UNLESS OTHERWISE NOTED

0 200 400

SCALE: 1:10

APPROVED:

A/E DESIGNER OF RECORD

SEAL:

STATE OF SOUTH CAROLINA
KEVIN R. CHAFIN
N. Charleston, SC
6374
REGISTERED ARCHITECT

US ARMY CORPS OF ENGINEERS
AFGHANISTAN ENGINEER DISTRICT

| Mark | Description | Date | Appr. |
|---|---|---|---|
| | | | |

Rev: 0

Date: 2/23/10
Design file no.
Drawing code:
File name: ANABOQSA-503DT
Plot date: 2/23/2010
Plot scale: X:X

Designed by: KRC
Drwn by: EBB
Ckd by: NLJ
Reviewed by: LHM
Submitted by: BAKER

U.S. ARMY CORPS OF ENGINEERS
AFGHANISTAN ENGINEER DISTRICT
APO AE 96338

*Michael Baker Jr., Inc*
*A unit of Michael Baker Corporation*
Airside Business Park
100 Airside Drive
Moon Township, PA 15108
www.mbakercorp.com

AFGHAN NATIONAL ARMY
REGIONAL MILITARY TRAINING CENTER
STANDARD DESIGN

SENIOR BOQ BARRACKS

STOOP DETAILS

Sheet reference number:
A-503

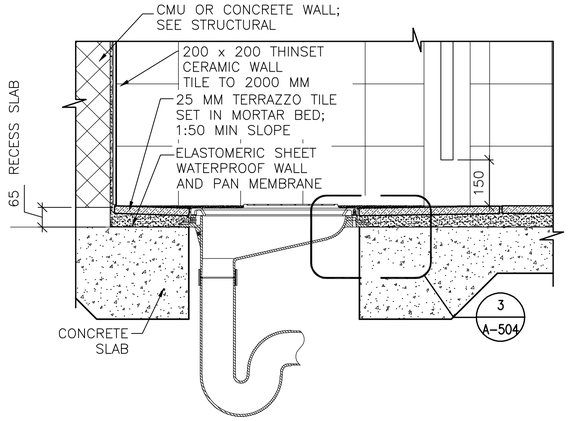


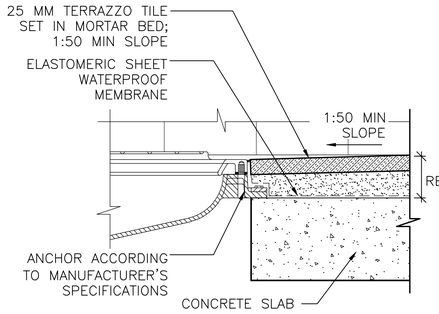


1 A-504 **LATRINE DETAIL**
**SCALE: 1:10**

3 A-504 **MOUNTING DETAIL**
**SCALE: 1:5**

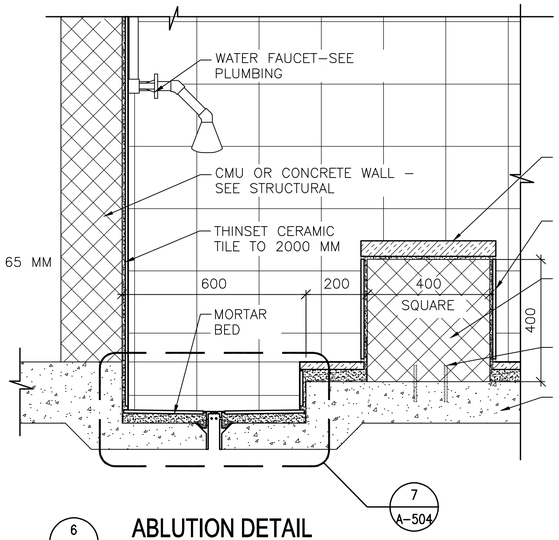


6 A-504 **ABLUTION DETAIL**
**SCALE: 1:10**

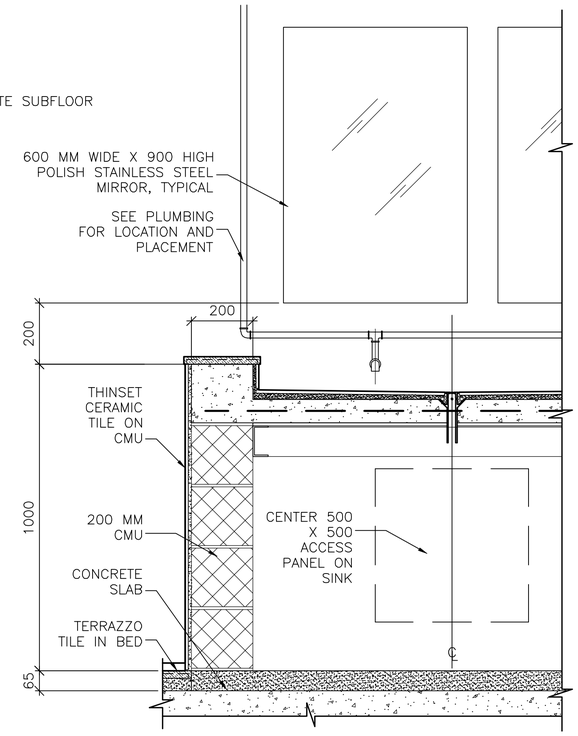


9 A-504 **LAVATORY SECTION**
**SCALE: 1:10**

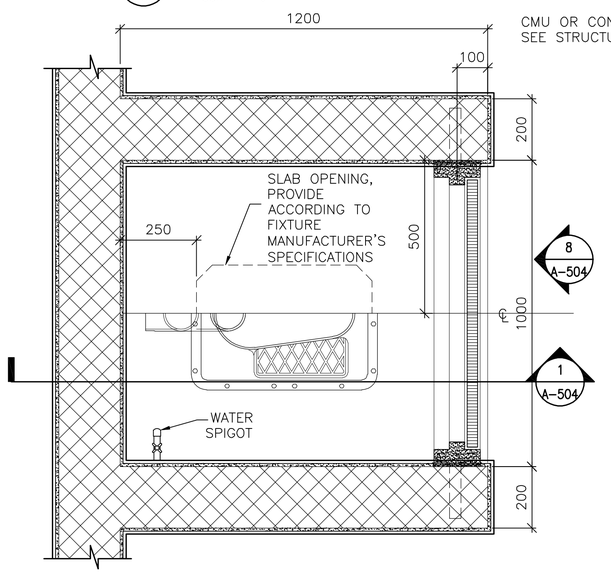


2 A-504 **TOILET DETAIL**
**SCALE: 1:10**

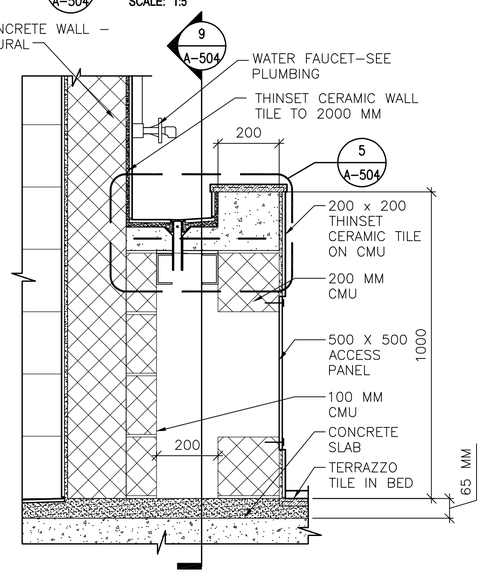


4 A-504 **LAVATORY SECTION**
**SCALE: 1:10**

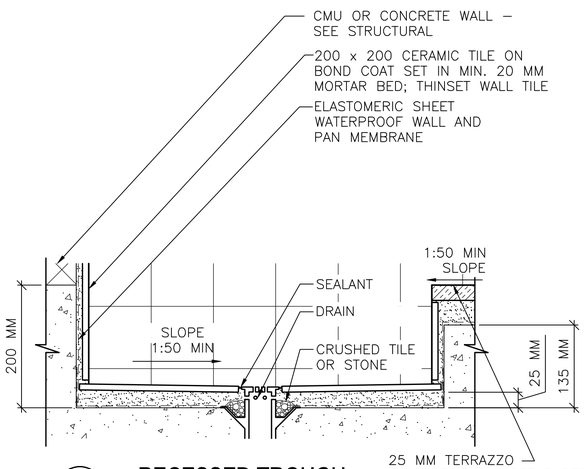


7 A-504 **RECESSED TROUGH**
**SCALE: 1:5**

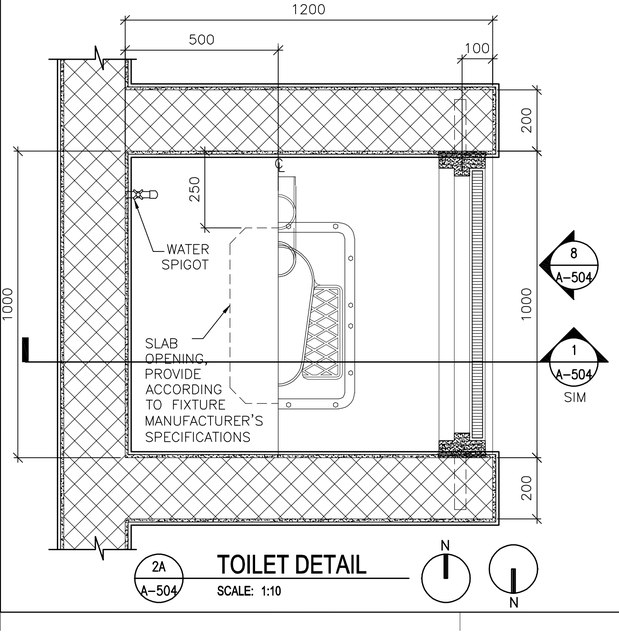


2A A-504 **TOILET DETAIL**
**SCALE: 1:10**

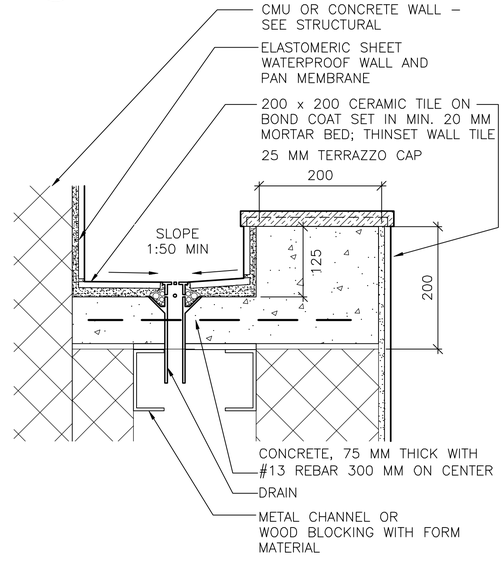


5 A-504 **LAVATORY DETAIL**
**SCALE: 1:5**

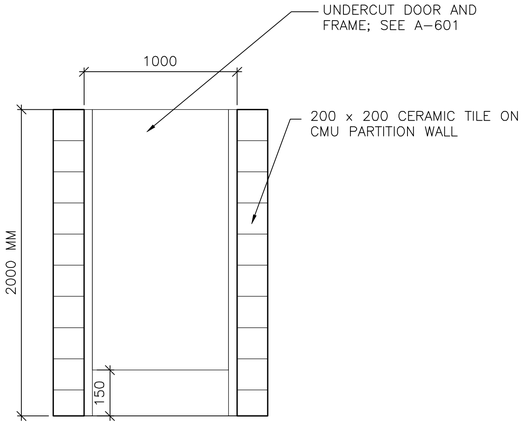


8 A-504 **TOILET PARTITION DOOR ELEVATION**
**SCALE: 1:20**

LINEAR DIMENSIONS SHOWN ARE IN MILLIMETERS (MM), UNLESS OTHERWISE NOTED

0 100 200
SCALE: 1:5

0 200 400
SCALE: 1:10

0 400 800
SCALE: 1:20

APPROVED:

A/E DESIGNER OF RECORD

SEAL:

STATE OF SOUTH CAROLINA
KEVIN R. CHAFIN
N. Charleston, SC 6374
REGISTERED ARCHITECT

US ARMY CORPS OF ENGINEERS
AFGHANISTAN ENGINEER DISTRICT

| Mark | Description | Date | Appr. |
|---|---|---|---|

Rev: 0
Date: 2/23/10
Design file no.
Drawing code:
File name: ANABOQSA-504DT
Plot date: 2/23/2010
Plot scale: x:X

Designed by: KRC
Dwn by: EBB
Ckd by: NLJ
Reviewed by: LHM
Submitted by: BAKER

U.S. ARMY CORPS OF ENGINEERS
AFGHANISTAN ENGINEER DISTRICT
APO AE 96338

*Michael Baker Jr., Inc*
*A unit of Michael Baker Corporation*
Airside Business Park
100 Airside Drive
Moon Township, PA 15108
www.mbakercorp.com

AFGHAN NATIONAL ARMY
REGIONAL MILITARY TRAINING CENTER
STANDARD DESIGN

SENIOR BOQ BARRACKS

TOILET, LAVATORY & ABLUTION DETAILS

Sheet reference number:
A-504

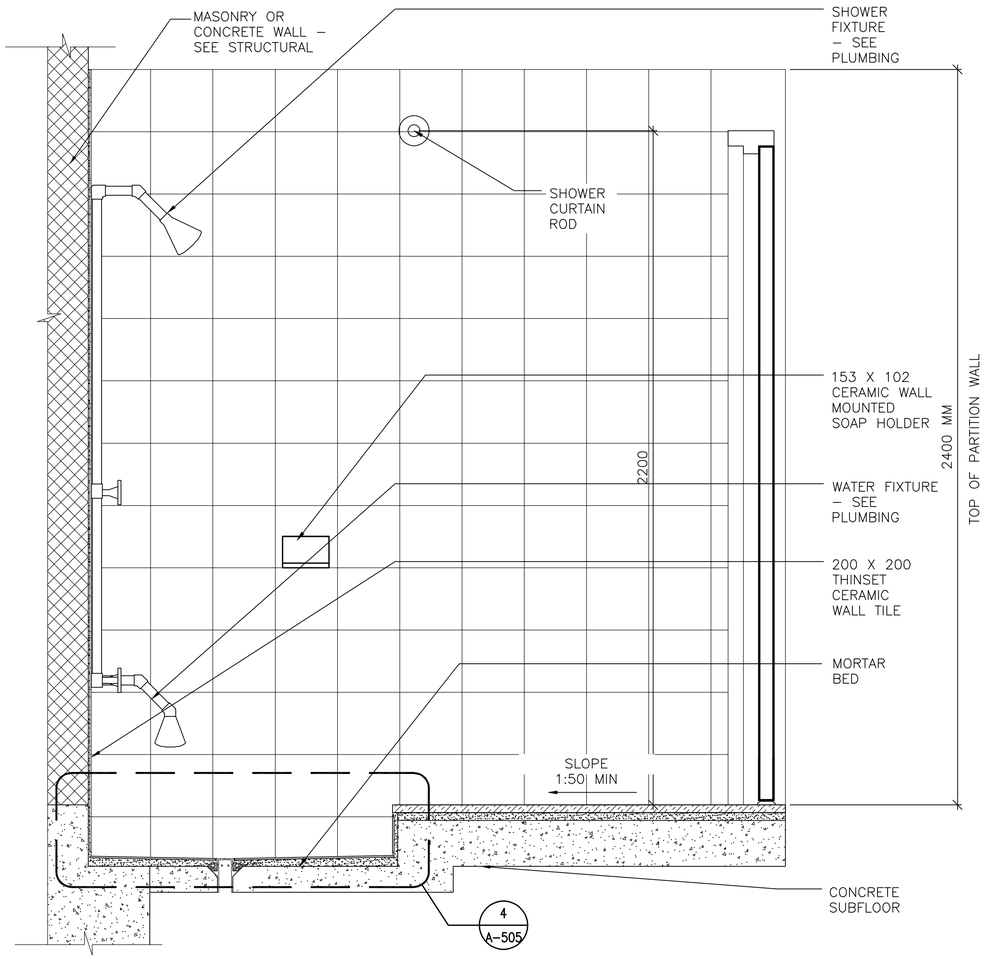


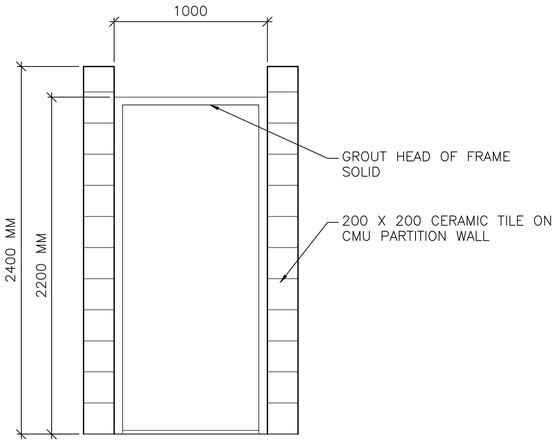


3 A–505 **SHOWER PARTITION DOOR ELEVATION**

SCALE: 1:20

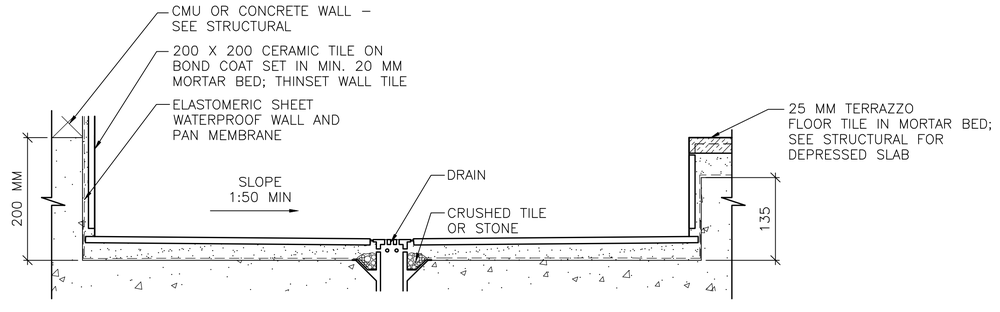


4 A–505 **SHOWER RECESS**

SCALE: 1:5

1 A–505 **SHOWER DETAIL**

SCALE: 1:10

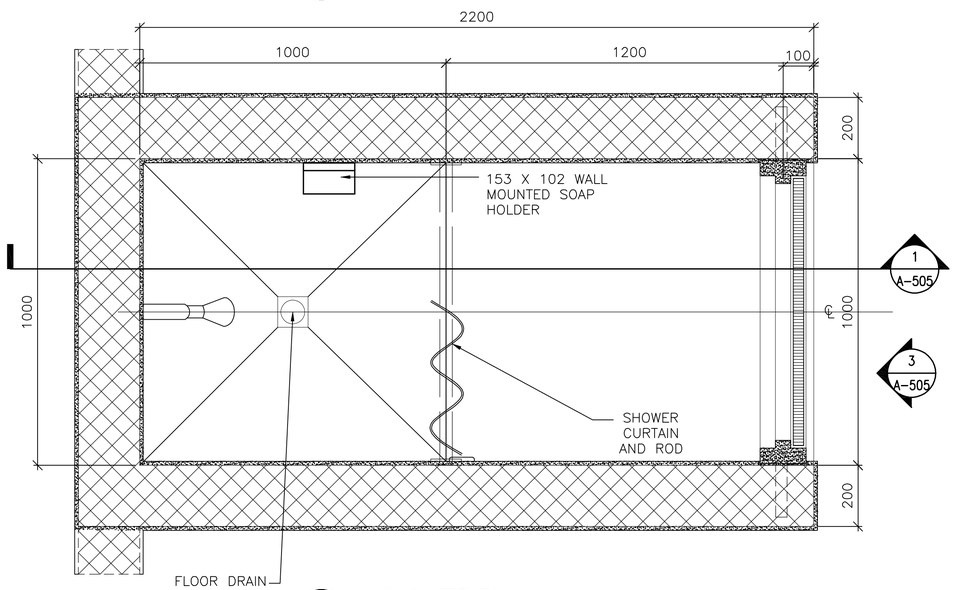


2 A–505 **SHOWER PLAN**

SCALE: 1:10

0 100 200
SCALE: 1:5

0 200 400
SCALE: 1:10

0 400 800
SCALE: 1:20

LINEAR DIMENSIONS SHOWN ARE IN MILLIMETERS (MM), UNLESS OTHERWISE NOTED

APPROVED:

A/E DESIGNER OF RECORD

SEAL:

STATE OF SOUTH CAROLINA
KEVIN R. CHAFIN
N. Charleston, SC
8374
REGISTERED ARCHITECT

US ARMY CORPS OF ENGINEERS
AFGHANISTAN ENGINEER DISTRICT

| Mark | Description | Date | Appr. | Mark | Description | Date | Appr. |
|---|---|---|---|---|---|---|---|
| | | | | | | | |

Designed by: KRC
Drwn by: EBB
Reviewed by: LHM
Submitted by: BAKER
Date: 2/23/10
Design file no.
Drawing code:
Rev: 0
Ckd by: NLJ
File name: ANABOQSA-5505T
Plot date: 2/23/2010
Plot scale: X:X

U.S. ARMY CORPS OF ENGINEERS
AFGHANISTAN ENGINEER DISTRICT
APO AE 96338

*Michael Baker Jr., Inc*
*A unit of Michael Baker Corporation*
Airside Business Park
100 Airside Drive
Moon Township, PA 15108
www.mbakercorp.com

AFGHAN NATIONAL ARMY
REGIONAL MILITARY TRAINING CENTER
STANDARD DESIGN

SENIOR BOQ BARRACKS

SHOWER DETAILS

Sheet reference number:
A–505

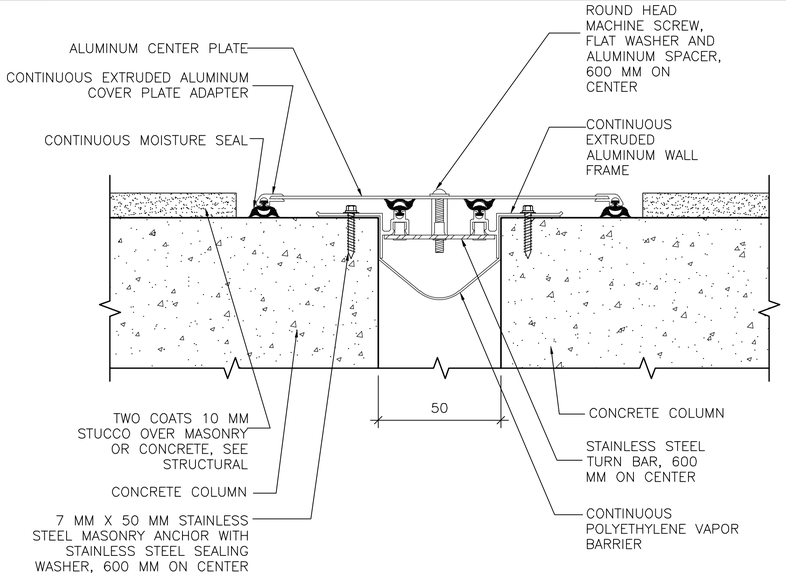


## 1 A–506 EXTERIOR ISOLATION JOINT COVER

SCALE: NTS

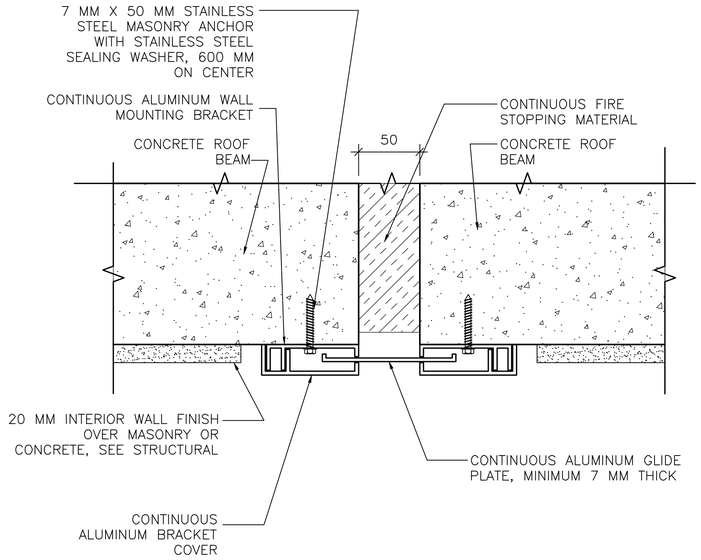


## 3 A–506 CEILING ISOLATION JOINT COVER

SCALE: NTS

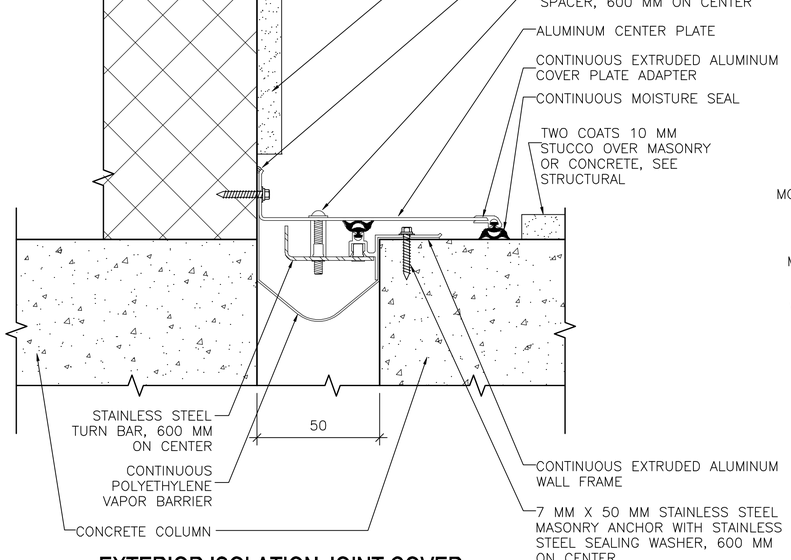


## 2 A–506 EXTERIOR ISOLATION JOINT COVER AT INSIDE CORNER

SCALE: NTS

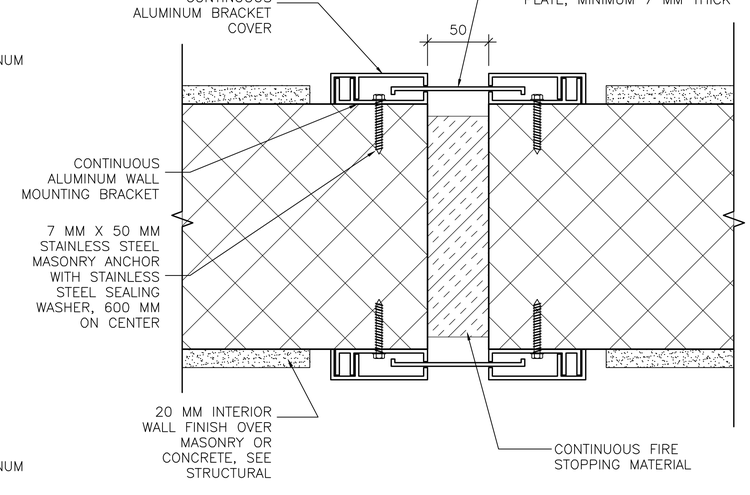


## 4 A–506 INTERIOR ISOLATION JOINT COVER

SCALE: NTS

LINEAR DIMENSIONS SHOWN ARE IN MILLIMETERS (MM), UNLESS OTHERWISE NOTED

APPROVED:

A/E DESIGNER OF RECORD

SEAL:

STATE OF SOUTH CAROLINA
KEVIN R. CHAFIN
N. Charleston, SC
6374
REGISTERED ARCHITECT

US ARMY CORPS OF ENGINEERS
AFGHANISTAN ENGINEER DISTRICT

| Mark | Description | Date | Appr. |
|---|---|---|---|
| | | | |

| Mark | Description | Date | Appr. |
|---|---|---|---|
| | | | |

U.S. ARMY CORPS OF ENGINEERS
AFGHANISTAN ENGINEER DISTRICT
APO AE 96338


Michael Baker Jr., Inc
A unit of Michael Baker Corporation
Airside Business Park
100 Airside Drive
Moon Township, PA 15108
www.mbakercorp.com


| | |
|---|---|
| Designed by: KRC | Date: 2/23/10 |
| Dwn by: KJG / Ckd by: NLJ | Design file no. |
| Reviewed by: LHM | Drawing code: |
| Submitted by: BAKER | File name: ANABOQSA-506DT<br>Plot date: 2/23/2010<br>Plot scale: x:x |

Rev: 0

AFGHAN NATIONAL ARMY
REGIONAL MILITARY TRAINING CENTER
STANDARD DESIGN

SENIOR BOQ BARRACKS

ISOLATION JOINT DETAILS

Sheet reference number:
A–506

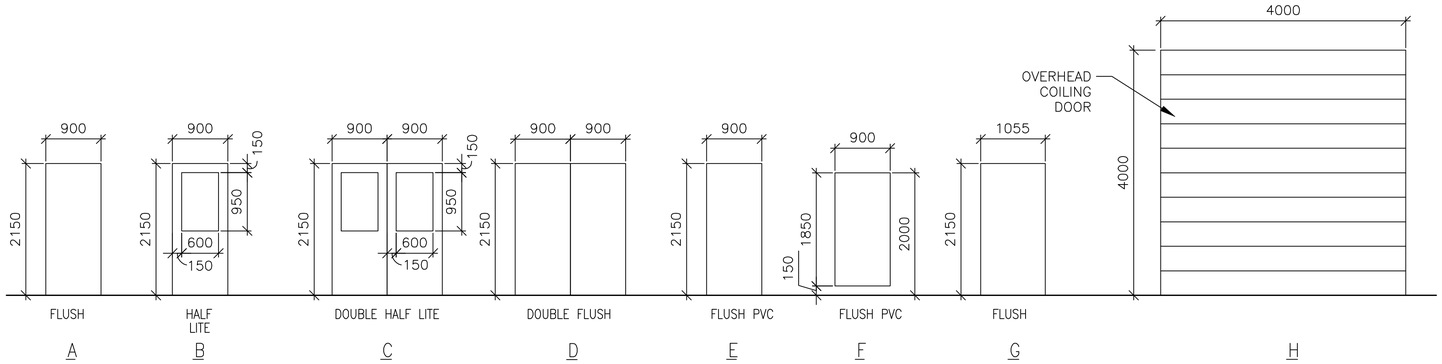


1 A-601 **DOOR TYPES**
SCALE: 1:50

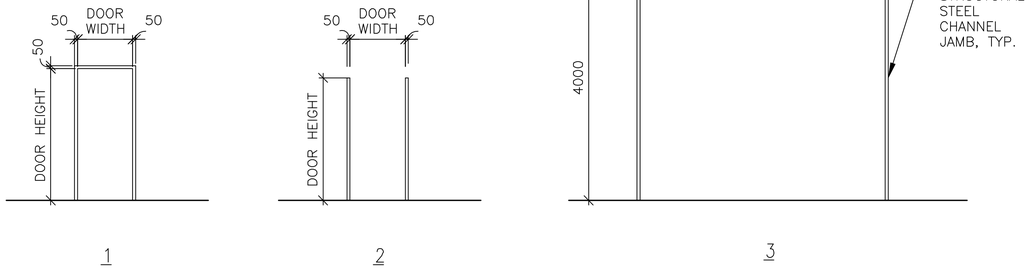


2 A-601 **FRAME TYPES**
SCALE: 1:50

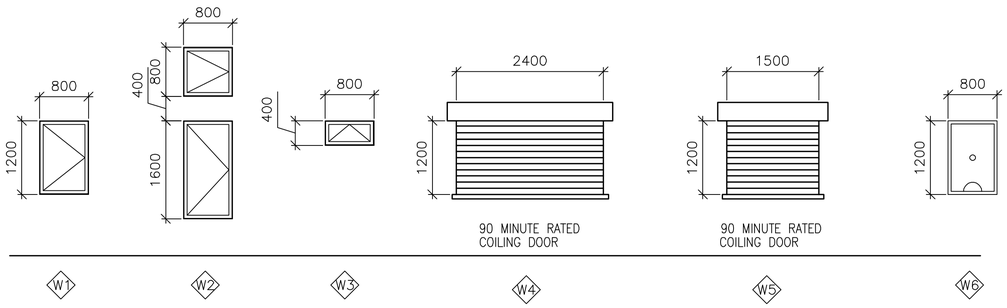


3 A-601 **WINDOW TYPES**
SCALE: 1:50

## WINDOW TYPE NOTES:

1. ALL EXTERIOR WINDOWS SHALL BE ALUMINUM WITH INSECT SCREENS. WINDOWS SHALL BE COMMERCIAL GRADE.
2. ALL EXTERIOR WINDOWS SHALL BE OPERABLE.

4 A-601 **DOOR TAG**
SCALE: NTS




5 A-601 **RATED DOOR TAG**
SCALE: NTS

## DOOR TAG NOTES:

1. THE DOOR TAG INDICATES THE DOOR TYPE, FRAME TYPE AND HARDWARE SET FOR EACH DOOR.
2. THE DOOR TAG FOR RATED DOORS INCLUDES THE RATING OF THE DOOR IN MINUTES.

## EXTERIOR DOOR HARDWARE TYPES:

HW-1 1-1/2 PR HINGES, A5112 114 X 114
1 EA RIM EXIT DEVICE, TYPE 1
1 EA CYLINDER. E09221A, GRADE 1
1 EA OVERHEAD CLOSER, C02061, LOW RESISTANCE
1 EA THRESHOLD, J32130
3 EA DOOR SILENCERS, L03011

HW-2 1-1/2 PR HINGES, A5112 114 X 114
1 EA LOCKSET, F13 ENTRY LOCK W/LEVER HANDLES, GRADE 1
1 EA OVERHEAD CLOSER, C02061, LOW RESISTANCE
1 EA THRESHOLD, J32130
3 EA DOOR SILENCERS, L03011

HW-3 3 PR HINGES, A5112 114 X 114
2 EA RIM EXIT DEVICE, TYPE 1
2 EA CYLINDER. GRADE 1
2 EA OVERHEAD CLOSER, C02061, LOW RESISTANCE
1 EA DOOR COORDINATOR, TYPE 21
1 EA ASTRAGAL
1 EA THRESHOLD, J32130
2 EA DOOR SILENCERS, L03011

HW-4 3 PR HINGES, A5112 114 X 114
1 EA LOCKSET W/LEVER HANDLES. GRADE 1, F13
1 EA OVERHEAD CLOSER, C02061, LOW RESISTANCE
2 EA MAGNETIC HOLDER PIN, ATTACHED TO DOOR LEAF
2 EA MAGNETIC HOLDER RECEIVER, ATTACHED TO STOOP
2 EA LEVER EXTENSION FLUSH BOLTS, L04081
1 EA ASTRAGAL
1 EA THRESHOLD, J32130
2 EA DOOR SILENCERS, L03011

## DOOR AND HARDWARE NOTES:

1. INTERIOR AND EXTERIOR METAL DOORS AND FRAME COLORS SHALL MATCH ADJACENT WALL COLORS AS SELECTED BY THE CONTRACTING OFFICER.
2. FRAMES, EXCEPT FIRE-RATED FRAMES, SHALL BE MOUNTED AND ADJUSTED IN ACCORDANCE WITH MANUFACTURER'S INSTRUCTIONS. FRAMES SHALL BE FASTENED WITH MINIMUM OF THREE ANCHORS PER JAMB AT EQUAL INTERVALS.
3. DIMENSIONS SHOWN ON DOOR TYPES DETAIL ARE BASED UPON MODULAR MASONRY (OR ROUGH OPENING), HEIGHT OF 2200 MM FOR STANDARD PERSONNEL DOORS. CONTRACTOR SHALL COORDINATE WITH DOOR SUPPLIER TO ENSURE THAT DIMENSIONS OF DOORS AND FRAMES PROVIDED ARE COMPATIBLE WITH DOOR OPENING DIMENSIONS.
4. HARDWARE SHALL BE HEAVY DUTY, COMMERCIAL GRADE, STAINLESS STEEL WITH A SATIN OR BRUSHED FINISH.
5. HARDWARE TYPES INCLUDE BUILDERS HARDWARE MANUFACTURERS ASSOCIATION (BMHA) NUMBER.
6. DOORS IN 2 HOUR RATED PARTITIONS SHALL BE 1.5 HOUR (90 MINUTE) RATED DOORS IN ACCORDANCE WITH NFPA 101, TABLE 8.3.4.2.
7. DOORS AT STAIR ENCLOSURES SHALL BE 1 HOUR (60 MINUTE) RATED AT 1 HOUR WALL IN ACCORDANCE WITH NFPA 101, TABLE 8.3.4.2.
8. DOORS IN 1 HOUR RATED WALLS SHALL BE 3/4 HOUR (45 MINUTE) RATED DOORS IN ACCORDANCE WITH NFPA 101, TABLE 8.3.4.2.
9. DOORS IN 1 HOUR RATED CORRIDOR WALLS SHALL BE 1/3 HOUR (20 MINUTE) IN ACCORDANCE WITH NFPA 101, TABLE 8.3.4.2.
10. PROVIDE DOOR STOPS TO PROTECT WALLS ON LOCATIONS WHERE DOOR SWING WILL STRIKE WALL.

THIS SHEET IS STANDARD AND IS INCLUSIVE OF ALL THE DOOR/ WINDOW/ HARDWARE TYPES FOR THE ENTIRE RMTC CONTRACT. NOT ALL DOOR/ WINDOW/ HARDWARE TYPES ARE USED FOR ANY PARTICULAR BUILDING DESIGN. CONTRACTOR SHALL REFER TO THE FLOOR PLAN FOR THE TYPES BEING USED.

## INTERIOR DOOR HARDWARE TYPES:

HW-5 1-1/2 PR HINGES, A8133 114 X 114
1 EA LOCKSET W/LEVER HANDLES, F08, GRADE 1
1 EA WALL STOP, L02101 OR L02161
3 EA DOOR SILENCERS, L03011

HW-6 1-1/2 PR HINGES, A8112 114 X 114
1 EA LOCKSET W/LEVER HANDLES, F08, GRADE 1
1 EA WALL STOP, L02101 OR L02161
1 EA OVERHEAD CLOSER, C02061, LOW RESISTANCE
3 EA DOOR SILENCERS, L03011

HW-7 1-1/2 PR HINGES, A8133
1 EA LOCKSET W/LEVER HANDLES, F13 GRADE 1
1 EA WALL STOP, L02101 OR L02161
2 EA MOP PLATE, J103
3 EA DOOR SILENCERS, L03011

HW-8 1-1/2 PR HINGES, A8112
1 EA LOCKSET W/LEVER HANDLES, F13 GRADE 1
1 EA WALL STOP, L02101 OR L02161
2 EA MOP PLATE, J103
1 EA OVERHEAD CLOSER, C02061, LOW RESISTANCE
3 EA DOOR SILENCERS, L03011

HW-9 1-1/2 PR HINGES, A5112 114 X 114
1 EA RIM EXIT DEVICE, TYPE 1
1 EA CYLINDER. E09221A, GRADE 1
1 EA OVERHEAD CLOSER, C02061, LOW RESISTANCE
3 EA DOOR SILENCERS, L03011

HW-10 3 PR HINGES, A5112 114 X 114
1 EA LOCKSET W/LEVER HANDLES. GRADE 1, F13
2 EA LEVER EXTENSION FLUSH BOLTS, L04081
1 EA ASTRAGAL
2 EA DOOR SILENCERS, L03011

HW-11 1-1/2 PR HINGES, A8112 114 X 114
1 EA LOCKSET W/LEVER HANDLES, F13, GRADE 1
1 EA WALL STOP, L02101 OR L02161
1 EA OVERHEAD CLOSER, C02061, LOW RESISTANCE
3 EA DOOR SILENCERS, L03011
1 EA ROBE HOOK

HW-12 1-1/2 PR HINGES, A8133
1 EA LATCHSET W/LEVER HANDLES, F76 GRADE 1
1 EA WALL STOP, L02101 OR L02161
2 EA MOP PLATE, J103
3 EA DOOR SILENCERS, L03011
1 EA ROBE HOOK

HW-13 3 PR HINGES, A5112 114 X 114
1 EA LOCKSET W/LEVER HANDLES. GRADE 1, F13
1 EA OVERHEAD CLOSER, C02061, LOW RESISTANCE
2 EA LEVER EXTENSION FLUSH BOLTS, L04081
1 EA ASTRAGAL
2 EA DOOR SILENCERS, L03011

HW-14 3 PR HINGES, A5112 114 X 114
2 EA RIM EXIT DEVICE, TYPE 1
2 EA CYLINDER. GRADE 1
2 EA OVERHEAD CLOSER, C02061, LOW RESISTANCE
1 EA DOOR COORDINATOR, TYPE 21
1 EA ASTRAGAL
2 EA DOOR SILENCERS, L03011

APPROVED:
A/E DESIGNER OF RECORD
SEAL:
STATE OF SOUTH CAROLINA
KEVIN R. CHAFIN
N. Charleston, SC
6374
REGISTERED ARCHITECT

US ARMY CORPS OF ENGINEERS
AFGHANISTAN ENGINEER DISTRICT

| Mark | Description | Date | Appr. |
|---|---|---|---|

Rev: 0
Date: 2/23/10
Design file no.
Drawing code:
File name: ANABOQSA-60150H
Plot date: 2/23/2010
Plot scale: X:X
Designed by: KRC
Dwn by: EBB
Ckd by: NLJ
Reviewed by: LHM
Submitted by: BAKER

U.S. ARMY CORPS OF ENGINEERS
AFGHANISTAN ENGINEER DISTRICT
APO AE 96338

*Michael Baker Jr., Inc.*
*A unit of Michael Baker Corporation*
Airside Business Park
100 Airside Drive
Moon Township, PA 15108
www.mbakercorp.com

AFGHAN NATIONAL ARMY
REGIONAL MILITARY TRAINING CENTER
STANDARD DESIGN

SENIOR BOQ BARRACKS

WINDOW AND DOOR SCHEDULES

Sheet reference number:
A-601

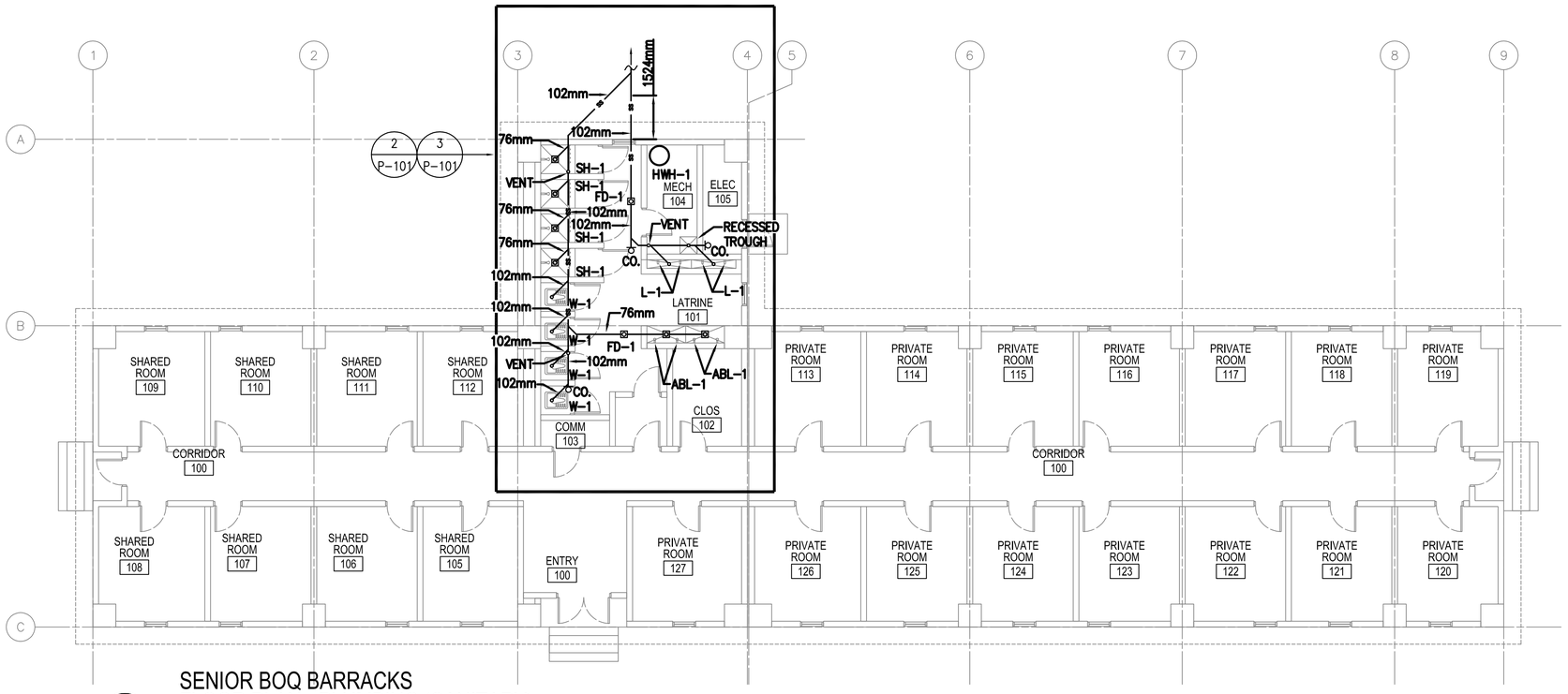


1 P-101 SENIOR BOQ BARRACKS
FLOOR PLAN - PLUMBING (SANITARY)
SCALE: 1:100

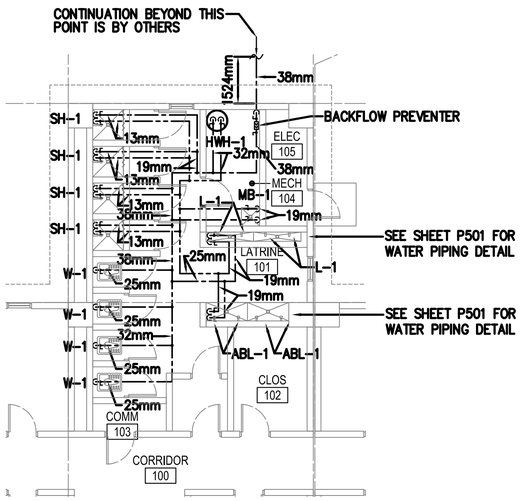


2 P-101 PARTIAL SENIOR BOQ BARRACKS
FLOOR PLAN - PLUMBING (HOT AND COLD WATER)
SCALE: 1:100

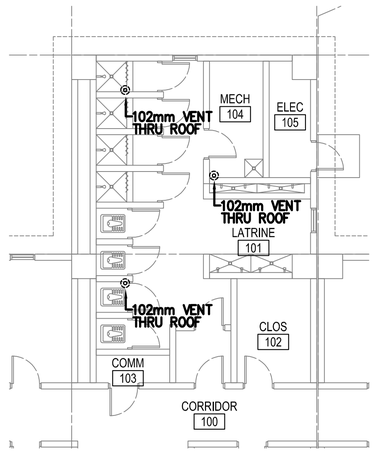


3 P-101 PARTIAL SENIOR BOQ BARRACKS
FLOOR PLAN - PLUMBING (VENT PIPING)
SCALE: 1:100

## PLUMBING SYMBOLS

- SANITARY SEWER PIPING (BELOW GROUND)
- SANITARY SEWER PIPING (ABOVE GROUND)
- VENT PIPING (V)
- COLD WATER PIPING (CW)
- HOT WATER PIPING (HW)
- BALL VALVE
- BACKFLOW PREVENTER
- OR CLEANOUT (CO.)
- ROOF PENETRATION

## FLOOR PLAN NOTES:

1. DO NOT SCALE DRAWINGS – ALL DIMENSIONS AND CONDITIONS SHALL BE CHECKED AND VERIFIED BY THE CONTRACTOR AT THE SITE.
2. ALL WORK PERFORMED ON THIS BUILDING SHALL BE IN COMPLIANCE WITH ALL PERTINENT CODES, RULES, ORDINANCES AND REGULATIONS OF THE GOVERNING AUTHORITIES.
3. ALL WORK PERFORMED UNDER AND IN CONNECTION WITH THESE DRAWINGS AND SPECIFICATIONS SHALL BE IN STRICT COMPLIANCE WITH THE LATEST SAFETY AND HEALTH STANDARDS.
4. REPORT ANY DISCREPANCIES FOUND IN THE PLUMBING DRAWINGS AND/OR IN THE SPECIFICATIONS DURING THE BIDDING PROCESS FOR CLARIFICATION BY THE ENGINEER.
5. ALL EASTERN STYLE WATER CLOSETS IN THIS FACILITY ARE TO HAVE THE FIXTURE DESIGNATION OF W-1. EACH FIXTURE SHALL HAVE A 25mm (1 INCH) COLD WATER LINE EXTENDED TO IT AND THEN BE REDUCED TO 13mm (1/2 INCH) FOR A FINAL CONNECTION TO THE FLUSH TANK AND A 102mm (4) INCH SANITARY CONNECTION.
6. ALL LAV FIXTURES IN THIS FACILITY ARE TO HAVE THE FIXTURE DESIGNATION OF L-1. EACH FIXTURE SHALL HAVE A 13mm (1/2 INCH) COLD WATER, 13mm (1/2 INCH) HOT WATER CONNECTION AND A 76mm (3 INCH) SANITARY CONNECTION.
7. ALL ABLUTION FIXTURES IN THIS FACILITY ARE TO HAVE THE FIXTURE DESIGNATION OF ABL-1. EACH FIXTURE SHALL HAVE A 13mm (1/2 INCH) COLD WATER, 13mm (1/2 INCH) HOT WATER CONNECTION AND A 76mm (3 INCH) SANITARY CONNECTION.
8. REFER TO SHEET P501, P502, AND P503 FOR DETAILS AND SYMBOLS.
9. ALL WATER, SANITARY AND VENT LINES TO BE EXPOSED. RUN LINES TIGHT TO CEILING AND WALL.

LINEAR DIMENSIONS SHOWN ARE IN MILLIMETERS (MM), UNLESS OTHERWISE NOTED

0 2000 4000
SCALE: 1:100

APPROVED:

A/E DESIGNER OF RECORD

SEAL:

COMMONWEALTH OF PENNSYLVANIA REGISTERED PROFESSIONAL MATTHEW R. SOTOSKY ENGINEER 065576-E

US ARMY CORPS OF ENGINEERS
AFGHANISTAN ENGINEER DISTRICT

| Mark | Description | Date | Appr. |
|---|---|---|---|

Rev: 0
Date: 02/23/10
Design file no.
Drawing code:
File name: ANABSOQSPL-101XX
Plot date: 02/26/2010
Plot scale: 1:50

Designed by: RMH
Dwn. by: RMH
Ckd by: CJM
Reviewed by:
Submitted by: BAKER

U.S. ARMY CORPS OF ENGINEERS
AFGHANISTAN ENGINEER DISTRICT
APO AE 96338

Michael Baker Jr., Inc
A unit of Michael Baker Corporation
Airside Business Park
100 Airside Drive
Moon Township, PA 15108
www.mbakercorp.com

AFGHAN NATIONAL ARMY
REGIONAL MILITARY TRAINING CENTER
STANDARD DESIGN

SENIOR BOQ BARRACKS
FLOOR PLAN – PLUMBING

Sheet reference number:
P-101

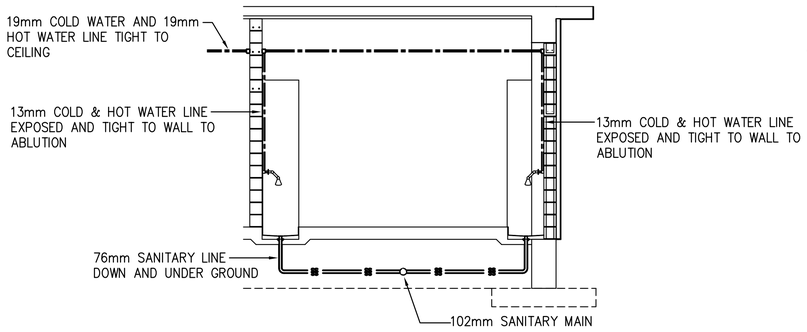


## TYPICAL ABLUTION SANITARY & WATER INSTALLATION SCHEMATIC

SCALE: N.T.S.

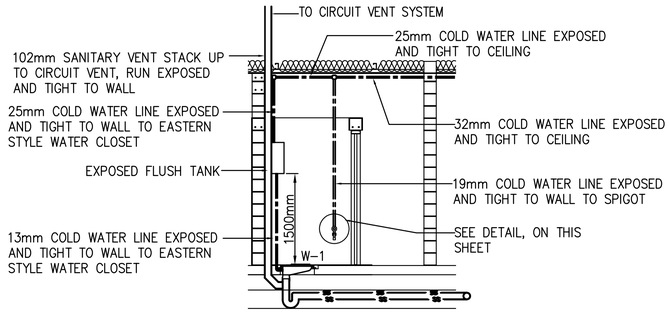


## TYPICAL EASTERN STYLE WATER CLOSET SANITARY & WATER INSTALLATION SCHEMATIC

SCALE: N.T.S.

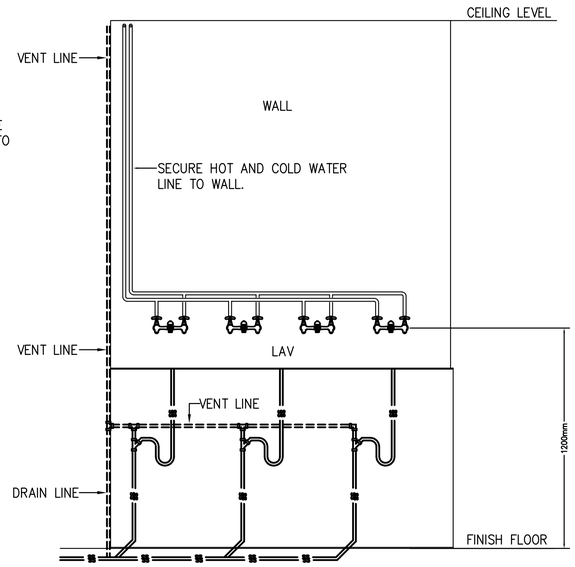


## LAVATORY ELEVATION PLAN - PLUMBING

SCALE: N.T.S.

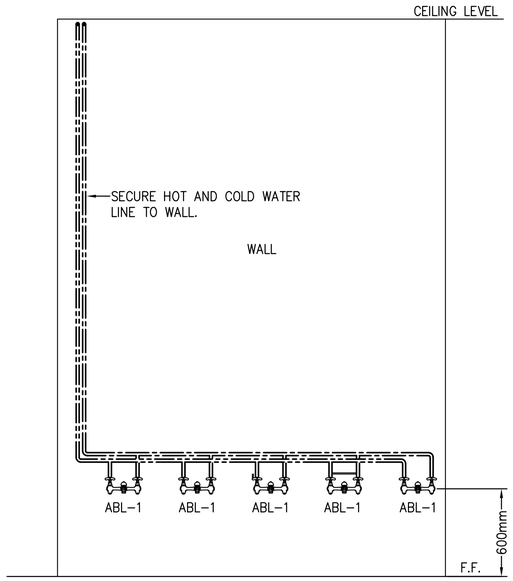


## TYPICAL ABLUTION ELEVATION PLUMBING PLAN - WATER INSTALLATION SCHEMATIC

SCALE: N.T.S.

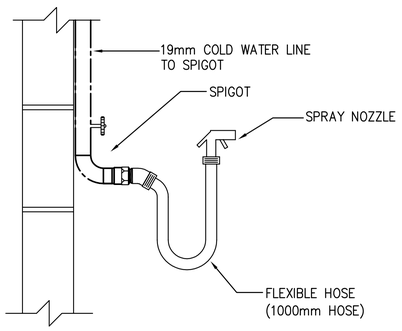


## TYPICAL DETAIL - SPIGOT, FLEXIBLE HOSE, AND SPRAY NOZZLE

SCALE: N.T.S.

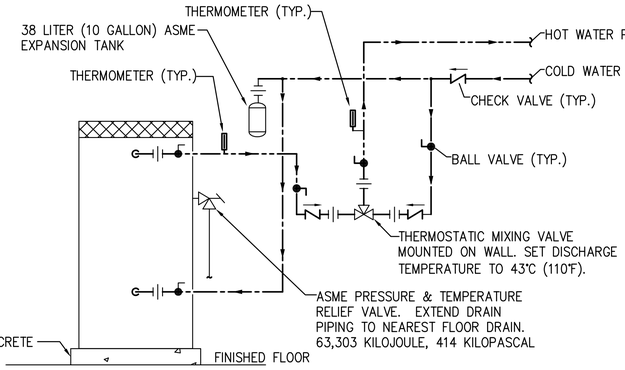


## ELECTRIC WATER HEATER PIPING SCHEMATIC

SCALE: N.T.S.

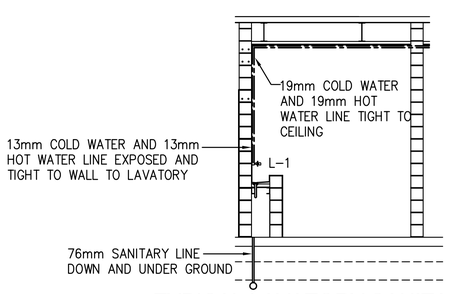


## TYPICAL LAVATORY SANITARY & WATER INSTALLATION SCHEMATIC

SCALE: N.T.S.

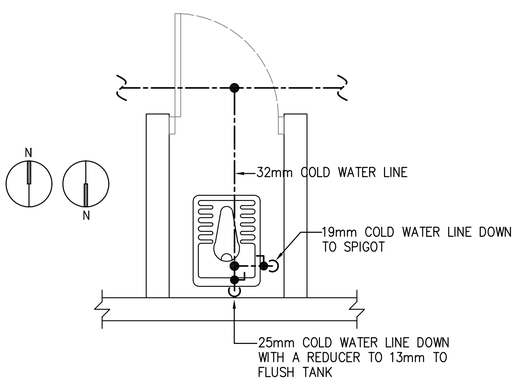


## TYPICAL EASTERN STYLE WATER CLOSET WITH SPIGOT WATER PIPING DETAIL

SCALE: N.T.S.

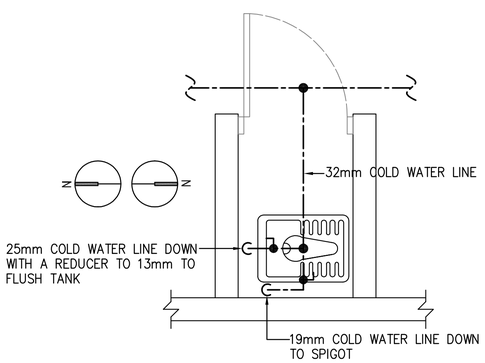


## TYPICAL EASTERN STYLE WATER CLOSET WITH SPIGOT WATER PIPING DETAIL

SCALE: N.T.S.

## GENERAL PLUMBING NOTES:

1. ALL SANITARY PIPING SHALL BE BELOW FLOOR, AND ALL WATER, AND VENT PIPING SHALL BE TIGHT TO CEILING, UNLESS OTHERWISE NOTED.

2. PLUMBING CONTRACTOR SHALL COORDINATE PLUMBING WORK WITH THE WORK OF ALL OTHER TRADES. VERIFY THE LOCATIONS OF ALL UTILITIES AT THE SITE PRIOR TO THE START OF ANY PLUMBING WORK.

3. COORDINATE ALL ACCESS PANEL LOCATIONS WITH THE ARCHITECT AND GENERAL CONTRACTOR.

4. ALL SANITARY PIPING BELOW SLAB SHALL BE A MINIMUM OF 51mm, UNLESS OTHERWISE NOTED OR AS REQUIRED BY THE LOCAL AUTHORITY HAVING JURISDICTION.

5. ALL SANITARY BRANCH LINES SHALL BE SLOPED AT 6mm PER 305mm, AND ALL MAIN LINES SHALL BE SLOPED AT 3mm PER 305mm, UNLESS OTHERWISE NOTED OR AS REQUIRED BY THE LOCAL AUTHORITY HAVING JURISDICTION.

6. THE CONTRACTOR SHALL BE RESPONSIBLE FOR COORDINATION WITH ALL UTILITY AUTHORITIES FOR INSTALLATION REQUIREMENTS, REGULATIONS, FEES, PERMITS, AND APPROVALS BEFORE THE START OF CONSTRUCTION.

7. THE CONTRACTOR SHALL ROUGH-IN AND CONNECT ALL EQUIPMENT REQUIRING WATER, WASTE, AND/OR VENT WHETHER OR NOT FURNISHED UNDER THIS CONTRACT. THE CONTRACTOR SHALL ALSO FURNISH AND INSTALL ALL NECESSARY PIPE, FITTINGS, VALVES, TRAPS, ETC., REQUIRED FOR A COMPLETE INSTALLATION, LEAVING SAME READY FOR SERVICE.

APPROVED:

A/E DESIGNER OF RECORD

SEAL:

COMMONWEALTH OF PENNSYLVANIA REGISTERED PROFESSIONAL MATTHEW R. SOTOSKY ENGINEER 065576-E

US ARMY CORPS OF ENGINEERS
AFGHANISTAN ENGINEER DISTRICT

| Mark | Description | Date | Appr. |
|---|---|---|---|

Rev: 0
Date: 02/23/10
Design file no.
Drawing code:
File name: ANABSOSPL-501XX
Plot date: 02/26/2010
Plot scale:1:100

Designed by: RMH
Dwn by: RMH
Ckd by: CJM
Reviewed by:
Submitted by: MRS

U.S. ARMY CORPS OF ENGINEERS
AFGHANISTAN ENGINEER DISTRICT
APO AE 96338

Michael Baker Jr., Inc
A unit of Michael Baker Corporation
Airside Business Park
100 Airside Drive
Moon Township, PA 15108
www.mbakercorp.com

AFGHAN NATIONAL ARMY
REGIONAL MILITARY TRAINING CENTER
STANDARD DESIGN

SENIOR BOQ BARRACKS
PLUMBING DETAILS

Sheet reference number:
P-501

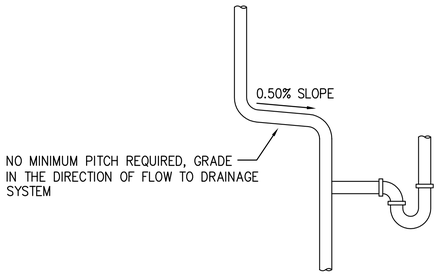


## TYPICAL VENT GRADE DETAILS

SCALE: N.T.S.

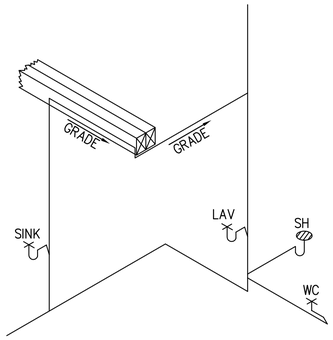


## TYPICAL VENT GRADE DETAILS

SCALE: N.T.S.

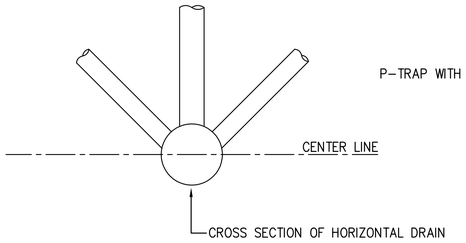


## ACCEPTABLE VENT CONNECTIONS TO HORIZONTAL DRAIN - DETAIL

SCALE: N.T.S.

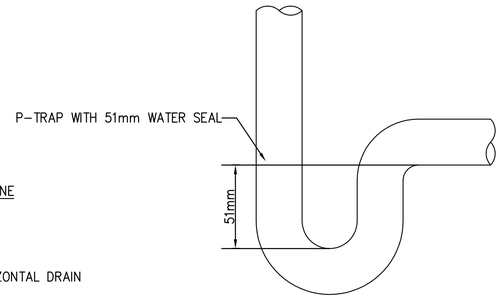


## P-TRAP WITH 51mm WATER SEAL DETAIL

SCALE: N.T.S.

## GENERAL PLUMBING NOTES:

1. ALL SANITARY PIPING SHALL BE BELOW FLOOR, AND ALL WATER, AND VENT PIPING SHALL BE TIGHT TO CEILING, UNLESS OTHERWISE NOTED.

2. PLUMBING CONTRACTOR SHALL COORDINATE PLUMBING WORK WITH THE WORK OF ALL OTHER TRADES. VERIFY THE LOCATIONS OF ALL UTILITIES AT THE SITE PRIOR TO THE START OF ANY PLUMBING WORK.

3. ALL SANITARY PIPING BELOW SLAB SHALL BE A MINIMUM OF 51mm, UNLESS OTHERWISE NOTED OR AS REQUIRED BY THE LOCAL AUTHORITY HAVING JURISDICTION.

4. ALL SANITARY BRANCH LINES SHALL BE SLOPED AT 6mm PER 305mm, AND ALL MAIN LINES SHALL BE SLOPED AT 3mm PER 305mm, UNLESS OTHERWISE NOTED OR AS REQUIRED BY THE LOCAL AUTHORITY HAVING JURISDICTION.

5. THE CONTRACTOR SHALL BE RESPONSIBLE FOR COORDINATION WITH ALL UTILITY AUTHORITIES FOR INSTALLATION REQUIREMENTS, REGULATIONS, FEES, PERMITS, AND APPROVALS BEFORE THE START OF CONSTRUCTION.

6. THE CONTRACTOR SHALL ROUGH-IN AND CONNECT ALL EQUIPMENT REQUIRING WATER, WASTE, AND/OR VENT WHETHER OR NOT FURNISHED UNDER THIS CONTRACT. THE CONTRACTOR SHALL ALSO FURNISH AND INSTALL ALL NECESSARY PIPE, FITTINGS, VALVES, TRAPS, ETC., REQUIRED FOR A COMPLETE INSTALLATION, LEAVING SAME READY FOR SERVICE.

## FIXTURE LIST

| TYPE | ITEM | SOIL & WASTE | VENT | COLD WATER | HOT WATER | REMARKS | REMARKS 2 |
|---|---|---|---|---|---|---|---|
| W-1 | EASTERN STYLE WATER CLOSET | 102mm | 51mm | 13mm | ------ | FLUSH TANK | LOW FLOW EFFICIENT TYPE |
| L-1 | TROUGH FIXTURE | 38mm | 38mm | 13mm | 13mm | FABRICATED IN FIELD | LOW FLOW EFFICIENT TYPE |
| ABL-1 | ABLUTION | FLOOR DRAIN | ------ | 13mm | 13mm | FABRICATED IN FIELD | ---------- |
| HWH-1 | WATER HEATER | --- | --- | SEE DWG. | SEE DWG. | 151 LITER ELECTRIC WATER HEATER, 380/3ø, 9KW | ---------- |
| SH-1 | SHOWER | 76mm | --- | 13mm | 13mm | DRAIN AND SHOWER CONTROLS | ---------- |

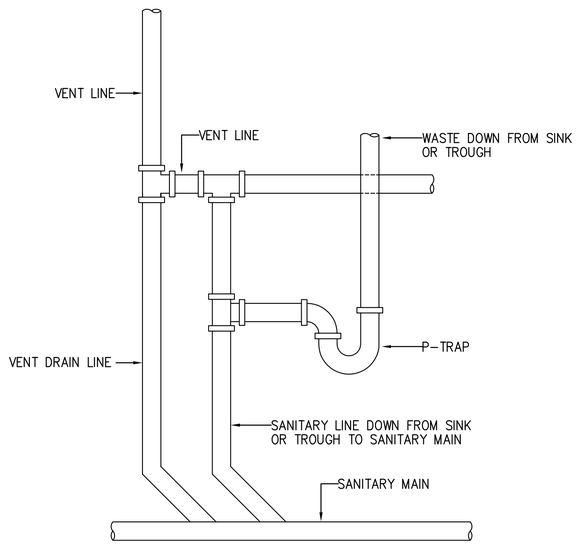


## TYPICAL LAVATORY/LAUNDRY VENT DETAIL

SCALE: N.T.S.

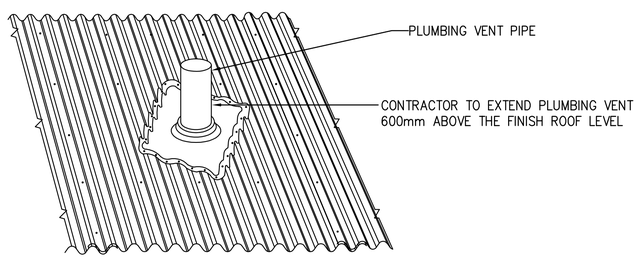


## PLUMBING VENT THRU ROOF DETAIL

SCALE: NTS

APPROVED:

A/E DESIGNER OF RECORD

SEAL:

US ARMY CORPS OF ENGINEERS
AFGHANISTAN ENGINEER DISTRICT

| Mark | Description | Date | Appr. |
|---|---|---|---|
| | | | |

Rev: 0
Date: 02/23/10
Design file no.
Drawing code:
File name: ANABSOSPI-502XXX
Plot date: 02/09/2010
Plot scale: 1:100

Designed by: RMH
Dwn by: RMH
Ckd by: CJM
Reviewed by:
Submitted by: MRS

U.S. ARMY CORPS OF ENGINEERS
AFGHANISTAN ENGINEER DISTRICT
APO AE 96338

*Michael Baker Jr., Inc*
*A unit of Michael Baker Corporation*
Airside Business Park
100 Airside Drive
Moon Township, PA 15108
www.mbakercorp.com

AFGHAN NATIONAL ARMY
REGIONAL MILITARY TRAINING CENTER
STANDARD DESIGN

SENIOR BOQ BARRACKS
PLUMBING DETAILS

Sheet reference number:
P-502

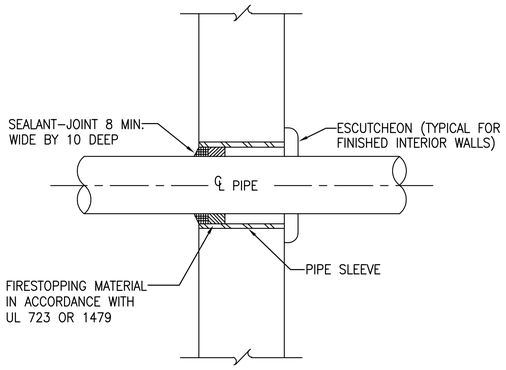


## TYPICAL WALL PENETRATION DETAIL

SCALE: N.T.S.

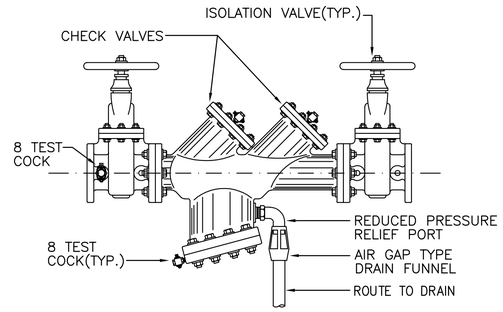


## TYPICAL BACKFLOW PREVENTER DETAIL

SCALE: N.T.S.

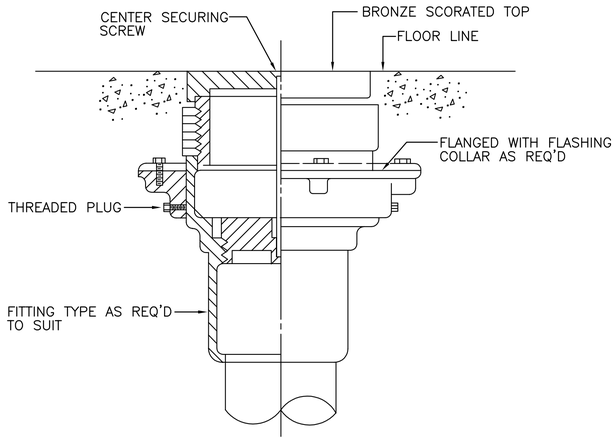


## TYPICAL FLOOR CLEANOUT DETAIL

SCALE: N.T.S.

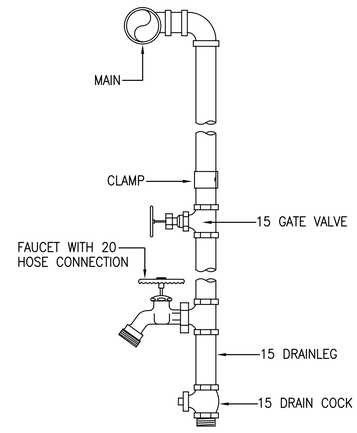


## TYPICAL WATER DROP DETAIL

SCALE: N.T.S.

US ARMY CORPS OF ENGINEERS
AFGHANISTAN ENGINEER DISTRICT

| Mark | Description | Date | Appr. | Mark | Description | Date | Appr. |
|---|---|---|---|---|---|---|---|

Designed by: RMH
Dwn by: RMH
Ckd by: CJM
Reviewed by:
Submitted by: MRS
Date: 02/23/10
Rev: 0
Design file no.
Drawing code:
File name: ANABOOSPL-503XXX
Plot date: 02/08/2010
Plot scale:1:100

U.S. ARMY CORPS OF ENGINEERS
AFGHANISTAN ENGINEER DISTRICT
APO AE 96338

Michael Baker Jr., Inc
A unit of Michael Baker Corporation
Airside Business Park
100 Airside Drive
Moon Township PA 15108
www.mbakercorp.com

AFGHAN NATIONAL ARMY
REGIONAL MILITARY TRAINING CENTER
STANDARD DESIGN

SENIOR BOQ BARRACKS
PLUMBING DETAILS

APPROVED:

A/E DESIGNER OF RECORD

SEAL:

COMMONWEALTH OF PENNSYLVANIA
REGISTERED PROFESSIONAL
MATTHEW R. SOTOSKY
ENGINEER
046576-E

Sheet reference number:
P–503

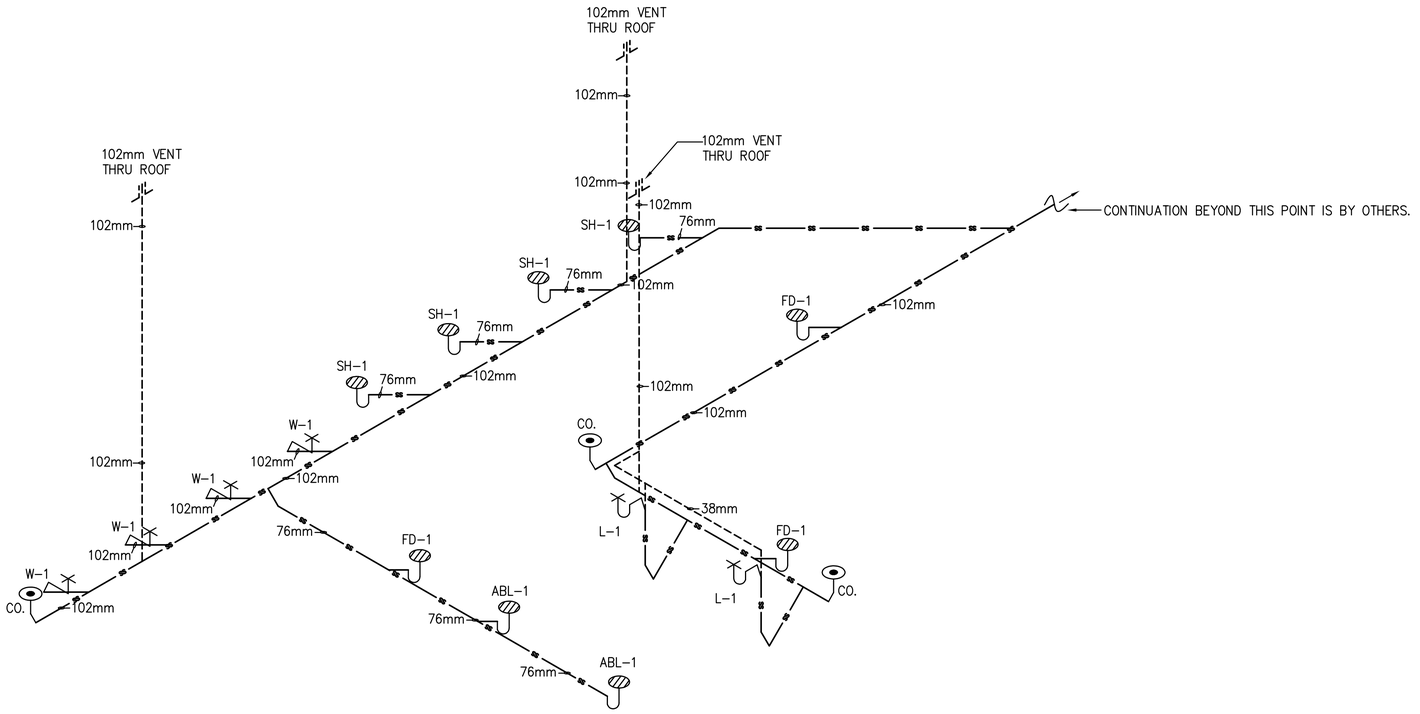


1 P-901 **BOQS DRAINAGE ISOMETRIC**

SCALE: N.T.S.

## PLUMBING SYMBOLS

- SANITARY SEWER PIPING (BELOW GROUND)
- SANITARY SEWER PIPING (ABOVE GROUND)
- VENT PIPING (V)
- COLD WATER PIPING (CW)
- HOT WATER PIPING (HW)
- BALL VALVE
- BACKFLOW PREVENTER
- CLEANOUT (CO.) OR
- ROOF PENETRATION




2 P-901 **BOQS HOT AND COLD WATER ISOMETRIC**

SCALE: N.T.S.

APPROVED:

A/E DESIGNER OF RECORD

SEAL:

COMMONWEALTH OF PENNSYLVANIA REGISTERED PROFESSIONAL MATTHEW R. SOTOSKY ENGINEER 046576-E

US ARMY CORPS OF ENGINEERS
AFGHANISTAN ENGINEER DISTRICT

| Mark | Description | Date | Appr. |
|---|---|---|---|
| | | | |

Rev: 0
Date: 02/23/10
Design file no.
Drawing code:
File name: ANABOQSPL-001XXX
Plot date: 02/26/2010
Plot scale: N.T.S.

Designed by: RMH
Dwn by: RMH
Ckd by: CJM
Reviewed by:
Submitted by: BAKER

U.S. ARMY CORPS OF ENGINEERS
AFGHANISTAN ENGINEER DISTRICT
APO AE 96338

*Michael Baker Jr., Inc.*
*A unit of Michael Baker Corporation*
Airside Business Park
100 Airside Drive
Moon Township, PA 15108
www.mbakercorp.com

AFGHAN NATIONAL ARMY
REGIONAL MILITARY TRAINING CENTER
STANDARD DESIGN

SENIOR BOQ BARRACKS
PLUMBING ISOMETRICS

Sheet reference number:
P-901

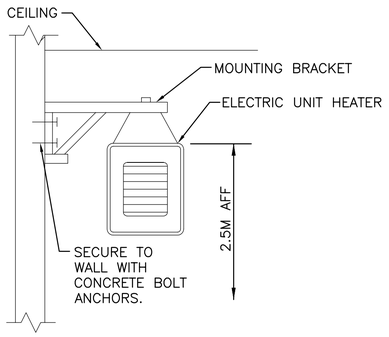


2 M-101 N.T.S.

## ELECTRIC UNIT HEATER MOUNTING DETAIL

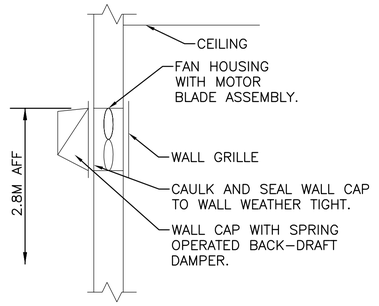


3 M-101 N.T.S.

## WALL EXHAUST FAN DETAIL

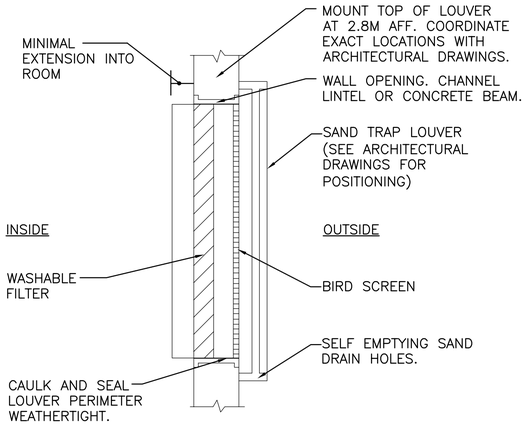


4 M-101 N.T.S.

## FILTERED SAND TRAP LOUVER

## EXHAUST FAN SCHEDULE

| NO. | TYPE | FAN CMS | DRIVE | HP | SP mmH20 | ELECTRICAL DATA | SWITCH |
|---|---|---|---|---|---|---|---|
| EF-1 | WALL | 0.330 | DIRECT | 1/6 | 13 | 220/1/50 | @ WALL |
| EF-2 | WALL | 0.035 | DIRECT | FRACT | 13 | 220/1/50 | @ WALL |
| EF-3 | WALL | 0.035 | DIRECT | FRACT | 13 | 220/1/50 | W/ STAT |

NOTES:
1. FANS SHALL HAVE LOW LEAKAGE GRAVITY LOUVER.

## MAKE UP AIR HEATERS

| NO. | BLOWER CMS | FUSE | KW | MIN. TEMP RISE °C | SP mmH20 | ELECTRICAL DATA | CONTROL |
|---|---|---|---|---|---|---|---|
| MUA-1 | 0.284 | 60 | 10 | 20 | 13 | 220/1/50 | REMOTE |

NOTES:
1. PROVIDE REMOTE MOUNTED THERMOSTAT WITH LOCKING COVER.
2. INTERLOCK BLOWER OPERATION WITH EXHAUST FANS EF-1 & STAT.
3. PROVIDE AIR SENSING SWITCH FOR HEATING OPERATION.

## ELECTRIC UNIT HEATER SCHEDULE

| NO. | CMS | KW | F.A.T. °C | ELECT. CHAR. | MOUNTING |
|---|---|---|---|---|---|
| EH-2 | 0.200 | 2.6 | 38 | 380/1/50 | WALL HUNG |

NOTES:
1. UNIT HEATERS SHALL HAVE TAMPER PROOF INTEGRAL STATS.
2. FINAL ELECTRICAL CONNECTIONS BY EC.

## CEILING FAN

| NO. | BLADE SIZE mm | BLADE SIZE IN | VOLTAGE | SWITCH | REMARKS |
|---|---|---|---|---|---|
| CF-1 | 1320 | 52 | 220/1/50 | @ WALL | 3 SPEED REVERSIBLE MOTOR |

NOTES:
1. INSTALL FANS 2.5M AFF.
2. PROVIDE WITH OUT LIGHT FIXTURE.
3. PROVIDE WITH REMOTE MOUNTED ON-OFF SWITCH SHOWN ON ELECTRICAL DRAWINGS.

## GENERAL NOTES:

1. DO NOT SCALE DRAWINGS – ALL DIMENSIONS AND CONDITIONS SHALL BE CHECKED AND VERIFIED BY THE CONTRACTOR AT THE SITE.
2. ALL WORK PERFORMED ON THIS BUILDING SHALL BE IN COMPLIANCE WITH ALL PERTINENT CODES, RULES, ORDINANCES AND REGULATIONS OF THE GOVERNING AUTHORITIES.
3. ALL WORK PERFORMED UNDER AND IN CONNECTION WITH THESE DRAWINGS AND SPECIFICATIONS SHALL BE IN STRICT COMPLIANCE WITH THE LATEST SAFETY AND HEALTH STANDARDS.

## SYMBOLS:

- (X) KEY NOTE
- (0.050) AIR VOLUME IN CUBIC METERS PER SECOND (CMS)
- UC DOOR UNDERCUT
- TG 200x400 (8x16) TRANSFER GRILLE
- $ SINGLE POLE SWITCH – 20A RATED

## ABBREVIATIONS:

| | |
|---|---|
| AFF | ABOVE FINISH FLOOR |
| CF | CEILING FANS |
| CMS | CUBIC METERS PER SECOND |
| EC | ELECTRICAL CONTRACTOR |
| STATS | THERMOSTATS |

## KEY NOTE:

1. INLINE EXHAUST FAN DUCTED TO WALL CAP WITH LOW LEAKAGE GRAVITY BACK-DRAFT DAMPER. SECURE FAN TO STRUCTURE ABOVE AND INTERLOCK WITH MAKE UP AIR HEATER.
2. ELECTRIC MAKE UP AIR HEATER SECURED TO STRUCTURE ABOVE. BLOWER SHALL BE SET TO ENERGIZE WITH EXHAUST FAN EF-1 & STAT, HEAT SHALL BE CONTROLLED BY STAT.
3. WALL EXHAUST FAN WITH LOW SPRING OPERATED BACK-DRAFT DAMPER. SEE DETAIL 3 THIS SHEET.
4. 600X600 (24X24) INTAKE LOUVER FOR MAKE UP AIR UNIT. PROVIDE WEATHER PROOF LOUVER WITH 50mm (2") WASHABLE FILTER AND SAND TRAP.
5. 200x150 (8x6) ALUMINUM DUCT MOUNTED SUPPLY GRILLE WITH ADJUSTABLE OPPOSED BLADE DAMPERS. BALANCE EACH GRILLE TO 0.070 CMS.
6. 150x150 (6x6) ALUMINUM DUCT MOUNTED EXHAUST GRILLE WITH ADJUSTABLE OPPOSED BLADE DAMPERS. BALANCE EACH GRILLE TO 0.075 CMS.
7. 150x150 (6x6) ALUMINUM WALL MOUNTED EXHAUST GRILLE WITH ADJUSTABLE OPPOSED BLADE DAMPERS. BALANCE GRILLE TO 0.030 CMS.
8. THERMOSTAT MOUNTED AS HIGH AS POSSIBLE. INTERLOCK STAT WITH CORRESPONDING EXHAUST FAN, SET FAN TO ENERGIZE ON RISE IN TEMPERATURE ABOVE 25°C (77°F).

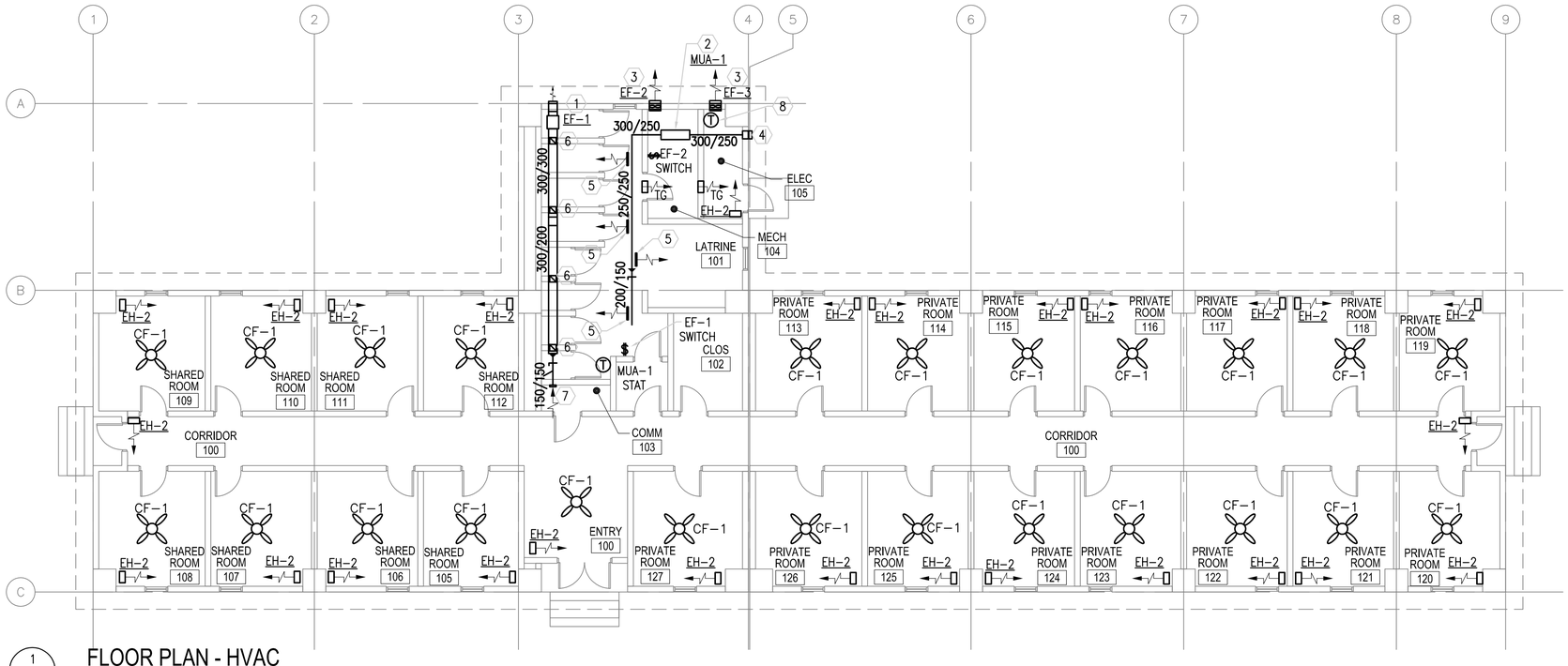


1 M-101 SCALE: 1:100

## FLOOR PLAN - HVAC

LINEAR DIMENSIONS SHOWN ARE IN MILLIMETERS (MM), UNLESS OTHERWISE NOTED

0 2000 4000
SCALE: 1:100

APPROVED:

A/E DESIGNER OF RECORD

SEAL:

COMMONWEALTH OF PENNSYLVANIA REGISTERED PROFESSIONAL MATTHEW R. SOTOSKY ENGINEER 065578-E

US ARMY CORPS OF ENGINEERS
AFGHANISTAN ENGINEER DISTRICT

| Mark | Description | Date | Appr. |
|---|---|---|---|
| | | | |

Date: 02/23/10
Rev: 0
Designed by: RML
Drawn by: JUN
Chkd by: CJM
Reviewed by: MRS
Submitted by: BAKER
Design file no.
Drawing code:
File name: ANABOQSMM-101XXX
Plot date: 02/26/2010
Plot scale: 1:100

U.S. ARMY CORPS OF ENGINEERS
AFGHANISTAN ENGINEER DISTRICT
APO AE 96338

Michael Baker Jr., Inc
A unit of Michael Baker Corporation
Airside Business Park
100 Airside Drive
Moon Township, PA 15108
www.mbakercorp.com

AFGHAN NATIONAL ARMY
REGIONAL MILITARY TRAINING CENTER
STANDARD DESIGN

SENIOR BOQ BARRACKS
HVAC – FLOOR PLAN, SCHEDULES AND DETAILS

Sheet reference number:
M-101

## POWER

- DISTRIBUTION PANELBOARD
- NEW PANELBOARD – SURFACE
- NEW PANELBOARD – RECESSED
- (G) GENERATOR
- TRANSFORMER (DRAWN TO SCALE)
- [J] JUNCTION BOX
- (J) JUNCTION BOX – CEILING
- FUSIBLE SAFETY SWITCH
- (M) MOTOR
- $^{M}$ MOTOR STARTING SWITCH – 220V, 20A RATED UNLESS OTHERWISE NOTED
- ELECTRIC WATER HEATER
- (CF) CEILING FAN – REFER TO SPECIFICATION SECTION 26 20 00

## RECEPTACLES

- DUPLEX 20A TYPE CEE 7/7 "SCHUKO STYLE" UNSWITCHED RECEPTACLE
- GF DUPLEX 20A TYPE CEE 7/7 "SCHUKO STYLE" UNSWITCHED RECEPTACLES – 10mA GROUND FAULT INTERRUPTER TYPE
- WP DUPLEX 20A TYPE CEE 7/7 "SCHUKO STYLE" UNSWITCHED TYPE WITH WEATHERPROOF COVER – 10mA GROUND FAULT INTERRUPTER TYPE
- EXP DUPLEX 20A TYPE CEE 7/7 "SCHUKO STYLE" UNSWITCHED RECEPTACLES – EXPLOSION PROOF
- * INDICATES MOUNT DEVICE ABOVE COUNTERTOP OR AT 1070mm ABOVE FINISHED FLOOR WHERE NO COUNTER IS TO BE INSTALLED.

## LIGHTNING PROTECTION

- AIR TERMINAL 20mm O.D. X 450mm SOLID COPPER, NICKEL PLATED ON ADHESIVE BASE
- EQ EQUIPMENT AIR TERMINAL
- TEST WELL WITH GROUND ROD(S)
- GROUND ROD
- GROUND PLATE
- MAIN GROUND CONDUCTER CONCEALED WITHIN CONSTRUCTION
- MAIN GROUND CONDUCTOR EXPOSED ON EXPOSED ON BUILDING EXTERIOR SURFACE
- GROUND CONDUCTOR CAD WELDED TO GROUND CABLE OR EQUIPMENT
- GROUND ROD TRIPOD, SPACED 3 METERS APART.
- LEVEL TO LEVEL CABLE

## LIGHTING

- LIGHTING FIXTURE – SEE FIXTURE SCHEDULE FOR MORE INFORMATION
- EMERGENCY LIGHTING FIXTURE – SEE FIXTURE SCHEDULE FOR MORE INFORMATION
- DOWNLIGHT
- LIGHTING FIXTURE ON NORMAL/EMERGENCY
- WALL MOUNTED LIGHT FIXTURE
- [E] EXIT SIGN – DIRECTIONAL ARROWS AS INDICATED ON DRAWINGS
- REMOTE HEAD FOR BATTERY PACK
- $ SINGLE POLE SWITCH – 20A RATED
- $^{3}$ 3–WAY SWITCH – 20A RATED
- $^{4}$ 4–WAY SWITCH – 20A RATED
- [LC] LIGHTING CONTACTOR
- POLE MOUNTED SITE LIGHTING FIXTURE– NUMBER OF FIXTURES PER POLE AS INDICATED ON DRAWINGS
- EXTERIOR DIRECTIONAL LIGHTING FIXTURE
- a SMALL CASE LETTERS REPRESENTS LAMP(S) / SWITCHES.

## TELECOMMUNICATIONS

- ▼ TELEPHONE OUTLET(S) @ 45cm AFF. U.N.O. WITH 20mm RACEWAY TERMINATED TO TELEDATA TERMINAL BOARD.
- ▽ DATA OUTLET(S) @ 45cm AFF. U.N.O. WITH 20mm RACEWAY TERMINATED TO TELEDATA TERMINAL BOARD.

## TELECOMMUNICATIONS (CONTINUED)

- ▼▽ COMBINATION TELEPHONE/DATA OUTLET(S) @ 45cm AFF. U.N.O. WITH 27mm RACEWAY TERMINATED TO TELEDATA TERMINAL BOARD.
- *▼ WALL MTD. TELEPHONE OUTLET WITH 20mm RACEWAY TO TELEDATA TERMINAL BOARD.
- (x)T INDICATES NUMBER OF TELEPHONE OUTLET(S) AND ASSOCIATED CABLING
- (x)D INDICATES NUMBER OF DATA OUTLET(S) AND ASSOCIATED CABLING
- (x)TF INDICATES NUMBER OF TELEPHONE OUTLETS AND ASSOCIATED CABLING WITH 1 OUTLET AND CABLE DEDICATED FOR FAX

## SINGLE LINE SYMBOLS

- SWITCH
- BREAKER
- FUSE
- TRANSFORMER
- GROUND
- CONTACT (NORMALLY OPEN)
- CONTACT (NORMALLY CLOSED)
- TRANSFER SWITCH
- CURRENT TRANSFORMER
- INDICATES NEW ELECTRICAL EQUIPMENT
- C INDICATES NEW CONTROL WIRING AND CONDUIT
- EQUIPMENT OUTLINE

## MISCELLANEOUS

- BRANCH CIRCUIT WIRING, SURFACE MOUNTED ON WALLS
- BRANCH CIRCUIT WIRING – 6mm$^{2}$
- BRANCH CIRCUIT WIRING – UNDER FLOOR
- HOME RUN BACK TO PANEL
- CONDUIT TURNED DOWN
- CONDUIT TURNED UP
- LV LOW VOLTAGE WIRING AND CONDUIT
- ~ INDICATES CONTINUATION OF LINE

## FIRE ALARM

- FACP FIRE ALARM CONTROL PANEL WITH BATTERY BACKUP
- [F] FIRE ALARM PULL STATION

## FIRE ALARM (CONTINUED)

- [F] FIRE ALARM STROBE – WALL MOUNTED
- [F] FIRE ALARM AUDIBLE/STROBE – WALL MOUNTED
- [F] FIRE ALARM HORN/STROBE – WALL MOUNTED
- (S) SMOKE DETECTOR
- (H) HEAT DETECTOR CEILING MOUNTED
- (D) DUCT DETECTOR – PROVIDED BY EC, INSTALLED BY MC AND CONNECTED BY EC

## DENOTATIONS & ABBREVIATIONS

| | |
|---|---|
| AFF | ABOVE FINISHED FLOOR |
| C | CEILING MOUNTED |
| E | EMERGENCY |
| EC | ELECTRICAL CONTRACTOR |
| EPO | EMERGENCY POWER OFF |
| EXP | EXPLOSION PROOF |
| F | FIRE ALARM |
| FF | FLUSH FLOOR MOUNTED |
| FL | FLUORESCENT |
| FO | FIBER OPTIC |
| FSS | FUSED SAFETY SWITCH |
| GF | GROUND FAULT INTERRUPTER |
| GC | GENERAL CONTRACTOR |
| IG | ISOLATED GROUND |
| K | KEY |
| LV | LOW VOLTAGE |
| M | MOTOR |
| MC | MECHANICAL CONTRACTOR |
| NE | NORMAL/EMERGENCY |
| NFSS | NON–FUSED SAFETY SWITCH |
| PA | PAGING SYSTEM |
| PLC | PLUMBING CONTRACTOR |
| SL | SINGLE LINE |
| T | TELEPHONE |

## DENOTATIONS & ABBREVIATIONS (CONT.)

| | |
|---|---|
| TP | TAMPER PROOF |
| UE | UNDERGROUND ELECTRIC |
| W | WALL MOUNTED |
| WP | WEATHERPROOF WITH GROUND FAULT INTERRUPTION |
| WT | WATER TIGHT |

## GENERAL PROJECT NOTES:

G1. UNLESS OTHERWISE NOTED, PROVIDE ALL EQUIPMENT SHOWN ON THE PLANS. THE ELECTRICAL CONTRACTOR SHALL COORDINATE ALL SYMBOLS SHOWN ON THE PLANS WITH THE SYMBOL LIST. IT SHALL BE THE RESPONSIBILITY OF THE CONTRACTOR TO VERIFY THE INTENT OF ANY SYMBOL THAT IS SHOWN ON THE PLANS AND NOT INDICATED ON THE SYMBOL LIST WITH THE ENGINEER PRIOR TO BID.

G2. THE CONTRACTOR SHALL VERIFY THE LOCATION OF ALL UNDERGROUND UTILITIES WITHIN THE CONSTRUCTION AREA THREE (3) WORKING DAYS NOTICE BEFORE COMMENCING DIGGING. NOTIFY THE LOCAL AUTHORITY HAVING JURISDICTION AND WAIT THE REQUIRED TIME BEFORE COMMENCING TO DIG.

G3. THE CONTRACTOR SHALL COORDINATE CONDUIT RUNS, LIGHTING FIXTURES AND OTHER EQUIPMENT LOCATIONS WITH THE OTHER TRADE CONTRACTORS TO AVOID CONFLICTS.

G4. WHERE VOLTAGES AND FREQUENCIES ON THE DRAWINGS AND IN THE SPECIFICATIONS DIFFER FROM THE LOCAL ONES, ALL WORK SHALL BE PERFORMED USING THE LOCAL VOLTAGES AND FREQUENCIES.

G5. THE MINIMUM WIRE SIZE ON THE PROJECT SHALL BE 4mm$^{2}$. THE MINIMUM CONDUIT SIZE SHALL BE 20mm. THE MINIMUM BREAKER SIZE SHALL BE 20 AMPS.

G6. THE CONTRACTOR SHALL PUT A MAXIMUM OF 6 DUPLEX RECEPTACLES ON A 20A SINGLE POLE CIRCUIT.

G7. WHERE THE 1010 SCOPE REVIEW, 1015 TECHNICAL REVIEW, DRAWINGS, AND SPECIFICATIONS DIFFER FROM AMERICAN CODES OR STANDARDS, THE 1010, 1015, DRAWINGS, AND SPECIFICATIONS SHALL RULE.

G8. ALL CONDUIT AND DEVICES SHALL BE SURFACE MOUNTED UNLESS OTHERWISE INDICATED.

G9. CONTRACTOR SHALL COORDINATE ALL WORK WITH ALL OTHER TRADES TO ENSURE ALL WORK IS COMPLETED IN A PROFESSIONAL, WORKMAN–LIKE MANNER.

APPROVED:

A/E DESIGNER OF RECORD

SEAL:

COMMONWEALTH OF PENNSYLVANIA
REGISTERED PROFESSIONAL
JOSEPH R GAUS
ENGINEER
PE-074251
1/29/10

US ARMY CORPS OF ENGINEERS
AFGHANISTAN ENGINEER DISTRICT

| Mark | Description | Date | Appr. |
|---|---|---|---|
| | | | |

| Mark | Description | Date | Appr. |
|---|---|---|---|
| | | | |

Rev: 0
Date: 2/23/10
Design file no.
Drawing code:
File name:
Plot date:
Plot scale:

Designed by: RAJ
Dwn by: BJB
Ckd by: JRG
Reviewed by: JRG
Submitted by: BAKER

U.S. ARMY CORPS OF ENGINEERS
AFGHANISTAN ENGINEER DISTRICT
APO AE 96338

*Michael Baker Jr; Inc*
*A unit of Michael Baker Corporation*
Airside Business Park
100 Airside Drive
Moon Township, PA 15108
www.mbakercorp.com

AFGHAN NATIONAL ARMY
REGIONAL MILITARY TRAINING CENTER
STANDARD DESIGN

SENIOR BOQ BARRACKS

# ELECTRICAL SYMBOLS & ABBREVIATIONS

Sheet reference number:
E–001

## GENERAL NOTES:

1. REFER TO DRAWING #E-001 FOR THE ELECTRICAL SYMBOLS LIST.
2. EXIT SIGNS SHALL BE WIRED AHEAD OF ANY LOCAL SWITCHING ON CIRCUITS. SEE WIRING DIAGRAM DETAIL 8, DRAWING #E-501.
3. REFER TO DRAWING #E-400 FOR THE LIGHTING FIXTURE SCHEDULE.
4. REFER TO DRAWING #E-500 FOR THE POWER RISER.
5. REFER TO DRAWING #E-600 FOR PANEL SCHEDULES.
6. LIGHT FIXTURES INDICATED AS EMERGENCY SHALL BE PROVIDED WITH A BATTERY BACKUP BALLAST. SEE WIRING DIAGRAM DETAIL 7, DRAWING #E-501.

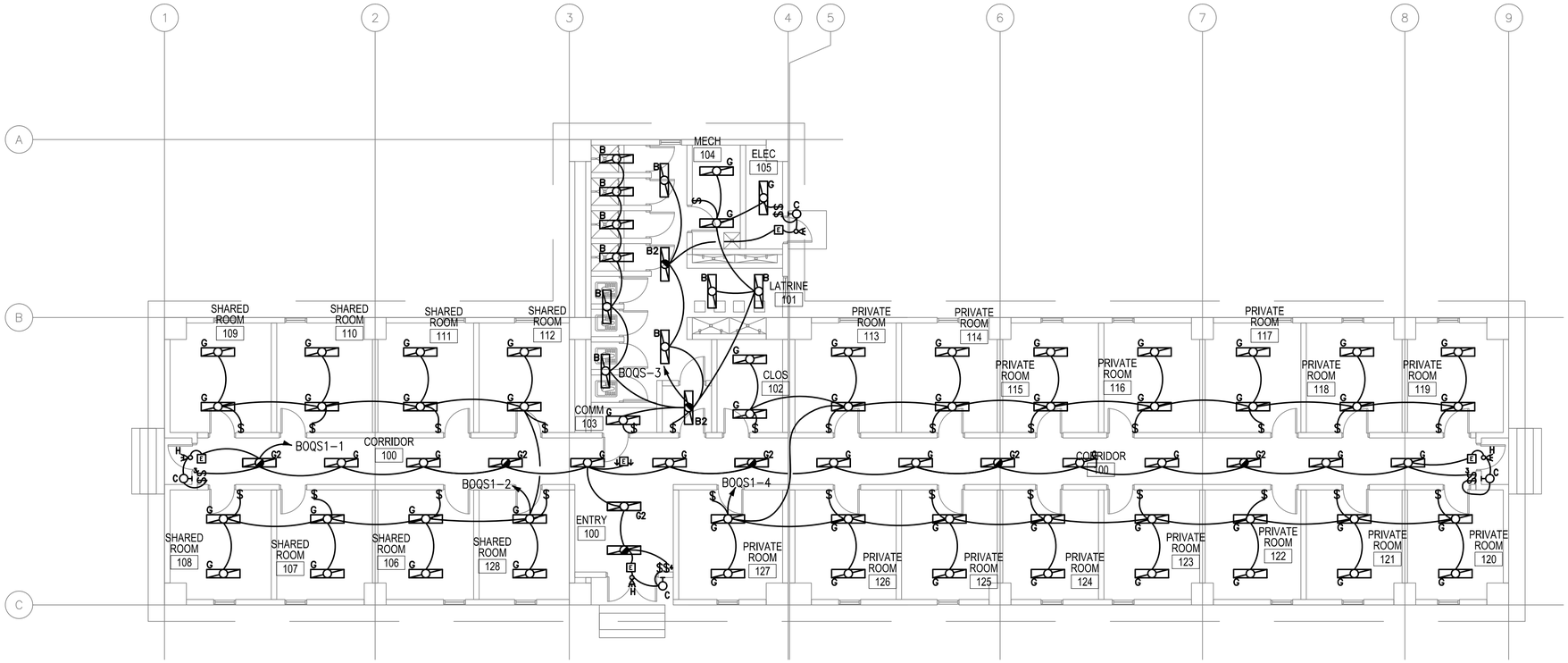


1 E-101 SENIOR BOQ BARRACKS- LIGHTING PLAN

SCALE: 1:100

0 2000 4000

SCALE: 1:100

APPROVED:

A/E DESIGNER OF RECORD

SEAL:

COMMONWEALTH OF PENNSYLVANIA REGISTERED PROFESSIONAL JOSEPH R. GAUS ENGINEER PE-074251

US ARMY CORPS OF ENGINEERS
AFGHANISTAN ENGINEER DISTRICT

| Mark | Description | Date | Appr. |
|---|---|---|---|
| | | | |

| Mark | Description | Date | Appr. |
|---|---|---|---|
| | | | |

U.S. ARMY CORPS OF ENGINEERS
AFGHANISTAN ENGINEER DISTRICT
APO AE 96338


Michael Baker Jr., Inc
A unit of Michael Baker Corporation
Airside Business Park
100 Airside Drive
Moon Township, PA 15108
www.mbakercorp.com


| | |
|---|---|
| Designed by: | RAJ |
| Dwn. by: | BJB |
| Ckd by: | JRG |
| Reviewed by: | JRG |
| Submitted by: | BAKER |
| Date: | 2/23/10 |
| Design file no. | |
| Drawing code: | |
| File name: | |
| Plot date: | |
| Plot scale: | |
| Rev: | 0 |

AFGHAN NATIONAL ARMY
REGIONAL MILITARY TRAINING CENTER
STANDARD DESIGN

SENIOR BOQ BARRACKS
ELECTRICAL LIGHTING PLAN

Sheet reference number:
E-101

## GENERAL NOTES:

1. REFER TO DRAWING #E-001 FOR THE ELECTRICAL SYMBOLS LIST.
2. REFER TO DRAWING #E-501 FOR THE POWER RISER.
3. REFER TO DRAWING #E-602 FOR PANEL SCHEDULES.
4. COORDINATE EXACT MOUNTING LOCATION OF DISCONNECTING MEANS FOR MECHANICAL AND PLUMBING EQUIPMENT IN THE FIELD.
5. FUSIBLE SAFETY SWITCHES THAT ARE NOT OTHERWISE IDENTIFIED SHALL BE 380V, 1P, 30A FUSED SAFETY SWITCHES WITH 20A FUSES.

## NUMBERED NOTES:

(1) PROVIDE POWER CONNECTION TO MAKE-UP AIR UNIT #1. SEE DRAWINGS #E-602 AND #M-101 FOR MORE INFORMATION.

(2) SEE DRAWING #E-602 FOR WIRE AND CONDUIT SIZE.

(3) PROVIDE POWER CONNECTION TO ELECTRIC UNIT HEATER #2. SEE DRAWINGS #E-602 AND #M-101 FOR MORE INFORMATION.

(4) PROVIDE POWER CONNECTION TO EXHAUST FAN #1. SEE DRAWINGS #E-602 AND #M-101 FOR MORE INFORMATION.

(5) PROVIDE POWER CONNECTION TO EXHAUST FAN #2. SEE DRAWINGS #E-602 AND #M-101 FOR MORE INFORMATION.

(6) PROVIDE POWER CONNECTION TO EXHAUST FAN #3. SEE DRAWINGS #E-602 AND #M-101 FOR MORE INFORMATION.

(7) PANEL BOQS1, BOQS2 AND BOQS3.

(8) NEMA 3R, 380V, 3P, 30A FUSED DISCONNECT FUSED AT 30A. SEE PLUMBING DRAWINGS FOR EXACT LOCATION OF WATER HEATER.

(9) PROVIDE A 1,200mm X 2,400mm PIECE OF PLYWOOD PAINTED WITH FIRE RESISTANT PAINT FOR MOUNTING TELECOMMUNICATIONS EQUIPMENT.

(10) PROVIDE CONDUIT STUB UP IN THE ROOM FOR INCOMMING TELECOMMUNICATIONS SERVICES FROM THE CENTRAL COMMUNICATIONS SYSTEM IN THE GARRISON.

(11) PROVIDE 220V, 1Ø, 60A MOTOR SNAP SWITCH IN NEMA 3R ENCLOSURE.

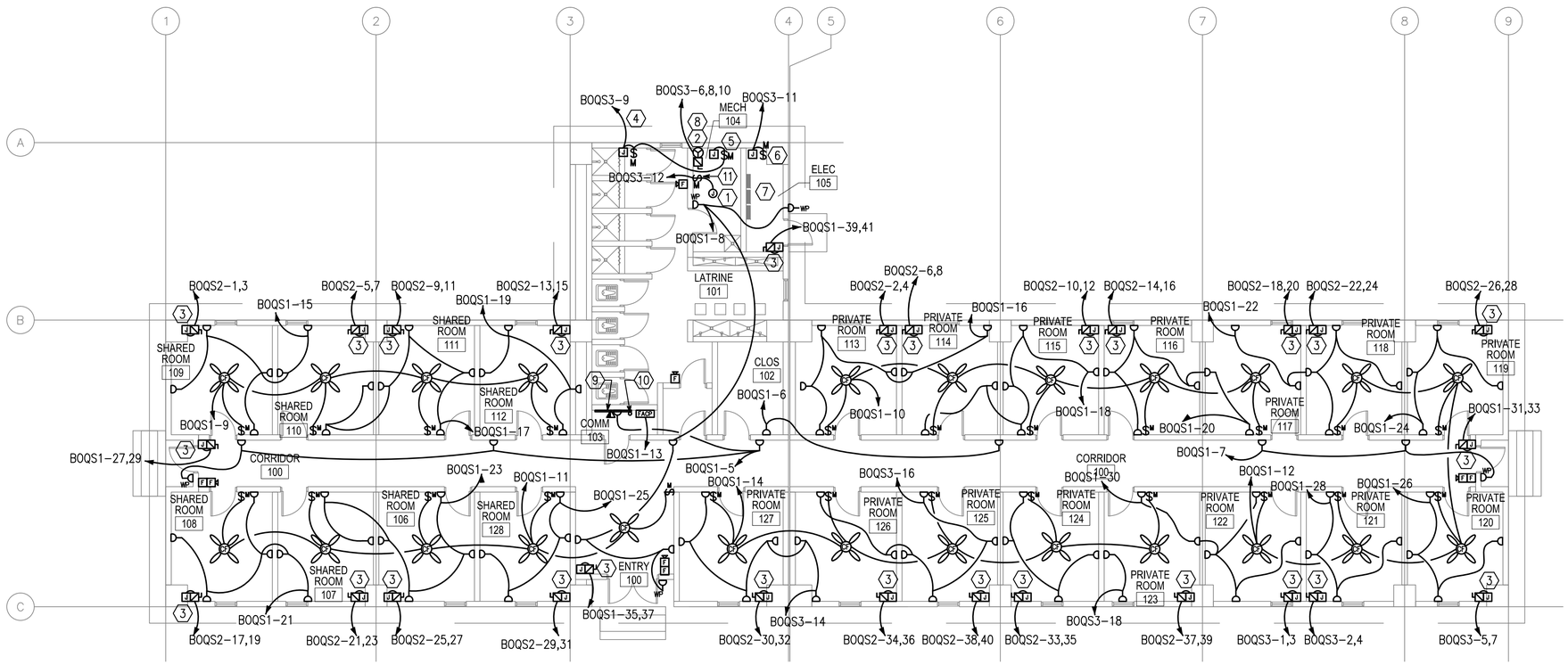


1 E-102

## SENIOR BOQ BARRACKS- POWER AND SYSTEMS PLAN

SCALE: 1:100

0 2000 4000

SCALE: 1:100

US ARMY CORPS OF ENGINEERS
AFGHANISTAN ENGINEER DISTRICT

| Mark | Description | Date | Appr. |
|---|---|---|---|
| | | | |

| Mark | Description | Date | Appr. |
|---|---|---|---|
| | | | |

Rev: 0
Date: 2/23/10
Design file no.
Drawing code:
File name:
Plot date:
Plot scale:

Designed by: RAJ
Dwn by: BJB
Ckd by: JRG
Reviewed by: JRG
Submitted by: BAKER

U.S. ARMY CORPS OF ENGINEERS
AFGHANISTAN ENGINEER DISTRICT
APO AE 96338

*Michael Baker Jr., Inc.*
*A unit of Michael Baker Corporation*
Airside Business Park
100 Airside Drive
Moon Township, PA. 15108
www.mbakercorp.com

AFGHAN NATIONAL ARMY
REGIONAL MILITARY TRAINING CENTER
STANDARD DESIGN

SENIOR BOQ BARRACKS
ELECTRICAL POWER AND SYSTEMS PLAN

APPROVED:

A/E DESIGNER OF RECORD

SEAL:

COMMONWEALTH OF PENNSYLVANIA
REGISTERED PROFESSIONAL
JOSEPH R GAUS
ENGINEER
PE-074251
2/23/10

Sheet reference number:
E-102

## GENERAL NOTES:

1. REFER TO DRAWING #E-001 FOR THE ELECTRICAL SYMBOLS LIST.

## NUMBERED NOTES:

1. (1) 120.0mm² BARE, TINNED, COPPER COUNTERPOISE GROUND 700mm BELOW GRADE.
2. INSTALL DOWN CONDUCTOR IN 25mm SCHEDULE 80 PVC CONDUIT TO 20mm DIAMETER X 3 METERS SOLID COPPER TINNED GROUND ROD. (TYPICAL)
3. CADWELD TO BUILDING STRUCTURE AT 18 METERS ON CENTER AROUND THE ENTIRE PERIMETER OF THE BUILDING. (TYPICAL)
4. 120mm² LIGHTNING PROTECTION CABLE.
5. AIR TERMINAL. TERMINALS SHALL BE PLACED AT A MAXIMUM OF 6M ON CENTER PER NFPA 780 PARA. 4.8.2.1, AND WITHIN 0.6M OF RIDGE ENDS PER NFPA 780 PARA. 4.8 (TYPICAL)
6. 700mm MIN. (TYP) BETWEEN FOUNDATION AND GROUND LOOP.

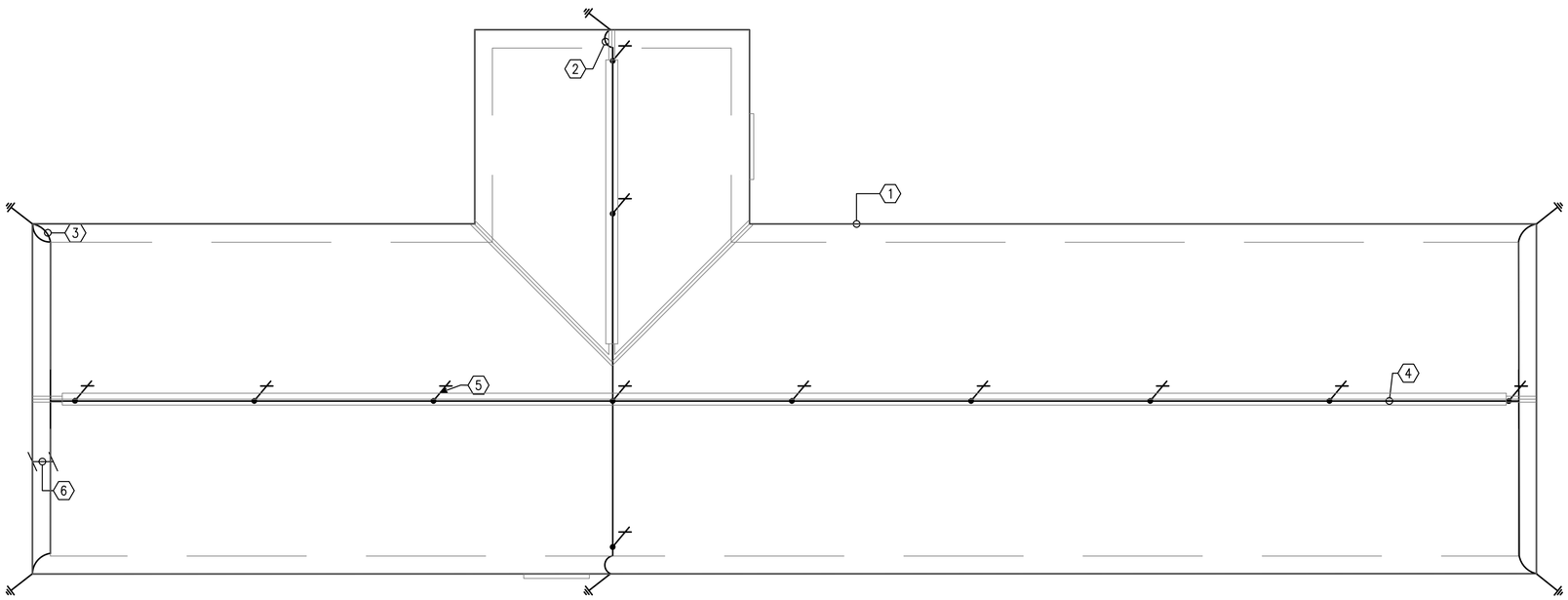


1 / E-103 SENIOR BOQ BARRACKS- LIGHTNING PROTECTION

SCALE: 1:100

0 2000 4000

SCALE: 1:100

APPROVED:

A/E DESIGNER OF RECORD

SEAL:

COMMONWEALTH OF PENNSYLVANIA REGISTERED PROFESSIONAL JOSEPH R GAUS ENGINEER PE-074251 12/29/10

US ARMY CORPS OF ENGINEERS
AFGHANISTAN ENGINEER DISTRICT

| Mark | Description | Date | Appr. |
|---|---|---|---|
| | | | |

| Mark | Description | Date | Appr. |
|---|---|---|---|
| | | | |

Rev: 0
Date: 2/23/10
Design file no.
Drawing code:
File name:
Plot date:
Plot scale:

Designed by: RAJ
Dwn by: BJB
Ckd by: JRG
Reviewed by: JRG
Submitted by: BAKER

U.S. ARMY CORPS OF ENGINEERS
AFGHANISTAN ENGINEER DISTRICT
APO AE 96338

Michael Baker Jr., Inc.
A unit of Michael Baker Corporation
Airside Business Park
100 Airside Drive
Moon Township, PA 15108
www.mbakercorp.com

AFGHAN NATIONAL ARMY
REGIONAL MILITARY TRAINING CENTER
STANDARD DESIGN

SENIOR BOQ BARRACKS
ELECTRICAL LIGHTNING PROTECTION PLAN

Sheet reference number:
E-103

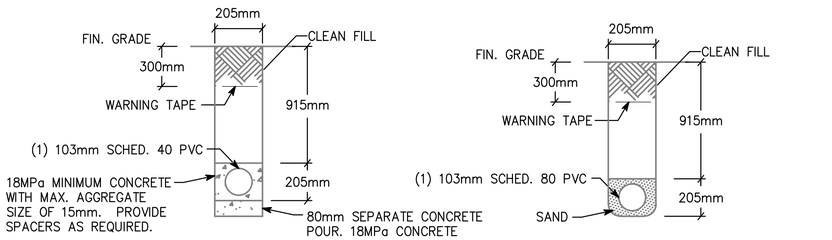


NOTE: PVC CONDUIT SHALL BE DIRECT BURIED SCHEDULE 80 FOR NO TRAFFIC AREAS AND CONCRETE-ENCASED SCHEDULE 40 FOR UNDER ROADWAYS OR TRAFFIC AREAS.

1 / E-501 **TYPICAL DUCT BANK DETAILS FOR CONDUIT IN SAND OR CONCRETE**

SCALE: N.T.S.

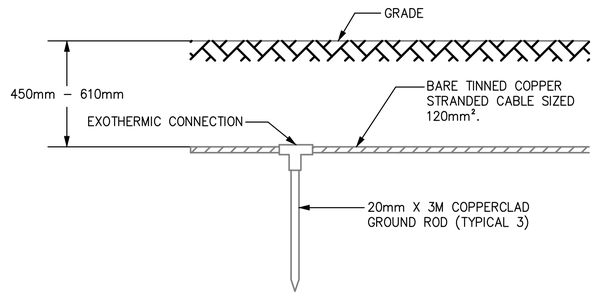


2 / E-501 **GROUND TRIPOD SYSTEM DETAIL - ELEVATION**

SCALE: N.T.S.

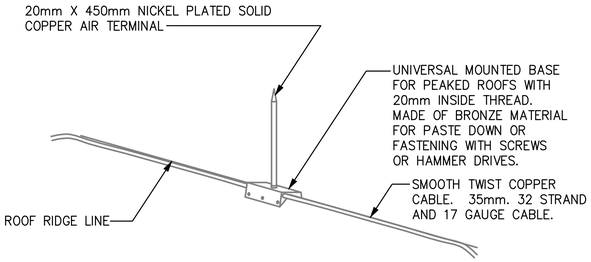


3 / E-501 **LIGHTNING PROTECTION AIR TERMINAL DETAIL**

SCALE: N.T.S.

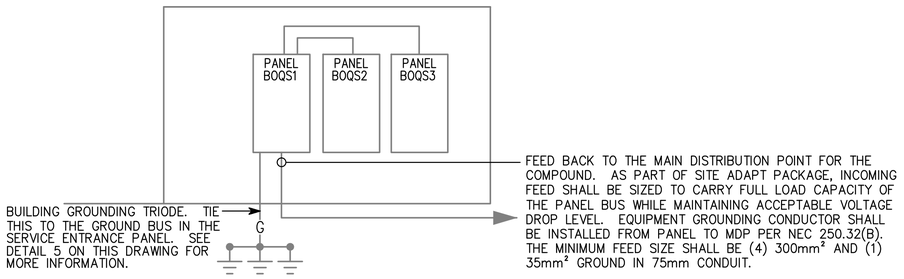


4 / E-501 **BOQS RISER DIAGRAM**

SCALE: N.T.S.

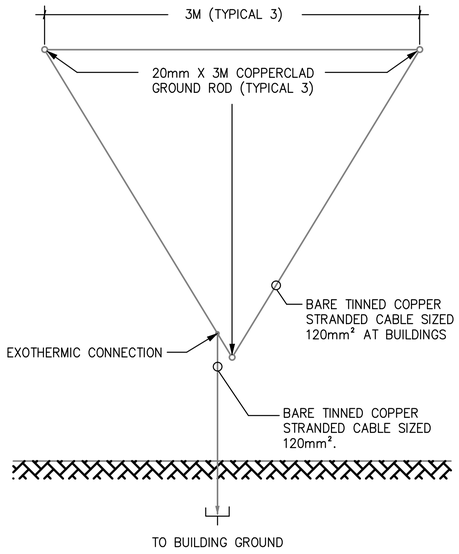


5 / E-501 **GROUND TRIPOD SYSTEM DETAIL - PLAN**

SCALE: N.T.S.

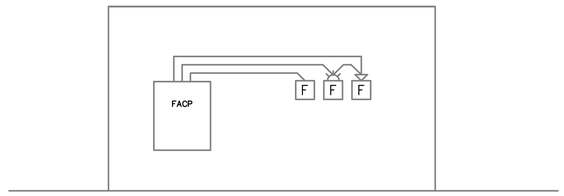


6 / E-501 **TYPICAL ONE STORY FIRE ALARM RISER**

SCALE: N.T.S.

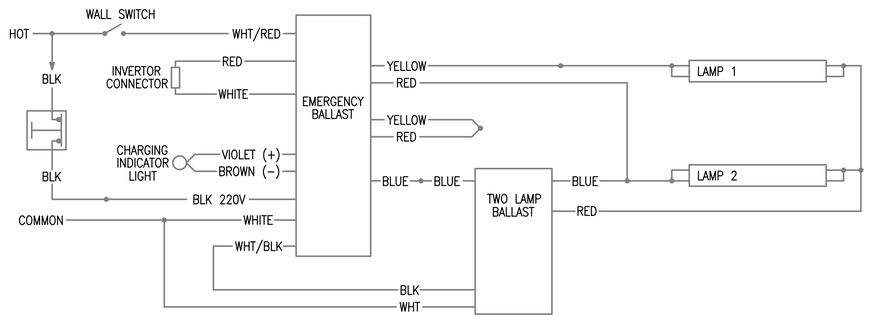


7 / E-501 **EMERGENCY FIXTURE WIRING DIAGRAM**

SCALE: N.T.S.

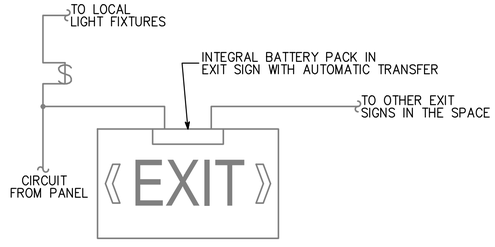


8 / E-501 **EXIT SIGN WIRING DIAGRAM**

SCALE: N.T.S.

APPROVED:

A/E DESIGNER OF RECORD

SEAL:

COMMONWEALTH OF PENNSYLVANIA REGISTERED PROFESSIONAL JOSEPH R GAUS ENGINEER PE-074251

US ARMY CORPS OF ENGINEERS
AFGHANISTAN ENGINEER DISTRICT

| Mark | Description | Date | Appr. |
|---|---|---|---|
| | | | |

| Mark | Description | Date | Appr. |
|---|---|---|---|
| | | | |

Rev: 0
Date: 2/23/10
Design file no.
Drawing code:
File name:
Plot date:
Plot scale:

Designed by: RAJ
Dwn by: BJB
Ckd by: JRG
Reviewed by: JRG
Submitted by: BAKER

U.S. ARMY CORPS OF ENGINEERS
AFGHANISTAN ENGINEER DISTRICT
APO AE 96338

*Michael Baker Jr., Inc.*
*A unit of Michael Baker Corporation*
Airside Business Park
100 Airside Drive
Moon Township, PA 15108
www.mbakercorp.com

AFGHAN NATIONAL ARMY
REGIONAL MILITARY TRAINING CENTER
STANDARD DESIGN

SENIOR BOQ BARRACKS
ELECTRICAL DETAILS

Sheet reference number:
E-501

| Ⓐ LARGER OF THE TWO SIZES GIVEN IN THE TABLES BELOW | |
|---|---|
| GROUNDING ELECTRODE CONDUCTOR (BASED ON AIC RATING) | |
| AIC RATING OF SERVICE EQUIPMENT | NECESSARY GROUNDING ELECTRODE CONDUCTOR SIZE |
| 10K | (1) 35mm² |
| 14K | (1) 50mm² |
| 18K | (1) 70mm² |
| 22K | (1) 70mm² |
| 25K | (1) 70mm² |
| 30K | (1) 95mm² |
| 35K | (1) 120mm² |
| 42K | (1) 150mm² |
| 65K | (1) 185mm² |
| 100K | (1) 300mm² |
| 125K | (2) 185mm² |
| 200K | (2) 300mm² |

| GROUNDING ELECTRODE CONDUCTOR (BASED ON NEC TABLE 250.66) | |
|---|---|
| SIZE OF LARGEST UNGROUNDED SERVICE CONDUCTOR OR EQUIVALENT AREA FOR PARALLEL CONDUCTORS | NECESSARY GROUNDING ELECTRODE CONDUCTOR SIZE |
| 350 kcmil OR SMALLER | 35mm² |
| OVER 350 kcmil TO 600 kcmil | 70mm² |
| OVER 600 kcmil TO 1100 kcmil | 70mm² |
| OVER 1100 kcmil | 95mm² |
| NOTE: ALL SIZES ARE BASED ON COPPER CONDUCTORS. | |

| Ⓑ EQUIPMENT GROUNDING CONDUCTOR | |
|---|---|
| RATING OR SETTING OF AUTOMATIC OVERCURRENT DEVICE IN CIRCUIT AHEAD OF EQUIPMENT, CONDUIT, ETC, NOT EXCEEDING (AMPERES) | NECESSARY EQUIPMENT GROUNDING CONDUCTOR SIZE |
| 15 | 2.5mm² |
| 20 | 4.0mm² |
| 30 | 6.0mm² |
| 40 | 6.0mm² |
| 60 | 6.0mm² |
| 100 | 10mm² |
| 200 | 16mm² |
| 300 | 25mm² |
| 400 | 25mm² |
| 500 | 35mm² |
| 600 | 50mm² |
| 800 | 70mm² |
| 1000 | 70mm² |
| 1200 | 95mm² |
| 1600 | 120mm² |
| 2000 | 150mm² |
| 2500 | 185mm² |
| 3000 | 240mm² |
| 4000 | 300mm² |
| 5000 | 400mm² |
| 6000 | 400mm² |
| NOTE: ALL SIZES ARE BASED ON COPPER CONDUCTORS. | |

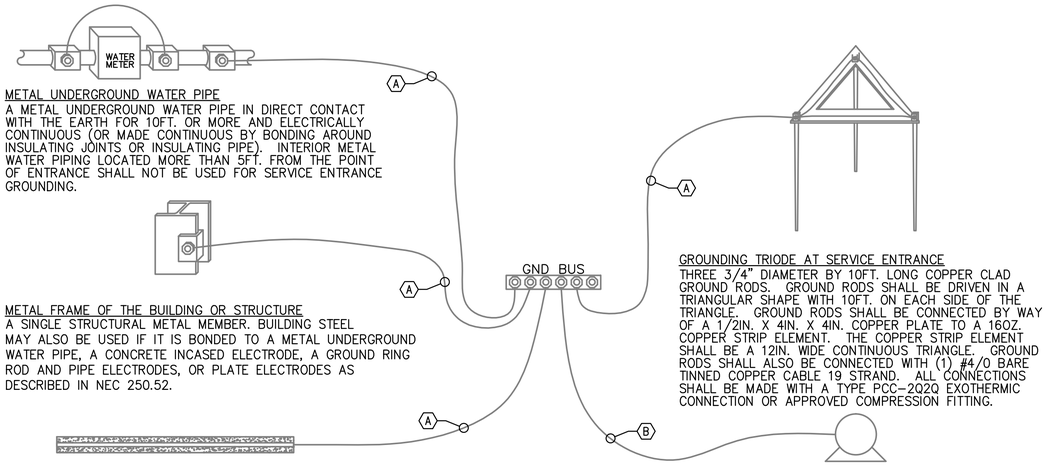


METAL UNDERGROUND WATER PIPE
A METAL UNDERGROUND WATER PIPE IN DIRECT CONTACT WITH THE EARTH FOR 10FT. OR MORE AND ELECTRICALLY CONTINUOUS (OR MADE CONTINUOUS BY BONDING AROUND INSULATING JOINTS OR INSULATING PIPE). INTERIOR METAL WATER PIPING LOCATED MORE THAN 5FT. FROM THE POINT OF ENTRANCE SHALL NOT BE USED FOR SERVICE ENTRANCE GROUNDING.

METAL FRAME OF THE BUILDING OR STRUCTURE
A SINGLE STRUCTURAL METAL MEMBER. BUILDING STEEL MAY ALSO BE USED IF IT IS BONDED TO A METAL UNDERGROUND WATER PIPE, A CONCRETE INCASED ELECTRODE, A GROUND RING ROD AND PIPE ELECTRODES, OR PLATE ELECTRODES AS DESCRIBED IN NEC 250.52.

CONCRETE ENCASED ELECTRODE
AN ELECTRODE ENCASED BY AT LEAST 2IN. OF CONCRETE , LOCATED WITHIN AND NEAR THE BOTTOM OF A CONCRETE FOUNDATION OR FOOTING THAT IS IN DIRECT CONTACT WITH THE EARTH, CONSISTING OF AT LEAST 20FT. OF ONE OR MORE BARE OR ZINC GALVANIZED OR OTHER ELECTRICALLY CONDUCTIVE COATED STEEL REINFORCING BARS OR RODS OF NOT LESS THAN 1/2" DIAMETER OR BARE COPPER CONDUCTOR NOT SMALLER THAN 4AWG.

GROUNDING TRIODE AT SERVICE ENTRANCE
THREE 3/4" DIAMETER BY 10FT. LONG COPPER CLAD GROUND RODS. GROUND RODS SHALL BE DRIVEN IN A TRIANGULAR SHAPE WITH 10FT. ON EACH SIDE OF THE TRIANGLE. GROUND RODS SHALL BE CONNECTED BY WAY OF A 1/2IN. X 4IN. X 4IN. COPPER PLATE TO A 16OZ. COPPER STRIP ELEMENT. THE COPPER STRIP ELEMENT SHALL BE A 12IN. WIDE CONTINUOUS TRIANGLE. GROUND RODS SHALL ALSO BE CONNECTED WITH (1) #4/0 BARE TINNED COPPER CABLE 19 STRAND. ALL CONNECTIONS SHALL BE MADE WITH A TYPE PCC-2Q2Q EXOTHERMIC CONNECTION OR APPROVED COMPRESSION FITTING.

LOAD OR DOWNSTREAM PANEL
ALL LOADS IN THE BUILDING SHALL HAVE AN EQUIPMENT GROUNDING CONDUCTOR PULLED TO THEM.

1
E-502

## SERVICE ENTRANCE GROUNDING DETAIL

SCALE: N.T.S.

APPROVED:

A/E DESIGNER OF RECORD

SEAL:

COMMONWEALTH OF PENNSYLVANIA
REGISTERED PROFESSIONAL
JOSEPH R GAUS
12/29/10
ENGINEER
PE-074251

US ARMY CORPS OF ENGINEERS
AFGHANISTAN ENGINEER DISTRICT

| Mark | Description | Date | Appr. |
|---|---|---|---|
| | | | |

| Mark | Description | Date | Appr. |
|---|---|---|---|
| | | | |

Rev: 0
Date: 2/23/10
Design file no.
Drawing code:
File name:
Plot date:
Plot scale:

Designed by: RAJ
Dwn by: BJB
Ckd by: JRG
Reviewed by: JRG
Submitted by: BAKER

U.S. ARMY CORPS OF ENGINEERS
AFGHANISTAN ENGINEER DISTRICT
APO AE 96338

*Michael Baker Jr., Inc*
*A unit of Michael Baker Corporation*
Airside Business Park
100 Airside Drive
Moon Township, PA 15108
www.mbakercorp.com

AFGHAN NATIONAL ARMY
REGIONAL MILITARY TRAINING CENTER
STANDARD DESIGN

SENIOR BOQ BARRACKS
ELECTRICAL DETAILS

Sheet reference number:
E-502

# LIGHT FIXTURE SCHEDULE

| FIXTURE MARK | STYLE NUMBER AND TYPE | NUMBER AND TYPE OF LAMPS | VOLTAGE | MOUNTING | NOTES |
|---|---|---|---|---|---|
| B | WET LOCATION WRAP AROUND SURFACE/PENDANT MOUNTED FLUORESCENT FIXTURE WITH PRISMATIC ACRYLIC LENS AND ELECTRONIC BALLAST | (2) 32W 3500K | 220V – 1ø 50HZ | SURFACE MOUNTED | FURNISHED WITH ELECTRONIC BALLAST, VIRGIN ACRYLIC WRAP AROUND LENS. |
| B2 | SAME AS FIXTURE 'B' WITH EMERGENCY BALLAST | (2) 32W 3500K | 220V – 1ø 50HZ | SURFACE MOUNTED | FURNISHED WITH ELECTRONIC BALLAST, VIRGIN ACRYLIC WRAP AROUND LENS. EMERGENCY BALLAST WITH SELF TEST SWITCH. |
| C | INCANDESCENT ONE PIECE W/ APPROVED LENS STABILIZED HIGH IMPACT POLY CARBONATE. | (1) A19 – 100W INCANDESCENT | 220V – 1ø 50HZ | WALL MOUNTED ABOVE EXTERIOR DOORS | |
| G | WRAP AROUND SURFACE/PENDANT MOUNTED FLUORESCENT FIXTURE WITH PRISMATIC ACRYLIC LENS AND ELECTRONIC BALLAST | (2) 32W 3500K | 220V – 1ø 50HZ | SURFACE MOUNTED | FURNISHED WITH ELECTRONIC BALLAST, VIRGIN ACRYLIC WRAP AROUND LENS. |
| G2 | SAME AS FIXTURE 'G' WITH EMERGENCY BALLAST | (2) 32W 3500K | 220V – 1ø 50HZ | SURFACE MOUNTED | FURNISHED WITH ELECTRONIC BALLAST, VIRGIN ACRYLIC WRAP AROUND LENS. EMERGENCY BALLAST WITH SELF TEST SWITCH. |
| H | REMOTE HEAD EXTERIOR LIGHT HEAD POWERED FROM EXIT SIGN BATTERY– 12V DOUBLE HEAD CORROSION RESISTANT WITH UL34 WEATHERPROOF CONSTRUCTION | (2) 12W/12V HALOGEN LAMP | 12V – 1ø 50HZ | EXTERIOR WALL MOUNTED AT TOP OF DOOR HEIGHT | |
| [E] | UNIVERSAL MOUNT ENGINEER GRADE THERMOPLASTIC HOUSING EXIT SIGN WITH LED LAMPS, RED LETTERS 6" IN HEIGHT WITH ARROWS AS INDICATED, WITH 12V CADMIUM BATTERY WITH REMOTE HEAD CAPABILITY | LED LAMPS | 220V – 1ø 50HZ | UNIVERSAL MOUNTING | |

FIXTURE MARK 'B'

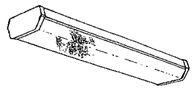

FIXTURE MARK 'C'

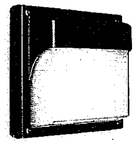

FIXTURE MARK 'G'

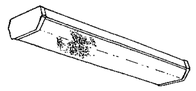

FIXTURE MARK 'H'

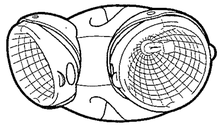

FIXTURE MARK '[E]'

APPROVED:

A/E DESIGNER OF RECORD

SEAL:

US ARMY CORPS OF ENGINEERS
AFGHANISTAN ENGINEER DISTRICT

| Mark | Description | Date | Appr. |
|---|---|---|---|
| | | | |

| Mark | Description | Date | Appr. |
|---|---|---|---|
| | | | |

Rev: 0
Date: 2/23/10
Design file no.
Drawing code:
File name:
Plot date:
Plot scale:

Designed by: RAJ
Dwn. by: BJB
Ckd by: JRG
Reviewed by: JRG
Submitted by: BAKER

U.S. ARMY CORPS OF ENGINEERS
AFGHANISTAN ENGINEER DISTRICT
APO AE 96338

*Michael Baker Jr., Inc*
*A unit of Michael Baker Corporation*
Airside Business Park
100 Airside Drive
Moon Township, PA 15108
www.mbakercorp.com

AFGHAN NATIONAL ARMY
REGIONAL MILITARY TRAINING CENTER
STANDARD DESIGN

SENIOR BOQ BARRACKS
ELECTRICAL LIGHT FIXTURE SCHEDULE

Sheet reference number:
E–601

PANELBOARD BOQS1 SURFACE MOUNTED
400 AMP. MAIN LUGS (OR) 400 AMP. MAIN BREAKER W/ 400 AMP. TRIP
CIRCUIT BREAKER TYPE 380/220 VOLTS 3 PHASE 4 WIRE 50 HZ 400 AMP. BUS

| CKT. NO. | TRIP AMPS | NO. POLES | WIRE MM² | GND MM² | CONDUIT MM | LOAD SERVED | LOAD-KVA A0 | LOAD-KVA B0 | LOAD-KVA C0 | LOAD-KVA A0 | LOAD-KVA B0 | LOAD-KVA C0 | LOAD SERVED | CONDUIT MM | GND MM² | WIRE MM² | NO. POLES | TRIP AMPS | CKT. NO. |
|---|---|---|---|---|---|---|---|---|---|---|---|---|---|---|---|---|---|---|---|
| 1 | 20 | 1 | 4.0 | 4.0 | 20 | LIGHTING – RM 100 | 1.4 | | | 1.1 | | | LIGHTING – RM 105–112 | 20 | 4.0 | 4.0 | 1 | 20 | 2 |
| 3 | 20 | 1 | 4.0 | 4.0 | 20 | LIGHTING – RM 101, 104, 105 | | 1.1 | | | 2.1 | | LIGHTING – RM 113–126 | 20 | 4.0 | 4.0 | 1 | 20 | 4 |
| 5 | 20 | 1 | 4.0 | 4.0 | 20 | RECEPTACLES – RM 100 | | | 1.2 | | | 0.8 | RECEPTACLES – RM 100 | 20 | 4.0 | 4.0 | 1 | 20 | 6 |
| 7 | 20 | 1 | 4.0 | 4.0 | 20 | RECEPTACLES – RM 100 | 0.8 | | | 1.2 | | | RECEPTACLES – RM 100,104,EXT | 20 | 4.0 | 4.0 | 1 | 20 | 8 |
| 9 | 20 | 1 | 4.0 | 4.0 | 20 | CEILING FANS – RM 109–111 | | 1.2 | | | 1.5 | | CEILING FANS – RM 113–117 | 20 | 4.0 | 4.0 | 1 | 20 | 10 |
| 11 | 20 | 1 | 4.0 | 4.0 | 20 | CEILING FANS – RM 105–108 | | | 1.2 | | | 1.5 | CEILING FANS – RM 117–122 | 20 | 4.0 | 4.0 | 1 | 20 | 12 |
| 13 | 20 | 1 | 4.0 | 4.0 | 20 | FACP – RM 103 | 0.5 | | | 1.5 | | | CEILING FANS – RM 123–127 | 20 | 4.0 | 4.0 | 1 | 20 | 14 |
| 15 | 20 | 1 | 4.0 | 4.0 | 20 | RECEPTACLES – RM 109, 110 | | 1.2 | | | 1.2 | | RECEPTACLES – RM 113, 114 | 20 | 4.0 | 4.0 | 1 | 20 | 16 |
| 17 | 20 | 1 | 4.0 | 4.0 | 20 | RECEPTACLES – RM 110, 111 | | | 1.2 | | | 1.2 | RECEPTACLES – RM 115, 116 | 20 | 4.0 | 4.0 | 1 | 20 | 18 |
| 19 | 20 | 1 | 4.0 | 4.0 | 20 | RECEPTACLES – RM 112 | 0.8 | | | 1.2 | | | RECEPTACLES – RM 116, 117 | 20 | 4.0 | 4.0 | 1 | 20 | 20 |
| 21 | 20 | 1 | 4.0 | 4.0 | 20 | RECEPTACLES – RM 107, 108 | | 1.2 | | | 1.2 | | RECEPTACLES – RM 117, 118 | 20 | 4.0 | 4.0 | 1 | 20 | 22 |
| 23 | 20 | 1 | 4.0 | 4.0 | 20 | RECEPTACLES – RM 106, 107 | | | 1.2 | | | 0.8 | RECEPTACLES – RM 118, 119 | 20 | 4.0 | 4.0 | 1 | 20 | 24 |
| 25 | 20 | 1 | 4.0 | 4.0 | 20 | RECEPTACLES – RM 105 | 0.8 | | | 0.8 | | | RECEPTACLES – RM 120 | 20 | 4.0 | 4.0 | 1 | 20 | 26 |
| 27 | 20 | 2 | 4.0 | 4.0 | 20 | ELECTRIC HEAT #2 – RM 100 | | 1.3 | | | 0.8 | | RECEPTACLES – RM 121 | 20 | 4.0 | 4.0 | 1 | 20 | 28 |
| 29 | | | | | | | | | 1.3 | | | 1.2 | RECEPTACLES – RM 122, 123 | 20 | 4.0 | 4.0 | 1 | 20 | 30 |
| 31 | 20 | 2 | 4.0 | 4.0 | 20 | ELECTRIC HEAT #2 – RM 100 | 1.3 | | | 10.1 | | | PANEL BOQS3 | 40 | 10.0 | 50.0 | 3 | 100 | 32 |
| 33 | | | | | | | | 1.3 | | | 9.8 | | | | | | | | 34 |
| 35 | 20 | 2 | 4.0 | 4.0 | 20 | ELECTRIC HEAT #2 – RM 100 | | | 1.3 | | | 18.0 | | | | | | | | 36 |
| 37 | | | | | | | 1.3 | | | 18.2 | | | PANEL BOQS2 | 40 | 16.0 | 70.0 | 3 | 150 | 38 |
| 39 | 20 | 2 | 4.0 | 4.0 | 20 | ELECTRIC HEAT #2 – RM 105 | | 1.3 | | | 18.2 | | | | | | | | 40 |
| 41 | | | | | | | | | 1.3 | | | 15.6 | | | | | | | 42 |
| | | | | | | | 6.9 | 8.6 | 8.7 | 34.1 | 34.8 | 39.1 | TOTAL CONN. LOAD PER PHASE (KVA): A0 41.0 B0 43.4 C0 47.8 | | | | | | |

TOTAL CONN. LOAD 132.2 KVA. 70 % DEMAND = ESTIMATED DEMAND LOAD 92.5

* MAIN BREAKER SHALL BE 3P EARTH GROUND TYPE

PANELBOARD BOQS2 SURFACE MOUNTED
225 AMP. MAIN LUGS (OR) 150 AMP. MAIN BREAKER W/ 150 AMP. TRIP
CIRCUIT BREAKER TYPE 380/220 VOLTS 3 PHASE 4 WIRE 50 HZ 225 AMP. BUS

| CKT. NO. | TRIP AMPS | NO. POLES | WIRE MM² | GND MM² | CONDUIT MM | LOAD SERVED | LOAD-KVA A0 | LOAD-KVA B0 | LOAD-KVA C0 | LOAD-KVA A0 | LOAD-KVA B0 | LOAD-KVA C0 | LOAD SERVED | CONDUIT MM | GND MM² | WIRE MM² | NO. POLES | TRIP AMPS | CKT. NO. |
|---|---|---|---|---|---|---|---|---|---|---|---|---|---|---|---|---|---|---|---|
| 1 | 20 | 2 | 4.0 | 4.0 | 20 | ELECTRIC HEAT #2 – RM 109 | 1.3 | | | 1.3 | | | ELECTRIC HEAT #2 – RM 113 | 20 | 4.0 | 4.0 | 2 | 20 | 2 |
| 3 | | | | | | | | 1.3 | | | 1.3 | | | | | | | | 4 |
| 5 | 20 | 2 | 4.0 | 4.0 | 20 | ELECTRIC HEAT #2 – RM 110 | | | 1.3 | | | 1.3 | ELECTRIC HEAT #2 – RM 114 | 20 | 4.0 | 4.0 | 2 | 20 | 6 |
| 7 | | | | | | | 1.3 | | | 1.3 | | | | | | | | | 8 |
| 9 | 20 | 2 | 4.0 | 4.0 | 20 | ELECTRIC HEAT #2 – RM 111 | | 1.3 | | | 1.3 | | ELECTRIC HEAT #2 – RM 115 | 20 | 4.0 | 4.0 | 2 | 20 | 10 |
| 11 | | | | | | | | | 1.3 | | | 1.3 | | | | | | | 12 |
| 13 | 20 | 2 | 4.0 | 4.0 | 20 | ELECTRIC HEAT #2 – RM 112 | 1.3 | | | 1.3 | | | ELECTRIC HEAT #2 – RM 116 | 20 | 4.0 | 4.0 | 2 | 20 | 14 |
| 15 | | | | | | | | 1.3 | | | 1.3 | | | | | | | | 16 |
| 17 | 20 | 2 | 4.0 | 4.0 | 20 | ELECTRIC HEAT #2 – RM 108 | | | 1.3 | | | 1.3 | ELECTRIC HEAT #2 – RM 117 | 20 | 4.0 | 4.0 | 2 | 20 | 18 |
| 19 | | | | | | | 1.3 | | | 1.3 | | | | | | | | | 20 |
| 21 | 20 | 2 | 4.0 | 4.0 | 20 | ELECTRIC HEAT #2 – RM 107 | | 1.3 | | | 1.3 | | ELECTRIC HEAT #2 – RM 118 | 20 | 4.0 | 4.0 | 2 | 20 | 22 |
| 23 | | | | | | | | | 1.3 | | | 1.3 | | | | | | | 24 |
| 25 | 20 | 2 | 4.0 | 4.0 | 20 | ELECTRIC HEAT #2 – RM 106 | 1.3 | | | 1.3 | | | ELECTRIC HEAT #2 – RM 119 | 20 | 4.0 | 4.0 | 2 | 20 | 26 |
| 27 | | | | | | | | 1.3 | | | 1.3 | | | | | | | | 28 |
| 29 | 20 | 2 | 4.0 | 4.0 | 20 | ELECTRIC HEAT #2 – RM 105 | | | 1.3 | | | 1.3 | ELECTRIC HEAT #2 – RM 127 | 20 | 4.0 | 4.0 | 2 | 20 | 30 |
| 31 | | | | | | | 1.3 | | | 1.3 | | | | | | | | | 32 |
| 33 | 20 | 2 | 4.0 | 4.0 | 20 | ELECTRIC HEAT #2 – RM 124 | | 1.3 | | | 1.3 | | ELECTRIC HEAT #2 – RM 126 | 20 | 4.0 | 4.0 | 2 | 20 | 34 |
| 35 | | | | | | | | | 1.3 | | | 1.3 | | | | | | | 36 |
| 37 | 20 | 2 | 4.0 | 4.0 | 20 | ELECTRIC HEAT #2 – RM 123 | 1.3 | | | 1.3 | | | ELECTRIC HEAT #2 – RM 125 | 20 | 4.0 | 4.0 | 2 | 20 | 38 |
| 39 | | | | | | | | 1.3 | | | 1.3 | | | | | | | | 40 |
| 41 | 20 | 1 | | | | SPARE | | | | | | | SPARE | | | | 1 | 20 | 42 |
| | | | | | | | 9.1 | 9.1 | 7.8 | 9.1 | 9.1 | 7.8 | TOTAL CONN. LOAD PER PHASE (KVA): A0 18.2 B0 18.2 C0 15.6 | | | | | | |

TOTAL CONN. LOAD 52.0 KVA. 70 % DEMAND = ESTIMATED DEMAND LOAD 36.4

* MAIN BREAKER SHALL BE 3P EARTH GROUND TYPE

PANELBOARD BOQS3 SURFACE MOUNTED
225 AMP. MAIN LUGS (OR) 100 AMP. MAIN BREAKER W/ 100 AMP. TRIP
CIRCUIT BREAKER TYPE 380/220 VOLTS 3 PHASE 4 WIRE 50 HZ 100 AMP. BUS

| CKT. NO. | TRIP AMPS | NO. POLES | WIRE MM² | GND MM² | CONDUIT MM | LOAD SERVED | LOAD-KVA A0 | LOAD-KVA B0 | LOAD-KVA C0 | LOAD-KVA A0 | LOAD-KVA B0 | LOAD-KVA C0 | LOAD SERVED | CONDUIT MM | GND MM² | WIRE MM² | NO. POLES | TRIP AMPS | CKT. NO. |
|---|---|---|---|---|---|---|---|---|---|---|---|---|---|---|---|---|---|---|---|
| 1 | 20 | 2 | 4.0 | 4.0 | 20 | ELECTRIC HEAT #2 – RM 122 | 1.3 | | | 1.3 | | | ELECTRIC HEAT #2 – 121 | 20 | 4.0 | 4.0 | 2 | 20 | 2 |
| 3 | | | | | | | | 1.3 | | | 1.3 | | | | | | | | 4 |
| 5 | 20 | 2 | 4.0 | 4.0 | 20 | ELECTRIC HEAT #2 – RM 120 | | | 1.3 | | | 5.0 | WATER HEATER – RM 104 | 20 | 6.0 | 6.0 | 3 | 30 | 6 |
| 7 | | | | | | | 1.3 | | | 5.0 | | | | | | | | | 8 |
| 9 | 20 | 1 | 4.0 | 4.0 | 20 | EXHAUST FANS #1, #2 – RM 101 | | 1.0 | | | 5.0 | | | | | | | | 10 |
| 11 | 20 | 1 | 4.0 | 4.0 | 20 | EXHAUST FAN #3 – RM 104 | | | 0.5 | | | 10.0 | MAKE UP AIR #1 – RM 104 | 25 | 6.0 | 25.0 | 1 | 60 | 12 |
| 13 | 20 | 1 | | | | SPARE | | | | 1.2 | | | RECEPTACLES – RM 126, 127 | 20 | 4.0 | 4.0 | 1 | 20 | 14 |
| 15 | 20 | 1 | | | | SPARE | | | | | 1.2 | | RECEPTACLES – RM 125, 126 | 20 | 4.0 | 4.0 | 1 | 20 | 16 |
| 17 | 20 | 1 | | | | SPARE | | | | | | 1.2 | RECEPTACLES – RM 124, 125 | 20 | 4.0 | 4.0 | 1 | 20 | 18 |
| 19 | 20 | 1 | | | | SPARE | | | | | | | SPARE | | | | 1 | 20 | 20 |
| 21 | 20 | 1 | | | | SPARE | | | | | | | SPARE | | | | 1 | 20 | 22 |
| 23 | 20 | 1 | | | | SPARE | | | | | | | SPARE | | | | 1 | 20 | 24 |
| 25 | 20 | 1 | | | | SPARE | | | | | | | SPARE | | | | 1 | 20 | 26 |
| 27 | 20 | 1 | | | | SPARE | | | | | | | SPARE | | | | 1 | 20 | 28 |
| 29 | 20 | 1 | | | | SPARE | | | | | | | SPARE | | | | 1 | 20 | 30 |
| 31 | 20 | 1 | | | | SPARE | | | | | | | SPARE | | | | 1 | 20 | 32 |
| 33 | 20 | 1 | | | | SPARE | | | | | | | SPARE | | | | 1 | 20 | 34 |
| 35 | 20 | 1 | | | | SPARE | | | | | | | SPARE | | | | 1 | 20 | 36 |
| 37 | 20 | 1 | | | | SPARE | | | | | | | SPARE | | | | 1 | 20 | 38 |
| 39 | 20 | 1 | | | | SPARE | | | | | | | SPARE | | | | 1 | 20 | 40 |
| 41 | 20 | 1 | | | | SPARE | | | | | | | SPARE | | | | 1 | 20 | 42 |
| | | | | | | | 2.6 | 2.3 | 1.8 | 7.5 | 7.5 | 16.2 | TOTAL CONN. LOAD PER PHASE (KVA): A0 10.1 B0 9.8 C0 18.0 | | | | | | |

TOTAL CONN. LOAD 37.9 KVA. 70 % DEMAND = ESTIMATED DEMAND LOAD 26.53

* MAIN BREAKER SHALL BE 3P EARTH GROUND TYPE

APPROVED:

A/E DESIGNER OF RECORD

SEAL:

COMMONWEALTH OF PENNSYLVANIA
REGISTERED PROFESSIONAL
JOSEPH R GAUS
ENGINEER
PE-074251
1/29/10

US ARMY CORPS OF ENGINEERS
AFGHANISTAN ENGINEER DISTRICT

| Mark | Description | Date | Appr. |
|---|---|---|---|

Rev: 0
Date: 2/23/10
Design file no.
Drawing code:
Designed by: RAJ
Dwn by: BJB
Ckd by: JRG
Reviewed by: JRG
Submitted by: BAKER
File name:
Plot date:
Plot scale:

U.S. ARMY CORPS OF ENGINEERS
AFGHANISTAN ENGINEER DISTRICT
APO AE 96338

Michael Baker Jr; Inc
A unit of Michael Baker Corporation
Airside Business Park
100 Airside Drive
Moon Township, PA 15108
www.mbakercorp.com

AFGHAN NATIONAL ARMY
REGIONAL MILITARY TRAINING CENTER
STANDARD DESIGN

SENIOR BOQ BARRACKS
ELECTRICAL PANEL SCHEDULES

Sheet reference number:
E–602

# AFGHAN NATIONAL ARMY

## STANDARD BUILDING DESIGN

## DINING FACILITY

## 100% FINAL DESIGN SUBMITTAL

### SHEET INDEX


G-001 COVER SHEET

CIVIL

| | |
|---|---|
| C-101 | SITE PLAN |
| C-501 | FENCING DETAILS |
| C-502 | FENCING DETAILS |
| C-503 | FENCING DETAILS |
| C-504 | FENCING DETAILS |

STRUCTURAL

| | |
|---|---|
| S-001 | GENERAL NOTES & DESIGN CRITERIA |
| S-101 | FOUNDATION/SLAB PLAN |
| S-102 | FOUNDATION/SLAB PLAN |
| S-103 | ROOF FRAMING PLAN |
| S-104 | ROOF FRAMING PLAN |
| S-105 | PROPANE STORAGE FND/SLAB & ROOF FRAMING PLANS |
| S-106 | WOOD STORAGE FND/SLAB & ROOF FRAMING PLANS |
| S-401 | BUILDING SECTIONS |
| S-402 | BUILDING SECTIONS |
| S-403 | BUILDING SECTIONS |
| S-501 | FOUNDATION SECTIONS |
| S-502 | SECTIONS |
| S-503 | BEAM & COLUMN DETAILS |
| S-504 | BEAM & COLUMN DETAILS |
| S-505 | MISCELLANEOUS SECTIONS |
| S-506 | MISCELLANEOUS SECTIONS |
| S-507 | SECTIONS |
| S-601 | SCHEDULES |
| S-701 | TYPICAL DETAILS |
| S-702 | TYPICAL DETAILS |

ARCHITECTURAL

| | |
|---|---|
| A-001 | LIFE SAFETY PLAN |
| A-101 | FLOOR PLAN |
| A-102 | FLOOR PLAN |
| A-103 | ROOF PLAN |
| A-201 | ELEVATIONS |
| A-301 | BUILDING SECTIONS |
| A-401 | WALL SECTIONS |
| A-402 | WALL SECTIONS |
| A-403 | ENLARGED PLAN |
| A-404 | PROPANE STOVE PLAN & SECTION |
| A-405 | WOOD BURNING STOVE DETAILS |
| A-406 | WOOD BURNING STOVE DETAILS |
| A-501 | EXTERIOR DETAILS |
| A-502 | HEAD, JAMB, & SILL DETAILS |
| A-503 | STOOP DETAILS |
| A-504 | CANOPY DETAILS |
| A-505 | TOILET & LAVATORY DETAILS |
| A-506 | DETAILS |
| A-507 | ISOLATION JOINT DETAILS |
| A-601 | WINDOW & DOOR SCHEDULES |

MECHANICAL

| | |
|---|---|
| P-101 | DFAC FLOOR PLAN-PLUMBING(SANITARY) |
| P-102 | DFAC FLOOR PLAN-PLUMBING(SANITARY) |
| P-103 | DFAC FLOOR PLAN-PLUMBING(HOT & COLD WATER) |
| P-104 | DFAC FLOOR PLAN-PLUMBING(HOT & COLD WATER) |
| P-105 | DFAC FLOOR PLAN-PLUMBING(PROPANE) |
| P-501 | PLUMBING DETAILS |
| P-502 | PLUMBING DETAILS |
| P-901 | DFAC DRAINAGE ISOMETRIC |
| P-902 | DFAC WATER ISOMETRIC |
| P-903 | DFAC PROPANE ISOMETRIC |
| M-101 | HVAC PARTIAL FLOOR PLAN |
| M-102 | HVAC PARTIAL FLOOR PLAN |
| M-501 | HVAC SCHEDULES AND DETAILS |
| M-502 | KITCHEN EXHAUST HOOD DETAILS |

ELECTRICAL

| | |
|---|---|
| E-001 | ELECTRICAL SYMBOLS & ABBREVIATIONS |
| E-101 | ELECTRICAL LIGHTING PLAN- PART A |
| E-102 | ELECTRICAL LIGHTING PLAN- PART B |
| E-103 | ELECTRICAL POWER & SYSTEMS PLAN- PART A |
| E-104 | ELECTRICAL POWER & SYSTEMS PLAN- PART B |
| E-105 | ELECTRICAL LIGHTNING PROTECTION |
| E-501 | ELECTRICAL DETAILS |
| E-502 | ELECTRICAL DETAILS |
| E-601 | ELECTRICAL LIGHT FIXTURE SCHEDULE |
| E-602 | ELECTRICAL PANEL SCHEDULES |


US ARMY CORPS OF ENGINEERS
AFGHANISTAN ENGINEER DISTRICT

| Mark | Description | Date | Appr. |
|---|---|---|---|
| | | | |

| Mark | Description | Date | Appr. |
|---|---|---|---|
| | | | |

Date: 2/23/10
Rev: 0
Design file no.
Drawing code:
File name: ANASFACG-G01CS
Plot date: 2/23/2010
Plot scale: X:X

Designed by: KMF/MMY
Dwn by: RCG
Ckd by: CWW
Reviewed by: LHM
Submitted by: BAKER

U.S. ARMY CORPS OF ENGINEERS
AFGHANISTAN ENGINEER DISTRICT
APO AE 96338

*Michael Baker Jr., Inc.*
*A unit of Michael Baker Corporation*
Airside Business Park
100 Airside Drive
Moon Township, PA 15108
www.mbakercorp.com

AFGHAN NATIONAL ARMY
REGIONAL MILITARY TRAINING CENTER
STANDARD DESIGN

DINING FACILITY

COVER SHEET

Sheet reference number:
G-001

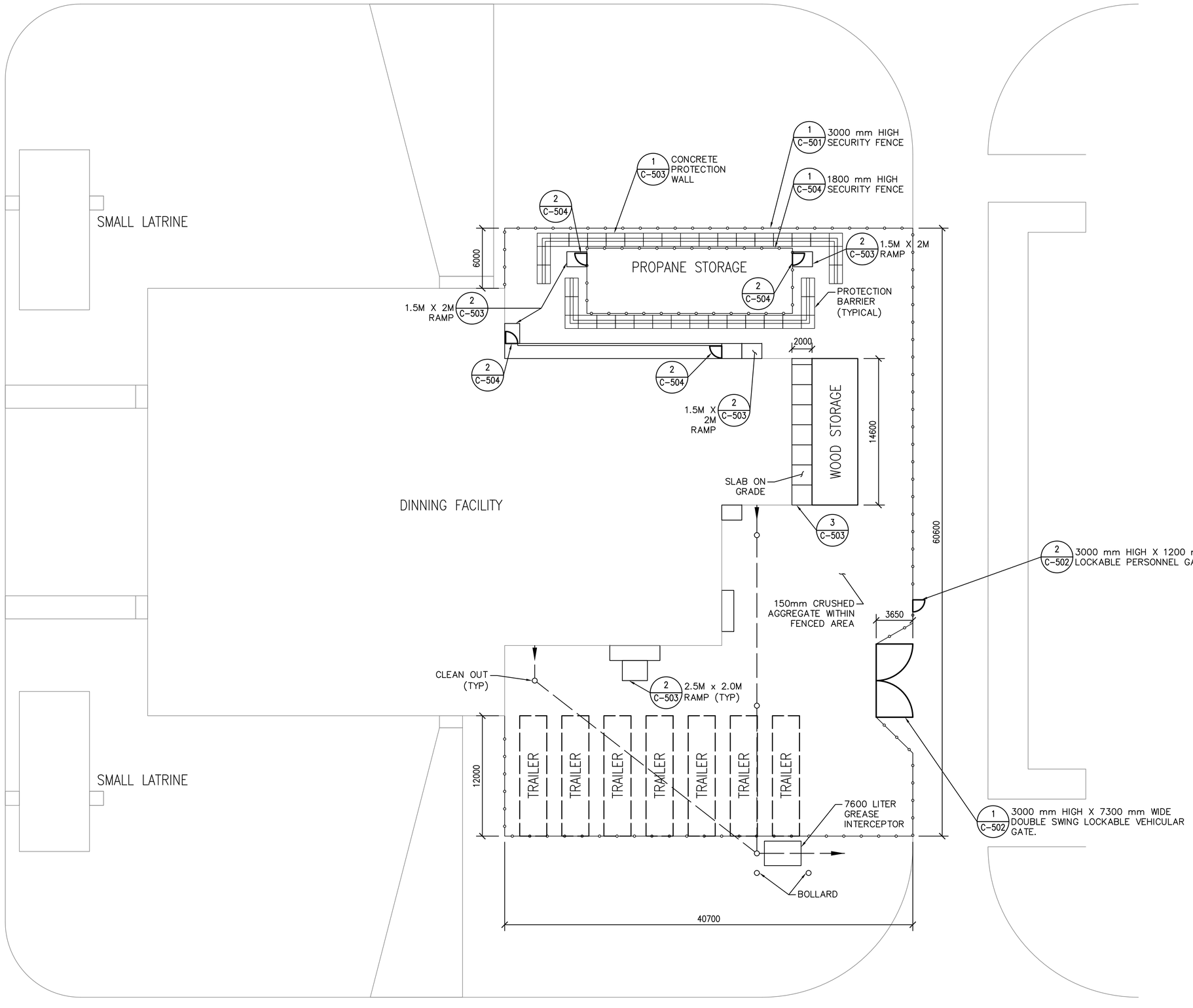


1 C-101 DFAC STORAGE AREA
SCALE: 1:200

0 2000 4000 8000
SCALE: 1: 200

US ARMY CORPS OF ENGINEERS
AFGHANISTAN ENGINEER DISTRICT

| Mark | Description | Date | Appr. |
|---|---|---|---|
| | | | |

Date: 2/23/2010 Rev: 0
Design file no. C-101
Drawing code:
File name: ANADNBS-C-101XXX
Plot date: 2/23/2010
Plot scale: 1:200

Designed by: GPH
Dwn by: JDS
Ckd by: LHM
Reviewed by: LHM
Submitted by: BAKER

U.S. ARMY ENGINEER DISTRICT, AFGHANISTAN
CORPS OF ENGINEERS
APO AE 96338

Michael Baker Jr., Inc
A unit of Michael Baker Corporation
Airside Business Park
100 Airside Drive
Moon Township, PA 15108
www.mbakercorp.com

AFGHAN NATIONAL ARMY
REGIONAL MILITARY TRAINING CENTER
STANDARD DESIGN

DFAC STORAGE AREA

SITE PLAN

APPROVED:

A/E DESIGNER OF RECORD

SEAL:

COMMONWEALTH OF PENNSYLVANIA
REGISTERED PROFESSIONAL
GREGORY P. HYNES
ENGINEER 044310-E

Sheet reference number:
C-101

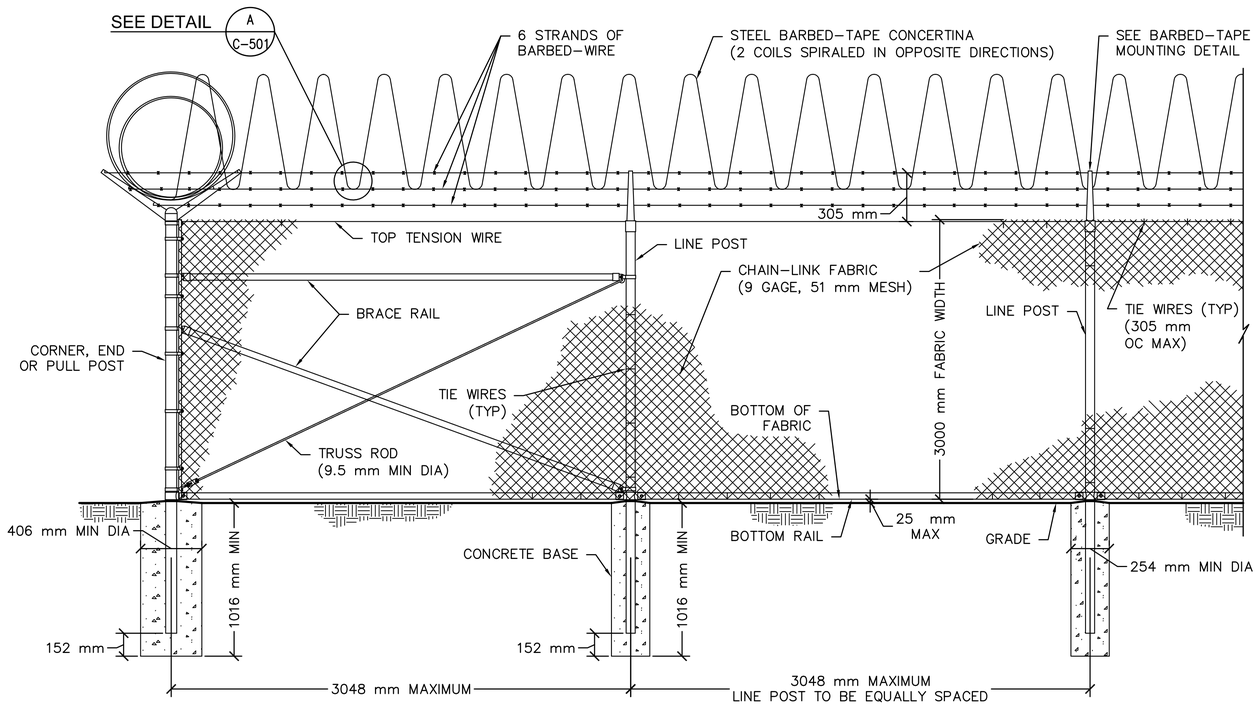


## 1 C-501 3000 mm CHAIN-LINK SECURITY FENCE DETAIL

SCALE: NTS

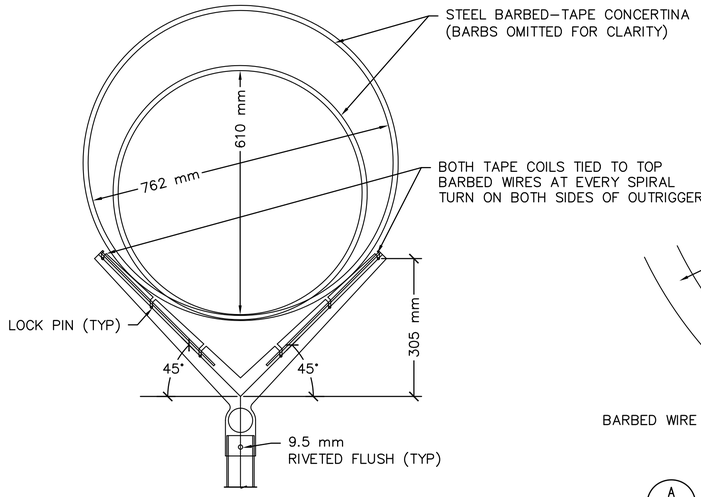


## BARBED-TAPE MOUNTING DETAIL

NO SCALE

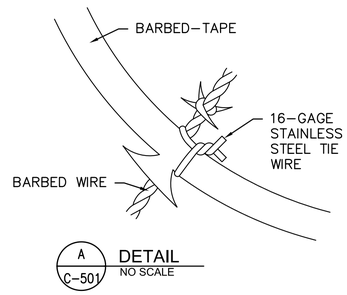


A C-501 DETAIL

NO SCALE

| STEEL POST SCHEDULE | |
|---|---|
| USE AND SECTION | MINIMUM OUTSIDE DIMENSIONS (NOMINAL) FABRIC WIDTH 2440 mm AND OVER |
| CORNER, END & PULL POSTS TUBULAR – ROUND | 102 mm O.D. |
| LINE POSTS TUBULAR – ROUND | 73 mm O.D. |
| BOTTOM & BRACE RAILS TUBULAR – ROUND | 42 mm O.D. |
| TUBULAR – SQUARE | 38 mm SQ. |
| H–SECTION | 41 mm x 38 mm |
| C–SECTION (ROLL–FORMED) | 41 mm x 32 mm |

NOTES:

1. WIRE TIES, RAILS, POSTS, AND BRACES SHALL BE CONSTRUCTED ON THE SECURE SIDE OF THE FENCE ALIGNMENT. CHAIN–LINK FABRIC SHALL BE PLACED ON THE SIDE OPPOSITE THE SECURE AREA.
2. ONLY 9–GAGE GALVANIZED STEEL TIE WIRES SHALL BE USED FOR FASTENING THE FENCE FABRIC TO FENCE POSTS AND RAILS. 16–GAGE, STAINLESS STEEL TIE WIRES SHALL BE USED FOR FASTENING FENCE FABRIC TO TENSION WIRES. HOG RINGS SHALL NOT BE ALLOWED ON SENSORED FENCES.
3. BOTTOM RAIL SHALL BE ATTACHED TO DOUBLE RAIL ENDS USING 9.5 mm CARRIAGE BOLTS AS SHOWN. ADDITIONAL HOLES SHALL BE DRILLED THROUGH THE BOTTOM RAIL ENDS TO INSURE THAT CARRIAGE BOLTS PASS THROUGH THE BOTTOM RAIL AS SHOWN.

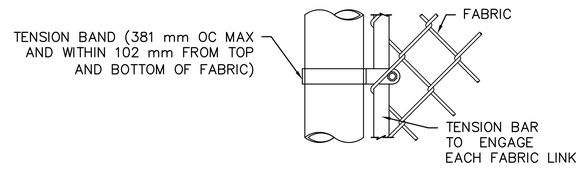


## END OR GATE POST DETAIL

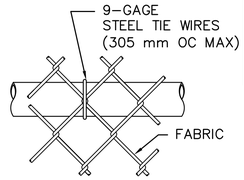


## BRACE RAIL ATTACHMENT

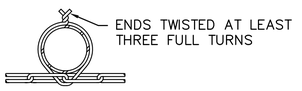


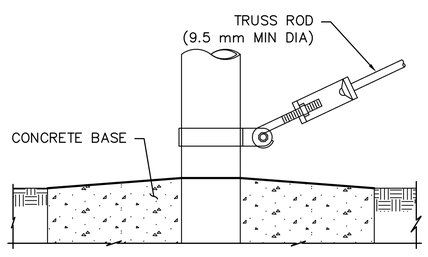


## TRUSS ROD AND BAND

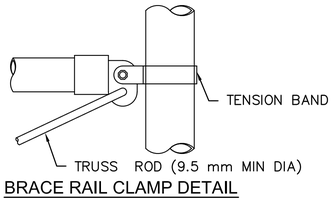


## BRACE RAIL CLAMP DETAIL

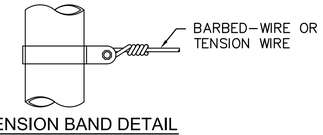


## TENSION BAND DETAIL

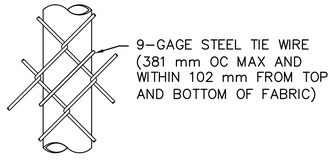


## LINE POST ATTACHMENTS

## FASTENING DETAILS

NO SCALE

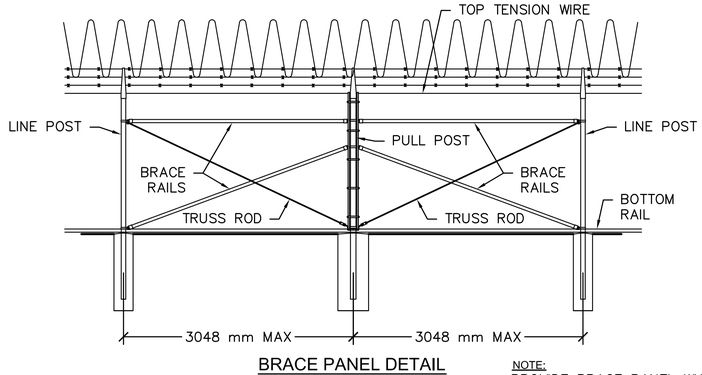


## BRACE PANEL DETAIL

NO SCALE

NOTE:
PROVIDE BRACE PANEL WHENEVER STRAIGHT RUNS EXCEED 152 METERS.

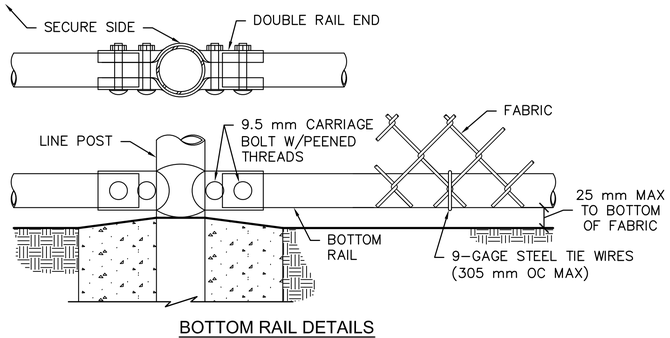


## BOTTOM RAIL DETAILS

NO SCALE

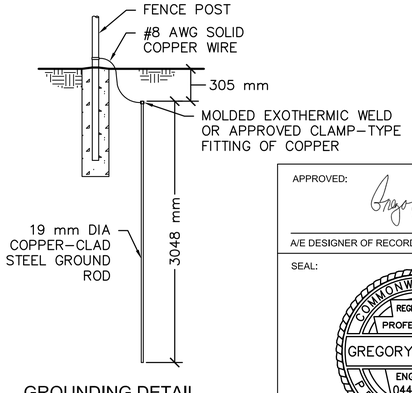


## GROUNDING DETAIL

NO SCALE

US ARMY CORPS OF ENGINEERS
AFGHANISTAN ENGINEER DISTRICT

| Mark | Description | Date | Appr. |
|---|---|---|---|
| 0 | | 2/23/2010 | |

Date: 2/23/2010 | Rev: 0
Design file no. C–501
Drawing code:
File name: ANADNIS-C-501XXX
Plot date: 2/23/2010
Plot scale:1:1

Designed by: GPH | Dwn by: JDS | Ckd by: JMB
Reviewed by: LHM
Submitted by: BAKER

U.S. ARMY ENGINEER DISTRICT, AFGHANISTAN
CORPS OF ENGINEERS
APO AE 96338

Michael Baker Jr, Inc
A unit of Michael Baker Corporation
Airside Business Park
100 Airside Drive
Moon Township, PA 15108
www.mbakercorp.com

AFGHAN NATIONAL ARMY
REGIONAL MILITARY TRAINING CENTER
STANDARD DESIGN

DFAC STORAGE AREA

3000 mm FENCING DETAILS

APPROVED:

A/E DESIGNER OF RECORD

SEAL:

COMMONWEALTH OF PENNSYLVANIA
REGISTERED PROFESSIONAL
GREGORY P. HYNES
ENGINEER
044310–E

Sheet reference number:
C–501

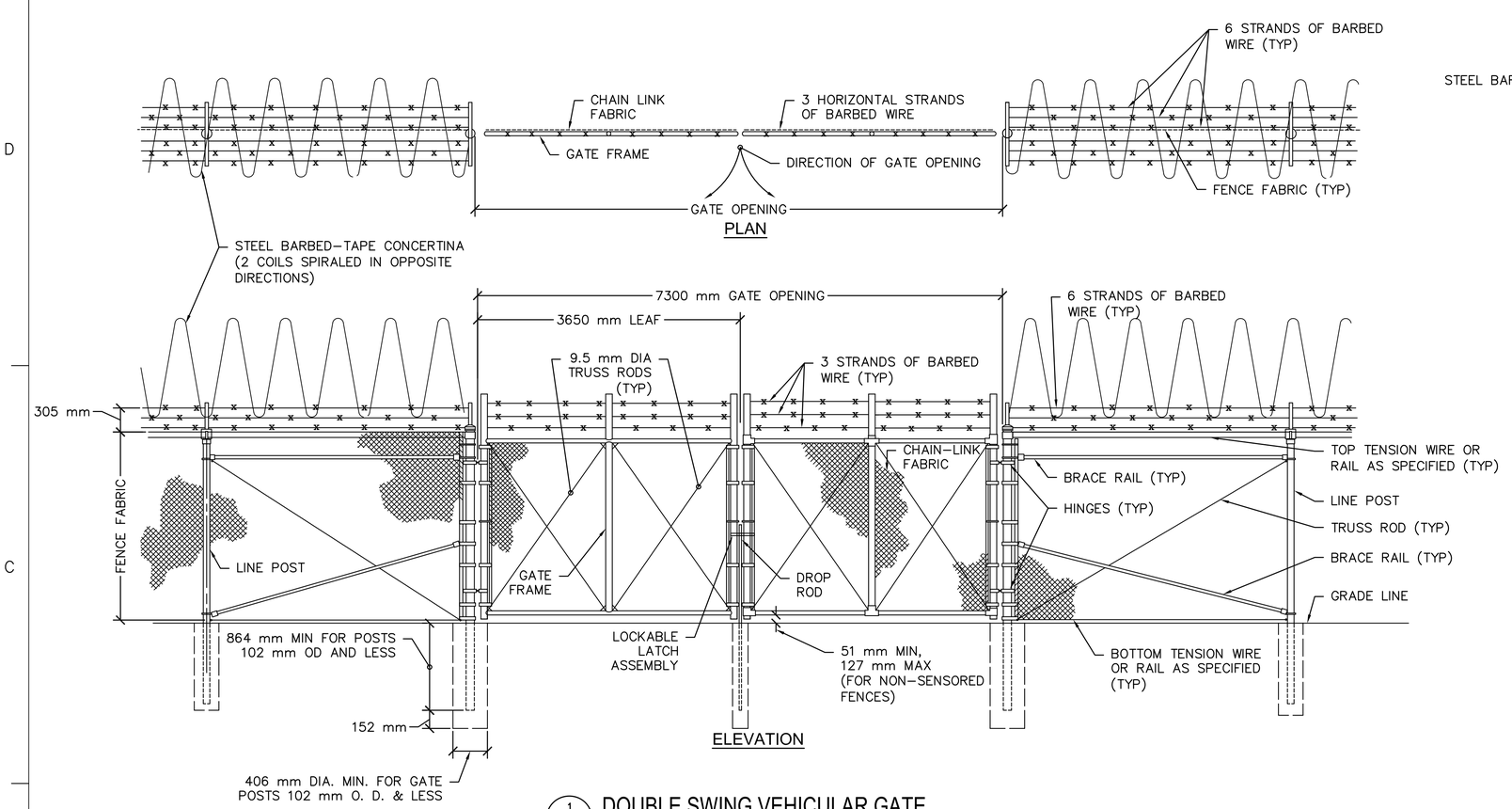


1 C–502 **DOUBLE SWING VEHICULAR GATE**
SCALE: NTS

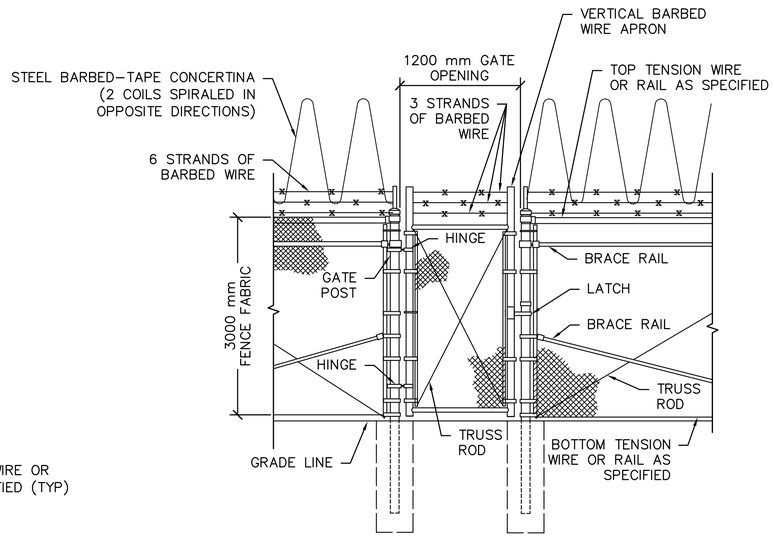


2 C–502 **PERSONNEL GATE**
NO SCALE

NOTES:

1. FOR NON–SENSORED FENCES, DETAILS SHOWN ARE TO CLARIFY REQUIREMENTS AND ARE NOT INTENDED TO LIMIT OTHER TYPE OF FENCE SECTIONS AND METHODS OF INSTALLATION THAT COMPLY WITH THE SPECIFICATIONS.
2. SWING GATES SHALL BE CONSTRUCTED WITH DROP RODS, PADLOCKS, LATCH ASSEMBLY AND GATE KEEPERS EXCEPT AS NOTED.
3. ALL GATE FRAMES SHALL MEET THE MINIMUM REQUIREMENTS OF ASTM F900 48 mm NOMINAL (ROUND) OR 51 mm NOMINAL (SQUARE). GATE FRAMES SHALL BE OF WELDED CONSTRUCTION OR SHALL BE ASSEMBLED USING HEAVY FITTINGS. AT CONTRACTOR'S OPTION A WELDED HORIZONTAL BRACE MAY BE USED IN LIEU OF TRUSS RODS TO BRACE ALL–WELDED GATE FRAMES. THE CONTRACTOR SHALL BE RESPONSIBLE FOR THE PROPER RIGID CONSTRUCTION OF ALL GATES SUPPLIED.

| GATE POST SCHEDULE | |
|---|---|
| GATE LEAF WIDTH (NOMINAL) | OUTSIDE DIMENSION (NOMINAL) |
| 1830 mm OR LESS | 73 mm OD<br>64 mm SQ |
| GREATER THAN 1830 mm TO 3660 mm | 102 mm OD |

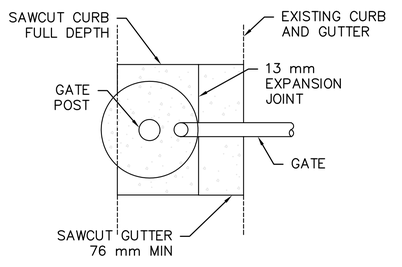


PLAN

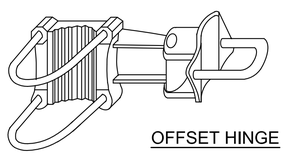

OFFSET HINGE

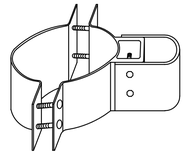

STANDARD HINGE

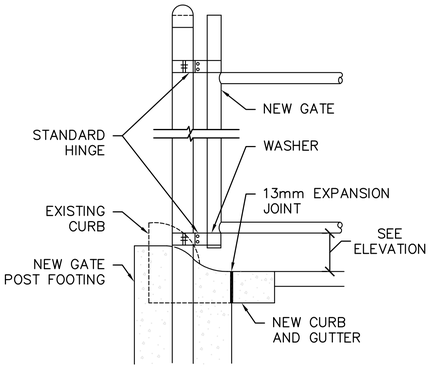


GATE POST SECTION AT CURB AND GUTTER
NO SCALE

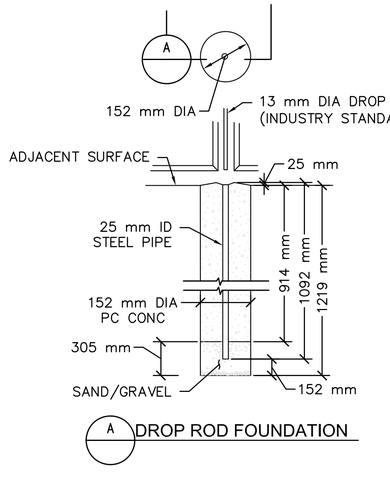


A DROP ROD FOUNDATION

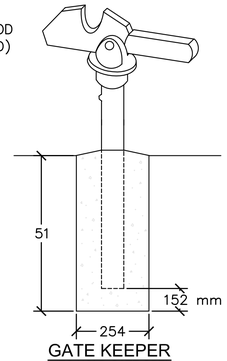


GATE KEEPER
(TO HOLD GATE OPEN)

SWING GATE DETAILS
NO SCALE

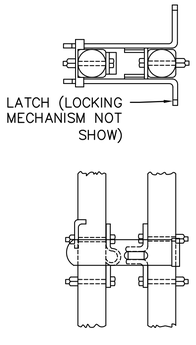


LOCKABLE LATCH ASSEMBLY

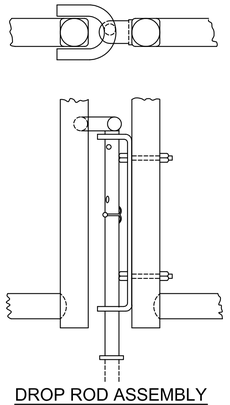

DROP ROD ASSEMBLY

APPROVED:

A/E DESIGNER OF RECORD

SEAL:

COMMONWEALTH OF PENNSYLVANIA
REGISTERED PROFESSIONAL
GREGORY P. HYNES
ENGINEER 044310–E

US ARMY CORPS OF ENGINEERS
AFGHANISTAN ENGINEER DISTRICT

| Mark | Description | Date | Appr. |
|---|---|---|---|

Date: 2/23/2010 | Rev: 0
Design file no. C–502 | Drawing code:
File name: ANADINS-C-502XXX
Plot date: 2/23/2010
Plot scale: 1:1

Designed by: GPH | Ckd by: JMB
Dwn by: JDS | Reviewed by: LHM
Submitted by: BAKER

U.S. ARMY ENGINEER DISTRICT, AFGHANISTAN
CORPS OF ENGINEERS
APO AE 96338

*Michael Baker Jr., Inc*
*A unit of Michael Baker Corporation*
Airside Business Park
100 Airside Drive
Moon Township, PA 15108
www.mbakercorp.com

AFGHAN NATIONAL ARMY
REGIONAL MILITARY TRAINING CENTER
STANDARD DESIGN

DFAC STORAGE AREA

FENCING DETAILS

Sheet reference number:
C–502

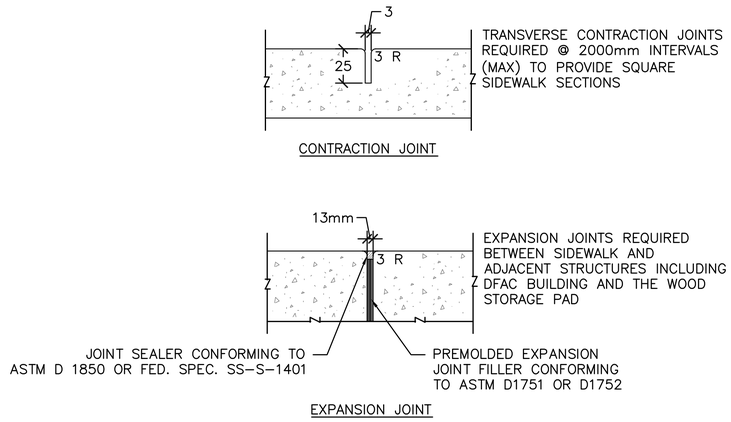


4 C-503 TYPICAL CONCRETE SIDEWALK DETAILS
SCALE: NTS

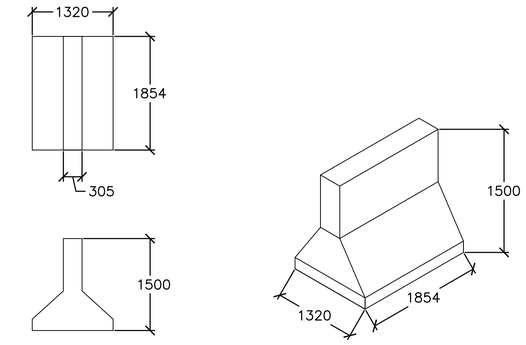


1 C-503 PROTECTION WALL DETAIL
SCALE: NTS

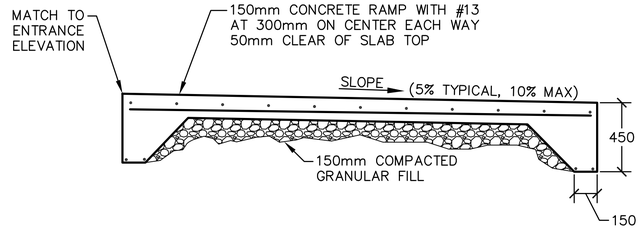


2 C-503 CONCRETE ENTRANCE RAMP DETAIL
SCALE: NTS

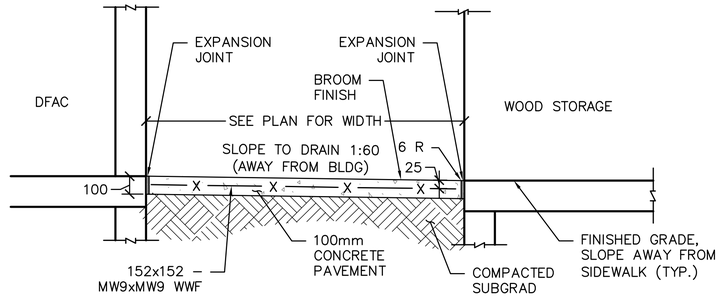


3 C-503 CONCRETE SIDEWALK DETAIL
SCALE: NTS

APPROVED:

A/E DESIGNER OF RECORD

SEAL:

COMMONWEALTH OF PENNSYLVANIA
REGISTERED PROFESSIONAL
GREGORY P. HYNES
ENGINEER
044310-E

US ARMY CORPS OF ENGINEERS
AFGHANISTAN ENGINEER DISTRICT

| Mark | Description | Date | Appr. |
|---|---|---|---|
| | | | |

| Mark | Description | Date | Appr. |
|---|---|---|---|
| | | | |

Date: 2/23/2010 | Rev: 0
Design file no. C-503
Drawing code:
File name: ANADNS-C-503XXX
Plot date: 2/23/2010
Plot scale:1:1

Designed by: GPH | Ckd by:
Dwn by: JDS | Ckd by:
Reviewed by: LHM
Submitted by: BAKER

U.S. ARMY ENGINEER DISTRICT, AFGHANISTAN
CORPS OF ENGINEERS
APO AE 96338

Michael Baker Jr., Inc
A unit of Michael Baker Corporation
Airside Business Park
100 Airside Drive
Moon Township, PA 15108
www.mbakercorp.com

AFGHAN NATIONAL ARMY
REGIONAL MILITARY TRAINING CENTER
STANDARD DESIGN

DFAC STORAGE AREA

3000 mm FENCING DETAILS

Sheet reference number:
C-503

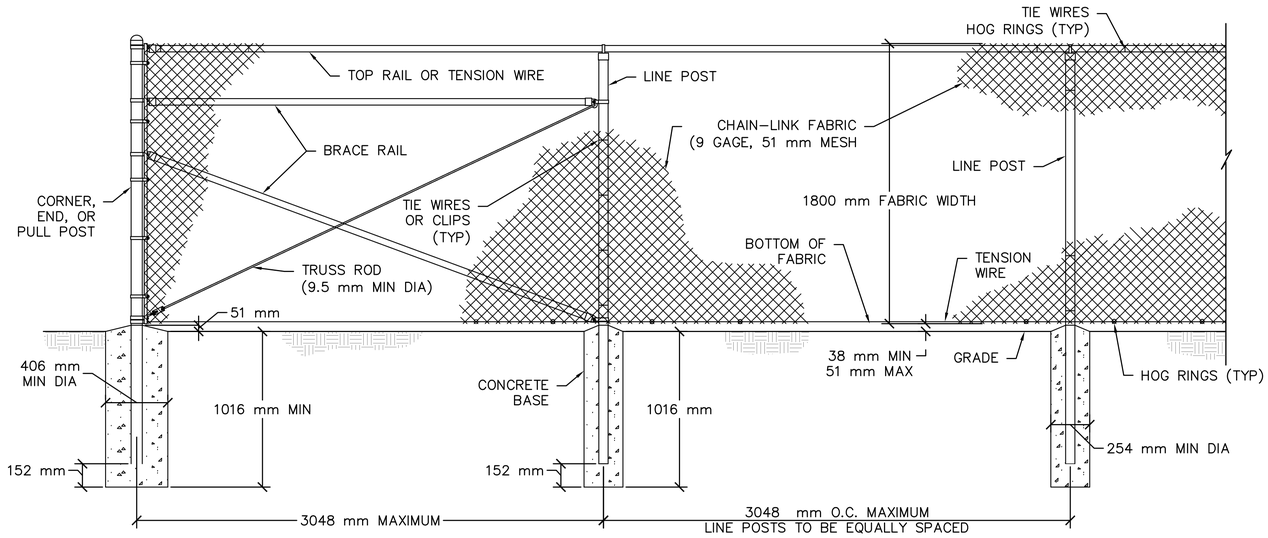


1 / C–504 1800 mm CHAIN-LINK SECURITY FENCE DETAIL
SCALE: NTS

| STEEL POST SCHEDULE | |
|---|---|
| USE AND SECTION | MINIMUM OUTSIDE DIMENSIONS (NOMINAL) FABRIC WIDTH 1829 mm OR LESS |
| CORNER, END & PULL POSTS | |
| TUBULAR – ROUND | 60 mm O.D. |
| TUBULAR – SQUARE | 51 mm SQ. |
| C–SECTION (ROLL–FORMED) | 89 mm X 89 mm |
| LINE POSTS | |
| TUBULAR – ROUND | 48 mm O.D. |
| H–SECTION | 57 mm X 43 mm |
| C–SECTION (ROLL–FORMED) | 48 mm X 41 mm |
| TOP, BOTTOM & BRACE RAILS | |
| TUBULAR – ROUND | 42 mm O.D. |
| TUBULAR – SQUARE | 38 mm SQ. |
| H–SECTION | 41 mm X 38 mm |
| C–SECTION (ROLL–FORMED) | 41 mm X 32 mm |

NOTES:

1. DETAILS SHOWN ARE TO CLARIFY REQUIREMENTS AND ARE NOT INTENDED TO LIMIT OTHER TYPES OF FENCE SECTIONS AND METHODS OF INSTALLATION THAT COMPLY WITH THE SPECIFICATIONS.

2. WIRE TIES, RAILS, POSTS, AND BRACES SHALL BE CONSTRUCTED ON THE SECURE SIDE OF THE FENCE ALIGNMENT. CHAIN–LINK FABRIC SHALL BE PLACED ON THE SIDE OPPOSITE THE SECURE AREA.

3. C–SECTION POSTS SHALL BE INSTALLED SO THAT THE VOID INSIDE THE POST IS COMPLETELY FILLED WITH CONCRETE UP TO THE TOP OF THE FOUNDATION.

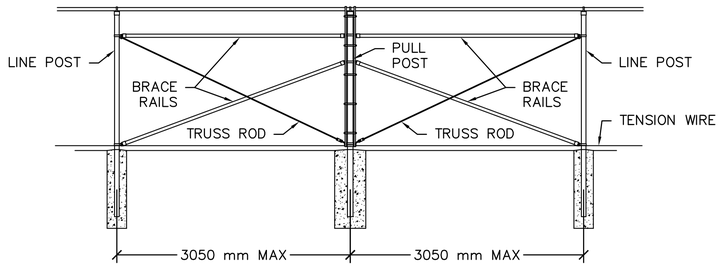


BRACE PANEL DETAIL
NTS

NOTE:
PROVIDE BRACE PANEL WHENEVER STRAIGHT RUNS EXCEED 152 METERS.

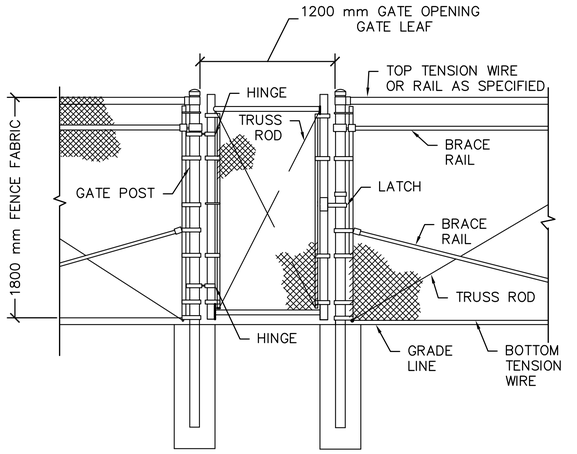


2 / C–504 PERSONNEL GATE 1800 mm FENCE
SCALE: NTS

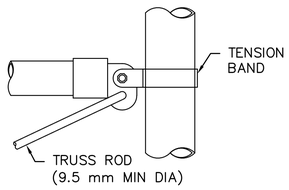


ROUND POST

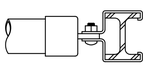

H-BEAM

BRACE RAIL CLAMP DETAILS

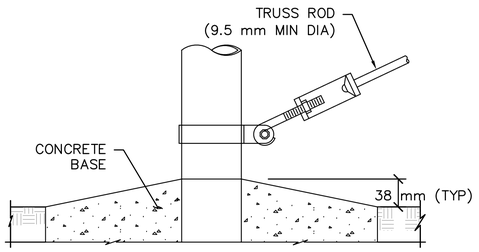


TRUSS ROD AND BAND

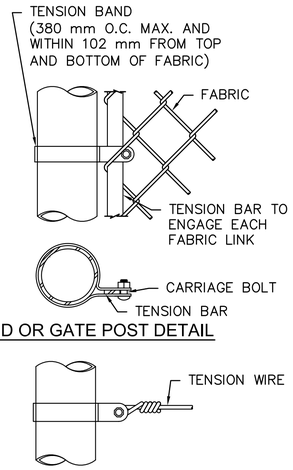


END OR GATE POST DETAIL

TENSION BAND DETAIL

FASTENING DETAILS
NTS

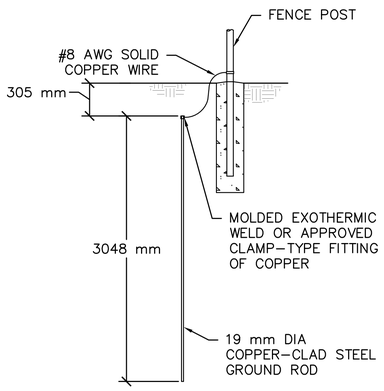


GROUNDING DETAIL
NTS

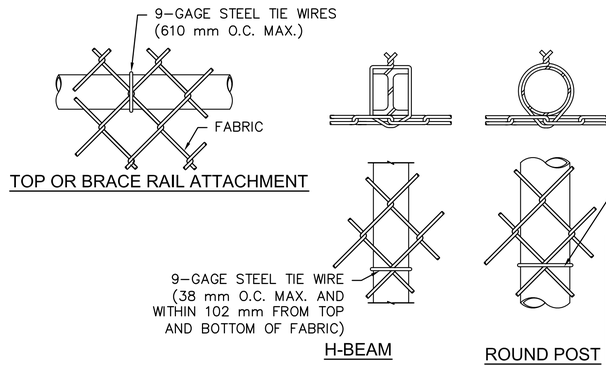


TOP OR BRACE RAIL ATTACHMENT

H-BEAM

ROUND POST

LINE POST ATTACHMENTS
NTS

APPROVED:

A/E DESIGNER OF RECORD

SEAL:

COMMONWEALTH OF PENNSYLVANIA
REGISTERED PROFESSIONAL
GREGORY P. HYNES
ENGINEER
044310–E

US ARMY CORPS OF ENGINEERS
AFGHANISTAN ENGINEER DISTRICT

| Mark | Description | Date | Appr. |
|---|---|---|---|

Rev: 0
Date: 2/23/2010
Design file no. C–504
Drawing code:
File name: ANA0INS-C-504XXX
Plot date: 2/23/2010
Plot scale: 1:1

Designed by: GPH
Dwn by: JDS
Ckd by: JMB
Reviewed by: LHM
Submitted by: BAKER

U.S. ARMY ENGINEER DISTRICT, AFGHANISTAN
CORPS OF ENGINEERS
APO AE 96338

Michael Baker Jr., Inc
A unit of Michael Baker Corporation
Airside Business Park
100 Airside Drive
Moon Township, PA 15108
www.mbakercorp.com

AFGHAN NATIONAL ARMY
REGIONAL MILITARY TRAINING CENTER
STANDARD DESIGN

DFAC STORAGE AREA

1800 mm FENCING DETAILS

Sheet reference number:
C–504

STRUCTURAL ABBREVIATIONS:

| | |
|---|---|
| ACI | AMERICAN CONCRETE INSTITUTE |
| ADD'L | ADDITIONAL |
| AISC | AMERICAN INSTITUTE OF STEEL CONSTRUCTION |
| AISI | AMERICAN IRON AND STEEL INSTITUTE |
| ASTM | AMERICAN SOCIETY FOR TESTING AND MATERIALS |
| ARCH | ARCHITECTURAL |
| B | BOTTOM |
| BLDG | BUILDING |
| BOTT | BOTTOM |
| ℄ | CENTER LINE |
| CFMRF | COLD FORM METAL ROOF FRAME |
| CFMF | COLD FORM METAL FRAME |
| CFS | COLD FORMED STEEL |
| CIP | CAST-IN-PLACE |
| CIPL | CAST-IN-PLACE LINTEL |
| CJ | CONTROL JOINT |
| CLR | CLEAR |
| CMU | CONCRETE MASONRY UNIT |
| COEFF | COEFFICIENT |
| COL | COLUMN |
| CONC | CONCRETE |
| CONT | CONTINUOUS |
| COORD | COORDINATE |
| CRSI | CONCRETE REINFORCING STEEL INSTITUTE |
| CSJ | CONSTRUCTION JOINT |
| DIA | DIAMETER |
| DIAG | DIAGONAL |
| DIM | DIMENSION |
| DWG | DRAWING |
| DWL | DOWEL |
| EA | EACH |
| EF | EACH FACE |
| ELEC | ELECTRICAL |
| ELEV | ELEVATION |
| EMBED | EMBEDMENT |
| EQUIV | EQUIVALENT |
| ETC | ET CETERA |
| EW | EACH WAY |
| EXP | EXPANSION |
| EXT | EXTERIOR |
| FND | FOUNDATION |
| FTG | FOOTING |
| GA | GAUGE |
| GB | GRADE BEAM |
| HORIZ | HORIZONTAL |
| h | HOUR |
| HRS | HOURS |
| IBC | INTERNATIONAL BUILDING CODE |
| INFO | INFORMATION |
| INT | INTERIOR |
| kg | KILOGRAM |
| km | KILOMETER |
| kN | KILONEWTON |
| kPa | KILOPASCAL |
| L# | ANGLE (# INDICATES SIZE) |
| LONG | LONGITUDINAL |
| LLV | LONG LEG VERTICAL |
| m | METER |
| MAX | MAXIMUM |
| MECH | MECHANICAL |
| MFG | MANUFACTURER |
| MID | MIDDLE |
| MIN | MINIMUM |
| MISC | MISCELLANEOUS |
| mm | MILLIMETER |
| MPa | MEGAPASCAL |
| MTL | METAL |
| MWFRS | MAIN WIND FORCE RESISTING SYSTEM |
| N | NEWTON |
| N | NORTH |
| N/A | NOT APPLICABLE |
| # | NUMBER SYMBOL FOR REBAR SIZE |
| NTS | NOT TO SCALE |
| OC | ON CENTER |
| OPNG | OPENING |
| ℙ or PL | PLATE |
| PRE-ENG | PRE-ENGINEERED |
| RB | ROOF BEAM |
| REINF | REINFORCED |
| REQ'D | REQUIRED |
| SIM | SIMILAR |
| SPECS | SPECIFICATIONS |
| STD | STANDARD |
| STRUCT | STRUCTURAL |
| SW | SHEAR WALL |
| T | TOP |
| T/ | TOP OF |
| T/ELEV | TOP ELEVATION |
| T/SLAB | TOP OF SLAB |
| T&B | TOP AND BOTTOM |
| THK | THICK |
| TYP | TYPICAL |
| UFC | UNIFIED FACILITIES CRITERIA |
| UON | UNLESS OTHERWISE NOTED |
| VERT | VERTICAL |
| W | WIDTH |
| W/ | WITH |

1.0 GENERAL NOTES:

1.1 THIS PROJECT HAS BEEN DESIGNED FOR THE WEIGHTS AND MATERIALS INDICATED ON THE SHEETS AND FOR THE LIVE LOADS INDICATED IN THE DESIGN DATA. IT IS THE CONTRACTOR'S RESPONSIBILITY TO DETERMINE ALLOWABLE CONSTRUCTION LOADS AND TO PROVIDE PROPER DESIGN AND CONSTRUCTION OF FALSEWORK, FORMWORK, STAGING, BRACING, SHEETING AND SHORING, ETC.

1.1 COORDINATE THESE SHEETS WITH THE ARCHITECTURAL, MECHANICAL, ELECTRICAL, PLUMBING, AND CIVIL SHEETS. ALL DIMENSIONS SHOWN ON THE SHEETS ARE MILLIMETERS UNLESS NOTED OTHERWISE.

1.2 THE CONTRACTOR SHALL VERIFY AND COORDINATE ALL FLOOR AND ROOF OPENING SIZES AND LOCATIONS, EQUIPMENT PAD SIZES AND LOCATIONS, ANCHOR BOLT LAYOUTS, ETC WITH EQUIPMENT SELECTED. THE CONTRACTOR SHALL MAKE ANY REQUIRED MODIFICATIONS AT NO ADDITIONAL COST.

1.3 THE CONTRACTOR SHALL REFER TO THE ARCHITECTURAL, MECHANICAL, ELECTRICAL AND PLUMBING SHEETS FOR SLEEVES, CURBS, INSERTS OR OPENINGS, ETC. NOT HEREIN INDICATED.

1.4 WORK NOT INCLUDED ON THE SHEETS BUT IMPLIED TO BE SIMILAR TO THAT SHOWN AT CORRESPONDING PLACES ELSEWHERE ON THE SHEETS SHALL BE REPEATED.

1.5 IN CASE OF CONFLICT BETWEEN THE NOTES, DETAILS AND SPECIFICATIONS THE MOST RIGID REQUIREMENTS SHALL GOVERN.

1.6 SEE ARCHITECTURAL SHEETS FOR LOCATIONS OF MASONRY AND NON-LOAD BEARING PARTITIONS. PROVIDE COMPRESSIBLE FIRESAFING AT TOP OF WALL AS REQUIRED BY ARCHITECTURAL SHEETS.

1.7 COORDINATE FINISHED FLOOR DATUM ELEVATION 0.0m WITH THE CIVIL SHEETS.

2.0 FOUNDATION NOTES

2.1 THE GEOTECHNICAL ANALYSIS FOR THIS PROJECT IS THE RESPONSIBILITY OF THE CONTRACTOR AWARDED THE WORK. AN ASSUMED ALLOWABLE SOIL BEARING VALUE OF 72 kPa HAS BEEN USED IN THE STRUCTURAL ANALYSIS OF THE BUILDING HEREIN AND SHALL BE CONFIRMED AND VERIFIED AS PART OF THE GEOTECHNICAL INVESTIGATION. VALUES WHICH DO NOT MEET THE REQUIREMENTS INDICATED ON THE BASIS OF DESIGN SHEET SHALL BE IMMEDIATELY BROUGHT TO THE ATTENTION OF THE CONTRACTING OFFICER FOR CONSIDERATION AND DETERMINATION ON THE NEXT APPROPRIATE COURSE OF ACTION.

2.2 SEE THE SPECIFICATION FOR ADDITIONAL REQUIREMENTS TO THOSE OUTLINED IN THE GEOTECHNICAL INVESTIGATION FOR EXCAVATION AND PREPARATION OF THE FOUNDATION AND THE SLAB ON GRADE SUBGRADE INCLUDING COMPACTION PROCEDURES.

2.3 EXCAVATIONS FOR FOOTINGS SHALL HAVE THE SIDES AND BOTTOMS TEMPORARILY LINED WITH 0.25mm POLYETHYLENE IF PLACEMENT OF CONCRETE DOES NOT OCCUR WITHIN 24 HRS OF THE EXCAVATION OF THE FOOTING.

2.4 FOUNDATION CONDITIONS NOTED DURING CONSTRUCTION WHICH DIFFER FROM THOSE DESCRIBED IN THE GEOTECHNICAL REPORT SHALL BE REPORTED TO THE GENERAL CONTRACTOR BEFORE FURTHER CONSTRUCTION IS ATTEMPTED. SEE PROJECT SPECIFICATIONS.

2.5 NO FOOTINGS OR SLABS SHALL BE POURED INTO OR AGAINST SUBGRADE CONTAINING FREE WATER, FROST, ICE OR LOOSE MATERIAL. FROST DEPTH ASSUMED TO BE 800mm.

2.6 ALL SLAB-ON-GRADE, TRENCH BOTTOMS AND OTHER ON-GRADE INTERIOR HORIZONTAL SURFACES SHALL BE PLACED OVER A 0.25mm POLYETHYLENE VAPOR RETARDER OVER A 100mm #57 STONE WATER CAPILLARY BARRIER PLACED ON SUBGRADE PROPERLY PREPARED IN ACCORDANCE WITH THE CONTRACT SPECIFICATIONS. (UON)

2.7 PRIOR TO START OF FOUNDATION OR SLAB-ON-GRADE CONSTRUCTION, EXISTING SUBGRADES SHALL BE COMPACTED TO MINIMUM OF 95% MAXIMUM DRY DENSITY OBTAINED THRU ASTM D 1557 MODIFIED PROCTOR TESTING.

2.8 SEE PLUMBING, ELECTRICAL & CIVIL SHEETS FOR REQUIRED UNDERSLAB UTILITIES.

2.9 SEE ARCHITECTURAL SHEETS FOR ALL WATERPROOFING DETAILS AND MATERIALS.

2.10 IF UNDERMINING OF FOOTINGS OCCURS, FILL VOIDS WITH 18 MPa CONCRETE. DO NOT ATTEMPT TO REPLACE AND RE-COMPACT SOIL.

3.0 CONCRETE

3.1 CONCRETE SHALL HAVE THE UNIT WEIGHT OF 2400 kg/m$^3$ AND A MINIMUM COMPRESSIVE STRENGTH (f'c) OF 28 MPa AT 28 DAYS. ALL CONCRETE SHALL HAVE A WATER-CEMENT RATIO OF 0.45. SEE SPECIFICATIONS FOR ADDITIONAL INFORMATION. ENTRAIN AIR TO PRODUCE TOTAL AIR CONTENT ACCORDING TO THE SPECIFICATIONS FOR CONCRETE EXPOSED TO FREEZING TEMPERATURES (EXTERIOR FOOTINGS, SLAB TURNDOWNS, EXTERIOR SLABS AND SLABS-ON-GRADE, EXTERIOR RETAINING WALLS, AND EXTERIOR GRADE BEAMS.)

3.2 NO CALCIUM CHLORIDE SHALL BE USED IN ANY CONCRETE.

3.3 MIXING, TRANSPORTING AND PLACING OF CONCRETE SHALL CONFORM TO ACI 301M-05.

3.4 ALL CONCRETE WORK SHALL CONFORM TO THE REQUIREMENTS OF THE AMERICAN CONCRETE INSTITUTE (ACI) 318M MANUAL (metric), "BUILDING CODE REQUIREMENTS FOR REINFORCED CONCRETE", AND REQUIREMENTS OUTLINED IN THE CONTRACT SPECIFICATIONS. WHEN THERE IS A CONFLICT BETWEEN ACI AND THE SPECIFICATIONS, THE MORE STRINGENT SHALL GOVERN.

3.5 CHAMFER ALL EXPOSED EXTERNAL CORNERS OF CONCRETE WITH 20mm x45 DEGREE CHAMFER UON.

3.6 CONCRETE REINFORCEMENT BARS SHALL CONFORM TO ASTM A615M-96a, GRADE 420 MPa, REINFORCING BARS SHALL NOT BE TACK WELDED, WELDED, HEATED OR CUT, UNLESS INDICATED ON THE CONTRACT DOCUMENTS. ALL LAP SPLICES SHALL BE CLASS "B" UON.

3.7 HORIZONTAL FOOTING AND HORIZONTAL WALL REINFORCEMENT SHALL BE CONTINUOUS AND SHALL HAVE 90 DEGREE BENDS AND EXTENSIONS, OR CORNER BARS OF EQUIVALENT SIZE LAPPED WITH A CLASS B TENSION SPLICE AT CORNERS AND INTERSECTIONS. TOP BAR CRITERIA SHALL APPLY IF 300mm OR MORE OF FRESH CONCRETE IS PLACED BELOW BAR.

3.8 SLABS-ON-GRADE SHALL HAVE CONSTRUCTION JOINTS OR CRACK CONTROL JOINTS AS SHOWN ON THE DRAWINGS. CONSTRUCTION JOINTS CAN BE USED AT CONTROL JOINT LOCATIONS AT CONTRACTORS OPTION. SEE SLAB PLANS & JOINT DETAILS FOR ADDITIONAL INFORMATION. FOR AREAS NOT SHOWN ON DWGS, THE MAXIMUM SPACING OF CONSTRUCTION/ CRACK CONTROL JOINTS SHALL BE 4800mm

3.9 ALL CONCRETE REINFORCEMENT SHALL BE DETAILED, FABRICATED, LABELED, SUPPORTED, AND SPACED IN FORMS AND SECURED IN PLACE IN ACCORDANCE WITH THE PROCEDURES AND REQUIREMENTS OUTLINED IN THE LATEST EDITION OF THE "BUILDING CODE REQUIREMENTS FOR REINFORCED CONCRETE", ACI 318M, AND THE "MANUAL OF STANDARD PRACTICE FOR DETAILING REINFORCED CONCRETE STRUCTURES", ACI 315M, LATEST EDITION. BASED ON IN COUNTRY REINFORCEMENT AVAILABILITY, IT IS THE CONTRACTOR'S OPTION TO ROUND DESIGNATED ODD NUMBERED REINFORCEMENT SIZES UP (1) ONE BAR SIZE.

3.10 ALL DOWELS SHALL MATCH SIZE AND NUMBER OF MAIN REINFORCING, UNLESS NOTED OTHERWISE ON THE SHEETS.

3.11 ADDITIONAL BARS SHALL BE PROVIDED AROUND ALL FLOOR AND WALL OPENINGS AS SHOWN ON THE SHEETS.

3.12 SEE ARCHITECTURAL SHEETS FOR TYPE AND LOCATION OF ALL FLOOR FINISHES.

3.13 THE CONTRACTOR SHALL COORDINATE ADDITIONAL WALL/SLAB OPENINGS NOT SHOWN ON STRUCTURAL SHEETS. SEE MECHANICAL, ELECTRICAL, PLUMBING AND CIVIL SHEETS.

3.14 UNLESS NOTED OTHERWISE, ALL CURBS SHALL BE REINFORCED WITH AT LEAST (1)-#13 CONTINUOUS AND #13 AT 300mm O.C. DOWELS TO STRUCTURE BELOW.

3.15 THE CONTRACTOR SHALL VERIFY ALL OPENINGS, PAD SIZES, AND ANCHOR BOLTS WITH EQUIPMENT SELECTED.

3.16 FOR ALL WALLS & PIERS, PROVIDE DOWELS INTO FOOTING AT EACH VERT REINF BAR, UON DOWEL SIZE SHALL BE SAME AS VERT REINF.

3.17 PROVIDE CONCRETE POUR STOPS OR FORMED AS REQUIRED FOR INSTALLATION OF ALL CONCRETE WORK.

3.18 PROVIDE ADDITIONAL (2)-#13 x 600mm REINFORCING BARS IN SLAB-ON GRADE AT ALL RE-ENTRANT CORNERS. PLACE BARS AT MID-DEPTH OF SLAB WITH A CLEARANCE OF 50mm FROM CORNER UON.

3.19 COLD-WEATHER PLACEMENT: COMPLY WITH ACI 306.1 AND AS FOLLOWS. PROTECT CONCRETE WORK FROM PHYSICAL DAMAGE OR REDUCED STRENGTH THAT COULD BE CAUSED BY FROST, FREEZING ACTIONS, OR LOW TEMPERATURES. SUBMIT A COLD WEATHER CONCRETING PLAN FOR APPROVAL.

3.20 PROVIDE BONDING COMPOUND PER ASTM C 1059-99: SPECIFICATION FOR LATEX AGENTS FOR BONDING FRESH CONCRETE (GROUT) TO HARDENED CONCRETE.

3.21 THE FORMED SURFACES FOR REINFORCED CONCRETE SHALL ACHIEVE A "CLASS A" FINISH WHEN RECEIVING PAINT OR A "CLASS B" FINISH WHEN RECEIVING PLASTER OR TILE AS PER SPECIFICATION SECTION 03 31 00 CAST-IN-PLACE STRUCTURAL CONCRETE.

3.22 AT INTERSECTING GRADE BEAMS AND SHEAR WALLS, PROVIDE CORNER BARS AT INTERSECTIONS WITH SAME QUANTITY, SIZE AND SPACING AS HORIZONTAL BARS WITH LEG LENGTH = 50db.

3.23 REFER TO S-800 SERIES REINFORCING BAR PLACEMENT DRAWINGS DEFINING LENGTHS, BENDS, AND SPACINGS FOR ALL STRUCTURAL CONCRETE. THE S-800 SERIES DRAWING ARE BASED ON THE S-400, S-500, S-600, AND S-700 SERIES DRAWING SCHEDULES, DETAILS, AND DIAGRAMS.

4.0 CONCRETE MASONRY

4.1 MASONRY CONSTRUCTION SHALL CONFORM TO SPECIFICATION FOR MASONRY STRUCTURES (ACI 530.1) UON.

4.2 STRENGTH OF MASONRY MATERIALS SHALL BE AS FOLLOWS:

a. CONCRETE MASONRY UNITS SHALL BE NORMAL WEIGHT, GRADE N, TYPE 1, CONFORMING TO ASTM C-90 AND HAVE A MINIMUM COMPRESSIVE STRENGTH OF 10.4 MPa ON THE NET AREA.
b. MORTAR SHALL CONFORM TO ASTM C-270 TYPE S.
c. GROUT FOR MASONRY SHALL BE NORMAL WEIGHT AND HAVE A MINIMUM COMPRESSIVE STRENGTH OF 14 MPa AT 28 DAYS. GROUT SHALL CONFORM TO ASTM C476M. GROUT LIFTS SHALL NOT EXCEED 1,400mm.
d. REINFORCED MASONRY SHALL HAVE A STRENGTH F'm = 10 MPa. (F'm IS THE COMPRESSIVE STRENGTH OF THE MASONRY AT 28 DAYS AS DETERMINED BY PRISM TESTS).

4.3 ALL VERTICAL REINFORCEMENT FOR CONCRETE MASONRY SHALL BE ASTM A615M-96a, GRADE 420 MPa. ALL SPLICES SHALL BE LAPPED 48 BAR DIAMETERS MINIMUM.

4.4 BOND BEAMS SHALL BE SPACED AT 1200mm OC VERTICALLY. BOND BEAM REINFORCING SHALL BE CONTINUOUS AND PROVIDED AT WALL INTERSECTIONS AND WALL CORNERS (REFERENCE CONCRETE MASONRY NOTE 4.11). ALL BOND BEAM REINFORCING SHALL BE CONTINUOUS AND HAVE STANDARD ACI HOOKS AT EACH END. PROVIDE STANDARD BAR SPLICES AS SPECIFIED. AS AN ALTERNATE TO CMU BOND BEAMS, IT IS THE CONTRACTOR'S OPTION TO PROVIDE 200mm x 200mm CONTINUOUS CAST-IN-PLACE CONCRETE BOND BEAMS WITH (2)-#16 IN LIEU OF CMU BOND BEAMS INDICATED ON THE DRAWINGS.

4.5 SEE TYPICAL DETAILS FOR MINIMUM REINFORCEMENT REQUIREMENTS FOR CMU WALLS. PROVIDE STANDARD BAR SPLICES AS SPECIFIED. ALL VERTICAL REINFORCEMENT EXTENDS FULL HEIGHT OF WALL.

4.6 CMU CELLS THAT REQUIRE VERTICAL REINFORCING BARS AS INDICATED ON THE CONTRACT DRAWINGS AND/OR SPECS SHALL HAVE REINF BARS PLACED IN CENTERS OF CMU CELLS AND CONTINUOUSLY GROUTED UON.

4.7 ALL CMU CELLS, OPEN CAVITIES, AND AIR SPACES OF ALL EXTERIOR WALLS SHALL BE GROUTED TO STOP FRAGMENTS FROM MORTAR BLAST.

4.8 CONTRACTOR SHALL COORDINATE LOCATION OF ALL OPENINGS SEE ARCH, MECH, ELEC, AND PLUMBING SHEETS FOR SIZE AND LOCATION OF OPENINGS.

4.9 MASONRY WALLS SHALL NOT BE BACK FILLED PRIOR TO THE MORTAR AND GROUT ATTAINING THEIR RESPECTIVE MAXIMUM DESIGN STRENGTHS PER SPECIFICATIONS.

4.10 PROVIDE GALVANIZED MORTAR/GROUT SCREEN W/ 3mm MESH WHERE CELLS BELOW ARE NOT GROUTED.

4.11 AT INTERSECTING BOND BEAMS, PROVIDE CORNER BAR FOR EACH HORIZONTAL BAR IN BOND BEAMS AT INTERSECTING WALLS. USE SAME SIZE AND SPACING AS HORIZONTAL BARS WITH LEG LENGTH = 50db.

4.12 THE ALTERNATE TOP OF CMU WALL BRACING DETAIL(S) SHOWN ON S-701 CAN BE UTILIZED AT THE CONTRACTOR'S OPTION IN PLACE OF THE "SLEEVED DOWEL" WALL CONNECTIONS DEPICTED ON S-400 AND S-500 SERIES DRAWINGS. IN ADDITION, ALTERNATE DETAIL(S) SHOW CAST-IN-PLACE WALL BOND BEAMS THAT CAN BE UTILIZED AT THE CONTRACTOR'S OPTION IN PLACE OF THE STANDARD CMU BOND BEAMS CONSTRUCTED OF CMU BLOCKS.

5.0 COLD-FORMED METAL FRAMING

5.1 ALL COLD-FORMED METAL FRAMING MEMBERS SHALL CONFORM TO ASTM A1003M, STRUCTURAL GRADE ST340 (MPa), WITH A GALVANIZED COATING OF Z275 OR BETTER IN ACCORDANCE WITH ASTM A653M.

5.2 ALL COLD-FORMED METAL FRAMING MEMBERS SHALL HAVE THE FOLLOWING MINIMUM PROPERTIES:

a. MINIMUM METAL THICKNESS:
TRACK = 1.37mm;
STUD/OTHER = 1.09mm
b. MINIMUM FLANGE WIDTH:
TRACK = 38mm;
STUD/OTHER = 35mm
c. MINIMUM MEMBER DEPTH:
ALL SECTIONS = 152.2mm
d. PURLIN (HAT CHANNEL)
DEPTHxWIDTH(FLAT TOP)xTHICK = 25mmx42mmx1.59mm

5.3 ALL CONNECTIONS SHALL BE MADE WITH CORROSION RESISTANT (ASTM A153M), SELF-DRILLING, SELF-TAPPING STEEL DRILL SCREWS IN ACCORDANCE WITH ASTM C1513. SCREWS SHALL HAVE A LOW PROFILE HEAD BENEATH ROOF DECK, AND STANDARD HEAD ALL OTHER LOCATIONS.

5.4 FABRICATE COLD FORMED METAL FRAMING AND ACCESSORIES PLUMB, SQUARE AND TRUE TO LINE, WITH CONNECTIONS SECURELY FASTENED ACCORDING TO AISI STANDARD FOR COLD FORMED STEEL FRAMING.

5.5 CUT FRAMING MEMBERS BY SAWING OR SHEATHING, DO NOT TORCH CUT.

5.6 INSTALL FRAMING MEMBERS IN ONE-PIECE LENGTHS UNLESS SPLICE CONNECTIONS ARE INDICATED FOR TRACK OR TENSION MEMBERS

5.7 INSTALL TEMPORARY BRACING AND SUPPORTS TO SECURE FRAMING DURING CONSTRUCTION. MAINTAIN BRACING AND SUPPORTS IN PLACE UNTIL THE STRUCTURE HAS BEEN COMPLETED WITH ALL CONNECTIONS AND PERMANENT BRACING SECURED.

6.0 STRUCTURAL DESIGN CRITERIA

6.1 ALL DESIGNS SHALL CONFORM TO THE PROVISIONS OF THE IBC 2006 AND UFC AS APPLICABLE.

6.2 DESIGN LOADS

6.2.1 DEAD LOADS (PER IBC 2006 & UFC 3-310-01)

| | |
|---|---|
| MECH/ELEC/PLUMBING | 0.20 kPa |
| MISCELLANEOUS | 0.15 kPa |
| COLD-FORMED FRAMING | 0.20 kPa |
| INSULATION | 0.10 kPa |
| METAL ROOF PANEL | 0.14 kPa |
| | 0.79 kPa |
| FLOOR PARTITION ALLOWANCE | 0.96 kPa |

6.2.2 LIVE LOADS (PER IBC 2006 & UFC 3-310-01)

| | |
|---|---|
| ROOF | 1.00 kPa |
| SLAB ON GRADE | 4.80 kPa |

6.2.3 SNOW LOADS (PER IBC 2006 & UFC 3-310-01)

| | |
|---|---|
| GROUND SNOW LOAD (Pg) | 1.2 kPa |
| SNOW IMPORTANCE FACTOR (I) | 1.0 |
| SNOW EXPOSURE FACTOR (Ce) | 1.0 |
| THERMAL FACTOR (Ct) | 1.0 |

6.2.4 WIND LOADS (PER IBC 2006)

| | |
|---|---|
| BASIC WIND SPEED | 137 km/h |
| WIND IMPORTANCE FACTOR | 1.0 |
| WIND EXPOSURE CATEGORY | D |
| DIRECTIONALITY COEFFICIENT (Kd) | 0.85 |
| TOPOGRAPHIC FACTOR (Kzt) | 1.0 |

6.2.5 SEISMIC LOADS (PER IBC 2006 & UFC 3-310-04)

OCCUPANCY USE CATEGORY
IRREGUALR PORTION II
REGULAR PORTION III
SEISMIC IMPORTANCE FACTOR (Ie) 1.0
SEISMIC SITE CLASS D

DFAC REGULAR PORTION: (COLUMN LINES 1 THRU 6)
$S_s$ = 1.50 (REDUCED FROM 2.40 PER ASCE 7-05 12.8.1.3 FOR BLDGS WITHOUT IRREGULARITIES)
$S_1$ = 1.20
$S_{DS}$ = 1.0 $S_{D1}$ = 1.20
SEISMIC DESIGN CATEGORY E
SEISMIC RESISTING SYSTEM:
-SPECIAL REINFORCED CONCRETE SHEAR WALL
RESPONSE MODIFICATION FACTOR (R) 6
RESPONSE COEFFICIENT (Cs) 0.167
SEISMIC ANALYTICAL PROCEDURE:
-EQUIVALENT LATERAL FORCE
SEISMIC BASE SHEAR 2675 kN

DFAC IRREGULAR PORTION: (COLUMN LINES 7 THRU 11)
$S_s$ = 2.40 $S_1$ = 1.20
$S_{DS}$ = 1.60 $S_{D1}$ = 1.20
SEISMIC DESIGN CATEGORY E
SEISMIC RESISTING SYSTEM:
-SPECIAL REINFORCED CONCRETE SHEAR WALL
RESPONSE MODIFICATION FACTOR (R) 6
RESPONSE COEFFICIENT (Cs) 0.267
SEISMIC ANALYTICAL PROCEDURE:
-EQUIVALENT LATERAL FORCE
SEISMIC BASE SHEAR 2395 kN

PROPANE CYLINDER STORAGE:
$S_s$ = 1.50 (REDUCED FROM 2.40 PER ASCE 7-05 12.8.1.3 FOR BLDGS WITHOUT IRREGULARITIES)
$S_1$ = 1.20
$S_{DS}$ = 1.0 $S_{D1}$ = 1.20
SEISMIC DESIGN CATEGORY E
SEISMIC RESISTING SYSTEM:
-SPECIAL REINFORCED CONCRETE SHEAR WALL
RESPONSE MODIFICATION FACTOR (R) 6
RESPONSE COEFFICIENT (Cs) 0.167
SEISMIC ANALYTICAL PROCEDURE:
-EQUIVALENT LATERAL FORCE
SEISMIC BASE SHEAR 410 kN

WOOD STORAGE:
$S_s$ = 2.40
$S_1$ = 1.20
$S_{DS}$ = 1.6 $S_{D1}$ = 1.20
SEISMIC DESIGN CATEGORY E
SEISMIC RESISTING SYSTEM:
-SPECIAL REINFORCED CONCRETE SHEAR WALL
RESPONSE MODIFICATION FACTOR (R) 6
RESPONSE COEFFICIENT (Cs) 0.267
SEISMIC ANALYTICAL PROCEDURE:
-EQUIVALENT LATERAL FORCE
SEISMIC BASE SHEAR 292 kN

APPROVED:

A/E DESIGNER OF RECORD

SEAL:

GEORGIA REGISTERED 1-27-10 No. 27141 PROFESSIONAL ENGINEER CHRISTOPHER W WHITMORE

US ARMY CORPS OF ENGINEERS
AFGHANISTAN ENGINEER DISTRICT

| Mark | Description | Date | Appr. |
|---|---|---|---|
| | | | |

Date: 2/23/10 Rev. 0
Design file no.
Drawing code:
File name: ANASFACS-S01GN
Plot date: 2/23/2010
Plot scale: X:X

Designed by: KMP/MMY
Dwn by: RCG
Ckd by: CWW
Reviewed by: LHM
Submitted by:
BAKER

U.S. ARMY CORPS OF ENGINEERS
AFGHANISTAN ENGINEER DISTRICT
APO AE 96338

Michael Baker Jr., Inc
A unit of Michael Baker Corporation
Airside Business Park
100 Airside Drive
Moon Township, PA 15108
www.mbakercorp.com

AFGHAN NATIONAL ARMY
REGIONAL MILITARY TRAINING CENTER
STANDARD DESIGN

DINING FACILITY

GENERAL NOTES & DESIGN CRITERIA

Sheet reference number:
S-001

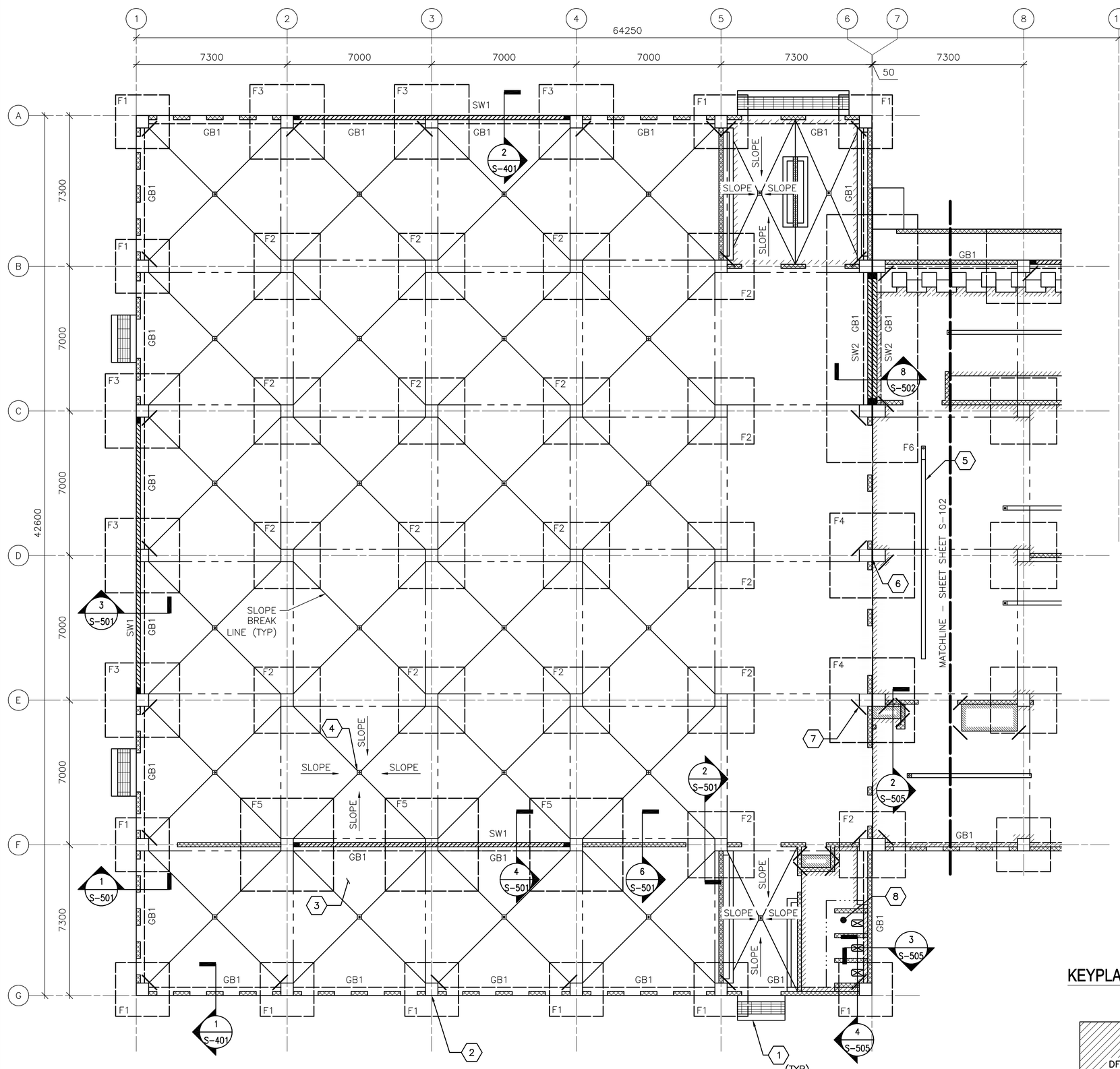


1 S-101 **FOUNDATION/SLAB PLAN**
SCALE: 1:100

## FOUNDATION/SLAB PLAN NOTES:

1. REFER TO SHEET S–001 FOR STRUCTURAL NOTES AND DESIGN CRITERIA.
2. FINISH FIRST FLOOR ELEVATION SHALL BE (DATUM 0.00). ALL PLUS OR MINUS DIMENSIONS INDICATED ON PLAN OR REFERRED TO IN NOTES RELATE TO FINISH FLOOR ELEVATION.
3. SLAB–ON–GRADE IS 150 WITH #13 @ 300 OC EW LOCATED 38 FROM T/SLAB UON. WHERE NOTED, 300 SLAB–ON–GRADE SHALL BE REINF W/ 13 @ 300 OC EW T&B.
4. TOP OF EXTERIOR FOOTINGS SHALL BE –950 UNLESS OTHERWISE INDICATED.
5. TOP OF INTERIOR FOOTINGS WITHOUT GRADE BEAM ABOVE SHALL BE –600.
6. TOP OF INTERIOR FOOTINGS WITH GRADE BEAM ABOVE SHALL BE –950.
7. COLUMN FOOTINGS INDICATED BY F# ON PLAN. REFER TO COLUMN FOOTING SCHEDULE ON SHEET S–601.
8. REFER TO COLUMN SCHEDULE ON SHEET S–601.
9. GRADE BEAM INDICATED BY GB# ON PLAN, REFER TO BEAM SCHEDULE ON SHEET S–601.
10. SHEARWALL INDICATED BY SW# ON PLAN, REFER TO SHEARWALL SCHEDULE ON SHEET S–601
11. SEE TYP EXTERIOR AND INTERIOR CMU WALL REINF DETAILS ON SHEET S–701.
12. SEE MECHANICAL AND ELECTRICAL SHEETS FOR CONCRETE PAD LOCATIONS, SIZES, AND THICKNESS NOT SHOWN. SEE SHEET S–701 FOR DETAILS.
13. THICKENED SLAB UNDER PERIMETER/PARTITION WALLS NOT SHOWN FOR CLARITY EXCEPT AT LATRINE AREAS.
14. SLOPE FINISH FLOOR TO FLOOR DRAINS (TYPICAL AS SHOWN ON PLAN). FINISH FLOOR ELEV @ FLOOR DRAIN SHALL BE –75 UNLESS OTHERWISE INDICATED.

## FOUNDATION/SLAB PLAN KEY NOTES: (X)

1. CONC PAD (ENTRANCE)–SEE ARCH DWGS FOR INFORMATION
2. REINF CONC COLUMN
3. REINF CONC SLAB–ON–GRADE
4. FLOOR DRAIN (SLOPE SLAB TOWARDS DRAIN)
5. TRENCH DRAIN
6. 50 ISOLATION JOINT BETWEEN STRUCTURES LOCATED ABOVE FIRST FLOOR SLAB–ON–GRADE
7. (2)–#13 @ RE–ENTRANT CORNERS – SEE SHEET S–701 FOR INFORMATION
8. 300 SLAB–ON–GRADE

## FOUNDATION/SLAB PLAN LEGEND:

- REINF CONC SHEAR WALL
- REINF CMU WALL
- CONTROL JOINT
- MATCHLINE
- INDICATES DROP SLAB 65 BELOW FINISH FLOOR
- INDICATES DROP SLAB 200 BELOW FINISH FLOOR
- SLAB OPENING
- TRENCH DRAIN
- TRANSITION BETWEEN 150 & 300 THICK SLAB AREAS

## KEYPLAN:

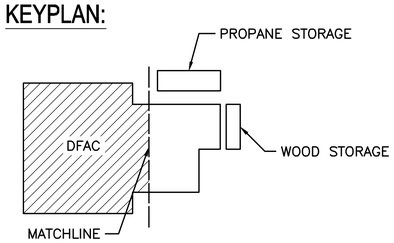


0 2000 4000
SCALE: 1:100

UNLESS OTHERWISE NOTED, LINEAR DIMENSIONS SHOWN ON DRAWINGS ARE IN MILLIMETERS (mm)

APPROVED:

A/E DESIGNER OF RECORD

SEAL:

GEORGIA REGISTERED 1-21-10 No. 27141 PROFESSIONAL ENGINEER CHRISTOPHER W. WHITMORE

US ARMY CORPS OF ENGINEERS
AFGHANISTAN ENGINEER DISTRICT

| Mark | Description | Date | Appr. | Mark | Description | Date | Appr. |
|---|---|---|---|---|---|---|---|
| | | | | | | | |

Date: 2/23/10
Design file no.
Drawing code:
Rev: 0

Designed by: KMP/MMY
Drn by: RCG
Ckd by: CWW
Reviewed by: LHM
Submitted by: BAKER

U.S. ARMY CORPS OF ENGINEERS
AFGHANISTAN ENGINEER DISTRICT
APO AE 96338

*Michael Baker Jr., Inc*
*A unit of Michael Baker Corporation*
Airside Business Park
100 Airside Drive
Moon Township, PA 15108
www.mbakercorp.com

File name: ANADFACS-101FNP
Plot date: 2/23/2010
Plot scale: x:x

AFGHAN NATIONAL ARMY
REGIONAL MILITARY TRAINING CENTER
STANDARD DESIGN

DINING FACILITY

FOUNDATION/SLAB PLAN

Sheet reference number:
S–101

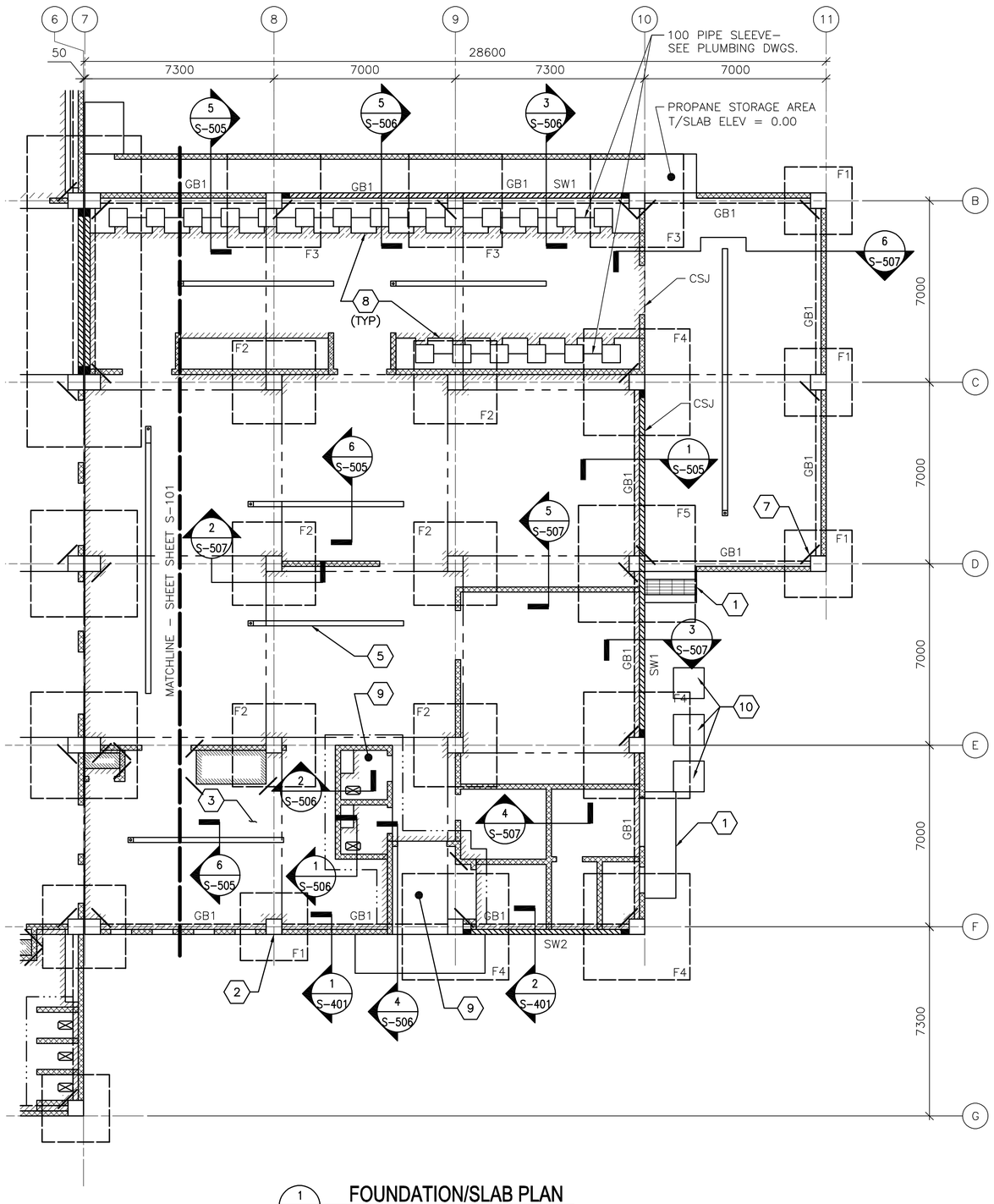


1 S–102 **FOUNDATION/SLAB PLAN**
SCALE: 1:100

## FOUNDATION/SLAB PLAN NOTES:

1. REFER TO SHEET S–001 FOR STRUCTURAL NOTES AND DESIGN CRITERIA.
2. FINISH FIRST FLOOR ELEVATION SHALL BE (DATUM 0.00). ALL PLUS OR MINUS DIMENSIONS INDICATED ON PLAN OR REFERRED TO IN NOTES RELATE TO FINISH FLOOR ELEVATION.
3. SLAB–ON–GRADE IS 150 WITH #13 @ 300 OC EW LOCATED 38 FROM T/SLAB UON. WHERE NOTED, 300 SLAB–ON–GRADE SHALL BE REINF W/ 13 @ 300 OC EW T&B.
4. TOP OF EXTERIOR FOOTINGS SHALL BE –950 UNLESS OTHERWISE INDICATED.
5. TOP OF INTERIOR FOOTINGS WITHOUT GRADE BEAM ABOVE SHALL BE –600.
6. TOP OF INTERIOR FOOTINGS WITH GRADE BEAM ABOVE SHALL BE –950.
7. COLUMN FOOTINGS INDICATED BY F# ON PLAN. REFER TO COLUMN FOOTING SCHEDULE ON SHEET S–601.
8. REFER TO COLUMN SCHEDULE ON SHEET S–601.
9. GRADE BEAM INDICATED BY GB# ON PLAN, REFER TO BEAM SCHEDULE ON SHEET S–601.
10. SHEARWALL INDICATED BY SW# ON PLAN, REFER TO SHEARWALL SCHEDULE ON SHEET S–601.
11. SEE TYP EXTERIOR AND INTERIOR CMU WALL REINF DETAILS ON SHEET S–701.
12. SEE MECHANICAL AND ELECTRICAL SHEETS FOR CONCRETE PAD LOCATIONS, SIZES, AND THICKNESS NOT SHOWN. SEE SHEET S–701 FOR DETAILS.
13. THICKENED SLAB UNDER PERIMETER/PARTITION WALLS NOT SHOWN FOR CLARITY EXCEPT AT LATRINE AREAS.
14. SLOPE FINISH FLOOR TO FLOOR DRAINS (TYPICAL AS SHOWN ON PLAN). FINISH FLOOR ELEV @ FLOOR DRAIN SHALL BE –75 UNLESS OTHERWISE INDICATED.

## FOUNDATION/SLAB PLAN KEY NOTES: (X)

1. CONC PAD (ENTRANCE)–SEE ARCH DWGS FOR INFORMATION
2. REINF CONC COLUMN
3. REINF CONC SLAB–ON–GRADE
4. NOT USED
5. TRENCH DRAIN
6. NOT USED
7. (2)–#13 @ RE–ENTRANT CORNERS – SEE S–701 FOR INFORMATION
8. CONC STEP FOR STOVE, SEE SECTION 3/S–506.
9. 300 SLAB–ON–GRADE
10. CONDENSING UNIT SLABS– SEE 9/S–701.

## FOUNDATION/SLAB PLAN LEGEND:

- REINF CONC SHEAR WALL
- REINF CMU WALL
- CONTROL JOINT
- MATCHLINE
- INDICATES DROP SLAB 65 BELOW FINISH FLOOR
- INDICATES DROP SLAB 200 BELOW FINISH FLOOR
- SLAB OPENING
- TRENCH DRAIN
- TRANSITION BETWEEN 150 & 300 THICK SLAB AREAS

## KEYPLAN:

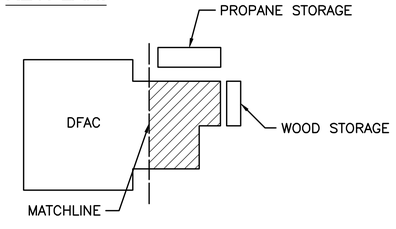


0 2000 4000
SCALE: 1:100

UNLESS OTHERWISE NOTED, LINEAR DIMENSIONS SHOWN ON DRAWINGS ARE IN MILLIMETERS (mm)

APPROVED:

A/E DESIGNER OF RECORD

SEAL:

GEORGIA REGISTERED 2-19-10 No. 27141 PROFESSIONAL ENGINEER CHRISTOPHER W. WHITMORE

US ARMY CORPS OF ENGINEERS
AFGHANISTAN ENGINEER DISTRICT

| Mark | Description | Date | Appr. |
|---|---|---|---|
| | | | |

| Mark | Description | Date | Appr. |
|---|---|---|---|
| | | | |

Rev: 0
Date: 2/23/10
Design file no.
Drawing code:
File name: ANAFAC8-102FNP
Plot date: 2/23/2010
Plot scale: x:x

Designed by: KMP/MMY
Dwn by: RCG
Ckd by: CWW
Reviewed by: LHM
Submitted by: BAKER

U.S. ARMY CORPS OF ENGINEERS
AFGHANISTAN ENGINEER DISTRICT
APO AE 96338

*Michael Baker Jr., Inc*
*A unit of Michael Baker Corporation*
Airside Business Park
100 Airside Drive
Moon Township, PA 15108
www.mbakercorp.com

AFGHAN NATIONAL ARMY
REGIONAL MILITARY TRAINING CENTER
STANDARD DESIGN

DINING FACILITY

FOUNDATION/SLAB PLAN

Sheet reference number:
S–102

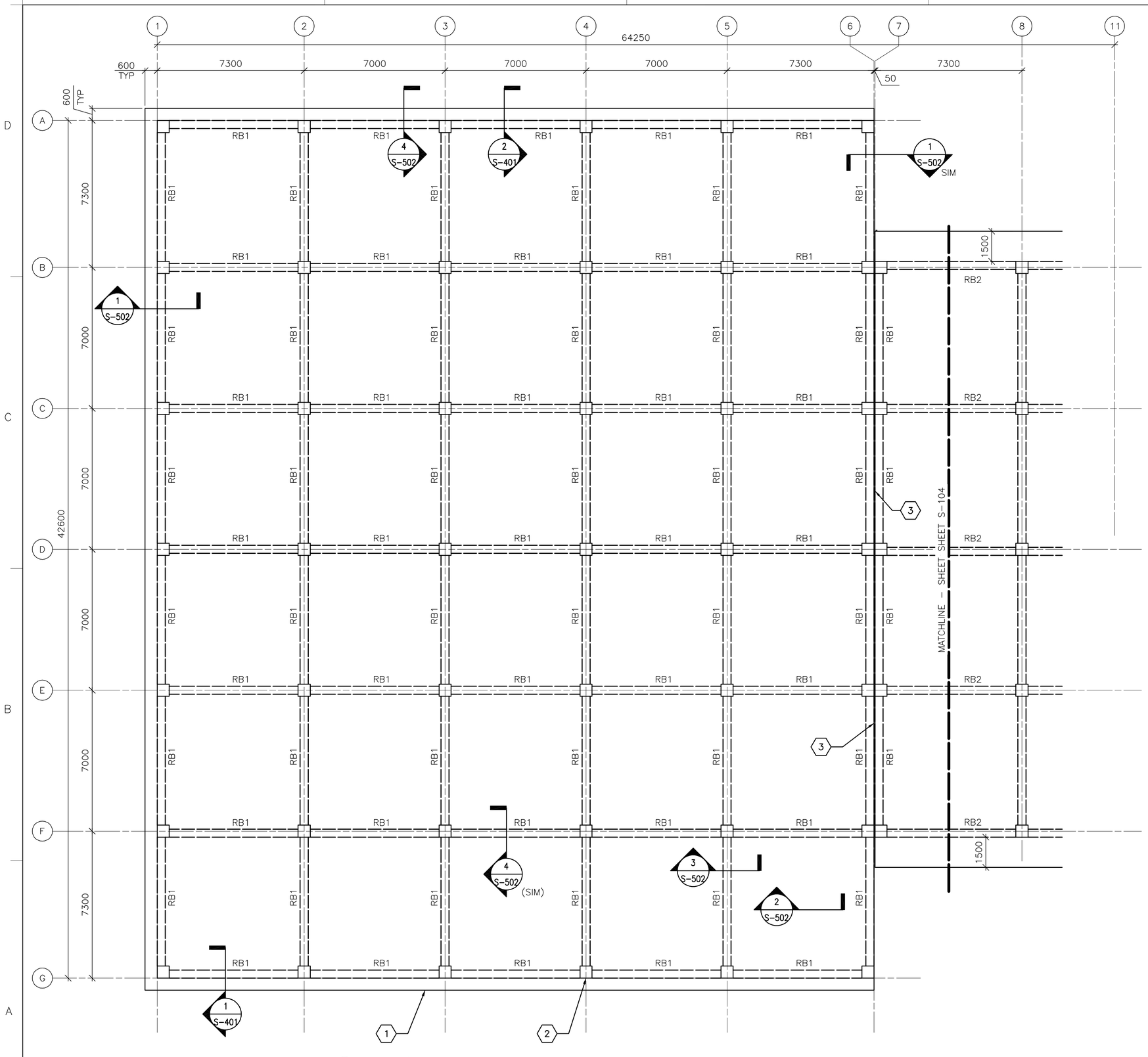


1 S-103 **ROOF FRAMING PLAN**
SCALE: 1:100

## ROOF FRAMING PLAN NOTES:

1. REFER TO SHEETS S-001 FOR STRUCTURAL NOTES AND DESIGN CRITERIA.
2. TOP OF SLAB ELEVATION = 4600 (COL 1-6) & 3800 (COL 7-11) UNLESS NOTED OTHERWISE.
3. ROOF SLAB IS 250 WITH #16 @ 300 OC EW T&B.
4. ROOF BEAM INDICATED BY RB# ON PLAN. REFER TO BEAM SCHEDULE ON SHEET S-601.
5. COORDINATE WITH ARCHITECTURAL SHEETS FOR COLD-FORMED STEEL OVERBUILD FRAMING ABOVE ROOF SLAB.
6. COLD-FORMED METAL OVERBUILD ROOF FRAMING NOT SHOWN FOR CLARITY. SEE OVERBUILD ROOF FRAMING DETAILS AND SECTIONS ON SHEET S-702.
7. CMU PERIMETER/PARTITION WALLS (BELOW ROOF SLAB) NOT SHOWN FOR CLARITY.
8. OVERHANG AREAS OF ROOF SLAB CONTAIN ROOF VENT PENETRATIONS. REFERENCE ARCHITECTURAL DRAWINGS FOR INFORMATION.
9. DISCONTINUE ALL ROOF FRAMING AT BUILDING EXPANSION JOINT. REFER TO ARCHITECTURAL SHEETS FOR COLD-FORMED ROOF OVERBUILD FRAMING EXPANSION JOINT DETAIL.

## ROOF FRAMING PLAN KEY NOTES: (X)

1. CONC ROOF SLAB (BELOW ROOF OVERBUILD)
2. REINF CONC COLUMN (BELOW CONC ROOF SLAB)
3. 50 ISOLATION JOINT BETWEEN STRUCTURES LOCATED ABOVE FIRST FLOOR SLAB-ON-GRADE

## KEYPLAN:

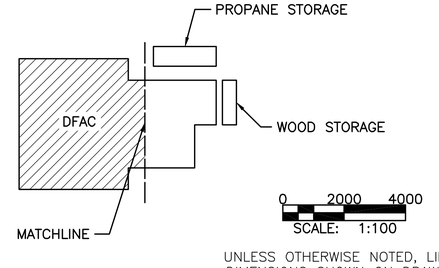


UNLESS OTHERWISE NOTED, LINEAR DIMENSIONS SHOWN ON DRAWINGS ARE IN MILLIMETERS (mm)

APPROVED:

A/E DESIGNER OF RECORD

SEAL:

GEORGIA REGISTERED No. 27141 PROFESSIONAL ENGINEER CHRISTOPHER W. WHITMORE 2-23-10

US ARMY CORPS OF ENGINEERS
AFGHANISTAN ENGINEER DISTRICT

| Mark | Description | Date | Appr. |
|---|---|---|---|

Date: 2/23/10
Design file no.
Drawing code:
Rev: 0
File name: ANADFACS-103FRP
Plot date: 2/23/2010
Plot scale: x:x

Designed by: KMP/MMY
Dwn by: RCG
Ckd by: CWW
Reviewed by: LHM
Submitted by: BAKER

U.S. ARMY CORPS OF ENGINEERS
AFGHANISTAN ENGINEER DISTRICT
APO AE 96338

*Michael Baker Jr., Inc.*
*A unit of Michael Baker Corporation*
Airside Business Park
100 Airside Drive
Moon Township, PA 15108
www.mbakercorp.com

AFGHAN NATIONAL ARMY
REGIONAL MILITARY TRAINING CENTER
STANDARD DESIGN

DINING FACILITY

ROOF FRAMING PLAN

Sheet reference number:
S-103

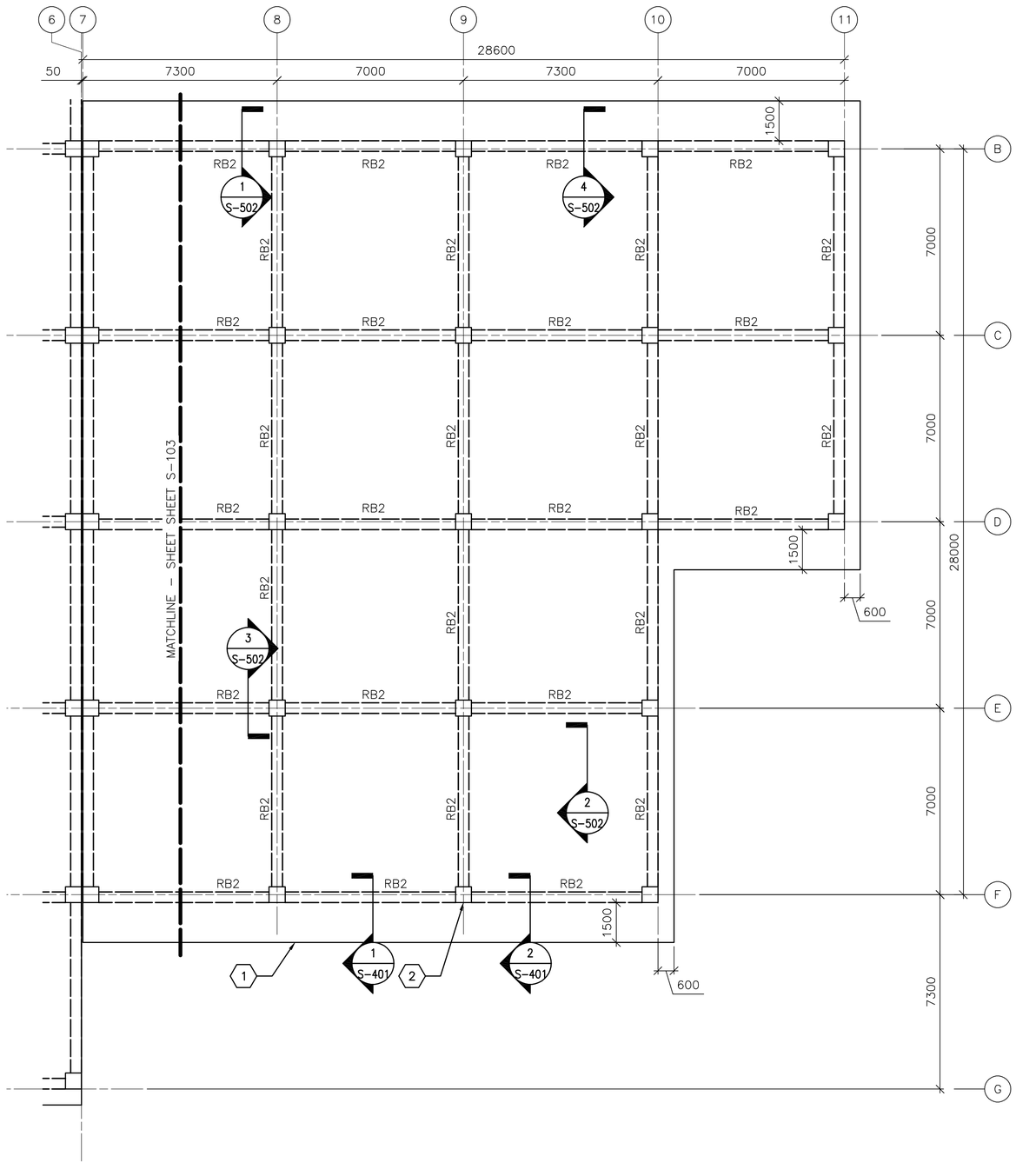


1 S-104 **ROOF FRAMING PLAN**
SCALE: 1:100

## ROOF FRAMING PLAN NOTES:

1. REFER TO SHEETS S-001 FOR STRUCTURAL NOTES AND DESIGN CRITERIA.
2. TOP OF SLAB ELEVATION = 4600 (COL 1-6) & 3800 (COL 7-11) UNLESS NOTED OTHERWISE.
3. ROOF SLAB IS 250 WITH #16 @ 300 OC EW T&B.
4. ROOF BEAM INDICATED BY RB# ON PLAN. REFER TO BEAM SCHEDULE ON SHEET S-601.
5. COORDINATE WITH ARCHITECTURAL SHEETS FOR COLD-FORMED STEEL OVERBUILD FRAMING ABOVE ROOF SLAB.
6. COLD-FORMED METAL OVERBUILD ROOF FRAMING NOT SHOWN FOR CLARITY. SEE OVERBUILD ROOF FRAMING DETAILS AND SECTIONS ON SHEET S-702.
7. CMU PERIMETER/PARTITION WALLS (BELOW ROOF SLAB) NOT SHOWN FOR CLARITY.
8. OVERHANG AREAS OF ROOF SLAB CONTAIN ROOF VENT PENETRATIONS. REFERENCE ARCHITECTURAL DRAWINGS FOR INFORMATION.
9. DISCONTINUE ALL ROOF FRAMING AT BUILDING EXPANSION JOINT. REFER TO ARCHITECTURAL SHEETS FOR COLD-FORMED ROOF OVERBUILD FRAMING EXPANSION JOINT DETAIL.

## ROOF FRAMING PLAN KEY NOTES: (X)

1. CONC ROOF SLAB (BELOW ROOF OVERBUILD)
2. REINF CONC COLUMN (BELOW CONC ROOF SLAB)

## KEYPLAN:

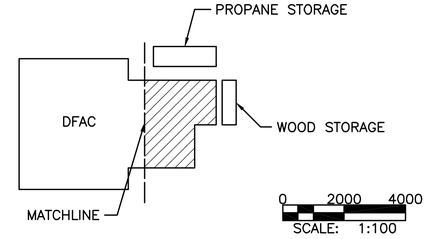


UNLESS OTHERWISE NOTED, LINEAR DIMENSIONS SHOWN ON DRAWINGS ARE IN MILLIMETERS (mm)

APPROVED:

A/E DESIGNER OF RECORD

SEAL:

GEORGIA REGISTERED 2-23-10 No. 27141 PROFESSIONAL ENGINEER CHRISTOPHER W. WHITMORE

US ARMY CORPS OF ENGINEERS
AFGHANISTAN ENGINEER DISTRICT

| Mark | Description | Date | Appr. |
|---|---|---|---|
| | | | |

| Mark | Description | Date | Appr. |
|---|---|---|---|
| | | | |

Designed by: KMP/MMY
Dwn by: RCG
Ckd by: CWW
Reviewed by: LHM
Submitted by: BAKER

Date: 2/23/10
Design file no.
Drawing code:
File name: ANAFAC8-104FRP
Plot date: 2/23/2010
Plot scale: x:x
Rev: 0

U.S. ARMY CORPS OF ENGINEERS
AFGHANISTAN ENGINEER DISTRICT
APO AE 96338

*Michael Baker Jr., Inc*
*A unit of Michael Baker Corporation*
Airside Business Park
100 Airside Drive
Moon Township, PA 15108
www.mbakercorp.com

AFGHAN NATIONAL ARMY
REGIONAL MILITARY TRAINING CENTER
STANDARD DESIGN

DINING FACILITY

ROOF FRAMING PLAN

Sheet reference number:
S-104

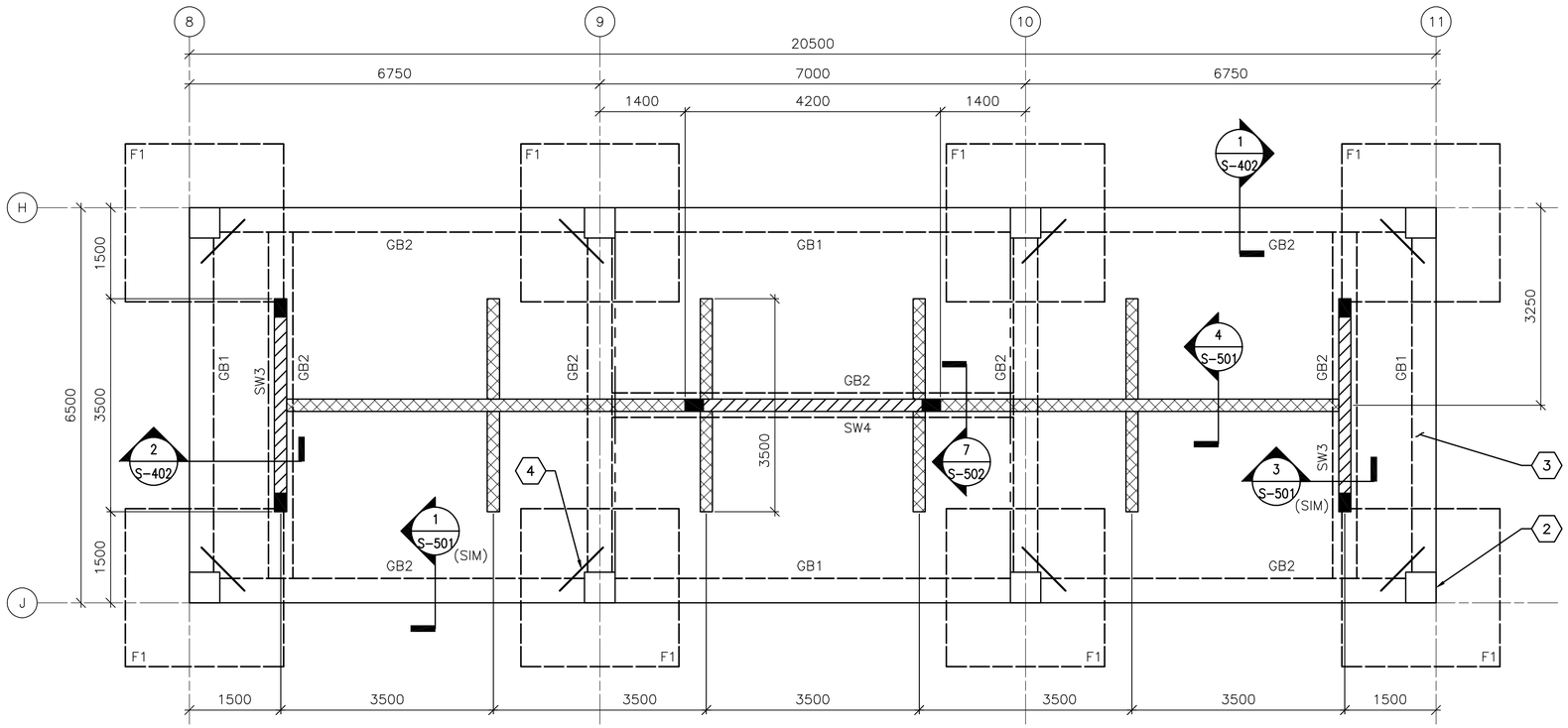


1 S-105 **FOUNDATION/SLAB PLAN**

SCALE: 1:50

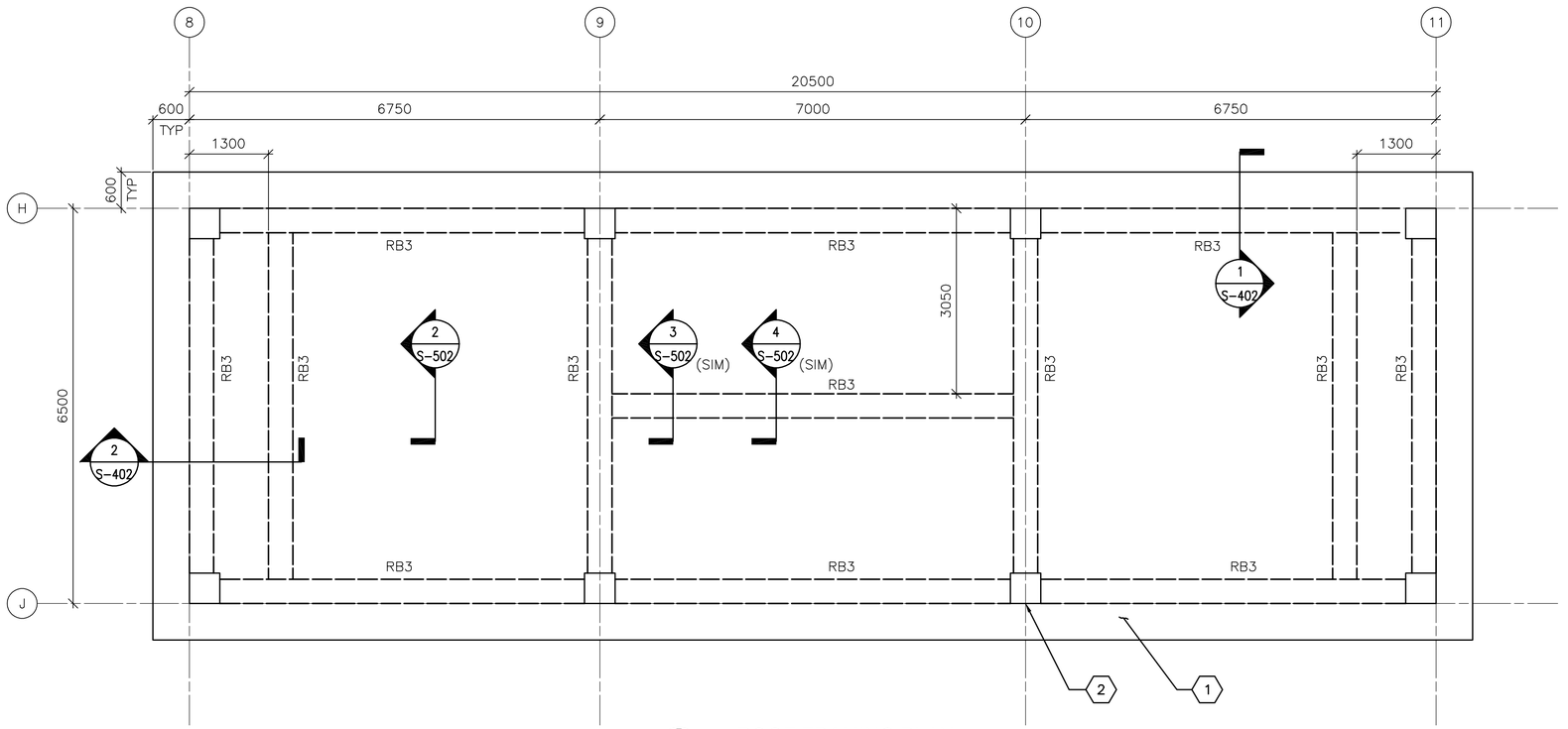


2 S-105 **ROOF FRAMING PLAN**

SCALE: 1:50

## FOUNDATION/SLAB PLAN NOTES:

1. REFER TO SHEET S-001 FOR STRUCTURAL NOTES AND DESIGN CRITERIA.
2. FINISH SLAB-ON-GRADER ELEVATION SHALL BE (DATUM 0.00). ALL PLUS OR MINUS DIMENSIONS INDICATED ON PLAN OR REFERRED TO IN NOTES RELATE TO SLAB-ON-GRADE ELEVATION.
3. SLAB-ON-GRADE IS 150 WITH #13 @ 300 OC EW LOCATED 38 FROM T/SLAB.
4. TOP OF EXTERIOR FOOTINGS SHALL BE -950 UNLESS OTHERWISE INDICATED.
5. COLUMN FOOTINGS INDICATED BY F# ON PLAN. REFER TO COLUMN FOOTING SCHEDULE ON SHEET S-601.
6. REFER TO COLUMN SCHEDULE ON SHEET S-601.
7. GRADE BEAM INDICATED BY GB# ON PLAN, REFER TO BEAM SCHEDULE ON SHEET S-601.
8. SHEARWALL INDICATED BY SW# ON PLAN, REFER TO SHEARWALL SCHEDULE ON SHEET S-601.
9. SEE TYP EXTERIOR CMU WALL DETAIL ON SHEET S-701.
10. SEE MECHANICAL AND ELECTRICAL SHEETS FOR CONCRETE PAD LOCATIONS, SIZES, AND THICKNESS NOT SHOWN. SEE SHEET S-701 FOR DETAILS.
11. THICKENED SLAB UNDER PARTITION WALLS NOT SHOWN FOR CLARITY.

## FOUNDATION/SLAB PLAN KEY NOTES: (X)

1. NOT USED
2. REINF CONC COLUMN
3. REINF CONC SLAB-ON-GRADE
4. (2)-#13 @ RE-ENTRANT CORNERS - SEE S-701 FOR INFORMATION

## FOUNDATION/SLAB PLAN LEGEND:

REINF CONC SHEAR WALL

REINF CMU WALL

CONTROL JOINT

## ROOF FRAMING PLAN NOTES:

1. REFER TO SHEETS S-001 FOR STRUCTURAL NOTES AND BASIS OF DESIGN.
2. TOP OF ROOF SLAB ELEVATION = 3500 UNLESS NOTED OTHERWISE.
3. ROOF SLAB IS 200 WITH #16 @ 300 OC EW T&B.
4. ROOF BEAM INDICATED BY RB# ON PLAN. REFER TO BEAM SCHEDULE ON SHEET S-601.
5. CMU PARTITION WALLS (BELOW ROOF SLAB) NOT SHOWN FOR CLARITY.
6. OVERHANG AREAS OF ROOF SLAB CONTAIN ROOF VENT PENETRATIONS. REFERENCE ARCHITECTURAL DRAWINGS FOR INFORMATION.

## ROOF FRAMING PLAN KEY NOTES: (X)

1. CONC ROOF SLAB
2. REINF CONC COLUMN (BELOW CONC ROOF SLAB)

## KEYPLAN:

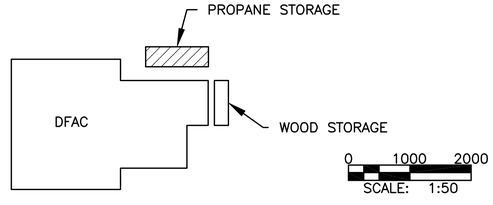


UNLESS OTHERWISE NOTED, LINEAR DIMENSIONS SHOWN ON DRAWINGS ARE IN MILLIMETERS (mm)

APPROVED:

A/E DESIGNER OF RECORD

SEAL:

GEORGIA REGISTERED 1-25-10 No. 27141 PROFESSIONAL ENGINEER CHRISTOPHER W. WHITMORE

US ARMY CORPS OF ENGINEERS
AFGHANISTAN ENGINEER DISTRICT

| Mark | Description | Date | Appr. |
|---|---|---|---|

Date: 2/23/10
Design file no.
Drawing code:
Rev: 0
Designed by: KMP/MMY
Dwn by: RCG
Ckd by: CWW
Reviewed by: LHM
Submitted by: BAKER
File name: ANAFACS-105FFP
Plot date: 2/23/2010
Plot scale: x:x

U.S. ARMY CORPS OF ENGINEERS
AFGHANISTAN ENGINEER DISTRICT
APO AE 96338

Michael Baker Jr., Inc
A unit of Michael Baker Corporation
Airside Business Park
100 Airside Drive
Moon Township, PA 15108
www.mbakercorp.com

AFGHAN NATIONAL ARMY
REGIONAL MILITARY TRAINING CENTER
STANDARD DESIGN

DINING FACILITY

PROPANE CYLINDER STORAGE
FND/SLAB & ROOF FRAMING PLAN

Sheet reference number:
S-105

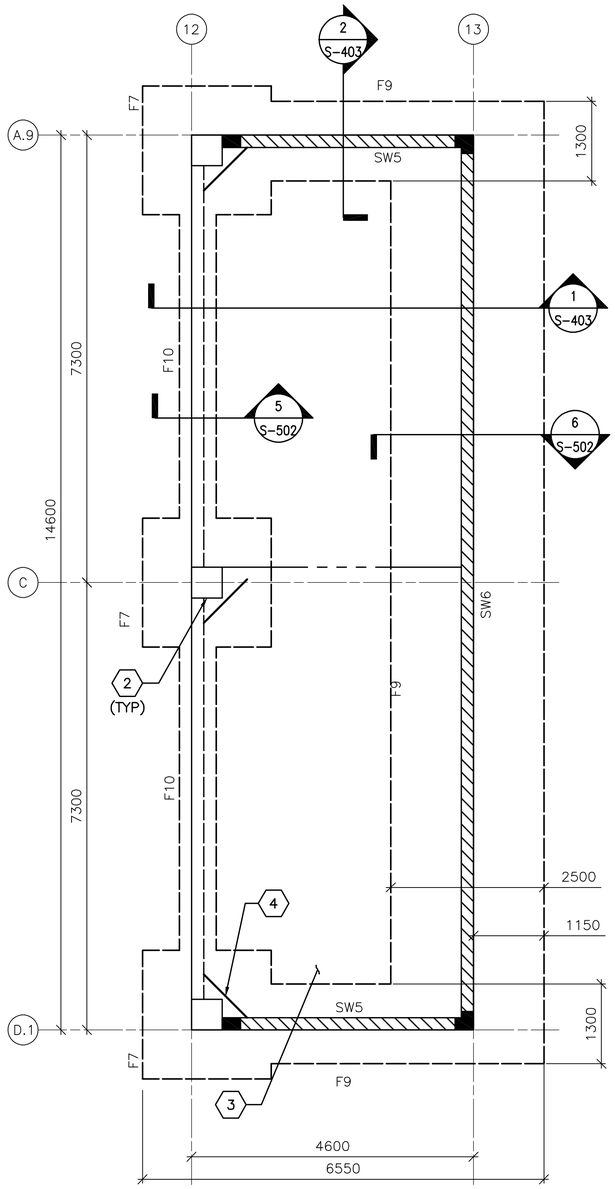


1 S-106 **FOUNDATION/SLAB PLAN**
SCALE: 1:50

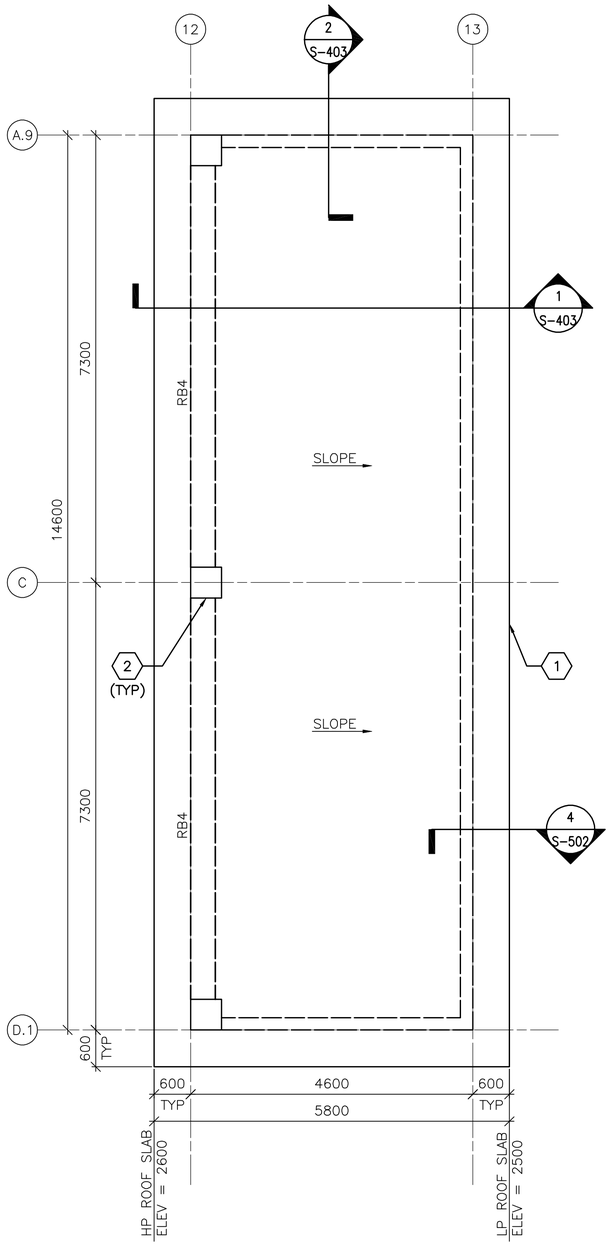


2 S-106 **ROOF FRAMING PLAN**
SCALE: 1:50

## FOUNDATION/SLAB PLAN NOTES:

1. REFER TO SHEET S-001 FOR STRUCTURAL NOTES AND DESIGN CRITERIA.
2. SLAB-ON-GRADE ELEVATION SHALL BE (DATUM 0.00). ALL PLUS OR MINUS DIMENSIONS INDICATED ON PLAN OR REFERRED TO IN NOTES RELATE TO SLAB-ON-GRADE ELEVATION.
3. SLAB-ON-GRADE IS 150 WITH #13 @ 300 OC EW LOCATED 38 FROM T/SLAB.
4. BOT OF EXTERIOR FOOTINGS SHALL BE -950 UNLESS OTHERWISE INDICATED.
5. COLUMN FOOTINGS INDICATED BY F# ON PLAN. REFER TO COLUMN FOOTING SCHEDULE ON SHEET S-601.
6. REFER TO COLUMN SCHEDULE ON SHEET S-601.
7. SHEARWALL INDICATED BY SW# ON PLAN, REFER TO SHEARWALL SCHEDULE ON SHEET S-601.
8. SEE MECHANICAL AND ELECTRICAL SHEETS FOR CONCRETE PAD LOCATIONS, SIZES, AND THICKNESS NOT SHOWN. SEE SHEET S-701 FOR DETAILS.

## FOUNDATION/SLAB PLAN KEY NOTES: (X)

1. NOT USED
2. REINF CONC COLUMN
3. REINF CONC SLAB-ON-GRADE
4. (2)-#13 @ RE-ENTRANT CORNERS - SEE S-701 FOR INFORMATION

## FOUNDATION/SLAB PLAN LEGEND:

REINF CONC SHEAR WALL

CONTROL JOINT

## ROOF FRAMING PLAN NOTES:

1. REFER TO SHEETS S-001 FOR STRUCTURAL NOTES AND BASIS OF DESIGN.
2. TOP OF ROOF SLAB ELEVATION = 2500 UNLESS NOTED OTHERWISE.
3. ROOF SLAB IS 250 WITH #16 @ 300 OC EW T&B.
4. ROOF BEAM INDICATED BY RB# ON PLAN. REFER TO BEAM SCHEDULE ON SHEET S-601.

## ROOF FRAMING PLAN KEY NOTES: (X)

1. CONC ROOF SLAB
2. REINF CONC COLUMN (BELOW CONC ROOF SLAB)

## KEYPLAN:

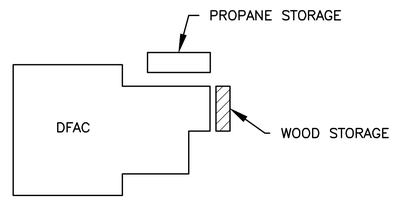


0 1000 2000
SCALE: 1:50

UNLESS OTHERWISE NOTED, LINEAR DIMENSIONS SHOWN ON DRAWINGS ARE IN MILLIMETERS (mm)

APPROVED:

A/E DESIGNER OF RECORD

SEAL:

GEORGIA REGISTERED 1-29-10 No. 27141 PROFESSIONAL ENGINEER CHRISTOPHER W. WHITMORE

US ARMY CORPS OF ENGINEERS
AFGHANISTAN ENGINEER DISTRICT

| Mark | Description | Date | Appr. |
|---|---|---|---|
| | | | |

Date: 2/23/10
Design file no.
Drawing code:
Rev: 0
File name: ANADFACS-106FFP
Plot date: 2/23/2010
Plot scale: x:X

Designed by: KMP/MMY
Dwn by: RCG
Ckd by: CWW
Reviewed by: LHM
Submitted by: BAKER

U.S. ARMY CORPS OF ENGINEERS
AFGHANISTAN ENGINEER DISTRICT
APO AE 96338

*Michael Baker Jr., Inc*
*A unit of Michael Baker Corporation*
Airside Business Park
100 Airside Drive
Moon Township, PA 15108
www.mbakercorp.com

AFGHAN NATIONAL ARMY
REGIONAL MILITARY TRAINING CENTER
STANDARD DESIGN

DINING FACILITY

WOOD STORAGE
FND/SLAB & ROOF FRAMING PLAN

Sheet reference number:
S-106

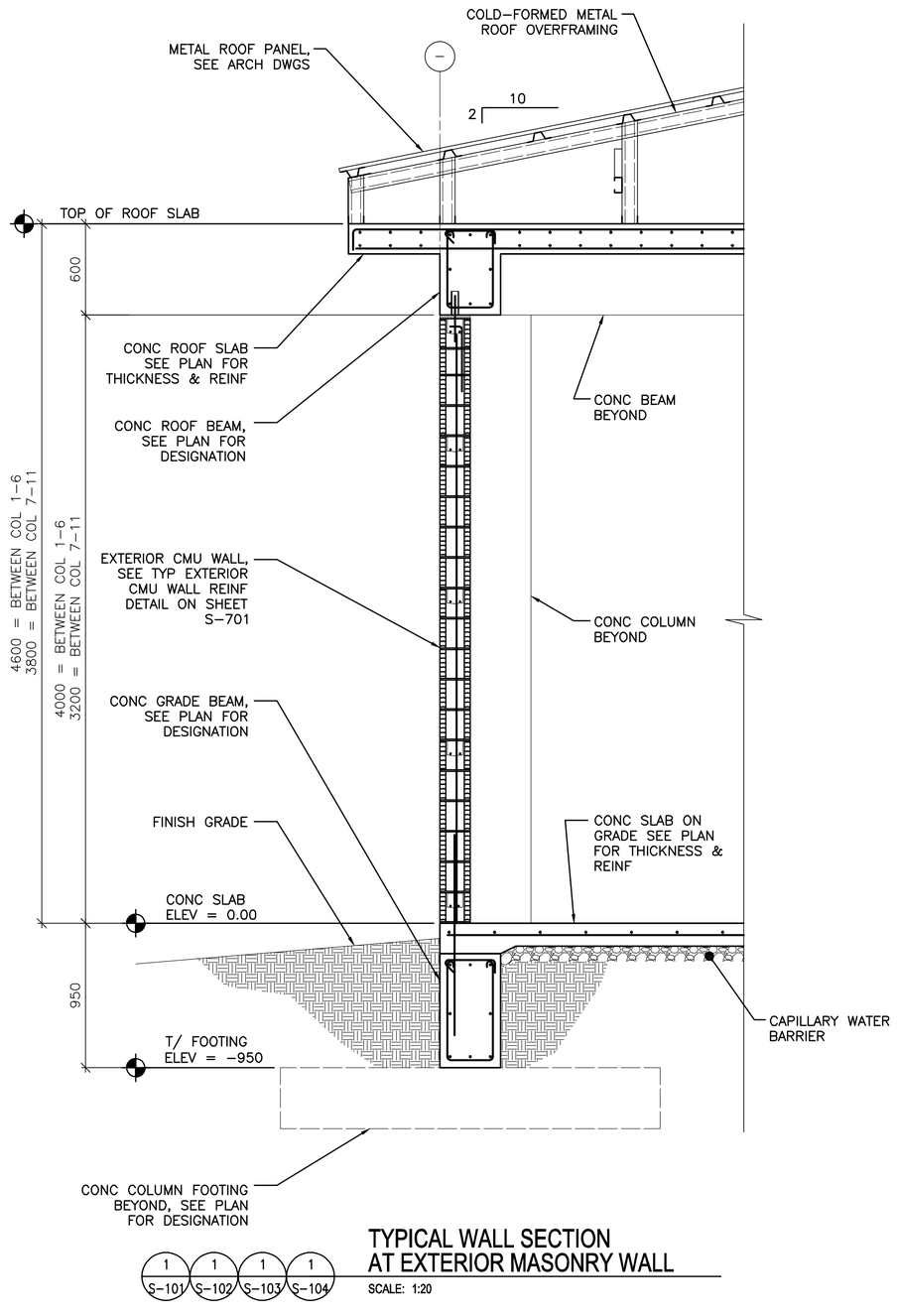


1 S–101 | 1 S–102 | 1 S–103 | 1 S–104

## TYPICAL WALL SECTION AT EXTERIOR MASONRY WALL

SCALE: 1:20

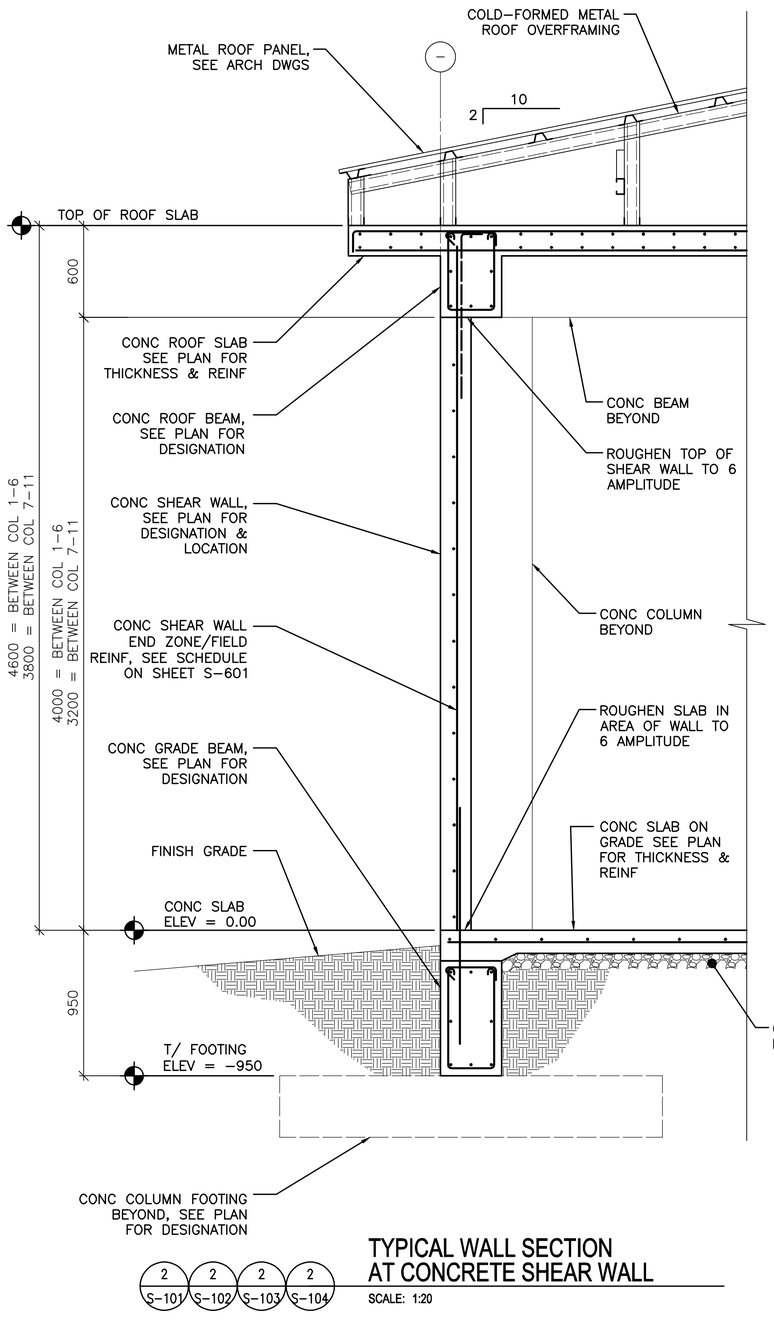


2 S–101 | 2 S–102 | 2 S–103 | 2 S–104

## TYPICAL WALL SECTION AT CONCRETE SHEAR WALL

SCALE: 1:20

0 400 800

SCALE: 1:20

UNLESS OTHERWISE NOTED, LINEAR DIMENSIONS SHOWN ON DRAWINGS ARE IN MILLIMETERS (mm)

APPROVED:

A/E DESIGNER OF RECORD

SEAL:

GEORGIA REGISTERED 2-23-10 No. 27141 PROFESSIONAL ENGINEER CHRISTOPHER W. WHITMORE

US ARMY CORPS OF ENGINEERS
AFGHANISTAN ENGINEER DISTRICT

| Mark | Description | Date | Appr. | Mark | Description | Date | Appr. |
|---|---|---|---|---|---|---|---|
| | | | | | | | |

Date: 2/23/10 | Rev: 0
Design file no.
Drawing code:
File name: ANADFAC8-401BS
Plot date: 2/23/2010
Plot scale: x:x
Designed by: KMP/MMY
Dwn by: RCG | Ckd by: CWW
Reviewed by: LHM
Submitted by: BAKER

U.S. ARMY CORPS OF ENGINEERS
AFGHANISTAN ENGINEER DISTRICT
APO AE 96338

Michael Baker Jr., Inc
A unit of Michael Baker Corporation
Airside Business Park
100 Airside Drive
Moon Township, PA 15108
www.mbakercorp.com

AFGHAN NATIONAL ARMY
REGIONAL MILITARY TRAINING CENTER
STANDARD DESIGN

DINING FACILITY

BUILDING SECTIONS

Sheet reference number:
S–401

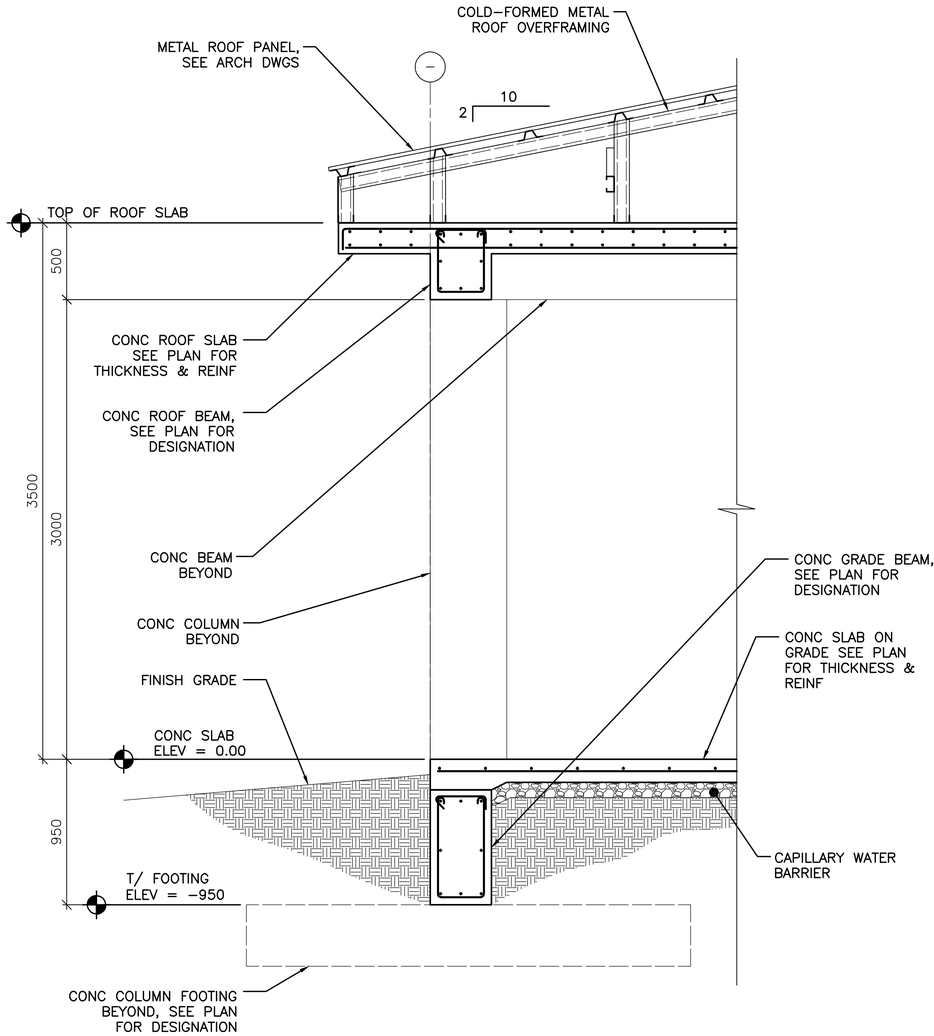


1 S–105 **TYPICAL WALL SECTION**

SCALE: 1:20

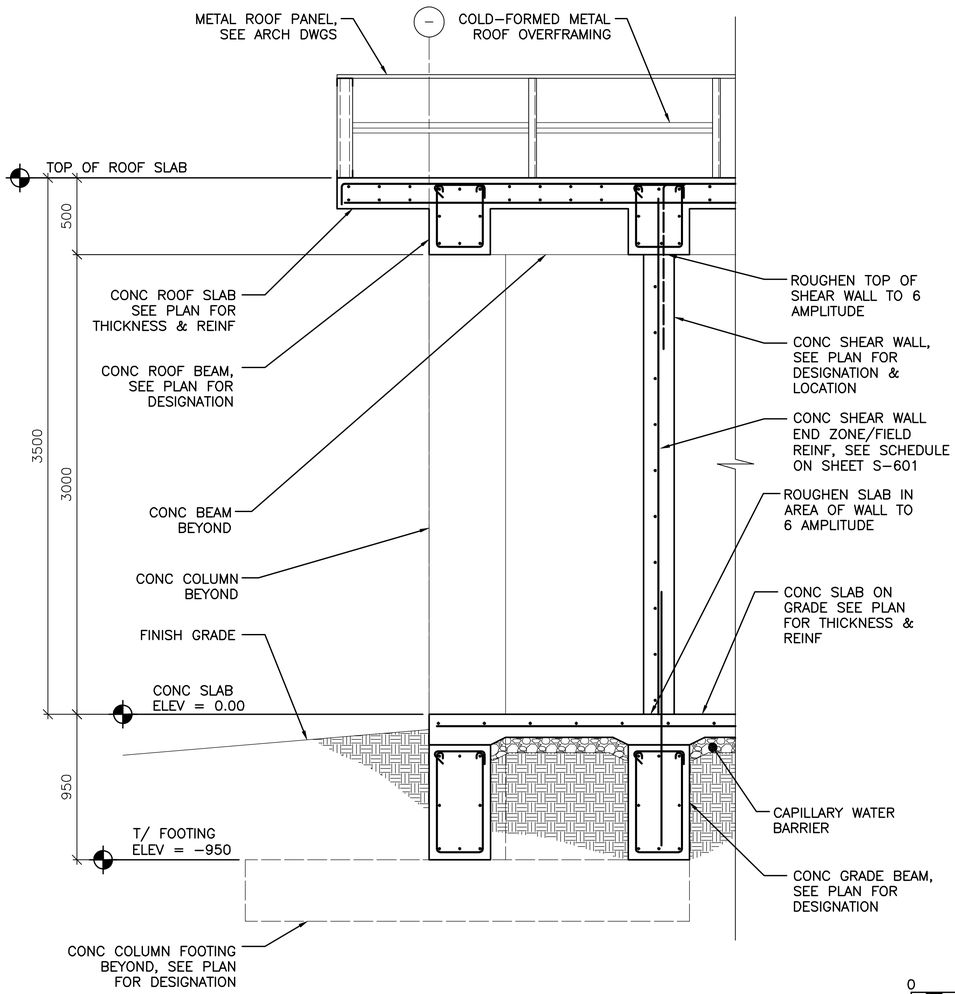


2 S–105 **TYPICAL WALL SECTION AT CONCRETE SHEAR WALL**

SCALE: 1:20

0 400 800

SCALE: 1:20

UNLESS OTHERWISE NOTED, LINEAR DIMENSIONS SHOWN ON DRAWINGS ARE IN MILLIMETERS (mm)

APPROVED:

A/E DESIGNER OF RECORD

SEAL:

GEORGIA REGISTERED 7-27-10 No. 27141 PROFESSIONAL ENGINEER CHRISTOPHER W. WHITMORE

US ARMY CORPS OF ENGINEERS
AFGHANISTAN ENGINEER DISTRICT

| Mark | Description | Date | Appr. |
|---|---|---|---|
| | | | |

U.S. ARMY CORPS OF ENGINEERS
AFGHANISTAN ENGINEER DISTRICT
APO AE 96338

*Michael Baker Jr., Inc*
*A unit of Michael Baker Corporation*
Airside Business Park
100 Airside Drive
Moon Township, PA 15108
www.mbakercorp.com

Designed by: KMP/MMY
Dwn by: RCG
Ckd by: CWW
Reviewed by: LHM
Submitted by: BAKER

Date: 2/23/10
Design file no.
Drawing code:
File name: ANADFAC3-402BS
Plot date: 2/23/2010
Plot scale: x:x
Rev: 0

AFGHAN NATIONAL ARMY
REGIONAL MILITARY TRAINING CENTER
STANDARD DESIGN

DINING FACILITY

BUILDING SECTIONS

Sheet reference number:
S–402

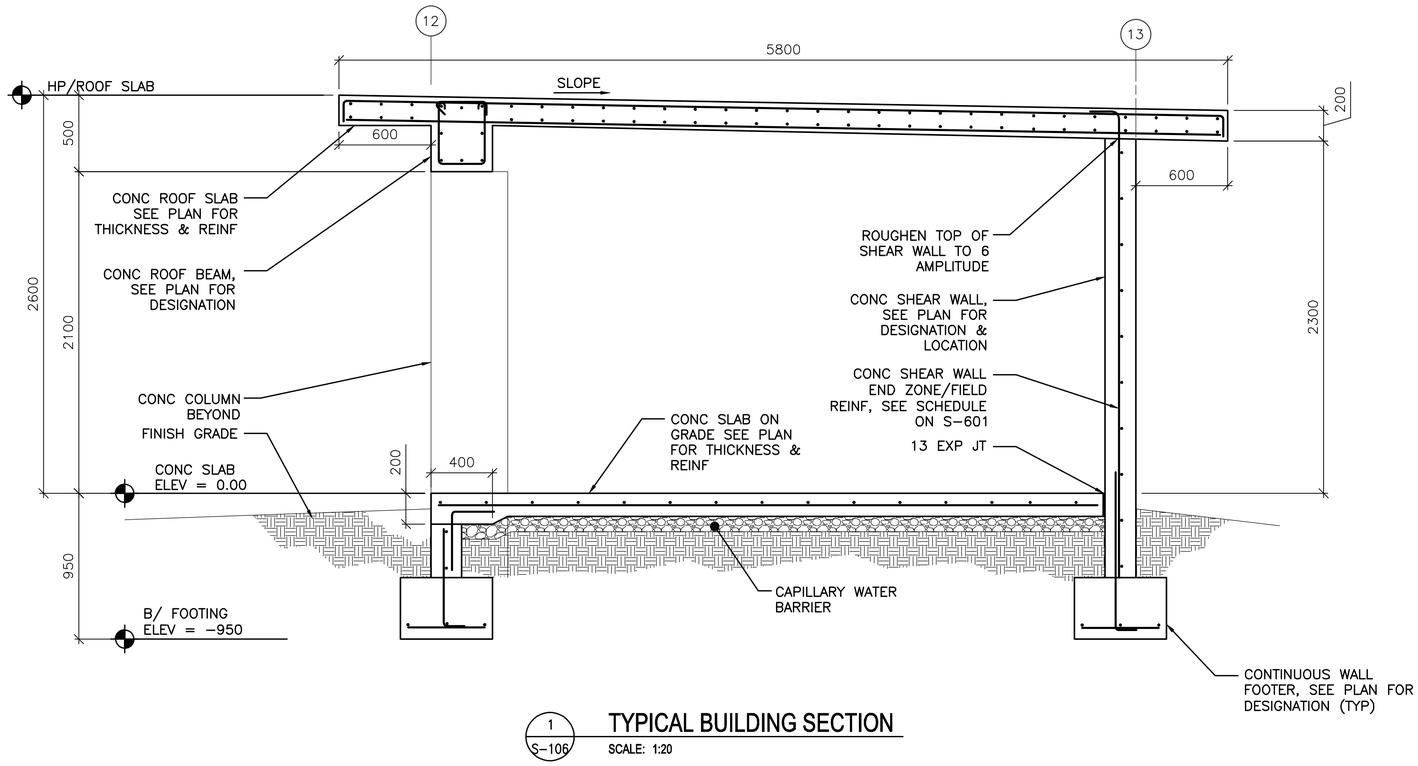


1 S-106 **TYPICAL BUILDING SECTION**

SCALE: 1:20

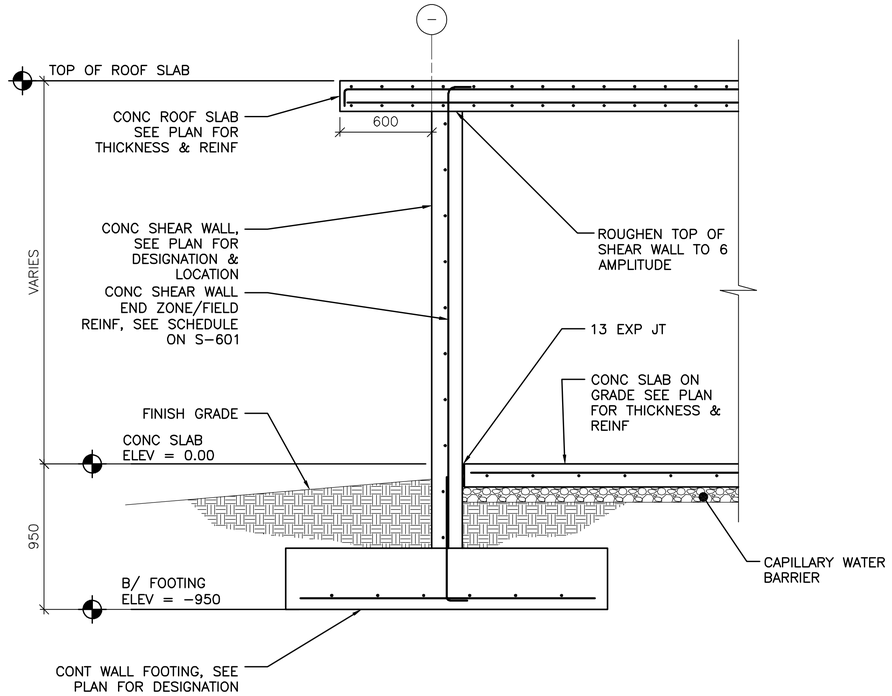


2 S-106 **TYPICAL WALL SECTION AT CONCRETE SHEAR WALL**

SCALE: 1:20

0 400 800

SCALE: 1:20

UNLESS OTHERWISE NOTED, LINEAR DIMENSIONS SHOWN ON DRAWINGS ARE IN MILLIMETERS (mm)

APPROVED:

A/E DESIGNER OF RECORD

SEAL:

GEORGIA REGISTERED No. 27141 PROFESSIONAL ENGINEER CHRISTOPHER W. WHITMORE

US ARMY CORPS OF ENGINEERS
AFGHANISTAN ENGINEER DISTRICT

| Mark | Description | Date | Appr. |
|---|---|---|---|

Date: 2/23/10 | Rev: 0
Design file no.
Drawing code:
File name: ANADFAC3-403BS
Plot date: 2/23/2010
Plot scale: x:X

Designed by: KMF/MMY | Ckd by: CWW
Dwn by: RCG | Reviewed by: LHM
Submitted by: BAKER

U.S. ARMY CORPS OF ENGINEERS
AFGHANISTAN ENGINEER DISTRICT
APO AE 96338

*Michael Baker Jr., Inc.*
*A unit of Michael Baker Corporation*
Airside Business Park
100 Airside Drive
Moon Township, PA 15108
www.mbakercorp.com

AFGHAN NATIONAL ARMY
REGIONAL MILITARY TRAINING CENTER
STANDARD DESIGN

DINING FACILITY

BUILDING SECTIONS

Sheet reference number:
S-403

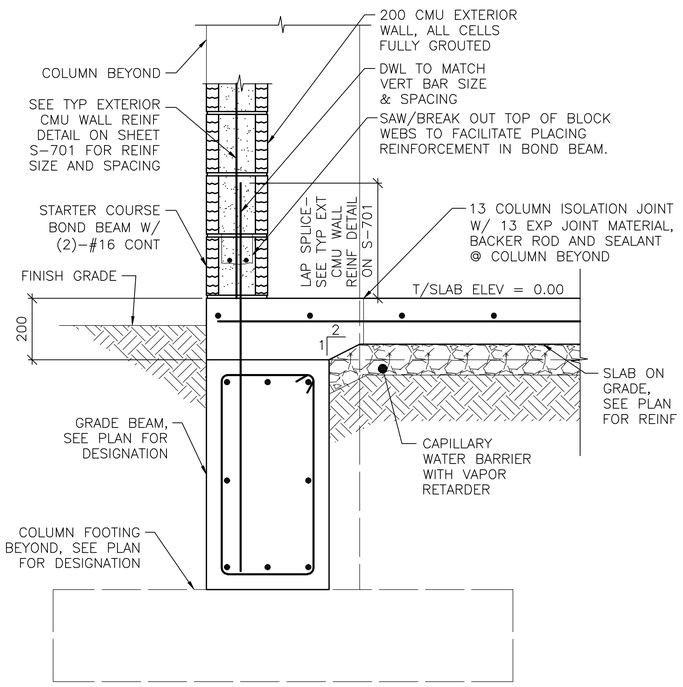


NOTE:
1. SECTION IS SIMILAR FOR INTERIOR CMU PARTITIONS OVER GRADE BEAMS SHOWING THICKENED 200 CONC SLAB AREA.

1 / S-101 **SECTION** SCALE: 1:10

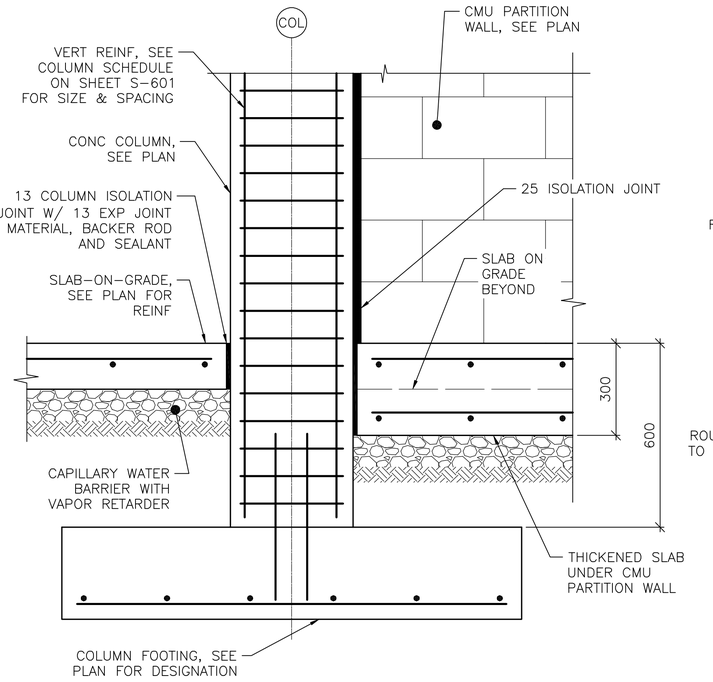


2 / S-101 **SECTION** SCALE: 1:10

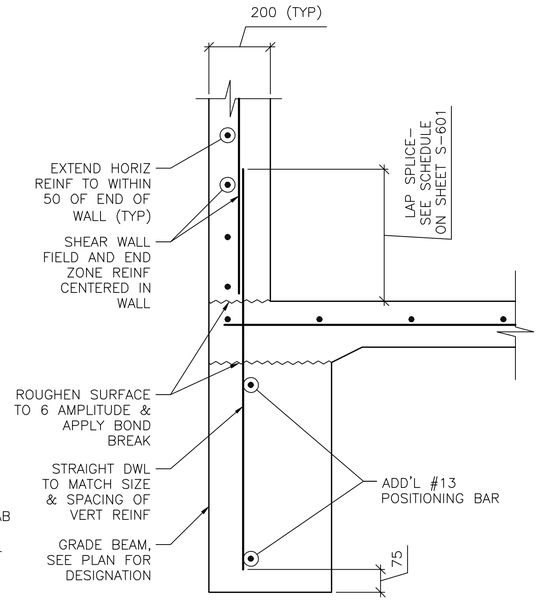


NOTES:
1. SECTION DEPICTS SHEAR WALL TERMINATION ONLY. GRADE BEAM REINFORCING NOT SHOWN FOR CLARITY
2. SEE SHEET S-601 AND SHEET S-702 FOR SCHEDULED FIELD AND END ZONE REINF.

3 / S-101 **SECTION** SCALE: 1:10

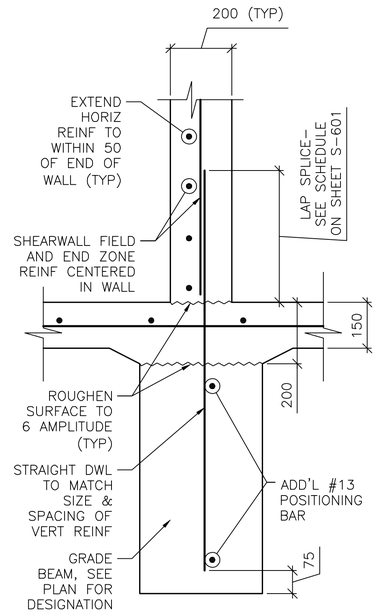


NOTE:
1. SECTION DEPICTS SHEAR WALL TERMINATION ONLY. GRADE BEAM REINFORCING NOT SHOWN FOR CLARITY
2. SEE SHEET S-601 AND SHEET S-702 FOR SCHEDULED FIELD AND END ZONE REINF.

4 / S-101 **SECTION** SCALE: 1:10

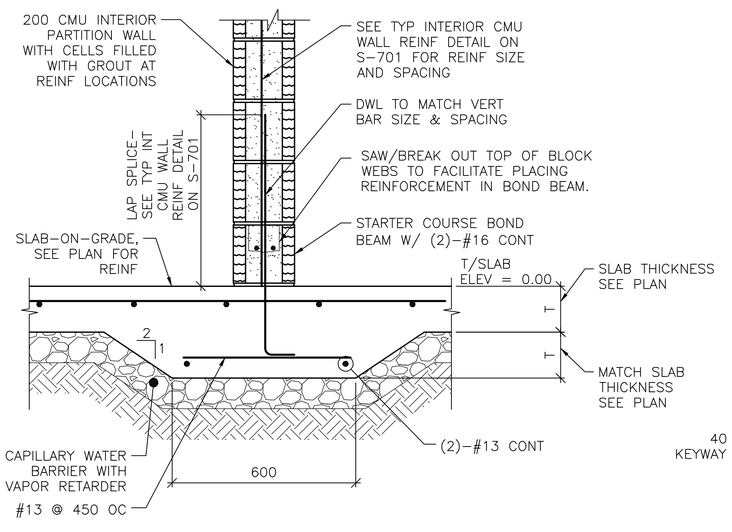


5 / S-101 **SECTION** SCALE: 1:10

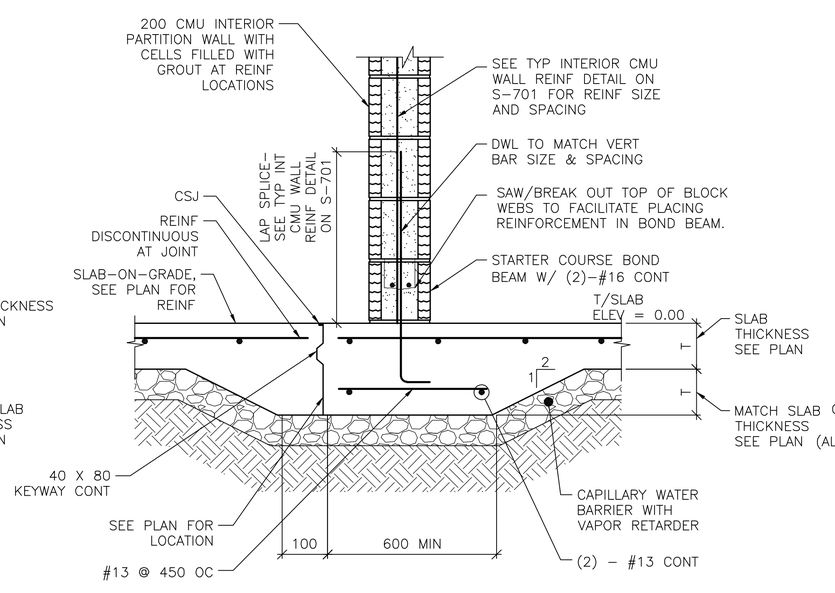


NOTE:
1. DETAIL IS APPLICABLE AT CONTROL JOINTS RUNNING PARALLEL TO CMU WALLS AND WITHIN 300 OF FACE OF WALL.

6 / S-101 **SECTION** SCALE: 1:10

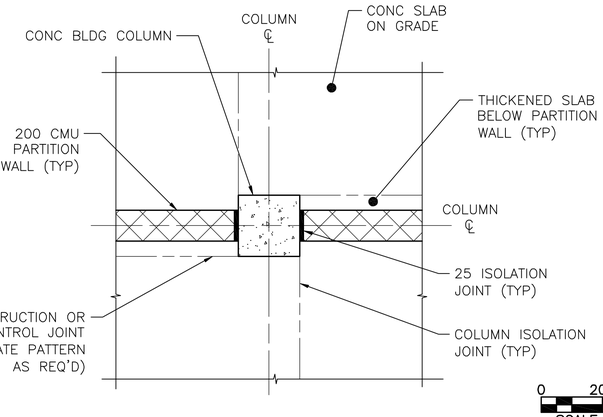


A / S-501 **COLUMN ISOLATION JOINT DETAIL** SCALE: NTS

UNLESS OTHERWISE NOTED, LINEAR DIMENSIONS SHOWN ON DRAWINGS ARE IN MILLIMETERS (mm)

APPROVED:

A/E DESIGNER OF RECORD

SEAL:

GEORGIA REGISTERED 2-22-10 No. 27141 PROFESSIONAL ENGINEER CHRISTOPHER W. WHITMORE

US ARMY CORPS OF ENGINEERS
AFGHANISTAN ENGINEER DISTRICT

| Mark | Description | Date | Appr. |
|---|---|---|---|

Rev: 0
Date: 2/23/10
Design file no.
Drawing code:
File name: ANAFAC8-50150
Plot date: 2/23/2010
Plot scale: x:x

Designed by: KMP/MMY
Dwn by: RCG
Ckd by: CWW
Reviewed by: LHM
Submitted by: BAKER

U.S. ARMY CORPS OF ENGINEERS
AFGHANISTAN ENGINEER DISTRICT
APO AE 96338

Michael Baker Jr., Inc
A unit of Michael Baker Corporation
Airside Business Park
100 Airside Drive
Moon Township, PA 15108
www.mbakercorp.com

AFGHAN NATIONAL ARMY
REGIONAL MILITARY TRAINING CENTER
STANDARD DESIGN

DINING FACILITY

FOUNDATION SECTIONS

Sheet reference number:
S-501

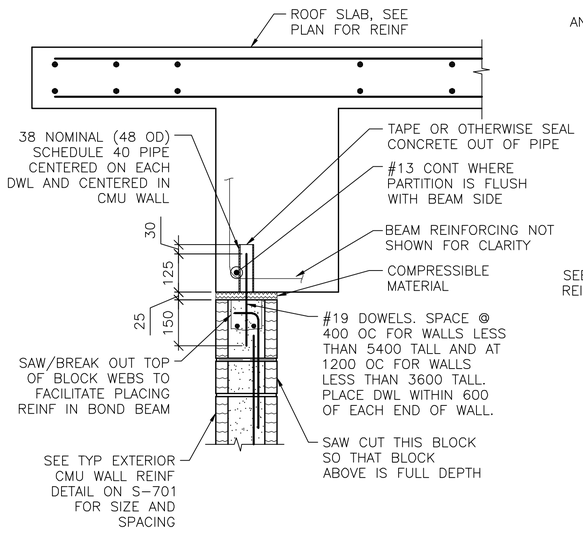


NOTES:
1. EXTEND DOWEL REINF TO 25 CLEAR FROM TOP OF CMU WALL.

1 S-103 / 1 S-104 **SECTION** SCALE: 1:10

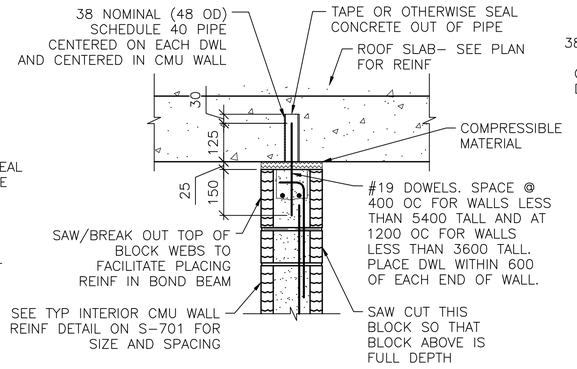


NOTES:
1. EXTEND DOWEL REINF TO 25 CLEAR FROM TOP OF CMU WALL.
2. SLAB REINF NOT SHOWN FOR CLARITY.

2 S-103 / 2 S-104 / 2 S-105 **SECTION** SCALE: 1:10

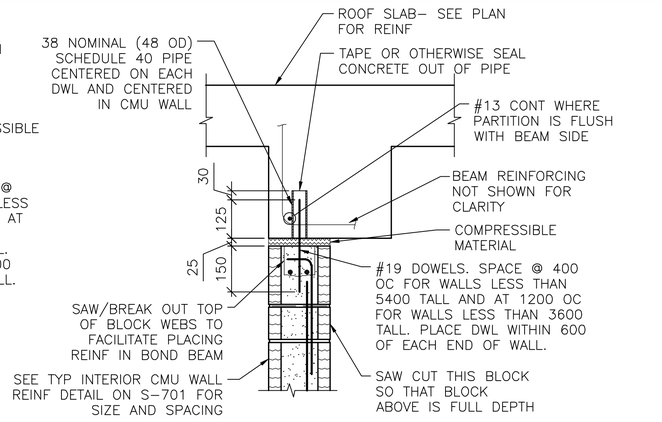


NOTES:
1. EXTEND DOWEL REINF TO 25 CLEAR FROM TOP OF CMU WALL.
2. PARTITION WALL MAY BE CENTERED UNDER THE BEAM OR FLUSH AS SHOWN. SEE PLAN FOR LOCATION.
3. SLAB REINF NOT SHOWN FOR CLARITY.

3 S-103 / 3 S-104 / 3 S-105 **SECTION** SCALE: 1:10

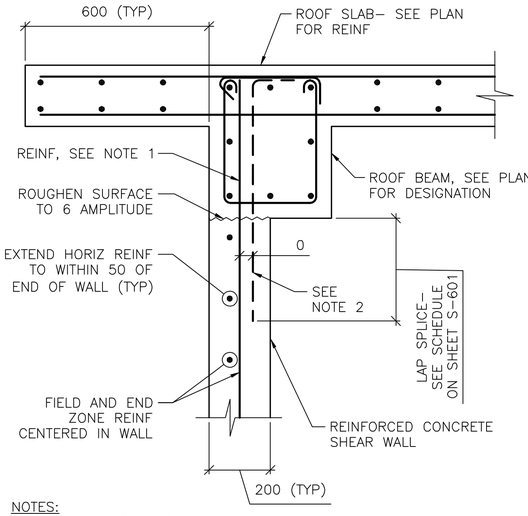


NOTES:
1. TERMINATE "FIELD" VERT REINF & END ZONE REINF @ 50 CLEAR FROM TOP OF ROOF SLAB.
2. WHERE END ZONE REINFORCING CANNOT BE DEVELOPED IN BEAM DEPTH, PROVIDE HOOKED DWLS SAME SIZE & SPACING. PROVIDE TENSION LAP BELOW ROOF BEAM.
3. SEE SHEET S-601 AND SHEET S-702 FOR SCHEDULED FIELD AND END ZONE REINF.
4. CAST SHEAR WALL BEFORE PLACING BEAM/SLAB.

4 S-103 / 4 S-104 / 4 S-105 / 4 S-106 **SECTION** SCALE: 1:10

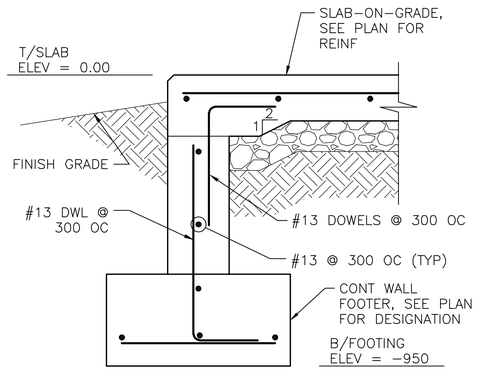


5 S-106 **SECTION** SCALE: 1:10

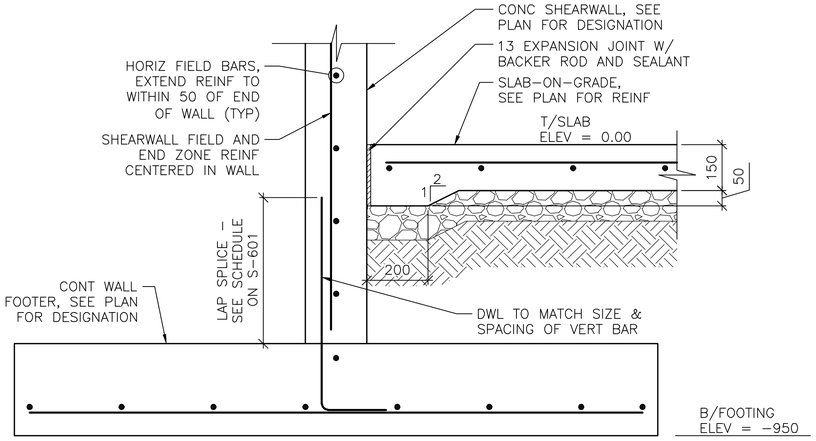


6 S-106 **SECTION** SCALE: 1:10

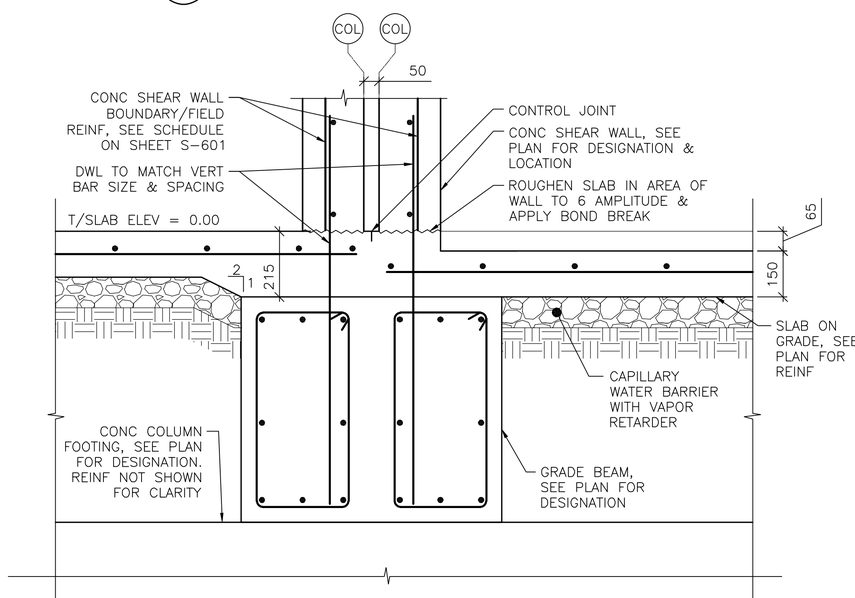


8 S-101 **SECTION** SCALE: 1:10

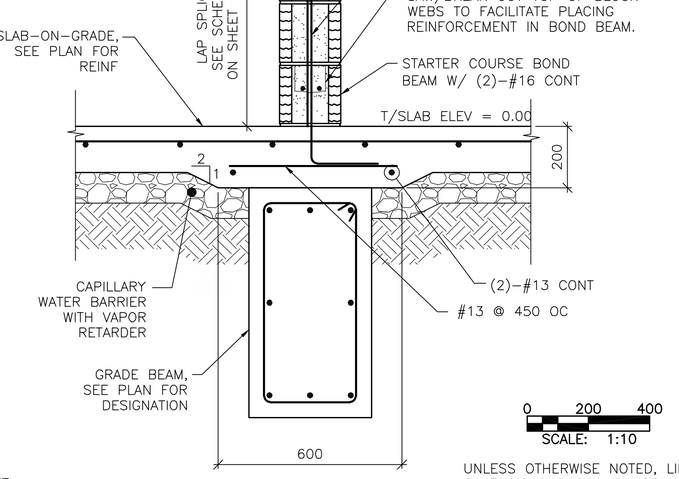


7 S-105 **SECTION** SCALE: 1:10

0 200 400
SCALE: 1:10

UNLESS OTHERWISE NOTED, LINEAR DIMENSIONS SHOWN ON DRAWINGS ARE IN MILLIMETERS (mm)

APPROVED:

A/E DESIGNER OF RECORD

SEAL:

GEORGIA REGISTERED 2-22-10 No. 27141 PROFESSIONAL ENGINEER CHRISTOPHER W. WHITMORE

US ARMY CORPS OF ENGINEERS
AFGHANISTAN ENGINEER DISTRICT

| Mark | Description | Date | Appr. |
|---|---|---|---|

Rev: 0
Date: 2/23/10
Design file no.
Drawing code:
File name: ANADFAC8-S025C
Plot date: 2/23/2010
Plot scale: x:x

Designed by: KMP/MMY
Drwn by: RCG
Ckd by: CWW
Reviewed by: LHM
Submitted by: BAKER

U.S. ARMY CORPS OF ENGINEERS
AFGHANISTAN ENGINEER DISTRICT
APO AE 96338

Michael Baker Jr., Inc
A unit of Michael Baker Corporation
Airside Business Park
100 Airside Drive
Moon Township, PA 15108
www.mbakercorp.com

AFGHAN NATIONAL ARMY
REGIONAL MILITARY TRAINING CENTER
STANDARD DESIGN

DINING FACILITY

SECTIONS

Sheet reference number:
S-502

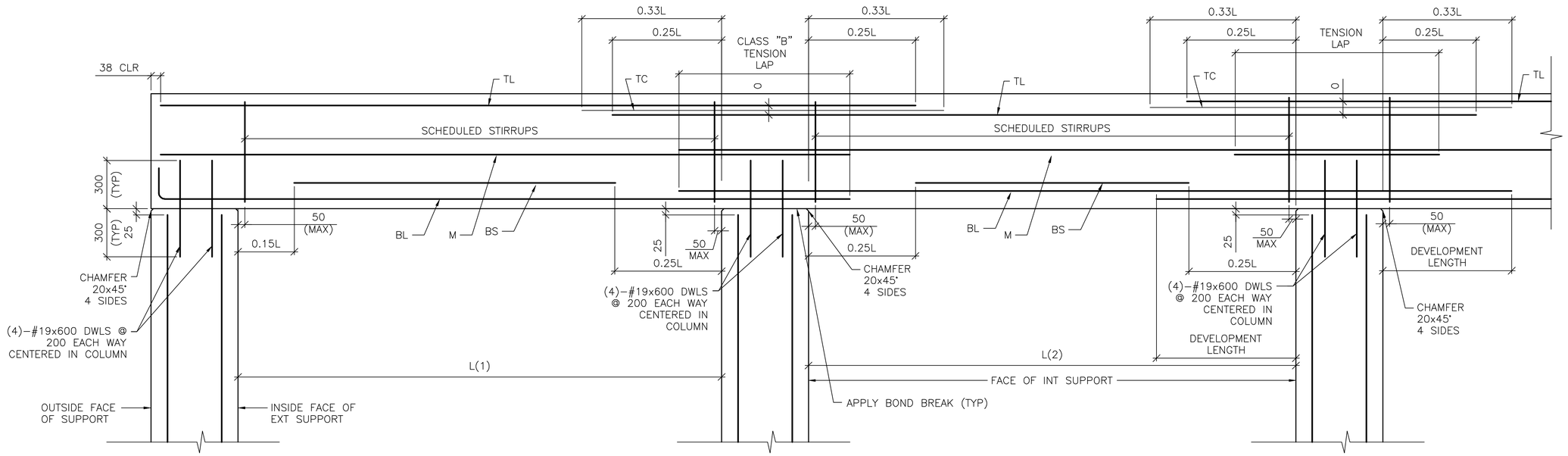


DETAIL NOTE:
1. WORK THIS DETAIL WITH BEAM SCHEDULE ON SHEET S-601.
2. L=GREATEST OF ADJACENT SPANS L(1) OR L(2)
3. ONLY COLUMN CORNER BARS ARE SHOWN

1 / S-503 **ROOF BEAM REINFORCING DETAIL**

**SCALE: NTS**

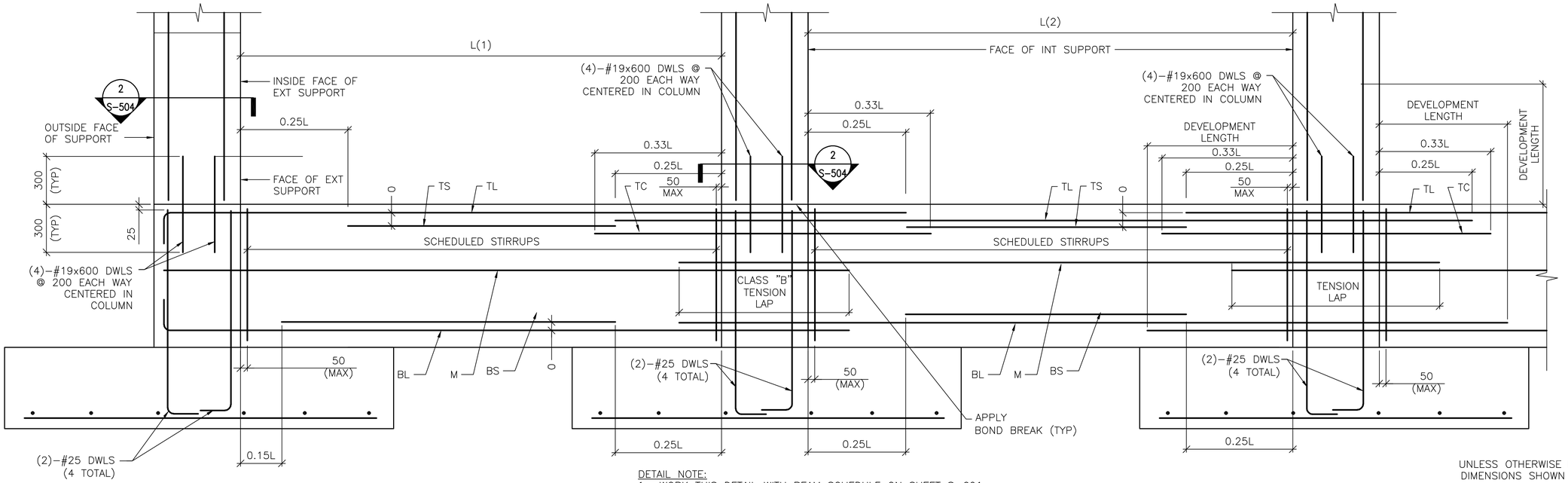


DETAIL NOTE:
1. WORK THIS DETAIL WITH BEAM SCHEDULE ON SHEET S-601.
2. L=GREATEST OF ADJACENT SPANS L(1) OR L(2)
3. ONLY COLUMN CORNER BARS ARE SHOWN.

2 / S-503 **GRADE BEAM REINFORCING DETAIL**

**SCALE: NTS**

UNLESS OTHERWISE NOTED, LINEAR DIMENSIONS SHOWN ON DRAWINGS ARE IN MILLIMETERS (mm)

APPROVED:

A/E DESIGNER OF RECORD

SEAL:

GEORGIA REGISTERED 1-28-10 No. 27141 PROFESSIONAL ENGINEER CHRISTOPHER W. WHITMORE

US ARMY CORPS OF ENGINEERS
AFGHANISTAN ENGINEER DISTRICT

| Mark | Description | Date | Appr. |
|---|---|---|---|
| | | | |

Rev: 0
Date: 2/23/10
Design file no.:
Drawing code: ANASFACS-S003T
Designed by: KMP/MMY
Dwn by: RCG
Ckd by: CWW
Reviewed by: LHM
Submitted by:
File name:
Plot date: 2/23/2010
Plot scale: XX

U.S. ARMY CORPS OF ENGINEERS
AFGHANISTAN ENGINEER DISTRICT
APO AE 96338

*Michael Baker Jr., Inc*
*A unit of Michael Baker Corporation*
Airside Business Park
100 Airside Drive
Moon Township, PA 15108
www.mbakercorp.com

BAKER

AFGHAN NATIONAL ARMY
REGIONAL MILITARY TRAINING CENTER
STANDARD DESIGN

DINING FACILITY

BEAM & COLUMN DETAILS

Sheet reference number:
S-503

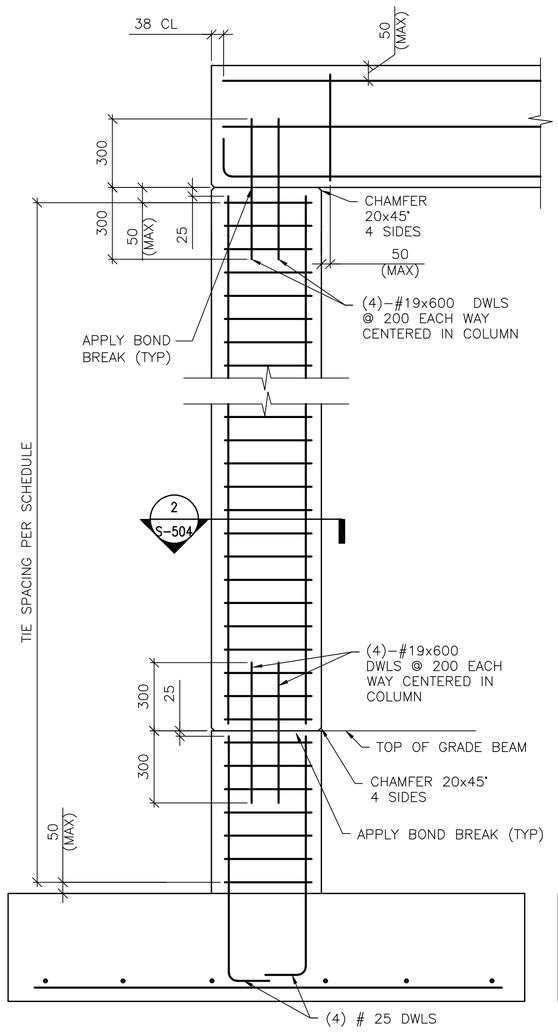


DETAIL NOTE:
1. ONLY COLUMN CORNER BARS ARE SHOWN

1 S–504 **1-STORY COLUMN REINF DETAILS**
SCALE: NTS
(WITH GRADE BEAM)

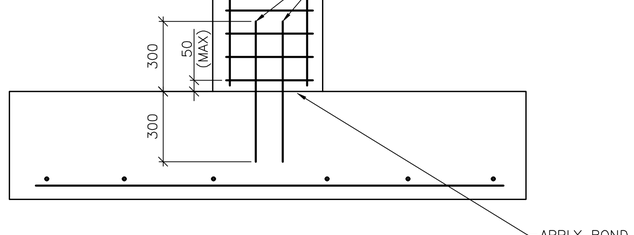


DETAIL NOTE:
1. ONLY COLUMN CORNER BARS ARE SHOWN

1 S–504 **1-STORY COLUMN REINF DETAILS**
SCALE: NTS
(WITHOUT GRADE BEAM)

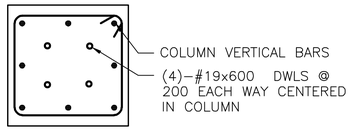


DETAIL NOTE:
1. 8 BAR COLUMN SHOWN, 4 BAR COLUMN SIMILAR
2. INTERIOR TIES NOT SHOWN FOR CLARITY. REFER TO DETAIL A THIS SHEET FOR INTERIOR TIE CONFIGURATION.

2 S–503 2 S–504 **SECTION**
SCALE: NTS

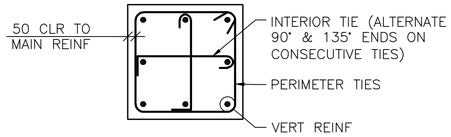


A S–504 **8 BAR COLUMN**
SCALE: NTS

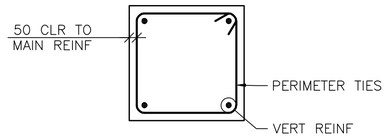


B S–504 **4 BAR COLUMN**
SCALE: NTS

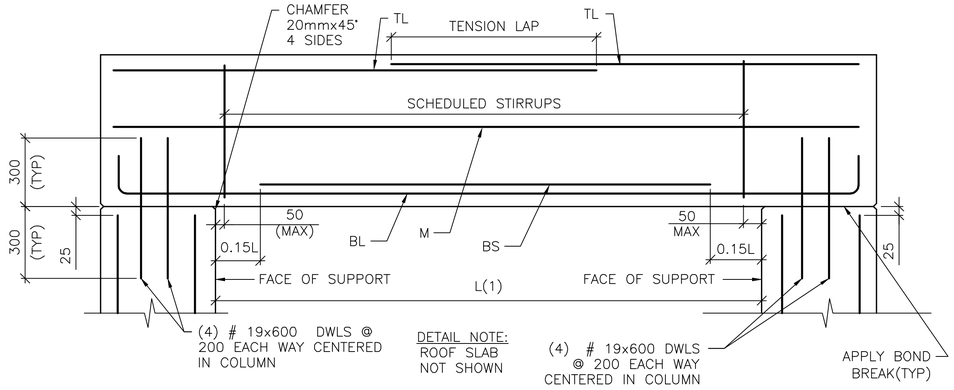


3 S–504 **SINGLE SPAN ROOF BEAM REINFORCING DETAIL**
SCALE: NTS

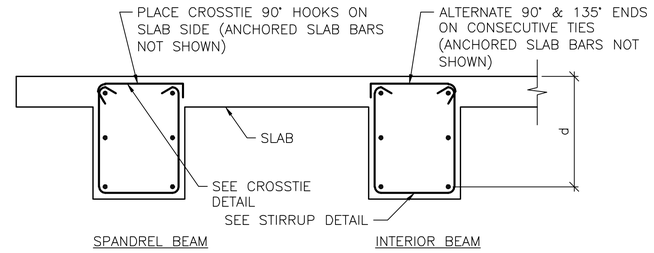


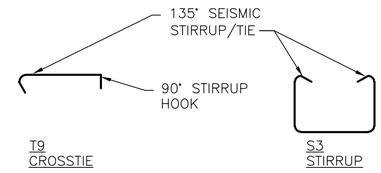


C S–504 **BEAM REINFORCEMENT DETAILS**
SCALE: NTS

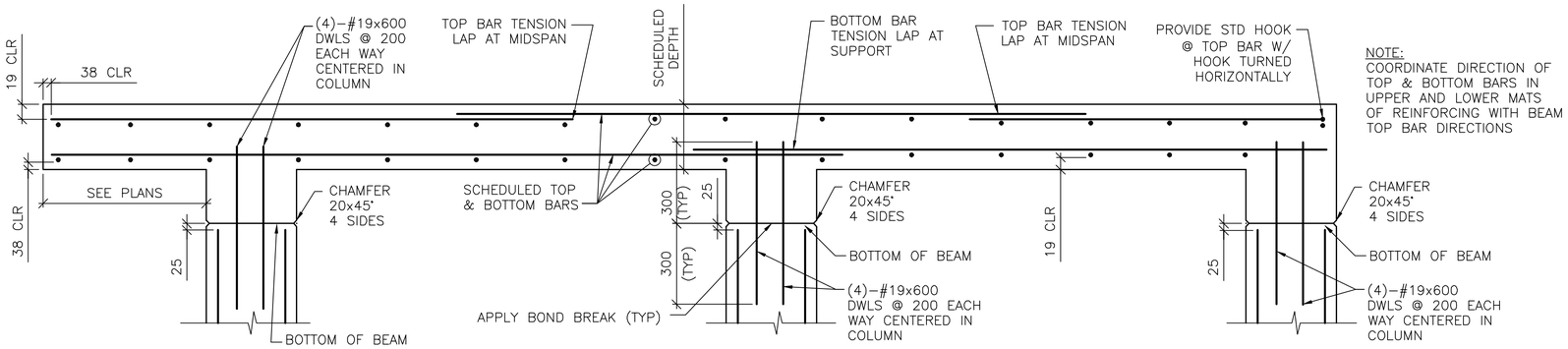


NOTE:
COORDINATE DIRECTION OF TOP & BOTTOM BARS IN UPPER AND LOWER MATS OF REINFORCING WITH BEAM TOP BAR DIRECTIONS

4 S–504 **FRAMED SLAB REINFORCING DETAIL**
SCALE: NTS

UNLESS OTHERWISE NOTED, LINEAR DIMENSIONS SHOWN ARE IN MILLIMETERS (mm)

APPROVED:

A/E DESIGNER OF RECORD

SEAL:

GEORGIA REGISTERED 1-25-10 No. 27141 PROFESSIONAL ENGINEER CHRISTOPHER W. WHITMORE

US ARMY CORPS OF ENGINEERS
AFGHANISTAN ENGINEER DISTRICT

| Mark | Description | Date | Appr. |
|---|---|---|---|
| | | | |

Date: 2/23/10 Rev. 0
Design file no.
Drawing code:
File name: ANAFACS-504DT
Plot date: 2/23/2010
Plot scale: X:X

Designed by: KMP/MMY
Drwn by: RCG
Ckd by: CWW
Reviewed by: LHM
Submitted by: BAKER

U.S. ARMY CORPS OF ENGINEERS
AFGHANISTAN ENGINEER DISTRICT
APO AE 96338

Michael Baker Jr., Inc
A unit of Michael Baker Corporation
Airside Business Park
100 Airside Drive
Moon Township, PA 15108
www.mbakercorp.com

AFGHAN NATIONAL ARMY
REGIONAL MILITARY TRAINING CENTER
STANDARD DESIGN

DINING FACILITY

BEAM & COLUMN DETAILS

Sheet reference number:
S–504

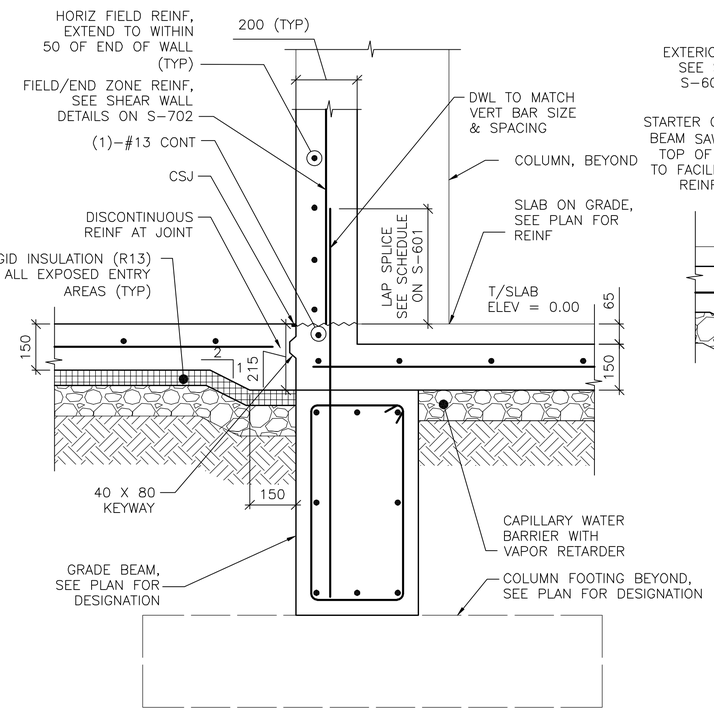


1 S-102 **SECTION**
SCALE: 1:10

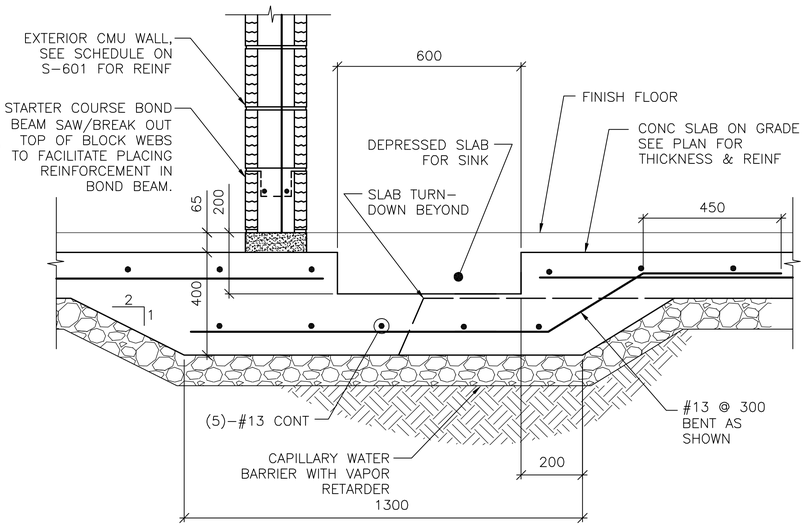


2 S-102 **SECTION**
SCALE: 1:10

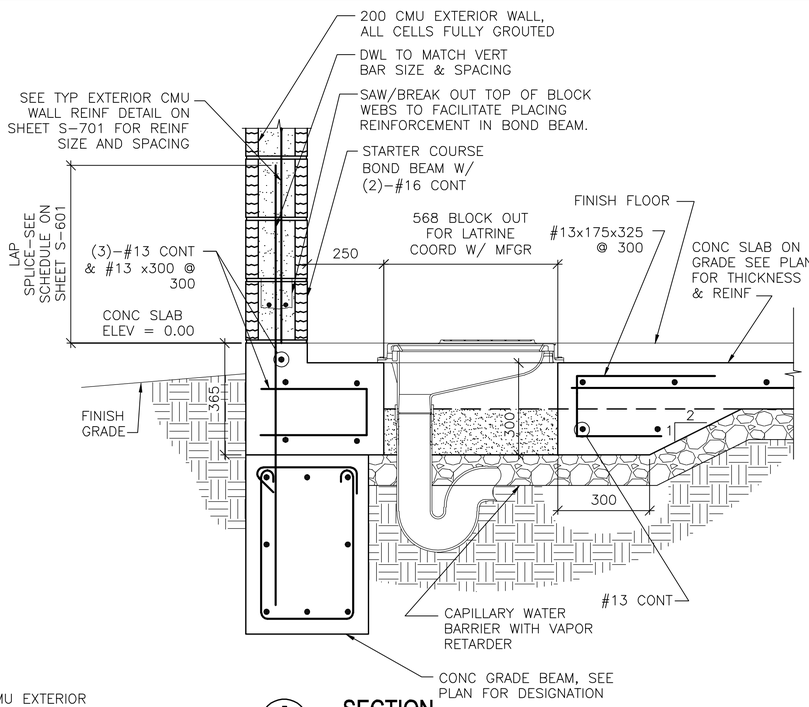


3 S-101 **SECTION**
SCALE: 1:10

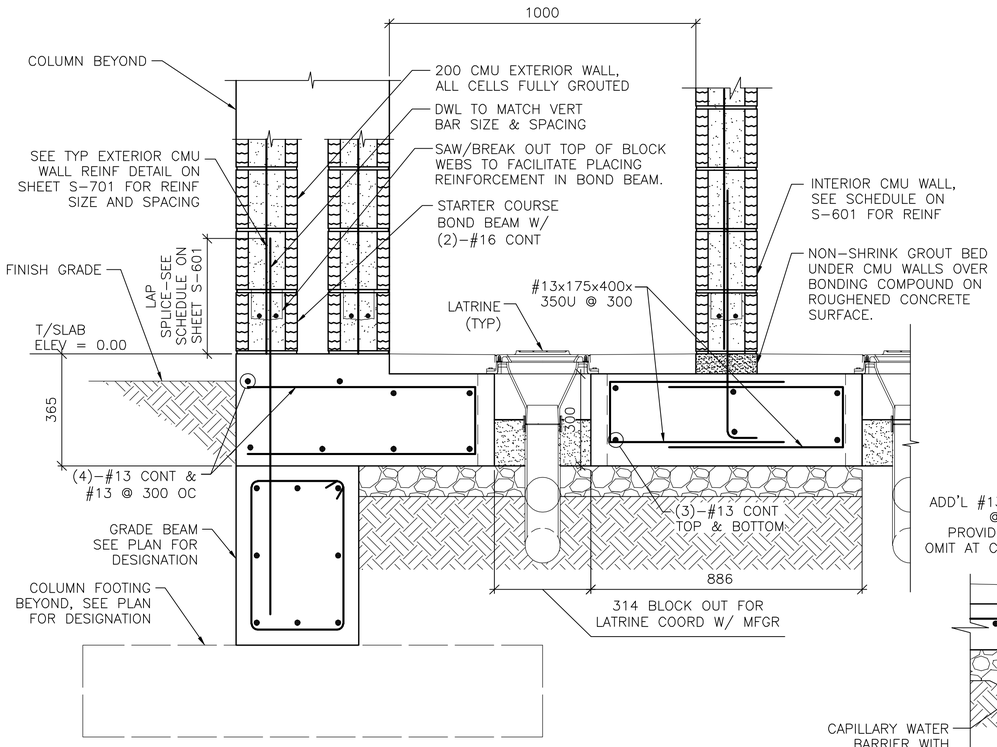


4 S-101 **SECTION**
SCALE: 1:10

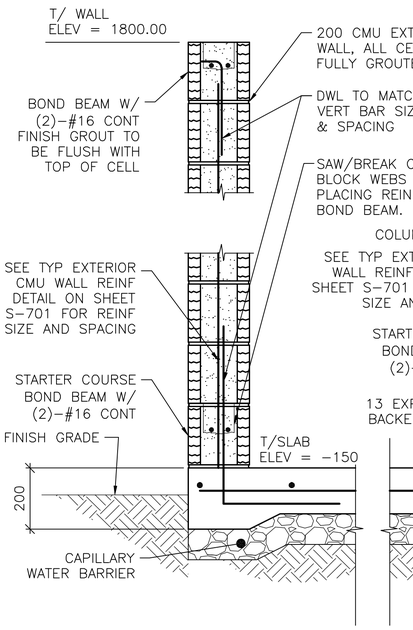


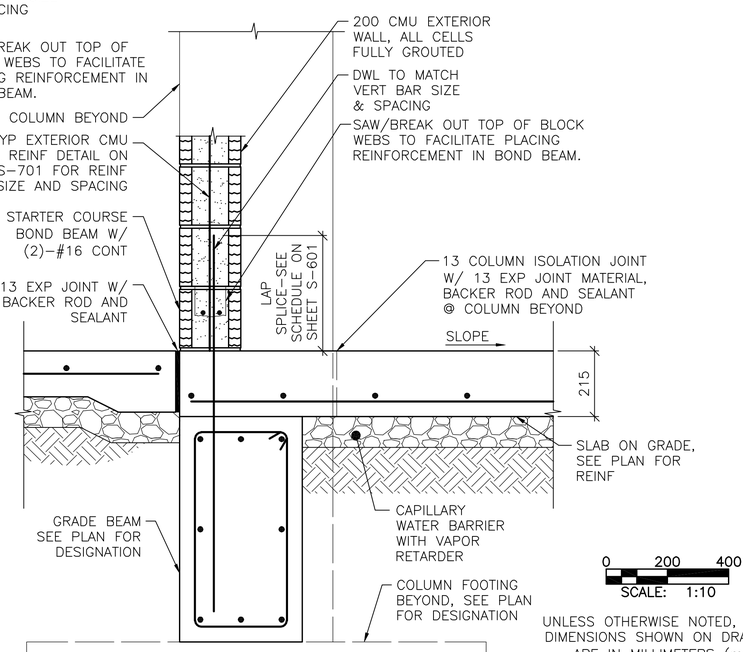


NOTE:
1. STOVE OMITED FOR CLARITY.

5 S-102 **SECTION**
SCALE: 1:10

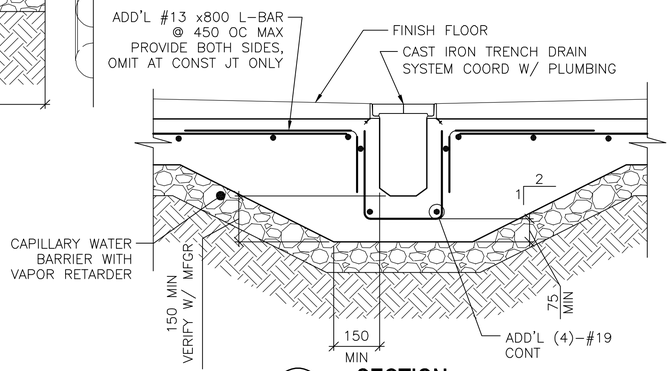


6 S-102 **SECTION**
SCALE: 1:10

0 200 400
SCALE: 1:10

UNLESS OTHERWISE NOTED, LINEAR DIMENSIONS SHOWN ON DRAWINGS ARE IN MILLIMETERS (mm)

APPROVED:

A/E DESIGNER OF RECORD

SEAL:

GEORGIA REGISTERED 1-19-10 No. 27141 PROFESSIONAL ENGINEER CHRISTOPHER W. WHITMORE

US ARMY CORPS OF ENGINEERS
AFGHANISTAN ENGINEER DISTRICT

| Mark | Description | Date | Appr. |
|---|---|---|---|

Rev: 0
Date: 2/23/10
Design file no.
Drawing code:
File name: ANAFAC8-505SC
Plot date: 2/23/2010
Plot scale: x:x

Designed by: KMP/MMY
Drwn by: RCG
Ckd by: CWW
Reviewed by: LHM
Submitted by: BAKER

U.S. ARMY CORPS OF ENGINEERS
AFGHANISTAN ENGINEER DISTRICT
APO AE 96338

Michael Baker Jr., Inc
A unit of Michael Baker Corporation
Airside Business Park
100 Airside Drive
Moon Township, PA 15108
www.mbakercorp.com

AFGHAN NATIONAL ARMY
REGIONAL MILITARY TRAINING CENTER
STANDARD DESIGN

DINING FACILITY

MISCELLANEOUS SECTIONS

Sheet reference number:
S-505

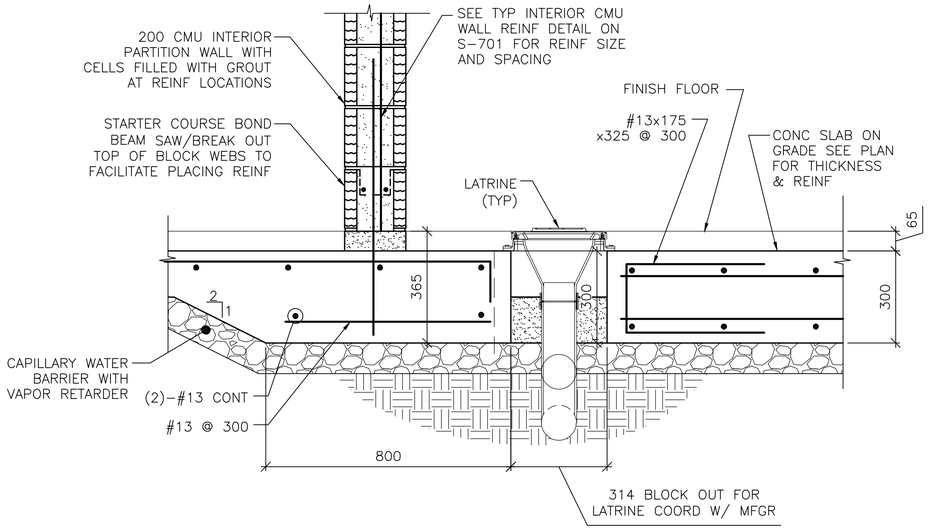


1 S-102 **SECTION**
SCALE: 1:10

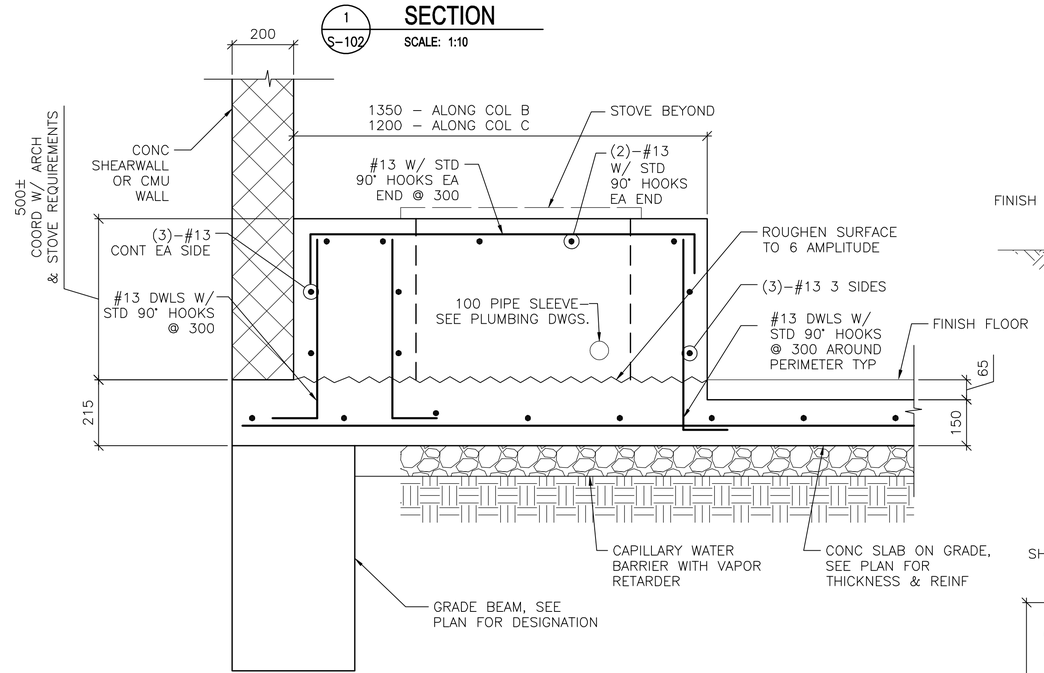


NOTES:
1. GRADE BEAM REINF NOT SHOWN FOR CLARITY.
2. OMIT GRADE BEAM FOR STOVE AT INTERIOR WALLS.
3. PROVIDE #3x450x450 CORNER BARS TO MATCH HORIZONTAL REINFORCING AT ALL EXTERNAL CORNERS.

3 S-102 **SECTION**
SCALE: 1:10

PROVIDE #3x450x450 CORNER BARS TO MATCH HORIZONTAL REINFORCING AT ALL CORNERS.

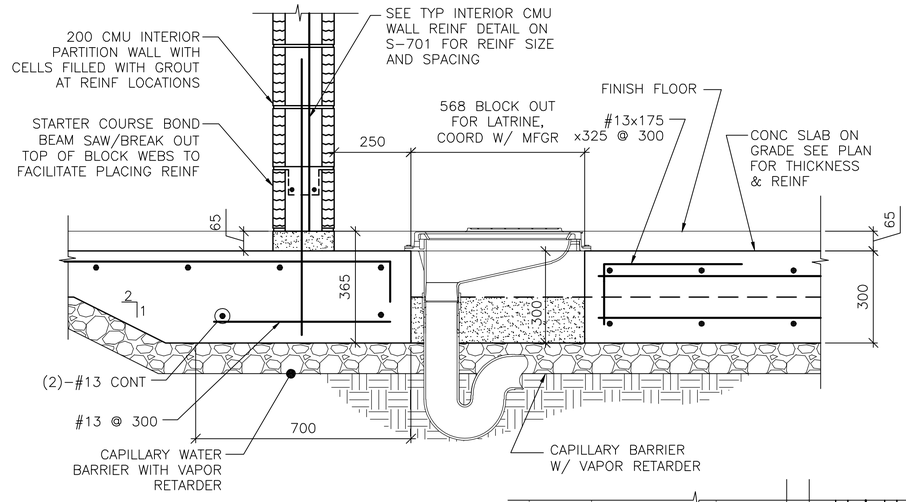


2 S-102 **SECTION**
SCALE: 1:10

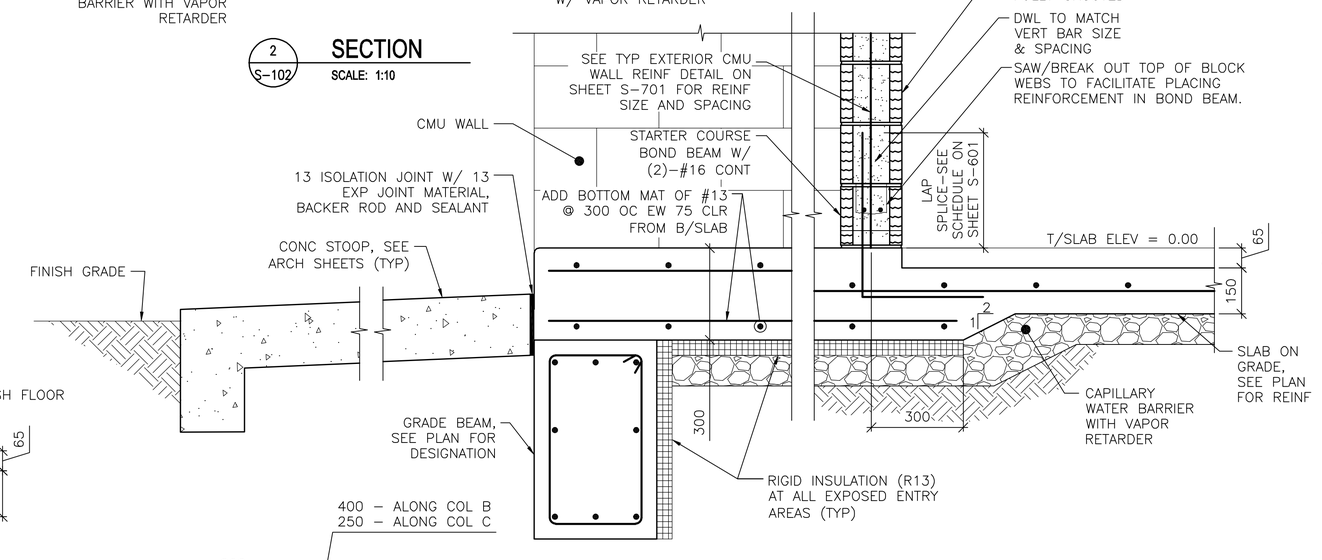


4 S-102 **SECTION**
SCALE: 1:10

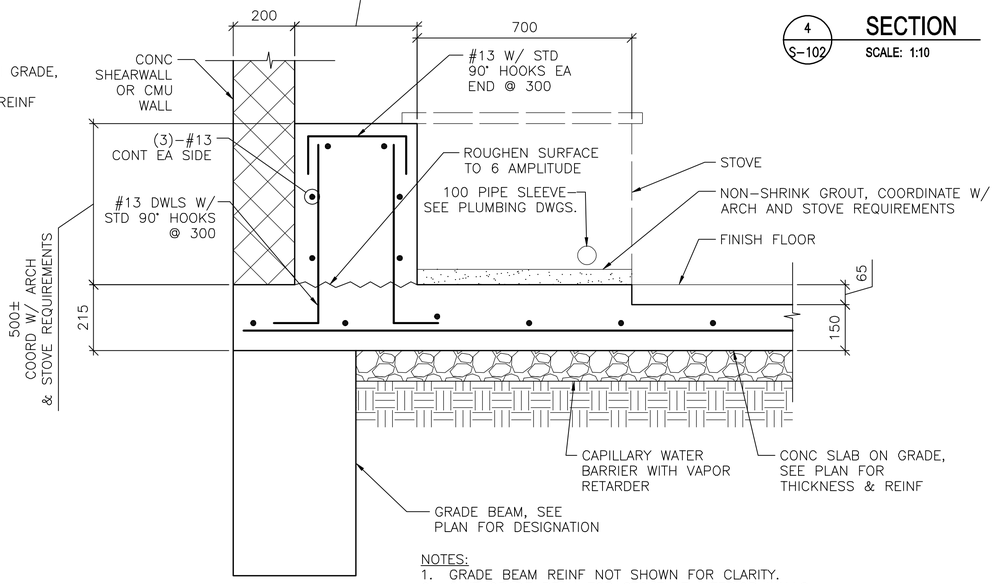


NOTES:
1. GRADE BEAM REINF NOT SHOWN FOR CLARITY.
2. OMIT GRADE BEAM FOR STOVE AT INTERIOR WALLS.

5 S-102 **SECTION**
SCALE: 1:10

0 200 400
SCALE: 1:10

UNLESS OTHERWISE NOTED, LINEAR DIMENSIONS SHOWN ON DRAWINGS ARE IN MILLIMETERS (mm)

APPROVED:

A/E DESIGNER OF RECORD

SEAL:

GEORGIA REGISTERED 1-29-10 No. 27141 PROFESSIONAL ENGINEER CHRISTOPHER W. WHITMORE

US ARMY CORPS OF ENGINEERS
AFGHANISTAN ENGINEER DISTRICT

| Mark | Description | Date | Appr. |
|---|---|---|---|
| | | | |

Designed by: KMP/MMY
Drwn by: RCG
Ckd by: CWW
Reviewed by: LHM
Submitted by: BAKER

Date: 2/23/10
Design file no.
Drawing code:
Rev: 0
File name: ANAFAC8-5085G
Plot date: 2/23/2010
Plot scale: x:x

U.S. ARMY CORPS OF ENGINEERS
AFGHANISTAN ENGINEER DISTRICT
APO AE 96338

Michael Baker Jr., Inc
A unit of Michael Baker Corporation
Airside Business Park
100 Airside Drive
Moon Township, PA 15108
www.mbakercorp.com

AFGHAN NATIONAL ARMY
REGIONAL MILITARY TRAINING CENTER
STANDARD DESIGN

DINING FACILITY

MISCELLANEOUS SECTIONS

Sheet reference number:
S-506

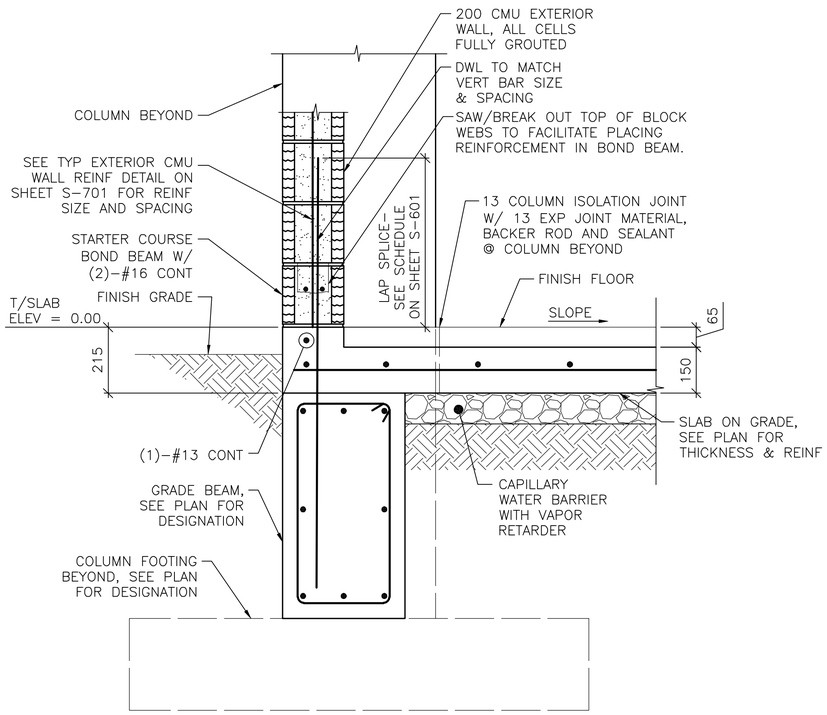


NOTE:
1. OMIT WALL FOR PROPANE CYLINDER STORAGE.
2. AT WOOD STOVE KITCHEN (RM 124), PROVIDE CAPILLARY WATER BARRIER FULL DEPTH OF GRADE BEAM.

1 S-102 **SECTION**
SCALE: 1:10

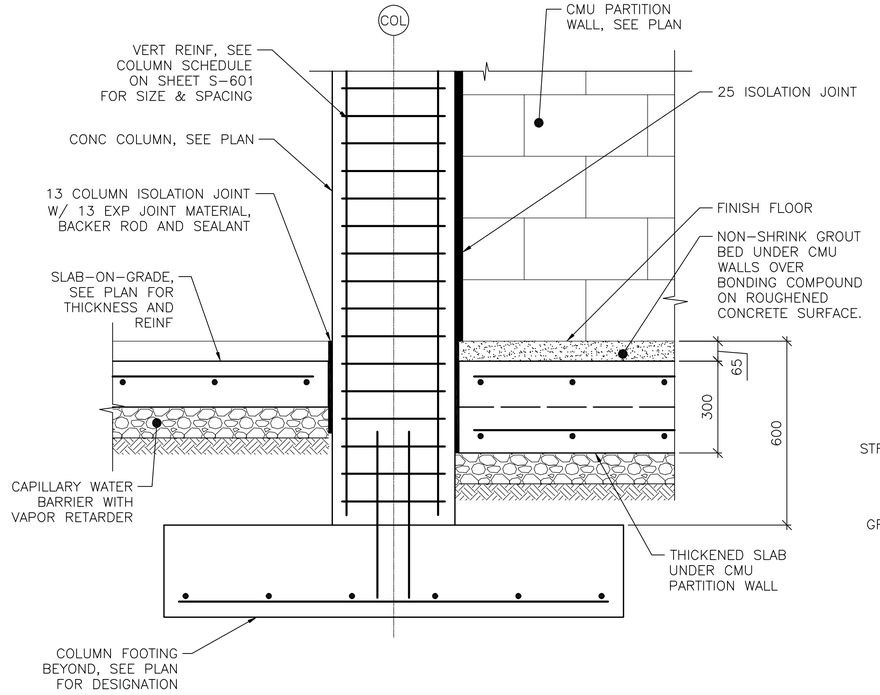


2 S-102 **SECTION**
SCALE: 1:10

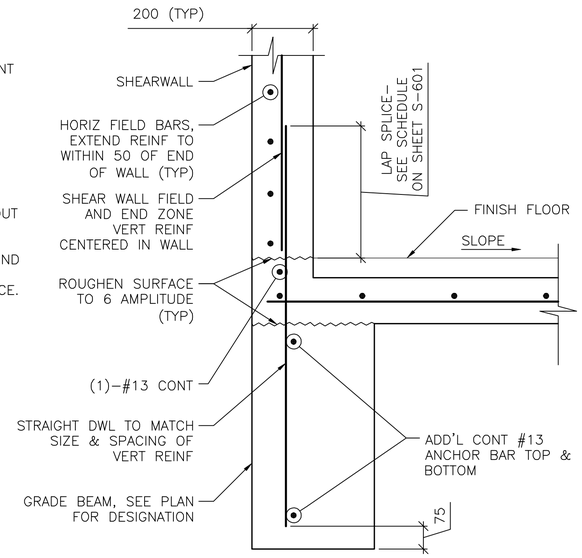


NOTE:
1. SECTION DEPICTS SHEAR WALL TERMINATION ONLY. GRADE BEAM REINFORCING NOT SHOWN FOR CLARITY
2. SEE SHEET S-601 AND SHEET S-702 FOR SCHEDULED SHEAR WALL FIELD AND END ZONE REINF.

3 S-102 **SECTION**
SCALE: 1:10

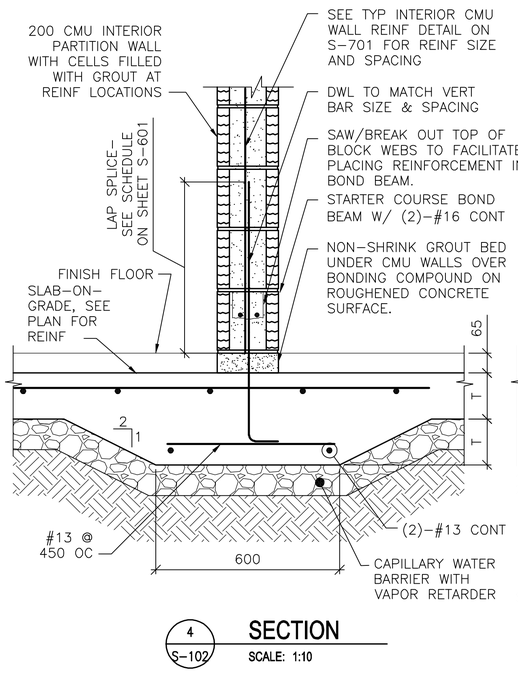


4 S-102 **SECTION**
SCALE: 1:10

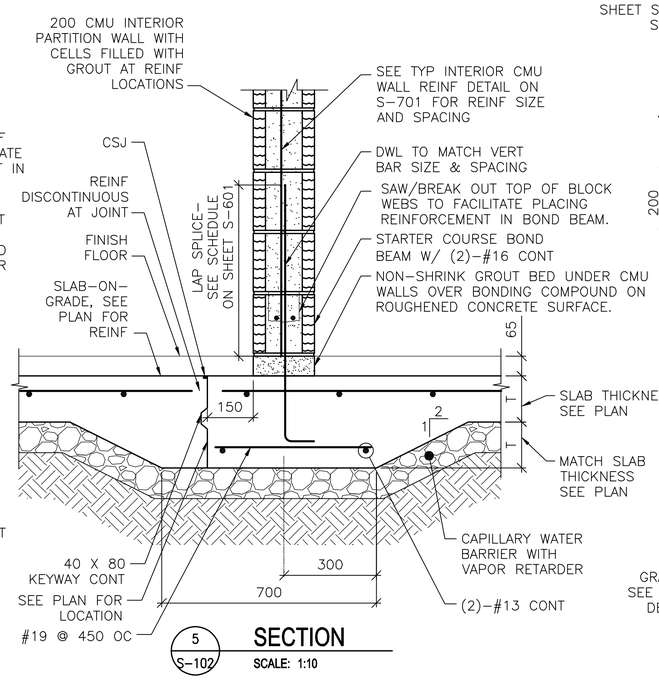


5 S-102 **SECTION**
SCALE: 1:10

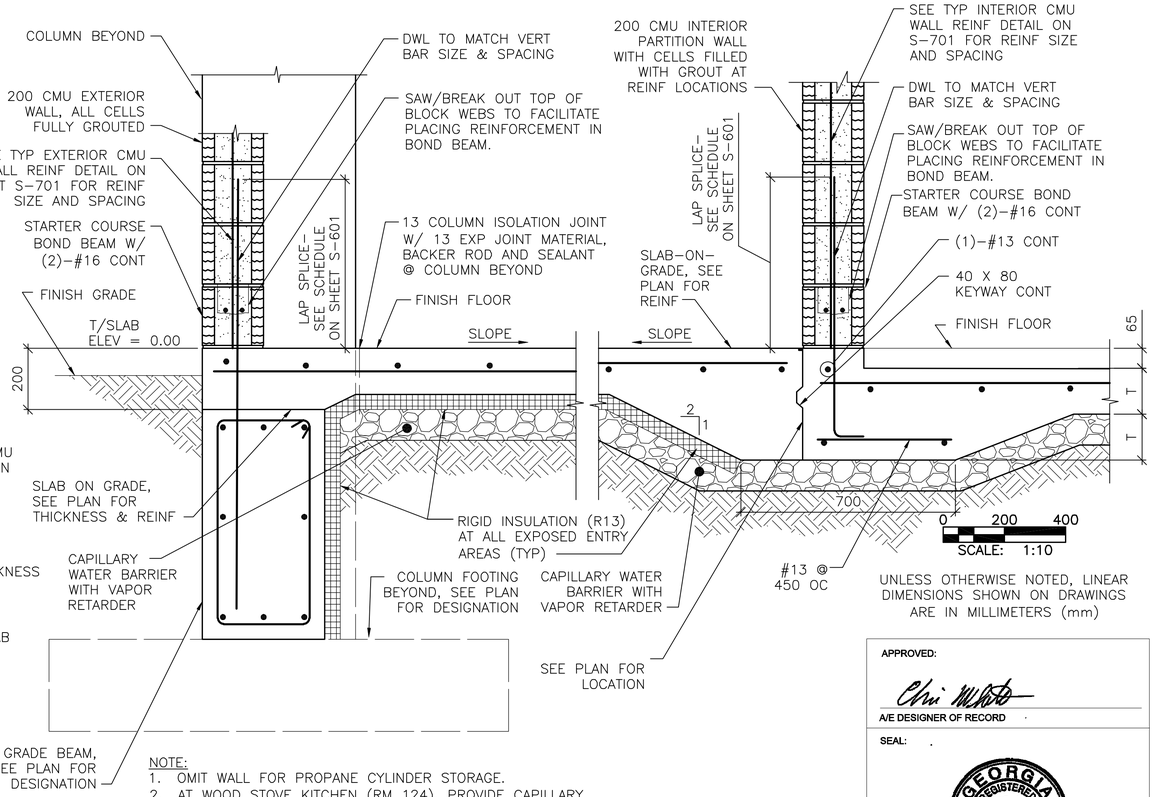


NOTE:
1. OMIT WALL FOR PROPANE CYLINDER STORAGE.
2. AT WOOD STOVE KITCHEN (RM 124), PROVIDE CAPILLARY WATER BARRIER FULL DEPTH OF GRADE BEAM.

6 S-102 **SECTION**
SCALE: 1:10

UNLESS OTHERWISE NOTED, LINEAR DIMENSIONS SHOWN ON DRAWINGS ARE IN MILLIMETERS (mm)

APPROVED:

A/E DESIGNER OF RECORD

SEAL:

GEORGIA REGISTERED 27141 PROFESSIONAL ENGINEER CHRISTOPHER W. WHITMORE

US ARMY CORPS OF ENGINEERS
AFGHANISTAN ENGINEER DISTRICT

| Mark | Description | Date | Appr. |
|---|---|---|---|

Rev: 0
Date: 2/23/10
Design file no.
Drawing code:
File name: ANADFAC8-80758
Plot date: 2/23/2010
Plot scale: x:x
Designed by: KMP/ MMY
Dwn by: RCG
Ckd by: CWW
Reviewed by: LHM
Submitted by: BAKER

U.S. ARMY CORPS OF ENGINEERS
AFGHANISTAN ENGINEER DISTRICT
APO AE 96338

Michael Baker Jr., Inc
A unit of Michael Baker Corporation
Airside Business Park
100 Airside Drive
Moon Township, PA 15108
www.mbakercorp.com

AFGHAN NATIONAL ARMY
REGIONAL MILITARY TRAINING CENTER
STANDARD DESIGN

DINING FACILITY

SECTIONS

Sheet reference number:
S-507

# CONCRETE REINFORCEMENT TENSION DEVELOPMENT/LAP SPLICE SCHEDULE

| f'c = 28 MPa | LAP CLASS | UNCOATED BARS | | | |
|---|---|---|---|---|---|
| | | TOP BARS | | OTHER BARS | |
| BAR SIZES | | CASE 1 | CASE 2 | CASE 1 | CASE 2 |
| #10 TO #19 | A | 50 BAR DIA | 74 BAR DIA | 38 BAR DIA | 57 BAR DIA |
| | B | 64 BAR DIA | 96 BAR DIA | 50 BAR DIA | 74 BAR DIA |
| #22 TO #57 | A | 62 BAR DIA | 93 BAR DIA | 48 BAR DIA | 71 BAR DIA |
| | B | 80 BAR DIA | 121 BAR DIA | 62 BAR DIA | 93 BAR DIA |

NOTES:
1. TABULATED TENSION DEVELOPMENT LENGTH VALUES ARE TAKEN FROM CRSI DESIGN HANDBOOK 2008 10TH ED.
2. TENSION DEVELOPMENT & TENSION LAP SPLICE LENGTHS ARE EXPRESSED AS MULTIPLES OF BAR DIAMETERS.
3. TABULATED VALUES ARE BASED ON MINIMUM YIELD STRENGTH OF REINFORCEMENT, fy, OF 420MPa.
4. CONCRETE IS NORMAL WEIGHT (2400Kg/m$^3$) AND 28 DAY COMPRESSIVE STRENGTH = 28MPa.
5. TABULATED VALUES FOR BEAMS & COLUMNS ARE BASED ON TRANSVERSE REINFORCEMENT AND CONCRETE COVER MEETING MINIMUM CODE REQUIREMENTS.
6. CASES 1 & 2, WHICH DEPEND ON THE TYPE OF STRUCTURAL MEMBER, CONCRETE COVER, AND CENTER-TO-CENTER SPACING OF THE BARS ARE DEFINED IN THE TABLE BELOW.
7. LAP SPLICE LENGTHS (MINIMUM 300mm) ARE MULTIPLES OF TENSION DEVELOPMENT LENGTHS: CLASS A = 1.0(TENSION DEVELOPMENT LENGTH) & CLASS B = 1.3(TENSION DEVELOPMENT LENGTH)
8. TOP BARS ARE HORIZONTAL REINFORCEMENT WITH MORE THAN 300mm OF CONCRETE CAST BELOW THE BARS.
9. IT SHALL BE PERMISSIBLE TO CALCULATE WALL AND SLAB REINFORCEMENT TENSION DEVELOPMENT/SPLICE LENGTHS IN ACCORDANCE WITH ACI 12.2.3 OR TABLE 5.3(b) OF CRSI 2008 IN LIEU OF VALUES TABULATED ABOVE.

| | | |
|---|---|---|
| BEAMS, COLUMNS | CASE 1 | CONCRETE COVER AT LEAST 1 BAR DIA AND CENTER-TO-CENTER SPACING AT LEAST 2 BAR DIA |
| | CASE 2 | CONCRETE COVER LESS THAN 1 BAR DIA OR CENTER-TO-CENTER SPACING LESS THAN 2 BAR DIA |
| ALL OTHERS | CASE 1 | CONCRETE COVER AT LEAST 1 BAR DIA AND CENTER-TO-CENTER SPACING AT LEAST 3 BAR DIA |
| | CASE 2 | CONCRETE COVER LESS THAN 1 BAR DIA OR CENTER-TO-CENTER SPACING LESS THAN 3 BAR DIA |

# CONCRETE COVER SCHEDULE

MINIMUM CONCRETE COVER PROTECTION FOR REINFORCEMENT BARS SHALL BE AS LISTED BELOW: (SEE ACI 318M-05, SECTION 7.7 FOR CONDITIONS NOT NOTED). DIMENSIONS FOR BAR PLACEMENT GIVEN IN SECTIONS AND DETAILS SHALL SUPERSEDE MINIMUM COVER REQUIREMENTS GIVEN HERE. DIMENSIONS ARE IN mm. PROVIDE STANDARD BAR CHAIRS AND SUPPORT BARS @1200mm MAXIMUM AS REQUIRED TO MAINTAIN CONCRETE PROTECTION SPECIFIED.

| | | |
|---|---|---|
| FOOTINGS (EARTH FORMED): | | 70 |
| COLUMNS / PIERS (TO TIES) | | 40 |
| GRADE BEAMS OR SLAB TURNED DOWN EDGES: | | |
| TOP | | 40 |
| BOTTOM (EARTH FORMED) | | 70 |
| SIDES (EARTH FORMED) | | 70 |
| SIDES (BOARD FORMED) | #16 BAR & SMALLER | 40 |
| | #19 THRU #36 BAR | 50 |
| ELEVATED BEAMS & SLABS: | | |
| BEAM TIES & STIRRUPS (NOT EXPOSED TO WEATHER) | | 40 |
| BEAM TIES & STIRRUPS (EXPOSED TO WEATHER) | | 50 |
| FLOOR SLABS (NOT EXPOSED TO WEATHER) | | 20 |
| FLOOR SLABS (EXPOSED TO WEATHER) | | |
| #19 & LARGER | | 50 |
| #13 & SMALLER | | 40 |
| ROOF SLAB BARS | | 25 |
| SLABS ON GRADE | | |
| NOT EXPOSED TO WEATHER (FROM TOP) | | 20 |
| EXPOSED TO WEATHER (FROM TOP) | | 40 |
| UTILITY TUNNEL WALLS, RETAINING WALLS AND SHEAR WALLS. (NO SURFACES SHALL BE EARTH FORMED) | | |
| EARTH SIDE AND FRONT SIDE (EXPOSED TO WEATHER) | | |
| #16 BAR AND SMALLER | | 40 |
| #19 THRU #36 BAR | | 50 |

# FOOTING SCHEDULE

| MARK | FOOTING SIZE (mm) | | | FOOTING REINFORCING | REMARKS |
|---|---|---|---|---|---|
| | LENGTH | WIDTH | THICKNESS | | |
| F1 | 2600 | 2600 | 300 | (9)-#16 EW BOTT | ----- |
| F2 | 3200 | 3200 | 300 | (11)-#16 EW BOTT | ----- |
| F3 | 3600 | 3600 | 350 | (13)-#22 EW BOTT | ----- |
| F4 | 4100 | 4100 | 350 | (14)-#22 EW BOTT | ----- |
| F5 | 4500 | 4500 | 400 | (16)-#22 EW BOTT | ----- |
| F6 | 4400 | 12000 | 500 | (40)-#29 SHORT BOTT (16)-#29 LONG BOTT | PROVIDE #25 DWL @ 300mm OC W/ STD 90° HOOK 75mm FROM B/FTG. CUT OFF DWL 50mm FROM T/GB |
| F7 | 2100 | 2100 | 400 | #16 @ 300mm EW | ----- |
| F8 | - | 2500 | 400 | #13 @ 300mm EW | ----- |
| F9 | - | 1300 | 400 | #13 @ 300mm EW | ----- |
| F10 | - | 600 | 400 | (17)-#16 SHORT BOTT (3)-#13 LONG BOTT | ----- |

# CONCRETE SHEAR WALL SCHEDULE

| MARK | TYPE | WALL LENGTH (L) (mm) | WALL REINFORCEMENT | | REMARKS |
|---|---|---|---|---|---|
| | | | END ZONE (EACH END) | FIELD | |
| SW1 | D | 13400 | (7)-#19 @ 230mm OC | #13 @ 300mm OC | ----- |
| SW2 | C | 6400 | (9)-#22 @ 300mm OC | #13 @ 300mm OC | ----- |
| SW3 | A | 3500 | (4)-#16 @ 150mm OC | #13 @ 300mm OC | ----- |
| SW4 | A | 4200 | (5)-#16 @ 230mm OC | #13 @ 300mm OC | ----- |
| SW5 | B | 4100 | (3)-#16 @ 150mm OC | #13 @ 300mm OC | ----- |
| SW6 | A | 15000 | N/A | #13 @ 300mm OC | ----- |

NOTES:
1. WORK THIS SCHEDULE WITH SHEAR WALL DETAILS ON SHEETS S-702
2. SEE PLAN FOR LOCATION OF SHEAR WALL(S).
3. VERTICAL "FIELD" BARS MAY BE OMITTED IN LOCATION OF "END ZONE" REINFORCEMENT.
4. WALL FIELD REINF LISTED APPLIES TO VERT & HORIZ BARS.
5. WALL FIELD REINFORCEMENT CENTERED IN WALL.

# STANDARD HOOKS IN TENSION PER (ACI 318M-05)

| HOOK DEVELOPMENT LENGTH (mm) | |
|---|---|
| BAR SIZE | f'c 28 MPa |
| #10 | 180 |
| #13 | 250 |
| #16 | 300 |
| #19 | 380 |
| #22 | 430 |
| #25 | 480 |
| #29 | 560 |
| #32 | 610 |
| #36 | 690 |

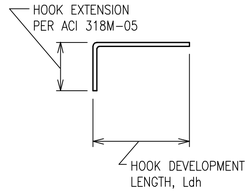


NOTES:
1. CONCRETE IS NORMAL WEIGHT CONCRETE.
2. BAR YIELD STRENGTH, fy = 420 MPa
3. SIDE COVER REQUIREMENTS OF ACI SECT. 12.5.3 ARE ASSUMED TO NOT BE MET.
4. TIE OR STIRRUP REQUIREMENTS OF ACI SECT. 12.5.3 ARE ASSUMED TO NOT BE MET.
5. REDUCTION FOR EXCESS REINFORCEMENT IS NOT TAKEN.
6. HOOK DEVELOPMENT LENGTH IS VALID FOR 180° HOOKS ALSO.

# CMU OR CAST IN PLACE CONC LINTEL SCHEDULE (TYP)

| OPENING TYPE OR SIZE, BEAM LOCATION OR TYPE | MAX SPAN (mm) | LINTEL DEPTH (mm) | REINFORCING BOTTOM |
|---|---|---|---|
| WALL OPENING | 4000 | 600 | (2)-#16 T&B |
| WALL OPENING | 1900 | 400 | (2)-#16 T&B |
| WALL OPENING | 1000 | 400 | (2)-#13 B |
| | | | |
| | | | |
| | | | |
| | | | |
| | | | |
| | | | |
| | | | |

1. STRUCTURAL SHEETS DO NOT INDICATE ALL OPENINGS IN MASONRY WALLS. VERIFY NUMBER, SIZE AND LOCATION OF ALL OPENINGS IN MASONRY WALLS FROM ARCHITECTURAL SHEETS AND APPROVED PLUMBING, MECHANICAL, AND ELECTRICAL SHOP DRAWINGS.
2. PROVIDE 200mm BEARING EA END.
3. FOR HEAD DETAILS REFER TO ARCHITECTURAL SHEETS.
4. REINFORCING SHALL BE ASTM A615M, GRADE 420. GROUT FOR CMU LINTELS SHALL HAVE A MINIMUM COMPRESSIVE STRENGTH OF 14 MPa AT 28 DAYS.
5. CONTRACTOR SHALL SUBMIT FOR APPROVAL SHOP DRAWINGS AND SCHEDULES SHOWING SIZE, SPAN, REINFORCEMENT, DETAILS, LOCATIONS, ETC.

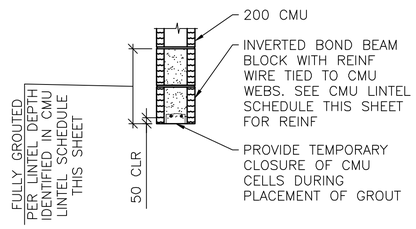


A S-601 **LINTEL DETAIL**
SCALE: NTS

# BEAM SCHEDULE

| MARK | BEAM SIZE (mm) | | BEAM REINFORCING | | | | | | STIRRUPS | | | REMARKS |
|---|---|---|---|---|---|---|---|---|---|---|---|---|
| | DEPTH | WIDTH | BL | BS | TL | TS | TC | M | SIZE | TYPE | SPACING | |
| GRADE BEAMS | | | | | | | | | | | | |
| GB1 | 750/ 735/ 585/ 650 | 400 | (2)-#25 | --- | (2)-#19 | --- | --- | --- | #13 | S3 + T9 | d/2 | LOWER TOP TO 735 BETWEEN A5-A6, A6-B6, B6-C6, B7-C7, B7-B10, C10-D10, D10-E10, E10-F10, F7-F8, F9-F10; TO 585 BETWEEN G5-G6 & F6-G6; TO 650 BETWEEN F8-F9 |
| GB2 | 750 | 400 | (2)-#25 | (1)-#25 | (2)-#19 | --- | --- | (2)-#25 | #13 | S3 + T9 | d/2 | --- |
| ROOF BEAMS | | | | | | | | | | | | |
| RB1 | 600 | 400 | (2)-#19 | (1)-#19 | (2)-#19 | --- | --- | --- | #13 | S3 + T9 | d/2 | --- |
| RB2 | 600 | 400 | (2)-#19 | (1)-#19 | (2)-#22 | --- | --- | --- | #13 | S3 + T9 | d/2 | --- |
| RB3 | 500 | 400 | (2)-#19 | (1)-#19 | (2)-#16 | --- | --- | --- | #13 | S3 + T9 | d/2 | --- |
| RB4 | 500 | 400 | (2)-#16 | --- | (2)-#19 | --- | --- | --- | #13 | S3 + T9 | d/2 | --- |

NOTES:
1. WORK THIS SCHEDULE WITH BEAM REINFORCING DETAILS ON SHEETS S-503 AND S-504.
2. HOOKS SHOWN ON SECTIONS AND DETAILS SHALL BE 90° STD UON.
3. USE ONLY (1) TC AT BEAM COLUMN INTERSECTION WHERE REQ'D.

# COLUMN SCHEDULE

| COLUMN MARK / DESCRIPTION | TYP UON | H/8,9,10,11 J/8,9,10,11 | A.9/12,13 C/12,13 D.1/12,13 | --- |
|---|---|---|---|---|
| TYPE | 8-BAR | 4-BAR | 4-BAR | --- |
| DIMENSION | 600mm SQ. | 500mm SQ. | 500mm SQ. | --- |
| VERTICAL REINFORCEMENT | (8)-#25 | (4)-#29 | (4)-#29 | --- |
| TIES | #13 @ d/2 | #13 @ d/2 | #13 @ d/2 | --- |
| TOP OF ROOF ELEVATION | 4600mm | 3800mm | 3800mm | --- |
| TOP OF GRADE BEAM ELEVATION | -200mm | -200mm | -200mm | --- |
| TOP OF FOOTING ELEVATION | -950mm | -950mm | -950mm | --- |

NOTES:
1. WORK THIS SCHEDULE WITH COLUMN DETAILS ON SHEET S-504.
2. SEE FOOTING SCHEDULE ON THIS SHEET FOR FOOTING INFORMATION.
3. COLUMN TIES: INTERIOR TIES TO MATCH SIZE & SPACING OF PERIMETER TIES.
4. HOOKS SHOWN ON SECTIONS & DETAILS SHALL BE 90° STD UON.

UNLESS OTHERWISE NOTED, LINEAR DIMENSIONS SHOWN ARE IN MILLIMETERS (mm)

APPROVED:

A/E DESIGNER OF RECORD .

SEAL: .

GEORGIA REGISTERED 1-27-10 No. 27141 PROFESSIONAL ENGINEER CHRISTOPHER W WHITMORE

US ARMY CORPS OF ENGINEERS
AFGHANISTAN ENGINEER DISTRICT

| Mark | Description | Date | Appr. |
|---|---|---|---|
| | | | |

| Mark | Description | Date | Appr. |
|---|---|---|---|
| | | | |

Rev. 0
Date: 2/23/10
Design file no.
Drawing code:
File name: ANASFACS-601SCH
Plot date: 2/23/2010
Plot scale: X:X

Designed by: KMP/MMY
Drwn by: RCG
Ckd by: CWW
Reviewed by: LHM
Submitted by:

U.S. ARMY CORPS OF ENGINEERS
AFGHANISTAN ENGINEER DISTRICT
APO AE 96338


Michael Baker Jr., Inc
A unit of Michael Baker Corporation
Airside Business Park
100 Airside Drive
Moon Township, PA 15108
www.mbakercorp.com


BAKER

AFGHAN NATIONAL ARMY
REGIONAL MILITARY TRAINING CENTER
STANDARD DESIGN

DINING FACILITY

SCHEDULES

Sheet reference number:
S-601

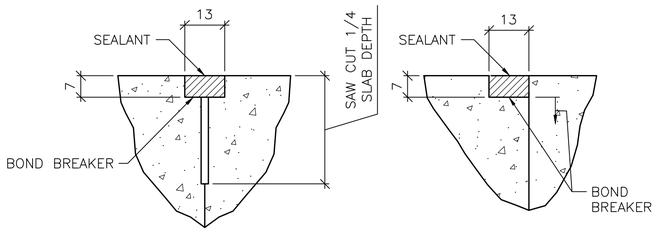


CONTROL JOINT DETAIL

CONSTRUCTION JOINT DETAIL

## TYPICAL CONCRETE SLAB JOINT FINISH DETAILS

1 / S-701 SCALE: NTS

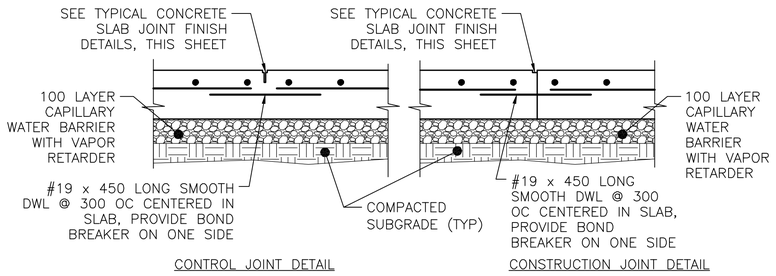


CONTROL JOINT DETAIL

CONSTRUCTION JOINT DETAIL

## TYPICAL SLAB ON GRADE JOINT DETAIL

2 / S-701 SCALE: NTS

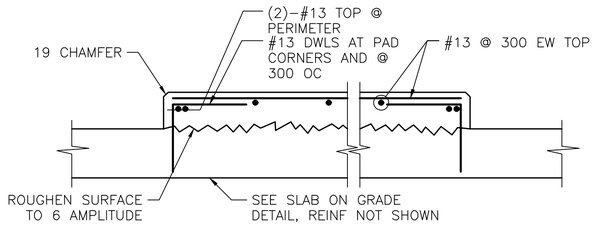


## INTERIOR EQUIPMENT PAD DETAIL

3 / S-701 SCALE: NTS

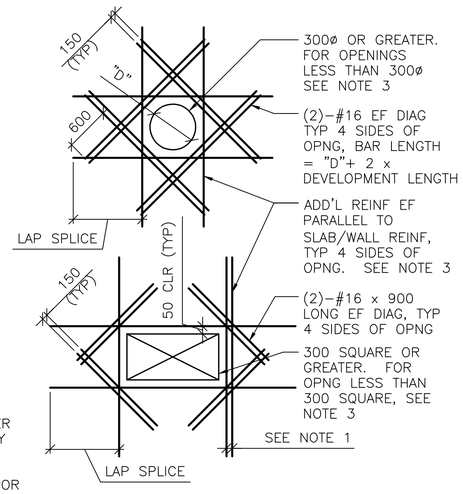


SHEAR WALL/SLAB OPENINGS

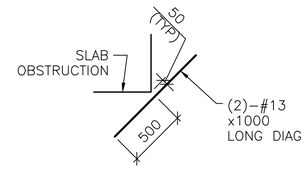


RE–ENTRANT CORNERS

DETAIL NOTES:
1. WHERE MORE THAN ONE ADDITIONAL BAR IS REQUIRED PARALLEL TO THE EXISTING SLAB/WALL REINFORCING THE ADDITIONAL REINFORCING BARS SHALL BE SPACED AT 100 ON CENTER.
2. ADDITIONAL REINFORCING PARALLEL TO THE SLAB/WALL REINFORCING SHALL BE #16 BARS THAT PROVIDE A STEEL AREA ON EACH SIDE OF THE OPENING EQUAL TO 1/2 THE AREA OF THE REINFORCING CUT BY THE OPENING.
3. FOR OPENINGS WITH SIDES OR DIAMETERS LESS THAN 300 SPREAD THE SLAB/WALL REINFORCING TO CLEAR THE OPENING.

## ADD'L CONCRETE REINFORCEMENT DETAILS

4 / S-701 SCALE: NTS

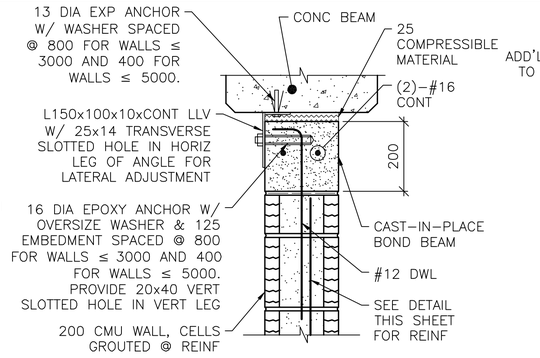


NOTE:
1. AT ANCHOR BOLTS, ADD AN ADDITIONAL 25 COMPRESSIBLE MATERIAL BELOW EXP ANCHOR HEAD.

INTERIOR BEAM

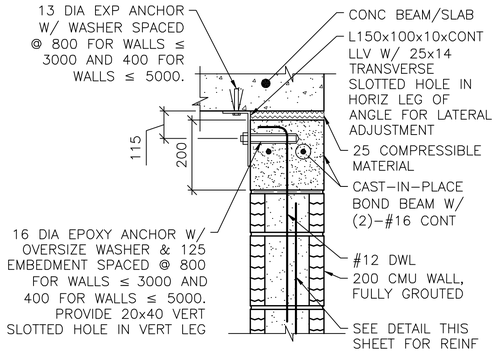


EXTERIOR WALL OR SLAB

NOTES:
1. THIS DETAIL IS AN ALTERNATE TOP OF WALL ANCHORAGE DETAIL TO BE USED AT THE CONTRACTOR'S OPTION IN LIEU OF DETAILS SHOWN ON S–400 & S–500 DRAWINGS.
2. CAST–IN–PLACE BOND BEAM SHOWN AT TOP OF WALL IS ALSO APPLICABLE FOR INTERMEDIATE AND STARTER COURSE BOND BEAMS WITHIN WALL.

## ALTERNATE TOP OF CMU WALL BRACING DETAILS

5 / S-701 SCALE: NTS

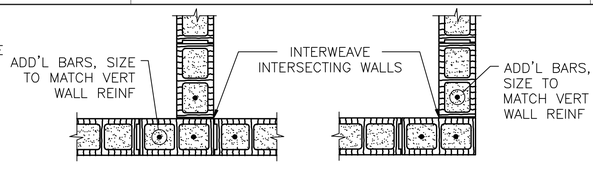


INTERSECTION

WALL CORNER

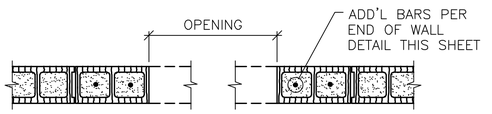


MASONRY OPENING W/ LINTEL

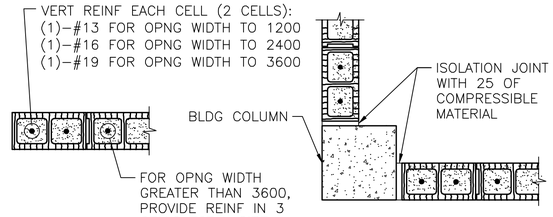


END OF WALL

END OF WALL @ COLUMN

NOTES:
1. OPENING WIDTH SHALL NOT EXCEED 3600 FOR THIS TYPE OF JAMB.
2. ALL CELLS FULLY GROUTED AT EXTERIOR WALLS. AT INTERIOR WALLS, ONLY GROUT CELLS CONTAINING REINF.

## TYP CMU DETAILS

6 / S-701 SCALE: NTS




DETAIL NOTE:
1. CENTER VERT REINF IN WALL.
2. GROUT ALL CMU CELLS.
3. REFERENCE ARCH DWGS FOR JOINT INFORMATION
4. DOWELS BETWEEN TOP BOND BEAM AND BEAM/SLAB ABOVE (INCLUDING EMBEDDED PIPE SLEEVE) NOT SHOWN FOR CLARITY. SEE SPECIFIC S–500 SERIES DWGS FOR INFO.
5. FOR INFORMATION ON ALTERNATE CAST–IN–PLACE WALL BOND BEAMS, REFERENCE ALTERNATE TOP OF CMU WALL BRACING DETAILS THIS SHEET.

## TYP EXTERIOR CMU WALL REINF DETAIL

7 / S-701 SCALE: NTS




DETAIL NOTE:
1. CENTER VERT REINF IN WALL.
2. GROUT ALL CMU CELLS.
3. REFERENCE ARCH DWGS FOR JOINT INFORMATION
4. DOWELS BETWEEN TOP BOND BEAM AND BEAM/SLAB ABOVE (INCLUDING EMBEDDED PIPE SLEEVE) NOT SHOWN FOR CLARITY. SEE SPECIFIC S–500 SERIES DWGS FOR INFO.
5. FOR INFORMATION ON ALTERNATE CAST–IN–PLACE WALL BOND BEAMS, REFERENCE ALTERNATE TOP OF CMU WALL BRACING DETAILS THIS SHEET.

## TYP INTERIOR CMU WALL REINF DETAIL

8 / S-701 SCALE: NTS

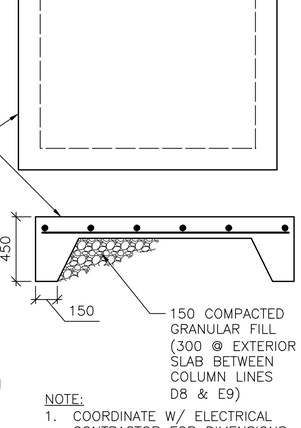


NOTE:
1. COORDINATE W/ ELECTRICAL CONTRACTOR FOR DIMENSIONS @ ELECTRICAL EQUIPMENT

## SLAB ON GRADE

9 / S-701 SCALE: NTS

UNLESS OTHERWISE NOTED, LINEAR DIMENSIONS SHOWN ARE IN MILLIMETERS (mm)

APPROVED:

A/E DESIGNER OF RECORD .

SEAL: .

GEORGIA REGISTERED 1-27-10 No. 27141 PROFESSIONAL ENGINEER CHRISTOPHER W. WHITMORE

US ARMY CORPS OF ENGINEERS
AFGHANISTAN ENGINEER DISTRICT

| Mark | Description | Date | Appr. |
|---|---|---|---|

Date: 2/23/10 Rev: 0
Design file no.
Drawing code:
File name: ANAFDACS-701DT
Plot date: 2/23/2010
Plot scale: X:X
Designed by: KMP/MMY
Dwn by: RCG
Ckd by: CWW
Reviewed by: LHM
Submitted by:
BAKER

U.S. ARMY CORPS OF ENGINEERS
AFGHANISTAN ENGINEER DISTRICT
APO AE 96338

Michael Baker Jr., Inc.
A unit of Michael Baker Corporation
Airside Business Park
100 Airport Drive
Moon Township, PA 15108
www.mbakercorp.com

AFGHAN NATIONAL ARMY
REGIONAL MILITARY TRAINING CENTER
STANDARD DESIGN

DINING FACILITY

TYPICAL DETAILS

Sheet reference number:
S–701

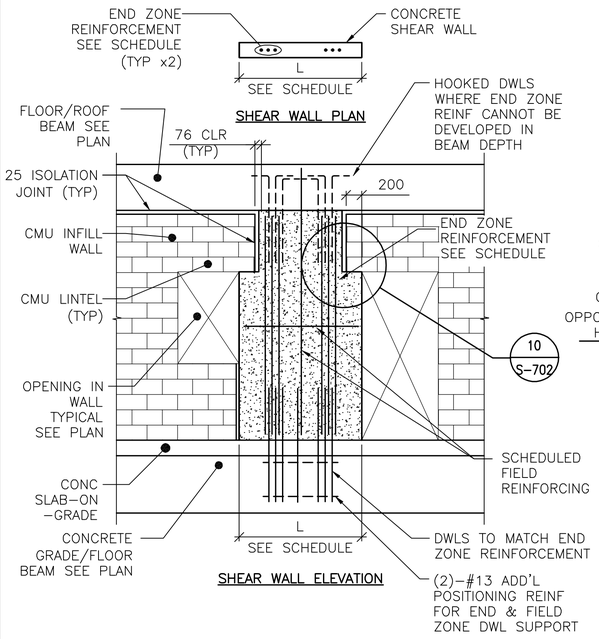


DETAIL NOTES:
1. FIELD REINFORCEMENT IN SHEAR WALL NOT SHOWN COMPLETELY FOR CLARITY.
2. FIELD REINFORCEMENT CENTERED IN WALL.
3. MINIMUM CONC CLEAR DISTANCE FOR END ZONE REINF = 76
4. SEE CONC SHEAR WALL SCHEDULE ON SHEET S-601
5. SEE ARCH DWGS FOR JOINT INFORMATION

## 1/S-702 TYPE "A" SHEAR WALL DETAIL

SCALE: NTS

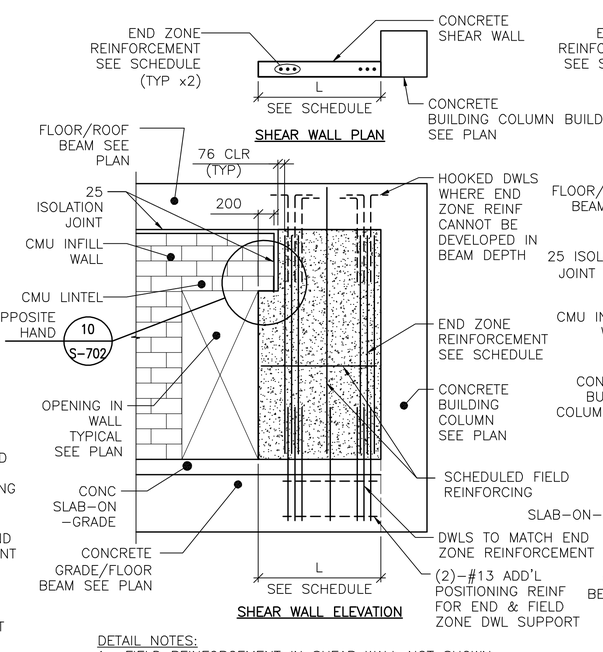


DETAIL NOTES:
1. FIELD REINFORCEMENT IN SHEAR WALL NOT SHOWN COMPLETELY FOR CLARITY.
2. FIELD REINFORCEMENT CENTERED IN WALL.
3. MINIMUM CONC CLEAR DISTANCE FOR END ZONE REINF = 76
4. SEE CONC SHEAR WALL SCHEDULE ON SHEET S-601
5. SEE ARCH DWGS FOR JOINT INFORMATION

## 2/S-702 TYPE "B" SHEAR WALL DETAIL

SCALE: NTS

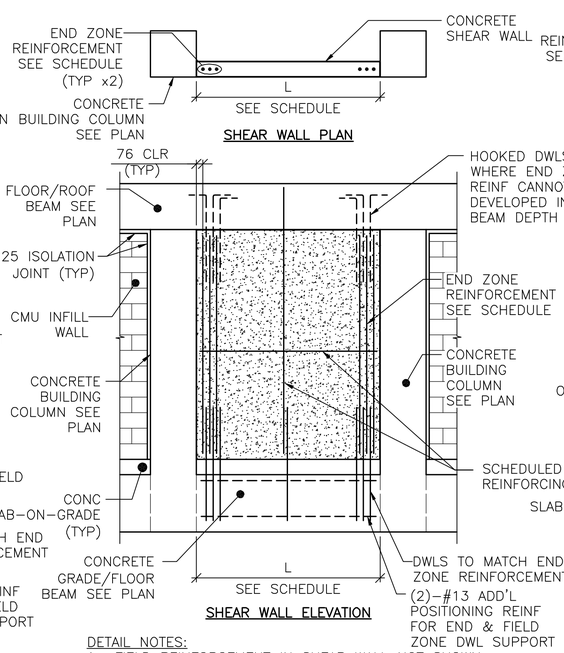


DETAIL NOTES:
1. FIELD REINFORCEMENT IN SHEAR WALL NOT SHOWN COMPLETELY FOR CLARITY.
2. FIELD REINFORCEMENT CENTERED IN WALL.
3. MINIMUM CONC CLEAR DISTANCE FOR END ZONE REINF = 76
4. SEE CONC SHEAR WALL SCHEDULE ON SHEET S-601
5. SEE ARCH DWGS FOR JOINT INFORMATION

## 3/S-702 TYPE "C" SHEAR WALL DETAIL

SCALE: NTS

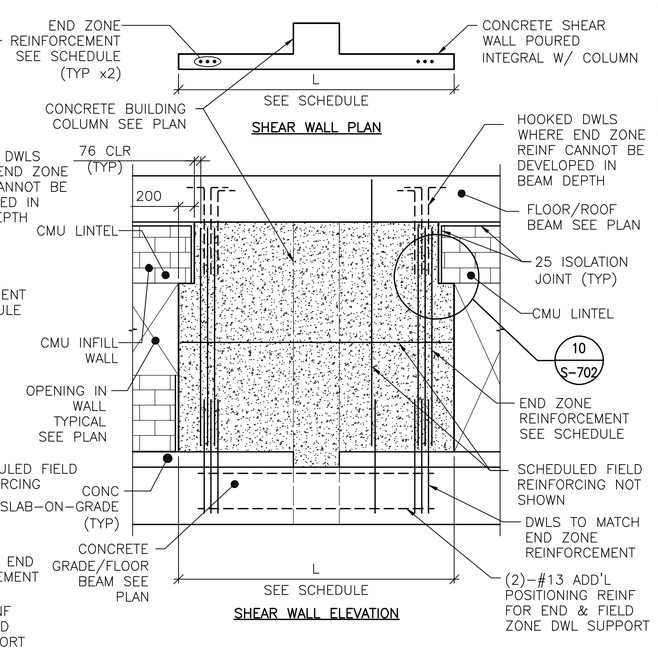


DETAIL NOTES:
1. FIELD REINFORCEMENT IN SHEAR WALL NOT SHOWN COMPLETELY FOR CLARITY.
2. FIELD REINFORCEMENT CENTERED IN WALL.
3. MINIMUM CONC CLEAR DISTANCE FOR END ZONE REINF = 76
4. SEE CONC SHEAR WALL SCHEDULE ON SHEET S-601
5. SEE ARCH DWGS FOR JOINT INFORMATION

## 4/S-702 TYPE "D" SHEAR WALL DETAIL

SCALE: NTS

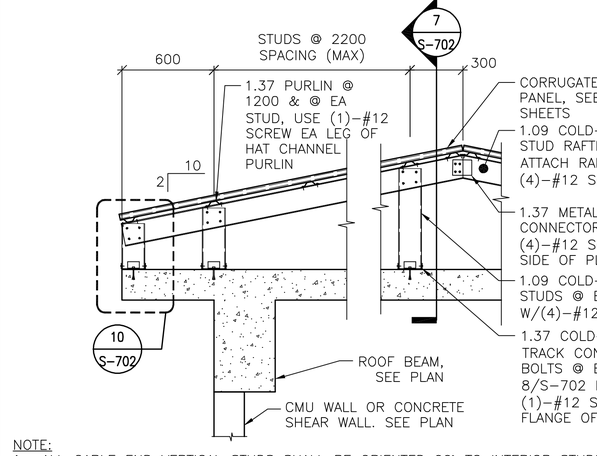


NOTE:
1. ALL GABLE END VERTICAL STUDS SHALL BE ORIENTED 90° TO INTERIOR STUDS & SPACED @ 600 OC. GABLE STUDS GREATER THAN 3800 IN LENGTH SHALL BE BACK-TO-BACK W/ #12 SCREWS @ 200 OC STAGGERED. GABLE END RAFTER SHALL BE 1.37 METAL TRACK SPANNING CONTINUOUSLY OVER GABLE END STUDS. INSET GIRTS AT GABLE END SHALL BE 1.09 COLD-FORMED METAL STUDS @ 1200 OC ATTACHED VIA 1.37 THICKNESS CLIP ANGLE W/ (2) #12 SCREWS EA LEG.
2. ALL INTERIOR, NON-GABLE END VERTICAL STUDS GREATER THAN 2400 IN LENGTH SHALL BE BACK-TO-BACK W/ #12 SCREWS @ 200 OC STAGGERED.

## 5/S-702 TYPICAL OVERBUILT ROOF FRAMING DETAIL

SCALE: NTS

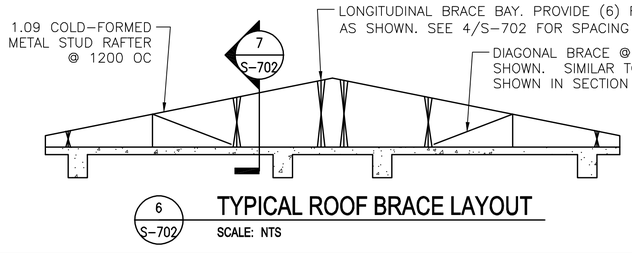


## 6/S-702 TYPICAL ROOF BRACE LAYOUT

SCALE: NTS

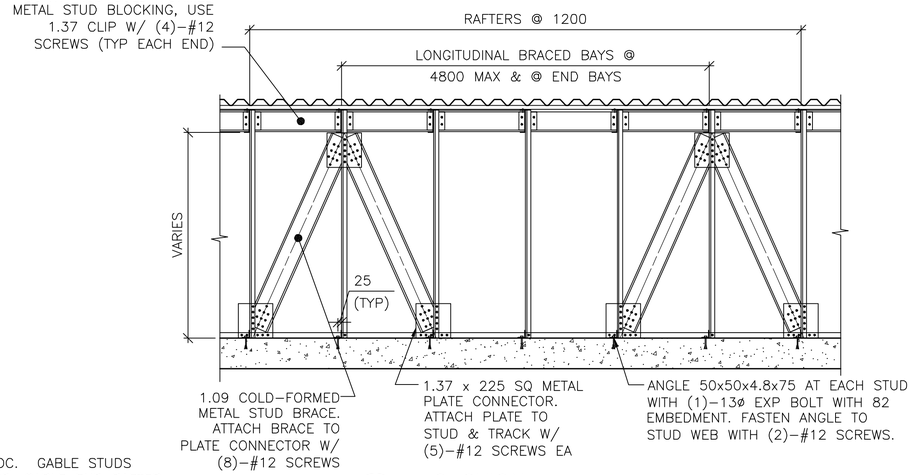


## 7/S-702 SECTION

SCALE: NTS

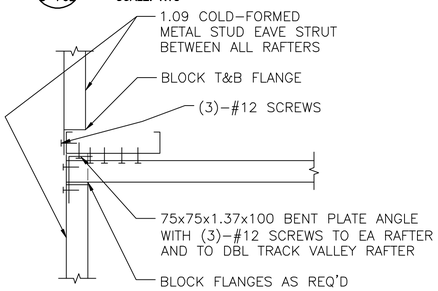


## 9/S-702 SECTION

SCALE: NTS

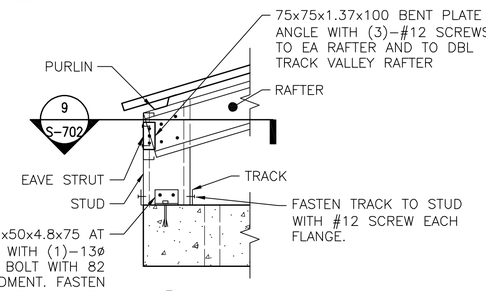


## 8/S-702 DETAIL

SCALE: NTS

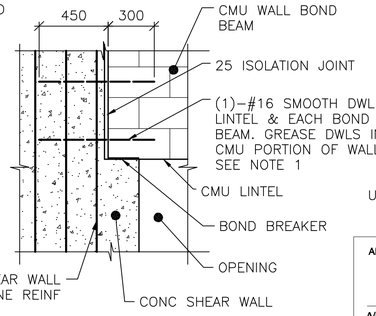


NOTE:
1. TIE SMOOTH DOWEL ROD TO SHEAR WALL END ZONE REINF FOR EACH BOND BEAM AND LINTEL.

## 10/S-702 SECTION

SCALE: NTS

UNLESS OTHERWISE NOTED, LINEAR DIMENSIONS SHOWN ARE IN MILLIMETERS (mm)

APPROVED:

A/E DESIGNER OF RECORD

SEAL:

GEORGIA REGISTERED 1-29-10 No. 27141 PROFESSIONAL ENGINEER CHRISTOPHER W. WHITMORE

US ARMY CORPS OF ENGINEERS
AFGHANISTAN ENGINEER DISTRICT

| Mark | Description | Date | Appr. |
|---|---|---|---|
| | | | |

Date: 2/23/10
Design file no.
Drawing code:
Rev: 0

Designed by: KMP/MMY
Dwn by: RCG
Ckd by: CWW
Reviewed by: LHM
Submitted by: BAKER

File name: ANAFAC8-702T01
Plot date: 2/23/2010
Plot scale: x:x

U.S. ARMY CORPS OF ENGINEERS
AFGHANISTAN ENGINEER DISTRICT
APO AE 96338

Michael Baker Jr., Inc
A unit of Michael Baker Corporation
Airside Business Park
100 Airside Drive
Moon Township, PA 15108
www.mbakercorp.com

AFGHAN NATIONAL ARMY
REGIONAL MILITARY TRAINING CENTER
STANDARD DESIGN

DINING FACILITY

TYPICAL DETAILS

Sheet reference number:
S-702

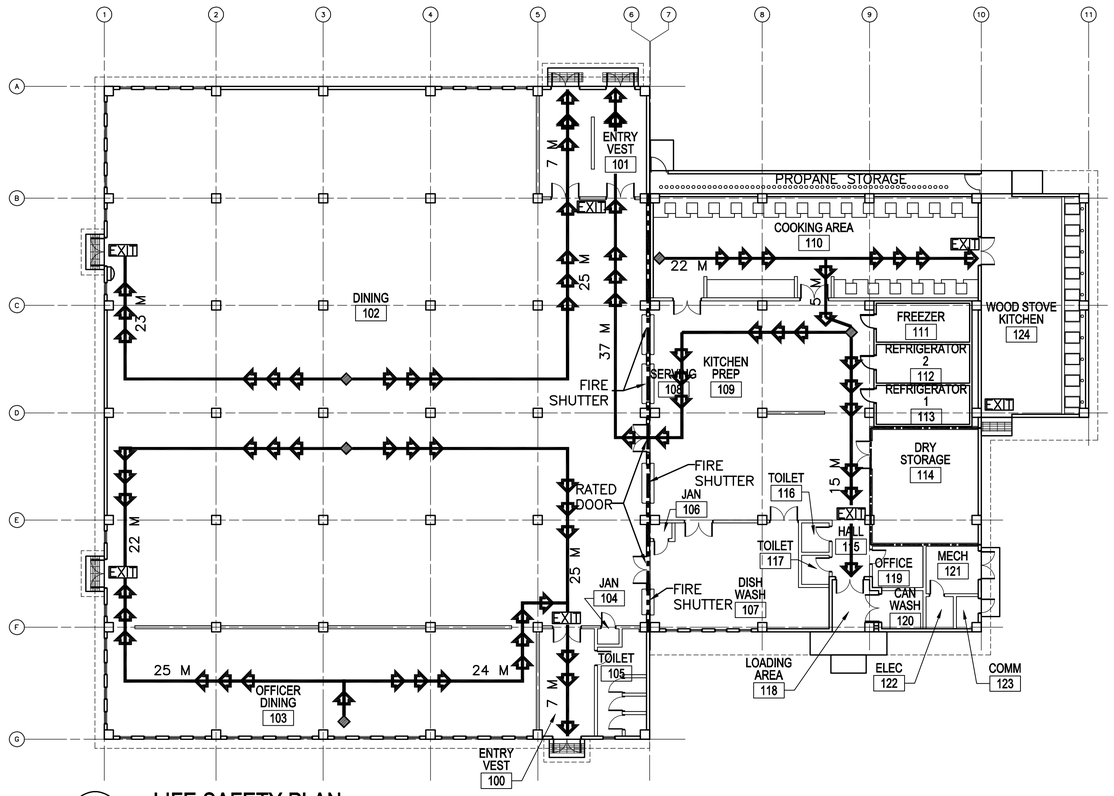


1 A-001 **LIFE SAFETY PLAN**

SCALE: 1:200

## LEGEND:

- DENOTES PATHS OF EXIT TRAVEL
- EXIT — DENOTES DOOR AS AN EMERGENCY EXIT
- DENOTES STARTING POINT FOR TRAVEL DISTANCE
- DENOTES FIRE EXTINGUISHER LOCATIONS
- (1) HOUR RATED WALL
- (2) HOUR RATED WALL
- (3) HOUR RATED WALL

## CODE ANALYSIS:

1. REFERENCES:
   2006 INTERNATIONAL BUILDING CODE (2006 IBC)
   2006 LIFE SAFETY CODE (2006 NFPA 101)

2. IBC OCCUPANCY CLASSIFICATION:
   GROUP A–2 (ASSEMBLY >1000 NFPA 101 6.1.2 AND CHAPTER 12)

3. TYPE OF CONSTRUCTION (IBC): TYPE II–A (NONSPRINKLERED)

4. IBC TABLE 503: ALLOWABLE HEIGHT AND BUILDING AREAS:
   GROUP A–2
   ALLOWABLE AREA: 2518 (1439 X 0.75 FRONTAGE INCREASE)
   FRONTAGE INCREASE FOR 9M (30') FRONTAGE: 0.5 = [199.6 M/199.6 M –0.25] 9 M/9 M

   ALLOWABLE HEIGHT: 3 STORIES (19 M)

   GROUP A–2
   PROPOSED TOTAL AREA: 2341 SM
   PROPOSED DINING AREA: 1382 SM
   PROPOSED INTERIOR KITCHEN AREA: 449 SM

   PROPOSED HEIGHT: 1 STORY (<19 M)

5. IBC TABLE 601 & 602: FIRE RESISTANCE RATING REQUIREMENTS FOR BUILDING ELEMENTS FOR TYPE II–A

| BUILDING ELEMENT | RATING (HOUR) | REFERENCE |
|---|---|---|
| STRUCTURAL FRAME (COLUMNS, GIRDERS & TRUSSES) | 1 | TABLE 601 |
| BEARING WALLS | | |
| EXTERIOR | 1 | TABLE 601 |
| INTERIOR | 1 | TABLE 601 |
| NONBEARING WALLS & PARTITIONS | | |
| INTERIOR | 0 | TABLE 601 |
| FLOOR CONSTRUCTION | 1 | TABLE 601 |
| ROOF CONSTRUCTION | 1 | TABLE 601 |
| EXTERIOR WALL | 0 | TABLE 602 (9M SEPARATION) |

6. IBC TABLE 803.5 – INTERIOR WALL AND CEILING FINISH REQUIREMENTS FOR A–2 OCCUPANCY/NONSPRINKLERED

| GROUP | EXIT ENCLOSURES AND EXIT PASSAGEWAY | CORRIDORS | ROOMS AND ENCLOSED SPACES |
|---|---|---|---|
| A–2 | A | A | B |

7. NFPA 101 TABLE 7.3.1.2 – OCCUPANT LOAD
   ASSEMBLY >1000 = 1.4 NET SM/PERSON CALCULATED = 988 OCCUPANTS
   KITCHEN = 9.3 SM/PERSON CALCULATED = 49 OCCUPANTS
   TOTAL = 1037 OCCUPANTS

8. NFPA 101 TABLE 7.3.3.1 – EGRESS CAPACITY
   ASSEMBLY = 5 MM PER OCCUPANT

   REQUIRED: 5185 MM (1037 OCCUPANTS x 5 MM PER OCCUPANT)
   PROPOSED EGRESS CAPACITY: 12,600 MM: (7) PAIRS 900 MM DOUBLE DOORS

9. NFPA 101 PARAGRAPH 12.2.6 – EXIT ACCESS TRAVEL DISTANCE
   REQUIRED: 61 METERS
   PROPOSED: 44 METERS

10. NFPA 101 PARAGRAPH 12.3.6 (1) – CORRIDOR FIRE–RESISTANCE RATING (HOUR)
    CORRIDORS ARE NOT REQUIRED AS DOORS EXIT DIRECTLY TO OUTSIDE

11. NFPA 101 PARAGRAPH 12.2.4.1 AND 7.4.1.1 AND 7.4.1.2 –
    MINIMUM NUMBER OF EXITS
    REQUIRED DINING: 4 MINIMUM
    PROPOSED DINING: 5

    REQUIRED KITCHEN: 2 MINIMUM
    PROPOSED KITCHEN: 2

    TOTAL PROPOSED: 7

12. NFPA 101 PARAGRAPH 12.3.2.1(2) PROTECTION FROM HAZARDS
    DINING TO KITCHEN: 1 HOUR SEPARATION
    DOOR SHALL BE 45 MINUTE (NFPA 101 TABLE 8.3.42)

    NOTE: AFGHAN DFAC'S TYPICALLY USE A 2 HOUR SEPARATION, AS THE KITCHEN IS CONSIDERED A HIGHER HAZARD DUE TO LACK OF PROTECTION REQUIRED BY NFPA 96. THEREFORE, A 2 HOUR SEPARATION WITH 90 MINUTE DOORS IS PROVIDED TO SEPARATE THE KITCHEN AND DINING AREAS.

LINEAR DIMENSIONS SHOWN ARE IN MILLIMETERS (MM), UNLESS OTHERWISE NOTED

0 4000 8000
SCALE: 1:200

APPROVED:

A/E DESIGNER OF RECORD

SEAL:

STATE OF SOUTH CAROLINA
KEVIN R. CHAFIN
N. Charleston, SC
6374
REGISTERED ARCHITECT

US ARMY CORPS OF ENGINEERS
AFGHANISTAN ENGINEER DISTRICT

| Mark | Description | Date | Appr. |
|---|---|---|---|

Rev: 0
Date: 2/23/10
Design file no.
Drawing code:
File name: ANAFACA001LSP
Plot date: 2/23/2010
Plot scale: x:x

Designed by: KRC
Drawn by: KJG
Ckd by: NLJ
Reviewed by: LHM
Submitted by: BAKER

U.S. ARMY CORPS OF ENGINEERS
AFGHANISTAN ENGINEER DISTRICT
APO AE 96338

Michael Baker Jr., Inc
A unit of Michael Baker Corporation
Airside Business Park
100 Airside Drive
Moon Township, PA 15108
www.mbakercorp.com

AFGHAN NATIONAL ARMY
REGIONAL MILITARY TRAINING CENTER
STANDARD DESIGN

DINING FACILITY

LIFE SAFETY PLAN

Sheet reference number:
A–001

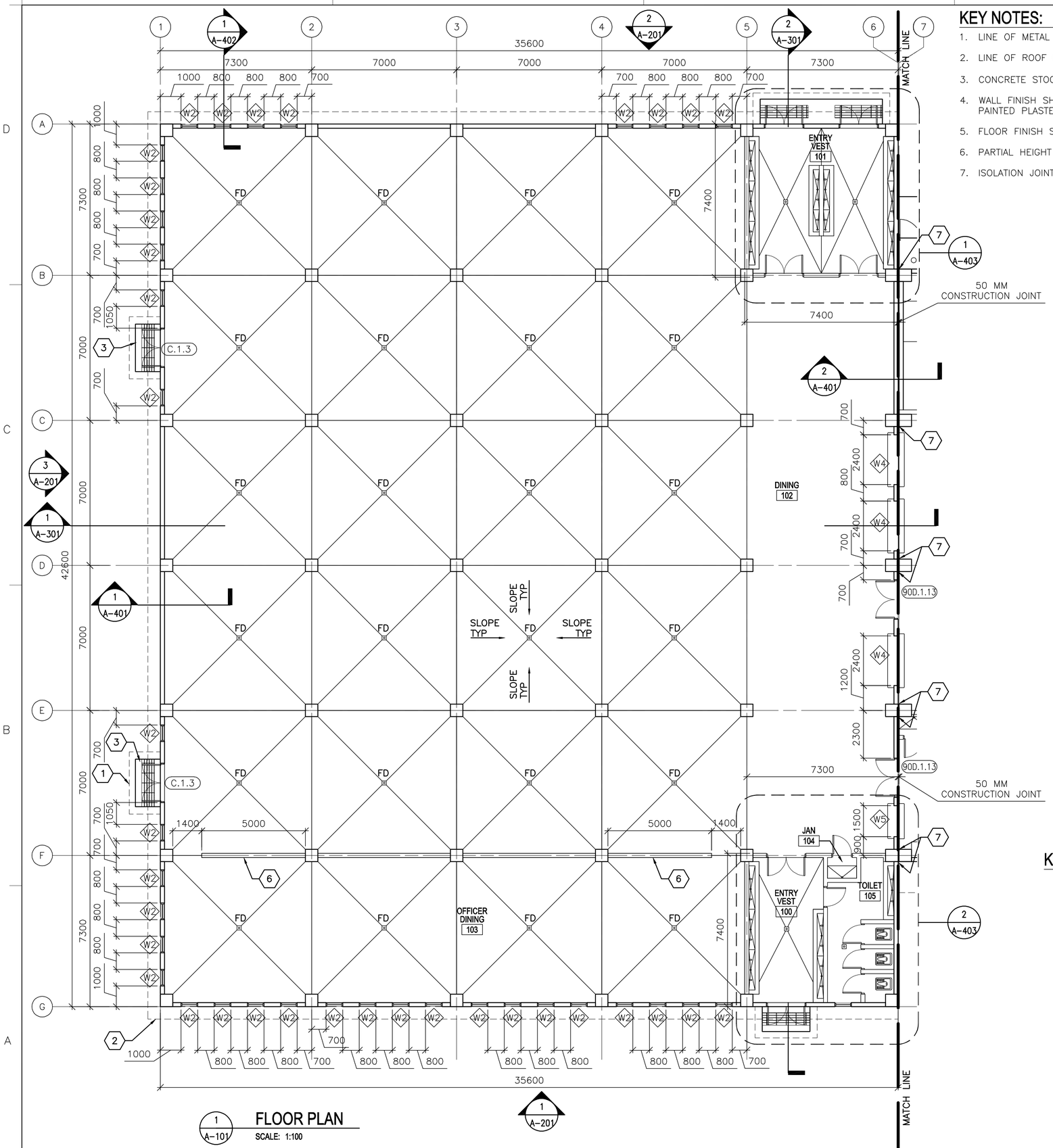


1 A-101 **FLOOR PLAN**
SCALE: 1:100

## KEY NOTES:

(X)

1. LINE OF METAL ENTRANCE CANOPY ABOVE.
2. LINE OF ROOF OVERHANG ABOVE.
3. CONCRETE STOOP WITH GRATE – SEE DETAIL 1/A-503.
4. WALL FINISH SHALL BE CERAMIC TILE TO 2000 MM WITH PAINTED PLASTER APPLIED TO STRUCTURE ABOVE.
5. FLOOR FINISH SHALL BE TERRAZZO TILE.
6. PARTIAL HEIGHT WALL –2600 MM ABOVE FINISH FLOOR.
7. ISOLATION JOINT COVER – SEE SHEET A-507.

## GENERAL NOTES:

A. DIMENSIONS ARE SHOWN TO OUTER EDGE OF EXTERIOR STRUCTURAL COLUMNS, STRUCTURAL COLUMN GRID, EDGE OF INTERIOR PARTITIONS, EDGE OF WINDOW OPENINGS, AND TO HINGE SIDE OF DOOR FRAME OPENINGS.

B. HINGE SIDE OF OPENINGS FOR DOORS AND FRAMES SHALL BE LOCATED 200 MM FROM THE ADJACENT WALL OR COLUMN, UNLESS NOTED OTHERWISE.

C. INTERIOR PARTITIONS SHALL BE 200 MM CMU. SEE STRUCTURAL DRAWINGS FOR LOCATION OF CONCRETE SHEAR WALLS.

D. COSMETIC REPAIR OF MINOR DEFECTS: REPAIR OR FILL MORTAR JOINTS AND MINOR DEFECTS, INCLUDING BUT NOT LIMITED TO SPALLS, IN ACCORDANCE WITH MANUFACTURER'S RECOMMENDATIONS AND PRIOR TO COATING APPLICATION. SURFACES TO BE PAINTED SHALL BE CLEAN AND FREE OF FOREIGN MATTER BEFORE APPLICATION OF PAINT. CLEANING SHALL BE SCHEDULED SO THAT DUST AND OTHER CONTAMINANTS WILL NOT FALL ON NEWLY PAINTED SURFACES.

E. CONCRETE, PLASTER AND MASONRY SURFACES SHALL BE ALLOWED TO CURE FOR AT LEAST 30 DAYS BEFORE PAINTING. CONCRETE SLABS-ON-GRADE SHALL BE ALLOWED TO CURE 90 DAYS BEFORE STAINING OR SEALING.

F. DO NOT USE PAINT MATERIALS CONTAINING LEAD CONTENT IN EXCESS OF 0.009 PERCENT OF THE WEIGHT OF THE TOTAL NONVOLATILE CONTENT OF THE PAINT OR THE WEIGHT OF THE DRIED PAINT FILM.

G. DO NOT USE ANY ASBESTOS CONTAINING MATERIALS (ACM) IN PROJECT. ACM IS DEFINED AS 1% OR MORE BY VOLUME.

H. DO NOT USE PAINT MATERIALS CONTAINING MERCURIAL FUNGICIDES.

I. FACTORY PRIMED METAL DOORS AND FRAMES SHALL RECEIVE TWO COATS OF PAINT.

J. FILL REMAINING SPACE AT PENETRATIONS IN FIRE-RATED FLOORS, PARTITIONS AND CEILINGS WITH APPROPRIATE FIRESTOPPING MATERIALS.

K. ALL CEILING FINISHES SHALL BE PAINTED PLASTER APPLIED TO STRUCTURE.

L. ALL WALL FINISHES SHALL BE PAINTED PLASTER APPLIED TO STRUCTURE, UNLESS NOTED OTHERWISE.

M. ALL FLOOR FINISHES SHALL BE EPOXY SEALED CONCRETE, UNLESS NOTED OTHERWISE.

N. PROVIDE TILE FINISHES AS INDICATED IN DETAILS

O. ALL TOILET STALL DOOR FRAMES AND HARDWARE SHALL BE F.2.12.

P. HEIGHT OF ALL TOILET PARTITIONS SHALL BE 2000 MM ABOVE FINISHED FLOOR.

## LEGEND:

| | |
|---|---|
| (XXX) | DOOR FRAME AND HARDWARE TYPE, SEE SHEET A-601 |
| A | WINDOW TYPE, SEE SHEET A-601 |
| X | KEY NOTE |

## KEY PLAN:

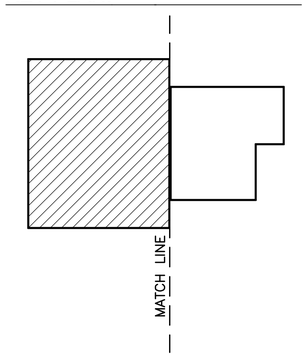


## ABBREVIATIONS:

| | |
|---|---|
| ELEC | ELECTRICAL |
| MECH | MECHANICAL |
| JAN | JANITOR |
| CLOS | CLOSET |
| COMM | COMMUNICATIONS |

LINEAR DIMENSIONS SHOWN ARE IN MILLIMETERS (MM), UNLESS OTHERWISE NOTED

0 2000 4000
SCALE: 1:100

APPROVED:

A/E DESIGNER OF RECORD

SEAL:

STATE OF SOUTH CAROLINA
KEVIN R. CHAFIN
N. Charleston, SC
6374
REGISTERED ARCHITECT

US ARMY CORPS OF ENGINEERS
AFGHANISTAN ENGINEER DISTRICT

| Mark | Description | Date | Appr. |
|---|---|---|---|
| | | | |

Designed by: KRC
Dwn by: KJG
Ckd by: NLJ
Reviewed by: LHM
Submitted by: BAKER

Date: 2/23/10
Design file no.
Drawing code:
Rev: 0
File name: ANAFACA-101FP
Plot date: 2/23/2010
Plot scale: x:x

U.S. ARMY CORPS OF ENGINEERS
AFGHANISTAN ENGINEER DISTRICT
APO AE 96338

*Michael Baker Jr., Inc*
*A unit of Michael Baker Corporation*
Airside Business Park
100 Airside Drive
Moon Township, PA 15108
www.mbakercorp.com

AFGHAN NATIONAL ARMY
REGIONAL MILITARY TRAINING CENTER
STANDARD DESIGN

DINING FACILITY

FLOOR PLAN-A

Sheet reference number:
A-101

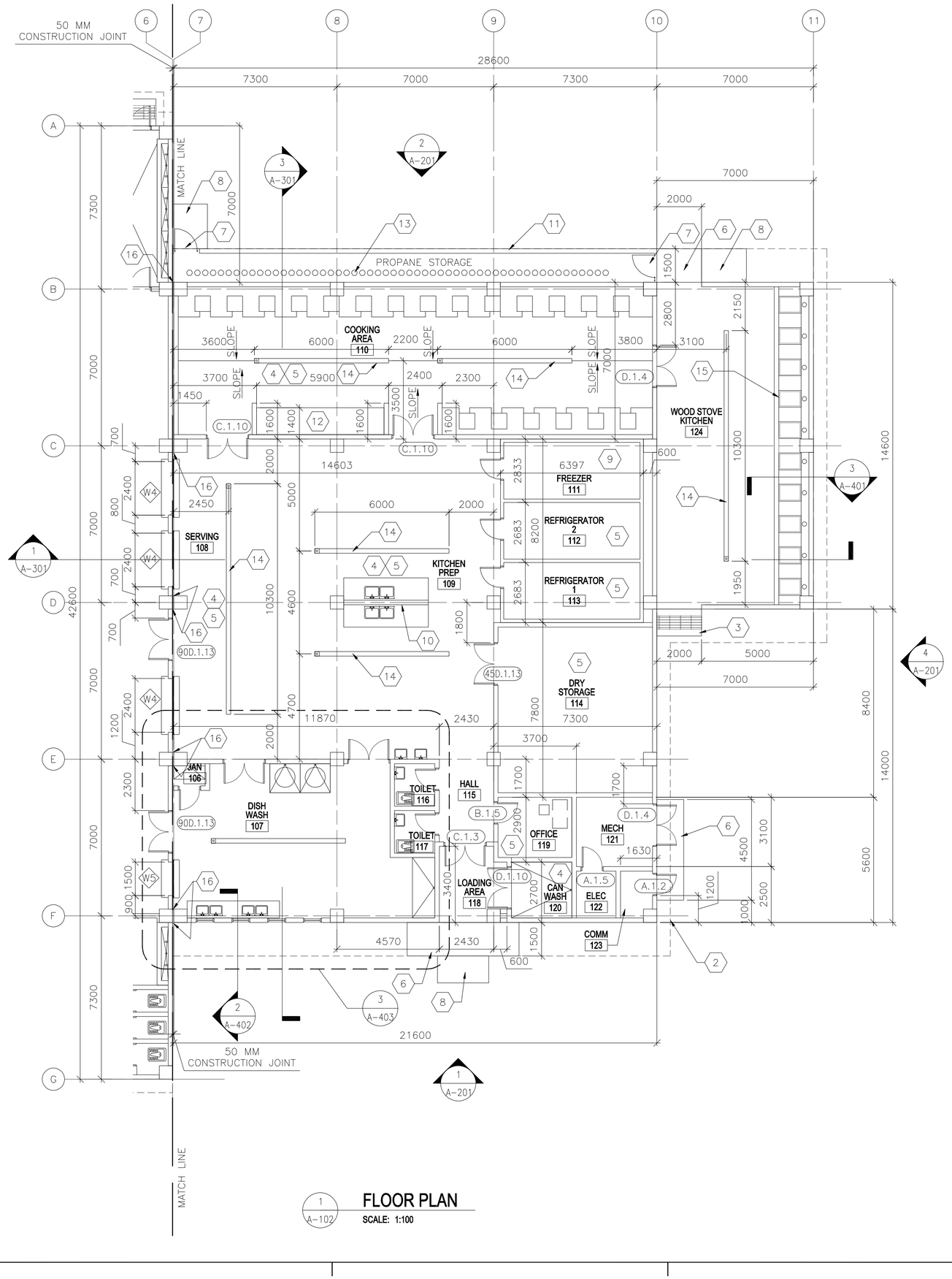


1 A-102 **FLOOR PLAN**
SCALE: 1:100

## KEY NOTES:

1. NOT USED.
2. LINE OF ROOF OVERHANG ABOVE.
3. CONCRETE STOOP WITH GRATE – SEE DETAIL 1/A–503.
4. WALL FINISH SHALL BE CERAMIC TILE TO 2000 MM WITH PAINTED PLASTER APPLIED TO STRUCTURE ABOVE.
5. FLOOR FINISH SHALL BE TERRAZZO TILE.
6. CONCRETE STOOP – SEE DETAIL 3/A–503.
7. CHAIN LINK FENCE GATE.
8. RAMP – SLOPE TO GRADE, SEE CIVIL DRAWINGS FOR TYPICAL DETAIL.
9. FLOOR FINISH SHALL BE EPOXY SEALED CONCRETE.
10. PARTIAL HEIGHT WALL – 1500 MM ABOVE FINISH FLOOR.
11. PARTIAL HEIGHT WALL – 1800 MM ABOVE FINISH FLOOR.
12. CHAI BOILER WITH TERRAZZO TILES ON TOP – 1000 MM ABOVE FINISH FLOOR – SEE DETAIL 5/A–506.
13. WALL MOUNTED RACK FOR PROPANE CYLINDERS – SEE P–501 FOR DETAIL.
14. CONTINUOUS TRENCH DRAIN – SEE SHEET S–505.
15. WOOD BURNING STOVE – SEE SHEETS A–405 AND A–406.
16. ISOLATION JOINT COVER – SEE SHEET A–507.

## GENERAL NOTES:

A. DIMENSIONS ARE SHOWN TO OUTER EDGE OF EXTERIOR STRUCTURAL COLUMNS, STRUCTURAL COLUMN GRID, EDGE OF INTERIOR PARTITIONS, EDGE OF WINDOW OPENINGS, AND TO HINGE SIDE OF DOOR FRAME OPENINGS.

B. HINGE SIDE OF OPENINGS FOR DOORS AND FRAMES SHALL BE LOCATED 200 MM FROM THE ADJACENT WALL OR COLUMN, UNLESS NOTED OTHERWISE.

C. INTERIOR PARTITIONS SHALL BE 200 MM CMU. SEE STRUCTURAL DRAWINGS FOR LOCATION OF CONCRETE SHEAR WALLS.

D. COSMETIC REPAIR OF MINOR DEFECTS: REPAIR OR FILL MORTAR JOINTS AND MINOR DEFECTS, INCLUDING BUT NOT LIMITED TO SPALLS, IN ACCORDANCE WITH MANUFACTURER'S RECOMMENDATIONS AND PRIOR TO COATING APPLICATION. SURFACES TO BE PAINTED SHALL BE CLEAN AND FREE OF FOREIGN MATTER BEFORE APPLICATION OF PAINT. CLEANING SHALL BE SCHEDULED SO THAT DUST AND OTHER CONTAMINANTS WILL NOT FALL ON NEWLY PAINTED SURFACES.

E. CONCRETE, PLASTER AND MASONRY SURFACES SHALL BE ALLOWED TO CURE FOR AT LEAST 30 DAYS BEFORE PAINTING. CONCRETE SLABS–ON–GRADE SHALL BE ALLOWED TO CURE 90 DAYS BEFORE STAINING OR SEALING.

F. DO NOT USE PAINT MATERIALS CONTAINING LEAD CONTENT IN EXCESS OF 0.009 PERCENT OF THE WEIGHT OF THE TOTAL NONVOLATILE CONTENT OF THE PAINT OR THE WEIGHT OF THE DRIED PAINT FILM.

G. DO NOT USE ANY ASBESTOS CONTAINING MATERIALS (ACM) IN PROJECT. ACM IS DEFINED AS 1% OR LESS BY VOLUME.

H. DO NOT USE PAINT MATERIALS CONTAINING MERCURIAL FUNGICIDES.

I. FACTORY PRIMED METAL DOORS AND FRAMES SHALL RECEIVE TWO COATS OF PAINT.

J. FILL REMAINING SPACE AT PENETRATIONS IN FIRE–RATED FLOORS, PARTITIONS AND CEILINGS WITH APPROPRIATE FIRESTOPPING MATERIALS.

K. ALL CEILING FINISHES SHALL BE PAINTED PLASTER APPLIED TO STRUCTURE.

L. ALL WALL FINISHES SHALL BE PAINTED PLASTER APPLIED TO STRUCTURE, UNLESS NOTED OTHERWISE.

M. ALL FLOOR FINISHES SHALL BE EPOXY SEALED CONCRETE, UNLESS NOTED OTHERWISE.

N. PROVIDE TILE FINISHES AS INDICATED IN DETAILS.

O. REFER TO SPECIFICATION SECTION 13 21 26 FOR REFRIGERATORS AND FREEZER.

## LEGEND:

(XXX) DOOR FRAME AND HARDWARE TYPE, SEE SHEET A–601

(A) WINDOW TYPE, SEE SHEET A–601

(X) KEY NOTE

## KEY PLAN:

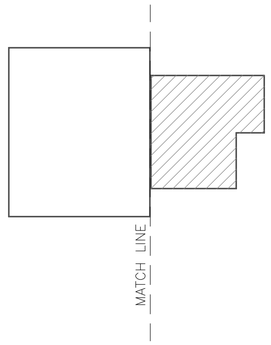


## ABBREVIATIONS:

| | |
|---|---|
| ELEC | ELECTRICAL |
| MECH | |
| JAN | |
| CLOS | |
| COMM | |

LINEAR DIMENSIONS SHOWN ARE IN MILLIMETERS (MM), UNLESS OTHERWISE NOTED

0 2000 4000
SCALE: 1:100

APPROVED:

A/E DESIGNER OF RECORD

SEAL:

STATE OF SOUTH CAROLINA
KEVIN R. CHAFIN
N. Charleston, SC
6374
REGISTERED ARCHITECT

US ARMY CORPS OF ENGINEERS
AFGHANISTAN ENGINEER DISTRICT

| Mark | Description | Date | Appr |
|---|---|---|---|
| | | | |

Rev: C
Date: 2/23/10
Design file no.
Drawing code:
File name: ANAFACA-102FP
Plot date: 2/23/2010
Plot scale: XX

Designed by: KRC
Drawn by: KJG
Ckd by: NLJ
Reviewed by: LHM
Submitted by: BAKER

U.S. ARMY CORPS OF ENGINEERS
AFGHANISTAN ENGINEER DISTRICT
APO AE 96338

*Michael Baker Jr., Inc*
*A unit of Michael Baker Corporation*
Airside Business Park
100 Airside Drive
Moon Township, PA 15108
www.mbakercorp.com

AFGHAN NATIONAL ARMY
REGIONAL MILITARY TRAINING CENTER
STANDARD DESIGN

DINING FACILITY

FLOOR PLAN–B

Sheet reference number:
A–102

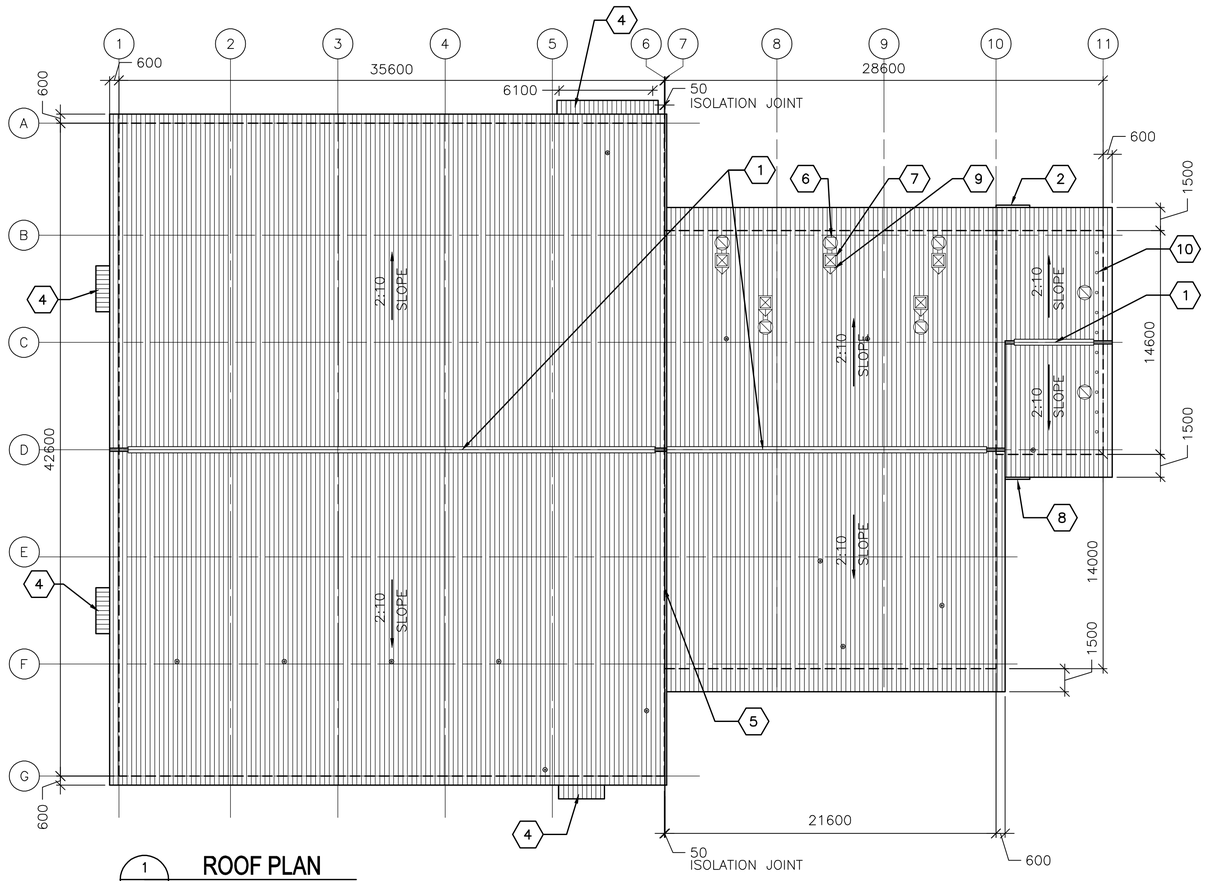


1 A–103 **ROOF PLAN**

SCALE: 1:200

## GENERAL NOTES:

A. THE APPROXIMATE LOCATION OF ROOF DEVICES AND PENETRATIONS ARE SHOWN ON THE ROOF PLAN FOR INFORMATION ONLY. THE CONTRACTOR SHALL BE RESPONSIBLE FOR UNDERSTANDING THE ACTUAL LOCATION OF THESE AND ALL OTHER ITEMS PRIOR TO BEGINNING CONSTRUCTION. COORDINATE ALL ROOF PENETRATIONS WITH STRUCTURAL, MECHANICAL AND PLUMBING WORK.

B. PLUMBING VENT PENETRATIONS SHALL TERMINATE 300 MM MINIMUM ABOVE THE ROOF.

C. UNLESS OTHERWISE NOTED, NOTES, DETAILS OR FEATURES INDICATED FOR ONE CONDITION SHALL BE APPLICABLE FOR ALL ALIKE AND SIMILAR CONDITIONS.

D. STOCKPILING OF MATERIALS, EQUIPMENT AND ANY OTHER ITEMS ON THE ROOF IS PROHIBITED.

E. ROOFS SHALL BE CORRUGATED METAL ROOF PANELS ON COLD–FORMED METAL FRAMING ON CONCRETE SLAB.

## KEY NOTES: (X)

1. CONTINUOUS METAL RIDGE VENT – SEE DETAIL 4/A–501.
2. METAL GUTTER, 2200 MM – SEE DETAIL 1B/A–501.
3. PLUMBING VENT – SEE DETAIL 5/A–501.
4. CANOPY – SEE DETAIL 2/A–504.
5. ROOF EXPANSION JOINT – SEE DETAIL 4/A–506.
6. EXHAUST FAN – SEE SHEET M–102.
7. MAKE–UP AIR FAN – SEE SHEET M–102.
8. METAL GUTTER, 1600 MM – SEE DETAIL 1B/A–501.
9. ROOF CURB AND METAL CRICKET – SEE DETAIL 6/A–506.
10. WOOD STOVE FLUE – SEE SHEETS A–405 AND A–406.

LINEAR DIMENSIONS SHOWN ARE IN MILLIMETERS (MM), UNLESS OTHERWISE NOTED

0 4000 8000
SCALE: 1:200

APPROVED:

A/E DESIGNER OF RECORD

SEAL:

STATE OF SOUTH CAROLINA
KEVIN R. CHAFIN
N. Charleston, SC
6374
REGISTERED ARCHITECT

US ARMY CORPS OF ENGINEERS
AFGHANISTAN ENGINEER DISTRICT

| Mark | Description | Date | Appr. |
|---|---|---|---|
| | | | |

| Designed by: KRC | Ckd by: NLJ | Date: 2/23/10 | Rev: 0 |
|---|---|---|---|
| Dwn by: KJG | Reviewed by: LHM | Design file no. | Drawing code: |
| | Submitted by: BAKER | File name: ANAFACA-1036P<br>Plot date: 2/23/2010<br>Plot scale: x:X | |

U.S. ARMY CORPS OF ENGINEERS
AFGHANISTAN ENGINEER DISTRICT
APO AE 96338

*Michael Baker Jr., Inc*
*A unit of Michael Baker Corporation*
Airside Business Park
100 Airside Drive
Moon Township, PA 15108
www.mbakercorp.com

AFGHAN NATIONAL ARMY
REGIONAL MILITARY TRAINING CENTER
STANDARD DESIGN

DINING FACILITY

ROOF PLAN

Sheet reference number:
A–103

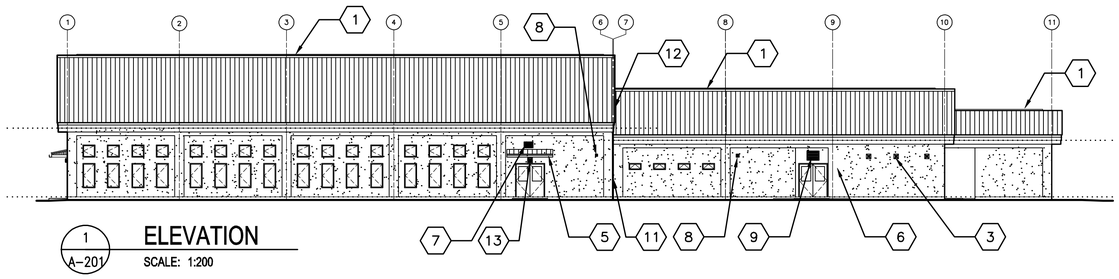


1 A–201 **ELEVATION**
SCALE: 1:200

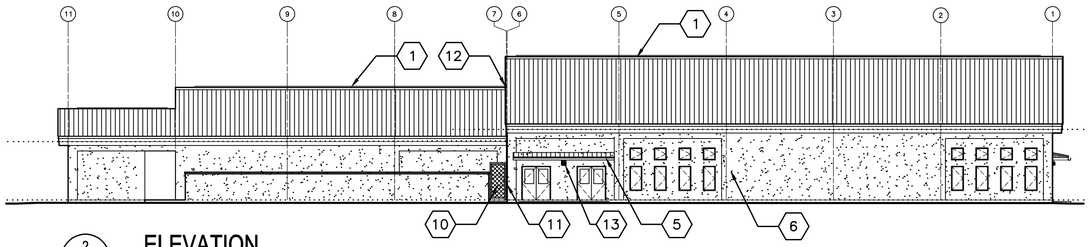


2 A–201 **ELEVATION**
SCALE: 1:200




3 A–201 **ELEVATION**
SCALE: 1:200

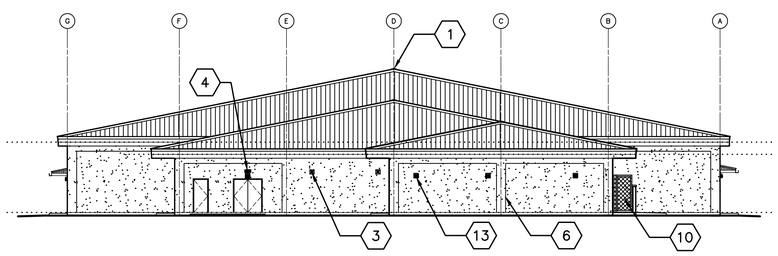


4 A–201 **ELEVATION**
SCALE: 1:200

## GENERAL NOTES:

A. COORDINATE SIZE AND LOCATION OF OPENINGS FOR MECHANICAL ITEMS WITH MECHANICAL DRAWINGS.

B. PROVIDE STRUCTURAL LINTELS AS REQUIRED – SEE STRUCTURAL DRAWINGS

C. ALL EXTERIOR WALL FINISHES SHALL BE STUCCO OVER CMU AND CONCRETE SUBSTRATES. PROVIDE CONTROL JOINTS IN STUCCO WALL FINISH AS NOTED.

D. ROOF SHALL BE CORRUGATED METAL ROOF PANELS ON COLD–FORMED METAL FRAMING ON CONCRETE SLAB.

## KEY NOTES: (X)

1. CONTINUOUS METAL RIDGE VENT – SEE DETAIL 4/A–501.
2. METAL LOUVER – SEE MECHANICAL DRAWINGS.
3. EXHAUST FAN, LOCATE TOP OF WALL PENETRATION 2800 MM ABOVE FINISHED FLOOR – SEE MECHANICAL DRAWINGS.
4. LOUVER, LOCATE TOP OF WALL PENETRATION 2800 MM ABOVE FINISHED FLOOR – SEE MECHANICAL DRAWINGS.
5. CANOPY – SEE DETAIL 1/A–504.
6. STUCCO CONTROL JOINT – SEE DETAIL 2A/A–501.
7. LOUVER, LOCATE TOP OF WALL PENETRATION 3600 MM ABOVE FINISHED FLOOR – SEE MECHANICAL DRAWINGS.
8. WALL GRILL, LOCATE TOP OF WALL PENETRATION 2800 MM ABOVE FINISHED FLOOR – SEE MECHANICAL DRAWINGS.
9. LOUVER, LOCATE TOP OF WALL PENETRATION 3000 MM ABOVE FINISHED FLOOR – SEE MECHANICAL DRAWINGS.
10. CHAIN LINK FENCE GATE.
11. EXPANSION JOINT COVER – SEE SHEET A–507.
12. ROOF EXPANSION JOINT – SEE DETAIL 4/A–506.
13. EXTERIOR LIGHT – SEE SHEETS E–101 AND E–102.

LINEAR DIMENSIONS SHOWN ARE IN MILLIMETERS (MM), UNLESS OTHERWISE NOTED

0 4000 8000
SCALE: 1:200

APPROVED:

A/E DESIGNER OF RECORD

SEAL:

STATE OF SOUTH CAROLINA
KEVIN R. CHAFIN
N. Charleston, SC 6374
REGISTERED ARCHITECT

US ARMY CORPS OF ENGINEERS
AFGHANISTAN ENGINEER DISTRICT

| Mark | Description | Date | Appr. |
|---|---|---|---|
| | | | |

Date: 2/23/10
Rev: 0
Design file no.
Drawing code:
File name: ANAFACA-001ELV
Plot date: 2/23/2010
Plot scale: x:X

Designed by: KRC
Dwn by: KJG
Ckd by: NLJ
Reviewed by: LHM
Submitted by: BAKER

U.S. ARMY CORPS OF ENGINEERS
AFGHANISTAN ENGINEER DISTRICT
APO AE 96338

*Michael Baker Jr., Inc.*
*A unit of Michael Baker Corporation*
Airside Business Park
100 Airside Drive
Moon Township, PA 15108
www.mbakercorp.com

AFGHAN NATIONAL ARMY
REGIONAL MILITARY TRAINING CENTER
STANDARD DESIGN

DINING FACILITY

ELEVATIONS

Sheet reference number:
A–201

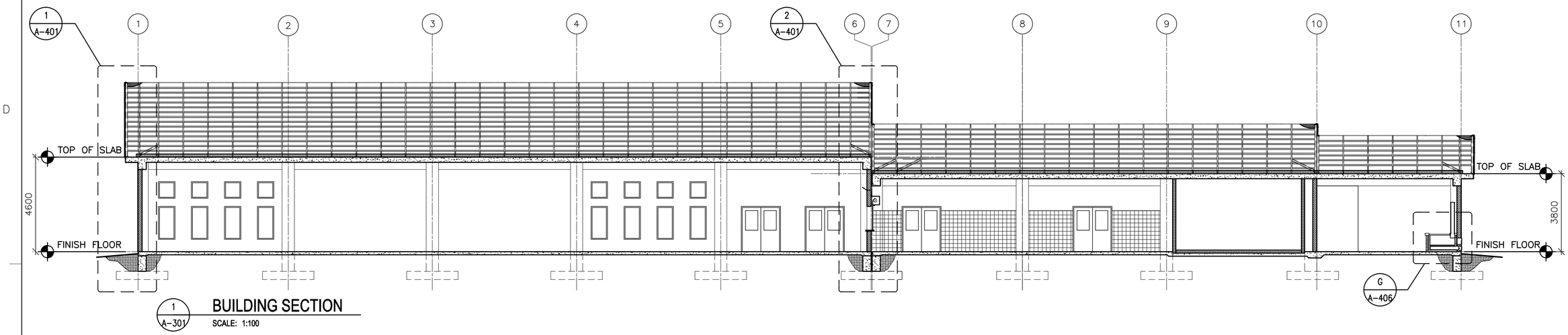


1 A-301 **BUILDING SECTION**
SCALE: 1:100

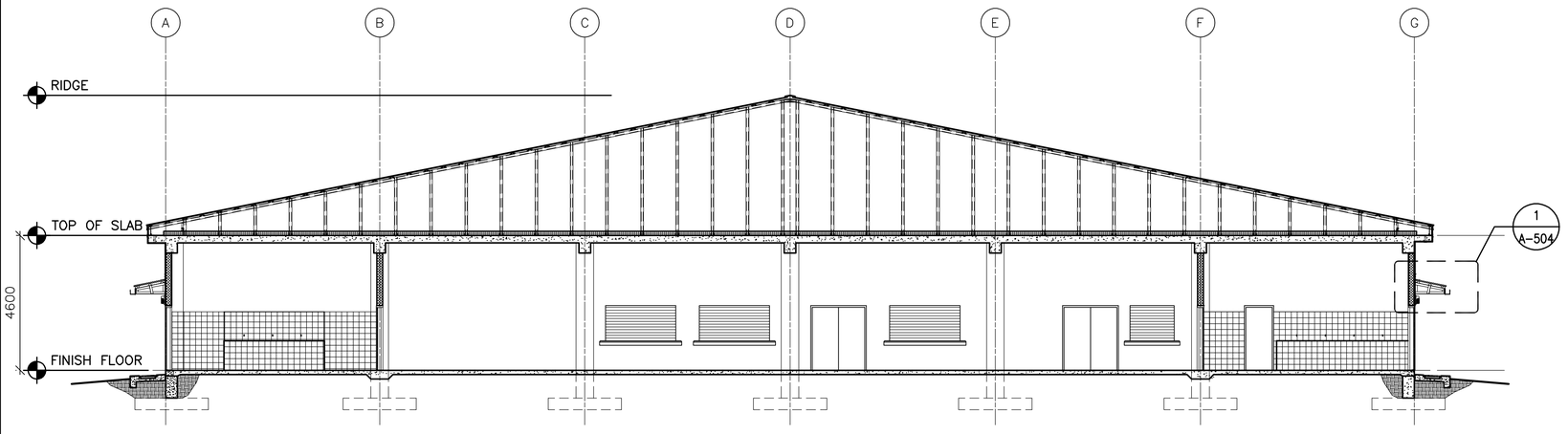


2 A-301 **BUILDING SECTION**
SCALE: 1:100

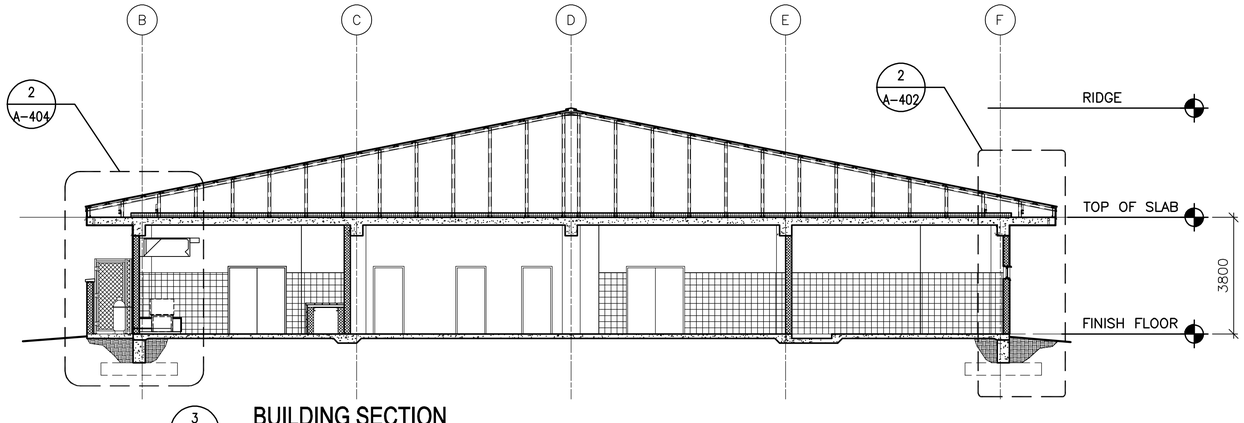


3 A-301 **BUILDING SECTION**
SCALE: 1:100

LINEAR DIMENSIONS SHOWN ARE IN MILLIMETERS (MM), UNLESS OTHERWISE NOTED

0 2000 4000
SCALE: 1:100

APPROVED:

A/E DESIGNER OF RECORD

SEAL:

STATE OF SOUTH CAROLINA
KEVIN R. CHAFIN
N. Charleston, SC
6374
REGISTERED ARCHITECT

US ARMY CORPS OF ENGINEERS
AFGHANISTAN ENGINEER DISTRICT

| Mark | Description | Date | Appr. |
|---|---|---|---|

Rev: 0
Date: 2/23/10
Design file no.
Drawing code:
File name: ANADFACA-301BS
Plot date: 2/23/2010
Plot scale: x:X

Designed by: KRC
Dwn by: KJG
Ckd by: NLJ
Reviewed by: LHM
Submitted by: BAKER

U.S. ARMY CORPS OF ENGINEERS
AFGHANISTAN ENGINEER DISTRICT
APO AE 96338

*Michael Baker Jr., Inc*
*A unit of Michael Baker Corporation*
Airside Business Park
100 Airside Drive
Moon Township, PA 15108
www.mbakercorp.com

AFGHAN NATIONAL ARMY
REGIONAL MILITARY TRAINING CENTER
STANDARD DESIGN

DINING FACILITY

BUILDING SECTIONS

Sheet reference number:
A-301

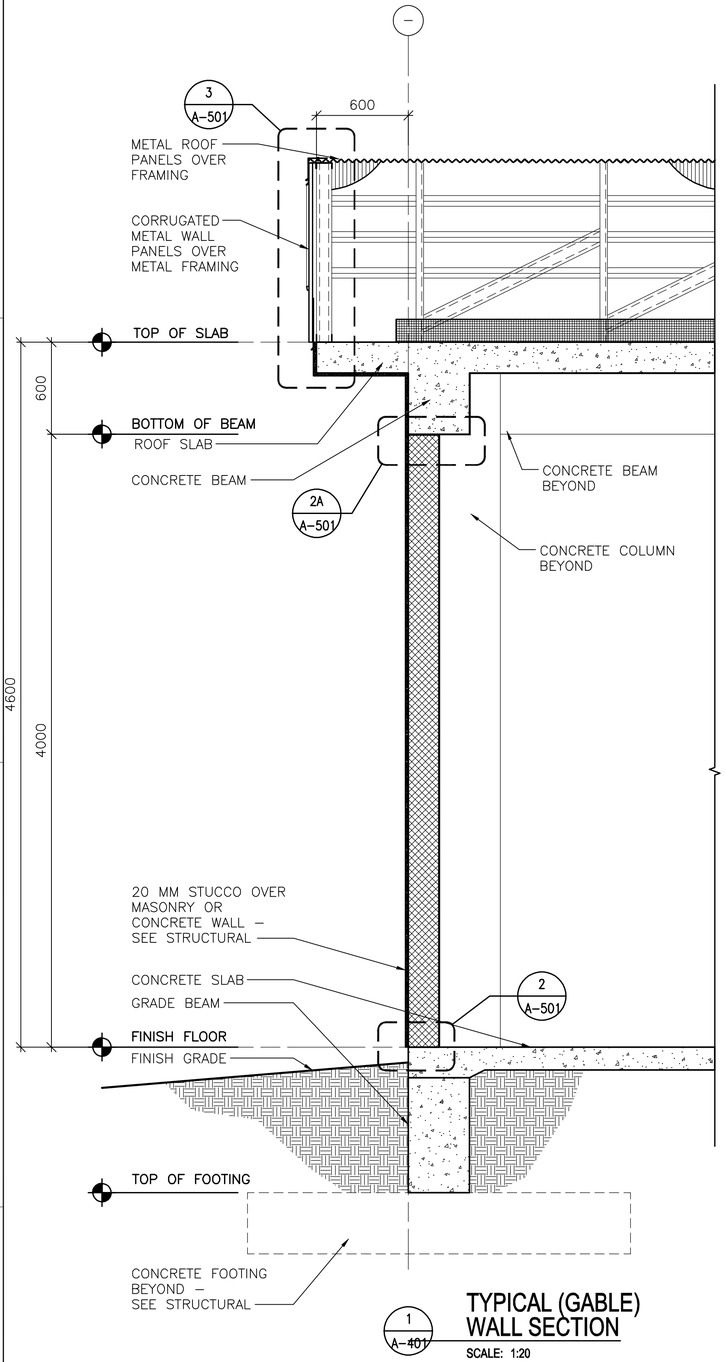


1 A-401 **TYPICAL (GABLE) WALL SECTION**

SCALE: 1:20

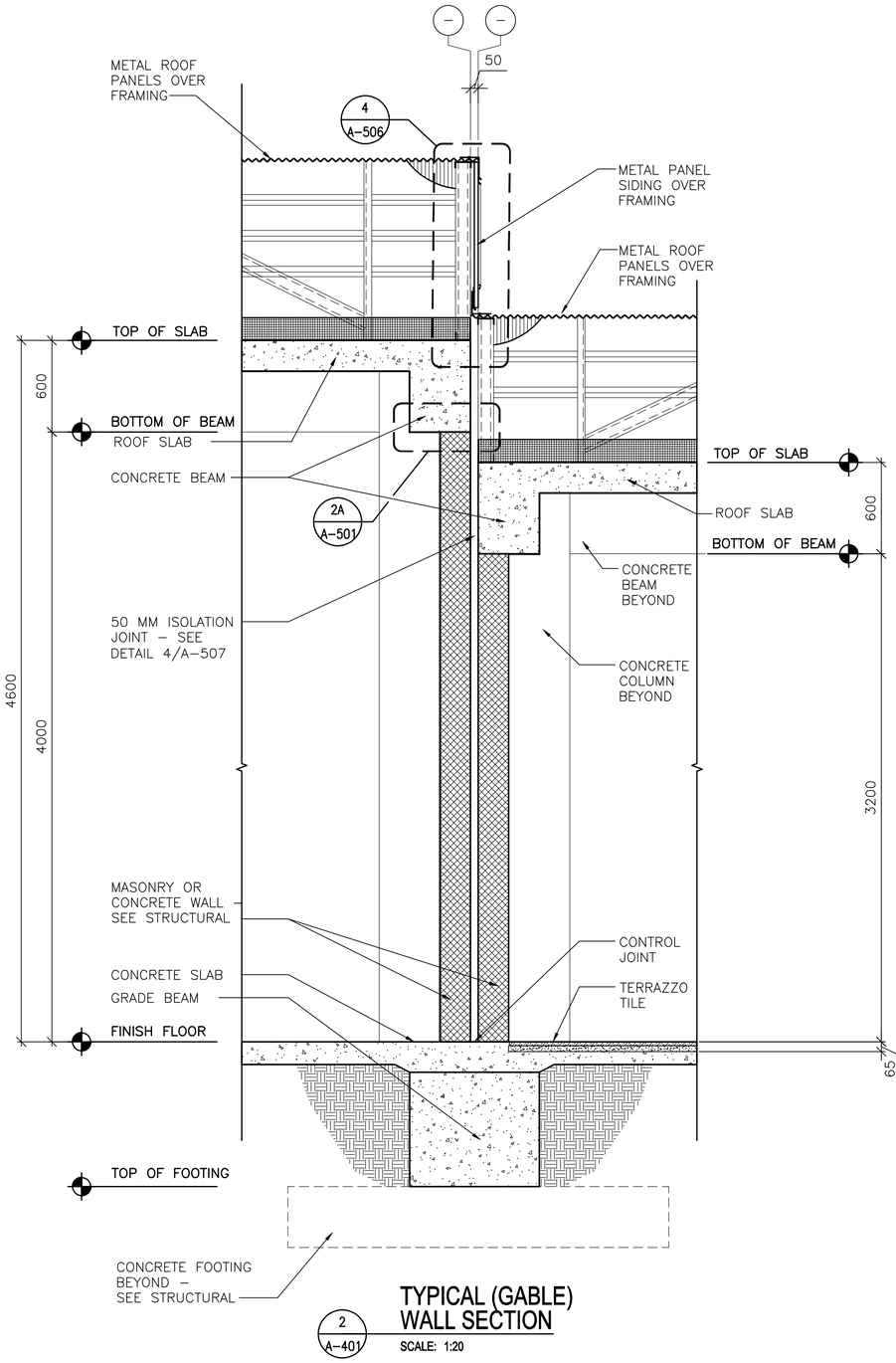


2 A-401 **TYPICAL (GABLE) WALL SECTION**

SCALE: 1:20

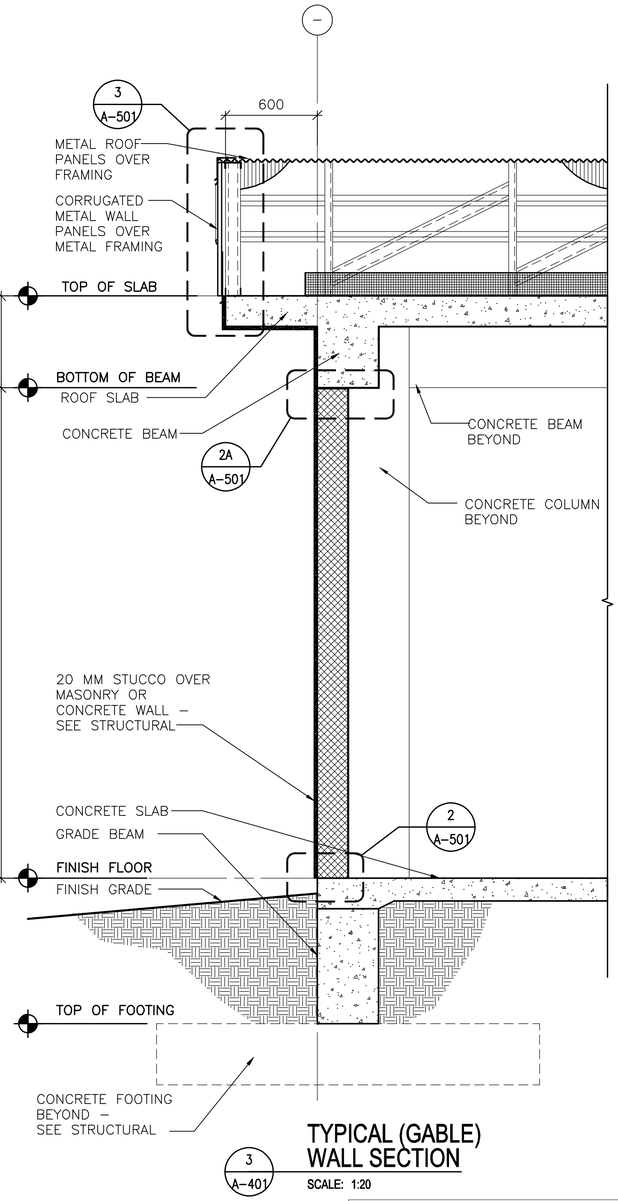


3 A-401 **TYPICAL (GABLE) WALL SECTION**

SCALE: 1:20

LINEAR DIMENSIONS SHOWN ARE IN MILLIMETERS (MM), UNLESS OTHERWISE NOTED

0 400 800

SCALE: 1:20

APPROVED:

A/E DESIGNER OF RECORD

SEAL:

STATE OF SOUTH CAROLINA
KEVIN R. CHAFIN
N. Charleston, SC
6374
REGISTERED ARCHITECT

US ARMY CORPS OF ENGINEERS
AFGHANISTAN ENGINEER DISTRICT

| Mark | Description | Date | Appr. |
|---|---|---|---|

Date: 2/23/10 Rev: 0
Design file no.
Drawing code:
File name: ANADFACA-401WS
Plot date: 2/23/2010
Plot scale: x:X

Designed by: KRC
Dwn by: KJG
Chkd by: NLJ
Reviewed by: LHM
Submitted by:
BAKER

U.S. ARMY CORPS OF ENGINEERS
AFGHANISTAN ENGINEER DISTRICT
APO AE 96338

*Michael Baker Jr., Inc*
*A unit of Michael Baker Corporation*
Airside Business Park
100 Airside Drive
Moon Township, PA 15108
www.mbakercorp.com

AFGHAN NATIONAL ARMY
REGIONAL MILITARY TRAINING CENTER
STANDARD DESIGN

DINING FACILITY

WALL SECTIONS

Sheet reference number:
A-401

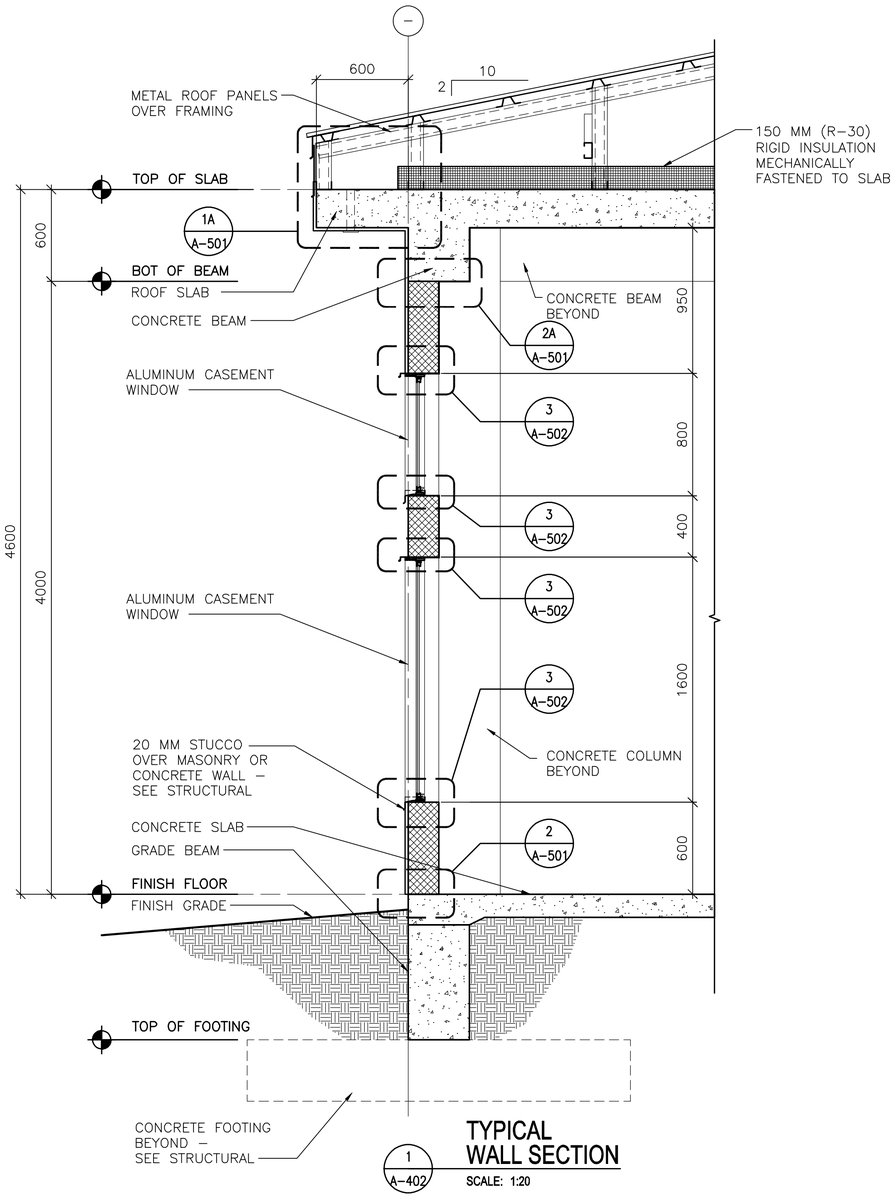


1 A-402 **TYPICAL WALL SECTION**

SCALE: 1:20

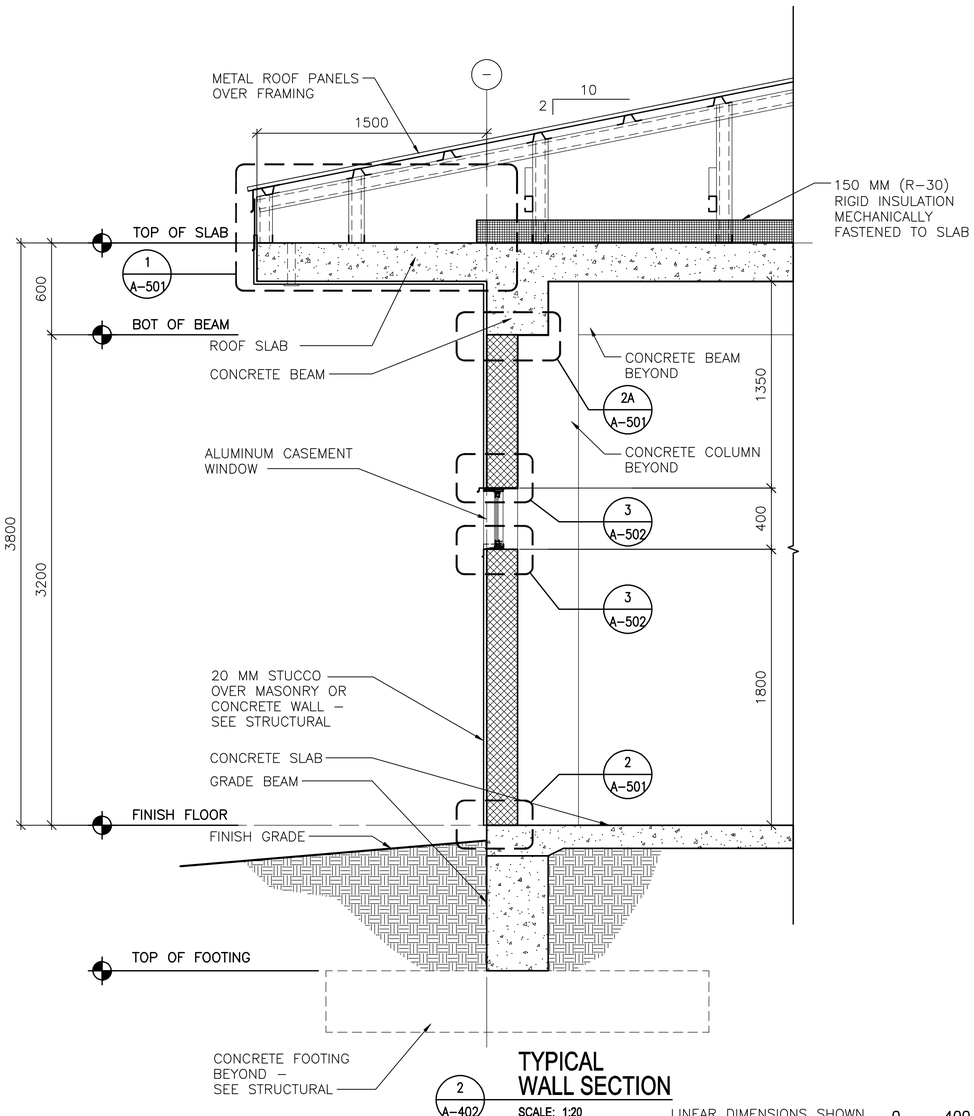


2 A-402 **TYPICAL WALL SECTION**

SCALE: 1:20

LINEAR DIMENSIONS SHOWN ARE IN MILLIMETERS (MM), UNLESS OTHERWISE NOTED

0 400 800

SCALE: 1:20

APPROVED:

A/E DESIGNER OF RECORD

SEAL:

STATE OF SOUTH CAROLINA
KEVIN R. CHAFIN
N. Charleston, SC
6374
REGISTERED ARCHITECT

US ARMY CORPS OF ENGINEERS
AFGHANISTAN ENGINEER DISTRICT

| Mark | Description | Date | Appr. |
|---|---|---|---|
| | | | |

Designed by: KRC
Dwn by: KJG
Ckd by: NLJ
Reviewed by: LHM
Submitted by: BAKER

Date: 2/23/10
Design file no.
Drawing code:
Rev: 0
File name: ANADFACA-402WS
Plot date: 2/23/2010
Plot scale: x:X

U.S. ARMY CORPS OF ENGINEERS
AFGHANISTAN ENGINEER DISTRICT
APO AE 96338

*Michael Baker Jr., Inc*
*A unit of Michael Baker Corporation*
Airside Business Park
100 Airside Drive
Moon Township, PA 15108
www.mbakercorp.com

AFGHAN NATIONAL ARMY
REGIONAL MILITARY TRAINING CENTER
STANDARD DESIGN

DINING FACILITY

WALL SECTIONS

Sheet reference number:
A-402

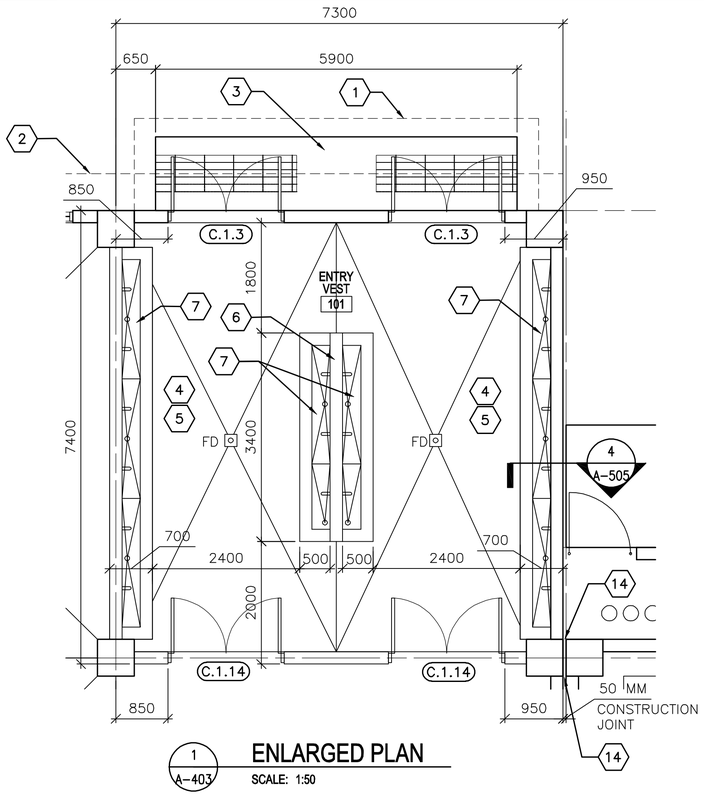


1 A-403 **ENLARGED PLAN**

SCALE: 1:50

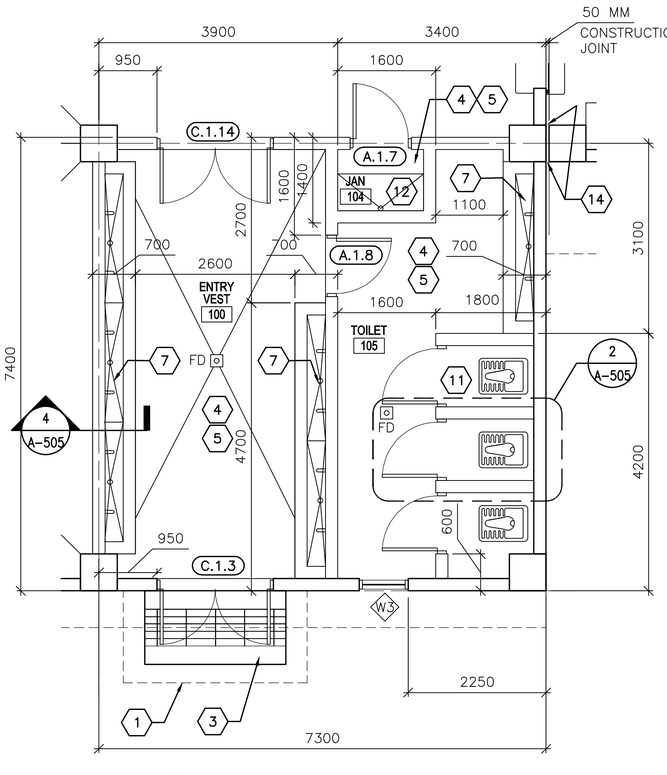


2 A-403 **ENLARGED PLAN**

SCALE: 1:50

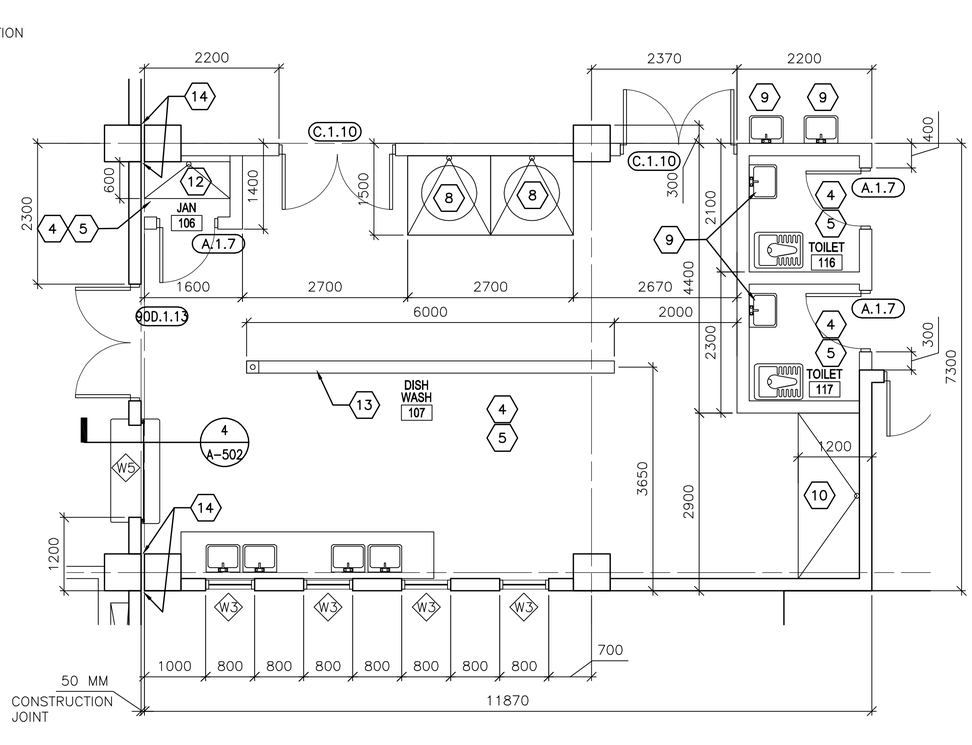


3 A-403 **ENLARGED PLAN**

SCALE: 1:50

LINEAR DIMENSIONS SHOWN ARE IN MILLIMETERS (MM), UNLESS OTHERWISE NOTED

0 1000 2000

SCALE: 1:50

## KEY NOTES: (X)

1. LINE OF METAL ENTRANCE CANOPY ABOVE.
2. LINE OF ROOF OVERHANG ABOVE.
3. CONCRETE STOOP WITH GRATE – SEE DETAIL 1/A–503.
4. WALL FINISH SHALL BE CERAMIC TILE TO 2000 MM WITH PAINTED PLASTER APPLIED TO STRUCTURE ABOVE.
5. FLOOR FINISH SHALL BE TERRAZZO TILE.
6. PARTIAL HEIGHT WALL –2000 MM ABOVE FINISH FLOOR.
7. LAVATORY – SEE DETAIL 4/A–505.
8. 1200 MM X 1200 MM RECESSED TROUGH – SEE DETAIL 6/A–505.
9. WALL MOUNTED LAVATORY – SEE DETAIL 2/A–506.
10. CART WASH.
11. TYPICAL TOILET STALL LAYOUT – SEE DETAIL 2/A–505.
12. 1400 MM X 600 MM RECESSED TROUGH – SEE DETAIL 6/A–505.
13. CONTINUOUS TRENCH DRAIN – SEE SHEET S–505.
14. ISOLATION JOINT COVER – SEE SHEET A–507.

## GENERAL NOTES:

A. DIMENSIONS ARE SHOWN TO OUTER EDGE OF EXTERIOR STRUCTURAL COLUMNS, STRUCTURAL COLUMN GRID, EDGE OF INTERIOR PARTITIONS, EDGE OF WINDOW OPENINGS, AND TO HINGE SIDE OF DOOR FRAME OPENINGS.

B. HINGE SIDE OF OPENINGS FOR DOORS AND FRAMES SHALL BE LOCATED 200 MM FROM THE ADJACENT WALL OR COLUMN, UNLESS NOTED OTHERWISE.

C. INTERIOR PARTITIONS SHALL BE 200 MM CMU. SEE STRUCTURAL DRAWINGS FOR LOCATION OF CONCRETE SHEAR WALLS.

D. COSMETIC REPAIR OF MINOR DEFECTS: REPAIR OR FILL MORTAR JOINTS AND MINOR DEFECTS, INCLUDING BUT NOT LIMITED TO SPALLS, IN ACCORDANCE WITH MANUFACTURER'S RECOMMENDATIONS AND PRIOR TO COATING APPLICATION. SURFACES TO BE PAINTED SHALL BE CLEAN AND FREE OF FOREIGN MATTER BEFORE APPLICATION OF PAINT. CLEANING SHALL BE SCHEDULED SO THAT DUST AND OTHER CONTAMINANTS WILL NOT FALL ON NEWLY PAINTED SURFACES.

E. CONCRETE, PLASTER AND MASONRY SURFACES SHALL BE ALLOWED TO CURE FOR AT LEAST 30 DAYS BEFORE PAINTING. CONCRETE SLABS–ON–GRADE SHALL BE ALLOWED TO CURE 90 DAYS BEFORE STAINING OR SEALING.

F. DO NOT USE PAINT MATERIALS CONTAINING LEAD CONTENT IN EXCESS OF 0.009 PERCENT OF THE WEIGHT OF THE TOTAL NONVOLATILE CONTENT OF THE PAINT OR THE WEIGHT OF THE DRIED PAINT FILM.

G. DO NOT USE ANY ASBESTOS CONTAINING MATERIALS (ACM) IN PROJECT. ACM IS DEFINED AS 1% OR MORE BY VOLUME.

H. DO NOT USE PAINT MATERIALS CONTAINING MERCURIAL FUNGICIDES.

I. FACTORY PRIMED METAL DOORS AND FRAMES SHALL RECEIVE TWO COATS OF PAINT.

J. FILL REMAINING SPACE AT PENETRATIONS IN FIRE–RATED FLOORS, PARTITIONS AND CEILINGS WITH APPROPRIATE FIRESTOPPING MATERIALS.

K. ALL CEILING FINISHES SHALL BE PAINTED PLASTER APPLIED TO STRUCTURE.

L. ALL WALL FINISHES SHALL BE PAINTED PLASTER APPLIED TO STRUCTURE, UNLESS NOTED OTHERWISE.

M. ALL FLOOR FINISHES SHALL BE EPOXY SEALED CONCRETE, UNLESS NOTED OTHERWISE.

N. PROVIDE TILE FINISHES AS INDICATED IN DETAILS

O. ALL TOILET STALL DOOR FRAMES AND HARDWARE SHALL BE F.2.12.

P. HEIGHT OF ALL TOILET PARTITIONS SHALL BE 2000 MM ABOVE FINISHED FLOOR.

## LEGEND:

| | |
|---|---|
| XXX | DOOR FRAME AND HARDWARE TYPE, SEE SHEET A–601 |
| A | WINDOW TYPE, SEE SHEET A–601 |
| X | KEY NOTE |

## ABBREVIATIONS:

| | |
|---|---|
| ELEC | ELECTRICAL |
| MECH | MECHANICAL |
| JAN | JANITOR |
| CLOS | CLOSET |
| COMM | COMMUNICATIONS |

APPROVED:

A/E DESIGNER OF RECORD

SEAL:

STATE OF SOUTH CAROLINA
KEVIN R. CHAFIN
N. Charleston, SC 6374
REGISTERED ARCHITECT

US ARMY CORPS OF ENGINEERS
AFGHANISTAN ENGINEER DISTRICT

| Mark | Description | Date | Appr. |
|---|---|---|---|
| | | | |

U.S. ARMY CORPS OF ENGINEERS
AFGHANISTAN ENGINEER DISTRICT
APO AE 96338

*Michael Baker Jr., Inc*
*A unit of Michael Baker Corporation*
Airside Business Park
100 Airside Drive
Moon Township, PA 15108
www.mbakercorp.com

Designed by: KRC
Drawn by: KJG
Checked by: NLJ
Reviewed by: LHM
Submitted by: BAKER

Date: 2/23/10
Design file no.
Drawing code:

File name: ANAFACA-403EP
Plot date: 2/23/2010
Plot scale: x:x

Rev. 0

AFGHAN NATIONAL ARMY
REGIONAL MILITARY TRAINING CENTER
STANDARD DESIGN

DINING FACILITY

ENLARGED PLANS

Sheet reference number:
A–403

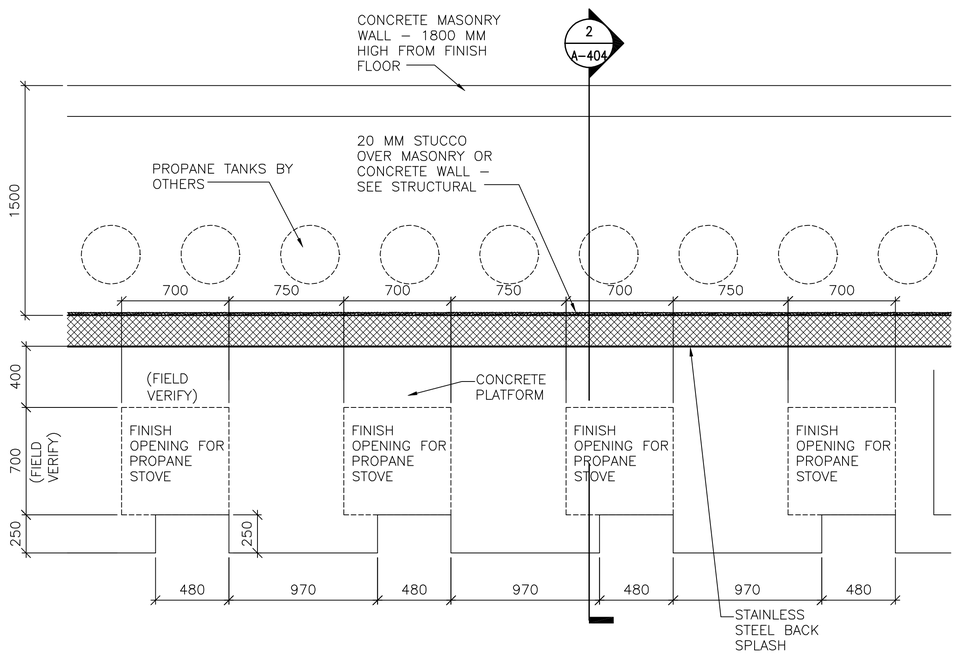


## 1 A–404 PARTIAL PROPANE STOVE ENCASEMENT PLAN

SCALE: 1:20

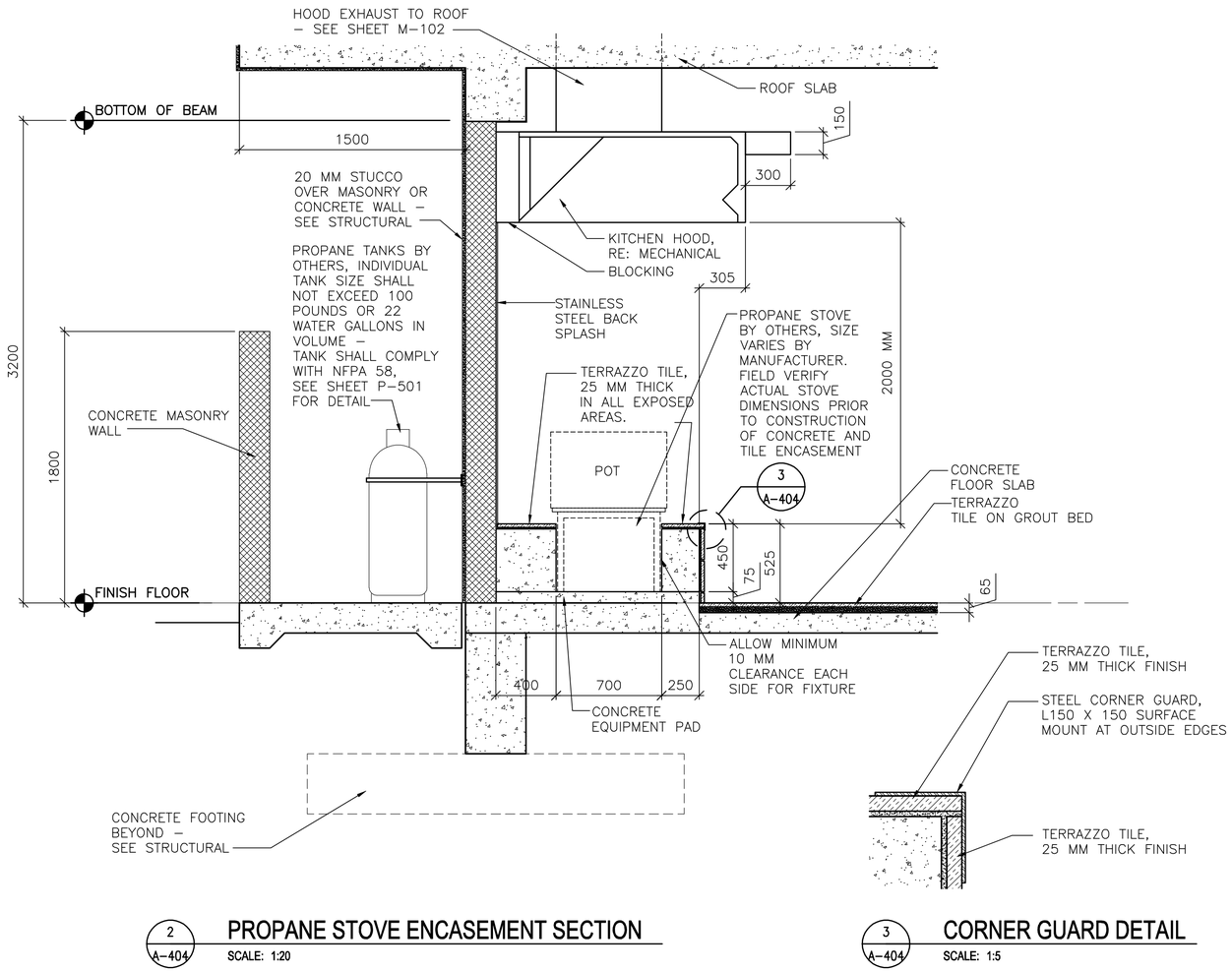


## 2 A–404 PROPANE STOVE ENCASEMENT SECTION

SCALE: 1:20




## 3 A–404 CORNER GUARD DETAIL

SCALE: 1:5

## KEY PLAN:

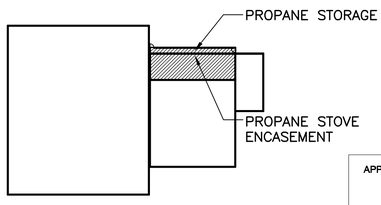


LINEAR DIMENSIONS SHOWN ARE IN MILLIMETERS (MM), UNLESS OTHERWISE NOTED

0 400 800
SCALE: 1:20

APPROVED:

A/E DESIGNER OF RECORD

SEAL:

STATE OF SOUTH CAROLINA
KEVIN R. CHAFIN
N. Charleston, SC
6374
REGISTERED ARCHITECT

US ARMY CORPS OF ENGINEERS
AFGHANISTAN ENGINEER DISTRICT

| Mark | Description | Date | Appr. |
|---|---|---|---|
| | | | |

Date: 2/23/10
Design file no.
Drawing code:
Rev: 0
File name: ANAFACA404PSP
Plot date: 2/23/2010
Plot scale: x:x

Designed by: KRC
Drwn by: KJG
Ckd by: NLJ
Reviewed by: LHM
Submitted by: BAKER

U.S. ARMY CORPS OF ENGINEERS
AFGHANISTAN ENGINEER DISTRICT
APO AE 96338

Michael Baker Jr., Inc
A unit of Michael Baker Corporation
Airside Business Park
100 Airside Drive
Moon Township, PA 15108
www.mbakercorp.com

AFGHAN NATIONAL ARMY
REGIONAL MILITARY TRAINING CENTER
STANDARD DESIGN

DINING FACILITY

PROPANE STOVE PLAN AND SECTION

Sheet reference number:
A–404

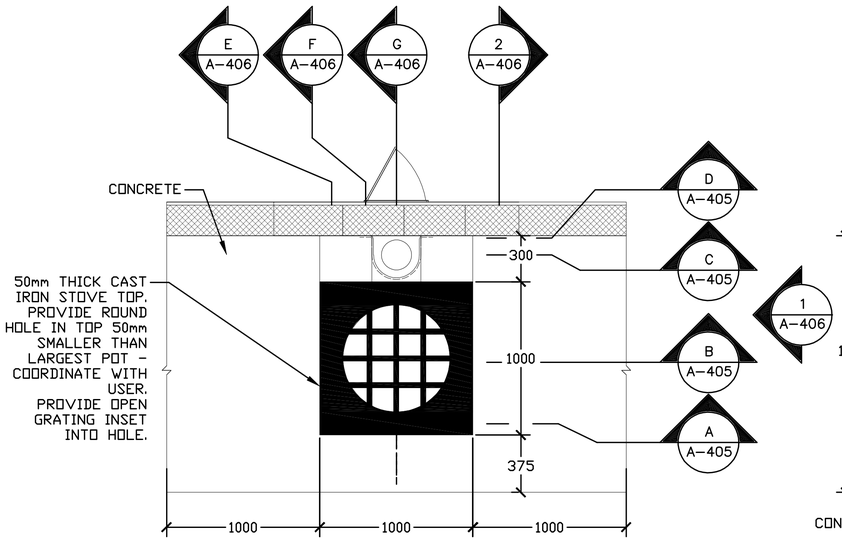


1 A-405 **PLAN** SCALE: 1:20

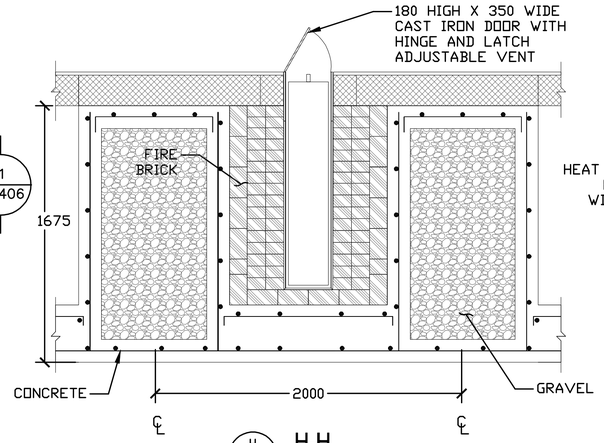


H A-405 **H-H** SCALE: 1:20

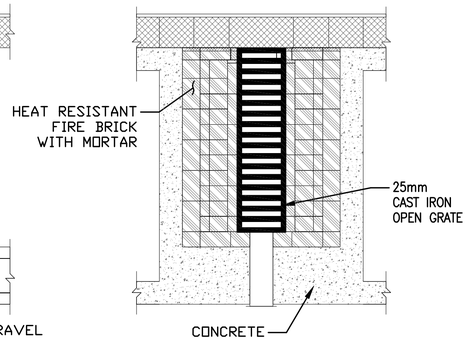


I A-405 **I-I** SCALE: 1:20

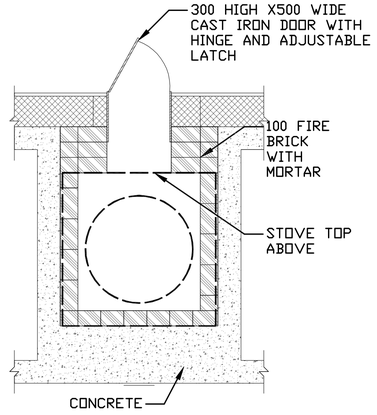


J A-405 **J-J** SCALE: 1:20

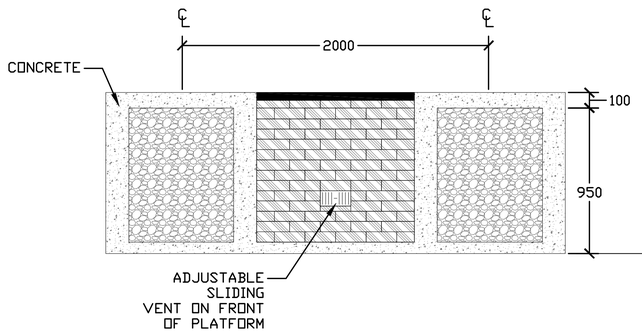


A A-405 **A-A** SCALE: 1:20

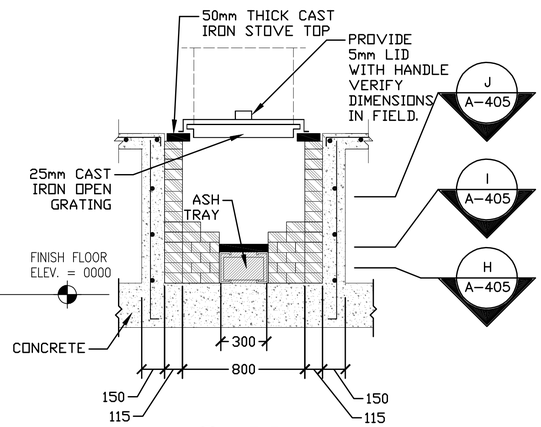


B A-405 **B-B** SCALE: 1:20

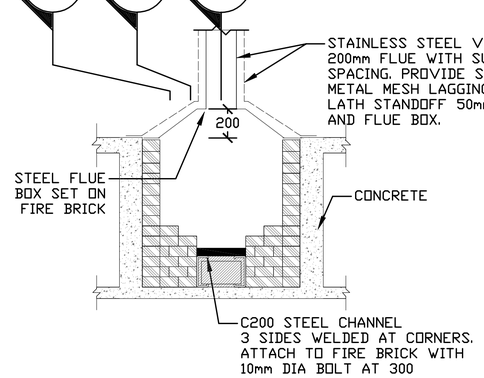


C A-405 **C-C** SCALE: 1:20

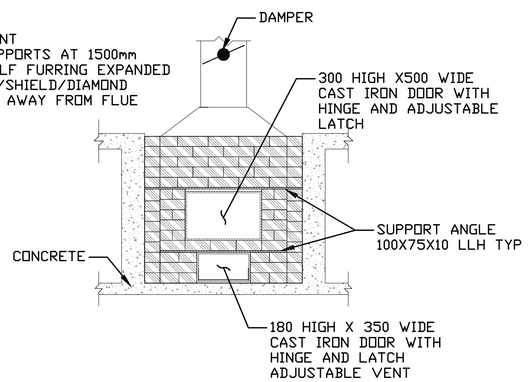


D A-405 **D-D** SCALE: 1:20

0 400 800
SCALE: 1:20

APPROVED:

A/E DESIGNER OF RECORD

SEAL:

STATE OF SOUTH CAROLINA
KEVIN R. CHAFIN
N. Charleston, SC
6374
REGISTERED ARCHITECT

US ARMY CORPS OF ENGINEERS
AFGHANISTAN ENGINEER DISTRICT

| Mark | Description | Date | Appr. |
|---|---|---|---|
| | | | |

Rev: 0
Date: 2/23/10
Design file no.
Drawing code:
File name: ANADFACA-A05WBS
Plot date: 2/24/2010
Plot scale: XX

Designed by: KRC
Dwn by: KJG
Ckd by: NLJ
Reviewed by: LHM
Submitted by: BAKER

U.S. ARMY CORPS OF ENGINEERS
AFGHANISTAN ENGINEER DISTRICT
APO AE 96338

*Michael Baker Jr., Inc*
*A unit of Michael Baker Corporation*
Airside Business Park
100 Airside Drive
Moon Township, PA 15108
www.mbakercorp.com

AFGHAN NATIONAL ARMY
REGIONAL MILITARY TRAINING CENTER
STANDARD DESIGN

DINING FACILITY

WOOD BURNING STOVE DETAILS

Sheet reference number:
A-405

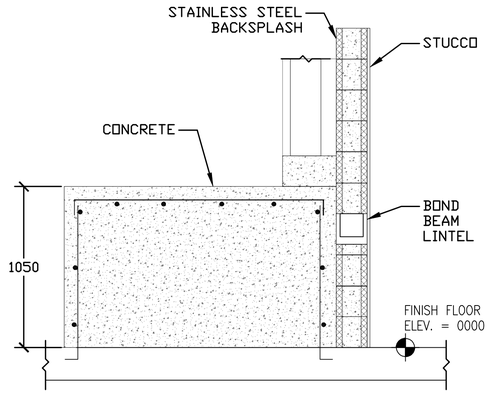


1 A-406 **ELEVATION**
SCALE: 1:20

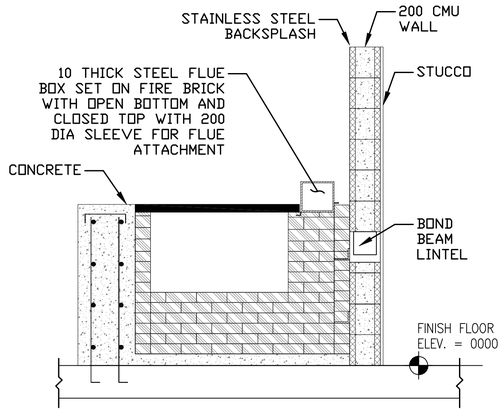


E A-406 **E-E**
SCALE: 1:20

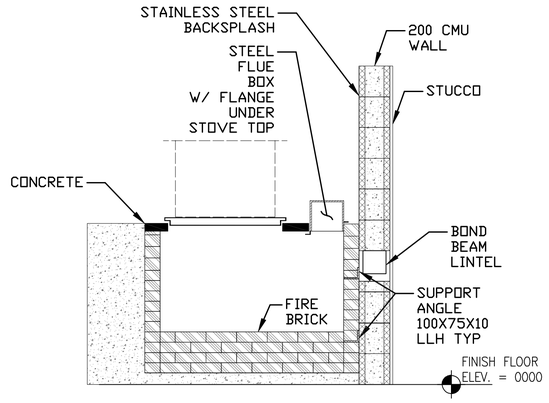


F A-406 **F-F**
SCALE: 1:20

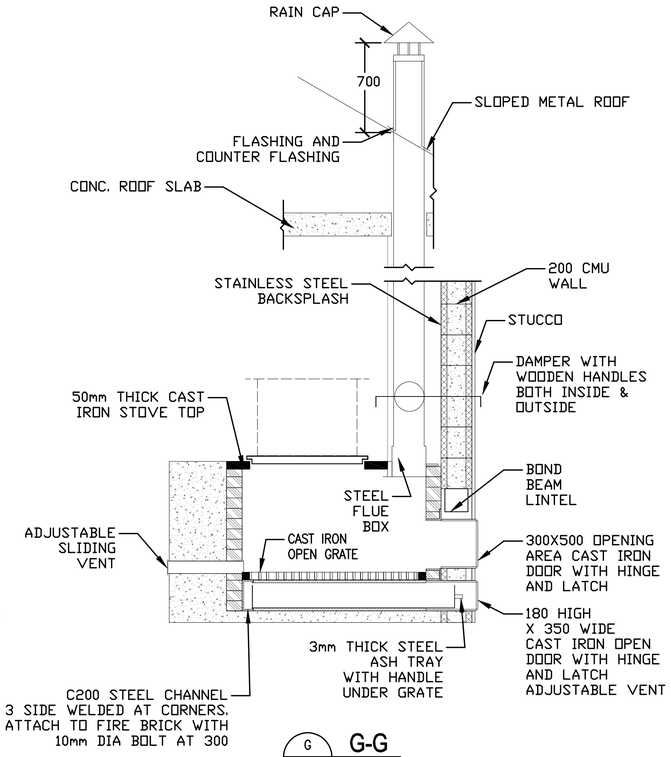


G A-406 **G-G**
SCALE: 1:20

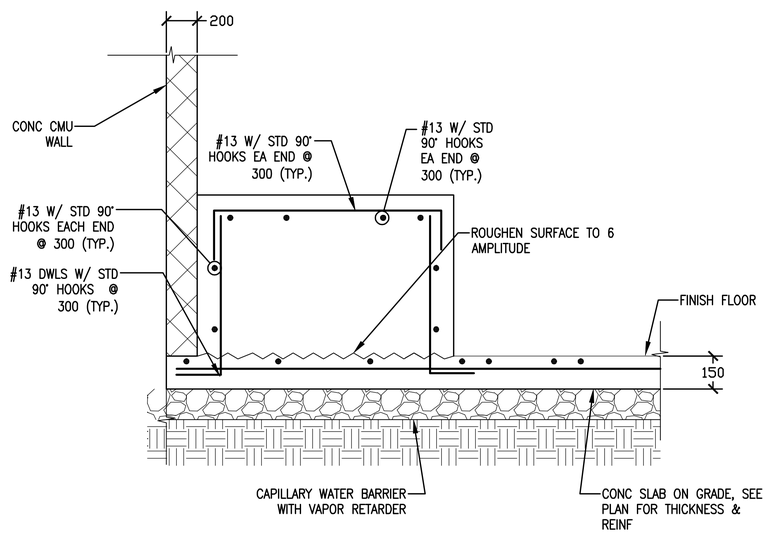


2 A-406 **DETAIL**
SCALE: NTS

0 400 800
SCALE: 1:20

APPROVED:

A/E DESIGNER OF RECORD

SEAL:

STATE OF SOUTH CAROLINA
KEVIN R. CHAFIN
N. Charleston, SC
6374
REGISTERED ARCHITECT

US ARMY CORPS OF ENGINEERS
AFGHANISTAN ENGINEER DISTRICT

| Mark | Description | Date | Appr. |
|---|---|---|---|

Date: 2/23/10
Design file no.
Drawing code:
File name: ANADFACA406WBS
Plot date: 2/24/2010
Plot scale: XX
Rev: 0

Designed by: KRC
Dwn by: KJG
Ckd by: NLJ
Reviewed by: LHM
Submitted by: BAKER

U.S. ARMY CORPS OF ENGINEERS
AFGHANISTAN ENGINEER DISTRICT
APO AE 96338

*Michael Baker Jr., Inc.*
*A unit of Michael Baker Corporation*
Airside Business Park
100 Airside Drive
Moon Township, PA 15108
www.mbakercorp.com

AFGHAN NATIONAL ARMY
REGIONAL MILITARY TRAINING CENTER
STANDARD DESIGN

DINING FACILITY

# WOOD BURNING STOVE DETAILS

Sheet reference number:
A-406

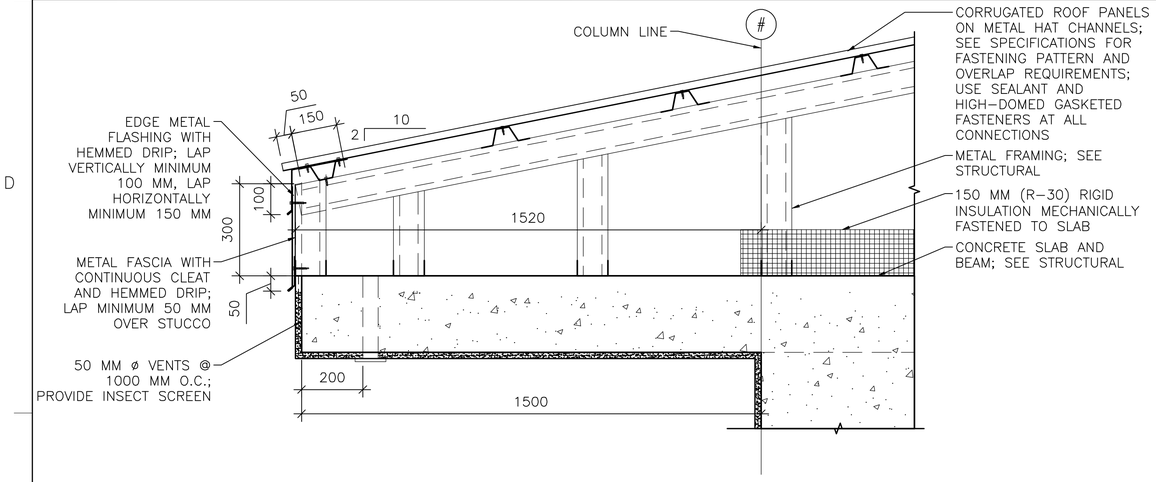


1 A–501 **EAVE DETAIL**
SCALE: 1:10

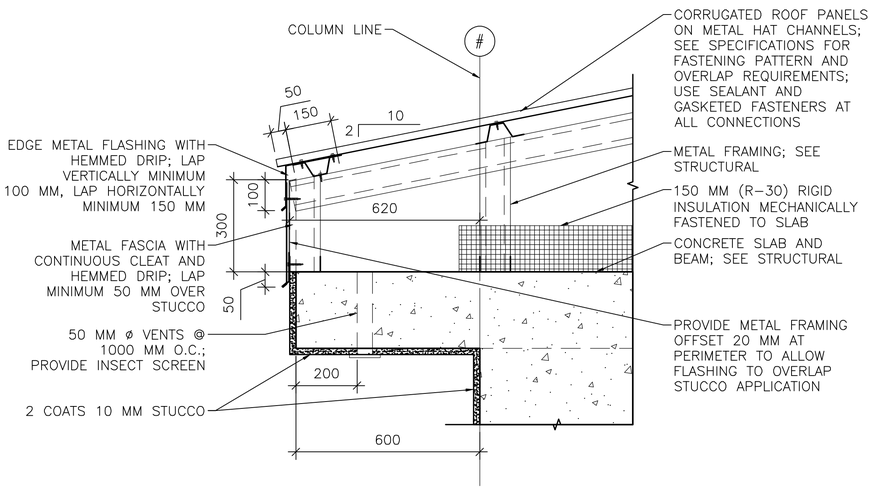


1A A–501 **EAVE DETAIL**
SCALE: 1:10

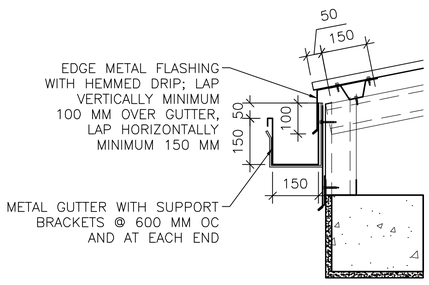


1B A–501 **GUTTER DETAIL**
SCALE: 1:10

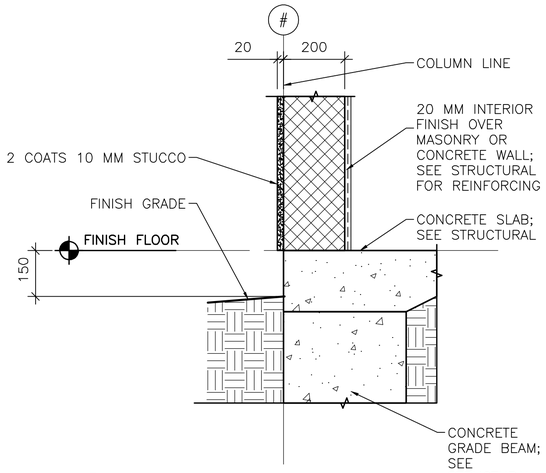


2 A–501 **STUCCO BASE DETAIL**
SCALE: 1:10

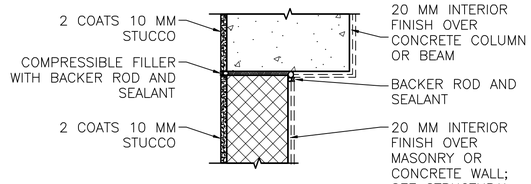


NOTE: DETAIL TYPICAL AT ALL WALL/COLUMN AND WALL/BEAM LOCATIONS, SEE ALTERNATE BRACING DETAIL BELOW 2B/A–501.

2A A–501 **STUCCO JOINT DETAIL**
SCALE: 1:10

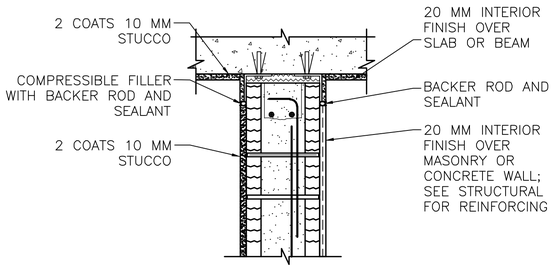


INTERIOR WALL/BEAM

2B A–501 **ALTERNATE BRACING DETAIL**
SCALE: 1:10

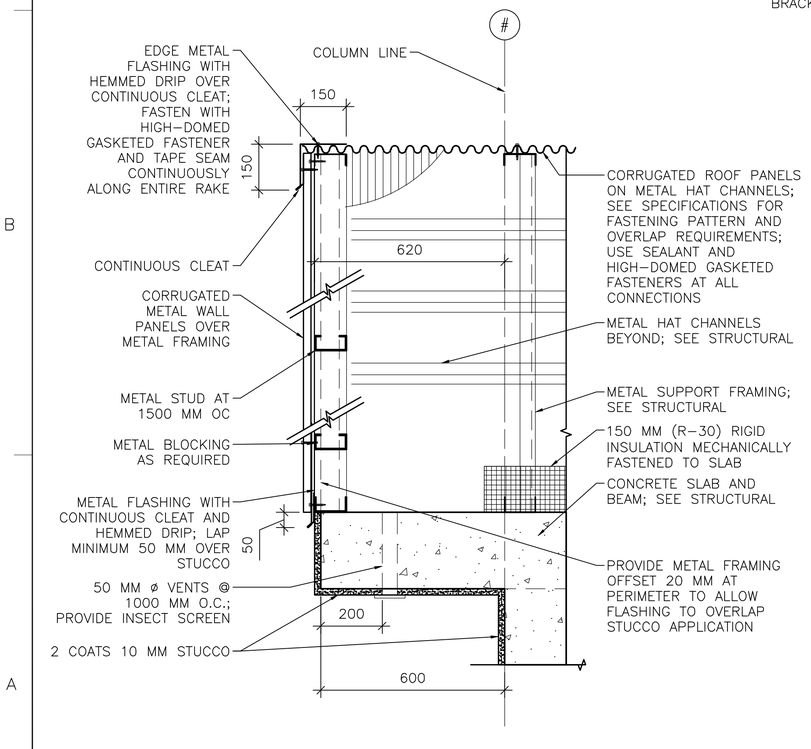


3 A–501 **RAKE/EAVE DETAIL**
SCALE: 1:10

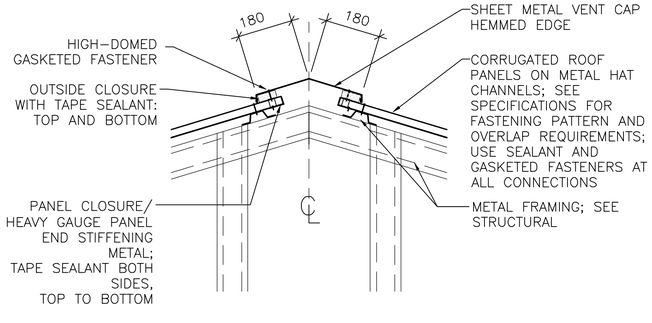


4 A–501 **RIDGE VENT DETAIL**
SCALE: 1:10

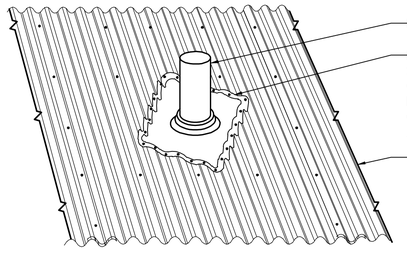


5 A–501 **PLUMBING VENT DETAIL**
SCALE: NTS

LINEAR DIMENSIONS SHOWN ARE IN MILLIMETERS (MM), UNLESS OTHERWISE NOTED

0 200 400
SCALE: 1:10

APPROVED:

A/E DESIGNER OF RECORD

SEAL:

STATE OF SOUTH CAROLINA
KEVIN R. CHAFIN
N. Charleston, SC
6374
REGISTERED ARCHITECT

US ARMY CORPS OF ENGINEERS
AFGHANISTAN ENGINEER DISTRICT

| Mark | Description | Date | Appr. |
|---|---|---|---|

U.S. ARMY CORPS OF ENGINEERS
AFGHANISTAN ENGINEER DISTRICT
APO AE 96338

*Michael Baker Jr., Inc.*
*A unit of Michael Baker Corporation*
Airside Business Park
100 Airside Drive
Moon Township, PA 15108
www.mbakercorp.com

Designed by: KRC
Dwn by: KJG
Ckd by: NLJ
Reviewed by: LHM
Submitted by: BAKER

Date: 2/23/10
Design file no.
Drawing code:
File name: ANAFACA-6010T
Plot date: 2/23/2010
Plot scale: X:X
Rev: 0

AFGHAN NATIONAL ARMY
REGIONAL MILITARY TRAINING CENTER
STANDARD DESIGN

DINING FACILITY

EXTERIOR DETAILS

Sheet reference number:
A–501

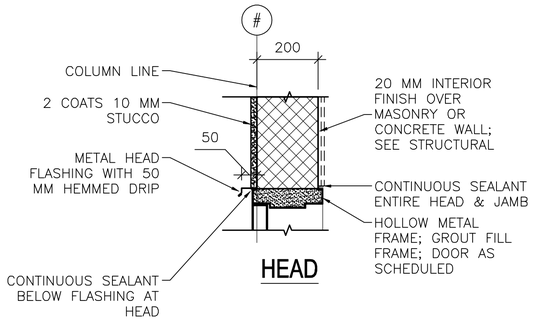


HEAD

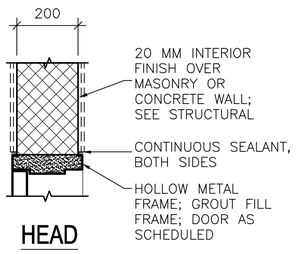


HEAD

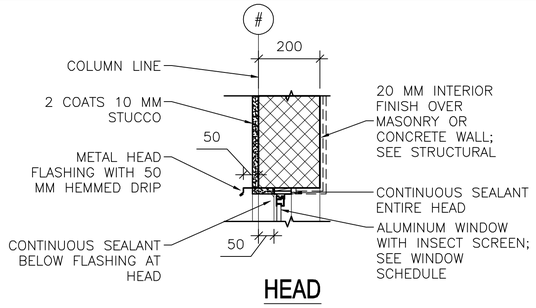


HEAD

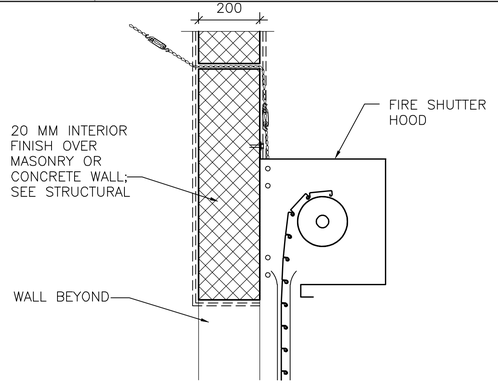


HEAD

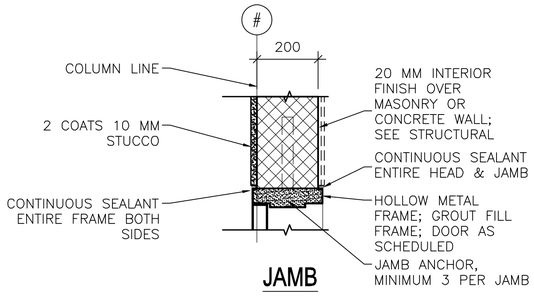


JAMB

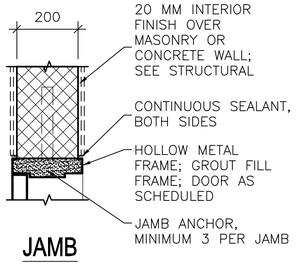


JAMB

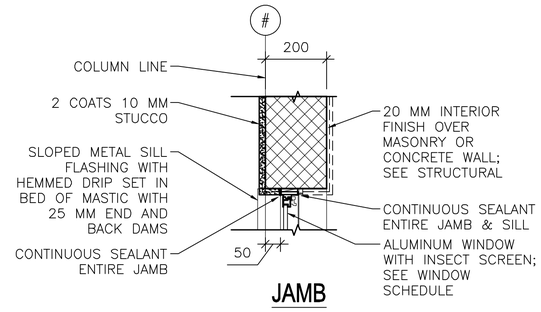


JAMB

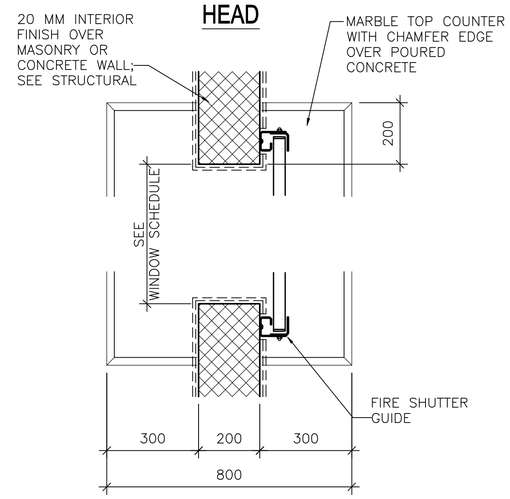


JAMB

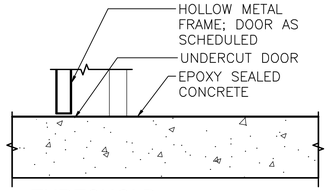


THRESHOLD

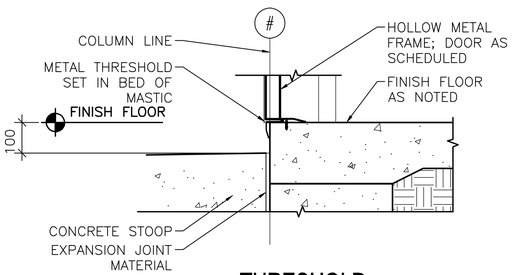


THRESHOLD

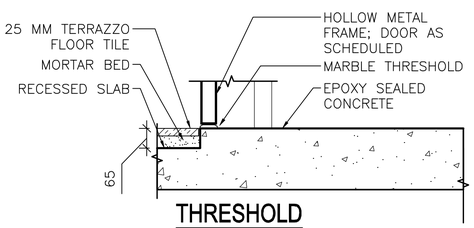


THRESHOLD

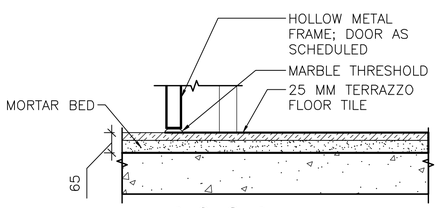


THRESHOLD

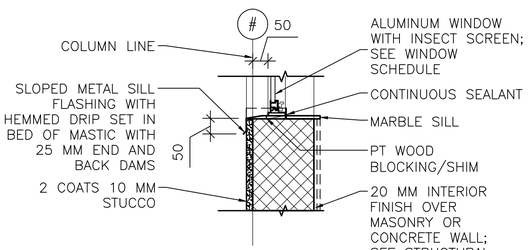


SILL

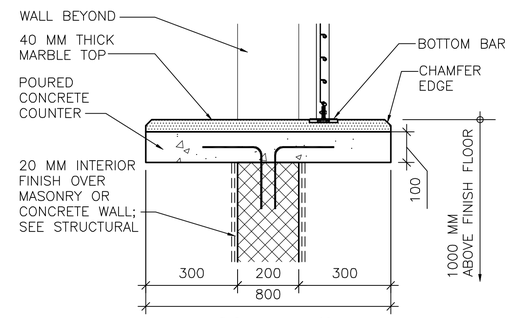


COUNTER/SILL

4 A–502 **FIRE SHUTTER COUNTER**

SCALE: 1:10

1 A–502 **EXTERIOR DOOR DETAILS**

SCALE: 1:10

2 A–502 **INTERIOR DOOR DETAILS**

SCALE: 1:10

3 A–502 **EXTERIOR WINDOW DETAILS**

SCALE: 1:10

LINEAR DIMENSIONS SHOWN ARE IN MILLIMETERS (MM), UNLESS OTHERWISE NOTED

0 200 400

SCALE: 1:10

APPROVED:

A/E DESIGNER OF RECORD

SEAL:

STATE OF SOUTH CAROLINA
KEVIN R. CHAFIN
N. Charleston, SC 6374
REGISTERED ARCHITECT

US ARMY CORPS OF ENGINEERS
AFGHANISTAN ENGINEER DISTRICT

| Mark | Description | Date | Appr. |
|---|---|---|---|

Date: 2/23/10
Design file no.
Drawing code:
Rev: 0
File name: ANAFACA-502HJS
Plot date: 2/23/2010
Plot scale: x:x

Designed by: KRC
Dwn by: KJG
Ckd by: NLJ
Reviewed by: LHM
Submitted by: BAKER

U.S. ARMY CORPS OF ENGINEERS
AFGHANISTAN ENGINEER DISTRICT
APO AE 96338

*Michael Baker Jr., Inc*
*A unit of Michael Baker Corporation*
Airside Business Park
100 Airside Drive
Moon Township, PA 15108
www.mbakercorp.com

AFGHAN NATIONAL ARMY
REGIONAL MILITARY TRAINING CENTER
STANDARD DESIGN

DINING FACILITY

HEAD, JAMB & SILL DETAILS

Sheet reference number:
A–502

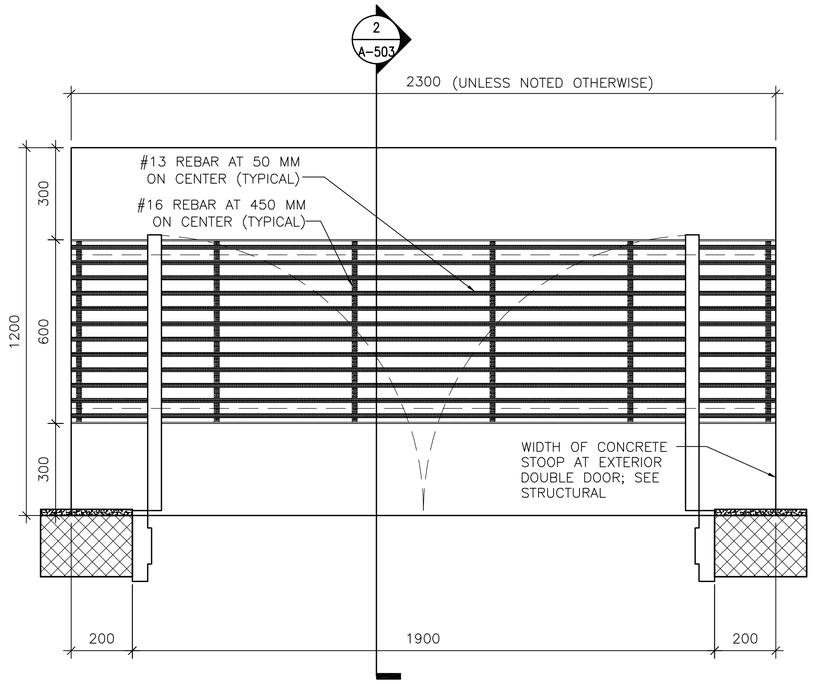


## 1 A-503 DOOR STOOP PLAN (WITH GRATE)

SCALE: 1:10

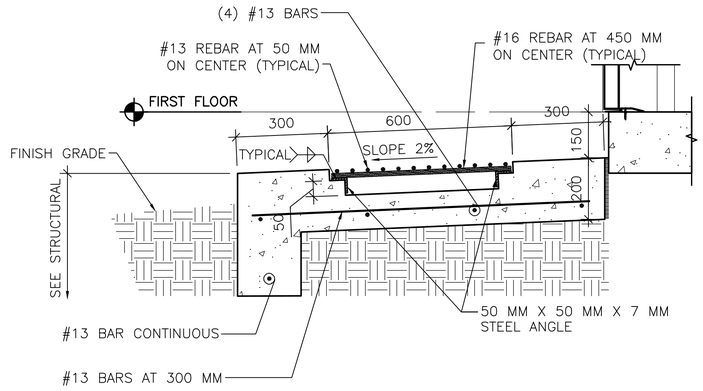


## 2 A-503 DOOR STOOP DETAIL

SCALE: 1:10

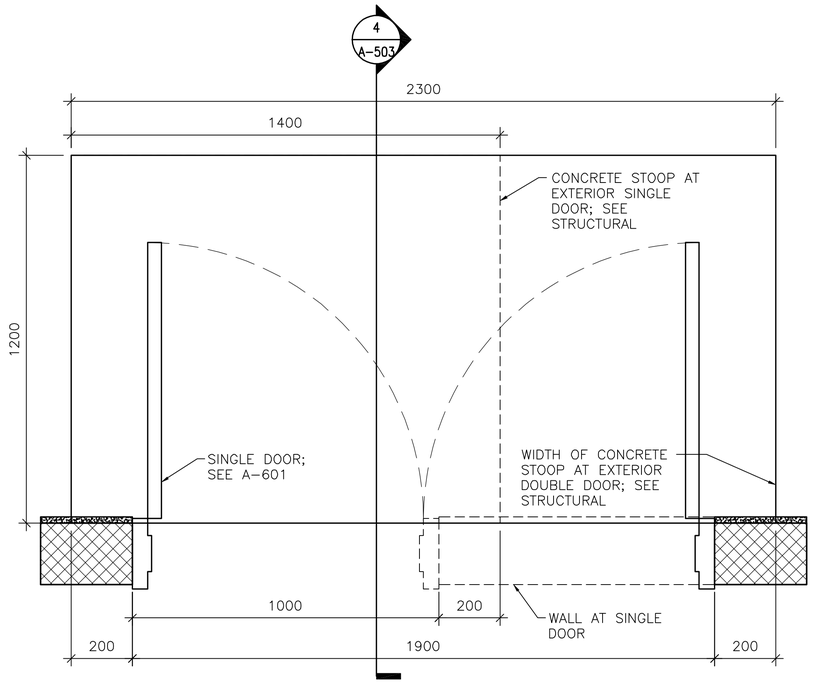


## 3 A-503 DOOR STOOP PLAN (WITHOUT GRATE)

SCALE: 1:10

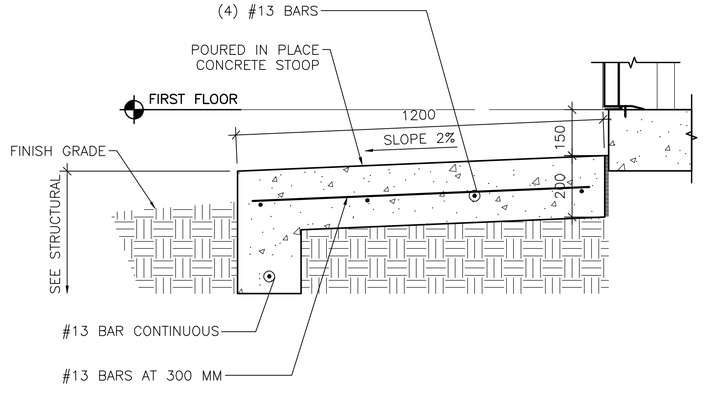


## 4 A-503 DOOR STOOP DETAIL

SCALE: 1:10

LINEAR DIMENSIONS SHOWN ARE IN MILLIMETERS (MM), UNLESS OTHERWISE NOTED

0 200 400

SCALE: 1:10

APPROVED:

A/E DESIGNER OF RECORD

SEAL:

STATE OF SOUTH CAROLINA
KEVIN R. CHAFIN
N. Charleston, SC
6374
REGISTERED ARCHITECT

US ARMY CORPS OF ENGINEERS
AFGHANISTAN ENGINEER DISTRICT

| Mark | Description | Date | Appr. |
|---|---|---|---|
| | | | |

U.S. ARMY CORPS OF ENGINEERS
AFGHANISTAN ENGINEER DISTRICT
APO AE 96338

Michael Baker Jr., Inc
A unit of Michael Baker Corporation
Airside Business Park
100 Airside Drive
Moon Township, PA 15108
www.mbakercorp.com

Designed by: KRC | Ckd by: NLJ
Dwn by: KJG | Reviewed by: LHM
Submitted by: BAKER

Date: 2/23/10
Design file no.
Drawing code:
File name: ANADFACA-6938T
Plot date: 2/23/2010
Plot scale: x:x
Rev: 0

AFGHAN NATIONAL ARMY
REGIONAL MILITARY TRAINING CENTER
STANDARD DESIGN

DINING FACILITY

STOOP DETAILS

Sheet reference number:
A-503

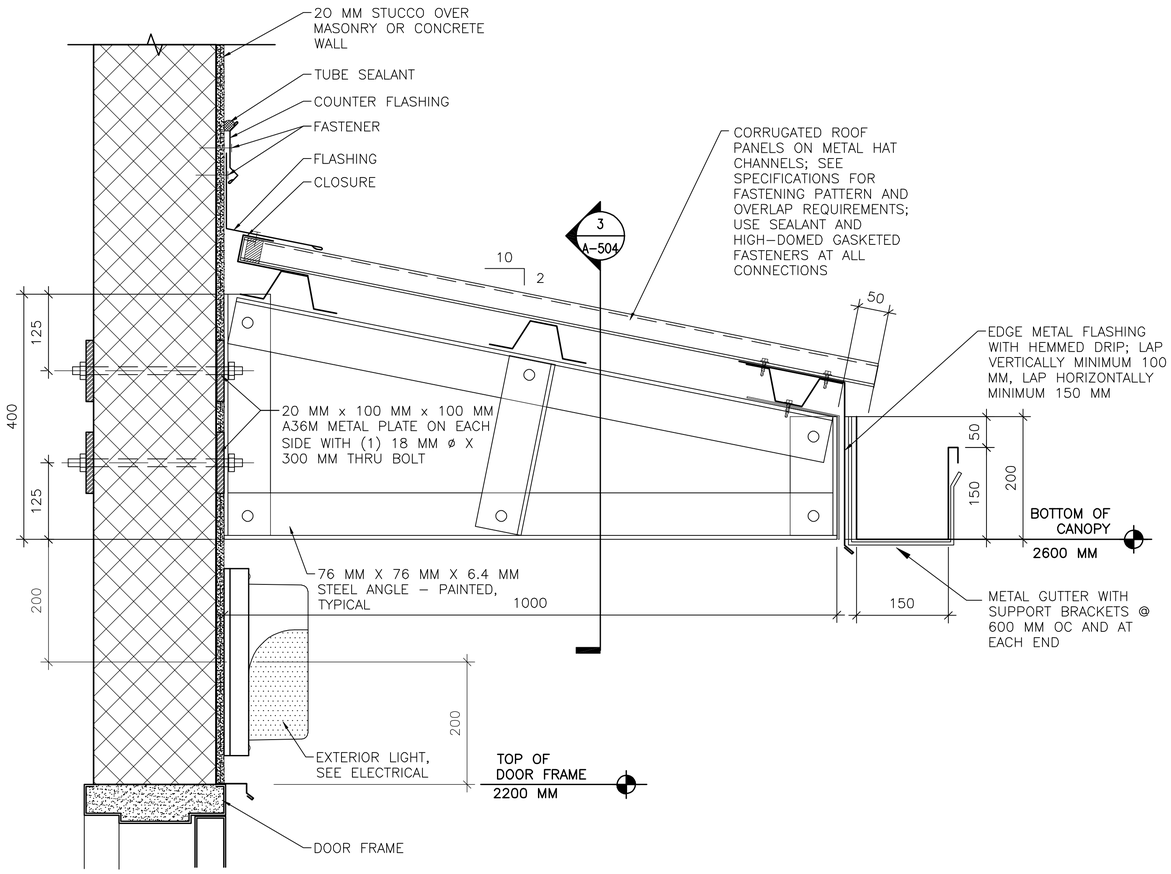


1 A-504 **CANOPY CONNECTION DETAILS**
SCALE: 1:5

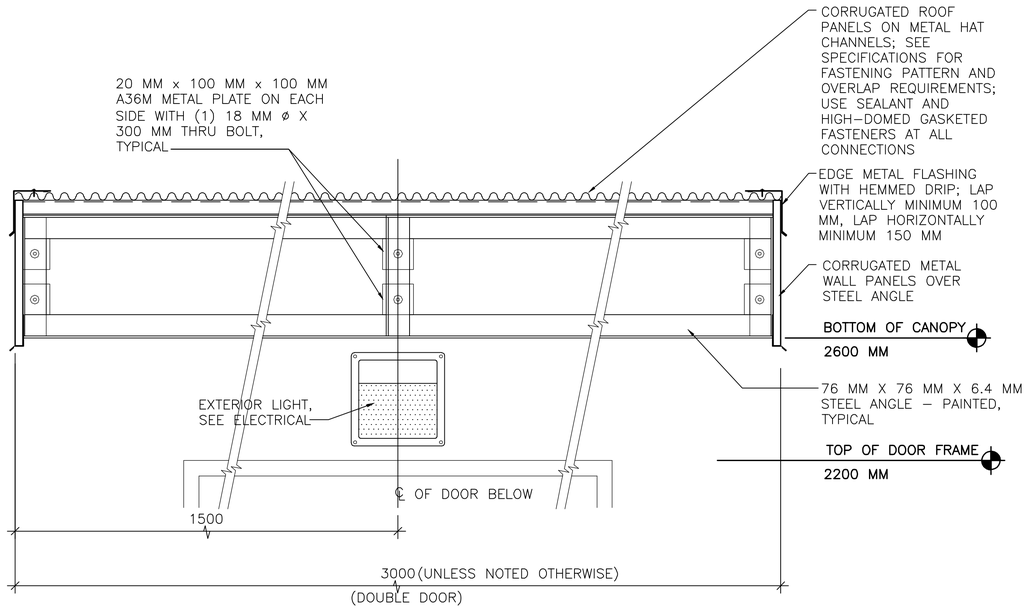


3 A-504 **CANOPY CONNECTION DETAILS**
SCALE: 1:10

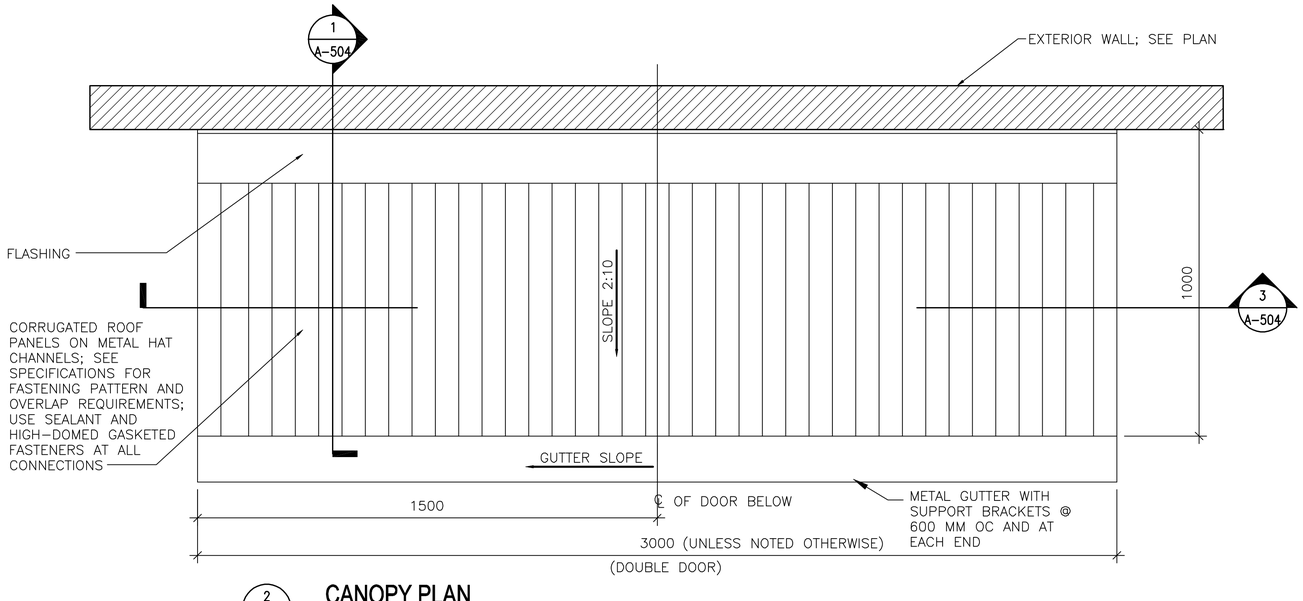


2 A-504 **CANOPY PLAN**
SCALE: 1:10

## SHEET NOTES:

1. SEE A-101 FOR FLOOR PLANS AND CANOPY LOCATIONS.

APPROVED:

A/E DESIGNER OF RECORD

SEAL:

STATE OF SOUTH CAROLINA
KEVIN R. CHAFIN
N. Charleston, SC
6374
REGISTERED ARCHITECT

0 200 400
SCALE: 1:10

0 100 200
SCALE: 1:5

LINEAR DIMENSIONS SHOWN ARE IN MILLIMETERS (MM), UNLESS OTHERWISE NOTED

US ARMY CORPS OF ENGINEERS
AFGHANISTAN ENGINEER DISTRICT

| Mark | Description | Date | Appr. |
|---|---|---|---|

| Mark | Description | Date | Appr. |
|---|---|---|---|

Date: 2/23/10
Rev: 0
Design file no.
Drawing code:
File name: ANAFACA-604DT
Plot date: 2/23/2010
Plot scale: x:x

Designed by: KRC
Drwn by: KJG
Ckd by: NLJ
Reviewed by: LHM
Submitted by: BAKER

U.S. ARMY CORPS OF ENGINEERS
AFGHANISTAN ENGINEER DISTRICT
APO AE 96338

Michael Baker Jr., Inc
A unit of Michael Baker Corporation
Airside Business Park
100 Airside Drive
Moon Township, PA 15108
www.mbakercorp.com

AFGHAN NATIONAL ARMY
REGIONAL MILITARY TRAINING CENTER
STANDARD DESIGN

DINING FACILITY

CANOPY DETAILS

Sheet reference number:
A-504

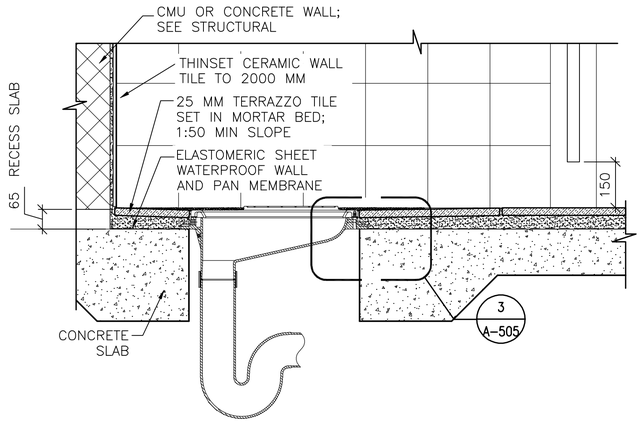


1 A-505 **LATRINE DETAIL**
SCALE: 1:10

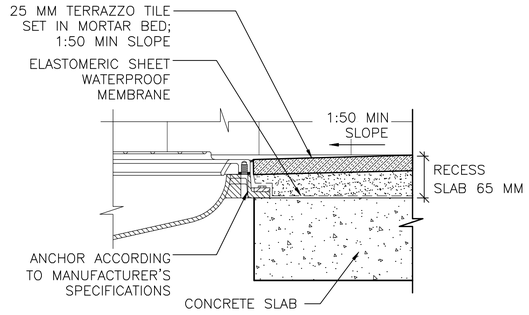


3 A-505 **MOUNTING DETAIL**
SCALE: 1:5

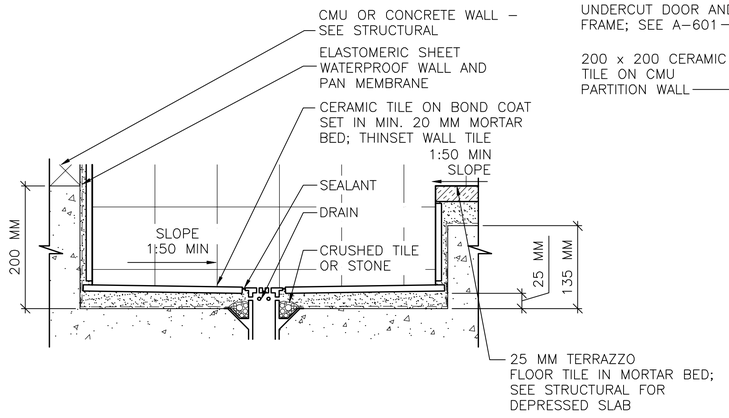


6 A-505 **RECESSED TROUGH**
SCALE: 1:5

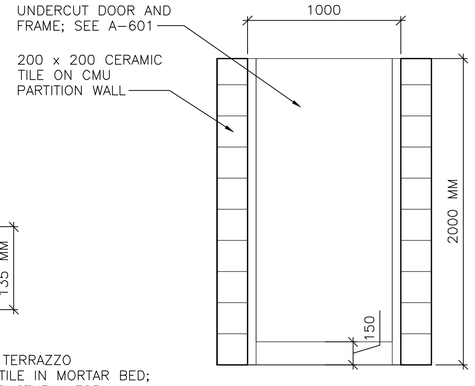


7 A-505 **TOILET PARTITION DOOR ELEVATION**
SCALE: 1:20

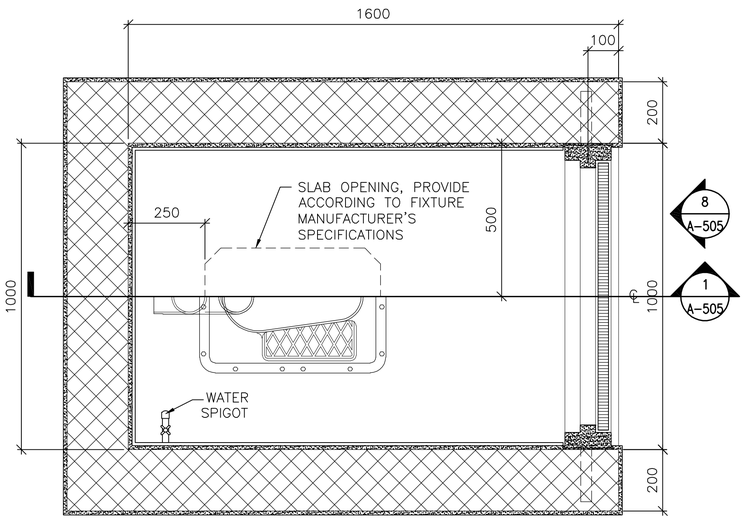


2 A-505 **TOILET DETAIL**
SCALE: 1:10

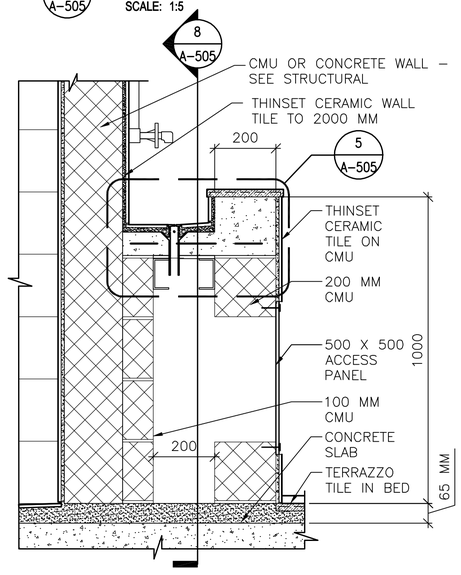


4 A-505 **LAVATORY SECTION**
SCALE: 1:10

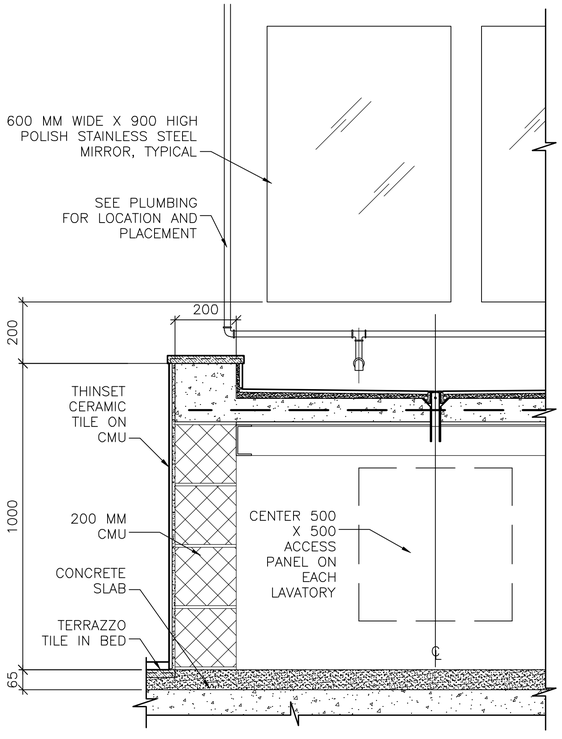


8 A-505 **LAVATORY SECTION**
SCALE: 1:10

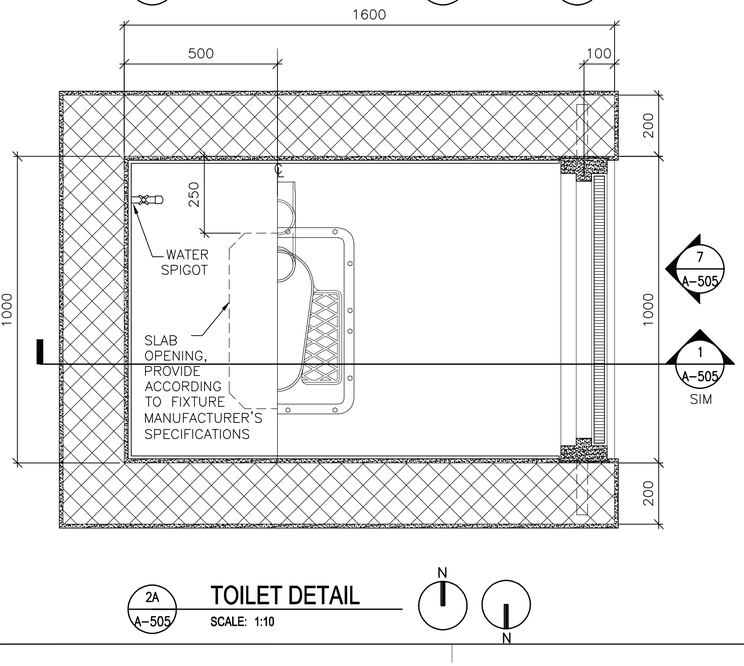


2A A-505 **TOILET DETAIL**
SCALE: 1:10

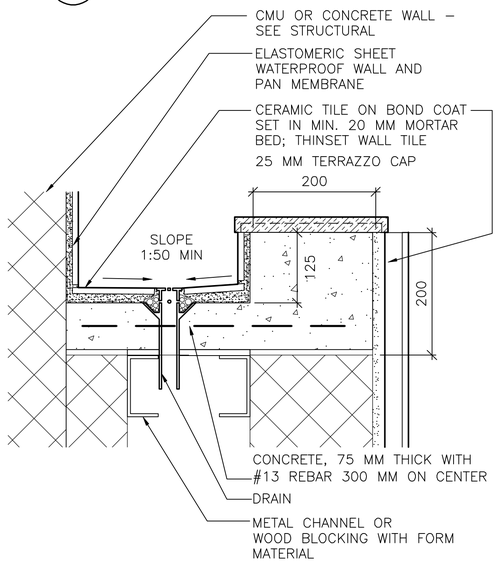


5 A-505 **LAVATORY DETAIL**
SCALE: 1:5

LINEAR DIMENSIONS SHOWN ARE IN MILLIMETERS (MM), UNLESS OTHERWISE NOTED

0 100 200
SCALE: 1:5

0 200 400
SCALE: 1:10

0 400 800
SCALE: 1:20

APPROVED:

A/E DESIGNER OF RECORD

SEAL:

STATE OF SOUTH CAROLINA
KEVIN R. CHARIN
N. Charleston, SC
6374
REGISTERED ARCHITECT

US ARMY CORPS OF ENGINEERS
AFGHANISTAN ENGINEER DISTRICT

| Mark | Description | Date | Appr. |
|---|---|---|---|
| | | | |

Date: 2/23/10
Design file no.
Drawing code:
Rev: 0
File name: ANAFACA-0505T
Plot date: 2/23/2010
Plot scale:

Designed by: KRC
Dwn by: KJG
Ckd by: NLJ
Reviewed by: LHM
Submitted by: BAKER

U.S. ARMY CORPS OF ENGINEERS
AFGHANISTAN ENGINEER DISTRICT
APO AE 96338

Michael Baker Jr., Inc
A unit of Michael Baker Corporation
Airside Business Park
100 Airside Drive
Moon Township, PA 15108
www.mbakercorp.com

AFGHAN NATIONAL ARMY
REGIONAL MILITARY TRAINING CENTER
STANDARD DESIGN

DINING FACILITY

TOILET & LAVATORY DETAILS

Sheet reference number:
A-505

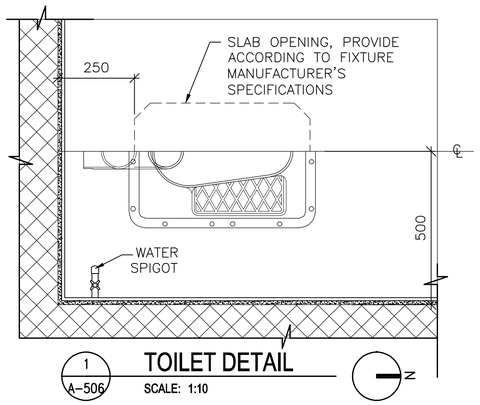


1 A-506 **TOILET DETAIL**
SCALE: 1:10

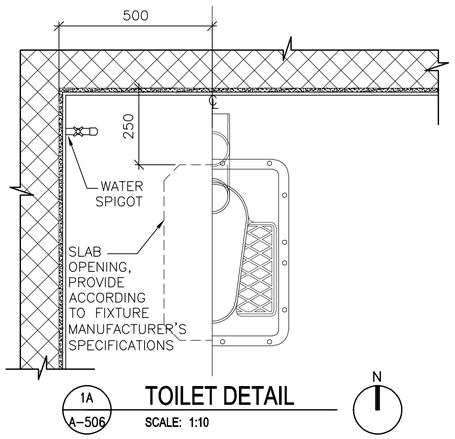


1A A-506 **TOILET DETAIL**
SCALE: 1:10

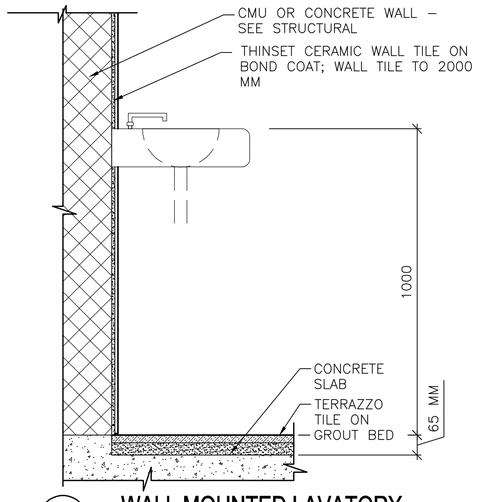


2 A-506 **WALL MOUNTED LAVATORY**
SCALE: 1:10

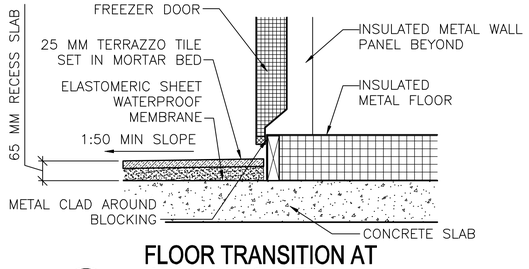


3 A-506 **FLOOR TRANSITION AT WALK-IN COOLER**
SCALE: 1:10

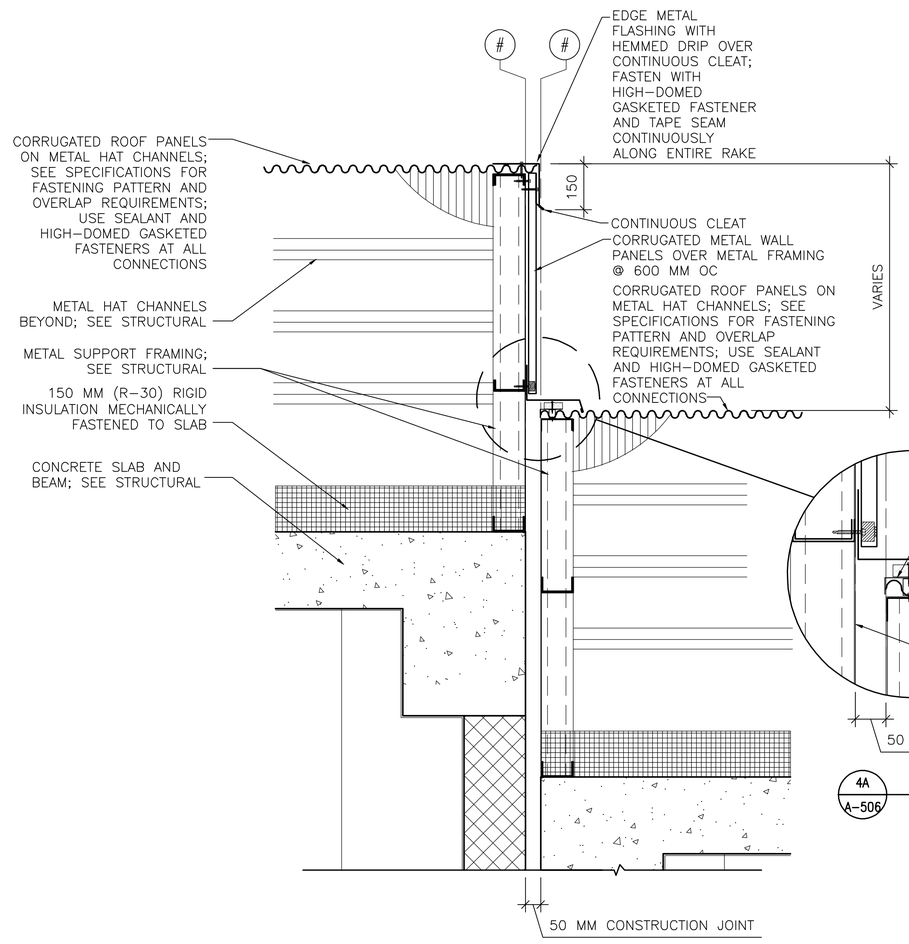


4 A-506 **ROOF EXPANSION JOINT DETAIL**
SCALE: 1:10

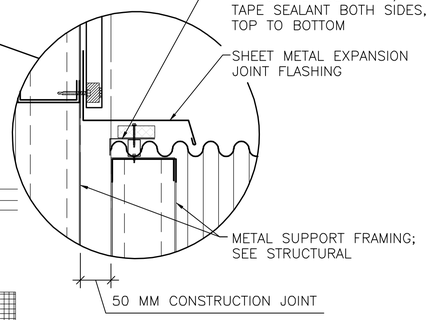


4A A-506 **DETAIL**
SCALE: 1:5

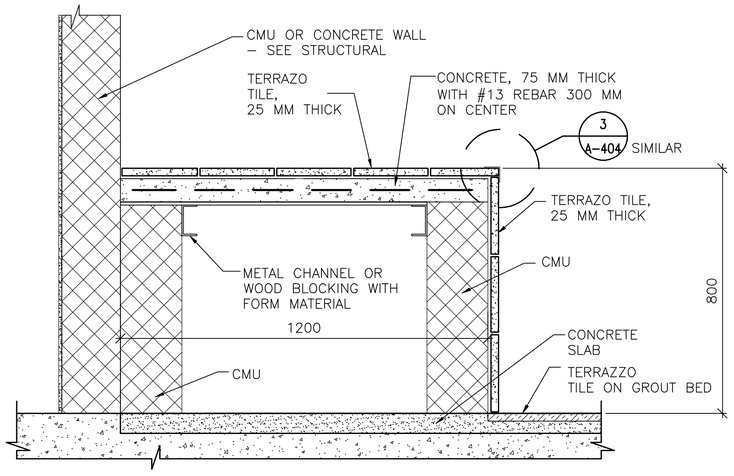


5 A-506 **CHAI BOILER SECTION**
SCALE: 1:10

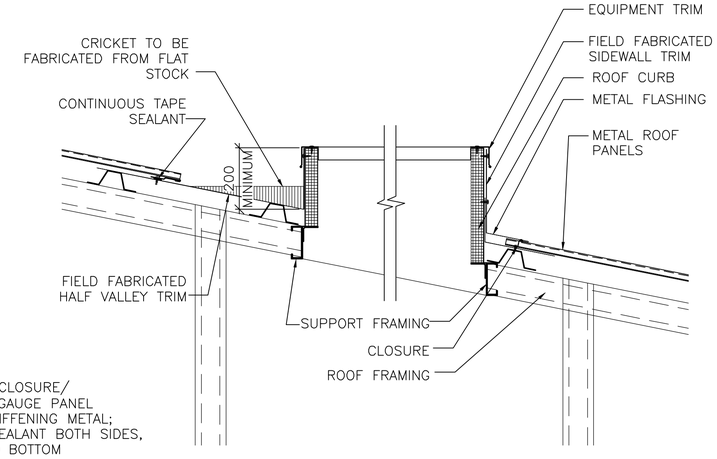


6 A-506 **ROOF CURB DETAIL**
SCALE: 1:10

LINEAR DIMENSIONS SHOWN ARE IN MILLIMETERS (MM), UNLESS OTHERWISE NOTED

0 200 400
SCALE: 1:10

APPROVED:

A/E DESIGNER OF RECORD

SEAL:

STATE OF SOUTH CAROLINA
KEVIN R. CHARIN
N. Charleston, SC
6374
REGISTERED ARCHITECT

US ARMY CORPS OF ENGINEERS
AFGHANISTAN ENGINEER DISTRICT

| Mark | Description | Date | Appr. |
|---|---|---|---|
| | | | |

U.S. ARMY CORPS OF ENGINEERS
AFGHANISTAN ENGINEER DISTRICT
APO AE 96338

*Michael Baker Jr., Inc*
*A unit of Michael Baker Corporation*
Airside Business Park
100 Airside Drive
Moon Township, PA 15108
www.mbakercorp.com

| | |
|---|---|
| Designed by: KRC | Date: 2/23/10 |
| Dwn by: KJG | Ckd by: NLJ |
| Reviewed by: LHM | Submitted by: BAKER |

Rev: 0
Design file no.
Drawing code:
File name: ANAFACA-606DT
Plot date: 2/23/2010
Plot scale:

AFGHAN NATIONAL ARMY
REGIONAL MILITARY TRAINING CENTER
STANDARD DESIGN

DINING FACILITY

DETAILS

Sheet reference number:
A–506

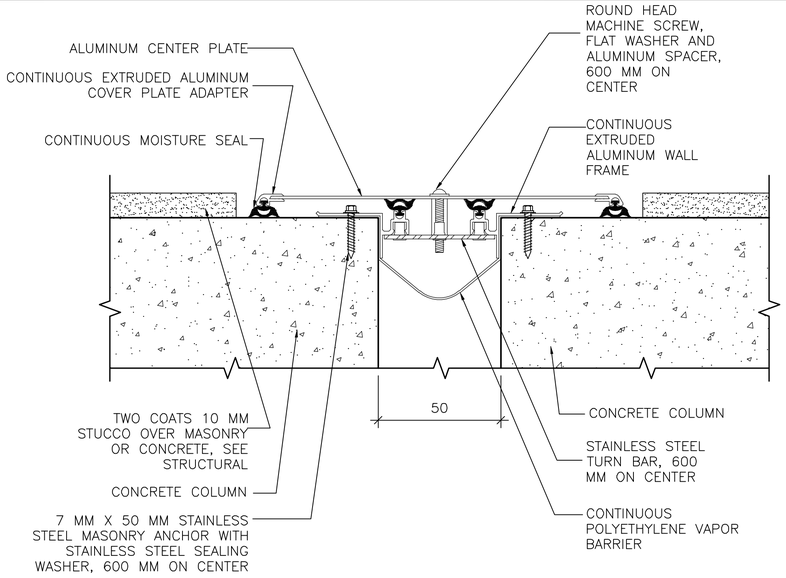


1 A–507 **EXTERIOR ISOLATION JOINT COVER**

SCALE: NTS

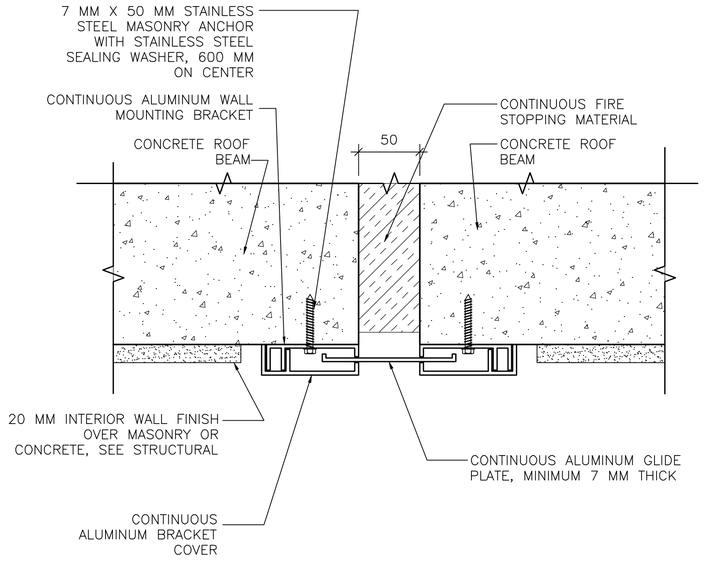


3 A–507 **CEILING ISOLATION JOINT COVER**

SCALE: NTS




2 A–507 **EXTERIOR ISOLATION JOINT COVER AT INSIDE CORNER**

SCALE: NTS




4 A–507 **INTERIOR ISOLATION JOINT COVER**

SCALE: NTS

LINEAR DIMENSIONS SHOWN ARE IN MILLIMETERS (MM), UNLESS OTHERWISE NOTED

APPROVED:

A/E DESIGNER OF RECORD

SEAL:

STATE OF SOUTH CAROLINA
KEVIN R. CHAFIN
N. Charleston, SC 6374
REGISTERED ARCHITECT

US ARMY CORPS OF ENGINEERS
AFGHANISTAN ENGINEER DISTRICT

| Mark | Description | Date | Appr. |
|---|---|---|---|
| | | | |

| Rev: 0 | Date: 2/23/10 | Designed by: KRC | Dwn by: KJG | Ckd by: NLJ | Reviewed by: LHM | Submitted by: BAKER |
|---|---|---|---|---|---|---|

Design file no.

Drawing code:

File name: ANADFACA-607DT
Plot date: 2/23/2010
Plot scale:

U.S. ARMY CORPS OF ENGINEERS
AFGHANISTAN ENGINEER DISTRICT
APO AE 96338

*Michael Baker Jr., Inc*
*A unit of Michael Baker Corporation*
Airside Business Park
100 Airside Drive
Moon Township, PA 15108
www.mbakercorp.com

AFGHAN NATIONAL ARMY
REGIONAL MILITARY TRAINING CENTER
STANDARD DESIGN

DINING FACILITY

ISOLATION JOINT DETAILS

Sheet reference number:
A–507

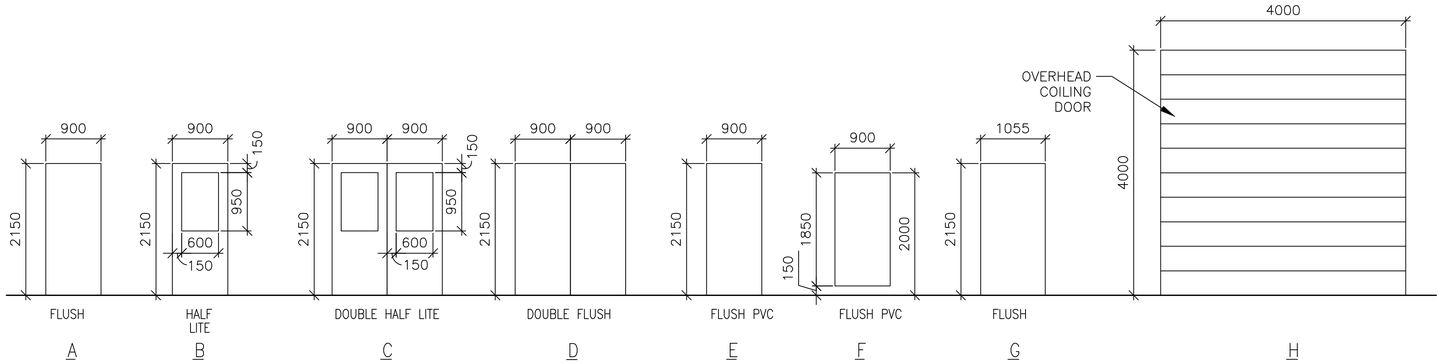


1 A-601 **DOOR TYPES**
SCALE: 1:50

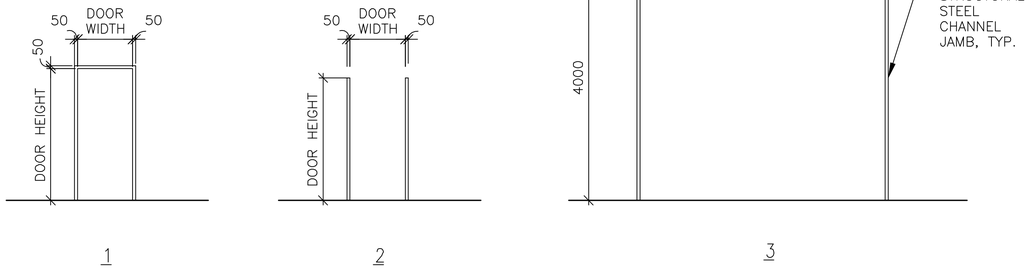


2 A-601 **FRAME TYPES**
SCALE: 1:50

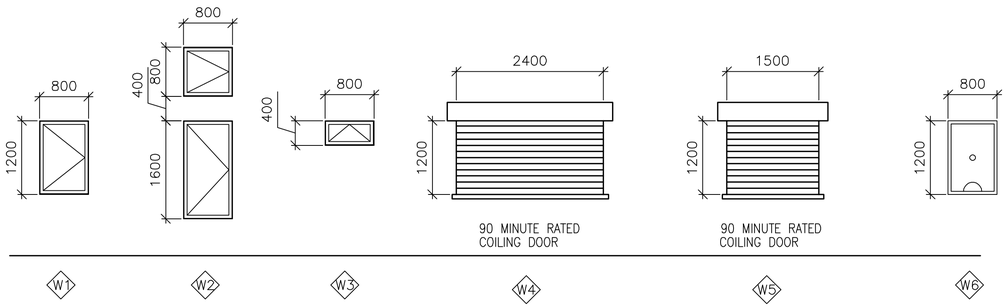


3 A-601 **WINDOW TYPES**
SCALE: 1:50

## WINDOW TYPE NOTES:

1. ALL EXTERIOR WINDOWS SHALL BE ALUMINUM WITH INSECT SCREENS. WINDOWS SHALL BE COMMERCIAL GRADE.
2. ALL EXTERIOR WINDOWS SHALL BE OPERABLE.

4 A-601 **DOOR TAG**
SCALE: NTS




5 A-601 **RATED DOOR TAG**
SCALE: NTS

## DOOR TAG NOTES:

1. THE DOOR TAG INDICATES THE DOOR TYPE, FRAME TYPE AND HARDWARE SET FOR EACH DOOR.
2. THE DOOR TAG FOR RATED DOORS INCLUDES THE RATING OF THE DOOR IN MINUTES.

## EXTERIOR DOOR HARDWARE TYPES:

HW-1 1-1/2 PR HINGES, A5112 114 X 114
1 EA RIM EXIT DEVICE, TYPE 1
1 EA CYLINDER. E09221A, GRADE 1
1 EA OVERHEAD CLOSER, C02061, LOW RESISTANCE
1 EA THRESHOLD, J32130
3 EA DOOR SILENCERS, L03011

HW-2 1-1/2 PR HINGES, A5112 114 X 114
1 EA LOCKSET, F13 ENTRY LOCK W/LEVER HANDLES, GRADE 1
1 EA OVERHEAD CLOSER, C02061, LOW RESISTANCE
1 EA THRESHOLD, J32130
3 EA DOOR SILENCERS, L03011

HW-3 3 PR HINGES, A5112 114 X 114
2 EA RIM EXIT DEVICE, TYPE 1
2 EA CYLINDER. GRADE 1
2 EA OVERHEAD CLOSER, C02061, LOW RESISTANCE
1 EA DOOR COORDINATOR, TYPE 21
1 EA ASTRAGAL
1 EA THRESHOLD, J32130
2 EA DOOR SILENCERS, L03011

HW-4 3 PR HINGES, A5112 114 X 114
1 EA LOCKSET W/LEVER HANDLES. GRADE 1, F13
1 EA OVERHEAD CLOSER, C02061, LOW RESISTANCE
2 EA MAGNETIC HOLDER PIN, ATTACHED TO DOOR LEAF
2 EA MAGNETIC HOLDER RECEIVER, ATTACHED TO STOOP
2 EA LEVER EXTENSION FLUSH BOLTS, L04081
1 EA ASTRAGAL
1 EA THRESHOLD, J32130
2 EA DOOR SILENCERS, L03011

## DOOR AND HARDWARE NOTES:

1. INTERIOR AND EXTERIOR METAL DOORS AND FRAME COLORS SHALL MATCH ADJACENT WALL COLORS AS SELECTED BY THE CONTRACTING OFFICER.
2. FRAMES, EXCEPT FIRE-RATED FRAMES, SHALL BE MOUNTED AND ADJUSTED IN ACCORDANCE WITH MANUFACTURER'S INSTRUCTIONS. FRAMES SHALL BE FASTENED WITH MINIMUM OF THREE ANCHORS PER JAMB AT EQUAL INTERVALS.
3. DIMENSIONS SHOWN ON DOOR TYPES DETAIL ARE BASED UPON MODULAR MASONRY (OR ROUGH OPENING), HEIGHT OF 2200 MM FOR STANDARD PERSONNEL DOORS. CONTRACTOR SHALL COORDINATE WITH DOOR SUPPLIER TO ENSURE THAT DIMENSIONS OF DOORS AND FRAMES PROVIDED ARE COMPATIBLE WITH DOOR OPENING DIMENSIONS.
4. HARDWARE SHALL BE HEAVY DUTY, COMMERCIAL GRADE, STAINLESS STEEL WITH A SATIN OR BRUSHED FINISH.
5. HARDWARE TYPES INCLUDE BUILDERS HARDWARE MANUFACTURERS ASSOCIATION (BMHA) NUMBER.
6. DOORS IN 2 HOUR RATED PARTITIONS SHALL BE 1.5 HOUR (90 MINUTE) RATED DOORS IN ACCORDANCE WITH NFPA 101, TABLE 8.3.4.2.
7. DOORS AT STAIR ENCLOSURES SHALL BE 1 HOUR (60 MINUTE) RATED AT 1 HOUR WALL IN ACCORDANCE WITH NFPA 101, TABLE 8.3.4.2.
8. DOORS IN 1 HOUR RATED WALLS SHALL BE 3/4 HOUR (45 MINUTE) RATED DOORS IN ACCORDANCE WITH NFPA 101, TABLE 8.3.4.2.
9. DOORS IN 1 HOUR RATED CORRIDOR WALLS SHALL BE 1/3 HOUR (20 MINUTE) IN ACCORDANCE WITH NFPA 101, TABLE 8.3.4.2.
10. PROVIDE DOOR STOPS TO PROTECT WALLS ON LOCATIONS WHERE DOOR SWING WILL STRIKE WALL.

THIS SHEET IS STANDARD AND IS INCLUSIVE OF ALL THE DOOR/ WINDOW/ HARDWARE TYPES FOR THE ENTIRE RMTC CONTRACT. NOT ALL DOOR/ WINDOW/ HARDWARE TYPES ARE USED FOR ANY PARTICULAR BUILDING DESIGN. CONTRACTOR SHALL REFER TO THE FLOOR PLAN FOR THE TYPES BEING USED.

## INTERIOR DOOR HARDWARE TYPES:

HW-5 1-1/2 PR HINGES, A8133 114 X 114
1 EA LOCKSET W/LEVER HANDLES, F08, GRADE 1
1 EA WALL STOP, L02101 OR L02161
3 EA DOOR SILENCERS, L03011

HW-6 1-1/2 PR HINGES, A8112 114 X 114
1 EA LOCKSET W/LEVER HANDLES, F08, GRADE 1
1 EA WALL STOP, L02101 OR L02161
1 EA OVERHEAD CLOSER, C02061, LOW RESISTANCE
3 EA DOOR SILENCERS, L03011

HW-7 1-1/2 PR HINGES, A8133
1 EA LOCKSET W/LEVER HANDLES, F13 GRADE 1
1 EA WALL STOP, L02101 OR L02161
2 EA MOP PLATE, J103
3 EA DOOR SILENCERS, L03011

HW-8 1-1/2 PR HINGES, A8112
1 EA LOCKSET W/LEVER HANDLES, F13 GRADE 1
1 EA WALL STOP, L02101 OR L02161
2 EA MOP PLATE, J103
1 EA OVERHEAD CLOSER, C02061, LOW RESISTANCE
3 EA DOOR SILENCERS, L03011

HW-9 1-1/2 PR HINGES, A5112 114 X 114
1 EA RIM EXIT DEVICE, TYPE 1
1 EA CYLINDER. E09221A, GRADE 1
1 EA OVERHEAD CLOSER, C02061, LOW RESISTANCE
3 EA DOOR SILENCERS, L03011

HW-10 3 PR HINGES, A5112 114 X 114
1 EA LOCKSET W/LEVER HANDLES. GRADE 1, F13
2 EA LEVER EXTENSION FLUSH BOLTS, L04081
1 EA ASTRAGAL
2 EA DOOR SILENCERS, L03011

HW-11 1-1/2 PR HINGES, A8112 114 X 114
1 EA LOCKSET W/LEVER HANDLES, F13, GRADE 1
1 EA WALL STOP, L02101 OR L02161
1 EA OVERHEAD CLOSER, C02061, LOW RESISTANCE
3 EA DOOR SILENCERS, L03011
1 EA ROBE HOOK

HW-12 1-1/2 PR HINGES, A8133
1 EA LATCHSET W/LEVER HANDLES, F76 GRADE 1
1 EA WALL STOP, L02101 OR L02161
2 EA MOP PLATE, J103
3 EA DOOR SILENCERS, L03011
1 EA ROBE HOOK

HW-13 3 PR HINGES, A5112 114 X 114
1 EA LOCKSET W/LEVER HANDLES. GRADE 1, F13
1 EA OVERHEAD CLOSER, C02061, LOW RESISTANCE
2 EA LEVER EXTENSION FLUSH BOLTS, L04081
1 EA ASTRAGAL
2 EA DOOR SILENCERS, L03011

HW-14 3 PR HINGES, A5112 114 X 114
2 EA RIM EXIT DEVICE, TYPE 1
2 EA CYLINDER. GRADE 1
2 EA OVERHEAD CLOSER, C02061, LOW RESISTANCE
1 EA DOOR COORDINATOR, TYPE 21
1 EA ASTRAGAL
2 EA DOOR SILENCERS, L03011

APPROVED:

A/E DESIGNER OF RECORD

SEAL:

STATE OF SOUTH CAROLINA
KEVIN R. CHAFIN
N. Charleston, SC
6374
REGISTERED ARCHITECT

US ARMY CORPS OF ENGINEERS
AFGHANISTAN ENGINEER DISTRICT

| Mark | Description | Date | Appr. |
|---|---|---|---|

Rev: 0
Date: 2/23/10
Design file no.
Drawing code:
File name: ANAFACA601SCH
Plot date: 2/23/2010
Plot scale: X:X
Designed by: KRC
Dwn by: KJG
Ckd by: NLJ
Reviewed by: LHM
Submitted by: BAKER

U.S. ARMY CORPS OF ENGINEERS
AFGHANISTAN ENGINEER DISTRICT
APO AE 96338

*Michael Baker Jr., Inc.*
*A unit of Michael Baker Corporation*
Airside Business Park
100 Airside Drive
Moon Township, PA 15108
www.mbakercorp.com

AFGHAN NATIONAL ARMY
REGIONAL MILITARY TRAINING CENTER
STANDARD DESIGN

DINING FACILITY

WINDOW AND DOOR SCHEDULES

Sheet reference number:
A-601

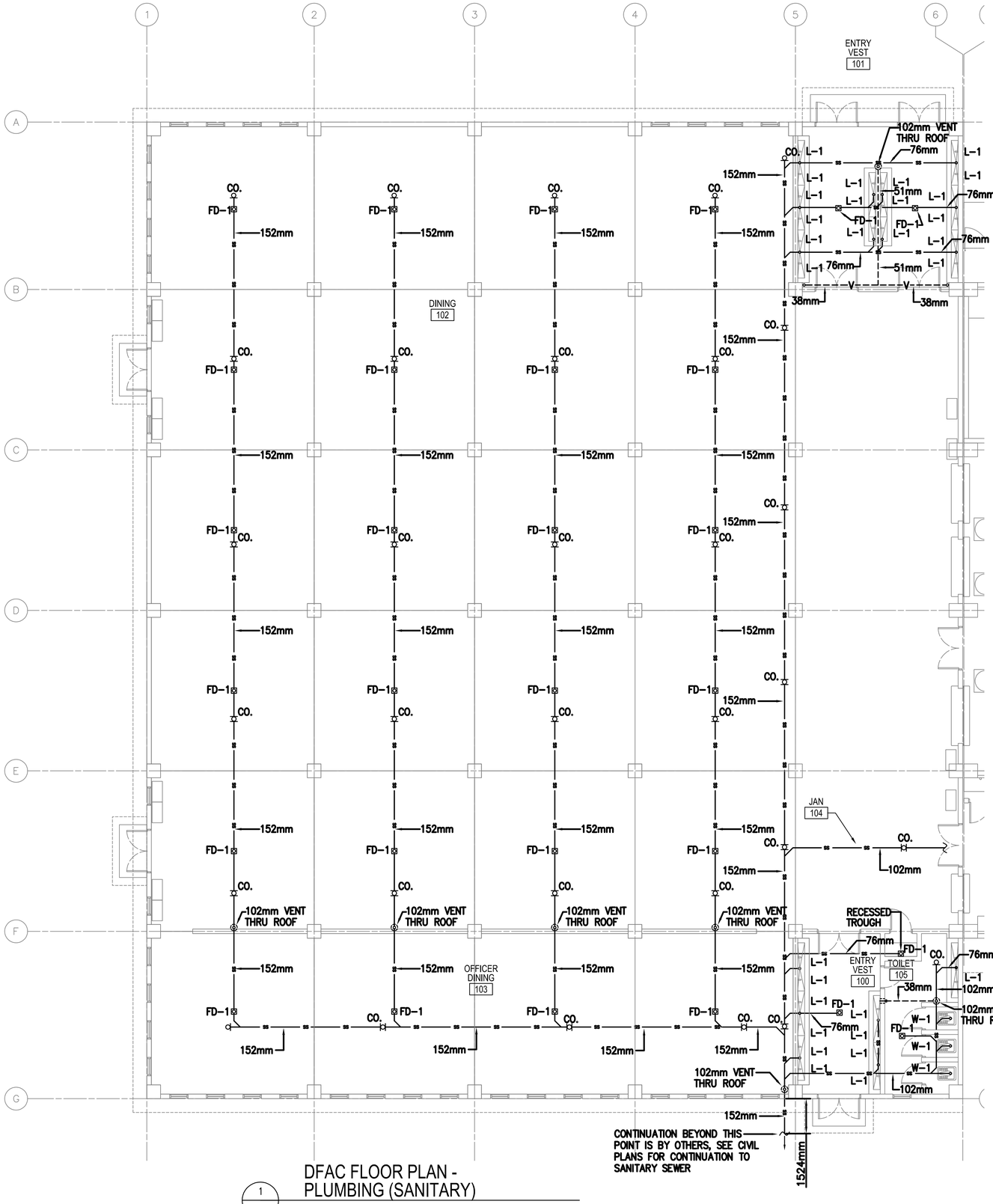


1 P101

DFAC FLOOR PLAN - PLUMBING (SANITARY)

SCALE: 1:100

## FLOOR PLAN NOTES:

1. DO NOT SCALE DRAWINGS – ALL DIMENSIONS AND CONDITIONS SHALL BE CHECKED AND VERIFIED BY THE CONTRACTOR AT THE SITE.
2. ALL WORK PERFORMED ON THIS BUILDING SHALL BE IN COMPLIANCE WITH ALL PERTINENT CODES, RULES, ORDINANCES AND REGULATIONS OF THE GOVERNING AUTHORITIES.
3. ALL WORK PERFORMED UNDER AND IN CONNECTION WITH THESE DRAWINGS AND SPECIFICATIONS SHALL BE IN STRICT COMPLIANCE WITH THE LATEST SAFETY AND HEALTH STANDARDS.
4. REPORT ANY DISCREPANCIES FOUND IN THE PLUMBING DRAWINGS AND/OR IN THE SPECIFICATIONS DURING THE BIDDING PROCESS FOR CLARIFICATION BY THE ENGINEER.
5. ALL EASTERN STYLE WATER CLOSETS IN THIS FACILITY ARE TO HAVE THE FIXTURE DESIGNATION OF W–1. EACH FIXTURE SHALL HAVE A 25mm (1 INCH) COLD WATER LINE EXTENDED TO IT AND THEN BE REDUCED TO 13mm (1/2 INCH) FOR A FINAL CONNECTION TO THE FLUSH TANK AND A 102mm (4) INCH SANITARY CONNECTION.
6. ALL TROUGH FIXTURES IN THIS FACILITY ARE TO HAVE THE FIXTURE DESIGNATION OF L–1. EACH FIXTURE SHALL HAVE A 13mm (1/2 INCH) COLD WATER, 13mm (1/2 INCH) HOT WATER CONNECTION AND A 76mm (3 INCH) SANITARY CONNECTION. SEE SHEET P501 FOR WATER PIPING LAYOUT DETAIL.
7. ALL ABLUTION FIXTURES IN THIS FACILITY ARE TO HAVE THE FIXTURE DESIGNATION OF ABL–1. EACH FIXTURE SHALL HAVE A 13mm (1/2 INCH) COLD WATER, 13mm (1/2 INCH) HOT WATER CONNECTION AND A 76mm (3 INCH) SANITARY CONNECTION. SEE SHEET P501 FOR WATER PIPING LAYOUT DETAIL.
8. REFER TO SHEET P501 & P502 FOR DETAILS AND SYMBOLS.
9. ALL WATER, SANITARY AND VENT LINES TO BE EXPOSED. RUN LINES TIGHT TO CEILING AND WALL.
10. SINK (S–1) IN THIS FACILITY IS TO BE SUPPLIED WITH A 13mm (1/2") COLD WATER, 13mm (1/2") HOT WATER AND A 76mm (3") SANITARY CONNECTION.
11. SINK (S–2) IN THIS FACILITY IS A 2–BOWL SINK. SINK SHALL BE SUPPLIED WITH A 13mm (1/2") COLD WATER, 13mm (1/2") HOT WATER, AND A 76mm (3") INDIRECT WASTE SYSTEM. (DIM. 2540mm X 807MM).
12. SINK (S–3) IN THIS FACILITY IS A 2–BOWL SINK. EACH SINK SHALL BE SUPPLIED WITH A 13mm (1/2") COLD WATER, 13mm (1/2") HOT WATER, AND A 76mm (3") GREASE WASTE LINE. (DIM. (2) AT 2540mm X 807mm).
13. DUE TO THE AMOUNT OF INFORMATION ON DRAWING, SEE DRAWING ISOMETRIC ON SHEET P901 FOR VENT PIPING.

## PLUMBING SYMBOLS

- SANITARY SEWER PIPING (BELOW GROUND)
- SANITARY SEWER PIPING (ABOVE GROUND)
- VENT PIPING (V)
- COLD WATER PIPING (CW)
- HOT WATER PIPING (HW)
- BALL VALVE
- BACKFLOW PREVENTER
- CLEANOUT (CO.) OR
- ROOF PENETRATION

## KEY PLAN:

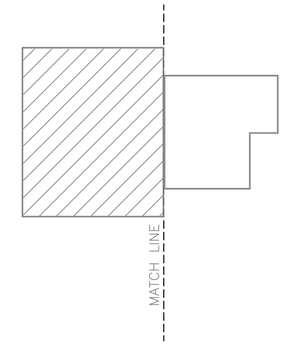


LINEAR DIMENSIONS SHOWN ARE IN MILLIMETERS (MM), UNLESS OTHERWISE NOTED

0 2000 4000
SCALE: 1:100

APPROVED:

A/E DESIGNER OF RECORD

SEAL:

COMMONWEALTH OF PENNSYLVANIA REGISTERED PROFESSIONAL MATTHEW R. SOTOSKY ENGINEER 046576-E

US ARMY CORPS OF ENGINEERS
AFGHANISTAN ENGINEER DISTRICT

| Mark | Description | Date | Appr. |
|---|---|---|---|

| Mark | Description | Date | Appr. |
|---|---|---|---|

Date: 02/23/10
Design file no.
Drawing code:
File name: ANADFACPL-101XXX
Plot date: 02/26/2010
Plot scale: 1:100
Rev: 0

Designed by: RMH
Dwn by: RMH
Ckd by: CJM
Reviewed by:
Submitted by: BAKER

U.S. ARMY CORPS OF ENGINEERS
AFGHANISTAN ENGINEER DISTRICT
APO AE 96338

*Michael Baker Jr., Inc.*
*A unit of Michael Baker Corporation*
Airside Business Park
100 Airside Drive
Moon Township, PA 15108
www.mbakercorp.com

AFGHAN NATIONAL ARMY
REGIONAL MILITARY TRAINING CENTER
STANDARD DESIGN

DINING FACILITY

DFAC FLOOR PLAN – PLUMBING (SANITARY)

Sheet reference number:
P–101

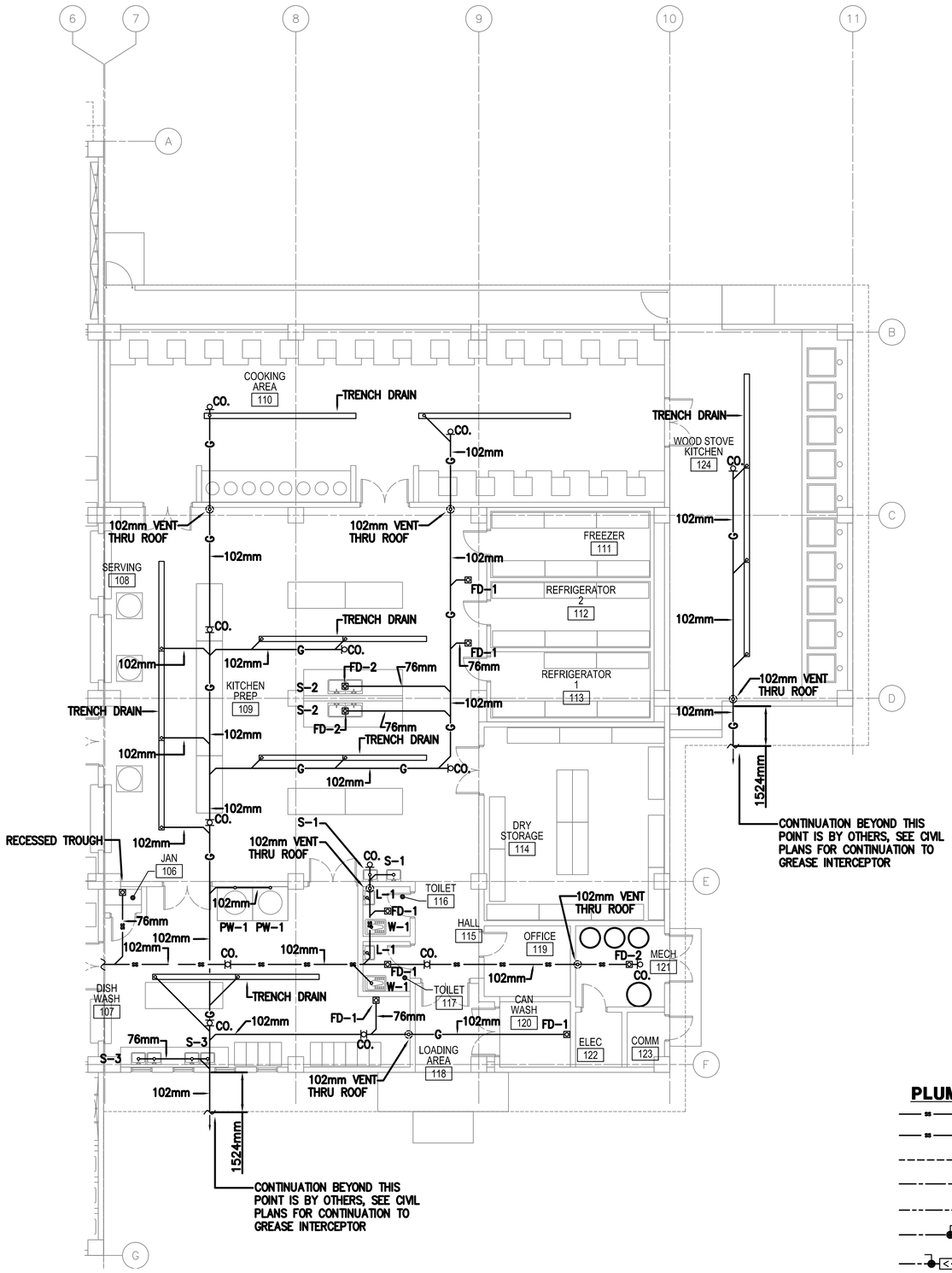


1 P102 DFAC FLOOR PLAN - PLUMBING (SANITARY)

SCALE: 1:100

## FLOOR PLAN NOTES:

1. DO NOT SCALE DRAWINGS – ALL DIMENSIONS AND CONDITIONS SHALL BE CHECKED AND VERIFIED BY THE CONTRACTOR AT THE SITE.
2. ALL WORK PERFORMED ON THIS BUILDING SHALL BE IN COMPLIANCE WITH ALL PERTINENT CODES, RULES, ORDINANCES AND REGULATIONS OF THE GOVERNING AUTHORITIES.
3. ALL WORK PERFORMED UNDER AND IN CONNECTION WITH THESE DRAWINGS AND SPECIFICATIONS SHALL BE IN STRICT COMPLIANCE WITH THE LATEST SAFETY AND HEALTH STANDARDS.
4. REPORT ANY DISCREPANCIES FOUND IN THE PLUMBING DRAWINGS AND/OR IN THE SPECIFICATIONS DURING THE BIDDING PROCESS FOR CLARIFICATION BY THE ENGINEER.
5. ALL EASTERN STYLE WATER CLOSETS IN THIS FACILITY ARE TO HAVE THE FIXTURE DESIGNATION OF W–1. EACH FIXTURE SHALL HAVE A 25mm (1 INCH) COLD WATER LINE EXTENDED TO IT AND THEN BE REDUCED TO 13mm (1/2 INCH) FOR A FINAL CONNECTION TO THE FLUSH TANK AND A 102mm (4) INCH SANITARY CONNECTION.
6. ALL TROUGH FIXTURES IN THIS FACILITY ARE TO HAVE THE FIXTURE DESIGNATION OF L–1. EACH FIXTURE SHALL HAVE A 13mm (1/2 INCH) COLD WATER, 13mm (1/2 INCH) HOT WATER CONNECTION AND A 76mm (3 INCH) SANITARY CONNECTION. SEE SHEET P501 FOR WATER PIPING LAYOUT DETAIL.
7. ALL ABLUTION FIXTURES IN THIS FACILITY ARE TO HAVE THE FIXTURE DESIGNATION OF ABL–1. EACH FIXTURE SHALL HAVE A 13mm (1/2 INCH) COLD WATER, 13mm (1/2 INCH) HOT WATER CONNECTION AND A 76mm (3 INCH) SANITARY CONNECTION. SEE SHEET P501 FOR WATER PIPING LAYOUT DETAIL.
8. REFER TO SHEET P501 & P502 FOR DETAILS AND SYMBOLS.
9. ALL WATER, SANITARY AND VENT LINES TO BE EXPOSED. RUN LINES TIGHT TO CEILING AND WALL.
10. SINK (S–1) IN THIS FACILITY IS TO BE SUPPLIED WITH A 13mm (1/2") COLD WATER, 13mm (1/2") HOT WATER AND A 76mm (3") SANITARY CONNECTION.
11. SINK (S–2) IN THIS FACILITY IS A 2–BOWL SINK. SINK SHALL BE SUPPLIED WITH A 13mm (1/2") COLD WATER, 13mm (1/2") HOT WATER, AND A 76mm (3") INDIRECT WASTE SYSTEM. (DIM. 2540mm X 807mm).
12. SINK (S–3) IN THIS FACILITY IS A 2–BOWL SINK. EACH SINK SHALL BE SUPPLIED WITH A 13mm (1/2") COLD WATER, 13mm (1/2") HOT WATER, AND A 76mm (3") GREASE WASTE LINE. (DIM. (2) AT 2540mm X 807mm).
13. DUE TO THE AMOUNT OF INFORMATION ON DRAWING, SEE DRAINAGE ISOMETRIC ON SHEET P901 FOR VENT PIPING.

## PLUMBING SYMBOLS

- SANITARY SEWER PIPING (BELOW GROUND)
- SANITARY SEWER PIPING (ABOVE GROUND)
- VENT PIPING (V)
- COLD WATER PIPING (CW)
- HOT WATER PIPING (HW)
- BALL VALVE
- BACKFLOW PREVENTER
- CLEANOUT (CO.) (OR)
- ROOF PENETRATION

## KEY PLAN:

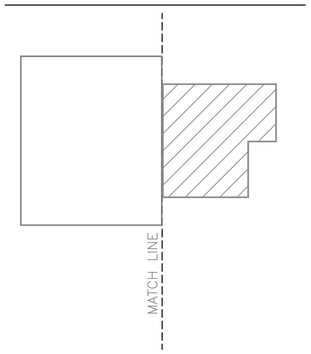


LINEAR DIMENSIONS SHOWN ARE IN MILLIMETERS (MM), UNLESS OTHERWISE NOTED

0 2000 4000
SCALE: 1:100

APPROVED:

A/E DESIGNER OF RECORD

SEAL:

COMMONWEALTH OF PENNSYLVANIA REGISTERED PROFESSIONAL MATTHEW R. SOTOSKY ENGINEER 045578-E

US ARMY CORPS OF ENGINEERS
AFGHANISTAN ENGINEER DISTRICT

| Mark | Description | Date | Appr. |
|---|---|---|---|
| | | | |

| Mark | Description | Date | Appr. |
|---|---|---|---|
| | | | |

Rev: 0
Date: 02/23/10
Design file no.
Drawing code:
File name: ANADFACPL-102XXX
Plot date: 02/26/2010
Plot scale: 1:100

Designed by: RMH
Drawn by: RMH
Ckd by: CJM
Reviewed by:
Submitted by: BAKER

U.S. ARMY CORPS OF ENGINEERS
AFGHANISTAN ENGINEER DISTRICT
APO AE 96338

*Michael Baker Jr., Inc*
*A unit of Michael Baker Corporation*
Airside Business Park
100 Airside Drive
Moon Township, PA 15108
www.mbakercorp.com

AFGHAN NATIONAL ARMY
REGIONAL MILITARY TRAINING CENTER
STANDARD DESIGN

DINING FACILITY

DFAC FLOOR PLAN – PLUMBING (SANITARY)

Sheet reference number:
P–102

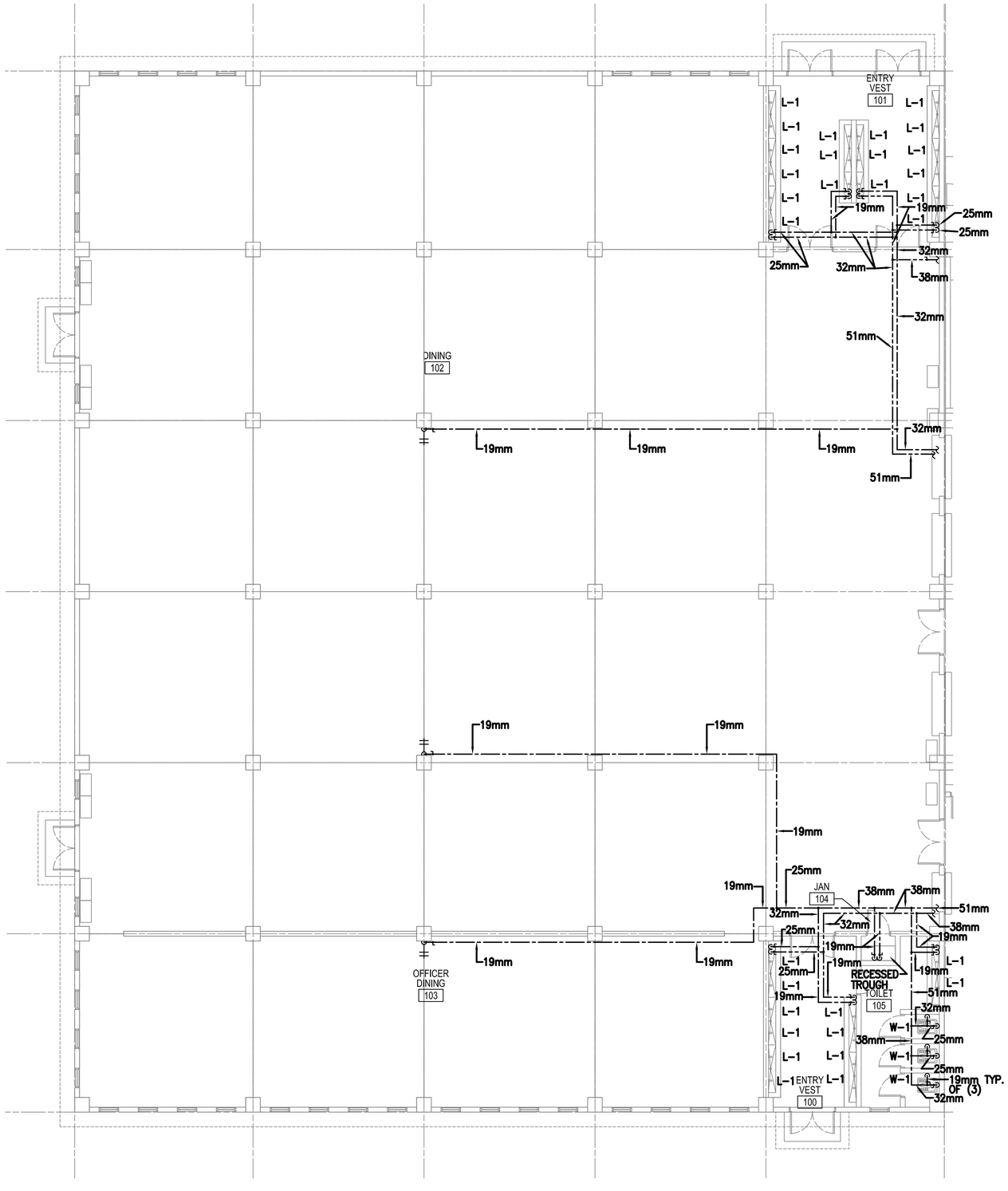


DFAC FLOOR PLAN -
PLUMBING (HOT & COLD WATER)

1 / P103

SCALE: 1:100

## FLOOR PLAN NOTES:

1. DO NOT SCALE DRAWINGS – ALL DIMENSIONS AND CONDITIONS SHALL BE CHECKED AND VERIFIED BY THE CONTRACTOR AT THE SITE.
2. ALL WORK PERFORMED ON THIS BUILDING SHALL BE IN COMPLIANCE WITH ALL PERTINENT CODES, RULES, ORDINANCES AND REGULATIONS OF THE GOVERNING AUTHORITIES.
3. ALL WORK PERFORMED UNDER AND IN CONNECTION WITH THESE DRAWINGS AND SPECIFICATIONS SHALL BE IN STRICT COMPLIANCE WITH THE LATEST SAFETY AND HEALTH STANDARDS.
4. REPORT ANY DISCREPANCIES FOUND IN THE PLUMBING DRAWINGS AND/OR IN THE SPECIFICATIONS DURING THE BIDDING PROCESS FOR CLARIFICATION BY THE ENGINEER.
5. ALL EASTERN STYLE WATER CLOSETS IN THIS FACILITY ARE TO HAVE THE FIXTURE DESIGNATION OF W–1. EACH FIXTURE SHALL HAVE A 25mm (1 INCH) COLD WATER LINE EXTENDED TO IT AND THEN BE REDUCED TO 13mm (1/2 INCH) FOR A FINAL CONNECTION TO THE FLUSH TANK AND A 102mm (4) INCH SANITARY CONNECTION.
6. ALL TROUGH FIXTURES IN THIS FACILITY ARE TO HAVE THE FIXTURE DESIGNATION OF L–1. EACH FIXTURE SHALL HAVE A 13mm (1/2 INCH) COLD WATER, 13mm (1/2 INCH) HOT WATER CONNECTION AND A 76mm (3 INCH) SANITARY CONNECTION. SEE SHEET P501 FOR WATER PIPING LAYOUT DETAIL.
7. ALL ABLUTION FIXTURES IN THIS FACILITY ARE TO HAVE THE FIXTURE DESIGNATION OF ABL–1. EACH FIXTURE SHALL HAVE A 13mm (1/2 INCH) COLD WATER, 13mm (1/2 INCH) HOT WATER CONNECTION AND A 76mm (3 INCH) SANITARY CONNECTION. SEE SHEET P501 FOR WATER PIPING LAYOUT DETAIL.
8. REFER TO SHEET P501 & P502 FOR DETAILS AND SYMBOLS.
9. ALL WATER, SANITARY AND VENT LINES TO BE EXPOSED. RUN LINES TIGHT TO CEILING AND WALL.
10. SINK (S–1) IN THIS FACILITY IS TO BE SUPPLIED WITH A 13mm (1/2") COLD WATER, 13mm (1/2") HOT WATER AND A 76mm (3") SANITARY CONNECTION.
11. SINK (S–2) IN THIS FACILITY IS A 2–BOWL SINK. SINK SHALL BE SUPPLIED WITH A 13mm (1/2") COLD WATER, 13mm (1/2") HOT WATER, AND A 76mm (3") INDIRECT WASTE SYSTEM.
12. SINK (S–3) IN THIS FACILITY IS A 2–BOWL SINK. EACH SINK SHALL BE SUPPLIED WITH A 13mm (1/2") COLD WATER, 13mm (1/2") HOT WATER, AND A 76mm (3") GREASE WASTE LINE.

## PLUMBING SYMBOLS

- SANITARY SEWER PIPING (BELOW GROUND)
- SANITARY SEWER PIPING (ABOVE GROUND)
- VENT PIPING (V)
- COLD WATER PIPING (CW)
- HOT WATER PIPING (HW)
- BALL VALVE
- BACKFLOW PREVENTER
- CLEANOUT (CO.) — OR
- ROOF PENETRATION

## KEY PLAN:

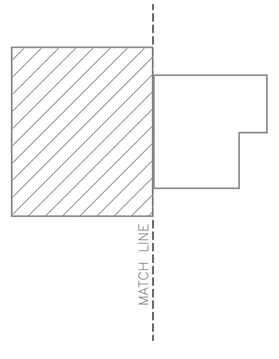


LINEAR DIMENSIONS SHOWN ARE IN MILLIMETERS (MM), UNLESS OTHERWISE NOTED

0 2000 4000
SCALE: 1:100

APPROVED:

A/E DESIGNER OF RECORD

SEAL:

COMMONWEALTH OF PENNSYLVANIA — REGISTERED PROFESSIONAL — MATTHEW R. SOTOSKY — ENGINEER — 045578-E

US ARMY CORPS OF ENGINEERS
AFGHANISTAN ENGINEER DISTRICT

| Mark | Description | Date | Appr. |
|---|---|---|---|
| | | | |

| Mark | Description | Date | Appr. |
|---|---|---|---|
| | | | |

Date: 02/23/10 | Rev: 0
Designed by: RMH | Drawing code:
Dwn by: RMH | Ckd by: CJM
Reviewed by:
Submitted by: BAKER
File name: ANADFACPL-103XXX
Plot date: 02/26/2010
Plot scale: 1:100

U.S. ARMY CORPS OF ENGINEERS
AFGHANISTAN ENGINEER DISTRICT
APO AE 96338

*Michael Baker Jr., Inc*
*A unit of Michael Baker Corporation*
Airside Business Park
100 Airside Drive
Moon Township, PA 15108
www.mbakercorp.com

AFGHAN NATIONAL ARMY
REGIONAL MILITARY TRAINING CENTER
STANDARD DESIGN

DINING FACILITY
DFAC FLOOR PLAN – PLUMBING (HOT & COLD WATER)

Sheet reference number:
P–103

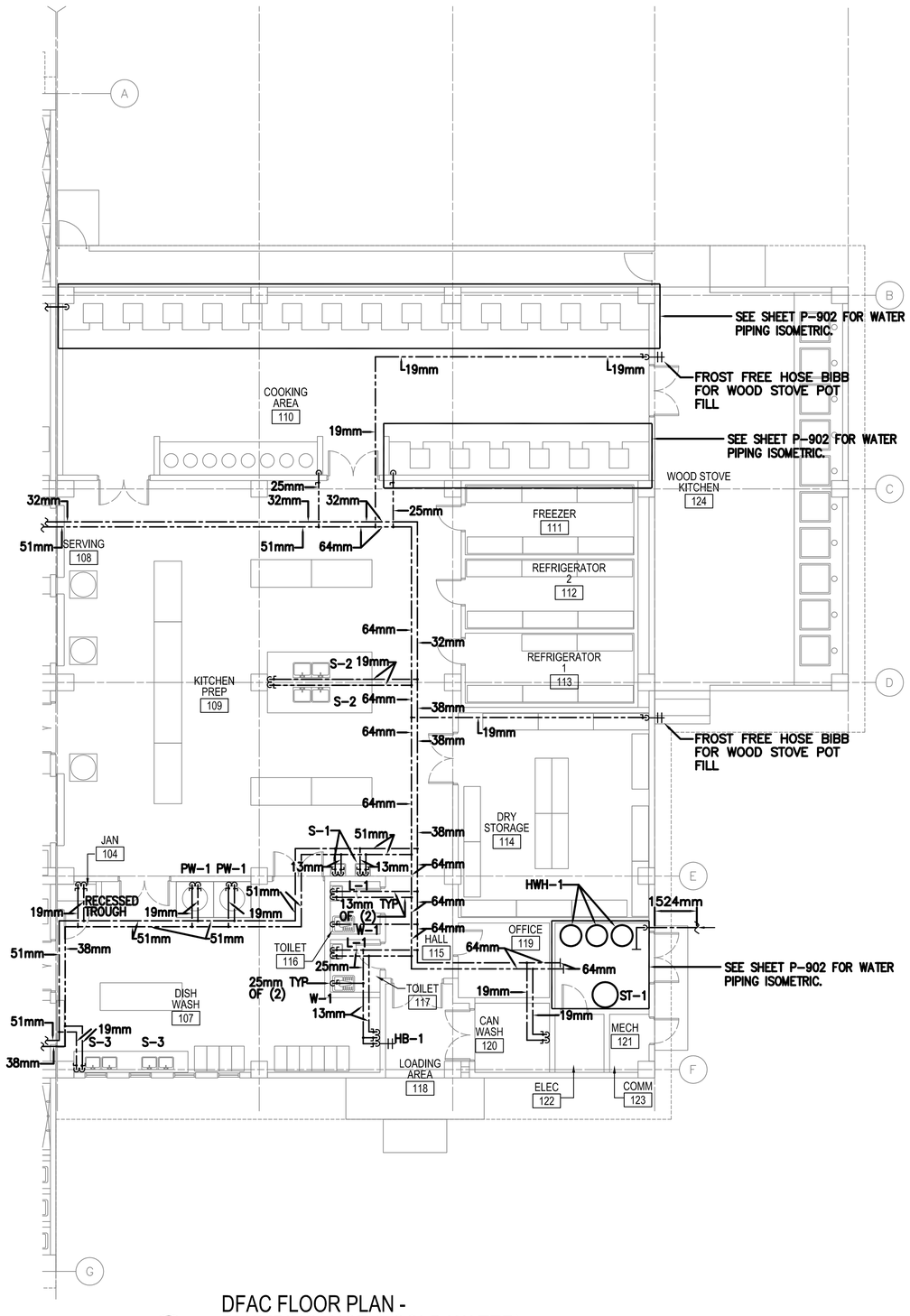


1 / P104 DFAC FLOOR PLAN - PLUMBING (HOT & COLD WATER)

SCALE: 1:100

## FLOOR PLAN NOTES:

1. DO NOT SCALE DRAWINGS – ALL DIMENSIONS AND CONDITIONS SHALL BE CHECKED AND VERIFIED BY THE CONTRACTOR AT THE SITE.
2. ALL WORK PERFORMED ON THIS BUILDING SHALL BE IN COMPLIANCE WITH ALL PERTINENT CODES, RULES, ORDINANCES AND REGULATIONS OF THE GOVERNING AUTHORITIES.
3. ALL WORK PERFORMED UNDER AND IN CONNECTION WITH THESE DRAWINGS AND SPECIFICATIONS SHALL BE IN STRICT COMPLIANCE WITH THE LATEST SAFETY AND HEALTH STANDARDS.
4. REPORT ANY DISCREPANCIES FOUND IN THE PLUMBING DRAWINGS AND/OR IN THE SPECIFICATIONS DURING THE BIDDING PROCESS FOR CLARIFICATION BY THE ENGINEER.
5. ALL EASTERN STYLE WATER CLOSETS IN THIS FACILITY ARE TO HAVE THE FIXTURE DESIGNATION OF W-1. EACH FIXTURE SHALL HAVE A 25mm (1 INCH) COLD WATER LINE EXTENDED TO IT AND THEN BE REDUCED TO 13mm (1/2 INCH) FOR A FINAL CONNECTION TO THE FLUSH TANK AND A 102mm (4) INCH SANITARY CONNECTION.
6. ALL TROUGH FIXTURES IN THIS FACILITY ARE TO HAVE THE FIXTURE DESIGNATION OF L-1. EACH FIXTURE SHALL HAVE A 13mm (1/2 INCH) COLD WATER, 13mm (1/2 INCH) HOT WATER CONNECTION AND A 76mm (3 INCH) SANITARY CONNECTION. SEE SHEET P501 FOR WATER PIPING LAYOUT DETAIL.
7. ALL ABLUTION FIXTURES IN THIS FACILITY ARE TO HAVE THE FIXTURE DESIGNATION OF ABL-1. EACH FIXTURE SHALL HAVE A 13mm (1/2 INCH) COLD WATER, 13mm (1/2 INCH) HOT WATER CONNECTION AND A 76mm (3 INCH) SANITARY CONNECTION. SEE SHEET P501 FOR WATER PIPING LAYOUT DETAIL.
8. REFER TO SHEET P501 & P502 FOR DETAILS AND SYMBOLS.
9. ALL WATER, SANITARY AND VENT LINES TO BE EXPOSED. RUN LINES TIGHT TO CEILING AND WALL.
10. SINK (S-1) IN THIS FACILITY IS TO BE SUPPLIED WITH A 13mm (1/2") COLD WATER, 13mm (1/2") HOT WATER AND A 76mm (3") SANITARY CONNECTION.
11. SINK (S-2) IN THIS FACILITY IS A 2-BOWL SINK. SINK SHALL BE SUPPLIED WITH A 13mm (1/2") COLD WATER, 13mm (1/2") HOT WATER, AND A 76mm (3") INDIRECT WASTE SYSTEM.
12. SINK (S-3) IN THIS FACILITY IS A 2-BOWL SINK. EACH SINK SHALL BE SUPPLIED WITH A 13mm (1/2") COLD WATER, 13mm (1/2") HOT WATER, AND A 76mm (3") GREASE WASTE LINE.

## PLUMBING SYMBOLS

- SANITARY SEWER PIPING (BELOW GROUND)
- SANITARY SEWER PIPING (ABOVE GROUND)
- VENT PIPING (V)
- COLD WATER PIPING (CW)
- HOT WATER PIPING (HW)
- BALL VALVE
- BACKFLOW PREVENTER
- CLEANOUT (CO.) (OR)
- ROOF PENETRATION

KEY PLAN:

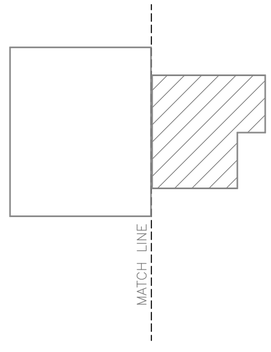


LINEAR DIMENSIONS SHOWN ARE IN MILLIMETERS (MM), UNLESS OTHERWISE NOTED

0 2000 4000
SCALE: 1:100

APPROVED:

A/E DESIGNER OF RECORD

SEAL:

COMMONWEALTH OF PENNSYLVANIA REGISTERED PROFESSIONAL MATTHEW R. SOTOSKY ENGINEER 065576-E

US ARMY CORPS OF ENGINEERS
AFGHANISTAN ENGINEER DISTRICT

| Mark | Description | Date | Appr. |
|---|---|---|---|

| Mark | Description | Date | Appr. |
|---|---|---|---|

Rev: 0
Date: 02/23/10
Design file no.
Drawing code:
File name: ANADFACPL-104XXX
Plot date: 02/09/2010
Plot scale: 1:100

Designed by: RMH
Dwn by: RMH
Ckd by: CJM
Reviewed by:
Submitted by: BAKER

U.S. ARMY CORPS OF ENGINEERS
AFGHANISTAN ENGINEER DISTRICT
APO AE 96338

*Michael Baker Jr., Inc*
*A unit of Michael Baker Corporation*
Airside Business Park
100 Airside Drive
Moon Township, PA 15108
www.mbakercorp.com

AFGHAN NATIONAL ARMY
REGIONAL MILITARY TRAINING CENTER
STANDARD DESIGN

DINING FACILITY
DFAC FLOOR PLAN - PLUMBING (HOT & COLD WATER)

Sheet reference number:
P-104

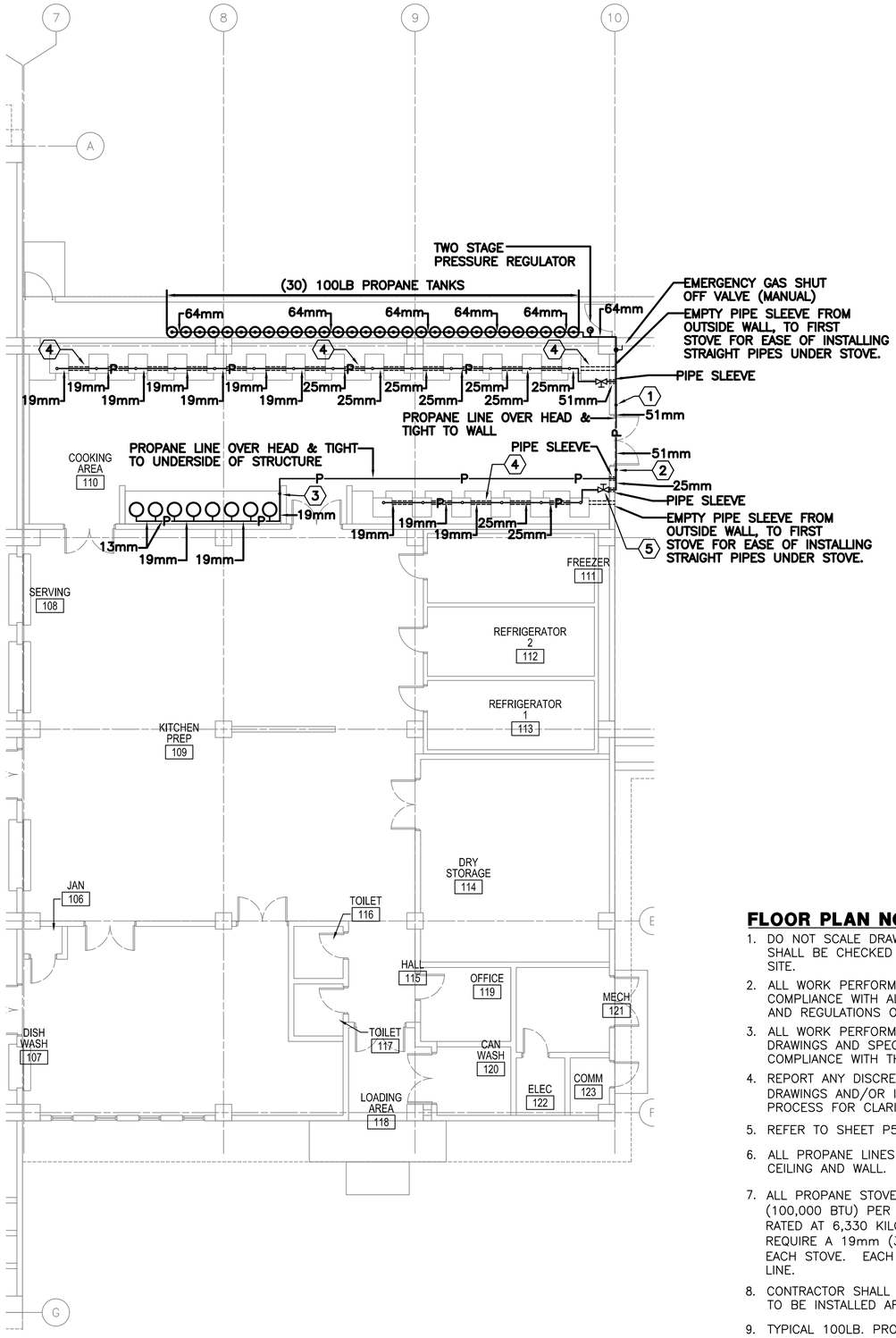


1 / P105 DFAC FLOOR PLAN - PLUMBING (PROPANE)

SCALE: 1:100

## DFAC PROPANE CODED NOTES:

1. PROPANE LINE UP AND ABOVE DOOR STAYING TIGHT TO THE WALL.
2. PROPANE LINE DOWN FROM ABOVE DOOR STAYING TIGHT TO WALL. CONTINUE LINE INTO PROPANE STOVE STRUCTURE WITH OVERSIZED PIPE SLEEVE.
3. PROPANE LINE DOWN TIGHT TO WALL TO 152mm ABOVE COUNTER TOP, CONTINUE LINE TIGHT TO WALL TO PROVIDE PROPANE TO ALL TEA KETTLE WARMERS. VALVE IN VERTICAL NEAR COUNTERTOP.
4. MANIFOLD SLEEVED BEHIND STOVE LEGS IN CONCRETE. EXTEND BRANCH VALVE UNDER STOVE WITH FLEXIBLE CONNECTOR FROM VALVE TO STOVE.
5. SHUT OFF VALVE–INSTALL PIPING CLOSE TO CONCRETE PLATFORM TO PREVENT TRIPPING HAZARD.

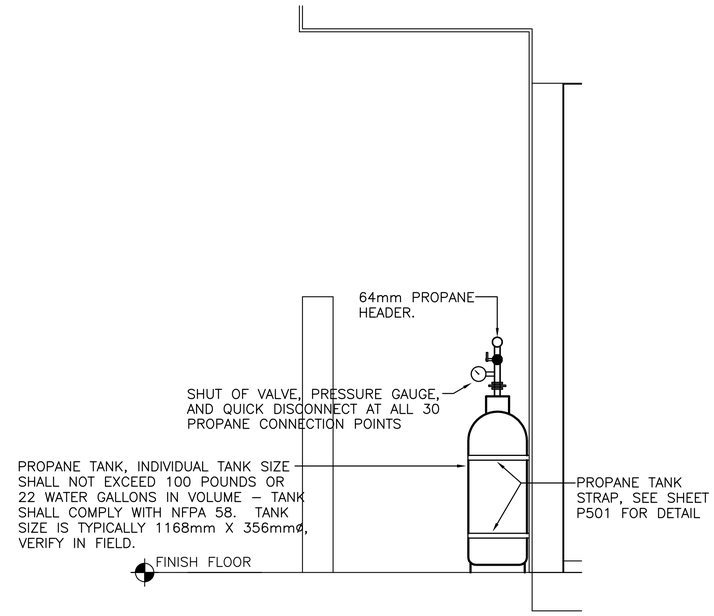


2 / P105 PROPANE TANK MOUNTING AND LINE DETAIL

SCALE: N.T.S.

## FLOOR PLAN NOTES:

1. DO NOT SCALE DRAWINGS – ALL DIMENSIONS AND CONDITIONS SHALL BE CHECKED AND VERIFIED BY THE CONTRACTOR AT THE SITE.
2. ALL WORK PERFORMED ON THIS BUILDING SHALL BE IN COMPLIANCE WITH ALL PERTINENT CODES, RULES, ORDINANCES AND REGULATIONS OF THE GOVERNING AUTHORITIES.
3. ALL WORK PERFORMED UNDER AND IN CONNECTION WITH THESE DRAWINGS AND SPECIFICATIONS SHALL BE IN STRICT COMPLIANCE WITH THE LATEST SAFETY AND HEALTH STANDARDS.
4. REPORT ANY DISCREPANCIES FOUND IN THE PLUMBING DRAWINGS AND/OR IN THE SPECIFICATIONS DURING THE BIDDING PROCESS FOR CLARIFICATION BY THE ENGINEER.
5. REFER TO SHEET P501, P502, & P503 FOR DETAILS AND SYMBOLS.
6. ALL PROPANE LINES TO BE EXPOSED. RUN LINES TIGHT TO CEILING AND WALL.
7. ALL PROPANE STOVES ARE RATED AT 105,506 KILOJOULES (100,000 BTU) PER HOUR, AND THE TEA KETTLE WARMERS ARE RATED AT 6,330 KILOJOULES (6,000 BTU). EACH STOVE WILL REQUIRE A 19mm (3/4") LINE WITH A SHUT OFF VALVE AT EACH STOVE. EACH TEA KETTLE WILL REQUIRE A 13mm (1/2") LINE.
8. CONTRACTOR SHALL PROVIDE A TWO STAGE PRESSURE REGULATOR TO BE INSTALLED AFTER FINAL PROPANE TANK IN THE MANIFOLD.
9. TYPICAL 100LB. PROPANE TANKS ARE 1168mm X 35mmø. VERIFY TANK SIZE IN FIELD.
10. SEAL ALL PIPE SLEEVE OPENINGS BETWEEN PROPANE PIPE AND PROPANE PIPE SLEEVE.

## PLUMBING SYMBOLS

- SS — SANITARY SEWER PIPING (BELOW GROUND)
- SS — SANITARY SEWER PIPING (ABOVE GROUND)
- VENT PIPING (V)
- COLD WATER PIPING (CW)
- HOT WATER PIPING (HW)
- P — PROPANE LINE
- P — TWO STAGE PRESSURE GAUGE
- BALL VALVE
- BACKFLOW PREVENTER
- OR — CLEANOUT (CO.)
- ROOF PENETRATION

## KEY PLAN:

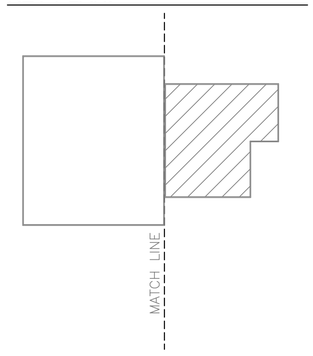


LINEAR DIMENSIONS SHOWN ARE IN MILLIMETERS (MM), UNLESS OTHERWISE NOTED

0 2000 4000
SCALE: 1:100

APPROVED:

A/E DESIGNER OF RECORD

SEAL:

COMMONWEALTH OF PENNSYLVANIA REGISTERED PROFESSIONAL MATTHEW R. SOTOSKY ENGINEER 065576-E

US ARMY CORPS OF ENGINEERS
AFGHANISTAN ENGINEER DISTRICT

| Mark | Description | Date | Appr. |
|---|---|---|---|

U.S. ARMY CORPS OF ENGINEERS
AFGHANISTAN ENGINEER DISTRICT
APO AE 96338

Michael Baker Jr., Inc
A unit of Michael Baker Corporation
Airside Business Park
100 Airside Drive
Moon Township, PA 15108
www.mbakercorp.com

Designed by: RMH
Dwn by: RMH
Ckd by: CJM
Reviewed by:
Submitted by: BAKER

Date: 02/23/10
Design file no.
Rev: 0
Drawing code:
File name: ANADFACPL-165XXX
Plot date: 02/09/2010
Plot scale: 1:100

AFGHAN NATIONAL ARMY
REGIONAL MILITARY TRAINING CENTER
STANDARD DESIGN

DINING FACILITY
DFAC FLOOR PLAN – PLUMBING (PROPANE)

Sheet reference number:
P–105

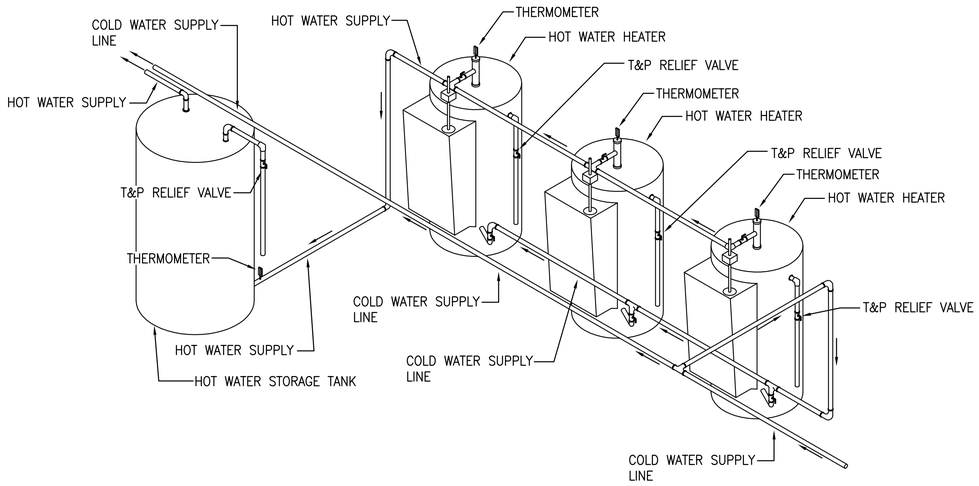


## HOT WATER HEATER AND STORAGE TANK SYSTEM DETAIL

SCALE: N.T.S.

## FIXTURE LIST

| TYPE | ITEM | SOIL & WASTE | VENT | COLD WATER | HOT WATER | REMARKS | REMARKS 2 |
|---|---|---|---|---|---|---|---|
| W–1 | EASTERN STYLE WATER CLOSET | 102mm | 51mm | 13mm | ------- | FLUSH TANK | LOW FLOW EFFICIENT TYPE |
| L–1 | TROUGH FIXTURE | 38mm | 38mm | 13mm | 13mm | FABRICATED IN FIELD | LOW FLOW EFFICIENT TYPE |
| PT–1 | POT FILL AT STOVE | -------- | -------- | 13mm | 13mm | WALL HUNG FIXTURE | POT FILL FAUCET |
| PW–1 | POT WASH | 38mm | 38mm | 13mm | 13mm | POT WASH | CAST IN PLACE |
| S–1 | WALL HUNG HAND SINK | 38mm | 38mm | 13mm | 13mm | 559mm x 635mm x 165mm STAINLESS STEEL | LOW FLOW EFFICIENT TYPE |
| S–2 | 2–COMPARTMENT SINK | INDIRECT WASTE | -------- | 13mm | 13mm | STAINLESS STEEL PREP SINK | LOW FLOW EFFICIENT TYPE |
| S–3 | 2–COMPARTMENT SINK | 38mm | 38mm | 13mm | 13mm | STAINLESS STEEL DISHWASHING SINK | LOW FLOW EFFICIENT TYPE |
| MB–1 | MOP BASIN | 76mm | 51mm | 19mm | 19mm | ------ | LOW FLOW EFFICIENT TYPE |
| HWH–1 | WATER HEATER | --- | --- | SEE DWG. | SEE DWG. | 454 LITER ELECTRIC WATER HEATER, 380/3ø, 24KW | ---------- |
| ST–1 | HOT WATER STORAGE TANK | --- | --- | SEE DWG. | SEE DWG. | 757 LITER HOT WATER STORAGE TANK | ---------- |
| FD–1 | FLOOR DRAIN | 76mm | --- | --- | --- | COORDINATE LOCATION WITH ARCHITECT | ---------- |

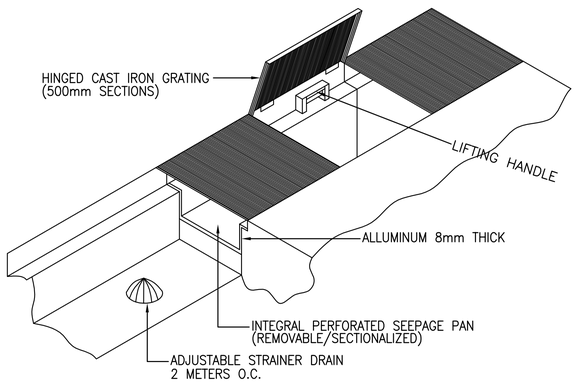


## FLOOR TRENCH DETAIL

SCALE: N.T.S.

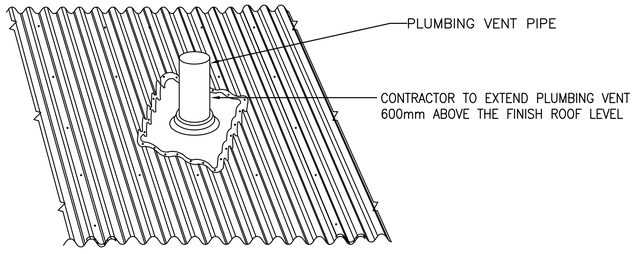


## PLUMBING VENT THRU ROOF DETAIL

SCALE: NTS

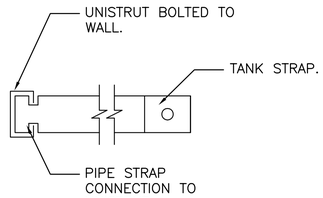


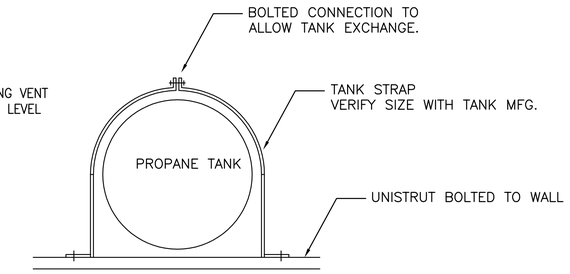


## PROPANE TANK SUPPORT DETAIL

SCALE: N.T.S.

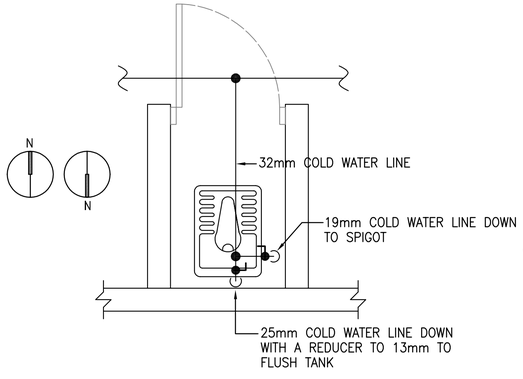


## TYPICAL EASTERN STYLE WATER CLOSET WITH SPIGOT WATER PIPING DETAIL

SCALE: N.T.S.

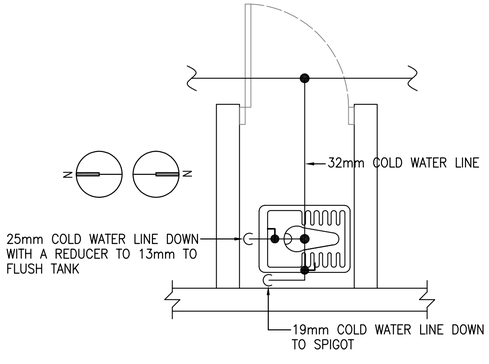


## TYPICAL EASTERN STYLE WATER CLOSET WITH SPIGOT WATER PIPING DETAIL

SCALE: N.T.S.

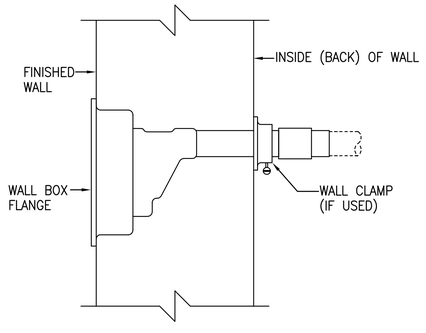


## TYPICAL FREEZEPROOF WALL HYDRANT DETAIL

SCALE: N.T.S.

GENERAL PLUMBING KITCHEN NOTES:

1. ALL ROUGH–INS AND FINAL PLUMBING CONNECTIONS SHALL BE PERFORMED IN STRICT ACCORDANCE WITH THE LATEST CODE REQUIREMENTS. CONTRACTOR SHALL BE RESPONSIBLE FOR VERIFICATION AND COMPLIANCE WITH ALL APPLICABLE CODE REQUIREMENTS.
2. CONTRACTOR SHALL BE RESPONSIBLE FOR PROVIDING AND INSTALLING ALL FAUCETS, VACUUM BREAKERS, CHECK VALVES, ETC. REQUIRED FOR ITEMS OF FOOD SERVICE EQUIPMENT THAT ARE NOT SUPPLIED AS PART OF THE EQUIPMENT, AND FOR PROVIDING FINAL CONNECTIONS TO SAME.
3. CONTRACTOR SHALL PROVIDE ALL FLOOR DRAINS, P–TRAPS, FLOOR SINKS, TRAPS, SHUT–OFF VALVES, PIPING, GAUGES, FITTINGS, AND ANY ADDITIONAL PIPING AND/OR FITTINGS REQUIRED FOR EQUIPMENT INSTALLATION.

APPROVED:

A/E DESIGNER OF RECORD

SEAL:

COMMONWEALTH OF PENNSYLVANIA REGISTERED PROFESSIONAL MATTHEW R. SOTOSKY ENGINEER 065576-E

US ARMY CORPS OF ENGINEERS
AFGHANISTAN ENGINEER DISTRICT

| Mark | Description | Date | Appr. |
|---|---|---|---|

Rev: 0
Date: 02/23/10
Design file no.
Drawing code:
File name: ANADFACPL-501XXX
Plot date: 02/26/2010
Plot scale: N.T.S.

Designed by: RMH
Dwn by: RMH
Ckd by: CJM
Reviewed by:
Submitted by: BAKER

U.S. ARMY CORPS OF ENGINEERS
AFGHANISTAN ENGINEER DISTRICT
APO AE 96338

*Michael Baker Jr., Inc*
*A unit of Michael Baker Corporation*
Airside Business Park
100 Airside Drive
Moon Township, PA 15108
www.mbakercorp.com

AFGHAN NATIONAL ARMY
REGIONAL MILITARY TRAINING CENTER
STANDARD DESIGN

DINING FACILITY
PLUMBING DETAILS

Sheet reference number:
P–501

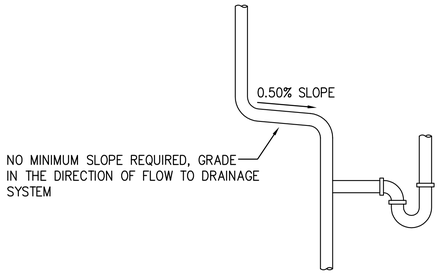


## TYPICAL VENT SLOPE DETAILS

SCALE: N.T.S.

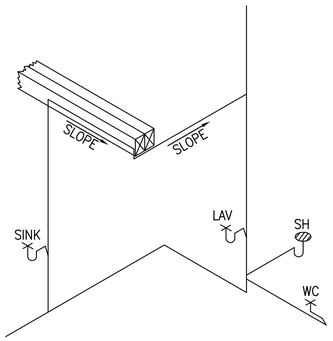


## TYPICAL VENT SLOPE DETAILS

SCALE: N.T.S.

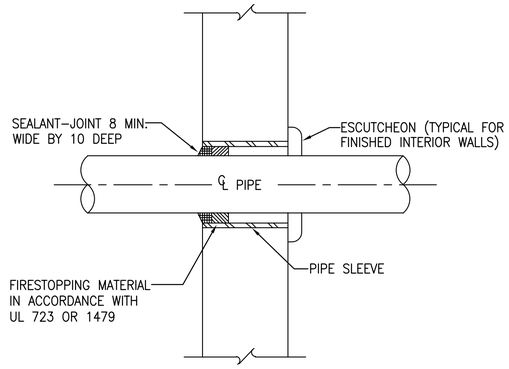


## TYPICAL WALL PENETRATION DETAIL

SCALE: N.T.S.

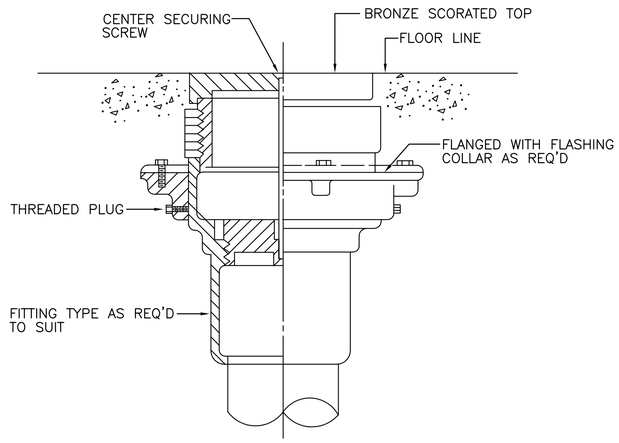


## TYPICAL FLOOR CLEANOUT DETAIL

SCALE: N.T.S.

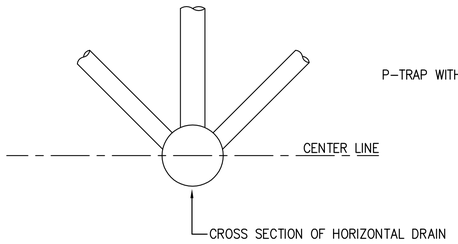


## ACCEPTABLE VENT CONNECTIONS TO HORIZONTAL DRAIN - DETAIL

SCALE: N.T.S.

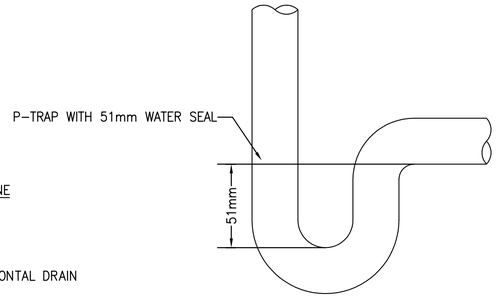


## P-TRAP WITH 51mm WATER SEAL DETAIL

SCALE: N.T.S.

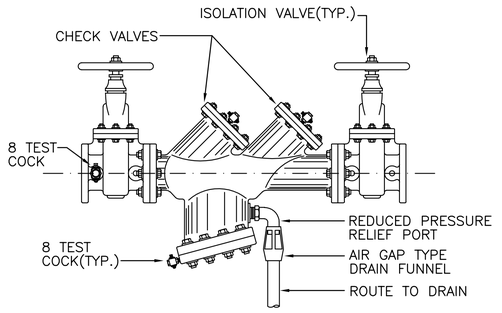


## TYPICAL BACKFLOW PREVENTER DETAIL

SCALE: N.T.S.

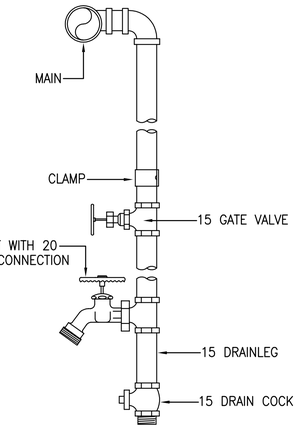


## TYPICAL WATER DROP DETAIL (SPIGOT)

SCALE: N.T.S.

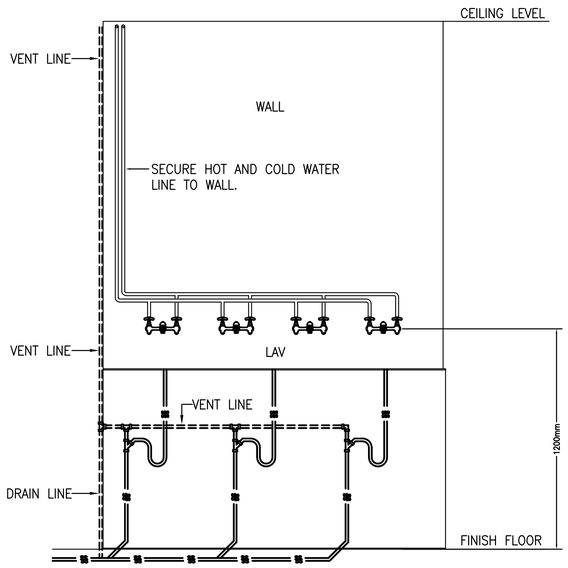


## LAVATORY ELEVATION PLAN - PLUMBING

SCALE: N.T.S.

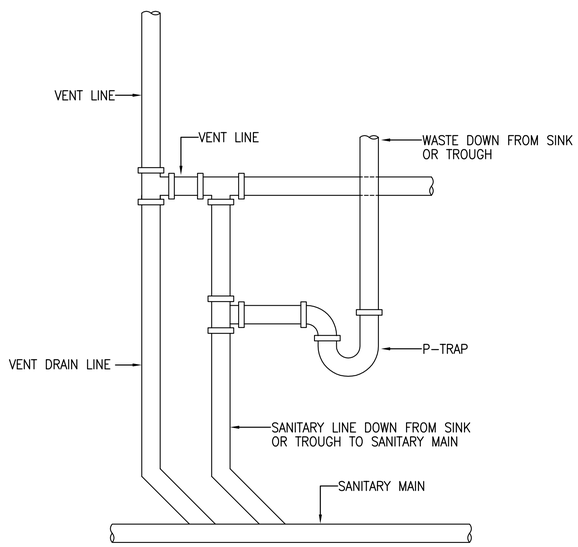


## TYPICAL LAVATORY/LAUNDRY VENT DETAIL

SCALE: N.T.S.

US ARMY CORPS OF ENGINEERS
AFGHANISTAN ENGINEER DISTRICT

| Mark | Description | Date | Appr. |
|---|---|---|---|

Rev: 0
Date: 02/23/10
Design file no.
Drawing code:
File name: ANADFACPL-502XXX
Plot date: 02/26/2010
Plot scale: N.T.S.

Designed by: RMH
Dwn by: RMH
Ckd by: CJM
Reviewed by: MRS
Submitted by: BAKER

U.S. ARMY CORPS OF ENGINEERS
AFGHANISTAN ENGINEER DISTRICT
APO AE 96338

Michael Baker Jr., Inc
A unit of Michael Baker Corporation
Airside Business Park
100 Airside Drive
Moon Township, PA 15108
www.mbakercorp.com

AFGHAN NATIONAL ARMY
REGIONAL MILITARY TRAINING CENTER
STANDARD DESIGN

DINING FACILITY

PLUMBING DETAILS & FIXTURE SCHEDULE

APPROVED:

A/E DESIGNER OF RECORD

SEAL:

COMMONWEALTH OF PENNSYLVANIA
REGISTERED PROFESSIONAL
MATTHEW R. SOTOSKY
ENGINEER
065576-E

Sheet reference number:
P–502

## PLUMBING SYMBOLS

- SANITARY SEWER PIPING (BELOW GROUND)
- SANITARY SEWER PIPING (GREASE LINE)
- VENT PIPING (V)
- COLD WATER PIPING (CW)
- HOT WATER PIPING (HW)
- BALL VALVE
- BACKFLOW PREVENTER
- CLEANOUT (CO.) — OR
- ROOF PENETRATION

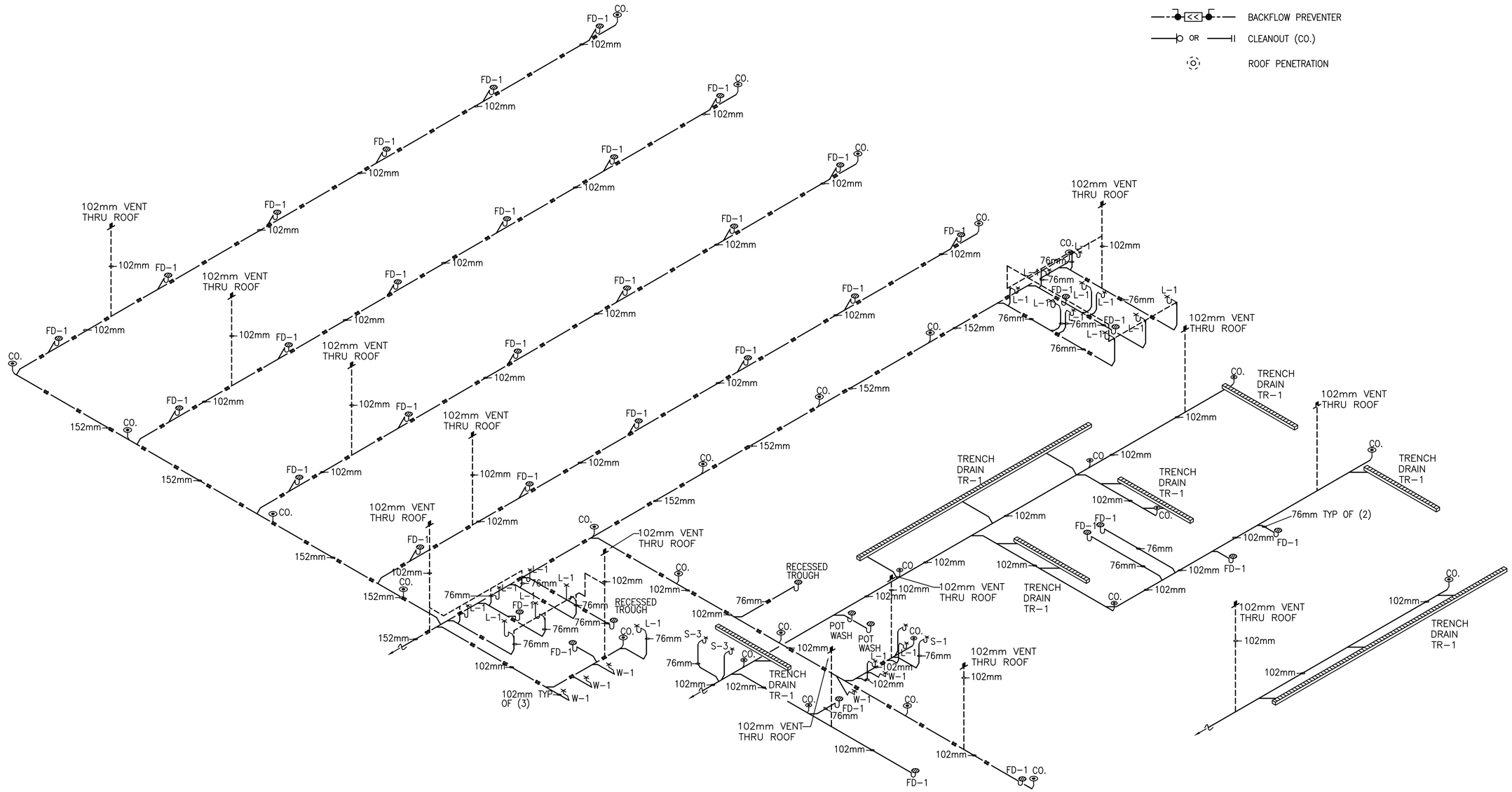


1 P901 DFAC DRAINAGE ISOMETRIC

SCALE: N.T.S.

US ARMY CORPS OF ENGINEERS
AFGHANISTAN ENGINEER DISTRICT

| Mark | Description | Date | Appr. |
|---|---|---|---|
| | | | |

Designed by: RMH | Ckd by: CJM | Date: 02/23/10 | Rev: 0
Drawn by: RMH | Reviewed by: | Drawing code: | Design file no.
Submitted by: BAKER | File name: ANADFACPL-001XXX | Plot date: 02/26/2010 | Plot scale: N.T.S.

U.S. ARMY CORPS OF ENGINEERS
AFGHANISTAN ENGINEER DISTRICT
APO AE 96338

Michael Baker Jr; Inc
A unit of Michael Baker Corporation
Airside Business Park
100 Airside Drive
Moon Township, PA 15108
www.mbakercorp.com

AFGHAN NATIONAL ARMY
REGIONAL MILITARY TRAINING CENTER
STANDARD DESIGN

DINING FACILITY

DFAC DRAINAGE ISOMETRIC

APPROVED:

A/E DESIGNER OF RECORD

SEAL:

COMMONWEALTH OF PENNSYLVANIA
REGISTERED PROFESSIONAL
MATTHEW R. SOTOSKY
ENGINEER
046570-E

Sheet reference number:
P-901

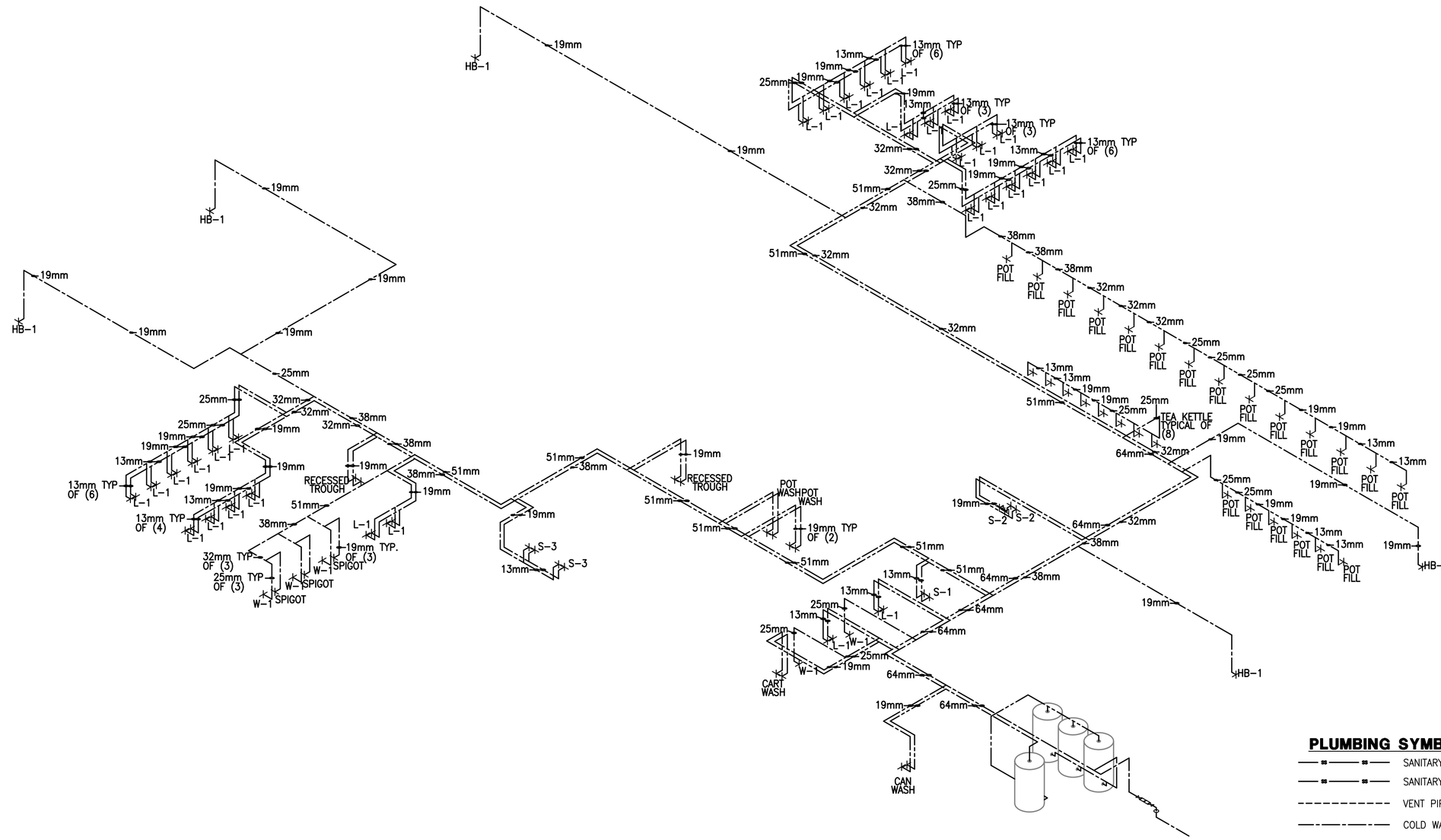


1 P-902

## DFAC WATER ISOMETRIC

SCALE: N.T.S.

## PLUMBING SYMBOLS

- SANITARY SEWER PIPING (BELOW GROUND)
- SANITARY SEWER PIPING (ABOVE GROUND)
- VENT PIPING (V)
- COLD WATER PIPING (CW)
- HOT WATER PIPING (HW)
- BALL VALVE
- BACKFLOW PREVENTER
- CLEANOUT (CO.) (OR)
- ROOF PENETRATION

APPROVED:

A/E DESIGNER OF RECORD

SEAL:

COMMONWEALTH OF PENNSYLVANIA REGISTERED PROFESSIONAL MATTHEW R. SOTOSKY ENGINEER 065576-E

US ARMY CORPS OF ENGINEERS
AFGHANISTAN ENGINEER DISTRICT

| Mark | Description | Date | Appr. | Mark | Description | Date | Appr. |
|---|---|---|---|---|---|---|---|
| | | | | | | | |

Designed by: RMH
Dwn by: RMH
Ckd by: CJM
Reviewed by:
Submitted by: BAKER

Date: 02/23/10
Design file no.
Drawing code:
File name: ANADFACPL-W02XXX
Plot date: 02/08/2010
Plot scale: N.T.S.
Rev: 0

U.S. ARMY CORPS OF ENGINEERS
AFGHANISTAN ENGINEER DISTRICT
APO AE 96338

*Michael Baker Jr., Inc*
*A unit of Michael Baker Corporation*
Airside Business Park
100 Airside Drive
Moon Township, PA 15108
www.mbakercorp.com

AFGHAN NATIONAL ARMY
REGIONAL MILITARY TRAINING CENTER
STANDARD DESIGN

DINING FACILITY

DFAC WATER ISOMETRIC

Sheet reference number:
P-902

## PLUMBING SYMBOLS

- SS — SANITARY SEWER PIPING (BELOW GROUND)
- SS — SANITARY SEWER PIPING (ABOVE GROUND)
- VENT PIPING (V)
- COLD WATER PIPING (CW)
- HOT WATER PIPING (HW)
- P — PROPANE LINE
- P — TWO STAGE PRESSURE GAUGE
- BALL VALVE
- BACKFLOW PREVENTER
- OR — CLEANOUT (CO.)
- ROOF PENETRATION

## ISOMETRIC NOTES:

1. SEAL ALL EXTERIOR PIPE SLEEVE OPENINGS BETWEEN PROPANE PIPE AND PROPANE PIPE SLEEVE.

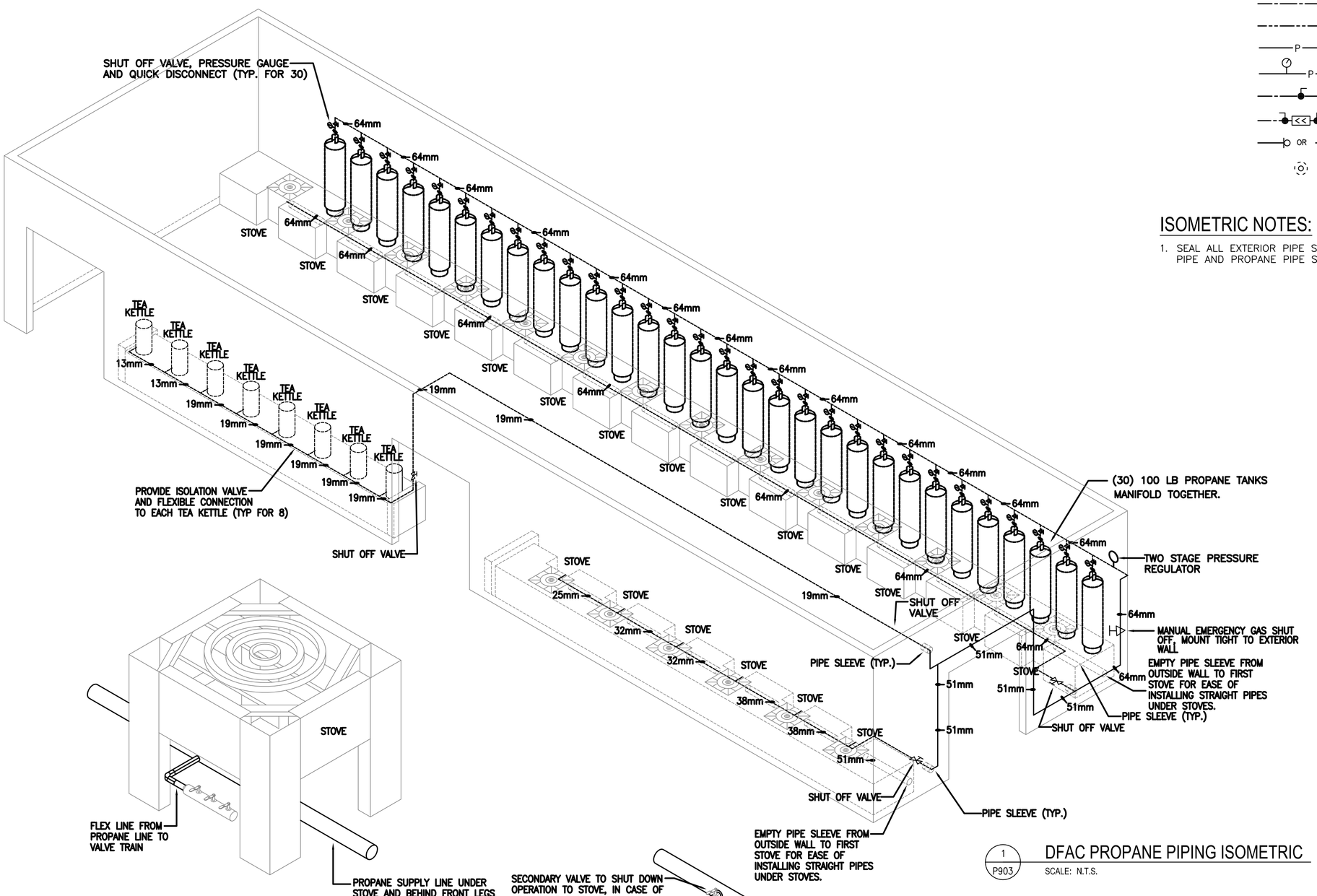


1 P903 DFAC PROPANE PIPING ISOMETRIC
SCALE: N.T.S.

2 P903 PROPANE STOVE WITH FLEX CONNECTION
SCALE: N.T.S.

3 P903 VALVE TRAIN, PROPANE FLEX LINE AND PROPANE MAIN DETAIL
SCALE: N.T.S.

US ARMY CORPS OF ENGINEERS
AFGHANISTAN ENGINEER DISTRICT

| Mark | Description | Date | Appr. |
|---|---|---|---|

Rev: 0
Date: 02/23/10
Design file no.
Drawing code:
File name: ANADFACPL-e03XXX
Plot date: 02/09/2010
Plot scale: N.T.S.

Designed by: RMH
Dwn by: RMH
Ckd by: CJM
Reviewed by:
Submitted by: BAKER

U.S. ARMY CORPS OF ENGINEERS
AFGHANISTAN ENGINEER DISTRICT
APO AE 96338

*Michael Baker Jr., Inc.*
*A unit of Michael Baker Corporation*
Airside Business Park
100 Airside Drive
Moon Township, PA 15108
www.mbakercorp.com

AFGHAN NATIONAL ARMY
REGIONAL MILITARY TRAINING CENTER
STANDARD DESIGN

DINING FACILITY
DFAC PROPANE ISOMETRIC

APPROVED:

A/E DESIGNER OF RECORD

SEAL:

COMMONWEALTH OF PENNSYLVANIA
REGISTERED PROFESSIONAL ENGINEER
MATTHEW R. SOTOSKY
065576-E

Sheet reference number:
P–903

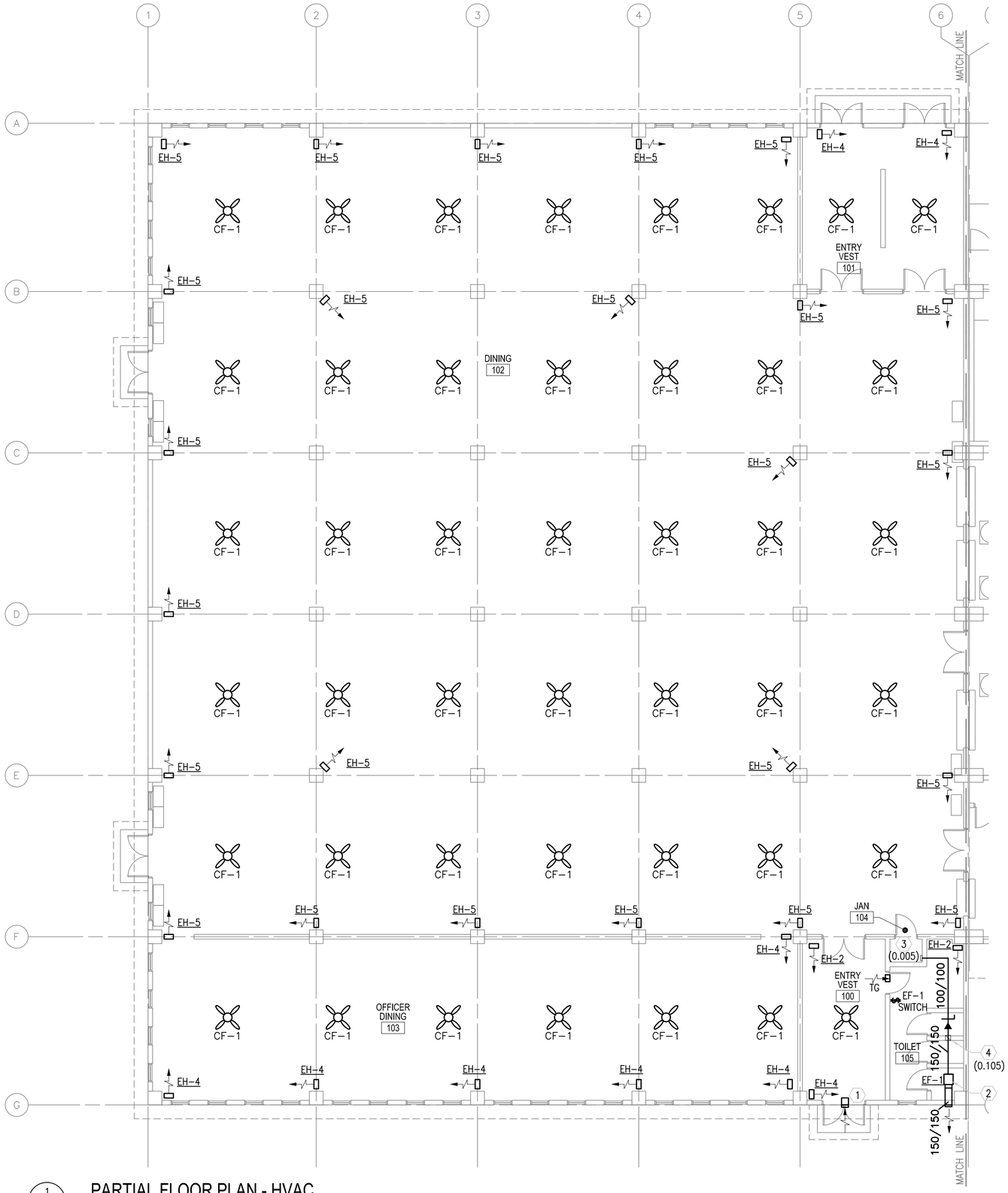


1 M-101 PARTIAL FLOOR PLAN - HVAC

SCALE: 1:100

## GENERAL NOTES:

1. DO NOT SCALE DRAWINGS – ALL DIMENSIONS AND CONDITIONS SHALL BE CHECKED AND VERIFIED BY THE CONTRACTOR AT THE SITE.
2. ALL WORK PERFORMED ON THIS BUILDING SHALL BE IN COMPLIANCE WITH ALL PERTINENT CODES, RULES, ORDINANCES AND REGULATIONS OF THE GOVERNING AUTHORITIES.
3. ALL WORK PERFORMED UNDER AND IN CONNECTION WITH THESE DRAWINGS AND SPECIFICATIONS SHALL BE IN STRICT COMPLIANCE WITH THE LATEST SAFETY AND HEALTH STANDARDS.

## SYMBOLS:

- (X) KEY NOTE
- (.050) AIR VOLUME IN CUBIC METERS PER SECOND (CMS)
- (T) THERMOSTAT WITH LOCKING COVER
- UC DOOR UNDERCUT
- TG TRANSFER GRILLE
- $ SINGLE POLE SWITCH – 20A RATED

## ABBREVIATIONS:

| | |
|---|---|
| AFF | ABOVE FINISH FLOOR |
| CF | CEILING FANS |
| CMS | CUBIC METERS PER SECOND |
| STATS | THERMOSTATS |

## KEY NOTE:

1. 610X400 (24X16) INTAKE LOUVER FOR MAKE UP AIR. PROVIDE WEATHER PROOF LOUVER WITH 50mm (2") WASHABLE FILTER AND SAND TRAP.
2. INLINE EXHAUST FAN DUCTED TO WALL CAP WITH LOW LEAKAGE GRAVITY BACK–DRAFT DAMPER. SECURE FAN TO STRUCTURE ABOVE.
3. 150x150 (6x6) ALUMINUM EXHAUST GRILLE WITH ADJUSTABLE OPPOSED BLADE DAMPERS. BALANCE TO CMS IN PARENTHESIS.
4. 250x150 (10x6) ALUMINUM EXHAUST GRILLE WITH ADJUSTABLE OPPOSED BLADE DAMPERS. BALANCE TO CMS IN PARENTHESIS.

## KEY PLAN:

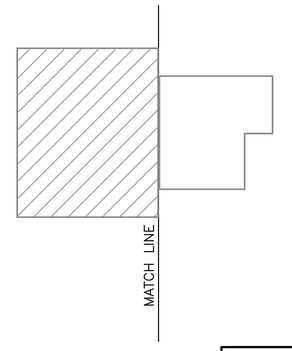


LINEAR DIMENSIONS SHOWN ARE IN MILLIMETERS (MM), UNLESS OTHERWISE NOTED

0 2000 4000
SCALE: 1:100

APPROVED:

A/E DESIGNER OF RECORD

SEAL:

COMMONWEALTH OF PENNSYLVANIA REGISTERED PROFESSIONAL MATTHEW R. SOTOSKY ENGINEER 065576-E

US ARMY CORPS OF ENGINEERS
AFGHANISTAN ENGINEER DISTRICT

| Mark | Description | Date | Appr. |
|---|---|---|---|

U.S. ARMY CORPS OF ENGINEERS
AFGHANISTAN ENGINEER DISTRICT
APO AE 96338

Michael Baker Jr., Inc
A unit of Michael Baker Corporation
Airside Business Park
100 Airport Drive
Moon Township, PA 15108
www.mbakercorp.com

Designed by: RML | Ckd by: CJM
Dwn by: JJN | Reviewed by: MRS
Submitted by: BAKER

Date: 02/23/10
Design file no.:
Drawing code:
File name: ANADFACMH-10YXX
Plot date: 02/26/2010
Plot scale: 1:100
Rev: 0

AFGHAN NATIONAL ARMY
REGIONAL MILITARY TRAINING CENTER
STANDARD DESIGN

DINING FACILITY

PARTIAL HVAC FLOOR PLAN

Sheet reference number:
M–101

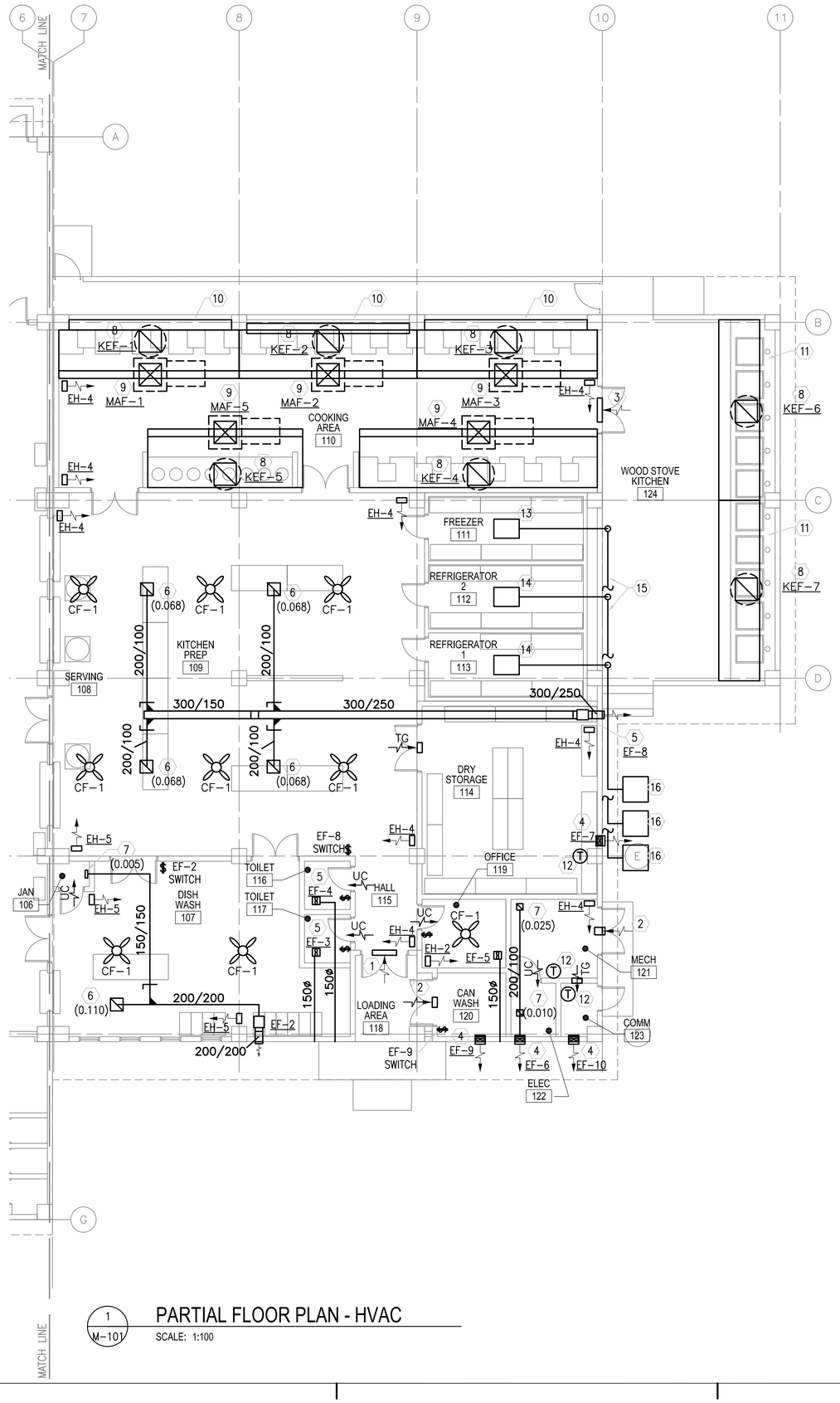


1 M-101 PARTIAL FLOOR PLAN - HVAC

SCALE: 1:100

## GENERAL NOTES:

1. DO NOT SCALE DRAWINGS – ALL DIMENSIONS AND CONDITIONS SHALL BE CHECKED AND VERIFIED BY THE CONTRACTOR AT THE SITE.
2. ALL WORK PERFORMED ON THIS BUILDING SHALL BE IN COMPLIANCE WITH ALL PERTINENT CODES, RULES, ORDINANCES AND REGULATIONS OF THE GOVERNING AUTHORITIES.
3. ALL WORK PERFORMED UNDER AND IN CONNECTION WITH THESE DRAWINGS AND SPECIFICATIONS SHALL BE IN STRICT COMPLIANCE WITH THE LATEST SAFETY AND HEALTH STANDARDS.

## SYMBOLS:

- (X) KEY NOTE
- (.050) AIR VOLUME IN CUBIC METERS PER SECOND (CMS)
- (T) THERMOSTAT WITH LOCKING COVER
- UC DOOR UNDERCUT
- TG TRANSFER GRILLE
- $ SINGLE POLE SWITCH – 20A RATED FOR EXHAUST FAN

## ABBREVIATIONS:

| | |
|---|---|
| AFF | ABOVE FINISH FLOOR |
| CF | CEILING FANS |
| CMS | CUBIC METERS PER SECOND |
| STATS | THERMOSTATS |

## KEY NOTE:

1. 810X610 (32X24) INTAKE LOUVER FOR MAKE UP AIR. PROVIDE WEATHER PROOF LOUVER W/0.05mm (2") WASHABLE FILTER AND SAND TRAP.
2. 400X200 (16X8) INTAKE LOUVER FOR MAKE UP AIR. PROVIDE WEATHER PROOF LOUVER W/0.05mm (2") WASHABLE FILTER AND SAND TRAP.
3. 1520x610 (60X24) INTAKE LOUVER FOR MAKE UP AIR. PROVIDE WEATHER PROOF LOUVER W/0.05mm (2") WASHABLE FILTER AND SAND TRAP.
4. WALL EXHAUST FAN WITH LOW SPRING OPERATED BACK–DRAFT DAMPER. SEE DETAIL ON SHEET M501.
5. INLINE EXHAUST FAN DUCTED TO WALL CAP WITH LOW LEAKAGE GRAVITY BACK–DRAFT DAMPER. SECURE FAN TO STRUCTURE ABOVE.
6. 250x150 (10x6) ALUMINUM EXHAUST GRILLE WITH ADJUSTABLE OPPOSED BLADE DAMPERS. BALANCE TO CMS IN PARENTHESIS.
7. 150x150 (6x6) ALUMINUM EXHAUST GRILLE WITH ADJUSTABLE OPPOSED BLADE DAMPERS. BALANCE TO CMS IN PARENTHESIS.
8. KITCHEN HOOD UP–BLAST EXHAUST FAN ON ROOF MOUNTED CURB. SEE DETAILS ON SHEET M502.
9. KITCHEN HOOD MAKE UP AIR FAN ON ROOF MOUNTED CURB. SEE DETAILS ON SHEET M502.
10. PROVIDE STAINLESS STEEL FILLER PANEL BEHIND HOOD IN BETWEEN COLUMNS.
11. HOLD HOOD OFF BACK WALL TO PROVIDE SPACE FOR FLUES TO PASS. PROVIDE HOOD BRACING BACK TO WALL IN BETWEEN FLUES.
12. THERMOSTAT MOUNTED AS HIGH AS POSSIBLE. INTERLOCK STAT WITH CORRESPONDING EXHAUST FAN, SET FAN TO ENERGIZE ON RISE IN TEMPERATURE ABOVE 25°C (77°F).
13. FREEZER EVAPORATOR UNIT
14. REFRIGERATOR EVAPORATOR UNIT
15. REFRIGERATION PIPING EXTENDED FROM EVAPORATOR TO CORRESPONDING CONDENSING UNIT. (TYPICAL)
16. REFRIGERATOR / FREEZER CONDENSING UNITS MOUNTED ON SLAB ON GRADE. REFER TO DETAIL "9" ON S–701.

## KEY PLAN:

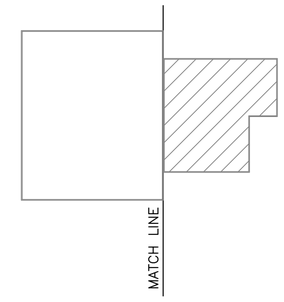


LINEAR DIMENSIONS SHOWN ARE IN MILLIMETERS (MM), UNLESS OTHERWISE NOTED

0 2000 4000

SCALE: 1:100

US ARMY CORPS OF ENGINEERS
AFGHANISTAN ENGINEER DISTRICT

| Mark | Description | Date | Appr. |
|---|---|---|---|
| | | | |

Rev: 0
Date: 02/23/10
Design file no.
Drawing code:
File name: ANAEF-ACMH-102XX3
Plot date: 02/26/2010
Plot scale: 1:100

Designed by: RML
Dwn by: JJN
Chkd by: CJM
Reviewed by: MRS
Submitted by: BAKER

U.S. ARMY CORPS OF ENGINEERS
AFGHANISTAN ENGINEER DISTRICT
APO AE 96338

Michael Baker Jr., Inc
A unit of Michael Baker Corporation
Airside Business Park
100 Airport Rd
Moon Township, PA 15108
www.mbakercorp.com

AFGHAN NATIONAL ARMY
REGIONAL MILITARY TRAINING CENTER
STANDARD DESIGN

DINING FACILITY

PARTIAL HVAC FLOOR PLAN

APPROVED:

A/E DESIGNER OF RECORD

SEAL:

COMMONWEALTH OF PENNSYLVANIA
REGISTERED PROFESSIONAL
MATTHEW R. SOTOSKY
ENGINEER
046576-E

Sheet reference number:
M–102

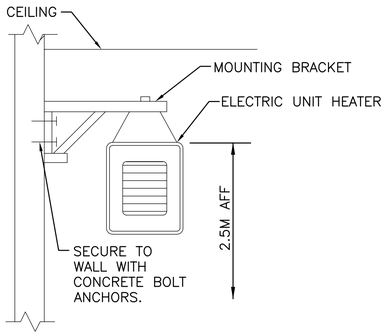


1 M-501 ELECTRIC UNIT HEATER MOUNTING DETAIL
N.T.S.

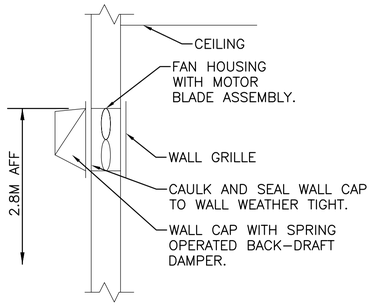


2 M-501 WALL EXHAUST FAN DETAIL
N.T.S.

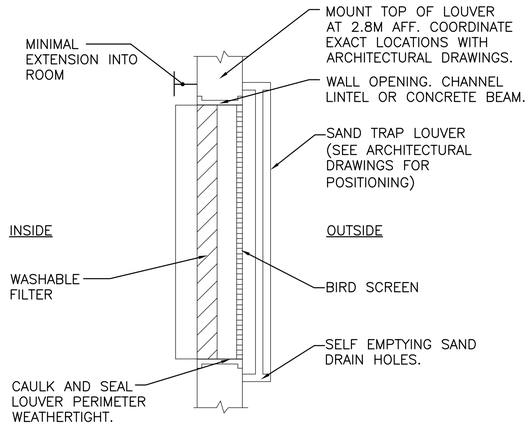


3 M-501 FILTERED SAND TRAP LOUVER
N.T.S.

## EXHAUST FAN SCHEDULE

| NO. | TYPE | FAN CMS | DRIVE | HP | SP mmH2O | ELECTRICAL DATA | SWITCH |
|---|---|---|---|---|---|---|---|
| EF-1 | INLINE | 0.110 | DIRECT | 1/12 | 13 | 220/1/50 | @ WALL |
| EF-2 | INLINE | 0.115 | DIRECT | 1/12 | 13 | 220/1/50 | @ WALL |
| EF-3 | INLINE | 0.035 | DIRECT | FRACT | 13 | 220/1/50 | @ WALL |
| EF-4 | INLINE | 0.035 | DIRECT | FRACT | 13 | 220/1/50 | @ WALL |
| EF-5 | INLINE | 0.035 | DIRECT | FRACT | 13 | 220/1/50 | @ WALL |
| EF-6 | INLINE | 0.035 | DIRECT | FRACT | 13 | 220/1/50 | W/ STAT |
| EF-7 | WALL | 0.035 | DIRECT | FRACT | 9.5 | 220/1/50 | W/ STAT |
| EF-8 | INLINE | 0.270 | DIRECT | 1/6 | 13 | 220/1/50 | @ WALL |
| EF-9 | WALL | 0.035 | DIRECT | FRACT | 9.5 | 220/1/50 | @ WALL |
| EF-10 | WALL | 0.035 | DIRECT | FRACT | 9.5 | 220/1/50 | W/ STAT |
| | | | | | | | |
| KEF-1 | UPBLAST | 4.400 | DIRECT | 3 | 25 | 220/1/50 | @ HOOD |
| KEF-2 | UPBLAST | 4.400 | DIRECT | 3 | 25 | 220/1/50 | @ HOOD |
| KEF-3 | UPBLAST | 4.400 | DIRECT | 3 | 25 | 220/1/50 | @ HOOD |
| KEF-4 | UPBLAST | 5.660 | DIRECT | 5 | 25 | 220/1/50 | @ HOOD |
| KEF-5 | UPBLAST | 3.800 | DIRECT | 3 | 25 | 220/1/50 | @ HOOD |
| KEF-6 | UPBLAST | 4.400 | DIRECT | 3 | 25 | 220/1/50 | @ HOOD |
| KEF-7 | UPBLAST | 4.400 | DIRECT | 3 | 25 | 220/1/50 | @ HOOD |

NOTE:
1. FANS SHALL BE CORROSION RESISTANT
2. WALL FANS SHALL HAVE SPRING OPERATED BACK-DRAFT DAMPER.

## MAKE-UP AIR FAN SCHEDULE

| NO. | TYPE | FAN CMS | DRIVE | HP | SP mmH2O | ELECTRICAL DATA | SWITCH |
|---|---|---|---|---|---|---|---|
| MAF-1 | ROOF | 4.200 | DIRECT | 5 | 19 | 220/1/50 | W/ KEF-1 |
| MAF-2 | ROOF | 4.200 | DIRECT | 5 | 19 | 220/1/50 | W/ KEF-2 |
| MAF-3 | ROOF | 4.200 | DIRECT | 5 | 19 | 220/1/50 | W/ KEF-3 |
| MAF-4 | ROOF | 5.400 | DIRECT | 7.5 | 19 | 220/1/50 | W/ KEF-4 |
| MAF-5 | ROOF | 3.600 | DIRECT | 5 | 19 | 220/1/50 | W/ KEF-5 |

NOTE:
1. FANS SHALL BE CORROSION RESISTANT

## ELECTRIC UNIT HEATER SCHEDULE

| NO. | CMS | KW | F.A.T. °C | ELECT. CHAR. | MOUNTING |
|---|---|---|---|---|---|
| EH-2 | .200 | 2.6 | 38 | 380/1/50 | WALL HUNG |
| EH-4 | .200 | 4 | 38 | 380/1/50 | WALL HUNG |
| EH-5 | .200 | 5 | 38 | 380/1/50 | WALL HUNG |

NOTES:
1. UNIT HEATERS SHALL BE MOUNTED 2.5M AFF.
2. UNIT HEATERS SHALL HAVE TAMPER PROOF INTEGRAL STATS.

## CEILING FAN

| NO. | BLADE SIZE mm | BLADE SIZE IN | VOLTAGE | SWITCH | REMARKS |
|---|---|---|---|---|---|
| CF-1 | 1320 | 52 | 220/1/50 | @ WALL | 3 SPEED REVERSIBLE MOTOR |

NOTES:
1. PROVIDE EXTENSION DOWN RODS, INSTALL FANS 2.5M AFF.
2. PROVIDE WITH OUT LIGHT FIXTURE.
3. PROVIDE WITH REMOTE MOUNTED ON-OFF SWITCH SHOWN ON ELECTRICAL DRAWINGS.

APPROVED:

A/E DESIGNER OF RECORD

SEAL:

COMMONWEALTH OF PENNSYLVANIA REGISTERED PROFESSIONAL MATTHEW R. SOTOSKY ENGINEER 046576-E

US ARMY CORPS OF ENGINEERS
AFGHANISTAN ENGINEER DISTRICT

| Mark | Description | Date | Appr. |
|---|---|---|---|
| | | | |

Date: 02/23/10 Rev: 0
Designed by: RML
Dwn by: JJN
Ckd by: CJM
Reviewed by: MRS
Submitted by: BAKER
Design file no.
Drawing code:
File name: ANADFACMH-501XXX
Plot date: 02/09/2010
Plot scale:

U.S. ARMY CORPS OF ENGINEERS
AFGHANISTAN ENGINEER DISTRICT
APO AE 96338

Michael Baker Jr., Inc.
A unit of Michael Baker Corporation
Airside Business Park
100 Airside Drive
Moon Township, PA 15108
www.mbakercorp.com

AFGHAN NATIONAL ARMY
REGIONAL MILITARY TRAINING CENTER
STANDARD DESIGN

DINING FACILITY

# HVAC SCHEDULES AND DETAILS

Sheet reference number:
M-501

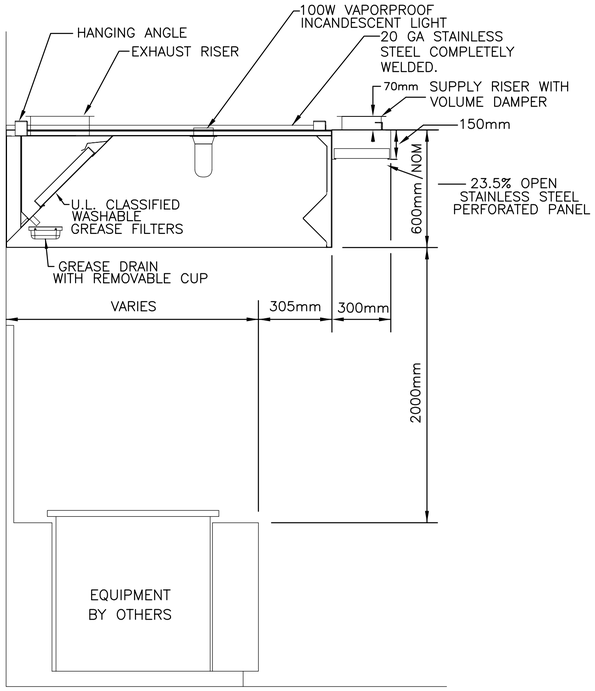


1 M-502 KITCHEN HOOD SECTION DETAIL
N.T.S.

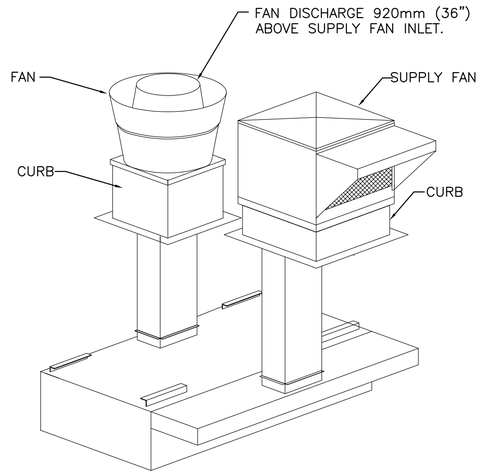


CORRECT INSTALLATION:
1. EXHAUST DUCT STRAIGHT UP
2. DO NOT USE FLEXIBLE SUPPLY DUCTWORK.
3. INSULATE EXHAUST DUCTS.

EXHAUST AND MAKE UP AIR
2 M-502 KITCHEN HOOD DUCT CONFIGURATION DETAIL
N.T.S.

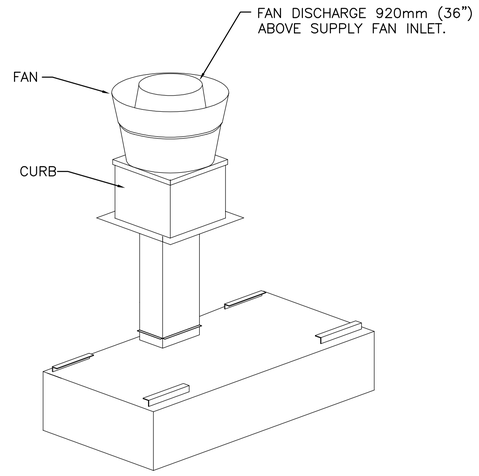


CORRECT INSTALLATION:
1. EXHAUST DUCT STRAIGHT UP
2. DO NOT USE FLEXIBLE SUPPLY DUCTWORK.
3. INSULATE EXHAUST DUCTS.

EXHAUST ONLY
5 M-502 KITCHEN HOOD DUCT CONFIGURATION DETAIL
N.T.S.

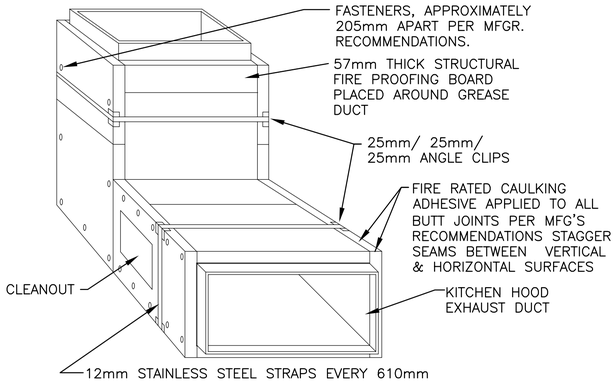


NOTES:
1. WHEN INSTALLING CLEANOUT DOOR COVER, USE REMOVABLE STAINLESS STEEL BANDS AT 305mm O.C. MAXIMUM ( 2 BANDS MINIMUM ).
2. DUCT SYSTEM SHALL BE SLOPED PER NFPA REGULATIONS.
3. DUCT HANGERS AND SUPPORTS FOR HORIZONTAL & VERTICAL RUNS SHALL BE DESIGNED TO PROVIDE ADEQUATE SUPPORT FOR THE DUCT AND ENCLOSURE ACCORDING TO REQUIREMENTS OF THE BUILDING & MECHANICAL CODES.
4. LABELS SHALL BE PROVIDED BY THE ENCLOSURE MANUFACTURER AND BE PLACED ADJACENT TO ALL CLEANOUT OPENINGS WHICH STATE THAT COVER MUST BE REPLACED USING REMOVABLE STAINLESS STEEL BANDS AT 305mm O.C. MAXIMUM (2 BANDS MINIMUM).
5. DUCT AND ENCLOSURE SHALL BE SUPPORTED BY HANGERS FROM BUILDING STRUCTURE. MAXIMUM DISTANCE BETWEEN SUPPORTS SHALL BE 1220mm.
6. PROVIDE 40mm GREASE DUCT INSULATION ON ALL KITCHEN EXHAUST DUCTS.

3 M-502 KITCHEN HOOD EXHAUST DUCT DETAIL
N.T.S.

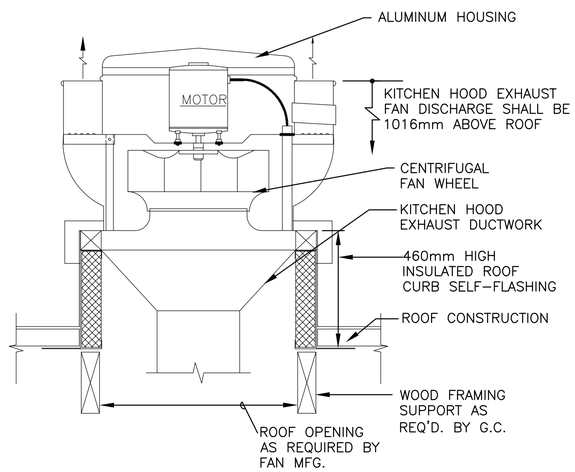


4 M-502 KITCHEN ROOF EXHAUST FAN DETAIL
N.T.S.

APPROVED:

A/E DESIGNER OF RECORD

SEAL:

COMMONWEALTH OF PENNSYLVANIA REGISTERED PROFESSIONAL MATTHEW R. SOTOSKY ENGINEER 046570-E

US ARMY CORPS OF ENGINEERS
AFGHANISTAN ENGINEER DISTRICT

| Mark | Description | Date | Appr. |
|---|---|---|---|
| | | | |

| Mark | Description | Date | Appr. |
|---|---|---|---|
| | | | |

Rev: 0
Date: 02/23/10
Design file no.
Drawing code:
File name: ANADFACMH-502X3
Plot date: 02/26/2010
Plot scale:

Designed by: RML
Dwn by: JJN
Ckd by: CJM
Reviewed by: MRS
Submitted by: BAKER

U.S. ARMY CORPS OF ENGINEERS
AFGHANISTAN ENGINEER DISTRICT
APO AE 96338

Michael Baker Jr., Inc.
A unit of Michael Baker Corporation
Airside Business Park
100 Airside Drive
Moon Township, PA 15108
www.mbakercorp.com

AFGHAN NATIONAL ARMY
REGIONAL MILITARY TRAINING CENTER
STANDARD DESIGN

DINING FACILITY

KITCHEN EXHAUST HOOD DETAILS

Sheet reference number:
M-502

## POWER

- DISTRIBUTION PANELBOARD
- NEW PANELBOARD – SURFACE
- NEW PANELBOARD – RECESSED
- (G) GENERATOR
- TRANSFORMER (DRAWN TO SCALE)
- [J] JUNCTION BOX
- (J) JUNCTION BOX – CEILING
- FUSIBLE SAFETY SWITCH
- (M) MOTOR
- $^{M}$ MOTOR STARTING SWITCH – 220V, 20A RATED UNLESS OTHERWISE NOTED
- ELECTRIC WATER HEATER
- (CF) CEILING FAN – REFER TO SPECIFICATION SECTION 26 20 00

## RECEPTACLES

- DUPLEX 20A TYPE CEE 7/7 "SCHUKO STYLE" UNSWITCHED RECEPTACLE
- $_{GF}$ DUPLEX 20A TYPE CEE 7/7 "SCHUKO STYLE" UNSWITCHED RECEPTACLES – 10mA GROUND FAULT INTERRUPTER TYPE
- $_{WP}$ DUPLEX 20A TYPE CEE 7/7 "SCHUKO STYLE" UNSWITCHED TYPE WITH WEATHERPROOF COVER – 10mA GROUND FAULT INTERRUPTER TYPE
- $_{EXP}$ DUPLEX 20A TYPE CEE 7/7 "SCHUKO STYLE" UNSWITCHED RECEPTACLES – EXPLOSION PROOF
- * INDICATES MOUNT DEVICE ABOVE COUNTERTOP OR AT 1070mm ABOVE FINISHED FLOOR WHERE NO COUNTER IS TO BE INSTALLED.

## LIGHTNING PROTECTION

- AIR TERMINAL 20mm O.D. X 450mm SOLID COPPER, NICKEL PLATED ON ADHESIVE BASE
- EQUIPMENT AIR TERMINAL
- TEST WELL WITH GROUND ROD(S)
- GROUND ROD
- [G] GROUND PLATE
- MAIN GROUND CONDUCTER CONCEALED WITHIN CONSTRUCTION
- MAIN GROUND CONDUCTOR EXPOSED ON EXPOSED ON BUILDING EXTERIOR SURFACE
- GROUND CONDUCTOR CAD WELDED TO GROUND CABLE OR EQUIPMENT
- GROUND ROD TRIPOD, SPACED 3 METERS APART.
- LEVEL TO LEVEL CABLE

## LIGHTING

- LIGHTING FIXTURE – SEE FIXTURE SCHEDULE FOR MORE INFORMATION
- EMERGENCY LIGHTING FIXTURE – SEE FIXTURE SCHEDULE FOR MORE INFORMATION
- DOWNLIGHT
- LIGHTING FIXTURE ON NORMAL/EMERGENCY
- WALL MOUNTED LIGHT FIXTURE
- [E] EXIT SIGN – DIRECTIONAL ARROWS AS INDICATED ON DRAWINGS
- REMOTE HEAD FOR BATTERY PACK
- $ SINGLE POLE SWITCH – 20A RATED
- $^{3}$ 3–WAY SWITCH – 20A RATED
- $^{4}$ 4–WAY SWITCH – 20A RATED
- [LC] LIGHTING CONTACTOR
- POLE MOUNTED SITE LIGHTING FIXTURE– NUMBER OF FIXTURES PER POLE AS INDICATED ON DRAWINGS
- EXTERIOR DIRECTIONAL LIGHTING FIXTURE
- a SMALL CASE LETTERS REPRESENTS LAMP(S) / SWITCHES.

## TELECOMMUNICATIONS

- ▼ TELEPHONE OUTLET(S) @ 45cm AFF. U.N.O. WITH 20mm RACEWAY TERMINATED TO TELEDATA TERMINAL BOARD.
- ▽ DATA OUTLET(S) @ 45cm AFF. U.N.O. WITH 20mm RACEWAY TERMINATED TO TELEDATA TERMINAL BOARD.

## TELECOMMUNICATIONS (CONTINUED)

- ▽▼ COMBINATION TELEPHONE/DATA OUTLET(S) @ 45cm AFF. U.N.O. WITH 27mm RACEWAY TERMINATED TO TELEDATA TERMINAL BOARD.
- *▼ WALL MTD. TELEPHONE OUTLET WITH 20mm RACEWAY TO TELEDATA TERMINAL BOARD.
- (x)T INDICATES NUMBER OF TELEPHONE OUTLET(S) AND ASSOCIATED CABLING
- (x)D INDICATES NUMBER OF DATA OUTLET(S) AND ASSOCIATED CABLING
- (x)TF INDICATES NUMBER OF TELEPHONE OUTLETS AND ASSOCIATED CABLING WITH 1 OUTLET AND CABLE DEDICATED FOR FAX

## SINGLE LINE SYMBOLS

- SWITCH
- BREAKER
- FUSE
- TRANSFORMER
- GROUND
- CONTACT (NORMALLY OPEN)
- CONTACT (NORMALLY CLOSED)
- TRANSFER SWITCH
- CURRENT TRANSFORMER
- INDICATES NEW ELECTRICAL EQUIPMENT
- C INDICATES NEW CONTROL WIRING AND CONDUIT
- EQUIPMENT OUTLINE

## MISCELLANEOUS

- BRANCH CIRCUIT WIRING, SURFACE MOUNTED ON WALLS
- BRANCH CIRCUIT WIRING – 6mm²
- BRANCH CIRCUIT WIRING – UNDER FLOOR
- HOME RUN BACK TO PANEL
- CONDUIT TURNED DOWN
- CONDUIT TURNED UP
- LV LOW VOLTAGE WIRING AND CONDUIT
- INDICATES CONTINUATION OF LINE

## FIRE ALARM

- [FACP] FIRE ALARM CONTROL PANEL WITH BATTERY BACKUP
- [F] FIRE ALARM PULL STATION

## FIRE ALARM (CONTINUED)

- [F] FIRE ALARM STROBE – WALL MOUNTED
- [F] FIRE ALARM AUDIBLE/STROBE – WALL MOUNTED
- [F] FIRE ALARM HORN/STROBE – WALL MOUNTED
- (S) SMOKE DETECTOR
- (H) HEAT DETECTOR CEILING MOUNTED
- (D) DUCT DETECTOR – PROVIDED BY EC, INSTALLED BY MC AND CONNECTED BY EC

## DENOTATIONS & ABBREVIATIONS

| | |
|---|---|
| AFF | ABOVE FINISHED FLOOR |
| C | CEILING MOUNTED |
| E | EMERGENCY |
| EC | ELECTRICAL CONTRACTOR |
| EPO | EMERGENCY POWER OFF |
| EXP | EXPLOSION PROOF |
| F | FIRE ALARM |
| FF | FLUSH FLOOR MOUNTED |
| FL | FLUORESCENT |
| FO | FIBER OPTIC |
| FSS | FUSED SAFETY SWITCH |
| GF | GROUND FAULT INTERRUPTER |
| GC | GENERAL CONTRACTOR |
| IG | ISOLATED GROUND |
| K | KEY |
| LV | LOW VOLTAGE |
| M | MOTOR |
| MC | MECHANICAL CONTRACTOR |
| NE | NORMAL/EMERGENCY |
| NFSS | NON–FUSED SAFETY SWITCH |
| PA | PAGING SYSTEM |
| PLC | PLUMBING CONTRACTOR |
| SL | SINGLE LINE |
| T | TELEPHONE |

## DENOTATIONS & ABBREVIATIONS (CONT.)

| | |
|---|---|
| TP | TAMPER PROOF |
| UE | UNDERGROUND ELECTRIC |
| W | WALL MOUNTED |
| WP | WEATHERPROOF WITH GROUND FAULT INTERRUPTION |
| WT | WATER TIGHT |

## GENERAL PROJECT NOTES:

G1. UNLESS OTHERWISE NOTED, PROVIDE ALL EQUIPMENT SHOWN ON THE PLANS. THE ELECTRICAL CONTRACTOR SHALL COORDINATE ALL SYMBOLS SHOWN ON THE PLANS WITH THE SYMBOL LIST. IT SHALL BE THE RESPONSIBILITY OF THE CONTRACTOR TO VERIFY THE INTENT OF ANY SYMBOL THAT IS SHOWN ON THE PLANS AND NOT INDICATED ON THE SYMBOL LIST WITH THE ENGINEER PRIOR TO BID.

G2. THE CONTRACTOR SHALL VERIFY THE LOCATION OF ALL UNDERGROUND UTILITIES WITHIN THE CONSTRUCTION AREA THREE (3) WORKING DAYS NOTICE BEFORE COMMENCING DIGGING. NOTIFY THE LOCAL AUTHORITY HAVING JURISDICTION AND WAIT THE REQUIRED TIME BEFORE COMMENCING TO DIG.

G3. THE CONTRACTOR SHALL COORDINATE CONDUIT RUNS, LIGHTING FIXTURES AND OTHER EQUIPMENT LOCATIONS WITH THE OTHER TRADE CONTRACTORS TO AVOID CONFLICTS.

G4. WHERE VOLTAGES AND FREQUENCIES ON THE DRAWINGS AND IN THE SPECIFICATIONS DIFFER FROM THE LOCAL ONES, ALL WORK SHALL BE PERFORMED USING THE LOCAL VOLTAGES AND FREQUENCIES.

G5. THE MINIMUM WIRE SIZE ON THE PROJECT SHALL BE 4mm². THE MINIMUM CONDUIT SIZE SHALL BE 20mm. THE MINIMUM BREAKER SIZE SHALL BE 20 AMPS.

G6. THE CONTRACTOR SHALL PUT A MAXIMUM OF 6 DUPLEX RECEPTACLES ON A 20A SINGLE POLE CIRCUIT.

G7. WHERE THE 1010 SCOPE REVIEW, 1015 TECHNICAL REVIEW, DRAWINGS, AND SPECIFICATIONS DIFFER FROM AMERICAN CODES OR STANDARDS, THE 1010, 1015, DRAWINGS, AND SPECIFICATIONS SHALL RULE.

G8. ALL CONDUIT AND DEVICES SHALL BE SURFACE MOUNTED UNLESS OTHERWISE INDICATED.

G9. CONTRACTOR SHALL COORDINATE ALL WORK WITH ALL OTHER TRADES TO ENSURE ALL WORK IS COMPLETED IN A PROFESSIONAL, WORKMAN–LIKE MANNER.

APPROVED:

A/E DESIGNER OF RECORD

SEAL:

COMMONWEALTH OF PENNSYLVANIA
REGISTERED PROFESSIONAL
JOSEPH R GAUS
ENGINEER
PE-074251
1/29/10

US ARMY CORPS OF ENGINEERS
AFGHANISTAN ENGINEER DISTRICT

| Mark | Description | Date | Appr. |
|---|---|---|---|
| | | | |

| Mark | Description | Date | Appr. |
|---|---|---|---|
| | | | |

Rev: 0
Date: 2/23/10
Design file no.
Drawing code:
File name:
Plot date:
Plot scale:

Designed by: RAJ
Dwn by: BJB
Ckd by: JRG
Reviewed by: JRG
Submitted by: BAKER

U.S. ARMY CORPS OF ENGINEERS
AFGHANISTAN ENGINEER DISTRICT
APO AE 96338

*Michael Baker Jr., Inc*
*A unit of Michael Baker Corporation*
Airside Business Park
100 Airside Drive
Moon Township, PA 15108
www.mbakercorp.com

AFGHAN NATIONAL ARMY
REGIONAL MILITARY TRAINING CENTER
STANDARD DESIGN

DINING FACILITY (DFAC)

# ELECTRICAL SYMBOLS & ABBREVIATIONS

Sheet reference number:
E–001

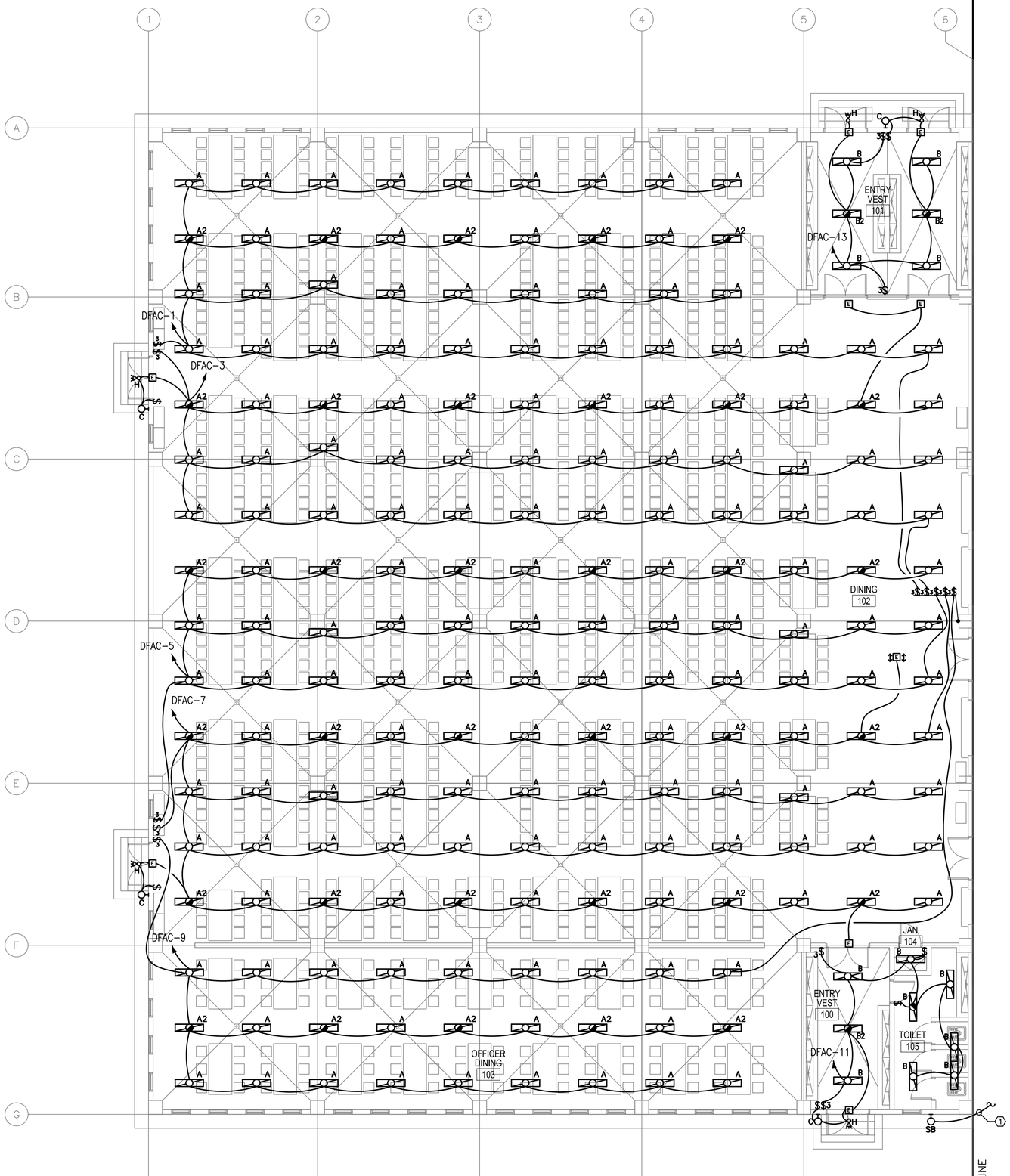


1 E-101

## DINING FACILITY- LIGHTING PLAN PART 'A'

SCALE: 1:100

## GENERAL NOTES:

1. REFER TO DRAWING #E-001 FOR THE ELECTRICAL SYMBOLS LIST.
2. EXIT SIGNS SHALL BE WIRED AHEAD OF ANY LOCAL SWITCHING ON CIRCUITS. SEE WIRING DIAGRAM DETAIL 8, DRAWING #E-501.
3. REFER TO DRAWING #E-601 FOR THE LIGHTING FIXTURE SCHEDULE.
4. REFER TO DRAWING #E-501 FOR THE POWER RISER.
5. REFER TO DRAWING #E-602 FOR PANEL SCHEDULES.
6. LIGHT FIXTURES INDICATED AS EMERGENCY SHALL BE PROVIDED WITH A BATTERY BACKUP BALLAST. SEE WIRING DIAGRAM DETAIL 7, DRAWING #E-501.
7. COORDINATE LIGHT FIXTURE LOCATIONS WITH CEILING FAN LOCATIONS PRIOR TO INSTALLATION. LIGHT FIXTURES SHALL HAVE PRIORITY OVER CEILING FANS.

## NUMBERED NOTES:

(1) TO FIXTURE ON DRAWING E-102.

## KEY PLAN:

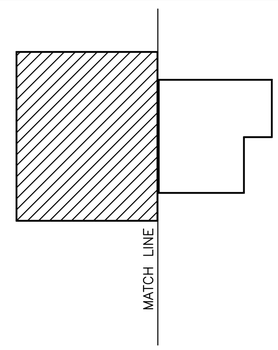


0 2000 4000
SCALE: 1:100

APPROVED:

A/E DESIGNER OF RECORD

SEAL:

COMMONWEALTH OF PENNSYLVANIA
REGISTERED PROFESSIONAL
JOSEPH R GAUS
1/29/10
ENGINEER
PE-074251

US ARMY CORPS OF ENGINEERS
AFGHANISTAN ENGINEER DISTRICT

| Mark | Description | Date | Appr. |
|---|---|---|---|
| | | | |

Rev: 0
Date: 2/23/10
Design file no.
Drawing code:
File name:
Plot date:
Plot scale:

Designed by: RAJ
Drwn by: BJB
Ckd by: JRG
Reviewed by: JRG
Submitted by: BAKER

U.S. ARMY CORPS OF ENGINEERS
AFGHANISTAN ENGINEER DISTRICT
APO AE 96338

Michael Baker Jr., Inc
A unit of Michael Baker Corporation
Airside Business Park
100 Airside Drive
Moon Township, PA 15108
www.mbakercorp.com

AFGHAN NATIONAL ARMY
REGIONAL MILITARY TRAINING CENTER
STANDARD DESIGN

DINING FACILITY (DFAC)
PARTIAL ELECTRICAL LIGHTING PLAN
PART 'A'

Sheet reference number:
E-101

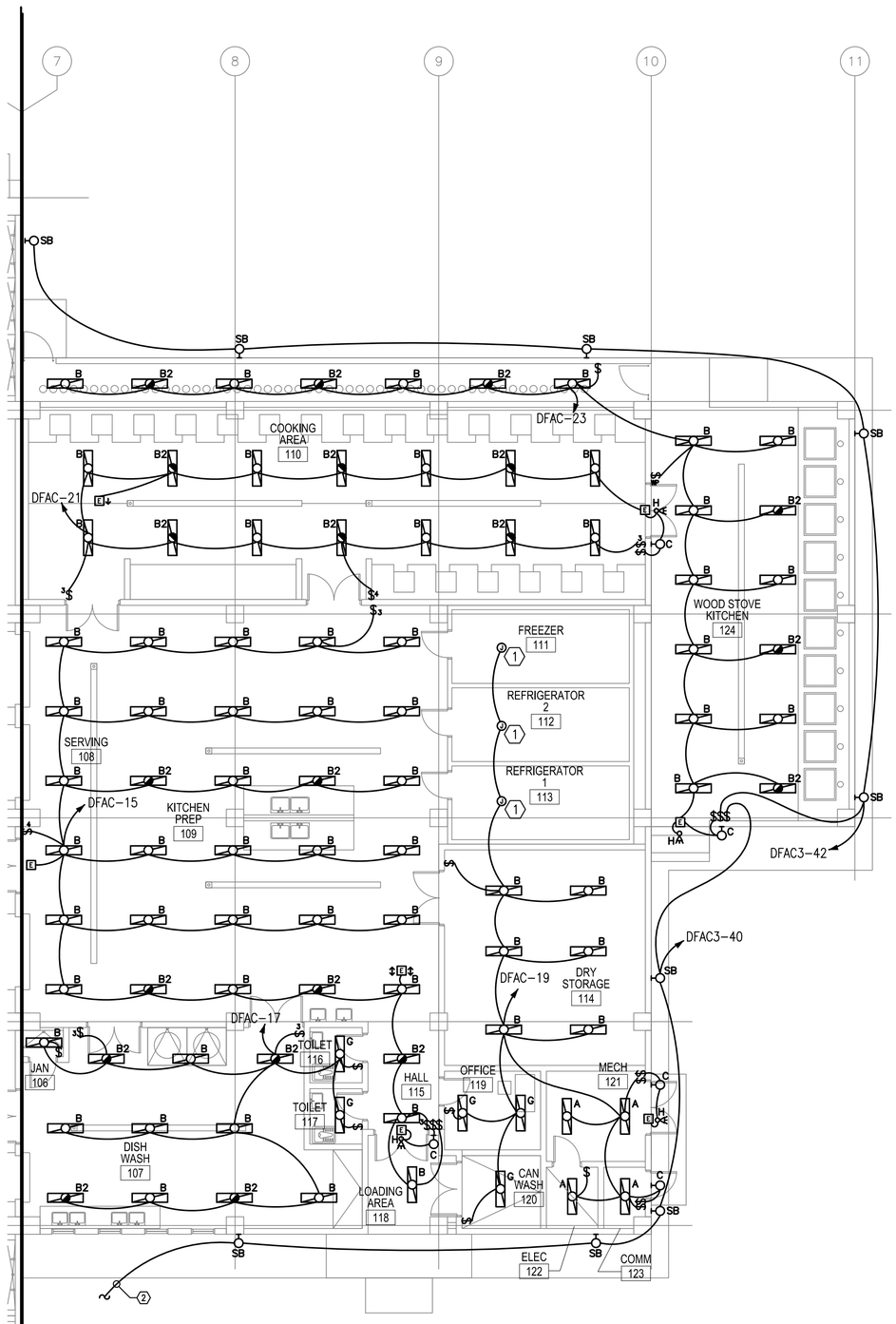


1 E-102 DINING FACILITY- LIGHTING PLAN PART 'B'

SCALE: 1:100

## GENERAL NOTES:

1. REFER TO DRAWING #E-001 FOR THE ELECTRICAL SYMBOLS LIST.
2. EXIT SIGNS SHALL BE WIRED AHEAD OF ANY LOCAL SWITCHING ON CIRCUITS. SEE WIRING DIAGRAM DETAIL 8, ON DRAWING #E-501.
3. REFER TO DRAWING #E-601 FOR THE LIGHTING FIXTURE SCHEDULE.
4. REFER TO DRAWING #E-501 FOR THE POWER RISER.
5. REFER TO DRAWING #E-602 FOR PANEL SCHEDULES.
6. LIGHT FIXTURES INDICATED AS EMERGENCY SHALL BE PROVIDED WITH A BATTERY BACKUP BALLAST. SEE WIRING DIAGRAM DETAIL 7, ON DRAWING #E-501.

## NUMBERED NOTES:

(1) IT SHALL BE THE RESPONSIBILITY OF THE ELECTRICAL CONTRACTOR TO PROVIDE POWER TO THE LIGHTS IN THE PACKAGED REFRIGERATION AND FREEZER UNITS.

(2) TO FIXTURE ON DRAWING E-101.

## KEY PLAN:

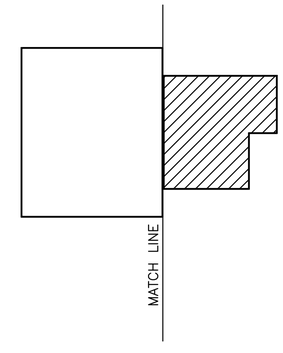


0 2000 4000
SCALE: 1:100

APPROVED:

A/E DESIGNER OF RECORD

SEAL:

COMMONWEALTH OF PENNSYLVANIA
REGISTERED PROFESSIONAL
JOSEPH R GAUS
ENGINEER
PE-074251

US ARMY CORPS OF ENGINEERS
AFGHANISTAN ENGINEER DISTRICT

| Mark | Description | Date | Appr. |
|---|---|---|---|
| | | | |

| Mark | Description | Date | Appr. |
|---|---|---|---|
| | | | |

Rev: 0
Date: 2/23/10
Design file no.
Drawing code:
File name:
Plot date:
Plot scale:

Designed by: RAJ
Dwn by: BJB
Ckd by: JRG
Reviewed by: JRG
Submitted by: BAKER

U.S. ARMY CORPS OF ENGINEERS
AFGHANISTAN ENGINEER DISTRICT
APO AE 96338

Michael Baker Jr., Inc.
A unit of Michael Baker Corporation
Airside Business Park
100 Airside Drive
Moon Township, PA 15108
www.mbakercorp.com

AFGHAN NATIONAL ARMY
REGIONAL MILITARY TRAINING CENTER
STANDARD DESIGN

DINING FACILITY (DFAC)
PARTIAL ELECTRICAL LIGHTING PLAN
PART 'B'

Sheet reference number:
E-102

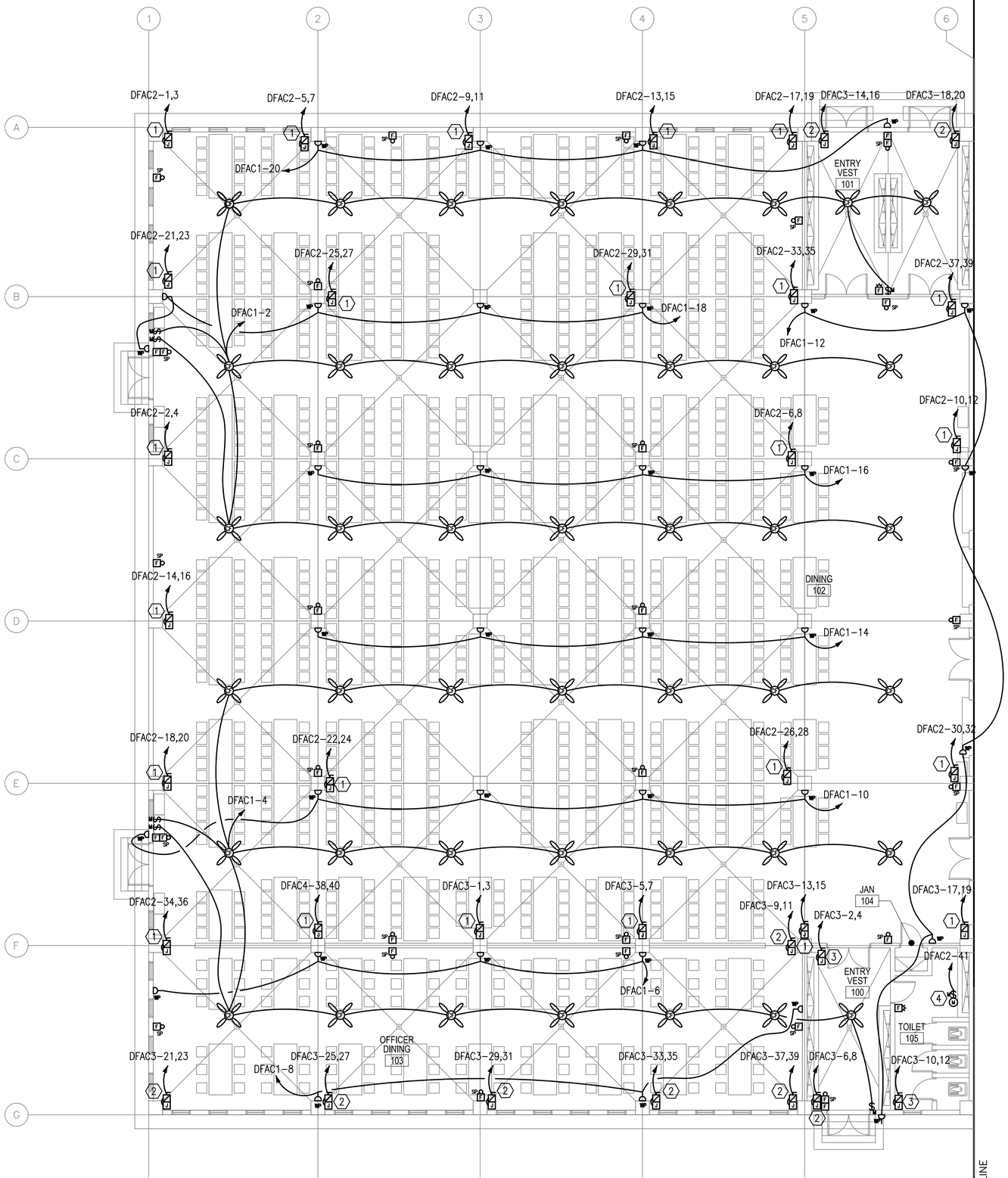


1 E-101

## DINING FACILITY- POWER AND SYSTEMS PLAN PART 'A'

SCALE: 1:100

## GENERAL NOTES:

1. REFER TO DRAWING #E-001 FOR THE ELECTRICAL SYMBOLS LIST.
2. REFER TO DRAWING #E-501 FOR THE POWER RISER.
3. REFER TO DRAWING #E-602 FOR PANEL SCHEDULES.
4. COORDINATE EXACT MOUNTING LOCATION OF DISCONNECTING MEANS FOR MECHANICAL AND PLUMBING EQUIPMENT IN THE FIELD.
5. FUSIBLE SAFETY SWITCHES THAT ARE NOT OTHERWISE IDENTIFIED SHALL BE 380V, 1P, 30A FUSED SAFETY SWITCHES WITH 20A FUSES.
6. CONTRACTOR SHALL COORDINATE FINAL LOCATIONS OF ALL MECHANICAL EQUIPMENT WITH MECHANICAL PLANS PER THIS PACKAGE.

## NUMBERED NOTES:

1. PROVIDE POWER CONNECTION TO ELECTRIC UNIT HEATER #5. SEE DRAWINGS #E-602 AND #M-101 FOR MORE INFORMATION.
2. PROVIDE POWER CONNECTION TO ELECTRIC UNIT HEATER #4. SEE DRAWINGS #E-602 AND #M-101 FOR MORE INFORMATION.
3. PROVIDE POWER CONNECTION TO ELECTRIC UNIT HEATER #2. SEE DRAWINGS #E-602 AND #M-101 FOR MORE INFORMATION.
4. PROVIDE POWER CONNECTION TO EXHAUST FAN #1. SEE DRAWINGS #E-602 AND #M-101 FOR MORE INFORMATION.

## KEY PLAN:

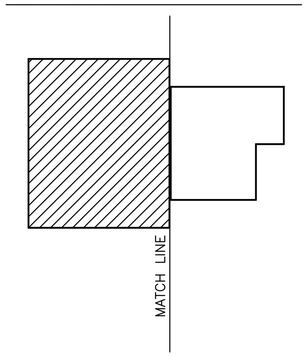


0 2000 4000
SCALE: 1:100

APPROVED:

A/E DESIGNER OF RECORD

SEAL:

COMMONWEALTH OF PENNSYLVANIA
REGISTERED PROFESSIONAL
JOSEPH R GAUS
ENGINEER
PE-074251
1/29/10

US ARMY CORPS OF ENGINEERS
AFGHANISTAN ENGINEER DISTRICT

| Mark | Description | Date | Appr. |
|---|---|---|---|
| | | | |

| Mark | Description | Date | Appr. |
|---|---|---|---|
| | | | |

Rev: 0
Date: 2/23/10
Design file no.
Drawing code:
File name:
Plot date:
Plot scale:

Designed by: RAJ
Dwn by: BJB
Ckd by: JRG
Reviewed by: JRG
Submitted by: BAKER

U.S. ARMY CORPS OF ENGINEERS
AFGHANISTAN ENGINEER DISTRICT
APO AE 96338

Michael Baker Jr., Inc
A unit of Michael Baker Corporation
Airside Business Park
100 Airside Drive
Moon Township, PA 15108
www.mbakercorp.com

AFGHAN NATIONAL ARMY
REGIONAL MILITARY TRAINING CENTER
STANDARD DESIGN

DINING FACILITY (DFAC)
PARTIAL ELECTRICAL POWER AND SYSTEMS PLAN PART 'A'

Sheet reference number:
E-103

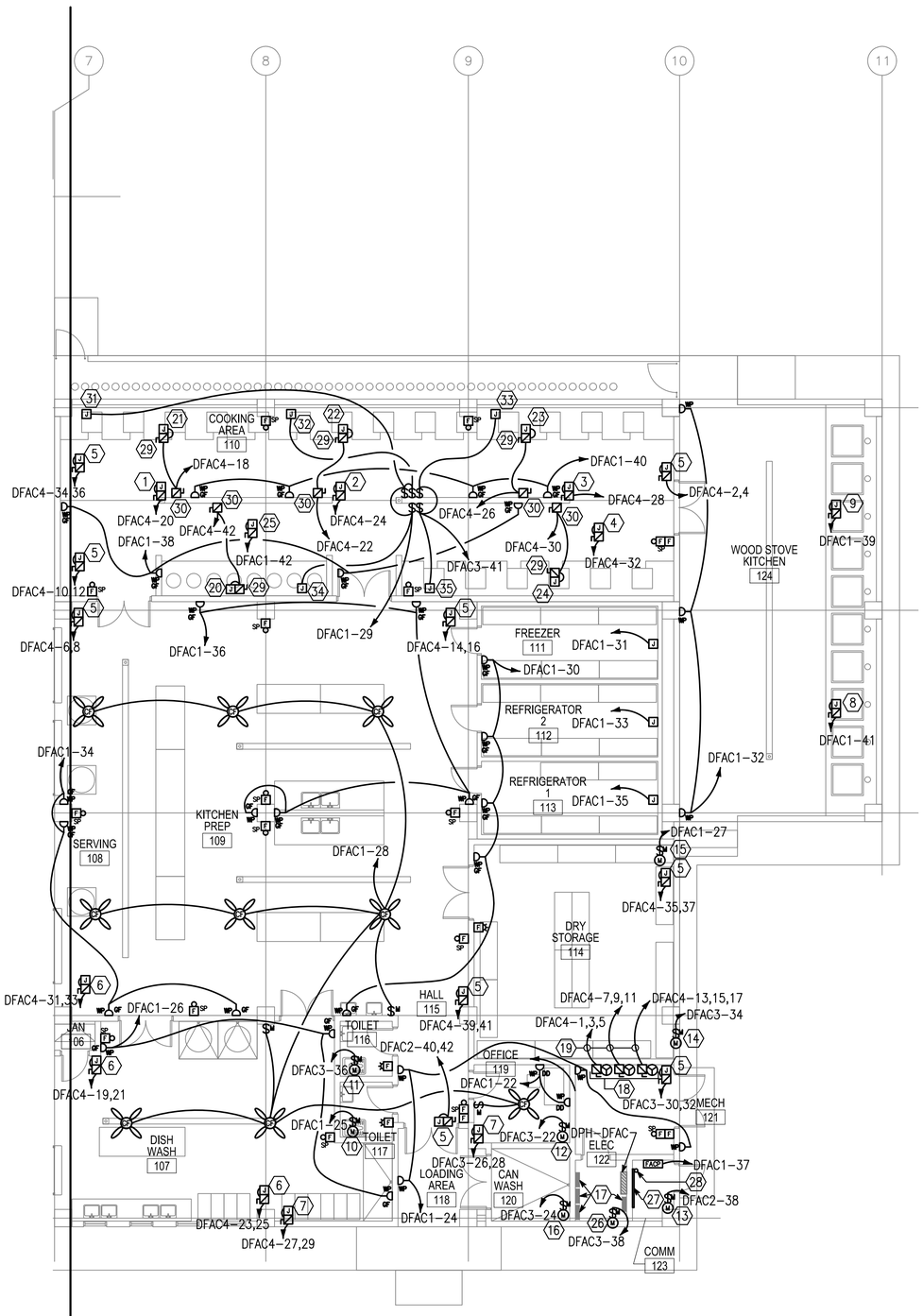


1 E-102

## DINING FACILITY- POWER AND SYSTEMS PLAN PART 'B'

SCALE: 1:100

## NUMBERED NOTES:

1. PROVIDE POWER CONNECTION TO MAKE-UP AIR UNIT #1. SEE DRAWINGS #E-602 AND #M-101 FOR MORE INFORMATION. PROVIDE 220V, 1ø, 30A MOTOR SNAP SWITCH.
2. PROVIDE POWER CONNECTION TO MAKE-UP AIR UNIT #2. SEE DRAWINGS #E-602 AND #M-101 FOR MORE INFORMATION. PROVIDE 220V, 1ø, 30A MOTOR SNAP SWITCH.
3. PROVIDE POWER CONNECTION TO MAKE-UP AIR UNIT #3. SEE DRAWINGS #E-602 AND #M-101 FOR MORE INFORMATION. PROVIDE 220V, 1ø, 30A MOTOR SNAP SWITCH.
4. PROVIDE POWER CONNECTION TO MAKE-UP AIR UNIT #4. SEE DRAWINGS #E-602 AND #M-101 FOR MORE INFORMATION. PROVIDE 220V, 1ø, 50A MOTOR SNAP SWITCH.
5. PROVIDE POWER CONNECTION TO ELECTRIC UNIT HEATER #4. SEE DRAWINGS #E-602 AND #M-101 FOR MORE INFORMATION.
6. PROVIDE POWER CONNECTION TO ELECTRIC UNIT HEATER #5. SEE DRAWINGS #E-602 AND #M-101 FOR MORE INFORMATION.
7. PROVIDE POWER CONNECTION TO ELECTRIC UNIT HEATER #2. SEE DRAWINGS #E-602 AND #M-101 FOR MORE INFORMATION.
8. PROVIDE POWER CONNECTION TO KITCHEN FAN #7. SEE DRAWINGS #E-602 AND #M-101 FOR MORE INFORMATION.
9. PROVIDE POWER CONNECTION TO KITCHEN FAN #6.. SEE DRAWINGS #E-602 AND #M-101 FOR MORE INFORMATION.
10. PROVIDE POWER CONNECTION TO EXHAUST FAN #3. SEE DRAWINGS #E-602 AND #M-101 FOR MORE INFORMATION.
11. PROVIDE POWER CONNECTION TO EXHAUST FAN #4. SEE DRAWINGS #E-602 AND #M-101 FOR MORE INFORMATION.
12. PROVIDE POWER CONNECTION TO EXHAUST FAN #5. SEE DRAWINGS #E-602 AND #M-101 FOR MORE INFORMATION.
13. PROVIDE POWER CONNECTION TO EXHAUST FAN #6. SEE DRAWINGS #E-602 AND #M-101 FOR MORE INFORMATION.
14. PROVIDE POWER CONNECTION TO EXHAUST FAN #7. SEE DRAWINGS #E-602 AND #M-101 FOR MORE INFORMATION.
15. PROVIDE POWER CONNECTION TO EXHAUST FAN #8. SEE DRAWINGS #E-602 AND #M-101 FOR MORE INFORMATION.
16. PROVIDE POWER CONNECTION TO EXHAUST FAN #9. SEE DRAWINGS #E-602 AND #M-101 FOR MORE INFORMATION.
17. PANEL DFAC1, DFAC2, DFAC3, & DFAC4
18. NEMA 3R, 380V, 3P, 60A FUSED DISCONNECT FUSED AT 60A. SEE PLUMBING DRAWINGS FOR EXACT LOCATION OF WATER HEATER.
19. SEE DRAWING #E-602 FOR WIRE AND CONDUIT SIZE.
20. PROVIDE POWER CONNECTION TO KITCHEN FAN #5. SEE DRAWINGS #E-602 AND #M-101 FOR MORE INFORMATION.

## NUMBERED NOTES (CONT):

21. PROVIDE POWER CONNECTION TO KITCHEN FAN #1. SEE DRAWINGS #E-602 AND #M-101 FOR MORE INFORMATION.
22. PROVIDE POWER CONNECTION TO KITCHEN FAN #2. SEE DRAWINGS #E-602 AND #M-101 FOR MORE INFORMATION.
23. PROVIDE POWER CONNECTION TO KITCHEN FAN #3. SEE DRAWINGS #E-602 AND #M-101 FOR MORE INFORMATION.
24. PROVIDE POWER CONNECTION TO KITCHEN FAN #4. SEE DRAWINGS #E-602 AND #M-101 FOR MORE INFORMATION. PROVIDE 220V, 1ø, 30A MOTOR SNAP SWITCH
25. PROVIDE POWER CONNECTION TO MAKE-UP AIR UNIT #5. SEE DRAWINGS #E-602 AND #M-101 FOR MORE INFORMATION. PROVIDE 220V, 1ø, 30A MOTOR SNAP SWITCH.
26. PROVIDE POWER CONNECTION TO EXHAUST FAN #10. SEE DRAWINGS #E-602 AND #M-101 FOR MORE INFORMATION.
27. PROVIDE A 1200mm X 2400mm SHEET OF PLYWOOD PAINTED WITH FIRE RESISTANT PAINT FOR FUTURE MOUNTING OF TELECOMMUNICATIONS EQUIPMENT.
28. PROVIDE CONDUIT STUB UP IN THE ROOM FOR INCOMING TELECOMMUNICATIONS SERVICES FROM THE CENTRAL COMMUNICATIONS SYSTEM IN THE GARRISON.
29. FUSIBLE SAFETY SWITCH TO BE MOUNTED ON EQUIPMENT LOCATED ON ROOF OF BUILDING
30. FUSIBLE SAFETY SWITCH TO BE MOUNTED INSIDE OF BUILDING TO CONTROL EQUIPMENT ON ROOF
31. JUNCTION BOX TO PROVIDE POWER TO LIGHTS IN EXHAUST HOOD OF KITCHEN FAN #1.
32. JUNCTION BOX TO PROVIDE POWER TO LIGHTS IN EXHAUST HOOD OF KITCHEN FAN #2.
33. JUNCTION BOX TO PROVIDE POWER TO LIGHTS IN EXHAUST HOOD OF KITCHEN FAN #3.
34. JUNCTION BOX TO PROVIDE POWER TO LIGHTS IN EXHAUST HOOD OF KITCHEN FAN #5.
35. JUNCTION BOX TO PROVIDE POWER TO LIGHTS IN EXHAUST HOOD OF KITCHEN FAN #4.

## GENERAL NOTES:

1. REFER TO DRAWING #E-001 FOR THE ELECTRICAL SYMBOLS LIST.
2. REFER TO DRAWING #E-501 FOR THE POWER RISER.
3. REFER TO DRAWING #E-602 FOR PANEL SCHEDULES.
4. COORDINATE EXACT MOUNTING LOCATION OF DISCONNECTING MEANS FOR MECHANICAL AND PLUMBING EQUIPMENT IN THE FIELD.
5. FUSIBLE SAFETY SWITCHES THAT ARE NOT OTHERWISE IDENTIFIED SHALL BE 380V, 1P, 30A FUSED SAFETY SWITCHES WITH 20A FUSES.
6. CONTRACTOR SHALL COORDINATE FINAL LOCATIONS OF ALL MECHANICAL EQUIPMENT WITH MECHANICAL PLANS PER THIS PACKAGE.

## KEY PLAN:

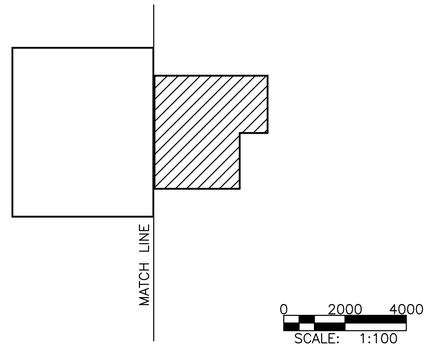


0 2000 4000
SCALE: 1:100

APPROVED:

A/E DESIGNER OF RECORD

SEAL:

COMMONWEALTH OF PENNSYLVANIA
REGISTERED PROFESSIONAL
JOSEPH R GAUS
ENGINEER
PE-074251
12/31/10

US ARMY CORPS OF ENGINEERS
AFGHANISTAN ENGINEER DISTRICT

| Mark | Description | Date | Appr. |
|---|---|---|---|
| | | | |

Rev: 0
Date: 2/23/10
Design file no.
Drawing code:
File name:
Plot date:
Plot scale:

Designed by: RAJ
Dwn by: BJB
Ckd by: JRG
Reviewed by: JRG
Submitted by: BAKER

U.S. ARMY CORPS OF ENGINEERS
AFGHANISTAN ENGINEER DISTRICT
APO AE 96338

Michael Baker Jr., Inc.
A unit of Michael Baker Corporation
Airside Business Park
100 Airside Drive
Moon Township, PA 15108
www.mbakercorp.com

AFGHAN NATIONAL ARMY
REGIONAL MILITARY TRAINING CENTER
STANDARD DESIGN

DINING FACILITY (DFAC)
PARTIAL ELECTRICAL POWER AND SYSTEMS PLAN PART 'B'

Sheet reference number:
E-104

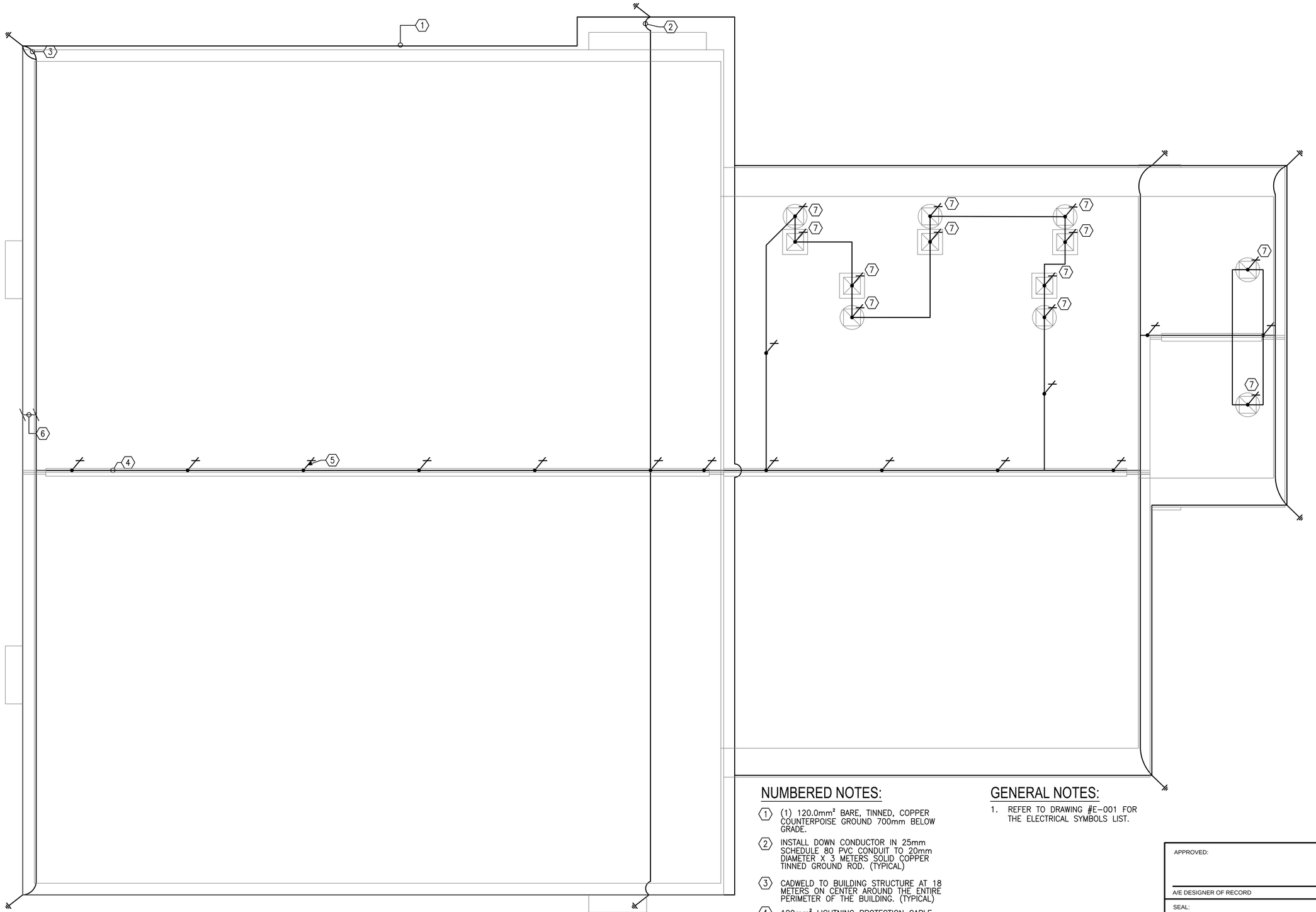


## DINING FACILITY- LIGHTNING PROTECTION PLAN

1 / E-105

SCALE: 1:100

## NUMBERED NOTES:

1. (1) 120.0mm² BARE, TINNED, COPPER COUNTERPOISE GROUND 700mm BELOW GRADE.
2. INSTALL DOWN CONDUCTOR IN 25mm SCHEDULE 80 PVC CONDUIT TO 20mm DIAMETER X 3 METERS SOLID COPPER TINNED GROUND ROD. (TYPICAL)
3. CADWELD TO BUILDING STRUCTURE AT 18 METERS ON CENTER AROUND THE ENTIRE PERIMETER OF THE BUILDING. (TYPICAL)
4. 120mm² LIGHTNING PROTECTION CABLE.
5. AIR TERMINAL. TERMINALS SHALL BE PLACED AT A MAXIMUM OF 6M ON CENTER PER NFPA 780 PARA. 4.8.2.1, AND WITHIN 0.6M OF RIDGE ENDS PER NFPA 780 PARA. 4.8 (TYPICAL)
6. 700mm MIN. (TYP) BETWEEN FOUNDATION AND GROUND LOOP.
7. AIR TERMINAL ON ROOFTOP FAN.

## GENERAL NOTES:

1. REFER TO DRAWING #E-001 FOR THE ELECTRICAL SYMBOLS LIST.

0 2000 4000

SCALE: 1:100

APPROVED:

A/E DESIGNER OF RECORD

SEAL:

COMMONWEALTH OF PENNSYLVANIA
REGISTERED PROFESSIONAL
JOSEPH R. GAUS
1/29/10
ENGINEER
PE-074251

US ARMY CORPS OF ENGINEERS
AFGHANISTAN ENGINEER DISTRICT

| Mark | Description | Date | Appr. |
|---|---|---|---|
| | | | |

| Mark | Description | Date | Appr. |
|---|---|---|---|
| | | | |

Rev: 0
Date: 2/23/10
Design file no.
Drawing code:
File name:
Plot date:
Plot scale:

Designed by: RAJ
Dwn. by: BJB
Ckd by: JRG
Reviewed by: JRG
Submitted by: BAKER

U.S. ARMY CORPS OF ENGINEERS
AFGHANISTAN ENGINEER DISTRICT
APO AE 96338

*Michael Baker Jr., Inc*
*A unit of Michael Baker Corporation*
Airside Business Park
100 Airside Drive
Moon Township, PA 15108
www.mbakercorp.com

AFGHAN NATIONAL ARMY
REGIONAL MILITARY TRAINING CENTER
STANDARD DESIGN

DINING FACILITY (DFAC)
PARTIAL ELECTRICAL LIGHTNING PROTECTION PLAN PART 'A'

Sheet reference number:
E-105

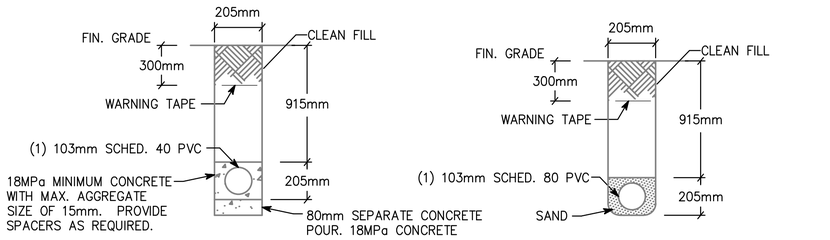


NOTE: PVC CONDUIT SHALL BE DIRECT BURIED SCHEDULE 80 FOR NO TRAFFIC AREAS AND CONCRETE-ENCASED SCHEDULE 40 FOR UNDER ROADWAYS OR TRAFFIC AREAS.

1 E-501 **TYPICAL DUCT BANK DETAILS FOR CONDUIT IN SAND OR CONCRETE**

SCALE: N.T.S.

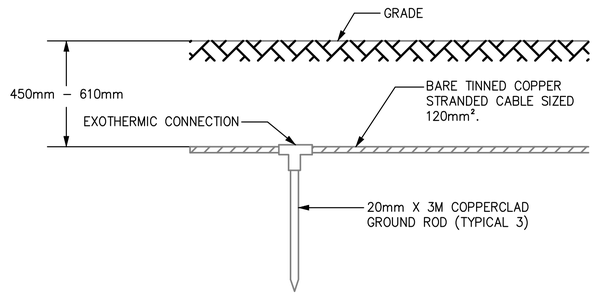


2 E-501 **GROUND TRIPOD SYSTEM DETAIL - ELEVATION**

SCALE: N.T.S.

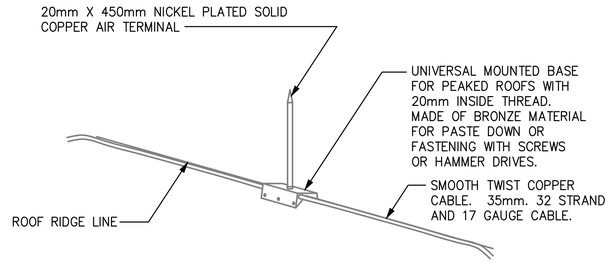


3 E-501 **LIGHTNING PROTECTION AIR TERMINAL DETAIL**

SCALE: N.T.S.

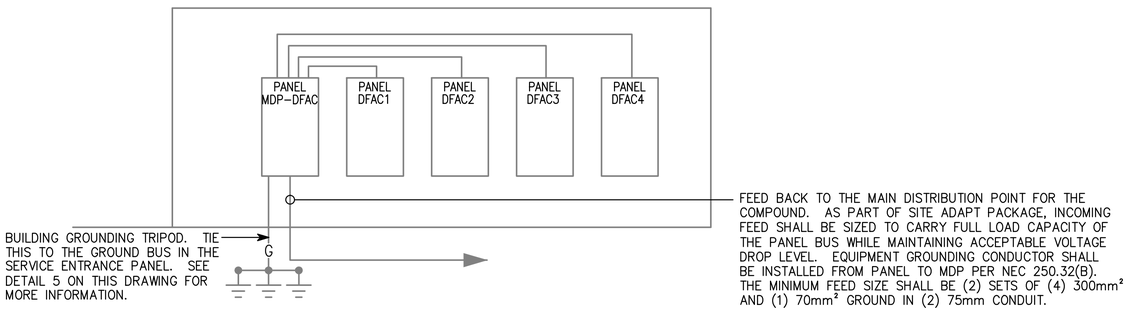


4 E-501 **(DFAC) DINING FACILITY RISER DIAGRAM**

SCALE: N.T.S.

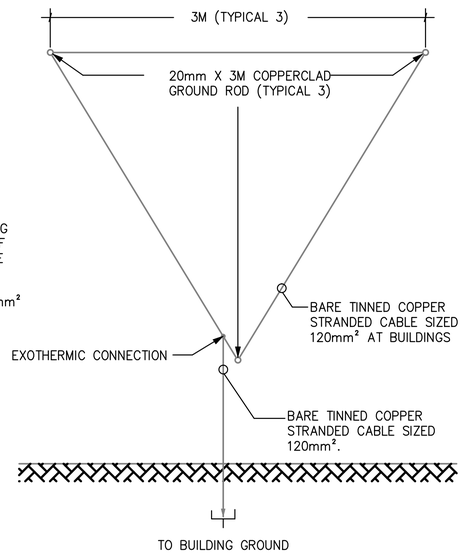


5 E-501 **GROUND TRIPOD SYSTEM DETAIL - PLAN**

SCALE: N.T.S.

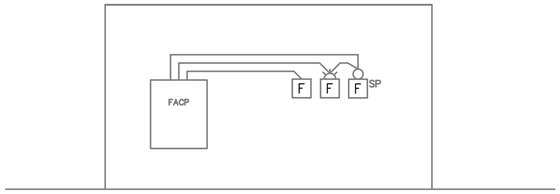


6 E-501 **TYPICAL ONE STORY FIRE ALARM RISER**

SCALE: N.T.S.

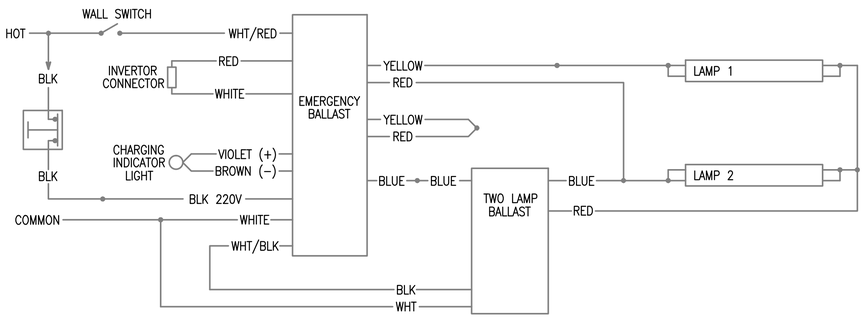


7 E-501 **EMERGENCY FIXTURE WIRING DIAGRAM**

SCALE: N.T.S.

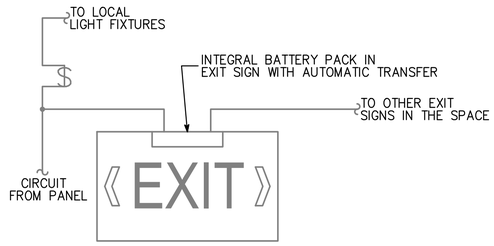


8 E-501 **EXIT SIGN WIRING DIAGRAM**

SCALE: N.T.S.

US ARMY CORPS OF ENGINEERS
AFGHANISTAN ENGINEER DISTRICT

| Mark | Description | Date | Appr. |
|---|---|---|---|
| | | | |

Rev: 0
Date: 2/23/10
Design file no.
Drawing code:
File name:
Plot date:
Plot scale:

Designed by: RAJ
Dwn. by: BJB
Ckd by: JRG
Reviewed by: JRG
Submitted by: BAKER

U.S. ARMY CORPS OF ENGINEERS
AFGHANISTAN ENGINEER DISTRICT
APO AE 96338

Michael Baker Jr., Inc
A unit of Michael Baker Corporation
Airside Business Park
100 Airside Drive
Moon Township, PA 15108
www.mbakercorp.com

AFGHAN NATIONAL ARMY
REGIONAL MILITARY TRAINING CENTER
STANDARD DESIGN

DINING FACILITY (DFAC)
ELECTRICAL DETAILS

APPROVED:

A/E DESIGNER OF RECORD

SEAL:

COMMONWEALTH OF PENNSYLVANIA
REGISTERED PROFESSIONAL
JOSEPH R. GAUS
1/29/10
ENGINEER
PE-074251

Sheet reference number:
E-501

| Ⓐ LARGER OF THE TWO SIZES GIVEN IN THE TABLES BELOW | |
|---|---|
| GROUNDING ELECTRODE CONDUCTOR (BASED ON AIC RATING) | |
| AIC RATING OF SERVICE EQUIPMENT | NECESSARY GROUNDING ELECTRODE CONDUCTOR SIZE |
| 10K | (1) 35mm² |
| 14K | (1) 50mm² |
| 18K | (1) 70mm² |
| 22K | (1) 70mm² |
| 25K | (1) 70mm² |
| 30K | (1) 95mm² |
| 35K | (1) 120mm² |
| 42K | (1) 150mm² |
| 65K | (1) 185mm² |
| 100K | (1) 300mm² |
| 125K | (2) 185mm² |
| 200K | (2) 300mm² |

| GROUNDING ELECTRODE CONDUCTOR (BASED ON NEC TABLE 250.66) | |
|---|---|
| SIZE OF LARGEST UNGROUNDED SERVICE CONDUCTOR OR EQUIVALENT AREA FOR PARALLEL CONDUCTORS | NECESSARY GROUNDING ELECTRODE CONDUCTOR SIZE |
| 350 kcmil OR SMALLER | 35mm² |
| OVER 350 kcmil TO 600 kcmil | 70mm² |
| OVER 600 kcmil TO 1100 kcmil | 70mm² |
| OVER 1100 kcmil | 95mm² |
| NOTE: ALL SIZES ARE BASED ON COPPER CONDUCTORS. | |

| Ⓑ EQUIPMENT GROUNDING CONDUCTOR | |
|---|---|
| RATING OR SETTING OF AUTOMATIC OVERCURRENT DEVICE IN CIRCUIT AHEAD OF EQUIPMENT, CONDUIT, ETC, NOT EXCEEDING (AMPERES) | NECESSARY EQUIPMENT GROUNDING CONDUCTOR SIZE |
| 15 | 2.5mm² |
| 20 | 4.0mm² |
| 30 | 6.0mm² |
| 40 | 6.0mm² |
| 60 | 6.0mm² |
| 100 | 10mm² |
| 200 | 16mm² |
| 300 | 25mm² |
| 400 | 25mm² |
| 500 | 35mm² |
| 600 | 50mm² |
| 800 | 70mm² |
| 1000 | 70mm² |
| 1200 | 95mm² |
| 1600 | 120mm² |
| 2000 | 150mm² |
| 2500 | 185mm² |
| 3000 | 240mm² |
| 4000 | 300mm² |
| 5000 | 400mm² |
| 6000 | 400mm² |
| NOTE: ALL SIZES ARE BASED ON COPPER CONDUCTORS. | |

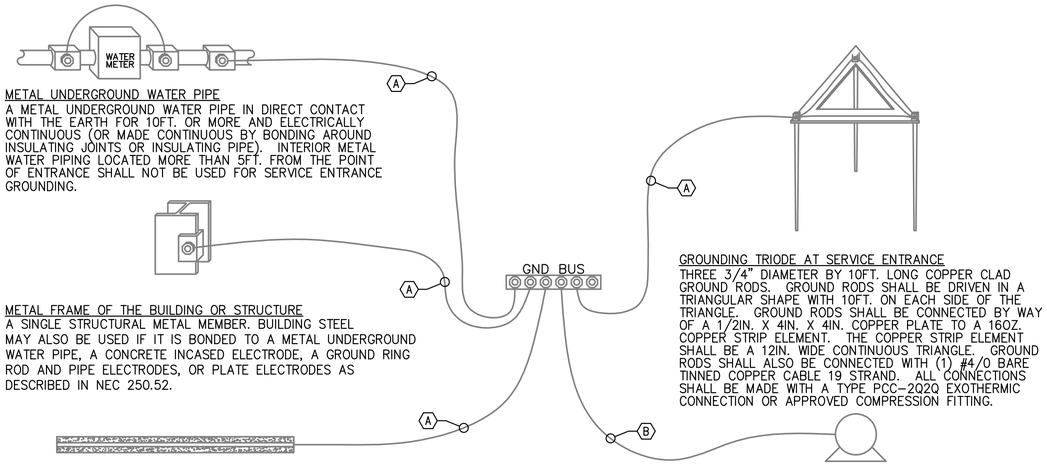


METAL UNDERGROUND WATER PIPE
A METAL UNDERGROUND WATER PIPE IN DIRECT CONTACT WITH THE EARTH FOR 10FT. OR MORE AND ELECTRICALLY CONTINUOUS (OR MADE CONTINUOUS BY BONDING AROUND INSULATING JOINTS OR INSULATING PIPE). INTERIOR METAL WATER PIPING LOCATED MORE THAN 5FT. FROM THE POINT OF ENTRANCE SHALL NOT BE USED FOR SERVICE ENTRANCE GROUNDING.

METAL FRAME OF THE BUILDING OR STRUCTURE
A SINGLE STRUCTURAL METAL MEMBER. BUILDING STEEL MAY ALSO BE USED IF IT IS BONDED TO A METAL UNDERGROUND WATER PIPE, A CONCRETE INCASED ELECTRODE, A GROUND RING ROD AND PIPE ELECTRODES, OR PLATE ELECTRODES AS DESCRIBED IN NEC 250.52.

CONCRETE ENCASED ELECTRODE
AN ELECTRODE ENCASED BY AT LEAST 2IN. OF CONCRETE , LOCATED WITHIN AND NEAR THE BOTTOM OF A CONCRETE FOUNDATION OR FOOTING THAT IS IN DIRECT CONTACT WITH THE EARTH, CONSISTING OF AT LEAST 20FT. OF ONE OR MORE BARE OR ZINC GALVANIZED OR OTHER ELECTRICALLY CONDUCTIVE COATED STEEL REINFORCING BARS OR RODS OF NOT LESS THAN 1/2" DIAMETER OR BARE COPPER CONDUCTOR NOT SMALLER THAN 4AWG.

GROUNDING TRIODE AT SERVICE ENTRANCE
THREE 3/4" DIAMETER BY 10FT. LONG COPPER CLAD GROUND RODS. GROUND RODS SHALL BE DRIVEN IN A TRIANGULAR SHAPE WITH 10FT. ON EACH SIDE OF THE TRIANGLE. GROUND RODS SHALL BE CONNECTED BY WAY OF A 1/2IN. X 4IN. X 4IN. COPPER PLATE TO A 16OZ. COPPER STRIP ELEMENT. THE COPPER STRIP ELEMENT SHALL BE A 12IN. WIDE CONTINUOUS TRIANGLE. GROUND RODS SHALL ALSO BE CONNECTED WITH (1) #4/0 BARE TINNED COPPER CABLE 19 STRAND. ALL CONNECTIONS SHALL BE MADE WITH A TYPE PCC-2Q2Q EXOTHERMIC CONNECTION OR APPROVED COMPRESSION FITTING.

LOAD OR DOWNSTREAM PANEL
ALL LOADS IN THE BUILDING SHALL HAVE AN EQUIPMENT GROUNDING CONDUCTOR PULLED TO THEM.

1
E-502

# SERVICE ENTRANCE GROUNDING DETAIL

SCALE: N.T.S.

APPROVED:

A/E DESIGNER OF RECORD

SEAL:

COMMONWEALTH OF PENNSYLVANIA
REGISTERED PROFESSIONAL
JOSEPH R GAUS
ENGINEER
PE-074251
12/29/10

US ARMY CORPS OF ENGINEERS
AFGHANISTAN ENGINEER DISTRICT

| Mark | Description | Date | Appr. |
|---|---|---|---|
| | | | |

| Mark | Description | Date | Appr. |
|---|---|---|---|
| | | | |

Rev: 0
Date: 2/23/10
Design file no.
Drawing code:
File name:
Plot date:
Plot scale:

Designed by: RAJ
Dwn by: BJB
Ckd by: JRG
Reviewed by: JRG
Submitted by: BAKER

U.S. ARMY CORPS OF ENGINEERS
AFGHANISTAN ENGINEER DISTRICT
APO AE 96338

*Michael Baker Jr., Inc.*
*A unit of Michael Baker Corporation*
Airside Business Park
100 Airside Drive
Moon Township, PA 15108
www.mbakercorp.com

AFGHAN NATIONAL ARMY
REGIONAL MILITARY TRAINING CENTER
STANDARD DESIGN

DINING FACILITY (DFAC)
ELECTRICAL DETAILS

Sheet reference number:
E-502

FIXTURE MARK 'A'

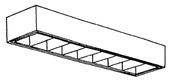

FIXTURE MARK 'B'

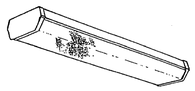

FIXTURE MARK 'C'

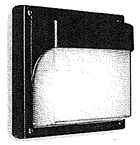

FIXTURE MARK 'G'

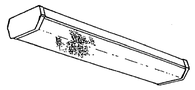

FIXTURE MARK 'H'

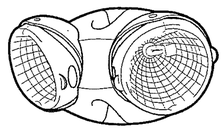

FIXTURE MARK 'SB'

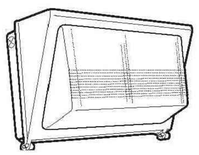

FIXTURE MARK '[E]'

# LIGHT FIXTURE SCHEDULE

| FIXTURE MARK | STYLE NUMBER AND TYPE | NUMBER AND TYPE OF LAMPS | VOLTAGE | MOUNTING | NOTES |
|---|---|---|---|---|---|
| A | PARABOLIC SURFACE/PENDANT MOUNTED 300MM X 1200MM FLUORESCENT FIXTURE WITH ELECTRONIC BALLAST | (2) 32W 3500K | 220V – 1ø 50HZ | PENDANT MOUNTED FROM CEILINGS | FURNISHED WITH ELECTRONIC BALLAST. PARABOLIC LOUVER SHALL BE SPECULAR LENS IRADESCENCE TYPE. |
| A2 | SAME AS FIXTURE 'A' WITH EMERGENCY BALLAST | (2) 32W 3500K | 220V – 1ø 50HZ | PENDANT MOUNTED FROM CEILINGS | FURNISHED WITH ELECTRONIC BALLAST. PARABOLIC LOUVER SHALL BE SPECULAR LENS IRADESCENCE TYPE. EMERGENCY BALLAST SELF TEST. |
| B | WET LOCATION WRAP AROUND SURFACE/PENDANT MOUNTED FLUORESCENT FIXTURE WITH PRISMATIC ACRYLIC LENS AND ELECTRONIC BALLAST | (2) 32W 3500K | 220V – 1ø 50HZ | PENDANT MOUNTED FROM CEILINGS | FURNISHED WITH ELECTRONIC BALLAST, VIRGIN ACRYLIC WRAP AROUND LENS. |
| B2 | SAME AS FIXTURE 'B' WITH EMERGENCY BALLAST | (2) 32W 3500K | 220V – 1ø 50HZ | PENDANT MOUNTED FROM CEILINGS | FURNISHED WITH ELECTRONIC BALLAST, VIRGIN ACRYLIC WRAP AROUND LENS. EMERGENCY BALLAST WITH SELF TEST SWITCH. |
| C | INCANDESCENT ONE PIECE W/ APPROVED LENS STABILIZED HIGH IMPACT POLY CARBONATE. | (1) A19 – 100W INCANDESCENT | 220V – 1ø 50HZ | WALL MOUNTED ABOVE EXTERIOR DOORS | |
| G | WRAP AROUND SURFACE/PENDANT MOUNTED FLUORESCENT FIXTURE WITH PRISMATIC ACRYLIC LENS AND ELECTRONIC BALLAST | (2) 32W 3500K | 220V – 1ø 50HZ | PENDANT MOUNTED FROM CEILINGS | FURNISHED WITH ELECTRONIC BALLAST, VIRGIN ACRYLIC WRAP AROUND LENS. |
| G2 | SAME AS FIXTURE 'G' WITH EMERGENCY BALLAST | (2) 32W 3500K | 220V – 1ø 50HZ | PENDANT MOUNTED FROM CEILINGS | FURNISHED WITH ELECTRONIC BALLAST, VIRGIN ACRYLIC WRAP AROUND LENS. EMERGENCY BALLAST WITH SELF TEST SWITCH. |
| H | REMOTE HEAD EXTERIOR LIGHT HEAD POWERED FROM EXIT SIGN BATTERY– 12V DOUBLE HEAD CORROSION RESISTANT WITH UL34 WEATHERPROOF CONSTRUCTION | (2) 12W/12V HALOGEN LAMP | 12V – 1ø 50HZ | EXTERIOR WALL MOUNTED AT TOP OF DOOR HEIGHT | |
| SB | METAL HALIDE WALL MOUNTED EXTERIOR AREA LIGHT WITH PRISMATIC ACRYLIC LENS – CORROSION RESISTANT CONSTRUCTION | (1) 250W METAL HALIDE LAMP | 220V – 1ø 50HZ | EXTERIOR WALL MOUNTED 500mm BELOW ROOF | |
| [E] | UNIVERSAL MOUNT ENGINEER GRADE THERMOPLASTIC HOUSING EXIT SIGN WITH LED LAMPS, RED LETTERS 6" IN HEIGHT WITH ARROWS AS INDICATED, WITH 12V CADMIUM BATTERY WITH REMOTE HEAD CAPABILITY | LED LAMPS | 220V – 1ø 50HZ | UNIVERSAL MOUNTING | |

APPROVED:

A/E DESIGNER OF RECORD

SEAL:

COMMONWEALTH OF PENNSYLVANIA
REGISTERED PROFESSIONAL ENGINEER
JOSEPH R. GAUS
PE-074251
1/29/10

US ARMY CORPS OF ENGINEERS
AFGHANISTAN ENGINEER DISTRICT

| Mark | Description | Date | Appr. |
|---|---|---|---|
| | | | |

| Mark | Description | Date | Appr. |
|---|---|---|---|
| | | | |

Designed by: RAJ
Dwn by: BJB
Ckd by: JRG
Reviewed by: JRG
Submitted by: BAKER

Date: 2/23/10
Design file no.
Drawing code:
File name:
Plot date:
Plot scale:
Rev: 0

U.S. ARMY CORPS OF ENGINEERS
AFGHANISTAN ENGINEER DISTRICT
APO AE 96338

Michael Baker Jr., Inc
A unit of Michael Baker Corporation
Airside Business Park
100 Airside Drive
Moon Township, PA 15108
www.mbakercorp.com

AFGHAN NATIONAL ARMY
REGIONAL MILITARY TRAINING CENTER
STANDARD DESIGN

DINING FACILITY (DFAC)

ELECTRICAL LIGHT FIXTURE SCHEDULE

Sheet reference number:
E–601

PANELBOARD MDP–DFAC SURFACE MOUNTED
AMP. MAIN LUGS (OR) 800 AMP. MAIN BREAKER W/ 800 AMP. TRIP
CIRCUIT BREAKER TYPE 380/220 VOLTS 3 PHASE 4 WIRE 50 HZ 800 AMP. BUS

| CKT. NO. | TRIP AMPS | NO. POLES | WIRE MM² | GND MM² | CONDUIT MM | LOAD SERVED | LOAD–KVA A0 | LOAD–KVA B0 | LOAD–KVA C0 | LOAD–KVA A0 | LOAD–KVA B0 | LOAD–KVA C0 | LOAD SERVED | CONDUIT MM | GND MM² | WIRE MM² | NO. POLES | TRIP AMPS | CKT. NO. |
|---|---|---|---|---|---|---|---|---|---|---|---|---|---|---|---|---|---|---|---|
| 1 | | | | | | | 15.6 | | | 33.0 | | | | | | | | | 2 |
| 3 | 150 | 3 | 70.0 | 16.0 | 40 | DFAC1 | | 21.8 | | | 34.5 | | DFAC2 | 60 | 25.0 | 150.0 | 3 | 250 | 4 |
| 5 | | | | | | | | | 24.4 | | | 32.5 | | | | | | | 6 |
| 7 | | | | | | | 27.1 | | | 61.5 | | | | | | | | | 8 |
| 9 | 225 | 3 | 120.0 | 25.0 | 50 | DFAC3 | | 24.1 | | | 53.1 | | DFAC4 | (2) 50 | (2) 10.0 | (2) 95.0 | 3 | 400 | 10 |
| 11 | | | | | | | | | 23.8 | | | 55.9 | | | | | | | 12 |
| 13 | | | | | | | | | | | | | | | | | | | 14 |
| 15 | 100 | 3 | | | | SPARE | | | | | | | SPARE | | | | 3 | 100 | 16 |
| 17 | | | | | | | | | | | | | | | | | | | 18 |
| | | | | | | | 42.7 | 45.9 | 48.2 | 94.5 | 87.6 | 88.4 | | | | | | | |

TOTAL CONN. LOAD PER PHASE (KVA): A0 137.2 B0 133.5 C0 136.6

TOTAL CONN. LOAD 407.3 KVA. 70 % DEMAND = ESTIMATED DEMAND LOAD 285.11

* MAIN BREAKER SHALL BE 3P EARTH GROUND TYPE

PANELBOARD DFAC1 SURFACE MOUNTED
AMP. MAIN LUGS (OR) 150 AMP. MAIN BREAKER W/ 150 AMP. TRIP
CIRCUIT BREAKER TYPE 380/220 VOLTS 3 PHASE 4 WIRE 50 HZ 225 AMP. BUS

| CKT. NO. | TRIP AMPS | NO. POLES | WIRE MM² | GND MM² | CONDUIT MM | LOAD SERVED | LOAD–KVA A0 | LOAD–KVA B0 | LOAD–KVA C0 | LOAD–KVA A0 | LOAD–KVA B0 | LOAD–KVA C0 | LOAD SERVED | CONDUIT MM | GND MM² | WIRE MM² | NO. POLES | TRIP AMPS | CKT. NO. |
|---|---|---|---|---|---|---|---|---|---|---|---|---|---|---|---|---|---|---|---|
| 1 | 20 | 1 | 4.0 | 4.0 | 20 | LIGHTING – RM 102 | 2.5 | | | 1.5 | | | CEILING FANS – RM 101, 102 | 20 | 4.0 | 4.0 | 1 | 20 | 2 |
| 3 | 20 | 1 | 4.0 | 4.0 | 20 | LIGHTING – RM 102 | | 2.5 | | | 2.5 | | CEILING FANS – RM 102, 103 | 20 | 4.0 | 4.0 | 1 | 20 | 4 |
| 5 | 20 | 1 | 4.0 | 4.0 | 20 | LIGHTING – RM 102 | | | 2.5 | | | 2.5 | RECEPTACLES – RM 103 | 20 | 4.0 | 4.0 | 1 | 20 | 6 |
| 7 | 20 | 1 | 4.0 | 4.0 | 20 | LIGHTING – RM 102 | 2.5 | | | 0.8 | | | RECEPTACLES – RM 103 | 20 | 4.0 | 4.0 | 1 | 20 | 8 |
| 9 | 20 | 1 | 4.0 | 4.0 | 20 | LIGHTING – RM 103 | | 2.5 | | | 0.6 | | RECEPTACLES – RM 102, EXTERIOR | 20 | 4.0 | 4.0 | 1 | 20 | 10 |
| 11 | 20 | 1 | 4.0 | 4.0 | 20 | LIGHTING – RM 100, 105 | | | 0.7 | | | 1.0 | RECEPTACLES – RM 102 | 20 | 4.0 | 4.0 | 1 | 20 | 12 |
| 13 | 20 | 1 | 4.0 | 4.0 | 20 | LIGHTING – RM 101 | 0.7 | | | 0.8 | | | RECEPTACLES – RM 102 | 20 | 4.0 | 4.0 | 1 | 20 | 14 |
| 15 | 20 | 1 | 4.0 | 4.0 | 20 | LIGHTING – 108, 109 | | 2.0 | | | 0.8 | | RECEPTACLES – RM 102 | 20 | 4.0 | 4.0 | 1 | 20 | 16 |
| 17 | 20 | 1 | 4.0 | 4.0 | 20 | LIGHTING – RM 108, 116, 117 | | | 1.6 | | | 0.8 | RECEPTACLES – RM 102, EXTERIOR | 20 | 4.0 | 4.0 | 1 | 20 | 18 |
| 19 | 20 | 1 | 4.0 | 4.0 | 20 | LIGHTING – RM 111–114, 119–123 | 2.0 | | | 0.8 | | | RECEPTACLES – RM 102 | 20 | 4.0 | 4.0 | 1 | 20 | 20 |
| 21 | 20 | 1 | 4.0 | 4.0 | 20 | LIGHTING – RM 110 | | 1.8 | | | 0.8 | | RECEPTACLES –RM 119 | 20 | 4.0 | 4.0 | 1 | 20 | 22 |
| 23 | 20 | 1 | 4.0 | 4.0 | 20 | LIGHTING – RM 124 | | | 1.2 | | | 0.8 | RECEPTACLES – RM 115, 121, EXT. | 20 | 4.0 | 4.0 | 1 | 20 | 24 |
| 25 | 20 | 1 | 4.0 | 4.0 | 20 | EXHAUST FAN #3 – RM 117 | 0.5 | | | 0.6 | | | RECEPTACLES – RM 107 | 20 | 4.0 | 4.0 | 1 | 20 | 26 |
| 27 | 20 | 1 | 4.0 | 4.0 | 20 | EXHAUST FAN #8 – RM 114 | | 0.5 | | | 1.5 | | CEILING FANS – RM 107, 109, 119 | 20 | 4.0 | 4.0 | 1 | 20 | 28 |
| 29 | 20 | 1 | 4.0 | 4.0 | 20 | EXHAUST HOOD LIGHTING | | | 3.2 | | | 1.2 | RECEPTACLES – 109,111,112,113 | 20 | 4.0 | 4.0 | 1 | 20 | 30 |
| 31 | 20 | 1 | 4.0 | 4.0 | 20 | FREEZER RM – 111 | 1.0 | | | 0.8 | | | RECEPTACLES – RM 124 | 20 | 4.0 | 4.0 | 1 | 20 | 32 |
| 33 | 20 | 1 | 4.0 | 4.0 | 20 | REFRIGERATOR 2 RM – 112 | | 1.0 | | | 0.8 | | RECEPTACLES – RM 108, 109 | 20 | 4.0 | 4.0 | 1 | 20 | 34 |
| 35 | 20 | 1 | 4.0 | 4.0 | 20 | REFRIGERATOR 1 RM – 113 | | | 1.0 | | | 0.8 | RECEPTACLES – RM 109 | 20 | 4.0 | 4.0 | 1 | 20 | 36 |
| 37 | 20 | 1 | 4.0 | 4.0 | 20 | FACP – RM 123 | 0.5 | | | 0.6 | | | RECEPTACLES – RM 110 | 20 | 4.0 | 4.0 | 1 | 20 | 38 |
| 39 | 30 | 1 | 6.0 | 6.0 | 20 | KITCHEN EXHAUST FAN #6 – RM 124 | | 3.9 | | | 0.6 | | RECEPTACLES – RM 110 | 20 | 4.0 | 4.0 | 1 | 20 | 40 |
| 41 | 30 | 1 | 6.0 | 6.0 | 20 | KITCHEN EXHAUST FAN #7 – RM 124 | | | 3.9 | | | 6.4 | MAKE UP AIR FAN #5 – RM 110 | 25 | 6.0 | 25.0 | 1 | 60 | 42 |
| | | | | | | | 9.7 | 14.2 | 14.1 | 5.9 | 7.6 | 13.5 | | | | | | | |

TOTAL CONN. LOAD PER PHASE (KVA): A0 15.6 B0 21.8 C0 27.6

TOTAL CONN. LOAD 65.0 KVA. 70 % DEMAND = ESTIMATED DEMAND LOAD 45.5

* MAIN BREAKER SHALL BE 3P EARTH GROUND TYPE

PANELBOARD DFAC3 SURFACE MOUNTED
AMP. MAIN LUGS (OR) 225 AMP. MAIN BREAKER W/ 225 AMP. TRIP
CIRCUIT BREAKER TYPE 380/220 VOLTS 3 PHASE 4 WIRE 50 HZ 225 AMP. BUS

| CKT. NO. | TRIP AMPS | NO. POLES | WIRE MM² | GND MM² | CONDUIT MM | LOAD SERVED | LOAD–KVA A0 | LOAD–KVA B0 | LOAD–KVA C0 | LOAD–KVA A0 | LOAD–KVA B0 | LOAD–KVA C0 | LOAD SERVED | CONDUIT MM | GND MM² | WIRE MM² | NO. POLES | TRIP AMPS | CKT. NO. |
|---|---|---|---|---|---|---|---|---|---|---|---|---|---|---|---|---|---|---|---|
| 1 | 20 | 2 | 4.0 | 4.0 | 20 | ELECTRIC HEAT #5 – RM 102 | 2.5 | | | 1.3 | | | ELECTRIC HEAT #2 – RM 100 | 20 | 4 | 4 | 2 | 20 | 2 |
| 3 | | | | | | | | 2.5 | | | 1.3 | | | | | | | | 4 |
| 5 | 20 | 2 | 4.0 | 4.0 | 20 | ELECTRIC HEAT #5 – RM 102 | | | 2.5 | | | 2.0 | ELECTRIC HEAT #4 – RM 100 | 20 | 4 | 4 | 2 | 20 | 6 |
| 7 | | | | | | | 2.5 | | | 2.0 | | | | | | | | | 8 |
| 9 | 20 | 2 | 4.0 | 4.0 | 20 | ELECTRIC HEAT #5 – RM 102 | | 2.0 | | | 1.3 | | ELECTRIC HEAT #2 – RM 105 | 20 | 4 | 4 | 2 | 20 | 10 |
| 11 | | | | | | | | | 2.0 | | | 1.3 | | | | | | | 12 |
| 13 | 20 | 2 | 4.0 | 4.0 | 20 | ELECTRIC HEAT #5 – RM 102 | 2.5 | | | 2.0 | | | ELECTRIC HEAT #4 – RM 101 | 20 | 4 | 4 | 2 | 20 | 14 |
| 15 | | | | | | | | 2.5 | | | 2.0 | | | | | | | | 16 |
| 17 | 20 | 2 | 4.0 | 4.0 | 20 | ELECTRIC HEAT #5 – RM 102 | | | 2.5 | | | 2.0 | ELECTRIC HEAT #4 – RM 101 | 20 | 4 | 4 | 2 | 20 | 18 |
| 19 | | | | | | | 2.5 | | | 2.0 | | | | | | | | | 20 |
| 21 | 20 | 2 | 4.0 | 4.0 | 20 | ELECTRIC HEAT #4 – RM 103 | | 2.0 | | | 0.5 | | EXHAUST FAN #5 – RM 119 | 20 | 4 | 4 | 1 | 20 | 22 |
| 23 | | | | | | | | | 2.0 | | | 0.5 | EXHAUST FAN #9 – RM 120 | 20 | 4 | 4 | 1 | 20 | 24 |
| 25 | 20 | 2 | 4.0 | 4.0 | 20 | ELECTRIC HEAT #4 – RM 103 | 2.0 | | | 1.3 | | | ELECTRIC HEAT #2 – RM 119 | 20 | 4 | 4 | 2 | 20 | 26 |
| 27 | | | | | | | | 2.0 | | | 1.3 | | | | | | | | 28 |
| 29 | 20 | 2 | 4.0 | 4.0 | 20 | ELECTRIC HEAT #4 – RM 103 | | | 2.0 | | | 2.0 | ELECTRIC HEAT #4 – RM 121 | 20 | 4 | 4 | 2 | 20 | 30 |
| 31 | | | | | | | 2.0 | | | 2.0 | | | | | | | | | 32 |
| 33 | 20 | 2 | 4.0 | 4.0 | 20 | ELECTRIC HEAT #4 – RM 103 | | 2.0 | | | 0.5 | | EXHAUST FAN #7 – RM 114 | 20 | 4 | 4 | 1 | 20 | 34 |
| 35 | | | | | | | | | 2.0 | | | 0.5 | EXHAUST FAN #4 – RM 116 | 20 | 4 | 4 | 1 | 20 | 36 |
| 37 | 20 | 2 | 4.0 | 4.0 | 20 | ELECTRIC HEAT #4 – RM 103 | 2.0 | | | 0.5 | | | EXHAUST FAN #10 – RM 122 | 20 | 4 | 4 | 1 | 20 | 38 |
| 39 | | | | | | | | 2.0 | | | 2.0 | | EXTERIOR BUILDING LIGHTING | 20 | 4 | 4 | 1 | 20 | 40 |
| 41 | 20 | 1 | 4.0 | 4.0 | 20 | EXHAUST HOOD LIGHTING | | | 2.6 | | | 2.0 | EXTERIOR BUILDING LIGHTING | 20 | 4 | 4 | 1 | 20 | 42 |
| | | | | | | | 16.0 | 15.0 | 15.6 | 11.1 | 9.1 | 10.8 | | | | | | | |

TOTAL CONN. LOAD PER PHASE (KVA): A0 27.1 B0 24.1 C0 26.4

TOTAL CONN. LOAD 77.6 KVA. 70 % DEMAND = ESTIMATED DEMAND LOAD 54.3

* MAIN BREAKER SHALL BE 3P EARTH GROUND TYPE

PANELBOARD DFAC2 SURFACE MOUNTED
AMP. MAIN LUGS (OR) 250 AMP. MAIN BREAKER W/ 250 AMP. TRIP
CIRCUIT BREAKER TYPE 380/220 VOLTS 3 PHASE 4 WIRE 50 HZ 400 AMP. BUS

| CKT. NO. | TRIP AMPS | NO. POLES | WIRE MM² | GND MM² | CONDUIT MM | LOAD SERVED | LOAD–KVA A0 | LOAD–KVA B0 | LOAD–KVA C0 | LOAD–KVA A0 | LOAD–KVA B0 | LOAD–KVA C0 | LOAD SERVED | CONDUIT MM | GND MM² | WIRE MM² | NO. POLES | TRIP AMPS | CKT. NO. |
|---|---|---|---|---|---|---|---|---|---|---|---|---|---|---|---|---|---|---|---|
| 1 | 20 | 2 | 4.0 | 4.0 | 20 | ELECTRIC HEAT #5 – RM 102 | 2.5 | | | 2.5 | | | ELECTRIC HEAT #5 – RM 102 | 20 | 4.0 | 4.0 | 2 | 20 | 2 |
| 3 | | | | | | | | 2.5 | | | 2.5 | | | | | | | | 4 |
| 5 | 20 | 2 | 4.0 | 4.0 | 20 | ELECTRIC HEAT #5 – RM 102 | | | 2.5 | | | 2.5 | ELECTRIC HEAT #5 – RM 102 | 20 | 4.0 | 4.0 | 2 | 20 | 6 |
| 7 | | | | | | | 2.5 | | | 2.5 | | | | | | | | | 8 |
| 9 | 20 | 2 | 4.0 | 4.0 | 20 | ELECTRIC HEAT #5 – RM 102 | | 2.5 | | | 2.5 | | ELECTRIC HEAT #5 – RM 102 | 20 | 4.0 | 4.0 | 2 | 20 | 10 |
| 11 | | | | | | | | | 2.5 | | | 2.5 | | | | | | | 12 |
| 13 | 20 | 2 | 4.0 | 4.0 | 20 | ELECTRIC HEAT #5 – RM 102 | 2.5 | | | 2.5 | | | ELECTRIC HEAT #5 – RM 102 | 20 | 4.0 | 4.0 | 2 | 20 | 14 |
| 15 | | | | | | | | 2.5 | | | 2.5 | | | | | | | | 16 |
| 17 | 20 | 2 | 4.0 | 4.0 | 20 | ELECTRIC HEAT #5 – RM 102 | | | 2.5 | | | 2.5 | ELECTRIC HEAT #5 – RM 102 | 20 | 4.0 | 4.0 | 2 | 20 | 18 |
| 19 | | | | | | | 2.5 | | | 2.5 | | | | | | | | | 20 |
| 21 | 20 | 2 | 4.0 | 4.0 | 20 | ELECTRIC HEAT #5 – RM 102 | | 2.5 | | | 2.5 | | ELECTRIC HEAT #5 – RM 102 | 20 | 4.0 | 4.0 | 2 | 20 | 22 |
| 23 | | | | | | | | | 2.5 | | | 2.5 | | | | | | | 24 |
| 25 | 20 | 2 | 4.0 | 4.0 | 20 | ELECTRIC HEAT #5 – RM 102 | 2.5 | | | 2.5 | | | ELECTRIC HEAT #5 – RM 102 | 20 | 4.0 | 4.0 | 2 | 20 | 26 |
| 27 | | | | | | | | 2.5 | | | 2.5 | | | | | | | | 28 |
| 29 | 20 | 2 | 4.0 | 4.0 | 20 | ELECTRIC HEAT #5 – RM 102 | | | 2.5 | | | 2.5 | ELECTRIC HEAT #5 – RM 102 | 20 | 4.0 | 4.0 | 2 | 20 | 30 |
| 31 | | | | | | | 2.5 | | | 2.5 | | | | | | | | | 32 |
| 33 | 20 | 2 | 4.0 | 4.0 | 20 | ELECTRIC HEAT #5 – RM 102 | | 2.5 | | | 2.5 | | ELECTRIC HEAT #5 – RM 102 | 20 | 4.0 | 4.0 | 2 | 20 | 34 |
| 35 | | | | | | | | | 2.5 | | | 2.5 | | | | | | | 36 |
| 37 | 20 | 2 | 4.0 | 4.0 | 20 | ELECTRIC HEAT #5 – RM 102 | 2.5 | | | 0.5 | | | EXHAUST FAN #6 – RM 123 | 20 | 4.0 | 4.0 | 1 | 20 | 38 |
| 39 | | | | | | | | 2.5 | | | 2.0 | | ELECTRIC HEAT #4 – RM 115 | 20 | 4.0 | 4.0 | 2 | 20 | 40 |
| 41 | 20 | 1 | 4.0 | 4.0 | 20 | EXHAUST FAN #1 – RM 105 | | | 0.5 | | | 2.0 | | | | | | | 42 |
| | | | | | | | 17.5 | 17.5 | 15.5 | 16 | 17 | 17 | | | | | | | |

TOTAL CONN. LOAD PER PHASE (KVA): A0 33.5 B0 34.5 C0 32.5

TOTAL CONN. LOAD 100.5 KVA. 70 % DEMAND = ESTIMATED DEMAND LOAD 70.4

* MAIN BREAKER SHALL BE 3P EARTH GROUND TYPE

PANELBOARD DFAC4 SURFACE MOUNTED
AMP. MAIN LUGS (OR) 400 AMP. MAIN BREAKER W/ 400 AMP. TRIP
CIRCUIT BREAKER TYPE 380/220 VOLTS 3 PHASE 4 WIRE 50 HZ 400 AMP. BUS

| CKT. NO. | TRIP AMPS | NO. POLES | WIRE MM² | GND MM² | CONDUIT MM | LOAD SERVED | LOAD–KVA A0 | LOAD–KVA B0 | LOAD–KVA C0 | LOAD–KVA A0 | LOAD–KVA B0 | LOAD–KVA C0 | LOAD SERVED | CONDUIT MM | GND MM² | WIRE MM² | NO. POLES | TRIP AMPS | CKT. NO. |
|---|---|---|---|---|---|---|---|---|---|---|---|---|---|---|---|---|---|---|---|
| 1 | | | | | | | 8.0 | | | 2.0 | | | | | | | | | 2 |
| 3 | 60 | 3 | 25.0 | 10 | 25 | WATER HEATER – RM 121 | | 8.0 | | | 2.0 | | ELECTRIC HEAT #4 – RM 110 | 20 | 4.0 | 4.0 | 2 | 20 | 4 |
| 5 | | | | | | | | | 8.0 | | | 2.0 | | | | | | | 6 |
| 7 | | | | | | | 8.0 | | | 2.0 | | | | | | | | | 8 |
| 9 | 60 | 3 | 25.0 | 10 | 25 | WATER HEATER – RM 121 | | 8.0 | | | 2.0 | | ELECTRIC HEAT #4 – RM 109 | 20 | 4.0 | 4.0 | 2 | 20 | 10 |
| 11 | | | | | | | | | 8.0 | | | 2.0 | | | | | | | 12 |
| 13 | | | | | | | 8.0 | | | 2.0 | | | | | | | | | 14 |
| 15 | 60 | 3 | 25.0 | 10 | 25 | WATER HEATER – RM 121 | | 8.0 | | | 2.0 | | ELECTRIC HEAT #4 – RM 109 | 20 | 4.0 | 4.0 | 2 | 20 | 16 |
| 17 | | | | | | | | | 8.0 | | | 3.9 | KITCHEN EXHAUST FAN #1 – RM 110 | 20 | 6.0 | 6.0 | 1 | 30 | 18 |
| 19 | 20 | 2 | 4.0 | 4.0 | 20 | ELECTRIC HEAT #5 – RM 107 | 2.5 | | | 6.4 | | | MAKE UP AIR #1 – RM 110 | 25 | 6.0 | 25.0 | 1 | 60 | 20 |
| 21 | | | | | | | | 2.5 | | | 3.9 | | KITCHEN EXHAUST FAN #2 – RM 110 | 20 | 6.0 | 6.0 | 1 | 30 | 22 |
| 23 | 20 | 2 | 4.0 | 4.0 | 20 | ELECTRIC HEAT #5 – RM 107 | | | 2.5 | | | 6.4 | MAKE UP AIR #2 – RM 110 | 25 | 6.0 | 25.0 | 1 | 60 | 24 |
| 25 | | | | | | | 2.5 | | | 3.9 | | | KITCHEN EXHAUST FAN #3 – RM 110 | 20 | 6.0 | 6.0 | 1 | 30 | 26 |
| 27 | 20 | 2 | 4.0 | 4.0 | 20 | ELECTRIC HEAT #2 – RM 107 | | 1.3 | | | 6.4 | | MAKE UP AIR #3 – RM 110 | 25 | 6.0 | 25.0 | 1 | 60 | 28 |
| 29 | | | | | | | | | 1.3 | | | 6.5 | KITCHEN EXHAUST FAN #4 – RM 110 | 20 | 6.0 | 6.0 | 1 | 30 | 30 |
| 31 | 20 | 2 | 4.0 | 4.0 | 20 | ELECTRIC HEAT #5 – RM 109 | 2.5 | | | 9.2 | | | MAKE UP AIR #4 – RM 110 | 25 | 6.0 | 25.0 | 1 | 60 | 32 |
| 33 | | | | | | | | 2.5 | | | 2.0 | | | | | | | | 34 |
| 35 | 20 | 2 | 4.0 | 4.0 | 20 | ELECTRIC HEAT #4 – RM 114 | | | 2.0 | | | 2.0 | ELECTRIC HEAT #4 – RM 110 | 20 | 4.0 | 4.0 | 2 | 20 | 36 |
| 37 | | | | | | | 2.0 | | | 2.5 | | | | | | | | | 38 |
| 39 | 20 | 2 | 4.0 | 4.0 | 20 | ELECTRIC HEAT #4 – RM 115 | | 2.0 | | | 2.5 | | ELECTRIC HEAT #5 – RM 102 | 20 | 4.0 | 4.0 | 2 | 20 | 40 |
| 41 | | | | | | | | | 2.0 | | | 3.9 | KITCHEN EXHAUST FAN #5 – RM 110 | 20 | 6.0 | 6.0 | 1 | 30 | 42 |
| | | | | | | | 33.5 | 32.3 | 31.8 | 28 | 20.8 | 26.7 | | | | | | | |

TOTAL CONN. LOAD PER PHASE (KVA): A0 61.5 B0 53.1 C0 58.5

TOTAL CONN. LOAD 173.1 KVA. 70 % DEMAND = ESTIMATED DEMAND LOAD 121.2

* MAIN BREAKER SHALL BE 3P EARTH GROUND TYPE

APPROVED:

A/E DESIGNER OF RECORD

SEAL:

COMMONWEALTH OF PENNSYLVANIA
REGISTERED PROFESSIONAL ENGINEER
JOSEPH R. GAUS
PE-074251
1/29/10

US ARMY CORPS OF ENGINEERS
AFGHANISTAN ENGINEER DISTRICT

| Mark | Description | Date | Appr. |
|---|---|---|---|
| | | | |

| Mark | Description | Date | Appr. |
|---|---|---|---|
| | | | |

Rev: 0
Date: 2/23/10
Design file no.
Drawing code:
File name:
Plot date:
Plot scale:

Designed by: RAJ
Drwn by: BJB
Ckd by: JRG
Reviewed by: JRG
Submitted by: BAKER

U.S. ARMY CORPS OF ENGINEERS
AFGHANISTAN ENGINEER DISTRICT
APO AE 96338

*Michael Baker Jr; Inc*
*A unit of Michael Baker Corporation*
Airside Business Park
100 Airside Drive
Moon Township, PA 15108
www.mbakercorp.com

AFGHAN NATIONAL ARMY
REGIONAL MILITARY TRAINING CENTER
STANDARD DESIGN

DINING FACILITY (DFAC)
ELECTRICAL PANEL SCHEDULES

Sheet reference number:
E–602

# AFGHAN NATIONAL ARMY

## STANDARD BUILDING DESIGN

## LATRINE BUILDING
## MEDIUM

## 100% FINAL DESIGN SUBMITTAL

### SHEET INDEX


G-001 COVER SHEET

STRUCTURAL

| | |
|---|---|
| S-001 | GENERAL NOTES & DESIGN CRITERIA |
| S-101 | FOUNDATION/SLAB & ROOF FRAMING PLANS |
| S-401 | BUILDING SECTIONS |
| S-501 | FOUNDATION SECTIONS |
| S-502 | FRAMING SECTIONS |
| S-503 | BEAM AND COLUMN DETAILS |
| S-504 | BEAM AND COLUMN DETAILS |
| S-601 | SCHEDULES |
| S-701 | TYPICAL DETAILS |
| S-702 | TYPICAL DETAILS |

ARCHITECTURAL

| | |
|---|---|
| A-001 | LIFE SAFETY PLAN |
| A-101 | FLOOR PLAN |
| A-102 | ROOF PLAN |
| A-201 | ELEVATIONS |
| A-301 | BUILDING SECTIONS |
| A-401 | WALL SECTIONS |
| A-501 | EXTERIOR DETAILS |
| A-502 | HEAD, JAMB, & SILL DETAILS |
| A-503 | STOOP DETAILS |
| A-504 | TOILET, LAVATORY & ABLUTION DETAILS |
| A-601 | WINDOW & DOOR SCHEDULES |

MECHANICAL

| | |
|---|---|
| P-101 | FLOOR PLAN-PLUMBING |
| P-501 | PLUMBING DETAILS |
| P-502 | PLUMBING DETAILS |
| P-503 | PLUMBING DETAILS |
| P-901 | PLUMBING ISOMETRICS |
| M-101 | HVAC FLOOR PLAN, SCHEDULES, & DETAILS |

ELECTRICAL

| | |
|---|---|
| E-001 | ELECTRICAL SYMBOLS & ABBREVIATIONS |
| E-101 | ELECTRICAL LIGHTING PLAN |
| E-102 | ELECTRICAL POWER & SYSTEMS PLAN |
| E-501 | ELECTRICAL DETAILS |
| E-502 | ELECTRICAL DETAILS |
| E-601 | ELECTRICAL LIGHT FIXTURE SCHEDULE |
| E-602 | ELECTRICAL PANEL SCHEDULES |


US ARMY CORPS OF ENGINEERS
AFGHANISTAN ENGINEER DISTRICT

| Mark | Description | Date | Appr. |
|---|---|---|---|
| | | | |

| Mark | Description | Date | Appr. |
|---|---|---|---|
| | | | |

Date: 2/23/10 | Rev: 0
Design file no.
Drawing code:
File name: ANALATMG-001CS
Plot date: 2/23/2010
Plot scale:

Designed by: KMF/MMY | Ckd by: CWW
Dwn by: RCG | Reviewed by: LHM
Submitted by: BAKER

U.S. ARMY ENGINEER DISTRICT, AFGHANISTAN
CORPS OF ENGINEERS
APO AE 96338


*Michael Baker Jr., Inc.*
*A unit of Michael Baker Corporation*
Airside Business Park
100 Airside Drive
Moon Township, PA 15108
www.mbakercorp.com


AFGHAN NATIONAL ARMY
REGIONAL MILITARY TRAINING CENTER
STANDARD DESIGN

LATRINE BUILDING
MEDIUM

COVER SHEET

Sheet reference number:
G-001

STRUCTURAL ABBREVIATIONS:

| | |
|---|---|
| ACI | AMERICAN CONCRETE INSTITUTE |
| ADD'L | ADDITIONAL |
| AISC | AMERICAN INSTITUTE OF STEEL CONSTRUCTION |
| AISI | AMERICAN IRON AND STEEL INSTITUTE |
| ASTM | AMERICAN SOCIETY FOR TESTING AND MATERIALS |
| ARCH | ARCHITECTURAL |
| B | BOTTOM |
| BLDG | BUILDING |
| BOTT | BOTTOM |
| ℄ | CENTER LINE |
| CFMRF | COLD FORM METAL ROOF FRAME |
| CFMF | COLD FORM METAL FRAME |
| CFS | COLD FORMED STEEL |
| CIP | CAST-IN-PLACE |
| CIPL | CAST-IN-PLACE LINTEL |
| CJ | CONTROL JOINT |
| CLR | CLEAR |
| CMU | CONCRETE MASONRY UNIT |
| COEFF | COEFFICIENT |
| COL | COLUMN |
| CONC | CONCRETE |
| CONT | CONTINUOUS |
| COORD | COORDINATE |
| CRSI | CONCRETE REINFORCING STEEL INSTITUTE |
| CSJ | CONSTRUCTION JOINT |
| DIA | DIAMETER |
| DIAG | DIAGONAL |
| DIM | DIMENSION |
| DWG | DRAWING |
| DWL | DOWEL |
| EA | EACH |
| EF | EACH FACE |
| ELEC | ELECTRICAL |
| ELEV | ELEVATION |
| EMBED | EMBEDMENT |
| EQUIV | EQUIVALENT |
| ETC | ET CETERA |
| EW | EACH WAY |
| EXP | EXPANSION |
| EXT | EXTERIOR |
| FTG | FOOTING |
| GA | GAUGE |
| GB | GRADE BEAM |
| HORIZ | HORIZONTAL |
| h | HOUR |
| HRS | HOURS |
| IBC | INTERNATIONAL BUILDING CODE |
| INFO | INFORMATION |
| INT | INTERIOR |
| kg | KILOGRAM |
| km | KILOMETER |
| kN | KILONEWTON |
| kPa | KILOPASCAL |
| L# | ANGLE (# INDICATES SIZE) |
| LONG | LONGITUDINAL |
| LLV | LONG LEG VERTICAL |
| m | METER |
| MAX | MAXIMUM |
| MECH | MECHANICAL |
| MFG | MANUFACTURER |
| MID | MIDDLE |
| MIN | MINIMUM |
| MISC | MISCELLANEOUS |
| mm | MILLIMETER |
| MPa | MEGAPASCAL |
| MTL | METAL |
| MWFRS | MAIN WIND FORCE RESISTING SYSTEM |
| N | NEWTON |
| N | NORTH |
| N/A | NOT APPLICABLE |
| # | NUMBER SYMBOL FOR REBAR SIZE |
| NTS | NOT TO SCALE |
| OC | ON CENTER |
| OPNG | OPENING |
| ℙ or PL | PLATE |
| PRE-ENG | PRE-ENGINEERED |
| RB | ROOF BEAM |
| REINF | REINFORCED |
| REQ'D | REQUIRED |
| SIM | SIMILAR |
| SPECS | SPECIFICATIONS |
| STD | STANDARD |
| STRUCT | STRUCTURAL |
| SW | SHEAR WALL |
| T | TOP |
| T/ | TOP OF |
| T/ELEV | TOP ELEVATION |
| T/SLAB | TOP OF SLAB |
| T&B | TOP AND BOTTOM |
| THK | THICK |
| TYP | TYPICAL |
| UFC | UNIFIED FACILITIES CRITERIA |
| UON | UNLESS OTHERWISE NOTED |
| VERT | VERTICAL |
| W | WIDTH |
| W/ | WITH |

1.0 GENERAL NOTES:

1.1 THIS PROJECT HAS BEEN DESIGNED FOR THE WEIGHTS AND MATERIALS INDICATED ON THE SHEETS AND FOR THE LIVE LOADS INDICATED IN THE DESIGN DATA. IT IS THE CONTRACTOR'S RESPONSIBILITY TO DETERMINE ALLOWABLE CONSTRUCTION LOADS AND TO PROVIDE PROPER DESIGN AND CONSTRUCTION OF FALSEWORK, FORMWORK, STAGING, BRACING, SHEETING AND SHORING, ETC.

1.1 COORDINATE THESE SHEETS WITH THE ARCHITECTURAL, MECHANICAL, ELECTRICAL, PLUMBING, AND CIVIL SHEETS. ALL DIMENSIONS SHOWN ON THE SHEETS ARE MILLIMETERS UNLESS NOTED OTHERWISE.

1.2 THE CONTRACTOR SHALL VERIFY AND COORDINATE ALL FLOOR AND ROOF OPENING SIZES AND LOCATIONS, EQUIPMENT PAD SIZES AND LOCATIONS, ANCHOR BOLT LAYOUTS, ETC WITH EQUIPMENT SELECTED. THE CONTRACTOR SHALL MAKE ANY REQUIRED MODIFICATIONS AT NO ADDITIONAL COST.

1.3 THE CONTRACTOR SHALL REFER TO THE ARCHITECTURAL, MECHANICAL, ELECTRICAL AND PLUMBING SHEETS FOR SLEEVES, CURBS, INSERTS OR OPENINGS, ETC. NOT HEREIN INDICATED.

1.4 WORK NOT INCLUDED ON THE SHEETS BUT IMPLIED TO BE SIMILAR TO THAT SHOWN AT CORRESPONDING PLACES ELSEWHERE ON THE SHEETS SHALL BE REPEATED.

1.5 IN CASE OF CONFLICT BETWEEN THE NOTES, DETAILS AND SPECIFICATIONS THE MOST RIGID REQUIREMENTS SHALL GOVERN.

1.6 SEE ARCHITECTURAL SHEETS FOR LOCATIONS OF MASONRY AND NON-LOAD BEARING PARTITIONS. PROVIDE COMPRESSIBLE FIRESAFING AT TOP OF WALL AS REQUIRED BY ARCHITECTURAL SHEETS.

1.7 COORDINATE FINISHED FLOOR DATUM ELEVATION 0.0m WITH THE CIVIL SHEETS.

2.0 FOUNDATION NOTES

2.1 THE GEOTECHNICAL ANALYSIS FOR THIS PROJECT IS THE RESPONSIBILITY OF THE CONTRACTOR AWARDED THE WORK. AN ASSUMED ALLOWABLE SOIL BEARING VALUE OF 72 kPa HAS BEEN USED IN THE STRUCTURAL ANALYSIS OF THE BUILDING HEREIN AND SHALL BE CONFIRMED AND VERIFIED AS PART OF THE GEOTECHNICAL INVESTIGATION. VALUES WHICH DO NOT MEET THE REQUIREMENTS INDICATED ON THE BASIS OF DESIGN SHEET SHALL BE IMMEDIATELY BROUGHT TO THE ATTENTION OF THE CONTRACTING OFFICER FOR CONSIDERATION AND DETERMINATION ON THE NEXT APPROPRIATE COURSE OF ACTION.

2.2 SEE THE SPECIFICATION FOR ADDITIONAL REQUIREMENTS TO THOSE OUTLINED IN THE GEOTECHNICAL INVESTIGATION FOR EXCAVATION AND PREPARATION OF THE FOUNDATION AND THE SLAB ON GRADE SUBGRADE INCLUDING COMPACTION PROCEDURES.

2.3 EXCAVATIONS FOR FOOTINGS SHALL HAVE THE SIDES AND BOTTOMS TEMPORARILY LINED WITH 0.25mm POLYETHYLENE IF PLACEMENT OF CONCRETE DOES NOT OCCUR WITHIN 24 HRS OF THE EXCAVATION OF THE FOOTING.

2.4 FOUNDATION CONDITIONS NOTED DURING CONSTRUCTION WHICH DIFFER FROM THOSE DESCRIBED IN THE GEOTECHNICAL REPORT SHALL BE REPORTED TO THE GENERAL CONTRACTOR BEFORE FURTHER CONSTRUCTION IS ATTEMPTED. SEE PROJECT SPECIFICATIONS.

2.5 NO FOOTINGS OR SLABS SHALL BE POURED INTO OR AGAINST SUBGRADE CONTAINING FREE WATER, FROST, ICE OR LOOSE MATERIAL. FROST DEPTH ASSUMED TO BE 800mm.

2.6 ALL SLAB-ON-GRADE, TRENCH BOTTOMS AND OTHER ON-GRADE INTERIOR HORIZONTAL SURFACES SHALL BE PLACED OVER A 0.25mm POLYETHYLENE VAPOR RETARDER OVER A 100mm #57 STONE WATER CAPILLARY BARRIER PLACED ON SUBGRADE PROPERLY PREPARED IN ACCORDANCE WITH THE CONTRACT SPECIFICATIONS. (UON)

2.7 PRIOR TO START OF FOUNDATION OR SLAB-ON-GRADE CONSTRUCTION, EXISTING SUBGRADES SHALL BE COMPACTED TO MINIMUM OF 95% MAXIMUM DRY DENSITY OBTAINED THRU ASTM D 1557 MODIFIED PROCTOR TESTING.

2.8 SEE PLUMBING, ELECTRICAL & CIVIL SHEETS FOR REQUIRED UNDERSLAB UTILITIES.

2.9 SEE ARCHITECTURAL SHEETS FOR ALL WATERPROOFING DETAILS AND MATERIALS.

2.10 IF UNDERMINING OF FOOTINGS OCCURS, FILL VOIDS WITH 18 MPa CONCRETE. DO NOT ATTEMPT TO REPLACE AND RE-COMPACT SOIL.

3.0 CONCRETE

3.1 CONCRETE SHALL HAVE THE UNIT WEIGHT OF 2400 kg/m$^3$ AND A MINIMUM COMPRESSIVE STRENGTH (f'c) OF 28 MPa AT 28 DAYS. ALL CONCRETE SHALL HAVE A WATER-CEMENT RATIO OF 0.45. SEE SPECIFICATIONS FOR ADDITIONAL INFORMATION. ENTRAIN AIR TO PRODUCE TOTAL AIR CONTENT ACCORDING TO THE SPECIFICATIONS FOR CONCRETE EXPOSED TO FREEZING TEMPERATURES (EXTERIOR FOOTINGS, SLAB TURNDOWNS, EXTERIOR SLABS AND SLABS-ON-GRADE, EXTERIOR RETAINING WALLS, AND EXTERIOR GRADE BEAMS.)

3.2 NO CALCIUM CHLORIDE SHALL BE USED IN ANY CONCRETE.

3.3 MIXING, TRANSPORTING AND PLACING OF CONCRETE SHALL CONFORM TO ACI 301M-05.

3.4 ALL CONCRETE WORK SHALL CONFORM TO THE REQUIREMENTS OF THE AMERICAN CONCRETE INSTITUTE (ACI) 318M MANUAL (metric), "BUILDING CODE REQUIREMENTS FOR REINFORCED CONCRETE", AND REQUIREMENTS OUTLINED IN THE CONTRACT SPECIFICATIONS. WHEN THERE IS A CONFLICT BETWEEN ACI AND THE SPECIFICATIONS, THE MORE STRINGENT SHALL GOVERN.

3.5 CHAMFER ALL EXPOSED EXTERNAL CORNERS OF CONCRETE WITH 20mm x45 DEGREE CHAMFER UON.

3.6 CONCRETE REINFORCEMENT BARS SHALL CONFORM TO ASTM A615M-96a, GRADE 420 MPa, REINFORCING BARS SHALL NOT BE TACK WELDED, WELDED, HEATED OR CUT, UNLESS INDICATED ON THE CONTRACT DOCUMENTS. ALL LAP SPLICES SHALL BE CLASS "B" UON.

3.7 HORIZONTAL FOOTING AND HORIZONTAL WALL REINFORCEMENT SHALL BE CONTINUOUS AND SHALL HAVE 90 DEGREE BENDS AND EXTENSIONS, OR CORNER BARS OF EQUIVALENT SIZE LAPPED WITH A CLASS B TENSION SPLICE AT CORNERS AND INTERSECTIONS. TOP BAR CRITERIA SHALL APPLY IF 300mm OR MORE OF FRESH CONCRETE IS PLACED BELOW BAR.

3.8 SLABS-ON-GRADE SHALL HAVE CONSTRUCTION JOINTS OR CRACK CONTROL JOINTS AS SHOWN ON THE DRAWINGS. CONSTRUCTION JOINTS CAN BE USED AT CONTROL JOINT LOCATIONS AT CONTRACTORS OPTION. SEE SLAB PLANS & JOINT DETAILS FOR ADDITIONAL INFORMATION. FOR AREAS NOT SHOWN ON DWGS, THE MAXIMUM SPACING OF CONSTRUCTION/ CRACK CONTROL JOINTS SHALL BE 4800mm

3.9 ALL CONCRETE REINFORCEMENT SHALL BE DETAILED, FABRICATED, LABELED, SUPPORTED, AND SPACED IN FORMS AND SECURED IN PLACE IN ACCORDANCE WITH THE PROCEDURES AND REQUIREMENTS OUTLINED IN THE LATEST EDITION OF THE "BUILDING CODE REQUIREMENTS FOR REINFORCED CONCRETE", ACI 318M, AND THE "MANUAL OF STANDARD PRACTICE FOR DETAILING REINFORCED CONCRETE STRUCTURES", ACI 315M, LATEST EDITION. BASED ON IN COUNTRY REINFORCEMENT AVAILABILITY, IT IS THE CONTRACTOR'S OPTION TO ROUND DESIGNATED ODD NUMBERED REINFORCEMENT SIZES UP (1) ONE BAR SIZE.

3.10 ALL DOWELS SHALL MATCH SIZE AND NUMBER OF MAIN REINFORCING, UNLESS NOTED OTHERWISE ON THE SHEETS.

3.11 ADDITIONAL BARS SHALL BE PROVIDED AROUND ALL FLOOR AND WALL OPENINGS AS SHOWN ON THE SHEETS.

3.12 SEE ARCHITECTURAL SHEETS FOR TYPE AND LOCATION OF ALL FLOOR FINISHES.

3.13 THE CONTRACTOR SHALL COORDINATE ADDITIONAL WALL/SLAB OPENINGS NOT SHOWN ON STRUCTURAL SHEETS. SEE MECHANICAL, ELECTRICAL, PLUMBING AND CIVIL SHEETS.

3.14 UNLESS NOTED OTHERWISE, ALL CURBS SHALL BE REINFORCED WITH AT LEAST (1)-#13 CONTINUOUS AND #13 AT 300mm O.C. DOWELS TO STRUCTURE BELOW.

3.15 THE CONTRACTOR SHALL VERIFY ALL OPENINGS, PAD SIZES, AND ANCHOR BOLTS WITH EQUIPMENT SELECTED.

3.16 FOR ALL WALLS & PIERS, PROVIDE DOWELS INTO FOOTING AT EACH VERT REINF BAR, UON DOWEL SIZE SHALL BE SAME AS VERT REINF.

3.17 PROVIDE CONCRETE POUR STOPS OR FORMED AS REQUIRED FOR INSTALLATION OF ALL CONCRETE WORK.

3.18 PROVIDE ADDITIONAL (2)-#13 x 600mm REINFORCING BARS IN SLAB-ON GRADE AT ALL RE-ENTRANT CORNERS. PLACE BARS AT MID-DEPTH OF SLAB WITH A CLEARANCE OF 50mm FROM CORNER UON.

3.19 COLD-WEATHER PLACEMENT: COMPLY WITH ACI 306.1 AND AS FOLLOWS. PROTECT CONCRETE WORK FROM PHYSICAL DAMAGE OR REDUCED STRENGTH THAT COULD BE CAUSED BY FROST, FREEZING ACTIONS, OR LOW TEMPERATURES. SUBMIT A COLD WEATHER CONCRETING PLAN FOR APPROVAL.

3.20 PROVIDE BONDING COMPOUND PER ASTM C 1059-99: SPECIFICATION FOR LATEX AGENTS FOR BONDING FRESH CONCRETE (GROUT) TO HARDENED CONCRETE.

3.21 THE FORMED SURFACES FOR REINFORCED CONCRETE SHALL ACHIEVE A "CLASS A" FINISH WHEN RECEIVING PAINT OR A "CLASS B" FINISH WHEN RECEIVING PLASTER OR TILE AS PER SPECIFICATION SECTION 03 31 00 CAST-IN-PLACE STRUCTURAL CONCRETE.

3.22 AT INTERSECTING GRADE BEAMS AND SHEAR WALLS, PROVIDE CORNER BARS AT INTERSECTIONS WITH SAME QUANTITY, SIZE AND SPACING AS HORIZONTAL BARS WITH LEG LENGTH = 50db.

3.23 REFER TO S-800 SERIES REINFORCING BAR PLACEMENT DRAWINGS DEFINING LENGTHS, BENDS, AND SPACINGS FOR ALL STRUCTURAL CONCRETE. THE S-800 SERIES DRAWING ARE BASED ON THE S-400, S-500, S-600, AND S-700 SERIES DRAWING SCHEDULES, DETAILS, AND DIAGRAMS.

4.0 CONCRETE MASONRY

4.1 MASONRY CONSTRUCTION SHALL CONFORM TO SPECIFICATION FOR MASONRY STRUCTURES (ACI 530.1) UON.

4.2 STRENGTH OF MASONRY MATERIALS SHALL BE AS FOLLOWS:

a. CONCRETE MASONRY UNITS SHALL BE NORMAL WEIGHT, GRADE N, TYPE 1, CONFORMING TO ASTM C-90 AND HAVE A MINIMUM COMPRESSIVE STRENGTH OF 10.4 MPa ON THE NET AREA.
b. MORTAR SHALL CONFORM TO ASTM C-270 TYPE S.
c. GROUT FOR MASONRY SHALL BE NORMAL WEIGHT AND HAVE A MINIMUM COMPRESSIVE STRENGTH OF 14 MPa AT 28 DAYS. GROUT SHALL CONFORM TO ASTM C476M. GROUT LIFTS SHALL NOT EXCEED 1,400mm.
d. REINFORCED MASONRY SHALL HAVE A STRENGTH F'm = 10 MPa. (F'm IS THE COMPRESSIVE STRENGTH OF THE MASONRY AT 28 DAYS AS DETERMINED BY PRISM TESTS).

4.3 ALL VERTICAL REINFORCEMENT FOR CONCRETE MASONRY SHALL BE ASTM A615M-96a, GRADE 420 MPa. ALL SPLICES SHALL BE LAPPED 48 BAR DIAMETERS MINIMUM.

4.4 BOND BEAMS SHALL BE SPACED AT 1200mm OC VERTICALLY. BOND BEAM REINFORCING SHALL BE CONTINUOUS AND PROVIDED AT WALL INTERSECTIONS AND WALL CORNERS (REFERENCE CONCRETE MASONRY NOTE 4.11). ALL BOND BEAM REINFORCING SHALL BE CONTINUOUS AND HAVE STANDARD ACI HOOKS AT EACH END. PROVIDE STANDARD BAR SPLICES AS SPECIFIED. AS AN ALTERNATE TO CMU BOND BEAMS, IT IS THE CONTRACTOR'S OPTION TO PROVIDE 200mm x 200mm CONTINUOUS CAST-IN-PLACE CONCRETE BOND BEAMS WITH (2)-#16 IN LIEU OF CMU BOND BEAMS INDICATED ON THE DRAWINGS.

4.5 SEE TYPICAL DETAILS FOR MINIMUM REINFORCEMENT REQUIREMENTS FOR CMU WALLS. PROVIDE STANDARD BAR SPLICES AS SPECIFIED. ALL VERTICAL REINFORCEMENT EXTENDS FULL HEIGHT OF WALL.

4.6 CMU CELLS THAT REQUIRE VERTICAL REINFORCING BARS AS INDICATED ON THE CONTRACT DRAWINGS AND/OR SPECS SHALL HAVE REINF BARS PLACED IN CENTERS OF CMU CELLS AND CONTINUOUSLY GROUTED UON.

4.7 ALL CMU CELLS, OPEN CAVITIES, AND AIR SPACES OF ALL EXTERIOR WALLS SHALL BE GROUTED TO STOP FRAGMENTS FROM MORTAR BLAST.

4.8 CONTRACTOR SHALL COORDINATE LOCATION OF ALL OPENINGS SEE ARCH, MECH, ELEC, AND PLUMBING SHEETS FOR SIZE AND LOCATION OF OPENINGS.

4.9 MASONRY WALLS SHALL NOT BE BACK FILLED PRIOR TO THE MORTAR AND GROUT ATTAINING THEIR RESPECTIVE MAXIMUM DESIGN STRENGTHS PER SPECIFICATIONS.

4.10 PROVIDE GALVANIZED MORTAR/GROUT SCREEN W/ 3mm MESH WHERE CELLS BELOW ARE NOT GROUTED.

4.11 AT INTERSECTING BOND BEAMS, PROVIDE CORNER BAR FOR EACH HORIZONTAL BAR IN BOND BEAMS AT INTERSECTING WALLS. USE SAME SIZE AND SPACING AS HORIZONTAL BARS WITH LEG LENGTH = 50db.

4.12 THE ALTERNATE TOP OF CMU WALL BRACING DETAIL(S) SHOWN ON S-701 CAN BE UTILIZED AT THE CONTRACTOR'S OPTION IN PLACE OF THE "SLEEVED DOWEL" WALL CONNECTIONS DEPICTED ON S-400 AND S-500 SERIES DRAWINGS. IN ADDITION, ALTERNATE DETAIL(S) SHOW CAST-IN-PLACE WALL BOND BEAMS THAT CAN BE UTILIZED AT THE CONTRACTOR'S OPTION IN PLACE OF THE STANDARD CMU BOND BEAMS CONSTRUCTED OF CMU BLOCKS.

5.0 COLD-FORMED METAL FRAMING

5.1 ALL COLD-FORMED METAL FRAMING MEMBERS SHALL CONFORM TO ASTM A1003M, STRUCTURAL GRADE ST340 (MPa), WITH A GALVANIZED COATING OF Z275 OR BETTER IN ACCORDANCE WITH ASTM A653M.

5.2 ALL COLD-FORMED METAL FRAMING MEMBERS SHALL HAVE THE FOLLOWING MINIMUM PROPERTIES:

a. MINIMUM METAL THICKNESS:
TRACK = 1.37mm;
STUD/OTHER = 1.09mm
b. MINIMUM FLANGE WIDTH:
TRACK = 38mm;
STUD/OTHER = 35mm
c. MINIMUM MEMBER DEPTH:
ALL SECTIONS = 152.2mm
d. PURLIN (HAT CHANNEL)
DEPTHxWIDTH(FLAT TOP)xTHICK = 25mmx42mmx1.59mm

5.3 ALL CONNECTIONS SHALL BE MADE WITH CORROSION RESISTANT (ASTM A153M), SELF-DRILLING, SELF-TAPPING STEEL DRILL SCREWS IN ACCORDANCE WITH ASTM C1513. SCREWS SHALL HAVE A LOW PROFILE HEAD BENEATH ROOF DECK, AND STANDARD HEAD ALL OTHER LOCATIONS.

5.4 FABRICATE COLD FORMED METAL FRAMING AND ACCESSORIES PLUMB, SQUARE AND TRUE TO LINE, WITH CONNECTIONS SECURELY FASTENED ACCORDING TO AISI STANDARD FOR COLD FORMED STEEL FRAMING.

5.5 CUT FRAMING MEMBERS BY SAWING OR SHEATHING, DO NOT TORCH CUT.

5.6 INSTALL FRAMING MEMBERS IN ONE-PIECE LENGTHS UNLESS SPLICE CONNECTIONS ARE INDICATED FOR TRACK OR TENSION MEMBERS

5.7 INSTALL TEMPORARY BRACING AND SUPPORTS TO SECURE FRAMING DURING CONSTRUCTION. MAINTAIN BRACING AND SUPPORTS IN PLACE UNTIL THE STRUCTURE HAS BEEN COMPLETED WITH ALL CONNECTIONS AND PERMANENT BRACING SECURED.

6.0 STRUCTURAL DESIGN CRITERIA

6.1 ALL DESIGNS SHALL CONFORM TO THE PROVISIONS OF THE IBC 2006 AND UFC AS APPLICABLE.

6.2 DESIGN LOADS

6.2.1 DEAD LOADS (PER IBC 2006 & UFC 3-310-01)

| | |
|---|---|
| MECH/ELEC/PLUMBING | 0.20 kPa |
| MISCELLANEOUS | 0.15 kPa |
| COLD-FORMED FRAMING | 0.20 kPa |
| INSULATION | 0.10 kPa |
| METAL ROOF PANEL | 0.14 kPa |
| | 0.79 kPa |
| FLOOR PARTITION ALLOWANCE | 0.96 kPa |

6.2.2 LIVE LOADS (PER IBC 2006 & UFC 3-310-01)

| | |
|---|---|
| ROOF | 1.00 kPa |
| CORRIDOR (2-STORY BLDG ONLY) | 4.80 kPa |
| ALL OTHERS (2-STORY BLDG ONLY) | 2.40 kPa |
| SLAB ON GRADE | 4.80 kPa |

6.2.3 SNOW LOADS (PER IBC 2006 & UFC 3-310-01)

| | |
|---|---|
| GROUND SNOW LOAD (Pg) | 1.2 kPa |
| SNOW IMPORTANCE FACTOR (I) | 1.0 |
| SNOW EXPOSURE FACTOR (Ce) | 1.0 |
| THERMAL FACTOR (Ct) | 1.0 |

6.2.4 WIND LOADS (PER IBC 2006)

| | |
|---|---|
| BASIC WIND SPEED | 137 km/h |
| WIND IMPORTANCE FACTOR | 1.0 |
| WIND EXPOSURE CATEGORY | D |
| DIRECTIONALITY COEFFICIENT (Kd) | 0.85 |
| TOPOGRAPHIC FACTOR (Kzt) | 1.0 |

6.2.5 SEISMIC LOADS (PER IBC 2006 & UFC 3-310-04)

| | |
|---|---|
| OCCUPANCY USE CATEGORY | II |
| SEISMIC IMPORTANCE FACTOR (Ie) | 1.0 |
| SEISMIC SITE CLASS | D |
| $S_s$ = 1.50 (REDUCED FROM 2.40 PER ASCE 7-05, 12.8.1.3 FOR A BUILDING WITHOUT IRREGULARITIES) | |
| $S_1$ = 1.20 | |
| $S_{DS}$ = 1.0 | |
| $S_{D1}$ = 1.20 | |
| SEISMIC DESIGN CATEGORY | E |
| SEISMIC RESISTING SYSTEM: -SPECIAL REINFORCED CONCRETE SHEAR WALL | |
| RESPONSE MODIFICATION FACTOR (R) | 6 |
| RESPONSE COEFFICIENT (Cs) | 0.167 |
| SEISMIC ANALYTICAL PROCEDURE = | EQUIV LATERAL FORCE |
| SEISMIC BASE SHEAR | 670 kN |

APPROVED:

A/E DESIGNER OF RECORD

SEAL:

GEORGIA REGISTERED 29-10 No. 27141 PROFESSIONAL ENGINEER CHRISTOPHER W. WHITMORE

US ARMY CORPS OF ENGINEERS
AFGHANISTAN ENGINEER DISTRICT

| Mark | Description | Date | Appr. |
|---|---|---|---|

| Rev. | Date | Description |
|---|---|---|
| 0 | 2/23/10 | CONSTRUCTION |

Designed by: KMP/MMY
Drawn by: RCG
Reviewed by: LHM
Submitted by: BAKER
Ckd by: CWW
Date: 2/23/10
Design file no.
Drawing code:
File name: ANALATMS-001GN
Plot date: 2/23/2010
Plot scale: X:X

U.S. ARMY ENGINEER DISTRICT, AFGHANISTAN
CORPS OF ENGINEERS
APO AE 96338

*Michael Baker Jr., Inc*
*A unit of Michael Baker Corporation*
Airside Business Park
100 Airside Drive
Moon Township, PA 15108
www.mbakercorp.com

AFGHAN NATIONAL ARMY
REGIONAL MILITARY TRAINING CENTER
STANDARD DESIGN

LATRINE BUILDING
MEDIUM

GENERAL NOTES & DESIGN CRITERIA

Sheet reference number:
S-001

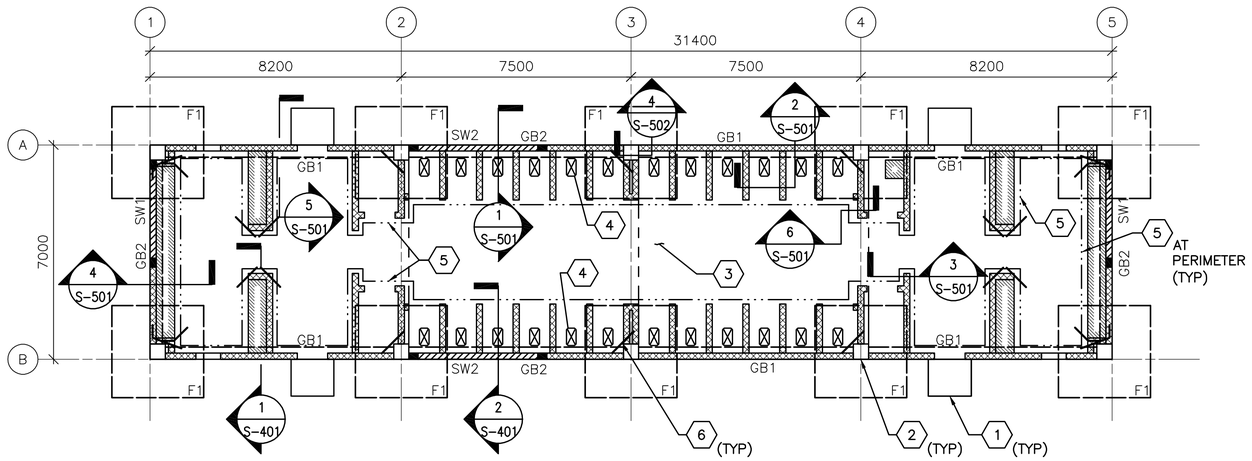


1 S-101 **FOUNDATION/SLAB PLAN**

SCALE: 1:100

## FOUNDATION/SLAB PLAN NOTES:

1. REFER TO SHEET S–001 FOR STRUCTURAL NOTES AND DESIGN CRITERIA.
2. FINISH FIRST FLOOR ELEVATION SHALL BE (DATUM 0.00) ALL PLUS OR MINUS DIMENSIONS INDICATED ON PLAN OR REFERRED TO IN NOTES RELATE TO FINISH FIRST FLOOR ELEVATION.
3. SLAB–ON–GRADE IS 150 WITH #13 @ 300 OC EW LOCATED 38 FROM T/SLAB UON. WHERE NOTED, 300 SLAB–ON–GRADE SHALL BE REINF W/ #13 @ 300 OC EW T&B. DEPRESS ALL SLABS 65 EXCEPT WHERE INDICATED.
4. TOP OF EXTERIOR FOOTINGS SHALL BE –950 UNLESS OTHERWISE INDICATED.
5. SPREAD FOOTINGS INDICATED BY F# ON PLAN. REFER TO SPREAD FOOTING SCHEDULE ON SHEET S–601.
6. REFER TO COLUMN SCHEDULE ON SHEET S–601.
7. GRADE BEAM INDICATED BY GB# ON PLAN, REFER TO BEAM SCHEDULE ON SHEET S–601.
8. SHEARWALL INDICATED BY SW# ON PLAN, REFER TO SHEARWALL SCHEDULE ON SHEET S–601.
9. SEE TYP EXTERIOR AND INTERIOR CMU WALL REINF DETAILS ON SHEET S–701.
10. SEE MECHANICAL AND ELECTRICAL SHEETS FOR CONCRETE PAD LOCATIONS, SIZES, AND THICKNESS NOT SHOWN. SEE SHEET S–701 FOR DETAILS.

## FOUNDATION/SLAB PLAN KEY NOTES: (X)

1. CONC PAD (ENTRANCE)–SEE ARCH DWGS FOR INFORMATION
2. REINF CONC COLUMN
3. REINF CONC SLAB–ON–GRADE
4. SLAB OPENING – COORDINATE W/ ARCH AND PLUMBING DWGS
5. 300 SLAB–ON–GRADE
6. (2)–#13 @ RE–ENTRANT CORNERS – SHEET S–701 FOR INFORMATION

## FOUNDATION/SLAB PLAN LEGEND:

- REINF CONC SHEAR WALL
- REINF CMU WALL
- CONTROL JOINT
- INDICATES DROP SLAB 200 BELOW FINISH FLOOR
- SLAB OPENING
- TRANSITION BETWEEN 150 AND 300 THICK SLAB AREAS

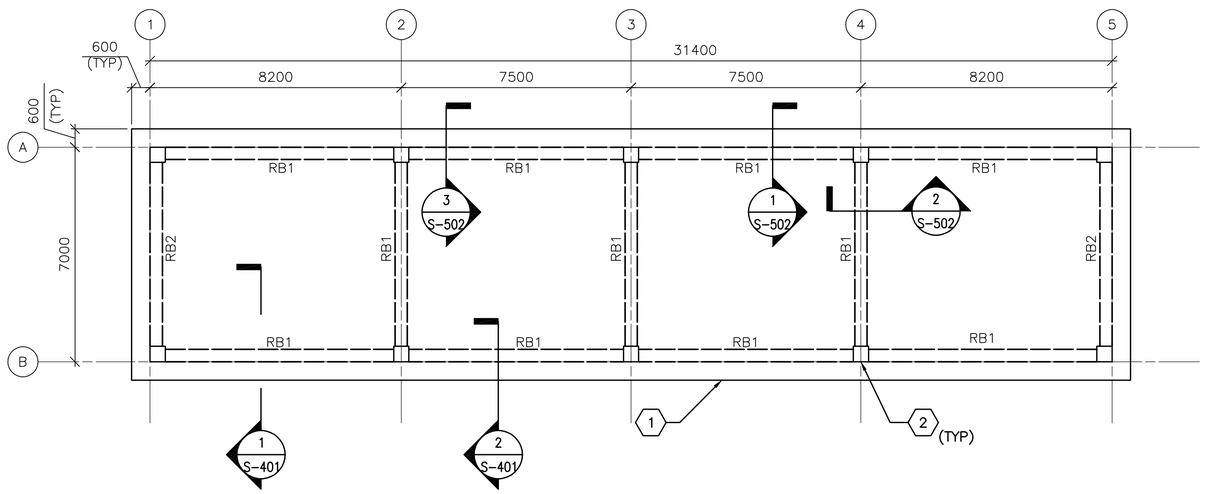


2 S-101 **ROOF FRAMING PLAN**

SCALE: 1:100

## ROOF FRAMING PLAN NOTES:

1. REFER TO SHEETS S–001 FOR STRUCTURAL NOTES AND DESIGN CRITERIA.
2. TOP OF SLAB ELEVATION = 3500 UNLESS NOTED OTHERWISE.
3. ROOF SLAB IS 250 WITH #19 @ 300 OC EW T&B.
4. ROOF BEAM INDICATED BY RB# ON PLAN. REFER TO BEAM SCHEDULE ON SHEET S–601.
5. COORDINATE WITH ARCHITECTURAL SHEETS FOR COLD–FORMED STEEL OVERBUILT FRAMING ABOVE ROOF SLAB.
6. COLD–FORMED METAL OVERBUILD ROOF FRAMING NOT SHOWN FOR CLARITY. SEE OVERBUILD ROOF FRAMING DETAILS AND SECTIONS ON SHEET S–702.
7. CMU PARTITION WALLS (BELOW ROOF SLAB) NOT SHOWN FOR CLARITY.
8. OVERHANG AREAS OF ROOF SLAB CONTAIN ROOF VENT PENETRATIONS. REFERENCE ARCHITECTURAL DRAWINGS FOR INFORMATION.

## ROOF FRAMING PLAN KEY NOTES: (X)

1. CONC ROOF SLAB (BELOW ROOF OVERBUILD)
2. REINF CONC COLUMN (BELOW CONC ROOF SLAB)

0 2000 4000

SCALE: 1:100

UNLESS OTHERWISE NOTED, LINEAR DIMENSIONS SHOWN ON DRAWINGS ARE IN MILLIMETERS (mm)

APPROVED:

A/E DESIGNER OF RECORD

SEAL:

GEORGIA REGISTERED No. 27141 PROFESSIONAL ENGINEER CHRISTOPHER W. WHITMORE 2-23-10

US ARMY CORPS OF ENGINEERS
AFGHANISTAN ENGINEER DISTRICT

| Mark | Description | Date | Appr. | Mark | Description | Date | Appr. |
|---|---|---|---|---|---|---|---|
| | | | | | | | |

Date: 2/23/10 | Rev: 0
Design file no.
Drawing code:
File name: ANAATMS-101FFP
Plot date: 2/23/2010
Plot scale: x:x

Designed by: KMP/MMY
Dwn by: RCG | Ckd by: CWW
Reviewed by: LHM
Submitted by: BAKER

U.S. ARMY ENGINEER DISTRICT, AFGHANISTAN
CORPS OF ENGINEERS
APO AE 96338

*Michael Baker Jr., Inc*
*A unit of Michael Baker Corporation*
Airside Business Park
100 Airside Drive
Moon Township, PA 15108
www.mbakercorp.com

AFGHAN NATIONAL ARMY
REGIONAL MILITARY TRAINING CENTER
STANDARD DESIGN

LATRINE BUILDING
MEDIUM

FOUNDATION/SLAB & ROOF FRAMING PLANS

Sheet reference number:
S–101

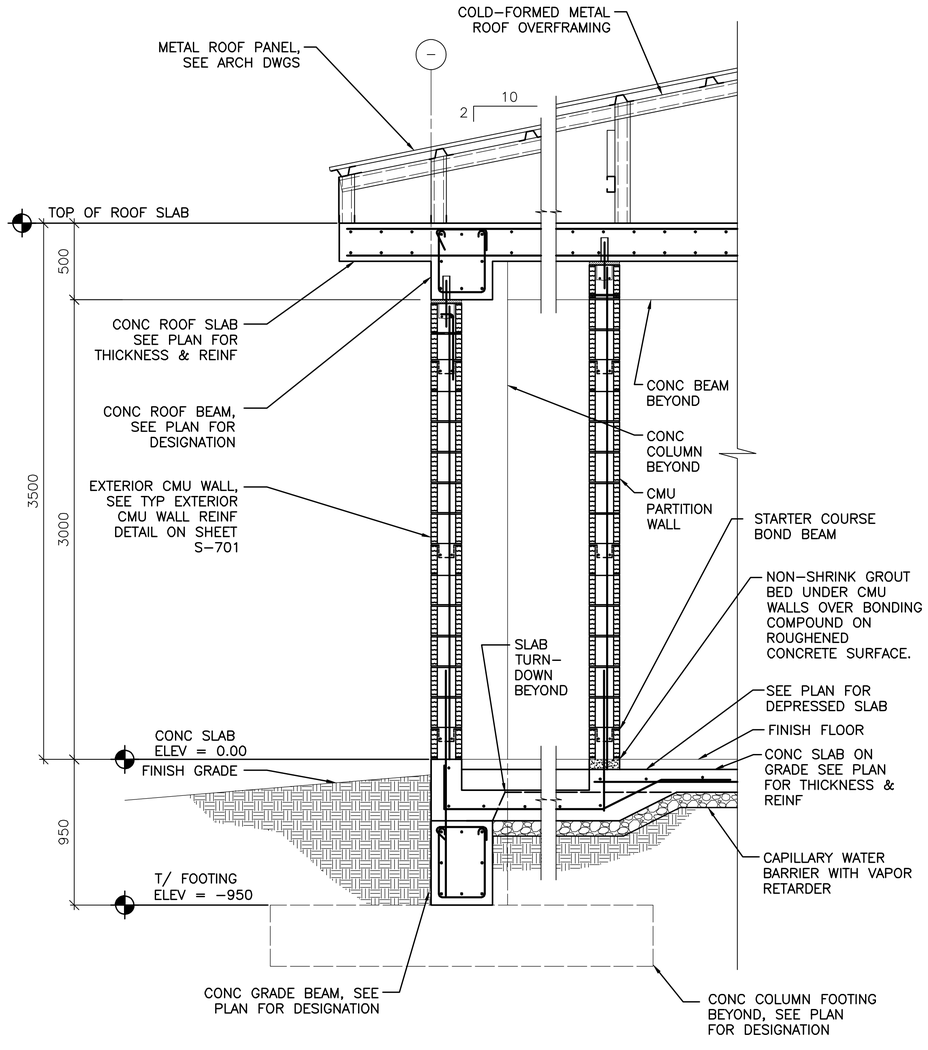


1 S–101 **TYPICAL WALL SECTION AT EXTERIOR MASONRY WALL**

SCALE: 1:20

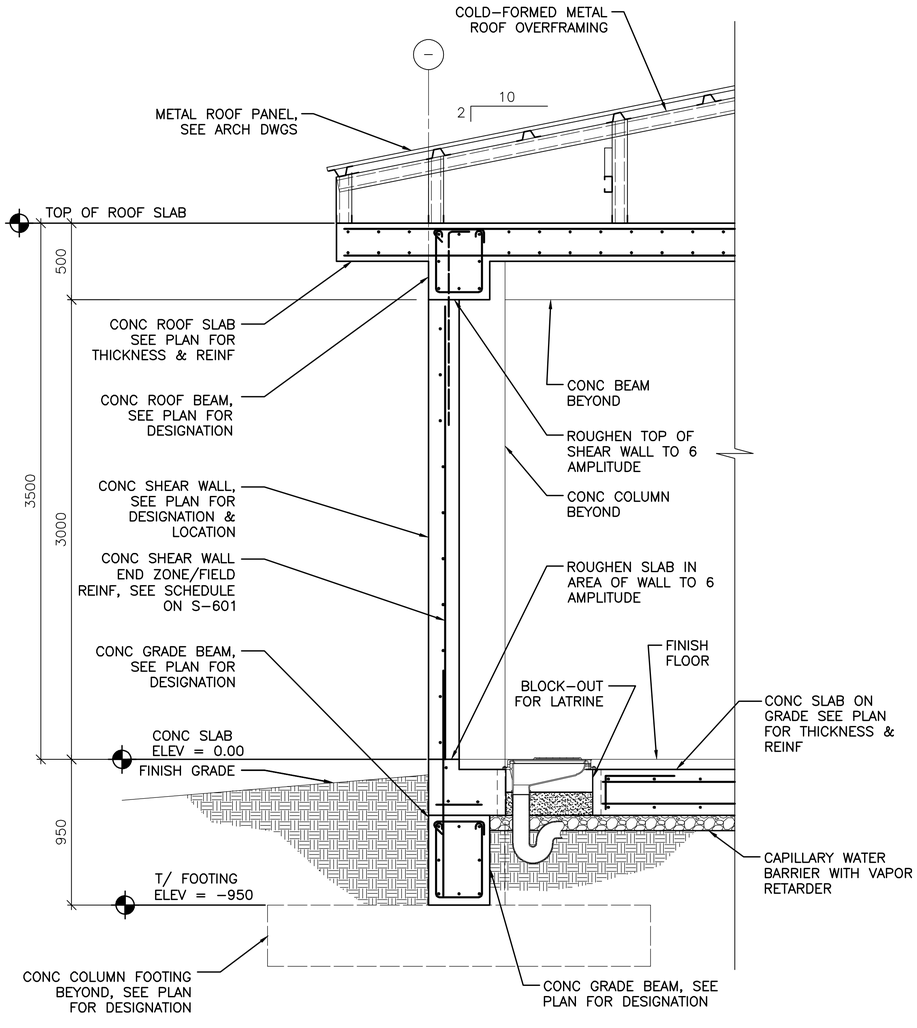


2 S–101 **TYPICAL WALL SECTION AT CONCRETE SHEAR WALL**

SCALE: 1:20

0 400 800

SCALE: 1:20

UNLESS OTHERWISE NOTED, LINEAR DIMENSIONS SHOWN ON DRAWINGS ARE IN MILLIMETERS (mm)

APPROVED:

A/E DESIGNER OF RECORD

SEAL:

GEORGIA REGISTERED 2-25-10 No. 27141 PROFESSIONAL ENGINEER CHRISTOPHER W. WHITMORE

US ARMY CORPS OF ENGINEERS
AFGHANISTAN ENGINEER DISTRICT

| Mark | Description | Date | Appr. | Mark | Description | Date | Appr. |
|---|---|---|---|---|---|---|---|
| | | | | | | | |

Date: 2/23/10 | Rev: 0
Design file no.
Drawing code:
File name: ANALATMS-401BS
Plot date: 2/23/2010
Plot scale: x:x

Designed by: KMP/MMY | Ckd by: CWW
Dwn by: RCG | Reviewed by: LHM | Submitted by: BAKER

U.S. ARMY ENGINEER DISTRICT, AFGHANISTAN
CORPS OF ENGINEERS
APO AE 96338

*Michael Baker Jr., Inc*
*A unit of Michael Baker Corporation*
Airside Business Park
100 Airside Drive
Moon Township, PA 15108
www.mbakercorp.com

AFGHAN NATIONAL ARMY
REGIONAL MILITARY TRAINING CENTER
STANDARD DESIGN

LATRINE BUILDING
MEDIUM

BUILDING SECTIONS

Sheet reference number:
S–401

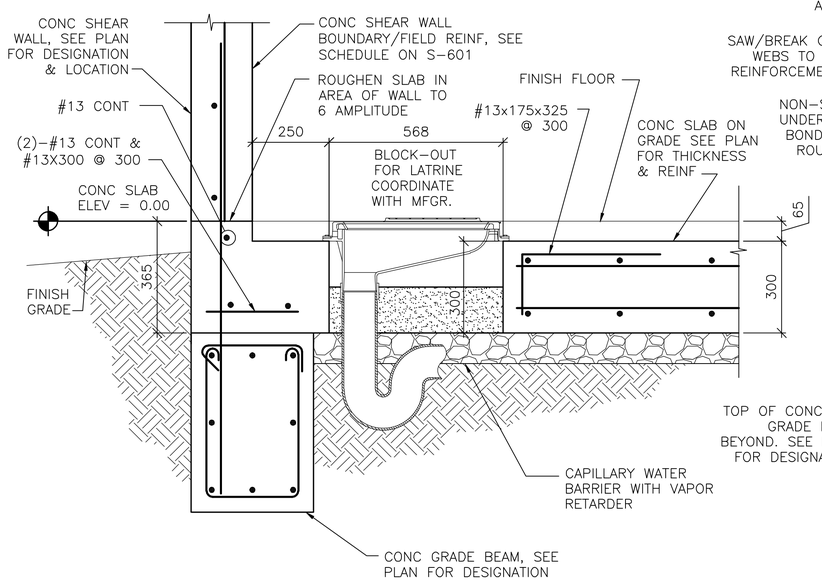


1 S-101 **SECTION**
SCALE: 1:10

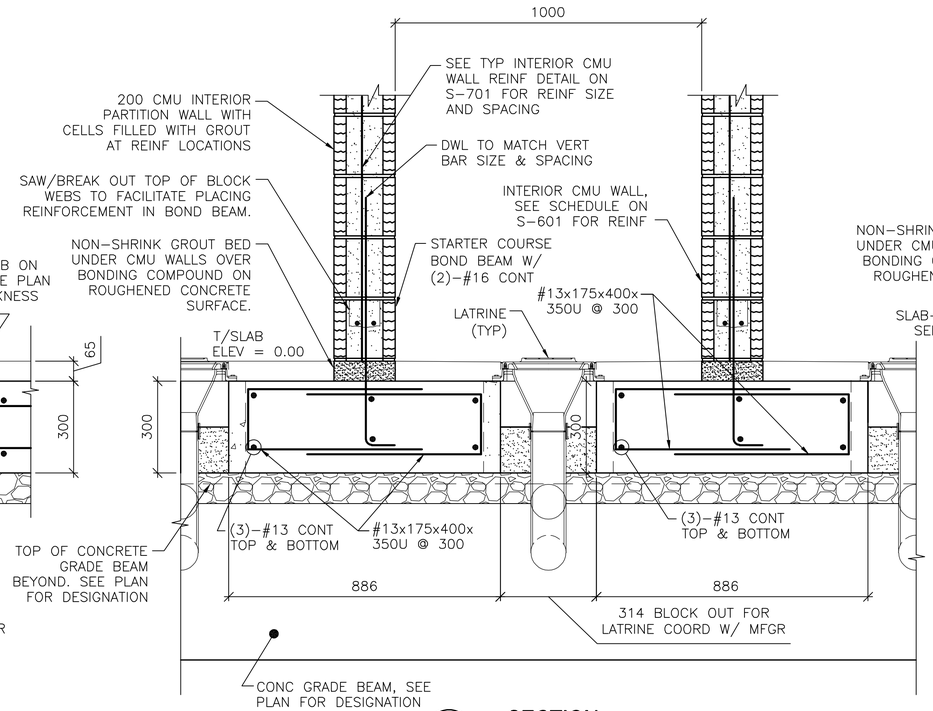


2 S-101 **SECTION**
SCALE: 1:10

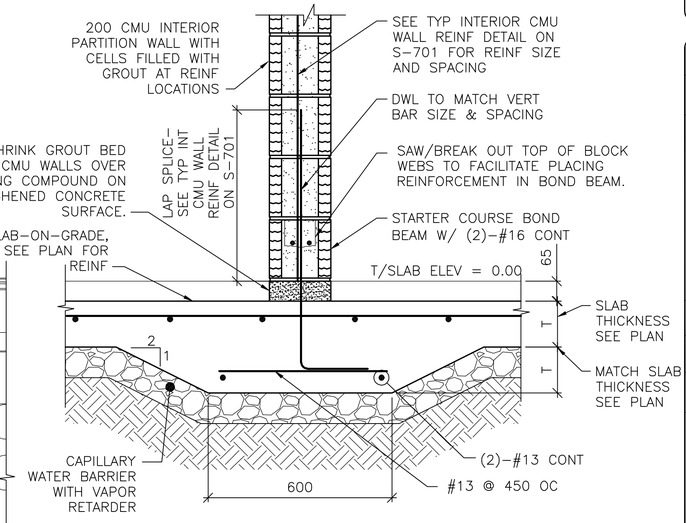


3 S-101 **SECTION**
SCALE: 1:10

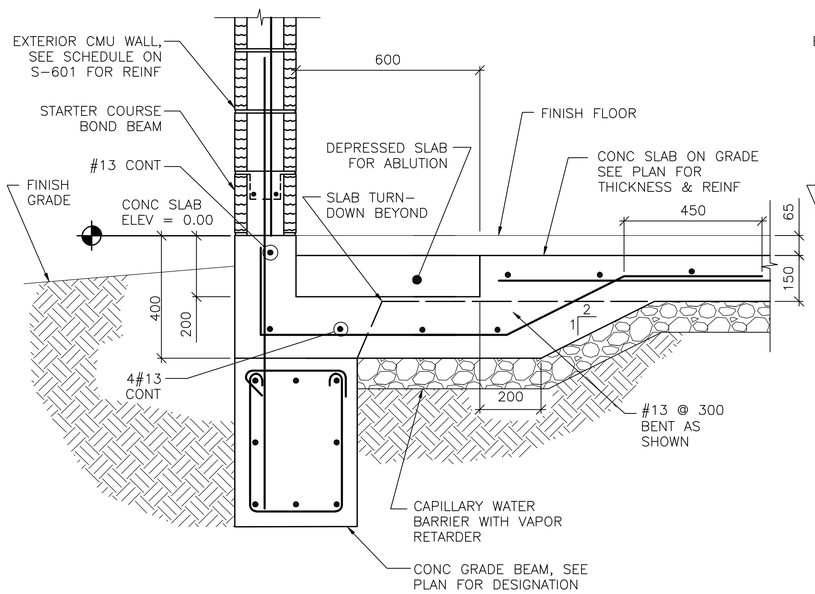


4 S-101 **SECTION**
SCALE: 1:10

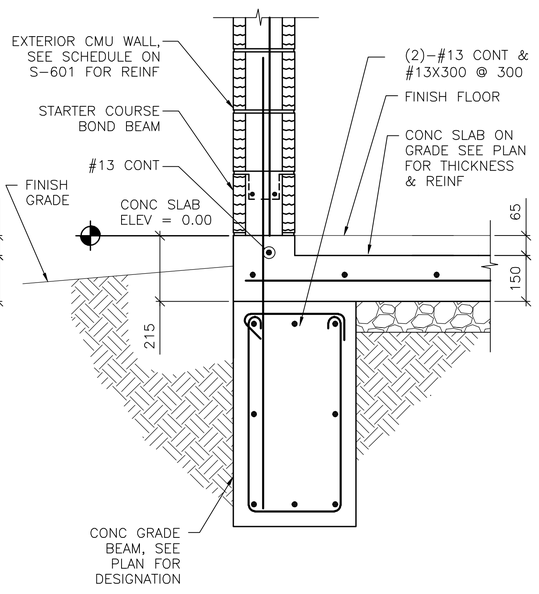


5 S-101 **SECTION**
SCALE: 1:10

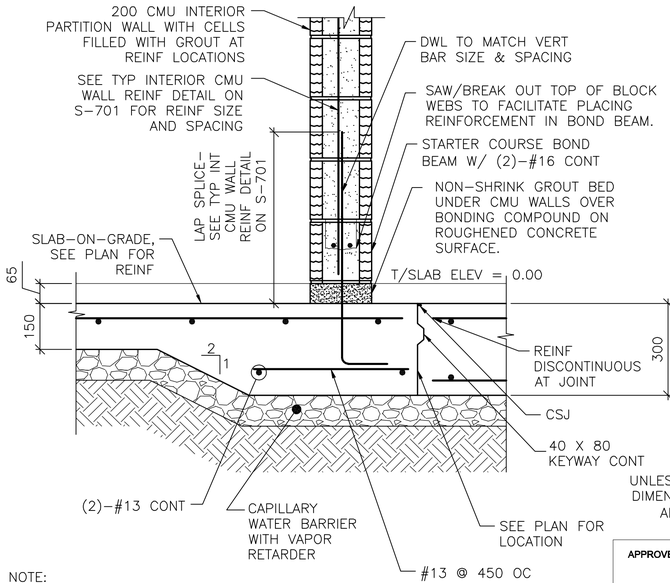


6 S-101 **SECTION**
SCALE: 1:10

NOTE:
1. DETAIL IS APPLICABLE AT CONTROL JOINTS RUNNING PARALLEL TO CMU WALLS AND WITHIN 300 OF FACE OF WALL.

0 200 400
SCALE: 1:10

UNLESS OTHERWISE NOTED, LINEAR DIMENSIONS SHOWN ON DRAWINGS ARE IN MILLIMETERS (mm)

APPROVED:

A/E DESIGNER OF RECORD

SEAL:

GEORGIA REGISTERED 1-27-10 No. 27141 PROFESSIONAL ENGINEER CHRISTOPHER W. WHITMORE

US ARMY CORPS OF ENGINEERS
AFGHANISTAN ENGINEER DISTRICT

| Mark | Description | Date | Appr. |
|---|---|---|---|

Date: 2/23/10
Design file no.
Drawing code:
Rev: 0
File name: ANALATMS-S0150
Plot date: 2/23/2010
Plot scale: x:x

Designed by: KMF/MMY
Dwn by: RCG
Ckd by: CWW
Reviewed by: LHM
Submitted by: BAKER

U.S. ARMY ENGINEER DISTRICT, AFGHANISTAN
CORPS OF ENGINEERS
APO AE 96338

*Michael Baker Jr., Inc.*
*A unit of Michael Baker Corporation*
Airside Business Park
100 Airside Drive
Moon Township, PA 15108
www.mbakercorp.com

AFGHAN NATIONAL ARMY
REGIONAL MILITARY TRAINING CENTER
STANDARD DESIGN

LATRINE BUILDING
MEDIUM

FOUNDATION SECTIONS

Sheet reference number:
S-501

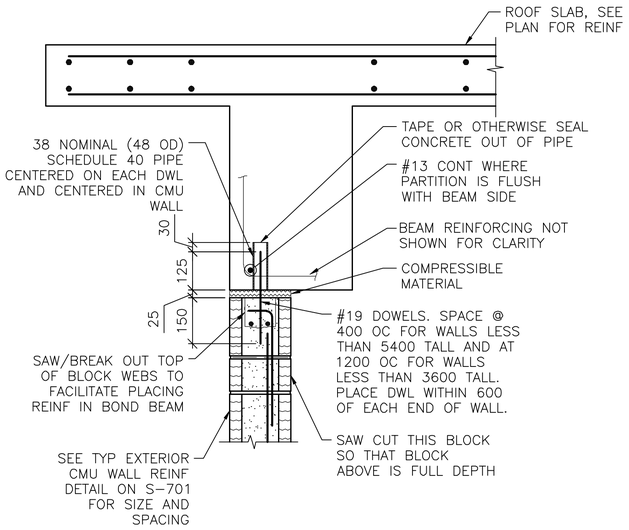


NOTES:
1. EXTEND DOWEL REINF TO 25 CLEAR FROM TOP OF CMU WALL.

1 / S-101 **SECTION**
SCALE: 1:10

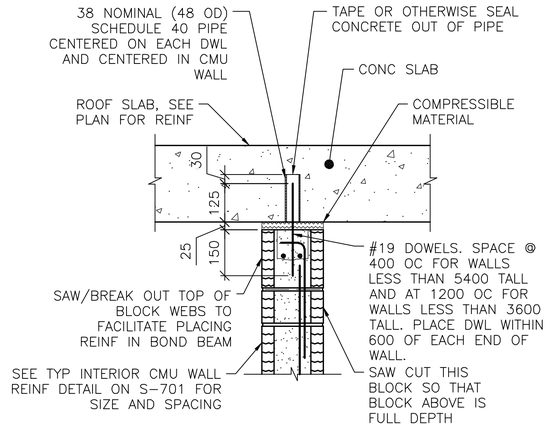


NOTES:
1. EXTEND DOWEL REINF TO 25 CLEAR FROM TOP OF CMU WALL.
2. SLAB REINF NOT SHOWN FOR CLARITY.

2 / S-101 **SECTION**
SCALE: 1:10

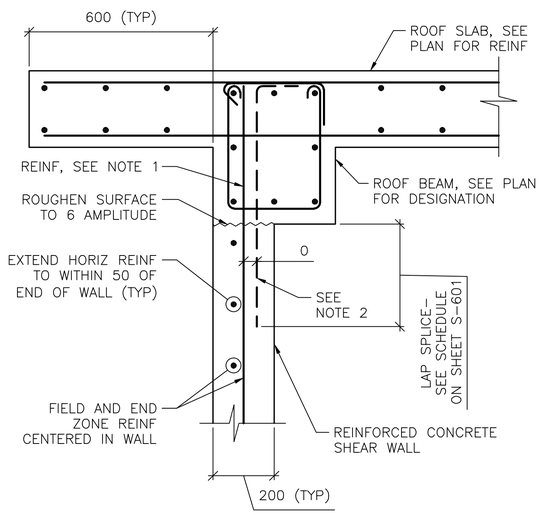


NOTES:
1. TERMINATE "FIELD" VERT REINF & END ZONE REINF @ 50 CLEAR FROM TOP OF ROOF SLAB.
2. WHERE END ZONE REINFORCING CANNOT BE DEVELOPED IN BEAM DEPTH, PROVIDE HOOKED DWLS SAME SIZE & SPACING. PROVIDE TENSION LAP BELOW ROOF BEAM.
3. SEE SHEET S-601 AND SHEET S-702 FOR SCHEDULED FIELD AND END ZONE REINF.

3 / S-101 **SECTION**
SCALE: 1:10

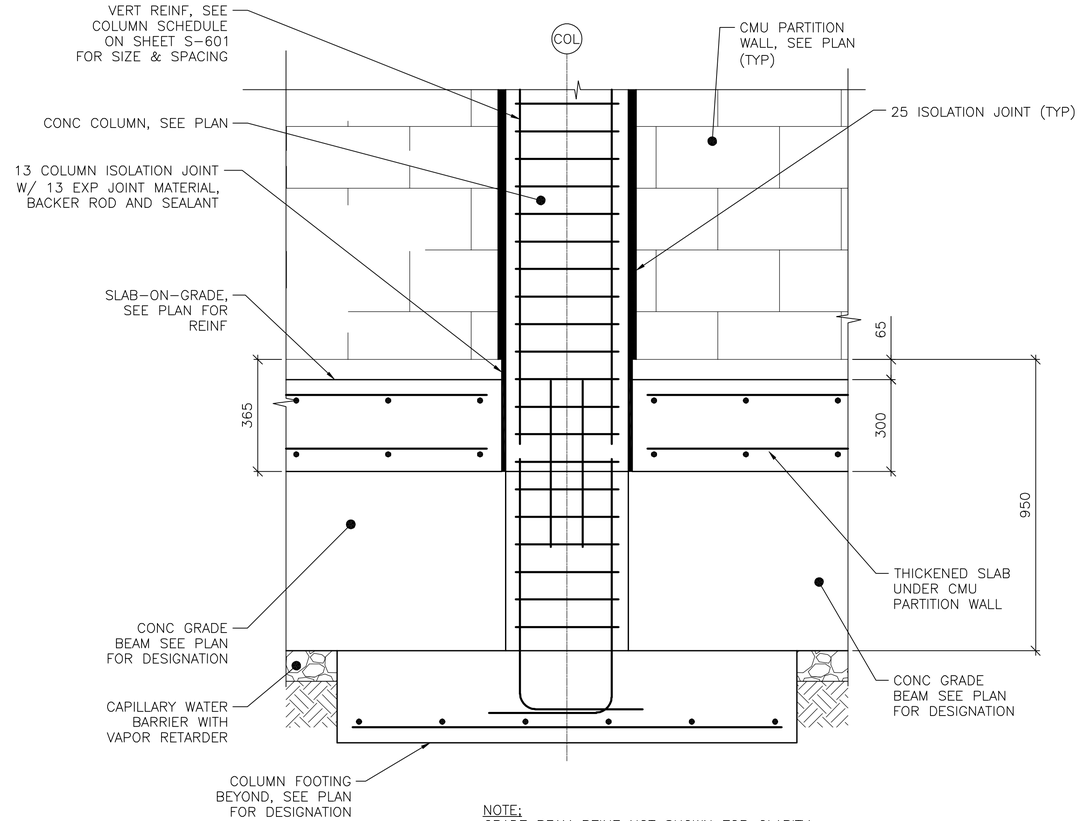


NOTE:
GRADE BEAM REINF NOT SHOWN FOR CLARITY.

4 / S-101 **SECTION**
SCALE: 1:10

0 200 400
SCALE: 1:10

UNLESS OTHERWISE NOTED, LINEAR DIMENSIONS SHOWN ON DRAWINGS ARE IN MILLIMETERS (mm)

APPROVED:

A/E DESIGNER OF RECORD

SEAL:

GEORGIA REGISTERED 29-10 No. 27141 PROFESSIONAL ENGINEER CHRISTOPHER W. WHITMORE

US ARMY CORPS OF ENGINEERS
AFGHANISTAN ENGINEER DISTRICT

| Mark | Description | Date | Appr. |
|---|---|---|---|
| | | | |

| Mark | Description | Date | Appr. |
|---|---|---|---|
| | | | |

Rev: 0
Date: 2/23/10
Design file no.
Drawing code:
File name: ANALATMS-60258
Plot date: 2/23/2010
Plot scale: x:x

Designed by: KMP/ MMY
Dwn by: RCG
Ckd by: CWW
Reviewed by: LHM
Submitted by: BAKER

U.S. ARMY ENGINEER DISTRICT, AFGHANISTAN
CORPS OF ENGINEERS
APO AE 96338

*Michael Baker Jr., Inc*
*A unit of Michael Baker Corporation*
Airside Business Park
100 Airside Drive
Moon Township, PA 15108
www.mbakercorp.com

AFGHAN NATIONAL ARMY
REGIONAL MILITARY TRAINING CENTER
STANDARD DESIGN

LATRINE BUILDING
MEDIUM

FRAMING SECTIONS

Sheet reference number:
S-502

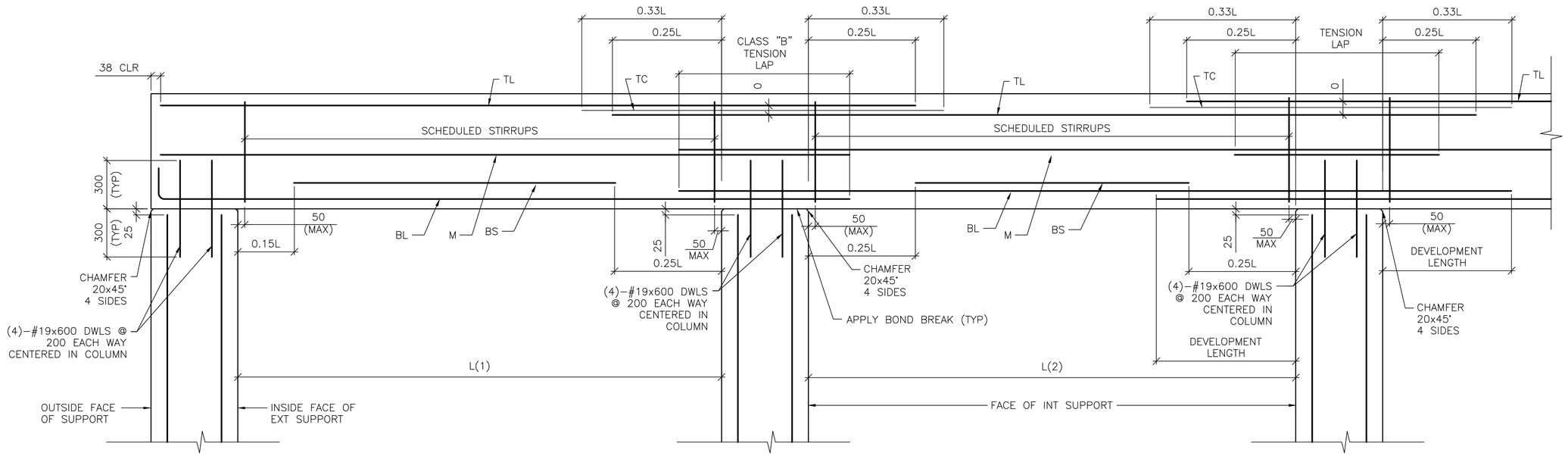


DETAIL NOTE:
1. WORK THIS DETAIL WITH BEAM SCHEDULE ON SHEET S-601.
2. L=GREATEST OF ADJACENT SPANS L(1) OR L(2)
3. ONLY COLUMN CORNER BARS ARE SHOWN

1 / S-503 **ROOF BEAM REINFORCING DETAIL**

SCALE: NTS

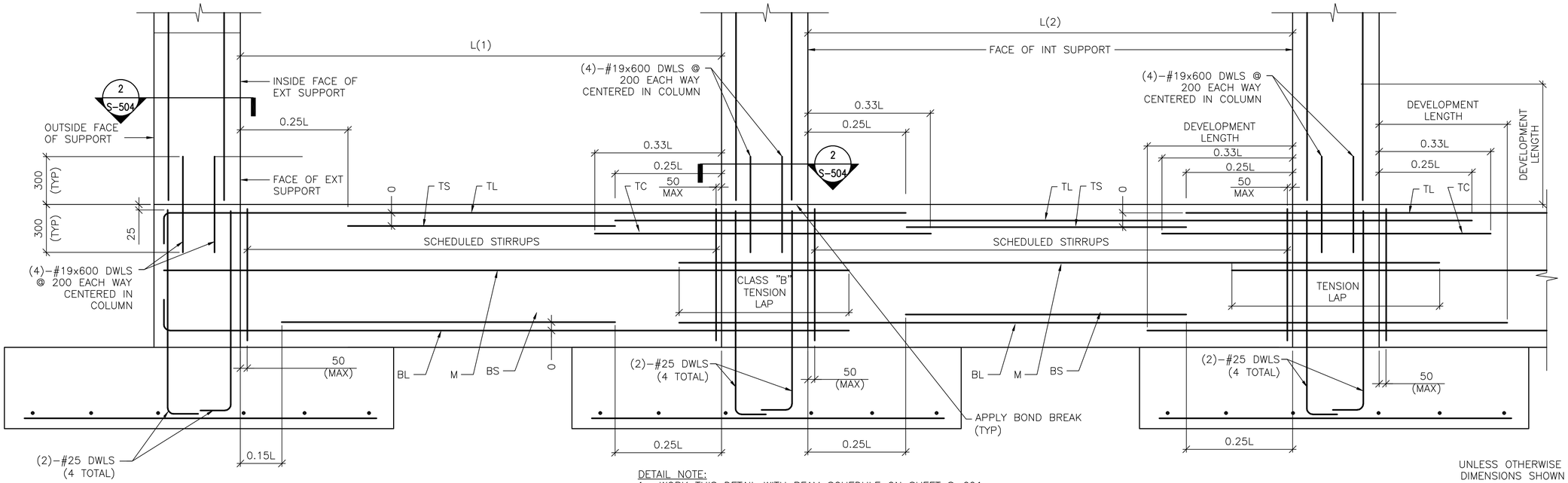


DETAIL NOTE:
1. WORK THIS DETAIL WITH BEAM SCHEDULE ON SHEET S-601.
2. L=GREATEST OF ADJACENT SPANS L(1) OR L(2)
3. ONLY COLUMN CORNER BARS ARE SHOWN.

2 / S-503 **GRADE BEAM REINFORCING DETAIL**

SCALE: NTS

UNLESS OTHERWISE NOTED, LINEAR DIMENSIONS SHOWN ON DRAWINGS ARE IN MILLIMETERS (mm)

APPROVED:

A/E DESIGNER OF RECORD

SEAL:

GEORGIA REGISTERED No. 27141 PROFESSIONAL ENGINEER CHRISTOPHER W. WHITMORE

US ARMY CORPS OF ENGINEERS
AFGHANISTAN ENGINEER DISTRICT

| Mark | Description | Date | Appr. |
|---|---|---|---|

Rev: 0
Date: 2/23/10
Design file no.
Drawing code: ANALATM5-503DT
File name:
Plot date: 2/23/2010
Plot scale: X:X
Designed by: KMP/MMY
Dwn by: RCG
Ckd by: CWW
Reviewed by: LHM
Submitted by:

U.S. ARMY ENGINEER DISTRICT, AFGHANISTAN
CORPS OF ENGINEERS
APO AE 96338

*Michael Baker Jr., Inc*
*A unit of Michael Baker Corporation*
Airside Business Park
100 Airside Drive
Moon Township, PA 15108
www.mbakercorp.com

BAKER

AFGHAN NATIONAL ARMY
REGIONAL MILITARY TRAINING CENTER
STANDARD DESIGN

LATRINE BUILDING
MEDIUM

BEAM & COLUMN DETAILS

Sheet reference number:
S-503

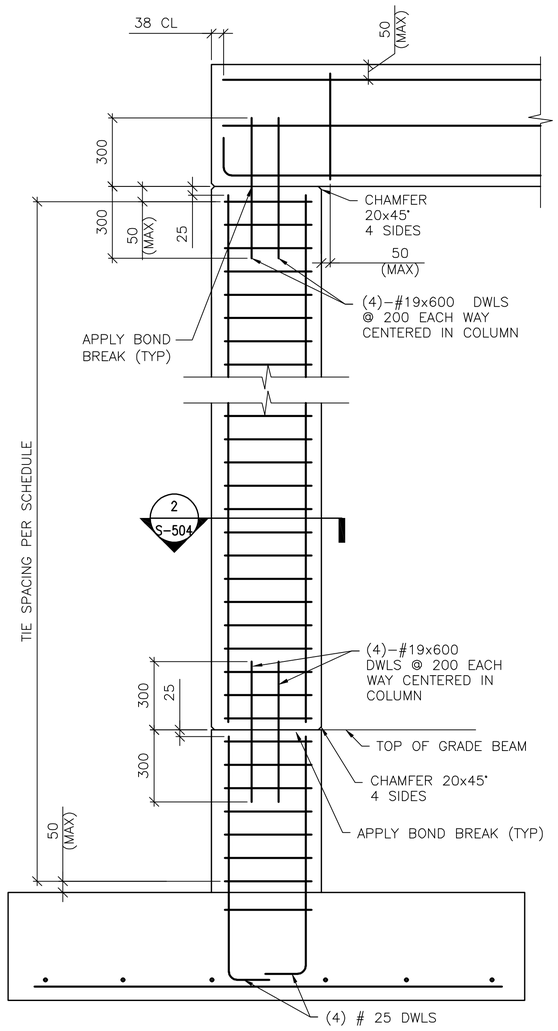


DETAIL NOTE:
1. ONLY COLUMN CORNER BARS ARE SHOWN

1 S–504 **1-STORY COLUMN REINF DETAILS**
SCALE: NTS
(WITH GRADE BEAM)

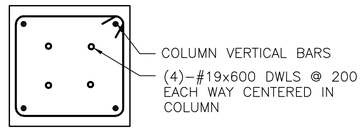


2 S–503 2 S–504 **SECTION**
SCALE: NTS

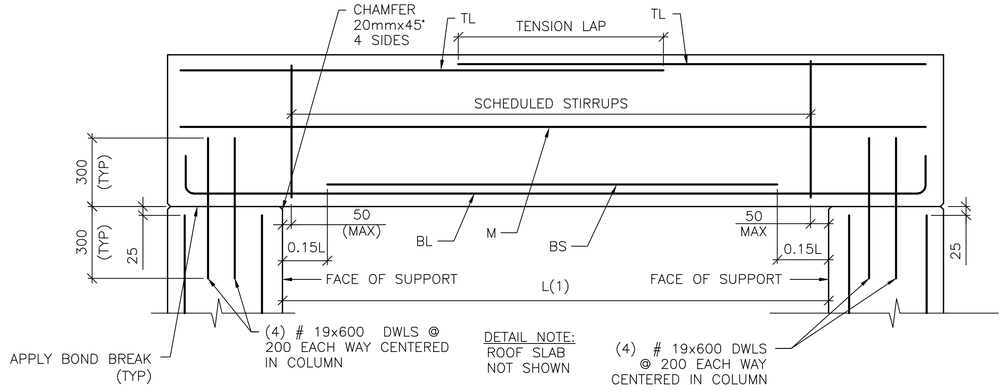


3 S–504 **SINGLE SPAN ROOF BEAM REINFORCING DETAIL**
SCALE: NTS

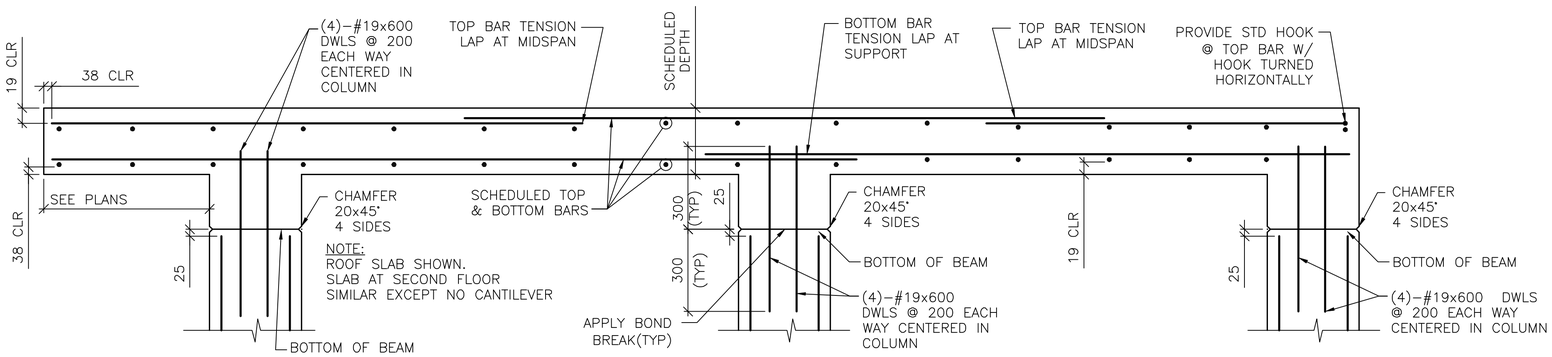


NOTE:
COORDINATE DIRECTION OF TOP & BOTTOM BARS IN UPPER AND LOWER MATS OF REINFORCING WITH BEAM TOP BAR DIRECTIONS

4 S–504 **FRAMED SLAB REINFORCING DETAIL**
SCALE: NTS

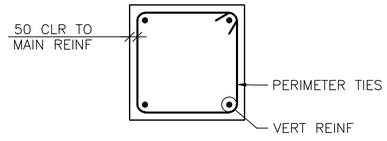


A S–504 **4 BAR COLUMN**
SCALE: NTS

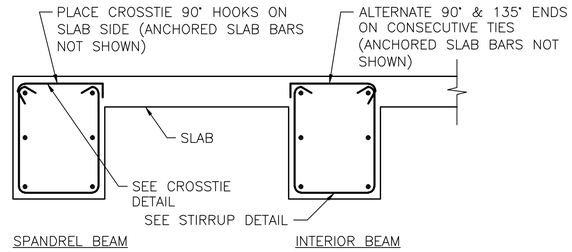


B S–504 **BEAM REINFORCEMENT DETAILS**
SCALE: NTS

UNLESS OTHERWISE NOTED, LINEAR DIMENSIONS SHOWN ON DRAWINGS ARE IN MILLIMETERS (mm)

APPROVED:

A/E DESIGNER OF RECORD

SEAL:

GEORGIA REGISTERED 1-28-10 No. 27141 PROFESSIONAL ENGINEER CHRISTOPHER W. WHITMORE

US ARMY CORPS OF ENGINEERS
AFGHANISTAN ENGINEER DISTRICT

| Mark | Description | Date | Appr. |
|---|---|---|---|

Rev: 0
Date: 2/23/10
Design file no.
Drawing code:
File name: ANAATM5-5040T
Plot date: 2/23/2010
Plot scale: x/x

Designed by: KMP/ MMY
Dwn by: RCG
Ckd by: CWW
Reviewed by: LHM
Submitted by: BAKER

U.S. ARMY ENGINEER DISTRICT, AFGHANISTAN
CORPS OF ENGINEERS
APO AE 96338

*Michael Baker Jr., Inc*
*A unit of Michael Baker Corporation*
Airside Business Park
100 Airside Drive
Moon Township, PA 15108
www.mbakercorp.com

AFGHAN NATIONAL ARMY
REGIONAL MILITARY TRAINING CENTER
STANDARD DESIGN

LATRINE BUILDING
MEDIUM

BEAM & COLUMN DETAILS

Sheet reference number:
S–504

# CONCRETE REINFORCEMENT TENSION DEVELOPMENT/LAP SPLICE SCHEDULE

| f'c = 28 MPa | LAP CLASS | UNCOATED BARS | | | |
|---|---|---|---|---|---|
| | | TOP BARS | | OTHER BARS | |
| BAR SIZES | | CASE 1 | CASE 2 | CASE 1 | CASE 2 |
| #10 TO #19 | A | 50 BAR DIA | 74 BAR DIA | 38 BAR DIA | 57 BAR DIA |
| | B | 64 BAR DIA | 96 BAR DIA | 50 BAR DIA | 74 BAR DIA |
| #22 TO #57 | A | 62 BAR DIA | 93 BAR DIA | 48 BAR DIA | 71 BAR DIA |
| | B | 80 BAR DIA | 121 BAR DIA | 62 BAR DIA | 93 BAR DIA |

NOTES:
1. TABULATED TENSION DEVELOPMENT LENGTH VALUES ARE TAKEN FROM CRSI DESIGN HANDBOOK 2008 10TH ED.
2. TENSION DEVELOPMENT & TENSION LAP SPLICE LENGTHS ARE EXPRESSED AS MULTIPLES OF BAR DIAMETERS.
3. TABULATED VALUES ARE BASED ON MINIMUM YIELD STRENGTH OF REINFORCEMENT, fy, OF 420MPa.
4. CONCRETE IS NORMAL WEIGHT (2400Kg/m³) AND 28 DAY COMPRESSIVE STRENGTH = 28MPa.
5. TABULATED VALUES FOR BEAMS & COLUMNS ARE BASED ON TRANSVERSE REINFORCEMENT AND CONCRETE COVER MEETING MINIMUM CODE REQUIREMENTS.
6. CASES 1 & 2, WHICH DEPEND ON THE TYPE OF STRUCTURAL MEMBER, CONCRETE COVER, AND CENTER-TO-CENTER SPACING OF THE BARS ARE DEFINED IN THE TABLE BELOW.
7. LAP SPLICE LENGTHS (MINIMUM 300mm) ARE MULTIPLES OF TENSION DEVELOPMENT LENGTHS: CLASS A = 1.0(TENSION DEVELOPMENT LENGTH) & CLASS B = 1.3(TENSION DEVELOPMENT LENGTH)
8. TOP BARS ARE HORIZONTAL REINFORCEMENT WITH MORE THAN 300mm OF CONCRETE CAST BELOW THE BARS.
9. IT SHALL BE PERMISSIBLE TO CALCULATE WALL AND SLAB REINFORCEMENT TENSION DEVELOPMENT/SPLICE LENGTHS IN ACCORDANCE WITH ACI 12.2.3 OR TABLE 5.3(b) OF CRSI 2008 IN LIEU OF VALUES TABULATED ABOVE.

| | | |
|---|---|---|
| BEAMS, COLUMNS | CASE 1 | CONCRETE COVER AT LEAST 1 BAR DIA AND CENTER-TO-CENTER SPACING AT LEAST 2 BAR DIA |
| | CASE 2 | CONCRETE COVER LESS THAN 1 BAR DIA OR CENTER-TO-CENTER SPACING LESS THAN 2 BAR DIA |
| ALL OTHERS | CASE 1 | CONCRETE COVER AT LEAST 1 BAR DIA AND CENTER-TO-CENTER SPACING AT LEAST 3 BAR DIA |
| | CASE 2 | CONCRETE COVER LESS THAN 1 BAR DIA OR CENTER-TO-CENTER SPACING LESS THAN 3 BAR DIA |

# CONCRETE COVER SCHEDULE

MINIMUM CONCRETE COVER PROTECTION FOR REINFORCEMENT BARS SHALL BE AS LISTED BELOW: (SEE ACI 318M-05, SECTION 7.7 FOR CONDITIONS NOT NOTED). DIMENSIONS FOR BAR PLACEMENT GIVEN IN SECTIONS AND DETAILS SHALL SUPERSEDE MINIMUM COVER REQUIREMENTS GIVEN HERE. DIMENSIONS ARE IN mm. PROVIDE STANDARD BAR CHAIRS AND SUPPORT BARS @1200mm MAXIMUM AS REQUIRED TO MAINTAIN CONCRETE PROTECTION SPECIFIED.

| | | |
|---|---|---|
| FOOTINGS (EARTH FORMED): | | 70 |
| COLUMNS / PIERS (TO TIES) | | 40 |
| GRADE BEAMS OR SLAB TURNED DOWN EDGES: | | |
| TOP | | 40 |
| BOTTOM (EARTH FORMED) | | 70 |
| SIDES (EARTH FORMED) | | 70 |
| SIDES (BOARD FORMED) | #16 BAR & SMALLER | 40 |
| | #19 THRU #36 BAR | 50 |
| ELEVATED BEAMS & SLABS: | | |
| BEAM TIES & STIRRUPS (NOT EXPOSED TO WEATHER) | | 40 |
| BEAM TIES & STIRRUPS (EXPOSED TO WEATHER) | | 50 |
| FLOOR SLABS (NOT EXPOSED TO WEATHER) | | 20 |
| FLOOR SLABS (EXPOSED TO WEATHER) | | |
| #19 & LARGER | | 50 |
| #13 & SMALLER | | 40 |
| ROOF SLAB BARS | | 25 |
| SLABS ON GRADE | | |
| NOT EXPOSED TO WEATHER (FROM TOP) | | 20 |
| EXPOSED TO WEATHER (FROM TOP) | | 40 |
| UTILITY TUNNEL WALLS, RETAINING WALLS AND SHEAR WALLS. (NO SURFACES SHALL BE EARTH FORMED) | | |
| EARTH SIDE AND FRONT SIDE (EXPOSED TO WEATHER) | | |
| #16 BAR AND SMALLER | | 40 |
| #19 THRU #36 BAR | | 50 |

# COLUMN FOOTING SCHEDULE

| MARK | FOOTING SIZE (mm) | | | FOOTING REINFORCING | REMARKS |
|---|---|---|---|---|---|
| | LENGTH | WIDTH | THICKNESS | | |
| F1 | 3000 | 3000 | 300 | (9)-#19 EW BOTT | ----- |

# CONCRETE SHEAR WALL SCHEDULE

| MARK | TYPE | WALL LENGTH (L) (mm) | WALL REINFORCEMENT | | REMARKS |
|---|---|---|---|---|---|
| | | | END ZONE | FIELD | |
| SW1 | B | 3500 | (4)-#16 @ 150mm OC | #13 @ 300mm OC | ----- |
| SW2 | B | 4500 | (6)-#25 @ 400mm OC | #13 @ 300mm OC | ----- |

NOTES:
1. WORK THIS SCHEDULE WITH SHEAR WALL DETAILS ON SHEETS S-702
2. SEE PLAN FOR LOCATION OF SHEAR WALL(S).
3. VERTICAL "FIELD" BARS MAY BE OMITTED IN LOCATION OF "END ZONE" REINFORCEMENT.
4. WALL FIELD REINF LISTED APPLIES TO VERT & HORIZ BARS.
5. WALL FIELD REINFORCEMENT CENTERED IN WALL.

# STANDARD HOOKS IN TENSION PER (ACI 318M-05)

HOOK DEVELOPMENT LENGTH Ldh (mm)

| BAR SIZE | f'c 28 MPa |
|---|---|
| #10 | 180 |
| #13 | 250 |
| #16 | 300 |
| #19 | 380 |
| #22 | 430 |
| #25 | 480 |
| #29 | 560 |
| #32 | 610 |
| #36 | 690 |

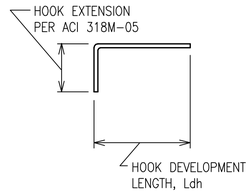


NOTES:
1. CONCRETE IS NORMAL WEIGHT CONCRETE.
2. BAR YIELD STRENGTH, fy = 420 MPa
3. SIDE COVER REQUIREMENTS OF ACI SECT. 12.5.3 ARE ASSUMED TO NOT BE MET.
4. TIE OR STIRRUP REQUIREMENTS OF ACI SECT. 12.5.3 ARE ASSUMED TO NOT BE MET.
5. REDUCTION FOR EXCESS REINFORCEMENT IS NOT TAKEN.
6. HOOK DEVELOPMENT LENGTH IS VALID FOR 180° HOOKS ALSO.

# CMU OR CAST IN PLACE CONC LINTEL SCHEDULE (TYP)

| OPENING TYPE OR SIZE, BEAM LOCATION OR TYPE | MAX SPAN (mm) | LINTEL DEPTH (mm) | REINFORCING BOTTOM |
|---|---|---|---|
| WALL OPENING | 4000 | 600 | (2)-#16 T&B |
| WALL OPENING | 1900 | 400 | (2)-#16 T&B |
| WALL OPENING | 1000 | 400 | (2)-#13 B |
| | | | |
| | | | |
| | | | |
| | | | |
| | | | |
| | | | |
| | | | |

1. STRUCTURAL SHEETS DO NOT INDICATE ALL OPENINGS IN MASONRY WALLS. VERIFY NUMBER, SIZE AND LOCATION OF ALL OPENINGS IN MASONRY WALLS FROM ARCHITECTURAL SHEETS AND APPROVED PLUMBING, MECHANICAL, AND ELECTRICAL SHOP DRAWINGS.
2. PROVIDE 200mm BEARING EA END.
3. FOR HEAD DETAILS REFER TO ARCHITECTURAL SHEETS.
4. REINFORCING SHALL BE ASTM A615M, GRADE 420. GROUT FOR CMU LINTELS SHALL HAVE A MINIMUM COMPRESSIVE STRENGTH OF 14 MPa AT 28 DAYS.
5. CONTRACTOR SHALL SUBMIT FOR APPROVAL SHOP DRAWINGS AND SCHEDULES SHOWING SIZE, SPAN, REINFORCEMENT, DETAILS, LOCATIONS, ETC.

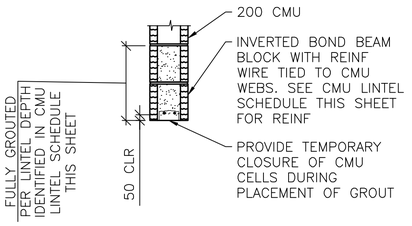


A S-601 **LINTEL DETAIL**
SCALE: NTS

# BEAM SCHEDULE

| MARK | BEAM SIZE (mm) | | BEAM REINFORCING | | | | | | STIRRUPS | | | REMARKS |
|---|---|---|---|---|---|---|---|---|---|---|---|---|
| | DEPTH | WIDTH | BL | BS | TL | TS | TC | M | SIZE | TYPE | SPACING | ----- |
| GRADE BEAMS | | | | | | | | | | | | |
| GB1 | 735/585/550 | 400 | (2)-#25 | (1)-#25 | (2)-#19 | --- | --- | #22 EF | #13 | S3+T9 | d/2 | LOWER TOP TO 585 BETWEEN A3-A4 & B3-B4; TO 550 BETWEEN A1-A2, B1-B2, A4-A5, & B4-B5 |
| GB2 | 585/550 | 400 | (2)-#29 | (2)-#29 | (2)-#19 | --- | --- | #22 EF | #13 | S3+T9 | d/2 | LOWER TOP TO 550 BETWEEN A1-B1 & A5-B5 |
| ROOF BEAMS | | | | | | | | | | | | |
| RB1 | 500 | 400 | (2)-#25 | (1)-#25 | (2)-#25 | --- | --- | --- | #13 | S3+T9 | d/2 | ----- |
| RB2 | 500 | 400 | (2)-#29 | (1)-#29 | (2)-#25 | --- | --- | --- | #13 | S3+T9 | d/2 | ----- |

NOTES:
1. WORK THIS SCHEDULE WITH BEAM REINFORCING DETAILS ON SHEETS S-503 AND S-504.
2. HOOKS SHOWN ON SECTIONS AND DETAILS SHALL BE 90° STD UON.
3. USE ONLY (1) TC AT BEAM COLUMN INTERSECTION WHERE REQ'D.

# COLUMN SCHEDULE

| DESCRIPTION \ COLUMN MARK | TYP UON | --- | --- | --- |
|---|---|---|---|---|
| TYPE | 4-BAR | --- | --- | --- |
| DIMENSIONS | 500mm SQ | --- | --- | --- |
| VERTICAL REINFORCEMENT | (4)-#29 | --- | --- | --- |
| TIES | #13 @ d/2 | --- | --- | --- |
| TOP OF ROOF ELEVATION | 3500mm | --- | --- | --- |
| TOP OF GRADE BEAM ELEVATION | -200mm | --- | --- | --- |
| TOP OF FOOTING ELEVATION | -950mm | --- | --- | --- |

NOTES:
1. WORK THIS SCHEDULE WITH COLUMN DETAILS ON SHEET S-504.
2. SEE FOOTING SCHEDULE ON THIS SHEET FOR FOOTING INFORMATION.
3. COLUMN TIES: INTERIOR TIES TO MATCH SIZE & SPACING OF PERIMETER TIES.
4. HOOKS SHOWN ON SECTIONS & DETAILS SHALL BE 90° STD UON.

UNLESS OTHERWISE NOTED, LINEAR DIMENSIONS SHOWN ON DRAWINGS ARE IN MILLIMETERS (mm)

APPROVED:

A/E DESIGNER OF RECORD

SEAL:

GEORGIA REGISTERED 1-27-10 No. 27141 PROFESSIONAL ENGINEER CHRISTOPHER W. WHITMORE

US ARMY CORPS OF ENGINEERS
AFGHANISTAN ENGINEER DISTRICT

| Mark | Description | Date | Appr. |
|---|---|---|---|
| | | | |

| Mark | Description | Date | Appr. |
|---|---|---|---|
| | | | |

Rev: 0
Date: 2/23/10
Design file no.
Drawing code:
Designed by: KMP/MMY
Dwn by: RCG
Ckd by: CWW
Reviewed by: LHM
Submitted by: BAKER
File name: ANALTMS-601SCH
Plot date: 2/23/2010
Plot scale: X:X

U.S. ARMY ENGINEER DISTRICT, AFGHANISTAN
CORPS OF ENGINEERS
APO AE 96338

Michael Baker Jr., Inc
A unit of Michael Baker Corporation
Airside Business Park
100 Airside Drive
Moon Township, PA 15108
www.mbakercorp.com

AFGHAN NATIONAL ARMY
REGIONAL MILITARY TRAINING CENTER
STANDARD DESIGN

LATRINE BUILDING
MEDIUM

SCHEDULES

Sheet reference number:
S-601

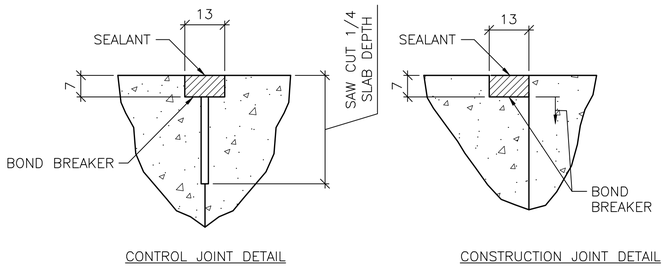


CONTROL JOINT DETAIL

CONSTRUCTION JOINT DETAIL

## 1 S-701 TYPICAL CONCRETE SLAB JOINT FINISH DETAILS

SCALE: NTS

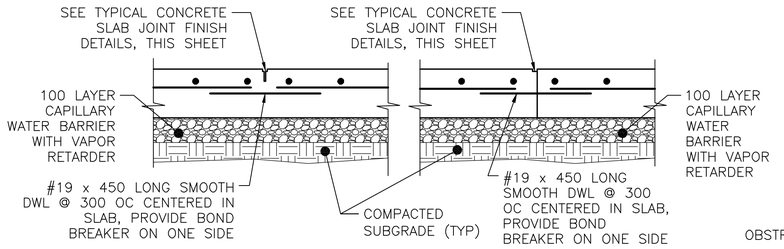


CONTROL JOINT DETAIL

CONSTRUCTION JOINT DETAIL

## 2 S-701 TYPICAL SLAB ON GRADE JOINT DETAIL

SCALE: NTS

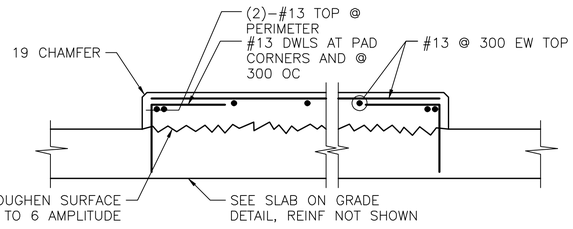


## 3 S-701 INTERIOR EQUIPMENT PAD DETAIL

SCALE: NTS

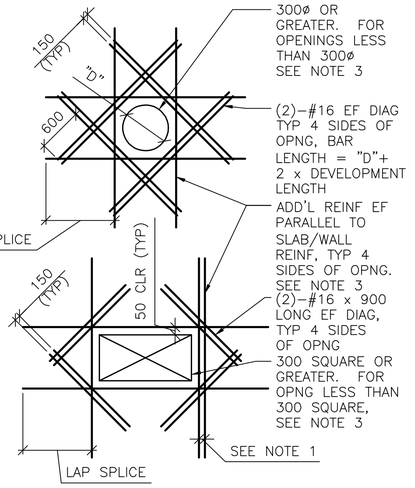


SHEAR WALL/SLAB OPENINGS

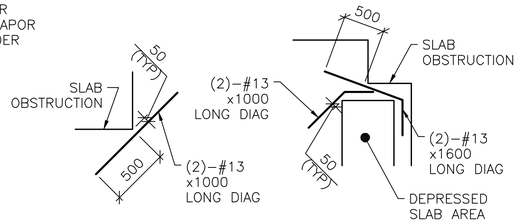


RE–ENTRANT CORNERS

DETAIL NOTES:

1. WHERE MORE THAN ONE ADDITIONAL BAR IS REQUIRED PARALLEL TO THE EXISTING SLAB/WALL REINFORCING THE ADDITIONAL REINFORCING BARS SHALL BE SPACED AT 100 ON CENTER.
2. ADDITIONAL REINFORCING PARALLEL TO THE SLAB/WALL REINFORCING SHALL BE #16 BARS THAT PROVIDE A STEEL AREA ON EACH SIDE OF THE OPENING EQUAL TO 1/2 THE AREA OF THE REINFORCING CUT BY THE OPENING.
3. FOR OPENINGS WITH SIDES OR DIAMETERS LESS THAN 300 SPREAD THE SLAB/WALL REINFORCING TO CLEAR THE OPENING.

## 4 S-701 ADD'L CONCRETE REINFORCEMENT DETAILS

SCALE: NTS

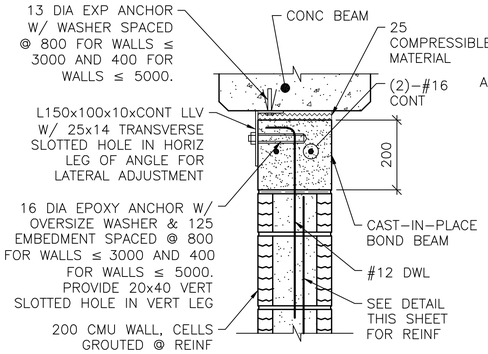


NOTE:

1. AT ANCHOR BOLTS, ADD AN ADDITIONAL 25 COMPRESSIBLE MATERIAL BELOW EXP ANCHOR HEAD.

INTERIOR BEAM

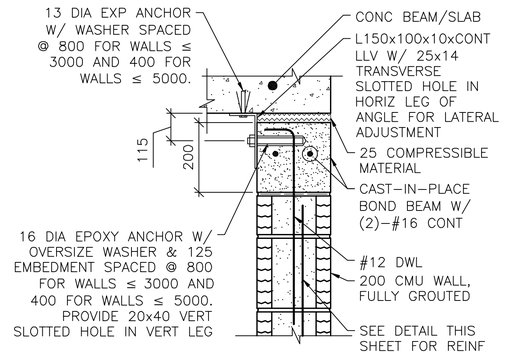


EXTERIOR WALL OR SLAB

NOTES:

1. THIS DETAIL IS AN ALTERNATE TOP OF WALL ANCHORAGE DETAIL TO BE USED AT THE CONTRACTOR'S OPTION IN LIEU OF DETAILS SHOWN ON S–400 & S–500 DRAWINGS.
2. CAST–IN–PLACE BOND BEAM SHOWN AT TOP OF WALL IS ALSO APPLICABLE FOR INTERMEDIATE AND STARTER COURSE BOND BEAMS WITHIN WALL.

## 5 S-701 ALTERNATE TOP OF CMU WALL BRACING DETAILS

SCALE: NTS

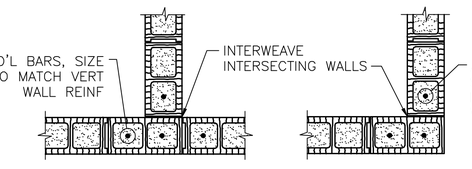


INTERSECTION

WALL CORNER

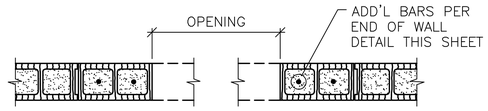


MASONRY OPENING W/ LINTEL

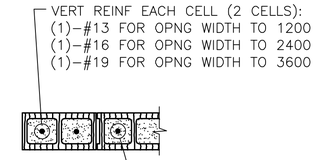


END OF WALL

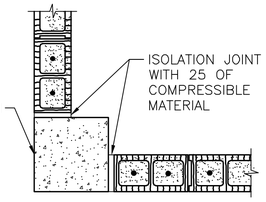


END OF WALL @ COLUMN

NOTES:

1. OPENING WIDTH SHALL NOT EXCEED 3600 FOR THIS TYPE OF JAMB.
2. ALL CELLS FULLY GROUTED AT EXTERIOR WALLS. AT INTERIOR WALLS, ONLY GROUT CELLS CONTAINING REINF.

## 6 S-701 TYP CMU DETAILS

SCALE: NTS

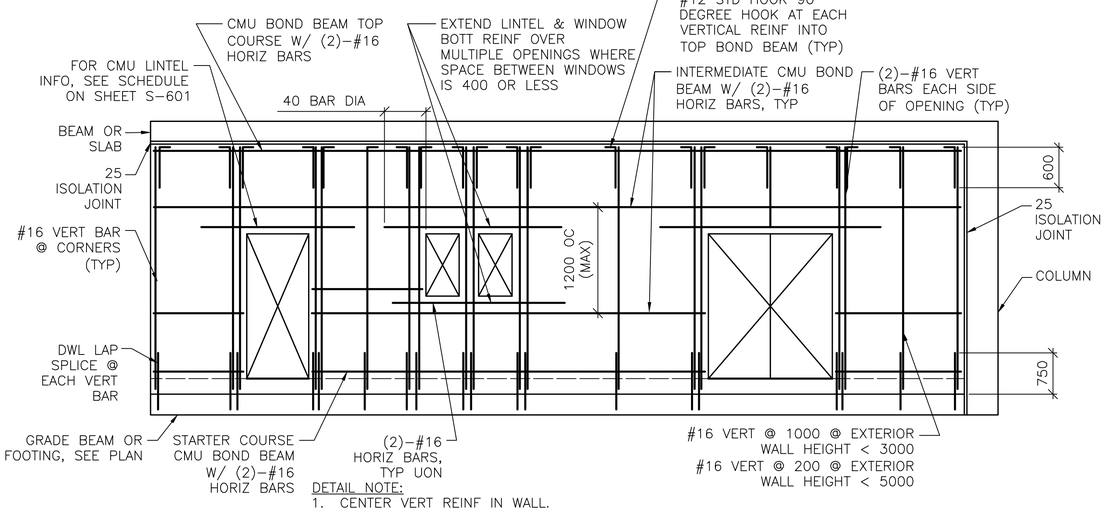


DETAIL NOTE:

1. CENTER VERT REINF IN WALL.
2. GROUT ALL CMU CELLS.
3. REFERENCE ARCH DWGS FOR JOINT INFORMATION
4. DOWELS BETWEEN TOP BOND BEAM AND BEAM/SLAB ABOVE (INCLUDING EMBEDDED PIPE SLEEVE) NOT SHOWN FOR CLARITY. SEE SPECIFIC S–500 SERIES DWGS FOR INFO.
5. FOR INFORMATION ON ALTERNATE CAST–IN–PLACE WALL BOND BEAMS, REFERENCE ALTERNATE TOP OF CMU WALL BRACING DETAILS THIS SHEET.

## 7 S-701 TYP EXTERIOR CMU WALL REINF DETAIL

SCALE: NTS

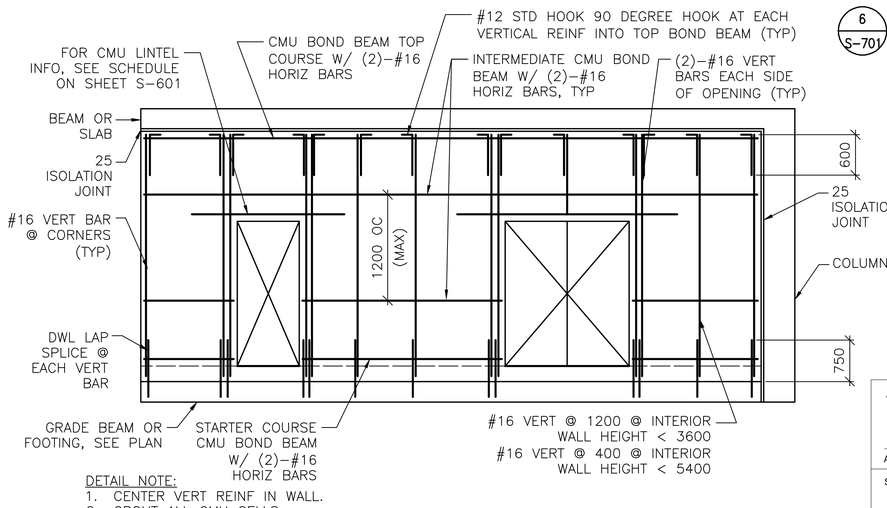


DETAIL NOTE:

1. CENTER VERT REINF IN WALL.
2. GROUT ALL CMU CELLS.
3. REFERENCE ARCH DWGS FOR JOINT INFORMATION
4. DOWELS BETWEEN TOP BOND BEAM AND BEAM/SLAB ABOVE (INCLUDING EMBEDDED PIPE SLEEVE) NOT SHOWN FOR CLARITY. SEE SPECIFIC S–500 SERIES DWGS FOR INFO.
5. FOR INFORMATION ON ALTERNATE CAST–IN–PLACE WALL BOND BEAMS, REFERENCE ALTERNATE TOP OF CMU WALL BRACING DETAILS THIS SHEET.

## 8 S-701 TYP INTERIOR CMU WALL REINF DETAIL

SCALE: NTS

UNLESS OTHERWISE NOTED, LINEAR DIMENSIONS SHOWN ON DRAWINGS ARE IN MILLIMETERS (mm)

APPROVED:

A/E DESIGNER OF RECORD

SEAL:

GEORGIA REGISTERED 2-23-10 No. 27141 PROFESSIONAL ENGINEER CHRISTOPHER W. WHITMORE

US ARMY CORPS OF ENGINEERS
AFGHANISTAN ENGINEER DISTRICT

| Mark | Description | Date | Appr. |
|---|---|---|---|

U.S. ARMY ENGINEER DISTRICT, AFGHANISTAN
CORPS OF ENGINEERS
APO AE 96338

Michael Baker Jr., Inc
A unit of Michael Baker Corporation
Airside Business Park
100 Airside Drive
Moon Township, PA 15108
www.mbakercorp.com

Date: 2/23/10
Design file no.
Rev: 0
Drawing code:
File name: ANALATMS-701TDT
Plot date: 2/23/2010
Plot scale: X/X

Designed by: KMP/MMY
Dwn by: RCG
Ckd by: CWW
Reviewed by: LHM
Submitted by: BAKER

AFGHAN NATIONAL ARMY
REGIONAL MILITARY TRAINING CENTER
STANDARD DESIGN

LATRINE BUILDING
MEDIUM

TYPICAL DETAILS

Sheet reference number:
S–701

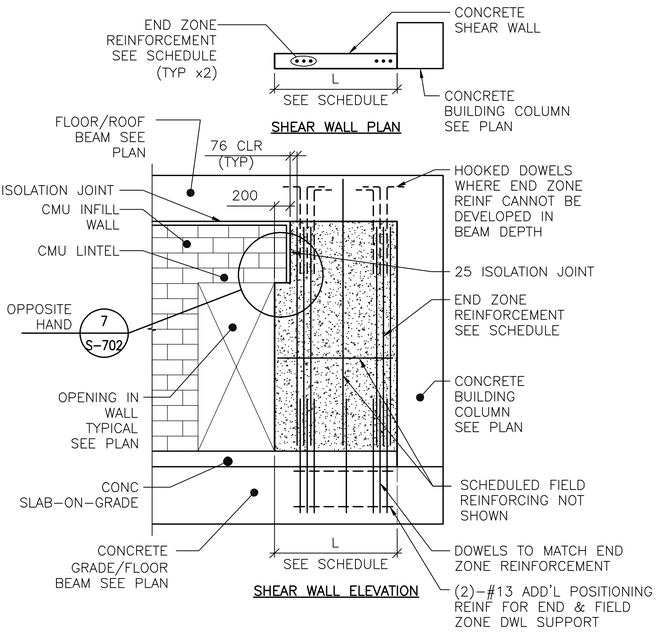


DETAIL NOTES:
1. FIELD REINFORCEMENT IN SHEAR WALL NOT SHOWN COMPLETELY FOR CLARITY.
2. FIELD REINFORCEMENT CENTERED IN WALL.
3. MINIMUM CONC CLEAR DISTANCE FOR END ZONE REINF = 76
4. SEE CONC SHEAR WALL SCHEDULE ON SHEET S-601
5. SEE ARCH DWGS FOR JOINT INFORMATION

## 1 S-702 TYPE "B" SHEAR WALL DETAIL

SCALE: NTS

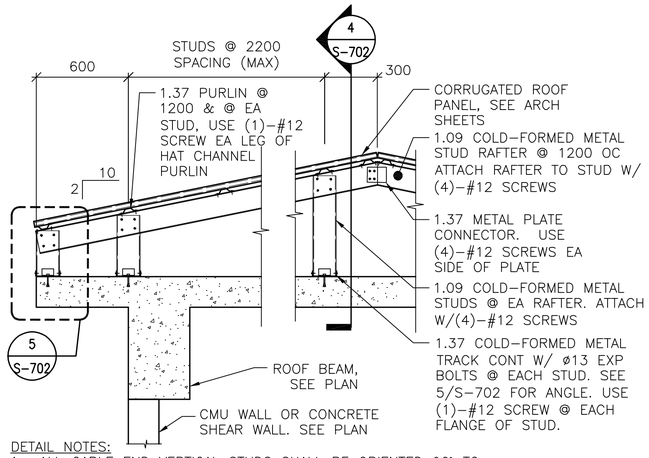


DETAIL NOTES:
1. ALL GABLE END VERTICAL STUDS SHALL BE ORIENTED 90° TO INTERIOR STUDS & SPACED @ 600 OC. GABLE END RAFTER SHALL BE 1.37 METAL TRACK SPANNING CONTINUOUSLY OVER GABLE END STUDS. INSET GIRTS AT GABLE END SHALL BE 1.09 COLD-FORMED METAL STUDS @ 1200 OC ATTACHED VIA 1.37 THICKNESS CLIP ANGLE W/ (2) #12 SCREWS EA LEG.
2. ALL INTERIOR, NON-GABLE END VERTICAL STUDS GREATER THAN 2400 IN LENGTH SHALL BE BACK-TO-BACK W/ #12 SCREWS @ 200 OC STAGGERED.

## 2 S-702 TYPICAL OVERBUILT ROOF FRAMING DETAIL

SCALE: NTS

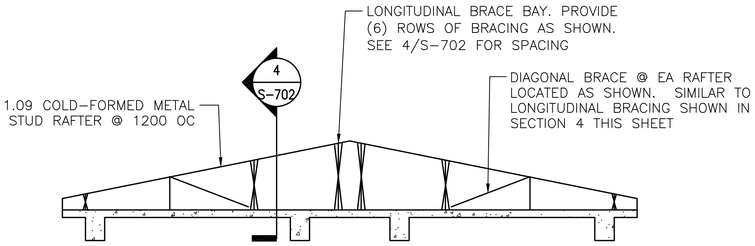


## 3 S-702 TYPICAL ROOF BRACE LAYOUT

SCALE: NTS

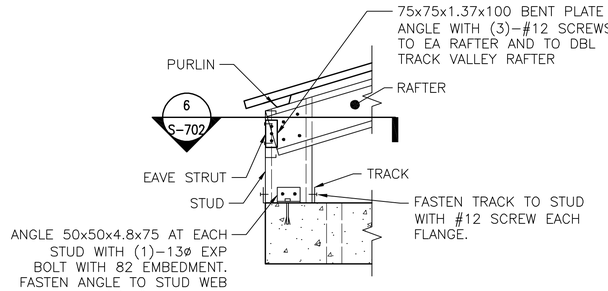


## 5 S-702 DETAIL

SCALE: NTS

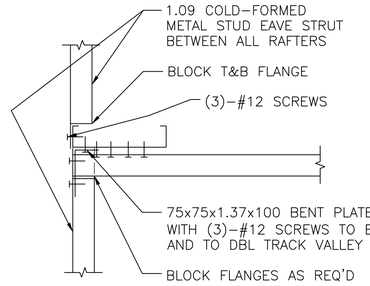


## 6 S-702 SECTION

SCALE: NTS

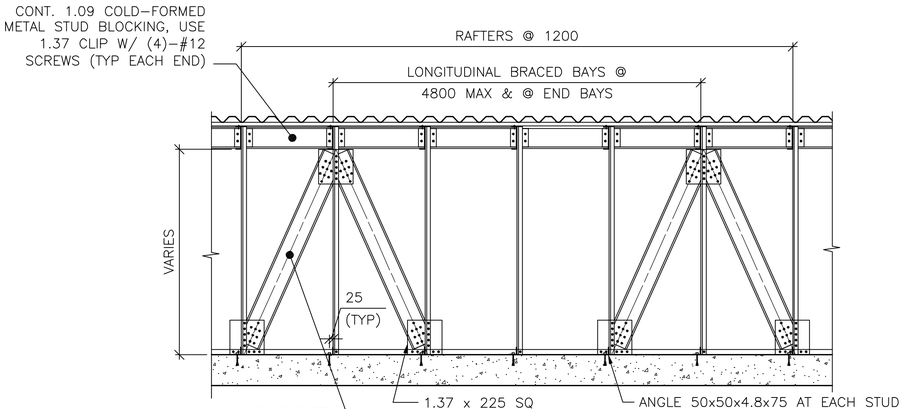


## 4 S-702 SECTION

SCALE: NTS

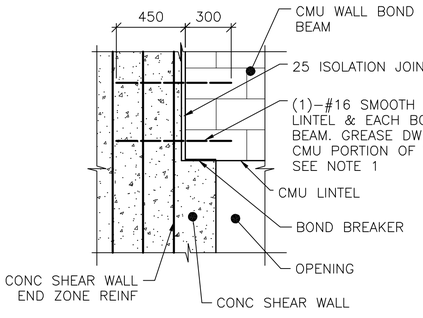


NOTE:
1. TIE SMOOTH DOWEL ROD TO SHEAR WALL END ZONE REINF FOR EACH BOND BEAM AND LINTEL.

## 7 S-702 SECTION

SCALE: NTS

UNLESS OTHERWISE NOTED, LINEAR DIMENSIONS SHOWN ARE IN MILLIMETERS (mm)

APPROVED:

A/E DESIGNER OF RECORD

SEAL:

GEORGIA REGISTERED 1-27-12 No. 27141 PROFESSIONAL ENGINEER CHRISTOPHER W. WHITMORE

US ARMY CORPS OF ENGINEERS
AFGHANISTAN ENGINEER DISTRICT

| Mark | Description | Date | Appr. |
|---|---|---|---|
| | | | |

Rev: 0
Date: 2/23/10
Design file no.
Drawing code:
File name: ANAATM5-702TDT
Plot date: 2/23/2010
Plot scale: x:x

Designed by: KMP/MMY
Dwn by: RCG
Ckd by: CWW
Reviewed by: LHM
Submitted by: BAKER

U.S. ARMY ENGINEER DISTRICT, AFGHANISTAN
CORPS OF ENGINEERS
APO AE 96338

*Michael Baker Jr., Inc*
*A unit of Michael Baker Corporation*
Airside Business Park
100 Airside Drive
Moon Township, PA 15108
www.mbakercorp.com

AFGHAN NATIONAL ARMY
REGIONAL MILITARY TRAINING CENTER
STANDARD DESIGN

LATRINE BUILDING
MEDIUM

TYPICAL DETAILS

Sheet reference number:
S-702

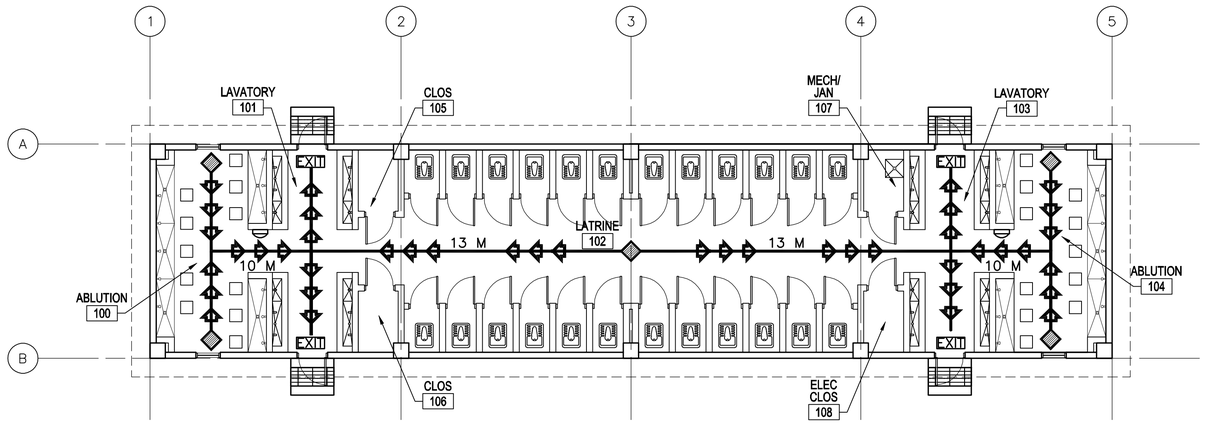


1
A–101

## LIFE SAFETY PLAN

SCALE: 1:100

# CODE ANALYSIS:

1. REFERENCES:
   2006 INTERNATIONAL BUILDING CODE (2006 IBC)
   2006 LIFE SAFETY CODE (2006 NFPA 101)

2. IBC OCCUPANCY CLASSIFICATION:
   GROUP U – UTILITY AND MISCELLANEOUS (ASSEMBLY ≤300 NFPA 101 6.1.2 AND CHAPTER 12)

3. TYPE OF CONSTRUCTION (IBC): TYPE II–B (UNPROTECTED/NONSPRINKLERED)

4. IBC TABLE 503: ALLOWABLE HEIGHT AND BUILDING AREAS:
   GROUP U
   ALLOWABLE AREA: 789 SM
   ALLOWABLE HEIGHT: 2 STORIES (<16 M)

   GROUP U
   PROPOSED AREA: 220 SM
   PROPOSED HEIGHT: 1 STORY (<16 M)

5. IBC TABLE 601 & 602: FIRE RESISTANCE RATING REQUIREMENTS FOR BUILDING ELEMENTS FOR TYPE II–B

| BUILDING ELEMENT | RATING (HOUR) | REFERENCE |
|---|---|---|
| STRUCTURAL FRAME (COLUMNS, GIRDERS & TRUSSES) | 0 | TABLE 601 |
| BEARING WALLS | | |
| EXTERIOR | 0 | TABLE 601 |
| INTERIOR | 0 | TABLE 601 |
| NONBEARING WALLS & PARTITIONS | | |
| INTERIOR | 0 | TABLE 601 |
| FLOOR CONSTRUCTION | 0 | TABLE 601 |
| ROOF CONSTRUCTION | 0 | TABLE 601 |
| EXTERIOR WALL | 0 | TABLE 602 |

6. IBC TABLE 803.5 – INTERIOR WALL AND CEILING FINISH

   REQUIREMENTS FOR U OCCUPANCY/NONSPRINKLERED

| GROUP | EXIT ENCLOSURES AND EXIT PASSAGEWAY | CORRIDORS | ROOMS AND ENCLOSED SPACES |
|---|---|---|---|
| U | NO RESTRICTIONS | NO RESTRICTIONS | NO RESTRICTIONS |

7. NFPA 101 TABLE 7.3.1.2 – OCCUPANT LOAD
   ASSEMBLY ≤ 300 = 1.4 NET SM/PERSON CALCULATED = 158 OCCUPANTS
   ACTUAL = 75 OCCUPANTS

8. NFPA 101 TABLE 7.3.3.1 – EGRESS CAPACITY
   ASSEMBLY = 5 MM PER OCCUPANT

   REQUIRED: 790 MM (158 OCCUPANTS x 5 MM PER OCCUPANT)
   PROPOSED EGRESS CAPACITY: 3600 MM: (4) 900 MM DOORS

9. NFPA 101 PARAGRAPH 12.2.6 – EXIT ACCESS TRAVEL DISTANCE
   REQUIRED: 60 METERS
   PROPOSED: 13 METERS

10. NFPA 101 PARAGRAPH 12.3.6 (1) – CORRIDOR FIRE–RESISTANCE RATING (HOUR)
    CORRIDORS ARE NOT REQUIRED AS DOORS EXIT DIRECTLY TO OUTSIDE

11. NFPA 101 PARAGRAPH 12.2.4.1 AND 7.4.1.1 – MINIMUM NUMBER OF EXITS
    REQUIRED: 2 MINIMUM
    PROPOSED: 4 EXITS

12. NFPA 101 PARAGRAPH 12.3.2.1.2 – PROTECTION FROM HAZARDS
    SEPARATION AT STORAGE NOT REQUIRED. STORAGE ROOMS WILL NOT CONTAIN QUANTITIES OR MATERIALS DEEMED HAZARDOUS.

    INCIDENTAL USE AREAS: IBC TABLES 508.2
    1 HOUR SEPARATION FOR STORAGE ROOMS OVER 9.3 SM
    STORAGE AREAS ARE 3 SM EACH, SO SEPARATION IS NOT REQUIRED

## LEGEND:

- DENOTES PATHS OF EXIT TRAVEL
- EXIT — DENOTES DOOR AS AN EMERGENCY EXIT
- DENOTES STARTING POINT FOR TRAVEL DISTANCE
- DENOTES FIRE EXTINGUISHER LOCATIONS

LINEAR DIMENSIONS SHOWN ARE IN MILLIMETERS (MM), UNLESS OTHERWISE NOTED

0 2000 4000
SCALE: 1:100

APPROVED:

A/E DESIGNER OF RECORD

SEAL:

STATE OF SOUTH CAROLINA
KEVIN R. CHAFIN
N. Charleston, SC
6374
REGISTERED ARCHITECT

US ARMY CORPS OF ENGINEERS
AFGHANISTAN ENGINEER DISTRICT

| Mark | Description | Date | Appr. |
|---|---|---|---|
| | | | |

Date: 2/23/10
Design file no.
Drawing code:
File name: ANALATMA-001LSP
Plot date: 2/23/2010
Plot scale:
Rev: 0

Designed by: KRC
Dwn by: KJG
Ckd by: NLJ
Reviewed by: LHM
Submitted by: BAKER

U.S. ARMY ENGINEER DISTRICT, AFGHANISTAN
CORPS OF ENGINEERS
APO AE 96338

*Michael Baker Jr., Inc.*
*A unit of Michael Baker Corporation*
Airside Business Park
100 Airside Drive
Moon Township, PA 15108
www.mbakercorp.com

AFGHAN NATIONAL ARMY
REGIONAL MILITARY TRAINING CENTER
STANDARD DESIGN

LATRINE BUILDING
MEDIUM

LIFE SAFETY PLAN

Sheet reference number:
A–001

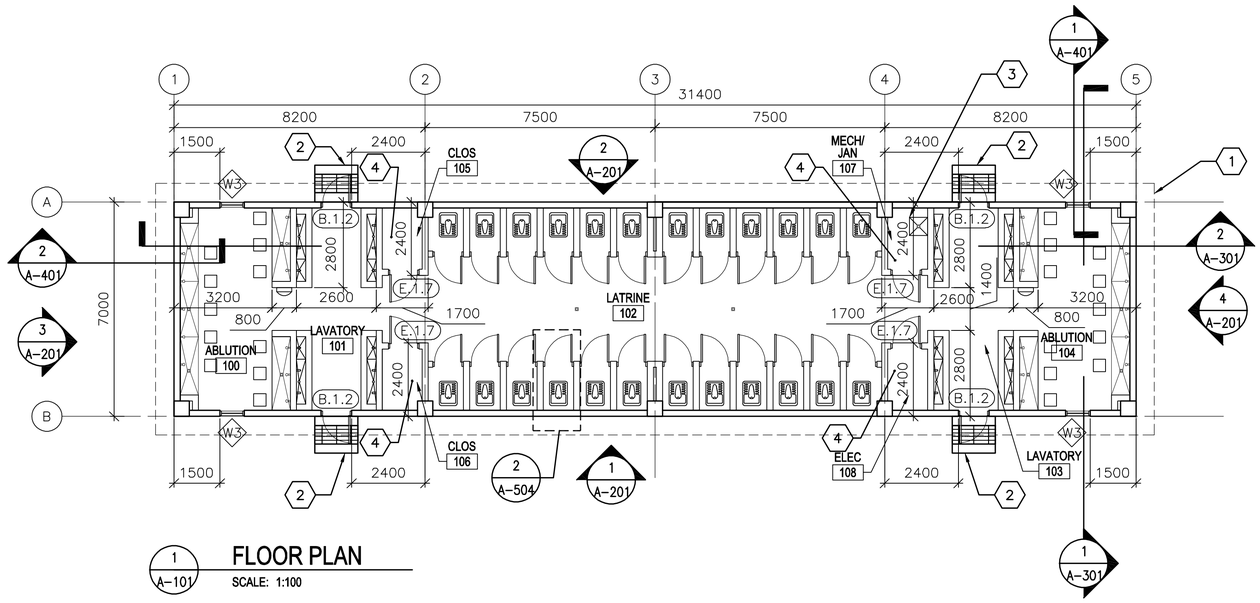


## 1 A-101 FLOOR PLAN

SCALE: 1:100

## GENERAL NOTES:

A. DIMENSIONS ARE SHOWN TO OUTER EDGE OF EXTERIOR STRUCTURAL COLUMNS, STRUCTURAL COLUMN GRID, EDGE OF INTERIOR PARTITIONS, EDGE OF WINDOW OPENINGS, AND TO HINGE SIDE OF DOOR FRAME OPENINGS.

B. HINGE SIDE OF OPENINGS FOR DOORS AND FRAMES SHALL BE LOCATED 200 MM FROM THE ADJACENT WALL OR COLUMN, UNLESS NOTED OTHERWISE.

C. INTERIOR PARTITIONS SHALL BE 200 MM CMU. SEE STRUCTURAL DRAWINGS FOR LOCATION OF CONCRETE SHEAR WALLS.

D. COSMETIC REPAIR OF MINOR DEFECTS: REPAIR OR FILL MORTAR JOINTS AND MINOR DEFECTS, INCLUDING BUT NOT LIMITED TO SPALLS, IN ACCORDANCE WITH MANUFACTURER'S RECOMMENDATIONS AND PRIOR TO COATING APPLICATION. SURFACES TO BE PAINTED SHALL BE CLEAN AND FREE OF FOREIGN MATTER BEFORE APPLICATION OF PAINT. CLEANING SHALL BE SCHEDULED SO THAT DUST AND OTHER CONTAMINANTS WILL NOT FALL ON NEWLY PAINTED SURFACES.

E. CONCRETE, PLASTER AND MASONRY SURFACES SHALL BE ALLOWED TO CURE FOR AT LEAST 30 DAYS BEFORE PAINTING. CONCRETE SLABS-ON-GRADE SHALL BE ALLOWED TO CURE 90 DAYS BEFORE STAINING OR SEALING.

F. DO NOT USE PAINT MATERIALS CONTAINING LEAD CONTENT IN EXCESS OF 0.009 PERCENT OF THE WEIGHT OF THE TOTAL NONVOLATILE CONTENT OF THE PAINT OR THE WEIGHT OF THE DRIED PAINT FILM.

G. DO NOT USE ANY ASBESTOS CONTAINING MATERIALS (ACM) IN PROJECT. ACM IS DEFINED AS 1% OR MORE BY VOLUME.

H. DO NOT USE PAINT MATERIALS CONTAINING MERCURIAL FUNGICIDES.

I. FACTORY PRIMED METAL DOORS AND FRAMES SHALL RECEIVE TWO COATS OF PAINT.

J. FILL REMAINING SPACE AT PENETRATIONS IN FIRE-RATED FLOORS, PARTITIONS AND CEILINGS WITH APPROPRIATE FIRESTOPPING MATERIALS.

K. ALL CEILING FINISHES SHALL BE PAINTED PLASTER APPLIED TO STRUCTURE.

L. ALL WALL FINISHES SHALL BE CERAMIC TILE TO 2000 MM WITH PAINTED PLASTER APPLIED TO STRUCTURE ABOVE, UNLESS NOTED OTHERWISE.

M. ALL FLOOR FINISHES SHALL BE TERRAZZO TILE.

N. PROVIDE TILE FINISHES AS INDICATED IN DETAILS.

O. ALL TOILET STALL DOORS, FRAMES, AND HARDWARE SHALL BE F.2.12

P. HEIGHT OF ALL TOILET PARTITIONS SHALL BE 2000 MM ABOVE FINISHED FLOOR.

Q. PROVIDE POLISHED STAINLESS STEEL MIRROR 600 X 900 ABOVE EVERY FAUCET.

## KEY NOTES: (X)

1. LINE OF ROOF OVERHANG ABOVE.
2. CONCRETE STOOP WITH GRATE – SEE DETAIL 1/A-503.
3. 600 MM X 600 MM RECESSED TROUGH – SEE DETAIL 7/A-504.
4. WALL FINISH: PAINTED PLASTER APPLIED TO STRUCTURE

## LEGEND:

(XXX) DOOR FRAME AND HARDWARE TYPE, SEE SHEET A-601

(A) WINDOW TYPE, SEE SHEET A-601

(X) KEY NOTE

## ABBREVIATIONS:

| | |
|---|---|
| COMM | COMMUNICATIONS |
| ELEC | ELECTRICAL |
| MECH | MECHANICAL |
| JAN | JANITOR |
| CLOS | CLOSET |

LINEAR DIMENSIONS SHOWN ARE IN MILLIMETERS (MM), UNLESS OTHERWISE NOTED

0 2000 4000
SCALE: 1:100

APPROVED:

A/E DESIGNER OF RECORD

SEAL:

STATE OF SOUTH CAROLINA
KEVIN R. CHAFIN
N. Charleston, SC
6374
REGISTERED ARCHITECT

US ARMY CORPS OF ENGINEERS
AFGHANISTAN ENGINEER DISTRICT

| Mark | Description | Date | Appr. |
|---|---|---|---|
| | | | |

Date: 2/23/10
Design file no.
Drawing code:
Rev: 0
File name: ANALATMA-101FP
Plot date: 2/23/2010
Plot scale:

Designed by: KRC
Dwn by: KJG
Ckd by: NLJ
Reviewed by: LHM
Submitted by: BAKER

U.S. ARMY ENGINEER DISTRICT, AFGHANISTAN
CORPS OF ENGINEERS
APO AE 96338

*Michael Baker Jr., Inc.*
*A unit of Michael Baker Corporation*
Airside Business Park
100 Airside Drive
Moon Township, PA 15108
www.mbakercorp.com

AFGHAN NATIONAL ARMY
REGIONAL MILITARY TRAINING CENTER
STANDARD DESIGN

LATRINE BUILDING
MEDIUM

FLOOR PLAN

Sheet reference number:
A-101

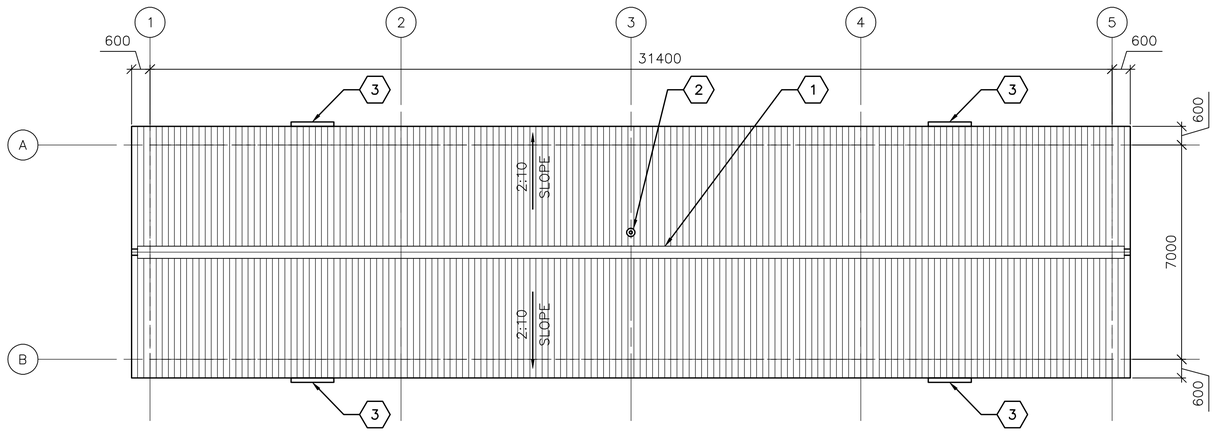


1 A–102 **ROOF PLAN**

SCALE: 1:100

## GENERAL NOTES:

A. THE APPROXIMATE LOCATION OF ROOF DEVICES AND PENETRATIONS ARE SHOWN ON THE ROOF PLAN FOR INFORMATION ONLY. THE CONTRACTOR SHALL BE RESPONSIBLE FOR UNDERSTANDING THE ACTUAL LOCATION OF THESE AND ALL OTHER ITEMS PRIOR TO BEGINNING CONSTRUCTION. COORDINATE ALL ROOF PENETRATIONS WITH STRUCTURAL, MECHANICAL AND PLUMBING WORK.

B. PLUMBING VENT PENETRATIONS SHALL TERMINATE 300 MM MINIMUM ABOVE THE ROOF.

C. UNLESS OTHERWISE NOTED, NOTES, DETAILS OR FEATURES INDICATED FOR ONE CONDITION SHALL BE APPLICABLE FOR ALL ALIKE AND SIMILAR CONDITIONS.

D. STOCKPILING OF MATERIALS, EQUIPMENT AND ANY OTHER ITEMS ON THE ROOF IS PROHIBITED.

E. ROOFS SHALL BE CORRUGATED METAL ROOF PANELS ON COLD–FORMED METAL FRAMING ON CONCRETE SLAB.

## KEY NOTES: (X)

1. CONTINUOUS METAL RIDGE VENT – SEE DETAIL 4/A–501.
2. PLUMBING VENT – SEE DETAIL 5/A–501.
3. METAL GUTTER, CENTER ON DOOR, 1400 MM – SEE DETAIL 1A/A–501.

LINEAR DIMENSIONS SHOWN ARE IN MILLIMETERS (MM), UNLESS OTHERWISE NOTED

0 2000 4000
SCALE: 1:100

APPROVED:

A/E DESIGNER OF RECORD

SEAL:

STATE OF SOUTH CAROLINA
KEVIN R. CHAFIN
N. Charleston, SC
6374
REGISTERED ARCHITECT

US ARMY CORPS OF ENGINEERS
AFGHANISTAN ENGINEER DISTRICT

| Mark | Description | Date | Appr. |
|---|---|---|---|
| | | | |

| Mark | Description | Date | Appr. |
|---|---|---|---|
| | | | |

Date: 2/23/10 | Rev: 0
Design file no.
Drawing code:
File name: ANALATMA-102SP
Plot date: 2/23/2010
Plot scale: x:x

Designed by: KRC | Dwn by: KJG | Ckd by: NLJ
Reviewed by: LHM
Submitted by: BAKER

U.S. ARMY ENGINEER DISTRICT, AFGHANISTAN
CORPS OF ENGINEERS
APO AE 96338

*Michael Baker Jr., Inc*
*A unit of Michael Baker Corporation*
Airside Business Park
100 Airside Drive
Moon Township, PA 15108
www.mbakercorp.com

AFGHAN NATIONAL ARMY
REGIONAL MILITARY TRAINING CENTER
STANDARD DESIGN

LATRINE BUILDING
MEDIUM

ROOF PLAN

Sheet reference number:
A–102

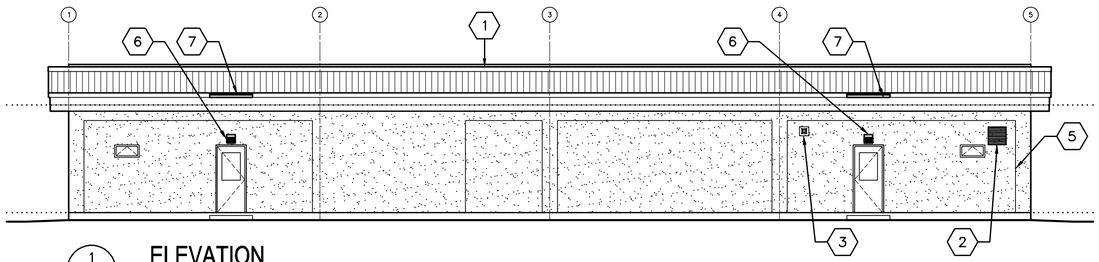


1 A-201 **ELEVATION**

SCALE: 1:100

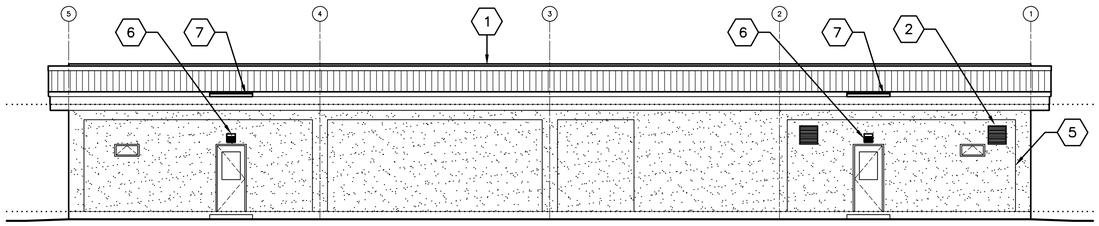


2 A-201 **ELEVATION**

SCALE: 1:100

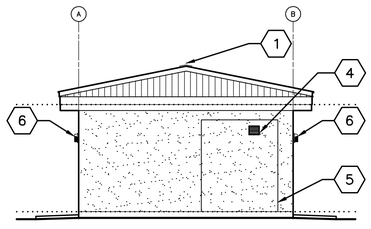


3 A-201 **ELEVATION**

SCALE: 1:100

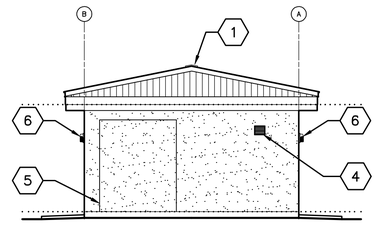


4 A-201 **ELEVATION**

SCALE: 1:100

## GENERAL NOTES:

A. COORDINATE SIZE AND LOCATION OF OPENINGS FOR MECHANICAL ITEMS WITH MECHANICAL DRAWINGS.

B. PROVIDE STRUCTURAL LINTELS AS REQUIRED – SEE STRUCTURAL DRAWINGS

C. ALL EXTERIOR WALL FINISHES SHALL BE STUCCO OVER CMU AND CONCRETE SUBSTRATES. PROVIDE CONTROL JOINTS IN STUCCO WALL FINISH AS NOTED.

D. ROOF SHALL BE CORRUGATED METAL ROOF PANELS ON COLD-FORMED METAL FRAMING ON CONCRETE SLAB.

## KEY NOTES: (X)

1. CONTINUOUS METAL RIDGE VENT – SEE DETAIL 4/A-501.
2. LOUVER, LOCATE TOP OF WALL PENETRATION 2800 MM ABOVE FINISHED FLOOR – SEE MECHANICAL DRAWINGS.
3. EXHAUST FAN, LOCATE TOP OF WALL PENETRATION 2800 MM ABOVE FINISHED FLOOR – SEE MECHANICAL DRAWINGS.
4. WALL GRILL, LOCATE TOP OF WALL PENETRATION 2800 MM ABOVE FINISHED FLOOR – SEE MECHANICAL DRAWINGS.
5. STUCCO CONTROL JOINT – SEE DETAIL 2A/A-501.
6. EXTERIOR LIGHT – SEE ELECTRICAL
7. METAL GUTTER, CENTER ON DOOR, 1400 MM – SEE DETAIL 1A/A-501

LINEAR DIMENSIONS SHOWN ARE IN MILLIMETERS (MM), UNLESS OTHERWISE NOTED

0 2000 4000
SCALE: 1:100

APPROVED:

A/E DESIGNER OF RECORD

SEAL:

STATE OF SOUTH CAROLINA
KEVIN R. CHAFIN
N. Charleston, SC
6374
REGISTERED ARCHITECT

US ARMY CORPS OF ENGINEERS
AFGHANISTAN ENGINEER DISTRICT

| Mark | Description | Date | Appr. |
|---|---|---|---|
| | | | |
| | | | |
| | | | |
| | | | |
| | | | |
| | | | |
| | | | |

Date: 2/23/10
Rev: 0
Design file no.
Drawing code:
File name: ANALATMA-02HELV
Plot date: 2/23/2010
Plot scale:

Designed by: KRC
Dwn by: KJG
Ckd by: NLJ
Reviewed by: LHM
Submitted by: BAKER

U.S. ARMY ENGINEER DISTRICT, AFGHANISTAN
CORPS OF ENGINEERS
APO AE 96338

*Michael Baker Jr., Inc*
*A unit of Michael Baker Corporation*
Airside Business Park
100 Airside Drive
Moon Township, PA 15108
www.mbakercorp.com

AFGHAN NATIONAL ARMY
REGIONAL MILITARY TRAINING CENTER
STANDARD DESIGN

LATRINE BUILDING
MEDIUM

ELEVATIONS

Sheet reference number:
A-201

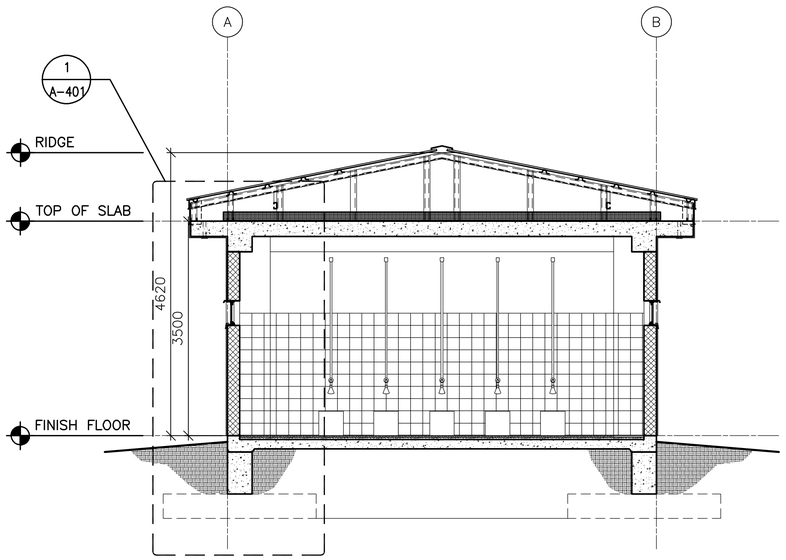


1 A-301 **BUILDING SECTION**

SCALE: 1:50

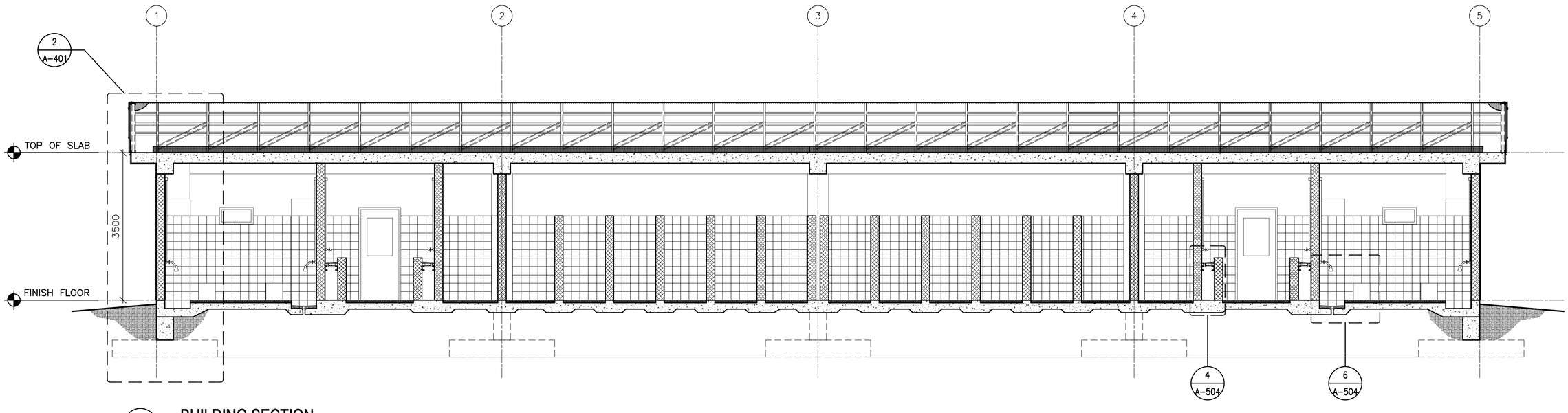


2 A-301 **BUILDING SECTION**

SCALE: 1:50

LINEAR DIMENSIONS SHOWN ARE IN MILLIMETERS (MM), UNLESS OTHERWISE NOTED

0 2000 4000

SCALE: 1:100

APPROVED:

A/E DESIGNER OF RECORD

SEAL:

STATE OF SOUTH CAROLINA
KEVIN R. CHAFIN
N. Charleston, SC
6374
REGISTERED ARCHITECT

US ARMY CORPS OF ENGINEERS
AFGHANISTAN ENGINEER DISTRICT

| Mark | Description | Date | Appr. |
|---|---|---|---|
| | | | |

| Mark | Description | Date | Appr. |
|---|---|---|---|
| | | | |

U.S. ARMY ENGINEER DISTRICT, AFGHANISTAN
CORPS OF ENGINEERS
APO AE 96338

*Michael Baker Jr., Inc*
*A unit of Michael Baker Corporation*
Airside Business Park
100 Airside Drive
Moon Township, PA 15108
www.mbakercorp.com

Designed by: KRC
Drwn by: KJG
Ckd by: NLJ
Reviewed by: LHM
Submitted by: BAKER

Date: 2/23/10
Design file no.
Drawing code:
File name: ANALATMA-301BS
Plot date: 2/23/2010
Plot scale:

Rev: 0

AFGHAN NATIONAL ARMY
REGIONAL MILITARY TRAINING CENTER
STANDARD DESIGN

LATRINE BUILDING
MEDIUM

# BUILDING SECTIONS

Sheet reference number:
A-301

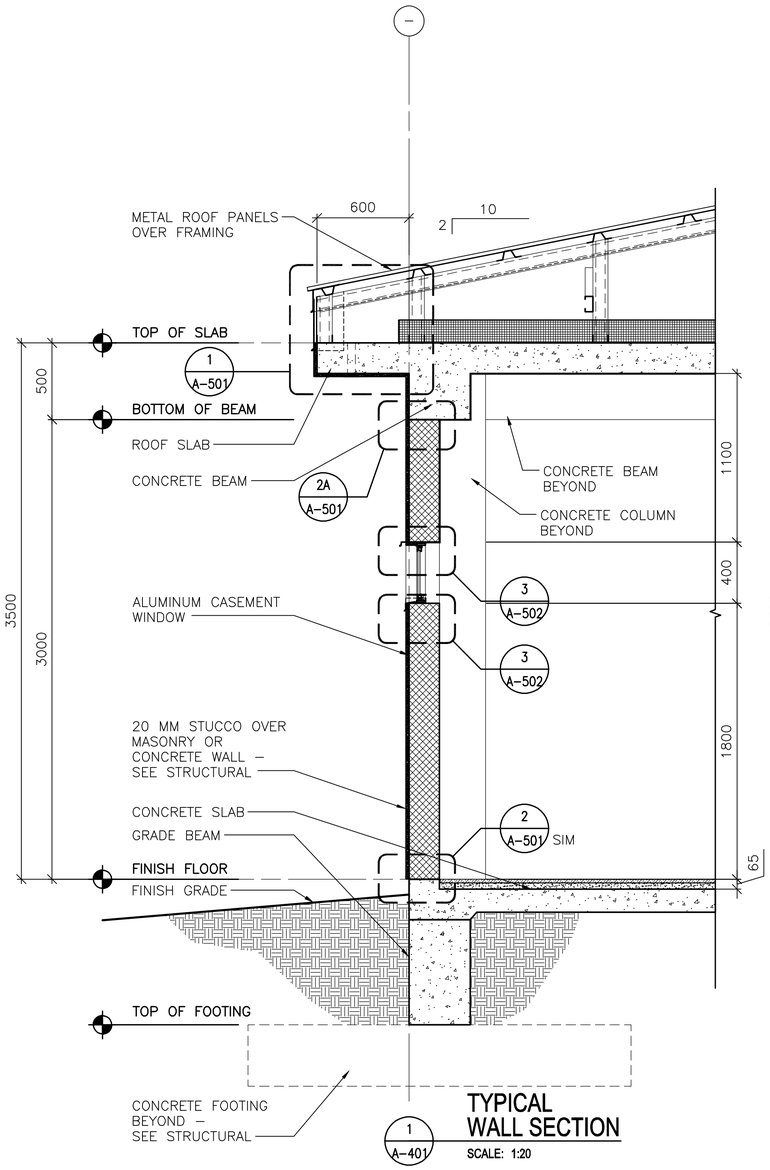


## TYPICAL WALL SECTION

1 A-401 SCALE: 1:20

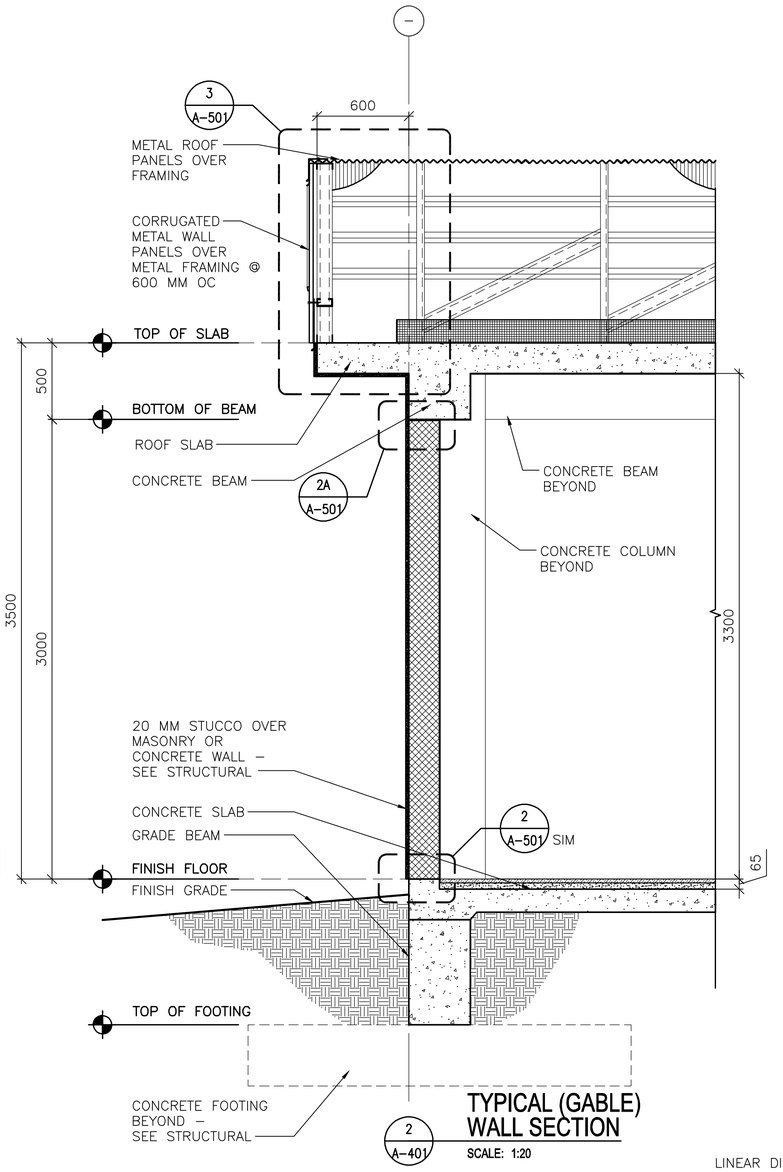


## TYPICAL (GABLE) WALL SECTION

2 A-401 SCALE: 1:20

LINEAR DIMENSIONS SHOWN ARE IN MILLIMETERS (MM), UNLESS OTHERWISE NOTED

0 400 800
SCALE: 1:20

APPROVED:

A/E DESIGNER OF RECORD

SEAL:

STATE OF SOUTH CAROLINA
KEVIN R. CHAFIN
N. Charleston, SC
6374
REGISTERED ARCHITECT

US ARMY CORPS OF ENGINEERS
AFGHANISTAN ENGINEER DISTRICT

| Mark | Description | Date | Appr. |
|---|---|---|---|
| | | | |

| Mark | Description | Date | Appr. |
|---|---|---|---|
| | | | |

U.S. ARMY ENGINEER DISTRICT, AFGHANISTAN
CORPS OF ENGINEERS
APO AE 96338

Michael Baker Jr., Inc
A unit of Michael Baker Corporation
Airside Business Park
100 Airside Drive
Moon Township, PA 15108
www.mbakercorp.com

Designed by: KRC
Drwn by: KJG
Ckd by: NLJ
Reviewed by: LHM
Submitted by: BAKER

Date: 2/23/10
Design file no.
Drawing code:
Rev: 0
File name: ANALATMA-401W3
Plot date: 2/23/2010
Plot scale:

AFGHAN NATIONAL ARMY
REGIONAL MILITARY TRAINING CENTER
STANDARD DESIGN

LATRINE BUILDING
MEDIUM

WALL SECTIONS

Sheet reference number:
A-401

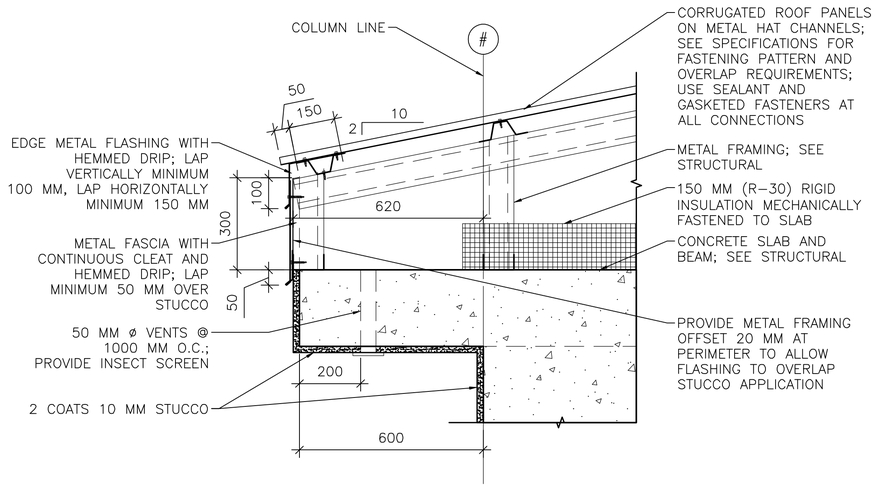


1 A–501 **EAVE DETAIL**
SCALE: 1:10

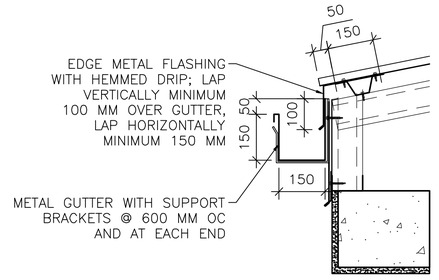


1A A–501 **GUTTER DETAIL**
SCALE: 1:10

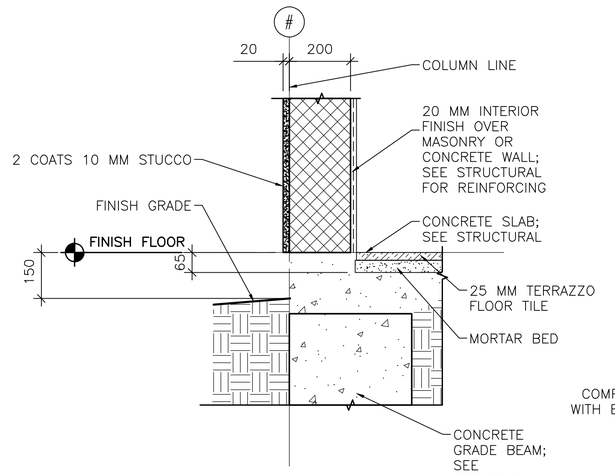


2 A–501 **STUCCO BASE DETAIL**
SCALE: 1:10

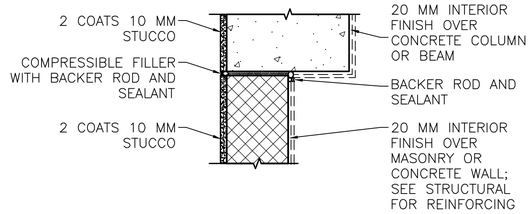


NOTE: DETAIL TYPICAL AT ALL WALL/COLUMN AND WALL/BEAM LOCATIONS, ALTERNATE BRACING DETAIL BELOW 2B/A–501.

2A A–501 **STUCCO JOINT DETAIL**
SCALE: 1:10

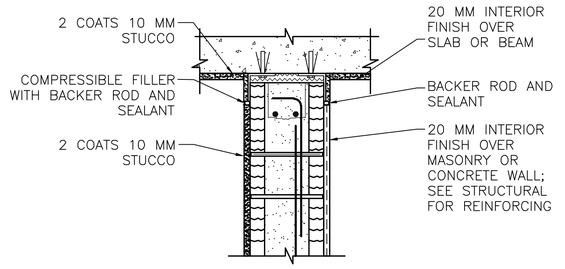


INTERIOR WALL/BEAM

2B A–501 **ALTERNATE BRACING DETAIL**
SCALE: 1:10

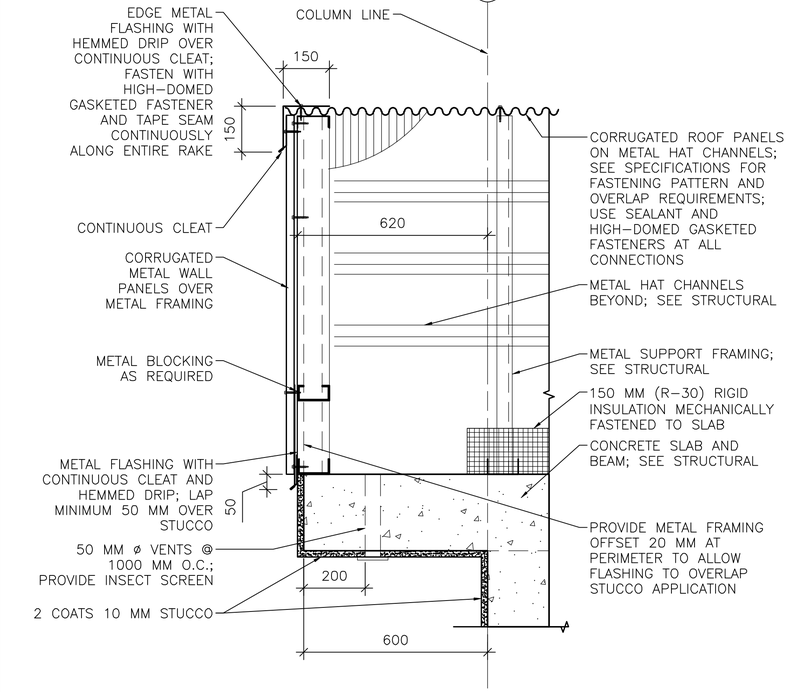


3 A–501 **RAKE/EAVE DETAIL**
SCALE: 1:10

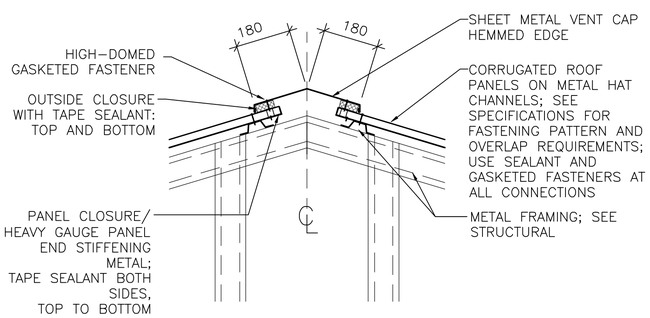


4 A–501 **RIDGE VENT DETAIL**
SCALE: 1:10

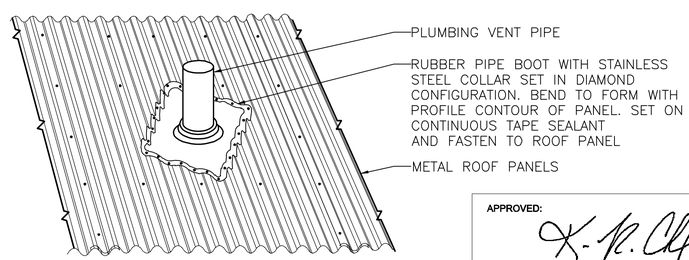


5 A–501 **PLUMBING VENT DETAIL**
SCALE: NTS

LINEAR DIMENSIONS SHOWN ARE IN MILLIMETERS (MM), UNLESS OTHERWISE NOTED

0 200 400
SCALE: 1:10

APPROVED:

A/E DESIGNER OF RECORD

SEAL:

STATE OF SOUTH CAROLINA
KEVIN R. CHAFIN
N. Charleston, SC
6374
REGISTERED ARCHITECT

US ARMY CORPS OF ENGINEERS
AFGHANISTAN ENGINEER DISTRICT

| Mark | Description | Date | Appr. |
|---|---|---|---|

| Mark | Description | Date | Appr. |
|---|---|---|---|

Rev: 0
Date: 2/23/10
Design file no.
Drawing code:
File name: ANALATMA-501DT
Plot date: 2/23/2010
Plot scale:

U.S. ARMY ENGINEER DISTRICT, AFGHANISTAN
CORPS OF ENGINEERS
APO AE 96338

Designed by: KRC
Dwn by: KJG
Ckd by: NLJ
Reviewed by: LHM
Submitted by:

BAKER

*Michael Baker Jr., Inc*
*A unit of Michael Baker Corporation*
Airside Business Park
100 Airside Drive
Moon Township, PA 15108
www.mbakercorp.com

AFGHAN NATIONAL ARMY
REGIONAL MILITARY TRAINING CENTER
STANDARD DESIGN

LATRINE BUILDING
MEDIUM

EXTERIOR DETAILS

Sheet reference number:
A–501

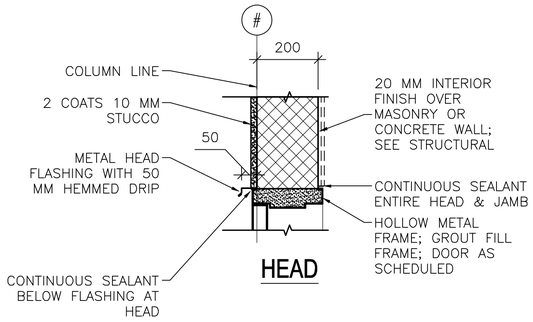


HEAD

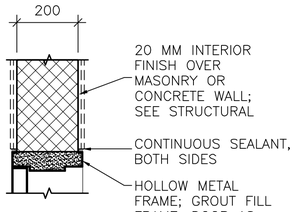


HEAD

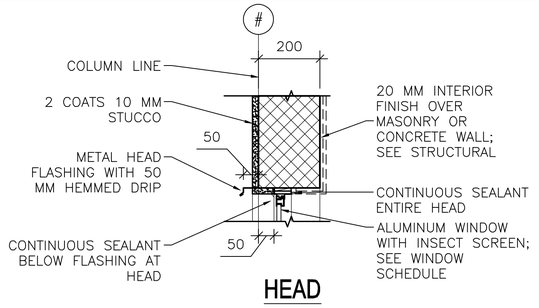


HEAD

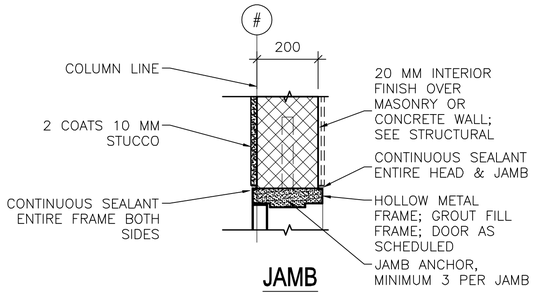


JAMB

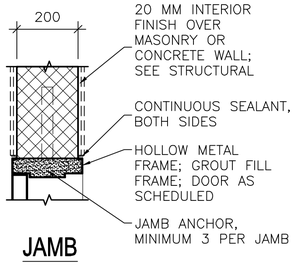


JAMB

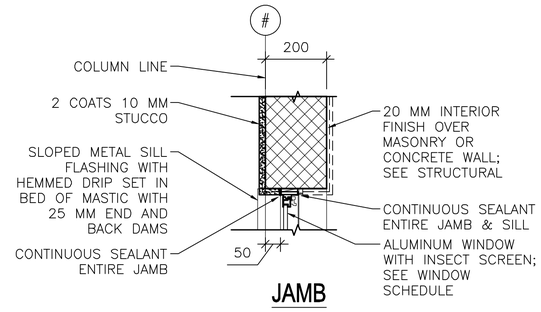


JAMB

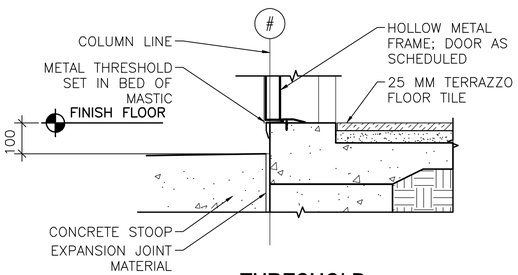


THRESHOLD

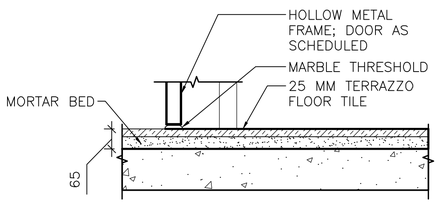


THRESHOLD

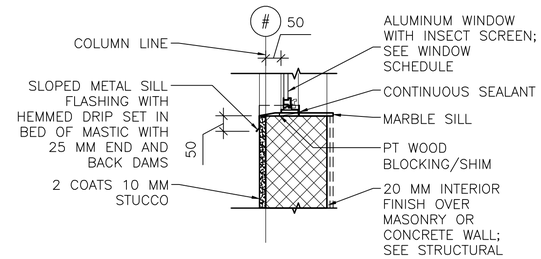


SILL

1 A–502 **EXTERIOR DOOR DETAILS**
SCALE: 1:10

2 A–502 **INTERIOR DOOR DETAILS**
SCALE: 1:10

3 A–502 **EXTERIOR WINDOW DETAILS**
SCALE: 1:10

LINEAR DIMENSIONS SHOWN ARE IN MILLIMETERS (MM), UNLESS OTHERWISE NOTED

0 200 400
SCALE: 1:10

APPROVED:

A/E DESIGNER OF RECORD

SEAL:

STATE OF SOUTH CAROLINA
KEVIN R. CHAFIN
N. Charleston, SC 6374
REGISTERED ARCHITECT

US ARMY CORPS OF ENGINEERS
AFGHANISTAN ENGINEER DISTRICT

| Mark | Description | Date | Appr. |
|---|---|---|---|
| | | | |

Date: 2/23/10
Rev: 0
Design file no.
Drawing code:
File name: ANALTMA-502HJS
Plot date: 2/23/2010
Plot scale:

Designed by: KRC
Dwn by: KJG
Ckd by: NLJ
Reviewed by: LHM
Submitted by: BAKER

U.S. ARMY ENGINEER DISTRICT, AFGHANISTAN
CORPS OF ENGINEERS
APO AE 96338

*Michael Baker Jr., Inc.*
*A unit of Michael Baker Corporation*
Airside Business Park
100 Airside Drive
Moon Township, PA 15108
www.mbakercorp.com

AFGHAN NATIONAL ARMY
REGIONAL MILITARY TRAINING CENTER
STANDARD DESIGN

LATRINE BUILDING
MEDIUM

HEAD, JAMB & SILL
DETAILS

Sheet reference number:
A–502

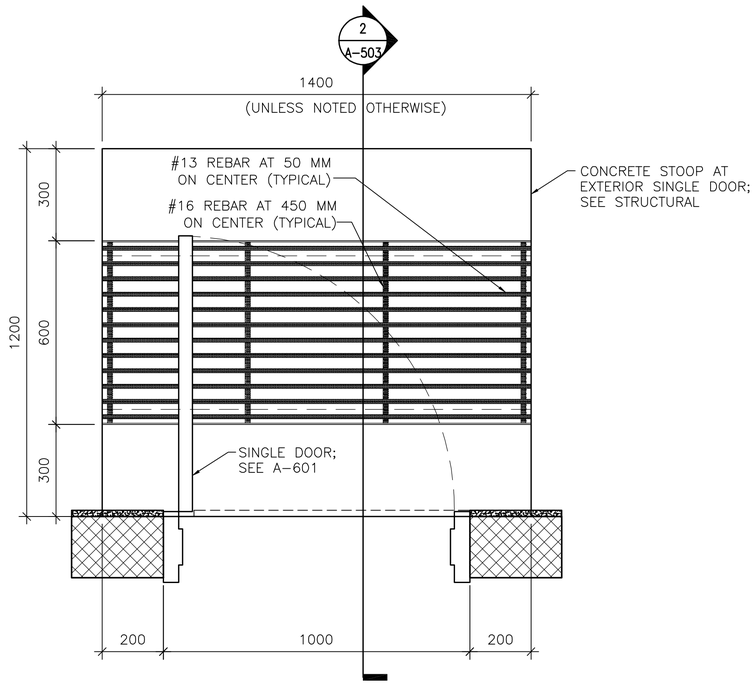


1 A-503 **DOOR STOOP PLAN (WITH GRATE)**

SCALE: 1:10

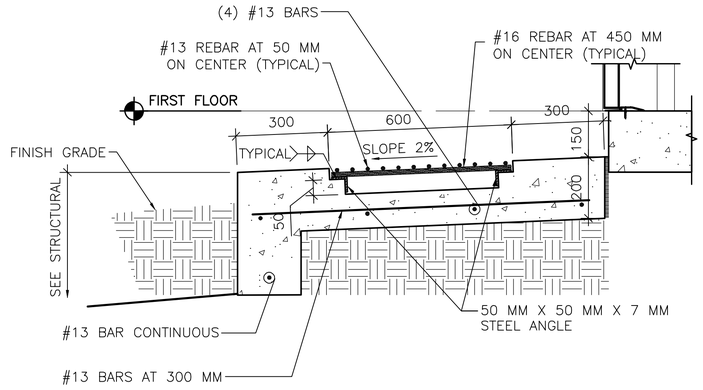


2 A-503 **DOOR STOOP DETAIL**

SCALE: 1:10

LINEAR DIMENSIONS SHOWN ARE IN MILLIMETERS (MM), UNLESS OTHERWISE NOTED

0 200 400
SCALE: 1:10

APPROVED:

A/E DESIGNER OF RECORD

SEAL:

STATE OF SOUTH CAROLINA
KEVIN R. CHAFIN
N. Charleston, SC
6374
REGISTERED ARCHITECT

US ARMY CORPS OF ENGINEERS
AFGHANISTAN ENGINEER DISTRICT

| Mark | Description | Date | Appr. |
|---|---|---|---|
| | | | |

| Mark | Description | Date | Appr. |
|---|---|---|---|
| | | | |

Rev: 0
Date: 2/23/10
Design file no.
Drawing code:
File name: ANALATMA-S530T
Plot date: 2/23/2010
Plot scale:

Designed by: KRC
Dwn by: KJG
Ckd by: NLJ
Reviewed by: LHM
Submitted by: BAKER

U.S. ARMY ENGINEER DISTRICT, AFGHANISTAN
CORPS OF ENGINEERS
APO AE 96338

*Michael Baker Jr., Inc.*
*A unit of Michael Baker Corporation*
Airside Business Park
100 Airside Drive
Moon Township, PA 15108
www.mbakercorp.com

AFGHAN NATIONAL ARMY
REGIONAL MILITARY TRAINING CENTER
STANDARD DESIGN

LATRINE BUILDING
MEDIUM
STOOP
DETAILS

Sheet reference number:
A-503

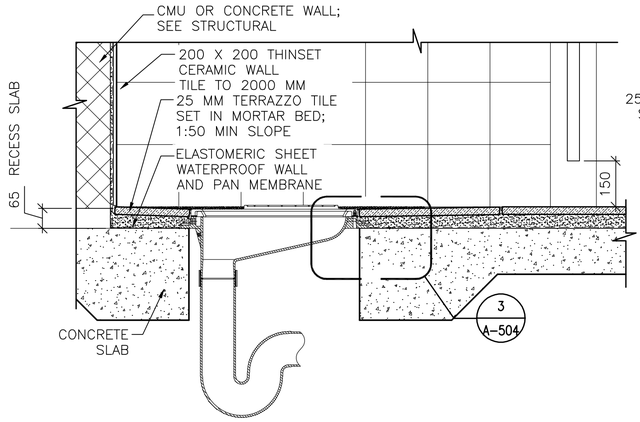


1 A-504 **LATRINE DETAIL**
SCALE: 1:10

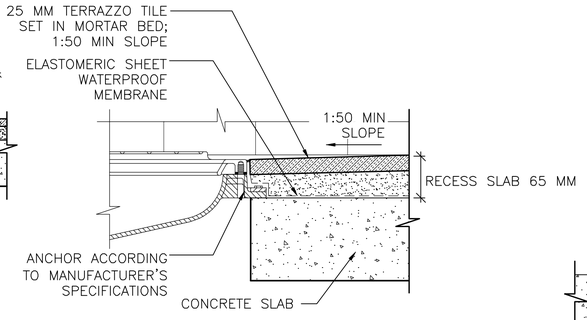


3 A-504 **MOUNTING DETAIL**
SCALE: 1:5

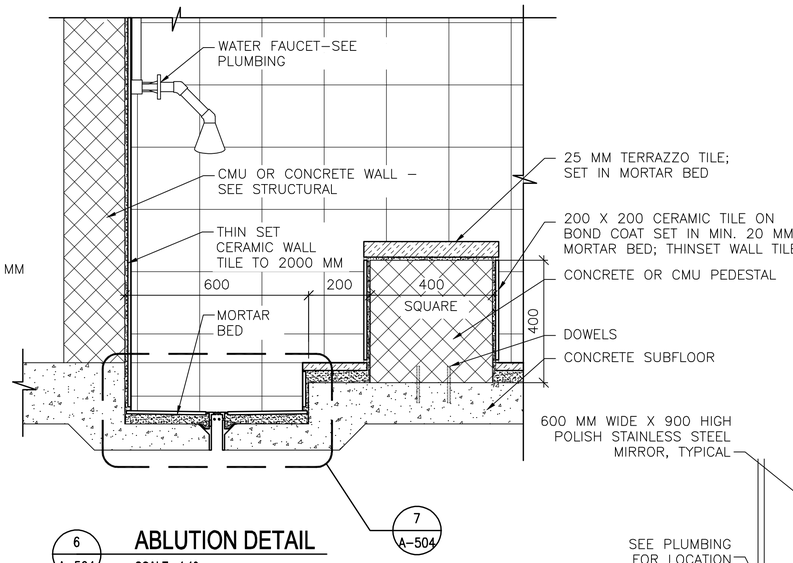


6 A-504 **ABLUTION DETAIL**
SCALE: 1:10

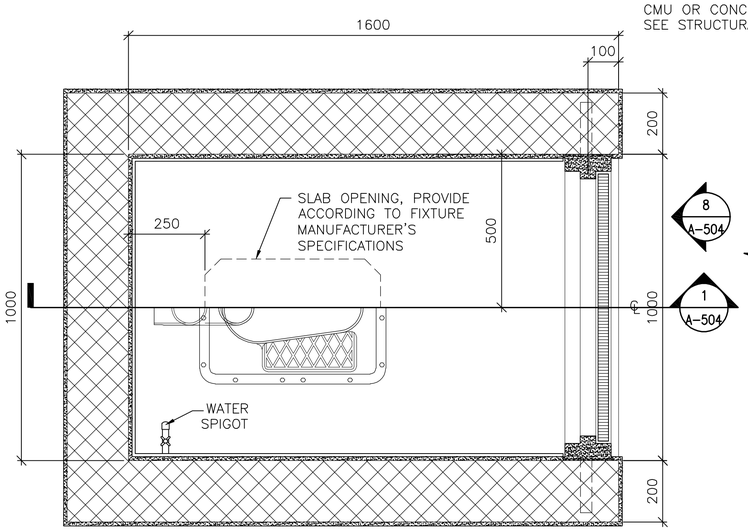


2 A-504 **TOILET DETAIL**
SCALE: 1:10

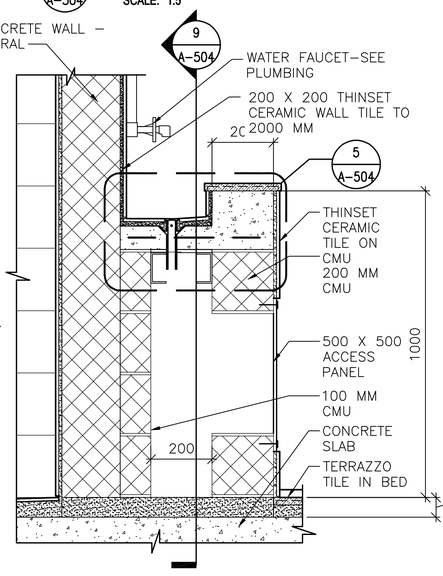


4 A-504 **LAVATORY SECTION**
SCALE: 1:10

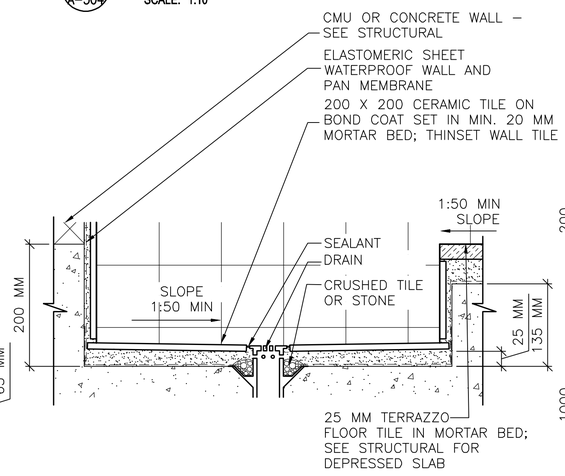


7 A-504 **RECESSED TROUGH**
SCALE: 1:5

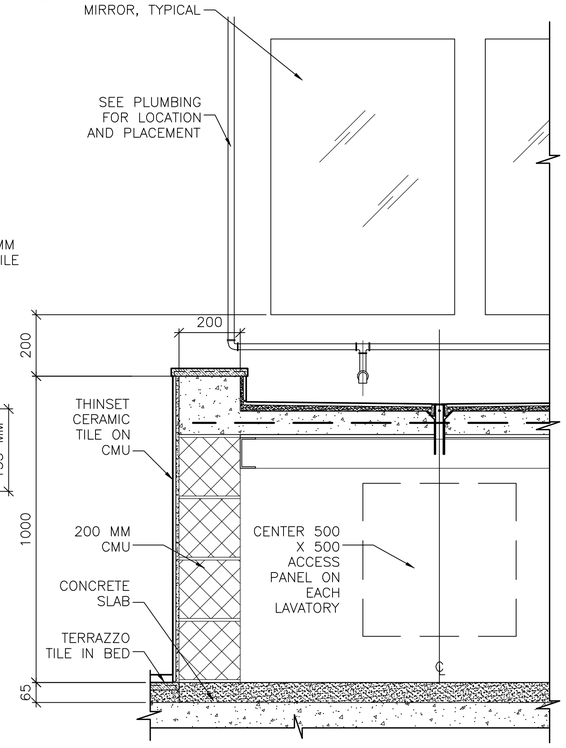


9 A-504 **LAVATORY SECTION**
SCALE: 1:10

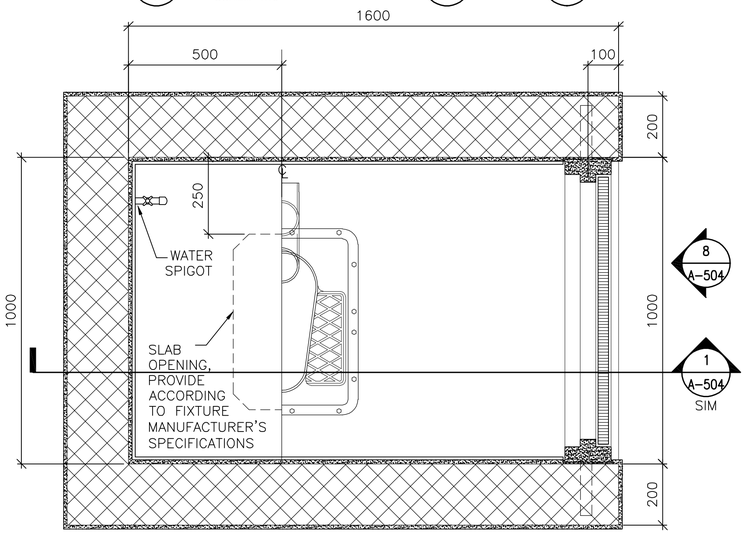


2A A-504 **TOILET DETAIL**
SCALE: 1:10

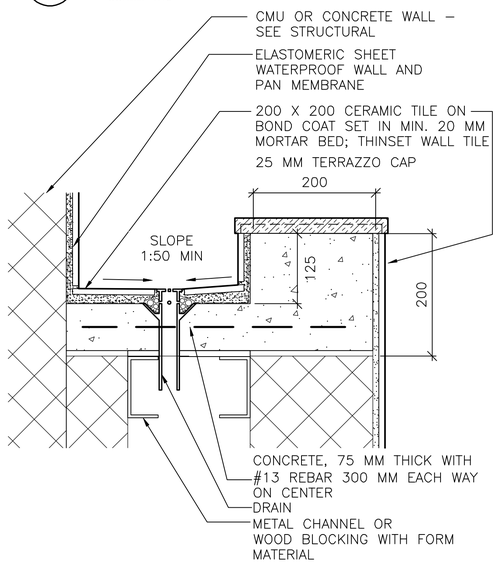


5 A-504 **LAVATORY DETAIL**
SCALE: 1:5

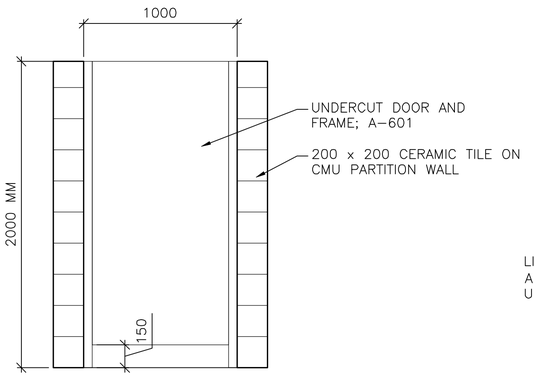


8 A-504 **TOILET PARTITION DOOR ELEVATION**
SCALE: 1:20

LINEAR DIMENSIONS SHOWN ARE IN MILLIMETERS (MM), UNLESS OTHERWISE NOTED

0 100 200
SCALE: 1:5

0 200 400
SCALE: 1:10

0 400 800
SCALE: 1:20

APPROVED:

A/E DESIGNER OF RECORD

SEAL:

STATE OF SOUTH CAROLINA
KEVIN R. CHAFIN
N. Charleston, SC
6374
REGISTERED ARCHITECT

US ARMY CORPS OF ENGINEERS
AFGHANISTAN ENGINEER DISTRICT

| Mark | Description | Date | Appr. |
|---|---|---|---|
| | | | |

Rev: 0
Date: 2/23/10
Design file no.
Drawing code:
Designed by: KRC
Dwn by: KJG
Ckd by: NLJ
Reviewed by: LHM
Submitted by: BAKER
File name: ANALATMA-B40DT
Plot date: 2/23/2010
Plot scale:

U.S. ARMY ENGINEER DISTRICT, AFGHANISTAN
CORPS OF ENGINEERS
APO AE 96338

*Michael Baker Jr., Inc*
*A unit of Michael Baker Corporation*
Airside Business Park
100 Airside Drive
Moon Township, PA 15108
www.mbakercorp.com

AFGHAN NATIONAL ARMY
REGIONAL MILITARY TRAINING CENTER
STANDARD DESIGN

LATRINE BUILDING
MEDIUM

TOILET, LAVATORY & ABLUTION DETAILS

Sheet reference number:
A–504

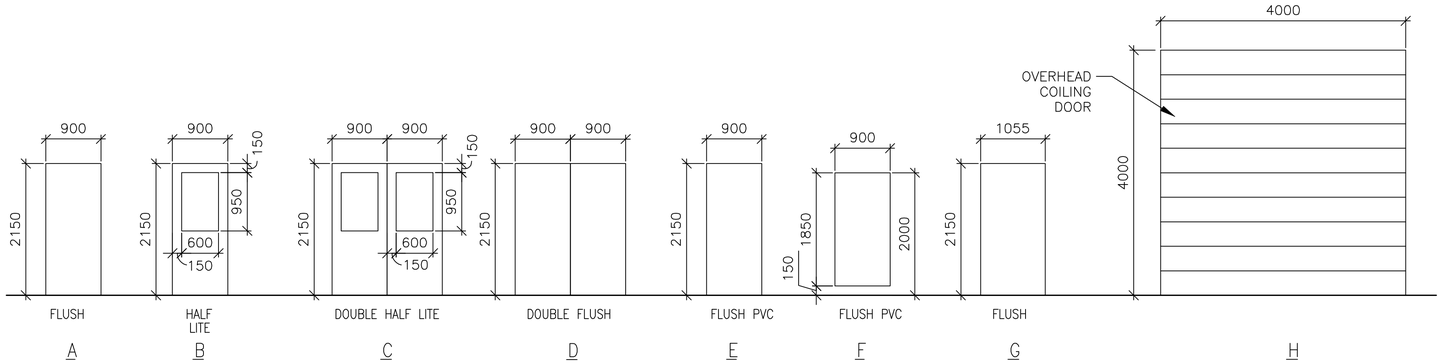


1 A-601 **DOOR TYPES**
SCALE: 1:50

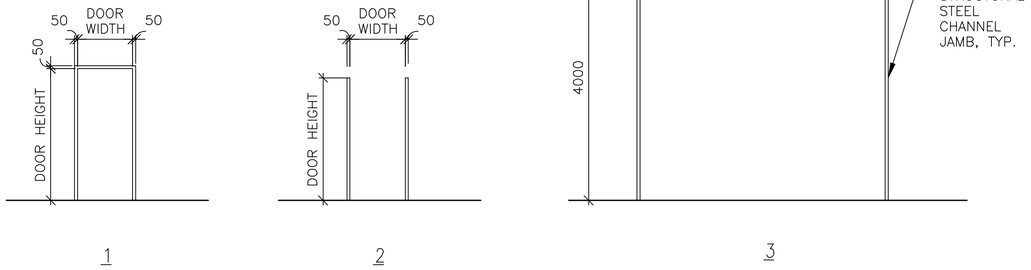


2 A-601 **FRAME TYPES**
SCALE: 1:50

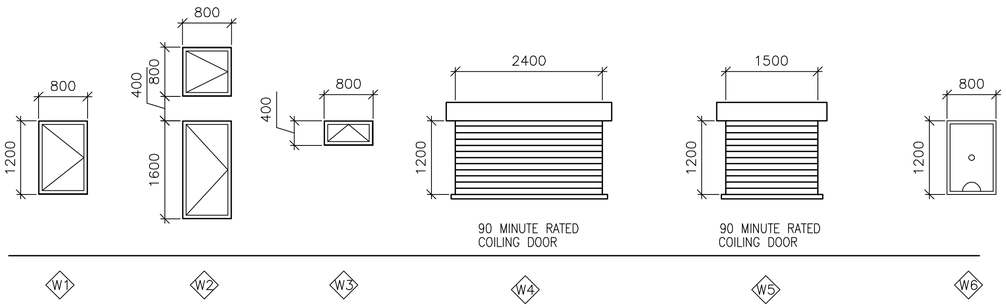


3 A-601 **WINDOW TYPES**
SCALE: 1:50

## WINDOW TYPE NOTES:

1. ALL EXTERIOR WINDOWS SHALL BE ALUMINUM WITH INSECT SCREENS. WINDOWS SHALL BE COMMERCIAL GRADE.
2. ALL EXTERIOR WINDOWS SHALL BE OPERABLE.

4 A-601 **DOOR TAG**
SCALE: NTS




5 A-601 **RATED DOOR TAG**
SCALE: NTS

## DOOR TAG NOTES:

1. THE DOOR TAG INDICATES THE DOOR TYPE, FRAME TYPE AND HARDWARE SET FOR EACH DOOR.
2. THE DOOR TAG FOR RATED DOORS INCLUDES THE RATING OF THE DOOR IN MINUTES.

## EXTERIOR DOOR HARDWARE TYPES:

HW-1 1-1/2 PR HINGES, A5112 114 X 114
1 EA RIM EXIT DEVICE, TYPE 1
1 EA CYLINDER. E09221A, GRADE 1
1 EA OVERHEAD CLOSER, C02061, LOW RESISTANCE
1 EA THRESHOLD, J32130
3 EA DOOR SILENCERS, L03011

HW-2 1-1/2 PR HINGES, A5112 114 X 114
1 EA LOCKSET, F13 ENTRY LOCK W/LEVER HANDLES, GRADE 1
1 EA OVERHEAD CLOSER, C02061, LOW RESISTANCE
1 EA THRESHOLD, J32130
3 EA DOOR SILENCERS, L03011

HW-3 3 PR HINGES, A5112 114 X 114
2 EA RIM EXIT DEVICE, TYPE 1
2 EA CYLINDER. GRADE 1
2 EA OVERHEAD CLOSER, C02061, LOW RESISTANCE
1 EA DOOR COORDINATOR, TYPE 21
1 EA ASTRAGAL
1 EA THRESHOLD, J32130
2 EA DOOR SILENCERS, L03011

HW-4 3 PR HINGES, A5112 114 X 114
1 EA LOCKSET W/LEVER HANDLES. GRADE 1, F13
1 EA OVERHEAD CLOSER, C02061, LOW RESISTANCE
2 EA MAGNETIC HOLDER PIN, ATTACHED TO DOOR LEAF
2 EA MAGNETIC HOLDER RECEIVER, ATTACHED TO STOOP
2 EA LEVER EXTENSION FLUSH BOLTS, L04081
1 EA ASTRAGAL
1 EA THRESHOLD, J32130
2 EA DOOR SILENCERS, L03011

## DOOR AND HARDWARE NOTES:

1. INTERIOR AND EXTERIOR METAL DOORS AND FRAME COLORS SHALL MATCH ADJACENT WALL COLORS AS SELECTED BY THE CONTRACTING OFFICER.
2. FRAMES, EXCEPT FIRE-RATED FRAMES, SHALL BE MOUNTED AND ADJUSTED IN ACCORDANCE WITH MANUFACTURER'S INSTRUCTIONS. FRAMES SHALL BE FASTENED WITH MINIMUM OF THREE ANCHORS PER JAMB AT EQUAL INTERVALS.
3. DIMENSIONS SHOWN ON DOOR TYPES DETAIL ARE BASED UPON MODULAR MASONRY (OR ROUGH OPENING), HEIGHT OF 2200 MM FOR STANDARD PERSONNEL DOORS. CONTRACTOR SHALL COORDINATE WITH DOOR SUPPLIER TO ENSURE THAT DIMENSIONS OF DOORS AND FRAMES PROVIDED ARE COMPATIBLE WITH DOOR OPENING DIMENSIONS.
4. HARDWARE SHALL BE HEAVY DUTY, COMMERCIAL GRADE, STAINLESS STEEL WITH A SATIN OR BRUSHED FINISH.
5. HARDWARE TYPES INCLUDE BUILDERS HARDWARE MANUFACTURERS ASSOCIATION (BMHA) NUMBER.
6. DOORS IN 2 HOUR RATED PARTITIONS SHALL BE 1.5 HOUR (90 MINUTE) RATED DOORS IN ACCORDANCE WITH NFPA 101, TABLE 8.3.4.2.
7. DOORS AT STAIR ENCLOSURES SHALL BE 1 HOUR (60 MINUTE) RATED AT 1 HOUR WALL IN ACCORDANCE WITH NFPA 101, TABLE 8.3.4.2.
8. DOORS IN 1 HOUR RATED WALLS SHALL BE 3/4 HOUR (45 MINUTE) RATED DOORS IN ACCORDANCE WITH NFPA 101, TABLE 8.3.4.2.
9. DOORS IN 1 HOUR RATED CORRIDOR WALLS SHALL BE 1/3 HOUR (20 MINUTE) IN ACCORDANCE WITH NFPA 101, TABLE 8.3.4.2.
10. PROVIDE DOOR STOPS TO PROTECT WALLS ON LOCATIONS WHERE DOOR SWING WILL STRIKE WALL.

THIS SHEET IS STANDARD AND IS INCLUSIVE OF ALL THE DOOR/ WINDOW/ HARDWARE TYPES FOR THE ENTIRE RMTC CONTRACT. NOT ALL DOOR/ WINDOW/ HARDWARE TYPES ARE USED FOR ANY PARTICULAR BUILDING DESIGN. CONTRACTOR SHALL REFER TO THE FLOOR PLAN FOR THE TYPES BEING USED.

## INTERIOR DOOR HARDWARE TYPES:

HW-5 1-1/2 PR HINGES, A8133 114 X 114
1 EA LOCKSET W/LEVER HANDLES, F08, GRADE 1
1 EA WALL STOP, L02101 OR L02161
3 EA DOOR SILENCERS, L03011

HW-6 1-1/2 PR HINGES, A8112 114 X 114
1 EA LOCKSET W/LEVER HANDLES, F08, GRADE 1
1 EA WALL STOP, L02101 OR L02161
1 EA OVERHEAD CLOSER, C02061, LOW RESISTANCE
3 EA DOOR SILENCERS, L03011

HW-7 1-1/2 PR HINGES, A8133
1 EA LOCKSET W/LEVER HANDLES, F13 GRADE 1
1 EA WALL STOP, L02101 OR L02161
2 EA MOP PLATE, J103
3 EA DOOR SILENCERS, L03011

HW-8 1-1/2 PR HINGES, A8112
1 EA LOCKSET W/LEVER HANDLES, F13 GRADE 1
1 EA WALL STOP, L02101 OR L02161
2 EA MOP PLATE, J103
1 EA OVERHEAD CLOSER, C02061, LOW RESISTANCE
3 EA DOOR SILENCERS, L03011

HW-9 1-1/2 PR HINGES, A5112 114 X 114
1 EA RIM EXIT DEVICE, TYPE 1
1 EA CYLINDER. E09221A, GRADE 1
1 EA OVERHEAD CLOSER, C02061, LOW RESISTANCE
3 EA DOOR SILENCERS, L03011

HW-10 3 PR HINGES, A5112 114 X 114
1 EA LOCKSET W/LEVER HANDLES. GRADE 1, F13
2 EA LEVER EXTENSION FLUSH BOLTS, L04081
1 EA ASTRAGAL
2 EA DOOR SILENCERS, L03011

HW-11 1-1/2 PR HINGES, A8112 114 X 114
1 EA LOCKSET W/LEVER HANDLES, F13, GRADE 1
1 EA WALL STOP, L02101 OR L02161
1 EA OVERHEAD CLOSER, C02061, LOW RESISTANCE
3 EA DOOR SILENCERS, L03011
1 EA ROBE HOOK

HW-12 1-1/2 PR HINGES, A8133
1 EA LATCHSET W/LEVER HANDLES, F76 GRADE 1
1 EA WALL STOP, L02101 OR L02161
2 EA MOP PLATE, J103
3 EA DOOR SILENCERS, L03011
1 EA ROBE HOOK

HW-13 3 PR HINGES, A5112 114 X 114
1 EA LOCKSET W/LEVER HANDLES. GRADE 1, F13
1 EA OVERHEAD CLOSER, C02061, LOW RESISTANCE
2 EA LEVER EXTENSION FLUSH BOLTS, L04081
1 EA ASTRAGAL
2 EA DOOR SILENCERS, L03011

HW-14 3 PR HINGES, A5112 114 X 114
2 EA RIM EXIT DEVICE, TYPE 1
2 EA CYLINDER. GRADE 1
2 EA OVERHEAD CLOSER, C02061, LOW RESISTANCE
1 EA DOOR COORDINATOR, TYPE 21
1 EA ASTRAGAL
2 EA DOOR SILENCERS, L03011

APPROVED:

A/E DESIGNER OF RECORD

SEAL:

STATE OF SOUTH CAROLINA
KEVIN R. CHAFIN
N. Charleston, SC
6374
REGISTERED ARCHITECT

US ARMY CORPS OF ENGINEERS
AFGHANISTAN ENGINEER DISTRICT

| Mark | Description | Date | Appr. |
|---|---|---|---|
| | | | |

Date: 2/23/10
Design file no.
Drawing code:
Rev: 0
File name: ANALTMA-601SCH
Plot date: 2/23/2010
Plot scale:

Designed by: KRC
Dwn by: KJG
Ckd by: NLJ
Reviewed by: LHM
Submitted by:
BAKER

U.S. ARMY ENGINEER DISTRICT, AFGHANISTAN
CORPS OF ENGINEERS
APO AE 96338

*Michael Baker Jr., Inc.*
*A unit of Michael Baker Corporation*
Airside Business Park
100 Airside Drive
Moon Township, PA 15108
www.mbakercorp.com

AFGHAN NATIONAL ARMY
REGIONAL MILITARY TRAINING CENTER
STANDARD DESIGN

LATRINE BUILDING
MEDIUM

WINDOW AND DOOR SCHEDULES

Sheet reference number:
A-601

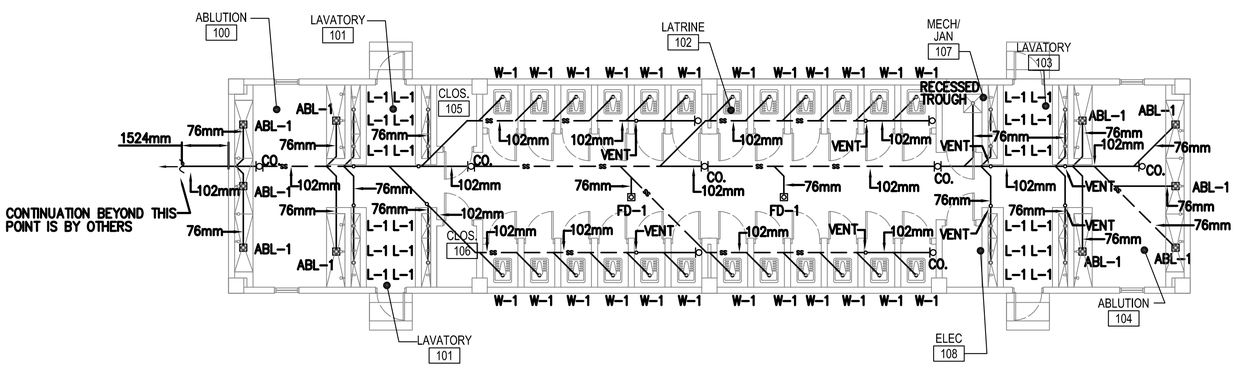


1 P-101

## MEDIUM LATRINE
## FLOOR PLAN - PLUMBING (SANITARY)

SCALE: 1:100

FLOOR PLAN NOTES:

1. DO NOT SCALE DRAWINGS – ALL DIMENSIONS AND CONDITIONS SHALL BE CHECKED AND VERIFIED BY THE CONTRACTOR AT THE SITE.
2. ALL WORK PERFORMED ON THIS BUILDING SHALL BE IN COMPLIANCE WITH ALL PERTINENT CODES, RULES, ORDINANCES AND REGULATIONS OF THE GOVERNING AUTHORITIES.
3. ALL WORK PERFORMED UNDER AND IN CONNECTION WITH THESE DRAWINGS AND SPECIFICATIONS SHALL BE IN STRICT COMPLIANCE WITH THE LATEST SAFETY AND HEALTH STANDARDS.
4. REPORT ANY DISCREPANCIES FOUND IN THE PLUMBING DRAWINGS AND/OR IN THE SPECIFICATIONS DURING THE BIDDING PROCESS FOR CLARIFICATION BY THE ENGINEER.
5. ALL EASTERN STYLE WATER CLOSETS IN THIS FACILITY ARE TO HAVE THE FIXTURE DESIGNATION OF W-1. EACH FIXTURE SHALL HAVE A 25mm (1 INCH) COLD WATER LINE EXTENDED TO IT AND THEN BE REDUCED TO 13mm (1/2 INCH) FOR A FINAL CONNECTION TO THE FLUSH TANK AND A 102mm (4) INCH SANITARY CONNECTION.
6. ALL TROUGH FIXTURES IN THIS FACILITY ARE TO HAVE THE FIXTURE DESIGNATION OF L-1. EACH FIXTURE SHALL HAVE A 13mm (1/2 INCH) COLD WATER, 13mm (1/2 INCH) HOT WATER CONNECTION AND A 76mm (3 INCH) SANITARY CONNECTION.
7. ALL ABLUTION FIXTURES IN THIS FACILITY ARE TO HAVE THE FIXTURE DESIGNATION OF ABL-1. EACH FIXTURE SHALL HAVE A 13mm (1/2 INCH) COLD WATER, 13mm (1/2 INCH) HOT WATER CONNECTION AND A 76mm (3 INCH) SANITARY CONNECTION.
8. REFER TO SHEET P501 & P502 FOR DETAILS AND SYMBOLS.
9. ALL WATER, SANITARY AND VENT LINES TO BE EXPOSED. RUN LINES TIGHT TO CEILING AND WALL.

## FIXTURE LIST

| TYPE | ITEM | SOIL & WASTE | VENT | COLD WATER | HOT WATER | REMARKS | REMARKS 2 |
|---|---|---|---|---|---|---|---|
| W-1 | EASTERN STYLE WATER CLOSET | 102mm | 51mm | 13mm | ------ | FLUSH TANK | LOW FLOW EFFICIENT TYPE |
| L-1 | TROUGH FIXTURE | 38mm | 38mm | 13mm | 13mm | FABRICATED IN FIELD | LOW FLOW EFFICIENT TYPE |
| ABL-1 | ABLUTION | FLOOR DRAIN | ------ | 13mm | 13mm | FABRICATED IN FIELD | ---------- |
| HWH-1 | WATER HEATER | --- | --- | SEE DWG. | SEE DWG. | 151 LITER ELECTRIC WATER HEATER, 380/3ø, 9KW | ---------- |

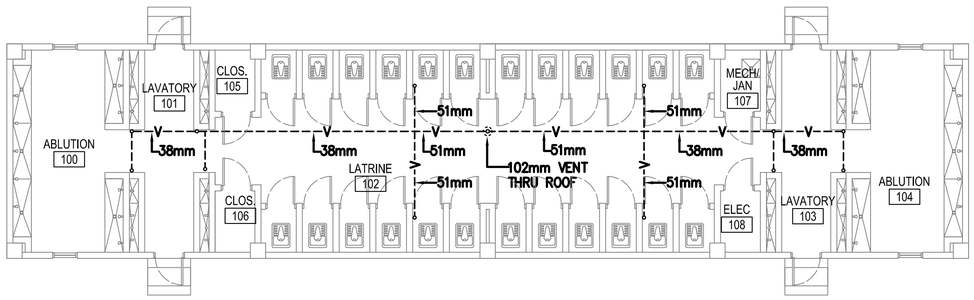


2 P-101

## MEDIUM LATRINE
## FLOOR PLAN - PLUMBING (VENT PIPING)

SCALE: 1:100

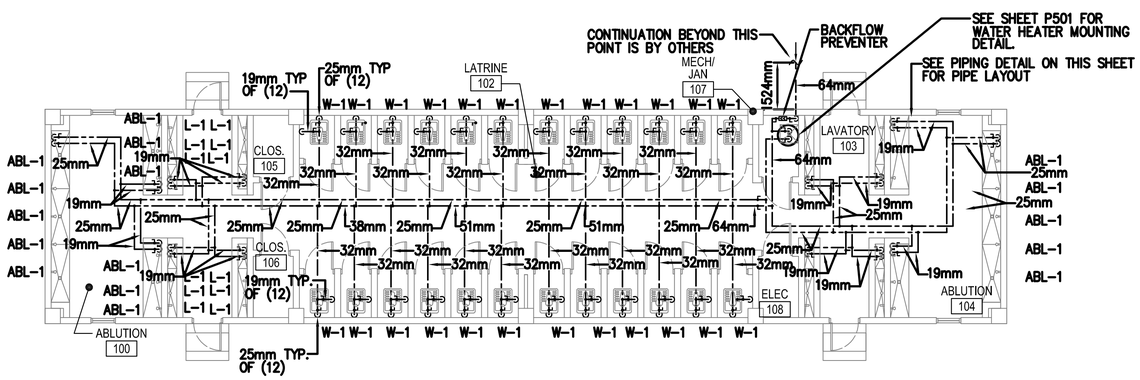


3 P-101

## MEDIUM LATRINE
## FLOOR PLAN - PLUMBING (HOT & COLD WATER)

SCALE: 1:100

## PLUMBING SYMBOLS

- SS — SANITARY SEWER PIPING (BELOW GROUND)
- SS — SANITARY SEWER PIPING (ABOVE GROUND)
- ---------- VENT PIPING (V)
- COLD WATER PIPING (CW)
- HOT WATER PIPING (HW)
- P — PROPANE LINE
- P — TWO STAGE PRESSURE GAUGE
- BALL VALVE
- BACKFLOW PREVENTER
- OR — CLEANOUT (CO.)
- ROOF PENETRATION

LINEAR DIMENSIONS SHOWN ARE IN MILLIMETERS (MM), UNLESS OTHERWISE NOTED

0 2000 4000
SCALE: 1:100

APPROVED:

A/E DESIGNER OF RECORD

SEAL:

COMMONWEALTH OF PENNSYLVANIA
REGISTERED PROFESSIONAL
MATTHEW R. SOTOSKY
ENGINEER
065574-E

US ARMY CORPS OF ENGINEERS
AFGHANISTAN ENGINEER DISTRICT

| Mark | Description | Date | Appr. |
|---|---|---|---|
| | | | |

Rev: 0
Date: 02/23/10
Design file no.
Drawing code:
File name: ANAATMPL-101XXX
Plot date: 02/09/10
Plot scale: 1:100

Designed by: RMH
Drwn by: RMH
Ckd by: CJM
Reviewed by: MRS
Submitted by: BAKER

U.S. ARMY ENGINEER DISTRICT, AFGHANISTAN
CORPS OF ENGINEERS
APO AE 96338

*Michael Baker Jr., Inc*
*A unit of Michael Baker Corporation*
Airside Business Park
100 Airside Drive
Moon Township, PA 15108
www.mbakercorp.com

AFGHAN NATIONAL ARMY
REGIONAL MILITARY TRAINING CENTER
STANDARD DESIGN

LATRINE BUILDING
MEDIUM

FLOOR PLAN PLUMBING

Sheet reference number:
P-101

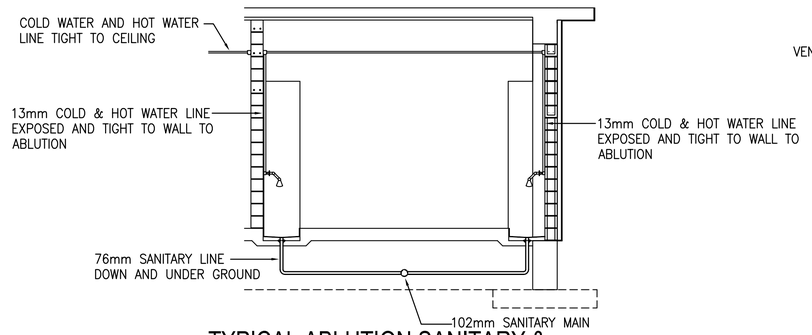


## TYPICAL ABLUTION SANITARY & WATER INSTALLATION SCHEMATIC

SCALE: N.T.S.

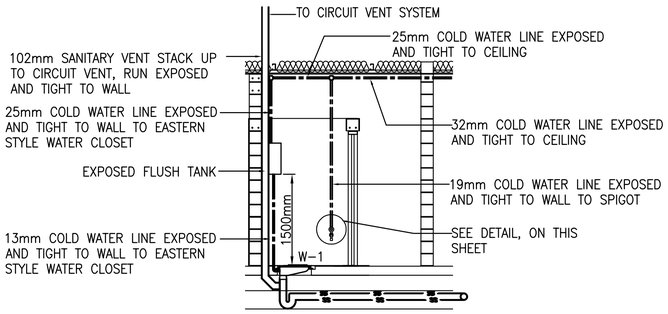


## TYPICAL EASTERN STYLE WATER CLOSET SANITARY & WATER INSTALLATION SCHEMATIC

SCALE: N.T.S.

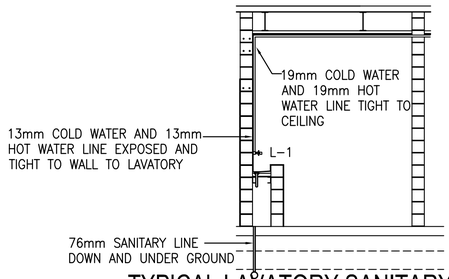


## TYPICAL LAVATORY SANITARY & WATER INSTALLATION SCHEMATIC

SCALE: N.T.S.

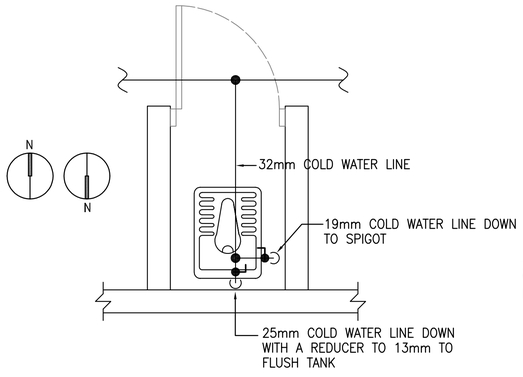


## TYPICAL EASTERN STYLE WATER CLOSET WITH SPIGOT WATER PIPING DETAIL

SCALE: N.T.S.

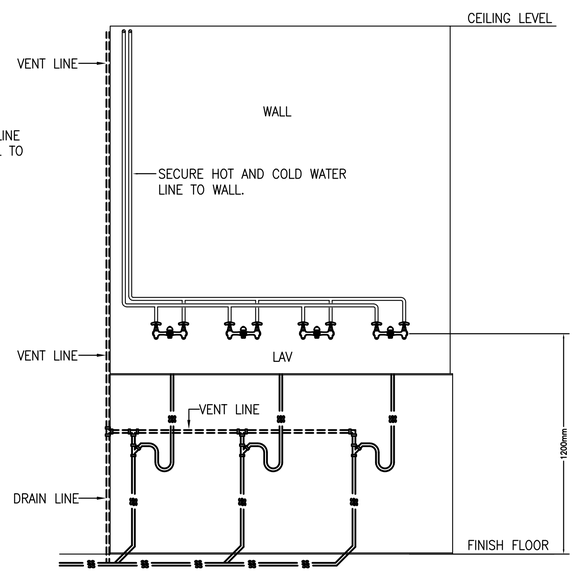


## LAVATORY ELEVATION PLAN - PLUMBING

SCALE: N.T.S.

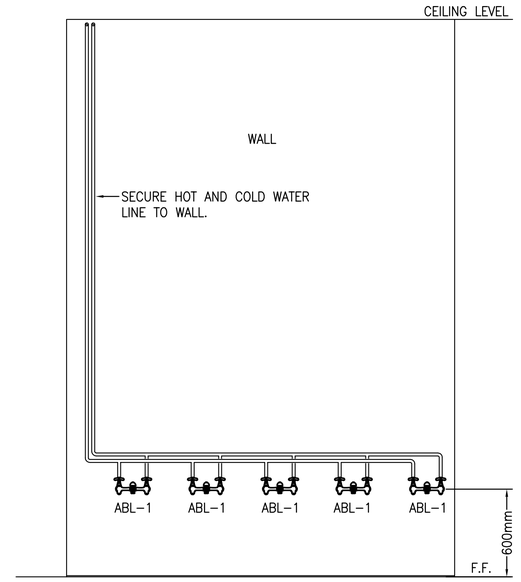


## TYPICAL ABLUTION ELEVATION PLUMBING PLAN - WATER INSTALLATION SCHEMATIC

SCALE: N.T.S.

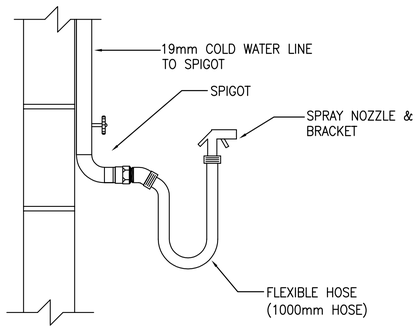


## TYPICAL DETAIL - SPIGOT, FLEXIBLE HOSE, AND SPRAY NOZZLE

SCALE: N.T.S.

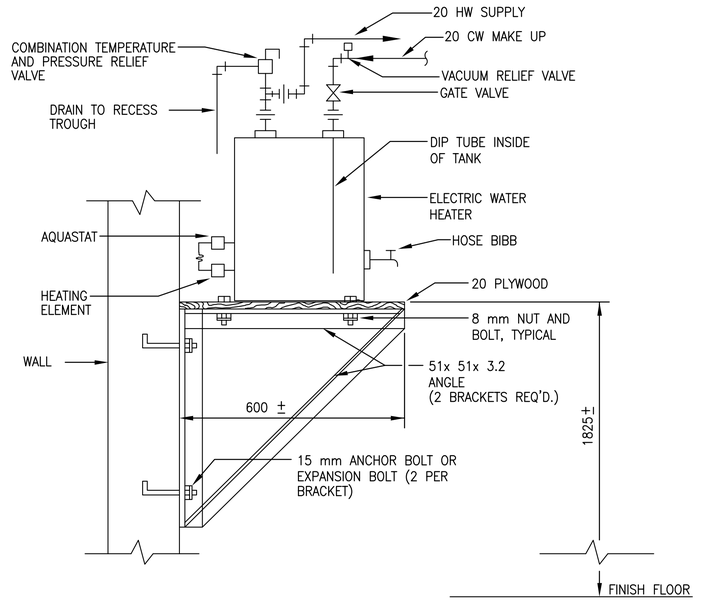


## WALL MOUNTED ELECTRIC WATER HEATER DETAIL

SCALE: N.T.S.

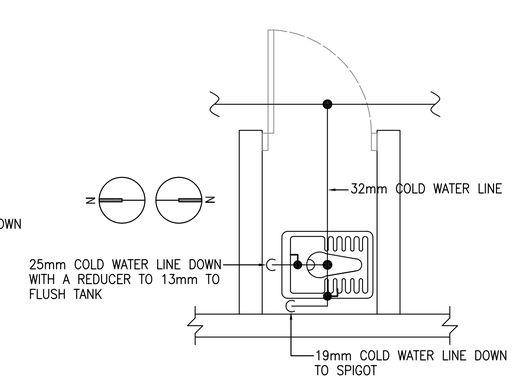


## TYPICAL EASTERN STYLE WATER CLOSET WITH SPIGOT WATER PIPING DETAIL

SCALE: N.T.S.

US ARMY CORPS OF ENGINEERS
AFGHANISTAN ENGINEER DISTRICT

| Mark | Description | Date | Appr. |
|---|---|---|---|
| | | | |

| Mark | Description | Date | Appr. |
|---|---|---|---|
| | | | |

Rev: 0
Date: 02/23/10
Design file no.
Drawing code:
File name: ANALATMPL-501XXX
Plot date: 02/09/10
Plot scale: N.T.S.

Designed by: RMH
Dwn by: RMH
Ckd by: CJM
Reviewed by: MRS
Submitted by: BAKER

U.S. ARMY ENGINEER DISTRICT, AFGHANISTAN
CORPS OF ENGINEERS
APO AE 96338

*Michael Baker Jr, Inc.*
*A unit of Michael Baker Corporation*
Airside Business Park
100 Airside Drive
Moon Township, PA 15108
www.mbakercorp.com

AFGHAN NATIONAL ARMY
REGIONAL MILITARY TRAINING CENTER
STANDARD DESIGN

LATRINE BUILDING
MEDIUM

PLUMBING DETAILS

APPROVED:

A/E DESIGNER OF RECORD

SEAL:

COMMONWEALTH OF PENNSYLVANIA
REGISTERED PROFESSIONAL
MATTHEW R. SOTOSKY
ENGINEER
046576-E

Sheet reference number:
P-501

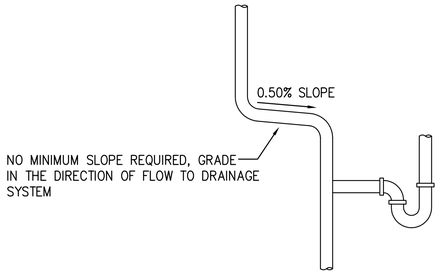


## TYPICAL VENT SLOPE DETAILS

SCALE: N.T.S.

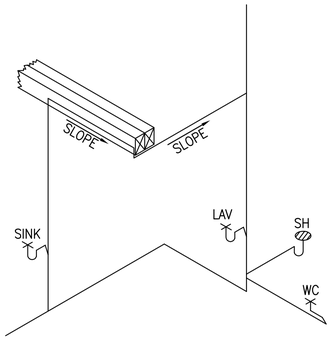


## TYPICAL VENT SLOPE DETAILS

SCALE: N.T.S.

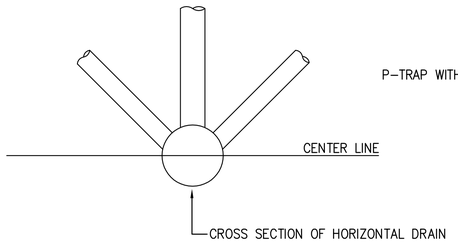


## ACCEPTABLE VENT CONNECTIONS TO HORIZONTAL DRAIN - DETAIL

SCALE: N.T.S.

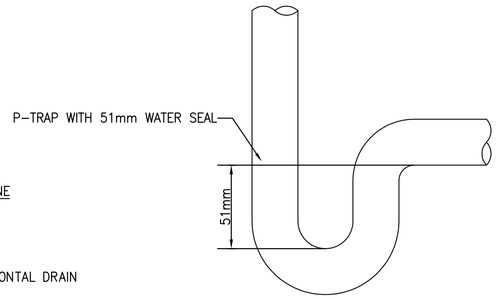


## P-TRAP WITH 51mm WATER SEAL DETAIL

SCALE: N.T.S.

## FIXTURE LIST

| TYPE | ITEM | SOIL & WASTE | VENT | COLD WATER | HOT WATER | REMARKS | REMARKS 2 |
|---|---|---|---|---|---|---|---|
| W–1 | EASTERN STYLE WATER CLOSET | 102mm | 51mm | 25mm | ------ | FLUSH VALVE | LOW FLOW EFFICIENT TYPE |
| L–1 | TROUGH FIXTURE | 38mm | 38mm | 13mm | 13mm | FABRICATED IN FIELD | LOW FLOW EFFICIENT TYPE |
| ABL–1 | ABLUTION | FLOOR DRAIN | ------ | 13mm | 13mm | FABRICATED IN FIELD | ---------- |
| HWH–1 | WATER HEATER | --- | --- | SEE DWG. | SEE DWG. | 151 LITER ELECTRIC WATER HEATER, 380/3ø, 9KW | ---------- |

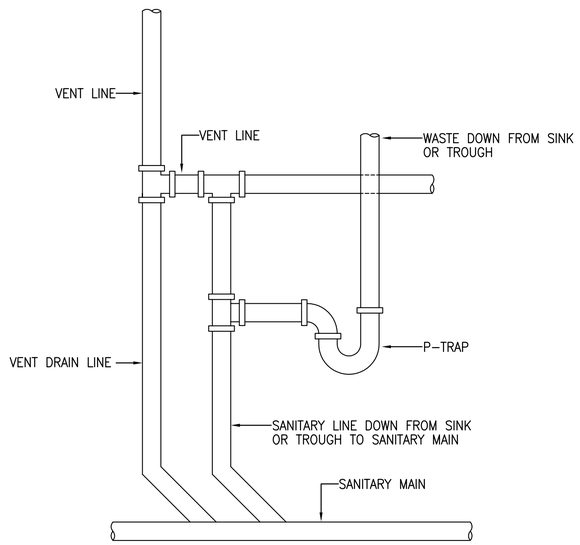


## TYPICAL LAVATORY/LAUNDRY VENT DETAIL

SCALE: N.T.S.

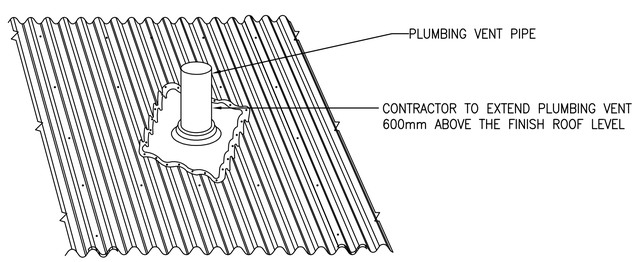


## PLUMBING VENT THRU ROOF DETAIL

SCALE: NTS

APPROVED:

A/E DESIGNER OF RECORD

SEAL:

COMMONWEALTH OF PENNSYLVANIA
REGISTERED PROFESSIONAL
MATTHEW R. SOTOSKY
ENGINEER
046576-E

US ARMY CORPS OF ENGINEERS
AFGHANISTAN ENGINEER DISTRICT

| Mark | Description | Date | Appr. |
|---|---|---|---|
| | | | |

Date: 02/23/10 Rev: 0
Design file no.
Drawing code:
File name: ANALATMPL-502XXX
Plot date: 02/09/10
Plot scale: N.T.S.

Designed by: RMH
Dwn by: RMH
Ckd by: CJM
Reviewed by: MRS
Submitted by: BAKER

U.S. ARMY ENGINEER DISTRICT, AFGHANISTAN
CORPS OF ENGINEERS
APO AE 96338

*Michael Baker Jr., Inc.*
*A unit of Michael Baker Corporation*
Airside Business Park
100 Airside Drive
Moon Township, PA 15108
www.mbakercorp.com

AFGHAN NATIONAL ARMY
REGIONAL MILITARY TRAINING CENTER
STANDARD DESIGN

LATRINE BUILDING
MEDIUM

PLUMBING DETAILS & FIXTURE SCHEDULE

Sheet reference number:
P–502

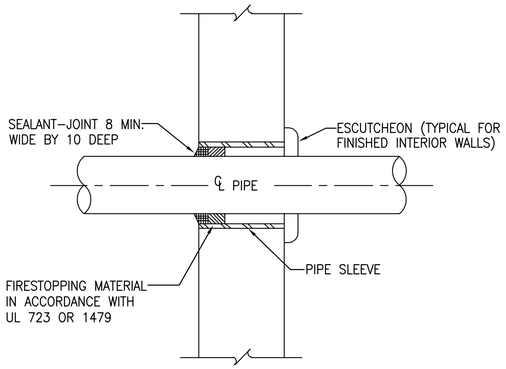


## TYPICAL WALL PENETRATION DETAIL

SCALE: N.T.S.

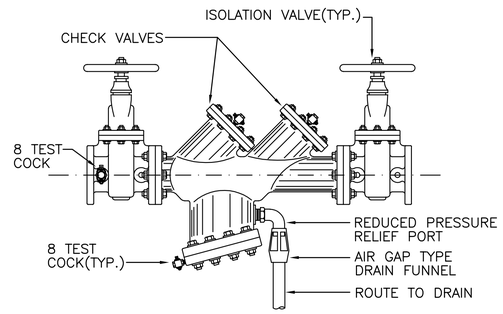


## TYPICAL BACKFLOW PREVENTER DETAIL

SCALE: N.T.S.

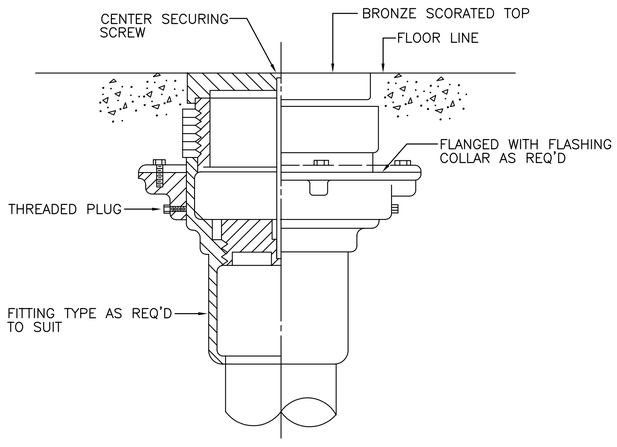


## TYPICAL FLOOR CLEANOUT DETAIL

SCALE: N.T.S.

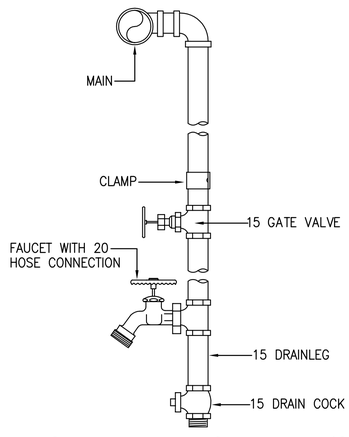


## TYPICAL WATER DROP DETAIL (SPIGOT)

SCALE: N.T.S.

US ARMY CORPS OF ENGINEERS
AFGHANISTAN ENGINEER DISTRICT

| Mark | Description | Date | Appr. |
|---|---|---|---|
| | | | |

| Mark | Description | Date | Appr. |
|---|---|---|---|
| | | | |

Rev: 0
Date: 02/23/10
Design file no.
Drawing code:
File name: ANNATMPL-563XXX
Plot date: 02/09/10
Plot scale:N.T.S.

Designed by: RMH
Drwn by: RMH
Ckd by: CJM
Reviewed by: MRS
Submitted by: BAKER

U.S. ARMY ENGINEER DISTRICT, AFGHANISTAN
CORPS OF ENGINEERS
APO AE 96338

*Michael Baker Jr., Inc*
*A unit of Michael Baker Corporation*
Airside Business Park
100 Airside Drive
Moon Township, PA 15108
www.mbakercorp.com

AFGHAN NATIONAL ARMY
REGIONAL MILITARY TRAINING CENTER
STANDARD DESIGN

LATRINE BUILDING
MEDIUM

PLUMBING DETAILS

APPROVED:

A/E DESIGNER OF RECORD

SEAL:

COMMONWEALTH OF PENNSYLVANIA
REGISTERED PROFESSIONAL
MATTHEW R. SOTOSKY
ENGINEER
046578-E

Sheet reference number:
P–503

## PLUMBING SYMBOLS

- SANITARY SEWER PIPING (BELOW GROUND)
- SANITARY SEWER PIPING (ABOVE GROUND)
- VENT PIPING (V)
- COLD WATER PIPING (CW)
- HOT WATER PIPING (HW)
- BALL VALVE
- BACKFLOW PREVENTER
- OR CLEANOUT (CO.)
- ROOF PENETRATION

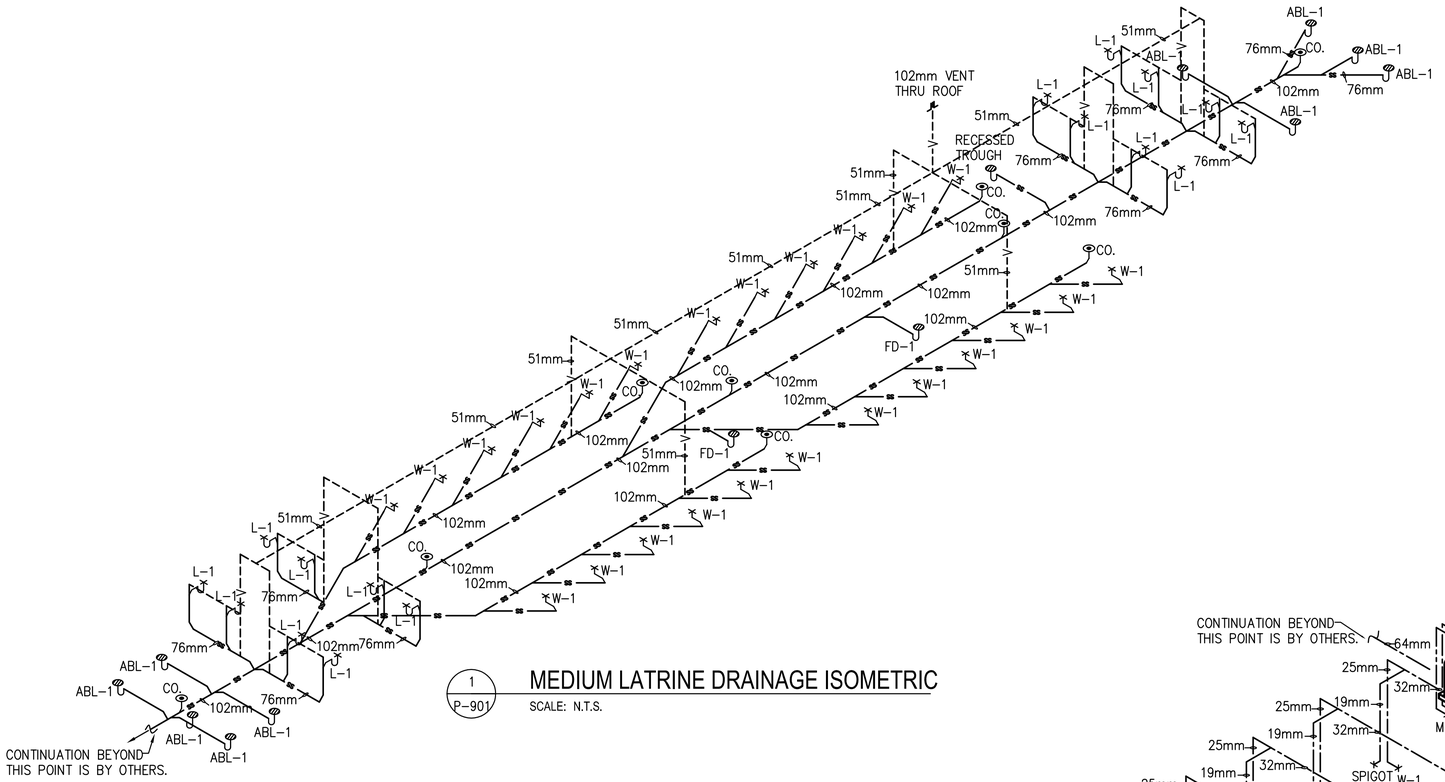


1 P-901 MEDIUM LATRINE DRAINAGE ISOMETRIC

SCALE: N.T.S.

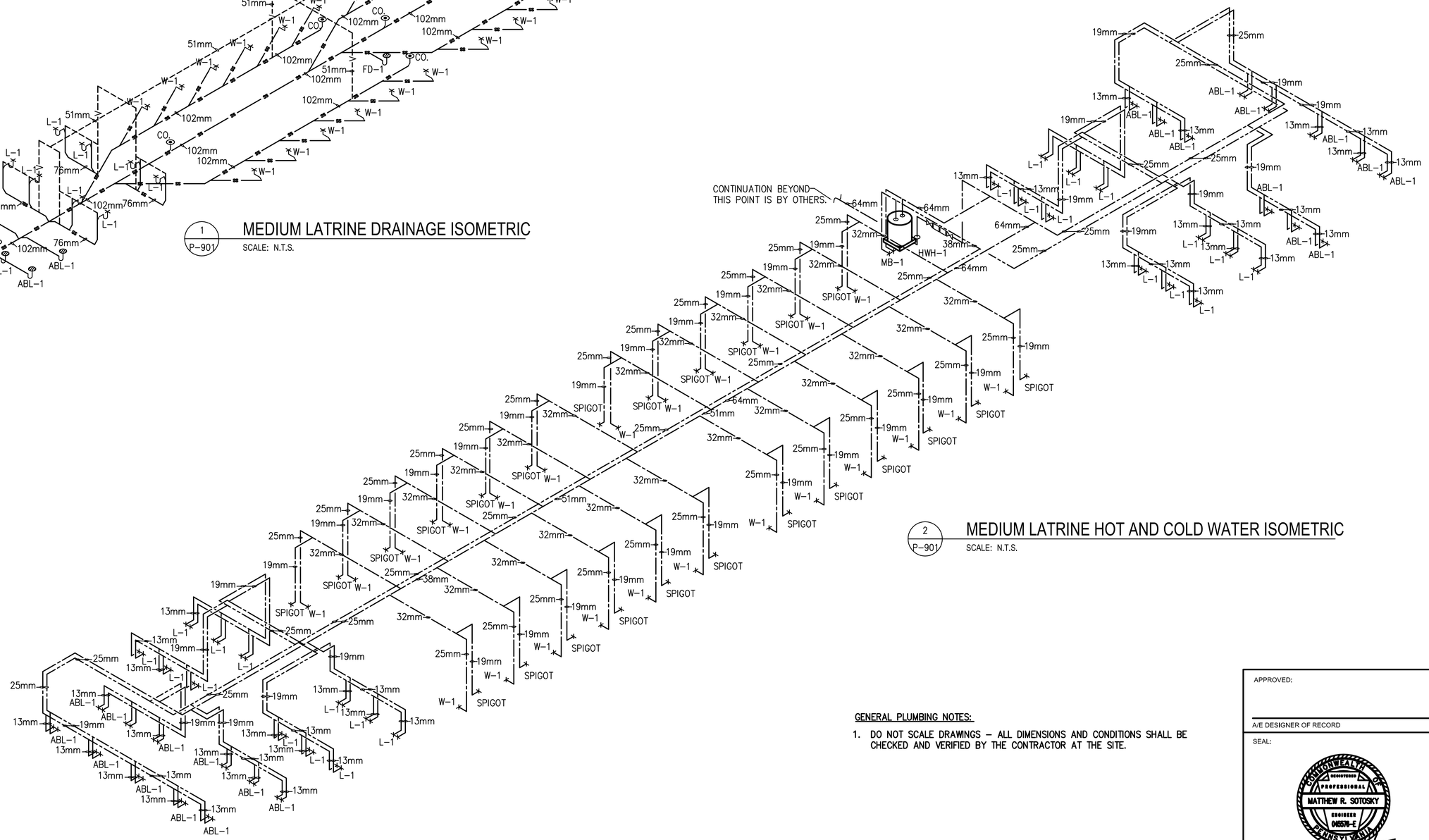


2 P-901 MEDIUM LATRINE HOT AND COLD WATER ISOMETRIC

SCALE: N.T.S.

GENERAL PLUMBING NOTES:

1. DO NOT SCALE DRAWINGS – ALL DIMENSIONS AND CONDITIONS SHALL BE CHECKED AND VERIFIED BY THE CONTRACTOR AT THE SITE.

APPROVED:

A/E DESIGNER OF RECORD

SEAL:

COMMONWEALTH OF PENNSYLVANIA
REGISTERED PROFESSIONAL
MATTHEW R. SOTOSKY
ENGINEER
045576-E

US ARMY CORPS OF ENGINEERS
AFGHANISTAN ENGINEER DISTRICT

| Mark | Description | Date | Appr. | Mark | Description | Date | Appr. |
|---|---|---|---|---|---|---|---|

Designed by: RMH
Dwn by: RMH
Ckd by: CJM
Reviewed by:
Submitted by: BAKER
Date: 02/23/10
Rev: 0
Design file no.
Drawing code:
File name: ANALATMPL-901XXX
Plot date: 02/08/10
Plot scale: N.T.S.

U.S. ARMY ENGINEER DISTRICT, AFGHANISTAN
CORPS OF ENGINEERS
APO AE 96338

Michael Baker Jr., Inc
A unit of Michael Baker Corporation
Airside Business Park
100 Airside Drive
Moon Township PA 15108
www.mbakercorp.com

AFGHAN NATIONAL ARMY
REGIONAL MILITARY TRAINING CENTER
STANDARD DESIGN

LATRINE BUILDING
MEDIUM
PLUMBING ISOMETRICS

Sheet reference number:
P-901

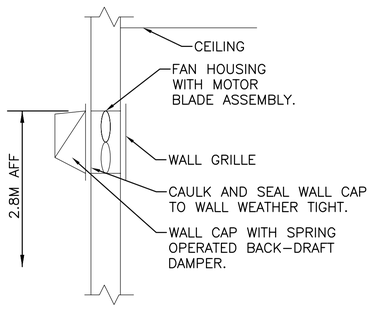


2 M-101 WALL EXHAUST FAN DETAIL
N.T.S.

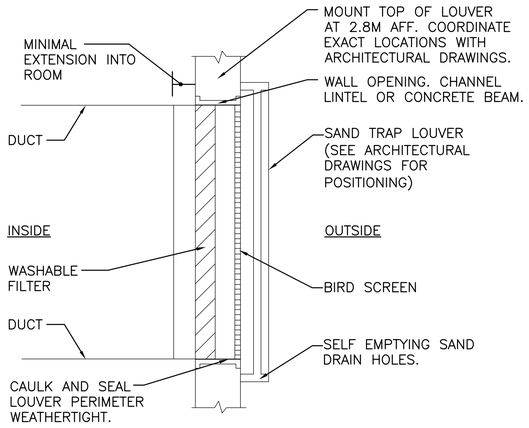


3 M-101 FILTERED SAND TRAP LOUVER
N.T.S.

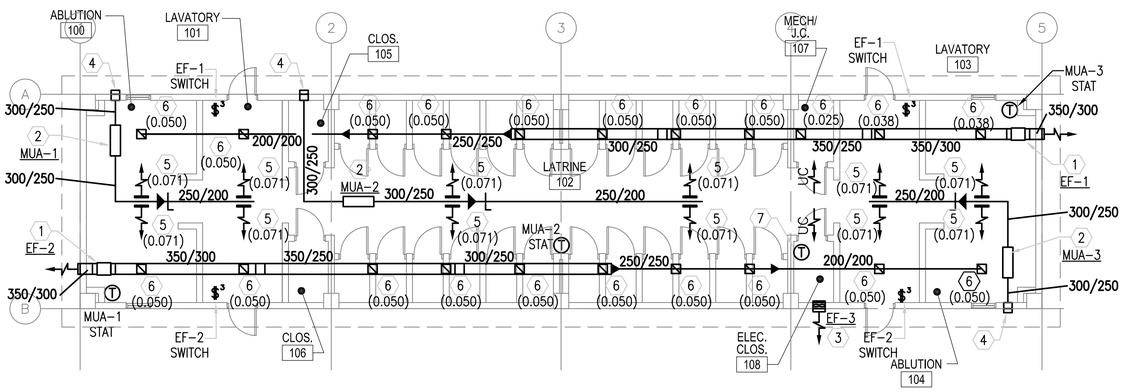


1 M-101 FLOOR PLAN - HVAC
SCALE: 1:100

## GENERAL NOTES:

1. DO NOT SCALE DRAWINGS – ALL DIMENSIONS AND CONDITIONS SHALL BE CHECKED AND VERIFIED BY THE CONTRACTOR AT THE SITE.
2. ALL WORK PERFORMED ON THIS BUILDING SHALL BE IN COMPLIANCE WITH ALL PERTINENT CODES, RULES, ORDINANCES AND REGULATIONS OF THE GOVERNING AUTHORITIES.
3. ALL WORK PERFORMED UNDER AND IN CONNECTION WITH THESE DRAWINGS AND SPECIFICATIONS SHALL BE IN STRICT COMPLIANCE WITH THE LATEST SAFETY AND HEALTH STANDARDS.

## SYMBOLS:

| | |
|---|---|
| (X) | KEY NOTE |
| (.050) | AIR VOLUME IN CUBIC METERS PER SECOND (CMS) |
| (T) | THERMOSTAT WITH LOCKING COVER |
| UC | DOOR UNDERCUT |
| $^3 | 3 WAY SWITCH – 20A RATED |

## ABBREVIATIONS:

| | |
|---|---|
| AFF | ABOVE FINISH FLOOR |
| CF | CEILING FANS |
| CMS | CUBIC METERS PER SECOND |
| STATS | THERMOSTATS |

## KEY NOTE:

1. INLINE EXHAUST FAN DUCTED TO WALL CAP WITH LOW LEAKAGE GRAVITY BACK–DRAFT DAMPER. SECURE FAN TO STRUCTURE ABOVE AND INTERLOCK WITH MAKE UP AIR HEATER.
2. ELECTRIC MAKE UP AIR HEATER SECURED TO STRUCTURE ABOVE. BLOWER SHALL BE SET TO ENERGIZE WITH CORRESPONDING EXHAUST FAN AND OR THE THERMOSTAT, HEAT SHALL BE CONTROLLED BY THERMOSTAT. COORDINATE DUCT AND LIGHT LOCATIONS WITH OTHER TRADES.
3. WALL EXHAUST FAN WITH LOW SPRING OPERATED BACK–DRAFT DAMPER. SEE DETAIL 2 THIS SHEET.
4. 600X600 (24X24) INTAKE LOUVER FOR MAKE UP AIR UNIT. PROVIDE WEATHER PROOF LOUVER WITH 50mm (2") WASHABLE FILTER AND SAND TRAP. SEE DETAIL 3 THIS SHEET.
5. 200x150 (8x6) ALUMINUM DUCT MOUNTED SUPPLY GRILLE WITH ADJUSTABLE OPPOSED BLADE DAMPERS. BALANCE TO CMS IN PARENTHESIS.
6. 150x150 (6x6) ALUMINUM DUCT MOUNTED EXHAUST GRILLE WITH ADJUSTABLE OPPOSED BLADE DAMPERS. BALANCE TO CMS IN PARENTHESIS.
7. THERMOSTAT MOUNTED AS HIGH AS POSSIBLE. INTERLOCK STAT WITH CORRESPONDING EXHAUST FAN, SET FAN TO ENERGIZE ON RISE IN TEMPERATURE ABOVE 25°C (77°F).

## EXHAUST FAN SCHEDULE

| NO. | TYPE | FAN CMS | DRIVE | HP | SP mmH2O | ELECTRICAL DATA | SWITCH |
|---|---|---|---|---|---|---|---|
| EF–1 | INLINE | 0.500 | DIRECT | 1/4 | 13 | 220/1/50 | @ WALL |
| EF–2 | INLINE | 0.500 | DIRECT | 1/4 | 13 | 220/1/50 | @ WALL |
| EF–3 | WALL | 0.035 | DIRECT | FRACT | 9.5 | 220/1/50 | W/ STAT |

NOTE:
1. FANS SHALL HAVE SPRING OPERATED BACK–DRAFT DAMPER.

## MAKE UP AIR HEATERS

| NO. | BLOWER CMS | FUSE | KW | MIN. TEMP RISE °C | SP mmH2O | ELECTRICAL DATA | CONTROL |
|---|---|---|---|---|---|---|---|
| MUA–1 | 0.284 | 60 | 10 | 20 | 13 | 220/1/50 | REMOTE |
| MUA–2 | 0.284 | 60 | 10 | 20 | 13 | 220/1/50 | REMOTE |
| MUA–3 | 0.284 | 60 | 10 | 20 | 13 | 220/1/50 | REMOTE |

NOTES:
1. PROVIDE REMOTE MOUNTED THERMOSTAT WITH LOCKING COVER.
2. INTERLOCK MUA–1 BLOWER OPERATION WITH EF–1 AND THERMOSTAT.
3. INTERLOCK MUA–2 BLOWER OPERATION WITH EF–2 AND THERMOSTAT.
4. INTERLOCK MUA–3 BLOWER OPERATION WITH EF–3 AND THERMOSTAT.
5. BLOWER SHALL BE SET TO ENERGIZE WITH EXHAUST FAN(S) AND OR THERMOSTAT(S), HEAT SHALL BE CONTROLLED BY THERMOSTAT. PROVIDE AIR SENSING SWITCH FOR HEATING OPERATION.

LINEAR DIMENSIONS SHOWN ARE IN MILLIMETERS (MM), UNLESS OTHERWISE NOTED

0 2000 4000
SCALE: 1:100

APPROVED:

A/E DESIGNER OF RECORD

SEAL:

COMMONWEALTH OF PENNSYLVANIA
REGISTERED PROFESSIONAL
MATTHEW R. SOTOSKY
ENGINEER
045578-E

US ARMY CORPS OF ENGINEERS
AFGHANISTAN ENGINEER DISTRICT

| Mark | Description | Date | Appr. |
|---|---|---|---|
| | | | |

| Mark | Description | Date | Appr. |
|---|---|---|---|
| | | | |

Date: 02/23/10
Design file no.
Drawing code:
Rev: 0
File name: ANALATMMH-101XX
Plot date: 02/09/10
Plot scale: 1:100

Designed by: RML
Dwn by: JUN
Ckd by: CJM
Reviewed by: MRS
Submitted by: BAKER

U.S. ARMY ENGINEER DISTRICT, AFGHANISTAN
CORPS OF ENGINEERS
APO AE 96338

*Michael Baker Jr., Inc*
*A unit of Michael Baker Corporation*
Airside Business Park
100 Airside Drive
Moon Township, PA 15108
www.mbakercorp.com

AFGHAN NATIONAL ARMY
REGIONAL MILITARY TRAINING CENTER
STANDARD DESIGN

LATRINE BUILDING
MEDIUM

HVAC PLANS SCHEDULES AND DETAILS

Sheet reference number:
M–101

## POWER

- DISTRIBUTION PANELBOARD
- NEW PANELBOARD – SURFACE
- NEW PANELBOARD – RECESSED
- (G) GENERATOR
- TRANSFORMER (DRAWN TO SCALE)
- [J] JUNCTION BOX
- (J) JUNCTION BOX – CEILING
- FUSIBLE SAFETY SWITCH
- (M) MOTOR
- $^{M}$ MOTOR STARTING SWITCH – 220V, 20A RATED UNLESS OTHERWISE NOTED
- ELECTRIC WATER HEATER
- (CF) CEILING FAN – REFER TO SPECIFICATION SECTION 26 20 00

## RECEPTACLES

- DUPLEX 20A TYPE CEE 7/7 "SCHUKO STYLE" UNSWITCHED RECEPTACLE
- $^{GF}$ DUPLEX 20A TYPE CEE 7/7 "SCHUKO STYLE" UNSWITCHED RECEPTACLES – 10mA GROUND FAULT INTERRUPTER TYPE
- $^{WP}$ DUPLEX 20A TYPE CEE 7/7 "SCHUKO STYLE" UNSWITCHED TYPE WITH WEATHERPROOF COVER – 10mA GROUND FAULT INTERRUPTER TYPE
- $^{EXP}$ DUPLEX 20A TYPE CEE 7/7 "SCHUKO STYLE" UNSWITCHED RECEPTACLES – EXPLOSION PROOF
- * INDICATES MOUNT DEVICE ABOVE COUNTERTOP OR AT 1070mm ABOVE FINISHED FLOOR WHERE NO COUNTER IS TO BE INSTALLED.

## LIGHTING

- LIGHTING FIXTURE – SEE FIXTURE SCHEDULE FOR MORE INFORMATION
- EMERGENCY LIGHTING FIXTURE – SEE FIXTURE SCHEDULE FOR MORE INFORMATION
- DOWNLIGHT
- LIGHTING FIXTURE ON NORMAL/EMERGENCY
- WALL MOUNTED LIGHT FIXTURE
- [E] EXIT SIGN – DIRECTIONAL ARROWS AS INDICATED ON DRAWINGS
- REMOTE HEAD FOR BATTERY PACK
- $ SINGLE POLE SWITCH – 20A RATED
- $^{3}$ 3–WAY SWITCH – 20A RATED
- $^{4}$ 4–WAY SWITCH – 20A RATED
- [LC] LIGHTING CONTACTOR
- POLE MOUNTED SITE LIGHTING FIXTURE– NUMBER OF FIXTURES PER POLE AS INDICATED ON DRAWINGS
- EXTERIOR DIRECTIONAL LIGHTING FIXTURE
- a SMALL CASE LETTERS REPRESENTS LAMP(S) / SWITCHES.

## TELECOMMUNICATIONS

- ▼ TELEPHONE OUTLET(S) @ 45cm AFF. U.N.O. WITH 20mm RACEWAY TERMINATED TO TELEDATA TERMINAL BOARD.
- ▽ DATA OUTLET(S) @ 45cm AFF. U.N.O. WITH 20mm RACEWAY TERMINATED TO TELEDATA TERMINAL BOARD.
- ▼ COMBINATION TELEPHONE/DATA OUTLET(S) @ 45cm AFF. U.N.O. WITH 27mm RACEWAY TERMINATED TO TELEDATA TERMINAL BOARD.
- "▼ WALL MTD. TELEPHONE OUTLET WITH 20mm RACEWAY TO TELEDATA TERMINAL BOARD.
- (x)T INDICATES NUMBER OF TELEPHONE OUTLET(S) AND ASSOCIATED CABLING
- (x)D INDICATES NUMBER OF DATA OUTLET(S) AND ASSOCIATED CABLING
- (x)TF INDICATES NUMBER OF TELEPHONE OUTLETS AND ASSOCIATED CABLING WITH 1 OUTLET AND CABLE DEDICATED FOR FAX

## SINGLE LINE SYMBOLS

- SWITCH
- BREAKER
- FUSE
- TRANSFORMER
- GROUND
- CONTACT (NORMALLY OPEN)
- CONTACT (NORMALLY CLOSED)
- TRANSFER SWITCH
- CURRENT TRANSFORMER
- INDICATES NEW ELECTRICAL EQUIPMENT
- C INDICATES NEW CONTROL WIRING AND CONDUIT
- EQUIPMENT OUTLINE

## MISCELLANEOUS

- BRANCH CIRCUIT WIRING, SURFACE MOUNTED ON WALLS
- BRANCH CIRCUIT WIRING – 6mm²
- BRANCH CIRCUIT WIRING – UNDER FLOOR
- HOME RUN BACK TO PANEL
- CONDUIT TURNED DOWN
- CONDUIT TURNED UP
- LV LOW VOLTAGE WIRING AND CONDUIT
- ~ INDICATES CONTINUATION OF LINE

## FIRE ALARM

- [FACP] FIRE ALARM CONTROL PANEL WITH BATTERY BACKUP
- [F] FIRE ALARM PULL STATION
- [F] FIRE ALARM STROBE – WALL MOUNTED
- [F] FIRE ALARM AUDIBLE/STROBE – WALL MOUNTED
- [F] FIRE ALARM HORN/STROBE – WALL MOUNTED
- (S) SMOKE DETECTOR
- (H) HEAT DETECTOR CEILING MOUNTED
- (D) DUCT DETECTOR – PROVIDED BY EC, INSTALLED BY MC AND CONNECTED BY EC

## DENOTATIONS & ABBREVIATIONS

| | |
|---|---|
| AFF | ABOVE FINISHED FLOOR |
| C | CEILING MOUNTED |
| E | EMERGENCY |
| EC | ELECTRICAL CONTRACTOR |
| EPO | EMERGENCY POWER OFF |
| EXP | EXPLOSION PROOF |
| F | FIRE ALARM |
| FF | FLUSH FLOOR MOUNTED |
| FL | FLUORESCENT |
| FO | FIBER OPTIC |
| FSS | FUSED SAFETY SWITCH |
| GF | GROUND FAULT INTERRUPTER |
| GC | GENERAL CONTRACTOR |
| IG | ISOLATED GROUND |
| K | KEY |
| LV | LOW VOLTAGE |
| M | MOTOR |
| MC | MECHANICAL CONTRACTOR |
| NE | NORMAL/EMERGENCY |
| NFSS | NON–FUSED SAFETY SWITCH |
| PA | PAGING SYSTEM |
| PLC | PLUMBING CONTRACTOR |
| SL | SINGLE LINE |
| T | TELEPHONE |

## DENOTATIONS & ABBREVIATIONS (CONT.)

| | |
|---|---|
| TP | TAMPER PROOF |
| UE | UNDERGROUND ELECTRIC |
| W | WALL MOUNTED |
| WP | WEATHERPROOF WITH GROUND FAULT INTERRUPTION |
| WT | WATER TIGHT |

## GENERAL PROJECT NOTES:

G1. UNLESS OTHERWISE NOTED, PROVIDE ALL EQUIPMENT SHOWN ON THE PLANS. THE ELECTRICAL CONTRACTOR SHALL COORDINATE ALL SYMBOLS SHOWN ON THE PLANS WITH THE SYMBOL LIST. IT SHALL BE THE RESPONSIBILITY OF THE CONTRACTOR TO VERIFY THE INTENT OF ANY SYMBOL THAT IS SHOWN ON THE PLANS AND NOT INDICATED ON THE SYMBOL LIST WITH THE ENGINEER PRIOR TO BID.

G2. THE CONTRACTOR SHALL VERIFY THE LOCATION OF ALL UNDERGROUND UTILITIES WITHIN THE CONSTRUCTION AREA THREE (3) WORKING DAYS NOTICE BEFORE COMMENCING DIGGING. NOTIFY THE LOCAL AUTHORITY HAVING JURISDICTION AND WAIT THE REQUIRED TIME BEFORE COMMENCING TO DIG.

G3. THE CONTRACTOR SHALL COORDINATE CONDUIT RUNS, LIGHTING FIXTURES AND OTHER EQUIPMENT LOCATIONS WITH THE OTHER TRADE CONTRACTORS TO AVOID CONFLICTS.

G4. WHERE VOLTAGES AND FREQUENCIES ON THE DRAWINGS AND IN THE SPECIFICATIONS DIFFER FROM THE LOCAL ONES, ALL WORK SHALL BE PERFORMED USING THE LOCAL VOLTAGES AND FREQUENCIES.

G5. THE MINIMUM WIRE SIZE ON THE PROJECT SHALL BE 4mm². THE MINIMUM CONDUIT SIZE SHALL BE 20mm. THE MINIMUM BREAKER SIZE SHALL BE 20 AMPS.

G6. THE CONTRACTOR SHALL PUT A MAXIMUM OF 6 DUPLEX RECEPTACLES ON A 20A SINGLE POLE CIRCUIT.

G7. WHERE THE 1010 SCOPE REVIEW, 1015 TECHNICAL REVIEW, DRAWINGS, AND SPECIFICATIONS DIFFER FROM AMERICAN CODES OR STANDARDS, THE 1010, 1015, DRAWINGS, AND SPECIFICATIONS SHALL RULE.

G8. ALL CONDUIT AND DEVICES SHALL BE SURFACE MOUNTED UNLESS OTHERWISE INDICATED.

G9. CONTRACTOR SHALL COORDINATE ALL WORK WITH ALL OTHER TRADES TO ENSURE ALL WORK IS COMPLETED IN A PROFESSIONAL, WORKMAN–LIKE MANNER.

APPROVED:

A/E DESIGNER OF RECORD

SEAL:

COMMONWEALTH OF PENNSYLVANIA
REGISTERED PROFESSIONAL ENGINEER
JOSEPH R. GAUS
PE-074251
11/29/10

US ARMY CORPS OF ENGINEERS
AFGHANISTAN ENGINEER DISTRICT

| Mark | Description | Date | Appr. |
|---|---|---|---|
| | | | |

| Mark | Description | Date | Appr. |
|---|---|---|---|
| | | | |

Rev: 0
Date: 2/23/10
File no.
Drawing code:
File name:
Plot date:
Plot scale:

Designed by: JRG
Dwn. by: BJB
Ckd by: JRG
Reviewed by: JRG
Submitted by: BAKER

U.S. ARMY ENGINEER DISTRICT, AFGHANISTAN
CORPS OF ENGINEERS
APO AE 96338

Michael Baker Jr., Inc
A unit of Michael Baker Corporation
Airside Business Park
100 Airside Drive
Moon Township, PA 15108
www.mbakercorp.com

AFGHAN NATIONAL ARMY
REGIONAL MILITARY TRAINING CENTER
STANDARD DESIGN

LATRINE BUILDING
MEDIUM

# ELECTRICAL SYMBOLS & ABBREVIATIONS

Sheet reference number:
E–001

## GENERAL NOTES:

1. REFER TO DRAWING #E-001 FOR THE ELECTRICAL SYMBOLS LIST.
2. EXIT SIGNS SHALL BE WIRED AHEAD OF ANY LOCAL SWITCHING ON CIRCUITS. SEE WIRING DIAGRAM DETAIL 6, ON DRAWING #E-501.
3. REFER TO DRAWING #E-601 FOR THE LIGHTING FIXTURE SCHEDULE.
4. REFER TO DRAWING #E-501 FOR THE POWER RISER.
5. REFER TO DRAWING #E-602 FOR PANEL SCHEDULES.
6. LIGHT FIXTURES INDICATED AS EMERGENCY SHALL BE PROVIDED WITH A BATTERY BACKUP BALLAST. SEE WIRING DIAGRAM DETAIL 5, ON DRAWING #E-501.
7. COORDINATE THE LOCATIONS OF LIGHT FIXTURES WITH THE LOCATION OF DUCTWORK PRIOR TO INSTALLATION.

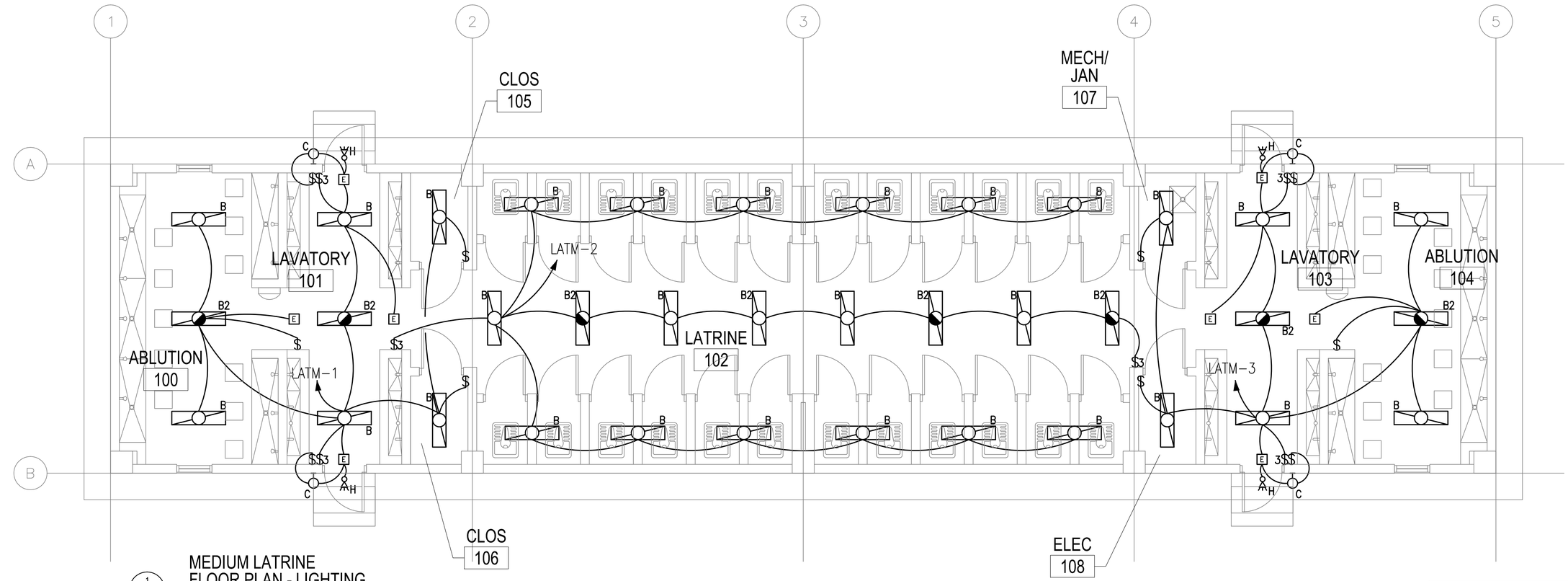


1 / E-101 MEDIUM LATRINE FLOOR PLAN - LIGHTING

SCALE: 1:50

0 1000 2000

SCALE: 1:50

US ARMY CORPS OF ENGINEERS
AFGHANISTAN ENGINEER DISTRICT

| Mark | Description | Date | Appr. |
|---|---|---|---|

| Mark | Description | Date | Appr. |
|---|---|---|---|

Rev: 0

Date: 2/23/10
Design file no.
Drawing code:
File name:
Plot date:
Plot scale:

Designed by: JRG
Dwn by: BJB
Ckd by: JRG
Reviewed by: JRG
Submitted by: BAKER

U.S. ARMY ENGINEER DISTRICT, AFGHANISTAN
CORPS OF ENGINEERS
APO AE 96338

Michael Baker Jr., Inc
A unit of Michael Baker Corporation
Airside Business Park
100 Airside Drive
Moon Township, PA 15108
www.mbakercorp.com

AFGHAN NATIONAL ARMY
REGIONAL MILITARY TRAINING CENTER
STANDARD DESIGN

LATRINE BUILDING
MEDIUM

ELECTRICAL LIGHTING PLAN

APPROVED:

A/E DESIGNER OF RECORD

SEAL:

COMMONWEALTH OF PENNSYLVANIA
REGISTERED PROFESSIONAL
JOSEPH R GAUS
ENGINEER
PE-074251
1/29/10

Sheet reference number:
E-101

## GENERAL NOTES:

1. REFER TO DRAWING #E-001 FOR THE ELECTRICAL SYMBOLS LIST.
2. REFER TO DRAWING #E-501 FOR THE POWER RISER.
3. REFER TO DRAWING #E-602 FOR PANEL SCHEDULES.
4. COORDINATE EXACT MOUNTING LOCATION OF DISCONNECTING MEANS FOR MECHANICAL AND PLUMBING EQUIPMENT IN THE FIELD.
5. FUSIBLE SAFETY SWITCHES THAT ARE NOT OTHERWISE IDENTIFIED SHALL BE 380V, 1P, 30A FUSED SAFETY SWITCHES WITH 20A FUSES.

## NUMBERED NOTES:

(1) PANEL LATM.

(2) NEMA 3R, 380V, 3P, 30A FUSED DISCONNECT FUSED AT 30A. SEE PLUMBING DRAWINGS FOR EXACT LOCATION OF WATER HEATER.

(3) SEE DRAWING #E-602 FOR WIRE AND CONDUIT SIZE.

(4) PROVIDE POWER CONNECTION TO EXHAUST FANS. SEE DRAWINGS #M-101 AND #E-602 FOR MORE INFORMATION.

(5) NOT USED

(6) PROVIDE POWER CONNECTION TO MAKE UP AIR UNIT #1. SEE DRAWINGS #M-101 AND #E-602 FOR MORE INFORMATION.

(7) PROVIDE POWER CONNECTION TO MAKE UP AIR UNIT #2. SEE DRAWINGS #M-101 AND #E-602 FOR MORE INFORMATION.

(8) PROVIDE POWER CONNECTION TO MAKE UP AIR UNIT #3. SEE DRAWINGS #M-101 AND #E-602 FOR MORE INFORMATION.

(9) THE DISCONNECTING MEANS FOR THIS PIECE OF EQUIPMENT SHALL BE IN A NEMA 3R ENCLOSURE.

(10) NEMA 3R, 220V, 1P, 60A FUSED DISCONNECT FUSED AT 60A. SEE MECHANICAL DRAWINGS FOR EXACT LOCATION OF MUA-1.

(11) NEMA 3R, 220V, 1P, 60A FUSED DISCONNECT FUSED AT 60A. SEE MECHANICAL DRAWINGS FOR EXACT LOCATION OF MUA-2.

(12) NEMA 3R, 220V, 1P, 60A FUSED DISCONNECT FUSED AT 60A. SEE MECHANICAL DRAWINGS FOR EXACT LOCATION OF MUA-3.

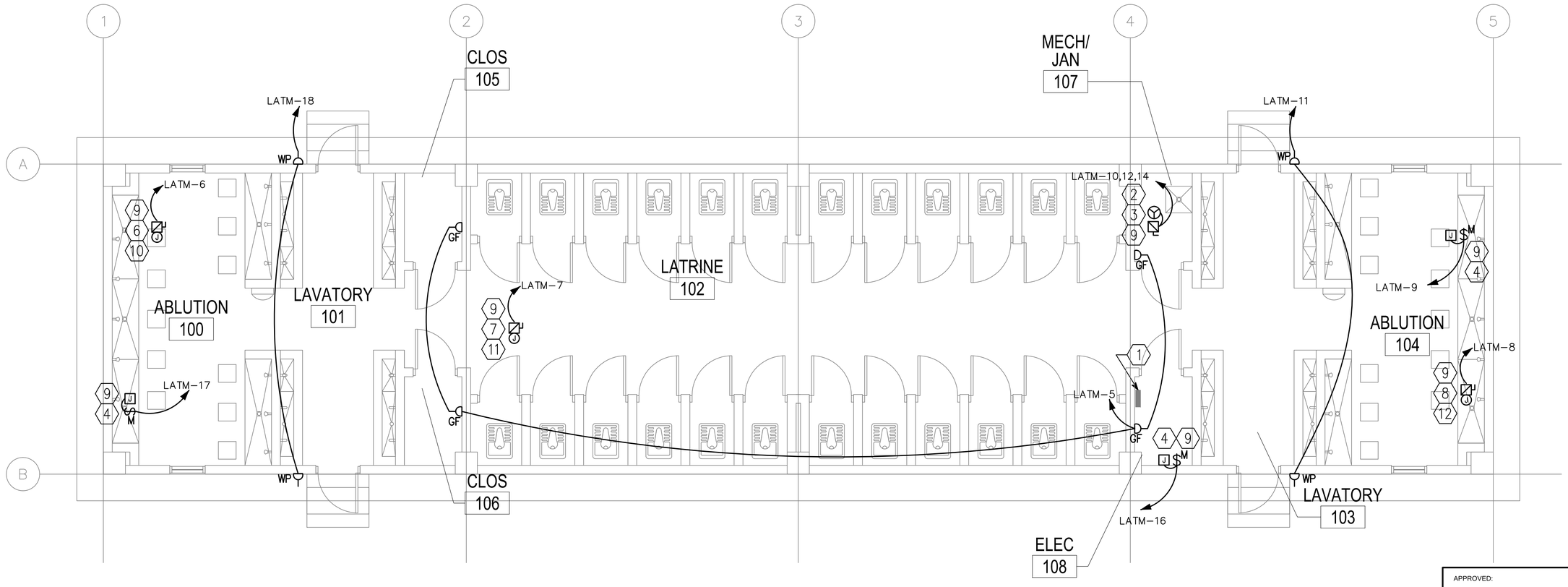


1 E-102 MEDIUM LATRINE FLOOR PLAN - POWER AND SYSTEMS

SCALE: 1:50

0 1000 2000

SCALE: 1:50

US ARMY CORPS OF ENGINEERS
AFGHANISTAN ENGINEER DISTRICT

| Mark | Description | Date | Appr. |
|---|---|---|---|
| | | | |

| Mark | Description | Date | Appr. |
|---|---|---|---|
| | | | |

Rev: 0
Date: 2/23/10
Design file no.
Drawing code:
File name:
Plot date:
Plot scale:

Designed by: JRG
Dwn. by: BJB
Ckd by: JRG
Reviewed by: JRG
Submitted by: BAKER

U.S. ARMY ENGINEER DISTRICT, AFGHANISTAN
CORPS OF ENGINEERS
APO AE 96338

Michael Baker Jr., Inc
A unit of Michael Baker Corporation
Airside Business Park
100 Airside Drive
Moon Township, PA 15108
www.mbakercorp.com

AFGHAN NATIONAL ARMY
REGIONAL MILITARY TRAINING CENTER
STANDARD DESIGN

LATRINE BUILDING
MEDIUM

ELECTRICAL POWER AND SYSTEMS PLAN

APPROVED:

A/E DESIGNER OF RECORD

SEAL:

COMMONWEALTH OF PENNSYLVANIA
REGISTERED PROFESSIONAL
JOSEPH R. GAUS
1/29/10
ENGINEER
PE-074251

Sheet reference number:
E-102

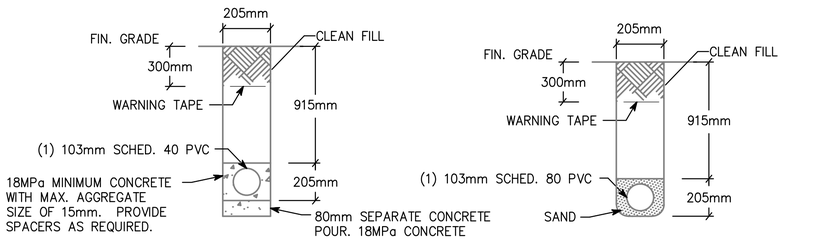


NOTE: PVC CONDUIT SHALL BE DIRECT BURIED SCHEDULE 80 FOR NO TRAFFIC AREAS AND CONCRETE-ENCASED SCHEDULE 40 FOR UNDER ROADWAYS OR TRAFFIC AREAS.

1 / E-501 **TYPICAL DUCT BANK DETAILS FOR CONDUIT IN SAND OR CONCRETE**

SCALE: N.T.S.

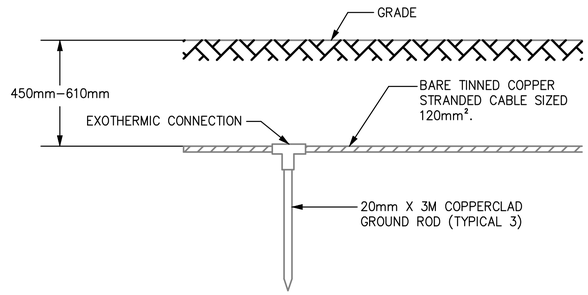


2 / E-501 **GROUND TRIPOD SYSTEM DETAIL - ELEVATION**

SCALE: N.T.S.

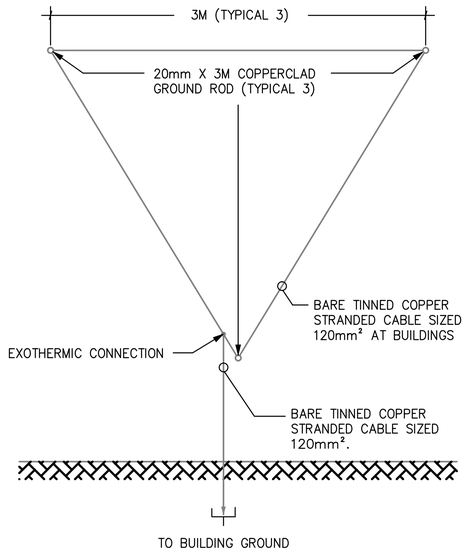


3 / E-501 **GROUND TRIPOD SYSTEM DETAIL - PLAN**

SCALE: N.T.S.

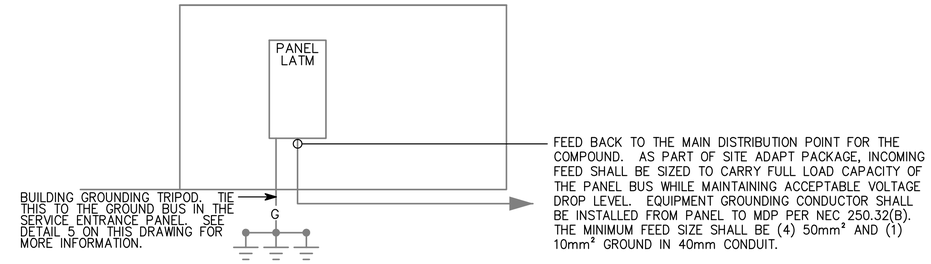


4 / E-501 **LATM RISER DIAGRAM**

SCALE: N.T.S.

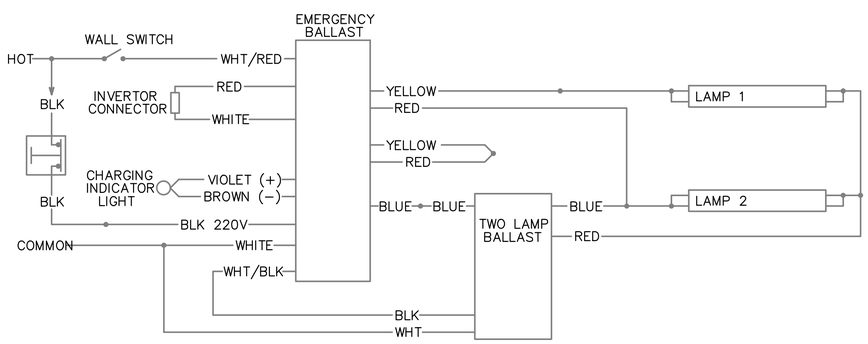


5 / E-501 **EMERGENCY FIXTURE WIRING DIAGRAM**

SCALE: N.T.S.

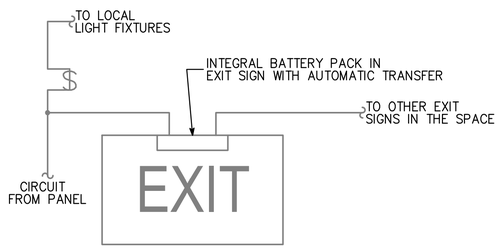


6 / E-501 **EXIT SIGN WIRING DIAGRAM**

SCALE: N.T.S.

APPROVED:

A/E DESIGNER OF RECORD

SEAL:

COMMONWEALTH OF PENNSYLVANIA
REGISTERED PROFESSIONAL
JOSEPH R. GAUS
ENGINEER
PE-074251

US ARMY CORPS OF ENGINEERS
AFGHANISTAN ENGINEER DISTRICT

| Mark | Description | Date | Appr. |
|---|---|---|---|
| | | | |

| Mark | Description | Date | Appr. |
|---|---|---|---|
| | | | |

Rev: 0
Date: 2/23/10
Design file no.
Drawing code:
File name:
Plot date:
Plot scale:

Designed by: JRG
Dwn by: BJB
Ckd by: JRG
Reviewed by: JRG
Submitted by: BAKER

U.S. ARMY ENGINEER DISTRICT, AFGHANISTAN
CORPS OF ENGINEERS
APO AE 96338

*Michael Baker Jr., Inc*
*A unit of Michael Baker Corporation*
Airside Business Park
100 Airside Drive
Moon Township, PA 15108
www.mbakercorp.com

AFGHAN NATIONAL ARMY
REGIONAL MILITARY TRAINING CENTER
STANDARD DESIGN

LATRINE BUILDING
MEDIUM

ELECTRICAL DETAILS

Sheet reference number:
E-501

| (A) LARGER OF THE TWO SIZES GIVEN IN THE TABLES BELOW | |
|---|---|
| GROUNDING ELECTRODE CONDUCTOR (BASED ON AIC RATING) | |
| AIC RATING OF SERVICE EQUIPMENT | NECESSARY GROUNDING ELECTRODE CONDUCTOR SIZE |
| 10K | (1) 35mm² |
| 14K | (1) 50mm² |
| 18K | (1) 70mm² |
| 22K | (1) 70mm² |
| 25K | (1) 70mm² |
| 30K | (1) 95mm² |
| 35K | (1) 120mm² |
| 42K | (1) 150mm² |
| 65K | (1) 185mm² |
| 100K | (1) 300mm² |
| 125K | (2) 185mm² |
| 200K | (2) 300mm² |

| GROUNDING ELECTRODE CONDUCTOR (BASED ON NEC TABLE 250.66) | |
|---|---|
| SIZE OF LARGEST UNGROUNDED SERVICE CONDUCTOR OR EQUIVALENT AREA FOR PARALLEL CONDUCTORS | NECESSARY GROUNDING ELECTRODE CONDUCTOR SIZE |
| 350 kcmil OR SMALLER | 35mm² |
| OVER 350 kcmil TO 600 kcmil | 70mm² |
| OVER 600 kcmil TO 1100 kcmil | 70mm² |
| OVER 1100 kcmil | 95mm² |
| NOTE: ALL SIZES ARE BASED ON COPPER CONDUCTORS. | |

| (B) EQUIPMENT GROUNDING CONDUCTOR | |
|---|---|
| RATING OR SETTING OF AUTOMATIC OVERCURRENT DEVICE IN CIRCUIT AHEAD OF EQUIPMENT, CONDUIT, ETC, NOT EXCEEDING (AMPERES) | NECESSARY EQUIPMENT GROUNDING CONDUCTOR SIZE |
| 15 | 2.5mm² |
| 20 | 4.0mm² |
| 30 | 6.0mm² |
| 40 | 6.0mm² |
| 60 | 6.0mm² |
| 100 | 10mm² |
| 200 | 16mm² |
| 300 | 25mm² |
| 400 | 25mm² |
| 500 | 35mm² |
| 600 | 50mm² |
| 800 | 70mm² |
| 1000 | 70mm² |
| 1200 | 95mm² |
| 1600 | 120mm² |
| 2000 | 150mm² |
| 2500 | 185mm² |
| 3000 | 240mm² |
| 4000 | 300mm² |
| 5000 | 400mm² |
| 6000 | 400mm² |
| NOTE: ALL SIZES ARE BASED ON COPPER CONDUCTORS. | |

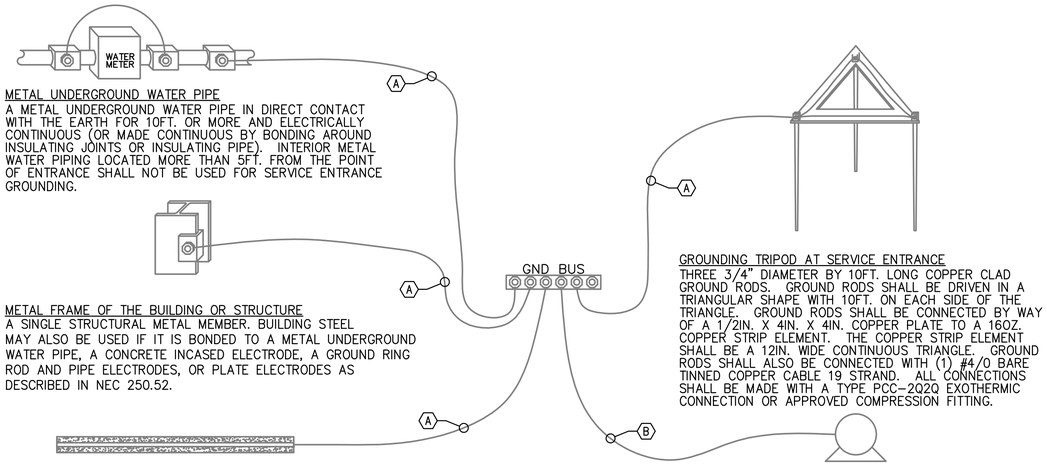


METAL UNDERGROUND WATER PIPE
A METAL UNDERGROUND WATER PIPE IN DIRECT CONTACT WITH THE EARTH FOR 10FT. OR MORE AND ELECTRICALLY CONTINUOUS (OR MADE CONTINUOUS BY BONDING AROUND INSULATING JOINTS OR INSULATING PIPE). INTERIOR METAL WATER PIPING LOCATED MORE THAN 5FT. FROM THE POINT OF ENTRANCE SHALL NOT BE USED FOR SERVICE ENTRANCE GROUNDING.

METAL FRAME OF THE BUILDING OR STRUCTURE
A SINGLE STRUCTURAL METAL MEMBER. BUILDING STEEL MAY ALSO BE USED IF IT IS BONDED TO A METAL UNDERGROUND WATER PIPE, A CONCRETE INCASED ELECTRODE, A GROUND RING ROD AND PIPE ELECTRODES, OR PLATE ELECTRODES AS DESCRIBED IN NEC 250.52.

CONCRETE ENCASED ELECTRODE
AN ELECTRODE ENCASED BY AT LEAST 2IN. OF CONCRETE , LOCATED WITHIN AND NEAR THE BOTTOM OF A CONCRETE FOUNDATION OR FOOTING THAT IS IN DIRECT CONTACT WITH THE EARTH, CONSISTING OF AT LEAST 20FT. OF ONE OR MORE BARE OR ZINC GALVANIZED OR OTHER ELECTRICALLY CONDUCTIVE COATED STEEL REINFORCING BARS OR RODS OF NOT LESS THAN 1/2" DIAMETER OR BARE COPPER CONDUCTOR NOT SMALLER THAN 4AWG.

GROUNDING TRIPOD AT SERVICE ENTRANCE
THREE 3/4" DIAMETER BY 10FT. LONG COPPER CLAD GROUND RODS. GROUND RODS SHALL BE DRIVEN IN A TRIANGULAR SHAPE WITH 10FT. ON EACH SIDE OF THE TRIANGLE. GROUND RODS SHALL BE CONNECTED BY WAY OF A 1/2IN. X 4IN. X 4IN. COPPER PLATE TO A 16OZ. COPPER STRIP ELEMENT. THE COPPER STRIP ELEMENT SHALL BE A 12IN. WIDE CONTINUOUS TRIANGLE. GROUND RODS SHALL ALSO BE CONNECTED WITH (1) #4/0 BARE TINNED COPPER CABLE 19 STRAND. ALL CONNECTIONS SHALL BE MADE WITH A TYPE PCC-2Q2Q EXOTHERMIC CONNECTION OR APPROVED COMPRESSION FITTING.

LOAD OR DOWNSTREAM PANEL
ALL LOADS IN THE BUILDING SHALL HAVE AN EQUIPMENT GROUNDING CONDUCTOR PULLED TO THEM.

1
E-502

# SERVICE ENTRANCE GROUNDING DETAIL

SCALE: N.T.S.

APPROVED:

A/E DESIGNER OF RECORD

SEAL:

COMMONWEALTH OF PENNSYLVANIA
REGISTERED PROFESSIONAL ENGINEER
JOSEPH R GAUS
PE-074251
12/29/10

US ARMY CORPS OF ENGINEERS
AFGHANISTAN ENGINEER DISTRICT

| Mark | Description | Date | Appr. |
|---|---|---|---|
| | | | |

| Mark | Description | Date | Appr. |
|---|---|---|---|
| | | | |

Rev: 0
Date: 2/23/10
Design file no.
Drawing code:
File name:
Plot date:
Plot scale:

Designed by: JRG
Dwn by: BJB
Ckd by: JRG
Reviewed by: JRG
Submitted by: BAKER

U.S. ARMY ENGINEER DISTRICT, AFGHANISTAN
CORPS OF ENGINEERS
APO AE 96338

*Michael Baker Jr., Inc.*
*A unit of Michael Baker Corporation*
Airside Business Park
100 Airside Drive
Moon Township, PA 15108
www.mbakercorp.com

AFGHAN NATIONAL ARMY
REGIONAL MILITARY TRAINING CENTER
STANDARD DESIGN

LATRINE BUILDING
MEDIUM

ELECTRICAL DETAILS

Sheet reference number:
E-502

FIXTURE MARK 'B'

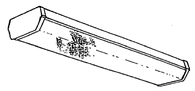

FIXTURE MARK 'C'

FIXTURE MARK 'H'

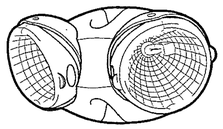

FIXTURE MARK '[E]'

# LIGHT FIXTURE SCHEDULE

| FIXTURE MARK | STYLE NUMBER AND TYPE | NUMBER AND TYPE OF LAMPS | VOLTAGE | MOUNTING | NOTES |
|---|---|---|---|---|---|
| B | WET LOCATION WRAP AROUND SURFACE/PENDANT MOUNTED FLUORESCENT FIXTURE WITH PRISMATIC ACRYLIC LENS AND ELECTRONIC BALLAST | (2) 32W 3500K | 220V – 1ø 50HZ | SURFACE MOUNTED | FURNISHED WITH ELECTRONIC BALLAST, VIRGIN ACRYLIC WRAP AROUND LENS. |
| B2 | SAME AS FIXTURE 'B' WITH EMERGENCY BALLAST | (2) 32W 3500K | 220V – 1ø 50HZ | SURFACE MOUNTED | FURNISHED WITH ELECTRONIC BALLAST, VIRGIN ACRYLIC WRAP AROUND LENS. EMERGENCY BALLAST WITH SELF TEST SWITCH. |
| C | INCANDESCENT ONE PIECE W/ APPROVED LENS STABILIZED HIGH IMPACT POLY CARBONATE. | (1) A19 – 100W INCANDESCENT | 220V – 1ø 50HZ | WALL MOUNTED ABOVE EXTERIOR DOORS | |
| H | REMOTE HEAD EXTERIOR LIGHT HEAD POWERED FROM EXIT SIGN BATTERY– 12V DOUBLE HEAD CORROSION RESISTANT WITH UL34 WEATHERPROOF CONSTRUCTION | (2) 12W/12V HALOGEN LAMP | 12V – 1ø 50HZ | EXTERIOR WALL MOUNTED AT TOP OF DOOR HEIGHT | |
| [E] | UNIVERSAL MOUNT ENGINEER GRADE THERMOPLASTIC HOUSING EXIT SIGN WITH LED LAMPS, RED LETTERS 6" IN HEIGHT WITH ARROWS AS INDICATED, WITH 12V CADMIUM BATTERY WITH REMOTE HEAD CAPABILITY | LED LAMPS | 220V – 1ø 50HZ | UNIVERSAL MOUNTING | |
| | | | | | |

APPROVED:

A/E DESIGNER OF RECORD

SEAL:

COMMONWEALTH OF PENNSYLVANIA
REGISTERED PROFESSIONAL ENGINEER
JOSEPH R GAUS
PE-074251
12/29/10

US ARMY CORPS OF ENGINEERS
AFGHANISTAN ENGINEER DISTRICT

| Mark | Description | Date | Appr. |
|---|---|---|---|
| | | | |

| Mark | Description | Date | Appr. |
|---|---|---|---|
| | | | |

Rev: 0
Date: 2/23/10
Design file no.
Drawing code:
File name:
Plot date:
Plot scale:

Designed by: JRG
Dwn by: BJB
Ckd by: JRG
Reviewed by: JRG
Submitted by: BAKER

U.S. ARMY ENGINEER DISTRICT, AFGHANISTAN
CORPS OF ENGINEERS
APO AE 96338

*Michael Baker Jr., Inc.*
*A unit of Michael Baker Corporation*
Airside Business Park
100 Airside Drive
Moon Township, PA 15108
www.mbakercorp.com

AFGHAN NATIONAL ARMY
REGIONAL MILITARY TRAINING CENTER
STANDARD DESIGN

LATRINE BUILDING
MEDIUM

ELECTRICAL LIGHT FIXTURE SCHEDULE

Sheet reference number:
E–601

PANELBOARD LATM SURFACE MOUNTED

AMP. MAIN LUGS (OR) 100 AMP. MAIN BREAKER W/ 100 AMP. TRIP

CIRCUIT BREAKER TYPE 380/220 VOLTS 3 PHASE 4 WIRE 50 HZ 100 AMP. BUS

| CKT. NO. | TRIP AMPS | NO. POLES | WIRE MM ² | GND MM ² | CONDUIT MM | LOAD SERVED | LOAD-KVA A0 | LOAD-KVA B0 | LOAD-KVA C0 | LOAD-KVA A0 | LOAD-KVA B0 | LOAD-KVA C0 | LOAD SERVED | CONDUIT MM | GND MM² | WIRE MM² | NO. POLES | TRIP AMPS | CKT. NO. |
|---|---|---|---|---|---|---|---|---|---|---|---|---|---|---|---|---|---|---|---|
| 1 | 20 | 1 | 4.0 | 4.0 | 20 | LIGHTING – RM 100,101 | 0.6 | | | 1.3 | | | LIGHTING – RM 102,105,106 | 20 | 4.0 | 4.0 | 1 | 20 | 2 |
| 3 | 20 | 1 | 4.0 | 4.0 | 20 | LIGHTING – RM 103,104,107,108 | | 0.6 | | | | | SPARE | | | | 1 | 20 | 4 |
| 5 | 20 | 1 | 4.0 | 4.0 | 20 | RECEPTACLES – RM 105–108 | | | 0.6 | | | 10.0 | MAKE UP AIR #1 – RM 100 | 25 | 6.0 | 25.0 | 1 | 60 | 6 |
| 7 | 60 | 1 | 25.0 | 6.0 | 25 | MAKE UP AIR #2 – RM 102 | 10.0 | | | 10.0 | | | MAKE UP AIR #3 – RM 104 | 25 | 6.0 | 25.0 | 1 | 60 | 8 |
| 9 | 20 | 1 | 4.0 | 4.0 | 20 | EXHAUST FAN #1 – RM 104 | | 0.5 | | | 3.0 | | WATER HEATER #1 – RM 107 | 20 | 6.0 | 6.0 | 3 | 30 | 10 |
| 11 | 20 | 1 | 4.0 | 4.0 | 20 | EXTERIOR RECEPT | | | 0.5 | | | 3.0 | | | | | | | 12 |
| 13 | 20 | 2 | | | | SPARE | | | | 3.0 | | | | | | | | | 14 |
| 15 | | | | | | | | | | | 0.5 | | EXHAUST FAN #3 – RM 108 | 20 | 4.0 | 4.0 | 1 | 20 | 16 |
| 17 | 20 | 1 | 4.0 | 4.0 | 20 | EXHAUST FAN #2 – RM 100 | | | 0.5 | | | 0.5 | EXTERIOR RECEPT | 20 | 4.0 | 4.0 | 1 | 20 | 18 |
| 19 | 20 | 1 | | | | SPARE | | | | | | | SPARE | | | | 1 | 20 | 20 |
| 21 | 20 | 1 | | | | SPARE | | | | | | | SPARE | | | | 1 | 20 | 22 |
| 23 | 20 | 1 | | | | SPARE | | | | | | | SPARE | | | | 1 | 20 | 24 |
| 25 | 20 | 1 | | | | SPARE | | | | | | | SPARE | | | | 1 | 20 | 26 |
| 27 | 20 | 1 | | | | SPARE | | | | | | | SPARE | | | | 1 | 20 | 28 |
| 29 | 20 | 1 | | | | SPARE | | | | | | | SPARE | | | | 1 | 20 | 30 |
| 21 | 20 | 1 | | | | SPARE | | | | | | | SPARE | | | | 1 | 20 | 32 |
| 23 | 20 | 1 | | | | SPARE | | | | | | | SPARE | | | | 1 | 20 | 34 |
| 25 | 20 | 1 | | | | SPARE | | | | | | | SPARE | | | | 1 | 20 | 36 |
| 27 | 20 | 1 | | | | SPARE | | | | | | | SPARE | | | | 1 | 20 | 38 |
| 29 | 20 | 1 | | | | SPARE | | | | | | | SPARE | | | | 1 | 20 | 40 |
| 29 | 20 | 1 | | | | SPARE | | | | | | | SPARE | | | | 1 | 20 | 42 |
| | | | | | | | 10.6 | 1.1 | 1.8 | 14.3 | 3.5 | 13.5 | | | | | | | |

TOTAL CONN. LOAD PER PHASE (KVA): A0 24.9 B0 4.6 C0 15.3

TOTAL CONN. LOAD 44.8 KVA. 70 % DEMAND = ESTIMATED DEMAND LOAD 31.4

* MAIN BREAKER SHALL BE 3P EARTH GROUND TYPE

APPROVED:

A/E DESIGNER OF RECORD

SEAL:

COMMONWEALTH OF PENNSYLVANIA
REGISTERED PROFESSIONAL ENGINEER
JOSEPH R GAUS
PE-074251
12/29/10

US ARMY CORPS OF ENGINEERS
AFGHANISTAN ENGINEER DISTRICT

| Mark | Description | Date | Appr. |
|---|---|---|---|
| | | | |

| Mark | Description | Date | Appr. |
|---|---|---|---|
| | | | |

Rev: 0
Date: 2/23/10
Design file no.
Drawing code:
File name:
Plot date:
Plot scale:

Designed by: JRG
Dwn by: BJB
Ckd by: JRG
Reviewed by: JRG
Submitted by: BAKER

U.S. ARMY ENGINEER DISTRICT, AFGHANISTAN
CORPS OF ENGINEERS
APO AE 96338

*Michael Baker Jr., Inc.*
*A unit of Michael Baker Corporation*
Airside Business Park
100 Airside Drive
Moon Township, PA 15108
www.mbakercorp.com

AFGHAN NATIONAL ARMY
REGIONAL MILITARY TRAINING CENTER
STANDARD DESIGN

LATRINE BUILDING
MEDIUM

ELECTRICAL PANEL SCHEDULES

Sheet reference number:
E–602

# AFGHAN NATIONAL ARMY

## STANDARD BUILDING DESIGN

## LATRINE BUILDING
## SMALL

## 100% FINAL DESIGN SUBMITTAL

### SHEET INDEX


G-001 COVER SHEET

STRUCTURAL

S-001 GENERAL NOTES & DESIGN CRITERIA
S-101 FOUNDATION/SLAB & ROOF FRAMING PLANS
S-401 BUILDING SECTIONS
S-501 FOUNDATION SECTIONS
S-502 FRAMING SECTIONS
S-503 BEAM AND COLUMN DETAILS
S-504 BEAM AND COLUMN DETAILS
S-601 SCHEDULES
S-701 TYPICAL DETAILS
S-702 TYPICAL DETAILS

ARCHITECTURAL

A-001 LIFE SAFETY PLAN
A-101 FLOOR PLAN
A-102 ROOF PLAN
A-201 ELEVATIONS
A-301 BUILDING SECTIONS
A-401 WALL SECTIONS
A-501 EXTERIOR DETAILS
A-502 HEAD, JAMB, & SILL DETAILS
A-503 STOOP DETAILS
A-504 TOILET, LAVATORY & ABLUTION DETAILS
A-601 WINDOW & DOOR SCHEDULES

MECHANICAL

P-101 FLOOR PLAN-PLUMBING
P-501 PLUMBING DETAILS
P-502 PLUMBING DETAILS
P-503 PLUMBING DETAILS
P-901 PLUMBING ISOMETRICS
P-902 PLUMBING ISOMETRICS

M-101 HVAC FLOOR PLAN, SCHEDULES, & DETAILS

ELECTRICAL

E-001 ELECTRICAL SYMBOLS & ABBREVIATIONS
E-101 ELECTRICAL LIGHTING PLAN
E-102 ELECTRICAL POWER & SYSTEMS PLAN
E-501 ELECTRICAL DETAILS
E-502 ELECTRICAL DETAILS
E-601 ELECTRICAL LIGHT FIXTURE SCHEDULE
E-602 ELECTRICAL PANEL SCHEDULES


US ARMY CORPS OF ENGINEERS
AFGHANISTAN ENGINEER DISTRICT

| Mark | Description | Date | Appr. |
|---|---|---|---|
| | | | |

| Mark | Description | Date | Appr. |
|---|---|---|---|
| | | | |

Date: 2/23/10
Design file no.
Drawing code:
File name: ANALATSG-001CS
Plot date: 2/23/2010
Plot scale: X:X
Rev: 0

Designed by: KMF/MMY
Dwn by: RCG
Ckd by: CWW
Reviewed by: LHM
Submitted by: BAKER

U.S. ARMY ENGINEER DISTRICT, AFGHANISTAN
CORPS OF ENGINEERS
APO AE 96338


*Michael Baker Jr., Inc.*
*A unit of Michael Baker Corporation*
Airside Business Park
100 Airside Drive
Moon Township, PA 15108
www.mbakercorp.com


AFGHAN NATIONAL ARMY
REGIONAL MILITARY TRAINING CENTER
STANDARD DESIGN

LATRINE BUILDING
SMALL

COVER SHEET

Sheet reference number:
G-001

STRUCTURAL ABBREVIATIONS:

| | |
|---|---|
| ACI | AMERICAN CONCRETE INSTITUTE |
| ADD'L | ADDITIONAL |
| AISC | AMERICAN INSTITUTE OF STEEL CONSTRUCTION |
| AISI | AMERICAN IRON AND STEEL INSTITUTE |
| ASTM | AMERICAN SOCIETY FOR TESTING AND MATERIALS |
| ARCH | ARCHITECTURAL |
| B | BOTTOM |
| BLDG | BUILDING |
| BOTT | BOTTOM |
| ℄ | CENTER LINE |
| CFMRF | COLD FORM METAL ROOF FRAME |
| CFMF | COLD FORM METAL FRAME |
| CFS | COLD FORMED STEEL |
| CIP | CAST-IN-PLACE |
| CIPL | CAST-IN-PLACE LINTEL |
| CJ | CONTROL JOINT |
| CLR | CLEAR |
| CMU | CONCRETE MASONRY UNIT |
| COEFF | COEFFICIENT |
| COL | COLUMN |
| CONC | CONCRETE |
| CONT | CONTINUOUS |
| COORD | COORDINATE |
| CSJ | CONSTRUCTION JOINT |
| CRSI | CONCRETE REINFORCING STEEL INSTITUTE |
| DIA | DIAMETER |
| DIAG | DIAGONAL |
| DIM | DIMENSION |
| DWG | DRAWING |
| DWL | DOWEL |
| EA | EACH |
| EF | EACH FACE |
| ELEC | ELECTRICAL |
| ELEV | ELEVATION |
| EMBED | EMBEDMENT |
| EQUIV | EQUIVALENT |
| ETC | ET CETERA |
| EW | EACH WAY |
| EXP | EXPANSION |
| EXT | EXTERIOR |
| FTG | FOOTING |
| GA | GAUGE |
| GB | GRADE BEAM |
| HORIZ | HORIZONTAL |
| h | HOUR |
| HRS | HOURS |
| IBC | INTERNATIONAL BUILDING CODE |
| INFO | INFORMATION |
| INT | INTERIOR |
| kg | KILOGRAM |
| km | KILOMETER |
| kN | KILONEWTON |
| kPa | KILOPASCAL |
| L# | ANGLE (# INDICATES SIZE) |
| LONG | LONGITUDINAL |
| LLV | LONG LEG VERTICAL |
| m | METER |
| MAX | MAXIMUM |
| MECH | MECHANICAL |
| MFG | MANUFACTURER |
| MID | MIDDLE |
| MIN | MINIMUM |
| MISC | MISCELLANEOUS |
| mm | MILLIMETER |
| MPa | MEGAPASCAL |
| MTL | METAL |
| MWFRS | MAIN WIND FORCE RESISTING SYSTEM |
| N | NEWTON |
| N | NORTH |
| N/A | NOT APPLICABLE |
| # | NUMBER SYMBOL FOR REBAR SIZE |
| NTS | NOT TO SCALE |
| OC | ON CENTER |
| OD | OUTSIDE DIAMETER |
| OPNG | OPENING |
| P or PL | PLATE |
| PRE-ENG | PRE-ENGINEERED |
| REINF | REINFORCED |
| REQ'D | REQUIRED |
| RB | ROOF BEAM |
| SIM | SIMILAR |
| SPECS | SPECIFICATIONS |
| STD | STANDARD |
| STRUCT | STRUCTURAL |
| SW | SHEAR WALL |
| T | TOP |
| T/ | TOP OF |
| T/ELEV | TOP ELEVATION |
| T/SLAB | TOP OF SLAB |
| T&B | TOP AND BOTTOM |
| THK | THICK |
| TYP | TYPICAL |
| UFC | UNIFIED FACILITIES CRITERIA |
| UON | UNLESS OTHERWISE NOTED |
| VERT | VERTICAL |
| W | WIDTH |
| W/ | WITH |

1.0 GENERAL NOTES:

1.1 THIS PROJECT HAS BEEN DESIGNED FOR THE WEIGHTS AND MATERIALS INDICATED ON THE SHEETS AND FOR THE LIVE LOADS INDICATED IN THE DESIGN DATA. IT IS THE CONTRACTOR'S RESPONSIBILITY TO DETERMINE ALLOWABLE CONSTRUCTION LOADS AND TO PROVIDE PROPER DESIGN AND CONSTRUCTION OF FALSEWORK, FORMWORK, STAGING, BRACING, SHEETING AND SHORING, ETC.

1.1 COORDINATE THESE SHEETS WITH THE ARCHITECTURAL, MECHANICAL, ELECTRICAL, PLUMBING, AND CIVIL SHEETS. ALL DIMENSIONS SHOWN ON THE SHEETS ARE MILLIMETERS UNLESS NOTED OTHERWISE.

1.2 THE CONTRACTOR SHALL VERIFY AND COORDINATE ALL FLOOR AND ROOF OPENING SIZES AND LOCATIONS, EQUIPMENT PAD SIZES AND LOCATIONS, ANCHOR BOLT LAYOUTS, ETC WITH EQUIPMENT SELECTED. THE CONTRACTOR SHALL MAKE ANY REQUIRED MODIFICATIONS AT NO ADDITIONAL COST.

1.3 THE CONTRACTOR SHALL REFER TO THE ARCHITECTURAL, MECHANICAL, ELECTRICAL AND PLUMBING SHEETS FOR SLEEVES, CURBS, INSERTS OR OPENINGS, ETC. NOT HEREIN INDICATED.

1.4 WORK NOT INCLUDED ON THE SHEETS BUT IMPLIED TO BE SIMILAR TO THAT SHOWN AT CORRESPONDING PLACES ELSEWHERE ON THE SHEETS SHALL BE REPEATED.

1.5 IN CASE OF CONFLICT BETWEEN THE NOTES, DETAILS AND SPECIFICATIONS THE MOST RIGID REQUIREMENTS SHALL GOVERN.

1.6 SEE ARCHITECTURAL SHEETS FOR LOCATIONS OF MASONRY AND NON-LOAD BEARING PARTITIONS. PROVIDE COMPRESSIBLE FIRESAFING AT TOP OF WALL AS REQUIRED BY ARCHITECTURAL SHEETS.

1.7 COORDINATE FINISHED FLOOR DATUM ELEVATION 0.0m WITH THE CIVIL SHEETS.

2.0 FOUNDATION NOTES

2.1 THE GEOTECHNICAL ANALYSIS FOR THIS PROJECT IS THE RESPONSIBILITY OF THE CONTRACTOR AWARDED THE WORK. AN ASSUMED ALLOWABLE SOIL BEARING VALUE OF 72 kPa HAS BEEN USED IN THE STRUCTURAL ANALYSIS OF THE BUILDING HEREIN AND SHALL BE CONFIRMED AND VERIFIED AS PART OF THE GEOTECHNICAL INVESTIGATION. VALUES WHICH DO NOT MEET THE REQUIREMENTS INDICATED ON THE BASIS OF DESIGN SHEET SHALL BE IMMEDIATELY BROUGHT TO THE ATTENTION OF THE CONTRACTING OFFICER FOR CONSIDERATION AND DETERMINATION ON THE NEXT APPROPRIATE COURSE OF ACTION.

2.2 SEE THE SPECIFICATION FOR ADDITIONAL REQUIREMENTS TO THOSE OUTLINED IN THE GEOTECHNICAL INVESTIGATION FOR EXCAVATION AND PREPARATION OF THE FOUNDATION AND THE SLAB ON GRADE SUBGRADE INCLUDING COMPACTION PROCEDURES.

2.3 EXCAVATIONS FOR FOOTINGS SHALL HAVE THE SIDES AND BOTTOMS TEMPORARILY LINED WITH 0.25mm POLYETHYLENE IF PLACEMENT OF CONCRETE DOES NOT OCCUR WITHIN 24 HRS OF THE EXCAVATION OF THE FOOTING.

2.4 FOUNDATION CONDITIONS NOTED DURING CONSTRUCTION WHICH DIFFER FROM THOSE DESCRIBED IN THE GEOTECHNICAL REPORT SHALL BE REPORTED TO THE GENERAL CONTRACTOR BEFORE FURTHER CONSTRUCTION IS ATTEMPTED. SEE PROJECT SPECIFICATIONS.

2.5 NO FOOTINGS OR SLABS SHALL BE POURED INTO OR AGAINST SUBGRADE CONTAINING FREE WATER, FROST, ICE OR LOOSE MATERIAL. FROST DEPTH ASSUMED TO BE 800mm.

2.6 ALL SLAB-ON-GRADE, TRENCH BOTTOMS AND OTHER ON-GRADE INTERIOR HORIZONTAL SURFACES SHALL BE PLACED OVER A 0.25mm POLYETHYLENE VAPOR RETARDER OVER A 100mm #57 STONE WATER CAPILLARY BARRIER PLACED ON SUBGRADE PROPERLY PREPARED IN ACCORDANCE WITH THE CONTRACT SPECIFICATIONS. (UON)

2.7 PRIOR TO START OF FOUNDATION OR SLAB-ON-GRADE CONSTRUCTION, EXISTING SUBGRADES SHALL BE COMPACTED TO MINIMUM OF 95% MAXIMUM DRY DENSITY OBTAINED THRU ASTM D 1557 MODIFIED PROCTOR TESTING.

2.8 SEE PLUMBING, ELECTRICAL & CIVIL SHEETS FOR REQUIRED UNDERSLAB UTILITIES.

2.9 SEE ARCHITECTURAL SHEETS FOR ALL WATERPROOFING DETAILS AND MATERIALS.

2.10 IF UNDERMINING OF FOOTINGS OCCURS, FILL VOIDS WITH 18 MPa CONCRETE. DO NOT ATTEMPT TO REPLACE AND RE-COMPACT SOIL.

3.0 CONCRETE

3.1 CONCRETE SHALL HAVE THE UNIT WEIGHT OF 2400 kg/m$^3$ AND A MINIMUM COMPRESSIVE STRENGTH (f'c) OF 28 MPa AT 28 DAYS. ALL CONCRETE SHALL HAVE A WATER-CEMENT RATIO OF 0.45. SEE SPECIFICATIONS FOR ADDITIONAL INFORMATION. ENTRAIN AIR TO PRODUCE TOTAL AIR CONTENT ACCORDING TO THE SPECIFICATIONS FOR CONCRETE EXPOSED TO FREEZING TEMPERATURES (EXTERIOR FOOTINGS, SLAB TURNDOWNS, EXTERIOR SLABS AND SLABS-ON-GRADE, EXTERIOR RETAINING WALLS, AND EXTERIOR GRADE BEAMS.)

3.2 NO CALCIUM CHLORIDE SHALL BE USED IN ANY CONCRETE.

3.3 MIXING, TRANSPORTING AND PLACING OF CONCRETE SHALL CONFORM TO ACI 301M-05.

3.4 ALL CONCRETE WORK SHALL CONFORM TO THE REQUIREMENTS OF THE AMERICAN CONCRETE INSTITUTE (ACI) 318M MANUAL (metric), "BUILDING CODE REQUIREMENTS FOR REINFORCED CONCRETE", AND REQUIREMENTS OUTLINED IN THE CONTRACT SPECIFICATIONS. WHEN THERE IS A CONFLICT BETWEEN ACI AND THE SPECIFICATIONS, THE MORE STRINGENT SHALL GOVERN.

3.5 CHAMFER ALL EXPOSED EXTERNAL CORNERS OF CONCRETE WITH 20mm x45 DEGREE CHAMFER UON.

3.6 CONCRETE REINFORCEMENT BARS SHALL CONFORM TO ASTM A615M-96a, GRADE 420 MPa, REINFORCING BARS SHALL NOT BE TACK WELDED, WELDED, HEATED OR CUT, UNLESS INDICATED ON THE CONTRACT DOCUMENTS. ALL LAP SPLICES SHALL BE CLASS "B" UON.

3.7 HORIZONTAL FOOTING AND HORIZONTAL WALL REINFORCEMENT SHALL BE CONTINUOUS AND SHALL HAVE 90 DEGREE BENDS AND EXTENSIONS, OR CORNER BARS OF EQUIVALENT SIZE LAPPED WITH A CLASS B TENSION SPLICE AT CORNERS AND INTERSECTIONS. TOP BAR CRITERIA SHALL APPLY IF 300mm OR MORE OF FRESH CONCRETE IS PLACED BELOW BAR.

3.8 SLABS-ON-GRADE SHALL HAVE CONSTRUCTION JOINTS OR CRACK CONTROL JOINTS AS SHOWN ON THE DRAWINGS. CONSTRUCTION JOINTS CAN BE USED AT CONTROL JOINT LOCATIONS AT CONTRACTORS OPTION. SEE SLAB PLANS & JOINT DETAILS FOR ADDITIONAL INFORMATION. FOR AREAS NOT SHOWN ON DWGS, THE MAXIMUM SPACING OF CONSTRUCTION/ CRACK CONTROL JOINTS SHALL BE 4800mm

3.9 ALL CONCRETE REINFORCEMENT SHALL BE DETAILED, FABRICATED, LABELED, SUPPORTED, AND SPACED IN FORMS AND SECURED IN PLACE IN ACCORDANCE WITH THE PROCEDURES AND REQUIREMENTS OUTLINED IN THE LATEST EDITION OF THE "BUILDING CODE REQUIREMENTS FOR REINFORCED CONCRETE", ACI 318M, AND THE "MANUAL OF STANDARD PRACTICE FOR DETAILING REINFORCED CONCRETE STRUCTURES", ACI 315M, LATEST EDITION. BASED ON IN COUNTRY REINFORCEMENT AVAILABILITY, IT IS THE CONTRACTOR'S OPTION TO ROUND DESIGNATED ODD NUMBERED REINFORCEMENT SIZES UP (1) ONE BAR SIZE.

3.10 ALL DOWELS SHALL MATCH SIZE AND NUMBER OF MAIN REINFORCING, UNLESS NOTED OTHERWISE ON THE SHEETS.

3.11 ADDITIONAL BARS SHALL BE PROVIDED AROUND ALL FLOOR AND WALL OPENINGS AS SHOWN ON THE SHEETS.

3.12 SEE ARCHITECTURAL SHEETS FOR TYPE AND LOCATION OF ALL FLOOR FINISHES.

3.13 THE CONTRACTOR SHALL COORDINATE ADDITIONAL WALL/SLAB OPENINGS NOT SHOWN ON STRUCTURAL SHEETS. SEE MECHANICAL, ELECTRICAL, PLUMBING AND CIVIL SHEETS.

3.14 UNLESS NOTED OTHERWISE, ALL CURBS SHALL BE REINFORCED WITH AT LEAST (1)-#13 CONTINUOUS AND #13 AT 300mm O.C. DOWELS TO STRUCTURE BELOW.

3.15 THE CONTRACTOR SHALL VERIFY ALL OPENINGS, PAD SIZES, AND ANCHOR BOLTS WITH EQUIPMENT SELECTED.

3.16 FOR ALL WALLS & PIERS, PROVIDE DOWELS INTO FOOTING AT EACH VERT REINF BAR, UON DOWEL SIZE SHALL BE SAME AS VERT REINF.

3.17 PROVIDE CONCRETE POUR STOPS OR FORMED AS REQUIRED FOR INSTALLATION OF ALL CONCRETE WORK.

3.18 PROVIDE ADDITIONAL (2)-#13 x 600mm REINFORCING BARS IN SLAB-ON GRADE AT ALL RE-ENTRANT CORNERS. PLACE BARS AT MID-DEPTH OF SLAB WITH A CLEARANCE OF 50mm FROM CORNER UON.

3.19 COLD-WEATHER PLACEMENT: COMPLY WITH ACI 306.1 AND AS FOLLOWS. PROTECT CONCRETE WORK FROM PHYSICAL DAMAGE OR REDUCED STRENGTH THAT COULD BE CAUSED BY FROST, FREEZING ACTIONS, OR LOW TEMPERATURES. SUBMIT A COLD WEATHER CONCRETING PLAN FOR APPROVAL.

3.20 PROVIDE BONDING COMPOUND PER ASTM C 1059-99: SPECIFICATION FOR LATEX AGENTS FOR BONDING FRESH CONCRETE (GROUT) TO HARDENED CONCRETE.

3.21 THE FORMED SURFACES FOR REINFORCED CONCRETE SHALL ACHIEVE A "CLASS A" FINISH WHEN RECEIVING PAINT OR A "CLASS B" FINISH WHEN RECEIVING PLASTER OR TILE AS PER SPECIFICATION SECTION 03 31 00 CAST-IN-PLACE STRUCTURAL CONCRETE.

3.22 AT INTERSECTING GRADE BEAMS AND SHEAR WALLS, PROVIDE CORNER BARS AT INTERSECTIONS WITH SAME QUANTITY, SIZE AND SPACING AS HORIZONTAL BARS WITH LEG LENGTH = 50db.

3.23 REFER TO S-800 SERIES REINFORCING BAR PLACEMENT DRAWINGS DEFINING LENGTHS, BENDS, AND SPACINGS FOR ALL STRUCTURAL CONCRETE. THE S-800 SERIES DRAWING ARE BASED ON THE S-400, S-500, S-600, AND S-700 SERIES DRAWING SCHEDULES, DETAILS, AND DIAGRAMS.

4.0 CONCRETE MASONRY

4.1 MASONRY CONSTRUCTION SHALL CONFORM TO SPECIFICATION FOR MASONRY STRUCTURES (ACI 530.1) UON.

4.2 STRENGTH OF MASONRY MATERIALS SHALL BE AS FOLLOWS:

a. CONCRETE MASONRY UNITS SHALL BE NORMAL WEIGHT, GRADE N, TYPE 1, CONFORMING TO ASTM C-90 AND HAVE A MINIMUM COMPRESSIVE STRENGTH OF 10.4 MPa ON THE NET AREA.
b. MORTAR SHALL CONFORM TO ASTM C-270 TYPE S.
c. GROUT FOR MASONRY SHALL BE NORMAL WEIGHT AND HAVE A MINIMUM COMPRESSIVE STRENGTH OF 14 MPa AT 28 DAYS. GROUT SHALL CONFORM TO ASTM C476M. GROUT LIFTS SHALL NOT EXCEED 1,400mm.
d. REINFORCED MASONRY SHALL HAVE A STRENGTH F'm = 10 MPa. (F'm IS THE COMPRESSIVE STRENGTH OF THE MASONRY AT 28 DAYS AS DETERMINED BY PRISM TESTS).

4.3 ALL VERTICAL REINFORCEMENT FOR CONCRETE MASONRY SHALL BE ASTM A615M-96a, GRADE 420 MPa. ALL SPLICES SHALL BE LAPPED 48 BAR DIAMETERS MINIMUM.

4.4 BOND BEAMS SHALL BE SPACED AT 1200mm OC VERTICALLY. BOND BEAM REINFORCING SHALL BE CONTINUOUS AND PROVIDED AT WALL INTERSECTIONS AND WALL CORNERS (REFERENCE CONCRETE MASONRY NOTE 4.11). ALL BOND BEAM REINFORCING SHALL BE CONTINUOUS AND HAVE STANDARD ACI HOOKS AT EACH END. PROVIDE STANDARD BAR SPLICES AS SPECIFIED. AS AN ALTERNATE TO CMU BOND BEAMS, IT IS THE CONTRACTOR'S OPTION TO PROVIDE 200mm x 200mm CONTINUOUS CAST-IN-PLACE CONCRETE BOND BEAMS WITH (2)-#16 IN LIEU OF CMU BOND BEAMS INDICATED ON THE DRAWINGS.

4.5 SEE TYPICAL DETAILS FOR MINIMUM REINFORCEMENT REQUIREMENTS FOR CMU WALLS. PROVIDE STANDARD BAR SPLICES AS SPECIFIED. ALL VERTICAL REINFORCEMENT EXTENDS FULL HEIGHT OF WALL.

4.6 CMU CELLS THAT REQUIRE VERTICAL REINFORCING BARS AS INDICATED ON THE CONTRACT DRAWINGS AND/OR SPECS SHALL HAVE REINF BARS PLACED IN CENTERS OF CMU CELLS AND CONTINUOUSLY GROUTED UON.

4.7 ALL CMU CELLS, OPEN CAVITIES, AND AIR SPACES OF ALL EXTERIOR WALLS SHALL BE GROUTED TO STOP FRAGMENTS FROM MORTAR BLAST.

4.8 CONTRACTOR SHALL COORDINATE LOCATION OF ALL OPENINGS SEE ARCH, MECH, ELEC, AND PLUMBING SHEETS FOR SIZE AND LOCATION OF OPENINGS.

4.9 MASONRY WALLS SHALL NOT BE BACK FILLED PRIOR TO THE MORTAR AND GROUT ATTAINING THEIR RESPECTIVE MAXIMUM DESIGN STRENGTHS PER SPECIFICATIONS.

4.10 PROVIDE GALVANIZED MORTAR/GROUT SCREEN W/ 3mm MESH WHERE CELLS BELOW ARE NOT GROUTED.

4.11 AT INTERSECTING BOND BEAMS, PROVIDE CORNER BAR FOR EACH HORIZONTAL BAR IN BOND BEAMS AT INTERSECTING WALLS. USE SAME SIZE AND SPACING AS HORIZONTAL BARS WITH LEG LENGTH = 50db.

4.12 THE ALTERNATE CMU BRACE DETAILS SHOWN ON S-701 CAN BE UTILIZED AT THE CONTRACTOR'S OPTION IN PLACE OF THE "FLOATING PIN" WALL BRACE CONNECTIONS AT TOP OF CMU WALLS DEPICTED ON S-400 AND S-500 SERIES DRAWINGS THESE ALTERNATE DETAILS ALSO SHOW ALTERNATE CAST-IN-PLACE WALL BOND BEAMS THAT CAN BE UTILIZED AT THE CONTRACTOR'S OPTION IN PLACE OF THE STANDARD CMU BOND BEAMS CONSTRUCTED OF CMU BLOCKS.

5.0 COLD-FORMED METAL FRAMING

5.1 ALL COLD-FORMED METAL FRAMING MEMBERS SHALL CONFORM TO ASTM A1003M, STRUCTURAL GRADE ST340 (MPa), WITH A GALVANIZED COATING OF Z275 OR BETTER IN ACCORDANCE WITH ASTM A653M.

5.2 ALL COLD-FORMED METAL FRAMING MEMBERS SHALL HAVE THE FOLLOWING MINIMUM PROPERTIES:

a. MINIMUM METAL THICKNESS:
TRACK = 1.37mm;
STUD/OTHER = 1.09mm
b. MINIMUM FLANGE WIDTH:
TRACK = 38mm;
STUD/OTHER = 35mm
c. MINIMUM MEMBER DEPTH:
ALL SECTIONS = 152.2mm
d. PURLIN (HAT CHANNEL)
DEPTHxWIDTH(FLAT TOP)xTHICK = 25mmx42mmx1.59mm

5.3 ALL CONNECTIONS SHALL BE MADE WITH CORROSION RESISTANT (ASTM A153M), SELF-DRILLING, SELF-TAPPING STEEL DRILL SCREWS IN ACCORDANCE WITH ASTM C1513. SCREWS SHALL HAVE A LOW PROFILE HEAD BENEATH ROOF DECK, AND STANDARD HEAD ALL OTHER LOCATIONS.

5.4 FABRICATE COLD FORMED METAL FRAMING AND ACCESSORIES PLUMB, SQUARE AND TRUE TO LINE, WITH CONNECTIONS SECURELY FASTENED ACCORDING TO AISI STANDARD FOR COLD FORMED STEEL FRAMING.

5.5 CUT FRAMING MEMBERS BY SAWING OR SHEATHING, DO NOT TORCH CUT.

5.6 INSTALL FRAMING MEMBERS IN ONE-PIECE LENGTHS UNLESS SPLICE CONNECTIONS ARE INDICATED FOR TRACK OR TENSION MEMBERS

5.7 INSTALL TEMPORARY BRACING AND SUPPORTS TO SECURE FRAMING DURING CONSTRUCTION. MAINTAIN BRACING AND SUPPORTS IN PLACE UNTIL THE STRUCTURE HAS BEEN COMPLETED WITH ALL CONNECTIONS AND PERMANENT BRACING SECURED.

6.0 STRUCTURAL DESIGN CRITERIA

6.1 ALL DESIGNS SHALL CONFORM TO THE PROVISIONS OF THE IBC 2006 AND UFC AS APPLICABLE.

6.2 DESIGN LOADS

6.2.1 DEAD LOADS (PER IBC 2006 & UFC 3-310-01)

| | |
|---|---|
| MECH/ELEC/PLUMBING | 0.20 kPa |
| MISCELLANEOUS | 0.15 kPa |
| COLD-FORMED FRAMING | 0.20 kPa |
| INSULATION | 0.10 kPa |
| METAL ROOF PANEL | 0.14 kPa |
| | 0.79 kPa |
| FLOOR PARTITION ALLOWANCE | 0.96 kPa |

6.2.2 LIVE LOADS (PER IBC 2006 & UFC 3-310-01)

| | |
|---|---|
| ROOF | 1.00 kPa |
| CORRIDOR (2-STORY BLDG ONLY) | 4.80 kPa |
| ALL OTHERS (2-STORY BLDG ONLY) | 2.40 kPa |
| SLAB ON GRADE | 4.80 kPa |

6.2.3 SNOW LOADS (PER IBC 2006 & UFC 3-310-01)

| | |
|---|---|
| GROUND SNOW LOAD (Pg) | 1.2 kPa |
| SNOW IMPORTANCE FACTOR (I) | 1.0 |
| SNOW EXPOSURE FACTOR (Ce) | 1.0 |
| THERMAL FACTOR (Ct) | 1.0 |

6.2.4 WIND LOADS (PER IBC 2006)

| | |
|---|---|
| BASIC WIND SPEED | 137 km/h |
| WIND IMPORTANCE FACTOR | 1.0 |
| WIND EXPOSURE CATEGORY | D |
| DIRECTIONALITY COEFFICIENT (Kd) | 0.85 |
| TOPOGRAPHIC FACTOR (Kzt) | 1.0 |

6.2.5 SEISMIC LOADS (PER IBC 2006 & UFC 3-310-04)

| | |
|---|---|
| OCCUPANCY USE CATEGORY | II |
| SEISMIC IMPORTANCE FACTOR (Ie) | 1.0 |
| SEISMIC SITE CLASS | D |

$S_s$ = 1.50 (REDUCED FROM 2.40 PER ASCE 7-05, 12.8.1.3 FOR A BUILDING WITHOUT IRREGULARITIES)
$S_1$ = 1.20
$S_{DS}$ = 1.00
$S_{D1}$ = 1.20

| | |
|---|---|
| SEISMIC DESIGN CATEGORY | E |
| SEISMIC RESISTING SYSTEM: -SPECIAL REINFORCED CONCRETE SHEAR WALL | |
| RESPONSE MODIFICATION FACTOR (R) | 6 |
| RESPONSE COEFFICIENT (Cs) | 0.167 |
| SEISMIC ANALYTICAL PROCEDURE = | EQUIV LATERAL FORCE |
| SEISMIC BASE SHEAR | 363 kN |

APPROVED:

A/E DESIGNER OF RECORD

SEAL:

GEORGIA REGISTERED 1-29-10 No. 27141 PROFESSIONAL ENGINEER CHRISTOPHER W. WHITMORE

US ARMY CORPS OF ENGINEERS
AFGHANISTAN ENGINEER DISTRICT

| Mark | Description | Date | Appr. |
|---|---|---|---|

Date: 2/23/10
Design file no.
Drawing code:
Rev: 0

Designed by: KMP/MMY
Dwn by: RCG
Ckd by: CWW
Reviewed by: LHM
Submitted by:
BAKER

File name: ANALATSS-001GN
Plot date: 2/23/2010
Plot scale: X:X

U.S. ARMY ENGINEER DISTRICT, AFGHANISTAN
CORPS OF ENGINEERS
APO AE 96338

Michael Baker Jr., Inc
A unit of Michael Baker Corporation
Airside Business Park
100 Airside Drive
Moon Township, PA 15108
www.mbakercorp.com

AFGHAN NATIONAL ARMY
REGIONAL MILITARY TRAINING CENTER
STANDARD DESIGN

LATRINE BUILDING
SMALL

GENERAL NOTES & DESIGN CRITERIA

Sheet reference number:
S-001

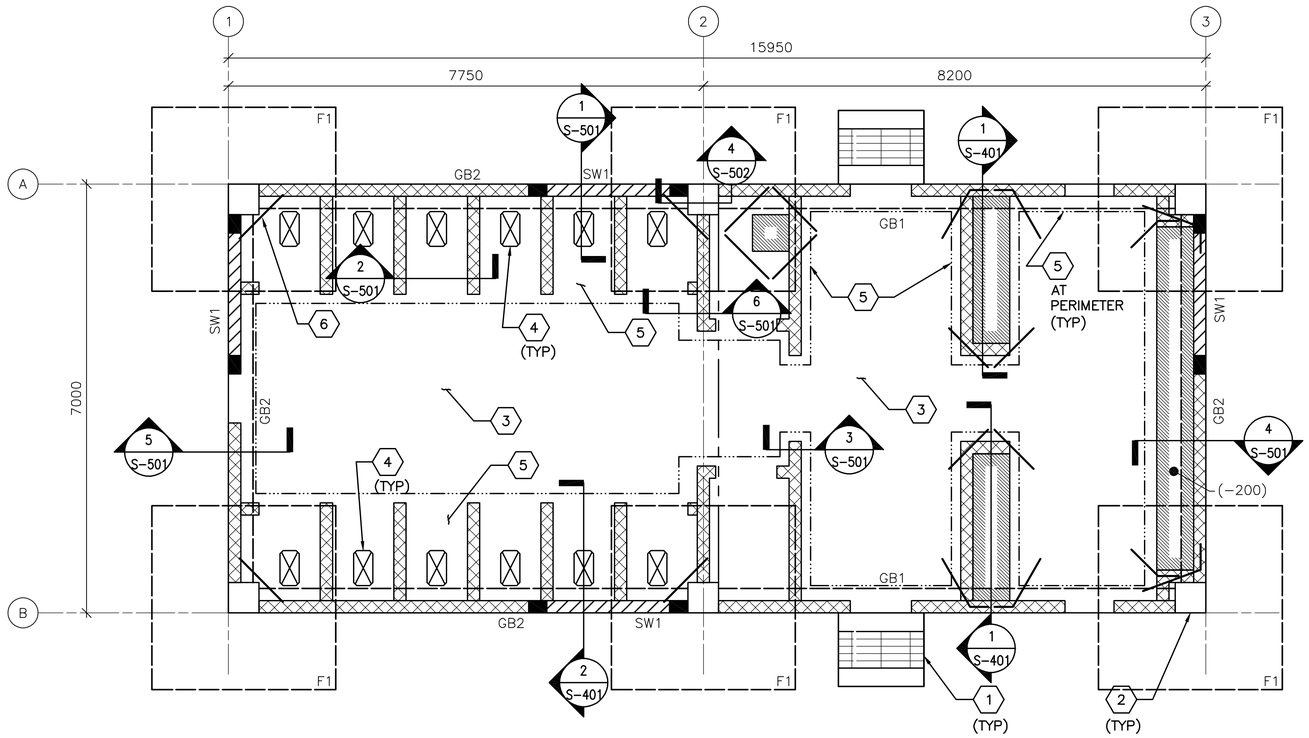


1 S-101 **FOUNDATION/SLAB PLAN**
SCALE: 1:50

## FOUNDATION/SLAB PLAN NOTES:

1. REFER TO SHEET S-001 FOR STRUCTURAL NOTES AND DESIGN CRITERIA.
2. FINISH FIRST FLOOR ELEVATION SHALL BE (DATUM 0.00) ALL PLUS OR MINUS DIMENSIONS INDICATED ON PLAN OR REFERRED TO IN NOTES RELATE TO FINISH FIRST FLOOR ELEVATION.
3. SLAB-ON-GRADE IS 150 WITH #13 @ 300 OC EW LOCATED 38 FROM T/SLAB UON. WHERE NOTED, 300 SLAB ON GRADE SHALL BE REINF W/ #13 @ 300 OC EW T&B. DEPRESS ALL SLABS 65 EXCEPT WHERE INDICATED.
4. TOP OF EXTERIOR FOOTINGS SHALL BE -950 UNLESS OTHERWISE INDICATED.
5. COLUMN FOOTINGS INDICATED BY F# ON PLAN. REFER TO COLUMN FOOTING SCHEDULE ON SHEET S-601.
6. REFER TO COLUMN SCHEDULE ON SHEET S-601.
7. GRADE BEAM INDICATED BY GB# ON PLAN, REFER TO BEAM SCHEDULE ON SHEET S-601.
8. SHEARWALL INDICATED BY SW# ON PLAN, REFER TO SHEARWALL SCHEDULE ON SHEET S-601.
9. SEE TYP EXTERIOR AND INTERIOR CMU WALL REINF DETAILS ON SHEET S-701.
10. SEE MECHANICAL AND ELECTRICAL SHEETS FOR CONCRETE PAD LOCATIONS, SIZES, AND THICKNESS NOT SHOWN. SEE SHEET S-701 FOR DETAILS.

## FOUNDATION/SLAB PLAN KEY NOTES: (X)

1. CONC PAD (ENTRANCE)-SEE ARCH DWGS FOR INFORMATION
2. REINF CONC COLUMN
3. REINF CONC SLAB-ON-GRADE
4. SLAB OPENING - COORDINATE W/ ARCH AND PLUMBING DWGS
5. 300 SLAB-ON-GRADE
6. (2)-#13 @ RE-ENTRANT CORNERS - SEE S-701 FOR INFORMATION

## FOUNDATION/SLAB PLAN LEGEND:

- REINF CONC SHEAR WALL
- REINF CMU WALL
- CONTROL JOINT
- INDICATES DROP SLAB 200 BELOW FINISH FLOOR
- TRANSITION BETWEEN 150 AND 300 THICK SLAB AREAS
- SLAB OPENING. SEE SHEET S-701 FOR ADDITIONAL SLAB REINF AT OPENING

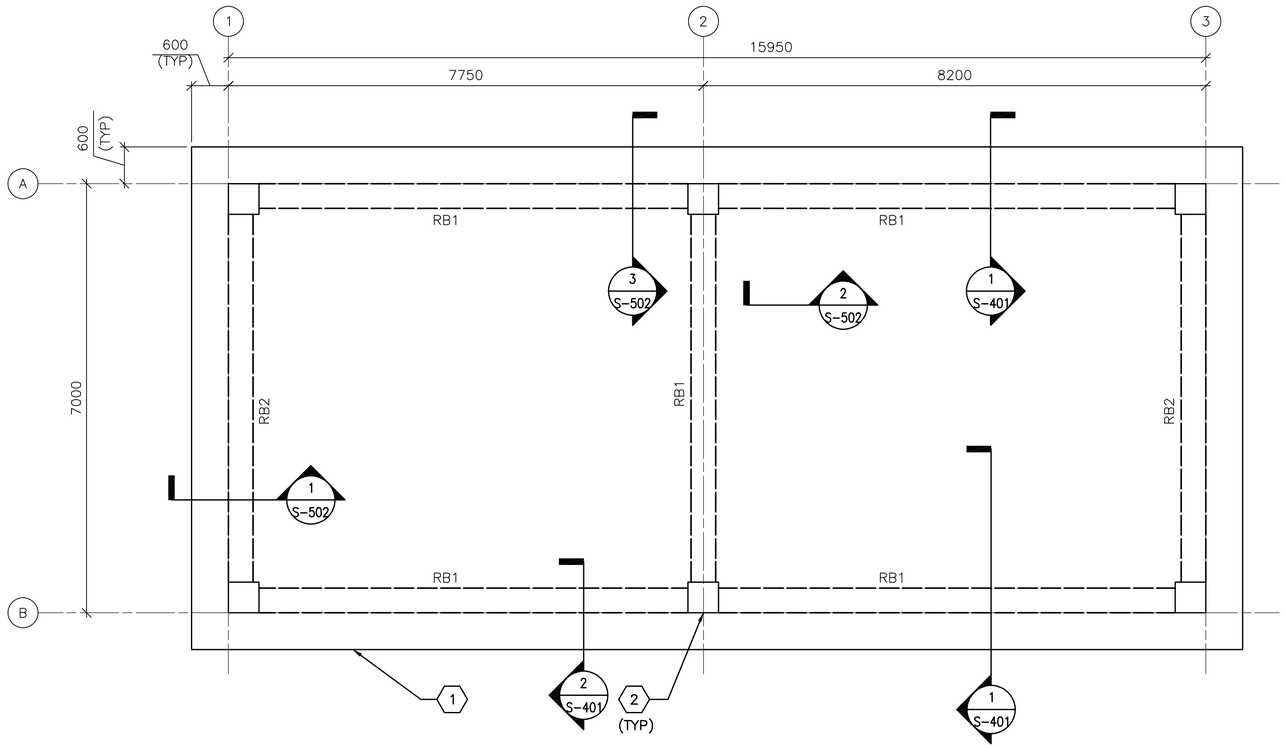


2 S-101 **ROOF FRAMING PLAN**
SCALE: 1:50

## ROOF FRAMING PLAN NOTES:

1. REFER TO SHEETS S-001 FOR STRUCTURAL NOTES AND DESIGN CRITERIA.
2. TOP OF SLAB ELEVATION = 3500 UNLESS NOTED OTHERWISE.
3. ROOF SLAB IS 250 WITH #19 @ 300 OC EW T&B.
4. ROOF BEAM INDICATED BY RB# ON PLAN. REFER TO BEAM SCHEDULE ON SHEET S-601.
5. COORDINATE WITH ARCHITECTURAL SHEETS FOR COLD-FORMED STEEL OVERBUILT FRAMING ABOVE ROOF SLAB.
6. COLD-FORMED METAL OVERBUILD ROOF FRAMING NOT SHOWN FOR CLARITY. SEE OVERBUILD ROOF FRAMING DETAILS AND SECTIONS ON SHEET S-702.
7. CMU PARTITION WALLS (BELOW ROOF SLAB) NOT SHOWN FOR CLARITY.
8. OVERHANG AREAS OF ROOF SLAB CONTAIN ROOF VENT PENETRATIONS. REFERENCE ARCHITECTURAL DRAWINGS FOR INFORMATION.

## ROOF FRAMING PLAN KEY NOTES: (X)

1. CONC ROOF SLAB (BELOW ROOF OVERBUILD)
2. REINF CONC COLUMN (BELOW CONC ROOF SLAB)

0 1000 2000
SCALE: 1:50

UNLESS OTHERWISE NOTED, LINEAR DIMENSIONS SHOWN ON DRAWINGS ARE IN MILLIMETERS (mm)

APPROVED:

A/E DESIGNER OF RECORD

SEAL:

GEORGIA REGISTERED 1-29-10 No. 27141 PROFESSIONAL ENGINEER CHRISTOPHER W. WHITMORE

US ARMY CORPS OF ENGINEERS
AFGHANISTAN ENGINEER DISTRICT

| Mark | Description | Date | Appr. |
|---|---|---|---|
| | | | |

Date: 2/23/10
Design file no.
Drawing code:
File name: ANALATSS-101FFP
Plot date: 2/23/2010
Plot scale: x:x
Rev: 0

Designed by: KMF/MMY
Dwn by: RCG
Ckd by: CWW
Reviewed by: LHM
Submitted by: BAKER

U.S. ARMY ENGINEER DISTRICT, AFGHANISTAN
CORPS OF ENGINEERS
APO AE 96338

*Michael Baker Jr., Inc.*
*A unit of Michael Baker Corporation*
Airside Business Park
100 Airside Drive
Moon Township, PA 15108
www.mbakercorp.com

AFGHAN NATIONAL ARMY
REGIONAL MILITARY TRAINING CENTER
STANDARD DESIGN

LATRINE BUILDING
SMALL

FOUNDATION/SLAB &
ROOF FRAMING PLANS

Sheet reference number:
S-101

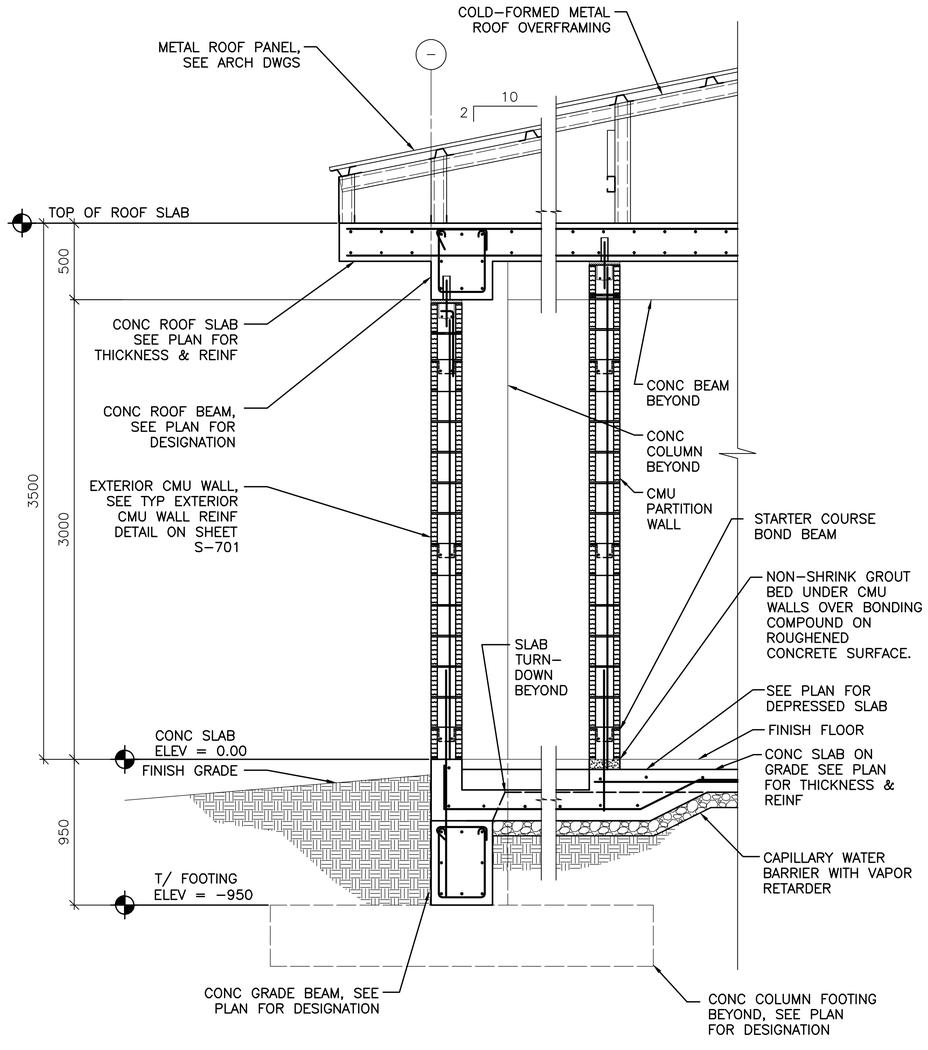


1 S–101

## TYPICAL WALL SECTION AT EXTERIOR MASONRY WALL

SCALE: 1:20

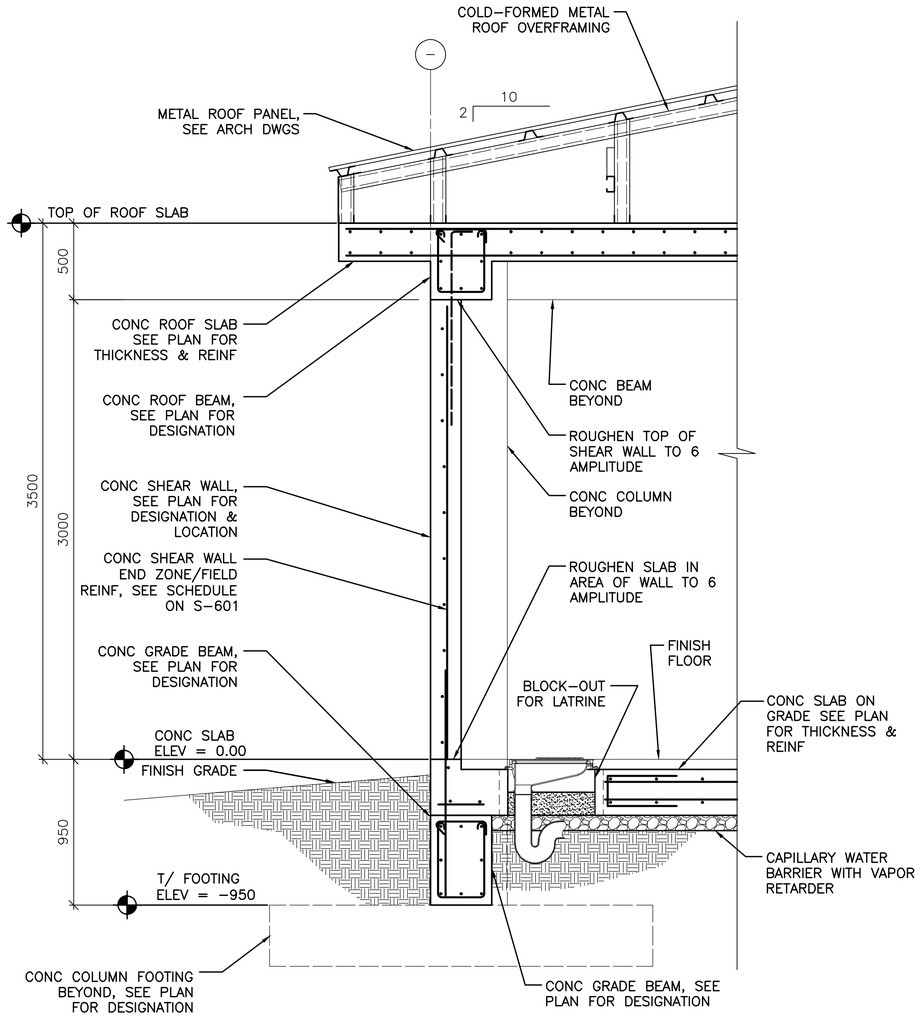


2 S–101

## TYPICAL WALL SECTION AT CONCRETE SHEAR WALL

SCALE: 1:20

0 400 800
SCALE: 1:20

UNLESS OTHERWISE NOTED, LINEAR DIMENSIONS SHOWN ON DRAWINGS ARE IN MILLIMETERS (mm)

APPROVED:

A/E DESIGNER OF RECORD

SEAL:

GEORGIA REGISTERED No. 27141 PROFESSIONAL ENGINEER CHRISTOPHER W. WHITMORE

US ARMY CORPS OF ENGINEERS
AFGHANISTAN ENGINEER DISTRICT

| Mark | Description | Date | Appr. | Mark | Description | Date | Appr. |
|---|---|---|---|---|---|---|---|
| | | | | | | | |

Date: 2/23/10 Rev: 0
Design file no.
Drawing code:
File name: ANALATSB-40188
Plot date: 2/23/2010
Plot scale: X:X

Designed by: KMP/MMY
Dwn by: RCG
Ckd by: CWW
Reviewed by: LHM
Submitted by: BAKER

U.S. ARMY ENGINEER DISTRICT, AFGHANISTAN
CORPS OF ENGINEERS
APO AE 96338

*Michael Baker Jr., Inc*
*A unit of Michael Baker Corporation*
Airside Business Park
100 Airside Drive
Moon Township, PA 15108
www.mbakercorp.com

AFGHAN NATIONAL ARMY
REGIONAL MILITARY TRAINING CENTER
STANDARD DESIGN

LATRINE BUILDING
SMALL

BUILDING SECTIONS

Sheet reference number:
S–401

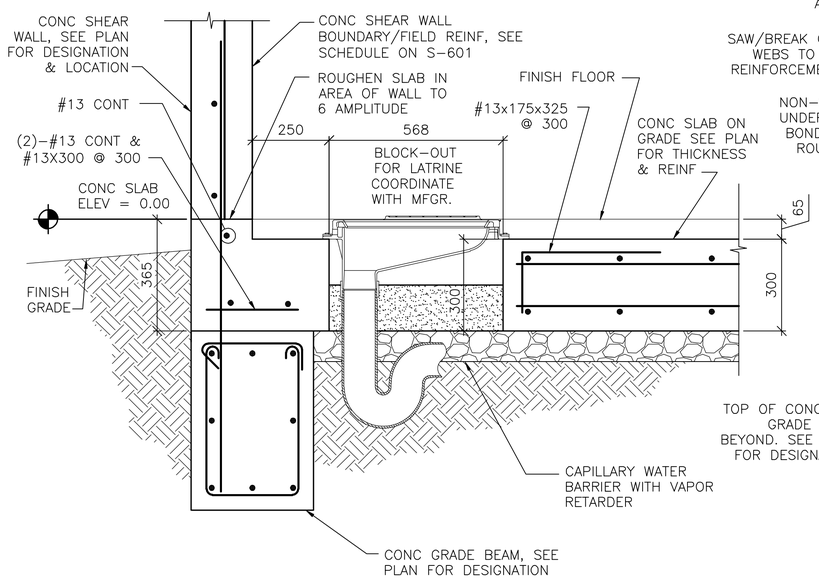


1 S-101 **SECTION**
SCALE: 1:10

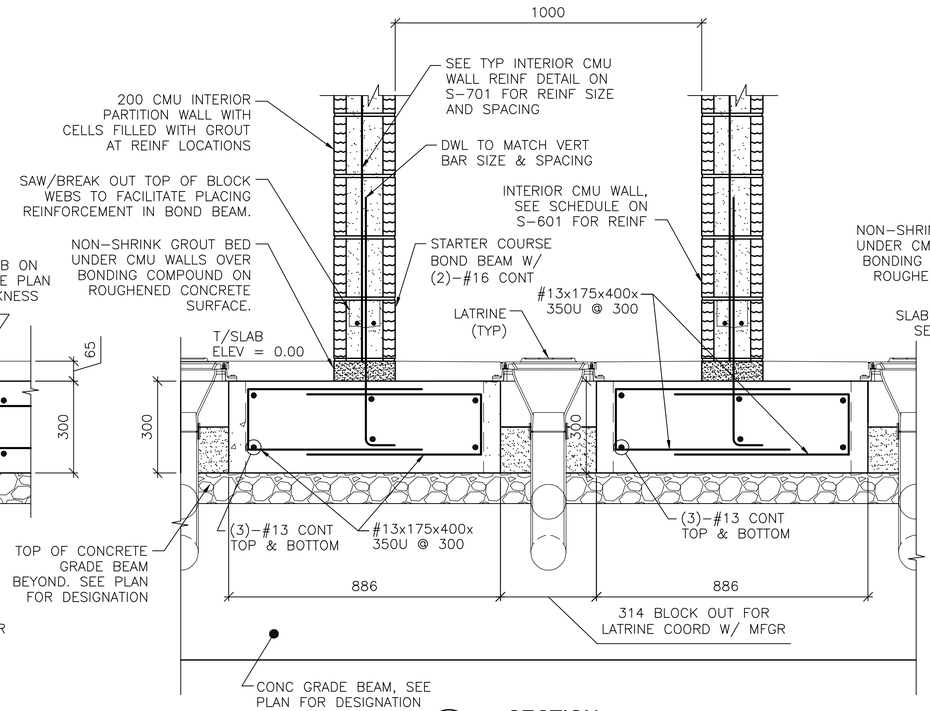


2 S-101 **SECTION**
SCALE: 1:10

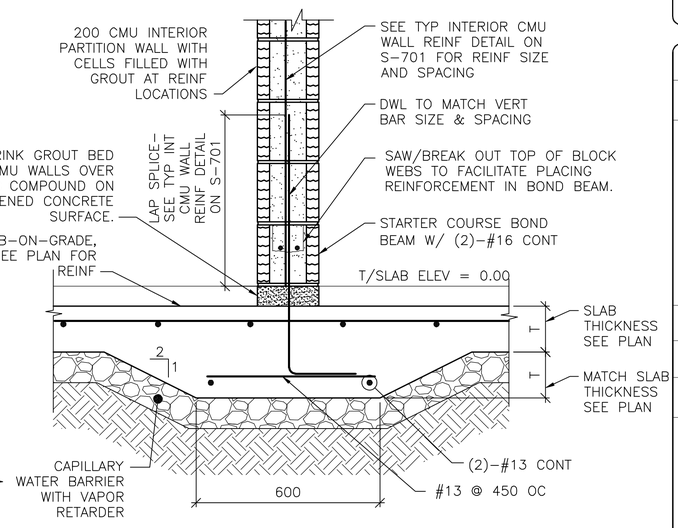


3 S-101 **SECTION**
SCALE: 1:10

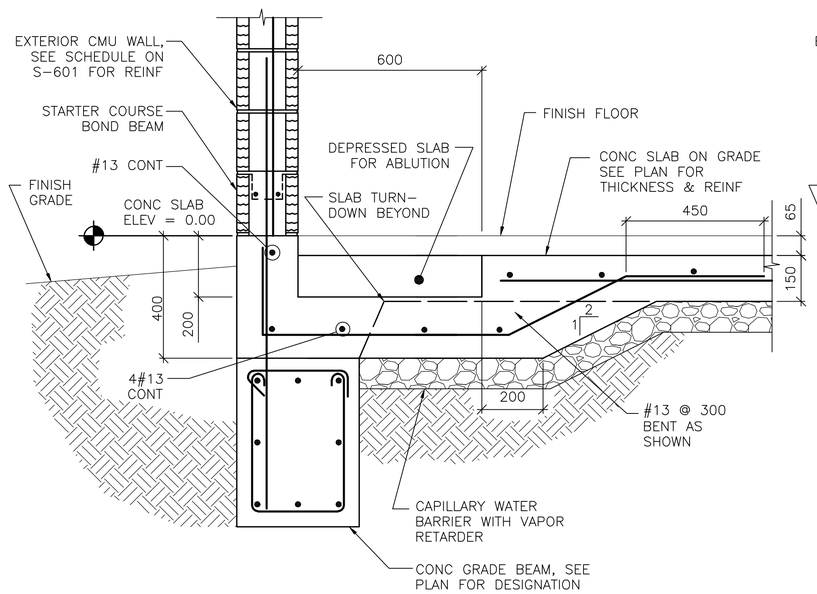


4 S-101 **SECTION**
SCALE: 1:10

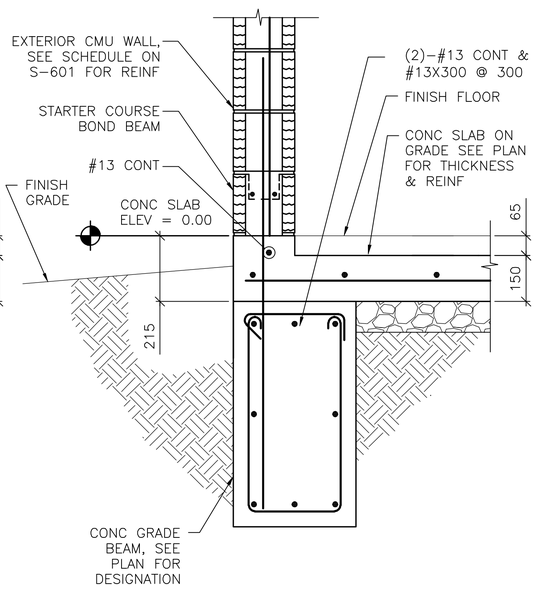


5 S-101 **SECTION**
SCALE: 1:10

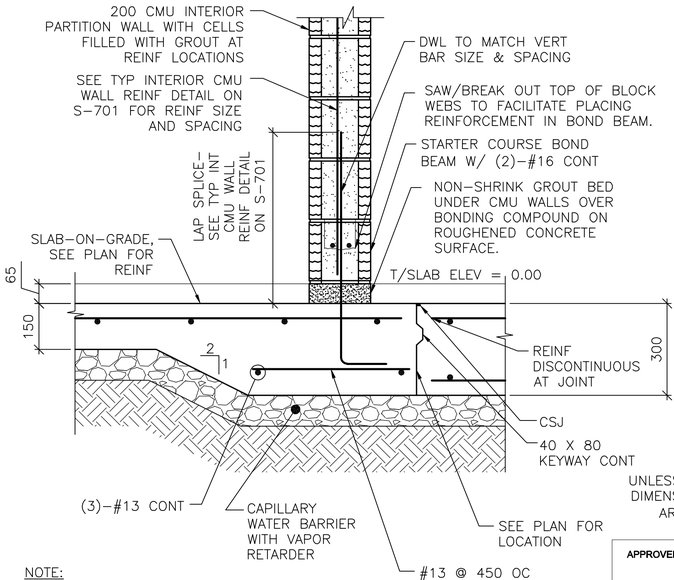


6 S-101 **SECTION**
SCALE: 1:10

0 200 400
SCALE: 1:10

UNLESS OTHERWISE NOTED, LINEAR DIMENSIONS SHOWN ON DRAWINGS ARE IN MILLIMETERS (mm)

NOTE:
1. DETAIL IS APPLICABLE AT CONTROL JOINTS RUNNING PARALLEL TO CMU WALLS AND WITHIN 300 OF FACE OF WALL.

APPROVED:

A/E DESIGNER OF RECORD

SEAL:

GEORGIA REGISTERED 1-29-10 No. 27141 PROFESSIONAL ENGINEER CHRISTOPHER W. WHITMORE

US ARMY CORPS OF ENGINEERS
AFGHANISTAN ENGINEER DISTRICT

| Mark | Description | Date | Appr. |
|---|---|---|---|

Rev: 0
Date: 2/23/10
Design file no.
Drawing code:
File name: ANALATSS-S01SC
Plot date: 2/23/2010
Plot scale: x:x

Designed by: KMF/MMY
Dwn by: RCG
Ckd by: CWW
Reviewed by: LHM
Submitted by: BAKER

U.S. ARMY ENGINEER DISTRICT, AFGHANISTAN
CORPS OF ENGINEERS
APO AE 96338

*Michael Baker Jr., Inc.*
*A unit of Michael Baker Corporation*
Airside Business Park
100 Airside Drive
Moon Township, PA 15108
www.mbakercorp.com

AFGHAN NATIONAL ARMY
REGIONAL MILITARY TRAINING CENTER
STANDARD DESIGN

LATRINE BUILDING
SMALL

FOUNDATION SECTIONS

Sheet reference number:
S-501

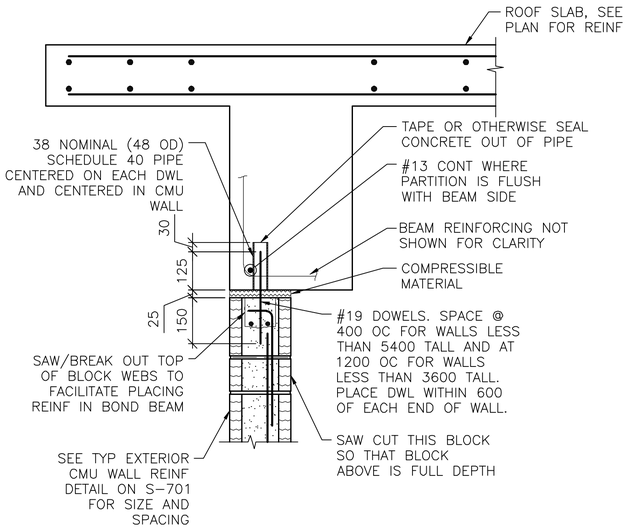


NOTES:
1. EXTEND DOWEL REINF TO 25 CLEAR FROM TOP OF CMU WALL.

1 / S-101 **SECTION**
SCALE: 1:10

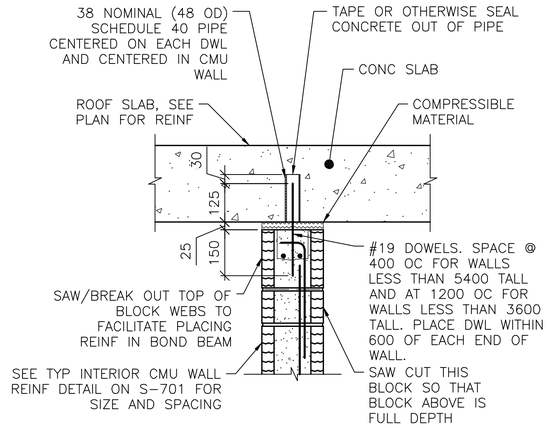


NOTES:
1. EXTEND DOWEL REINF TO 25 CLEAR FROM TOP OF CMU WALL.
2. SLAB REINF NOT SHOWN FOR CLARITY.

2 / S-101 **SECTION**
SCALE: 1:10

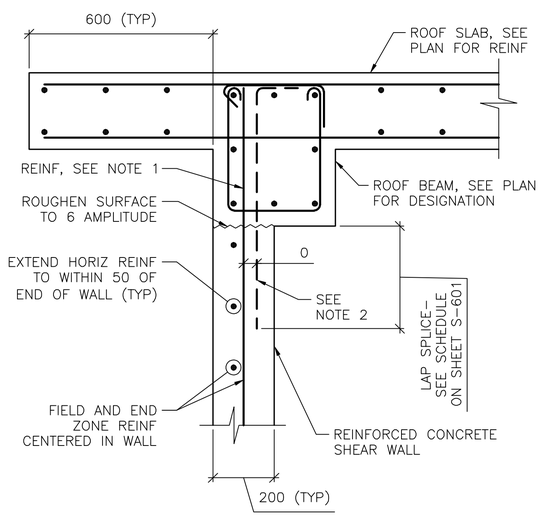


NOTES:
1. TERMINATE "FIELD" VERT REINF & END ZONE REINF @ 50 CLEAR FROM TOP OF ROOF SLAB.
2. WHERE END ZONE REINFORCING CANNOT BE DEVELOPED IN BEAM DEPTH, PROVIDE HOOKED DWLS SAME SIZE & SPACING. PROVIDE TENSION LAP BELOW ROOF BEAM.
3. SEE SHEET S-601 AND SHEET S-702 FOR SCHEDULED FIELD AND END ZONE REINF.

3 / S-101 **SECTION**
SCALE: 1:10

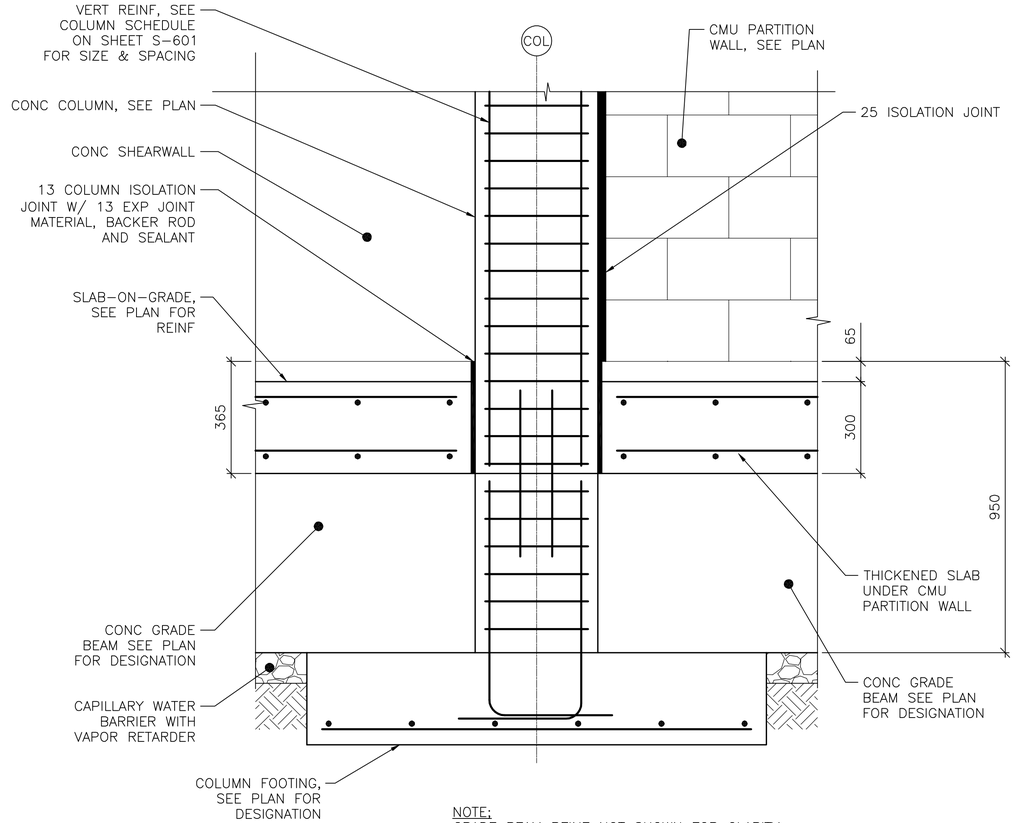


NOTE:
GRADE BEAM REINF NOT SHOWN FOR CLARITY.

4 / S-101 **SECTION**
SCALE: 1:10

0 200 400
SCALE: 1:10

UNLESS OTHERWISE NOTED, LINEAR DIMENSIONS SHOWN ON DRAWINGS ARE IN MILLIMETERS (mm)

APPROVED:

A/E DESIGNER OF RECORD

SEAL:

GEORGIA REGISTERED 2-23-10 No. 27141 PROFESSIONAL ENGINEER CHRISTOPHER W. WHITMORE

US ARMY CORPS OF ENGINEERS
AFGHANISTAN ENGINEER DISTRICT

| Mark | Description | Date | Appr. |
|---|---|---|---|
| | | | |

| Mark | Description | Date | Appr. |
|---|---|---|---|
| | | | |

Rev: 0
Date: 2/23/10
Design file no.:
Drawing code:
File name: ANALATSS-S025C
Plot date: 2/23/2010
Plot scale: x:x

Designed by: KMP/ MMY
Dwn by: RCG
Ckd by: CWW
Reviewed by: LHM
Submitted by: BAKER

U.S. ARMY ENGINEER DISTRICT, AFGHANISTAN
CORPS OF ENGINEERS
APO AE 96338

*Michael Baker Jr., Inc*
*A unit of Michael Baker Corporation*
Airside Business Park
100 Airside Drive
Moon Township, PA 15108
www.mbakercorp.com

AFGHAN NATIONAL ARMY
REGIONAL MILITARY TRAINING CENTER
STANDARD DESIGN

LATRINE BUILDING
SMALL

FRAMING SECTIONS

Sheet reference number:
S-502

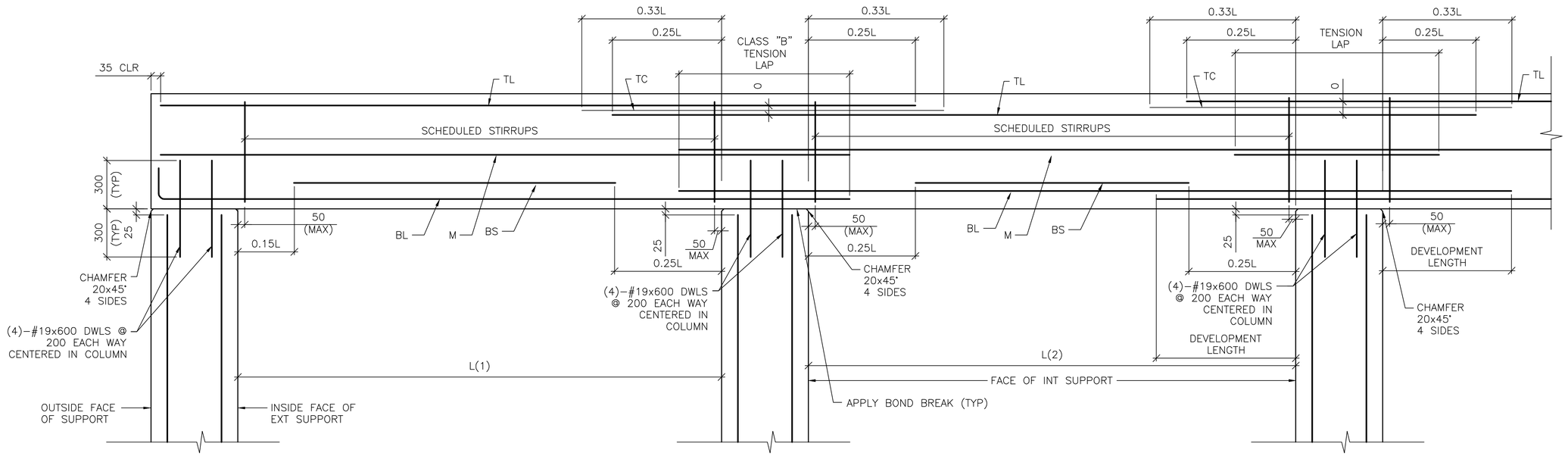


DETAIL NOTE:
1. WORK THIS DETAIL WITH BEAM SCHEDULE ON SHEET S-601.
2. L=GREATEST OF ADJACENT SPANS L(1) OR L(2)
3. ONLY COLUMN CORNER BARS ARE SHOWN

1 / S-503 **ROOF BEAM REINFORCING DETAIL**

SCALE: NTS

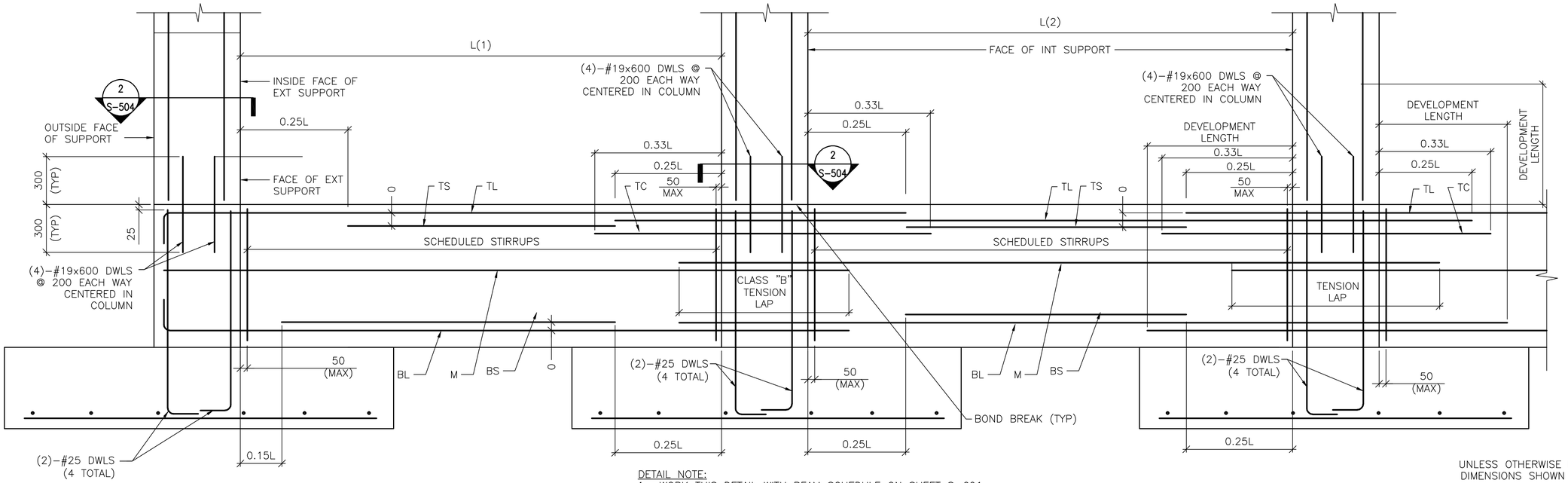


DETAIL NOTE:
1. WORK THIS DETAIL WITH BEAM SCHEDULE ON SHEET S-601.
2. L=GREATEST OF ADJACENT SPANS L(1) OR L(2)
3. ONLY COLUMN CORNER BARS ARE SHOWN.

2 / S-503 **GRADE BEAM REINFORCING DETAIL**

SCALE: NTS

UNLESS OTHERWISE NOTED, LINEAR DIMENSIONS SHOWN ON DRAWINGS ARE IN MILLIMETERS (mm)

APPROVED:

A/E DESIGNER OF RECORD

SEAL:

GEORGIA REGISTERED 2-23-10 No. 27141 PROFESSIONAL ENGINEER CHRISTOPHER W. WHITMORE

US ARMY CORPS OF ENGINEERS
AFGHANISTAN ENGINEER DISTRICT

| Mark | Description | Date | Appr. |
|---|---|---|---|
| | | | |

| Rev: 0 |
|---|
| Date: 2/23/10 |
| Design file no. |
| Drawing code: |
| File name: ANALATSS-S0307 |
| Plot date: 2/23/2010 |
| Plot scale: X:X |

| Designed by: KMP/MMY | Ckd by: CWW |
|---|---|
| Dwn by: RCG | Reviewed by: LHM |
| Submitted by: BAKER | |

U.S. ARMY ENGINEER DISTRICT, AFGHANISTAN
CORPS OF ENGINEERS
APO AE 96338

*Michael Baker Jr., Inc*
*A unit of Michael Baker Corporation*
Airside Business Park
100 Airside Drive
Moon Township, PA 15108
www.mbakercorp.com

AFGHAN NATIONAL ARMY
REGIONAL MILITARY TRAINING CENTER
STANDARD DESIGN

LATRINE BUILDING
SMALL

BEAM & COLUMN DETAILS

Sheet reference number:
S-503

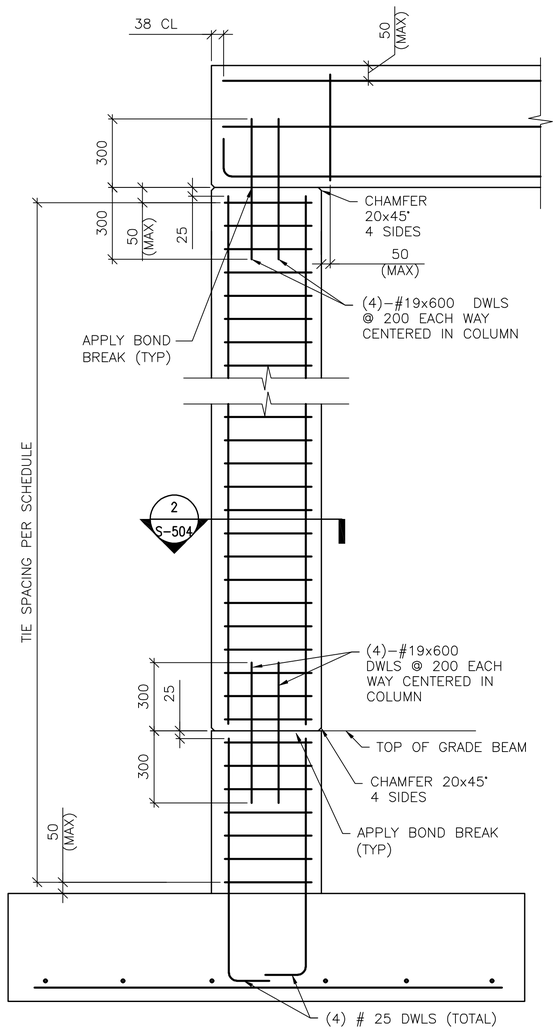


DETAIL NOTE:
1. ONLY COLUMN CORNER BARS ARE SHOWN

## 1-STORY COLUMN REINF DETAILS
1 / S–504
SCALE: NTS
(WITH GRADE BEAM)

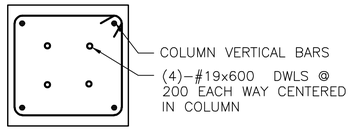


## SECTION
2 / S–503 — 2 / S–504
SCALE: NTS

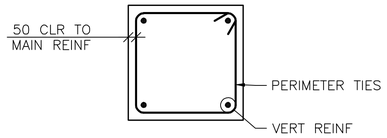


## 4 BAR COLUMN
A / S–504
SCALE: NTS

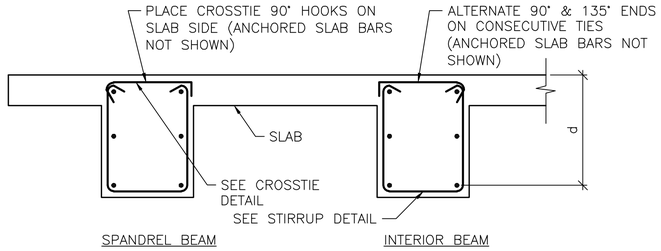


## BEAM REINFORCEMENT DETAILS
B / S–504
SCALE: NTS

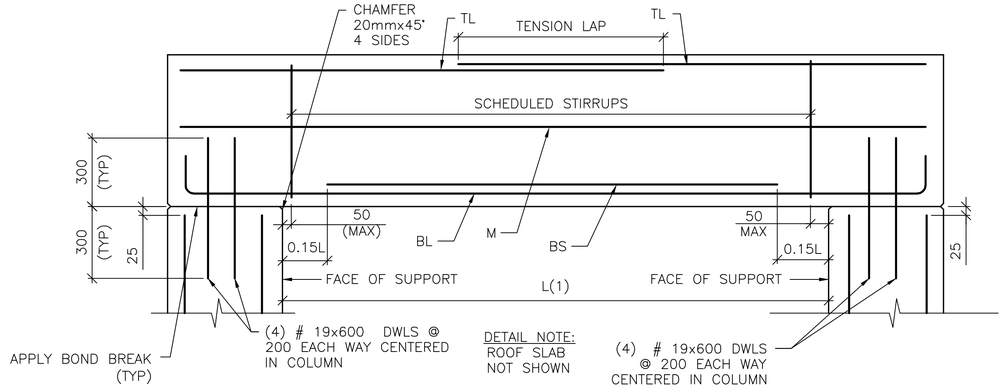


## SINGLE SPAN ROOF BEAM REINFORCING DETAIL
3 / S–504
SCALE: NTS

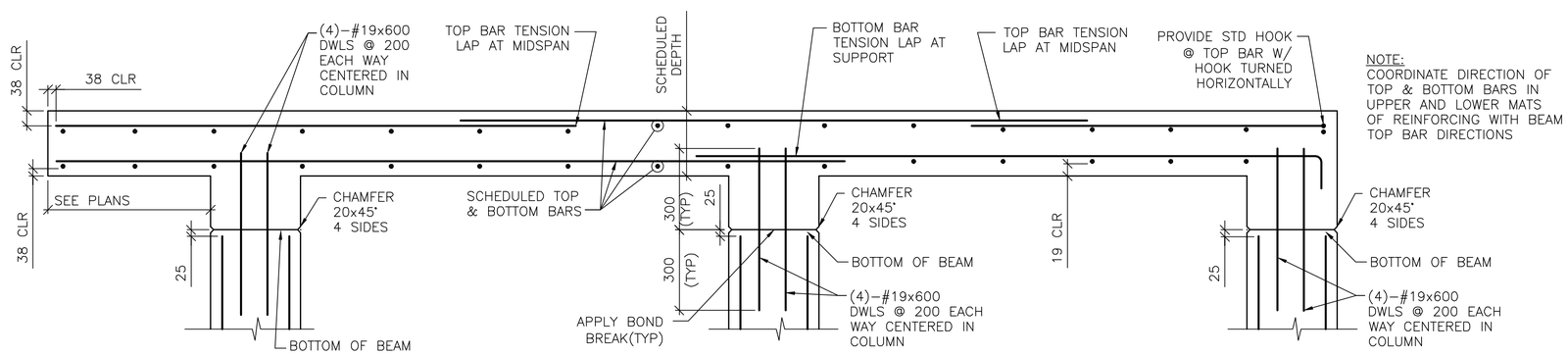


## FRAMED SLAB REINFORCING DETAIL
4 / S–504
SCALE: NTS

UNLESS OTHERWISE NOTED, LINEAR DIMENSIONS SHOWN ARE IN MILLIMETERS (mm)

APPROVED:

A/E DESIGNER OF RECORD

SEAL:

GEORGIA REGISTERED 1-29-10 No. 27141 PROFESSIONAL ENGINEER CHRISTOPHER W. WHITMORE

US ARMY CORPS OF ENGINEERS
AFGHANISTAN ENGINEER DISTRICT

| Mark | Description | Date | Appr. |
|---|---|---|---|
| | | | |

Date: 2/23/10
Design file no.
Drawing code:
Rev: 0

Designed by: KMP/MMY
Dwn by: RCG
Ckd by: CWW
Reviewed by: LHM
Submitted by: BAKER

File name: ANAATSS-S04DT
Plot date: 2/23/2010
Plot scale: X:X

U.S. ARMY ENGINEER DISTRICT, AFGHANISTAN
CORPS OF ENGINEERS
APO AE 96338

*Michael Baker Jr., Inc*
*A unit of Michael Baker Corporation*
Airside Business Park
100 Airside Drive
Moon Township, PA 15108
www.mbakercorp.com

AFGHAN NATIONAL ARMY
REGIONAL MILITARY TRAINING CENTER
STANDARD DESIGN

LATRINE BUILDING
SMALL

BEAM & COLUMN DETAILS

Sheet reference number:
S–504

# CONCRETE REINFORCEMENT TENSION DEVELOPMENT/LAP SPLICE SCHEDULE

| f'c = 28 MPa | LAP CLASS | UNCOATED BARS | | | |
|---|---|---|---|---|---|
| | | TOP BARS | | OTHER BARS | |
| BAR SIZES | | CASE 1 | CASE 2 | CASE 1 | CASE 2 |
| #10 TO #19 | A | 50 BAR DIA | 74 BAR DIA | 38 BAR DIA | 57 BAR DIA |
| | B | 64 BAR DIA | 96 BAR DIA | 50 BAR DIA | 74 BAR DIA |
| #22 TO #57 | A | 62 BAR DIA | 93 BAR DIA | 48 BAR DIA | 71 BAR DIA |
| | B | 80 BAR DIA | 121 BAR DIA | 62 BAR DIA | 93 BAR DIA |

NOTES:
1. TABULATED TENSION DEVELOPMENT LENGTH VALUES ARE TAKEN FROM CRSI DESIGN HANDBOOK 2008 10TH ED.
2. TENSION DEVELOPMENT & TENSION LAP SPLICE LENGTHS ARE EXPRESSED AS MULTIPLES OF BAR DIAMETERS.
3. TABULATED VALUES ARE BASED ON MINIMUM YIELD STRENGTH OF REINFORCEMENT, fy, OF 420MPa.
4. CONCRETE IS NORMAL WEIGHT (2400Kg/m³) AND 28 DAY COMPRESSIVE STRENGTH = 28MPa.
5. TABULATED VALUES FOR BEAMS & COLUMNS ARE BASED ON TRANSVERSE REINFORCEMENT AND CONCRETE COVER MEETING MINIMUM CODE REQUIREMENTS.
6. CASES 1 & 2, WHICH DEPEND ON THE TYPE OF STRUCTURAL MEMBER, CONCRETE COVER, AND CENTER-TO-CENTER SPACING OF THE BARS ARE DEFINED IN THE TABLE BELOW.
7. LAP SPLICE LENGTHS (MINIMUM 300mm) ARE MULTIPLES OF TENSION DEVELOPMENT LENGTHS: CLASS A = 1.0(TENSION DEVELOPMENT LENGTH) & CLASS B = 1.3(TENSION DEVELOPMENT LENGTH)
8. TOP BARS ARE HORIZONTAL REINFORCEMENT WITH MORE THAN 300mm OF CONCRETE CAST BELOW THE BARS.
9. IT SHALL BE PERMISSIBLE TO CALCULATE WALL AND SLAB REINFORCEMENT TENSION DEVELOPMENT/SPLICE LENGTHS IN ACCORDANCE WITH ACI 12.2.3 OR TABLE 5.3(b) OF CRSI 2008 IN LIEU OF VALUES TABULATED ABOVE.

| | | |
|---|---|---|
| BEAMS, COLUMNS | CASE 1 | CONCRETE COVER AT LEAST 1 BAR DIA AND CENTER-TO-CENTER SPACING AT LEAST 2 BAR DIA |
| | CASE 2 | CONCRETE COVER LESS THAN 1 BAR DIA OR CENTER-TO-CENTER SPACING LESS THAN 2 BAR DIA |
| ALL OTHERS | CASE 1 | CONCRETE COVER AT LEAST 1 BAR DIA AND CENTER-TO-CENTER SPACING AT LEAST 3 BAR DIA |
| | CASE 2 | CONCRETE COVER LESS THAN 1 BAR DIA OR CENTER-TO-CENTER SPACING LESS THAN 3 BAR DIA |

# CONCRETE COVER SCHEDULE

MINIMUM CONCRETE COVER PROTECTION FOR REINFORCEMENT BARS SHALL BE AS LISTED BELOW: (SEE ACI 318M-05, SECTION 7.7 FOR CONDITIONS NOT NOTED). DIMENSIONS FOR BAR PLACEMENT GIVEN IN SECTIONS AND DETAILS SHALL SUPERSEDE MINIMUM COVER REQUIREMENTS GIVEN HERE. DIMENSIONS ARE IN mm. PROVIDE STANDARD BAR CHAIRS AND SUPPORT BARS @1200mm MAXIMUM AS REQUIRED TO MAINTAIN CONCRETE PROTECTION SPECIFIED.

| | | |
|---|---|---|
| FOOTINGS (EARTH FORMED): | | 70 |
| COLUMNS / PIERS (TO TIES) | | 40 |
| GRADE BEAMS OR SLAB TURNED DOWN EDGES: | | |
| TOP | | 40 |
| BOTTOM (EARTH FORMED) | | 70 |
| SIDES (EARTH FORMED) | | 70 |
| SIDES (BOARD FORMED) | #16 BAR & SMALLER | 40 |
| | #19 THRU #36 BAR | 50 |
| ELEVATED BEAMS & SLABS: | | |
| BEAM TIES & STIRRUPS (NOT EXPOSED TO WEATHER) | | 40 |
| BEAM TIES & STIRRUPS (EXPOSED TO WEATHER) | | 50 |
| FLOOR SLABS (NOT EXPOSED TO WEATHER) | | 20 |
| FLOOR SLABS (EXPOSED TO WEATHER) | | |
| #19 & LARGER | | 50 |
| #13 & SMALLER | | 40 |
| ROOF SLAB BARS | | 25 |
| SLABS ON GRADE | | |
| NOT EXPOSED TO WEATHER (FROM TOP) | | 20 |
| EXPOSED TO WEATHER (FROM TOP) | | 40 |
| UTILITY TUNNEL WALLS, RETAINING WALLS AND SHEAR WALLS. (NO SURFACES SHALL BE EARTH FORMED) | | |
| EARTH SIDE AND FRONT SIDE (EXPOSED TO WEATHER) | | |
| #16 BAR AND SMALLER | | 40 |
| #19 THRU #36 BAR | | 50 |

# COLUMN FOOTING SCHEDULE

| MARK | FOOTING SIZE (mm) | | | FOOTING REINFORCING | REMARKS |
|---|---|---|---|---|---|
| | LENGTH | WIDTH | THICKNESS | | |
| F1 | 3000 | 3000 | 300 | (9)-#19 EW BOTT | ----- |

# CONCRETE SHEAR WALL SCHEDULE

| MARK | TYPE | WALL LENGTH (L) (mm) | WALL REINFORCEMENT | | REMARKS |
|---|---|---|---|---|---|
| | | | END ZONE | FIELD | |
| SW1 | B | 2600 | (4)-#16 @ 150mm OC | #13 @ 300mm OC | ----- |

NOTES:
1. WORK THIS SCHEDULE WITH SHEAR WALL DETAILS ON SHEETS S-702
2. SEE PLAN FOR LOCATION OF SHEAR WALL(S).
3. VERTICAL "FIELD" BARS MAY BE OMITTED IN LOCATION OF "END ZONE" REINFORCEMENT.
4. WALL FIELD REINF LISTED APPLIES TO VERT & HORIZ BARS.
5. WALL FIELD REINFORCEMENT CENTERED IN WALL.

# STANDARD HOOKS IN TENSION PER (ACI 318M-05)

| HOOK DEVELOPMENT LENGTH (mm) | |
|---|---|
| BAR SIZE | f'c 28 MPa |
| #10 | 180 |
| #13 | 250 |
| #16 | 300 |
| #19 | 380 |
| #22 | 430 |
| #25 | 480 |
| #29 | 560 |
| #32 | 610 |
| #36 | 690 |

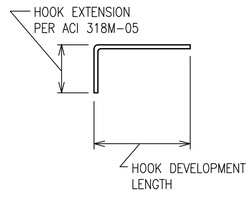


NOTES:
1. CONCRETE IS NORMAL WEIGHT CONCRETE.
2. BAR YIELD STRENGTH, fy = 420 MPa
3. SIDE COVER REQUIREMENTS OF ACI SECT. 12.5.3 ARE ASSUMED TO NOT BE MET.
4. TIE OR STIRRUP REQUIREMENTS OF ACI SECT. 12.5.3 ARE ASSUMED TO NOT BE MET.
5. REDUCTION FOR EXCESS REINFORCEMENT IS NOT TAKEN.
6. HOOK DEVELOPMENT LENGTH IS VALID FOR 180° HOOKS ALSO.

# BEAM SCHEDULE

| MARK | BEAM SIZE (mm) | | BEAM REINFORCING | | | | | | STIRRUPS | | | REMARKS |
|---|---|---|---|---|---|---|---|---|---|---|---|---|
| | DEPTH | WIDTH | BL | BS | TL | TS | TC | M | SIZE | TYPE | SPACING | |
| GRADE BEAMS | | | | | | | | | | | | |
| GB1 | 735/550 | 400 | (2)-#25 | (1)-#25 | (2)-#19 | --- | --- | #22 EF | #13 | S3+T9 | d/2 | LOWER TOP TO 550 BETWEEN A2-A3 & B2-B3 |
| GB2 | 735/585 /550 | 400 | (2)-#29 | (2)-#29 | (2)-#19 | --- | --- | #22 EF | #13 | S3+T9 | d/2 | LOWER TOP TO 585 BETWEEN A1-A2 & B1-B2; TO 550 BETWEEN A3-B3 |
| ROOF BEAMS | | | | | | | | | | | | |
| RB1 | 500 | 400 | (2)-#25 | (1)-#25 | (2)-#25 | --- | --- | --- | #13 | S3+T9 | d/2 | ----- |
| RB2 | 500 | 400 | (2)-#29 | (1)-#29 | (2)-#25 | --- | --- | --- | #13 | S3+T9 | d/2 | ----- |

NOTES:
1. WORK THIS SCHEDULE WITH BEAM REINFORCING DETAILS ON SHEETS S-503 AND S-504.
2. HOOKS SHOWN ON SECTIONS AND DETAILS SHALL BE 90° STD UON.
3. USE ONLY (1) TC AT BEAM COLUMN INTERSECTION WHERE REQ'D.

# COLUMN SCHEDULE

| DESCRIPTION \ COLUMN MARK | TYP UON | --- | --- | --- |
|---|---|---|---|---|
| TYPE | 4-BAR | --- | --- | --- |
| DIMENSIONS | 500mm SQ | --- | --- | --- |
| VERTICAL REINFORCEMENT | (4)-#29 | --- | --- | --- |
| TIES | #13 @ d/2 | --- | --- | --- |
| TOP OF ROOF ELEVATION | 3500mm | --- | --- | --- |
| TOP OF GRADE BEAM ELEVATION | -200mm | --- | --- | --- |
| TOP OF FOOTING ELEVATION | -950mm | --- | --- | --- |

NOTES:
1. WORK THIS SCHEDULE WITH COLUMN DETAILS ON SHEET S-504.
2. SEE FOOTING SCHEDULE THIS SHEET FOR FOOTING INFORMATION
3. COLUMN TIES: INTERIOR TIES TO MATCH SIZE & SPACING OF PERIMETER TIES.
4. HOOKS SHOWN ON SECTIONS & DETAILS SHALL BE 90° STD UON

# CMU OR CAST IN PLACE CONC LINTEL SCHEDULE (TYP)

| OPENING TYPE OR SIZE, BEAM LOCATION OR TYPE | MAX SPAN (mm) | LINTEL DEPTH (mm) | REINFORCING BOTTOM |
|---|---|---|---|
| WALL OPENING | 4000 | 600 | (2)-#16 T&B |
| WALL OPENING | 1900 | 400 | (2)-#16 T&B |
| WALL OPENING | 1000 | 400 | (2)-#13 B |
| | | | |
| | | | |
| | | | |
| | | | |
| | | | |
| | | | |
| | | | |

1. STRUCTURAL SHEETS DO NOT INDICATE ALL OPENINGS IN MASONRY WALLS. VERIFY NUMBER, SIZE AND LOCATION OF ALL OPENINGS IN MASONRY WALLS FROM ARCHITECTURAL SHEETS AND APPROVED PLUMBING, MECHANICAL, AND ELECTRICAL SHOP DRAWINGS.
2. PROVIDE 200mm BEARING EA END.
3. FOR HEAD DETAILS REFER TO ARCHITECTURAL SHEETS.
4. REINFORCING SHALL BE ASTM A615M, GRADE 420. GROUT FOR CMU LINTELS SHALL HAVE A MINIMUM COMPRESSIVE STRENGTH OF 14 MPa AT 28 DAYS.
5. CONTRACTOR SHALL SUBMIT FOR APPROVAL SHOP DRAWINGS AND SCHEDULES SHOWING SIZE, SPAN, REINFORCEMENT, DETAILS, LOCATIONS, ETC.

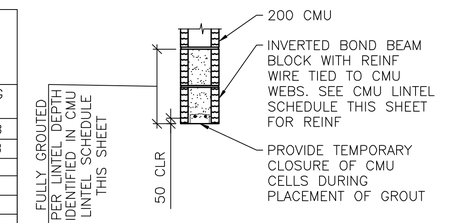


A / S-601 **LINTEL DETAIL**
SCALE: NTS

UNLESS OTHERWISE NOTED, LINEAR DIMENSIONS SHOWN ON DRAWINGS ARE IN MILLIMETERS (mm)

APPROVED:

A/E DESIGNER OF RECORD

SEAL:

GEORGIA REGISTERED PROFESSIONAL ENGINEER No. 27141 CHRISTOPHER W. WHITMORE 2-22-10

US ARMY CORPS OF ENGINEERS
AFGHANISTAN ENGINEER DISTRICT

| Mark | Description | Date | Appr. |
|---|---|---|---|
| | | | |

Date: 2/23/10 Rev: 0
Design file no.
Drawing code:
File name: ANAATSS-601SCH
Plot date: 2/23/2010
Plot scale: X:X

Designed by: KMP/MMY
Dwn by: RCG
Ckd by: CWW
Reviewed by: LMH
Submitted by: BAKER

U.S. ARMY ENGINEER DISTRICT, AFGHANISTAN
CORPS OF ENGINEERS
APO AE 96338

Michael Baker Jr., Inc
A unit of Michael Baker Corporation
Airside Business Park
100 Airside Drive
Moon Township, PA 15108
www.mbakercorp.com

AFGHAN NATIONAL ARMY
REGIONAL MILITARY TRAINING CENTER
STANDARD DESIGN

LATRINE BUILDING
SMALL

SCHEDULES

Sheet reference number:
S-601

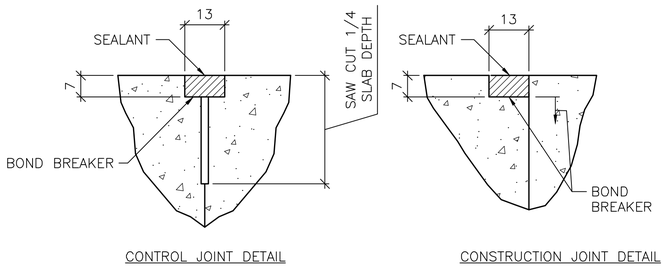


CONTROL JOINT DETAIL

CONSTRUCTION JOINT DETAIL

## 1 S-701 TYPICAL CONCRETE SLAB JOINT FINISH DETAILS

SCALE: NTS

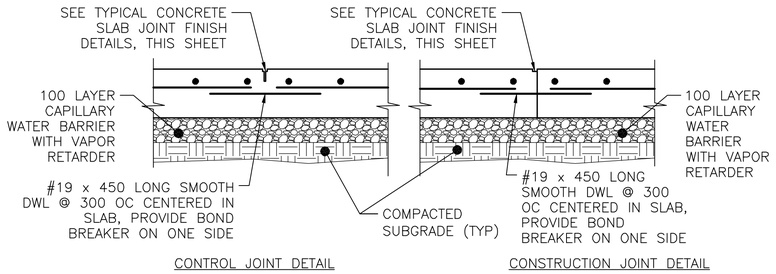


CONTROL JOINT DETAIL

CONSTRUCTION JOINT DETAIL

## 2 S-701 TYPICAL SLAB ON GRADE JOINT DETAIL

SCALE: NTS

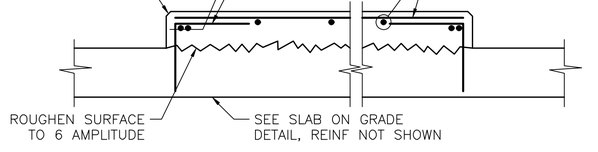


## 3 S-701 INTERIOR EQUIPMENT PAD DETAIL

SCALE: NTS

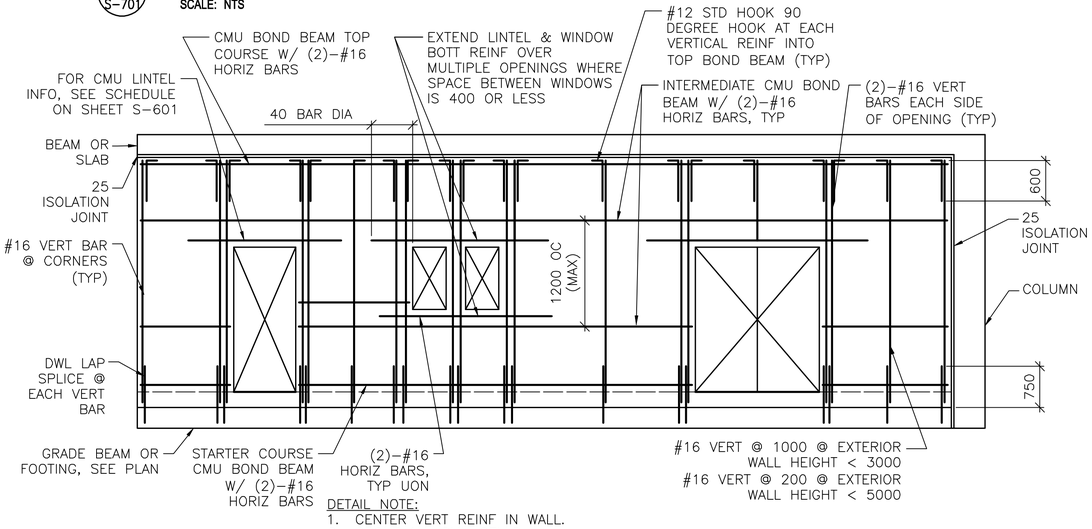


DETAIL NOTE:
1. CENTER VERT REINF IN WALL.
2. GROUT ALL CMU CELLS.
3. REFERENCE ARCH DWGS FOR JOINT INFORMATION
4. DOWELS BETWEEN TOP BOND BEAM AND BEAM/SLAB ABOVE (INCLUDING EMBEDDED PIPE SLEEVE) NOT SHOWN FOR CLARITY. SEE SPECIFIC S–500 SERIES DWGS FOR INFO.
5. FOR INFORMATION ON ALTERNATE CAST–IN–PLACE WALL BOND BEAMS, REFERENCE ALTERNATE TOP OF CMU WALL BRACING DETAILS THIS SHEET.

## 7 S-701 TYP EXTERIOR CMU WALL REINF DETAIL

SCALE: NTS

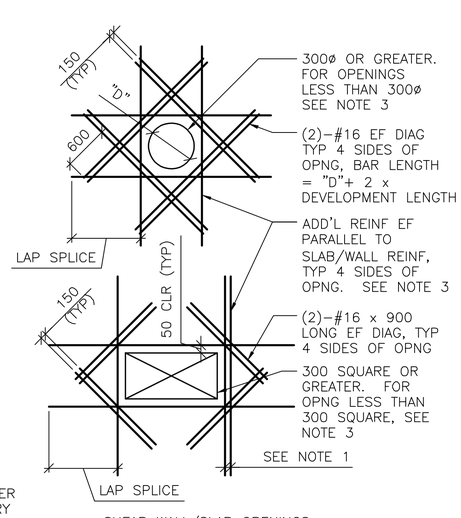


SHEAR WALL/SLAB OPENINGS

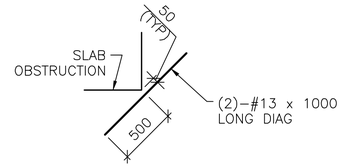


RE–ENTRANT CORNERS

DETAIL NOTES:
1. WHERE MORE THAN ONE ADDITIONAL BAR IS REQUIRED PARALLEL TO THE EXISTING SLAB/WALL REINFORCING THE ADDITIONAL REINFORCING BARS SHALL BE SPACED AT 100 ON CENTER.
2. ADDITIONAL REINFORCING PARALLEL TO THE SLAB/WALL REINFORCING SHALL BE #16 BARS THAT PROVIDE A STEEL AREA ON EACH SIDE OF THE OPENING EQUAL TO 1/2 THE AREA OF THE REINFORCING CUT BY THE OPENING.
3. FOR OPENINGS WITH SIDES OR DIAMETERS LESS THAN 300 SPREAD THE SLAB/WALL REINFORCING TO CLEAR THE OPENING.

## 4 S-701 ADD'L CONCRETE REINFORCEMENT DETAILS

SCALE: NTS

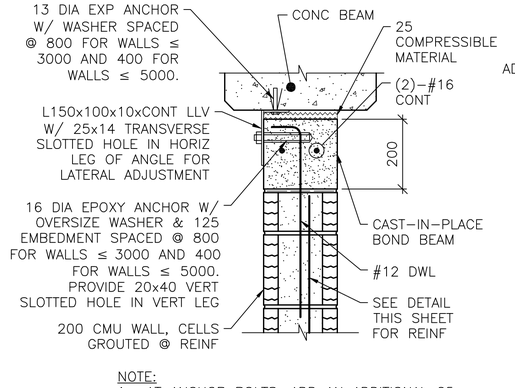


NOTE:
1. AT ANCHOR BOLTS, ADD AN ADDITIONAL 25 COMPRESSIBLE MATERIAL BELOW EXP ANCHOR HEAD.

INTERIOR BEAM

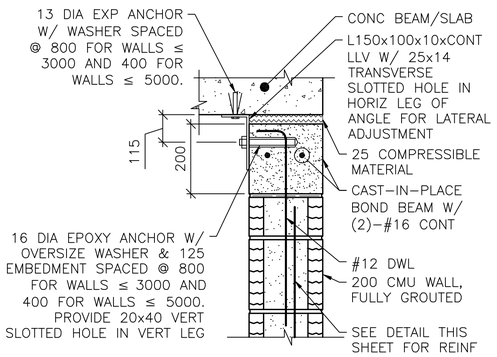


EXTERIOR WALL OR SLAB

NOTES:
1. THIS DETAIL IS AN ALTERNATE TOP OF WALL ANCHORAGE DETAIL TO BE USED AT THE CONTRACTOR'S OPTION IN LIEU OF DETAILS SHOWN ON S–400 & S–500 DRAWINGS.
2. CAST–IN–PLACE BOND BEAM SHOWN AT TOP OF WALL IS ALSO APPLICABLE FOR INTERMEDIATE AND STARTER COURSE BOND BEAMS WITHIN WALL.

## 5 S-701 ALTERNATE TOP OF CMU WALL BRACING DETAILS

SCALE: NTS

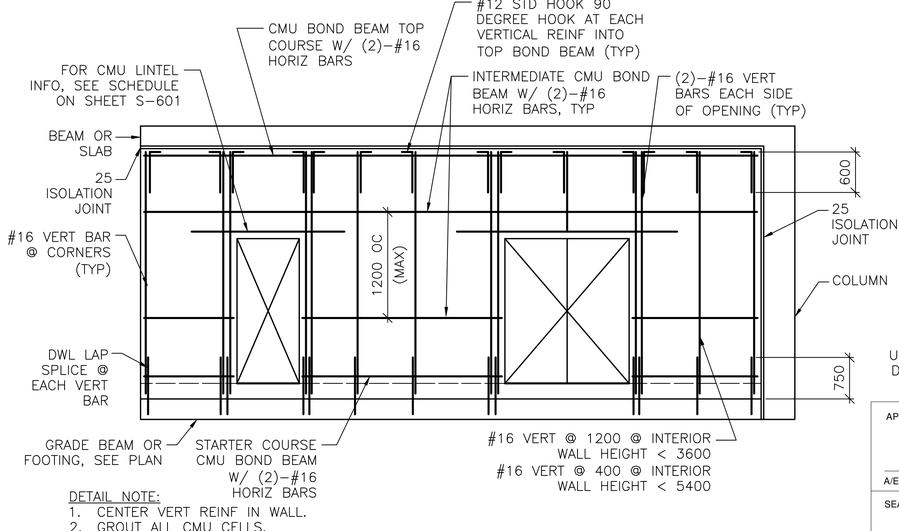


DETAIL NOTE:
1. CENTER VERT REINF IN WALL.
2. GROUT ALL CMU CELLS.
3. REFERENCE ARCH DWGS FOR JOINT INFORMATION
4. DOWELS BETWEEN TOP BOND BEAM AND BEAM/SLAB ABOVE (INCLUDING EMBEDDED PIPE SLEEVE) NOT SHOWN FOR CLARITY. SEE SPECIFIC S–500 SERIES DWGS FOR INFO.
5. FOR INFORMATION ON ALTERNATE CAST–IN–PLACE WALL BOND BEAMS, REFERENCE ALTERNATE TOP OF CMU WALL BRACING DETAILS THIS SHEET.

## 8 S-701 TYP INTERIOR CMU WALL REINF DETAIL

SCALE: NTS

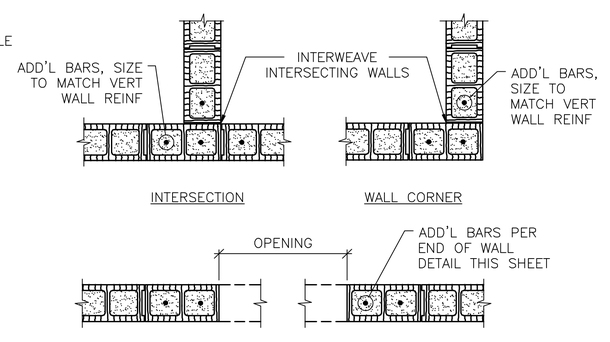


INTERSECTION

WALL CORNER




MASONRY OPENING W/ LINTEL

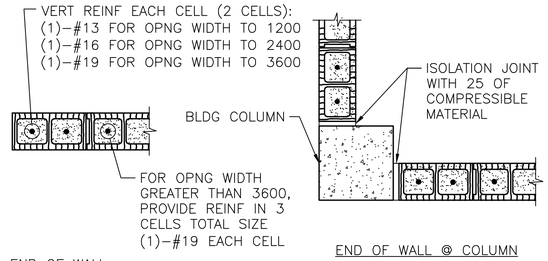


END OF WALL

END OF WALL @ COLUMN

NOTES:
1. OPENING WIDTH SHALL NOT EXCEED 3600 FOR THIS TYPE OF JAMB.
2. ALL CELLS FULLY GROUTED AT EXTERIOR WALLS. AT INTERIOR WALLS, ONLY GROUT CELLS CONTAINING REINF.

## 6 S-701 TYP CMU DETAILS

SCALE: NTS

UNLESS OTHERWISE NOTED, LINEAR DIMENSIONS SHOWN ON DRAWINGS ARE IN MILLIMETERS (mm)

APPROVED:

A/E DESIGNER OF RECORD

SEAL:

GEORGIA REGISTERED No. 27141 PROFESSIONAL ENGINEER CHRISTOPHER W. WHITMORE 1-27-10

US ARMY CORPS OF ENGINEERS
AFGHANISTAN ENGINEER DISTRICT

| Mark | Description | Date | Appr. |
|---|---|---|---|

U.S. ARMY ENGINEER DISTRICT, AFGHANISTAN
CORPS OF ENGINEERS
APO AE 96338

Michael Baker Jr., Inc
A unit of Michael Baker Corporation
Airside Business Park
100 Airside Drive
Moon Township, PA 15108
www.mbakercorp.com

Designed by: KMP/MMY
Dwn by: RCG
Ckd by: CWW
Reviewed by: LHM
Submitted by: BAKER

Date: 2/23/10
Design file no.
Drawing code:
File name: ANALATSS-701DT
Plot date: 2/23/2010
Plot scale: X:X
Rev. 0

AFGHAN NATIONAL ARMY
REGIONAL MILITARY TRAINING CENTER
STANDARD DESIGN

LATRINE BUILDING
SMALL

TYPICAL DETAILS

Sheet reference number:
S–701

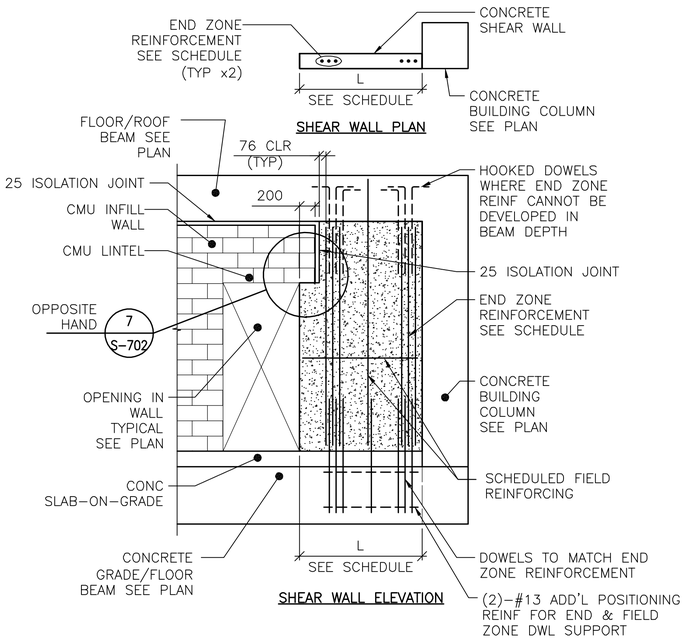


DETAIL NOTES:
1. FIELD REINFORCEMENT IN SHEAR WALL NOT SHOWN COMPLETELY FOR CLARITY.
2. FIELD REINFORCEMENT CENTERED IN WALL.
3. MINIMUM CONC CLEAR DISTANCE FOR END ZONE REINF = 76
4. SEE CONC SHEAR WALL SCHEDULE ON SHEET S-601
5. SEE ARCH DWGS FOR JOINT INFORMATION

1 S-702 **TYPE "B" SHEAR WALL DETAIL**
SCALE: NTS

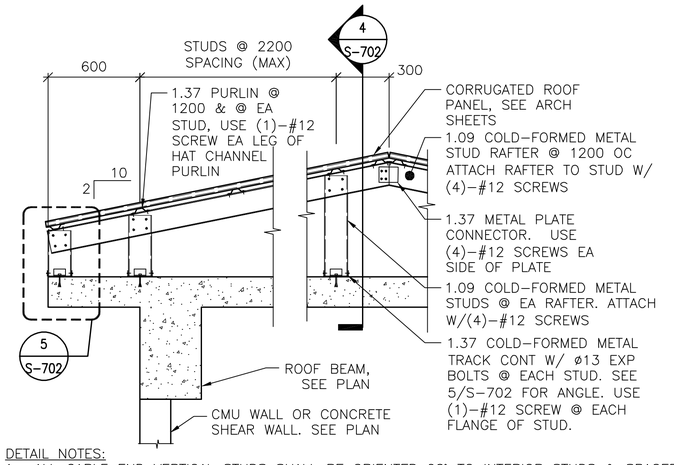


DETAIL NOTES:
1. ALL GABLE END VERTICAL STUDS SHALL BE ORIENTED 90° TO INTERIOR STUDS & SPACED @ 600 OC. GABLE END RAFTER SHALL BE 1.37 METAL TRACK SPANNING CONTINUOUSLY OVER GABLE END STUDS. INSET GIRTS AT GABLE END SHALL BE 1.09 COLD-FORMED METAL STUDS @ 1200 OC ATTACHED VIA 1.37 THICKNESS CLIP ANGLE W/ (2) #12 SCREWS EA LEG.
2. ALL INTERIOR, NON-GABLE END VERTICAL STUDS GREATER THAN 2400 IN LENGTH SHALL BE BACK-TO-BACK W/ #12 SCREWS @ 200 OC STAGGERED.

2 S-702 **TYPICAL OVERBUILT ROOF FRAMING DETAIL**
SCALE: NTS

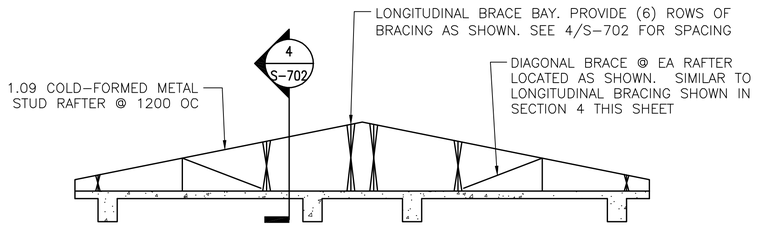


3 S-702 **TYPICAL ROOF BRACE LAYOUT**
SCALE: NTS

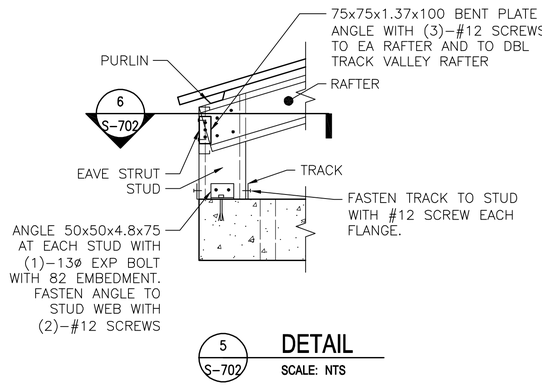


5 S-702 **DETAIL**
SCALE: NTS

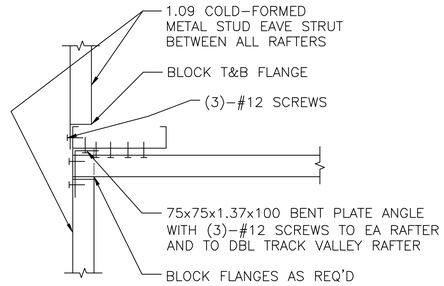


6 S-702 **SECTION**
SCALE: NTS

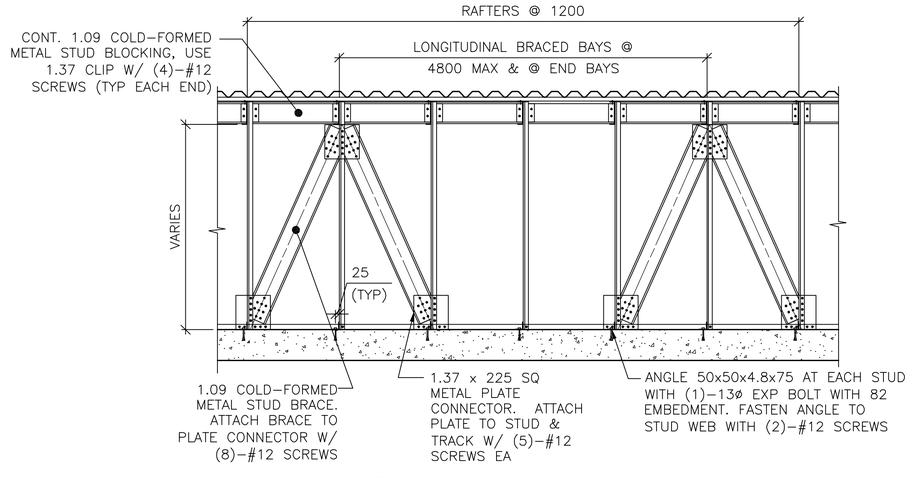


4 S-702 **SECTION**
SCALE: NTS

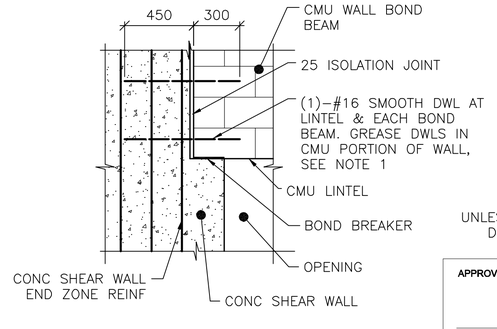


NOTE:
1. TIE SMOOTH DOWEL ROD TO SHEAR WALL END ZONE REINF FOR EACH BOND BEAM AND LINTEL.

7 S-702 **SECTION**
SCALE: NTS

UNLESS OTHERWISE NOTED, LINEAR DIMENSIONS SHOWN ARE IN MILLIMETERS (mm)

APPROVED:

A/E DESIGNER OF RECORD

SEAL:

GEORGIA REGISTERED 1-27-10 No. 27141 PROFESSIONAL ENGINEER CHRISTOPHER W. WHITMORE

US ARMY CORPS OF ENGINEERS
AFGHANISTAN ENGINEER DISTRICT

| Mark | Description | Date | Appr. |
|---|---|---|---|

Rev: 0
Date: 2/23/10
Design file no.
Drawing code:
File name: ANAAT8S-702TDT
Plot date: 2/23/2010
Plot scale: x:X

Designed by: KMP/MMY
Dwn by: RCG
Ckd by: CWW
Reviewed by: LHM
Submitted by: BAKER

U.S. ARMY ENGINEER DISTRICT, AFGHANISTAN
CORPS OF ENGINEERS
APO AE 96338

*Michael Baker Jr., Inc.*
*A unit of Michael Baker Corporation*
Airside Business Park
100 Airside Drive
Moon Township, PA 15108
www.mbakercorp.com

AFGHAN NATIONAL ARMY
REGIONAL MILITARY TRAINING CENTER
STANDARD DESIGN

LATRINE BUILDING
SMALL

TYPICAL DETAILS

Sheet reference number:
S-702

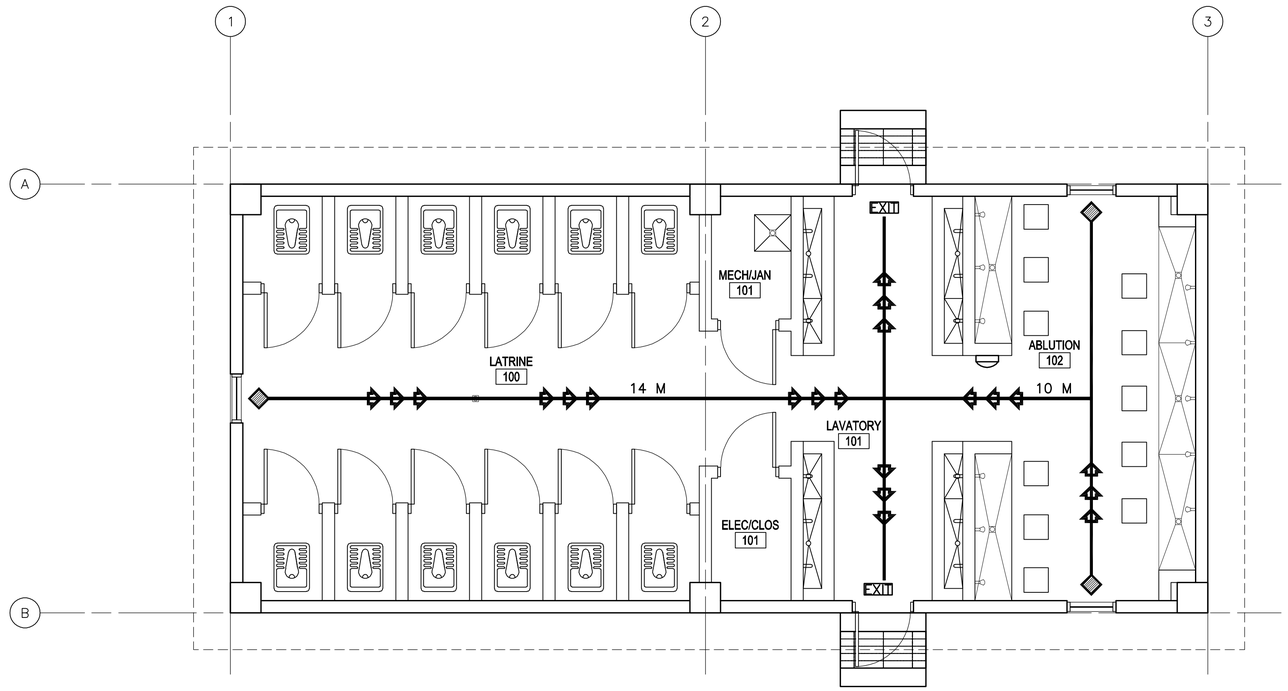


1 A-001 **LIFE SAFETY PLAN**

SCALE: 1:50

# CODE ANALYSIS:

1. REFERENCES:
   2006 INTERNATIONAL BUILDING CODE (2006 IBC)
   2006 LIFE SAFETY CODE (2006 NFPA 101)

2. IBC OCCUPANCY CLASSIFICATION:
   GROUP U UTILITY AND MISCELLANEOUS (ASSEMBLY ≤300 NFPA 101 6.1.2 AND CHAPTER 12)

3. TYPE OF CONSTRUCTION (IBC): TYPE II-B (UNPROTECTED/NONSPRINKLERED)

4. IBC TABLE 503: ALLOWABLE HEIGHT AND BUILDING AREAS:
   GROUP U
   ALLOWABLE AREA: 789 SM
   ALLOWABLE HEIGHT: 2 STORIES (<16 M)

   GROUP U
   PROPOSED AREA: 112 SM
   PROPOSED HEIGHT: 1 STORY (<16 M)

5. IBC TABLE 601 & 602: FIRE RESISTANCE RATING REQUIREMENTS FOR BUILDING ELEMENTS FOR TYPE II-B

| BUILDING ELEMENT | RATING (HOUR) | REFERENCE |
|---|---|---|
| STRUCTURAL FRAME (COLUMNS, GIRDERS & TRUSSES) | 0 | TABLE 601 |
| BEARING WALLS | | |
| EXTERIOR | 0 | TABLE 601 |
| INTERIOR | 0 | TABLE 601 |
| NONBEARING WALLS & PARTITIONS | | |
| INTERIOR | 0 | TABLE 601 |
| FLOOR CONSTRUCTION | 0 | TABLE 601 |
| ROOF CONSTRUCTION | 0 | TABLE 601 |
| EXTERIOR WALL | 0 | TABLE 602 |

6. IBC TABLE 803.5 – INTERIOR WALL AND CEILING FINISH REQUIREMENTS FOR U OCCUPANCY/NONSPRINKLERED

| GROUP | EXIT ENCLOSURES AND EXIT PASSAGEWAY | CORRIDORS | ROOMS AND ENCLOSED SPACES |
|---|---|---|---|
| U | NO RESTRICTIONS | NO RESTRICTIONS | NO RESTRICTIONS |

7. NFPA 101 TABLE 7.3.1.2 – OCCUPANT LOAD
   ASSEMBLY ≤ 300 = 1.4 NET SM/PERSON CALCULATED = 80 OCCUPANTS
   ACTUAL = 35 OCCUPANTS

8. NFPA 101 TABLE 7.3.3.1 – EGRESS CAPACITY
   ASSEMBLY = 5 MM PER OCCUPANT

   REQUIRED: 400 MM (80 OCCUPANTS x 5 MM PER OCCUPANT)
   PROPOSED EGRESS CAPACITY: 1800 MM: (2) 900 MM DOORS

9. NFPA 101 PARAGRAPH 12.2.6 – EXIT ACCESS TRAVEL DISTANCE
   REQUIRED: 60 METERS
   PROPOSED: 14 METERS

10. NFPA 101 PARAGRAPH 12.3.6 (1) – CORRIDOR FIRE-RESISTANCE RATING (HOUR)
    CORRIDORS ARE NOT REQUIRED AS DOORS EXIT DIRECTLY TO OUTSIDE

11. NFPA 101 PARAGRAPH 12.2.4.1 AND 7.4.1.1 – MINIMUM NUMBER OF EXITS
    REQUIRED: 2 MINIMUM
    PROPOSED: 2 EXITS

12. NFPA 101 PARAGRAPH 12.3.2.1.2 – PROTECTION FROM HAZARDS
    SEPARATION AT STORAGE NOT REQUIRED. STORAGE ROOMS WILL NOT CONTAIN QUANTITIES OR MATERIALS DEEMED HAZARDOUS.

    INCIDENTAL USE AREAS: IBC TABLES 508.2
    1 HOUR SEPARATION FOR STORAGE ROOMS OVER 9.3 SM
    STORAGE AREAS ARE 3 SM EACH, SO SEPARATION IS NOT REQUIRED

## LEGEND:

- DENOTES PATHS OF EXIT TRAVEL
- EXIT — DENOTES DOOR AS AN EMERGENCY EXIT
- DENOTES STARTING POINT FOR TRAVEL DISTANCE
- DENOTES FIRE EXTINGUISHER LOCATIONS

LINEAR DIMENSIONS SHOWN ARE IN MILLIMETERS (MM), UNLESS OTHERWISE NOTED

0 1000 2000
SCALE: 1:50

APPROVED:

A/E DESIGNER OF RECORD

SEAL:

STATE OF SOUTH CAROLINA
KEVIN R. CHAFIN
N. Charleston, SC
6374
REGISTERED ARCHITECT

US ARMY CORPS OF ENGINEERS
AFGHANISTAN ENGINEER DISTRICT

| Mark | Description | Date | Appr. |
|---|---|---|---|

| Mark | Description | Date | Appr. |
|---|---|---|---|

Rev: 0
Date: 2/23/10
Design file no.
Drawing code:
File name: ANALATSA-001LSP
Plot date: 2/23/2010
Plot scale: x:x

Designed by: KRC
Dwn by: EBB
Ckd by: NLJ
Reviewed by: LHM
Submitted by: BAKER

U.S. ARMY ENGINEER DISTRICT, AFGHANISTAN
CORPS OF ENGINEERS
APO AE 96338

*Michael Baker Jr., Inc.*
*A unit of Michael Baker Corporation*
Airside Business Park
100 Airside Drive
Moon Township, PA 15108
www.mbakercorp.com

AFGHAN NATIONAL ARMY
REGIONAL MILITARY TRAINING CENTER
STANDARD DESIGN

LATRINE BUILDING
SMALL

LIFE SAFETY PLAN

Sheet reference number:
A-001

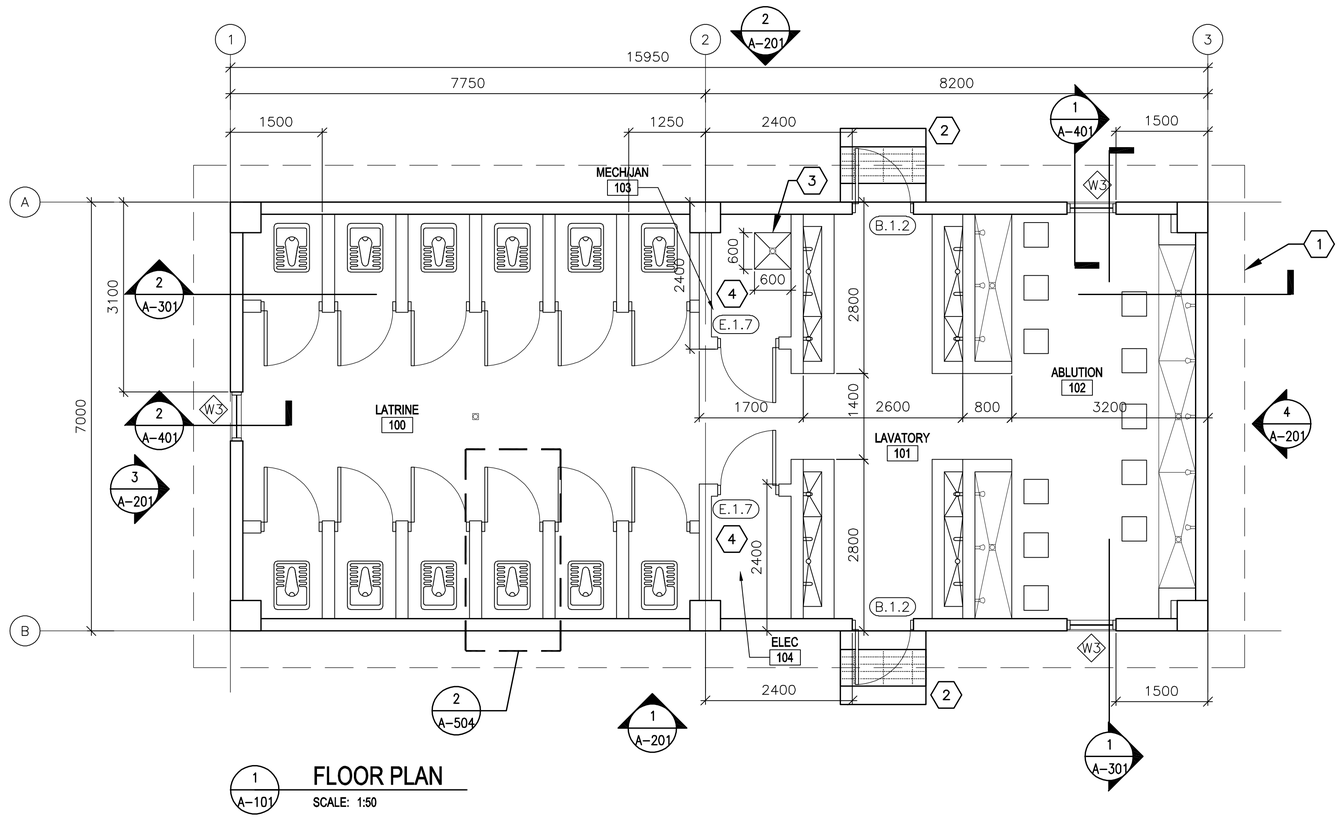


1 A-101 **FLOOR PLAN**

SCALE: 1:50

## GENERAL NOTES:

A. DIMENSIONS ARE SHOWN TO OUTER EDGE OF EXTERIOR STRUCTURAL COLUMNS, STRUCTURAL COLUMN GRID, EDGE OF INTERIOR PARTITIONS, EDGE OF WINDOW OPENINGS, AND TO HINGED SIDE OF DOOR FRAME OPENINGS.

B. OPENINGS FOR DOORS AND FRAMES SHALL BE LOCATED 200 MM FROM THE ADJACENT WALL OR COLUMN, UNLESS NOTED OTHERWISE.

C. INTERIOR PARTITIONS SHALL BE 200 MM CMU. SEE STRUCTURAL DRAWINGS FOR LOCATION OF CONCRETE SHEAR WALLS.

D. COSMETIC REPAIR OF MINOR DEFECTS: REPAIR OR FILL MORTAR JOINTS AND MINOR DEFECTS, INCLUDING BUT NOT LIMITED TO SPALLS, IN ACCORDANCE WITH MANUFACTURER'S RECOMMENDATIONS AND PRIOR TO COATING APPLICATION. SURFACES TO BE PAINTED OR PLASTERED SHALL BE CLEAN AND FREE OF FOREIGN MATTER BEFORE APPLICATION OF PAINT. CLEANING SHALL BE SCHEDULED SO THAT DUST AND OTHER CONTAMINANTS WILL NOT FALL ON NEWLY PAINTED SURFACES.

E. CONCRETE, PLASTER AND MASONRY SURFACES SHALL BE ALLOWED TO CURE FOR AT LEAST 30 DAYS BEFORE PAINTING OR TILING. CONCRETE SLABS-ON-GRADE SHALL BE ALLOWED TO CURE 90 DAYS BEFORE STAINING OR SEALING.

F. DO NOT USE PAINT MATERIALS CONTAINING LEAD CONTENT IN EXCESS OF 0.009 PERCENT OF THE WEIGHT OF THE TOTAL NONVOLATILE CONTENT OF THE PAINT OR THE WEIGHT OF THE DRIED PAINT FILM.

G. DO NOT USE ANY ASBESTOS CONTAINING MATERIALS (ACM) IN PROJECT. ACM IS DEFINED AS 1% OR MORE BY VOLUME.

H. DO NOT USE PAINT MATERIALS CONTAINING MERCURIAL FUNGICIDES.

I. FACTORY PRIMED METAL DOORS AND FRAMES SHALL RECEIVE TWO COATS OF PAINT.

J. FILL REMAINING SPACE AT PENETRATIONS IN FIRE-RATED FLOORS, PARTITIONS AND CEILINGS WITH APPROPRIATE FIRESTOPPING MATERIALS.

K. ALL CEILING FINISHES SHALL BE PAINTED PLASTER APPLIED TO STRUCTURE.

L. ALL WALL FINISHES SHALL BE CERAMIC TILE TO 2000 MM WITH PAINTED PLASTER APPLIED TO STRUCTURE ABOVE, UNLESS NOTED OTHERWISE.

M. ALL FLOOR FINISHES SHALL BE TERRAZZO TILE.

N. PROVIDE TILE FINISHES AS INDICATED IN DETAILS.

O. ALL TOILET STALL DOORS, FRAMES & HARDWARE TYPE SHALL BE F.2.12

P. HEIGHT OF ALL TOILET PARTITIONS SHALL BE 2000 MM ABOVE FINISHED FLOOR.

Q. PROVIDE POLISHED STAINLESS STEEL MIRROR 600 X 900 ABOVE EVERY LAVATORY FAUCET.

## KEY NOTES: (X)

1. LINE OF ROOF OVERHANG ABOVE.
2. CONCRETE STOOP WITH GRATE – SEE DETAIL 1/A-503.
3. RECESSED TROUGH – SEE DETAIL 7/A-504.
4. WALL FINISH: PAINTED PLASTER APPLIED TO STRUCTURE.

## LEGEND:

(XXX) DOOR FRAME AND HARDWARE TYPE, SEE SHEET A-601

(A) WINDOW TYPE, SEE SHEET A-601

(X) KEY NOTE

## ABBREVIATIONS:

| | |
|---|---|
| COMM | COMMUNICATIONS |
| ELEC | ELECTRICAL |
| MECH | MECHANICAL |
| JAN | JANITOR |
| CLOS | CLOSET |

LINEAR DIMENSIONS SHOWN ARE IN MILLIMETERS (MM), UNLESS OTHERWISE NOTED

0 1000 2000
SCALE: 1:50

APPROVED:

A/E DESIGNER OF RECORD

SEAL:

STATE OF SOUTH CAROLINA
KEVIN R. CHAFIN
N. Charleston, SC
6374
REGISTERED ARCHITECT

US ARMY CORPS OF ENGINEERS
AFGHANISTAN ENGINEER DISTRICT

| Mark | Description | Date | Appr. |
|---|---|---|---|

Rev: 0
Date: 2/23/10
Design file no.
Drawing code:
File name: ANALATSA-101FP
Plot date: 2/23/2010
Plot scale: x:x

Designed by: KRC
Dwn by: EBB
Ckd by: NLJ
Reviewed by: LHM
Submitted by: BAKER

U.S. ARMY ENGINEER DISTRICT, AFGHANISTAN
CORPS OF ENGINEERS
APO AE 96338

*Michael Baker Jr., Inc.*
*A unit of Michael Baker Corporation*
Airside Business Park
100 Airside Drive
Moon Township, PA 15108
www.mbakercorp.com

AFGHAN NATIONAL ARMY
REGIONAL MILITARY TRAINING CENTER
STANDARD DESIGN

LATRINE BUILDING
SMALL

FLOOR PLAN

Sheet reference number:
A-101

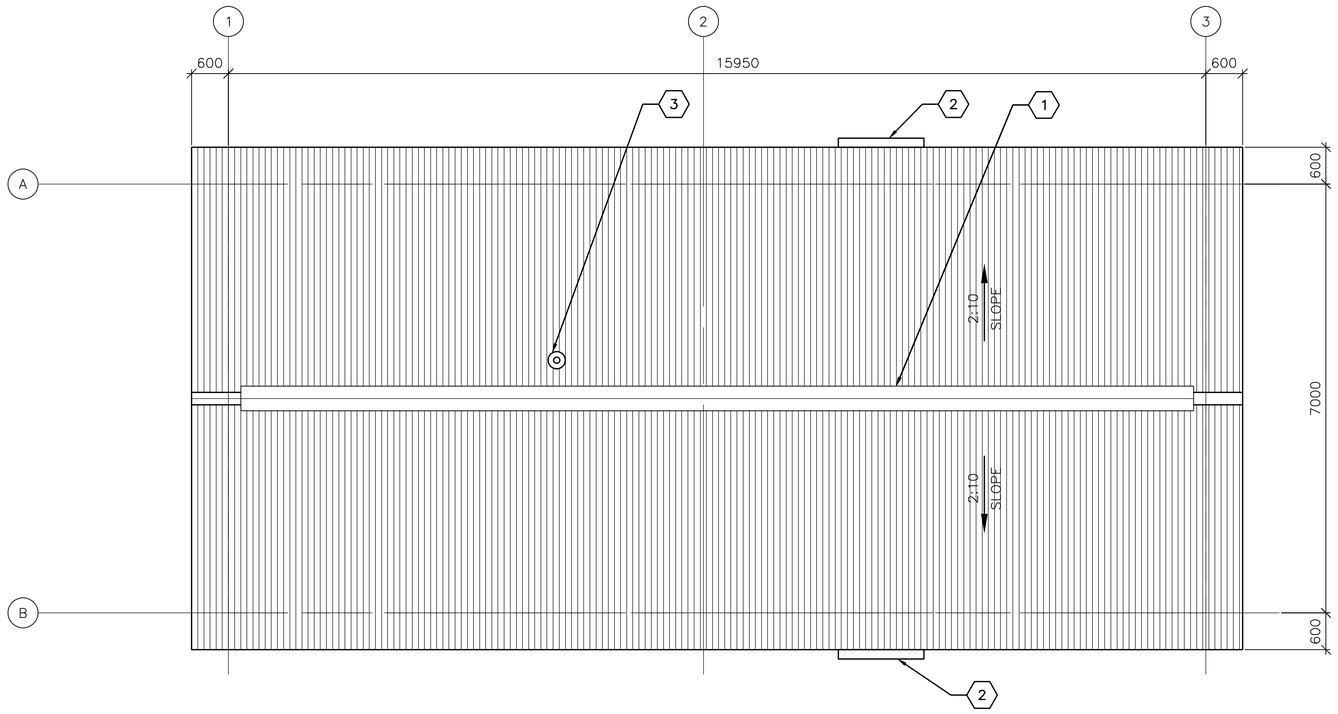


1 / A–102 **ROOF PLAN**

SCALE: 1:50

## GENERAL NOTES:

A. THE APPROXIMATE LOCATION OF ROOF DEVICES AND PENETRATIONS ARE SHOWN ON THE ROOF PLAN FOR INFORMATION ONLY. THE CONTRACTOR SHALL BE RESPONSIBLE FOR UNDERSTANDING THE ACTUAL LOCATION OF THESE AND ALL OTHER ITEMS PRIOR TO BEGINNING CONSTRUCTION. COORDINATE ALL ROOF PENETRATIONS WITH STRUCTURAL, MECHANICAL AND PLUMBING WORK.

B. PLUMBING VENT PENETRATIONS SHALL TERMINATE 300 MM MINIMUM ABOVE THE ROOF.

C. UNLESS OTHERWISE NOTED, NOTES, DETAILS OR FEATURES INDICATED FOR ONE CONDITION SHALL BE APPLICABLE FOR ALL ALIKE AND SIMILAR CONDITIONS.

D. STOCKPILING OF MATERIALS, EQUIPMENT AND ANY OTHER ITEMS ON THE ROOF IS PROHIBITED.

E. ROOFS SHALL BE CORRUGATED METAL ROOF PANELS ON COLD–FORMED METAL FRAMING ON CONCRETE SLAB.

## KEY NOTES: (X)

1. CONTINUOUS METAL RIDGE VENT SEE DETAIL 4/A–501.
2. METAL GUTTER, CENTER ON DOOR, 1400 MM – SEE DETAIL 1A/A–501.
3. PLUMBING VENT – SEE DETAIL 5/A–501.

LINEAR DIMENSIONS SHOWN ARE IN MILLIMETERS (MM), UNLESS OTHERWISE NOTED

0 1000 2000
SCALE: 1:50

APPROVED:

A/E DESIGNER OF RECORD

SEAL:

STATE OF SOUTH CAROLINA
KEVIN R. CHAFIN
N. Charleston, SC
6374
REGISTERED ARCHITECT

US ARMY CORPS OF ENGINEERS
AFGHANISTAN ENGINEER DISTRICT

| Mark | Description | Date | Appr. |
|---|---|---|---|
| | | | |

| Mark | Description | Date | Appr. |
|---|---|---|---|
| | | | |

Rev: 0
Date: 2/23/10
Design file no.
Drawing code:
File name: ANALATSA-1026P
Plot date: 2/23/2010
Plot scale: x:X

Designed by: KRC
Dwn by: EBB
Ckd by: NLJ
Reviewed by: LHM
Submitted by: BAKER

U.S. ARMY ENGINEER DISTRICT, AFGHANISTAN
CORPS OF ENGINEERS
APO AE 96338

*Michael Baker Jr., Inc*
*A unit of Michael Baker Corporation*
Airside Business Park
100 Airside Drive
Moon Township, PA 15108
www.mbakercorp.com

AFGHAN NATIONAL ARMY
REGIONAL MILITARY TRAINING CENTER
STANDARD DESIGN

LATRINE BUILDING
SMALL

ROOF PLAN

Sheet reference number:
A–102

1 / A-201 **ELEVATION**
SCALE: 1:50

2 / A-201 **ELEVATION**
SCALE: 1:50

3 / A-201 **ELEVATION**
SCALE: 1:50

4 / A-201 **ELEVATION**
SCALE: 1:50

## GENERAL NOTES:

A. COORDINATE SIZE AND LOCATION OF OPENINGS FOR MECHANICAL ITEMS WITH MECHANICAL DRAWINGS.

B. PROVIDE STRUCTURAL LINTELS AS REQUIRED – SEE STRUCTURAL DRAWINGS

C. ALL EXTERIOR WALL FINISHES SHALL BE STUCCO OVER CMU AND CONCRETE SUBSTRATES. PROVIDE CONTROL JOINTS IN STUCCO WALL FINISH AS NOTED.

D. ROOF SHALL BE CORRUGATED METAL ROOF PANELS ON COLD–FORMED METAL FRAMING ON CONCRETE SLAB.

## KEY NOTES: (X)

1. CONTINUOUS METAL RIDGE VENT – SEE DETAIL 4/A–501.
2. LOUVER, LOCATE TOP OF WALL PENETRATION 2800 MM ABOVE FINISHED FLOOR – SEE MECHANICAL DRAWINGS.
3. EXHAUST FAN, LOCATE TOP OF WALL PENETRATION 2800 MM ABOVE FINISHED FLOOR – SEE MECHANICAL DRAWINGS.
4. WALL GRILL, LOCATE TOP OF WALL PENETRATION 2800 MM ABOVE FINISHED FLOOR – SEE MECHANICAL DRAWINGS.
5. STUCCO CONTROL JOINT – SEE DETAIL 2A/A–501.
6. METAL GUTTER, CENTER ON DOOR, 1400 MM – SEE DETAIL 1A/A501.
7. EXTERIOR LIGHT FIXTURE – SEE ELECTRICAL.

LINEAR DIMENSIONS SHOWN ARE IN MILLIMETERS (MM), UNLESS OTHERWISE NOTED

0 1000 2000
SCALE: 1:50

APPROVED:
A/E DESIGNER OF RECORD
SEAL:
STATE OF SOUTH CAROLINA
KEVIN R. CHAFIN
N. Charleston, SC
6374
REGISTERED ARCHITECT

US ARMY CORPS OF ENGINEERS
AFGHANISTAN ENGINEER DISTRICT

| Mark | Description | Date | Appr. | Mark | Description | Date | Appr. |
|---|---|---|---|---|---|---|---|

U.S. ARMY ENGINEER DISTRICT, AFGHANISTAN
CORPS OF ENGINEERS
APO AE 96338

*Michael Baker Jr., Inc*
*A unit of Michael Baker Corporation*
Airside Business Park
100 Airside Drive
Moon Township PA 15108
www.mbakercorp.com

Designed by: KRC
Dwn by: EBB
Ckd by: NLJ
Reviewed by: LHM
Submitted by: BAKER
Date: 2/23/10
Rev: 0
Design file no.
Drawing code:
File name: ANALATSA-201ELV
Plot date: 2/23/2010
Plot scale: X:X

AFGHAN NATIONAL ARMY
REGIONAL MILITARY TRAINING CENTER
STANDARD DESIGN

LATRINE BUILDING
SMALL

ELEVATIONS

Sheet reference number:
A–201

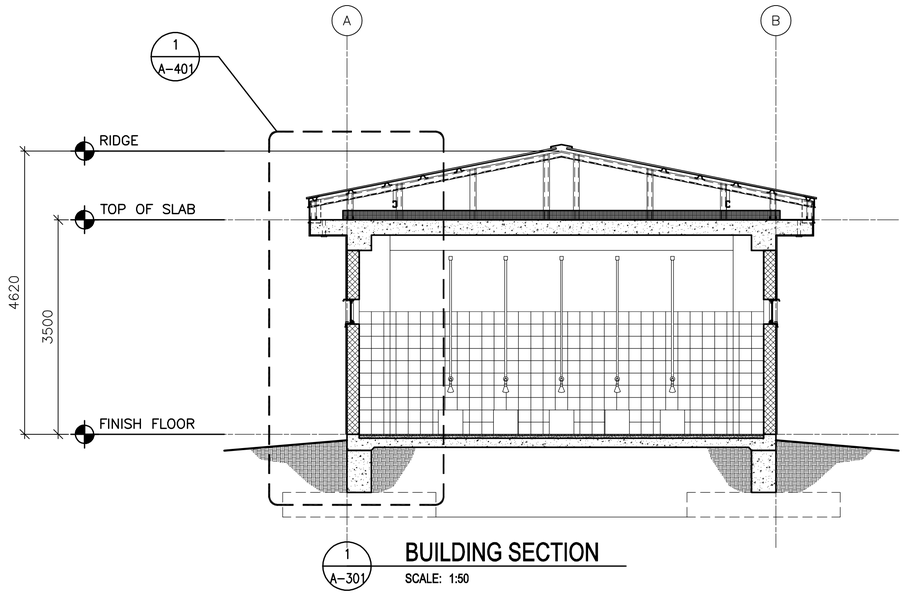


1 A-301 **BUILDING SECTION**
SCALE: 1:50

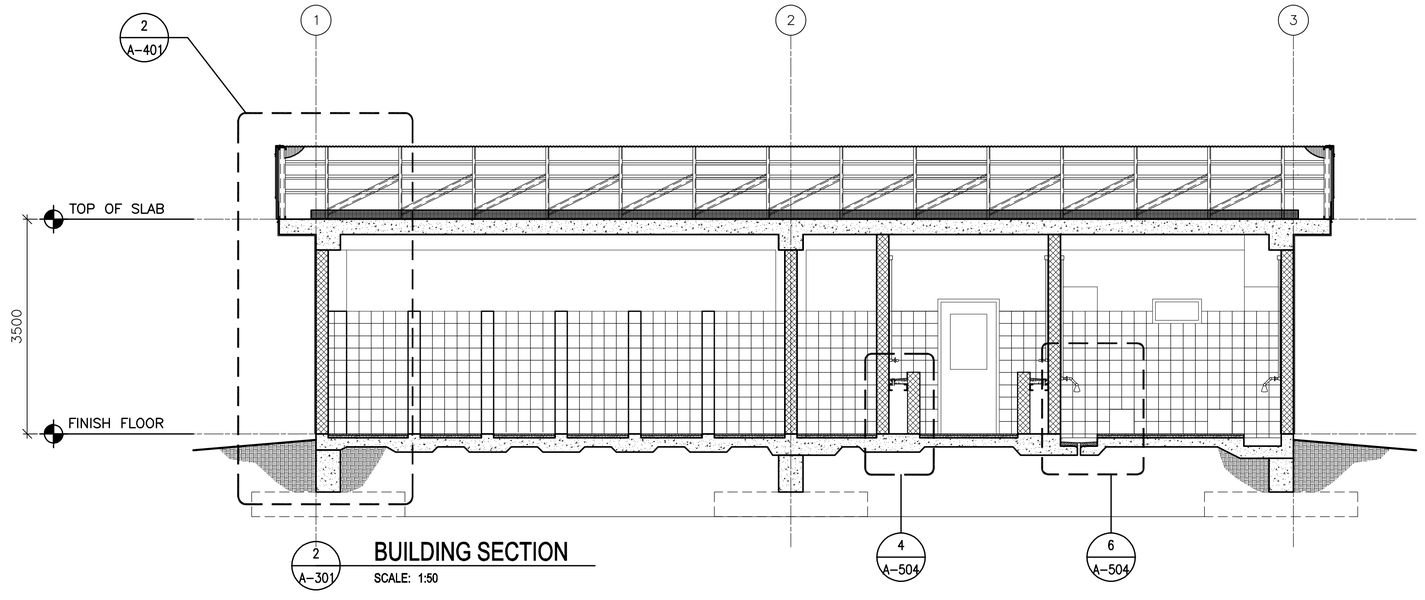


2 A-301 **BUILDING SECTION**
SCALE: 1:50

LINEAR DIMENSIONS SHOWN ARE IN MILLIMETERS (MM), UNLESS OTHERWISE NOTED

0 1000 2000
SCALE: 1:50

APPROVED:

A/E DESIGNER OF RECORD

SEAL:

STATE OF SOUTH CAROLINA
KEVIN R. CHAFIN
N. Charleston, SC
6374
REGISTERED ARCHITECT

US ARMY CORPS OF ENGINEERS
AFGHANISTAN ENGINEER DISTRICT

| Mark | Description | Date | Appr. |
|---|---|---|---|
| | | | |

| Mark | Description | Date | Appr. |
|---|---|---|---|
| | | | |

Date: 2/23/10
Design file no.
Drawing code:
File name: ANALATSA-301BS
Plot date: 2/23/2010
Plot scale: x:X

Designed by: KRC
Drwn by: EBB
Ckd by: NLJ
Reviewed by: LHM
Submitted by: BAKER

U.S. ARMY ENGINEER DISTRICT, AFGHANISTAN
CORPS OF ENGINEERS
APO AE 96338

*Michael Baker Jr., Inc*
*A unit of Michael Baker Corporation*
Airside Business Park
100 Airside Drive
Moon Township, PA 15108
www.mbakercorp.com

AFGHAN NATIONAL ARMY
REGIONAL MILITARY TRAINING CENTER
STANDARD DESIGN

LATRINE BUILDING
SMALL

BUILDING SECTIONS

Sheet reference number:
A-301

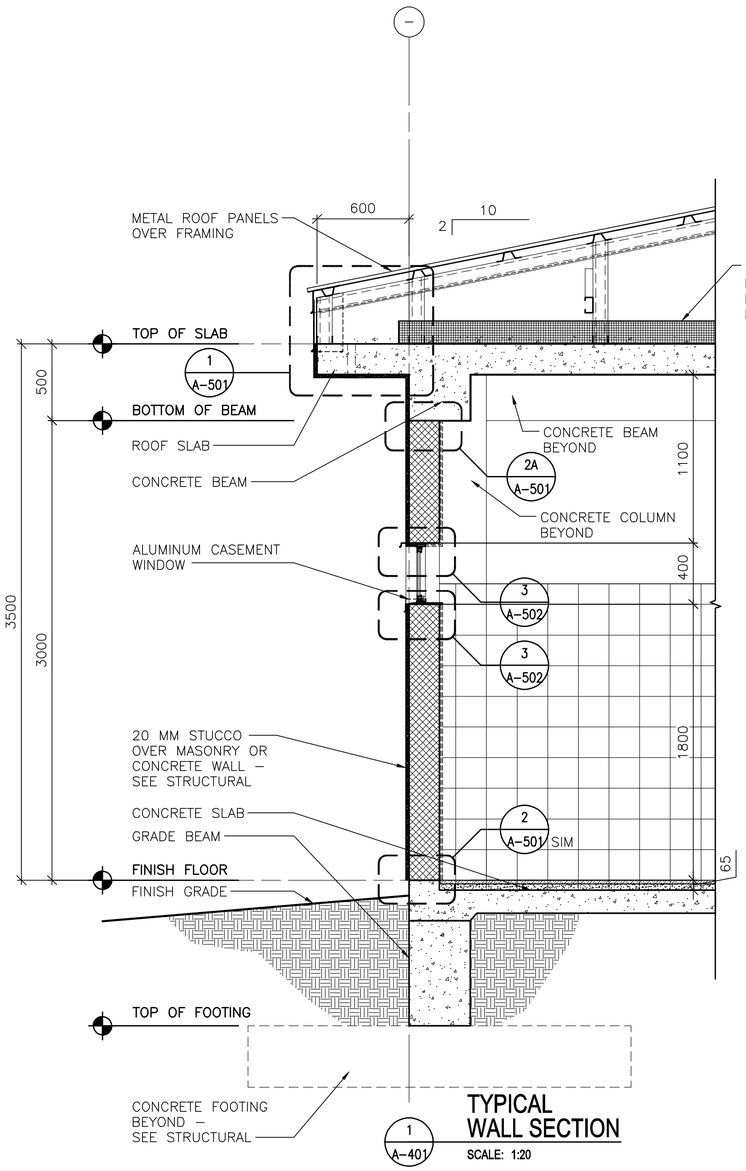


TYPICAL WALL SECTION

SCALE: 1:20

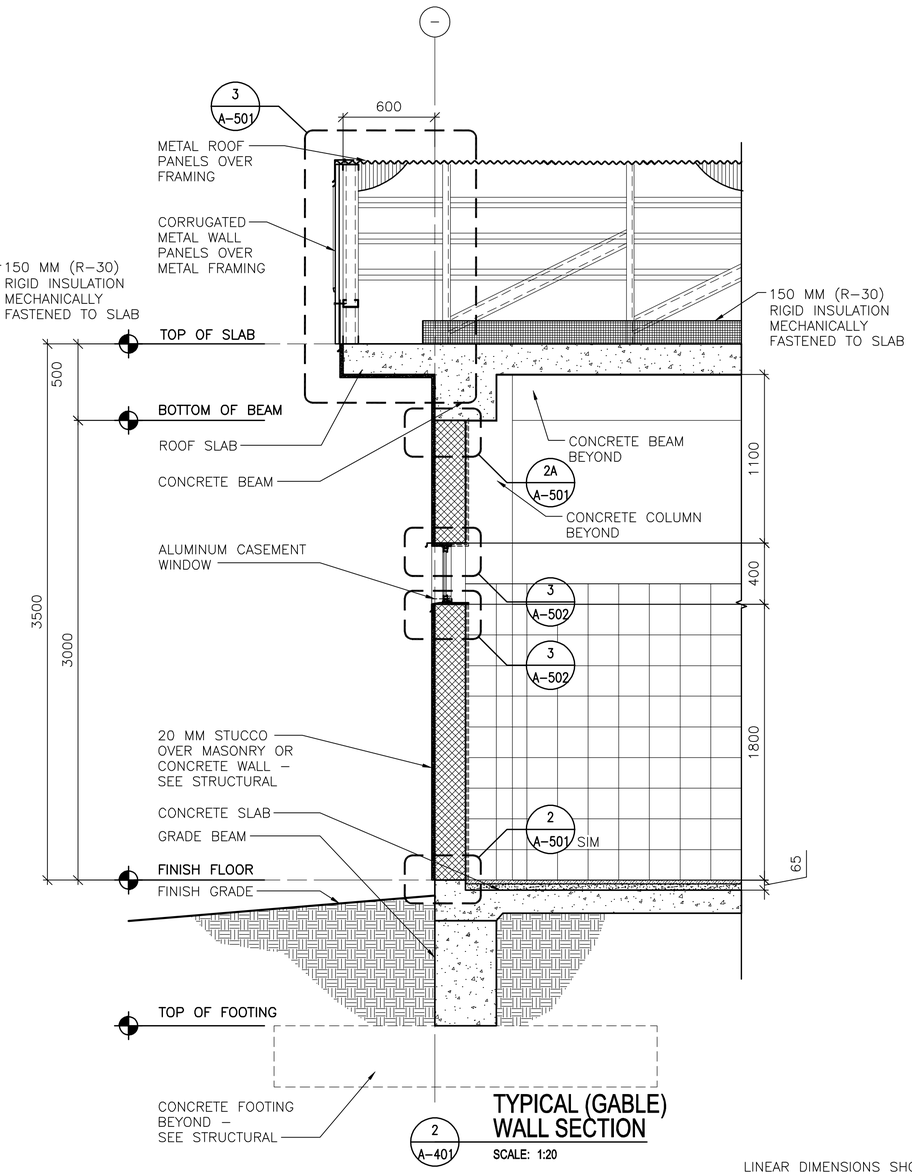


TYPICAL (GABLE) WALL SECTION

SCALE: 1:20

LINEAR DIMENSIONS SHOWN ARE IN MILLIMETERS (MM), UNLESS OTHERWISE NOTED

0 400 800

SCALE: 1:20

APPROVED:

A/E DESIGNER OF RECORD

SEAL:

STATE OF SOUTH CAROLINA
KEVIN R. CHAFIN
N. Charleston, SC
6374
REGISTERED ARCHITECT

US ARMY CORPS OF ENGINEERS
AFGHANISTAN ENGINEER DISTRICT

| Mark | Description | Date | Appr. |
|---|---|---|---|
| | | | |

| Mark | Description | Date | Appr. |
|---|---|---|---|
| | | | |

Date: 2/23/10
Design file no.
Drawing code:
Rev: 0

Designed by: KRC
Dwn by: EBB
Ckd by: NLJ
Reviewed by: LHM
Submitted by: BAKER

File name: ANALATSA-A01W3
Plot date: 2/23/2010
Plot scale: x:X

U.S. ARMY ENGINEER DISTRICT, AFGHANISTAN
CORPS OF ENGINEERS
APO AE 96338

Michael Baker Jr., Inc
A unit of Michael Baker Corporation
Airside Business Park
100 Airside Drive
Moon Township, PA 15108
www.mbakercorp.com

AFGHAN NATIONAL ARMY
REGIONAL MILITARY TRAINING CENTER
STANDARD DESIGN

LATRINE BUILDING
SMALL

WALL SECTIONS

Sheet reference number:
A-401

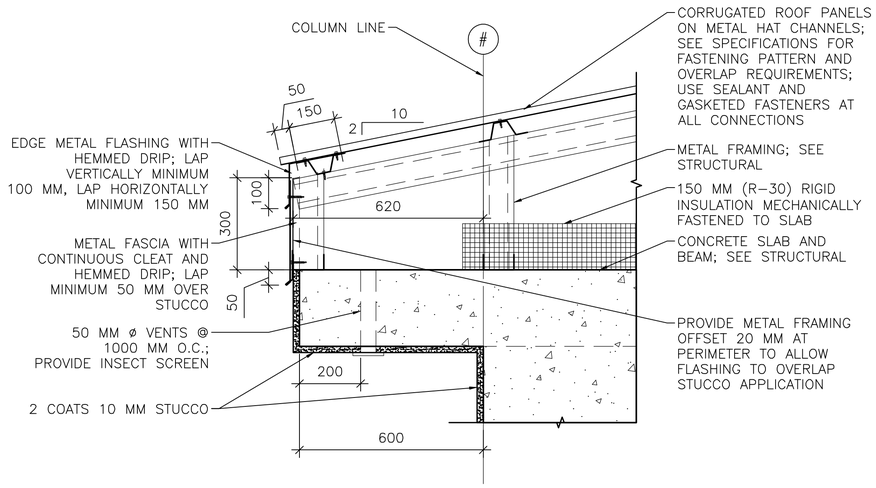


1 A–501 **EAVE DETAIL**
SCALE: 1:10

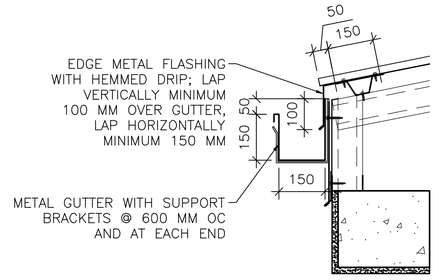


1A A–501 **GUTTER DETAIL**
SCALE: 1:10

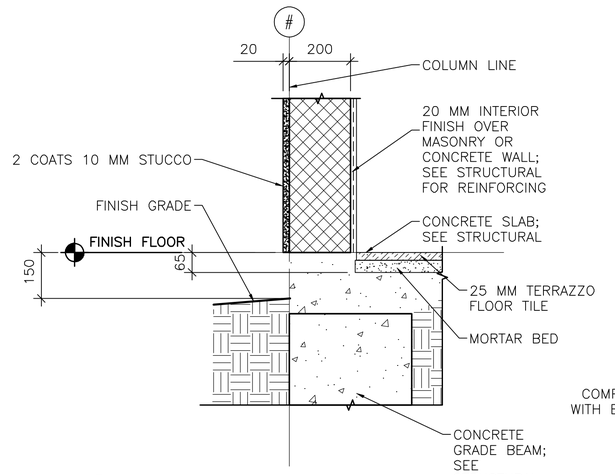


2 A–501 **STUCCO BASE DETAIL**
SCALE: 1:10

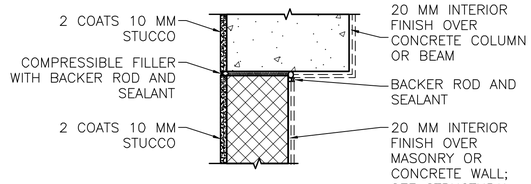


NOTE: DETAIL TYPICAL AT ALL WALL/COLUMN AND WALL/BEAM LOCATIONS, ALTERNATE BRACING DETAIL BELOW 2B/A–501.

2A A–501 **STUCCO JOINT DETAIL**
SCALE: 1:10

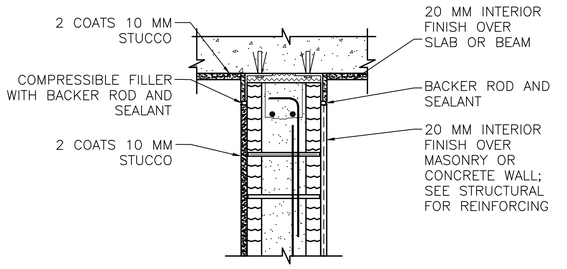


INTERIOR WALL/BEAM

2B A–501 **ALTERNATE BRACING DETAIL**
SCALE: 1:10

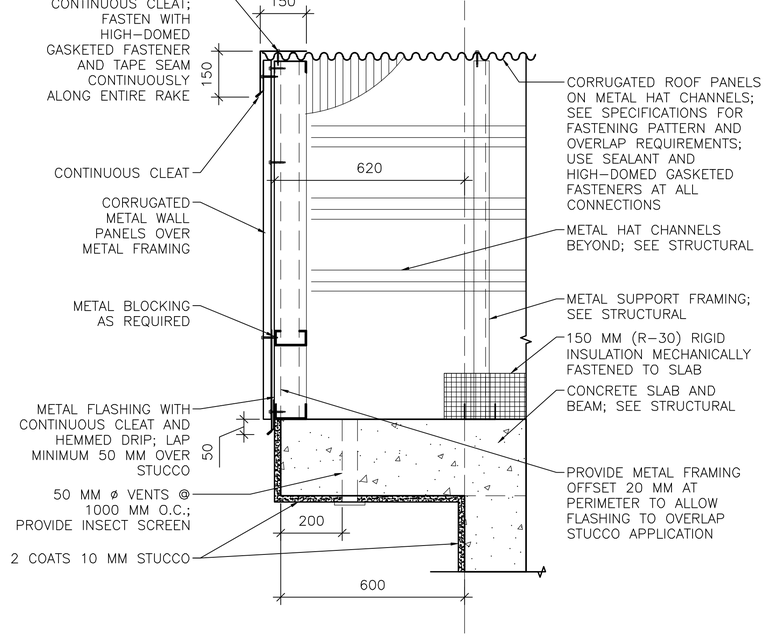


3 A–501 **RAKE/EAVE DETAIL**
SCALE: 1:10

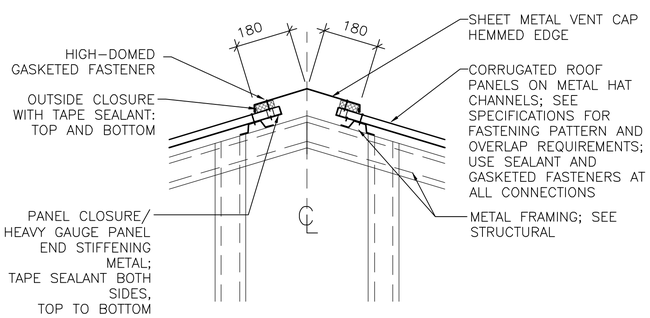


4 A–501 **RIDGE VENT DETAIL**
SCALE: 1:10

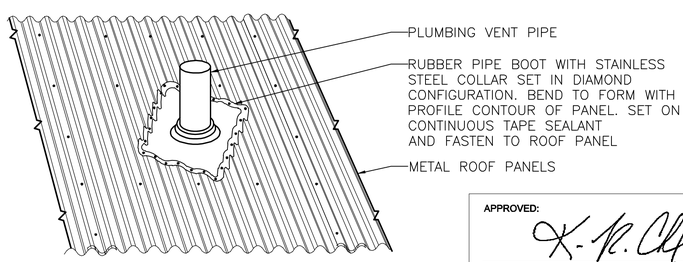


5 A–501 **PLUMBING VENT DETAIL**
SCALE: NTS

LINEAR DIMENSIONS SHOWN ARE IN MILLIMETERS (MM), UNLESS OTHERWISE NOTED

0 200 400
SCALE: 1:10

APPROVED:

A/E DESIGNER OF RECORD

SEAL:

STATE OF SOUTH CAROLINA
KEVIN R. CHAFIN
N. Charleston, SC
5374
REGISTERED ARCHITECT

US ARMY CORPS OF ENGINEERS
AFGHANISTAN ENGINEER DISTRICT

| Mark | Description | Date | Appr. |
|---|---|---|---|
| | | | |

| Mark | Description | Date | Appr. |
|---|---|---|---|
| | | | |

Date: 2/23/10
Rev: 0
Design file no.
Drawing code:
File name: ANALATSA-501DT
Plot date: 2/23/2010
Plot scale: x:x

Designed by: KRC
Ckd by: NLJ
Drwn by: EBB
Reviewed by: LHM
Submitted by: BAKER

U.S. ARMY ENGINEER DISTRICT, AFGHANISTAN
CORPS OF ENGINEERS
APO AE 96338

*Michael Baker Jr., Inc*
*A unit of Michael Baker Corporation*
Airside Business Park
100 Airside Drive
Moon Township, PA 15108
www.mbakercorp.com

AFGHAN NATIONAL ARMY
REGIONAL MILITARY TRAINING CENTER
STANDARD DESIGN

LATRINE BUILDING
SMALL

EXTERIOR DETAILS

Sheet reference number:
A–501

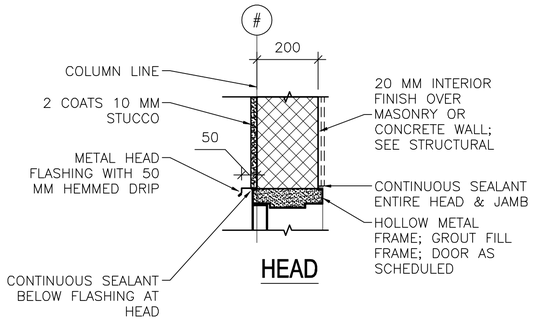


HEAD

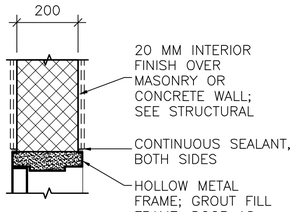


HEAD

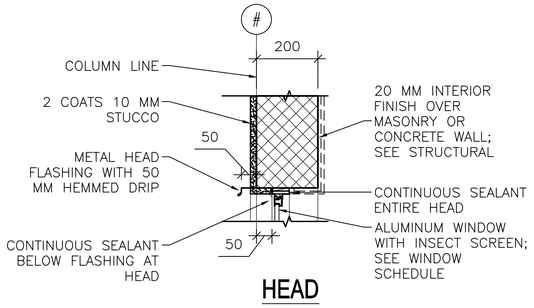


HEAD

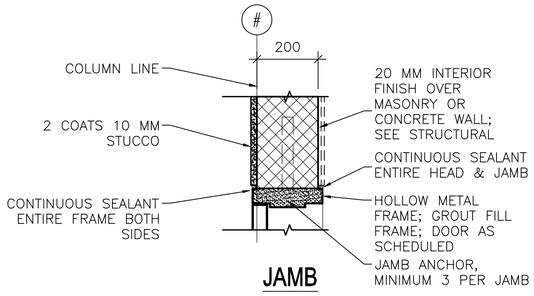


JAMB

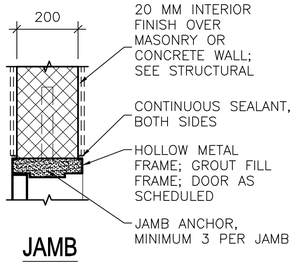


JAMB

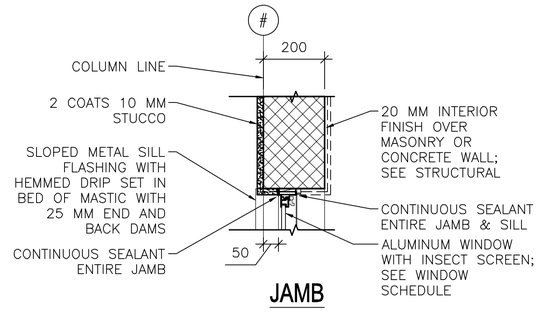


JAMB

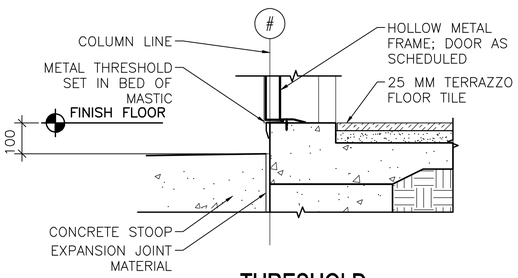


THRESHOLD

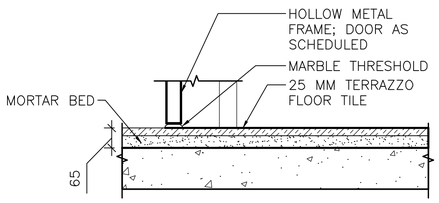


THRESHOLD

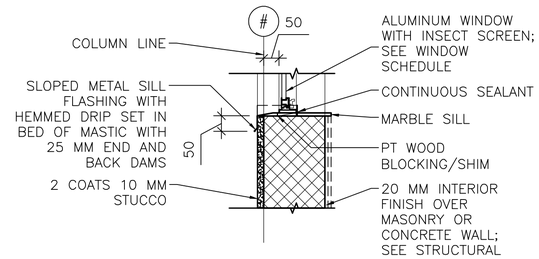


SILL

1 A–502 **EXTERIOR DOOR DETAILS**
SCALE: 1:10

2 A–502 **INTERIOR DOOR DETAILS**
SCALE: 1:10

3 A–502 **EXTERIOR WINDOW DETAILS**
SCALE: 1:10

LINEAR DIMENSIONS SHOWN ARE IN MILLIMETERS (MM), UNLESS OTHERWISE NOTED

0 200 400
SCALE: 1:10

APPROVED:

A/E DESIGNER OF RECORD

SEAL:

STATE OF SOUTH CAROLINA
KEVIN R. CHAFIN
N. Charleston, SC
6374
REGISTERED ARCHITECT

US ARMY CORPS OF ENGINEERS
AFGHANISTAN ENGINEER DISTRICT

| Mark | Description | Date | Appr. | Mark | Description | Date | Appr. |
|---|---|---|---|---|---|---|---|
| | | | | | | | |

Date: 2/23/10 | Rev: 0
Design file no.
Drawing code:
File name: ANALATSA-502HJS
Plot date: 2/23/2010
Plot scale: x:X

Designed by: KRC | Ckd by: NLJ
Dwn by: EBB | Reviewed by: LHM
Submitted by: BAKER

U.S. ARMY ENGINEER DISTRICT, AFGHANISTAN
CORPS OF ENGINEERS
APO AE 96338

*Michael Baker Jr., Inc.*
*A unit of Michael Baker Corporation*
Airside Business Park
100 Airside Drive
Moon Township, PA 15108
www.mbakercorp.com

AFGHAN NATIONAL ARMY
REGIONAL MILITARY TRAINING CENTER
STANDARD DESIGN

LATRINE BUILDING
SMALL

HEAD, JAMB & SILL
DETAILS

Sheet reference number:
A–502

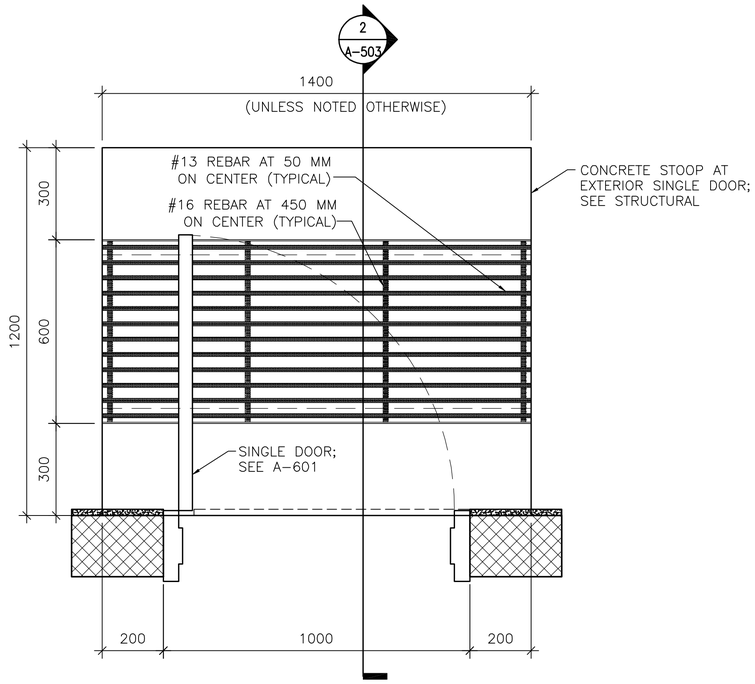


1 A-503 **DOOR STOOP PLAN (WITH GRATE)**

SCALE: 1:10

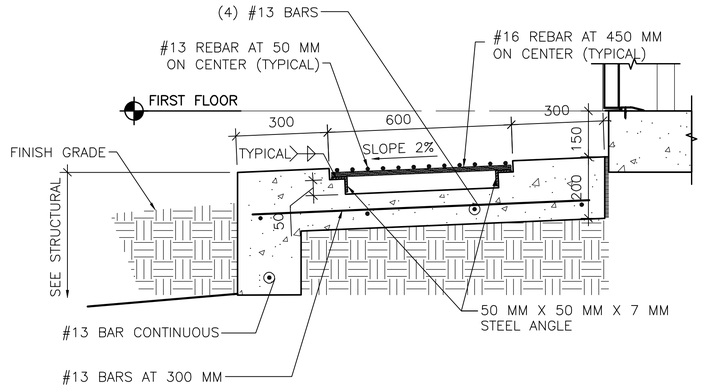


2 A-503 **DOOR STOOP DETAIL**

SCALE: 1:10

LINEAR DIMENSIONS SHOWN ARE IN MILLIMETERS (MM), UNLESS OTHERWISE NOTED

0 200 400
SCALE: 1:10

APPROVED:

A/E DESIGNER OF RECORD

SEAL:

STATE OF SOUTH CAROLINA
KEVIN R. CHAFIN
N. Charleston, SC
6374
REGISTERED ARCHITECT

US ARMY CORPS OF ENGINEERS
AFGHANISTAN ENGINEER DISTRICT

| Mark | Description | Date | Appr. |
|---|---|---|---|
| Mark | Description | Date | Appr. |

Date: 2/23/10
Design file no.
Drawing code:
File name: ANAATSA-S03DT
Plot date: 2/23/2010
Plot scale: x:X
Rev: 0

Designed by: KRC
Dwn by: EBB
Ckd by: NLJ
Reviewed by: LHM
Submitted by: BAKER

U.S. ARMY ENGINEER DISTRICT, AFGHANISTAN
CORPS OF ENGINEERS
APO AE 96338

*Michael Baker Jr., Inc.*
*A unit of Michael Baker Corporation*
Airside Business Park
100 Airside Drive
Moon Township, PA 15108
www.mbakercorp.com

AFGHAN NATIONAL ARMY
REGIONAL MILITARY TRAINING CENTER
STANDARD DESIGN

LATRINE BUILDING
SMALL
STOOP
DETAILS

Sheet reference number:
A-503

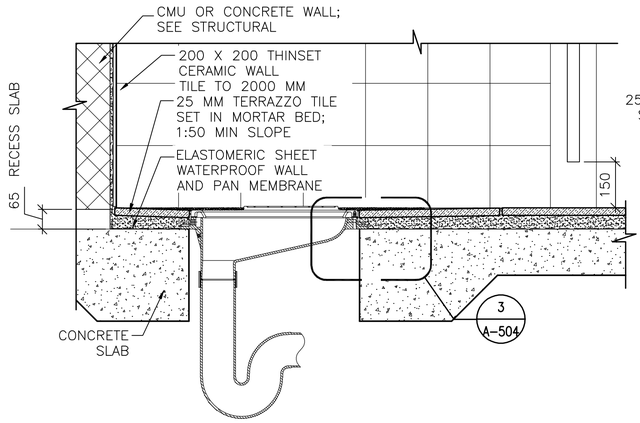


1 A-504 **LATRINE DETAIL**
SCALE: 1:10

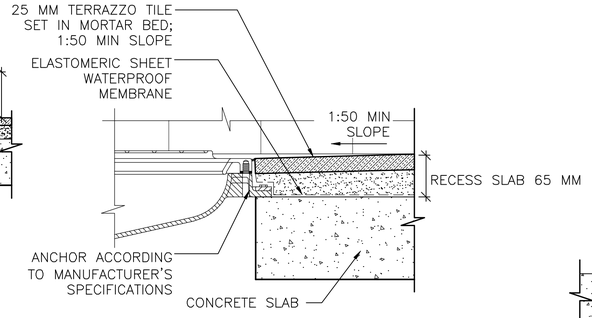


3 A-504 **MOUNTING DETAIL**
SCALE: 1:5

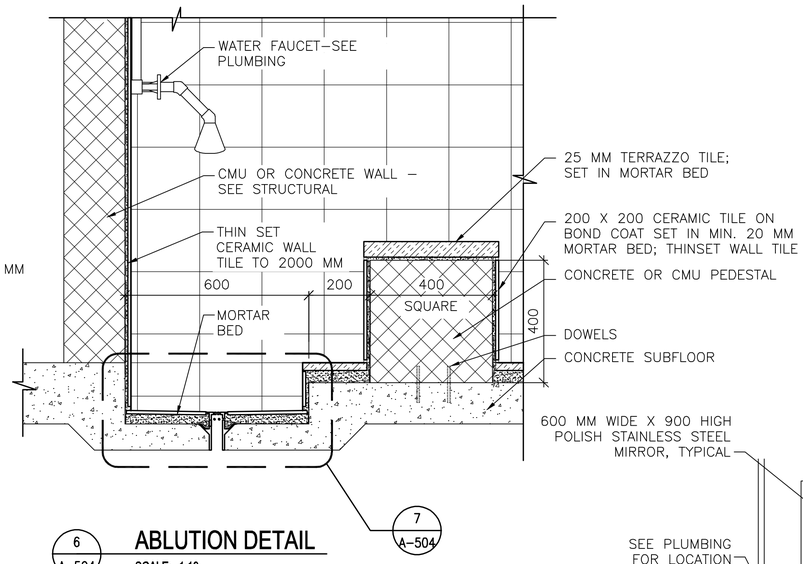


6 A-504 **ABLUTION DETAIL**
SCALE: 1:10

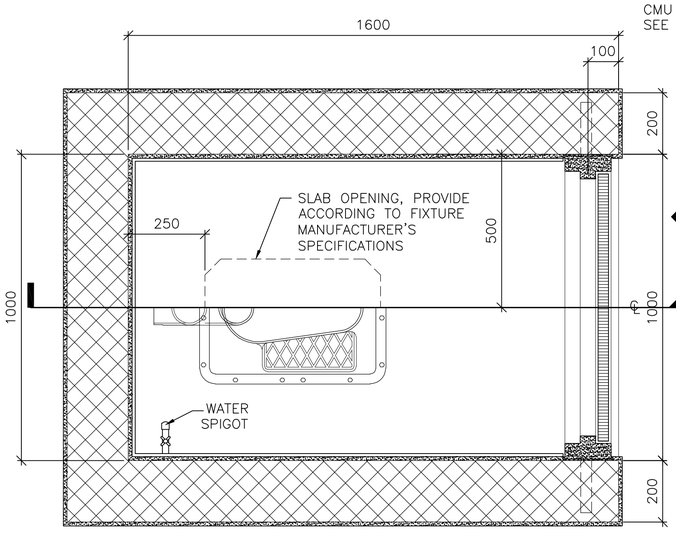


2 A-504 **TOILET DETAIL**
SCALE: 1:10

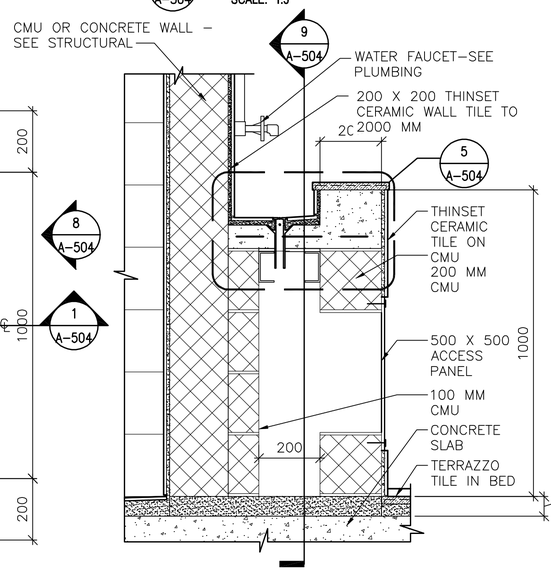


4 A-504 **LAVATORY SECTION**
SCALE: 1:10

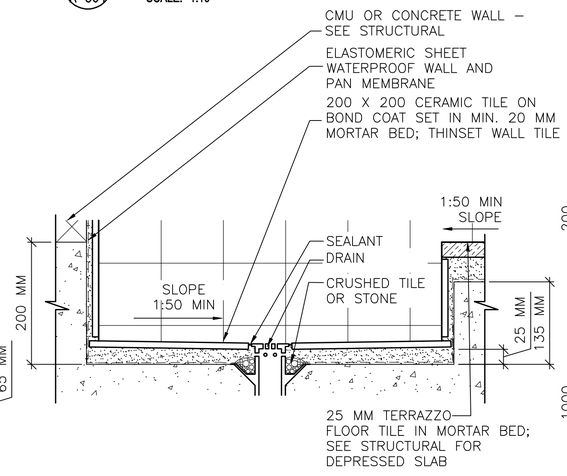


7 A-504 **RECESSED TROUGH**
SCALE: 1:5

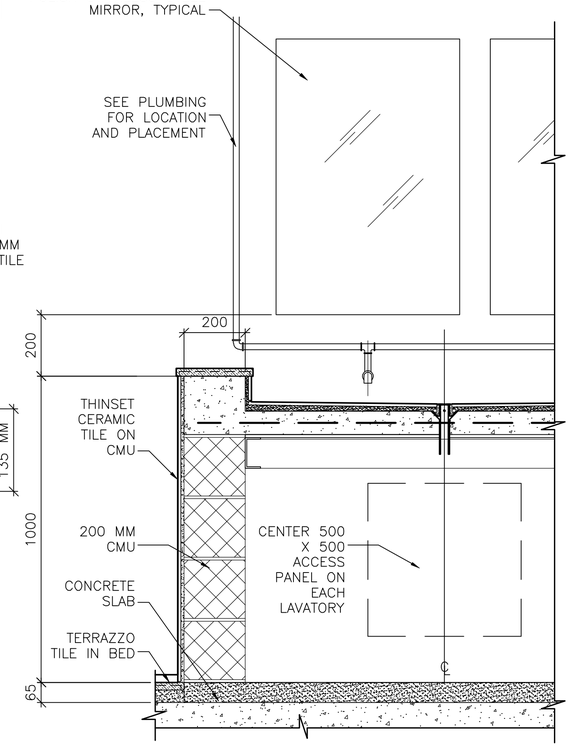


9 A-504 **LAVATORY SECTION**
SCALE: 1:10

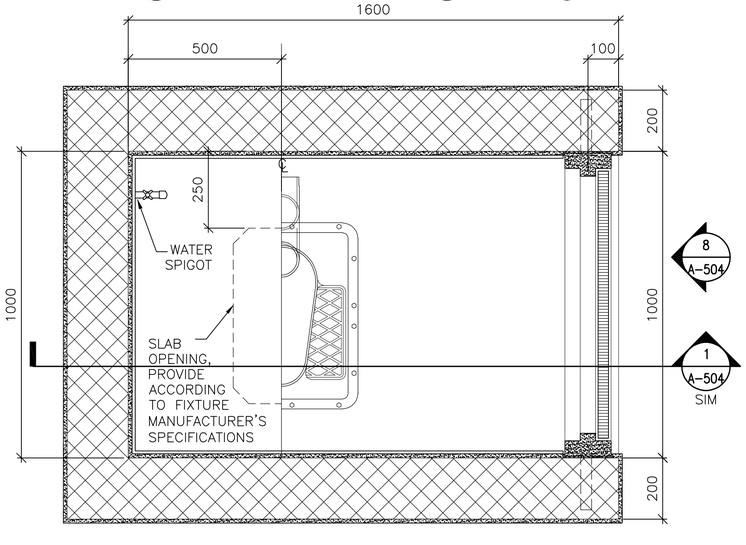


2A A-504 **TOILET DETAIL**
SCALE: 1:10

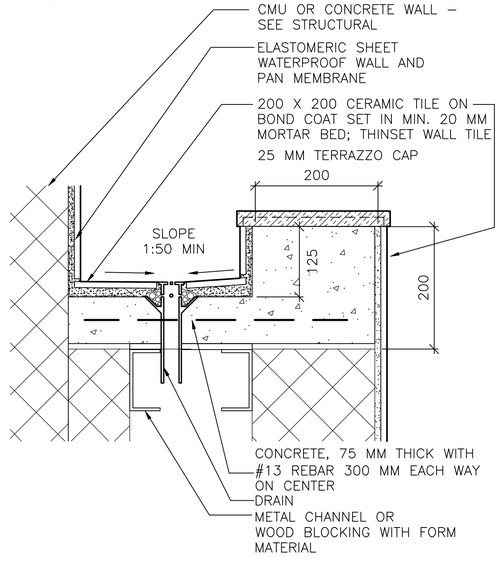


5 A-504 **LAVATORY DETAIL**
SCALE: 1:5

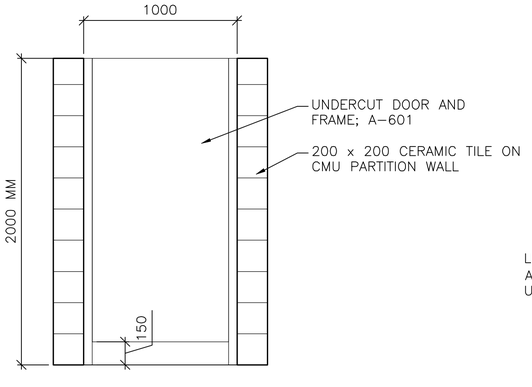


8 A-504 **TOILET PARTITION DOOR ELEVATION**
SCALE: 1:20

LINEAR DIMENSIONS SHOWN ARE IN MILLIMETERS (MM), UNLESS OTHERWISE NOTED

0 100 200
SCALE: 1:5

0 200 400
SCALE: 1:10

0 400 800
SCALE: 1:20

APPROVED:

A/E DESIGNER OF RECORD

SEAL:

STATE OF SOUTH CAROLINA
KEVIN R. CHAFIN
N. Charleston, SC
6374
REGISTERED ARCHITECT

US ARMY CORPS OF ENGINEERS
AFGHANISTAN ENGINEER DISTRICT

| Mark | Description | Date | Appr. |
|---|---|---|---|

Rev: 0
Date: 2/23/10
Design file no.
Drawing code:
File name: ANALATSA-504DT
Plot date: 2/23/2010
Plot scale: x:x

Designed by: KRC
Drawn by: EBB
Checked by: NLJ
Reviewed by: LHM
Submitted by:

U.S. ARMY ENGINEER DISTRICT, AFGHANISTAN
CORPS OF ENGINEERS
APO AE 96338

BAKER

Michael Baker Jr., Inc
A unit of Michael Baker Corporation
Airside Business Park
100 Airside Drive
Moon Township, PA 15108
www.mbakercorp.com

AFGHAN NATIONAL ARMY
REGIONAL MILITARY TRAINING CENTER
STANDARD DESIGN

LATRINE BUILDING
SMALL

TOILET, LAVATORY & ABLUTION DETAILS

Sheet reference number:
A–504

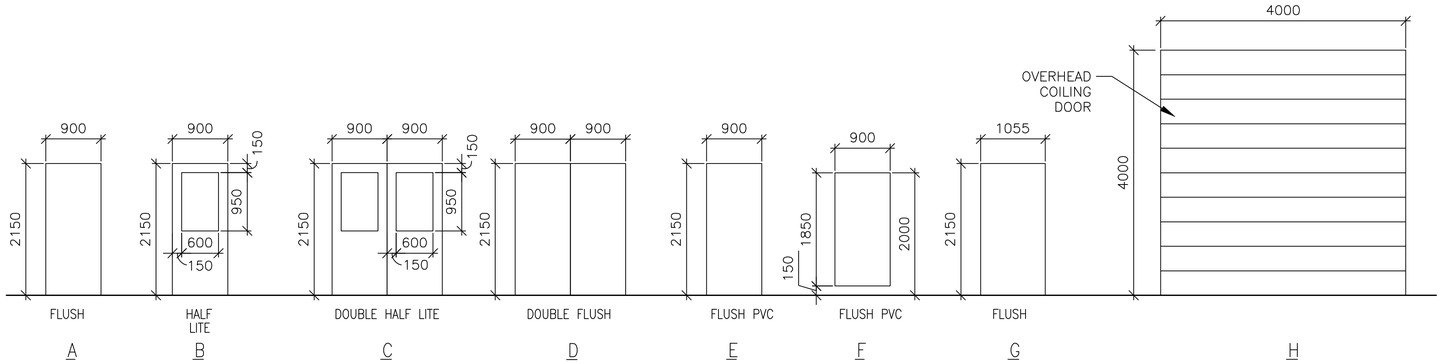


## 1 A-601 DOOR TYPES

SCALE: 1:50

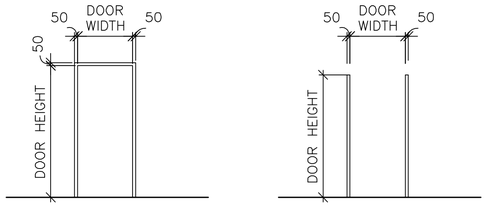





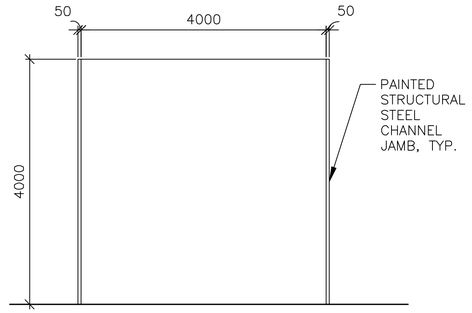


## 2 A-601 FRAME TYPES

SCALE: 1:50

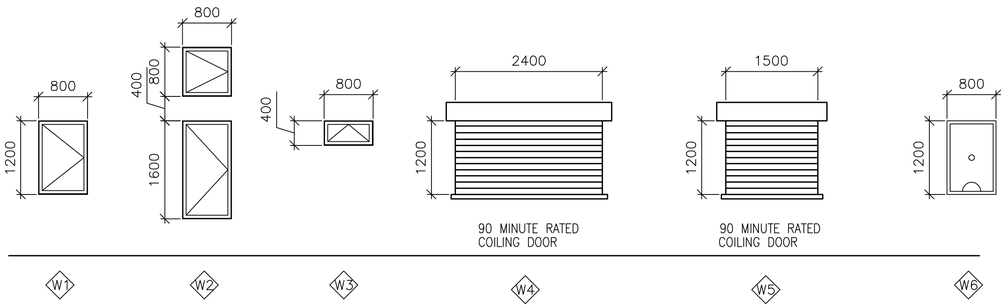


## 3 A-601 WINDOW TYPES

SCALE: 1:50

## WINDOW TYPE NOTES:

1. ALL EXTERIOR WINDOWS SHALL BE ALUMINUM WITH INSECT SCREENS. WINDOWS SHALL BE COMMERCIAL GRADE.
2. ALL EXTERIOR WINDOWS SHALL BE OPERABLE.

## 4 A-601 DOOR TAG

SCALE: NTS




## 5 A-601 RATED DOOR TAG

SCALE: NTS

## DOOR TAG NOTES:

1. THE DOOR TAG INDICATES THE DOOR TYPE, FRAME TYPE AND HARDWARE SET FOR EACH DOOR.
2. THE DOOR TAG FOR RATED DOORS INCLUDES THE RATING OF THE DOOR IN MINUTES.

## EXTERIOR DOOR HARDWARE TYPES:

HW-1 1-1/2 PR HINGES, A5112 114 X 114
1 EA RIM EXIT DEVICE, TYPE 1
1 EA CYLINDER. E09221A, GRADE 1
1 EA OVERHEAD CLOSER, C02061, LOW RESISTANCE
1 EA THRESHOLD, J32130
3 EA DOOR SILENCERS, L03011

HW-2 1-1/2 PR HINGES, A5112 114 X 114
1 EA LOCKSET, F13 ENTRY LOCK W/LEVER HANDLES, GRADE 1
1 EA OVERHEAD CLOSER, C02061, LOW RESISTANCE
1 EA THRESHOLD, J32130
3 EA DOOR SILENCERS, L03011

HW-3 3 PR HINGES, A5112 114 X 114
2 EA RIM EXIT DEVICE, TYPE 1
2 EA CYLINDER. GRADE 1
2 EA OVERHEAD CLOSER, C02061, LOW RESISTANCE
1 EA DOOR COORDINATOR, TYPE 21
1 EA ASTRAGAL
1 EA THRESHOLD, J32130
2 EA DOOR SILENCERS, L03011

HW-4 3 PR HINGES, A5112 114 X 114
1 EA LOCKSET W/LEVER HANDLES. GRADE 1, F13
1 EA OVERHEAD CLOSER, C02061, LOW RESISTANCE
2 EA MAGNETIC HOLDER PIN, ATTACHED TO DOOR LEAF
2 EA MAGNETIC HOLDER RECEIVER, ATTACHED TO STOOP
2 EA LEVER EXTENSION FLUSH BOLTS, L04081
1 EA ASTRAGAL
1 EA THRESHOLD, J32130
2 EA DOOR SILENCERS, L03011

## DOOR AND HARDWARE NOTES:

1. INTERIOR AND EXTERIOR METAL DOORS AND FRAME COLORS SHALL MATCH ADJACENT WALL COLORS AS SELECTED BY THE CONTRACTING OFFICER.
2. FRAMES, EXCEPT FIRE-RATED FRAMES, SHALL BE MOUNTED AND ADJUSTED IN ACCORDANCE WITH MANUFACTURER'S INSTRUCTIONS. FRAMES SHALL BE FASTENED WITH MINIMUM OF THREE ANCHORS PER JAMB AT EQUAL INTERVALS.
3. DIMENSIONS SHOWN ON DOOR TYPES DETAIL ARE BASED UPON MODULAR MASONRY (OR ROUGH OPENING), HEIGHT OF 2200 MM FOR STANDARD PERSONNEL DOORS. CONTRACTOR SHALL COORDINATE WITH DOOR SUPPLIER TO ENSURE THAT DIMENSIONS OF DOORS AND FRAMES PROVIDED ARE COMPATIBLE WITH DOOR OPENING DIMENSIONS.
4. HARDWARE SHALL BE HEAVY DUTY, COMMERCIAL GRADE, STAINLESS STEEL WITH A SATIN OR BRUSHED FINISH.
5. HARDWARE TYPES INCLUDE BUILDERS HARDWARE MANUFACTURERS ASSOCIATION (BMHA) NUMBER.
6. DOORS IN 2 HOUR RATED PARTITIONS SHALL BE 1.5 HOUR (90 MINUTE) RATED DOORS IN ACCORDANCE WITH NFPA 101, TABLE 8.3.4.2.
7. DOORS AT STAIR ENCLOSURES SHALL BE 1 HOUR (60 MINUTE) RATED AT 1 HOUR WALL IN ACCORDANCE WITH NFPA 101, TABLE 8.3.4.2.
8. DOORS IN 1 HOUR RATED WALLS SHALL BE 3/4 HOUR (45 MINUTE) RATED DOORS IN ACCORDANCE WITH NFPA 101, TABLE 8.3.4.2.
9. DOORS IN 1 HOUR RATED CORRIDOR WALLS SHALL BE 1/3 HOUR (20 MINUTE) IN ACCORDANCE WITH NFPA 101, TABLE 8.3.4.2.
10. PROVIDE DOOR STOPS TO PROTECT WALLS ON LOCATIONS WHERE DOOR SWING WILL STRIKE WALL.

THIS SHEET IS STANDARD AND IS INCLUSIVE OF ALL THE DOOR/ WINDOW/ HARDWARE TYPES FOR THE ENTIRE RMTC CONTRACT. NOT ALL DOOR/ WINDOW/ HARDWARE TYPES ARE USED FOR ANY PARTICULAR BUILDING DESIGN. CONTRACTOR SHALL REFER TO THE FLOOR PLAN FOR THE TYPES BEING USED.

## INTERIOR DOOR HARDWARE TYPES:

HW-5 1-1/2 PR HINGES, A8133 114 X 114
1 EA LOCKSET W/LEVER HANDLES, F08, GRADE 1
1 EA WALL STOP, L02101 OR L02161
3 EA DOOR SILENCERS, L03011

HW-6 1-1/2 PR HINGES, A8112 114 X 114
1 EA LOCKSET W/LEVER HANDLES, F08, GRADE 1
1 EA WALL STOP, L02101 OR L02161
1 EA OVERHEAD CLOSER, C02061, LOW RESISTANCE
3 EA DOOR SILENCERS, L03011

HW-7 1-1/2 PR HINGES, A8133
1 EA LOCKSET W/LEVER HANDLES, F13 GRADE 1
1 EA WALL STOP, L02101 OR L02161
2 EA MOP PLATE, J103
3 EA DOOR SILENCERS, L03011

HW-8 1-1/2 PR HINGES, A8112
1 EA LOCKSET W/LEVER HANDLES, F13 GRADE 1
1 EA WALL STOP, L02101 OR L02161
2 EA MOP PLATE, J103
1 EA OVERHEAD CLOSER, C02061, LOW RESISTANCE
3 EA DOOR SILENCERS, L03011

HW-9 1-1/2 PR HINGES, A5112 114 X 114
1 EA RIM EXIT DEVICE, TYPE 1
1 EA CYLINDER. E09221A, GRADE 1
1 EA OVERHEAD CLOSER, C02061, LOW RESISTANCE
3 EA DOOR SILENCERS, L03011

HW-10 3 PR HINGES, A5112 114 X 114
1 EA LOCKSET W/LEVER HANDLES. GRADE 1, F13
2 EA LEVER EXTENSION FLUSH BOLTS, L04081
1 EA ASTRAGAL
2 EA DOOR SILENCERS, L03011

HW-11 1-1/2 PR HINGES, A8112 114 X 114
1 EA LOCKSET W/LEVER HANDLES, F13, GRADE 1
1 EA WALL STOP, L02101 OR L02161
1 EA OVERHEAD CLOSER, C02061, LOW RESISTANCE
3 EA DOOR SILENCERS, L03011
1 EA ROBE HOOK

HW-12 1-1/2 PR HINGES, A8133
1 EA LATCHSET W/LEVER HANDLES, F76 GRADE 1
1 EA WALL STOP, L02101 OR L02161
2 EA MOP PLATE, J103
3 EA DOOR SILENCERS, L03011
1 EA ROBE HOOK

HW-13 3 PR HINGES, A5112 114 X 114
1 EA LOCKSET W/LEVER HANDLES. GRADE 1, F13
1 EA OVERHEAD CLOSER, C02061, LOW RESISTANCE
2 EA LEVER EXTENSION FLUSH BOLTS, L04081
1 EA ASTRAGAL
2 EA DOOR SILENCERS, L03011

HW-14 3 PR HINGES, A5112 114 X 114
2 EA RIM EXIT DEVICE, TYPE 1
2 EA CYLINDER. GRADE 1
2 EA OVERHEAD CLOSER, C02061, LOW RESISTANCE
1 EA DOOR COORDINATOR, TYPE 21
1 EA ASTRAGAL
2 EA DOOR SILENCERS, L03011

APPROVED:

A/E DESIGNER OF RECORD

SEAL:

STATE OF SOUTH CAROLINA
KEVIN R. CHAFIN
N. Charleston, SC 6374
REGISTERED ARCHITECT

US ARMY CORPS OF ENGINEERS
AFGHANISTAN ENGINEER DISTRICT

| Mark | Description | Date | Appr. |
|---|---|---|---|
| | | | |

| Mark | Description | Date | Appr. |
|---|---|---|---|
| | | | |

Rev: 0
Date: 2/23/10
Design file no.
Drawing code:
File name: ANALTSA-601SCH
Plot date: 2/23/2010
Plot scale: X:X

Designed by: KRC
Dwn by: EBB
Ckd by: NLJ
Reviewed by: LHM
Submitted by: BAKER

U.S. ARMY ENGINEER DISTRICT, AFGHANISTAN
CORPS OF ENGINEERS
APO AE 96338

*Michael Baker Jr., Inc.*
*A unit of Michael Baker Corporation*
Airside Business Park
100 Airside Drive
Moon Township, PA 15108
www.mbakercorp.com

AFGHAN NATIONAL ARMY
REGIONAL MILITARY TRAINING CENTER
STANDARD DESIGN

LATRINE BUILDING
SMALL

WINDOW AND DOOR SCHEDULES

Sheet reference number:
A-601

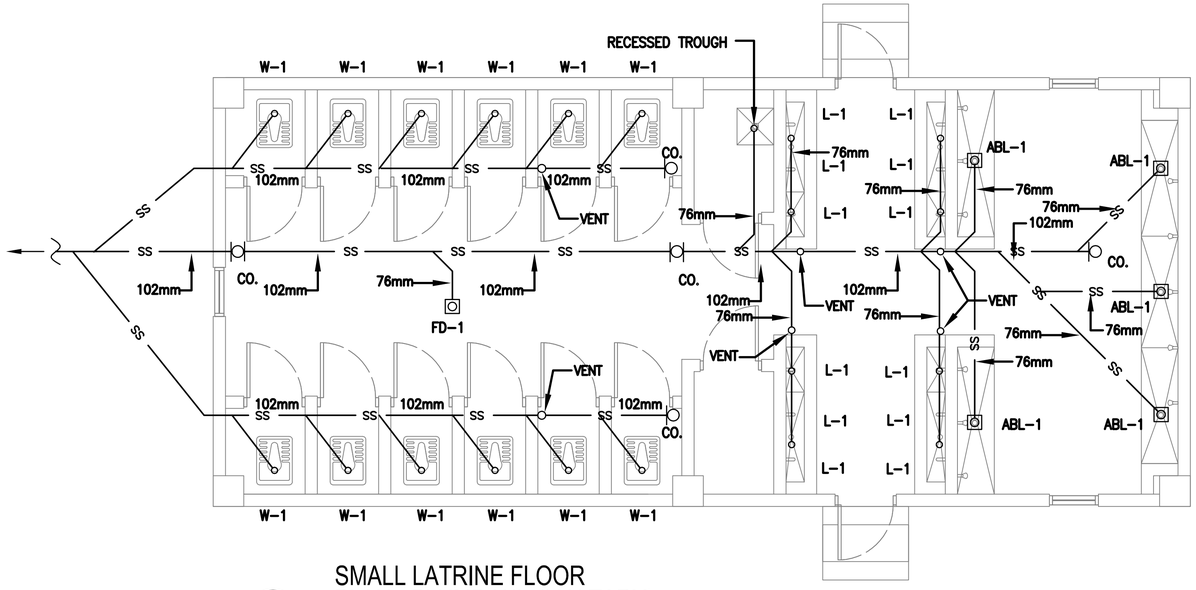


1 P-101

## SMALL LATRINE FLOOR PLAN - PLUMBING (SANITARY)

SCALE: 1:50

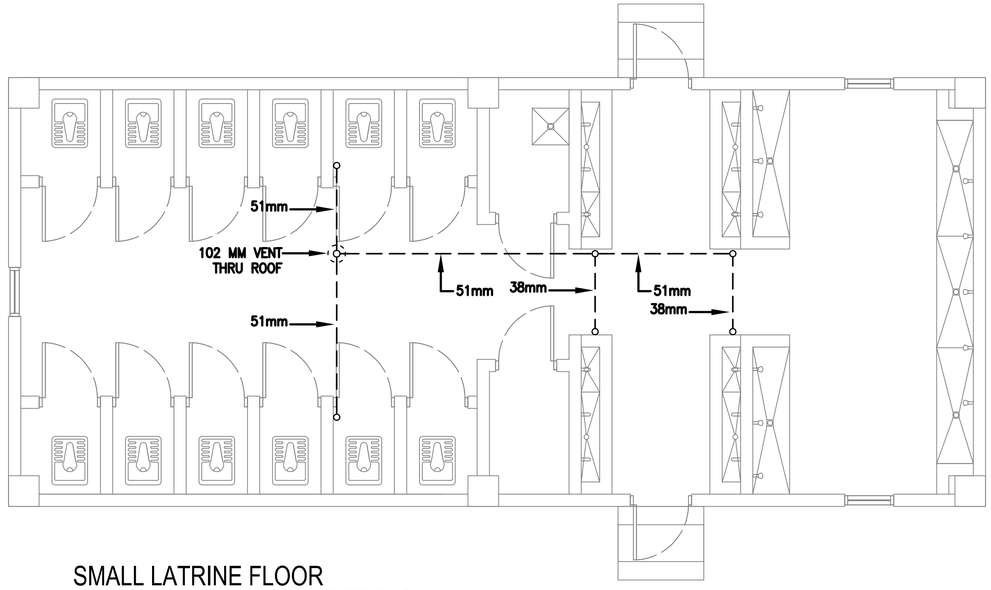


2 P-101

## SMALL LATRINE FLOOR PLAN - PLUMBING (VENT PIPING)

SCALE: 1:50

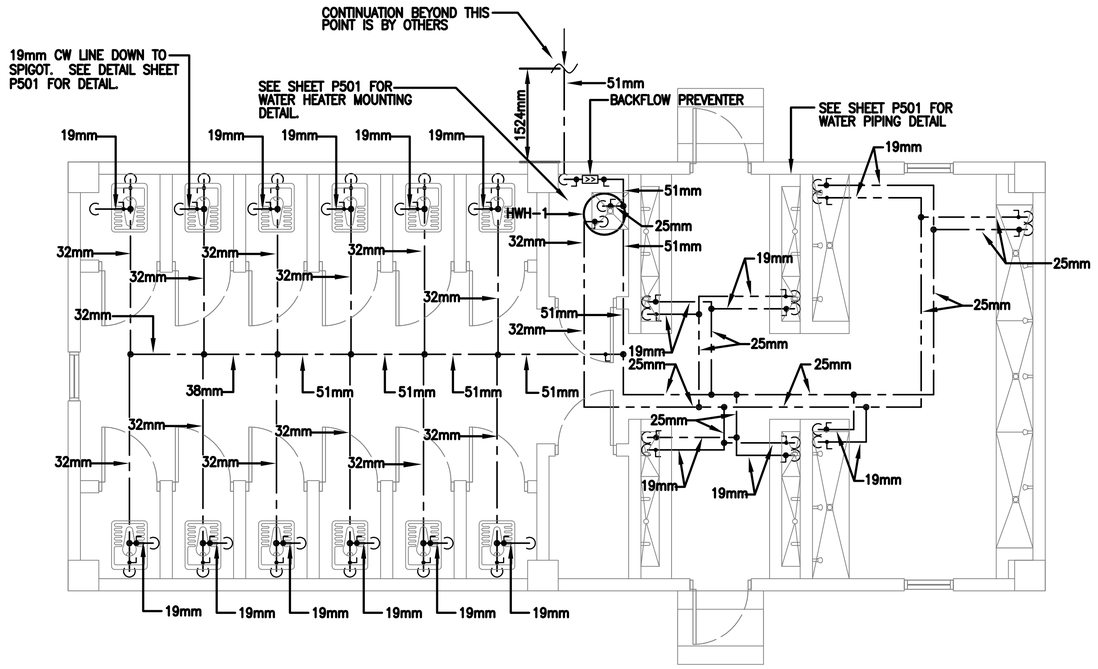


3 P-101

## SMALL LATRINE FLOOR PLAN - PLUMBING (HOT & COLD WATER)

SCALE: 1:50

## FLOOR PLAN NOTES:

1. DO NOT SCALE DRAWINGS – ALL DIMENSIONS AND CONDITIONS SHALL BE CHECKED AND VERIFIED BY THE CONTRACTOR AT THE SITE.
2. ALL WORK PERFORMED ON THIS BUILDING SHALL BE IN COMPLIANCE WITH ALL PERTINENT CODES, RULES, ORDINANCES AND REGULATIONS OF THE GOVERNING AUTHORITIES.
3. ALL WORK PERFORMED UNDER AND IN CONNECTION WITH THESE DRAWINGS AND SPECIFICATIONS SHALL BE IN STRICT COMPLIANCE WITH THE LATEST SAFETY AND HEALTH STANDARDS.
4. REPORT ANY DISCREPANCIES FOUND IN THE PLUMBING DRAWINGS AND/OR IN THE SPECIFICATIONS DURING THE BIDDING PROCESS FOR CLARIFICATION BY THE ENGINEER.
5. ALL EASTERN STYLE WATER CLOSETS IN THIS FACILITY ARE TO HAVE THE FIXTURE DESIGNATION OF W-1. EACH FIXTURE SHALL HAVE A 25mm (1 INCH) COLD WATER LINE EXTENDED TO IT AND THEN BE REDUCED TO 13mm (1/2 INCH) FOR A FINAL CONNECTION TO THE FLUSH TANK AND A 102mm (4) INCH SANITARY CONNECTION.
6. ALL TROUGH FIXTURES IN THIS FACILITY ARE TO HAVE THE FIXTURE DESIGNATION OF L-1. EACH FIXTURE SHALL HAVE A 13mm (1/2 INCH) COLD WATER, 13mm (1/2 INCH) HOT WATER CONNECTION AND A 76mm (3 INCH) SANITARY CONNECTION.
7. ALL ABLUTION FIXTURES IN THIS FACILITY ARE TO HAVE THE FIXTURE DESIGNATION OF ABL-1. EACH FIXTURE SHALL HAVE A 13mm (1/2 INCH) COLD WATER, 13mm (1/2 INCH) HOT WATER CONNECTION AND A 76mm (3 INCH) SANITARY CONNECTION.
8. REFER TO SHEET P501 & P502 FOR DETAILS AND SYMBOLS.
9. ALL WATER, SANITARY AND VENT LINES TO BE EXPOSED. RUN LINES TIGHT TO CEILING AND WALL.
10. CONTRACTOR TO COORDINATE ALL WORK WITH MECHANICAL AND ELECTRICAL DRAWINGS.
11. L-1 DESIGNATION REPRESENTS THE NUMBER OF FAUCETS FOR THE TROUGH FIXTURE.
12. CONTRACTOR TO COORDINATE WATER PIPING MOUNTING LOCATION WITH BOTH MECHANICAL & ELECTRICAL DRAWINGS.

LINEAR DIMENSIONS SHOWN ARE IN MILLIMETERS (MM), UNLESS OTHERWISE NOTED

0 1000 2000
SCALE: 1:50

## PLUMBING SYMBOLS

- SS — SANITARY SEWER PIPING (BELOW GROUND)
- SS — SANITARY SEWER PIPING (ABOVE GROUND)
- VENT PIPING (V)
- COLD WATER PIPING (CW)
- HOT WATER PIPING (HW)
- BALL VALVE
- BACKFLOW PREVENTER
- OR — CLEANOUT (CO.)
- ROOF PENETRATION

APPROVED:

A/E DESIGNER OF RECORD

SEAL:

COMMONWEALTH OF PENNSYLVANIA REGISTERED PROFESSIONAL MATTHEW R. SOTOSKY ENGINEER 046576-E

US ARMY CORPS OF ENGINEERS
AFGHANISTAN ENGINEER DISTRICT

| Mark | Description | Date | Appr. |
|---|---|---|---|

| Mark | Description | Date | Appr. |
|---|---|---|---|

Rev: 0
Date: 02/23/10
Design file no.
Drawing code:
File name: ANALATSPL-1101XXX
Plot date: 02/09/2010
Plot scale: 1:50

Designed by: RMH
Dwn by: RMH
Ckd by: CJM
Reviewed by: MRS
Submitted by: BAKER

U.S. ARMY ENGINEER DISTRICT, AFGHANISTAN
CORPS OF ENGINEERS
APO AE 96338

*Michael Baker Jr., Inc*
*A unit of Michael Baker Corporation*
Airside Business Park
100 Airside Drive
Moon Township, PA 15108
www.mbakercorp.com

AFGHAN NATIONAL ARMY REGIONAL MILITARY TRAINING CENTER STANDARD DESIGN

LATRINE BUILDING SMALL

FLOOR PLAN PLUMBING

Sheet reference number:
P-101

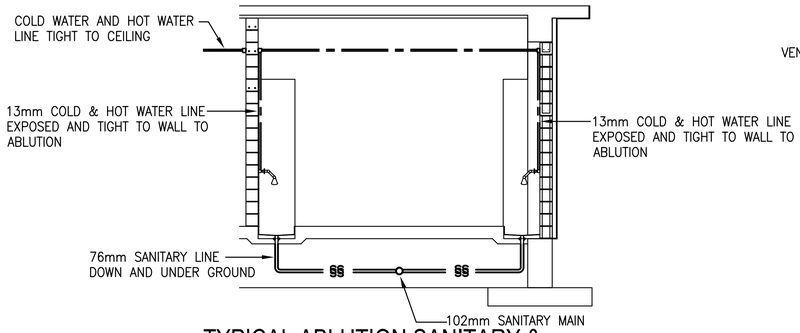


## TYPICAL ABLUTION SANITARY & WATER INSTALLATION SCHEMATIC

SCALE: N.T.S.

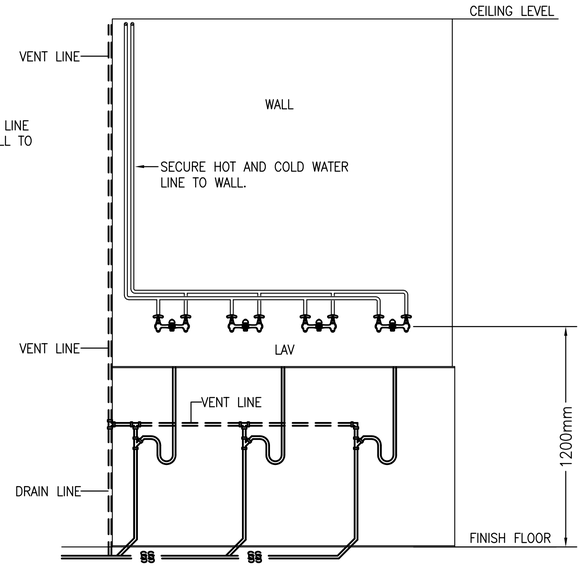


## LAVATORY ELEVATION PLAN - PLUMBING

SCALE: N.T.S.

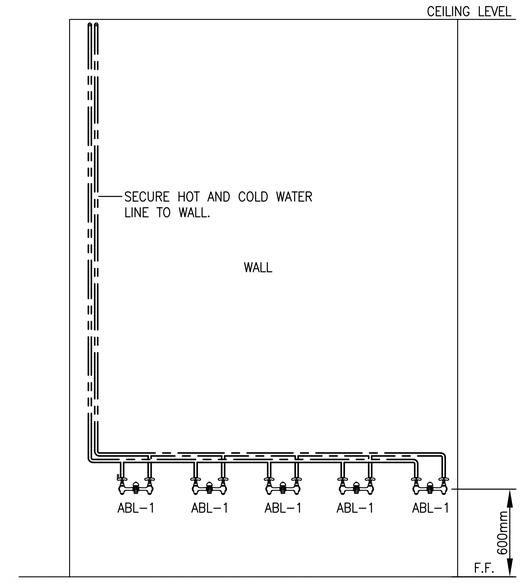


## TYPICAL ABLUTION ELEVATION PLUMBING PLAN - WATER INSTALLATION SCHEMATIC

SCALE: N.T.S.

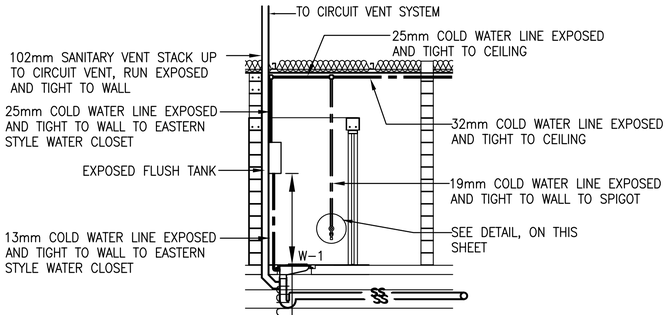


## TYPICAL EASTERN STYLE WATER CLOSET SANITARY & WATER INSTALLATION SCHEMATIC

SCALE: N.T.S.

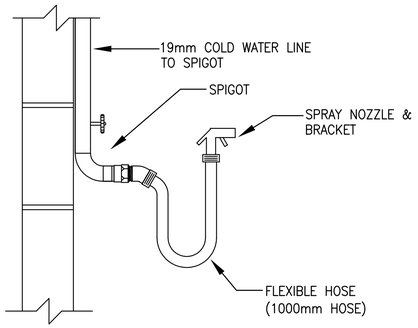


## TYPICAL DETAIL - SPIGOT, FLEXIBLE HOSE, AND SPRAY NOZZLE

SCALE: N.T.S.

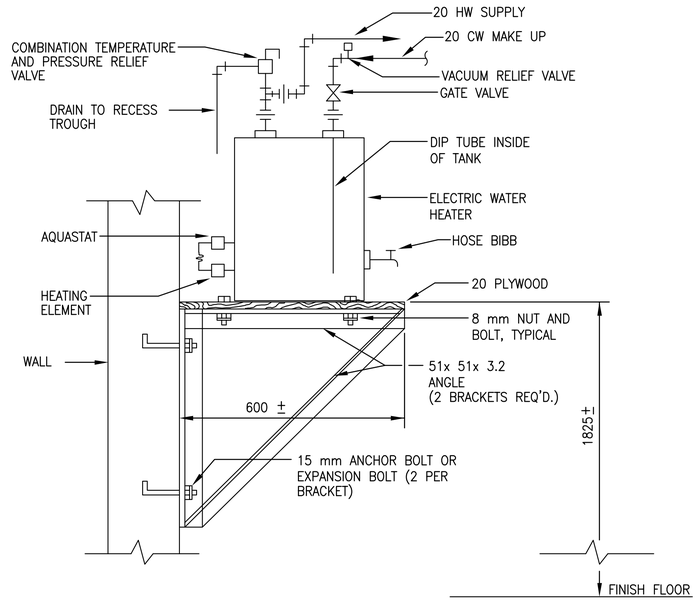


## WALL MOUNTED ELECTRIC WATER HEATER DETAIL

SCALE: N.T.S.

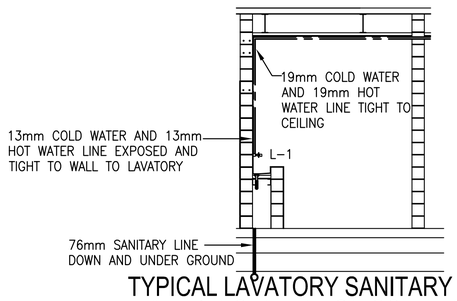


## TYPICAL LAVATORY SANITARY & WATER INSTALLATION SCHEMATIC

SCALE: N.T.S.

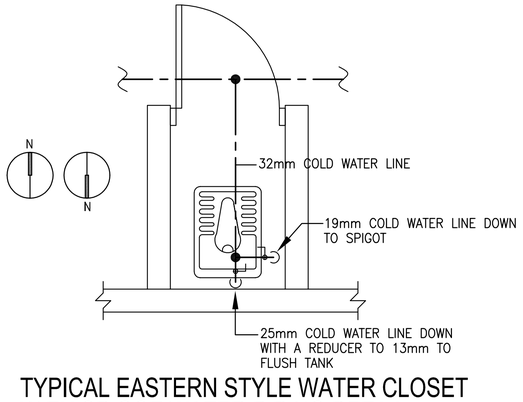


## TYPICAL EASTERN STYLE WATER CLOSET WITH SPIGOT WATER PIPING DETAIL

SCALE: N.T.S.

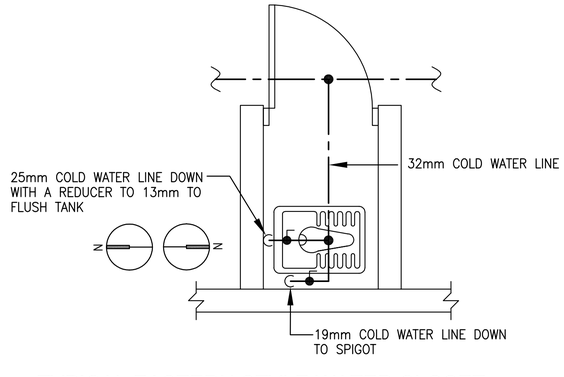


## TYPICAL EASTERN STYLE WATER CLOSET WITH SPIGOT WATER PIPING DETAIL

SCALE: N.T.S.

US ARMY CORPS OF ENGINEERS
AFGHANISTAN ENGINEER DISTRICT

| Mark | Description | Date | Appr. |
|---|---|---|---|
| | | | |

| Mark | Description | Date | Appr. |
|---|---|---|---|
| | | | |

Rev: 0
Date: 02/23/10
Design file no.
Drawing code:
File name: ANALATSPL-001XXX
Plot date: 02/26/2010
Plot scale: N.T.S.

Designed by: RMH
Dwn. by: RMH
Ckd by: CJM
Reviewed by: MRS
Submitted by: BAKER

U.S. ARMY ENGINEER DISTRICT, AFGHANISTAN
CORPS OF ENGINEERS
APO AE 96338

Michael Baker Jr., Inc
A unit of Michael Baker Corporation
Airside Business Park
100 Airside Drive
Moon Township, PA 15108
www.mbakercorp.com

AFGHAN NATIONAL ARMY
REGIONAL MILITARY TRAINING CENTER
STANDARD DESIGN

LATRINE BUILDING
SMALL

PLUMBING DETAILS

APPROVED:

A/E DESIGNER OF RECORD

SEAL:

COMMONWEALTH OF PENNSYLVANIA
REGISTERED
PROFESSIONAL
MATTHEW R. SOTOSKY
ENGINEER
065578-E

Sheet reference number:
P-501

## FIXTURE LIST

| TYPE | ITEM | SOIL & WASTE | VENT | COLD WATER | HOT WATER | REMARKS | REMARKS 2 |
|---|---|---|---|---|---|---|---|
| W-1 | EASTERN STYLE WATER CLOSET | 102mm | 51mm | 13mm | ------ | FLUSH TANK | LOW FLOW EFFICIENT TYPE |
| L-1 | TROUGH FIXTURE | 38mm | 38mm | 13mm | 13mm | FABRICATED IN FIELD | LOW FLOW EFFICIENT TYPE |
| ABL-1 | ABLUTION | FLOOR DRAIN | ------ | 13mm | 13mm | FABRICATED IN FIELD | ---------- |
| HWH-1 | WATER HEATER | --- | --- | SEE DWG. | SEE DWG. | 151 LITER ELECTRIC WATER HEATER, 380/3ø, 9KW | ---------- |

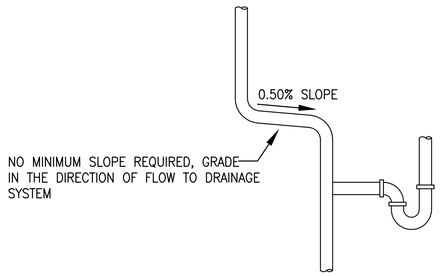


TYPICAL VENT SLOPE DETAIL

SCALE: N.T.S.

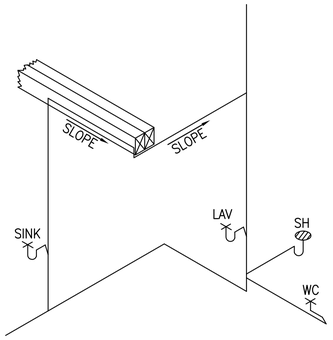


TYPICAL VENT SLOPE DETAIL

SCALE: N.T.S.

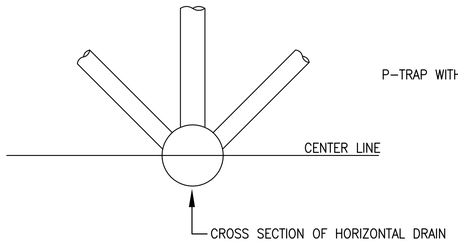


ACCEPTABLE VENT CONNECTIONS TO HORIZONTAL DRAIN - DETAIL

SCALE: N.T.S.

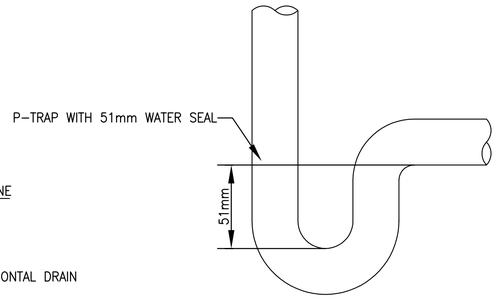


P-TRAP WITH 51mm WATER SEAL DETAIL

SCALE: N.T.S.

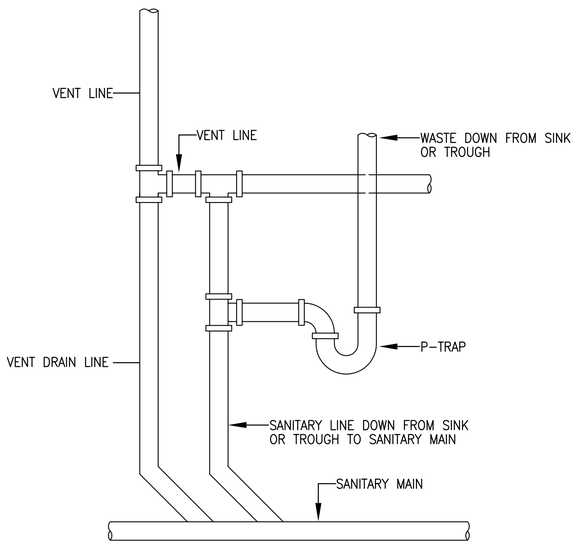


TYPICAL LAVATORY/LAUNDRY VENT DETAIL

SCALE: N.T.S.

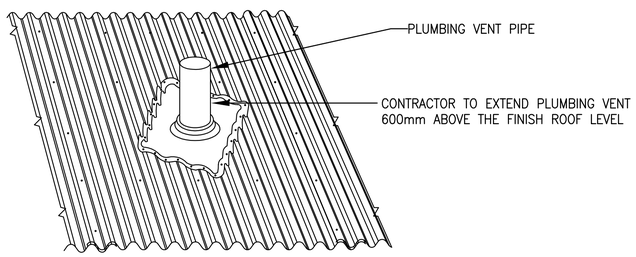


PLUMBING VENT THRU ROOF DETAIL

SCALE: NTS

APPROVED:

A/E DESIGNER OF RECORD

SEAL:

US ARMY CORPS OF ENGINEERS
AFGHANISTAN ENGINEER DISTRICT

| Mark | Description | Date | Appr. | Mark | Description | Date | Appr. |
|---|---|---|---|---|---|---|---|

Designed by: RMH
Dwn by: RMH
Ckd by: CJM
Reviewed by: MRS
Submitted by: BAKER
Date: 02/23/10
Rev: 0
Design file no.
Drawing code:
File name: ANALATSPL-502XXX
Plot date: 02/08/2010
Plot scale: N.T.S.

U.S. ARMY ENGINEER DISTRICT, AFGHANISTAN
CORPS OF ENGINEERS
APO AE 96338

Michael Baker Jr., Inc
A unit of Michael Baker Corporation
Airside Business Park
100 Airside Drive
Moon Township PA 15108
www.mbakercorp.com

AFGHAN NATIONAL ARMY
REGIONAL MILITARY TRAINING CENTER
STANDARD DESIGN

LATRINE BUILDING
SMALL

PLUMBING DETAILS & FIXTURE SCHEDULE

Sheet reference number:
P-502

## TYPICAL WALL PENETRATION DETAIL

SCALE: N.T.S.

## TYPICAL BACKFLOW PREVENTER DETAIL

SCALE: N.T.S.

## TYPICAL FLOOR CLEANOUT DETAIL

SCALE: N.T.S.

## TYPICAL WATER DROP DETAIL

SCALE: N.T.S.

APPROVED:

A/E DESIGNER OF RECORD

SEAL:

US ARMY CORPS OF ENGINEERS
AFGHANISTAN ENGINEER DISTRICT

| Mark | Description | Date | Appr. |
|---|---|---|---|

| Mark | Description | Date | Appr. |
|---|---|---|---|

Date: 02/23/10
Rev: 0
Design file no.
Drawing code:
File name: ANALATSPL-503XXX
Plot date: 02/08/2010
Plot scale:N.T.S.
Designed by: RMH
Dwn by: RMH
Ckd by: CJM
Reviewed by: MRS
Submitted by: BAKER

U.S. ARMY ENGINEER DISTRICT, AFGHANISTAN
CORPS OF ENGINEERS
APO AE 96338

*Michael Baker Jr., Inc*
*A unit of Michael Baker Corporation*
Airside Business Park
100 Airside Drive
Moon Township PA 15108
www.mbakercorp.com

AFGHAN NATIONAL ARMY
REGIONAL MILITARY TRAINING CENTER
STANDARD DESIGN

LATRINE BUILDING
SMALL

PLUMBING DETAILS

Sheet reference number:
P–503

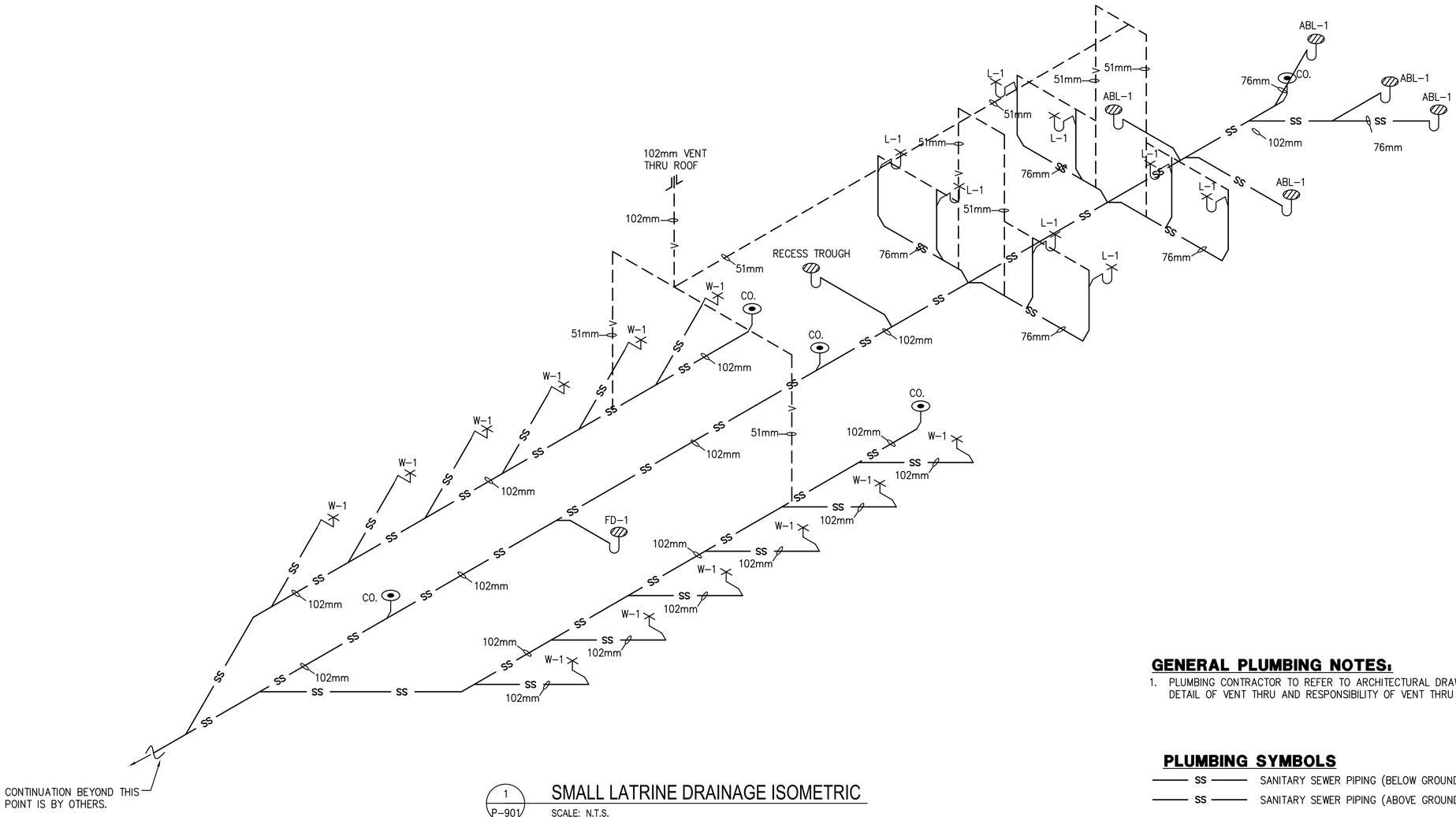


1 P-901 SMALL LATRINE DRAINAGE ISOMETRIC

SCALE: N.T.S.

## GENERAL PLUMBING NOTES:

1. PLUMBING CONTRACTOR TO REFER TO ARCHITECTURAL DRAWINGS FOR DETAIL OF VENT THRU AND RESPONSIBILITY OF VENT THRU ROOF.

## PLUMBING SYMBOLS

- SS — SANITARY SEWER PIPING (BELOW GROUND)
- SS — SANITARY SEWER PIPING (ABOVE GROUND)
- V — VENT PIPING (V)
- CW — COLD WATER PIPING (CW)
- HW — HOT WATER PIPING (HW)
- BALL VALVE
- BACKFLOW PREVENTER
- OR — CLEANOUT (CO.)
- ROOF PENETRATION

APPROVED:

A/E DESIGNER OF RECORD

SEAL:

COMMONWEALTH OF PENNSYLVANIA REGISTERED PROFESSIONAL MATTHEW R. SOTOSKY ENGINEER 046576-E

US ARMY CORPS OF ENGINEERS
AFGHANISTAN ENGINEER DISTRICT

| Mark | Description | Date | Appr. |
|---|---|---|---|
| | | | |

| Mark | Description | Date | Appr. |
|---|---|---|---|
| | | | |

Designed by: RMH
Dwn by: RMH
Ckd by: CJM
Reviewed by: MRS
Submitted by: BAKER

Date: 02/23/10
Design file no.
Drawing code:
File name: ANALATSPL-d01XXX
Plot date: 02/26/2010
Plot scale: N.T.S.
Rev: 0

U.S. ARMY ENGINEER DISTRICT, AFGHANISTAN
CORPS OF ENGINEERS
APO AE 96338

Michael Baker Jr; Inc
A unit of Michael Baker Corporation
Airside Business Park
100 Airside Drive
Moon Township, PA 15108
www.mbakercorp.com

AFGHAN NATIONAL ARMY
REGIONAL MILITARY TRAINING CENTER
STANDARD DESIGN

LATRINE BUILDING
SMALL

PLUMBING ISOMETRICS

Sheet reference number:
P-901

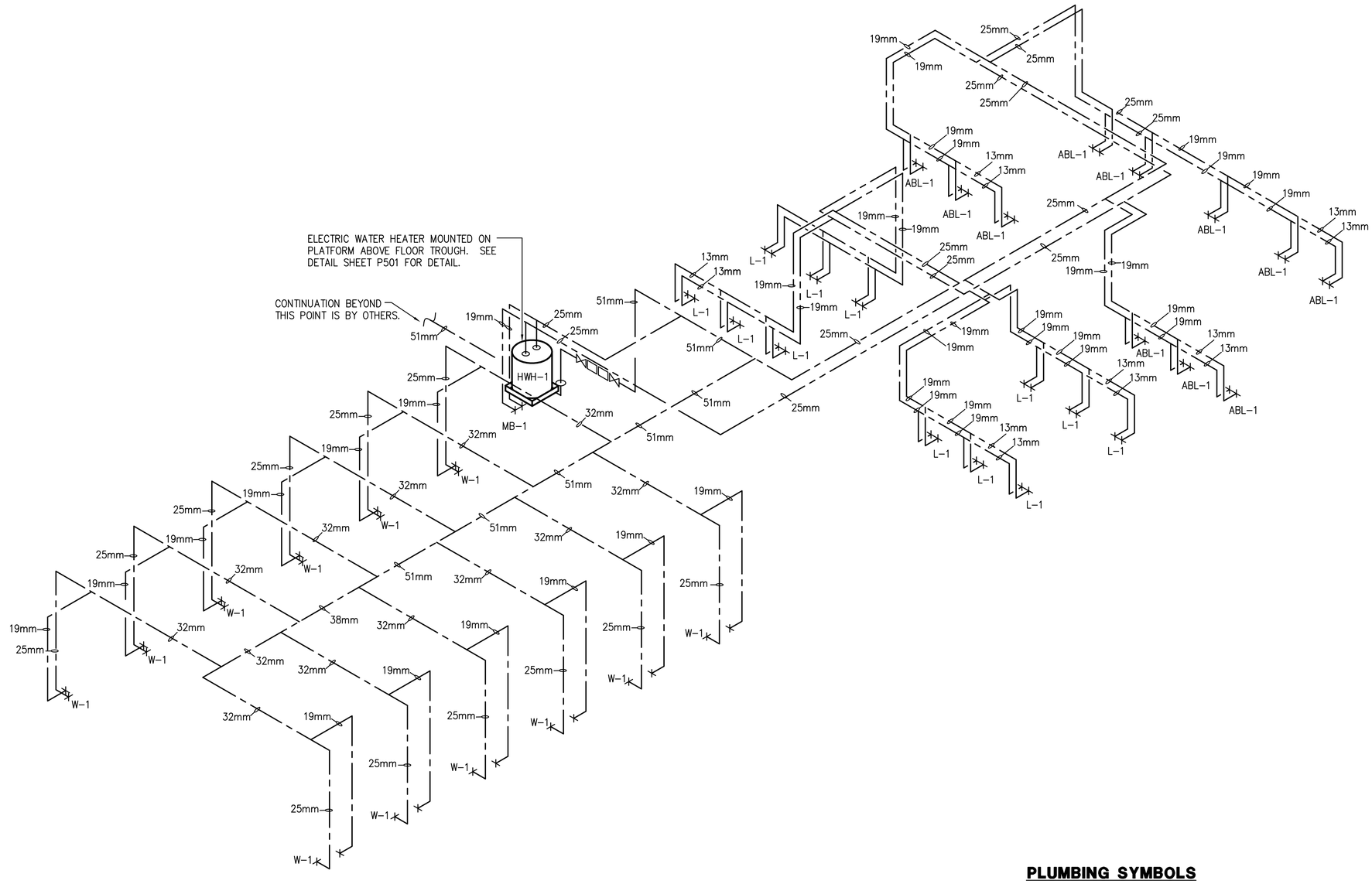


1 / P-902 SMALL LATRINE HOT AND COLD WATER ISOMETRIC

SCALE: N.T.S.

## PLUMBING SYMBOLS

| | |
|---|---|
| SS | SANITARY SEWER PIPING (BELOW GROUND) |
| SS | SANITARY SEWER PIPING (ABOVE GROUND) |
| | VENT PIPING (V) |
| | COLD WATER PIPING (CW) |
| | HOT WATER PIPING (HW) |
| | BALL VALVE |
| | BACKFLOW PREVENTER |
| OR | CLEANOUT (CO.) |
| | ROOF PENETRATION |

APPROVED:

A/E DESIGNER OF RECORD

SEAL:

COMMONWEALTH OF PENNSYLVANIA
REGISTERED PROFESSIONAL
MATTHEW R. SOTOSKY
ENGINEER
045576-E

US ARMY CORPS OF ENGINEERS
AFGHANISTAN ENGINEER DISTRICT

| Mark | Description | Date | Appr. | Mark | Description | Date | Appr. |
|---|---|---|---|---|---|---|---|

Designed by: RMH
Dwn by: RMH
Ckd by: CJM
Reviewed by: MRS
Submitted by: BAKER
Date: 02/23/10
Rev: 0
Design file no.
Drawing code:
File name: ANALATSPL-902XXX
Plot date: 02/08/2010
Plot scale: N.T.S.

U.S. ARMY ENGINEER DISTRICT, AFGHANISTAN
CORPS OF ENGINEERS
APO AE 96338

Michael Baker Jr., Inc
A unit of Michael Baker Corporation
Airside Business Park
100 Airside Drive
Moon Township, PA 15108
www.mbakercorp.com

AFGHAN NATIONAL ARMY
REGIONAL MILITARY TRAINING CENTER
STANDARD DESIGN

LATRINE BUILDING
SMALL

PLUMBING ISOMETRICS

Sheet reference number:
P-902

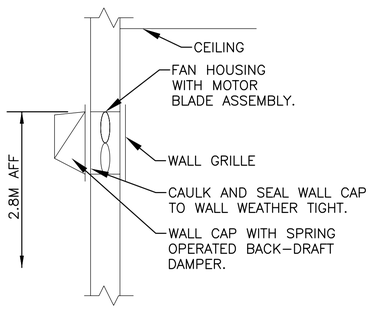


2 M-101 WALL EXHAUST FAN DETAIL
N.T.S.

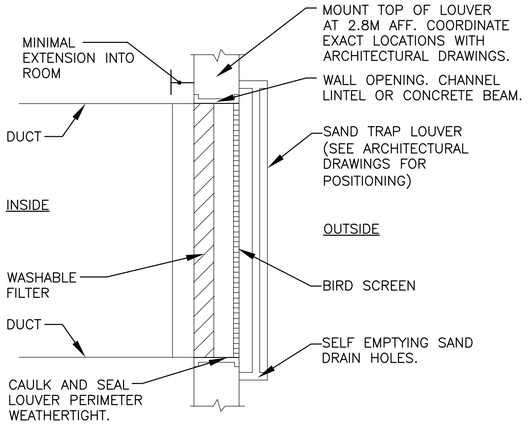


3 M-101 FILTERED SAND TRAP LOUVER
N.T.S.

## EXHAUST FAN SCHEDULE

| NO. | TYPE | FAN CMS | DRIVE | HP | SP mmH20 | ELECTRICAL DATA | SWITCH |
|---|---|---|---|---|---|---|---|
| EF-1 | INLINE | 0.250 | DIRECT | 1/8 | 13 | 220/1/50 | @ WALL |
| EF-2 | INLINE | 0.250 | DIRECT | 1/8 | 13 | 220/1/50 | @ WALL |
| EF-3 | WALL | 0.035 | DIRECT | FRACT | 9.5 | 220/1/50 | W/ STAT |

NOTE:
1. FANS SHALL BE CORROSION RESISTANT.
2. FANS SHALL HAVE SPRING OPERATED BACK DRAFT DAMPER.

## MAKE UP AIR HEATERS

| NO. | BLOWER CMS | FUSE | KW | MIN. TEMP RISE °C | SP mmH20 | ELECTRICAL DATA | CONTROL |
|---|---|---|---|---|---|---|---|
| MUA-1 | 0.284 | 60 | 10 | 20 | 13 | 220/1/50 | REMOTE |
| MUA-2 | 0.142 | 30 | 5 | 20 | 13 | 220/1/50 | REMOTE |

NOTES:
1. PROVIDE REMOTE MOUNTED THERMOSTAT WITH LOCKING COVER.
2. INTERLOCK MUA-1 BLOWER OPERATION WITH EF-1 AND THERMOSTAT.
3. INTERLOCK MUA-2 BLOWER OPERATION WITH EF-2 AND THERMOSTAT.
4. BLOWER SHALL BE SET TO ENERGIZE WITH EXHAUST FAN(S) AND OR THERMOSTAT(S), HEAT SHALL BE CONTROLLED BY THERMOSTAT. PROVIDE AIR SENSING SWITCH FOR HEATING OPERATION.

## GENERAL NOTES:

1. DO NOT SCALE DRAWINGS – ALL DIMENSIONS AND CONDITIONS SHALL BE CHECKED AND VERIFIED BY THE CONTRACTOR AT THE SITE.
2. ALL WORK PERFORMED ON THIS BUILDING SHALL BE IN COMPLIANCE WITH ALL PERTINENT CODES, RULES, ORDINANCES AND REGULATIONS OF THE GOVERNING AUTHORITIES.
3. ALL WORK PERFORMED UNDER AND IN CONNECTION WITH THESE DRAWINGS AND SPECIFICATIONS SHALL BE IN STRICT COMPLIANCE WITH THE LATEST SAFETY AND HEALTH STANDARDS.

## SYMBOLS:

- (X) KEY NOTE
- (0.050) AIR VOLUME IN CUBIC METERS PER SECOND (CMS)
- ¬ VOLUME DAMPER
- (T) THERMOSTAT WITH LOCKING COVER
- UC DOOR UNDERCUT
- TG TRANSFER GRILLE

## ABBREVIATIONS:

| | |
|---|---|
| AFF | ABOVE FINISH FLOOR |
| CF | CEILING FANS |
| CMS | CUBIC METERS PER SECOND |
| STATS | THERMOSTATS |

## KEY NOTE:

1. INLINE EXHAUST FAN DUCTED TO WALL CAP WITH LOW LEAKAGE GRAVITY BACK-DRAFT DAMPER. SECURE FAN TO STRUCTURE ABOVE AND INTERLOCK WITH MAKE UP AIR HEATER.
2. ELECTRIC MAKE UP AIR HEATER SECURED TO STRUCTURE ABOVE. BLOWER SHALL BE SET TO ENERGIZE WITH CORRESPONDING EXHAUST FAN AND OR THE THERMOSTAT, HEAT SHALL BE CONTROLLED BY THERMOSTAT. COORDINATE DUCT AND LIGHT LOCATIONS WITH OTHER TRADES.
3. WALL EXHAUST FAN WITH LOW SPRING OPERATED BACK-DRAFT DAMPER. SEE DETAIL 2 THIS SHEET.
4. 600X600 (24X24) INTAKE LOUVER WITH BACK-DRAFT DAMPER FOR MAKE UP AIR UNIT. PROVIDE WEATHER PROOF LOUVER WITH 50mm (2") WASHABLE FILTER AND SAND TRAP. SEE DETAIL 3 THIS SHEET.
5. 200x150 (8x6) ALUMINUM DUCT MOUNTED SUPPLY GRILLE WITH ADJUSTABLE OPPOSED BLADE DAMPERS. BALANCE TO CMS IN PARENTHESIS.
6. 150x150 (6x6) ALUMINUM DUCT MOUNTED EXHAUST GRILLE WITH ADJUSTABLE OPPOSED BLADE DAMPERS. BALANCE TO CMS IN PARENTHESIS.
7. THERMOSTAT MOUNTED AS HIGH AS POSSIBLE. INTERLOCK STAT WITH CORRESPONDING EXHAUST FAN, SET FAN TO ENERGIZE ON RISE IN TEMPERATURE ABOVE 25°C (77°F).

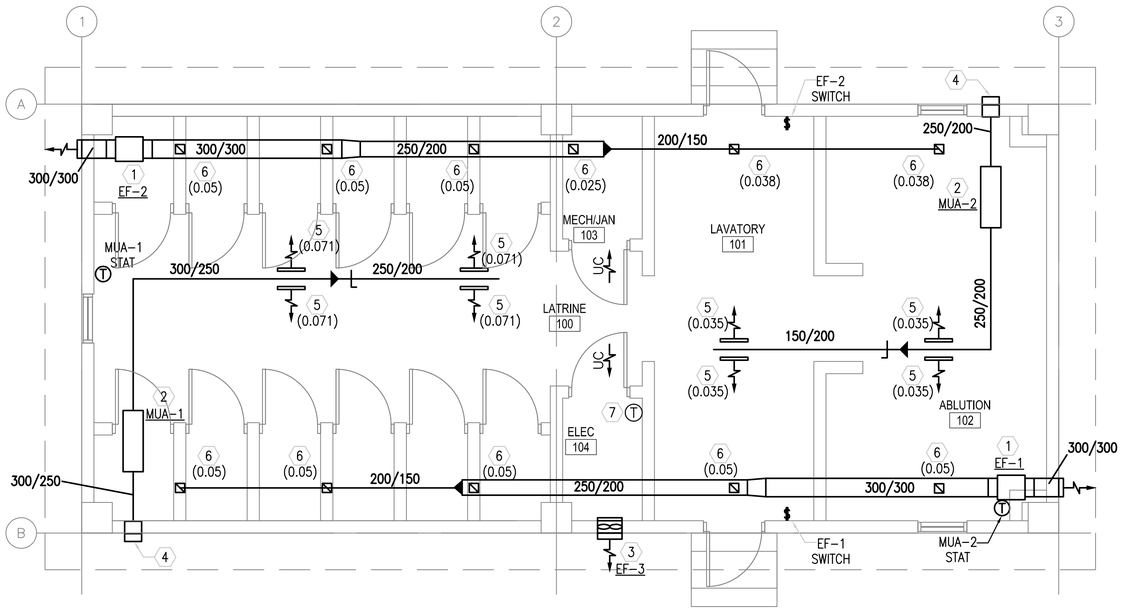


1 M-101 FLOOR PLAN - HVAC
SCALE: 1:50

LINEAR DIMENSIONS SHOWN ARE IN MILLIMETERS (MM), UNLESS OTHERWISE NOTED

0 1000 2000
SCALE: 1:50

APPROVED:

A/E DESIGNER OF RECORD

SEAL:

COMMONWEALTH OF PENNSYLVANIA REGISTERED PROFESSIONAL MATTHEW R. SOTOSKY ENGINEER 065578-E

US ARMY CORPS OF ENGINEERS
AFGHANISTAN ENGINEER DISTRICT

| Mark | Description | Date | Appr. |
|---|---|---|---|

Designed by: RML
Drawn by: JUN
Ckd by: CJM
Reviewed by: MRS
Submitted by: BAKER

Date: 02/23/10
Design file no.
Rev: 0
Drawing code:
File name: ANALATSMH-101XX0
Plot date: 02/26/2010
Plot scale: 1:50

U.S. ARMY ENGINEER DISTRICT, AFGHANISTAN
CORPS OF ENGINEERS
APO AE 96338

Michael Baker Jr., Inc
A unit of Michael Baker Corporation
Airside Business Park
100 Airside Drive
Moon Township, PA 15108
www.mbakercorp.com

AFGHAN NATIONAL ARMY
REGIONAL MILITARY TRAINING CENTER
STANDARD DESIGN

LATRINE BUILDING
SMALL

HVAC PLANS, SCHEDULES AND DETAILS

Sheet reference number:
M-101

## POWER

- DISTRIBUTION PANELBOARD
- NEW PANELBOARD – SURFACE
- NEW PANELBOARD – RECESSED
- (G) GENERATOR
- TRANSFORMER (DRAWN TO SCALE)
- [J] JUNCTION BOX
- (J) JUNCTION BOX – CEILING
- FUSIBLE SAFETY SWITCH
- (M) MOTOR
- $^{M}$ MOTOR STARTING SWITCH – 220V, 20A RATED UNLESS OTHERWISE NOTED
- ELECTRIC WATER HEATER
- (CF) CEILING FAN – REFER TO SPECIFICATION SECTION 26 20 00

## RECEPTACLES

- DUPLEX 20A TYPE CEE 7/7 "SCHUKO STYLE" UNSWITCHED RECEPTACLE
- GF DUPLEX 20A TYPE CEE 7/7 "SCHUKO STYLE" UNSWITCHED RECEPTACLES – 10mA GROUND FAULT INTERRUPTER TYPE
- WP DUPLEX 20A TYPE CEE 7/7 "SCHUKO STYLE" UNSWITCHED TYPE WITH WEATHERPROOF COVER – 10mA GROUND FAULT INTERRUPTER TYPE
- EXP DUPLEX 20A TYPE CEE 7/7 "SCHUKO STYLE" UNSWITCHED RECEPTACLES – EXPLOSION PROOF
- * INDICATES MOUNT DEVICE ABOVE COUNTERTOP OR AT 1070mm ABOVE FINISHED FLOOR WHERE NO COUNTER IS TO BE INSTALLED.

## LIGHTING

- LIGHTING FIXTURE – SEE FIXTURE SCHEDULE FOR MORE INFORMATION
- EMERGENCY LIGHTING FIXTURE – SEE FIXTURE SCHEDULE FOR MORE INFORMATION
- DOWNLIGHT
- LIGHTING FIXTURE ON NORMAL/EMERGENCY
- WALL MOUNTED LIGHT FIXTURE
- [E] EXIT SIGN – DIRECTIONAL ARROWS AS INDICATED ON DRAWINGS
- REMOTE HEAD FOR BATTERY PACK
- $ SINGLE POLE SWITCH – 20A RATED
- $^{3}$ 3–WAY SWITCH – 20A RATED
- $^{4}$ 4–WAY SWITCH – 20A RATED
- [LC] LIGHTING CONTACTOR
- POLE MOUNTED SITE LIGHTING FIXTURE– NUMBER OF FIXTURES PER POLE AS INDICATED ON DRAWINGS
- EXTERIOR DIRECTIONAL LIGHTING FIXTURE
- a SMALL CASE LETTERS REPRESENTS LAMP(S) / SWITCHES.

## TELECOMMUNICATIONS

- ▼ TELEPHONE OUTLET(S) @ 45cm AFF. U.N.O. WITH 20mm RACEWAY TERMINATED TO TELEDATA TERMINAL BOARD.
- ▽ DATA OUTLET(S) @ 45cm AFF. U.N.O. WITH 20mm RACEWAY TERMINATED TO TELEDATA TERMINAL BOARD.

## TELECOMMUNICATIONS (CONTINUED)

- ▼ COMBINATION TELEPHONE/DATA OUTLET(S) @ 45cm AFF. U.N.O. WITH 27mm RACEWAY TERMINATED TO TELEDATA TERMINAL BOARD.
- W▼ WALL MTD. TELEPHONE OUTLET WITH 20mm RACEWAY TO TELEDATA TERMINAL BOARD.
- (x)T INDICATES NUMBER OF TELEPHONE OUTLET(S) AND ASSOCIATED CABLING
- (x)D INDICATES NUMBER OF DATA OUTLET(S) AND ASSOCIATED CABLING
- (x)TF INDICATES NUMBER OF TELEPHONE OUTLETS AND ASSOCIATED CABLING WITH 1 OUTLET AND CABLE DEDICATED FOR FAX

## SINGLE LINE SYMBOLS

- SWITCH
- BREAKER
- FUSE
- TRANSFORMER
- GROUND
- CONTACT (NORMALLY OPEN)
- CONTACT (NORMALLY CLOSED)
- TRANSFER SWITCH
- CURRENT TRANSFORMER
- INDICATES NEW ELECTRICAL EQUIPMENT
- C INDICATES NEW CONTROL WIRING AND CONDUIT
- EQUIPMENT OUTLINE

## MISCELLANEOUS

- BRANCH CIRCUIT WIRING, SURFACE MOUNTED ON WALLS
- BRANCH CIRCUIT WIRING – 6mm²
- BRANCH CIRCUIT WIRING – UNDER FLOOR
- HOME RUN BACK TO PANEL
- CONDUIT TURNED DOWN
- CONDUIT TURNED UP
- LV LOW VOLTAGE WIRING AND CONDUIT
- ~ INDICATES CONTINUATION OF LINE

## FIRE ALARM

- [FACP] FIRE ALARM CONTROL PANEL WITH BATTERY BACKUP
- [F] FIRE ALARM PULL STATION

## FIRE ALARM (CONTINUED)

- [F] FIRE ALARM STROBE – WALL MOUNTED
- [F] FIRE ALARM AUDIBLE/STROBE – WALL MOUNTED
- [F] FIRE ALARM HORN/STROBE – WALL MOUNTED
- (S) SMOKE DETECTOR
- (H) HEAT DETECTOR CEILING MOUNTED
- (D) DUCT DETECTOR – PROVIDED BY EC, INSTALLED BY MC AND CONNECTED BY EC

## DENOTATIONS & ABBREVIATIONS

| | |
|---|---|
| AFF | ABOVE FINISHED FLOOR |
| C | CEILING MOUNTED |
| E | EMERGENCY |
| EC | ELECTRICAL CONTRACTOR |
| EPO | EMERGENCY POWER OFF |
| EXP | EXPLOSION PROOF |
| F | FIRE ALARM |
| FF | FLUSH FLOOR MOUNTED |
| FL | FLUORESCENT |
| FO | FIBER OPTIC |
| FSS | FUSED SAFETY SWITCH |
| GF | GROUND FAULT INTERRUPTER |
| GC | GENERAL CONTRACTOR |
| IG | ISOLATED GROUND |
| K | KEY |
| LV | LOW VOLTAGE |
| M | MOTOR |
| MC | MECHANICAL CONTRACTOR |
| NE | NORMAL/EMERGENCY |
| NFSS | NON–FUSED SAFETY SWITCH |
| PA | PAGING SYSTEM |
| PLC | PLUMBING CONTRACTOR |
| SL | SINGLE LINE |
| T | TELEPHONE |

## DENOTATIONS & ABBREVIATIONS (CONT.)

| | |
|---|---|
| TP | TAMPER PROOF |
| UE | UNDERGROUND ELECTRIC |
| W | WALL MOUNTED |
| WP | WEATHERPROOF WITH GROUND FAULT INTERRUPTION |
| WT | WATER TIGHT |

## GENERAL PROJECT NOTES:

G1. UNLESS OTHERWISE NOTED, PROVIDE ALL EQUIPMENT SHOWN ON THE PLANS. THE ELECTRICAL CONTRACTOR SHALL COORDINATE ALL SYMBOLS SHOWN ON THE PLANS WITH THE SYMBOL LIST. IT SHALL BE THE RESPONSIBILITY OF THE CONTRACTOR TO VERIFY THE INTENT OF ANY SYMBOL THAT IS SHOWN ON THE PLANS AND NOT INDICATED ON THE SYMBOL LIST WITH THE ENGINEER PRIOR TO BID.

G2. THE CONTRACTOR SHALL VERIFY THE LOCATION OF ALL UNDERGROUND UTILITIES WITHIN THE CONSTRUCTION AREA THREE (3) WORKING DAYS NOTICE BEFORE COMMENCING DIGGING. NOTIFY THE LOCAL AUTHORITY HAVING JURISDICTION AND WAIT THE REQUIRED TIME BEFORE COMMENCING TO DIG.

G3. THE CONTRACTOR SHALL COORDINATE CONDUIT RUNS, LIGHTING FIXTURES AND OTHER EQUIPMENT LOCATIONS WITH THE OTHER TRADE CONTRACTORS TO AVOID CONFLICTS.

G4. WHERE VOLTAGES AND FREQUENCIES ON THE DRAWINGS AND IN THE SPECIFICATIONS DIFFER FROM THE LOCAL ONES, ALL WORK SHALL BE PERFORMED USING THE LOCAL VOLTAGES AND FREQUENCIES.

G5. THE MINIMUM WIRE SIZE ON THE PROJECT SHALL BE 4mm². THE MINIMUM CONDUIT SIZE SHALL BE 20mm. THE MINIMUM BREAKER SIZE SHALL BE 20 AMPS.

G6. THE CONTRACTOR SHALL PUT A MAXIMUM OF 6 DUPLEX RECEPTACLES ON A 20A SINGLE POLE CIRCUIT.

G7. WHERE THE 1010 SCOPE REVIEW, 1015 TECHNICAL REVIEW, DRAWINGS, AND SPECIFICATIONS DIFFER FROM AMERICAN CODES OR STANDARDS, THE 1010, 1015, DRAWINGS, AND SPECIFICATIONS SHALL RULE.

G8. ALL CONDUIT AND DEVICES SHALL BE SURFACE MOUNTED UNLESS OTHERWISE INDICATED.

G9. CONTRACTOR SHALL COORDINATE ALL WORK WITH ALL OTHER TRADES TO ENSURE ALL WORK IS COMPLETED IN A PROFESSIONAL, WORKMAN–LIKE MANNER.

US ARMY CORPS OF ENGINEERS
AFGHANISTAN ENGINEER DISTRICT

| Rev: | Description | Date | Appr. |
|---|---|---|---|
| | | | |

| Rev: | Description | Date | Appr. |
|---|---|---|---|
| | | | |

Rev: 0
Date: 2/23/10
Designed by: RAJ
Dwn. by: BJB
Ckd by: JRG
Reviewed by: JRG
Submitted by: BAKER
Design file no.
Drawing code:
File name:
Plot date:
Plot scale:

U.S. ARMY ENGINEER DISTRICT, AFGHANISTAN
CORPS OF ENGINEERS
APO AE 96338

Michael Baker Jr., Inc
A unit of Michael Baker Corporation
Airside Business Park
100 Airside Drive
Moon Township, PA 15108
www.mbakercorp.com

AFGHAN NATIONAL ARMY
REGIONAL MILITARY TRAINING CENTER
STANDARD DESIGN

LATRINE BUILDING
SMALL

# ELECTRICAL SYMBOLS & ABBREVIATIONS

APPROVED:

A/E DESIGNER OF RECORD

SEAL:

COMMONWEALTH OF PENNSYLVANIA
REGISTERED PROFESSIONAL ENGINEER
JOSEPH R. GAUS
PE-074251
1/29/10

Sheet reference number:
E–001

## GENERAL NOTES:

1. REFER TO DRAWING #E-001 FOR THE ELECTRICAL SYMBOLS LIST.
2. EXIT SIGNS SHALL BE WIRED AHEAD OF ANY LOCAL SWITCHING ON CIRCUITS. SEE WIRING DIAGRAM DETAIL 6, ON DRAWING #E-501.
3. REFER TO DRAWING #E-601 FOR THE LIGHTING FIXTURE SCHEDULE.
4. REFER TO DRAWING #E-501 FOR THE POWER RISER.
5. REFER TO DRAWING #E-602 FOR PANEL SCHEDULES.
6. LIGHT FIXTURES INDICATED AS EMERGENCY SHALL BE PROVIDED WITH A BATTERY BACKUP BALLAST. SEE WIRING DIAGRAM DETAIL 5, ON DRAWING #E-501.
7. COORDINATE THE LOCATIONS OF LIGHT FIXTURES WITH THE LOCATION OF DUCTWORK PRIOR TO INSTALLATION.

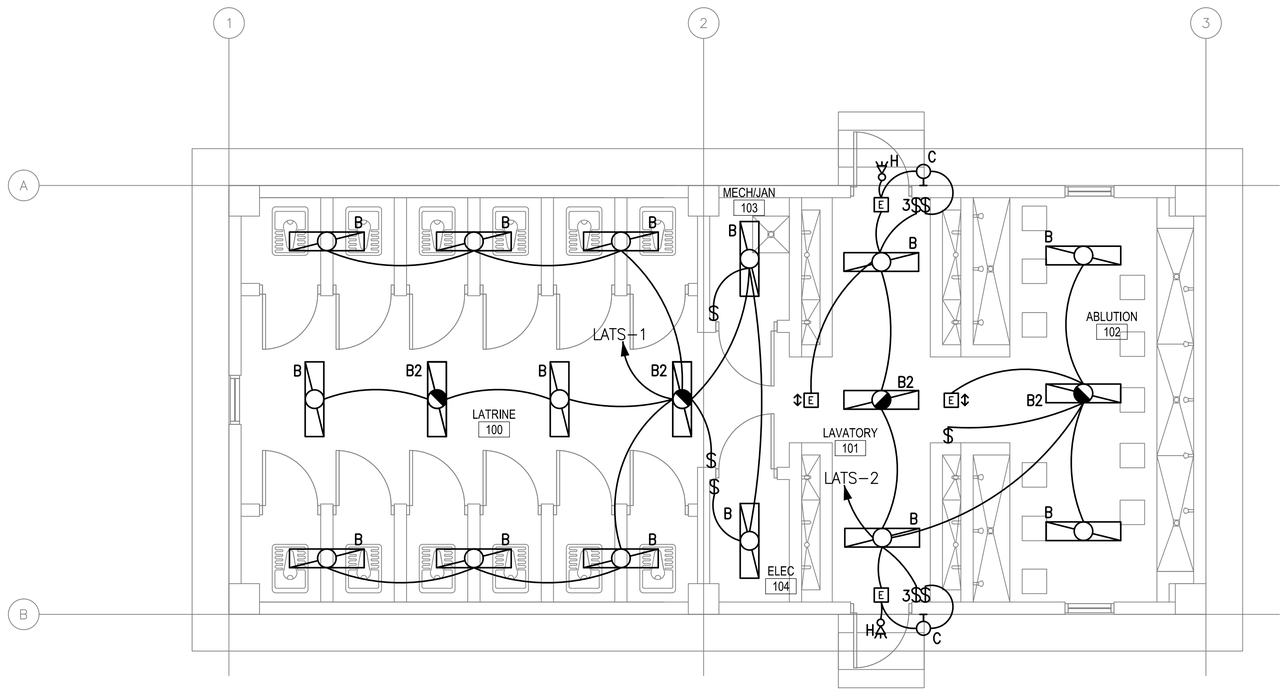


1 / E-101 SMALL LATRINE FLOOR PLAN - LIGHTING

SCALE: 1:50

0 1000 2000

SCALE: 1:50

US ARMY CORPS OF ENGINEERS
AFGHANISTAN ENGINEER DISTRICT

| Mark | Description | Date | Appr. |
|---|---|---|---|
| | | | |

| Mark | Description | Date | Appr. |
|---|---|---|---|
| | | | |

Rev: 0
Date: 2/23/10
Design file no.
Drawing code:
File name:
Plot date:
Plot scale:

Designed by: RAJ
Dwn by: BJB
Ckd by: JRG
Reviewed by: JRG
Submitted by: BAKER

U.S. ARMY ENGINEER DISTRICT, AFGHANISTAN
CORPS OF ENGINEERS
APO AE 96338

*Michael Baker Jr., Inc*
*A unit of Michael Baker Corporation*
Airside Business Park
100 Airside Drive
Moon Township, PA 15108
www.mbakercorp.com

AFGHAN NATIONAL ARMY
REGIONAL MILITARY TRAINING CENTER
STANDARD DESIGN

LATRINE BUILDING
SMALL

ELECTRICAL LIGHTING PLAN

APPROVED:

A/E DESIGNER OF RECORD

SEAL:

COMMONWEALTH OF PENNSYLVANIA
REGISTERED PROFESSIONAL
JOSEPH R. GAUS
ENGINEER
PE-074251

Sheet reference number:
E-101

## GENERAL NOTES:

1. REFER TO DRAWING #E-001 FOR THE ELECTRICAL SYMBOLS LIST.
2. REFER TO DRAWING #E-501 FOR THE POWER RISER.
3. REFER TO DRAWING #E-602 FOR PANEL SCHEDULES.
4. COORDINATE EXACT MOUNTING LOCATION OF DISCONNECTING MEANS FOR MECHANICAL AND PLUMBING EQUIPMENT IN THE FIELD.
5. FUSIBLE SAFETY SWITCHES THAT ARE NOT OTHERWISE IDENTIFIED SHALL BE 380V, 1P, 30A FUSED SAFETY SWITCHES WITH 20A FUSES.

## NUMBERED NOTES:

1. PANEL LATS.
2. NEMA 3R, 380V, 3P, 30A FUSED DISCONNECT FUSED AT 30A. SEE PLUMBING DRAWINGS FOR EXACT LOCATION OF WATER HEATER.
3. SEE DRAWING #E-602 FOR WIRE AND CONDUIT SIZE.
4. PROVIDE POWER CONNECTION TO EXHAUST FANS. SEE DRAWINGS #M-101 AND #E-602 FOR MORE INFORMATION.
5. NEMA 3R, 220V, 1P, 30A FUSED DISCONNECT FUSED AT 30A. SEE MECHANICAL DRAWINGS FOR EXACT LOCATION OF MUA-2.
6. PROVIDE POWER CONNECTION TO MAKE UP AIR UNIT #1. SEE DRAWINGS #M-101 AND #E-602 FOR MORE INFORMATION.
7. PROVIDE POWER CONNECTION TO MAKE UP AIR UNIT #2. SEE DRAWINGS #M-101 AND #E-602 FOR MORE INFORMATION.
8. THE DISCONNECTING MEANS FOR THIS PIECE OF EQUIPMENT SHALL BE IN A NEMA 3R ENCLOSURE.
9. NEMA 3R, 220V, 1P, 60A FUSED DISCONNECT FUSED AT 60A. SEE MECHANICAL DRAWINGS FOR EXACT LOCATION OF MUA-1.

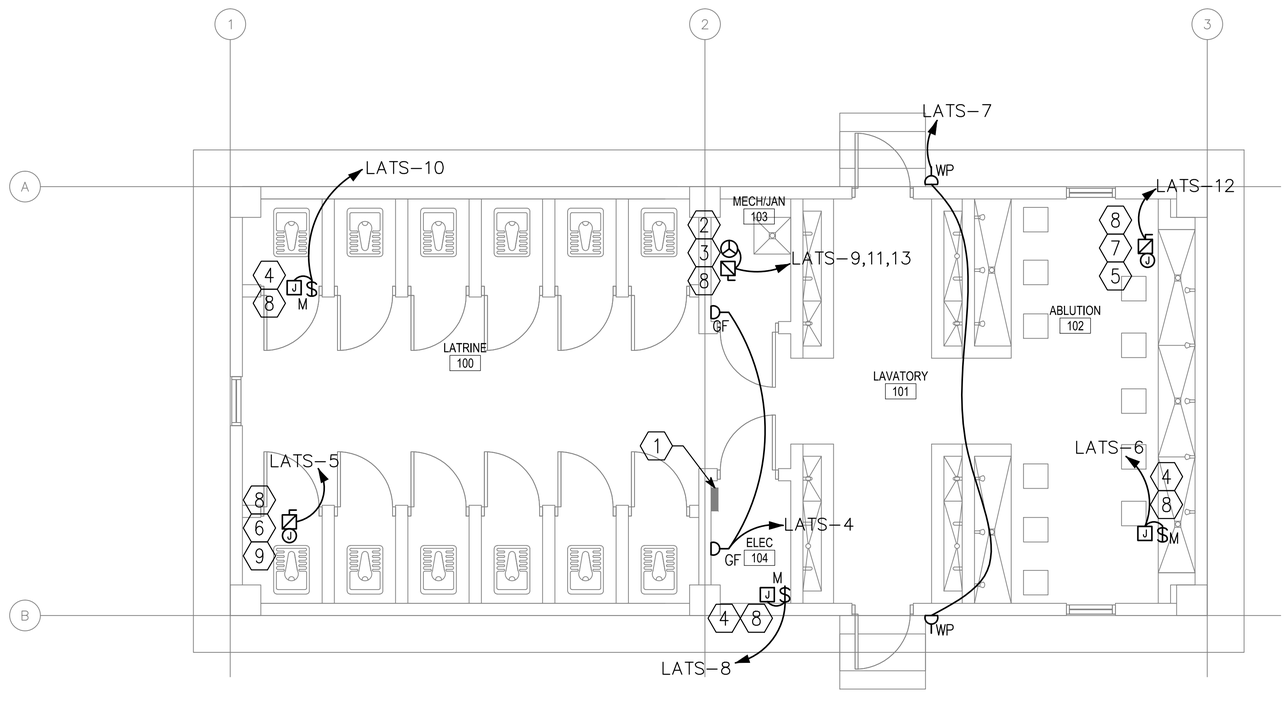


1 / E-102 SMALL LATRINE FLOOR PLAN - POWER & SYSTEMS

SCALE: 1:50

0 1000 2000

SCALE: 1:50

APPROVED:

A/E DESIGNER OF RECORD

SEAL:

COMMONWEALTH OF PENNSYLVANIA
REGISTERED PROFESSIONAL
JOSEPH R. GAUS
1/29/10
ENGINEER
PE-074251

US ARMY CORPS OF ENGINEERS
AFGHANISTAN ENGINEER DISTRICT

| Mark | Description | Date | Appr. |
|---|---|---|---|
| | | | |

| Mark | Description | Date | Appr. |
|---|---|---|---|
| | | | |

U.S. ARMY ENGINEER DISTRICT, AFGHANISTAN
CORPS OF ENGINEERS
APO AE 96338

*Michael Baker Jr., Inc*
*A unit of Michael Baker Corporation*
Airside Business Park
100 Airside Drive
Moon Township, PA 15108
www.mbakercorp.com

Designed by: RAJ
Dwn by: BJB
Ckd by: JRG
Reviewed by: JRG
Submitted by: BAKER
Date: 2/23/10
Design file no.
Drawing code:
File name:
Plot date:
Plot scale:
Rev: 0

AFGHAN NATIONAL ARMY
REGIONAL MILITARY TRAINING CENTER
STANDARD DESIGN

LATRINE BUILDING
SMALL
ELECTRICAL POWER AND SYSTEMS PLAN

Sheet reference number:
E-102

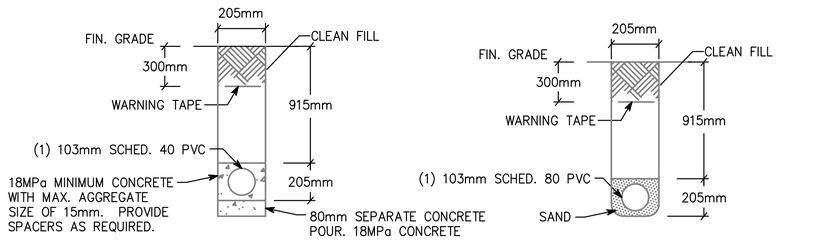


NOTE: PVC CONDUIT SHALL BE DIRECT BURIED SCHEDULE 80 FOR NO TRAFFIC AREAS AND CONCRETE-ENCASED SCHEDULE 40 FOR UNDER ROADWAYS OR TRAFFIC AREAS.

1 / E-501 **TYPICAL DUCT BANK DETAILS FOR CONDUIT IN SAND OR CONCRETE**

SCALE: N.T.S.

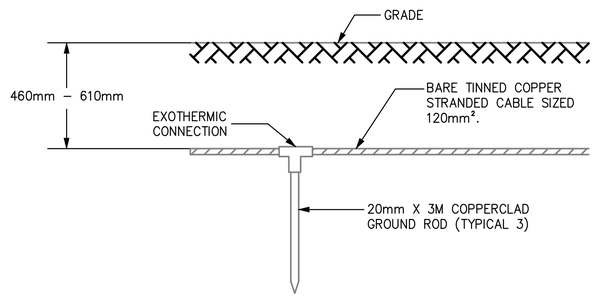


3 / E-501 **GROUND TRIPOD SYSTEM DETAIL - ELEVATION**

SCALE: N.T.S.

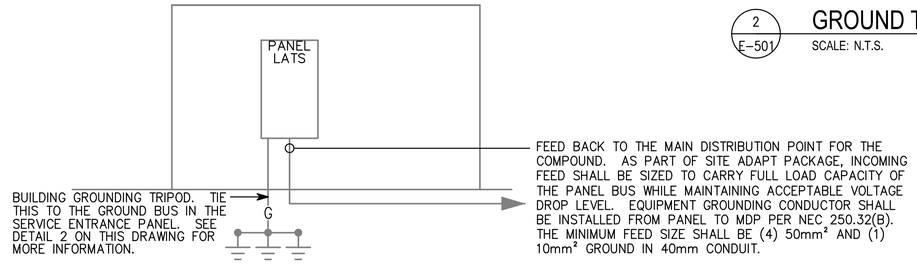


4 / E-501 **LATS RISER DIAGRAM**

SCALE: N.T.S.

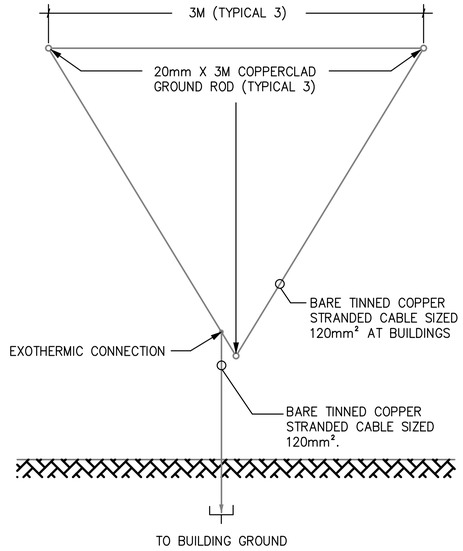


2 / E-501 **GROUND TRIPOD SYSTEM DETAIL - PLAN**

SCALE: N.T.S.

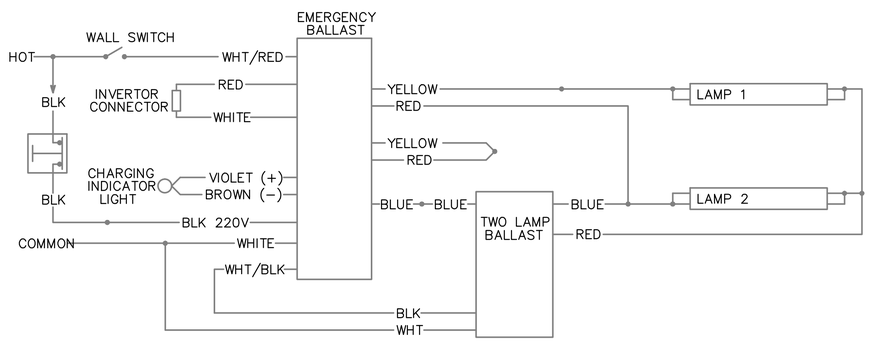


6 / E-501 **EMERGENCY FIXTURE WIRING DIAGRAM**

SCALE: N.T.S.

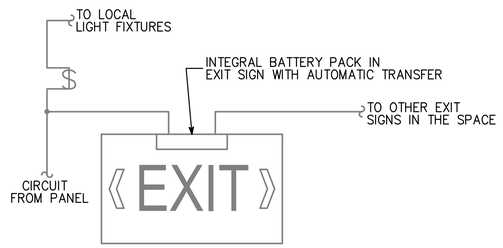


6 / E-501 **EXIT SIGN WIRING DIAGRAM**

SCALE: N.T.S.

US ARMY CORPS OF ENGINEERS
AFGHANISTAN ENGINEER DISTRICT

| Mark | Description | Date | Appr. |
|---|---|---|---|
| | | | |

| Mark | Description | Date | Appr. |
|---|---|---|---|
| | | | |

Rev: 0
Date: 2/23/10
Design file no.
Drawing code:
File name:
Plot date:
Plot scale:

Designed by: RAJ
Dwn by: BJB
Ckd by: JRG
Reviewed by: JRG
Submitted by: BAKER

U.S. ARMY ENGINEER DISTRICT, AFGHANISTAN
CORPS OF ENGINEERS
APO AE 96338

*Michael Baker Jr., Inc*
*A unit of Michael Baker Corporation*
Airside Business Park
100 Airside Drive
Moon Township, PA 15108
www.mbakercorp.com

AFGHAN NATIONAL ARMY
REGIONAL MILITARY TRAINING CENTER
STANDARD DESIGN

LATRINE BUILDING
SMALL
ELECTRICAL DETAILS

APPROVED:

A/E DESIGNER OF RECORD

SEAL:

COMMONWEALTH OF PENNSYLVANIA
REGISTERED PROFESSIONAL
JOSEPH R. GAUS
ENGINEER
PE-074251

Sheet reference number:
E-501

| Ⓐ LARGER OF THE TWO SIZES GIVEN IN THE TABLES BELOW | |
|---|---|
| GROUNDING ELECTRODE CONDUCTOR (BASED ON AIC RATING) | |
| AIC RATING OF SERVICE EQUIPMENT | NECESSARY GROUNDING ELECTRODE CONDUCTOR SIZE |
| 10K | (1) 35mm² |
| 14K | (1) 50mm² |
| 18K | (1) 70mm² |
| 22K | (1) 70mm² |
| 25K | (1) 70mm² |
| 30K | (1) 95mm² |
| 35K | (1) 120mm² |
| 42K | (1) 150mm² |
| 65K | (1) 185mm² |
| 100K | (1) 300mm² |
| 125K | (2) 185mm² |
| 200K | (2) 300mm² |

| GROUNDING ELECTRODE CONDUCTOR (BASED ON NEC TABLE 250.66) | |
|---|---|
| SIZE OF LARGEST UNGROUNDED SERVICE CONDUCTOR OR EQUIVALENT AREA FOR PARALLEL CONDUCTORS | NECESSARY GROUNDING ELECTRODE CONDUCTOR SIZE |
| 350 kcmil OR SMALLER | 35mm² |
| OVER 350 kcmil TO 600 kcmil | 70mm² |
| OVER 600 kcmil TO 1100 kcmil | 70mm² |
| OVER 1100 kcmil | 95mm² |
| NOTE: ALL SIZES ARE BASED ON COPPER CONDUCTORS. | |

| Ⓑ EQUIPMENT GROUNDING CONDUCTOR | |
|---|---|
| RATING OR SETTING OF AUTOMATIC OVERCURRENT DEVICE IN CIRCUIT AHEAD OF EQUIPMENT, CONDUIT, ETC, NOT EXCEEDING (AMPERES) | NECESSARY EQUIPMENT GROUNDING CONDUCTOR SIZE |
| 15 | 2.5mm² |
| 20 | 4.0mm² |
| 30 | 6.0mm² |
| 40 | 6.0mm² |
| 60 | 6.0mm² |
| 100 | 10mm² |
| 200 | 16mm² |
| 300 | 25mm² |
| 400 | 25mm² |
| 500 | 35mm² |
| 600 | 50mm² |
| 800 | 70mm² |
| 1000 | 70mm² |
| 1200 | 95mm² |
| 1600 | 120mm² |
| 2000 | 150mm² |
| 2500 | 185mm² |
| 3000 | 240mm² |
| 4000 | 300mm² |
| 5000 | 400mm² |
| 6000 | 400mm² |
| NOTE: ALL SIZES ARE BASED ON COPPER CONDUCTORS. | |

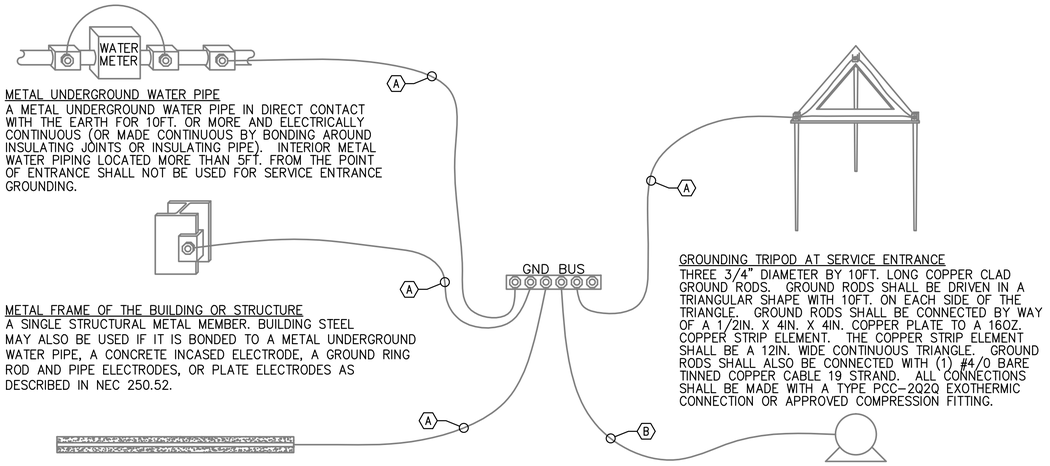


METAL UNDERGROUND WATER PIPE
A METAL UNDERGROUND WATER PIPE IN DIRECT CONTACT WITH THE EARTH FOR 10FT. OR MORE AND ELECTRICALLY CONTINUOUS (OR MADE CONTINUOUS BY BONDING AROUND INSULATING JOINTS OR INSULATING PIPE). INTERIOR METAL WATER PIPING LOCATED MORE THAN 5FT. FROM THE POINT OF ENTRANCE SHALL NOT BE USED FOR SERVICE ENTRANCE GROUNDING.

METAL FRAME OF THE BUILDING OR STRUCTURE
A SINGLE STRUCTURAL METAL MEMBER. BUILDING STEEL MAY ALSO BE USED IF IT IS BONDED TO A METAL UNDERGROUND WATER PIPE, A CONCRETE INCASED ELECTRODE, A GROUND RING ROD AND PIPE ELECTRODES, OR PLATE ELECTRODES AS DESCRIBED IN NEC 250.52.

CONCRETE ENCASED ELECTRODE
AN ELECTRODE ENCASED BY AT LEAST 2IN. OF CONCRETE , LOCATED WITHIN AND NEAR THE BOTTOM OF A CONCRETE FOUNDATION OR FOOTING THAT IS IN DIRECT CONTACT WITH THE EARTH, CONSISTING OF AT LEAST 20FT. OF ONE OR MORE BARE OR ZINC GALVANIZED OR OTHER ELECTRICALLY CONDUCTIVE COATED STEEL REINFORCING BARS OR RODS OF NOT LESS THAN 1/2" DIAMETER OR BARE COPPER CONDUCTOR NOT SMALLER THAN 4AWG.

GROUNDING TRIPOD AT SERVICE ENTRANCE
THREE 3/4" DIAMETER BY 10FT. LONG COPPER CLAD GROUND RODS. GROUND RODS SHALL BE DRIVEN IN A TRIANGULAR SHAPE WITH 10FT. ON EACH SIDE OF THE TRIANGLE. GROUND RODS SHALL BE CONNECTED BY WAY OF A 1/2IN. X 4IN. X 4IN. COPPER PLATE TO A 16OZ. COPPER STRIP ELEMENT. THE COPPER STRIP ELEMENT SHALL BE A 12IN. WIDE CONTINUOUS TRIANGLE. GROUND RODS SHALL ALSO BE CONNECTED WITH (1) #4/0 BARE TINNED COPPER CABLE 19 STRAND. ALL CONNECTIONS SHALL BE MADE WITH A TYPE PCC-2Q2Q EXOTHERMIC CONNECTION OR APPROVED COMPRESSION FITTING.

LOAD OR DOWNSTREAM PANEL
ALL LOADS IN THE BUILDING SHALL HAVE AN EQUIPMENT GROUNDING CONDUCTOR PULLED TO THEM.

1 / E-502 SERVICE ENTRANCE GROUNDING DETAIL

SCALE: N.T.S.

APPROVED:

A/E DESIGNER OF RECORD

SEAL:

COMMONWEALTH OF PENNSYLVANIA
REGISTERED PROFESSIONAL ENGINEER
JOSEPH R GAUS
PE-074251
12/29/10

US ARMY CORPS OF ENGINEERS
AFGHANISTAN ENGINEER DISTRICT

| Mark | Description | Date | Appr. |
|---|---|---|---|
| | | | |

| Mark | Description | Date | Appr. |
|---|---|---|---|
| | | | |

Rev: 0
Date: 2/23/10
Design file no.
Drawing code:
File name:
Plot date:
Plot scale:

Designed by: RAJ
Dwn by: BJB
Ckd by: JRG
Reviewed by: JRG
Submitted by: BAKER

U.S. ARMY ENGINEER DISTRICT, AFGHANISTAN
CORPS OF ENGINEERS
APO AE 96338


*Michael Baker Jr., Inc.*
*A unit of Michael Baker Corporation*
Airside Business Park
100 Airside Drive
Moon Township, PA 15108
www.mbakercorp.com


AFGHAN NATIONAL ARMY
REGIONAL MILITARY TRAINING CENTER
STANDARD DESIGN

LATRINE BUILDING
SMALL

ELECTRICAL DETAILS

Sheet reference number:
E-502

FIXTURE MARK 'B' & 'B2'

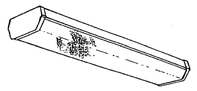

FIXTURE MARK 'C'

FIXTURE MARK 'H'

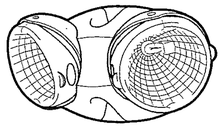

FIXTURE MARK [E]

# LIGHTING FIXTURE SCHEDULE

| FIXTURE MARK | STYLE NUMBER AND TYPE | NUMBER AND TYPE OF LAMPS | VOLTAGE | MOUNTING | NOTES |
|---|---|---|---|---|---|
| B | WET LOCATION WRAP AROUND SURFACE MOUNTED FLUORESCENT FIXTURE WITH PRISMATIC ACRYLIC LENS AND ELECTRONIC BALLAST | (2) 32W 3500K | 220V – 1ø 50HZ | SURFACE MOUNTED | FURNISHED WITH ELECTRONIC BALLAST, VIRGIN ACRYLIC WRAP AROUND LENS. |
| B2 | SAME AS FIXTURE 'B' WITH EMERGENCY BALLAST | (2) 32W 3500K | 220V – 1ø 50HZ | SURFACE MOUNTED | FURNISHED WITH ELECTRONIC BALLAST, VIRGIN ACRYLIC WRAP AROUND LENS. EMERGENCY BALLAST WITH SELF TEST SWITCH. |
| C | INCANDESCENT ONE PIECE W/ APPROVED LENS STABILIZED HIGH IMPACT POLY CARBONATE. | (1) A19 – 100W INCANDESCENT | 220V – 1ø 50HZ | WALL MOUNTED ABOVE EXTERIOR DOORS | |
| H | REMOTE HEAD EXTERIOR LIGHT HEAD POWERED FROM EXIT SIGN BATTERY– 12V DOUBLE HEAD CORROSION RESISTANT WITH UL34 WEATHERPROOF CONSTRUCTION | (2) 12W/12V HALOGEN LAMP | 12V – 1ø 50HZ | EXTERIOR WALL MOUNTED AT TOP OF DOOR HEIGHT | |
| [E] | UNIVERSAL MOUNT ENGINEER GRADE THERMOPLASTIC HOUSING EXIT SIGN WITH LED LAMPS, RED LETTERS 155mm IN HEIGHT WITH ARROWS AS INDICATED, WITH 12V CADMIUM BATTERY WITH REMOTE HEAD CAPABILITY | LED LAMPS | 220V – 1ø 50HZ | UNIVERSAL MOUNTING | |
| | | | | | |

APPROVED:

A/E DESIGNER OF RECORD

SEAL:

COMMONWEALTH OF PENNSYLVANIA
REGISTERED PROFESSIONAL
JOSEPH R GAUS
ENGINEER
PE-074251
12/29/10

US ARMY CORPS OF ENGINEERS
AFGHANISTAN ENGINEER DISTRICT

| Mark | Description | Date | Appr. |
|---|---|---|---|
| | | | |

| Mark | Description | Date | Appr. |
|---|---|---|---|
| | | | |

Rev: 0
Date: 2/23/10
Design file no.
Drawing code:
File name:
Plot date:
Plot scale:

Designed by: RAJ
Dwn by: BJB
Ckd by: JRG
Reviewed by: JRG
Submitted by: BAKER

U.S. ARMY ENGINEER DISTRICT, AFGHANISTAN
CORPS OF ENGINEERS
APO AE 96338

*Michael Baker Jr., Inc.*
*A unit of Michael Baker Corporation*
Airside Business Park
100 Airside Drive
Moon Township, PA 15108
www.mbakercorp.com

AFGHAN NATIONAL ARMY
REGIONAL MILITARY TRAINING CENTER
STANDARD DESIGN

LATRINE BUILDING
SMALL

ELECTRICAL LIGHTING FIXTURE SCHEDULE

Sheet reference number:
E–601
. .

PANELBOARD LATS SURFACE MOUNTED

_____ AMP. MAIN LUGS (OR) 100 AMP. MAIN BREAKER W/ 100 AMP. TRIP

CIRCUIT BREAKER TYPE 380/220 VOLTS 3 PHASE 4 WIRE 50 HZ 100 AMP. BUS

| CKT. NO. | TRIP AMPS | NO. POLES | WIRE MM ² | GND MM² | CONDUIT MM | LOAD SERVED | LOAD-KVA A0 | LOAD-KVA B0 | LOAD-KVA C0 | LOAD-KVA A0 | LOAD-KVA B0 | LOAD-KVA C0 | LOAD SERVED | CONDUIT MM | GND MM² | WIRE MM² | NO. POLES | TRIP AMPS | CKT. NO. |
|---|---|---|---|---|---|---|---|---|---|---|---|---|---|---|---|---|---|---|---|
| 1 | 20 | 1 | 4.0 | 4.0 | 20 | LIGHTING – RM 100, 103, 104 | 0.9 | | | 0.5 | | | LIGHTING – RM 101, 102 | 20 | 4.0 | 4.0 | 1 | 20 | 2 |
| 3 | 20 | 1 | | | | SPARE | | | | | 0.4 | | RECEPTACLES – RM 103, 104 | 20 | 4.0 | 4.0 | 1 | 20 | 4 |
| 5 | 60 | 1 | 25.0 | 6.0 | 25 | MAKE UP AIR #1 – RM 100 | | | 10.0 | | | 0.5 | EXHAUST FAN #1 – RM 102 | 20 | 4.0 | 4.0 | 1 | 20 | 6 |
| 7 | 20 | 1 | 4.0 | 4.0 | 20 | EXTERIOR RECEPT | 0.4 | | | 0.5 | | | EXHAUST FAN #3 – RM 101 | 20 | 4.0 | 4.0 | 1 | 20 | 8 |
| 9 | 30 | 3 | 6.0 | 6.0 | 20 | WATER HEATER – RM 103 | | 3.0 | | | 0.5 | | EXHAUST FAN #2 – RM 100 | 20 | 4.0 | 4.0 | 1 | 20 | 10 |
| 11 | | | | | | | | | 3.0 | | | 5.0 | MAKE UP AIR #2 – RM 102 | 20 | 6.0 | 6.0 | 1 | 30 | 12 |
| 13 | | | | | | | 3.0 | | | | | | SPARE | | | | 1 | 20 | 14 |
| 15 | 20 | 1 | | | | SPARE | | | | | | | SPARE | | | | 1 | 20 | 16 |
| 17 | 20 | 1 | | | | SPARE | | | | | | | SPARE | | | | 1 | 20 | 18 |
| 19 | 20 | 1 | | | | SPARE | | | | | | | SPARE | | | | 1 | 20 | 20 |
| 21 | 20 | 1 | | | | SPARE | | | | | | | SPARE | | | | 1 | 20 | 22 |
| 23 | 20 | 1 | | | | SPARE | | | | | | | SPARE | | | | 1 | 20 | 24 |
| 25 | 20 | 1 | | | | SPARE | | | | | | | SPARE | | | | 1 | 20 | 26 |
| 27 | 20 | 1 | | | | SPARE | | | | | | | SPARE | | | | 1 | 20 | 28 |
| 29 | 20 | 1 | | | | SPARE | | | | | | | SPARE | | | | 1 | 20 | 30 |
| | | | | | | | 4.3 | 3.0 | 13.0 | 1.0 | 0.9 | 5.5 | | | | | | | |

TOTAL CONN. LOAD PER PHASE (KVA): AO 5.3 BO 3.9 CO 18.5

TOTAL CONN. LOAD 27.7 KVA. 70 % DEMAND = ESTIMATED DEMAND LOAD 19.39

* MAIN BREAKER SHALL BE 3P EARTH GROUND TYPE

APPROVED:

A/E DESIGNER OF RECORD

SEAL:

COMMONWEALTH OF PENNSYLVANIA
REGISTERED PROFESSIONAL ENGINEER
JOSEPH R GAUS
PE-074251
12/29/10

US ARMY CORPS OF ENGINEERS
AFGHANISTAN ENGINEER DISTRICT

| Mark | Description | Date | Appr. |
|---|---|---|---|
| | | | |

| Mark | Description | Date | Appr. |
|---|---|---|---|
| | | | |

Rev: 0
Date: 2/23/10
Design file no.
Drawing code:
File name:
Plot date:
Plot scale:

Designed by: RAJ
Dwn by: BJB
Ckd by: JRG
Reviewed by: JRG
Submitted by: BAKER

U.S. ARMY ENGINEER DISTRICT, AFGHANISTAN
CORPS OF ENGINEERS
APO AE 96338

*Michael Baker Jr., Inc.*
*A unit of Michael Baker Corporation*
Airside Business Park
100 Airside Drive
Moon Township, PA 15108
www.mbakercorp.com

AFGHAN NATIONAL ARMY
REGIONAL MILITARY TRAINING CENTER
STANDARD DESIGN

LATRINE BUILDING
SMALL

ELECTRICAL PANEL SCHEDULES

Sheet reference number:
E-602