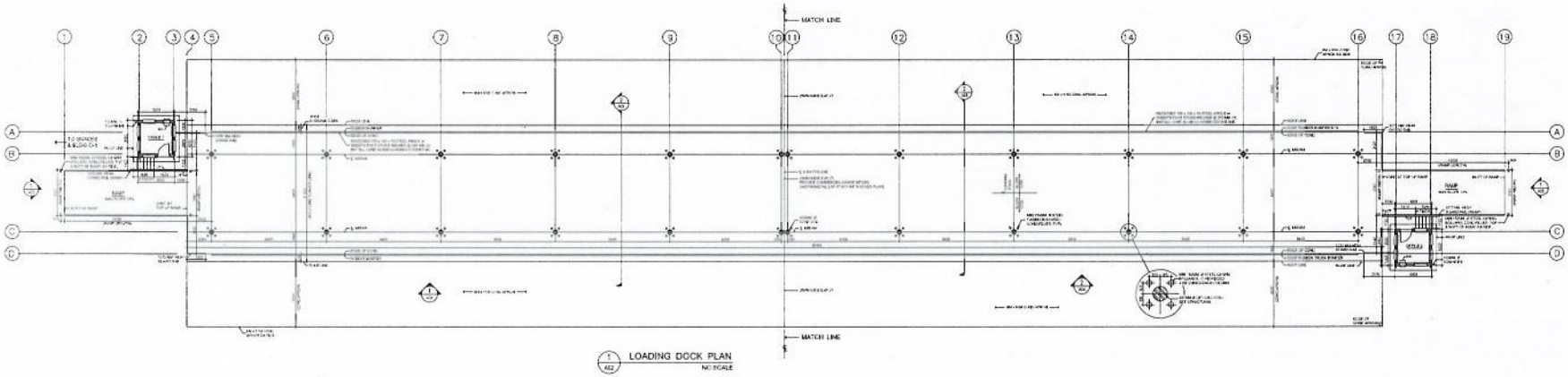

1 / A02 LOADING DOCK PLAN
NO SCALE

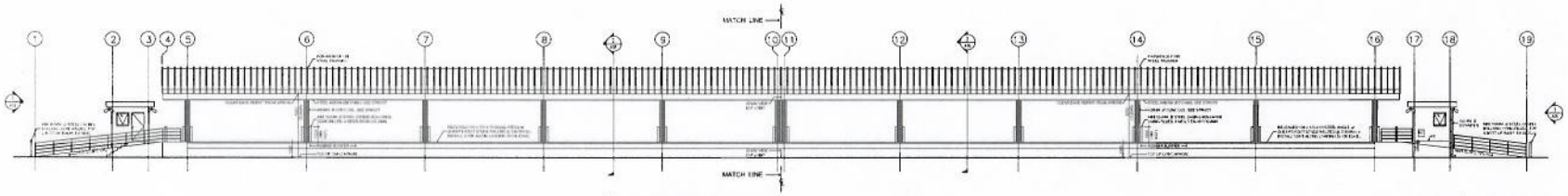

2 / A02 LOADING DOCK ELEVATION
NO SCALE

AFGHAN NATIONAL SECURITY FORCE
Comprehensive Plan for Facilities Development

WEISH BORDER FACILITY
PORT OF ENTRY

TRANSLOADING DOCK
OVERALL PLAN & ELEVATION

DESIGNED P.T.HOPE
DRAWN P.T.HOPE
CHECKED P.T.HOPE
IN CHARGE DAVID WHEELER
DATE 27 JULY 2010

REVISION	DATE	BY	SUB	APP	DESCRIPTION

SCALE AS SHOWN

PROJECT NO. -

A02

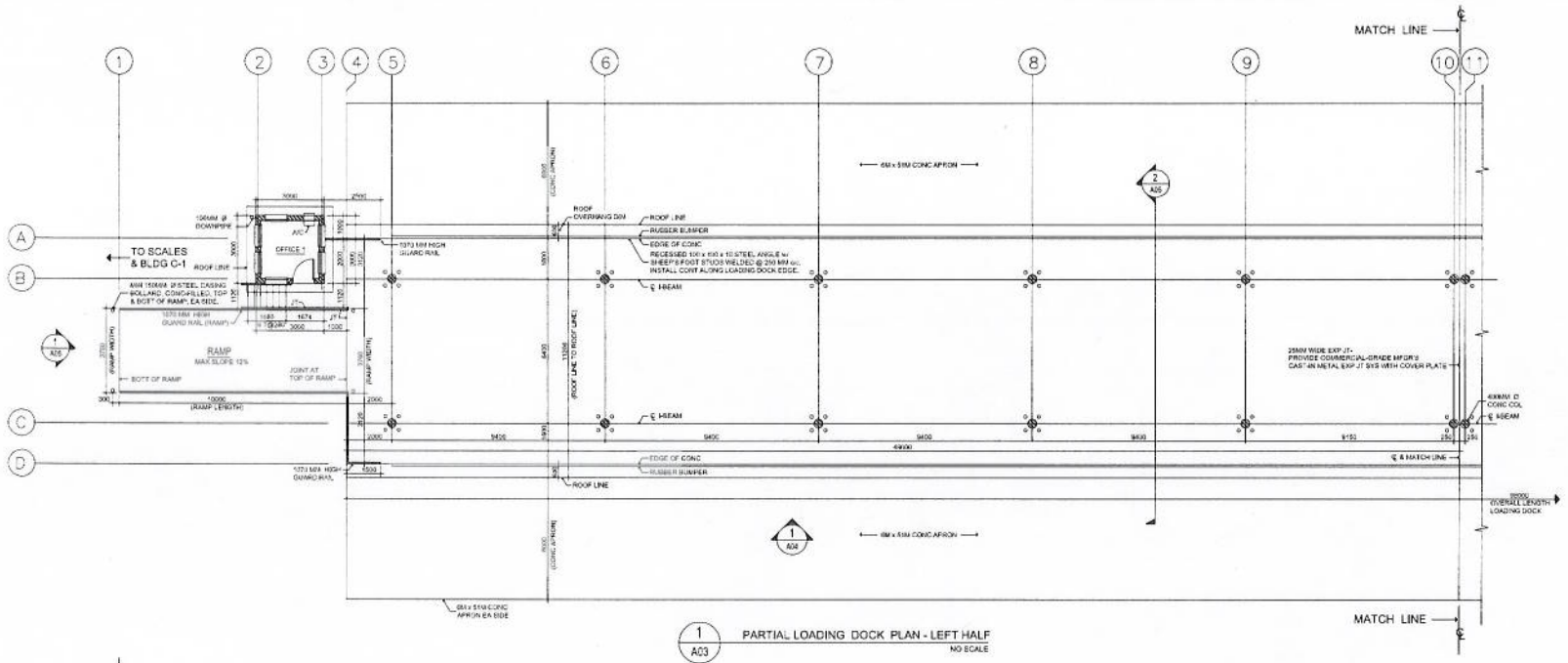

1 A03 PARTIAL LOADING DOCK PLAN - LEFT HALF
NO SCALE

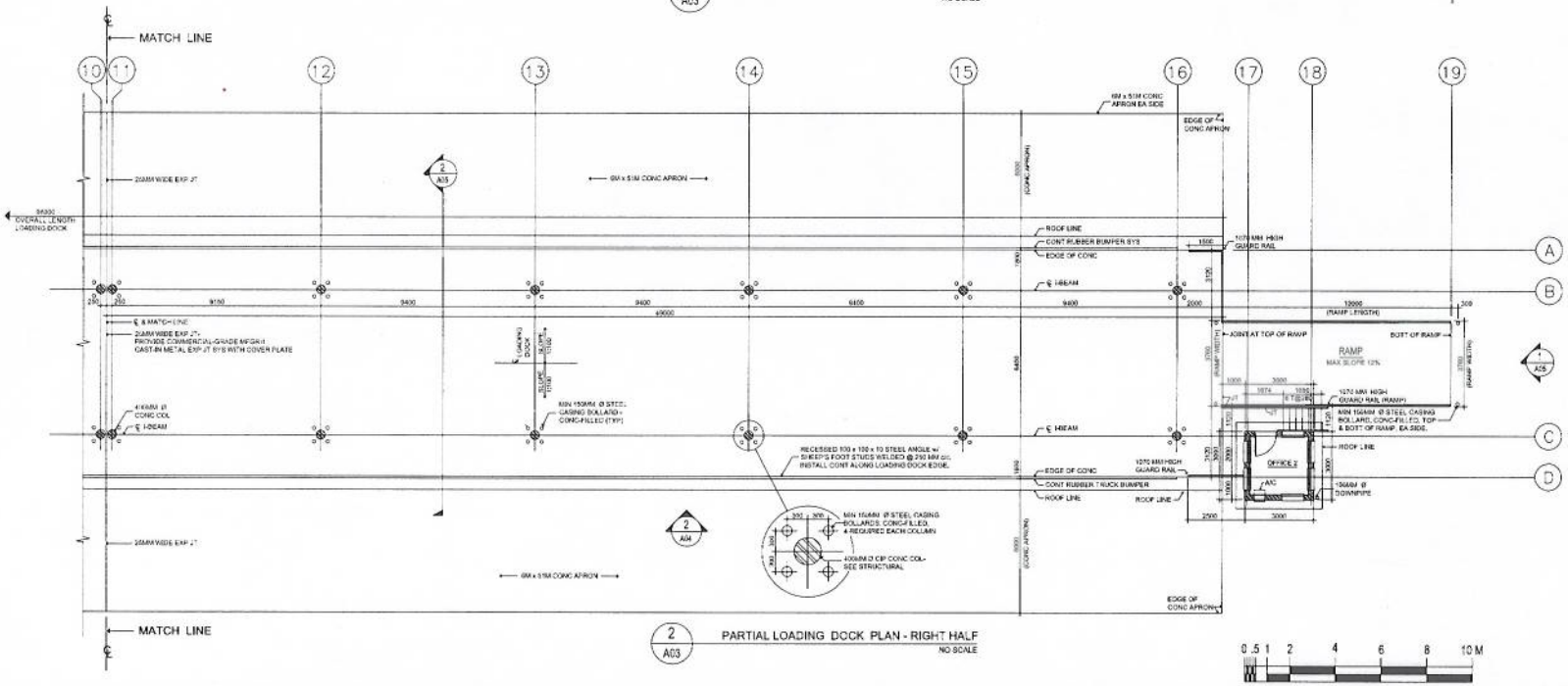

2 A03 PARTIAL LOADING DOCK PLAN - RIGHT HALF
NO SCALE

AFGHAN NATIONAL SECURITY FORCE
Comprehensive Plan for Facilities Development

WEISH BORDER FACILITY
PORT OF ENTRY

TRANSLOADING DOCK
ENLARGED PLAN

DESIGNED PT.HOPE
DRAWN PT.HOPE
CHECKED PT.HOPE
IN CHARGE DAVID WHEELER
DATE 27 JULY 2010

REV | DATE | BY | SUB | APP | DESCRIPTION

SCALE AS SHOWN

PROJECT NO. –

A03

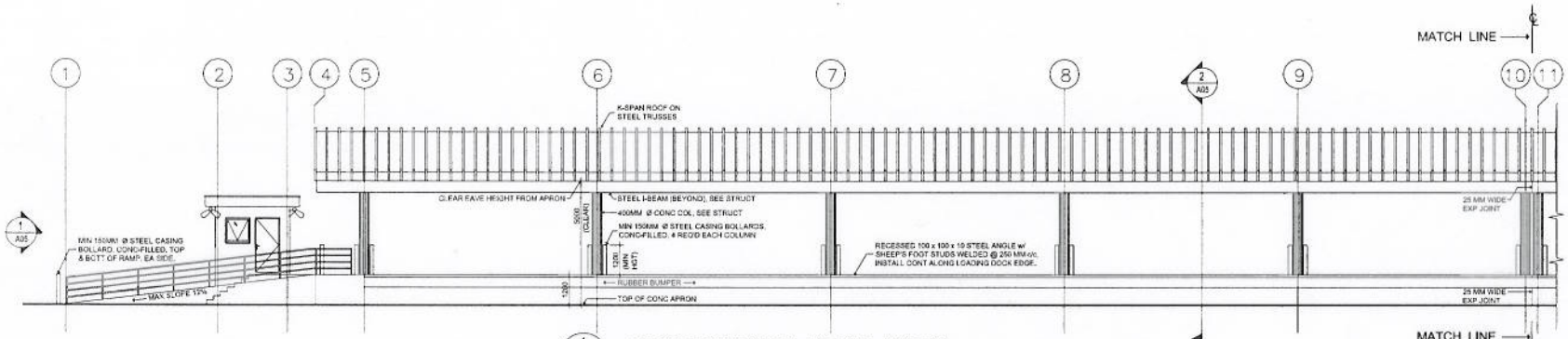

1 / A04 LOADING DOCK ELEVATION - SIDE VIEW - LEFT HALF

NO SCALE

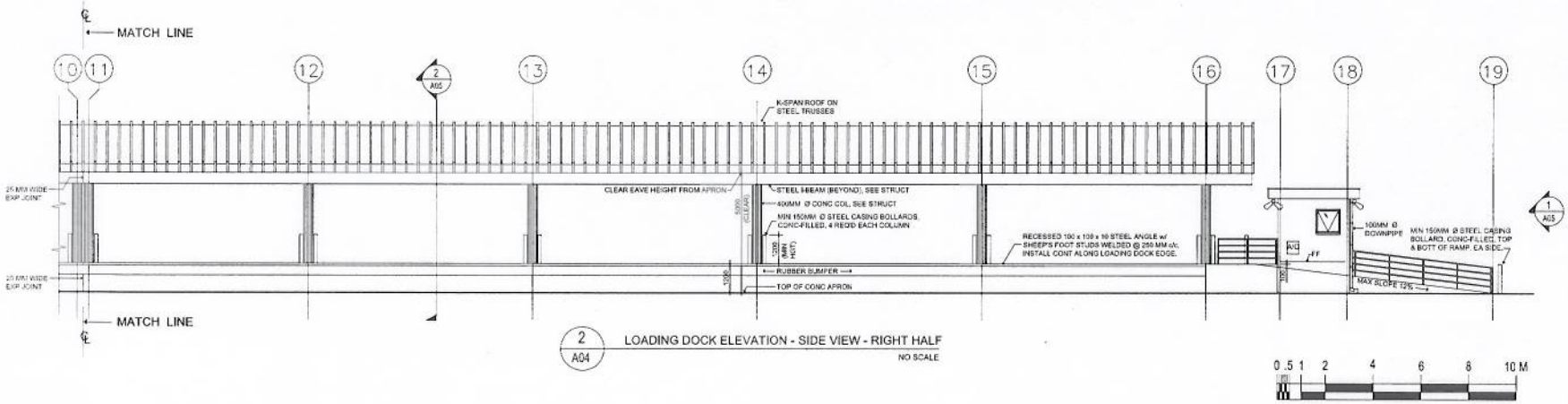

2 / A04 LOADING DOCK ELEVATION - SIDE VIEW - RIGHT HALF

NO SCALE

AFGHAN NATIONAL SECURITY FORCE
Comprehensive Plan for Facilities Development

WEISH BORDER FACILITY
PORT OF ENTRY

TRANSLOADING DOCK
ENLARGED ELEVATION

DESIGNED PT.HOPE
DRAWN PT.HOPE
CHECKED PT.HOPE
IN CHARGE DAVID WHEELER
DATE 27 JULY 2010

REV DATE BY SUB APP DESCRIPTION

SCALE AS SHOWN

PROJECT NO. -

A04

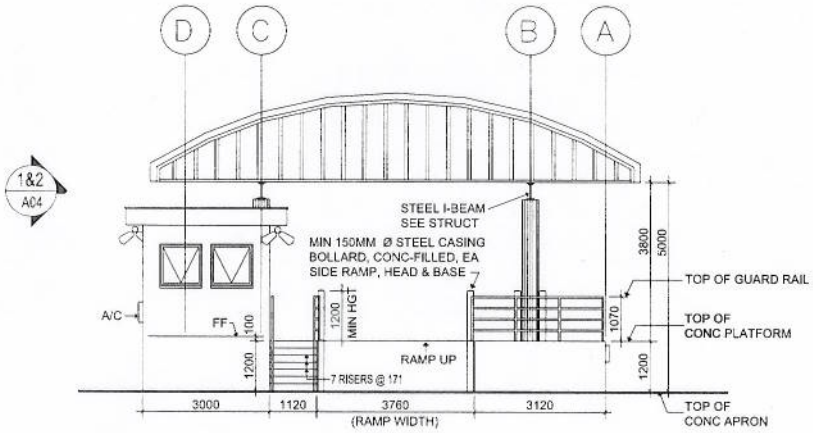

1 A05 LOADING DOCK ELEVATION - TYP END VIEW

NO SCALE

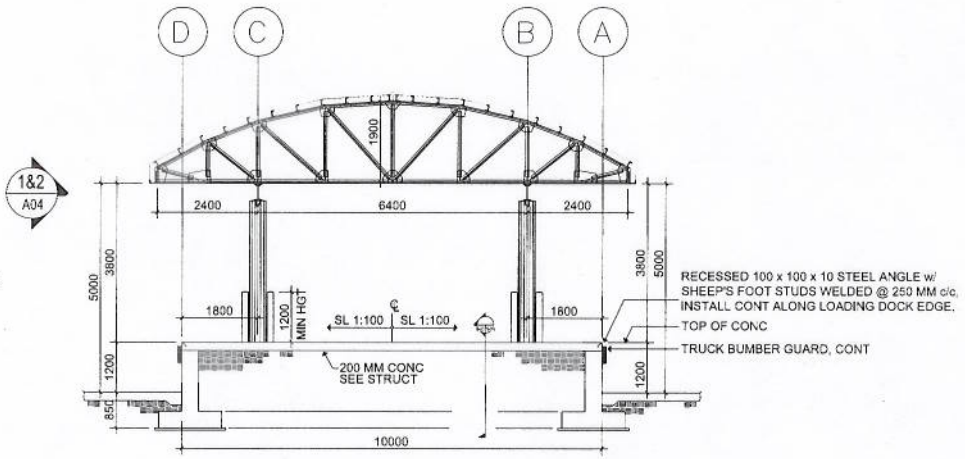

2 A05 LOADING DOCK TRANSVERSE SECTION

NO SCALE

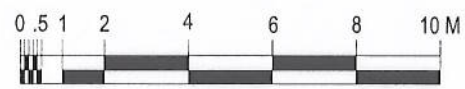

AFGHAN NATIONAL SECURITY FORCE
Comprehensive Plan for Facilities Development

WEISH BORDER FACILITY
PORT OF ENTRY

TRANSLOADING DOCK
END ELEVATION & SECTION

DESIGNED PT.HOPE
DRAWN PT.HOPE
CHECKED PT.HOPE
IN CHARGE DAVID WHEELER
DATE 27 JULY 2010

REV | DATE | BY | SUB | APP | DESCRIPTION

SCALE AS SHOWN

PROJECT NO. -

A05

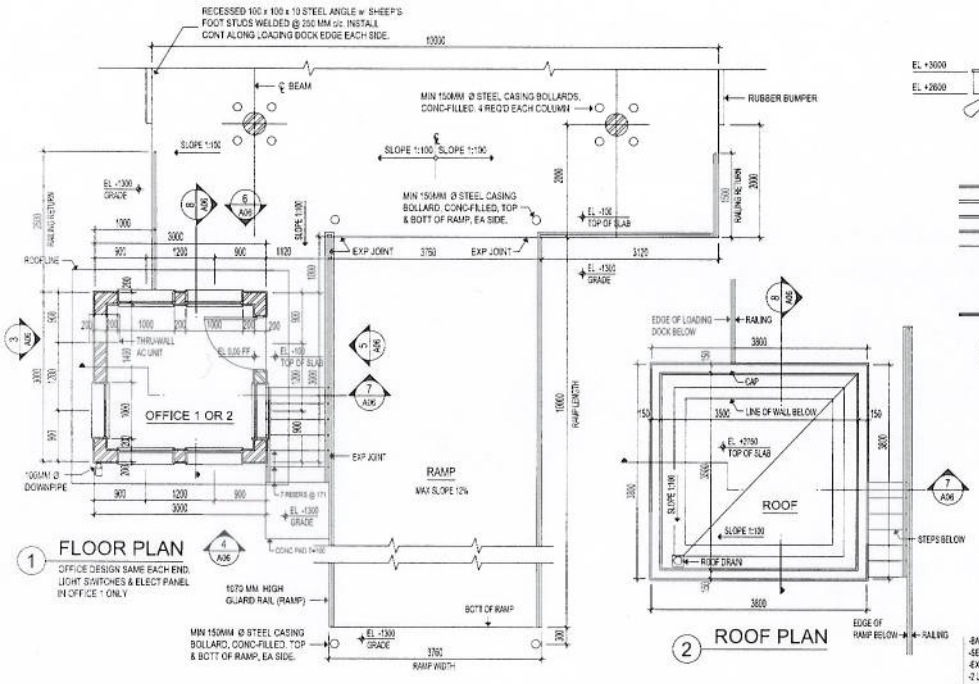

1 FLOOR PLAN

OFFICE DESIGN SAME EACH END. LIGHT SWITCHES & ELECT PANEL IN OFFICE 1 ONLY

2 ROOF PLAN

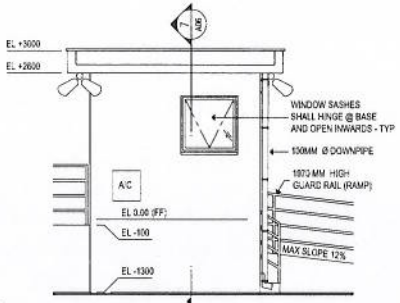

3 ELEVATION

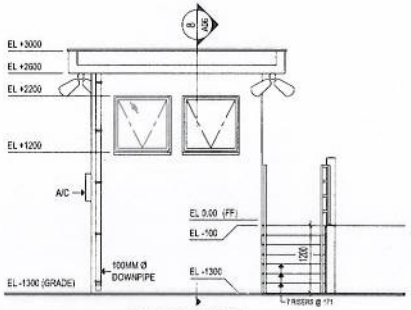

4 ELEVATION

NOTES

1- ALL WALLS ARE CMU UNLESSNOTED OTHERWISE.
2- ALL WALLS TERMINATE AT CEILING LEVEL UNLESS NOTED OTHERWISE.
3- ALL DIMENSIONS ARE TO FACE OF CMU UNLESS NOTED OTHERWISE.
4- ALL ELEVATIONS REFERENCE BACK TO OFFICE FINISH FLOOR OF 0.00.
5- REFER TO ELECTRICAL DRAWINGS FOR ELECTRICAL PLAN & PANELS.
6- REFER TO STRUCTURAL DRAWINGS FOR ALL STRUCT DETAILS & CALCULATIONS.
7- WINDOWS: SHALL BE 1Mx1M WOOD FRAME & WOOD SASH, PAINTED. SASHES SHALL BE OPERABLE (OPEN) AND SHALL BE LOCKABLE. SASHES SHALL BE HINGED AT BASE AND OPEN INWARDS.
8- DOORS: SHALL BE 914mm(3') x 2134mm(7') FLUSH SOLID CORE WOOD IN WOOD FRAME, PAINT WITH PRIMER COAT AND TWO TOP COATS APPROVED ENAMEL. PROVIDE COMMERCIAL GRADE BRUSHED BRONZE LOCKSETS WITH MATCHING KEYED DEADBOLTS. ALL LOCKSETS SHALL BE KEYED ALIKE. ALL DEADBOLTS SHALL BE KEYED ALIKE, BUT DIFFERENT FROM LOCKSETS.
9- FINISHES:

FLOORS-	EPOXY FLOOR PAINT ON PREPPED SURFACE
BASEBOARD-	TERRAZO TILE, H=60MM
WALLS, INTERIOR-	WHITE PAINTED PLASTER
WALLS, EXTERIOR-	PAINTED EXTERIOR PLASTER
CEILINGS-	WHITE PAINTED PLASTER

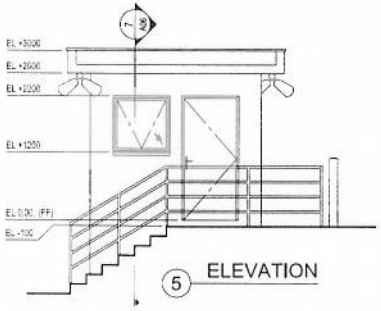

5 ELEVATION

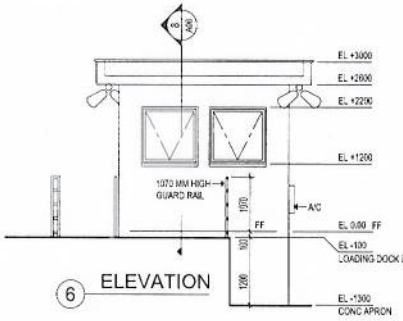

6 ELEVATION

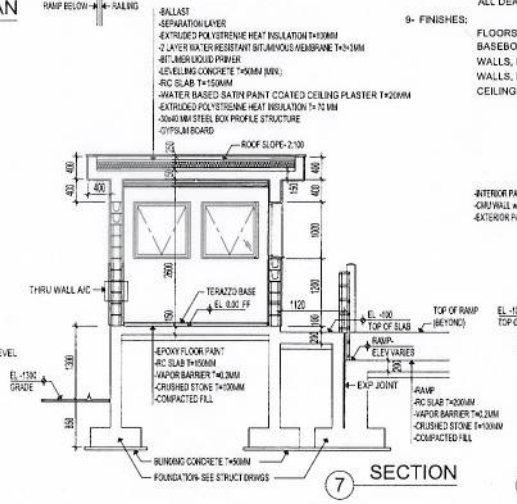

7 SECTION

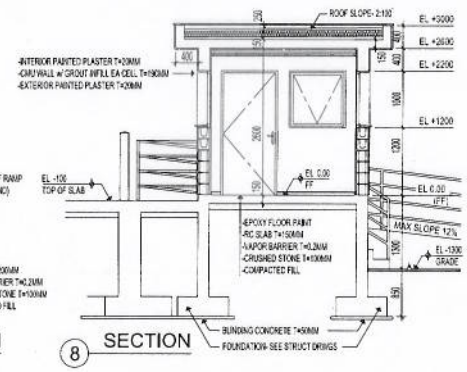

8 SECTION

ALL LINEAR DIMENSIONS ARE IN MILLIMETERS, UNLESS OTHERWISE NOTED

0 1 2 3 4 M

REV	DATE	BY	SUB-APP	DESCRIPTION

DESIGNED PT.HOPE
DRAWN PT.HOPE
CHECKED PT.HOPE
IN CHARGE DAVID WHEELER
DATE 27 JULY 2010

AFGHAN NATIONAL SECURITY FORCE
Comprehensive Plan for Facilities Development

WEISH BORDER FACILITY
PORT OF ENTRY

TRANSLOADING DOCK
DOCK MASTER OFFICES

SCALE AS SHOWN

PROJECT NO. -

A06

TRANSLOADING DOCK PANEL PP

PANEL LOCATION:	Entrance Office	SUPPLIED FROM:	SITE DISTRIBUTION SYSTEM
PANEL:	PP	AMPS MAIN: 60	INTERRUPTING CAPACITY: 35 KAIC
MOUNTING:	SURFACE	PHASE: 3	FEEDER INFORMATION: 4(1CX16mm²); Ø35mm — MAIN LUGS:
VOLTAGE:	380	WIRE: 4	GROUNDING:6mm² — MAIN BREAKER: 60

POLE	TRIP	GND WIRE	CONDUCTOR	CONDUIT	DESIGNATION	VA	NO	PHASE ØA	PHASE ØB	PHASE ØC	NO	VA	DESIGNATION	CONDUIT	CONDUCTOR	GND WIRE	TRIP	POLE
1	20A	4mm²	2(1CX4mm²)	21mm	Lighting	800	1				2	2500	AC Unit	21mm	2(1CX4mm²)	4mm²	20A	1
1	20A	4mm²	2(1CX4mm²)	21mm	Receptacles	540	3				4	1500	Lighting	21mm	2(1CX4mm²)	4mm²	20A	1
1	20A	4mm²	2(1CX4mm²)	21mm	Lighting	1250	5				6	2750	Lighting	21mm	2(1CX4mm²)	4mm²	20A	1
1	20A	4mm²	2(1CX4mm²)	21mm	Receptacles	2160	7				8	550	Emergency lighting	21mm	2(1CX4mm²)	4mm²	20A	1
1	20A	4mm²	2(1CX4mm²)	21mm	Lighting	2750	9				10	2160	Receptacles	21mm	2(1CX4mm²)	4mm²	20A	1
1	20A	4mm²	2(1CX4mm²)	21mm	AC Unit	2500	11				12	1250	Lighting	21mm	2(1CX4mm²)	4mm²	20A	1
1	20A	4mm²	2(1CX4mm²)	21mm	Receptacles	540	13				14	800	Lighting	21mm	2(1CX4mm²)	4mm²	20A	1
1	20A	4mm²	2(1CX4mm²)	21mm	Lighting	1500	15				16		Spare	21mm	2(1CX4mm²)	4mm²	20A	1
1	20A				Spare		17				18		Spare				20A	1
1	20A				Spare		19				20		Space				20A	1
					Space		21				22		Space					
					Space		23				24		Space					
					Space		25				26							
							27				28							
							29				30							
							31				32							
							33				34							
							35				36							
1	6A				Indicator Light		37				38							
1	6A				Indicator Light		39				40		Surge Protection Device	35mm	4(1CX16mm²)	16mm²	60A	3
1	6A				Indicator Light		41				42							
								7350	6540	7750								

SUPPLY		kVA	AMPS
TOTAL PHASE	A	7.35	33.41
TOTAL PHASE	B	8.45	38.41
TOTAL PHASE	C	7.75	35.23

TOTAL CONNECTED LOAD		23.55	kVA
DEMAND FACTOR	0.89	20.85	kVA
FUTURE LOAD	20%	4.17	kVA
ANCILLARY LOAD	0%		

TOTAL LOAD		25.02	kVA
TOTAL AMPERES		38.01	AMPS
80% BRK. RATING	125%	47.52	AMPS

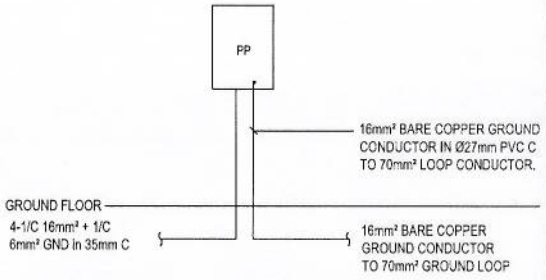

POWER RISER DIAGRAM

NOT TO SCALE

FIXTURE TYPE	FIXTURE DESCRIPTION	FIXTURE MANUFACTURES & CATALOG NUMBERS (CATALOG NUMBERS MAY REQUIRE ADJUSTMENTS TO CONFORM FIXTURE TO CEILING FINAL CONSTRUCTION)	LAMP QTY	LAMP TYPE	VOLTS	EQUAL MANUFACTURERS
A	PENDANT MOUNTED INDUSTRIAL FIXTURE WITH WIDE DISTRIBUTION REFLECTOR KIT (2-LAMP)	COOPER/METALUX MOD-DIM-232-220-4 W/ELECTRONIC BALLAST & WIRE GUARDS OR EQUIVALENT	2	T8/32W /SPX35	220	LIGHTOLIER, THOMAS INDUSTRIES OR APPROVED EQUAL
G	PENDANT MOUNTED INDUSTRIAL HIGH PRESSURE SODIUM FIXTURE	COOPER/LUMARK MOD-HPRB-RP22-100-240V-FH-1-SS-HL-EM-GRY	1	100HPS	220	LIGHTOLIER, THOMAS INDUSTRIES OR APPROVED EQUAL
X2	DOUBLE HEAD METAL BODY EMERGENCY LIGHT	COOPER/SURELITES MOD-AA1-220V	2	INCONDECENT 9W	220	LIGHTOLIER, THOMAS INDUSTRIES OR APPROVED EQUAL
F3	WALL MOUNTED HIGH PRESSURE SODIUM, PULSE START METAL HALIDE	COOPER/LUMARK MOD-XPXF25T-220V	1	250HPS	220	LIGHTOLIER, THOMAS INDUSTRIES OR APPROVED EQUAL

LIGHTING FIXTURE NOTES:

1. ALL PENDANT MOUNTED FIXTURES ARE TO INCLUDE MANUFACTURERS "BALL-HANGER" TYPE CANOPY TO COMPENSATE FOR ROOF PITCH AND MANUFACTURES PENDANTS. FIELD CUT TO LENGTH.
2. ALL LIGHTING FIXTURES TO BE PROVIDED WITH ELECTRONIC BALLASTS, UNLESS NOTED OTHERWISE.

HPRB-RP22-100-240V-FH-1-SS-HL-EM-GRY

REV	DATE	BY	SUPP	DESCRIPTION

DESIGNED STEGMER VIKTOR
DRAWN HAYAT RAHMAN
CHECKED STEGMER VIKTOR
IN CHARGE DAVID WHEELER
DATE 27 JULY 2010

AFGHAN NATIONAL SECURITY FORCE
Comprehensive Plan for Facilities Development

WEISH BORDER FACILITY
PORT OF ENTRY

TRANSLOADING DOCK
ELECTRICAL PANEL & SCHEDULE

SCALE AS SHOWN

PROJECT NO. -

E02

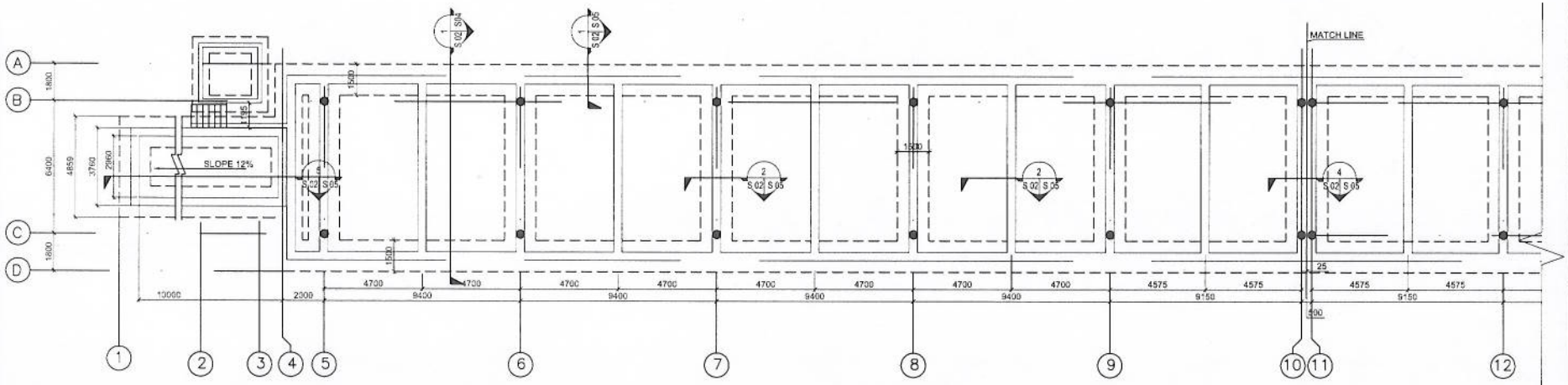
MATCH LINE
SLOPE 12%
A
B
C
D
1800
6400
4859
3760
2960
1500
1500
1500

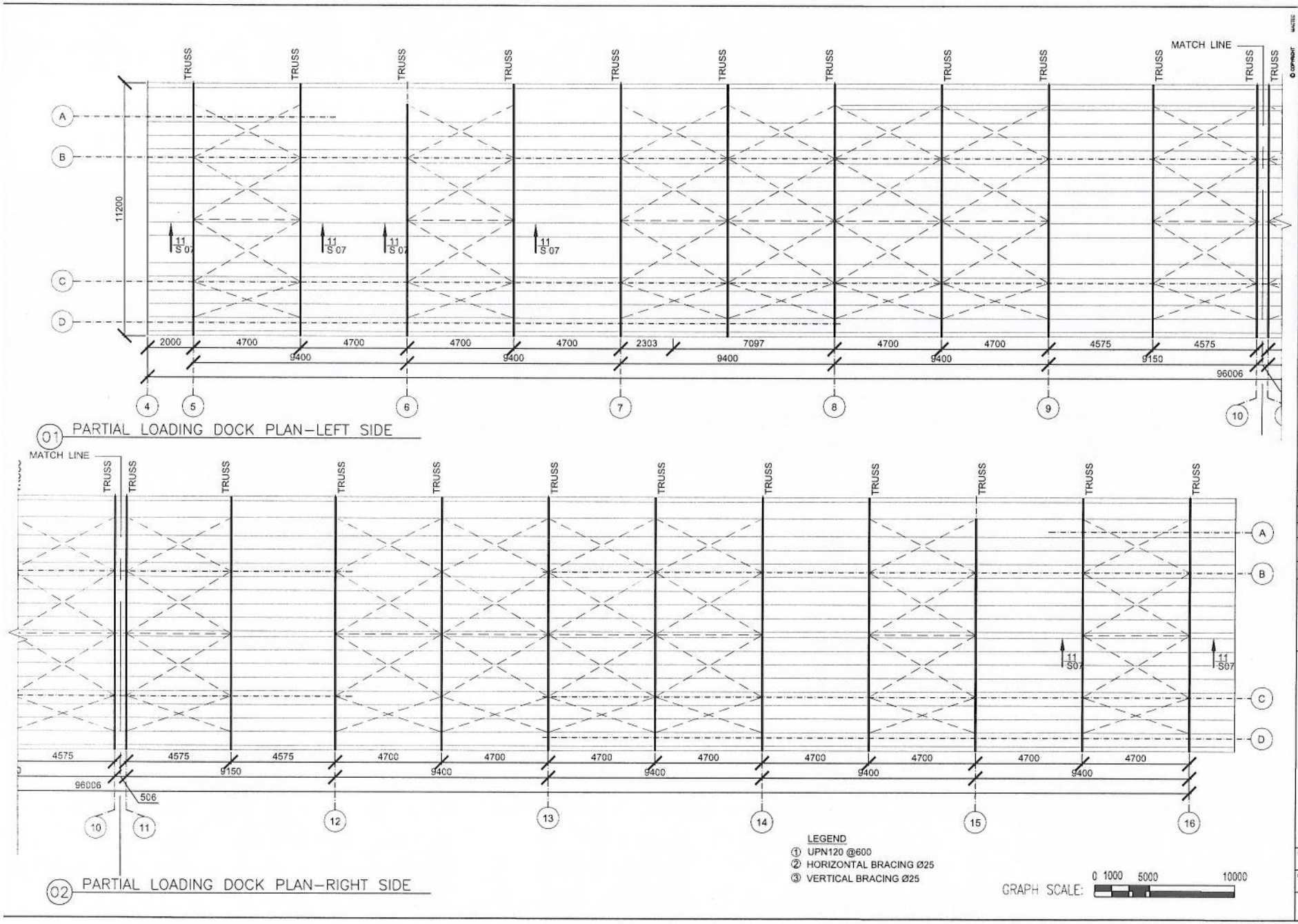

01 PARTIAL LOADING DOCK PLAN–LEFT SIDE

02 PARTIAL LOADING DOCK PLAN–RIGHT SIDE

© COPYRIGHT MACTEC

REV	DATE	BY	SUB	APP	DESCRIPTION

DESIGNED STEGMEIR VIKTOR
DRAWN ABDULLAH.M
CHECKED STEGMEIR VIKTOR
IN CHARGE DAVID WHEELER
DATE 27 JULY 2010

AFGHAN NATIONAL SECURITY FORCE
Comprehensive Plan for Facilities Development

WEISH BORDER FACILITY
PORT OF ENTRY
TRANSLOADING DOCK
ROOF TRUSS PLAN

SCALE AS SHOWN

PROJECT NO. –

S03

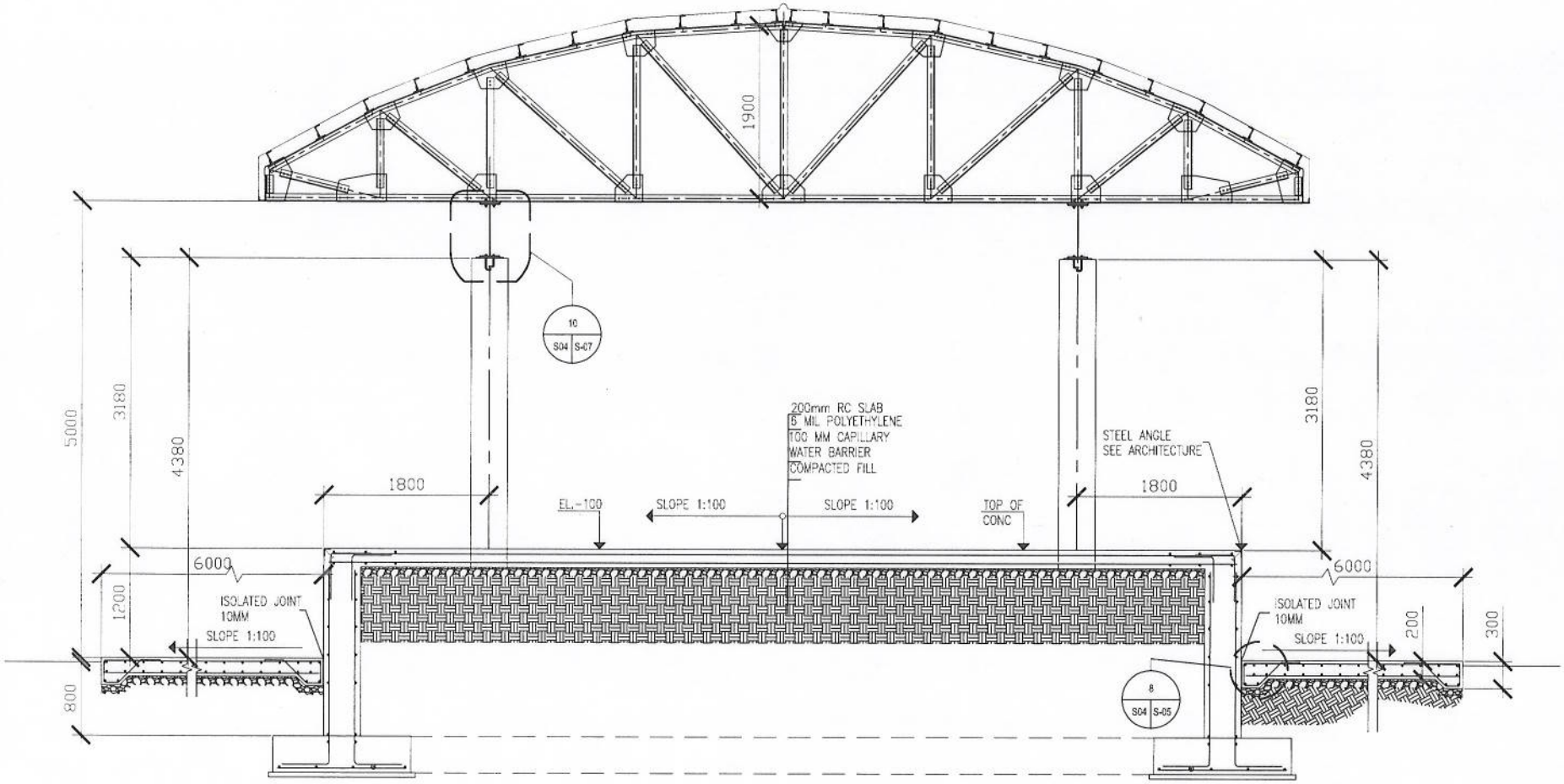

1 SECITION

GRAPH SCALE: 0100 500 1000

© COPYRIGHT MACTEC

REV	DATE	BY	SUB	APP	DESCRIPTION

DESIGNED STEGMEIR VIKTOR
DRAWN ABDULLAH.M
CHECKED STEGMEIR VIKTOR
IN CHARGE DAVID WHEELER
DATE 27 JULY 2010

AFGHAN NATIONAL SECURITY FORCE
Comprehensive Plan for Facilities Development

WEISH BORDER FACILITY
PORT OF ENTRY
TRANSLOADING DOCK
SECTION

SCALE AS SHOWN

PROJECT NO. -

S04

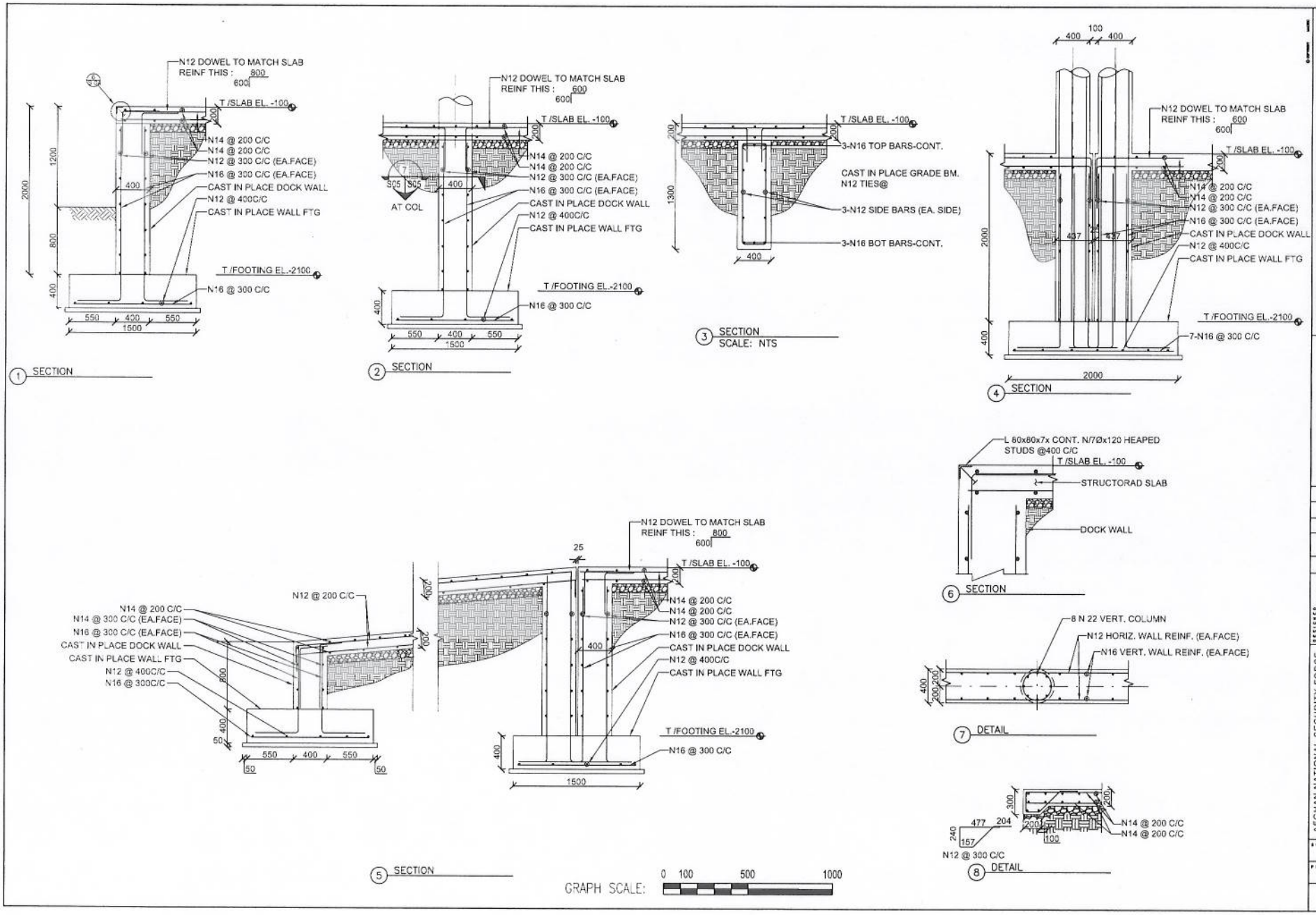

AFGHAN NATIONAL SECURITY FORCE
Comprehensive Plan for Facilities Development

WEISH BORDER FACILITY
PORT OF ENTRY
TRANSLOADING DOCK
DETAILS

DESIGNED STEGMEIR VIKTOR
DRAWN ABDULLAHM
CHECKED STEGMEIR VIKTOR
IN CHARGE DAVID WHEELER
DATE 27 JULY 2010

REV | DATE | BY | SUB | APP | DESCRIPTION

SCALE AS SHOWN

PROJECT NO. -

S05

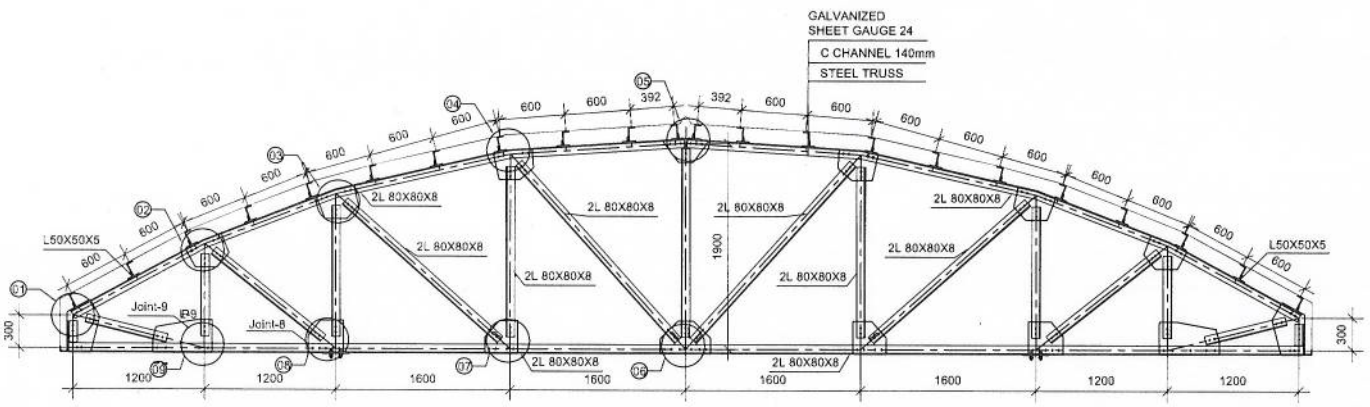

STEEL TRUSS

GRAPH SCALE: 0 100 500 1000

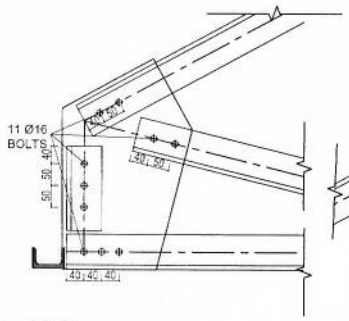

01 JOINT

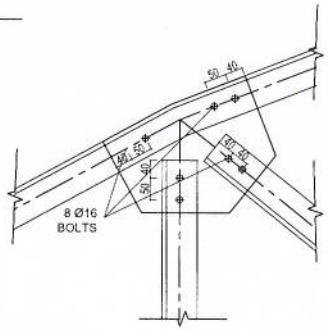

02 JOINT

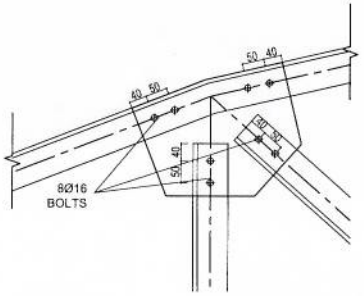

03 JOINT

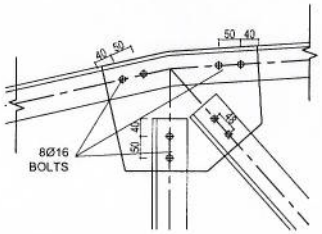

04 JOINT

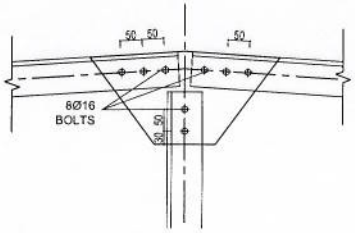

05 JOINT

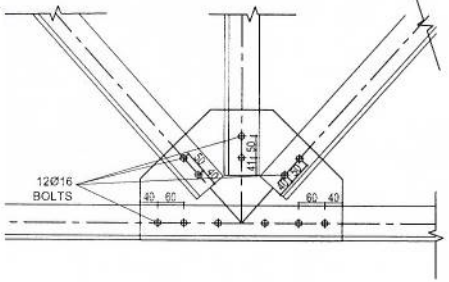

06 JOINT

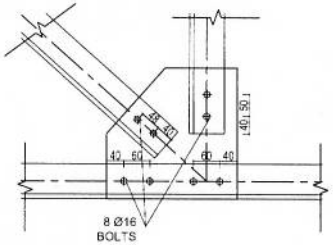

07 JOINT

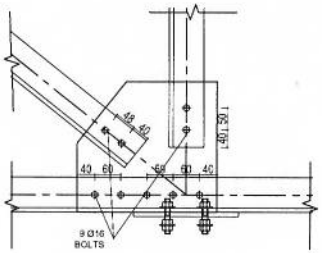

08 JOINT

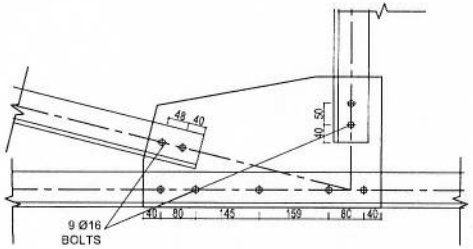

09 JOINT

GRAPH SCALE: 0 25 100 200

© COPYRIGHT MACTEC

REV	DATE	BY	CHK'D	DESCRIPTION

DESIGNED STEGMEIR VIKTOR
DRAWN ABDULKAHIM
CHECKED STEGMEIR VIKTOR
LA COVERED DAVID WHEELER
DATE 27 JULY 2010

AFGHAN NATIONAL SECURITY FORCE
Comprehensive Plan for Facilities Development

WEISH BORDER FACILITY
PORT OF ENTRY

TRANSLOADING DOCK TRUSS
SECTION & DETAILS

SCALE AS SHOWN

PROJECT NO.

S06

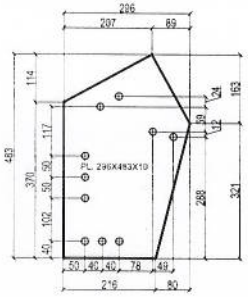

01 PLATE

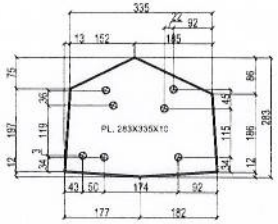

02 PLATE

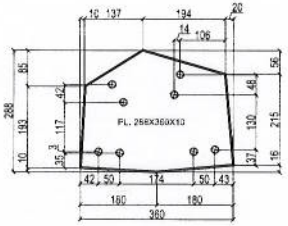

03 PLATE

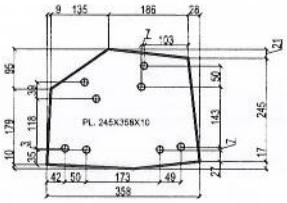

04 PLATE

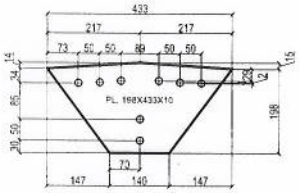

05 PLATE

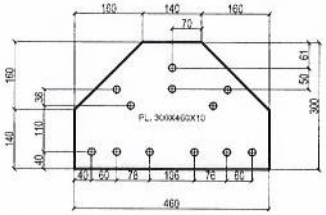

06 PLATE

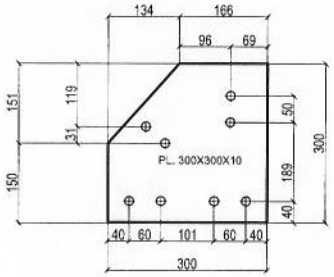

07 PLATE

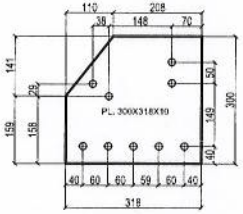

08 PLATE

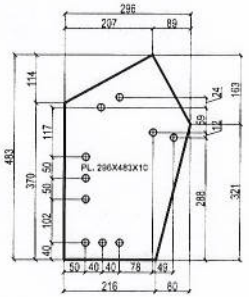

09 PLATE

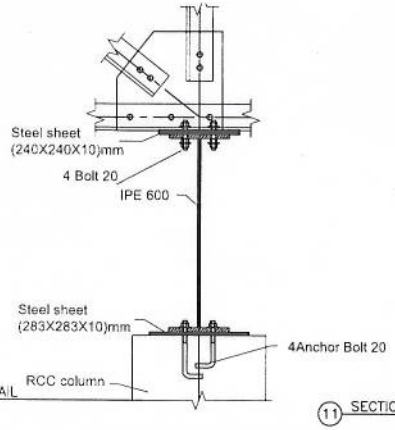

10 DETAIL

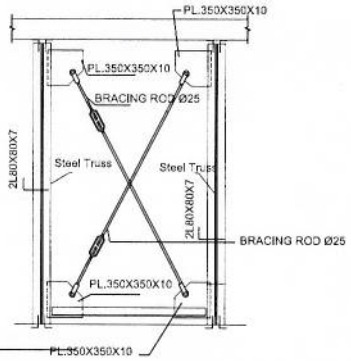

11 SECTION

NOTES:
1. ALL DIMENSIONS ARE IN MILLIMETERS AND ELEVATION IN METERS.
2. ALL STEEL PLATES & SECTIONS SHALL BE A36M.
3. ALL BOLTS SHALL BE A325-N.
4. FOR PLATE WELDING, E70 ELECTRODE (FY=4900KG/CM2) SHALL BE USED.
5. WELDING SHOULD BE PERFORMED IN FACTORY AND WATCH FULL INSPECTION SHALL BE DONE.
6. THICKNESS OF STEEL GUSSET PLATE IS NOT LESS THEN 10mm.
7. ALL HOWELL OF THE PLATES ARE Ø 16.2mm

GRAPH SCALE: 0 25 100 200

AFGHAN NATIONAL SECURITY FORCE
Comprehensive Plan for Facilities Development

WEISH BORDER FACILITY
PORT OF ENTRY
TRANSLOADING DOCK
DETAILS

DESIGNED: STEGMER WKTOR
DRAWN: ABDULLAHUM
CHECKED: STEGMER WKTOR
APPROVED: DAVID WHEELER
DATE: 27 JULY 2010

SCALE: AS SHOWN
PROJECT NO. -

S07

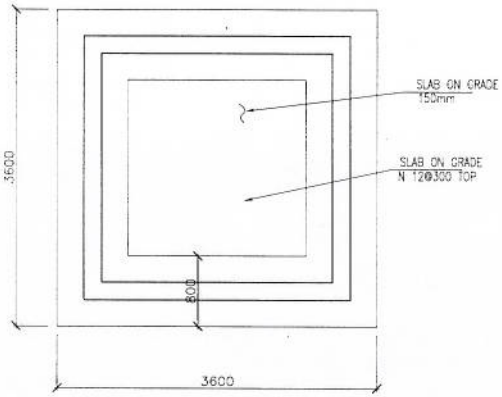

1 FOUNDAITON PLAN

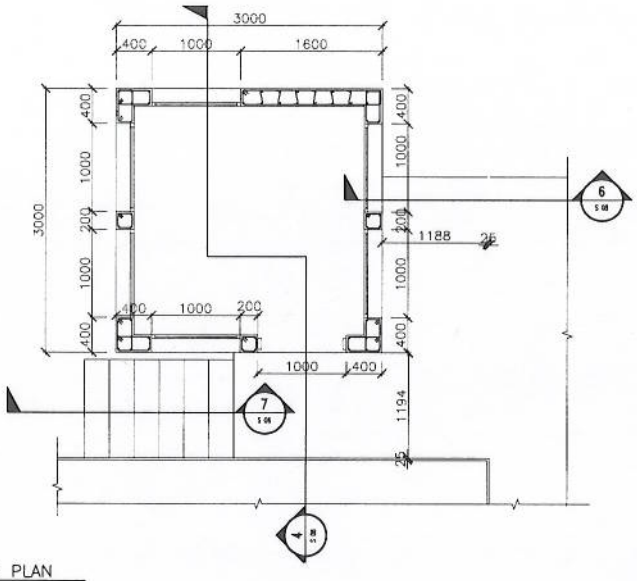

2 SHEAR WALLS PLAN

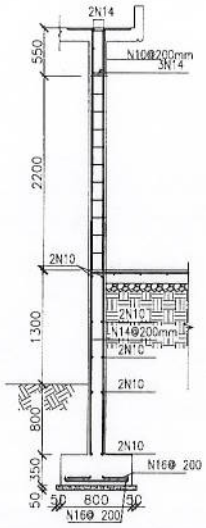

3 TYPICAL SECTION FOR SHEAR WALL

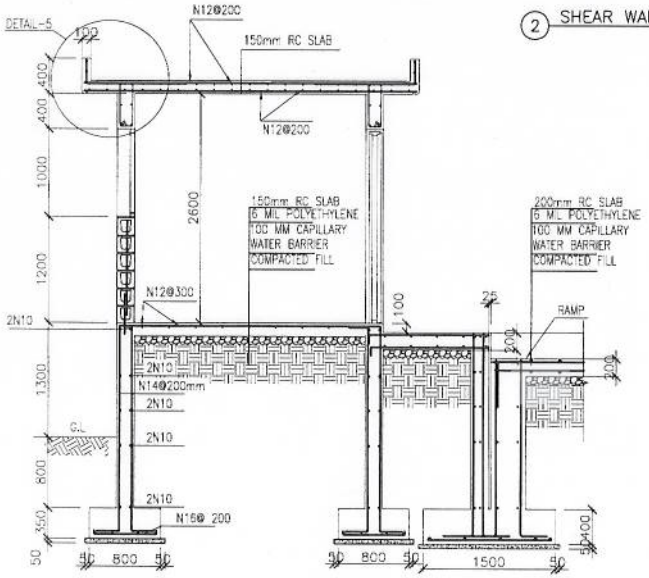

4 SECTION

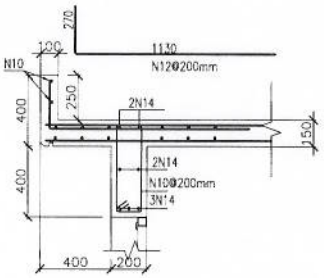

5 DETIAL

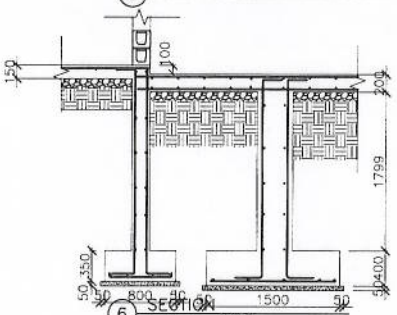

6 SECTION
SCALE: 1:20

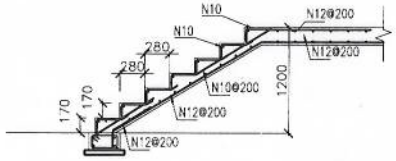

7 SECTION

Notes

1- ALL DIMENSIONS ARE IN MM UNLESS OTHERWISE SPECIFIED.
2- THE STEEL GRADE SHALL BE Fy=60 KS:(Fy=4220Kg/cm²)
3- FOR CAST-IN-PLACE STRUCTURAL CONCRETE,MINIMUM 28 DAYS, CYLINDER STRENGTH f'c=4000 PSI(f'c=280Kg/cm²).

GRAPH SCALE: 0 100 500 1000

DESIGNER	STEVEN A. WICTOR
DRAWN	ABDULLAH.M
CHECKED	STEVEN A. WICTOR
APPROVED	DAVID WHEELER
DATE	27 JULY 2010

AFGHAN NATIONAL SECURITY FORCE
Comprehensive Plan for Facilities Development
WEISH BORDER FACILITY
PORT OF ENTRY
TRANSLOADING DOCK
DETAILS

SCALE AS SHOWN

PROJECT NO. -

S08

REV	DATE	BY	DESCRIPTION

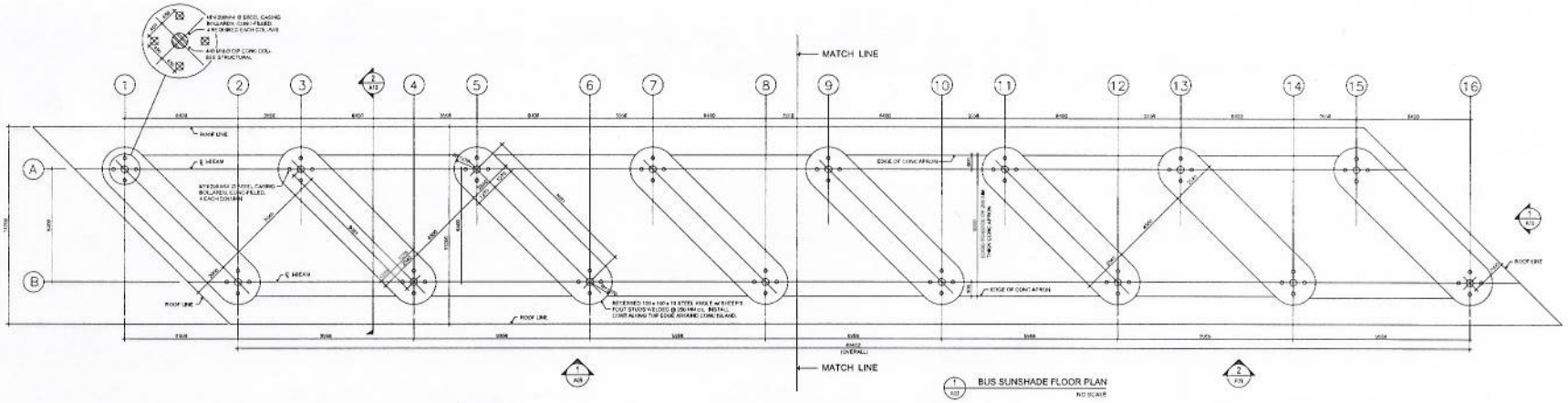

1 A03 BUS SUNSHADE FLOOR PLAN
NO SCALE

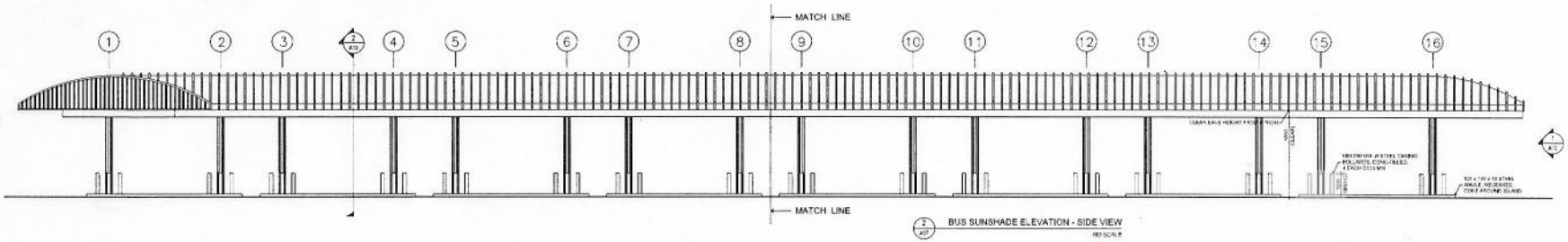

2 A07 BUS SUNSHADE ELEVATION - SIDE VIEW
NO SCALE

0 .5 1 2 4 6 8 10 M

REV	DATE	BY	SUB	APP	DESCRIPTION

DESIGNED PT HOPE
DRAWN PT HOPE
CHECKED PT HOPE
DATE 27 JULY 2010

AFGHAN NATIONAL SECURITY FORCE
Comprehensive Plan for Facilities Development
WEISH BORDER FACILITY
PORT OF ENTRY
BUS/POV INSPECTION SUNSHADE
OVERALL PLAN & ELEVATION

SCALE AS SHOWN
PROJECT NO. -

A07

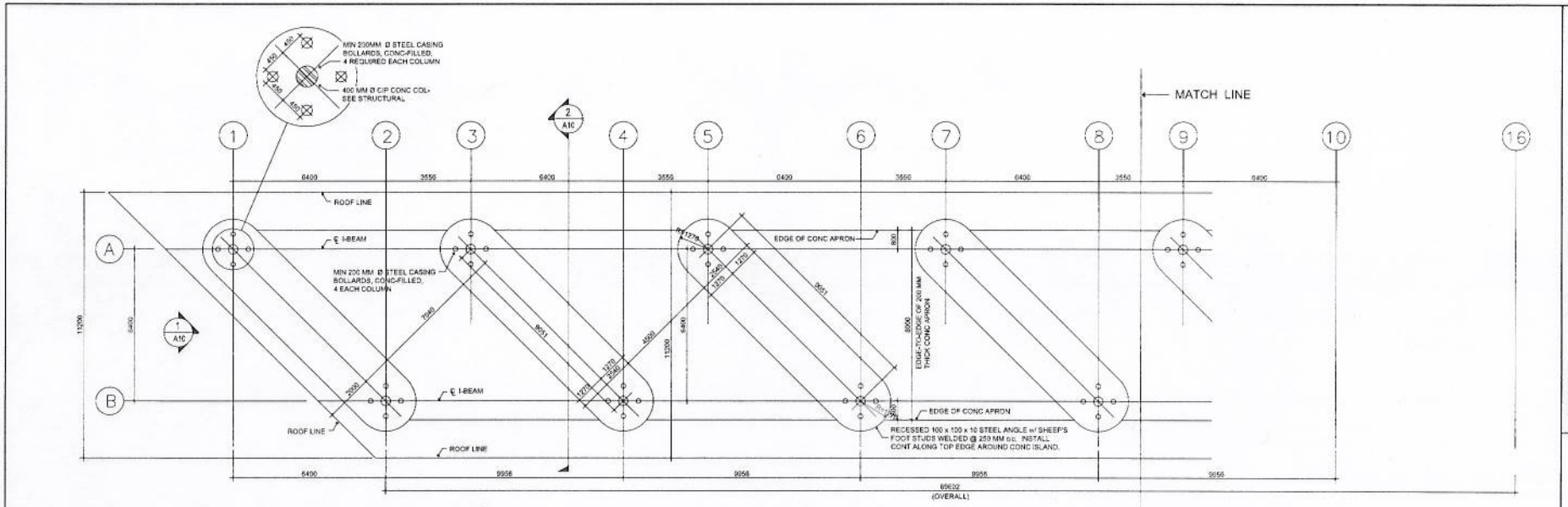

1 A09

1 A08 BUS SUNSHADE FLOOR PLAN - LEFT HALF

NO SCALE

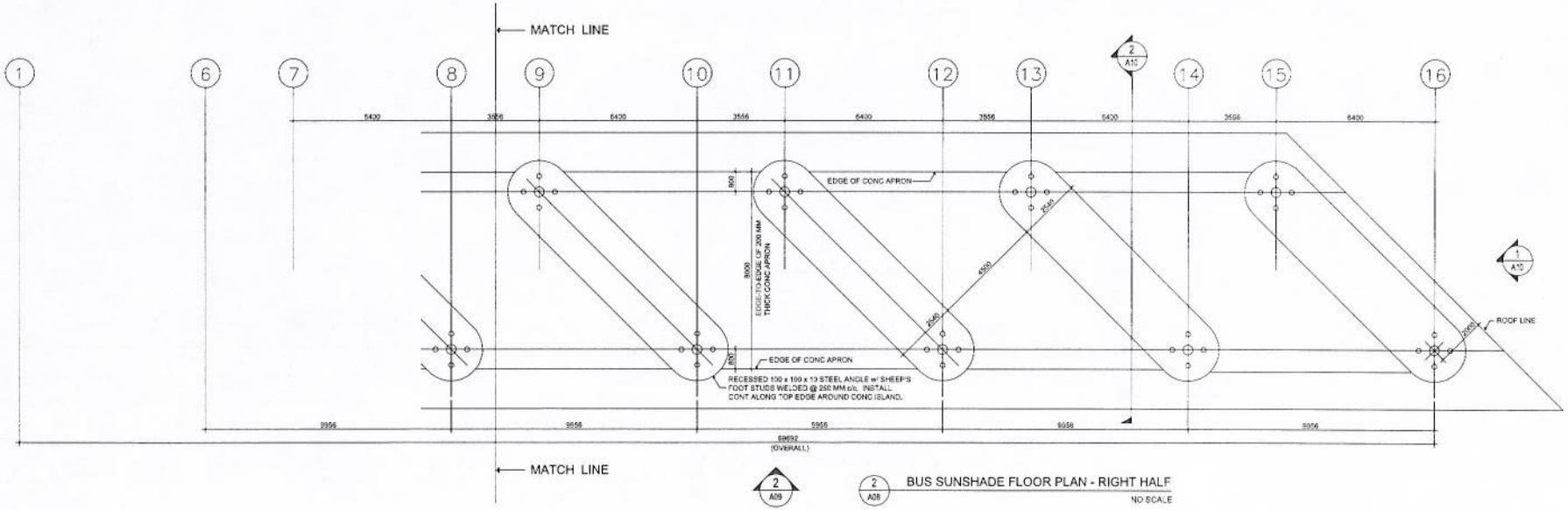

2 A09

2 A08 BUS SUNSHADE FLOOR PLAN - RIGHT HALF

NO SCALE

0.5 1 2 4 6 8 10 M

AFGHAN NATIONAL SECURITY FORCE
Comprehensive Plan for Facilities Development

WEISH BORDER FACILITY
PORT OF ENTRY

BUS/POV INSPECTION SUNSHADE
ENLARGED PLAN

DESIGNED PT.HOPE
DRAWN PT.HOPE
CHECKED PT.HOPE
REVIEWED DAVID WHEELER
DATE 27 JULY 2010

REV DATE BY SUB APP DESCRIPTION

SCALE AS SHOWN

PROJECT NO. -

A08

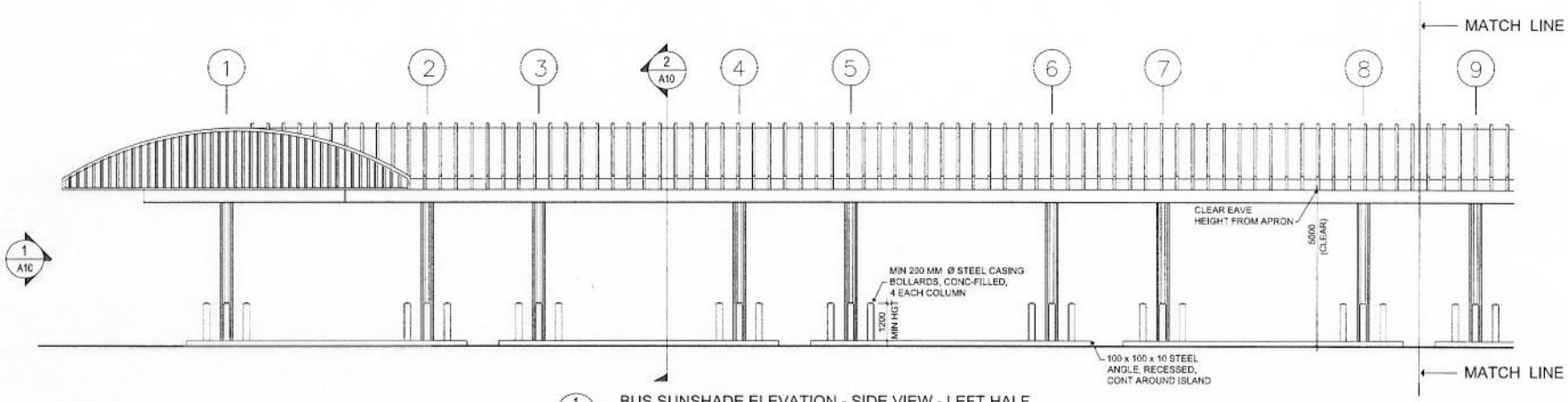

1 A09 BUS SUNSHADE ELEVATION - SIDE VIEW - LEFT HALF

NO SCALE

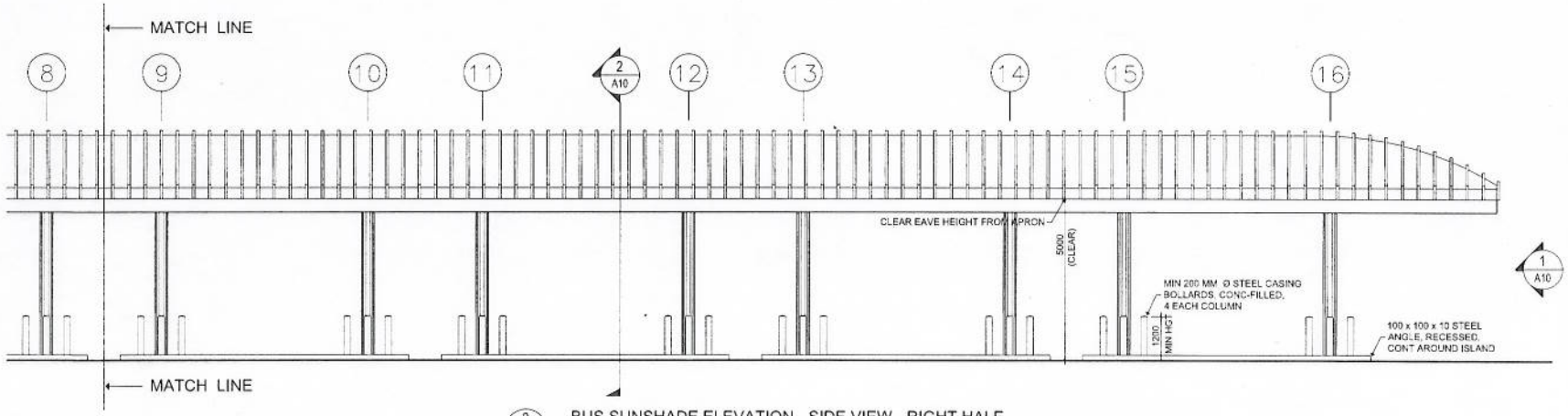

2 A09 BUS SUNSHADE ELEVATION - SIDE VIEW - RIGHT HALF

NO SCALE

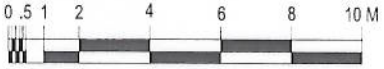

AFGHAN NATIONAL SECURITY FORCE
Comprehensive Plan for Facilities Development

WEISH BORDER FACILITY
PORT OF ENTRY

BUS/POV INSPECTION SUNSHADE
ENLARGED ELEVATION

DESIGNED P.T.HOPE
DRAWN P.T.HOPE
CHECKED P.T.HOPE
IN CHARGE DAVID WHEELER
DATE 27 JULY 2010

REV DATE BY SUB APP DESCRIPTION

SCALE AS SHOWN

PROJECT NO. –

A09

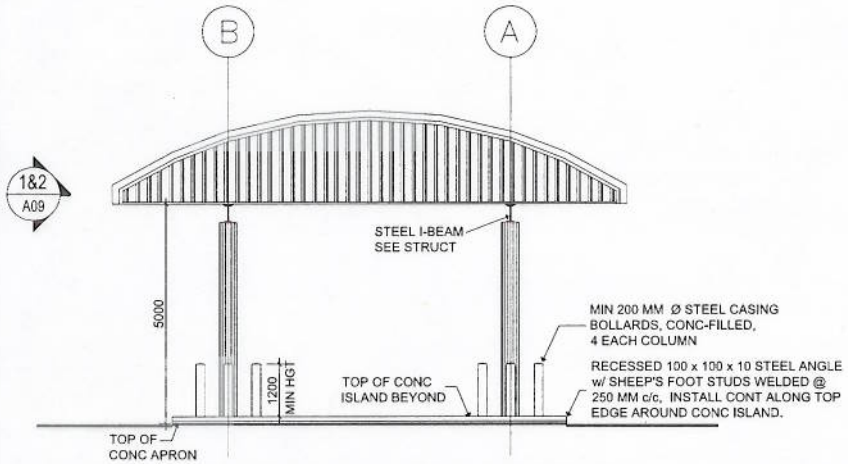

1 / A10 BUS SUNSHADE ELEVATION - TYP END VIEW

NO SCALE

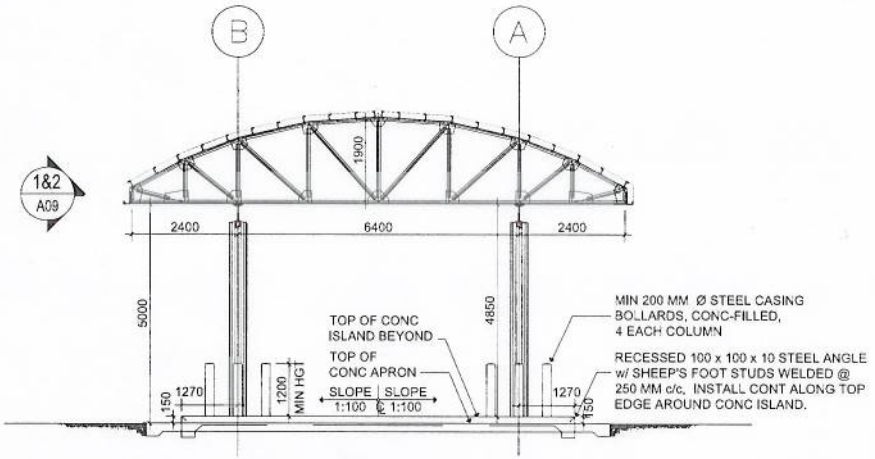

2 / A10 BUS SUNSHADE TRANSVERSE SECTION

NO SCALE

AFGHAN NATIONAL SECURITY FORCE
Comprehensive Plan for Facilities Development

WEISH BORDER FACILITY
PORT OF ENTRY

BUS/POV INSPECTION SUNSHADE
END ELEVATION & SECTION

DESIGNED PT.HOPE
DRAWN PT.HOPE
CHECKED PT.HOPE
IN CHARGE DAVID WHEELER
DATE 27 JULY 2010

REV | DATE | BY | SUB | APP | DESCRIPTION

SCALE AS SHOWN

PROJECT NO. -

A10

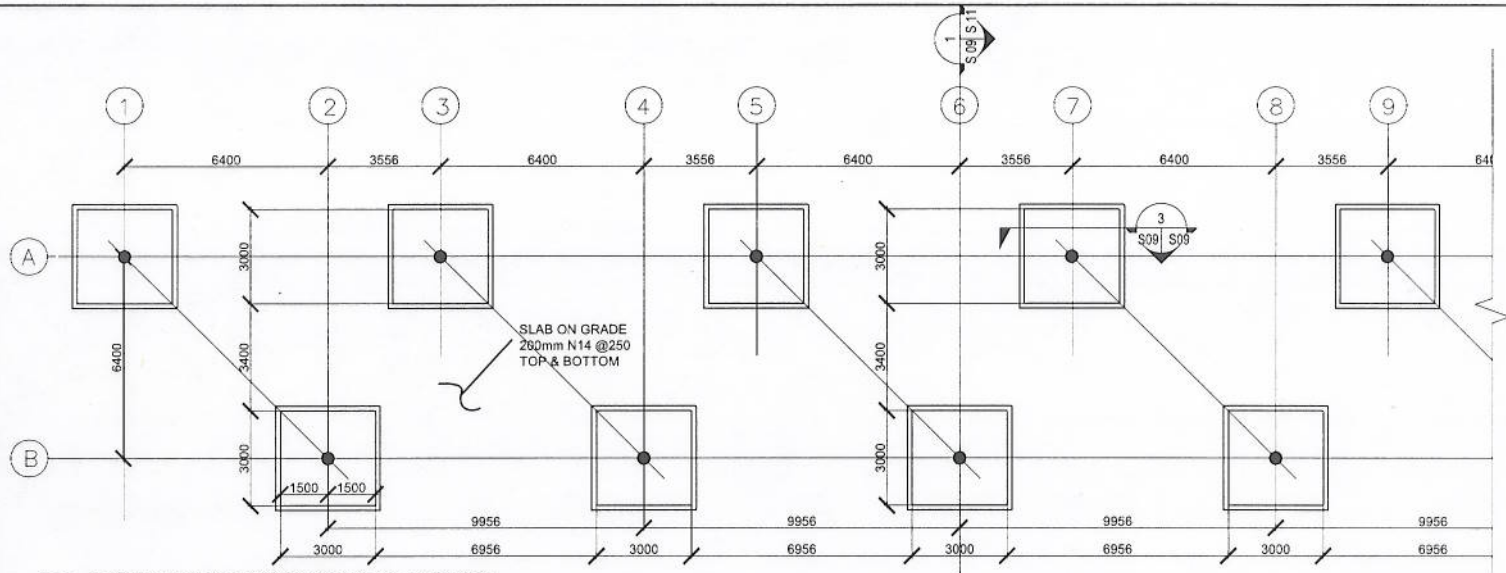

1 BUS SUNSHADE FOUNDATION PLAN- LEFT SIDE

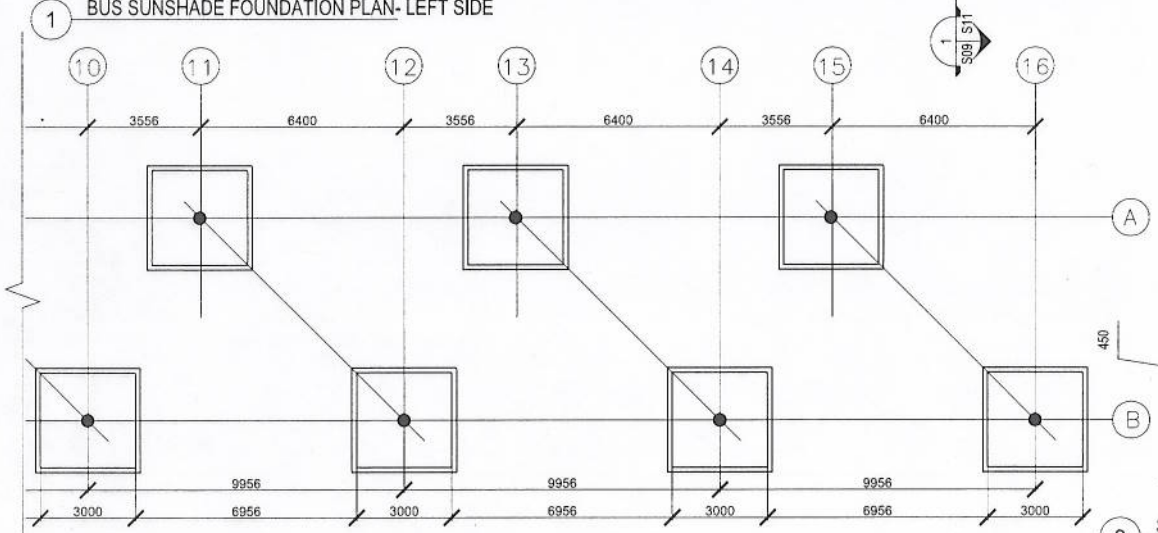

2 BUS SUNSHADE FOUNDATION PLAN- RIGHT SIDE

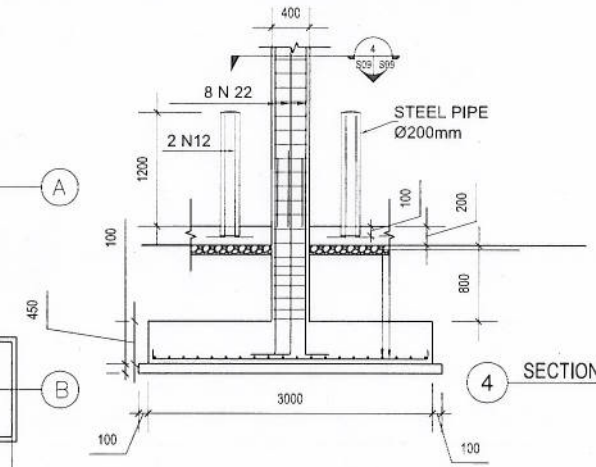

3 SECTION

4 SECTION

SCHEDULE OF FOOTING

MARK	SIZE			BOTT. REINFORCEMENT	
	b	h	d	LONG SPAN	SHORT SPAN
F1	3000	3000	450	N16@150	N16@150

SCHEDULE OF COLUMNS

MARK	SIZE	BARS	STIRRUPS
	d		
C1	400	BN22	N10 SEE

GRAPH SCALE: 0 1500 5000 10000

GRAPH SCALE: 0 50 250 500

Notes

1- ALL DIMENSIONS ARE IN MM UNLESS OTHERWISE SPECIFIED.
2- THE STEEL GRADE SHALL BE Fy=60 KSI(Fy=4220Kg/cm²)
3- FOR CAST-IN-PLACE STRUCTURAL CONCRETE,MINIMUM 28 DAYS, CYLINDER STRENGTH f'c=4000 PSI(f'c=280Kg/cm²).

AFGHAN NATIONAL SECURITY FORCE
Comprehensive Plan for Facilities Development

WEISH BORDER FACILITY
PORT OF ENTRY
BUS SUNSHADE
FOUNDATION PLAN AND DETAILS

DESIGNED STEGMEIR VIKTOR
DRAWN ABDULLAHIM
CHECKED STEGMEIR VIKTOR
IN CHARGE DAVID WHEELER
DATE 27 JAY 2010

SCALE AS SHOWN
PROJECT NO. -

S09

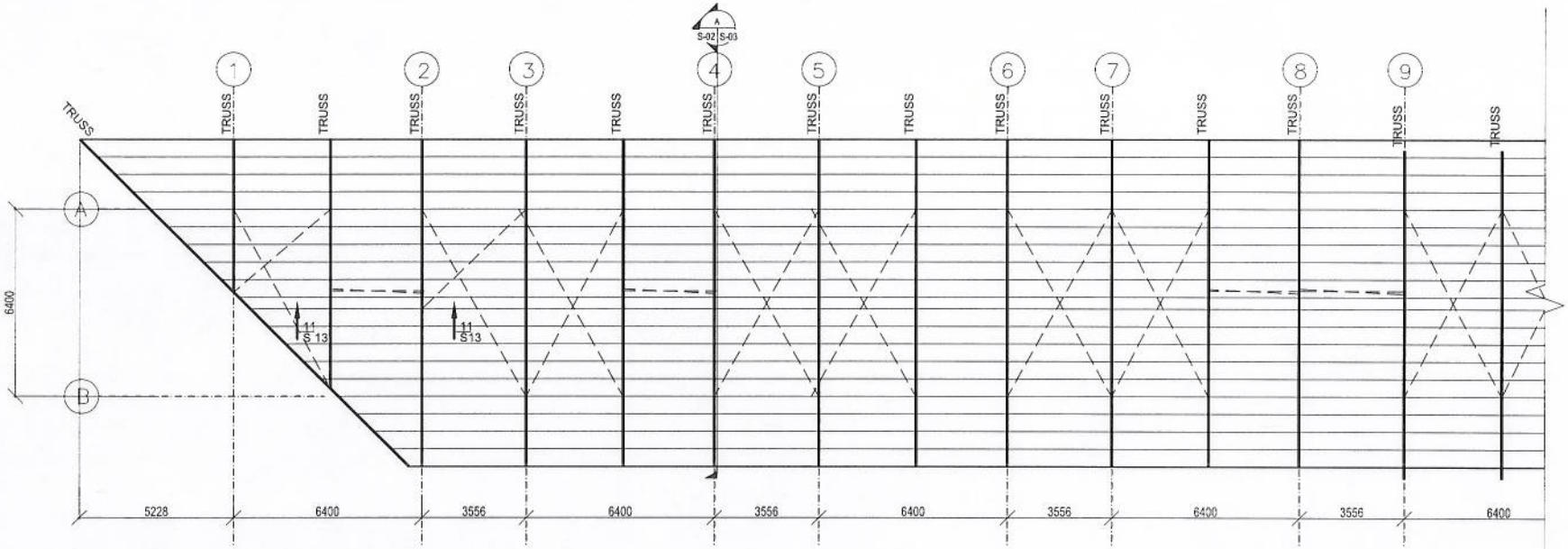

1 BUS SUNSHADE ROOF PLAN - LEFT SIDE

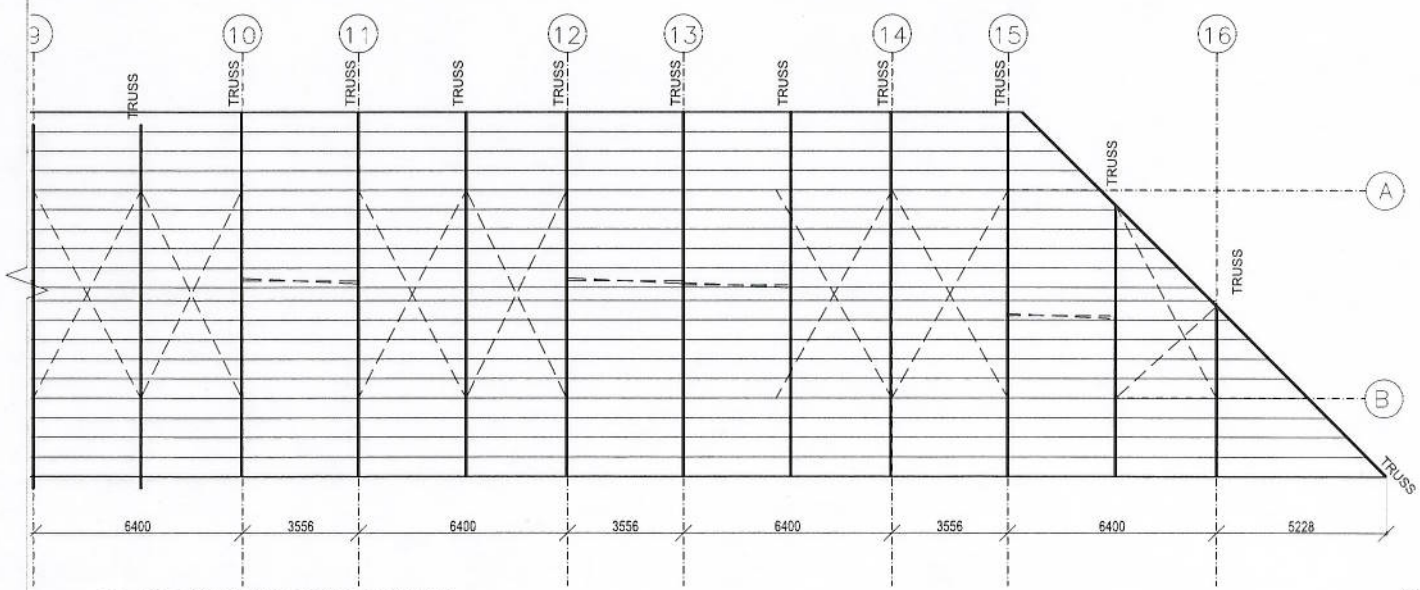

2 BUS SUNSHADE ROOF PLAN- RIGHT SIDE

LEGEND
1. UPN120 @600
2. HORIZONTAL BRACING Ø25
3. VERTICAL BRACING Ø25

GRAPH SCALE: 0 1500 5000 10000

AFGHAN NATIONAL SECURITY FORCE
Comprehensive Plan for Facilities Development

WEISH BORDER FACILITY
PORT OF ENTRY
BUS SUNSHADE
ROOF PLAN

DESIGNED STEGMEIR VICTOR
DRAWN ABDULLAHM
CHECKED STEGMEIR VICTOR
IN CHARGE DAVID WHEELER
DATE 27 JULY 2010

REV/DATE BY/SUBJECT DESCRIPTION

SCALE AS SHOWN

PROJECT NO. -

S10

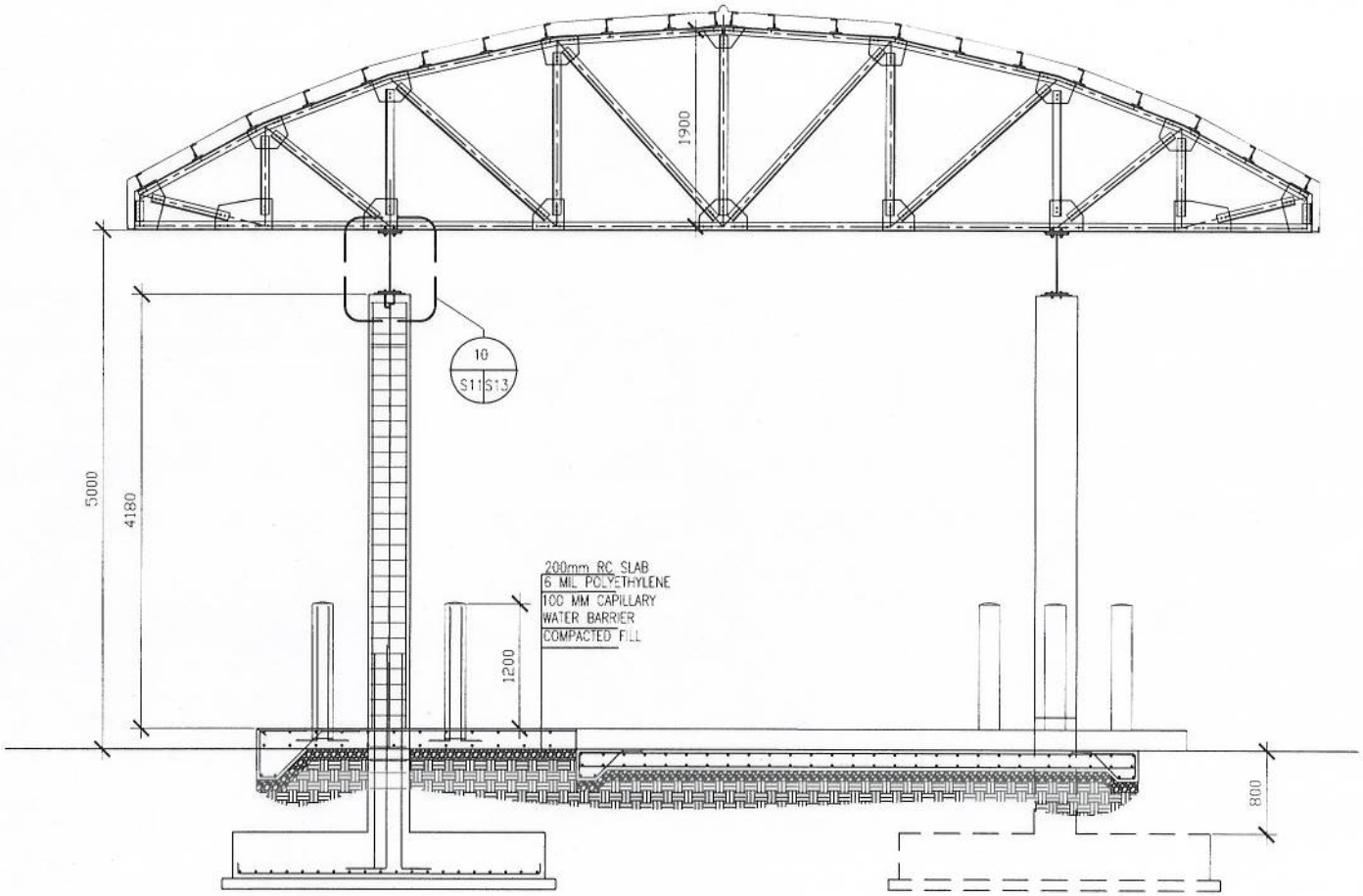

1 SECTION

GRAPH SCALE: 0 200 500 1000

© COPYRIGHT 2010 MACTEC

AFGHAN NATIONAL SECURITY FORCE
Comprehensive Plan for Facilities Development

WEISH BORDER FACILITY
PORT OF ENTRY
BUS SUNSHADE
SECTION

DESIGNED STEGMER VIKTOR
DRAWN ABDULLAH.M
CHECKED STEGMER VIKTOR
IN CHARGE DAVID WHEELER
DATE 27 JULY 2010

REV | DATE | BY | SUB | APP | DESCRIPTION

SCALE AS SHOWN

PROJECT NO. -

S11

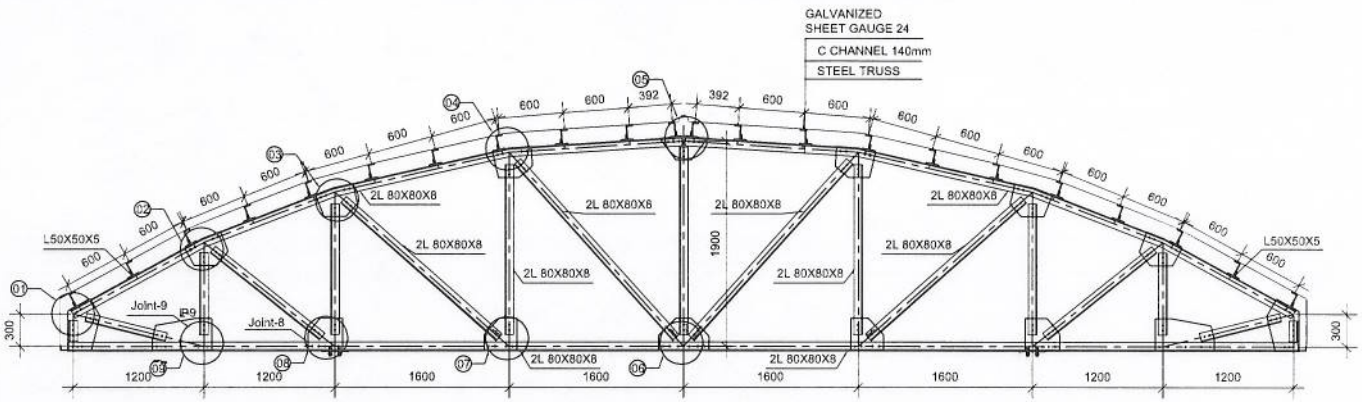

STEEL TRUSS

GRAPH SCALE: 0 100 500 1000

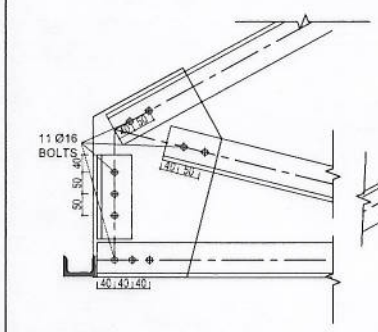

01 JOINT

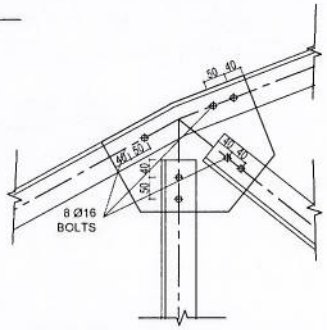

02 JOINT

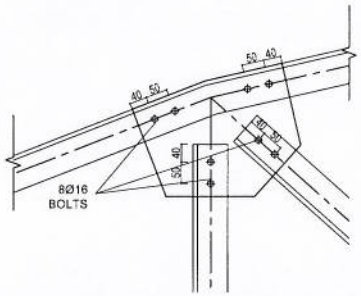

03 JOINT

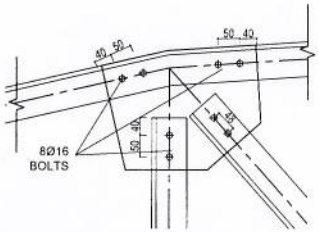

04 JOINT

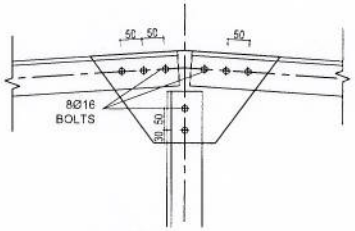

05 JOINT

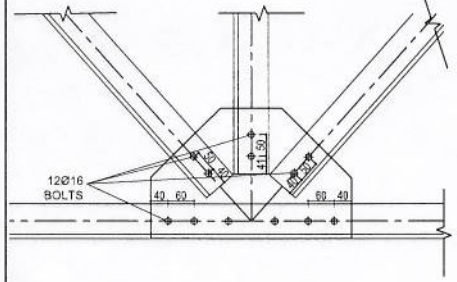

06 JOINT

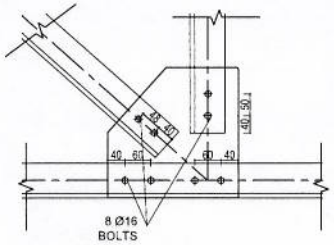

07 JOINT

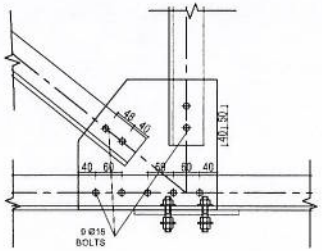

08 JOINT

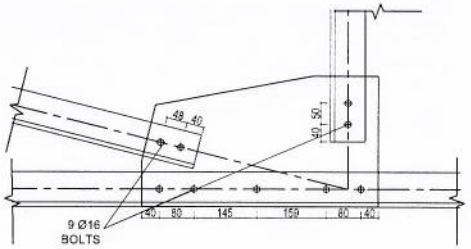

09 JOINT

GRAPH SCALE: 0 25 100 200

© COPYRIGHT MACTEC

REV	DATE	BY	DESCRIPTION

DESIGNED STEGMEIR VIKTOR
DRAWN ABDULLAHM
CHECKED STEGMEIR VIKTOR
APPROVED DAVID WHEELER
DATE 27 JULY 2010

AFGHAN NATIONAL SECURITY FORCE
Comprehensive Plan for Facilities Development

WEISH BORDER FACILITY
PORT OF ENTRY
BUS SUNSHADE TRUSS
SECTION & DETAILS

SCALE AS SHOWN

PROJECT NO.

S12

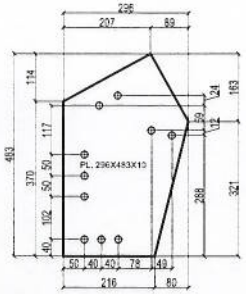

01 PLATE

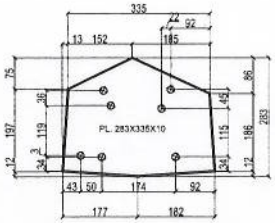

02 PLATE

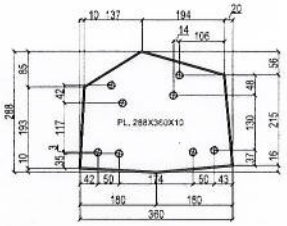

03 PLATE

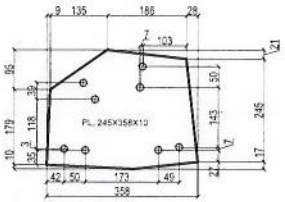

04 PLATE

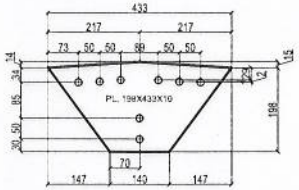

05 PLATE

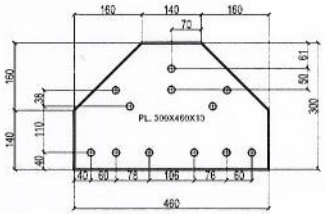

06 PLATE

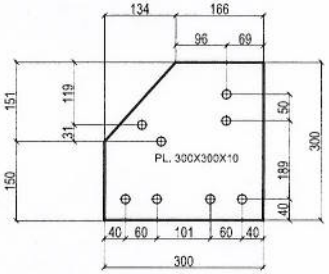

07 PLATE

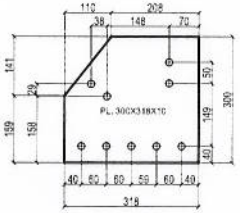

08 PLATE

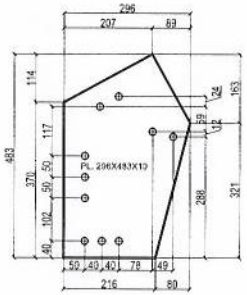

09 PLATE

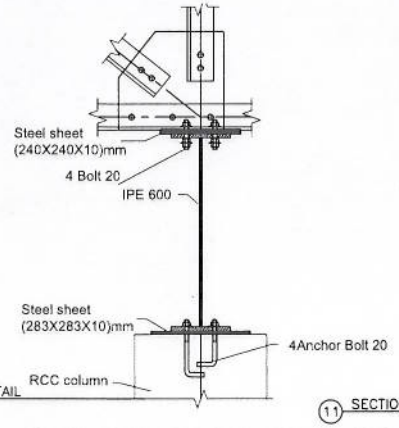

10 DETAIL

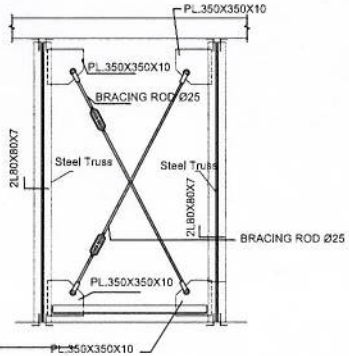

11 SECTION

NOTES:
1. ALL DIMENSIONS ARE IN MILLIMETERS AND ELEVATION IN METERS.
2. ALL STEEL PLATES & SECTIONS SHALL BE A36M.
3. ALL BOLTS SHALL BE A325-N.
4. FOR PLATE WELDING, E70 ELECTRODE (FY=4900KG/CM2) SHALL BE USED.
5. WELDING SHOULD BE PERFORMED IN FACTORY AND WATCH FULL INSPECTION SHALL BE DONE.
6. THICKNESS OF STEEL GUSSET PLATE IS NOT LESS THEN 10mm.
7. ALL HOWELL OF THE PLATES ARE Ø 16.2mm

GRAPH SCALE: 0 25 100 200

REVDATE	BY	SUB	APP	DESCRIPTION

DESIGNER: STEWART VIKTOR
DRAWN: ABDULLAKIM
CHECKED: STEWART VIKTOR
APPROVED BY: DAVID WHEELER
DATE: 27 JULY 2010

AFGHAN NATIONAL SECURITY FORCE
Comprehensive Plan for Facilities Development
WEISH BORDER FACILITY
PORT OF ENTRY
BUS SUNSHADE
DETAILS

SCALE: AS SHOWN
PROJECT NO. -

S13

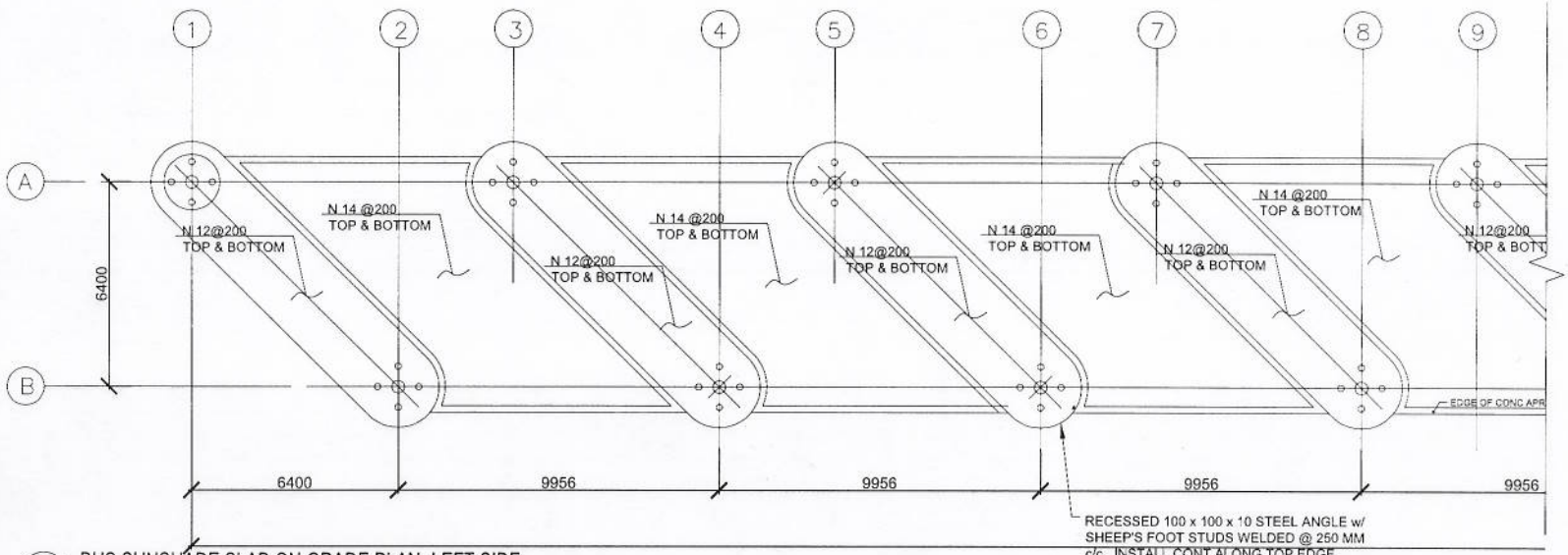

1 BUS SUNSHADE SLAB ON GRADE PLAN- LEFT SIDE

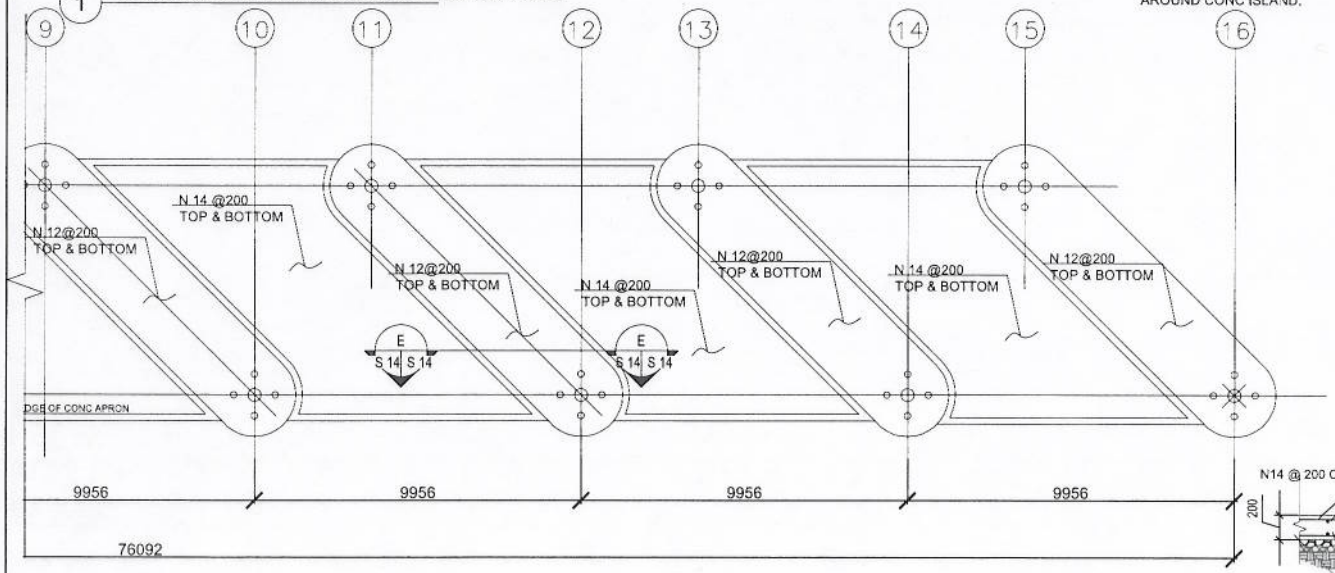

2 BUS SUNSHADE SLAB ON GRADE-RIGHT SIDE

GRAPH SCALE: 0 1500 5000 10000

Notes

1- ALL DIMENSIONS ARE IN MM UNLESS OTHERWISE SPECIFIED.
2- THE STEEL GRADE SHALL BE Fy=60 KSI(Fy=4220Kg/cm²)
3- FOR CAST-IN-PLACE STRUCTURAL CONCRETE,MINIMUM 28 DAYS, CYLINDER STRENGTH f'c=4000 PSI(f'c=280Kg/cm²).

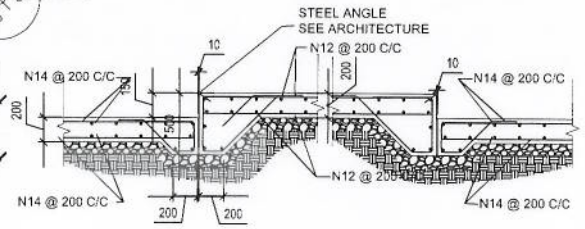

E SECTION

AFGHAN NATIONAL SECURITY FORCE
Comprehensive Plan for Facilities Development
WEISH BORDER FACILITY
PORT OF ENTRY
BUS SUNSHADE
SLAB ON GRADE

DESIGNED STEGMEIR VIKTOR
DRAWN ABDULLAH.M
CHECKED STEGMEIR VIKTOR
IN CHARGE DAVID WHEELER
DATE 27 JULY 2010

REV DATE BY SUB APP DESCRIPTION

SCALE AS SHOWN
PROJECT NO. -

S14

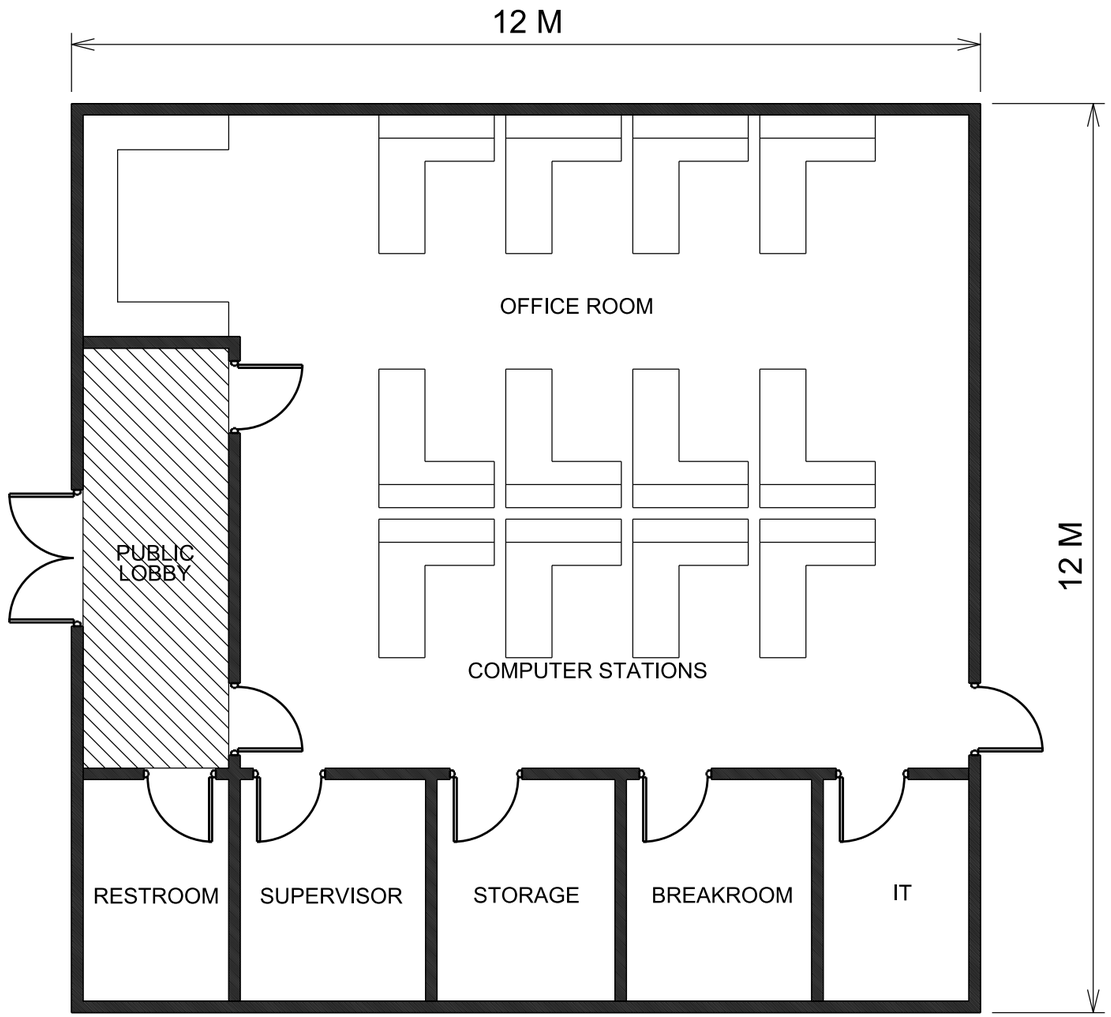

BORDER DATA MANAGMENT

- GENERAL LAYOUT -

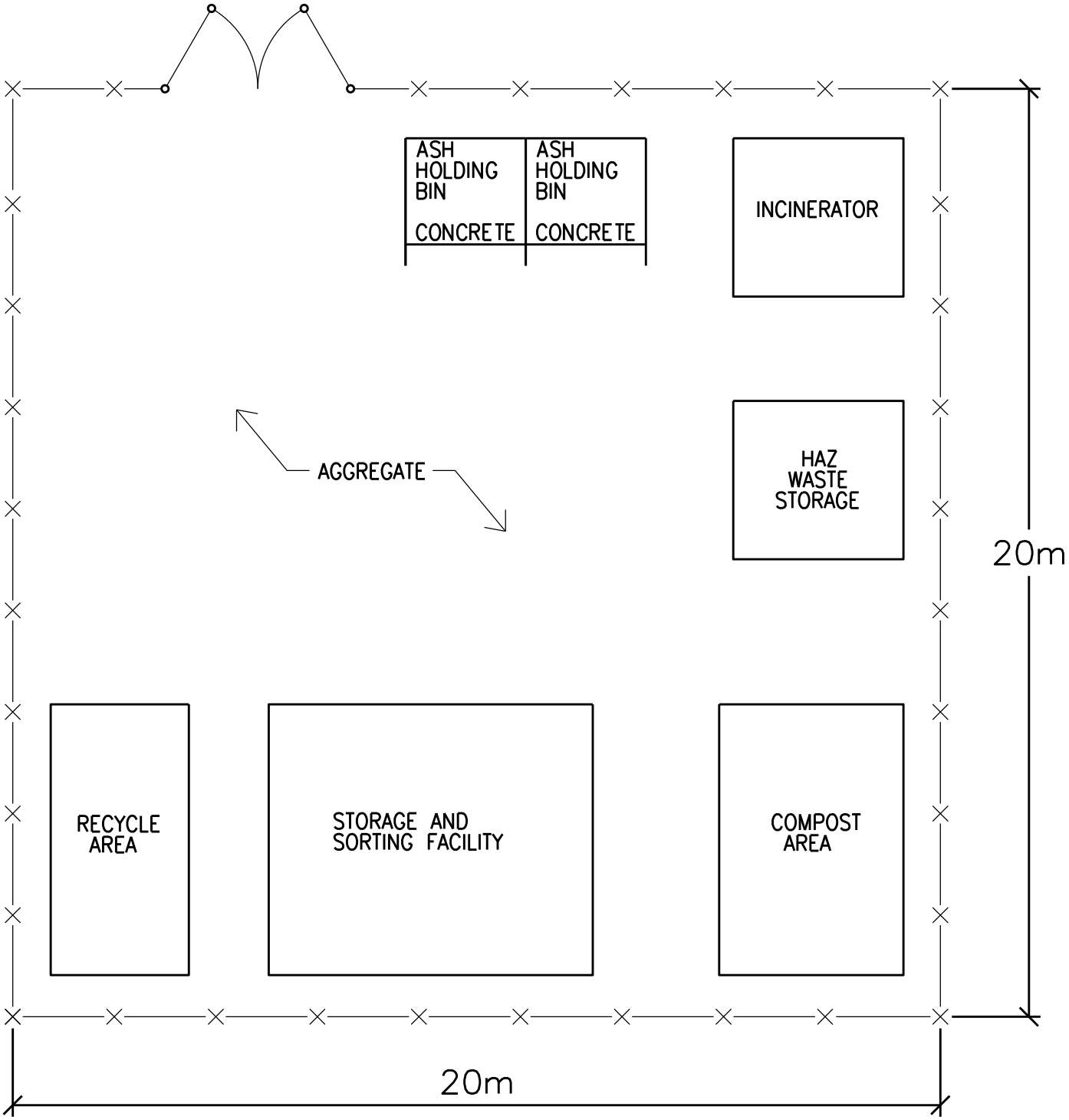

INCINERATOR FACILITY

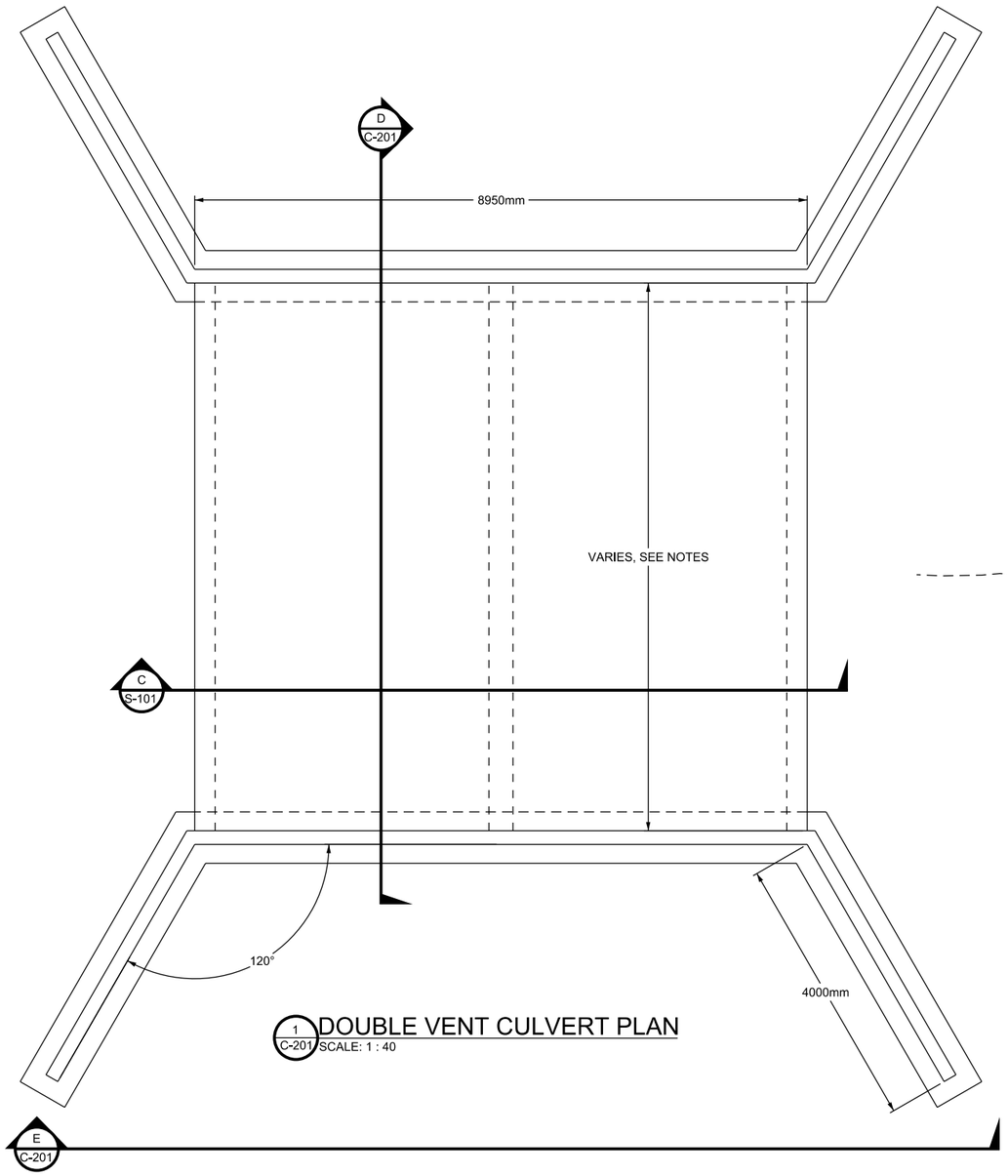

1 C-201 DOUBLE VENT CULVERT PLAN
SCALE: 1 : 40

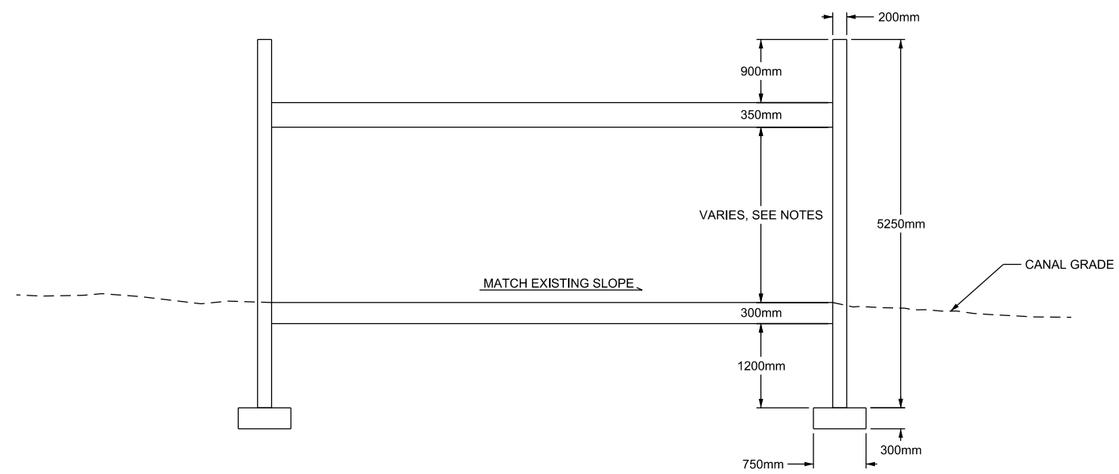

D C-201 DOUBLE VENT CULVERT SECTION
SCALE: 1 : 40

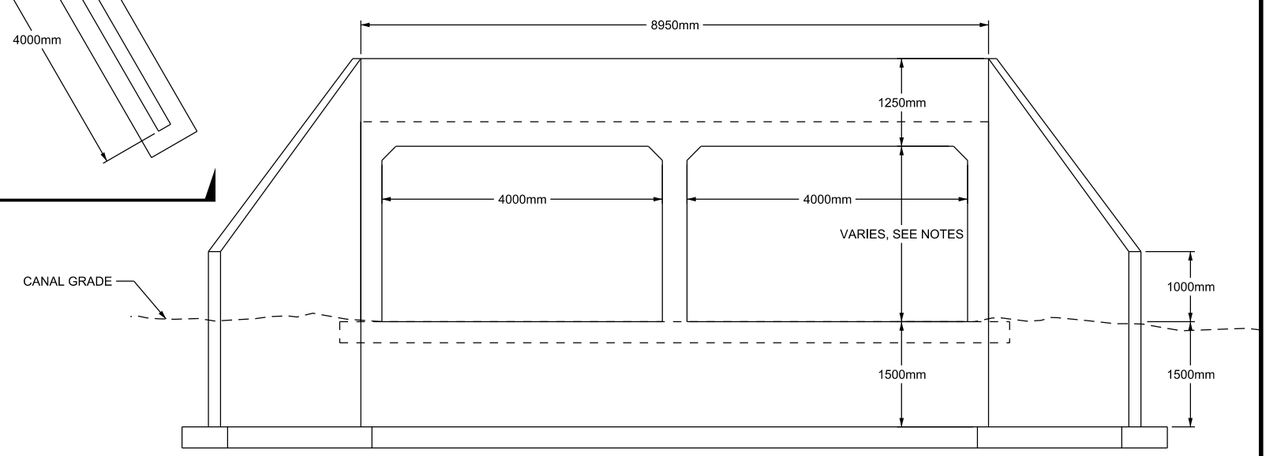

E C-201 DOUBLE VENT HEADWALL ELEVATION
SCALE: 1 : 40

NOTES:

GENERAL

VENT OPENING HEIGHT WILL VARY BETWEEN 2000mm AND 4000mm.

THE DRIVING SURFACE OF THE CULVERTS SHALL BE 8 METERS MINIMUM. THIS WIDTH VARRIES WITH THE SKEW OF THE CULVERT ACROSS THE CANALS.

ADDITIONAL VENTS SHALL BE ADDED AS REQUIRED TO SPAN THE CANALS.

ALL CONSTRUCTION SHALL BE CAST IN PLACE REINFORCED CONCRETE.

CULVERT AND RETAINING WALL THICKENESSES SHOWN ARE MINIMUM ACCEPTABLE THICKNESSES. INCREASE WALL THICKNESS TO SUPPORT THE DESIGN LOADS IF NECESSARY.

THE RETAINING WALLS SHALL BE DESIGNED TO WITHSTAND COMPLETE SOIL SATURATION IN COMBINATION WITH THE DESIGN VEHICLE LOADS.

HEADWALLS AND WING WALLS

WING WALL FOUNDATION DIMENSIONS SHALL BE ADJUSTED AS REQUIRED TO SUPPORT THE DESIGN LOAD CONDITIONS.

GRAPHIC SCALE

2000 800 400 0 2000 4000

SCALE: 1 : 40

US ARMY CORPS OF ENGINEERS AFGHANISTAN ENGINEER DISTRICT - SOUTH

SYMBOL	DESCRIPTION	DATE	APPR.

SYMBOL	DESCRIPTION	DATE	APPR.

DESIGNED BY: LEWIS NATHAN EPPS
DWN BY: LNE
CKD BY:
REVIEWED BY:
SUBMITTED BY:
DATE: xx-xx-xx
DESIGN FILE NO.
DRAWING CODE:
FILE NAME:
PLOT SCALE:
PLOT DATE: xx-xx-xx
REV.

U.S. ARMY CORPS OF ENGINEERS
AFGHANISTAN ENGINEER DISTRICT - SOUTH
APO AE 09355
KANDAHAR, AFGHANISTAN

ENGINEERING AND CONSTRUCTION DIVISION

HIGHWAY 615
NAWA TO LASHKAR GAH
HELMAND PROVINCE, AFGHANISTAN

DOUBLE VENT CULVERT

SHEET REFERENCE NUMBER:
C-201
SHEET — OF —

A1 Size 594mm x 841mm

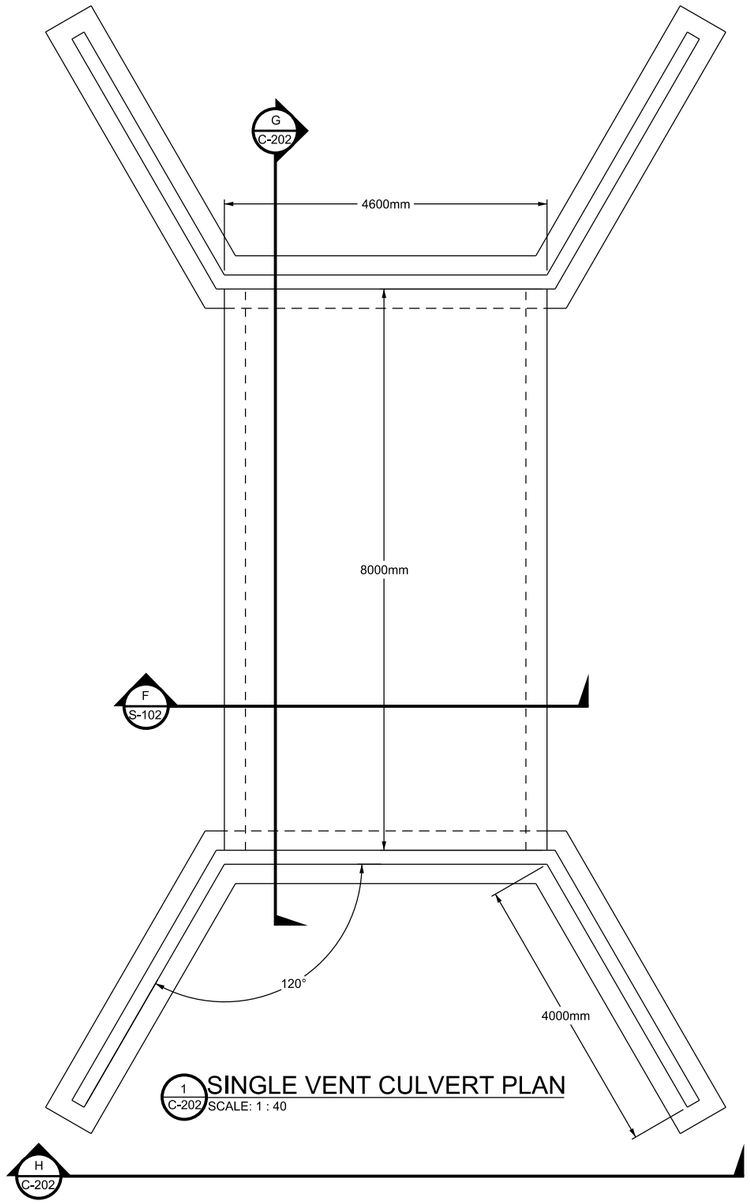

1 C-202 SINGLE VENT CULVERT PLAN
SCALE: 1 : 40

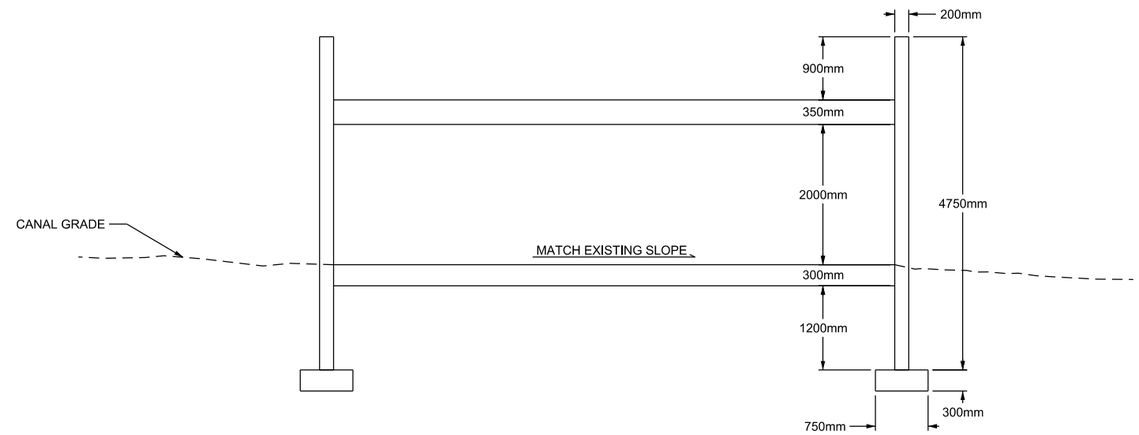

G C-202 SINGLE VENT CULVERT SECTION
SCALE: 1 : 40

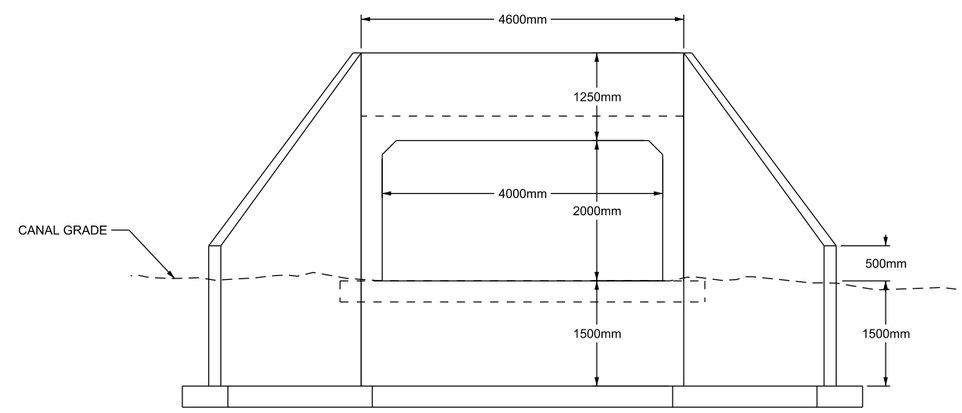

H C-202 SINGLE VENT HEADWALL ELEVATION
SCALE: 1 : 40

GRAPHIC SCALE

2000 800 400 0 2000 4000

SCALE: 1 : 40

NOTES:

GENERAL

ALL CONSTRUCTION SHALL BE CAST IN PLACE REINFORCED CONCRETE.

CULVERT AND RETAINING WALL THICKENESSES SHOWN ARE MINIMUM ACCEPTABLE THICKNESSES. INCREASE WALL THICKNESS TO SUPPORT THE DESIGN LOADS IF NECESSARY.

ALL REINFORCEMENT SHALL BE DESIGNED TO SUPPORT THE DESIGN VEHICLE ON THE ROADWAY.

THE RETAINING WALLS SHALL BE DESIGNED TO WITHSTAND COMPLETE SOIL SATURATION IN COMBINATION WITH THE DESIGN VEHICLE LOADS.

HEADWALLS AND WING WALLS

WING WALL FOUNDATION DIMENSIONS SHALL BE ADJUSTED AS REQUIRED TO SUPPORT THE DESIGN LOAD CONDITIONS.

US ARMY CORPS OF ENGINEERS
AFGHANISTAN
ENGINEER DISTRICT - SOUTH

SYMBOL	DESCRIPTION	DATE	APPR.

SYMBOL	DESCRIPTION	DATE	APPR.

DESIGNED BY: LEWIS NATHAN EPPS
DWN BY: CKD BY:
LNE
REVIEWED BY:
SUBMITTED BY:
DATE: xx-xx-xx
DESIGN FILE NO.
DRAWING CODE:
FILE NAME:
PLOT SCALE:
PLOT DATE: xx-xx-xx
REV.

U.S. ARMY CORPS OF ENGINEERS
AFGHANISTAN ENGINEER DISTRICT - SOUTH
APO AE 09355
KANDAHAR, AFGHANISTAN

ENGINEERING AND CONSTRUCTION DIVISION

HIGHWAY 615
NAWA TO LASHKAR GAH
HELMAND PROVINCE, AFGHANISTAN

SINGLE VENT CULVERT

SHEET REFERENCE NUMBER:
C-202
SHEET — OF —

A1 Size 594mm x 841mm

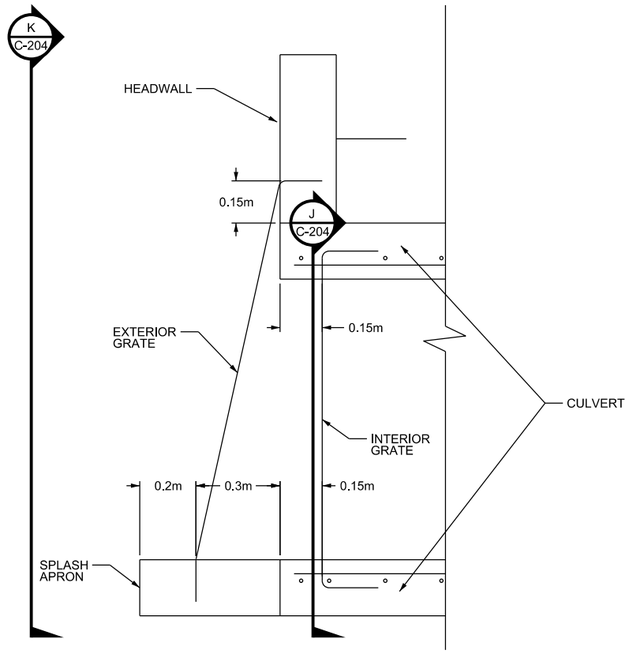

1 C-204 CULVERT DENIAL GRATE SECTION
SCALE: 1 : 10

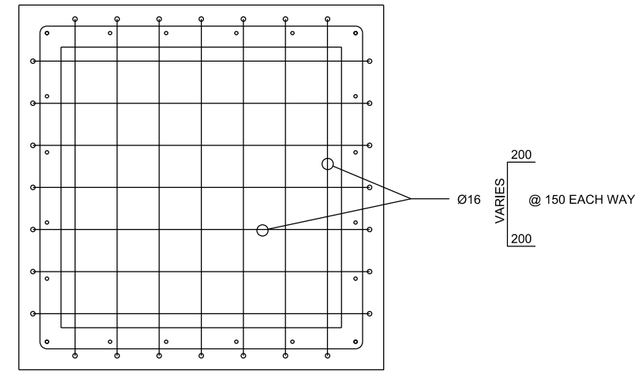

J C-204 CULVERT DENIAL INTERIOR GRATE SECTION
SCALE: 1 : 10

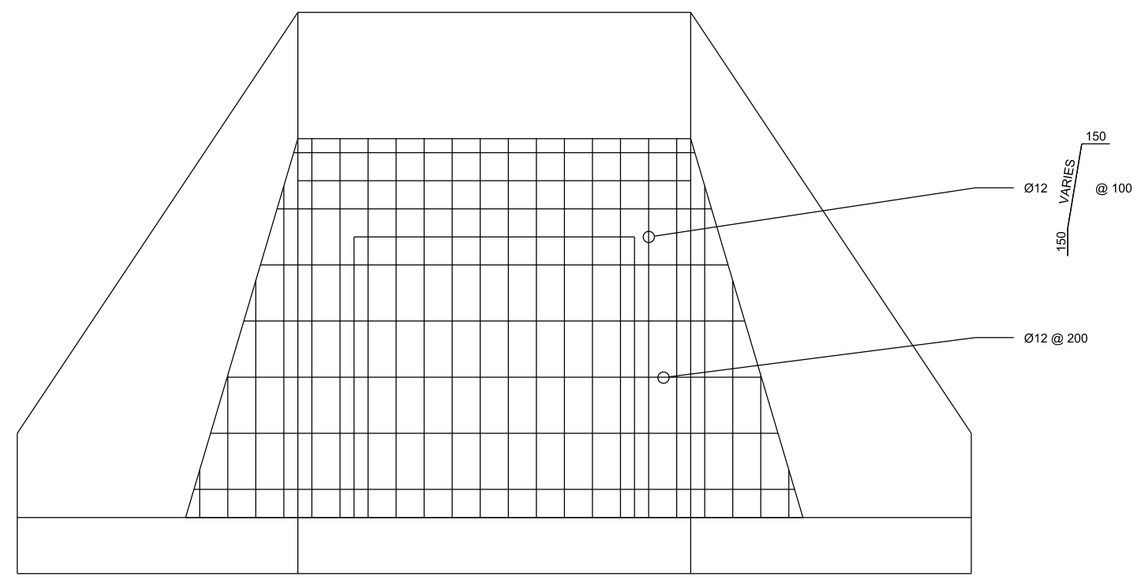

K C-204 CULVERT DENIAL EXTERIOR GRATE ELEVATION
SCALE: 1 : 10

NOTES:

GENERAL

MINIMUM CULVERT OPENING SHALL BE 1 METER x 1 METER OR A 1 METER DIAMETER PIPE.

CULVERT DENIAL SHALL BE INSTALLED ON ALL CULVERTS WITH OPENINGS SMALLER THAN 2 METERS x 2 METERS.

GRATES SHALL EITHER BE CAST INTO CONCRETE OR ATTACHED WITH HOOKS DRILLED AND EPOXIED INTO CONCRETE. MINIMUM EMBEDMENT OF BARS INTO THE CONCRETE FOR EITHER METHOD IS 150 MILIMETERS.

EXTERIOR DENIAL GRATE

EXTERIOR GRATES SHALL BE SIZED AND SHAPED TO FIT THE HEADWALL OF EACH CULVERT.

EXTERIOR BARS SHALL BE EMBEDDED A MINIMUM OF 150 MILIMETERS INTO THE HEADWALLS AT BOTH ENDS.

VERTICAL BARS SHALL BE PLACED ON THE OUTSIDE OF THE DENIAL GRATE.

ADDITIONAL HEADWALL REINFORCING BARS SHALL BE PLACED ACROSS THE EMBEDDED ENDS OF THE VERTICAL BARS OF THE EXTERIOR DENIAL GRATE.

HEADWALLS MUST BE CONSTRUCTED OF CAST IN PLACE CONCRETE TO A MINIMUM OF 200 MILIMETERS BEYOND THE EXTENT OF THE EXTERIOR GRATE. STONE MASONRY CONSTRUCTION IS PROHIBITED WITHIN THESE EXTENTS.

INTERIOR DENIAL GRATE

ADDITIONAL CULVERT REINFORCING BARS SHALL BE PLACED AT THE BENDS IN ALL BARS OF THE INTERIOR DENIAL GRATE.

IF THE INTERIOR GRATE IS CONSTRUCTED AS A PRE-CAST UNIT, THE LENGTH OF THE UNIT SHALL BE A MINIMUM OF 1 METER.

GRAPHIC SCALE

500 200 100 0 500 1000

SCALE: 1 : 10

US ARMY CORPS OF ENGINEERS
AFGHANISTAN
ENGINEER DISTRICT - SOUTH

SYMBOL	DESCRIPTION	DATE	APPR.	SYMBOL	DESCRIPTION	DATE	APPR.

DESIGNED BY: EMRS/MULTI-MAN EPPS
DWN BY: LINE
CKD BY:
REVIEWED BY:
SUBMITTED BY:
DATE: XX-XX-XX
DESIGN FILE NO.:
DRAWING CODE:
FILE NAME:
PLOT SCALE:
PLOT DATE: XX-XX-XX
REV: __

U.S. ARMY CORPS OF ENGINEERS
AFGHANISTAN ENGINEER DISTRICT - SOUTH
APO AE 09355
KANDAHAR, AFGHANISTAN

ENGINEERING AND CONSTRUCTION DIVISION

HIGHWAY 615
NAWA TO LASHKAR GAH
HELMAND PROVINCE, AFGHANISTAN

CULVERT DENIAL DETAILS

SHEET REFERENCE NUMBER:
C-204
SHEET — OF —

A1 Size 594mm x 841mm

GRAPHIC SCALE

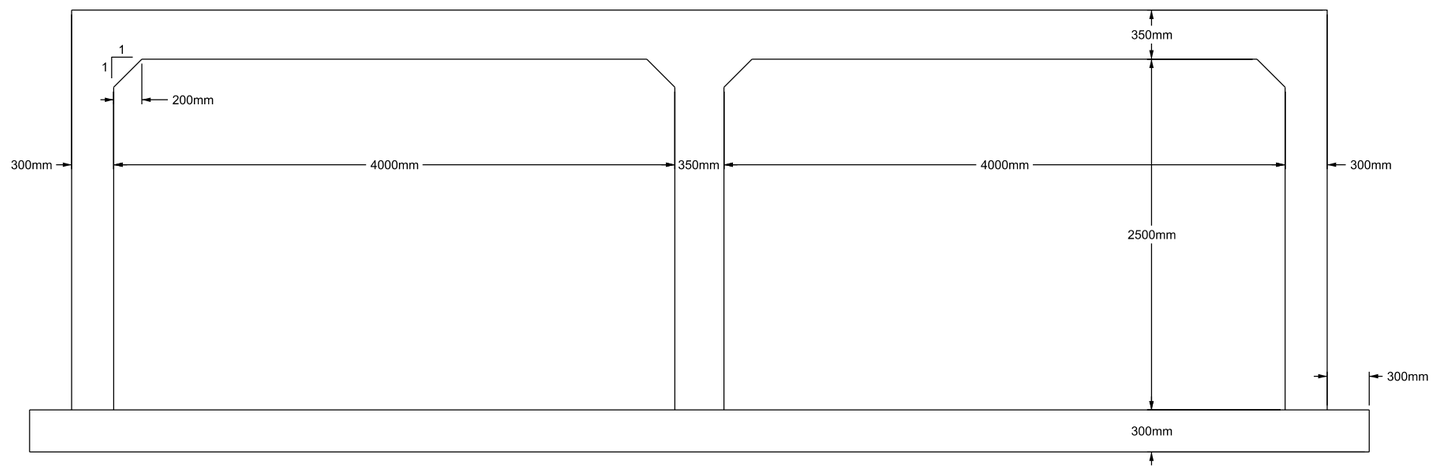

C S-101 DOUBLE VENT CULVERT SECTION
SCALE: 1 : 20

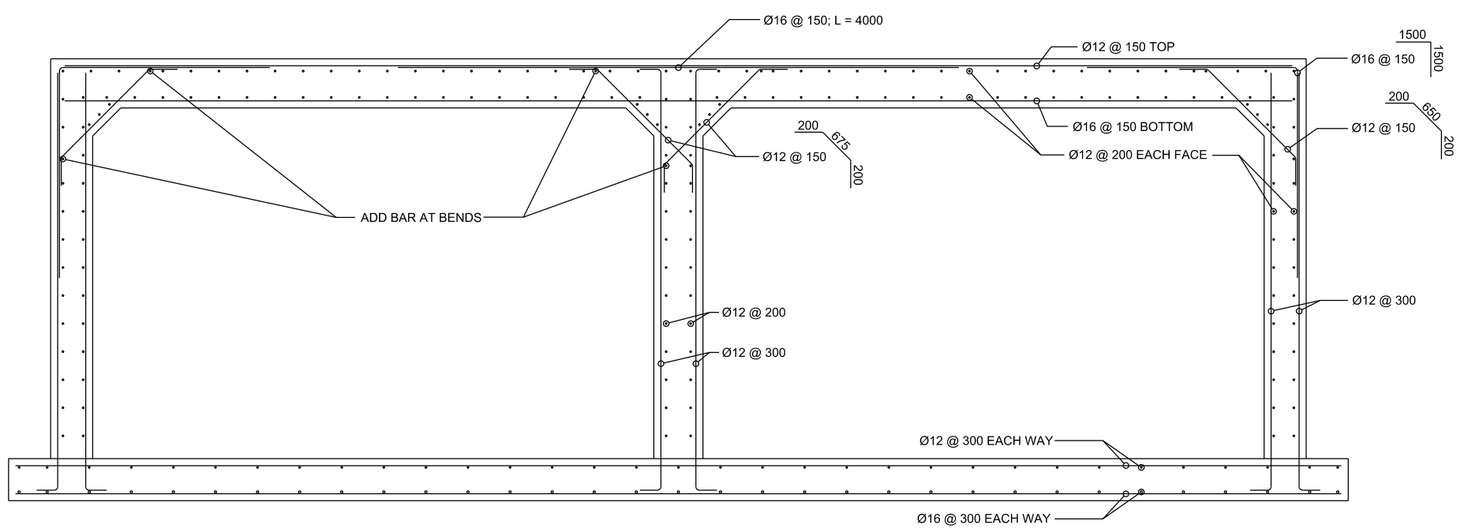

L S-101 DOUBLE VENT CULVERT REINFORCEMENT
SCALE: 1 : 20

US ARMY CORPS OF ENGINEERS
AFGHANISTAN
ENGINEER DISTRICT - SOUTH

SYMBOL	DESCRIPTION	DATE	APPR.	SYMBOL	DESCRIPTION	DATE	APPR.

DESIGNED BY: ESTIS-NATIONAL EPPS
DWN BY: LNE
CKD BY:
REVIEWED BY:
SUBMITTED BY:
DATE: XX-XX-XX
DESIGN FILE NO.:
DRAWING CODE:
FILE NAME:
PLOT SCALE:
PLOT DATE: XX-XX-XX
REV.:

U.S. ARMY CORPS OF ENGINEERS
AFGHANISTAN ENGINEER DISTRICT - SOUTH
APO AE 09355
KANDAHAR, AFGHANISTAN

ENGINEERING AND CONSTRUCTION DIVISION

HIGHWAY 615
NAWA TO LASHKAR GAH
HELMAND PROVINCE, AFGHANISTAN

DOUBLE VENT CULVERT
STRUCTURAL DETAILS

SHEET REFERENCE NUMBER:
S-101
SHEET — OF —

A1 Size 594mm x 841mm

GRAPHIC SCALE

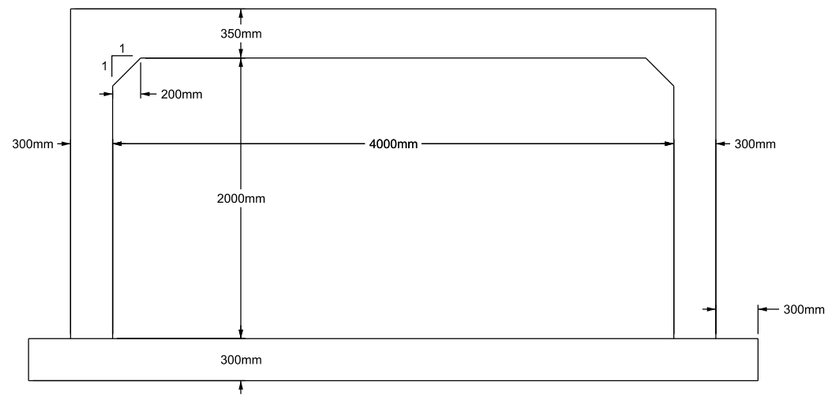

F
S-102
SINGLE VENT CULVERT SECTION
SCALE: 1 : 20

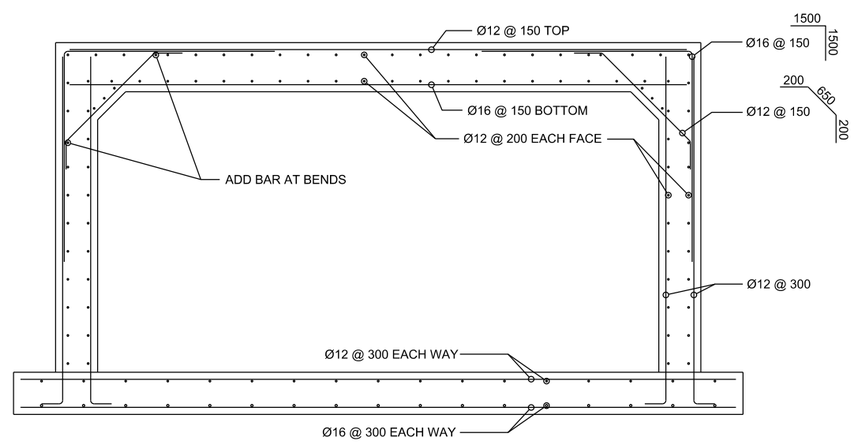

M
S-102
SINGLE VENT CULVERT REINFORCEMENT
SCALE: 1 : 20

US ARMY CORPS OF ENGINEERS AFGHANISTAN ENGINEER DISTRICT - SOUTH

SYMBOL	DESCRIPTION	DATE	APPR.	SYMBOL	DESCRIPTION	DATE	APPR.

DESIGNED BY: LEWIS NATHAN EPPS
DWN BY: LNE
CKD BY:
REVIEWED BY:
SUBMITTED BY:
DATE: xx-xx-xx
DESIGN FILE NO.
DRAWING CODE:
FILE NAME:
PLOT SCALE:
PLOT DATE: xx-xx-xx
REV.

U.S. ARMY CORPS OF ENGINEERS
AFGHANISTAN ENGINEER DISTRICT - SOUTH
APO AE 09355
KANDAHAR, AFGHANISTAN

ENGINEERING AND CONSTRUCTION DIVISION

HIGHWAY 615
NAWA TO LASHKAR GAH
HELMAND PROVINCE, AFGHANISTAN

SINGLE VENT CULVERT STRUCTURAL DETAILS

SHEET REFERENCE NUMBER:
S-102
SHEET — OF —

A1 Size 594mm x 841mm

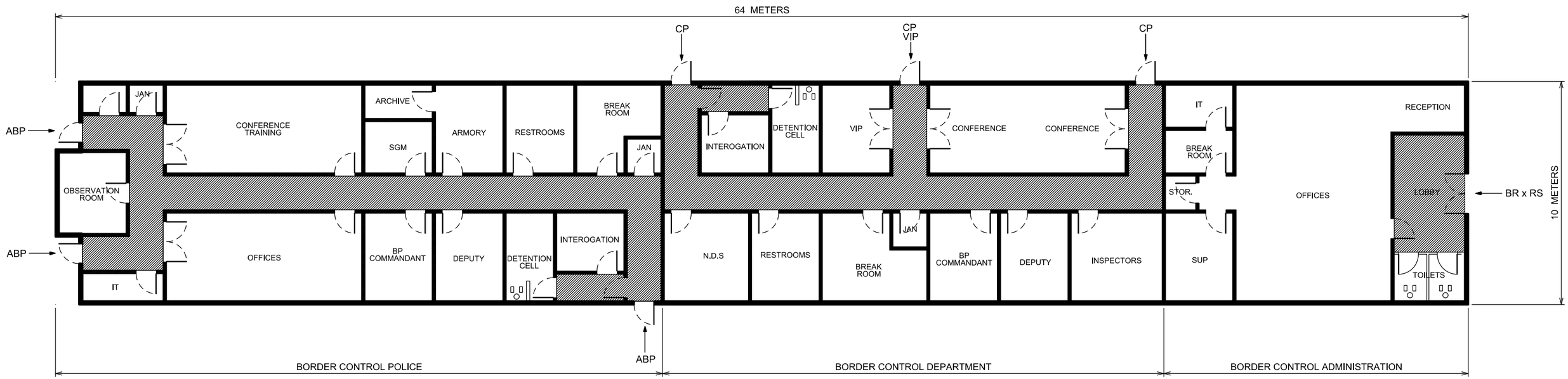

BORDER CONTOL ADMINISTRATION

- GENERAL LAYOUT -