APPENDIX B-3

REFERENCE DRAWINGS

INDEX

AF-0701	ANP HEADQUARTERS (2 STORY) COMPOUND

Afghanistan National Police (ANP)

District Headquarters Compounds

1 Story HQ

Various Locations, Afghanistan

US Army Corps
of Engineers
Afghanistan Engineer District

29 October 2007

AF0607A–AR061

DRAWING INDEX

SHT.REF. NO.	FILE NO.	REVISIONS REV. NO.	REVISIONS AM/COP NO.	TITLE
				GENERAL
G–1	AF0607––GI01GN			DRAWING INDEX
				SITE DESIGN
C–1	AF0607––CI01PN			SITE PLAN
C–2	AF0607––CI02DT			DETAILS
C–3	AF0607––CI03DT			DETAILS
C–4	AF0607––CI04DT			WELL HOUSE PLAN AND SECTION
C–5	AF0607––CI05DT			SEPTIC TANK DETAILS
XM–1	AF0607––MS01PN			MECHANICAL SITE PLAN
XE–1	AF0607––ES01PN			ELECTRICAL SITE PLAN
				1 STORY BUILDING (A)
A–1	AF0607A–AR01PN			FIRST FLOOR PLAN
A–2	AF0607A–AR02PN			ROOF PLAN
A–3	AF0607A–AR03SE			BUILDING SECTIONS
A–4	AF0607A–AR04SE			WALL SECTION
A–5	AF0607A–AR05EL			BUILDING ELEVATIONS
A–6	AF0607A–AR06EL			BUILDING ELEVATIONS
A–7	AF0607A–AR07LS			ENLARGED TOILET PLANS
A–8	AF0607A–AR08SC			DOOR SCHEDULE AND DOOR TYPES
A–9	AF0607A–AR09SC			ROOM FINISH SCHEDULE
S–1	AF0607A–SB01PN			FOUNDATION PLAN
S–2	AF0607A–SB02PN			GRADE BEAM PLAN
S–3	AF0607A–SB03PN			LOWER ROOF BEAM PLAN
S–4	AF0607A–SB04PN			HIGH ROOF BEAM PLAN
S–5	AF0607A–SB05DT			FOOTING AND COLUMN DETAILS
S–6	AF0607A–SB06DT			BEAM DETAILS
S–7	AF0607A–SB07DT			STANDARD BEAM AND COLUMN DETAILS
M–1	AF0607A–MH01PN			HVAC PLAN
M–2	AF0607A–MH02PN			HEATING PLAN
M–3	AF0607A–MH03PN			ROOF PLAN
P–1	AF0607A–MP01PN			PLUMBING PLAN
P–2	AF0607A–MP02LS			ENLARGED PLUMBING PLANS –DOMESTIC WATER
P–3	AF0607A–MP03LS			ENLARGED PLUMBING PLANS –WASTE AND DRAINS
P–4	AF0607A–MP04LS			ENLARGED PLUMBING PLANS –WASTE AND DRAINS
P–5	AF0607A–MP05DI			DOMESTIC WATER RISER DIAGRAM
P–6	AF0607A–MP06SC			PLUMBING SCHEDULES
E–1	AF0607A–EL01PN			LIGHTING PLAN
E–2	AF0607A–EP02PN			POWER PLAN
E–3	AF0607A–EC03PN			PANEL SCHEDULE
				GUARD TOWER (B)
A–1	AF0607B–AR01PN			FLOOR PLAN, SECTION ELEVATION AND ROOF PLAN
S–1	AF0607B–SB01PN			FOUNDATION AND SLAB PLAN ROOF FRAMING PLAN
E–1	AF0607B–EL01PN			LIGHTING & POWER PLAN
				GUARD SHACK (C)
A–1	AF0607C–AR01PN			FLOOR PLANS AND ELEVATIONS
S–1	AF0607C–SB01PN			FOUNDATION AND SLAB PLAN ROOF FRAMING PLAN
E–1	AF0607C–EL01PN			LIGHTING PLAN
				POWER PLANT (D)
E–1	AF0607D–EP01DI			ONE LINE DIAGRAM
				WELL HOUSE (E)
A–1	AF0607E–AR01PN			FLOOR PLAN, ELEVATIONS AND SCHEDULES
S–1	AF0607E–SB01PN			FOUNDATION PLAN AND ROOF PLAN
S–2	AF0607E–SB02DT			FOOTING DETAILS
S–3	AF0607E–SF03DT			SLAB–ON–GRADE DETAILS
S–4	AF0607E–SF04DT			ROOF BEAM AND STRUCTURAL SLAB DETAILS
M–1	AF0607E–MH01PN			HVAC PLAN
E–1	AF0607E–EL01PN			LIGHTING AND POWER PLAN
E–2	AF0607E–EL02SC			ELECTRICAL SCHEDULES

SHT.REF. NO.	FILE NO.	REVISIONS REV. NO.	REVISIONS AM/COP NO.	TITLE
				STANDARD DETAILS
SA–1	AF0607$–AR01GN			ABBREVIATIONS AND SYMBOLS
SA–2	AF0607$–AR02DT			WALL SECTION AND ROOF DETAILS
SS–1	AF0607$–SB01GN			GENERAL NOTES AND ABBREVIATIONS
SS–2	AF0607$–SB02DT			STANDARD DETAILS
SS–3	AF0607$–SB03DT			DETAILS
SM–1	AF0607$–MH01GN			LEGEND AND ABBREVIATIONS
SM–2	AF0607$–MH02SC			MECHANICAL SCHEDULES
SM–3	AF0607$–MH03DT			MECHANICAL STANDARD DETAILS
SP–1	AF0607$–MP01GN			LEGENDS AND ABBREVIATIONS
SP–2	AF0607$–MP02DT			STANDARD PLUMBING DETAILS
SP–3	AF0607$–MP03DT			STANDARD PLUMBING DETAILS
SE–1	AF0607$–EL01GN			LEGEND AND ABBREVIATIONS
SE–2	AF0607$–EL02DT			STANDARD LIGHTING DETAILS
SE–3	AF0607$–EL03DT			DUCTBANK DETAILS
SE–4	AF0607$–EL04DT			STANDARD ELECTRICAL DETAILS
SE–5	AF0607$–EL05DT			POWER PLANT DETAILS
SE–6	AF0607$–EL06DT			HAND HOLE DETAILS

SYMBOL	DESCRIPTION	DATE	APR

DESIGNED BY: | DATE: 29 OCTOBER 2007
DWN BY: | SUBMITTED BY:
CHK BY: | FILE NO.:

US Army Corps of Engineers
Afghanistan Engineer District

AFGHANISTAN NATIONAL POLICE (ANP) DISTRICT HEADQUARTERS COMPOUNDS – 1 STORY HQ
VARIOUS LOCATIONS, AFGHANISTAN

DRAWING INDEX

SHEET REFERENCE NUMBER:
G–1

10/27/2007
S:\Engineering & Construction\Engineering\00_RFPs in-progress\ANP\ANP ON_1-Story Design\ANP_Dist_HQ_1Story_Design_Changes_26Oct07\Microstation Files\gen\AF0607-GI01GN.dgn

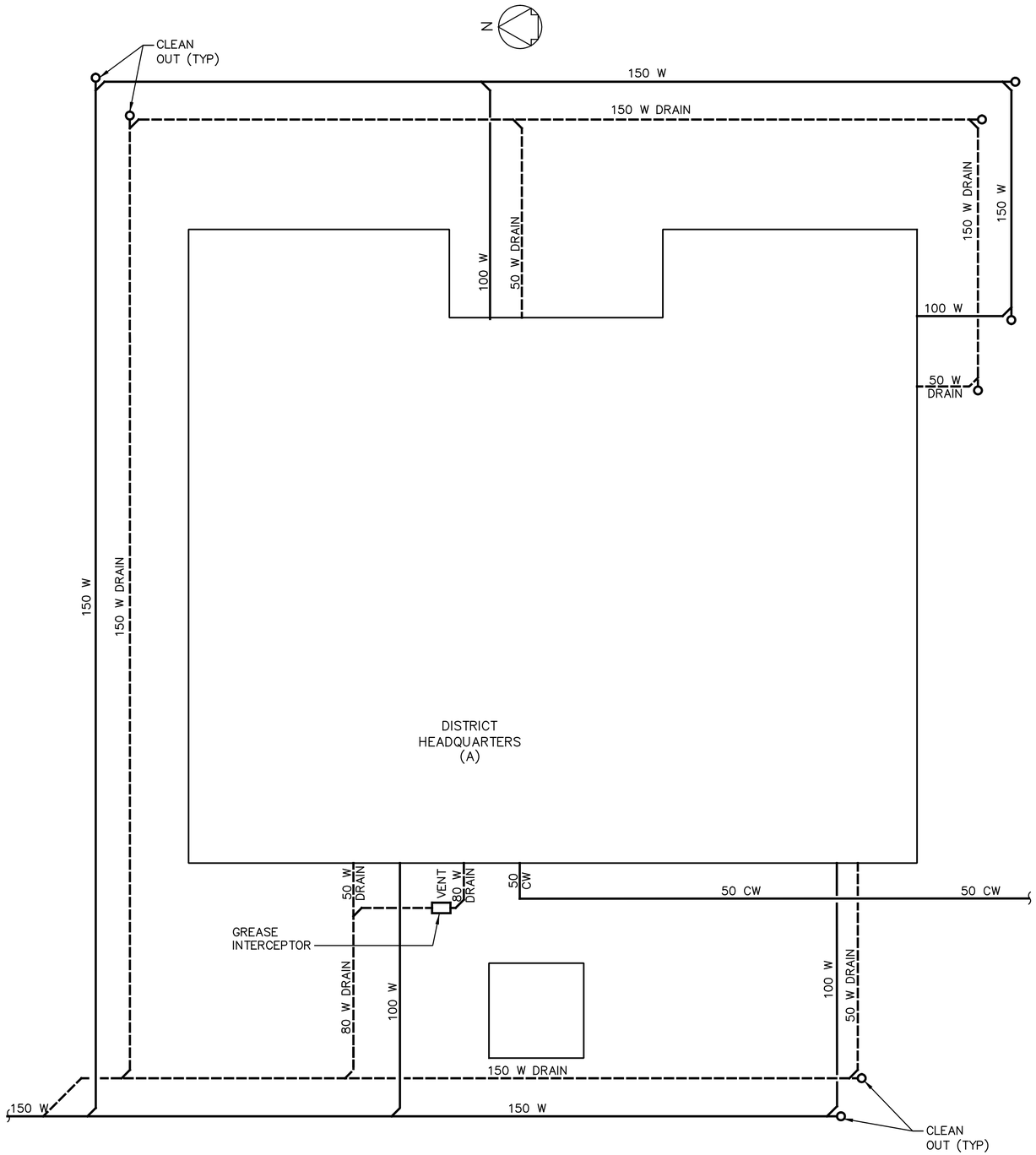

ENLARGED UTILITY SITE PLAN
SCALE= 1:100

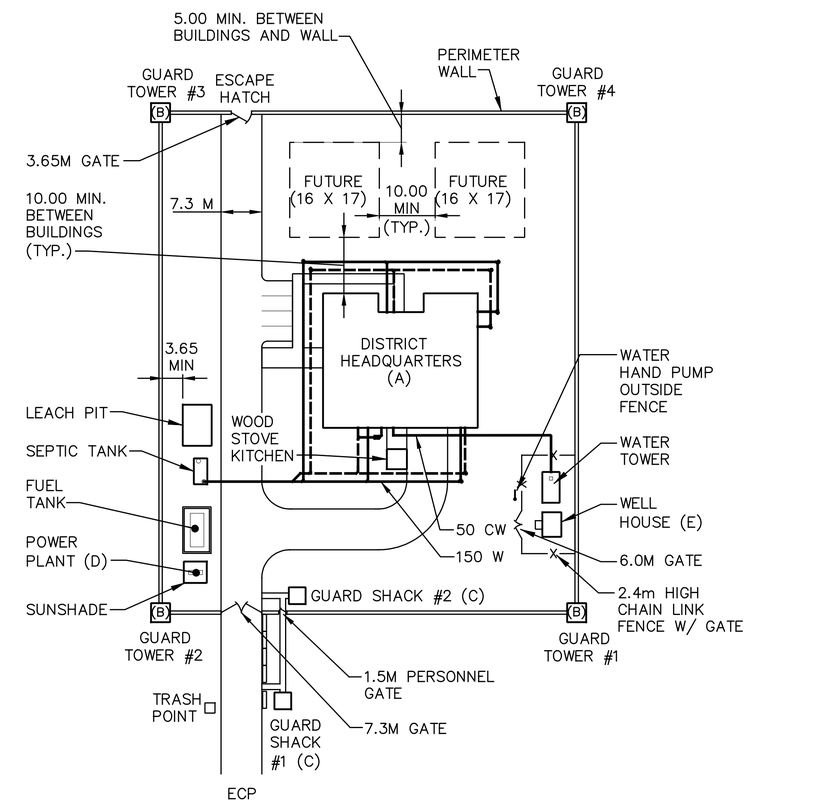

1:100
1:600

SYMBOL	DESCRIPTION	DATE	APR

DESIGNED BY: JLK
DATE: 29 OCTOBER 2007
DWN BY: JLK
SUBMITTED BY:
CHK BY: JLK
FILE NO.: AF0607---C01PN

US Army Corps of Engineers
Afghanistan Engineer District

AFGHANISTAN NATIONAL POLICE (ANP) DISTRICT HEADQUARTERS COMPOUNDS – 1 STORY HQ
VARIOUS LOCATIONS, AFGHANISTAN
SITE DESIGN
SITE PLAN

SHEET REFERENCE NUMBER:
C–1

10/22/2007
S:\Engineering & Construction\Engineering\00_RFPs in-progress\ANP\ANP ONE-Story Design\ANP_Dist_HQ_1Story_Design_Changes_26Oct07\Microstation Files\civil\AF0607-C01PN.dgn

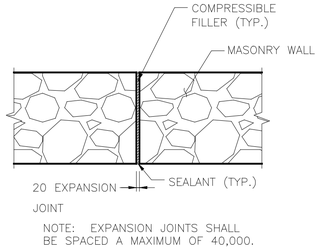

STONE WALL
EXPANSION JOINT DETAIL
NOT TO SCALE

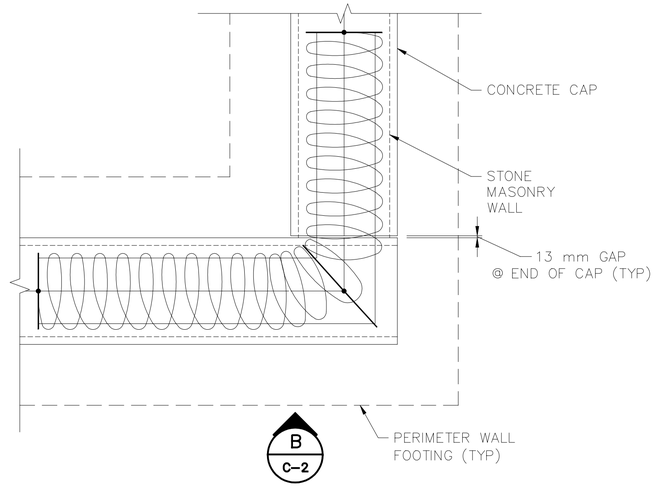

PERIMETER – STONE WALL CORNER – PLAN
(END CONDITION SIMILAR)
NOT TO SCALE

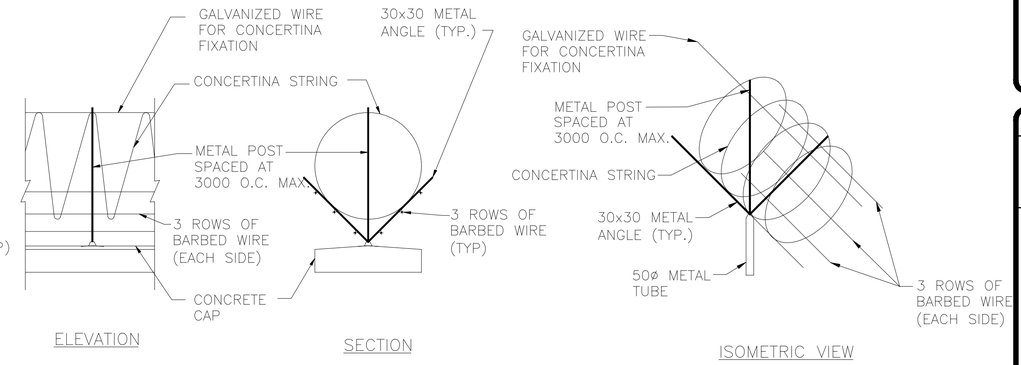

CONCERTINA STRING & BARBED WIRE DETAILS
NOT TO SCALE

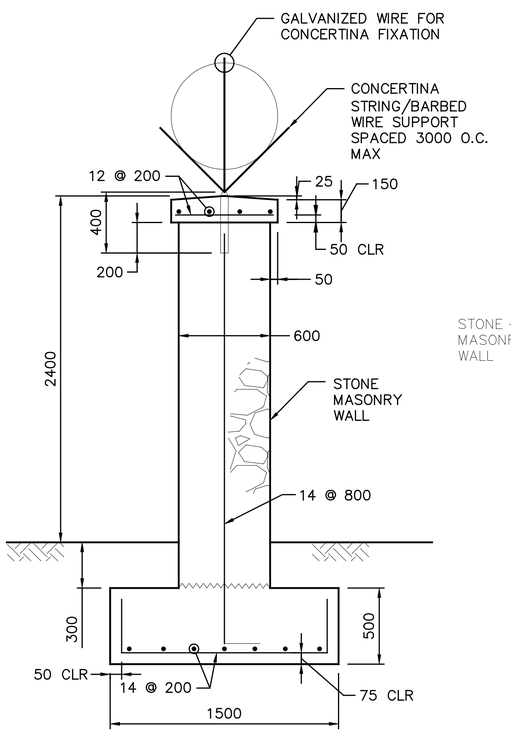

SECTION
SCALE=NO SCALE
A
C-2 C-2

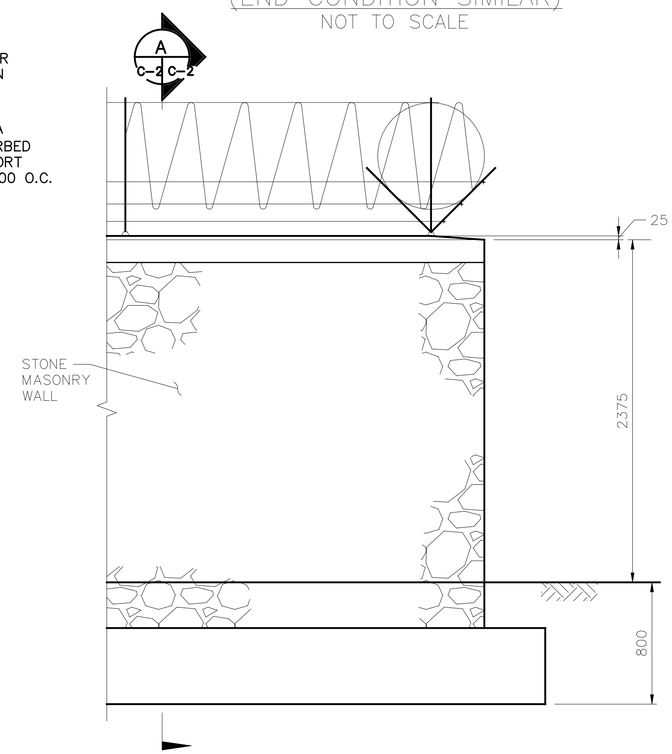

ELEVATION
SCALE=NO SCALE
B
C-2 C-2

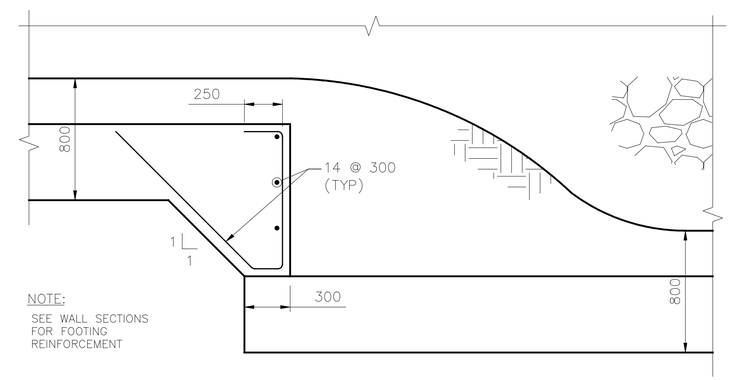

NOTE:
SEE WALL SECTIONS FOR FOOTING REINFORCEMENT

STEPPED FOOTING DETAIL FOR
GRADE CHANGE GREATER THAN 15 DEGREES
NOT TO SCALE

UNLESS OTHERWISE NOTED, LINEAR DIMENSIONS SHOWN ARE IN MILLIMETERS.

SYMBOL	DESCRIPTION	DATE	APR

DESIGNED BY: MW
DATE: 29 OCTOBER 2007
DWN BY: TSR
SUBMITTED BY:
CHK BY: REK
FILE NO.: AF0607-C102DT

US Army Corps of Engineers
Afghanistan Engineer District

AFGHANISTAN NATIONAL POLICE (ANP) DISTRICT HEADQUARTERS COMPOUNDS – 1 STORY HQ
VARIOUS LOCATIONS, AFGHANISTAN
SITE DESIGN
DETAILS

SHEET REFERENCE NUMBER:
C–2

10/22/2007
S:\Engineering & Construction\Engineering\00_RFPs in-progress\ANP\ANP ON 1-Story Design\ANP Dist HQ 1Story Design Changes 2607\Microstation files\civil\AF0607-C102DT.dgn

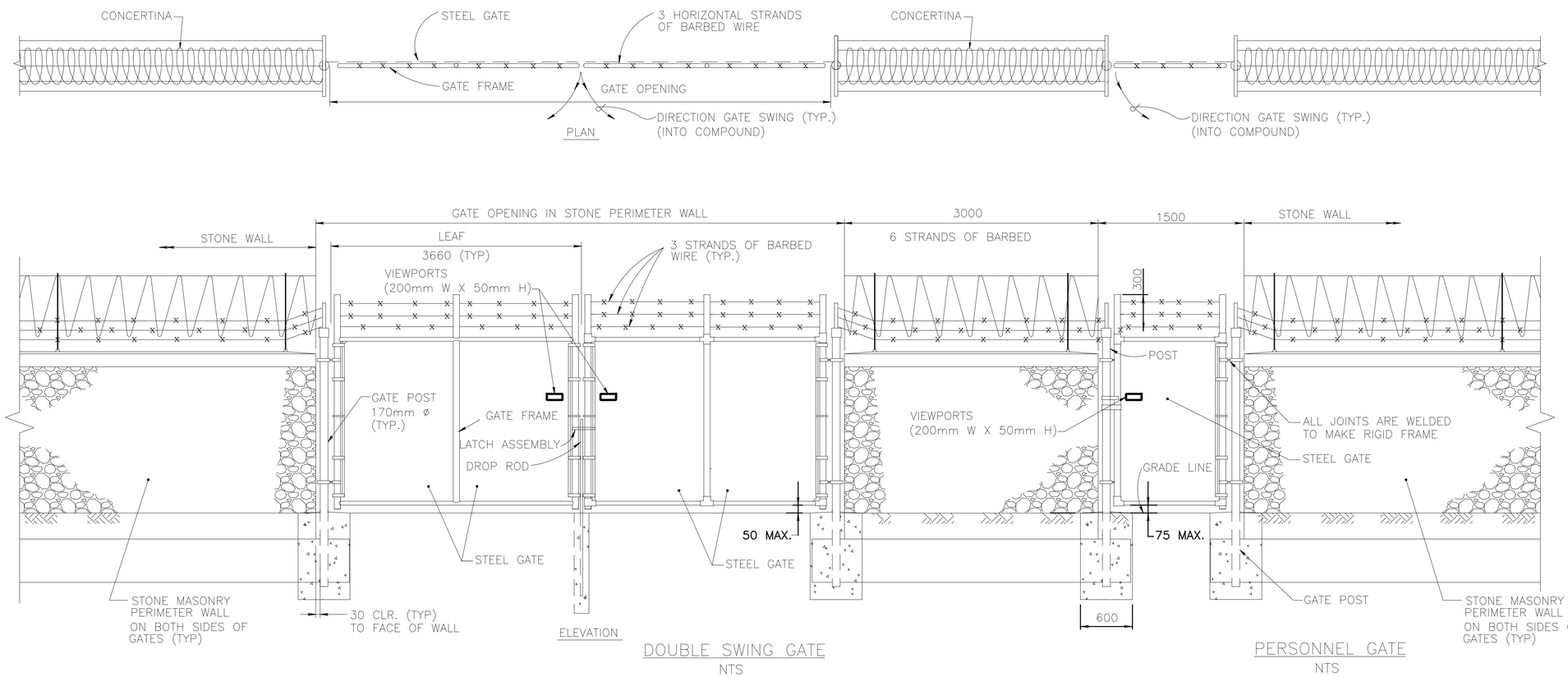

UNLESS OTHERWISE NOTED, LINEAR DIMENSIONS SHOWN ARE IN MILLIMETERS.

SYMBOL	DESCRIPTION	DATE	APR

DESIGNED BY: MW
DATE: 29 OCTOBER 2007
DWN BY: TSR
SUBMITTED BY:
CHK BY: REK
FILE NO.: AF0607-C1030T

US Army Corps of Engineers
Afghanistan Engineer District

AFGHANISTAN NATIONAL POLICE (ANP) DISTRICT HEADQUARTERS COMPOUNDS – 1 STORY HQ
VARIOUS LOCATIONS, AFGHANISTAN
SITE DESIGN
DETAILS

SHEET REFERENCE NUMBER:
C–3

10/22/2007
S:\Engineering & Construction\Engineering\00_RFPs in-progress\ANP\ANP 01_1-Story Design\ANP 03 Dist HQ 1Story Design Changes 26Oct07\Microstation Files\civil\AF0607-C1030T.dgn

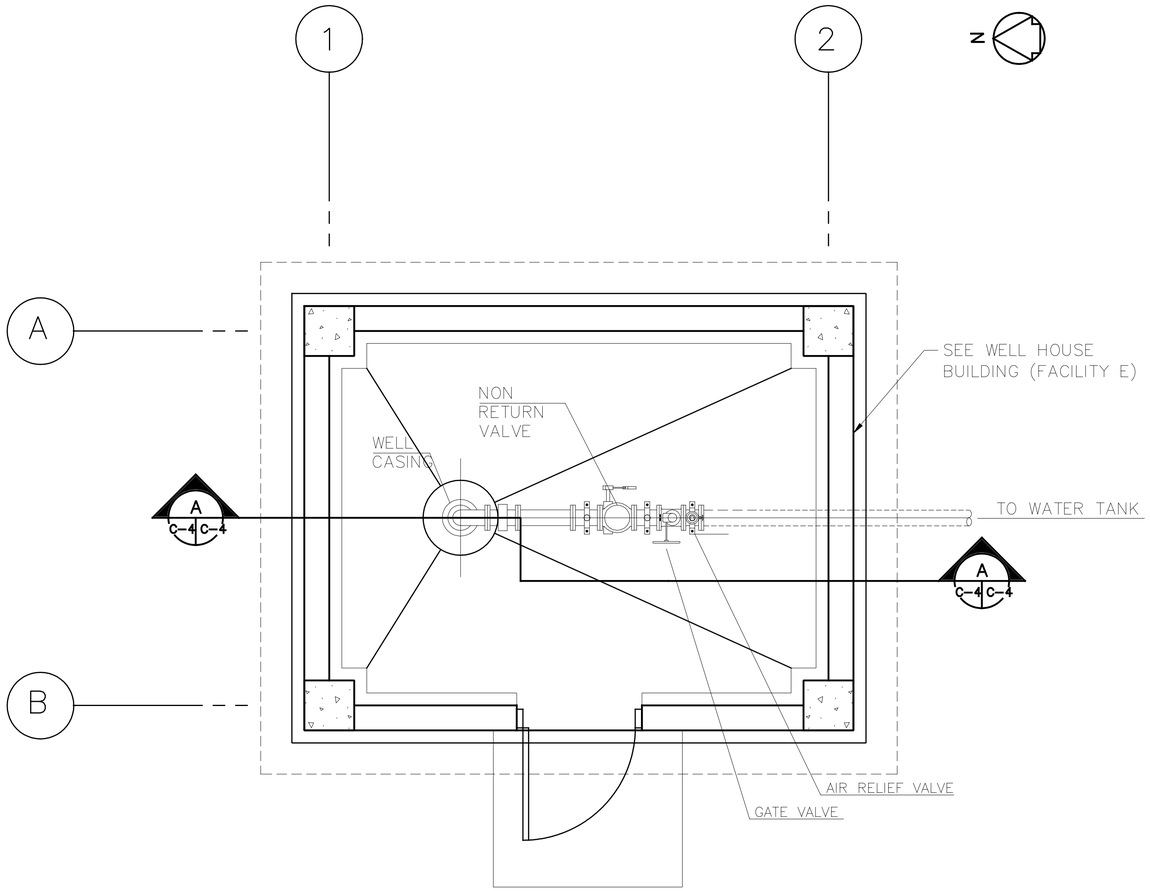

FLOOR PLAN
NOT TO SCALE

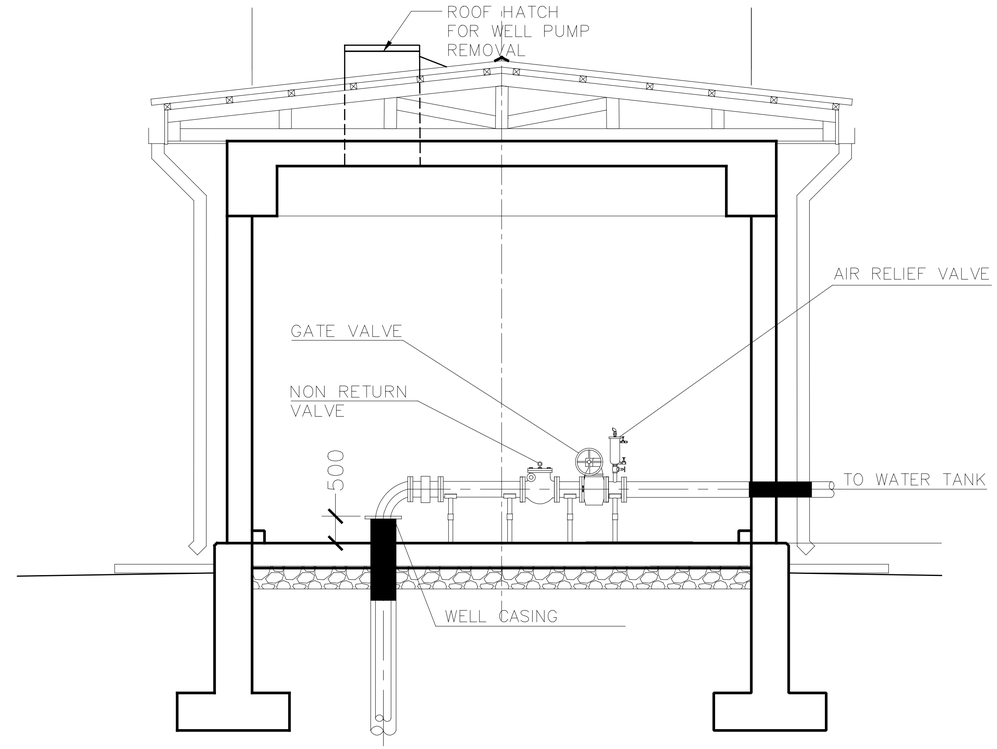

A C-4 C-4 BUILDING SECTION
NOT TO SCALE

UNLESS OTHERWISE NOTED, LINEAR DIMENSIONS SHOWN ARE IN MILLIMETERS.

SYMBOL	DESCRIPTION	DATE	APR

DESIGNED BY: MW
DATE: 29 OCTOBER 2007
DWN BY: TSR
SUBMITTED BY:
CHK BY: REK
FILE NO.: AF0607-C104DT

US Army Corps of Engineers
Afghanistan Engineer District

AFGHANISTAN NATIONAL POLICE (ANP) DISTRICT HEADQUARTERS COMPOUNDS – 1 STORY HQ
VARIOUS LOCATIONS, AFGHANISTAN
SITE DESIGN
WELL HOUSE PLAN AND SECTION

SHEET REFERENCE NUMBER:
C-4

10/27/2007
S:\Engineering & Construction\Engineering\00_RFPs in-progress\ANP\ANP ONE-Story Design\ANP_Dist_HQ_1Story_Design_Changes_26Oct07\Microstation Files\civil\AF0607-C104DT.dgn

NOTE:
1. SEE CIVIL SITE PLAN FOR ORIENTATION OF INLET AND OUTLET CONNECTIONS.

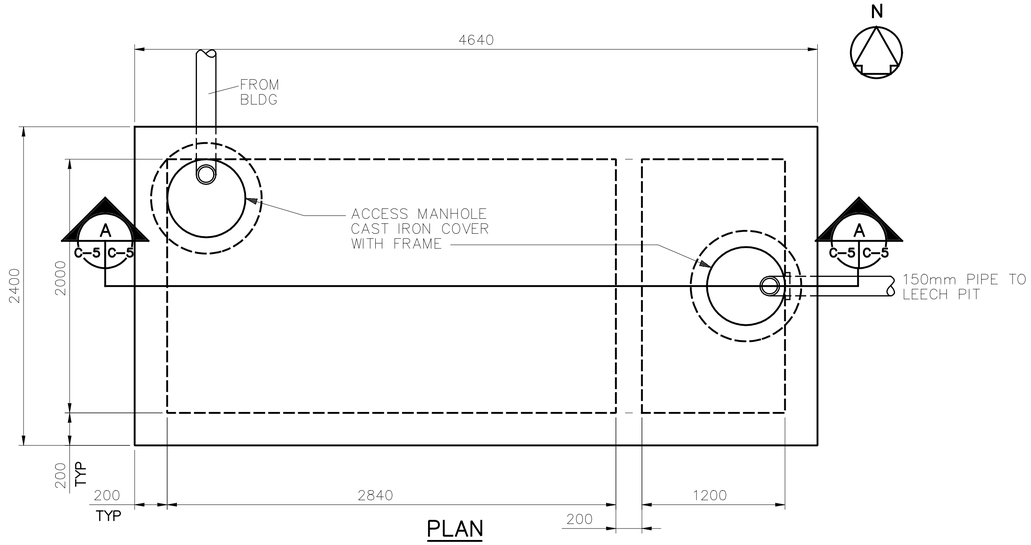

PLAN

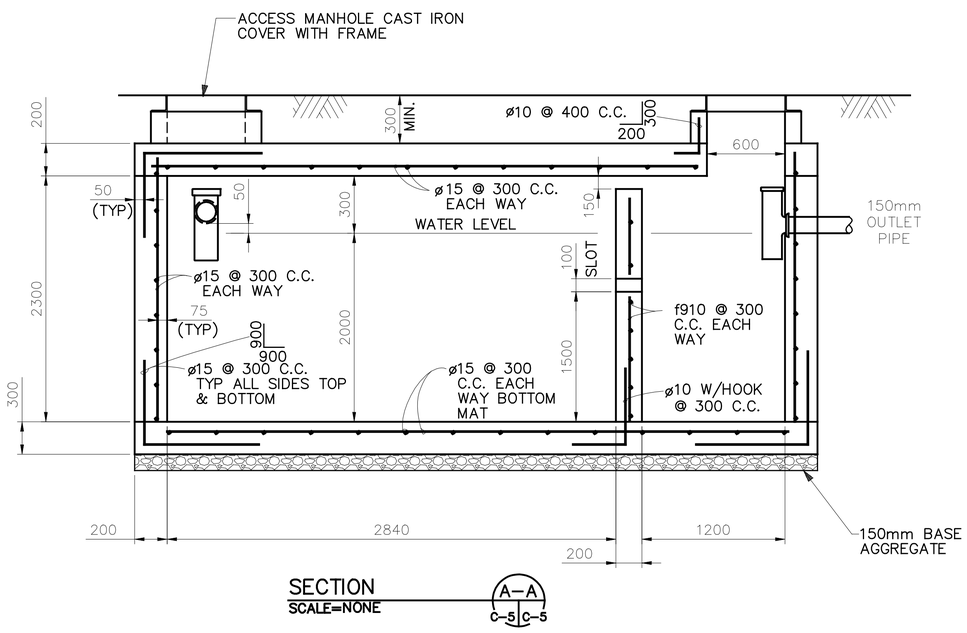

SECTION A–A
SCALE=NONE
C-5 C-5

CONCRETE SEPTIC TANK DETAILS

NOT TO SCALE

UNLESS OTHERWISE NOTED, LINEAR DIMENSIONS SHOWN ARE IN MILLIMETERS.

SYMBOL	DESCRIPTION	DATE	APR

DESIGNED BY: MW
DATE: 29 OCTOBER 2007
DWN BY: TSR
SUBMITTED BY:
CHK BY: REK
FILE NO.: AF0607-C105DT

US Army Corps of Engineers
Afghanistan Engineer District

AFGHANISTAN NATIONAL POLICE (ANP) DISTRICT HEADQUARTERS COMPOUNDS – 1 STORY HQ
VARIOUS LOCATIONS, AFGHANISTAN
SITE DESIGN
SEPTIC TANK DETAILS

SHEET REFERENCE NUMBER:
C–5

10/22/2007
S:\Engineering & Construction\Engineering\00_RFPs in-progress\ANP\ANP ON 1-Story Design\AND Dist HQ 1Story Design Changes 26Oct07\Microstation Files\civil\AF0607-C105DT.dgn

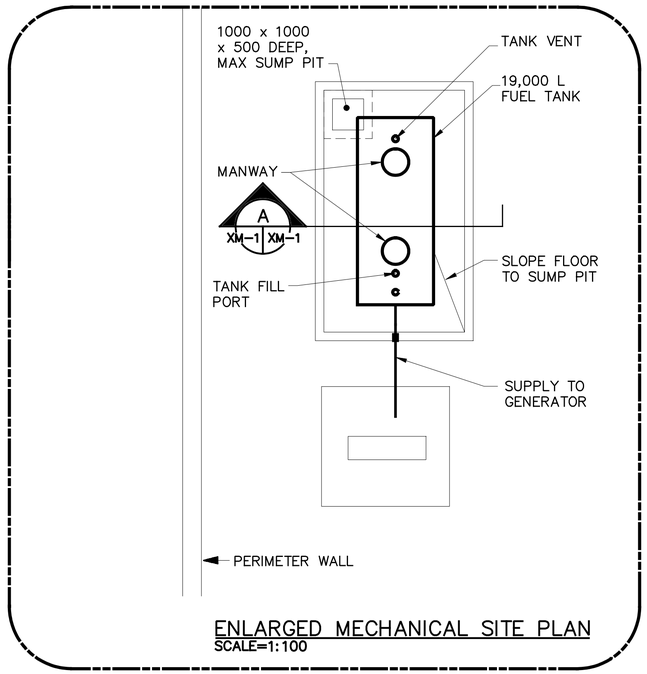

ENLARGED MECHANICAL SITE PLAN
SCALE=1:100

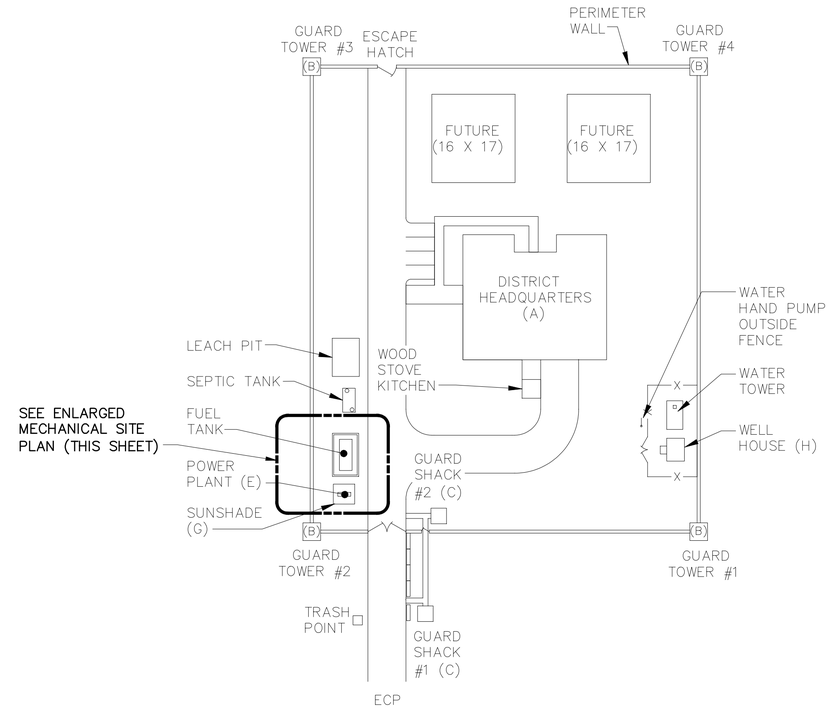

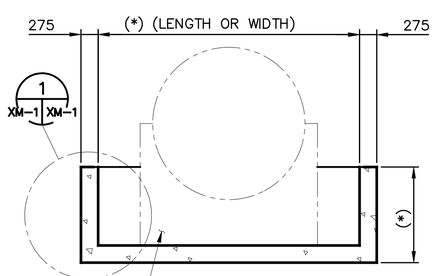

SEE SPEC FOR
SADDLE
REQUIREMENTS

(*) – COORDINATE LENGTH, WIDTH, AND HEIGHT OF CONTAINMENT DIKE WITH TANK REQUIREMENTS. HEIGHT OF WALL IS TO BE DETERMINED BASED ON SPECIFICATION 01015. FOR HEIGHTS GREATER THAN 1000mm, REINFORCEMENT SHOWN REQUIRES VERIFICATION BY ENGINEER.

SECTION A–A
SCALE=1:50
XM-1 XM-1

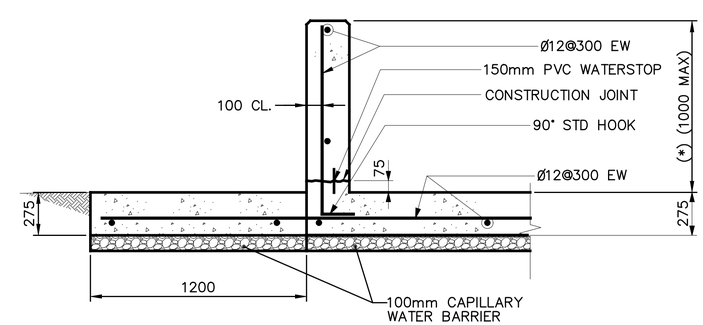

CONTAINMENT
WALL DETAIL
SCALE= NO SCALE
1
XM-1 XM-1

MECHANICAL SITE PLAN
SCALE= 1:600

1:50 1:100 1:600

SYMBOL	DESCRIPTION	DATE	APR

DESIGNED BY: JLK
DATE: 29 OCTOBER 2007
DWN BY: JLK
SUBMITTED BY:
CHK BY: JLK
FILE NO.: AF0607--MS01PN

US Army Corps of Engineers
Afghanistan Engineer District

AFGHANISTAN NATIONAL POLICE (ANP) DISTRICT HEADQUARTERS COMPOUNDS – 1 STORY HQ
VARIOUS LOCATIONS, AFGHANISTAN
SITE DESIGN
MECHANICAL SITE PLAN

SHEET REFERENCE NUMBER:
XM–1

10/22/2007
S:\Engineering & Construction\Engineering\00_RFPs in Progress\ANP\ANP 01-Story Design\ANP Dist HQ 1Story Design Changes 26Oct07\Microstation Files\mech\AF0607-MS01PN.dgn

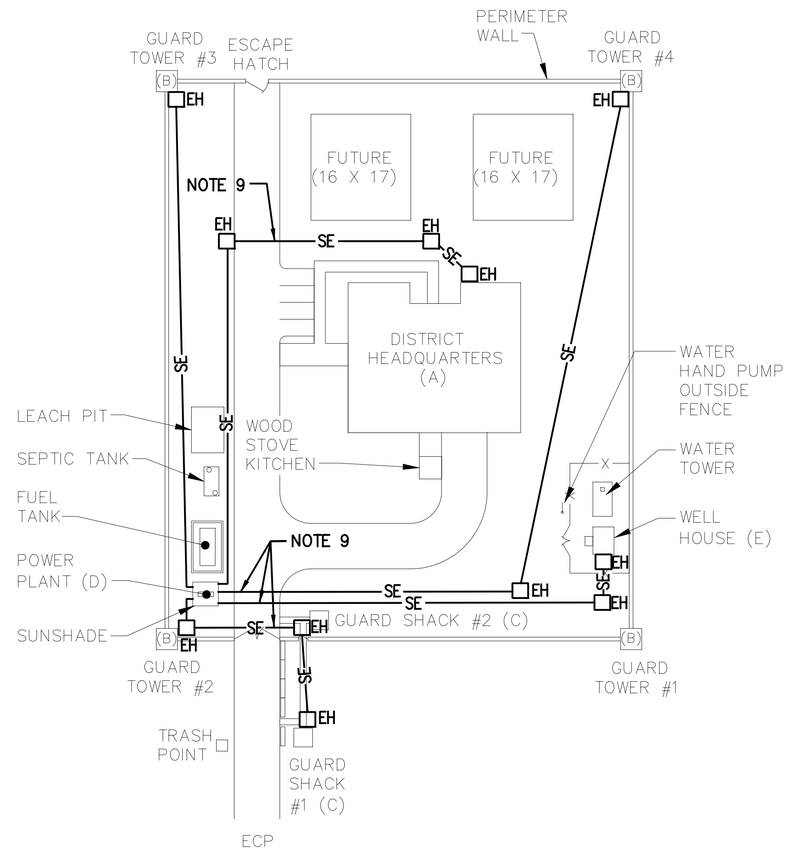

ELECTRICAL SITE PLAN

SCALE= 1:500

NOTES:

1. FOR LEGENDS AND ABBREVIATIONS SEE PLATE SE–1.
2. FOR SECONDARY DISTRIBUTION DIRECT BURIED (DB) DUCT DETAILS AND GENERATOR POWER PLANT DETAILS SEE PLATES SE–4 AND SE–5.
3. FOR ELECTRICAL HAND HOLE (EH) SEE PLATE SE–6.
4. FOR POWER PLANT ONE LINE DIAGRAM SEE PLATE D/E–1, POWER PLANT.
5. ALL SECONDARY DISTRIBUTION CABLES SHALL BE RACKED ON THE SIDES OF EH. SEE DETAIL ON PLATE SE–4.
6. ALL DIRECT BURIED PVC CONDUIT 90 DEGREE BENDS SHALL HAVE A RADIUS OF NOT LESS THAN 92mm, OR NOT LESS THAN THE CABLE MANUFACTURER'S RECOMMENDED CABLE BENDING RADIUS, WHICH EVER BEND RADIUS IS LARGER.
7. ALL CABLE SPLICES SHALL BE MADE IN AN EH AND IN ACCORDANCE WITH THE CABLE MANUFACTURER'S RECOMMENDATIONS.
8. COORDINATE ROUTING OF SECONDARY SERVICES AS NECESSARY TO AVOID FACILITIES AND STRUCTURES.
9. PROVIDE CONCRETE ENCASED DUCT BANK UNDER TRAFFIC AREAS.

10 0 10 20 30 40 50
1:500

UNLESS OTHERWISE NOTED, LINEAR DIMENSIONS SHOWN ARE IN MILLIMETERS.

SYMBOL	DESCRIPTION	DATE	APR

DESIGNED BY: JJK
DWN BY: JJK
CHK BY: JJK
DATE: 29 OCTOBER 2007
SUBMITTED BY:
FILE NO.: AF0607--ES01PN

US Army Corps of Engineers
Afghanistan Engineer District

AFGHANISTAN NATIONAL POLICE (ANP) DISTRICT HEADQUARTERS COMPOUNDS – 1 STORY HQ
VARIOUS LOCATIONS, AFGHANISTAN
SITE DESIGN
ELECTRICAL SITE PLAN

SHEET REFERENCE NUMBER:
XE–1

10/27/2007
S:\Engineering & Construction\Engineering\00_RFPs in-progress\ANP\ANP ON 1-Story Design\ANP Dist HQ 1Story Design Changes 26Oct07\Microstation Files\elec\AF0607-ES01PN.dgn

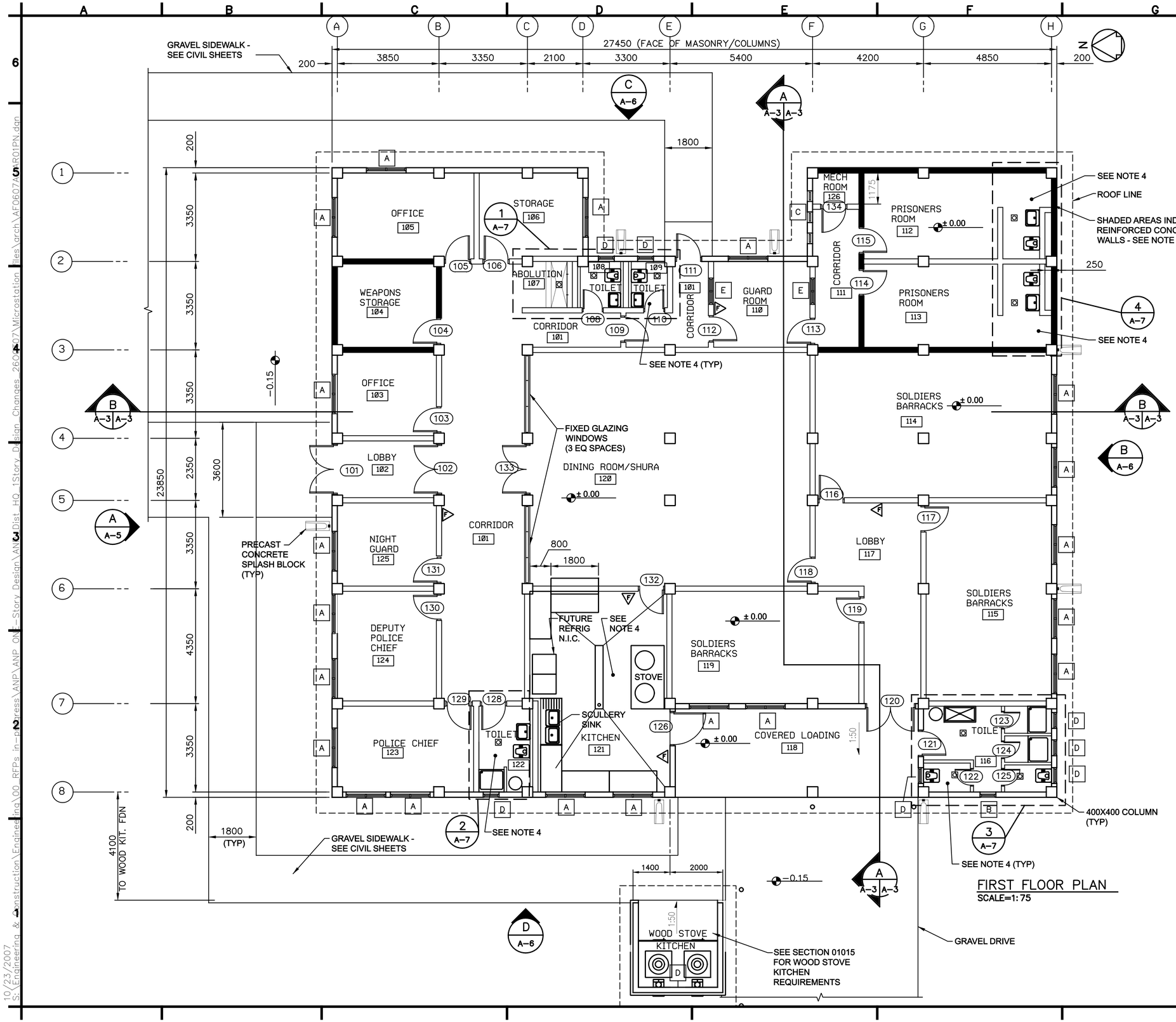

GENERAL NOTES:

1. PROVIDE PORTABLE FIRE EXTINGUISHERS, ABC DRY CHEMICAL 4A:60B:C

2. ALL INTERIOR WALLS SHALL BE 200 mm THICK BRICK MASONRY AND SHALL EXTEND TO THE BOTTOM OF STRUCTURE ABOVE AND CENTER ON COLUMNS UNLESS NOTED OTHERWISE.

3. TOILET AND SHOWER PARTITIONS SHALL BE 2200mm HIGH.

4. SLOPE FLOORS IN KITCHENS AND TOILET/SHOWER AREAS 1:50 MINIMUM TO TRENCH DRAINS AND FLOOR DRAINS WHERE INDICATED. SLOPE TRENCH DRAINS 1:50 TO DRAIN AT ONE END. SEE ENLARGED ARCHITECTURAL DRAWINGS, PLUMBING DRAWINGS, AND STRUCTURAL DRAWINGS.

5. INTERIOR AND EXTERIOR WALLS AROUND PRISONERS ROOMS AND WEAPONS STORAGE, AS INDICATED BY SHADING, SHALL BE 200mm THICK REINFORCED CONCRETE – SEE STRUCTURAL FOR DETAILS.

UNLESS OTHERWISE NOTED, LINEAR DIMENSIONS SHOWN ARE IN MILLIMETERS.

SYMBOL	DESCRIPTION	DATE	APR

DESIGNED BY: JLK
DATE: 29 OCTOBER 2007
DWN BY: JLK
SUBMITTED BY:
CHK BY: JLK
FILE NO.: AF0607A-AR01PN

US Army Corps of Engineers
Afghanistan Engineer District

AFGHANISTAN NATIONAL POLICE (ANP) DISTRICT HEADQUARTERS COMPOUNDS – 1 STORY HQ
VARIOUS LOCATIONS, AFGHANISTAN
1 STORY BUILDING
FIRST FLOOR PLAN

SHEET REFERENCE NUMBER:
A
A–1

10/23/2007
S:\Engineering & Construction\Engineering\00_RFPs in-progress\ANP\ANP 01_1-Story Design\ANP Dist HQ 1Story Design Changes 26Oct07\Microstation Files\Arch\AF0607A-AR01PN.dgn

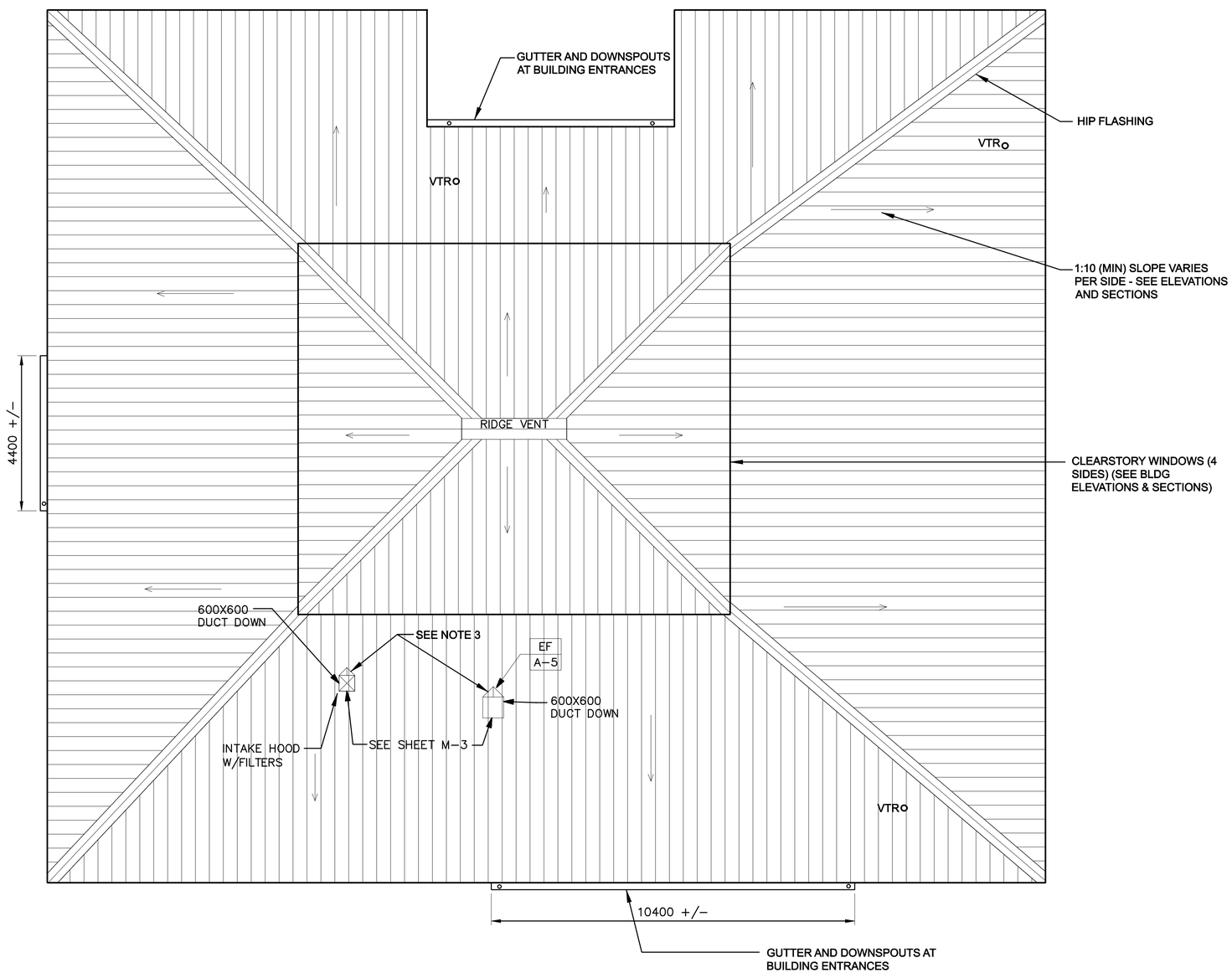

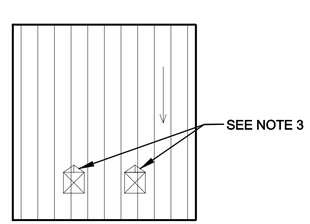

ROOF PLAN

SCALE= 1:75

NOTE:

1. TYPICAL ROOF SLOPE IS 1 IN 10.

2. ALL ROOF PENETRATIONS SHALL BE PROPERLY FLASHED AND SEALED WEATHER TIGHT.

3. PROVIDE WATER TIGHT SHEET METAL CRICKETS, FLASHING AND SEALANT PER ROOFING MANUFACTURERS RECOMMENDATIONS AT EACH PENETRATION. ALIGN STANDING SEAMS WITH FLASHING AT CRICKETS SUCH THAT WATER IS DIVERTED AROUND PENETRATIONS.

3 1.50 0 3 4.5
1:75

UNLESS OTHERWISE NOTED, LINEAR DIMENSIONS SHOWN ARE IN MILLIMETERS.

SYMBOL	DESCRIPTION	DATE	APP

DESIGNED BY: JLK
DWN BY: JLK
CHK BY: JLK
DATE: 29 OCTOBER 2007
SUBMITTED BY:
FILE NO.: AF0607A-AR02PN

US Army Corps of Engineers
Afghanistan Engineer District

AFGHANISTAN NATIONAL POLICE (ANP) DISTRICT HEADQUARTERS COMPOUNDS – 1 STORY HQ
VARIOUS LOCATIONS, AFGHANISTAN
1 STORY BUILDING
ROOF PLAN

SHEET REFERENCE NUMBER:
A
A-2

10/27/2007
S:\Engineering & Construction\Engineering\00_RFPs in-progress\ANP\ANP 01-Story Design\ANP Dist HQ 1Story Design Changes 26Oct07\Microstation files\arch\AF0607A-AR02PN.dgn

GENERAL NOTES:
1. UNLESS NOTED OTHERWISE, ELEVATIONS ARE SHOWN IN METERS ABOVE OR BELOW FINISHED FLOOR.

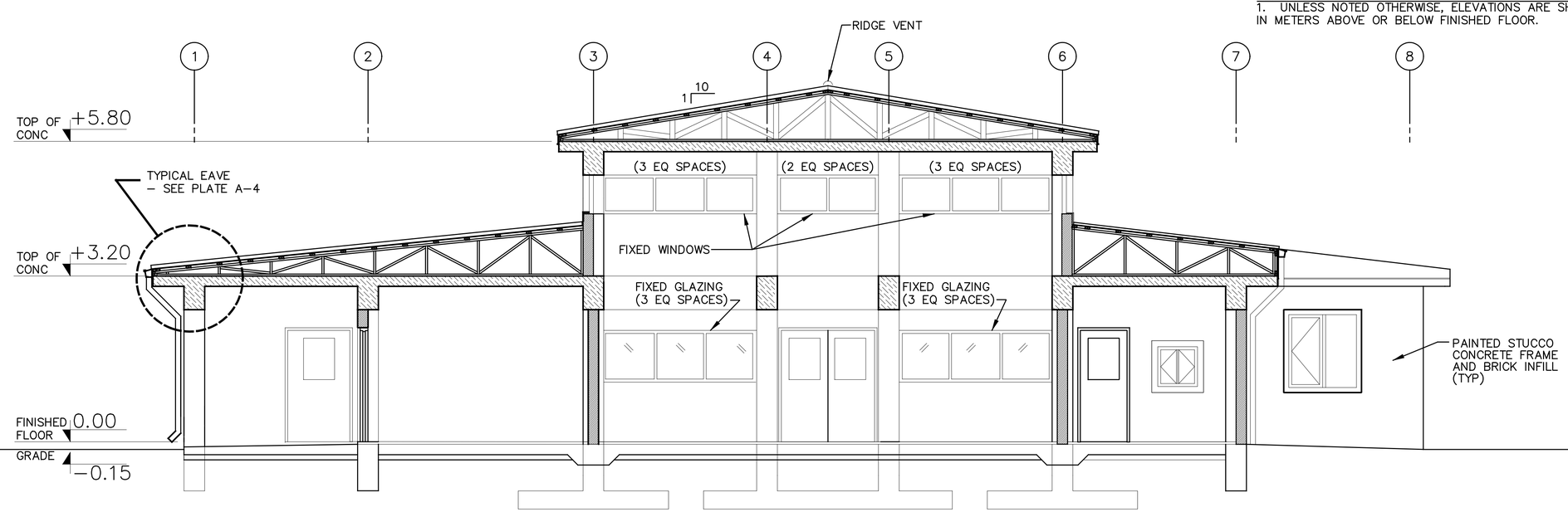

BUILDING SECTION A–A (A–1 / A–3)
SCALE=1:50

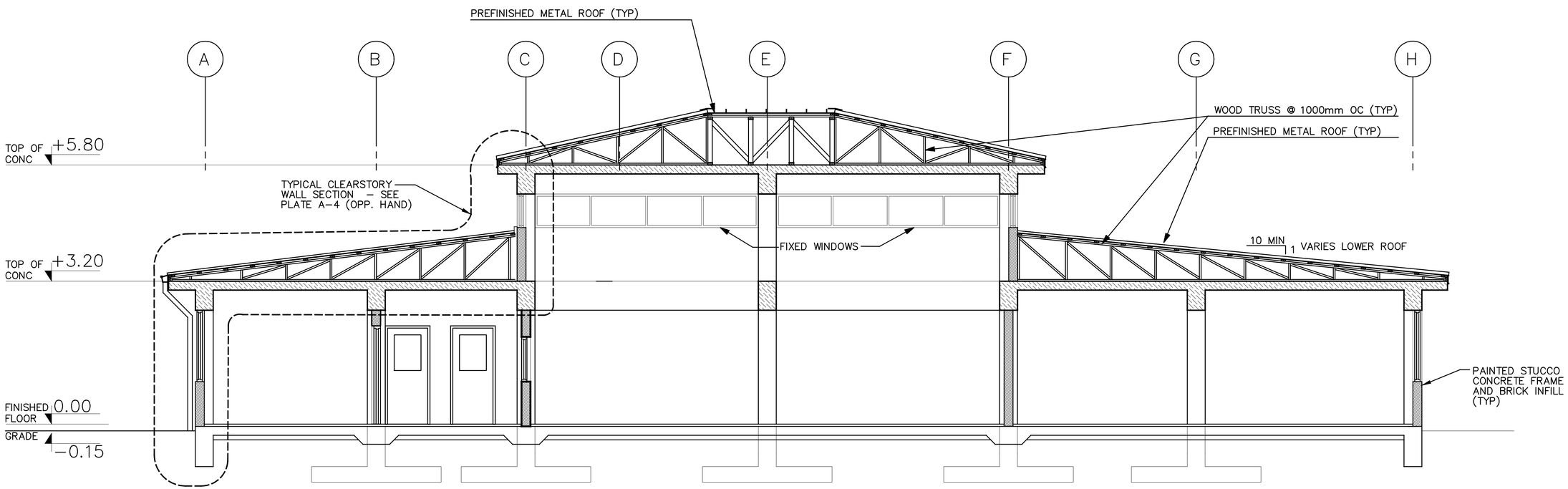

BUILDING SECTION B–B (A–1 / A–3)
SCALE=1:50

1:50

UNLESS OTHERWISE NOTED, LINEAR DIMENSIONS SHOWN ARE IN MILLIMETERS.

SYMBOL	DESCRIPTION	DATE	APR

DESIGNED BY: JLK
DATE: 29 OCTOBER 2007
DWN BY: JLK
SUBMITTED BY:
CHK BY: JLK
FILE NO.: AF0807A–AR03SE

US Army Corps of Engineers
Afghanistan Engineer District

AFGHANISTAN NATIONAL POLICE (ANP) DISTRICT HEADQUARTERS COMPOUNDS – 1 STORY HQ
VARIOUS LOCATIONS, AFGHANISTAN
1 STORY BUILDING
BUILDING SECTIONS

SHEET REFERENCE NUMBER:
A
A–3

10/22/2007
S:\Engineering & Construction\Engineering\00_RFPs in-Progress\ANP\ANP 01 1-Story Design\ANP Dist HQ 1Story Design Changes 26Oct07\Microstation Files\Arch\AF0607A-AR03SE.dgn

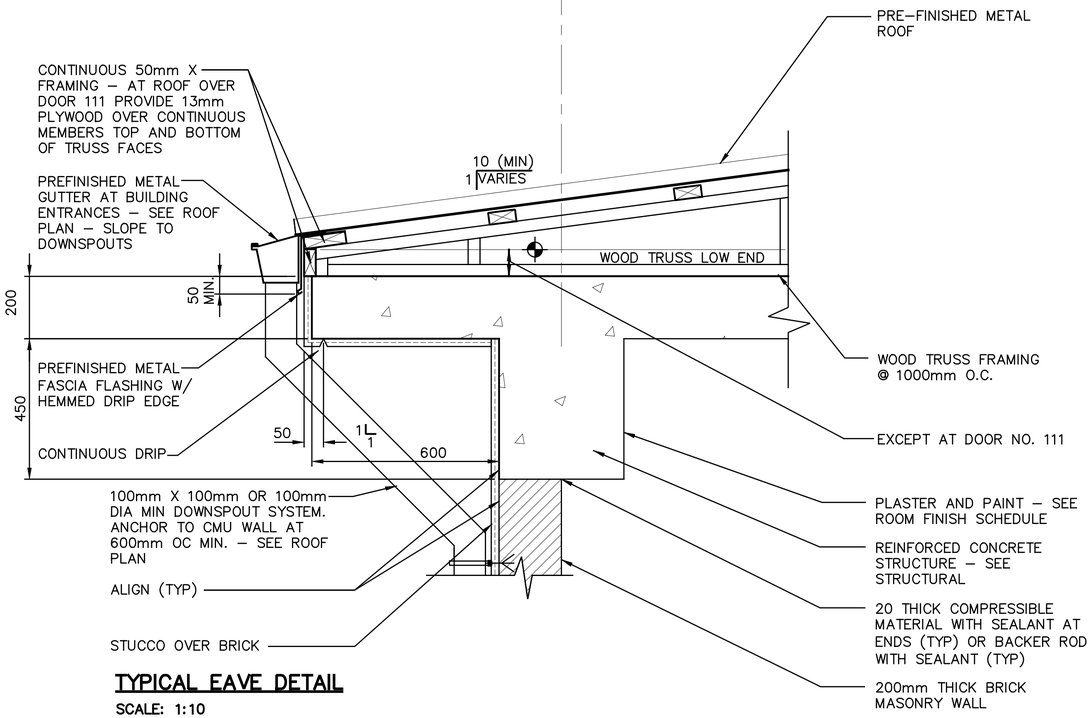

TYPICAL EAVE DETAIL

SCALE: 1:10

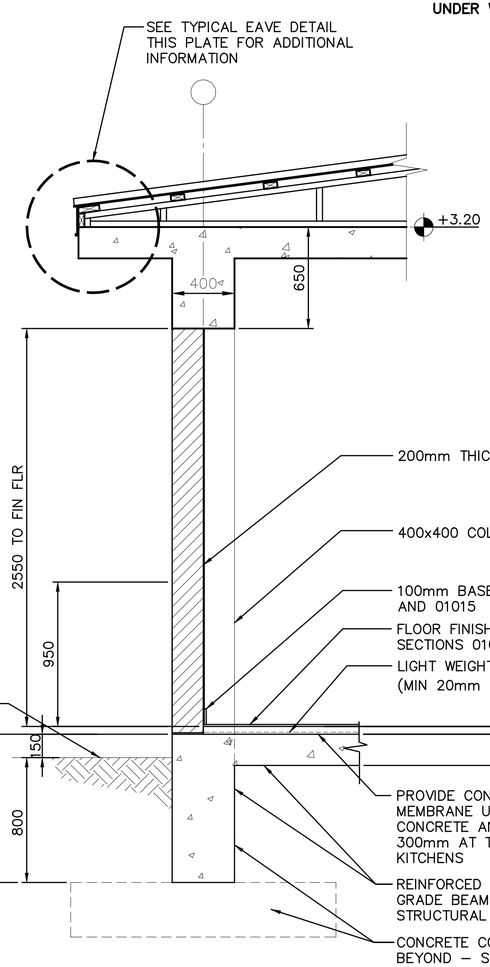

TYPICAL WALL SECTION

SCALE: 1:20

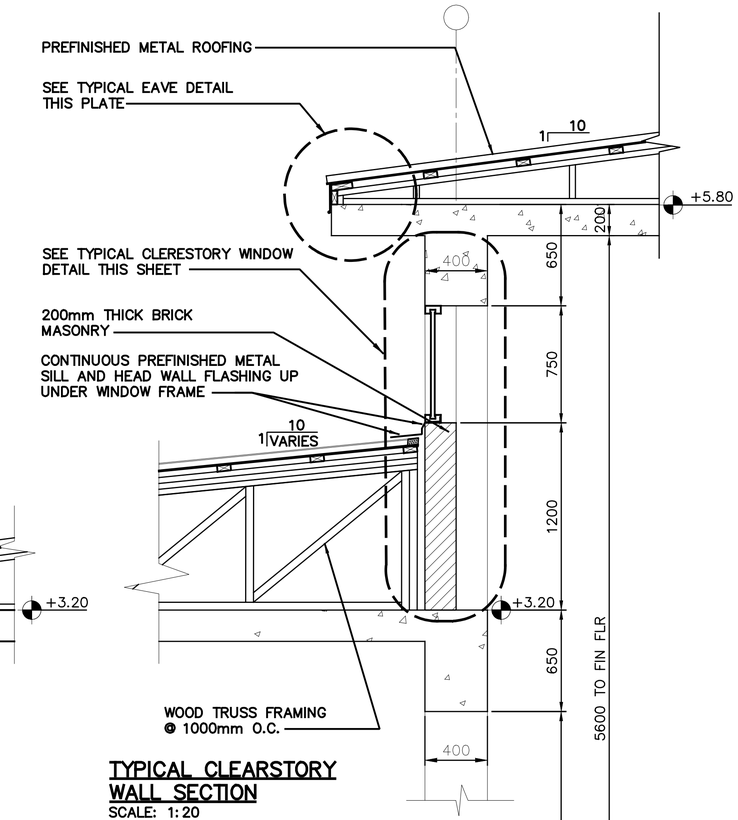

TYPICAL CLEARSTORY WALL SECTION

SCALE: 1:20

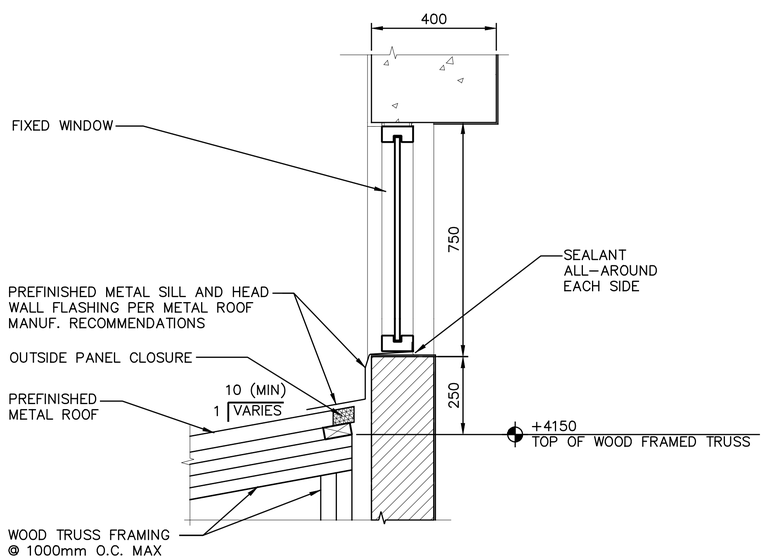

TYPICAL CLERESTORY WINDOW DETAIL

SCALE: 1:10

0 .50 1.00
1:10

1 .50 0 1
1:20

UNLESS OTHERWISE NOTED, LINEAR DIMENSIONS SHOWN ARE IN MILLIMETERS.

SYMBOL	DESCRIPTION	DATE	APR

DESIGNED BY: JLK
DATE: 29 OCTOBER 2007
DWN BY: JLK
SUBMITTED BY:
CHK BY: JLK
FILE NO.: AF0607A–AR04SE

US Army Corps of Engineers
Afghanistan Engineer District

AFGHANISTAN NATIONAL POLICE (ANP) DISTRICT HEADQUARTERS COMPOUNDS – 1 STORY HQ
VARIOUS LOCATIONS, AFGHANISTAN
1 STORY BUILDING
WALL SECTION

SHEET REFERENCE NUMBER:
A
A–4

10/22/2007
S:\Engineering & Construction\Engineering\00_RFPs in Progress\ANP\ANP ONE-Story Design\ANP Dist HQ 1Story Design Changes 26Oct07\Microstation Files\Arch\AF0607A-AR04SE.dgn

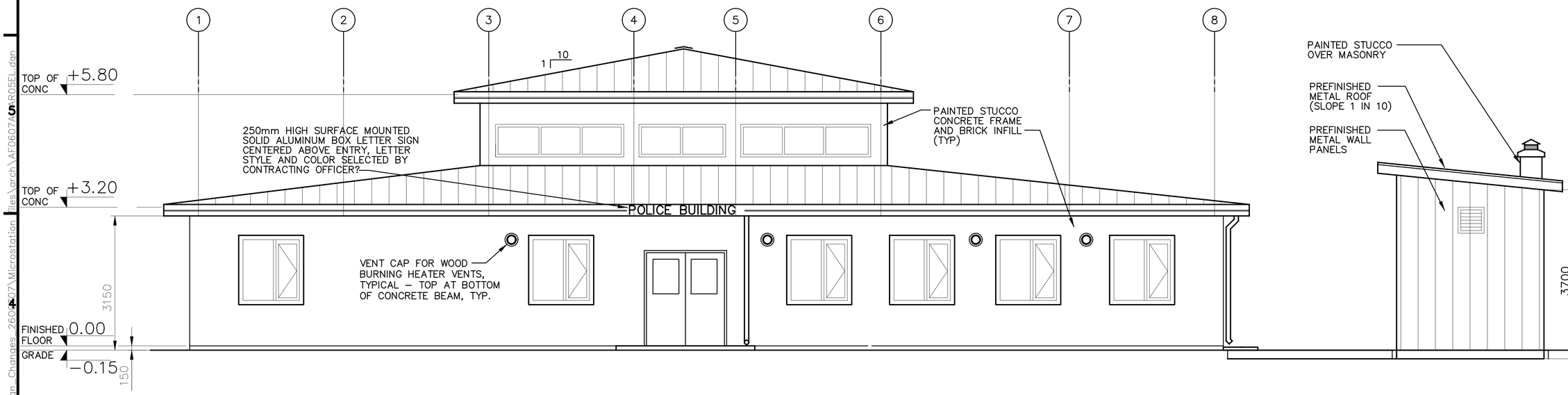

ELEVATION A
SCALE=1:50
A-1 A-5

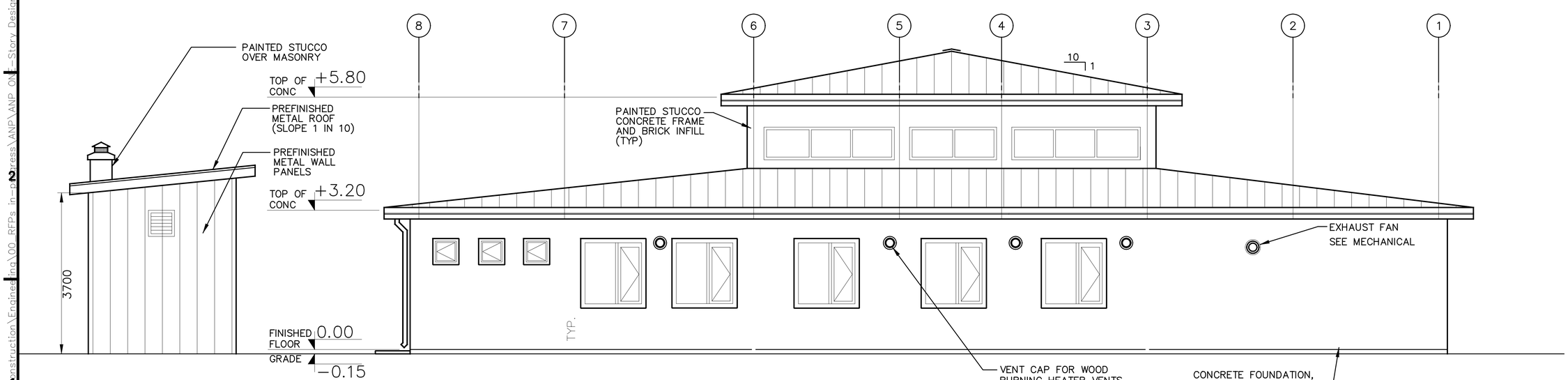

ELEVATION B
SCALE=1:50
A-1 A-5

NOTE: SEE STANDARD DETAILS FOR ADDITIONAL NOTES.

1:50

UNLESS OTHERWISE NOTED, LINEAR DIMENSIONS SHOWN ARE IN MILLIMETERS.

SYMBOL	DESCRIPTION	DATE	APR

DESIGNED BY: JLK
DWN BY: JLK
CHK BY: JLK
DATE: 29 OCTOBER 2007
SUBMITTED BY:
FILE NO.: AF0607A-AR05EL

US Army Corps of Engineers
Afghanistan Engineer District

AFGHANISTAN NATIONAL POLICE (ANP) DISTRICT HEADQUARTERS COMPOUNDS – 1 STORY HQ
VARIOUS LOCATIONS, AFGHANISTAN
1 STORY BUILDING
BUILDING ELEVATIONS

SHEET REFERENCE NUMBER:
A
A–5

10/22/2007
S:\Engineering & Construction\Engineering\00_RFPs in-progress\ANP\ANP 01-Story Design\AND Dist HQ 1Story Design Changes 26Oct07\Microstation files\arch\AF0607A-AR05EL.dgn

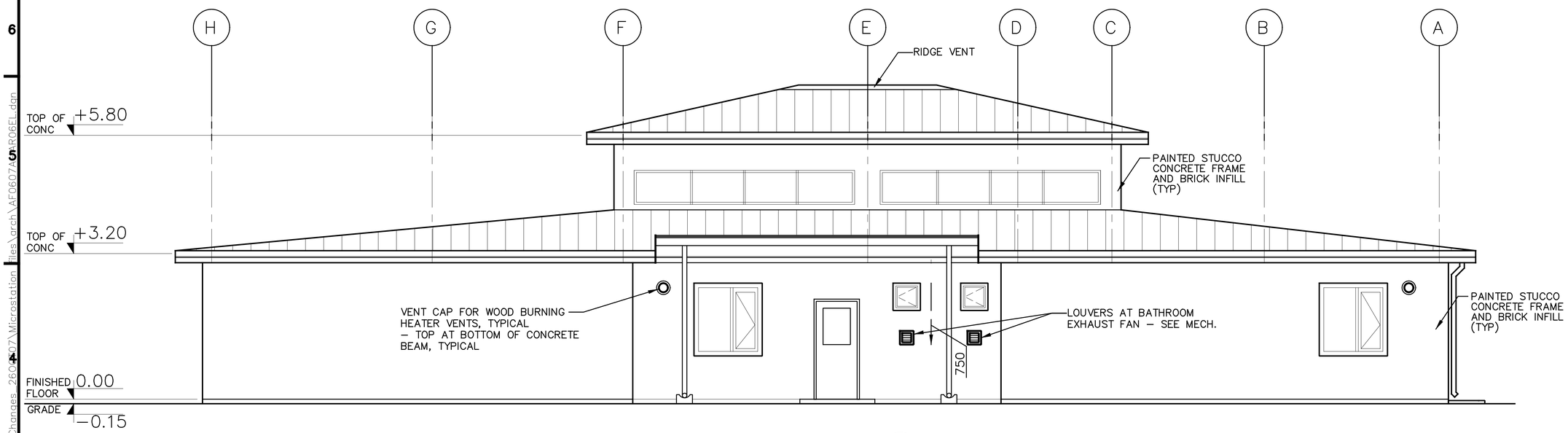

ELEVATION
SCALE=1:50
C A–1 A–6

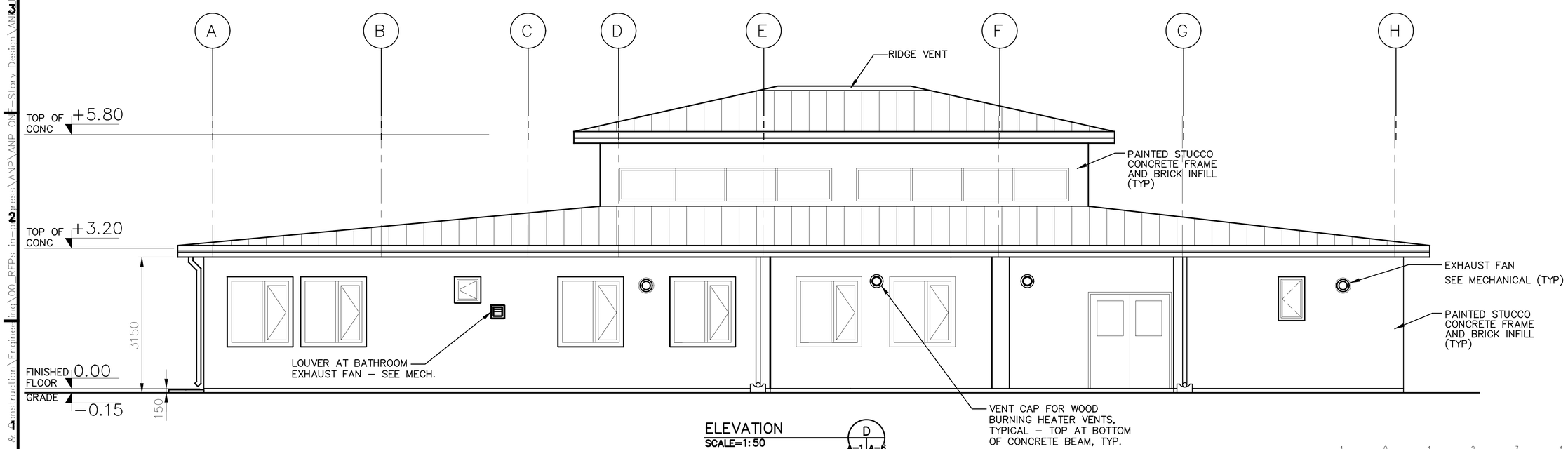

ELEVATION
SCALE=1:50
D A–1 A–6

1 0 1 2 3 4
1:50

UNLESS OTHERWISE NOTED, LINEAR DIMENSIONS SHOWN ARE IN MILLIMETERS.

SYMBOL	DESCRIPTION	DATE	APR

DESIGNED BY: JLK
DATE: 29 OCTOBER 2007
DWN BY: JLK
SUBMITTED BY:
CHK BY: JLK
FILE NO.: AF0607A–AR06EL

US Army Corps of Engineers
Afghanistan Engineer District

AFGHANISTAN NATIONAL POLICE (ANP) DISTRICT HEADQUARTERS COMPOUNDS – 1 STORY HQ
VARIOUS LOCATIONS, AFGHANISTAN
1 STORY BUILDING
BUILDING ELEVATIONS

SHEET REFERENCE NUMBER:
A
A–6

10/23/2007
S:\Engineering & Construction\Engineering\00_RFPs in-progress\ANP\ANP ONE-Story Design\ANP Dist HQ 1Story Design Changes 26Oct07\Microstation Files\arch\AF0607A-AR06EL.dgn

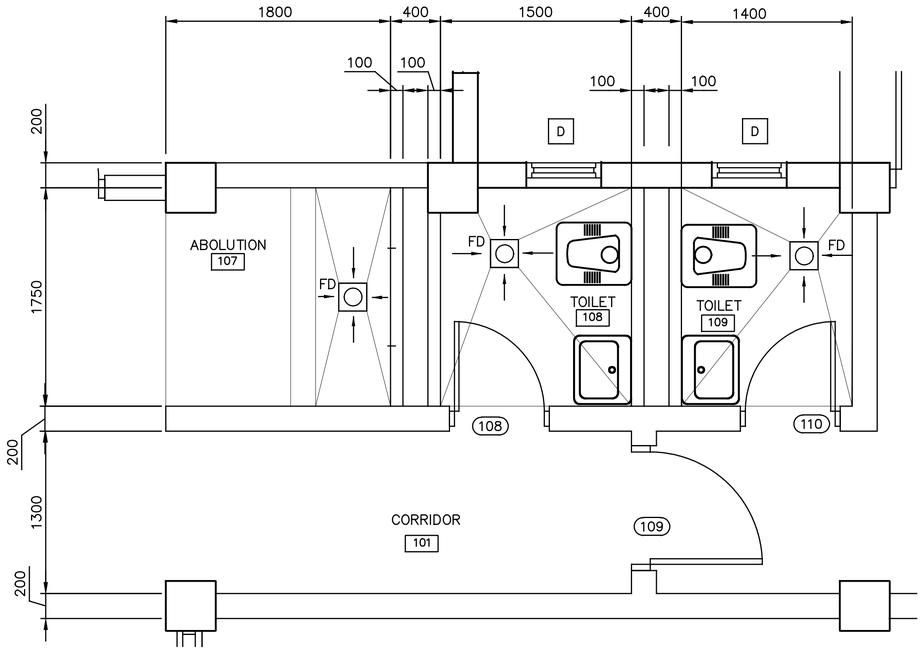

DETAIL 1
SCALE=1:25
A-1 | A-7

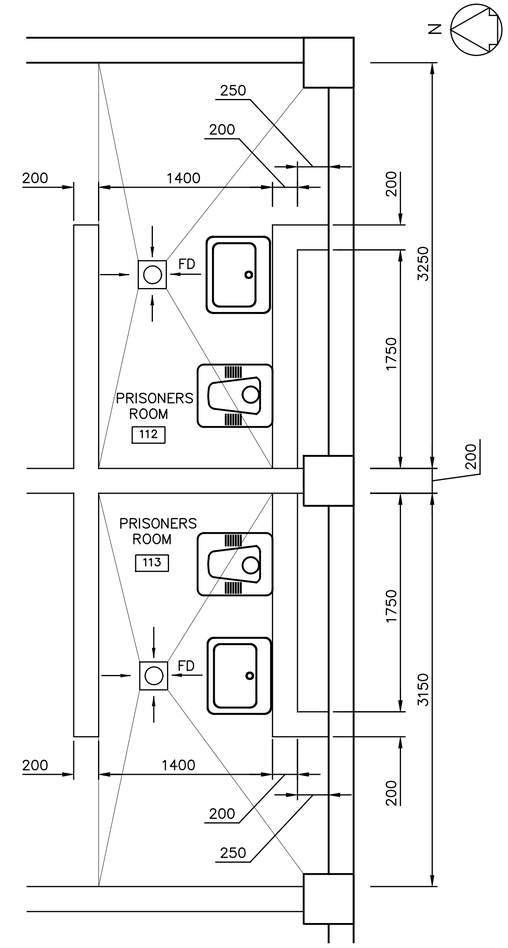

DETAIL 4
SCALE=1:25
A-1 | A-7

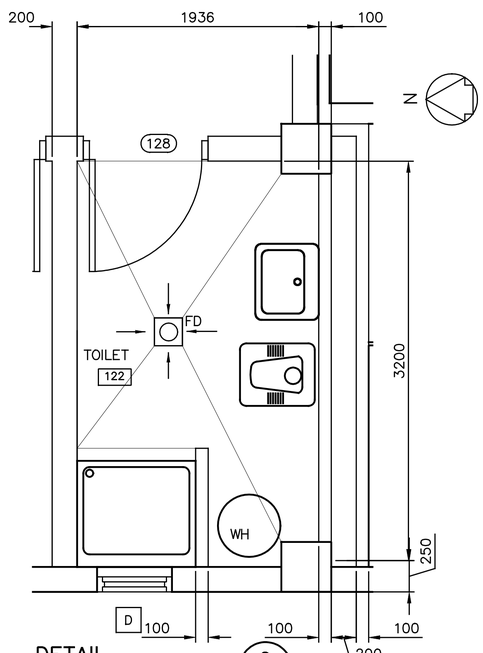

DETAIL 2
SCALE=1:25
A-1 | A-7

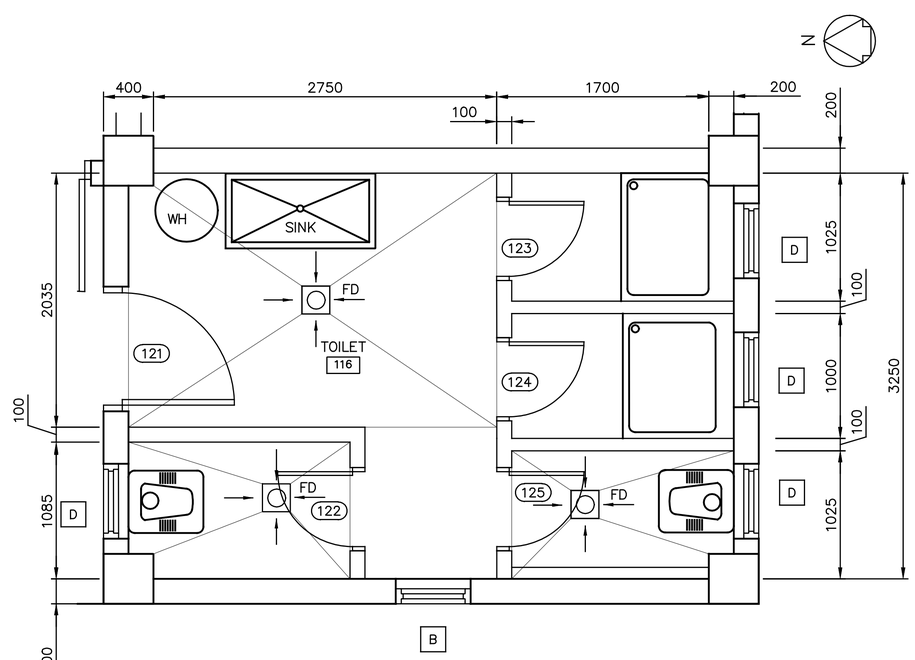

DETAIL 3
SCALE= 1:25
A-1 | A-7

NOTE: PARTITION WALLS BETWEEN TOILET STALLS TO BE 2200mm HIGH.

NOTE:

1. ALL WATER CLOSETS SHALL FACE NORTH OR SOUTH DIRECTION.

1 .50 0 1 1.5
1:25

UNLESS OTHERWISE NOTED, LINEAR DIMENSIONS SHOWN ARE IN MILLIMETERS.

SYMBOL	DESCRIPTION	DATE	APR

DESIGNED BY: JLK
DATE: 29 OCTOBER 2007
DWN BY: JLK
SUBMITTED BY:
CHK BY: JLK
FILE NO.: AF0607A-AR07LS

US Army Corps of Engineers
Afghanistan Engineer District

AFGHANISTAN NATIONAL POLICE (ANP) DISTRICT HEADQUARTERS COMPOUNDS – 1 STORY HQ
VARIOUS LOCATIONS, AFGHANISTAN
1 STORY BUILDING
ENLARGED TOILET PLANS

SHEET REFERENCE NUMBER:
A
A-7

10/23/2007
S:\Engineering & Construction\Engineering\00_RFPs in-progress\ANP\ANP_ONE-Story_Design\ANP\Dist_HQ_1Story_Design_Changes_2607\Microstation Files\Arch\AF0607A-AR07LS.dgn

DOOR SCHEDULE

DOOR							FRAME	HDW SET	REMARKS
NO.	LOCATION	TYPE	MAT'L	WIDTH	HEIGHT	THICK	MAT"L		
101	LOBBY	G (PR)	WOOD	1800	2100	45	WOOD	2	4, 7
102	CORRIDOR	G (PR)	WOOD	1800			WOOD	8	4, 7
103	OFFICE	F	WOOD	900			WOOD	4	
104	WEAPONS STORAGE	F	STEEL	900			STEEL	11	5
105	OFFICE	F	WOOD	900			WOOD	4	
106	STORAGE	F	WOOD	900			WOOD	6	
107	NOT USED								
108	TOILET	L	WOOD	700			WOOD	5	2
109	CORRIDOR	N	WOOD	900			WOOD	4	7
110	TOILET	L	WOOD	700			WOOD	5	2
111	CORRIDOR	G	WOOD	900			WOOD	1	7
112	TO GUARD RM.	N	WOOD	900			WOOD	4	7
113	CORRIDOR	N	WOOD	900			WOOD	4	7
114	Prisoners Rm	C	STEEL	900			NOTE 1	11	CELL DOOR
115	Prisoners Rm	C	STEEL	900			NOTE 1	11	CELL DOOR
116	SOLDIERS BARRACKS	F	WOOD	900			WOOD	7	6
117	SOLDIERS BARRACKS	F	WOOD	900			WOOD	7	6
118	DINING ROOM	F	WOOD	900			WOOD	7	4, 6
119	SOLDIERS BARRACKS	F	WOOD	900			WOOD	7	6
120	LOBBY	G (PR)	WOOD	1800			WOOD	2	4, 7
121	TOILET	L	WOOD	900			WOOD	10	2
122	TOILET STALL	L	WOOD	600			WOOD	3	2
123	TOILET STALL	L	WOOD	600			WOOD	3	2
124	TOILET STALL	L	WOOD	600			WOOD	3	2
125	TOILET STALL	L	WOOD	600			WOOD	3	2
126	KITCHEN	F	WOOD	1200			WOOD	1	4
127	NOT USED								
128	TOILET	L	WOOD	900			WOOD	5	2
129	POLICE CHIEF	F	WOOD	900			WOOD	4	
130	DEPUTY POLICE CHIEF	F	WOOD	900			WOOD	4	
131	NIGHT GUARD	F	WOOD	900			WOOD	4	
132	KITCHEN	N	WOOD	900			WOOD	9	7
133	DINING ROOM	G (PR)	WOOD	1800			WOOD	2	4, 6
134	MECHANICAL ROOM	F	WOOD	900			WOOD	6	

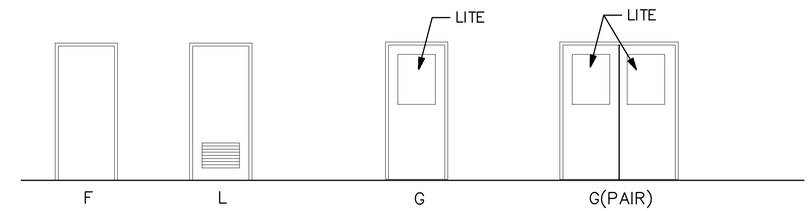

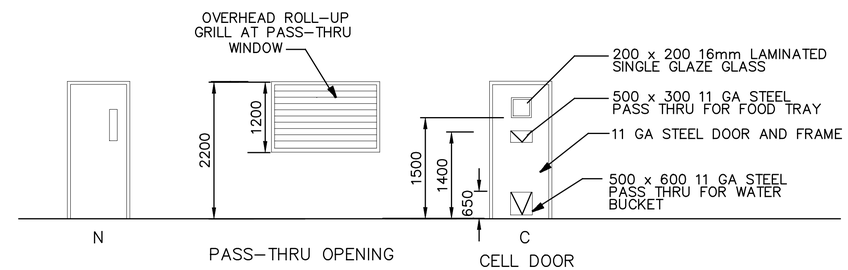

DOOR NOTES:

1. SEE DOOR SCHEDULE FOR DOOR AND FRAME SIZES.

TYPICAL DOOR TYPES

(NOT TO SCALE)

DOOR SCHEDULE NOTES:

1. CELL DOOR SHALL BE 11 GA STEEL DOOR WITH PASS-THRU WINDOWS. PROVIDE HINGED DOORS TO THESE PASS-THRU WINDOWS WITH PADLOCKS TO THE OUTSIDE.
2. PROVIDE 600 X 400 LOUVERS IN DOOR TYPE (L)
3. UNDERCUT DOORS BY 12 mm REQUIRED, EXCEPT NO UNDERCUT AT DOOR TYPE C.
4. PROVIDE PANIC HARDWARE, WHERE INDICATED.
5. PROVIDE 11 GA STEEL DOOR AND FRAME.
6. NO THRESHOLD OR DOOR SWEEP REQUIRED.
7. ALL DOOR GLAZING SHALL BE MIN. 8mm THICK PLEXIGLASS EXCEPT AT CELL DOORS WHERE GLAZING SHALL BE LAMINATED GLASS.

SYMBOL	DESCRIPTION	DATE	APR

DESIGNED BY: JLK
DATE: 29 OCTOBER 2007
DWN BY: JLK
SUBMITTED BY:
CHK BY: JLK
FILE NO.: AF0607A-AR08SC

US Army Corps of Engineers
Afghanistan Engineer District

AFGHANISTAN NATIONAL POLICE (ANP) DISTRICT HEADQUARTERS COMPOUNDS – 1 STORY HQ
VARIOUS LOCATIONS, AFGHANISTAN
1 STORY BUILDING
DOOR SCHEDULE AND DOOR TYPES

SHEET REFERENCE NUMBER:
A
A-8

10/23/2007
S:\Engineering & Construction\Engineering\00_RFPs in-progress\ANP\ANP ON 1-Story Design\ANP Dist HQ 1Story Design Changes 26Oct07\Microstation Files\Arch\AF0607A-AR08SC.dgn

ROOM FINISH SCHEDULE

ROOM NO.	ROOM NAME	FLOOR FINISH	BASE FINISH	WALLS FINISH	CEILING FINISH	CEILING HEIGHT	REMARKS
101	CORRIDOR	F2	B2	W2	C2	3.0 m	
102	LOBBY	F2	B2	W2	C2		
103	OFFICE	F2	B2	W2	C2		
104	WEAPONS STORAGE	F1	B2	W2	C2		
105	OFFICE	F2	B2	W2	C2		
106	STORAGE	F1	B2	W2	C2		
107	ABOLUTION	F3	B3	W3	C2		
108	TOILET	F3	B3	W3	C2		
109	TOILET	F3	B3	W3	C2		
110	GUARD ROOM	F2	B2	W2	C2		
111	CORRIDOR	F2	B2	W2	C2		
112	PRISONER'S ROOM	F2	B2	W2	C2		
113	PRISONER'S ROOM	F2	B2	W2	C2		
114	SOLDIER'S BARRACKS	F2	B2	W2	C2		
115	SOLDIER'S BARRACKS	F2	B2	W2	C2		
116	TOILET	F3	B3	W3	C2		
117	LOBBY	F2	B2	W2	C2		
118	COVERED LOADING	F1	B5	--	--		
119	SOLDIER'S BARRACKS	F2	B2	W2	C2		
120	DINING ROOM/SHURA	F2	B2	W2	C2	5.6 m	
121	KITCHEN	F2	B2	W2	C2	3.0 m	
122	TOILET	F3	B3	W3	C2		
123	POLICE CHIEF	F2	B2	W2	C2		
124	DEPUTY POLICE CHIEF	F2	B2	W2	C2		
125	NIGHT GUARD	F2	B2	W2	C2		
126	MECHANICAL ROOM	F2	B2	W2	C2		

ROOM FINISH SCHEDULE LEGEND

FLOOR FINISH
- F1 SEALED CONCRETE
- F2 TERRAZZO TILE
- F3 CERAMIC TILE

BASE FINISH
- B2 TERRAZZO
- B3 CERAMIC TILE
- B5 NO BASE

WALL FINISH
- W2 PAINTED PLASTER
- W3 CERAMIC TILE

CEILING FINISH
- C2 PAINTED PLASTER

ROOM FINISH SCHEDULE NOTES:

1. ALL INTERIOR SURFACES NOT PROVIDED WITH A COLOR FACTORY FINISH SHALL RECEIVE A PAINT FINISH.
2. PAINTED PLASTER CEILING FINISH SHALL BE OFF-WHITE IN COLOR. ALL OTHER INTERIOR COLORS SHALL BE SELECTED FROM EARTH TONE COLORS; GRAYS, BEIGES, ETC. SUBMIT PAINT COLOR BOARD TO CONTRACTING OFFICER'S REPRESENTATIVE FOR APPROVAL PRIOR TO INSTALLATION.
3. ALL INTERIOR DOORS, WINDOWS, AND FRAMES SHALL HAVE A SEMI-GLOSS FINISH.
4. ALL WALL PENETRATIONS SHALL BE SEALED TO PROVIDE A NEAT APPEARANCE.
5. SEALANT COLORS SHALL MATCH COLOR OF ADJACENT FINISH.
6. PLASTER AND CERAMRIC TILE WALL FINISH, WHERE SCHEDULED, SHALL EXTEND TO UNDERSIDE OF CEILING.
7. PLASTER CEILINGS SHALL HAVE A FLAT PAINT FINISH EXCEPT AT TOILETS, ABOLUTION, AND KITCHEN WHERE PAINT FINISH SHALL BE SEMI-GLOSS.

EXTERIOR FINISH NOTES:

1. ALL EXTERIOR SURFACES NOT PROVIDED WITH A COLOR FACTORY FINISH SHALL RECEIVE A PAINT FINISH.
2. ALL EXTERIOR COLORS SHALL MATCH ADJACENT BUILDINGS TO THE GREATEST EXTENT POSSIBLE. SUBMIT PAINT COLOR BOARD TO CONTRACTING OFFICER'S REPRESENTATIVE FOR APPROVAL PRIOR TO INSTALLATION.
3. ALL EXTERIOR DOORS, WINDOWS, FRAMES, SOFFIT, FASCIA, AND TRIM SHALL HAVE A SEMI-GLOSS FINISH.
4. ALL WALL PENETRATIONS SHALL BE SEALED WATER-TIGHT AND SHALL HAVE A NEAT APPEARANCE.
5. SEALANT COLORS SHALL MATCH COLOR OF ADJACENT FINISH.

SYMBOL	DESCRIPTION	DATE	APR

DESIGNED BY: JLK | DATE: 29 OCTOBER 2007
DWN BY: JLK | SUBMITTED BY:
CHK BY: JLK | FILE NO.: AF0607A-AR09SC

US Army Corps of Engineers
Afghanistan Engineer District

AFGHANISTAN NATIONAL POLICE (ANP) DISTRICT HEADQUARTERS COMPOUNDS – 1 STORY HQ
VARIOUS LOCATIONS, AFGHANISTAN
1 STORY BUILDING
ROOM FINISH SCHEDULE

SHEET REFERENCE NUMBER:
A
A-9

10/23/2007
S:\Engineering & Construction\Engineering\00_RFPs in-progress\ANP\ANP 01-Story Design\ANP Dist HQ 1Story Design Changes 26Oct07\Microstation files\arch\AF0607A-AR09SC.dgn

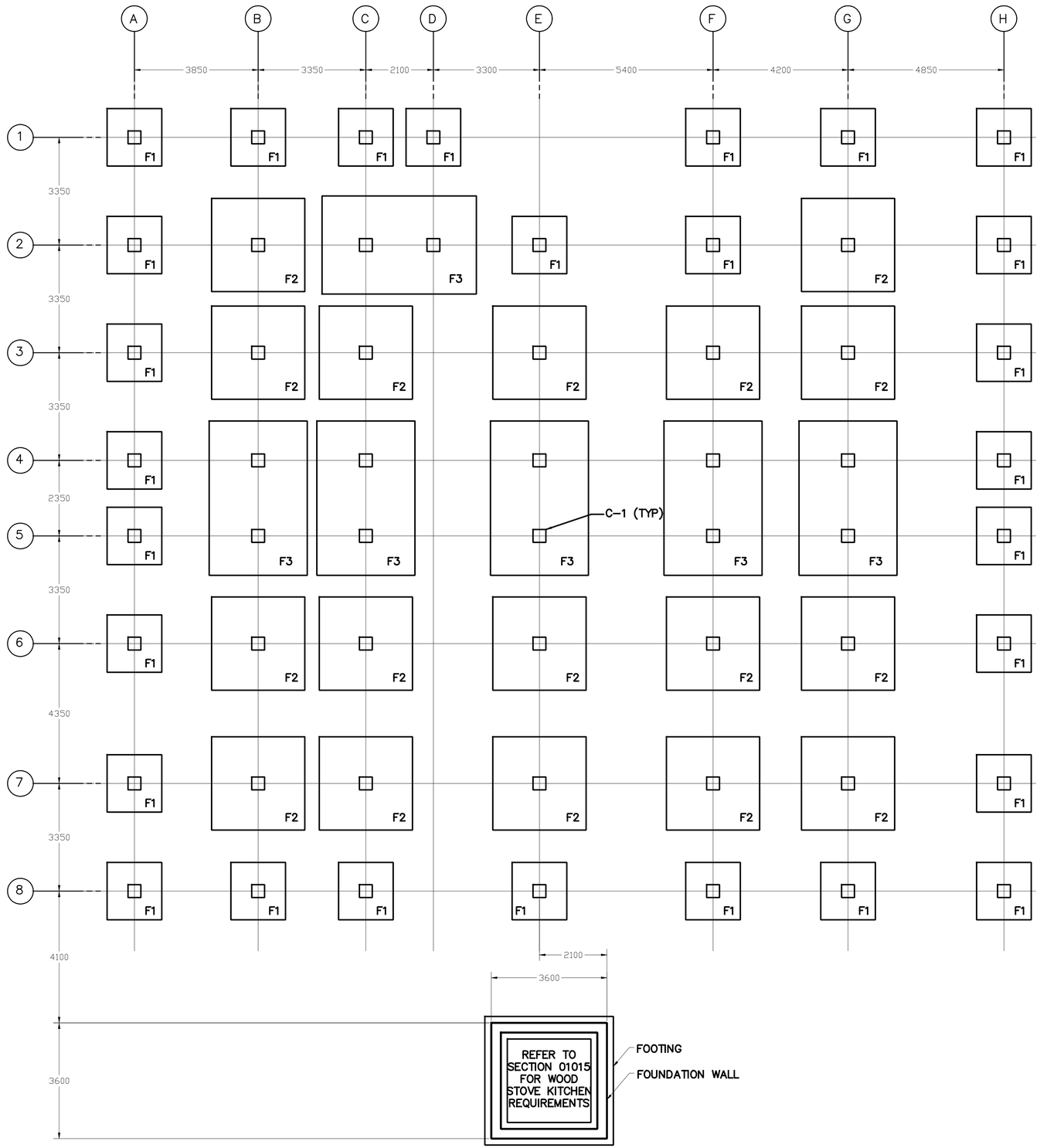

NOTES:

1. GEOTECHNICAL INVESTIGATION SHALL CONFIRM BEARING CAPACITY TO BE NO LESS THAN 0.75 KG/SQ CM. IF GEOTECHNICAL INVESTIGATION SHOWS LESS THAN 0.75 KG/SQ CM, CONTRACTOR SHALL REDESIGN FOOTINGS BASED ON THE GEOTECHNICAL INVESTIGATION, SEE SPECIFICATION 01015 PARA 2.1, GEOTECHNICAL, FOUNDATION AND SURVEY.
2. DEAD LOADS CONSIST OF THE WEIGHTS OF ALL MATERIAL OF CONSTRUCTION INCORPORATED IN THE BUILDING. LIVE LOADS USED FOR DESIGN SHALL BE IN ACCORDANCE WITH THE ASCE STANDARDS AND MINIMUM DESIGN LOADS FOR BUILDINGS AND OTHER STRUCTURES, ASCE 7–02.
3. WIND LOADS SHALL BE CALCULATED IN ACCORDANCE WITH ASCE 7–02 USING A "3 SECOND GUST" WIND SPEED OF 125 KM/HR. ALL FACILITIES SHALL BE CLASSIFIED AS A MINIMUM OF CATEGORY II IN ACCORDANCE WITH TABLE 1–1 IN ASCE 7–02.
4. THE BUILDING AND ALL PARTS THEREOF SHALL BE DESIGNED FOR THE SEISMIC REQUIREMENTS AS DEFINED BY THE INTERNATIONAL BUILDING CODE 2000. SITE SPECIFIC DATA: SPECTRAL COORDINATES SS=1.65g AND S1=0.75g.
5. REFER TO DWG S–5 FOR FOOTING SCHEDULE. TOP OF FOOTING SHALL BE LOCATED 800mm (MIN) BELOW FINISHED GRADE.
6. ALL CONCRETE COLUMNS ARE TYPE C–1. REFER TO SECTION 10/S–5.

3 1.50 0 3 4.5
1:75

UNLESS OTHERWISE NOTED, LINEAR DIMENSIONS SHOWN ARE IN MILLIMETERS.

SYMBOL	DESCRIPTION	DATE	APR

DESIGNED BY: TCP
DATE: 29 OCTOBER 2007
DWN BY: JLK
SUBMITTED BY:
CHK BY: JLK
FILE NO.: AF0607A–SB01PN

US Army Corps of Engineers
Afghanistan Engineer District

AFGHANISTAN NATIONAL POLICE (ANP) DISTRICT HEADQUARTERS COMPOUNDS – 1 STORY HQ
VARIOUS LOCATIONS, AFGHANISTAN
1 STORY BUILDING
FOUNDATION PLAN

SHEET REFERENCE NUMBER:
A
S–1

10/23/2007
S:\Engineering & Construction\Engineering\00_RFPs in-progress\ANP\ANP_ON_1-Story Design\AN\Dist_HQ_1Story_Design_Changes_26Oct07\Microstation_files\struct\AF0607A-SB01PN.dgn

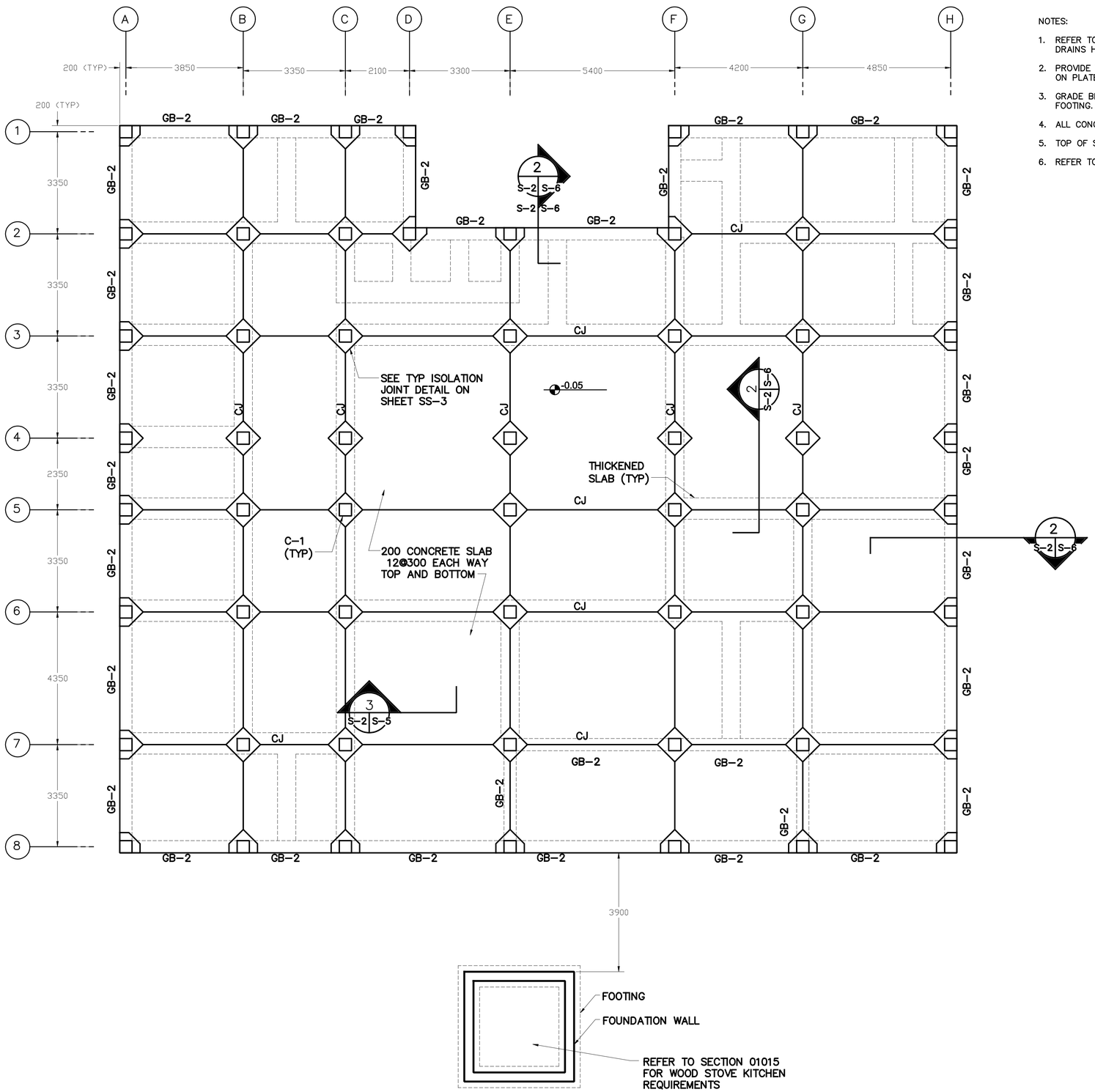

NOTES:

1. REFER TO PLUMBING AND ARCHITECTURAL PLANS FOR FLOOR DRAIN LOCATIONS. NOT ALL DRAINS HAVE BEEN SHOWN. FLOOR SHALL BE SLOPED TO DRAIN.
2. PROVIDE THICKENED SLAB UNDER ALL INTERIOR PARTITIONS. REFER TO SECTIONS 1 AND 2 ON PLATE S-5 FOR ADDITIONAL INFORMATION.
3. GRADE BEAM SHALL EXTEND FROM COLUMN SPREAD FOOTING TO COLUMN SPREAD FOOTING. BOTTOM OF GRADE BEAM TO COINCIDE WITH TOP OF COLUMN FOOTING.
4. ALL CONCRETE COLUMNS ARE TYPE C-1. REFER TO SECTION 10/S-5.
5. TOP OF SLAB AND GRADE BEAM ELEVATIONS ARE AT 50mm BELOW FINISHED FLOOR.
6. REFER TO SHEET SS-3 FOR TYPICAL CONTROL JOINT (CJ) DETAIL.

3 1.50 0 3 4.5
1:75

UNLESS OTHERWISE NOTED, LINEAR DIMENSIONS SHOWN ARE IN MILLIMETERS.

SYMBOL	DESCRIPTION	DATE	APR

DESIGNED BY: TCP	DATE: 29 OCTOBER 2007	
DWN BY: JLK	SUBMITTED BY:	
CHK BY: JLK	FILE NO.: AF0607A-SB02PN	

US Army Corps of Engineers
Afghanistan Engineer District

AFGHANISTAN NATIONAL POLICE (ANP) DISTRICT HEADQUARTERS COMPOUNDS – 1 STORY HQ
VARIOUS LOCATIONS, AFGHANISTAN
1 STORY BUILDING
GRADE BEAM PLAN

SHEET REFERENCE NUMBER:
A
S-2

10/23/2007
S:\Engineering & Construction\Engineering\00_RFPs in-progress\ANP\ANP ON 1-Story Design\ANP Dist HQ 1Story Design Changes 26Oct07\Microstation Files\struct\AF0607A-SB02PN.dgn

NOTES:

1. TOP OF LOW ROOF SLAB AND LOW ROOF BEAMS IS AT 3200 A.F.F.
2. COORDINATE ROOF OPENING REQUIREMENTS WITH OTHER DISCIPLINES. PROVIDE ADDITIONAL REINFORCEMENT AROUND OPENINGS PER TYPICAL DETAIL ON DWG SS-2.
3. REFER TO SHEET S-7 FOR STANDARD BEAM AND COLUMN CONSTRUCTION DETAILS.

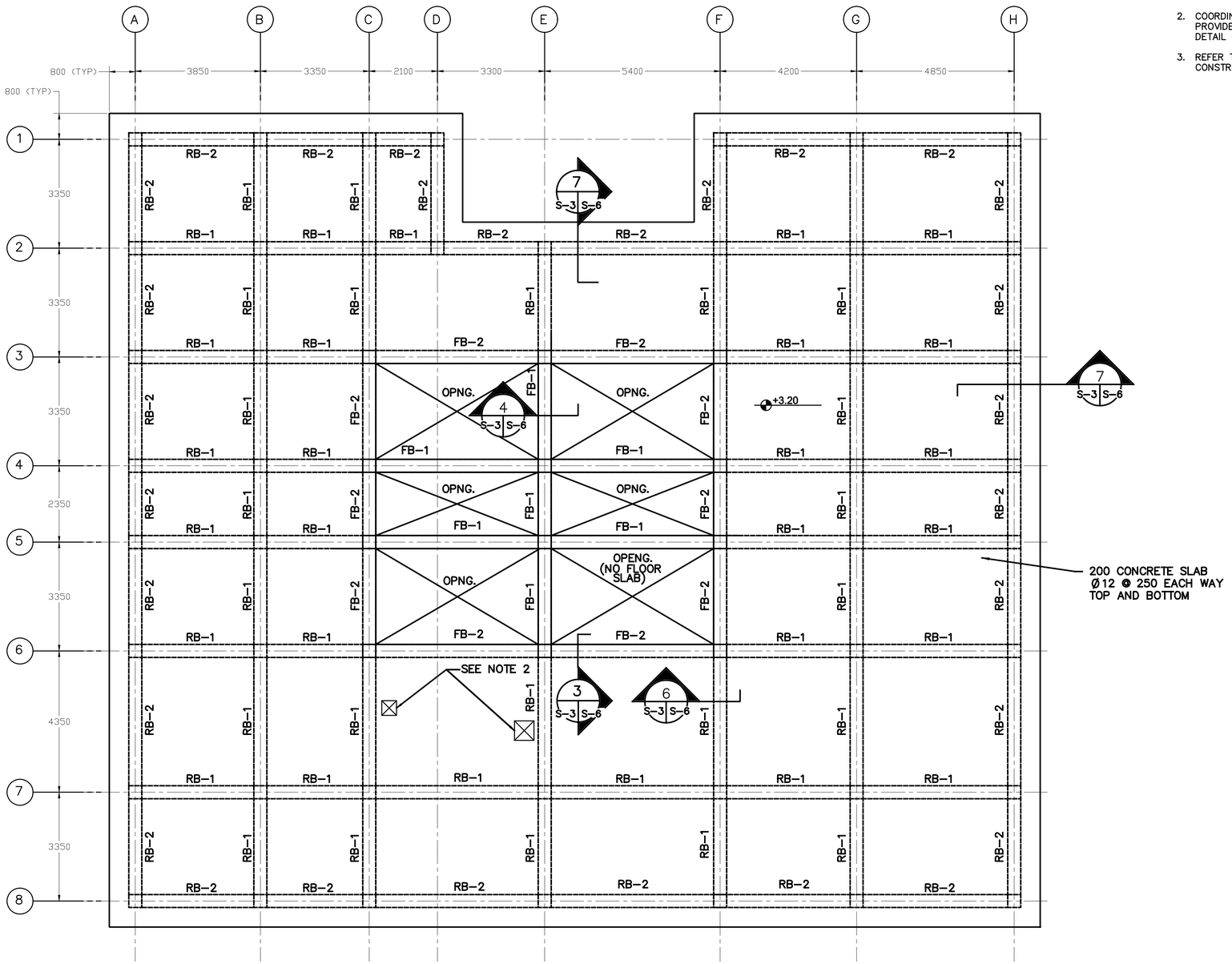

UNLESS OTHERWISE NOTED, LINEAR DIMENSIONS SHOWN ARE IN MILLIMETERS.

SYMBOL	DESCRIPTION	DATE	APR

DESIGNED BY: TCP
DATE: 29 OCTOBER 2007
DWN BY: TCP
SUBMITTED BY:
CHK BY: KGO
FILE NO.: AF0607A-S803PN

US Army Corps of Engineers
Afghanistan Engineer District

AFGHANISTAN NATIONAL POLICE (ANP) DISTRICT HEADQUARTERS COMPOUNDS – 1 STORY HQ
VARIOUS LOCATIONS, AFGHANISTAN
1 STORY BUILDING
LOWER ROOF BEAM PLAN

SHEET REFERENCE NUMBER:
A
S-3

10/23/2007
S:\Engineering & Construction\Engineering\00_RFPs in progress\ANP\ANP_ON_1-Story Design\ANP_Dist_HQ_1Story_Design_Changes_260907\Microstation Files\struct\AF0607A-S803PN.dgn

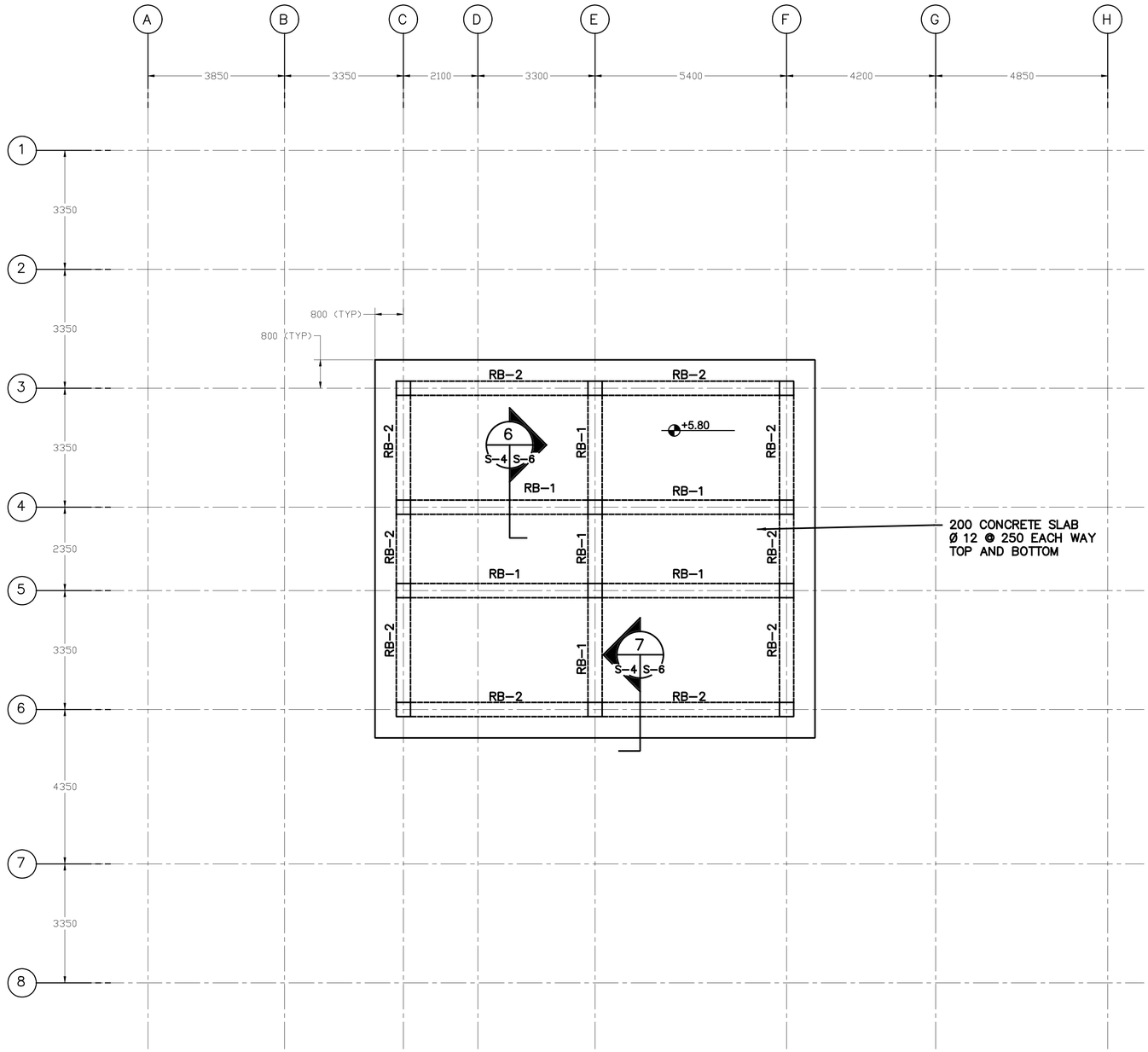

NOTES:

1. TOP OF HIGH ROOF SLAB AND HIGH ROOF BEAMS IS AT 5800 A.F.F.
2. COORDINATE ROOF OPENING REQUIREMENTS WITH OTHER DISCIPLINES. PROVIDE ADDITIONAL REINFORCEMENT AROUND OPENINGS PER TYPICAL DETAIL ON DWG SS-2.
3. REFER TO SHEET S-7 FOR STANDARD BEAM AND COLUMN CONSTRUCTION DETAILS.

3 1.50 0 3 4.5
1:75

UNLESS OTHERWISE NOTED, LINEAR DIMENSIONS SHOWN ARE IN MILLIMETERS.

SYMBOL	DESCRIPTION	DATE	APR

DESIGNED BY: TCP
DWN BY: TCP
CHK BY: KGO
DATE: 29 OCTOBER 2007
SUBMITTED BY:
FILE NO.: AF0607A-SB04PN

US Army Corps of Engineers
Afghanistan Engineer District

AFGHANISTAN NATIONAL POLICE (ANP) DISTRICT HEADQUARTERS COMPOUNDS – 1 STORY HQ
VARIOUS LOCATIONS, AFGHANISTAN
1 STORY BUILDING
HIGH ROOF BEAM PLAN

SHEET REFERENCE NUMBER:
A
S-4

10/23/2007
S:\Engineering & Construction\Engineering\00_RFPs in-progress\ANP\ANP ON-Story Design\ANP Dist HQ 1Story Design Changes 26Oct07\Microstation Files\struct\AF0607A-SB04PN.dgn

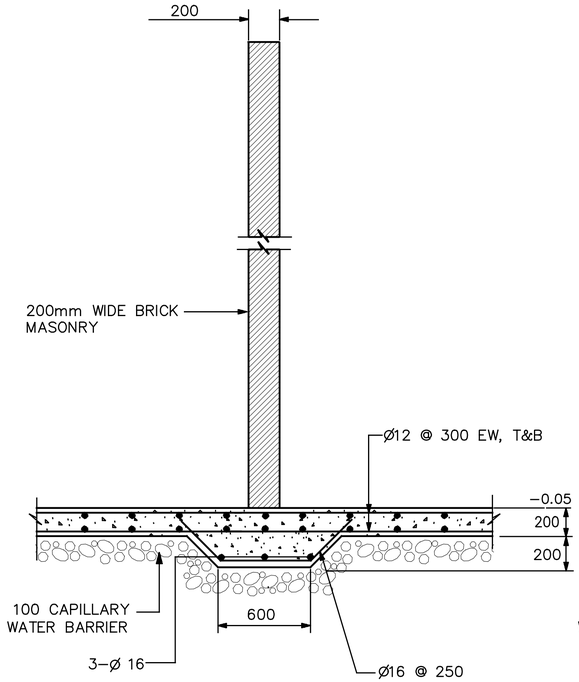

NOTE:
1. TYPICAL AT ALL INTERIOR PARTITIONS EXCEPT WHERE CONCRETE PARTITIONS ARE INDICATED IN ARCHITECTURAL FLOOR PLANS.

TYPICAL PARTITION DETAIL (2 / S-2 S-5)
NOT TO SCALE

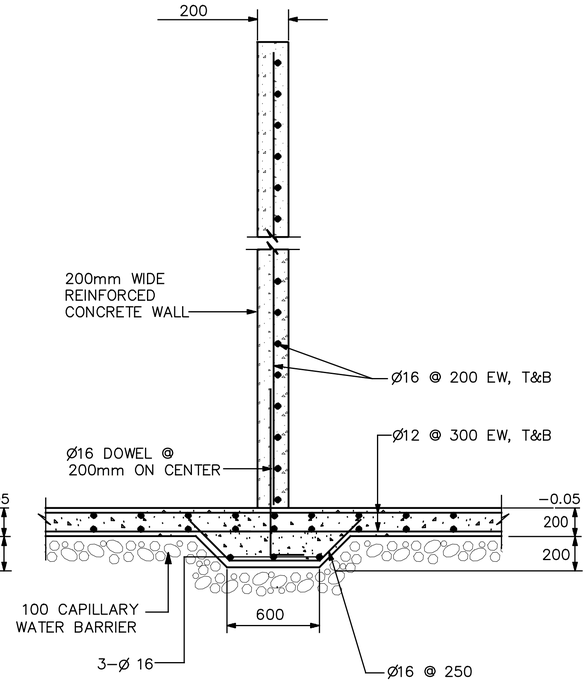

NOTES:
1. SEE ARCHITECTURAL FLOOR PLANS FOR LOCATION OF CONCRETE PARTITIONS.
2. SIMILAR CONDITION AT EXTERIOR CONCRETE WALLS IDENTIFIED IN ARCHITECTURAL FLOOR PLANS – PROVIDE VERTICAL AND HORIZONTAL REINFORCEMENT INDICATED.

REINF. CONCRETE PARTITION DETAIL (1 / S-2 S-5)
NOT TO SCALE

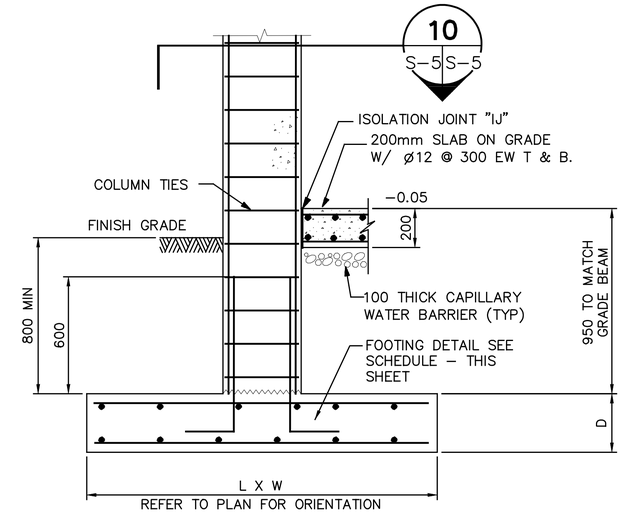

TYPICAL COLUMN AND FOOTING
NOT TO SCALE

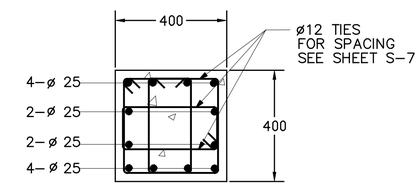

C-1

SECTION (10 / S-5 S-5)
SCALE=1:10

FOOTING SCHEDULE				
FTG TYPE	SIZE (L X W)	DEPTH (D)*	REINFORCING	
			TOP EW	BOTT EW
F1	1700 X 1700	250	Ø25 @ 300	Ø 25 @ 300
F2	2700 X 2700	425	Ø25 @ 350	Ø 25 @ 350
F3	4800 X 3050	425	Ø25 @ 350	Ø 25 @ 350

*TOP FOOTING ELEVATION SHALL BE THE SAME FOR ALL FOOTINGS.
*FOR THE COMBINED FOOTINGS, CENTER ON THE CENTROID FOR THE TWO COLUMNS.
*REFER TO FOUNDATION PLAN FOR ORIENTATION.

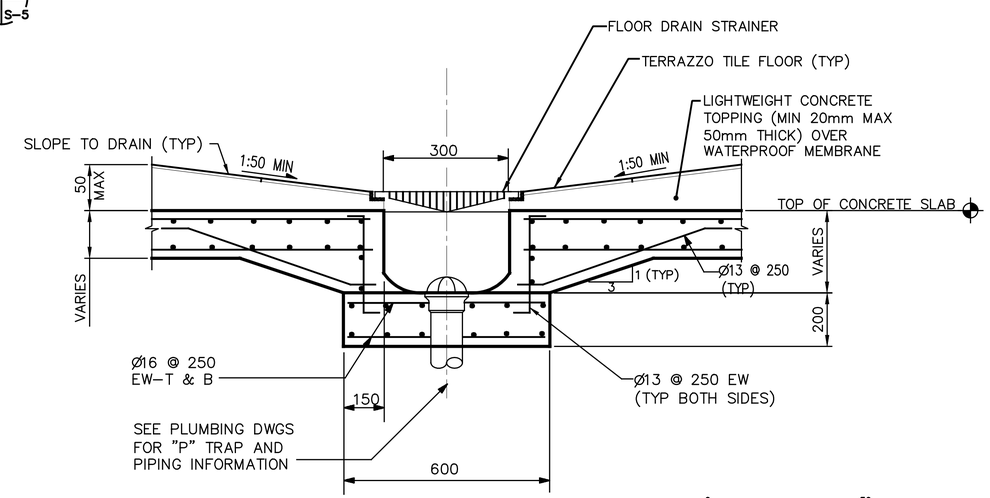

SECTION (3 / S-2 S-5)
NOT TO SCALE

0 .50 1.00
1:10

UNLESS OTHERWISE NOTED, SHOWN ARE IN MILLIMETERS.

SYMBOL	DESCRIPTION	DATE	APR

DESIGNED BY: TCP
DATE: 29 OCTOBER 2007
DWN BY: JLK
SUBMITTED BY:
CHK BY: JLK
FILE NO.: AF0607A-SB05DT

US Army Corps of Engineers
Afghanistan Engineer District

AFGHANISTAN NATIONAL POLICE (ANP) DISTRICT HEADQUARTERS COMPOUNDS – 1 STORY HQ
VARIOUS LOCATIONS, AFGHANISTAN
1 STORY BUILDING
FOOTING AND COLUMN DETAILS

SHEET REFERENCE NUMBER:
A
S-5

10/23/2007
S:\Engineering & Construction\Engineering\00_RFPs in-progress\ANP\ANP ONE-Story Design\ANP Dist_HQ_1Story_Design_Changes_26OCT07\Microstation Files\struct\AF0607A-SB05DT.dgn

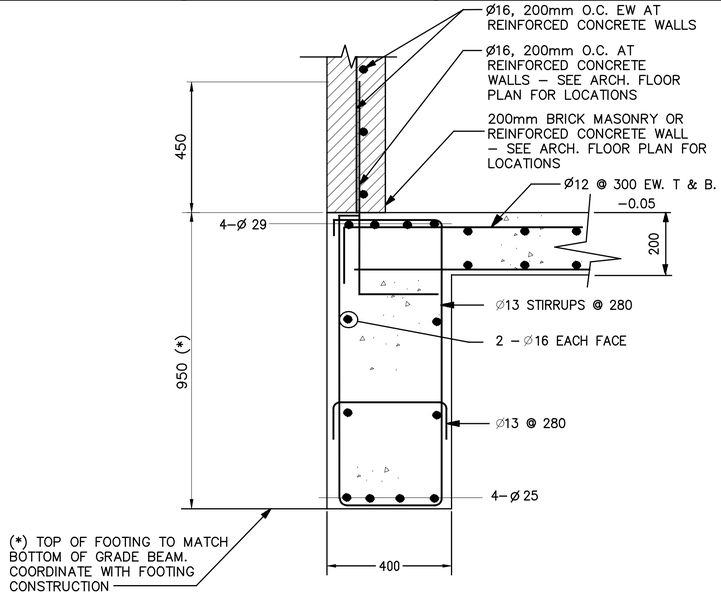

GB–2

SECTION 2 S–2 S–6
SCALE 1:10

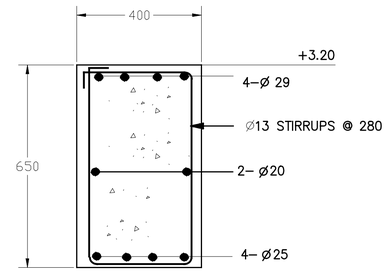

FB–1

SECTION 4 S–3 S–6
SCALE 1:10

NOTE:

1. GRADE BEAM REINFORCING IS CONTINUOUS THROUGH THE COLUMN.

2. COORDINATE REBAR PLACEMENT BETWEEN BEAMS SO THAT A MAXIMUM NUMBER OF REBAR ARE CONTINUOUS. BEND BARS AS REQUIRED.

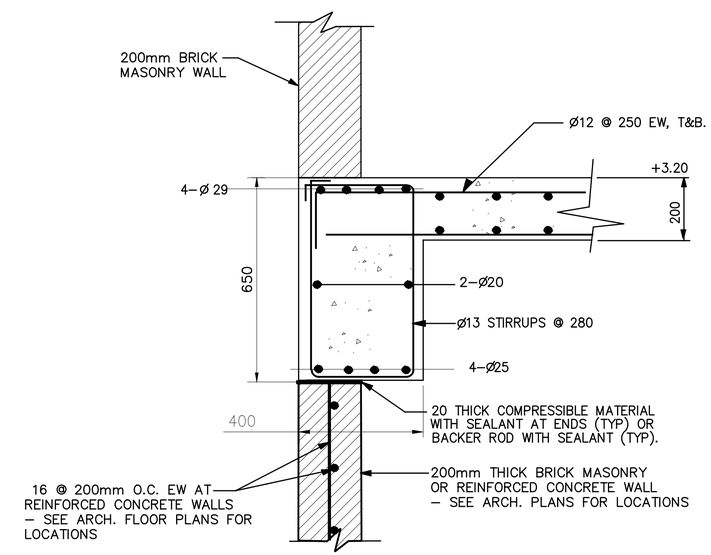

FB–2

SECTION 3 S–3 S–6
SCALE 1:10

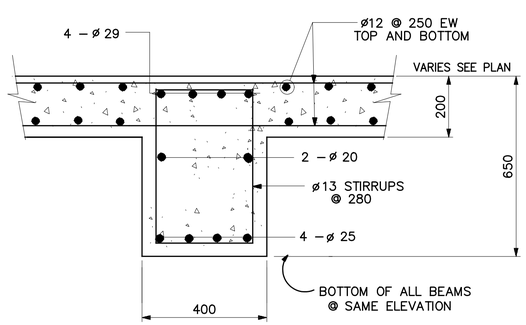

RB–1

SECTION 6 S–3,S–4 S–6
SCALE= NONE

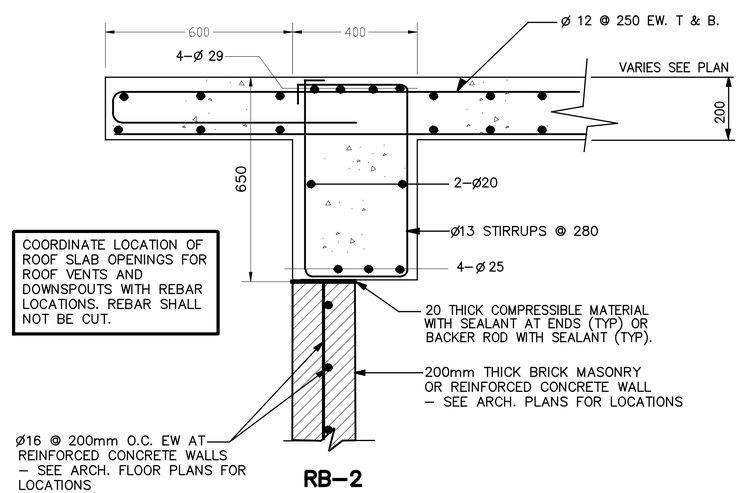

COORDINATE LOCATION OF ROOF SLAB OPENINGS FOR ROOF VENTS AND DOWNSPOUTS WITH REBAR LOCATIONS. REBAR SHALL NOT BE CUT.

RB–2

SECTION 7 S–3,S–4 S–6
SCALE 1:10

0 .50 1.00
1:10

UNLESS OTHERWISE NOTED, LINEAR DIMENSIONS SHOWN ARE IN MILLIMETERS.

SYMBOL	DESCRIPTION	DATE	APR

DESIGNED BY: TCP
DATE: 29 OCTOBER 2007
DWN BY: JLK
SUBMITTED BY:
CHK BY: JLK
FILE NO.: AF0607A–SB06DT

US Army Corps of Engineers
Afghanistan Engineer District

AFGHANISTAN NATIONAL POLICE (ANP) DISTRICT HEADQUARTERS COMPOUNDS – 1 STORY HQ
VARIOUS LOCATIONS, AFGHANISTAN
1 STORY BUILDING
BEAM DETAILS

SHEET REFERENCE NUMBER:
A
S–6

10/23/2007
S:\Engineering & Construction\Engineering\00_RFPs in-progress\ANP\ANP_ON_1-Story Design\AN\Dist_HQ_1Story_Design_Changes_26Oct07\Microstation Files\struct\AF0607A-SB06DT.dgn

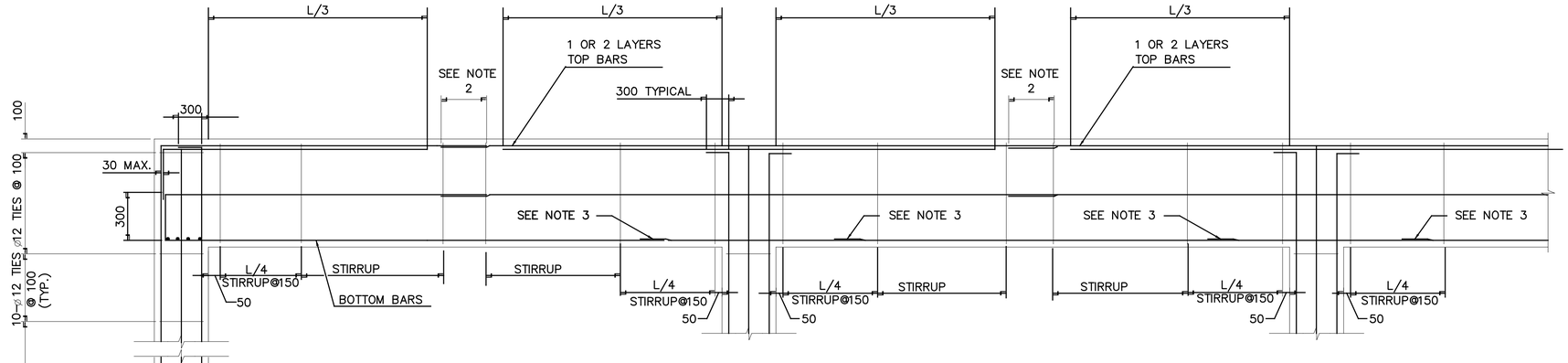

TYPICAL ROOF BEAMS AND FLOOR BEAMS AT DISCONTINUOUS COLUMNS

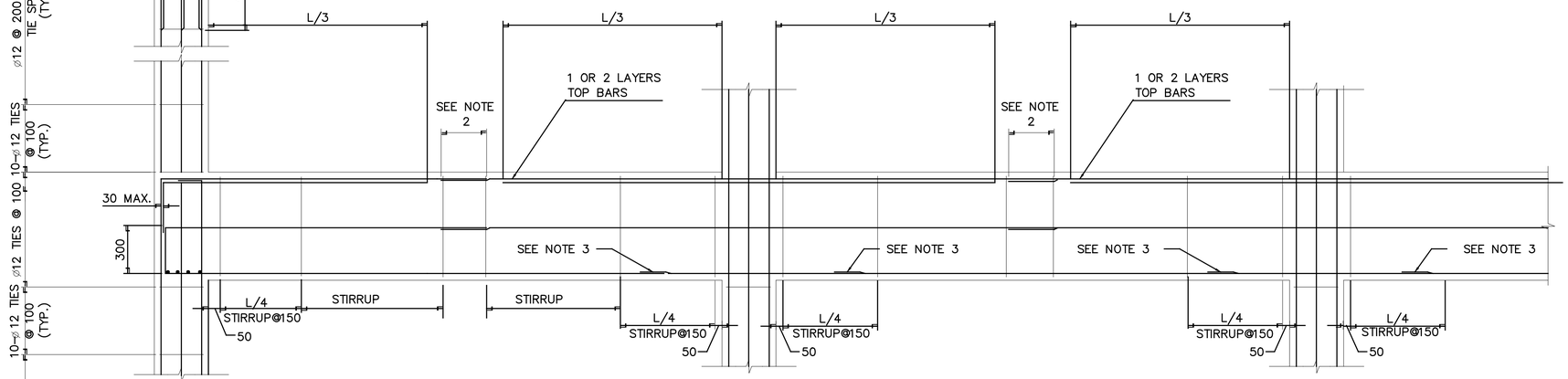

TYPICAL FLOOR BEAMS

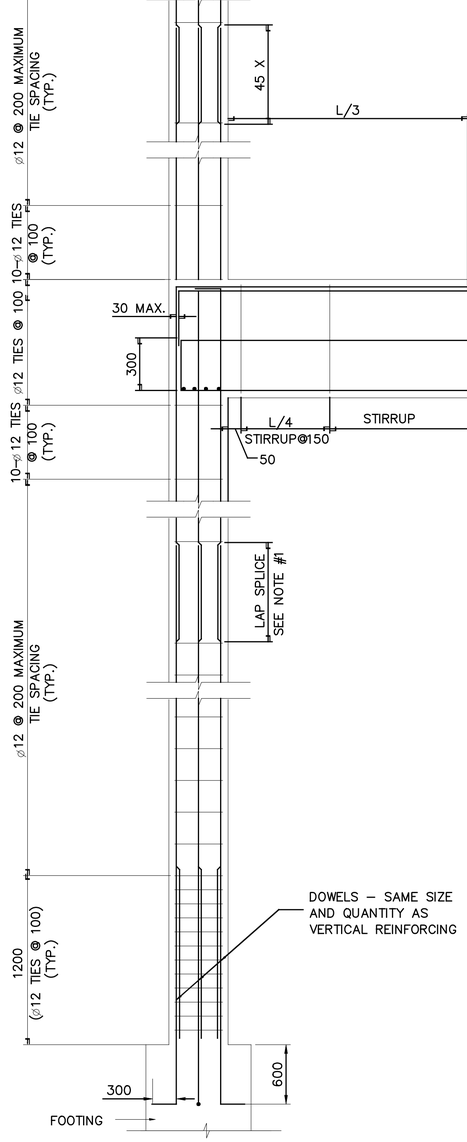

NOTES:

1. ALL LAP SPLICES IN BEAMS AND COLUMNS SHALL BE CLASS B SPLICES

2. PROVIDE A 150mm MAXIMUM OF STIRRUP SPACING AT LAP SPLICES, AS SHOWN ON DRAWING. ALL SPLICES NOTED SHALL OCCUR AT MIDSPAN. REFER INDIVIDUAL BEAM DETAILS FOR STIRRUP SPACING.

3. THE LAP SPLICES SHOWN SHALL BE PERMITTED IN SPANS MEASURING 6 METERS OR MORE FROM CENTERLINES OF SUPPORTS (COLUMNS OR WALLS) ONLY. SPLICES INDICATED SHALL BE LOCATED ONE METER FROM THE FACE OF THE COLUMN, AS SHOWN.

4. BEAM STEEL NOT SHOWN FOR CLARITY.

STANDARD BEAM AND COLUMN DETAIL

1 .50 0 1
1:20

UNLESS OTHERWISE NOTED, LINEAR DIMENSIONS SHOWN ARE IN MILLIMETERS.

SYMBOL	DESCRIPTION	DATE	APR

DESIGNED BY: TCP
DATE: 29 OCTOBER 2007
DWN BY: TCP
SUBMITTED BY:
CHK BY: KGO
FILE NO.: AF0607A–SB07DT

US Army Corps of Engineers
Afghanistan Engineer District

AFGHANISTAN NATIONAL POLICE (ANP) DISTRICT HEADQUARTERS COMPOUNDS – 1 STORY HQ
VARIOUS LOCATIONS, AFGHANISTAN
1 STORY BUILDING
STANDARD BEAM AND COLUMN DETAIL

SHEET REFERENCE NUMBER:
A
S–7

10/23/2007
S:\Engineering & Construction\Engineering\00_RFPs in-progress\ANP\ANP ONE-Story Design\ANP Dist HQ 1Story Design Changes 26Oct07\Microstation files\struct\AF0607A-SB07DT.dgn

NOTES:
1. FOR LEGENDS, ABBREVIATIONS AND STANDARD MECHANICAL DETAILS SEE SHEETS SM-1 AND SM-3.
2. FOR EQUIPMENT SCHEDULES AND CONTROL DIAGRAMS SEE SHEET SM-2.
3. ALL DIMENSIONS ARE IN MM UNLESS NOTED OTHERWISE.
4. PROVIDE EACH EXHAUST FAN WITH MANUFACTURER'S STANDARD EXHAUST GRILL AND GRAVITY BACKDRAFT DAMPER.
5. PROVIDE 200 x 100 ALL-WEATHER LOUVER WITH BIRDSCREEN.
6. KITCHEN EXHAUST HOOD WITH ALUMINUM FILTERS AND SEALED DUCT CONNECTION TO EXHAUST FAN. SIZE OF HOOD TO MATCH COOKING EQUIPMENT PROVIDED.
7. EXHAUST FAN EF-A-5 CAPACITY INDICATED HERE IS MINIMUM BASED ON 1200W X 3000L HOOD: ITS CAPACITY SHALL BE REVISED UPWARD TO MATCH AIRFLOW PERFORMANCE REQUIRED BY THE KITCHEN HOOD EQUIPMENT MANUFACTURER. PROPANE STOVE FLUE DUCT SHALL CONNECT TO KITCHEN EXHAUST HOOD.

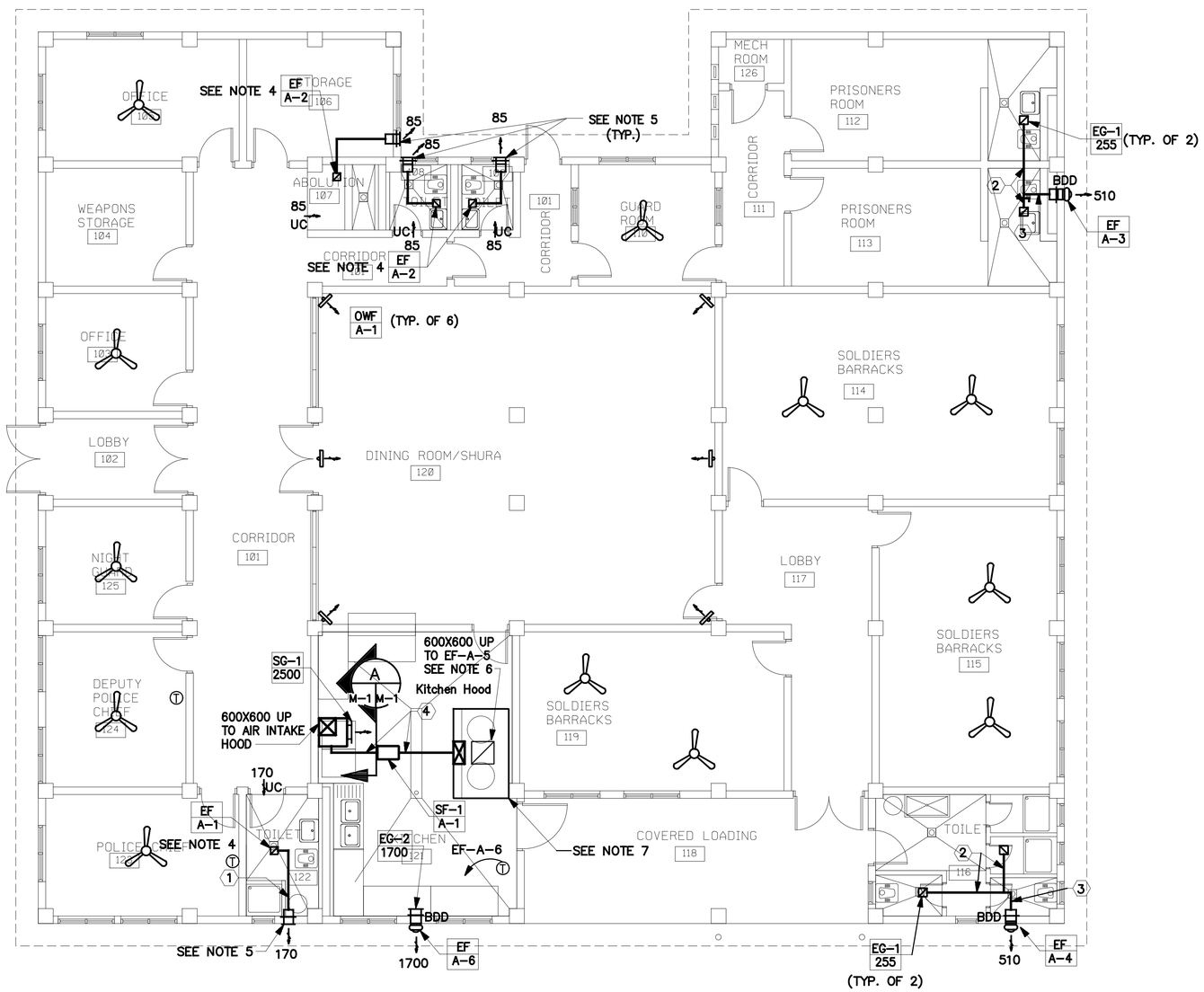

HVAC PLAN
SCALE= 1: 75

DUCT SIZING LEGEND

1	200 X 100
2	200 X 150
3	200 X 200
4	600 X 300

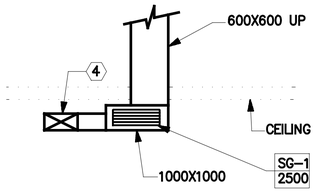

KITCHEN

DETAIL A M-1
SCALE 1: 50

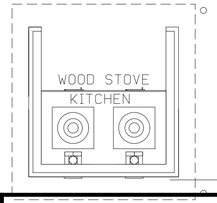

1 0 1 2 3 4
1:50

3 1.50 0 3 4.5
1:75

UNLESS OTHERWISE NOTED, LINEAR DIMENSIONS SHOWN ARE IN MILLIMETERS.

SYMBOL	DESCRIPTION	DATE	APR

DESIGNED BY: RMS
DATE: 29 OCTOBER 2007
DWN BY: JRP
SUBMITTED BY:
CHK BY: JLK
FILE NO.: AF0607A-MH01PN

US Army Corps of Engineers
Afghanistan Engineer District

AFGHANISTAN NATIONAL POLICE (ANP) DISTRICT HEADQUARTERS COMPOUNDS – 1 STORY HQ
VARIOUS LOCATIONS, AFGHANISTAN
1 STORY BUILDING
HVAC PLAN

SHEET REFERENCE NUMBER:
A
M-1

10/25/2007
S:\Engineering & Construction\Engineering\00 RFPs in-progress\ANP\ANP ON 1-Story Design\ANP Dist HQ 1Story Design Changes 26Oct07\Microstation files\mech\AF0607A-MH01PN.dgn

NOTES:
1. PROVIDE DOUBLE WALL TYPE METAL VENT THROUGH EXTERIOR WALL FOR VENTING OF WOOD STOVES, TOP AT BOTTOM OF CONCRETE BEAM. WOOD STOVES TO BE PROVIDED BY OCCUPANTS. COORDINATE SIZE OF VENT THROUGH WALL WITH WOOD STOVE MANUFACTURER'S RECOMMENDATIONS.

2. PROVIDE 25MM GAS SUPPLY LINE WITH A SERVICE SHUT-OFF VALVE DOWN TO THE COOKING STOVES. GAS PIPING AND CONNECTION TO INDIVIDUAL STOVES SHALL BE IN CONFORMANCE WITH STOVE MANUFACTURER RECOMMENDATIONS.

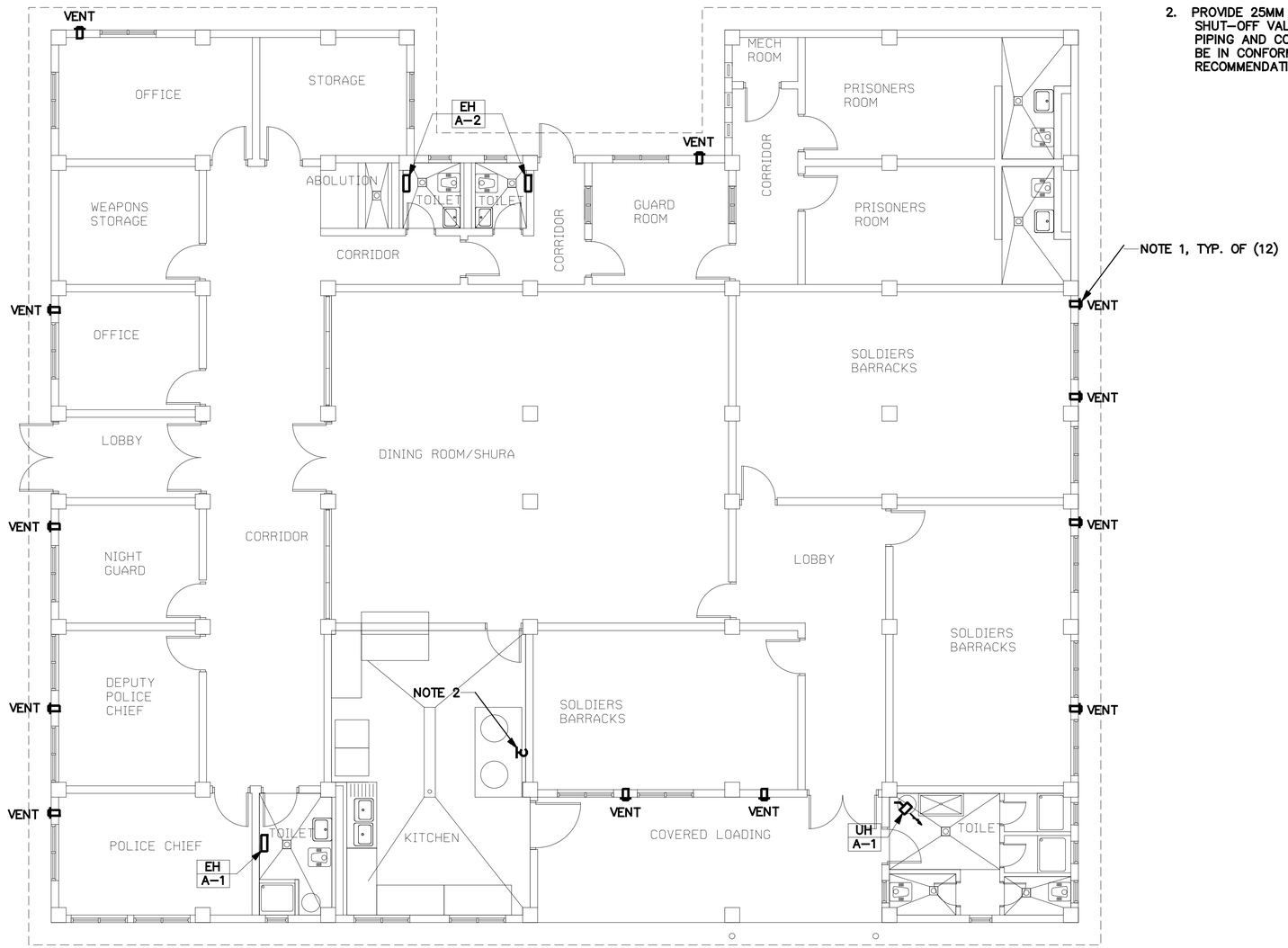

HEATING PLAN
SCALE= 1: 75

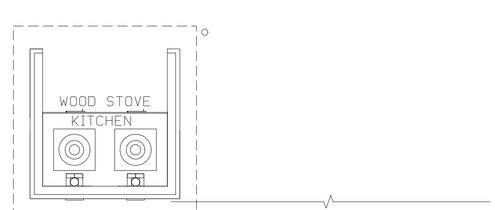

3 1.50 0 3 4.5
1:75
UNLESS OTHERWISE NOTED, LINEAR DIMENSIONS SHOWN ARE IN MILLIMETERS.

SYMBOL	DESCRIPTION	DATE	APR

DESIGNED BY: RMS
DATE: 29 OCTOBER 2007
DWN BY: JRP
SUBMITTED BY:
CHK BY: JLK
FILE NO.: AF0607A-MH02PN

US Army Corps of Engineers
Afghanistan Engineer District

AFGHANISTAN NATIONAL POLICE (ANP) DISTRICT HEADQUARTERS COMPOUNDS – 1 STORY HQ
VARIOUS LOCATIONS, AFGHANISTAN
1 STORY BUILDING
HEATING PLAN

SHEET REFERENCE NUMBER:
A
M-2

10/25/2007
S:\Engineering & Construction\Engineering\00 RFPs in-progress\ANP\ANP ON 1-Story Design\ANP Dist HQ 1Story Design Changes 26Oct07\Microstation Files\mech\AF0607A-MH02PN.dgn

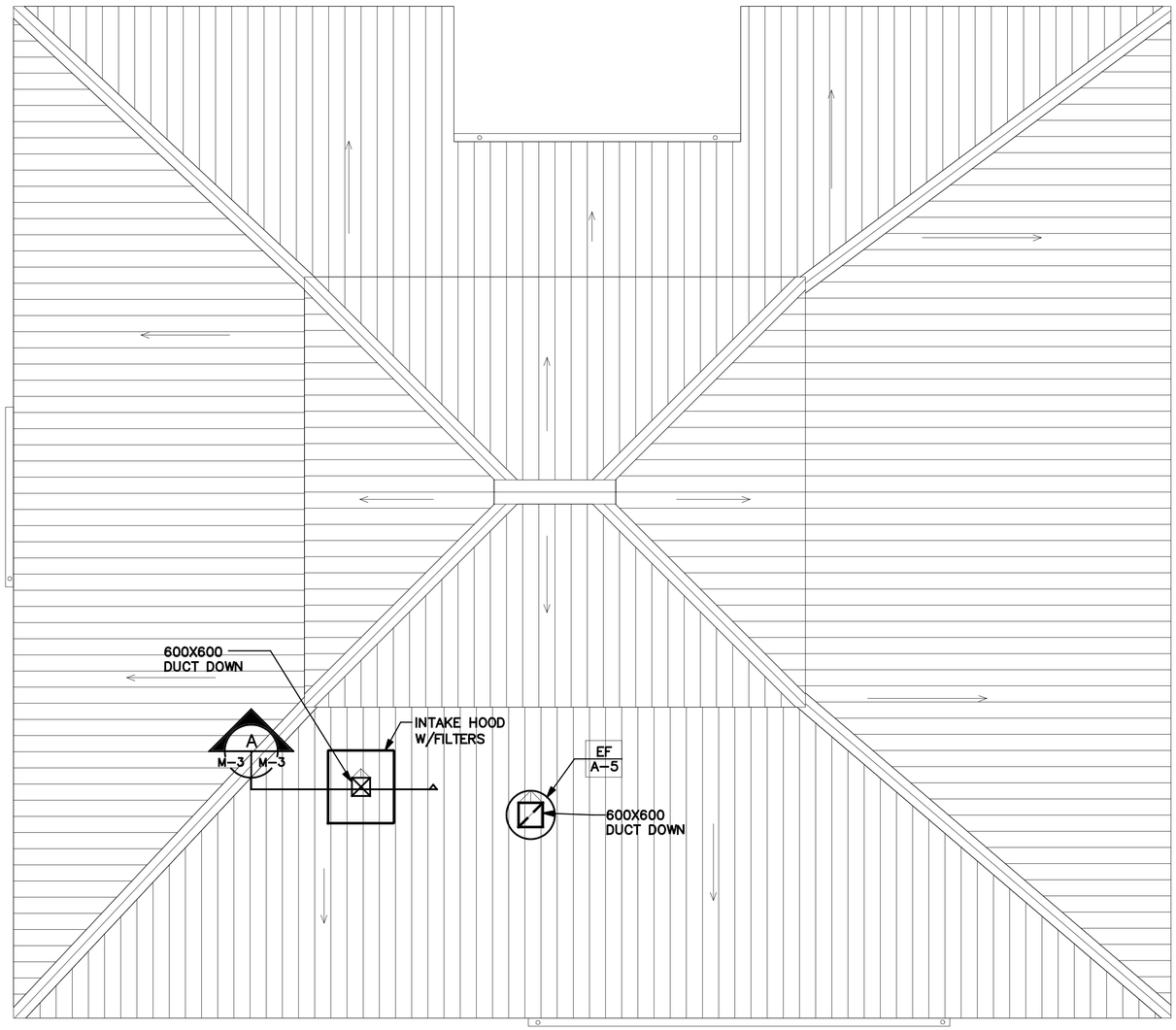

ROOF PLAN
SCALE= 1: 75

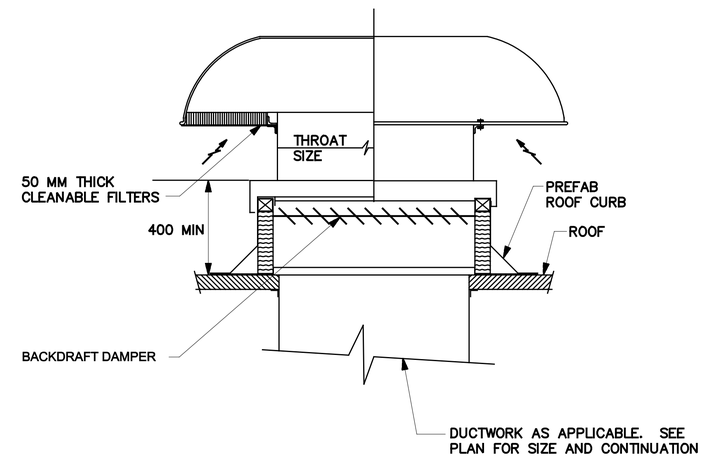

NOTE:
1. FILTER AREA SELECTION AT MAXIMUM FACE VELOCITY OF 300 FPM OR 1.52 MPS.

AIR INTAKE HOOD (A / M-3)
NOT TO SCALE

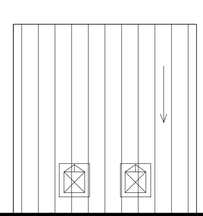

3 1.50 0 3 4.5
1:75
UNLESS OTHERWISE NOTED, LINEAR DIMENSIONS SHOWN ARE IN MILLIMETERS.

SYMBOL	DESCRIPTION	DATE	APR

DESIGNED BY: RMS
DWN BY: JLK
CHK BY: JLK
DATE: 29 OCTOBER 2007
SUBMITTED BY:
FILE NO.: AF0607A-MH03PN

US Army Corps of Engineers
Afghanistan Engineer District

AFGHANISTAN NATIONAL POLICE (ANP) DISTRICT HEADQUARTERS COMPOUNDS – 1 STORY HQ
VARIOUS LOCATIONS, AFGHANISTAN
1 STORY BUILDING
ROOF PLAN

SHEET REFERENCE NUMBER:
A
M-3

10/25/2007
S:\Engineering & Construction\Engineering\00_RFPs in-progress\ANP\ANP 0_1-Story Design\ANP Dist HQ 1Story Design Changes 26Oct07\Microstation Files\mech\AF0607A-MH03PN.dgn

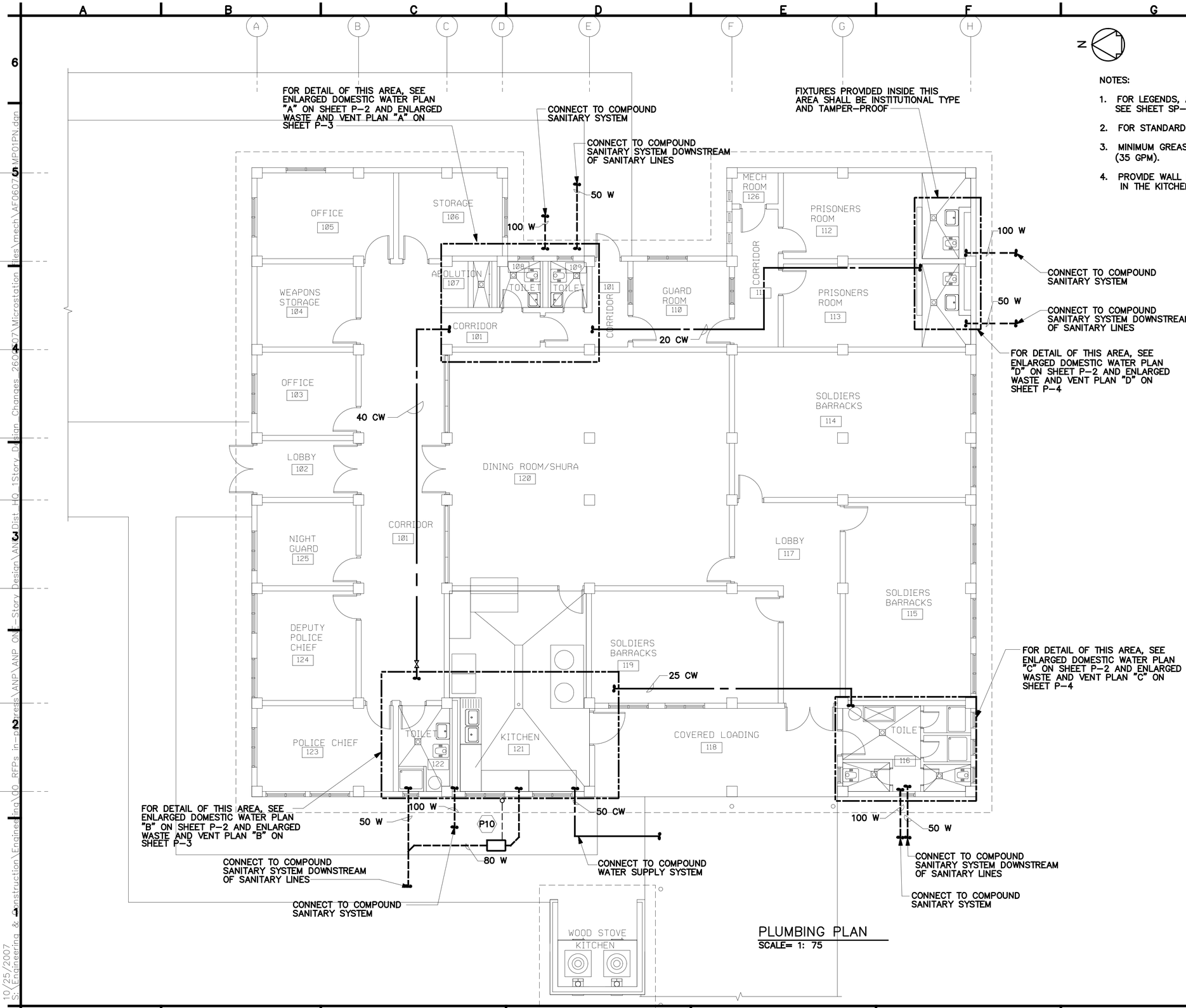

NOTES:

1. FOR LEGENDS, ABBREVIATIONS AND PLUMBING FIXTURE SCHEDULE SEE SHEET SP-1.
2. FOR STANDARD PLUMBING DETAILS SEE SHEET SP-2.
3. MINIMUM GREASE INTERCEPTOR FLOW RATE SHALL BE 135 LPM (35 GPM).
4. PROVIDE WALL MOUNTED, 15MM DIA. 12.5m LONG HOSE REEL IN THE KITCHEN.

PLUMBING PLAN
SCALE= 1: 75

3 1.50 0 3 4.5
1:75
UNLESS OTHERWISE NOTED, LINEAR DIMENSIONS SHOWN ARE IN MILLIMETERS.

SYMBOL	DESCRIPTION	DATE	APR

DESIGNED BY: RMS
DATE: 29 OCTOBER 2007
DWN BY: JLK
SUBMITTED BY:
CHK BY: JLK
FILE NO.: AF0607A-MP01PN

US Army Corps of Engineers
Afghanistan Engineer District

AFGHANISTAN NATIONAL POLICE (ANP) DISTRICT HEADQUARTERS COMPOUNDS – 1 STORY HQ
VARIOUS LOCATIONS, AFGHANISTAN
1 STORY BUILDING
PLUMBING PLAN

SHEET REFERENCE NUMBER:
A
P-1

10/25/2007
S:\Engineering & Construction\Engineering\00 RFPs in-progress\ANP\ANP 01-Story Design\AND Dist HQ 1Story Design Changes 26Oct07\Microstation files\mech\AF0607A-MP01PN.dgn

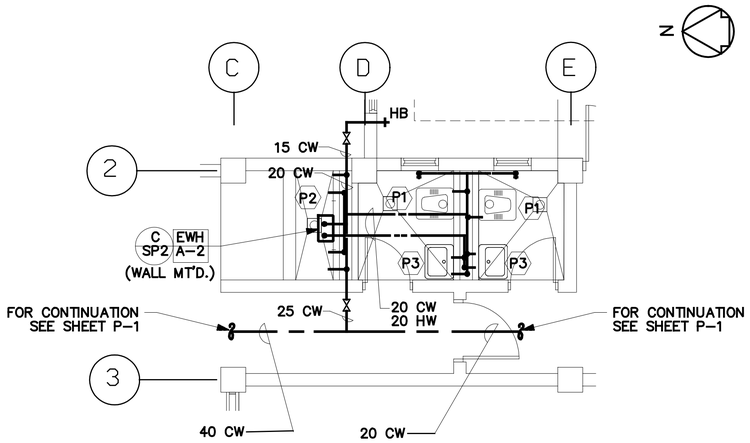

ENLARGED PLAN "A"– DOMESTIC WATER
SCALE= 1: 50

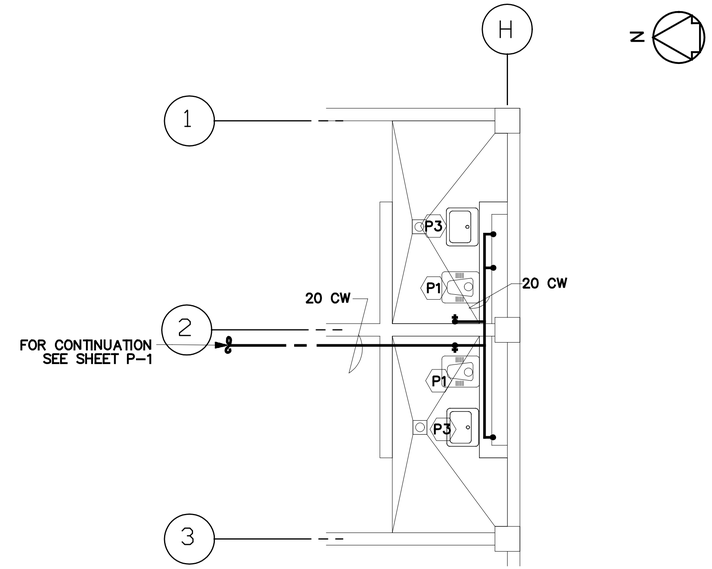

ENLARGED PLAN "D"– DOMESTIC WATER
SCALE= 1: 50

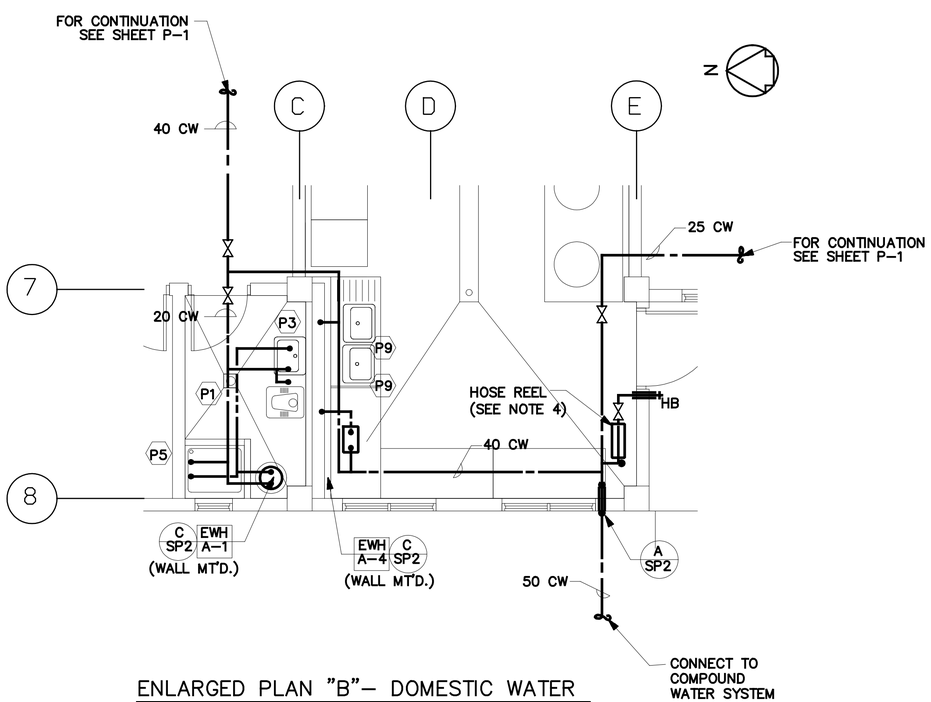

ENLARGED PLAN "B"– DOMESTIC WATER
SCALE= 1: 50

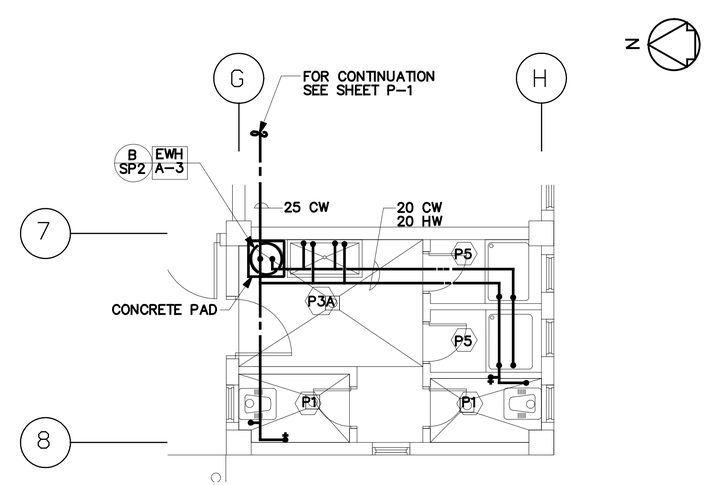

ENLARGED PLAN "C"– DOMESTIC WATER
SCALE= 1: 50

1 0 1 2 3 4
1:50

UNLESS OTHERWISE NOTED, LINEAR DIMENSIONS SHOWN ARE IN MILLIMETERS.

SYMBOL	DESCRIPTION	DATE	APR

DESIGNED BY: RMS
DATE: 29 OCTOBER 2007
DWN BY: JLK
SUBMITTED BY:
CHK BY: JLK
FILE NO.: AF0607A–MP02LS

US Army Corps of Engineers
Afghanistan Engineer District

AFGHANISTAN NATIONAL POLICE (ANP) DISTRICT HEADQUARTERS COMPOUNDS – 1 STORY HQ
VARIOUS LOCATIONS, AFGHANISTAN
1 STORY BUILDING
ENLARGED PLUMBING PLANS– DOMESTIC WATER

SHEET REFERENCE NUMBER:
A
P–2

10/25/2007
S:\Engineering & Construction\Engineering\00_RFPs in Progress\ANP\ANP 01_1-Story Design\ANP Dist HQ 1Story Design Changes 26Oct07\Microstation Files\mech\AF0607MP02LS.dgn

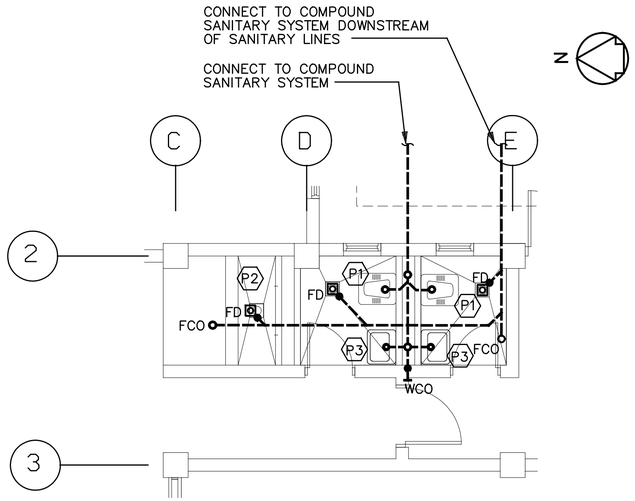

ENLARGED PLAN "A"- WASTE AND DRAINS

SCALE= 1: 50

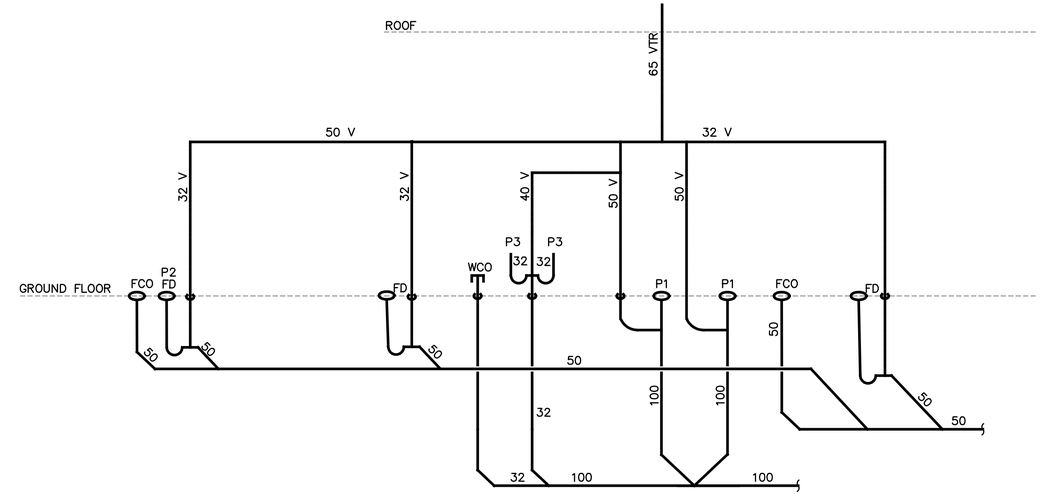

ENLARGED PLAN "A"- WASTE AND DRAIN PIPING SCHEMATIC

SCALE=NO SCALE

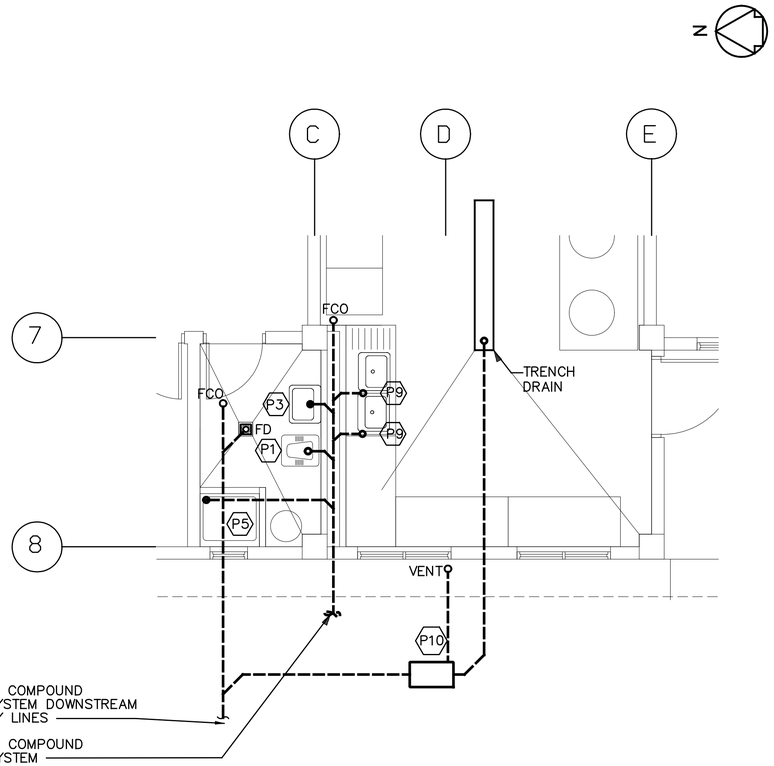

ENLARGED PLAN "B"- WASTE AND DRAINS

SCALE= 1: 50

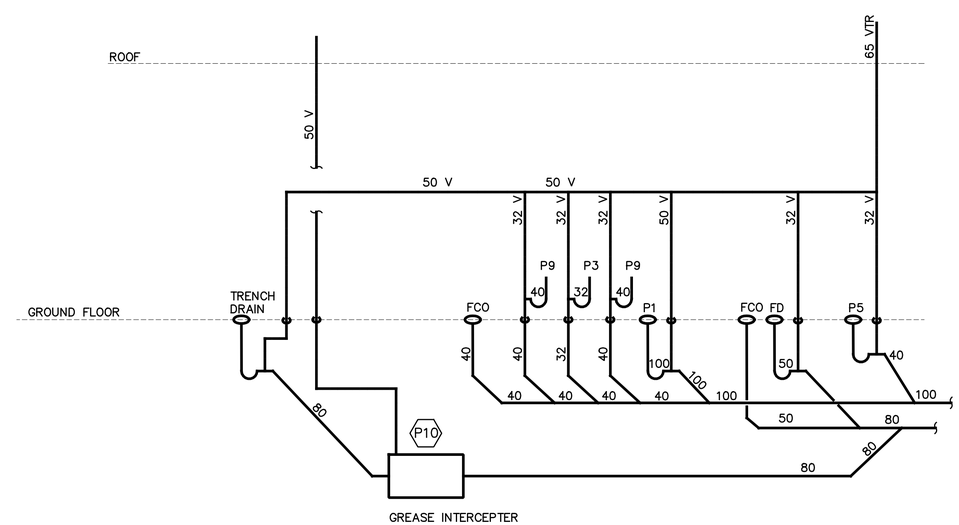

ENLARGED PLAN "B"- WASTE AND DRAIN PIPING SCHEMATIC

SCALE= NO SCALE

1 0 1 2 3 4
1:50

UNLESS OTHERWISE NOTED, LINEAR DIMENSIONS SHOWN ARE IN MILLIMETERS.

SYMBOL	DESCRIPTION	DATE	APR

DESIGNED BY: RMS
DATE: 29 OCTOBER 2007
DWN BY: JLK
SUBMITTED BY:
CHK BY: JLK
FILE NO.: AF0607A-MP03LS

US Army Corps of Engineers
Afghanistan Engineer District

AFGHANISTAN NATIONAL POLICE (ANP) DISTRICT HEADQUARTERS COMPOUNDS – 1 STORY HQ
VARIOUS LOCATIONS, AFGHANISTAN
1 STORY BUILDING
ENLARGED PLUMBING PLANS– WASTE AND DRAINS

SHEET REFERENCE NUMBER:
A
P–3

10/25/2007
S:\Engineering & Construction\Engineering\00_RFPs in Progress\ANP\ANP 01 1-Story Design\ANP Dist HQ 1Story Design Changes 26Oct07\Microstation Files\mech\AF0607MP03LS.dgn

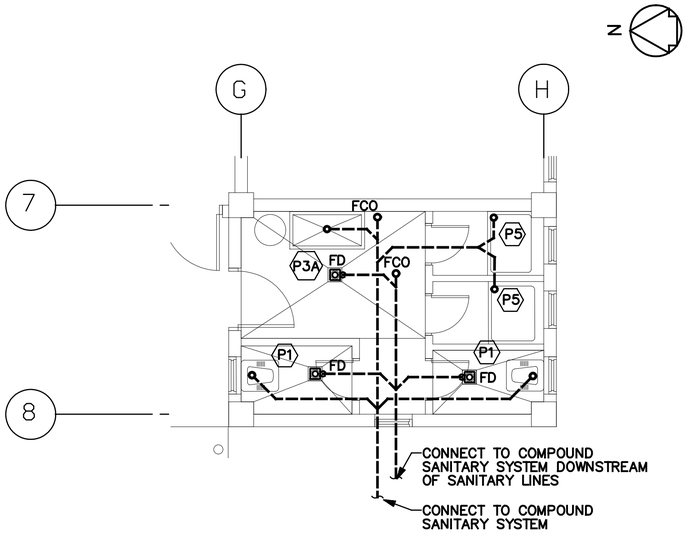

ENLARGED PLAN "C"- WASTE AND DRAINS
SCALE= 1: 50

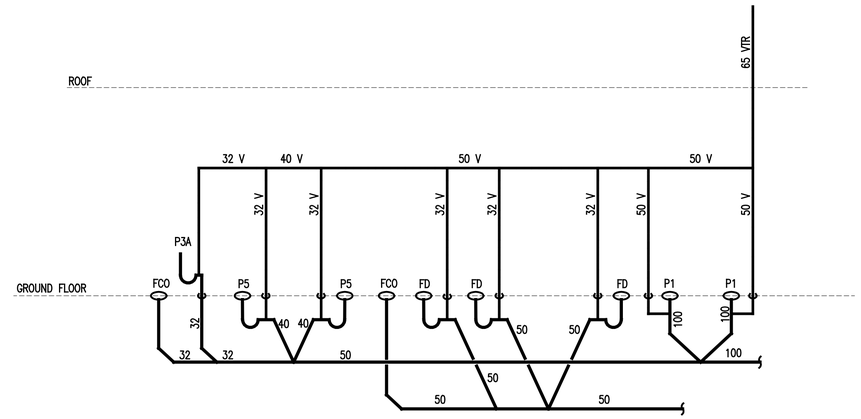

ENLARGED PLAN "C"- WASTE AND DRAIN PIPING SCHEMATIC
SCALE=NO SCALE

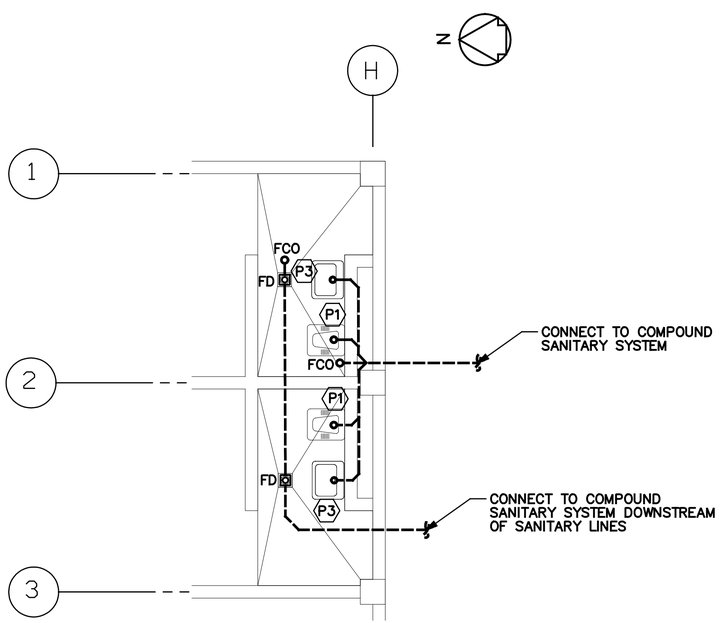

ENLARGED PLAN "D"- WASTE AND DRAINS
SCALE= 1: 50

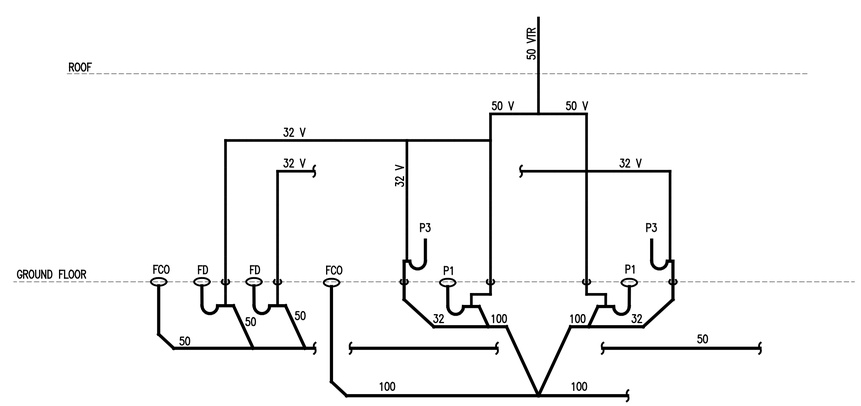

ENLARGED PLAN "D"- WASTE AND DRAIN PIPING SCHEMATIC
SCALE=NO SCALE

1 0 1 2 3 4
1:50

UNLESS OTHERWISE NOTED, LINEAR DIMENSIONS SHOWN ARE IN MILLIMETERS.

SYMBOL	DESCRIPTION	DATE	APR

DESIGNED BY: RMS
DWN BY: JMC
CHK BY: RMS
DATE: 29 OCTOBER 2007
SUBMITTED BY:
FILE NO.: AF0607A-MP04LS

US Army Corps of Engineers
Afghanistan Engineer District

AFGHANISTAN NATIONAL POLICE (ANP) DISTRICT HEADQUARTERS COMPOUNDS – 1 STORY HQ
VARIOUS LOCATIONS, AFGHANISTAN
1 STORY BUILDING
ENLARGED PLUMBING PLANS– WASTE AND DRAINS

SHEET REFERENCE NUMBER:
A
P–4

10/25/2007
S:\Engineering & Construction\Engineering\00_RFPs in progress\ANP\ANP 01 Story Design\ANP Dist HQ 1Story Design Changes 2607\Microstation files\mech\AF0607A-MP04LS.dgn

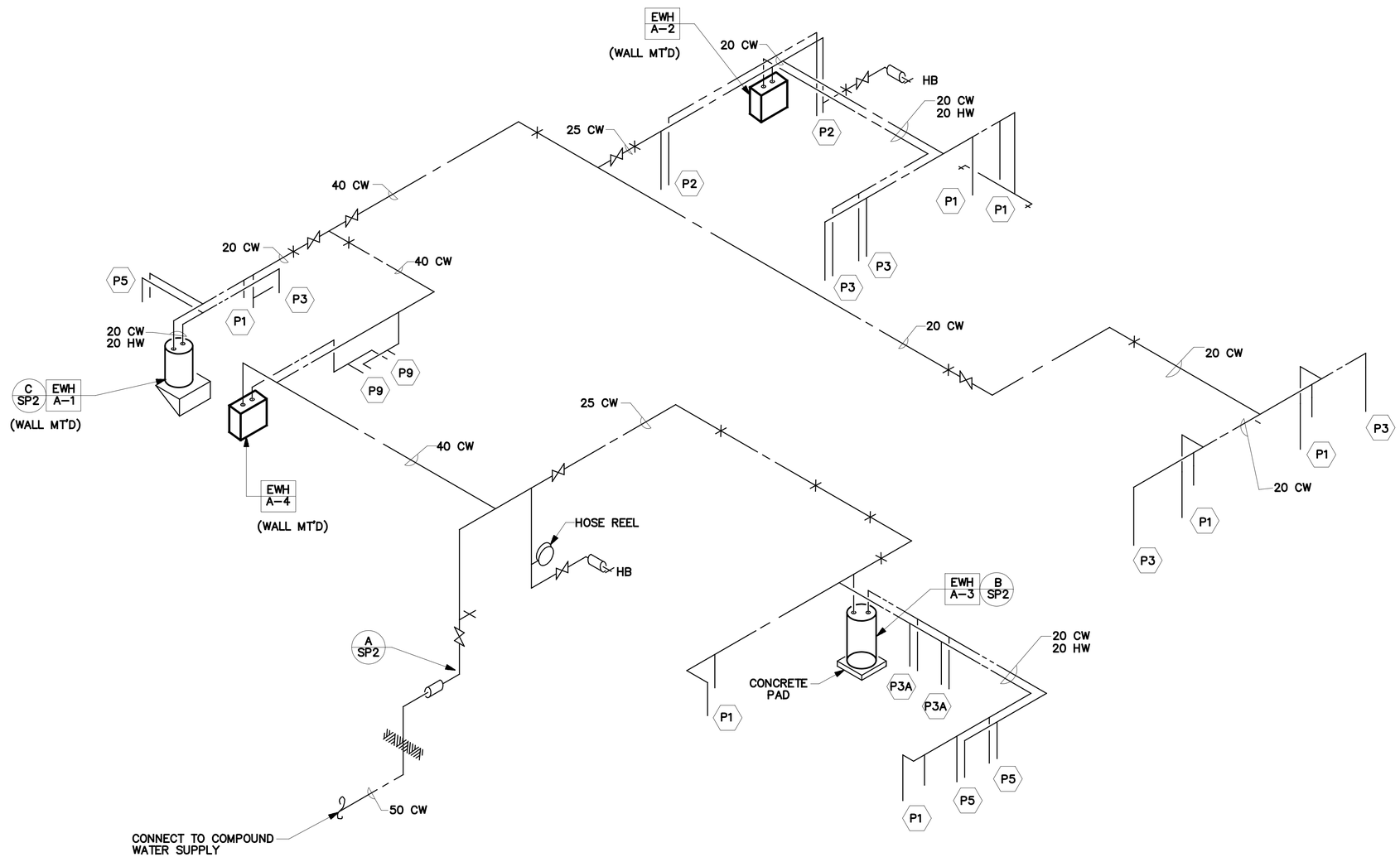

DOMESTIC WATER RISER DIAGRAM
NOT TO SCALE

SYMBOL	DESCRIPTION	DATE	APR

DESIGNED BY: RMS
DATE: 29 OCTOBER 2007
DWN BY: JLK
SUBMITTED BY:
CHK BY: JLK
FILE NO.: AF0607A–MP05DI

US Army Corps of Engineers
Afghanistan Engineer District

AFGHANISTAN NATIONAL POLICE (ANP) DISTRICT HEADQUARTERS COMPOUNDS – 1 STORY HQ
VARIOUS LOCATIONS, AFGHANISTAN
1 STORY BUILDING
DOMESTIC WATER RISER DIAGRAM

SHEET REFERENCE NUMBER:
A
P–5

10/25/2007
S:\Engineering & Construction\Engineering\00 RFPs in-progress\ANP\ANP ON 1-Story Design\ANP Dist HQ 1Story Design Changes 2607\Microstation Files\mech\AF0607A-MP05DI.dgn

EWH A–X ELECTRIC WATER HEATER SCHEDULE

UNIT NUMBER	LOCATION (ROOM NO.)	TYPE	STORAGE CAPACITY (LITERS)	MINIMUM RECOVERY RATE (LITERS/HOUR) @ 55.5 C RISE	NUMBER OF ELEMENTS	ELECTRICAL REQUIREMENTS				REMARKS
						KW INPUT	VOLTS	PH	HZ	
A–1	OFFICERS TOILET	STORAGE TANK	75	39	1	2.5	220	1	50	WALL MOUNTED
A–2	WOMENS TOILET	TANKLESS	N/A	N/A	2	9.0	220	1	50	WALL MOUNTED
A–3	BARRACKS TOILET	STORAGE TANK	200	143	2	9.0	380	3	50	FLOOR MOUNTED
A–4	KITCHEN	TANKLESS	N/A	N/A	2	12.0	220	1	50	WALL MOUNTED

SYMBOL	DESCRIPTION	DATE	APR

DESIGNED BY: RMS
DATE: 29 OCTOBER 2007
DWN BY: JMC
SUBMITTED BY:
CHK BY: RMS
FILE NO.: AF0607A–MP06SC

US Army Corps of Engineers
Afghanistan Engineer District

AFGHANISTAN NATIONAL POLICE (ANP) DISTRICT HEADQUARTERS COMPOUNDS – 1 STORY HQ
VARIOUS LOCATIONS, AFGHANISTAN
1 STORY BUILDING
PLUMBING SCHEDULES

SHEET REFERENCE NUMBER:
A
P–6

10/25/2007
S:\Engineering & Construction\Engineering\00_RFPs in-process\ANP\ANP_ON_1-Story Design\ANP Dist HQ 1Story Design Changes 26Oct07\Microstation Files\mech\AF0607A_MP06SC.dgn

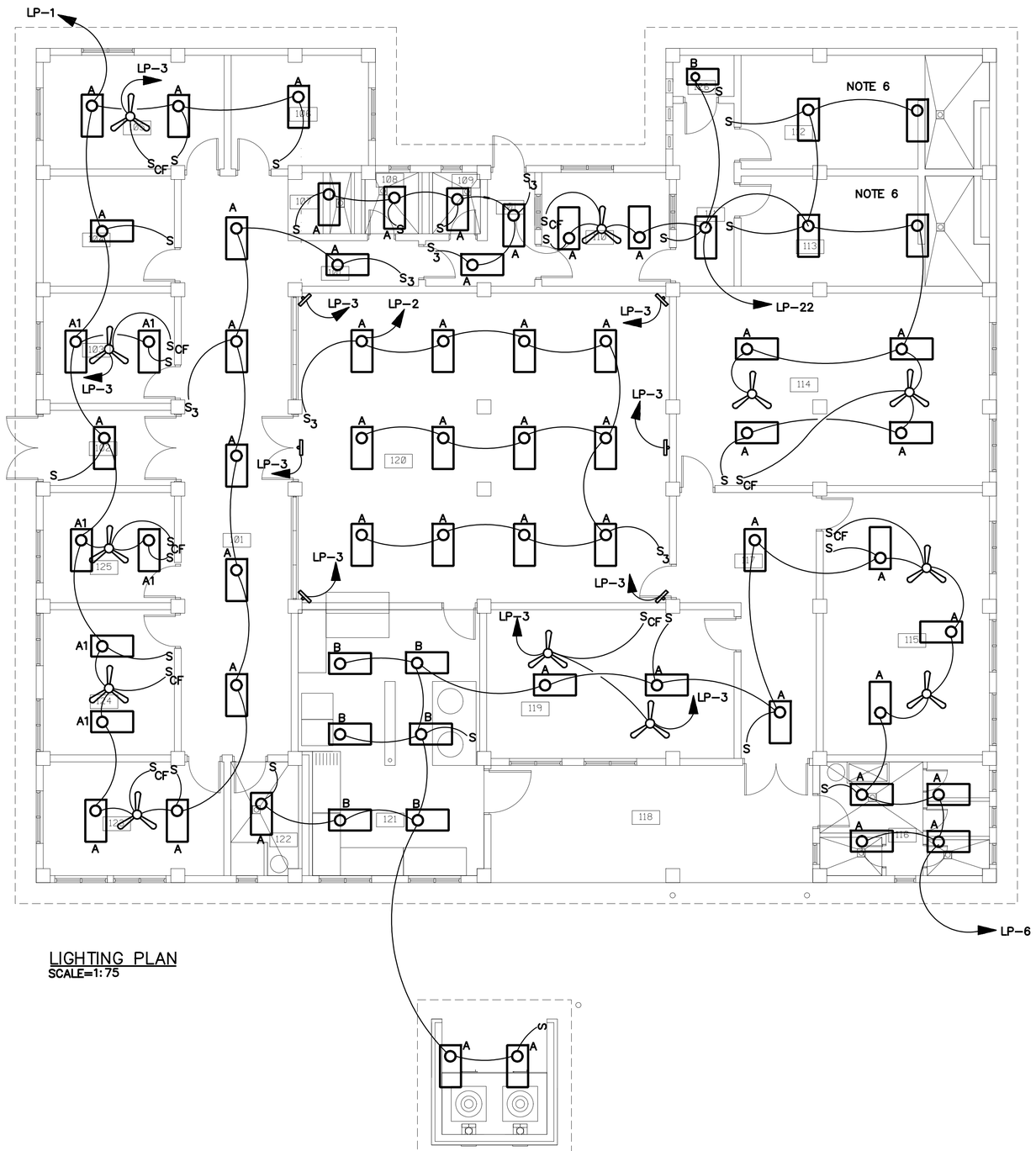

LIGHTING PLAN
SCALE=1:75

NOTES:

1. FOR LEGEND AND ABBREVIATIONS SEE DRAWING SE-1.
2. COORDINATE LOCATION OF ALL ELECTRICAL FIXTURES AND EQUIPMENT WITH ALL OTHER TRADES.
3. FOR ONE LINE DIAGRAM SEE DRAWING D/E- 1, POWER PLANT.
4. ALL WIRING SHALL BE SURFACE MOUNTED IN METAL CONDUIT.
5. FOR EXACT LOCATION OF MECHANICAL EQUIPMENT SEE MECHANICAL DRAWINGS.
6. ALL LIGHT FIXTURES IN JAIL CELLS SHALL BE TWO LAMP FLUORESCENT TYPE FIXTURES SUITABLE FOR VANDAL RESISTANCE/DETENTION CENTER. LIGHT FIXTURES SHALL WITHSTAND THE PHYSICAL ABUSE AND THE INTENT-TO-DESTROY TYPE ABUSE.
7. COORDINATE LOCATION OF ALL LIGHT FIXTURES WITH CEILING FANS.

3 1.50 0 3 4.5
1:75

UNLESS OTHERWISE NOTED, LINEAR DIMENSIONS SHOWN ARE IN MILLIMETERS.

SYMBOL	DESCRIPTION	DATE	APR

DESIGNED BY: MM
DATE: 29 OCTOBER 2007
DWN BY: JLK
SUBMITTED BY:
CHK BY: JLK
FILE NO.: AF0607A-EL01PN

US Army Corps of Engineers
Afghanistan Engineer District

AFGHANISTAN NATIONAL POLICE (ANP) DISTRICT HEADQUARTERS COMPOUNDS – 1 STORY HQ
VARIOUS LOCATIONS, AFGHANISTAN
1 STORY BUILDING
LIGHTING PLAN

SHEET REFERENCE NUMBER:
A
E-1

10/27/2007
S:\Engineering & Construction\Engineering\00_RFPs in-process\ANP\ANP ON 1-Story Design\ANP Dist HQ 1Story Design Changes 26Oct07\Microstation Files\elec\AF0607A-EL01PN.dgn

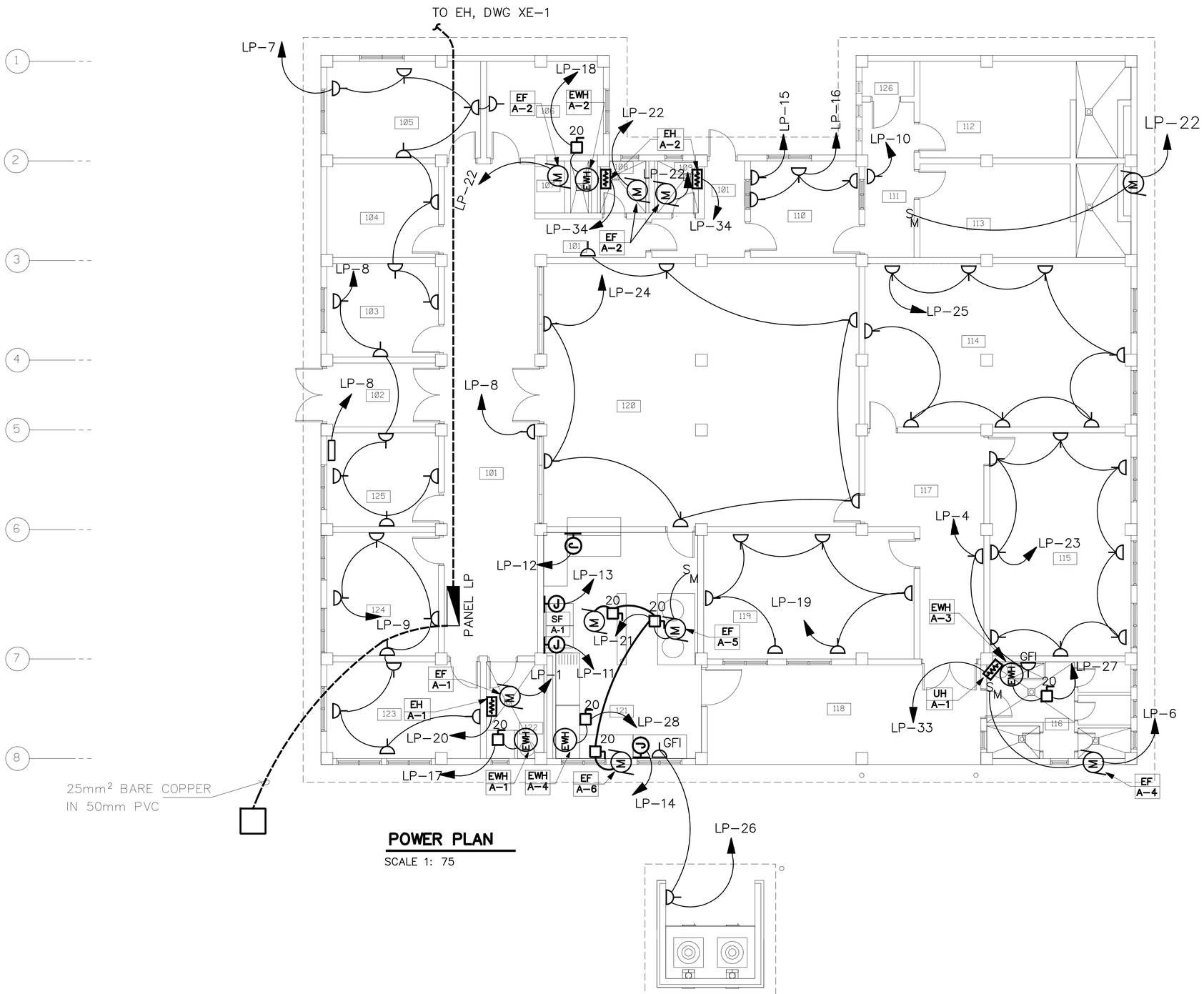

POWER PLAN

SCALE 1: 75

NOTES:

1. FOR LEGEND AND ABBREVIATIONS SEE DRAWING SE-1.
2. COORDINATE LOCATION OF ALL ELECTRICAL FIXTURES AND EQUIPMENT WITH ALL OTHER TRADES.
3. FOR ONE LINE DIAGRAM SEE DRAWING D/E-1, POWER PLANT.
4. ALL WIRING SHALL BE SURFACE MOUNTED IN METAL CONDUIT.
5. FOR EXACT LOCATION OF MECHANICAL EQUIPMENT SEE MECHANICAL DRAWINGS.
6. EXHAUST FAN EF-A-1 AND EF-A-2 SHALL BE CONTROLLED BY THE LIGHT SWITCH IN THEIR RESPECTIVE ROOM.
7. EXHAUST FAN EF-A-3, EF-A-4, AND EF-A-5 SHALL BE CONTROLLED BY A MANUAL MOTOR STARTER FROM THE LOCATION AS SHOWN ON THIS DRAWING.
8. EXHAUST FAN EF-A-6 SHALL BE CONTROLLED BY A THERMOSTAT. REFER TO MECHANICAL DRAWING FOR LOCATION OF THE THERMOSTAT.

3 1.50 0 3 4.5
1:75

UNLESS OTHERWISE NOTED, LINEAR DIMENSIONS SHOWN ARE IN MILLIMETERS.

SYMBOL	DESCRIPTION	DATE	APR

DESIGNED BY: MM
DATE: 29 OCTOBER 2007
DWN BY: JLK
SUBMITTED BY:
CHK BY: JLK
FILE NO.: AF0607A-EP02PN

US Army Corps of Engineers
Afghanistan Engineer District

AFGHANISTAN NATIONAL POLICE (ANP) DISTRICT HEADQUARTERS COMPOUNDS – 1 STORY HQ
VARIOUS LOCATIONS, AFGHANISTAN
1 STORY BUILDING
POWER PLAN

SHEET REFERENCE NUMBER:
A
E-2

10/26/2007
S:\Engineering & Construction\Engineering\00_RFPs in-progress\ANP\ANP 01_Story Design\AN\Dist_HQ_1Story_Design_Changes_26Oct07\Microstation Files\elec\AF0607A-EP02PN.dgn

PANELBOARD LP FLUSH MOUNTED MINIMUM 22,000 ASYM. A.I.C. MIN.

_____ AMP. MAIN LUGS (OR) 150 AMP. MAIN BREAKER W/ 150 AMP. TRIP

CIRCUIT BREAKER TYPE 380/220 VOLTS 3 PHASE 4 WIRE 150 AMP. BUS 50 HZ

CKT. NO.	TRIP AMPS	NO. POLES	WIRE mm2	GND mm2	CONDUIT mm	LOAD SERVED	LOAD–V.A. A0	LOAD–V.A. B0	LOAD–V.A. C0	LOAD–V.A. A0	LOAD–V.A. B0	LOAD–V.A. C0	LOAD SERVED	CONDUIT mm	GND mm2	WIRE mm2	NO. POLES	TRIP AMPS	CKT. NO.
1	20	1	4	4	20	LIGHTING,FANS, EF–A–1	3230			1440			LIGHTING	20	4	4	1	20	2
3	20	1	4	4	20	FANS		2000			360		RECEPTACLES	20	4	4	1	20	4
5	20	1				SPARE						3415	LIGHTING, FANS,EF–A–4	20	4	4	1	20	6
7	20	1	4	4	20	RECEPTACLES	1440			1260			RECEPTACLES	20	4	4	1	20	8
9	20	1	4	4	20	RECEPTACLES		1440			180		RECEPTACLE	20	4	4	1	20	10
11	20	1	4	4	20	JB FOR REFRIGERATOR/FREEZER			2000			2000	JB FOR REFRIGERATOR/FREEZER	20	4	4	1	20	12
13	20	1	4	4	20	JB FOR REFRIGERATOR/FREEZER	2000			2000			JB FOR REFRIGERATOR/FREEZER	20	4	4	1	20	14
15	20	1	4	4	20	RECEPTACLES		500			540		RECEPTACLES	20	4	4	1	20	16
17	20	1	4	4	20	ELECTRIC WATER HEATER A–1			2500			9000	ELECTRIC WATER HEATER A–2	20	6	10	1	50	18
19	20	1	4	4	20	RECEPTACLES	1080			1550			EH–A–1	20	4	4	1	20	20
21	20	1	4	4	20	EXHAUST FAN EF–A–5, A–6		1585			2800		LIGHTING,FANS,EF–A–2,EF–A–3	20	4	4	1	20	22
23	20	1	4	4	20	RECEPTACLES			1440			1260	RECEPTACLES	20	4	4	1	20	24
25	20	1	4	4	20	RECEPTACLES	1440			720			RECEPTACLES	20	4	4	1	20	26
27	20	3	4	4	20	EWH–A–3		3000			12000		ELECTRIC WATER HEATER A–4	20	6	16	1	70	28
29	↓	↓	↓	↓	↓	↓			3000				SPARE				1	20	30
31	↓	↓	↓	↓	↓	↓	3000						SPARE				1	20	32
33	20	1	4	4	20	UH–A–1		3000			2080		EH–A–2	20	4	4	1	20	34
35	20	1				SPARE							SPARE				1	20	36
37	20	1				SPARE							SPARE				1	20	38
39	20	1				SPARE							SPACE						40
41						SPACE							SPACE						42
							12190	11525	8940	6970	17960	15675							

TOTAL CONN. LOAD 73.26 KVA. 80 % DEMAND = ESTIMATED DEMAND LOAD: 58.61 kVA

TOTAL CONN. LOAD PER PHASE (KVA): A0 19.16 B0 29.49 C0 24.62

SUPPLIED FROM POWER PLANT SWITCHBOARD

NOTES:

1. FOR LEGEND AND ABBREVIATIONS SEE DRAWING SE–1.
2. CONTRACTOR SHALL CONFIRM THAT ALL CIRCUIT RATINGS ARE BASED ON THE ACTUAL NAMEPLATE OF THE SUPPLIED EQUIPMENT.

UNLESS OTHERWISE NOTED, LINEAR DIMENSIONS SHOWN ARE IN MILLIMETERS.

SYMBOL	DESCRIPTION	DATE	APR

DESIGNED BY: mm | DATE: 29 OCTOBER 2007
DWN BY: JLK | SUBMITTED BY:
CHK BY: JLK | FILE NO.: AF0607A–EL04SC

US Army Corps of Engineers
Afghanistan Engineer District

AFGHANISTAN NATIONAL POLICE (ANP) DISTRICT HEADQUARTERS COMPOUNDS – 1 STORY HQ
VARIOUS LOCATIONS, AFGHANISTAN
1 STORY BUILDING
PANEL SCHEDULE

SHEET REFERENCE NUMBER:
A
E–3

10/27/2007
S:\Engineering & Construction\Engineering\00_RFPs in-progress\ANP\ANP 01–Story Design\ANP Dist HQ 1Story Design Changes 26Oct07\Microstation Files\elec\AF0607A–EL03SC.dgn

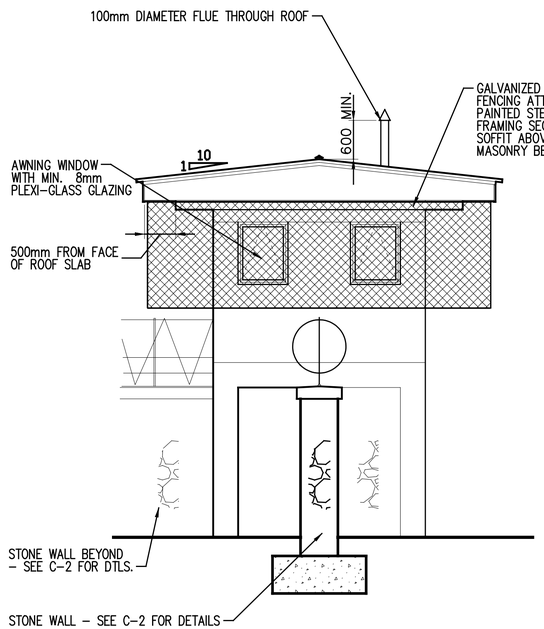

3 A-1 A-1 ELEVATION
SCALE= 1:50

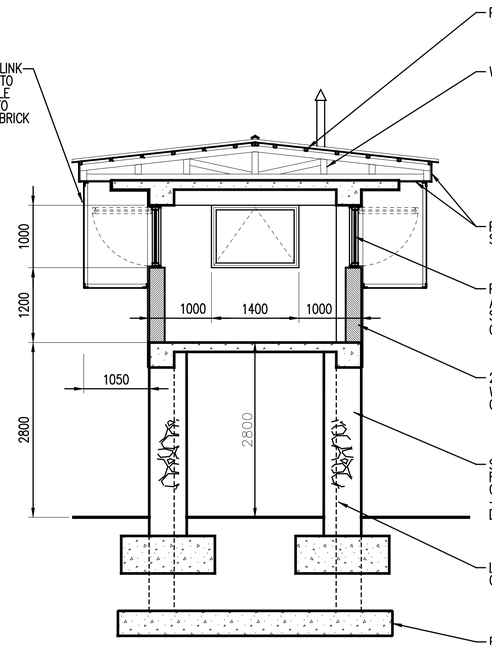

2 A-1 A-1 SECTION
SCALE= 1:50

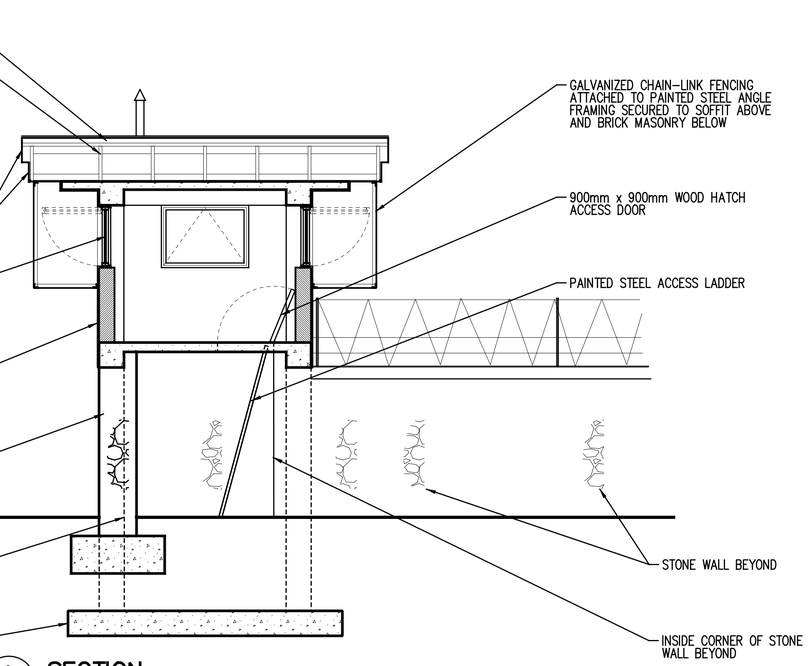

1 A-1 A-1 SECTION
SCALE= 1:50

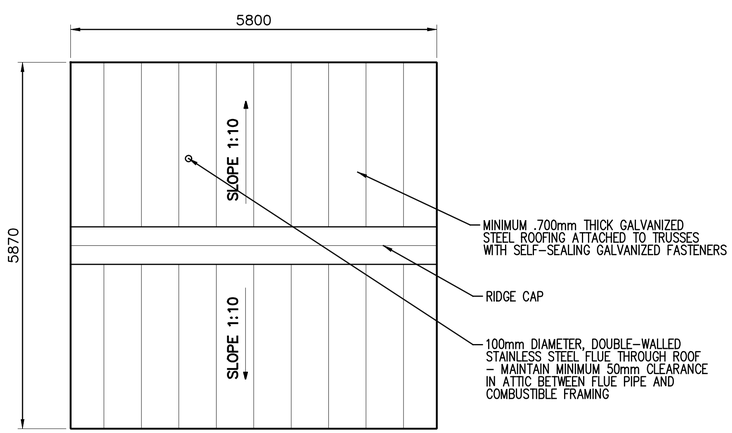

ROOF PLAN
SCALE= 1:50

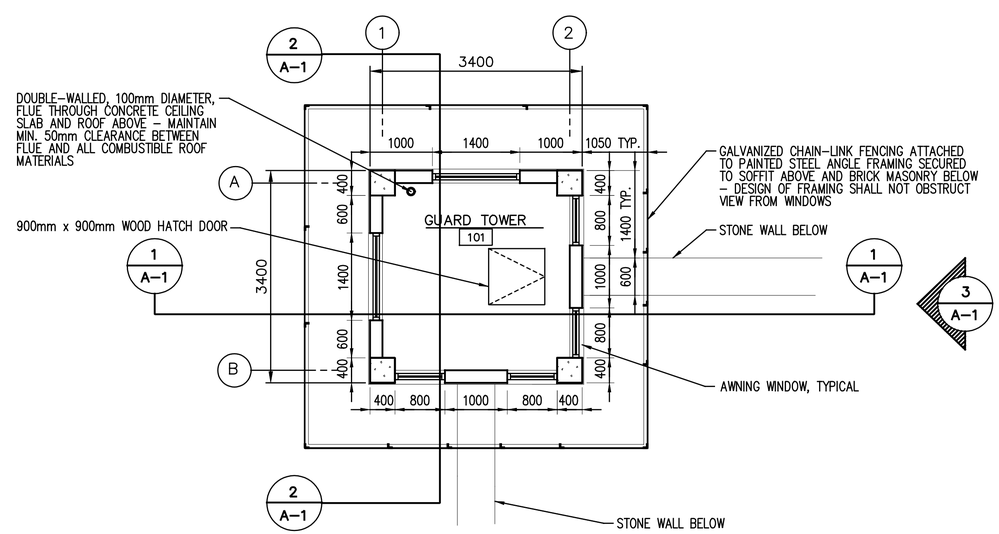

FIRST FLOOR PLAN
SCALE= 1:50

UNLESS OTHERWISE NOTED, LINEAR DIMENSIONS SHOWN ARE IN MILLIMETERS.

SYMBOL	DESCRIPTION	DATE	APR

DESIGNED BY: JLK
DATE: 29 OCTOBER 2007
DWN BY: JLK
SUBMITTED BY:
CHK BY: JLK
FILE NO.: AF0607B-AR01PN

US Army Corps of Engineers
Afghanistan Engineer District

AFGHANISTAN NATIONAL POLICE (ANP) DISTRICT HEADQUARTERS COMPOUNDS – 1 STORY HQ
VARIOUS LOCATIONS, AFGHANISTAN
GUARD TOWER
FLOOR PLAN, SECTION
ELEVATION AND ROOF PLAN

SHEET REFERENCE NUMBER:
B
A–1

10/27/2007
S:\Engineering & Construction\Engineering\00 RFPs in-progress\ANP\ANP ON 1-Story Design\ANP Dist HQ 1Story Design Changes 26Oct07\Microstation Files\Arch\AF0607B-AR01PN.dgn

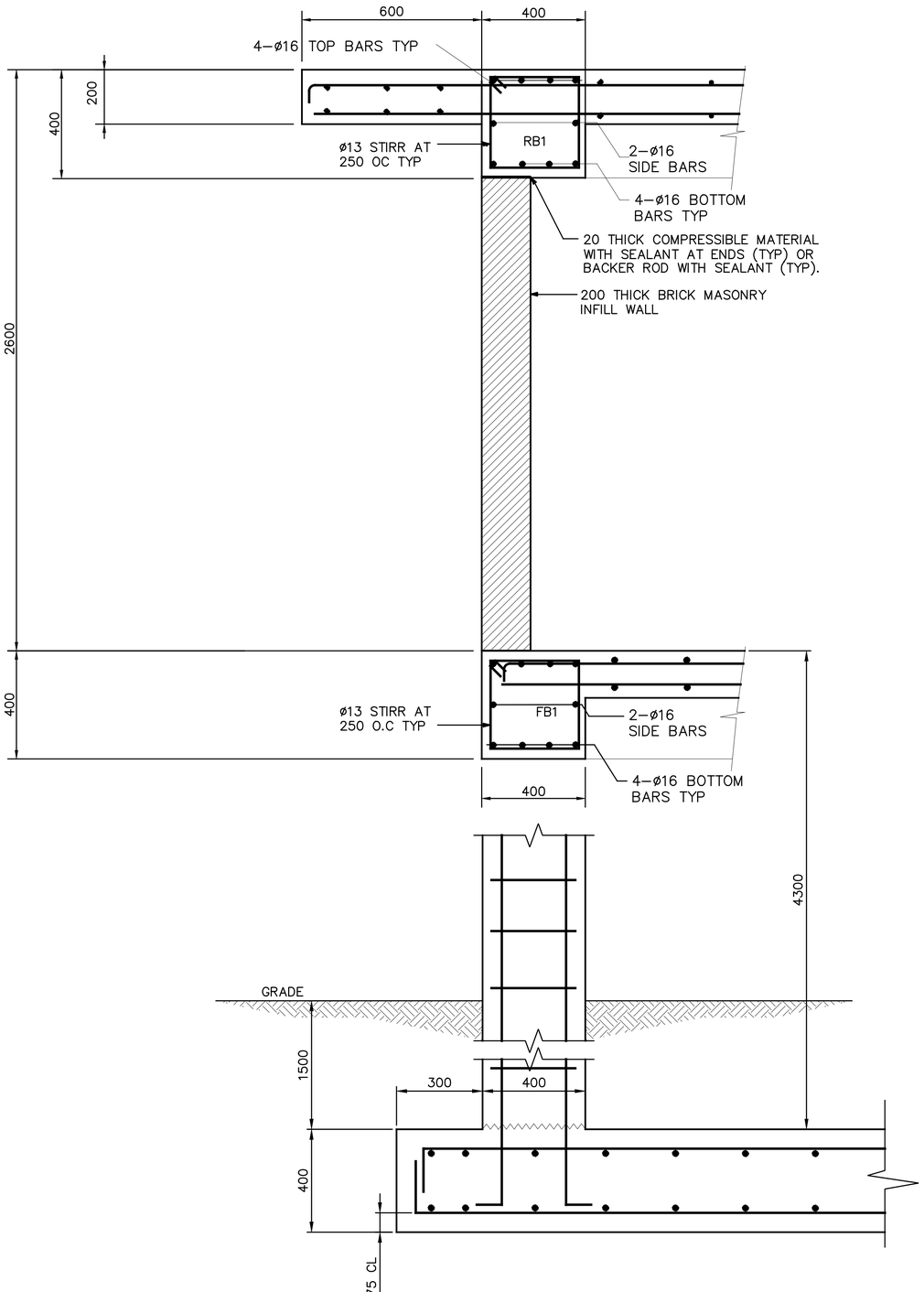

TYPICAL SECTION (A–A, S–1 | S–1)
SCALE=NTS

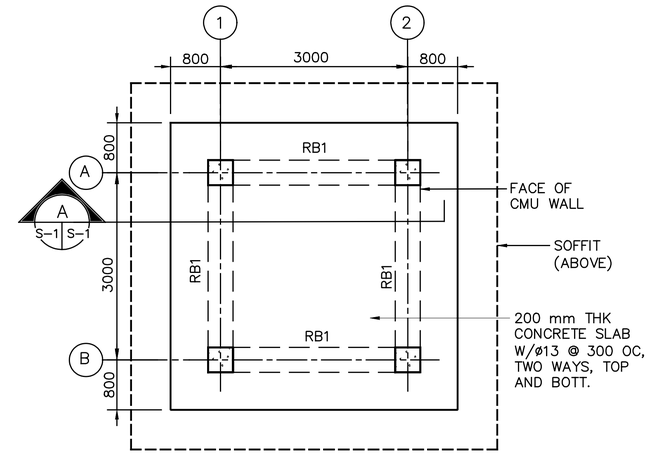

ROOF FRAMING PLAN
SCALE= 1:50

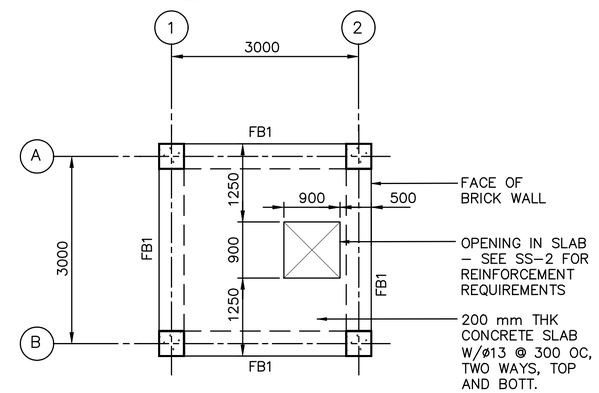

FIRST FLOOR PLAN
SCALE= 1:50

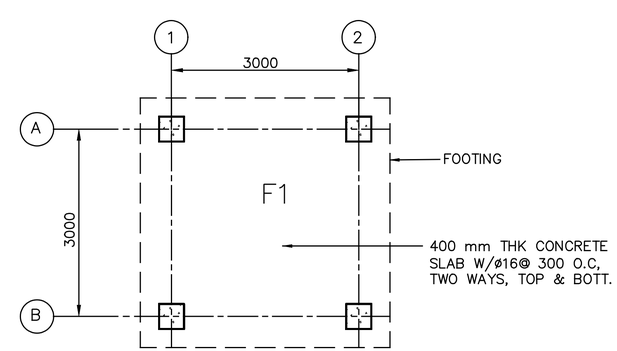

FOUNDATION AND SLAB PLAN
SCALE= 1:50

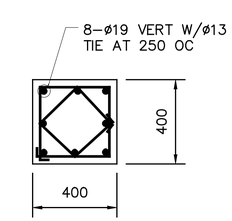

TYP COLUMN
REINFORCING DETAIL

1 0 1 2 3 4
1:50

UNLESS OTHERWISE NOTED, LINEAR DIMENSIONS SHOWN ARE IN MILLIMETERS.

GENERAL NOTES

1. DESIGN LOADS (SERVICE)

   LIVE LOADS:
   ROOF: 1.0 KPA (20 PSF)
   OTHERS: 4.8 KPA (100 PSF)
   8.9 KN (2.0 K)
   CONCENTRATED LOAD

   WIND LOADS PER IBC–2003:
   USING A "3–SECOND" WIND VELOCITY OF 125 KPH
   EXPOSURE C AND IMPORTANCE FACTOR I=1.0

   EARTHQUAKE LOADS PER IBC–2003:
   USING A SEISMICITY: Ss=1.65g AND S_1 =0.75g

2. MATERIALS:

   CONCRETE: 28 MPa (4 KSI)
   CYLINDER STRENGTH AT 28 DAYS

   REINFORCING: ASTM A615 GRADE 60 (60 KSI)

3. WORK THESE STRUCTURAL DRAWINGS WITH THE STANDARD–DETAILS DRAWINGS.

4. A RELATIVE (DATUM) FINISH FLOOR ELEVATION EQUAL TO 0.00M IS USED AS REFERENCE ELEVATION FOR ALL STRUCTURAL DRAWINGS. COORDINATE WITH SITE SPECIFIC GRADING PLAN TO BE PROVIDED BY CONTRACTOR.

5. FOUNDATIONS ARE DESIGNED USING AN ALLOWABLE BEARING PRESSURE OF 0.75 KG/SQ. CM (1500 PSF), AND BOTTOM OF FOOTINGS ARE PLACED AS SHOWN ON DRAWINGS. GEOTECHNICAL INVESTIGATION SHALL CONFIRM BEARING CAPACITY TO BE NO LESS THAN 0.75 KG/SQ CM. IF GEOTECHNICAL INVESTIGATION SHOWS LESS THAN 0.75 KG/SQ CM THE CONTRACTOR SHALL REDESIGN FOOTINGS BASED ON THE GEOTECHNICAL INVESTIGATION. SEE SPECIFICATION 01015 PARAGRAPH, GEOTECHNICAL, FOUNDATION AND SURVEY.

6. FOR BUILDING NORTH ORIENTATION SEE SHEET C–1.

SYMBOL	DESCRIPTION	DATE	APR

DESIGNED BY: JK
DWN BY: RG
CHK BY: JK
DATE: 29 OCTOBER 2007
SUBMITTED BY:
FILE NO.: AF0607B–SB01PN

US Army Corps of Engineers
Afghanistan Engineer District

AFGHANISTAN NATIONAL POLICE (ANP) DISTRICT HEADQUARTERS COMPOUNDS – 1 STORY HQ
VARIOUS LOCATIONS, AFGHANISTAN
GUARD TOWER
FOUNDATION AND SLAB PLAN
ROOF FRAMING PLAN

SHEET REFERENCE NUMBER:
B
S–1

10/27/2007
S:\Engineering & Construction\Engineering\00_RFPs in-progress\ANP\ANP ONE-Story Design\ANP Dist_HQ_1Story_Design_Changes_2600\07\Microstation Files\struct\AF0607B_SB01PN.dgn

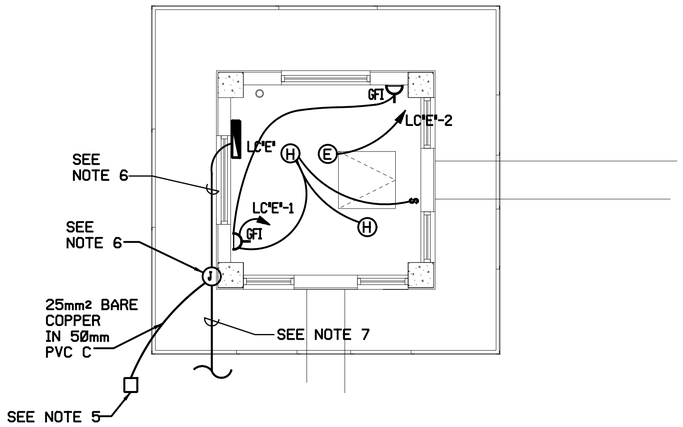

LIGHTING & POWER

NOT TO SCALE

LOAD CENTER "E" GUARD TOWER #1, 2, 3, & 4

40 AMP MAIN CIRCUIT BREAKER, 220V, 1 PH, 2W, 50 HZ, 100A BUS, 10000 AIC

CKT. NO.	TRIP AMPS	NO. POLES	WIRE MM^2	GND MM^2	CONDUIT MM	LOAD SERVED	LOAD-V.A.
1	20	1	4	4	20	LIGHTING & RECEPTACLES	560
2	20	1	4	4	20	SPOT LIGHT, 1000W	1000
3	20	1				SPARE	
4	20	1				SPARE	
5						SPACE	
6						SPACE	
7						SPACE	
8						SPACE	
						TOTAL CONN. LOAD	1560

TOTAL CONN. LOAD 1.56 KVA.

80 %DEMAND = EST. DEMAND LOAD: 1.25 SERVED FROM: PPSB

NOTES:

1. FOR LEGEND, ABBREVIATIONS AND LIGHT FIXTURE SCHEDULE SEE DRAWING SE-1.
2. COORDINATE LOCATION OF ALL ELECTRICAL DEVICES AND EQUIPMENT WITH ALL OTHER TRADES.
3. ALL WIRING SHALL BE IN CONCEALED OR SURFACE MOUNTED METAL CONDUIT.
4. PLAN IS TYPICAL FOR ALL GUARD TOWERS 1-4.
5. FOR GROUNDING ROD ACCESS BOX DETAIL SEE SHEET SE-2.
6. PROVIDE 50 METAL C WITH TWO 16mm2 COPPER CONDUCTORS AND 16mm2 COPPER GROUNDING CONDUCTOR TO JUNCTION BOX. FOR JUNCTION BOX DETAIL SEE SHEET SE-5.
7. FOR CONTINUATION TO SECONDARY DISTRIBUTION SYSTEM SEE DRAWING XE-1.
8. PROVIDE MANUFACTURER SUPPLIED RED, BLUE, AND BLACK LAMPS.
9. FOR BUILDING NORTH ORIENTATION SEE SHEET C-1.

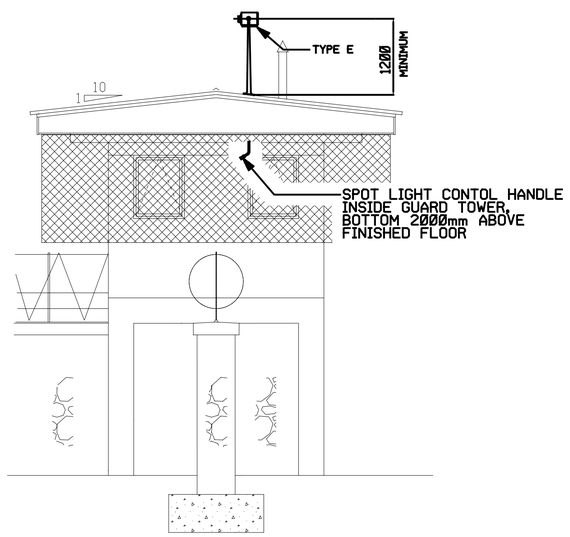

SPOTLIGHT MOUNTING DETAIL

NOT TO SCALE

UNLESS OTHERWISE NOTED, LINEAR DIMENSIONS SHOWN ARE IN MILLIMETERS.

SYMBOL	DESCRIPTION	DATE	APP

DESIGNED BY: JLK
DWN BY: JLK
CHK BY: JLK
DATE: 29 OCTOBER 2007
SUBMITTED BY:
FILE NO.: AR060078-EL01PN

US Army Corps of Engineers
Afghanistan Engineer District

AFGHANISTAN NATIONAL POLICE (ANP) DISTRICT HEADQUARTERS COMPOUNDS – 1 STORY HQ
VARIOUS LOCATIONS, AFGHANISTAN
GUARD TOWERS

SHEET REFERENCE NUMBER:
B
E-1

$DATE$
$FILE$

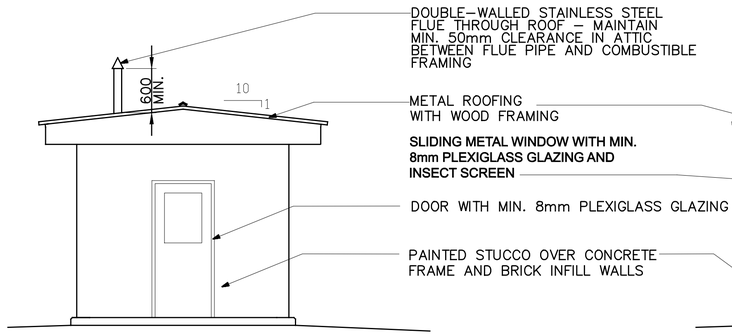

ELEVATION
SCALE=1:50

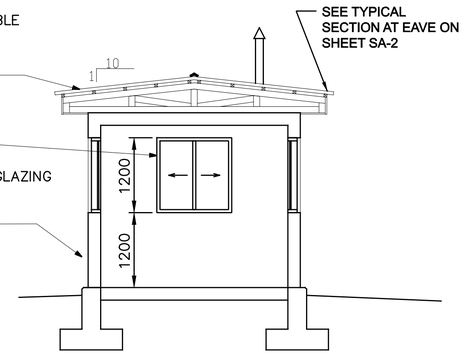

SECTION
SCALE=1:50

GENERAL NOTES:

1. ALL WALLS AND CEILINGS SHALL BE PLASTERED AND PAINTED.
2. CONTRACTOR SHALL CONFIGURE THE METAL ROOFING AS SHOWN AND CONSTRUCT WITH APPROPRIATE WOOD FRAMING.
3. FLOOR SHALL BE SEALED CONCRETE.

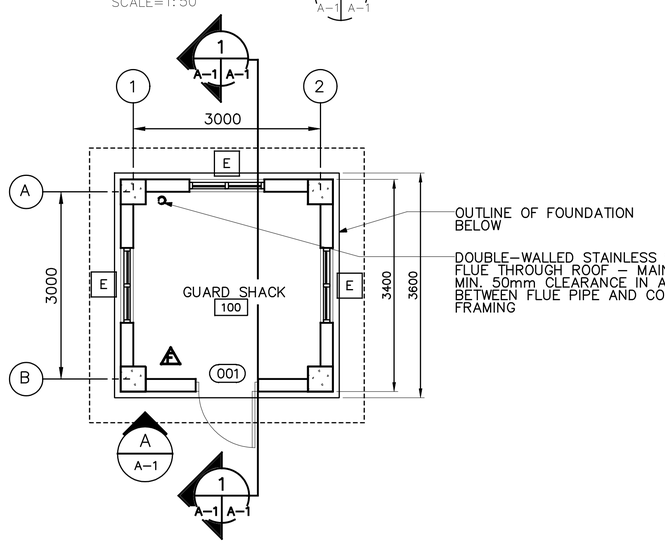

FIRST FLOOR PLAN
SCALE=1:50

△2 PROVIDE PORTABLE FIRE EXTINGUISHERS, ABC DRY CHEMICAL 4A:60B:C

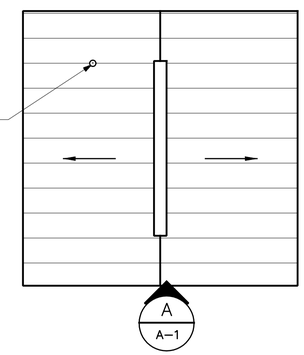

ROOF PLAN
SCALE=1:50

ROOM FINISH SCHEDULE LEGEND

FLOOR TYPE
F1 SEALED CONCRETE

FLOOR COLOR
1 SEALED CONCRETE – NATURAL FINISH

WALL TYPE
W1 PAINTED PLASTER

CEILING TYPE
C1 PAINTED EXPOSED STRUCTURE

ROOM FINISH SCHEDULE

ROOM NO.	ROOM NAME	FLOOR MAT'L.	BASE MAT'L.	WALLS MAT'L.	CEILING MAT'L.	CEILING HEIGHT	REMARKS
101	GUARD SHACK	F1	--	W1	C1	3400	

DOOR SCHEDULE

DOOR NO.	LOCATION	TYPE	MAT'L	WIDTH	HEIGHT	THICK	FRAME MAT"L	FIRE LABEL	HDW SET	REMARKS
001	GUARD SHACK	F	WOOD	1800	2150	45	WOOD	--	2	

ROOM FINISH SCHEDULE NOTES:

1. ALL WALL PENETRATIONS SHALL BE SEALED TO PROVIDE A NEAT APPEARANCE. PENETRATIONS OF EXTERIOR WALLS SHALL BE SEALED TO BE WATER-TIGHT.
2. SEALANTS SHALL MATCH THE COLOR OF ADJACENT SURFACES.

1 0 1 2 3 4
1:50

UNLESS OTHERWISE NOTED, LINEAR DIMENSIONS SHOWN ARE IN MILLIMETERS.

SYMBOL	DESCRIPTION	DATE	APR

DESIGNED BY: YSK
DATE: 29 OCTOBER 2007
DWN BY: JSG
SUBMITTED BY:
CHK BY: TBD
FILE NO.: AF0607C-AR01PN

US Army Corps of Engineers
Afghanistan Engineer District

AFGHANISTAN NATIONAL POLICE (ANP) DISTRICT HEADQUARTERS COMPOUNDS – 1 STORY HQ
VARIOUS LOCATIONS, AFGHANISTAN
GUARD SHACK
FLOOR PLANS AND ELEVATIONS

SHEET REFERENCE NUMBER:
C
A-1

10/27/2007
S:\Engineering & Construction\Engineering\00_RFPs in-progress\ANP\ANP ON-Story Design\ANP Dist HQ 1Story Design Changes 26Oct07\Microstation Files\Arch\AF0607C-AR01PN.dgn

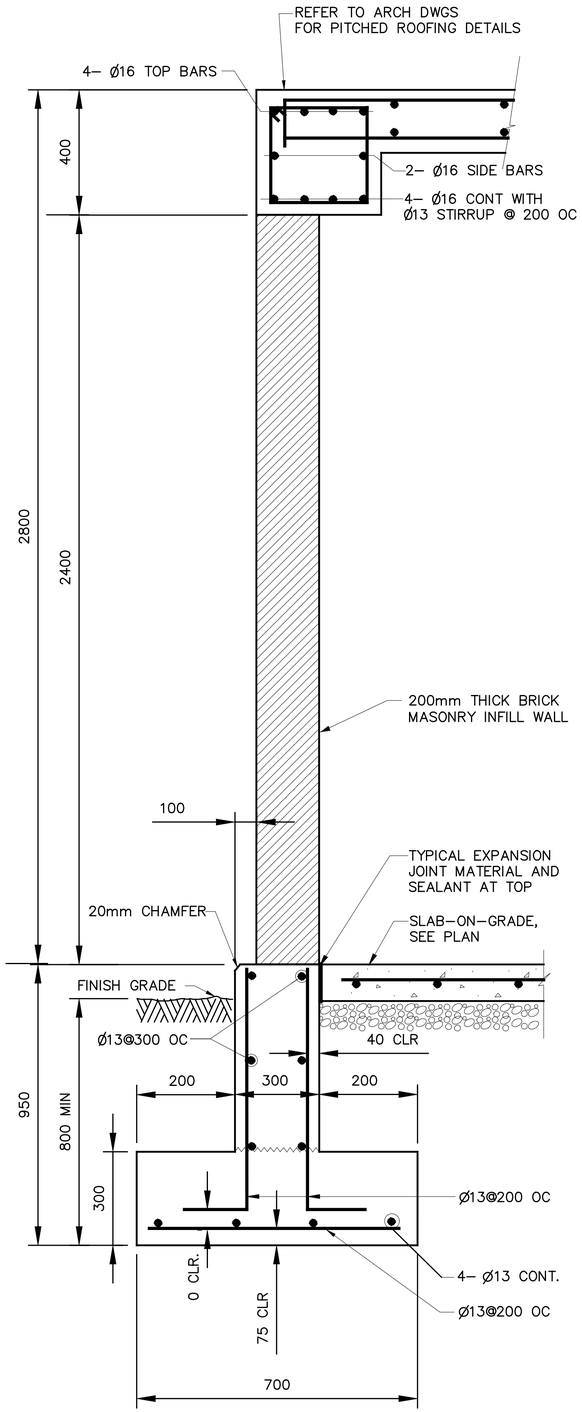

TYP EXTERIOR WALL SECTION

NOT TO SCALE

1 S–1 S–1

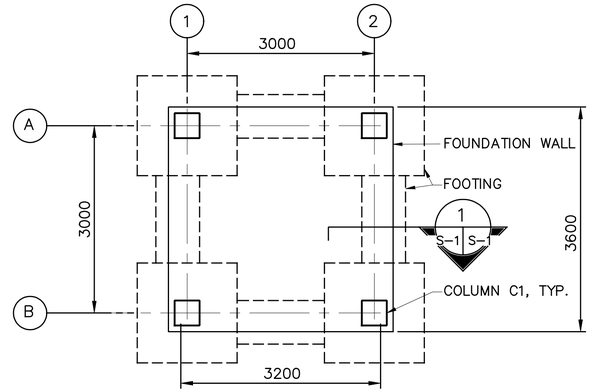

ALL SLABS ON GRADE (TYP): 150 MM THICK CONC SLAB ON GRADE WITH % %870913 AT 300 MM ON CENTER TWO WAYS. 100mm THK CAPILLARY WATER BARRIER ON 95% COMPACTED GROUND.

FOUNDATION AND SLAB PLAN

SCALE= 1:50

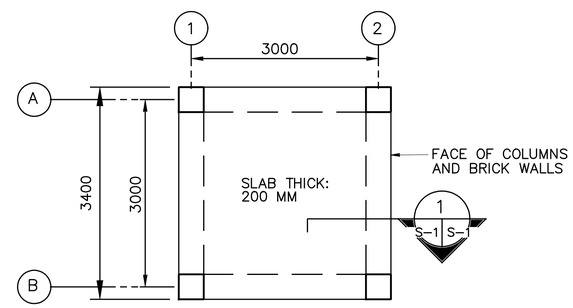

TOP BAR: Ø13@300 ON CENTER TWO WAYS
BOTTOM BAR: Ø13@300 ON CENTER TWO WAYS.

ROOF FRAMING AND SLAB PLAN

SCALE= 1:50

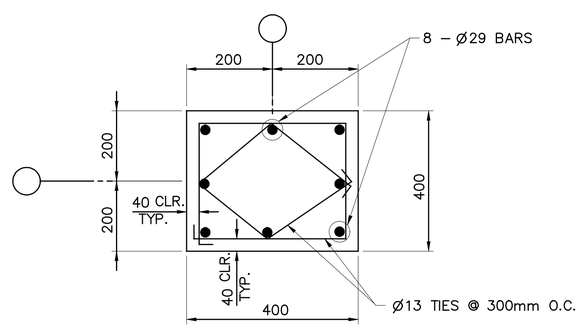

C1
COLUMN TYPE

NOTE: SEE WELL HOUSE (E) STRUCTURAL PLATES FOR COLUMN DETAILS AND SCHEDULES

GENERAL NOTES

1. DESIGN LOADS (SERVICE)

   LIVE LOADS:

   ROOF: 1.0 KPA (20 PSF)
   OTHERS: 4.8 KPA (100 PSF)
   8.9 KN (2.0 K) CONCENTRATED LOAD

   WIND LOADS PER IBC–2003

   USING A "3–SECOND" WIND VELOCITY OF 125 KPH
   EXPOSURE C AND IMPORTANCE FACTOR I=1.0

   EARTHQUAKE LOADS PER IBC–2003:

   USING A SEISMICITY: Ss=1.65g AND S_1 =0.75g

2. MATERIALS:

   CONCRETE: 28 MPa (4 KSI)
   CYLINDER STRENGTH AT 28 DAYS

   REINFORCING: ASTM A615 GRADE 60 (60 KSI)

3. WORK THESE STRUCTURAL DRAWINGS WITH THE STANDARD-DETAILS DRAWINGS.

4. A RELATIVE (DATUM) FINISH FLOOR ELEVATION EQUAL TO 0.00 M. IS USED AS REFERENCE ELEVATION FOR ALL STRUCTURAL DRAWINGS. COORDINATE WITH SITE SPECIFIC GRADING PLAN TO BE PROVIDED BY CONTRACTOR.

5. FOUNDATIONS ARE DESIGNED USING AN ALLOWABLE BEARING PRESSURE OF 0.75 KG/SQ. CM (1500 PSF), AND BOTTOM OF FOOTINGS ARE PLACED AS SHOWN ON DRAWINGS. GEOTECHNICAL INVESTIGATION SHALL CONFIRM BEARING CAPACITY TO BE NO LESS THAN 0.75 KG/SQ CM. IF GEOTECHNICAL INVESTIGATION SHOWS LESS THAN 0.75 KG/SQ CM THE CONTRACTOR SHALL REDESIGN FOOTINGS BASED ON THE GEOTECHNICAL INVESTIGATION. SEE SPECIFICAITON 01015 PARAGRAPH, GEOTECHNICAL, FOUNDATION AND SURVEY.

6. FOR BUILDING NORTH ORIENTATION SEE SHEET C-1.

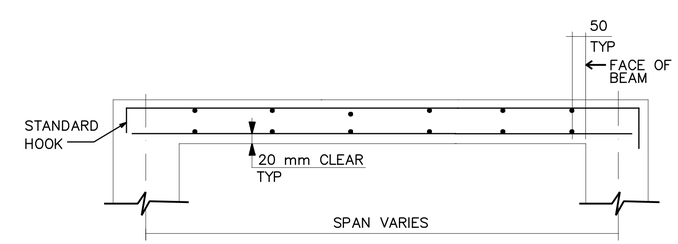

TYPICAL SECTION FOR STRUCTURAL SLABS

NOT TO SCALE

1 0 1 2 3 4
1:50

UNLESS OTHERWISE NOTED, LINEAR DIMENSIONS SHOWN ARE IN MILLIMETERS.

REVISIONS			
*	SYMBOL	DESCRIPTION	DATE	APR
			03/04/2007	

DESIGNED BY: JK | DATE: 29 OCTOBER 2007
DWN BY: JK | SUBMITTED BY:
CHK BY: JK | FILE NO.: AF0607C–SB01PN

US Army Corps of Engineers
Afghanistan Engineer District

AFGHANISTAN NATIONAL POLICE (ANP) DISTRICT HEADQUARTERS COMPOUNDS – 1 STORY HQ
VARIOUS LOCATIONS, AFGHANISTAN
GUARD SHACKS
FOUNDATION AND SLAB PLAN
ROOF FRAMING PLAN

SHEET REFERENCE NUMBER:
C
S–1

10/27/2007
S:\Engineering & Construction\Engineering\00_RFPs in Progress\ANP\ANP 01_1-Story Design\ANP Dist HQ 1Story Design Changes 26Oct07\Microstation Files\struct\AF0607C-SB01PN.dgn

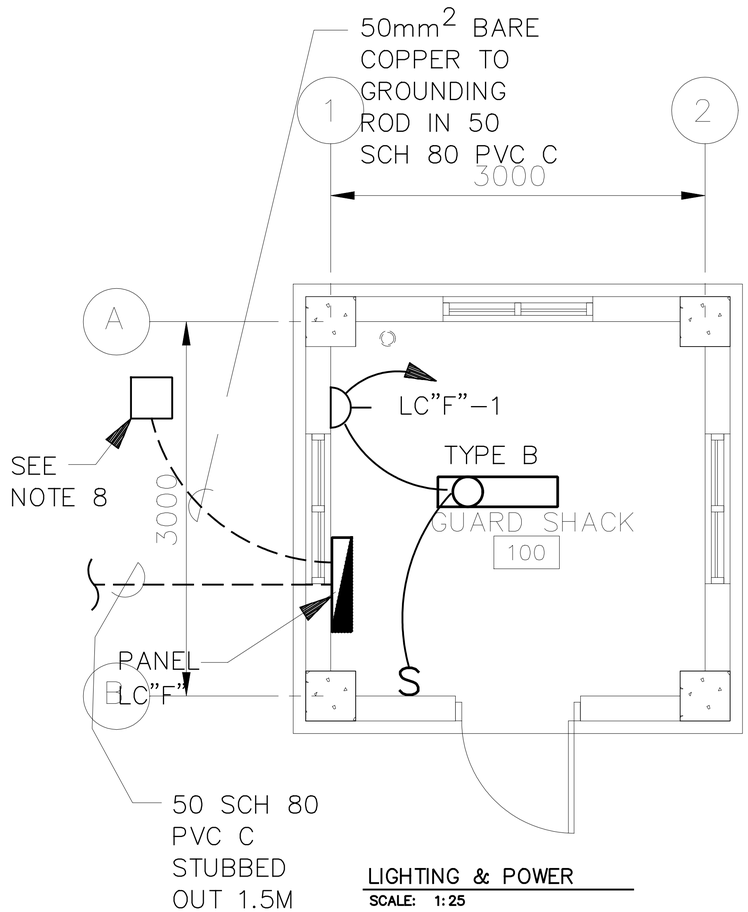

LIGHTING & POWER
SCALE: 1:25

FLOOR PLAN
SCALE= 1:50

NOTES:

1. FOR LEGEND AND ABBREVIATIONS SEE DRAWING SE-1.
2. EMERGENCY LIGHT SHALL BE CONNECTED AHEAD OF LIGHT SWITCH.
3. FOR LIGHT FIXTURE SCHEDULE SEE DRAWING SE-1.
4. COORDINATE LOCATION OF ALL ELECTRICAL FIXTURES AND MECHANICAL EQUIPMENT WITH ALL OTHER TRADES.
5. ALL WIRING SHALL BE CONCEALED OR SURFACE MOUNTED IN METAL CONDUIT.
6. PLAN IS TYPICAL FOR GUARD SHACK #1 AND #2. SECONDARY SERVICE IS SUPPLIED FROM PANEL LOAD CENTER "B2" (LC "B2") LOCATED IN THE GUARD TOWER #2.
7. SEE DRAWING XE-1 FOR LOCATION OF GUARD SHACKS.
8. FOR GROUNDING ROD ACCESS BOX SEE SHEET SE-2.
9. FOR SECONDARY DISTRIBUTION SEE DRAWING XE-1.
10. PROVIDE 53mm RGS C STUBBED OUT 1.5M, 600 BFG, TO BE TIED INTO SITE COMM CH AND DIRECT BURIED DUCT SYSTEM.
11. FOR BUILDING NORTH ORIENTATION SEE SHEET C-1.

LOAD CENTER "F" GUARD SHACK #1 & #2

40 AMP MAIN CIRCUIT BREAKER, 220V, 1 PH, 2W, 50 HZ, 100A BUS, 10000 AIC

CKT. NO.	TRIP AMPS	NO. POLES	WIRE MM^2	GND MM^2	CONDUIT MM	LOAD SERVED	LOAD-V.A.
1	20	1	4	4	20	LIGHTING& RECEP.GUARD SHACK#2	300
2	25	1	6	6	20	ELECT.HEAT GUARD SHACK#2	4000
3	20	1				SPARE	
4	20	1				SPARE	
5						SPACE	
6						SPACE	
7						SPACE	
8						SPACE	
						TOTAL CONN. LOAD	4300

TOTAL CONN. LOAD 4.30 KVA.
80 %DEMAND = EST. DEMAND LOAD: 3.44 SERVED FROM: LC-"C"

1 .50 0 1 1.5
1:25

UNLESS OTHERWISE NOTED, LINEAR DIMENSIONS SHOWN ARE IN MILLIMETERS.

SYMBOL	DESCRIPTION	DATE	APR

DESIGNED BY: MM
DWN BY: MM
CHK BY: MFH
DATE: 29 OCTOBER 2007
SUBMITTED BY:
FILE NO.: AF0607C-EL01PN

US Army Corps of Engineers
Afghanistan Engineer District

AFGHANISTAN NATIONAL POLICE (ANP) DISTRICT HEADQUARTERS COMPOUNDS - 1 STORY HQ
VARIOUS LOCATIONS, AFGHANISTAN
GUARD SHACKS
LIGHTING PLAN

SHEET REFERENCE NUMBER:
C
E-1

10/27/2007
S:\Engineering & Construction\Engineering\00_RFPs in Progress\ANP\ANP 01 1-Story Design\ANP Dist HQ 1Story Design Changes 26Oct07\Microstation Files\elec\AF0607C-EL01PN.dgn

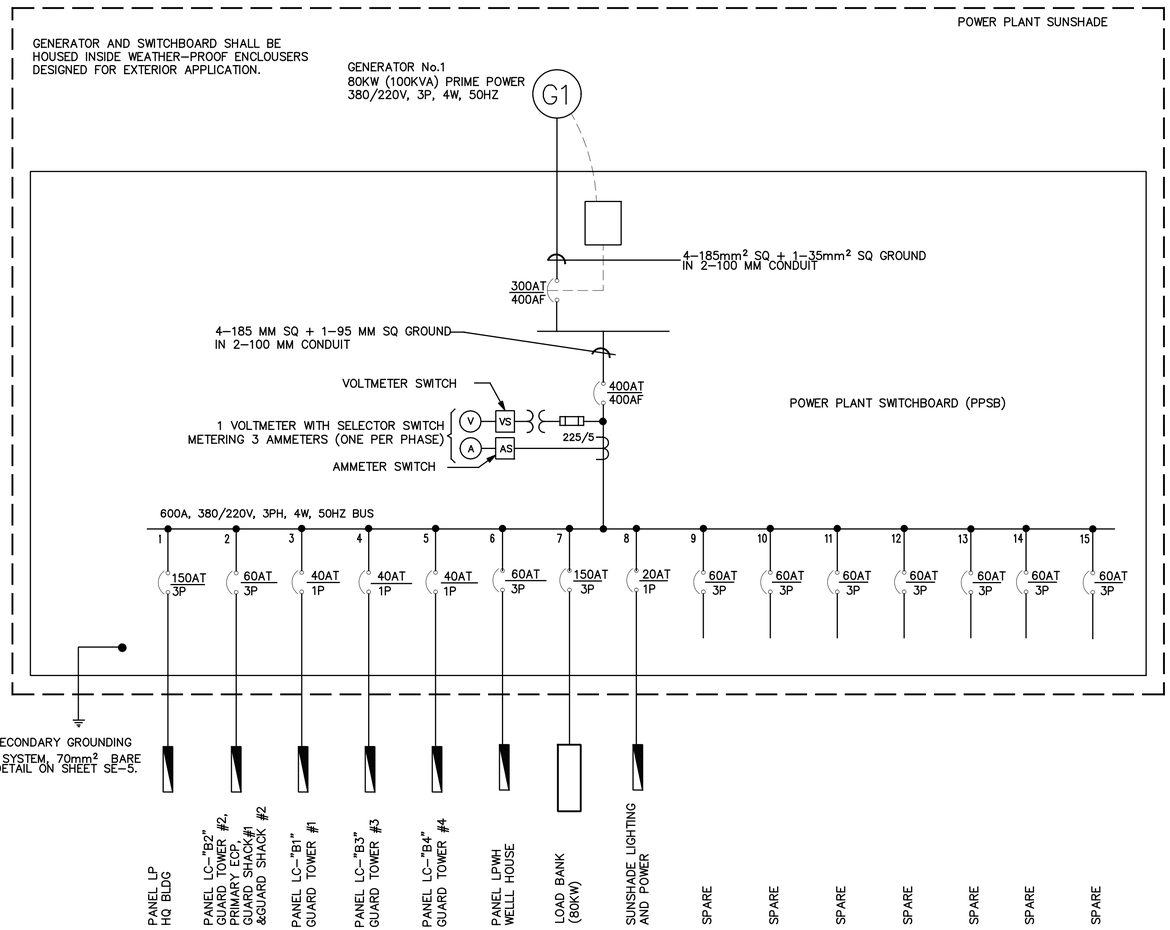

ONE LINE DIAGRAM
NOT TO SCALE

NOTES:

1. FOR LEGEND AND ABBREVIATIONS SEE DRAWING SE–1.
2. FOR POWER PLANT GROUNDING DETAILS SEE SHEET SE–5.
3. CONTRACTOR SHALL CONFIRM THAT ALL FINAL CIRCUIT RATINGS ARE BASED ON THE ACTUAL NAMEPLATE OF THE SUPPLIED EQUIPMENT.
4. ALL PPSB SECONDARY DISTRIBUTION CIRCUIT CONDUITS SHALL BE RAN FROM THE BOTTOM OF PPSB THROUGH GENERATOR CONCRETE SLAB TO ELECRIC HAND HOLES IN SCHEDULE 40 PVC CONDUIT.
5. ALL SECONDARY DISTRIBUTION CABLES SHALL BE 600V – FOUR CORE OR TWO CORE (AS INDICATED) COPPER CONDUCTOR PVC INSULATED PVC SHEATHED CABLES (CU/PVC/PVC).
6. THE POWER PLANT SWITCHBOARD SHALL BE A MANUFACTURERS STANDARD PRODUCT WITH MOLDED CASE CKT BREAKERS, DEAD FRONT CONSTRUCTION IN AN APPROVED IP54 ENCLOSURE.
7. FOR A TYPICAL POWER PLANT EQUIPMENT LAYOUT SEE THE GROUNDING PLAN ON SHEET SE–5.

PANELBOARD: PPSB
MOUNTED: FLOOR
ASYM. A.I.C. MIN: MINIMUM 22,000
MAIN BREAKER (AT/AF): 300/400
VOLTAGE RATING: 380/220V, 3PH, 4W, 50HZ
BUS AMP. RATING: 400

CKT. NO.	TRIP AMPS	NO. POLES	WIRE MM²	GND MM²	CONDUIT MM	CONNECTED	REMARKS
1	150	3	70	50	75	73.26	PANEL LP, HEADQUARTERS BUILDING
2	60	3	16	6	38	10.16	PANEL LC–"B2": GUARD TOWER #2, PRIMARY ECP, GUARD SHACK #1, GUARD SHACK #2
3	40	1	10	6	25	1.56	PANEL LC–"B1": GUARD TOWER #1
4	40	1	25	16	38	1.56	PANEL LC–"B3": GUARD TOWER #3
5	40	1	25	16	38	1.56	PANEL LC–"B4": GUARD TOWER #4
6	60	3	16	6	38	9.81	PANEL LPWH,WELL HOUSE BUILDING
7	150	3	70	16	75		LOAD BANK
8	20	1	6	4	25	0.51	SUNSHADE LIGHTING AND POWER
9	60	3					SPARE
10	60	3					SPARE
11	60	3					SPARE
12	60	3					SPARE
13	60	3					SPARE
14	60	3					SPARE
15	60	3					SPARE
TOTAL CONNECTED LOAD						98.42 KVA	

CONN. LOAD: 98.42 KVA 80 % DEMAND = EST DEM LOAD 78.74 KVA
SUPPLIED FROM: GENERATORS

78.74 KVA x 1.20 (SPARE) = 94.49 KVA = 75.52 KW

UNLESS OTHERWISE NOTED, LINEAR DIMENSIONS SHOWN ARE IN MILLIMETERS.

SYMBOL	DESCRIPTION	DATE	APR

DESIGNED BY: MM | DATE: 29 OCTOBER 2007
DWN BY: JLK | SUBMITTED BY:
CHK BY: JLK | FILE NO.: AF0607D–EP01DI

US Army Corps of Engineers
Afghanistan Engineer District

AFGHANISTAN NATIONAL POLICE (ANP) DISTRICT HEADQUARTERS COMPOUNDS – 1 STORY HQ
VARIOUS LOCATIONS, AFGHANISTAN
POWER PLANT
ONE LINE DIAGRAM

SHEET REFERENCE NUMBER:
D
E–1

10/27/2007
S:\Engineering & Construction\Engineering\00_RFPs in-progress\ANP\ANP_ONE-Story Design\ANP Dist HQ 1Story Design Changes 26Oct07\Microstation Files\Elec\AF0607D-EP01DI.dgn

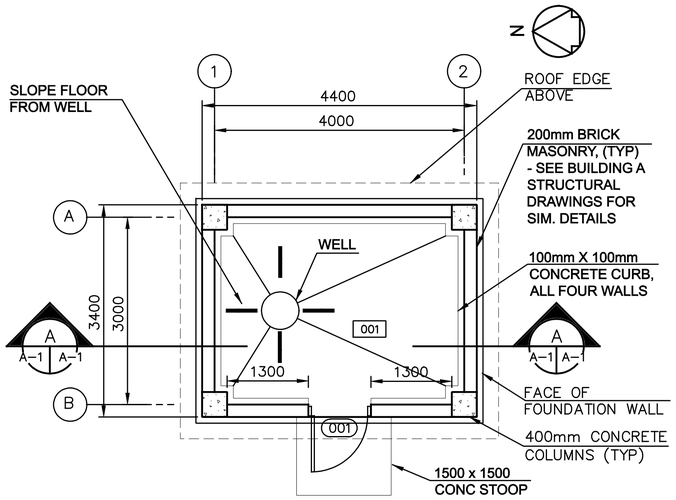

FLOOR PLAN
SCALE=1 : 50

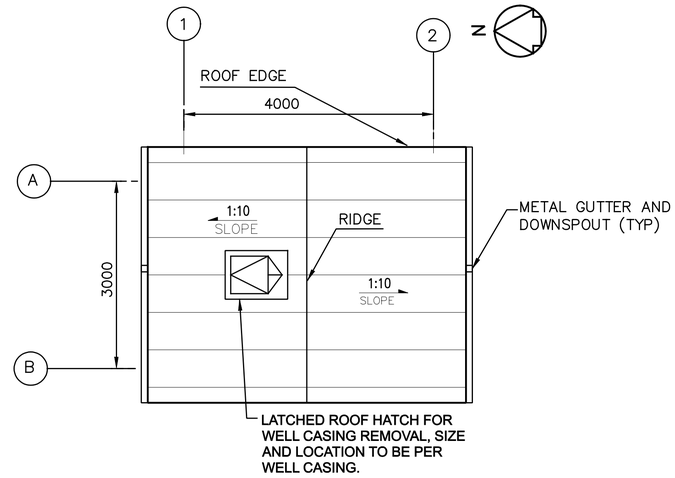

ROOF PLAN
SCALE= 1:50

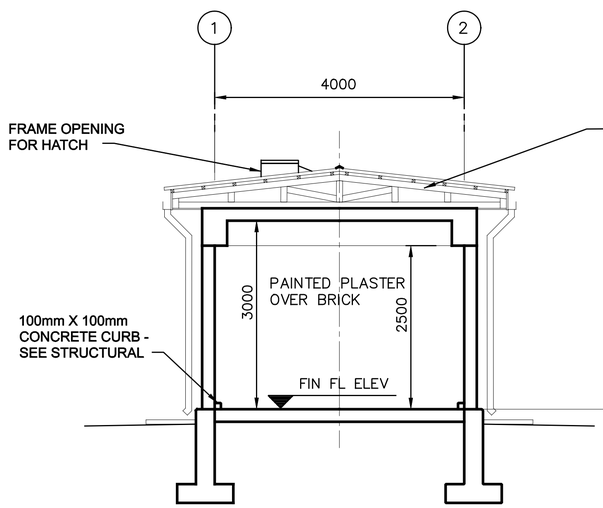

BUILDING SECTION
SCALE=1:100

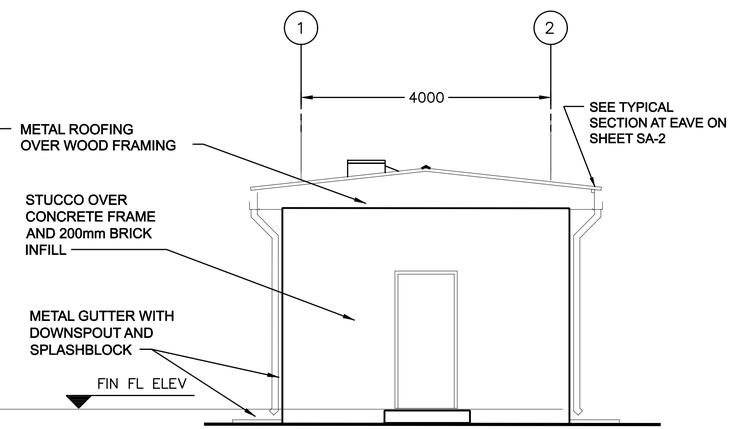

ELEVATION
SCALE=1:50

ROOM FINISH SCHEDULE

ROOM NO.	ROOM NAME	FLOOR MAT'L.	BASE MAT'L.	WALLS MAT'L.	CEILING MAT'L.	CEILING HEIGHT	REMARKS
001	WELL HOUSE ROOM	F1	--	W1	C1	3000	

DOOR SCHEDULE

DOOR NO.	LOCATION	TYPE	MAT'L	WIDTH	HEIGHT	THICK	FRAME MAT'L	FIRE LABEL	HDW SET	REMARKS
001	WELL HOUSE ROOM	F	WOOD	900	2150	45	WOOD	--	6	

ROOM FINISH SCHEDULE LEGEND

FLOOR TYPE
F1 SEALED CONCRETE

WALL TYPE
W1 PAINTED PLASTER – OFF WHITE

CEILING TYPE
C1 PAINTED EXPOSED STRUCTURE – OFF WHITE

ROOM FINISH SCHEDULE NOTES:

1. ALL WALL PENETRATIONS SHALL BE SEALED TO PROVIDE A NEAT APPEARANCE. PENETRATIONS OF EXTERIOR WALLS SHALL BE SEALED TO BE WATER–TIGHT.
2. SEALANTS SHALL MATCH THE COLOR OF ADJACENT SURFACES.

1:50

UNLESS OTHERWISE NOTED, LINEAR DIMENSIONS SHOWN ARE IN MILLIMETERS.

SYMBOL	DESCRIPTION	DATE	APR

DESIGNED BY: YSK
DWN BY: JSG
CHK BY: TBD
DATE: 29 OCTOBER 2007
SUBMITTED BY:
FILE NO.: af0607E–ar01pn

US Army Corps of Engineers
Afghanistan Engineer District

AFGHANISTAN NATIONAL POLICE (ANP) DISTRICT HEADQUARTERS COMPOUNDS – 1 STORY HQ
VARIOUS LOCATIONS, AFGHANISTAN
WELL HOUSE
FLOOR PLAN, ELEVATIONS AND SCHEDULES

SHEET REFERENCE NUMBER:
E
A–1

10/27/2007 S:\Engineering & Construction\Engineering\00_RFPs in-progress\ANP\ANP 01_1-Story Design\ANP Dist HQ 1Story Design Changes 26Oct07\Microstation Files\Arch\af0607E-ar01pn.dgn

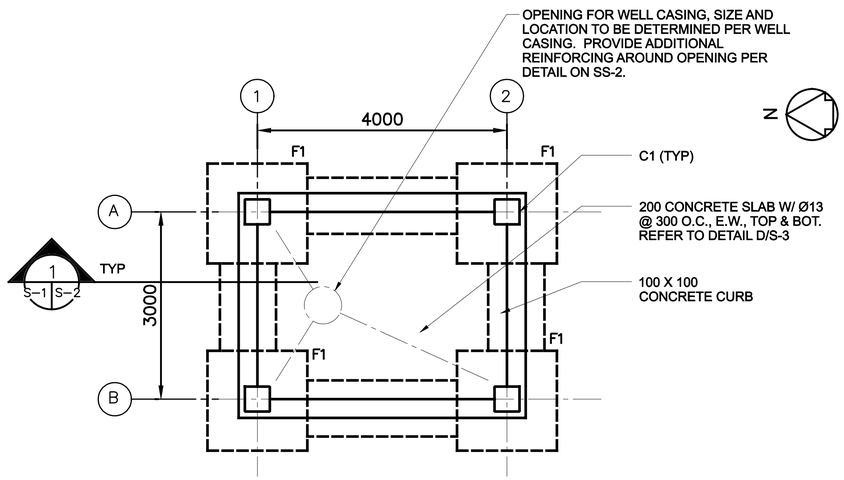

FOUNDATION AND SLAB PLAN
SCALE=1:50

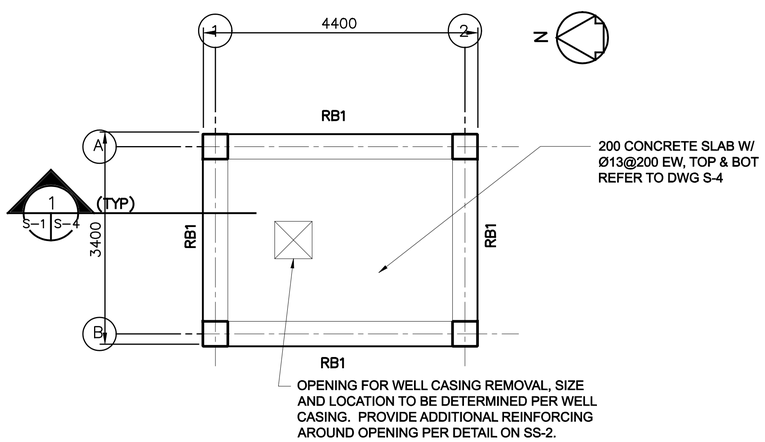

ROOF FRAMING PLAN
SCALE=1:50

1. DESIGN LOADS (SERVICE)

LIVE LOADS:

ROOF: 1.0 KPA (20 PSF)
OTHERS: 4.8 KPA (100 PSF)
8.9 KN (2.0 K) CONCENTRATED LOAD

WIND LOADS PER IBC–2003

USING A "3–SECOND" WIND VELOCITY OF 125 KPH (78 MPH), EXPOSURE C AND IMPORTANCE FACTOR I=1.0

EARTHQUAKE LOADS PER IBC–2003:

USING A SEISMICITY: Ss=1.65g AND S_1 =0.75g

2. MATERIALS:

CONCRETE: 28 MPa (4 KSI)
CYLINDER STRENGTH AT 28 DAYS

REINFORCING: ASTM A615 GRADE 60 (60 KSI)

3. WORK THESE STRUCTURAL DRAWINGS WITH THE STANDARD-DETAILS DRAWINGS.

4. A RELATIVE (DATUM) FINISH FLOOR ELEVATION EQUAL TO 0.00 M. IS USED AS REFERENCE ELEVATION FOR ALL STRUCTURAL DRAWINGS. COORDINATE WITH SITE SPECIFIC GRADING PLAN TO BE PROVIDED BY CONTRACTOR.

5. FOUNDATIONS ARE DESIGNED USING AN ALLOWABLE BEARING PRESSURE OF 0.75 KG/SQ CM (1500 PSF), AND BOTTOM OF FOOTINGS ARE PLACED AS SHOWN ON DRAWINGS. GEOTECHNICAL INVESTIGATION SHALL CONFIRM BEARING CAPACITY TO BE NO LESS THAN 0.75 KG/SQ CM. IF GEOTECHNICAL INVESTIGATION SHOWS LESS THAN 0.75 KG/SQ CM THE CONTRACTOR SHALL REDESIGN FOOTINGS BASED ON THE GEOTECHNICAL INVESTIGATION. SEE SPECIFICATION 01015 PARAGRAPH, GEOTECHNICAL, FOUNDATION AND SURVEY.

6. REFER TO DWG S-3 FOR COLUMN SCHEDULE.

7. REFER TO DWG S-2 FOR FOOTING SCHEDULE.

8. REFER TO DWG S-4 FOR BEAM SCHEDULE.

1 0 1 2 3 4
1:50

UNLESS OTHERWISE NOTED, LINEAR DIMENSIONS SHOWN ARE IN MILLIMETERS.

SYMBOL	DESCRIPTION	DATE	APR

DESIGNED BY: TCP
DWN BY: TCP
CHK BY: KGO
DATE: 29 OCTOBER 2007
SUBMITTED BY:
FILE NO.: AF0607E–SB01PN

US Army Corps of Engineers
Afghanistan Engineer District

AFGHANISTAN NATIONAL POLICE (ANP) DISTRICT HEADQUARTERS COMPOUNDS – 1 STORY HQ
VARIOUS LOCATIONS, AFGHANISTAN
WELL HOUSE
FOUNDATION PLAN AND ROOF PLAN

SHEET REFERENCE NUMBER:
E
S–1

10/27/2007
S:\Engineering & Construction\Engineering\00_RFPs in-progress\ANP\ANP ON 1-Story Design\ANP 1-Story Dist HQ 1Story Design Changes 26Oct07\Microstation Files\struct\AF0607E_SB01PN.dgn

FOOTING SCHEDULE

MARK	CONCRETE DIMENSIONS			REINFORCEMENT		REMARKS
	WIDTH	LENGTH	THICKNESS	TOP	BOTTOM	
F1	1600	1600	300	——	5–Ø 25 E.W.	REFER TO TYPICAL COLUMN FOOTING DETAIL THIS SHEET.

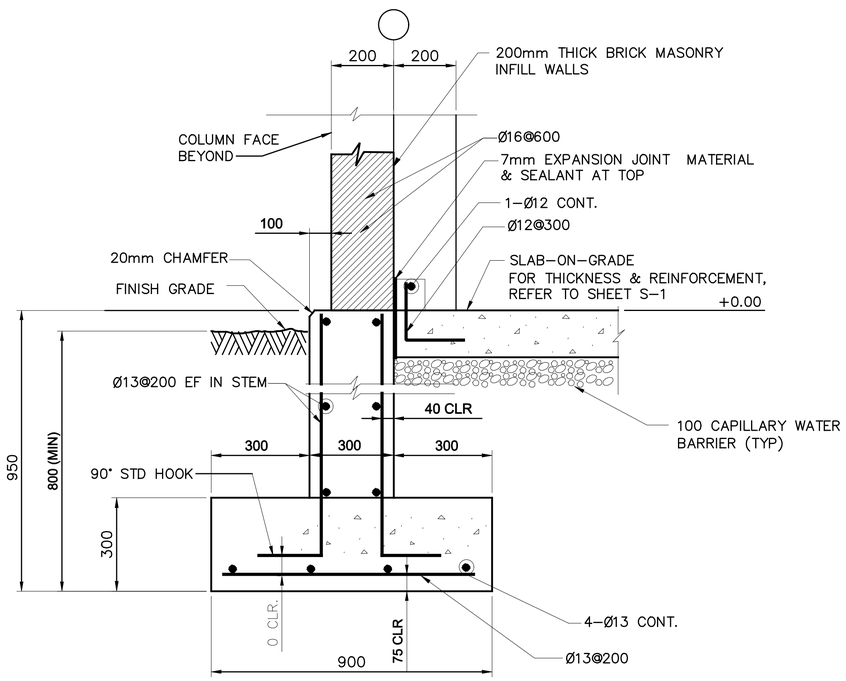

TYPICAL WALL FOOTING

SECTION 1 S–1 S–2
SCALE=N.T.S.

NOTES:
1. HORIZONTAL STEM WALL AND FOOTING REINFORCEMENTS ARE CONTINUOUS THROUGH COLUMN AND COLUMN FOOTING
2. AT DISCONTINUOUS STEM WALL BARS TERMINATE WITH STANDARD HOOK IN COLUMN. FOOTING BARS TERMINATE WITH 600 MM EMBEDMENT IN COLUMN FOOTING.

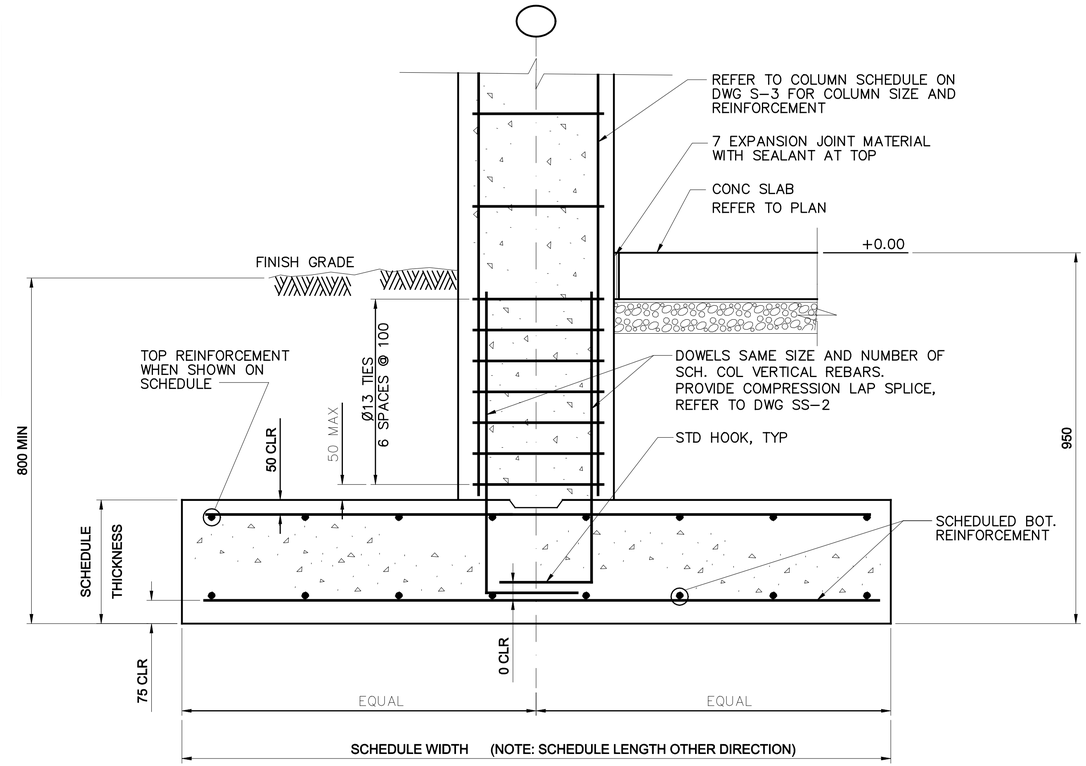

DETAIL A S–2 S–2
SCALE=N.T.S.

TYPICAL COLUMN FOOTING

UNLESS OTHERWISE NOTED, LINEAR DIMENSIONS SHOWN ARE IN MILLIMETERS.

SYMBOL	DESCRIPTION	DATE	APR

DESIGNED BY: TCP
DWN BY: TCP
CHK BY: KGO
DATE: 29 OCTOBER 2007
SUBMITTED BY:
FILE NO.: AF0607E–SB02DT

US Army Corps of Engineers
Afghanistan Engineer District

AFGHANISTAN NATIONAL POLICE (ANP) DISTRICT HEADQUARTERS COMPOUNDS – 1 STORY HQ
VARIOUS LOCATIONS, AFGHANISTAN
WELL HOUSE
FOOTING DETAILS

SHEET REFERENCE NUMBER:
E
S–2

10/27/2007
S:\Engineering & Construction\Engineering\00 RFPs in-progress\ANP\ANP ON 1-Story Design\ANP 3 Dist HQ 1Story Design Changes 26Oct07\Microstation Files\struct\AF0607E-SB02DT.dgn

COLUMN SCHEDULE

NOTES: 1. REFER TO DETAILS ON PLATES S–3 AND S–2 FOR TYPICAL COLUMN DETAILS.

COLUMN GRIDS	COLUMN TYPE	CONCRETE DIMENSIONS		VERTICAL REINFORCEMENT	TIE REINFORCEMENT	
		WIDTH	DEPTH		SIZE	SPACING
A–1, A–2 B–1, B–2	C1	400	400	8–Ø 29	Ø13	300

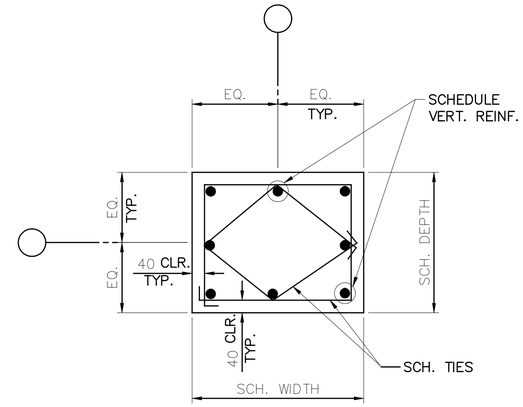

C1

COLUMN TYPE

DETAIL
SCALE=N.T.S.
A
S–3 S–3

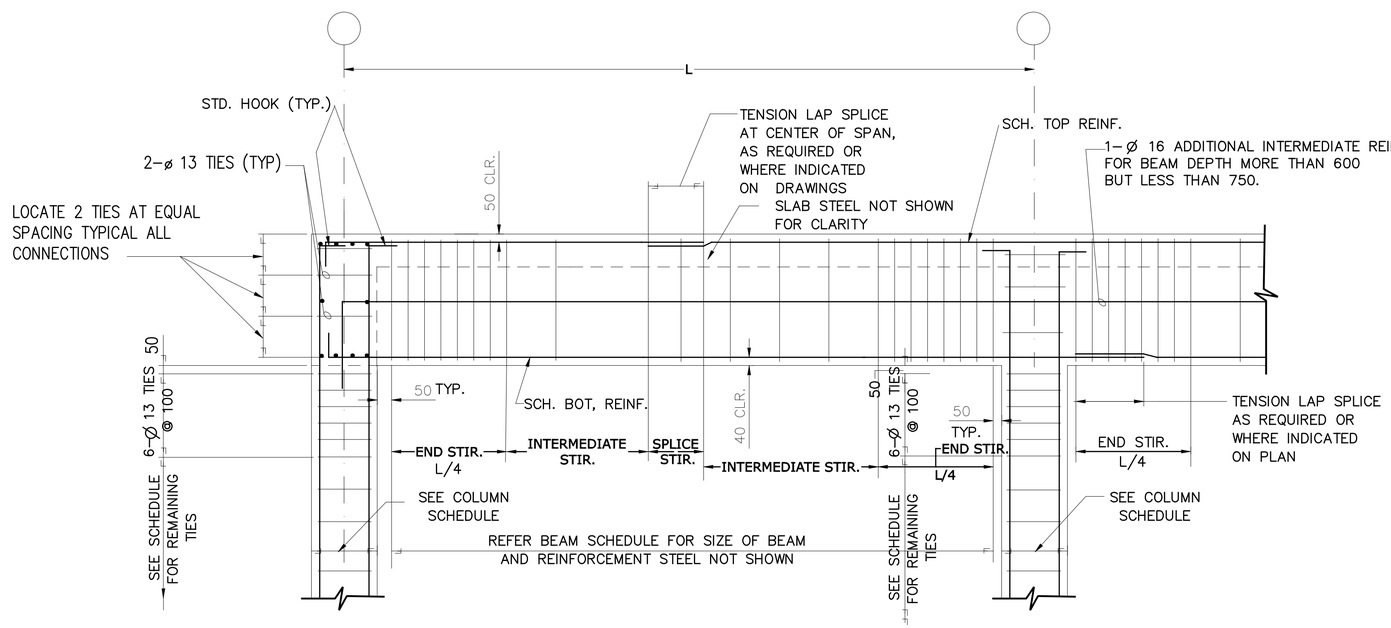

TYPICAL BEAM TO COLUMN END CONNECTION

DETAIL
SCALE=N.T.S.
B
S–3 S–3

TYPICAL BEAM TO COLUMN INTERIOR CONNECTION

DETAIL
SCALE=N.T.S.
C
S–3 S–3

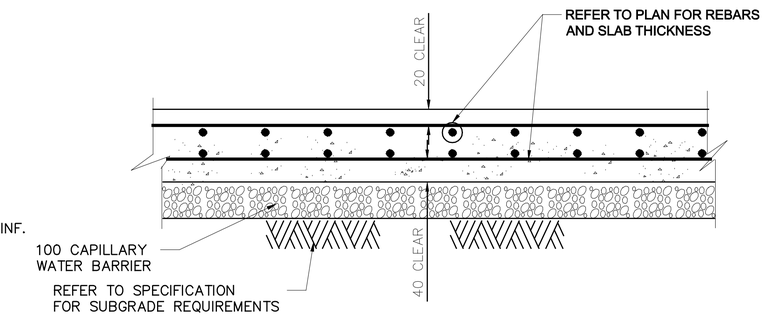

SLAB–ON–GRADE WITH TOP & BOTTOM REINFORCEMENTS

DETAIL
SCALE=N.T.S.
D
S–1 S–3

UNLESS OTHERWISE NOTED, LINEAR DIMENSIONS SHOWN ARE IN MILLIMETERS.

SYMBOL	DESCRIPTION	DATE	APR

DESIGNED BY: TCP
DATE: 29 OCTOBER 2007
DWN BY: TCP
SUBMITTED BY:
CHK BY: KGO
FILE NO.: AF0607E–SF03DT

US Army Corps of Engineers
Afghanistan Engineer District

AFGHANISTAN NATIONAL POLICE (ANP) DISTRICT HEADQUARTERS COMPOUNDS – 1 STORY HQ
VARIOUS LOCATIONS, AFGHANISTAN
WELL HOUSE
SLAB–ON–GRADE DETAILS

SHEET REFERENCE NUMBER:
E
S–3

10/27/2007
S:\Engineering & Construction\Engineering\00_RFPs in Progress\ANP\ANP 01 - Story Design\ANP Dist HQ 1Story Design Changes 26Oct07\Microstation Files\struct\AF0607E-SF03DT.dgn

BEAM SCHEDULE

MARK	CONCRETE DIMENSIONS		FLEXURAL REINFORCEMENT		STIRRUP REINFORCEMENT				REMARKS
					SIZE	TYPE	SPACING		
	WIDTH	DEPTH	TOP	BOTTOM			ENDS & SPLICE	INTERMEDIATE	
RB1	400	700	4–Ø 22	4–Ø 22	Ø13		160	320	

NOTE: REFER TO DETAILS ON PLATE S–2 FOR TYPICAL BEAM ELEVATIONS AND SECTION 1 THIS PLATE FOR TYPICAL BEAM SECTION.

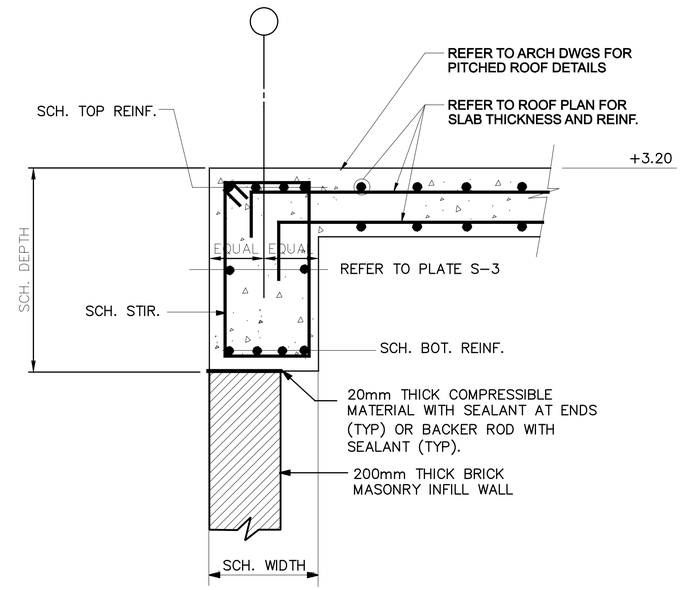

SECTION 1 S–1 S–4
SCALE=N.T.S.

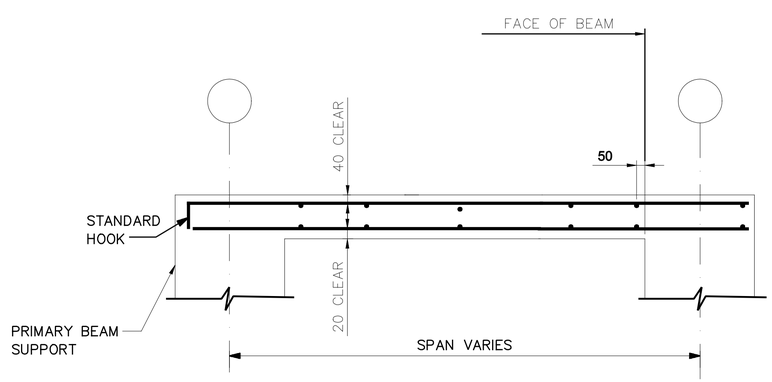

STRUCTURAL SLAB WITH TOP & BOTTOM REINFORCEMENTS

UNLESS OTHERWISE NOTED, LINEAR DIMENSIONS SHOWN ARE IN MILLIMETERS.

SYMBOL	DESCRIPTION	DATE	APR

DESIGNED BY: TCP | DATE: 29 OCTOBER 2007
DWN BY: TCP | SUBMITTED BY:
CHK BY: KGO | FILE NO.: AF0607E–SF04DT

US Army Corps of Engineers
Afghanistan Engineer District

AFGHANISTAN NATIONAL POLICE (ANP) DISTRICT HEADQUARTERS COMPOUNDS – 1 STORY HQ
VARIOUS LOCATIONS, AFGHANISTAN
WELL HOUSE
ROOF BEAM AND STRUCTURAL SLAB DETAILS

SHEET REFERENCE NUMBER:
E
S–4

10/27/2007
S:\Engineering & Construction\Engineering\00_RFPs in-progress\ANP\ANP ON 1-Story Design\ANP Dist HQ 1Story Design Changes 26Oct07\Microstation Files\struct\AF0607E-SF04DT.dgn

NOTES:
1. FOR LEGENDS, ABBREVIATIONS AND STANDARD MECHANICAL DETAILS SEE SHEETS SM-1 AND SM-3.
2. FOR EQUIPMENT SCHEDULES AND CONTROL DIAGRAMS SEE SHEET SM-2.
3. PROVIDE EACH EXHAUST FAN WITH MANUFACTURER'S STANDARD EXHAUST GRILL AND GRAVITY BACKDRAFT DAMPER.
4. PROVIDE 400x400 SAND LOUVER WITH 50MM THICK WASHABLE METAL FILTERS.

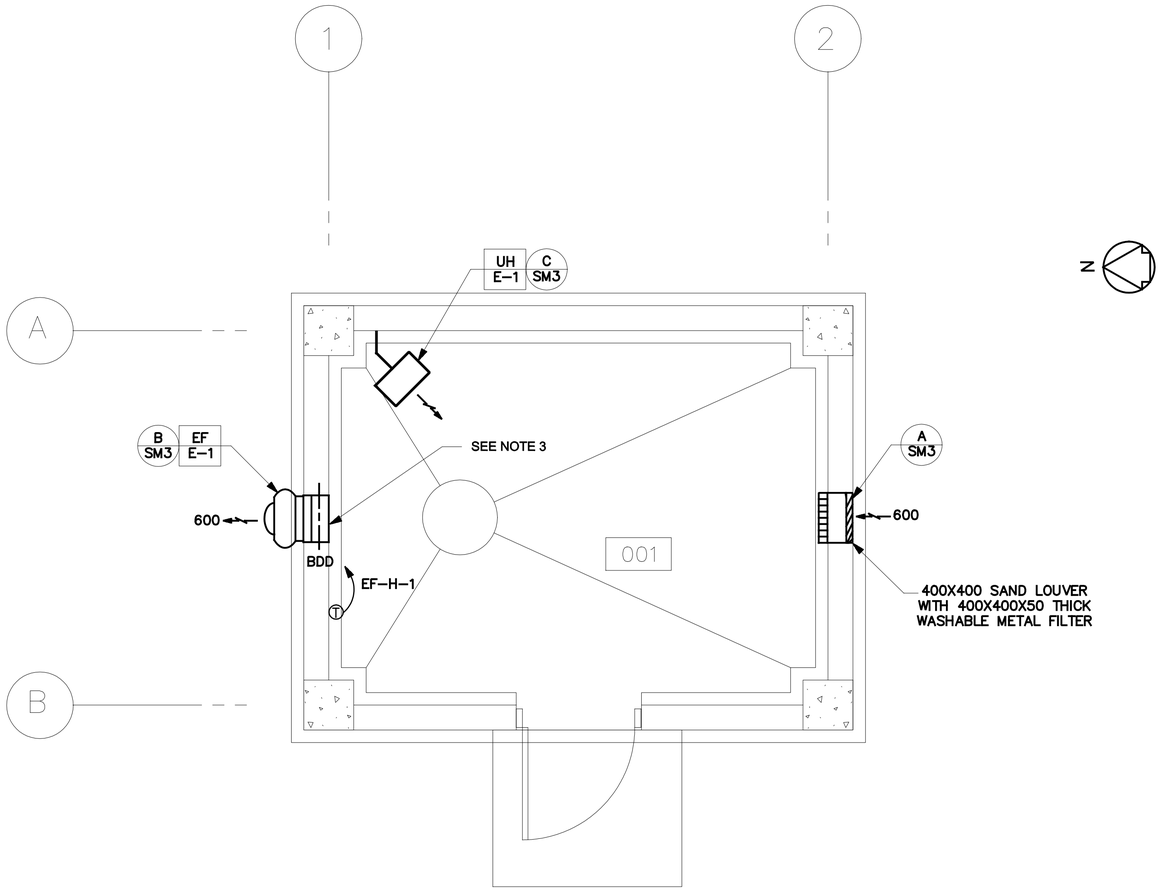

HVAC PLAN
SCALE= 1: 25

1 .50 0 1 1.5
1:25

UNLESS OTHERWISE NOTED, LINEAR DIMENSIONS SHOWN ARE IN MILLIMETERS.

SYMBOL	DESCRIPTION	DATE	APR

DESIGNED BY: RMS
DATE: 29 OCTOBER 2007
DWN BY: JMC
SUBMITTED BY:
CHK BY: SE
FILE NO.: AF0607E-MH01PN

US Army Corps of Engineers
Afghanistan Engineer District

AFGHANISTAN NATIONAL POLICE (ANP) DISTRICT HEADQUARTERS COMPOUNDS – 1 STORY HQ
VARIOUS LOCATIONS, AFGHANISTAN
WELL HOUSE
HVAC PLAN

SHEET REFERENCE NUMBER:
E
M-1

10/27/2007
S:\Engineering & Construction\Engineering\00_RFPs in-progress\ANP\ANP ON 1-Story Design\ANP Dist HQ 1Story Design Changes 26Oct07\Microstation Files\mech\AF0607E-MH01PN.dgn

NOTES:

1. FOR LEGEND AND ABBREVIATIONS SEE DRAWING SE-1.

2.COORDINATE LOCATION OF ALL ELECTRICAL FIXTURES AND EQUIPMENT WITH ALL OTHER TRADES.

3. FOR ONE LINE DIAGRAM SEE DRAWING E- 1, POWER PLANT.

4. ALL WIRING SHALL BE SURFACE MOUNTED IN METAL CONDUIT.

5. FOR EXACT LOCATION OF MECHANICAL EQUIPMENT SEE MECHANICAL DRAWINGS.

6. DESIGN IS BASED ON A 5 HP PUMP. IT IS CONTRACTOR'S RESPONSIBILITY TO DESIGN AND PROVIDE PROPERLY SIZED PUMP AS REQUIRED BY THE CONTRACT DOCUMENTS.

7. CONTRACTOR SHALL CONFIRM THAT ALL CIRCUIT RATINGS ARE BASED ON THE ACTUAL NAMEPLATE OF THE SUPPLIED EQUIPMENT.

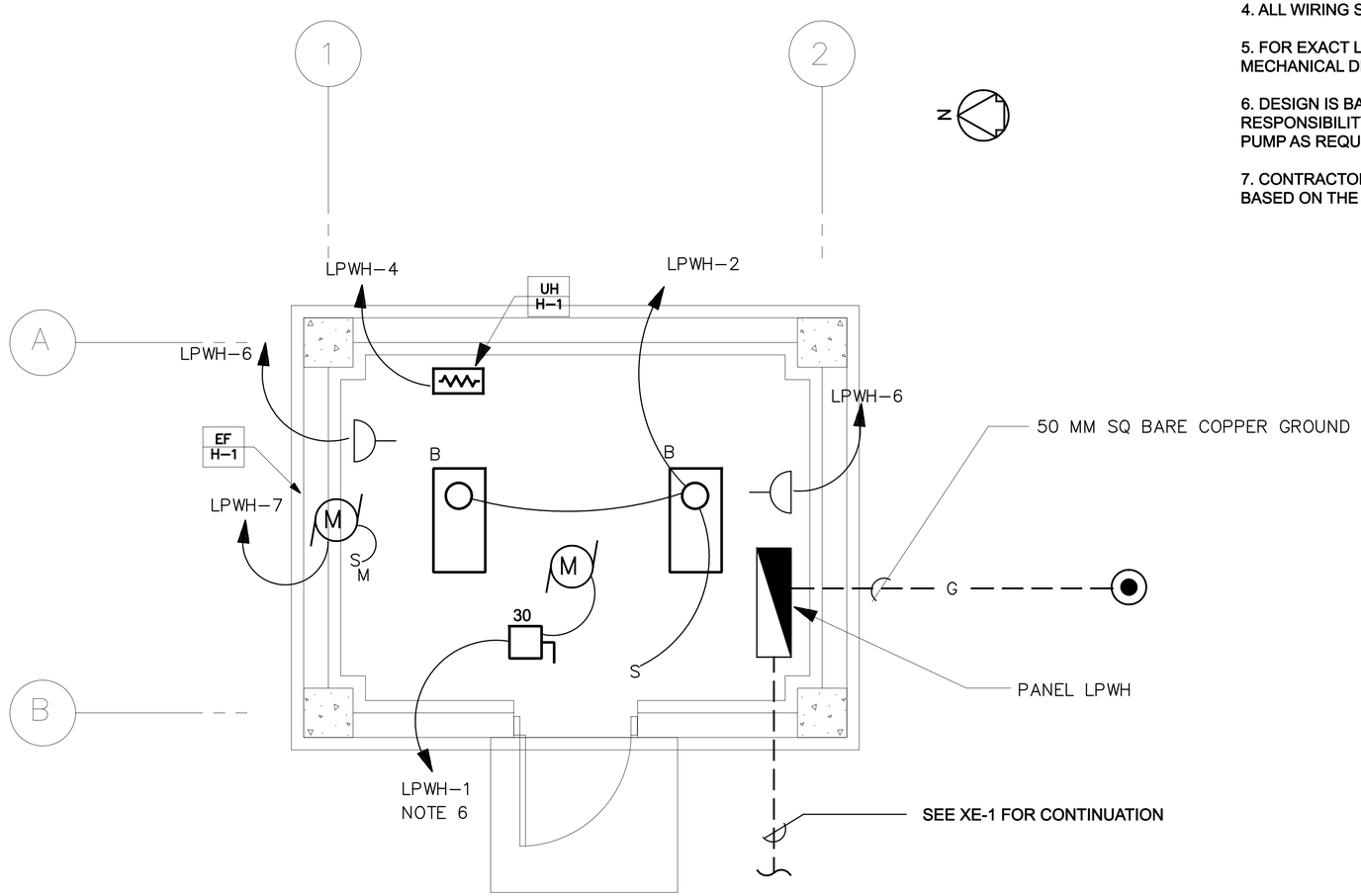

LIGHTING AND POWER PLAN

SCALE= 1:25

1 .50 0 1 1.5
1:25

UNLESS OTHERWISE NOTED, LINEAR DIMENSIONS SHOWN ARE IN MILLIMETERS.

SYMBOL	DESCRIPTION	DATE	APR

DESIGNED BY: MM
DWN BY: JMR
CHK BY: SE
DATE: 29 OCTOBER 2007
SUBMITTED BY:
FILE NO.: AF0607E-EL01PN

US Army Corps of Engineers
Afghanistan Engineer District

AFGHANISTAN NATIONAL POLICE (ANP) DISTRICT HEADQUARTERS COMPOUNDS – 1 STORY HQ
VARIOUS LOCATIONS, AFGHANISTAN
WELL HOUSE
LIGHTING AND POWER PLAN

SHEET REFERENCE NUMBER:
E
E-1

10/27/2007
S:\Engineering & Construction\Engineering\00_RFPs in-progress\ANP\ANP 01_1-Story Design\ANP Dist HQ 1Story Design Changes 26Oct07\Microstation Files\elec\AF0607E-01PN.dgn

PANELBOARD LPWH SURFACE MOUNTED MINIMUM 14,000 ASYM. A.I.C. MIN.

_____ AMP. MAIN LUGS (OR) 60 AMP. MAIN BREAKER W/ 60 AMP. TRIP

CIRCUIT BREAKER TYPE 380/220 VOLTS 3 PHASE 4 WIRE 100 AMP. BUS

CKT. NO.	TRIP AMPS	NO. POLES	WIRE MM2	GND MM2	CONDUIT MM	LOAD SERVED	LOAD-V.A.			LOAD-V.A.			LOAD SERVED	CONDUIT MM	GND 2 MM	WIRE 2 MM	NO. POLES	TRIP AMPS	CKT. NO.
							A0	B0	C0	A0	B0	C0							
1	40	1	6	6	25	WELL PUMP	6048			150			LIGHTING	20	4	4	1	20	2
3	20	1	4	4	20	EF-H-1	250	0			3000		ELECTRIC HEAT, UH-E-1	20	4	4	1	20	4
5	20	1				SPARE			0			360	RECEPTACLES	20	4	4	1	20	6
7						SPACE							SPARE				1	20	8
9						SPACE							SPACE						10
11						SPACE							SPACE						12
13						SPACE							SPACE						14
15						SPACE							SPACE						16
							6298	0	0	150	3000	360							

TOTAL CONN. LOAD 9.81 KVA 80 % DEMAND = ESTIMATED DEMAND LOAD: 7.85 KVA

TOTAL CONN. LOAD PER PHASE (KVA): A0 6.45 B0 3.00 C0 .36

SUPPLIED FROM POWER PLANT SWITCHBOARD(PPSB)

NOTES:

1. FOR LEGEND AND ABBREVIATIONS SEE DRAWING SE-1.
2. EMERGENCY LIGHT SHALL BE CONNECTED AHEAD OF LIGHT SWITCH.
3. FOR LIGHT FIXTURE SCHEDULE SEE DRAWING SE-1.
4. COORDINATE LOCATION OF ALL ELECTRICAL FIXTURES AND EQUIPMENT WITH ALL OTHER TRADES.
5. ALL WIRING SHALL BE IN CONCEALED OR SURFACE MOUNTED METAL CONDUIT.
6. FOR ONE LINE DIAGRAM SEE DRAWING D/E-1, POWER PLANT.
7. CONTRACTOR SHALL CONFIRM THAT ALL CIRCUIT RATING IS BASED ON THE ACTUAL NAME PLATE OF THE SUPPLIED EQUIPMENT.

UNLESS OTHERWISE NOTED, LINEAR DIMENSIONS SHOWN ARE IN MILLIMETERS.

SYMBOL	DESCRIPTION	DATE	APR

DESIGNED BY: MM | DATE: 29 OCTOBER 2007
DWN BY: JMR | SUBMITTED BY:
CHK BY: SE | FILE NO.: AF0607E-EL02SC

US Army Corps of Engineers
Afghanistan Engineer District

AFGHANISTAN NATIONAL POLICE (ANP) DISTRICT HEADQUARTERS COMPOUNDS – 1 STORY HQ
VARIOUS LOCATIONS, AFGHANISTAN
WELL HOUSE
ELECTRICAL SCHEDULES

SHEET REFERENCE NUMBER:
E
E-2

10/27/2007
S:\Engineering & Construction\Engineering\00_RFPs in-progress\ANP\ANP_ON_1-Story Design\ANP Dist HQ 1Story Design Changes 26Oct07\Microstation Files\elec\AF0607E-L02SC.dgn

ARCHITECTURAL ABBREVIATIONS AND SYMBOLS

ABBREVIATIONS

A

@	AT
AC	AIR CONDITIONER
ACCFLR	RAISED FLOOR SYSTEM
ACFT	AIRCRAFT
ACST	ACOUSTICAL
AD	AREA DRAIN
A/E	ARCHITECT/ENGINEERS
AFF	ABOVE FINISH FLOOR
ALUM	ALUMINUM
ANOD	ANODIZED
AOC	AIR OPERATIONS CENTER
APPROX	APPROXIMATELY
ARCH	ARCHITECTURAL
ASPH	ASPHALT
ATC	ACOUSTICAL TILE CEILING
AWP	ACOUSTICAL WALL PANEL

B

BB	BALL BEARING
BMUM	BITUMINOUS
BL	BASE LINE
BLDG	BUILDING
BLK	BLOCK
B/M	BENCH MARK OR BEAM
BOM	BILL OF MATERIALS
BRKT	BRACKET
BOT	BOTTOM
BRD	BOARD

C

CARP	CARPET
CB	CORE BORING
C TO C	CENTER TO CENTER
CEM	CEMENT
CH	CLEAR HEART
CFM	CUBIC FEET PER MINUTE
CI	CAST IRON
CIP	CAST IN PLACE
CJ OR CJT	CONTROL JOINT
℄	CENTER LINE
CLF	CHAIN LINK FENCE
CLG	CEILING
CLR	CLEAR
CM	CENTIMETER
CMDR	COMMANDER
CMP	CORRUGATED METAL PIPE
CMU	CONCRETE MASONRY UNIT
CO	CLEANOUT
COE	CORPS OF ENGINEERS
CONCR	CONCRETE
CONN	CONNECTION
CONST	CONSTRUCTION
CONT	CONTINUOUS
CONTAM	CONTAMINATED
CONTR	CONTRACTOR
CORR	CORRUGATED
CPRSR	COMPRESSOR
CT	CERAMIC TILE
CTR	CENTER
CUL	CULVERT
CUM	CUBIC METERS
CWT	COUNTERWEIGHT
COORD	COORDINATE

D

D	DEPTH
DECON	DECONTAMINATION
DET	DETAIL
DI	DRAIN INLET
DIA	DIAMETER
DIM	DIMENSION
DISP	DISPENSER
DJ	DUMMY JOINT
DRWG	DRAWING
DS	DOWNSPOUT
DW	DRINKING WATER

E

E	EAST
EA	EACH
EG	EXISTING GRADE
EJ	EXPANSION JOINT
EL OR ELEV	ELEVATION
ELEC	ELECTRICAL
ENCL	ENCLOSURE
ENGR	ENGINEER
ENT	ENTRANCE
EPDM	ELASTOMERIC ROOFING
EPX	EPOXY COATING
EQ	EQUAL
ES/EW	EMERGENCY SHOWER/EYE WASH
EW	EACH WAY
EXCA	EXCAVATE
EXH	EXHAUST
EXIST	EXISTING
EXP	EXPANSION OR EXPOSED
EWC	ELECTRIC WATER COOLER
EWH	ELECTRIC WATER HEATER

ABBREVIATIONS

F

F	FEET
FD	FLOOR DRAIN
FDN	FOUNDATION
FF & E	FURNITURE, FURNISHINGS AND EQUIPMENT
F TO F	FACE TO FACE
FE	FIRE EXTINGUISHER
FFLEL	FINISH FLOOR ELEVATION
FG	FINISH GRADE
FH	FIRE HYDRANT
FIN	FINISH
FL	FLOOR
FPM	FEET PER MINUTE
FTG	FOOTING

G

GA	GAUGE
GALV	GALVANIZED
GPM	GALLONS PER MINUTE
GR	GRADE
GT	GATE (FENCE)
GVL	GRAVEL
GYP	GYPSUM

H

HB	HOSE BIB
HDW	HARDWARE
HDWD	HARDWOOD
HZ	HERTZ
HF	HIGH FREQUENCY
HGT	HEIGHT
HM	HOLLOW METAL
HORIZ	HORIZONTAL
HP	HIGH POINT
HH	HEX HEAD
HC	HANDICAPPED
HR	HOUR

I

ID	INSIDE DIAMETER
INSTL	INSTALL
INTEL	INTELLIGENCE
INTER	INTERIOR
INV	INVERT
INSUL	INSULATION

J

JAN	JANITOR
JB	JUNCTION BOX
JCT	JUNCTION
JT	JOINT

K

KG	KILOGRAM
KM	KILOMETER
KPA	KILO PASCAL
KPH	KILOMETERS PER HOUR

L

LAM	LAMINATE
LAT	LATITUDE
LAV	LAVATORY
LBY	LOBBY
LBS	POUNDS
LG	LONG
LINMET	LINEAR METAL CEILING SYSTEM
LNRPNL	METAL LINER PANEL
LOC	LIMITS OF CONSTRUCTION
LONG	LONGITUDE
LP	LOW POINT
LSD	LARGE SCREEN DISPLAY
LTG P	LIGHTING PANEL
LVR	LOUVER

M

M	METER
MATL	MATERIAL
MAX	MAXIMUM
MECH	MECHANICAL
MH	MANHOLE
MISC	MISCELLANEOUS
MIN	MINIMUM
ML	MATCH LINE
MM	MILLIMETERS
MO	MASONRY OPENING
MON	MONUMENT
MOIST	MOISTURE
MPH	MILES PER HOUR
MTD	MOUNTED
MTL	METAL
MSNRY	MASONRY
MFR	MANUFACTURER
MATL	MATERIAL
MW	FORCE PROTECTION DOOR

ABBREVIATIONS

N

N	NORTH
NA	NOT APPLICABLE
NIC	NOT IN CONTRACT
NICAD	NICKEL CADMIUM
NO	NUMBER
NTS	NOT TO SCALE

O

OC	ON CENTER
OD	OUTSIDE DIAMETER
OPH	OPPOSITE HAND
OPNG	OPENING
OPP	OPPOSITE
OPS	OPERATIONS

P

PANL	PANEL
PCS	PIECES
PE	POLYETHYLENE
PKG	PARKING OR PACKAGE
PL	PLATE
PLAS	PLASTER
PLBG	PLUMBING
POL	PETROLEUM OIL LUBRICANT
PP	POWER PANEL
PRCST	PRECAST
PROP	PROPERTY
PSF	POUNDS PER SQUARE FOOT
PTD	PAINTED
PTR	PIPE TRENCH
PVMT	PAVEMENT

Q

Q	DESIGN DISCHARGE
QD	QUICK DISCONNECT

R

R	RADIUS OR REINFORCED
RCP	REINFORCED CONCRETE PIPE
RD	ROOF DRAIN
RE	REFERENCE
REINF	REINFORCED
REQD	REQUIRED
REV	REVISION
RH	RIGHT HAND
RI	RISER
RM	ROOM
RO	ROUGH OPENING
ROW	RIGHT OF WAY
RP	RADIUS POINT
RR	RAILROAD
RT	RIGHT
RTU	ROOF TOP UNIT
RVS	REVERSE
RW	RAW WATER

S

S OR SO	SOUTH
SCH	SCHEDULE
SECT	SECTION
SD	SMOKE DETECTOR
SG	SUB GRADE
SH OR SHT	SHEET
SHWR	SHOWER
SIM	SIMILIAR
SL	SLOPE
SMH	SEWER MANHOLE
SOC	STRATEGIC OPERATIONS CENTER
SPEC	SPECIFICATION
SPFC	SPECIFIC
SQ	SQUARE
SS	SANITARY SEWER
SST	STAINLESS STEEL
STA	STATION
STD	STANDARD
STL	STEEL
STRUCT	STRUCTURAL
SUSPLAS	SUSPENDED PLASTER
SVC	SERVICE CONNECTION

ABBREVIATIONS

T

TC	TOP OF CURB
TELE C	TELEPHONE CABINET
TER	TERRAZZO
TG	TOP OF GRATE
TK	TANK
TO	TECHNICAL ORDER
TOS	TOP OF STEEL
TOW	TOP OF WALL
TP	TEST PIT
TR	TRENCH
TSW	TOP OF SIDEWALK
TYP	TYPICAL
TP	TOP OF PAVEMENT
TH/THK	THICK / THICKNESS

U

UBC	UNIFORM BUILDING CODE
UG	UNDERGROUND
UNO	UNLESS NOTED OTHERWISE
UPS	UNINTERRUPTIBLE POWER SUPPLY
UTIL	UTILITY

V

VB	VALVE BOX
VC	VERTICAL CURVE
VCT	VINYL COMPOSITION TILE
VEH	VEHICLE
VEL	VELOCITY
VERT	VERTICAL
VEST	VESTIBULE
VIP	VERY IMPORTANT PERSON
VTR	VENT THRU ROOF

W

W	WEST, WIDE
WC	WATER CLOSET
WM	WIRE MESH PARTITION
WSP	WELDED STEEL PIPE
WT	WEIGHT
W/O	WITHOUT
W/	WITH
WWF	WELDED WIRE FABRIC

REFERENCE SYMBOLS

A / A-1 A-2	DETAIL IDENTIFICATION NO.OF SHEET ON WHICH DETAIL IS DRAWN NO. OF SHEET ON WHICH CONDITION IS REFERENCED
1 / A-3	BUILDING SECTION IDENTIFICATION NO.OF SHEET ON WHICH SECTION IS DRAWN
A / A-3	WALL SECTION IDENTIFICATION NO.OF SHEET ON WHICH SECTION IS DRAWN
102	ROOM NUMBER
102	DOOR NUMBER
H	COLUMN LINE
A	WINDOW TYPE
A	WALL TYPE IDENTIFIER
102	EQUIPMENT IDENTIFIER
102	FURNITURE IDENTIFIER
FIN FL ELEV 100.00	FINISH FLOOR EL. SYMBOL IN PLAN
FIN FL ELEV 100.00	FINISH FLOOR EL. SYMBOL IN SECT. AND ELEV.
A B C D	INTERIOR ELEVATION KEY SYMBOL
A / A-3	EXTERIOR ELEVATION IDENTIFIER
	STUCCO CONTROL JOINT
L2	LOUVER IDENTIFIER
	STRUCTURAL CONTROL JOINT
	WALLS TO THE UNDERSIDE OF THE STRUCTURE
F	FIRE EXTINGUISHER

MATERIAL SYMBOLS

	EARTH
	CAST CONCRETE (SECTION)
	LIGHTWEIGHT CONCRETE (SECTION)
	CONCRETE MASONRY UNIT (LARGE SCALE-PLAN)
	STEEL
	ROUGH WOOD
	FINISHED WOOD
	WOOD BLOCKING
	PLYWOOD-LARGE SCALE
	GLASS (ELEVATION)
	BATT FILL INSULATION (SECTION)
	LOOSE FILL INSULATION (PLAN)
	RIGID BOARD INSULATION
	CERAMIC TILE-LARGE SCALE
	CONCRETE (PLAN & ELEVATION)
	CERAMIC TILE (PLAN & ELEVATION)
	PLASTER OR STUCCO (ELEVATION)
	SHEET MEMBRANE
	LANDSCAPING (TREE, SHRUB, ETC.)

GENERAL NOTES:

1. THE LIST OF ABBREVIATIONS IS SHOWN AS A GUIDE ONLY AND DOES NOT NECESSARILY INCLUDE ALL ABBREVIATIONS USED. OTHER ABBREVIATIONS MAY BE FOUND AMONG THE DRAWINGS. SOME ABBREVIATIONS LISTED MAY NOT HAVE BEEN USED.
2. FOR REFERENCE PURPOSES, A FINISHED FLOOR ELEVATION OF 100.00 HAS BEEN ESTABLISHED FOR GRADE LEVEL FLOOR PLANS. ON ARCHITECTURAL DRAWINGS. SEE CIVIL DRAWINGS FOR ACTUAL FINISHED FLOOR AND FINISHED GRADE ELEVATIONS.
3. HOUSEKEEPING PADS FOR MECHANICAL EQUIPMENT SHALL BE PROVIDED AS REQUIRED BY MECHANICAL DRAWINGS. SIZE AND LOCATION SHALL BE COORDINATED WITH MECHANICAL EQUIPMENT PROVIDED.

UNLESS OTHERWISE NOTED, LINEAR DIMENSIONS SHOWN ARE IN MILLIMETERS.

SYMBOL	DESCRIPTION	DATE	APR

DESIGNED BY: SH
DATE: 29 OCTOBER 2007
DWN BY: JSG
SUBMITTED BY:
CHK BY: YSK
FILE NO.:

US Army Corps of Engineers
Afghanistan Engineer District

AFGHANISTAN NATIONAL POLICE (ANP) DISTRICT HEADQUARTERS COMPOUNDS – 1 STORY HQ
VARIOUS LOCATIONS, AFGHANISTAN
STANDARD DETAILS
ABBREVIATIONS AND SYMBOLS

SHEET REFERENCE NUMBER:
SA–1

10/24/2007
S:\Engineering & Construction\Engineering\00_RFPs in-progress\ANP\ANP ON 1-Story Design\AN Dist HQ 1Story Design Changes 26OCT07\Microstation Files\arch\AF060075R01GN.dgn

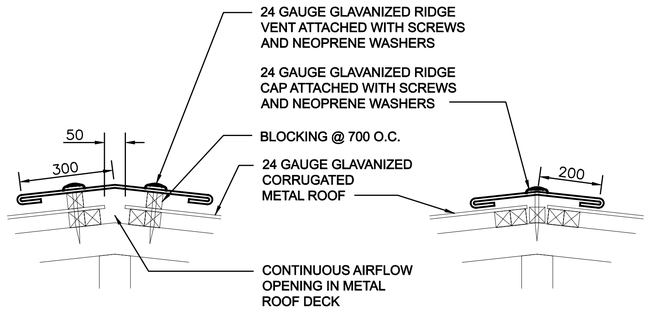

TYPICAL RIDGE VENT SECTION
NOT TO SCALE

TYPICAL RIDGE CAP SECTION
NOT TO SCALE

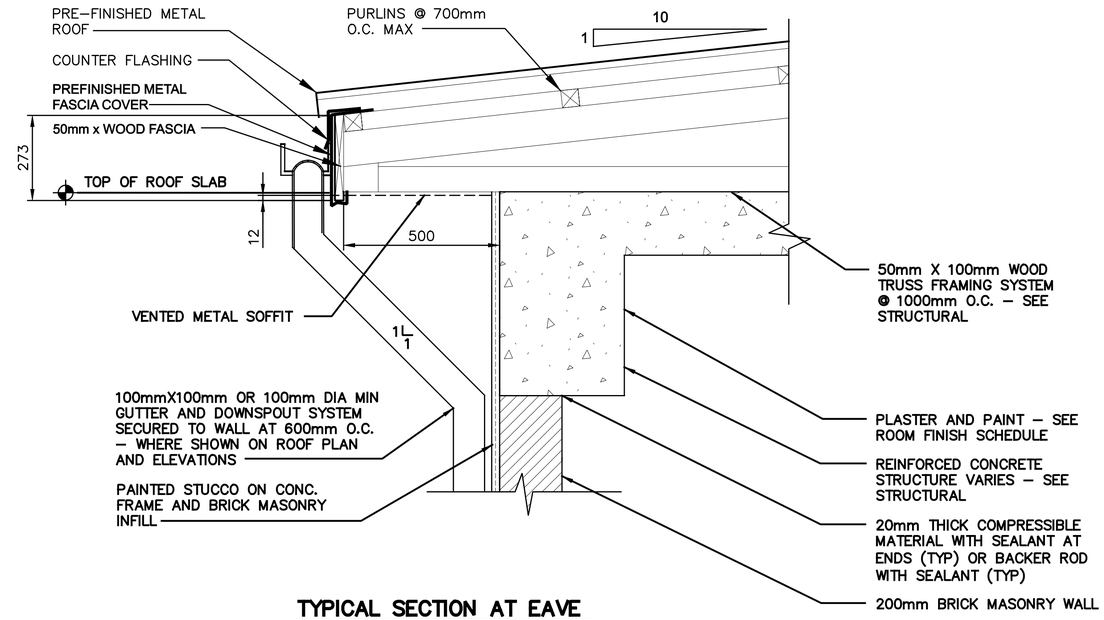

TYPICAL SECTION AT EAVE
FOR BUILDINGS C, D, H, AND I
SCALE= 1:10

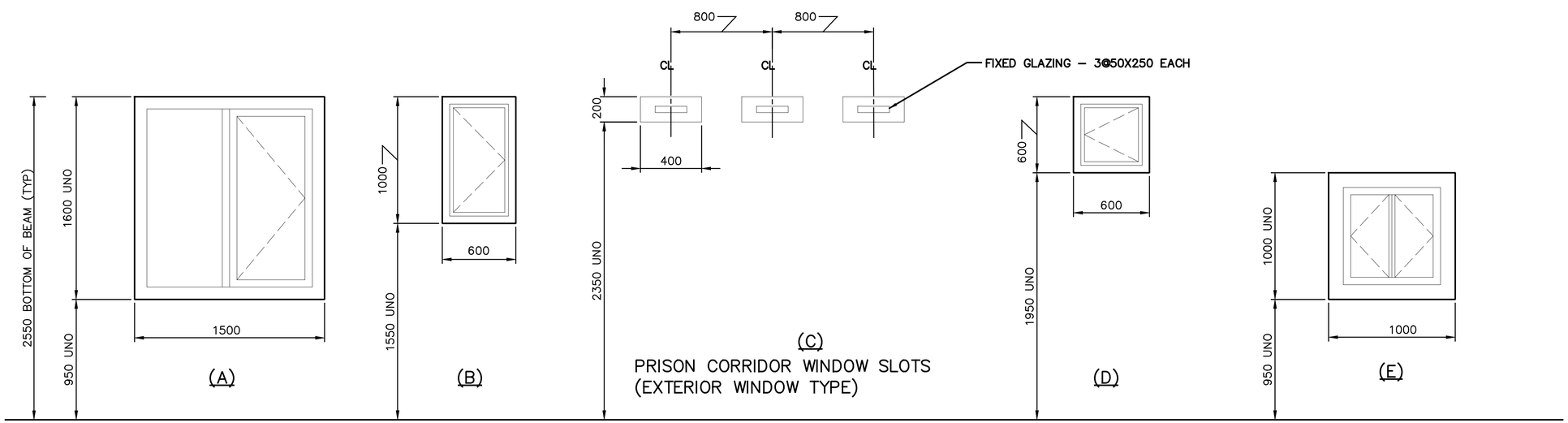

NOTES:
1. ALL EXTERIOR WINDOWS SHALL UTILIZE MIN. 8mm THICK PLEXIGLASS.
2. PROVIDE PROTECTIVE COATING AT ALL DISSIMILAR METALS CONTACT AREAS, AS APPROPRIATE.
3. ALL OPERABLE EXTERIOR WINDOWS SHALL BE PROVIDED WITH INSECT SCREENS.
4. FIXED WINDOWS AND CLEARSTORY WINDOWS ARE SHOWN ON BUILDING ELEVATIONS AND SECTIONS.

0 .50 1.00
1:10

UNLESS OTHERWISE NOTED, LINEAR DIMENSIONS SHOWN ARE IN MILLIMETERS.

SYMBOL	DESCRIPTION	DATE	APR

DESIGNED BY: SH
DATE: 29 OCTOBER 2007
DWN BY: JLK
SUBMITTED BY:
CHK BY: JLK
FILE NO.: AF06073-AR02DT

US Army Corps of Engineers
Afghanistan Engineer District

AFGHANISTAN NATIONAL POLICE (ANP) DISTRICT HEADQUARTERS COMPOUNDS – 1 STORY HQ
VARIOUS LOCATIONS, AFGHANISTAN
STANDARD DETAILS
WALL SECTION AND ROOF DETAILS

SHEET REFERENCE NUMBER:
SA–2

10/24/2007
S:\Engineering & Construction\Engineering\00_RFPs in-progress\ANP\ANP ONE-Story Design\ANP Dist HQ 1Story Design Changes 26Oct07\Microstation files\arch\AF06073AR02DT.dgn

GENERAL NOTES

GENERAL

1. DESIGN REFERENCES:
   A. AMERICAN CONCRETE INSTITUTE (ACI) BUILDING CODE REQUIREMENTS OR REINFORCED CONCRETE (ACI 318).
   B. SPECIFICATION FOR STRUCTURAL STEEL BUILDINGS – ALLOWABLE STRESS DESIGN AND PLASTIC DESIGN (S335).
   C. AMERICAN WELDING SOCIETY (AWS) STRUCTURAL WELDING CODE – STEEL (AWS D 1.1).
   D. MASONRY STRUCTURAL DESIGN FOR BUILDINGS (TM–809–3).
   E. STEEL DECK INSTITUTE (SDI) DESIGN MANUAL FOR COMPOSITE DECKS, FORM DECKS, AND ROOF DECKS.
2. DIMENSIONS PROVIDED IN SECTIONS OR DETAILS AND ON PLAN AND ELEVATION VIEWS ARE SHOWN USING MILLIMETERS. UNLESS OTHERWISE NOTED.
3. ALL BUILDING ELEVATIONS ARE GIVEN AS REFERENCE ELEVATIONS TO THE FINISHED GROUND FLOOR ELEVATION. A REFERENCE FLOOR ELEVATION OF 0.000 IS USED FOR THE FINISHED GROUND FLOOR.
4. CONTRACTOR SHALL VERIFY ALL DIMENSIONS AND CONDITIONS AFFECTING THE WORK AT THE JOB SITE.
5. ALL STRUCTURAL WORK AND MATERIALS SHALL CONFORM TO THE REQUIREMENTS OF THE PROJECT SPECIFICATIONS.
6. DO NOT SCALE DRAWINGS.
7. FOR LOCATION AND DIMENSIONS OF PARTITIONS, DEPRESSIONS, GROOVES, SLEEVES, CURBS, OPENINGS, EMBEDDED OR ATTACHED ITEMS, REFER TO ARCHITECTURAL, MECHANICAL, ELECTRICAL, AND PLUMBING DRAWINGS.
8. FOR ADDITIONAL INFORMATION REFER TO INDIVIDUAL SHEETS FOR EACH STRUCTURE.
8 FOR ADDITIONAL INFORMATION REFER TO INDIVIDUAL SHEETS FOR EACH STRUCTURE.
9. METAL BUILDING SYSTEMS SHALL BE AS REQUIRED ON THE DRAWINGS AND NOTES.
10. FOOTING ELEVATIONS GIVEN ARE AT TOP OF FOOTING BASE.
11. ALL FOOTING EXCAVATIONS SHALL BE INSPECTED AND APPROVED BY THE CONTRACTING OFFICER OR HIS APPROVED AGENT PRIOR TO PLACING CONCRETE.

CONCRETE

1. EMBEDDED MATERIAL:
   A. BEFORE PLACING CONCRETE, CARE SHALL BE TAKEN TO INSURE THAT ALL EMBEDDED ITEMS ARE IN POSITION AND SECURELY FASTENED IN PLACE.
   B. ELECTRIC CONDUITS AND PIPING TO BE EMBEDDED IN CONCRETE SHALL MEET THE APPLICABLE REQUIREMENTS OF ACI 318.
   C. WATERSTOPS, WHERE REQUIRED, SHALL BE MADE CONTINUOUS. ALL PROJECTING WATERSTOPS SHALL BE SUPPORTED AND PROTECTED FROM DAMAGE DURING CONSTRUCTION.
2. PROVIDE 20 MILLIMETER CHAMFER FOR ALL EXPOSED EDGES OF COLUMNS, BEAMS, WALLS AND ANY OTHER MEMBERS AS DIRECTED BY THE CONTRACTING OFFICER.
3. PROVIDE APPROPRIATE DEPRESSIONS IN SLABS FOR TILE OR OTHER SIMILAR MATERIALS. MAINTAIN FULL SLAB THICKNESS BELOW THESE DEPRESSIONS. SEE ARCHITECTURAL INTERIOR FINISH SCHEDULES, FLOOR PLANS, AND DETAILS FOR REQUIRED DEPRESSIONS.
4. JOINTS SHALL BE LOCATED IN ACCORDANCE WITH ACI–318.
5. FOR SLABS ON GRADE, CONTROL JOINTS SHALL BE LOCATED NOT MORE THAN 7.6 METERS APART IN EITHER DIRECTION UNLESS OTHERWISE NOTED.
6. CONSTRUCTION JOINTS FOR STRUCTURAL SLABS, BEAMS AND GIRDERS SHALL BE LOCATED WITHIN THE MIDDLE THIRD OF THEIR SPAN. JOINTS IN GIRDERS SHALL BE OFFSET A MINIMUM DISTANCE OF TWO TIMES THE WIDTH OF AN INTERSECTING BEAM.
7. A SET OF DRAWINGS SHOWING CONCRETE PLACING SEQUENCE AND LOCATION OF JOINTS SHALL BE SUBMITTED TO THE CONTRACTING OFFICER FOR APPROVAL PRIOR TO PREPARATION OF AFFECTED REINFORCING SHOP DRAWINGS.
8. ALL REINFORCING BARS SHALL BE PLACED IN ACCORDANCE WITH ACI BUILDING CODE (ACI–318).
9. ALL REINFORCING BARS SHALL BE DEFORMED BILLET–STEEL CONFORMING TO ASTM A 615, GRADE 60, OR APPROVED EQUAL WITH THE FOLLOWING MINIMUM REQUIREMENTS: MINIMUM YIELD STRENGTH 413 MPa (60000 PSI).
10. WELDED WIRE FABRIC SHALL BE COLD DRAWN CONFORMING TO ASTM A–185, GRADE 60, OR APPROVED EQUAL WITH THE FOLLOWING MINIMUM REQUIREMENTS: MINIMUM YIELD STRENGTH 413 MPa. (60000 PSI)
11. DETAILING OF REINFORCEMENT SHALL BE IN ACCORDANCE WITH THE LATEST ACI MANUAL FOR DETAILING (SP–66).
12. DIMENSIONS AND SPACING OF BARS ARE IN MILLIMETERS UNLESS OTHERWISE NOTED. THUS, f920@300.
13. CONCRETE SHALL HAVE A MINIMUM 28 DAY COMPRESSIVE STRENGTH OF 28 MPa (4,000 PSI) AND CONTAIN ASTM C–150 TYPE I CEMENT UNLESS OTHERWISE NOTED.
14. REINFORCEMENT MAY BE MOVED WITH APPROVAL OF THE CONTRACTING OFFICER TO CLEAR PIPES, SEALS, RECESSES, EMBEDDED METALWORK, AND CONDUITS.
15. CLEAR CONCRETE COVER FOR REINFORCING BARS IN CAST–IN–PLACE CONCRETE SHALL BE PROVIDED AS FOLLOWS, UNLESS OTHERWISE NOTED:
    A. FOOTINGS OR BEAMS CAST AGAINST AND PERMANENTLY EXPOSED TO EARTH 75mm.
    B. FORMED SURFACES EXPOSED TO WEATHER OR EARTH:
       (1).f916 BARS OR SMALLER 40mm
       (2).ALL OTHERS 50mm
    C. FORMED SURFACES NOT EXPOSED DIRECTLY TO WEATHER OR EARTH:
       (1). SLABS, WALLS 20mm
       (2). BEAMS, GIRDERS, COLUMNS: PRINCIPAL REINFORCEMENT, TIES OR STIRRUPS 40mm
16. REFER TO DWG SS–4 FOR CONSTRUCTION JOINT (CJ) AND CONTROL JOINT (CJT) DETAILS.
17. REINFORCING BARS SHALL NOT BE BENT OR STRAIGHTENED IN A MANNER THAT WILL INJURE THE MATERIAL. BARS WITH KINKS OR IMPROPER BENDS SHALL NOT BE USED.
18. THE FIRST AND LAST BAR IN SLABS AND WALLS SHALL BE PLACED A MAXIMUM OF ONE–HALF OF THE BAR SPACING SHOWN UNLESS OTHERWISE NOTED.
19. THE CLEAR DISTANCE BETWEEN PARALLEL BARS IN A LAYER SHALL NOT BE LESS THAN THE NOMINAL DIAMETER OF THE BAR, NOR 33mm, THE CLEAR DISTANCE BETWEEN LONGITUDINAL BARS IN COLUMNS SHALL NOT BE LESS THAN 1.5 TIMES THE NOMINAL BAR DIAMETER NOR 40mm.
20. PROVIDE 1–f912 REBAR IN MID – DEPTH OF SLAB AT ALL RE–ENTRANT CORNERS.
21. PROVIDE SEALANT AT ALL CONTROL AND ISOLATION JOINTS. WHERE CONCRETE SLAB WORK WILL NOT BE COVERED BY SOME OTHER FINISH FLOOR MATERIAL PROVIDE TOOLED CONTROL JOINTS HAVING A RADIUS OF 3 MILLMETERS.
22. ALL CMU WALLS SHALL BE REINFORCED AS SHOWN ON THE DRAWINGS.

STRUCTURAL STEEL

1. ALL METAL WORK SHOWN ON DRAWINGS SHALL BE FABRICATED OF STRUCTURAL STEEL UNLESS OTHERWISE NOTED.
2. DESIGN OF STRUCTURAL STEEL WORK SHALL BE IN ACCORDANCE WITH THE REQUIREMENTS OF THE SPECIFICATION FOR STRUCTURAL STEEL BUILDINGS–ALLOWABLE STRESS DESIGN AND PLASTIC DESIGN (S335).
3. **ALL WELDING SHALL BE IN ACCORDANCE WITH THE APPLICABLE REQUIREMENTS OF THE CURRENT AWS, D1.1, STRUCTURAL WELDING CODE–STEEL.**
4. WHERE WELD SIZE IS NOT CALLED OUT, USE AISC MINIMUM SIZE.
5. STRUCTURAL STEEL SHALL CONFORM TO THE REQUIREMENTS OF ASTM A500, GRADE B OR STRUCTURAL TUBING AND ASTM A36 FOR OTHER STRUCTURAL SHAPES (UNLESS OTHERWISE NOTED).
6. ALL BOLTED CONNECTIONS SHALL BE BEARING TYPE CONNECTIONS MADE WITH 19 DIAMETER BOLTS MEETING REQUIREMENTS OF ASTM A325, TYPE X (UNLESS NOTED OTHERWISE)
7. SHOP CONNECTIONS MAY BE EITHER BOLTED OR WELDED. ALL FIELD CONNECTIONS SHALL BE BOLTED UNLESS OTHERWISE SHOWN ON THE DRAWINGS.
8. UNLESS OTHERWISE NOTED BEAM END CONNECTIONS SHALL COMFORMTO A.I.S.C. STANDARD TWO ANGLE WEB CONNECTIONS. WHETHER BOLTED OR WELDED, EACH END CONNECTION SHALL BE CAPABLE OF SUPPORTING ONE–HALF THE TOTAL UNIFORM LOAD CAPACITY SHOWN IN THE ALLOWABLE UNIFORM LOAD TABLES, PART II , OF THE A.I.S.C. MANUAL OF STEEL CONSTRUCTION. HOLES WILL BE SHORT–SLOTTED IN THE OUTSTANDING ANGLE LEGS (THOSE CONNECTED TO THE SUPPORTING MEMBER) AND STANDARD OTHERWISE.
9. NO CONNECTION SHALL CONSIST OF LESS THAN 2–f919 BOLTS OR A WELD CAPABLE OF RESISTING 2720 KILOGRAMS.
10. ALL ANCHOR BOLTS SHALL BE ASTM A36, EXCEPT AS OTHERWISE NOTED.
11. STRUCTURAL STEEL DESIGN IS BASED ON ALLOWABLE STRESS DESIGN.

LEGENDS AND NOTATIONS: (UNLESS OTHERWISE NOTED)

A. PLATE SIZES ARE GIVEN IN MILLIMETERS. THUS, PL 200 x 600 X 10

B. ROLLED STEEL SHAPES ARE INDICATED BY AISC METRIC NOTATION THUS, W200 x 150.

C. ANGLE SIZES ARE GIVEN IN MILLIMETERS. THUS, ∟100 x 100 x 10 x 600 LG.

D. WELDING NOTATION SIZE, LENGTH AND SPACING ARE GIVEN IN MILLIMETERS WITH SYMBOLS IN ACCORDANCE WITH AWS.

E. BOLT SIZE DIAMETERS ARE GIVEN IN MILLIMETERS. LENGTH IS GIVEN IN MILLIMETERS. THUS, f919 X 300 LG.

ABBREVIATIONS

A.B.	ANCHOR BOLT
ADD	ADDED OR ADDITIONAL
AFF	ABOVE FINISH FLOOR
ARCH	ARCHITECTURAL
@	AT THE RATE OF
BM	BEAM
BRG	BEARING
B OR BOT	BOTTOM
℄	CENTERLINE
CONC	CONCRETE
CJ	CONTROL JOINT
CJT	CONSTRUCTION JOINT
CIP	CAST–IN–PLACE
COL	COLUMN
CONT	CONTINUOUS
DIA OR ∅	DIAMETER
DIR	DIRECTION
DWG	DRAWING
EE	EACH END
EF	EACH FACE
⊕ OR ELEV	ELEVATION
ES	EACH SIDE
EW	EACH WAY
EJT	EXPANSION JOINT
FF	FAR FACE
FTG	FOOTING
FDN	FOUNDATION
GB	GRADE BEAM
H OR HORZ	HORIZONTAL
HP	HIGH POINT
IJ	ISOLATION JOINT
JT	JOINT
KSM	KILOGRAMS PER SQUARE METER
LG	LONG
LL	LOWER LAYER
LP	LOW POINT
MCJ	MASONRY CONTROL JOINT
M	METERS
MM	MILLIMETERS
MAX	MAXIMUM
MECH	MECHANICAL
MIN	MINIMUM
NF	NEAR FACE
NO OR #	NUMBER
NTS	NOT TO SCALE
O/C	ON CENTER
OPNG	OPENING
PC	PRECAST
PEJ	PREMOLDED EXPANSION JOINT
PL	PLATE
PSF	POUNDS PER SQUARE FOOT
PSI	POUNDS PER SQUARE INCH
REINF	REINFORCEMENT
REF	REFERENCE
REQ	REQUIRED
SCH	SCHEDULE
SHT	SHEET
SIM	SIMILAR
STD	STANDARD
SQ	SQUARE
T	TOP
TB	TIE BEAM
T & B	TOP AND BOTTOM
TOC	TOP OF CONCRETE
TOF	TOP OF FOOTING
TOS	TOP OF SLAB OR TOP OF STEEL
TYP	TYPICAL
UL	UPPER LAYER
UNO	UNLESS NOTED OTHERWISE
VERT	VERTICAL
WWF	WELDED WIRE FABRIC
WP	WORKING POINT
W/	WITH

UNLESS OTHERWISE NOTED, LINEAR DIMENSIONS SHOWN ARE IN MILLIMETERS.

SYMBOL	DESCRIPTION	DATE	APR

DESIGNED BY: TCP | DATE: 29 OCTOBER 2007
DWN BY: TCP | SUBMITTED BY:
CHK BY: KGO | FILE NO.: AF06073–SB01GN

US Army Corps of Engineers
Afghanistan Engineer District

AFGHANISTAN NATIONAL POLICE (ANP) DISTRICT HEADQUARTERS COMPOUNDS – 1 STORY HQ
VARIOUS LOCATIONS, AFGHANISTAN
STANDARD DETAILS
GENERAL NOTES AND ABBREVIATIONS

SHEET REFERENCE NUMBER:
SS–1

10/24/2007 S:\Engineering & Construction\Engineering\00_RFPs in-progress\ANP\ANP ONE-Story Design\ANP Dist HQ 1Story Design Changes 26Oct07\Microstation Files\struct\AF06073_SB01GN.dgn

SPLICES

LOCATION OF SOME SPLICES ARE SHOWN ON DRAWINGS. SPLICES NOT SHOWN ON DRAWINGS SHALL BE IN ACCORDANCE WITH THE APPLICABLE REQUIREMENTS FOR DETAILING REINFORCEMENT AND AS APPROVED BY THE CONTRACTING OFFICER.

WHEN REINFORCEMENT OF DIFFERENT SIZE SPLICES, THE LAP LENGTH IS GOVERNED BY THE SMALLER BAR UNLESS NOTED OTHERWISE.

WALL AND SLAB REINFORCEMENT SPLICES ARE TO BE MADE SO THAT REQUIRED CLEARANCES ARE MAINTAINED.

TENSION LAP SPLICES		
AS (PROVIDED) / AS (REQUIRED)	MAXIMUM % OF REBARS SPLICED WITHIN REQ. LAP LENGTH	
	50	100
EQUAL TO OR GREATER THAN 2	CLASS A	CLASS B
LESS THAN 2	CLASS B	CLASS B

TENSION LAP SPLICE LENGTH SHALL BE AS FOLLOWS:

FOR CLASS "A" SPLICES 1.0 ld
FOR CLASS "B" SPLICES 1.3 ld

WHERE ld IS THE BASIC TENSION DEVELOPMENT LENGTH.

BASIC TENSION DEVELOPMENT ld (mm)& TENSION DOWEL EMBEDMENT LENGTH

CONCRETE	TYPE OF BARS	BAR SIZE								
		#3	#4	#5	#6	#7	#8	#9	#10	#11
28 MPa (4000 PSI)	TOP BARS	400	500	600	700	800	1000	1200	1600	2000
	OTHER	300	400	450	600	600	750	950	1200	1500

NOTES:

1. FOR BARS WITH CLEAR SPACING NOT LESS THAN 5X BAR DIAMETER AND WITH COVER FROM FACE OF MEMBER TO EDGE BARS, MEASURED IN THE PLANE OF THE BARS, NOT LESS THAN 2.5X BAR DIAMETER USE 0.8ld, BUT THE LAP SPLICE LENGTH SHALL NOT BE LESS THAN 300MM.
2. TOP BARS ARE HORIZONTAL AND INCLINED REINFORCING BARS SO PLACED THAT MORE THAN 300MM. OF CONCRETE IS CAST IN THE MEMBER BELOW THE BARS.

STANDARD COMPRESSION LAP SPLICE LENGTH (MM)

BAR SIZE	#3	#4	#5	#6	#7	#8	#9	#10	#11
SPLICE LENGTH	300	380	480	580	660	760	860	960	1070

BASIC COMPRESSION DEVELOPMENT (MM) & COMPRESSION DOWEL EMBEDMENT LENGTH

CONCRETE	BAR SIZE								
	#3	#4	#5	#6	#7	#8	#9	#10	#11
28 MPa (4000 PSI)	200	250	300	360	420	480	550	610	680

ALL BARS MARKED CONTINUOUS SHALL BE PROPERLY LAPPED AT SPLICES AND CORNERS AND HOOKED AT NON-CONTINUOUS ENDS.

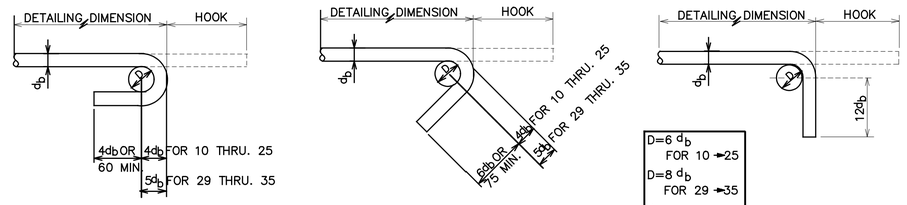

D=6 db FOR 10 → 25
D=8 db FOR 29 → 35
db = BAR DIA.

BAR BENDING DETAILS

DESIGN LOADS

SERVICE LOADS

DEAD ----------CALCULATED
LIVE ----------REFER TO INDIVIDUAL SHEETS

WIND LOAD

BASIC WIND VELOCITY IS 125 KM/H

EARTHQUAKE:

SITE SEISMICITY:
Ss = 1.65g, S1 = 0.75g

EQUIVALENT REINFORCING BAR SIZE CHART

ACI DESIGNATION	METRIC DIAMETER (MM)
#3	10
#4	13 (ø12 ACCEPTABLE)
#5	16
#6	19 (ø20 ACCEPTABLE)
#7	22
#8	25
#9	29
#10	32
#11	35

EQUIVALENT STEEL FABRIC SIZE CHART

WIRE REINFORCING INSTITUTE DESIGNATION	METRIC SIZES (MM)	
	WIRE SPACING	WIRE DIAMETER
6 X 6 – W2.9 X W2.9	150 X 150	5.0 X 5.0

FILLET WELD STRENGTH *

SIZE INCHES	STRENGTH KIPS/INCH
1/8	1.86
3/16	2.78
1/4	3.71
5/16	4.64
3/8	5.57
7/16	6.50
1/2	7.42
9/16	8.35

* AWS A5.1 OR A5.5 E70 XX ELECTRODES FOR A36 MATCHING BASE MATERIAL

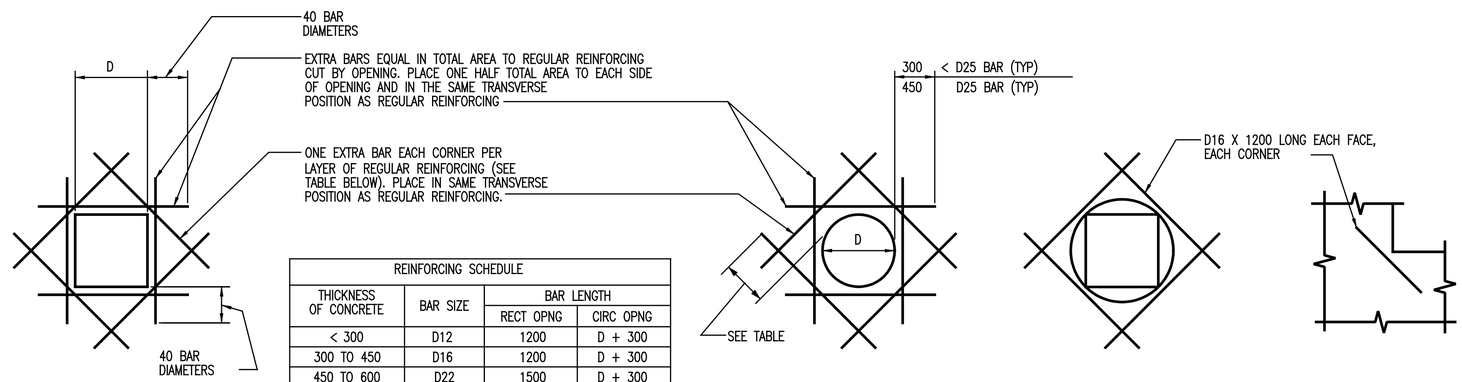

REINFORCING SCHEDULE			
THICKNESS OF CONCRETE	BAR SIZE	BAR LENGTH	
		RECT OPNG	CIRC OPNG
< 300	D12	1200	D + 300
300 TO 450	D16	1200	D + 300
450 TO 600	D22	1500	D + 300
> 600	D25	1800	D + 450

RECTANGULAR OPENINGS

CIRCULAR OPENINGS

FOR OPENINGS 500 AND SMALLER IN DIAMETER OR DIAGONAL

ISOLATED RE-ENTRANT CORNERS

FOR OPENING LARGER THAN 500 IN DIAMETER OR DIAGONAL

TYPICAL EXTRA REINFORCING AT OPENINGS IN WALLS AND SLABS

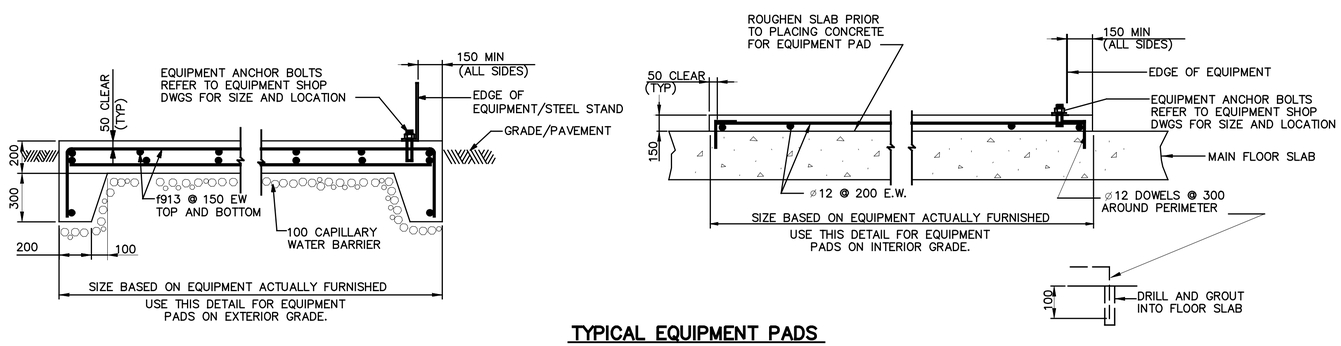

TYPICAL EQUIPMENT PADS

NOT TO SCALE

UNLESS OTHERWISE NOTED, LINEAR DIMENSIONS SHOWN ARE IN MILLIMETERS.

SYMBOL	DESCRIPTION	DATE	APR

DESIGNED BY: KGO
DATE: 29 OCTOBER 2007
DWN BY: KGO
SUBMITTED BY:
CHK BY: KMP
FILE NO.: AF060713-SB02DT

US Army Corps of Engineers
Afghanistan Engineer District

AFGHANISTAN NATIONAL POLICE (ANP) DISTRICT HEADQUARTERS COMPOUNDS – 1 STORY HQ
VARIOUS LOCATIONS, AFGHANISTAN
STANDARD DETAILS
STANDARD DETAILS

SHEET REFERENCE NUMBER:
SS–2

10/24/2007
S:\Engineering & Construction\Engineering\00_RFPs in-progress\ANP\ANP ON-Story Design\ANP Dist HQ 1Story Design Changes 26OCT07\Microstation Files\struct\AF060713-SB02DT.dgn

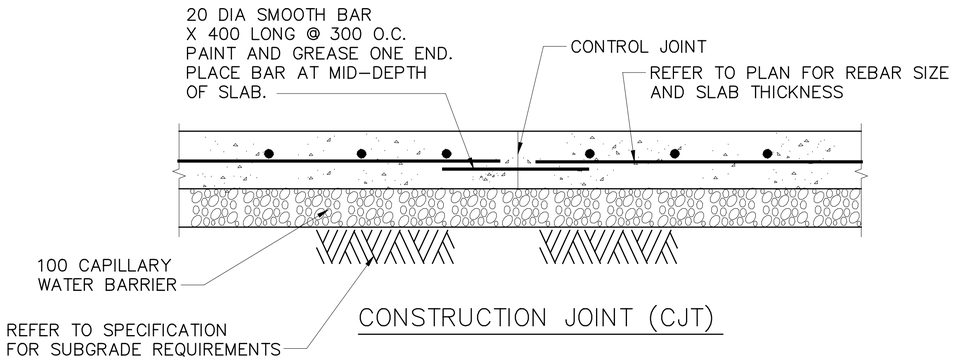

CONSTRUCTION JOINT (CJT)

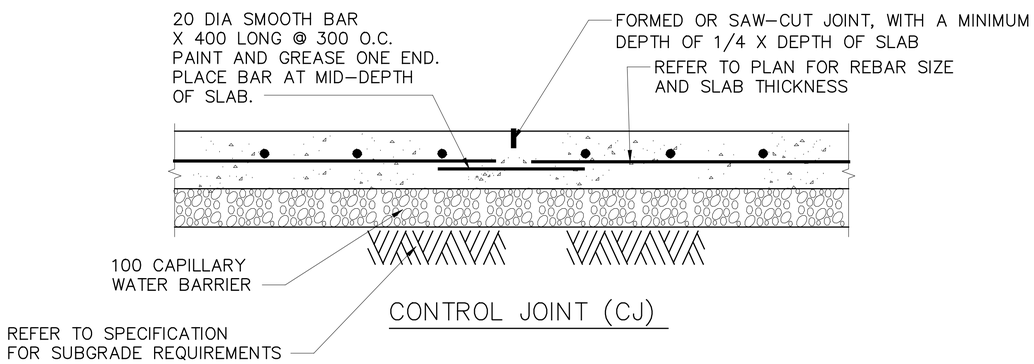

CONTROL JOINT (CJ)

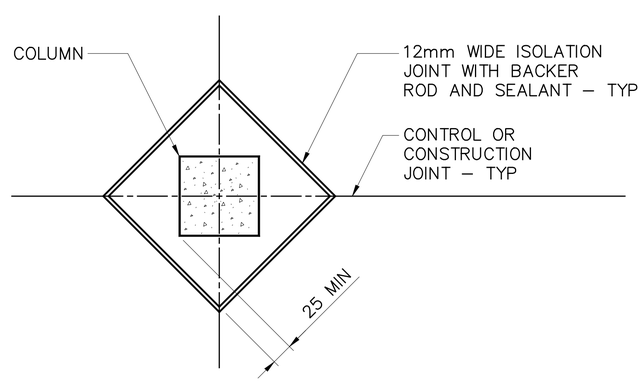

TYPICAL ISOLATION JOINT

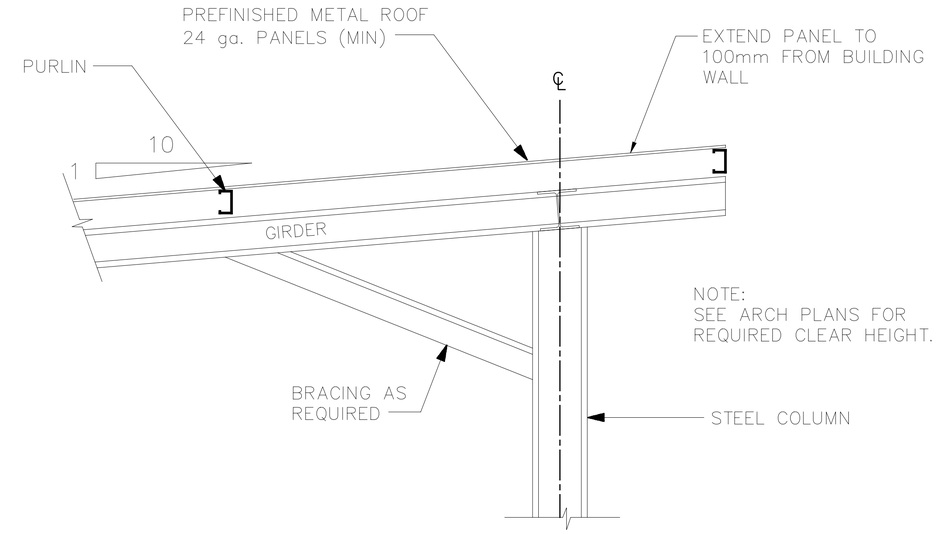

TYPICAL SUNSHADE FRAMING

SCALE= NONE

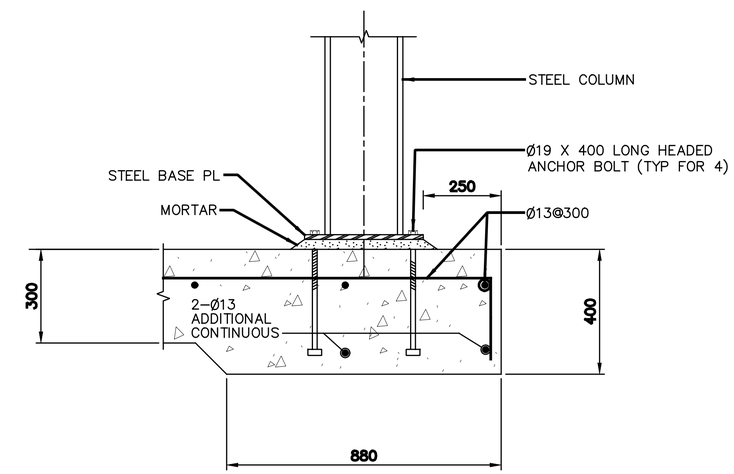

TYPICAL SUNSHADE COLUMN BASE

SCALE= NONE

TYPICAL SUNSHADE NOTES:

1. PER SPECIFICATION 01015, PARAGRAPH 3.6.6, DESIGN CALCULATIONS AND FABRICATION DRAWINGS FOR SUNSHADES SHALL BE SUBMITTED FOR APPROVAL.
2. FRAMING PLAN AND SECTION SHOWN ON THIS DRAWING ARE SCHEMATIC ONLY. ACTUAL MEMBER SIZES AND LAYOUT SHALL BE AS REQUIRED BY DESIGN CALCULATIONS.
3. REFER TO ARCHITECTURAL DRAWINGS FOR ADDITIONAL INFORMATION.

UNLESS OTHERWISE NOTED, LINEAR DIMENSIONS SHOWN ARE IN MILLIMETERS.

SYMBOL	DESCRIPTION	DATE	APR

DESIGNED BY: TCP
DWN BY: TCP
CHK BY: KGO
DATE: 29 OCTOBER 2007
SUBMITTED BY:
FILE NO.: AF06074-SB03DT

US Army Corps of Engineers
Afghanistan Engineer District

AFGHANISTAN NATIONAL POLICE (ANP) DISTRICT HEADQUARTERS COMPOUNDS – 1 STORY HQ
VARIOUS LOCATIONS, AFGHANISTAN
STANDARD DETAILS
DETAILS

SHEET REFERENCE NUMBER:
SS–3

10/24/2007
S:\Engineering & Construction\Engineering\00_RFPs in-progress\ANP\ANP 01-Story Design\ANP3Dist_HQ_1Story_Design_Changes_26Oct07\Microstation files\struct\AF06074-SB03DT.dgn

PIPING AND HVAC LEGEND

SYMBOL	DESCRIPTION
	THREE-WAY VALVE (ANY TYPE OF OPERATOR)
	GATE VALVE
	BALL VALVE
	GLOBE VALVE
	ANGLE GLOBE VALVE
	PRESSURE RELIEF VALVE
	PRESSURE-TEMPERATURE RELIEF VALVE
	BALANCING COCK
	BUTTERFLY VALVE
	CHECK VALVE
	UNION (SCREWED)
	PRESSURE CONTROL VALVE (SELF-CONTAINED)
S	SOLENOID VALVE
M	MOTOR OPERATED CONTROL VALVE
	AIR ELIMINATOR
AAV	AIR VENT, AUTOMATIC
	AIR VENT, MANUAL
	BACK PRESSURE VALVE
	PRESSURE REDUCING VALVE
	"Y" STRAINER
	AIR VALVE
	TEMPERATURE REGULATING VALVE
	EXPANSION VALVE, HAND
	EXPANSION VALVE, THERMOSTATIC
T	THERMOMETER, DIAL TYPE
T	THERMOMETER, VERTICAL TYPE
P	PRESSURE GAGE
	RISER DOWN (ELBOW)
	RISER UP (ELBOW)
	PITCH DOWN IN DIRECTION OF FLOW
	RISE OR DROP
CHS	CHILLED WATER SUPPLY
CHR	CHILLED WATER RETURN
C	CONDENSATE DRAIN

SYMBOL	DESCRIPTION
	BRANCH CONNECTION OUT OF TOP
	BRANCH CONNECTION OUT OF BOTTOM
	BRANCH CONNECTION OUT OF SIDE
	CAP ON END OF PIPE
	CONCENTRIC REDUCER
	ECCENTRIC REDUCER
	ANCHOR POINT
	FLEXIBLE CONNECTION
FS	FLOW SWITCH
	EXPANSION JOINT
	FLUSH VALVE
HB HB	HOSE BIBB
	WATER FIXTURE
	MIXING FAUCET COLD & HOT WATER
DV	DRAIN VALVE
	SIGHT GLASS
FM	FLOW METER
	PET COCK
	FLOW DIRECTION
	INLINE-PUMP
	CALIBRATED BALANCE VALVE
T	AQUASTAT
M	MOTOR OPERATED BUTTERFLY VALVE
	CEILING FAN
	OSCILATING WALL FAN

ABBREVIATIONS

AAV	AIR VENT AUTOMATIC
AC	AIR CONDITIONING UNIT
ACMH	ACTUAL CUBIC METERS PER HOUR
ACC	AIR COOLED CHILLER
ACCU	AIR COOLED CONDENSING UNIT
AF	AIR FILTER
AFF	ABOVE FINISHED FLOOR
AD	AREA DRAIN
AHU	AIR HANDLING UNIT
AP	ACCESS PANEL
BF	BOTTOM FLAT
BD	BALANCING DAMPER
BDD	BACKDRAFT DAMPER
BFP	BACKFLOW PREVENTER
BHP	BRAKE HORSEPOWER
BOD	BOTTOM OF DUCT
°C	DEGREES CELSIUS
CD	CEILING DIFFUSER
CF	CEILING FAN
CHW	CHILLED WATER
CLG	CEILING
CM	CENTIMETER
CMH	CUBIC METER PER HOUR
CONN	CONNECTION
CONT	CONTINUATION
CU	CONDENSING UNIT
CW	CHILLED WATER COOLING COIL
D	DROP/DEPTH
DB	DRY BULB
DET	DETAIL
DIA	DIAMETER
DH	DUCT HEATER
DIFF	DIFFERENTIAL
DG	DOOR GRILLE
DN	DOWN
DWG	DRAWING
DX	DIRECT EXPANSION
EA	EXHAUST AIR
EAT	ENTERING AIR TEMPERATURE
EDB	ENTERING DRY BULB
EDH	ELECTRIC DUCT HEATER
EF	EXHAUST FAN
EG	EXHAUST GRILLE
EH	ELECTRICAL CABINET HEATER
EL	ELEVATION
ELEC	ELECTRICITY/ELECTRICAL
EQUIP	EQUIPMENT
ER	EXHAUST REGISTER
EWB	ENTERING WET BULB
EWH	ELECTRIC WATER HEATER
EWT	ENTERING WATER TEMPERATURE
EXH	EXHAUST
EXT	EXTERNAL/EXTERIOR
FCO	FLOOR CLEAN OUT
FCU	FAN COIL UNIT
FCV	FLOW CONTROL VALVE
FD	FLOOR DRAIN/FIRE DAMPER
FIN	FINISHED
FL	FLOOR
FOS	FUEL OIL SUPPLY
FOR	FUEL OIL RETURN
FS	FLOOR SINK
FSD	COMBINATION FIRE/SMOKE DAMPER
GA	GAUGE
HB	HOSE BIBB
HC	HEATING COIL
HORIZ	HORIZONTAL
HP	HORSEPOWER
HR	HOUR
HVAC	HEATING, VENTILATING & AIR CONDITIONING
HZ	HERTZ
ID	INSIDE DIAMETER
IH	INTAKE HOOD
IS	INERTIAL SEPARATOR
INV.EL.	INVERT ELEVATION
KG	KILOGRAM
KH	KITCHEN HOOD
KW	KILOWATT
KPa	KILO PASCALS

LAT	LEAVING AIR TEMPERATURE
LAV	LAVATORY
LFACP	LOCAL FIRE ALARM CONTROL PANEL
LPM	LITERS PER MINUTE
LPH	LITERS PER HOUR
LS	LEVEL SWITCH
LVG	LEAVING
LVR	LOUVER
M	METER
M^2	SQUARE METER
M^3	CUBIC METER
MAX	MAXIMUM
MECH	MECHANICAL
MIN	MINIMUM
MISC	MISCELLANEOUS
MM	MILLIMETER
MVD	MANUAL VOLUME DAMPER
NC	NORMALLY CLOSED
NFPA	NATIONAL FIRE PROTECTION ASSOCIATION
NO	NORMALLY OPEN/NUMBER
NOM	NOMINAL
NTS	NOT TO SCALE
OA	OUTSIDE AIR
OC	ON CENTER
OD	OVERFLOW DRAIN
OI	OIL INTERCEPTOR
OWF	OSCILATING WALL FAN
ϕ	PHASE
P	PUMP
PD	PRESSURE DIFFERENTIAL
PH	PROPANE SPACE HEATER
PRESS	PRESSURE
PRV	PRESSURE REDUCING VALVE
PS	PRESSURE SWITCH
QTY	QUANTITY
R	RISE
RA	RETURN AIR
RC	REFRIGERATION COOLER
RD	ROOF DRAIN
REQD	REQUIRED
RF	RETURN FAN
RG	RETURN GRILLE
RH	RELATIVE HUMIDITY
RL	REFRIGERANT LIQUID
RM	ROOM
RPM	REVOLUTIONS PER MINUTE
RR	RETURN REGISTER
RS	REFRIGERANT SUCTION
S	SOIL/SOUTH/SECOND
SA	SUPPLY AIR
SD	SUPPLY AIR DIFFUSER
SENS	SENSIBLE
SF	SUPPLY FAN
SG	SUPPLY GRILLE
SH	SHEET
SMACNA	SHEET METAL AND AIR CONDITIONING CONTRACTORS NATIONAL ASSOCIATION
SOV	SHUT-OFF VALVE
SP	STATIC PRESSURE
SQ FT	SQUARE FOOT/SQUARE FEET
SR	SUPPLY REGISTER
SST	SATURATED SUCTION TEMPERATURE
TCP	TEMPERATURE CONTROL PANEL
TCV	TEMPERATURE CONTROL VALVE
TEMP	TEMPERATURE
TG	TRANSFER GRILLE
TK	TANK
TP	TRAP PRIMER
TYP	TYPICAL
UC	UNDERCUT DOOR
UH	UNIT HEATER
UL	UNDERWRITER'S LABORATORIES
V	VOLTS
VEL	VELOCITY
VH	VENT HOOD
WCCU	WATER COOLED CONDENSING UNIT
WG	WATER GAGE

GENERAL NOTES:

1. SEE ARCHITECTURAL DRAWINGS FOR EXACT LOCATION OF LOUVERS, EQUIPMENT PADS AND SUPPORT PLATFORMS.
2. SEE ARCHITECTURAL REFLECTED CEILING PLAN FOR EXACT LOCATION OF DIFFUSERS, REGISTERS, AND GRIILLES.
3. INSULATE DUCTWORK AND REFRIGERANT PIPING SYSTEMS IN ACCORDANCE WITH SPEC. SECTION 01015, THERMAL INSULATION FOR MECHANICAL SYSTEMS.
4. ALL DIMENSIONS SHOWN IN mm UNLESS INDICATED OTHERWISE.
5. ALL DUCT DIMENSIONS SHOWN ON THE DRAWINGS ARE CLEAR INSIDE DIMENSIONS.
6. MOUNT WALL THERMOSTATS 1.5M ABOVE FINISHED FLOOR.
7. OUTDOOR CONDENSING UNITS SHALL BE INSTALLED ON 300 HIGH STEEL PLATFORM ON A CONCRETE PAD AND PROVIDED WITH VIBRATION PADS.

CONTROL LEGEND

SYMBOL	DESCRIPTION
M	MOTORIZED CONTROL DAMPER
	CONTROL CONNECTION
S/S	START/STOP CONTROL
H	HUMIDISTAT, TWO POSITION
Hm	HUMIDISTAT, MODULATING
H	HUMIDITY SENSOR
SD	SMOKE DETECTOR
T_2	THERMOSTAT, TWO POSITION
T	SPACE THERMOSTAT
FS	FLOW SWITCH
TI	TEMPERATURE INDICATOR
T_S	SPACE TEMPERATURE SENSOR

UNLESS OTHERWISE NOTED, LINEAR DIMENSIONS SHOWN ARE IN MILLIMETERS.

SYMBOL	DESCRIPTION	DATE	APR

DESIGNED BY: RMS
DWN BY: RMS
CHK BY: SE
DATE: 29 OCTOBER 2007
SUBMITTED BY:
FILE NO.: AF06073-MH01GN

US Army Corps of Engineers
Afghanistan Engineer District

AFGHANISTAN NATIONAL POLICE (ANP) DISTRICT HEADQUARTERS COMPOUNDS – 1 STORY HQ
VARIOUS LOCATIONS, AFGHANISTAN
STANDARD DETAILS
LEGENDS AND ABBREVIATIONS

SHEET REFERENCE NUMBER:
SM-1

10/23/2007
S:\Engineering & Construction\Engineering\00_RFPs in-progress\ANP\ANP ONE-Story Design\ANP Dist HQ 1Story Design Changes 26OCT07\Microstation Files\mech\AF06073MH01GN.dgn

ELECTRIC CABINET/UNIT HEATER SCHEDULE

EH X–X | UH X–X

EQUIPT. NO.	LOCATION (1)	DISCHARGE	CAPACITY (KW)	AIR FLOW (CMH)	ELECTRICAL DATA HP	VOLTS	PH	HZ	TEMP. RISE DEG C	SOUND POWER dBA	REMARKS
EH–A–1	CHIEF'S TOILET	HORIZONTAL	1.5	136	50 W	220	1	50	30		WALL MOUNTED CABINET HEATER
EH–A–2	TOILETS (2)	HORIZONTAL	1	68	40 W	220	1	50	40		WALL MOUNTED CABINET HEATER
UH–A–1	TOILETS/ SHOWERS	HORIZONTAL	3.0	510	1/20	220	1	50	17		WALL MOUNTED UNIT HEATER SEE DETAIL C ON SHT. SM3.
UH–C–1	GUARD SHACK	HORIZONTAL	4	425	1/30	220	1	50	10		FLOOR MOUNTED CABINET HEATER
UH–E–1	WELL HOUSE	HORIZONTAL	3.0	510	1/20	220	1	50	17		WALL MOUNTED UNIT HEATER SEE DETAIL C ON SHT. SM3.

(1) SEE PLANS FOR LOCATION AND QUANTITY.

EXHAUST FAN SCHEDULE

EF A–X

EQUIPT. NO.	LOCATION	AIR QUANTITY CMH	S.P. MM–W.G.	FAN TYPE	ELECTRICAL DATA HP	VOLTS	PH	HZ	CONTROL DIAGRAM	SOUND POWER dWA	REMARKS
EF–A–1	CHIEF'S TOILET	170	7	CEILING CABINET	80 WATTS	220	1	50	E1	50	CEILING MOUNTED WITH GRAVITY BACKDRAFT DAMPER AND CEILING GRILL
EF–A–2	TOILETS (3)	85	7	CEILING CABINET	80 WATTS	220	1	50	E1	50	CEILING MOUNTED WITH GRAVITY BACKDRAFT DAMPER AND CEILING GRILL
EF–A–3	PRISONER CELLS	510	7	WALL CENTRIFUGAL	1/12	220	1	50	E2	50	WALL MOUNTED WITH BACKDRAFT DAMPER
EF–A–4	MEN'S TOILET	510	7	WALL CENTRIFUGAL	1/12	220	1	50	E2	50	WALL MOUNTED WITH BACKDRAFT DAMPER
EF–A–5	KITCHEN	3,300	14	ROOF CENTRIFUGAL UPBLAST	3/4	220	1	50	E2	65	RATED FOR 175° C AND KITCHEN HOOD
EF–A–6	KITCHEN	1,700	8	WALL CENTRIFUGAL	1/4	220	1	50	E4	60	WALL MOUNTED WITH BACKDRAFT DAMPER
EF–E–1	WELL HOUSE	600	10	WALL CENTRIFUGAL	1/4	220	1	50	E4	65	WALL MOUNTED WITH BACKDRAFT DAMPER
SF–A–1	KITCHEN	3,300	8	INLINE CENTRIFUGAL	1/2	220	1	50	E2	60	CEILING MOUNTED W/GRAVITY BACKDRAFT DAMPER

CEILING AND OSCILLATING WALL FAN SCHEDULE

CF A–1 | OWF A–1

EQUIPT. NO.	AIR QUALITY CMH	FAN TYPE	ELECTRICAL DATA HP	VOLTS	PH	HZ	REMARKS
CF–A–1	13,600	CEILING FAN	85 WATTS	220	1	50	CEILING MOUNTED
OWF-A-1	5,000	OSCILLATING WALL FAN	1/4	220	1	50	WALL MOUNTED

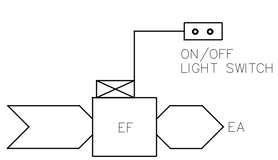

TEMPERATURE CONTROL DIAGRAM E1

E1 SEQUENCE OF CONTROL

START–UP

THE EXHAUST FAN SHALL BE STARTED MANUALLY FROM A LOCAL START/STOP LIGHT SWITCH.

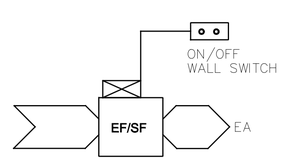

TEMPERATURE CONTROL DIAGRAM E2

E2 SEQUENCE OF CONTROL

START–UP

THE EXHAUST/SUPPLY FAN SHALL BE STARTED MANUALLY FROM A LOCAL START/STOP LIGHT SWITCH.

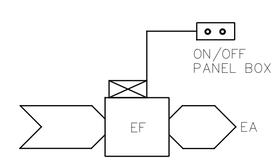

TEMPERATURE CONTROL DIAGRAM E3

E3 SEQUENCE OF CONTROL

START–UP

THE EXHAUST FAN SHALL BE STARTED MANUALLY FROM AN THE ON–OFF SWITCH IN THE PANEL BOX.

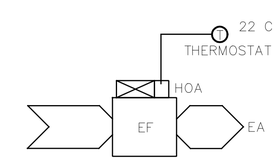

TEMPERATURE CONTROL DIAGRAM E4

E4 SEQUENCE OF CONTROL

START–UP

THE EXHAUST FAN SHALL BE STARTED MANUALLY BY PLACING THE HAND–OFF–AUTO (HOA) SWITCH IN THE HAND POSITION. IN THE AUTO POSITION, FAN OPERATION SHALL BE CONTROLLED OFF AN ADJUSTABLE THERMOSTAT.

SYMBOL	DESCRIPTION	DATE	APR

DESIGNED BY: RMS | DATE: 29 OCTOBER 2007
DWN BY: JRP | SUBMITTED BY:
CHK BY: JLK | FILE NO.: AF06073–MH02SC

US Army Corps of Engineers
Afghanistan Engineer District

AFGHANISTAN NATIONAL POLICE (ANP) DISTRICT HEADQUARTERS COMPOUNDS – 1 STORY HQ
VARIOUS LOCATIONS, AFGHANISTAN
STANDARD DETAILS
MECHANICAL SCHEDULES

SHEET REFERENCE NUMBER:
SM–2

10/23/2007
S:\Engineering & Construction\Engineering\00_RFPs in-progress\ANP\ANP 01-Story Design\ANP Dist HQ 1Story Design Changes 26Oct07\Microstation files\mech\AF06073-MH02SC.dgn

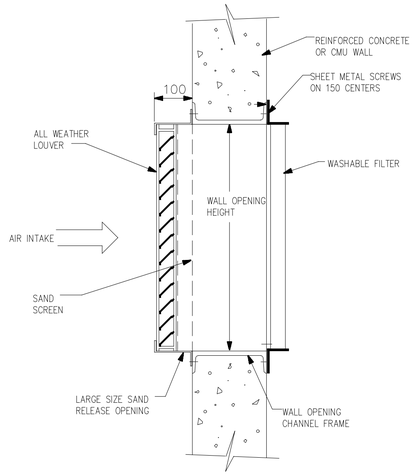

SAND TRAP TYPE LOUVER (A / SM3)
NOT TO SCALE

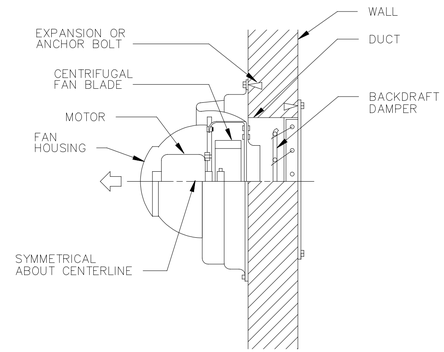

POWER WALL VENTILATOR DETAIL (B / SM3)
NOT TO SCALE

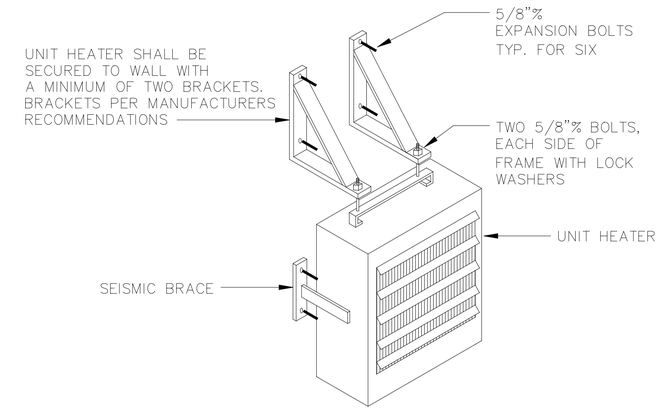

ELECTRIC UNIT HEATER DETAIL (C / SM3)
NOT TO SCALE

NOT USED (D / SM3)

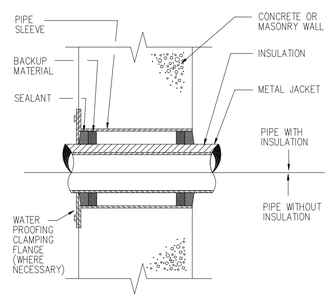

PIPE SLEEVE THRU WALL (E / SM3)
NOT TO SCALE

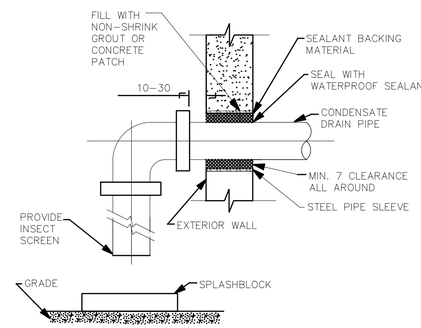

CONDENSATE DRAIN THRU EXTERIOR WALL (F / SM3)
NOT TO SCALE

NOT USED (G / SM3)
NOT TO SCALE

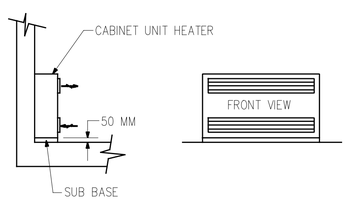

CABINET UNIT HEATER (H / SM3)
NOT TO SCALE

UNLESS OTHERWISE NOTED, LINEAR DIMENSIONS SHOWN ARE IN MILLIMETERS.

SYMBOL	DESCRIPTION	DATE	APR

DESIGNED BY: RMS
DWN BY: RMS
CHK BY: SE
DATE: 29 OCTOBER 2007
SUBMITTED BY:
FILE NO.: AF06074-MH03DT

US Army Corps of Engineers
Afghanistan Engineer District

AFGHANISTAN NATIONAL POLICE (ANP) DISTRICT HEADQUARTERS COMPOUNDS – 1 STORY HQ
VARIOUS LOCATIONS, AFGHANISTAN
STANDARD DETAILS
MECHANICAL STANDARD DETAILS

SHEET REFERENCE NUMBER:
SM–3

10/24/2007
S:\Engineering & Construction\Engineering\00_RFPs in-press\ANP\ANP ON-Story Design\ANP Dist HQ 1Story Design Changes 26Oct07\Microstation files\mech\AF06074MH03DT.dgn

LEGEND

- GATE VALVE
- GLOBE VALVE
- BUTTERFLY VALVE
- CHECK VALVE
- STOP CHECK VALVE
- PLUG VALVE
- 3-WAY VALVE
- RELIEF OR SAFETY VALVE
- ANGLE VALVE
- ANGLE GLOBE VALVE
- BALANCING COCK
- AIR VALVE
- HOSE GATE DRAIN VALVE
- EXPANSION VALVE
- AAV — AIR VENT, AUTOMATIC
- AIR VENT, MANUAL
- M — MOTORIZED VALVE (MODULATING OR TWO POSITION)
- S — SOLENOID VALVE
- M — 3-WAY MOTORIZED VALVE (MOD. OR 3-POSITION)
- S — 3-WAY SOLENOID VALVE
- TEMPERATURE REGULATING VALVE
- AIR ELIMINATOR
- BACK PRESSURE VALVE
- PRESSURE REDUCING VALVE
- D.V. — DRAIN VALVE
- SLEEVE COUPLING (SC)
- BP — BACKFLOW PREVENTER
- WHA 'A' — WATER HAMMER ARRESTOR

LEGEND

- P — PRESSURE GAUGE
- T — THERMOMETER, DIAL TYPE
- T — THERMOMETER, VERTICAL TYPE
- H.B. — HOSE BIBB, PLAN
- H.B. — HOSE BIBB, ELEV.
- W.H. — WALL HYDRANT
- CO — EXPOSED CLEANOUT
- FCO — FLOOR CLEANOUT
- WCO — WALL CLEANOUT
- BALL VALVE
- UNION
- FLANGE SET
- FLEXIBLE HOSE/CONNECTION
- Y-TYPE STRAINER
- SIGHT GLASS
- GAUGE GLASS W/COCKS
- FILTER / DRYER
- TANK AIR CONTROL FITTING
- CAPPED / PLUGGED CONNECTION
- REDUCER - INCREASER
- EXPANSION LOOP
- EXPANSION JOINT
- SUPPORT LOCATION
- PIPE TURNING DOWN
- PIPE TURNING UP
- FD — FLOOR DRAIN
- ROOF DRAIN
- POINT OF CONNECTION TO EXISTING SYSTEM

LEGEND

- A — COMPRESSED AIR DROP
- HU — HUMIDIFIER
- I.F. — INSULATING FLANGE
- THERMAL RELIEF VALVE W/ SIGHT FLOW INDICATOR
- S — BASKET STRAINER
- W — WATER METER
- TS — FLOW CONTROL VALVE
- SAMPLE CONNECTION
- FIRE SAFETY VALVE
- R — NON - SURGE CHECK VALVE
- FLOW CONTROL VALVE
- P — PRESSURE REGULATING VALVE
- W — WATER SLUG VALVE (WSV)

ABBREVIATIONS

A A	AMERICAN DISABILITIES ACT
CO	EXPOSED CLEAN OUT
CW	COLD WATER
EWH	ELECTRIC WATER HEATER
FCO	FLOOR CLEAN OUT
FD	FLOOR DRAIN
FFE	FINISHED FLOOR ELEVATION
FS	FLOOR SINK
GWH	GAS WATER HEATER
HB	HOSE BIBB
HW	HOT WATER
HWR	HOT WATER CIRCULATION
N.C.	NORMALLY CLOSED
P	PUMP
S.R.	SHORT RADIUS
S.S.	STAINLESS STEEL
V	VENT
VTR	VENT THROUGH ROOF
W	WASTE
WCO	WALL CLEAN OUT
WH	WALL HYDRANT

- SOIL OR WASTE PIPE ABOVE FLOOR
- SOIL OR WASTE PIPE BELOW FLOOR (MIN. 50 SIZE)
- COLD WATER, DOMESTIC (PLAN)
- HOT WATER, DOMESTIC (PLAN)
- HOT WATER, CIRCULATION, DOMESTIC (PLAN)
- VENT PIPE
- C — CONDENSATE DRAIN
- CA — COMPRESSED AIR
- HPIW — HIGH PRESSURE INDUSTRIAL WATER
- IW — INDUSTRIAL WATER

EQUIPMENT DESIGNATION

EF — EQUIPMENT TYPE
A-1 — EQUIPMENT NUMBER
BUILDING NUMBER

DETAIL REFERENCE

X — REFERENCE DESIGNATION LETTER
X — DETAIL SHEET LOCATION

PLUMBING FIXTURE SCHEDULE

FIX. NO.	SYMBOL	FIXTURE NAME	C.W.	H.W.	WASTE (W)	VENT (V)	REMARKS
P1		EASTERN WATER CLOSET (FLUSH TANK)	15	--	100	50	CW CONNECTION SHALL BE 25 UNLESS NOTED OTHERWISE. FLOOR OUTLET
P2		ABOLUTION (2 STATION)	15	--	50	32	(2) COMPLETE WALL MOUNTED LAVATORY VALVE ASSEMBLIES AND TRIM MOUNTED 600mm A.F.F.
P3		LAVATORY	15	15	32	32	
P3A		LAVATORY (2 STATION GANG)	15	15	32	32	
P4		MOP SINK (FLOOR MOUNT JANITOR TYPE)	15	15	50	40	DRAIN ON FLOOR OR AS INDICATED
P5		SHOWER	15	15	40	32	
P6		NOT USED					
P7		NOT USED					
P8		NOT USED					
P9		KITCHEN SINK	15	15	40	32	
P10		GREASE INTERCEPTOR			80	50	MANUAL CLEANING TYPE, WITH 135 LPM FLOW RATE

WATER HAMMER ARRESTOR SIZING CHART

P.D.I. SYMBOL	FIXTURE UNIT RATING	NIPPLE SIZE (MM)	CHAMBER HEIGHT (MM)
A	1-11	20	100
B	12-32	25	125
C	33-60	25	150
D	61-113	25	175
E	114-154	25	200
F	155-330	25	225

P. D. I. = PLUMBING AND DRAINAGE INSTITUTE.

GENERAL NOTES:

1. DRAINAGE PIPING LOCATED BELOW FLOORS SHALL BE ROUTED BELOW FOOTINGS UNLESS INDICATED OTHERWISE.
2. INTERIOR SOIL AND WASTE PIPING 80mm AND SMALLER SHALL BE ROUTED WITH A 2% SLOPE. INTERIOR SOIL AND WASTE PIPING 100mm AND LARGER SHALL BE ROUTED WITH A MINIMUM 1% SLOPE.
3. ALL DIMENSIONS SHOWN HERE AND ON PLANS ARE IN MM UNLESS INDICATED OTHERWISE.
4. MINIMUM BURIED PIPE SIZE SHALL BE 50 mm.
5. SEE STANDARD SHEET SM-1 FOR ADDITIONAL ABBREVIATIONS.
6. FOR FOOD SERVICE EQUIPMENT DESCRIPTION, SEE ARCHITECTURAL DRAWINGS.

SYMBOL	DESCRIPTION	DATE	APR

DESIGNED BY: RMS
DATE: 29 OCTOBER 2007
DWN BY: JLK
SUBMITTED BY:
CHK BY: JLK
FILE NO.: AF0607$--MP01GN

US Army Corps of Engineers
Afghanistan Engineer District

AFGHANISTAN NATIONAL POLICE (ANP) DISTRICT HEADQUARTERS COMPOUNDS – 1 STORY HQ
VARIOUS LOCATIONS, AFGHANISTAN
STANDARD DETAILS
LEGEND AND ABBREVIATIONS

SHEET REFERENCE NUMBER:
SP–1

10/24/2007
S:\Engineering & Construction\Engineering\00_RFPs in-progress\ANP\ANP ONE-Story Design\ANP Dist HQ 1Story Design Changes 26Oct07\Microstation Files\mech\AF0607$MP01GN.dgn

NOTES:
1. PIPING SHALL BE PLASTIC PVC TO MATCH WATER DISTRIBUTION SYSTEM.
2. CONTRACTOR SHALL INSTALL DIELECTRIC UNION BETWEEN CONNECTIONS OF DISSIMILAR METALS.

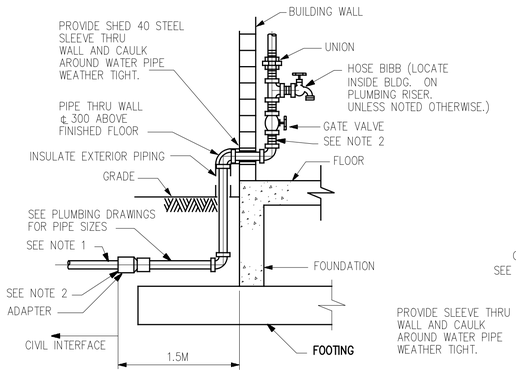

WATER SERVICE ENTRANCE SIDE VIEW

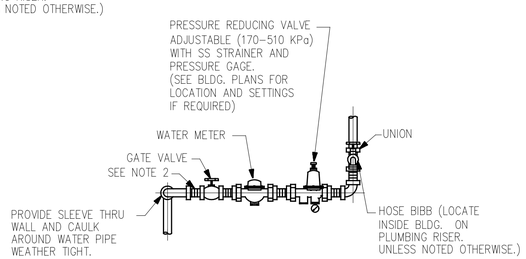

WATER SERVICE ENTRANCE FRONT VIEW

WATER SERVICE ENTRANCE DETAILS (A / SP2)
NOT TO SCALE

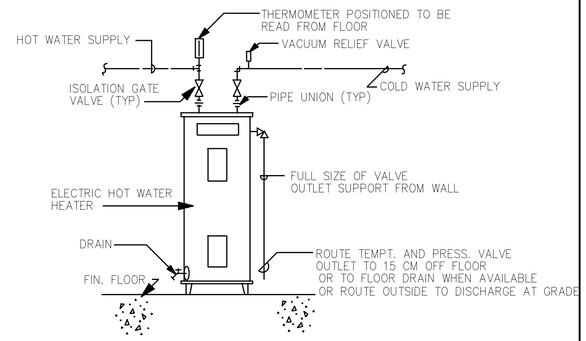

ELECTRIC WATER HEATER DETAIL (B / SP2)
NOT TO SCALE

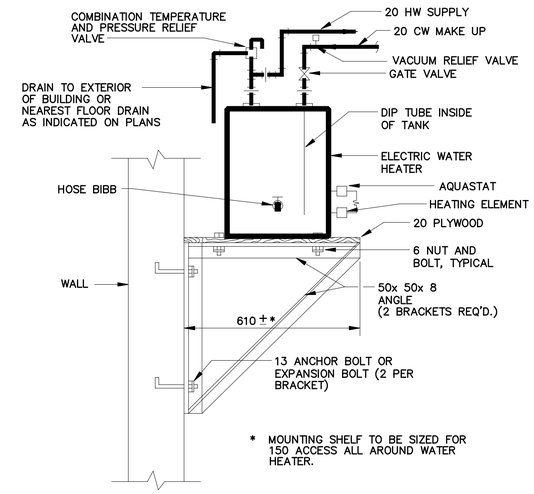

IF WATER HEATER COMES EQUIPPED WITH A MOUNTING BRACKET, CONTRACTOR WILL SUBMIT TO THE ENGINEER FOR APPROVAL, ALTERNATE INSTALLATION DETAIL AS RECOMMENDED BY HEATER MANUFACTURER FOR THE TYPE OF WALL (CMU,METAL STUD, ETC.) APPLICABLE

WALL MOUNTED ELECTRIC WATER HEATER DETAIL (C / SP2)
NOT TO SCALE

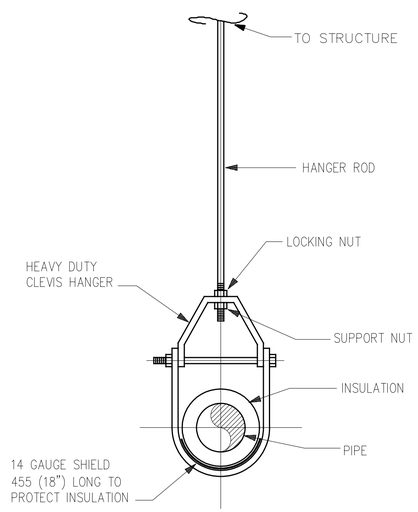

CLEVIS HANGER DETAIL (D / SP2)
NOT TO SCALE

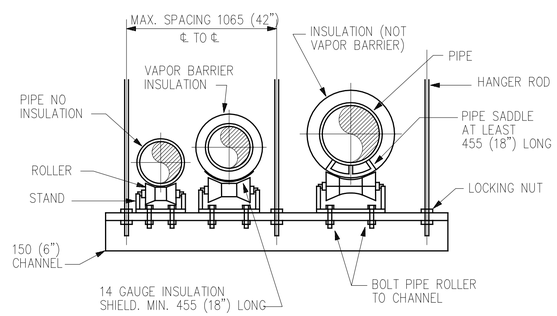

TRAPEZE HANGER DETAIL (E / SP2)
NOT TO SCALE

NOT USED (F / SP2)
NOT TO SCALE

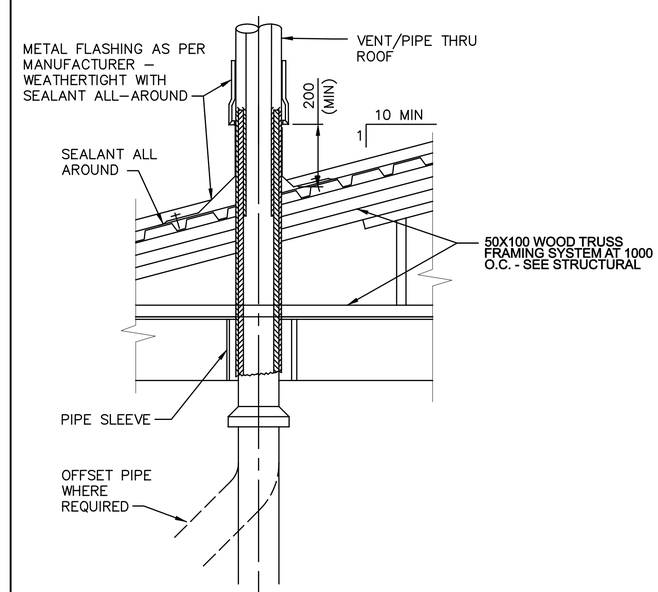

VENT THRU ROOF DETAIL (G / SP2)
NOT TO SCALE

UNLESS OTHERWISE NOTED, LINEAR DIMENSIONS SHOWN ARE IN MILLIMETERS.

SYMBOL	DESCRIPTION	DATE	APR

DESIGNED BY: RMS
DWN BY: RMS
CHK BY: SE
DATE: 29 OCTOBER 2007
SUBMITTED BY:
FILE NO.: AF06074-MP02DT

US Army Corps of Engineers
Afghanistan Engineer District

AFGHANISTAN NATIONAL POLICE (ANP) DISTRICT HEADQUARTERS COMPOUNDS – 1 STORY HQ
VARIOUS LOCATIONS, AFGHANISTAN
STANDARD DETAILS
STANDARD PLUMBING DETAILS

SHEET REFERENCE NUMBER:
SP–2

10/24/2007
S:\Engineering & Construction\Engineering\00 RFPs in-process\ANP\ANP ON 1-Story Design\AN Dist HQ 1Story Design Changes 26Oct07\Microstation files\mech\AF06074MP02DT.dgn

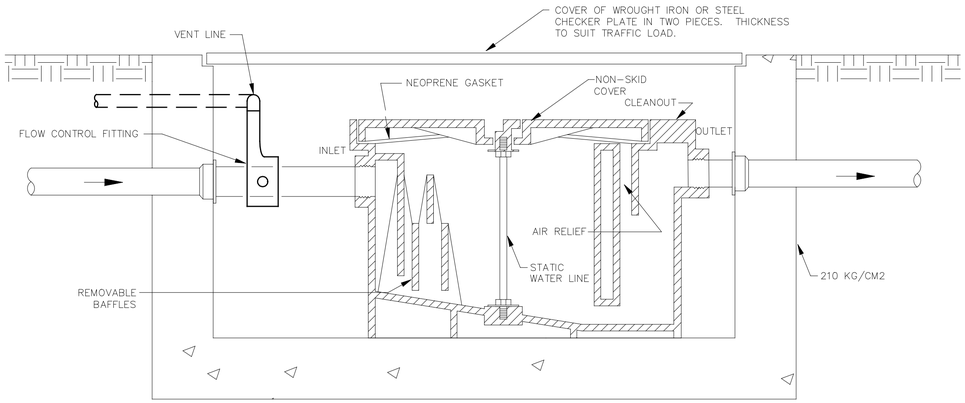

FLOW – 135 LPM
GREASE CAPACITY – 22 KG

GREASE INTERCEPTOR DETAIL (A / SP3)
NOT TO SCALE

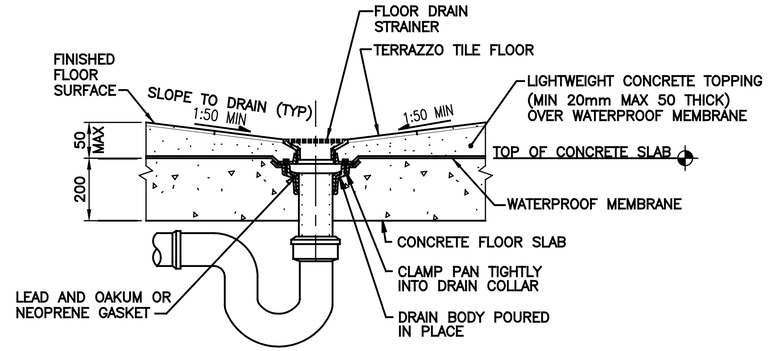

TYPICAL FLOOR DRAIN DETAIL (B / SP3)
NOT TO SCALE

UNLESS OTHERWISE NOTED, LINEAR DIMENSIONS SHOWN ARE IN MILLIMETERS.

SYMBOL	DESCRIPTION	DATE	APR

DESIGNED BY: RMS
DATE: 29 OCTOBER 2007
DWN BY: RMS
SUBMITTED BY:
CHK BY: SE
FILE NO.: AF06073-MP03DT

US Army Corps of Engineers
Afghanistan Engineer District

AFGHANISTAN NATIONAL POLICE (ANP) DISTRICT HEADQUARTERS COMPOUNDS – 1 STORY HQ
VARIOUS LOCATIONS, AFGHANISTAN
STANDARD DETAILS
STANDARD PLUMBING DETAILS

SHEET REFERENCE NUMBER:
SP–3

10/24/2007
S:\Engineering & Construction\Engineering\00_RFPs in-process\ANP\ANP_ON_1-Story Design\AND Dist HQ 1Story Design Changes 26Oct07\Microstation Files\mech\AF06073MP03DT.dgn

LEGEND

- FLUORESCENT LIGHT FIXTURE,
- LIGHT FIXTURES, FIXTURE MARK AS INDICATED
- EXIT SIGN, TYPE F FIXTURE, MTD 2.2M AFF
- EMERGENCY LIGHT, TYPE C FIXTURE, MTD 2.4M AFF
- WP,S — DUPLEX SOCKET OUTLET (13A, 250V), BS 1363
  S – A/C OR WATER HEATER SWITCH–RECEPTACLE COMBINATION
  WP – WEATHERPROOF
- J — JUNCTION BOX
- S3,WP — SWITCH, WP–WEATHERPROOF, 3–3 WAY, EP–EXPLOSION PROOF
- S — LIGHT SWITCH
- SF — EXHAUST FAN SWITCH
- SCF — CEILING FAN SWITCH
- 20 — SAFETY DISCONNECT SWITCH, SWITCH SHALL BE 1P56 ENCLOSURE, 20A UNO
- 1/3 — MOTOR (1/3 HP)
- SM — MANUAL MOTOR STARTER
- ELECTRIC CABINET/ UNIT HEATER
- EWH — ELECTRIC WATER HEATER
- LP–2 — HOMERUN, PNL LP, CIRCUIT 2
- LP–2 — HOMERUN, PNL LP, 3PH CKT, CIRCUIT 2
- COMBINATION LIGHTING AND POWER PANEL (LP), OR LOAD CENTER (LC)
- 400AT / 600AF — 3 POLE, 600A ADJUSTABLE TRIP CIRCUIT BREAKER
- 150AT / 3P — 3 POLE, 150A CIRCUIT BREAKER
- COMBINATION TELEPHONE/DATA OUTLET. SEE DETAIL SHEET SE–5 MOUNTED 0.5M AFF
- W — SINGLE TELEPHONE ONLY OUTLET, WALL MOUNTED 1.2m AFF
- TBB — TELEPHONE BACK BOARD (TVBB INDICATES TELEVISION BACKBOARD) (1200mmx600mmx12mm)UNLESS NOTED OTHERWISE
- EXOTHERMIC WELDED GROUND CONNECTION
- GROUND ROD (EARTH ELECTRODE) WITH EXOTHERMIC WELD CONNECTION, COPPER, 20mm DIA X 3.0m LENGTH
- EM 1 — ELECTRIC POWER MANHOLE, H INDICATES HANDHOLE.
- CM 1 — COMMUNICATIONS MANHOLE, H INDICATES HANDHOLE.
- SE — UNDERGROUND SECONDARY DISTRIBUTION POWER LINE, DIRECT BURIED IN SCHEDULE 40 PVC C, UNO
- UNDERGROUND DIRECT BURIED SCH 40 PVC C, AS INDICATED, 600 BFG, UNO

GENERAL NOTES:

1. REFER TO SECTION 01015 FOR ADDITIONAL / DETAIL REQUIREMENTS.
2. ALL WIRING INSTALLATION FOR LIGHTING, POWER, AND TELECOMMUNICATIONS, SHALL BE IN APPROVED METAL CONDUIT, EITHER CONCEALED OR SURFACE MTD.
3. EXIT AND EMERGENCY LIGHTING FIXTURES SHALL BE CONNECTED TO AN UN SWITCHED POWER CIRCUIT.
4. MOUNTING HEIGHT FOR ALL PENDANT MTD LIGHT FIXTURE IS 3M AFF UNO ON THE DRAWINGS OR IN THE LIGHT FIXTURE SCH.
5. MOUNT ALL LIGHT AND FAN SWITCHES 1.2M AFF UNO.
6. MOUNT ALL RECEPTACLES 500 AFF UNO. MOUNT ALL COUNTER TOP RECEPTACLES 100 ABOVE COUNTER TOP, AND PROVIDE GFI PROTECTION.
7. ALL SPARE OR EMPTY CONDUITS SHALL HAVE A PULL STRING SECURED AT BOTH ENDS OF CONDUIT.
8. ALL ELECTRICAL SYSTEMS SHALL BE INSTALLED IN ACCORDANCE WITH THE MANUFACTURERS RECOMMENDATIONS AND THE NEC.
9. BOND LIGHTING PROTECTION GROUND SYSTEMS TO BUILDING ELECTRICAL GROUND SYSTEM PER NEC 250.16

LIGHTING FIXTURE SCHEDULE

* SEE LIGHTING FIXTURE DETAILS ON DRAWINGS SE–2 & SE–3

FIXTURE MARK	LINE VOLT.	TYPE	LAMPS NO.	LAMPS WATTAGE	MOUNTING	REMARKS
A	240	230B1	3	40	SURFACE/PENDANT	INDUSTRIAL FLUORESCENT, WITH ELECTRONIC BALLAST
A1	240	230A1	2	40	SURFACE/PENDANT	INDUSTRIAL FLUORESCENT, WITH ELECTRONIC BALLAST
B	240	232	2	40	SURFACE/PENDANT	VAPORTIGHT FLUORESCENT
E	240	–	1	1000	ROOF	SPOT LIGHT
H	240	SF–11	1	100	SURFACE	VAPOR PROOF PROTECTED INCANDESCENT WITH CLEAR, RED, BLUE,AND BLACK GLOBE LAMPS ON THE DRAWINGS

ABBREVIATIONS

AFG	ABOVE FINISHED GRADE
AFF	ABOVE FINISHED FLOOR
AF	AMP FRAME
AT	AMP TRIP
ACCU	AIR COOLED CONDENSING UNIT
A	AMPERE
AHU	AIR HANDLING UNIT
AIC	AMPERE INTERRUPTING CAPACITY
BFG	BELOW FINISHED GRADE
CH	COMMUNICATIONS HANDHOLE
CKT	CIRCUIT
CM	COMMUNICATIONS MANHOLE
CND	CONDUCTOR(S)
C	CONDUIT
COR	CONTRACTING OFFICERS REPRESENTATIVE
EF	EXHAUST FAN
EH	ELECTRIC POWER HANDHOLE
EM	ELECTRIC POWER MANHOLE
EP	EXPLOSION PROOF
ELCB	EARTH LEAKAGE CIRCUIT BREAKER
FACP	FIRE ALARM CONTROL PANEL
GFI	GROUND FAULT INTERRUPTING
GFCI	GOVERNMENT FURNISHED CONTRACTOR INSTALLED
HP	HORSEPOWER
HPS	HIGH PRESSURE SODIUM
HZ	HERTZ
KV	KILOVOLT
KW	KILOWATT
KVA	KILOVOLT–AMPERE
M	METERS
MBB	METERING BACK BOARD
MDF	MAIN DISTRIBUTION FRAME
MEW	HOST NATION MINISTRY OF ELECTRICITY AND WATER
MTD	MOUNTED
NEC	NATIONAL ELECTRICAL CODE
NFPA	NATIONAL FIRE PROTECTION ASSOCIATION
NIC	NOT IN CONTRACT
PH, Ø	PHASE
P	POLE
XXX	HOST NATION ARMED FORCES
TEL	TEL CO.
RM	ROOM
SCH	SCHEDULE
SN	SOLID NEUTRAL
TBB	TELEPHONE TERMINAL BACKBOARD
TCB	TELEPHONE CONNECTION BOX (BY TEL CO)
TYP.	TYPICAL
UNO	UNLESS NOTED OTHERWISE
V	VOLT
W	WIRE
WP	WEATHERPROOF
XFMR,T	TRANSFORMER

EQUIVALENT CONDUIT SIZE

mm	INCHES
20	3/4
25	1
32	1 1/4
38	1 1/2
50	2
60	2 1/2
80	3
90	3 1/2
100	4

METRIC COPPER CONDUCTOR CONVERSION CHART

AWG KCMIL	COMPUTED CONVERSION mm 2	ADVISED CROSS SECTION mm 2
16	1.31	1.5
14	2.08	2.5
12	3.31	4
10	5.27	6
8	8.4	10
6	13.3	16
4	21.2	25
3	26.7	25
2	33.6	35
1	42.4	50
1/0	53.4	50
2/0	67.5	70
3/0	85.0	95
4/0	107.2	120
250	126.7	120
300	152.0	150
350	177.4	185
400	202.7	240
500	253.4	300

UNLESS OTHERWISE NOTED, LINEAR DIMENSIONS SHOWN ARE IN MILLIMETERS.

SYMBOL	DESCRIPTION	DATE	APR

DESIGNED BY: MM | DATE: 29 OCTOBER 2007
DWN BY: MM | SUBMITTED BY:
CHK BY: SE | FILE NO.: AF06073-EL01GN

US Army Corps of Engineers
Afghanistan Engineer District

AFGHANISTAN NATIONAL POLICE (ANP) DISTRICT HEADQUARTERS COMPOUNDS – 1 STORY HQ
VARIOUS LOCATIONS, AFGHANISTAN
STANDARD DETAILS
LEGEND & ABBREVATIONS

SHEET REFERENCE NUMBER:
SE–1

10/24/2007
S:\Engineering & Construction\Engineering\00 RFPs in-progress\ANP\ANP ON-Story Design\ANP Dist HQ 1Story Design Changes 26Oct07\Microstation Files\elec\AF06073-EL01GN.dgn

FIXTURE MARK A

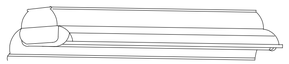

TYPE 230
SUSPENSION MOUNTED, INDUSTRIAL,
OPEN TYPE FLUORESCENT FIXTURE, 4-FOOT

FIRST SUFFIX	SECOND-SUFFIX	DESCRIPTION
A		TWO LAMPS
B		THREE LAMPS
C		FOUR LAMPS
	1	8 TO 15 PERCENT UPLIGHT
	2	18 TO 25 PERCENT UPLIGHT

FIXTURE SHALL CONFORM TO UL1570. STANDARD BALLAST(S) SHALL BE THE CLASS P, HIGH POWER FACTOR TYPE APPROVED FOR THE APPLICATION BY THE CERTIFIED BALLAST MANUFACTURERS. CHANNEL HOUSING, END FITTINGS, AND REFLECTOR SHALL BE CONSTRUCTED WITH DIE-FORMED, COLD-ROLLED STEEL. REFLECTOR FINISH SHALL BE PORCELIAN ENAMEL, BAKED WHITE ENAMEL OR ALUMINUM OXIDE. SOCKETS SHALL BE OF THE TYPE REQUIRING A FORCED MOVEMENT ALONG THE LONGITUDINAL AXIS OF THE LAMP FOR INSERTION AND REMOVAL OF THE LAMP. FIXTURE SHALL BE PREWIRED. FLUORESCENT TUBES SHALL BE PROTECTED BY A VIRGIN ACRYLIC PROTECTIVE SLEEVE AND CLEAR PLASTIC VENTED END CAPS.

FIXTURE MARK B

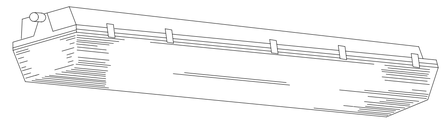

TYPE 232
4-FOOT FIXTURE LENGTH

ENCLOSED AND GASKETED, VAPOR-TIGHT FLUORESCENT FIXTURE
FOR SURFACE OR PENDANT MOUNTING

FIXTURE SHALL CONFORM TO UL1570 AND SHALL BE VAPOR-TIGHT AND SUITABLE FOR USE IN WET LOCATIONS. FIXTURE SHALL HAVE ONE-PIECE HOUSINGOF MOLDED HIGH-IMPACT PLASTIC OR REINFORCED FIBERGLASS. HOUSING BODY SHALL HAVE AN INTERNAL, DIE-FORMED, COLD-ROLLED STEEL CHANNEL WITH COVER TO PROVIDE FIXTURE RIGIDITY AND TO CONTAIN ELECTRIC COMPONENTS. THE METAL CHANNEL AND COVER SHALL RECEIVE A RUST INHIBITIVE COATING BEFORE APPLICATION OF THE FINISH COAT, WHICH SHALL CONSIST OF BAKED WHITE ENAMEL OR PORCELAIN ENAMEL. THE LENS SHALL BE ONE PIECE, OF HIGH-IMPACT-RESISTANT ACRYLIC, AND SHALL HAVE SMOOTH EXTERIOR SURFACE AND STIPPLED OR PEBBLED INTERIOR SURFACE. THE LENS SHALL BE SECURED TO THE HOUSING WITH CAPTIVE MOLDED PLASTIC OR STAINLESS STEEL SPRING LATCHES. A CONTINUOUS GASKET SHALL BE PROVIDED TO FORM A VAPOR SEAL BETWEEN THE LENS AND THE FIXTURE BODY. ALL OPENINGS IN THE HOUSING FOR MOUNTING, CONDUIT, ETC., SHALL BE CAPABLE OF FORMING A VAPOR-TIGHT SEAL. BALLAST(S) SHALL BE COLD WEATHER TYPE FOR STARTING TEMPERATURES DOWN TO MINUS 20 DEGREES F. STANDARD BALLAST(S) SHALL BE THE CLASS P, HIGH POWER FACTOR TYPE APPROVED FOR THE APPLICATION BY THE CERTIFIED BALLAST MANUFACTURERS. FIXTURE SHALL BE PREWIRED, AND PROVIDED WITH LAMPS THAT ARE PROPERLY MATED TO THE BALLAST OPERATING CHARACTERISTICS.

FIXTURE MARK E

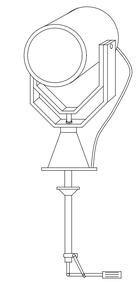

SEALED BEAM SPOTLIGHT, MOUNTED TO GUARD TOWER ROOF, WITH 1000 WATT HALOGEN NARROW SPOT PAR 56 LAMP. SPOTLIGHT SHALL BE PROVIDED WITH TWIST LEVER CONTROL, MINIMUM 10" DIAMETER LIGHT HEAD, WORKING RANGE OF 1/2 MILE, COUPLING FOR OPERATION FROM GUARD TOWER PLATFORM AND RATED FOR OUTDOOR ROUGH SERVICE WITH ANTI-SHOCK LAMPHOLDER.

FIXTURE MARK H

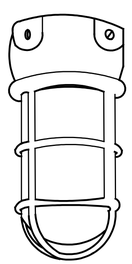

TYPE SF11

FEATURES

LAMP TYPE: INCCANDESCENT BULB: 100W
GLASS GLOBE CLEAR, BLUE, RED, AND BLACK LAMPS INDICATED ON THE DRAWINGS
PROFILE: 1 LAMP
SHIELDING: CLEAR GLASS GLOBE

OPTIONS

GLASS GLOBE: CLEAR, RED, BLUE, OR BLACK
LAMP TYPE: 75W, 100W, 150W
MOUNTING: PENDANT OR SURFACE
SHIELDING: HEAT RESISTANT

NOM. DIMENSIONS: 111mm X 251mm

GENERAL DESCRIPTION

HOUSING: 30 PERCENT GLASS FILLED THERMOPLASTIC POLYSTER
ELECTRICAL: 220 – 240 VOLT
FINISH: MOLDED IN NON-GRAYING FINISH

SURFACE MOUNTED INCANDESCENT
VAPOR TIGHT JELLY JAR WITH WIRE GUARD

NOT TO SCALE

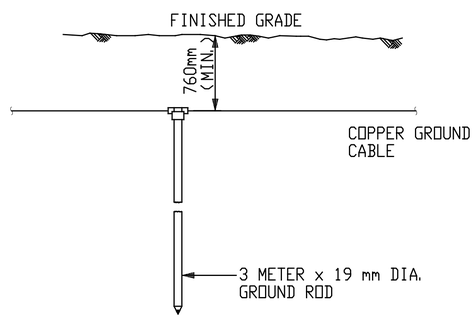

NOTES:

1. CONDUCTOR SIZE SHALL BE AS INDICATED ON PLANS.
2. EXOTHERMIC WELDS SHALL BE AS RECOMMENDED BY MANUFACTURER FOR THE SIZE OF CONNECTION AND MATERIAL INVOLVED. SEE DETAIL 5 ON SHEET SE-7.

BELOW GRADE GROUNDING ROD DETAIL

NOT TO SCALE

DETAIL 1
NOT TO SCALE

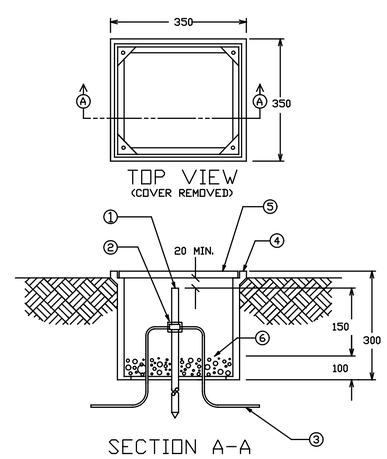

MATERIAL LIST

1. GROUND ROD
2. EXOTHERMIC WELD
3. GROUNDING CONDUCTOR 70mm² COPPER
4. POLYMER CONCRETE FIBERGLASS REINFORCED BOX
5. COVER FOR ABOVE BOX
6. GRAVEL OR CRUSHED STONE

GROUND ROD ACCESS
BOX INSTALLATION DETAIL

NOT TO SCALE

DETAIL 2
NOT TO SCALE

UNLESS OTHERWISE NOTED, LINEAR DIMENSIONS SHOWN ARE IN MILLIMETERS.

SYMBOL	DESCRIPTION	DATE	APR

DESIGNED BY: MM
DWN BY: MM
CHK BY: SE
DATE: 29 OCTOBER 2007
SUBMITTED BY:
FILE NO.: AF06073-EL02DT

US Army Corps of Engineers
Afghanistan Engineer District

AFGHANISTAN NATIONAL POLICE (ANP) DISTRICT HEADQUARTERS COMPOUNDS – 1 STORY HQ
VARIOUS LOCATIONS, AFGHANISTAN
STANDARD DETAILS
STANDARD LIGHTING DETAILS

SHEET REFERENCE NUMBER:
SE-2

10/24/2007
S:\Engineering & Construction\Engineering\00_RFPs in-progress\ANP\ANP ONE-Story Design\ANP Dist HQ 1Story Design Changes 26Oct07\Microstation files\elec\AF06073$EL02DT.dgn

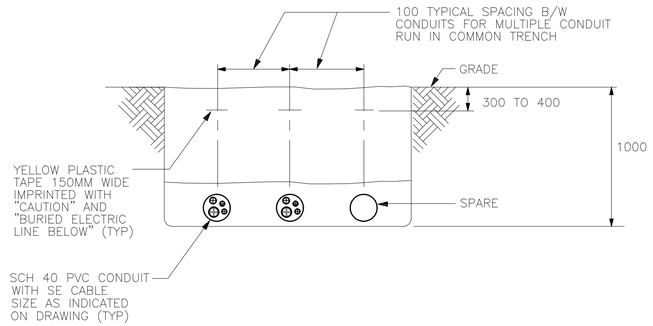

SECONDARY DISTRIBUTION CONDUIT TRENCH DETAIL

NOT TO SCALE

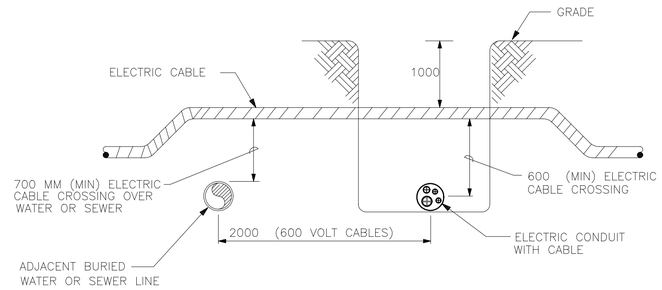

UNDERGROUND UTILITIES CROSSING DETAIL

NOT TO SCALE

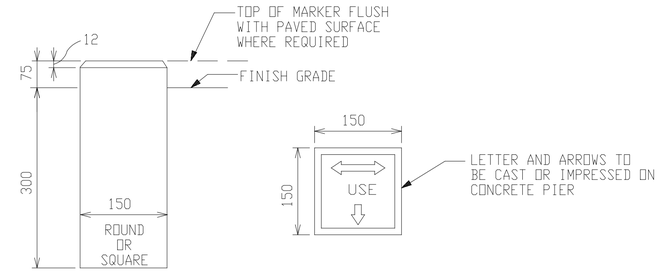

DIRECT BURIED CABLE MARKER DETAIL

NOT TO SCALE

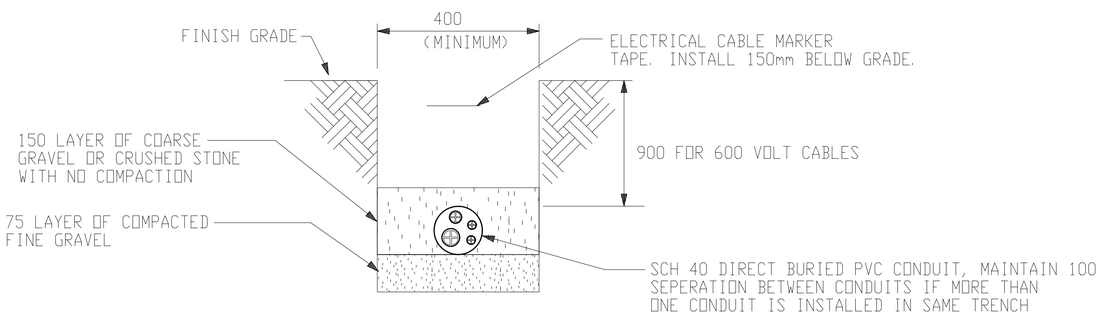

DIRECT BURIED DUCT DETAIL

NOT TO SCALE

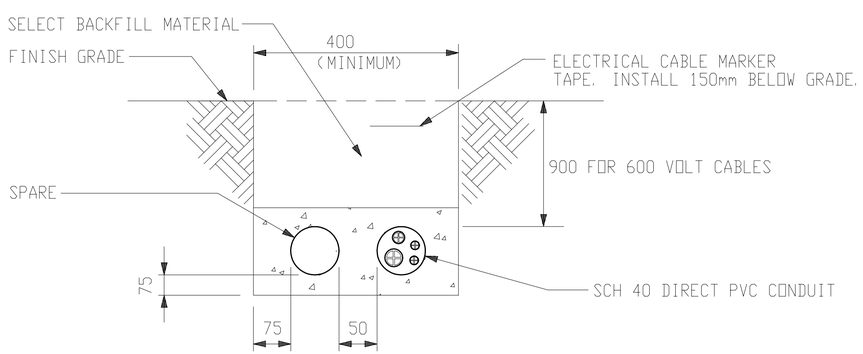

CONCRETE-ENCASED DUCT DETAIL FOR TRAFFIC AREAS

NOT TO SCALE

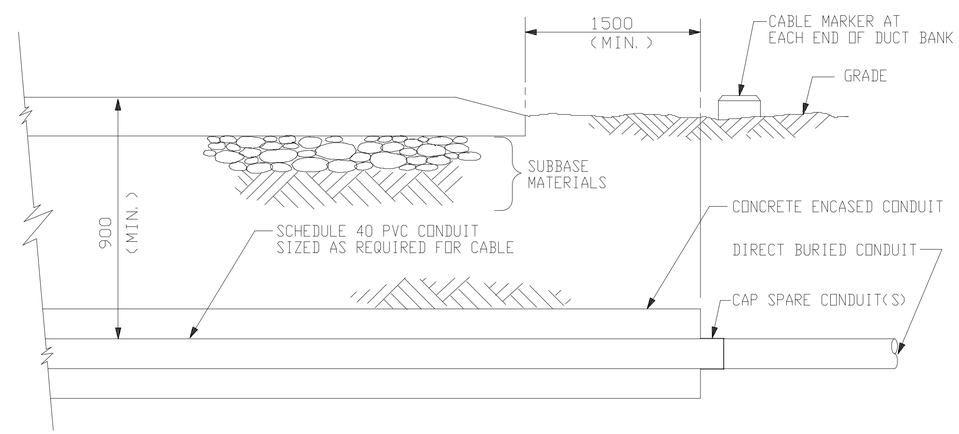

UNDER ROADWAY DUCT CROSSING DETAIL

NOT TO SCALE

UNLESS OTHERWISE NOTED, LINEAR DIMENSIONS SHOWN ARE IN MILLIMETERS.

UNLESS OTHERWISE NOTED, LINEAR DIMENSIONS SHOWN ARE IN MILLIMETERS.

SYMBOL	DESCRIPTION	DATE	APR

DESIGNED BY: MM	DATE: 29 OCTOBER 2007	
DWN BY: MM	SUBMITTED BY:	
CHK BY: SE	FILE NO.: AF06073-EL03DT	

US Army Corps of Engineers
Afghanistan Engineer District

AFGHANISTAN NATIONAL POLICE (ANP) DISTRICT HEADQUARTERS COMPOUNDS – 1 STORY HQ
VARIOUS LOCATIONS, AFGHANISTAN

STANDARD DETAILS
DUCTBANK DETAILS

SHEET REFERENCE NUMBER:
SE–3

10/24/2007
S:\Engineering & Construction\Engineering\00_RFPs in-progress\ANP\ANP ON-Story Design\ANP Dist HQ 1Story Design Changes 26Oct07\Microstation Files\elec\AF06073EL03DT.dgn

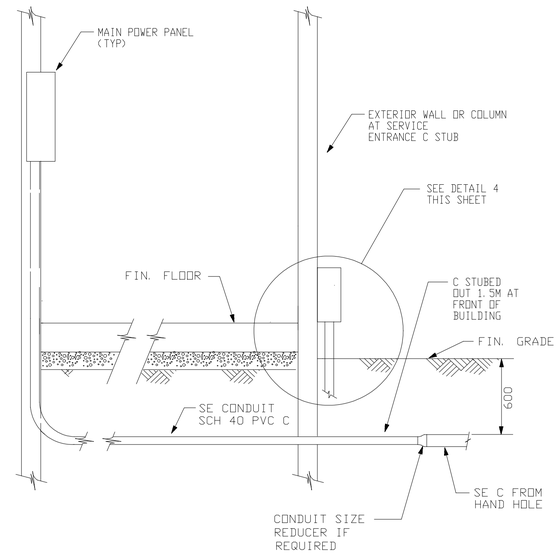

SERVICE PANEL CABLE ENTRANCE DIAGRAM
NOT TO SCALE

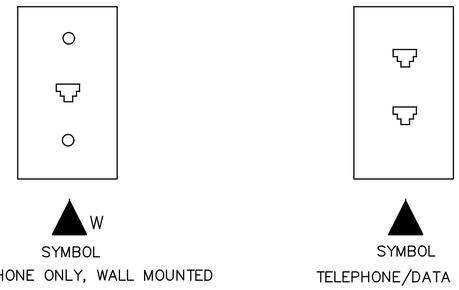

TELEPHONE AND DATA OUTLET DETAILS
NOT TO SCALE

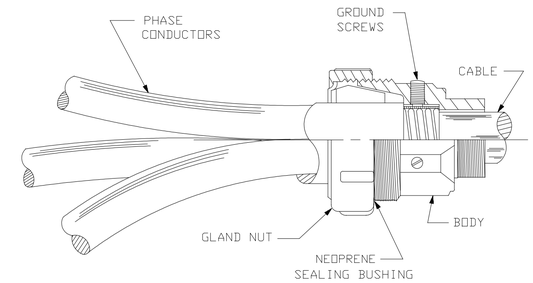

TYPICAL 600V CABLE TERMINATOR DETAIL
NOT TO SCALE

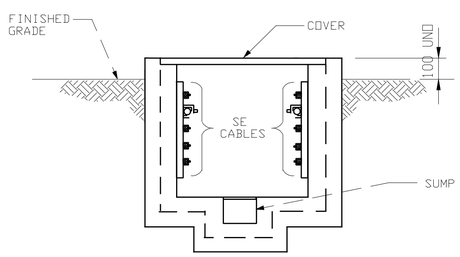

HANDHOLE CABLE INSTALLATION
NOT TO SCALE

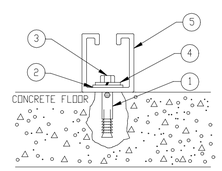

CHANNEL STRUT INSTALATION

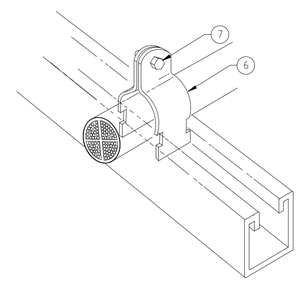

CABLE CLAMP INSTALLATION
NOT TO SCALE

CHANNEL SYSTEM LIST OF MATERIALS					
ITEM	SML	DESCRIPTION	PART NO/NSN	UI	QTY
1		SHIELD, EXPANSION			
2		WASHER, FLAT 3/8 " ID			
3		BOLT,LAG,HEX HEAD, 3/8 "-16 X 1 1/4 "			
4		WASHER, LOCK 3/8 " ID			
5		CHANNEL, CONT. SLOTTED 1-5/8"			
6		CONDUIT / CONDUCTOR CLAMP			
7		SLOTTED HEX MACHINE SCREW & SQUARE NUT			

CONDUIT / CONDUCTOR CHANNEL SYSTEM INSTALLATION DETAIL
NOT TO SCALE

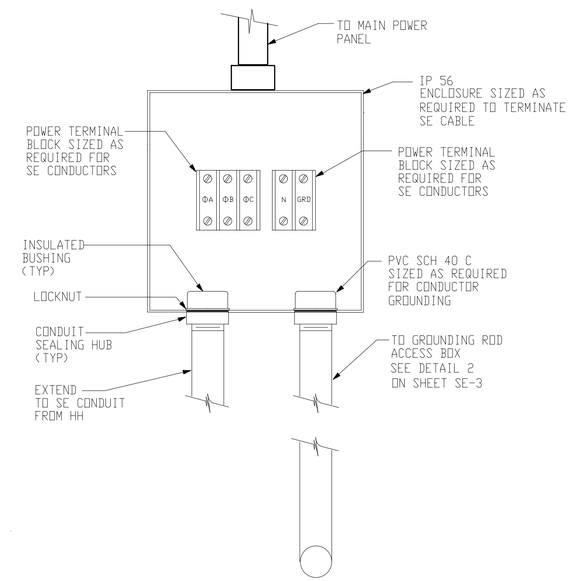

SE JUNCTION BOX
NOT TO SCALE

DETAIL 4
NOT TO SCALE

UNLESS OTHERWISE NOTED, LINEAR DIMENSIONS SHOWN ARE IN MILLIMETERS.

SYMBOL	DESCRIPTION	DATE	APR

DESIGNED BY: MM
DATE: 29 OCTOBER 2007
DWN BY: MM
SUBMITTED BY:
CHK BY: SE
FILE NO.: AF06073-EL04DT

US Army Corps of Engineers
Afghanistan Engineer District

AFGHANISTAN NATIONAL POLICE (ANP) DISTRICT HEADQUARTERS COMPOUNDS – 1 STORY HQ
VARIOUS LOCATIONS, AFGHANISTAN
STANDARD DETAILS
STANDARD ELECTRICAL DETAILS

SHEET REFERENCE NUMBER:
SE-4

10/24/2007
S:\Engineering & Construction\Engineering\00 RFPs in-progress\ANP\ANP ON 1-Story Design\ANP 1-Story Dist HQ 1Story Design Changes 26Oct07\Microstation Files\elec\AF06073EL04DT.dgn

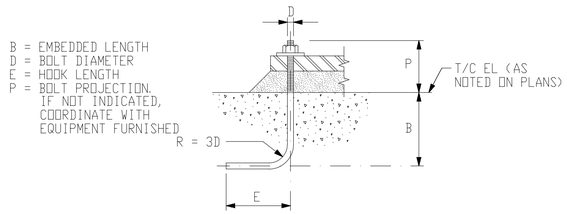

NOTE:
UNLESS OTHERWISE INDICATED, TYPE V OR VI ANCHOR RODS MAY BE USED AT THE CONTRACTOR'S OPTION

SCHEDULE			
D (IN)	B (mm)	E (mm)	REMARKS
3/8"	125	125	
1/2"	150	150	
5/8"	200	180	
3/4"	255	220	
7/8"	305	280	
1"	355	330	

TYPE V ANCHOR RODS
HOOKED BOLT

SCHEDULE			
D (IN)	B (mm)	E (mm)	REMARKS
3/8"	180	75	
1/2"	230	75	
5/8"	280	100	
3/4"	355	125	
7/8"	405	180	
1"	485	200	

TYPE VI ANCHOR RODS
HOOKED BOLT

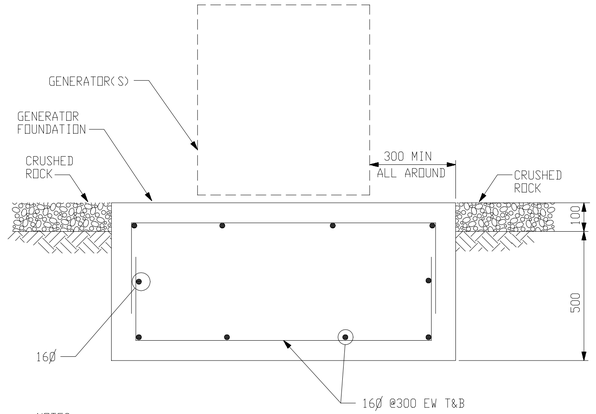

NOTES:
1. SEE DRAWING XE-1 FOR GENERATOR LOCATIONS.
2. COORDINATE PAD SIZE AND ANCHOR BOLT REQUIREMENTS WITH THE EQUIPMENT SUPPLIED.

TYPICAL EXTERIOR GENERATOR FOUNDATION
NOT TO SCALE

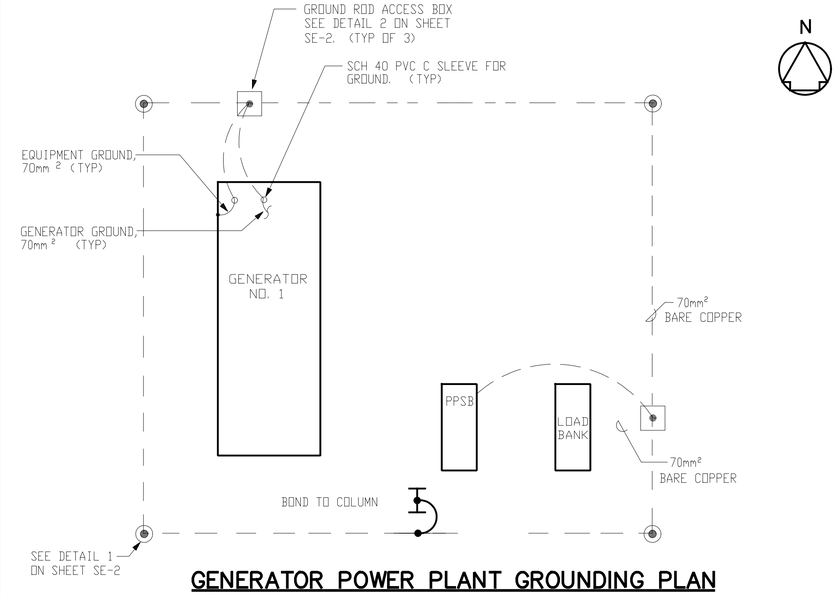

GENERATOR POWER PLANT GROUNDING PLAN
NOT TO SCALE

NOTES:
1. GROUNDING COUNTERPOISE SHALL BE 1.5M AWAY FROM GENERATOR PAD FOUNDATION AND 0.760M BELOW FINISHED GRADE.
2. ALL GROUNDING CONNECTIONS SHALL BE EXOTHERMIC WELD CONNECTIONS,
3. A DAY TANK SHALL BE AN INTEGRAL PART OF EACH GENERATOR SET.
4. GENERATORS, DAYTANKS, PPSB AND LOAD BANK SHALL HAVE NEMA 3R OR EQUAL ENCLOSURES.

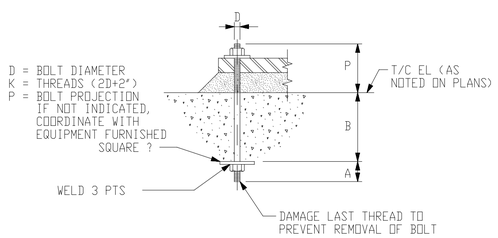

SCHEDULE				
D	A	B	SQUARE ?	REMARKS
3/4	50mm	250mm	?13x75x75	
7/8	75mm	300mm	?16x90x90	
1 1/8	75mm	400mm	?20x100x100	
1 1/4	75mm	460mm	?20x110x110	

TYPE II ANCHOR RODS
UNSLEEVED BOLT

TYPICAL ANCHOR ROD DETAILS
NOT TO SCALE

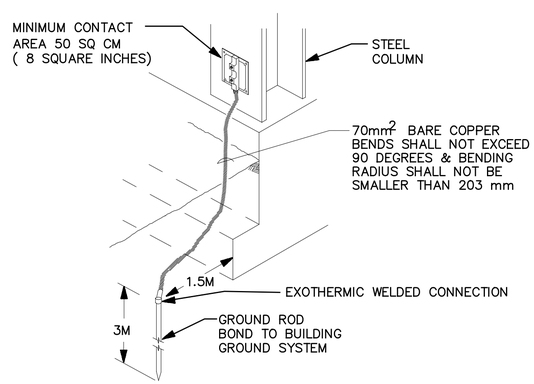

COLUMN GROUNDING DETAIL
NOT TO SCALE

UNLESS OTHERWISE NOTED, LINEAR DIMENSIONS SHOWN ARE IN MILLIMETERS.

SYMBOL	DESCRIPTION	DATE	APP

DESIGNED BY: MM
DATE: 29 OCTOBER 2007
DWN BY: JLK
SUBMITTED BY:
CHK BY: JLK
FILE NO.: AF0607$-EL05DT

US Army Corps of Engineers
Afghanistan Engineer District

AFGHANISTAN NATIONAL POLICE (ANP) DISTRICT HEADQUARTERS COMPOUNDS – 1 STORY HQ
VARIOUS LOCATIONS, AFGHANISTAN
STANDARD DETAILS
POWER PLANT DETAILS

SHEET REFERENCE NUMBER:
SE-5

10/24/2007
S:\Engineering & Construction\Engineering\00_RFPs in-progress\ANP\ANP ONE-Story Design\ANDist_HQ_1Story_Design_Changes_2607\Microstation Files\elec\AF0607$EL05DT.dgn

CONSTRUCTION REQUIREMENTS				
CLEAR MINIMUM INSIDE REQUIREMENTS FOR INSTALLATION AND MAINTENANCE PURPOSES				
TYPE	HEIGHT	LENGTH	WIDTH	SUMP DEPTH
HH	1.2M	1.2M	1.2M	0.3M

MINIMUM CONCRETE THICKNESS	
HANDHOLE WALLS TOP, AND FLOORS	SUMP WALLS AND FLOOR
150mm	100mm

MINIMUM REINFORCING

1. BARS WILL BE A MINIMUM OF 13ϕ ROUND DEFORMED.
2. WALLS AND FLOOR WILL HAVE BARS AT 200mm MAXIMUM ON CENTERS WITH A MINIMUM 300mm HOOK AT CORNERS AND INTERSECTIONS.
3. THE TOP SHALL HAVE BARS INSTALLED AS SHOWN AT A MINIMUM OF 50mm FROM THE OPENING AND WITH A MINIMUM 100mm SPACING BETWEEN BARS.

NOTE: REINFORCING SHALL BE INCREASED WHERE REQUIRED TO SUIT ACTUAL INSTALLATION. MINIMUM REQUIREMENTS ARE FOR A H20 WHEEL LOADING (ASSHTO).

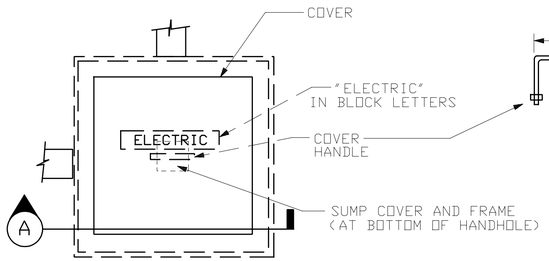

HANDHOLE COVER DETAIL
NOT TO SCALE

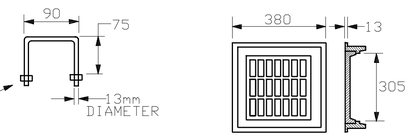

SUMP FRAME AND COVER DETAIL
NOT TO SCALE

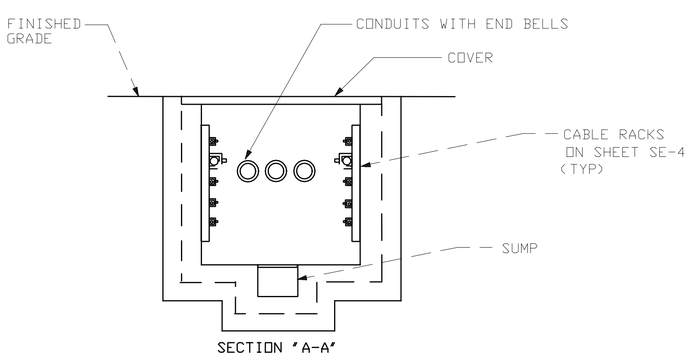

HANDHOLE DETAIL
NOT TO SCALE

UNLESS OTHERWISE NOTED, LINEAR DIMENSIONS SHOWN ARE IN MILLIMETERS.

SYMBOL	DESCRIPTION	DATE	APR

DESIGNED BY: MM
DWN BY: MM
CHK BY: SE
DATE: 29 OCTOBER 2007
SUBMITTED BY:
FILE NO.: AF06073-EL06DT

US Army Corps of Engineers
Afghanistan Engineer District

AFGHANISTAN NATIONAL POLICE (ANP) DISTRICT HEADQUARTERS COMPOUNDS – 1 STORY HQ
VARIOUS LOCATIONS, AFGHANISTAN

STANDARD DETAILS
HANDHOLE DETAILS

SHEET REFERENCE NUMBER:
SE–6

10/24/2007
S:\Engineering & Construction\Engineering\00_RFPs in-progress\ANP\ANP 01_Story Design\ANP Dist HQ 1Story Design Changes 26Oct07\Microstation files\elec\AF06073-EL06DT.dgn