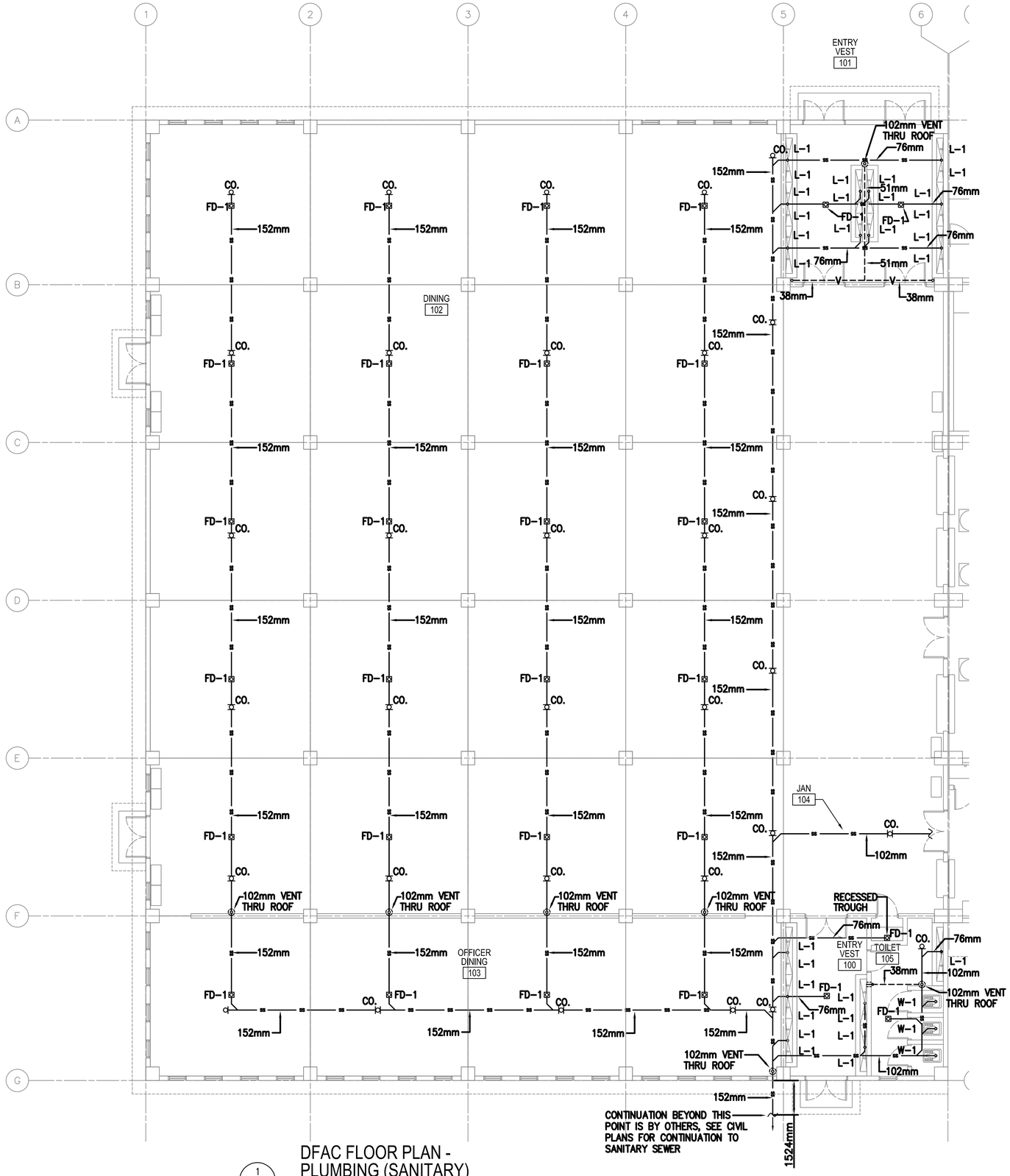

1 P101 DFAC FLOOR PLAN - PLUMBING (SANITARY)

SCALE: 1:100

FLOOR PLAN NOTES:

1. DO NOT SCALE DRAWINGS – ALL DIMENSIONS AND CONDITIONS SHALL BE CHECKED AND VERIFIED BY THE CONTRACTOR AT THE SITE.
2. ALL WORK PERFORMED ON THIS BUILDING SHALL BE IN COMPLIANCE WITH ALL PERTINENT CODES, RULES, ORDINANCES AND REGULATIONS OF THE GOVERNING AUTHORITIES.
3. ALL WORK PERFORMED UNDER AND IN CONNECTION WITH THESE DRAWINGS AND SPECIFICATIONS SHALL BE IN STRICT COMPLIANCE WITH THE LATEST SAFETY AND HEALTH STANDARDS.
4. REPORT ANY DISCREPANCIES FOUND IN THE PLUMBING DRAWINGS AND/OR IN THE SPECIFICATIONS DURING THE BIDDING PROCESS FOR CLARIFICATION BY THE ENGINEER.
5. ALL EASTERN STYLE WATER CLOSETS IN THIS FACILITY ARE TO HAVE THE FIXTURE DESIGNATION OF W–1. EACH FIXTURE SHALL HAVE A 25mm (1 INCH) COLD WATER LINE EXTENDED TO IT AND THEN BE REDUCED TO 13mm (1/2 INCH) FOR A FINAL CONNECTION TO THE FLUSH TANK AND A 102mm (4) INCH SANITARY CONNECTION.
6. ALL TROUGH FIXTURES IN THIS FACILITY ARE TO HAVE THE FIXTURE DESIGNATION OF L–1. EACH FIXTURE SHALL HAVE A 13mm (1/2 INCH) COLD WATER, 13mm (1/2 INCH) HOT WATER CONNECTION AND A 76mm (3 INCH) SANITARY CONNECTION. SEE SHEET P501 FOR WATER PIPING LAYOUT DETAIL.
7. ALL ABLUTION FIXTURES IN THIS FACILITY ARE TO HAVE THE FIXTURE DESIGNATION OF ABL–1. EACH FIXTURE SHALL HAVE A 13mm (1/2 INCH) COLD WATER, 13mm (1/2 INCH) HOT WATER CONNECTION AND A 76mm (3 INCH) SANITARY CONNECTION. SEE SHEET P501 FOR WATER PIPING LAYOUT DETAIL.
8. REFER TO SHEET P501 & P502 FOR DETAILS AND SYMBOLS.
9. ALL WATER, SANITARY AND VENT LINES TO BE EXPOSED. RUN LINES TIGHT TO CEILING AND WALL.
10. SINK (S–1) IN THIS FACILITY IS TO BE SUPPLIED WITH A 13mm (1/2") COLD WATER, 13mm (1/2") HOT WATER AND A 76mm (3") SANITARY CONNECTION.
11. SINK (S–2) IN THIS FACILITY IS A 2–BOWL SINK. SINK SHALL BE SUPPLIED WITH A 13mm (1/2") COLD WATER, 13mm (1/2") HOT WATER, AND A 76mm (3") INDIRECT WASTE SYSTEM. (DIM. 2540mm X 807MM).
12. SINK (S–3) IN THIS FACILITY IS A 2–BOWL SINK. EACH SINK SHALL BE SUPPLIED WITH A 13mm (1/2") COLD WATER, 13mm (1/2") HOT WATER, AND A 76mm (3") GREASE WASTE LINE. (DIM. (2) AT 2540mm X 807mm).
13. DUE TO THE AMOUNT OF INFORMATION ON DRAWING, SEE DRAWING ISOMETRIC ON SHEET P901 FOR VENT PIPING.

PLUMBING SYMBOLS

- SANITARY SEWER PIPING (BELOW GROUND)
- SANITARY SEWER PIPING (ABOVE GROUND)
- VENT PIPING (V)
- COLD WATER PIPING (CW)
- HOT WATER PIPING (HW)
- BALL VALVE
- BACKFLOW PREVENTER
- CLEANOUT (CO.) (OR)
- ROOF PENETRATION

KEY PLAN:

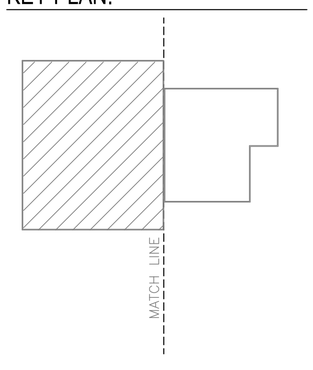

LINEAR DIMENSIONS SHOWN ARE IN MILLIMETERS (MM), UNLESS OTHERWISE NOTED

0 2000 4000
SCALE: 1:100

APPROVED:

A/E DESIGNER OF RECORD

SEAL:

COMMONWEALTH OF PENNSYLVANIA REGISTERED PROFESSIONAL ENGINEER MATTHEW R. SOTOSKY 046576-E

US ARMY CORPS OF ENGINEERS
AFGHANISTAN ENGINEER DISTRICT

Mark	Description	Date	Appr.	Mark	Description	Date	Appr.

Designed by: RMH
Dwn by: RMH
Ckd by: CJM
Reviewed by:
Submitted by: BAKER
Date: 02/23/10
Design file no.
Rev: 0
Drawing code:
File name: ANADFAICPL-1011XXX
Plot date: 02/26/2010
Plot scale: 1:100

U.S. ARMY CORPS OF ENGINEERS
AFGHANISTAN ENGINEER DISTRICT
APO AE 96338

Michael Baker Jr., Inc.
A unit of Michael Baker Corporation
Airside Business Park
100 Airside Drive
Moon Township, PA 15108
www.mbakercorp.com

AFGHAN NATIONAL ARMY
REGIONAL MILITARY TRAINING CENTER
STANDARD DESIGN

DINING FACILITY

DFAC FLOOR PLAN – PLUMBING (SANITARY)

Sheet reference number:
P–101

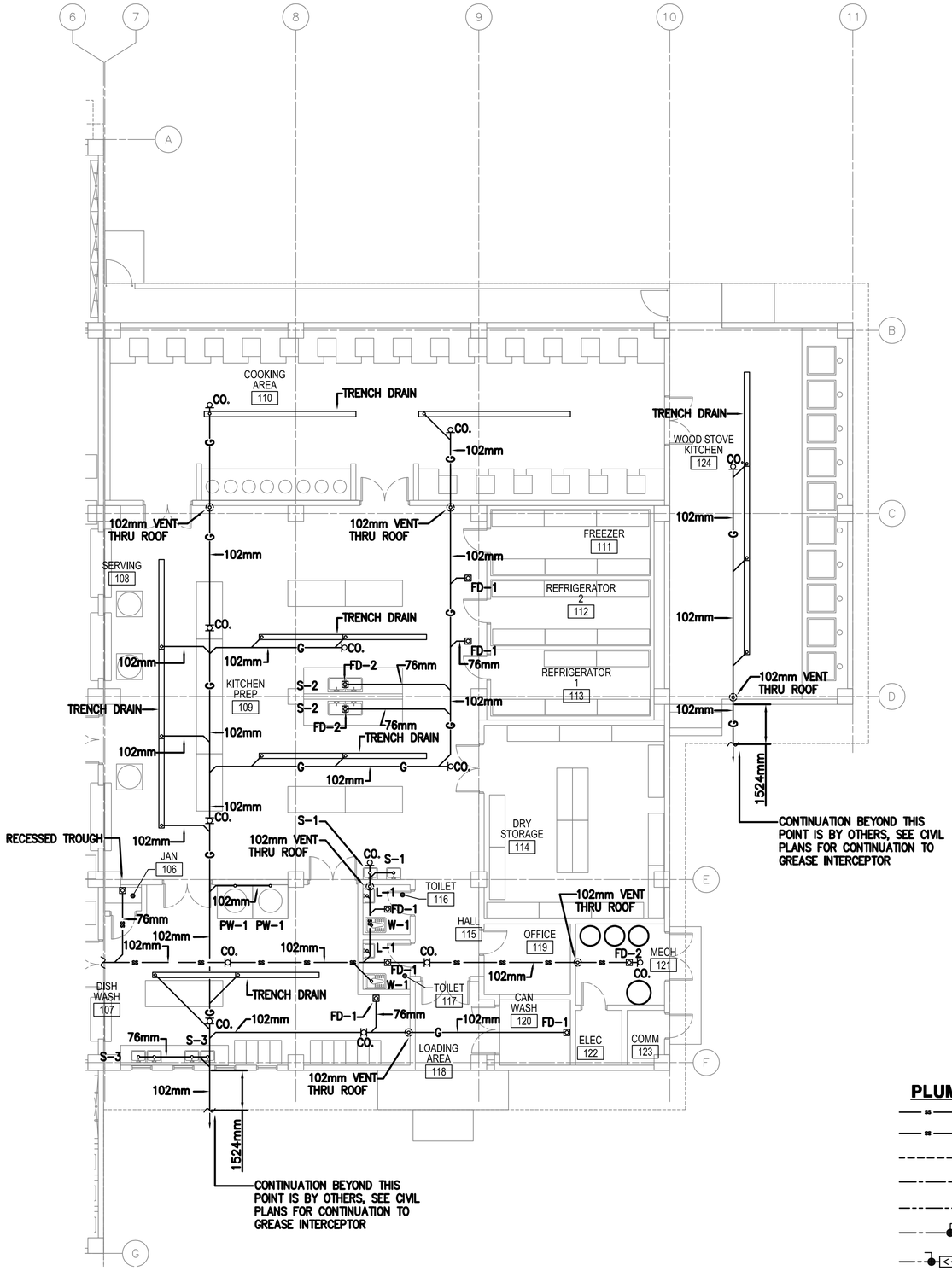

1 P102 DFAC FLOOR PLAN - PLUMBING (SANITARY)

SCALE: 1:100

FLOOR PLAN NOTES:

1. DO NOT SCALE DRAWINGS – ALL DIMENSIONS AND CONDITIONS SHALL BE CHECKED AND VERIFIED BY THE CONTRACTOR AT THE SITE.
2. ALL WORK PERFORMED ON THIS BUILDING SHALL BE IN COMPLIANCE WITH ALL PERTINENT CODES, RULES, ORDINANCES AND REGULATIONS OF THE GOVERNING AUTHORITIES.
3. ALL WORK PERFORMED UNDER AND IN CONNECTION WITH THESE DRAWINGS AND SPECIFICATIONS SHALL BE IN STRICT COMPLIANCE WITH THE LATEST SAFETY AND HEALTH STANDARDS.
4. REPORT ANY DISCREPANCIES FOUND IN THE PLUMBING DRAWINGS AND/OR IN THE SPECIFICATIONS DURING THE BIDDING PROCESS FOR CLARIFICATION BY THE ENGINEER.
5. ALL EASTERN STYLE WATER CLOSETS IN THIS FACILITY ARE TO HAVE THE FIXTURE DESIGNATION OF W–1. EACH FIXTURE SHALL HAVE A 25mm (1 INCH) COLD WATER LINE EXTENDED TO IT AND THEN BE REDUCED TO 13mm (1/2 INCH) FOR A FINAL CONNECTION TO THE FLUSH TANK AND A 102mm (4) INCH SANITARY CONNECTION.
6. ALL TROUGH FIXTURES IN THIS FACILITY ARE TO HAVE THE FIXTURE DESIGNATION OF L–1. EACH FIXTURE SHALL HAVE A 13mm (1/2 INCH) COLD WATER, 13mm (1/2 INCH) HOT WATER CONNECTION AND A 76mm (3 INCH) SANITARY CONNECTION. SEE SHEET P501 FOR WATER PIPING LAYOUT DETAIL.
7. ALL ABLUTION FIXTURES IN THIS FACILITY ARE TO HAVE THE FIXTURE DESIGNATION OF ABL–1. EACH FIXTURE SHALL HAVE A 13mm (1/2 INCH) COLD WATER, 13mm (1/2 INCH) HOT WATER CONNECTION AND A 76mm (3 INCH) SANITARY CONNECTION. SEE SHEET P501 FOR WATER PIPING LAYOUT DETAIL.
8. REFER TO SHEET P501 & P502 FOR DETAILS AND SYMBOLS.
9. ALL WATER, SANITARY AND VENT LINES TO BE EXPOSED. RUN LINES TIGHT TO CEILING AND WALL.
10. SINK (S–1) IN THIS FACILITY IS TO BE SUPPLIED WITH A 13mm (1/2") COLD WATER, 13mm (1/2") HOT WATER AND A 76mm (3") SANITARY CONNECTION.
11. SINK (S–2) IN THIS FACILITY IS A 2–BOWL SINK. SINK SHALL BE SUPPLIED WITH A 13mm (1/2") COLD WATER, 13mm (1/2") HOT WATER, AND A 76mm (3") INDIRECT WASTE SYSTEM. (DIM. 2540mm X 807mm).
12. SINK (S–3) IN THIS FACILITY IS A 2–BOWL SINK. EACH SINK SHALL BE SUPPLIED WITH A 13mm (1/2") COLD WATER, 13mm (1/2") HOT WATER, AND A 76mm (3") GREASE WASTE LINE. (DIM. (2) AT 2540mm X 807mm).
13. DUE TO THE AMOUNT OF INFORMATION ON DRAWING, SEE DRAINAGE ISOMETRIC ON SHEET P901 FOR VENT PIPING.

PLUMBING SYMBOLS

- SANITARY SEWER PIPING (BELOW GROUND)
- SANITARY SEWER PIPING (ABOVE GROUND)
- VENT PIPING (V)
- COLD WATER PIPING (CW)
- HOT WATER PIPING (HW)
- BALL VALVE
- BACKFLOW PREVENTER
- CLEANOUT (CO.) OR
- ROOF PENETRATION

KEY PLAN:

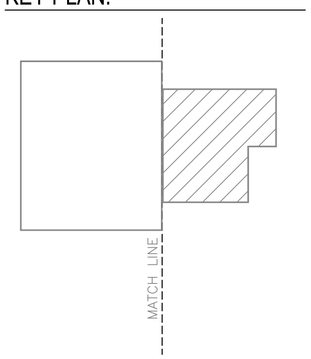

LINEAR DIMENSIONS SHOWN ARE IN MILLIMETERS (MM), UNLESS OTHERWISE NOTED

0 2000 4000
SCALE: 1:100

APPROVED:

A/E DESIGNER OF RECORD

SEAL:

COMMONWEALTH OF PENNSYLVANIA
REGISTERED PROFESSIONAL
MATTHEW R. SOTOSKY
ENGINEER
045570-E

US ARMY CORPS OF ENGINEERS
AFGHANISTAN ENGINEER DISTRICT

Mark	Description	Date	Appr.	Mark	Description	Date	Appr.

Rev: 0
Date: 02/23/10
Design file no.
Drawing code:
File name: ANADFACPL-1103XXX
Plot date: 02/26/2010
Plot scale: 1:100

Designed by: RMH
Dwn by: RMH
Ckd by: CJM
Reviewed by:
Submitted by: BAKER

U.S. ARMY CORPS OF ENGINEERS
AFGHANISTAN ENGINEER DISTRICT
APO AE 96338

Michael Baker Jr., Inc
A unit of Michael Baker Corporation
Airside Business Park
100 Airside Drive
Moon Township, PA 15108
www.mbakercorp.com

AFGHAN NATIONAL ARMY
REGIONAL MILITARY TRAINING CENTER
STANDARD DESIGN

DINING FACILITY
DFAC FLOOR PLAN – PLUMBING (SANITARY)

Sheet reference number:
P–102

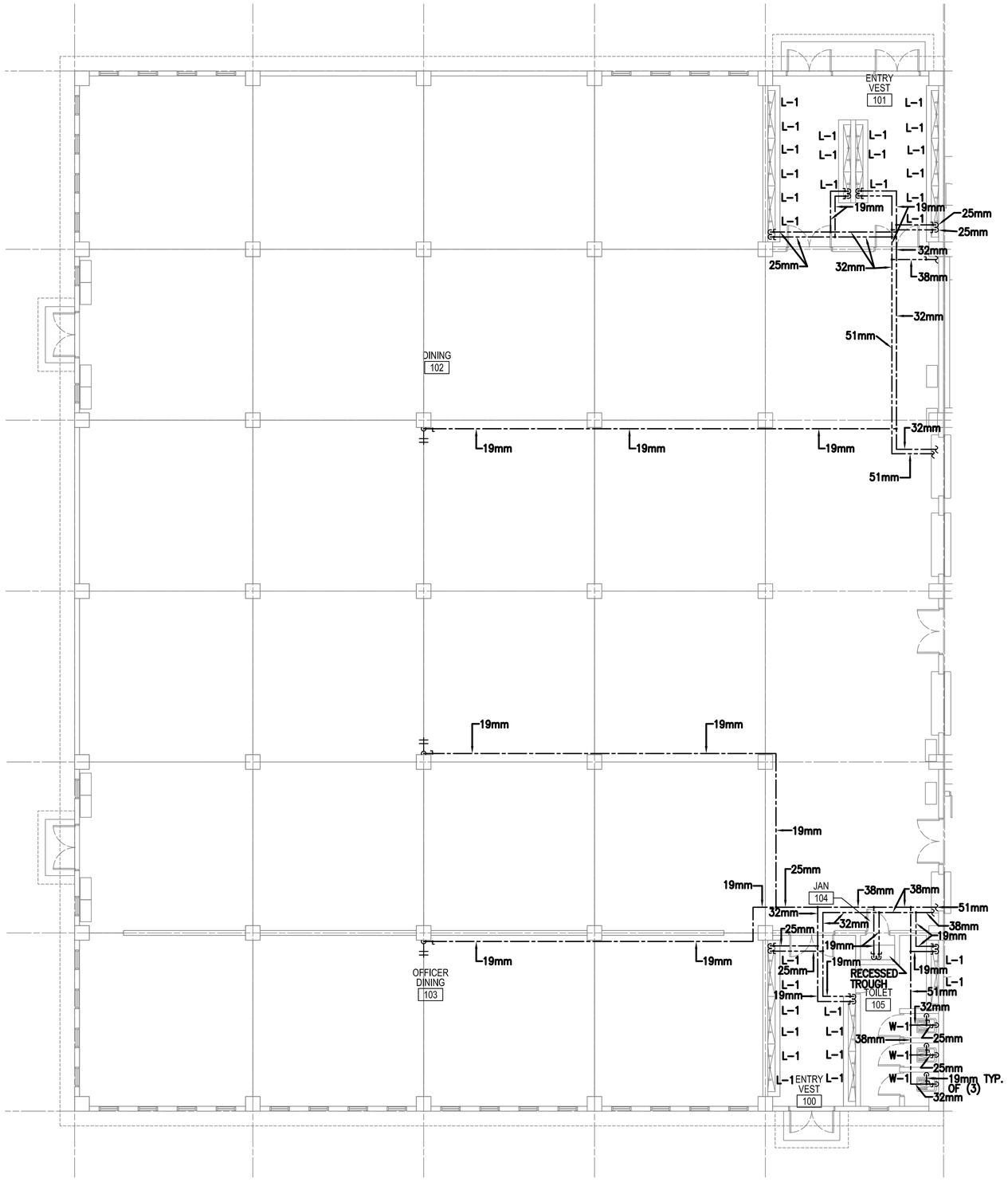

1
P103

DFAC FLOOR PLAN -
PLUMBING (HOT & COLD WATER)

SCALE: 1:100

FLOOR PLAN NOTES:

1. DO NOT SCALE DRAWINGS – ALL DIMENSIONS AND CONDITIONS SHALL BE CHECKED AND VERIFIED BY THE CONTRACTOR AT THE SITE.
2. ALL WORK PERFORMED ON THIS BUILDING SHALL BE IN COMPLIANCE WITH ALL PERTINENT CODES, RULES, ORDINANCES AND REGULATIONS OF THE GOVERNING AUTHORITIES.
3. ALL WORK PERFORMED UNDER AND IN CONNECTION WITH THESE DRAWINGS AND SPECIFICATIONS SHALL BE IN STRICT COMPLIANCE WITH THE LATEST SAFETY AND HEALTH STANDARDS.
4. REPORT ANY DISCREPANCIES FOUND IN THE PLUMBING DRAWINGS AND/OR IN THE SPECIFICATIONS DURING THE BIDDING PROCESS FOR CLARIFICATION BY THE ENGINEER.
5. ALL EASTERN STYLE WATER CLOSETS IN THIS FACILITY ARE TO HAVE THE FIXTURE DESIGNATION OF W–1. EACH FIXTURE SHALL HAVE A 25mm (1 INCH) COLD WATER LINE EXTENDED TO IT AND THEN BE REDUCED TO 13mm (1/2 INCH) FOR A FINAL CONNECTION TO THE FLUSH TANK AND A 102mm (4) INCH SANITARY CONNECTION.
6. ALL TROUGH FIXTURES IN THIS FACILITY ARE TO HAVE THE FIXTURE DESIGNATION OF L–1. EACH FIXTURE SHALL HAVE A 13mm (1/2 INCH) COLD WATER, 13mm (1/2 INCH) HOT WATER CONNECTION AND A 76mm (3 INCH) SANITARY CONNECTION. SEE SHEET P501 FOR WATER PIPING LAYOUT DETAIL.
7. ALL ABLUTION FIXTURES IN THIS FACILITY ARE TO HAVE THE FIXTURE DESIGNATION OF ABL–1. EACH FIXTURE SHALL HAVE A 13mm (1/2 INCH) COLD WATER, 13mm (1/2 INCH) HOT WATER CONNECTION AND A 76mm (3 INCH) SANITARY CONNECTION. SEE SHEET P501 FOR WATER PIPING LAYOUT DETAIL.
8. REFER TO SHEET P501 & P502 FOR DETAILS AND SYMBOLS.
9. ALL WATER, SANITARY AND VENT LINES TO BE EXPOSED. RUN LINES TIGHT TO CEILING AND WALL.
10. SINK (S–1) IN THIS FACILITY IS TO BE SUPPLIED WITH A 13mm (1/2") COLD WATER, 13mm (1/2") HOT WATER AND A 76mm (3") SANITARY CONNECTION.
11. SINK (S–2) IN THIS FACILITY IS A 2–BOWL SINK. SINK SHALL BE SUPPLIED WITH A 13mm (1/2") COLD WATER, 13mm (1/2") HOT WATER, AND A 76mm (3") INDIRECT WASTE SYSTEM.
12. SINK (S–3) IN THIS FACILITY IS A 2–BOWL SINK. EACH SINK SHALL BE SUPPLIED WITH A 13mm (1/2") COLD WATER, 13mm (1/2") HOT WATER, AND A 76mm (3") GREASE WASTE LINE.

PLUMBING SYMBOLS

- SANITARY SEWER PIPING (BELOW GROUND)
- SANITARY SEWER PIPING (ABOVE GROUND)
- VENT PIPING (V)
- COLD WATER PIPING (CW)
- HOT WATER PIPING (HW)
- BALL VALVE
- BACKFLOW PREVENTER
- OR CLEANOUT (CO.)
- ROOF PENETRATION

KEY PLAN:

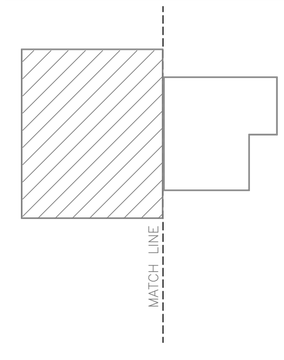

LINEAR DIMENSIONS SHOWN ARE IN MILLIMETERS (MM), UNLESS OTHERWISE NOTED

0 2000 4000
SCALE: 1:100

APPROVED:

A/E DESIGNER OF RECORD

SEAL:

COMMONWEALTH OF PENNSYLVANIA
REGISTERED PROFESSIONAL
MATTHEW R. SOTOSKY
ENGINEER
045576-E

US ARMY CORPS OF ENGINEERS
AFGHANISTAN ENGINEER DISTRICT

Mark	Description	Date	Appr.	Mark	Description	Date	Appr.

Designed by: RMH
Dwn by: RMH
Ckd by: CJM
Reviewed by:
Submitted by: BAKER
Date: 02/23/10
Rev: 0
Design file no.
Drawing code:
File name: ANADFACPL-103XXX
Plot date: 02/08/2010
Plot scale: 1:100

U.S. ARMY CORPS OF ENGINEERS
AFGHANISTAN ENGINEER DISTRICT
APO AE 96338

Michael Baker Jr., Inc
A unit of Michael Baker Corporation
Airside Business Park
100 Airside Drive
Moon Township PA 15108
www.mbakercorp.com

AFGHAN NATIONAL ARMY
REGIONAL MILITARY TRAINING CENTER
STANDARD DESIGN

DINING FACILITY
DFAC FLOOR PLAN –
PLUMBING (HOT & COLD WATER)

Sheet reference number:
P–103

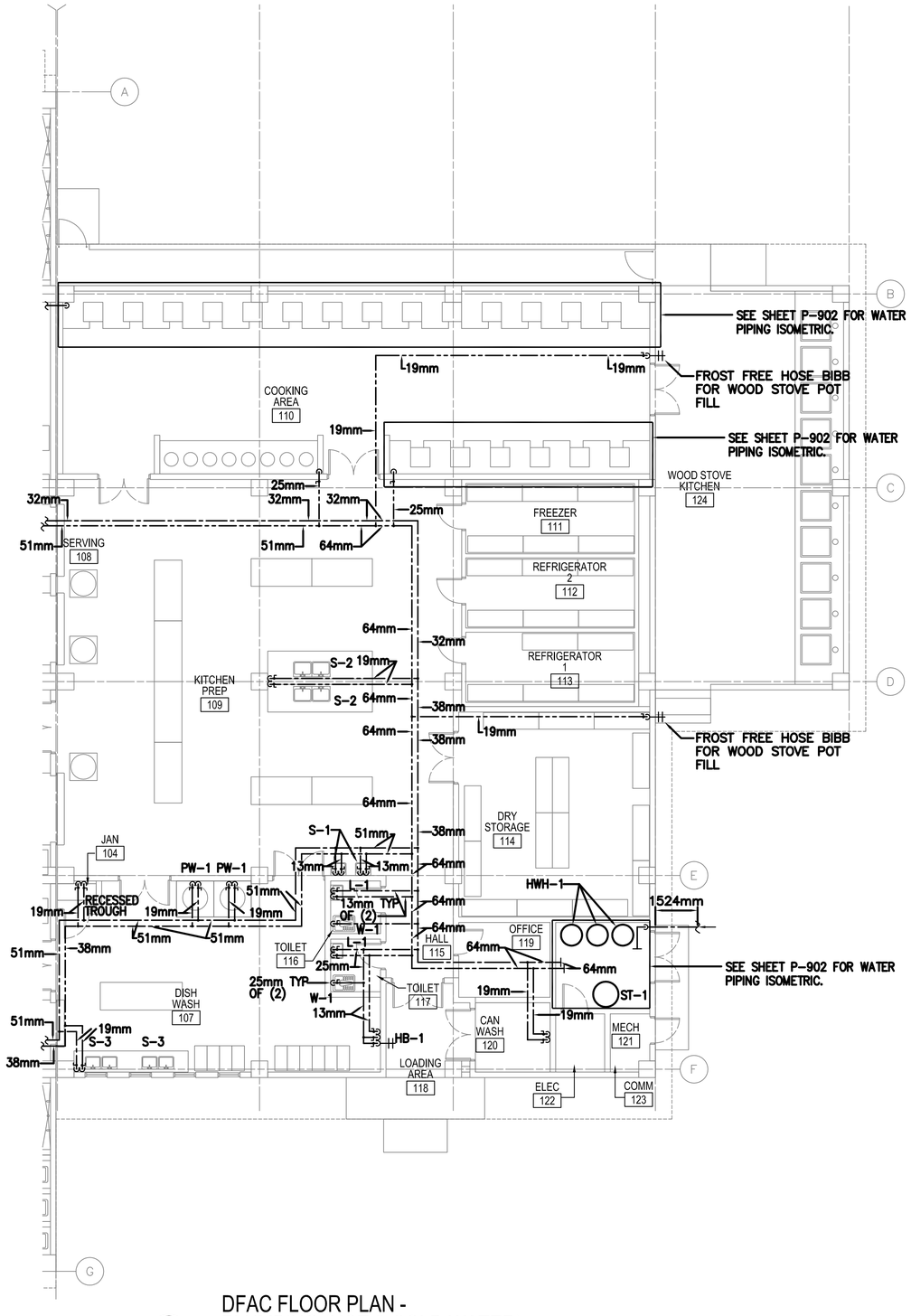

1 P104 DFAC FLOOR PLAN - PLUMBING (HOT & COLD WATER)

SCALE: 1:100

FLOOR PLAN NOTES:

1. DO NOT SCALE DRAWINGS – ALL DIMENSIONS AND CONDITIONS SHALL BE CHECKED AND VERIFIED BY THE CONTRACTOR AT THE SITE.
2. ALL WORK PERFORMED ON THIS BUILDING SHALL BE IN COMPLIANCE WITH ALL PERTINENT CODES, RULES, ORDINANCES AND REGULATIONS OF THE GOVERNING AUTHORITIES.
3. ALL WORK PERFORMED UNDER AND IN CONNECTION WITH THESE DRAWINGS AND SPECIFICATIONS SHALL BE IN STRICT COMPLIANCE WITH THE LATEST SAFETY AND HEALTH STANDARDS.
4. REPORT ANY DISCREPANCIES FOUND IN THE PLUMBING DRAWINGS AND/OR IN THE SPECIFICATIONS DURING THE BIDDING PROCESS FOR CLARIFICATION BY THE ENGINEER.
5. ALL EASTERN STYLE WATER CLOSETS IN THIS FACILITY ARE TO HAVE THE FIXTURE DESIGNATION OF W–1. EACH FIXTURE SHALL HAVE A 25mm (1 INCH) COLD WATER LINE EXTENDED TO IT AND THEN BE REDUCED TO 13mm (1/2 INCH) FOR A FINAL CONNECTION TO THE FLUSH TANK AND A 102mm (4) INCH SANITARY CONNECTION.
6. ALL TROUGH FIXTURES IN THIS FACILITY ARE TO HAVE THE FIXTURE DESIGNATION OF L–1. EACH FIXTURE SHALL HAVE A 13mm (1/2 INCH) COLD WATER, 13mm (1/2 INCH) HOT WATER CONNECTION AND A 76mm (3 INCH) SANITARY CONNECTION. SEE SHEET P501 FOR WATER PIPING LAYOUT DETAIL.
7. ALL ABLUTION FIXTURES IN THIS FACILITY ARE TO HAVE THE FIXTURE DESIGNATION OF ABL–1. EACH FIXTURE SHALL HAVE A 13mm (1/2 INCH) COLD WATER, 13mm (1/2 INCH) HOT WATER CONNECTION AND A 76mm (3 INCH) SANITARY CONNECTION. SEE SHEET P501 FOR WATER PIPING LAYOUT DETAIL.
8. REFER TO SHEET P501 & P502 FOR DETAILS AND SYMBOLS.
9. ALL WATER, SANITARY AND VENT LINES TO BE EXPOSED. RUN LINES TIGHT TO CEILING AND WALL.
10. SINK (S–1) IN THIS FACILITY IS TO BE SUPPLIED WITH A 13mm (1/2") COLD WATER, 13mm (1/2") HOT WATER AND A 76mm (3") SANITARY CONNECTION.
11. SINK (S–2) IN THIS FACILITY IS A 2–BOWL SINK. SINK SHALL BE SUPPLIED WITH A 13mm (1/2") COLD WATER, 13mm (1/2") HOT WATER, AND A 76mm (3") INDIRECT WASTE SYSTEM.
12. SINK (S–3) IN THIS FACILITY IS A 2–BOWL SINK. EACH SINK SHALL BE SUPPLIED WITH A 13mm (1/2") COLD WATER, 13mm (1/2") HOT WATER, AND A 76mm (3") GREASE WASTE LINE.

PLUMBING SYMBOLS

- SANITARY SEWER PIPING (BELOW GROUND)
- SANITARY SEWER PIPING (ABOVE GROUND)
- VENT PIPING (V)
- COLD WATER PIPING (CW)
- HOT WATER PIPING (HW)
- BALL VALVE
- BACKFLOW PREVENTER
- OR CLEANOUT (CO.)
- ROOF PENETRATION

KEY PLAN:

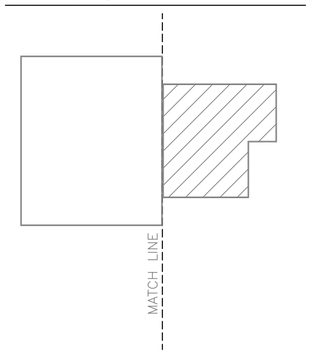

LINEAR DIMENSIONS SHOWN ARE IN MILLIMETERS (MM), UNLESS OTHERWISE NOTED

0 2000 4000
SCALE: 1:100

APPROVED:

A/E DESIGNER OF RECORD

SEAL:

COMMONWEALTH OF PENNSYLVANIA REGISTERED PROFESSIONAL MATTHEW R. SOTOSKY ENGINEER 045576-E

US ARMY CORPS OF ENGINEERS
AFGHANISTAN ENGINEER DISTRICT

Mark	Description	Date	Appr.

Mark	Description	Date	Appr.

Rev: 0
Date: 02/23/10
Design file no.
Drawing code:
File name: AN4DFACPL-104XXX
Plot date: 02/09/2010
Plot scale: 1:100

Designed by: RMH
Dwn by: RMH
Ckd by: CJM
Reviewed by:
Submitted by:
BAKER

U.S. ARMY CORPS OF ENGINEERS
AFGHANISTAN ENGINEER DISTRICT
APO AE 96338

Michael Baker Jr., Inc
A unit of Michael Baker Corporation
Airside Business Park
100 Airside Drive
Moon Township, PA 15108
www.mbakercorp.com

AFGHAN NATIONAL ARMY
REGIONAL MILITARY TRAINING CENTER
STANDARD DESIGN

DINING FACILITY
DFAC FLOOR PLAN – PLUMBING (HOT & COLD WATER)

Sheet reference number:
P–104

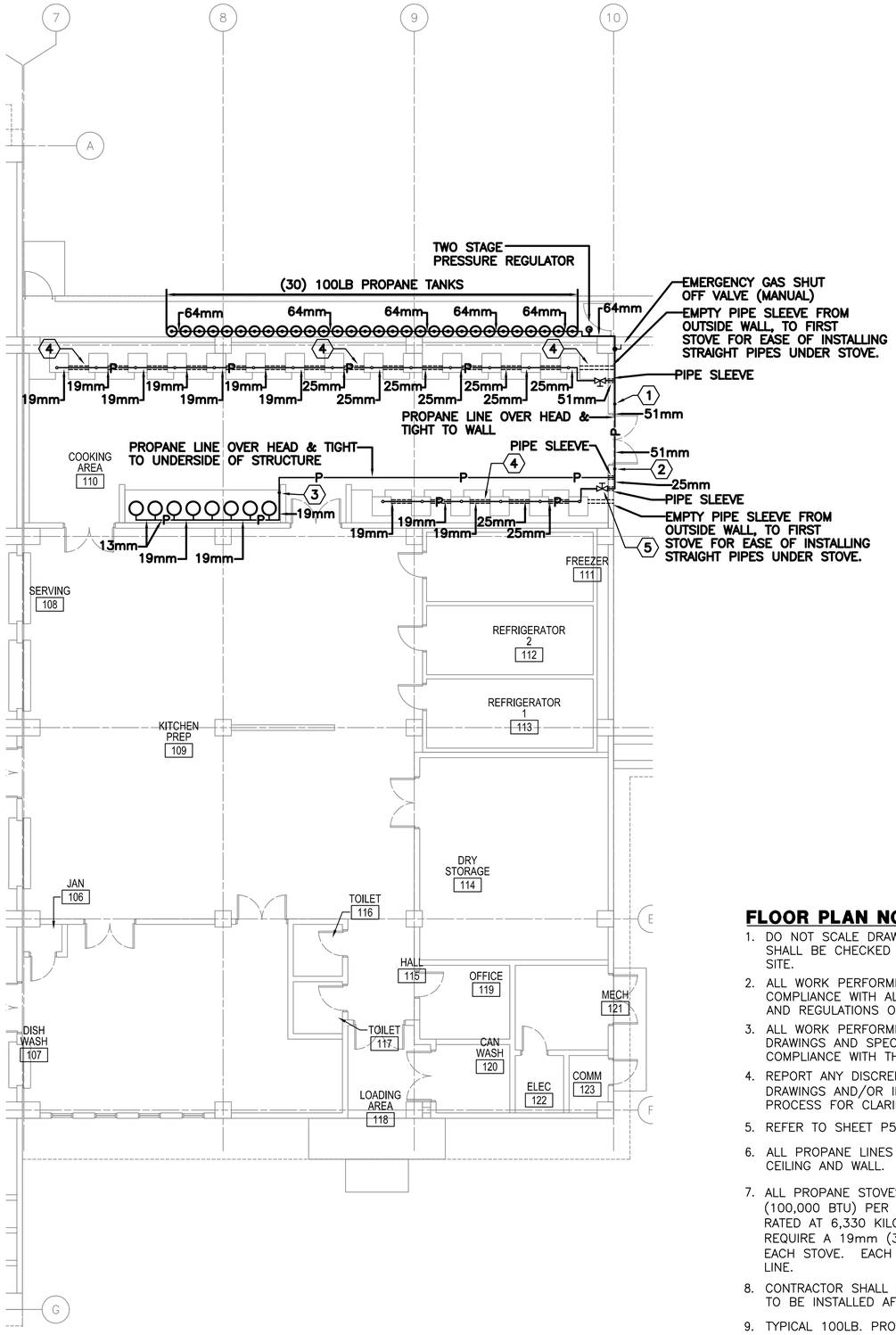

1 P105 DFAC FLOOR PLAN - PLUMBING (PROPANE)

SCALE: 1:100

DFAC PROPANE CODED NOTES:

1. PROPANE LINE UP AND ABOVE DOOR STAYING TIGHT TO THE WALL.
2. PROPANE LINE DOWN FROM ABOVE DOOR STAYING TIGHT TO WALL. CONTINUE LINE INTO PROPANE STOVE STRUCTURE WITH OVERSIZED PIPE SLEEVE.
3. PROPANE LINE DOWN TIGHT TO WALL TO 152mm ABOVE COUNTER TOP, CONTINUE LINE TIGHT TO WALL TO PROVIDE PROPANE TO ALL TEA KETTLE WARMERS. VALVE IN VERTICAL NEAR COUNTERTOP.
4. MANIFOLD SLEEVED BEHIND STOVE LEGS IN CONCRETE. EXTEND BRANCH VALVE UNDER STOVE WITH FLEXIBLE CONNECTOR FROM VALVE TO STOVE.
5. SHUT OFF VALVE–INSTALL PIPING CLOSE TO CONCRETE PLATFORM TO PREVENT TRIPPING HAZARD.

FLOOR PLAN NOTES:

1. DO NOT SCALE DRAWINGS – ALL DIMENSIONS AND CONDITIONS SHALL BE CHECKED AND VERIFIED BY THE CONTRACTOR AT THE SITE.
2. ALL WORK PERFORMED ON THIS BUILDING SHALL BE IN COMPLIANCE WITH ALL PERTINENT CODES, RULES, ORDINANCES AND REGULATIONS OF THE GOVERNING AUTHORITIES.
3. ALL WORK PERFORMED UNDER AND IN CONNECTION WITH THESE DRAWINGS AND SPECIFICATIONS SHALL BE IN STRICT COMPLIANCE WITH THE LATEST SAFETY AND HEALTH STANDARDS.
4. REPORT ANY DISCREPANCIES FOUND IN THE PLUMBING DRAWINGS AND/OR IN THE SPECIFICATIONS DURING THE BIDDING PROCESS FOR CLARIFICATION BY THE ENGINEER.
5. REFER TO SHEET P501, P502, & P503 FOR DETAILS AND SYMBOLS.
6. ALL PROPANE LINES TO BE EXPOSED. RUN LINES TIGHT TO CEILING AND WALL.
7. ALL PROPANE STOVES ARE RATED AT 105,506 KILOJOULES (100,000 BTU) PER HOUR, AND THE TEA KETTLE WARMERS ARE RATED AT 6,330 KILOJOULES (6,000 BTU). EACH STOVE WILL REQUIRE A 19mm (3/4") LINE WITH A SHUT OFF VALVE AT EACH STOVE. EACH TEA KETTLE WILL REQUIRE A 13mm (1/2") LINE.
8. CONTRACTOR SHALL PROVIDE A TWO STAGE PRESSURE REGULATOR TO BE INSTALLED AFTER FINAL PROPANE TANK IN THE MANIFOLD.
9. TYPICAL 100LB. PROPANE TANKS ARE 1168mm X 35mmø. VERIFY TANK SIZE IN FIELD.
10. SEAL ALL PIPE SLEEVE OPENINGS BETWEEN PROPANE PIPE AND PROPANE PIPE SLEEVE.

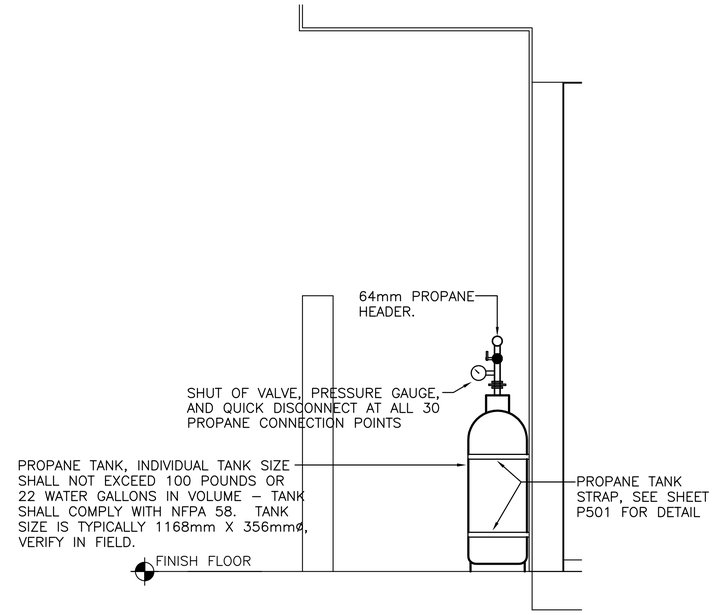

2 P105 PROPANE TANK MOUNTING AND LINE DETAIL

SCALE: N.T.S.

KEY PLAN:

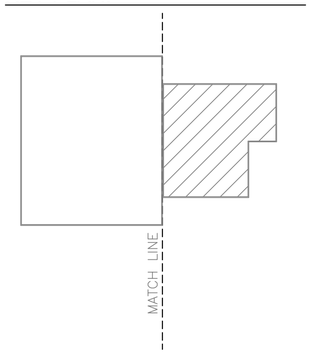

PLUMBING SYMBOLS

SS	SANITARY SEWER PIPING (BELOW GROUND)
SS	SANITARY SEWER PIPING (ABOVE GROUND)
	VENT PIPING (V)
	COLD WATER PIPING (CW)
	HOT WATER PIPING (HW)
P	PROPANE LINE
P	TWO STAGE PRESSURE GAUGE
	BALL VALVE
<<	BACKFLOW PREVENTER
OR	CLEANOUT (CO.)
	ROOF PENETRATION

LINEAR DIMENSIONS SHOWN ARE IN MILLIMETERS (MM), UNLESS OTHERWISE NOTED

0 2000 4000
SCALE: 1:100

APPROVED:

A/E DESIGNER OF RECORD

SEAL:

COMMONWEALTH OF PENNSYLVANIA REGISTERED PROFESSIONAL MATTHEW R. SOTOSKY ENGINEER 065576-E

US ARMY CORPS OF ENGINEERS
AFGHANISTAN ENGINEER DISTRICT

Mark	Description	Date	Appr.	Mark	Description	Date	Appr.

Designed by: RMH
Dwn by: RMH
Ckd by: CJM
Reviewed by:
Submitted by:
Date: 02/23/10
Rev: 0
Design file no.
Drawing code:
File name: AN4DFACPL-165XXX
Plot date: 02/09/2010
Plot scale: 1:100

U.S. ARMY CORPS OF ENGINEERS
AFGHANISTAN ENGINEER DISTRICT
APO AE 96338

Michael Baker Jr., Inc.
A unit of Michael Baker Corporation
Airside Business Park
100 Airside Drive
Moon Township, PA 15108
www.mbakercorp.com

BAKER

AFGHAN NATIONAL ARMY
REGIONAL MILITARY TRAINING CENTER
STANDARD DESIGN

DINING FACILITY
DFAC FLOOR PLAN – PLUMBING (PROPANE)

Sheet reference number:
P–105

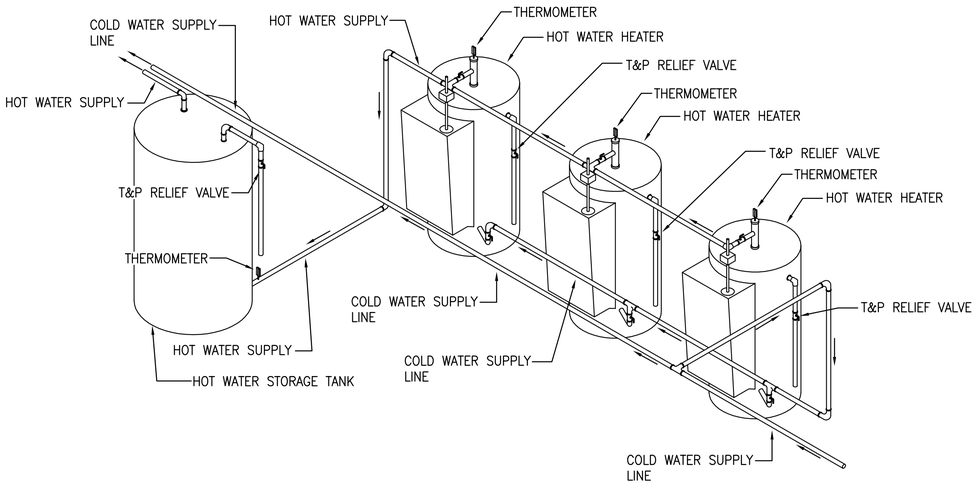

HOT WATER HEATER AND STORAGE TANK SYSTEM DETAIL

SCALE: N.T.S.

FIXTURE LIST

TYPE	ITEM	SOIL & WASTE	VENT	COLD WATER	HOT WATER	REMARKS	REMARKS 2
W–1	EASTERN STYLE WATER CLOSET	102mm	51mm	13mm	------	FLUSH TANK	LOW FLOW EFFICIENT TYPE
L–1	TROUGH FIXTURE	38mm	38mm	13mm	13mm	FABRICATED IN FIELD	LOW FLOW EFFICIENT TYPE
PT–1	POT FILL AT STOVE	--------	--------	13mm	13mm	WALL HUNG FIXTURE	POT FILL FAUCET
PW–1	POT WASH	38mm	38mm	13mm	13mm	POT WASH	CAST IN PLACE
S–1	WALL HUNG HAND SINK	38mm	38mm	13mm	13mm	559mm x 635mm x 165mm STAINLESS STEEL	LOW FLOW EFFICIENT TYPE
S–2	2–COMPARTMENT SINK	INDIRECT WASTE	--------	13mm	13mm	STAINLESS STEEL PREP SINK	LOW FLOW EFFICIENT TYPE
S–3	2–COMPARTMENT SINK	38mm	38mm	13mm	13mm	STAINLESS STEEL DISHWASHING SINK	LOW FLOW EFFICIENT TYPE
MB–1	MOP BASIN	76mm	51mm	19mm	19mm	------	LOW FLOW EFFICIENT TYPE
HWH–1	WATER HEATER	---	---	SEE DWG.	SEE DWG.	454 LITER ELECTRIC WATER HEATER, 380/3ø, 24KW	----------
ST–1	HOT WATER STORAGE TANK	---	---	SEE DWG.	SEE DWG.	757 LITER HOT WATER STORAGE TANK	----------
FD–1	FLOOR DRAIN	76mm	---	---	---	COORDINATE LOCATION WITH ARCHITECT	----------

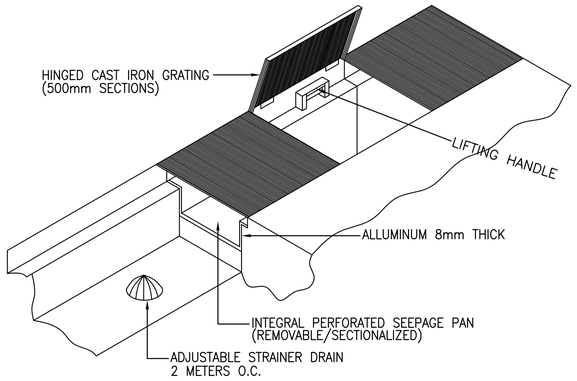

FLOOR TRENCH DETAIL

SCALE: N.T.S.

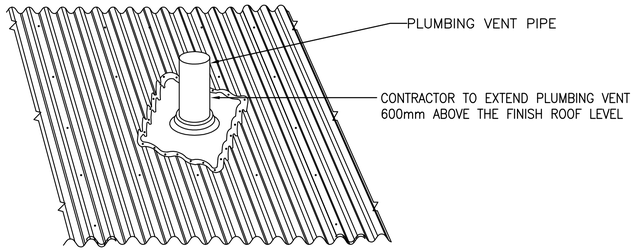

PLUMBING VENT THRU ROOF DETAIL

SCALE: NTS

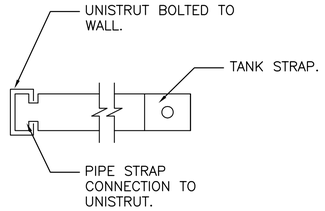

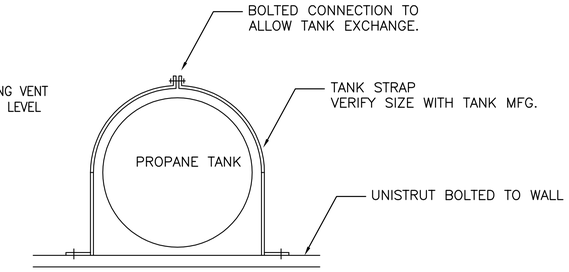

PROPANE TANK SUPPORT DETAIL

SCALE: N.T.S.

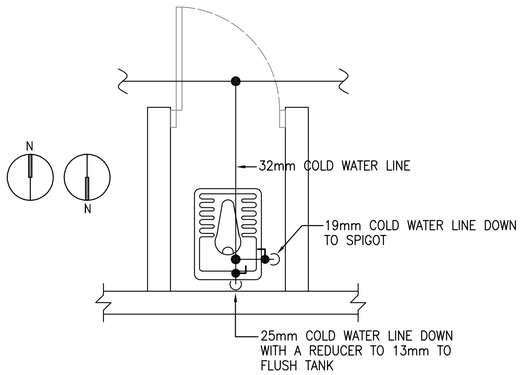

TYPICAL EASTERN STYLE WATER CLOSET WITH SPIGOT WATER PIPING DETAIL

SCALE: N.T.S.

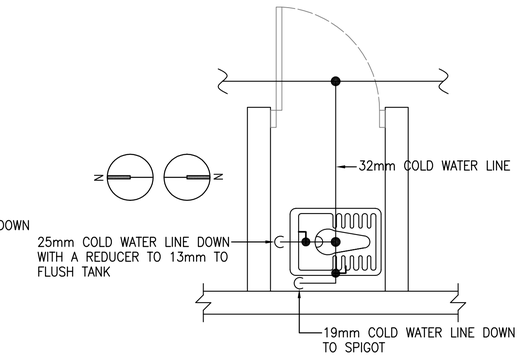

TYPICAL EASTERN STYLE WATER CLOSET WITH SPIGOT WATER PIPING DETAIL

SCALE: N.T.S.

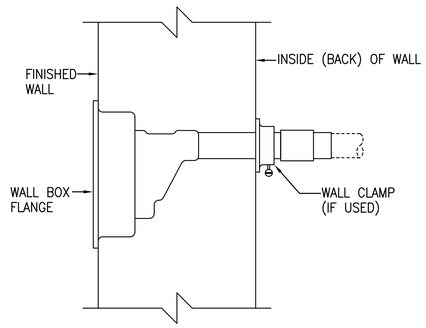

TYPICAL FREEZEPROOF WALL HYDRANT DETAIL

SCALE: N.T.S.

GENERAL PLUMBING KITCHEN NOTES:

1. ALL ROUGH–INS AND FINAL PLUMBING CONNECTIONS SHALL BE PERFORMED IN STRICT ACCORDANCE WITH THE LATEST CODE REQUIREMENTS. CONTRACTOR SHALL BE RESPONSIBLE FOR VERIFICATION AND COMPLIANCE WITH ALL APPLICABLE CODE REQUIREMENTS.
2. CONTRACTOR SHALL BE RESPONSIBLE FOR PROVIDING AND INSTALLING ALL FAUCETS, VACUUM BREAKERS, CHECK VALVES, ETC. REQUIRED FOR ITEMS OF FOOD SERVICE EQUIPMENT THAT ARE NOT SUPPLIED AS PART OF THE EQUIPMENT, AND FOR PROVIDING FINAL CONNECTIONS TO SAME.
3. CONTRACTOR SHALL PROVIDE ALL FLOOR DRAINS, P–TRAPS, FLOOR SINKS, TRAPS, SHUT–OFF VALVES, PIPING, GAUGES, FITTINGS, AND ANY ADDITIONAL PIPING AND/OR FITTINGS REQUIRED FOR EQUIPMENT INSTALLATION.

APPROVED:

A/E DESIGNER OF RECORD

SEAL:

US ARMY CORPS OF ENGINEERS
AFGHANISTAN ENGINEER DISTRICT

Mark	Description	Date	Appr.

Mark	Description	Date	Appr.

Designed by: RMH
Dwn by: RMH
Ckd by: CJM
Reviewed by:
Submitted by:
Date: 02/23/10
Rev: 0
Design file no.
Drawing code:
File name: ANASFACPL-501XXX
Plot date: 02/05/2010
Plot scale: N.T.S.

U.S. ARMY CORPS OF ENGINEERS
AFGHANISTAN ENGINEER DISTRICT
APO AE 96338

Michael Baker Jr., Inc.
A unit of Michael Baker Corporation
Airside Business Park
100 Airside Drive
Moon Township, PA 15108
www.mbakercorp.com

BAKER

AFGHAN NATIONAL ARMY
REGIONAL MILITARY TRAINING CENTER
STANDARD DESIGN

DINING FACILITY
PLUMBING DETAILS

Sheet reference number:
P–501

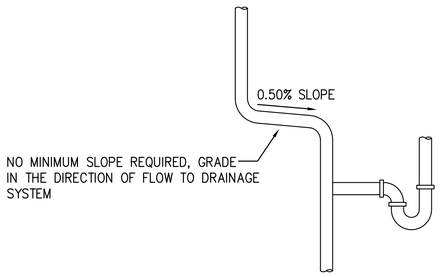

TYPICAL VENT SLOPE DETAILS

SCALE: N.T.S.

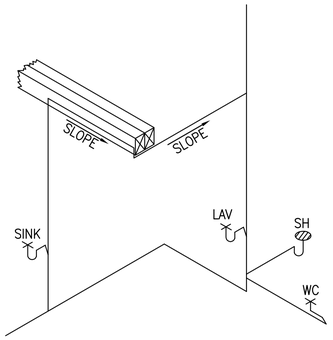

TYPICAL VENT SLOPE DETAILS

SCALE: N.T.S.

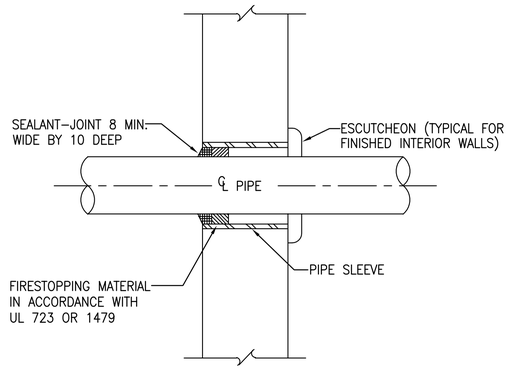

TYPICAL WALL PENETRATION DETAIL

SCALE: N.T.S.

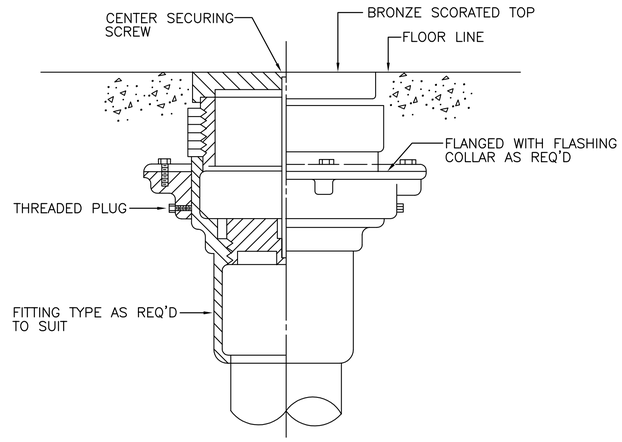

TYPICAL FLOOR CLEANOUT DETAIL

SCALE: N.T.S.

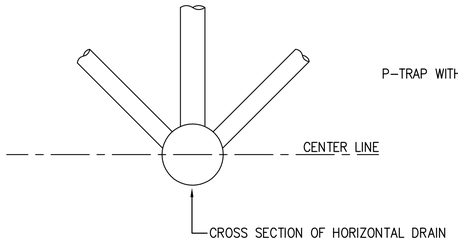

ACCEPTABLE VENT CONNECTIONS TO HORIZONTAL DRAIN - DETAIL

SCALE: N.T.S.

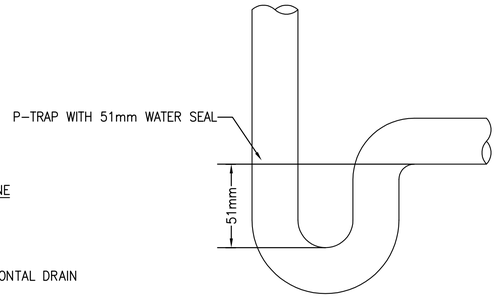

P-TRAP WITH 51mm WATER SEAL DETAIL

SCALE: N.T.S.

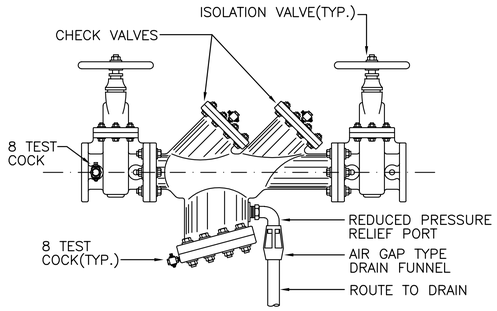

TYPICAL BACKFLOW PREVENTER DETAIL

SCALE: N.T.S.

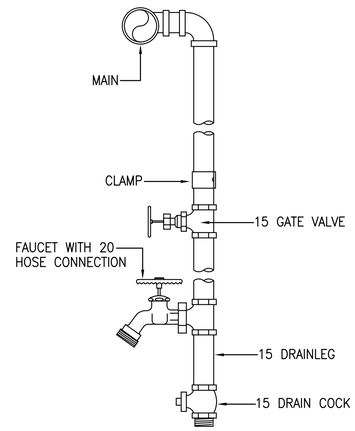

TYPICAL WATER DROP DETAIL (SPIGOT)

SCALE: N.T.S.

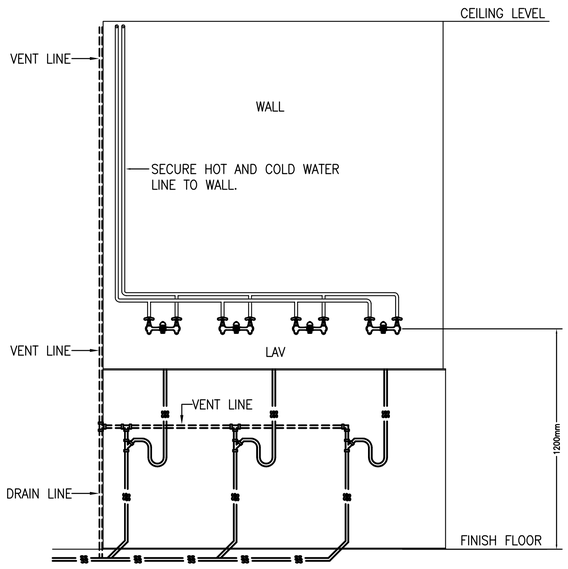

LAVATORY ELEVATION PLAN - PLUMBING

SCALE: N.T.S.

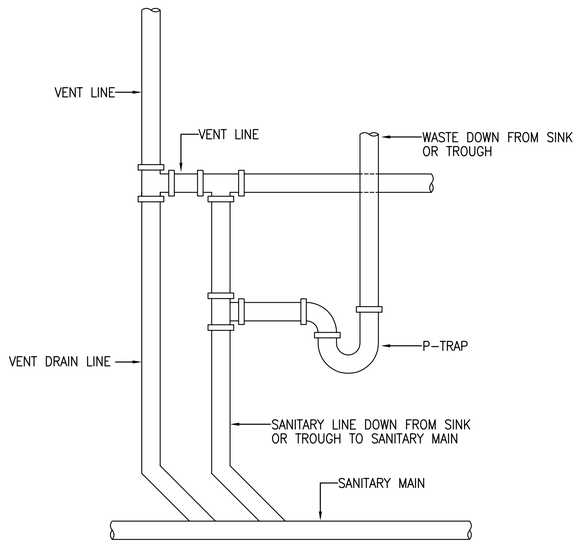

TYPICAL LAVATORY/LAUNDRY VENT DETAIL

SCALE: N.T.S.

APPROVED:

A/E DESIGNER OF RECORD

SEAL:

COMMONWEALTH OF PENNSYLVANIA
REGISTERED PROFESSIONAL
MATTHEW R. SOTOSKY
ENGINEER
045576-E

US ARMY CORPS OF ENGINEERS
AFGHANISTAN ENGINEER DISTRICT

Mark	Description	Date	Appr.	Mark	Description	Date	Appr.

Rev: 0
Date: 02/23/10
Designed by: RMH
Dwn by: RMH
Ckd by: CJM
Reviewed by: MRS
Submitted by: BAKER
Design file no.
Drawing code:
File name: ANADFAICP_-502XXX
Plot date: 02/09/2010
Plot scale: N.T.S.

U.S. ARMY CORPS OF ENGINEERS
AFGHANISTAN ENGINEER DISTRICT
APO AE 96338

Michael Baker Jr., Inc.
A unit of Michael Baker Corporation
Airside Business Park
100 Airside Drive
Moon Township, PA 15108
www.mbakercorp.com

AFGHAN NATIONAL ARMY
REGIONAL MILITARY TRAINING CENTER
STANDARD DESIGN

DINING FACILITY

PLUMBING DETAILS & FIXTURE SCHEDULE

Sheet reference number:
P–502

PLUMBING SYMBOLS

- SANITARY SEWER PIPING (BELOW GROUND)
- SANITARY SEWER PIPING (GREASE LINE)
- VENT PIPING (V)
- COLD WATER PIPING (CW)
- HOT WATER PIPING (HW)
- BALL VALVE
- BACKFLOW PREVENTER
- OR CLEANOUT (CO.)
- ROOF PENETRATION

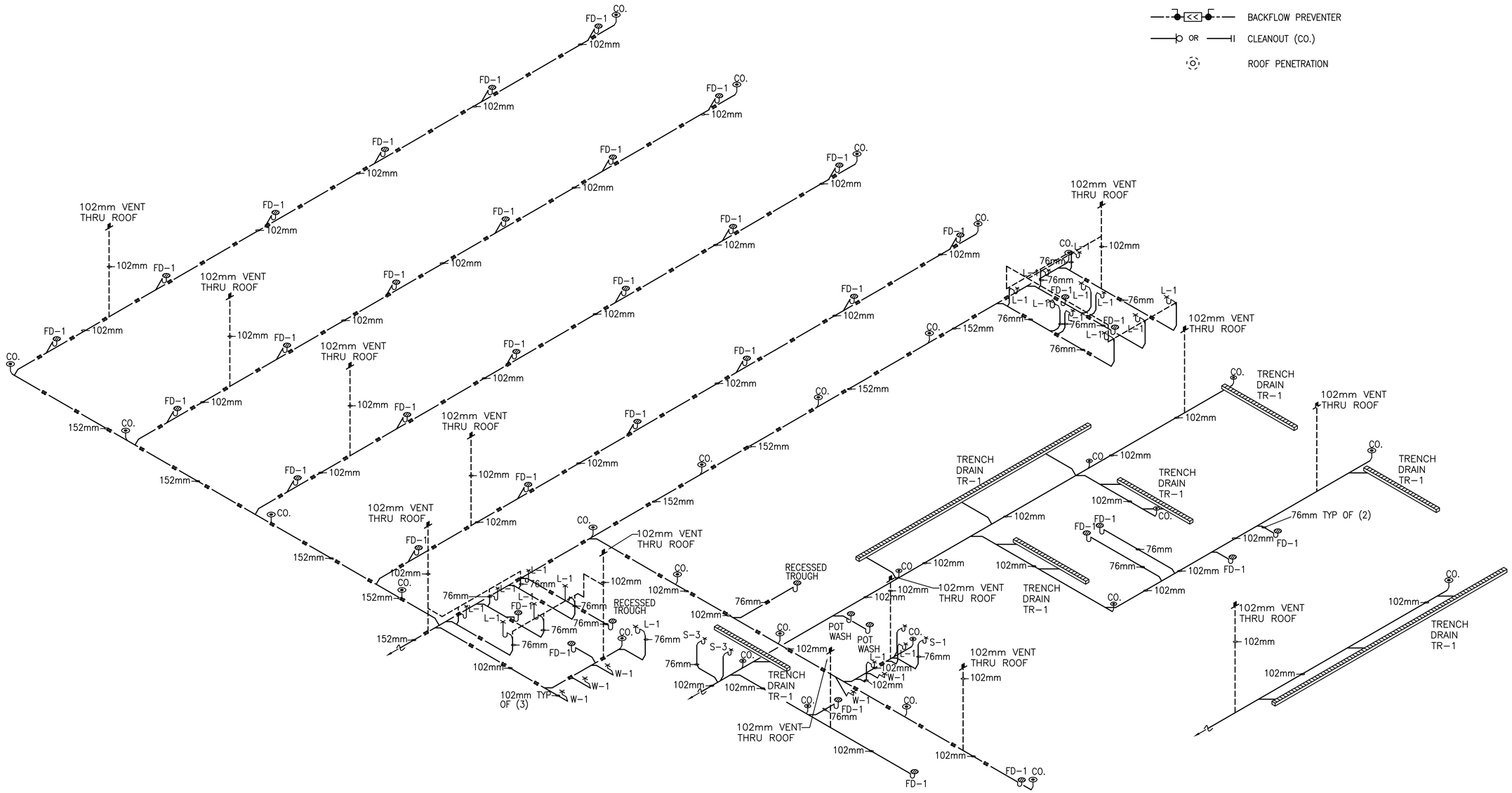

1 P901 DFAC DRAINAGE ISOMETRIC

SCALE: N.T.S.

US ARMY CORPS OF ENGINEERS
AFGHANISTAN ENGINEER DISTRICT

Mark	Description	Date	Appr.	Mark	Description	Date	Appr.

Designed by: RMH
Dwn by: RMH
Ckd by: CJM
Reviewed by:
Submitted by: BAKER
Date: 02/23/10
Rev: 0
Design file no.
Drawing code:
File name: ANADFACPL-901XXX
Plot date: 02/08/2010
Plot scale: N.T.S.

U.S. ARMY CORPS OF ENGINEERS
AFGHANISTAN ENGINEER DISTRICT
APO AE 96338

Michael Baker Jr., Inc
A unit of Michael Baker Corporation
Airside Business Park
100 Airside Drive
Moon Township, PA 15108
www.mbakercorp.com

AFGHAN NATIONAL ARMY
REGIONAL MILITARY TRAINING CENTER
STANDARD DESIGN

DINING FACILITY
DFAC DRAINAGE ISOMETRIC

APPROVED:

A/E DESIGNER OF RECORD

SEAL:

COMMONWEALTH OF PENNSYLVANIA
REGISTERED PROFESSIONAL
MATTHEW R. SOTOSKY
ENGINEER
046576-E

Sheet reference number:
P-901

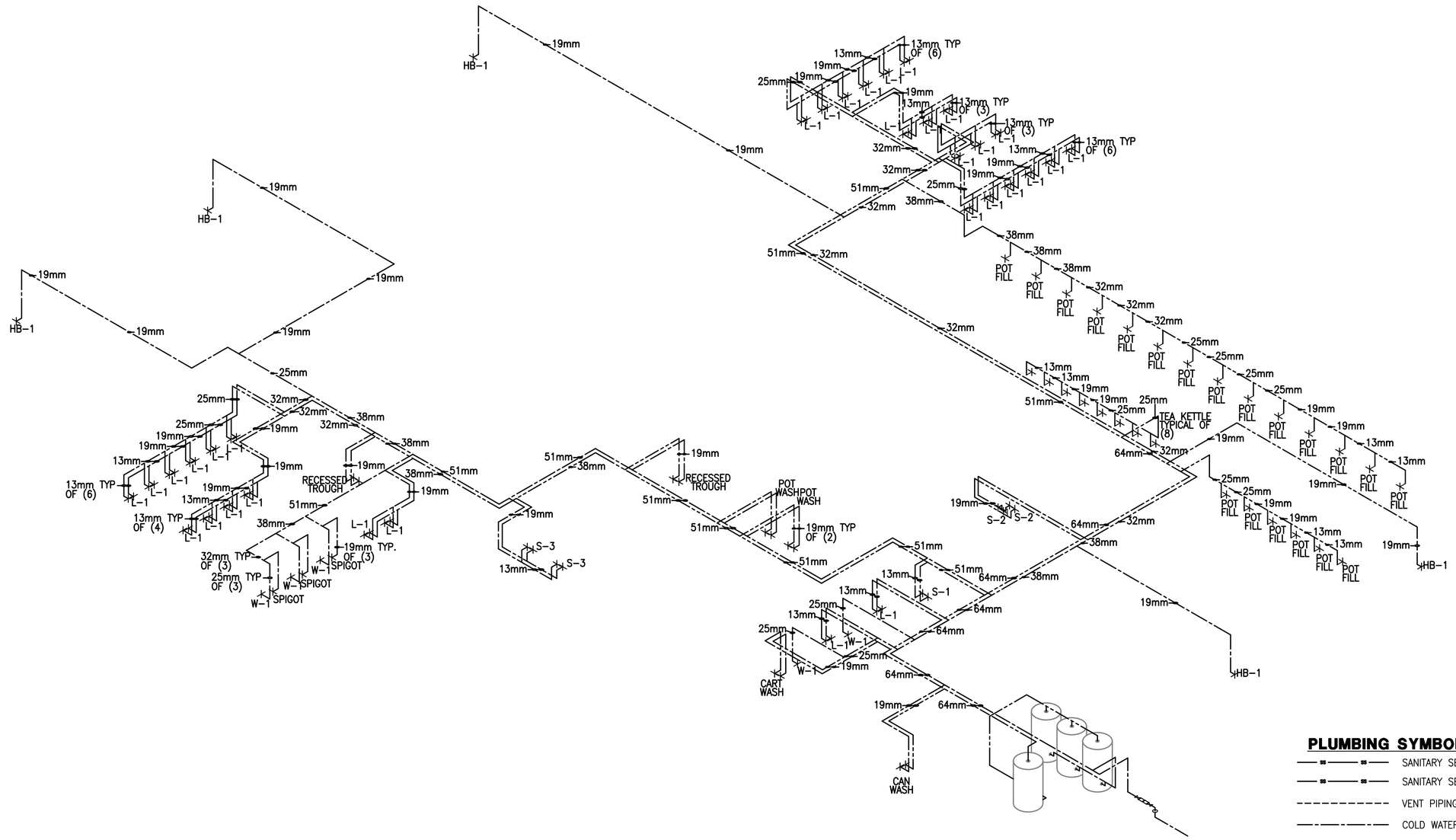

PLUMBING SYMBOLS

- SANITARY SEWER PIPING (BELOW GROUND)
- SANITARY SEWER PIPING (ABOVE GROUND)
- VENT PIPING (V)
- COLD WATER PIPING (CW)
- HOT WATER PIPING (HW)
- BALL VALVE
- BACKFLOW PREVENTER
- OR CLEANOUT (CO.)
- ROOF PENETRATION

1 / P-902 DFAC WATER ISOMETRIC

SCALE: N.T.S.

APPROVED:

A/E DESIGNER OF RECORD

SEAL:

COMMONWEALTH OF PENNSYLVANIA
REGISTERED PROFESSIONAL
MATTHEW R. SOTOSKY
ENGINEER
045576-E

US ARMY CORPS OF ENGINEERS
AFGHANISTAN ENGINEER DISTRICT

Mark	Description	Date	Appr.	Mark	Description	Date	Appr.

Designed by: RMH
Dwn by: RMH
Ckd by: CJM
Reviewed by:
Submitted by: BAKER
Date: 02/23/10
Rev: 0
Design file no.
Drawing code:
File name: ANADFACPL-902XXX
Plot date: 02/08/2010
Plot scale: N.T.S.

U.S. ARMY CORPS OF ENGINEERS
AFGHANISTAN ENGINEER DISTRICT
APO AE 96338

Michael Baker Jr., Inc
A unit of Michael Baker Corporation
Airside Business Park
100 Airside Drive
Moon Township PA 15108
www.mbakercorp.com

AFGHAN NATIONAL ARMY
REGIONAL MILITARY TRAINING CENTER
STANDARD DESIGN

DINING FACILITY
DFAC WATER ISOMETRIC

Sheet reference number:
P-902

PLUMBING SYMBOLS

SS	SANITARY SEWER PIPING (BELOW GROUND)
SS	SANITARY SEWER PIPING (ABOVE GROUND)
	VENT PIPING (V)
	COLD WATER PIPING (CW)
	HOT WATER PIPING (HW)
P	PROPANE LINE
P	TWO STAGE PRESSURE GAUGE
	BALL VALVE
	BACKFLOW PREVENTER
OR	CLEANOUT (CO.)
	ROOF PENETRATION

ISOMETRIC NOTES:

1. SEAL ALL EXTERIOR PIPE SLEEVE OPENINGS BETWEEN PROPANE PIPE AND PROPANE PIPE SLEEVE.

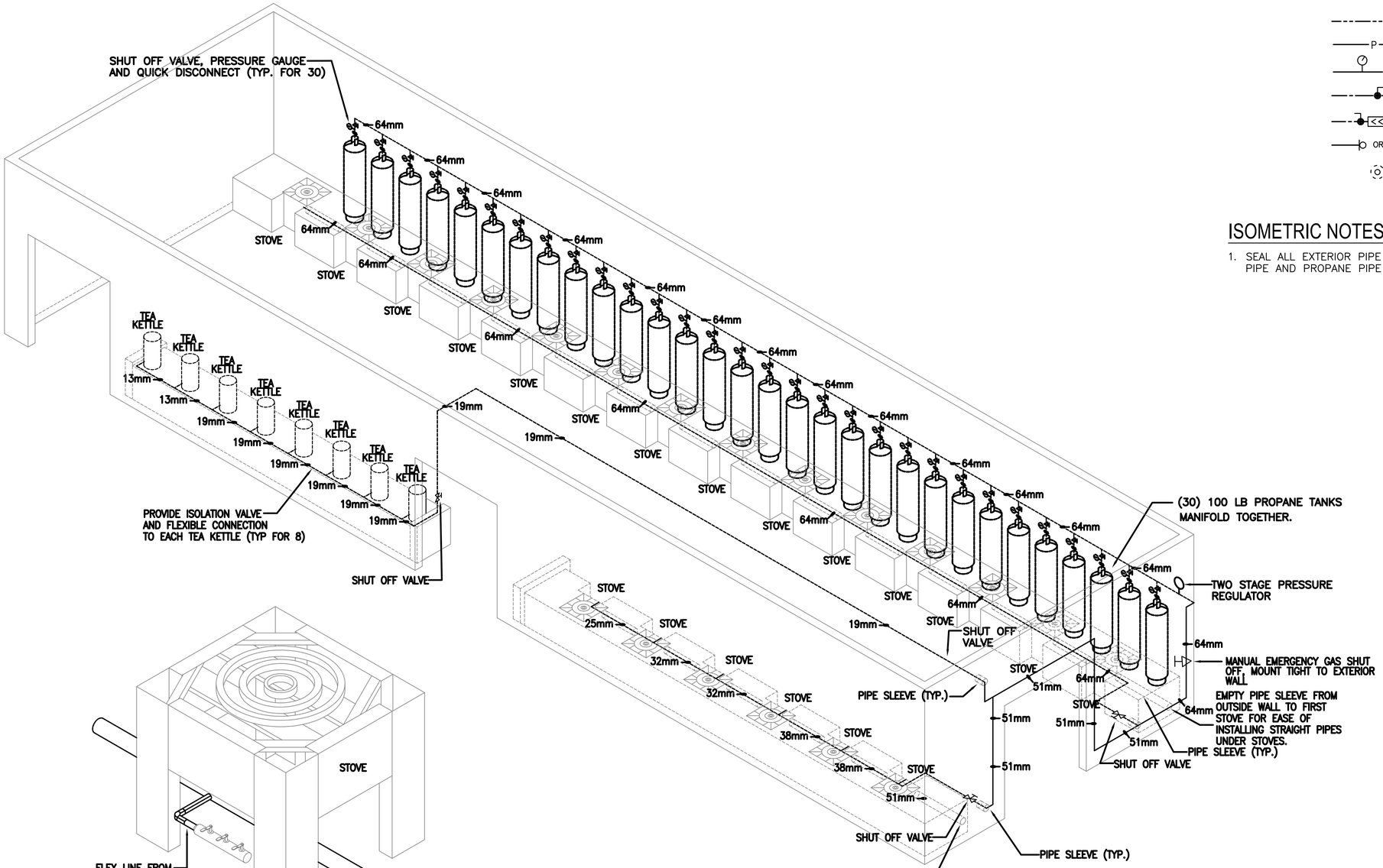

1 P903 DFAC PROPANE PIPING ISOMETRIC

SCALE: N.T.S.

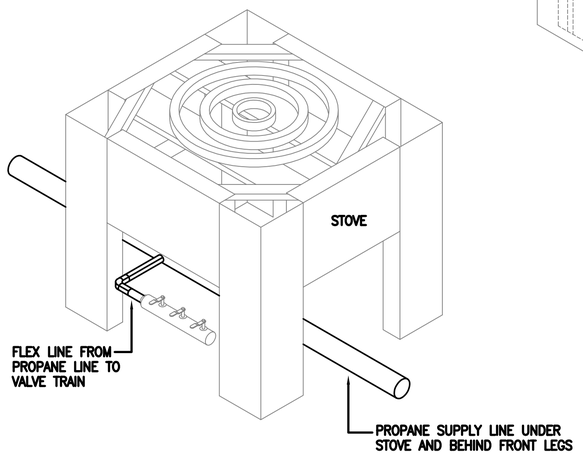

2 P903 PROPANE STOVE WITH FLEX CONNECTION

SCALE: N.T.S.

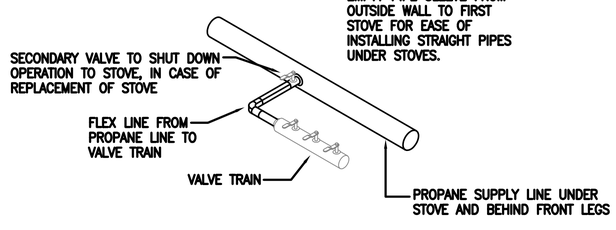

3 P903 VALVE TRAIN, PROPANE FLEX LINE AND PROPANE MAIN DETAIL

SCALE: N.T.S.

US ARMY CORPS OF ENGINEERS
AFGHANISTAN ENGINEER DISTRICT

Mark	Description	Date	Appr.	Mark	Description	Date	Appr.

Designed by: RMH
Dwn by: RMH
Ckd by: CJM
Reviewed by:
Submitted by: BAKER
Date: 02/23/10
Rev: 0
Design file no.
Drawing code:
File name: ANADFACPL-903XXX
Plot date: 02/08/2010
Plot scale: N.T.S.

U.S. ARMY CORPS OF ENGINEERS
AFGHANISTAN ENGINEER DISTRICT
APO AE 96338

Michael Baker Jr., Inc.
A unit of Michael Baker Corporation
Airside Business Park
100 Airside Drive
Moon Township, PA 15108
www.mbakercorp.com

AFGHAN NATIONAL ARMY
REGIONAL MILITARY TRAINING CENTER
STANDARD DESIGN

DINING FACILITY
DFAC PROPANE ISOMETRIC

APPROVED:

A/E DESIGNER OF RECORD

SEAL:

COMMONWEALTH OF PENNSYLVANIA
REGISTERED PROFESSIONAL
MATTHEW R. SOTOSKY
ENGINEER
045576-E

Sheet reference number:
P-903

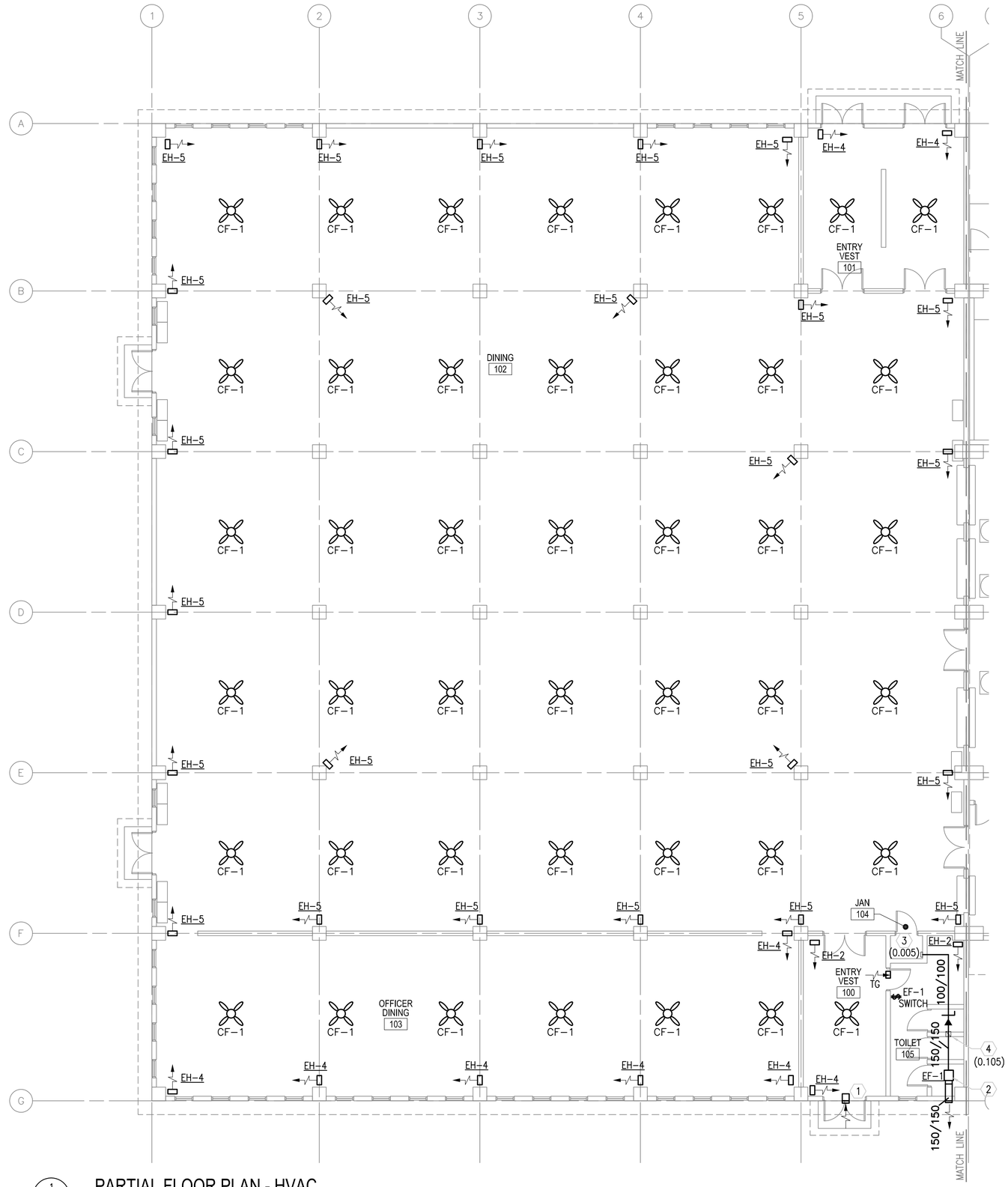

1 M-101 PARTIAL FLOOR PLAN - HVAC

SCALE: 1:100

GENERAL NOTES:

1. DO NOT SCALE DRAWINGS – ALL DIMENSIONS AND CONDITIONS SHALL BE CHECKED AND VERIFIED BY THE CONTRACTOR AT THE SITE.
2. ALL WORK PERFORMED ON THIS BUILDING SHALL BE IN COMPLIANCE WITH ALL PERTINENT CODES, RULES, ORDINANCES AND REGULATIONS OF THE GOVERNING AUTHORITIES.
3. ALL WORK PERFORMED UNDER AND IN CONNECTION WITH THESE DRAWINGS AND SPECIFICATIONS SHALL BE IN STRICT COMPLIANCE WITH THE LATEST SAFETY AND HEALTH STANDARDS.

SYMBOLS:

- (X) KEY NOTE
- (.050) AIR VOLUME IN CUBIC METERS PER SECOND (CMS)
- (T) THERMOSTAT WITH LOCKING COVER
- UC DOOR UNDERCUT
- TG TRANSFER GRILLE
- $ SINGLE POLE SWITCH – 20A RATED

ABBREVIATIONS:

AFF	ABOVE FINISH FLOOR
CF	CEILING FANS
CMS	CUBIC METERS PER SECOND
STATS	THERMOSTATS

KEY NOTE:

1. 610X400 (24X16) INTAKE LOUVER FOR MAKE UP AIR. PROVIDE WEATHER PROOF LOUVER WITH 50mm (2") WASHABLE FILTER AND SAND TRAP.
2. INLINE EXHAUST FAN DUCTED TO WALL CAP WITH LOW LEAKAGE GRAVITY BACK–DRAFT DAMPER. SECURE FAN TO STRUCTURE ABOVE.
3. 150x150 (6x6) ALUMINUM EXHAUST GRILLE WITH ADJUSTABLE OPPOSED BLADE DAMPERS. BALANCE TO CMS IN PARENTHESIS.
4. 250x150 (10x6) ALUMINUM EXHAUST GRILLE WITH ADJUSTABLE OPPOSED BLADE DAMPERS. BALANCE TO CMS IN PARENTHESIS.

KEY PLAN:

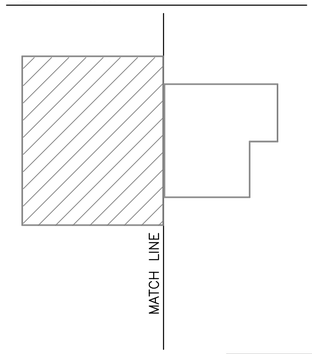

LINEAR DIMENSIONS SHOWN ARE IN MILLIMETERS (MM), UNLESS OTHERWISE NOTED

0 2000 4000
SCALE: 1:100

APPROVED:

A/E DESIGNER OF RECORD

SEAL:

COMMONWEALTH OF PENNSYLVANIA REGISTERED PROFESSIONAL MATTHEW R. SOTOSKY ENGINEER 046576-E

US ARMY CORPS OF ENGINEERS
AFGHANISTAN ENGINEER DISTRICT

Mark	Description	Date	Appr.	Mark	Description	Date	Appr.

Designed by: RML
Dwn by: JJN
Ckd by: CJM
Reviewed by: MRS
Submitted by: BAKER
Date: 02/23/10
Rev: 0
Design file no.
Drawing code:
File name: ANADFACMR-101XXX
Plot date: 02/26/2010
Plot scale: 1:100

U.S. ARMY CORPS OF ENGINEERS
AFGHANISTAN ENGINEER DISTRICT
APO AE 96338

Michael Baker Jr., Inc.
A unit of Michael Baker Corporation
Airside Business Park
100 Airside Drive
Moon Township, PA 15108
www.mbakercorp.com

AFGHAN NATIONAL ARMY
REGIONAL MILITARY TRAINING CENTER
STANDARD DESIGN

DINING FACILITY

PARTIAL HVAC FLOOR PLAN

Sheet reference number:
M–101

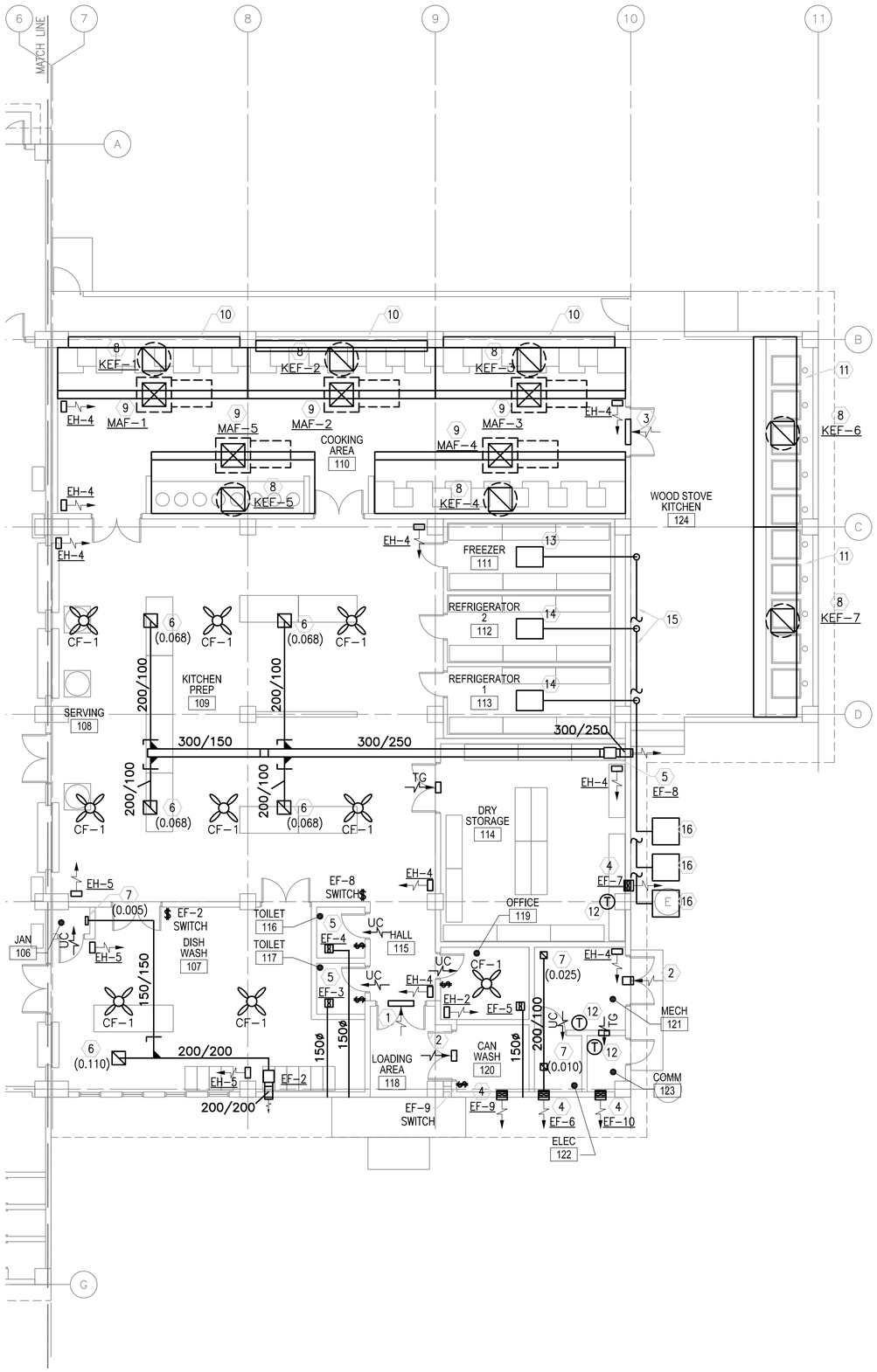

1 M-101 PARTIAL FLOOR PLAN - HVAC

SCALE: 1:100

GENERAL NOTES:

1. DO NOT SCALE DRAWINGS – ALL DIMENSIONS AND CONDITIONS SHALL BE CHECKED AND VERIFIED BY THE CONTRACTOR AT THE SITE.
2. ALL WORK PERFORMED ON THIS BUILDING SHALL BE IN COMPLIANCE WITH ALL PERTINENT CODES, RULES, ORDINANCES AND REGULATIONS OF THE GOVERNING AUTHORITIES.
3. ALL WORK PERFORMED UNDER AND IN CONNECTION WITH THESE DRAWINGS AND SPECIFICATIONS SHALL BE IN STRICT COMPLIANCE WITH THE LATEST SAFETY AND HEALTH STANDARDS.

SYMBOLS:

- (X) KEY NOTE
- (.050) AIR VOLUME IN CUBIC METERS PER SECOND (CMS)
- (T) THERMOSTAT WITH LOCKING COVER
- UC DOOR UNDERCUT
- TG TRANSFER GRILLE
- $ SINGLE POLE SWITCH – 20A RATED FOR EXHAUST FAN

ABBREVIATIONS:

AFF	ABOVE FINISH FLOOR
CF	CEILING FANS
CMS	CUBIC METERS PER SECOND
STATS	THERMOSTATS

KEY NOTE:

1. 810X610 (32X24) INTAKE LOUVER FOR MAKE UP AIR. PROVIDE WEATHER PROOF LOUVER W/0.05mm (2") WASHABLE FILTER AND SAND TRAP.
2. 400X200 (16X8) INTAKE LOUVER FOR MAKE UP AIR. PROVIDE WEATHER PROOF LOUVER W/0.05mm (2") WASHABLE FILTER AND SAND TRAP.
3. 1520x610 (60X24) INTAKE LOUVER FOR MAKE UP AIR. PROVIDE WEATHER PROOF LOUVER W/0.05mm (2") WASHABLE FILTER AND SAND TRAP.
4. WALL EXHAUST FAN WITH LOW SPRING OPERATED BACK–DRAFT DAMPER. SEE DETAIL ON SHEET M501.
5. INLINE EXHAUST FAN DUCTED TO WALL CAP WITH LOW LEAKAGE GRAVITY BACK–DRAFT DAMPER. SECURE FAN TO STRUCTURE ABOVE.
6. 250x150 (10x6) ALUMINUM EXHAUST GRILLE WITH ADJUSTABLE OPPOSED BLADE DAMPERS. BALANCE TO CMS IN PARENTHESIS.
7. 150x150 (6x6) ALUMINUM EXHAUST GRILLE WITH ADJUSTABLE OPPOSED BLADE DAMPERS. BALANCE TO CMS IN PARENTHESIS.
8. KITCHEN HOOD UP–BLAST EXHAUST FAN ON ROOF MOUNTED CURB. SEE DETAILS ON SHEET M502.
9. KITCHEN HOOD MAKE UP AIR FAN ON ROOF MOUNTED CURB. SEE DETAILS ON SHEET M502.
10. PROVIDE STAINLESS STEEL FILLER PANEL BEHIND HOOD IN BETWEEN COLUMNS.
11. HOLD HOOD OFF BACK WALL TO PROVIDE SPACE FOR FLUES TO PASS. PROVIDE HOOD BRACING BACK TO WALL IN BETWEEN FLUES.
12. THERMOSTAT MOUNTED AS HIGH AS POSSIBLE. INTERLOCK STAT WITH CORRESPONDING EXHAUST FAN, SET FAN TO ENERGIZE ON RISE IN TEMPERATURE ABOVE 25°C (77°F).
13. FREEZER EVAPORATOR UNIT
14. REFRIGERATOR EVAPORATOR UNIT
15. REFRIGERATION PIPING EXTENDED FROM EVAPORATOR TO CORRESPONDING CONDENSING UNIT. (TYPICAL)
16. REFRIGERATOR / FREEZER CONDENSING UNITS MOUNTED ON SLAB ON GRADE. REFER TO DETAIL "9" ON S–701.

KEY PLAN:

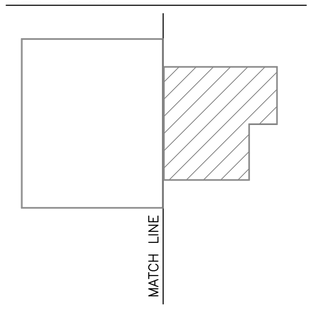

LINEAR DIMENSIONS SHOWN ARE IN MILLIMETERS (MM), UNLESS OTHERWISE NOTED

0 2000 4000
SCALE: 1:100

APPROVED:

A/E DESIGNER OF RECORD

SEAL:

US ARMY CORPS OF ENGINEERS
AFGHANISTAN ENGINEER DISTRICT

Mark	Description	Date	Appr.	Mark	Description	Date	Appr.

Date: 02/23/10
Rev: 0
Designed by: RML
Dwn by: JJN
Ckd by: CJM
Reviewed by: MRS
Submitted by: BAKER
Drawing code:
File name: ANADFACMH-102XXX
Plot date: 02/26/2010
Plot scale: 1:100

U.S. ARMY CORPS OF ENGINEERS
AFGHANISTAN ENGINEER DISTRICT
APO AE 96338

Michael Baker Jr., Inc
A unit of Michael Baker Corporation
Airside Business Park
100 Airside Drive
Moon Township, PA 15108
www.mbakercorp.com

AFGHAN NATIONAL ARMY
REGIONAL MILITARY TRAINING CENTER
STANDARD DESIGN

DINING FACILITY

PARTIAL HVAC FLOOR PLAN

Sheet reference number:
M–102

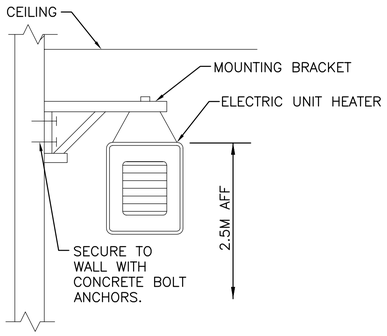

1 M-501 ELECTRIC UNIT HEATER MOUNTING DETAIL
N.T.S.

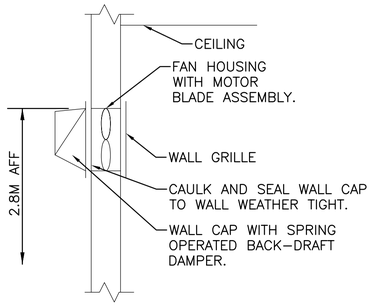

2 M-501 WALL EXHAUST FAN DETAIL
N.T.S.

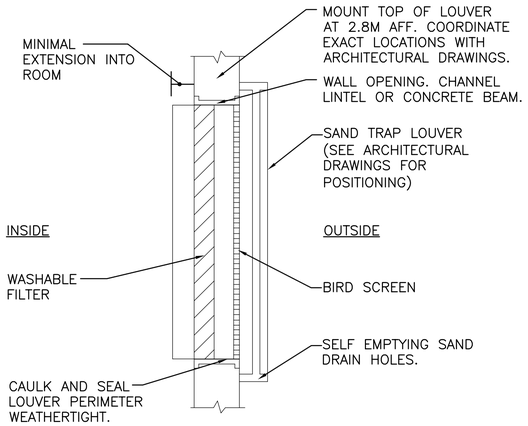

3 M-501 FILTERED SAND TRAP LOUVER
N.T.S.

EXHAUST FAN SCHEDULE

NO.	TYPE	FAN CMS	DRIVE	HP	SP mmH2O	ELECTRICAL DATA	SWITCH
EF-1	INLINE	0.110	DIRECT	1/12	13	220/1/50	@ WALL
EF-2	INLINE	0.115	DIRECT	1/12	13	220/1/50	@ WALL
EF-3	INLINE	0.035	DIRECT	FRACT	13	220/1/50	@ WALL
EF-4	INLINE	0.035	DIRECT	FRACT	13	220/1/50	@ WALL
EF-5	INLINE	0.035	DIRECT	FRACT	13	220/1/50	@ WALL
EF-6	INLINE	0.035	DIRECT	FRACT	13	220/1/50	W/ STAT
EF-7	WALL	0.035	DIRECT	FRACT	9.5	220/1/50	W/ STAT
EF-8	INLINE	0.270	DIRECT	1/6	13	220/1/50	@ WALL
EF-9	WALL	0.035	DIRECT	FRACT	9.5	220/1/50	@ WALL
EF-10	WALL	0.035	DIRECT	FRACT	9.5	220/1/50	W/ STAT
KEF-1	UPBLAST	4.400	DIRECT	3	25	220/1/50	@ HOOD
KEF-2	UPBLAST	4.400	DIRECT	3	25	220/1/50	@ HOOD
KEF-3	UPBLAST	4.400	DIRECT	3	25	220/1/50	@ HOOD
KEF-4	UPBLAST	5.660	DIRECT	5	25	220/1/50	@ HOOD
KEF-5	UPBLAST	3.800	DIRECT	3	25	220/1/50	@ HOOD
KEF-6	UPBLAST	4.400	DIRECT	3	25	220/1/50	@ HOOD
KEF-7	UPBLAST	4.400	DIRECT	3	25	220/1/50	@ HOOD

NOTE:
1. FANS SHALL BE CORROSION RESISTANT
2. WALL FANS SHALL HAVE SPRING OPERATED BACK-DRAFT DAMPER.

MAKE-UP AIR FAN SCHEDULE

NO.	TYPE	FAN CMS	DRIVE	HP	SP mmH2O	ELECTRICAL DATA	SWITCH
MAF-1	ROOF	4.200	DIRECT	5	19	220/1/50	W/ KEF-1
MAF-2	ROOF	4.200	DIRECT	5	19	220/1/50	W/ KEF-2
MAF-3	ROOF	4.200	DIRECT	5	19	220/1/50	W/ KEF-3
MAF-4	ROOF	5.400	DIRECT	7.5	19	220/1/50	W/ KEF-4
MAF-5	ROOF	3.600	DIRECT	5	19	220/1/50	W/ KEF-5

NOTE:
1. FANS SHALL BE CORROSION RESISTANT

ELECTRIC UNIT HEATER SCHEDULE

NO.	CMS	KW	F.A.T. °C	ELECT. CHAR.	MOUNTING
EH-2	.200	2.6	38	380/1/50	WALL HUNG
EH-4	.200	4	38	380/1/50	WALL HUNG
EH-5	.200	5	38	380/1/50	WALL HUNG

NOTES:
1. UNIT HEATERS SHALL BE MOUNTED 2.5M AFF.
2. UNIT HEATERS SHALL HAVE TAMPER PROOF INTEGRAL STATS.

CEILING FAN

NO.	BLADE SIZE mm	BLADE SIZE IN	VOLTAGE	SWITCH	REMARKS
CF-1	1320	52	220/1/50	@ WALL	3 SPEED REVERSIBLE MOTOR

NOTES:
1. PROVIDE EXTENSION DOWN RODS, INSTALL FANS 2.5M AFF.
2. PROVIDE WITH OUT LIGHT FIXTURE.
3. PROVIDE WITH REMOTE MOUNTED ON-OFF SWITCH SHOWN ON ELECTRICAL DRAWINGS.

APPROVED:

A/E DESIGNER OF RECORD

SEAL:

COMMONWEALTH OF PENNSYLVANIA
REGISTERED PROFESSIONAL
MATTHEW R. SOTOSKY
ENGINEER
046576-E

US ARMY CORPS OF ENGINEERS
AFGHANISTAN ENGINEER DISTRICT

Mark	Description	Date	Appr.

Mark	Description	Date	Appr.

Date: 02/23/10 | Rev: 0
Designed by: RML | Dwn by: JJN | Ckd by: CJM
Reviewed by: MRS
Submitted by: BAKER
Drawing code:
File name: ANADFAGMH-501XXX
Plot date: 02/09/2010
Plot scale:

U.S. ARMY CORPS OF ENGINEERS
AFGHANISTAN ENGINEER DISTRICT
APO AE 96338

Michael Baker Jr., Inc.
A unit of Michael Baker Corporation
Airside Business Park
100 Airside Drive
Moon Township, PA 15108
www.mbakercorp.com

AFGHAN NATIONAL ARMY
REGIONAL MILITARY TRAINING CENTER
STANDARD DESIGN

DINING FACILITY

HVAC SCHEDULES AND DETAILS

Sheet reference number:
M-501

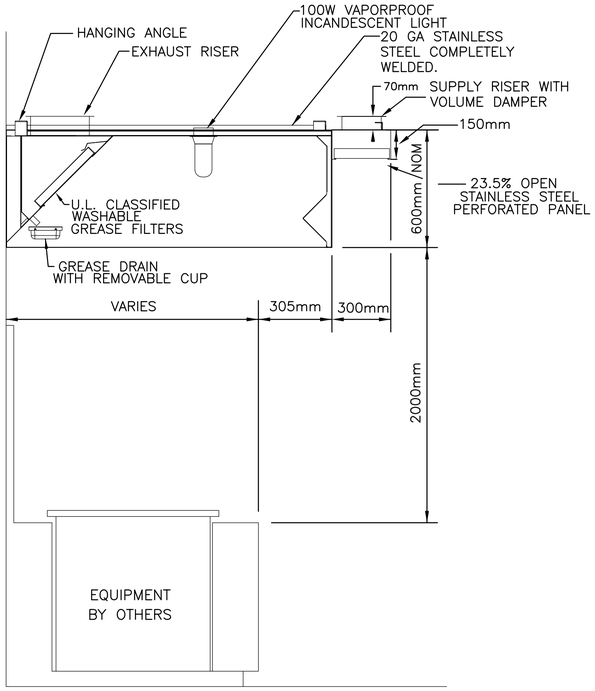

1 M-502 KITCHEN HOOD SECTION DETAIL
N.T.S.

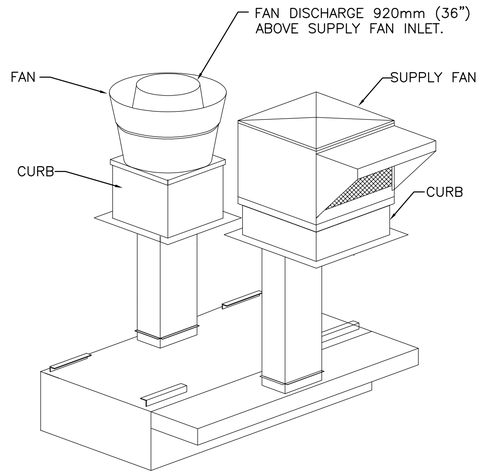

CORRECT INSTALLATION:
1. EXHAUST DUCT STRAIGHT UP
2. DO NOT USE FLEXIBLE SUPPLY DUCTWORK.
3. INSULATE EXHAUST DUCTS.

EXHAUST AND MAKE UP AIR
2 M-502 KITCHEN HOOD DUCT CONFIGURATION DETAIL
N.T.S.

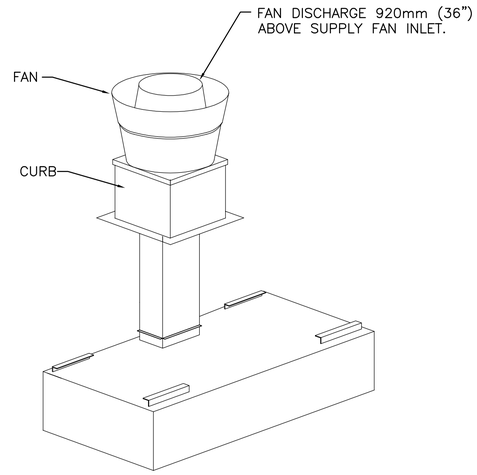

CORRECT INSTALLATION:
1. EXHAUST DUCT STRAIGHT UP
2. DO NOT USE FLEXIBLE SUPPLY DUCTWORK.
3. INSULATE EXHAUST DUCTS.

EXHAUST ONLY
5 M-502 KITCHEN HOOD DUCT CONFIGURATION DETAIL
N.T.S.

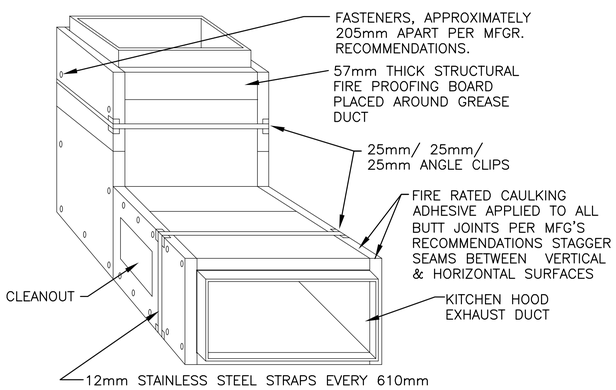

NOTES:
1. WHEN INSTALLING CLEANOUT DOOR COVER, USE REMOVABLE STAINLESS STEEL BANDS AT 305mm O.C. MAXIMUM (2 BANDS MINIMUM).
2. DUCT SYSTEM SHALL BE SLOPED PER NFPA REGULATIONS.
3. DUCT HANGERS AND SUPPORTS FOR HORIZONTAL & VERTICAL RUNS SHALL BE DESIGNED TO PROVIDE ADEQUATE SUPPORT FOR THE DUCT AND ENCLOSURE ACCORDING TO REQUIREMENTS OF THE BUILDING & MECHANICAL CODES.
4. LABELS SHALL BE PROVIDED BY THE ENCLOSURE MANUFACTURER AND BE PLACED ADJACENT TO ALL CLEANOUT OPENINGS WHICH STATE THAT COVER MUST BE REPLACED USING REMOVABLE STAINLESS STEEL BANDS AT 305mm O.C. MAXIMUM (2 BANDS MINIMUM).
5. DUCT AND ENCLOSURE SHALL BE SUPPORTED BY HANGERS FROM BUILDING STRUCTURE. MAXIMUM DISTANCE BETWEEN SUPPORTS SHALL BE 1220mm.
6. PROVIDE 40mm GREASE DUCT INSULATION ON ALL KITCHEN EXHAUST DUCTS.

3 M-502 KITCHEN HOOD EXHAUST DUCT DETAIL
N.T.S.

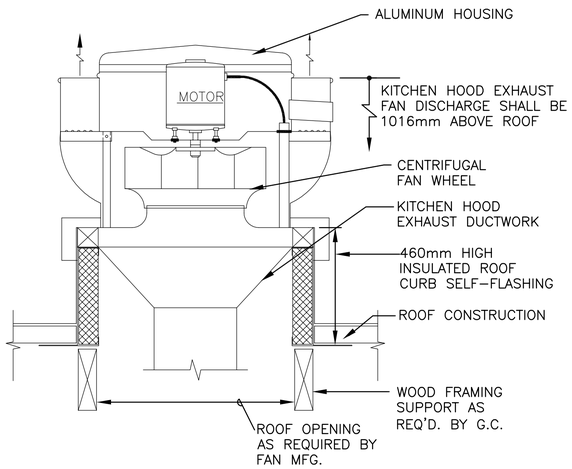

4 M-502 KITCHEN ROOF EXHAUST FAN DETAIL
N.T.S.

APPROVED:

A/E DESIGNER OF RECORD

SEAL:

COMMONWEALTH OF PENNSYLVANIA
REGISTERED PROFESSIONAL
MATTHEW R. SOTOSKY
ENGINEER
046576-E

US ARMY CORPS OF ENGINEERS
AFGHANISTAN ENGINEER DISTRICT

Mark	Description	Date	Appr.	Mark	Description	Date	Appr.

Rev: 0
Date: 02/23/10
Designed by: RML
Dwn by: JJN
Ckd by: CJM
Reviewed by: MRS
Submitted by: BAKER
Design file no.
Drawing code:
File name: ANADFAOMH-502XXX
Plot date: 02/08/2010
Plot scale:

U.S. ARMY CORPS OF ENGINEERS
AFGHANISTAN ENGINEER DISTRICT
APO AE 96338

Michael Baker Jr., Inc.
A unit of Michael Baker Corporation
Airside Business Park
100 Airside Drive
Moon Township, PA 15108
www.mbakercorp.com

AFGHAN NATIONAL ARMY
REGIONAL MILITARY TRAINING CENTER
STANDARD DESIGN

DINING FACILITY

KITCHEN EXHAUST HOOD DETAILS

Sheet reference number:
M-502

POWER

- DISTRIBUTION PANELBOARD
- NEW PANELBOARD – SURFACE
- NEW PANELBOARD – RECESSED
- GENERATOR
- TRANSFORMER (DRAWN TO SIZE)
- JUNCTION BOX
- JUNCTION BOX – CEILING
- FUSIBLE SAFETY SWITCH
- MOTOR
- MOTOR STARTING SWITCH – 220V, 20A RATED UNLESS OTHERWISE NOTED
- ELECTRIC WATER HEATER
- CEILING FAN – REFER TO SPECIFICATION SECTION 26 20 00

RECEPTACLES

- DUPLEX 20A TYPE CEE 7/7 "SCHUKO STYLE" UNSWITCHED RECEPTACLE
- GF DUPLEX 20A TYPE CEE 7/7 "SCHUKO STYLE" UNSWITCHED RECEPTACLES – 10mA GROUND FAULT INTERRUPTER TYPE
- WP DUPLEX 20A TYPE CEE 7/7 "SCHUKO STYLE" UNSWITCHED TYPE WITH WEATHERPROOF COVER – 10mA GROUND FAULT INTERRUPTER TYPE
- EXP DUPLEX 20A TYPE CEE 7/7 "SCHUKO STYLE" UNSWITCHED RECEPTACLES – EXPLOSION PROOF
- ★ INDICATES MOUNT DEVICE ABOVE COUNTERTOP OR AT 1070mm ABOVE FINISHED FLOOR WHERE NO COUNTER IS TO BE INSTALLED.

LIGHTNING PROTECTION

- AIR TERMINAL 20mm O.D. X 450mm SOLID COPPER, NICKEL PLATED ON ADHESIVE BASE
- EQ EQUIPMENT AIR TERMINAL
- TEST WELL WITH GROUND ROD(S)
- GROUND ROD
- G GROUND PLATE
- MAIN GROUND CONDUCTER CONCEALED WITHIN CONSTRUCTION
- MAIN GROUND CONDUCTOR EXPOSED ON EXPOSED ON BUILDING EXTERIOR SURFACE
- GROUND CONDUCTOR CAD WELDED TO GROUND CABLE OR EQUIPMENT
- GROUND ROD TRIPOD, SPACED 3 METERS APART.
- LEVEL TO LEVEL CABLE

LIGHTING

- LIGHTING FIXTURE – SEE FIXTURE SCHEDULE FOR MORE INFORMATION
- EMERGENCY LIGHTING FIXTURE – SEE FIXTURE SCHEDULE FOR MORE INFORMATION
- DOWNLIGHT
- LIGHTING FIXTURE ON NORMAL/EMERGENCY
- WALL MOUNTED LIGHT FIXTURE
- E EXIT SIGN – DIRECTIONAL ARROWS AS INDICATED ON DRAWINGS
- REMOTE HEAD FOR BATTERY PACK
- $ SINGLE POLE SWITCH – 20A RATED
- $3 3-WAY SWITCH – 20A RATED
- $4 4-WAY SWITCH – 20A RATED
- LC LIGHTING CONTACTOR
- POLE MOUNTED SITE LIGHTING FIXTURE– NUMBER OF FIXTURES PER POLE AS INDICATED ON DRAWINGS
- EXTERIOR DIRECTIONAL LIGHTING FIXTURE
- a SMALL CASE LETTERS REPRESENTS LAMP(S) / SWITCHES.

TELECOMMUNICATIONS

- TELEPHONE OUTLET(S) @ 45cm AFF. U.N.O. WITH 20mm RACEWAY TERMINATED TO TELEDATA TERMINAL BOARD.
- DATA OUTLET(S) @ 45cm AFF. U.N.O. WITH 20mm RACEWAY TERMINATED TO TELEDATA TERMINAL BOARD.

TELECOMMUNICATIONS (CONTINUED)

- COMBINATION TELEPHONE/DATA OUTLET(S) @ 45cm AFF. U.N.O. WITH 27mm RACEWAY TERMINATED TO TELEDATA TERMINAL BOARD.
- W WALL MTD. TELEPHONE OUTLET WITH 20mm RACEWAY TO TELEDATA TERMINAL BOARD.
- (x)T INDICATES NUMBER OF TELEPHONE OUTLET(S) AND ASSOCIATED CABLING
- (x)D INDICATES NUMBER OF DATA OUTLET(S) AND ASSOCIATED CABLING
- (x)TF INDICATES NUMBER OF TELEPHONE OUTLETS AND ASSOCIATED CABLING WITH 1 OUTLET AND CABLE DEDICATED FOR FAX

SINGLE LINE SYMBOLS

- SWITCH
- BREAKER
- FUSE
- TRANSFORMER
- GROUND
- CONTACT (NORMALLY OPEN)
- CONTACT (NORMALLY CLOSED)
- TRANSFER SWITCH
- CURRENT TRANSFORMER
- INDICATES NEW ELECTRICAL EQUIPMENT
- C INDICATES NEW CONTROL WIRING AND CONDUIT
- EQUIPMENT OUTLINE

MISCELLANEOUS

- BRANCH CIRCUIT WIRING, SURFACE MOUNTED ON WALLS
- BRANCH CIRCUIT WIRING – 6mm²
- BRANCH CIRCUIT WIRING – UNDER FLOOR
- HOME RUN BACK TO PANEL
- CONDUIT TURNED DOWN
- CONDUIT TURNED UP
- LV LOW VOLTAGE WIRING AND CONDUIT
- INDICATES CONTINUATION OF LINE

FIRE ALARM

- FACP FIRE ALARM CONTROL PANEL WITH BATTERY BACKUP
- F FIRE ALARM PULL STATION

FIRE ALARM (CONTINUED)

- F FIRE ALARM STROBE – WALL MOUNTED
- F FIRE ALARM AUDIBLE/STROBE – WALL MOUNTED
- F FIRE ALARM HORN/STROBE – WALL MOUNTED
- S SMOKE DETECTOR
- H HEAT DETECTOR CEILING MOUNTED
- D DUCT DETECTOR – PROVIDED BY EC, INSTALLED BY MC AND CONNECTED BY EC

DENOTATIONS & ABBREVIATIONS

AFF	ABOVE FINISHED FLOOR
C	CEILING MOUNTED
E	EMERGENCY
EC	ELECTRICAL CONTRACTOR
EPO	EMERGENCY POWER OFF
EXP	EXPLOSION PROOF
F	FIRE ALARM
FF	FLUSH FLOOR MOUNTED
FL	FLUORESCENT
FO	FIBER OPTIC
FSS	FUSED SAFETY SWITCH
GF	GROUND FAULT INTERRUPTER
GC	GENERAL CONTRACTOR
IG	ISOLATED GROUND
K	KEY
LV	LOW VOLTAGE
M	MOTOR
MC	MECHANICAL CONTRACTOR
NE	NORMAL/EMERGENCY
NFSS	NON-FUSED SAFETY SWITCH
PA	PAGING SYSTEM
PLC	PLUMBING CONTRACTOR
SL	SINGLE LINE
T	TELEPHONE

DENOTATIONS & ABBREVIATIONS (CONT.)

TP	TAMPER PROOF
UE	UNDERGROUND ELECTRIC
W	WALL MOUNTED
WP	WEATHERPROOF WITH GROUND FAULT INTERRUPTION
WT	WATER TIGHT

GENERAL PROJECT NOTES:

G1. UNLESS OTHERWISE NOTED, PROVIDE ALL EQUIPMENT SHOWN ON THE PLANS. THE ELECTRICAL CONTRACTOR SHALL COORDINATE ALL SYMBOLS SHOWN ON THE PLANS WITH THE SYMBOL LIST. IT SHALL BE THE RESPONSIBILITY OF THE CONTRACTOR TO VERIFY THE INTENT OF ANY SYMBOL THAT IS SHOWN ON THE PLANS AND NOT INDICATED ON THE SYMBOL LIST WITH THE ENGINEER PRIOR TO BID.

G2. THE CONTRACTOR SHALL VERIFY THE LOCATION OF ALL UNDERGROUND UTILITIES WITHIN THE CONSTRUCTION AREA THREE (3) WORKING DAYS NOTICE BEFORE COMMENCING DIGGING. NOTIFY THE LOCAL AUTHORITY HAVING JURISDICTION AND WAIT THE REQUIRED TIME BEFORE COMMENCING TO DIG.

G3. THE CONTRACTOR SHALL COORDINATE CONDUIT RUNS, LIGHTING FIXTURES AND OTHER EQUIPMENT LOCATIONS WITH THE OTHER TRADE CONTRACTORS TO AVOID CONFLICTS.

G4. WHERE VOLTAGES AND FREQUENCIES ON THE DRAWINGS AND IN THE SPECIFICATIONS DIFFER FROM THE LOCAL ONES, ALL WORK SHALL BE PERFORMED USING THE LOCAL VOLTAGES AND FREQUENCIES.

G5. THE MINIMUM WIRE SIZE ON THE PROJECT SHALL BE 4mm². THE MINIMUM CONDUIT SIZE SHALL BE 20mm. THE MINIMUM BREAKER SIZE SHALL BE 20 AMPS.

G6. THE CONTRACTOR SHALL PUT A MAXIMUM OF 6 DUPLEX RECEPTACLES ON A 20A SINGLE POLE CIRCUIT.

G7. WHERE THE 1010 SCOPE REVIEW, 1015 TECHNICAL REVIEW, DRAWINGS, AND SPECIFICATIONS DIFFER FROM AMERICAN CODES OR STANDARDS, THE 1010, 1015, DRAWINGS, AND SPECIFICATIONS SHALL RULE.

G8. ALL CONDUIT AND DEVICES SHALL BE SURFACE MOUNTED UNLESS OTHERWISE INDICATED.

G9. CONTRACTOR SHALL COORDINATE ALL WORK WITH ALL OTHER TRADES TO ENSURE ALL WORK IS COMPLETED IN A PROFESSIONAL, WORKMAN-LIKE MANNER.

APPROVED:

A/E DESIGNER OF RECORD

SEAL:

COMMONWEALTH OF PENNSYLVANIA
REGISTERED PROFESSIONAL
JOSEPH R. GAUS
1/29/10
ENGINEER
PE-074251

US ARMY CORPS OF ENGINEERS
AFGHANISTAN ENGINEER DISTRICT

Mark	Description	Date	Appr.	Mark	Description	Date	Appr.

Rev: 0
Date: 2/23/10
Design file no.
Drawing code:
File name:
Plot date:
Plot scale:

Designed by: RAJ
Dwn by: BJB
Ckd by: JRG
Reviewed by: JRG
Submitted by: BAKER

U.S. ARMY CORPS OF ENGINEERS
AFGHANISTAN ENGINEER DISTRICT
APO AE 96338

Michael Baker Jr., Inc
A unit of Michael Baker Corporation
Airside Business Park
100 Airside Drive
Moon Township, PA 15108
www.mbakercorp.com

AFGHAN NATIONAL ARMY
REGIONAL MILITARY TRAINING CENTER
STANDARD DESIGN

DINING FACILITY (DFAC)

ELECTRICAL SYMBOLS & ABBREVIATIONS

Sheet reference number:
E-001

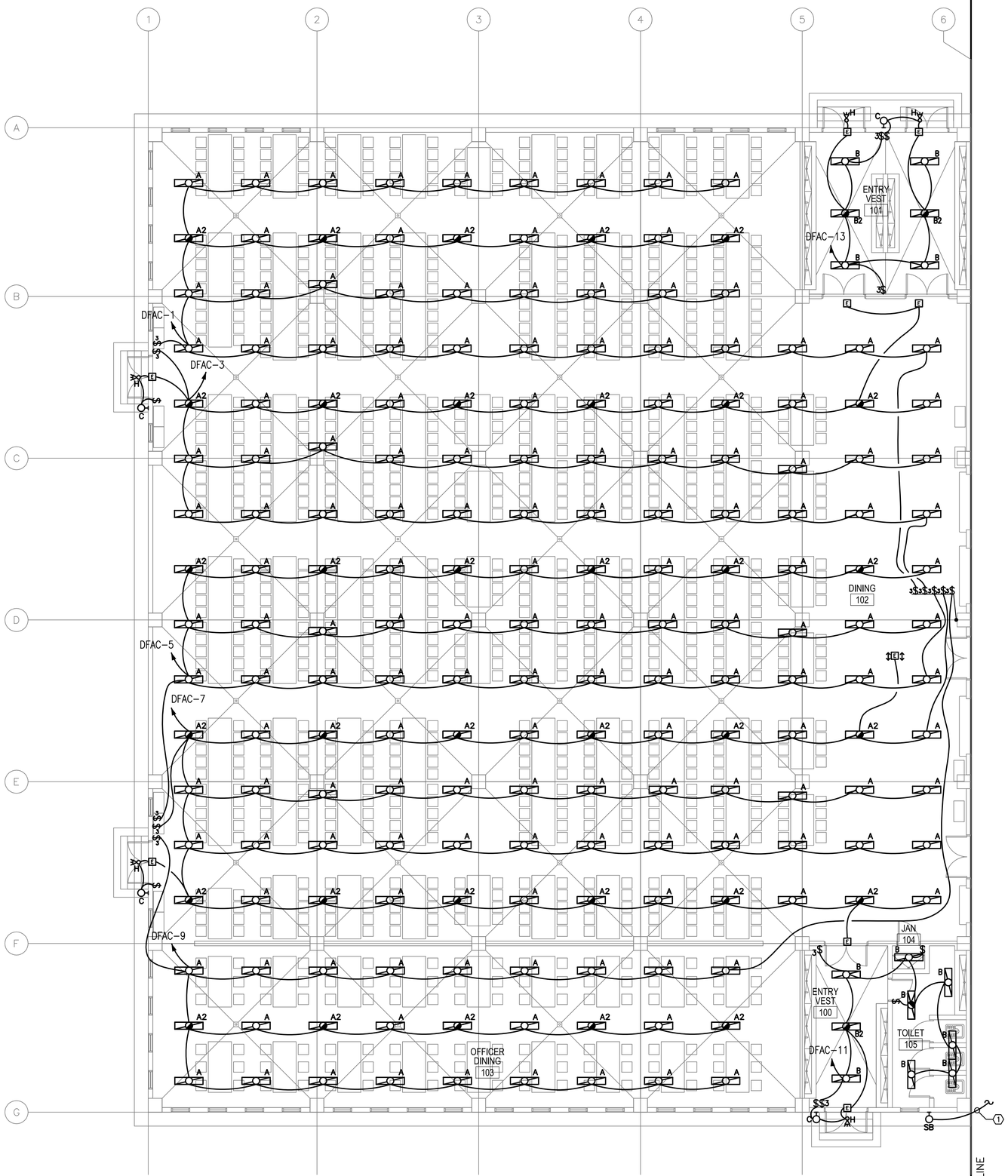

1
E-101

DINING FACILITY- LIGHTING PLAN PART 'A'

SCALE: 1:100

GENERAL NOTES:

1. REFER TO DRAWING #E-001 FOR THE ELECTRICAL SYMBOLS LIST.
2. EXIT SIGNS SHALL BE WIRED AHEAD OF ANY LOCAL SWITCHING ON CIRCUITS. SEE WIRING DIAGRAM DETAIL 8, DRAWING #E-501.
3. REFER TO DRAWING #E-601 FOR THE LIGHTING FIXTURE SCHEDULE.
4. REFER TO DRAWING #E-501 FOR THE POWER RISER.
5. REFER TO DRAWING #E-602 FOR PANEL SCHEDULES.
6. LIGHT FIXTURES INDICATED AS EMERGENCY SHALL BE PROVIDED WITH A BATTERY BACKUP BALLAST. SEE WIRING DIAGRAM DETAIL 7, DRAWING #E-501.
7. COORDINATE LIGHT FIXTURE LOCATIONS WITH CEILING FAN LOCATIONS PRIOR TO INSTALLATION. LIGHT FIXTURES SHALL HAVE PRIORITY OVER CEILING FANS.

NUMBERED NOTES:

(1) TO FIXTURE ON DRAWING E-102.

KEY PLAN:

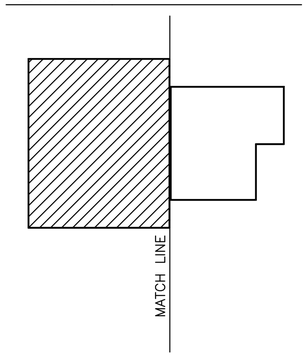

0 2000 4000
SCALE: 1:100

APPROVED:

A/E DESIGNER OF RECORD

SEAL:

COMMONWEALTH OF PENNSYLVANIA
REGISTERED PROFESSIONAL
JOSEPH R. GAUS
1/29/10
ENGINEER
PE-074251

US ARMY CORPS OF ENGINEERS
AFGHANISTAN ENGINEER DISTRICT

Mark	Description	Date	Appr.	Mark	Description	Date	Appr.

Designed by: RAJ
Dwn by: BJB
Ckd by: JRG
Reviewed by: JRG
Submitted by: BAKER
Date: 2/23/10
Design file no.
Rev: 0
Drawing code:
File name:
Plot date:
Plot scale:

U.S. ARMY CORPS OF ENGINEERS
AFGHANISTAN ENGINEER DISTRICT
APO AE 96338

Michael Baker Jr., Inc
A unit of Michael Baker Corporation
Airside Business Park
100 Airside Drive
Moon Township, PA 15108
www.mbakercorp.com

AFGHAN NATIONAL ARMY
REGIONAL MILITARY TRAINING CENTER
STANDARD DESIGN

DINING FACILITY (DFAC)
PARTIAL ELECTRICAL LIGHTING PLAN
PART 'A'

Sheet reference number:
E-101

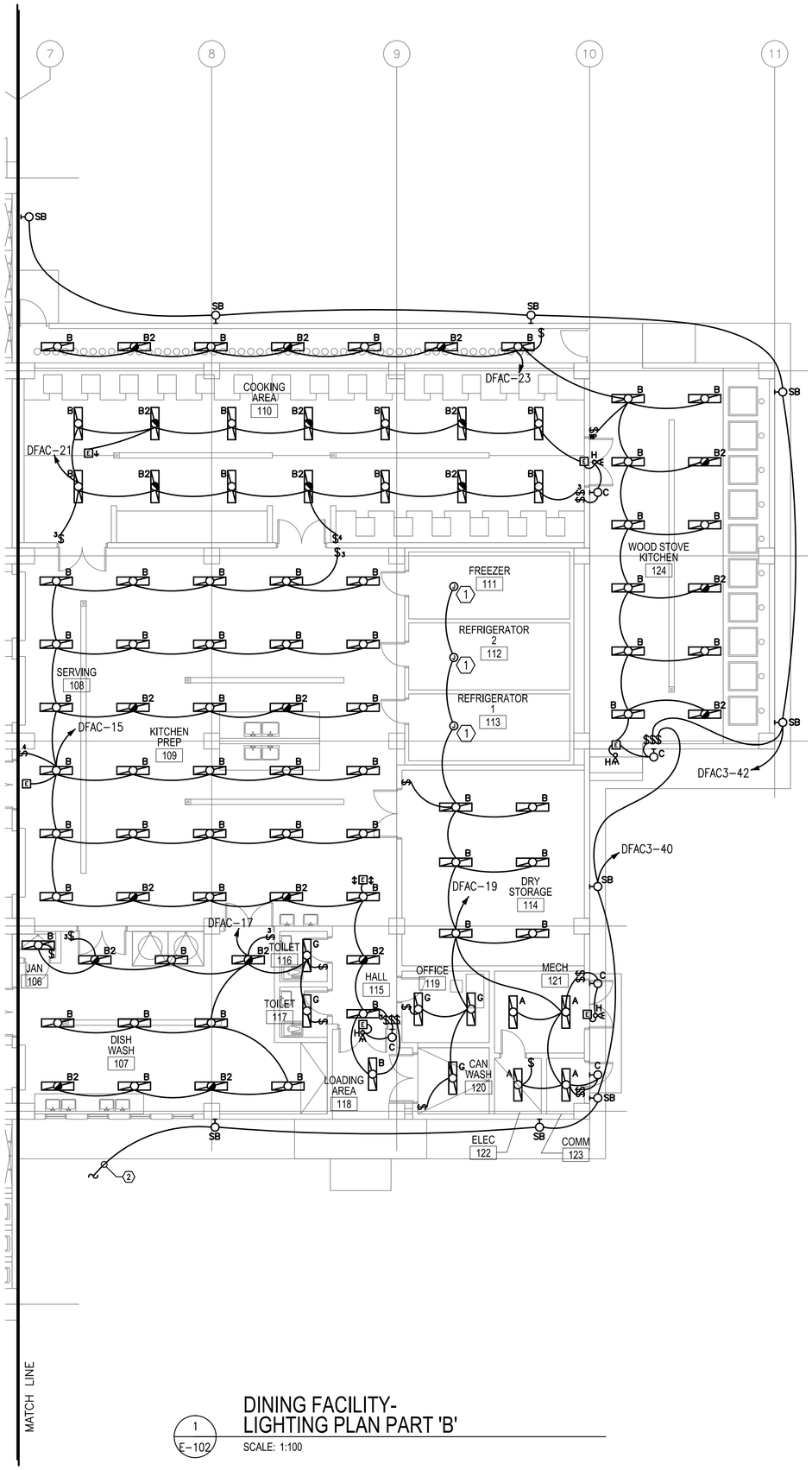

1
E-102

DINING FACILITY-
LIGHTING PLAN PART 'B'

SCALE: 1:100

GENERAL NOTES:

1. REFER TO DRAWING #E-001 FOR THE ELECTRICAL SYMBOLS LIST.
2. EXIT SIGNS SHALL BE WIRED AHEAD OF ANY LOCAL SWITCHING ON CIRCUITS. SEE WIRING DIAGRAM DETAIL 8, ON DRAWING #E-501.
3. REFER TO DRAWING #E-601 FOR THE LIGHTING FIXTURE SCHEDULE.
4. REFER TO DRAWING #E-501 FOR THE POWER RISER.
5. REFER TO DRAWING #E-602 FOR PANEL SCHEDULES.
6. LIGHT FIXTURES INDICATED AS EMERGENCY SHALL BE PROVIDED WITH A BATTERY BACKUP BALLAST. SEE WIRING DIAGRAM DETAIL 7, ON DRAWING #E-501.

NUMBERED NOTES:

(1) IT SHALL BE THE RESPONSIBILITY OF THE ELECTRICAL CONTRACTOR TO PROVIDE POWER TO THE LIGHTS IN THE PACKAGED REFRIGERATION AND FREEZER UNITS.

(2) TO FIXTURE ON DRAWING E-101.

KEY PLAN:

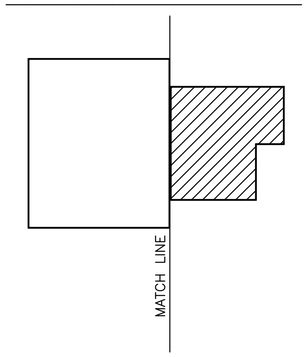

0 2000 4000
SCALE: 1:100

APPROVED:

A/E DESIGNER OF RECORD

SEAL:

COMMONWEALTH OF PENNSYLVANIA
REGISTERED PROFESSIONAL ENGINEER
JOSEPH R. GAUS
PE-074251

US ARMY CORPS OF ENGINEERS
AFGHANISTAN ENGINEER DISTRICT

Mark	Description	Date	Appr.	Mark	Description	Date	Appr.

Designed by: RAJ
Dwn by: BJB
Ckd by: JRG
Reviewed by: JRG
Submitted by: BAKER
Date: 2/23/10
Rev: 0
Design file no.
Drawing code:
File name:
Plot date:
Plot scale:

U.S. ARMY CORPS OF ENGINEERS
AFGHANISTAN ENGINEER DISTRICT
APO AE 96338

Michael Baker Jr., Inc.
A unit of Michael Baker Corporation
Airside Business Park
100 Airside Drive
Moon Township, PA 15108
www.mbakercorp.com

AFGHAN NATIONAL ARMY
REGIONAL MILITARY TRAINING CENTER
STANDARD DESIGN

DINING FACILITY (DFAC)
PARTIAL ELECTRICAL LIGHTING PLAN
PART 'B'

Sheet reference number:
E-102

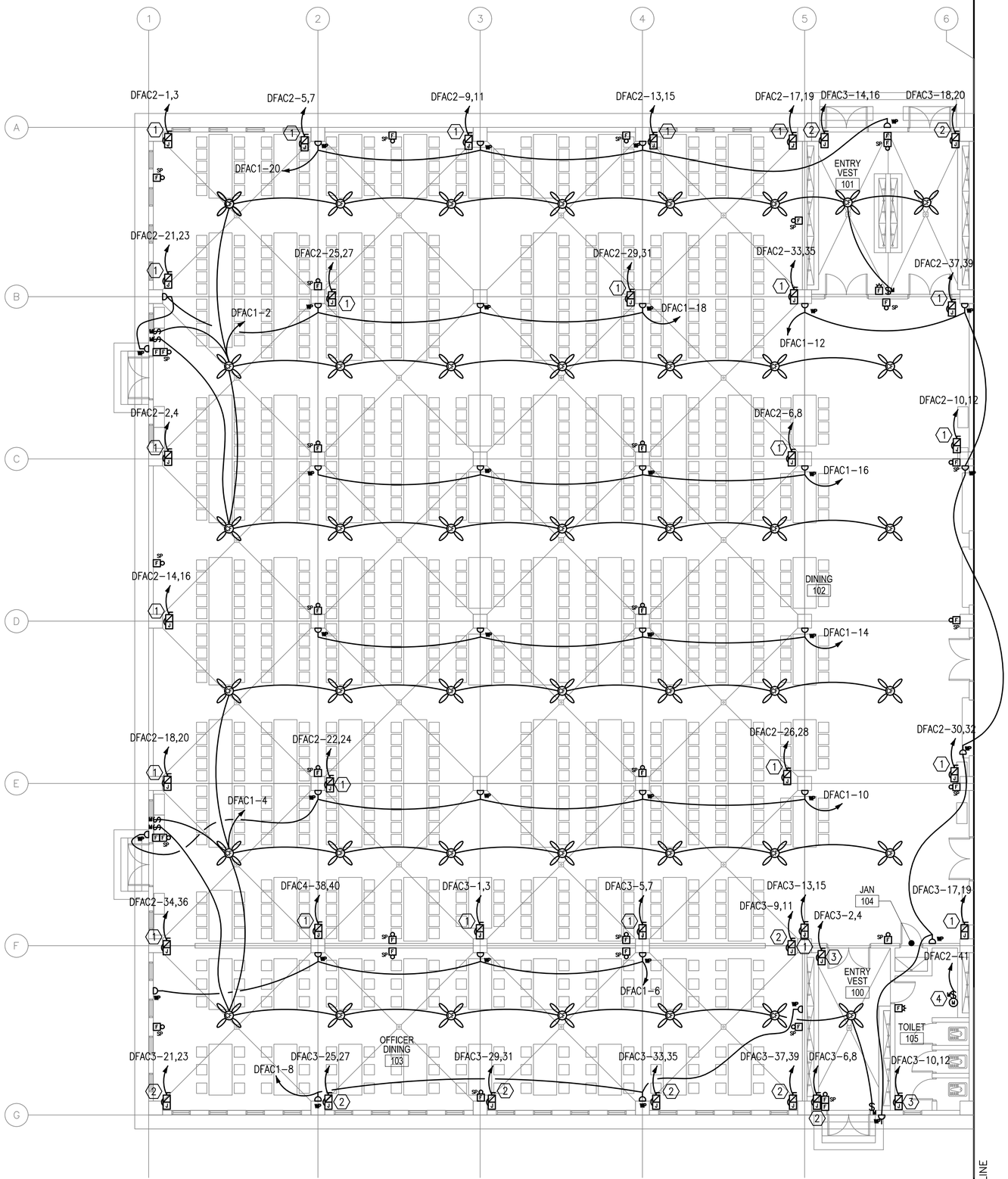

1
E-101

DINING FACILITY-
POWER AND SYSTEMS PLAN PART 'A'

SCALE: 1:100

GENERAL NOTES:

1. REFER TO DRAWING #E-001 FOR THE ELECTRICAL SYMBOLS LIST.
2. REFER TO DRAWING #E-501 FOR THE POWER RISER.
3. REFER TO DRAWING #E-602 FOR PANEL SCHEDULES.
4. COORDINATE EXACT MOUNTING LOCATION OF DISCONNECTING MEANS FOR MECHANICAL AND PLUMBING EQUIPMENT IN THE FIELD.
5. FUSIBLE SAFETY SWITCHES THAT ARE NOT OTHERWISE IDENTIFIED SHALL BE 380V, 1P, 30A FUSED SAFETY SWITCHES WITH 20A FUSES.
6. CONTRACTOR SHALL COORDINATE FINAL LOCATIONS OF ALL MECHANICAL EQUIPMENT WITH MECHANICAL PLANS PER THIS PACKAGE.

NUMBERED NOTES:

1. PROVIDE POWER CONNECTION TO ELECTRIC UNIT HEATER #5. SEE DRAWINGS #E-602 AND #M-101 FOR MORE INFORMATION.
2. PROVIDE POWER CONNECTION TO ELECTRIC UNIT HEATER #4. SEE DRAWINGS #E-602 AND #M-101 FOR MORE INFORMATION.
3. PROVIDE POWER CONNECTION TO ELECTRIC UNIT HEATER #2. SEE DRAWINGS #E-602 AND #M-101 FOR MORE INFORMATION.
4. PROVIDE POWER CONNECTION TO EXHAUST FAN #1. SEE DRAWINGS #E-602 AND #M-101 FOR MORE INFORMATION.

KEY PLAN:

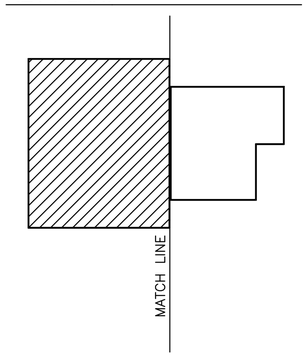

0 2000 4000
SCALE: 1:100

APPROVED:

A/E DESIGNER OF RECORD

SEAL:

COMMONWEALTH OF PENNSYLVANIA
REGISTERED PROFESSIONAL
JOSEPH R. GAUS
1/29/10
ENGINEER
PE-074251

US ARMY CORPS OF ENGINEERS
AFGHANISTAN ENGINEER DISTRICT

Mark	Description	Date	Appr.	Mark	Description	Date	Appr.

Rev: 0
Date: 2/23/10
Design file no.
Drawing code:
File name:
Plot date:
Plot scale:

Designed by: RAJ
Dwn by: BJB
Ckd by: JRG
Reviewed by: JRG
Submitted by: BAKER

U.S. ARMY CORPS OF ENGINEERS
AFGHANISTAN ENGINEER DISTRICT
APO AE 96338

Michael Baker Jr., Inc
A unit of Michael Baker Corporation
Airside Business Park
100 Airside Drive
Moon Township, PA 15108
www.mbakercorp.com

AFGHAN NATIONAL ARMY
REGIONAL MILITARY TRAINING CENTER
STANDARD DESIGN

DINING FACILITY (DFAC)
PARTIAL ELECTRICAL POWER AND SYSTEMS PLAN PART 'A'

Sheet reference number:
E-103

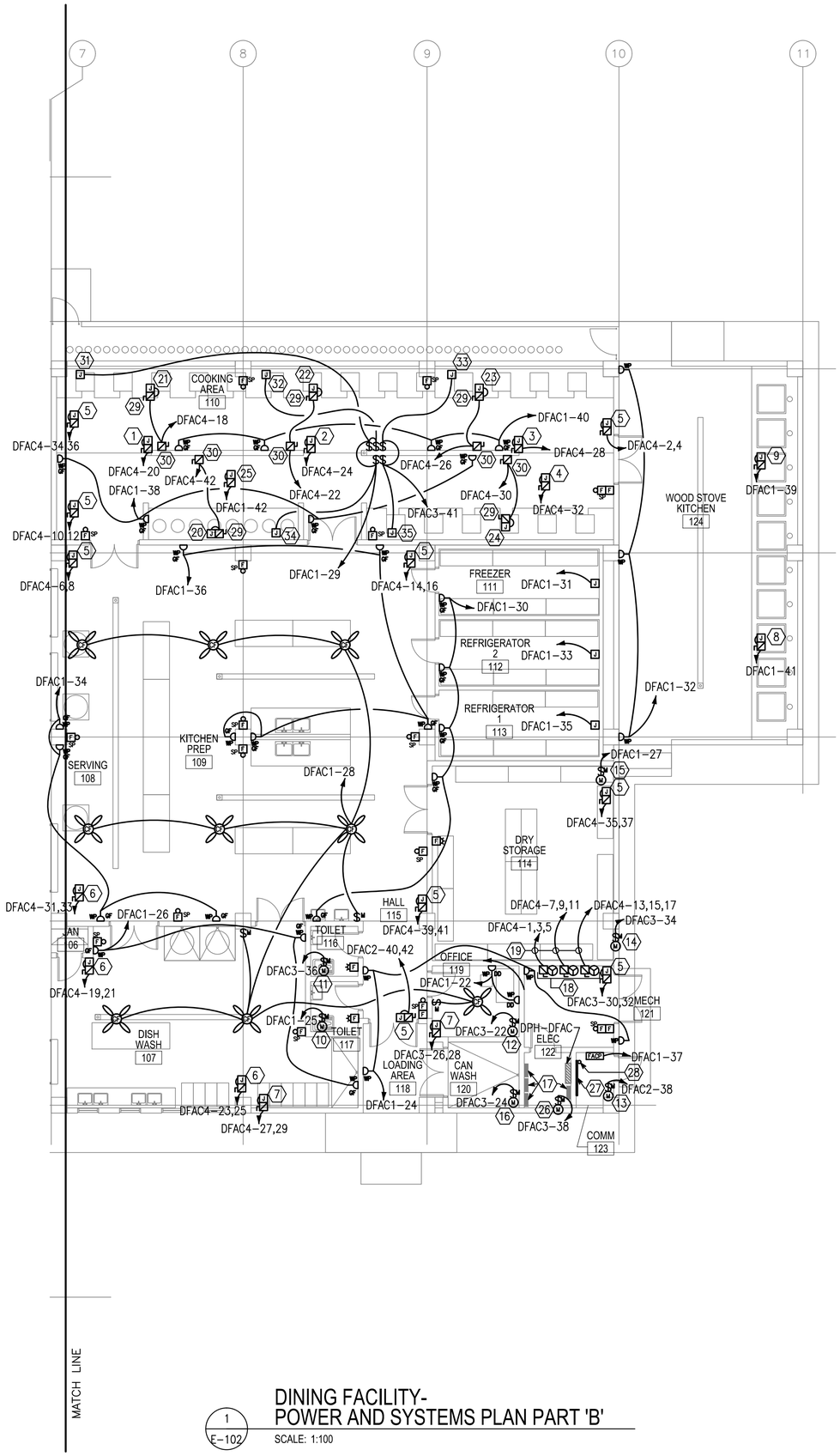

1
E-102

DINING FACILITY- POWER AND SYSTEMS PLAN PART 'B'

SCALE: 1:100

NUMBERED NOTES:

1. PROVIDE POWER CONNECTION TO MAKE-UP AIR UNIT #1. SEE DRAWINGS #E-602 AND #M-101 FOR MORE INFORMATION. PROVIDE 220V, 1ø, 30A MOTOR SNAP SWITCH.
2. PROVIDE POWER CONNECTION TO MAKE-UP AIR UNIT #2. SEE DRAWINGS #E-602 AND #M-101 FOR MORE INFORMATION. PROVIDE 220V, 1ø, 30A MOTOR SNAP SWITCH.
3. PROVIDE POWER CONNECTION TO MAKE-UP AIR UNIT #3. SEE DRAWINGS #E-602 AND #M-101 FOR MORE INFORMATION. PROVIDE 220V, 1ø, 30A MOTOR SNAP SWITCH.
4. PROVIDE POWER CONNECTION TO MAKE-UP AIR UNIT #4. SEE DRAWINGS #E-602 AND #M-101 FOR MORE INFORMATION. PROVIDE 220V, 1ø, 50A MOTOR SNAP SWITCH.
5. PROVIDE POWER CONNECTION TO ELECTRIC UNIT HEATER #4. SEE DRAWINGS #E-602 AND #M-101 FOR MORE INFORMATION.
6. PROVIDE POWER CONNECTION TO ELECTRIC UNIT HEATER #5. SEE DRAWINGS #E-602 AND #M-101 FOR MORE INFORMATION.
7. PROVIDE POWER CONNECTION TO ELECTRIC UNIT HEATER #2. SEE DRAWINGS #E-602 AND #M-101 FOR MORE INFORMATION.
8. PROVIDE POWER CONNECTION TO KITCHEN FAN #7. SEE DRAWINGS #E-602 AND #M-101 FOR MORE INFORMATION.
9. PROVIDE POWER CONNECTION TO KITCHEN FAN #6.. SEE DRAWINGS #E-602 AND #M-101 FOR MORE INFORMATION.
10. PROVIDE POWER CONNECTION TO EXHAUST FAN #3. SEE DRAWINGS #E-602 AND #M-101 FOR MORE INFORMATION.
11. PROVIDE POWER CONNECTION TO EXHAUST FAN #4. SEE DRAWINGS #E-602 AND #M-101 FOR MORE INFORMATION.
12. PROVIDE POWER CONNECTION TO EXHAUST FAN #5. SEE DRAWINGS #E-602 AND #M-101 FOR MORE INFORMATION.
13. PROVIDE POWER CONNECTION TO EXHAUST FAN #6. SEE DRAWINGS #E-602 AND #M-101 FOR MORE INFORMATION.
14. PROVIDE POWER CONNECTION TO EXHAUST FAN #7. SEE DRAWINGS #E-602 AND #M-101 FOR MORE INFORMATION.
15. PROVIDE POWER CONNECTION TO EXHAUST FAN #8. SEE DRAWINGS #E-602 AND #M-101 FOR MORE INFORMATION.
16. PROVIDE POWER CONNECTION TO EXHAUST FAN #9. SEE DRAWINGS #E-602 AND #M-101 FOR MORE INFORMATION.
17. PANEL DFAC1, DFAC2, DFAC3, & DFAC4
18. NEMA 3R, 380V, 3P, 60A FUSED DISCONNECT FUSED AT 60A. SEE PLUMBING DRAWINGS FOR EXACT LOCATION OF WATER HEATER.
19. SEE DRAWING #E-602 FOR WIRE AND CONDUIT SIZE.
20. PROVIDE POWER CONNECTION TO KITCHEN FAN #5. SEE DRAWINGS #E-602 AND #M-101 FOR MORE INFORMATION.

NUMBERED NOTES (CONT):

21. PROVIDE POWER CONNECTION TO KITCHEN FAN #1. SEE DRAWINGS #E-602 AND #M-101 FOR MORE INFORMATION.
22. PROVIDE POWER CONNECTION TO KITCHEN FAN #2. SEE DRAWINGS #E-602 AND #M-101 FOR MORE INFORMATION.
23. PROVIDE POWER CONNECTION TO KITCHEN FAN #3. SEE DRAWINGS #E-602 AND #M-101 FOR MORE INFORMATION.
24. PROVIDE POWER CONNECTION TO KITCHEN FAN #4. SEE DRAWINGS #E-602 AND #M-101 FOR MORE INFORMATION. PROVIDE 220V, 1ø, 30A MOTOR SNAP SWITCH
25. PROVIDE POWER CONNECTION TO MAKE-UP AIR UNIT #5. SEE DRAWINGS #E-602 AND #M-101 FOR MORE INFORMATION. PROVIDE 220V, 1ø, 30A MOTOR SNAP SWITCH.
26. PROVIDE POWER CONNECTION TO EXHAUST FAN #10. SEE DRAWINGS #E-602 AND #M-101 FOR MORE INFORMATION.
27. PROVIDE A 1200mm X 2400mm SHEET OF PLYWOOD PAINTED WITH FIRE RESISTANT PAINT FOR FUTURE MOUNTING OF TELECOMMUNICATIONS EQUIPMENT.
28. PROVIDE CONDUIT STUB UP IN THE ROOM FOR INCOMING TELECOMMUNICATIONS SERVICES FROM THE CENTRAL COMMUNICATIONS SYSTEM IN THE GARRISON.
29. FUSIBLE SAFETY SWITCH TO BE MOUNTED ON EQUIPMENT LOCATED ON ROOF OF BUILDING
30. FUSIBLE SAFETY SWITCH TO BE MOUNTED INSIDE OF BUILDING TO CONTROL EQUIPMENT ON ROOF
31. JUNCTION BOX TO PROVIDE POWER TO LIGHTS IN EXHAUST HOOD OF KITCHEN FAN #1.
32. JUNCTION BOX TO PROVIDE POWER TO LIGHTS IN EXHAUST HOOD OF KITCHEN FAN #2.
33. JUNCTION BOX TO PROVIDE POWER TO LIGHTS IN EXHAUST HOOD OF KITCHEN FAN #3.
34. JUNCTION BOX TO PROVIDE POWER TO LIGHTS IN EXHAUST HOOD OF KITCHEN FAN #5.
35. JUNCTION BOX TO PROVIDE POWER TO LIGHTS IN EXHAUST HOOD OF KITCHEN FAN #4.

GENERAL NOTES:

1. REFER TO DRAWING #E-001 FOR THE ELECTRICAL SYMBOLS LIST.
2. REFER TO DRAWING #E-501 FOR THE POWER RISER.
3. REFER TO DRAWING #E-602 FOR PANEL SCHEDULES.
4. COORDINATE EXACT MOUNTING LOCATION OF DISCONNECTING MEANS FOR MECHANICAL AND PLUMBING EQUIPMENT IN THE FIELD.
5. FUSIBLE SAFETY SWITCHES THAT ARE NOT OTHERWISE IDENTIFIED SHALL BE 380V, 1P, 30A FUSED SAFETY SWITCHES WITH 20A FUSES.
6. CONTRACTOR SHALL COORDINATE FINAL LOCATIONS OF ALL MECHANICAL EQUIPMENT WITH MECHANICAL PLANS PER THIS PACKAGE.

KEY PLAN:

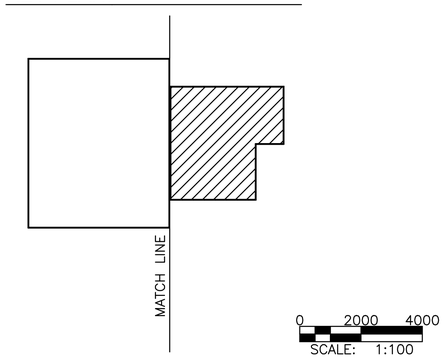

APPROVED:

A/E DESIGNER OF RECORD

SEAL:

COMMONWEALTH OF PENNSYLVANIA
REGISTERED PROFESSIONAL
JOSEPH R. GAUS
ENGINEER
PE-074251

US ARMY CORPS OF ENGINEERS
AFGHANISTAN ENGINEER DISTRICT

Mark	Description	Date	Appr.	Mark	Description	Date	Appr.

Rev: 0
Date: 2/23/10
Design file no.
Drawing code:
File name:
Plot date:
Plot scale:

Designed by: RAJ
Dwn by: BJB
Ckd by: JRG
Reviewed by: JRG
Submitted by:
BAKER

U.S. ARMY CORPS OF ENGINEERS
AFGHANISTAN ENGINEER DISTRICT
APO AE 96338

Michael Baker Jr., Inc.
A unit of Michael Baker Corporation
Airside Business Park
100 Airside Drive
Moon Township, PA 15108
www.mbakercorp.com

AFGHAN NATIONAL ARMY
REGIONAL MILITARY TRAINING CENTER
STANDARD DESIGN

DINING FACILITY (DFAC)
PARTIAL ELECTRICAL POWER AND SYSTEMS PLAN PART 'B'

Sheet reference number:
E-104

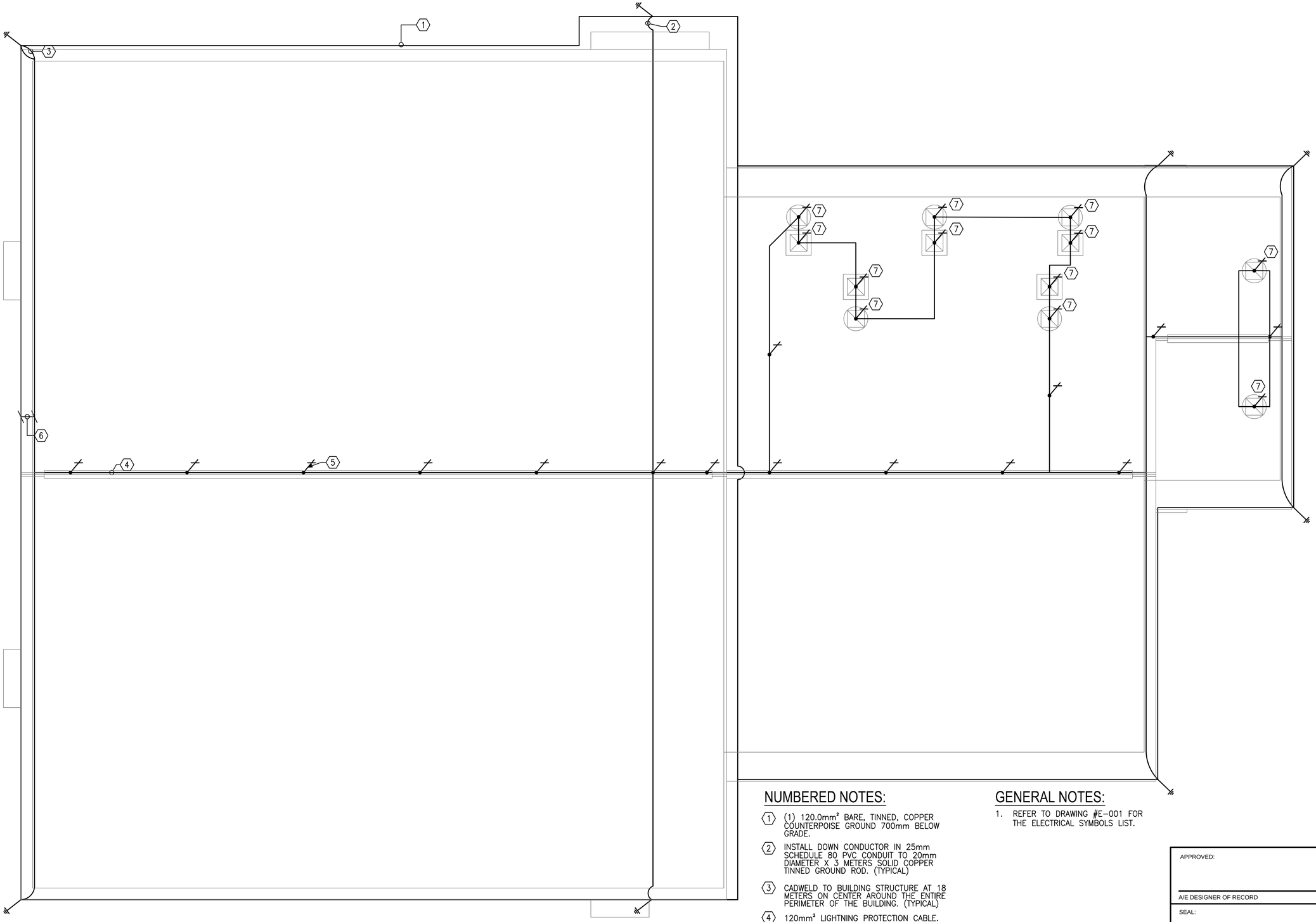

DINING FACILITY- LIGHTNING PROTECTION PLAN

1 / E-105

SCALE: 1:100

NUMBERED NOTES:

1. (1) 120.0mm² BARE, TINNED, COPPER COUNTERPOISE GROUND 700mm BELOW GRADE.
2. INSTALL DOWN CONDUCTOR IN 25mm SCHEDULE 80 PVC CONDUIT TO 20mm DIAMETER X 3 METERS SOLID COPPER TINNED GROUND ROD. (TYPICAL)
3. CADWELD TO BUILDING STRUCTURE AT 18 METERS ON CENTER AROUND THE ENTIRE PERIMETER OF THE BUILDING. (TYPICAL)
4. 120mm² LIGHTNING PROTECTION CABLE.
5. AIR TERMINAL. TERMINALS SHALL BE PLACED AT A MAXIMUM OF 6M ON CENTER PER NFPA 780 PARA. 4.8.2.1, AND WITHIN 0.6M OF RIDGE ENDS PER NFPA 780 PARA. 4.8 (TYPICAL)
6. 700mm MIN. (TYP) BETWEEN FOUNDATION AND GROUND LOOP.
7. AIR TERMINAL ON ROOFTOP FAN.

GENERAL NOTES:

1. REFER TO DRAWING #E-001 FOR THE ELECTRICAL SYMBOLS LIST.

0 2000 4000

SCALE: 1:100

APPROVED:

A/E DESIGNER OF RECORD

SEAL:

COMMONWEALTH OF PENNSYLVANIA
REGISTERED PROFESSIONAL
JOSEPH R. GAUS
1/29/10
ENGINEER
PE-074251

US ARMY CORPS OF ENGINEERS
AFGHANISTAN ENGINEER DISTRICT

Mark	Description	Date	Appr.	Mark	Description	Date	Appr.

Date: 2/23/10
Rev: 0
Design file no.
Drawing code:
File name:
Plot date:
Plot scale:

Designed by: RAJ
Dwn by: BJB
Ckd by: JRG
Reviewed by: JRG
Submitted by: BAKER

U.S. ARMY CORPS OF ENGINEERS
AFGHANISTAN ENGINEER DISTRICT
APO AE 96338

Michael Baker Jr., Inc
A unit of Michael Baker Corporation
Airside Business Park
100 Airside Drive
Moon Township, PA 15108
www.mbakercorp.com

AFGHAN NATIONAL ARMY
REGIONAL MILITARY TRAINING CENTER
STANDARD DESIGN

DINING FACILITY (DFAC)
PARTIAL ELECTRICAL LIGHTNING PROTECTION PLAN PART 'A'

Sheet reference number:
E-105

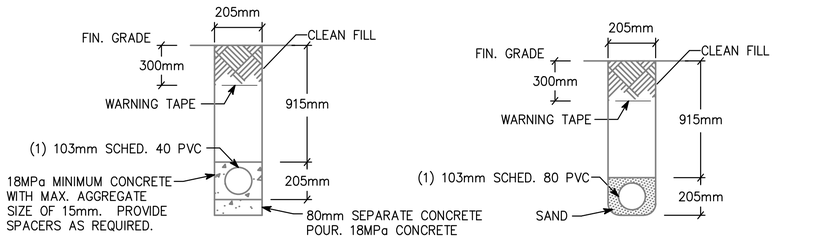

NOTE: PVC CONDUIT SHALL BE DIRECT BURIED SCHEDULE 80 FOR NO TRAFFIC AREAS AND CONCRETE-ENCASED SCHEDULE 40 FOR UNDER ROADWAYS OR TRAFFIC AREAS.

1 / E-501 TYPICAL DUCT BANK DETAILS FOR CONDUIT IN SAND OR CONCRETE

SCALE: N.T.S.

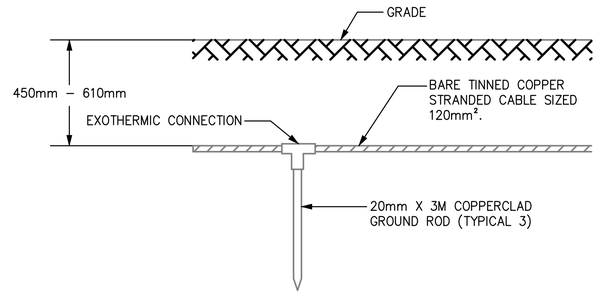

2 / E-501 GROUND TRIPOD SYSTEM DETAIL - ELEVATION

SCALE: N.T.S.

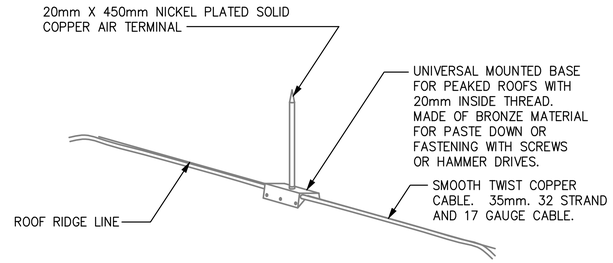

3 / E-501 LIGHTNING PROTECTION AIR TERMINAL DETAIL

SCALE: N.T.S.

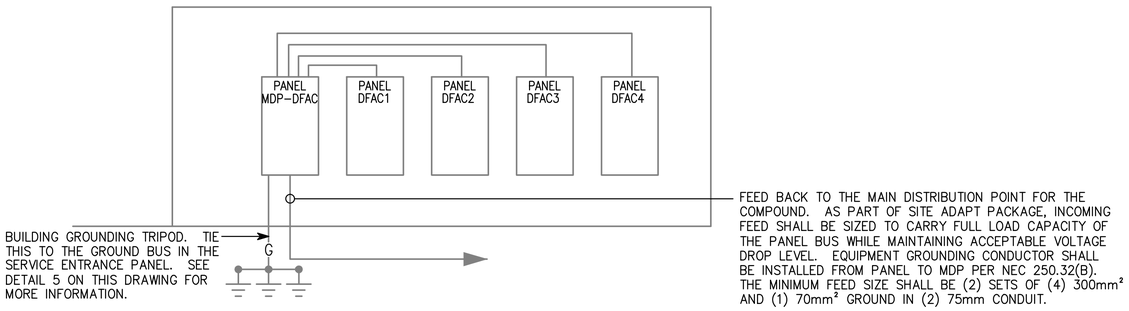

4 / E-501 (DFAC) DINING FACILITY RISER DIAGRAM

SCALE: N.T.S.

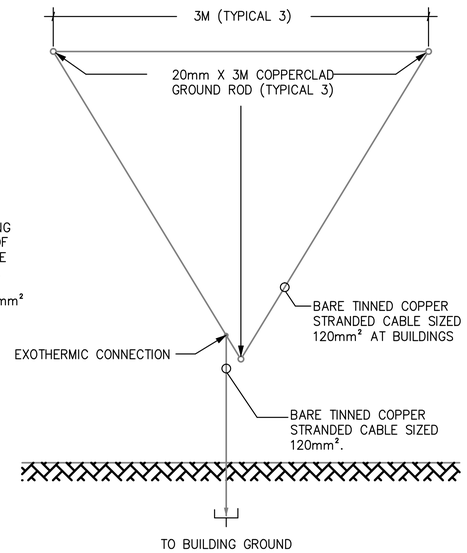

5 / E-501 GROUND TRIPOD SYSTEM DETAIL - PLAN

SCALE: N.T.S.

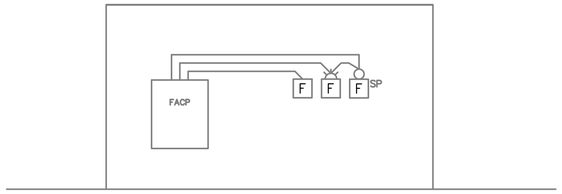

6 / E-501 TYPICAL ONE STORY FIRE ALARM RISER

SCALE: N.T.S.

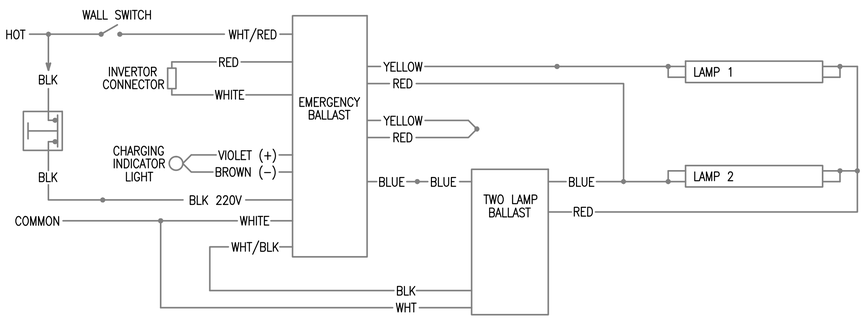

7 / E-501 EMERGENCY FIXTURE WIRING DIAGRAM

SCALE: N.T.S.

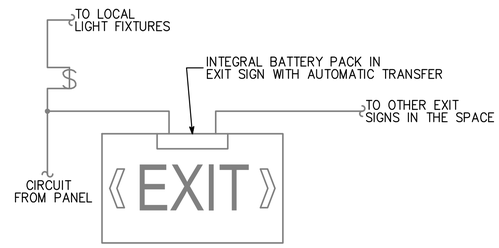

8 / E-501 EXIT SIGN WIRING DIAGRAM

SCALE: N.T.S.

APPROVED:

A/E DESIGNER OF RECORD

SEAL:

COMMONWEALTH OF PENNSYLVANIA
REGISTERED PROFESSIONAL ENGINEER
JOSEPH R. GAUS
PE-074251
1/29/10

US ARMY CORPS OF ENGINEERS
AFGHANISTAN ENGINEER DISTRICT

Mark	Description	Date	Appr.	Mark	Description	Date	Appr.

Designed by: RAJ
Dwn by: BJB
Ckd by: JRG
Reviewed by: JRG
Submitted by: BAKER
Date: 2/23/10
Rev: 0
Design file no.
Drawing code:
File name:
Plot date:
Plot scale:

U.S. ARMY CORPS OF ENGINEERS
AFGHANISTAN ENGINEER DISTRICT
APO AE 96338

Michael Baker Jr., Inc
A unit of Michael Baker Corporation
Airside Business Park
100 Airside Drive
Moon Township, PA 15108
www.mbakercorp.com

AFGHAN NATIONAL ARMY
REGIONAL MILITARY TRAINING CENTER
STANDARD DESIGN

DINING FACILITY (DFAC)
ELECTRICAL DETAILS

Sheet reference number:
E-501

(A) LARGER OF THE TWO SIZES GIVEN IN THE TABLES BELOW	
GROUNDING ELECTRODE CONDUCTOR (BASED ON AIC RATING)	
AIC RATING OF SERVICE EQUIPMENT	NECESSARY GROUNDING ELECTRODE CONDUCTOR SIZE
10K	(1) 35mm²
14K	(1) 50mm²
18K	(1) 70mm²
22K	(1) 70mm²
25K	(1) 70mm²
30K	(1) 95mm²
35K	(1) 120mm²
42K	(1) 150mm²
65K	(1) 185mm²
100K	(1) 300mm²
125K	(2) 185mm²
200K	(2) 300mm²
GROUNDING ELECTRODE CONDUCTOR (BASED ON NEC TABLE 250.66)	
SIZE OF LARGEST UNGROUNDED SERVICE CONDUCTOR OR EQUIVALENT AREA FOR PARALLEL CONDUCTORS	NECESSARY GROUNDING ELECTRODE CONDUCTOR SIZE
350 kcmil OR SMALLER	35mm²
OVER 350 kcmil TO 600 kcmil	70mm²
OVER 600 kcmil TO 1100 kcmil	70mm²
OVER 1100 kcmil	95mm²
NOTE: ALL SIZES ARE BASED ON COPPER CONDUCTORS.	

(B) EQUIPMENT GROUNDING CONDUCTOR	
RATING OR SETTING OF AUTOMATIC OVERCURRENT DEVICE IN CIRCUIT AHEAD OF EQUIPMENT, CONDUIT, ETC, NOT EXCEEDING (AMPERES)	NECESSARY EQUIPMENT GROUNDING CONDUCTOR SIZE
15	2.5mm²
20	4.0mm²
30	6.0mm²
40	6.0mm²
60	6.0mm²
100	10mm²
200	16mm²
300	25mm²
400	25mm²
500	35mm²
600	50mm²
800	70mm²
1000	70mm²
1200	95mm²
1600	120mm²
2000	150mm²
2500	185mm²
3000	240mm²
4000	300mm²
5000	400mm²
6000	400mm²
NOTE: ALL SIZES ARE BASED ON COPPER CONDUCTORS.	

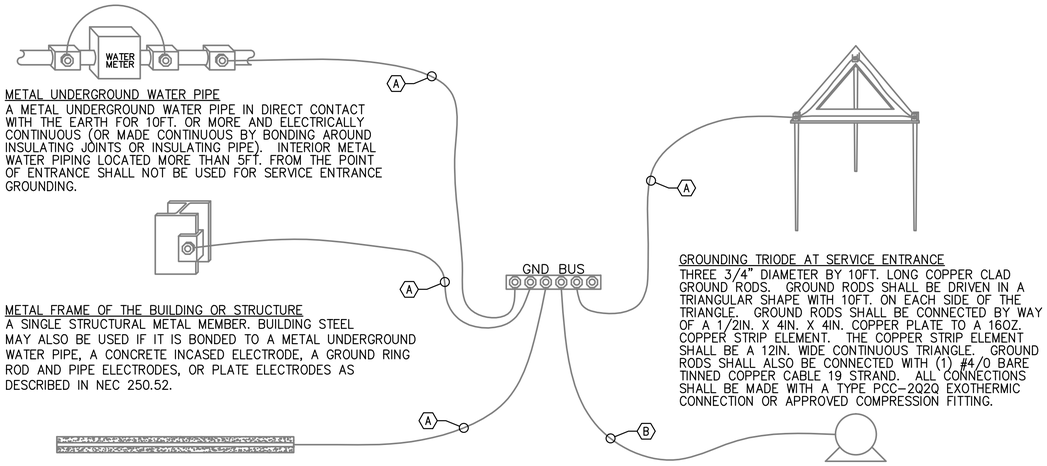

METAL UNDERGROUND WATER PIPE
A METAL UNDERGROUND WATER PIPE IN DIRECT CONTACT WITH THE EARTH FOR 10FT. OR MORE AND ELECTRICALLY CONTINUOUS (OR MADE CONTINUOUS BY BONDING AROUND INSULATING JOINTS OR INSULATING PIPE). INTERIOR METAL WATER PIPING LOCATED MORE THAN 5FT. FROM THE POINT OF ENTRANCE SHALL NOT BE USED FOR SERVICE ENTRANCE GROUNDING.

METAL FRAME OF THE BUILDING OR STRUCTURE
A SINGLE STRUCTURAL METAL MEMBER. BUILDING STEEL MAY ALSO BE USED IF IT IS BONDED TO A METAL UNDERGROUND WATER PIPE, A CONCRETE INCASED ELECTRODE, A GROUND RING ROD AND PIPE ELECTRODES, OR PLATE ELECTRODES AS DESCRIBED IN NEC 250.52.

CONCRETE ENCASED ELECTRODE
AN ELECTRODE ENCASED BY AT LEAST 2IN. OF CONCRETE , LOCATED WITHIN AND NEAR THE BOTTOM OF A CONCRETE FOUNDATION OR FOOTING THAT IS IN DIRECT CONTACT WITH THE EARTH, CONSISTING OF AT LEAST 20FT. OF ONE OR MORE BARE OR ZINC GALVANIZED OR OTHER ELECTRICALLY CONDUCTIVE COATED STEEL REINFORCING BARS OR RODS OF NOT LESS THAN 1/2" DIAMETER OR BARE COPPER CONDUCTOR NOT SMALLER THAN 4AWG.

GROUNDING TRIODE AT SERVICE ENTRANCE
THREE 3/4" DIAMETER BY 10FT. LONG COPPER CLAD GROUND RODS. GROUND RODS SHALL BE DRIVEN IN A TRIANGULAR SHAPE WITH 10FT. ON EACH SIDE OF THE TRIANGLE. GROUND RODS SHALL BE CONNECTED BY WAY OF A 1/2IN. X 4IN. X 4IN. COPPER PLATE TO A 16OZ. COPPER STRIP ELEMENT. THE COPPER STRIP ELEMENT SHALL BE A 12IN. WIDE CONTINUOUS TRIANGLE. GROUND RODS SHALL ALSO BE CONNECTED WITH (1) #4/0 BARE TINNED COPPER CABLE 19 STRAND. ALL CONNECTIONS SHALL BE MADE WITH A TYPE PCC-2Q2Q EXOTHERMIC CONNECTION OR APPROVED COMPRESSION FITTING.

LOAD OR DOWNSTREAM PANEL
ALL LOADS IN THE BUILDING SHALL HAVE AN EQUIPMENT GROUNDING CONDUCTOR PULLED TO THEM.

1
E-502

SERVICE ENTRANCE GROUNDING DETAIL

SCALE: N.T.S.

APPROVED:

A/E DESIGNER OF RECORD

SEAL:

COMMONWEALTH OF PENNSYLVANIA
REGISTERED PROFESSIONAL
JOSEPH R. GAUS
ENGINEER
PE-074251
1/29/10

US ARMY CORPS OF ENGINEERS
AFGHANISTAN ENGINEER DISTRICT

Mark	Description	Date	Appr.	Mark	Description	Date	Appr.

Rev: 0
Date: 2/23/10
Design file no.
Drawing code:
File name:
Plot date:
Plot scale:

Designed by: RAJ
Dwn by: BJB
Ckd by: JRG
Reviewed by: JRG
Submitted by: BAKER

U.S. ARMY CORPS OF ENGINEERS
AFGHANISTAN ENGINEER DISTRICT
APO AE 96338

Michael Baker Jr., Inc.
A unit of Michael Baker Corporation
Airside Business Park
100 Airside Drive
Moon Township, PA 15108
www.mbakercorp.com

AFGHAN NATIONAL ARMY
REGIONAL MILITARY TRAINING CENTER
STANDARD DESIGN

DINING FACILITY (DFAC)
ELECTRICAL DETAILS

Sheet reference number:
E-502

FIXTURE MARK 'A'

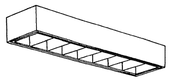

FIXTURE MARK 'B'

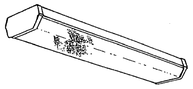

FIXTURE MARK 'C'

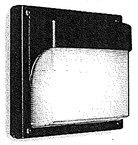

FIXTURE MARK 'G'

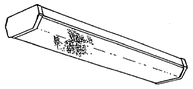

FIXTURE MARK 'H'

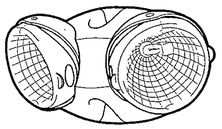

FIXTURE MARK 'SB'

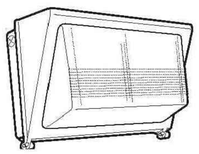

FIXTURE MARK 'E'

LIGHT FIXTURE SCHEDULE

FIXTURE MARK	STYLE NUMBER AND TYPE	NUMBER AND TYPE OF LAMPS	VOLTAGE	MOUNTING	NOTES
A	PARABOLIC SURFACE/PENDANT MOUNTED 300MM X 1200MM FLUORESCENT FIXTURE WITH ELECTRONIC BALLAST	(2) 32W 3500K	220V – 1ø 50HZ	PENDANT MOUNTED FROM CEILINGS	FURNISHED WITH ELECTRONIC BALLAST. PARABOLIC LOUVER SHALL BE SPECULAR LENS IRADESCENCE TYPE.
A2	SAME AS FIXTURE 'A' WITH EMERGENCY BALLAST	(2) 32W 3500K	220V – 1ø 50HZ	PENDANT MOUNTED FROM CEILINGS	FURNISHED WITH ELECTRONIC BALLAST. PARABOLIC LOUVER SHALL BE SPECULAR LENS IRADESCENCE TYPE. EMERGENCY BALLAST SELF TEST.
B	WET LOCATION WRAP AROUND SURFACE/PENDANT MOUNTED FLUORESCENT FIXTURE WITH PRISMATIC ACRYLIC LENS AND ELECTRONIC BALLAST	(2) 32W 3500K	220V – 1ø 50HZ	PENDANT MOUNTED FROM CEILINGS	FURNISHED WITH ELECTRONIC BALLAST, VIRGIN ACRYLIC WRAP AROUND LENS.
B2	SAME AS FIXTURE 'B' WITH EMERGENCY BALLAST	(2) 32W 3500K	220V – 1ø 50HZ	PENDANT MOUNTED FROM CEILINGS	FURNISHED WITH ELECTRONIC BALLAST, VIRGIN ACRYLIC WRAP AROUND LENS. EMERGENCY BALLAST WITH SELF TEST SWITCH.
C	INCANDESCENT ONE PIECE W/ APPROVED LENS STABILIZED HIGH IMPACT POLY CARBONATE.	(1) A19 – 100W INCANDESCENT	220V – 1ø 50HZ	WALL MOUNTED ABOVE EXTERIOR DOORS	
G	WRAP AROUND SURFACE/PENDANT MOUNTED FLUORESCENT FIXTURE WITH PRISMATIC ACRYLIC LENS AND ELECTRONIC BALLAST	(2) 32W 3500K	220V – 1ø 50HZ	PENDANT MOUNTED FROM CEILINGS	FURNISHED WITH ELECTRONIC BALLAST, VIRGIN ACRYLIC WRAP AROUND LENS.
G2	SAME AS FIXTURE 'G' WITH EMERGENCY BALLAST	(2) 32W 3500K	220V – 1ø 50HZ	PENDANT MOUNTED FROM CEILINGS	FURNISHED WITH ELECTRONIC BALLAST, VIRGIN ACRYLIC WRAP AROUND LENS. EMERGENCY BALLAST WITH SELF TEST SWITCH.
H	REMOTE HEAD EXTERIOR LIGHT HEAD POWERED FROM EXIT SIGN BATTERY– 12V DOUBLE HEAD CORROSION RESISTANT WITH UL34 WEATHERPROOF CONSTRUCTION	(2) 12W/12V HALOGEN LAMP	12V – 1ø 50HZ	EXTERIOR WALL MOUNTED AT TOP OF DOOR HEIGHT	
SB	METAL HALIDE WALL MOUNTED EXTERIOR AREA LIGHT WITH PRISMATIC ACRYLIC LENS – CORROSION RESISTANT CONSTRUCTION	(1) 250W METAL HALIDE LAMP	220V – 1ø 50HZ	EXTERIOR WALL MOUNTED 500mm BELOW ROOF	
E	UNIVERSAL MOUNT ENGINEER GRADE THERMOPLASTIC HOUSING EXIT SIGN WITH LED LAMPS, RED LETTERS 6" IN HEIGHT WITH ARROWS AS INDICATED, WITH 12V CADMIUM BATTERY WITH REMOTE HEAD CAPABILITY	LED LAMPS	220V – 1ø 50HZ	UNIVERSAL MOUNTING	

APPROVED:

A/E DESIGNER OF RECORD

SEAL:

COMMONWEALTH OF PENNSYLVANIA
REGISTERED PROFESSIONAL
JOSEPH R. GAUS
1/29/10
ENGINEER
PE-074251

US ARMY CORPS OF ENGINEERS
AFGHANISTAN ENGINEER DISTRICT

Mark	Description	Date	Appr.

Mark	Description	Date	Appr.

Designed by: RAJ
Dwn by: BJB
Ckd by: JRG
Reviewed by: JRG
Submitted by: BAKER
Date: 2/23/10
Rev: 0
Design file no.
Drawing code:
File name:
Plot date:
Plot scale:

U.S. ARMY CORPS OF ENGINEERS
AFGHANISTAN ENGINEER DISTRICT
APO AE 96338

Michael Baker Jr., Inc
A unit of Michael Baker Corporation
Airside Business Park
100 Airside Drive
Moon Township, PA 15108
www.mbakercorp.com

AFGHAN NATIONAL ARMY
REGIONAL MILITARY TRAINING CENTER
STANDARD DESIGN

DINING FACILITY (DFAC)

ELECTRICAL LIGHT FIXTURE SCHEDULE

Sheet reference number:
E–601