AFGHAN NATIONAL ARMY

STANDARD BUILDING DESIGN

ENLISTED BARRACKS

100% FINAL DESIGN SUBMITTAL

SHEET INDEX

G–001 COVER SHEET

STRUCTURAL

S–001 GENERAL NOTES & DESIGN CRITERIA
S–101 FOUNDATION/SLAB PLAN
S–102 SECOND FLOOR FRAMING PLAN
S–103 ROOF FRAMING PLAN
S–401 BUILDING SECTIONS
S–402 ENLARGED 2ND FLOOR FRAMING PLAN
S–403 ENLARGED LATRINE SLAB PLAN
S–501 FOUNDATION SECTIONS
S–502 FRAMING SECTIONS
S–503 BEAM & COLUMN DETAILS
S–504 BEAM & COLUMN DETAILS
S–505 SECTIONS & DETAILS
S–506 MISCELLANEOUS SECTIONS
S–507 MISCELLANEOUS SECTIONS
S–601 SCHEDULES
S–701 TYPICAL DETAILS
S–702 TYPICAL DETAILS

ARCHITECTURAL

A–001 LIFE SAFETY PLAN
A–101 1ST FLOOR PLAN
A–102 2ND FLOOR PLAN
A–103 ROOF PLAN
A–201 ELEVATIONS
A–301 BUILDING SECTIONS
A–401 WALL SECTIONS
A–402 STAIR PLANS
A–403 STAIR SECTIONS
A–404 STAIR DETAILS
A–405 ENLARGED PLAN
A–501 EXTERIOR DETAILS
A–502 HEAD, JAMB, & SILL DETAILS
A–503 STOOP DETAILS
A–504 CANOPY DETAILS
A–505 TOILET, LAVATORY, & ABLUTION DETAILS
A–506 SHOWER DETAILS
A–507 ISOLATION JOINT DETAILS
A–601 WINDOW & DOOR SCHEDULES

MECHANICAL

P–101 PARTIAL 1ST FLOOR PLAN–PLUMBING
P–102 PARTIAL 2ND FLOOR PLAN–PLUMBING
P–501 PLUMBING DETAILS
P–502 PLUMBING DETAILS
P–503 PLUMBING DETAILS
P–901 DRAINAGE ISOMETRIC
P–902 HOT AND COLD WATER PIPING ISOMETRICS

M–101 HVAC 1ST FLOOR PLAN, SCHEDULES, & DETAILS
M–102 HVAC 2ND FLOOR PLAN, SCHEDULES, & DETAILS
M–501 HVAC DETAILS

ELECTRICAL

E–001 ELECTRICAL SYMBOLS & ABBREVIATIONS
E–101 ELECTRICAL LIGHTING PLAN– 1ST FLOOR PART A
E–102 ELECTRICAL LIGHTING PLAN– 1ST FLOOR PART B
E–103 ELECTRICAL LIGHTING PLAN– 2ND FLOOR PART A
E–104 ELECTRICAL LIGHTING PLAN– 2ND FLOOR PART B
E–105 ELECTRICAL POWER & SYSTEMS PLAN–1ST FLOOR PART A
E–106 ELECTRICAL POWER & SYSTEMS PLAN–1ST FLOOR PART B
E–107 ELECTRICAL POWER & SYSTEMS PLAN–2ND FLOOR PART A
E–108 ELECTRICAL POWER & SYSTEMS PLAN–2ND FLOOR PART B
E–109 ELECTRICAL LIGHTNING PROTECTION PLAN – PART A
E–110 ELECTRICAL LIGHTNING PROTECTION PLAN – PART B
E–501 ELECTRICAL DETAILS
E–502 ELECTRICAL DETAILS
E–601 ELECTRICAL LIGHT FIXTURE SCHEDULE
E–602 ELECTRICAL PANEL SCHEDULES
E–603 ELECTRICAL PANEL SCHEDULES

US ARMY CORPS OF ENGINEERS
AFGHANISTAN ENGINEER DISTRICT

Mark	Description	Date	Appr.	Mark	Description	Date	Appr.

Date: 2/23/10 | Rev: 0
Design file no.
Drawing code:
File name: ANABENBG001CS
Plot date: 2/23/2010
Plot scale: X:X

Designed by: KMF/MMY
Dwn by: RCG | Ckd by: CWW
Reviewed by: LHM
Submitted by: BAKER

U.S. ARMY CORPS OF ENGINEERS
AFGHANISTAN ENGINEER DISTRICT
APO AE 96338

Michael Baker Jr., Inc.
A unit of Michael Baker Corporation
Airside Business Park
100 Airside Drive
Moon Township, PA 15108
www.mbakercorp.com

AFGHAN NATIONAL ARMY
REGIONAL MILITARY TRAINING CENTER
STANDARD DESIGN

ENLISTED BARRACKS

COVER SHEET

Sheet reference number:
G–001

STRUCTURAL ABBREVIATIONS:

ACI	AMERICAN CONCRETE INSTITUTE
ADD'L	ADDITIONAL
AISC	AMERICAN INSTITUTE OF STEEL CONSTRUCTION
AISI	AMERICAN IRON AND STEEL INSTITUTE
ASTM	AMERICAN SOCIETY FOR TESTING AND MATERIALS
ARCH	ARCHITECTURAL
B	BOTTOM
BLDG	BUILDING
BOTT	BOTTOM
℄	CENTER LINE
CFMRF	COLD FORM METAL ROOF FRAME
CFMF	COLD FORM METAL FRAME
CFS	COLD FORMED STEEL
CIP	CAST-IN-PLACE
CIPL	CAST-IN-PLACE LINTEL
CJ	CONTROL JOINT
CLR	CLEAR
CMU	CONCRETE MASONRY UNIT
COEFF	COEFFICIENT
COL	COLUMN
CONC	CONCRETE
CONT	CONTINUOUS
COORD	COORDINATE
CSJ	CONSTRUCTION JOINT
CRSI	CONCRETE REINFORCING STEEL INSTITUTE
DIA	DIAMETER
DIAG	DIAGONAL
DIM	DIMENSION
DWG	DRAWING
DWL	DOWEL
EA	EACH
EF	EACH FACE
ELEC	ELECTRICAL
ELEV	ELEVATION
EMBED	EMBEDMENT
EQUIV	EQUIVALENT
ETC	ET CETERA
EW	EACH WAY
EXP	EXPANSION
EXT	EXTERIOR
FTG	FOOTING
GA	GAUGE
GB	GRADE BEAM
HORIZ	HORIZONTAL
h	HOUR
HRS	HOURS
IBC	INTERNATIONAL BUILDING CODE
INFO	INFORMATION
INT	INTERIOR
kg	KILOGRAM
km	KILOMETER
kN	KILONEWTON
kPa	KILOPASCAL
Ld	LENGTH OF DEVELOPMENT
L#	ANGLE (# INDICATES SIZE)
LONG	LONGITUDINAL
LLV	LONG LEG VERTICAL
m	METER
MAX	MAXIMUM
MECH	MECHANICAL
MFG	MANUFACTURER
MID	MIDDLE
MIN	MINIMUM
MISC	MISCELLANEOUS
mm	MILLIMETER
MPa	MEGAPASCAL
MTL	METAL
MWFRS	MAIN WIND FORCE RESISTING SYSTEM
N	NEWTON
N	NORTH
N/A	NOT APPLICABLE
#	NUMBER SYMBOL FOR REBAR SIZE
NTS	NOT TO SCALE
OC	ON CENTER
OD	OUTSIDE DIAMETER
OPNG	OPENING
ℙ or PL	PLATE
PRE-ENG	PRE-ENGINEERED
RB	ROOF BEAM
REINF	REINFORCED
REQ'D	REQUIRED
SIM	SIMILAR
SPECS	SPECIFICATIONS
STD	STANDARD
STRUCT	STRUCTURAL
SW	SHEAR WALL
T	TOP
T/	TOP OF
T/ELEV	TOP ELEVATION
T/SLAB	TOP OF SLAB
T&B	TOP AND BOTTOM
THK	THICK
TYP	TYPICAL
UFC	UNIFIED FACILITIES CRITERIA
UON	UNLESS OTHERWISE NOTED
VERT	VERTICAL
W	WIDTH
W/	WITH

1.0 GENERAL NOTES:

1.1 THIS PROJECT HAS BEEN DESIGNED FOR THE WEIGHTS AND MATERIALS INDICATED ON THE SHEETS AND FOR THE LIVE LOADS INDICATED IN THE DESIGN DATA. IT IS THE CONTRACTOR'S RESPONSIBILITY TO DETERMINE ALLOWABLE CONSTRUCTION LOADS AND TO PROVIDE PROPER DESIGN AND CONSTRUCTION OF FALSEWORK, FORMWORK, STAGING, BRACING, SHEETING AND SHORING, ETC.

1.1 COORDINATE THESE SHEETS WITH THE ARCHITECTURAL, MECHANICAL, ELECTRICAL, PLUMBING, AND CIVIL SHEETS. ALL DIMENSIONS SHOWN ON THE SHEETS ARE MILLIMETERS UNLESS NOTED OTHERWISE.

1.2 THE CONTRACTOR SHALL VERIFY AND COORDINATE ALL FLOOR AND ROOF OPENING SIZES AND LOCATIONS, EQUIPMENT PAD SIZES AND LOCATIONS, ANCHOR BOLT LAYOUTS, ETC WITH EQUIPMENT SELECTED. THE CONTRACTOR SHALL MAKE ANY REQUIRED MODIFICATIONS AT NO ADDITIONAL COST.

1.3 THE CONTRACTOR SHALL REFER TO THE ARCHITECTURAL, MECHANICAL, ELECTRICAL AND PLUMBING SHEETS FOR SLEEVES, CURBS, INSERTS OR OPENINGS, ETC. NOT HEREIN INDICATED.

1.4 WORK NOT INCLUDED ON THE SHEETS BUT IMPLIED TO BE SIMILAR TO THAT SHOWN AT CORRESPONDING PLACES ELSEWHERE ON THE SHEETS SHALL BE REPEATED.

1.5 IN CASE OF CONFLICT BETWEEN THE NOTES, DETAILS AND SPECIFICATIONS THE MOST RIGID REQUIREMENTS SHALL GOVERN.

1.6 SEE ARCHITECTURAL SHEETS FOR LOCATIONS OF MASONRY AND NON-LOAD BEARING PARTITIONS. PROVIDE COMPRESSIBLE FIRESAFING AT TOP OF WALL AS REQUIRED BY ARCHITECTURAL SHEETS.

1.7 COORDINATE FINISHED FLOOR DATUM ELEVATION 0.0m WITH THE CIVIL SHEETS.

2.0 FOUNDATION NOTES

2.1 THE GEOTECHNICAL ANALYSIS FOR THIS PROJECT IS THE RESPONSIBILITY OF THE CONTRACTOR AWARDED THE WORK. AN ASSUMED ALLOWABLE SOIL BEARING VALUE OF 72 kPa HAS BEEN USED IN THE STRUCTURAL ANALYSIS OF THE BUILDING HEREIN AND SHALL BE CONFIRMED AND VERIFIED AS PART OF THE GEOTECHNICAL INVESTIGATION. VALUES WHICH DO NOT MEET THE REQUIREMENTS INDICATED ON THE BASIS OF DESIGN SHEET SHALL BE IMMEDIATELY BROUGHT TO THE ATTENTION OF THE CONTRACTING OFFICER FOR CONSIDERATION AND DETERMINATION ON THE NEXT APPROPRIATE COURSE OF ACTION.

2.2 SEE THE SPECIFICATION FOR ADDITIONAL REQUIREMENTS TO THOSE OUTLINED IN THE GEOTECHNICAL INVESTIGATION FOR EXCAVATION AND PREPARATION OF THE FOUNDATION AND THE SLAB ON GRADE SUBGRADE INCLUDING COMPACTION PROCEDURES.

2.3 EXCAVATIONS FOR FOOTINGS SHALL HAVE THE SIDES AND BOTTOMS TEMPORARILY LINED WITH 0.25mm POLYETHYLENE IF PLACEMENT OF CONCRETE DOES NOT OCCUR WITHIN 24 HRS OF THE EXCAVATION OF THE FOOTING.

2.4 FOUNDATION CONDITIONS NOTED DURING CONSTRUCTION WHICH DIFFER FROM THOSE DESCRIBED IN THE GEOTECHNICAL REPORT SHALL BE REPORTED TO THE GENERAL CONTRACTOR BEFORE FURTHER CONSTRUCTION IS ATTEMPTED. SEE PROJECT SPECIFICATIONS.

2.5 NO FOOTINGS OR SLABS SHALL BE POURED INTO OR AGAINST SUBGRADE CONTAINING FREE WATER, FROST, ICE OR LOOSE MATERIAL. FROST DEPTH ASSUMED TO BE 800mm.

2.6 ALL SLAB-ON-GRADE, TRENCH BOTTOMS AND OTHER ON-GRADE INTERIOR HORIZONTAL SURFACES SHALL BE PLACED OVER A 0.25mm POLYETHYLENE VAPOR RETARDER OVER A 100mm #57 STONE WATER CAPILLARY BARRIER PLACED ON SUBGRADE PROPERLY PREPARED IN ACCORDANCE WITH THE CONTRACT SPECIFICATIONS. (UON)

2.7 PRIOR TO START OF FOUNDATION OR SLAB-ON-GRADE CONSTRUCTION, EXISTING SUBGRADES SHALL BE COMPACTED TO MINIMUM OF 95% MAXIMUM DRY DENSITY OBTAINED THRU ASTM D 1557 MODIFIED PROCTOR TESTING.

2.8 SEE PLUMBING, ELECTRICAL & CIVIL SHEETS FOR REQUIRED UNDERSLAB UTILITIES.

2.9 SEE ARCHITECTURAL SHEETS FOR ALL WATERPROOFING DETAILS AND MATERIALS.

2.10 IF UNDERMINING OF FOOTINGS OCCURS, FILL VOIDS WITH 18 MPa CONCRETE. DO NOT ATTEMPT TO REPLACE AND RE-COMPACT SOIL.

3.0 CONCRETE

3.1 CONCRETE SHALL HAVE THE UNIT WEIGHT OF 2400 kg/m^3 AND A MINIMUM COMPRESSIVE STRENGTH (f'c) OF 28 MPa AT 28 DAYS. ALL CONCRETE SHALL HAVE A WATER-CEMENT RATIO OF 0.45. SEE SPECIFICATIONS FOR ADDITIONAL INFORMATION. ENTRAIN AIR TO PRODUCE TOTAL AIR CONTENT ACCORDING TO THE SPECIFICATIONS FOR CONCRETE EXPOSED TO FREEZING TEMPERATURES (EXTERIOR FOOTINGS, SLAB TURNDOWNS, EXTERIOR SLABS AND SLABS-ON-GRADE, EXTERIOR RETAINING WALLS, AND EXTERIOR GRADE BEAMS.)

3.2 NO CALCIUM CHLORIDE SHALL BE USED IN ANY CONCRETE.

3.3 MIXING, TRANSPORTING AND PLACING OF CONCRETE SHALL CONFORM TO ACI 301M-05.

3.4 ALL CONCRETE WORK SHALL CONFORM TO THE REQUIREMENTS OF THE AMERICAN CONCRETE INSTITUTE (ACI) 318M MANUAL (metric), "BUILDING CODE REQUIREMENTS FOR REINFORCED CONCRETE", AND REQUIREMENTS OUTLINED IN THE CONTRACT SPECIFICATIONS. WHEN THERE IS A CONFLICT BETWEEN ACI AND THE SPECIFICATIONS, THE MORE STRINGENT SHALL GOVERN.

3.5 CHAMFER ALL EXPOSED EXTERNAL CORNERS OF CONCRETE WITH 20mm x45 DEGREE CHAMFER UON.

3.6 CONCRETE REINFORCEMENT BARS SHALL CONFORM TO ASTM A615M-96a, GRADE 420 MPa, REINFORCING BARS SHALL NOT BE TACK WELDED, WELDED, HEATED OR CUT, UNLESS INDICATED ON THE CONTRACT DOCUMENTS. ALL LAP SPLICES SHALL BE CLASS "B" UON.

3.7 HORIZONTAL FOOTING AND HORIZONTAL WALL REINFORCEMENT SHALL BE CONTINUOUS AND SHALL HAVE 90 DEGREE BENDS AND EXTENSIONS, OR CORNER BARS OF EQUIVALENT SIZE LAPPED WITH A CLASS B TENSION SPLICE AT CORNERS AND INTERSECTIONS. TOP BAR CRITERIA SHALL APPLY IF 300mm OR MORE OF FRESH CONCRETE IS PLACED BELOW BAR.

3.8 SLABS-ON-GRADE SHALL HAVE CONSTRUCTION JOINTS OR CRACK CONTROL JOINTS AS SHOWN ON THE DRAWINGS. CONSTRUCTION JOINTS CAN BE USED AT CONTROL JOINT LOCATIONS AT CONTRACTORS OPTION. SEE SLAB PLANS & JOINT DETAILS FOR ADDITIONAL INFORMATION. FOR AREAS NOT SHOWN ON DWGS, THE MAXIMUM SPACING OF CONSTRUCTION/ CRACK CONTROL JOINTS SHALL BE 4800mm

3.9 ALL CONCRETE REINFORCEMENT SHALL BE DETAILED, FABRICATED, LABELED, SUPPORTED, AND SPACED IN FORMS AND SECURED IN PLACE IN ACCORDANCE WITH THE PROCEDURES AND REQUIREMENTS OUTLINED IN THE LATEST EDITION OF THE "BUILDING CODE REQUIREMENTS FOR REINFORCED CONCRETE", ACI 318M, AND THE "MANUAL OF STANDARD PRACTICE FOR DETAILING REINFORCED CONCRETE STRUCTURES", ACI 315M, LATEST EDITION. BASED ON IN COUNTRY REINFORCEMENT AVAILABILITY, IT IS THE CONTRACTOR'S OPTION TO ROUND DESIGNATED ODD NUMBERED REINFORCEMENT SIZES UP (1) ONE BAR SIZE.

3.10 ALL DOWELS SHALL MATCH SIZE AND NUMBER OF MAIN REINFORCING, UNLESS NOTED OTHERWISE ON THE SHEETS.

3.11 ADDITIONAL BARS SHALL BE PROVIDED AROUND ALL FLOOR AND WALL OPENINGS AS SHOWN ON THE SHEETS.

3.12 SEE ARCHITECTURAL SHEETS FOR TYPE AND LOCATION OF ALL FLOOR FINISHES.

3.13 THE CONTRACTOR SHALL COORDINATE ADDITIONAL WALL/SLAB OPENINGS NOT SHOWN ON STRUCTURAL SHEETS. SEE MECHANICAL, ELECTRICAL, PLUMBING AND CIVIL SHEETS.

3.14 UNLESS NOTED OTHERWISE, ALL CURBS SHALL BE REINFORCED WITH AT LEAST (1)-#13 CONTINUOUS AND #13 AT 300mm O.C. DOWELS TO STRUCTURE BELOW.

3.15 THE CONTRACTOR SHALL VERIFY ALL OPENINGS, PAD SIZES, AND ANCHOR BOLTS WITH EQUIPMENT SELECTED.

3.16 FOR ALL WALLS & PIERS, PROVIDE DOWELS INTO FOOTING AT EACH VERT REINF BAR, UON DOWEL SIZE SHALL BE SAME AS VERT REINF.

3.17 PROVIDE CONCRETE POUR STOPS OR FORMED AS REQUIRED FOR INSTALLATION OF ALL CONCRETE WORK.

3.18 PROVIDE ADDITIONAL (2)-#13 x 600mm REINFORCING BARS IN SLAB-ON GRADE AT ALL RE-ENTRANT CORNERS. PLACE BARS AT MID-DEPTH OF SLAB WITH A CLEARANCE OF 50mm FROM CORNER UON.

3.19 COLD-WEATHER PLACEMENT: COMPLY WITH ACI 306.1 AND AS FOLLOWS. PROTECT CONCRETE WORK FROM PHYSICAL DAMAGE OR REDUCED STRENGTH THAT COULD BE CAUSED BY FROST, FREEZING ACTIONS, OR LOW TEMPERATURES. SUBMIT A COLD WEATHER CONCRETING PLAN FOR APPROVAL.

3.20 PROVIDE BONDING COMPOUND PER ASTM C 1059-99: SPECIFICATION FOR LATEX AGENTS FOR BONDING FRESH CONCRETE (GROUT) TO HARDENED CONCRETE.

3.21 THE FORMED SURFACES FOR REINFORCED CONCRETE SHALL ACHIEVE A "CLASS A" FINISH WHEN RECEIVING PAINT OR A "CLASS B" FINISH WHEN RECEIVING PLASTER OR TILE AS PER SPECIFICATION SECTION 03 31 00 CAST-IN-PLACE STRUCTURAL CONCRETE.

3.22 AT INTERSECTING GRADE BEAMS AND SHEAR WALLS, PROVIDE CORNER BARS AT INTERSECTIONS WITH SAME QUANTITY, SIZE AND SPACING AS HORIZONTAL BARS WITH LEG LENGTH = 50db.

3.23 REFER TO S-800 SERIES REINFORCING BAR PLACEMENT DRAWINGS DEFINING LENGTHS, BENDS, AND SPACINGS FOR ALL STRUCTURAL CONCRETE. THE S-800 SERIES DRAWING ARE BASED ON THE S-400, S-500, S-600, AND S-700 SERIES DRAWING SCHEDULES, DETAILS, AND DIAGRAMS.

4.0 CONCRETE MASONRY

4.1 MASONRY CONSTRUCTION SHALL CONFORM TO SPECIFICATION FOR MASONRY STRUCTURES (ACI 530.1) UON.

4.2 STRENGTH OF MASONRY MATERIALS SHALL BE AS FOLLOWS:

a. CONCRETE MASONRY UNITS SHALL BE NORMAL WEIGHT, GRADE N, TYPE 1, CONFORMING TO ASTM C-90 AND HAVE A MINIMUM COMPRESSIVE STRENGTH OF 10.4 MPa ON THE NET AREA.
b. MORTAR SHALL CONFORM TO ASTM C-270 TYPE S.
c. GROUT FOR MASONRY SHALL BE NORMAL WEIGHT AND HAVE A MINIMUM COMPRESSIVE STRENGTH OF 14 MPa AT 28 DAYS. GROUT SHALL CONFORM TO ASTM C476M. GROUT LIFTS SHALL NOT EXCEED 1,400mm.
d. REINFORCED MASONRY SHALL HAVE A STRENGTH F'm = 10 MPa. (F'm IS THE COMPRESSIVE STRENGTH OF THE MASONRY AT 28 DAYS AS DETERMINED BY PRISM TESTS).

4.3 ALL VERTICAL REINFORCEMENT FOR CONCRETE MASONRY SHALL BE ASTM A615M-96a, GRADE 420 MPa. ALL SPLICES SHALL BE LAPPED 48 BAR DIAMETERS MINIMUM.

4.4 BOND BEAMS SHALL BE SPACED AT 1200mm OC VERTICALLY. BOND BEAM REINFORCING SHALL BE CONTINUOUS AND PROVIDED AT WALL INTERSECTIONS AND WALL CORNERS (REFERENCE CONCRETE MASONRY NOTE 4.11). ALL BOND BEAM REINFORCING SHALL BE CONTINUOUS AND HAVE STANDARD ACI HOOKS AT EACH END. PROVIDE STANDARD BAR SPLICES AS SPECIFIED. AS AN ALTERNATE TO CMU BOND BEAMS, IT IS THE CONTRACTOR'S OPTION TO PROVIDE 200mm x 200mm CONTINUOUS CAST-IN-PLACE CONCRETE BOND BEAMS WITH (2)-#16 IN LIEU OF CMU BOND BEAMS INDICATED ON THE DRAWINGS.

4.5 SEE TYPICAL DETAILS FOR MINIMUM REINFORCEMENT REQUIREMENTS FOR CMU WALLS. PROVIDE STANDARD BAR SPLICES AS SPECIFIED. ALL VERTICAL REINFORCEMENT EXTENDS FULL HEIGHT OF WALL.

4.6 CMU CELLS THAT REQUIRE VERTICAL REINFORCING BARS AS INDICATED ON THE CONTRACT DRAWINGS AND/OR SPECS SHALL HAVE REINF BARS PLACED IN CENTERS OF CMU CELLS AND CONTINUOUSLY GROUTED UON.

4.7 ALL CMU CELLS, OPEN CAVITIES, AND AIR SPACES OF ALL EXTERIOR WALLS SHALL BE GROUTED TO STOP FRAGMENTS FROM MORTAR BLAST.

4.8 CONTRACTOR SHALL COORDINATE LOCATION OF ALL OPENINGS SEE ARCH, MECH, ELEC, AND PLUMBING SHEETS FOR SIZE AND LOCATION OF OPENINGS.

4.9 MASONRY WALLS SHALL NOT BE BACK FILLED PRIOR TO THE MORTAR AND GROUT ATTAINING THEIR RESPECTIVE MAXIMUM DESIGN STRENGTHS PER SPECIFICATIONS.

4.10 PROVIDE GALVANIZED MORTAR/GROUT SCREEN W/ 3mm MESH WHERE CELLS BELOW ARE NOT GROUTED.

4.11 AT INTERSECTING BOND BEAMS, PROVIDE CORNER BAR FOR EACH HORIZONTAL BAR IN BOND BEAMS AT INTERSECTING WALLS. USE SAME SIZE AND SPACING AS HORIZONTAL BARS WITH LEG LENGTH = 50db.

4.12 THE ALTERNATE TOP OF CMU WALL BRACING DETAIL(S) SHOWN ON S-701 CAN BE UTILIZED AT THE CONTRACTOR'S OPTION IN PLACE OF THE "SLEEVED DOWEL" WALL CONNECTIONS DEPICTED ON S-400 AND S-500 SERIES DRAWINGS. IN ADDITION, ALTERNATE DETAIL(S) SHOW CAST-IN-PLACE WALL BOND BEAMS THAT CAN BE UTILIZED AT THE CONTRACTOR'S OPTION IN PLACE OF THE STANDARD CMU BOND BEAMS CONSTRUCTED OF CMU BLOCKS.

5.0 COLD-FORMED METAL FRAMING

5.1 ALL COLD-FORMED METAL FRAMING MEMBERS SHALL CONFORM TO ASTM A1003M, STRUCTURAL GRADE ST340 (MPa), WITH A GALVANIZED COATING OF Z275 OR BETTER IN ACCORDANCE WITH ASTM A653M.

5.2 ALL COLD-FORMED METAL FRAMING MEMBERS SHALL HAVE THE FOLLOWING MINIMUM PROPERTIES:

a. MINIMUM METAL THICKNESS:
TRACK = 1.37mm;
STUD/OTHER = 1.09mm
b. MINIMUM FLANGE WIDTH:
TRACK = 38mm;
STUD/OTHER = 35mm
c. MINIMUM MEMBER DEPTH:
ALL SECTIONS = 152.2mm
d. PURLIN (HAT CHANNEL)
DEPTHxWIDTH(FLAT TOP)xTHICK = 25mmx42mmx1.59mm

5.3 ALL CONNECTIONS SHALL BE MADE WITH CORROSION RESISTANT (ASTM A153M), SELF-DRILLING, SELF-TAPPING STEEL DRILL SCREWS IN ACCORDANCE WITH ASTM C1513. SCREWS SHALL HAVE A LOW PROFILE HEAD BENEATH ROOF DECK, AND STANDARD HEAD ALL OTHER LOCATIONS.

5.4 FABRICATE COLD FORMED METAL FRAMING AND ACCESSORIES PLUMB, SQUARE AND TRUE TO LINE, WITH CONNECTIONS SECURELY FASTENED ACCORDING TO AISI STANDARD FOR COLD FORMED STEEL FRAMING.

5.5 CUT FRAMING MEMBERS BY SAWING OR SHEATHING, DO NOT TORCH CUT.

5.6 INSTALL FRAMING MEMBERS IN ONE-PIECE LENGTHS UNLESS SPLICE CONNECTIONS ARE INDICATED FOR TRACK OR TENSION MEMBERS

5.7 INSTALL TEMPORARY BRACING AND SUPPORTS TO SECURE FRAMING DURING CONSTRUCTION. MAINTAIN BRACING AND SUPPORTS IN PLACE UNTIL THE STRUCTURE HAS BEEN COMPLETED WITH ALL CONNECTIONS AND PERMANENT BRACING SECURED.

6.0 STRUCTURAL DESIGN CRITERIA

6.1 ALL DESIGNS SHALL CONFORM TO THE PROVISIONS OF THE IBC 2006 AND UFC AS APPLICABLE.

6.2 DESIGN LOADS

6.2.1 DEAD LOADS (PER IBC 2006 & UFC 3-310-01)

MECH/ELEC/PLUMBING	0.20 kPa
MISCELLANEOUS	0.15 kPa
COLD-FORMED FRAMING	0.20 kPa
INSULATION	0.10 kPa
METAL ROOF PANEL	0.14 kPa
	0.79 kPa
FLOOR PARTITION ALLOWANCE	0.96 kPa

6.2.2 LIVE LOADS (PER IBC 2006 & UFC 3-310-01)

ROOF	1.00 kPa
CORRIDOR (2-STORY BLDG ONLY)	4.80 kPa
ALL OTHERS (2-STORY BLDG ONLY)	2.40 kPa
SLAB ON GRADE	4.80 kPa

6.2.3 SNOW LOADS (PER IBC 2006 & UFC 3-310-01)

GROUND SNOW LOAD (Pg)	1.2 kPa
SNOW IMPORTANCE FACTOR (I)	1.0
SNOW EXPOSURE FACTOR (Ce)	1.0
THERMAL FACTOR (Ct)	1.0

6.2.4 WIND LOADS (PER IBC 2006)

BASIC WIND SPEED	137 km/h
WIND IMPORTANCE FACTOR	1.0
WIND EXPOSURE CATEGORY	D
DIRECTIONALITY COEFFICIENT (Kd)	0.85
TOPOGRAPHIC FACTOR (Kzt)	1.0

6.2.5 SEISMIC LOADS (PER IBC 2006 & UFC 3-310-04)

OCCUPANCY USE CATEGORY	II
SEISMIC IMPORTANCE FACTOR (Ie)	1.0
SEISMIC SITE CLASS	D

S_s = 2.40 (FOR IRREGULAR PORTION OF BLDG – COLUMNS 8 THRU 17)

S_S = 1.50 (REDUCED FROM 2.40 PER ASCE 7-05, 12.8.1.3 FOR A BUILDING WITHOUT IRREGULARITIES – COLUMNS 1 THRU 7)

S_1 = 1.20

S_{DS} = 1.60 AND 1.00

S_{D1} = 1.20

SEISMIC DESIGN CATEGORY	E
SEISMIC RESISTING SYSTEM: –SPECIAL REINFORCED CONCRETE SHEAR WALL	
RESPONSE MODIFICATION FACTOR (R)	6
RESPONSE COEFFICIENT (Cs) – IRREGULAR	0.267
RESPONSE COEFFICIENT (Cs) – REGULAR	0.167
SEISMIC ANALYTICAL PROCEDURE =	EQUIV LATERAL FORCE
SEISMIC BASE SHEAR – IRREGULAR	4890 kN
SEISMIC BASE SHEAR – REGULAR	1990 kN

APPROVED:

A/E DESIGNER OF RECORD

SEAL:

GEORGIA REGISTERED 1-21-10 No. 27141 PROFESSIONAL ENGINEER CHRISTOPHER W. WHITMORE

US ARMY CORPS OF ENGINEERS
AFGHANISTAN ENGINEER DISTRICT

Mark	Description	Date	Appr.	Mark	Description	Date	Appr.

Date: 2/23/10 | Rev: 0
Design file no.
Drawing code:
File name: AAMENB5-001GN
Plot date: 2/23/2010
Plot scale: X:X

Designed by: KMF/MMY
Dwn by: RCG | Ckd by: CWW
Reviewed by: LHM
Submitted by:
BAKER

U.S. ARMY CORPS OF ENGINEERS
AFGHANISTAN ENGINEER DISTRICT
APO AE 96338

Michael Baker Jr., Inc
A unit of Michael Baker Corporation
Airside Business Park
100 Airside Drive
Moon Township, PA 15108
www.mbakercorp.com

AFGHAN NATIONAL ARMY
REGIONAL MILITARY TRAINING CENTER
STANDARD DESIGN

ENLISTED BARRACKS

GENERAL NOTES & DESIGN CRITERIA

Sheet reference number:
S-001

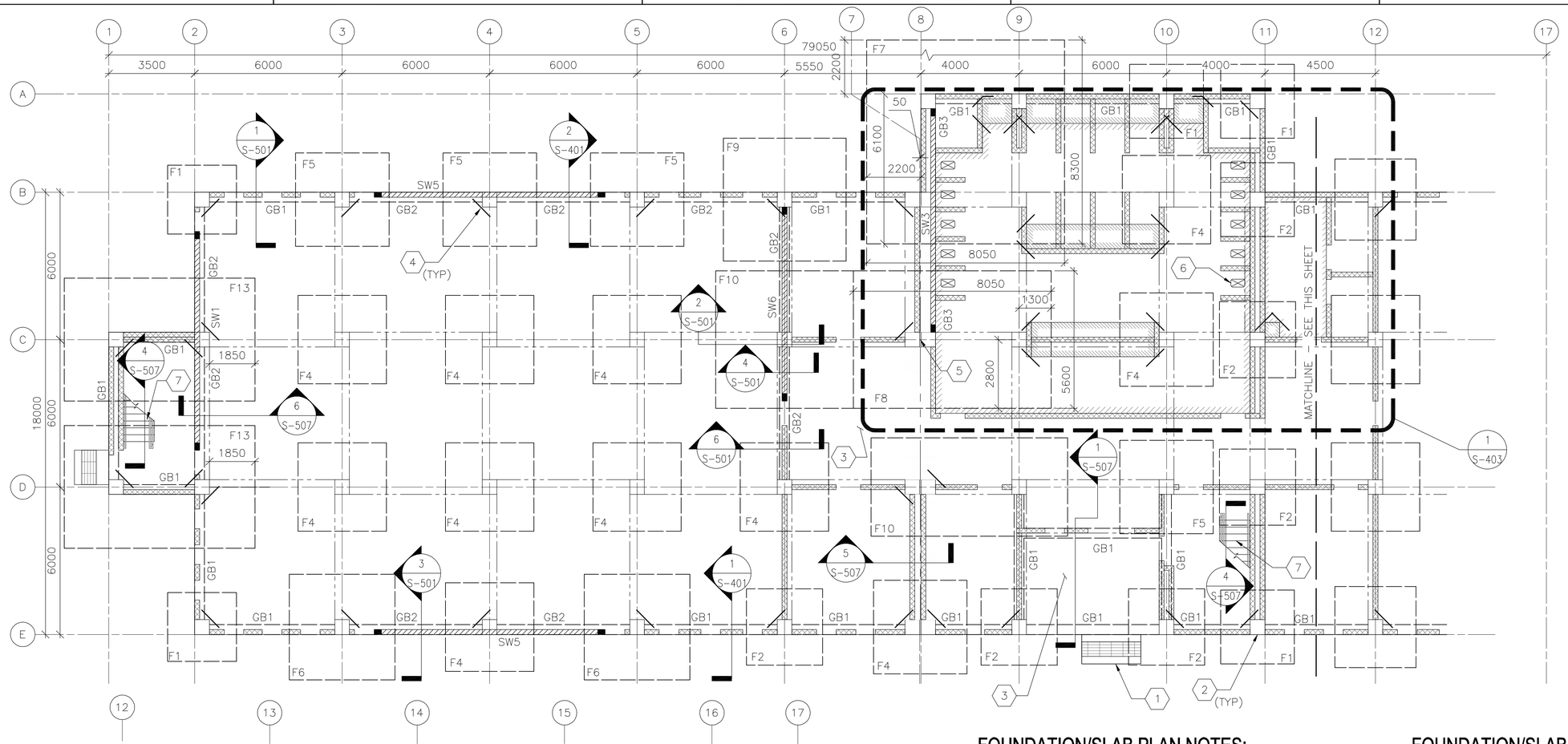

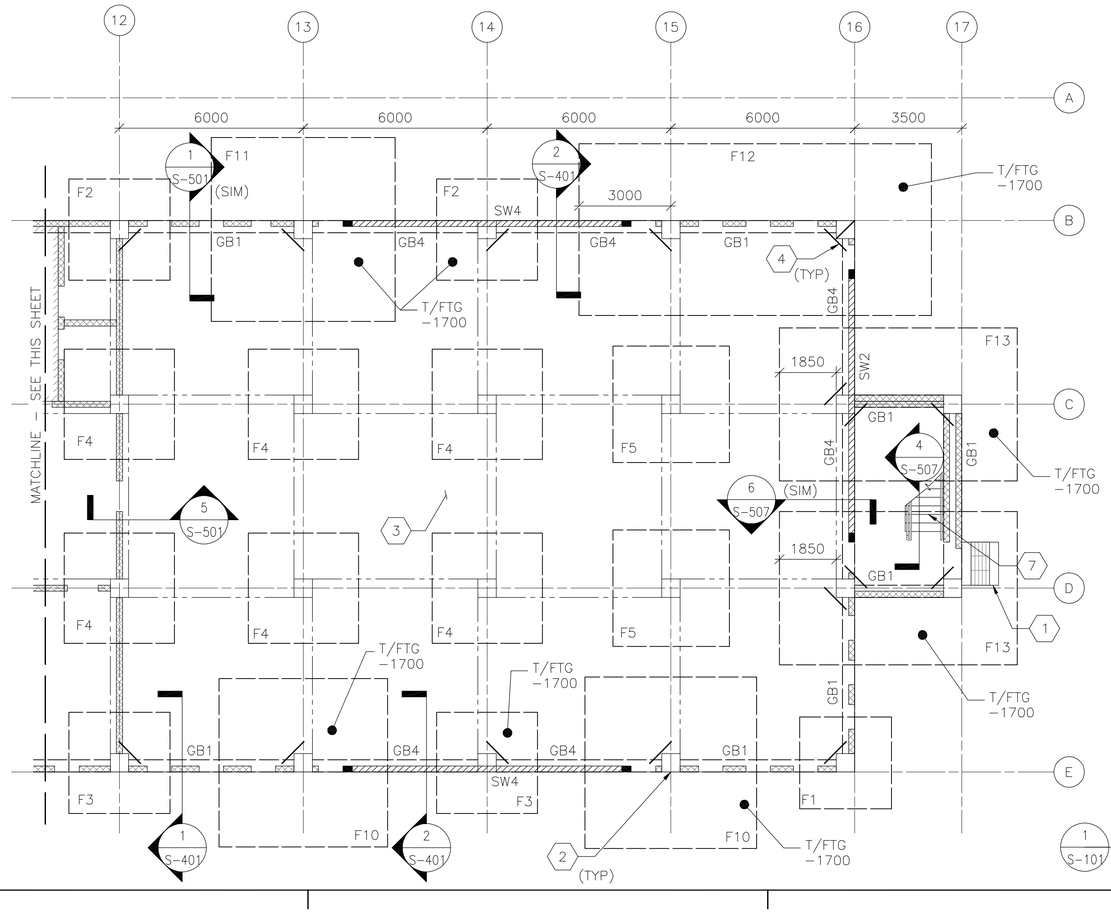

FOUNDATION/SLAB PLAN NOTES:

1. REFER TO SHEET S-001 FOR STRUCTURAL NOTES AND DESIGN CRITERIA.
2. FINISH FIRST FLOOR ELEVATION SHALL BE (DATUM 0.00) ALL PLUS OR MINUS DIMENSIONS INDICATED ON PLAN OR REFERRED TO IN NOTES RELATE TO FINISH FIRST FLOOR ELEVATION.
3. SLAB-ON-GRADE IS 150 WITH #13 @ 300 OC EW LOCATED 38 FROM T/SLAB UON. WHERE NOTED, 300 SLAB-ON-GRADE SHALL BE REINF W/ #13 @ 300 OC EW T&B.
4. TOP OF EXTERIOR FOOTINGS SHALL BE -950 UNLESS OTHERWISE INDICATED.
5. TOP OF INTERIOR FOOTINGS WITHOUT GRADE BEAM ABOVE SHALL BE -600.
6. TOP OF INTERIOR FOOTINGS WITH GRADE BEAM ABOVE SHALL BE -950.
7. COLUMN FOOTINGS INDICATED BY F# ON PLAN. REFER TO COLUMN FOOTING SCHEDULE ON SHEET S-601.
8. REFER TO COLUMN SCHEDULE ON SHEET S-601.
9. GRADE BEAM INDICATED BY GB# ON PLAN, REFER TO BEAM SCHEDULE ON SHEET S-601.
10. SHEARWALL INDICATED BY SW# ON PLAN, REFER TO SHEARWALL SCHEDULE ON SHEET S-601.
11. SEE TYP EXTERIOR AND INTERIOR CMU WALL REINFORCING DETAILS ON SHEET S-701.
12. SEE MECHANICAL AND ELECTRICAL SHEETS FOR CONCRETE PAD LOCATIONS, SIZES, AND THICKNESS NOT SHOWN. SEE SHEET S-701 FOR DETAILS.
13. THICKENED SLAB UNDER CMU PERIMETER/PARTITION WALLS NOT SHOWN FOR CLARITY.

FOUNDATION/SLAB PLAN KEY NOTES: (X)

1. CONC PAD (ENTRANCE) – SEE ARCH DWGS FOR INFORMATION
2. REINF CONC COLUMN
3. REINF CONC SLAB-ON-GRADE
4. (2)-#13 @ RE-ENTRANT CORNERS – SEE S-701 FOR INFORMATION
5. 50 ISOLATION JOINT BETWEEN STRUCTURES LOCATED ABOVE FIRST FLOOR SLAB-ON-GRADE
6. OPENING IN SLAB FOR LATRINE. SEE SLAB OPENING DETAIL ON DWG S-701. COORDINATE SIZE WITH MANUFACTURER.
7. CONCRETE STAIR TO SECOND FLOOR
8. NOT USED

FOUNDATION/SLAB PLAN LEGEND:

- REINF CONC SHEAR WALL
- REINF CMU WALL
- CONTROL JOINT
- MATCHLINE
- INDICATES DROP SLAB 65 BELOW FINISH FLOOR
- INDICATES DROP SLAB 200 BELOW FINISH FLOOR
- SLAB OPENING

1 / S-101 **FOUNDATION/SLAB PLAN**

SCALE: 1:100

0 2000 4000
SCALE: 1:100

UNLESS OTHERWISE NOTED, LINEAR DIMENSIONS SHOWN ON DRAWINGS ARE IN MILLIMETERS (mm)

APPROVED:

A/E DESIGNER OF RECORD

SEAL:

GEORGIA REGISTERED 4-29-10 No. 27141 PROFESSIONAL ENGINEER CHRISTOPHER W. WHITMORE

US ARMY CORPS OF ENGINEERS
AFGHANISTAN ENGINEER DISTRICT

Mark	Description	Date	Appr.	Mark	Description	Date	Appr.

Date: 2/23/10
Rev: 0
Design file no.
Drawing code:
File name: AN4BENB5-101FNP
Plot date: 2/23/2010
Plot scale: x:X

Designed by: KMP/MMY
Dwn by: RCG
Ckd by: CWW
Reviewed by: LHM
Submitted by:
BAKER

U.S. ARMY CORPS OF ENGINEERS
AFGHANISTAN ENGINEER DISTRICT
APO AE 96338

Michael Baker Jr., Inc.
A unit of Michael Baker Corporation
Airside Business Park
100 Airside Drive
Moon Township, PA 15108
www.mbakercorp.com

AFGHAN NATIONAL ARMY
REGIONAL MILITARY TRAINING CENTER
STANDARD DESIGN

ENLISTED BARRACKS

FOUNDATION/SLAB PLAN

Sheet reference number:
S-101

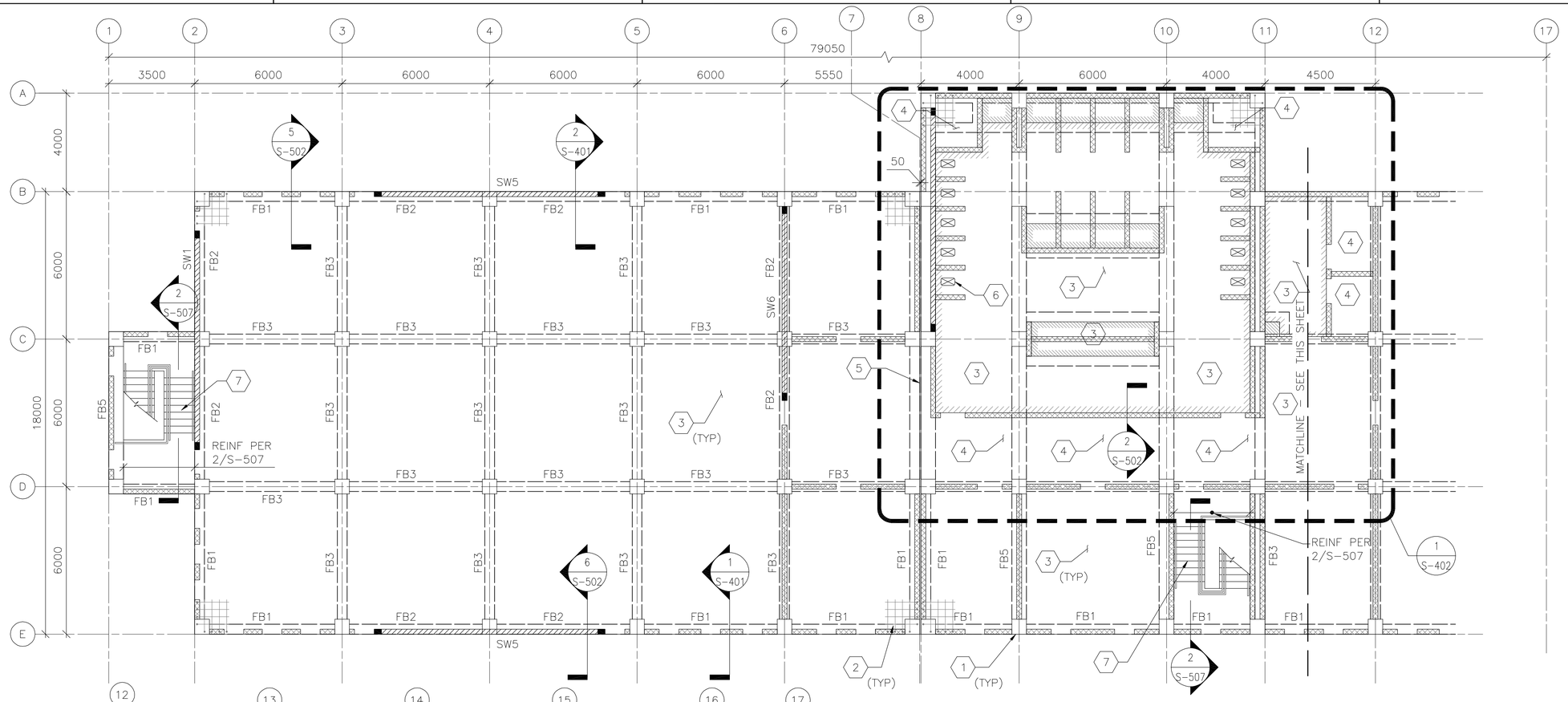

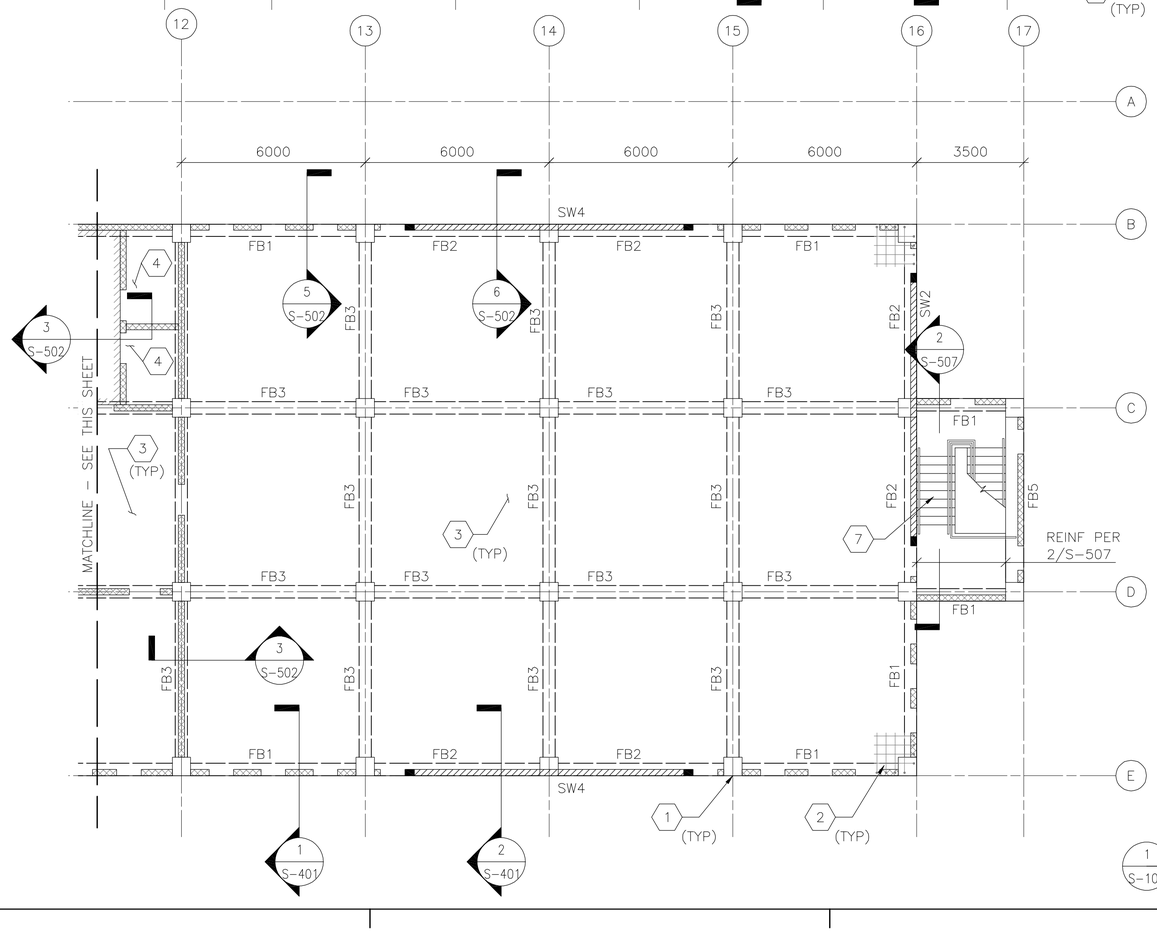

SECOND FLOOR FRAMING PLAN NOTES:

1. REFER TO SHEETS S-001 FOR STRUCTURAL NOTES AND DESIGN CRITERIA.
2. TOP OF SLAB ELEVATION = 3600 UNLESS NOTED OTHERWISE.
3. SEE KEY NOTES FOR SLAB THICKNESS & REINFORCING.
4. SECOND FLOOR BEAM INDICATED BY FB# ON PLAN. REFER TO BEAM SCHEDULE ON SHEET S-601.
5. SHEARWALL INDICATED BY SW# ON PLAN, REFER TO SHEARWALL SCHEDULE ON SHEET S-601.
6. SEE CMU WALL REINFORCING SCHEDULE ON SHEET S-601 AND TYP CMU WALL DETAIL ON SHEET S-701
7. SEE TYP EXTERIOR AND INTERIOR CMU WALL REINFORCING DETAILS ON SHEET S-701.
8. STAIRS OMITTED FOR CLARITY.

SECOND FLOOR FRAMING PLAN KEY NOTES: (X)

1. REINF CONC COLUMN
2. ADD'L REINF @ CONC SLAB CORNERS - SEE 4/S-701 FOR INFORMATION
3. 200 THICK CONC SLAB WITH #13 @ 300 OC EACH WAY TOP & BOTTOM
4. 265 THICK CONC SLAB WITH #13 @ 300 OC EACH WAY TOP & BOTTOM
5. 50 ISOLATION JOINT BETWEEN STRUCTURES LOCATED ABOVE FIRST FLOOR SLAB-ON-GRADE
6. OPENING IN SLAB FOR LATRINE. SEE SLAB OPENING DETAIL ON DWG S-701. COORDINATE SIZE WITH MANUFACTURER.
7. CONCRETE STAIR

SECOND FLOOR FRAMING PLAN LEGEND:

- REINF CONC SHEAR WALL
- REINF CMU WALL
- MATCH LINE
- INDICATES DROP SLAB 65 BELOW FINISH FLOOR
- INDICATES DROP SLAB 200 BELOW FINISH FLOOR
- SLAB OPENING

1 S-102 **SECOND FLOOR FRAMING PLAN**

SCALE: 1:100

0 2000 4000

SCALE: 1:100

UNLESS OTHERWISE NOTED, LINEAR DIMENSIONS SHOWN ON DRAWINGS ARE IN MILLIMETERS (mm)

APPROVED:

A/E DESIGNER OF RECORD

SEAL:

GEORGIA REGISTERED 1-29-10 No. 27141 PROFESSIONAL ENGINEER CHRISTOPHER W. WHITMORE

US ARMY CORPS OF ENGINEERS
AFGHANISTAN ENGINEER DISTRICT

Mark	Description	Date	Appr.	Mark	Description	Date	Appr.

Designed by: KMP/MMY
Dwn by: RCG
Ckd by: CWW
Reviewed by: LHM
Submitted by: BAKER
Date: 2/23/10
Rev: 0
Design file no.
Drawing code:
File name: ANABEHBS-102FRP
Plot date: 2/23/2010
Plot scale: X:X

U.S. ARMY CORPS OF ENGINEERS
AFGHANISTAN ENGINEER DISTRICT
APO AE 96338

Michael Baker Jr., Inc
A unit of Michael Baker Corporation
Airside Business Park
100 Airside Drive
Moon Township PA 15108
www.mbakercorp.com

AFGHAN NATIONAL ARMY
REGIONAL MILITARY TRAINING CENTER
STANDARD DESIGN

ENLISTED BARRACKS

SECOND FLOOR FRAMING PLAN

Sheet reference number:
S-102

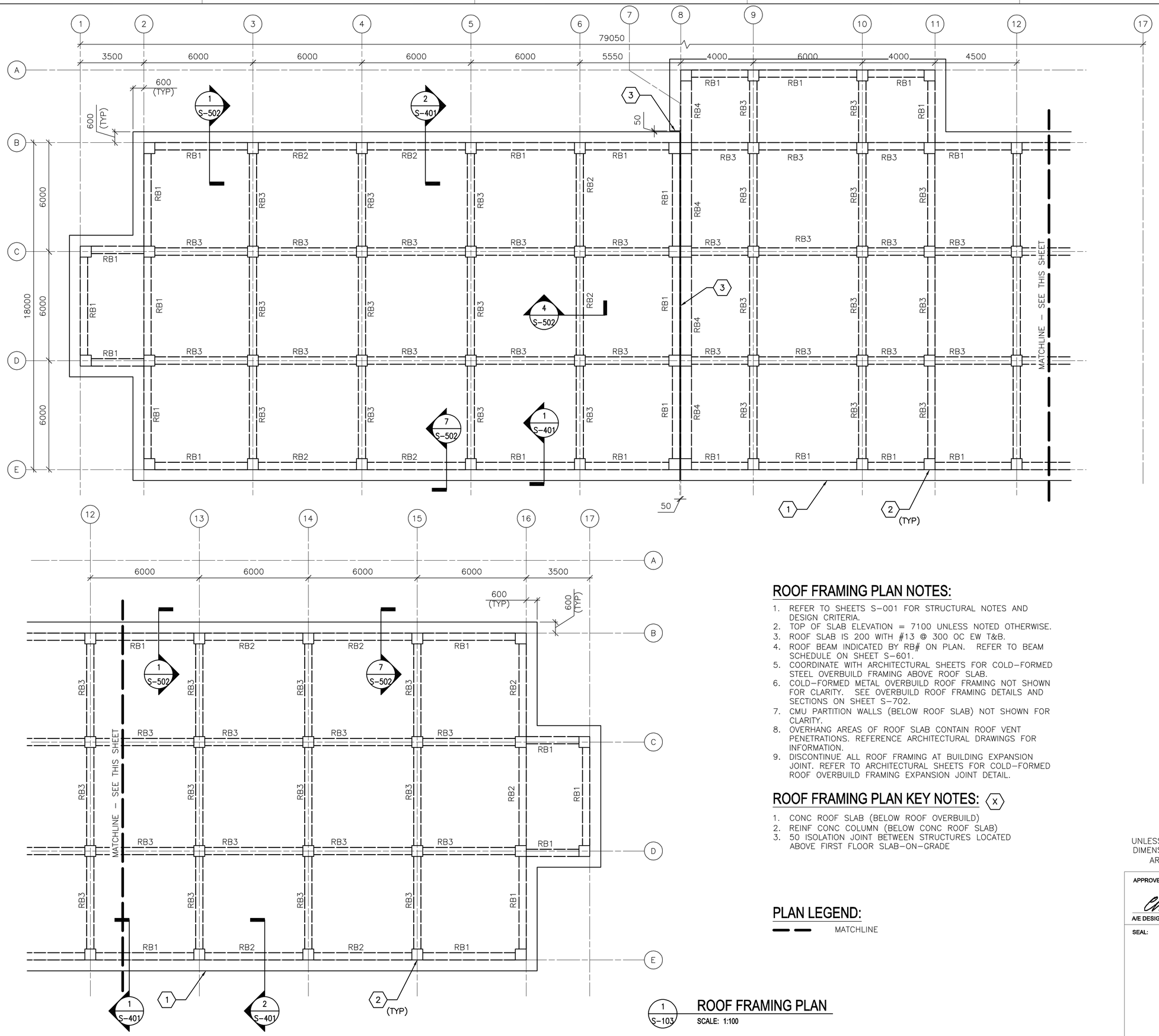

ROOF FRAMING PLAN NOTES:

1. REFER TO SHEETS S-001 FOR STRUCTURAL NOTES AND DESIGN CRITERIA.
2. TOP OF SLAB ELEVATION = 7100 UNLESS NOTED OTHERWISE.
3. ROOF SLAB IS 200 WITH #13 @ 300 OC EW T&B.
4. ROOF BEAM INDICATED BY RB# ON PLAN. REFER TO BEAM SCHEDULE ON SHEET S-601.
5. COORDINATE WITH ARCHITECTURAL SHEETS FOR COLD-FORMED STEEL OVERBUILD FRAMING ABOVE ROOF SLAB.
6. COLD-FORMED METAL OVERBUILD ROOF FRAMING NOT SHOWN FOR CLARITY. SEE OVERBUILD ROOF FRAMING DETAILS AND SECTIONS ON SHEET S-702.
7. CMU PARTITION WALLS (BELOW ROOF SLAB) NOT SHOWN FOR CLARITY.
8. OVERHANG AREAS OF ROOF SLAB CONTAIN ROOF VENT PENETRATIONS. REFERENCE ARCHITECTURAL DRAWINGS FOR INFORMATION.
9. DISCONTINUE ALL ROOF FRAMING AT BUILDING EXPANSION JOINT. REFER TO ARCHITECTURAL SHEETS FOR COLD-FORMED ROOF OVERBUILD FRAMING EXPANSION JOINT DETAIL.

ROOF FRAMING PLAN KEY NOTES: (X)

1. CONC ROOF SLAB (BELOW ROOF OVERBUILD)
2. REINF CONC COLUMN (BELOW CONC ROOF SLAB)
3. 50 ISOLATION JOINT BETWEEN STRUCTURES LOCATED ABOVE FIRST FLOOR SLAB-ON-GRADE

PLAN LEGEND:

MATCHLINE

0 2000 4000
SCALE: 1:100

UNLESS OTHERWISE NOTED, LINEAR DIMENSIONS SHOWN ON DRAWINGS ARE IN MILLIMETERS (mm)

APPROVED:

A/E DESIGNER OF RECORD

SEAL:

GEORGIA REGISTERED 1-27-10 No. 27141 PROFESSIONAL ENGINEER CHRISTOPHER W. WHITMORE

1 / S-103 ROOF FRAMING PLAN
SCALE: 1:100

US ARMY CORPS OF ENGINEERS
AFGHANISTAN ENGINEER DISTRICT

Mark	Description	Date	Appr.	Mark	Description	Date	Appr.

Designed by: KMP/MMY
Dwn by: RCG
Ckd by: CWW
Reviewed by: LHM
Submitted by: BAKER
Date: 2/23/10
Rev: 0
Design file no.
Drawing code:
File name: AAABENBS-103FRP
Plot date: 2/23/2010
Plot scale: x:X

U.S. ARMY CORPS OF ENGINEERS
AFGHANISTAN ENGINEER DISTRICT
APO AE 96338

Michael Baker Jr., Inc
A unit of Michael Baker Corporation
Airside Business Park
100 Airside Drive
Moon Township, PA 15108
www.mbakercorp.com

AFGHAN NATIONAL ARMY
REGIONAL MILITARY TRAINING CENTER
STANDARD DESIGN

ENLISTED BARRACKS

ROOF FRAMING PLAN

Sheet reference number:
S-103

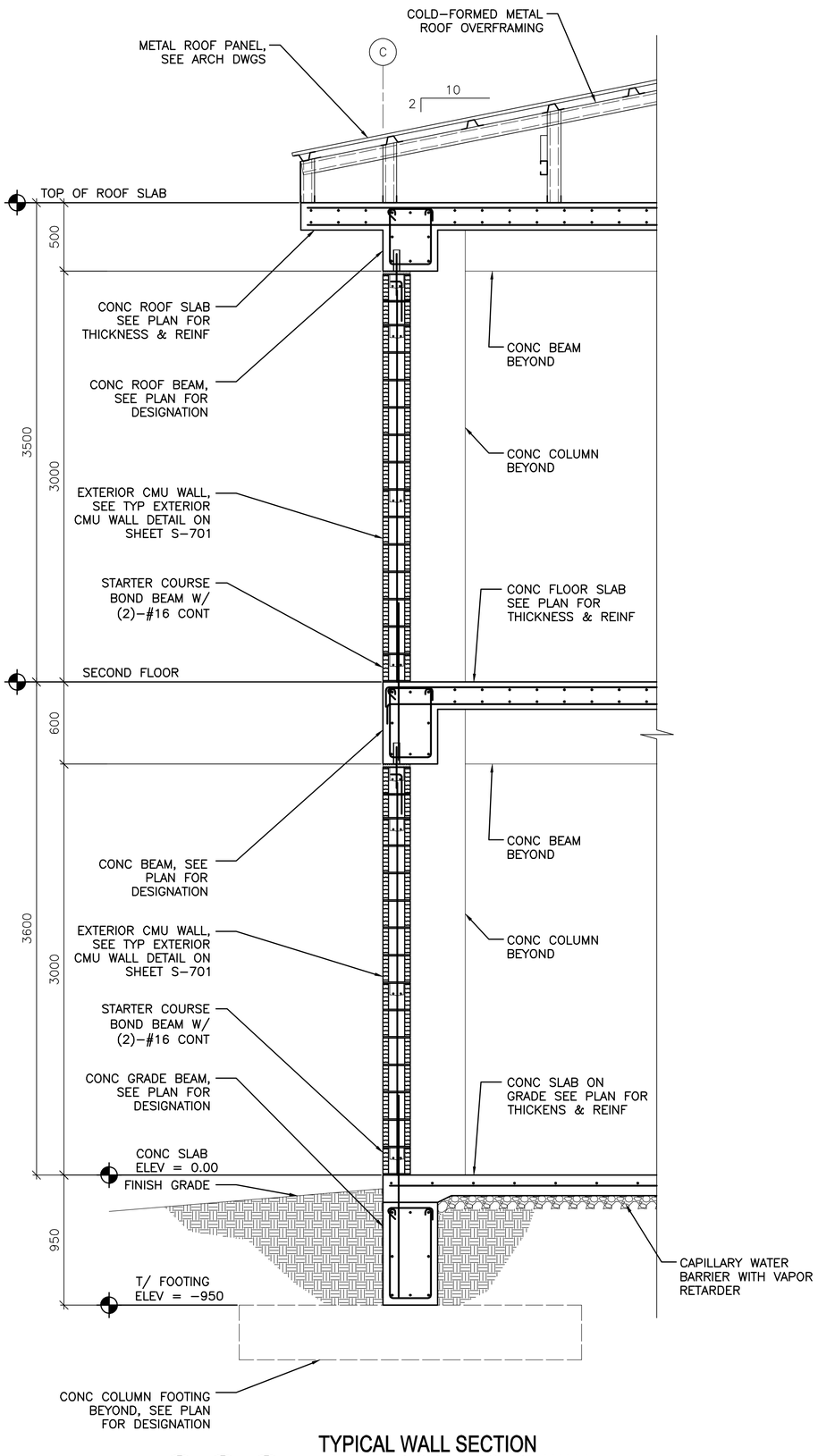

1 S-101 1 S-102 1 S-103

TYPICAL WALL SECTION AT EXTERIOR MASONRY WALL

SCALE: 1:20

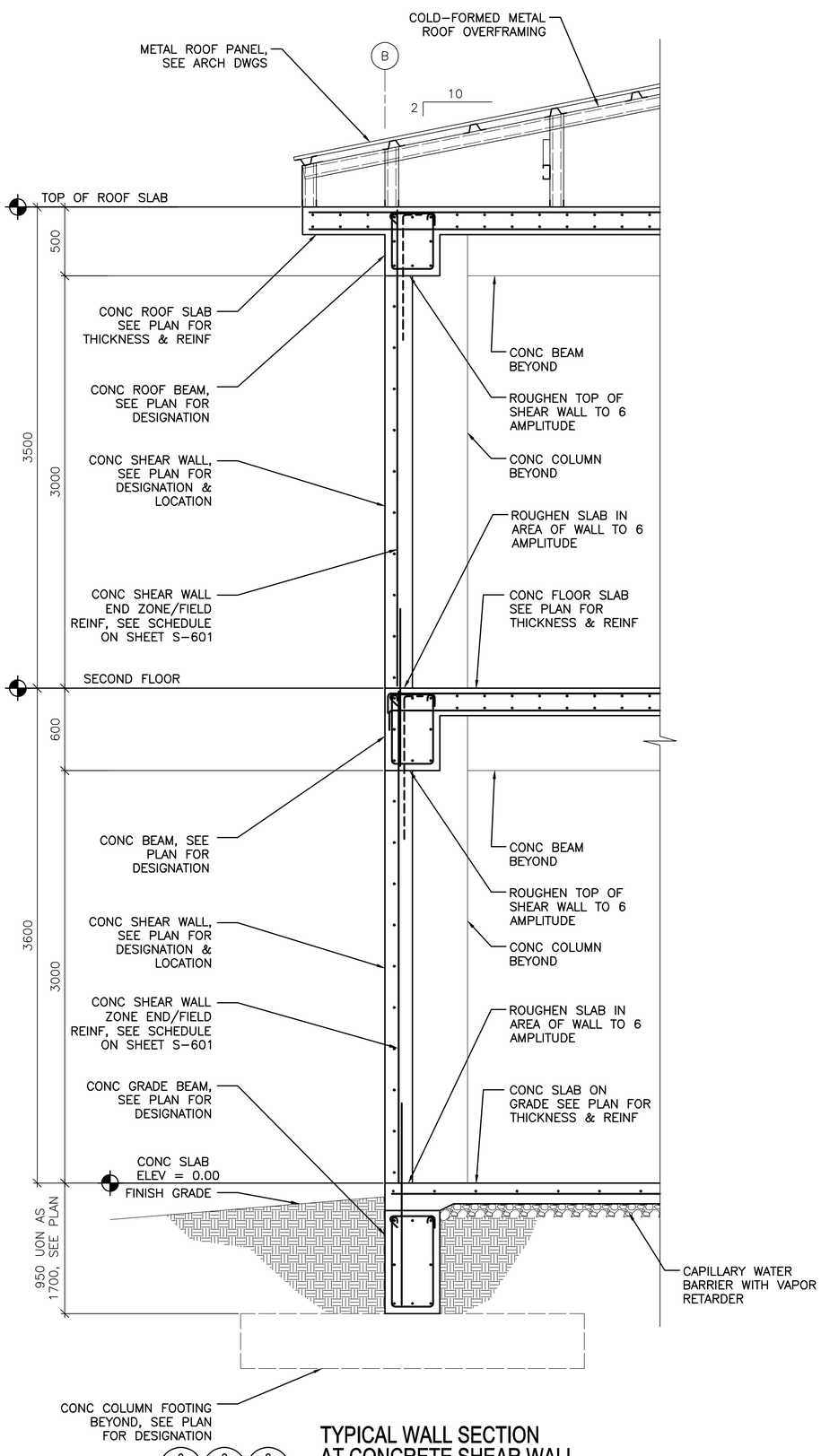

2 S-101 2 S-102 2 S-103

TYPICAL WALL SECTION AT CONCRETE SHEAR WALL

SCALE: 1:20

0 400 800
SCALE: 1:20

UNLESS OTHERWISE NOTED, LINEAR DIMENSIONS SHOWN ON DRAWINGS ARE IN MILLIMETERS (mm)

APPROVED:

A/E DESIGNER OF RECORD

SEAL:

GEORGIA REGISTERED No. 27141 PROFESSIONAL ENGINEER CHRISTOPHER W. WHITMORE 1-29-10

US ARMY CORPS OF ENGINEERS
AFGHANISTAN ENGINEER DISTRICT

Mark	Description	Date	Appr.	Mark	Description	Date	Appr.

Designed by: KMP/MMY
Dwn by: RCG
Ckd by: CWW
Reviewed by: LHM
Submitted by: BAKER
Date: 2/23/10
Rev: 0
Design file no.
Drawing code:
File name: ANABENBS-401BS
Plot date: 2/23/2010
Plot scale: X:X

U.S. ARMY CORPS OF ENGINEERS
AFGHANISTAN ENGINEER DISTRICT
APO AE 96338

Michael Baker Jr., Inc
A unit of Michael Baker Corporation
Airside Business Park
100 Airside Drive
Moon Township PA 15108
www.mbakercorp.com

AFGHAN NATIONAL ARMY
REGIONAL MILITARY TRAINING CENTER
STANDARD DESIGN

ENLISTED BARRACKS

BUILDING SECTIONS

Sheet reference number:
S-401

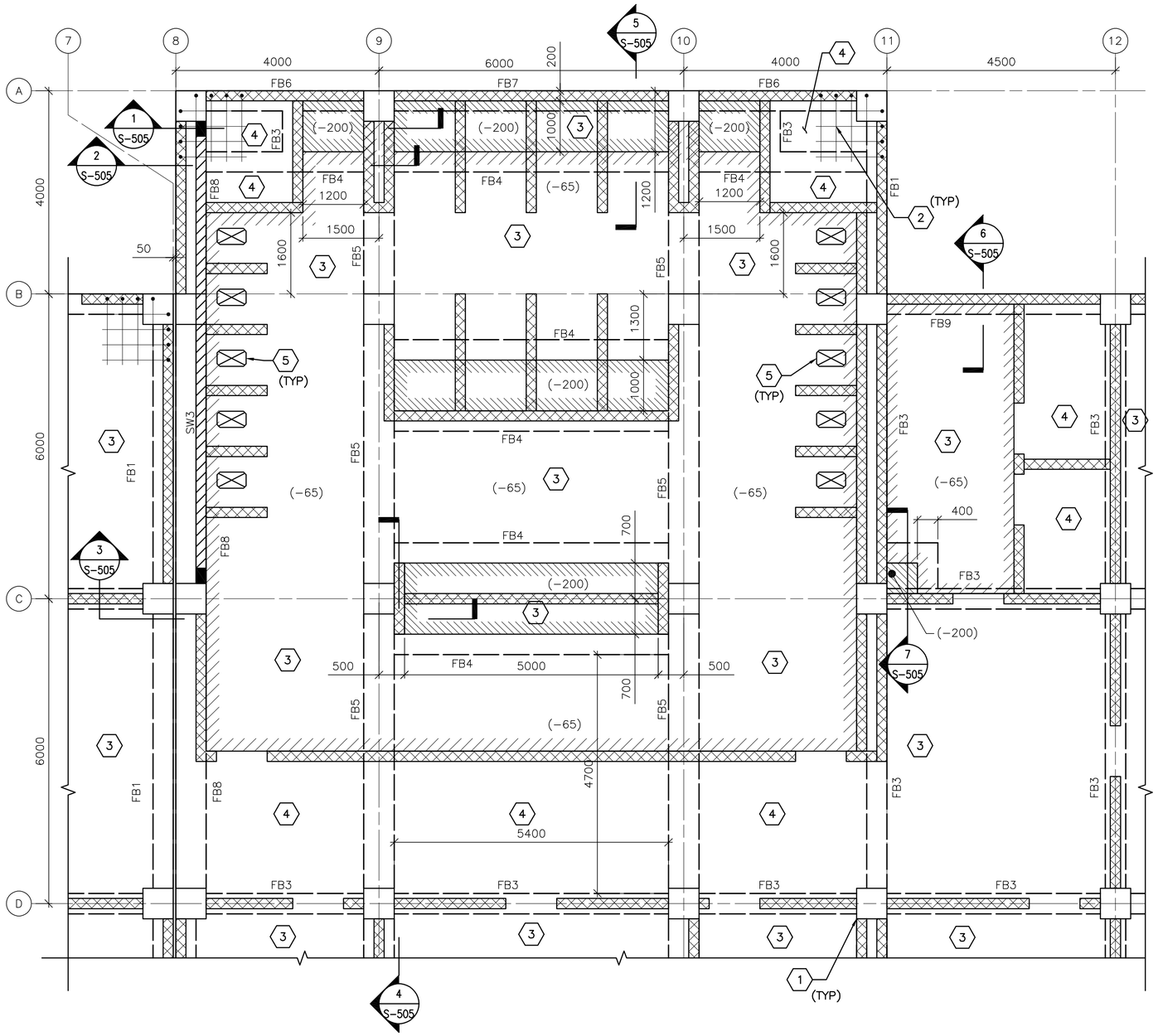

ENLARGED PORTION OF SECOND FLOOR FRAMING PLAN

1 / S-102

SCALE: 1:50

SECOND FLOOR FRAMING PLAN NOTES:

1. REFER TO SHEETS S-001 FOR STRUCTURAL NOTES AND DESIGN CRITERIA.
2. TOP OF SLAB ELEVATION = 3600 UNLESS NOTED OTHERWISE.
3. SEE KEY NOTES FOR SLAB THICKNESS & REINFORCING.
4. SECOND FLOOR BEAM INDICATED BY FB# ON PLAN. REFER TO BEAM SCHEDULE ON SHEET S-601.
5. SHEARWALL INDICATED BY SW# ON PLAN, REFER TO SHEARWALL SCHEDULE ON SHEET S-601.
6. SEE TYP EXTERIOR AND INTERIOR CMU WALL REINFORCING DETAILS ON SHEET S-701.
7. SEE ADDITIONAL CONCRETE REINF DETAIL ON SHEET S-701 FOR ADDED REINF @ SLAB OPENINGS.

SECOND FLOOR FRAMING PLAN KEY NOTES: (X)

1. REINF CONC COLUMN
2. ADD'L REINF @ CONC SLAB CORNERS
3. 200 THICK CONC SLAB WITH #13 @ 300 O.C. EACH WAY TOP & BOTTOM
4. 265 THICK CONC SLAB WITH #13 @ 300 O.C. EACH WAY TOP & BOTTOM
5. OPENING IN CONC SLAB FOR LATRINES. COORDINATE LOCATION WITH ARCH AND PLUMBING DWGS. SEE SLAB OPENING DETAIL ON DWG S-701. COORDINATE SIZE WITH MANUFACTURER.

PLAN LEGEND:

- REINF CONC SHEAR WALL
- REINF CMU WALL
- INDICATES DROP SLAB 65 BELOW FIN FLOOR
- INDICATES DROP SLAB 200 BELOW FIN FLOOR

0 1000 2000

SCALE: 1:50

UNLESS OTHERWISE NOTED, LINEAR DIMENSIONS SHOWN ON DRAWINGS ARE IN MILLIMETERS (mm)

APPROVED:

A/E DESIGNER OF RECORD

SEAL:

GEORGIA REGISTERED 1-29-10 No. 27141 PROFESSIONAL ENGINEER CHRISTOPHER W. WHITMORE

US ARMY CORPS OF ENGINEERS
AFGHANISTAN ENGINEER DISTRICT

Mark	Description	Date	Appr.	Mark	Description	Date	Appr.

Designed by: KMP/MMY
Dwn by: RCG
Ckd by: CWW
Reviewed by: LHM
Submitted by: BAKER
Date: 2/23/10
Rev: 0
Design file no.
Drawing code:
File name: ANABENBS-402EP
Plot date: 2/23/2010
Plot scale: X:X

U.S. ARMY CORPS OF ENGINEERS
AFGHANISTAN ENGINEER DISTRICT
APO AE 96338

Michael Baker Jr., Inc
A unit of Michael Baker Corporation
Airside Business Park
100 Airside Drive
Moon Township PA 15108
www.mbakercorp.com

AFGHAN NATIONAL ARMY
REGIONAL MILITARY TRAINING CENTER
STANDARD DESIGN

ENLISTED BARRACKS

ENLARGED 2ND FLOOR FRAMING PLAN

Sheet reference number:
S-402

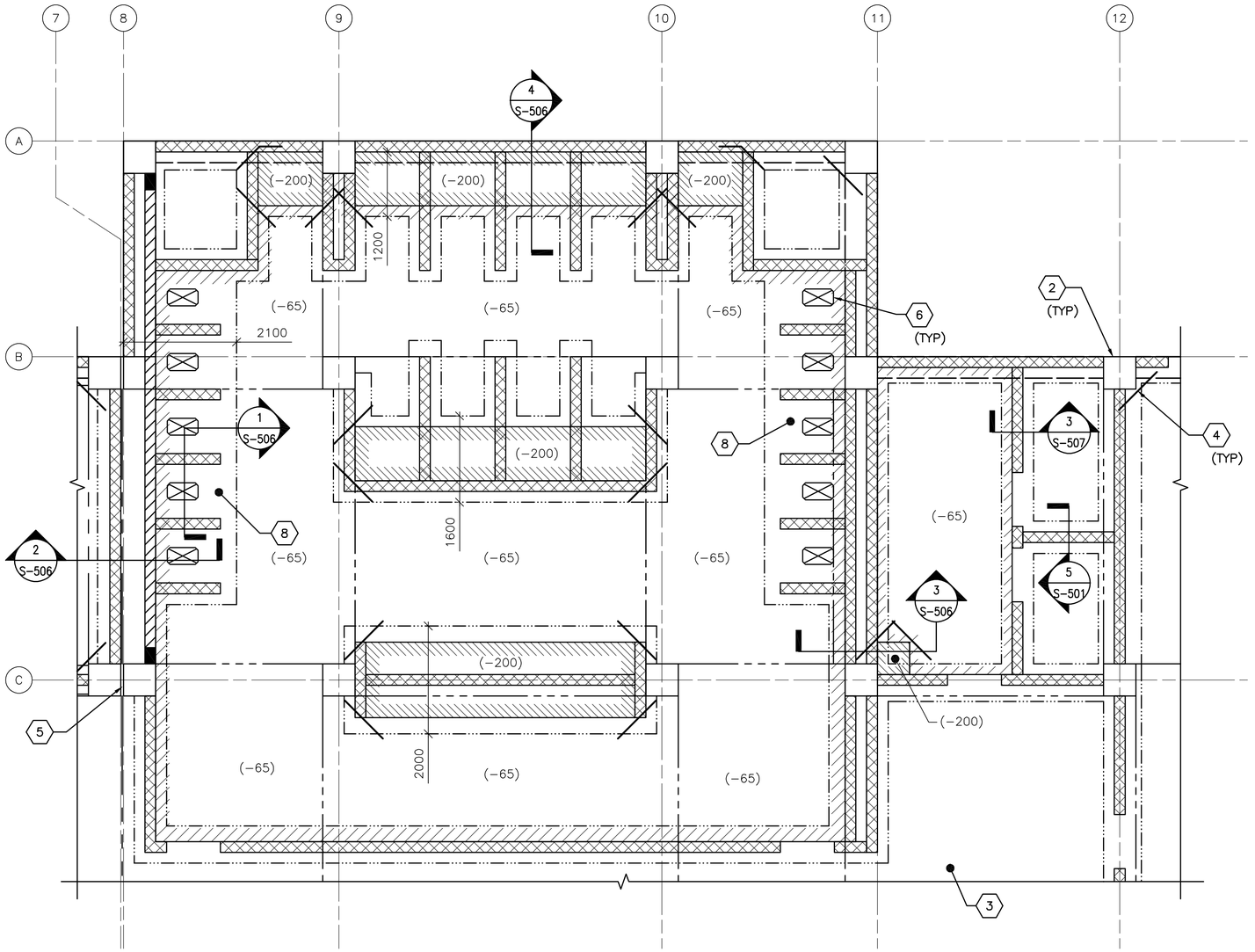

1 S-101 ENLARGED LATRINE SLAB PLAN

SCALE: 1:50

ENLARGED PLAN NOTES:

1. REFER TO SHEET S-001 FOR STRUCTURAL NOTES AND DESIGN CRITERIA.
2. FINISH FIRST FLOOR ELEVATION SHALL BE (DATUM 0.00MM) ALL PLUS OR MINUS DIMENSIONS INDICATED ON PLAN OR REFERRED TO IN NOTES RELATE TO FINISH FIRST FLOOR ELEVATION.
3. SLAB-ON-GRADE IS 150 WITH #13 @ 300 OC EW LOCATED 38 FROM T/SLAB UON. WHERE NOTED, 300 SLAB-ON-GRADE SHALL BE REINFORCED W/ #13 @300 OC EW T&B.
4. REFER TO FOUNDATION/SLAB PLAN ON SHEET S-101 FOR COLUMN DESIGNATION AND COLUMN SCHEDULE ON SHEET S-601.
5. REFER TO FOUNDATION/SLAB PLAN ON SHEET S-101 FOR SHEARWALL DESIGNATION AND SHEARWALL SCHEDULE ON SHEET S-601.
6. REFER TO FOUNDATION/SLAB PLAN ON SHEET S-101 FOR GRADE BEAM DESIGNATION AND GRADE BEAM SCHEDULE ON SHEET S-601.
7. SEE TYP EXTERIOR AND INTERIOR CMU WALL REINFORCING DETAILS ON SHEET S-701.

ENLARGED PLAN KEYNOTES: (X)

1. NOT USED.
2. REINF CONC COLUMN
3. REINF CONC SLAB-ON-GRADE
4. (2)-#13 @ RE-ENTRANT CORNERS - SEE S-701 FOR INFORMATION
5. 50 ISOLATION JOINT BETWEEN STRUCTURES LOCATED ABOVE FIRST FLOOR SLAB-ON-GRADE
6. OPENING IN SLAB FOR LATRINE. COORDINATE LOCATION WITH ARCH AND PLUMBING DWGS. SEE SLAB OPENING DETAIL ON DWG S-701. COORDINATE SIZE WITH MANUFACTURER.
7. NOT USED.
8. 300 SLAB-ON-GRADE

PLAN LEGEND:

- REINF CONC SHEAR WALL
- REINF CMU WALL
- CONTROL JOINT
- INDICATES DROP SLAB 65 BELOW FINISH FLOOR
- INDICATES DROP SLAB 200 BELOW FINISH FLOOR
- SLAB OPENING
- OUTLINE OF THICKENED SLAB AREAS
- GRADE BEAM

0 1000 2000

SCALE: 1:50

UNLESS OTHERWISE NOTED, LINEAR DIMENSIONS SHOWN ON DRAWINGS ARE IN MILLIMETERS (mm)

APPROVED:

A/E DESIGNER OF RECORD

SEAL:

GEORGIA REGISTERED 1-29-10 No. 27141 PROFESSIONAL ENGINEER CHRISTOPHER W. WHITMORE

US ARMY CORPS OF ENGINEERS
AFGHANISTAN ENGINEER DISTRICT

Mark	Description	Date	Appr.	Mark	Description	Date	Appr.

Designed by: KMP/MMY
Dwn by: RCG
Ckd by: CWW
Reviewed by: LHM
Submitted by: BAKER
Date: 2/23/10
Rev: 0
Design file no.
Drawing code:
File name: ANABENBS-403EP
Plot date: 2/23/2010
Plot scale: X:X

U.S. ARMY CORPS OF ENGINEERS
AFGHANISTAN ENGINEER DISTRICT
APO AE 96338

Michael Baker Jr., Inc
A unit of Michael Baker Corporation
Airside Business Park
100 Airside Drive
Moon Township PA 15108
www.mbakercorp.com

AFGHAN NATIONAL ARMY
REGIONAL MILITARY TRAINING CENTER
STANDARD DESIGN

ENLISTED BARRACKS

ENLARGED LATRINE SLAB PLAN

Sheet reference number:
S-403

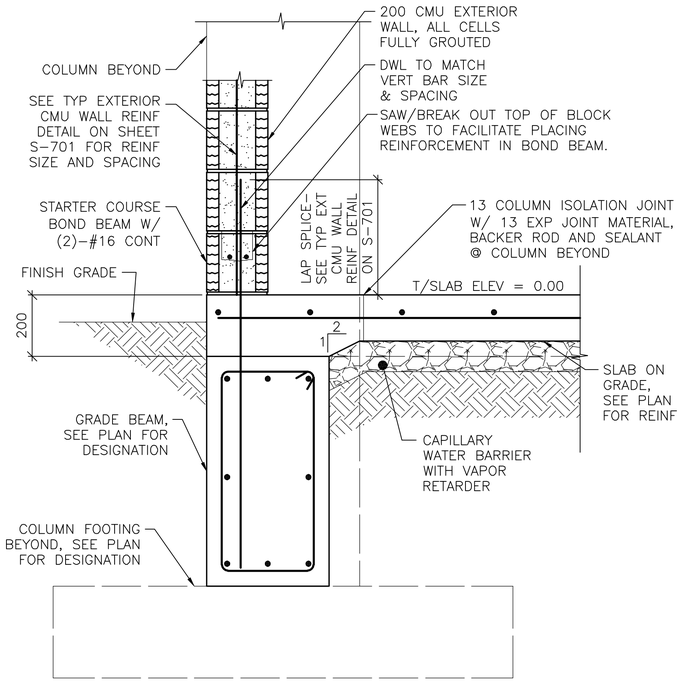

NOTE:
1. SECTION IS SIMILAR FOR INTERIOR CMU PARTITIONS OVER GRADE BEAMS SHOWING THICKENED 200 CONC SLAB AREA.

1 S-101 **SECTION**
SCALE: 1:10

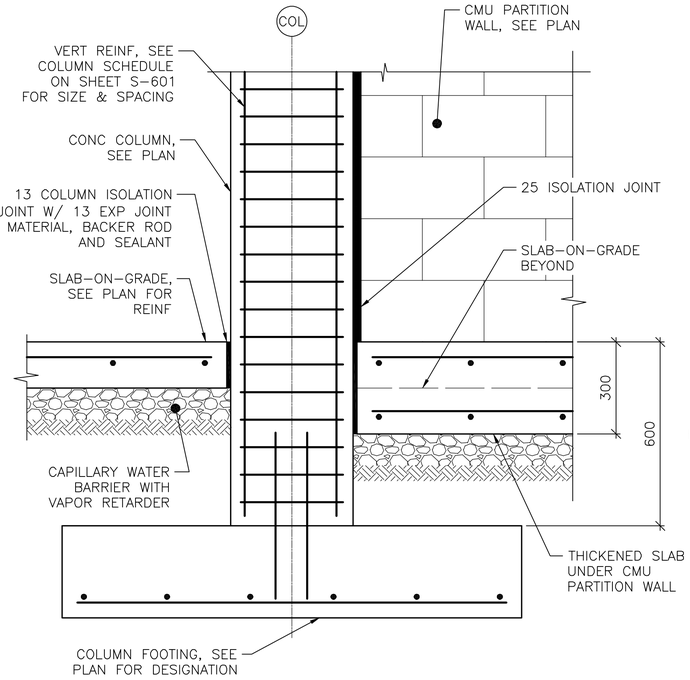

2 S-101 **SECTION**
SCALE: 1:10

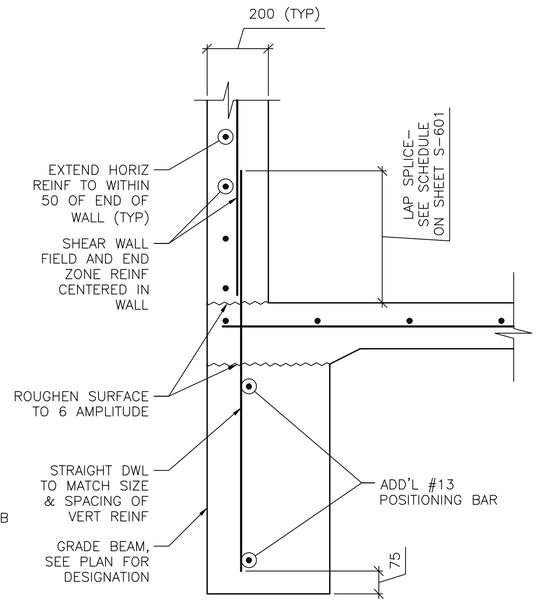

NOTES:
1. SECTION DEPICTS SHEAR WALL TERMINATION ONLY. GRADE BEAM REINFORCING NOT SHOWN FOR CLARITY
2. SEE SHEET S-601 AND SHEET S-702 FOR SCHEDULED FIELD AND END ZONE REINF.

3 S-101 **SECTION**
SCALE: 1:10

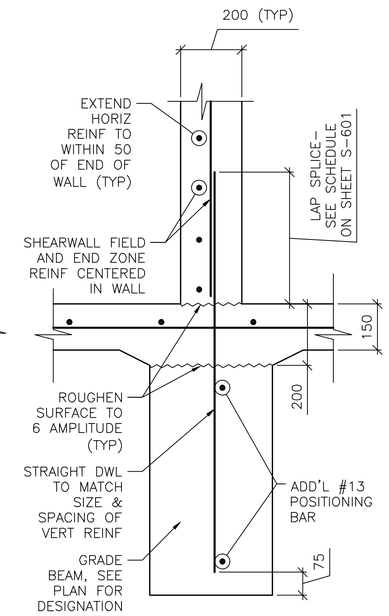

NOTE:
1. SECTION DEPICTS SHEAR WALL TERMINATION ONLY. GRADE BEAM REINFORCING NOT SHOWN FOR CLARITY
2. SEE SHEET S-601 AND SHEET S-702 FOR SCHEDULED FIELD AND END ZONE REINF.

4 S-101 **SECTION**
SCALE: 1:10

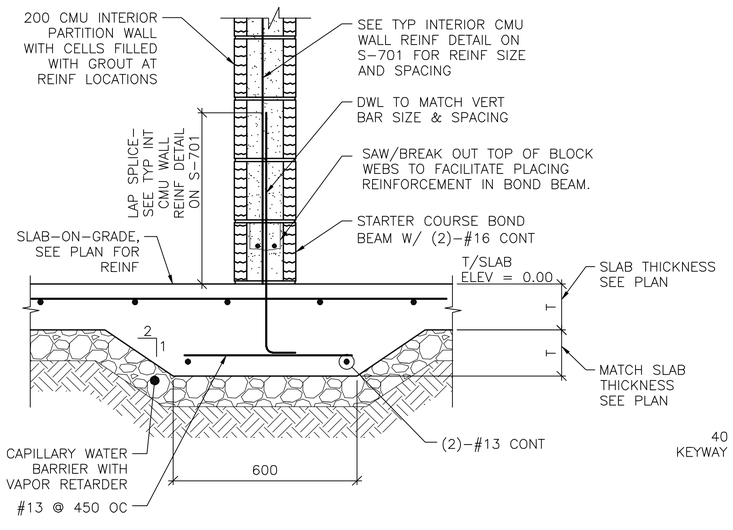

5 S-403 **SECTION**
SCALE: 1:10

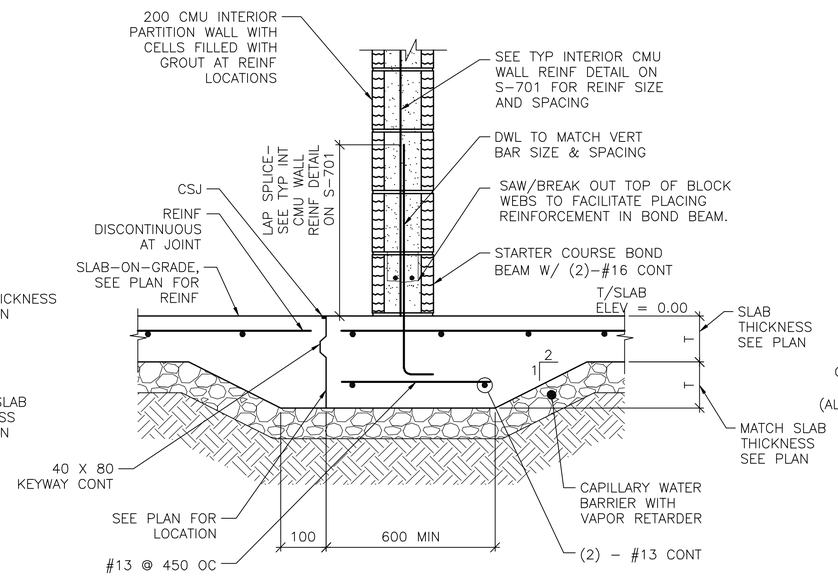

6 S-101 **SECTION**
SCALE: 1:10

NOTE:
1. DETAIL IS APPLICABLE AT CONTROL JOINTS RUNNING PARALLEL TO CMU WALLS AND WITHIN 300 OF FACE OF WALL.

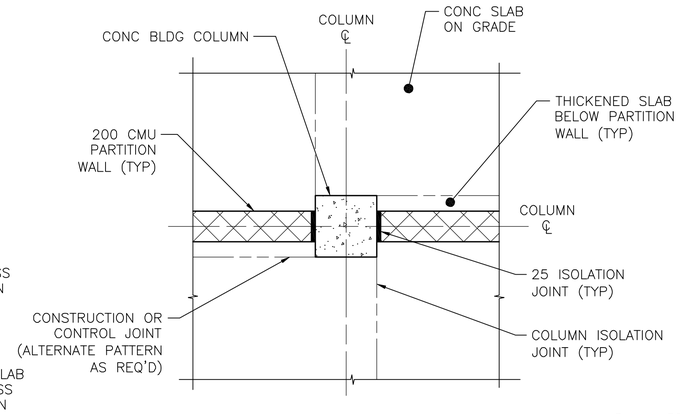

A S-501 **COLUMN ISOLATION JOINT DETAIL**
SCALE: NTS

0 200 400
SCALE: 1:10

UNLESS OTHERWISE NOTED, LINEAR DIMENSIONS SHOWN ON DRAWINGS ARE IN MILLIMETERS (mm)

APPROVED:

A/E DESIGNER OF RECORD

SEAL:

GEORGIA REGISTERED PROFESSIONAL ENGINEER No. 27141 CHRISTOPHER W. WHITMORE 2-23-10

US ARMY CORPS OF ENGINEERS
AFGHANISTAN ENGINEER DISTRICT

Mark	Description	Date	Appr.	Mark	Description	Date	Appr.

Rev: 0
Date: 2/23/10
Design file no.
Drawing code:
File name: AN4BEN8S-501SC
Plot date: 2/23/2010
Plot scale: X:X

Designed by: KMP/MMY
Dwn by: RCG
Ckd by: CWW
Reviewed by: LHM
Submitted by:
BAKER

U.S. ARMY CORPS OF ENGINEERS
AFGHANISTAN ENGINEER DISTRICT
APO AE 96338

Michael Baker Jr., Inc
A unit of Michael Baker Corporation
Airside Business Park
100 Airside Drive
Moon Township, PA 15108
www.mbakercorp.com

AFGHAN NATIONAL ARMY
REGIONAL MILITARY TRAINING CENTER
STANDARD DESIGN

ENLISTED BARRACKS

FOUNDATION SECTIONS

Sheet reference number:
S-501

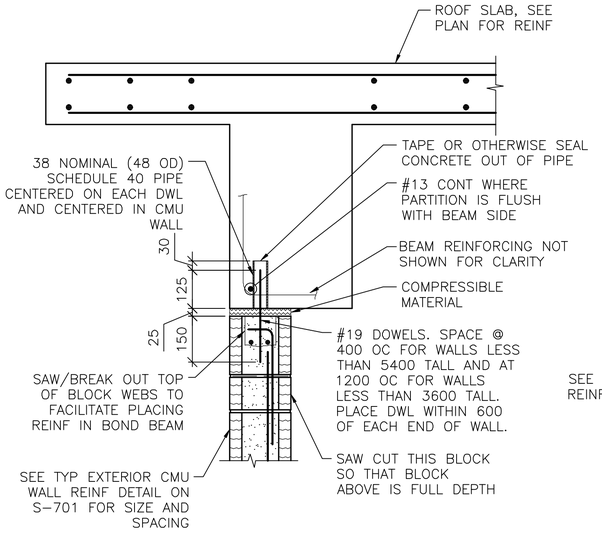

NOTES:
1. EXTEND DOWEL REINF TO 25 CLEAR FROM TOP OF CMU WALL.

1 S-103 **SECTION**
SCALE: 1:10

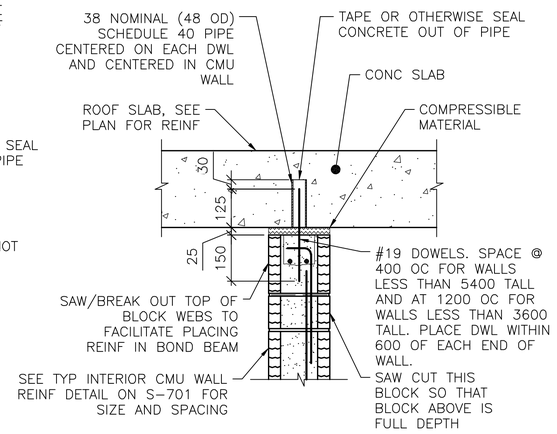

NOTES:
1. EXTEND DOWEL REINF TO 25 CLEAR FROM TOP OF CMU WALL.
2. SLAB REINF NOT SHOWN FOR CLARITY.
3. CMU WALL ABOVE SLAB NOT SHOWN FOR CLARITY.

2 S-102 **SECTION**
SCALE: 1:10

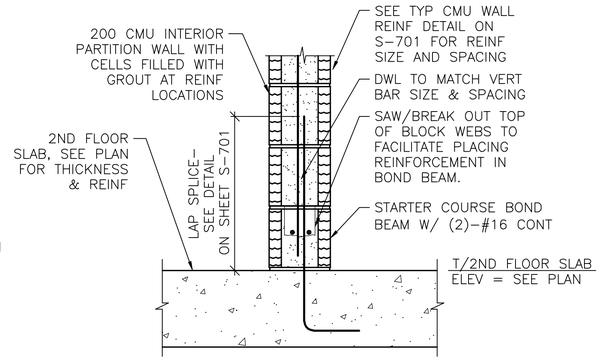

NOTES:
1. SEE PLAN FOR LOCATION OF PARTITION WALLS.
2. SLAB REINF NOT SHOWN FOR CLARITY.

3 S-102 **SECTION**
SCALE: 1:10

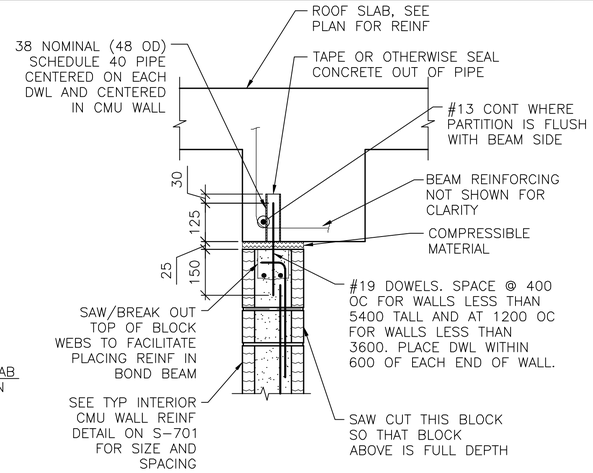

NOTES:
1. EXTEND DOWEL REINF TO 25 CLEAR FROM TOP OF CMU WALL.
2. PARTITION WALL MAY BE CENTERED UNDER THE BEAM OR FLUSH AS SHOWN. SEE PLAN FOR LOCATION.
3. SLAB REINF NOT SHOWN FOR CLARITY.

4 S-103 **SECTION**
SCALE: 1:10

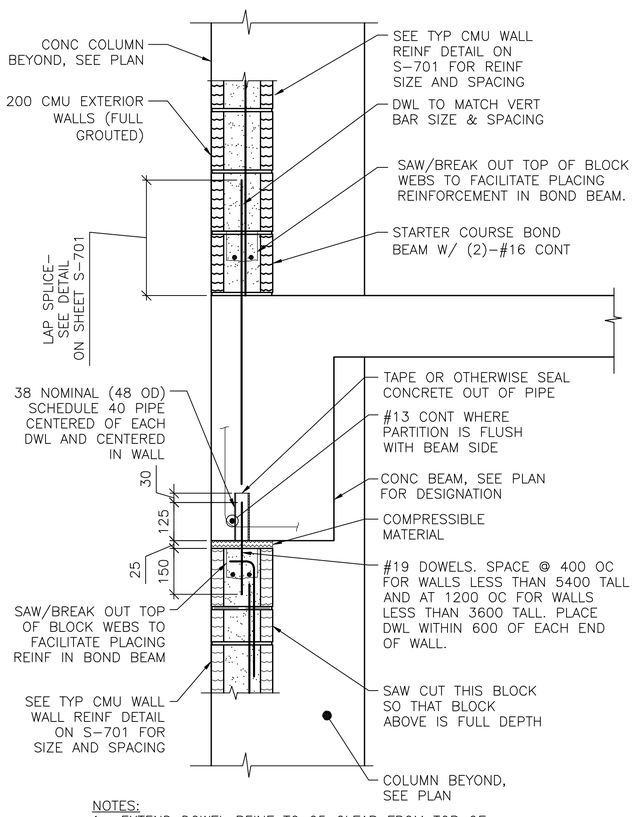

NOTES:
1. EXTEND DOWEL REINF TO 25 CLEAR FROM TOP OF CMU WALL.
2. BEAM/SLAB REINF NOT SHOWN FOR CLARITY.

5 S-102 **SECTION**
SCALE: 1:10

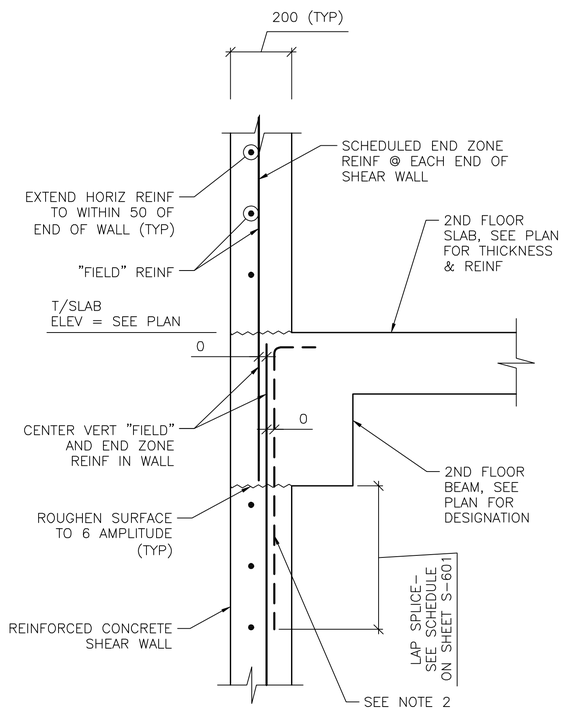

NOTES:
1. TERMINATE "FIELD" VERT REINF & END ZONE REINF @ 50 CLEAR FROM TOP OF ROOF SLAB.
2. WHERE END ZONE REINFORCING CANNOT BE DEVELOPED IN BEAM DEPTH, PROVIDE HOOKED DWLS SAME SIZE & SPACING. PROVIDE TENSION LAP BELOW ROOF BEAM (TYP AT UPPER AND LOWER SHEAR WALL TERMINATIONS).

6 S-102 **SECTION**
SCALE: 1:10

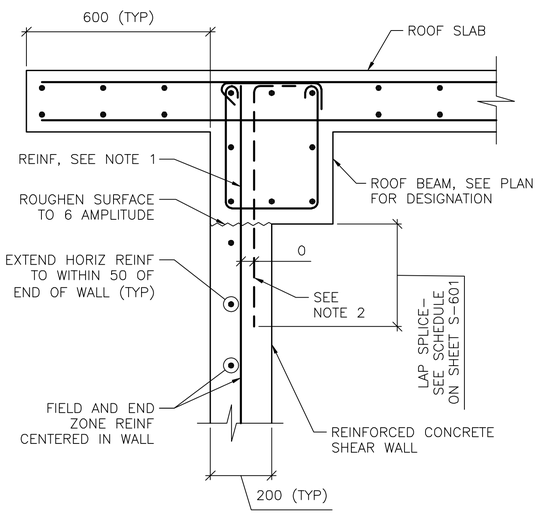

NOTES:
1. TERMINATE "FIELD" VERT REINF & END ZONE REINF @ 50 CLEAR FROM TOP OF ROOF SLAB.
2. WHERE END ZONE REINFORCING CANNOT BE DEVELOPED IN BEAM DEPTH, PROVIDE HOOKED DWLS SAME SIZE & SPACING. PROVIDE TENSION LAP BELOW ROOF BEAM.
3. SEE SHEET S-601 AND SHEET S-702 FOR SCHEDULED FIELD AND END ZONE REINF.

7 S-103 **SECTION**
SCALE: 1:10

0 200 400
SCALE: 1:10

UNLESS OTHERWISE NOTED, LINEAR DIMENSIONS SHOWN ON DRAWINGS ARE IN MILLIMETERS (mm)

APPROVED:

A/E DESIGNER OF RECORD

SEAL:

GEORGIA REGISTERED 1-29-10 No. 27141 PROFESSIONAL ENGINEER CHRISTOPHER W. WHITMORE

US ARMY CORPS OF ENGINEERS
AFGHANISTAN ENGINEER DISTRICT

Mark	Description	Date	Appr.	Mark	Description	Date	Appr.

Rev: 0
Date: 2/23/10
Design file no.
Drawing code:
File name: ANABENBS-S025C
Plot date: 2/23/2010
Plot scale: X:X

Designed by: KMF/MMY
Dwn by: RCG
Ckd by: CWW
Reviewed by: LHM
Submitted by:
BAKER

U.S. ARMY CORPS OF ENGINEERS
AFGHANISTAN ENGINEER DISTRICT
APO AE 96338

Michael Baker Jr., Inc.
A unit of Michael Baker Corporation
Airside Business Park
100 Airside Drive
Moon Township, PA 15108
www.mbakercorp.com

AFGHAN NATIONAL ARMY
REGIONAL MILITARY TRAINING CENTER
STANDARD DESIGN

ENLISTED BARRACKS

FRAMING SECTIONS

Sheet reference number:
S-502

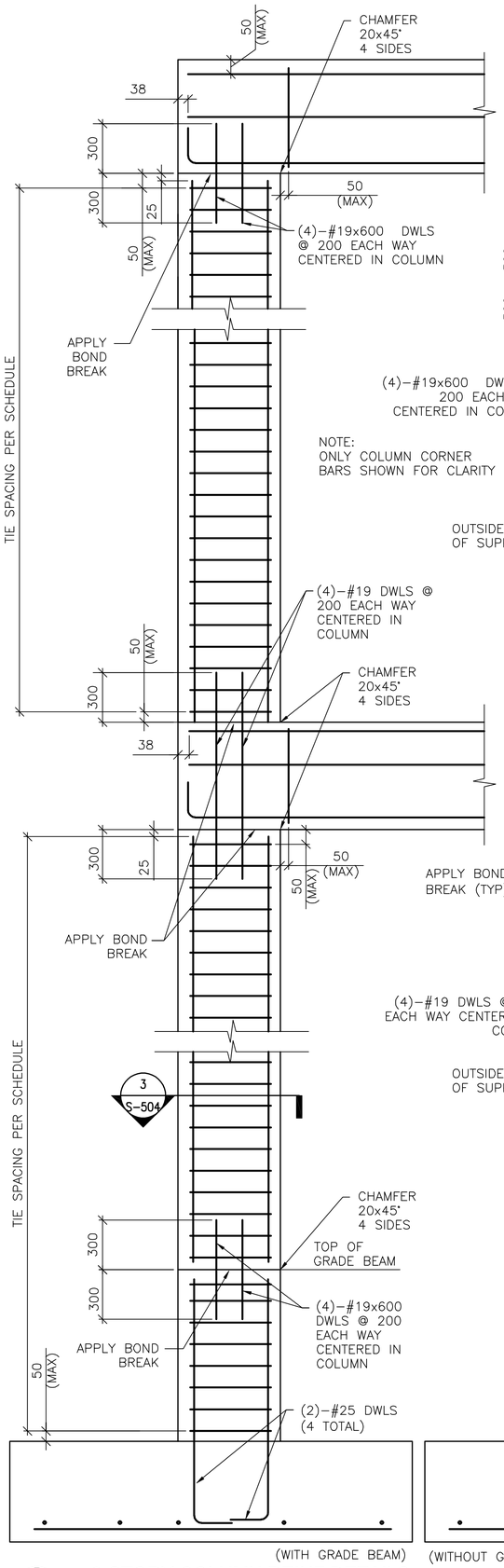

1 S-503 **2-STORY COLUMN REINF DETAILS**
SCALE: NTS

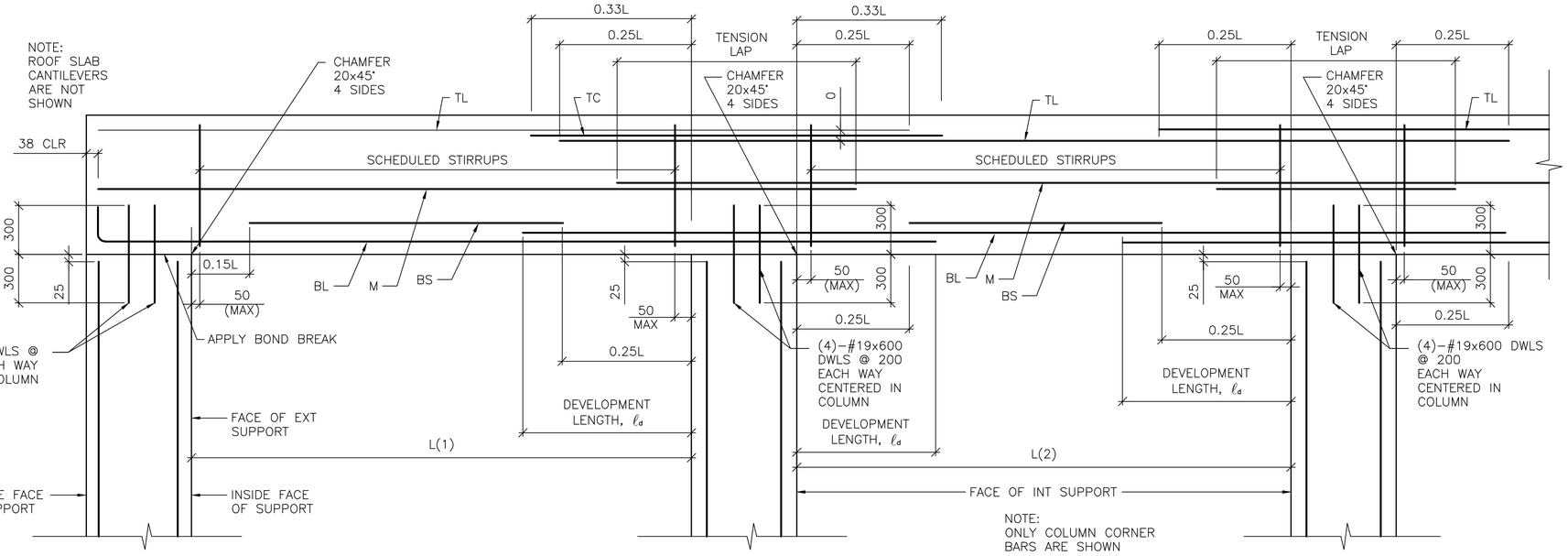

2 S-503 **ROOF BEAM REINFORCING DETAIL**
SCALE: NTS

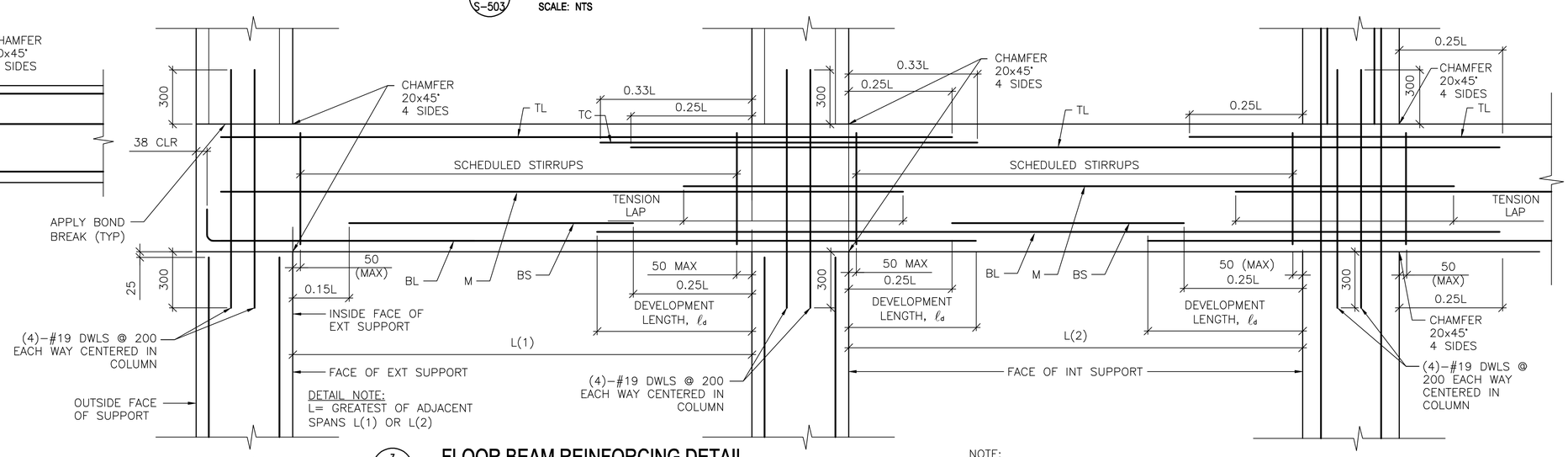

3 S-503 **FLOOR BEAM REINFORCING DETAIL**
SCALE: NTS

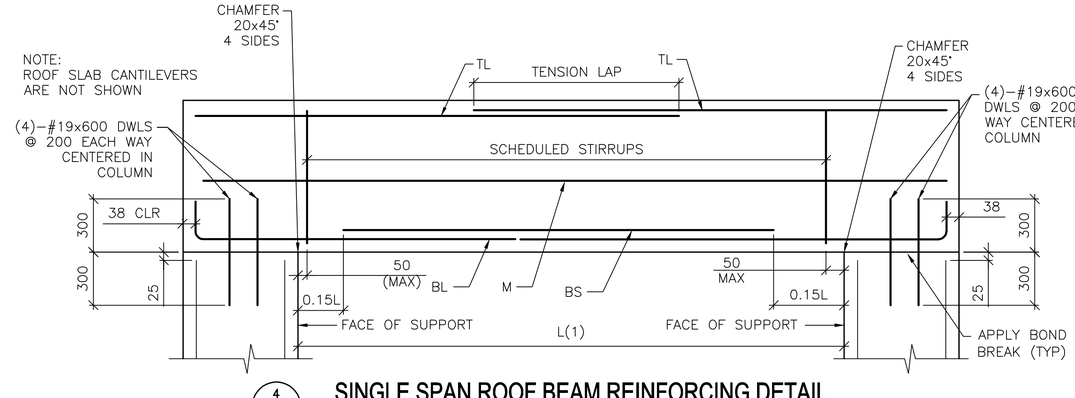

4 S-503 **SINGLE SPAN ROOF BEAM REINFORCING DETAIL**
SCALE: NTS

UNLESS OTHERWISE NOTED, LINEAR DIMENSIONS SHOWN ARE IN MILLIMETERS (mm)

APPROVED:

A/E DESIGNER OF RECORD

SEAL:

GEORGIA REGISTERED 1-29-10 No. 27141 PROFESSIONAL ENGINEER CHRISTOPHER W. WHITMORE

US ARMY CORPS OF ENGINEERS
AFGHANISTAN ENGINEER DISTRICT

Mark	Description	Date	Appr.	Mark	Description	Date	Appr.

Designed by: KMP/MMY
Dwn by: RCG
Ckd by: CWW
Reviewed by: LHM
Submitted by: BAKER
Date: 2/23/10
Rev: 0
Design file no.
Drawing code:
File name: ANABENBS-503DT
Plot date: 2/23/2010
Plot scale: X:X

U.S. ARMY CORPS OF ENGINEERS
AFGHANISTAN ENGINEER DISTRICT
APO AE 96338

Michael Baker Jr., Inc
A unit of Michael Baker Corporation
Airside Business Park
100 Airside Drive
Moon Township, PA 15108
www.mbakercorp.com

AFGHAN NATIONAL ARMY
REGIONAL MILITARY TRAINING CENTER
STANDARD DESIGN

ENLISTED BARRACKS

BEAM & COLUMN DETAILS

Sheet reference number:
S-503

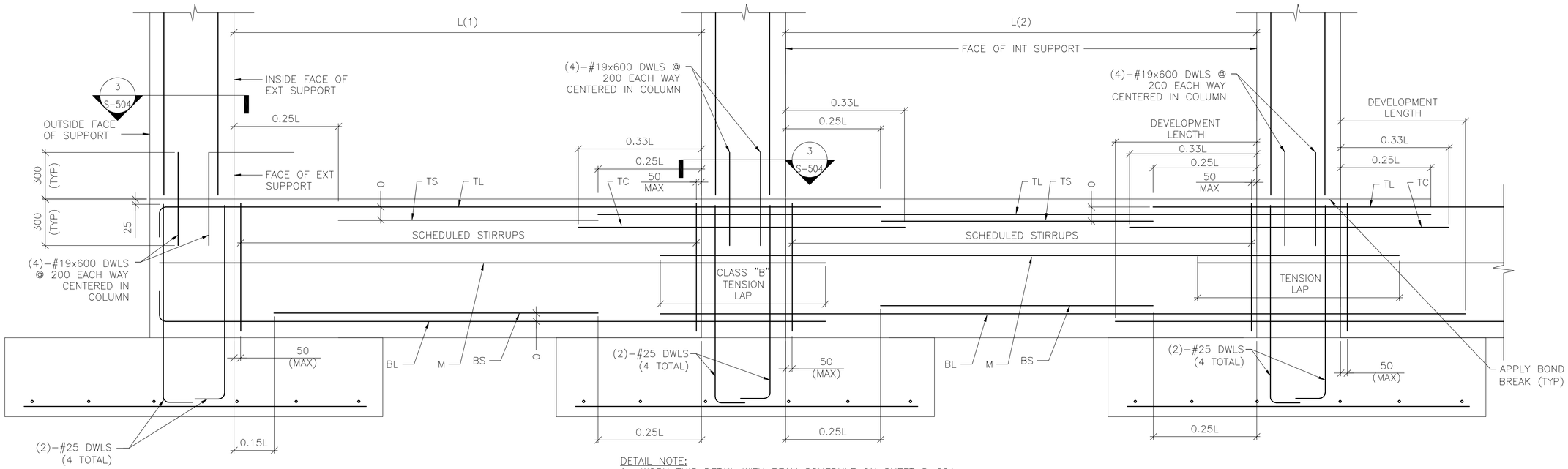

DETAIL NOTE:
1. WORK THIS DETAIL WITH BEAM SCHEDULE ON SHEET S-601.
2. L=GREATEST OF ADJACENT SPANS L(1) OR L(2)
3. ONLY COLUMN CORNER BARS ARE SHOWN.

1 / S-504 GRADE BEAM REINFORCING DETAIL

SCALE: NTS

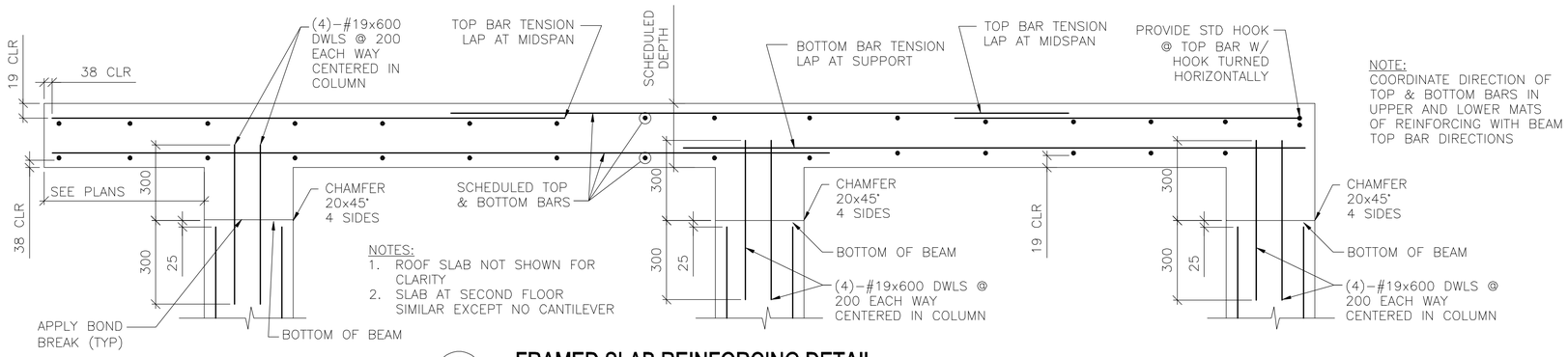

NOTES:
1. ROOF SLAB NOT SHOWN FOR CLARITY
2. SLAB AT SECOND FLOOR SIMILAR EXCEPT NO CANTILEVER

NOTE:
COORDINATE DIRECTION OF TOP & BOTTOM BARS IN UPPER AND LOWER MATS OF REINFORCING WITH BEAM TOP BAR DIRECTIONS

2 / S-504 FRAMED SLAB REINFORCING DETAIL

SCALE: NTS

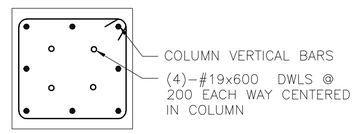

DETAIL NOTE:
1. INTERIOR TIES NOT SHOWN FOR CLARITY. REFER TO DETAILS A & B THIS SHEET FOR INTERIOR TIE CONFIGURATION

3 / S-503 3 / S-504 SECTION

SCALE: NTS

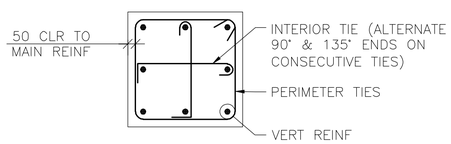

A / S-504 8 BAR COLUMN

SCALE: NTS

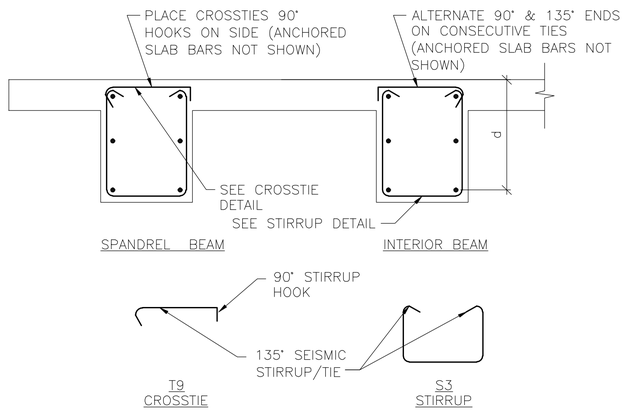

B / S-504 BEAM REINFORCEMENT DETAILS

SCALE: NTS

UNLESS OTHERWISE NOTED, LINEAR DIMENSIONS SHOWN ARE IN MILLIMETERS (mm)

APPROVED:

A/E DESIGNER OF RECORD

SEAL:

GEORGIA REGISTERED 1-27-10 No. 27141 PROFESSIONAL ENGINEER CHRISTOPHER W. WHITMORE

US ARMY CORPS OF ENGINEERS
AFGHANISTAN ENGINEER DISTRICT

Mark	Description	Date	Appr.	Mark	Description	Date	Appr.

Rev: 0
Date: 2/23/10
Design file no.
Drawing code:
File name: AMABENB5-S04DT
Plot date: 2/23/2010
Plot scale: X:X

Designed by: KMP/MMY
Dwn by: RCG
Ckd by: CWW
Reviewed by: LHM
Submitted by:
BAKER

U.S. ARMY CORPS OF ENGINEERS
AFGHANISTAN ENGINEER DISTRICT
APO AE 96338

Michael Baker Jr., Inc
A unit of Michael Baker Corporation
Airside Business Park
100 Airside Drive
Moon Township, PA 15108
www.mbakercorp.com

AFGHAN NATIONAL ARMY
REGIONAL MILITARY TRAINING CENTER
STANDARD DESIGN

ENLISTED BARRACKS

BEAM & COLUMN DETAILS

Sheet reference number:
S-504

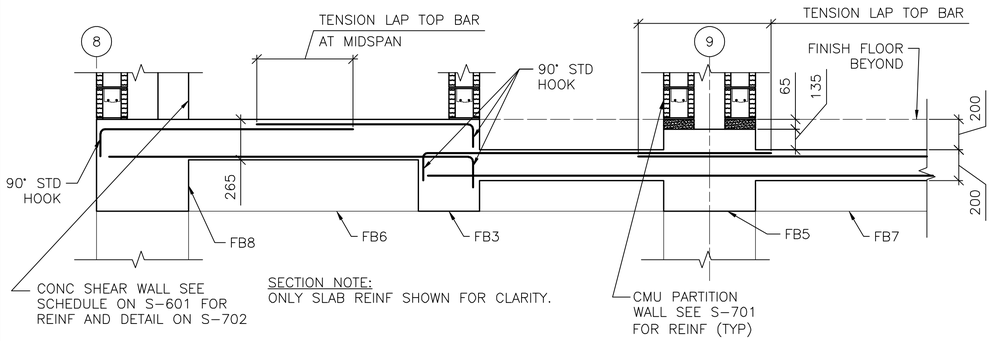

1 S-402 **SECTION** SCALE: 1:20

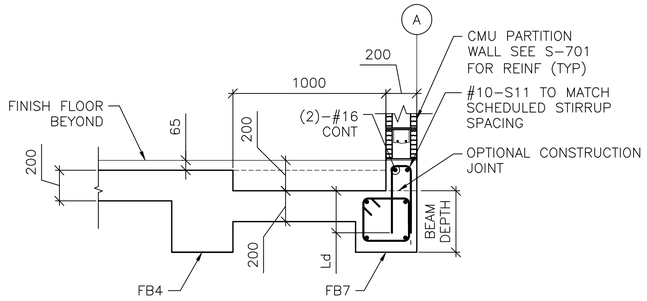

5 S-402 **SECTION** SCALE: 1:10

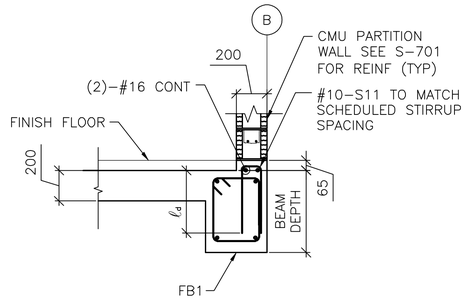

6 S-402 **SECTION** SCALE: 1:10

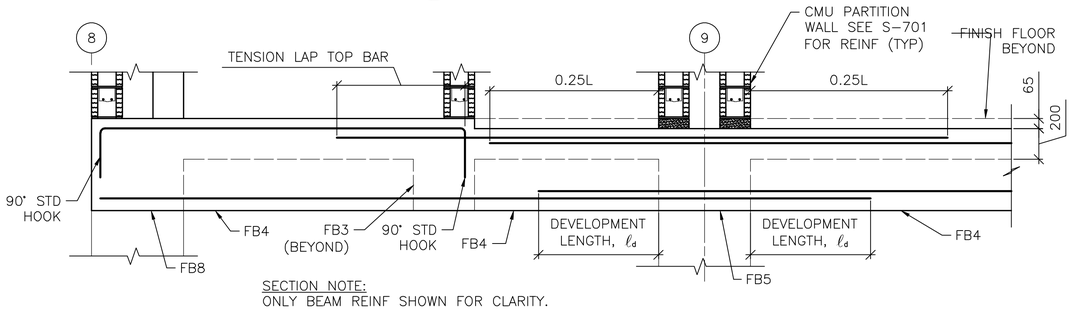

2 S-402 **SECTION** SCALE: 1:20

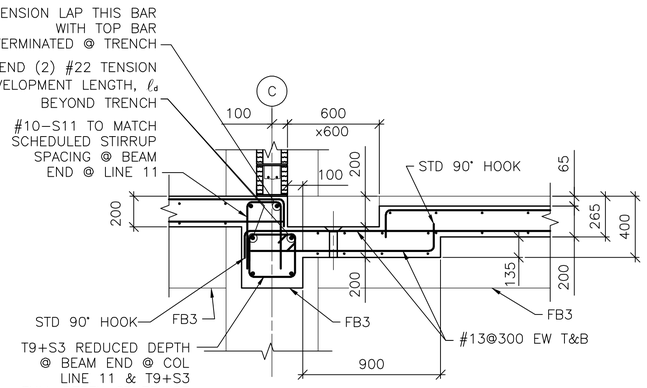

7 S-402 **SECTION** SCALE: 1:20

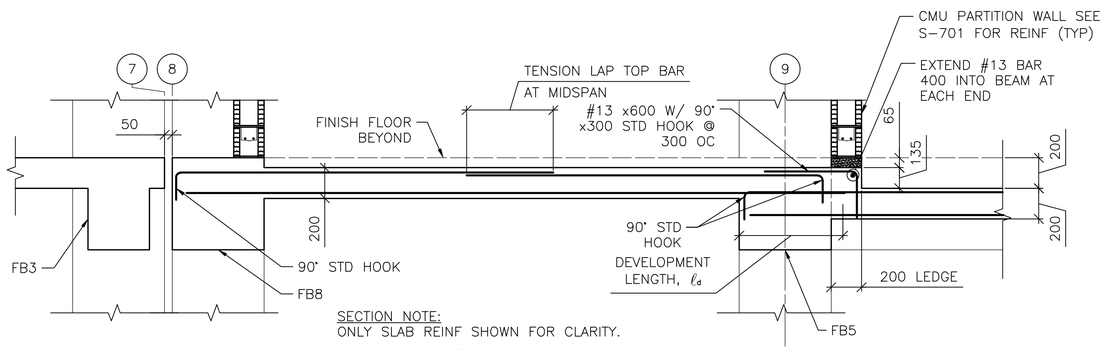

3 S-402 **SECTION** SCALE: 1:20

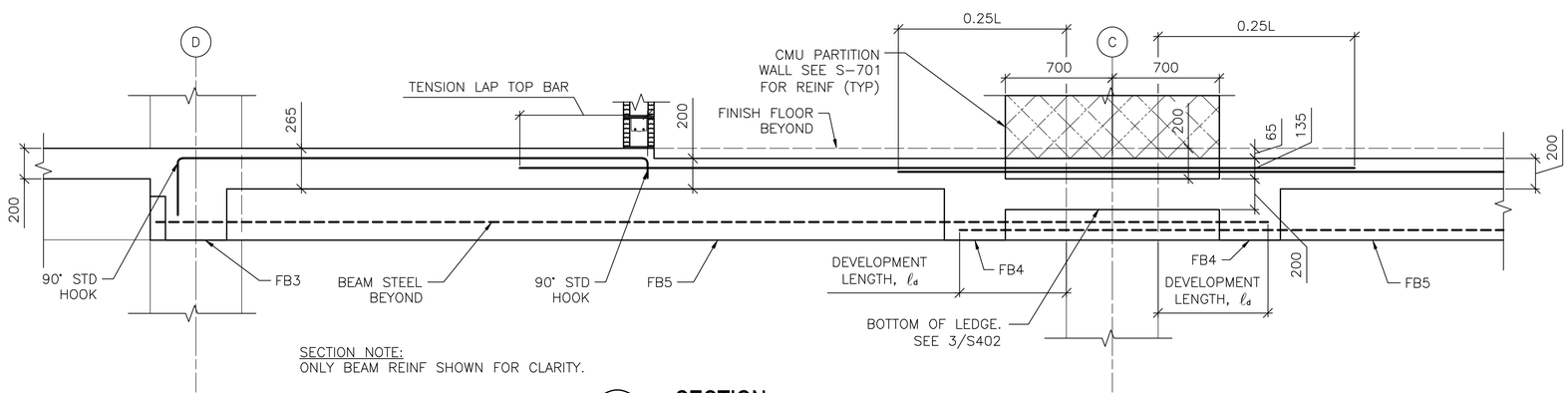

4 S-402 **SECTION** SCALE: 1:20

0 400 800
SCALE: 1:20

UNLESS OTHERWISE NOTED,
LINEAR DIMENSIONS SHOWN ARE
IN MILLIMETERS (mm)

APPROVED:

A/E DESIGNER OF RECORD

SEAL:

GEORGIA REGISTERED PROFESSIONAL ENGINEER CHRISTOPHER W. WHITMORE No. 27141 1-29-10

US ARMY CORPS OF ENGINEERS
AFGHANISTAN ENGINEER DISTRICT

Mark	Description	Date	Appr.	Mark	Description	Date	Appr.

Designed by: KMP/MMY
Dwn by: RCG
Ckd by: CWW
Reviewed by: LHM
Submitted by: BAKER
Date: 2/23/10
Design file no.
Drawing code:
Rev: 0
File name: AN4BEN8S-S505C
Plot date: 2/23/2010
Plot scale: x:X

U.S. ARMY CORPS OF ENGINEERS
AFGHANISTAN ENGINEER DISTRICT
APO AE 96338

Michael Baker Jr., Inc
A unit of Michael Baker Corporation
Airside Business Park
100 Airside Drive
Moon Township, PA 15108
www.mbakercorp.com

AFGHAN NATIONAL ARMY
REGIONAL MILITARY TRAINING CENTER
STANDARD DESIGN

ENLISTED BARRACKS

SECTIONS AND DETAILS

Sheet reference number:
S-505

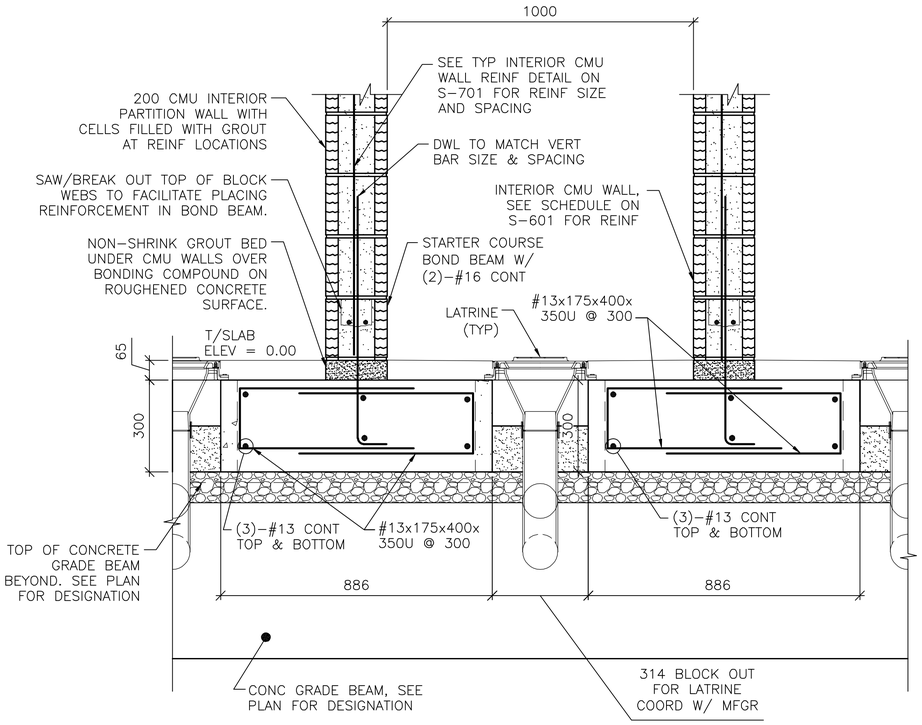

1 S-403 **SECTION**
SCALE: 1:10

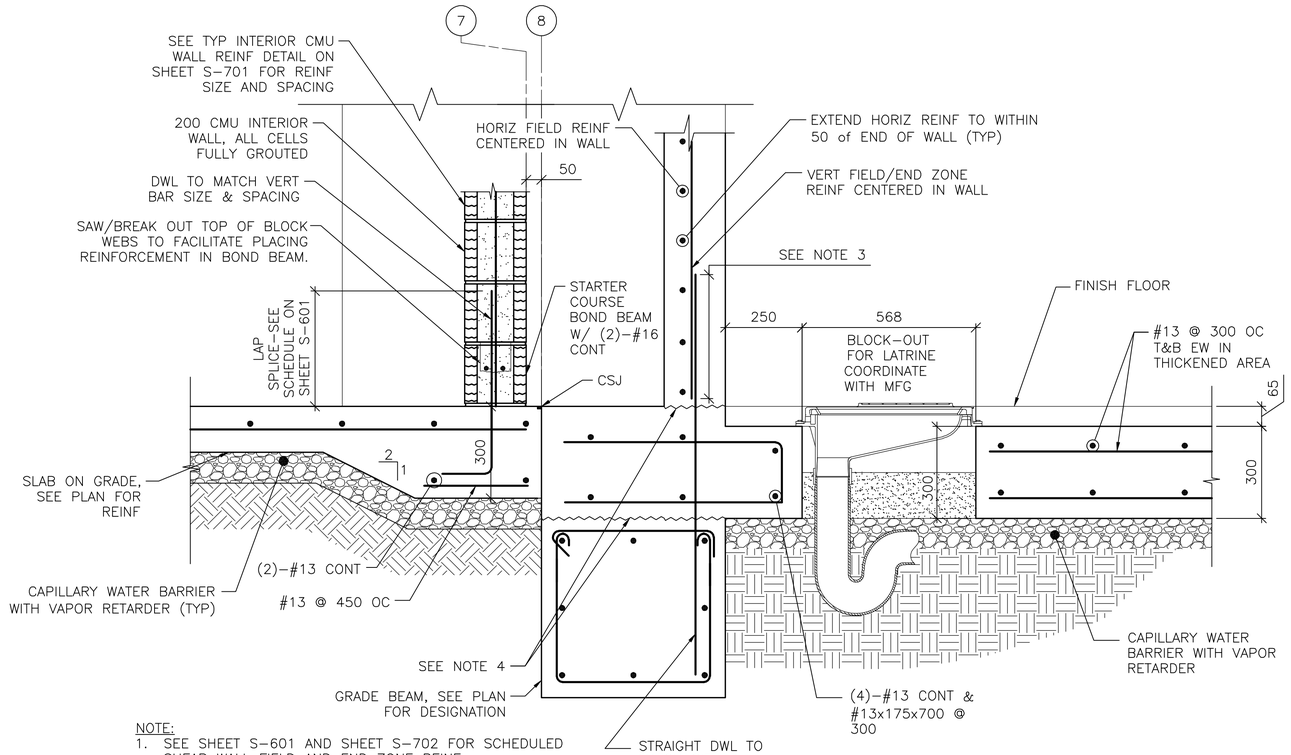

NOTE:
1. SEE SHEET S-601 AND SHEET S-702 FOR SCHEDULED SHEAR WALL FIELD AND END ZONE REINF.
2. STALL PARTITION WALLS NOT SHOWN FOR CLARITY.
3. SEE SCHEDULE ON SHEET S-601 FOR LAP SPLICE DIMS.
4. ROUGHEN SURFACE TO 6 AMPLITUDE.

2 S-403 **SECTION**
SCALE: 1:10

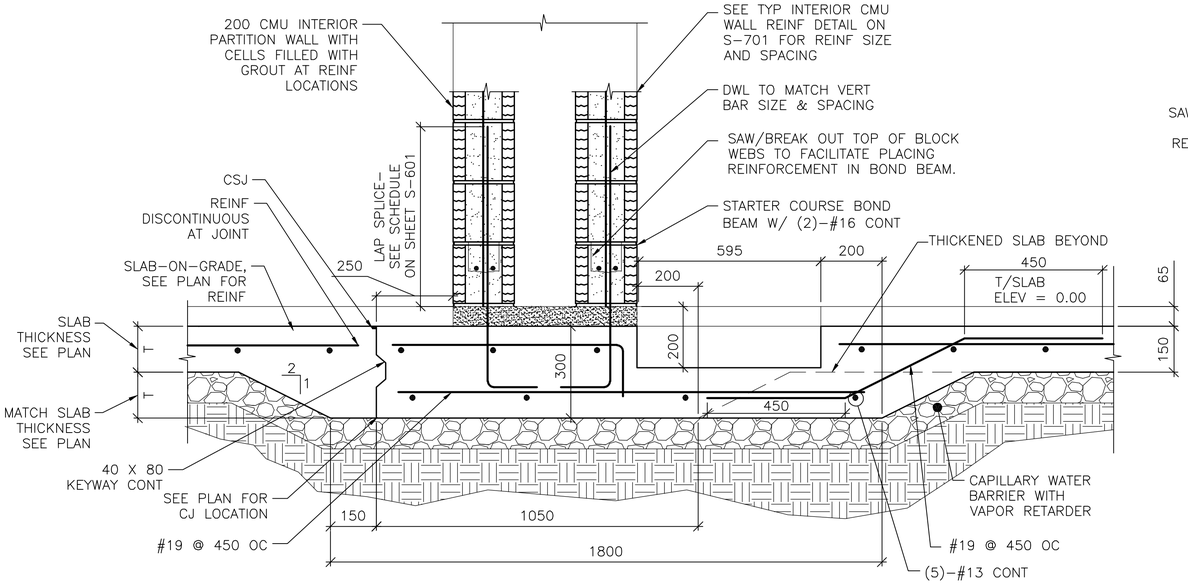

3 S-403 **SECTION**
SCALE: 1:10

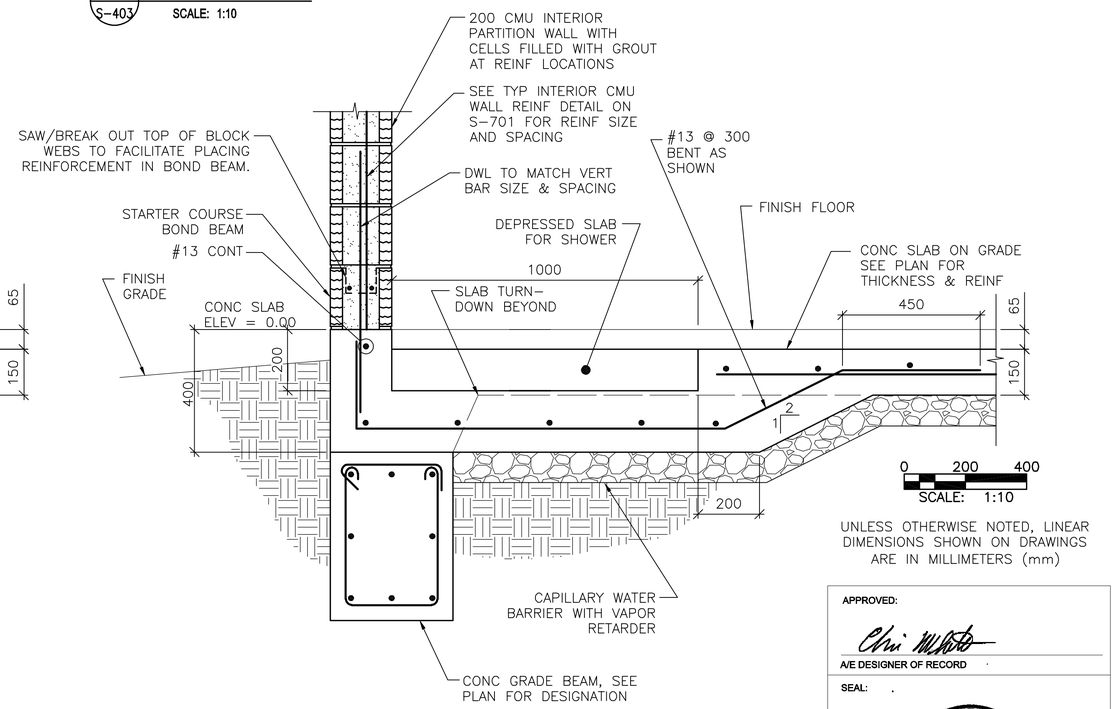

4 S-403 **SECTION**
SCALE: 1:10

0 200 400
SCALE: 1:10

UNLESS OTHERWISE NOTED, LINEAR DIMENSIONS SHOWN ON DRAWINGS ARE IN MILLIMETERS (mm)

APPROVED:

A/E DESIGNER OF RECORD

SEAL:

GEORGIA REGISTERED 2-23-10 No. 27141 PROFESSIONAL ENGINEER CHRISTOPHER W. WHITMORE

US ARMY CORPS OF ENGINEERS
AFGHANISTAN ENGINEER DISTRICT

Mark	Description	Date	Appr.	Mark	Description	Date	Appr.

U.S. ARMY CORPS OF ENGINEERS
AFGHANISTAN ENGINEER DISTRICT
APO AE 96338

Michael Baker Jr., Inc
A unit of Michael Baker Corporation
Airside Business Park
100 Airside Drive
Moon Township, PA 15108
www.mbakercorp.com

Designed by: KMP/MMY
Dwn by: RCG
Ckd by: CWW
Reviewed by: LHM
Submitted by: BAKER
Date: 2/23/10
Design file no.
Drawing code:
Rev: 0
File name: AAABEN8S-S06SC
Plot date: 2/23/2010
Plot scale: x:X

AFGHAN NATIONAL ARMY
REGIONAL MILITARY TRAINING CENTER
STANDARD DESIGN

ENLISTED BARRACKS

MISCELLANEOUS SECTIONS

Sheet reference number:
S-506

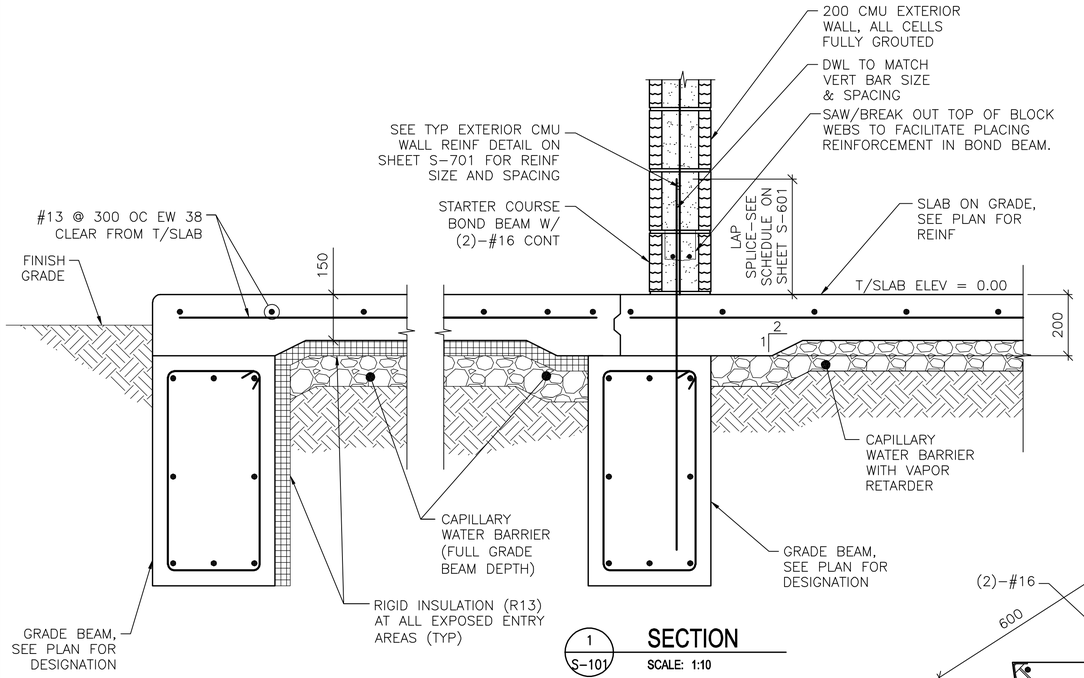

1 S-101 **SECTION**
SCALE: 1:10

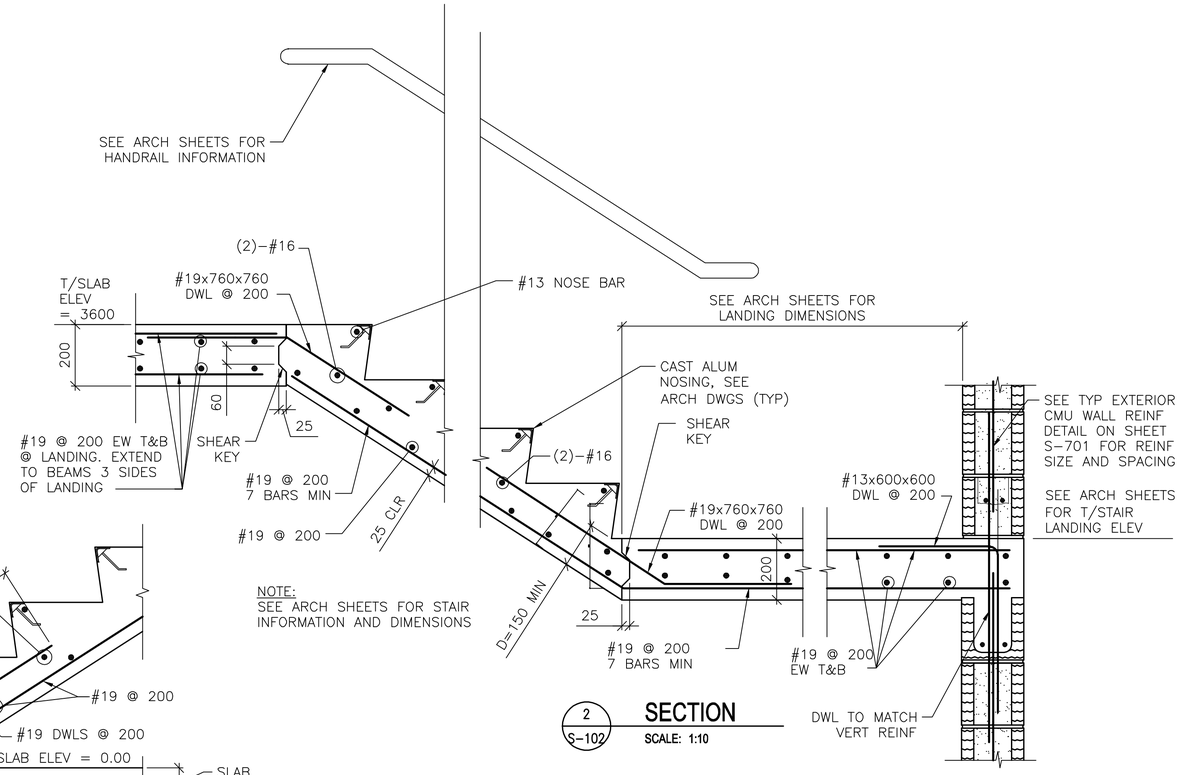

2 S-102 **SECTION**
SCALE: 1:10

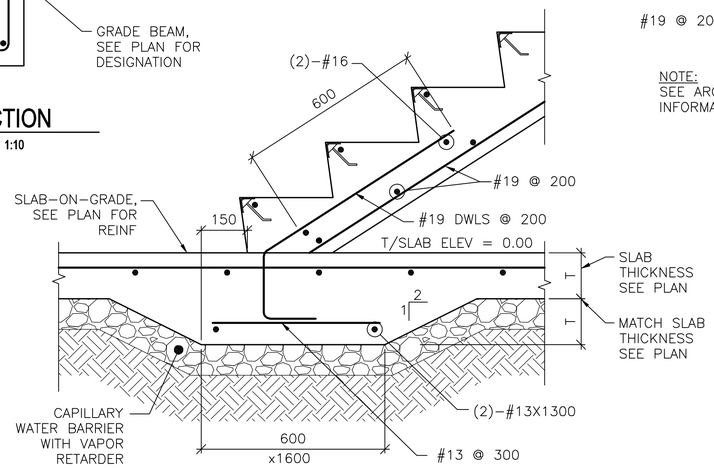

4 A-101 **SECTION**
SCALE: 1:10

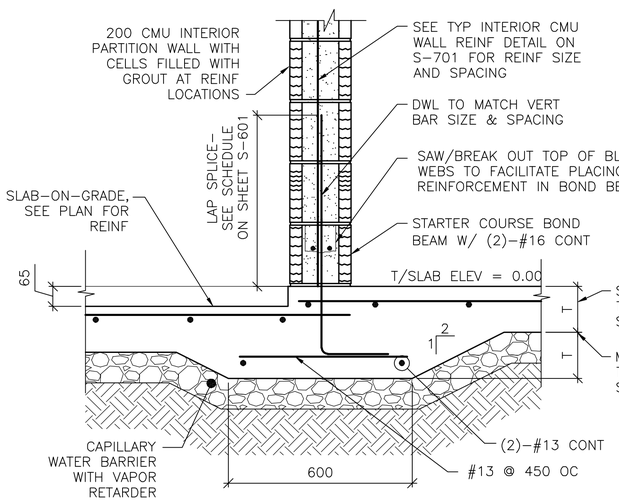

3 S-403 **SECTION**
SCALE: 1:10

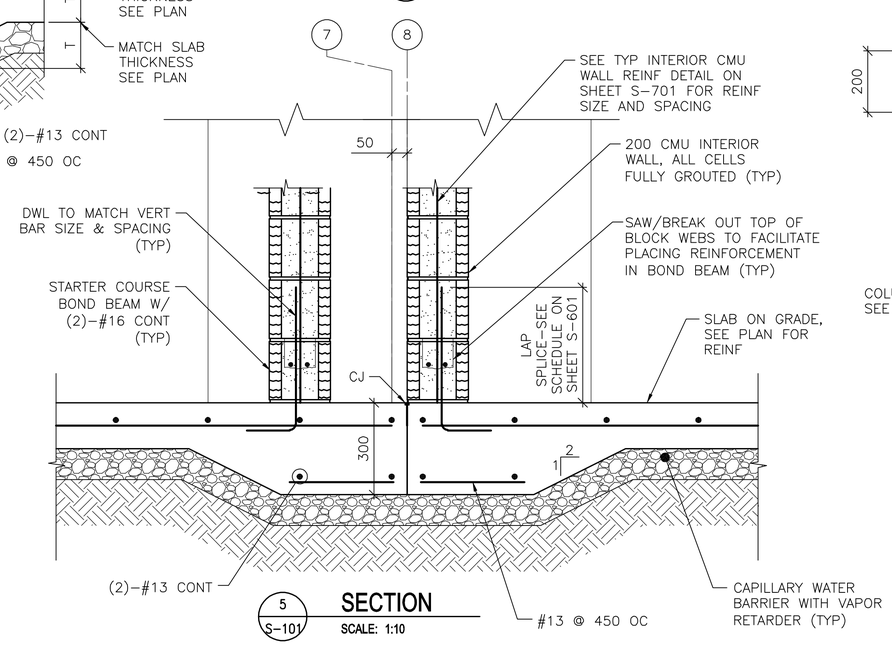

5 S-101 **SECTION**
SCALE: 1:10

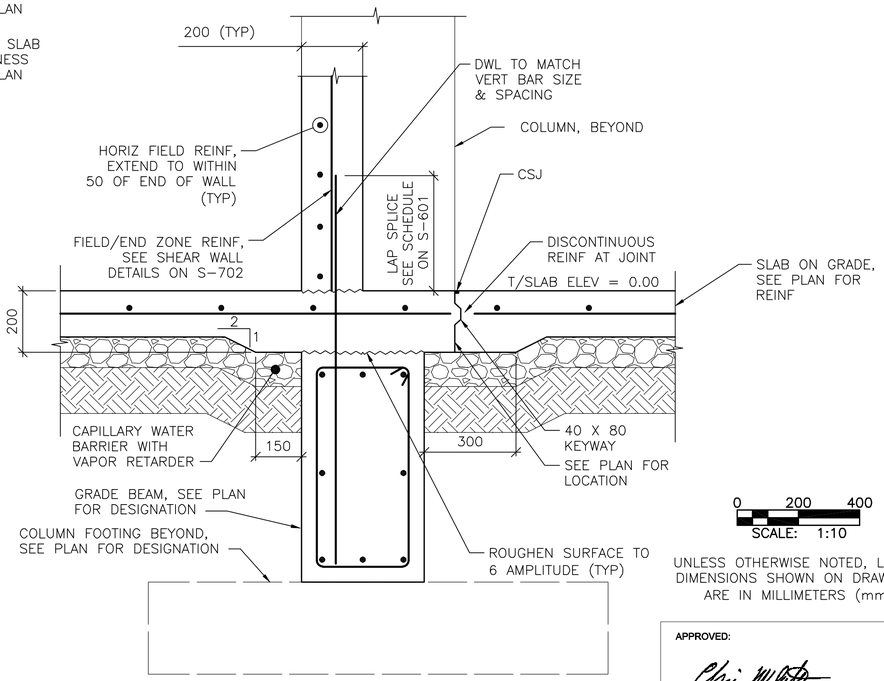

6 S-101 **SECTION**
SCALE: 1:10

0 200 400
SCALE: 1:10

UNLESS OTHERWISE NOTED, LINEAR DIMENSIONS SHOWN ON DRAWINGS ARE IN MILLIMETERS (mm)

APPROVED:

A/E DESIGNER OF RECORD

SEAL:

GEORGIA REGISTERED 1-22-10 No. 27141 PROFESSIONAL ENGINEER CHRISTOPHER W. WHITMORE

US ARMY CORPS OF ENGINEERS
AFGHANISTAN ENGINEER DISTRICT

Mark	Description	Date	Appr.	Mark	Description	Date	Appr.

U.S. ARMY CORPS OF ENGINEERS
AFGHANISTAN ENGINEER DISTRICT
APO AE 96338

Michael Baker Jr., Inc.
A unit of Michael Baker Corporation
Airside Business Park
100 Airside Drive
Moon Township, PA 15108
www.mbakercorp.com

Designed by: KMP/MMY
Dwn by: RCG
Ckd by: CWW
Reviewed by: LHM
Submitted by:
BAKER

Date: 2/23/10
Rev: 0
Design file no.
Drawing code:
File name: AAABENBS-S0753C
Plot date: 2/23/2010
Plot scale: x:X

AFGHAN NATIONAL ARMY
REGIONAL MILITARY TRAINING CENTER
STANDARD DESIGN

ENLISTED BARRACKS

MISCELLANEOUS SECTIONS

Sheet reference number:
S-507

CONCRETE REINFORCEMENT TENSION DEVELOPMENT/LAP SPLICE SCHEDULE

f'c = 28 MPa	LAP CLASS	UNCOATED BARS			
		TOP BARS		OTHER BARS	
BAR SIZES		CASE 1	CASE 2	CASE 1	CASE 2
#10 TO #19	A	50 BAR DIA	74 BAR DIA	38 BAR DIA	57 BAR DIA
	B	64 BAR DIA	96 BAR DIA	50 BAR DIA	74 BAR DIA
#22 TO #57	A	62 BAR DIA	93 BAR DIA	48 BAR DIA	71 BAR DIA
	B	80 BAR DIA	121 BAR DIA	62 BAR DIA	93 BAR DIA

NOTES:
1. TABULATED TENSION DEVELOPMENT LENGTH VALUES ARE TAKEN FROM CRSI DESIGN HANDBOOK 2008 10TH ED.
2. TENSION DEVELOPMENT & TENSION LAP SPLICE LENGTHS ARE EXPRESSED AS MULTIPLES OF BAR DIAMETERS.
3. TABULATED VALUES ARE BASED ON MINIMUM YIELD STRENGTH OF REINFORCEMENT, fy, OF 420MPa.
4. CONCRETE IS NORMAL WEIGHT (2400Kg/m^3) AND 28 DAY COMPRESSIVE STRENGTH = 28MPa.
5. TABULATED VALUES FOR BEAMS & COLUMNS ARE BASED ON TRANSVERSE REINFORCEMENT AND CONCRETE COVER MEETING MINIMUM CODE REQUIREMENTS.
6. CASES 1 & 2, WHICH DEPEND ON THE TYPE OF STRUCTURAL MEMBER, CONCRETE COVER, AND CENTER-TO-CENTER SPACING OF THE BARS ARE DEFINED IN THE TABLE BELOW.
7. LAP SPLICE LENGTHS (MINIMUM 300mm) ARE MULTIPLES OF TENSION DEVELOPMENT LENGTHS: CLASS A = 1.0(TENSION DEVELOPMENT LENGTH) & CLASS B = 1.3(TENSION DEVELOPMENT LENGTH)
8. TOP BARS ARE HORIZONTAL REINFORCEMENT WITH MORE THAN 300mm OF CONCRETE CAST BELOW THE BARS.
9. IT SHALL BE PERMISSIBLE TO CALCULATE WALL AND SLAB REINFORCEMENT TENSION DEVELOPMENT/SPLICE LENGTHS IN ACCORDANCE WITH ACI 12.2.3 OR TABLE 5.3(b) OF CRSI 2008 IN LIEU OF VALUES TABULATED ABOVE.

BEAMS, COLUMNS	CASE 1	CONCRETE COVER AT LEAST 1 BAR DIA AND CENTER-TO-CENTER SPACING AT LEAST 2 BAR DIA
	CASE 2	CONCRETE COVER LESS THAN 1 BAR DIA OR CENTER-TO-CENTER SPACING LESS THAN 2 BAR DIA
ALL OTHERS	CASE 1	CONCRETE COVER AT LEAST 1 BAR DIA AND CENTER-TO-CENTER SPACING AT LEAST 3 BAR DIA
	CASE 2	CONCRETE COVER LESS THAN 1 BAR DIA OR CENTER-TO-CENTER SPACING LESS THAN 3 BAR DIA

CONCRETE COVER SCHEDULE

MINIMUM CONCRETE COVER PROTECTION FOR REINFORCEMENT BARS SHALL BE AS LISTED BELOW: (SEE ACI 318M-05, SECTION 7.7 FOR CONDITIONS NOT NOTED). DIMENSIONS FOR BAR PLACEMENT GIVEN IN SECTIONS AND DETAILS SHALL SUPERSEDE MINIMUM COVER REQUIREMENTS GIVEN HERE. DIMENSIONS ARE IN mm. PROVIDE STANDARD BAR CHAIRS AND SUPPORT BARS @1200mm MAXIMUM AS REQUIRED TO MAINTAIN CONCRETE PROTECTION SPECIFIED.

FOOTINGS (EARTH FORMED):		70
COLUMNS / PIERS (TO TIES)		40
GRADE BEAMS OR SLAB TURNED DOWN EDGES:		
TOP		40
BOTTOM (EARTH FORMED)		70
SIDES (EARTH FORMED)		70
SIDES (BOARD FORMED)	#16 BAR & SMALLER	40
	#19 THRU #36 BAR	50
ELEVATED BEAMS & SLABS:		
BEAM TIES & STIRRUPS (NOT EXPOSED TO WEATHER)		40
BEAM TIES & STIRRUPS (EXPOSED TO WEATHER)		50
FLOOR SLABS (NOT EXPOSED TO WEATHER)		20
FLOOR SLABS (EXPOSED TO WEATHER)		
#19 & LARGER		50
#13 & SMALLER		40
ROOF SLAB BARS		25
SLABS ON GRADE		
NOT EXPOSED TO WEATHER (FROM TOP)		20
EXPOSED TO WEATHER (FROM TOP)		40
UTILITY TUNNEL WALLS, RETAINING WALLS AND SHEAR WALLS. (NO SURFACES SHALL BE EARTH FORMED)		
EARTH SIDE AND FRONT SIDE (EXPOSED TO WEATHER)		
#16 BAR AND SMALLER		40
#19 THRU #36 BAR		50

COLUMN FOOTING SCHEDULE

MARK	FOOTING SIZE (mm)			FOOTING REINFORCING
	LENGTH	WIDTH	THICKNESS	
F1	2800	2800	300	(10)-#19 EW BOTT
F2	3100	3100	325	(11)-#19 EW BOTT
F3	3300	3300	325	(11)-#22 EW BOTT
F4	3600	3600	350	(12)-#22 EW BOTT
F5	3800	3800	400	(14)-#22 EW BOTT
F6	4300	4300	400	(15)-#22 EW BOTT
F7	8050	8300	710	#22@300 EW T&B
F8	5600	8050	710	#25@300 EW T&B
F9	5000	5000	550	(20)-#22 EW T&B
F10	5600	5600	550	(20)-#25 EW BOTT
F11	6000	6000	710	(20)-#25 EW TOP & BOTTOM
F12	11700	6000	710	(40)-#25 SHORT T&B (20)-#25 LONG T&B
F13	7800	5000	550	(31)-#22 SHORT T&B (20)-#22 LONG T&B

CONCRETE SHEAR WALL SCHEDULE

MARK	TYPE	WALL LENGTH (L) (mm)	WALL REINFORCEMENT	
			END ZONE	FIELD
SW1	D	8100	(6)-#22 @ 300mm OC	#13 @ 300mm OC
SW2	D	8900	(14)-#22 @ 300mm OC	#13 @ 300mm OC
SW3	D	9100	(15)-#22 @ 300mm OC	#13 @ 300mm OC
SW4	D	9400	(15)-#22 @ 300mm OC	#13 @ 300mm OC
SW5	D	9400	(6)-#22 @ 300mm OC	#13 @ 300mm OC
SW6	D	7900	(9)-#22 @ 300mm OC	#13 @ 300mm OC

NOTES:
1. WORK THIS SCHEDULE WITH SHEAR WALL DETAILS ON SHEETS S-702
2. SEE PLAN FOR LOCATION OF SHEAR WALL(S).
3. WALL "FIELD" REINFORCEMENT LISTED APPLIES TO VERTICAL & HORIZONTAL BARS.
4. WALL "FIELD" REINFORCEMENT SHOULD BE CENTERED IN WALL.
5. VERTICAL "FIELD" BARS MAY BE OMITTED IN LOCATION OF "END ZONE" REINFORCEMENT.

STANDARD HOOKS IN TENSION PER (ACI 318M-05)

HOOK DEVELOPMENT LENGTH (mm)	
BAR SIZE	f'c 28 MPa
#10	180
#13	250
#16	300
#19	380
#22	430
#25	480
#29	560
#32	610
#36	690

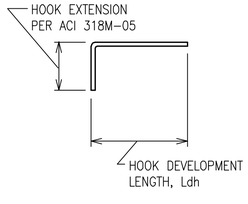

NOTES:
1. CONCRETE IS NORMAL WEIGHT CONCRETE.
2. BAR YIELD STRENGTH, fy = 420 MPa
3. SIDE COVER REQUIREMENTS OF ACI SECT. 12.5.3 ARE ASSUMED TO NOT BE MET.
4. TIE OR STIRRUP REQUIREMENTS OF ACI SECT. 12.5.3 ARE ASSUMED TO NOT BE MET.
5. REDUCTION FOR EXCESS REINFORCEMENT IS NOT TAKEN.
6. HOOK DEVELOPMENT LENGTH IS VALID FOR 180° HOOKS ALSO.

CMU OR CAST IN PLACE CONC LINTEL SCHEDULE (TYP)

OPENING TYPE OR SIZE, BEAM LOCATION OR TYPE	MAX SPAN (mm)	LINTEL DEPTH (mm)	REINFORCING BOTTOM
WALL OPENING	4000	600	(2)-#16 T&B
WALL OPENING	1900	400	(2)-#16 T&B
WALL OPENING	1000	400	(2)-#13 B

1. STRUCTURAL SHEETS DO NOT INDICATE ALL OPENINGS IN MASONRY WALLS. VERIFY NUMBER, SIZE AND LOCATION OF ALL OPENINGS IN MASONRY WALLS FROM ARCHITECTURAL SHEETS AND APPROVED PLUMBING, MECHANICAL, AND ELECTRICAL SHOP DRAWINGS.
2. PROVIDE 200mm BEARING EA END.
3. FOR HEAD DETAILS REFER TO ARCHITECTURAL SHEETS.
4. REINFORCING SHALL BE ASTM A615M, GRADE 420. GROUT FOR CMU LINTELS SHALL HAVE A MINIMUM COMPRESSIVE STRENGTH OF 14 MPa AT 28 DAYS.
5. CONTRACTOR SHALL SUBMIT FOR APPROVAL SHOP DRAWINGS AND SCHEDULES SHOWING SIZE, SPAN, REIN, DETAILS & LOCATIONS.
6. REFERENCE LINTEL DETAIL ON THIS SHEET.

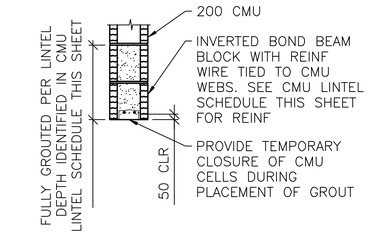

A / S-601 **LINTEL DETAIL**
SCALE: NTS

BEAM SCHEDULE

MARK	BEAM SIZE (mm)		BEAM REINFORCING						STIRRUPS			REMARKS
	DEPTH	WIDTH	BL	BS	TL	TS	TC	M	SIZE	TYPE	SPACING	
GRADE BEAMS												
GB1	750/550	400	(2)-#22	(1)-#22	(2)-#22	---	---	---	#13	S3+T9	d/2	LOWER TOP TO 550 @ LATRINES BETWEEN A8-A11
GB2	750	400	(4)-#25	---	(4)-#25	---	---	(2)-#25	#13	S3+T9	d/2	-----
GB3	750	600	(2)-#22	(1)-#22	(2)-#22	(1)-#22	(1)-#25	(2)-#25	#13	S3+T9	d/2	
GB4	1500	400	(5)-#29	(5)-#29	(8)-#29	---	---	(6)-#16	#13	S3+T9	250	TOP & BOTT BARS IN 2 LAYERS
FLOOR BEAMS												
FB1	600	400	(3)-#25	---	(2)-#25	---	---	---	#13	S3+T9+ #10-S-11	d/2	-----
FB2	600	400	(4)-#25	---	(2)-#25	---	---	---	#13	S3+T9	d/2	
FB3	600	400	(3)-#22	---	(2)-#22	---	---	---	#13	S3+T9+ #10-S-11	d/2	
FB4	600/535	400	(2)-#22	---	(2)-#22	---	---	---	#13	S3+T9	d/2	LOWER TOP TO 535 LINE A.3 BETWEEN 8.6 & 10.4
FB5	600/535	600	(3)-#25	---	(2)-#25	---	---	---	#13	S3+T9	d/2	LOWER TOP TO 535 LINE 9 & 10 BETWEEN C.5 & A.3
FB6	600/400	400	(2)-#22	---	(2)-#25	---	---	---	#13	S3+T9	d/2	LOWER TOP TO 400 LINE A BETWEEN 8.9 & 10.4
FB7	600/400	400	(2)-#22	---	(2)-#25	---	---	---	#13	S3+T9+ #10-S-11	d/2	LOWER TOP TO 400 BEWTWEEN 9A-10A
FB8	600	600	(2)-#22	---	(2)-#22	---	---	---	#13	S3+T9	d/2	-----
FB9	600/535	400	(3)-#25	---	(2)-#25	---	---	---	#13	S3+T9+ #10-S-11	d/2	LOWER TOP TO 535 LINE B BETWEEN 11.0 & 11.6
ROOF BEAMS												
RB1	500	400	(2)-#19	(1)-#19	(2)-#19	---	---	---	#13	S3+T9	d/2	-----
RB2	500	400	(2)-#25	(1)-#25	(2)-#25	---	---	---	#13	S3+T9	d/2	
RB3	500	400	(2)-#19	(1)-#19	(2)-#16	---	---	---	#13	S3+T9	d/2	
RB4	500	600	(2)-#19	---	(2)-#19	---	---	---	#13	S3+T9	d/2	

NOTES:
1. WORK THIS SCHEDULE WITH BEAM REINFORCING DETAILS ON SHEETS S-503 AND S-504.
2. HOOKS SHOWN ON SECTIONS AND DETAILS SHALL BE 90° STD UON.
3. USE ONLY (1) TC AT BEAM COLUMN INTERSECTION WHERE REQ'D.

COLUMN SCHEDULE

COLUMN MARK / DESCRIPTION	TYP UON	---	---	---
TYPE	8-BAR	---	---	---
DIMENSION	600mm SQ.	---	---	---
1ST STORY VERTICAL REINF	(8)-#25	---	---	---
2ND STORY VERTICAL REINF	(8)-#25	---	---	---
TIES	#13 @ d/2	---	---	---
TOP OF 2ND FLOOR ELEVATION	3600mm	---	---	---
TOP OF ROOF ELEVATION	7100mm	---	---	---
TOP OF GRADE BEAM ELEVATION	-200mm	---	---	---
TOP OF FOOTING ELEVATION	-950mm	---	---	---

NOTES:
1. WORK THIS SCHEDULE WITH COLUMN DETAILS ON SHEET S-504.
2. SEE FOOTING SCHEDULE ON THIS SHEET FOR FOOTING INFORMATION.
3. COLUMN TIES: INTERIOR TIES TO MATCH SIZE & SPACING OF PERIMETER TIES.
4. HOOKS SHOWN ON SECTIONS & DETAILS SHALL BE 90° STD UON.

UNLESS OTHERWISE NOTED, LINEAR DIMENSIONS SHOWN ON DRAWINGS ARE IN MILLIMETERS (mm)

APPROVED:

A/E DESIGNER OF RECORD

SEAL:

GEORGIA REGISTERED PROFESSIONAL ENGINEER No. 27141 CHRISTOPHER W. WHITMORE

US ARMY CORPS OF ENGINEERS
AFGHANISTAN ENGINEER DISTRICT

Mark	Description	Date	Appr.	Mark	Description	Date	Appr.

Rev. 0
Date: 2/23/10
Design file no.
Drawing code:
File name: AMMENIS-601SCH
Plot date: 2/23/2010
Plot scale: X:X

Designed by: KMP/MMY
Dwn by: RCG
Ckd by: CWW
Reviewed by: LHM
Submitted by: BAKER

U.S. ARMY CORPS OF ENGINEERS
AFGHANISTAN ENGINEER DISTRICT
APO AE 96338

Michael Baker Jr., Inc.
A unit of Michael Baker Corporation
Airside Business Park
100 Airside Drive
Moon Township, PA 15108
www.mbakercorp.com

AFGHAN NATIONAL ARMY
REGIONAL MILITARY TRAINING CENTER
STANDARD DESIGN

ENLISTED BARRACKS

SCHEDULES

Sheet reference number:
S-601

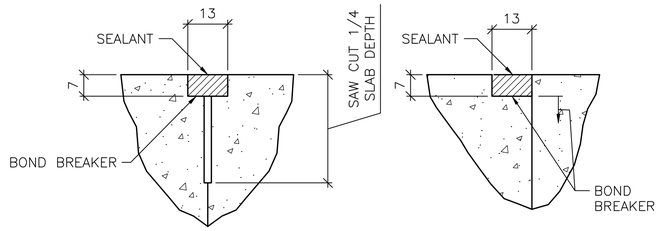

CONTROL JOINT DETAIL

CONSTRUCTION JOINT DETAIL

TYPICAL CONCRETE SLAB JOINT FINISH DETAILS

1 / S-701 SCALE: NTS

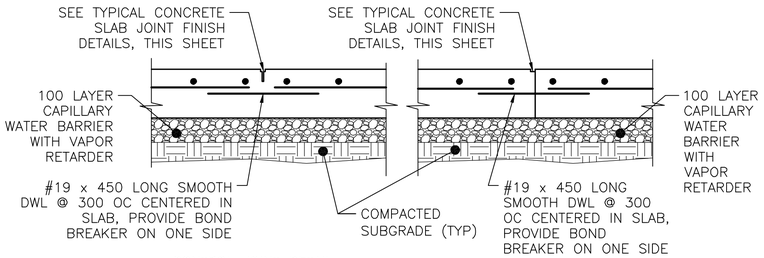

CONTROL JOINT DETAIL

CONSTRUCTION JOINT DETAIL

TYPICAL SLAB ON GRADE JOINT DETAIL

2 / S-701 SCALE: NTS

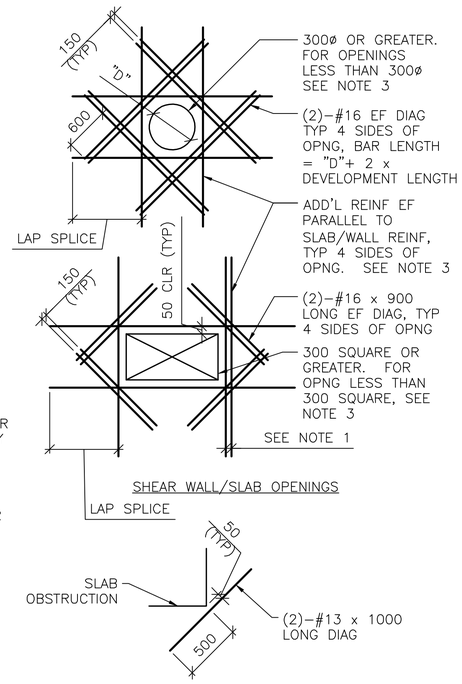

SHEAR WALL/SLAB OPENINGS

RE-ENTRANT CORNERS

DETAIL NOTES:

1. WHERE MORE THAN ONE ADDITIONAL BAR IS REQUIRED PARALLEL TO THE EXISTING SLAB/WALL REINFORCING THE ADDITIONAL REINFORCING BARS SHALL BE SPACED AT 100 ON CENTER.
2. ADDITIONAL REINFORCING PARALLEL TO THE SLAB/WALL REINFORCING SHALL BE #16 BARS THAT PROVIDE A STEEL AREA ON EACH SIDE OF THE OPENING EQUAL TO 1/2 THE AREA OF THE REINFORCING CUT BY THE OPENING.
3. FOR OPENINGS WITH SIDES OR DIAMETERS LESS THAN 300 SPREAD THE SLAB/WALL REINFORCING TO CLEAR THE OPENING.

ADD'L CONCRETE REINFORCEMENT DETAILS

4 / S-701 SCALE: NTS

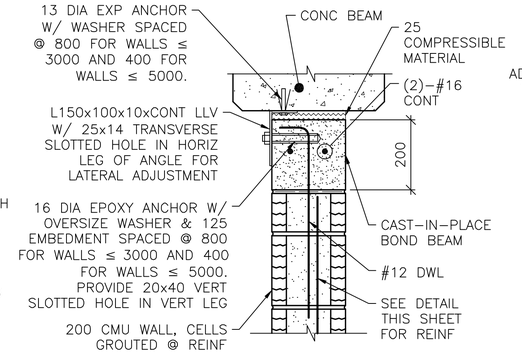

NOTE:
1. AT ANCHOR BOLTS, ADD AN ADDITIONAL 25 COMPRESSIBLE MATERIAL BELOW EXP ANCHOR HEAD.

INTERIOR BEAM

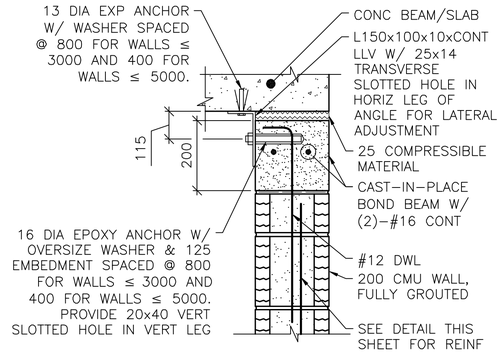

EXTERIOR WALL OR SLAB

NOTES:

1. THIS DETAIL IS AN ALTERNATE TOP OF WALL ANCHORAGE DETAIL TO BE USED AT THE CONTRACTOR'S OPTION IN LIEU OF DETAILS SHOWN ON S-400 & S-500 DRAWINGS.
2. CAST-IN-PLACE BOND BEAM SHOWN AT TOP OF WALL IS ALSO APPLICABLE FOR INTERMEDIATE AND STARTER COURSE BOND BEAMS WITHIN WALL.

ALTERNATE TOP OF CMU WALL BRACING DETAILS

5 / S-701 SCALE: NTS

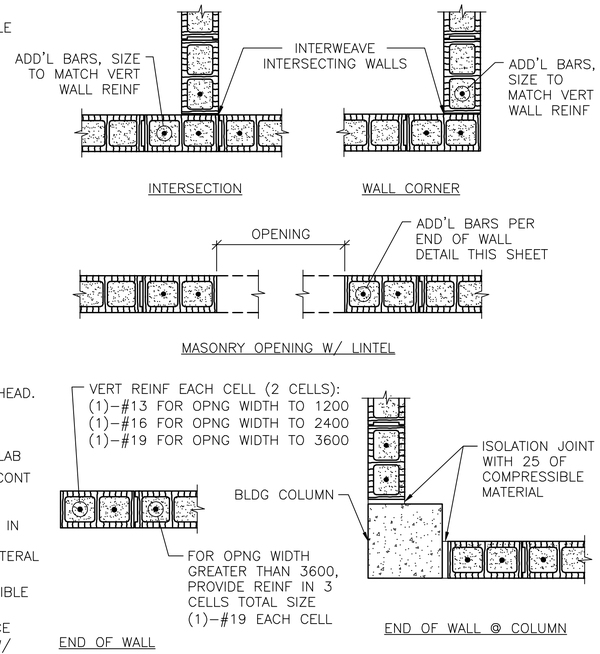

NOTES:
1. OPENING WIDTH SHALL NOT EXCEED 3600 FOR THIS TYPE OF JAMB.
2. ALL CELLS FULLY GROUTED AT EXTERIOR WALLS. AT INTERIOR WALLS, ONLY GROUT CELLS CONTAINING REINF.

TYP CMU DETAILS

6 / S-701 SCALE: NTS

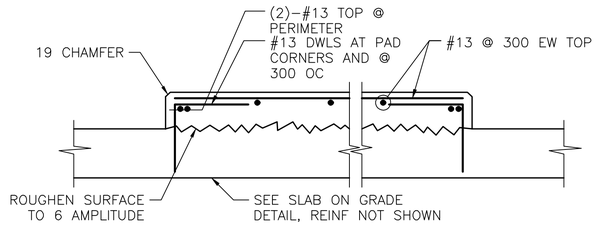

INTERIOR EQUIPMENT PAD DETAIL

3 / S-701 SCALE: NTS

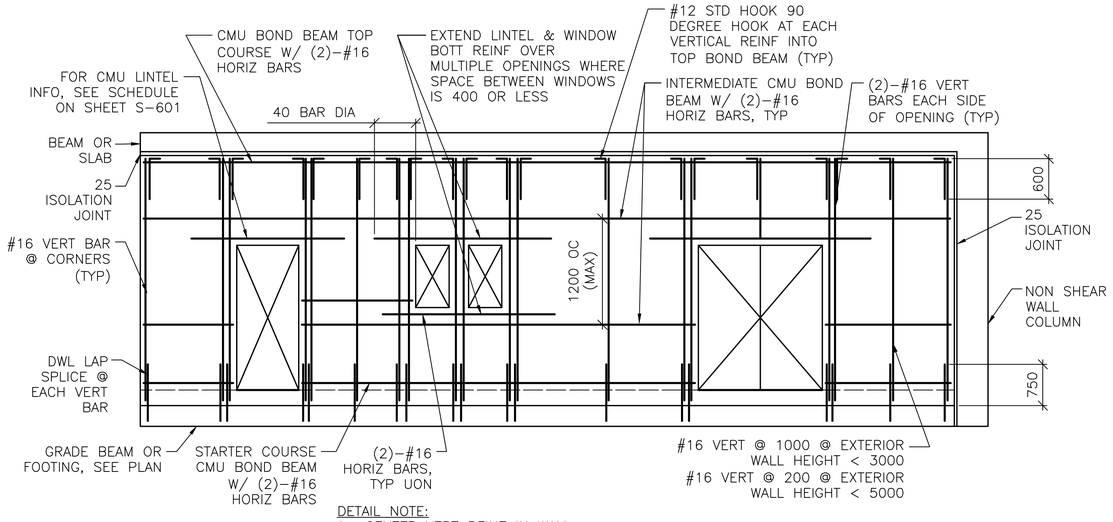

DETAIL NOTE:
1. CENTER VERT REINF IN WALL.
2. GROUT ALL CMU CELLS.
3. REFERENCE ARCH DWGS FOR JOINT INFORMATION
4. DOWELS BETWEEN TOP BOND BEAM AND BEAM/SLAB ABOVE (INCLUDING EMBEDDED PIPE SLEEVE) NOT SHOWN FOR CLARITY. SEE SPECIFIC S-500 SERIES DWGS FOR INFO.
5. FOR INFORMATION ON ALTERNATE CAST-IN-PLACE WALL BOND BEAMS, REFERENCE ALTERNATE TOP OF CMU WALL BRACING DETAILS THIS SHEET.

TYP EXTERIOR CMU WALL REINF DETAIL

7 / S-701 SCALE: NTS

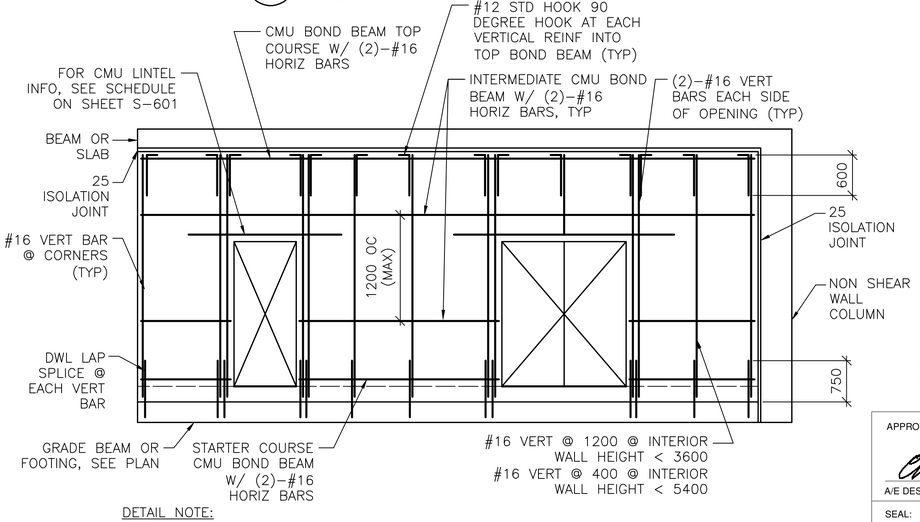

DETAIL NOTE:
1. CENTER VERT REINF IN WALL.
2. GROUT ALL CMU CELLS.
3. REFERENCE ARCH DWGS FOR JOINT INFORMATION
4. DOWELS BETWEEN TOP BOND BEAM AND BEAM/SLAB ABOVE (INCLUDING EMBEDDED PIPE SLEEVE) NOT SHOWN FOR CLARITY. SEE SPECIFIC S-500 SERIES DWGS FOR INFO.
5. FOR INFORMATION ON ALTERNATE CAST-IN-PLACE WALL BOND BEAMS, REFERENCE ALTERNATE TOP OF CMU WALL BRACING DETAILS THIS SHEET.

TYP INTERIOR CMU WALL REINF DETAIL

8 / S-701 SCALE: NTS

UNLESS OTHERWISE NOTED, LINEAR DIMENSIONS SHOWN ARE IN MILLIMETERS (mm)

APPROVED:

A/E DESIGNER OF RECORD

SEAL:

GEORGIA REGISTERED 1-29-10 No. 27141 PROFESSIONAL ENGINEER CHRISTOPHER W. WHITMORE

US ARMY CORPS OF ENGINEERS
AFGHANISTAN ENGINEER DISTRICT

Mark	Description	Date	Appr.	Mark	Description	Date	Appr.

Designed by: KMP/MMY
Dwn by: RCG
Ckd by: CWW
Reviewed by: LHM
Submitted by: BAKER
Date: 2/23/10
Design file no.
Rev: 0
Drawing code:
File name: AAMBENB5-701TDT
Plot date: 2/23/2010
Plot scale: X:X

U.S. ARMY CORPS OF ENGINEERS
AFGHANISTAN ENGINEER DISTRICT
APO AE 96338

Michael Baker Jr., Inc.
A unit of Michael Baker Corporation
Airside Business Park
100 Airside Drive
Moon Township, PA 15108
www.mbakercorp.com

AFGHAN NATIONAL ARMY
REGIONAL MILITARY TRAINING CENTER
STANDARD DESIGN

ENLISTED BARRACKS

TYPICAL DETAILS

Sheet reference number:
S-701

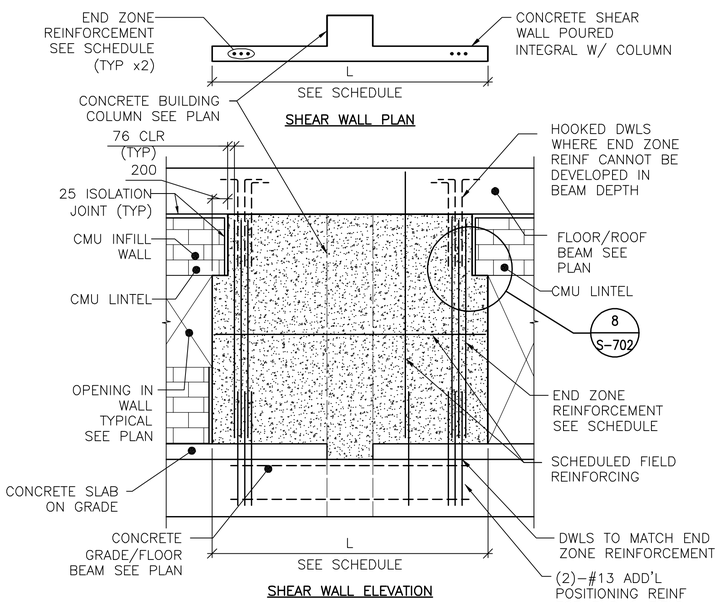

DETAIL NOTES:
1. FIELD REINFORCEMENT IN SHEAR WALL NOT COMPLETELY SHOWN FOR CLARITY.
2. FIELD REINFORCEMENT CENTERED IN WALL.
3. MINIMUM CONC CLEAR DISTANCE FOR END ZONE REINF = 76
4. SEE CONC SHEAR WALL SCHEDULE ON SHEET S-601
5. SEE ARCH DWGS FOR JOINT INFORMATION

TYPE "D" SHEAR WALL DETAIL

1 / S-702 SCALE: NTS

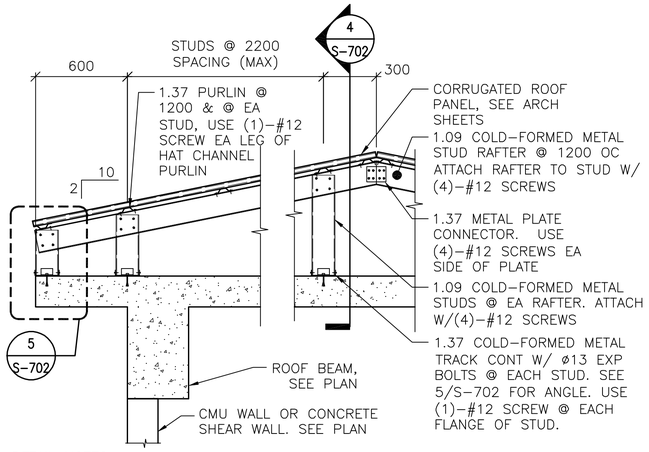

DETAIL NOTES:
1. ALL GABLE END VERTICAL STUDS SHALL BE ORIENTED 90° TO INTERIOR STUDS & SPACED @ 600 OC. GABLE END RAFTER SHALL BE 1.37 METAL TRACK SPANNING CONTINUOUSLY OVER GABLE END STUDS. INSET GIRTS AT GABLE END SHALL BE 1.09 COLD-FORMED METAL STUDS @ 1200 OC ATTACHED VIA 1.37 THICKNESS CLIP ANGLE W/ (2) #12 SCREWS EA LEG.
2. ALL INTERIOR, NON-GABLE END VERTICAL STUDS GREATER THAN 2400 IN LENGTH SHALL BE BACK-TO-BACK W/ #12 SCREWS @ 200 OC STAGGERED.

TYPICAL OVERBUILT ROOF FRAMING DETAIL

2 / S-702 SCALE: NTS

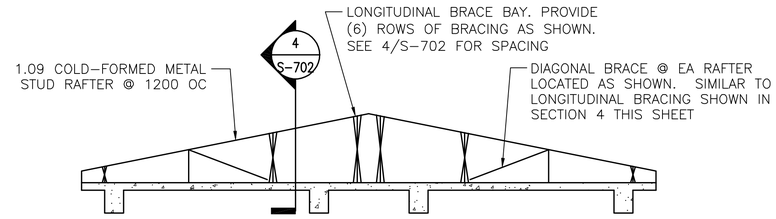

TYPICAL ROOF BRACE LAYOUT

3 / S-702 SCALE: NTS

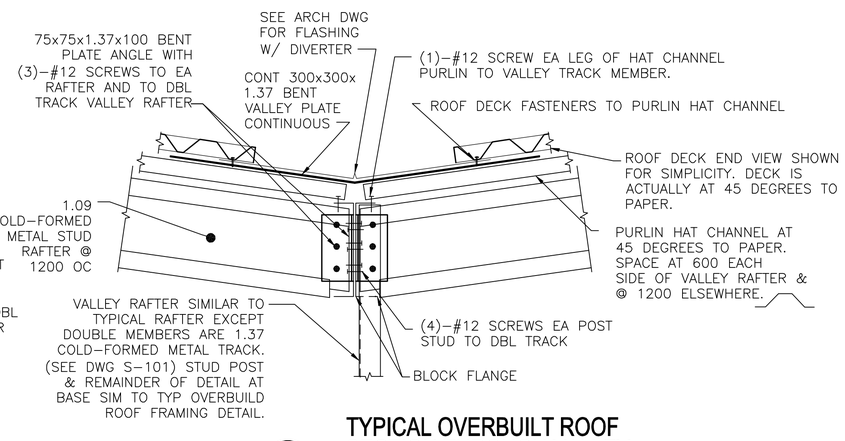

TYPICAL OVERBUILT ROOF SECTION THROUGH VALLEY

6 / S-702 SCALE: NTS

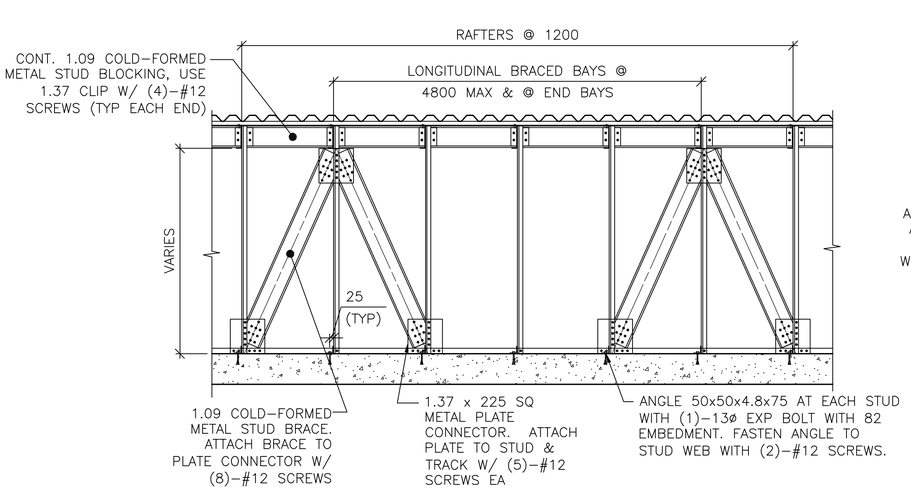

SECTION

4 / S-702 SCALE: NTS

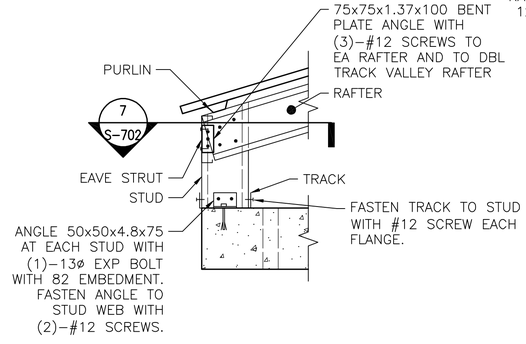

DETAIL

5 / S-702 SCALE: NTS

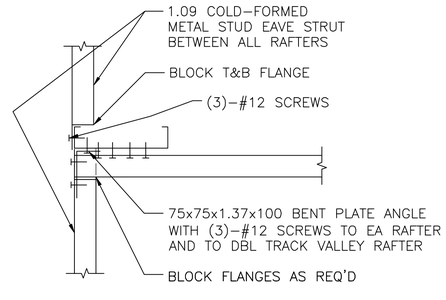

SECTION

7 / S-702 SCALE: NTS

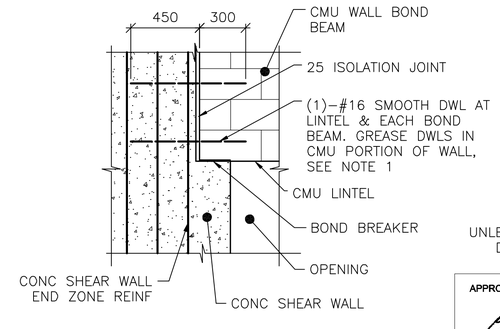

NOTE:
1. TIE SMOOTH DOWEL ROD TO SHEAR WALL END ZONE REINF FOR EACH BOND BEAM AND LINTEL.

SECTION

8 / S-702 SCALE: NTS

UNLESS OTHERWISE NOTED, LINEAR DIMENSIONS SHOWN ARE IN MILLIMETERS (mm)

APPROVED:

A/E DESIGNER OF RECORD

SEAL:

GEORGIA REGISTERED PROFESSIONAL ENGINEER No. 27141 1-29-10 CHRISTOPHER W. WHITMORE

US ARMY CORPS OF ENGINEERS
AFGHANISTAN ENGINEER DISTRICT

Mark	Description	Date	Appr.	Mark	Description	Date	Appr.

Date: 2/23/10 Rev: 0
Design file no.
Drawing code:
File name: AANBENBS-702TOT
Plot date: 2/23/2010
Plot scale: x:X

Designed by: KMP/MMY
Dwn by: RCG Ckd by: CWW
Reviewed by: LHM
Submitted by: BAKER

U.S. ARMY CORPS OF ENGINEERS
AFGHANISTAN ENGINEER DISTRICT
APO AE 96338

Michael Baker Jr., Inc
A unit of Michael Baker Corporation
Airside Business Park
100 Airside Drive
Moon Township, PA 15108
www.mbakercorp.com

AFGHAN NATIONAL ARMY
REGIONAL MILITARY TRAINING CENTER
STANDARD DESIGN

ENLISTED BARRACKS

TYPICAL DETAILS

Sheet reference number:
S-702

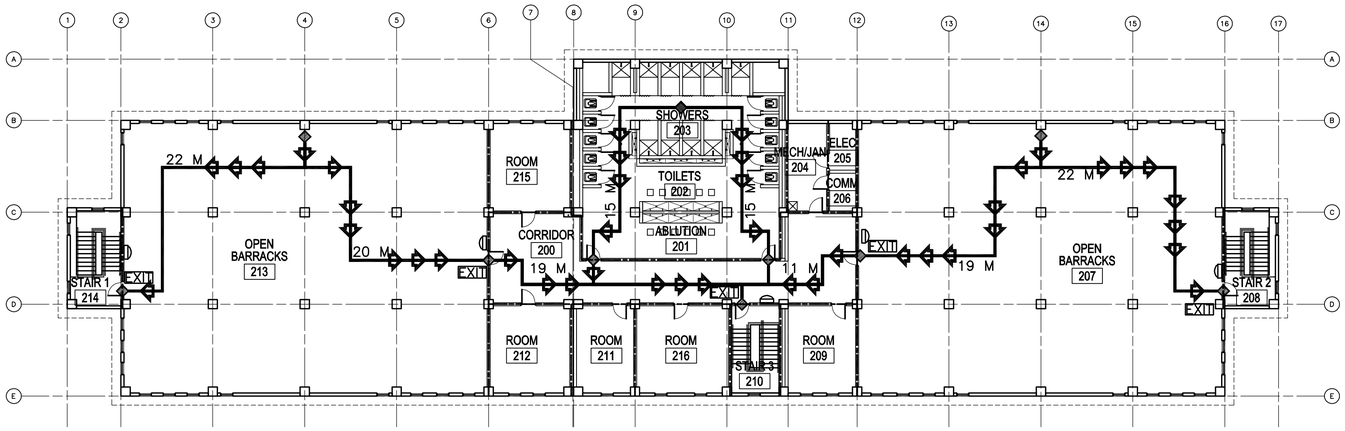

2 A-001 **SECOND FLOOR LIFE SAFETY PLAN**

SCALE: 1:200

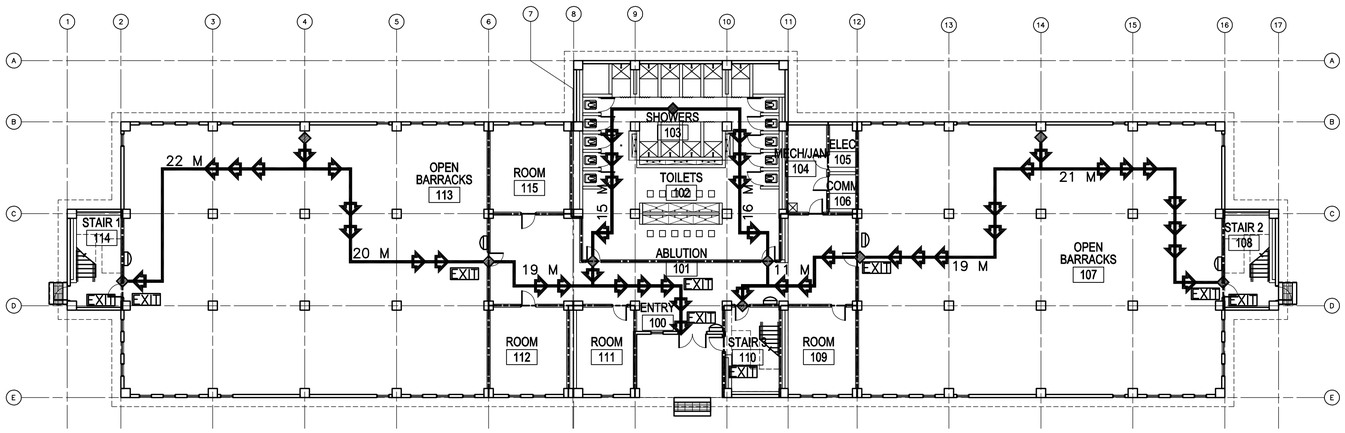

1 A-001 **FIRST FLOOR LIFE SAFETY PLAN**

SCALE: 1:200

CODE ANALYSIS:

1. REFERENCES:
   2006 INTERNATIONAL BUILDING CODE (2006 IBC)
   2006 LIFE SAFETY CODE (2006 NFPA 101)

2. IBC OCCUPANCY CLASSIFICATION:
   GROUP R–2 (NEW HOTELS AND DORMITORIES NFPA 101 6.1.8 AND CHAPTER 28)

3. TYPE OF CONSTRUCTION (IBC): TYPE I–B (UNPROTECTED/NONSPRINKLERED)

4. IBC TABLE 503: ALLOWABLE HEIGHT AND BUILDING AREAS:
   GROUP R–2
   ALLOWABLE AREA: UL SM
   ALLOWABLE HEIGHT: 11 STORIES (48 M)

   GROUP R–2
   PROPOSED AREA: 3574 SM
   PROPOSED HEIGHT: 2 STORY (<48 M)

   STORAGE ROOMS: 1 HOUR SEPARATION REQUIRED

5. IBC TABLE 601 & 602: FIRE RESISTANCE RATING REQUIREMENTS FOR BUILDING ELEMENTS FOR TYPE I–B

BUILDING ELEMENT	RATING (HOUR)	REFERENCE
STRUCTURAL FRAME (COLUMNS, GIRDERS & TRUSSES)	2	TABLE 601
BEARING WALLS		
EXTERIOR	2	TABLE 601
INTERIOR	2	TABLE 601
NONBEARING WALLS & PARTITIONS		
INTERIOR	0	TABLE 601
FLOOR CONSTRUCTION	2	TABLE 601
ROOF CONSTRUCTION	1	TABLE 601
EXTERIOR WALL	0	TABLE 602

6. IBC TABLE 803.5 – INTERIOR WALL AND CEILING FINISH REQUIREMENTS FOR R–2 OCCUPANCY/NONSPRINKLERED

GROUP	EXIT ENCLOSURES AND EXIT PASSAGEWAY	CORRIDORS	ROOMS AND ENCLOSED SPACES
R–2	B	B	C

7. NFPA 101 TABLE 7.3.1.2 – OCCUPANT LOAD
   HOTELS AND DORMITORIES = 18.6 SM/PERSON CALCULATED = 193 OCCUPANTS
   ACTUAL = 212 OCCUPANTS

8. NFPA 101 TABLE 7.3.3.1 – EGRESS CAPACITY
   HOTELS AND DORMITORIES = 5 MM PER OCCUPANT

   MINIMUM REQUIRED: 1060 MM (212 OCCUPANTS x 5 MM PER OCCUPANT)
   PROPOSED EGRESS CAPACITY: 4500 MM: (3) 900 MM DOORS, (1) 900 MM DOUBLE DOOR

9. NFPA 101 TABLE 7.3.3.1 – STAIR CAPACITY
   HOTELS AND DORMITORIES = 7.6 MM PER OCCUPANT
   MINIMUM REQUIRED: 821 MM (108 OCCUPANTS X 7.6 MM PER OCCUPANT)

   NFPA 101 TABLE 7.2.2.2.1.2 – MINIMUM STAIR WIDTH
   1120 MM, LESS 114 MM PROJECTION FOR HANDRAILS & GUARDRAILS EACH SIDE, 892 MM

   PROVIDED: 892 MM CLEAR WIDTH EACH STAIR

10. NFPA 101 PARAGRAPH 28.2.6 – EXIT ACCESS TRAVEL DISTANCE
    MAXIMUM ALLOWED WITHIN ROOM OR SUITE TO CORRIDOR: 23 METERS
    MAXIMUM ALLOWED CORRIDOR DOOR OF ANY ROOM OR SUITE TO NEAREST EXIT: 30 METERS

    PROPOSED WITHIN ROOM OR SUITE TO CORRIDOR: 22 METERS
    PROPOSED CORRIDOR DOOR OF ANY ROOM OR SUITE TO NEAREST EXIT: 20 METERS

11. NFPA 101 PARAGRAPH 28.3.6.1.2 – CORRIDOR FIRE–RESISTANCE RATING (HOUR)
    REQUIRED: WALLS NOT LESS THAN ONE HOUR FIRE RESISTANCE RATING
    PROPOSED: 1 HOUR WALLS

12. NFPA 101 PARAGRAPH 28.3.6.2 & TABLE 8.3.4.2 – DOORS INTO EXIT ACCESS CORRIDORS
    REQUIRED MINIMUM: 20 MINUTE FIRE PROTECTION RATING
    PROPOSED: 20 MINUTE DOORS

13. NFPA 101 PARAGRAPH 28.2.3.3 – CORRIDOR WIDTH
    REQUIRED: SUFFICIENT FOR OCCUPANT LOAD, BUT NOT LESS THAN 1120 MM
    CALCULATED WIDTH REQUIRED PER OCCUPANT LOAD: 1060 (212 OCCUPANTS X 5 MM)
    PROVIDED: 1700 MM

14. NFPA 101 PARAGRAPH 28.2.5.3 – COMMON PATH OF TRAVEL
    MAXIMUM ALLOWED: 10.7 METERS
    PROVIDED: 0 METERS

15. NFPA 101 PARAGRAPH 28.2.5.5 – DEAD END CORRIDORS
    PERMITTED: 10.7 METERS
    PROPOSED: NO DEAD END CORRIDORS

16. NFPA 101 PARAGRAPH 28.2.4.1 AND 7.4.1.1 – MINIMUM NUMBER OF EXITS
    REQUIRED: 2 MINIMUM
    PROPOSED: 4 EXITS

17. NFPA 101 PARAGRAPH 28.2.1.2 & 24.2 – SECONDARY MEANS OF ESCAPE
    ONE OF THE FOLLOWING REQUIRED:
    1)DOOR, SIMILAR TO PRIMARY, BUT REMOTE FROM PRIMARY
    2) OPERABLE WINDOW, 0.53 SM, NOT LESS THAN 510 MM WIDE, 610 MM HIGH, NOT MORE THAN 1120 MM AFF, WITHIN 6100 MM OF GRADE
    PROVIDED: OPERABLE WINDOWS, 0.93 SM EACH, MULTIPLE PER SLEEPING ROOM

18. NFPA 101 PARAGRAPH 24.2.2.4 – TWO PRIMARY MEANS OF ESCAPE
    AREA WITH DWELLING UNIT EXCEEDS 185 SM PER STORY
    ALLOWED AREA PER STORY WITHIN DWELLING UNIT: 185 SM
    PROVIDED AREA WITHIN DWELLING UNIT: 497 SM
    REQUIRED PRIMARY EXITS: 2
    PROVIDED PRIMARY EXITS: 2

19. NFPA 101 PARAGRAPH 28.3.7.1 – SUBDIVISION OF BUILDING SPACES – NONSPRINKLERED
    REQUIRED: EACH GUEST ROOM OR DORMITORY ROOM SHALL BE SEPARATED FROM OTHER GUEST OR DORMITORY ROOMS BY FIRE BARRIERS HAVING FIRE RESISTANCE RATING OF NOT LESS THAN 1 HOUR
    PROVIDED: 1 HOUR SEPARATION

20. HAZARDOUS AREA PROTECTION TABLE 28.3.2.2.2
    STORAGE ROOMS: 1 HOUR SEPARATION REQUIRED

21. NFPA 101 A.3.3.53 DORMITORY: ROOMS WITHIN DORMITORIES INTENDED FOR THE USE OF INDIVIDUALS FOR COMBINED LIVING AND SLEEPING PURPOSES ARE GUEST ROOMS OR GUEST SUITES. EXAMPLES OF DORMITORIES ARE COLLEGE DORMITORIES, FRATERNITY AND SORORITY HOUSES AND MILITARY BARRACKS.

22. NFPA 101 28.3.5.2 EXTINGUISHMENT REQUIREMENTS: AUTOMATIC SPRINKLER PROTECTION REQUIRED UNLESS SLEEPING ROOMS HAVE DOORS DIRECTLY TO OUTSIDE.
    DUE TO AUSTERE DESIGN CRITERIA, THE GOVERNMENT HAS A FIRE PROTECTION WAIVER FOR THIS REQUIREMENT.

LEGEND:

- DENOTES PATHS OF EXIT TRAVEL
- EXIT — DENOTES DOOR AS AN EMERGENCY EXIT
- DENOTES STARTING POINT FOR TRAVEL DISTANCE
- DENOTES FIRE EXTINGUISHER LOCATIONS
- (1) HOUR RATED WALL
- (2) HOUR RATED WALL
- (3) HOUR RATED WALL

LINEAR DIMENSIONS SHOWN ARE IN MILLIMETERS (MM), UNLESS OTHERWISE NOTED

0 4000 8000
SCALE: 1:200

APPROVED:

A/E DESIGNER OF RECORD

SEAL:

STATE OF SOUTH CAROLINA
KEVIN R. CHAFIN
N. Charleston, SC
6374
REGISTERED ARCHITECT

US ARMY CORPS OF ENGINEERS
AFGHANISTAN ENGINEER DISTRICT

Mark	Description	Date	Appr.	Mark	Description	Date	Appr.

Designed by: KRC
Dwn by: EBB
Ckd by: NLJ
Reviewed by: LHM
Submitted by: BAKER
Date: 2/23/10
Rev: 0
Design file no.
Drawing code:
File name: ANABENSA-A001LSP
Plot date: 2/23/2010
Plot scale: x:X

U.S. ARMY CORPS OF ENGINEERS
AFGHANISTAN ENGINEER DISTRICT
APO AE 96338

Michael Baker Jr., Inc
A unit of Michael Baker Corporation
Airside Business Park
100 Airside Drive
Moon Township, PA 15108
www.mbakercorp.com

AFGHAN NATIONAL ARMY
REGIONAL MILITARY TRAINING CENTER
STANDARD DESIGN

ENLISTED BARRACKS

LIFE SAFETY PLAN

Sheet reference number:
A–001

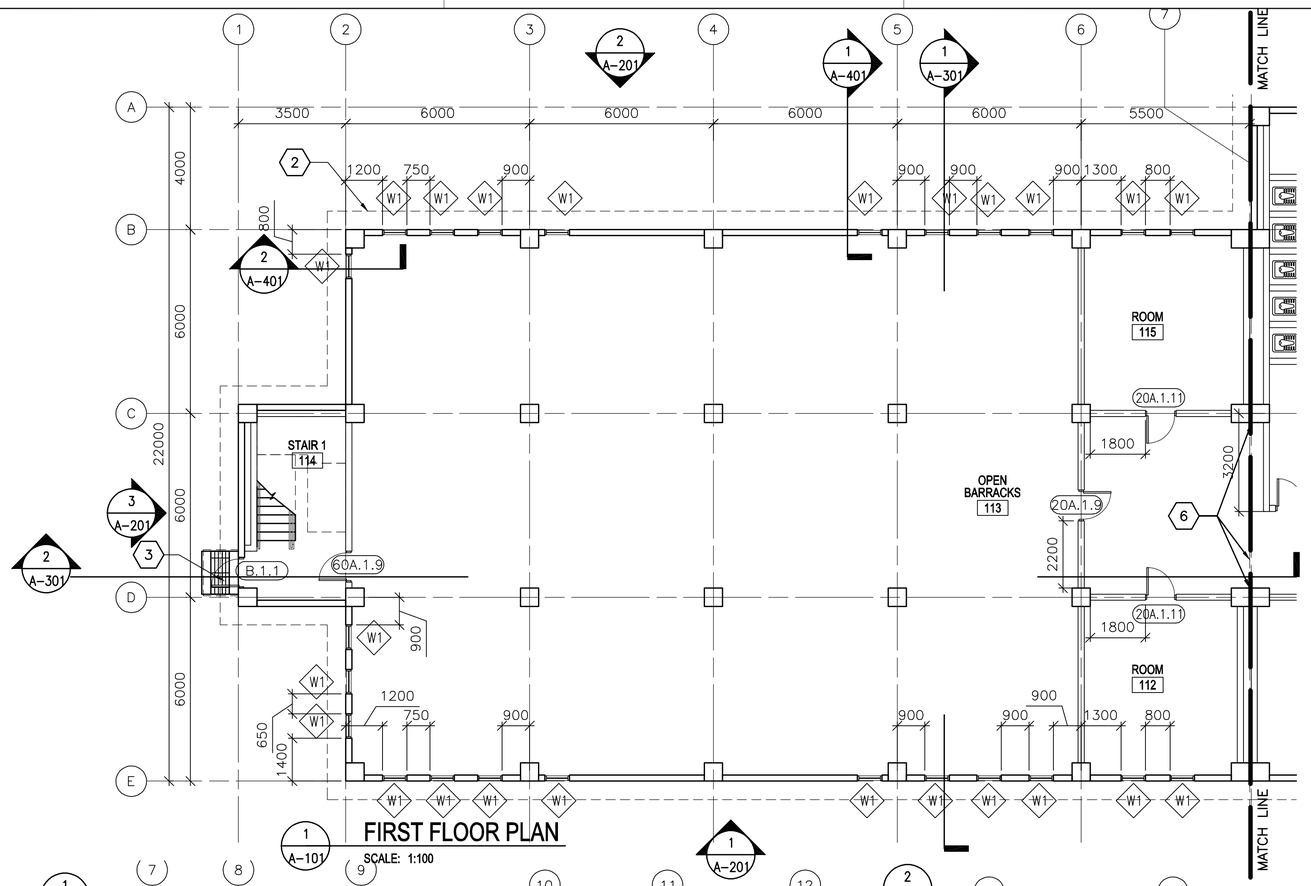

1 A-101 FIRST FLOOR PLAN
SCALE: 1:100

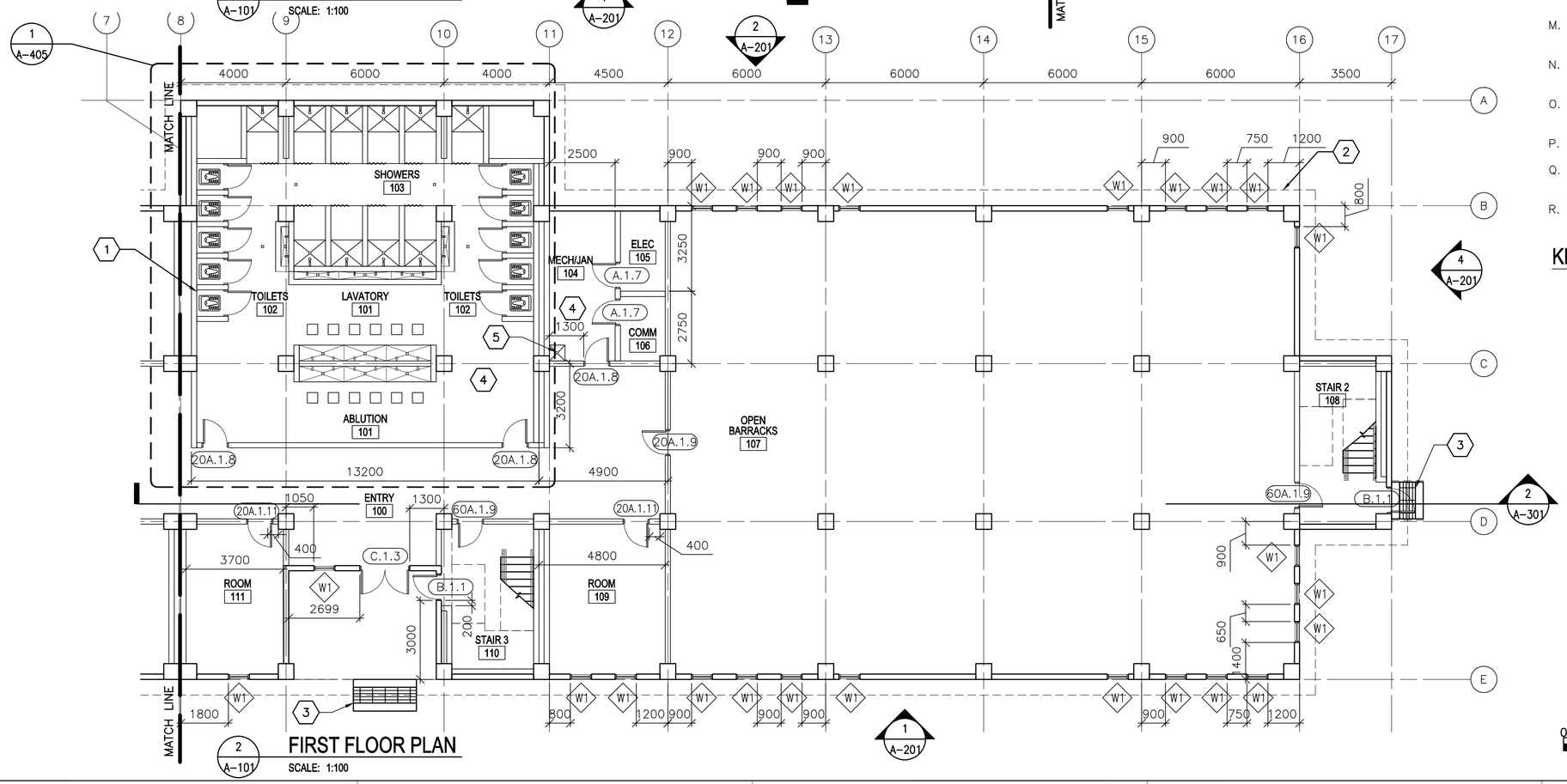

2 A-101 FIRST FLOOR PLAN
SCALE: 1:100

KEY NOTES:

1. TYPICAL TOILET STALL LAYOUT – SEE DETAIL 2/A-505.
2. LINE OF ROOF OVERHANG ABOVE.
3. CONCRETE STOOP WITH GRATE – SEE DETAIL 1/A-503.
4. TERRAZZO FLOOR TILE AND CERAMIC WALL TILE TO 2000 MM ABOVE FINISHED FLOOR UNLESS OTHERWISE NOTED.
5. RECESSED TROUGH – SEE DETAIL 7/A-505.
6. ISOLATION JOINT COVER – SEE SHEET A-507.

LEGEND:

- XXX — DOOR FRAME AND HARDWARE TYPE, SEE SHEET A-601
- A — WINDOW TYPE, SEE SHEET A-601
- X — KEY NOTE

ABBREVIATIONS:

ELEC	ELECTRICAL
MECH	MECHANICAL
JAN	JANITOR
CLOS	CLOSET
COMM	COMMUNICATIONS

GENERAL NOTES:

A. DIMENSIONS ARE SHOWN TO OUTER EDGE OF EXTERIOR STRUCTURAL COLUMNS, STRUCTURAL COLUMN GRID, EDGE OF INTERIOR PARTITIONS, EDGE OF WINDOW OPENINGS, AND TO HINGE SIDE OF DOOR FRAME OPENINGS.

B. HINGE SIDE OF OPENINGS FOR DOORS AND FRAMES SHALL BE LOCATED 200 MM FROM THE ADJACENT WALL OR COLUMN, UNLESS NOTED OTHERWISE.

C. INTERIOR PARTITIONS SHALL BE 200 MM CMU, UNLESS NOTED OTHERWISE.

D. COSMETIC REPAIR OF MINOR DEFECTS: REPAIR OR FILL MORTAR JOINTS AND MINOR DEFECTS, INCLUDING BUT NOT LIMITED TO SPALLS, IN ACCORDANCE WITH MANUFACTURER'S RECOMMENDATIONS AND PRIOR TO COATING APPLICATION. SURFACES TO BE PAINTED SHALL BE CLEAN AND FREE OF FOREIGN MATTER BEFORE APPLICATION OF PAINT. CLEANING SHALL BE SCHEDULED SO THAT DUST AND OTHER CONTAMINANTS WILL NOT FALL ON NEWLY PAINTED SURFACES.

E. CONCRETE, PLASTER AND MASONRY SURFACES SHALL BE ALLOWED TO CURE FOR AT LEAST 30 DAYS BEFORE PAINTING. CONCRETE SLABS-ON-GRADE SHALL BE ALLOWED TO CURE 90 DAYS BEFORE STAINING OR SEALING.

F. DO NOT USE PAINT MATERIALS CONTAINING LEAD CONTENT IN EXCESS OF 0.009 PERCENT OF THE WEIGHT OF THE TOTAL NONVOLATILE CONTENT OF THE PAINT OR THE WEIGHT OF THE DRIED PAINT FILM.

G. DO NOT USE ANY ASBESTOS CONTAINING MATERIALS (ACM) IN PROJECT. ACM IS DEFINED AS 1% OR MORE BY VOLUME.

H. DO NOT USE PAINT MATERIALS CONTAINING MERCURIAL FUNGICIDES.

I. FACTORY PRIMED METAL DOORS AND FRAMES SHALL RECEIVE TWO COATS OF PAINT.

J. FILL REMAINING SPACE AT PENETRATIONS IN FIRE-RATED FLOORS, PARTITIONS AND CEILINGS WITH APPROPRIATE FIRESTOPPING MATERIALS.

K. ALL CEILING FINISHES SHALL BE PAINTED PLASTER APPLIED TO STRUCTURE.

L. ALL WALL FINISHES SHALL BE PAINTED PLASTER APPLIED TO STRUCTURE UNLESS OTHERWISE NOTED.

M. ALL FLOOR FINISHES SHALL BE SEALED CONCRETE, UNLESS NOTED OTHERWISE.

N. PROVIDE TILE FINISHES AS INDICATED IN Details & KEY NOTES.

O. ALL DOOR, FRAME AND HARDWARE TYPES SHALL BE 20A.1.11 UNLESS NOTED OTHERWISE.

P. TOILET STALL DOORS SHALL BE F.2.12

Q. SHOWER STALL DOOR, FRAME AND HARDWARE TYPE SHALL BE E.1.12

R. PROVIDE POLISHED STAINLESS MIRROR 600 X 900 ABOVE EVERY LAVATORY FAUCET

KEY PLAN:

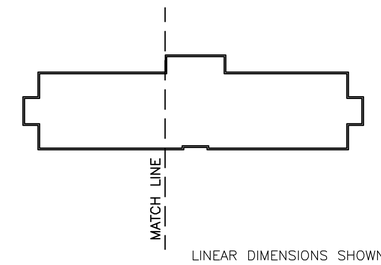

LINEAR DIMENSIONS SHOWN ARE IN MILLIMETERS (MM), UNLESS OTHERWISE NOTED

APPROVED:

A/E DESIGNER OF RECORD

SEAL:

STATE OF SOUTH CAROLINA
KEVIN R. CHAFIN
N. Charleston, SC
6374
REGISTERED ARCHITECT

0 2000 4000
SCALE: 1:100

US ARMY CORPS OF ENGINEERS
AFGHANISTAN ENGINEER DISTRICT

Mark	Description	Date	Appr.	Mark	Description	Date	Appr.

Rev: 0
Date: 2/23/10
Design file no.
Drawing code:
File name: AN4BENBA-101F1P
Plot date: 2/23/2010
Plot scale: X:X

Designed by: KRC
Dwn by: EBB
Ckd by: NLJ
Reviewed by: LHM
Submitted by: BAKER

U.S. ARMY CORPS OF ENGINEERS
AFGHANISTAN ENGINEER DISTRICT
APO AE 96338

Michael Baker Jr., Inc
A unit of Michael Baker Corporation
Airside Business Park
100 Airside Drive
Moon Township, PA 15108
www.mbakercorp.com

AFGHAN NATIONAL ARMY
REGIONAL MILITARY TRAINING CENTER
STANDARD DESIGN

ENLISTED BARRACKS

FIRST FLOOR PLAN

Sheet reference number:
A-101

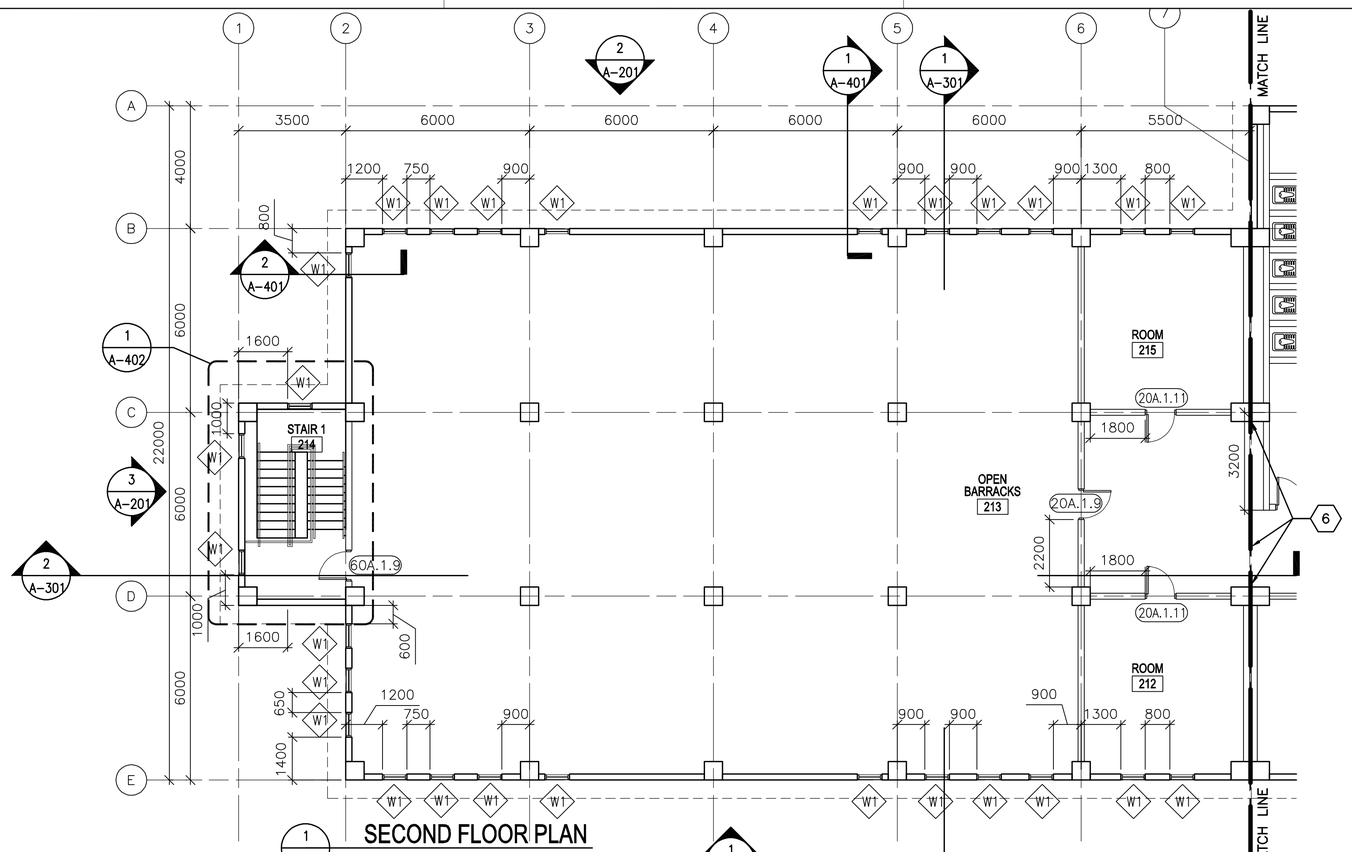

1 A-102 SECOND FLOOR PLAN
SCALE: 1:100

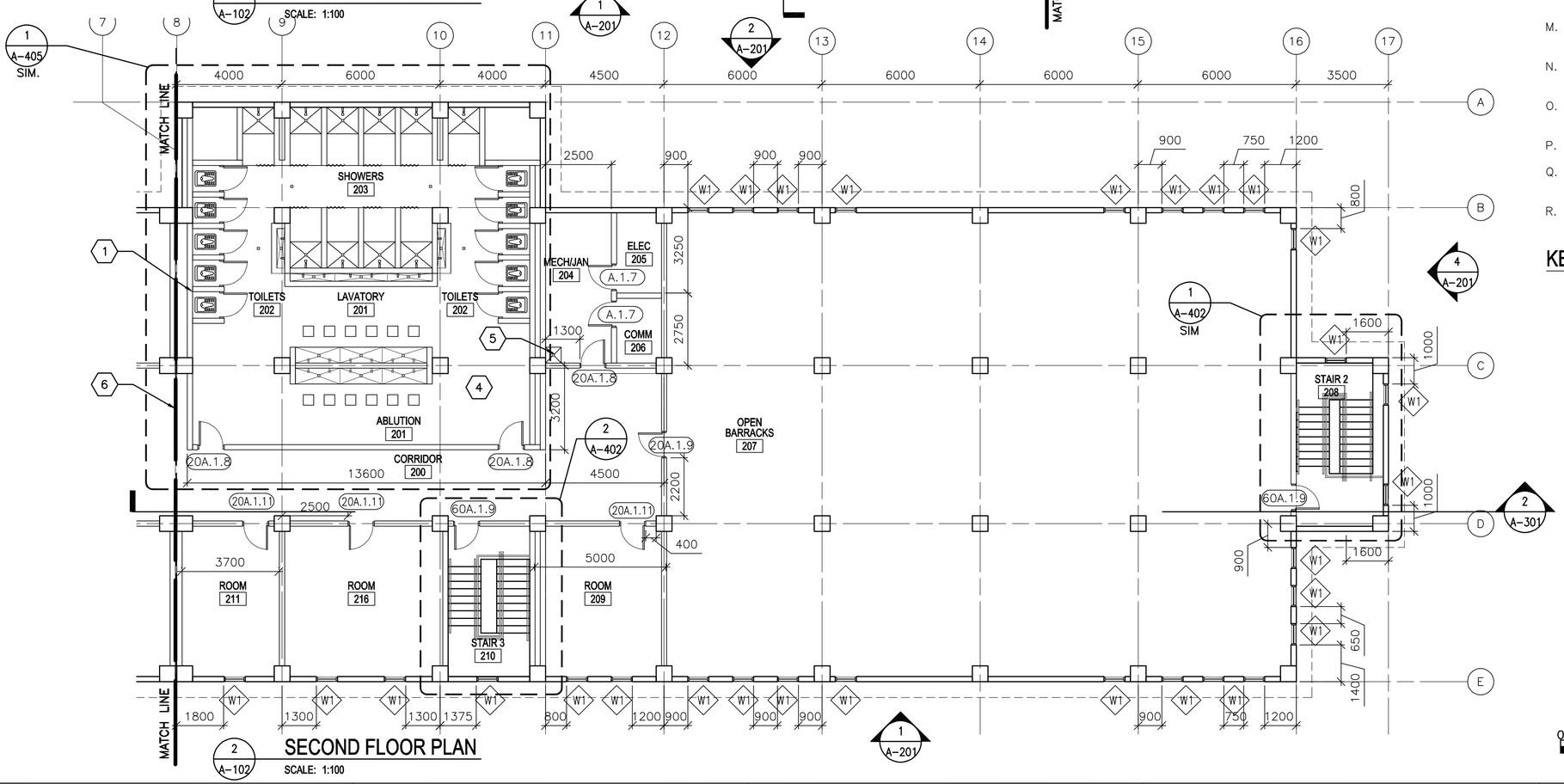

2 A-102 SECOND FLOOR PLAN
SCALE: 1:100

KEY NOTES:

1. TYPICAL TOILET STALL LAYOUT – SEE DETAIL 2/A–505.
2. LINE OF ROOF OVERHANG ABOVE.
3. NOT USED
4. TERRAZZO FLOOR TILE AND CERAMIC WALL TILE TO 2000 MM ABOVE FINISHED FLOOR.
5. 600 MM X 600 MM RECESSED TROUGH – SEE DETAIL 7/A–505.
6. ISOLATION JOINT COVER– SEE SHEET A–507.

LEGEND:

XXX	DOOR FRAME AND HARDWARE TYPE, SEE SHEET A–601
A	WINDOW TYPE, SEE SHEET A–601
X	KEY NOTE

ABBREVIATIONS:

ELEC	ELECTRICAL
MECH	MECHANICAL
JAN	JANITOR
CLOS	CLOSET
COMM	COMMUNICATIONS

GENERAL NOTES:

A. DIMENSIONS ARE SHOWN TO OUTER EDGE OF EXTERIOR STRUCTURAL COLUMNS, STRUCTURAL COLUMN GRID, EDGE OF INTERIOR PARTITIONS, EDGE OF WINDOW OPENINGS, AND TO HINGE SIDE OF DOOR FRAME OPENINGS.

B. HINGE SIDE OF OPENINGS FOR DOORS AND FRAMES SHALL BE LOCATED 200 MM FROM THE ADJACENT WALL OR COLUMN, UNLESS NOTED OTHERWISE.

C. INTERIOR PARTITIONS SHALL BE 200 MM CMU, UNLESS NOTED OTHERWISE.

D. COSMETIC REPAIR OF MINOR DEFECTS: REPAIR OR FILL MORTAR JOINTS AND MINOR DEFECTS, INCLUDING BUT NOT LIMITED TO SPALLS, IN ACCORDANCE WITH MANUFACTURER'S RECOMMENDATIONS AND PRIOR TO COATING APPLICATION. SURFACES TO BE PAINTED SHALL BE CLEAN AND FREE OF FOREIGN MATTER BEFORE APPLICATION OF PAINT. CLEANING SHALL BE SCHEDULED SO THAT DUST AND OTHER CONTAMINANTS WILL NOT FALL ON NEWLY PAINTED SURFACES.

E. CONCRETE, PLASTER AND MASONRY SURFACES SHALL BE ALLOWED TO CURE FOR AT LEAST 30 DAYS BEFORE PAINTING. CONCRETE SLABS–ON–GRADE SHALL BE ALLOWED TO CURE 90 DAYS BEFORE STAINING OR SEALING.

F. DO NOT USE PAINT MATERIALS CONTAINING LEAD CONTENT IN EXCESS OF 0.009 PERCENT OF THE WEIGHT OF THE TOTAL NONVOLATILE CONTENT OF THE PAINT OR THE WEIGHT OF THE DRIED PAINT FILM.

G. DO NOT USE ANY ASBESTOS CONTAINING MATERIALS (ACM) IN PROJECT. ACM IS DEFINED AS 1% OR MORE BY VOLUME.

H. DO NOT USE PAINT MATERIALS CONTAINING MERCURIAL FUNGICIDES.

I. FACTORY PRIMED METAL DOORS AND FRAMES SHALL RECEIVE TWO COATS OF PAINT.

J. FILL REMAINING SPACE AT PENETRATIONS IN FIRE–RATED FLOORS, PARTITIONS AND CEILINGS WITH APPROPRIATE FIRESTOPPING MATERIALS.

K. ALL CEILING FINISHES SHALL BE PAINTED PLASTER APPLIED TO STRUCTURE.

L. ALL WALL FINISHES SHALL BE PAINTED PLASTER APPLIED TO STRUCTURE UNLESS OTHERWISE NOTED.

M. ALL FLOOR FINISHES SHALL BE SEALED CONCRETE, UNLESS NOTED OTHERWISE.

N. PROVIDE TILE FINISHES AS INDICATED IN Details & KEY NOTES.

O. ALL DOOR, FRAME AND HARDWARE TYPES SHALL BE 20A.1.11 UNLESS NOTED OTHERWISE.

P. TOILET STALL DOORS SHALL BE F.2.12

Q. SHOWER STALL DOOR, FRAME AND HARDWARE TYPE SHALL BE E.1.12

R. PROVIDE POLISHED STAINLESS MIRROR 600 X 900 ABOVE EVERY LAVATORY FAUCET

KEY PLAN:

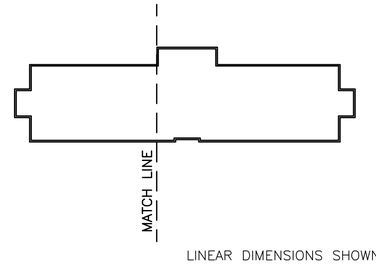

LINEAR DIMENSIONS SHOWN ARE IN MILLIMETERS (MM), UNLESS OTHERWISE NOTED

0 2000 4000
SCALE: 1:100

APPROVED:

A/E DESIGNER OF RECORD

SEAL:

STATE OF SOUTH CAROLINA
KEVIN R. CHAFIN
N. Charleston, SC
6374
REGISTERED ARCHITECT

US ARMY CORPS OF ENGINEERS
AFGHANISTAN ENGINEER DISTRICT

Mark	Description	Date	Appr.	Mark	Description	Date	Appr.

Rev: 0
Date: 2/23/10
Design file no.
Drawing code:
File name: AN4BESBA-102F2P
Plot date: 2/23/2010
Plot scale: X:X

Designed by: KRC
Dwn by: EBB
Ckd by: NLJ
Reviewed by: LHM
Submitted by: BAKER

U.S. ARMY CORPS OF ENGINEERS
AFGHANISTAN ENGINEER DISTRICT
APO AE 96338

Michael Baker Jr., Inc
A unit of Michael Baker Corporation
Airside Business Park
100 Airside Drive
Moon Township, PA 15108
www.mbakercorp.com

AFGHAN NATIONAL ARMY
REGIONAL MILITARY TRAINING CENTER
STANDARD DESIGN

ENLISTED BARRACKS

SECOND FLOOR PLAN

Sheet reference number:
A–102