AFGHAN NATIONAL ARMY

STANDARD BUILDING DESIGN

PERSONNEL BUNKER

100% FINAL DESIGN SUBMITTAL

SHEET INDEX

G–001 COVER SHEET

CIVIL

C–101 PLAN, ELEVATIONS, AND SECTION

US ARMY CORPS OF ENGINEERS
AFGHANISTAN ENGINEER DISTRICT

Mark	Description	Date	Appr.	Mark	Description	Date	Appr.

Designed by:
Dwn by: JDS
Ckd by: JDS
Reviewed by: LHM
Submitted by: BAKER
Date: 2/23/2010
Rev: 0
Design file no. G–001
Drawing code:
File name: ANAPNBK-G-001XXX
Plot date: 2/23/2010
Plot scale: 1:1

U.S. ARMY ENGINEER DISTRICT, AFGHANISTAN
CORPS OF ENGINEERS
APO AE 96338

Michael Baker Jr., Inc
A unit of Michael Baker Corporation
Airside Business Park
100 Airside Drive
Moon Township, PA 15108
www.mbakercorp.com

AFGHAN NATIONAL ARMY
REGIONAL MILITARY TRAINING CENTER
STANDARD DESIGN

PERSONNEL BUNKER

COVER SHEET

Sheet reference number:
G–001

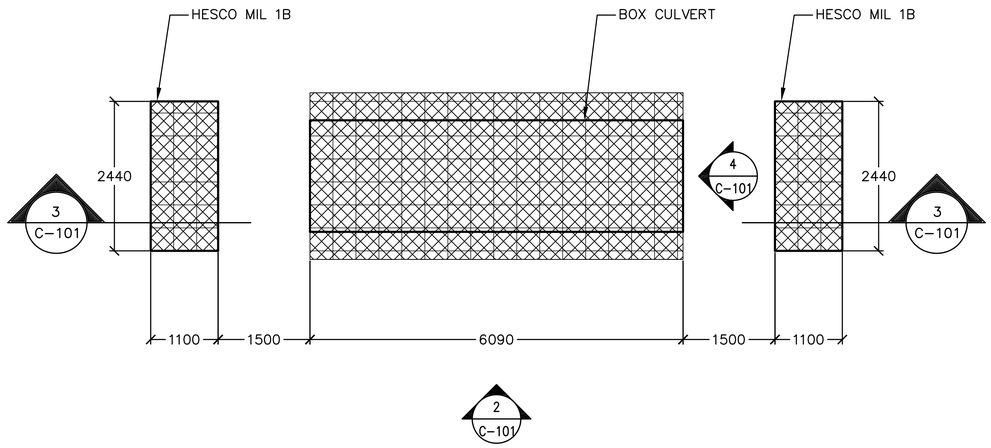

1 C-101 PLAN VIEW
SCALE: 1:50

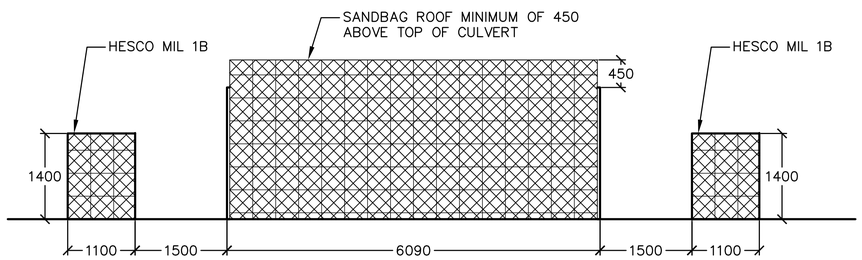

2 C-101 SIDE ELEVATION
SCALE: 1:50

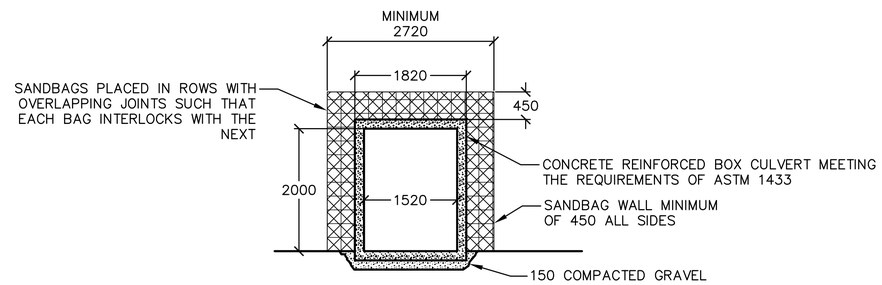

4 C-101 FRONT ELEVATION
SCALE: 1:50

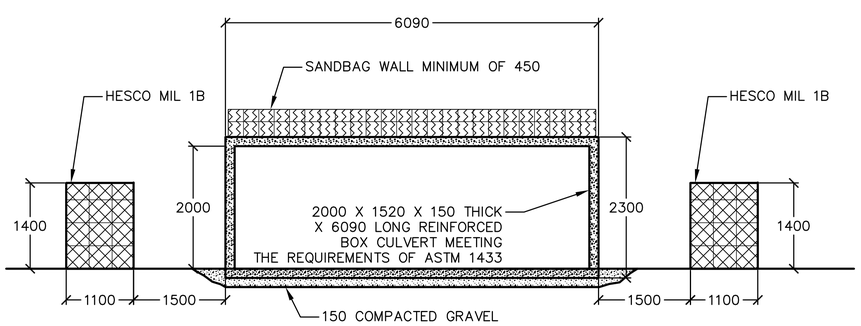

3 C-101 SECTION
SCALE: 1:50

NOTES:
1. PROVIDE CEMENTITIOUS COATING TO SANDBAG EXTERIOR CONSISTING OF A PORTLAND CEMENT SLURRY OR OTHER APPROVED COATING.
2. REINFORCED CONCRETE BOX CULVERT SHALL MEET THE REQUIREMENTS OF ASTM 1433.

NOTE: ALL DIMENSIONS ARE IN MILLIMETERS UNLESS OTHERWISE NOTED

0 500 1000 2000
SCALE: 1:50

APPROVED:
A/E DESIGNER OF RECORD

SEAL:
COMMONWEALTH OF PENNSYLVANIA
REGISTERED PROFESSIONAL
GREGORY P. HYNES
ENGINEER
044310-E

US ARMY CORPS OF ENGINEERS
AFGHANISTAN ENGINEER DISTRICT

Mark	Description	Date	Appr.	Mark	Description	Date	Appr.

Rev: 0
Date: 2/23/2010
Designed by: GPH
Dwn by: JDS
Ckd by: JMB
Reviewed by: LHM
Submitted by: BAKER
Design file no. C-101
Drawing code:
File name: ANAPNBK-C-101XXX
Plot date: 2/23/2010
Plot scale: 1:50

U.S. ARMY ENGINEER DISTRICT, AFGHANISTAN
CORPS OF ENGINEERS
APO AE 96338

Michael Baker Jr., Inc
A unit of Michael Baker Corporation
Airside Business Park
100 Airside Drive
Moon Township, PA 15108
www.mbakercorp.com

AFGHAN NATIONAL ARMY
REGIONAL MILITARY TRAINING CENTER
STANDARD DESIGN

PERSONNEL BUNKER
PLAN, ELEVATIONS, AND SECTION

Sheet reference number:
C-101