AFGHAN NATIONAL ARMY

STANDARD BUILDING DESIGN

WEAPONS STORAGE (ASP)

100% FINAL DESIGN SUBMITTAL

SHEET INDEX

G-001 COVER SHEET

STRUCTURAL

S-001 GENERAL NOTES & DESIGN CRITERIA
S-101 FOUNDATION/SLAB & ROOF FRAMING PLAN
S-401 BUILDING SECTIONS
S-501 FOUNDATION & FRAMING SECTIONS
S-502 BEAM & COLUMN DETAILS
S-503 BEAM & COLUMN DETAILS
S-601 SCHEDULES
S-701 TYPICAL DETAILS
S-702 TYPICAL DETAILS

ARCHITECTURAL

A-001 LIFE SAFETY PLAN
A-101 FLOOR PLAN
A-102 ROOF PLAN
A-201 ELEVATIONS
A-301 BUILDING SECTIONS
A-401 WALL SECTIONS
A-501 EXTERIOR DETAILS
A-502 HEAD, JAMB, & SILL DETAILS
A-503 STOOP DETAILS
A-601 WINDOW & DOOR SCHEDULES

MECHANICAL

M-101 HVAC FLOOR PLAN, SCHEDULES, & DETAILS

ELECTRICAL

E-001 ELECTRICAL SYMBOLS & ABBREVIATIONS
E-101 ELECTRICAL LIGHTING PLAN
E-102 ELECTRICAL POWER & SYSTEMS PLAN
E-103 ELECTRICAL LIGHTNING PROTECTION
E-501 ELECTRICAL DETAILS
E-502 ELECTRICAL DETAILS
E-601 ELECTRICAL LIGHT FIXTURE SCHEDULES
E-602 ELECTRICAL PANEL SCHEDULES

US ARMY CORPS OF ENGINEERS
AFGHANISTAN ENGINEER DISTRICT

Mark	Description	Date	Appr.	Mark	Description	Date	Appr.

U.S. ARMY CORPS OF ENGINEERS
AFGHANISTAN ENGINEER DISTRICT
APO AE 96338

Michael Baker Jr., Inc.
A unit of Michael Baker Corporation
Airside Business Park
100 Airside Drive
Moon Township, PA 15108
www.mbakercorp.com

Designed by: KMP/MMY
Dwn by: RCG
Ckd by: CWW
Reviewed by: LHM
Submitted by: BAKER
Date: 2/23/10
Rev: 0
Design file no.
Drawing code:
File name: ANASPIS-001CS
Plot date: 2/23/2010
Plot scale: X:X

AFGHAN NATIONAL ARMY
REGIONAL MILITARY TRAINING CENTER
STANDARD DESIGN

WEAPONS STORAGE (ASP)

COVER SHEET

Sheet reference number:
G-001

STRUCTURAL ABBREVIATIONS:

ACI	AMERICAN CONCRETE INSTITUTE
ADD'L	ADDITIONAL
AISC	AMERICAN INSTITUTE OF STEEL CONSTRUCTION
AISI	AMERICAN IRON AND STEEL INSTITUTE
ASTM	AMERICAN SOCIETY FOR TESTING AND MATERIALS
ARCH	ARCHITECTURAL
B	BOTTOM
BLDG	BUILDING
BOTT	BOTTOM
℄	CENTER LINE
CFMRF	COLD FORM METAL ROOF FRAME
CFMF	COLD FORM METAL FRAME
CFS	COLD FORMED STEEL
CIP	CAST-IN-PLACE
CIPL	CAST-IN-PLACE LINTEL
CJ	CONTROL JOINT
CLR	CLEAR
CMU	CONCRETE MASONRY UNIT
COEFF	COEFFICIENT
COL	COLUMN
CONC	CONCRETE
CONT	CONTINUOUS
COORD	COORDINATE
CRSI	CONCRETE REINFORCING STEEL INSTITUTE
CSJ	CONSTRUCTION JOINT
DIA	DIAMETER
DIAG	DIAGONAL
DIM	DIMENSION
DWG	DRAWING
DWL	DOWEL
EA	EACH
EF	EACH FACE
ELEC	ELECTRICAL
ELEV	ELEVATION
EMBED	EMBEDMENT
EQUIV	EQUIVALENT
ETC	ET CETERA
EW	EACH WAY
EXP	EXPANSION
EXT	EXTERIOR
FTG	FOOTING
GA	GAUGE
GB	GRADE BEAM
HORIZ	HORIZONTAL
h	HOUR
HRS	HOURS
IBC	INTERNATIONAL BUILDING CODE
INFO	INFORMATION
INT	INTERIOR
kg	KILOGRAM
km	KILOMETER
kN	KILONEWTON
kPa	KILOPASCAL
L#	ANGLE (# INDICATES SIZE)
LONG	LONGITUDINAL
LLV	LONG LEG VERTICAL
m	METER
MAX	MAXIMUM
MECH	MECHANICAL
MFG	MANUFACTURER
MID	MIDDLE
MIN	MINIMUM
MISC	MISCELLANEOUS
mm	MILLIMETER
MPa	MEGAPASCAL
MTL	METAL
MWFRS	MAIN WIND FORCE RESISTING SYSTEM
N	NEWTON
N	NORTH
N/A	NOT APPLICABLE
#	NUMBER SYMBOL FOR REBAR SIZE
NTS	NOT TO SCALE
OC	ON CENTER
OPNG	OPENING
ℙL or PL	PLATE
PRE-ENG	PRE-ENGINEERED
RB	ROOF BEAM
REINF	REINFORCED
REQ'D	REQUIRED
SIM	SIMILAR
SPECS	SPECIFICATIONS
STD	STANDARD
STRUCT	STRUCTURAL
SW	SHEAR WALL
T	TOP
T/	TOP OF
T/ELEV	TOP ELEVATION
T/SLAB	TOP OF SLAB
T&B	TOP AND BOTTOM
THK	THICK
TYP	TYPICAL
UFC	UNIFIED FACILITIES CRITERIA
UON	UNLESS OTHERWISE NOTED
VERT	VERTICAL
W	WIDTH
W/	WITH

1.0 GENERAL NOTES:

1.1 THIS PROJECT HAS BEEN DESIGNED FOR THE WEIGHTS AND MATERIALS INDICATED ON THE SHEETS AND FOR THE LIVE LOADS INDICATED IN THE DESIGN DATA. IT IS THE CONTRACTOR'S RESPONSIBILITY TO DETERMINE ALLOWABLE CONSTRUCTION LOADS AND TO PROVIDE PROPER DESIGN AND CONSTRUCTION OF FALSEWORK, FORMWORK, STAGING, BRACING, SHEETING AND SHORING, ETC.

1.1 COORDINATE THESE SHEETS WITH THE ARCHITECTURAL, MECHANICAL, ELECTRICAL, PLUMBING, AND CIVIL SHEETS. ALL DIMENSIONS SHOWN ON THE SHEETS ARE MILLIMETERS UNLESS NOTED OTHERWISE.

1.2 THE CONTRACTOR SHALL VERIFY AND COORDINATE ALL FLOOR AND ROOF OPENING SIZES AND LOCATIONS, EQUIPMENT PAD SIZES AND LOCATIONS, ANCHOR BOLT LAYOUTS, ETC WITH EQUIPMENT SELECTED. THE CONTRACTOR SHALL MAKE ANY REQUIRED MODIFICATIONS AT NO ADDITIONAL COST.

1.3 THE CONTRACTOR SHALL REFER TO THE ARCHITECTURAL, MECHANICAL, ELECTRICAL AND PLUMBING SHEETS FOR SLEEVES, CURBS, INSERTS OR OPENINGS, ETC. NOT HEREIN INDICATED.

1.4 WORK NOT INCLUDED ON THE SHEETS BUT IMPLIED TO BE SIMILAR TO THAT SHOWN AT CORRESPONDING PLACES ELSEWHERE ON THE SHEETS SHALL BE REPEATED.

1.5 IN CASE OF CONFLICT BETWEEN THE NOTES, DETAILS AND SPECIFICATIONS THE MOST RIGID REQUIREMENTS SHALL GOVERN.

1.6 SEE ARCHITECTURAL SHEETS FOR LOCATIONS OF MASONRY AND NON-LOAD BEARING PARTITIONS. PROVIDE COMPRESSIBLE FIRESAFING AT TOP OF WALL AS REQUIRED BY ARCHITECTURAL SHEETS.

1.7 COORDINATE FINISHED FLOOR DATUM ELEVATION 0.0m WITH THE CIVIL SHEETS.

2.0 FOUNDATION NOTES

2.1 THE GEOTECHNICAL ANALYSIS FOR THIS PROJECT IS THE RESPONSIBILITY OF THE CONTRACTOR AWARDED THE WORK. AN ASSUMED ALLOWABLE SOIL BEARING VALUE OF 72 kPa HAS BEEN USED IN THE STRUCTURAL ANALYSIS OF THE BUILDING HEREIN AND SHALL BE CONFIRMED AND VERIFIED AS PART OF THE GEOTECHNICAL INVESTIGATION. VALUES WHICH DO NOT MEET THE REQUIREMENTS INDICATED ON THE BASIS OF DESIGN SHEET SHALL BE IMMEDIATELY BROUGHT TO THE ATTENTION OF THE CONTRACTING OFFICER FOR CONSIDERATION AND DETERMINATION ON THE NEXT APPROPRIATE COURSE OF ACTION.

2.2 SEE THE SPECIFICATION FOR ADDITIONAL REQUIREMENTS TO THOSE OUTLINED IN THE GEOTECHNICAL INVESTIGATION FOR EXCAVATION AND PREPARATION OF THE FOUNDATION AND THE SLAB ON GRADE SUBGRADE INCLUDING COMPACTION PROCEDURES.

2.3 EXCAVATIONS FOR FOOTINGS SHALL HAVE THE SIDES AND BOTTOMS TEMPORARILY LINED WITH 0.25mm POLYETHYLENE IF PLACEMENT OF CONCRETE DOES NOT OCCUR WITHIN 24 HRS OF THE EXCAVATION OF THE FOOTING.

2.4 FOUNDATION CONDITIONS NOTED DURING CONSTRUCTION WHICH DIFFER FROM THOSE DESCRIBED IN THE GEOTECHNICAL REPORT SHALL BE REPORTED TO THE GENERAL CONTRACTOR BEFORE FURTHER CONSTRUCTION IS ATTEMPTED. SEE PROJECT SPECIFICATIONS.

2.5 NO FOOTINGS OR SLABS SHALL BE POURED INTO OR AGAINST SUBGRADE CONTAINING FREE WATER, FROST, ICE OR LOOSE MATERIAL. FROST DEPTH ASSUMED TO BE 800mm.

2.6 ALL SLAB-ON-GRADE, TRENCH BOTTOMS AND OTHER ON-GRADE INTERIOR HORIZONTAL SURFACES SHALL BE PLACED OVER A 0.25mm POLYETHYLENE VAPOR RETARDER OVER A 100mm #57 STONE WATER CAPILLARY BARRIER PLACED ON SUBGRADE PROPERLY PREPARED IN ACCORDANCE WITH THE CONTRACT SPECIFICATIONS. (UON)

2.7 PRIOR TO START OF FOUNDATION OR SLAB-ON-GRADE CONSTRUCTION, EXISTING SUBGRADES SHALL BE COMPACTED TO MINIMUM OF 95% MAXIMUM DRY DENSITY OBTAINED THRU ASTM D 1557 MODIFIED PROCTOR TESTING.

2.8 SEE PLUMBING, ELECTRICAL & CIVIL SHEETS FOR REQUIRED UNDERSLAB UTILITIES.

2.9 SEE ARCHITECTURAL SHEETS FOR ALL WATERPROOFING DETAILS AND MATERIALS.

2.10 IF UNDERMINING OF FOOTINGS OCCURS, FILL VOIDS WITH 18 MPa CONCRETE. DO NOT ATTEMPT TO REPLACE AND RE-COMPACT SOIL.

3.0 CONCRETE

3.1 CONCRETE SHALL HAVE THE UNIT WEIGHT OF 2400 kg/m^3 AND A MINIMUM COMPRESSIVE STRENGTH (f'c) OF 28 MPa AT 28 DAYS. ALL CONCRETE SHALL HAVE A WATER-CEMENT RATIO OF 0.45. SEE SPECIFICATIONS FOR ADDITIONAL INFORMATION. ENTRAIN AIR TO PRODUCE TOTAL AIR CONTENT ACCORDING TO THE SPECIFICATIONS FOR CONCRETE EXPOSED TO FREEZING TEMPERATURES (EXTERIOR FOOTINGS, SLAB TURNDOWNS, EXTERIOR SLABS AND SLABS-ON-GRADE, EXTERIOR RETAINING WALLS, AND EXTERIOR GRADE BEAMS.)

3.2 NO CALCIUM CHLORIDE SHALL BE USED IN ANY CONCRETE.

3.3 MIXING, TRANSPORTING AND PLACING OF CONCRETE SHALL CONFORM TO ACI 301M-05.

3.4 ALL CONCRETE WORK SHALL CONFORM TO THE REQUIREMENTS OF THE AMERICAN CONCRETE INSTITUTE (ACI) 318M MANUAL (metric), "BUILDING CODE REQUIREMENTS FOR REINFORCED CONCRETE", AND REQUIREMENTS OUTLINED IN THE CONTRACT SPECIFICATIONS. WHEN THERE IS A CONFLICT BETWEEN ACI AND THE SPECIFICATIONS, THE MORE STRINGENT SHALL GOVERN.

3.5 CHAMFER ALL EXPOSED EXTERNAL CORNERS OF CONCRETE WITH 20mm x45 DEGREE CHAMFER UON.

3.6 CONCRETE REINFORCEMENT BARS SHALL CONFORM TO ASTM A615M-96a, GRADE 420 MPa, REINFORCING BARS SHALL NOT BE TACK WELDED, WELDED, HEATED OR CUT, UNLESS INDICATED ON THE CONTRACT DOCUMENTS. ALL LAP SPLICES SHALL BE CLASS "B" UON.

3.7 HORIZONTAL FOOTING AND HORIZONTAL WALL REINFORCEMENT SHALL BE CONTINUOUS AND SHALL HAVE 90 DEGREE BENDS AND EXTENSIONS, OR CORNER BARS OF EQUIVALENT SIZE LAPPED WITH A CLASS B TENSION SPLICE AT CORNERS AND INTERSECTIONS. TOP BAR CRITERIA SHALL APPLY IF 300mm OR MORE OF FRESH CONCRETE IS PLACED BELOW BAR.

3.8 SLABS-ON-GRADE SHALL HAVE CONSTRUCTION JOINTS OR CRACK CONTROL JOINTS AS SHOWN ON THE DRAWINGS. CONSTRUCTION JOINTS CAN BE USED AT CONTROL JOINT LOCATIONS AT CONTRACTORS OPTION. SEE SLAB PLANS & JOINT DETAILS FOR ADDITIONAL INFORMATION. FOR AREAS NOT SHOWN ON DWGS, THE MAXIMUM SPACING OF CONSTRUCTION/ CRACK CONTROL JOINTS SHALL BE 4800mm

3.9 ALL CONCRETE REINFORCEMENT SHALL BE DETAILED, FABRICATED, LABELED, SUPPORTED, AND SPACED IN FORMS AND SECURED IN PLACE IN ACCORDANCE WITH THE PROCEDURES AND REQUIREMENTS OUTLINED IN THE LATEST EDITION OF THE "BUILDING CODE REQUIREMENTS FOR REINFORCED CONCRETE", ACI 318M, AND THE "MANUAL OF STANDARD PRACTICE FOR DETAILING REINFORCED CONCRETE STRUCTURES", ACI 315M, LATEST EDITION. BASED ON IN COUNTRY REINFORCEMENT AVAILABILITY, IT IS THE CONTRACTOR'S OPTION TO ROUND DESIGNATED ODD NUMBERED REINFORCEMENT SIZES UP (1) ONE BAR SIZE.

3.10 ALL DOWELS SHALL MATCH SIZE AND NUMBER OF MAIN REINFORCING, UNLESS NOTED OTHERWISE ON THE SHEETS.

3.11 ADDITIONAL BARS SHALL BE PROVIDED AROUND ALL FLOOR AND WALL OPENINGS AS SHOWN ON THE SHEETS.

3.12 SEE ARCHITECTURAL SHEETS FOR TYPE AND LOCATION OF ALL FLOOR FINISHES.

3.13 THE CONTRACTOR SHALL COORDINATE ADDITIONAL WALL/SLAB OPENINGS NOT SHOWN ON STRUCTURAL SHEETS. SEE MECHANICAL, ELECTRICAL, PLUMBING AND CIVIL SHEETS.

3.14 UNLESS NOTED OTHERWISE, ALL CURBS SHALL BE REINFORCED WITH AT LEAST (1)-#13 CONTINUOUS AND #13 AT 300mm O.C. DOWELS TO STRUCTURE BELOW.

3.15 THE CONTRACTOR SHALL VERIFY ALL OPENINGS, PAD SIZES, AND ANCHOR BOLTS WITH EQUIPMENT SELECTED.

3.16 FOR ALL WALLS & PIERS, PROVIDE DOWELS INTO FOOTING AT EACH VERT REINF BAR, UON DOWEL SIZE SHALL BE SAME AS VERT REINF.

3.17 PROVIDE CONCRETE POUR STOPS OR FORMED AS REQUIRED FOR INSTALLATION OF ALL CONCRETE WORK.

3.18 PROVIDE ADDITIONAL (2)-#13 x 600mm REINFORCING BARS IN SLAB-ON GRADE AT ALL RE-ENTRANT CORNERS. PLACE BARS AT MID-DEPTH OF SLAB WITH A CLEARANCE OF 50mm FROM CORNER UON.

3.19 COLD-WEATHER PLACEMENT: COMPLY WITH ACI 306.1 AND AS FOLLOWS. PROTECT CONCRETE WORK FROM PHYSICAL DAMAGE OR REDUCED STRENGTH THAT COULD BE CAUSED BY FROST, FREEZING ACTIONS, OR LOW TEMPERATURES. SUBMIT A COLD WEATHER CONCRETING PLAN FOR APPROVAL.

3.20 PROVIDE BONDING COMPOUND PER ASTM C 1059-99: SPECIFICATION FOR LATEX AGENTS FOR BONDING FRESH CONCRETE (GROUT) TO HARDENED CONCRETE.

3.21 THE FORMED SURFACES FOR REINFORCED CONCRETE SHALL ACHIEVE A "CLASS A" FINISH WHEN RECEIVING PAINT OR A "CLASS B" FINISH WHEN RECEIVING PLASTER OR TILE AS PER SPECIFICATION SECTION 03 31 00 CAST-IN-PLACE STRUCTURAL CONCRETE.

3.22 AT INTERSECTING GRADE BEAMS AND SHEAR WALLS, PROVIDE CORNER BARS AT INTERSECTIONS WITH SAME QUANTITY, SIZE AND SPACING AS HORIZONTAL BARS WITH LEG LENGTH = 50db.

3.23 REFER TO S-800 SERIES REINFORCING BAR PLACEMENT DRAWINGS DEFINING LENGTHS, BENDS, AND SPACINGS FOR ALL STRUCTURAL CONCRETE. THE S-800 SERIES DRAWING ARE BASED ON THE S-400, S-500, S-600, AND S-700 SERIES DRAWING SCHEDULES, DETAILS, AND DIAGRAMS.

4.0 CONCRETE MASONRY

4.1 MASONRY CONSTRUCTION SHALL CONFORM TO SPECIFICATION FOR MASONRY STRUCTURES (ACI 530.1) UON.

4.2 STRENGTH OF MASONRY MATERIALS SHALL BE AS FOLLOWS:

a. CONCRETE MASONRY UNITS SHALL BE NORMAL WEIGHT, GRADE N, TYPE 1, CONFORMING TO ASTM C-90 AND HAVE A MINIMUM COMPRESSIVE STRENGTH OF 10.4 MPa ON THE NET AREA.
b. MORTAR SHALL CONFORM TO ASTM C-270 TYPE S.
c. GROUT FOR MASONRY SHALL BE NORMAL WEIGHT AND HAVE A MINIMUM COMPRESSIVE STRENGTH OF 14 MPa AT 28 DAYS. GROUT SHALL CONFORM TO ASTM C476M. GROUT LIFTS SHALL NOT EXCEED 1,400mm.
d. REINFORCED MASONRY SHALL HAVE A STRENGTH F'm = 10 MPa. (F'm IS THE COMPRESSIVE STRENGTH OF THE MASONRY AT 28 DAYS AS DETERMINED BY PRISM TESTS).

4.3 ALL VERTICAL REINFORCEMENT FOR CONCRETE MASONRY SHALL BE ASTM A615M-96a, GRADE 420 MPa. ALL SPLICES SHALL BE LAPPED 48 BAR DIAMETERS MINIMUM.

4.4 BOND BEAMS SHALL BE SPACED AT 1200mm OC VERTICALLY. BOND BEAM REINFORCING SHALL BE CONTINUOUS AND PROVIDED AT WALL INTERSECTIONS AND WALL CORNERS (REFERENCE CONCRETE MASONRY NOTE 4.11). ALL BOND BEAM REINFORCING SHALL BE CONTINUOUS AND HAVE STANDARD ACI HOOKS AT EACH END. PROVIDE STANDARD BAR SPLICES AS SPECIFIED. AS AN ALTERNATE TO CMU BOND BEAMS, IT IS THE CONTRACTOR'S OPTION TO PROVIDE 200mm x 200mm CONTINUOUS CAST-IN-PLACE CONCRETE BOND BEAMS WITH (2)-#16 IN LIEU OF CMU BOND BEAMS INDICATED ON THE DRAWINGS.

4.5 SEE TYPICAL DETAILS FOR MINIMUM REINFORCEMENT REQUIREMENTS FOR CMU WALLS. PROVIDE STANDARD BAR SPLICES AS SPECIFIED. ALL VERTICAL REINFORCEMENT EXTENDS FULL HEIGHT OF WALL.

4.6 CMU CELLS THAT REQUIRE VERTICAL REINFORCING BARS AS INDICATED ON THE CONTRACT DRAWINGS AND/OR SPECS SHALL HAVE REINF BARS PLACED IN CENTERS OF CMU CELLS AND CONTINUOUSLY GROUTED UON.

4.7 ALL CMU CELLS, OPEN CAVITIES, AND AIR SPACES OF ALL EXTERIOR WALLS SHALL BE GROUTED TO STOP FRAGMENTS FROM MORTAR BLAST.

4.8 CONTRACTOR SHALL COORDINATE LOCATION OF ALL OPENINGS SEE ARCH, MECH, ELEC, AND PLUMBING SHEETS FOR SIZE AND LOCATION OF OPENINGS.

4.9 MASONRY WALLS SHALL NOT BE BACK FILLED PRIOR TO THE MORTAR AND GROUT ATTAINING THEIR RESPECTIVE MAXIMUM DESIGN STRENGTHS PER SPECIFICATIONS.

4.10 PROVIDE GALVANIZED MORTAR/GROUT SCREEN W/ 3mm MESH WHERE CELLS BELOW ARE NOT GROUTED.

4.11 AT INTERSECTING BOND BEAMS, PROVIDE CORNER BAR FOR EACH HORIZONTAL BAR IN BOND BEAMS AT INTERSECTING WALLS. USE SAME SIZE AND SPACING AS HORIZONTAL BARS WITH LEG LENGTH = 50db.

4.12 THE ALTERNATE TOP OF CMU WALL BRACING DETAIL(S) SHOWN ON S-701 CAN BE UTILIZED AT THE CONTRACTOR'S OPTION IN PLACE OF THE "SLEEVED DOWEL" WALL CONNECTIONS DEPICTED ON S-400 AND S-500 SERIES DRAWINGS. IN ADDITION, ALTERNATE DETAIL(S) SHOW CAST-IN-PLACE WALL BOND BEAMS THAT CAN BE UTILIZED AT THE CONTRACTOR'S OPTION IN PLACE OF THE STANDARD CMU BOND BEAMS CONSTRUCTED OF CMU BLOCKS.

5.0 COLD-FORMED METAL FRAMING

5.1 ALL COLD-FORMED METAL FRAMING MEMBERS SHALL CONFORM TO ASTM A1003M, STRUCTURAL GRADE ST340 (MPa), WITH A GALVANIZED COATING OF Z275 OR BETTER IN ACCORDANCE WITH ASTM A653M.

5.2 ALL COLD-FORMED METAL FRAMING MEMBERS SHALL HAVE THE FOLLOWING MINIMUM PROPERTIES:

a. MINIMUM METAL THICKNESS:
TRACK = 1.37mm;
STUD/OTHER = 1.09mm
b. MINIMUM FLANGE WIDTH:
TRACK = 38mm;
STUD/OTHER = 35mm
c. MINIMUM MEMBER DEPTH:
ALL SECTIONS = 152.2mm
d. PURLIN (HAT CHANNEL)
DEPTHxWIDTH(FLAT TOP)xTHICK = 25mmx42mmx1.59mm

5.3 ALL CONNECTIONS SHALL BE MADE WITH CORROSION RESISTANT (ASTM A153M), SELF-DRILLING, SELF-TAPPING STEEL DRILL SCREWS IN ACCORDANCE WITH ASTM C1513. SCREWS SHALL HAVE A LOW PROFILE HEAD BENEATH ROOF DECK, AND STANDARD HEAD ALL OTHER LOCATIONS.

5.4 FABRICATE COLD FORMED METAL FRAMING AND ACCESSORIES PLUMB, SQUARE AND TRUE TO LINE, WITH CONNECTIONS SECURELY FASTENED ACCORDING TO AISI STANDARD FOR COLD FORMED STEEL FRAMING.

5.5 CUT FRAMING MEMBERS BY SAWING OR SHEATHING, DO NOT TORCH CUT.

5.6 INSTALL FRAMING MEMBERS IN ONE-PIECE LENGTHS UNLESS SPLICE CONNECTIONS ARE INDICATED FOR TRACK OR TENSION MEMBERS

5.7 INSTALL TEMPORARY BRACING AND SUPPORTS TO SECURE FRAMING DURING CONSTRUCTION. MAINTAIN BRACING AND SUPPORTS IN PLACE UNTIL THE STRUCTURE HAS BEEN COMPLETED WITH ALL CONNECTIONS AND PERMANENT BRACING SECURED.

6.0 STRUCTURAL DESIGN CRITERIA

6.1 ALL DESIGNS SHALL CONFORM TO THE PROVISIONS OF THE IBC 2006 AND UFC AS APPLICABLE.

6.2 DESIGN LOADS

6.2.1 DEAD LOADS (PER IBC 2006 & UFC 3-310-01)

MECH/ELEC/PLUMBING	0.20 kPa
MISCELLANEOUS	0.15 kPa
COLD-FORMED FRAMING	0.20 kPa
INSULATION	0.10 kPa
METAL ROOF PANEL	0.14 kPa
	0.79 kPa
FLOOR PARTITION ALLOWANCE	0.96 kPa

6.2.2 LIVE LOADS (PER IBC 2006 & UFC 3-310-01)

ROOF	1.00 kPa
CORRIDOR (2-STORY BLDG ONLY)	4.80 kPa
ALL OTHERS (2-STORY BLDG ONLY)	2.40 kPa
SLAB ON GRADE	4.80 kPa

6.2.3 SNOW LOADS (PER IBC 2006 & UFC 3-310-01)

GROUND SNOW LOAD (Pg)	1.2 kPa
SNOW IMPORTANCE FACTOR (I)	1.0
SNOW EXPOSURE FACTOR (Ce)	1.0
THERMAL FACTOR (Ct)	1.0

6.2.4 WIND LOADS (PER IBC 2006)

BASIC WIND SPEED	137 km/h
WIND IMPORTANCE FACTOR	1.0
WIND EXPOSURE CATEGORY	D
DIRECTIONALITY COEFFICIENT (Kd)	0.85
TOPOGRAPHIC FACTOR (Kzt)	1.0

6.2.5 SEISMIC LOADS (PER IBC 2006 & UFC 3-310-04)

OCCUPANCY USE CATEGORY	II
SEISMIC IMPORTANCE FACTOR (Ie)	1.0
SEISMIC SITE CLASS	D

S_s = 1.5 (REDUCED FROM 2.4 PER ASCE 7-05, 12.8.1.3 FOR A BUILDING WITHOUT IRREGULARITIES)

S_1 = 1.20	
S_{DS} = 1.0	
S_{D1} = 1.20	
SEISMIC DESIGN CATEGORY	E
SEISMIC RESISTING SYSTEM: -SPECIAL REINFORCED CONCRETE SHEAR WALL	
RESPONSE MODIFICATION FACTOR (R)	6
RESPONSE COEFFICIENT (Cs)	0.167
SEISMIC ANALYTICAL PROCEDURE =	EQUIV LATERAL FORCE
SEISMIC BASE SHEAR	290 kN

APPROVED:

A/E DESIGNER OF RECORD

SEAL:

GEORGIA REGISTERED 1-29-10 No. 27141 PROFESSIONAL ENGINEER CHRISTOPHER W. WHITMOYER

US ARMY CORPS OF ENGINEERS
AFGHANISTAN ENGINEER DISTRICT

Mark	Description	Date	Appr.	Mark	Description	Date	Appr.

Date: 2/23/10 | Rev: 0
Design file no.
Drawing code:
File name: ANMASPS-001GN
Plot date: 2/23/2010
Plot scale: X:X

Designed by: KMF/MMY
Dwn by: RCG | Ckd by: CWW
Reviewed by: LHM
Submitted by:
BAKER

U.S. ARMY CORPS OF ENGINEERS
AFGHANISTAN ENGINEER DISTRICT
APO AE 96338

Michael Baker Jr., Inc
A unit of Michael Baker Corporation
Airside Business Park
100 Airside Drive
Moon Township, PA 15108
www.mbakercorp.com

AFGHAN NATIONAL ARMY
REGIONAL MILITARY TRAINING CENTER
STANDARD DESIGN

WEAPONS STORAGE (ASP)

GENERAL NOTES & DESIGN CRITERIA

Sheet reference number:
S-001

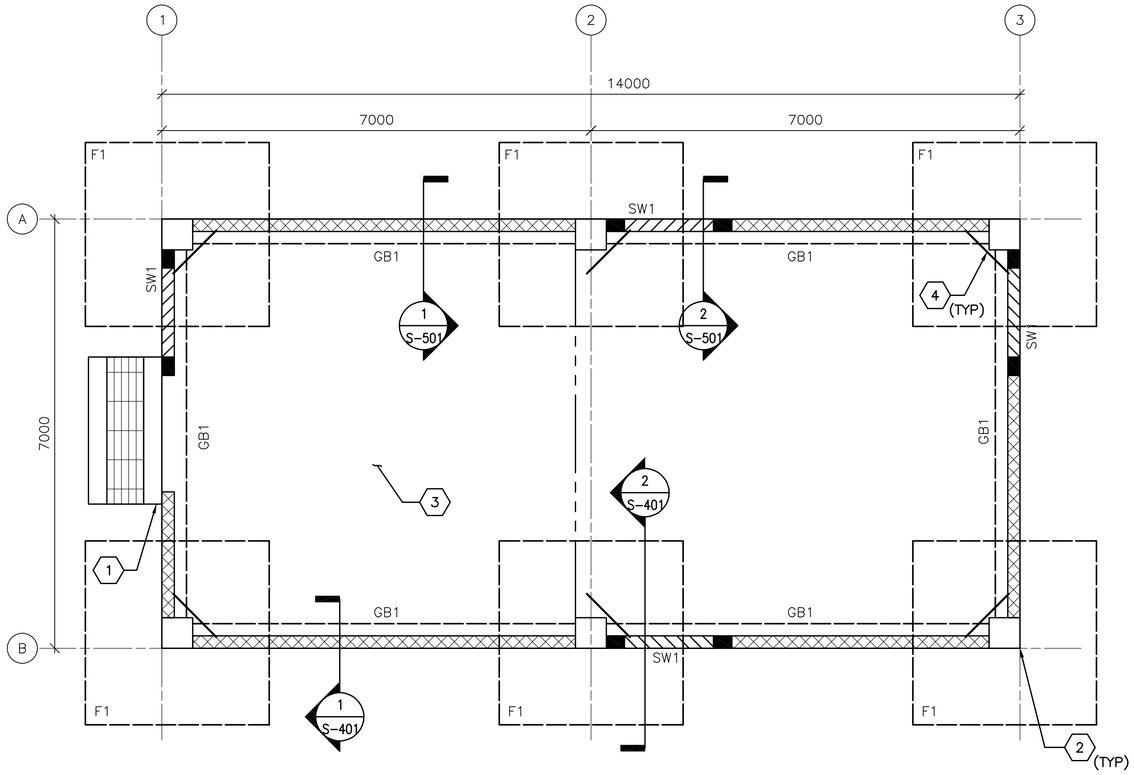

1 S-101 **FOUNDATION/SLAB PLAN**
SCALE: 1:50

FOUNDATION/SLAB PLAN NOTES:

1. REFER TO SHEET S-001 FOR STRUCTURAL NOTES AND DESIGN CRITERIA.
2. FINISH FIRST FLOOR ELEVATION SHALL BE (DATUM 0.00) ALL PLUS OR MINUS DIMENSIONS INDICATED ON PLAN OR REFERRED TO IN NOTES RELATE TO FINISH FLOOR ELEVATION.
3. SLAB-ON-GRADE IS 150 WITH #13 @ 300 OC EW LOCATED 38 FROM T/SLAB.
4. TOP OF EXTERIOR FOOTINGS SHALL BE -950 UNLESS OTHERWISE INDICATED.
5. COLUMN FOOTINGS INDICATED BY F# ON PLAN. REFER TO COLUMN FOOTING SCHEDULE ON SHEET S-601.
6. REFER TO COLUMN SCHEDULE ON SHEET S-601.
7. GRADE BEAM INDICATED BY GB# ON PLAN, REFER TO BEAM SCHEDULE ON SHEET S-601.
8. SHEARWALL INDICATED BY SW# ON PLAN, REFER TO SHEARWALL SCHEDULE ON SHEET S-601.
9. SEE TYP EXTERIOR CMU WALL DETAIL ON SHEET S-701.
10. SEE MECHANICAL AND ELECTRICAL SHEETS FOR CONCRETE PAD LOCATIONS, SIZES, AND THICKNESS NOT SHOWN. SEE SHEET S-701 FOR DETAILS.
11. THICKENED SLAB UNDER PERIMETER CMU WALLS NOT SHOWN FOR CLARITY.

FOUNDATION/SLAB PLAN KEY NOTES: (X)

1. CONC PAD (ENTRANCE)-SEE ARCH DWGS FOR INFORMATION
2. REINF CONC COLUMN
3. REINF CONC SLAB-ON-GRADE
4. (2)-#13 RE-ENTRANT CORNER BARS - SEE S-701 FOR INFORMATION

FOUNDATION/SLAB PLAN LEGEND:

REINF CONC SHEAR WALL

REINF CMU WALL

CONTROL JOINT

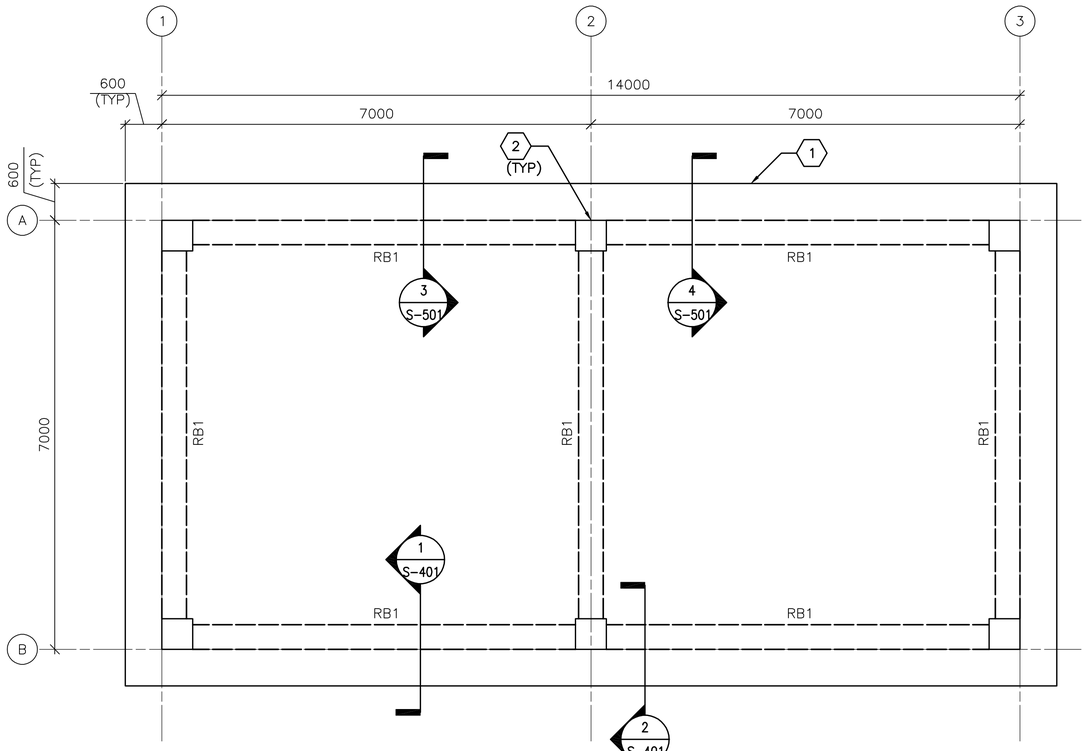

2 S-101 **ROOF FRAMING PLAN**
SCALE: 1:50

ROOF FRAMING PLAN NOTES:

1. REFER TO SHEETS S-001 FOR STRUCTURAL NOTES AND BASIS OF DESIGN.
2. TOP OF SLAB ELEVATION = 3500 UNLESS NOTED OTHERWISE.
3. ROOF SLAB IS 250 WITH #16 @ 300 OC EW T&B.
4. ROOF BEAM INDICATED BY RB# ON PLAN. REFER TO BEAM SCHEDULE ON SHEET S-601.
5. COORDINATE WITH ARCHITECTURAL SHEETS FOR COLD-FORMED STEEL OVERBUILD FRAMING ABOVE ROOF SLAB.
6. COLD-FORMED METAL OVERBUILD ROOF FRAMING NOT SHOWN FOR CLARITY. SEE OVERBUILD ROOF FRAMING DETAILS AND SECTIONS ON SHEET S-702.
7. OVERHANG AREAS OF ROOF SLAB CONTAIN ROOF VENT PENETRATIONS. REFERENCE ARCHITECTURAL DRAWINGS FOR INFORMATION.

ROOF FRAMING PLAN KEY NOTES: (X)

ROOF FRAMING PLAN:

1. CONC ROOF SLAB (BELOW ROOF OVERBUILD)
2. REINF CONC COLUMN (BELOW CONC ROOF SLAB)

0 1000 2000
SCALE: 1:50

UNLESS OTHERWISE NOTED, LINEAR DIMENSIONS SHOWN ON DRAWINGS ARE IN MILLIMETERS (mm)

APPROVED:

A/E DESIGNER OF RECORD

SEAL:

GEORGIA REGISTERED PROFESSIONAL ENGINEER No. 37141 1-27-10 CHRISTOPHER W. WHITMORE

US ARMY CORPS OF ENGINEERS
AFGHANISTAN ENGINEER DISTRICT

Mark	Description	Date	Appr.	Mark	Description	Date	Appr.

U.S. ARMY CORPS OF ENGINEERS
AFGHANISTAN ENGINEER DISTRICT
APO AE 96338

Michael Baker Jr., Inc.
A unit of Michael Baker Corporation
Airside Business Park
100 Airside Drive
Moon Township, PA 15108
www.mbakercorp.com

Designed by: KWP/MMY
Dwn by: RCG
Ckd by: CWW
Reviewed by: LHM
Submitted by: BAKER
Date: 2/23/10
Design file no.
Drawing code:
File name: ANAASPS-101FFP
Plot date: 2/23/2010
Plot scale: x:X
Rev: 0

AFGHAN NATIONAL ARMY
REGIONAL MILITARY TRAINING CENTER
STANDARD DESIGN

WEAPONS STORAGE (ASP)

FOUNDATION/SLAB & ROOF FRAMING PLAN

Sheet reference number:
S-101

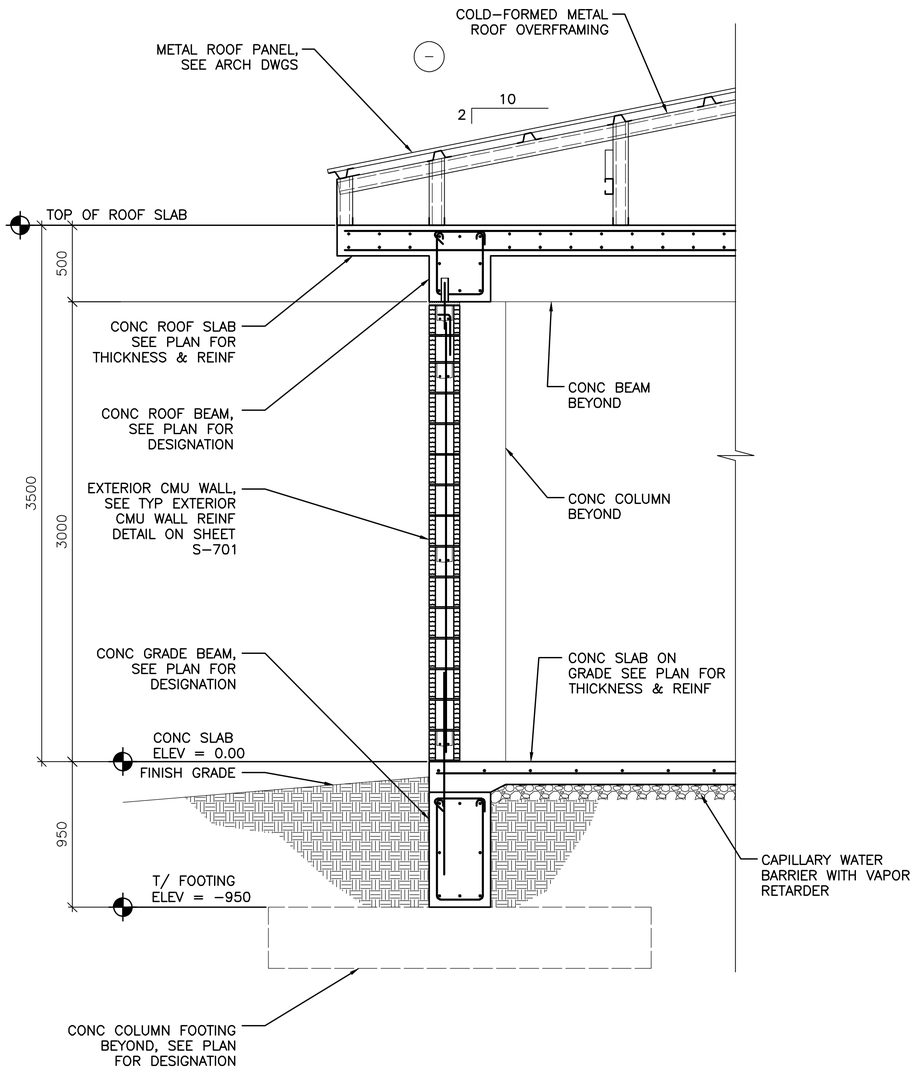

1 S-101 **TYPICAL WALL SECTION AT EXTERIOR MASONRY WALL**

SCALE: 1:20

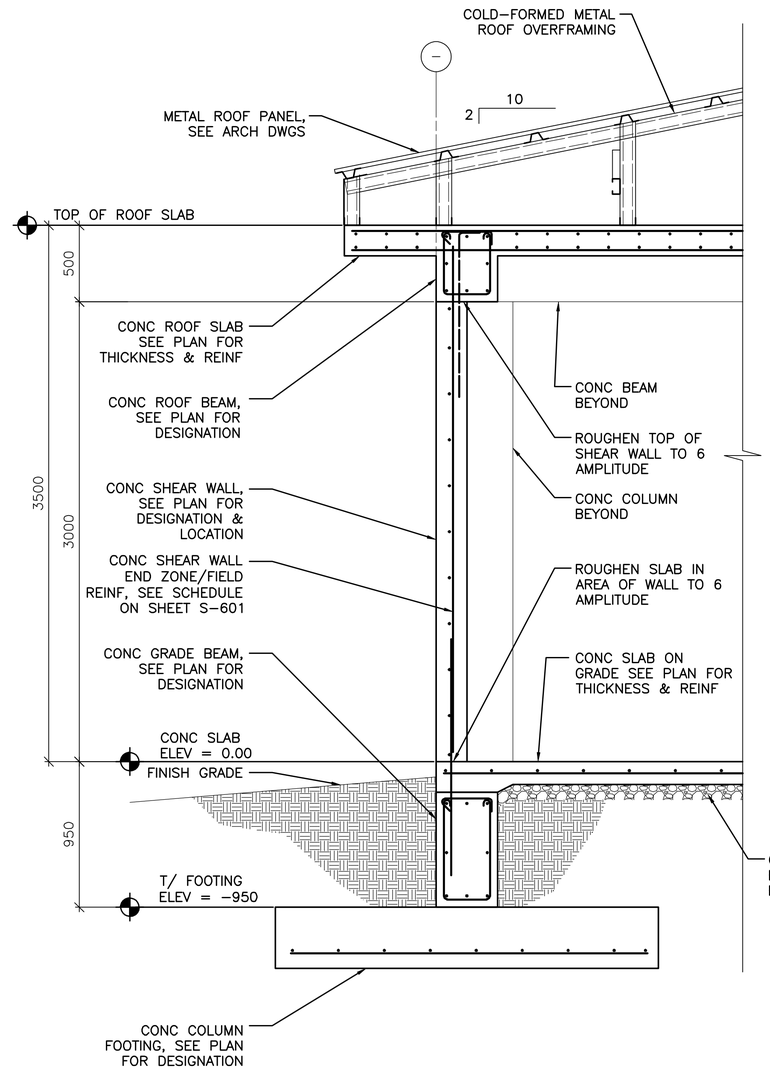

2 S-101 **TYPICAL WALL SECTION AT CONCRETE SHEAR WALL**

SCALE: 1:20

0 400 800
SCALE: 1:20

UNLESS OTHERWISE NOTED, LINEAR DIMENSIONS SHOWN ON DRAWINGS ARE IN MILLIMETERS (mm)

APPROVED:

A/E DESIGNER OF RECORD

SEAL:

GEORGIA REGISTERED 1-29-10 No. 27141 PROFESSIONAL ENGINEER CHRISTOPHER W. WHITMORE

US ARMY CORPS OF ENGINEERS
AFGHANISTAN ENGINEER DISTRICT

Mark	Description	Date	Appr.	Mark	Description	Date	Appr.

U.S. ARMY CORPS OF ENGINEERS
AFGHANISTAN ENGINEER DISTRICT
APO AE 96338

Michael Baker Jr., Inc
A unit of Michael Baker Corporation
Airside Business Park
100 Airside Drive
Moon Township, PA 15108
www.mbakercorp.com

Designed by: KMP/MMY
Dwn by: RCG
Ckd by: CWW
Reviewed by: LHM
Submitted by: BAKER
Date: 2/23/10
Rev: 0
Design file no.
Drawing code:
File name: ANAASPS-401BS
Plot date: 2/23/2010
Plot scale: x:X

AFGHAN NATIONAL ARMY
REGIONAL MILITARY TRAINING CENTER
STANDARD DESIGN

WEAPONS STORAGE (ASP)

BUILDING SECTIONS

Sheet reference number:
S-401

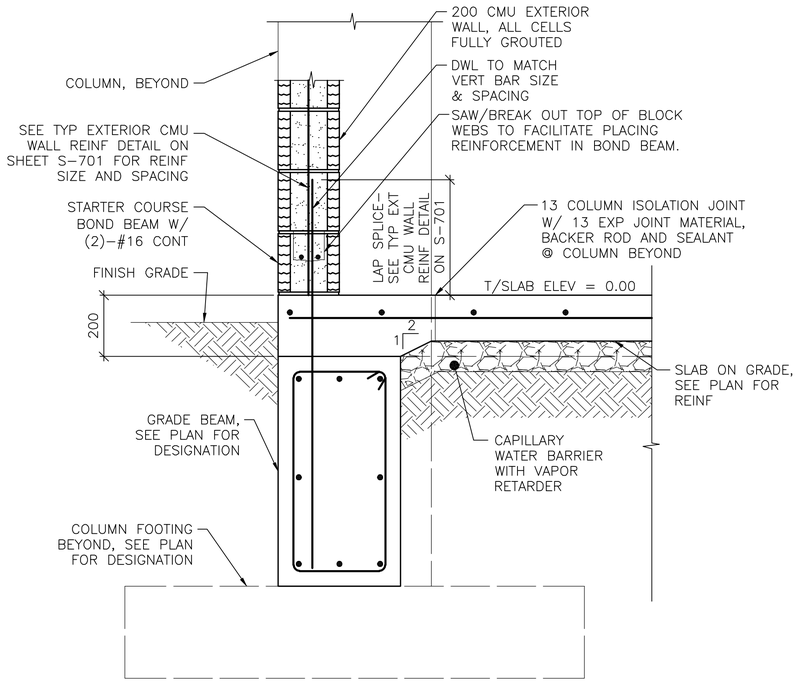

NOTE:
1. SECTION IS SIMILAR FOR INTERIOR CMU PARTITIONS OVER GRADE BEAMS SHOWING THICKENED 200 CONC SLAB AREA.

1 / S-101 **SECTION**
SCALE: 1:10

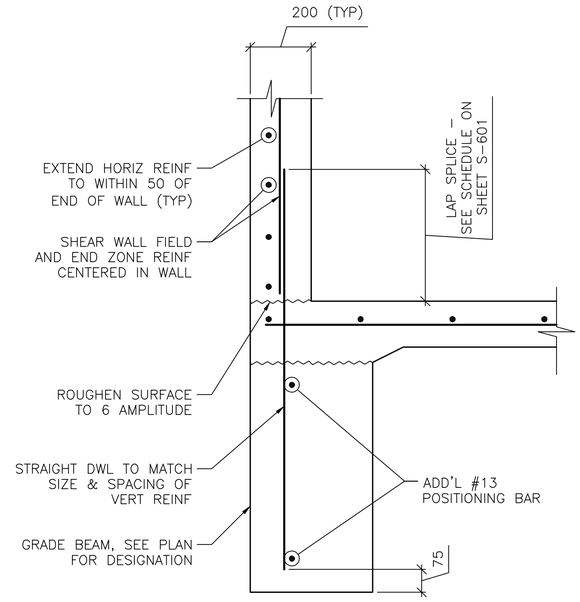

NOTES:
1. SECTION DEPICTS SHEAR WALL TERMINATION ONLY. GRADE BEAM REINFORCING NOT SHOWN FOR CLARITY
2. SEE SHEET S-601 AND SHEET S-702 FOR SCHEDULED FIELD AND END ZONE REINF.

2 / S-101 **SECTION**
SCALE: 1:10

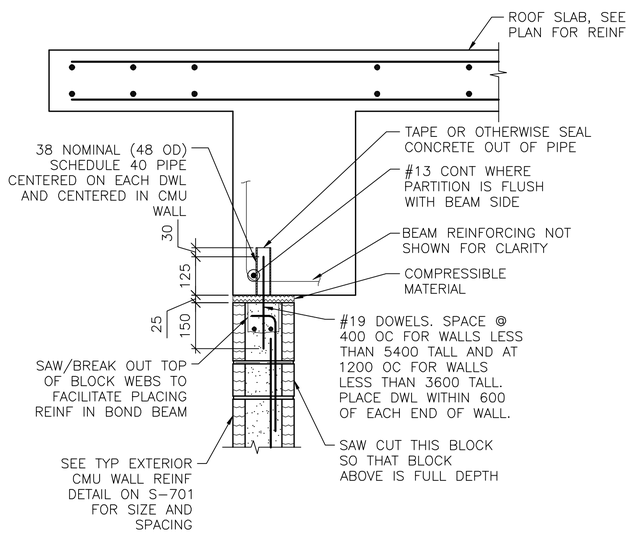

NOTES:
1. EXTEND DOWEL REINF TO 25 CLEAR FROM TOP OF CMU WALL.

3 / S-101 **SECTION**
SCALE: 1:10

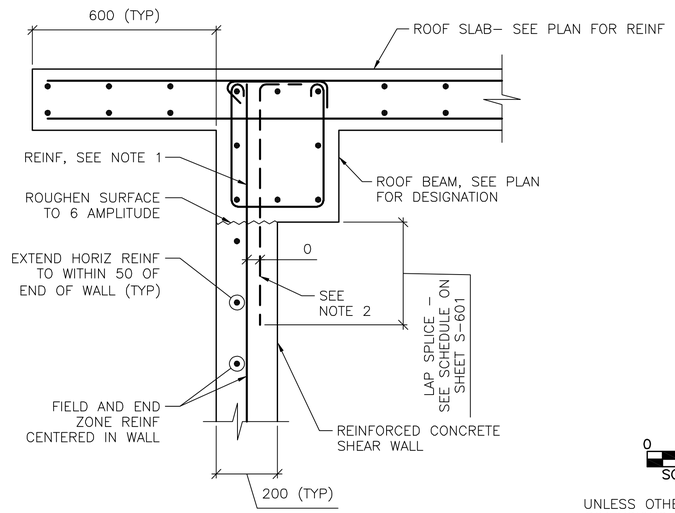

NOTES:
1. TERMINATE "FIELD" VERT REINF & END ZONE REINF @ 50 CLEAR FROM TOP OF ROOF SLAB.
2. WHERE END ZONE REINFORCING CANNOT BE DEVELOPED IN BEAM DEPTH, PROVIDE HOOKED DWLS SAME SIZE & SPACING. PROVIDE TENSION LAP BELOW ROOF BEAM.
3. SEE SHEET S-601 AND SHEET S-702 FOR SCHEDULED FIELD AND END ZONE REINF.

4 / S-101 **SECTION**
SCALE: 1:10

0 200 400
SCALE: 1:10

UNLESS OTHERWISE NOTED, LINEAR DIMENSIONS SHOWN ON DRAWINGS ARE IN MILLIMETERS (mm)

APPROVED:

A/E DESIGNER OF RECORD

SEAL:

GEORGIA REGISTERED PROFESSIONAL ENGINEER No. 27141 2-23-10 CHRISTOPHER W. WHITMORE

US ARMY CORPS OF ENGINEERS
AFGHANISTAN ENGINEER DISTRICT

Mark	Description	Date	Appr.	Mark	Description	Date	Appr.

Date: 2/23/10 | Rev: 0
Design file no.
Drawing code:
File name: AANASPS-501SC
Plot date: 2/23/2010
Plot scale: x:X

Designed by: KMP/MMY
Dwn by: RCG | Ckd by: CWW
Reviewed by: LHM
Submitted by:
BAKER

U.S. ARMY CORPS OF ENGINEERS
AFGHANISTAN ENGINEER DISTRICT
APO AE 96338

Michael Baker Jr., Inc.
A unit of Michael Baker Corporation
Airside Business Park
100 Airside Drive
Moon Township, PA 15108
www.mbakercorp.com

AFGHAN NATIONAL ARMY
REGIONAL MILITARY TRAINING CENTER
STANDARD DESIGN

WEAPONS STORAGE (ASP)

FOUNDATION & FRAMING SECTIONS

Sheet reference number:
S-501

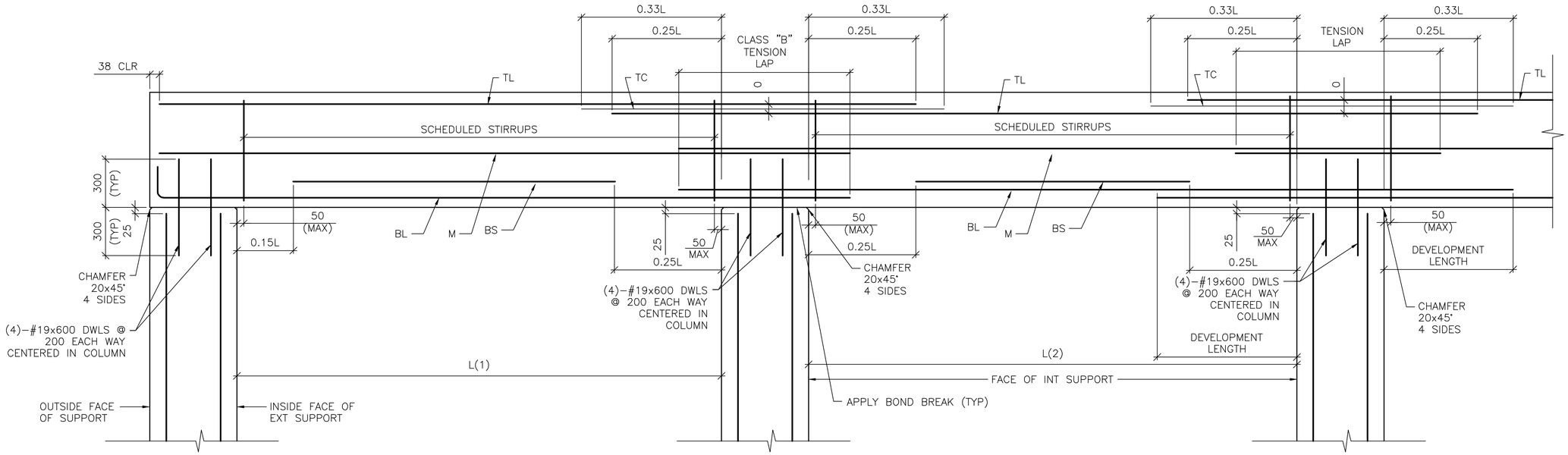

DETAIL NOTE:
1. WORK THIS DETAIL WITH BEAM SCHEDULE ON SHEET S-601.
2. L=GREATEST OF ADJACENT SPANS L(1) OR L(2)
3. ONLY COLUMN CORNER BARS ARE SHOWN

1 / S-502 ROOF BEAM REINFORCING DETAIL

SCALE: NTS

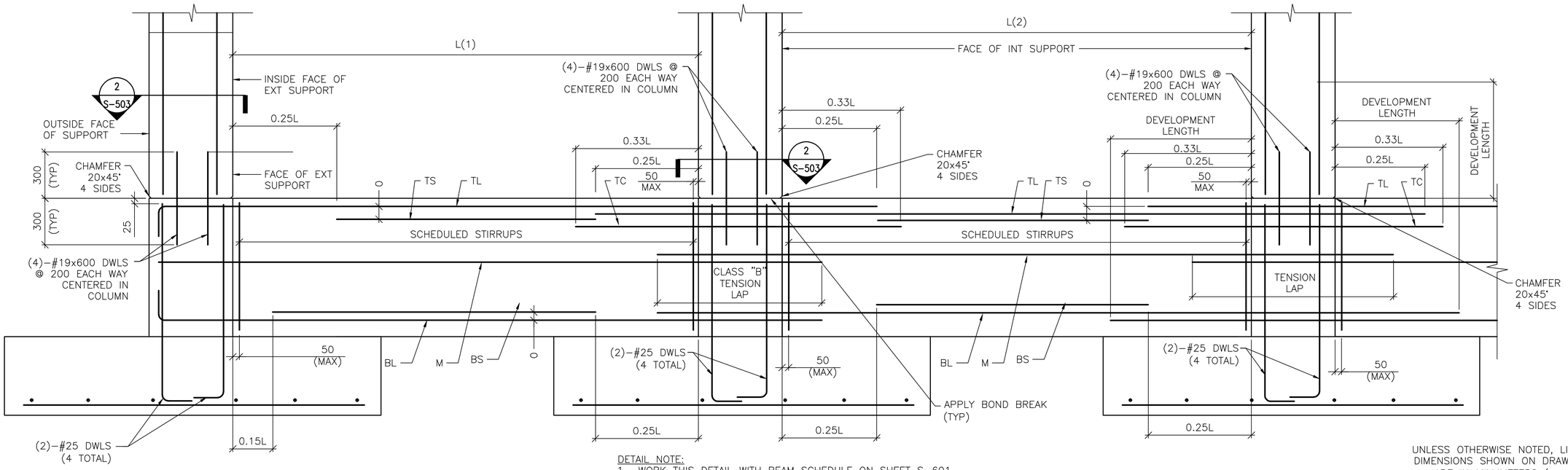

DETAIL NOTE:
1. WORK THIS DETAIL WITH BEAM SCHEDULE ON SHEET S-601.
2. L=GREATEST OF ADJACENT SPANS L(1) OR L(2)
3. ONLY COLUMN CORNER BARS ARE SHOWN.

2 / S-502 GRADE BEAM REINFORCING DETAIL

SCALE: NTS

UNLESS OTHERWISE NOTED, LINEAR DIMENSIONS SHOWN ON DRAWINGS ARE IN MILLIMETERS (mm)

APPROVED:

A/E DESIGNER OF RECORD

SEAL:

GEORGIA REGISTERED 1-29-10 No. 27141 PROFESSIONAL ENGINEER CHRISTOPHER W. WHITMORE

US ARMY CORPS OF ENGINEERS
AFGHANISTAN ENGINEER DISTRICT

Mark	Description	Date	Appr.	Mark	Description	Date	Appr.

Rev: 0
Date: 2/23/10
Designed by: KMP/MMY
Dwn by: RCG
Ckd by: CWW
Reviewed by: LHM
Submitted by: BAKER
Design file no.
Drawing code:
File name: ANAASPS-502DT
Plot date: 2/23/2010
Plot scale: X/X

U.S. ARMY CORPS OF ENGINEERS
AFGHANISTAN ENGINEER DISTRICT
APO AE 96338

Michael Baker Jr., Inc.
A unit of Michael Baker Corporation
Airside Business Park
100 Airside Drive
Moon Township, PA 15108
www.mbakercorp.com

AFGHAN NATIONAL ARMY
REGIONAL MILITARY TRAINING CENTER
STANDARD DESIGN

WEAPONS STORAGE (ASP)

BEAM & COLUMN DETAILS

Sheet reference number:
S-502

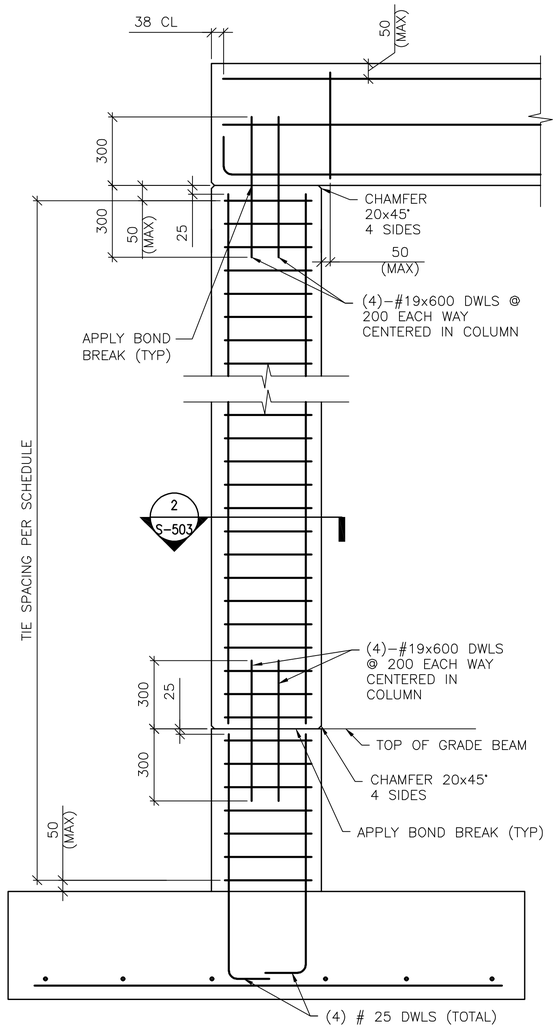

DETAIL NOTE:
1. ONLY COLUMN CORNER BARS ARE SHOWN

1 S-503 **1-STORY COLUMN REINF DETAILS**
SCALE: NTS
(WITH GRADE BEAM)

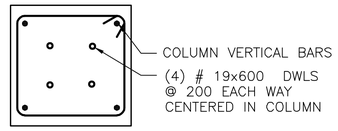

2 S-502 2 S-503 **SECTION**
SCALE: NTS

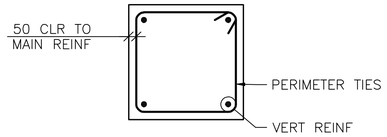

A S-503 **4 BAR COLUMN**
SCALE: NTS

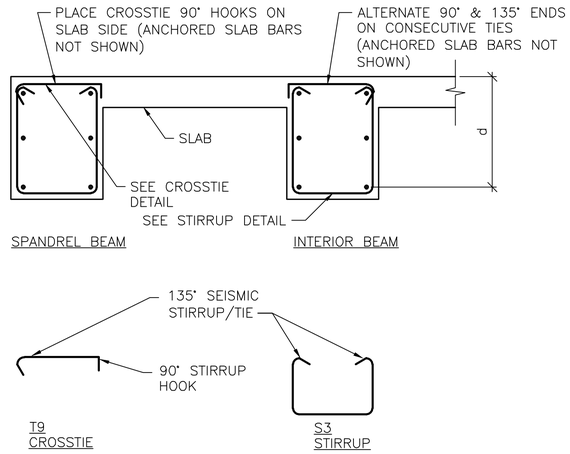

B S-503 **BEAM REINFORCEMENT DETAILS**
SCALE: NTS

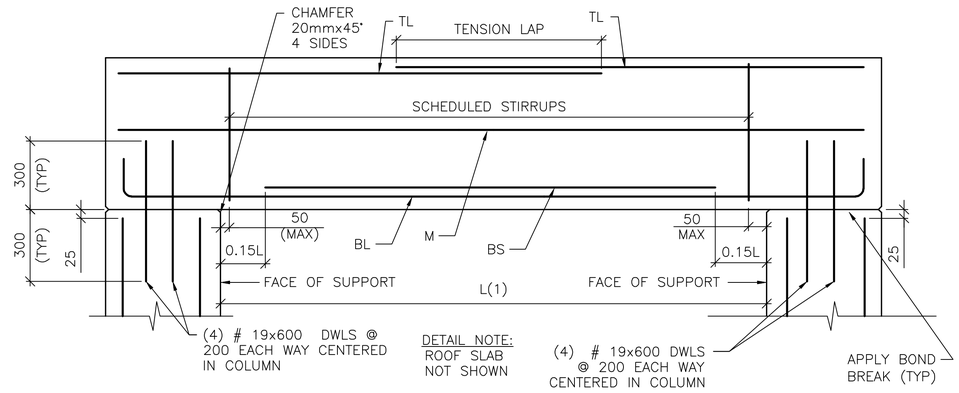

3 S-503 **SINGLE SPAN ROOF BEAM REINFORCING DETAIL**
SCALE: NTS

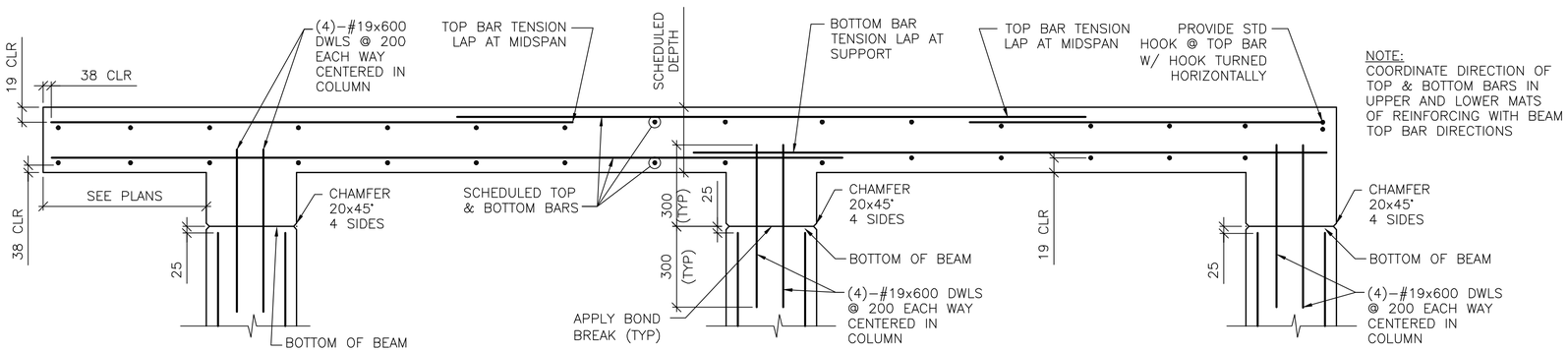

4 S-503 **FRAMED SLAB REINFORCING DETAIL**
SCALE: NTS

UNLESS OTHERWISE NOTED, LINEAR DIMENSIONS SHOWN ON DRAWINGS ARE IN MILLIMETERS (mm)

APPROVED:

A/E DESIGNER OF RECORD

SEAL:

GEORGIA REGISTERED 7-29-10 No. 27141 PROFESSIONAL ENGINEER CHRISTOPHER W. WHITMORE

US ARMY CORPS OF ENGINEERS
AFGHANISTAN ENGINEER DISTRICT

Mark	Description	Date	Appr.	Mark	Description	Date	Appr.

U.S. ARMY CORPS OF ENGINEERS
AFGHANISTAN ENGINEER DISTRICT
APO AE 96338

Michael Baker Jr., Inc
A unit of Michael Baker Corporation
Airside Business Park
100 Airside Drive
Moon Township, PA 15108
www.mbakercorp.com

Designed by: KMP/MMY
Dwn by: RCG
Ckd by: CWW
Reviewed by: LHM
Submitted by: BAKER
Date: 2/23/10
Rev: 0
Design file no.
Drawing code:
File name: AMA5PS-503DT
Plot date: 2/23/2010
Plot scale: X:X

AFGHAN NATIONAL ARMY
REGIONAL MILITARY TRAINING CENTER
STANDARD DESIGN

WEAPONS STORAGE (ASP)

BEAM & COLUMN DETAILS

Sheet reference number:
S-503

CONCRETE REINFORCEMENT TENSION DEVELOPMENT/LAP SPLICE SCHEDULE

f'c = 28 MPa	LAP CLASS	UNCOATED BARS			
		TOP BARS		OTHER BARS	
BAR SIZES		CASE 1	CASE 2	CASE 1	CASE 2
#10 TO #19	A	50 BAR DIA	74 BAR DIA	38 BAR DIA	57 BAR DIA
	B	64 BAR DIA	96 BAR DIA	50 BAR DIA	74 BAR DIA
#22 TO #57	A	62 BAR DIA	93 BAR DIA	48 BAR DIA	71 BAR DIA
	B	80 BAR DIA	121 BAR DIA	62 BAR DIA	93 BAR DIA

NOTES:
1. TABULATED TENSION DEVELOPMENT LENGTH VALUES ARE TAKEN FROM CRSI DESIGN HANDBOOK 2008 10TH ED.
2. TENSION DEVELOPMENT & TENSION LAP SPLICE LENGTHS ARE EXPRESSED AS MULTIPLES OF BAR DIAMETERS.
3. TABULATED VALUES ARE BASED ON MINIMUM YIELD STRENGTH OF REINFORCEMENT, fy, OF 420MPa.
4. CONCRETE IS NORMAL WEIGHT (2400Kg/m^3) AND 28 DAY COMPRESSIVE STRENGTH = 28MPa.
5. TABULATED VALUES FOR BEAMS & COLUMNS ARE BASED ON TRANSVERSE REINFORCEMENT AND CONCRETE COVER MEETING MINIMUM CODE REQUIREMENTS.
6. CASES 1 & 2, WHICH DEPEND ON THE TYPE OF STRUCTURAL MEMBER, CONCRETE COVER, AND CENTER-TO-CENTER SPACING OF THE BARS ARE DEFINED IN THE TABLE BELOW.
7. LAP SPLICE LENGTHS (MINIMUM 300mm) ARE MULTIPLES OF TENSION DEVELOPMENT LENGTHS: CLASS A = 1.0(TENSION DEVELOPMENT LENGTH) & CLASS B = 1.3(TENSION DEVELOPMENT LENGTH)
8. TOP BARS ARE HORIZONTAL REINFORCEMENT WITH MORE THAN 300mm OF CONCRETE CAST BELOW THE BARS.
9. IT SHALL BE PERMISSIBLE TO CALCULATE WALL AND SLAB REINFORCEMENT TENSION DEVELOPMENT/SPLICE LENGTHS IN ACCORDANCE WITH ACI 12.2.3 OR TABLE 5.3(b) OF CRSI 2008 IN LIEU OF VALUES TABULATED ABOVE.

BEAMS, COLUMNS	CASE 1	CONCRETE COVER AT LEAST 1 BAR DIA AND CENTER-TO-CENTER SPACING AT LEAST 2 BAR DIA
	CASE 2	CONCRETE COVER LESS THAN 1 BAR DIA OR CENTER-TO-CENTER SPACING LESS THAN 2 BAR DIA
ALL OTHERS	CASE 1	CONCRETE COVER AT LEAST 1 BAR DIA AND CENTER-TO-CENTER SPACING AT LEAST 3 BAR DIA
	CASE 2	CONCRETE COVER LESS THAN 1 BAR DIA OR CENTER-TO-CENTER SPACING LESS THAN 3 BAR DIA

CONCRETE COVER SCHEDULE

MINIMUM CONCRETE COVER PROTECTION FOR REINFORCEMENT BARS SHALL BE AS LISTED BELOW: (SEE ACI 318M-05, SECTION 7.7 FOR CONDITIONS NOT NOTED). DIMENSIONS FOR BAR PLACEMENT GIVEN IN SECTIONS AND DETAILS SHALL SUPERSEDE MINIMUM COVER REQUIREMENTS GIVEN HERE. DIMENSIONS ARE IN mm. PROVIDE STANDARD BAR CHAIRS AND SUPPORT BARS @1200mm MAXIMUM AS REQUIRED TO MAINTAIN CONCRETE PROTECTION SPECIFIED.

FOOTINGS (EARTH FORMED):		70
COLUMNS / PIERS (TO TIES)		40
GRADE BEAMS OR SLAB TURNED DOWN EDGES:		
TOP		40
BOTTOM (EARTH FORMED)		70
SIDES (EARTH FORMED)		70
SIDES (BOARD FORMED)	#16 BAR & SMALLER	40
	#19 THRU #36 BAR	50
ELEVATED BEAMS & SLABS:		
BEAM TIES & STIRRUPS (NOT EXPOSED TO WEATHER)		40
BEAM TIES & STIRRUPS (EXPOSED TO WEATHER)		50
FLOOR SLABS (NOT EXPOSED TO WEATHER)		20
FLOOR SLABS (EXPOSED TO WEATHER)		
#19 & LARGER		50
#13 & SMALLER		40
ROOF SLAB BARS		25
SLABS ON GRADE		
NOT EXPOSED TO WEATHER (FROM TOP)		20
EXPOSED TO WEATHER (FROM TOP)		40
UTILITY TUNNEL WALLS, RETAINING WALLS AND SHEAR WALLS. (NO SURFACES SHALL BE EARTH FORMED)		
EARTH SIDE AND FRONT SIDE (EXPOSED TO WEATHER)		
#16 BAR AND SMALLER		40
#19 THRU #36 BAR		50

COLUMN FOOTING SCHEDULE

MARK	FOOTING SIZE (mm)			FOOTING REINFORCING	REMARKS
	LENGTH	WIDTH	THICKNESS		
F1	3000	3000	350	(8)-#19 EW BOTT	-----

CONCRETE SHEAR WALL SCHEDULE

MARK	TYPE	WALL LENGTH (L) (mm)	WALL REINFORCEMENT		REMARKS
			END ZONE	FIELD	
SW1	B	2050	(4)-#16 @ 150mm OC	#13 @ 300mm OC	-----

NOTES:
1. WORK THIS SCHEDULE WITH SHEAR WALL DETAILS ON SHEETS S-702
2. SEE PLAN FOR LOCATION OF SHEAR WALL(S).
3. WALL "FIELD" REINFORCEMENT LISTED APPLIES TO VERTICAL & HORIZONTAL BARS.
4. WALL "FIELD" REINFORCEMENT SHOULD BE CENTERED IN WALL.
5. VERTICAL "FIELD" BARS MAY BE OMITTED IN LOCATION OF "END ZONE" REINFORCEMENT.

STANDARD HOOKS IN TENSION PER (ACI 318M-05)

HOOK DEVELOPMENT LENGTH (mm)	
BAR SIZE	f'c 28 MPa
#10	180
#13	250
#16	300
#19	380
#22	430
#25	480
#29	560
#32	610
#36	690

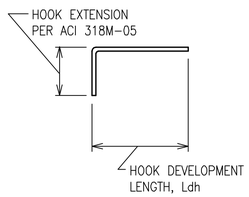

NOTES:
1. CONCRETE IS NORMAL WEIGHT CONCRETE.
2. BAR YIELD STRENGTH, fy = 420 MPa
3. SIDE COVER REQUIREMENTS OF ACI SECT. 12.5.3 ARE ASSUMED TO NOT BE MET.
4. TIE OR STIRRUP REQUIREMENTS OF ACI SECT. 12.5.3 ARE ASSUMED TO NOT BE MET.
5. REDUCTION FOR EXCESS REINFORCEMENT IS NOT TAKEN.
6. HOOK DEVELOPMENT LENGTH IS VALID FOR 180° HOOKS ALSO.

CMU OR CAST IN PLACE CONC LINTEL SCHEDULE (TYP)

OPENING TYPE OR SIZE, BEAM LOCATION OR TYPE	MAX SPAN (mm)	LINTEL DEPTH (mm)	REINFORCING BOTTOM
WALL OPENING	4000	600	(2)-#16 T&B
WALL OPENING	1900	400	(2)-#16 T&B
WALL OPENING	1000	400	(2)-#13 B

1. STRUCTURAL SHEETS DO NOT INDICATE ALL OPENINGS IN MASONRY WALLS. VERIFY NUMBER, SIZE AND LOCATION OF ALL OPENINGS IN MASONRY WALLS FROM ARCHITECTURAL SHEETS AND APPROVED PLUMBING, MECHANICAL, AND ELECTRICAL SHOP DRAWINGS.
2. PROVIDE 200mm BEARING EA END.
3. FOR HEAD DETAILS REFER TO ARCHITECTURAL SHEETS.
4. REINFORCING SHALL BE ASTM A615M, GRADE 420. GROUT FOR CMU LINTELS SHALL HAVE A MINIMUM COMPRESSIVE STRENGTH OF 14 MPa AT 28 DAYS.
5. CONTRACTOR SHALL SUBMIT FOR APPROVAL SHOP DRAWINGS AND SCHEDULES SHOWING SIZE, SPAN, REINFORCEMENT, DETAILS, LOCATIONS, ETC.

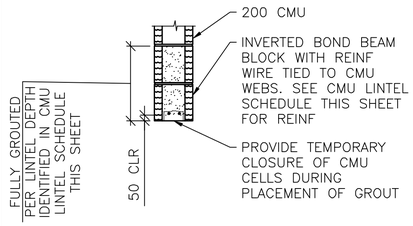

A S-601 **LINTEL DETAIL**
SCALE: NTS

BEAM SCHEDULE

MARK	BEAM SIZE (mm)		BEAM REINFORCING						STIRRUPS			REMARKS
	DEPTH	WIDTH	BL	BS	TL	TS	TC	M	SIZE	TYPE	SPACING	-----
GRADE BEAMS												
GB1	750	400	(2)-#29	(1)-#29	(2)-#25	---	---	---	#13	S3 + T9	d/2	-----
ROOF BEAMS												
RB1	500	400	(2)-#22	(1)-#22	(2)-#25	---	---	---	#13	S3 + T9	d/2	-----

NOTES:
1. WORK THIS SCHEDULE WITH BEAM REINFORCING DETAILS ON SHEETS S-503.
2. HOOKS SHOWN ON SECTIONS AND DETAILS SHALL BE 90° STD UON.
3. USE ONLY (1) TC AT BEAM COLUMN INTERSECTION WHERE REQ'D.

COLUMN SCHEDULE

COLUMN MARK / DESCRIPTION	TYP UON	---	---	---
TYPE	4-BAR	---	---	---
DIMENSIONS	500mm SQ	---	---	---
VERTICAL REINFORCEMENT	(4)-#29	---	---	---
TIES	#13 @ d/2	---	---	---
TOP OF ROOF ELEVATION	3500mm	---	---	---
TOP OF GRADE BEAM ELEVATION	-200mm	---	---	---
TOP OF FOOTING ELEVATION	-950mm	---	---	---

NOTES:
1. WORK THIS SCHEDULE WITH COLUMN DETAILS ON SHEET S-503.
2. SEE FOOTING SCHEDULE THIS SHEET FOR FOOTING INFORMATION.
3. HOOKS SHOWN ON SECTIONS & DETAILS SHALL BE 90° STD UON.

UNLESS OTHERWISE NOTED, LINEAR DIMENSIONS SHOWN ARE IN MILLIMETERS (mm)

APPROVED:

A/E DESIGNER OF RECORD

SEAL:

GEORGIA REGISTERED 1-29-10 No. 27141 PROFESSIONAL ENGINEER CHRISTOPHER W. WHITMORE

US ARMY CORPS OF ENGINEERS
AFGHANISTAN ENGINEER DISTRICT

Mark	Description	Date	Appr.	Mark	Description	Date	Appr.

Date: 2/23/10 Rev: 0
Design file no.
Drawing code:
File name: AMASPS-601SCH
Plot date: 2/23/2010
Plot scale: X:X

Designed by: KMP/MMY
Dwn by: RCG Ckd by: CWW
Reviewed by: LHM
Submitted by: BAKER

U.S. ARMY CORPS OF ENGINEERS
AFGHANISTAN ENGINEER DISTRICT
APO AE 96338

Michael Baker Jr., Inc
A unit of Michael Baker Corporation
Airside Business Park
100 Airside Drive
Moon Township, PA 15108
www.mbakercorp.com

AFGHAN NATIONAL ARMY
REGIONAL MILITARY TRAINING CENTER
STANDARD DESIGN

WEAPONS STORAGE (ASP)

SCHEDULES

Sheet reference number:
S-601

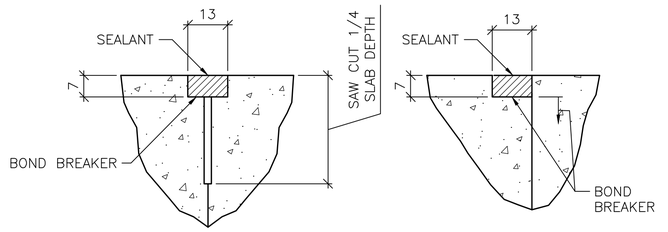

CONTROL JOINT DETAIL

CONSTRUCTION JOINT DETAIL

TYPICAL CONCRETE SLAB JOINT FINISH DETAILS

1 / S-701 SCALE: NTS

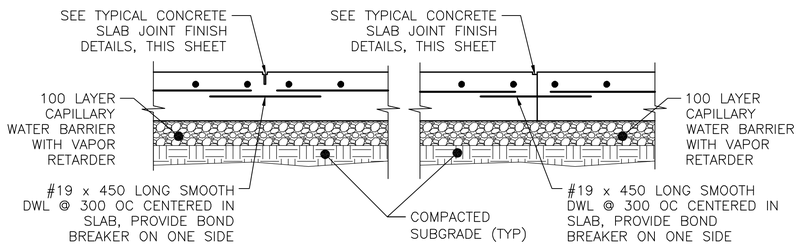

CONTROL JOINT DETAIL

CONSTRUCTION JOINT DETAIL

TYPICAL SLAB ON GRADE JOINT DETAIL

2 / S-701 SCALE: NTS

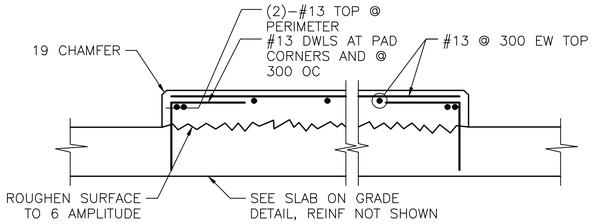

INTERIOR EQUIPMENT PAD DETAIL

3 / S-701 SCALE: NTS

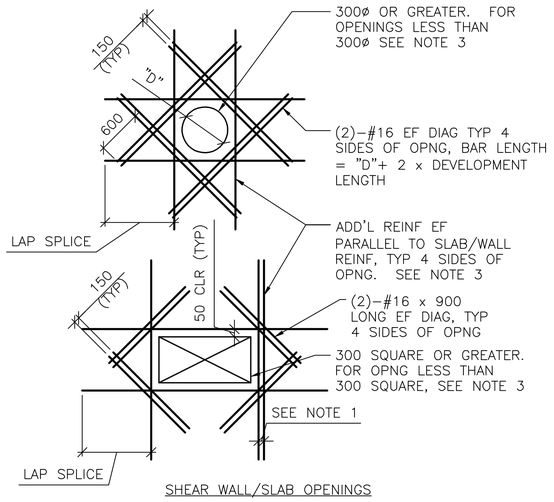

SHEAR WALL/SLAB OPENINGS

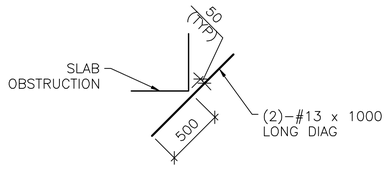

RE-ENTRANT CORNERS

DETAIL NOTES:

1. WHERE MORE THAN ONE ADDITIONAL BAR IS REQUIRED PARALLEL TO THE EXISTING SLAB/WALL REINFORCING THE ADDITIONAL REINFORCING BARS SHALL BE SPACED AT 100 ON CENTER.
2. ADDITIONAL REINFORCING PARALLEL TO THE SLAB/WALL REINFORCING SHALL BE #16 BARS THAT PROVIDE A STEEL AREA ON EACH SIDE OF THE OPENING EQUAL TO 1/2 THE AREA OF THE REINFORCING CUT BY THE OPENING.
3. FOR OPENINGS WITH SIDES OR DIAMETERS LESS THAN 300 SPREAD THE SLAB/WALL REINFORCING TO CLEAR THE OPENING.

ADD'L CONCRETE REINFORCEMENT DETAILS

4 / S-701 SCALE: NTS

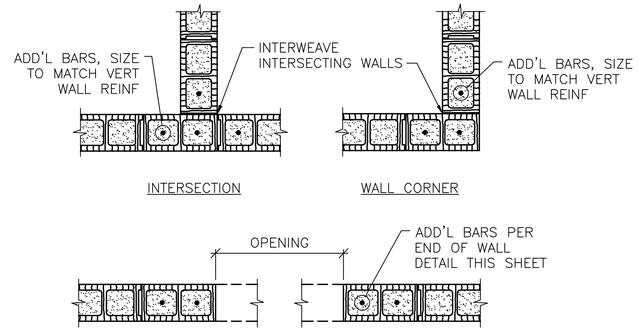

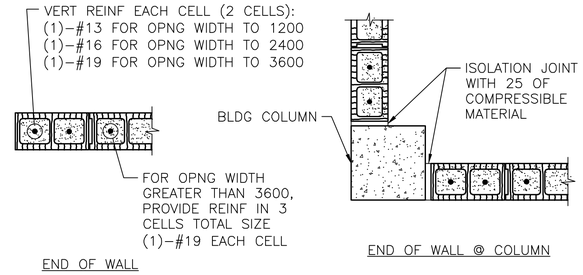

END OF WALL

END OF WALL @ COLUMN

NOTES:

1. OPENING WIDTH SHALL NOT EXCEED 3600 FOR THIS TYPE OF JAMB.
2. ALL CELLS FULLY GROUTED AT EXTERIOR WALLS. AT INTERIOR WALLS, ONLY GROUT CELLS CONTAINING REINF.

TYP CMU DETAILS

5 / S-701 SCALE: NTS

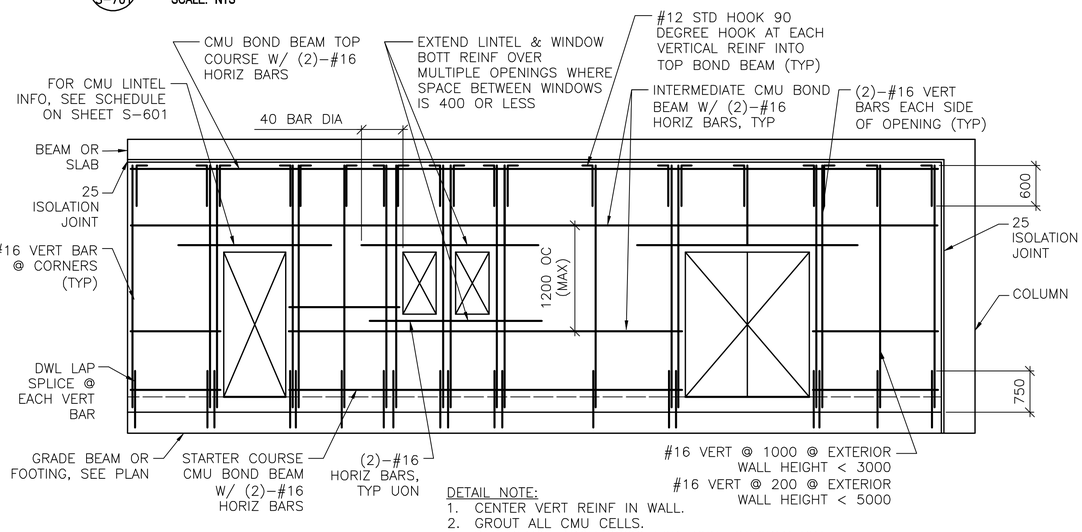

DETAIL NOTE:

1. CENTER VERT REINF IN WALL.
2. GROUT ALL CMU CELLS.
3. REFERENCE ARCH DWGS FOR JOINT INFORMATION
4. DOWELS BETWEEN TOP BOND BEAM AND BEAM/SLAB ABOVE (INCLUDING EMBEDDED PIPE SLEEVE) NOT SHOWN FOR CLARITY. SEE SPECIFIC S-500 SERIES DWGS FOR INFO.
5. FOR INFORMATION ON ALTERNATE CAST-IN-PLACE WALL BOND BEAMS, REFERENCE ALTERNATE TOP OF CMU WALL BRACING DETAIL THIS SHEET.

TYP EXTERIOR CMU WALL REINF DETAIL

6 / S-701 SCALE: NTS

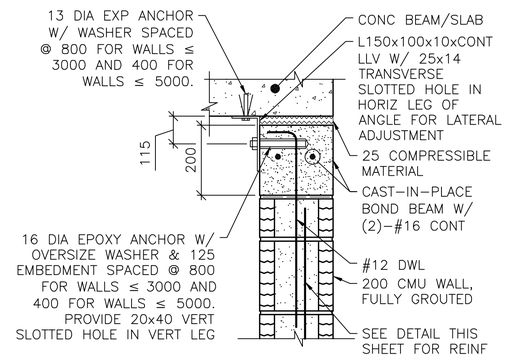

EXTERIOR WALL OR SLAB

NOTES:

1. THIS DETAIL IS AN ALTERNATE TOP OF WALL ANCHORAGE DETAIL TO BE USED AT THE CONTRACTOR'S OPTION IN LIEU OF DETAILS SHOWN ON S-400 & S-500 DRAWINGS.
2. CAST-IN-PLACE BOND BEAM SHOWN AT TOP OF WALL IS ALSO APPLICABLE FOR INTERMEDIATE AND STARTER COURSE BOND BEAMS WITHIN WALL.

ALTERNATE TOP OF CMU WALL BRACING DETAIL

7 / S-701 SCALE: NTS

UNLESS OTHERWISE NOTED, LINEAR DIMENSIONS SHOWN ARE IN MILLIMETERS (mm)

APPROVED:

A/E DESIGNER OF RECORD

SEAL:

US ARMY CORPS OF ENGINEERS
AFGHANISTAN ENGINEER DISTRICT

Mark	Description	Date	Appr.	Mark	Description	Date	Appr.

Designed by: KMP/MMY
Dwn by: RCG
Ckd by: CWW
Reviewed by: LHM
Submitted by: BAKER
Date: 2/23/10
Rev: 0
Design file no.
Drawing code:
File name: AMASFS-701.DDT
Plot date: 2/23/2010
Plot scale: X:X

U.S. ARMY CORPS OF ENGINEERS
AFGHANISTAN ENGINEER DISTRICT
APO AE 96338

Michael Baker Jr., Inc
A unit of Michael Baker Corporation
Airside Business Park
100 Airside Drive
Moon Township, PA 15108
www.mbakercorp.com

AFGHAN NATIONAL ARMY
REGIONAL MILITARY TRAINING CENTER
STANDARD DESIGN

WEAPONS STORAGE (ASP)

TYPICAL DETAILS

Sheet reference number:
S-701

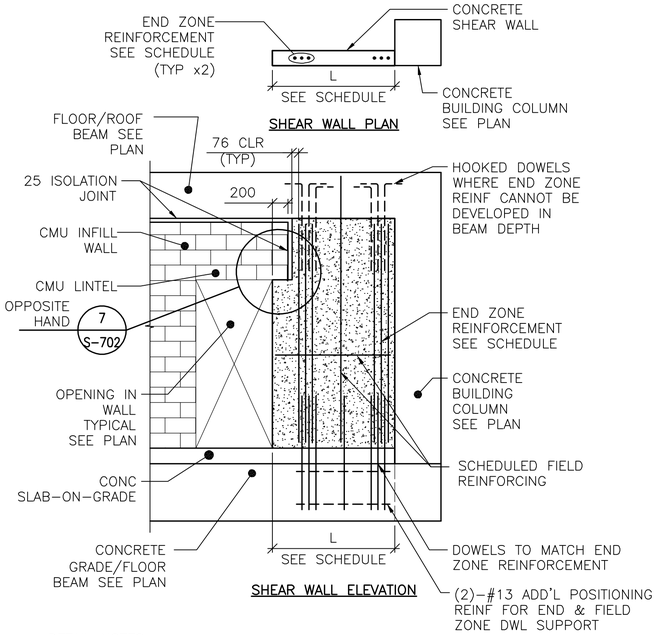

DETAIL NOTES:
1. FIELD REINFORCEMENT IN SHEAR WALL NOT COMPLETELY SHOWN FOR CLARITY.
2. FIELD REINFORCEMENT CENTERED IN WALL.
3. MINIMUM CONC CLEAR DISTANCE FOR END ZONE REINF = 76
4. SEE CONC SHEAR WALL SCHEDULE ON SHEET S-601
5. SEE ARCH DWGS FOR ISOLATION JOINT INFORMATION

TYPE "B" SHEAR WALL DETAIL

1 / S-702 SCALE: NTS

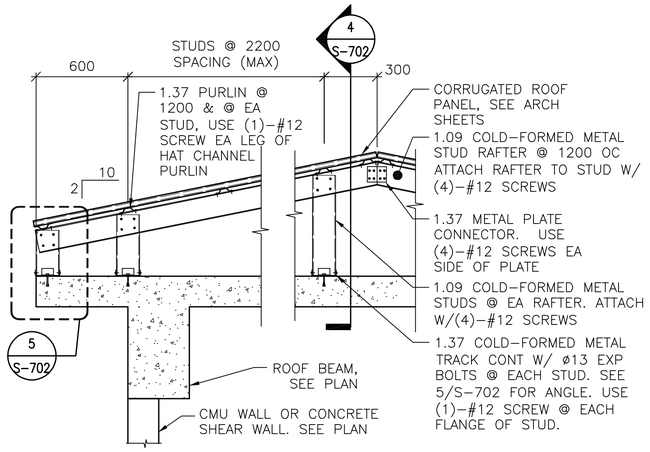

DETAIL NOTES:
1. ALL GABLE END VERTICAL STUDS SHALL BE ORIENTED 90° TO INTERIOR STUDS & SPACED @ 600 OC. GABLE END RAFTER SHALL BE 1.37 METAL TRACK SPANNING CONTINUOUSLY OVER GABLE END STUDS. INSET GIRTS AT GABLE END SHALL BE 1.09 COLD-FORMED METAL STUDS @ 1200 OC ATTACHED VIA 1.37 THICKNESS CLIP ANGLE W/ (2) #12 SCREWS EA LEG.
2. ALL INTERIOR, NON-GABLE END VERTICAL STUDS GREATER THAN 2400 IN LENGTH SHALL BE BACK-TO-BACK W/ #12 SCREWS @ 200 OC STAGGERED.

TYPICAL OVERBUILT ROOF FRAMING DETAIL

2 / S-702 SCALE: NTS

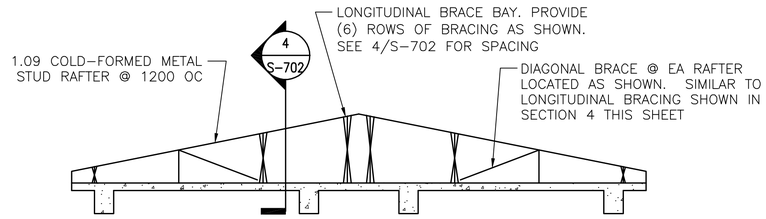

TYPICAL ROOF BRACE LAYOUT

3 / S-702 SCALE: NTS

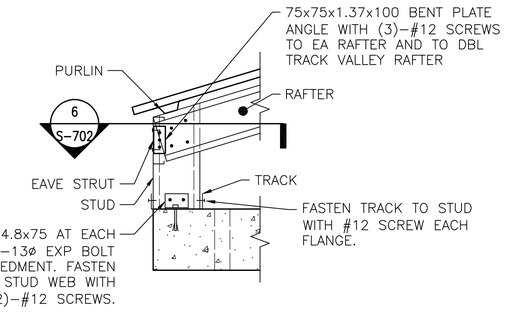

DETAIL

5 / S-702 SCALE: NTS

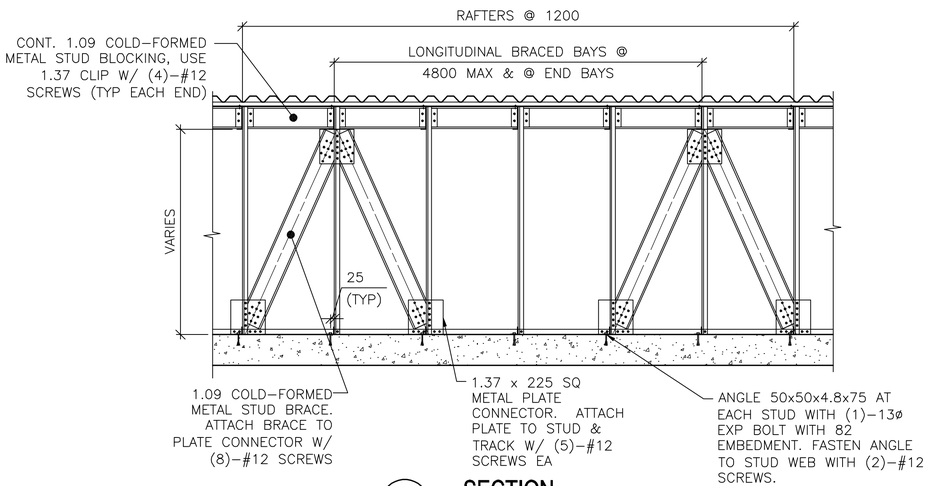

SECTION

4 / S-702 SCALE: NTS

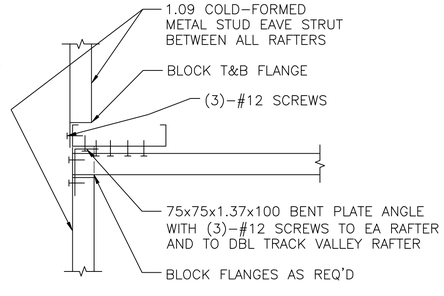

SECTION

6 / S-702 SCALE: NTS

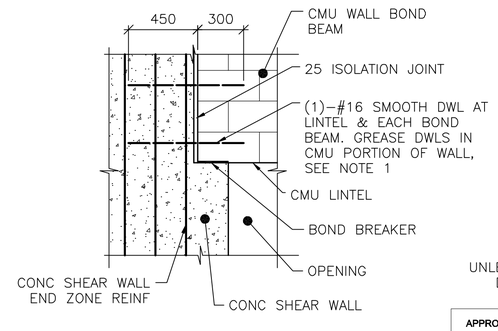

NOTE:
1. TIE SMOOTH DOWEL ROD TO SHEAR WALL END ZONE REINF FOR EACH BOND BEAM AND LINTEL.

SECTION

7 / S-702 SCALE: NTS

UNLESS OTHERWISE NOTED, LINEAR DIMENSIONS SHOWN ARE IN MILLIMETERS (mm)

APPROVED:

A/E DESIGNER OF RECORD

SEAL:

GEORGIA REGISTERED 1-29-10 No. 27141 PROFESSIONAL ENGINEER CHRISTOPHER W. WHITMORE

US ARMY CORPS OF ENGINEERS
AFGHANISTAN ENGINEER DISTRICT

Mark	Description	Date	Appr.	Mark	Description	Date	Appr.

Date: 2/23/10 Rev: 0
Design file no.
Drawing code:
File name: AANASPS-702TDT
Plot date: 2/23/2010
Plot scale: x:X

Designed by: KMP/MMY
Dwn by: RCG Ckd by: CWW
Reviewed by: LHM
Submitted by: BAKER

U.S. ARMY CORPS OF ENGINEERS
AFGHANISTAN ENGINEER DISTRICT
APO AE 96338

Michael Baker Jr., Inc
A unit of Michael Baker Corporation
Airside Business Park
100 Airside Drive
Moon Township, PA 15108
www.mbakercorp.com

AFGHAN NATIONAL ARMY
REGIONAL MILITARY TRAINING CENTER
STANDARD DESIGN

WEAPONS STORAGE (ASP)

TYPICAL DETAILS

Sheet reference number:
S-702

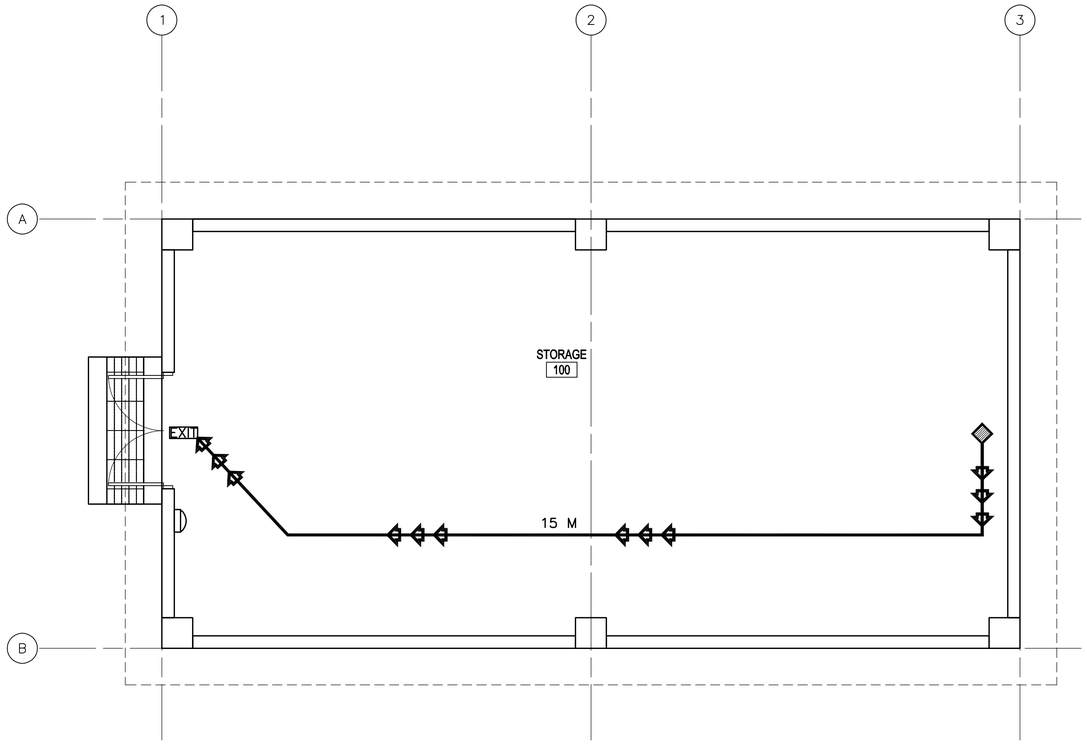

1 / A-001 **LIFE SAFETY PLAN**

SCALE: 1:50

CODE ANALYSIS:

1. REFERENCES:
   2006 INTERNATIONAL BUILDING CODE (2006 IBC)
   2006 LIFE SAFETY CODE (2006 NFPA 101)

2. IBC OCCUPANCY CLASSIFICATION:
   GROUP H–3
   (STORAGE, ORDINARY HAZARD NFPA 101 6.1.13.1 & 6.2.2 AND CHAPTER 42)

3. TYPE OF CONSTRUCTION (IBC): TYPE II–B (UNPROTECTED/NONSPRINKLERED)

4. IBC TABLE 503: ALLOWABLE HEIGHT AND BUILDING AREAS:
   GROUP H–3
   ALLOWABLE AREA: 1300 SM
   ALLOWABLE HEIGHT: 2 STORIES (16 M)

   GROUP H–3
   PROPOSED AREA: 98 SM
   PROPOSED HEIGHT: 1 STORY (<16 M)

5. IBC TABLE 601 & 602: FIRE RESISTANCE RATING REQUIREMENTS FOR BUILDING ELEMENTS FOR TYPE II–B

BUILDING ELEMENT	RATING (HOUR)	REFERENCE
STRUCTURAL FRAME (COLUMNS, GIRDERS & TRUSSES)	0	TABLE 601
BEARING WALLS		
EXTERIOR	0	TABLE 601
INTERIOR	0	TABLE 601
NONBEARING WALLS & PARTITIONS		
INTERIOR	0	TABLE 601
FLOOR CONSTRUCTION	0	TABLE 601
ROOF CONSTRUCTION	0	TABLE 601
EXTERIOR WALL	0	TABLE 602

6. IBC TABLE 803.5 – INTERIOR WALL AND CEILING FINISH REQUIREMENTS FOR H–3 OCCUPANCY/NONSPRINKLERED

GROUP	EXIT ENCLOSURES AND EXIT PASSAGEWAY	CORRIDORS	ROOMS AND ENCLOSED SPACES
H	A	A	B

7. NFPA 101 TABLE 7.3.1.2 – OCCUPANT LOAD
   STORAGE = N/A
   NFPA 101 42.1.7: USE THE PROBABLE POPULATION: 5

8. NFPA 101 TABLE 7.3.3.1 – EGRESS CAPACITY
   STORAGE = 5 MM PER OCCUPANT

   REQUIRED: 25 MM (5 OCCUPANTS x 5 MM PER OCCUPANT)
   PROPOSED EGRESS CAPACITY: 1800 MM: (1) 900 MM DOUBLE DOORS

9. NFPA 101 PARAGRAPH 42.2.6 AND TABLE 42.2.6 – EXIT ACCESS TRAVEL DISTANCE
   REQUIRED: 61 METERS
   PROPOSED: 15 METERS

10. NFPA 101 PARAGRAPH 42.3.6 – CORRIDORS
    CORRIDORS ARE NOT REQUIRED AS DOORS EXIT DIRECTLY TO OUTSIDE

11. NFPA 101 PARAGRAPH 42.2.4.1(2) AND 7.4.1.1 – MINIMUM NUMBER OF EXITS
    REQUIRED: 1 MINIMUM
    PROPOSED: 1 EXIT

LEGEND:

- DENOTES PATHS OF EXIT TRAVEL
- EXIT — DENOTES DOOR AS AN EMERGENCY EXIT
- DENOTES STARTING POINT FOR TRAVEL DISTANCE
- DENOTES FIRE EXTINGUISHER LOCATIONS

LINEAR DIMENSIONS SHOWN ARE IN MILLIMETERS (MM), UNLESS OTHERWISE NOTED

0 1000 2000
SCALE: 1:50

APPROVED:

A/E DESIGNER OF RECORD

SEAL:

STATE OF SOUTH CAROLINA
KEVIN R. CHAFIN
N. Charleston, SC
6374
REGISTERED ARCHITECT

US ARMY CORPS OF ENGINEERS
AFGHANISTAN ENGINEER DISTRICT

Mark	Description	Date	Appr.	Mark	Description	Date	Appr.

Date: 2/23/10 Rev: 0
Design file no.
Drawing code:
File name: ANAASPA-001LSP
Plot date: 2/23/2010
Plot scale: x:X

Designed by: KRC
Dwn by: KJG
Ckd by: NLJ
Reviewed by: LHM
Submitted by:
BAKER

U.S. ARMY CORPS OF ENGINEERS
AFGHANISTAN ENGINEER DISTRICT
APO AE 96338

Michael Baker Jr., Inc.
A unit of Michael Baker Corporation
Airside Business Park
100 Airside Drive
Moon Township, PA 15108
www.mbakercorp.com

AFGHAN NATIONAL ARMY
REGIONAL MILITARY TRAINING CENTER
STANDARD DESIGN

WEAPONS STORAGE (ASP)

LIFE SAFETY PLAN

Sheet reference number:
A–001

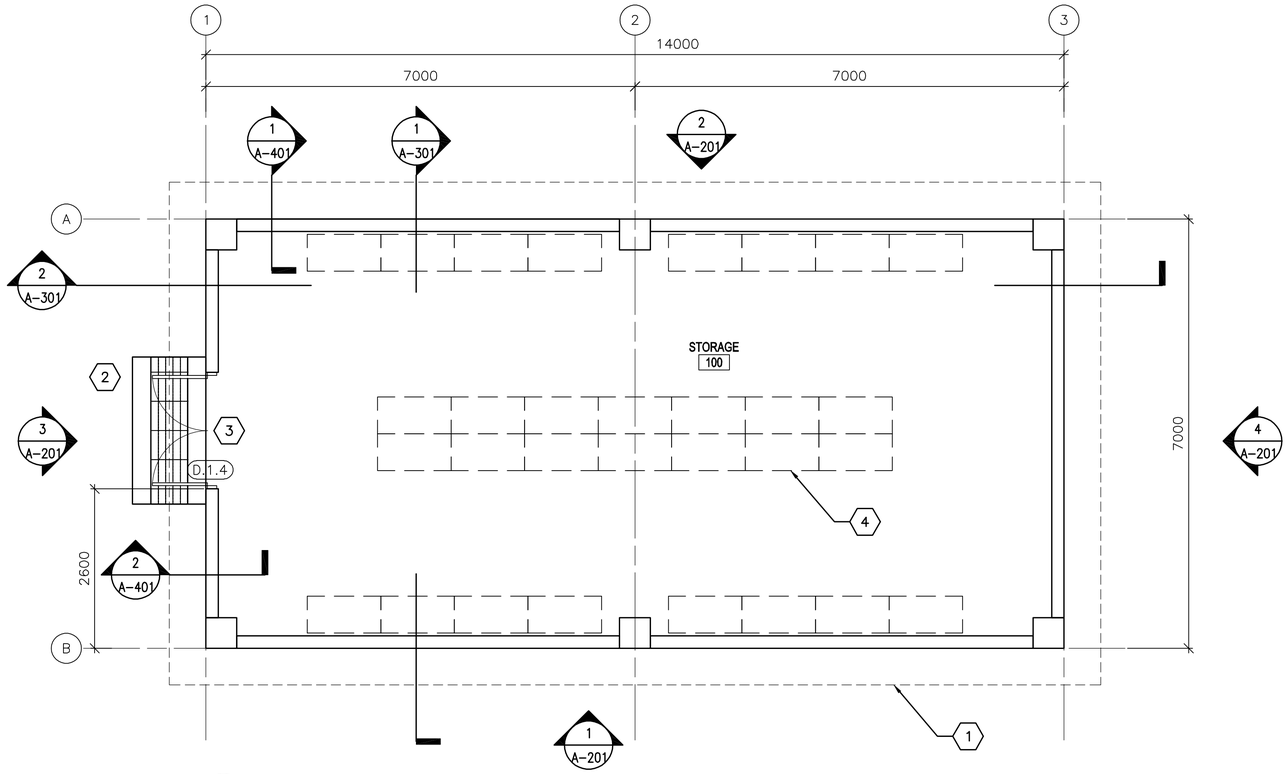

1 A-101 **FLOOR PLAN**

SCALE: 1:50

GENERAL NOTES:

A. DIMENSIONS ARE SHOWN TO OUTER EDGE OF EXTERIOR STRUCTURAL COLUMNS, STRUCTURAL COLUMN GRID, EDGE OF INTERIOR PARTITIONS, EDGE OF WINDOW OPENINGS, AND TO HINGE SIDE OF DOOR FRAME OPENINGS.

B. HINGE SIDE OF OPENINGS FOR DOORS AND FRAMES SHALL BE LOCATED 200 MM FROM THE ADJACENT WALL OR COLUMN, UNLESS NOTED OTHERWISE.

C. INTERIOR PARTITIONS SHALL BE 200 MM CMU. SEE STRUCTURAL DRAWINGS FOR LOCATION OF CONCRETE SHEAR WALLS.

D. COSMETIC REPAIR OF MINOR DEFECTS: REPAIR OR FILL MORTAR JOINTS AND MINOR DEFECTS, INCLUDING BUT NOT LIMITED TO SPALLS, IN ACCORDANCE WITH MANUFACTURER'S RECOMMENDATIONS AND PRIOR TO COATING APPLICATION. SURFACES TO BE PAINTED SHALL BE CLEAN AND FREE OF FOREIGN MATTER BEFORE APPLICATION OF PAINT. CLEANING SHALL BE SCHEDULED SO THAT DUST AND OTHER CONTAMINANTS WILL NOT FALL ON NEWLY PAINTED SURFACES.

E. CONCRETE, PLASTER AND MASONRY SURFACES SHALL BE ALLOWED TO CURE FOR AT LEAST 30 DAYS BEFORE PAINTING. CONCRETE SLABS-ON-GRADE SHALL BE ALLOWED TO CURE 90 DAYS BEFORE STAINING OR SEALING.

F. DO NOT USE PAINT MATERIALS CONTAINING LEAD CONTENT IN EXCESS OF 0.009 PERCENT OF THE WEIGHT OF THE TOTAL NONVOLATILE CONTENT OF THE PAINT OR THE WEIGHT OF THE DRIED PAINT FILM.

G. DO NOT USE ANY ASBESTOS CONTAINING MATERIALS (ACM) IN PROJECT. ACM IS DEFINED AS 1% OR MORE BY VOLUME.

H. DO NOT USE PAINT MATERIALS CONTAINING MERCURIAL FUNGICIDES.

I. FACTORY PRIMED METAL DOORS AND FRAMES SHALL RECEIVE TWO COATS OF PAINT.

J. FILL REMAINING SPACE AT PENETRATIONS IN FIRE-RATED FLOORS, PARTITIONS AND CEILINGS WITH APPROPRIATE FIRESTOPPING MATERIALS.

K. ALL CEILING FINISHES SHALL BE PAINTED STRUCTURE.

L. ALL WALL FINISHES SHALL BE PAINTED.

M. ALL FLOOR FINISHES SHALL BE GRAY EPOXY SEALED CONCRETE, UNLESS NOTED OTHERWISE.

KEY NOTES: (X)

1. LINE OF ROOF OVERHANG ABOVE.
2. CONCRETE STOOP WITH GRATE – SEE DETAIL 1/A-503.
3. DOOR SHALL BE MAXIMUM DUTY.
4. SHELVING (NIC) TYPICAL.

LEGEND:

(XXX) DOOR FRAME AND HARDWARE TYPE, SEE SHEET A-601

(A) WINDOW TYPE, SEE SHEET A-601

(X) KEY NOTE

ABBREVIATIONS:

ELEC	ELECTRICAL
MECH	MECHANICAL
JAN	JANITOR
CLOS	CLOSET
COMM	COMMUNICATIONS

LINEAR DIMENSIONS SHOWN ARE IN MILLIMETERS (MM), UNLESS OTHERWISE NOTED

0 1000 2000
SCALE: 1:50

APPROVED:

A/E DESIGNER OF RECORD

SEAL:

STATE OF SOUTH CAROLINA
KEVIN R. CHAFIN
N. Charleston, SC
6374
REGISTERED ARCHITECT

US ARMY CORPS OF ENGINEERS
AFGHANISTAN ENGINEER DISTRICT

Mark	Description	Date	Appr.	Mark	Description	Date	Appr.

Date: 2/23/10
Rev: 0
Design file no.
Drawing code:
File name: ANASPA-101FP
Plot date: 2/23/2010
Plot scale: x:X

Designed by: KRC
Dwn by: KJG
Ckd by: NLJ
Reviewed by: LHM
Submitted by: BAKER

U.S. ARMY CORPS OF ENGINEERS
AFGHANISTAN ENGINEER DISTRICT
APO AE 96338

Michael Baker Jr., Inc.
A unit of Michael Baker Corporation
Airside Business Park
100 Airside Drive
Moon Township, PA 15108
www.mbakercorp.com

AFGHAN NATIONAL ARMY
REGIONAL MILITARY TRAINING CENTER
STANDARD DESIGN

WEAPONS STORAGE (ASP)

FLOOR PLAN

Sheet reference number:
A-101

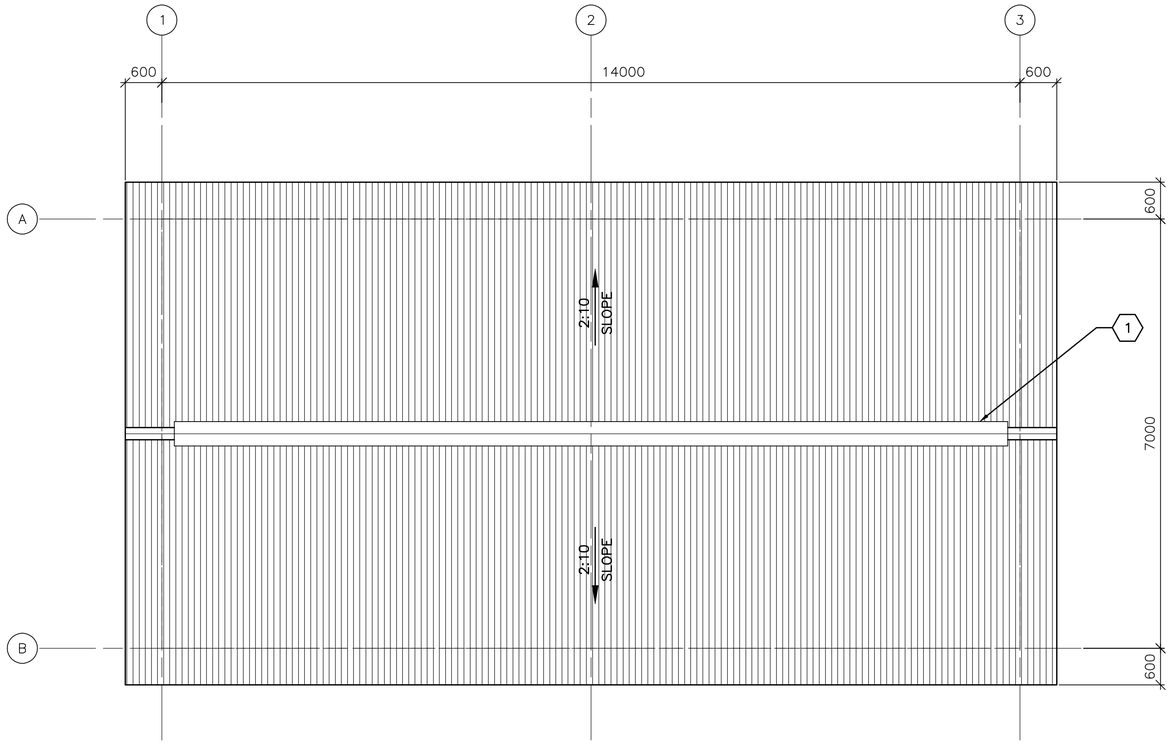

1 / A-102 **ROOF PLAN**

SCALE: 1:50

GENERAL NOTES:

A. THE APPROXIMATE LOCATION OF ROOF DEVICES AND PENETRATIONS ARE SHOWN ON THE ROOF PLAN FOR INFORMATION ONLY. THE CONTRACTOR SHALL BE RESPONSIBLE FOR UNDERSTANDING THE ACTUAL LOCATION OF THESE AND ALL OTHER ITEMS PRIOR TO BEGINNING CONSTRUCTION. COORDINATE ALL ROOF PENETRATIONS WITH STRUCTURAL, MECHANICAL AND PLUMBING WORK.

B. UNLESS OTHERWISE NOTED, NOTES, DETAILS OR FEATURES INDICATED FOR ONE CONDITION SHALL BE APPLICABLE FOR ALL ALIKE AND SIMILAR CONDITIONS.

C. STOCKPILING OF MATERIALS, EQUIPMENT AND ANY OTHER ITEMS ON THE ROOF IS PROHIBITED.

D. ROOFS SHALL BE CORRUGATED METAL ROOF PANELS ON COLD-FORMED METAL FRAMING ON CONCRETE SLAB.

KEY NOTES:

(X)

1. CONTINUOUS METAL RIDGE VENT SEE DETAIL 4/A-501.

LINEAR DIMENSIONS SHOWN ARE IN MILLIMETERS (MM), UNLESS OTHERWISE NOTED

0 1000 2000
SCALE: 1:50

APPROVED:

A/E DESIGNER OF RECORD

SEAL:

STATE OF SOUTH CAROLINA
KEVIN R. CHAFIN
N. Charleston, SC
6374
REGISTERED ARCHITECT

US ARMY CORPS OF ENGINEERS
AFGHANISTAN ENGINEER DISTRICT

Mark	Description	Date	Appr.	Mark	Description	Date	Appr.

U.S. ARMY CORPS OF ENGINEERS
AFGHANISTAN ENGINEER DISTRICT
APO AE 96338

Michael Baker Jr., Inc
A unit of Michael Baker Corporation
Airside Business Park
100 Airside Drive
Moon Township, PA 15108
www.mbakercorp.com

Designed by: KRC
Dwn by: KJG
Ckd by: NLJ
Reviewed by: LHM
Submitted by: BAKER
Date: 2/23/10
Rev: 0
Design file no.
Drawing code:
File name: ANASPA-102RP
Plot date: 2/23/2010
Plot scale: x:X

AFGHAN NATIONAL ARMY
REGIONAL MILITARY TRAINING CENTER
STANDARD DESIGN

WEAPONS STORAGE (ASP)

ROOF PLAN

Sheet reference number:
A-102

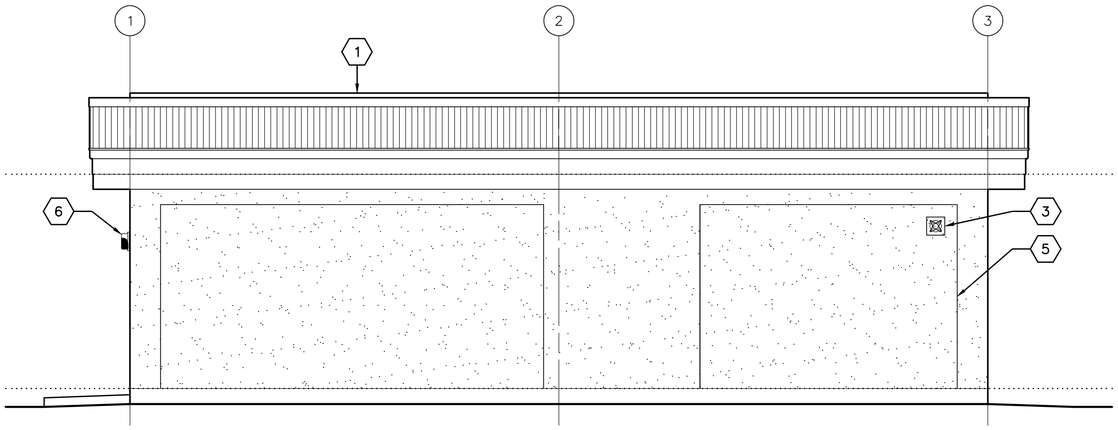

1 A-201 **ELEVATION**
SCALE: 1:50

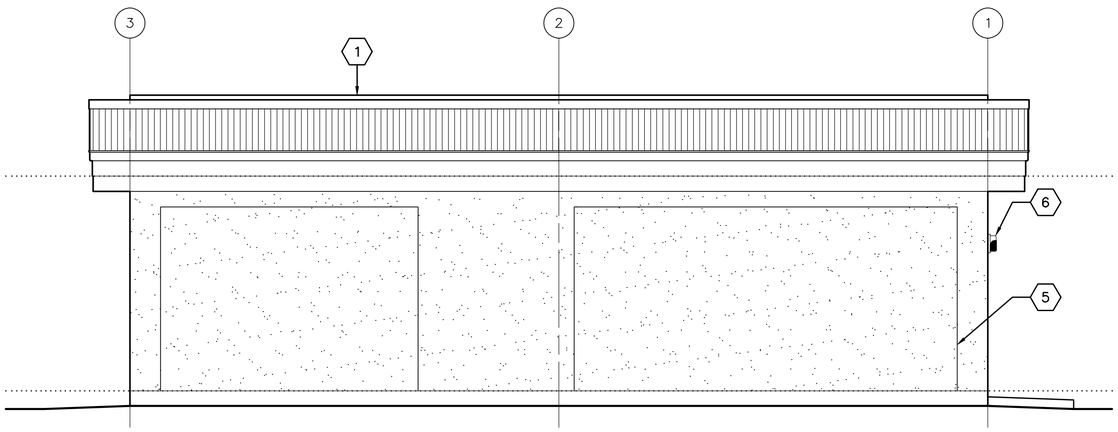

2 A-201 **ELEVATION**
SCALE: 1:50

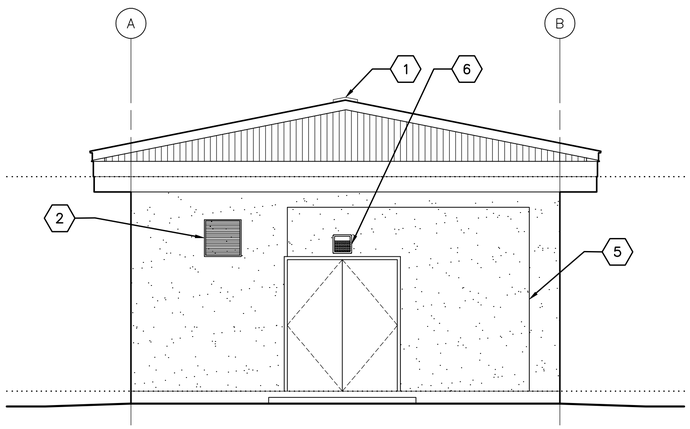

3 A-201 **ELEVATION**
SCALE: 1:50

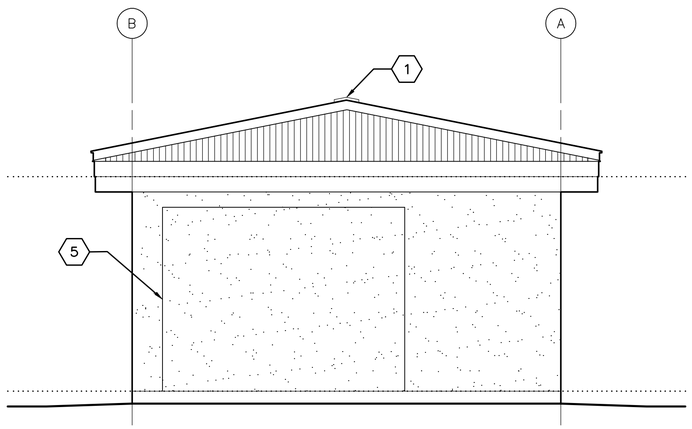

4 A-201 **ELEVATION**
SCALE: 1:50

GENERAL NOTES:

A. COORDINATE SIZE AND LOCATION OF OPENINGS FOR MECHANICAL ITEMS WITH MECHANICAL DRAWINGS.

B. PROVIDE STRUCTURAL LINTELS AS REQUIRED – SEE STRUCTURAL DRAWINGS

C. ALL EXTERIOR WALL FINISHES SHALL BE STUCCO OVER CMU AND CONCRETE SUBSTRATES. PROVIDE CONTROL JOINTS IN STUCCO WALL FINISH AS NOTED.

D. ROOF SHALL BE CORRUGATED METAL ROOF PANELS ON COLD–FORMED METAL FRAMING ON CONCRETE SLAB.

KEY NOTES:

1. CONTINUOUS METAL RIDGE VENT – SEE DETAIL 4/A–501.
2. LOUVER, LOCATE TOP OF WALL PENETRATION 2800 MM ABOVE FINISHED FLOOR – SEE MECHANICAL DRAWINGS.
3. EXHAUST FAN, LOCATE TOP OF WALL PENETRATION 2800 MM ABOVE FINISHED FLOOR – SEE MECHANICAL DRAWINGS.
4. NOT USED
5. STUCCO CONTROL JOINT – SEE DETAIL 2A/A–501.
6. EXTERIOR LIGHT FIXTURE – SEE ELECTRICAL.

LINEAR DIMENSIONS SHOWN ARE IN MILLIMETERS (MM), UNLESS OTHERWISE NOTED

0 1000 2000
SCALE: 1:50

APPROVED:

A/E DESIGNER OF RECORD

SEAL:

STATE OF SOUTH CAROLINA
KEVIN R. CHAFIN
N. Charleston, SC
6374
REGISTERED ARCHITECT

US ARMY CORPS OF ENGINEERS
AFGHANISTAN ENGINEER DISTRICT

Mark	Description	Date	Appr.	Mark	Description	Date	Appr.

U.S. ARMY CORPS OF ENGINEERS
AFGHANISTAN ENGINEER DISTRICT
APO AE 96338

Michael Baker Jr., Inc
A unit of Michael Baker Corporation
Airside Business Park
100 Airside Drive
Moon Township, PA 15108
www.mbakercorp.com

Designed by: KRC
Dwn by: KJG
Ckd by: NLJ
Reviewed by: LHM
Submitted by: BAKER
Date: 2/23/10
Rev: 0
Design file no.
Drawing code:
File name: ANASPA-201ELV
Plot date: 2/23/2010
Plot scale: x:x

AFGHAN NATIONAL ARMY
REGIONAL MILITARY TRAINING CENTER
STANDARD DESIGN

WEAPONS STORAGE (ASP)

ELEVATIONS

Sheet reference number:
A–201

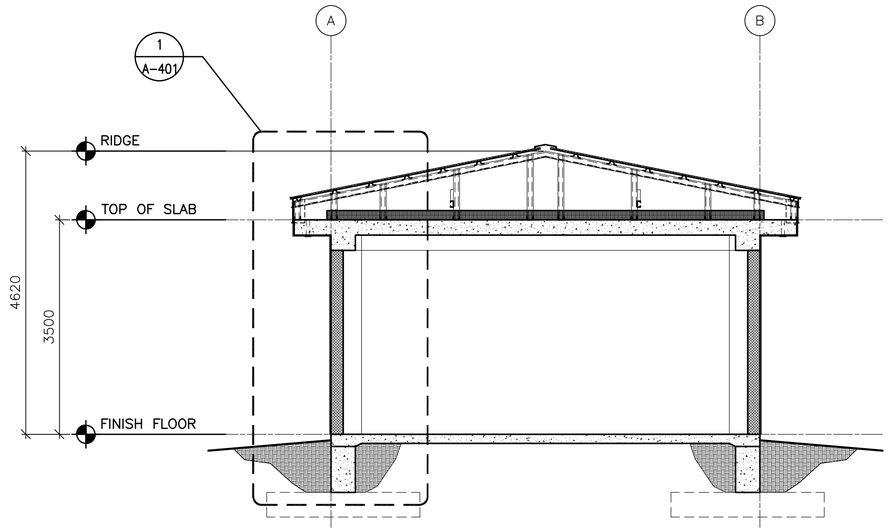

1 A-301 **BUILDING SECTION**
SCALE: 1:50

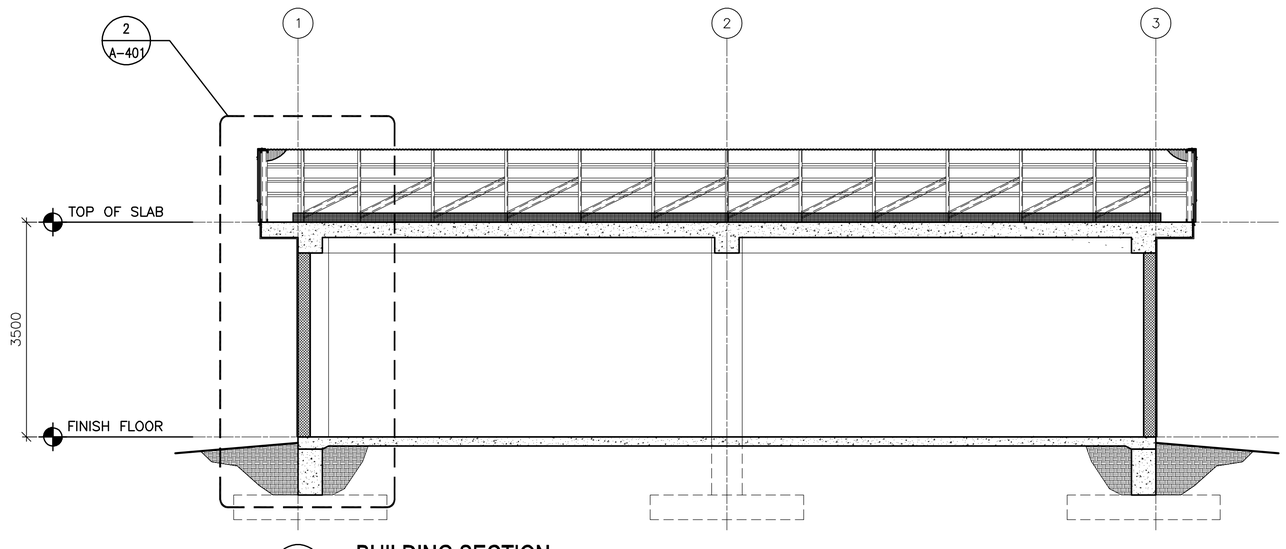

2 A-301 **BUILDING SECTION**
SCALE: 1:50

LINEAR DIMENSIONS SHOWN ARE IN MILLIMETERS (MM), UNLESS OTHERWISE NOTED

0 1000 2000
SCALE: 1:50

APPROVED:

A/E DESIGNER OF RECORD

SEAL:

STATE OF SOUTH CAROLINA
KEVIN R. CHAFIN
N. Charleston, SC
6374
REGISTERED ARCHITECT

US ARMY CORPS OF ENGINEERS
AFGHANISTAN ENGINEER DISTRICT

Mark	Description	Date	Appr.	Mark	Description	Date	Appr.

U.S. ARMY CORPS OF ENGINEERS
AFGHANISTAN ENGINEER DISTRICT
APO AE 96338

Michael Baker Jr., Inc
A unit of Michael Baker Corporation
Airside Business Park
100 Airside Drive
Moon Township, PA 15108
www.mbakercorp.com

Designed by: KRC
Dwn by: KJG
Ckd by: NLH
Reviewed by: LHM
Submitted by: BAKER

Date: 2/23/10
Rev: 0
Design file no.
Drawing code:
File name: ANAASPA-301BS
Plot date: 2/23/2010
Plot scale: x:X

AFGHAN NATIONAL ARMY
REGIONAL MILITARY TRAINING CENTER
STANDARD DESIGN

WEAPONS STORAGE (ASP)

BUILDING SECTIONS

Sheet reference number:
A-301

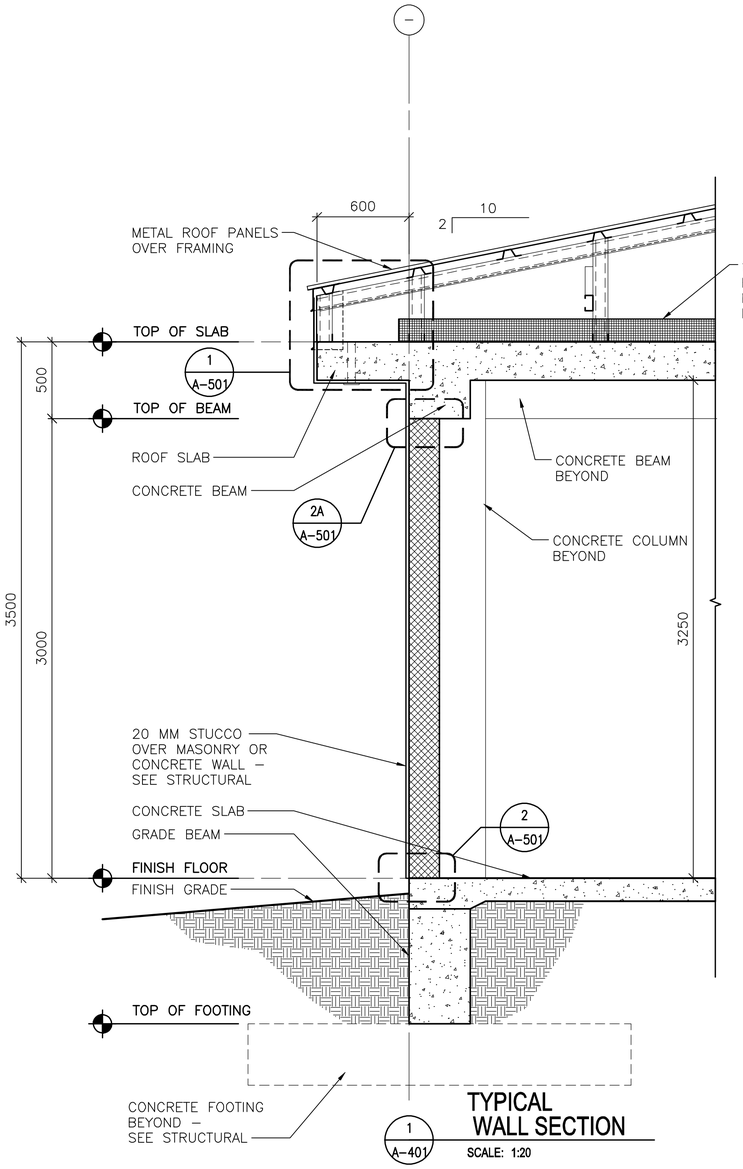

1 A-401 **TYPICAL WALL SECTION**

SCALE: 1:20

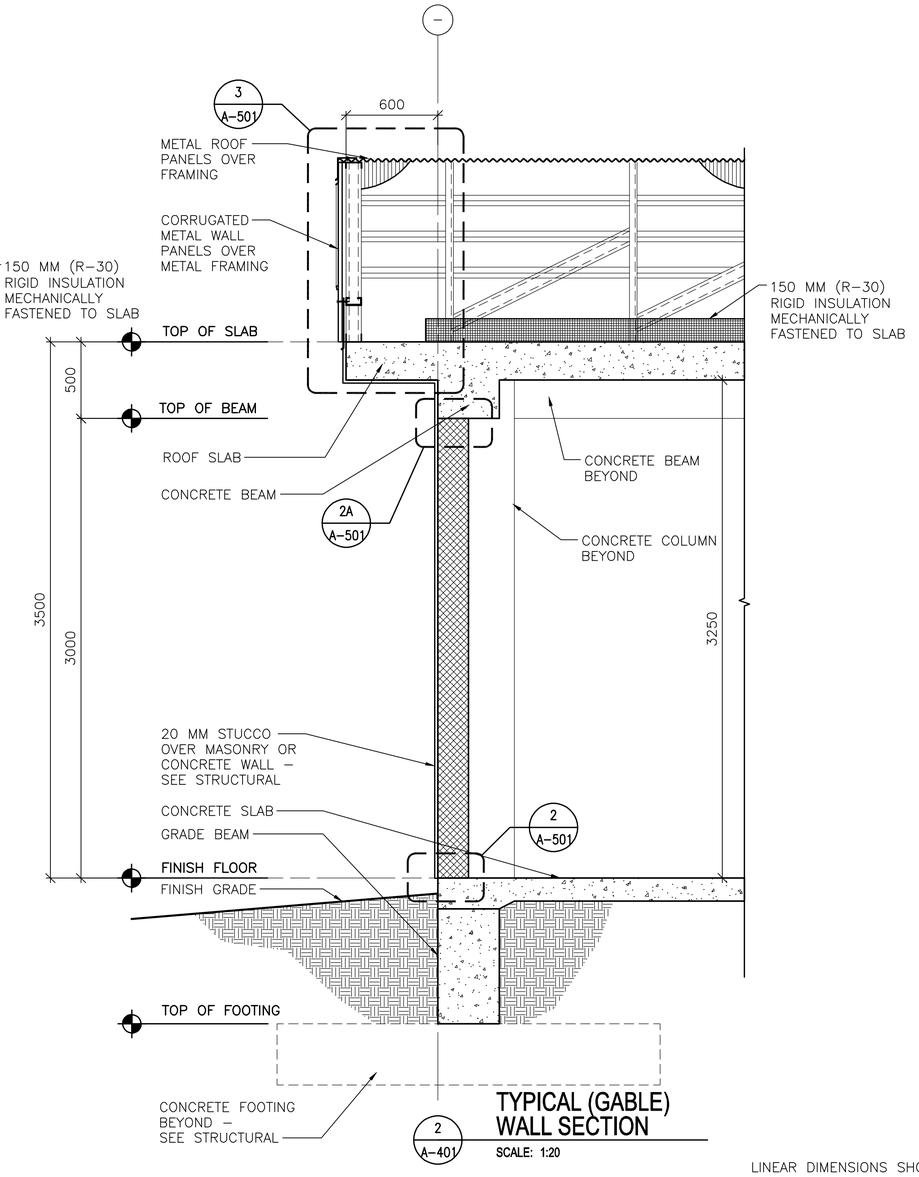

2 A-401 **TYPICAL (GABLE) WALL SECTION**

SCALE: 1:20

LINEAR DIMENSIONS SHOWN ARE IN MILLIMETERS (MM), UNLESS OTHERWISE NOTED

0 400 800

SCALE: 1:20

APPROVED:

A/E DESIGNER OF RECORD

SEAL:

STATE OF SOUTH CAROLINA
KEVIN R. CHAFIN
N. Charleston, SC
6374
REGISTERED ARCHITECT

US ARMY CORPS OF ENGINEERS
AFGHANISTAN ENGINEER DISTRICT

Mark	Description	Date	Appr.	Mark	Description	Date	Appr.

Rev: 0
Date: 2/23/10
Design file no.
Drawing code:
File name: ANASPA-401WS
Plot date: 2/23/2010
Plot scale: x:X

Designed by: KRC
Dwn by: KJG
Ckd by: NLJ
Reviewed by: LHM
Submitted by: BAKER

U.S. ARMY CORPS OF ENGINEERS
AFGHANISTAN ENGINEER DISTRICT
APO AE 96338

Michael Baker Jr., Inc
A unit of Michael Baker Corporation
Airside Business Park
100 Airside Drive
Moon Township, PA 15108
www.mbakercorp.com

AFGHAN NATIONAL ARMY
REGIONAL MILITARY TRAINING CENTER
STANDARD DESIGN

WEAPONS STORAGE (ASP)

WALL SECTIONS

Sheet reference number:
A-401

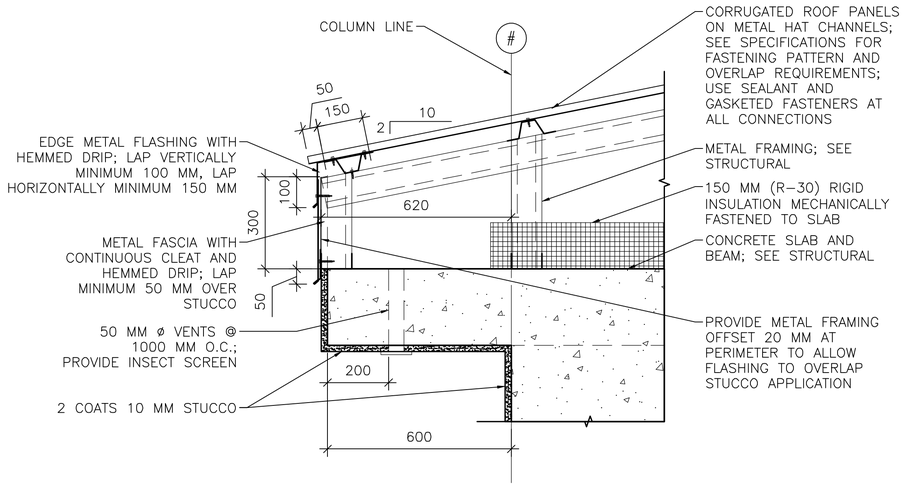

1 / A–501 **EAVE DETAIL**
SCALE: 1:10

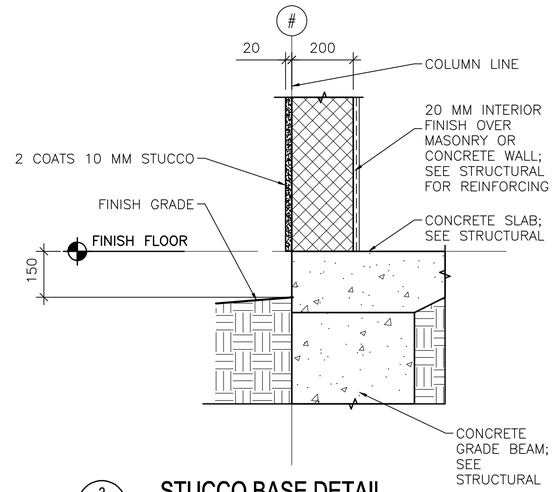

2 / A–501 **STUCCO BASE DETAIL**
SCALE: 1:10

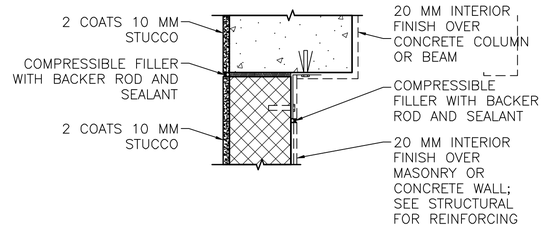

NOTE: DETAIL TYPICAL AT ALL WALL/COLUMN AND WALL/BEAM LOCATIONS, SEE ALTERNATE BRACING DETAIL BELOW 2B/A–501.

2A / A–501 **STUCCO JOINT DETAIL**
SCALE: 1:10

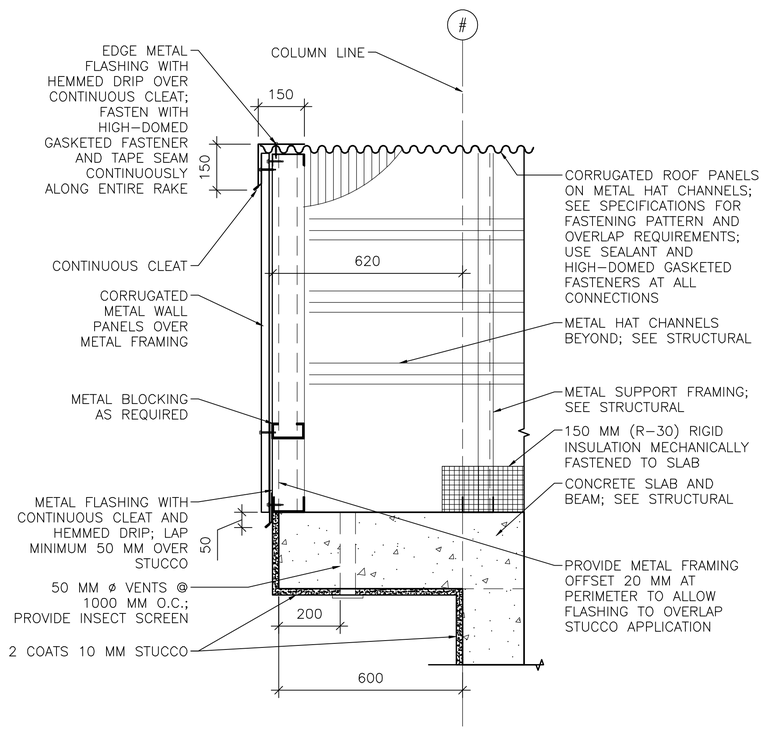

3 / A–501 **RAKE/EAVE DETAIL**
SCALE: 1:10

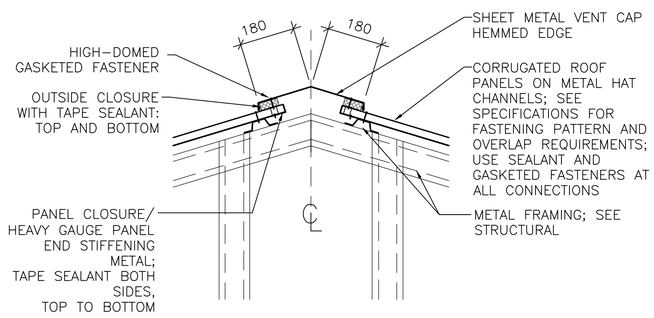

4 / A–501 **RIDGE VENT DETAIL**
SCALE: 1:10

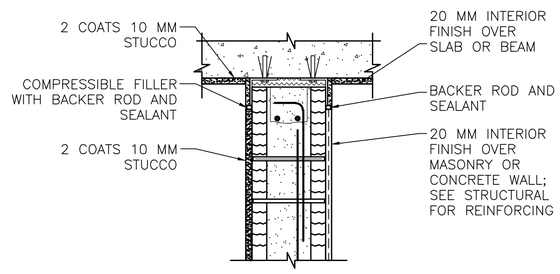

INTERIOR WALL/BEAM

2B / A–501 **ALTERNATE BRACING DETAIL**
SCALE: 1:10

LINEAR DIMENSIONS SHOWN ARE IN MILLIMETERS (MM), UNLESS OTHERWISE NOTED

0 200 400
SCALE: 1:10

APPROVED:

A/E DESIGNER OF RECORD

SEAL:

STATE OF SOUTH CAROLINA
KEVIN R. CHAFIN
N. Charleston, SC
6374
REGISTERED ARCHITECT

US ARMY CORPS OF ENGINEERS
AFGHANISTAN ENGINEER DISTRICT

Mark	Description	Date	Appr.	Mark	Description	Date	Appr.

U.S. ARMY CORPS OF ENGINEERS
AFGHANISTAN ENGINEER DISTRICT
APO AE 96338

Michael Baker Jr., Inc.
A unit of Michael Baker Corporation
Airside Business Park
100 Airside Drive
Moon Township, PA 15108
www.mbakercorp.com

Designed by: KRC
Dwn by: KJG
Ckd by: NLJ
Reviewed by: LHM
Submitted by:
BAKER
Date: 2/23/10
Rev: 0
Design file no.
Drawing code:
File name: ANASPA-501DT
Plot date: 2/23/2010
Plot scale: x:X

AFGHAN NATIONAL ARMY
REGIONAL MILITARY TRAINING CENTER
STANDARD DESIGN

WEAPONS STORAGE (ASP)

EXTERIOR DETAILS

Sheet reference number:
A–501

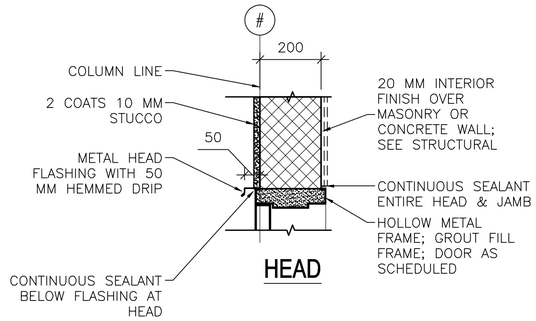

HEAD

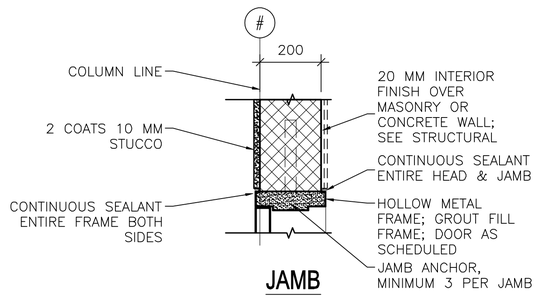

JAMB

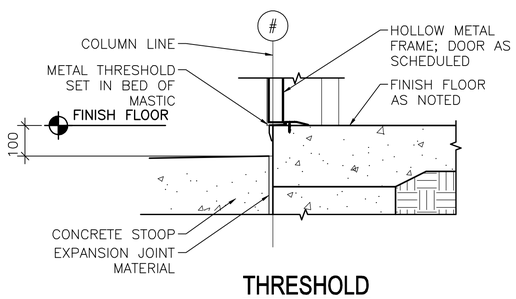

THRESHOLD

1
A–502

EXTERIOR DOOR DETAILS

SCALE: 1:10

LINEAR DIMENSIONS SHOWN ARE IN MILLIMETERS (MM), UNLESS OTHERWISE NOTED

0 200 400
SCALE: 1:10

APPROVED:

A/E DESIGNER OF RECORD

SEAL:

STATE OF SOUTH CAROLINA
KEVIN R. CHAFIN
N. Charleston, SC
6374
REGISTERED ARCHITECT

US ARMY CORPS OF ENGINEERS
AFGHANISTAN ENGINEER DISTRICT

Mark	Description	Date	Appr.	Mark	Description	Date	Appr.

Date: 2/23/10
Rev: 0
Design file no.
Drawing code:
File name: ANAASPA-502HLS
Plot date: 2/23/2010
Plot scale: x:X

Designed by: KRC
Dwn by: KJG
Ckd by: NLJ
Reviewed by: LHM
Submitted by: BAKER

U.S. ARMY CORPS OF ENGINEERS
AFGHANISTAN ENGINEER DISTRICT
APO AE 96338

Michael Baker Jr., Inc
A unit of Michael Baker Corporation
Airside Business Park
100 Airside Drive
Moon Township, PA 15108
www.mbakercorp.com

AFGHAN NATIONAL ARMY
REGIONAL MILITARY TRAINING CENTER
STANDARD DESIGN

WEAPONS STORAGE (ASP)

HEAD, JAMB & SILL DETAILS

Sheet reference number:
A–502

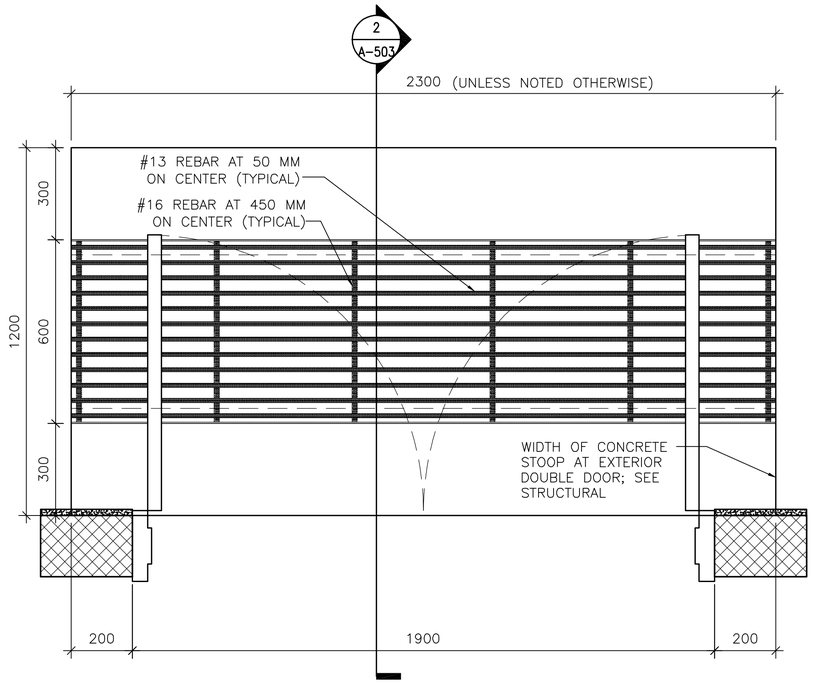

1 A-503 **DOOR STOOP PLAN (WITH GRATE)**

SCALE: 1:10

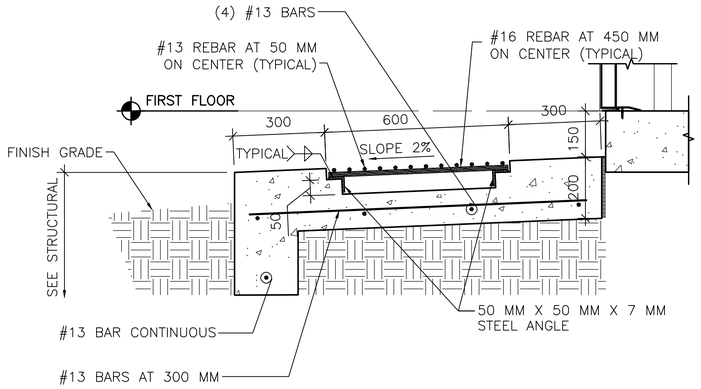

2 A-503 **DOOR STOOP DETAIL**

SCALE: 1:10

LINEAR DIMENSIONS SHOWN ARE IN MILLIMETERS (MM), UNLESS OTHERWISE NOTED

0 200 400
SCALE: 1:10

STATE OF SOUTH CAROLINA
KEVIN R. CHAFIN
N. Charleston, SC
6374
REGISTERED ARCHITECT

US ARMY CORPS OF ENGINEERS
AFGHANISTAN ENGINEER DISTRICT

Mark	Description	Date	Appr.	Mark	Description	Date	Appr.

Designed by: KRC
Dwn by: KJG
Ckd by: NLJ
Reviewed by: LHM
Submitted by: BAKER
Date: 2/23/10
Rev: 0
Design file no.
Drawing code:
File name: ANASPA-503DT
Plot date: 2/23/2010
Plot scale: x:X

U.S. ARMY CORPS OF ENGINEERS
AFGHANISTAN ENGINEER DISTRICT
APO AE 96338

Michael Baker Jr., Inc.
A unit of Michael Baker Corporation
Airside Business Park
100 Airside Drive
Moon Township, PA 15108
www.mbakercorp.com

AFGHAN NATIONAL ARMY
REGIONAL MILITARY TRAINING CENTER
STANDARD DESIGN

WEAPONS STORAGE (ASP)

STOOP DETAILS

Sheet reference number:
A-503

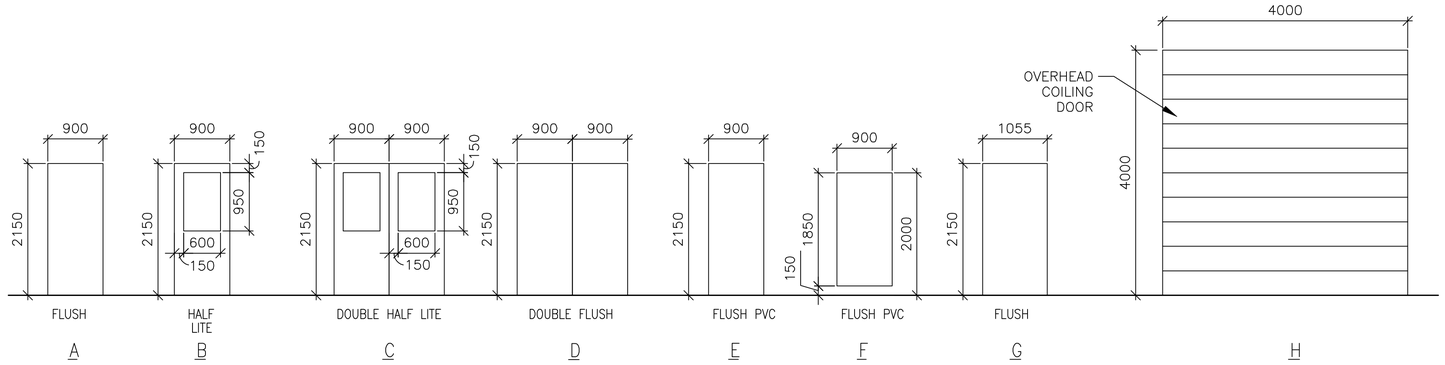

1 A-601 DOOR TYPES

SCALE: 1:50

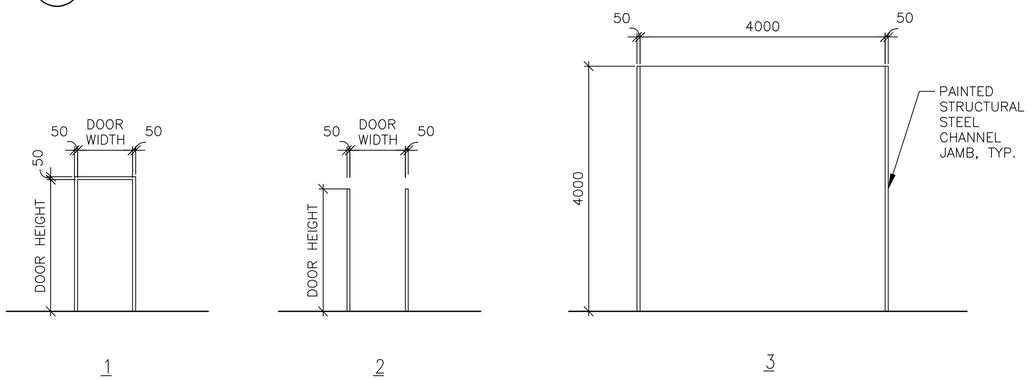

2 A-601 FRAME TYPES

SCALE: 1:50

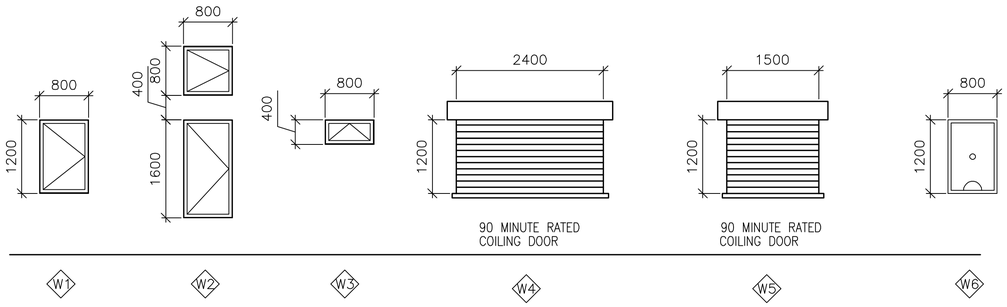

3 A-601 WINDOW TYPES

SCALE: 1:50

WINDOW TYPE NOTES:

1. ALL EXTERIOR WINDOWS SHALL BE ALUMINUM WITH INSECT SCREENS. WINDOWS SHALL BE COMMERCIAL GRADE.
2. ALL EXTERIOR WINDOWS SHALL BE OPERABLE.

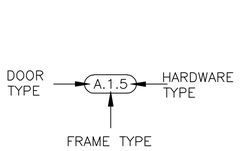

4 A-601 DOOR TAG

SCALE: NTS

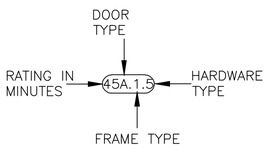

5 A-601 RATED DOOR TAG

SCALE: NTS

DOOR TAG NOTES:

1. THE DOOR TAG INDICATES THE DOOR TYPE, FRAME TYPE AND HARDWARE SET FOR EACH DOOR.
2. THE DOOR TAG FOR RATED DOORS INCLUDES THE RATING OF THE DOOR IN MINUTES.

EXTERIOR DOOR HARDWARE TYPES:

HW-1
1-1/2 PR HINGES, A5112 114 X 114
1 EA RIM EXIT DEVICE, TYPE 1
1 EA CYLINDER. E09221A, GRADE 1
1 EA OVERHEAD CLOSER, C02061, LOW RESISTANCE
1 EA THRESHOLD, J32130
3 EA DOOR SILENCERS, L03011

HW-2
1-1/2 PR HINGES, A5112 114 X 114
1 EA LOCKSET, F13 ENTRY LOCK W/LEVER HANDLES, GRADE 1
1 EA OVERHEAD CLOSER, C02061, LOW RESISTANCE
1 EA THRESHOLD, J32130
3 EA DOOR SILENCERS, L03011

HW-3
3 PR HINGES, A5112 114 X 114
2 EA RIM EXIT DEVICE, TYPE 1
2 EA CYLINDER. GRADE 1
2 EA OVERHEAD CLOSER, C02061, LOW RESISTANCE
1 EA DOOR COORDINATOR, TYPE 21
1 EA ASTRAGAL
1 EA THRESHOLD, J32130
2 EA DOOR SILENCERS, L03011

HW-4
3 PR HINGES, A5112 114 X 114
1 EA LOCKSET W/LEVER HANDLES. GRADE 1, F13
1 EA OVERHEAD CLOSER, C02061, LOW RESISTANCE
2 EA MAGNETIC HOLDER PIN, ATTACHED TO DOOR LEAF
2 EA MAGNETIC HOLDER RECEIVER, ATTACHED TO STOOP
2 EA LEVER EXTENSION FLUSH BOLTS, L04081
1 EA ASTRAGAL
1 EA THRESHOLD, J32130
2 EA DOOR SILENCERS, L03011

DOOR AND HARDWARE NOTES:

1. INTERIOR AND EXTERIOR METAL DOORS AND FRAME COLORS SHALL MATCH ADJACENT WALL COLORS AS SELECTED BY THE CONTRACTING OFFICER.
2. FRAMES, EXCEPT FIRE-RATED FRAMES, SHALL BE MOUNTED AND ADJUSTED IN ACCORDANCE WITH MANUFACTURER'S INSTRUCTIONS. FRAMES SHALL BE FASTENED WITH MINIMUM OF THREE ANCHORS PER JAMB AT EQUAL INTERVALS.
3. DIMENSIONS SHOWN ON DOOR TYPES DETAIL ARE BASED UPON MODULAR MASONRY (OR ROUGH OPENING), HEIGHT OF 2200 MM FOR STANDARD PERSONNEL DOORS. CONTRACTOR SHALL COORDINATE WITH DOOR SUPPLIER TO ENSURE THAT DIMENSIONS OF DOORS AND FRAMES PROVIDED ARE COMPATIBLE WITH DOOR OPENING DIMENSIONS.
4. HARDWARE SHALL BE HEAVY DUTY, COMMERCIAL GRADE, STAINLESS STEEL WITH A SATIN OR BRUSHED FINISH.
5. HARDWARE TYPES INCLUDE BUILDERS HARDWARE MANUFACTURERS ASSOCIATION (BMHA) NUMBER.
6. DOORS IN 2 HOUR RATED PARTITIONS SHALL BE 1.5 HOUR (90 MINUTE) RATED DOORS IN ACCORDANCE WITH NFPA 101, TABLE 8.3.4.2.
7. DOORS AT STAIR ENCLOSURES SHALL BE 1 HOUR (60 MINUTE) RATED AT 1 HOUR WALL IN ACCORDANCE WITH NFPA 101, TABLE 8.3.4.2.
8. DOORS IN 1 HOUR RATED WALLS SHALL BE 3/4 HOUR (45 MINUTE) RATED DOORS IN ACCORDANCE WITH NFPA 101, TABLE 8.3.4.2.
9. DOORS IN 1 HOUR RATED CORRIDOR WALLS SHALL BE 1/3 HOUR (20 MINUTE) IN ACCORDANCE WITH NFPA 101, TABLE 8.3.4.2.
10. PROVIDE DOOR STOPS TO PROTECT WALLS ON LOCATIONS WHERE DOOR SWING WILL STRIKE WALL.

THIS SHEET IS STANDARD AND IS INCLUSIVE OF ALL THE DOOR/ WINDOW/ HARDWARE TYPES FOR THE ENTIRE RMTC CONTRACT. NOT ALL DOOR/ WINDOW/ HARDWARE TYPES ARE USED FOR ANY PARTICULAR BUILDING DESIGN. CONTRACTOR SHALL REFER TO THE FLOOR PLAN FOR THE TYPES BEING USED.

INTERIOR DOOR HARDWARE TYPES:

HW-5
1-1/2 PR HINGES, A8133 114 X 114
1 EA LOCKSET W/LEVER HANDLES, F08, GRADE 1
1 EA WALL STOP, L02101 OR L02161
3 EA DOOR SILENCERS, L03011

HW-6
1-1/2 PR HINGES, A8112 114 X 114
1 EA LOCKSET W/LEVER HANDLES, F08, GRADE 1
1 EA WALL STOP, L02101 OR L02161
1 EA OVERHEAD CLOSER, C02061, LOW RESISTANCE
3 EA DOOR SILENCERS, L03011

HW-7
1-1/2 PR HINGES, A8133
1 EA LOCKSET W/LEVER HANDLES, F13 GRADE 1
1 EA WALL STOP, L02101 OR L02161
2 EA MOP PLATE, J103
3 EA DOOR SILENCERS, L03011

HW-8
1-1/2 PR HINGES, A8112
1 EA LOCKSET W/LEVER HANDLES, F13 GRADE 1
1 EA WALL STOP, L02101 OR L02161
2 EA MOP PLATE, J103
1 EA OVERHEAD CLOSER, C02061, LOW RESISTANCE
3 EA DOOR SILENCERS, L03011

HW-9
1-1/2 PR HINGES, A5112 114 X 114
1 EA RIM EXIT DEVICE, TYPE 1
1 EA CYLINDER. E09221A, GRADE 1
1 EA OVERHEAD CLOSER, C02061, LOW RESISTANCE
3 EA DOOR SILENCERS, L03011

HW-10
3 PR HINGES, A5112 114 X 114
1 EA LOCKSET W/LEVER HANDLES. GRADE 1, F13
2 EA LEVER EXTENSION FLUSH BOLTS, L04081
1 EA ASTRAGAL
2 EA DOOR SILENCERS, L03011

HW-11
1-1/2 PR HINGES, A8112 114 X 114
1 EA LOCKSET W/LEVER HANDLES, F13, GRADE 1
1 EA WALL STOP, L02101 OR L02161
1 EA OVERHEAD CLOSER, C02061, LOW RESISTANCE
3 EA DOOR SILENCERS, L03011
1 EA ROBE HOOK

HW-12
1-1/2 PR HINGES, A8133
1 EA LATCHSET W/LEVER HANDLES, F76 GRADE 1
1 EA WALL STOP, L02101 OR L02161
2 EA MOP PLATE, J103
3 EA DOOR SILENCERS, L03011
1 EA ROBE HOOK

HW-13
3 PR HINGES, A5112 114 X 114
1 EA LOCKSET W/LEVER HANDLES. GRADE 1, F13
1 EA OVERHEAD CLOSER, C02061, LOW RESISTANCE
2 EA LEVER EXTENSION FLUSH BOLTS, L04081
1 EA ASTRAGAL
2 EA DOOR SILENCERS, L03011

HW-14
3 PR HINGES, A5112 114 X 114
2 EA RIM EXIT DEVICE, TYPE 1
2 EA CYLINDER. GRADE 1
2 EA OVERHEAD CLOSER, C02061, LOW RESISTANCE
1 EA DOOR COORDINATOR, TYPE 21
1 EA ASTRAGAL
2 EA DOOR SILENCERS, L03011

APPROVED:

A/E DESIGNER OF RECORD

SEAL:

STATE OF SOUTH CAROLINA
KEVIN R. CHAFIN
N. Charleston, SC
6374
REGISTERED ARCHITECT

US ARMY CORPS OF ENGINEERS
AFGHANISTAN ENGINEER DISTRICT

Mark	Description	Date	Appr.	Mark	Description	Date	Appr.

Date: 2/23/10 | Rev: 0
Design file no.
Drawing code:
File name: ANASPA-601SCH
Plot date: 2/23/2010
Plot scale: x:X

Designed by: KRC | Dwn by: KJG | Ckd by: NLJ
Reviewed by: LHM
Submitted by:
BAKER

U.S. ARMY CORPS OF ENGINEERS
AFGHANISTAN ENGINEER DISTRICT
APO AE 96338

Michael Baker Jr., Inc.
A unit of Michael Baker Corporation
Airside Business Park
100 Airside Drive
Moon Township, PA 15108
www.mbakercorp.com

AFGHAN NATIONAL ARMY
REGIONAL MILITARY TRAINING CENTER
STANDARD DESIGN

WEAPONS STORAGE (ASP)

WINDOW AND DOOR SCHEDULES

Sheet reference number:
A-601

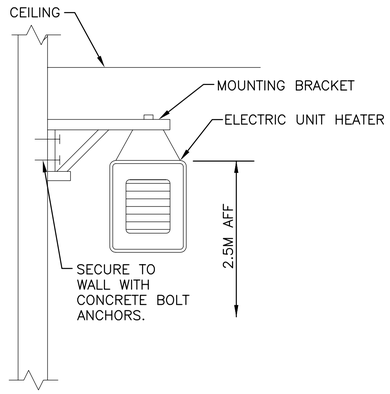

2 M-101 ELECTRIC UNIT HEATER MOUNTING DETAIL
N.T.S.

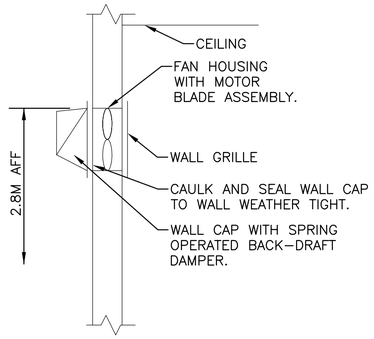

3 M-101 THROUGH THE WALL EXHAUST FAN DETAIL
N.T.S.

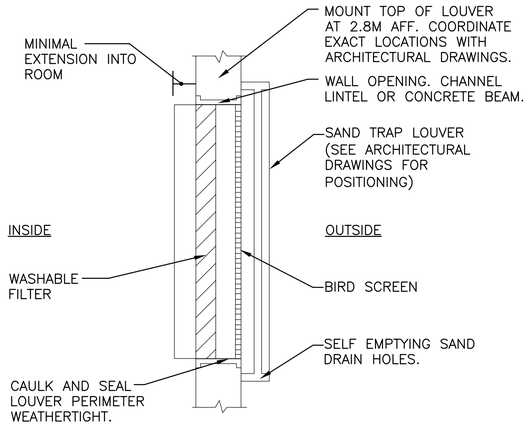

4 M-101 FILTERED SAND TRAP LOUVER
N.T.S.

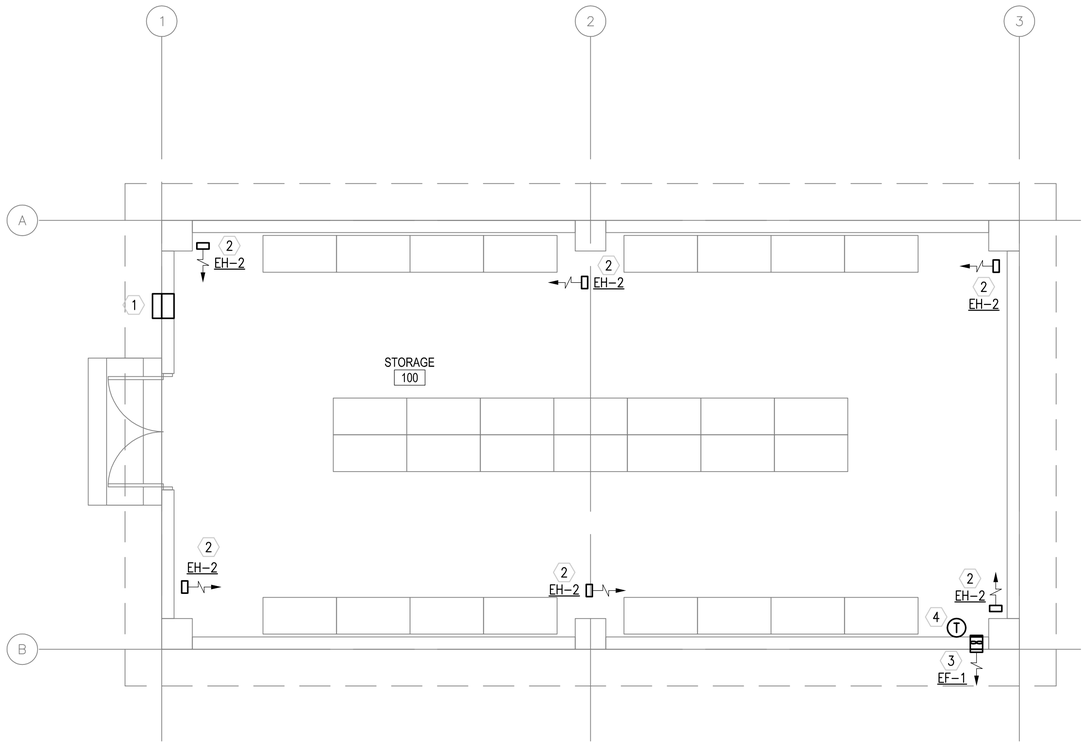

1 M-101 FLOOR PLAN - HVAC
SCALE: 1:50

GENERAL NOTES:

1. DO NOT SCALE DRAWINGS – ALL DIMENSIONS AND CONDITIONS SHALL BE CHECKED AND VERIFIED BY THE CONTRACTOR AT THE SITE.
2. ALL WORK PERFORMED ON THIS BUILDING SHALL BE IN COMPLIANCE WITH ALL PERTINENT CODES, RULES, ORDINANCES AND REGULATIONS OF THE GOVERNING AUTHORITIES.
3. ALL WORK PERFORMED UNDER AND IN CONNECTION WITH THESE DRAWINGS AND SPECIFICATIONS SHALL BE IN STRICT COMPLIANCE WITH THE LATEST SAFETY AND HEALTH STANDARDS.
4. ALL EQUIPMENT, WITHIN THIS BUILDING SHALL BE NONINCENDIVE OR HERMETICALLY SEALED OR SHALL BE PROVIDED WITH A NONINCENDIVE OR HERMETICALLY SEALED ENCLOSURE PER NEC ARTICLE 500.7. ALL WORK IN THIS BUILDING SHALL BE IN ACCORDANCE WITH NEC ARTICLE 502. NONINCENDIVE OR HERMETICALLY SEALED EQUIPMENT SHALL BE USED FOR ALL FIXTURES AND DEVICES. PROVIDE CONDUIT SEALS WHERE REQUIRED. ALL WIRING SHALL BE IN ACCORDANCE WITH NEC ARTICLE 502. FOR CLASS II LOCATIONS. INSTALLATION SHALL BE IN ACCORDANCE WITH DEPARTMENT OF DEFENSE DESIGN DOCUMENT 6055.9–STD.

SYMBOLS:

(X) KEY NOTE

TG 200x400 (8x16) TRANSFER GRILLE

ABBREVIATIONS:

AFF	ABOVE FINISH FLOOR
CF	CEILING FANS
CMS	CUBIC METERS PER SECOND
STATS	THERMOSTATS

KEY NOTE:

1. 610x610 (24x24) INTAKE LOUVER WITH BACK–DRAFT DAMPER PROVIDE WEATHER PROOF LOUVER WITH 50mm (2") WASHABLE FILTER AND SAND TRAP. SEE DETAIL 4 THIS SHEET.
2. EXPLOSION PROOF ELECTRIC UNIT HEATER SECURED TO WALL. SEE DETAIL 2 THIS SHEET.
3. WALL EXHAUST FAN WITH LOW SPRING OPERATED BACK–DRAFT DAMPER. SEE DETAIL 3 THIS SHEET.
4. THERMOSTAT MOUNTED AS HIGH AS POSSIBLE. INTERLOCK STAT WITH CORRESPONDING EXHAUST FAN, SET FAN TO ENERGIZE ON RISE IN TEMPERATURE ABOVE 25°C (77°F).

EXHAUST FAN SCHEDULE

NO.	TYPE	FAN CMS	DRIVE	HP	SP mmH20	ELECTRICAL DATA	SWITCH
EF–1	WALL	0.330	DIRECT	FRACT	13	220/1/50	W/ STAT

NOTES:
1. FANS SHALL HAVE SPRING OPERATED BACK–DRAFT DAMPER.
2. SEE GENERAL NOTE #4.

ELECTRIC UNIT HEATER SCHEDULE

NO.	CMS	KW	F.A.T. °C	ELECT. CHAR.	MOUNTING
EH–2	0.200	2.6	38	380/1/50	WALL HUNG

NOTES:
1. COORDINATE LOCATION AND ORIENTATION IN FIELD.
2. UNIT HEATERS SHALL HAVE TAMPER PROOF INTEGRAL STATS.
3. SEE GENERAL NOTE #4.

LINEAR DIMENSIONS SHOWN ARE IN MILLIMETERS (MM), UNLESS OTHERWISE NOTED

0 1000 2000
SCALE: 1:50

APPROVED:

A/E DESIGNER OF RECORD

SEAL:

COMMONWEALTH OF PENNSYLVANIA
REGISTERED PROFESSIONAL
MATTHEW R. SOTOSKY
ENGINEER
045576-E

US ARMY CORPS OF ENGINEERS
AFGHANISTAN ENGINEER DISTRICT

Mark	Description	Date	Appr.

Mark	Description	Date	Appr.

Date: 02/23/10
Rev: 0
Design file no.
Drawing code:
File name: ANASPMH-1010XXX
Plot date: 02/09/2010
Plot scale: 1:50

Designed by: RML
Dwn by: JJN
Ckd by: CJM
Reviewed by: MRS
Submitted by: BAKER

U.S. ARMY CORPS OF ENGINEERS
AFGHANISTAN ENGINEER DISTRICT
APO AE 96338

Michael Baker Jr., Inc
A unit of Michael Baker Corporation
Airside Business Park
100 Airside Drive
Moon Township, PA 15108
www.mbakercorp.com

AFGHAN NATIONAL ARMY
REGIONAL MILITARY TRAINING CENTER
STANDARD DESIGN

WEAPON SUPPLY (ASP)
HVAC – FLOOR PLAN, SCHEDULES AND DETAILS

Sheet reference number:
M–101

POWER

- DISTRIBUTION PANELBOARD
- NEW PANELBOARD – SURFACE
- NEW PANELBOARD – RECESSED
- GENERATOR
- TRANSFORMER (DRAWN TO SIZE)
- JUNCTION BOX
- JUNCTION BOX – CEILING
- FUSIBLE SAFETY SWITCH
- MOTOR
- MOTOR STARTING SWITCH – 220V, 20A RATED UNLESS OTHERWISE NOTED
- ELECTRIC WATER HEATER
- CEILING FAN – REFER TO SPECIFICATION SECTION 26 20 00

RECEPTACLES

- DUPLEX 20A TYPE CEE 7/7 "SCHUKO STYLE" UNSWITCHED RECEPTACLE
- GF — DUPLEX 20A TYPE CEE 7/7 "SCHUKO STYLE" UNSWITCHED RECEPTACLES – 10mA GROUND FAULT INTERRUPTER TYPE
- WP — DUPLEX 20A TYPE CEE 7/7 "SCHUKO STYLE" UNSWITCHED TYPE WITH WEATHERPROOF COVER – 10mA GROUND FAULT INTERRUPTER TYPE
- EXP — DUPLEX 20A TYPE CEE 7/7 "SCHUKO STYLE" UNSWITCHED RECEPTACLES – EXPLOSION PROOF
- * — INDICATES MOUNT DEVICE ABOVE COUNTERTOP OR AT 1070mm ABOVE FINISHED FLOOR WHERE NO COUNTER IS TO BE INSTALLED.

LIGHTNING PROTECTION

- AIR TERMINAL 20mm O.D. X 450mm SOLID COPPER, NICKEL PLATED ON ADHESIVE BASE
- EQ — EQUIPMENT AIR TERMINAL
- TEST WELL WITH GROUND ROD(S)
- GROUND ROD
- G — GROUND PLATE
- MAIN GROUND CONDUCTOR CONCEALED WITHIN CONSTRUCTION
- MAIN GROUND CONDUCTOR EXPOSED ON EXPOSED ON BUILDING EXTERIOR SURFACE
- GROUND CONDUCTOR CAD WELDED TO GROUND CABLE OR EQUIPMENT
- GROUND ROD TRIPOD, SPACED 3 METERS APART.
- LEVEL TO LEVEL CABLE

LIGHTING

- LIGHTING FIXTURE – SEE FIXTURE SCHEDULE FOR MORE INFORMATION
- EMERGENCY LIGHTING FIXTURE – SEE FIXTURE SCHEDULE FOR MORE INFORMATION
- DOWNLIGHT
- LIGHTING FIXTURE ON NORMAL/EMERGENCY
- WALL MOUNTED LIGHT FIXTURE
- E — EXIT SIGN – DIRECTIONAL ARROWS AS INDICATED ON DRAWINGS
- REMOTE HEAD FOR BATTERY PACK
- $ — SINGLE POLE SWITCH – 20A RATED
- $3 — 3-WAY SWITCH – 20A RATED
- $4 — 4-WAY SWITCH – 20A RATED
- LC — LIGHTING CONTACTOR
- POLE MOUNTED SITE LIGHTING FIXTURE– NUMBER OF FIXTURES PER POLE AS INDICATED ON DRAWINGS
- EXTERIOR DIRECTIONAL LIGHTING FIXTURE
- a — SMALL CASE LETTERS REPRESENTS LAMP(S) / SWITCHES.

TELECOMMUNICATIONS

- TELEPHONE OUTLET(S) @ 45cm AFF. U.N.O. WITH 20mm RACEWAY TERMINATED TO TELEDATA TERMINAL BOARD.
- DATA OUTLET(S) @ 45cm AFF. U.N.O. WITH 20mm RACEWAY TERMINATED TO TELEDATA TERMINAL BOARD.

TELECOMMUNICATIONS (CONTINUED)

- COMBINATION TELEPHONE/DATA OUTLET(S) @ 45cm AFF. U.N.O. WITH 27mm RACEWAY TERMINATED TO TELEDATA TERMINAL BOARD.
- W — WALL MTD. TELEPHONE OUTLET WITH 20mm RACEWAY TO TELEDATA TERMINAL BOARD.
- (x)T — INDICATES NUMBER OF TELEPHONE OUTLET(S) AND ASSOCIATED CABLING
- (x)D — INDICATES NUMBER OF DATA OUTLET(S) AND ASSOCIATED CABLING
- (x)TF — INDICATES NUMBER OF TELEPHONE OUTLETS AND ASSOCIATED CABLING WITH 1 OUTLET AND CABLE DEDICATED FOR FAX

SINGLE LINE SYMBOLS

- SWITCH
- BREAKER
- FUSE
- TRANSFORMER
- GROUND
- CONTACT (NORMALLY OPEN)
- CONTACT (NORMALLY CLOSED)
- TRANSFER SWITCH
- CURRENT TRANSFORMER
- INDICATES NEW ELECTRICAL EQUIPMENT
- C — INDICATES NEW CONTROL WIRING AND CONDUIT
- EQUIPMENT OUTLINE

MISCELLANEOUS

- BRANCH CIRCUIT WIRING, SURFACE MOUNTED ON WALLS
- BRANCH CIRCUIT WIRING – 6mm²
- BRANCH CIRCUIT WIRING – UNDER FLOOR
- HOME RUN BACK TO PANEL
- CONDUIT TURNED DOWN
- CONDUIT TURNED UP
- LV — LOW VOLTAGE WIRING AND CONDUIT
- INDICATES CONTINUATION OF LINE

FIRE ALARM

- FACP — FIRE ALARM CONTROL PANEL WITH BATTERY BACKUP
- F — FIRE ALARM PULL STATION

FIRE ALARM (CONTINUED)

- F — FIRE ALARM STROBE – WALL MOUNTED
- F — FIRE ALARM AUDIBLE/STROBE – WALL MOUNTED
- F — FIRE ALARM HORN/STROBE – WALL MOUNTED
- S — SMOKE DETECTOR
- H — HEAT DETECTOR CEILING MOUNTED
- D — DUCT DETECTOR – PROVIDED BY EC, INSTALLED BY MC AND CONNECTED BY EC

DENOTATIONS & ABBREVIATIONS

AFF	ABOVE FINISHED FLOOR
C	CEILING MOUNTED
E	EMERGENCY
EC	ELECTRICAL CONTRACTOR
EPO	EMERGENCY POWER OFF
EXP	EXPLOSION PROOF
F	FIRE ALARM
FF	FLUSH FLOOR MOUNTED
FL	FLUORESCENT
FO	FIBER OPTIC
FSS	FUSED SAFETY SWITCH
GF	GROUND FAULT INTERRUPTER
GC	GENERAL CONTRACTOR
IG	ISOLATED GROUND
K	KEY
LV	LOW VOLTAGE
M	MOTOR
MC	MECHANICAL CONTRACTOR
NE	NORMAL/EMERGENCY
NFSS	NON-FUSED SAFETY SWITCH
PA	PAGING SYSTEM
PLC	PLUMBING CONTRACTOR
SL	SINGLE LINE
T	TELEPHONE

DENOTATIONS & ABBREVIATIONS (CONT.)

TP	TAMPER PROOF
UE	UNDERGROUND ELECTRIC
W	WALL MOUNTED
WP	WEATHERPROOF WITH GROUND FAULT INTERRUPTION
WT	WATER TIGHT

GENERAL PROJECT NOTES:

G1. UNLESS OTHERWISE NOTED, PROVIDE ALL EQUIPMENT SHOWN ON THE PLANS. THE ELECTRICAL CONTRACTOR SHALL COORDINATE ALL SYMBOLS SHOWN ON THE PLANS WITH THE SYMBOL LIST. IT SHALL BE THE RESPONSIBILITY OF THE CONTRACTOR TO VERIFY THE INTENT OF ANY SYMBOL THAT IS SHOWN ON THE PLANS AND NOT INDICATED ON THE SYMBOL LIST WITH THE ENGINEER PRIOR TO BID.

G2. THE CONTRACTOR SHALL VERIFY THE LOCATION OF ALL UNDERGROUND UTILITIES WITHIN THE CONSTRUCTION AREA THREE (3) WORKING DAYS NOTICE BEFORE COMMENCING DIGGING. NOTIFY THE LOCAL AUTHORITY HAVING JURISDICTION AND WAIT THE REQUIRED TIME BEFORE COMMENCING TO DIG.

G3. THE CONTRACTOR SHALL COORDINATE CONDUIT RUNS, LIGHTING FIXTURES AND OTHER EQUIPMENT LOCATIONS WITH THE OTHER TRADE CONTRACTORS TO AVOID CONFLICTS.

G4. WHERE VOLTAGES AND FREQUENCIES ON THE DRAWINGS AND IN THE SPECIFICATIONS DIFFER FROM THE LOCAL ONES, ALL WORK SHALL BE PERFORMED USING THE LOCAL VOLTAGES AND FREQUENCIES.

G5. THE MINIMUM WIRE SIZE ON THE PROJECT SHALL BE 4mm². THE MINIMUM CONDUIT SIZE SHALL BE 20mm. THE MINIMUM BREAKER SIZE SHALL BE 20 AMPS.

G6. THE CONTRACTOR SHALL PUT A MAXIMUM OF 6 DUPLEX RECEPTACLES ON A 20A SINGLE POLE CIRCUIT.

G7. WHERE THE 1010 SCOPE REVIEW, 1015 TECHNICAL REVIEW, DRAWINGS, AND SPECIFICATIONS DIFFER FROM AMERICAN CODES OR STANDARDS, THE 1010, 1015, DRAWINGS, AND SPECIFICATIONS SHALL RULE.

G8. ALL CONDUIT AND DEVICES SHALL BE SURFACE MOUNTED UNLESS OTHERWISE INDICATED.

G9. CONTRACTOR SHALL COORDINATE ALL WORK WITH ALL OTHER TRADES TO ENSURE ALL WORK IS COMPLETED IN A PROFESSIONAL, WORKMAN-LIKE MANNER.

APPROVED:

A/E DESIGNER OF RECORD

SEAL:

COMMONWEALTH OF PENNSYLVANIA
REGISTERED PROFESSIONAL
JOSEPH R. GAUS
ENGINEER
PE-074251
1/29/10

US ARMY CORPS OF ENGINEERS
AFGHANISTAN ENGINEER DISTRICT

Mark	Description	Date	Appr.

Mark	Description	Date	Appr.

Rev: 0
Date: 2/23/10
Design file no.
Drawing code:
File name:
Plot date:
Plot scale:

Designed by: JRG
Dwn by: BJB
Ckd by: JRG
Reviewed by: JRG
Submitted by: BAKER

U.S. ARMY CORPS OF ENGINEERS
AFGHANISTAN ENGINEER DISTRICT
APO AE 96338

Michael Baker Jr., Inc
A unit of Michael Baker Corporation
Airside Business Park
100 Airside Drive
Moon Township, PA 15108
www.mbakercorp.com

AFGHAN NATIONAL ARMY
REGIONAL MILITARY TRAINING CENTER
STANDARD DESIGN

WEAPON SUPPLY (ASP)

ELECTRICAL SYMBOLS & ABBREVIATIONS

Sheet reference number:
E-001

GENERAL NOTES:

1. REFER TO DRAWING #E-001 FOR THE ELECTRICAL SYMBOLS LIST.
2. REFER TO DRAWING #E-601 FOR THE LIGHTING FIXTURE SCHEDULE.
3. REFER TO DRAWING #E-602 FOR PANEL SCHEDULES.
4. LIGHT FIXTURES INDICATED AS EMERGENCY SHALL BE PROVIDED WITH A BATTERY BACKUP BALLAST. SEE WIRING DIAGRAM DETAIL 7, ON DRAWING #E-501.
5. ALL PANELS, DEVICES, EQUIPMENT, ETC. SHALL BE NONINCENDIVE OR HERMETICALLY SEALED OR SHALL BE PROVIDED WITH A NONINCENDIVE OR HERMETICALLY SEALED ENCLOSURE PER NEC ARTICLE 500.7. ALL WORK IN THIS BUILDING SHALL BE IN ACCORDANCE WITH NEC ARTICLE 502. NONINCENDIVE OR HERMETICALLY SEALED EQUIPMENT SHALL BE USED FOR ALL FIXTURES AND DEVICES. PROVIDE CONDUIT SEALS WHERE REQUIRED. ALL WIRING SHALL BE IN ACCORDANCE WITH NEC ARTICLE 502. FOR CLASS II LOCATIONS. INSTALLATION SHALL BE IN ACCORDANCE WITH DEPARTMENT OF DEFENSE DESIGN DOCUMENT 6055.9-STD.
6. EXIT SIGNS SHALL BE WIRED AHEAD OF ALL LOCAL SWITCHING. SEE WIRING DIAGRAM DETAIL 6, ON DRAWING #E-501.

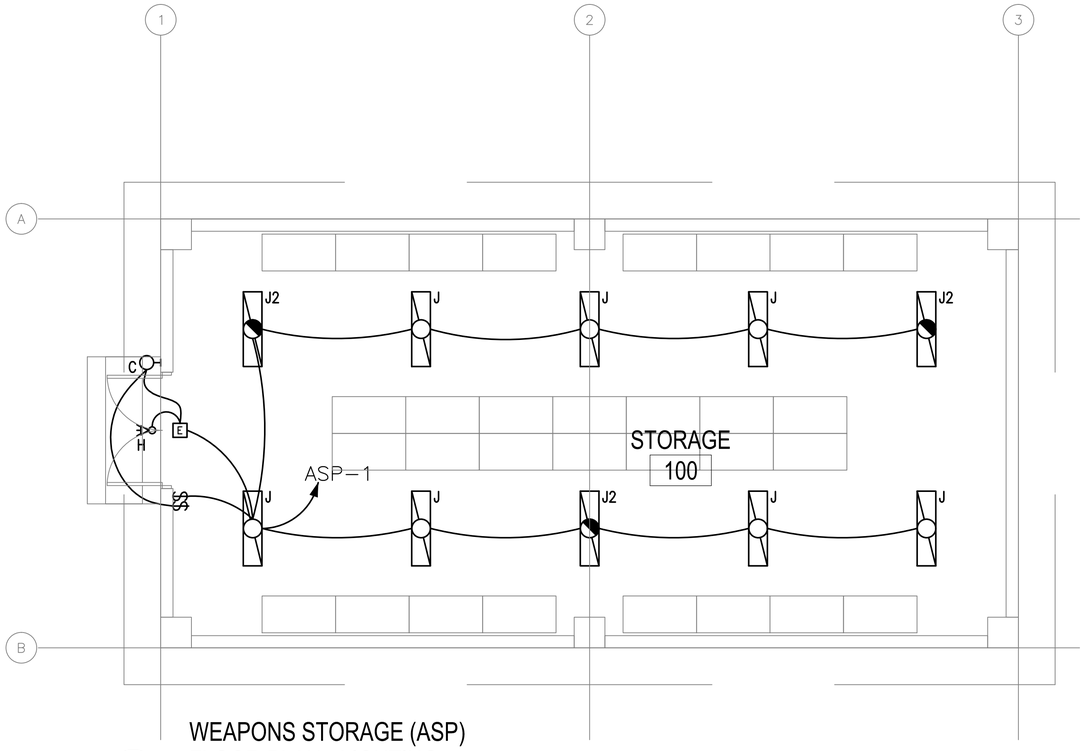

1
E-102
WEAPONS STORAGE (ASP)
FLOOR PLAN - LIGHTING
SCALE: 1:50

0 1000 2000
SCALE: 1:50

APPROVED:

A/E DESIGNER OF RECORD

SEAL:

COMMONWEALTH OF PENNSYLVANIA
REGISTERED PROFESSIONAL
JOSEPH R. GAUS
ENGINEER
PE-074251
1/29/10

US ARMY CORPS OF ENGINEERS
AFGHANISTAN ENGINEER DISTRICT

Mark	Description	Date	Appr.

Mark	Description	Date	Appr.

Rev: 0
Date: 2/23/10
Design file no.
Drawing code:
File name:
Plot date:
Plot scale:

Designed by: KJR
Dwn by: BJB
Ckd by: JRG
Reviewed by: JRG
Submitted by: BAKER

U.S. ARMY CORPS OF ENGINEERS
AFGHANISTAN ENGINEER DISTRICT
APO AE 96338

Michael Baker Jr., Inc.
A unit of Michael Baker Corporation
Airside Business Park
100 Airside Drive
Moon Township, PA 15108
www.mbakercorp.com

AFGHAN NATIONAL ARMY
REGIONAL MILITARY TRAINING CENTER
STANDARD DESIGN

WEAPON SUPPLY (ASP)
ELECTRICAL LIGHTING PLAN

Sheet reference number:
E-101

GENERAL NOTES:

1. REFER TO DRAWING #E-001 FOR THE ELECTRICAL SYMBOLS LIST.
2. REFER TO DRAWING #E-501 FOR THE POWER RISER.
3. REFER TO DRAWING #E-602 FOR PANEL SCHEDULES.
4. COORDINATE EXACT MOUNTING LOCATION OF DISCONNECTING MEANS FOR MECHANICAL AND PLUMBING EQUIPMENT IN THE FIELD.
5. FUSIBLE SAFETY SWITCHES THAT ARE NOT OTHERWISE IDENTIFIED SHALL BE 380V, 1P, 30A FUSED SAFETY SWITCHES WITH 20A FUSES.
6. ALL PANELS, DEVICES, EQUIPMENT, ETC. SHALL BE NONINCENDIVE OR HERMETICALLY SEALED OR SHALL BE PROVIDED WITH A NONINCENDIVE OR HERMETICALLY SEALED ENCLOSURE PER NEC ARTICLE 500.7. ALL WORK IN THIS BUILDING SHALL BE IN ACCORDANCE WITH NEC ARTICLE 502. NONINCENDIVE OR HERMETICALLY SEALED EQUIPMENT SHALL BE USED FOR ALL FIXTURES AND DEVICES. PROVIDE CONDUIT SEALS WHERE REQUIRED. ALL WIRING SHALL BE IN ACCORDANCE WITH NEC ARTICLE 502. FOR CLASS II LOCATIONS. INSTALLATION SHALL BE IN ACCORDANCE WITH DEPARTMENT OF DEFENSE DESIGN DOCUMENT 6055.9-STD.

NUMBERED NOTES:

(1) PANEL ASP WITH NEMA 3R LOCKABLE WEATHERPROOF HOUSING.

(2) PROVIDE POWER CONNECTION TO ELECTRIC UNIT HEATER #2. SEE DRAWINGS #M-101 AND #E-602 FOR MORE INFORMATION.

(3) PROVIDE POWER CONNECTION TO EXHAUST FANS. SEE DRAWINGS #M-101 AND #E-602 FOR MORE INFORMATION.

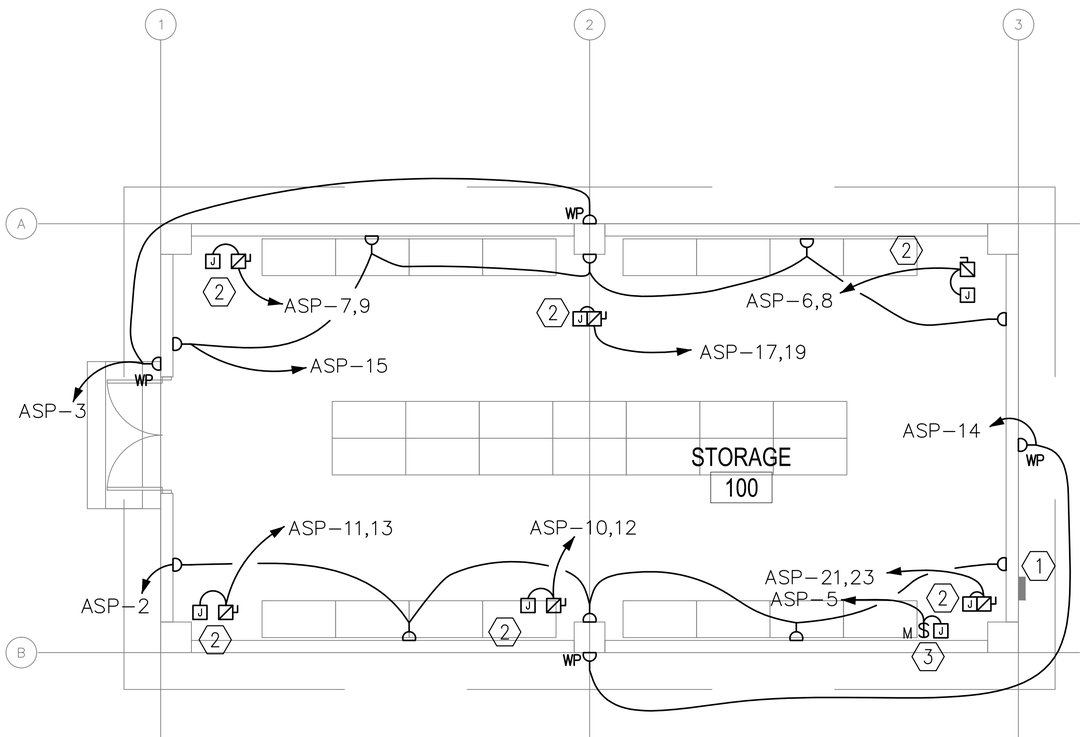

1 / E-102 WEAPONS STORAGE (ASP) FLOOR PLAN - POWER AND SYSTEMS

SCALE: 1:50

0 1000 2000
SCALE: 1:50

APPROVED:

A/E DESIGNER OF RECORD

SEAL:

COMMONWEALTH OF PENNSYLVANIA
REGISTERED PROFESSIONAL ENGINEER
JOSEPH R. GAUS
PE-074251

US ARMY CORPS OF ENGINEERS
AFGHANISTAN ENGINEER DISTRICT

Mark	Description	Date	Appr.

Mark	Description	Date	Appr.

U.S. ARMY CORPS OF ENGINEERS
AFGHANISTAN ENGINEER DISTRICT
APO AE 96338

Michael Baker Jr., Inc
A unit of Michael Baker Corporation
Airside Business Park
100 Airside Drive
Moon Township, PA 15108
www.mbakercorp.com

Designed by: KJR
Dwn by: BJB
Ckd by: JRG
Reviewed by: JRG
Submitted by: BAKER
Date: 2/23/10
Rev: 0
Design file no.
Drawing code:
File name:
Plot date:
Plot scale:

AFGHAN NATIONAL ARMY
REGIONAL MILITARY TRAINING CENTER
STANDARD DESIGN

WEAPON SUPPLY (ASP)
ELECTRICAL POWER AND SYSTEMS PLAN

Sheet reference number:
E-102

GENERAL NOTES:

1. REFER TO DRAWING #E-001 FOR THE ELECTRICAL SYMBOLS LIST.

NUMBERED NOTES:

1. (1) 120.0mm² BARE, TINNED, COPPER COUNTERPOISE GROUND 700mm BELOW GRADE.
2. INSTALL DOWN CONDUCTOR IN 25mm SCHEDULE 80 PVC CONDUIT TO 20mm DIAMETER X 3 METERS SOLID COPPER TINNED GROUND ROD. (TYPICAL)
3. CADWELD TO BUILDING STRUCTURE AT 18 METERS ON CENTER AROUND THE ENTIRE PERIMETER OF THE BUILDING. (TYPICAL)
4. 120mm² LIGHTNING PROTECTION CABLE.
5. AIR TERMINAL. TERMINALS SHALL BE PLACED AT A MAXIMUM OF 6M ON CENTER PER NFPA 780 PARA. 4.8.2.1, AND WITHIN 0.6M OF RIDGE ENDS PER NFPA 780 PARA. 4.8 (TYPICAL).

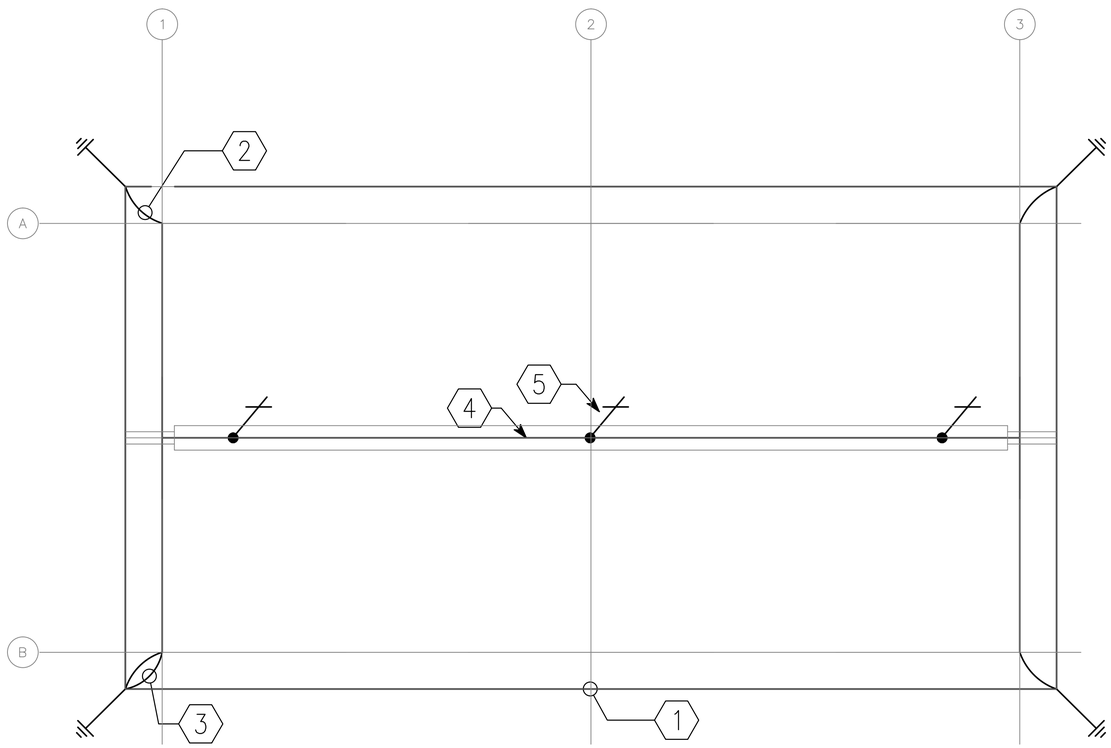

1 / E-103 WEAPONS STORAGE (ASP) FLOOR PLAN - LIGHTNING PROTECTION

SCALE: 1:50

0 1000 2000
SCALE: 1:50

APPROVED:

A/E DESIGNER OF RECORD

SEAL:

COMMONWEALTH OF PENNSYLVANIA
REGISTERED PROFESSIONAL
JOSEPH R. GAUS
ENGINEER
PE-074251

US ARMY CORPS OF ENGINEERS
AFGHANISTAN ENGINEER DISTRICT

Mark	Description	Date	Appr.

Mark	Description	Date	Appr.

U.S. ARMY CORPS OF ENGINEERS
AFGHANISTAN ENGINEER DISTRICT
APO AE 96338

Michael Baker Jr., Inc
A unit of Michael Baker Corporation
Airside Business Park
100 Airside Drive
Moon Township, PA 15108
www.mbakercorp.com

Designed by: KJR
Dwn by: BJB
Ckd by: JRG
Reviewed by: JRG
Submitted by: BAKER
Date: 2/23/10
Rev: 0
Design file no.
Drawing code:
File name:
Plot date:
Plot scale:

AFGHAN NATIONAL ARMY
REGIONAL MILITARY TRAINING CENTER
STANDARD DESIGN

WEAPON SUPPLY (ASP)
ELECTRICAL LIGHTNING PROTECTION PLAN

Sheet reference number:
E-103

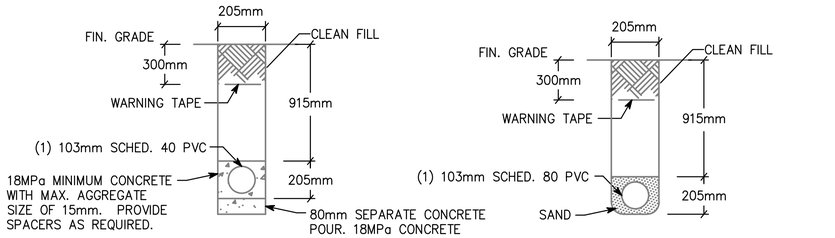

NOTE: PVC CONDUIT SHALL BE DIRECT BURIED SCHEDULE 80 FOR NO TRAFFIC AREAS AND CONCRETE-ENCASED SCHEDULE 40 FOR UNDER ROADWAYS OR TRAFFIC AREAS.

1 / E-501 TYPICAL DUCT BANK DETAILS FOR CONDUIT IN SAND OR CONCRETE

SCALE: N.T.S.

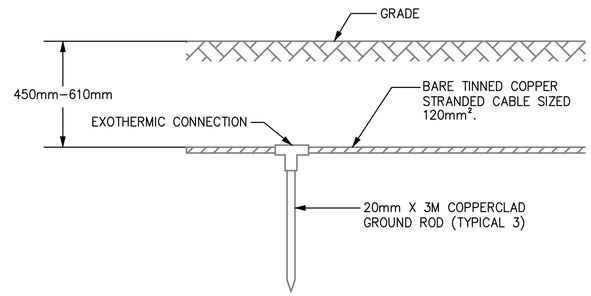

2 / E-501 GROUND TRIPOD SYSTEM DETAIL - ELEVATION

SCALE: N.T.S.

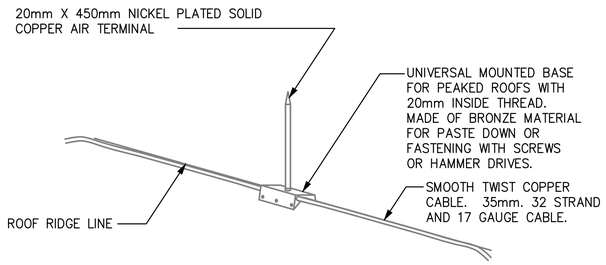

3 / E-501 LIGHTNING PROTECTION AIR TERMINAL DETAIL

SCALE: N.T.S.

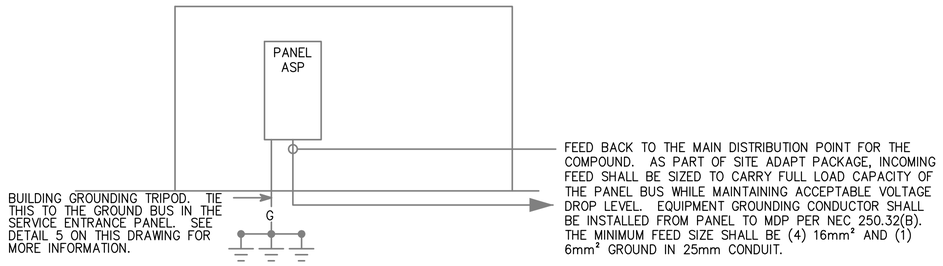

4 / E-501 ASP RISER DIAGRAM

SCALE: N.T.S.

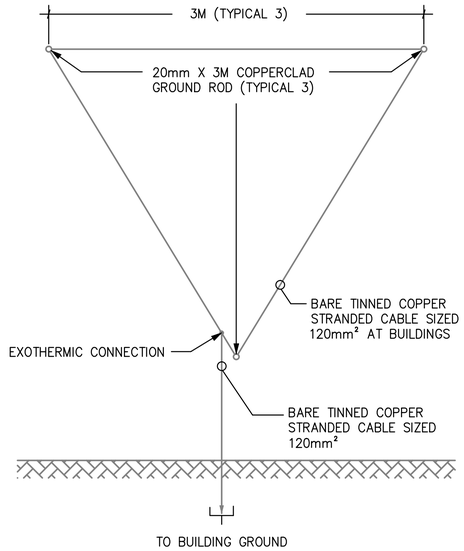

5 / E-501 GROUND TRIPOD SYSTEM DETAIL - PLAN

SCALE: N.T.S.

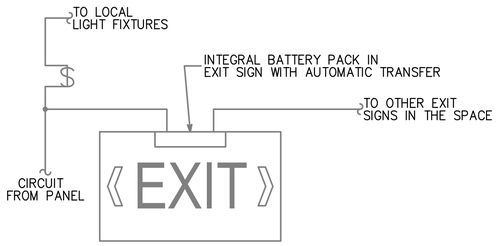

6 / E-501 EXIT SIGN WIRING DIAGRAM

SCALE: N.T.S.

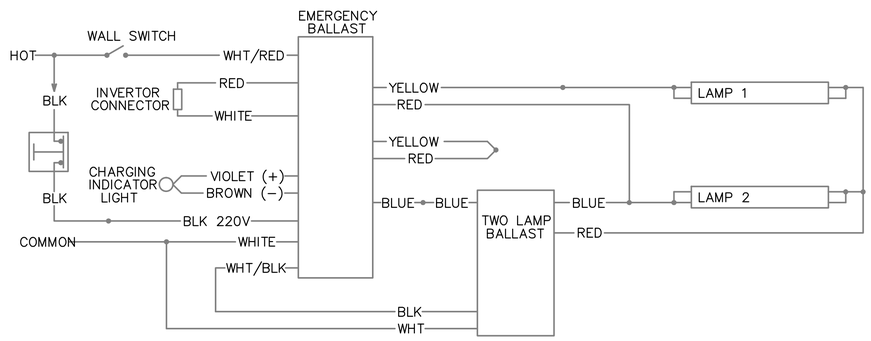

7 / E-501 EMERGENCY FIXTURE WIRING DIAGRAM

SCALE: N.T.S.

APPROVED:

A/E DESIGNER OF RECORD

SEAL:

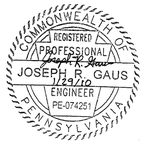

US ARMY CORPS OF ENGINEERS
AFGHANISTAN ENGINEER DISTRICT

Mark	Description	Date	Appr.	Mark	Description	Date	Appr.

Rev: 0
Date: 2/23/10
Design file no.
Drawing code:
File name:
Plot date:
Plot scale:

Designed by: KJR
Dwn by: BJB
Ckd by: JRG
Reviewed by: JRG
Submitted by: BAKER

U.S. ARMY CORPS OF ENGINEERS
AFGHANISTAN ENGINEER DISTRICT
APO AE 96338

Michael Baker Jr., Inc.
A unit of Michael Baker Corporation
Airside Business Park
100 Airside Drive
Moon Township, PA 15108
www.mbakercorp.com

AFGHAN NATIONAL ARMY
REGIONAL MILITARY TRAINING CENTER
STANDARD DESIGN

WEAPON SUPPLY (ASP)
ELECTRICAL DETAILS

Sheet reference number:
E-501

(A) LARGER OF THE TWO SIZES GIVEN IN THE TABLES BELOW	
GROUNDING ELECTRODE CONDUCTOR (BASED ON AIC RATING)	
AIC RATING OF SERVICE EQUIPMENT	NECESSARY GROUNDING ELECTRODE CONDUCTOR SIZE
10K	(1) 35mm²
14K	(1) 50mm²
18K	(1) 70mm²
22K	(1) 70mm²
25K	(1) 70mm²
30K	(1) 95mm²
35K	(1) 120mm²
42K	(1) 150mm²
65K	(1) 185mm²
100K	(1) 300mm²
125K	(2) 185mm²
200K	(2) 300mm²
GROUNDING ELECTRODE CONDUCTOR (BASED ON NEC TABLE 250.66)	
SIZE OF LARGEST UNGROUNDED SERVICE CONDUCTOR OR EQUIVALENT AREA FOR PARALLEL CONDUCTORS	NECESSARY GROUNDING ELECTRODE CONDUCTOR SIZE
350 kcmil OR SMALLER	35mm²
OVER 350 kcmil TO 600 kcmil	70mm²
OVER 600 kcmil TO 1100 kcmil	70mm²
OVER 1100 kcmil	95mm²
NOTE: ALL SIZES ARE BASED ON COPPER CONDUCTORS.	

(B) EQUIPMENT GROUNDING CONDUCTOR	
RATING OR SETTING OF AUTOMATIC OVERCURRENT DEVICE IN CIRCUIT AHEAD OF EQUIPMENT, CONDUIT, ETC, NOT EXCEEDING (AMPERES)	NECESSARY EQUIPMENT GROUNDING CONDUCTOR SIZE
15	2.5mm²
20	4.0mm²
30	6.0mm²
40	6.0mm²
60	6.0mm²
100	10mm²
200	16mm²
300	25mm²
400	25mm²
500	35mm²
600	50mm²
800	70mm²
1000	70mm²
1200	95mm²
1600	120mm²
2000	150mm²
2500	185mm²
3000	240mm²
4000	300mm²
5000	400mm²
6000	400mm²
NOTE: ALL SIZES ARE BASED ON COPPER CONDUCTORS.	

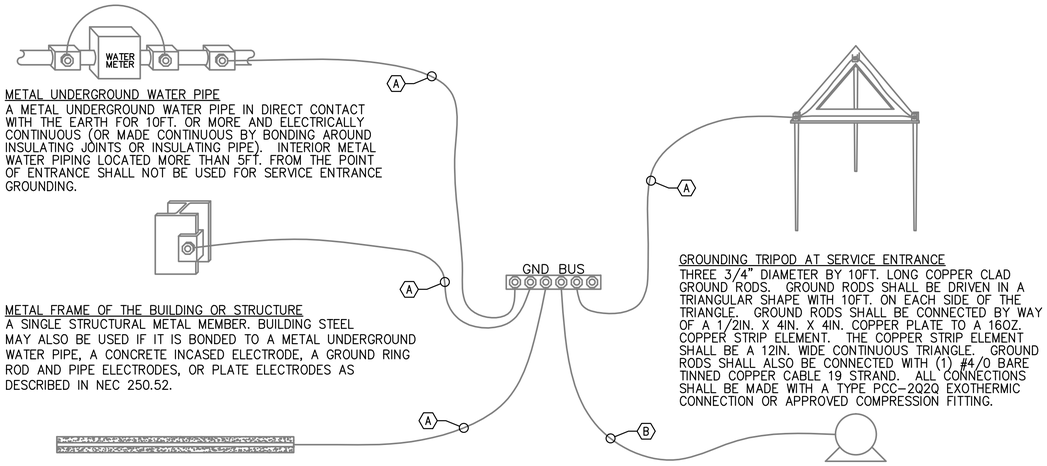

METAL UNDERGROUND WATER PIPE
A METAL UNDERGROUND WATER PIPE IN DIRECT CONTACT WITH THE EARTH FOR 10FT. OR MORE AND ELECTRICALLY CONTINUOUS (OR MADE CONTINUOUS BY BONDING AROUND INSULATING JOINTS OR INSULATING PIPE). INTERIOR METAL WATER PIPING LOCATED MORE THAN 5FT. FROM THE POINT OF ENTRANCE SHALL NOT BE USED FOR SERVICE ENTRANCE GROUNDING.

METAL FRAME OF THE BUILDING OR STRUCTURE
A SINGLE STRUCTURAL METAL MEMBER. BUILDING STEEL MAY ALSO BE USED IF IT IS BONDED TO A METAL UNDERGROUND WATER PIPE, A CONCRETE INCASED ELECTRODE, A GROUND RING ROD AND PIPE ELECTRODES, OR PLATE ELECTRODES AS DESCRIBED IN NEC 250.52.

CONCRETE ENCASED ELECTRODE
AN ELECTRODE ENCASED BY AT LEAST 2IN. OF CONCRETE , LOCATED WITHIN AND NEAR THE BOTTOM OF A CONCRETE FOUNDATION OR FOOTING THAT IS IN DIRECT CONTACT WITH THE EARTH, CONSISTING OF AT LEAST 20FT. OF ONE OR MORE BARE OR ZINC GALVANIZED OR OTHER ELECTRICALLY CONDUCTIVE COATED STEEL REINFORCING BARS OR RODS OF NOT LESS THAN 1/2" DIAMETER OR BARE COPPER CONDUCTOR NOT SMALLER THAN 4AWG.

GROUNDING TRIPOD AT SERVICE ENTRANCE
THREE 3/4" DIAMETER BY 10FT. LONG COPPER CLAD GROUND RODS. GROUND RODS SHALL BE DRIVEN IN A TRIANGULAR SHAPE WITH 10FT. ON EACH SIDE OF THE TRIANGLE. GROUND RODS SHALL BE CONNECTED BY WAY OF A 1/2IN. X 4IN. X 4IN. COPPER PLATE TO A 16OZ. COPPER STRIP ELEMENT. THE COPPER STRIP ELEMENT SHALL BE A 12IN. WIDE CONTINUOUS TRIANGLE. GROUND RODS SHALL ALSO BE CONNECTED WITH (1) #4/0 BARE TINNED COPPER CABLE 19 STRAND. ALL CONNECTIONS SHALL BE MADE WITH A TYPE PCC-2Q2Q EXOTHERMIC CONNECTION OR APPROVED COMPRESSION FITTING.

LOAD OR DOWNSTREAM PANEL
ALL LOADS IN THE BUILDING SHALL HAVE AN EQUIPMENT GROUNDING CONDUCTOR PULLED TO THEM.

1
E-502

SERVICE ENTRANCE GROUNDING DETAIL

SCALE: N.T.S.

APPROVED:

A/E DESIGNER OF RECORD

SEAL:

COMMONWEALTH OF PENNSYLVANIA
REGISTERED PROFESSIONAL
JOSEPH R. GAUS
ENGINEER
PE-074251
1/29/10

US ARMY CORPS OF ENGINEERS
AFGHANISTAN ENGINEER DISTRICT

Mark	Description	Date	Appr.	Mark	Description	Date	Appr.

Rev: 0
Date: 2/23/10
Design file no.
Drawing code:
File name:
Plot date:
Plot scale:

Designed by: KJR
Dwn by: BJB
Ckd by: JRG
Reviewed by: JRG
Submitted by: BAKER

U.S. ARMY CORPS OF ENGINEERS
AFGHANISTAN ENGINEER DISTRICT
APO AE 96338

Michael Baker Jr., Inc.
A unit of Michael Baker Corporation
Airside Business Park
100 Airside Drive
Moon Township, PA 15108
www.mbakercorp.com

AFGHAN NATIONAL ARMY
REGIONAL MILITARY TRAINING CENTER
STANDARD DESIGN

WEAPON SUPPLY (ASP)
ELECTRICAL DETAILS

Sheet reference number:
E-502

FIXTURE MARK 'C'

FIXTURE MARK 'H'

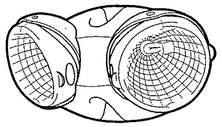

FIXTURE MARK 'E'

FIXTURE MARK 'J'

LIGHT FIXTURE SCHEDULE

FIXTURE MARK	STYLE NUMBER AND TYPE	NUMBER AND TYPE OF LAMPS	VOLTAGE	MOUNTING	NOTES
C	INCANDESCENT ONE PIECE W/ APPROVED LENS STABILIZED HIGH IMPACT POLY CARBONATE.	(1) A19 – 100W INCANDESCENT	220V – 1ø 50HZ	WALL MOUNTED ABOVE EXTERIOR DOORS	
H	REMOTE HEAD EXTERIOR LIGHT HEAD POWERED FROM EXIT SIGN BATTERY– 12V DOUBLE HEAD CORROSION RESISTANT WITH UL34 WEATHERPROOF CONSTRUCTION	(2) 12W/12V HALOGEN LAMP	12V – 1ø 50HZ	EXTERIOR WALL MOUNTED AT TOP OF DOOR HEIGHT	
J	EXPLOSION–PROOF (2) LAMP FIXTURE PROVIDED WITH LAMPS. COPPER FREE, ALUMINUM HOUSING, TEMPERED BOROSILICATE GLASS, AND BIAX LAMPS WITH WIRE GUARD	(2) 40W 3500K BIAX FLUORESCENT LAMPS	220V – 1ø 50HZ	PENDANT MOUNTED FROM CEILINGS	FURNISHED WITH LAMPS AND WIRE GUARD
J2	SAME AS FIXTURE 'J' WITH EMERGENCY BALLAST	(2) 40W 3500K BIAX FLUORESCENT LAMPS	220V – 1ø 50HZ	PENDANT MOUNTED FROM CEILINGS	FURNISHED WITH LAMPS, WIRE GUARD, EMERGENCY BALLAST WITH SELF TEST SWITCH
E	UNIVERSAL MOUNT NONINCENDIVE GRADE THERMOPLASTIC HOUSING EXIT SIGN WITH LED LAMPS, RED LETTERS 6" IN HEIGHT WITH ARROWS AS INDICATED, WITH 12V CADMIUM BATTERY WITH REMOTE HEAD CAPABILITY	LED LAMPS	220V – 1ø 50HZ	UNIVERSAL MOUNTING	EXIT SIGN SHALL BE NONINCENDIVE TYPE EXIT SIGN.

APPROVED:

A/E DESIGNER OF RECORD

SEAL:

COMMONWEALTH OF PENNSYLVANIA
REGISTERED PROFESSIONAL
JOSEPH R. GAUS
ENGINEER
PE-074251
1/29/10

US ARMY CORPS OF ENGINEERS
AFGHANISTAN ENGINEER DISTRICT

Mark	Description	Date	Appr.

Mark	Description	Date	Appr.

Designed by: KJR
Dwn by: BJB
Ckd by: JRG
Reviewed by: JRG
Submitted by: BAKER
Date: 2/23/10
Design file no.
Drawing code:
File name:
Plot date:
Plot scale:
Rev: 0

U.S. ARMY CORPS OF ENGINEERS
AFGHANISTAN ENGINEER DISTRICT
APO AE 96338

Michael Baker Jr., Inc.
A unit of Michael Baker Corporation
Airside Business Park
100 Airside Drive
Moon Township, PA 15108
www.mbakercorp.com

AFGHAN NATIONAL ARMY
REGIONAL MILITARY TRAINING CENTER
STANDARD DESIGN

WEAPON SUPPLY (ASP)
ELECTRICAL LIGHT FIXTURE SCHEDULE

Sheet reference number:
E–601

PANELBOARD ASP SURFACE MOUNTED

AMP. MAIN LUGS (OR) 50 AMP. MAIN BREAKER W/ 50 AMP. TRIP

CIRCUIT BREAKER TYPE 380/220 VOLTS 3 PHASE 4 WIRE 50 HZ 100 AMP. BUS

CKT. NO.	TRIP AMPS	NO. POLES	WIRE MM ²	GND MM ²	CONDUIT MM	LOAD SERVED	LOAD-KVA A0	LOAD-KVA B0	LOAD-KVA C0	LOAD-KVA A0	LOAD-KVA B0	LOAD-KVA C0	LOAD SERVED	CONDUIT MM	GND MM²	WIRE MM²	NO. POLES	TRIP AMPS	CKT. NO.
1	20	1	4.0	4.0	20	LIGHTING – RM 100	0.6			1.0			RECEPTACLES – RM 100	20	4.0	4.0	1	20	2
3	20	1	4.0	4.0	20	RECEPTACLES – EXTERIOR		0.4					SPARE				1	20	4
5	20	1	4.0	4.0	20	EXHAUST FANS – EF-2 RM 100			0.5			1.3	ELECTRIC HEAT #2 – RM 100	20	4.0	4.0	2	20	6
7	20	2	4.0	4.0	20	ELECTRIC HEAT #2 – RM 100	1.3			1.3									8
9								1.3			1.3		ELECTRIC HEAT #2 – RM 100	20	4.0	4.0	2	20	10
11	20	2	4.0	4.0	20	ELECTRIC HEAT #2 – RM 100			1.3			1.3							12
13							1.3			0.4			RECEPTACLES – EXTERIOR	20	4.0	4.0	1	20	14
15	20	1	4.0	4.0	20	RECEPTACLES – RM 100		1.0					SPARE				1	20	16
17	20	2	4.0	4.0	20	ELECTRIC HEAT #2 – RM 100			1.3				SPARE				1	20	18
19							1.3						SPARE				1	20	20
21	20	2	4.0	4.0	20	ELECTRIC HEAT #2 – RM 100		1.3					SPARE				1	20	22
23									1.3				SPARE				1	20	24
25	20	1				SPARE							SPARE				1	20	26
27	20	1				SPARE							SPARE				1	20	28
29	20	1				SPARE							SPARE				1	20	30
31	20	1				SPARE							SPARE				1	20	32
33	20	1				SPARE							SPARE				1	20	34
35	20	1				SPARE							SPARE				1	20	36
37	20	1				SPARE							SPARE				1	20	38
39	20	1				SPARE							SPARE				1	20	40
41	20	1				SPARE							SPARE				1	20	42
							4.5	4.0	4.4	2.7	1.3	2.6							

TOTAL CONN. LOAD PER PHASE (KVA): A0 7.2 B0 5.3 C0 7.0

TOTAL CONN. LOAD 19.5 KVA. 70 % DEMAND = ESTIMATED DEMAND LOAD 13.65

* MAIN BREAKER SHALL BE 3P EARTH GROUND TYPE

APPROVED:

A/E DESIGNER OF RECORD

SEAL:

COMMONWEALTH OF PENNSYLVANIA
REGISTERED PROFESSIONAL
JOSEPH R. GAUS
ENGINEER
PE-074251
1/29/10

US ARMY CORPS OF ENGINEERS
AFGHANISTAN ENGINEER DISTRICT

Mark	Description	Date	Appr.

Mark	Description	Date	Appr.

Designed by: KJR
Dwn by: BJB
Ckd by: JRG
Reviewed by: JRG
Submitted by: BAKER
Date: 2/23/10
Rev: 0
Design file no.
Drawing code:
File name:
Plot date:
Plot scale:

U.S. ARMY CORPS OF ENGINEERS
AFGHANISTAN ENGINEER DISTRICT
APO AE 96338

Michael Baker Jr., Inc.
A unit of Michael Baker Corporation
Airside Business Park
100 Airside Drive
Moon Township, PA 15108
www.mbakercorp.com

AFGHAN NATIONAL ARMY
REGIONAL MILITARY TRAINING CENTER
STANDARD DESIGN

WEAPON SUPPLY (ASP)
ELECTRICAL PANEL SCHEDULE

Sheet reference number:
E-602