AFGHAN NATIONAL ARMY

STANDARD BUILDING DESIGN

300 STUDENT CLASSROOM BUILDING
(2) 150 STUDENT CLASSROOMS

100% FINAL DESIGN SUBMITTAL

SHEET INDEX

G–001 COVER SHEET

STRUCTURAL

S–001 GENERAL NOTES & DESIGN CRITERIA
S–101 FOUNDATION/SLAB & ROOF FRAMING PLAN
S–401 BUILDING SECTIONS
S–501 FOUNDATION SECTIONS
S–502 FRAMING SECTIONS
S–503 BEAM & COLUMN DETAILS
S–504 BEAM & COLUMN DETAILS
S–601 SCHEDULES
S–701 TYPICAL DETAILS
S–702 TYPICAL DETAILS

ARCHITECTURAL

A–001 LIFE SAFETY PLAN
A–101 FLOOR PLAN
A–102 ROOF PLAN
A–201 ELEVATIONS
A–301 BUILDING SECTIONS
A–401 WALL SECTIONS
A–501 EXTERIOR DETAILS
A–502 HEAD, JAMB, & SILL DETAILS
A–503 STOOP DETAILS
A–504 CANOPY DETAILS
A–601 WINDOW & DOOR SCHEDULES

MECHANICAL

M–101 HVAC FLOOR PLAN, SCHEDULES, & DETAILS

ELECTRICAL

E–001 ELECTRICAL SYMBOLS & ABBREVIATIONS
E–101 ELECTRICAL LIGHTING PLAN
E–102 ELECTRICAL POWER & SYSTEMS PLAN
E–103 ELECTRICAL LIGHTNING PROTECTION
E–501 ELECTRICAL DETAILS
E–502 ELECTRICAL DETAILS
E–601 ELECTRICAL LIGHT FIXTURE SCHEDULE
E–602 ELECTRICAL PANEL SCHEDULES

US ARMY CORPS OF ENGINEERS
AFGHANISTAN ENGINEER DISTRICT

Mark	Description	Date	Appr.	Mark	Description	Date	Appr.

U.S. ARMY ENGINEER DISTRICT, AFGHANISTAN
CORPS OF ENGINEERS
APO AE 96338

Michael Baker Jr., Inc.
A unit of Michael Baker Corporation
Airside Business Park
100 Airside Drive
Moon Township, PA 15108
www.mbakercorp.com

Designed by: KMF/MMY
Dwn by: RCG
Ckd by: CWW
Reviewed by: LHM
Submitted by: BAKER
Date: 2/23/10
Rev: 0
Design file no.
Drawing code:
File name: ANMCB150G-001CS
Plot date: 2/23/2010
Plot scale:

AFGHAN NATIONAL ARMY
REGIONAL MILITARY TRAINING CENTER
STANDARD DESIGN

300 STUDENT CLASSROOM BUILDING
(2) 150 STUDENT CLASSROOMS

COVER SHEET

Sheet reference number:
G–001

STRUCTURAL ABBREVIATIONS:

ACI	AMERICAN CONCRETE INSTITUTE
ADD'L	ADDITIONAL
AISC	AMERICAN INSTITUTE OF STEEL CONSTRUCTION
AISI	AMERICAN IRON AND STEEL INSTITUTE
ASTM	AMERICAN SOCIETY FOR TESTING AND MATERIALS
ARCH	ARCHITECTURAL
B	BOTTOM
BLDG	BUILDING
BOTT	BOTTOM
℄	CENTER LINE
CFMRF	COLD FORM METAL ROOF FRAME
CFMF	COLD FORM METAL FRAME
CFS	COLD FORMED STEEL
CIP	CAST-IN-PLACE
CIPL	CAST-IN-PLACE LINTEL
CJ	CONTROL JOINT
CLR	CLEAR
CMU	CONCRETE MASONRY UNIT
COEFF	COEFFICIENT
COL	COLUMN
CONC	CONCRETE
CONT	CONTINUOUS
COORD	COORDINATE
CSJ	CONSTRUCTION JOINT
CRSI	CONCRETE REINFORCING STEEL INSTITUTE
DIA	DIAMETER
DIAG	DIAGONAL
DIM	DIMENSION
DWG	DRAWING
DWL	DOWEL
EA	EACH
EF	EACH FACE
ELEC	ELECTRICAL
ELEV	ELEVATION
EMBED	EMBEDMENT
EQUIV	EQUIVALENT
ETC	ET CETERA
EW	EACH WAY
EXP	EXPANSION
EXT	EXTERIOR
FTG	FOOTING
GA	GAUGE
GB	GRADE BEAM
HORIZ	HORIZONTAL
h	HOUR
HRS	HOURS
IBC	INTERNATIONAL BUILDING CODE
INFO	INFORMATION
INT	INTERIOR
kg	KILOGRAM
km	KILOMETER
kN	KILONEWTON
kPa	KILOPASCAL
L#	ANGLE (# INDICATES SIZE)
LONG	LONGITUDINAL
LLV	LONG LEG VERTICAL
m	METER
MAX	MAXIMUM
MECH	MECHANICAL
MFG	MANUFACTURER
MID	MIDDLE
MIN	MINIMUM
MISC	MISCELLANEOUS
mm	MILLIMETER
MPa	MEGAPASCAL
MTL	METAL
MWFRS	MAIN WIND FORCE RESISTING SYSTEM
N	NEWTON
N	NORTH
N/A	NOT APPLICABLE
#	NUMBER SYMBOL FOR REBAR SIZE
NTS	NOT TO SCALE
OC	ON CENTER
OD	OUTSIDE DIAMETER
OPNG	OPENING
ℙ or PL	PLATE
PRE-ENG	PRE-ENGINEERED
REINF	REINFORCED
REQ'D	REQUIRED
RB	ROOF BEAM
SIM	SIMILAR
SPECS	SPECIFICATIONS
STD	STANDARD
STRUCT	STRUCTURAL
SW	SHEAR WALL
T	TOP
T/	TOP OF
T/ELEV	TOP ELEVATION
T/SLAB	TOP OF SLAB
T&B	TOP AND BOTTOM
THK	THICK
TYP	TYPICAL
UFC	UNIFIED FACILITIES CRITERIA
UON	UNLESS OTHERWISE NOTED
VERT	VERTICAL
W	WIDTH
W/	WITH

1.0 GENERAL NOTES:

1.1 THIS PROJECT HAS BEEN DESIGNED FOR THE WEIGHTS AND MATERIALS INDICATED ON THE SHEETS AND FOR THE LIVE LOADS INDICATED IN THE DESIGN DATA. IT IS THE CONTRACTOR'S RESPONSIBILITY TO DETERMINE ALLOWABLE CONSTRUCTION LOADS AND TO PROVIDE PROPER DESIGN AND CONSTRUCTION OF FALSEWORK, FORMWORK, STAGING, BRACING, SHEETING AND SHORING, ETC.

1.1 COORDINATE THESE SHEETS WITH THE ARCHITECTURAL, MECHANICAL, ELECTRICAL, PLUMBING, AND CIVIL SHEETS. ALL DIMENSIONS SHOWN ON THE SHEETS ARE MILLIMETERS UNLESS NOTED OTHERWISE.

1.2 THE CONTRACTOR SHALL VERIFY AND COORDINATE ALL FLOOR AND ROOF OPENING SIZES AND LOCATIONS, EQUIPMENT PAD SIZES AND LOCATIONS, ANCHOR BOLT LAYOUTS, ETC WITH EQUIPMENT SELECTED. THE CONTRACTOR SHALL MAKE ANY REQUIRED MODIFICATIONS AT NO ADDITIONAL COST.

1.3 THE CONTRACTOR SHALL REFER TO THE ARCHITECTURAL, MECHANICAL, ELECTRICAL AND PLUMBING SHEETS FOR SLEEVES, CURBS, INSERTS OR OPENINGS, ETC. NOT HEREIN INDICATED.

1.4 WORK NOT INCLUDED ON THE SHEETS BUT IMPLIED TO BE SIMILAR TO THAT SHOWN AT CORRESPONDING PLACES ELSEWHERE ON THE SHEETS SHALL BE REPEATED.

1.5 IN CASE OF CONFLICT BETWEEN THE NOTES, DETAILS AND SPECIFICATIONS THE MOST RIGID REQUIREMENTS SHALL GOVERN.

1.6 SEE ARCHITECTURAL SHEETS FOR LOCATIONS OF MASONRY AND NON-LOAD BEARING PARTITIONS. PROVIDE COMPRESSIBLE FIRESAFING AT TOP OF WALL AS REQUIRED BY ARCHITECTURAL SHEETS.

1.7 COORDINATE FINISHED FLOOR DATUM ELEVATION 0.0m WITH THE CIVIL SHEETS.

2.0 FOUNDATION NOTES

2.1 THE GEOTECHNICAL ANALYSIS FOR THIS PROJECT IS THE RESPONSIBILITY OF THE CONTRACTOR AWARDED THE WORK. AN ASSUMED ALLOWABLE SOIL BEARING VALUE OF 72 kPa HAS BEEN USED IN THE STRUCTURAL ANALYSIS OF THE BUILDING HEREIN AND SHALL BE CONFIRMED AND VERIFIED AS PART OF THE GEOTECHNICAL INVESTIGATION. VALUES WHICH DO NOT MEET THE REQUIREMENTS INDICATED ON THE BASIS OF DESIGN SHEET SHALL BE IMMEDIATELY BROUGHT TO THE ATTENTION OF THE CONTRACTING OFFICER FOR CONSIDERATION AND DETERMINATION ON THE NEXT APPROPRIATE COURSE OF ACTION.

2.2 SEE THE SPECIFICATION FOR ADDITIONAL REQUIREMENTS TO THOSE OUTLINED IN THE GEOTECHNICAL INVESTIGATION FOR EXCAVATION AND PREPARATION OF THE FOUNDATION AND THE SLAB ON GRADE SUBGRADE INCLUDING COMPACTION PROCEDURES.

2.3 EXCAVATIONS FOR FOOTINGS SHALL HAVE THE SIDES AND BOTTOMS TEMPORARILY LINED WITH 0.25mm POLYETHYLENE IF PLACEMENT OF CONCRETE DOES NOT OCCUR WITHIN 24 HRS OF THE EXCAVATION OF THE FOOTING.

2.4 FOUNDATION CONDITIONS NOTED DURING CONSTRUCTION WHICH DIFFER FROM THOSE DESCRIBED IN THE GEOTECHNICAL REPORT SHALL BE REPORTED TO THE GENERAL CONTRACTOR BEFORE FURTHER CONSTRUCTION IS ATTEMPTED. SEE PROJECT SPECIFICATIONS.

2.5 NO FOOTINGS OR SLABS SHALL BE POURED INTO OR AGAINST SUBGRADE CONTAINING FREE WATER, FROST, ICE OR LOOSE MATERIAL. FROST DEPTH ASSUMED TO BE 800mm.

2.6 ALL SLAB-ON-GRADE, TRENCH BOTTOMS AND OTHER ON-GRADE INTERIOR HORIZONTAL SURFACES SHALL BE PLACED OVER A 0.25mm POLYETHYLENE VAPOR RETARDER OVER A 100mm #57 STONE WATER CAPILLARY BARRIER PLACED ON SUBGRADE PROPERLY PREPARED IN ACCORDANCE WITH THE CONTRACT SPECIFICATIONS. (UON)

2.7 PRIOR TO START OF FOUNDATION OR SLAB-ON-GRADE CONSTRUCTION, EXISTING SUBGRADES SHALL BE COMPACTED TO MINIMUM OF 95% MAXIMUM DRY DENSITY OBTAINED THRU ASTM D 1557 MODIFIED PROCTOR TESTING.

2.8 SEE PLUMBING, ELECTRICAL & CIVIL SHEETS FOR REQUIRED UNDERSLAB UTILITIES.

2.9 SEE ARCHITECTURAL SHEETS FOR ALL WATERPROOFING DETAILS AND MATERIALS.

2.10 IF UNDERMINING OF FOOTINGS OCCURS, FILL VOIDS WITH 18 MPa CONCRETE. DO NOT ATTEMPT TO REPLACE AND RE-COMPACT SOIL.

3.0 CONCRETE

3.1 CONCRETE SHALL HAVE THE UNIT WEIGHT OF 2400 kg/m^3 AND A MINIMUM COMPRESSIVE STRENGTH (f'c) OF 28 MPa AT 28 DAYS. ALL CONCRETE SHALL HAVE A WATER-CEMENT RATIO OF 0.45. SEE SPECIFICATIONS FOR ADDITIONAL INFORMATION. ENTRAIN AIR TO PRODUCE TOTAL AIR CONTENT ACCORDING TO THE SPECIFICATIONS FOR CONCRETE EXPOSED TO FREEZING TEMPERATURES (EXTERIOR FOOTINGS, SLAB TURNDOWNS, EXTERIOR SLABS AND SLABS-ON-GRADE, EXTERIOR RETAINING WALLS, AND EXTERIOR GRADE BEAMS.)

3.2 NO CALCIUM CHLORIDE SHALL BE USED IN ANY CONCRETE.

3.3 MIXING, TRANSPORTING AND PLACING OF CONCRETE SHALL CONFORM TO ACI 301M-05.

3.4 ALL CONCRETE WORK SHALL CONFORM TO THE REQUIREMENTS OF THE AMERICAN CONCRETE INSTITUTE (ACI) 318M MANUAL (metric), "BUILDING CODE REQUIREMENTS FOR REINFORCED CONCRETE", AND REQUIREMENTS OUTLINED IN THE CONTRACT SPECIFICATIONS. WHEN THERE IS A CONFLICT BETWEEN ACI AND THE SPECIFICATIONS, THE MORE STRINGENT SHALL GOVERN.

3.5 CHAMFER ALL EXPOSED EXTERNAL CORNERS OF CONCRETE WITH 20mm x45 DEGREE CHAMFER UON.

3.6 CONCRETE REINFORCEMENT BARS SHALL CONFORM TO ASTM A615M-96a, GRADE 420 MPa, REINFORCING BARS SHALL NOT BE TACK WELDED, WELDED, HEATED OR CUT, UNLESS INDICATED ON THE CONTRACT DOCUMENTS. ALL LAP SPLICES SHALL BE CLASS "B" UON.

3.7 HORIZONTAL FOOTING AND HORIZONTAL WALL REINFORCEMENT SHALL BE CONTINUOUS AND SHALL HAVE 90 DEGREE BENDS AND EXTENSIONS, OR CORNER BARS OF EQUIVALENT SIZE LAPPED WITH A CLASS B TENSION SPLICE AT CORNERS AND INTERSECTIONS. TOP BAR CRITERIA SHALL APPLY IF 300mm OR MORE OF FRESH CONCRETE IS PLACED BELOW BAR.

3.8 SLABS-ON-GRADE SHALL HAVE CONSTRUCTION JOINTS OR CRACK CONTROL JOINTS AS SHOWN ON THE DRAWINGS. CONSTRUCTION JOINTS CAN BE USED AT CONTROL JOINT LOCATIONS AT CONTRACTORS OPTION. SEE SLAB PLANS & JOINT DETAILS FOR ADDITIONAL INFORMATION. FOR AREAS NOT SHOWN ON DWGS, THE MAXIMUM SPACING OF CONSTRUCTION/ CRACK CONTROL JOINTS SHALL BE 4800mm

3.9 ALL CONCRETE REINFORCEMENT SHALL BE DETAILED, FABRICATED, LABELED, SUPPORTED, AND SPACED IN FORMS AND SECURED IN PLACE IN ACCORDANCE WITH THE PROCEDURES AND REQUIREMENTS OUTLINED IN THE LATEST EDITION OF THE "BUILDING CODE REQUIREMENTS FOR REINFORCED CONCRETE", ACI 318M, AND THE "MANUAL OF STANDARD PRACTICE FOR DETAILING REINFORCED CONCRETE STRUCTURES", ACI 315M, LATEST EDITION. BASED ON IN COUNTRY REINFORCEMENT AVAILABILITY, IT IS THE CONTRACTOR'S OPTION TO ROUND DESIGNATED ODD NUMBERED REINFORCEMENT SIZES UP (1) ONE BAR SIZE.

3.10 ALL DOWELS SHALL MATCH SIZE AND NUMBER OF MAIN REINFORCING, UNLESS NOTED OTHERWISE ON THE SHEETS.

3.11 ADDITIONAL BARS SHALL BE PROVIDED AROUND ALL FLOOR AND WALL OPENINGS AS SHOWN ON THE SHEETS.

3.12 SEE ARCHITECTURAL SHEETS FOR TYPE AND LOCATION OF ALL FLOOR FINISHES.

3.13 THE CONTRACTOR SHALL COORDINATE ADDITIONAL WALL/SLAB OPENINGS NOT SHOWN ON STRUCTURAL SHEETS. SEE MECHANICAL, ELECTRICAL, PLUMBING AND CIVIL SHEETS.

3.14 UNLESS NOTED OTHERWISE, ALL CURBS SHALL BE REINFORCED WITH AT LEAST (1)-#13 CONTINUOUS AND #13 AT 300mm O.C. DOWELS TO STRUCTURE BELOW.

3.15 THE CONTRACTOR SHALL VERIFY ALL OPENINGS, PAD SIZES, AND ANCHOR BOLTS WITH EQUIPMENT SELECTED.

3.16 FOR ALL WALLS & PIERS, PROVIDE DOWELS INTO FOOTING AT EACH VERT REINF BAR, UON DOWEL SIZE SHALL BE SAME AS VERT REINF.

3.17 PROVIDE CONCRETE POUR STOPS OR FORMED AS REQUIRED FOR INSTALLATION OF ALL CONCRETE WORK.

3.18 PROVIDE ADDITIONAL (2)-#13 x 600mm REINFORCING BARS IN SLAB-ON GRADE AT ALL RE-ENTRANT CORNERS. PLACE BARS AT MID-DEPTH OF SLAB WITH A CLEARANCE OF 50mm FROM CORNER UON.

3.19 COLD-WEATHER PLACEMENT: COMPLY WITH ACI 306.1 AND AS FOLLOWS. PROTECT CONCRETE WORK FROM PHYSICAL DAMAGE OR REDUCED STRENGTH THAT COULD BE CAUSED BY FROST, FREEZING ACTIONS, OR LOW TEMPERATURES. SUBMIT A COLD WEATHER CONCRETING PLAN FOR APPROVAL.

3.20 PROVIDE BONDING COMPOUND PER ASTM C 1059-99: SPECIFICATION FOR LATEX AGENTS FOR BONDING FRESH CONCRETE (GROUT) TO HARDENED CONCRETE.

3.21 THE FORMED SURFACES FOR REINFORCED CONCRETE SHALL ACHIEVE A "CLASS A" FINISH WHEN RECEIVING PAINT OR A "CLASS B" FINISH WHEN RECEIVING PLASTER OR TILE AS PER SPECIFICATION SECTION 03 31 00 CAST-IN-PLACE STRUCTURAL CONCRETE.

3.22 AT INTERSECTING GRADE BEAMS AND SHEAR WALLS, PROVIDE CORNER BARS AT INTERSECTIONS WITH SAME QUANTITY, SIZE AND SPACING AS HORIZONTAL BARS WITH LEG LENGTH = 50db.

3.23 REFER TO S-800 SERIES REINFORCING BAR PLACEMENT DRAWINGS DEFINING LENGTHS, BENDS, AND SPACINGS FOR ALL STRUCTURAL CONCRETE. THE S-800 SERIES DRAWING ARE BASED ON THE S-400, S-500, S-600, AND S-700 SERIES DRAWING SCHEDULES, DETAILS, AND DIAGRAMS.

4.0 CONCRETE MASONRY

4.1 MASONRY CONSTRUCTION SHALL CONFORM TO SPECIFICATION FOR MASONRY STRUCTURES (ACI 530.1) UON.

4.2 STRENGTH OF MASONRY MATERIALS SHALL BE AS FOLLOWS:

a. CONCRETE MASONRY UNITS SHALL BE NORMAL WEIGHT, GRADE N, TYPE 1, CONFORMING TO ASTM C-90 AND HAVE A MINIMUM COMPRESSIVE STRENGTH OF 10.4 MPa ON THE NET AREA.

b. MORTAR SHALL CONFORM TO ASTM C-270 TYPE S.

c. GROUT FOR MASONRY SHALL BE NORMAL WEIGHT AND HAVE A MINIMUM COMPRESSIVE STRENGTH OF 14 MPa AT 28 DAYS. GROUT SHALL CONFORM TO ASTM C476M. GROUT LIFTS SHALL NOT EXCEED 1,400mm.

d. REINFORCED MASONRY SHALL HAVE A STRENGTH F'm = 10 MPa. (F'm IS THE COMPRESSIVE STRENGTH OF THE MASONRY AT 28 DAYS AS DETERMINED BY PRISM TESTS).

4.3 ALL VERTICAL REINFORCEMENT FOR CONCRETE MASONRY SHALL BE ASTM A615M-96a, GRADE 420 MPa. ALL SPLICES SHALL BE LAPPED 48 BAR DIAMETERS MINIMUM.

4.4 BOND BEAMS SHALL BE SPACED AT 1200mm OC VERTICALLY. BOND BEAM REINFORCING SHALL BE CONTINUOUS AND PROVIDED AT WALL INTERSECTIONS AND WALL CORNERS (REFERENCE CONCRETE MASONRY NOTE 4.11). ALL BOND BEAM REINFORCING SHALL BE CONTINUOUS AND HAVE STANDARD ACI HOOKS AT EACH END. PROVIDE STANDARD BAR SPLICES AS SPECIFIED. AS AN ALTERNATE TO CMU BOND BEAMS, IT IS THE CONTRACTOR'S OPTION TO PROVIDE 200mm x 200mm CONTINUOUS CAST-IN-PLACE CONCRETE BOND BEAMS WITH (2)-#16 IN LIEU OF CMU BOND BEAMS INDICATED ON THE DRAWINGS.

4.5 SEE TYPICAL DETAILS FOR MINIMUM REINFORCEMENT REQUIREMENTS FOR CMU WALLS. PROVIDE STANDARD BAR SPLICES AS SPECIFIED. ALL VERTICAL REINFORCEMENT EXTENDS FULL HEIGHT OF WALL.

4.6 CMU CELLS THAT REQUIRE VERTICAL REINFORCING BARS AS INDICATED ON THE CONTRACT DRAWINGS AND/OR SPECS SHALL HAVE REINF BARS PLACED IN CENTERS OF CMU CELLS AND CONTINUOUSLY GROUTED UON.

4.7 ALL CMU CELLS, OPEN CAVITIES, AND AIR SPACES OF ALL EXTERIOR WALLS SHALL BE GROUTED TO STOP FRAGMENTS FROM MORTAR BLAST.

4.8 CONTRACTOR SHALL COORDINATE LOCATION OF ALL OPENINGS SEE ARCH, MECH, ELEC, AND PLUMBING SHEETS FOR SIZE AND LOCATION OF OPENINGS.

4.9 MASONRY WALLS SHALL NOT BE BACK FILLED PRIOR TO THE MORTAR AND GROUT ATTAINING THEIR RESPECTIVE MAXIMUM DESIGN STRENGTHS PER SPECIFICATIONS.

4.10 PROVIDE GALVANIZED MORTAR/GROUT SCREEN W/ 3mm MESH WHERE CELLS BELOW ARE NOT GROUTED.

4.11 AT INTERSECTING BOND BEAMS, PROVIDE CORNER BAR FOR EACH HORIZONTAL BAR IN BOND BEAMS AT INTERSECTING WALLS. USE SAME SIZE AND SPACING AS HORIZONTAL BARS WITH LEG LENGTH = 50db.

4.12 THE ALTERNATE TOP OF CMU WALL BRACING DETAIL(S) SHOWN ON S-701 CAN BE UTILIZED AT THE CONTRACTOR'S OPTION IN PLACE OF THE "SLEEVED DOWEL" WALL CONNECTIONS DEPICTED ON S-400 AND S-500 SERIES DRAWINGS. IN ADDITION, ALTERNATE DETAIL(S) SHOW CAST-IN-PLACE WALL BOND BEAMS THAT CAN BE UTILIZED AT THE CONTRACTOR'S OPTION IN PLACE OF THE STANDARD CMU BOND BEAMS CONSTRUCTED OF CMU BLOCKS.

5.0 COLD-FORMED METAL FRAMING

5.1 ALL COLD-FORMED METAL FRAMING MEMBERS SHALL CONFORM TO ASTM A1003M, STRUCTURAL GRADE ST340 (MPa), WITH A GALVANIZED COATING OF Z275 OR BETTER IN ACCORDANCE WITH ASTM A653M.

5.2 ALL COLD-FORMED METAL FRAMING MEMBERS SHALL HAVE THE FOLLOWING MINIMUM PROPERTIES:

a. MINIMUM METAL THICKNESS:
TRACK = 1.37mm;
STUD/OTHER = 1.09mm

b. MINIMUM FLANGE WIDTH:
TRACK = 38mm;
STUD/OTHER = 35mm

c. MINIMUM MEMBER DEPTH:
ALL SECTIONS = 152.2mm

d. PURLIN (HAT CHANNEL)
DEPTHxWIDTH(FLAT TOP)xTHICK = 25mmx42mmx1.59mm

5.3 ALL CONNECTIONS SHALL BE MADE WITH CORROSION RESISTANT (ASTM A153M), SELF-DRILLING, SELF-TAPPING STEEL DRILL SCREWS IN ACCORDANCE WITH ASTM C1513. SCREWS SHALL HAVE A LOW PROFILE HEAD BENEATH ROOF DECK, AND STANDARD HEAD ALL OTHER LOCATIONS.

5.4 FABRICATE COLD FORMED METAL FRAMING AND ACCESSORIES PLUMB, SQUARE AND TRUE TO LINE, WITH CONNECTIONS SECURELY FASTENED ACCORDING TO AISI STANDARD FOR COLD FORMED STEEL FRAMING.

5.5 CUT FRAMING MEMBERS BY SAWING OR SHEATHING, DO NOT TORCH CUT.

5.6 INSTALL FRAMING MEMBERS IN ONE-PIECE LENGTHS UNLESS SPLICE CONNECTIONS ARE INDICATED FOR TRACK OR TENSION MEMBERS

5.7 INSTALL TEMPORARY BRACING AND SUPPORTS TO SECURE FRAMING DURING CONSTRUCTION. MAINTAIN BRACING AND SUPPORTS IN PLACE UNTIL THE STRUCTURE HAS BEEN COMPLETED WITH ALL CONNECTIONS AND PERMANENT BRACING SECURED.

6.0 STRUCTURAL DESIGN CRITERIA

6.1 ALL DESIGNS SHALL CONFORM TO THE PROVISIONS OF THE IBC 2006 AND UFC AS APPLICABLE.

6.2 DESIGN LOADS

6.2.1 DEAD LOADS (PER IBC 2006 & UFC 3-310-01)

MECH/ELEC/PLUMBING	0.20 kPa
MISCELLANEOUS	0.15 kPa
COLD-FORMED FRAMING	0.20 kPa
INSULATION	0.10 kPa
METAL ROOF PANEL	0.14 kPa
	0.79 kPa
FLOOR PARTITION ALLOWANCE	0.96 kPa

6.2.2 LIVE LOADS (PER IBC 2006 & UFC 3-310-01)

ROOF	1.00 kPa
CORRIDOR (2-STORY BLDG ONLY)	4.80 kPa
ALL OTHERS (2-STORY BLDG ONLY)	2.40 kPa
SLAB ON GRADE	4.80 kPa

6.2.3 SNOW LOADS (PER IBC 2006 & UFC 3-310-01)

GROUND SNOW LOAD (Pg)	1.2 kPa
SNOW IMPORTANCE FACTOR (I)	1.0
SNOW EXPOSURE FACTOR (Ce)	1.0
THERMAL FACTOR (Ct)	1.0

6.2.4 WIND LOADS (PER IBC 2006)

BASIC WIND SPEED	137 km/h
WIND IMPORTANCE FACTOR	1.0
WIND EXPOSURE CATEGORY	D
DIRECTIONALITY COEFFICIENT (Kd)	0.85
TOPOGRAPHIC FACTOR (Kzt)	1.0

6.2.5 SEISMIC LOADS (PER IBC 2006 & UFC 3-310-04)

OCCUPANCY USE CATEGORY	II
SEISMIC IMPORTANCE FACTOR (Ie)	1.0
SEISMIC SITE CLASS	D

S_s = 1.50 (REDUCED FROM 2.40 PER ASCE 7-05, 12.8.1.3 FOR A BUILDING WITHOUT IRREGULARITIES)
S_1 = 1.20
S_{DS} = 1.60
S_{D1} = 1.20

SEISMIC DESIGN CATEGORY	E
SEISMIC RESISTING SYSTEM: -SPECIAL REINFORCED CONCRETE SHEAR WALL	
RESPONSE MODIFICATION FACTOR (R)	6
RESPONSE COEFFICIENT (Cs)	0.167
SEISMIC ANALYTICAL PROCEDURE =	EQUIV LATERAL FORCE
SEISMIC BASE SHEAR	1440 kN

APPROVED:

A/E DESIGNER OF RECORD

SEAL:

GEORGIA REGISTERED PROFESSIONAL ENGINEER No. 27141 1-29-10 CHRISTOPHER W. WHITMORE

US ARMY CORPS OF ENGINEERS
AFGHANISTAN ENGINEER DISTRICT

Mark	Description	Date	Appr.	Mark	Description	Date	Appr.

U.S. ARMY ENGINEER DISTRICT, AFGHANISTAN
CORPS OF ENGINEERS
APO AE 96338

Michael Baker Jr., Inc
A unit of Michael Baker Corporation
Airside Business Park
100 Airside Drive
Moon Township, PA 15108
www.mbakercorp.com

Designed by: KMF/MMY
Dwn by: RCG
Ckd by: CWW
Reviewed by: LHM
Submitted by: BAKER
Date: 2/23/10
Rev: 0
Design file no.
Drawing code:
File name: AMCB150S-001GN
Plot date: 2/23/2010
Plot scale: X:X

AFGHAN NATIONAL ARMY
REGIONAL MILITARY TRAINING CENTER
STANDARD DESIGN

300 STUDENT CLASSROOM BUILDING
(2) 150 STUDENT CLASSROOMS

GENERAL NOTES & DESIGN CRITERIA

Sheet reference number:
S-001

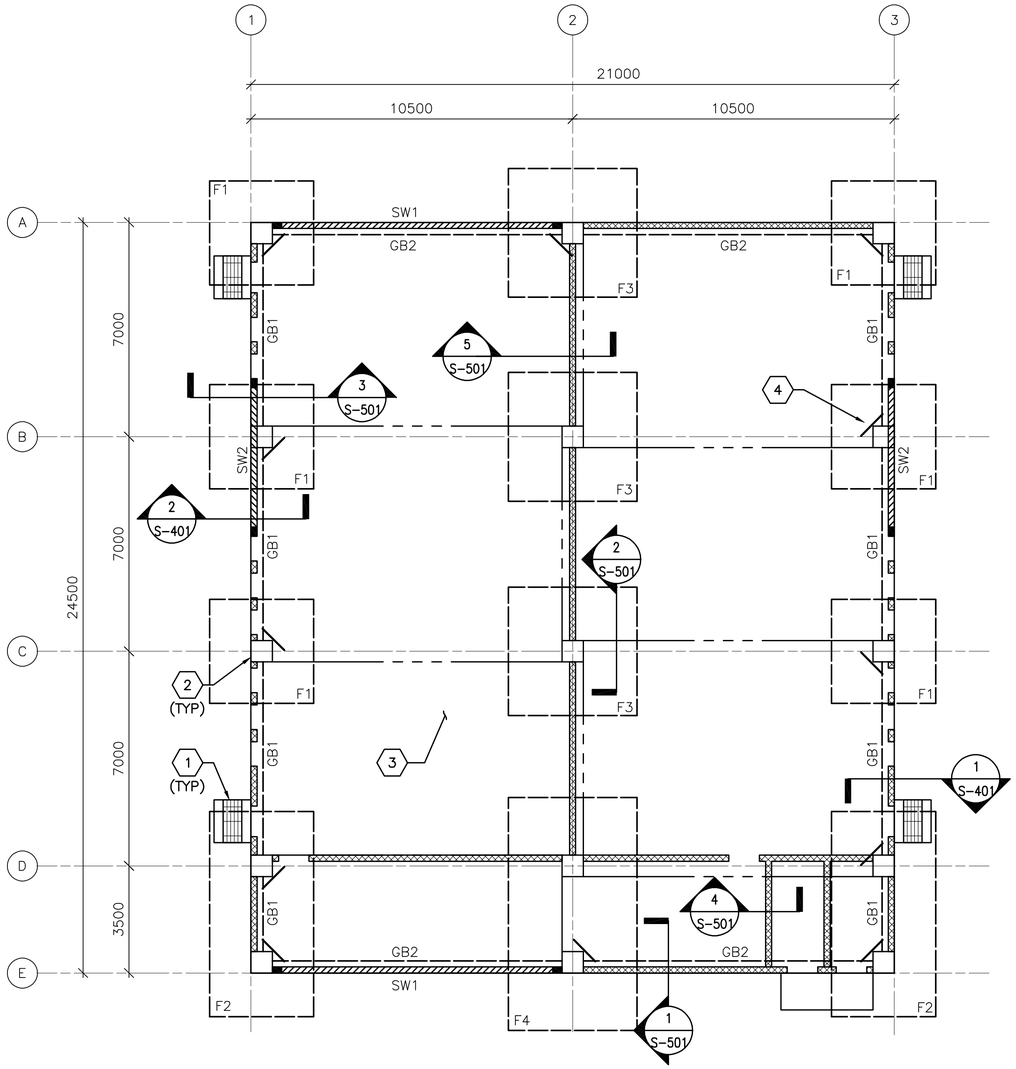

1 S-101 **FOUNDATION/SLAB PLAN**

SCALE: 1:100

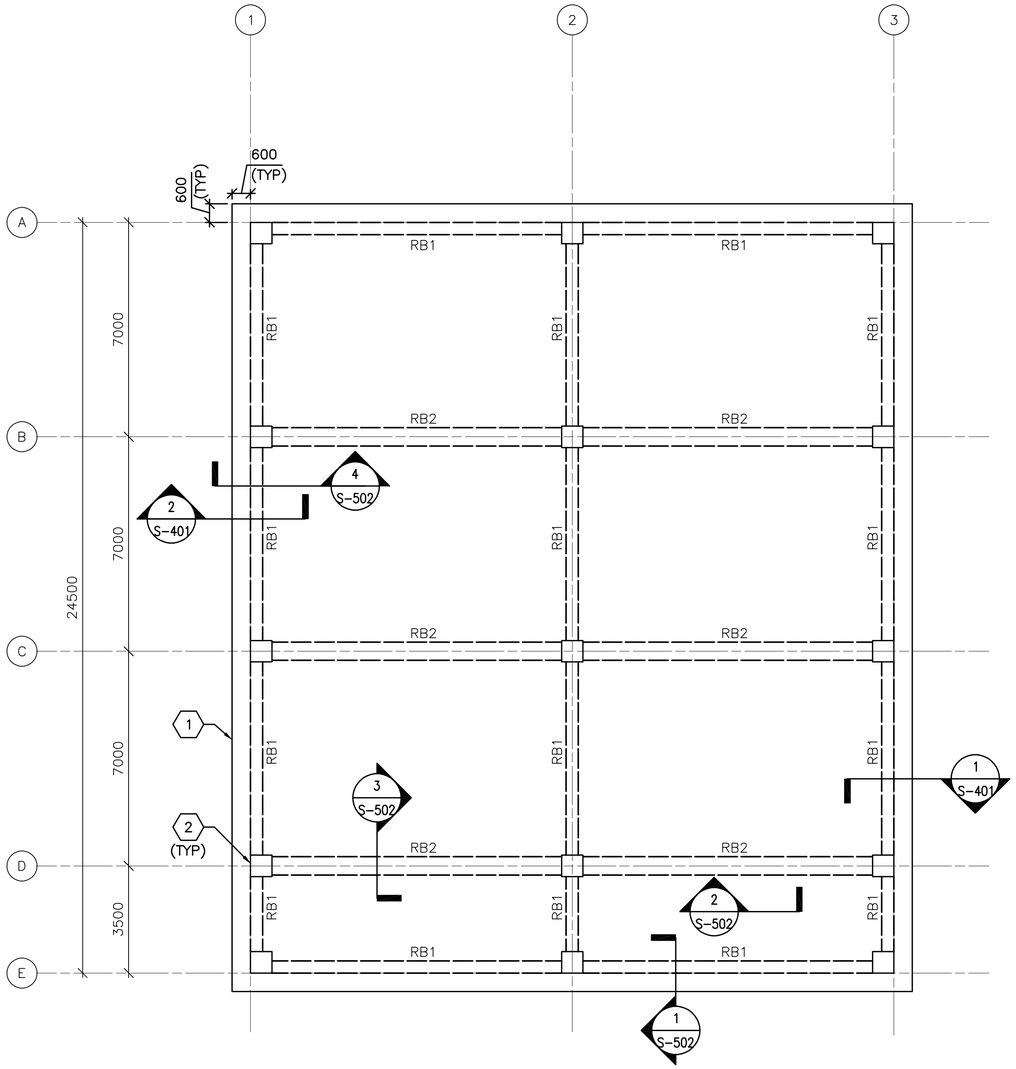

2 S-101 **ROOF FRAMING PLAN**

SCALE: 1:100

FOUNDATION/SLAB PLAN NOTES:

1. REFER TO SHEET S-001 FOR STRUCTURAL NOTES AND DESIGN CRITERIA.
2. FINISH FIRST FLOOR ELEVATION SHALL BE (DATUM 0.00) ALL PLUS OR MINUS DIMENSIONS INDICATED ON PLAN OR REFERRED TO IN NOTES RELATE TO FINISH FIRST FLOOR ELEVATION.
3. SLAB-ON-GRADE IS 150 WITH #13 @ 300 OC EW LOCATED 38 FROM T/SLAB.
4. TOP OF EXTERIOR FOOTINGS SHALL BE -950 UNLESS OTHERWISE INDICATED.
5. TOP OF INTERIOR FOOTINGS WITHOUT GRADE BEAM ABOVE SHALL BE -600.
6. COLUMN FOOTINGS INDICATED BY F# ON PLAN. REFER TO COLUMN FOOTING SCHEDULE ON SHEET S-601.
7. REFER TO COLUMN SCHEDULE ON SHEET S-601.
8. GRADE BEAM INDICATED BY GB# ON PLAN, REFER TO BEAM SCHEDULE ON SHEET S-601.
9. SHEARWALL INDICATED BY SW# ON PLAN, REFER TO SHEARWALL SCHEDULE ON SHEET S-601.
10. SEE TYP EXTERIOR & INTERIOR CMU WALL DETAILS ON SHEET S-701.
11. SEE MECHANICAL AND ELECTRICAL SHEETS FOR CONCRETE PAD LOCATIONS, SIZES, AND THICKNESS NOT SHOWN. SEE SHEET S-701 FOR DETAILS.
12. THICKENED SLAB UNDER CMU PERIMETER/PARTITION WALLS NOT SHOWN FOR CLARITY.

FOUNDATION/SLAB PLAN KEY NOTES: (X)

1. CONC SLAB (ENTRANCE)-SEE ARCH DWGS FOR INFORMATION
2. REINF CONC COLUMN
3. REINF CONC SLAB-ON-GRADE
4. (2)-#13 @ RE-ENTRANT CORNERS - SEE S-701 FOR INFORMATION

FOUNDATION/SLAB PLAN LEGEND:

REINF CONC SHEAR WALL

REINF CMU WALL

CONTROL JOINT

ROOF FRAMING PLAN NOTES:

1. REFER TO SHEETS S-001 FOR STRUCTURAL NOTES AND DESIGN CRITERIA.
2. TOP OF SLAB ELEVATION = 5000 UNLESS NOTED OTHERWISE.
3. ROOF SLAB IS 300 WITH #16 @ 300 OC EW T&B.
4. ROOF BEAM INDICATED BY RB# ON PLAN. REFER TO BEAM SCHEDULE ON SHEET S-601.
5. COORDINATE WITH ARCHITECTURAL SHEETS FOR COLD-FORMED STEEL OVERBUILD FRAMING ABOVE ROOF SLAB.
6. COLD-FORMED METAL OVERBUILD ROOF FRAMING NOT SHOWN FOR CLARITY. SEE OVERBUILD ROOF FRAMING DETAILS AND SECTIONS ON SHEET S-702.
7. CMU PARTITION WALLS (BELOW ROOF SLAB) NOT SHOWN FOR CLARITY.
8. OVERHANG AREAS OF ROOF SLAB CONTAIN ROOF VENT PENETRATIONS. REFERENCE ARCHITECTURAL DRAWINGS FOR INFORMATION.

ROOF FRAMING PLAN KEY NOTES: (X)

1. CONC ROOF SLAB (BELOW ROOF OVERBUILD)
2. REINF CONC COLUMN (BELOW CONC ROOF SLAB)

0 2000 4000
SCALE: 1:100

UNLESS OTHERWISE NOTED, LINEAR DIMENSIONS SHOWN ON DRAWINGS ARE IN MILLIMETERS (mm)

APPROVED:

A/E DESIGNER OF RECORD

SEAL:

GEORGIA REGISTERED 1-28-10 No. 27141 PROFESSIONAL ENGINEER CHRISTOPHER W. WHITMORE

US ARMY CORPS OF ENGINEERS
AFGHANISTAN ENGINEER DISTRICT

Mark	Description	Date	Appr.	Mark	Description	Date	Appr.

Date: 2/23/10
Design file no.
Rev: 0
Drawing code:
File name: ANACB150S-101FFP
Plot date: 2/23/2010
Plot scale: x:X

Designed by: KMP/MMY
Dwn by: RCG
Ckd by: CWW
Reviewed by: LHM
Submitted by: BAKER

U.S. ARMY ENGINEER DISTRICT, AFGHANISTAN
CORPS OF ENGINEERS
APO AE 96338

Michael Baker Jr., Inc
A unit of Michael Baker Corporation
Airside Business Park
100 Airside Drive
Moon Township, PA 15108
www.mbakercorp.com

AFGHAN NATIONAL ARMY
REGIONAL MILITARY TRAINING CENTER
STANDARD DESIGN

300 STUDENT CLASSROOM BUILDING
(2) 150 STUDENT CLASSROOMS
FOUNDATION/SLAB PLAN
ROOF FRAMING PLAN

Sheet reference number:
S-101

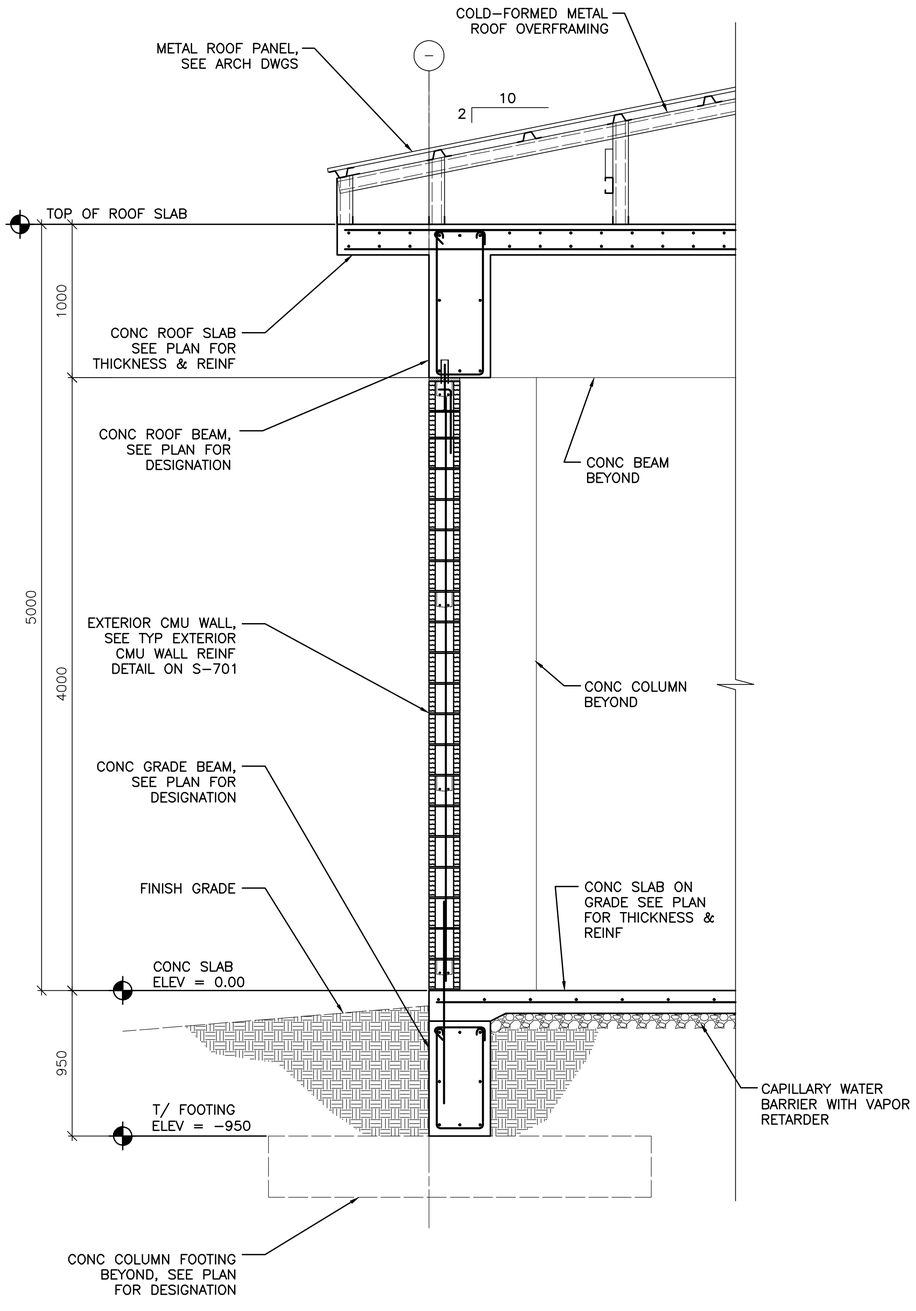

1 S-101 **TYPICAL WALL SECTION AT EXTERIOR MASONRY WALL**

SCALE: 1:20

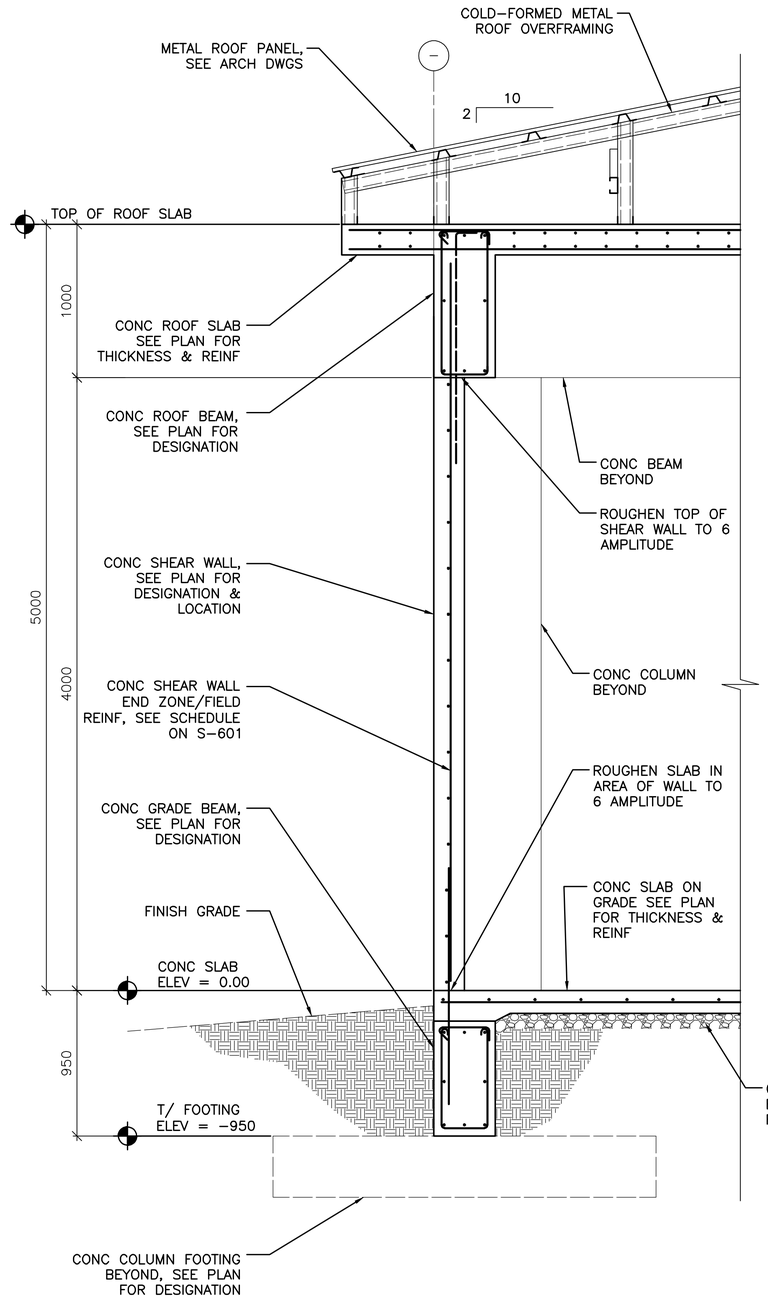

2 S-101 **TYPICAL WALL SECTION AT CONCRETE SHEAR WALL**

SCALE: 1:20

0 400 800
SCALE: 1:20

UNLESS OTHERWISE NOTED, LINEAR DIMENSIONS SHOWN ON DRAWINGS ARE IN MILLIMETERS (mm)

APPROVED:

A/E DESIGNER OF RECORD

SEAL:

GEORGIA REGISTERED 1-28-10 No. 27141 PROFESSIONAL ENGINEER CHRISTOPHER W. WHITMORE

US ARMY CORPS OF ENGINEERS
AFGHANISTAN ENGINEER DISTRICT

Mark	Description	Date	Appr.	Mark	Description	Date	Appr.

Date: 2/23/10
Rev: 0
Design file no.
Drawing code:
File name: ANACB1508-40188
Plot date: 2/23/2010
Plot scale: x:X

Designed by: KMP/MMY
Dwn by: RCG
Ckd by: CWW
Reviewed by: LHM
Submitted by: BAKER

U.S. ARMY ENGINEER DISTRICT, AFGHANISTAN
CORPS OF ENGINEERS
APO AE 96338

Michael Baker Jr., Inc
A unit of Michael Baker Corporation
Airside Business Park
100 Airside Drive
Moon Township, PA 15108
www.mbakercorp.com

AFGHAN NATIONAL ARMY
REGIONAL MILITARY TRAINING CENTER
STANDARD DESIGN

300 STUDENT CLASSROOM BUILDING
(2) 150 STUDENT CLASSROOMS

BUILDING SECTIONS

Sheet reference number:
S-401

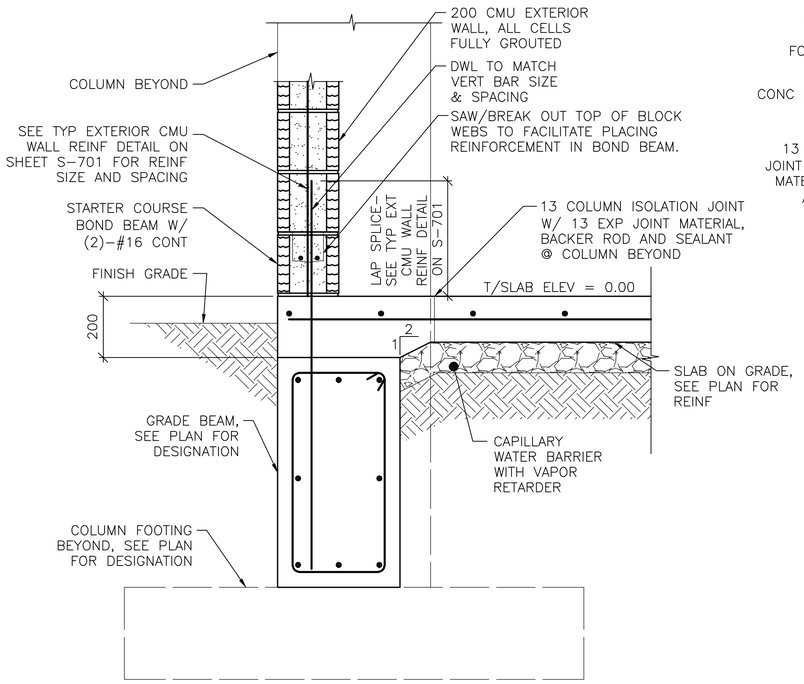

NOTE:
1. SECTION IS SIMILAR FOR INTERIOR CMU PARTITIONS OVER GRADE BEAMS SHOWING THICKENED 200 CONC SLAB AREA.

1 S-101 **SECTION**
SCALE: 1:10

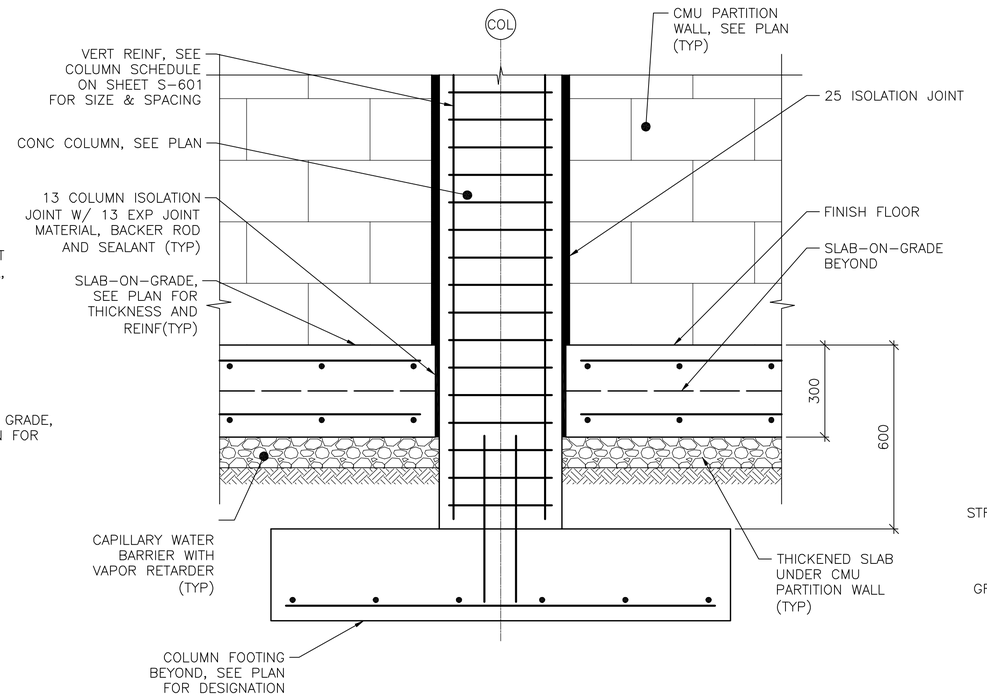

2 S-101 **SECTION**
SCALE: 1:10

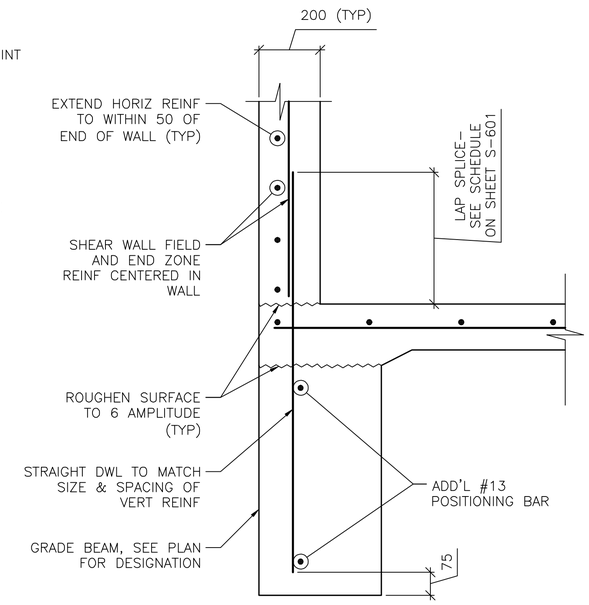

NOTE:
1. SECTION DEPICTS SHEAR WALL TERMINATION ONLY. GRADE BEAM REINFORCING NOT SHOWN FOR CLARITY.
2. SEE SHEET S-601 AND SHEET S-702 FOR SCHEDULED FIELD AND END ZONE REINF.

3 S-101 **SECTION**
SCALE: 1:10

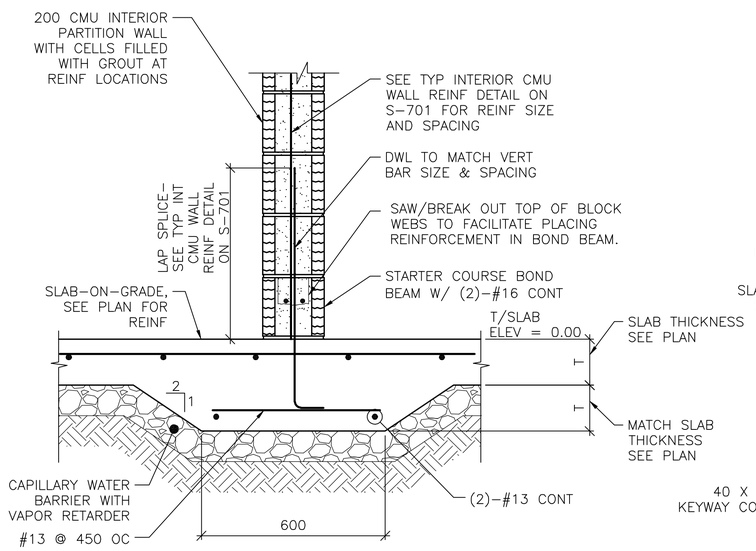

4 S-101 **SECTION**
SCALE: 1:10

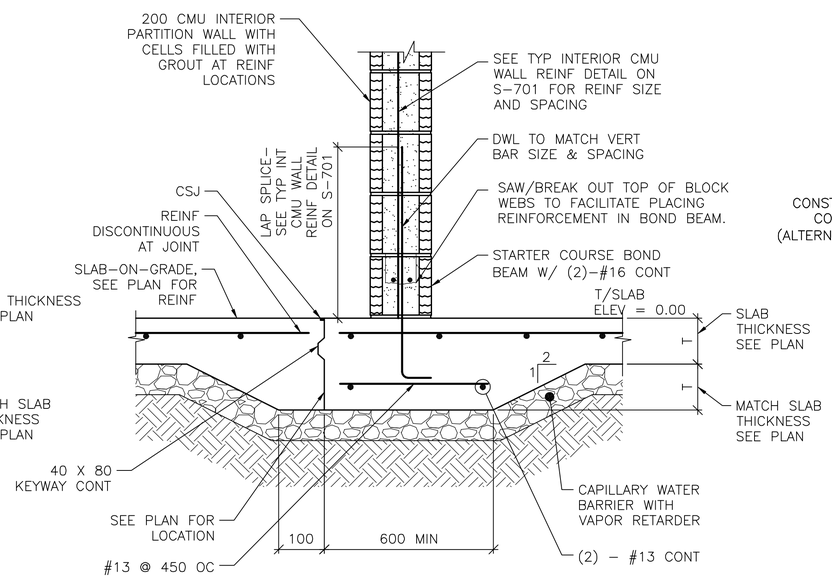

5 S-101 **SECTION**
SCALE: 1:10

NOTE:
1. DETAIL IS APPLICABLE AT CONTROL JOINTS RUNNING PARALLEL TO CMU WALLS AND WITHIN 300 OF FACE OF WALL.

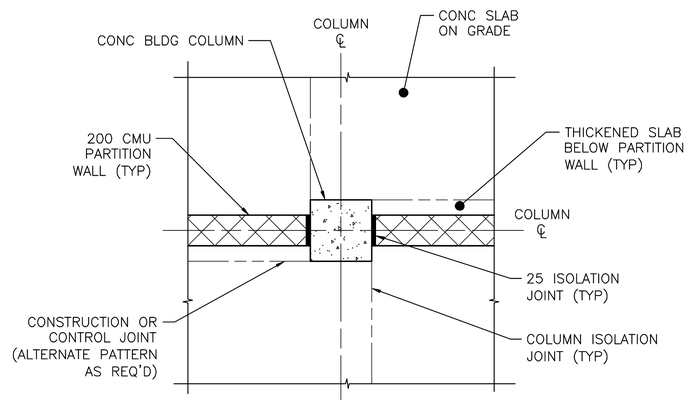

A S-501 **COLUMN ISOLATION JOINT DETAIL**
SCALE: NTS

0 200 400
SCALE: 1:10

UNLESS OTHERWISE NOTED, LINEAR DIMENSIONS SHOWN ON DRAWINGS ARE IN MILLIMETERS (mm)

APPROVED:

A/E DESIGNER OF RECORD

SEAL:

GEORGIA REGISTERED 1-29-10 No. 27141 PROFESSIONAL ENGINEER CHRISTOPHER W. WHITMORE

US ARMY CORPS OF ENGINEERS
AFGHANISTAN ENGINEER DISTRICT

Mark	Description	Date	Appr.	Mark	Description	Date	Appr.

Date: 2/23/10
Rev: 0
Design file no.
Drawing code:
File name: AAACB1503-S0150
Plot date: 2/23/2010
Plot scale: x:X

Designed by: KMP/MMY
Dwn by: RCG
Ckd by: CWW
Reviewed by: LHM
Submitted by: BAKER

U.S. ARMY ENGINEER DISTRICT, AFGHANISTAN
CORPS OF ENGINEERS
APO AE 96338

Michael Baker Jr., Inc
A unit of Michael Baker Corporation
Airside Business Park
100 Airside Drive
Moon Township, PA 15108
www.mbakercorp.com

AFGHAN NATIONAL ARMY
REGIONAL MILITARY TRAINING CENTER
STANDARD DESIGN

300 STUDENT CLASSROOM BUILDING
(2) 150 STUDENT CLASSROOMS

FOUNDATION SECTIONS

Sheet reference number:
S-501

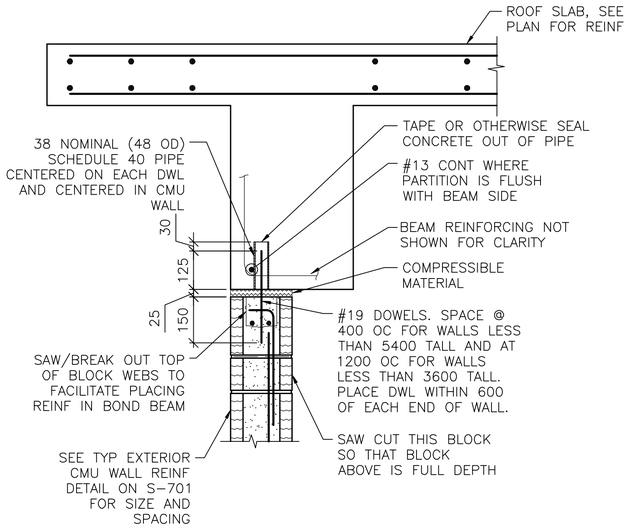

NOTES:
1. EXTEND DOWEL REINF TO 25 CLEAR FROM TOP OF CMU WALL.

1 S-101 **SECTION**
SCALE: 1:10

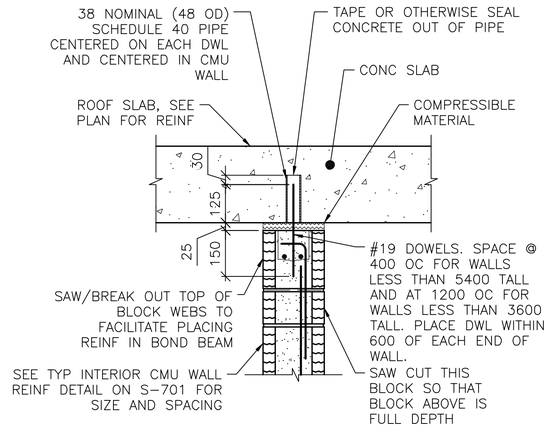

NOTES:
1. EXTEND DOWEL REINF TO 25 CLEAR FROM TOP OF CMU WALL.
2. SLAB REINF NOT SHOWN FOR CLARITY.

2 S-101 **SECTION**
SCALE: 1:10

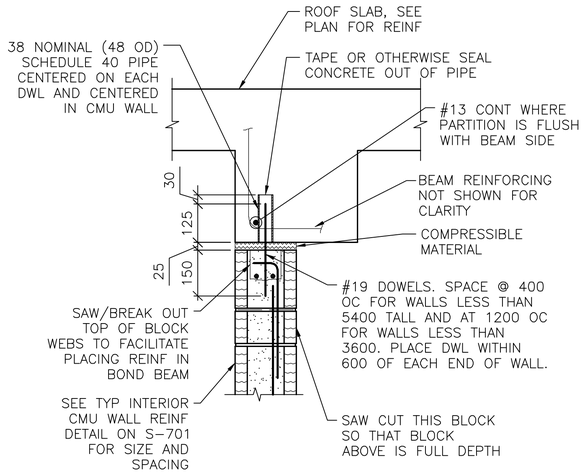

NOTES:
1. EXTEND DOWEL REINF TO 25 CLEAR FROM TOP OF CMU WALL.
2. PARTITION WALL MAY BE CENTERED UNDER THE BEAM OR FLUSH AS SHOWN. SEE PLAN FOR LOCATION.
3. SLAB REINF NOT SHOWN FOR CLARITY.

3 S-101 **SECTION**
SCALE: 1:10

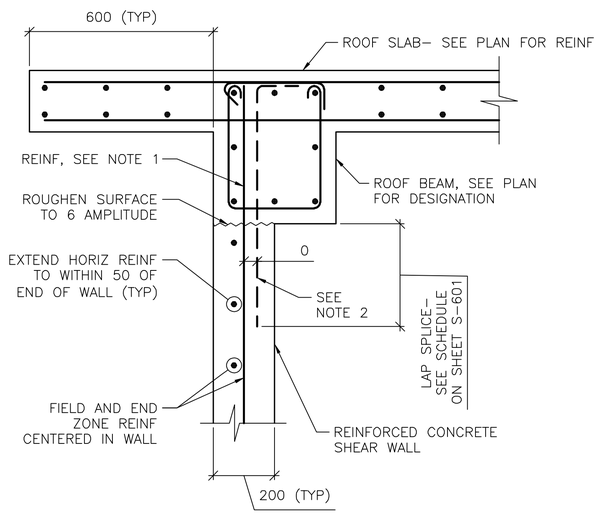

NOTES:
1. TERMINATE "FIELD" VERT REINF & END ZONE REINF @ 50 CLEAR FROM TOP OF ROOF SLAB.
2. WHERE END ZONE REINFORCING CANNOT BE DEVELOPED IN BEAM DEPTH, PROVIDE HOOKED DWLS SAME SIZE & SPACING. PROVIDE TENSION LAP BELOW ROOF BEAM.
3. SEE SHEET S-601 AND SHEET S-702 FOR SCHEDULED FIELD AND END ZONE REINF.

4 S-101 **SECTION**
SCALE: 1:10

0 200 400
SCALE: 1:10

UNLESS OTHERWISE NOTED, LINEAR DIMENSIONS SHOWN ON DRAWINGS ARE IN MILLIMETERS (mm)

APPROVED:

A/E DESIGNER OF RECORD

SEAL:

GEORGIA REGISTERED 2-23-10 No. 27141 PROFESSIONAL ENGINEER CHRISTOPHER W. WHITMORE

US ARMY CORPS OF ENGINEERS
AFGHANISTAN ENGINEER DISTRICT

Mark	Description	Date	Appr.	Mark	Description	Date	Appr.

U.S. ARMY ENGINEER DISTRICT, AFGHANISTAN
CORPS OF ENGINEERS
APO AE 96338

Michael Baker Jr., Inc
A unit of Michael Baker Corporation
Airside Business Park
100 Airside Drive
Moon Township, PA 15108
www.mbakercorp.com

Designed by: KMP/MMY
Dwn by: RCG
Ckd by: CWW
Reviewed by: LHM
Submitted by: BAKER
Date: 2/23/10
Rev: 0
Design file no.
Drawing code:
File name: ANACB1508-5025C
Plot date: 2/23/2010
Plot scale: X:X

AFGHAN NATIONAL ARMY
REGIONAL MILITARY TRAINING CENTER
STANDARD DESIGN

300 STUDENT CLASSROOM BUILDING
(2) 150 STUDENT CLASSROOMS

FRAMING SECTIONS

Sheet reference number:
S-502

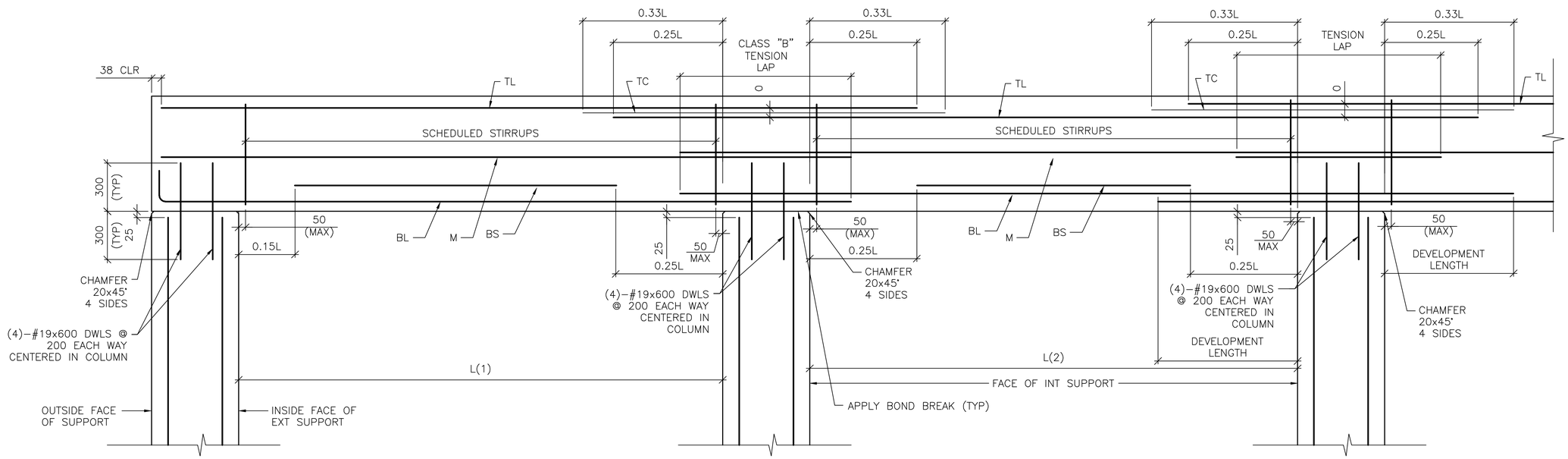

DETAIL NOTE:
1. WORK THIS DETAIL WITH BEAM SCHEDULE ON SHEET S–601.
2. L=GREATEST OF ADJACENT SPANS L(1) OR L(2)
3. ONLY COLUMN CORNER BARS ARE SHOWN

1 / S–503 **ROOF BEAM REINFORCING DETAIL**

SCALE: NTS

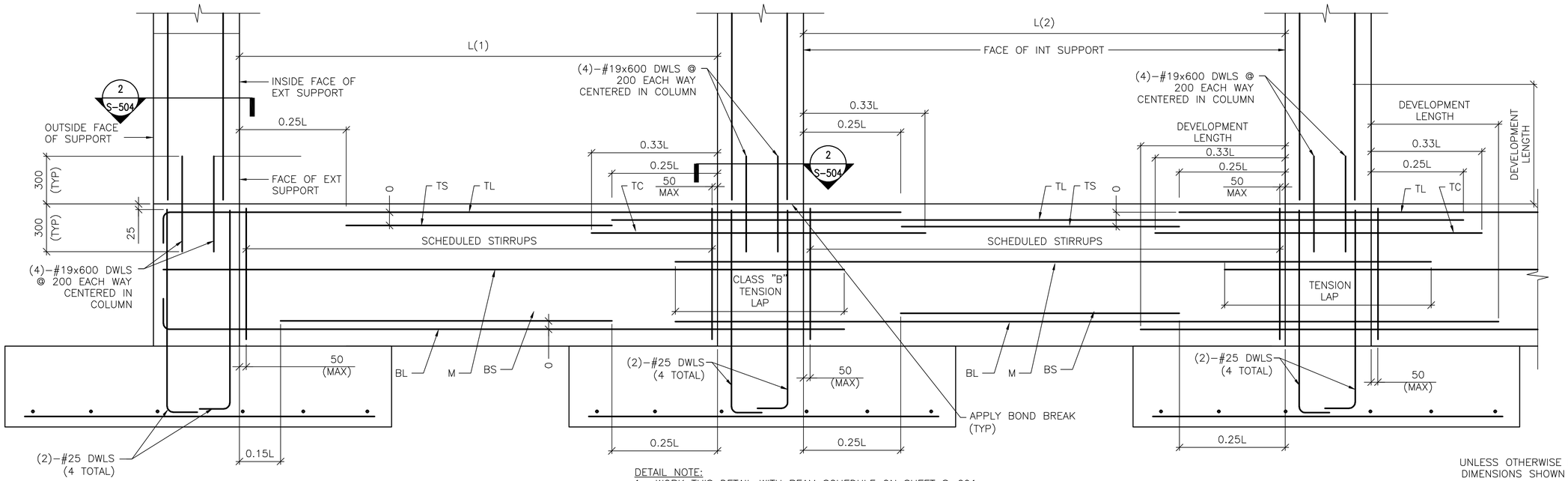

DETAIL NOTE:
1. WORK THIS DETAIL WITH BEAM SCHEDULE ON SHEET S–601.
2. L=GREATEST OF ADJACENT SPANS L(1) OR L(2)
3. ONLY COLUMN CORNER BARS ARE SHOWN.

2 / S–503 **GRADE BEAM REINFORCING DETAIL**

SCALE: NTS

UNLESS OTHERWISE NOTED, LINEAR DIMENSIONS SHOWN ON DRAWINGS ARE IN MILLIMETERS (mm)

APPROVED:

A/E DESIGNER OF RECORD

SEAL:

GEORGIA REGISTERED 2-23-10 No. 27141 PROFESSIONAL ENGINEER CHRISTOPHER W. WHITMORE

US ARMY CORPS OF ENGINEERS
AFGHANISTAN ENGINEER DISTRICT

Mark	Description	Date	Appr.	Mark	Description	Date	Appr.

U.S. ARMY ENGINEER DISTRICT, AFGHANISTAN
CORPS OF ENGINEERS
APO AE 96338

Michael Baker Jr., Inc.
A unit of Michael Baker Corporation
Airside Business Park
100 Airside Drive
Moon Township, PA 15108
www.mbakercorp.com

Designed by: KMP/MMY
Dwn by: RCG
Ckd by: CWW
Reviewed by: LHM
Submitted by: BAKER
Date: 2/23/10
Design file no.
Drawing code:
File name: ANACB1505-S503T
Plot date: 2/23/2010
Plot scale: X:X
Rev: 0

AFGHAN NATIONAL ARMY
REGIONAL MILITARY TRAINING CENTER
STANDARD DESIGN

300 STUDENT CLASSROOM BUILDING
(2) 150 STUDENT CLASSROOMS

BEAM & COLUMN DETAILS

Sheet reference number:
S–503

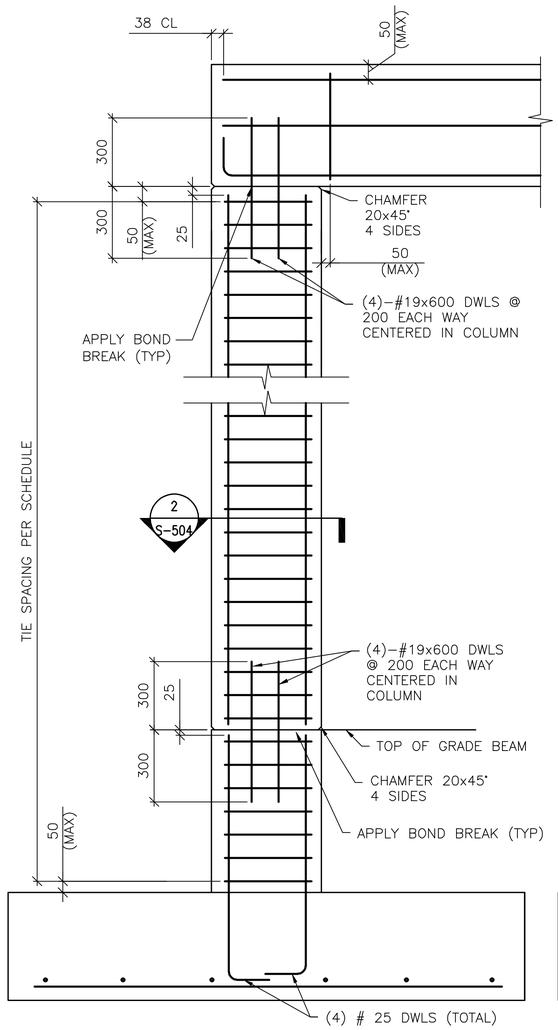

DETAIL NOTE:
1. ONLY COLUMN CORNER BARS ARE SHOWN

1 S-504 **1-STORY COLUMN REINF DETAILS**
SCALE: NTS
(WITH GRADE BEAM)

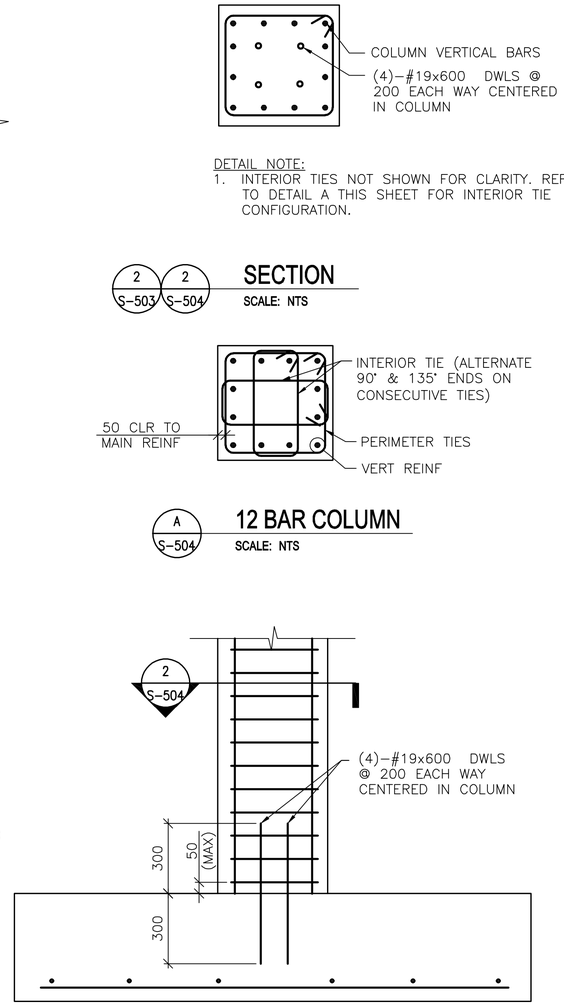

DETAIL NOTE:
1. ONLY COLUMN CORNER BARS ARE SHOWN

1 S-504 **1-STORY COLUMN REINF DETAILS**
SCALE: NTS
(WITHOUT GRADE BEAM)

DETAIL NOTE:
1. INTERIOR TIES NOT SHOWN FOR CLARITY. REFER TO DETAIL A THIS SHEET FOR INTERIOR TIE CONFIGURATION.

2 2 S-503 S-504 **SECTION**
SCALE: NTS

A S-504 **12 BAR COLUMN**
SCALE: NTS

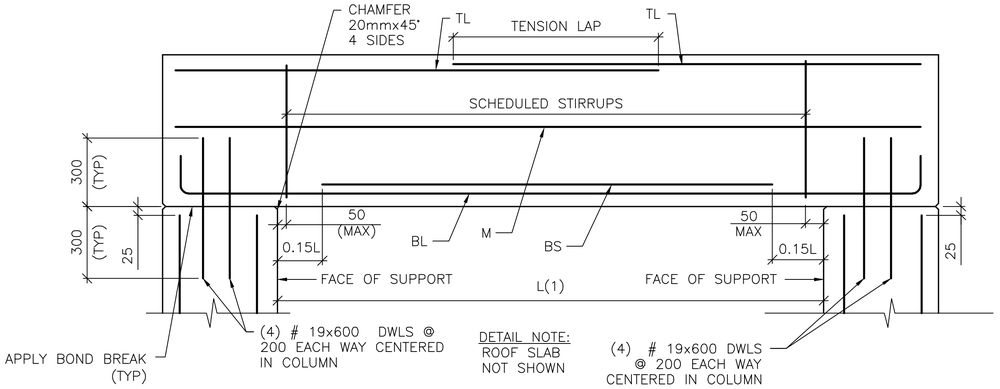

3 S-504 **SINGLE SPAN ROOF BEAM REINFORCING DETAIL**
SCALE: NTS

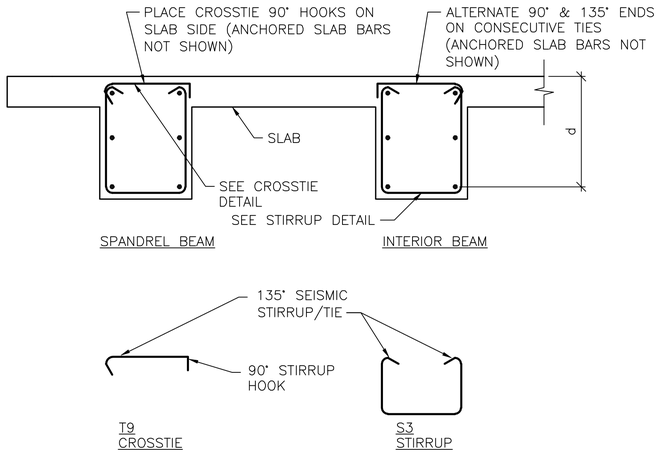

B S-504 **BEAM REINFORCEMENT DETAILS**
SCALE: NTS

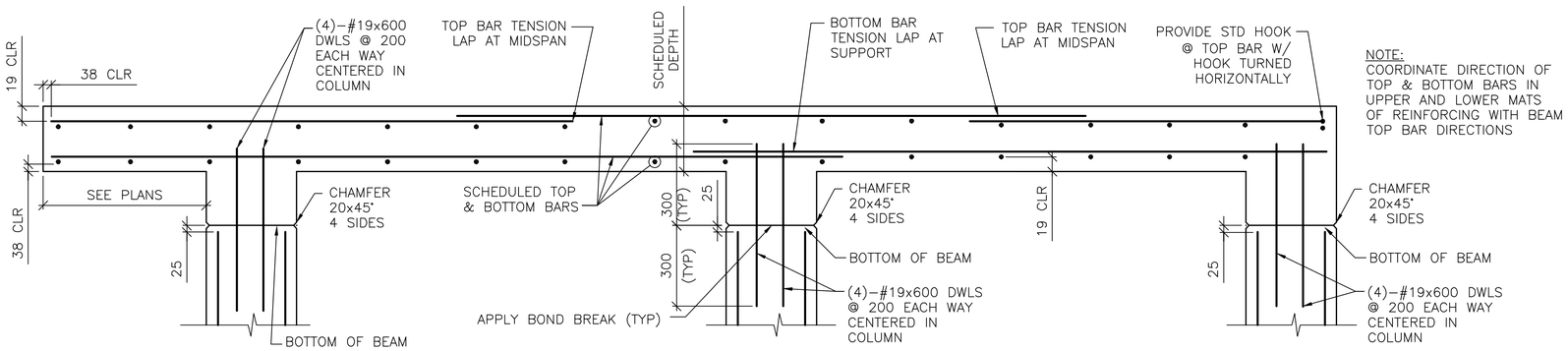

4 S-504 **FRAMED SLAB REINFORCING DETAIL**
SCALE: NTS

UNLESS OTHERWISE NOTED, LINEAR DIMENSIONS SHOWN ARE IN MILLIMETERS (mm)

APPROVED:
A/E DESIGNER OF RECORD
SEAL:

US ARMY CORPS OF ENGINEERS
AFGHANISTAN ENGINEER DISTRICT

Mark	Description	Date	Appr.	Mark	Description	Date	Appr.

Date: 2/23/10
Rev: 0
Design file no.
Drawing code:
File name: AMCB195S-504DT
Plot date: 2/23/2010
Plot scale: X:X

Designed by: KMP/MMY
Dwn by: RCG
Ckd by: CWW
Reviewed by: LHM
Submitted by: BAKER

U.S. ARMY ENGINEER DISTRICT, AFGHANISTAN
CORPS OF ENGINEERS
APO AE 96338

Michael Baker Jr., Inc
A unit of Michael Baker Corporation
Airside Business Park
100 Airside Drive
Moon Township, PA 15108
www.mbakercorp.com

AFGHAN NATIONAL ARMY
REGIONAL MILITARY TRAINING CENTER
STANDARD DESIGN

300 STUDENT CLASSROOM BUILDING
(2) 150 STUDENT CLASSROOMS

BEAM & COLUMN DETAILS

Sheet reference number:
S-504

CONCRETE REINFORCEMENT TENSION DEVELOPMENT/LAP SPLICE SCHEDULE

f'c = 28 MPa	LAP CLASS	UNCOATED BARS			
		TOP BARS		OTHER BARS	
BAR SIZES		CASE 1	CASE 2	CASE 1	CASE 2
#10 TO #19	A	50 BAR DIA	74 BAR DIA	38 BAR DIA	57 BAR DIA
	B	64 BAR DIA	96 BAR DIA	50 BAR DIA	74 BAR DIA
#22 TO #57	A	62 BAR DIA	93 BAR DIA	48 BAR DIA	71 BAR DIA
	B	80 BAR DIA	121 BAR DIA	62 BAR DIA	93 BAR DIA

NOTES:
1. TABULATED TENSION DEVELOPMENT LENGTH VALUES ARE TAKEN FROM CRSI DESIGN HANDBOOK 2008 10TH ED.
2. TENSION DEVELOPMENT & TENSION LAP SPLICE LENGTHS ARE EXPRESSED AS MULTIPLES OF BAR DIAMETERS.
3. TABULATED VALUES ARE BASED ON MINIMUM YIELD STRENGTH OF REINFORCEMENT, fy, OF 420MPa.
4. CONCRETE IS NORMAL WEIGHT (2400Kg/m^3) AND 28 DAY COMPRESSIVE STRENGTH = 28MPa.
5. TABULATED VALUES FOR BEAMS & COLUMNS ARE BASED ON TRANSVERSE REINFORCEMENT AND CONCRETE COVER MEETING MINIMUM CODE REQUIREMENTS.
6. CASES 1 & 2, WHICH DEPEND ON THE TYPE OF STRUCTURAL MEMBER, CONCRETE COVER, AND CENTER-TO-CENTER SPACING OF THE BARS ARE DEFINED IN THE TABLE BELOW.
7. LAP SPLICE LENGTHS (MINIMUM 300mm) ARE MULTIPLES OF TENSION DEVELOPMENT LENGTHS: CLASS A = 1.0(TENSION DEVELOPMENT LENGTH) & CLASS B = 1.3(TENSION DEVELOPMENT LENGTH)
8. TOP BARS ARE HORIZONTAL REINFORCEMENT WITH MORE THAN 300mm OF CONCRETE CAST BELOW THE BARS.
9. IT SHALL BE PERMISSIBLE TO CALCULATE WALL AND SLAB REINFORCEMENT TENSION DEVELOPMENT/SPLICE LENGTHS IN ACCORDANCE WITH ACI 12.2.3 OR TABLE 5.3(b) OF CRSI 2008 IN LIEU OF VALUES TABULATED ABOVE.

BEAMS, COLUMNS	CASE 1	CONCRETE COVER AT LEAST 1 BAR DIA AND CENTER-TO-CENTER SPACING AT LEAST 2 BAR DIA
	CASE 2	CONCRETE COVER LESS THAN 1 BAR DIA OR CENTER-TO-CENTER SPACING LESS THAN 2 BAR DIA
ALL OTHERS	CASE 1	CONCRETE COVER AT LEAST 1 BAR DIA AND CENTER-TO-CENTER SPACING AT LEAST 3 BAR DIA
	CASE 2	CONCRETE COVER LESS THAN 1 BAR DIA OR CENTER-TO-CENTER SPACING LESS THAN 3 BAR DIA

CONCRETE COVER SCHEDULE

MINIMUM CONCRETE COVER PROTECTION FOR REINFORCEMENT BARS SHALL BE AS LISTED BELOW: (SEE ACI 318M-05, SECTION 7.7 FOR CONDITIONS NOT NOTED). DIMENSIONS FOR BAR PLACEMENT GIVEN IN SECTIONS AND DETAILS SHALL SUPERSEDE MINIMUM COVER REQUIREMENTS GIVEN HERE. DIMENSIONS ARE IN mm. PROVIDE STANDARD BAR CHAIRS AND SUPPORT BARS @1200mm MAXIMUM AS REQUIRED TO MAINTAIN CONCRETE PROTECTION SPECIFIED.

FOOTINGS (EARTH FORMED):		70
COLUMNS / PIERS (TO TIES)		40
GRADE BEAMS OR SLAB TURNED DOWN EDGES:		
TOP		40
BOTTOM (EARTH FORMED)		70
SIDES (EARTH FORMED)		70
SIDES (BOARD FORMED)	#16 BAR & SMALLER	40
	#19 THRU #36 BAR	50
ELEVATED BEAMS & SLABS:		
BEAM TIES & STIRRUPS (NOT EXPOSED TO WEATHER)		40
BEAM TIES & STIRRUPS (EXPOSED TO WEATHER)		50
FLOOR SLABS (NOT EXPOSED TO WEATHER)		20
FLOOR SLABS (EXPOSED TO WEATHER)		
#19 & LARGER		50
#13 & SMALLER		40
ROOF SLAB BARS		25
SLABS ON GRADE		
NOT EXPOSED TO WEATHER (FROM TOP)		20
EXPOSED TO WEATHER (FROM TOP)		40
UTILITY TUNNEL WALLS, RETAINING WALLS AND SHEAR WALLS. (NO SURFACES SHALL BE EARTH FORMED)		
EARTH SIDE AND FRONT SIDE (EXPOSED TO WEATHER)		
#16 BAR AND SMALLER		40
#19 THRU #36 BAR		50

COLUMN FOOTING SCHEDULE

MARK	FOOTING SIZE (mm)			FOOTING REINFORCING	REMARKS
	LENGTH	WIDTH	THICKNESS		
F1	3400	3400	300	(10)-#22 EW BOTT	-----
F2	6700	3400	300	(16)-#22 SHORT BOTT (8)-#22 LONG BOTT	-----
F3	4200	4200	400	(11)-#25 EW BOTT	-----
F4	7600	4200	350	(30)-#25 SHORT BOTT (13)-#25 LONG BOTT	-----

CONCRETE SHEAR WALL SCHEDULE

MARK	TYPE	WALL LENGTH (L) (mm)	WALL REINFORCEMENT		REMARKS
			END ZONE	FIELD	
SW1	C	9450	(8)-#16 @ 150mm OC	#13 @ 300mm OC	-----
SW2	D	5150	(16)-#16 @ 150mm OC	#13 @ 300mm OC	-----

NOTES:
1. WORK THIS SCHEDULE WITH SHEAR WALL DETAILS ON SHEETS S-702
2. SEE PLAN FOR LOCATION OF SHEAR WALL(S).
3. VERTICAL "FIELD" BARS MAY BE OMITTED IN LOCATION OF "END ZONE" REINFORCEMENT.
4. WALL FIELD REINF LISTED APPLIES TO VERT & HORIZ BARS.
5. WALL FIELD REINFORCEMENT CENTERED IN WALL.

STANDARD HOOKS IN TENSION PER (ACI 318M-05)

HOOK DEVELOPMENT LENGTH (mm)	
BAR SIZE	f'c 28 MPa
#10	180
#13	250
#16	300
#19	380
#22	430
#25	480
#29	560
#32	610
#36	690

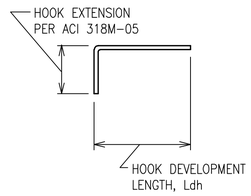

NOTES:
1. CONCRETE IS NORMAL WEIGHT CONCRETE.
2. BAR YIELD STRENGTH, fy = 420 MPa
3. SIDE COVER REQUIREMENTS OF ACI SECT. 12.5.3 ARE ASSUMED TO NOT BE MET.
4. TIE OR STIRRUP REQUIREMENTS OF ACI SECT. 12.5.3 ARE ASSUMED TO NOT BE MET.
5. REDUCTION FOR EXCESS REINFORCEMENT IS NOT TAKEN.
6. HOOK DEVELOPMENT LENGTH IS VALID FOR 180° HOOKS ALSO.

CMU OR CAST IN PLACE CONC LINTEL SCHEDULE (TYP)

OPENING TYPE OR SIZE, BEAM LOCATION OR TYPE	MAX SPAN (mm)	LINTEL DEPTH (mm)	REINFORCING BOTTOM
WALL OPENING	4000	600	(2)-#16 T&B
WALL OPENING	1900	400	(2)-#16 T&B
WALL OPENING	1000	400	(2)-#13 B

1. STRUCTURAL SHEETS DO NOT INDICATE ALL OPENINGS IN MASONRY WALLS. VERIFY NUMBER, SIZE AND LOCATION OF ALL OPENINGS IN MASONRY WALLS FROM ARCHITECTURAL SHEETS AND APPROVED PLUMBING, MECHANICAL, AND ELECTRICAL SHOP DRAWINGS.
2. PROVIDE 200mm BEARING EA END.
3. FOR HEAD DETAILS REFER TO ARCHITECTURAL SHEETS.
4. REINFORCING SHALL BE ASTM A615M, GRADE 420. GROUT FOR CMU LINTELS SHALL HAVE A MINIMUM COMPRESSIVE STRENGTH OF 14 MPa AT 28 DAYS.
5. CONTRACTOR SHALL SUBMIT FOR APPROVAL SHOP DRAWINGS AND SCHEDULES SHOWING SIZE, SPAN, REINFORCEMENT, DETAILS, LOCATIONS, ETC.

MASONRY LAP SPLICE SCHEDULE

BAR SIZE	MINIMUM LAP SPLICE (Ld) FOR CMU REINFORCING
#10	450
#13	600
#16	750
#19	900
#22	1050
#25	1200

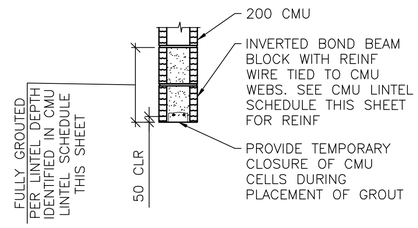

A
S-601
LINTEL DETAIL
SCALE: NTS

BEAM SCHEDULE

MARK	BEAM SIZE (mm)		BEAM REINFORCING						STIRRUPS			REMARKS
	DEPTH	WIDTH	BL	BS	TL	TS	TC	M	SIZE	TYPE	SPACING	
GRADE BEAMS												
GB1	750	400	(2)-#29	(1)-#29	(2)-#22	---	---	---	#13	S3 +T9	d/2	-----
GB2	750	400	(2)-#29	(1)-#29	(2)-#19	---	---	---	#13	S3 +T9	d/2	-----
ROOF BEAMS												
RB1	1000	400	(2)-#29	(2)-#29	(2)-#29	---	---	---	#13	S3 +T9	d/2	-----
RB2	1000	600	(2)-#29	(1)-#29	(2)-#29	---	(1)-#29	---	#13	S3 +T9	d/2	

NOTES:
1. WORK THIS SCHEDULE WITH BEAM REINFORCING DETAILS ON SHEETS S-503 AND S-504.
2. HOOKS SHOWN ON SECTIONS AND DETAILS SHALL BE 90° STD UON.
3. USE ONLY (1) TC AT BEAM COLUMN INTERSECTION WHERE REQ'D.

COLUMN SCHEDULE

COLUMN MARK / DESCRIPTION	TYP UON	---	---	---
TYPE	12-BAR	---	---	---
DIMENSION	700mm SQ.	---	---	---
VERTICAL REINFORCEMENT	(12)-#25	---	---	---
TIES	#13 @ d/2	---	---	---
TOP OF ROOF ELEVATION	3600mm	---	---	---
TOP OF GRADE BEAM ELEVATION	-200mm	---	---	---
TOP OF FOOTING ELEVATION	-950mm	---	---	---

NOTES:
1. WORK THIS SCHEDULE WITH COLUMN DETAILS ON SHEET S-504.
2. SEE FOOTING SCHEDULE ON THIS SHEET FOR FOOTING INFORMATION.
3. COLUMN TIES: INTERIOR TIES TO MATCH SIZE & SPACING OF PERIMETER TIES.
4. HOOKS SHOWN ON SECTIONS & DETAILS SHALL BE 90° STD UON.

UNLESS OTHERWISE NOTED, LINEAR DIMENSIONS SHOWN ARE IN MILLIMETERS (mm)

APPROVED:

A/E DESIGNER OF RECORD

SEAL:

GEORGIA REGISTERED 1-22-10 No. 27141 PROFESSIONAL ENGINEER CHRISTOPHER W. WHITMORE

US ARMY CORPS OF ENGINEERS
AFGHANISTAN ENGINEER DISTRICT

Mark	Description	Date	Appr.	Mark	Description	Date	Appr.

Date: 2/23/10 Rev: 0
Design file no.
Drawing code:
File name: AMCB195S-S01SCH
Plot date: 2/23/2010
Plot scale: X:X

Designed by: KMP/MMY
Dwn by: RCG
Ckd by: CWW
Reviewed by: LHM
Submitted by:
BAKER

U.S. ARMY ENGINEER DISTRICT, AFGHANISTAN
CORPS OF ENGINEERS
APO AE 96338

Michael Baker Jr., Inc
A unit of Michael Baker Corporation
Airside Business Park
100 Airside Drive
Moon Township, Pennsylvania 15108
www.mbakercorp.com

AFGHAN NATIONAL ARMY
REGIONAL MILITARY TRAINING CENTER
STANDARD DESIGN

300 STUDENT CLASSROOM BUILDING
(2) 150 STUDENT CLASSROOMS

SCHEDULES

Sheet reference number:
S-601

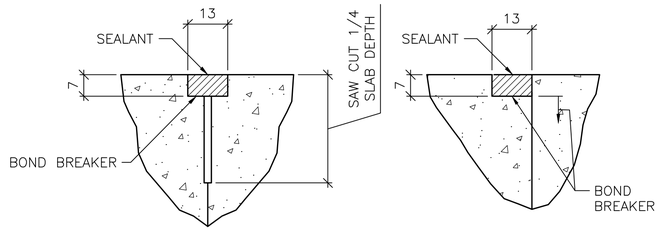

CONTROL JOINT DETAIL

CONSTRUCTION JOINT DETAIL

TYPICAL CONCRETE SLAB JOINT FINISH DETAILS

1 / S-701 SCALE: NTS

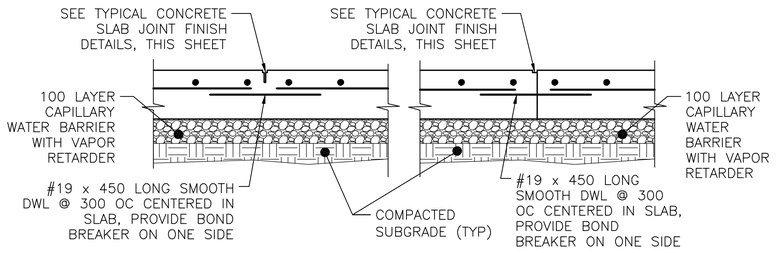

CONTROL JOINT DETAIL

CONSTRUCTION JOINT DETAIL

TYPICAL SLAB ON GRADE JOINT DETAIL

2 / S-701 SCALE: NTS

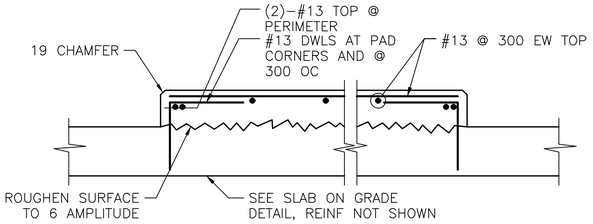

INTERIOR EQUIPMENT PAD DETAIL

3 / S-701 SCALE: NTS

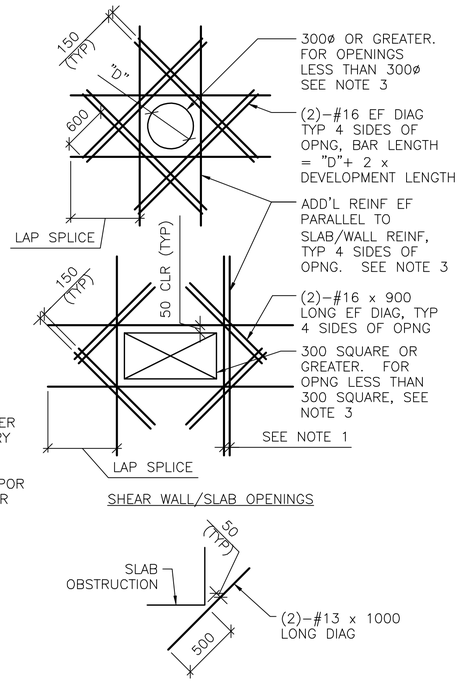

SHEAR WALL/SLAB OPENINGS

RE-ENTRANT CORNERS

DETAIL NOTES:
1. WHERE MORE THAN ONE ADDITIONAL BAR IS REQUIRED PARALLEL TO THE EXISTING SLAB/WALL REINFORCING THE ADDITIONAL REINFORCING BARS SHALL BE SPACED AT 100 ON CENTER.
2. ADDITIONAL REINFORCING PARALLEL TO THE SLAB/WALL REINFORCING SHALL BE #16 BARS THAT PROVIDE A STEEL AREA ON EACH SIDE OF THE OPENING EQUAL TO 1/2 THE AREA OF THE REINFORCING CUT BY THE OPENING.
3. FOR OPENINGS WITH SIDES OR DIAMETERS LESS THAN 300 SPREAD THE SLAB/WALL REINFORCING TO CLEAR THE OPENING.

ADD'L CONCRETE REINFORCEMENT DETAILS

4 / S-701 SCALE: NTS

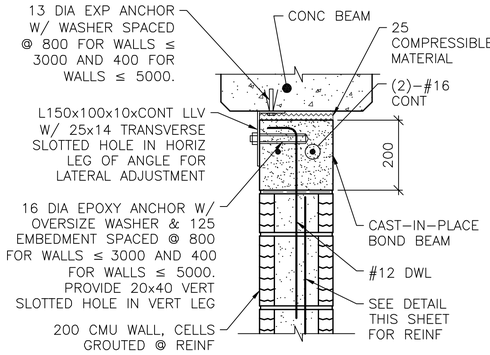

NOTE:
1. AT ANCHOR BOLTS, ADD AN ADDITIONAL 25 COMPRESSIBLE MATERIAL BELOW EXP ANCHOR HEAD.

INTERIOR BEAM

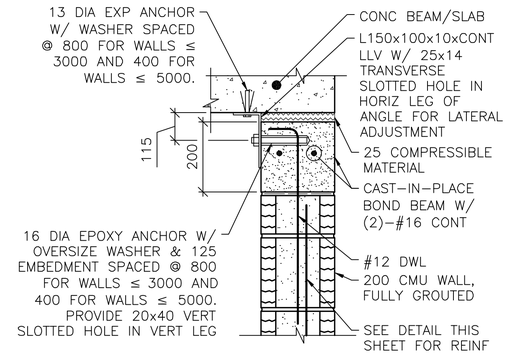

EXTERIOR WALL OR SLAB

NOTES:
1. THIS DETAIL IS AN ALTERNATE TOP OF WALL ANCHORAGE DETAIL TO BE USED AT THE CONTRACTOR'S OPTION IN LIEU OF DETAILS SHOWN ON S-400 & S-500 DRAWINGS.
2. CAST-IN-PLACE BOND BEAM SHOWN AT TOP OF WALL IS ALSO APPLICABLE FOR INTERMEDIATE AND STARTER COURSE BOND BEAMS WITHIN WALL.

ALTERNATE TOP OF CMU WALL BRACING DETAILS

5 / S-701 SCALE: NTS

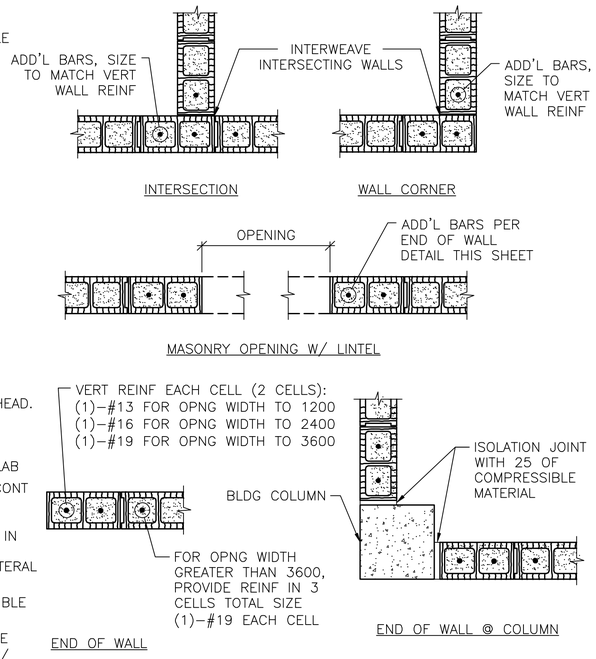

NOTES:
1. OPENING WIDTH SHALL NOT EXCEED 3600 FOR THIS TYPE OF JAMB.
2. ALL CELLS FULLY GROUTED AT EXTERIOR WALLS. AT INTERIOR WALLS, ONLY GROUT CELLS CONTAINING REINF.

TYP CMU DETAILS

6 / S-701 SCALE: NTS

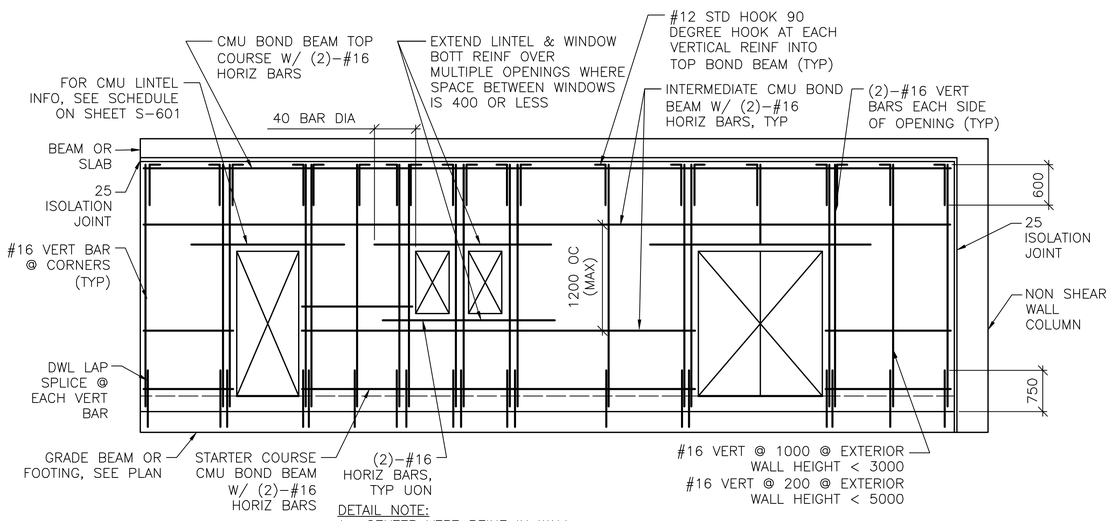

DETAIL NOTE:
1. CENTER VERT REINF IN WALL.
2. GROUT ALL CMU CELLS.
3. REFERENCE ARCH DWGS FOR JOINT INFORMATION
4. DOWELS BETWEEN TOP BOND BEAM AND BEAM/SLAB ABOVE (INCLUDING EMBEDDED PIPE SLEEVE) NOT SHOWN FOR CLARITY. SEE SPECIFIC S-500 SERIES DWGS FOR INFO.
5. FOR INFORMATION ON ALTERNATE CAST-IN-PLACE WALL BOND BEAMS, REFERENCE ALTERNATE TOP OF CMU WALL BRACING DETAILS THIS SHEET.

TYP EXTERIOR CMU WALL REINF DETAIL

7 / S-701 SCALE: NTS

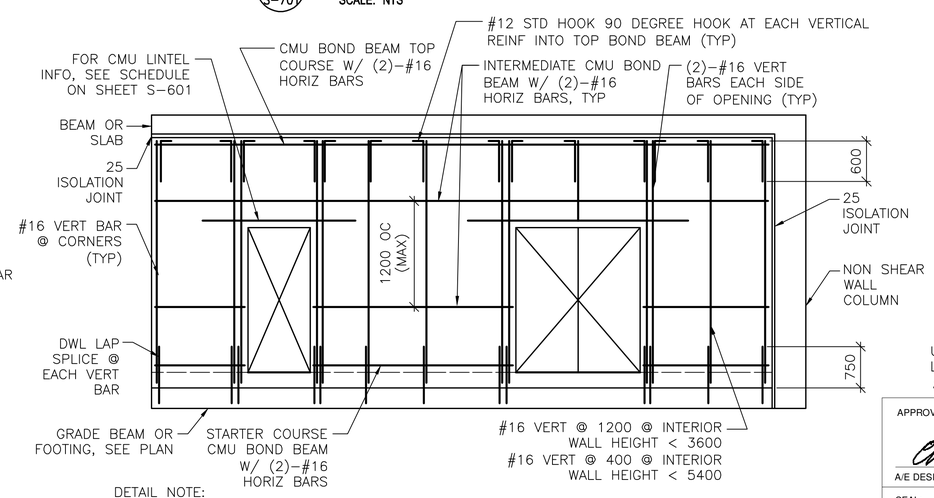

DETAIL NOTE:
1. CENTER VERT REINF IN WALL.
2. GROUT ALL CMU CELLS.
3. REFERENCE ARCH DWGS FOR JOINT INFORMATION
4. DOWELS BETWEEN TOP BOND BEAM AND BEAM/SLAB ABOVE (INCLUDING EMBEDDED PIPE SLEEVE) NOT SHOWN FOR CLARITY. SEE SPECIFIC S-500 SERIES DWGS FOR INFO.
5. FOR INFORMATION ON ALTERNATE CAST-IN-PLACE WALL BOND BEAMS, REFERENCE ALTERNATE TOP OF CMU WALL BRACING DETAILS THIS SHEET.

TYP INTERIOR CMU WALL REINF DETAIL

8 / S-701 SCALE: NTS

UNLESS OTHERWISE NOTED, LINEAR DIMENSIONS SHOWN ARE IN MILLIMETERS (mm)

APPROVED:

A/E DESIGNER OF RECORD

SEAL:

GEORGIA REGISTERED 1-29-10 No. 27141 PROFESSIONAL ENGINEER CHRISTOPHER W. WHITMORE

US ARMY CORPS OF ENGINEERS
AFGHANISTAN ENGINEER DISTRICT

Mark	Description	Date	Appr.	Mark	Description	Date	Appr.

Designed by: KMP/MMY
Dwn by: RCG
Ckd by: CWW
Reviewed by: LHM
Submitted by: BAKER
Date: 2/23/10
Design file no.
Rev: 0
Drawing code:
File name: AMAC8195S-701T01T
Plot date: 2/23/2010
Plot scale: X:X

U.S. ARMY ENGINEER DISTRICT, AFGHANISTAN
CORPS OF ENGINEERS
APO AE 96338

Michael Baker Jr., Inc
A unit of Michael Baker Corporation
Airside Business Park
100 Airside Drive
Moon Township, PA 15108
www.mbakercorp.com

AFGHAN NATIONAL ARMY
REGIONAL MILITARY TRAINING CENTER
STANDARD DESIGN

300 STUDENT CLASSROOM BUILDING
(2) 150 STUDENT CLASSROOMS

TYPICAL DETAILS

Sheet reference number:
S-701

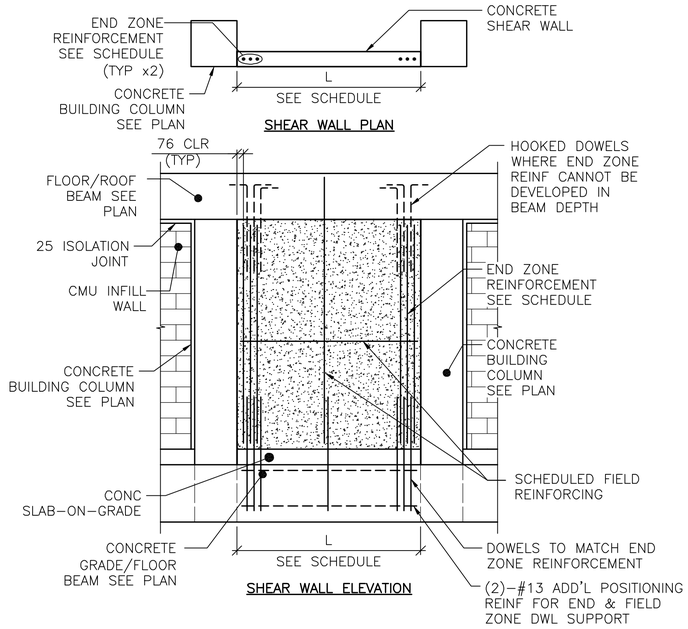

DETAIL NOTES:
1. FIELD REINFORCEMENT IN SHEAR WALL NOT SHOWN COMPLETELY FOR CLARITY.
2. FIELD REINFORCEMENT CENTERED IN WALL.
3. MINIMUM CONC CLEAR DISTANCE FOR END ZONE REINF = 76
4. SEE CONC SHEAR WALL SCHEDULE ON SHEET S-601
5. SEE ARCH DWGS FOR ISOLATION JOINT INFORMATION

TYPE "C" SHEAR WALL DETAIL
1 / S-702 SCALE: NTS

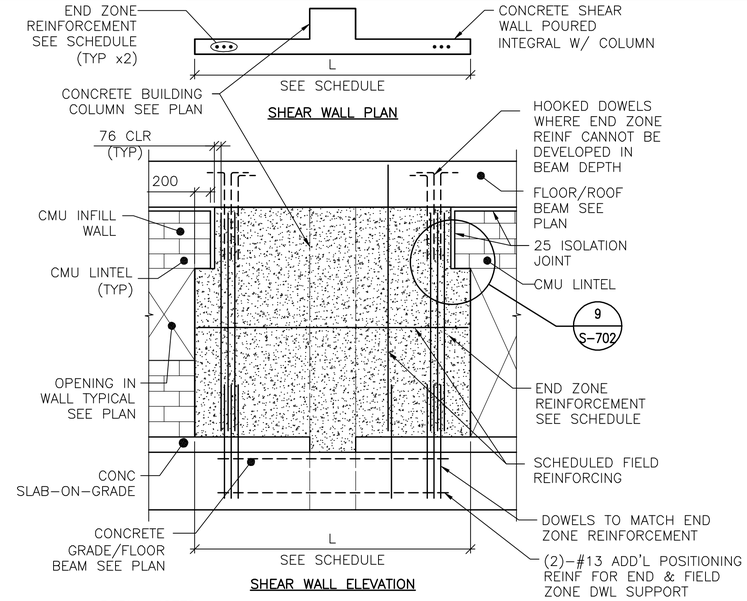

DETAIL NOTES:
1. FIELD REINFORCEMENT IN SHEAR WALL NOT COMPLETELY SHOWN COMPLETELY FOR CLARITY.
2. FIELD REINFORCEMENT CENTERED IN WALL.
3. MINIMUM CONC CLEAR DISTANCE FOR END ZONE REINF = 76
4. SEE CONC SHEAR WALL SCHEDULE ON SHEET S-601
5. SEE ARCH DWGS FOR ISOLATION JOINT INFORMATION

TYPE "D" SHEAR WALL DETAIL
2 / S-702 SCALE: NTS

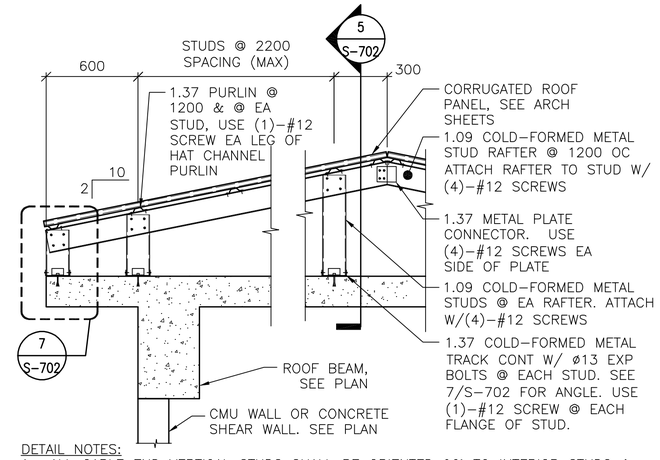

DETAIL NOTES:
1. ALL GABLE END VERTICAL STUDS SHALL BE ORIENTED 90° TO INTERIOR STUDS & SPACED @ 600 OC. GABLE END RAFTER SHALL BE 1.37 METAL TRACK SPANNING CONTINUOUSLY OVER GABLE END STUDS. INSET GIRTS AT GABLE END SHALL BE 1.09 COLD-FORMED METAL STUDS @ 1200 OC ATTACHED VIA 1.37 THICKNESS CLIP ANGLE W/ (2) #12 SCREWS EA LEG.
2. ALL INTERIOR, NON-GABLE END VERTICAL STUDS GREATER THAN 2400 IN LENGTH SHALL BE BACK-TO-BACK W/ #12 SCREWS @ 200 OC STAGGERED.

TYPICAL OVERBUILT ROOF FRAMING DETAIL
3 / S-702 SCALE: NTS

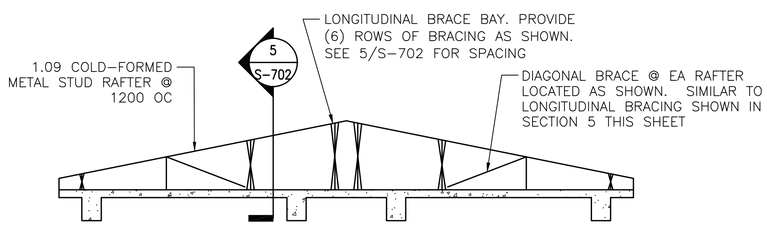

TYPICAL ROOF BRACE LAYOUT
4 / S-702 SCALE: NTS

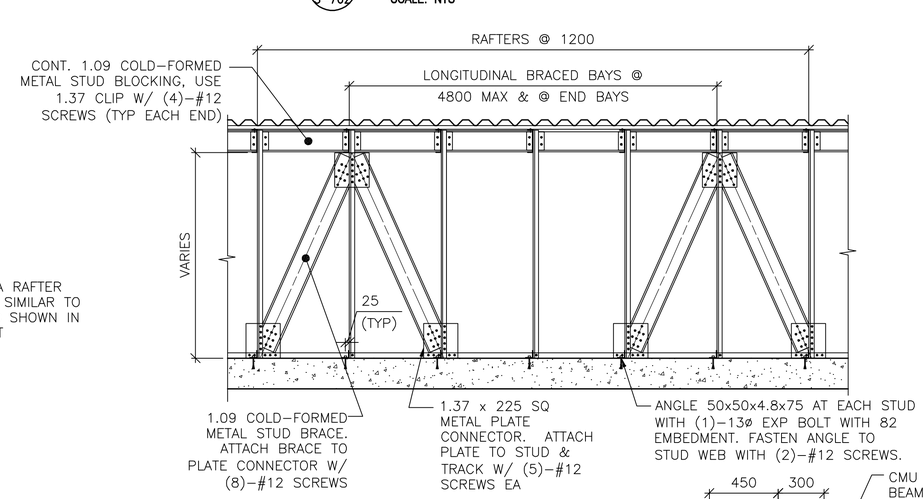

SECTION
5 / S-702 SCALE: NTS

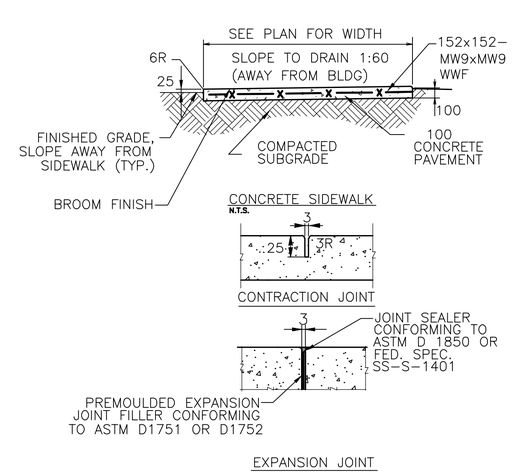

TYPICAL CONCRETE SIDEWALK DETAILS
6 / S-702 SCALE: NTS

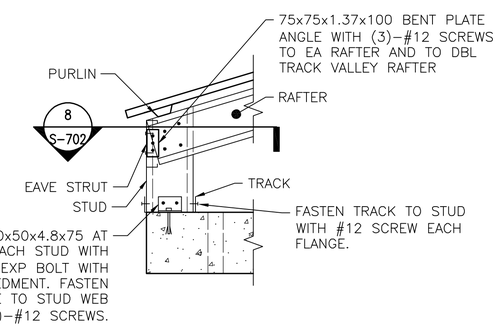

DETAIL
7 / S-702 SCALE: NTS

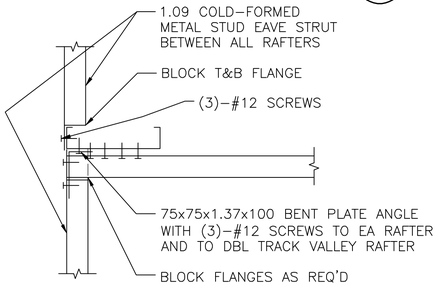

SECTION
8 / S-702 SCALE: NTS

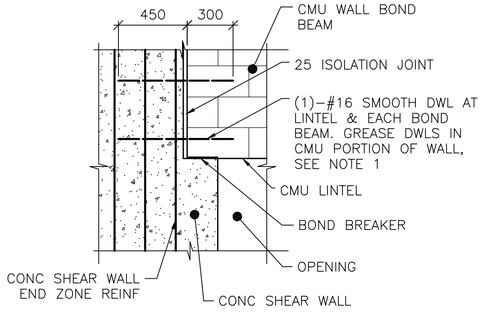

NOTE:
1. TIE SMOOTH DOWEL ROD TO SHEAR WALL END ZONE REINF FOR EACH BOND BEAM AND LINTEL.

SECTION
9 / S-702 SCALE: NTS

UNLESS OTHERWISE NOTED, LINEAR DIMENSIONS SHOWN ARE IN MILLIMETERS (mm)

APPROVED:

A/E DESIGNER OF RECORD

SEAL:

GEORGIA REGISTERED 2-23-10 No. 27141 PROFESSIONAL ENGINEER CHRISTOPHER W. WHITMORE

US ARMY CORPS OF ENGINEERS
AFGHANISTAN ENGINEER DISTRICT

Mark	Description	Date	Appr.	Mark	Description	Date	Appr.

U.S. ARMY ENGINEER DISTRICT, AFGHANISTAN
CORPS OF ENGINEERS
APO AE 96338

Michael Baker Jr., Inc.
A unit of Michael Baker Corporation
Airside Business Park
100 Airside Drive
Moon Township, PA 15108
www.mbakercorp.com

Designed by: KMP/MMY
Dwn by: RCG
Ckd by: CWW
Reviewed by: LHM
Submitted by: BAKER
Date: 2/23/10
Rev: 0
Design file no.
Drawing code:
File name: ANACB1505-702TDT
Plot date: 2/23/2010
Plot scale: X:X

AFGHAN NATIONAL ARMY
REGIONAL MILITARY TRAINING CENTER
STANDARD DESIGN

300 STUDENT CLASSROOM BUILDING
(2) 150 STUDENT CLASSROOMS

TYPICAL DETAILS

Sheet reference number:
S-702

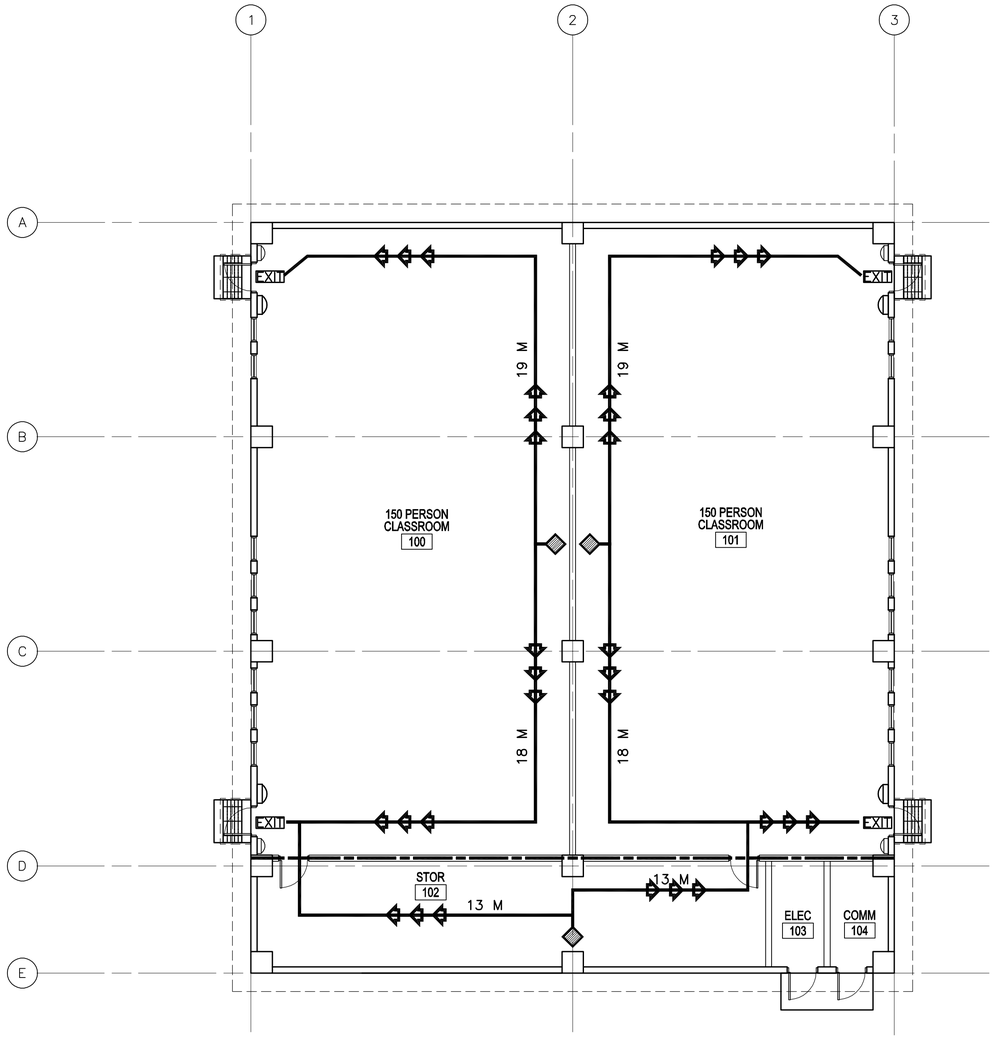

1
A-001

LIFE SAFETY PLAN

SCALE: 1:100

CODE ANALYSIS:

1. REFERENCES:
   2006 INTERNATIONAL BUILDING CODE (2006 IBC)
   2006 LIFE SAFETY CODE (2006 NFPA 101)

2. IBC OCCUPANCY CLASSIFICATION:
   GROUP A–3 (ASSEMBLY ≤300 NFPA 101 6.1.2 AND CHAPTER 12)

3. TYPE OF CONSTRUCTION (IBC): TYPE II–B (UNPROTECTED/NONSPRINKLERED)

4. IBC TABLE 503: ALLOWABLE HEIGHT AND BUILDING AREAS:
   GROUP A–3
   ALLOWABLE AREA: 883 SM
   ALLOWABLE HEIGHT: 2 STORIES (16 M)

   GROUP A–3
   PROPOSED AREA: 515 SM
   PROPOSED HEIGHT: 1 STORY (<16 M)

5. IBC TABLE 601 & 602: FIRE RESISTANCE RATING REQUIREMENTS FOR BUILDING ELEMENTS FOR TYPE II–B

BUILDING ELEMENT	RATING (HOUR)	REFERENCE
STRUCTURAL FRAME (COLUMNS, GIRDERS & TRUSSES)	0	TABLE 601
BEARING WALLS		
EXTERIOR	0	TABLE 601
INTERIOR	0	TABLE 601
NONBEARING WALLS & PARTITIONS		
INTERIOR	0	TABLE 601
FLOOR CONSTRUCTION	0	TABLE 601
ROOF CONSTRUCTION	0	TABLE 601
EXTERIOR WALL	0	TABLE 602

6. IBC TABLE 803.5 – INTERIOR WALL AND CEILING FINISH REQUIREMENTS FOR A–3 OCCUPANCY/NONSPRINKLERED

GROUP	EXIT ENCLOSURES AND EXIT PASSAGEWAY	CORRIDORS	ROOMS AND ENCLOSED SPACES
A–3	A	A	C

7. NFPA 101 TABLE 7.3.1.2 – OCCUPANT LOAD
   ASSEMBLY ≤ 300 = 1.4 NET SM/PERSON CALCULATED = 367 OCCUPANTS

8. NFPA 101 TABLE 7.3.3.1 – EGRESS CAPACITY
   ASSEMBLY = 5 MM PER OCCUPANT

   REQUIRED: 1835 MM (367 OCCUPANTS x 5 MM PER OCCUPANT)
   PROPOSED EGRESS CAPACITY: 3600 MM: (4) 900 MM DOORS

9. NFPA 101 PARAGRAPH 12.2.6 – EXIT ACCESS TRAVEL DISTANCE
   REQUIRED: 60 METERS
   PROPOSED: 19 METERS

10. NFPA 101 PARAGRAPH 12.3.6 (1) – CORRIDOR FIRE–RESISTANCE RATING (HOUR)
    CORRIDORS ARE NOT REQUIRED AS DOORS EXIT DIRECTLY TO OUTSIDE

11. NFPA 101 PARAGRAPH 12.2.4.1 AND 7.4.1.1 – MINIMUM NUMBER OF EXITS
    REQUIRED: 2 MINIMUM
    PROPOSED: 4 EXITS

12. INCIDENTAL USE AREAS: IBC TABLES 508.2
    1 HOUR SEPARATION FOR STORAGE ROOMS OVER 9.3 SM
    DOOR SHALL BE 45 MINUTE (IBC TABLE 715.4 AND NFPA 101 TABLE 8.3.42)

LEGEND:

- DENOTES PATHS OF EXIT TRAVEL
- EXIT — DENOTES DOOR AS AN EMERGENCY EXIT
- DENOTES STARTING POINT FOR TRAVEL DISTANCE
- DENOTES FIRE EXTINGUISHER LOCATIONS
- (1) HOUR RATED WALL
- (2) HOUR RATED WALL
- (3) HOUR RATED WALL

LINEAR DIMENSIONS SHOWN ARE IN MILLIMETERS (MM), UNLESS OTHERWISE NOTED

0 2000 4000
SCALE: 1:100

APPROVED:

A/E DESIGNER OF RECORD

SEAL:

STATE OF SOUTH CAROLINA
KEVIN R. CHAFIN
N. Charleston, SC
6374
REGISTERED ARCHITECT

US ARMY CORPS OF ENGINEERS
AFGHANISTAN ENGINEER DISTRICT

Mark	Description	Date	Appr.	Mark	Description	Date	Appr.

Rev: 0
Date: 2/23/10
Design file no.
Drawing code:
File name: ANACB150A-001LSP
Plot date: 2/23/2010
Plot scale:

Designed by: KRC
Dwn by: KJG
Ckd by: NLJ
Reviewed by: LHM
Submitted by:
BAKER

U.S. ARMY ENGINEER DISTRICT, AFGHANISTAN
CORPS OF ENGINEERS
APO AE 96338

Michael Baker Jr., Inc
A unit of Michael Baker Corporation
Airside Business Park
100 Airside Drive
Moon Township, PA 15108
www.mbakercorp.com

AFGHAN NATIONAL ARMY
REGIONAL MILITARY TRAINING CENTER
STANDARD DESIGN

300 STUDENT CLASSROOM BUILDING
(2) 150 STUDENT CLASSROOMS

LIFE SAFETY PLAN

Sheet reference number:
A–001

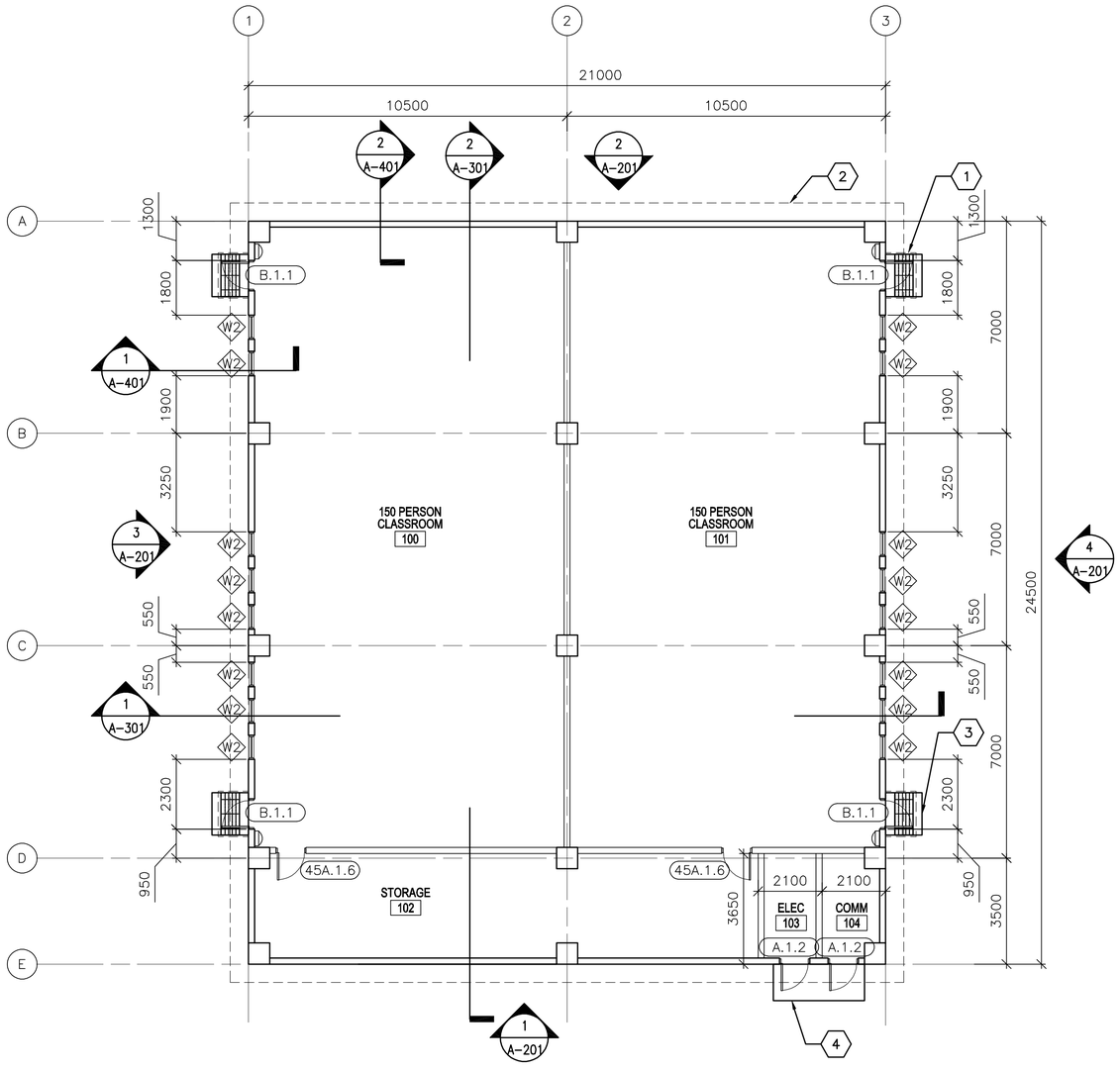

1 A-101 **FLOOR PLAN**

SCALE: 1:100

GENERAL NOTES:

A. DIMENSIONS ARE SHOWN TO OUTER EDGE OF EXTERIOR STRUCTURAL COLUMNS, STRUCTURAL COLUMN GRID, EDGE OF INTERIOR PARTITIONS, EDGE OF WINDOW OPENINGS, AND TO HINGE SIDE OF DOOR FRAME OPENINGS.

B. HINGE SIDE OF OPENINGS FOR DOORS AND FRAMES SHALL BE LOCATED 200 MM FROM THE ADJACENT WALL OR COLUMN, UNLESS NOTED OTHERWISE.

C. INTERIOR PARTITIONS SHALL BE 200 MM CMU. SEE STRUCTURAL DRAWINGS FOR LOCATION OF CONCRETE SHEAR WALLS.

D. COSMETIC REPAIR OF MINOR DEFECTS: REPAIR OR FILL MORTAR JOINTS AND MINOR DEFECTS, INCLUDING BUT NOT LIMITED TO SPALLS, IN ACCORDANCE WITH MANUFACTURER'S RECOMMENDATIONS AND PRIOR TO COATING APPLICATION. SURFACES TO BE PAINTED SHALL BE CLEAN AND FREE OF FOREIGN MATTER BEFORE APPLICATION OF PAINT. CLEANING SHALL BE SCHEDULED SO THAT DUST AND OTHER CONTAMINANTS WILL NOT FALL ON NEWLY PAINTED SURFACES.

E. CONCRETE, PLASTER AND MASONRY SURFACES SHALL BE ALLOWED TO CURE FOR AT LEAST 30 DAYS BEFORE PAINTING. CONCRETE SLABS–ON–GRADE SHALL BE ALLOWED TO CURE 90 DAYS BEFORE STAINING OR SEALING.

F. DO NOT USE PAINT MATERIALS CONTAINING LEAD CONTENT IN EXCESS OF 0.009 PERCENT OF THE WEIGHT OF THE TOTAL NONVOLATILE CONTENT OF THE PAINT OR THE WEIGHT OF THE DRIED PAINT FILM.

G. DO NOT USE ANY ASBESTOS CONTAINING MATERIALS (ACM) IN PROJECT. ACM IS DEFINED AS 1% OR MORE BY VOLUME.

H. DO NOT USE PAINT MATERIALS CONTAINING MERCURIAL FUNGICIDES.

I. FACTORY PRIMED METAL DOORS AND FRAMES SHALL RECEIVE TWO COATS OF PAINT.

J. FILL REMAINING SPACE AT PENETRATIONS IN FIRE–RATED FLOORS, PARTITIONS AND CEILINGS WITH APPROPRIATE FIRESTOPPING MATERIALS.

K. ALL CEILING FINISHES SHALL BE PAINTED PLASTER APPLIED TO STRUCTURE.

L. ALL WALL FINISHES SHALL BE PAINTED PLASTER APPLIED TO STRUCTURE, UNLESS NOTED OTHERWISE.

M. ALL FLOOR FINISHES SHALL BE EPOXY SEALED CONCRETE, UNLESS NOTED OTHERWISE.

KEY NOTES: (X)

1. CANOPY – SEE DETAIL 2/A–504.
2. LINE OF ROOF OVERHANG ABOVE.
3. CONCRETE STOOP WITH GRATE – SEE DETAIL 1/A–503.
4. CONCRETE STOOP – SEE DETAIL 3/A–503.

LEGEND:

(XXX) DOOR FRAME AND HARDWARE TYPE, SEE SHEET A–601

(A) WINDOW TYPE, SEE SHEET A–601

(X) KEY NOTE

ABBREVIATIONS:

ELEC	ELECTRICAL
MECH	MECHANICAL
JAN	JANITOR
CLOS	CLOSET
COMM	COMMUNICATIONS

APPROVED:

A/E DESIGNER OF RECORD

SEAL:

STATE OF SOUTH CAROLINA
KEVIN R. CHAFIN
N. Charleston, SC
6374
REGISTERED ARCHITECT

LINEAR DIMENSIONS SHOWN ARE IN MILLIMETERS (MM), UNLESS OTHERWISE NOTED

0 2000 4000
SCALE: 1:100

US ARMY CORPS OF ENGINEERS
AFGHANISTAN ENGINEER DISTRICT

Mark	Description	Date	Appr.	Mark	Description	Date	Appr.

Rev: 0
Date: 2/23/10
Design file no.
Drawing code:
File name: ANACB150A-101FP
Plot date: 2/23/2010
Plot scale:

Designed by: KRC
Dwn by: KJG
Ckd by: NLJ
Reviewed by: LHM
Submitted by: BAKER

U.S. ARMY ENGINEER DISTRICT, AFGHANISTAN
CORPS OF ENGINEERS
APO AE 96338

Michael Baker Jr., Inc
A unit of Michael Baker Corporation
Airside Business Park
100 Airside Drive
Moon Township, PA 15108
www.mbakercorp.com

AFGHAN NATIONAL ARMY
REGIONAL MILITARY TRAINING CENTER
STANDARD DESIGN

300 STUDENT CLASSROOM BUILDING
(2) 150 STUDENT CLASSROOMS

FLOOR PLAN

Sheet reference number:
A–101

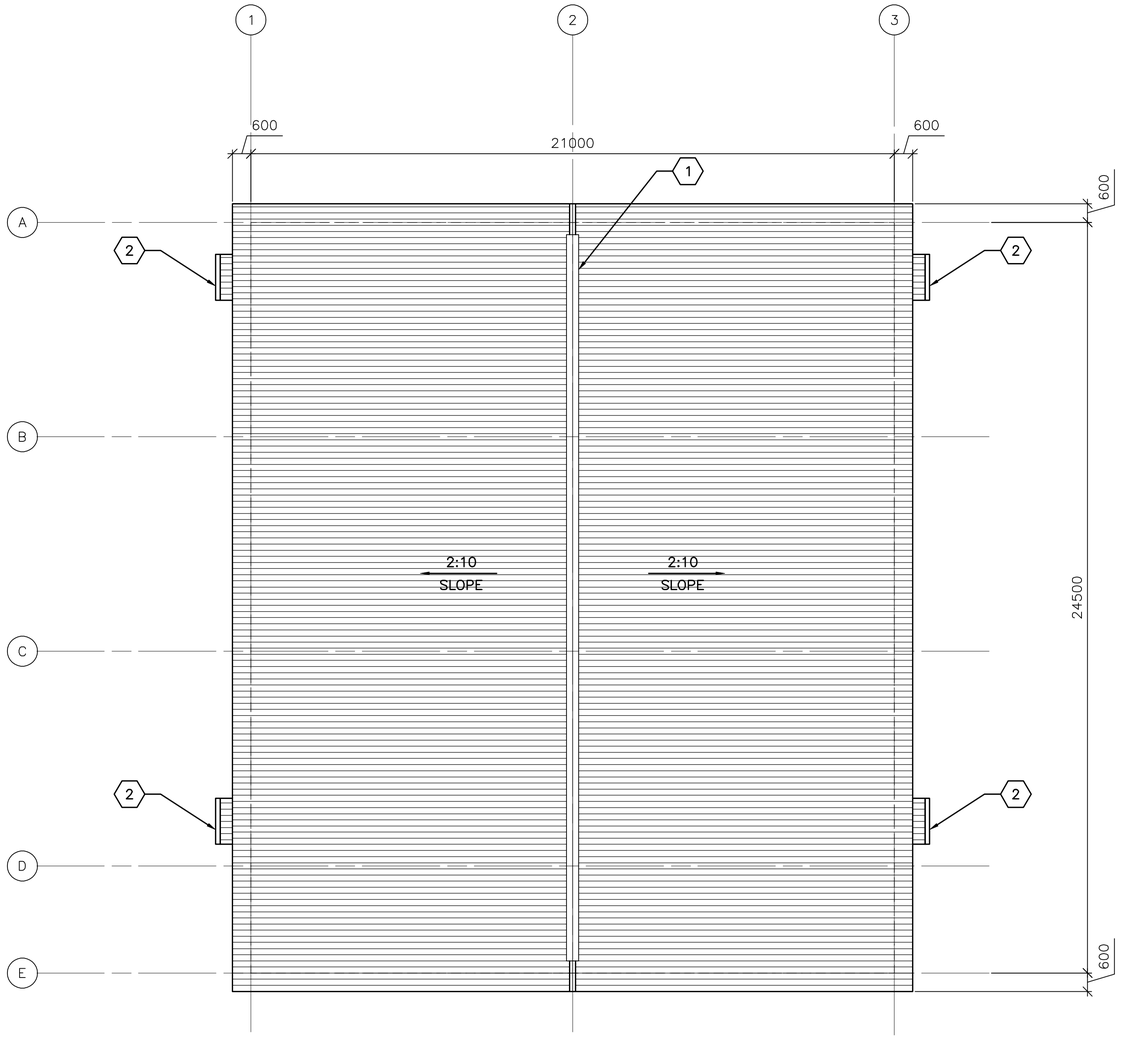

1 A–102 **ROOF PLAN**

SCALE: 1:100

GENERAL NOTES:

A. THE APPROXIMATE LOCATION OF ROOF DEVICES AND PENETRATIONS ARE SHOWN ON THE ROOF PLAN FOR INFORMATION ONLY. THE CONTRACTOR SHALL BE RESPONSIBLE FOR UNDERSTANDING THE ACTUAL LOCATION OF THESE AND ALL OTHER ITEMS PRIOR TO BEGINNING CONSTRUCTION. COORDINATE ALL ROOF PENETRATIONS WITH STRUCTURAL, MECHANICAL AND PLUMBING WORK.

B. UNLESS OTHERWISE NOTED, NOTES, DETAILS OR FEATURES INDICATED FOR ONE CONDITION SHALL BE APPLICABLE FOR ALL ALIKE AND SIMILAR CONDITIONS.

C. STOCKPILING OF MATERIALS, EQUIPMENT AND ANY OTHER ITEMS ON THE ROOF IS PROHIBITED.

D. ROOFS SHALL BE CORRUGATED METAL ROOF PANELS ON COLD–FORMED METAL FRAMING ON CONCRETE SLAB.

KEY NOTES: (X)

1. CONTINUOUS METAL RIDGE VENT – SEE DETAIL 4/A–501.
2. CANOPY – SEE DETAIL 2/A–504.

LINEAR DIMENSIONS SHOWN ARE IN MILLIMETERS (MM), UNLESS OTHERWISE NOTED

0 2000 4000
SCALE: 1:100

APPROVED:

A/E DESIGNER OF RECORD

SEAL:

STATE OF SOUTH CAROLINA
KEVIN R. CHAFIN
N. Charleston, SC
8374
REGISTERED ARCHITECT

US ARMY CORPS OF ENGINEERS
AFGHANISTAN ENGINEER DISTRICT

Mark	Description	Date	Appr.	Mark	Description	Date	Appr.

Designed by: KRC
Dwn by: KJG
Ckd by: NLJ
Reviewed by: LHM
Submitted by: BAKER
Date: 2/23/10
Rev: 0
Design file no.
Drawing code:
File name: ANACB150A-100RP
Plot date: 2/23/2010
Plot scale:

U.S. ARMY ENGINEER DISTRICT, AFGHANISTAN
CORPS OF ENGINEERS
APO AE 96338

Michael Baker Jr., Inc
A unit of Michael Baker Corporation
Airside Business Park
100 Airside Drive
Moon Township, PA 15108
www.mbakercorp.com

AFGHAN NATIONAL ARMY
REGIONAL MILITARY TRAINING CENTER
STANDARD DESIGN

300 STUDENT CLASSROOM BUILDING
(2) 150 STUDENT CLASSROOMS

ROOF PLAN

Sheet reference number:
A–102

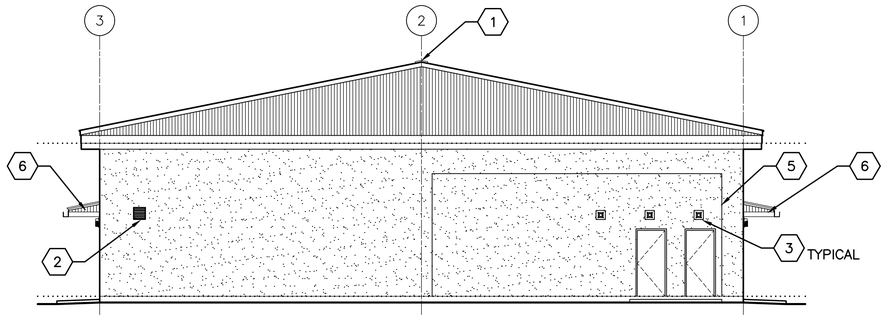

1 A-201 **ELEVATION**
SCALE: 1:100

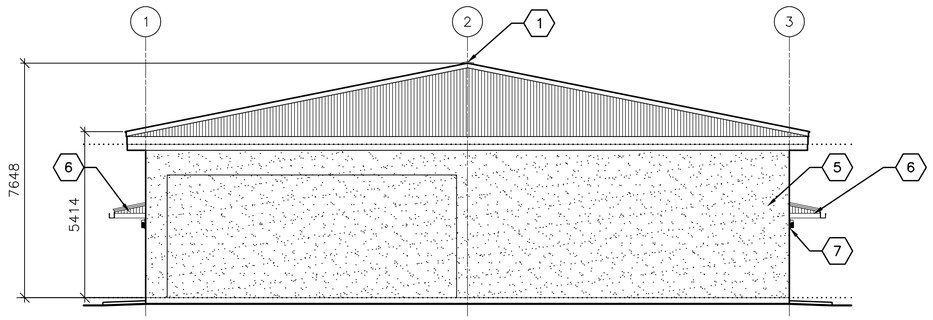

2 A-201 **ELEVATION**
SCALE: 1:100

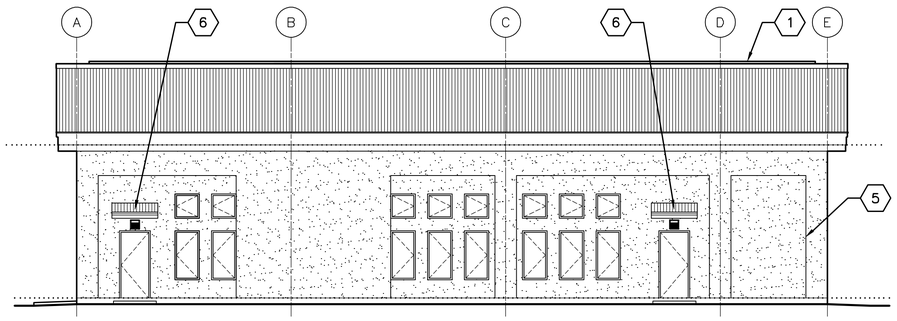

3 A-201 **ELEVATION**
SCALE: 1:100

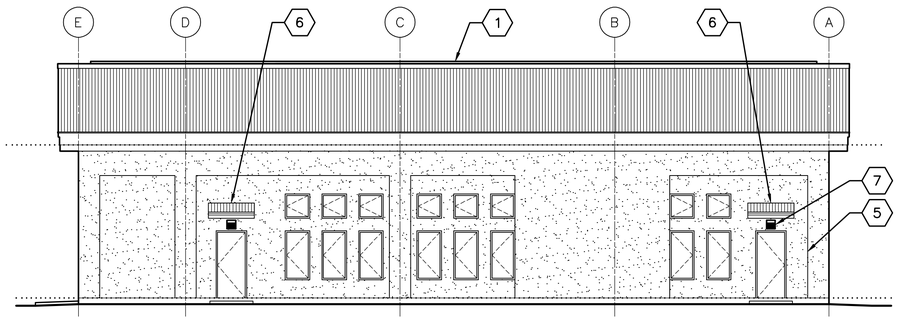

4 A-201 **ELEVATION**
SCALE: 1:100

GENERAL NOTES:

A. COORDINATE SIZE AND LOCATION OF OPENINGS FOR MECHANICAL ITEMS WITH MECHANICAL DRAWINGS.

B. PROVIDE STRUCTURAL LINTELS AS REQUIRED – SEE STRUCTURAL DRAWINGS

C. ALL EXTERIOR WALL FINISHES SHALL BE STUCCO OVER CMU AND CONCRETE SUBSTRATES. PROVIDE CONTROL JOINTS IN STUCCO WALL FINISH AS NOTED

D. ROOF SHALL BE CORRUGATED METAL ROOF PANELS ON COLD-FORMED METAL FRAMING ON CONCRETE SLAB.

KEY NOTES: (X)

1. CONTINUOUS METAL RIDGE VENT – SEE DETAIL 4/A-501.
2. LOUVER, LOCATE TOP OF WALL PENETRATION 2800 MM ABOVE FINISHED FLOOR – SEE MECHANICAL DRAWINGS.
3. EXHAUST FAN, LOCATE TOP OF WALL PENETRATION 2800 MM ABOVE FINISHED FLOOR – SEE MECHANICAL DRAWINGS.
4. NOT USED
5. STUCCO CONTROL JOINT – SEE DETAIL 2A/A-501.
6. CANOPY – SEE DETAIL 1/A-504.
7. EXTERIOR LIGHT FIXTURE – SEE ELECTRICAL

LINEAR DIMENSIONS SHOWN ARE IN MILLIMETERS (MM), UNLESS OTHERWISE NOTED

0 2000 4000
SCALE: 1:100

APPROVED:

A/E DESIGNER OF RECORD

SEAL:

STATE OF SOUTH CAROLINA
KEVIN R. CHAFIN
N. Charleston, SC
6374
REGISTERED ARCHITECT

US ARMY CORPS OF ENGINEERS
AFGHANISTAN ENGINEER DISTRICT

Mark	Description	Date	Appr.	Mark	Description	Date	Appr.

Rev: 0
Date: 2/23/10
Design file no.
Drawing code:
File name: ANACB150A-201ELV
Plot date: 2/23/2010
Plot scale:

Designed by: KRC
Dwn by: KJG
Ckd by: NLJ
Reviewed by: LHM
Submitted by:
BAKER

U.S. ARMY ENGINEER DISTRICT, AFGHANISTAN
CORPS OF ENGINEERS
APO AE 96338

Michael Baker Jr., Inc
A unit of Michael Baker Corporation
Airside Business Park
100 Airside Drive
Moon Township, PA 15108
www.mbakercorp.com

AFGHAN NATIONAL ARMY
REGIONAL MILITARY TRAINING CENTER
STANDARD DESIGN

300 STUDENT CLASSROOM BUILDING
(2) 150 STUDENT CLASSROOMS

ELEVATIONS

Sheet reference number:
A-201

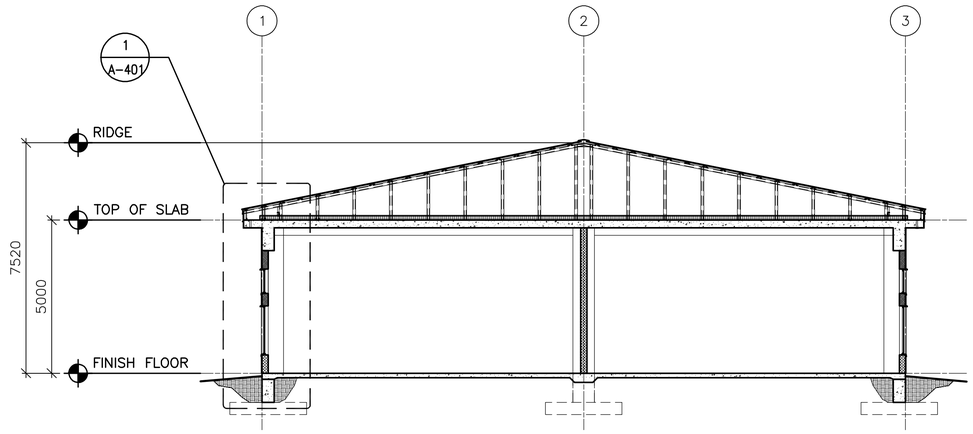

1 A-301 **BUILDING SECTION**
SCALE: 1:100

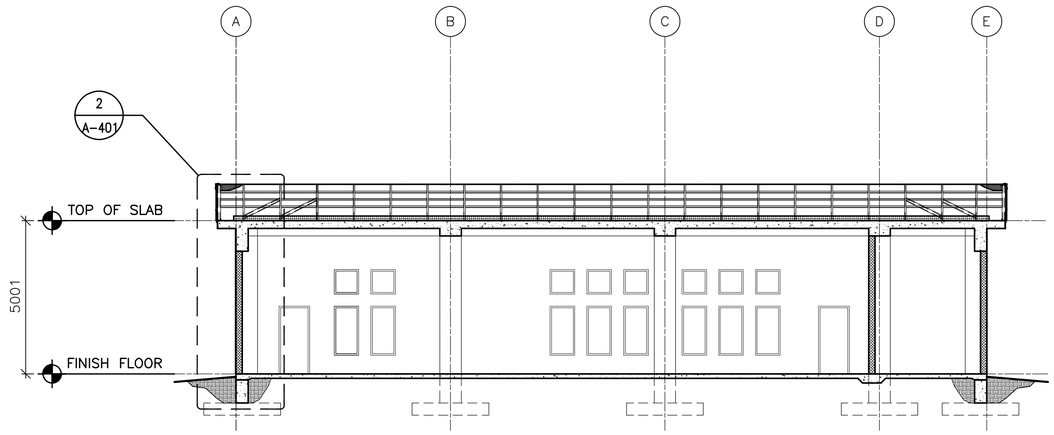

2 A-301 **BUILDING SECTION**
SCALE: 1:100

LINEAR DIMENSIONS SHOWN ARE IN MILLIMETERS (MM), UNLESS OTHERWISE NOTED

0 2000 4000
SCALE: 1:100

APPROVED:

A/E DESIGNER OF RECORD

SEAL:

STATE OF SOUTH CAROLINA
KEVIN R. CHAFIN
N. Charleston, SC
6374
REGISTERED ARCHITECT

US ARMY CORPS OF ENGINEERS
AFGHANISTAN ENGINEER DISTRICT

Mark	Description	Date	Appr.	Mark	Description	Date	Appr.

U.S. ARMY ENGINEER DISTRICT, AFGHANISTAN
CORPS OF ENGINEERS
APO AE 96338

Michael Baker Jr., Inc.
A unit of Michael Baker Corporation
Airside Business Park
100 Airside Drive
Moon Township, PA 15108
www.mbakercorp.com

Designed by: KRC
Dwn by: KJG
Ckd by: NLJ
Reviewed by: LHM
Submitted by: BAKER
Date: 2/23/10
Rev: 0
Design file no.
Drawing code:
File name: ANACB150A-301BS
Plot date: 2/23/2010
Plot scale:

AFGHAN NATIONAL ARMY
REGIONAL MILITARY TRAINING CENTER
STANDARD DESIGN

300 STUDENT CLASSROOM BUILDING
(2) 150 STUDENT CLASSROOMS

BUILDING SECTIONS

Sheet reference number:
A-301

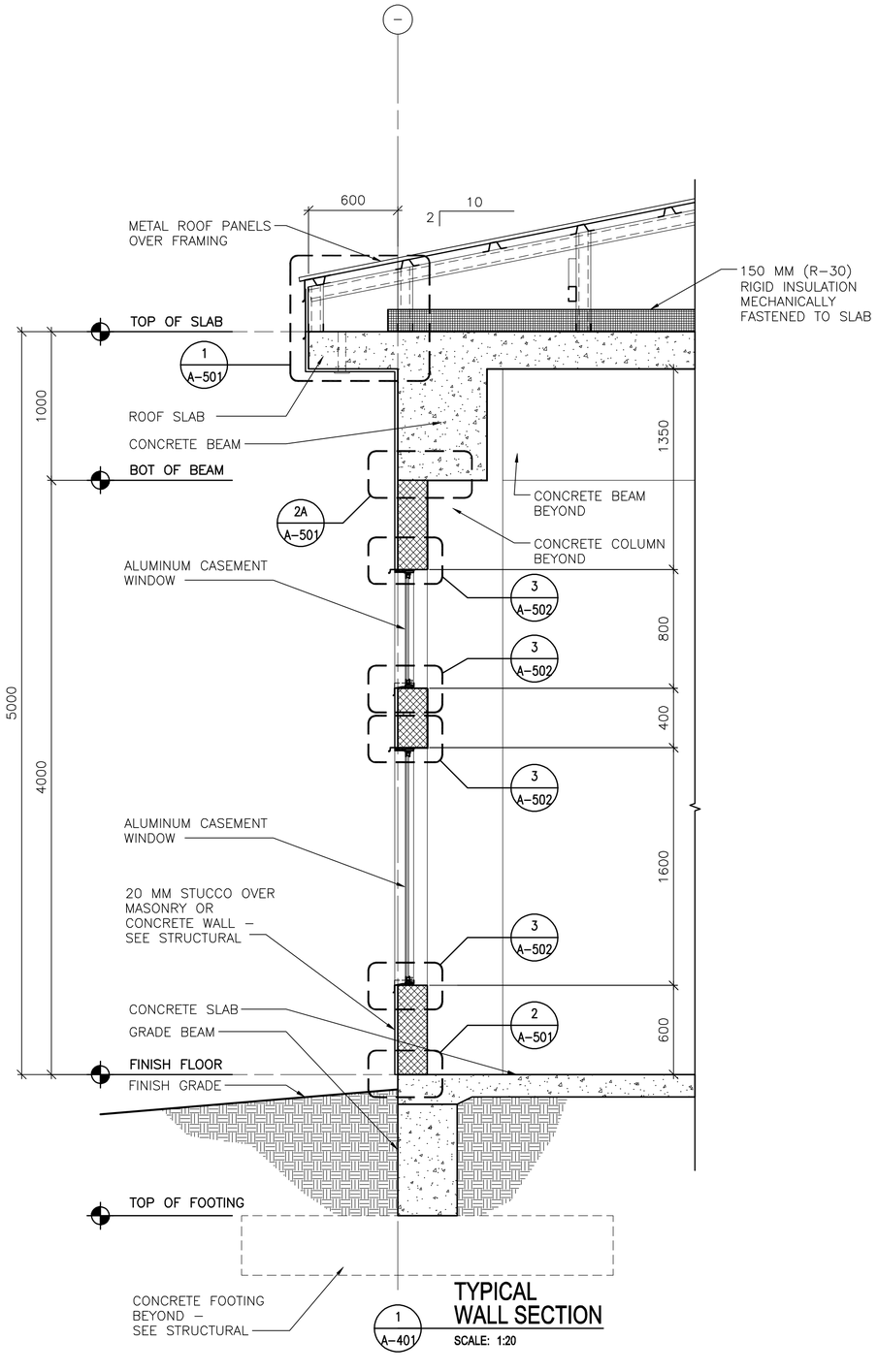

1 A-401 **TYPICAL WALL SECTION**

SCALE: 1:20

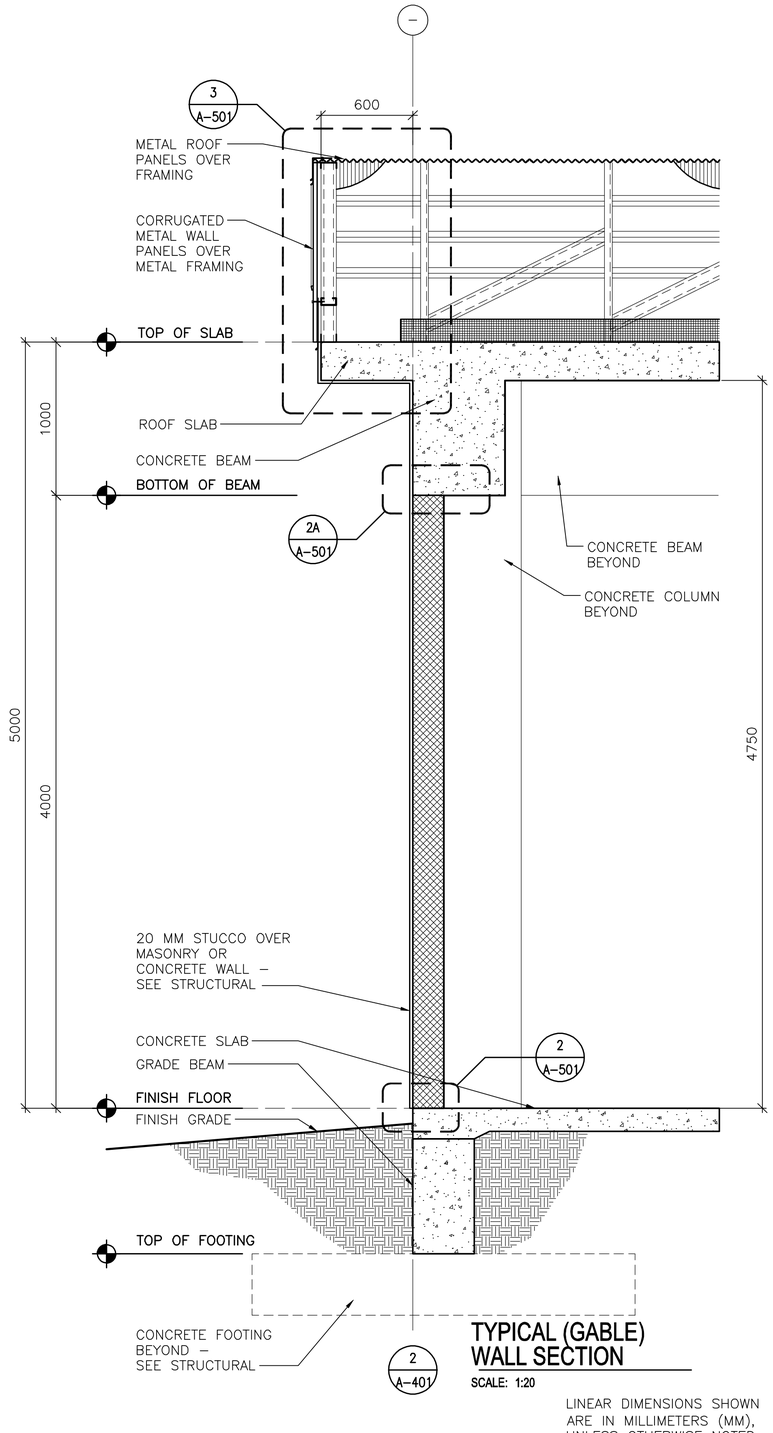

2 A-401 **TYPICAL (GABLE) WALL SECTION**

SCALE: 1:20

LINEAR DIMENSIONS SHOWN ARE IN MILLIMETERS (MM), UNLESS OTHERWISE NOTED

0 400 800
SCALE: 1:20

APPROVED:

A/E DESIGNER OF RECORD

SEAL:

STATE OF SOUTH CAROLINA
KEVIN R. CHAFIN
N. Charleston, SC
6374
REGISTERED ARCHITECT

US ARMY CORPS OF ENGINEERS
AFGHANISTAN ENGINEER DISTRICT

Mark	Description	Date	Appr.	Mark	Description	Date	Appr.

U.S. ARMY ENGINEER DISTRICT, AFGHANISTAN
CORPS OF ENGINEERS
APO AE 96338

Michael Baker Jr., Inc
A unit of Michael Baker Corporation
Airside Business Park
100 Airside Drive
Moon Township, PA 15108
www.mbakercorp.com

Designed by: KRC	Date: 2/23/10
Dwn by: KJG	Ckd by: NLJ
Reviewed by: LHM	Drawing code:
Submitted by: BAKER	File name: ANACB150A-401WS
	Plot date: 2/23/2010
	Plot scale:
	Rev: 0
	Design file no.

AFGHAN NATIONAL ARMY
REGIONAL MILITARY TRAINING CENTER
STANDARD DESIGN

300 STUDENT CLASSROOM BUILDING
(2) 150 STUDENT CLASSROOMS

WALL SECTION

Sheet reference number:
A-401

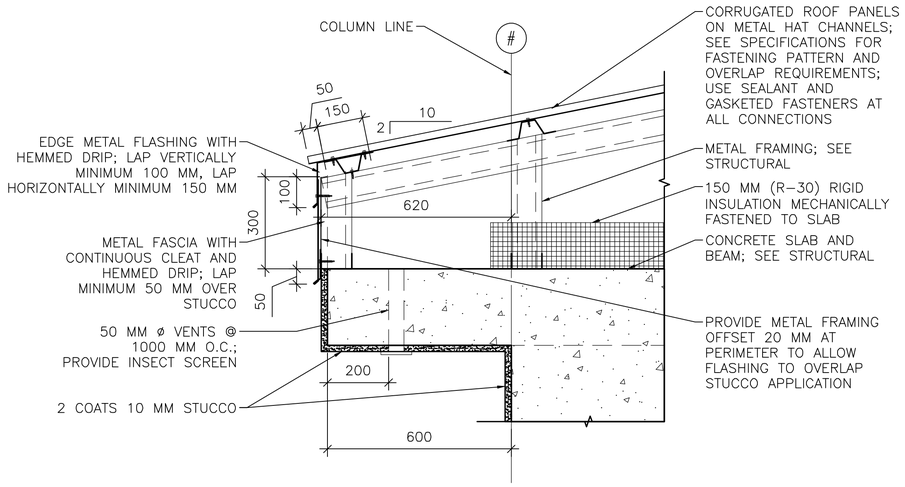

1 / A–501 **EAVE DETAIL**
SCALE: 1:10

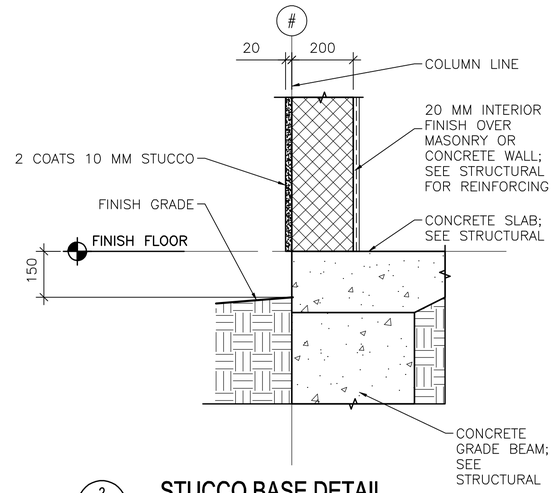

2 / A–501 **STUCCO BASE DETAIL**
SCALE: 1:10

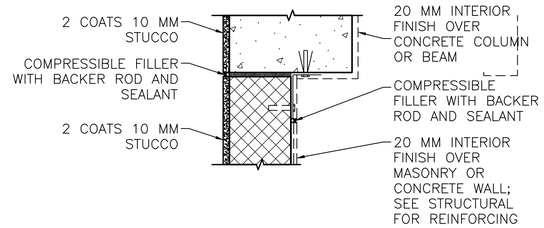

NOTE: DETAIL TYPICAL AT ALL WALL/COLUMN AND WALL/BEAM LOCATIONS, SEE ALTERNATE BRACING DETAIL BELOW 2B/A–501.

2A / A–501 **STUCCO JOINT DETAIL**
SCALE: 1:10

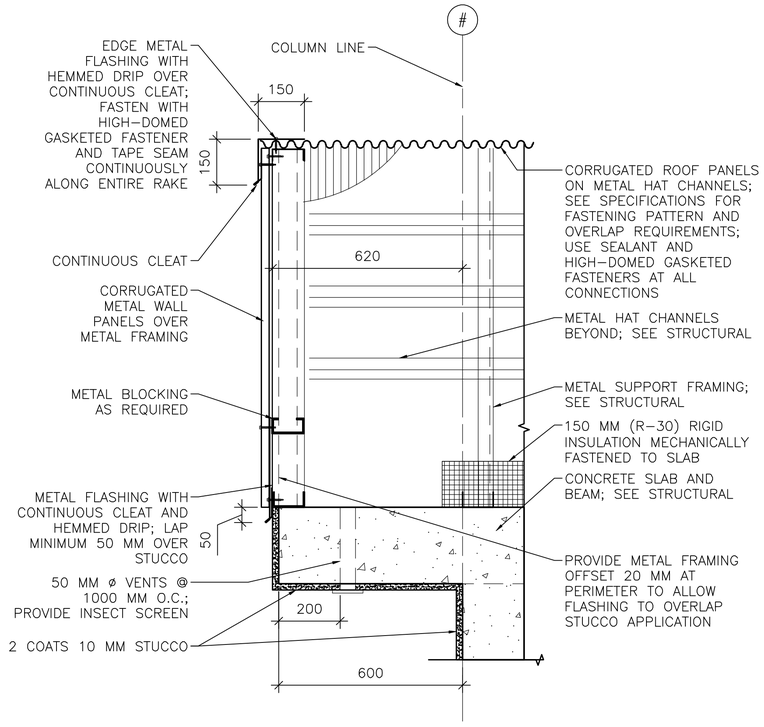

3 / A–501 **RAKE/EAVE DETAIL**
SCALE: 1:10

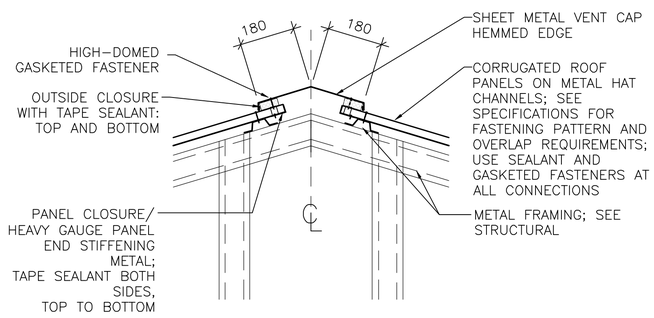

4 / A–501 **RIDGE VENT DETAIL**
SCALE: 1:10

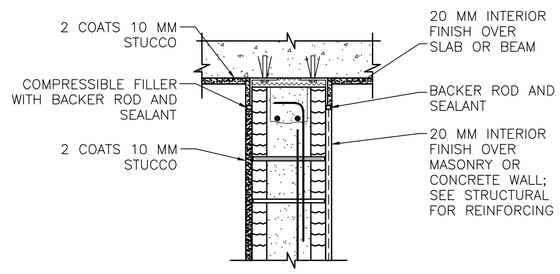

INTERIOR WALL/BEAM

2B / A–501 **ALTERNATE BRACING DETAIL**
SCALE: 1:10

LINEAR DIMENSIONS SHOWN ARE IN MILLIMETERS (MM), UNLESS OTHERWISE NOTED

0 200 400
SCALE: 1:10

APPROVED:

A/E DESIGNER OF RECORD

SEAL:

STATE OF SOUTH CAROLINA
KEVIN R. CHAFIN
N. Charleston, SC
6374
REGISTERED ARCHITECT

US ARMY CORPS OF ENGINEERS
AFGHANISTAN ENGINEER DISTRICT

Mark	Description	Date	Appr.	Mark	Description	Date	Appr.

Date: 2/23/10 | Rev: 0
Design file no.
Drawing code:
File name: ANACB150A-501DT
Plot date: 2/23/2010
Plot scale: x:X

Designed by: KRC | Dwn by: KJG | Ckd by: NLJ
Reviewed by: LHM
Submitted by: BAKER

U.S. ARMY ENGINEER DISTRICT, AFGHANISTAN
CORPS OF ENGINEERS
APO AE 96338

Michael Baker Jr., Inc.
A unit of Michael Baker Corporation
Airside Business Park
100 Airside Drive
Moon Township, PA 15108
www.mbakercorp.com

AFGHAN NATIONAL ARMY
REGIONAL MILITARY TRAINING CENTER
STANDARD DESIGN

300 STUDENT CLASSROOM BUILDING
(2) 150 STUDENT CLASSROOMS

EXTERIOR DETAILS

Sheet reference number:
A–501

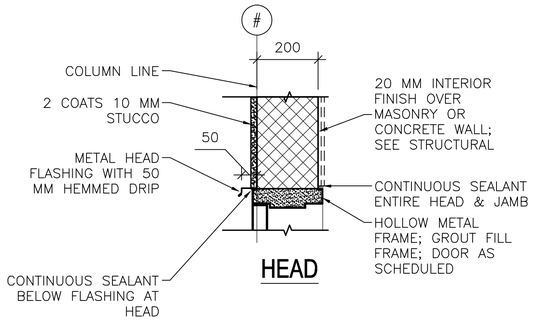

HEAD

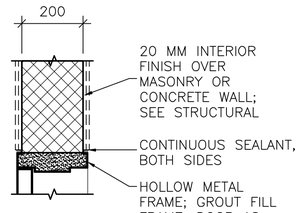

HEAD

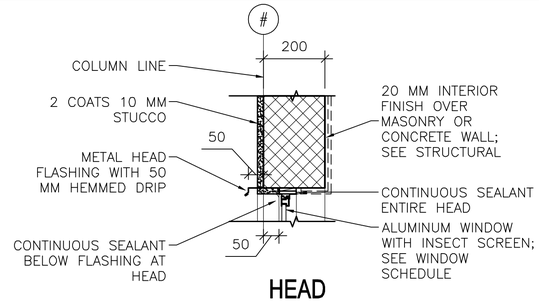

HEAD

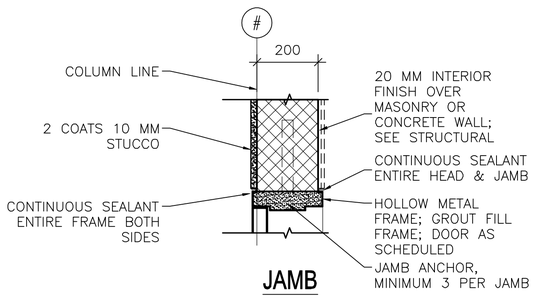

JAMB

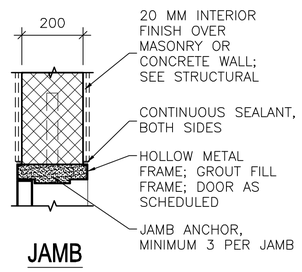

JAMB

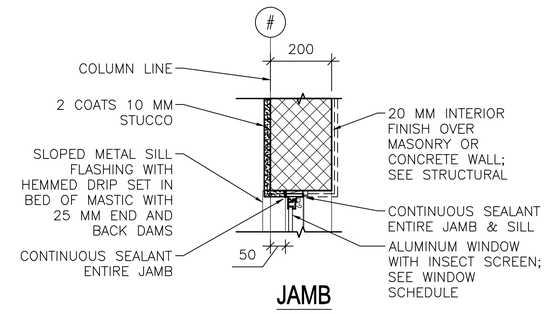

JAMB

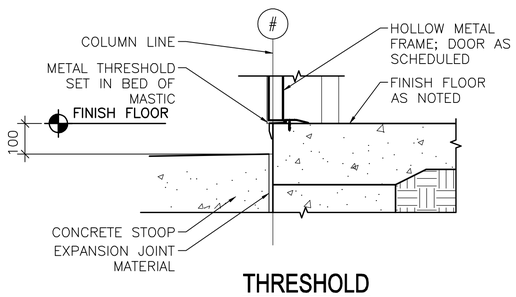

THRESHOLD

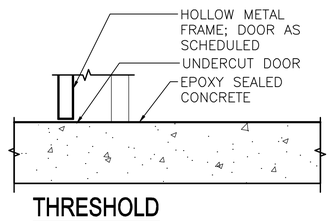

THRESHOLD

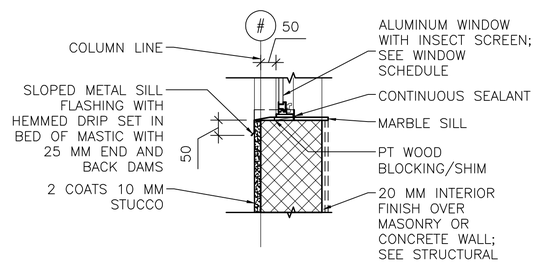

SILL

1 A-502 **EXTERIOR DOOR DETAILS**
SCALE: 1:10

2 A-502 **INTERIOR DOOR DETAILS**
SCALE: 1:10

3 A-502 **EXTERIOR WINDOW DETAILS**
SCALE: 1:10

LINEAR DIMENSIONS SHOWN ARE IN MILLIMETERS (MM), UNLESS OTHERWISE NOTED

0 200 400
SCALE: 1:10

APPROVED:

A/E DESIGNER OF RECORD

SEAL:

STATE OF SOUTH CAROLINA
KEVIN R. CHAFIN
N. Charleston, SC
6374
REGISTERED ARCHITECT

US ARMY CORPS OF ENGINEERS
AFGHANISTAN ENGINEER DISTRICT

Mark	Description	Date	Appr.	Mark	Description	Date	Appr.

Date: 2/23/10 | Rev: 0
Design file no.
Drawing code:
File name: ANACB150A-5020-HS
Plot date: 2/23/2010
Plot scale: X:X

Designed by: KRC | Dwn by: KJG | Ckd by: NLJ
Reviewed by: LHM
Submitted by: BAKER

U.S. ARMY ENGINEER DISTRICT, AFGHANISTAN
CORPS OF ENGINEERS
APO AE 96338

Michael Baker Jr., Inc
A unit of Michael Baker Corporation
Airside Business Park
100 Airside Drive
Moon Township, PA 15108
www.mbakercorp.com

AFGHAN NATIONAL ARMY
REGIONAL MILITARY TRAINING CENTER
STANDARD DESIGN

300 STUDENT CLASSROOM BUILDING
(2) 150 STUDENT CLASSROOMS
HEAD, JAMB & SILL DETAILS

Sheet reference number:
A-502

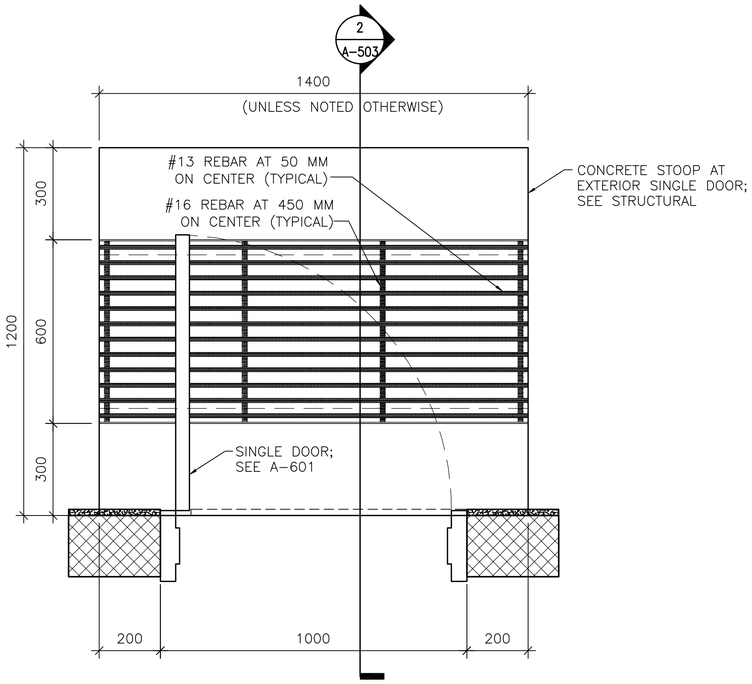

1 A-503 **DOOR STOOP PLAN (WITH GRATE)**

SCALE: 1:10

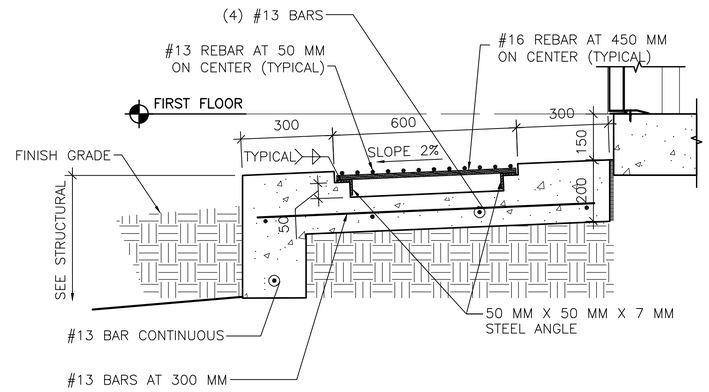

2 A-503 **DOOR STOOP DETAIL**

SCALE: 1:10

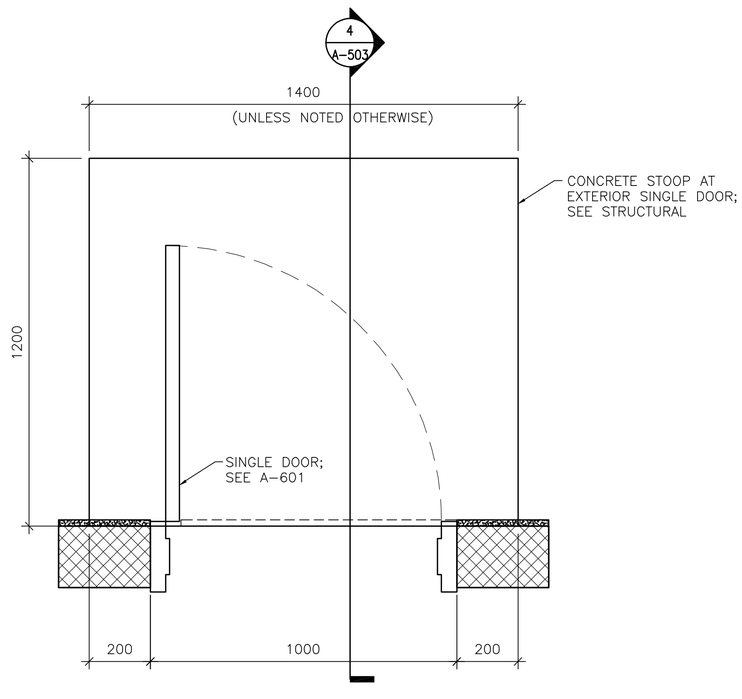

3 A-503 **DOOR STOOP PLAN (WITHOUT GRATE)**

SCALE: 1:10

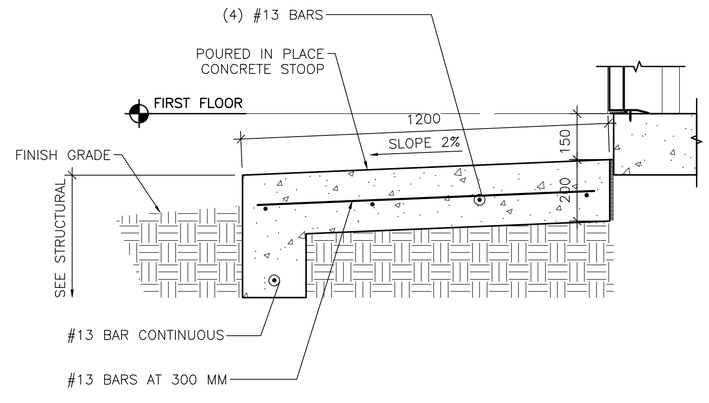

4 A-503 **DOOR STOOP DETAIL**

SCALE: 1:10

LINEAR DIMENSIONS SHOWN ARE IN MILLIMETERS (MM), UNLESS OTHERWISE NOTED

0 200 400
SCALE: 1:10

APPROVED:

A/E DESIGNER OF RECORD

SEAL:

STATE OF SOUTH CAROLINA
KEVIN R. CHAFIN
N. Charleston, SC
6374
REGISTERED ARCHITECT

US ARMY CORPS OF ENGINEERS
AFGHANISTAN ENGINEER DISTRICT

Mark	Description	Date	Appr.	Mark	Description	Date	Appr.

U.S. ARMY ENGINEER DISTRICT, AFGHANISTAN
CORPS OF ENGINEERS
APO AE 96338

Michael Baker Jr., Inc
A unit of Michael Baker Corporation
Airside Business Park
100 Airside Drive
Moon Township, PA 15108
www.mbakercorp.com

Designed by: KRC
Dwn by: KJG
Ckd by: NLJ
Reviewed by: LHM
Submitted by: BAKER
Date: 2/23/10
Rev: 0
Design file no.
Drawing code:
File name: ANACB150A-503DT
Plot date: 2/23/2010
Plot scale: x:X

AFGHAN NATIONAL ARMY
REGIONAL MILITARY TRAINING CENTER
STANDARD DESIGN

300 STUDENT CLASSROOM BUILDING
(2) 150 STUDENT CLASSROOMS

STOOP DETAILS

Sheet reference number:
A-503

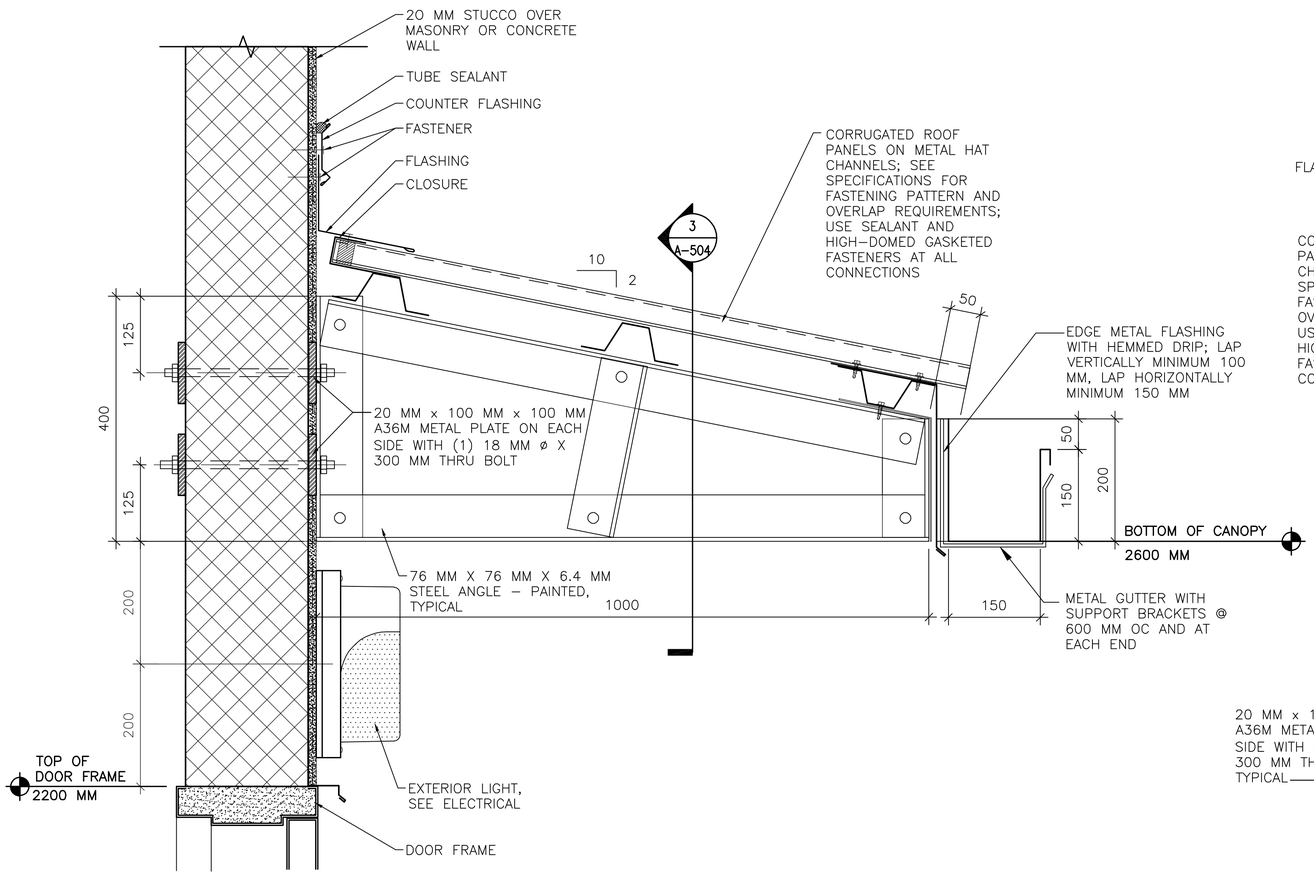

1 A-504 **CANOPY CONNECTION DETAILS**

SCALE: 1:5

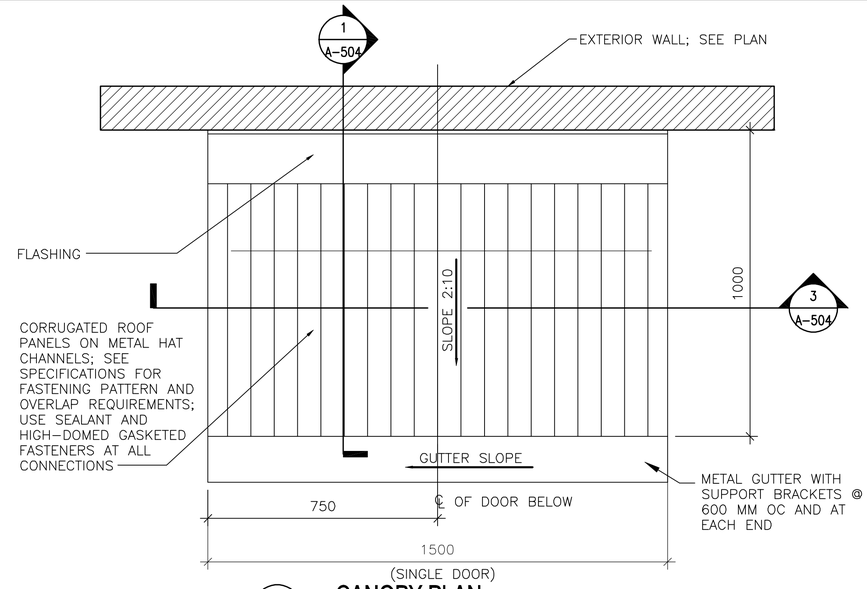

2 A-504 **CANOPY PLAN**

SCALE: 1:10

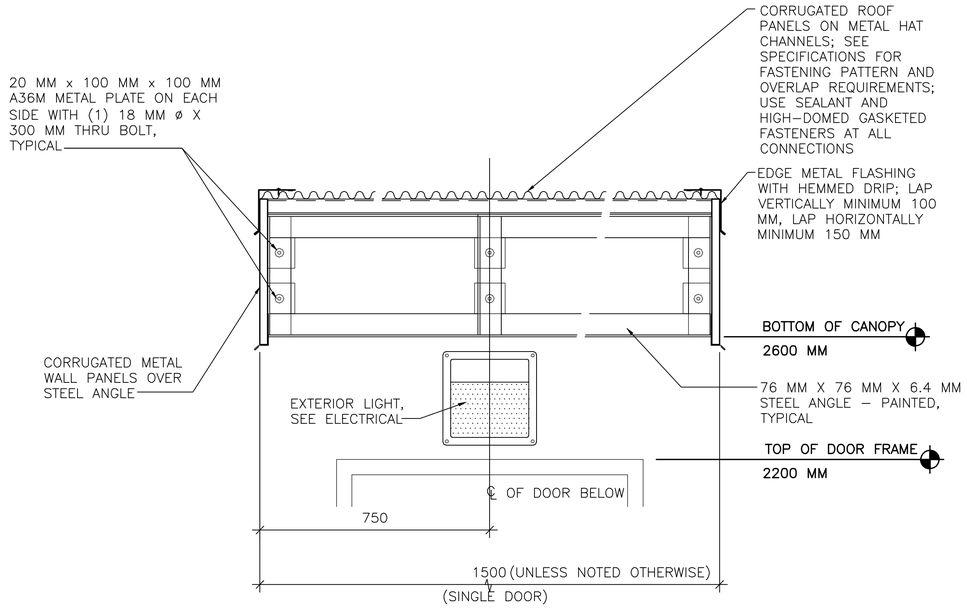

3 A-504 **CANOPY CONNECTION DETAILS**

SCALE: 1:10

SHEET NOTES:

1. SEE A–101 FOR FLOOR PLANS AND CANOPY LOCATIONS.

APPROVED:

A/E DESIGNER OF RECORD

SEAL:

STATE OF SOUTH CAROLINA
KEVIN R. CHAFIN
N. Charleston, SC
6374
REGISTERED ARCHITECT

LINEAR DIMENSIONS SHOWN ARE IN MILLIMETERS (MM), UNLESS OTHERWISE NOTED

0 100 200
SCALE: 1:5

US ARMY CORPS OF ENGINEERS
AFGHANISTAN ENGINEER DISTRICT

Mark	Description	Date	Appr.	Mark	Description	Date	Appr.

U.S. ARMY ENGINEER DISTRICT, AFGHANISTAN
CORPS OF ENGINEERS
APO AE 96338

Michael Baker Jr., Inc
A unit of Michael Baker Corporation
Airside Business Park
100 Airside Drive
Moon Township, PA 15108
www.mbakercorp.com

Designed by: KRC
Dwn by: KJG
Ckd by: NLJ
Reviewed by: LHM
Submitted by: BAKER
Date: 2/23/10
Rev: 0
Design file no.
Drawing code:
File name: ANACB150A-5040T
Plot date: 2/23/2010
Plot scale: x:X

AFGHAN NATIONAL ARMY
REGIONAL MILITARY TRAINING CENTER
STANDARD DESIGN

300 STUDENT CLASSROOM BUILDING
(2) 150 STUDENT CLASSROOMS

CANOPY DETAILS

Sheet reference number:
A–504

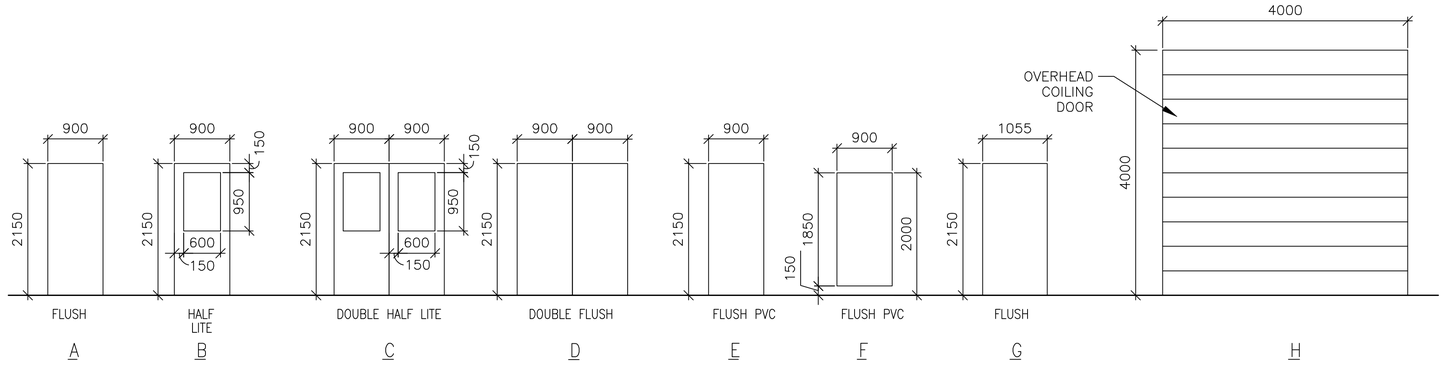

1 A-601 DOOR TYPES

SCALE: 1:50

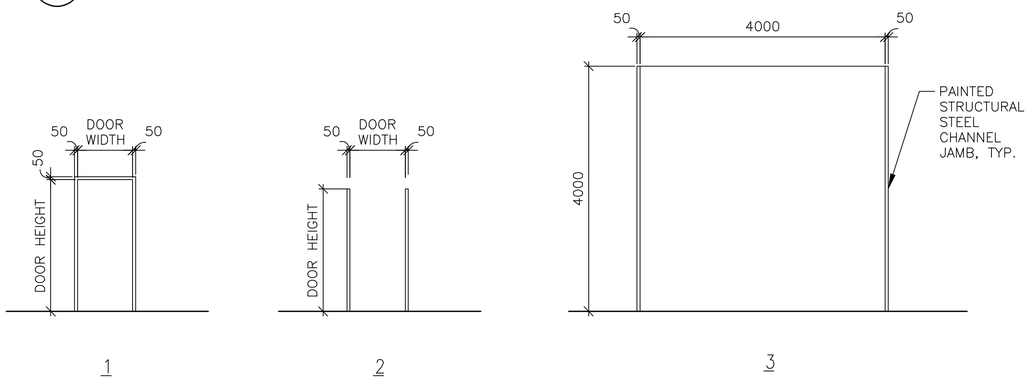

2 A-601 FRAME TYPES

SCALE: 1:50

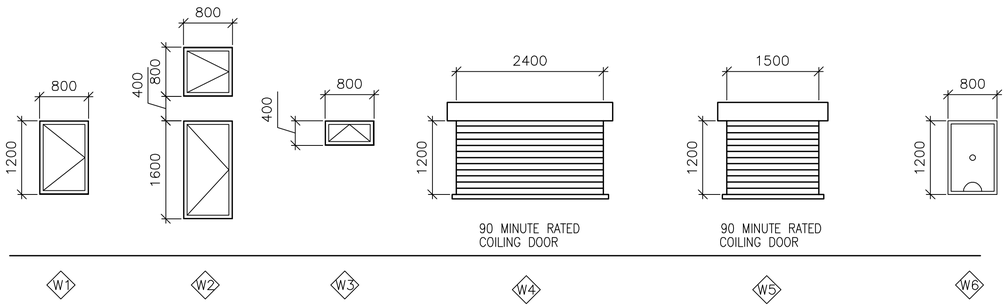

3 A-601 WINDOW TYPES

SCALE: 1:50

WINDOW TYPE NOTES:

1. ALL EXTERIOR WINDOWS SHALL BE ALUMINUM WITH INSECT SCREENS. WINDOWS SHALL BE COMMERCIAL GRADE.
2. ALL EXTERIOR WINDOWS SHALL BE OPERABLE.

4 A-601 DOOR TAG

SCALE: NTS

5 A-601 RATED DOOR TAG

SCALE: NTS

DOOR TAG NOTES:

1. THE DOOR TAG INDICATES THE DOOR TYPE, FRAME TYPE AND HARDWARE SET FOR EACH DOOR.
2. THE DOOR TAG FOR RATED DOORS INCLUDES THE RATING OF THE DOOR IN MINUTES.

EXTERIOR DOOR HARDWARE TYPES:

HW-1 1-1/2 PR HINGES, A5112 114 X 114
1 EA RIM EXIT DEVICE, TYPE 1
1 EA CYLINDER. E09221A, GRADE 1
1 EA OVERHEAD CLOSER, C02061, LOW RESISTANCE
1 EA THRESHOLD, J32130
3 EA DOOR SILENCERS, L03011

HW-2 1-1/2 PR HINGES, A5112 114 X 114
1 EA LOCKSET, F13 ENTRY LOCK W/LEVER HANDLES, GRADE 1
1 EA OVERHEAD CLOSER, C02061, LOW RESISTANCE
1 EA THRESHOLD, J32130
3 EA DOOR SILENCERS, L03011

HW-3 3 PR HINGES, A5112 114 X 114
2 EA RIM EXIT DEVICE, TYPE 1
2 EA CYLINDER. GRADE 1
2 EA OVERHEAD CLOSER, C02061, LOW RESISTANCE
1 EA DOOR COORDINATOR, TYPE 21
1 EA ASTRAGAL
1 EA THRESHOLD, J32130
2 EA DOOR SILENCERS, L03011

HW-4 3 PR HINGES, A5112 114 X 114
1 EA LOCKSET W/LEVER HANDLES. GRADE 1, F13
1 EA OVERHEAD CLOSER, C02061, LOW RESISTANCE
2 EA MAGNETIC HOLDER PIN, ATTACHED TO DOOR LEAF
2 EA MAGNETIC HOLDER RECEIVER, ATTACHED TO STOOP
2 EA LEVER EXTENSION FLUSH BOLTS, L04081
1 EA ASTRAGAL
1 EA THRESHOLD, J32130
2 EA DOOR SILENCERS, L03011

DOOR AND HARDWARE NOTES:

1. INTERIOR AND EXTERIOR METAL DOORS AND FRAME COLORS SHALL MATCH ADJACENT WALL COLORS AS SELECTED BY THE CONTRACTING OFFICER.
2. FRAMES, EXCEPT FIRE-RATED FRAMES, SHALL BE MOUNTED AND ADJUSTED IN ACCORDANCE WITH MANUFACTURER'S INSTRUCTIONS. FRAMES SHALL BE FASTENED WITH MINIMUM OF THREE ANCHORS PER JAMB AT EQUAL INTERVALS.
3. DIMENSIONS SHOWN ON DOOR TYPES DETAIL ARE BASED UPON MODULAR MASONRY (OR ROUGH OPENING), HEIGHT OF 2200 MM FOR STANDARD PERSONNEL DOORS. CONTRACTOR SHALL COORDINATE WITH DOOR SUPPLIER TO ENSURE THAT DIMENSIONS OF DOORS AND FRAMES PROVIDED ARE COMPATIBLE WITH DOOR OPENING DIMENSIONS.
4. HARDWARE SHALL BE HEAVY DUTY, COMMERCIAL GRADE, STAINLESS STEEL WITH A SATIN OR BRUSHED FINISH.
5. HARDWARE TYPES INCLUDE BUILDERS HARDWARE MANUFACTURERS ASSOCIATION (BMHA) NUMBER.
6. DOORS IN 2 HOUR RATED PARTITIONS SHALL BE 1.5 HOUR (90 MINUTE) RATED DOORS IN ACCORDANCE WITH NFPA 101, TABLE 8.3.4.2.
7. DOORS AT STAIR ENCLOSURES SHALL BE 1 HOUR (60 MINUTE) RATED AT 1 HOUR WALL IN ACCORDANCE WITH NFPA 101, TABLE 8.3.4.2.
8. DOORS IN 1 HOUR RATED WALLS SHALL BE 3/4 HOUR (45 MINUTE) RATED DOORS IN ACCORDANCE WITH NFPA 101, TABLE 8.3.4.2.
9. DOORS IN 1 HOUR RATED CORRIDOR WALLS SHALL BE 1/3 HOUR (20 MINUTE) IN ACCORDANCE WITH NFPA 101, TABLE 8.3.4.2.
10. PROVIDE DOOR STOPS TO PROTECT WALLS ON LOCATIONS WHERE DOOR SWING WILL STRIKE WALL.

THIS SHEET IS STANDARD AND IS INCLUSIVE OF ALL THE DOOR/ WINDOW/ HARDWARE TYPES FOR THE ENTIRE RMTC CONTRACT. NOT ALL DOOR/ WINDOW/ HARDWARE TYPES ARE USED FOR ANY PARTICULAR BUILDING DESIGN. CONTRACTOR SHALL REFER TO THE FLOOR PLAN FOR THE TYPES BEING USED.

INTERIOR DOOR HARDWARE TYPES:

HW-5 1-1/2 PR HINGES, A8133 114 X 114
1 EA LOCKSET W/LEVER HANDLES, F08, GRADE 1
1 EA WALL STOP, L02101 OR L02161
3 EA DOOR SILENCERS, L03011

HW-6 1-1/2 PR HINGES, A8112 114 X 114
1 EA LOCKSET W/LEVER HANDLES, F08, GRADE 1
1 EA WALL STOP, L02101 OR L02161
1 EA OVERHEAD CLOSER, C02061, LOW RESISTANCE
3 EA DOOR SILENCERS, L03011

HW-7 1-1/2 PR HINGES, A8133
1 EA LOCKSET W/LEVER HANDLES, F13 GRADE 1
1 EA WALL STOP, L02101 OR L02161
2 EA MOP PLATE, J103
3 EA DOOR SILENCERS, L03011

HW-8 1-1/2 PR HINGES, A8112
1 EA LOCKSET W/LEVER HANDLES, F13 GRADE 1
1 EA WALL STOP, L02101 OR L02161
2 EA MOP PLATE, J103
1 EA OVERHEAD CLOSER, C02061, LOW RESISTANCE
3 EA DOOR SILENCERS, L03011

HW-9 1-1/2 PR HINGES, A5112 114 X 114
1 EA RIM EXIT DEVICE, TYPE 1
1 EA CYLINDER. E09221A, GRADE 1
1 EA OVERHEAD CLOSER, C02061, LOW RESISTANCE
3 EA DOOR SILENCERS, L03011

HW-10 3 PR HINGES, A5112 114 X 114
1 EA LOCKSET W/LEVER HANDLES. GRADE 1, F13
2 EA LEVER EXTENSION FLUSH BOLTS, L04081
1 EA ASTRAGAL
2 EA DOOR SILENCERS, L03011

HW-11 1-1/2 PR HINGES, A8112 114 X 114
1 EA LOCKSET W/LEVER HANDLES, F13, GRADE 1
1 EA WALL STOP, L02101 OR L02161
1 EA OVERHEAD CLOSER, C02061, LOW RESISTANCE
3 EA DOOR SILENCERS, L03011
1 EA ROBE HOOK

HW-12 1-1/2 PR HINGES, A8133
1 EA LATCHSET W/LEVER HANDLES, F76 GRADE 1
1 EA WALL STOP, L02101 OR L02161
2 EA MOP PLATE, J103
3 EA DOOR SILENCERS, L03011
1 EA ROBE HOOK

HW-13 3 PR HINGES, A5112 114 X 114
1 EA LOCKSET W/LEVER HANDLES. GRADE 1, F13
1 EA OVERHEAD CLOSER, C02061, LOW RESISTANCE
2 EA LEVER EXTENSION FLUSH BOLTS, L04081
1 EA ASTRAGAL
2 EA DOOR SILENCERS, L03011

HW-14 3 PR HINGES, A5112 114 X 114
2 EA RIM EXIT DEVICE, TYPE 1
2 EA CYLINDER. GRADE 1
2 EA OVERHEAD CLOSER, C02061, LOW RESISTANCE
1 EA DOOR COORDINATOR, TYPE 21
1 EA ASTRAGAL
2 EA DOOR SILENCERS, L03011

APPROVED:

A/E DESIGNER OF RECORD

SEAL:

STATE OF SOUTH CAROLINA
KEVIN R. CHAFIN
N. Charleston, SC
6374
REGISTERED ARCHITECT

US ARMY CORPS OF ENGINEERS
AFGHANISTAN ENGINEER DISTRICT

Mark	Description	Date	Appr.	Mark	Description	Date	Appr.

Date: 2/23/10 Rev: 0
Design file no.
Drawing code:
File name: ANACB150A-6015CH
Plot date: 2/23/2010
Plot scale: X:X

Designed by: KRC
Dwn by: KJG
Ckd by: NLJ
Reviewed by: LHM
Submitted by:
BAKER

U.S. ARMY ENGINEER DISTRICT, AFGHANISTAN
CORPS OF ENGINEERS
APO AE 96338

Michael Baker Jr., Inc.
A unit of Michael Baker Corporation
Airside Business Park
100 Airside Drive
Moon Township, PA 15108
www.mbakercorp.com

AFGHAN NATIONAL ARMY
REGIONAL MILITARY TRAINING CENTER
STANDARD DESIGN

300 STUDENT CLASSROOM BUILDING
(2) 150 STUDENT CLASSROOMS

WINDOW AND DOOR SCHEDULES

Sheet reference number:
A-601

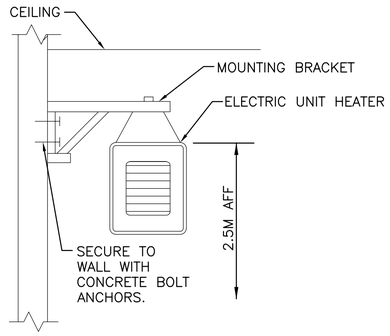

2 M-101 ELECTRIC UNIT HEATER MOUNTING DETAIL
N.T.S.

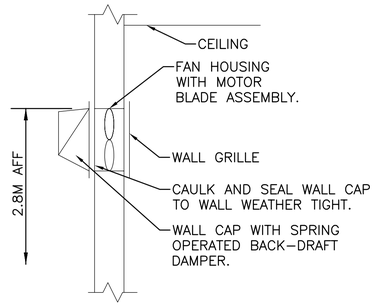

3 M-101 THROUGH THE WALL EXHAUST FAN DETAIL
N.T.S.

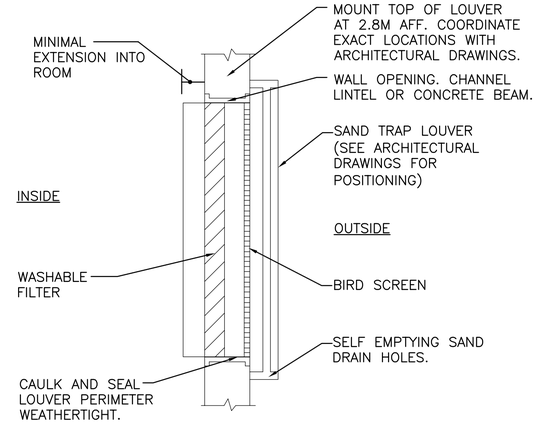

4 M-101 FILTERED SAND TRAP LOUVER
N.T.S.

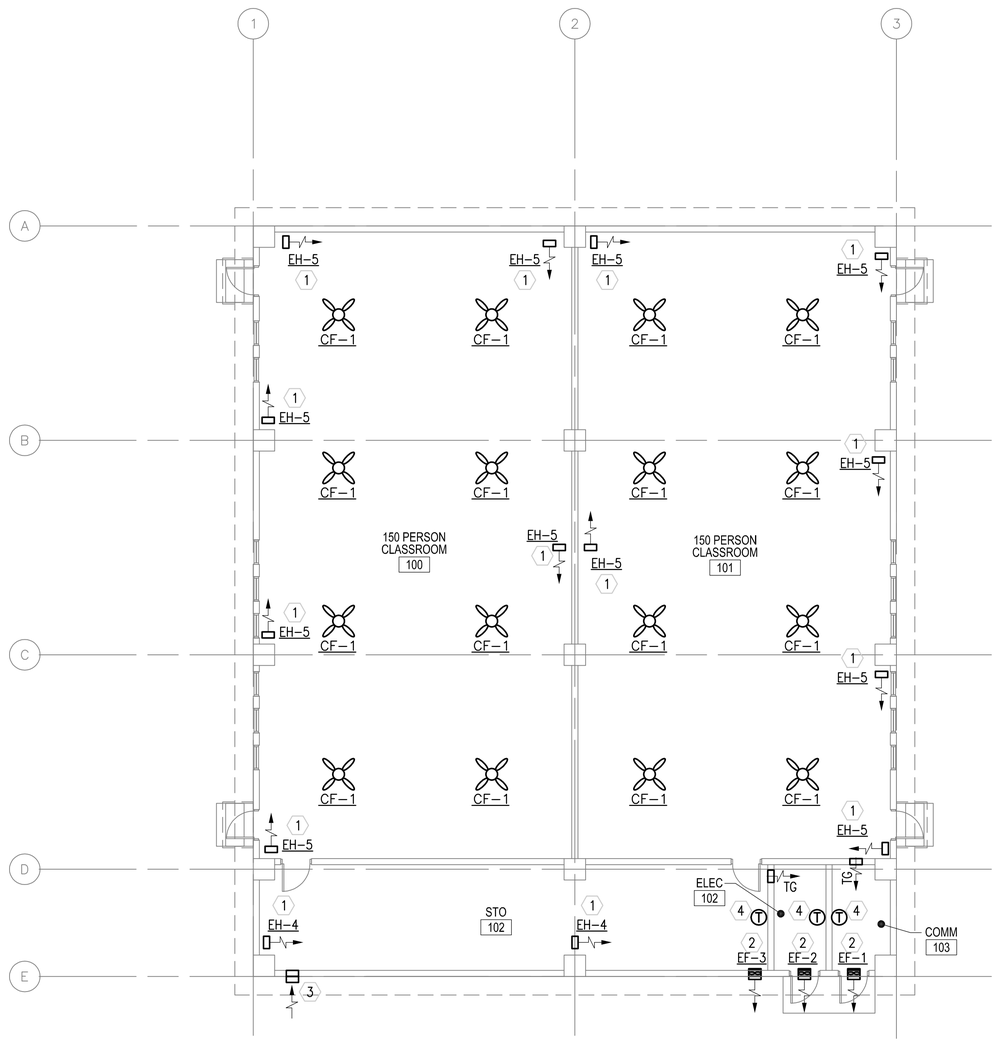

1 M-101 FLOOR PLAN - HVAC
SCALE: 1:100

GENERAL NOTES:

1. DO NOT SCALE DRAWINGS – ALL DIMENSIONS AND CONDITIONS SHALL BE CHECKED AND VERIFIED BY THE CONTRACTOR AT THE SITE.
2. ALL WORK PERFORMED ON THIS BUILDING SHALL BE IN COMPLIANCE WITH ALL PERTINENT CODES, RULES, ORDINANCES AND REGULATIONS OF THE GOVERNING AUTHORITIES.
3. ALL WORK PERFORMED UNDER AND IN CONNECTION WITH THESE DRAWINGS AND SPECIFICATIONS SHALL BE IN STRICT COMPLIANCE WITH THE LATEST SAFETY AND HEALTH STANDARDS.

SYMBOLS:

(X) KEY NOTE

(0.050) AIR VOLUME IN CUBIC METERS PER SECOND (CMS)

UC DOOR UNDERCUT

TG 200x400 (8x16) TRANSFER GRILLE

ABBREVIATIONS:

AFF	ABOVE FINISH FLOOR
CF	CEILING FANS
CMS	CUBIC METERS PER SECOND
STATS	THERMOSTATS

KEY NOTE:

1. UNIT HEATER SECURED FROM WALL. SEE DETAIL THIS SHEET.
2. WALL EXHAUST FAN WITH LOW SPRING OPERATED BACK-DRAFT DAMPER. SEE DETAIL 3 THIS SHEET.
3. 400x400 (16x16) INTAKE LOUVER WITH BACK-DRAFT DAMPER PROVIDE WEATHER PROOF LOUVER W/0.05mm (2") WASHABLE FILTER AND SAND TRAP. SEE DETAIL 4 THIS SHEET.
4. THERMOSTAT MOUNTED AS HIGH AS POSSIBLE. INTERLOCK STAT WITH CORRESPONDING EXHAUST FAN, SET FAN TO ENERGIZE ON RISE IN TEMPERATURE ABOVE 25°C (77°F).

EXHAUST FAN SCHEDULE

NO.	TYPE	FAN CMS	DRIVE	HP	SP mmH20	ELECTRICAL DATA	SWITCH
EF-1	WALL	0.035	DIRECT	FRACT	9.5	220/1/50	W/ STAT
EF-2	WALL	0.035	DIRECT	FRACT	9.5	220/1/50	W/ STAT
EF-3	WALL	0.035	DIRECT	FRACT	9.5	220/1/50	W/ STAT

NOTES:
1. FANS SHALL HAVE SPRING OPERATED BACK-DRAFT DAMPER.

ELECTRIC UNIT HEATER SCHEDULE

NO.	CMS	KW	F.A.T. °C	ELECT. CHAR.	MOUNTING
EH-4	0.200	4	38	380/1/50	WALL HUNG
EH-5	0.200	5	38	380/1/50	WALL HUNG

NOTES:
1. UNIT HEATERS SHALL HAVE TAMPER PROOF INTEGRAL STATS.
2. COORDINATE LOCATION AND ORIENTATION IN FIELD.

CEILING FAN

NO.	BLADE SIZE mm	BLADE SIZE IN	VOLTAGE	SWITCH	REMARKS
CF-1	1320	52	220/1/50	@ WALL	3 SPEED REVERSIBLE MOTOR

NOTES:
1. PROVIDE EXTENSION DOWN RODS, INSTALL FANS 2.5M AFF.
2. PROVIDE WITH OUT LIGHT FIXTURE.
3. PROVIDE WITH REMOTE MOUNTED ON-OFF SWITCH SHOWN ON ELECTRICAL DRAWINGS.

LINEAR DIMENSIONS SHOWN ARE IN MILLIMETERS (MM), UNLESS OTHERWISE NOTED

0 2000 4000
SCALE: 1:100

APPROVED:

A/E DESIGNER OF RECORD

SEAL:

COMMONWEALTH OF PENNSYLVANIA
REGISTERED PROFESSIONAL
MATTHEW R. SOTOSKY
ENGINEER
045576-E

US ARMY CORPS OF ENGINEERS
AFGHANISTAN ENGINEER DISTRICT

Mark	Description	Date	Appr.	Mark	Description	Date	Appr.

Rev: 0
Date: 02/23/10
Design file no.
Drawing code:
File name: ANACB150MH-101X0X
Plot date: 02/09/2010
Plot scale: 1:100

Designed by: RML
Dwn by: JUN
Ckd by: CJM
Reviewed by: MRS
Submitted by: BAKER

U.S. ARMY ENGINEER DISTRICT, AFGHANISTAN
CORPS OF ENGINEERS
APO AE 96338

Michael Baker Jr., Inc
A unit of Michael Baker Corporation
Airside Business Park
100 Airside Drive
Moon Township, PA 15108
www.mbakercorp.com

AFGHAN NATIONAL ARMY
REGIONAL MILITARY TRAINING CENTER
STANDARD DESIGN

300 STUDENT CLASSROOM BUILDING
(2) 150 STUDENT CLASSROOMS

HVAC PLANS, SCHEDULES AND DETAILS

Sheet reference number:
M-101

POWER

- DISTRIBUTION PANELBOARD
- NEW PANELBOARD – SURFACE
- NEW PANELBOARD – RECESSED
- GENERATOR
- TRANSFORMER (DRAWN TO SIZE)
- JUNCTION BOX
- JUNCTION BOX – CEILING
- FUSIBLE SAFETY SWITCH
- MOTOR
- MOTOR STARTING SWITCH – 220V, 20A RATED UNLESS OTHERWISE NOTED
- ELECTRIC WATER HEATER
- CEILING FAN – REFER TO SPECIFICATION SECTION 26 20 00

RECEPTACLES

- DUPLEX 20A TYPE CEE 7/7 "SCHUKO STYLE" UNSWITCHED RECEPTACLE
- GF — DUPLEX 20A TYPE CEE 7/7 "SCHUKO STYLE" UNSWITCHED RECEPTACLES – 10mA GROUND FAULT INTERRUPTER TYPE
- WP — DUPLEX 20A TYPE CEE 7/7 "SCHUKO STYLE" UNSWITCHED TYPE WITH WEATHERPROOF COVER – 10mA GROUND FAULT INTERRUPTER TYPE
- EXP — DUPLEX 20A TYPE CEE 7/7 "SCHUKO STYLE" UNSWITCHED RECEPTACLES – EXPLOSION PROOF
- ★ INDICATES MOUNT DEVICE ABOVE COUNTERTOP OR AT 1070mm ABOVE FINISHED FLOOR WHERE NO COUNTER IS TO BE INSTALLED.

LIGHTNING PROTECTION

- AIR TERMINAL 20mm O.D. X 450mm SOLID COPPER, NICKEL PLATED ON ADHESIVE BASE
- EQ — EQUIPMENT AIR TERMINAL
- TEST WELL WITH GROUND ROD(S)
- GROUND ROD
- G — GROUND PLATE
- MAIN GROUND CONDUCTER CONCEALED WITHIN CONSTRUCTION
- MAIN GROUND CONDUCTOR EXPOSED ON EXPOSED ON BUILDING EXTERIOR SURFACE
- GROUND CONDUCTOR CAD WELDED TO GROUND CABLE OR EQUIPMENT
- GROUND ROD TRIPOD, SPACED 3 METERS APART.
- LEVEL TO LEVEL CABLE

LIGHTING

- LIGHTING FIXTURE – SEE FIXTURE SCHEDULE FOR MORE INFORMATION
- EMERGENCY LIGHTING FIXTURE – SEE FIXTURE SCHEDULE FOR MORE INFORMATION
- DOWNLIGHT
- LIGHTING FIXTURE ON NORMAL/EMERGENCY
- WALL MOUNTED LIGHT FIXTURE
- E — EXIT SIGN – DIRECTIONAL ARROWS AS INDICATED ON DRAWINGS
- REMOTE HEAD FOR BATTERY PACK
- $ — SINGLE POLE SWITCH – 20A RATED
- $3 — 3-WAY SWITCH – 20A RATED
- $4 — 4-WAY SWITCH – 20A RATED
- C — LIGHTING CONTACTOR
- POLE MOUNTED SITE LIGHTING FIXTURE– NUMBER OF FIXTURES PER POLE AS INDICATED ON DRAWINGS
- EXTERIOR DIRECTIONAL LIGHTING FIXTURE
- a — SMALL CASE LETTERS REPRESENTS LAMP(S) / SWITCHES.

TELECOMMUNICATIONS

- TELEPHONE OUTLET(S) @ 45cm AFF. U.N.O. WITH 20mm RACEWAY TERMINATED TO TELEDATA TERMINAL BOARD.
- DATA OUTLET(S) @ 45cm AFF. U.N.O. WITH 20mm RACEWAY TERMINATED TO TELEDATA TERMINAL BOARD.

TELECOMMUNICATIONS (CONTINUED)

- COMBINATION TELEPHONE/DATA OUTLET(S) @ 45cm AFF. U.N.O. WITH 27mm RACEWAY TERMINATED TO TELEDATA TERMINAL AREA.
- W — WALL MTD. TELEPHONE OUTLET WITH 20mm RACEWAY TO TELEDATA TERMINAL BOARD.
- (x)T — INDICATES NUMBER OF TELEPHONE OUTLET(S) AND ASSOCIATED CABLING
- (x)D — INDICATES NUMBER OF DATA OUTLET(S) AND ASSOCIATED CABLING
- (x)TF — INDICATES NUMBER OF TELEPHONE OUTLETS AND ASSOCIATED CABLING WITH 1 OUTLET AND CABLE DEDICATED FOR FAX

SINGLE LINE SYMBOLS

- SWITCH
- BREAKER
- FUSE
- TRANSFORMER
- GROUND
- CONTACT (NORMALLY OPEN)
- CONTACT (NORMALLY CLOSED)
- TRANSFER SWITCH
- CURRENT TRANSFORMER
- INDICATES NEW ELECTRICAL EQUIPMENT
- INDICATES NEW CONTROL WIRING AND CONDUIT
- EQUIPMENT OUTLINE

MISCELLANEOUS

- BRANCH CIRCUIT WIRING, SURFACE MOUNTED ON WALLS
- BRANCH CIRCUIT WIRING – 6mm²
- BRANCH CIRCUIT WIRING – UNDER FLOOR
- HOME RUN BACK TO PANEL
- CONDUIT TURNED DOWN
- CONDUIT TURNED UP
- LV — LOW VOLTAGE WIRING AND CONDUIT
- INDICATES CONTINUATION OF LINE

FIRE ALARM

- FACP — FIRE ALARM CONTROL PANEL WITH BATTERY BACKUP
- F — FIRE ALARM PULL STATION

FIRE ALARM (CONTINUED)

- F — FIRE ALARM STROBE – WALL MOUNTED
- F — FIRE ALARM AUDIBLE/STROBE – WALL MOUNTED
- F — FIRE ALARM HORN/STROBE – WALL MOUNTED
- S — SMOKE DETECTOR
- H — HEAT DETECTOR CEILING MOUNTED
- D — DUCT DETECTOR – PROVIDED BY EC, INSTALLED BY MC AND CONNECTED BY EC

DENOTATIONS & ABBREVIATIONS

AFF	ABOVE FINISHED FLOOR
C	CEILING MOUNTED
E	EMERGENCY
EC	ELECTRICAL CONTRACTOR
EPO	EMERGENCY POWER OFF
EXP	EXPLOSION PROOF
F	FIRE ALARM
FF	FLUSH FLOOR MOUNTED
FL	FLUORESCENT
FO	FIBER OPTIC
FSS	FUSED SAFETY SWITCH
GF	GROUND FAULT INTERRUPTER
GC	GENERAL CONTRACTOR
IG	ISOLATED GROUND
K	KEY
LV	LOW VOLTAGE
M	MOTOR
MC	MECHANICAL CONTRACTOR
NE	NORMAL/EMERGENCY
NFSS	NON-FUSED SAFETY SWITCH
PA	PAGING SYSTEM
PLC	PLUMBING CONTRACTOR
SL	SINGLE LINE
T	TELEPHONE

DENOTATIONS & ABBREVIATIONS (CONT.)

TP	TAMPER PROOF
UE	UNDERGROUND ELECTRIC
W	WALL MOUNTED
WP	WEATHERPROOF WITH GROUND FAULT INTERRUPTION
WT	WATER TIGHT

GENERAL PROJECT NOTES:

G1. UNLESS OTHERWISE NOTED, PROVIDE ALL EQUIPMENT SHOWN ON THE PLANS. THE ELECTRICAL CONTRACTOR SHALL COORDINATE ALL SYMBOLS SHOWN ON THE PLANS WITH THE SYMBOL LIST. IT SHALL BE THE RESPONSIBILITY OF THE CONTRACTOR TO VERIFY THE INTENT OF ANY SYMBOL THAT IS SHOWN ON THE PLANS AND NOT INDICATED ON THE SYMBOL LIST WITH THE ENGINEER PRIOR TO BID.

G2. THE CONTRACTOR SHALL VERIFY THE LOCATION OF ALL UNDERGROUND UTILITIES WITHIN THE CONSTRUCTION AREA THREE (3) WORKING DAYS NOTICE BEFORE COMMENCING DIGGING. NOTIFY THE LOCAL AUTHORITY HAVING JURISDICTION AND WAIT THE REQUIRED TIME BEFORE COMMENCING TO DIG.

G3. THE CONTRACTOR SHALL COORDINATE CONDUIT RUNS, LIGHTING FIXTURES AND OTHER EQUIPMENT LOCATIONS WITH THE OTHER TRADE CONTRACTORS TO AVOID CONFLICTS.

G4. WHERE VOLTAGES AND FREQUENCIES ON THE DRAWINGS AND IN THE SPECIFICATIONS DIFFER FROM THE LOCAL ONES, ALL WORK SHALL BE PERFORMED USING THE LOCAL VOLTAGES AND FREQUENCIES.

G5. THE MINIMUM WIRE SIZE ON THE PROJECT SHALL BE 4mm². THE MINIMUM CONDUIT SIZE SHALL BE 20mm. THE MINIMUM BREAKER SIZE SHALL BE 20 AMPS.

G6. THE CONTRACTOR SHALL PUT A MAXIMUM OF 6 DUPLEX RECEPTACLES ON A 20A SINGLE POLE CIRCUIT.

G7. WHERE THE 1010 SCOPE REVIEW, 1015 TECHNICAL REVIEW, DRAWINGS, AND SPECIFICATIONS DIFFER FROM AMERICAN CODES OR STANDARDS THE 1010, 1015, DRAWINGS, AND SPECIFICATIONS SHALL RULE.

G8. ALL CONDUIT AND DEVICES SHALL BE SURFACE MOUNTED UNLESS OTHERWISE INDICATED.

G9. CONTRACTOR SHALL COORDINATE ALL WORK WITH ALL OTHER TRADES TO ENSURE ALL WORK IS COMPLETED IN A PROFESSIONAL, WORKMAN-LIKE MANNER.

APPROVED:

A/E DESIGNER OF RECORD

SEAL:

COMMONWEALTH OF PENNSYLVANIA
REGISTERED PROFESSIONAL
JOSEPH R. GAUS
1/29/10
ENGINEER
PE-074251

US ARMY CORPS OF ENGINEERS
AFGHANISTAN ENGINEER DISTRICT

Mark	Description	Date	Appr.

Mark	Description	Date	Appr.

U.S. ARMY ENGINEER DISTRICT, AFGHANISTAN
CORPS OF ENGINEERS
APO AE 96338

Michael Baker Jr., Inc
A unit of Michael Baker Corporation
Airside Business Park
100 Airside Drive
Moon Township, PA 15108
www.mbakercorp.com

Designed by: JRG	Ckd by: JRG	Date: 2/23/10	Rev: 0
Dwn by: BJB	Reviewed by: JRG	Design file no.	
		Drawing code:	
	Submitted by: BAKER	File name:	
		Plot date:	
		Plot scale:	

AFGHAN NATIONAL ARMY
REGIONAL MILITARY TRAINING CENTER
STANDARD DESIGN

300 STUDENT CLASSROOM BUILDING
(2) 150 STUDENT CLASSROOMS

ELECTRICAL SYMBOLS & ABBREVIATIONS

Sheet reference number:
E-001

GENERAL NOTES:

1. REFER TO DRAWING #E-001 FOR THE ELECTRICAL SYMBOLS LIST.
2. EXIT SIGNS SHALL BE WIRED AHEAD OF ANY LOCAL SWITCHING ON CIRCUITS. SEE WIRING DIAGRAM DETAIL 8, ON DRAWING #E-501
3. REFER TO DRAWING #E-601 FOR THE LIGHTING FIXTURE SCHEDULE.
4. REFER TO DRAWING #E-501 FOR THE POWER RISER.
5. REFER TO DRAWING #E-602 FOR PANEL SCHEDULES.
6. LIGHT FIXTURES INDICATED AS EMERGENCY SHALL BE PROVIDED WITH A BATTERY BACKUP BALLAST. SEE WIRING DIAGRAM DETAIL 7, ON DRAWING #E-501.

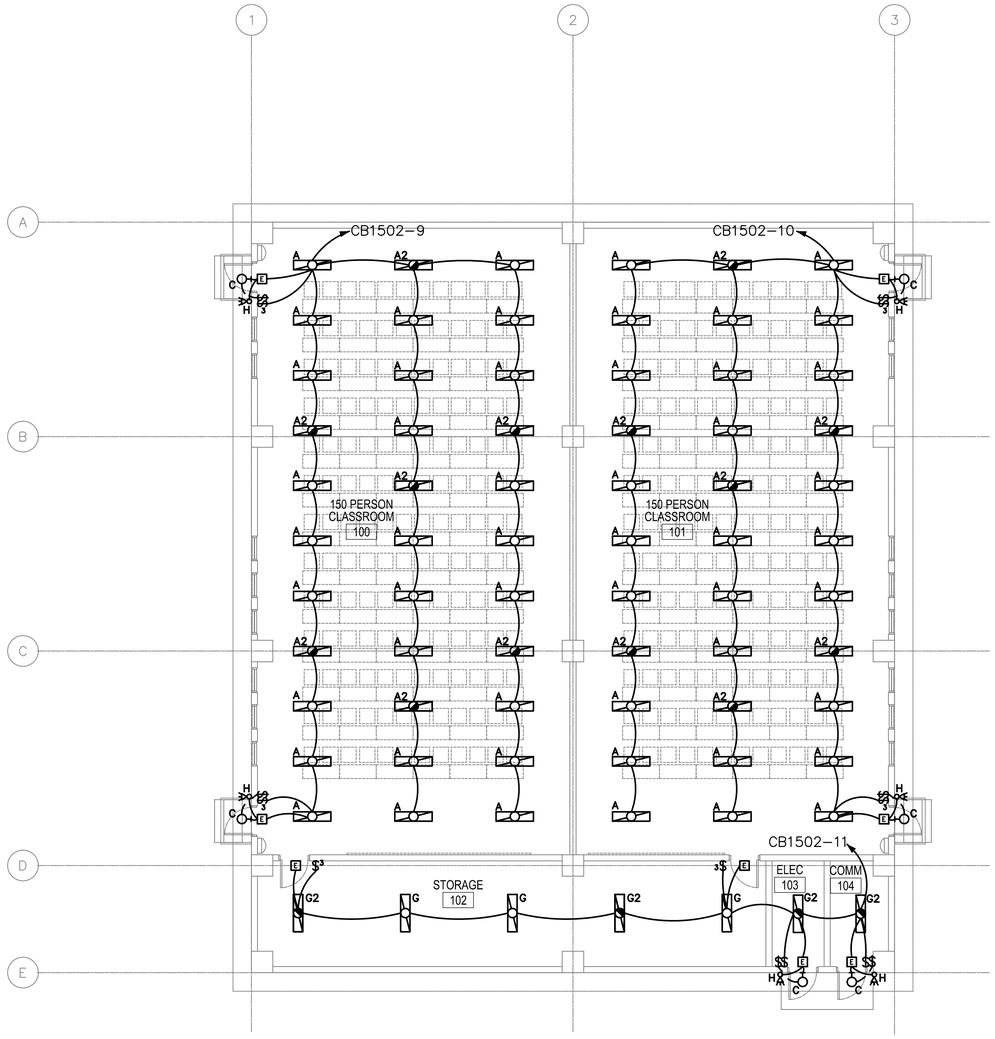

300 STUDENT TOTAL
(2) 150-STUDENT CLASSROOMS - LIGHTING

1
E-101

SCALE: 1:100

0 2000 4000
SCALE: 1:100

APPROVED:

A/E DESIGNER OF RECORD

SEAL:

COMMONWEALTH OF PENNSYLVANIA
REGISTERED PROFESSIONAL
JOSEPH R. GAUS
ENGINEER
PE-074251
1/29/10

US ARMY CORPS OF ENGINEERS
AFGHANISTAN ENGINEER DISTRICT

Mark	Description	Date	Appr.

Mark	Description	Date	Appr.

Designed by: JRG
Dwn by: BJB
Ckd by: JRG
Reviewed by: JRG
Submitted by: BAKER
Date: 2/23/10
Design file no.
Drawing code:
File name:
Plot date:
Plot scale:
Rev: 0

U.S. ARMY ENGINEER DISTRICT, AFGHANISTAN
CORPS OF ENGINEERS
APO AE 96338

Michael Baker Jr., Inc.
A unit of Michael Baker Corporation
Airside Business Park
100 Airside Drive
Moon Township, PA 15108
www.mbakercorp.com

AFGHAN NATIONAL ARMY
REGIONAL MILITARY TRAINING CENTER
STANDARD DESIGN

300 STUDENT CLASSROOM BUILDING
(2) 150 STUDENT CLASSROOMS
ELECTRICAL LIGHTING PLAN

Sheet reference number:
E-101

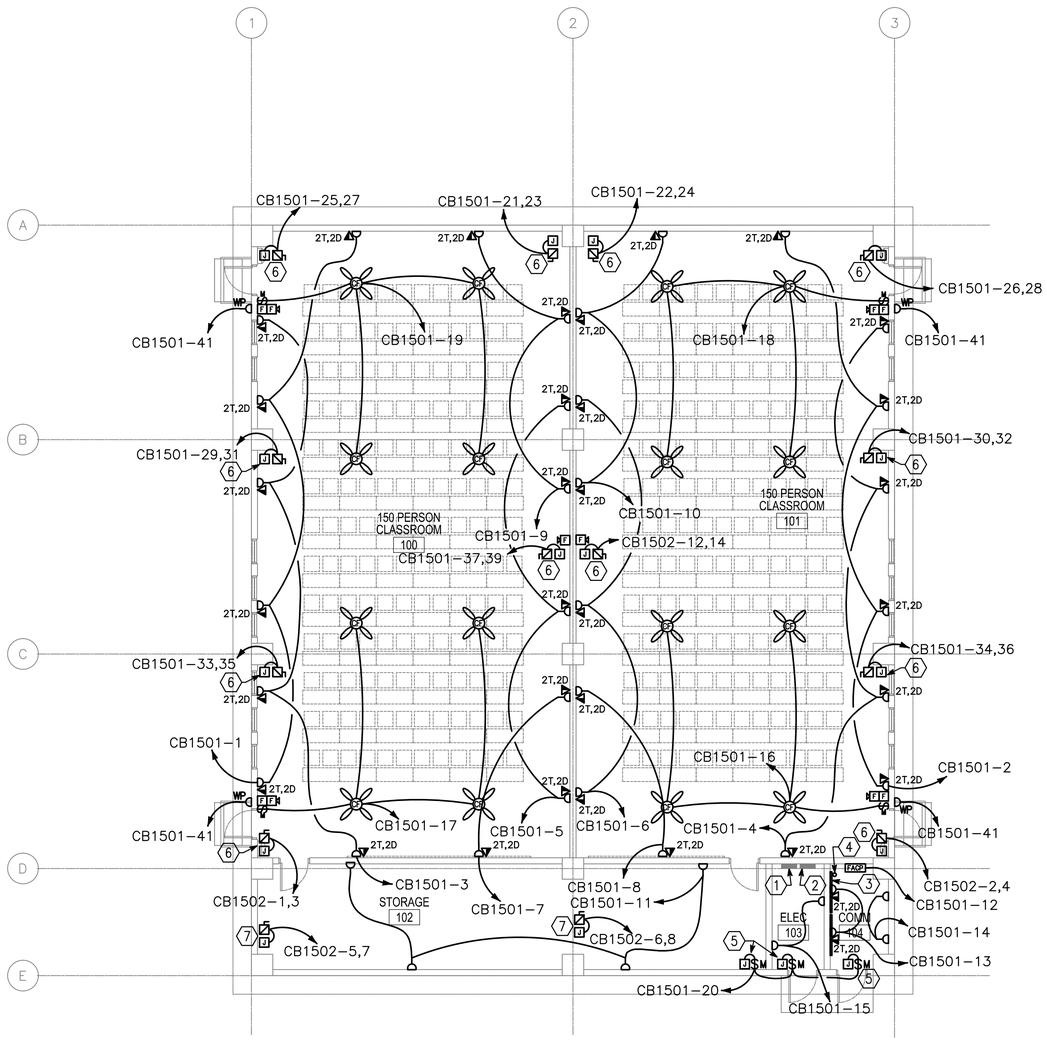

300 STUDENT TOTAL
(2) 150-STUDENT CLASSROOMS - POWER AND SYSTEMS

1 / E-102

SCALE: 1:100

GENERAL NOTES:

1. REFER TO DRAWING #E-001 FOR THE ELECTRICAL SYMBOLS LIST.
2. REFER TO DRAWING #E-501 FOR THE POWER RISER.
3. REFER TO DRAWING #E-602 FOR PANEL SCHEDULES.
4. COORDINATE EXACT MOUNTING LOCATION OF DISCONNECTING MEANS FOR MECHANICAL AND PLUMBING EQUIPMENT IN THE FIELD.
5. FUSIBLE SAFETY SWITCHES THAT ARE NOT OTHERWISE IDENTIFIED SHALL BE 380V, 1P, 30A FUSED SAFETY SWITCHES WITH 20A FUSES.

NUMBERED NOTES:

1. PANEL CB1501.
2. PANEL CB1502.
3. PROVIDE A 1200mm X 2400mm SHEET OF PLYWOOD PAINTED WITH FIRE RESISTANT PAINT FOR MOUNTING TELECOMMUNICATIONS EQUIPMENT.
4. PROVIDE CONDUIT STUB UP IN THE ROOM FOR INCOMING TELECOMMUNICATIONS SERVICES FROM THE CENTRAL COMMUNICATIONS SYSTEM IN THE GARRISON.
5. PROVIDE POWER CONNECTION TO EXHAUST FANS. SEE DRAWINGS #M-101 AND #E-602 FOR MORE INFORMATION.
6. PROVIDE POWER CONNECTION TO ELECTRIC UNIT HEATER #5. SEE DRAWINGS #M-101 AND #E-602 FOR MORE INFORMATION.
7. PROVIDE POWER CONNECTION TO ELECTRIC UNIT HEATER #4. SEE DRAWINGS #M-101 AND #E-602 FOR MORE INFORMATION.

US ARMY CORPS OF ENGINEERS
AFGHANISTAN ENGINEER DISTRICT

Mark	Description	Date	Appr.	Mark	Description	Date	Appr.

Rev: 0
Date: 2/23/10
Design file no.
Drawing code:
File name:
Plot date:
Plot scale:

Designed by: JRG
Dwn by: BJB
Ckd by: JRG
Reviewed by: JRG
Submitted by: BAKER

U.S. ARMY ENGINEER DISTRICT, AFGHANISTAN
CORPS OF ENGINEERS
APO AE 96338

Michael Baker Jr., Inc.
A unit of Michael Baker Corporation
Airside Business Park
100 Airside Drive
Moon Township, PA 15108
www.mbakercorp.com

AFGHAN NATIONAL ARMY
REGIONAL MILITARY TRAINING CENTER
STANDARD DESIGN

300 STUDENT CLASSROOM BUILDING
(2) 150 STUDENT CLASSROOMS
ELECTRICAL POWER AND SYSTEMS PLAN

APPROVED:

A/E DESIGNER OF RECORD

SEAL:

COMMONWEALTH OF PENNSYLVANIA
REGISTERED PROFESSIONAL ENGINEER
JOSEPH R. GAUS
PE-074251
1/29/10

Sheet reference number:
E-102

0 2000 4000
SCALE: 1:100

GENERAL NOTES:

1. REFER TO DRAWING #E-001 FOR THE ELECTRICAL SYMBOLS LIST.

NUMBERED NOTES:

1. (1) 120.0mm² BARE, TINNED, COPPER COUNTERPOISE GROUND 700mm BELOW GRADE.
2. INSTALL DOWN CONDUCTOR IN 25mm SCHEDULE 80 PVC CONDUIT TO 20mm DIAMETER X 3 METERS SOLID COPPER TINNED GROUND ROD. (TYPICAL)
3. CADWELD TO BUILDING STRUCTURE AT 18 METERS ON CENTER AROUND THE ENTIRE PERIMETER OF THE BUILDING. (TYPICAL)
4. 120mm² LIGHTNING PROTECTION CABLE.
5. AIR TERMINAL. TERMINALS SHALL BE PLACED AT A MAXIMUM OF 6M ON CENTER PER NFPA 780 PARA. 4.8.2.1, AND WITHIN 0.6M OF RIDGE ENDS PER NFPA 780 PARA. 4.8 (TYPICAL)
6. 700mm MIN. (TYP) BETWEEN FOUNDATION AND GROUND LOOP.

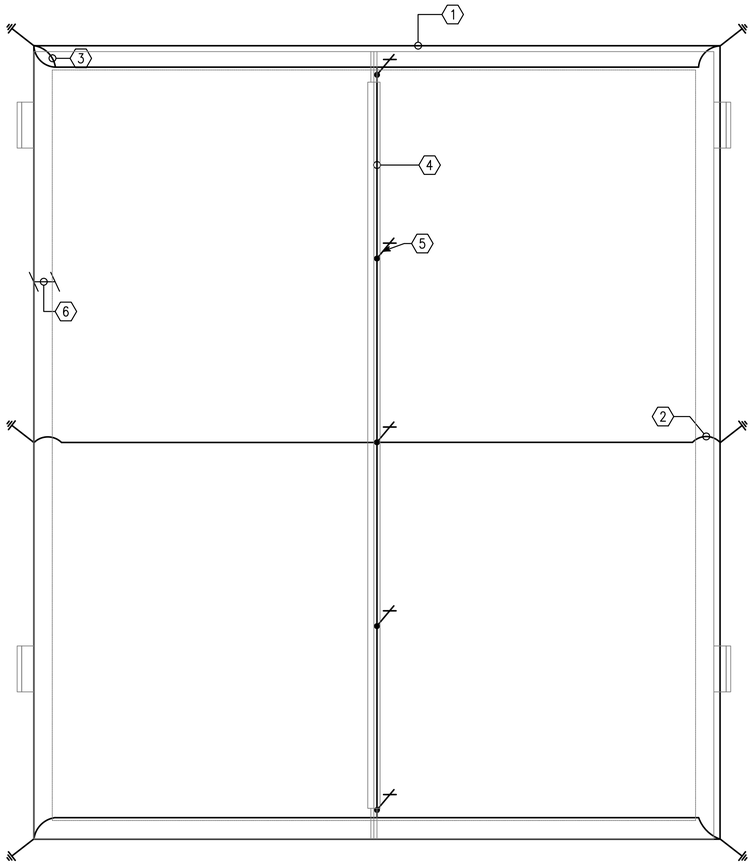

1 / E-103 300 STUDENT TOTAL - (2) 150-STUDENT CLASSROOMS - LIGHTNING PROTECTION

SCALE: 1:100

0 2000 4000
SCALE: 1:100

APPROVED:

A/E DESIGNER OF RECORD

SEAL:

COMMONWEALTH OF PENNSYLVANIA
REGISTERED PROFESSIONAL
JOSEPH R. GAUS
ENGINEER
PE-074251
1/29/10

US ARMY CORPS OF ENGINEERS
AFGHANISTAN ENGINEER DISTRICT

Mark	Description	Date	Appr.	Mark	Description	Date	Appr.

Rev: 0
Date: 2/23/10
Design file no.
Drawing code:
File name:
Plot date:
Plot scale:

Designed by: JRG
Dwn by: BJB
Ckd by: JRG
Reviewed by: JRG
Submitted by: BAKER

U.S. ARMY ENGINEER DISTRICT, AFGHANISTAN
CORPS OF ENGINEERS
APO AE 96338

Michael Baker Jr., Inc.
A unit of Michael Baker Corporation
Airside Business Park
100 Airside Drive
Moon Township, PA 15108
www.mbakercorp.com

AFGHAN NATIONAL ARMY
REGIONAL MILITARY TRAINING CENTER
STANDARD DESIGN

300 STUDENT CLASSROOM BUILDING
(2) 150 STUDENT CLASSROOMS

ELECTRICAL LIGHTNING PROTECTION PLAN

Sheet reference number:
E-103

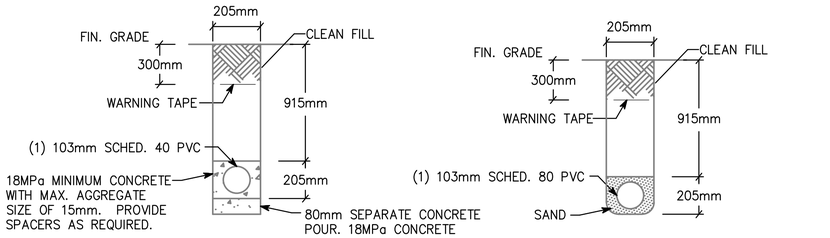

NOTE: PVC CONDUIT SHALL BE DIRECT BURIED SCHEDULE 80 FOR NO TRAFFIC AREAS AND CONCRETE-ENCASED SCHEDULE 40 FOR UNDER ROADWAYS OR TRAFFIC AREAS.

1 / E-501 TYPICAL DUCT BANK DETAILS FOR CONDUIT IN SAND OR CONCRETE

SCALE: N.T.S.

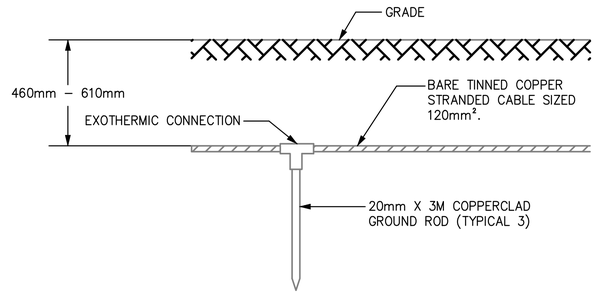

2 / E-501 GROUND TRIPOD SYSTEM DETAIL - ELEVATION

SCALE: N.T.S.

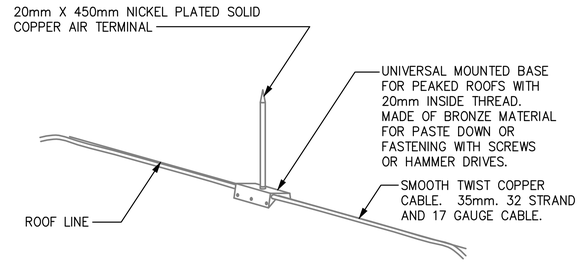

3 / E-501 LIGHTNING PROTECTION AIR TERMINAL DETAIL

SCALE: N.T.S.

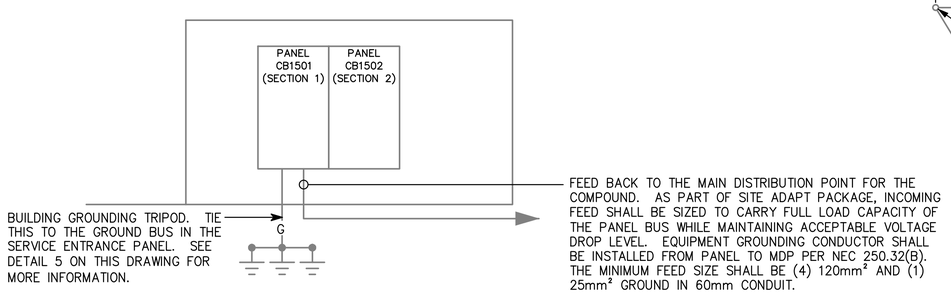

4 / E-501 CB150 RISER DIAGRAM

SCALE: N.T.S.

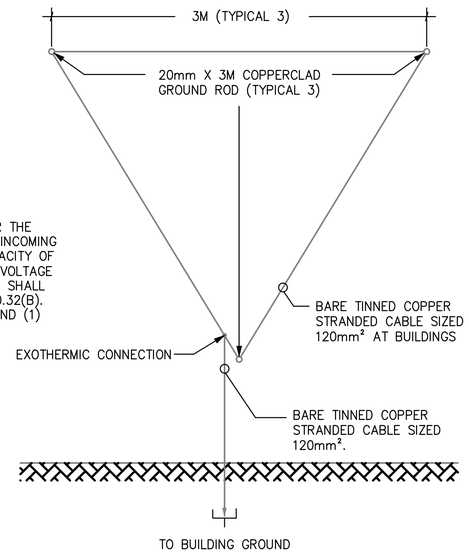

5 / E-501 GROUND TRIPOD SYSTEM DETAIL - PLAN

SCALE: N.T.S.

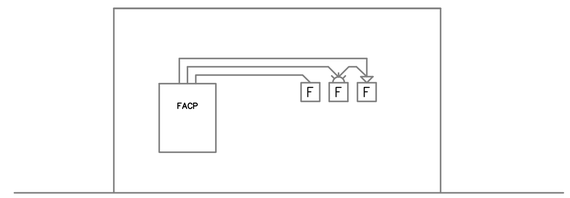

6 / E-501 TYPICAL ONE STORY FIRE ALARM RISER

SCALE: N.T.S.

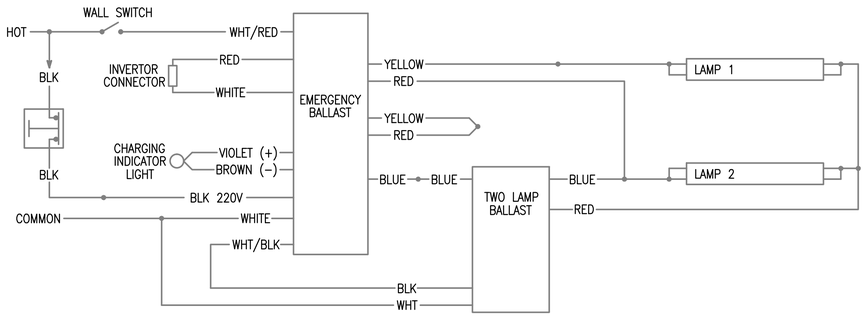

7 / E-501 EMERGENCY FIXTURE WIRING DIAGRAM

SCALE: N.T.S.

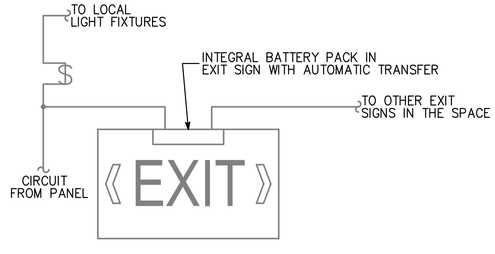

8 / E-501 EXIT SIGN WIRING DIAGRAM

SCALE: N.T.S.

APPROVED:

A/E DESIGNER OF RECORD

SEAL:

COMMONWEALTH OF PENNSYLVANIA
REGISTERED PROFESSIONAL
JOSEPH R. GAUS
1/29/10
ENGINEER
PE-074251

US ARMY CORPS OF ENGINEERS
AFGHANISTAN ENGINEER DISTRICT

Mark	Description	Date	Appr.	Mark	Description	Date	Appr.

Designed by: JRG
Dwn by: BJB
Ckd by: JRG
Reviewed by: JRG
Submitted by: BAKER
Date: 2/23/10
Rev: 0
Design file no.
Drawing code:
File name:
Plot date:
Plot scale:

U.S. ARMY ENGINEER DISTRICT, AFGHANISTAN
CORPS OF ENGINEERS
APO AE 96338

Michael Baker Jr., Inc
A unit of Michael Baker Corporation
Airside Business Park
100 Airside Drive
Moon Township, PA 15108
www.mbakercorp.com

AFGHAN NATIONAL ARMY
REGIONAL MILITARY TRAINING CENTER
STANDARD DESIGN

300 STUDENT CLASSROOM BUILDING
(2) 150 STUDENT CLASSROOMS
ELECTRICAL DETAILS

Sheet reference number:
E-501

(A) LARGER OF THE TWO SIZES GIVEN IN THE TABLES BELOW	
GROUNDING ELECTRODE CONDUCTOR (BASED ON AIC RATING)	
AIC RATING OF SERVICE EQUIPMENT	NECESSARY GROUNDING ELECTRODE CONDUCTOR SIZE
10K	(1) 35mm²
14K	(1) 50mm²
18K	(1) 70mm²
22K	(1) 70mm²
25K	(1) 70mm²
30K	(1) 95mm²
35K	(1) 120mm²
42K	(1) 150mm²
65K	(1) 185mm²
100K	(1) 300mm²
125K	(2) 185mm²
200K	(2) 300mm²
GROUNDING ELECTRODE CONDUCTOR (BASED ON NEC TABLE 250.66)	
SIZE OF LARGEST UNGROUNDED SERVICE CONDUCTOR OR EQUIVALENT AREA FOR PARALLEL CONDUCTORS	NECESSARY GROUNDING ELECTRODE CONDUCTOR SIZE
350 kcmil OR SMALLER	35mm²
OVER 350 kcmil TO 600 kcmil	70mm²
OVER 600 kcmil TO 1100 kcmil	70mm²
OVER 1100 kcmil	95mm²
NOTE: ALL SIZES ARE BASED ON COPPER CONDUCTORS.	

(B) EQUIPMENT GROUNDING CONDUCTOR	
RATING OR SETTING OF AUTOMATIC OVERCURRENT DEVICE IN CIRCUIT AHEAD OF EQUIPMENT, CONDUIT, ETC, NOT EXCEEDING (AMPERES)	NECESSARY EQUIPMENT GROUNDING CONDUCTOR SIZE
15	2.5mm²
20	4.0mm²
30	6.0mm²
40	6.0mm²
60	6.0mm²
100	10mm²
200	16mm²
300	25mm²
400	25mm²
500	35mm²
600	50mm²
800	70mm²
1000	70mm²
1200	95mm²
1600	120mm²
2000	150mm²
2500	185mm²
3000	240mm²
4000	300mm²
5000	400mm²
6000	400mm²
NOTE: ALL SIZES ARE BASED ON COPPER CONDUCTORS.	

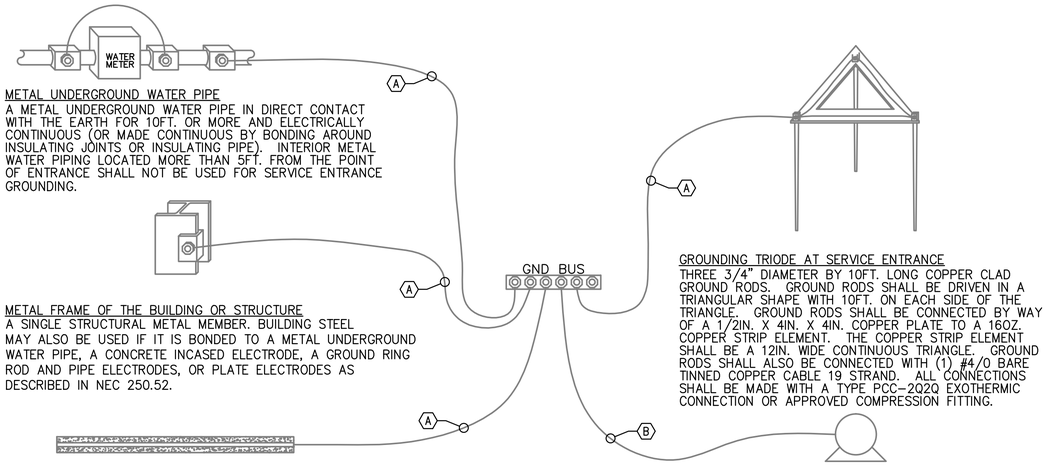

METAL UNDERGROUND WATER PIPE
A METAL UNDERGROUND WATER PIPE IN DIRECT CONTACT WITH THE EARTH FOR 10FT. OR MORE AND ELECTRICALLY CONTINUOUS (OR MADE CONTINUOUS BY BONDING AROUND INSULATING JOINTS OR INSULATING PIPE). INTERIOR METAL WATER PIPING LOCATED MORE THAN 5FT. FROM THE POINT OF ENTRANCE SHALL NOT BE USED FOR SERVICE ENTRANCE GROUNDING.

METAL FRAME OF THE BUILDING OR STRUCTURE
A SINGLE STRUCTURAL METAL MEMBER. BUILDING STEEL MAY ALSO BE USED IF IT IS BONDED TO A METAL UNDERGROUND WATER PIPE, A CONCRETE INCASED ELECTRODE, A GROUND RING ROD AND PIPE ELECTRODES, OR PLATE ELECTRODES AS DESCRIBED IN NEC 250.52.

CONCRETE ENCASED ELECTRODE
AN ELECTRODE ENCASED BY AT LEAST 2IN. OF CONCRETE , LOCATED WITHIN AND NEAR THE BOTTOM OF A CONCRETE FOUNDATION OR FOOTING THAT IS IN DIRECT CONTACT WITH THE EARTH, CONSISTING OF AT LEAST 20FT. OF ONE OR MORE BARE OR ZINC GALVANIZED OR OTHER ELECTRICALLY CONDUCTIVE COATED STEEL REINFORCING BARS OR RODS OF NOT LESS THAN 1/2" DIAMETER OR BARE COPPER CONDUCTOR NOT SMALLER THAN 4AWG.

GROUNDING TRIODE AT SERVICE ENTRANCE
THREE 3/4" DIAMETER BY 10FT. LONG COPPER CLAD GROUND RODS. GROUND RODS SHALL BE DRIVEN IN A TRIANGULAR SHAPE WITH 10FT. ON EACH SIDE OF THE TRIANGLE. GROUND RODS SHALL BE CONNECTED BY WAY OF A 1/2IN. X 4IN. X 4IN. COPPER PLATE TO A 16OZ. COPPER STRIP ELEMENT. THE COPPER STRIP ELEMENT SHALL BE A 12IN. WIDE CONTINUOUS TRIANGLE. GROUND RODS SHALL ALSO BE CONNECTED WITH (1) #4/0 BARE TINNED COPPER CABLE 19 STRAND. ALL CONNECTIONS SHALL BE MADE WITH A TYPE PCC-2Q2Q EXOTHERMIC CONNECTION OR APPROVED COMPRESSION FITTING.

LOAD OR DOWNSTREAM PANEL
ALL LOADS IN THE BUILDING SHALL HAVE AN EQUIPMENT GROUNDING CONDUCTOR PULLED TO THEM.

1
E-502

SERVICE ENTRANCE GROUNDING DETAIL

SCALE: N.T.S.

APPROVED:

A/E DESIGNER OF RECORD

SEAL:

COMMONWEALTH OF PENNSYLVANIA
REGISTERED PROFESSIONAL
JOSEPH R. GAUS
ENGINEER
PE-074251
1/29/10

US ARMY CORPS OF ENGINEERS
AFGHANISTAN ENGINEER DISTRICT

Mark	Description	Date	Appr.	Mark	Description	Date	Appr.

Rev: 0
Date: 2/23/10
Design file no.
Drawing code:
File name:
Plot date:
Plot scale:

Designed by: JRG
Dwn by: BJB
Ckd by: JRG
Reviewed by: JRG
Submitted by: BAKER

U.S. ARMY ENGINEER DISTRICT, AFGHANISTAN
CORPS OF ENGINEERS
APO AE 96338

Michael Baker Jr., Inc.
A unit of Michael Baker Corporation
Airside Business Park
100 Airside Drive
Moon Township, PA 15108
www.mbakercorp.com

AFGHAN NATIONAL ARMY
REGIONAL MILITARY TRAINING CENTER
STANDARD DESIGN

300 STUDENT CLASSROOM BUILDING
(2) 150 STUDENT CLASSROOMS
ELECTRICAL DETAILS

Sheet reference number:
E-502

FIXTURE MARK 'A'

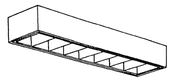

FIXTURE MARK 'C'

FIXTURE MARK 'G'

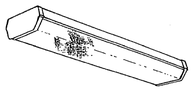

FIXTURE MARK 'H'

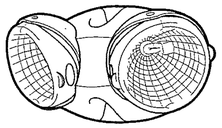

FIXTURE MARK 'E'

LIGHT FIXTURE SCHEDULE

FIXTURE MARK	STYLE NUMBER AND TYPE	NUMBER AND TYPE OF LAMPS	VOLTAGE	MOUNTING	NOTES
A	PARABOLIC SURFACE/PENDANT MOUNTED 300MM X 1200MM FLUORESCENT FIXTURE WITH ELECTRONIC BALLAST	(2) 32W 3500K	220V – 1ø 50HZ	SURFACE MOUNTED	FURNISHED WITH ELECTRONIC BALLAST. PARABOLIC LOUVER SHALL BE SPECULAR LENS IRADESCENCE TYPE.
A2	SAME AS FIXTURE 'A' WITH EMERGENCY BALLAST	(2) 32W 3500K	220V – 1ø 50HZ	SURFACE MOUNTED	FURNISHED WITH ELECTRONIC BALLAST. PARABOLIC LOUVER SHALL BE SPECULAR LENS IRADESCENCE TYPE. EMERGENCY BALLAST SELF TEST.
C	INCANDESCENT ONE PIECE W/ APPROVED LENS STABILIZED HIGH IMPACT POLY CARBONATE.	(1) A19 – 100W INCANDESCENT	220V – 1ø 50HZ	WALL MOUNTED ABOVE EXTERIOR DOORS	
G	WRAP AROUND SURFACE/PENDANT MOUNTED FLUORESCENT FIXTURE WITH PRISMATIC ACRYLIC LENS AND ELECTRONIC BALLAST	(2) 32W 3500K	220V – 1ø 50HZ	SURFACE MOUNTED	FURNISHED WITH ELECTRONIC BALLAST, VIRGIN ACRYLIC WRAP AROUND LENS.
G2	SAME AS FIXTURE 'G' WITH EMERGENCY BALLAST	(2) 32W 3500K	220V – 1ø 50HZ	SURFACE MOUNTED	FURNISHED WITH ELECTRONIC BALLAST, VIRGIN ACRYLIC WRAP AROUND LENS. EMERGENCY BALLAST WITH SELF TEST SWITCH.
H	REMOTE HEAD EXTERIOR LIGHT HEAD POWERED FROM EXIT SIGN BATTERY– 12V DOUBLE HEAD CORROSION RESISTANT WITH UL34 WEATHERPROOF CONSTRUCTION	(2) 12W/12V HALOGEN LAMP	12V – 1ø 50HZ	EXTERIOR WALL MOUNTED AT TOP OF DOOR HEIGHT	
E	UNIVERSAL MOUNT ENGINEER GRADE THERMOPLASTIC HOUSING EXIT SIGN WITH LED LAMPS, RED LETTERS 6" IN HEIGHT WITH ARROWS AS INDICATED, WITH 12V CADMIUM BATTERY WITH REMOTE HEAD CAPABILITY	LED LAMPS	220V – 1ø 50HZ	UNIVERSAL MOUNTING	

APPROVED:

A/E DESIGNER OF RECORD

SEAL:

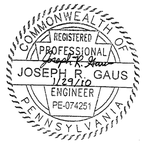

US ARMY CORPS OF ENGINEERS
AFGHANISTAN ENGINEER DISTRICT

Mark	Description	Date	Appr.	Mark	Description	Date	Appr.

Rev: 0
Date: 2/23/10
Design file no.
Drawing code:
File name:
Plot date:
Plot scale:

Designed by: JRG
Dwn by: BJB
Ckd by: JRG
Reviewed by: JRG
Submitted by: BAKER

U.S. ARMY ENGINEER DISTRICT, AFGHANISTAN
CORPS OF ENGINEERS
APO AE 96338

Michael Baker Jr., Inc.
A unit of Michael Baker Corporation
Airside Business Park
100 Airside Drive
Moon Township, PA 15108
www.mbakercorp.com

AFGHAN NATIONAL ARMY
REGIONAL MILITARY TRAINING CENTER
STANDARD DESIGN

300 STUDENT CLASSROOM BUILDING
(2) 150 STUDENT CLASSROOMS

ELECTRICAL LIGHTING FIXTURE SCHEDULE

Sheet reference number:
E–601

PANELBOARD CB1501 SURFACE MOUNTED
AMP. MAIN LUGS (OR) 225 AMP. MAIN BREAKER W/ 225 AMP. TRIP
CIRCUIT BREAKER TYPE 380/220 VOLTS 3 PHASE 4 WIRE 50 HZ 225 AMP. BUS

CKT. NO.	TRIP AMPS	NO. POLES	WIRE MM ²	GND MM²	CONDUIT MM	LOAD SERVED	LOAD-KVA A0	LOAD-KVA B0	LOAD-KVA C0	LOAD-KVA A0	LOAD-KVA B0	LOAD-KVA C0	LOAD SERVED	CONDUIT MM	GND MM²	WIRE MM²	NO. POLES	TRIP AMPS	CKT. NO.
1	20	1	4.0	4.0	20	RECEPTACLES – RM 100	0.8			0.8			RECEPTACLES – RM 101	20	4.0	4.0	1	20	2
3	20	1	4.0	4.0	20	RECEPTACLES – RM 100		0.8			0.8		RECEPTACLES – RM 101	20	4.0	4.0	1	20	4
5	20	1	4.0	4.0	20	RECEPTACLES – RM 100			0.6			0.6	RECEPTACLES – RM 101	20	4.0	4.0	1	20	6
7	20	1	4.0	4.0	20	RECEPTACLES – RM 100	0.4			0.4			RECEPTACLES – RM 101	20	4.0	4.0	1	20	8
9	20	1	4.0	4.0	20	RECEPTACLES – RM 100		0.6			0.6		RECEPTACLES – RM 101	20	4.0	4.0	1	20	10
11	20	1	4.0	4.0	20	RECEPTACLES – RM 102			0.8			0.5	FACP – RM 104	20	4.0	4.0	1	20	12
13	20	1	4.0	4.0	20	RECEPTACLES – RM 104	0.6			0.4			RECEPTACLES – RM 103	20	4.0	4.0	1	20	14
15	20	1	4.0	4.0	20	RECEPTACLES – RM 103		0.6			2.4		CEILING FANS – RM 101	20	4.0	4.0	1	20	16
17	20	1	4.0	4.0	20	CEILING FANS – RM 100			2.4			2.4	CEILING FANS – RM 101	20	4.0	4.0	1	20	18
19	20	1	4.0	4.0	20	CEILING FANS – RM 100	2.4			0.4			EXHAUST FANS #1,2 – RM 103,104	20	4.0	4.0	1	20	20
21	20	2	4.0	4.0	20	ELECTRIC HEAT #5 – RM 100		2.5			2.5		ELECTRIC HEAT #5 – RM 101	20	4.0	4.0	2	20	22
23									2.5			2.5							24
25	20	2	4.0	4.0	20	ELECTRIC HEAT #5 – RM 100	2.5			2.5			ELECTRIC HEAT #5 – RM 101	20	4.0	4.0	2	20	26
27								2.5			2.5								28
29	20	2	4.0	4.0	20	ELECTRIC HEAT #5 – RM 100			2.5			2.5	ELECTRIC HEAT #5 – RM 101	20	4.0	4.0	2	20	30
31							2.5			2.5									32
33	20	2	4.0	4.0	20	ELECTRIC HEAT #5 – RM 100		2.5			2.5		ELECTRIC HEAT #5 – RM 101	20	4.0	4.0	2	20	34
35									2.5			2.5							36
37	20	2	4.0	4.0	20	ELECTRIC HEAT #5 – RM 100	2.5			11.5			PANEL – CB1502	40	10.0	50.0	3	100	38
39								2.5			10.2								40
41	20	1	4.0	4.0	20	RECEPTACLES – EXTERIOR			0.8			7.7							42
							11.7	12.0	14.5	18.5	21.5	18.7							

TOTAL CONN. LOAD PER PHASE (KVA): A0 30.2 B0 36.0 C0 30.7

TOTAL CONN. LOAD 96.9 KVA. 70 % DEMAND = ESTIMATED DEMAND LOAD 67.8

* MAIN BREAKER SHALL BE 3P EARTH GROUND TYPE

PANELBOARD CB1502 SURFACE MOUNTED
225 AMP. MAIN LUGS (OR) 100 AMP. MAIN BREAKER W/ 100 AMP. TRIP
CIRCUIT BREAKER TYPE 380/220 VOLTS 3 PHASE 4 WIRE 50 HZ 100 AMP. BUS

CKT. NO.	TRIP AMPS	NO. POLES	WIRE MM ²	GND MM²	CONDUIT MM	LOAD SERVED	LOAD-KVA A0	LOAD-KVA B0	LOAD-KVA C0	LOAD-KVA A0	LOAD-KVA B0	LOAD-KVA C0	LOAD SERVED	CONDUIT MM	GND MM²	WIRE MM²	NO. POLES	TRIP AMPS	CKT. NO.
1	20	2	4.0	4.0	20	ELECTRIC HEAT #5 – RM 100	2.5			2.5			ELECTRIC HEAT #5 – RM 101	20	4.0	4.0	2	20	2
3								2.5			2.5								4
5	20	2	4.0	4.0	20	ELECTRIC HEAT #4 – RM 102			2.0			2.0	ELECTRIC HEAT #4 – RM 102	20	4.0	4.0	2	20	6
7							2.0			2.0									8
9	20	1	4.0	4.0	20	LIGHTING – RM 100		2.6			2.6		LIGHTING – RM 101	20	4.0	4.0	1	20	10
11	20	1	4.0	4.0	20	LIGHTING – RM 102			1.2			2.5	ELECTRIC HEAT #5 – RM 101	20	4.0	4.0	2	20	12
13	20	1				SPARE				2.5									14
15	20	1				SPARE							SPARE				1	20	16
17	20	1				SPARE							SPARE				1	20	18
19	20	1				SPARE							SPARE				1	20	20
21	20	1				SPARE							SPARE				1	20	22
23	20	1				SPARE							SPARE				1	20	24
25	20	1				SPARE							SPARE				1	20	26
27	20	1				SPARE							SPARE				1	20	28
29	20	1				SPARE							SPARE				1	20	30
31	20	1				SPARE							SPARE				1	20	32
33	20	1				SPARE							SPARE				1	20	34
35	20	1				SPARE							SPARE				1	20	36
37	20	1				SPARE							SPARE				1	20	38
39	20	1				SPARE							SPARE				1	20	40
41	20	1				SPARE							SPARE				1	20	42
							4.5	5.1	3.2	7.0	5.1	4.5							

TOTAL CONN. LOAD PER PHASE (KVA): A0 11.5 B0 10.2 C0 7.7

TOTAL CONN. LOAD 29.4 KVA. 70 % DEMAND = ESTIMATED DEMAND LOAD 20.6

* MAIN BREAKER SHALL BE 3P EARTH GROUND TYPE

APPROVED:

A/E DESIGNER OF RECORD

SEAL:

COMMONWEALTH OF PENNSYLVANIA
REGISTERED PROFESSIONAL
JOSEPH R. GAUS
ENGINEER
PE-074251
1/29/10

US ARMY CORPS OF ENGINEERS
AFGHANISTAN ENGINEER DISTRICT

Mark	Description	Date	Appr.

Mark	Description	Date	Appr.

Designed by: JRG
Dwn by: BJB
Ckd by: JRG
Reviewed by: JRG
Submitted by: BAKER
Date: 2/23/10
Rev: 0
Design file no.
Drawing code:
File name:
Plot date:
Plot scale:

U.S. ARMY ENGINEER DISTRICT, AFGHANISTAN
CORPS OF ENGINEERS
APO AE 96338

Michael Baker Jr., Inc.
A unit of Michael Baker Corporation
Airside Business Park
100 Airside Drive
Moon Township, PA 15108
www.mbakercorp.com

AFGHAN NATIONAL ARMY
REGIONAL MILITARY TRAINING CENTER
STANDARD DESIGN

300 STUDENT CLASSROOM BUILDING
(2) 150 STUDENT CLASSROOMS
ELECTRICAL PANEL SCHEDULES

Sheet reference number:
E–602

AFGHAN NATIONAL ARMY

STANDARD BUILDING DESIGN

200 STUDENT CLASSROOM BUILDING
(4) 50 STUDENT CLASSROOMS

100% FINAL DESIGN SUBMITTAL

SHEET INDEX

G–001 COVER SHEET

STRUCTURAL

S–001 GENERAL NOTES & DESIGN CRITERIA
S–101 FOUNDATION/SLAB & ROOF FRAMING PLAN
S–401 BUILDING SECTIONS
S–501 FOUNDATION SECTIONS
S–502 FRAMING SECTIONS
S–503 BEAM & COLUMN DETAILS
S–504 BEAM & COLUMN DETAILS
S–601 SCHEDULES
S–701 TYPICAL DETAILS
S–702 TYPICAL DETAILS

ARCHITECTURAL

A–001 LIFE SAFETY PLAN
A–101 FLOOR PLAN
A–102 ROOF PLAN
A–201 ELEVATIONS
A–301 BUILDING SECTIONS
A–401 WALL SECTIONS
A–501 EXTERIOR DETAILS
A–502 HEAD, JAMB, & SILL DETAILS
A–503 STOOP DETAILS
A–601 WINDOW & DOOR SCHEDULES

MECHANICAL

M–101 HVAC FLOOR PLAN, SCHEDULES, & DETAILS

ELECTRICAL

E–001 ELECTRICAL SYMBOLS & ABBREVIATIONS
E–101 ELECTRICAL LIGHTING PLAN
E–102 ELECTRICAL POWER & SYSTEMS PLAN
E–501 ELECTRICAL DETAILS
E–502 ELECTRICAL DETAILS
E–601 ELECTRICAL LIGHT FIXTURE SCHEDULES
E–602 ELECTRICAL PANEL SCHEDULES

US ARMY CORPS OF ENGINEERS
AFGHANISTAN ENGINEER DISTRICT

Mark	Description	Date	Appr.	Mark	Description	Date	Appr.

U.S. ARMY CORPS OF ENGINEERS
AFGHANISTAN ENGINEER DISTRICT
APO AE 96338

Michael Baker Jr., Inc.
A unit of Michael Baker Corporation
Airside Business Park
100 Airside Drive
Moon Township, PA 15108
www.mbakercorp.com

Designed by: KMF/MMY
Dwn by: RCG
Ckd by: CWW
Reviewed by: LHM
Submitted by: BAKER
Date: 2/23/10
Rev: 0
Design file no.
Drawing code:
File name: ANMCB50G-001CS
Plot date: 2/23/2010
Plot scale: X:X

AFGHAN NATIONAL ARMY
REGIONAL MILITARY TRAINING CENTER
STANDARD DESIGN

200 STUDENT CLASSROOM BUILDING
(4) 50 STUDENT CLASSROOMS

COVER SHEET

Sheet reference number:
G–001

STRUCTURAL ABBREVIATIONS:

ACI	AMERICAN CONCRETE INSTITUTE
ADD'L	ADDITIONAL
AISC	AMERICAN INSTITUTE OF STEEL CONSTRUCTION
AISI	AMERICAN IRON AND STEEL INSTITUTE
ASTM	AMERICAN SOCIETY FOR TESTING AND MATERIALS
ARCH	ARCHITECTURAL
B	BOTTOM
BLDG	BUILDING
BOTT	BOTTOM
℄	CENTER LINE
CFMRF	COLD FORM METAL ROOF FRAME
CFMF	COLD FORM METAL FRAME
CFS	COLD FORMED STEEL
CIP	CAST-IN-PLACE
CIPL	CAST-IN-PLACE LINTEL
CJ	CONTROL JOINT
CLR	CLEAR
CMU	CONCRETE MASONRY UNIT
COEFF	COEFFICIENT
COL	COLUMN
CONC	CONCRETE
CONT	CONTINUOUS
COORD	COORDINATE
CRSI	CONCRETE REINFORCING STEEL INSTITUTE
CSJ	CONSTRUCTION JOINT
DIA	DIAMETER
DIAG	DIAGONAL
DIM	DIMENSION
DWG	DRAWING
DWL	DOWEL
EA	EACH
EF	EACH FACE
ELEC	ELECTRICAL
ELEV	ELEVATION
EMBED	EMBEDMENT
EQUIV	EQUIVALENT
ETC	ET CETERA
EW	EACH WAY
EXP	EXPANSION
EXT	EXTERIOR
FTG	FOOTING
GA	GAUGE
GB	GRADE BEAM
HORIZ	HORIZONTAL
h	HOUR
HRS	HOURS
IBC	INTERNATIONAL BUILDING CODE
INFO	INFORMATION
INT	INTERIOR
kg	KILOGRAM
km	KILOMETER
kN	KILONEWTON
kPa	KILOPASCAL
L#	ANGLE (# INDICATES SIZE)
LONG	LONGITUDINAL
LLV	LONG LEG VERTICAL
m	METER
MAX	MAXIMUM
MECH	MECHANICAL
MFG	MANUFACTURER
MID	MIDDLE
MIN	MINIMUM
MISC	MISCELLANEOUS
mm	MILLIMETER
MPa	MEGAPASCAL
MTL	METAL
MWFRS	MAIN WIND FORCE RESISTING SYSTEM
N	NEWTON
N	NORTH
N/A	NOT APPLICABLE
#	NUMBER SYMBOL FOR REBAR SIZE
NTS	NOT TO SCALE
OC	ON CENTER
OD	OUTSIDE FACE
OPNG	OPENING
ℙ or PL	PLATE
PRE-ENG	PRE-ENGINEERED
RB	ROOF BEAM
REINF	REINFORCED
REQ'D	REQUIRED
SIM	SIMILAR
SPECS	SPECIFICATIONS
STD	STANDARD
STRUCT	STRUCTURAL
SW	SHEAR WALL
T	TOP
T/	TOP OF
T/ELEV	TOP ELEVATION
T/SLAB	TOP OF SLAB
T&B	TOP AND BOTTOM
THK	THICK
TYP	TYPICAL
UFC	UNIFIED FACILITIES CRITERIA
UON	UNLESS OTHERWISE NOTED
VERT	VERTICAL
W	WIDTH
W/	WITH

1.0 GENERAL NOTES:

1.1 THIS PROJECT HAS BEEN DESIGNED FOR THE WEIGHTS AND MATERIALS INDICATED ON THE SHEETS AND FOR THE LIVE LOADS INDICATED IN THE DESIGN DATA. IT IS THE CONTRACTOR'S RESPONSIBILITY TO DETERMINE ALLOWABLE CONSTRUCTION LOADS AND TO PROVIDE PROPER DESIGN AND CONSTRUCTION OF FALSEWORK, FORMWORK, STAGING, BRACING, SHEETING AND SHORING, ETC.

1.1 COORDINATE THESE SHEETS WITH THE ARCHITECTURAL, MECHANICAL, ELECTRICAL, PLUMBING, AND CIVIL SHEETS. ALL DIMENSIONS SHOWN ON THE SHEETS ARE MILLIMETERS UNLESS NOTED OTHERWISE.

1.2 THE CONTRACTOR SHALL VERIFY AND COORDINATE ALL FLOOR AND ROOF OPENING SIZES AND LOCATIONS, EQUIPMENT PAD SIZES AND LOCATIONS, ANCHOR BOLT LAYOUTS, ETC WITH EQUIPMENT SELECTED. THE CONTRACTOR SHALL MAKE ANY REQUIRED MODIFICATIONS AT NO ADDITIONAL COST.

1.3 THE CONTRACTOR SHALL REFER TO THE ARCHITECTURAL, MECHANICAL, ELECTRICAL AND PLUMBING SHEETS FOR SLEEVES, CURBS, INSERTS OR OPENINGS, ETC. NOT HEREIN INDICATED.

1.4 WORK NOT INCLUDED ON THE SHEETS BUT IMPLIED TO BE SIMILAR TO THAT SHOWN AT CORRESPONDING PLACES ELSEWHERE ON THE SHEETS SHALL BE REPEATED.

1.5 IN CASE OF CONFLICT BETWEEN THE NOTES, DETAILS AND SPECIFICATIONS THE MOST RIGID REQUIREMENTS SHALL GOVERN.

1.6 SEE ARCHITECTURAL SHEETS FOR LOCATIONS OF MASONRY AND NON-LOAD BEARING PARTITIONS. PROVIDE COMPRESSIBLE FIRESAFING AT TOP OF WALL AS REQUIRED BY ARCHITECTURAL SHEETS.

1.7 COORDINATE FINISHED FLOOR DATUM ELEVATION 0.0m WITH THE CIVIL SHEETS.

2.0 FOUNDATION NOTES

2.1 THE GEOTECHNICAL ANALYSIS FOR THIS PROJECT IS THE RESPONSIBILITY OF THE CONTRACTOR AWARDED THE WORK. AN ASSUMED ALLOWABLE SOIL BEARING VALUE OF 72 kPa HAS BEEN USED IN THE STRUCTURAL ANALYSIS OF THE BUILDING HEREIN AND SHALL BE CONFIRMED AND VERIFIED AS PART OF THE GEOTECHNICAL INVESTIGATION. VALUES WHICH DO NOT MEET THE REQUIREMENTS INDICATED ON THE BASIS OF DESIGN SHEET SHALL BE IMMEDIATELY BROUGHT TO THE ATTENTION OF THE CONTRACTING OFFICER FOR CONSIDERATION AND DETERMINATION ON THE NEXT APPROPRIATE COURSE OF ACTION.

2.2 SEE THE SPECIFICATION FOR ADDITIONAL REQUIREMENTS TO THOSE OUTLINED IN THE GEOTECHNICAL INVESTIGATION FOR EXCAVATION AND PREPARATION OF THE FOUNDATION AND THE SLAB ON GRADE SUBGRADE INCLUDING COMPACTION PROCEDURES.

2.3 EXCAVATIONS FOR FOOTINGS SHALL HAVE THE SIDES AND BOTTOMS TEMPORARILY LINED WITH 0.25mm POLYETHYLENE IF PLACEMENT OF CONCRETE DOES NOT OCCUR WITHIN 24 HRS OF THE EXCAVATION OF THE FOOTING.

2.4 FOUNDATION CONDITIONS NOTED DURING CONSTRUCTION WHICH DIFFER FROM THOSE DESCRIBED IN THE GEOTECHNICAL REPORT SHALL BE REPORTED TO THE GENERAL CONTRACTOR BEFORE FURTHER CONSTRUCTION IS ATTEMPTED. SEE PROJECT SPECIFICATIONS.

2.5 NO FOOTINGS OR SLABS SHALL BE POURED INTO OR AGAINST SUBGRADE CONTAINING FREE WATER, FROST, ICE OR LOOSE MATERIAL. FROST DEPTH ASSUMED TO BE 800mm.

2.6 ALL SLAB-ON-GRADE, TRENCH BOTTOMS AND OTHER ON-GRADE INTERIOR HORIZONTAL SURFACES SHALL BE PLACED OVER A 0.25mm POLYETHYLENE VAPOR RETARDER OVER A 100mm #57 STONE WATER CAPILLARY BARRIER PLACED ON SUBGRADE PROPERLY PREPARED IN ACCORDANCE WITH THE CONTRACT SPECIFICATIONS. (UON)

2.7 PRIOR TO START OF FOUNDATION OR SLAB-ON-GRADE CONSTRUCTION, EXISTING SUBGRADES SHALL BE COMPACTED TO MINIMUM OF 95% MAXIMUM DRY DENSITY OBTAINED THRU ASTM D 1557 MODIFIED PROCTOR TESTING.

2.8 SEE PLUMBING, ELECTRICAL & CIVIL SHEETS FOR REQUIRED UNDERSLAB UTILITIES.

2.9 SEE ARCHITECTURAL SHEETS FOR ALL WATERPROOFING DETAILS AND MATERIALS.

2.10 IF UNDERMINING OF FOOTINGS OCCURS, FILL VOIDS WITH 18 MPa CONCRETE. DO NOT ATTEMPT TO REPLACE AND RE-COMPACT SOIL.

3.0 CONCRETE

3.1 CONCRETE SHALL HAVE THE UNIT WEIGHT OF 2400 kg/m^3 AND A MINIMUM COMPRESSIVE STRENGTH (f'c) OF 28 MPa AT 28 DAYS. ALL CONCRETE SHALL HAVE A WATER-CEMENT RATIO OF 0.45. SEE SPECIFICATIONS FOR ADDITIONAL INFORMATION. ENTRAIN AIR TO PRODUCE TOTAL AIR CONTENT ACCORDING TO THE SPECIFICATIONS FOR CONCRETE EXPOSED TO FREEZING TEMPERATURES (EXTERIOR FOOTINGS, SLAB TURNDOWNS, EXTERIOR SLABS AND SLABS-ON-GRADE, EXTERIOR RETAINING WALLS, AND EXTERIOR GRADE BEAMS.)

3.2 NO CALCIUM CHLORIDE SHALL BE USED IN ANY CONCRETE.

3.3 MIXING, TRANSPORTING AND PLACING OF CONCRETE SHALL CONFORM TO ACI 301M-05.

3.4 ALL CONCRETE WORK SHALL CONFORM TO THE REQUIREMENTS OF THE AMERICAN CONCRETE INSTITUTE (ACI) 318M MANUAL (metric), "BUILDING CODE REQUIREMENTS FOR REINFORCED CONCRETE", AND REQUIREMENTS OUTLINED IN THE CONTRACT SPECIFICATIONS. WHEN THERE IS A CONFLICT BETWEEN ACI AND THE SPECIFICATIONS, THE MORE STRINGENT SHALL GOVERN.

3.5 CHAMFER ALL EXPOSED EXTERNAL CORNERS OF CONCRETE WITH 20mm x45 DEGREE CHAMFER UON.

3.6 CONCRETE REINFORCEMENT BARS SHALL CONFORM TO ASTM A615M-96a, GRADE 420 MPa, REINFORCING BARS SHALL NOT BE TACK WELDED, WELDED, HEATED OR CUT, UNLESS INDICATED ON THE CONTRACT DOCUMENTS. ALL LAP SPLICES SHALL BE CLASS "B" UON.

3.7 HORIZONTAL FOOTING AND HORIZONTAL WALL REINFORCEMENT SHALL BE CONTINUOUS AND SHALL HAVE 90 DEGREE BENDS AND EXTENSIONS, OR CORNER BARS OF EQUIVALENT SIZE LAPPED WITH A CLASS B TENSION SPLICE AT CORNERS AND INTERSECTIONS. TOP BAR CRITERIA SHALL APPLY IF 300mm OR MORE OF FRESH CONCRETE IS PLACED BELOW BAR.

3.8 SLABS-ON-GRADE SHALL HAVE CONSTRUCTION JOINTS OR CRACK CONTROL JOINTS AS SHOWN ON THE DRAWINGS. CONSTRUCTION JOINTS CAN BE USED AT CONTROL JOINT LOCATIONS AT CONTRACTORS OPTION. SEE SLAB PLANS & JOINT DETAILS FOR ADDITIONAL INFORMATION. FOR AREAS NOT SHOWN ON DWGS, THE MAXIMUM SPACING OF CONSTRUCTION/ CRACK CONTROL JOINTS SHALL BE 4800mm

3.9 ALL CONCRETE REINFORCEMENT SHALL BE DETAILED, FABRICATED, LABELED, SUPPORTED, AND SPACED IN FORMS AND SECURED IN PLACE IN ACCORDANCE WITH THE PROCEDURES AND REQUIREMENTS OUTLINED IN THE LATEST EDITION OF THE "BUILDING CODE REQUIREMENTS FOR REINFORCED CONCRETE", ACI 318M, AND THE "MANUAL OF STANDARD PRACTICE FOR DETAILING REINFORCED CONCRETE STRUCTURES", ACI 315M, LATEST EDITION. BASED ON IN COUNTRY REINFORCEMENT AVAILABILITY, IT IS THE CONTRACTOR'S OPTION TO ROUND DESIGNATED ODD NUMBERED REINFORCEMENT SIZES UP (1) ONE BAR SIZE.

3.10 ALL DOWELS SHALL MATCH SIZE AND NUMBER OF MAIN REINFORCING, UNLESS NOTED OTHERWISE ON THE SHEETS.

3.11 ADDITIONAL BARS SHALL BE PROVIDED AROUND ALL FLOOR AND WALL OPENINGS AS SHOWN ON THE SHEETS.

3.12 SEE ARCHITECTURAL SHEETS FOR TYPE AND LOCATION OF ALL FLOOR FINISHES.

3.13 THE CONTRACTOR SHALL COORDINATE ADDITIONAL WALL/SLAB OPENINGS NOT SHOWN ON STRUCTURAL SHEETS. SEE MECHANICAL, ELECTRICAL, PLUMBING AND CIVIL SHEETS.

3.14 UNLESS NOTED OTHERWISE, ALL CURBS SHALL BE REINFORCED WITH AT LEAST (1)-#13 CONTINUOUS AND #13 AT 300mm O.C. DOWELS TO STRUCTURE BELOW.

3.15 THE CONTRACTOR SHALL VERIFY ALL OPENINGS, PAD SIZES, AND ANCHOR BOLTS WITH EQUIPMENT SELECTED.

3.16 FOR ALL WALLS & PIERS, PROVIDE DOWELS INTO FOOTING AT EACH VERT REINF BAR, UON DOWEL SIZE SHALL BE SAME AS VERT REINF.

3.17 PROVIDE CONCRETE POUR STOPS OR FORMED AS REQUIRED FOR INSTALLATION OF ALL CONCRETE WORK.

3.18 PROVIDE ADDITIONAL (2)-#13 x 600mm REINFORCING BARS IN SLAB-ON GRADE AT ALL RE-ENTRANT CORNERS. PLACE BARS AT MID-DEPTH OF SLAB WITH A CLEARANCE OF 50mm FROM CORNER UON.

3.19 COLD-WEATHER PLACEMENT: COMPLY WITH ACI 306.1 AND AS FOLLOWS. PROTECT CONCRETE WORK FROM PHYSICAL DAMAGE OR REDUCED STRENGTH THAT COULD BE CAUSED BY FROST, FREEZING ACTIONS, OR LOW TEMPERATURES. SUBMIT A COLD WEATHER CONCRETING PLAN FOR APPROVAL.

3.20 PROVIDE BONDING COMPOUND PER ASTM C 1059-99: SPECIFICATION FOR LATEX AGENTS FOR BONDING FRESH CONCRETE (GROUT) TO HARDENED CONCRETE.

3.21 THE FORMED SURFACES FOR REINFORCED CONCRETE SHALL ACHIEVE A "CLASS A" FINISH WHEN RECEIVING PAINT OR A "CLASS B" FINISH WHEN RECEIVING PLASTER OR TILE AS PER SPECIFICATION SECTION 03 31 00 CAST-IN-PLACE STRUCTURAL CONCRETE.

3.22 AT INTERSECTING GRADE BEAMS AND SHEAR WALLS, PROVIDE CORNER BARS AT INTERSECTIONS WITH SAME QUANTITY, SIZE AND SPACING AS HORIZONTAL BARS WITH LEG LENGTH = 50db.

3.23 REFER TO S-800 SERIES REINFORCING BAR PLACEMENT DRAWINGS DEFINING LENGTHS, BENDS, AND SPACINGS FOR ALL STRUCTURAL CONCRETE. THE S-800 SERIES DRAWING ARE BASED ON THE S-400, S-500, S-600, AND S-700 SERIES DRAWING SCHEDULES, DETAILS, AND DIAGRAMS.

4.0 CONCRETE MASONRY

4.1 MASONRY CONSTRUCTION SHALL CONFORM TO SPECIFICATION FOR MASONRY STRUCTURES (ACI 530.1) UON.

4.2 STRENGTH OF MASONRY MATERIALS SHALL BE AS FOLLOWS:

a. CONCRETE MASONRY UNITS SHALL BE NORMAL WEIGHT, GRADE N, TYPE 1, CONFORMING TO ASTM C-90 AND HAVE A MINIMUM COMPRESSIVE STRENGTH OF 10.4 MPa ON THE NET AREA.

b. MORTAR SHALL CONFORM TO ASTM C-270 TYPE S.

c. GROUT FOR MASONRY SHALL BE NORMAL WEIGHT AND HAVE A MINIMUM COMPRESSIVE STRENGTH OF 14 MPa AT 28 DAYS. GROUT SHALL CONFORM TO ASTM C476M. GROUT LIFTS SHALL NOT EXCEED 1,400mm.

d. REINFORCED MASONRY SHALL HAVE A STRENGTH F'm = 10 MPa. (F'm IS THE COMPRESSIVE STRENGTH OF THE MASONRY AT 28 DAYS AS DETERMINED BY PRISM TESTS).

4.3 ALL VERTICAL REINFORCEMENT FOR CONCRETE MASONRY SHALL BE ASTM A615M-96a, GRADE 420 MPa. ALL SPLICES SHALL BE LAPPED 48 BAR DIAMETERS MINIMUM.

4.4 BOND BEAMS SHALL BE SPACED AT 1200mm OC VERTICALLY. BOND BEAM REINFORCING SHALL BE CONTINUOUS AND PROVIDED AT WALL INTERSECTIONS AND WALL CORNERS (REFERENCE CONCRETE MASONRY NOTE 4.11). ALL BOND BEAM REINFORCING SHALL BE CONTINUOUS AND HAVE STANDARD ACI HOOKS AT EACH END. PROVIDE STANDARD BAR SPLICES AS SPECIFIED. AS AN ALTERNATE TO CMU BOND BEAMS, IT IS THE CONTRACTOR'S OPTION TO PROVIDE 200mm x 200mm CONTINUOUS CAST-IN-PLACE CONCRETE BOND BEAMS WITH (2)-#16 IN LIEU OF CMU BOND BEAMS INDICATED ON THE DRAWINGS.

4.5 SEE TYPICAL DETAILS FOR MINIMUM REINFORCEMENT REQUIREMENTS FOR CMU WALLS. PROVIDE STANDARD BAR SPLICES AS SPECIFIED. ALL VERTICAL REINFORCEMENT EXTENDS FULL HEIGHT OF WALL.

4.6 CMU CELLS THAT REQUIRE VERTICAL REINFORCING BARS AS INDICATED ON THE CONTRACT DRAWINGS AND/OR SPECS SHALL HAVE REINF BARS PLACED IN CENTERS OF CMU CELLS AND CONTINUOUSLY GROUTED UON.

4.7 ALL CMU CELLS, OPEN CAVITIES, AND AIR SPACES OF ALL EXTERIOR WALLS SHALL BE GROUTED TO STOP FRAGMENTS FROM MORTAR BLAST.

4.8 CONTRACTOR SHALL COORDINATE LOCATION OF ALL OPENINGS SEE ARCH, MECH, ELEC, AND PLUMBING SHEETS FOR SIZE AND LOCATION OF OPENINGS.

4.9 MASONRY WALLS SHALL NOT BE BACK FILLED PRIOR TO THE MORTAR AND GROUT ATTAINING THEIR RESPECTIVE MAXIMUM DESIGN STRENGTHS PER SPECIFICATIONS.

4.10 PROVIDE GALVANIZED MORTAR/GROUT SCREEN W/ 3mm MESH WHERE CELLS BELOW ARE NOT GROUTED.

4.11 AT INTERSECTING BOND BEAMS, PROVIDE CORNER BAR FOR EACH HORIZONTAL BAR IN BOND BEAMS AT INTERSECTING WALLS. USE SAME SIZE AND SPACING AS HORIZONTAL BARS WITH LEG LENGTH = 50db.

4.12 THE ALTERNATE TOP OF CMU WALL BRACING DETAIL(S) SHOWN ON S-701 CAN BE UTILIZED AT THE CONTRACTOR'S OPTION IN PLACE OF THE "SLEEVED DOWEL" WALL CONNECTIONS DEPICTED ON S-400 AND S-500 SERIES DRAWINGS. IN ADDITION, ALTERNATE DETAIL(S) SHOW CAST-IN-PLACE WALL BOND BEAMS THAT CAN BE UTILIZED AT THE CONTRACTOR'S OPTION IN PLACE OF THE STANDARD CMU BOND BEAMS CONSTRUCTED OF CMU BLOCKS.

5.0 COLD-FORMED METAL FRAMING

5.1 ALL COLD-FORMED METAL FRAMING MEMBERS SHALL CONFORM TO ASTM A1003M, STRUCTURAL GRADE ST340 (MPa), WITH A GALVANIZED COATING OF Z275 OR BETTER IN ACCORDANCE WITH ASTM A653M.

5.2 ALL COLD-FORMED METAL FRAMING MEMBERS SHALL HAVE THE FOLLOWING MINIMUM PROPERTIES:

a. MINIMUM METAL THICKNESS:
TRACK = 1.37mm;
STUD/OTHER = 1.09mm

b. MINIMUM FLANGE WIDTH:
TRACK = 38mm;
STUD/OTHER = 35mm

c. MINIMUM MEMBER DEPTH:
ALL SECTIONS = 152.2mm

d. PURLIN (HAT CHANNEL)
DEPTHxWIDTH(FLAT TOP)xTHICK = 25mmx42mmx1.59mm

5.3 ALL CONNECTIONS SHALL BE MADE WITH CORROSION RESISTANT (ASTM A153M), SELF-DRILLING, SELF-TAPPING STEEL DRILL SCREWS IN ACCORDANCE WITH ASTM C1513. SCREWS SHALL HAVE A LOW PROFILE HEAD BENEATH ROOF DECK, AND STANDARD HEAD ALL OTHER LOCATIONS.

5.4 FABRICATE COLD FORMED METAL FRAMING AND ACCESSORIES PLUMB, SQUARE AND TRUE TO LINE, WITH CONNECTIONS SECURELY FASTENED ACCORDING TO AISI STANDARD FOR COLD FORMED STEEL FRAMING.

5.5 CUT FRAMING MEMBERS BY SAWING OR SHEATHING, DO NOT TORCH CUT.

5.6 INSTALL FRAMING MEMBERS IN ONE-PIECE LENGTHS UNLESS SPLICE CONNECTIONS ARE INDICATED FOR TRACK OR TENSION MEMBERS

5.7 INSTALL TEMPORARY BRACING AND SUPPORTS TO SECURE FRAMING DURING CONSTRUCTION. MAINTAIN BRACING AND SUPPORTS IN PLACE UNTIL THE STRUCTURE HAS BEEN COMPLETED WITH ALL CONNECTIONS AND PERMANENT BRACING SECURED.

6.0 STRUCTURAL DESIGN CRITERIA

6.1 ALL DESIGNS SHALL CONFORM TO THE PROVISIONS OF THE IBC 2006 AND UFC AS APPLICABLE.

6.2 DESIGN LOADS

6.2.1 DEAD LOADS (PER IBC 2006 & UFC 3-310-01)

MECH/ELEC/PLUMBING	0.20 kPa
MISCELLANEOUS	0.15 kPa
COLD-FORMED FRAMING	0.20 kPa
INSULATION	0.10 kPa
METAL ROOF PANEL	0.14 kPa
	0.79 kPa
FLOOR PARTITION ALLOWANCE	0.96 kPa

6.2.2 LIVE LOADS (PER IBC 2006 & UFC 3-310-01)

ROOF	1.00 kPa
CORRIDOR (2-STORY BLDG ONLY)	4.80 kPa
ALL OTHERS (2-STORY BLDG ONLY)	2.40 kPa
SLAB ON GRADE	4.80 kPa

6.2.3 SNOW LOADS (PER IBC 2006 & UFC 3-310-01)

GROUND SNOW LOAD (Pg)	1.2 kPa
SNOW IMPORTANCE FACTOR (I)	1.0
SNOW EXPOSURE FACTOR (Ce)	1.0
THERMAL FACTOR (Ct)	1.0

6.2.4 WIND LOADS (PER IBC 2006)

BASIC WIND SPEED	137 km/h
WIND IMPORTANCE FACTOR	1.0
WIND EXPOSURE CATEGORY	D
DIRECTIONALITY COEFFICIENT (Kd)	0.85
TOPOGRAPHIC FACTOR (Kzt)	1.0

6.2.5 SEISMIC LOADS (PER IBC 2006 & UFC 3-310-04)

OCCUPANCY USE CATEGORY	II
SEISMIC IMPORTANCE FACTOR (Ie)	1.0
SEISMIC SITE CLASS	D

S_s = 1.50 (REDUCED FROM 2.40 PER ASCE 7-05, 12.8.1.3 FOR A BUILDING WITHOUT IRREGULARITIES)
S_1 = 1.20
S_{DS} = 1.00
S_{D1} = 1.20

SEISMIC DESIGN CATEGORY	E
SEISMIC RESISTING SYSTEM: -SPECIAL REINFORCED CONCRETE SHEAR WALL	
RESPONSE MODIFICATION FACTOR (R)	6
RESPONSE COEFFICIENT (Cs)	0.167
SEISMIC ANALYTICAL PROCEDURE =	EQUIV LATERAL FORCE
SEISMIC BASE SHEAR	950 kN

APPROVED:

A/E DESIGNER OF RECORD

SEAL:

GEORGIA REGISTERED 1-29-10 No. 27141 PROFESSIONAL ENGINEER CHRISTOPHER W. WHITMORE

US ARMY CORPS OF ENGINEERS
AFGHANISTAN ENGINEER DISTRICT

Mark	Description	Date	Appr.	Mark	Description	Date	Appr.

U.S. ARMY CORPS OF ENGINEERS
AFGHANISTAN ENGINEER DISTRICT
APO AE 96338

Michael Baker Jr., Inc
A unit of Michael Baker Corporation
Airside Business Park
100 Airside Drive
Moon Township, PA 15108
www.mbakercorp.com

Designed by: KMF/MMY
Dwn by: RCG
Ckd by: CWW
Reviewed by: LHM
Submitted by: BAKER
Date: 2/23/10
Rev: 0
Design file no.
Drawing code:
File name: ANACB505-001GN
Plot date: 2/23/2010
Plot scale: X:X

AFGHAN NATIONAL ARMY
REGIONAL MILITARY TRAINING CENTER
STANDARD DESIGN

200 STUDENT CLASSROOM BUILDING
(4) 50 STUDENT CLASSROOMS

GENERAL NOTES & DESIGN CRITERIA

Sheet reference number:
S-001

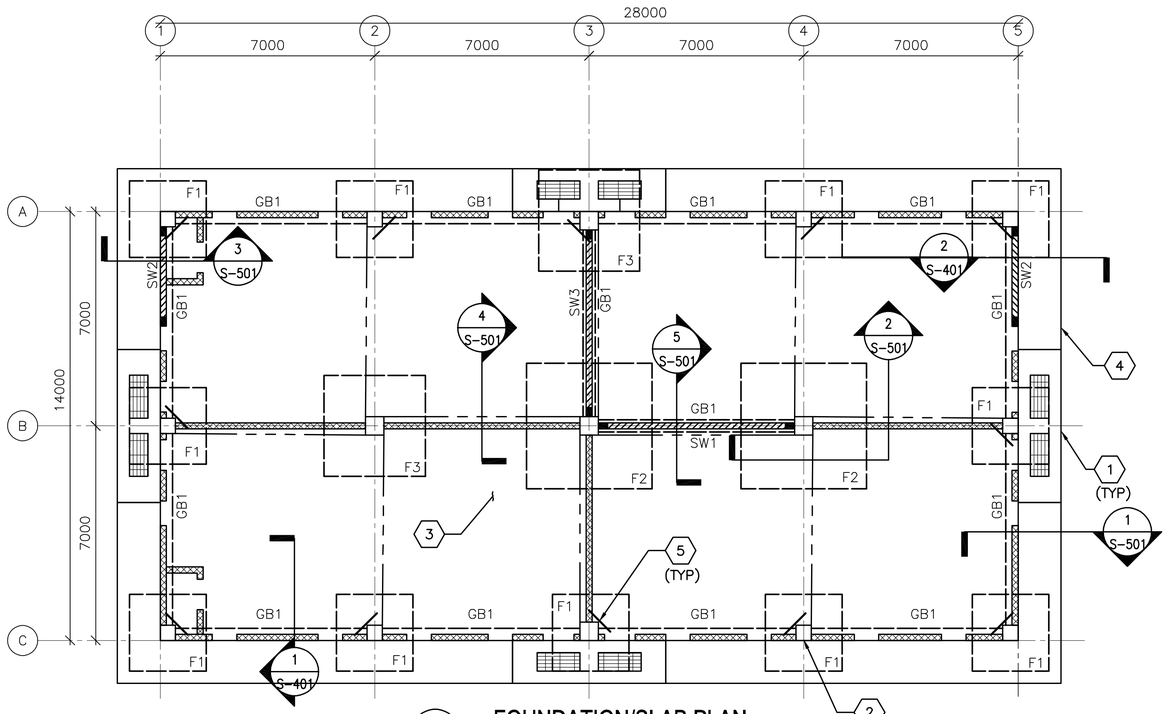

1 S101 **FOUNDATION/SLAB PLAN**

SCALE: 1:100

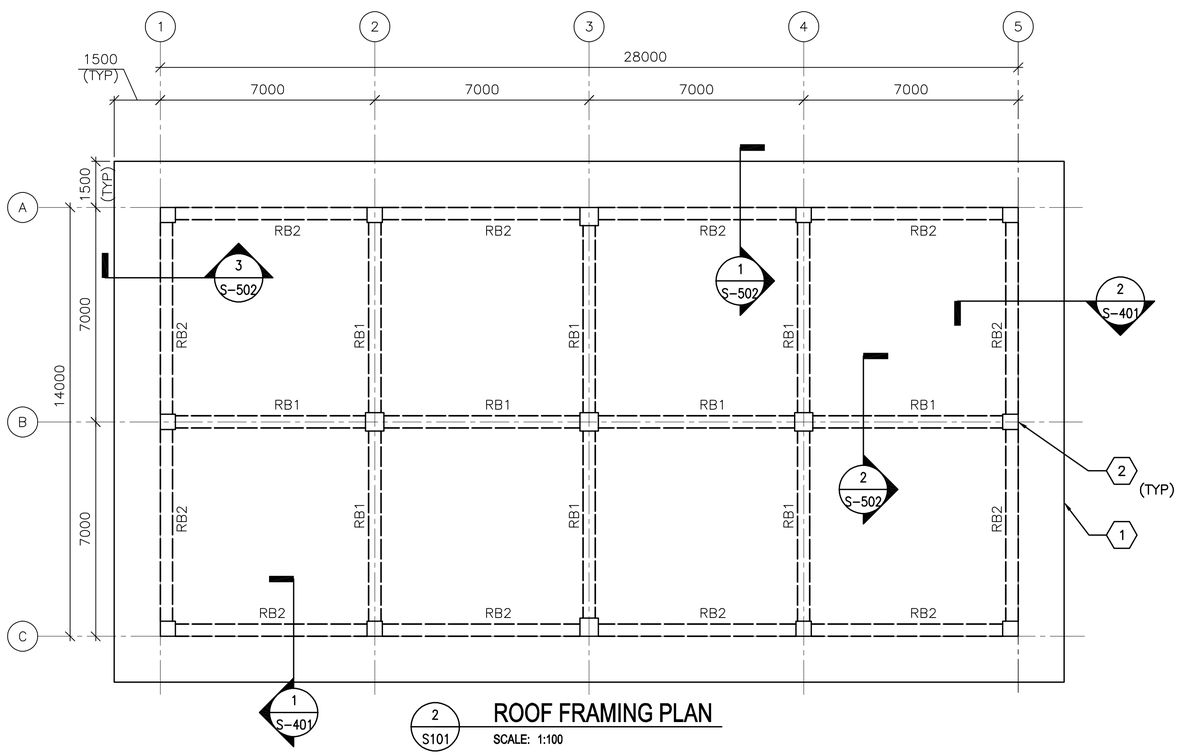

2 S101 **ROOF FRAMING PLAN**

SCALE: 1:100

FOUNDATION/SLAB PLAN NOTES:

1. REFER TO SHEET S-001 FOR STRUCTURAL NOTES AND DESIGN CRITERIA.
2. FINISH FIRST FLOOR ELEVATION SHALL BE (DATUM 0.00) ALL PLUS OR MINUS DIMENSIONS INDICATED ON PLAN OR REFERRED TO IN NOTES RELATE TO FINISH FIRST FLOOR ELEVATION.
3. SLAB-ON-GRADE IS 150 WITH #13 @ 300 OC EW LOCATED 38 FROM T/SLAB.
4. TOP OF EXTERIOR FOOTINGS SHALL BE -950 UNLESS OTHERWISE INDICATED.
5. TOP OF INTERIOR FOOTINGS WITHOUT GRADE BEAM ABOVE SHALL BE -600.
6. TOP OF INTERIOR FOOTINGS WITH GRADE BEAM ABOVE SHALL BE -950.
7. COLUMN FOOTINGS INDICATED BY F# ON PLAN. REFER TO COLUMN FOOTING SCHEDULE ON SHEET S-601.
8. REFER TO COLUMN SCHEDULE ON SHEET S-601.
9. GRADE BEAM INDICATED BY GB# ON PLAN, REFER TO BEAM SCHEDULE ON SHEET S-601.
10. SHEARWALL INDICATED BY SW# ON PLAN, REFER TO SHEARWALL SCHEDULE ON SHEET S-601.
11. FOR CMU REINFORCEMENT, SEE TYP EXTERIOR AND INTERIOR CMU REINFORCEMENT DETAILS ON S-701.
12. SEE MECHANICAL AND ELECTRICAL SHEETS FOR CONCRETE PAD LOCATIONS, SIZES, AND THICKNESS NOT SHOWN. SEE SHEET S-701 FOR DETAILS.
13. THICKENED SLAB UNDER PERIMETER & PARTITION CONC/CMU WALLS NOT SHOWN FOR CLARITY.

FOUNDATION/SLAB PLAN KEY NOTES: (X)

1. CONC SLAB (ENTRANCE)-SEE ARCH DWGS FOR INFORMATION
2. REINF CONC COLUMN
3. REINF CONC SLAB-ON-GRADE
4. CONC SIDEWALK
5. (2)-#13 @ RE-ENTRANT CORNERS - SEE S-701 FOR INFORMATION

FOUNDATION/SLAB PLAN LEGEND:

REINF CONC SHEAR WALL

REINF CMU WALL

CONTROL JOINT

ROOF FRAMING PLAN NOTES:

1. REFER TO SHEETS S-001 FOR STRUCTURAL NOTES AND DESIGN CRITERIA.
2. TOP OF SLAB ELEVATION = 3500 UNLESS NOTED OTHERWISE.
3. ROOF SLAB IS 200 WITH #16 @ 300 OC EW T&B.
4. ROOF BEAM INDICATED BY RB# ON PLAN. REFER TO BEAM SCHEDULE ON SHEET S-601
5. COORDINATE WITH ARCHITECTURAL SHEETS FOR COLD-FORMED STEEL OVERBUILD FRAMING ABOVE ROOF SLAB.
6. COLD-FORMED METAL OVERBUILD ROOF FRAMING NOT SHOWN FOR CLARITY. SEE OVERBUILD ROOF FRAMING DETAILS AND SECTIONS ON SHEET S-702.
7. CONCRETE/CMU PERIMETER AND PARTITION WALLS (BELOW ROOF SLAB) NOT SHOWN FOR CLARITY.
8. OVERHANG AREAS OF ROOF SLAB CONTAIN ROOF VENT PENETRATIONS. REFERENCE ARCHITECTURAL DRAWINGS FOR INFORMATION.

ROOF FRAMING PLAN KEY NOTES: (X)

1. CONC ROOF SLAB (BELOW ROOF OVERBUILD)
2. REINF CONC COLUMN (BELOW CONC ROOF SLAB)

0 2000 4000

SCALE: 1:100

UNLESS OTHERWISE NOTED, LINEAR DIMENSIONS SHOWN ON DRAWINGS ARE IN MILLIMETERS (mm)

APPROVED:

A/E DESIGNER OF RECORD

SEAL:

GEORGIA REGISTERED 2-23-10 No. 27141 PROFESSIONAL ENGINEER CHRISTOPHER W. WHITMORE

US ARMY CORPS OF ENGINEERS
AFGHANISTAN ENGINEER DISTRICT

Mark	Description	Date	Appr.	Mark	Description	Date	Appr.

U.S. ARMY CORPS OF ENGINEERS
AFGHANISTAN ENGINEER DISTRICT
APO AE 96338

Michael Baker Jr., Inc.
A unit of Michael Baker Corporation
Airside Business Park
100 Airside Drive
Moon Township, PA 15108
www.mbakercorp.com

Designed by: KMP/MMY
Dwn by: RCG
Ckd by: CWW
Reviewed by: LHM
Submitted by:
BAKER

Date: 2/23/10
Design file no.
Drawing code:
File name: ANAC8508-101FFP
Plot date: 2/23/2010
Plot scale: x:X
Rev: 0

AFGHAN NATIONAL ARMY
REGIONAL MILITARY TRAINING CENTER
STANDARD DESIGN

200 STUDENT CLASSROOM BUILDING
(4) 50 STUDENT CLASSROOMS
FOUNDATION/SLAB & ROOF FRAMING PLAN

Sheet reference number:
S-101

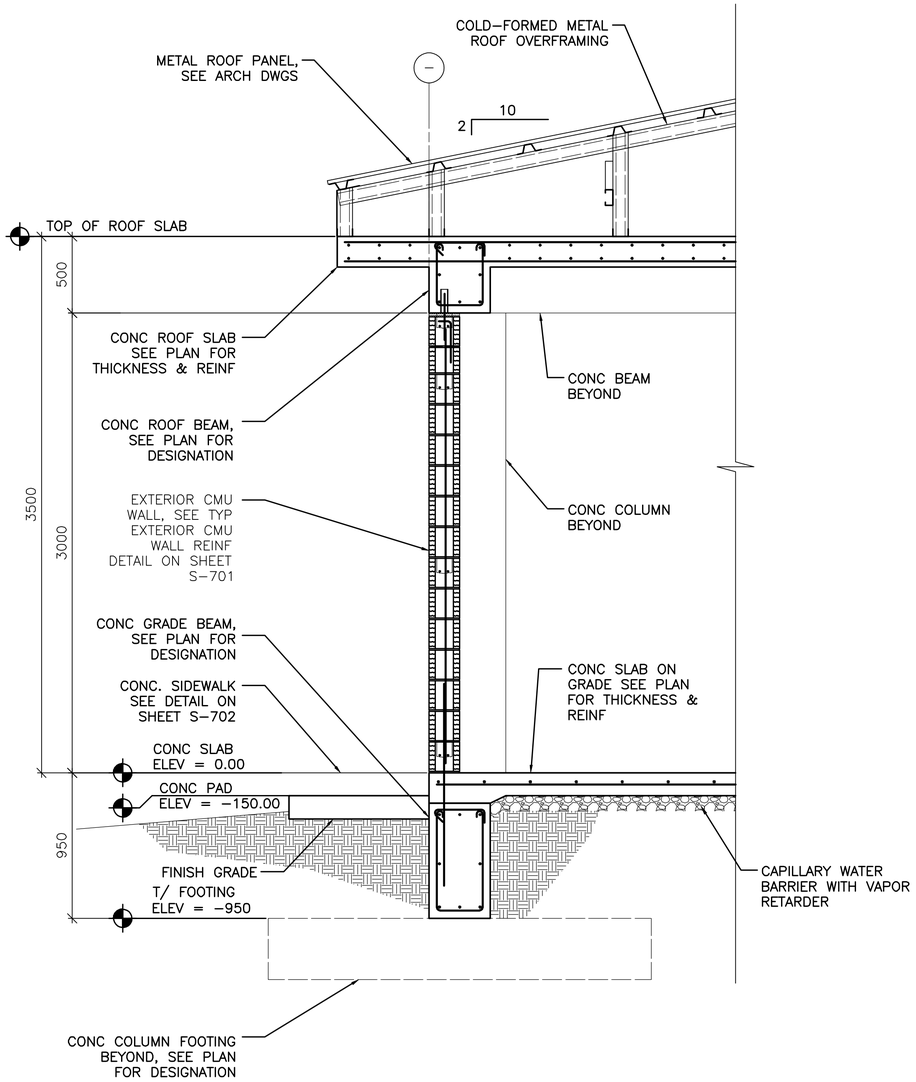

1 / S-101 **TYPICAL WALL SECTION AT EXTERIOR MASONRY WALL**

SCALE: 1:20

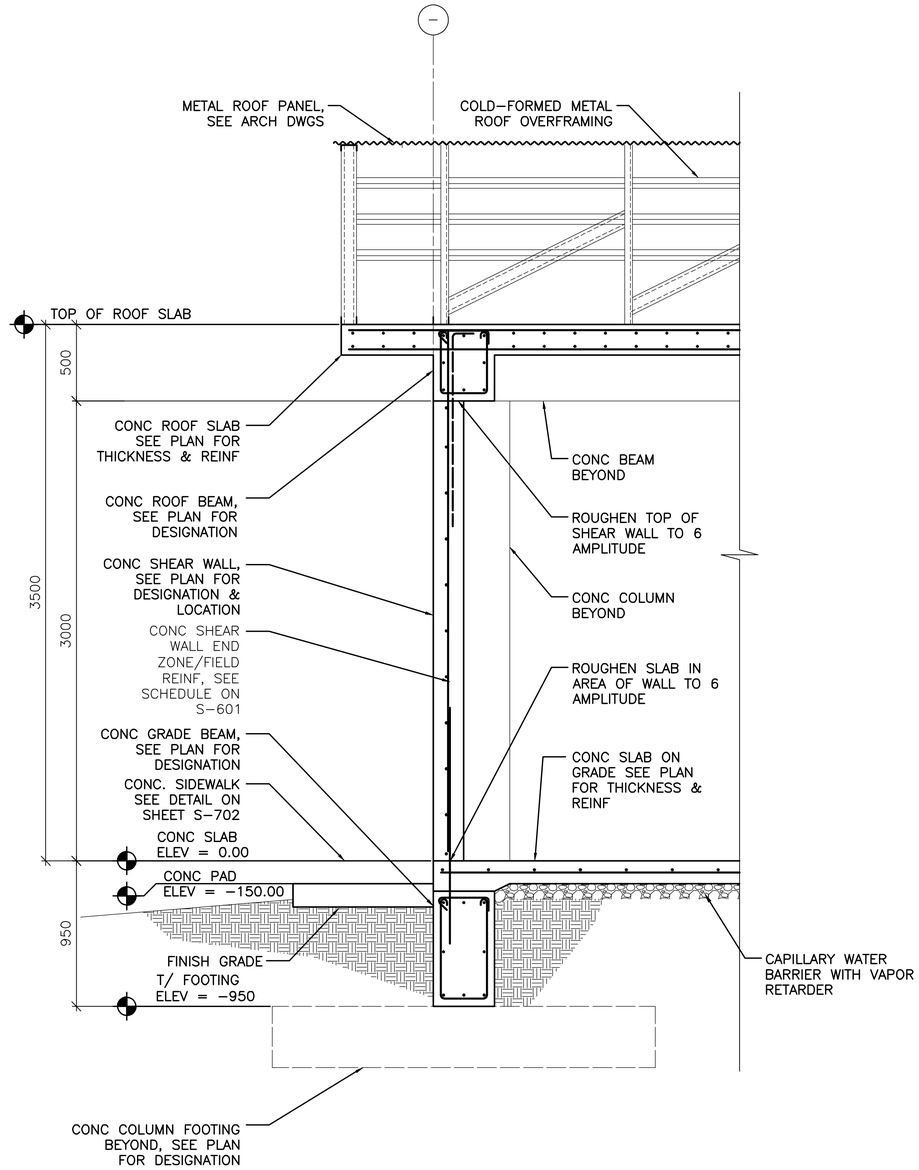

2 / S-101 **TYPICAL WALL SECTION AT CONCRETE SHEAR WALL**

SCALE: 1:20

0 400 800
SCALE: 1:20

UNLESS OTHERWISE NOTED, LINEAR DIMENSIONS SHOWN ON DRAWINGS ARE IN MILLIMETERS (mm)

APPROVED:

A/E DESIGNER OF RECORD

SEAL:

GEORGIA REGISTERED 1-27-10 No. 27141 PROFESSIONAL ENGINEER CHRISTOPHER W. WHITMORE

US ARMY CORPS OF ENGINEERS
AFGHANISTAN ENGINEER DISTRICT

Mark	Description	Date	Appr.	Mark	Description	Date	Appr.

Date: 2/23/10 Rev: 0
Design file no.
Drawing code:
File name: ANACB505-001BS
Plot date: 2/23/2010
Plot scale: x:X

Designed by: KMP/MMY
Dwn by: RCG Ckd by: CWW
Reviewed by: LHM
Submitted by: BAKER

U.S. ARMY CORPS OF ENGINEERS
AFGHANISTAN ENGINEER DISTRICT
APO AE 96338

Michael Baker Jr., Inc
A unit of Michael Baker Corporation
Airside Business Park
100 Airside Drive
Moon Township, PA 15108
www.mbakercorp.com

AFGHAN NATIONAL ARMY
REGIONAL MILITARY TRAINING CENTER
STANDARD DESIGN

200 STUDENT CLASSROOM BUILDING
(4) 50 STUDENT CLASSROOMS

BUILDING SECTIONS

Sheet reference number:
S-401

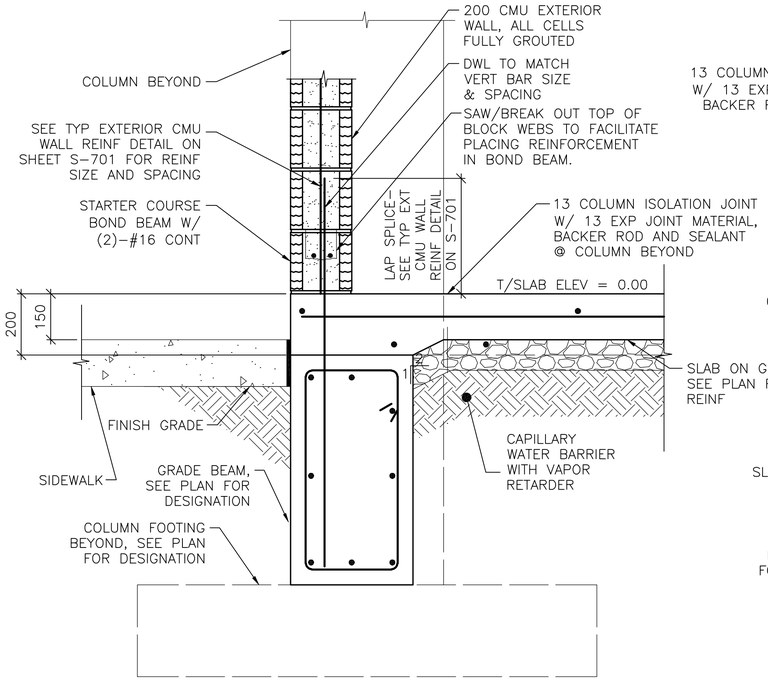

NOTE:
1. SECTION IS SIMILAR FOR INTERIOR CMU PARTITIONS OVER GRADE BEAMS SHOWING THICKENED 200 CONC SLAB AREA.

1 S-101 **SECTION**
SCALE: 1:10

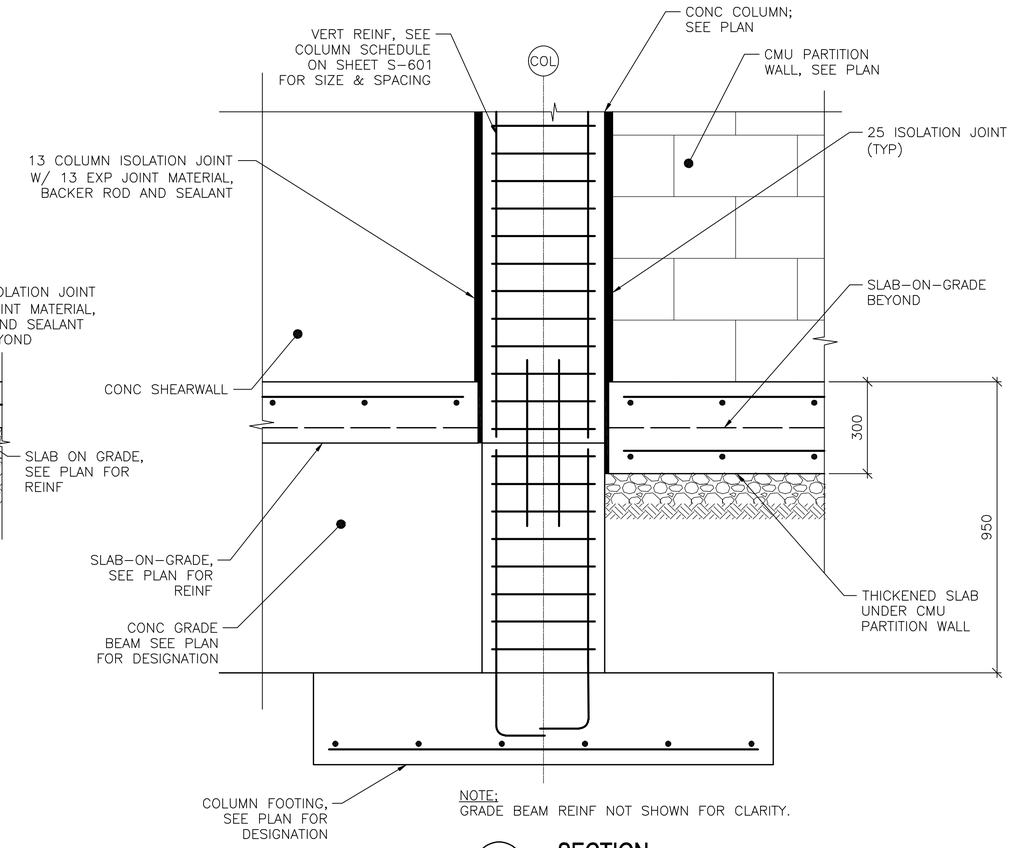

NOTE:
GRADE BEAM REINF NOT SHOWN FOR CLARITY.

2 S-101 **SECTION**
SCALE: 1:10

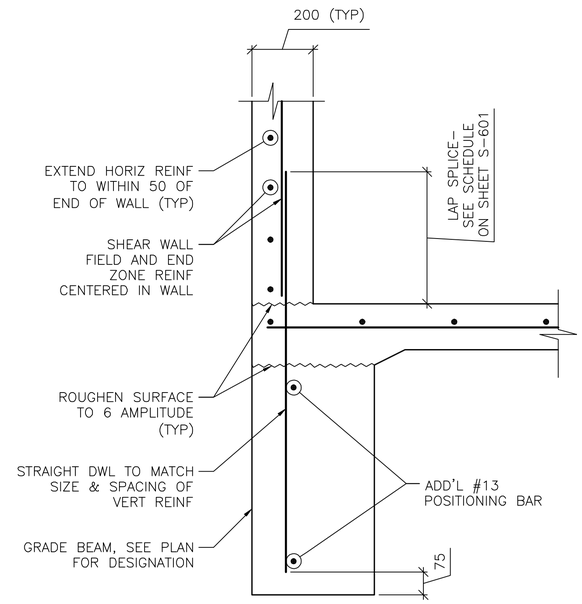

NOTE:
1. SECTION DEPICTS SHEAR WALL TERMINATION ONLY. GRADE BEAM REINFORCING NOT SHOWN FOR CLARITY.
2. SEE SHEET S-601 AND SHEET S-702 FOR SCHEDULED FIELD AND END ZONE REINF.

3 S-101 **SECTION**
SCALE: 1:10

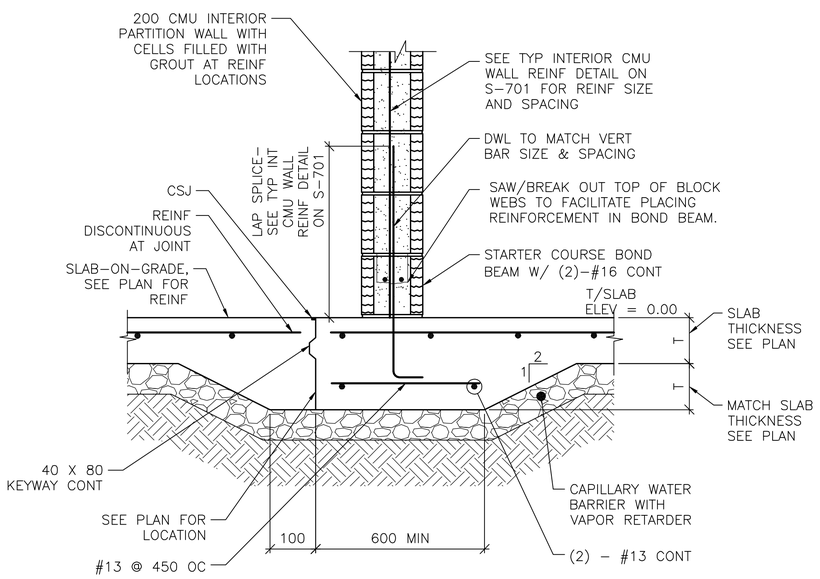

NOTE:
1. DETAIL IS APPLICABLE AT CONTROL JOINTS RUNNING PARALLEL TO CMU WALLS AND WITHIN 300 OF FACE OF WALL.

4 S-101 **SECTION**
SCALE: 1:10

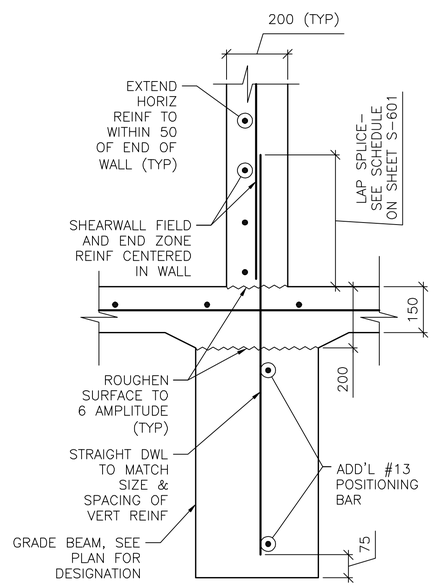

NOTE:
1. SECTION DEPICTS SHEAR WALL TERMINATION ONLY. GRADE BEAM REINFORCING NOT SHOWN FOR CLARITY
2. SEE SHEET S-601 AND SHEET S-702 FOR SCHEDULED FIELD AND END ZONE REINF.

5 S-101 **SECTION**
SCALE: 1:10

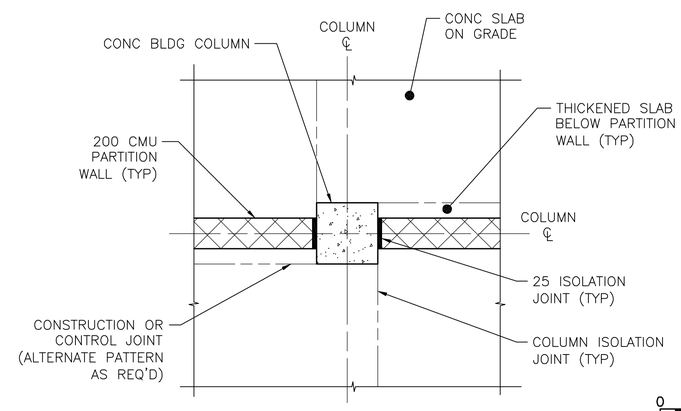

A S-501 **COLUMN ISOLATION JOINT DETAIL**
SCALE: NTS

0 200 400
SCALE: 1:10

UNLESS OTHERWISE NOTED, LINEAR DIMENSIONS SHOWN ON DRAWINGS ARE IN MILLIMETERS (mm)

APPROVED:

A/E DESIGNER OF RECORD

SEAL:

GEORGIA REGISTERED 1-29-10 No. 27141 PROFESSIONAL ENGINEER CHRISTOPHER W. WHITMORE

US ARMY CORPS OF ENGINEERS
AFGHANISTAN ENGINEER DISTRICT

Mark	Description	Date	Appr.	Mark	Description	Date	Appr.

Rev: 0
Date: 2/23/10
Design file no.
Drawing code:
File name: ANACB505-S01SC
Plot date: 2/23/2010
Plot scale: x:X

Designed by: KMP/MMY
Dwn by: RCG
Ckd by: CWW
Reviewed by: LHM
Submitted by: BAKER

U.S. ARMY CORPS OF ENGINEERS
AFGHANISTAN ENGINEER DISTRICT
APO AE 96338

Michael Baker Jr., Inc
A unit of Michael Baker Corporation
Airside Business Park
100 Airside Drive
Moon Township, PA 15108
www.mbakercorp.com

AFGHAN NATIONAL ARMY
REGIONAL MILITARY TRAINING CENTER
STANDARD DESIGN

200 STUDENT CLASSROOM BUILDING
(4) 50 STUDENT CLASSROOMS

FOUNDATION SECTIONS

Sheet reference number:
S-501

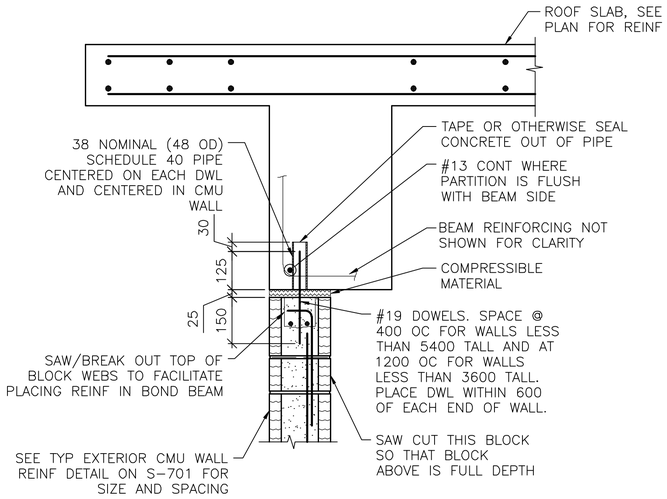

NOTES:
1. EXTEND DOWEL REINF TO 25 CLEAR FROM TOP OF CMU WALL.

1 / S-101 **SECTION**
SCALE: 1:10

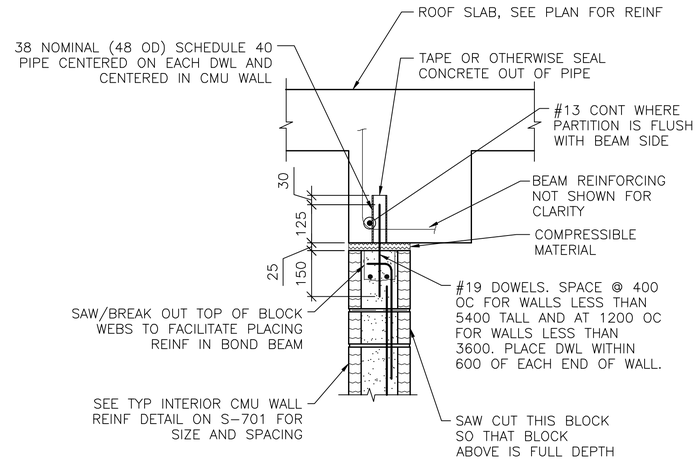

NOTES:
1. EXTEND DOWEL REINF TO 25 CLEAR FROM TOP OF CMU WALL.
2. PARTITION WALL MAY BE CENTERED UNDER THE BEAM OR FLUSH AS SHOWN. SEE PLAN FOR LOCATION.
3. SLAB REINF NOT SHOWN FOR CLARITY.

2 / S-101 **SECTION**
SCALE: 1:10

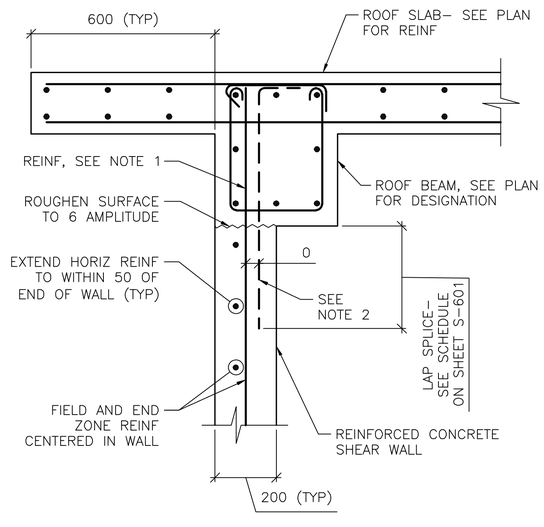

NOTES:
1. TERMINATE "FIELD" VERT REINF & END ZONE REINF @ 50 CLEAR FROM TOP OF ROOF SLAB.
2. WHERE END ZONE REINFORCING CANNOT BE DEVELOPED IN BEAM DEPTH, PROVIDE HOOKED DWLS SAME SIZE & SPACING. PROVIDE TENSION LAP BELOW ROOF BEAM.
3. SEE SHEET S-601 AND SHEET S-702 FOR SCHEDULED FIELD AND END ZONE REINF.

3 / S-101 **SECTION**
SCALE: 1:10

0 200 400
SCALE: 1:10

UNLESS OTHERWISE NOTED, LINEAR DIMENSIONS SHOWN ON DRAWINGS ARE IN MILLIMETERS (mm)

APPROVED:

A/E DESIGNER OF RECORD

SEAL:

GEORGIA REGISTERED 2-23-10 No. 27141 PROFESSIONAL ENGINEER CHRISTOPHER W. WHITMORE

US ARMY CORPS OF ENGINEERS
AFGHANISTAN ENGINEER DISTRICT

Mark	Description	Date	Appr.	Mark	Description	Date	Appr.

Rev: 0
Date: 2/23/10
Design file no.
Drawing code:
File name: ANACB505-502SC
Plot date: 2/23/2010
Plot scale: x:X

Designed by: KMP/MMY
Dwn by: RCG
Ckd by: CWW
Reviewed by: LHM
Submitted by: BAKER

U.S. ARMY CORPS OF ENGINEERS
AFGHANISTAN ENGINEER DISTRICT
APO AE 96338

Michael Baker Jr., Inc
A unit of Michael Baker Corporation
Airside Business Park
100 Airside Drive
Moon Township, PA 15108
www.mbakercorp.com

AFGHAN NATIONAL ARMY
REGIONAL MILITARY TRAINING CENTER
STANDARD DESIGN

200 STUDENT CLASSROOM BUILDING
(4) 50 STUDENT CLASSROOMS

FRAMING SECTIONS

Sheet reference number:
S-502

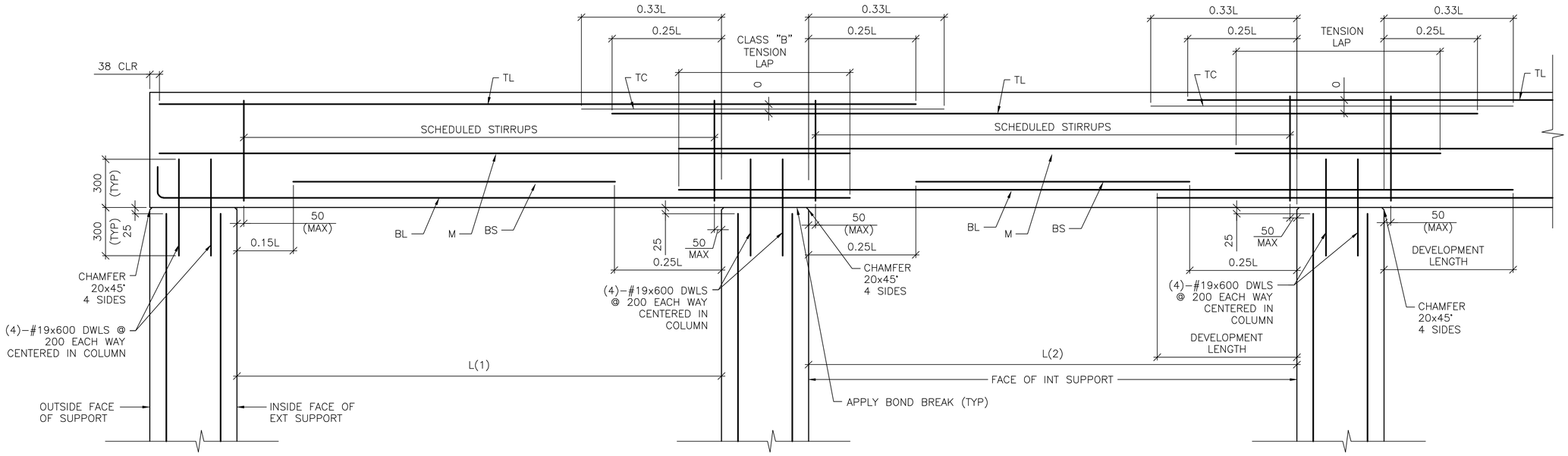

DETAIL NOTE:
1. WORK THIS DETAIL WITH BEAM SCHEDULE ON SHEET S-601.
2. L=GREATEST OF ADJACENT SPANS L(1) OR L(2)
3. ONLY COLUMN CORNER BARS ARE SHOWN

1 S-503 **ROOF BEAM REINFORCING DETAIL**

SCALE: NTS

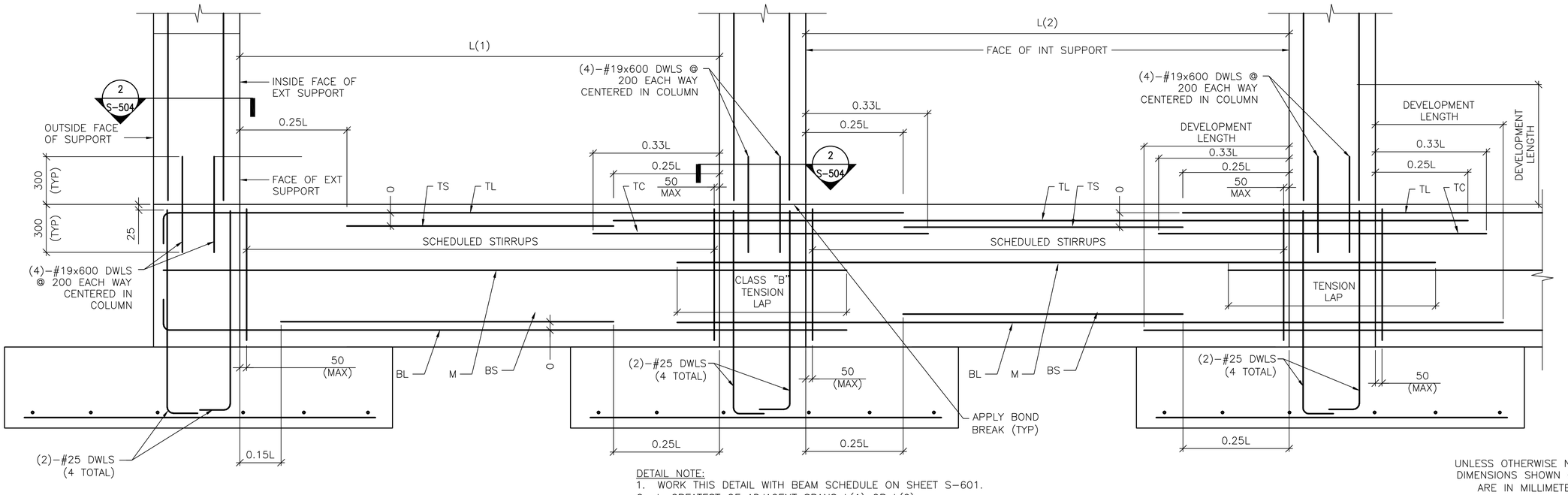

DETAIL NOTE:
1. WORK THIS DETAIL WITH BEAM SCHEDULE ON SHEET S-601.
2. L=GREATEST OF ADJACENT SPANS L(1) OR L(2)
3. ONLY COLUMN CORNER BARS ARE SHOWN.

2 S-503 **GRADE BEAM REINFORCING DETAIL**

SCALE: NTS

UNLESS OTHERWISE NOTED, LINEAR DIMENSIONS SHOWN ON DRAWINGS ARE IN MILLIMETERS (mm)

APPROVED:

A/E DESIGNER OF RECORD

SEAL:

GEORGIA REGISTERED 1-29-10 No. 27141 PROFESSIONAL ENGINEER CHRISTOPHER W. WHITMORE

US ARMY CORPS OF ENGINEERS
AFGHANISTAN ENGINEER DISTRICT

Mark	Description	Date	Appr.

Designed by: KMP/MMY
Dwn by: RCG
Ckd by: CWW
Reviewed by: LHM
Submitted by: BAKER
Date: 2/23/10
Rev: 0
Design file no.
Drawing code:
File name: ANACB50S-503DT
Plot date: 2/23/2010
Plot scale: X:X

U.S. ARMY CORPS OF ENGINEERS
AFGHANISTAN ENGINEER DISTRICT
APO AE 96338

Michael Baker Jr., Inc
A unit of Michael Baker Corporation
Airside Business Park
100 Airside Drive
Moon Township, PA 15108
www.mbakercorp.com

AFGHAN NATIONAL ARMY
REGIONAL MILITARY TRAINING CENTER
STANDARD DESIGN

200 STUDENT CLASSROOM BUILDING
(4) 50 STUDENT CLASSROOMS

BEAM & COLUMN DETAILS

Sheet reference number:
S-503

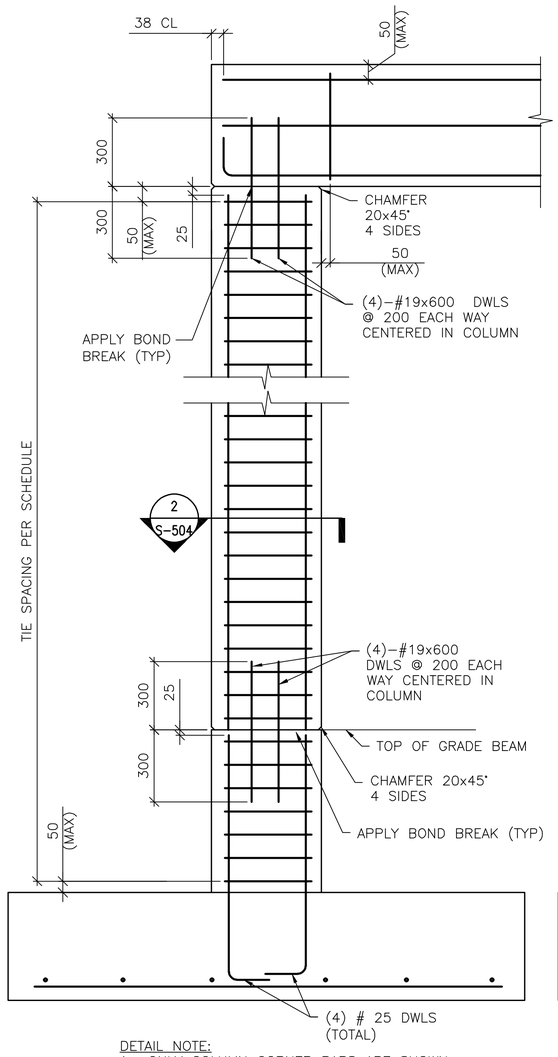

DETAIL NOTE:
1. ONLY COLUMN CORNER BARS ARE SHOWN

1 S-504 **1-STORY COLUMN REINF DETAILS**
SCALE: NTS
(WITH GRADE BEAM)

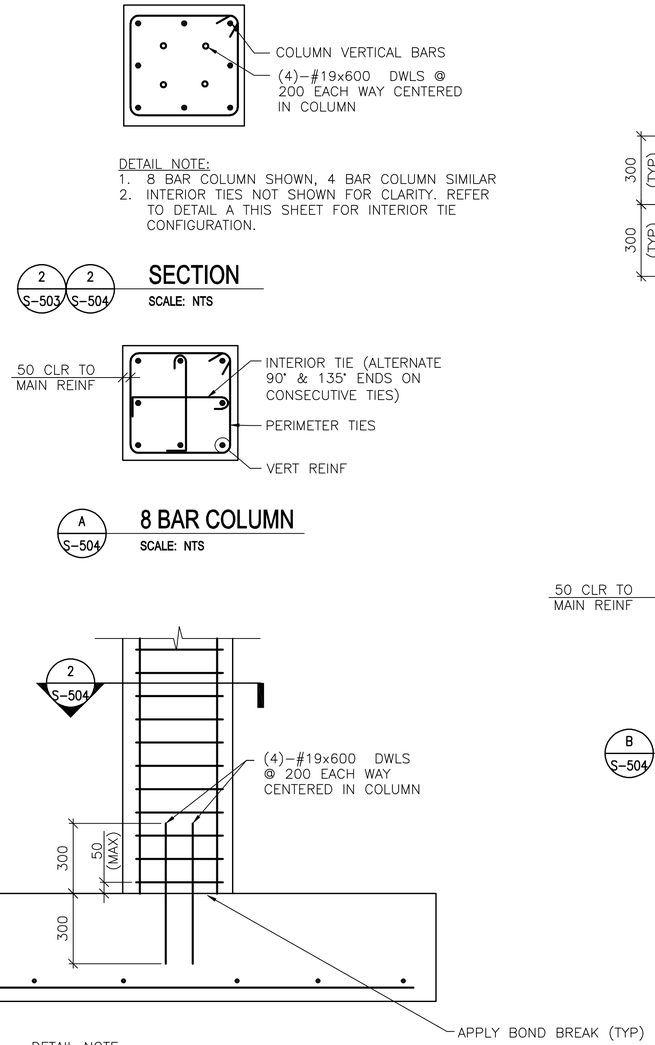

DETAIL NOTE:
1. ONLY COLUMN CORNER BARS ARE SHOWN

1 S-504 **1-STORY COLUMN REINF DETAILS**
SCALE: NTS
(WITHOUT GRADE BEAM)

DETAIL NOTE:
1. 8 BAR COLUMN SHOWN, 4 BAR COLUMN SIMILAR
2. INTERIOR TIES NOT SHOWN FOR CLARITY. REFER TO DETAIL A THIS SHEET FOR INTERIOR TIE CONFIGURATION.

2 S-503 2 S-504 **SECTION**
SCALE: NTS

A S-504 **8 BAR COLUMN**
SCALE: NTS

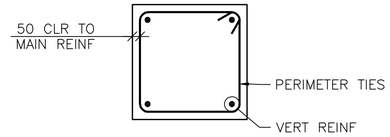

B S-504 **4 BAR COLUMN**
SCALE: NTS

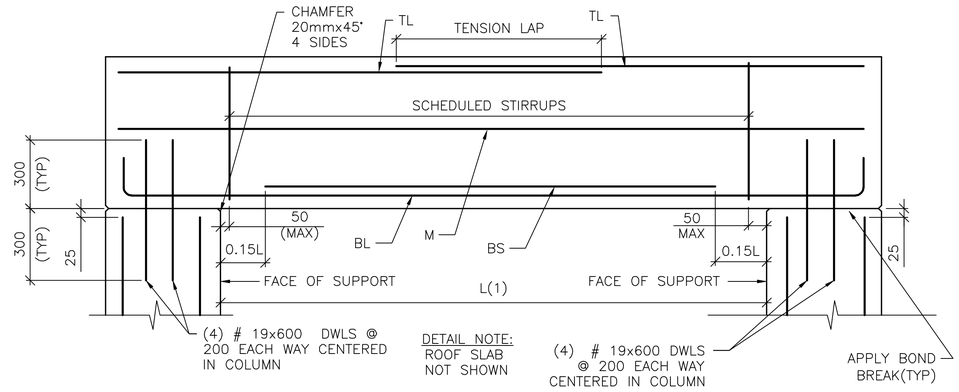

3 S-504 **SINGLE SPAN ROOF BEAM REINFORCING DETAIL**
SCALE: NTS

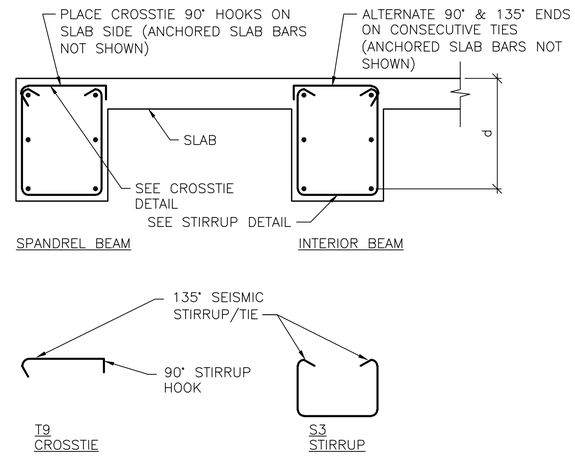

C S-504 **BEAM REINFORCEMENT DETAILS**
SCALE: NTS

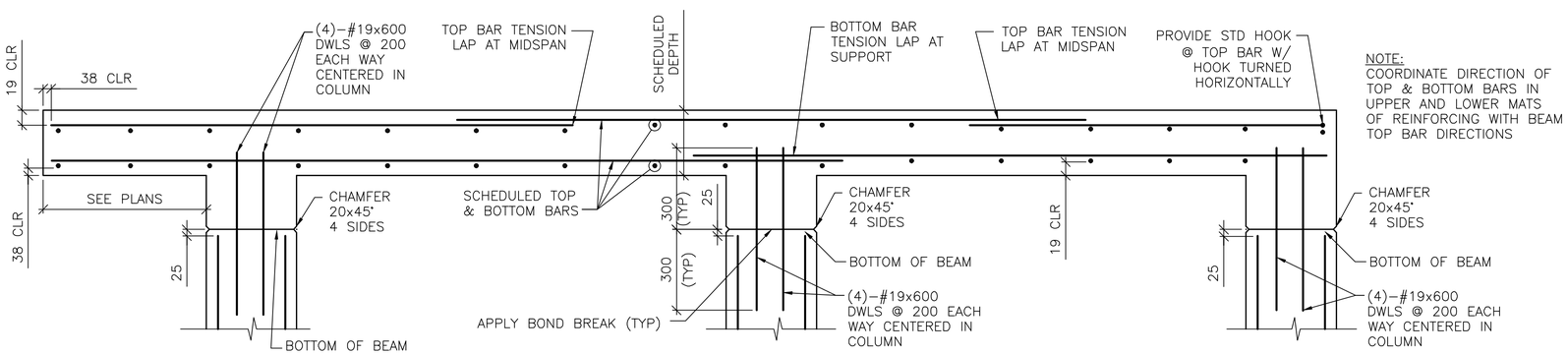

4 S-504 **FRAMED SLAB REINFORCING DETAIL**
SCALE: NTS

UNLESS OTHERWISE NOTED, LINEAR DIMENSIONS SHOWN ARE IN MILLIMETERS (mm)

APPROVED:
A/E DESIGNER OF RECORD
SEAL:

GEORGIA REGISTERED 1-29-10 No. 27141 PROFESSIONAL ENGINEER CHRISTOPHER W. WHITMORE

US ARMY CORPS OF ENGINEERS
AFGHANISTAN ENGINEER DISTRICT

Mark	Description	Date	Appr.	Mark	Description	Date	Appr.

Rev: 0
Date: 2/23/10
Design file no.
Drawing code:
File name: AN4C8505-S04DT
Plot date: 2/23/2010
Plot scale: X:X

Designed by: KMP/MMY
Dwn by: RCG
Ckd by: CWW
Reviewed by: LHM
Submitted by:
BAKER

U.S. ARMY CORPS OF ENGINEERS
AFGHANISTAN ENGINEER DISTRICT
APO AE 96338

Michael Baker Jr., Inc
A unit of Michael Baker Corporation
Airside Business Park
100 Airside Drive
Moon Township, PA 15108
www.mbakercorp.com

AFGHAN NATIONAL ARMY
REGIONAL MILITARY TRAINING CENTER
STANDARD DESIGN

200 STUDENT CLASSROOM BUILDING
(4) 50 STUDENT CLASSROOMS

BEAM & COLUMN DETAILS

Sheet reference number:
S-504

CONCRETE REINFORCEMENT TENSION DEVELOPMENT/LAP SPLICE SCHEDULE

f'c = 28 MPa	LAP CLASS	UNCOATED BARS			
		TOP BARS		OTHER BARS	
BAR SIZES		CASE 1	CASE 2	CASE 1	CASE 2
#10 TO #19	A	50 BAR DIA	74 BAR DIA	38 BAR DIA	57 BAR DIA
	B	64 BAR DIA	96 BAR DIA	50 BAR DIA	74 BAR DIA
#22 TO #57	A	62 BAR DIA	93 BAR DIA	48 BAR DIA	71 BAR DIA
	B	80 BAR DIA	121 BAR DIA	62 BAR DIA	93 BAR DIA

NOTES:
1. TABULATED TENSION DEVELOPMENT LENGTH VALUES ARE TAKEN FROM CRSI DESIGN HANDBOOK 2008 10TH ED.
2. TENSION DEVELOPMENT & TENSION LAP SPLICE LENGTHS ARE EXPRESSED AS MULTIPLES OF BAR DIAMETERS.
3. TABULATED VALUES ARE BASED ON MINIMUM YIELD STRENGTH OF REINFORCEMENT, fy, OF 420MPa.
4. CONCRETE IS NORMAL WEIGHT (2400Kg/m^3) AND 28 DAY COMPRESSIVE STRENGTH = 28MPa.
5. TABULATED VALUES FOR BEAMS & COLUMNS ARE BASED ON TRANSVERSE REINFORCEMENT AND CONCRETE COVER MEETING MINIMUM CODE REQUIREMENTS.
6. CASES 1 & 2, WHICH DEPEND ON THE TYPE OF STRUCTURAL MEMBER, CONCRETE COVER, AND CENTER-TO-CENTER SPACING OF THE BARS ARE DEFINED IN THE TABLE BELOW.
7. LAP SPLICE LENGTHS (MINIMUM 300mm) ARE MULTIPLES OF TENSION DEVELOPMENT LENGTHS: CLASS A = 1.0(TENSION DEVELOPMENT LENGTH) & CLASS B = 1.3(TENSION DEVELOPMENT LENGTH)
8. TOP BARS ARE HORIZONTAL REINFORCEMENT WITH MORE THAN 300mm OF CONCRETE CAST BELOW THE BARS.
9. IT SHALL BE PERMISSIBLE TO CALCULATE WALL AND SLAB REINFORCEMENT TENSION DEVELOPMENT/SPLICE LENGTHS IN ACCORDANCE WITH ACI 12.2.3 OR TABLE 5.3(b) OF CRSI 2008 IN LIEU OF VALUES TABULATED ABOVE.

BEAMS, COLUMNS	CASE 1	CONCRETE COVER AT LEAST 1 BAR DIA AND CENTER-TO-CENTER SPACING AT LEAST 2 BAR DIA
	CASE 2	CONCRETE COVER LESS THAN 1 BAR DIA OR CENTER-TO-CENTER SPACING LESS THAN 2 BAR DIA
ALL OTHERS	CASE 1	CONCRETE COVER AT LEAST 1 BAR DIA AND CENTER-TO-CENTER SPACING AT LEAST 3 BAR DIA
	CASE 2	CONCRETE COVER LESS THAN 1 BAR DIA OR CENTER-TO-CENTER SPACING LESS THAN 3 BAR DIA

CONCRETE COVER SCHEDULE

MINIMUM CONCRETE COVER PROTECTION FOR REINFORCEMENT BARS SHALL BE AS LISTED BELOW: (SEE ACI 318M-05, SECTION 7.7 FOR CONDITIONS NOT NOTED). DIMENSIONS FOR BAR PLACEMENT GIVEN IN SECTIONS AND DETAILS SHALL SUPERSEDE MINIMUM COVER REQUIREMENTS GIVEN HERE. DIMENSIONS ARE IN mm. PROVIDE STANDARD BAR CHAIRS AND SUPPORT BARS @1200mm MAXIMUM AS REQUIRED TO MAINTAIN CONCRETE PROTECTION SPECIFIED.

FOOTINGS (EARTH FORMED):		70
COLUMNS / PIERS (TO TIES)		40
GRADE BEAMS OR SLAB TURNED DOWN EDGES:		
TOP		40
BOTTOM (EARTH FORMED)		70
SIDES (EARTH FORMED)		70
SIDES (BOARD FORMED)	#16 BAR & SMALLER	40
	#19 THRU #36 BAR	50
ELEVATED BEAMS & SLABS:		
BEAM TIES & STIRRUPS (NOT EXPOSED TO WEATHER)		40
BEAM TIES & STIRRUPS (EXPOSED TO WEATHER)		50
FLOOR SLABS (NOT EXPOSED TO WEATHER)		20
FLOOR SLABS (EXPOSED TO WEATHER)		
#19 & LARGER		50
#13 & SMALLER		40
ROOF SLAB BARS		25
SLABS ON GRADE		
NOT EXPOSED TO WEATHER (FROM TOP)		20
EXPOSED TO WEATHER (FROM TOP)		40
UTILITY TUNNEL WALLS, RETAINING WALLS AND SHEAR WALLS. (NO SURFACES SHALL BE EARTH FORMED)		
EARTH SIDE AND FRONT SIDE (EXPOSED TO WEATHER)		
#16 BAR AND SMALLER		40
#19 THRU #36 BAR		50

COLUMN FOOTING SCHEDULE

MARK	FOOTING SIZE (mm)			FOOTING REINFORCING	REMARKS
	LENGTH	WIDTH	THICKNESS		
F1	2500	2500	250	(7)-#19 EW BOTT	-----
F2	4100	4100	400	(11)-#25 EW BOTT	-----
F3	3300	3300	300	(10)-#22 EW BOTT	-----

CONCRETE SHEAR WALL SCHEDULE

MARK	TYPE	WALL LENGTH (L) (mm)	WALL REINFORCEMENT		REMARKS
			END ZONE	FIELD	
SW1	C	6400	(6)-#16 @ 150mm OC	#13 @ 300mm OC	-----
SW2	B	3200	(3)-#16 @ 150mm OC	#13 @ 300mm OC	-----
SW3	C	6100	(4)-#16 @ 150mm OC	#13 @ 300mm OC	-----

NOTES:
1. WORK THIS SCHEDULE WITH SHEAR WALL DETAILS ON SHEETS S-702
2. SEE PLAN FOR LOCATION OF SHEAR WALL(S).
3. WALL "FIELD" REINFORCEMENT LISTED APPLIES TO VERTICAL & HORIZONTAL BARS.
4. WALL "FIELD" REINFORCEMENT SHOULD BE CENTERED IN WALL.
5. VERTICAL "FIELD" BARS MAY BE OMITTED IN LOCATION OF "END ZONE" REINFORCEMENT.

STANDARD HOOKS IN TENSION PER (ACI 318M-05)

HOOK DEVELOPMENT LENGTH (mm)

BAR SIZE	f'c 28 MPa
#10	180
#13	250
#16	300
#19	380
#22	430
#25	480
#29	560
#32	610
#36	690

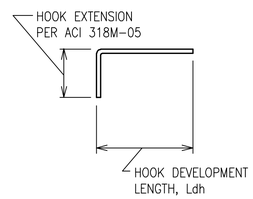

NOTES:
1. CONCRETE IS NORMAL WEIGHT CONCRETE.
2. BAR YIELD STRENGTH, fy = 420 MPa
3. SIDE COVER REQUIREMENTS OF ACI SECT. 12.5.3 ARE ASSUMED TO NOT BE MET.
4. TIE OR STIRRUP REQUIREMENTS OF ACI SECT. 12.5.3 ARE ASSUMED TO NOT BE MET.
5. REDUCTION FOR EXCESS REINFORCEMENT IS NOT TAKEN.
6. HOOK DEVELOPMENT LENGTH IS VALID FOR 180° HOOKS ALSO.

CMU OR CAST IN PLACE CONC LINTEL SCHEDULE (TYP)

OPENING TYPE OR SIZE, BEAM LOCATION OR TYPE	MAX SPAN (mm)	LINTEL DEPTH (mm)	REINFORCING BOTTOM
WALL OPENING	4000	600	(2)-#16 T&B
WALL OPENING	1900	400	(2)-#16 T&B
WALL OPENING	1000	400	(2)-#13 B

1. STRUCTURAL SHEETS DO NOT INDICATE ALL OPENINGS IN MASONRY WALLS. VERIFY NUMBER, SIZE AND LOCATION OF ALL OPENINGS IN MASONRY WALLS FROM ARCHITECTURAL SHEETS AND APPROVED PLUMBING, MECHANICAL, AND ELECTRICAL SHOP DRAWINGS.
2. PROVIDE 200mm BEARING EA END.
3. FOR HEAD DETAILS REFER TO ARCHITECTURAL SHEETS.
4. REINFORCING SHALL BE ASTM A615M, GRADE 420. GROUT FOR CMU LINTELS SHALL HAVE A MINIMUM COMPRESSIVE STRENGTH OF 14 MPa AT 28 DAYS.
5. CONTRACTOR SHALL SUBMIT FOR APPROVAL SHOP DRAWINGS AND SCHEDULES SHOWING SIZE, SPAN, REINFORCEMENT, DETAILS, LOCATIONS, ETC.

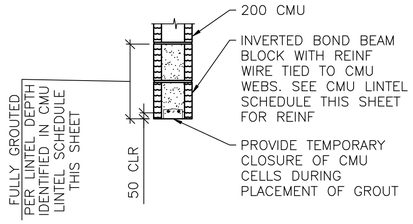

A
S-601
LINTEL DETAIL
SCALE: NTS

BEAM SCHEDULE

MARK	BEAM SIZE (mm)		BEAM REINFORCING						STIRRUPS			REMARKS
	DEPTH	WIDTH	BL	BS	TL	TS	TC	M	SIZE	TYPE	SPACING	
GRADE BEAMS												
GB1	750	400	(2)-#22	(1)-#22	(2)-#22	---	---	---	#13	S3 +T9	d/2	-----
ROOF BEAMS												
RB1	500	400	(2)-#19	(1)-#19	(2)-#22	---	---	---	#13	S3 +T9	d/2	-----
RB2	500	400	(2)-#19	(1)-#19	(2)-#19	---	---	---	#13	S3 +T9	d/2	

NOTES:
1. WORK THIS SCHEDULE WITH BEAM REINFORCING DETAILS ON SHEETS S-503 AND S-504.
2. HOOKS SHOWN ON SECTIONS AND DETAILS SHALL BE 90° STD UON.
3. USE ONLY (1) TC AT BEAM COLUMN INTERSECTION WHERE REQ'D.

COLUMN SCHEDULE

COLUMN MARK / DESCRIPTION	TYP UON	A3 B2, B3, B4 C3	---	---
TYPE	4-BAR	8-BAR	---	---
DIMENSION	500mm SQ.	600mm SQ.	---	---
VERTICAL REINFORCEMENT	(4)-#29	(8)-#25	---	---
TIES	#13 @ d/2	#13 @ d/2	---	---
TOP OF ROOF ELEVATION	3700mm	3700mm	---	---
TOP OF GRADE BEAM ELEVATION	-200mm	-200mm	---	---
TOP OF FOOTING ELEVATION	-950mm	-950mm	---	---

NOTES:
1. WORK THIS SCHEDULE WITH COLUMN DETAILS ON SHEET S-504.
2. SEE FOOTING SCHEDULE ON THIS SHEET FOR FOOTING INFORMATION.
3. COLUMN TIES: INTERIOR TIES TO MATCH SIZE & SPACING OF PERIMETER TIES.
4. HOOKS SHOWN ON SECTIONS & DETAILS SHALL BE 90° STD UON.

UNLESS OTHERWISE NOTED, LINEAR DIMENSIONS SHOWN ARE IN MILLIMETERS (mm)

APPROVED:

A/E DESIGNER OF RECORD

SEAL:

US ARMY CORPS OF ENGINEERS
AFGHANISTAN ENGINEER DISTRICT

Mark	Description	Date	Appr.	Mark	Description	Date	Appr.

Rev: 0
Date: 2/23/10
Design file no.
Drawing code:
File name: AMM2B5R5-601SCH
Plot date: 2/23/2010
Plot scale: X:X

Designed by: KMP/MMY
Ckd by: CWW
Dwn by: RCG
Reviewed by: LHM
Submitted by:

U.S. ARMY CORPS OF ENGINEERS
AFGHANISTAN ENGINEER DISTRICT
APO AE 96338

Michael Baker Jr., Inc
A unit of Michael Baker Corporation
Airside Business Park
100 Airside Drive
Moon Township, PA 15108
www.mbakercorp.com

BAKER

AFGHAN NATIONAL ARMY
REGIONAL MILITARY TRAINING CENTER
STANDARD DESIGN

200 STUDENT CLASSROOM BUILDING
(4) 50 STUDENT CLASSROOMS

SCHEDULES

Sheet reference number:
S-601

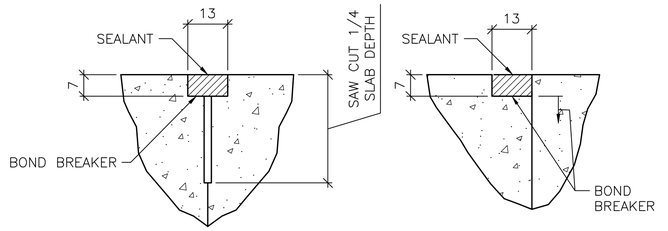

1 S-701 TYPICAL CONCRETE SLAB JOINT FINISH DETAILS

SCALE: NTS

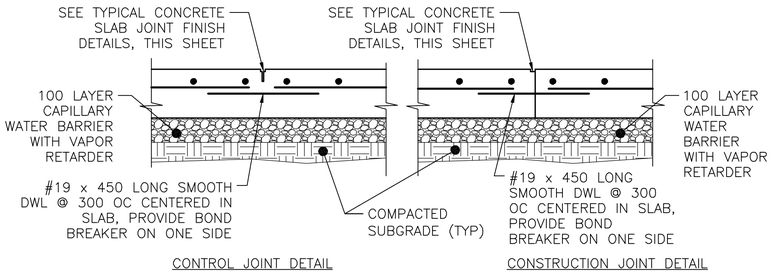

2 S-701 TYPICAL SLAB ON GRADE JOINT DETAIL

SCALE: NTS

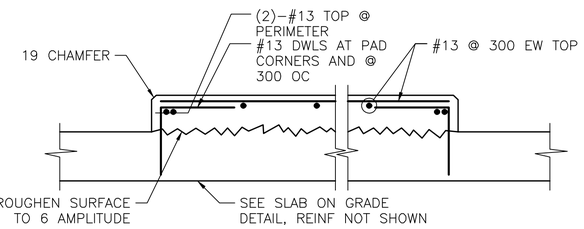

3 S-701 INTERIOR EQUIPMENT PAD DETAIL

SCALE: NTS

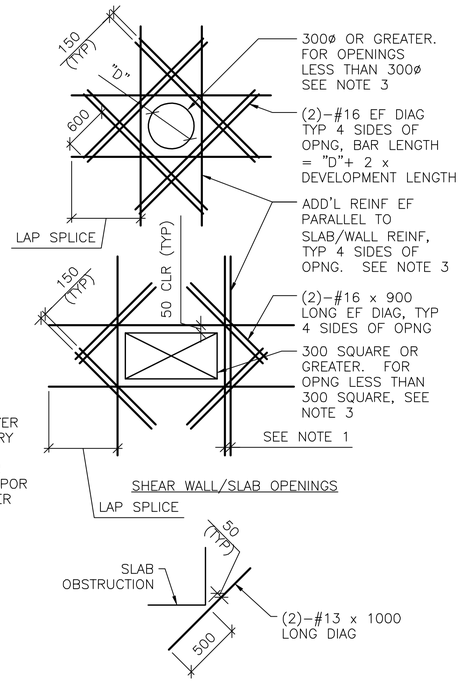

DETAIL NOTES:

1. WHERE MORE THAN ONE ADDITIONAL BAR IS REQUIRED PARALLEL TO THE EXISTING SLAB/WALL REINFORCING THE ADDITIONAL REINFORCING BARS SHALL BE SPACED AT 100 ON CENTER.
2. ADDITIONAL REINFORCING PARALLEL TO THE SLAB/WALL REINFORCING SHALL BE #16 BARS THAT PROVIDE A STEEL AREA ON EACH SIDE OF THE OPENING EQUAL TO 1/2 THE AREA OF THE REINFORCING CUT BY THE OPENING.
3. FOR OPENINGS WITH SIDES OR DIAMETERS LESS THAN 300 SPREAD THE SLAB/WALL REINFORCING TO CLEAR THE OPENING.

4 S-701 ADD'L CONCRETE REINFORCEMENT DETAILS

SCALE: NTS

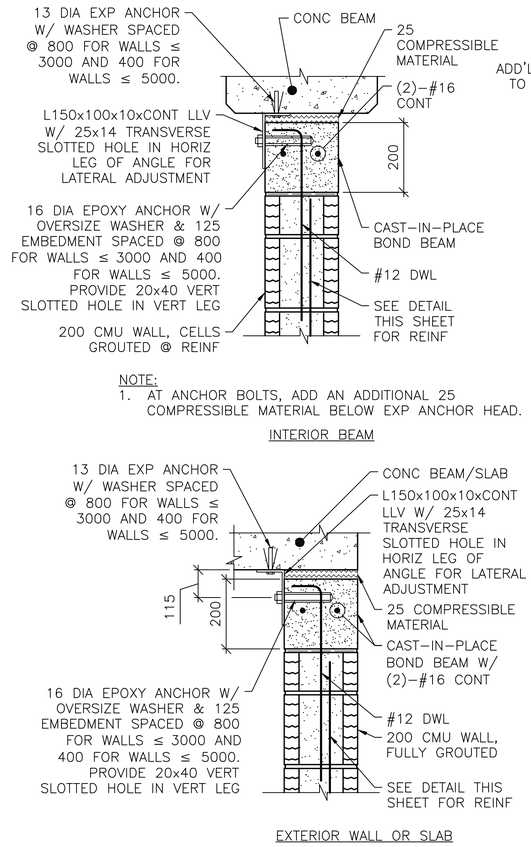

NOTE:

1. AT ANCHOR BOLTS, ADD AN ADDITIONAL 25 COMPRESSIBLE MATERIAL BELOW EXP ANCHOR HEAD.

NOTES:

1. THIS DETAIL IS AN ALTERNATE TOP OF WALL ANCHORAGE DETAIL TO BE USED AT THE CONTRACTOR'S OPTION IN LIEU OF DETAILS SHOWN ON S-400 & S-500 DRAWINGS.
2. CAST-IN-PLACE BOND BEAM SHOWN AT TOP OF WALL IS ALSO APPLICABLE FOR INTERMEDIATE AND STARTER COURSE BOND BEAMS WITHIN WALL.

5 S-701 ALTERNATE TOP OF CMU WALL BRACING DETAILS

SCALE: NTS

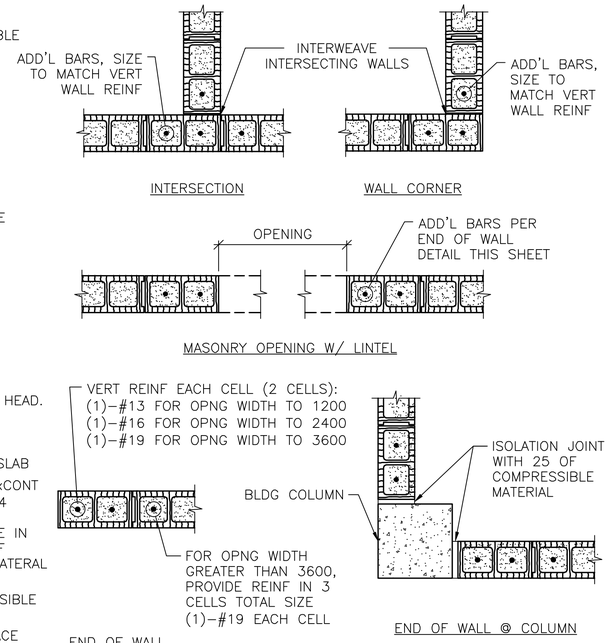

NOTES:

1. OPENING WIDTH SHALL NOT EXCEED 3600 FOR THIS TYPE OF JAMB.
2. ALL CELLS FULLY GROUTED AT EXTERIOR WALLS. AT INTERIOR WALLS, ONLY GROUT CELLS CONTAINING REINF.

6 S-701 TYP CMU DETAILS

SCALE: NTS

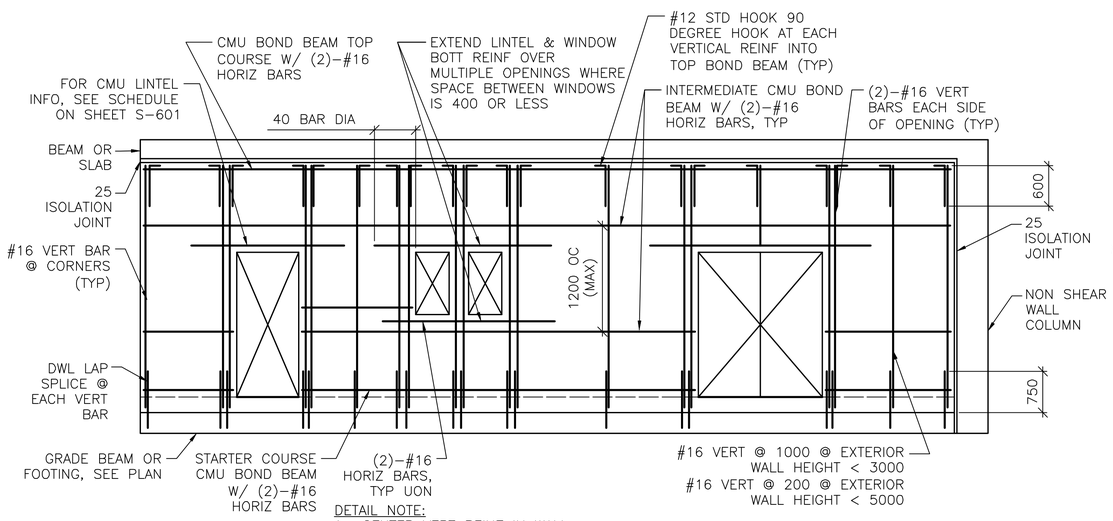

DETAIL NOTE:

1. CENTER VERT REINF IN WALL.
2. GROUT ALL CMU CELLS.
3. REFERENCE ARCH DWGS FOR JOINT INFORMATION
4. DOWELS BETWEEN TOP BOND BEAM AND BEAM/SLAB ABOVE (INCLUDING EMBEDDED PIPE SLEEVE) NOT SHOWN FOR CLARITY. SEE SPECIFIC S-500 SERIES DWGS FOR INFO.
5. FOR INFORMATION ON ALTERNATE CAST-IN-PLACE WALL BOND BEAMS, REFERENCE ALTERNATE TOP OF CMU WALL BRACING DETAILS THIS SHEET.

7 S-701 TYP EXTERIOR CMU WALL REINF DETAIL

SCALE: NTS

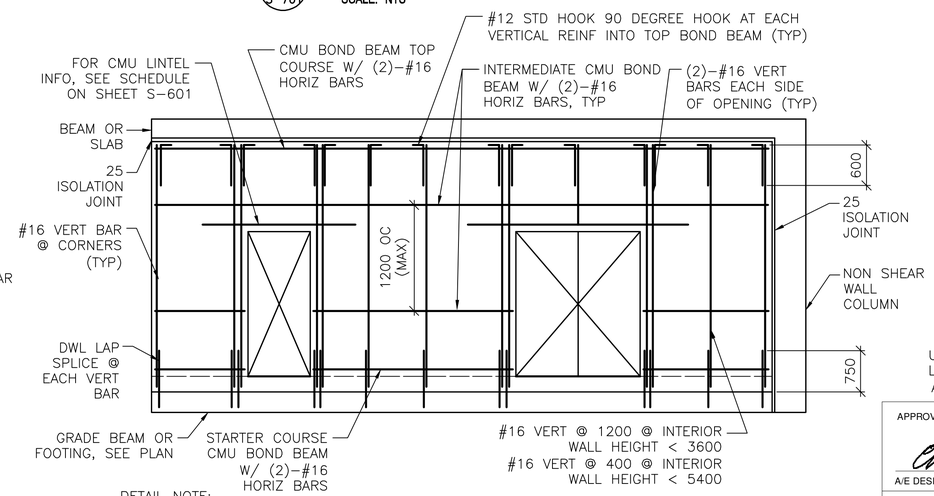

DETAIL NOTE:

1. CENTER VERT REINF IN WALL.
2. GROUT ALL CMU CELLS.
3. REFERENCE ARCH DWGS FOR JOINT INFORMATION
4. DOWELS BETWEEN TOP BOND BEAM AND BEAM/SLAB ABOVE (INCLUDING EMBEDDED PIPE SLEEVE) NOT SHOWN FOR CLARITY. SEE SPECIFIC S-500 SERIES DWGS FOR INFO.
5. FOR INFORMATION ON ALTERNATE CAST-IN-PLACE WALL BOND BEAMS, REFERENCE ALTERNATE TOP OF CMU WALL BRACING DETAILS THIS SHEET.

8 S-701 TYP INTERIOR CMU WALL REINF DETAIL

SCALE: NTS

UNLESS OTHERWISE NOTED, LINEAR DIMENSIONS SHOWN ARE IN MILLIMETERS (mm)

APPROVED:

A/E DESIGNER OF RECORD

SEAL:

GEORGIA REGISTERED 1-29-10 No. 27141 PROFESSIONAL ENGINEER CHRISTOPHER W. WHITMORE

US ARMY CORPS OF ENGINEERS
AFGHANISTAN ENGINEER DISTRICT

Mark	Description	Date	Appr.	Mark	Description	Date	Appr.

Rev: 0
Date: 2/23/10
Design file no.
Drawing code:
File name: ANA08565-701T01
Plot date: 2/23/2010
Plot scale: X:X
Designed by: KMF/MMY
Dwn by: RCG
Ckd by: CWW
Reviewed by: LHM
Submitted by:
BAKER

U.S. ARMY CORPS OF ENGINEERS
AFGHANISTAN ENGINEER DISTRICT
APO AE 96338

Michael Baker Jr., Inc
A unit of Michael Baker Corporation
Airside Business Park
100 Airside Drive
Moon Township, PA 15108
www.mbakercorp.com

AFGHAN NATIONAL ARMY
REGIONAL MILITARY TRAINING CENTER
STANDARD DESIGN

200 STUDENT CLASSROOM BUILDING
(4) 50 STUDENT CLASSROOMS

TYPICAL DETAILS

Sheet reference number:
S-701

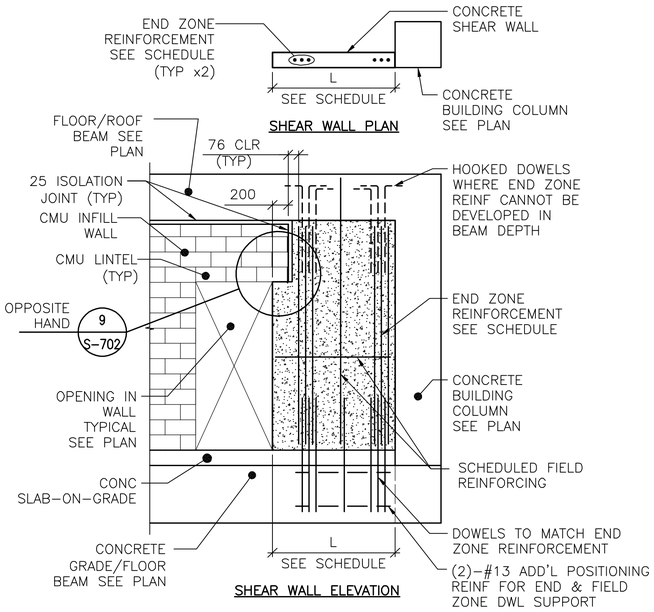

DETAIL NOTES:
1. FIELD REINFORCEMENT IN SHEAR WALL NOT COMPLETELY SHOWN FOR CLARITY.
2. FIELD REINFORCEMENT CENTERED IN WALL.
3. MINIMUM CONC CLEAR DISTANCE FOR END ZONE REINF = 76
4. SEE CONC SHEAR WALL SCHEDULE ON SHEET S-601
5. SEE ARCH DWGS FOR ISOLATION JOINT INFORMATION

1 S-702 TYPE "B" SHEAR WALL DETAIL

SCALE: NTS

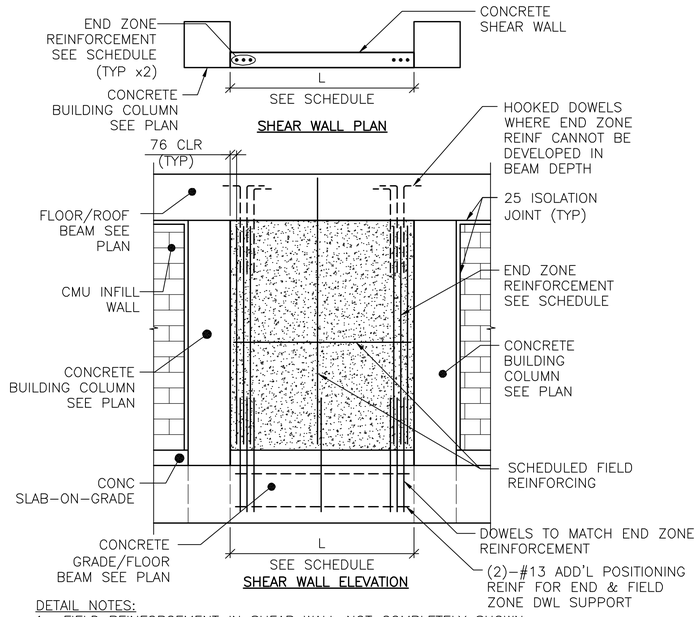

DETAIL NOTES:
1. FIELD REINFORCEMENT IN SHEAR WALL NOT COMPLETELY SHOWN FOR CLARITY.
2. FIELD REINFORCEMENT CENTERED IN WALL.
3. MINIMUM CONC CLEAR DISTANCE FOR END ZONE REINF = 76
4. SEE CONC SHEAR WALL SCHEDULE ON SHEET S-601
5. SEE ARCH DWGS FOR ISOLATION JOINT INFORMATION

2 S-702 TYPE "C" SHEAR WALL DETAIL

SCALE: NTS

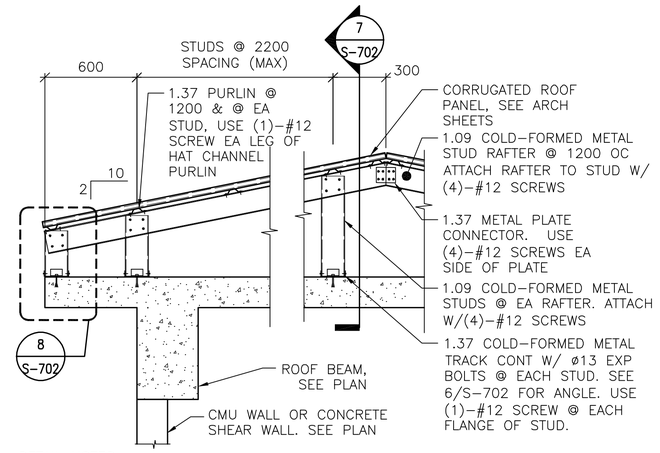

DETAIL NOTES:
1. ALL GABLE END VERTICAL STUDS SHALL BE ORIENTED 90° TO INTERIOR STUDS & SPACED @ 600 OC. GABLE END RAFTER SHALL BE 1.37 METAL TRACK SPANNING CONTINUOUSLY OVER GABLE END STUDS. INSET GIRTS AT GABLE END SHALL BE 1.09 COLD-FORMED METAL STUDS @ 1200 OC ATTACHED VIA 1.37 THICKNESS CLIP ANGLE W/ (2) #12 SCREWS EA LEG.
2. ALL INTERIOR, NON-GABLE END VERTICAL STUDS GREATER THAN 2400 IN LENGTH SHALL BE BACK-TO-BACK W/ #12 SCREWS @ 200 OC STAGGERED.

3 S-702 TYPICAL OVERBUILT ROOF FRAMING DETAIL

SCALE: NTS

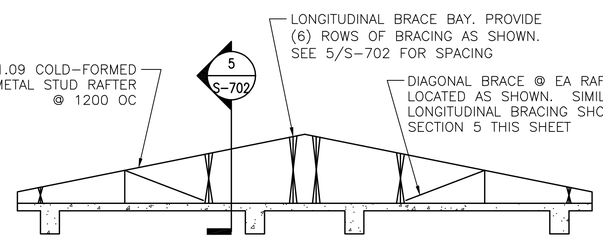

4 S-702 TYPICAL ROOF BRACE LAYOUT

SCALE: NTS

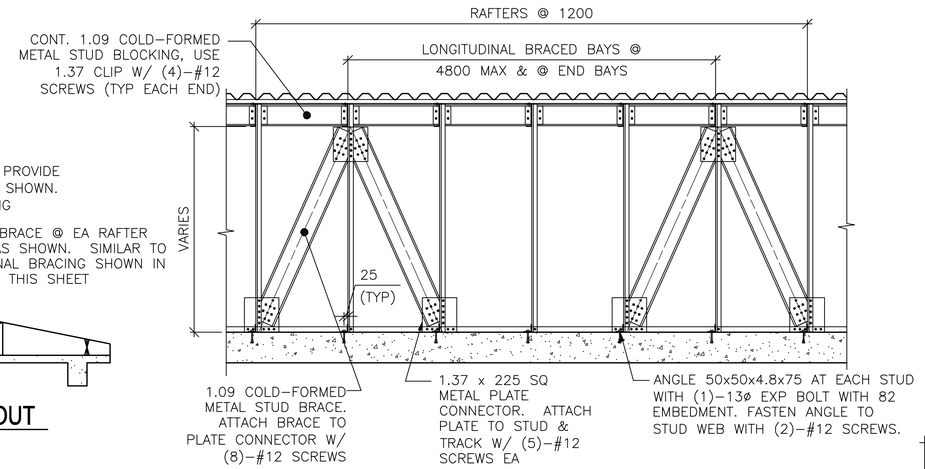

5 S-702 SECTION

SCALE: NTS

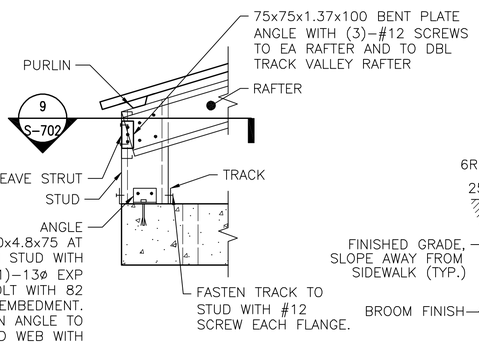

6 S-702 DETAIL

SCALE: NTS

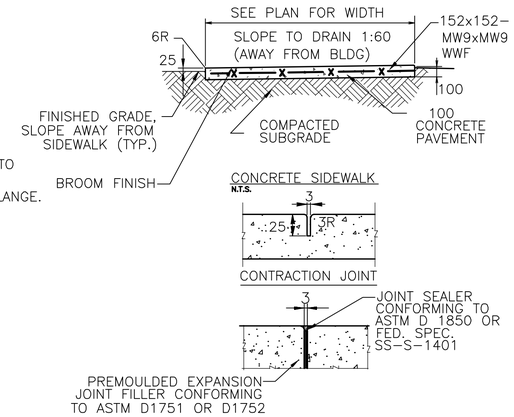

7 S-702 TYPICAL CONCRETE SIDEWALK DETAILS

SCALE: NTS

UNLESS OTHERWISE NOTED, LINEAR DIMENSIONS SHOWN ARE IN MILLIMETERS (mm)

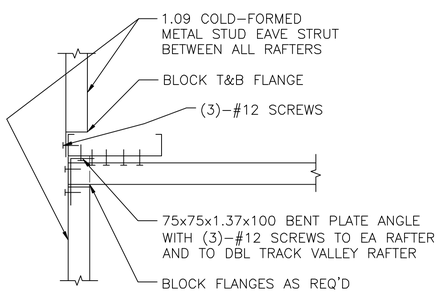

8 S-702 SECTION

SCALE: NTS

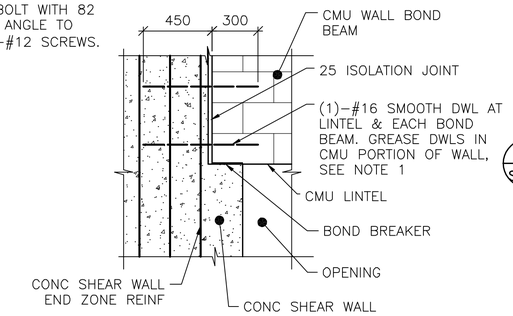

NOTE:
1. TIE SMOOTH DOWEL ROD TO SHEAR WALL END ZONE REINF FOR EACH BOND BEAM AND LINTEL.

9 S-702 SECTION

SCALE: NTS

APPROVED:

A/E DESIGNER OF RECORD

SEAL:

GEORGIA REGISTERED 1-27-10 No. 27141 PROFESSIONAL ENGINEER CHRISTOPHER W. WHITMORE

US ARMY CORPS OF ENGINEERS
AFGHANISTAN ENGINEER DISTRICT

Mark	Description	Date	Appr.	Mark	Description	Date	Appr.

Rev: 0
Date: 2/23/10
Design file no.
Drawing code:
File name: ANAC8509-702TDT
Plot date: 2/23/2010
Plot scale: X:X
Designed by: KMP/MMY
Dwn by: RCG
Ckd by: CWW
Reviewed by: LHM
Submitted by: BAKER

U.S. ARMY CORPS OF ENGINEERS
AFGHANISTAN ENGINEER DISTRICT
APO AE 96338

Michael Baker Jr., Inc
A unit of Michael Baker Corporation
Airside Business Park
100 Airside Drive
Moon Township, PA 15108
www.mbakercorp.com

AFGHAN NATIONAL ARMY
REGIONAL MILITARY TRAINING CENTER
STANDARD DESIGN

200 STUDENT CLASSROOM BUILDING
(4) 50 STUDENT CLASSROOMS

TYPICAL DETAILS

Sheet reference number:
S-702

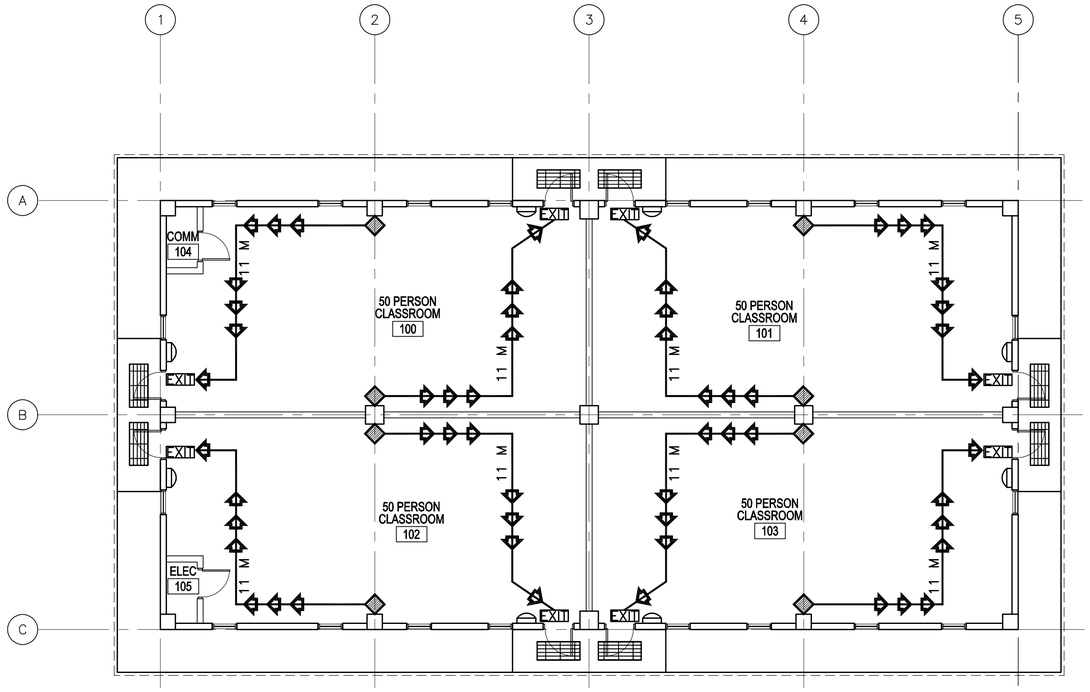

1 / A-001 **LIFE SAFETY PLAN**

SCALE: 1:100

CODE ANALYSIS:

1. REFERENCES:
   2006 INTERNATIONAL BUILDING CODE (2006 IBC)
   2006 LIFE SAFETY CODE (2006 NFPA 101)

2. IBC OCCUPANCY CLASSIFICATION:
   GROUP A–3 (ASSEMBLY ≤300 NFPA 101 6.1.2 AND CHAPTER 12)

3. TYPE OF CONSTRUCTION (IBC): TYPE II–B (UNPROTECTED/NONSPRINKLERED)

4. IBC TABLE 503: ALLOWABLE HEIGHT AND BUILDING AREAS:
   GROUP A–3
   ALLOWABLE AREA: 883 SM
   ALLOWABLE HEIGHT: 2 STORIES (16 M)

   GROUP A–3
   PROPOSED AREA: 392 SM
   PROPOSED HEIGHT: 1 STORY (<16 M)

5. IBC TABLE 601 & 602: FIRE RESISTANCE RATING REQUIREMENTS FOR BUILDING ELEMENTS FOR TYPE II–B

BUILDING ELEMENT	RATING (HOUR)	REFERENCE
STRUCTURAL FRAME (COLUMNS, GIRDERS & TRUSSES)	0	TABLE 601
BEARING WALLS		
EXTERIOR	0	TABLE 601
INTERIOR	0	TABLE 601
NONBEARING WALLS & PARTITIONS		
INTERIOR	0	TABLE 601
FLOOR CONSTRUCTION	0	TABLE 601
ROOF CONSTRUCTION	0	TABLE 601
EXTERIOR WALL	0	TABLE 602

6. IBC TABLE 803.5 – INTERIOR WALL AND CEILING FINISH REQUIREMENTS FOR A–3 OCCUPANCY/NONSPRINKLERED

GROUP	EXIT ENCLOSURES AND EXIT PASSAGEWAY	CORRIDORS	ROOMS AND ENCLOSED SPACES
A–3	A	A	C

7. NFPA 101 TABLE 7.3.1.2 – OCCUPANT LOAD
   ASSEMBLY ≤ 300 = 1.4 NET SM/PERSON CALCULATED = 280 OCCUPANTS

8. NFPA 101 TABLE 7.3.3.1 – EGRESS CAPACITY
   ASSEMBLY = 5 MM PER OCCUPANT

   REQUIRED: 1400 MM (280 OCCUPANTS x 5 MM PER OCCUPANT)
   PROPOSED EGRESS CAPACITY: 7200 MM: (8) 900 MM DOORS

9. NFPA 101 PARAGRAPH 12.2.6 – EXIT ACCESS TRAVEL DISTANCE
   REQUIRED: 60 METERS
   PROPOSED: 11 METERS

10. NFPA 101 PARAGRAPH 12.3.6 (1) – CORRIDOR FIRE–RESISTANCE RATING (HOUR)
    CORRIDORS ARE NOT REQUIRED AS DOORS EXIT DIRECTLY TO OUTSIDE

11. NFPA 101 PARAGRAPH 12.2.4.1 AND 7.4.1.1 – MINIMUM NUMBER OF EXITS
    REQUIRED: 2 MINIMUM PER CLASSROOM
    PROPOSED: 2 EXITS PER CLASSROOM

12. NFPA 101 12.2.2.2.3 – EXIT HARDWARE OCCUPANT WAS LESS THAN 100, NO PANIC HARDWARE IS REQUIRED.

LEGEND:

- DENOTES PATHS OF EXIT TRAVEL
- EXIT — DENOTES DOOR AS AN EMERGENCY EXIT
- DENOTES STARTING POINT FOR TRAVEL DISTANCE
- DENOTES FIRE EXTINGUISHER LOCATIONS

LINEAR DIMENSIONS SHOWN ARE IN MILLIMETERS (MM), UNLESS OTHERWISE NOTED

0 2000 4000
SCALE: 1:100

APPROVED:

A/E DESIGNER OF RECORD

SEAL:

STATE OF SOUTH CAROLINA
KEVIN R. CHAFIN
N. Charleston, SC
6374
REGISTERED ARCHITECT

US ARMY CORPS OF ENGINEERS
AFGHANISTAN ENGINEER DISTRICT

Mark	Description	Date	Appr.	Mark	Description	Date	Appr.

Date: 2/23/10 Rev: 0
Design file no.
Drawing code:
File name: ANACB50A-001LSP
Plot date: 2/23/2010
Plot scale: x:X

Designed by: KRC
Dwn by: KJG
Ckd by: NLJ
Reviewed by: LHM
Submitted by: BAKER

U.S. ARMY CORPS OF ENGINEERS
AFGHANISTAN ENGINEER DISTRICT
APO AE 96338

Michael Baker Jr., Inc.
A unit of Michael Baker Corporation
Airside Business Park
100 Airside Drive
Moon Township, PA 15108
www.mbakercorp.com

AFGHAN NATIONAL ARMY
REGIONAL MILITARY TRAINING CENTER
STANDARD DESIGN

200 STUDENT CLASSROOM BUILDING
(4) 50 STUDENT CLASSROOMS

LIFE SAFETY PLAN

Sheet reference number:
A–001

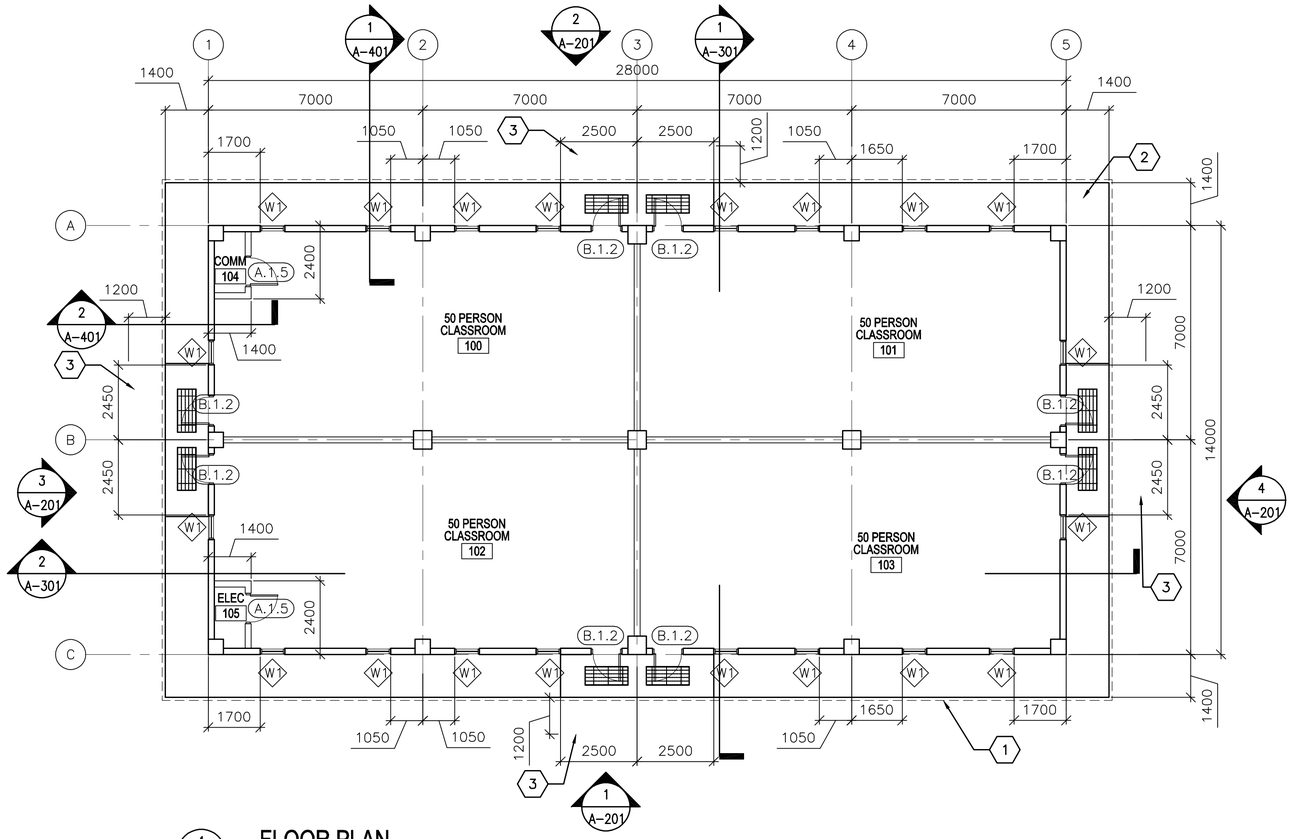

1 A-101 **FLOOR PLAN**

SCALE: 1:100

GENERAL NOTES:

A. DIMENSIONS ARE SHOWN TO OUTER EDGE OF EXTERIOR STRUCTURAL COLUMNS, STRUCTURAL COLUMN GRID, EDGE OF INTERIOR PARTITIONS, EDGE OF WINDOW OPENINGS, AND TO HINGE SIDE OF DOOR FRAME OPENINGS.

B. HINGE SIDE OF OPENINGS FOR DOORS AND FRAMES SHALL BE LOCATED 200 MM FROM THE ADJACENT WALL OR COLUMN, UNLESS NOTED OTHERWISE.

C. INTERIOR PARTITIONS SHALL BE 200 MM CMU. SEE STRUCTURAL DRAWINGS FOR LOCATION OF CONCRETE SHEAR WALLS.

D. COSMETIC REPAIR OF MINOR DEFECTS: REPAIR OR FILL MORTAR JOINTS AND MINOR DEFECTS, INCLUDING BUT NOT LIMITED TO SPALLS, IN ACCORDANCE WITH MANUFACTURER'S RECOMMENDATIONS AND PRIOR TO COATING APPLICATION. SURFACES TO BE PAINTED SHALL BE CLEAN AND FREE OF FOREIGN MATTER BEFORE APPLICATION OF PAINT. CLEANING SHALL BE SCHEDULED SO THAT DUST AND OTHER CONTAMINANTS WILL NOT FALL ON NEWLY PAINTED SURFACES.

E. CONCRETE, PLASTER, AND MASONRY SURFACES SHALL BE ALLOWED TO CURE FOR AT LEAST 30 DAYS BEFORE PAINTING. CONCRETE SLABS-ON-GRADE SHALL BE ALLOWED TO CURE 90 DAYS BEFORE STAINING OR SEALING.

F. DO NOT USE PAINT MATERIALS CONTAINING LEAD CONTENT IN EXCESS OF 0.009 PERCENT OF THE WEIGHT OF THE TOTAL NONVOLATILE CONTENT OF THE PAINT OR THE WEIGHT OF THE DRIED PAINT FILM.

G. DO NOT USE ANY ASBESTOS CONTAINING MATERIALS (ACM) IN PROJECT. ACM IS DEFINED AS 1% OR MORE BY VOLUME.

H. DO NOT USE PAINT MATERIALS CONTAINING MERCURIAL FUNGICIDES.

I. FACTORY PRIMED METAL DOORS AND FRAMES SHALL RECEIVE TWO COATS OF PAINT.

J. FILL REMAINING SPACE AT PENETRATIONS IN FIRE-RATED FLOORS, PARTITIONS AND CEILINGS WITH APPROPRIATE FIRESTOPPING MATERIALS.

K. ALL CEILING FINISHES SHALL BE PAINTED PLASTER APPLIED TO STRUCTURE.

L. ALL WALL FINISHES SHALL BE PAINTED PLASTER APPLIED TO STRUCTURE, UNLESS NOTED OTHERWISE.

M. ALL FLOOR FINISHES SHALL BE EPOXY SEALED CONCRETE, UNLESS NOTED OTHERWISE.

KEY NOTES: (X)

1. LINE OF ROOF OVERHANG ABOVE.
2. CONCRETE SIDEWALK – SEE DETAIL 2/A-503.
3. CONCRETE STOOP WITH GRATE – SEE DETAIL 1/A-503.

LEGEND:

(XXX) DOOR FRAME AND HARDWARE TYPE, SEE SHEET A-601

(A) WINDOW TYPE, SEE SHEET A-601

(X) KEY NOTE

ABBREVIATIONS:

ELEC	ELECTRICAL
MECH	MECHANICAL
JAN	JANITOR
CLOS	CLOSET
COMM	COMMUNICATIONS

LINEAR DIMENSIONS SHOWN ARE IN MILLIMETERS (MM), UNLESS OTHERWISE NOTED

0 2000 4000
SCALE: 1:100

APPROVED:

A/E DESIGNER OF RECORD

SEAL:

STATE OF SOUTH CAROLINA
KEVIN R. CHAFIN
N. Charleston, SC
6374
REGISTERED ARCHITECT

US ARMY CORPS OF ENGINEERS
AFGHANISTAN ENGINEER DISTRICT

Mark	Description	Date	Appr.	Mark	Description	Date	Appr.

Date: 2/23/10 | Rev: 0
Design file no.
Drawing code:
File name: ANACB50A-101FP
Plot date: 2/23/2010
Plot scale: x:X

Designed by: KRC | Ckd by: NLJ
Dwn by: KJG | Reviewed by: LHM
Submitted by: BAKER

U.S. ARMY CORPS OF ENGINEERS
AFGHANISTAN ENGINEER DISTRICT
APO AE 96338

Michael Baker Jr., Inc
A unit of Michael Baker Corporation
Airside Business Park
100 Airside Drive
Moon Township, PA 15108
www.mbakercorp.com

AFGHAN NATIONAL ARMY
REGIONAL MILITARY TRAINING CENTER
STANDARD DESIGN

200 STUDENT CLASSROOM BUILDING
(4) 50 STUDENT CLASSROOMS

FLOOR PLAN

Sheet reference number:
A-101

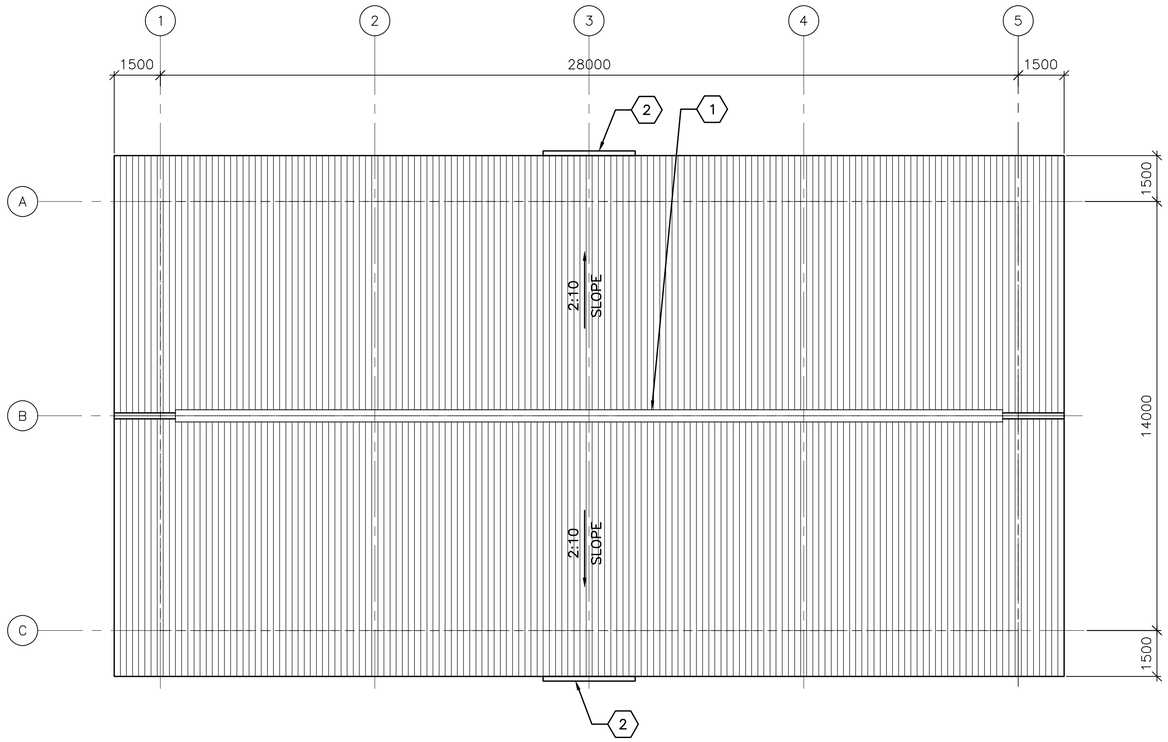

1 A–102 **ROOF PLAN**

SCALE: 1:100

GENERAL NOTES:

A. THE APPROXIMATE LOCATION OF ROOF DEVICES AND PENETRATIONS ARE SHOWN ON THE ROOF PLAN FOR INFORMATION ONLY. THE CONTRACTOR SHALL BE RESPONSIBLE FOR UNDERSTANDING THE ACTUAL LOCATION OF THESE AND ALL OTHER ITEMS PRIOR TO BEGINNING CONSTRUCTION. COORDINATE ALL ROOF PENETRATIONS WITH STRUCTURAL, MECHANICAL AND PLUMBING WORK.

B. UNLESS OTHERWISE NOTED, NOTES, DETAILS OR FEATURES INDICATED FOR ONE CONDITION SHALL BE APPLICABLE FOR ALL ALIKE AND SIMILAR CONDITIONS.

C. STOCKPILING OF MATERIALS, EQUIPMENT AND ANY OTHER ITEMS ON THE ROOF IS PROHIBITED.

D. ROOFS SHALL BE CORRUGATED METAL ROOF PANELS ON COLD–FORMED METAL FRAMING ON CONCRETE SLAB.

KEY NOTES:

1. CONTINUOUS METAL RIDGE VENT – SEE DETAIL 4/A–501.
2. METAL GUTTER, CENTER ON DOOR, 3000 MM – SEE DETAIL 1A/A–501.

LINEAR DIMENSIONS SHOWN ARE IN MILLIMETERS (MM), UNLESS OTHERWISE NOTED

0 2000 4000
SCALE: 1:100

APPROVED:

A/E DESIGNER OF RECORD

SEAL:

STATE OF SOUTH CAROLINA
KEVIN R. CHAFIN
N. Charleston, SC
6374
REGISTERED ARCHITECT

US ARMY CORPS OF ENGINEERS
AFGHANISTAN ENGINEER DISTRICT

Mark	Description	Date	Appr.	Mark	Description	Date	Appr.

U.S. ARMY CORPS OF ENGINEERS
AFGHANISTAN ENGINEER DISTRICT
APO AE 96338

Michael Baker Jr., Inc.
A unit of Michael Baker Corporation
Airside Business Park
100 Airside Drive
Moon Township, PA 15108
www.mbakercorp.com

Designed by: KRC
Dwn by: KJG
Ckd by: NLJ
Reviewed by: LHM
Submitted by: BAKER
Date: 2/23/10
Rev: 0
Design file no.
Drawing code:
File name: ANACB50A-102RP
Plot date: 2/23/2010
Plot scale: x:X

AFGHAN NATIONAL ARMY
REGIONAL MILITARY TRAINING CENTER
STANDARD DESIGN

200 STUDENT CLASSROOM BUILDING
(4) 50 STUDENT CLASSROOMS

ROOF PLAN

Sheet reference number:
A–102

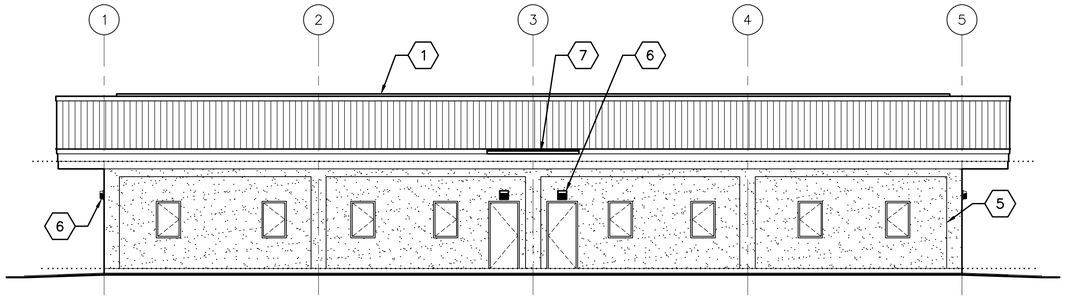

1 A–201 **ELEVATION**
SCALE: 1:100

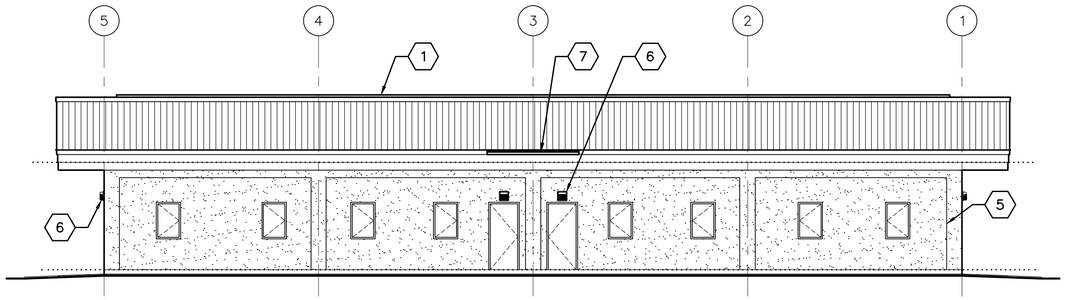

2 A–201 **ELEVATION**
SCALE: 1:100

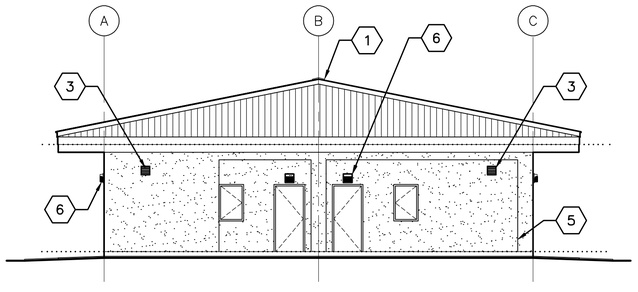

3 A–201 **ELEVATION**
SCALE: 1:100

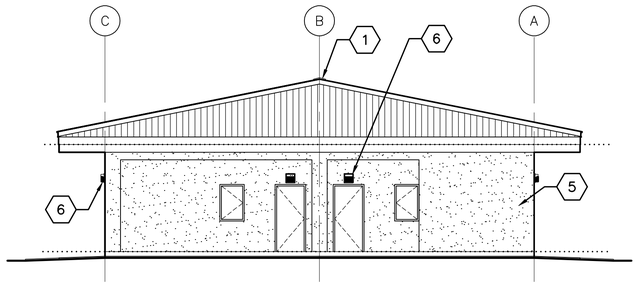

4 A–201 **ELEVATION**
SCALE: 1:100

GENERAL NOTES:

A. COORDINATE SIZE AND LOCATION OF OPENINGS FOR MECHANICAL ITEMS WITH MECHANICAL DRAWINGS.

B. PROVIDE STRUCTURAL LINTELS AS REQUIRED – SEE STRUCTURAL DRAWINGS

C. ALL EXTERIOR WALL FINISHES SHALL BE STUCCO OVER CMU AND CONCRETE SUBSTRATES. PROVIDE CONTROL JOINTS IN STUCCO WALL FINISH AS NOTED.

D. ROOF SHALL BE CORRUGATED METAL ROOF PANELS ON COLD–FORMED METAL FRAMING ON CONCRETE SLAB.

KEY NOTES: (X)

1. CONTINUOUS METAL RIDGE VENT – SEE DETAIL 4/A–501.
2. NOT USED
3. EXHAUST FAN, LOCATE TOP OF WALL PENETRATION 2800 MM ABOVE FINISHED FLOOR – SEE MECHANICAL DRAWINGS.
4. NOT USED
5. STUCCO CONTROL JOINT – SEE DETAIL 2A/A–501.
6. EXTERIOR LIGHT FIXTURE – SEE ELECTRICAL.
7. METAL GUTTER, CENTER ON DOOR, 3000 MM – SEE DETAIL 1A/A–501.

LINEAR DIMENSIONS SHOWN ARE IN MILLIMETERS (MM), UNLESS OTHERWISE NOTED

0 2000 4000
SCALE: 1:100

APPROVED:

A/E DESIGNER OF RECORD

SEAL:

STATE OF SOUTH CAROLINA
KEVIN R. CHAFIN
N. Charleston, SC
6374
REGISTERED ARCHITECT

US ARMY CORPS OF ENGINEERS
AFGHANISTAN ENGINEER DISTRICT

Mark	Description	Date	Appr.	Mark	Description	Date	Appr.

U.S. ARMY CORPS OF ENGINEERS
AFGHANISTAN ENGINEER DISTRICT
APO AE 96338

Michael Baker Jr., Inc
A unit of Michael Baker Corporation
Airside Business Park
100 Airside Drive
Moon Township, PA 15108
www.mbakercorp.com

Designed by: KRC
Dwn by: KJG
Ckd by: NLJ
Reviewed by: LHM
Submitted by: BAKER
Date: 2/23/10
Rev: 0
Design file no.
Drawing code:
File name: ANACB50A-201ELV
Plot date: 2/23/2010
Plot scale: x:X

AFGHAN NATIONAL ARMY
REGIONAL MILITARY TRAINING CENTER
STANDARD DESIGN

200 STUDENT CLASSROOM BUILDING
(4) 50 STUDENT CLASSROOMS

ELEVATIONS

Sheet reference number:
A–201

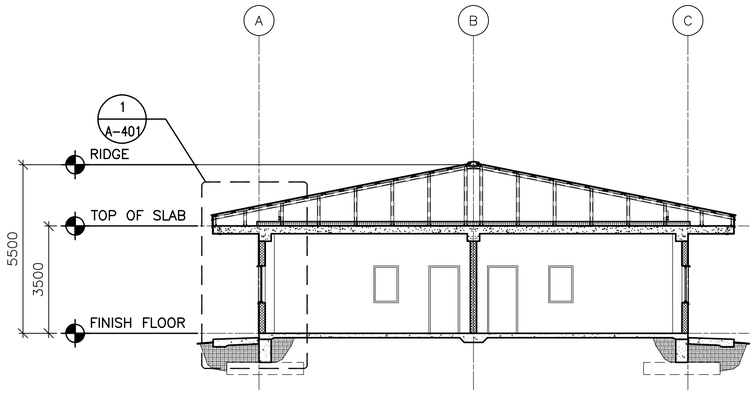

1 A-301 **BUILDING SECTION**
SCALE: 1:100

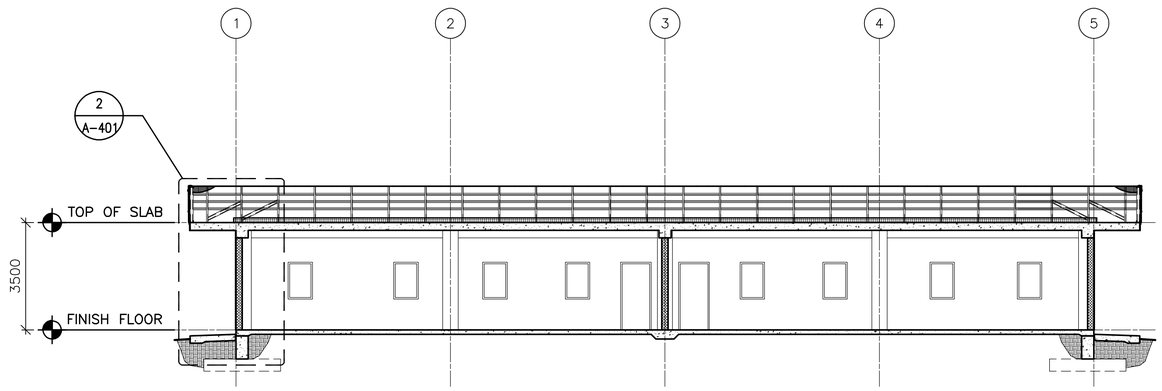

2 A-301 **BUILDING SECTION**
SCALE: 1:100

LINEAR DIMENSIONS SHOWN ARE IN MILLIMETERS (MM), UNLESS OTHERWISE NOTED

0 2000 4000
SCALE: 1:100

APPROVED:

A/E DESIGNER OF RECORD

SEAL:

STATE OF SOUTH CAROLINA
KEVIN R. CHAFIN
N. Charleston, SC
6374
REGISTERED ARCHITECT

US ARMY CORPS OF ENGINEERS
AFGHANISTAN ENGINEER DISTRICT

Mark	Description	Date	Appr.	Mark	Description	Date	Appr.

U.S. ARMY CORPS OF ENGINEERS
AFGHANISTAN ENGINEER DISTRICT
APO AE 96338

Michael Baker Jr., Inc.
A unit of Michael Baker Corporation
Airside Business Park
100 Airside Drive
Moon Township, PA 15108
www.mbakercorp.com

Designed by: KRC
Dwn by: KJG
Ckd by: NLJ
Reviewed by: LHM
Submitted by: BAKER
Date: 2/23/10
Design file no.
Drawing code:
File name: ANACB50A-301BS
Plot date: 2/23/2010
Plot scale: x:X
Rev: 0

AFGHAN NATIONAL ARMY
REGIONAL MILITARY TRAINING CENTER
STANDARD DESIGN

200 STUDENT CLASSROOM BUILDING
(4) 50 STUDENT CLASSROOMS

BUILDING SECTIONS

Sheet reference number:
A-301

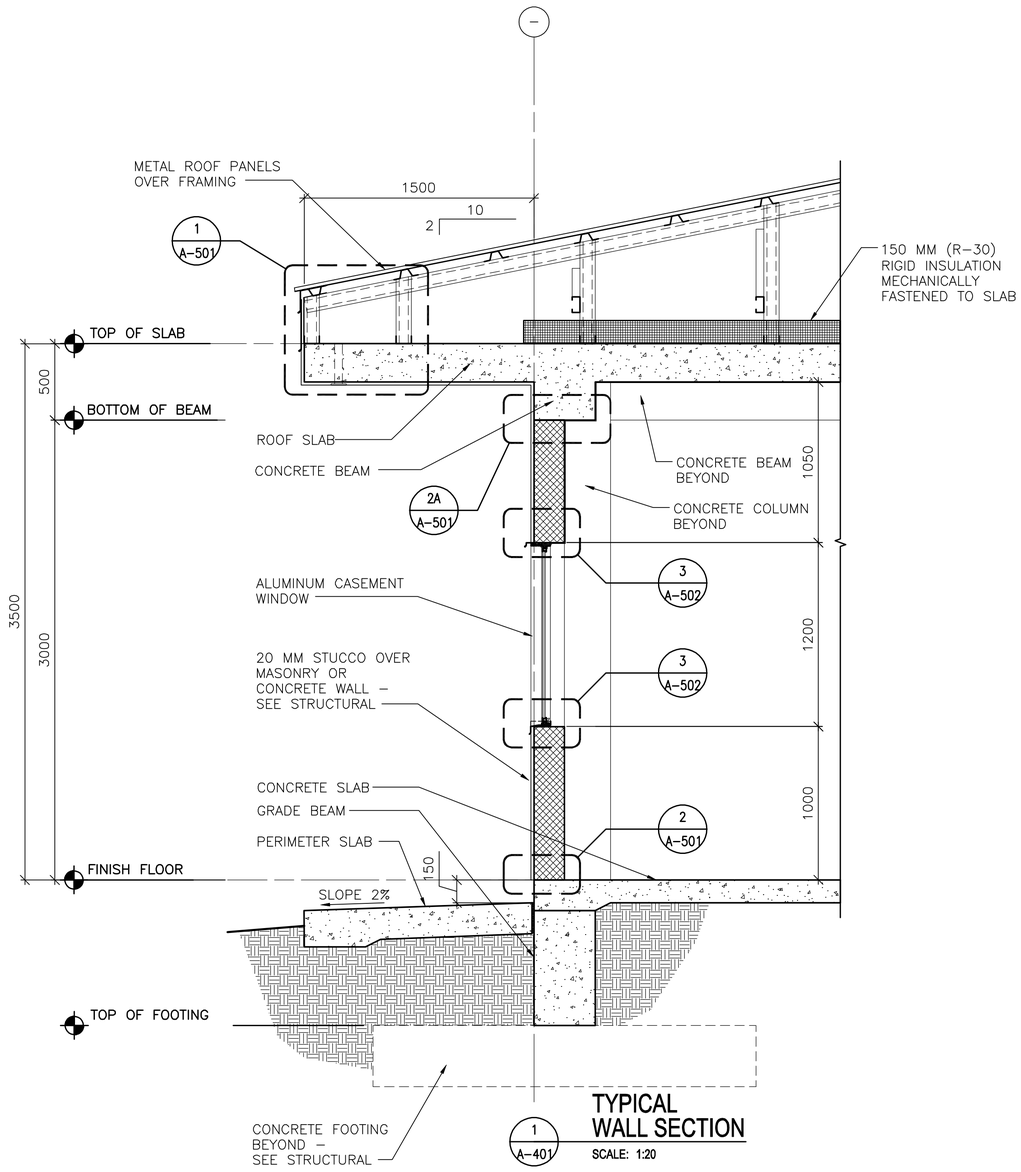

1 A-401 **TYPICAL WALL SECTION**
SCALE: 1:20

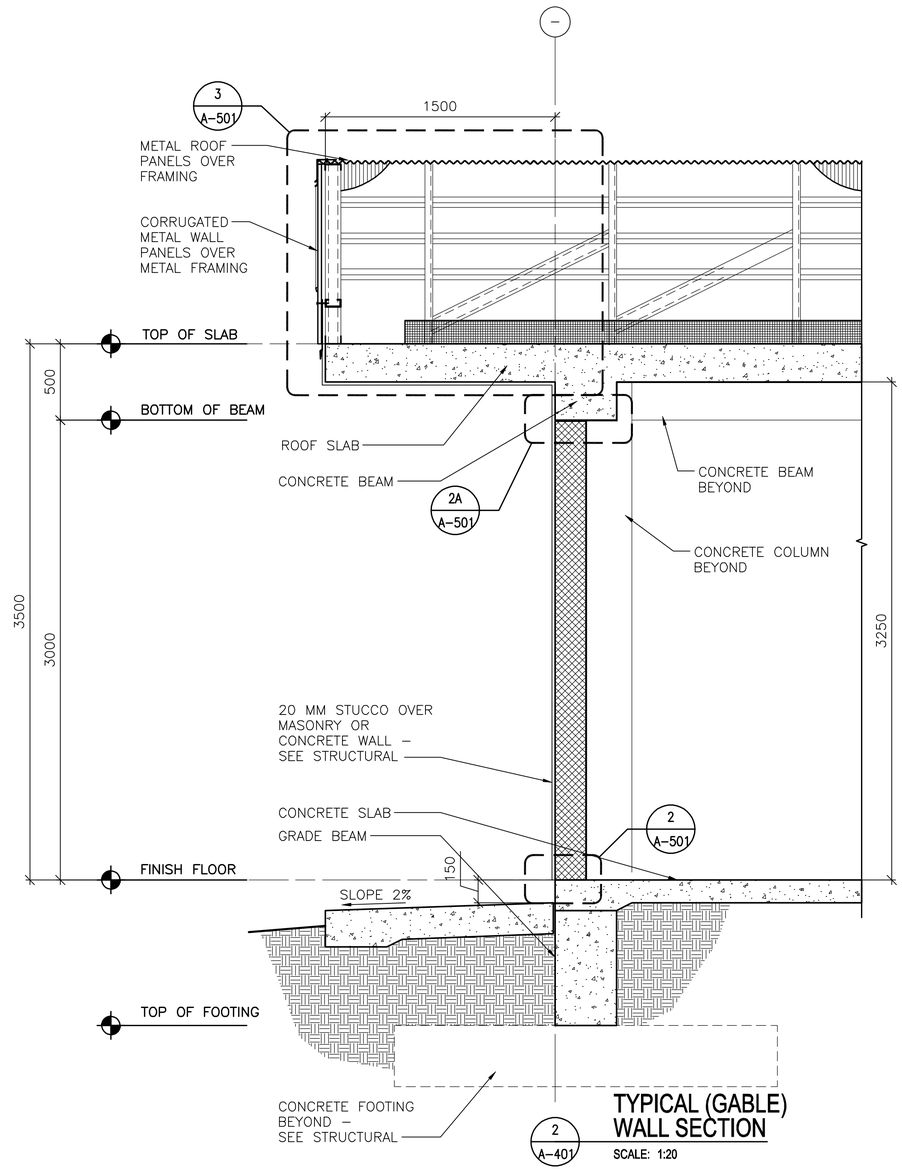

2 A-401 **TYPICAL (GABLE) WALL SECTION**
SCALE: 1:20

LINEAR DIMENSIONS SHOWN ARE IN MILLIMETERS (MM), UNLESS OTHERWISE NOTED

0 400 800
SCALE: 1:20

APPROVED:

A/E DESIGNER OF RECORD

SEAL:

STATE OF SOUTH CAROLINA
KEVIN R. CHAFIN
N. Charleston, SC
6374
REGISTERED ARCHITECT

US ARMY CORPS OF ENGINEERS
AFGHANISTAN ENGINEER DISTRICT

Mark	Description	Date	Appr.	Mark	Description	Date	Appr.

U.S. ARMY CORPS OF ENGINEERS
AFGHANISTAN ENGINEER DISTRICT
APO AE 96338

Michael Baker Jr., Inc
A unit of Michael Baker Corporation
Airside Business Park
100 Airside Drive
Moon Township, PA 15108
www.mbakercorp.com

Designed by: KRC	Date: 2/23/10
Dwn by: KJG	Ckd by: NLJ
Reviewed by: LHM	Drawing code:
Submitted by: BAKER	File name: ANACB50A-001WS
	Plot date: 2/23/2010
	Plot scale: x:X
	Design file no.
	Rev: 0

AFGHAN NATIONAL ARMY
REGIONAL MILITARY TRAINING CENTER
STANDARD DESIGN

200 STUDENT CLASSROOM BUILDING
(4) 50 STUDENT CLASSROOMS

WALL SECTIONS

Sheet reference number:
A-401

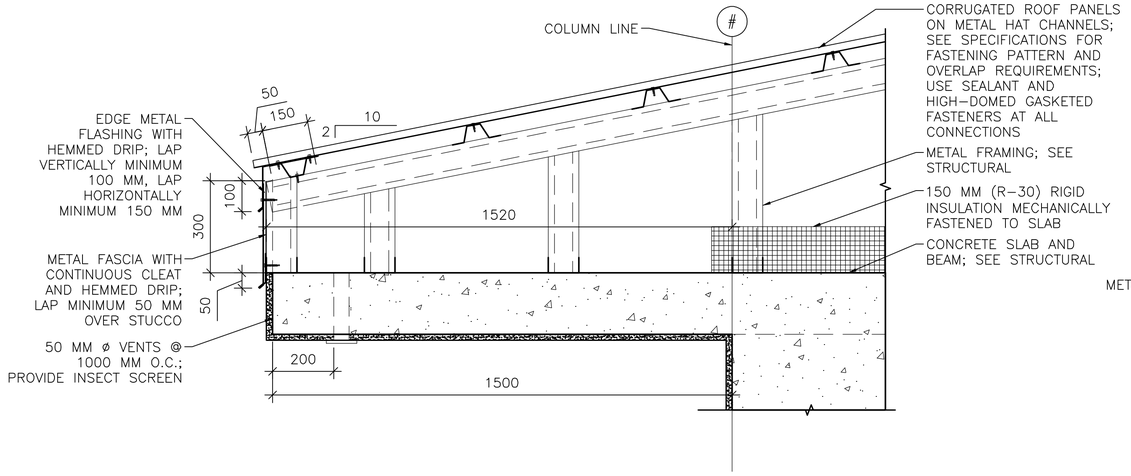

1 A–501 **EAVE DETAIL**
SCALE: 1:10

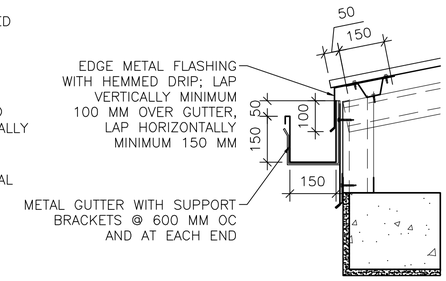

1A A–501 **GUTTER DETAIL**
SCALE: 1:10

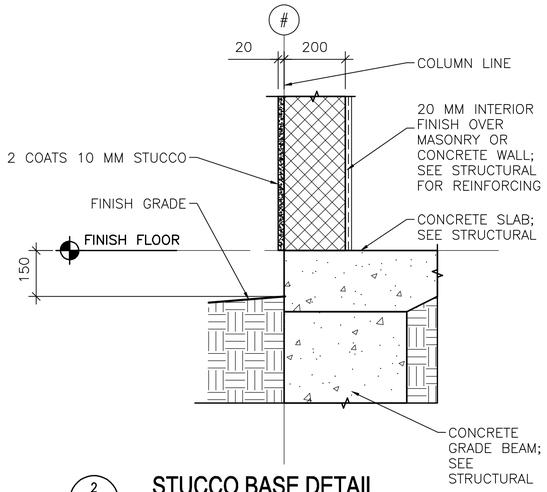

2 A–501 **STUCCO BASE DETAIL**
SCALE: 1:10

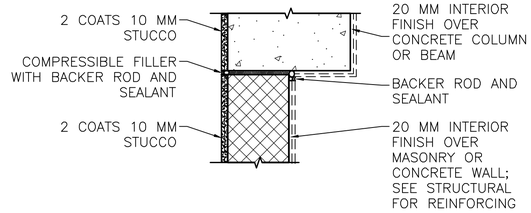

NOTE: DETAIL TYPICAL AT ALL WALL/COLUMN AND WALL/BEAM LOCATIONS, SEE ALTERNATE BRACING DETAIL BELOW. 2B/A–501.

2A A–501 **STUCCO JOINT DETAIL**
SCALE: 1:10

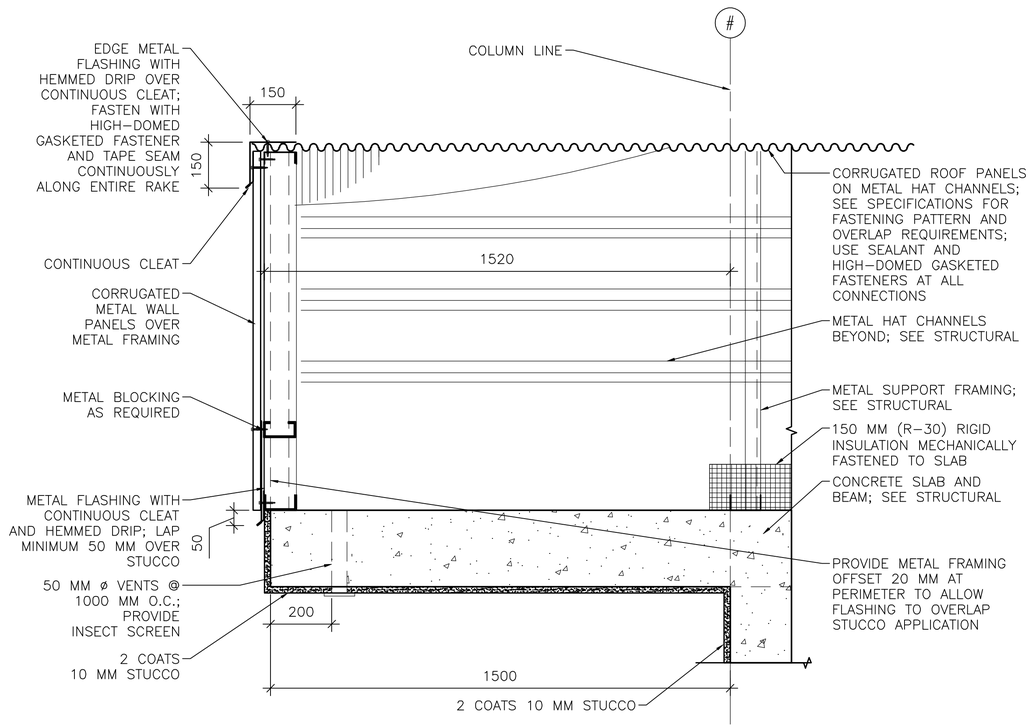

3 A–501 **RAKE/EAVE DETAIL**
SCALE: 1:10

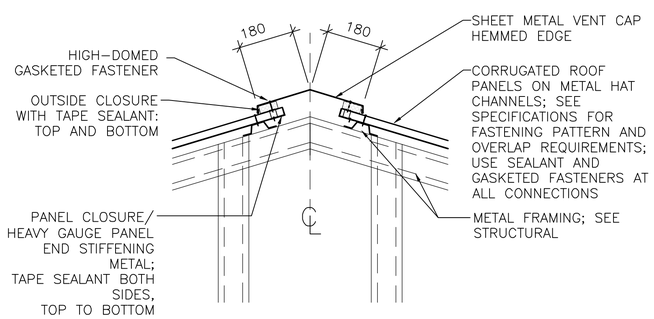

4 A–501 **RIDGE VENT DETAIL**
SCALE: 1:10

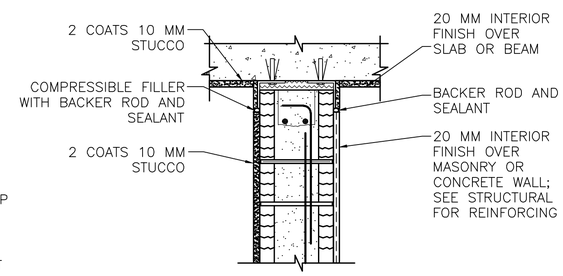

INTERIOR WALL/BEAM

2B A–501 **ALTERNATE BRACING DETAIL**
SCALE: 1:10

LINEAR DIMENSIONS SHOWN ARE IN MILLIMETERS (MM), UNLESS OTHERWISE NOTED

0 200 400
SCALE: 1:10

APPROVED:

A/E DESIGNER OF RECORD

SEAL:

STATE OF SOUTH CAROLINA
KEVIN R. CHAFIN
N. Charleston, SC
6374
REGISTERED ARCHITECT

US ARMY CORPS OF ENGINEERS
AFGHANISTAN ENGINEER DISTRICT

Mark	Description	Date	Appr.	Mark	Description	Date	Appr.

Rev: 0
Date: 2/23/10
Design file no.
Drawing code:
File name: ANACB50A-501DT
Plot date: 2/23/2010
Plot scale: x:X

Designed by: KRC
Dwn by: KJG
Ckd by: NLJ
Reviewed by: LHM
Submitted by: BAKER

U.S. ARMY CORPS OF ENGINEERS
AFGHANISTAN ENGINEER DISTRICT
APO AE 96338

Michael Baker Jr., Inc
A unit of Michael Baker Corporation
Airside Business Park
100 Airside Drive
Moon Township, PA 15108
www.mbakercorp.com

AFGHAN NATIONAL ARMY
REGIONAL MILITARY TRAINING CENTER
STANDARD DESIGN

200 STUDENT CLASSROOM BUILDING
(4) 50 STUDENT CLASSROOMS
EXTERIOR
DETAILS

Sheet reference number:
A–501

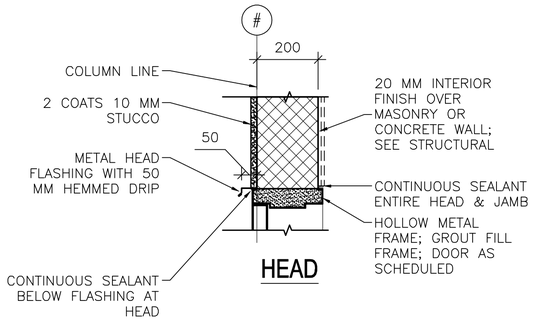

HEAD

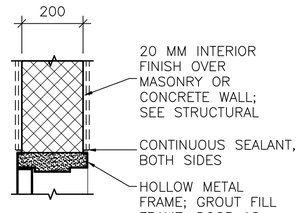

HEAD

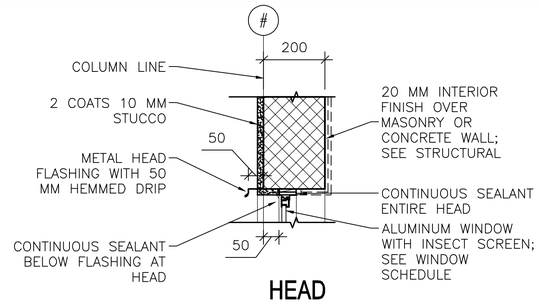

HEAD

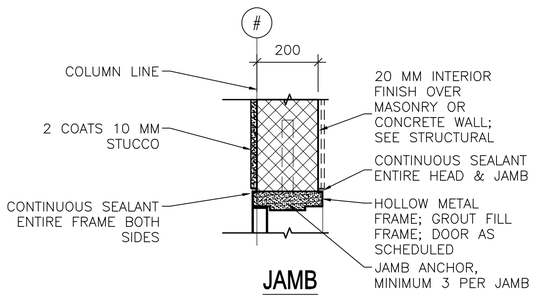

JAMB

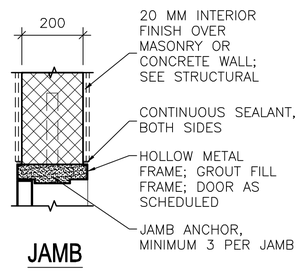

JAMB

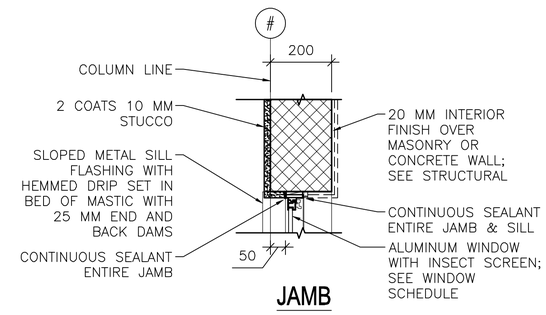

JAMB

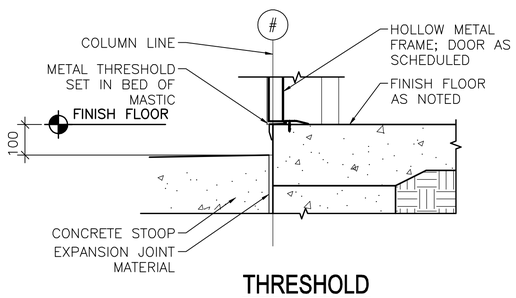

THRESHOLD

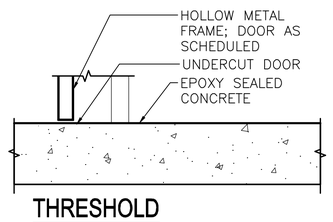

THRESHOLD

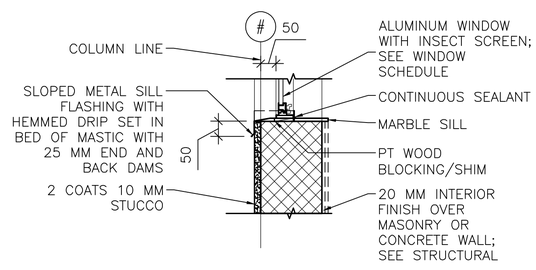

SILL

1 A-502 **EXTERIOR DOOR DETAILS**
SCALE: 1:10

2 A-502 **INTERIOR DOOR DETAILS**
SCALE: 1:10

3 A-502 **EXTERIOR WINDOW DETAILS**
SCALE: 1:10

LINEAR DIMENSIONS SHOWN ARE IN MILLIMETERS (MM), UNLESS OTHERWISE NOTED

0 200 400
SCALE: 1:10

APPROVED:

A/E DESIGNER OF RECORD

SEAL:

STATE OF SOUTH CAROLINA
KEVIN R. CHAFIN
N. Charleston, SC
6374
REGISTERED ARCHITECT

US ARMY CORPS OF ENGINEERS
AFGHANISTAN ENGINEER DISTRICT

Mark	Description	Date	Appr.	Mark	Description	Date	Appr.

U.S. ARMY CORPS OF ENGINEERS
AFGHANISTAN ENGINEER DISTRICT
APO AE 96338

Michael Baker Jr., Inc
A unit of Michael Baker Corporation
Airside Business Park
100 Airside Drive
Moon Township, PA 15108
www.mbakercorp.com

Designed by: KRC		Date: 2/23/10	Rev: 0
Dwn by: KJG	Ckd by: NLJ	Design file no.	
Reviewed by: LHM		Drawing code:	
Submitted by: BAKER		File name: ANACB50A-502HJS Plot date: 2/23/2010 Plot scale: x:X	

AFGHAN NATIONAL ARMY
REGIONAL MILITARY TRAINING CENTER
STANDARD DESIGN

200 STUDENT CLASSROOM BUILDING
(4) 50 STUDENT CLASSROOMS
HEAD, JAMB & SILL
DETAILS

Sheet reference number:
A-502

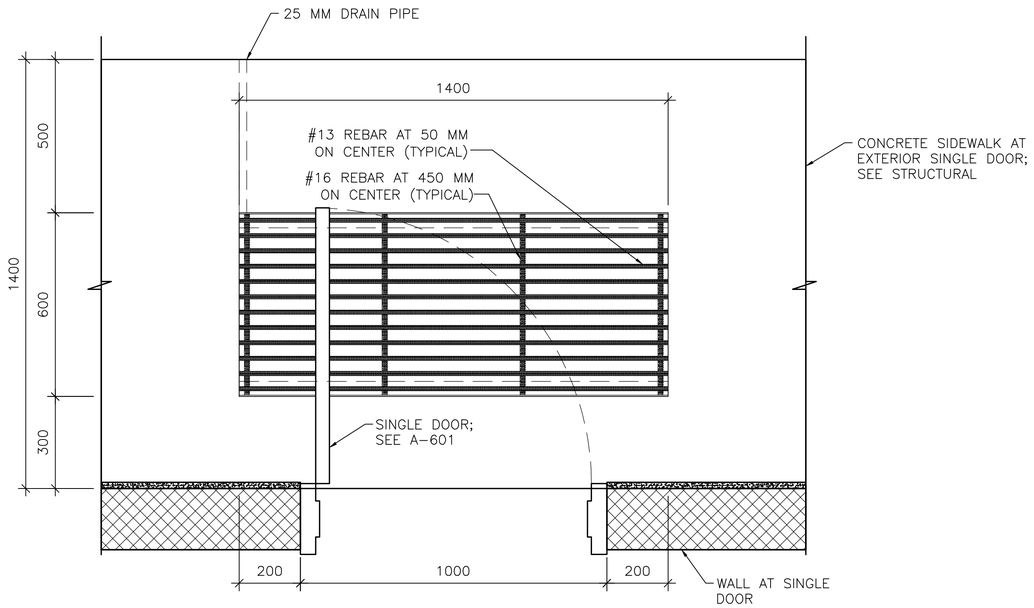

1 A-503 **SIDEWALK GRATE PLAN**

SCALE: 1:10

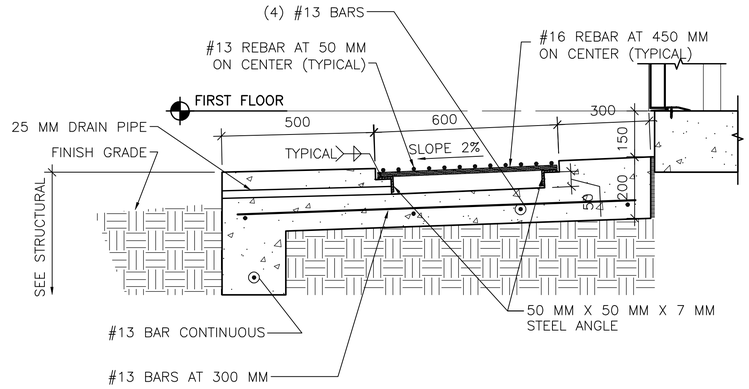

2 A-503 **SIDEWALK DETAIL WITH GRATE**

SCALE: 1:10

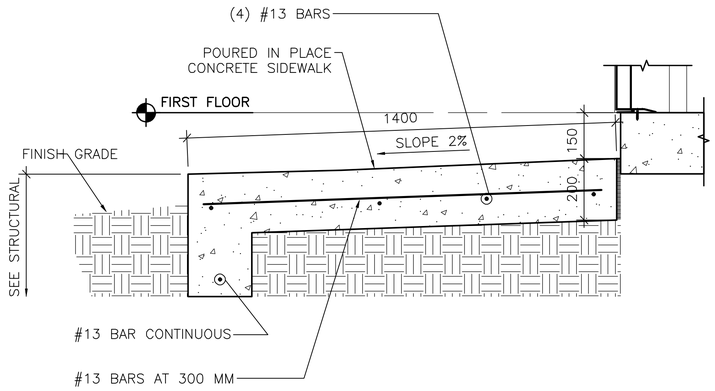

2A A-503 **SIDEWALK DETAIL**

SCALE: 1:10

LINEAR DIMENSIONS SHOWN ARE IN MILLIMETERS (MM), UNLESS OTHERWISE NOTED

0 200 400
SCALE: 1:10

APPROVED:

A/E DESIGNER OF RECORD

SEAL:

STATE OF SOUTH CAROLINA
KEVIN R. CHAFIN
N. Charleston, SC
6374
REGISTERED ARCHITECT

US ARMY CORPS OF ENGINEERS
AFGHANISTAN ENGINEER DISTRICT

Mark	Description	Date	Appr.	Mark	Description	Date	Appr.

Designed by: KRC
Dwn by: KJG
Ckd by: NLJ
Reviewed by: LHM
Submitted by: BAKER
Date: 2/23/10
Rev: 0
Design file no.
Drawing code:
File name: ANACB50A-503DT
Plot date: 2/23/2010
Plot scale: x:X

U.S. ARMY CORPS OF ENGINEERS
AFGHANISTAN ENGINEER DISTRICT
APO AE 96338

Michael Baker Jr., Inc.
A unit of Michael Baker Corporation
Airside Business Park
100 Airside Drive
Moon Township, PA 15108
www.mbakercorp.com

AFGHAN NATIONAL ARMY
REGIONAL MILITARY TRAINING CENTER
STANDARD DESIGN

200 STUDENT CLASSROOM BUILDING
(4) 50 STUDENT CLASSROOMS
STOOP
DETAILS

Sheet reference number:
A-503

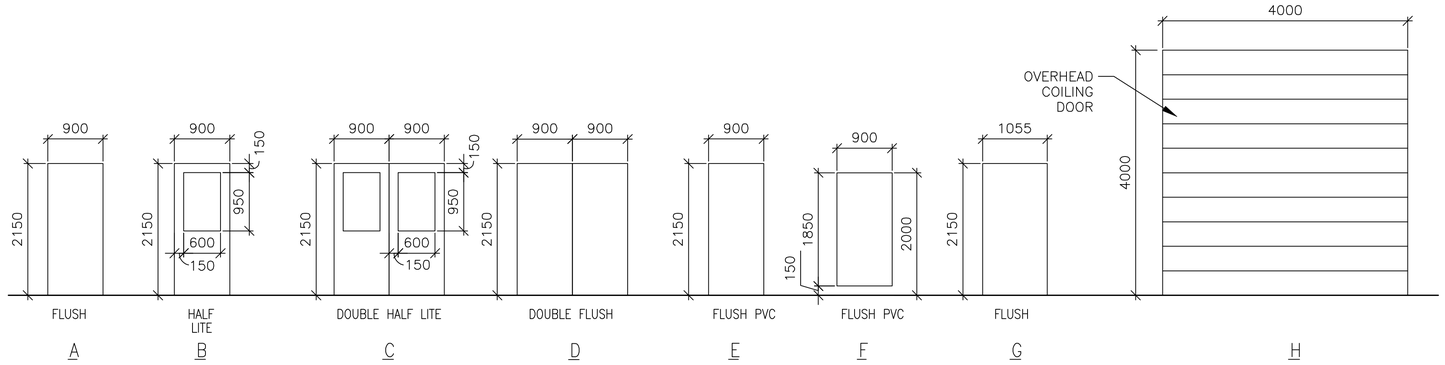

1 A-601 DOOR TYPES

SCALE: 1:50

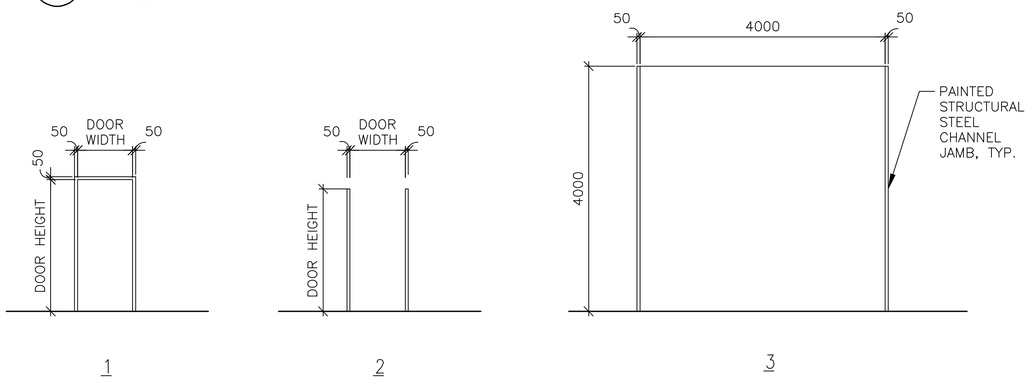

2 A-601 FRAME TYPES

SCALE: 1:50

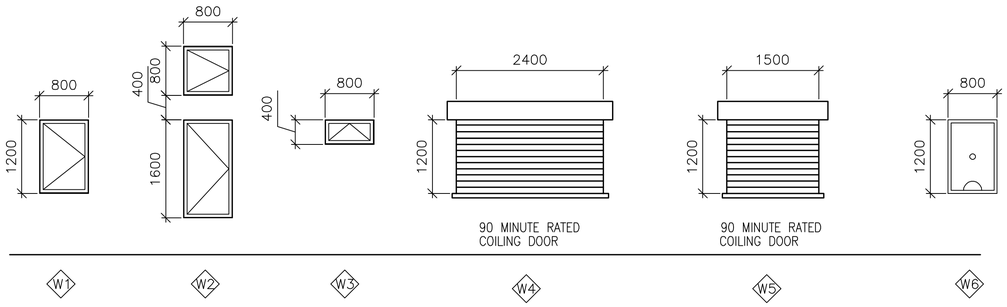

3 A-601 WINDOW TYPES

SCALE: 1:50

WINDOW TYPE NOTES:

1. ALL EXTERIOR WINDOWS SHALL BE ALUMINUM WITH INSECT SCREENS. WINDOWS SHALL BE COMMERCIAL GRADE.
2. ALL EXTERIOR WINDOWS SHALL BE OPERABLE.

4 A-601 DOOR TAG

SCALE: NTS

5 A-601 RATED DOOR TAG

SCALE: NTS

DOOR TAG NOTES:

1. THE DOOR TAG INDICATES THE DOOR TYPE, FRAME TYPE AND HARDWARE SET FOR EACH DOOR.
2. THE DOOR TAG FOR RATED DOORS INCLUDES THE RATING OF THE DOOR IN MINUTES.

EXTERIOR DOOR HARDWARE TYPES:

HW-1
1-1/2 PR HINGES, A5112 114 X 114
1 EA RIM EXIT DEVICE, TYPE 1
1 EA CYLINDER. E09221A, GRADE 1
1 EA OVERHEAD CLOSER, C02061, LOW RESISTANCE
1 EA THRESHOLD, J32130
3 EA DOOR SILENCERS, L03011

HW-2
1-1/2 PR HINGES, A5112 114 X 114
1 EA LOCKSET, F13 ENTRY LOCK W/LEVER HANDLES, GRADE 1
1 EA OVERHEAD CLOSER, C02061, LOW RESISTANCE
1 EA THRESHOLD, J32130
3 EA DOOR SILENCERS, L03011

HW-3
3 PR HINGES, A5112 114 X 114
2 EA RIM EXIT DEVICE, TYPE 1
2 EA CYLINDER. GRADE 1
2 EA OVERHEAD CLOSER, C02061, LOW RESISTANCE
1 EA DOOR COORDINATOR, TYPE 21
1 EA ASTRAGAL
1 EA THRESHOLD, J32130
2 EA DOOR SILENCERS, L03011

HW-4
3 PR HINGES, A5112 114 X 114
1 EA LOCKSET W/LEVER HANDLES. GRADE 1, F13
1 EA OVERHEAD CLOSER, C02061, LOW RESISTANCE
2 EA MAGNETIC HOLDER PIN, ATTACHED TO DOOR LEAF
2 EA MAGNETIC HOLDER RECEIVER, ATTACHED TO STOOP
2 EA LEVER EXTENSION FLUSH BOLTS, L04081
1 EA ASTRAGAL
1 EA THRESHOLD, J32130
2 EA DOOR SILENCERS, L03011

DOOR AND HARDWARE NOTES:

1. INTERIOR AND EXTERIOR METAL DOORS AND FRAME COLORS SHALL MATCH ADJACENT WALL COLORS AS SELECTED BY THE CONTRACTING OFFICER.
2. FRAMES, EXCEPT FIRE-RATED FRAMES, SHALL BE MOUNTED AND ADJUSTED IN ACCORDANCE WITH MANUFACTURER'S INSTRUCTIONS. FRAMES SHALL BE FASTENED WITH MINIMUM OF THREE ANCHORS PER JAMB AT EQUAL INTERVALS.
3. DIMENSIONS SHOWN ON DOOR TYPES DETAIL ARE BASED UPON MODULAR MASONRY (OR ROUGH OPENING), HEIGHT OF 2200 MM FOR STANDARD PERSONNEL DOORS. CONTRACTOR SHALL COORDINATE WITH DOOR SUPPLIER TO ENSURE THAT DIMENSIONS OF DOORS AND FRAMES PROVIDED ARE COMPATIBLE WITH DOOR OPENING DIMENSIONS.
4. HARDWARE SHALL BE HEAVY DUTY, COMMERCIAL GRADE, STAINLESS STEEL WITH A SATIN OR BRUSHED FINISH.
5. HARDWARE TYPES INCLUDE BUILDERS HARDWARE MANUFACTURERS ASSOCIATION (BMHA) NUMBER.
6. DOORS IN 2 HOUR RATED PARTITIONS SHALL BE 1.5 HOUR (90 MINUTE) RATED DOORS IN ACCORDANCE WITH NFPA 101, TABLE 8.3.4.2.
7. DOORS AT STAIR ENCLOSURES SHALL BE 1 HOUR (60 MINUTE) RATED AT 1 HOUR WALL IN ACCORDANCE WITH NFPA 101, TABLE 8.3.4.2.
8. DOORS IN 1 HOUR RATED WALLS SHALL BE 3/4 HOUR (45 MINUTE) RATED DOORS IN ACCORDANCE WITH NFPA 101, TABLE 8.3.4.2.
9. DOORS IN 1 HOUR RATED CORRIDOR WALLS SHALL BE 1/3 HOUR (20 MINUTE) IN ACCORDANCE WITH NFPA 101, TABLE 8.3.4.2.
10. PROVIDE DOOR STOPS TO PROTECT WALLS ON LOCATIONS WHERE DOOR SWING WILL STRIKE WALL.

THIS SHEET IS STANDARD AND IS INCLUSIVE OF ALL THE DOOR/ WINDOW/ HARDWARE TYPES FOR THE ENTIRE RMTC CONTRACT. NOT ALL DOOR/ WINDOW/ HARDWARE TYPES ARE USED FOR ANY PARTICULAR BUILDING DESIGN. CONTRACTOR SHALL REFER TO THE FLOOR PLAN FOR THE TYPES BEING USED.

INTERIOR DOOR HARDWARE TYPES:

HW-5
1-1/2 PR HINGES, A8133 114 X 114
1 EA LOCKSET W/LEVER HANDLES, F08, GRADE 1
1 EA WALL STOP, L02101 OR L02161
3 EA DOOR SILENCERS, L03011

HW-6
1-1/2 PR HINGES, A8112 114 X 114
1 EA LOCKSET W/LEVER HANDLES, F08, GRADE 1
1 EA WALL STOP, L02101 OR L02161
1 EA OVERHEAD CLOSER, C02061, LOW RESISTANCE
3 EA DOOR SILENCERS, L03011

HW-7
1-1/2 PR HINGES, A8133
1 EA LOCKSET W/LEVER HANDLES, F13 GRADE 1
1 EA WALL STOP, L02101 OR L02161
2 EA MOP PLATE, J103
3 EA DOOR SILENCERS, L03011

HW-8
1-1/2 PR HINGES, A8112
1 EA LOCKSET W/LEVER HANDLES, F13 GRADE 1
1 EA WALL STOP, L02101 OR L02161
2 EA MOP PLATE, J103
1 EA OVERHEAD CLOSER, C02061, LOW RESISTANCE
3 EA DOOR SILENCERS, L03011

HW-9
1-1/2 PR HINGES, A5112 114 X 114
1 EA RIM EXIT DEVICE, TYPE 1
1 EA CYLINDER. E09221A, GRADE 1
1 EA OVERHEAD CLOSER, C02061, LOW RESISTANCE
3 EA DOOR SILENCERS, L03011

HW-10
3 PR HINGES, A5112 114 X 114
1 EA LOCKSET W/LEVER HANDLES. GRADE 1, F13
2 EA LEVER EXTENSION FLUSH BOLTS, L04081
1 EA ASTRAGAL
2 EA DOOR SILENCERS, L03011

HW-11
1-1/2 PR HINGES, A8112 114 X 114
1 EA LOCKSET W/LEVER HANDLES, F13, GRADE 1
1 EA WALL STOP, L02101 OR L02161
1 EA OVERHEAD CLOSER, C02061, LOW RESISTANCE
3 EA DOOR SILENCERS, L03011
1 EA ROBE HOOK

HW-12
1-1/2 PR HINGES, A8133
1 EA LATCHSET W/LEVER HANDLES, F76 GRADE 1
1 EA WALL STOP, L02101 OR L02161
2 EA MOP PLATE, J103
3 EA DOOR SILENCERS, L03011
1 EA ROBE HOOK

HW-13
3 PR HINGES, A5112 114 X 114
1 EA LOCKSET W/LEVER HANDLES. GRADE 1, F13
1 EA OVERHEAD CLOSER, C02061, LOW RESISTANCE
2 EA LEVER EXTENSION FLUSH BOLTS, L04081
1 EA ASTRAGAL
2 EA DOOR SILENCERS, L03011

HW-14
3 PR HINGES, A5112 114 X 114
2 EA RIM EXIT DEVICE, TYPE 1
2 EA CYLINDER. GRADE 1
2 EA OVERHEAD CLOSER, C02061, LOW RESISTANCE
1 EA DOOR COORDINATOR, TYPE 21
1 EA ASTRAGAL
2 EA DOOR SILENCERS, L03011

APPROVED:

A/E DESIGNER OF RECORD

SEAL:

STATE OF SOUTH CAROLINA
KEVIN R. CHAFIN
N. Charleston, SC
6374
REGISTERED ARCHITECT

US ARMY CORPS OF ENGINEERS
AFGHANISTAN ENGINEER DISTRICT

Mark	Description	Date	Appr.	Mark	Description	Date	Appr.

Date: 2/23/10 Rev: 0
Design file no.
Drawing code:
File name: ANACB50A-S01SCH
Plot date: 2/23/2010
Plot scale: x:X

Designed by: KRC
Dwn by: KJG
Ckd by: NLJ
Reviewed by: LHM
Submitted by:
BAKER

U.S. ARMY CORPS OF ENGINEERS
AFGHANISTAN ENGINEER DISTRICT
APO AE 96338

Michael Baker Jr., Inc.
A unit of Michael Baker Corporation
Airside Business Park
100 Airside Drive
Moon Township, PA 15108
www.mbakercorp.com

AFGHAN NATIONAL ARMY
REGIONAL MILITARY TRAINING CENTER
STANDARD DESIGN

200 STUDENT CLASSROOM BUILDING
(4) 50 STUDENT CLASSROOMS

WINDOW AND DOOR SCHEDULES

Sheet reference number:
A-601

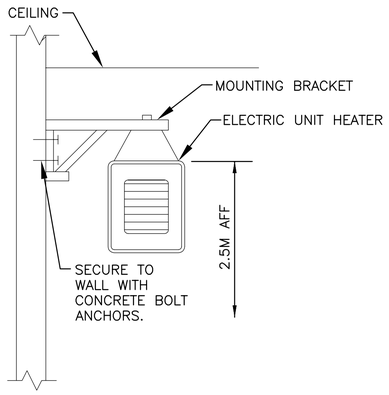

2 M-101 ELECTRIC UNIT HEATER MOUNTING DETAIL
N.T.S.

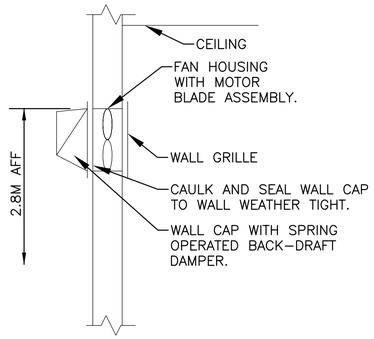

3 M-101 THROUGH THE WALL EXHAUST FAN DETAIL
N.T.S.

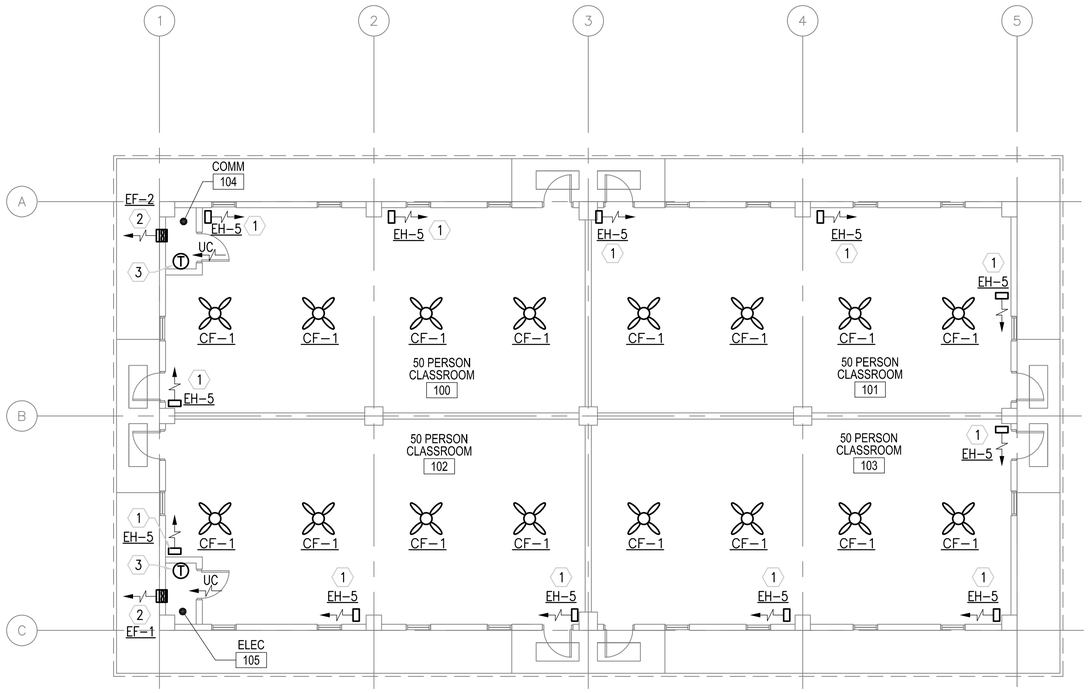

1 M-101 FLOOR PLANS - HVAC
SCALE: 1:100

GENERAL NOTES:

1. DO NOT SCALE DRAWINGS – ALL DIMENSIONS AND CONDITIONS SHALL BE CHECKED AND VERIFIED BY THE CONTRACTOR AT THE SITE.
2. ALL WORK PERFORMED ON THIS BUILDING SHALL BE IN COMPLIANCE WITH ALL PERTINENT CODES, RULES, ORDINANCES AND REGULATIONS OF THE GOVERNING AUTHORITIES.
3. ALL WORK PERFORMED UNDER AND IN CONNECTION WITH THESE DRAWINGS AND SPECIFICATIONS SHALL BE IN STRICT COMPLIANCE WITH THE LATEST SAFETY AND HEALTH STANDARDS.

SYMBOLS:

(X) KEY NOTE

(0.050) AIR VOLUME IN CUBIC METERS PER SECOND (CMS)

UC DOOR UNDERCUT

ABBREVIATIONS:

AFF	ABOVE FINISH FLOOR
CF	CEILING FANS
CMS	CUBIC METERS PER SECOND
EC	ELECTRICAL CONTRACTOR
STATS	THERMOSTATS

KEY NOTE:

1. UNIT HEATER SECURED FROM WALL. SEE DETAIL THIS SHEET.
2. WALL EXHAUST FAN WITH LOW SPRING OPERATED BACK-DRAFT DAMPER. SEE DETAIL 3 THIS SHEET.
3. THERMOSTAT MOUNTED AS HIGH AS POSSIBLE. INTERLOCK STAT WITH CORRESPONDING EXHAUST FAN, SET FAN TO ENERGIZE ON RISE IN TEMPERATURE ABOVE 25°C (77°F).

EXHAUST FAN SCHEDULE

NO.	TYPE	FAN CMS	DRIVE	HP	SP mmH20	ELECTRICAL DATA	SWITCH
EF-1	WALL	0.035	DIRECT	FRACT	9.5	220/1/50	W/ STAT
EF-2	WALL	0.035	DIRECT	FRACT	9.5	220/1/50	W/ STAT

NOTES:
1. FANS SHALL HAVE SPRING OPERATED BACK-DRAFT DAMPER.

ELECTRIC UNIT HEATER SCHEDULE

NO.	CMS	KW	F.A.T. °C	ELECT. CHAR.	MOUNTING
EH-5	0.200	5	38	380/1/50	WALL HUNG

NOTES:
1. UNIT HEATERS SHALL HAVE TAMPER PROOF INTEGRAL STATS.
2. COORDINATE LOCATION AND ORIENTATION IN FIELD.

CEILING FAN

NO.	BLADE SIZE mm	BLADE SIZE IN	VOLTAGE	SWITCH	REMARKS
CF-1	1320	52	220/1/50	@ WALL	3 SPEED REVERSIBLE MOTOR

NOTES:
1. PROVIDE EXTENSION DOWN RODS, INSTALL FANS 2.5M AFF.
2. PROVIDE WITH OUT LIGHT FIXTURE.
3. PROVIDE WITH REMOTE MOUNTED ON-OFF SWITCH SHOWN ON ELECTRICAL DRAWINGS.

LINEAR DIMENSIONS SHOWN ARE IN MILLIMETERS (MM), UNLESS OTHERWISE NOTED

0 2000 4000
SCALE: 1:100

APPROVED:

A/E DESIGNER OF RECORD

SEAL:

COMMONWEALTH OF PENNSYLVANIA
REGISTERED PROFESSIONAL
MATTHEW R. SOTOSKY
ENGINEER
046570-E

US ARMY CORPS OF ENGINEERS
AFGHANISTAN ENGINEER DISTRICT

Mark	Description	Date	Appr.	Mark	Description	Date	Appr.

Rev: 0
Date: 02/23/10
Design file no.
Drawing code:
File name: ANACB50MH-101XXX
Plot date: 02/09/2010
Plot scale: 1:100

Designed by: RML
Dwn by: JJN
Ckd by: CJM
Reviewed by: MRS
Submitted by: BAKER

U.S. ARMY CORPS OF ENGINEERS
AFGHANISTAN ENGINEER DISTRICT
APO AE 96338

Michael Baker Jr., Inc
A unit of Michael Baker Corporation
Airside Business Park
100 Airside Drive
Moon Township, Pa. 15108
www.mbakercorp.com

AFGHAN NATIONAL ARMY
REGIONAL MILITARY TRAINING CENTER
STANDARD DESIGN

200 STUDENT CLASSROOM BUILDING
(4) 50 STUDENT CLASSROOMS

HVAC PLANS, SCHEDULES AND DETAILS

Sheet reference number:
M-101

POWER

- DISTRIBUTION PANELBOARD
- NEW PANELBOARD – SURFACE
- NEW PANELBOARD – RECESSED
- GENERATOR
- TRANSFORMER (DRAWN TO SCALE)
- JUNCTION BOX
- JUNCTION BOX – CEILING
- FUSIBLE SAFETY SWITCH
- MOTOR
- ^{M} MOTOR STARTING SWITCH – 220V, 20A RATED UNLESS OTHERWISE NTOED
- ELECTRIC WATER HEATER
- CF CEILING FAN – REFER TO SPECIFICATION SECTION 26 20 00

RECEPTACLES

- DUPLEX 20A TYPE CEE 7/7 "SCHUKO STYLE" UNSWITCHED RECEPTACLE
- GF DUPLEX 20A TYPE CEE 7/7 "SCHUKO STYLE" UNSWITCHED RECEPTACLES – 10mA GROUND FAULT INTERRUPTER TYPE
- WP DUPLEX 20A TYPE CEE 7/7 "SCHUKO STYLE" UNSWITCHED TYPE WITH WEATHERPROOF COVER – 10mA GROUND FAULT INTERRUPTER TYPE
- EXP DUPLEX 20A TYPE CEE 7/7 "SCHUKO STYLE" UNSWITCHED RECEPTACLES – EXPLOSION PROOF
- * INDICATES MOUNT DEVICE ABOVE COUNTERTOP OR AT 1070mm ABOVE FINISHED FLOOR WHERE NO COUNTER IS TO BE INSTALLED.

LIGHTING

- LIGHTING FIXTURE – SEE FIXTURE SCHEDULE FOR MORE INFORMATION
- EMERGENCY LIGHTING FIXTURE – SEE FIXTURE SCHEDULE FOR MORE INFORMATION
- DOWNLIGHT
- LIGHTING FIXTURE ON NORMAL/EMERGENCY
- WALL MOUNTED LIGHT FIXTURE
- E EXIT SIGN – DIRECTIONAL ARROWS AS INDICATED ON DRAWINGS
- REMOTE HEAD FOR BATTERY PACK
- $ SINGLE POLE SWITCH – 20A RATED
- $^{3} 3–WAY SWITCH – 20A RATED
- $^{4} 4–WAY SWITCH – 20A RATED
- LC LIGHTING CONTACTOR
- POLE MOUNTED SITE LIGHTING FIXTURE– NUMBER OF FIXTURES PER POLE AS INDICATED ON DRAWINGS
- EXTERIOR DIRECTIONAL LIGHTING FIXTURE
- a SMALL CASE LETTERS REPRESENTS LAMP(S) / SWITCHES.

TELECOMMUNICATIONS

- TELEPHONE OUTLET(S) @ 45cm AFF. U.N.O. WITH 20mm RACEWAY TERMINATED TO TELEDATA TERMINAL BOARD.
- DATA OUTLET(S) @ 45cm AFF. U.N.O. WITH 20mm RACEWAY TERMINATED TO TELEDATA TERMINAL BOARD.

TELECOMMUNICATIONS (CONTINUED)

- COMBINATION TELEPHONE/DATA OUTLET(S) @ 45cm AFF. U.N.O. WITH 27mm RACEWAY TERMINATED TO TELEDATA TERMINAL AREA.
- W WALL MTD. TELEPHONE OUTLET WITH 20mm RACEWAY TO TELEDATA TERMINAL BOARD.
- (x)T INDICATES NUMBER OF TELEPHONE OUTLET(S) AND ASSOCIATED CABLING
- (x)D INDICATES NUMBER OF DATA OUTLET(S) AND ASSOCIATED CABLING
- (x)TF INDICATES NUMBER OF TELEPHONE OUTLETS AND ASSOCIATED CABLING WITH 1 OUTLET AND CABLE DEDICATED FOR FAX

SINGLE LINE SYMBOLS

- SWITCH
- BREAKER
- FUSE
- TRANSFORMER
- GROUND
- CONTACT (NORMALLY OPEN)
- CONTACT (NORMALLY CLOSED)
- TRANSFER SWITCH
- CURRENT TRANSFORMER
- INDICATES NEW ELECTRICAL EQUIPMENT
- C INDICATES NEW CONTROL WIRING AND CONDUIT
- EQUIPMENT OUTLINE

MISCELLANEOUS

- BRANCH CIRCUIT WIRING, SURFACE MOUNTED ON WALLS
- BRANCH CIRCUIT WIRING – 6mm²
- BRANCH CIRCUIT WIRING – UNDER FLOOR
- HOME RUN BACK TO PANEL
- CONDUIT TURNED DOWN
- CONDUIT TURNED UP
- LV LOW VOLTAGE WIRING AND CONDUIT
- ~ INDICATES CONTINUATION OF LINE

FIRE ALARM

- FACP FIRE ALARM CONTROL PANEL WITH BATTERY BACKUP
- F FIRE ALARM PULL STATION

FIRE ALARM (CONTINUED)

- F FIRE ALARM STROBE – WALL MOUNTED
- F FIRE ALARM AUDIBLE/STROBE – WALL MOUNTED
- F FIRE ALARM HORN/STROBE – WALL MOUNTED
- S SMOKE DETECTOR
- H HEAT DETECTOR CEILING MOUNTED
- D DUCT DETECTOR – PROVIDED BY EC, INSTALLED BY MC AND CONNECTED BY EC

DENOTATIONS & ABBREVIATIONS

AFF	ABOVE FINISHED FLOOR
C	CEILING MOUNTED
E	EMERGENCY
EC	ELECTRICAL CONTRACTOR
EPO	EMERGENCY POWER OFF
EXP	EXPLOSION PROOF
F	FIRE ALARM
FF	FLUSH FLOOR MOUNTED
FL	FLUORESCENT
FO	FIBER OPTIC
FSS	FUSED SAFETY SWITCH
GF	GROUND FAULT INTERRUPTER
GC	GENERAL CONTRACTOR
IG	ISOLATED GROUND
K	KEY
LV	LOW VOLTAGE
M	MOTOR
MC	MECHANICAL CONTRACTOR
NE	NORMAL/EMERGENCY
NFSS	NON–FUSED SAFETY SWITCH
PA	PAGING SYSTEM
PLC	PLUMBING CONTRACTOR
SL	SINGLE LINE
T	TELEPHONE

DENOTATIONS & ABBREVIATIONS (CONT.)

TP	TAMPER PROOF
UE	UNDERGROUND ELECTRIC
W	WALL MOUNTED
WP	WEATHERPROOF WITH GROUND FAULT INTERRUPTION
WT	WATER TIGHT

GENERAL PROJECT NOTES:

G1. UNLESS OTHERWISE NOTED, PROVIDE ALL EQUIPMENT SHOWN ON THE PLANS. THE ELECTRICAL CONTRACTOR SHALL COORDINATE ALL SYMBOLS SHOWN ON THE PLANS WITH THE SYMBOL LIST. IT SHALL BE THE RESPONSIBILITY OF THE CONTRACTOR TO VERIFY THE INTENT OF ANY SYMBOL THAT IS SHOWN ON THE PLANS AND NOT INDICATED ON THE SYMBOL LIST WITH THE ENGINEER PRIOR TO BID.

G2. THE CONTRACTOR SHALL VERIFY THE LOCATION OF ALL UNDERGROUND UTILITIES WITHIN THE CONSTRUCTION AREA THREE (3) WORKING DAYS NOTICE BEFORE COMMENCING DIGGING. NOTIFY THE LOCAL AUTHORITY HAVING JURISDICTION AND WAIT THE REQUIRED TIME BEFORE COMMENCING TO DIG.

G3. THE CONTRACTOR SHALL COORDINATE CONDUIT RUNS, LIGHTING FIXTURES AND OTHER EQUIPMENT LOCATIONS WITH THE OTHER TRADE CONTRACTORS TO AVOID CONFLICTS.

G4. WHERE VOLTAGES AND FREQUENCIES ON THE DRAWINGS AND IN THE SPECIFICATIONS DIFFER FROM THE LOCAL ONES, ALL WORK SHALL BE PERFORMED USING THE LOCAL VOLTAGES AND FREQUENCIES.

G5. THE MINIMUM WIRE SIZE ON THE PROJECT SHALL BE 4mm². THE MINIMUM CONDUIT SIZE SHALL BE 20mm. THE MINIMUM BREAKER SIZE SHALL BE 20 AMPS.

G6. THE CONTRACTOR SHALL PUT A MAXIMUM OF 6 DUPLEX RECEPTACLES ON A 20A SINGLE POLE CIRCUIT.

G7. WHERE THE 1010 SCOPE REVIEW, 1015 TECHNICAL REVIEW, DRAWINGS, AND SPECIFICATIONS DIFFER FROM AMERICAN CODES OR STANDARDS, THE 1010, 1015, DRAWINGS, AND SPECIFICATIONS SHALL RULE.

G8. ALL CONDUIT AND DEVICES SHALL BE SURFACE MOUNTED UNLESS OTHERWISE INDICATED.

G9. CONTRACTOR SHALL COORDINATE ALL WORK WITH ALL OTHER TRADES TO ENSURE ALL WORK IS COMPLETED IN A PROFESSIONAL, WORKMAN–LIKE MANNER.

APPROVED:

A/E DESIGNER OF RECORD

SEAL:

COMMONWEALTH OF PENNSYLVANIA
REGISTERED PROFESSIONAL
JOSEPH R. GAUS
1/29/10
ENGINEER
PE-074251

US ARMY CORPS OF ENGINEERS
AFGHANISTAN ENGINEER DISTRICT

Mark	Description	Date	Appr.	Mark	Description	Date	Appr.

Rev: 0
Date: 2/23/10
Design file no.
Drawing code:
File name:
Plot date:
Plot scale:

Designed by: JRG
Dwn by: BJB
Ckd by: JRG
Reviewed by: JRG
Submitted by: BAKER

U.S. ARMY CORPS OF ENGINEERS
AFGHANISTAN ENGINEER DISTRICT
APO AE 96338

Michael Baker Jr., Inc
A unit of Michael Baker Corporation
Airside Business Park
100 Airside Drive
Moon Township, PA 15108
www.mbakercorp.com

AFGHAN NATIONAL ARMY
REGIONAL MILITARY TRAINING CENTER
STANDARD DESIGN

200 STUDENT CLASSROOM BUILDING
(4) 50 STUDENT CLASSROOMS
ELECTRICAL SYMBOLS & ABBREVIATIONS

Sheet reference number:
E–001

GENERAL NOTES:

1. REFER TO DRAWING #E-001 FOR THE ELECTRICAL SYMBOLS LIST.
2. EXIT SIGNS SHALL BE WIRED AHEAD OF ANY LOCAL SWITCHING ON CIRCUITS. SEE WIRING DIAGRAM DETAIL 6, DRAWING #E-501.
3. REFER TO DRAWING #E-601 FOR THE LIGHTING FIXTURE SCHEDULE.
4. REFER TO DRAWING #E-501 FOR THE POWER RISER.
5. REFER TO DRAWING #E-602 FOR PANEL SCHEDULES.
6. LIGHT FIXTURES INDICATED AS EMERGENCY SHALL BE PROVIDED WITH A BATTERY BACKUP BALLAST. SEE WIRING DIAGRAM DETAIL 5, DRAWING # E-501.

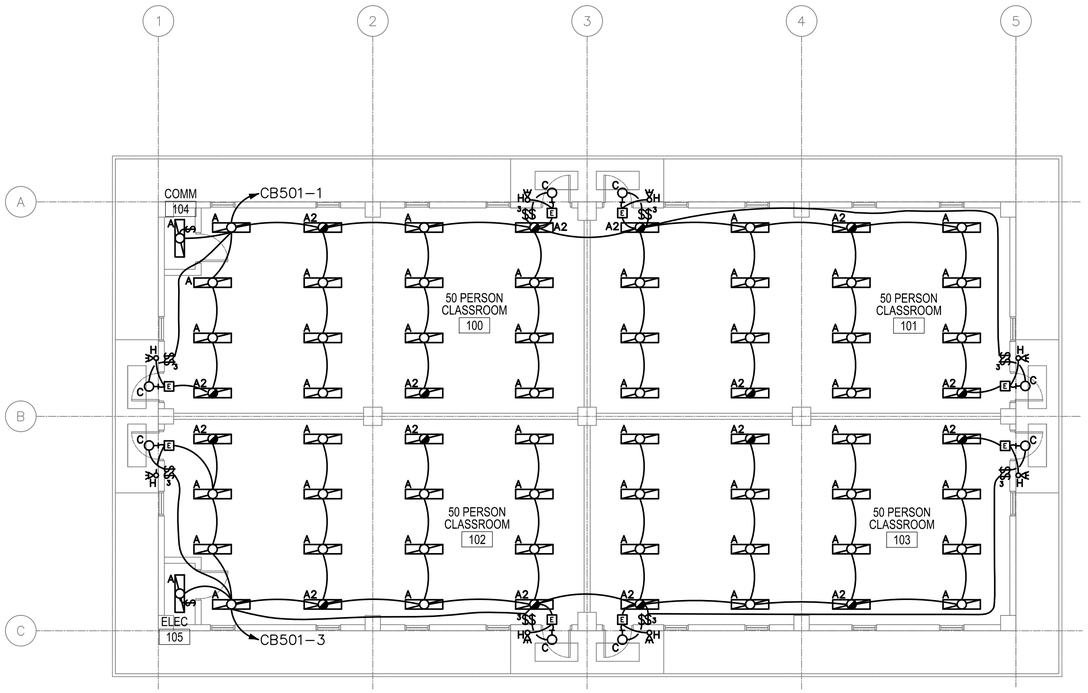

1 / E-101 200 STUDENT TOTAL
(4) 50-STUDENT CLASSROOMS - LIGHTING
SCALE: 1:100

0 2000 4000
SCALE: 1:100

APPROVED:

A/E DESIGNER OF RECORD

SEAL:

COMMONWEALTH OF PENNSYLVANIA
REGISTERED PROFESSIONAL
JOSEPH R. GAUS
ENGINEER
PE-074251
1/29/10

US ARMY CORPS OF ENGINEERS
AFGHANISTAN ENGINEER DISTRICT

Mark	Description	Date	Appr.

Mark	Description	Date	Appr.

U.S. ARMY CORPS OF ENGINEERS
AFGHANISTAN ENGINEER DISTRICT
APO AE 96338

Michael Baker Jr., Inc
A unit of Michael Baker Corporation
Airside Business Park
100 Airside Drive
Moon Township, PA 15108
www.mbakercorp.com

Designed by: JRG
Dwn by: BJB
Ckd by: JRG
Reviewed by: JRG
Submitted by: BAKER
Date: 2/23/10
Rev: 0
Design file no.
Drawing code:
File name:
Plot date:
Plot scale:

AFGHAN NATIONAL ARMY
REGIONAL MILITARY TRAINING CENTER
STANDARD DESIGN

200 STUDENT CLASSROOM BUILDING
(4) 50 STUDENT CLASSROOMS
ELECTRICAL LIGHTING PLAN

Sheet reference number:
E-101

GENERAL NOTES:

1. REFER TO DRAWING #E-001 FOR THE ELECTRICAL SYMBOLS LIST.
2. REFER TO DRAWING #E-501 FOR THE POWER RISER.
3. REFER TO DRAWING #E-602 FOR PANEL SCHEDULES.
4. COORDINATE EXACT MOUNTING LOCATION OF DISCONNECTING MEANS FOR MECHANICAL AND PLUMBING EQUIPMENT IN THE FIELD.
5. FUSIBLE SAFETY SWITCHES THAT ARE NOT OTHERWISE IDENTIFIED SHALL BE 380V, 1P, 30A FUSED SAFETY SWITCHES WITH 20A FUSES.

NUMBERED NOTES:

(1) PANEL CB501.

(2) PANEL CB502.

(3) PROVIDE A 1200mm X 2400mm SHEET OF PLYWOOD PAINTED WITH FIRE RESISTANT PAINT FOR MOUNTING TELECOMMUNICATIONS EQUIPMENT.

(4) PROVIDE CONDUIT STUB UP IN THE ROOM FOR INCOMING TELECOMMUNICATIONS SERVICES FROM THE CENTRAL COMMUNICATIONS SYSTEM IN THE GARRISON.

(5) PROVIDE POWER CONNECTION TO EXHAUST FANS. SEE DRAWINGS #M-101 AND #E-602 FOR MORE INFORMATION.

(6) PROVIDE POWER CONNECTION TO ELECTRIC UNIT HEATER #5. SEE DRAWINGS #M-101 AND #E-602 FOR MORE INFORMATION.

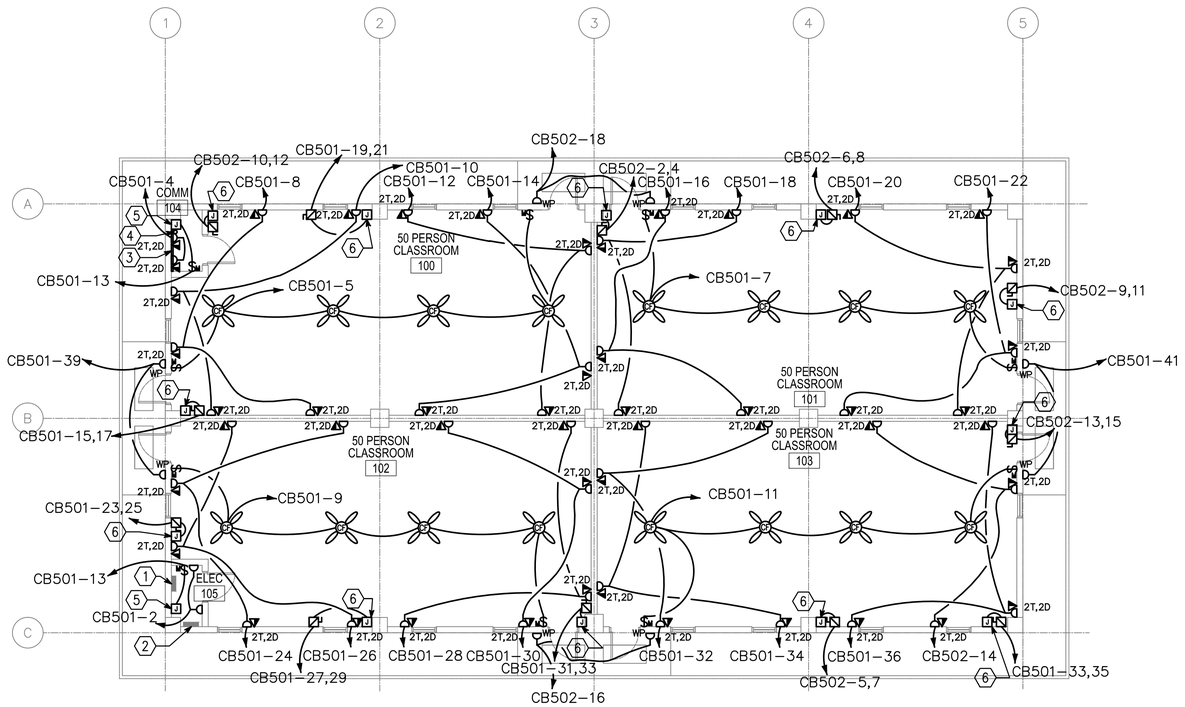

200 STUDENT TOTAL
(4) 50-STUDENT CLASSROOMS - POWER AND SYSTEMS

1 / E-102

SCALE: 1:100

0 2000 4000
SCALE: 1:100

APPROVED:

A/E DESIGNER OF RECORD

SEAL:

COMMONWEALTH OF PENNSYLVANIA
REGISTERED PROFESSIONAL
JOSEPH R. GAUS
ENGINEER
PE-074251
1/29/10

US ARMY CORPS OF ENGINEERS
AFGHANISTAN ENGINEER DISTRICT

Mark	Description	Date	Appr.

Mark	Description	Date	Appr.

Designed by: JRG
Dwn by: BJB
Ckd by: JRG
Reviewed by: JRG
Submitted by: BAKER
Date: 2/23/10
Rev: 0
Design file no.
Drawing code:
File name:
Plot date:
Plot scale:

U.S. ARMY CORPS OF ENGINEERS
AFGHANISTAN ENGINEER DISTRICT
APO AE 96338

Michael Baker Jr., Inc
A unit of Michael Baker Corporation
Airside Business Park
100 Airside Drive
Moon Township, PA 15108
www.mbakercorp.com

AFGHAN NATIONAL ARMY
REGIONAL MILITARY TRAINING CENTER
STANDARD DESIGN

200 STUDENT CLASSROOM BUILDING
(4) 50 STUDENT CLASSROOMS
ELECTRICAL POWER AND SYSTEMS PLAN

Sheet reference number:
E-102

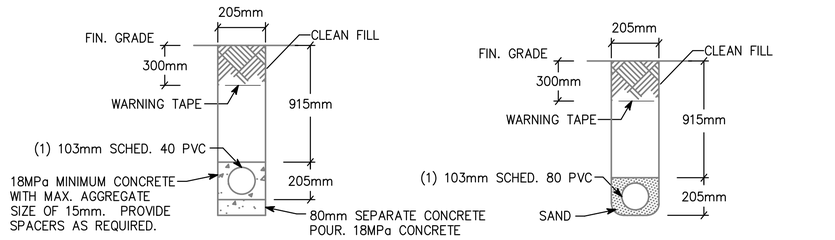

NOTE: PVC CONDUIT SHALL BE DIRECT BURIED SCHEDULE 80 FOR NO TRAFFIC AREAS AND CONCRETE-ENCASED SCHEDULE 40 FOR UNDER ROADWAYS OR TRAFFIC AREAS.

1 / E-501 TYPICAL DUCT BANK DETAILS FOR CONDUIT IN SAND OR CONCRETE

SCALE: N.T.S.

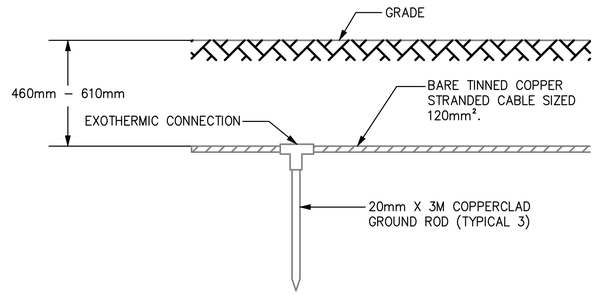

2 / E-501 GROUND TRIPOD SYSTEM DETAIL - ELEVATION

SCALE: N.T.S.

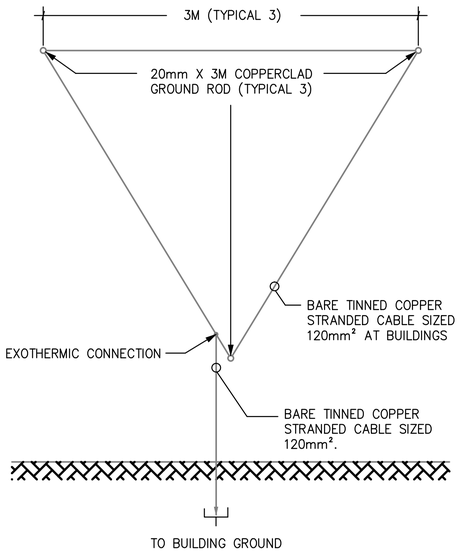

3 / E-501 GROUND TRIPOD SYSTEM DETAIL - PLAN

SCALE: N.T.S.

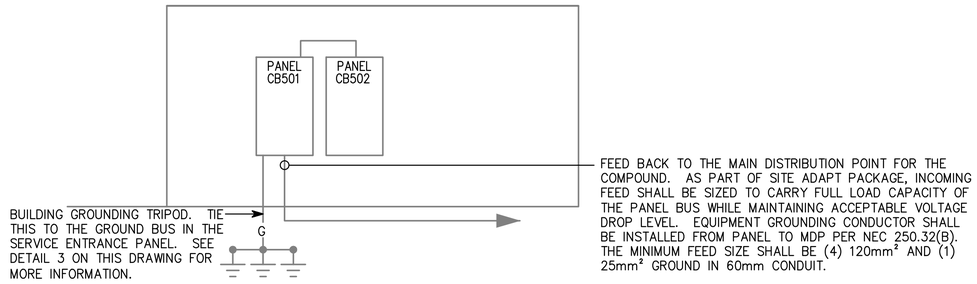

4 / E-501 CB50 RISER DIAGRAM

SCALE: N.T.S.

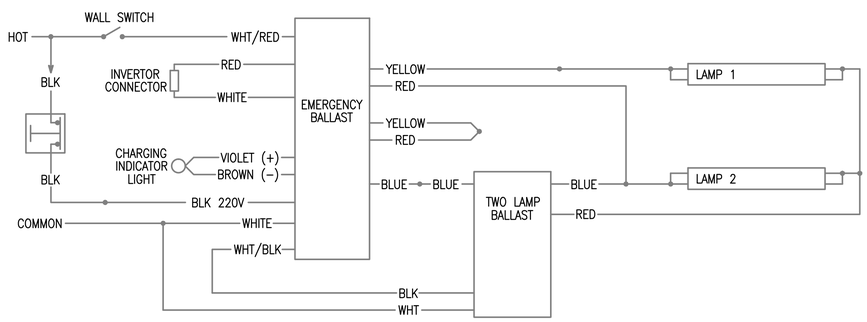

5 / E-501 EMERGENCY FIXTURE WIRING DIAGRAM

SCALE: N.T.S.

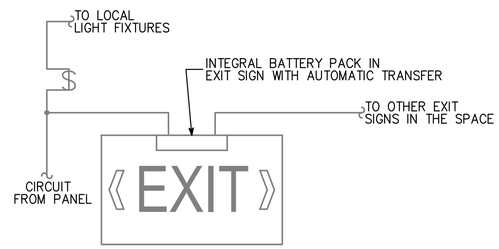

6 / E-501 EXIT SIGN WIRING DIAGRAM

SCALE: N.T.S.

APPROVED:

A/E DESIGNER OF RECORD

SEAL:

COMMONWEALTH OF PENNSYLVANIA
REGISTERED PROFESSIONAL ENGINEER
JOSEPH R. GAUS
PE-074251

US ARMY CORPS OF ENGINEERS
AFGHANISTAN ENGINEER DISTRICT

Mark	Description	Date	Appr.	Mark	Description	Date	Appr.

Designed by: JRG
Dwn by: BJB
Ckd by: JRG
Reviewed by: JRG
Submitted by:
Date: 2/23/10
Rev: 0
Design file no.
Drawing code:
File name:
Plot date:
Plot scale:

U.S. ARMY CORPS OF ENGINEERS
AFGHANISTAN ENGINEER DISTRICT
APO AE 96338

Michael Baker Jr., Inc.
A unit of Michael Baker Corporation
Airside Business Park
100 Airside Drive
Moon Township, PA 15108
www.mbakercorp.com

BAKER

AFGHAN NATIONAL ARMY
REGIONAL MILITARY TRAINING CENTER
STANDARD DESIGN

200 STUDENT CLASSROOM BUILDING
(4) 50 STUDENT CLASSROOMS
ELECTRICAL DETAILS

Sheet reference number:
E-501

(A) LARGER OF THE TWO SIZES GIVEN IN THE TABLES BELOW	
GROUNDING ELECTRODE CONDUCTOR (BASED ON AIC RATING)	
AIC RATING OF SERVICE EQUIPMENT	NECESSARY GROUNDING ELECTRODE CONDUCTOR SIZE
10K	(1) 35mm²
14K	(1) 50mm²
18K	(1) 70mm²
22K	(1) 70mm²
25K	(1) 70mm²
30K	(1) 95mm²
35K	(1) 120mm²
42K	(1) 150mm²
65K	(1) 185mm²
100K	(1) 300mm²
125K	(2) 185mm²
200K	(2) 300mm²
GROUNDING ELECTRODE CONDUCTOR (BASED ON NEC TABLE 250.66)	
SIZE OF LARGEST UNGROUNDED SERVICE CONDUCTOR OR EQUIVALENT AREA FOR PARALLEL CONDUCTORS	NECESSARY GROUNDING ELECTRODE CONDUCTOR SIZE
350 kcmil OR SMALLER	35mm²
OVER 350 kcmil TO 600 kcmil	70mm²
OVER 600 kcmil TO 1100 kcmil	70mm²
OVER 1100 kcmil	95mm²
NOTE: ALL SIZES ARE BASED ON COPPER CONDUCTORS.	

(B) EQUIPMENT GROUNDING CONDUCTOR	
RATING OR SETTING OF AUTOMATIC OVERCURRENT DEVICE IN CIRCUIT AHEAD OF EQUIPMENT, CONDUIT, ETC, NOT EXCEEDING (AMPERES)	NECESSARY EQUIPMENT GROUNDING CONDUCTOR SIZE
15	2.5mm²
20	4.0mm²
30	6.0mm²
40	6.0mm²
60	6.0mm²
100	10mm²
200	16mm²
300	25mm²
400	25mm²
500	35mm²
600	50mm²
800	70mm²
1000	70mm²
1200	95mm²
1600	120mm²
2000	150mm²
2500	185mm²
3000	240mm²
4000	300mm²
5000	400mm²
6000	400mm²
NOTE: ALL SIZES ARE BASED ON COPPER CONDUCTORS.	

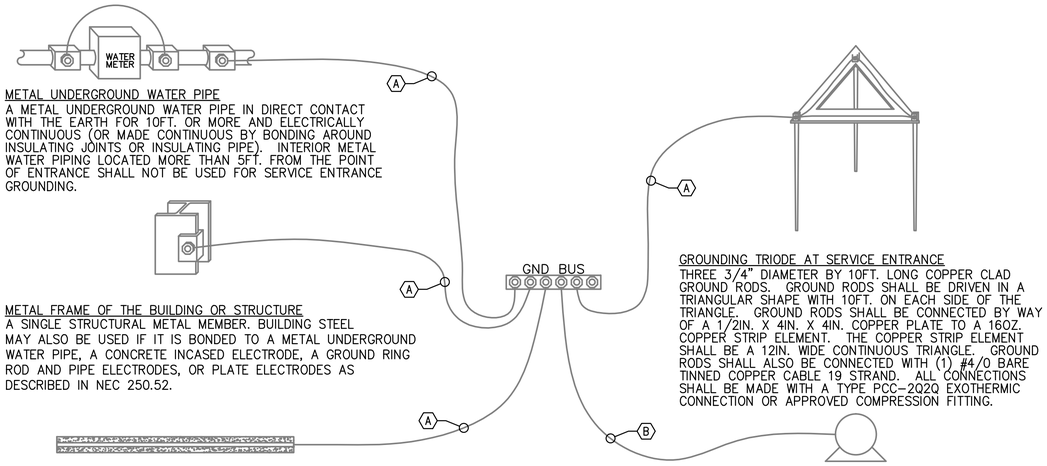

METAL UNDERGROUND WATER PIPE
A METAL UNDERGROUND WATER PIPE IN DIRECT CONTACT WITH THE EARTH FOR 10FT. OR MORE AND ELECTRICALLY CONTINUOUS (OR MADE CONTINUOUS BY BONDING AROUND INSULATING JOINTS OR INSULATING PIPE). INTERIOR METAL WATER PIPING LOCATED MORE THAN 5FT. FROM THE POINT OF ENTRANCE SHALL NOT BE USED FOR SERVICE ENTRANCE GROUNDING.

METAL FRAME OF THE BUILDING OR STRUCTURE
A SINGLE STRUCTURAL METAL MEMBER. BUILDING STEEL MAY ALSO BE USED IF IT IS BONDED TO A METAL UNDERGROUND WATER PIPE, A CONCRETE INCASED ELECTRODE, A GROUND RING ROD AND PIPE ELECTRODES, OR PLATE ELECTRODES AS DESCRIBED IN NEC 250.52.

CONCRETE ENCASED ELECTRODE
AN ELECTRODE ENCASED BY AT LEAST 2IN. OF CONCRETE , LOCATED WITHIN AND NEAR THE BOTTOM OF A CONCRETE FOUNDATION OR FOOTING THAT IS IN DIRECT CONTACT WITH THE EARTH, CONSISTING OF AT LEAST 20FT. OF ONE OR MORE BARE OR ZINC GALVANIZED OR OTHER ELECTRICALLY CONDUCTIVE COATED STEEL REINFORCING BARS OR RODS OF NOT LESS THAN 1/2" DIAMETER OR BARE COPPER CONDUCTOR NOT SMALLER THAN 4AWG.

GROUNDING TRIODE AT SERVICE ENTRANCE
THREE 3/4" DIAMETER BY 10FT. LONG COPPER CLAD GROUND RODS. GROUND RODS SHALL BE DRIVEN IN A TRIANGULAR SHAPE WITH 10FT. ON EACH SIDE OF THE TRIANGLE. GROUND RODS SHALL BE CONNECTED BY WAY OF A 1/2IN. X 4IN. X 4IN. COPPER PLATE TO A 16OZ. COPPER STRIP ELEMENT. THE COPPER STRIP ELEMENT SHALL BE A 12IN. WIDE CONTINUOUS TRIANGLE. GROUND RODS SHALL ALSO BE CONNECTED WITH (1) #4/0 BARE TINNED COPPER CABLE 19 STRAND. ALL CONNECTIONS SHALL BE MADE WITH A TYPE PCC-2Q2Q EXOTHERMIC CONNECTION OR APPROVED COMPRESSION FITTING.

LOAD OR DOWNSTREAM PANEL
ALL LOADS IN THE BUILDING SHALL HAVE AN EQUIPMENT GROUNDING CONDUCTOR PULLED TO THEM.

1
E-502

SERVICE ENTRANCE GROUNDING DETAIL

SCALE: N.T.S.

APPROVED:

A/E DESIGNER OF RECORD

SEAL:

COMMONWEALTH OF PENNSYLVANIA
REGISTERED PROFESSIONAL
JOSEPH R. GAUS
ENGINEER
PE-074251
1/29/10

US ARMY CORPS OF ENGINEERS
AFGHANISTAN ENGINEER DISTRICT

Mark	Description	Date	Appr.	Mark	Description	Date	Appr.

Rev: 0
Date: 2/23/10
Design file no.
Drawing code:
File name:
Plot date:
Plot scale:

Designed by: JRG
Dwn by: BJB
Ckd by: JRG
Reviewed by: JRG
Submitted by: BAKER

U.S. ARMY CORPS OF ENGINEERS
AFGHANISTAN ENGINEER DISTRICT
APO AE 96338

Michael Baker Jr., Inc.
A unit of Michael Baker Corporation
Airside Business Park
100 Airside Drive
Moon Township, PA 15108
www.mbakercorp.com

AFGHAN NATIONAL ARMY
REGIONAL MILITARY TRAINING CENTER
STANDARD DESIGN

200 STUDENT CLASSROOM BUILDING
(4) 50 STUDENT CLASSROOMS
ELECTRICAL DETAILS

Sheet reference number:
E-502

FIXTURE MARK 'A'

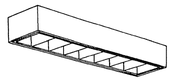

FIXTURE MARK 'C'

FIXTURE MARK 'H'

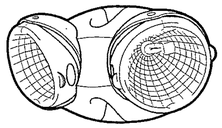

FIXTURE MARK 'E'

LIGHT FIXTURE SCHEDULE

FIXTURE MARK	STYLE NUMBER AND TYPE	NUMBER AND TYPE OF LAMPS	VOLTAGE	MOUNTING	NOTES
A	PARABOLIC SURFACE/PENDANT MOUNTED 300MM X 1200MM FLUORESCENT FIXTURE WITH ELECTRONIC BALLAST	(2) 32W 3500K	220V – 1ø 50HZ	SURFACE MOUNTED	FURNISHED WITH ELECTRONIC BALLAST. PARABOLIC LOUVER SHALL BE SPECULAR LENS IRADESCENCE TYPE.
A2	SAME AS FIXTURE 'A' WITH EMERGENCY BALLAST	(2) 32W 3500K	220V – 1ø 50HZ	SURFACE MOUNTED	FURNISHED WITH ELECTRONIC BALLAST. PARABOLIC LOUVER SHALL BE SPECULAR LENS IRADESCENCE TYPE. EMERGENCY BALLAST SELF TEST.
C	INCANDESCENT ONE PIECE W/ APPROVED LENS STABILIZED HIGH IMPACT POLY CARBONATE.	(1) A19 – 100W INCANDESCENT	220V – 1ø 50HZ	WALL MOUNTED ABOVE EXTERIOR DOORS	
H	REMOTE HEAD EXTERIOR LIGHT HEAD POWERED FROM EXIT SIGN BATTERY– 12V DOUBLE HEAD CORROSION RESISTANT WITH UL34 WEATHERPROOF CONSTRUCTION	(2) 12W/12V HALOGEN LAMP	12V – 1ø 50HZ	EXTERIOR WALL MOUNTED AT TOP OF DOOR HEIGHT	
E	UNIVERSAL MOUNT ENGINEER GRADE THERMOPLASTIC HOUSING EXIT SIGN WITH LED LAMPS, RED LETTERS 6" IN HEIGHT WITH ARROWS AS INDICATED, WITH 12V CADMIUM BATTERY WITH REMOTE HEAD CAPABILITY	LED LAMPS	220V – 1ø 50HZ	UNIVERSAL MOUNTING	

APPROVED:

A/E DESIGNER OF RECORD

SEAL:

COMMONWEALTH OF PENNSYLVANIA
REGISTERED PROFESSIONAL
JOSEPH R. GAUS
1/29/10
ENGINEER
PE-074251

US ARMY CORPS OF ENGINEERS
AFGHANISTAN ENGINEER DISTRICT

Mark	Description	Date	Appr.	Mark	Description	Date	Appr.

Designed by: JRG
Dwn by: BJB
Ckd by: JRG
Reviewed by: JRG
Submitted by: BAKER
Date: 2/23/10
Rev: 0
Design file no.
Drawing code:
File name:
Plot date:
Plot scale:

U.S. ARMY CORPS OF ENGINEERS
AFGHANISTAN ENGINEER DISTRICT
APO AE 96338

Michael Baker Jr., Inc.
A unit of Michael Baker Corporation
Airside Business Park
100 Airside Drive
Moon Township, PA 15108
www.mbakercorp.com

AFGHAN NATIONAL ARMY
REGIONAL MILITARY TRAINING CENTER
STANDARD DESIGN

200 STUDENT CLASSROOM BUILDING
(4) 50 STUDENT CLASSROOMS
ELECTRICAL LIGHTING FIXTURE SCHEDULE

Sheet reference number:
E–601

PANELBOARD CB501 SURFACE MOUNTED
225 AMP. MAIN LUGS (OR) 225 AMP. MAIN BREAKER W/ 225 AMP. TRIP
CIRCUIT BREAKER TYPE 380/220 VOLTS 3 PHASE 4 WIRE 50 HZ 225 AMP. BUS

CKT. NO.	TRIP AMPS	NO. POLES	WIRE MM ²	GND MM ²	CONDUIT MM	LOAD SERVED	LOAD-KVA A0	LOAD-KVA B0	LOAD-KVA C0	LOAD-KVA A0	LOAD-KVA B0	LOAD-KVA C0	LOAD SERVED	CONDUIT MM	GND MM²	WIRE MM²	NO. POLES	TRIP AMPS	CKT. NO.
1	20	1	4.0	4.0	20	LIGHTING – RM 100, 101	2.7			0.4			RECEPTACLES – ROOM 105	20	4.0	4.0	1	20	2
3	20	1	4.0	4.0	20	LIGHTING – RM 102, 103		2.7			0.4		RECEPTACLES – ROOM 104	20	4.0	4.0	1	20	4
5	20	1	4.0	4.0	20	CEILING FANS – RM 100			1.6				SPARE				1	20	6
7	20	1	4.0	4.0	20	CEILING FANS – RM 101	1.6			0.6			RECEPTACLES – RM 100	20	4.0	4.0	1	20	8
9	20	1	4.0	4.0	20	CEILING FANS – RM 102		1.6			0.6		RECEPTACLES – RM 100	20	4.0	4.0	1	20	10
11	20	1	4.0	4.0	20	CEILING FANS – RM 103			1.6			0.6	RECEPTACLES – RM 100	20	4.0	4.0	1	20	12
13	20	1	4.0	4.0	20	EXHAUST FANS #1,2 – RM 104,105	0.5			0.6			RECEPTACLES – RM 100	20	4.0	4.0	1	20	14
15	20	2	4.0	4.0	20	ELECTRIC HEAT #5 – RM 100		2.5			0.6		RECEPTACLES – RM 101	20	4.0	4.0	1	20	16
17									2.5			0.6	RECEPTACLES – RM 101	20	4.0	4.0	1	20	18
19	20	2	4.0	4.0	20	ELECTRIC HEAT #5 – RM 100	2.5			0.6			RECEPTACLES – RM 101	20	4.0	4.0	1	20	20
21								2.5			0.6		RECEPTACLES – RM 101	20	4.0	4.0	1	20	22
23	20	2	4.0	4.0	20	ELECTRIC HEAT #5 – RM. 102			2.5			0.6	RECEPTACLES – RM 102	20	4.0	4.0	1	20	24
25							2.5			0.6			RECEPTACLES – RM 102	20	4.0	4.0	1	20	26
27	20	2	4.0	4.0	20	ELECTRIC HEAT #5 – RM 102		2.5			0.6		RECEPTACLES – RM 102	20	4.0	4.0	1	20	28
29									2.5			0.6	RECEPTACLES – RM 102	20	4.0	4.0	1	20	30
31	20	2	4.0	4.0	20	ELECTRIC HEAT #5 – RM 102	2.5			0.6			RECEPTACLES – RM 103	20	4.0	4.0	1	20	32
33								2.5			0.6		RECEPTACLES – RM 103	20	4.0	4.0	1	20	34
35	20	2	4.0	4.0	20	ELECTRIC HEAT #5 – RM 103			2.5			0.6	RECEPTACLES – RM 103	20	4.0	4.0	1	20	36
37							2.5			10.6			PANEL – CB502	40	10.0	50.0	3	100	38
39	20	1	4.0	4.0	20	RECEPTACLES – EXTERIOR		0.4			10.4								40
41	20	1	4.0	4.0	20	RECEPTACLES – EXTERIOR			0.4			10.4							42
							14.8	14.7	13.6	14.0	13.8	13.4							

TOTAL CONN. LOAD PER PHASE (KVA): A0 28.8 B0 28.5 C0 27.0

TOTAL CONN. LOAD 84.3 KVA. 70 % DEMAND = ESTIMATED DEMAND LOAD 59.01

* MAIN BREAKER SHALL BE 3P EARTH GROUND TYPE

PANELBOARD CB502 SURFACE MOUNTED
225 AMP. MAIN LUGS (OR) 100 AMP. MAIN BREAKER W/ 100 AMP. TRIP
CIRCUIT BREAKER TYPE 380/220 VOLTS 3 PHASE 4 WIRE 50 HZ 100 AMP. BUS

CKT. NO.	TRIP AMPS	NO. POLES	WIRE MM ²	GND MM ²	CONDUIT MM	LOAD SERVED	LOAD-KVA A0	LOAD-KVA B0	LOAD-KVA C0	LOAD-KVA A0	LOAD-KVA B0	LOAD-KVA C0	LOAD SERVED	CONDUIT MM	GND MM²	WIRE MM²	NO. POLES	TRIP AMPS	CKT. NO.
1	20	2				SPARE				2.5			ELECTRIC HEAT #5 – RM 101	20	4.0	4.0	2	20	2
3											2.5								4
5	20	2	4.0	4.0	20	ELECTRIC HEAT #5 – RM 103			2.5			2.5	ELECTRIC HEAT #5 – RM 101	20	4.0	4.0	2	20	6
7							2.5			2.5									8
9	20	2	4.0	4.0	20	ELECTRIC HEAT #5 – RM 101		2.5			2.5		ELECTRIC HEAT #5 – RM 100	20	4.0	4.0	2	20	10
11									2.5			2.5							12
13	20	2	4.0	4.0	20	ELECTRIC HEAT #5 – RM 103	2.5			0.6			RECEPTACLES – ROOM 103	20	4.0	4.0	1	20	14
15								2.5			0.4		RECEPTACLES – EXTERIOR	20	4.0	4.0	1	20	16
17	20	1				SPARE						0.4	RECEPTACLES – EXTERIOR	20	4.0	4.0	1	20	18
19	20	1				SPARE							SPARE				1	20	20
21	20	1				SPARE							SPARE				1	20	22
23	20	1				SPARE							SPARE				1	20	24
25	20	1				SPARE							SPARE				1	20	26
27	20	1				SPARE							SPARE				1	20	28
29	20	1				SPARE							SPARE				1	20	30
31	20	1				SPARE							SPARE				1	20	32
33	20	1				SPARE							SPARE				1	20	34
35	20	1				SPARE							SPARE				1	20	36
37	20	1				SPARE							SPARE				1	20	38
39	20	1				SPARE							SPARE				1	20	40
41	20	1				SPARE							SPARE				1	20	42
							5.0	5.0	5.0	5.6	5.4	5.4							

TOTAL CONN. LOAD PER PHASE (KVA): A0 10.6 B0 10.4 C0 10.4

TOTAL CONN. LOAD 31.4 KVA. 70 % DEMAND = ESTIMATED DEMAND LOAD 21.98

APPROVED:

A/E DESIGNER OF RECORD

SEAL:

COMMONWEALTH OF PENNSYLVANIA
REGISTERED PROFESSIONAL
JOSEPH R. GAUS
1/29/10
ENGINEER
PE-074251

US ARMY CORPS OF ENGINEERS
AFGHANISTAN ENGINEER DISTRICT

Mark	Description	Date	Appr.

Mark	Description	Date	Appr.

Rev: 0
Date: 2/23/10
Design file no.
Drawing code:
File name:
Plot date:
Plot scale:

Designed by: JRG
Dwn by: BJB
Ckd by: JRG
Reviewed by: JRG
Submitted by: BAKER

U.S. ARMY CORPS OF ENGINEERS
AFGHANISTAN ENGINEER DISTRICT
APO AE 96338

Michael Baker Jr., Inc.
A unit of Michael Baker Corporation
Airside Business Park
100 Airside Drive
Moon Township, PA 15108
www.mbakercorp.com

AFGHAN NATIONAL ARMY
REGIONAL MILITARY TRAINING CENTER
STANDARD DESIGN

200 STUDENT CLASSROOM BUILDING
(4) 50 STUDENT CLASSROOMS
ELECTRICAL PANEL SCHEDULES

Sheet reference number:
E–602

AFGHAN NATIONAL ARMY

STANDARD BUILDING DESIGN

200 STUDENT CLASSROOM BUILDING
(8) 25 STUDENT CLASSROOMS

100% FINAL DESIGN SUBMITTAL

SHEET INDEX

G–001 COVER SHEET

STRUCTURAL

S–001 GENERAL NOTES & DESIGN CRITERIA
S–101 FOUNDATION/SLAB & ROOF FRAMING PLANS
S–401 BUILDING SECTIONS
S–501 FOUNDATION SECTIONS
S–502 FRAMING SECTIONS
S–503 BEAM & COLUMN DETAILS
S–504 BEAM & COLUMN DETAILS
S–601 SCHEDULES
S–701 TYPICAL DETAILS
S–702 TYPICAL DETAILS

ARCHITECTURAL

A–001 LIFE SAFETY PLAN
A–101 FLOOR PLAN
A–102 ROOF PLAN
A–201 ELEVATIONS
A–301 BUILDING SECTIONS
A–401 WALL SECTIONS
A–501 EXTERIOR DETAILS
A–502 HEAD, JAMB, & SILL DETAILS
A–503 STOOP DETAILS
A–601 WINDOW & DOOR SCHEDULES

MECHANICAL

M–101 HVAC FLOOR PLAN, SCHEDULES, & DETAILS

ELECTRICAL

E–001 ELECTRICAL SYMBOLS & ABBREVIATIONS
E–101 ELECTRICAL LIGHTING PLAN
E–102 ELECTRICAL POWER & SYSTEMS PLAN
E–501 ELECTRICAL DETAILS
E–502 ELECTRICAL DETAILS
E–601 ELECTRICAL LIGHT FIXTURE SCHEDULE
E–602 ELECTRICAL PANEL SCHEDULES

US ARMY CORPS OF ENGINEERS
AFGHANISTAN ENGINEER DISTRICT

Mark	Description	Date	Appr.	Mark	Description	Date	Appr.

Date: 2/23/10 | Rev: 0
Design file no.
Drawing code:
File name: ANACBSG-001CS
Plot date: 2/23/2010
Plot scale: X:X

Designed by: KMF/MMY
Dwn by: RCG | Ckd by: CWW
Reviewed by: LHM
Submitted by: BAKER

U.S. ARMY CORPS OF ENGINEERS
AFGHANISTAN ENGINEER DISTRICT
APO AE 96338

Michael Baker Jr., Inc.
A unit of Michael Baker Corporation
Airside Business Park
100 Airside Drive
Moon Township, PA 15108
www.mbakercorp.com

AFGHAN NATIONAL ARMY
REGIONAL MILITARY TRAINING CENTER
STANDARD DESIGN

200 STUDENT CLASSROOM BUILDING
(8) 25 STUDENT CLASSROOMS

COVER SHEET

Sheet reference number:
G–001

STRUCTURAL ABBREVIATIONS:

ACI	AMERICAN CONCRETE INSTITUTE
ADD'L	ADDITIONAL
AISC	AMERICAN INSTITUTE OF STEEL CONSTRUCTION
AISI	AMERICAN IRON AND STEEL INSTITUTE
ASTM	AMERICAN SOCIETY FOR TESTING AND MATERIALS
ARCH	ARCHITECTURAL
B	BOTTOM
BLDG	BUILDING
BOTT	BOTTOM
℄	CENTER LINE
CFMRF	COLD FORM METAL ROOF FRAME
CFMF	COLD FORM METAL FRAME
CFS	COLD FORMED STEEL
CIP	CAST–IN–PLACE
CIPL	CAST–IN–PLACE LINTEL
CJ	CONTROL JOINT
CLR	CLEAR
CMU	CONCRETE MASONRY UNIT
COEFF	COEFFICIENT
COL	COLUMN
CONC	CONCRETE
CONT	CONTINUOUS
COORD	COORDINATE
CRSI	CONCRETE REINFORCING STEEL INSTITUTE
CSJ	CONSTRUCTION JOINT
DIA	DIAMETER
DIAG	DIAGONAL
DIM	DIMENSION
DWG	DRAWING
DWL	DOWEL
EA	EACH
EF	EACH FACE
ELEC	ELECTRICAL
ELEV	ELEVATION
EMBED	EMBEDMENT
EQUIV	EQUIVALENT
ETC	ET CETERA
EW	EACH WAY
EXP	EXPANSION
EXT	EXTERIOR
FTG	FOOTING
GA	GAUGE
GB	GRADE BEAM
HORIZ	HORIZONTAL
h	HOUR
HRS	HOURS
IBC	INTERNATIONAL BUILDING CODE
INFO	INFORMATION
INT	INTERIOR
kg	KILOGRAM
km	KILOMETER
kN	KILONEWTON
kPa	KILOPASCAL
L#	ANGLE (# INDICATES SIZE)
LONG	LONGITUDINAL
LLV	LONG LEG VERTICAL
m	METER
MAX	MAXIMUM
MECH	MECHANICAL
MFG	MANUFACTURER
MID	MIDDLE
MIN	MINIMUM
MISC	MISCELLANEOUS
mm	MILLIMETER
MPa	MEGAPASCAL
MTL	METAL
MWFRS	MAIN WIND FORCE RESISTING SYSTEM
N	NEWTON
N	NORTH
N/A	NOT APPLICABLE
#	NUMBER SYMBOL FOR REBAR SIZE
NTS	NOT TO SCALE
OC	ON CENTER
OPNG	OPENING
PL or PL	PLATE
PRE–ENG	PRE–ENGINEERED
REINF	REINFORCED
REQ'D	REQUIRED
RB	ROOF BEAM
SIM	SIMILAR
SPECS	SPECIFICATIONS
STD	STANDARD
STRUCT	STRUCTURAL
SW	SHEAR WALL
T	TOP
T/	TOP OF
T/ELEV	TOP ELEVATION
T/SLAB	TOP OF SLAB
T&B	TOP AND BOTTOM
THK	THICK
TYP	TYPICAL
UFC	UNIFIED FACILITIES CRITERIA
UON	UNLESS OTHERWISE NOTED
VERT	VERTICAL
W	WIDTH
W/	WITH

1.0 GENERAL NOTES:

1.1 THIS PROJECT HAS BEEN DESIGNED FOR THE WEIGHTS AND MATERIALS INDICATED ON THE SHEETS AND FOR THE LIVE LOADS INDICATED IN THE DESIGN DATA. IT IS THE CONTRACTOR'S RESPONSIBILITY TO DETERMINE ALLOWABLE CONSTRUCTION LOADS AND TO PROVIDE PROPER DESIGN AND CONSTRUCTION OF FALSEWORK, FORMWORK, STAGING, BRACING, SHEETING AND SHORING, ETC.

1.1 COORDINATE THESE SHEETS WITH THE ARCHITECTURAL, MECHANICAL, ELECTRICAL, PLUMBING, AND CIVIL SHEETS. ALL DIMENSIONS SHOWN ON THE SHEETS ARE MILLIMETERS UNLESS NOTED OTHERWISE.

1.2 THE CONTRACTOR SHALL VERIFY AND COORDINATE ALL FLOOR AND ROOF OPENING SIZES AND LOCATIONS, EQUIPMENT PAD SIZES AND LOCATIONS, ANCHOR BOLT LAYOUTS, ETC WITH EQUIPMENT SELECTED. THE CONTRACTOR SHALL MAKE ANY REQUIRED MODIFICATIONS AT NO ADDITIONAL COST.

1.3 THE CONTRACTOR SHALL REFER TO THE ARCHITECTURAL, MECHANICAL, ELECTRICAL AND PLUMBING SHEETS FOR SLEEVES, CURBS, INSERTS OR OPENINGS, ETC. NOT HEREIN INDICATED.

1.4 WORK NOT INCLUDED ON THE SHEETS BUT IMPLIED TO BE SIMILAR TO THAT SHOWN AT CORRESPONDING PLACES ELSEWHERE ON THE SHEETS SHALL BE REPEATED.

1.5 IN CASE OF CONFLICT BETWEEN THE NOTES, DETAILS AND SPECIFICATIONS THE MOST RIGID REQUIREMENTS SHALL GOVERN.

1.6 SEE ARCHITECTURAL SHEETS FOR LOCATIONS OF MASONRY AND NON–LOAD BEARING PARTITIONS. PROVIDE COMPRESSIBLE FIRESAFING AT TOP OF WALL AS REQUIRED BY ARCHITECTURAL SHEETS.

1.7 COORDINATE FINISHED FLOOR DATUM ELEVATION 0.0m WITH THE CIVIL SHEETS.

2.0 FOUNDATION NOTES

2.1 THE GEOTECHNICAL ANALYSIS FOR THIS PROJECT IS THE RESPONSIBILITY OF THE CONTRACTOR AWARDED THE WORK. AN ASSUMED ALLOWABLE SOIL BEARING VALUE OF 72 kPa HAS BEEN USED IN THE STRUCTURAL ANALYSIS OF THE BUILDING HEREIN AND SHALL BE CONFIRMED AND VERIFIED AS PART OF THE GEOTECHNICAL INVESTIGATION. VALUES WHICH DO NOT MEET THE REQUIREMENTS INDICATED ON THE BASIS OF DESIGN SHEET SHALL BE IMMEDIATELY BROUGHT TO THE ATTENTION OF THE CONTRACTING OFFICER FOR CONSIDERATION AND DETERMINATION ON THE NEXT APPROPRIATE COURSE OF ACTION.

2.2 SEE THE SPECIFICATION FOR ADDITIONAL REQUIREMENTS TO THOSE OUTLINED IN THE GEOTECHNICAL INVESTIGATION FOR EXCAVATION AND PREPARATION OF THE FOUNDATION AND THE SLAB ON GRADE SUBGRADE INCLUDING COMPACTION PROCEDURES.

2.3 EXCAVATIONS FOR FOOTINGS SHALL HAVE THE SIDES AND BOTTOMS TEMPORARILY LINED WITH 0.25mm POLYETHYLENE IF PLACEMENT OF CONCRETE DOES NOT OCCUR WITHIN 24 HRS OF THE EXCAVATION OF THE FOOTING.

2.4 FOUNDATION CONDITIONS NOTED DURING CONSTRUCTION WHICH DIFFER FROM THOSE DESCRIBED IN THE GEOTECHNICAL REPORT SHALL BE REPORTED TO THE GENERAL CONTRACTOR BEFORE FURTHER CONSTRUCTION IS ATTEMPTED. SEE PROJECT SPECIFICATIONS.

2.5 NO FOOTINGS OR SLABS SHALL BE POURED INTO OR AGAINST SUBGRADE CONTAINING FREE WATER, FROST, ICE OR LOOSE MATERIAL. FROST DEPTH ASSUMED TO BE 800mm.

2.6 ALL SLAB–ON–GRADE, TRENCH BOTTOMS AND OTHER ON–GRADE INTERIOR HORIZONTAL SURFACES SHALL BE PLACED OVER A 0.25mm POLYETHYLENE VAPOR RETARDER OVER A 100mm #57 STONE WATER CAPILLARY BARRIER PLACED ON SUBGRADE PROPERLY PREPARED IN ACCORDANCE WITH THE CONTRACT SPECIFICATIONS. (UON)

2.7 PRIOR TO START OF FOUNDATION OR SLAB–ON–GRADE CONSTRUCTION, EXISTING SUBGRADES SHALL BE COMPACTED TO MINIMUM OF 95% MAXIMUM DRY DENSITY OBTAINED THRU ASTM D 1557 MODIFIED PROCTOR TESTING.

2.8 SEE PLUMBING, ELECTRICAL & CIVIL SHEETS FOR REQUIRED UNDERSLAB UTILITIES.

2.9 SEE ARCHITECTURAL SHEETS FOR ALL WATERPROOFING DETAILS AND MATERIALS.

2.10 IF UNDERMINING OF FOOTINGS OCCURS, FILL VOIDS WITH 18 MPa CONCRETE. DO NOT ATTEMPT TO REPLACE AND RE–COMPACT SOIL.

3.0 CONCRETE

3.1 CONCRETE SHALL HAVE THE UNIT WEIGHT OF 2400 kg/m^3 AND A MINIMUM COMPRESSIVE STRENGTH (f'c) OF 28 MPa AT 28 DAYS. ALL CONCRETE SHALL HAVE A WATER–CEMENT RATIO OF 0.45. SEE SPECIFICATIONS FOR ADDITIONAL INFORMATION. ENTRAIN AIR TO PRODUCE TOTAL AIR CONTENT ACCORDING TO THE SPECIFICATIONS FOR CONCRETE EXPOSED TO FREEZING TEMPERATURES (EXTERIOR FOOTINGS, SLAB TURNDOWNS, EXTERIOR SLABS AND SLABS–ON–GRADE, EXTERIOR RETAINING WALLS, AND EXTERIOR GRADE BEAMS.)

3.2 NO CALCIUM CHLORIDE SHALL BE USED IN ANY CONCRETE.

3.3 MIXING, TRANSPORTING AND PLACING OF CONCRETE SHALL CONFORM TO ACI 301M–05.

3.4 ALL CONCRETE WORK SHALL CONFORM TO THE REQUIREMENTS OF THE AMERICAN CONCRETE INSTITUTE (ACI) 318M MANUAL (metric), "BUILDING CODE REQUIREMENTS FOR REINFORCED CONCRETE", AND REQUIREMENTS OUTLINED IN THE CONTRACT SPECIFICATIONS. WHEN THERE IS A CONFLICT BETWEEN ACI AND THE SPECIFICATIONS, THE MORE STRINGENT SHALL GOVERN.

3.5 CHAMFER ALL EXPOSED EXTERNAL CORNERS OF CONCRETE WITH 20mm x45 DEGREE CHAMFER UON.

3.6 CONCRETE REINFORCEMENT BARS SHALL CONFORM TO ASTM A615M–96a, GRADE 420 MPa, REINFORCING BARS SHALL NOT BE TACK WELDED, WELDED, HEATED OR CUT, UNLESS INDICATED ON THE CONTRACT DOCUMENTS. ALL LAP SPLICES SHALL BE CLASS "B" UON.

3.7 HORIZONTAL FOOTING AND HORIZONTAL WALL REINFORCEMENT SHALL BE CONTINUOUS AND SHALL HAVE 90 DEGREE BENDS AND EXTENSIONS, OR CORNER BARS OF EQUIVALENT SIZE LAPPED WITH A CLASS B TENSION SPLICE AT CORNERS AND INTERSECTIONS. TOP BAR CRITERIA SHALL APPLY IF 300mm OR MORE OF FRESH CONCRETE IS PLACED BELOW BAR.

3.8 SLABS–ON–GRADE SHALL HAVE CONSTRUCTION JOINTS OR CRACK CONTROL JOINTS AS SHOWN ON THE DRAWINGS. CONSTRUCTION JOINTS CAN BE USED AT CONTROL JOINT LOCATIONS AT CONTRACTORS OPTION. SEE SLAB PLANS & JOINT DETAILS FOR ADDITIONAL INFORMATION. FOR AREAS NOT SHOWN ON DWGS, THE MAXIMUM SPACING OF CONSTRUCTION/ CRACK CONTROL JOINTS SHALL BE 4800mm

3.9 ALL CONCRETE REINFORCEMENT SHALL BE DETAILED, FABRICATED, LABELED, SUPPORTED, AND SPACED IN FORMS AND SECURED IN PLACE IN ACCORDANCE WITH THE PROCEDURES AND REQUIREMENTS OUTLINED IN THE LATEST EDITION OF THE "BUILDING CODE REQUIREMENTS FOR REINFORCED CONCRETE", ACI 318M, AND THE "MANUAL OF STANDARD PRACTICE FOR DETAILING REINFORCED CONCRETE STRUCTURES", ACI 315M, LATEST EDITION. BASED ON IN COUNTRY REINFORCEMENT AVAILABILITY, IT IS THE CONTRACTOR'S OPTION TO ROUND DESIGNATED ODD NUMBERED REINFORCEMENT SIZES UP (1) ONE BAR SIZE.

3.10 ALL DOWELS SHALL MATCH SIZE AND NUMBER OF MAIN REINFORCING, UNLESS NOTED OTHERWISE ON THE SHEETS.

3.11 ADDITIONAL BARS SHALL BE PROVIDED AROUND ALL FLOOR AND WALL OPENINGS AS SHOWN ON THE SHEETS.

3.12 SEE ARCHITECTURAL SHEETS FOR TYPE AND LOCATION OF ALL FLOOR FINISHES.

3.13 THE CONTRACTOR SHALL COORDINATE ADDITIONAL WALL/SLAB OPENINGS NOT SHOWN ON STRUCTURAL SHEETS. SEE MECHANICAL, ELECTRICAL, PLUMBING AND CIVIL SHEETS.

3.14 UNLESS NOTED OTHERWISE, ALL CURBS SHALL BE REINFORCED WITH AT LEAST (1)–#13 CONTINUOUS AND #13 AT 300mm O.C. DOWELS TO STRUCTURE BELOW.

3.15 THE CONTRACTOR SHALL VERIFY ALL OPENINGS, PAD SIZES, AND ANCHOR BOLTS WITH EQUIPMENT SELECTED.

3.16 FOR ALL WALLS & PIERS, PROVIDE DOWELS INTO FOOTING AT EACH VERT REINF BAR, UON DOWEL SIZE SHALL BE SAME AS VERT REINF.

3.17 PROVIDE CONCRETE POUR STOPS OR FORMED AS REQUIRED FOR INSTALLATION OF ALL CONCRETE WORK.

3.18 PROVIDE ADDITIONAL (2)–#13 x 600mm REINFORCING BARS IN SLAB–ON GRADE AT ALL RE–ENTRANT CORNERS. PLACE BARS AT MID–DEPTH OF SLAB WITH A CLEARANCE OF 50mm FROM CORNER UON.

3.19 COLD–WEATHER PLACEMENT: COMPLY WITH ACI 306.1 AND AS FOLLOWS. PROTECT CONCRETE WORK FROM PHYSICAL DAMAGE OR REDUCED STRENGTH THAT COULD BE CAUSED BY FROST, FREEZING ACTIONS, OR LOW TEMPERATURES. SUBMIT A COLD WEATHER CONCRETING PLAN FOR APPROVAL.

3.20 PROVIDE BONDING COMPOUND PER ASTM C 1059–99: SPECIFICATION FOR LATEX AGENTS FOR BONDING FRESH CONCRETE (GROUT) TO HARDENED CONCRETE.

3.21 THE FORMED SURFACES FOR REINFORCED CONCRETE SHALL ACHIEVE A "CLASS A" FINISH WHEN RECEIVING PAINT OR A "CLASS B" FINISH WHEN RECEIVING PLASTER OR TILE AS PER SPECIFICATION SECTION 03 31 00 CAST–IN–PLACE STRUCTURAL CONCRETE.

3.22 AT INTERSECTING GRADE BEAMS AND SHEAR WALLS, PROVIDE CORNER BARS AT INTERSECTIONS WITH SAME QUANTITY, SIZE AND SPACING AS HORIZONTAL BARS WITH LEG LENGTH = 50db.

3.23 REFER TO S–800 SERIES REINFORCING BAR PLACEMENT DRAWINGS DEFINING LENGTHS, BENDS, AND SPACINGS FOR ALL STRUCTURAL CONCRETE. THE S–800 SERIES DRAWING ARE BASED ON THE S–400, S–500, S–600, AND S–700 SERIES DRAWING SCHEDULES, DETAILS, AND DIAGRAMS.

4.0 CONCRETE MASONRY

4.1 MASONRY CONSTRUCTION SHALL CONFORM TO SPECIFICATION FOR MASONRY STRUCTURES (ACI 530.1) UON.

4.2 STRENGTH OF MASONRY MATERIALS SHALL BE AS FOLLOWS:

a. CONCRETE MASONRY UNITS SHALL BE NORMAL WEIGHT, GRADE N, TYPE 1, CONFORMING TO ASTM C–90 AND HAVE A MINIMUM COMPRESSIVE STRENGTH OF 10.4 MPa ON THE NET AREA.

b. MORTAR SHALL CONFORM TO ASTM C–270 TYPE S.

c. GROUT FOR MASONRY SHALL BE NORMAL WEIGHT AND HAVE A MINIMUM COMPRESSIVE STRENGTH OF 14 MPa AT 28 DAYS. GROUT SHALL CONFORM TO ASTM C476M. GROUT LIFTS SHALL NOT EXCEED 1,400mm.

d. REINFORCED MASONRY SHALL HAVE A STRENGTH F'm = 10 MPa. (F'm IS THE COMPRESSIVE STRENGTH OF THE MASONRY AT 28 DAYS AS DETERMINED BY PRISM TESTS).

4.3 ALL VERTICAL REINFORCEMENT FOR CONCRETE MASONRY SHALL BE ASTM A615M–96a, GRADE 420 MPa. ALL SPLICES SHALL BE LAPPED 48 BAR DIAMETERS MINIMUM.

4.4 BOND BEAMS SHALL BE SPACED AT 1200mm OC VERTICALLY. BOND BEAM REINFORCING SHALL BE CONTINUOUS AND PROVIDED AT WALL INTERSECTIONS AND WALL CORNERS (REFERENCE CONCRETE MASONRY NOTE 4.11). ALL BOND BEAM REINFORCING SHALL BE CONTINUOUS AND HAVE STANDARD ACI HOOKS AT EACH END. PROVIDE STANDARD BAR SPLICES AS SPECIFIED. AS AN ALTERNATE TO CMU BOND BEAMS, IT IS THE CONTRACTOR'S OPTION TO PROVIDE 200mm x 200mm CONTINUOUS CAST–IN–PLACE CONCRETE BOND BEAMS WITH (2)–#16 IN LIEU OF CMU BOND BEAMS INDICATED ON THE DRAWINGS.

4.5 SEE TYPICAL DETAILS FOR MINIMUM REINFORCEMENT REQUIREMENTS FOR CMU WALLS. PROVIDE STANDARD BAR SPLICES AS SPECIFIED. ALL VERTICAL REINFORCEMENT EXTENDS FULL HEIGHT OF WALL.

4.6 CMU CELLS THAT REQUIRE VERTICAL REINFORCING BARS AS INDICATED ON THE CONTRACT DRAWINGS AND/OR SPECS SHALL HAVE REINF BARS PLACED IN CENTERS OF CMU CELLS AND CONTINUOUSLY GROUTED UON.

4.7 ALL CMU CELLS, OPEN CAVITIES, AND AIR SPACES OF ALL EXTERIOR WALLS SHALL BE GROUTED TO STOP FRAGMENTS FROM MORTAR BLAST.

4.8 CONTRACTOR SHALL COORDINATE LOCATION OF ALL OPENINGS SEE ARCH, MECH, ELEC, AND PLUMBING SHEETS FOR SIZE AND LOCATION OF OPENINGS.

4.9 MASONRY WALLS SHALL NOT BE BACK FILLED PRIOR TO THE MORTAR AND GROUT ATTAINING THEIR RESPECTIVE MAXIMUM DESIGN STRENGTHS PER SPECIFICATIONS.

4.10 PROVIDE GALVANIZED MORTAR/GROUT SCREEN W/ 3mm MESH WHERE CELLS BELOW ARE NOT GROUTED.

4.11 AT INTERSECTING BOND BEAMS, PROVIDE CORNER BAR FOR EACH HORIZONTAL BAR IN BOND BEAMS AT INTERSECTING WALLS. USE SAME SIZE AND SPACING AS HORIZONTAL BARS WITH LEG LENGTH = 50db.

4.12 THE ALTERNATE TOP OF CMU WALL BRACING DETAIL(S) SHOWN ON S–701 CAN BE UTILIZED AT THE CONTRACTOR'S OPTION IN PLACE OF THE "SLEEVED DOWEL" WALL CONNECTIONS DEPICTED ON S–400 AND S–500 SERIES DRAWINGS. IN ADDITION, ALTERNATE DETAIL(S) SHOW CAST–IN–PLACE WALL BOND BEAMS THAT CAN BE UTILIZED AT THE CONTRACTOR'S OPTION IN PLACE OF THE STANDARD CMU BOND BEAMS CONSTRUCTED OF CMU BLOCKS.

5.0 COLD–FORMED METAL FRAMING

5.1 ALL COLD–FORMED METAL FRAMING MEMBERS SHALL CONFORM TO ASTM A1003M, STRUCTURAL GRADE ST340 (MPa), WITH A GALVANIZED COATING OF Z275 OR BETTER IN ACCORDANCE WITH ASTM A653M.

5.2 ALL COLD–FORMED METAL FRAMING MEMBERS SHALL HAVE THE FOLLOWING MINIMUM PROPERTIES:

a. MINIMUM METAL THICKNESS:
TRACK = 1.37mm;
STUD OTHER = 1.09mm

b. MINIMUM FLANGE WIDTH:
TRACK = 38mm;
STUD/OTHER = 35mm

c. MINIMUM MEMBER DEPTH:
ALL SECTIONS = 152.2mm

d. PURLIN (HAT CHANNEL)
DEPTHxWIDTH(FLAT TOP)xTHICK = 25mmx42mmx1.59mm

5.3 ALL CONNECTIONS SHALL BE MADE WITH CORROSION RESISTANT (ASTM A153M), SELF–DRILLING, SELF–TAPPING STEEL DRILL SCREWS IN ACCORDANCE WITH ASTM C1513. SCREWS SHALL HAVE A LOW PROFILE HEAD BENEATH ROOF DECK, AND STANDARD HEAD ALL OTHER LOCATIONS.

5.4 FABRICATE COLD FORMED METAL FRAMING AND ACCESSORIES PLUMB, SQUARE AND TRUE TO LINE, WITH CONNECTIONS SECURELY FASTENED ACCORDING TO AISI STANDARD FOR COLD FORMED STEEL FRAMING.

5.5 CUT FRAMING MEMBERS BY SAWING OR SHEATHING, DO NOT TORCH CUT.

5.6 INSTALL FRAMING MEMBERS IN ONE–PIECE LENGTHS UNLESS SPLICE CONNECTIONS ARE INDICATED FOR TRACK OR TENSION MEMBERS

5.7 INSTALL TEMPORARY BRACING AND SUPPORTS TO SECURE FRAMING DURING CONSTRUCTION. MAINTAIN BRACING AND SUPPORTS IN PLACE UNTIL THE STRUCTURE HAS BEEN COMPLETED WITH ALL CONNECTIONS AND PERMANENT BRACING SECURED.

6.0 STRUCTURAL DESIGN CRITERIA

6.1 ALL DESIGNS SHALL CONFORM TO THE PROVISIONS OF THE IBC 2006 AND UFC AS APPLICABLE.

6.2 DESIGN LOADS

6.2.1 DEAD LOADS (PER IBC 2006 & UFC 3–310–01)

MECH/ELEC/PLUMBING	0.20 kPa
MISCELLANEOUS	0.15 kPa
COLD–FORMED FRAMING	0.20 kPa
INSULATION	0.10 kPa
METAL ROOF PANEL	0.14 kPa
	0.79 kPa
FLOOR PARTITION ALLOWANCE	0.96 kPa

6.2.2 LIVE LOADS (PER IBC 2006 & UFC 3–310–01)

ROOF	1.00 kPa
CORRIDOR (2–STORY BLDG ONLY)	4.80 kPa
ALL OTHERS (2–STORY BLDG ONLY)	2.40 kPa
SLAB ON GRADE	4.80 kPa

6.2.3 SNOW LOADS (PER IBC 2006 & UFC 3–310–01)

GROUND SNOW LOAD (Pg)	1.2 kPa
SNOW IMPORTANCE FACTOR (I)	1.0
SNOW EXPOSURE FACTOR (Ce)	1.0
THERMAL FACTOR (Ct)	1.0

6.2.4 WIND LOADS (PER IBC 2006)

BASIC WIND SPEED	137 km/h
WIND IMPORTANCE FACTOR	1.0
WIND EXPOSURE CATEGORY	D
DIRECTIONALITY COEFFICIENT (Kd)	0.85
TOPOGRAPHIC FACTOR (Kzt)	1.0

6.2.5 SEISMIC LOADS (PER IBC 2006 & UFC 3–310–04)

OCCUPANCY USE CATEGORY — II
SEISMIC IMPORTANCE FACTOR (Ie) — 1.0
SEISMIC SITE CLASS — D
S_s = 1.5 (REDUCED FROM 2.4 PER ASCE 7–05, 12.8.1.3 FOR A BUILDING WITHOUT IRREGULARITIES)
S_1 = 1.20
S_{DS} = 1.00
S_{D1} = 1.20
SEISMIC DESIGN CATEGORY — E
SEISMIC RESISTING SYSTEM:
–SPECIAL REINFORCED CONCRETE SHEAR WALL
RESPONSE MODIFICATION FACTOR (R) — 6
RESPONSE COEFFICIENT (Cs) — 0.167
SEISMIC ANALYTICAL PROCEDURE = EQUIV LATERAL FORCE
SEISMIC BASE SHEAR — 950 kN

APPROVED:
A/E DESIGNER OF RECORD
SEAL:
GEORGIA REGISTERED 1-29-10 No. 27141 PROFESSIONAL ENGINEER CHRISTOPHER W. WHITMORE

US ARMY CORPS OF ENGINEERS
AFGHANISTAN ENGINEER DISTRICT

Mark	Description	Date	Appr.

Designed by: KMP/MMY | Dwn by: RCG | Ckd by: CWW | Reviewed by: LHM | Submitted by: BAKER
Date: 2/23/10 | Rev: 0 | Design file no. | Drawing code: | File name: ANACB25S-001GN | Plot date: 2/23/2010 | Plot scale: X:X

U.S. ARMY CORPS OF ENGINEERS
AFGHANISTAN ENGINEER DISTRICT
APO AE 96338

Michael Baker Jr., Inc
A unit of Michael Baker Corporation
Airside Business Park
100 Airside Drive
Moon Township PA 15108
www.mbakercorp.com

AFGHAN NATIONAL ARMY
REGIONAL MILITARY TRAINING CENTER
STANDARD DESIGN

200 STUDENT CLASSROOM BUILDING
(8) 25 STUDENT CLASSROOMS

GENERAL NOTES & DESIGN CRITERIA

Sheet reference number:
S–001

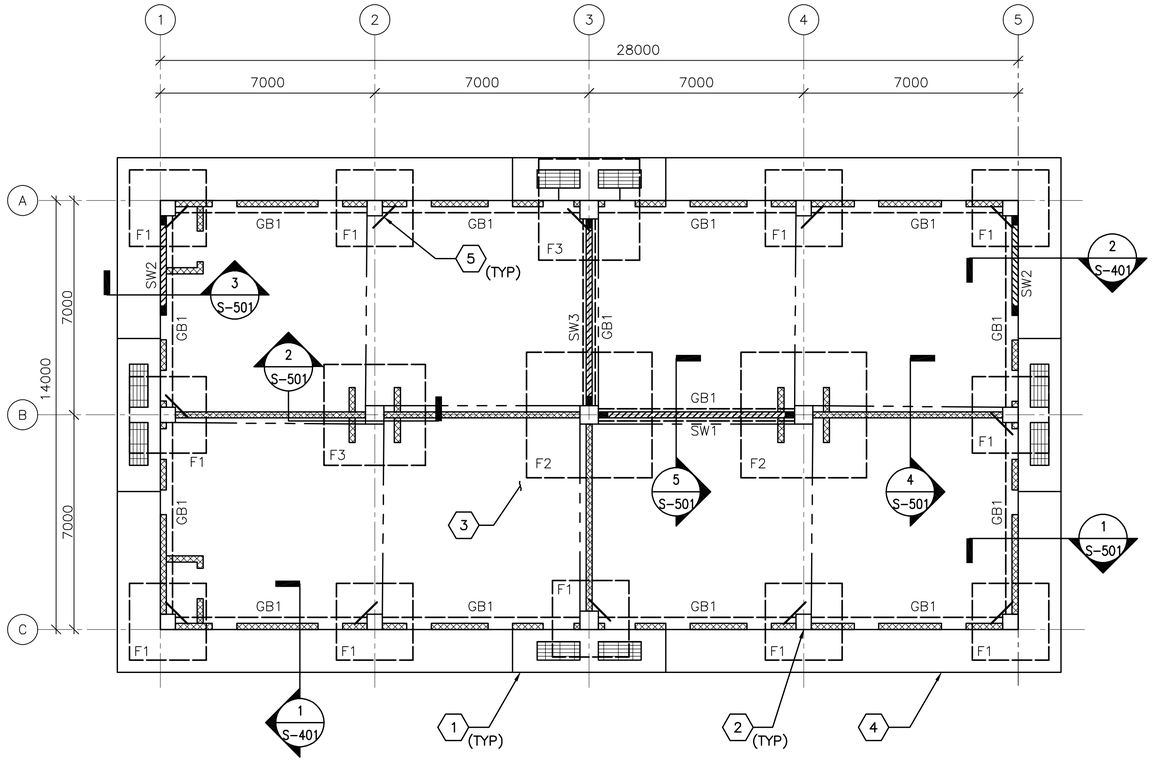

1 S101 **FOUNDATION/SLAB PLAN**

SCALE: 1:100

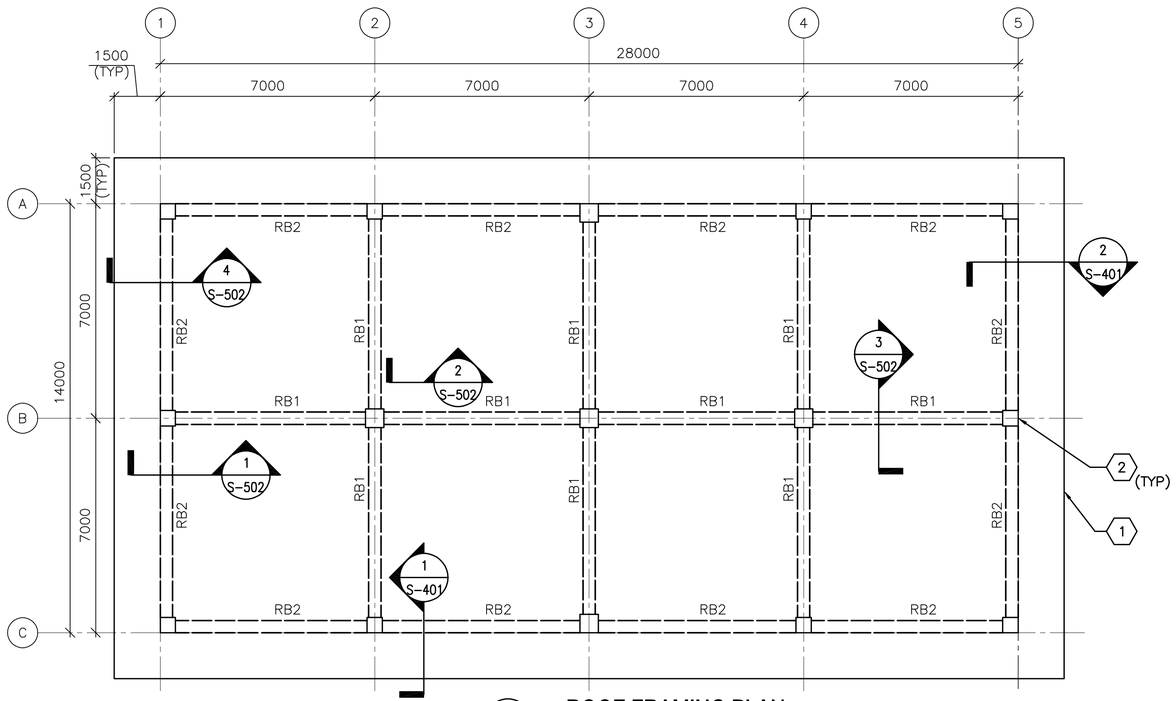

2 S101 **ROOF FRAMING PLAN**

SCALE: 1:100

FOUNDATION/SLAB PLAN NOTES:

1. REFER TO SHEET S-001 FOR STRUCTURAL NOTES AND DESIGN CRITERIA.
2. FINISH FIRST FLOOR ELEVATION SHALL BE (DATUM 0.00) ALL PLUS OR MINUS DIMENSIONS INDICATED ON PLAN OR REFERRED TO IN NOTES RELATE TO FINISH FLOOR ELEVATION.
3. SLAB-ON-GRADE IS 150 WITH #13 @ 300 OC EW LOCATED 38 FROM T/SLAB.
4. TOP OF EXTERIOR FOOTINGS SHALL BE -950 UNLESS OTHERWISE INDICATED.
5. TOP OF INTERIOR FOOTINGS WITHOUT GRADE BEAM ABOVE SHALL BE -600
6. TOP OF INTERIOR FOOTINGS WITH GRADE BEAM ABOVE SHALL BE -950
7. COLUMN FOOTINGS INDICATED BY F# ON PLAN. REFER TO COLUMN FOOTING SCHEDULE ON SHEET S-601.
8. REFER TO COLUMN SCHEDULE ON SHEET S-601.
9. GRADE BEAM INDICATED BY GB# ON PLAN, REFER TO BEAM SCHEDULE ON SHEET S-601.
10. SHEARWALL INDICATED BY SW# ON PLAN, REFER TO SHEARWALL SCHEDULE ON SHEET S-601.
11. SEE TYP EXTERIOR AND INTERIOR CMU WALL REINF DETAILS ON SHEET S-701.
12. SEE MECHANICAL AND ELECTRICAL SHEETS FOR CONCRETE PAD LOCATIONS, SIZES, AND THICKNESS NOT SHOWN. SEE SHEET S-701 FOR DETAILS.
13. THICKENED SLAB UNDER PERIMETER/PARTITON WALLS NOT SHOWN FOR CLARITY.

FOUNDATION/SLAB PLAN KEY NOTES: (X)

1. CONC SLAB (ENTRANCE)-SEE ARCH DWGS FOR INFORMATION
2. REINF CONC COLUMN
3. REINF CONC SLAB-ON-GRADE
4. CONC SIDEWALK
5. (2)-#13 RE-ENTRANT CORNER BARS - SEE S-701 FOR INFORMATION

FOUNDATION/SLAB PLAN LEGEND:

- REINF CONC SHEAR WALL
- REINF CMU WALL
- CONTROL JOINT

ROOF FRAMING PLAN NOTES:

1. REFER TO SHEETS S-001 FOR STRUCTURAL NOTES AND DESIGN CRITERIA.
2. TOP OF SLAB ELEVATION = 3500 UNLESS NOTED OTHERWISE.
3. ROOF SLAB IS 200 WITH #16 @ 300 OC EW T&B.
4. ROOF BEAM INDICATED BY RB# ON PLAN. REFER TO BEAM SCHEDULE ON SHEET S-601.
5. COORDINATE WITH ARCHITECTURAL SHEETS FOR COLD-FORMED STEEL OVERBUILD FRAMING ABOVE ROOF SLAB.
6. COLD-FORMED METAL OVERBUILD ROOF FRAMING NOT SHOWN FOR CLARITY. SEE OVERBUILD ROOF FRAMING DETAILS AND SECTIONS ON SHEET S-702.
7. CONCRETE/CMU PERIMETER AND PARTITION WALLS (BELOW ROOF SLAB) NOT SHOWN FOR CLARITY.
8. OVERHANG AREAS OF ROOF SLAB CONTAIN ROOF VENT PENETRATIONS. REFERENCE ARCHITECTURAL DRAWINGS FOR INFORMATION.

ROOF FRAMING PLAN KEY NOTES: (X)

1. CONC ROOF SLAB (BELOW ROOF OVERBUILD)
2. REINF CONC COLUMN (BELOW CONC ROOF SLAB)

0 2000 4000
SCALE: 1:100

UNLESS OTHERWISE NOTED, LINEAR DIMENSIONS SHOWN ON DRAWINGS ARE IN MILLIMETERS (mm)

APPROVED:

A/E DESIGNER OF RECORD

SEAL:

GEORGIA REGISTERED 1-29-10 No. 27141 PROFESSIONAL ENGINEER CHRISTOPHER W. WHITMORE

US ARMY CORPS OF ENGINEERS
AFGHANISTAN ENGINEER DISTRICT

Mark	Description	Date	Appr.	Mark	Description	Date	Appr.

Date: 2/23/10 Rev: 0
Design file no.
Drawing code:
File name: ANAC8285-101FFP
Plot date: 2/23/2010
Plot scale: x:X

Designed by: KMF/MMY
Dwn by: RCG
Ckd by: CWW
Reviewed by: LHM
Submitted by: BAKER

U.S. ARMY CORPS OF ENGINEERS
AFGHANISTAN ENGINEER DISTRICT
APO AE 96338

Michael Baker Jr., Inc.
A unit of Michael Baker Corporation
Airside Business Park
100 Airside Drive
Moon Township, PA 15108
www.mbakercorp.com

AFGHAN NATIONAL ARMY
REGIONAL MILITARY TRAINING CENTER
STANDARD DESIGN

200 STUDENT CLASSROOM BUILDING
(8) 25 STUDENT CLASSROOMS
FOUNDATION/SLAB &
ROOF FRAMING PLANS

Sheet reference number:
S-101

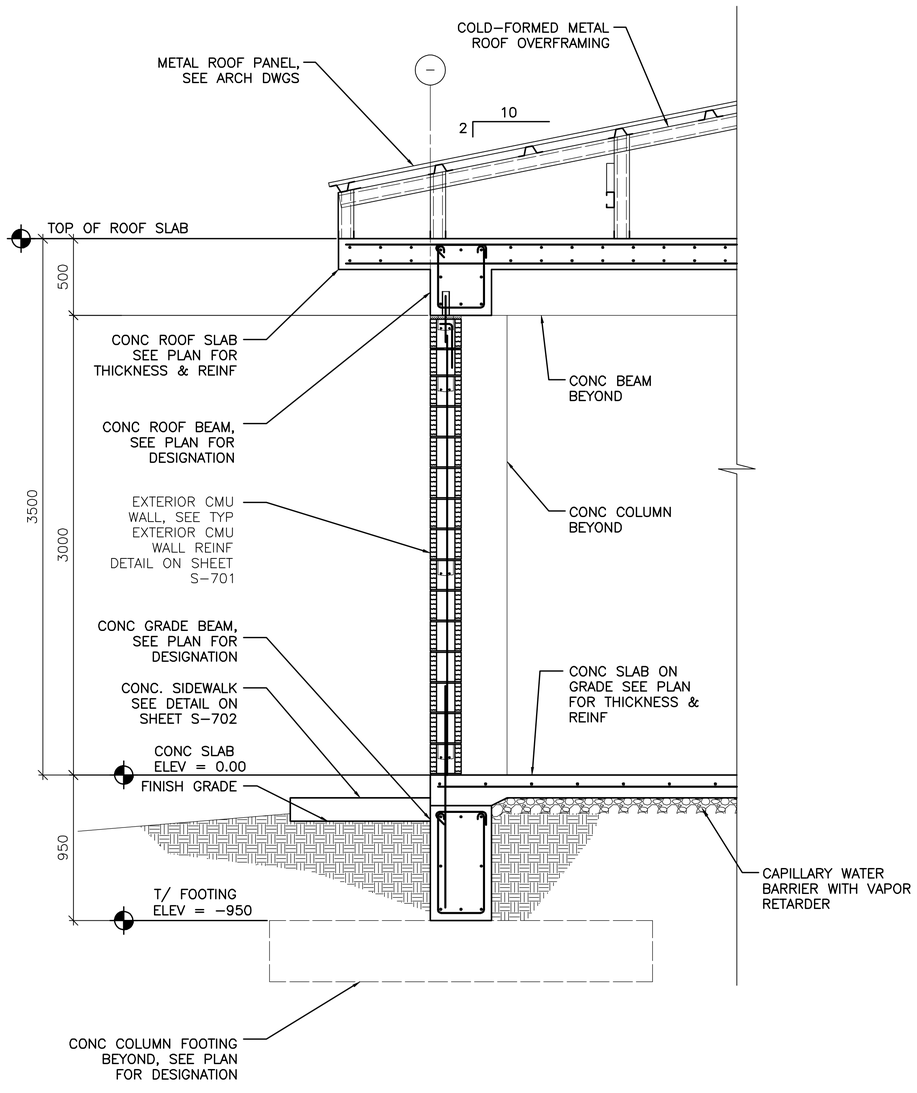

1 S-101 **TYPICAL WALL SECTION AT EXTERIOR MASONRY WALL**

SCALE: 1:20

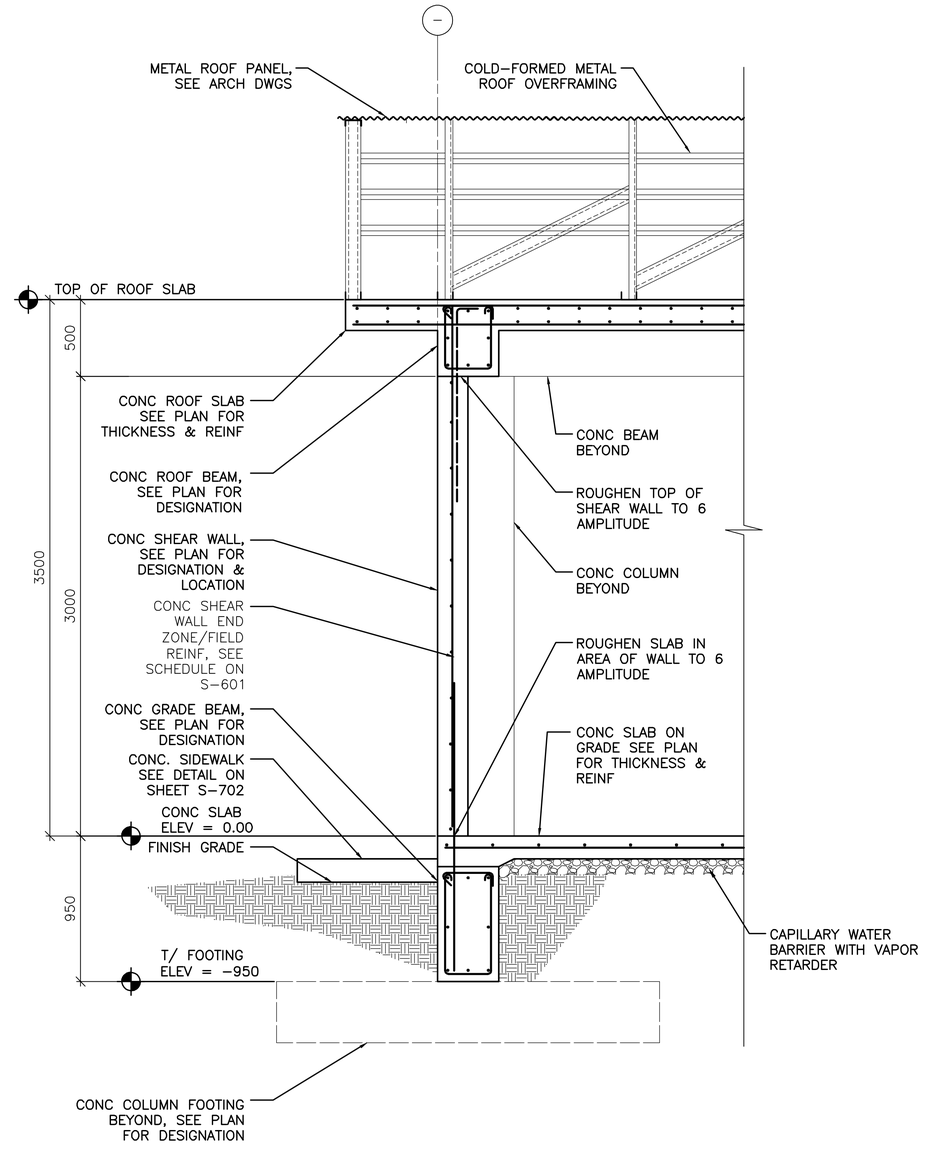

2 S-101 **TYPICAL WALL SECTION AT CONCRETE SHEAR WALL**

SCALE: 1:20

0 400 800
SCALE: 1:20

UNLESS OTHERWISE NOTED, LINEAR DIMENSIONS SHOWN ON DRAWINGS ARE IN MILLIMETERS (mm)

APPROVED:

A/E DESIGNER OF RECORD

SEAL:

GEORGIA REGISTERED 1-29-10 No. 27141 PROFESSIONAL ENGINEER CHRISTOPHER W. WHITMORE

US ARMY CORPS OF ENGINEERS
AFGHANISTAN ENGINEER DISTRICT

Mark	Description	Date	Appr.	Mark	Description	Date	Appr.

Date: 2/23/10 | Rev: 0
Design file no.
Drawing code:
File name: ANACB258-401BS
Plot date: 2/23/2010
Plot scale: x:X

Designed by: KMP/MMY
Dwn by: RCG | Ckd by: CWW
Reviewed by: LHM
Submitted by: BAKER

U.S. ARMY CORPS OF ENGINEERS
AFGHANISTAN ENGINEER DISTRICT
APO AE 96338

Michael Baker Jr., Inc
A unit of Michael Baker Corporation
Airside Business Park
100 Airside Drive
Moon Township, PA 15108
www.mbakercorp.com

AFGHAN NATIONAL ARMY
REGIONAL MILITARY TRAINING CENTER
STANDARD DESIGN

200 STUDENT CLASSROOM BUILDING
(8) 25 STUDENT CLASSROOMS

BUILDING SECTIONS

Sheet reference number:
S-401

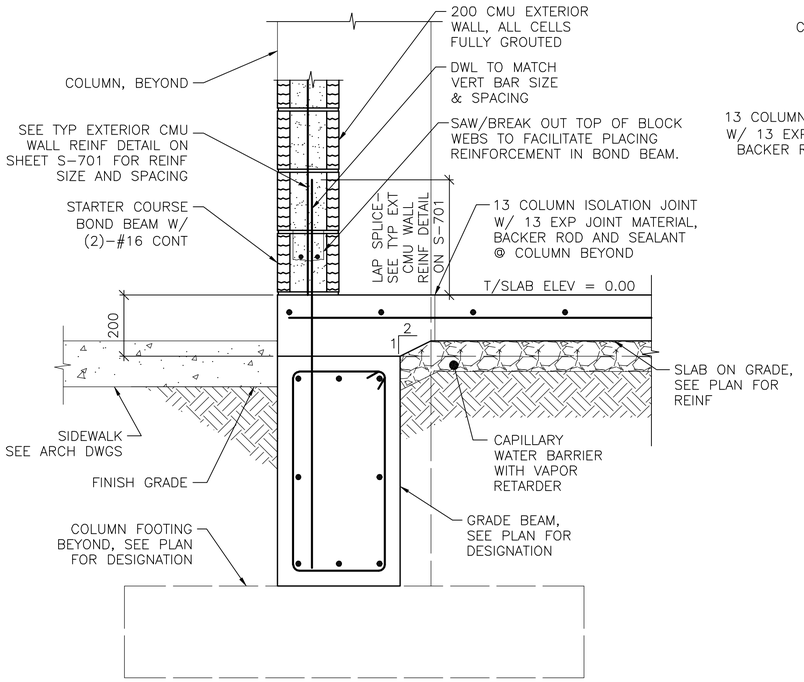

NOTE:
1. SECTION IS SIMILAR FOR INTERIOR CMU PARTITIONS OVER GRADE BEAMS SHOWING THICKENED 200 CONC SLAB AREA.

1 S-101 **SECTION**
SCALE: 1:10

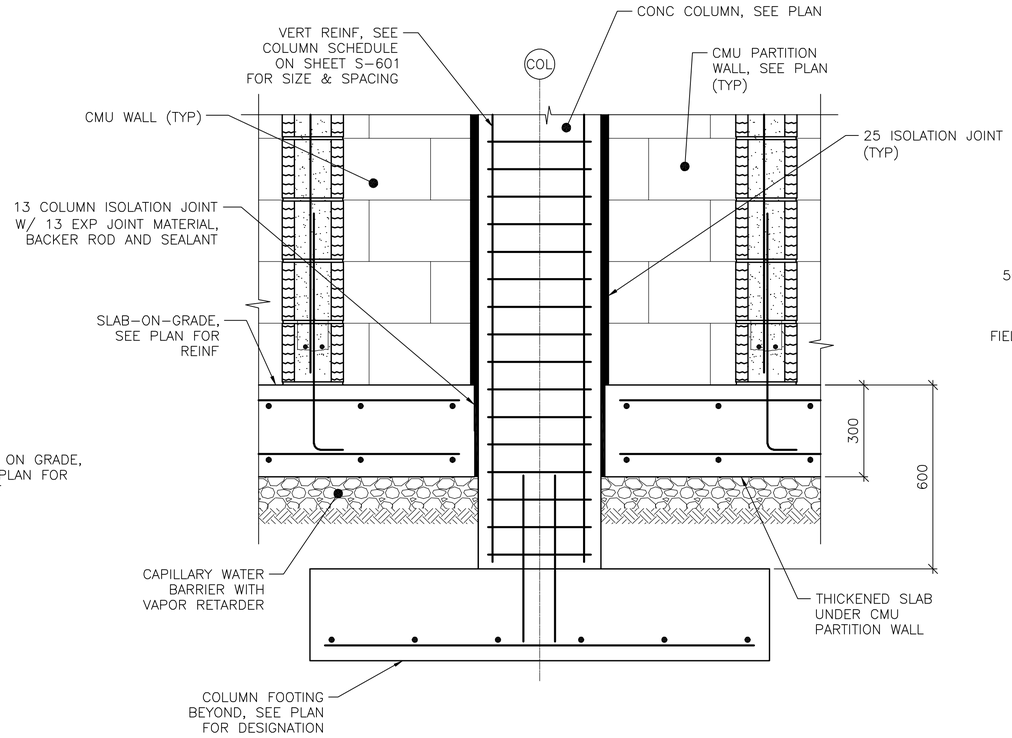

2 S-101 **SECTION**
SCALE: 1:10

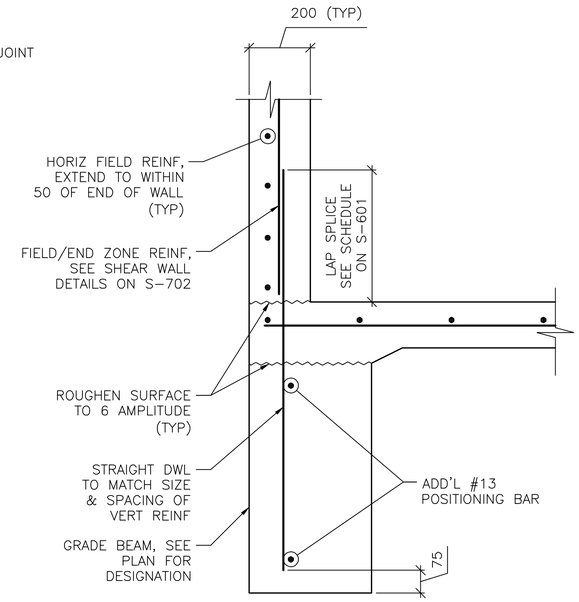

NOTES:
1. SECTION DEPICTS SHEAR WALL TERMINATION ONLY. GRADE BEAM REINFORCING NOT SHOWN FOR CLARITY.
2. SEE S-601 AND S-702 FOR SCHEDULED FIELD AND END ZONE REINF.

3 S-101 **SECTION**
SCALE: 1:10

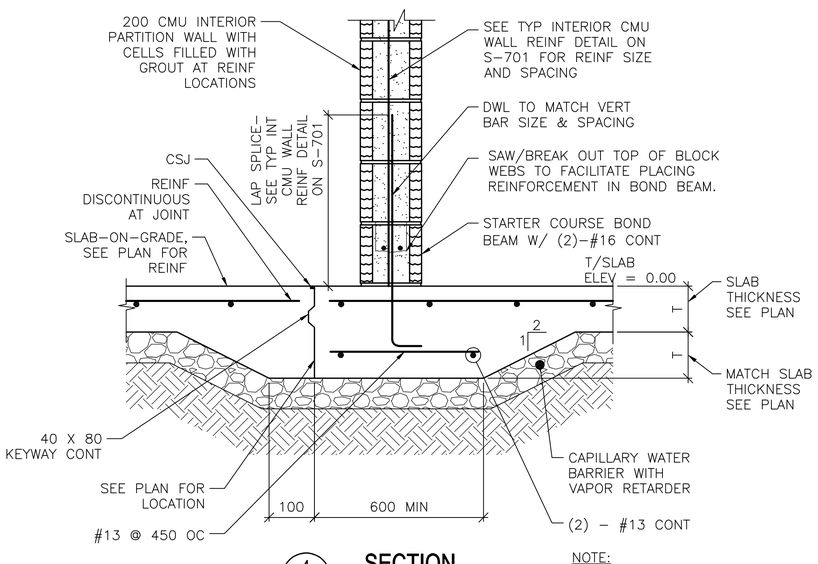

4 S-101 **SECTION**
SCALE: 1:10

NOTE:
1. DETAIL IS APPLICABLE AT CONTROL JOINTS RUNNING PARALLEL TO CMU WALLS AND WITHIN 300 OF FACE OF WALL.

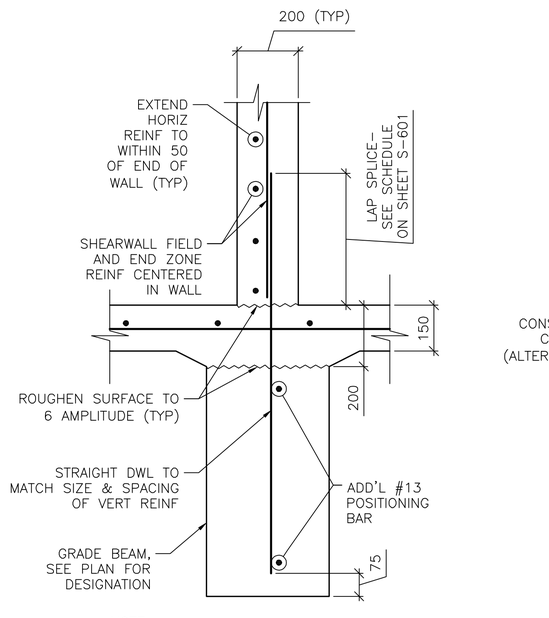

NOTE:
1. SECTION DEPICTS SHEAR WALL TERMINATION ONLY. GRADE BEAM REINFORCING NOT SHOWN FOR CLARITY.
2. SEE SHEET S-601 AND SHEET S-702 FOR SCHEDULED FIELD AND END ZONE REINF.

5 S-101 **SECTION**
SCALE: 1:10

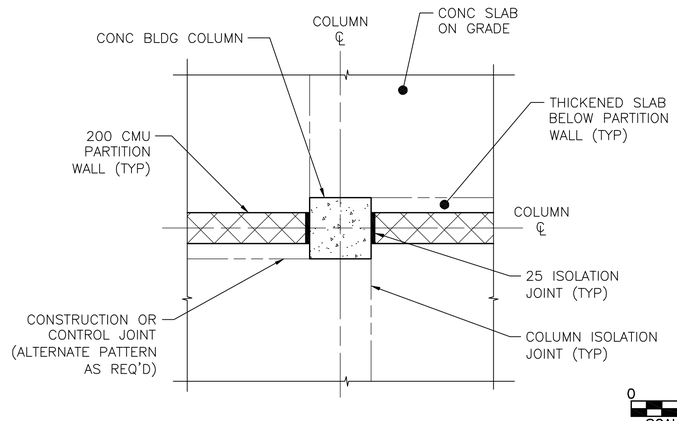

A S-501 **COLUMN ISOLATION JOINT DETAIL**
SCALE: NTS

0 200 400
SCALE: 1:10

UNLESS OTHERWISE NOTED, LINEAR DIMENSIONS SHOWN ON DRAWINGS ARE IN MILLIMETERS (mm)

APPROVED:

A/E DESIGNER OF RECORD

SEAL:

US ARMY CORPS OF ENGINEERS
AFGHANISTAN ENGINEER DISTRICT

Mark	Description	Date	Appr.	Mark	Description	Date	Appr.

Designed by: KMP/MMY
Dwn by: RCG
Ckd by: CWW
Reviewed by: LHM
Submitted by: BAKER
Date: 2/23/10
Design file no.
Rev: 0
Drawing code:
File name: ANACB258-S01SC
Plot date: 2/23/2010
Plot scale: x:X

U.S. ARMY CORPS OF ENGINEERS
AFGHANISTAN ENGINEER DISTRICT
APO AE 96338

Michael Baker Jr., Inc
A unit of Michael Baker Corporation
Airside Business Park
100 Airside Drive
Moon Township, PA 15108
www.mbakercorp.com

AFGHAN NATIONAL ARMY
REGIONAL MILITARY TRAINING CENTER
STANDARD DESIGN

200 STUDENT CLASSROOM BUILDING
(8) 25 STUDENT CLASSROOMS

FOUNDATION SECTIONS

Sheet reference number:
S-501

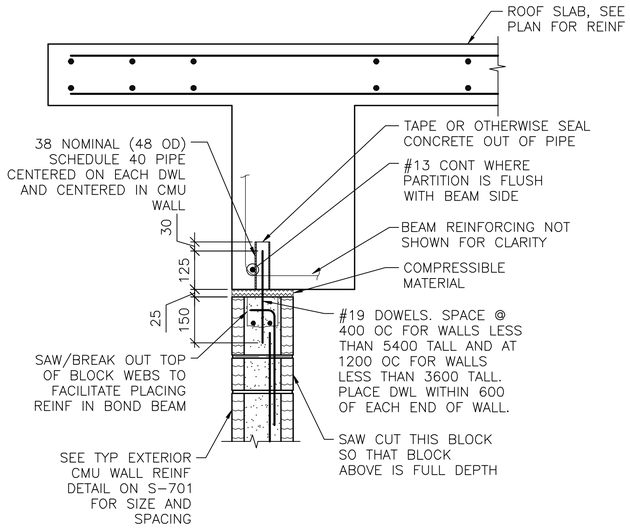

NOTES:
1. EXTEND DOWEL REINF TO 25 CLEAR FROM TOP OF CMU WALL.

1 / S-101 **SECTION**
SCALE: 1:10

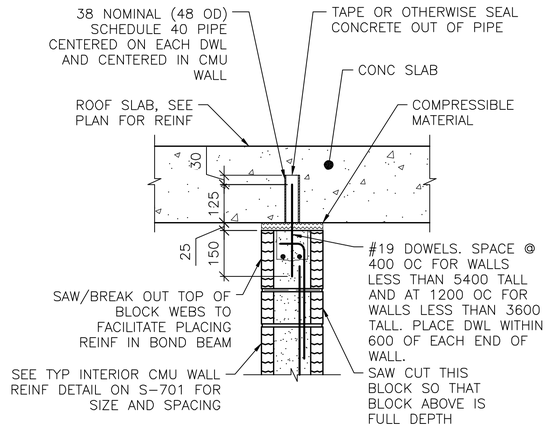

NOTES:
1. EXTEND DOWEL REINF TO 25 CLEAR FROM TOP OF CMU WALL.
2. SLAB REINF NOT SHOWN FOR CLARITY.

2 / S-101 **SECTION**
SCALE: 1:10

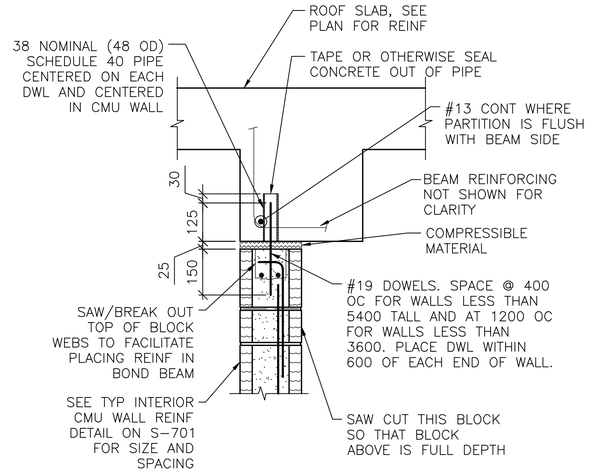

NOTES:
1. EXTEND DOWEL REINF TO 25 CLEAR FROM TOP OF CMU WALL.
2. PARTITION WALL MAY BE CENTERED UNDER THE BEAM OR FLUSH AS SHOWN. SEE PLAN FOR LOCATION.
3. SLAB REINF NOT SHOWN FOR CLARITY.

3 / S-101 **SECTION**
SCALE: 1:10

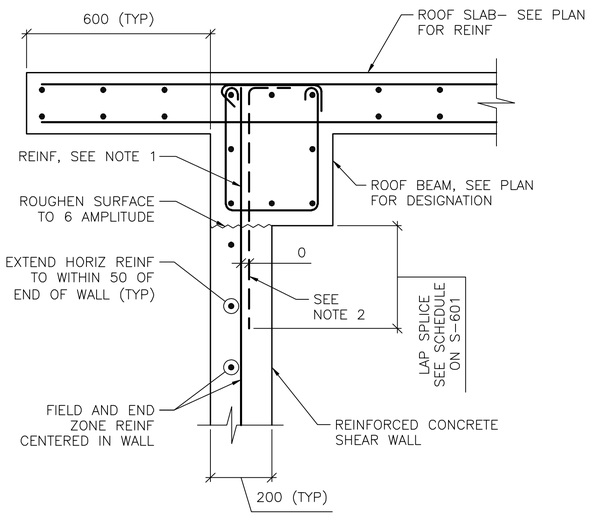

NOTES:
1. TERMINATE "FIELD" VERT REINF & END ZONE REINF @ 50 CLEAR FROM TOP OF ROOF SLAB.
2. WHERE END ZONE REINFORCING CANNOT BE DEVELOPED IN BEAM DEPTH, PROVIDE HOOKED DWLS SAME SIZE & SPACING. PROVIDE TENSION LAP BELOW ROOF BEAM.
3. SEE SHEETS S-601 AND S-702 FOR SCHEDULED FIELD AND END ZONE REINF.

4 / S-101 **SECTION**
SCALE: 1:10

0 200 400
SCALE: 1:10

UNLESS OTHERWISE NOTED, LINEAR DIMENSIONS SHOWN ON DRAWINGS ARE IN MILLIMETERS (mm)

APPROVED:

A/E DESIGNER OF RECORD

SEAL:

GEORGIA REGISTERED PROFESSIONAL ENGINEER No. 27141 1-27-10 CHRISTOPHER W. WHITMORE

US ARMY CORPS OF ENGINEERS
AFGHANISTAN ENGINEER DISTRICT

Mark	Description	Date	Appr.	Mark	Description	Date	Appr.

Date: 2/23/10
Design file no.
Rev: 0
Drawing code:
File name: ANACB258-5025C
Plot date: 2/23/2010
Plot scale: X:X

Designed by: KMP/MMY
Dwn by: RCG
Ckd by: CWW
Reviewed by: LHM
Submitted by: BAKER

U.S. ARMY CORPS OF ENGINEERS
AFGHANISTAN ENGINEER DISTRICT
APO AE 96338

Michael Baker Jr., Inc.
A unit of Michael Baker Corporation
Airside Business Park
100 Airside Drive
Moon Township, PA 15108
www.mbakercorp.com

AFGHAN NATIONAL ARMY
REGIONAL MILITARY TRAINING CENTER
STANDARD DESIGN

200 STUDENT CLASSROOM BUILDING
(8) 25 STUDENT CLASSROOMS

FRAMING SECTIONS

Sheet reference number:
S-502

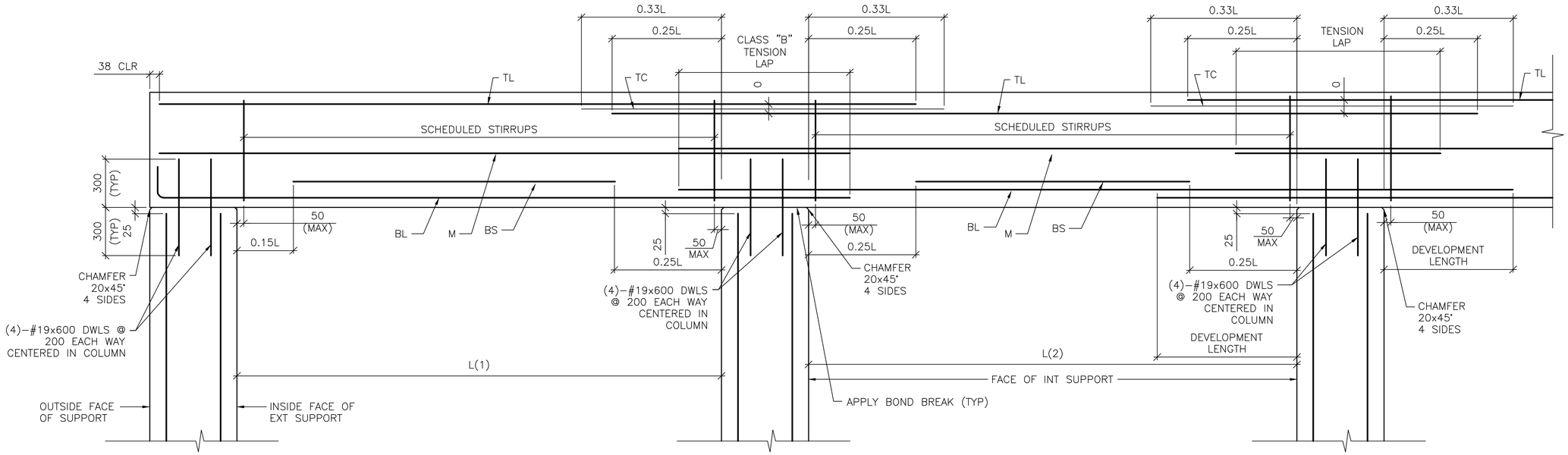

DETAIL NOTE:
1. WORK THIS DETAIL WITH BEAM SCHEDULE ON SHEET S-601.
2. L=GREATEST OF ADJACENT SPANS L(1) OR L(2)
3. ONLY COLUMN CORNER BARS ARE SHOWN

1 S-503 **ROOF BEAM REINFORCING DETAIL**

SCALE: NTS

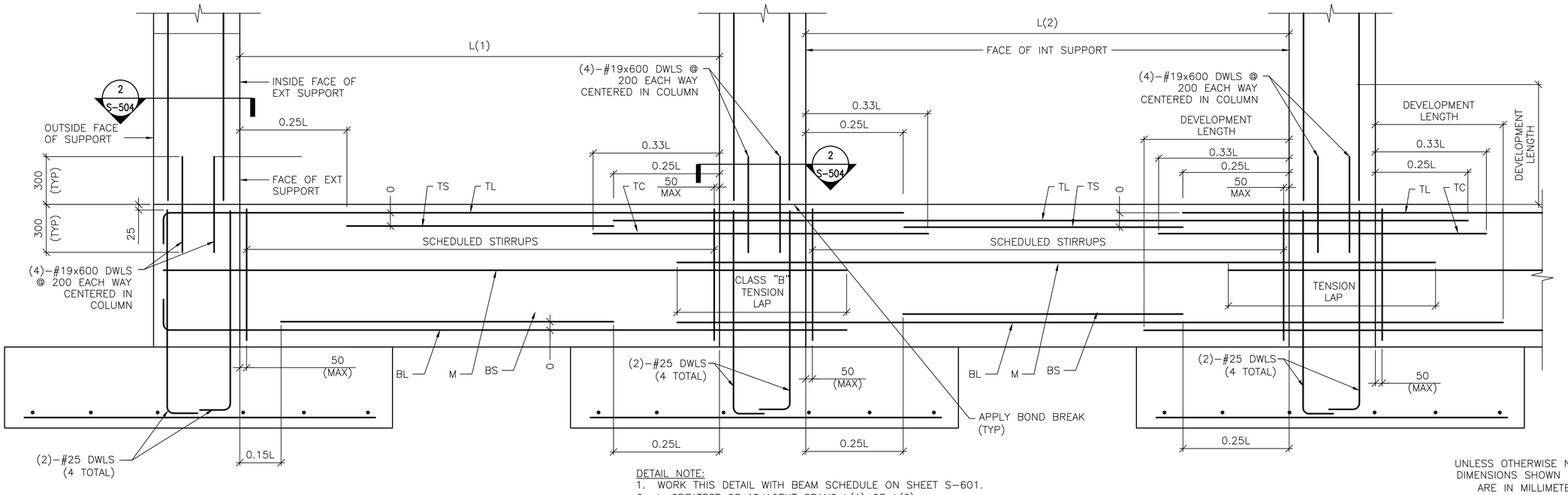

DETAIL NOTE:
1. WORK THIS DETAIL WITH BEAM SCHEDULE ON SHEET S-601.
2. L=GREATEST OF ADJACENT SPANS L(1) OR L(2)
3. ONLY COLUMN CORNER BARS ARE SHOWN.

2 S-503 **GRADE BEAM REINFORCING DETAIL**

SCALE: NTS

UNLESS OTHERWISE NOTED, LINEAR DIMENSIONS SHOWN ON DRAWINGS ARE IN MILLIMETERS (mm)

APPROVED:

A/E DESIGNER OF RECORD

SEAL:

GEORGIA REGISTERED 1-29-10 No. 27141 PROFESSIONAL ENGINEER CHRISTOPHER W. WHITMORE

US ARMY CORPS OF ENGINEERS
AFGHANISTAN ENGINEER DISTRICT

Mark	Description	Date	Appr.	Mark	Description	Date	Appr.

Designed by: KMP/MMY
Dwn by: RCG
Ckd by: CWW
Reviewed by: LHM
Submitted by: BAKER
Date: 2/23/10
Rev: 0
Design file no.
Drawing code:
File name: ANACB25S-503DT
Plot date: 2/23/2010
Plot scale: X:X

U.S. ARMY CORPS OF ENGINEERS
AFGHANISTAN ENGINEER DISTRICT
APO AE 96338

Michael Baker Jr., Inc
A unit of Michael Baker Corporation
Airside Business Park
100 Airside Drive
Moon Township, PA 15108
www.mbakercorp.com

AFGHAN NATIONAL ARMY
REGIONAL MILITARY TRAINING CENTER
STANDARD DESIGN

200 STUDENT CLASSROOM BUILDING
(8) 25 STUDENT CLASSROOMS

BEAM & COLUMN DETAILS

Sheet reference number:
S-503

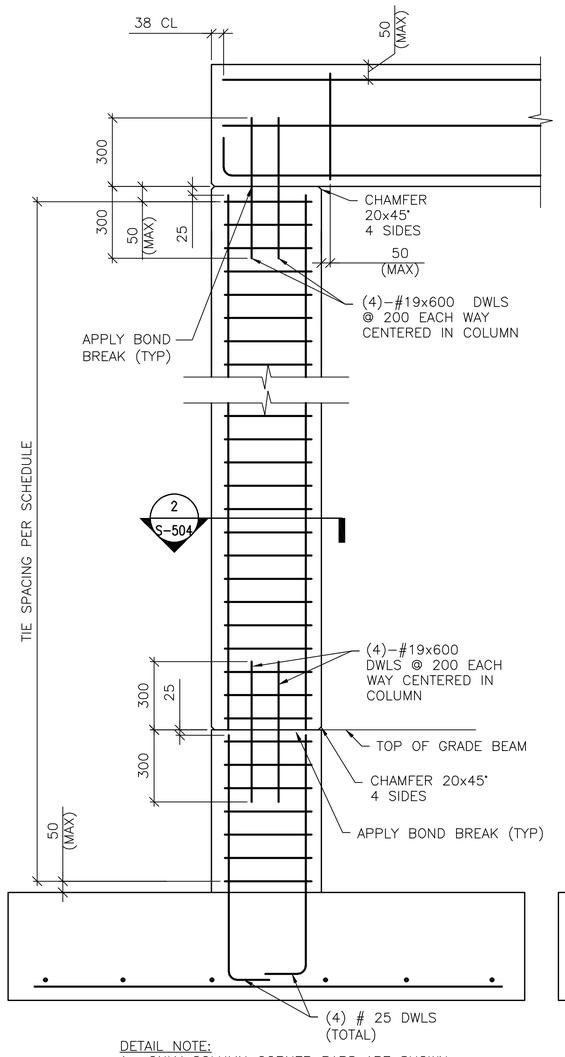

DETAIL NOTE:
1. ONLY COLUMN CORNER BARS ARE SHOWN

1 / S-504 1-STORY COLUMN REINF DETAILS
SCALE: NTS
(WITH GRADE BEAM)

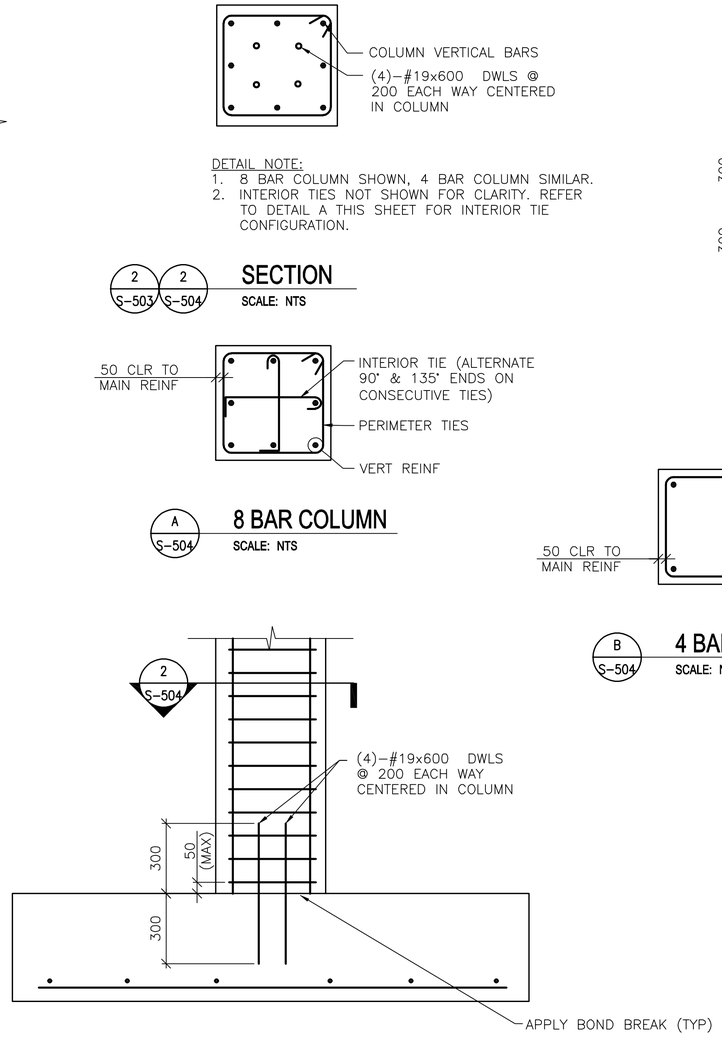

DETAIL NOTE:
1. ONLY COLUMN CORNER BARS ARE SHOWN

1 / S-504 1-STORY COLUMN REINF DETAILS
SCALE: NTS
(WITHOUT GRADE BEAM)

DETAIL NOTE:
1. 8 BAR COLUMN SHOWN, 4 BAR COLUMN SIMILAR.
2. INTERIOR TIES NOT SHOWN FOR CLARITY. REFER TO DETAIL A THIS SHEET FOR INTERIOR TIE CONFIGURATION.

2 / S-503 2 / S-504 SECTION
SCALE: NTS

A / S-504 8 BAR COLUMN
SCALE: NTS

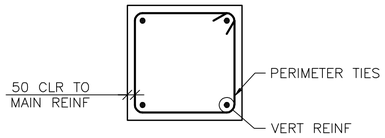

B / S-504 4 BAR COLUMN
SCALE: NTS

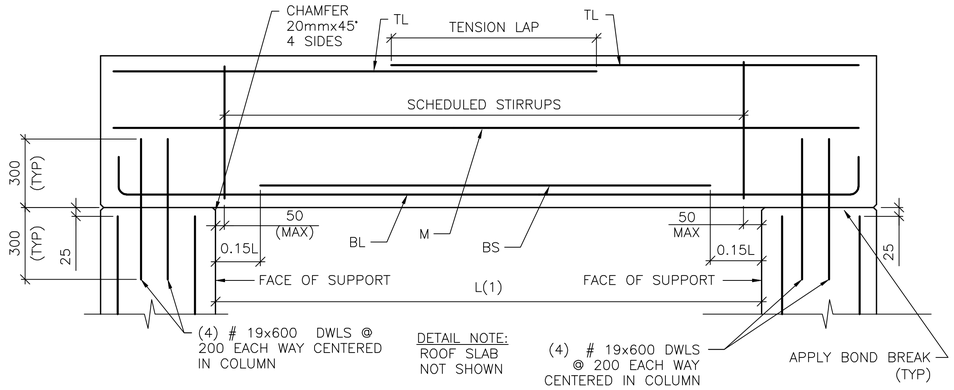

3 / S-504 SINGLE SPAN ROOF BEAM REINFORCING DETAIL
SCALE: NTS

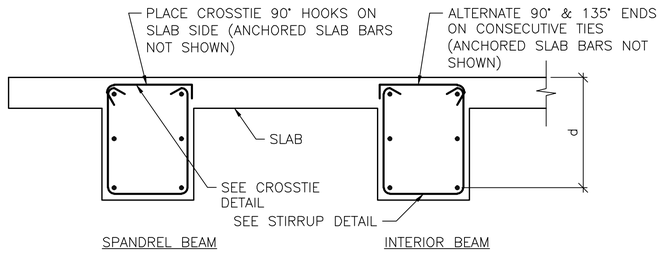

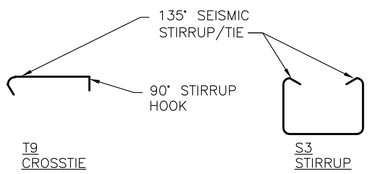

C / S-504 BEAM REINFORCEMENT DETAILS
SCALE: NTS

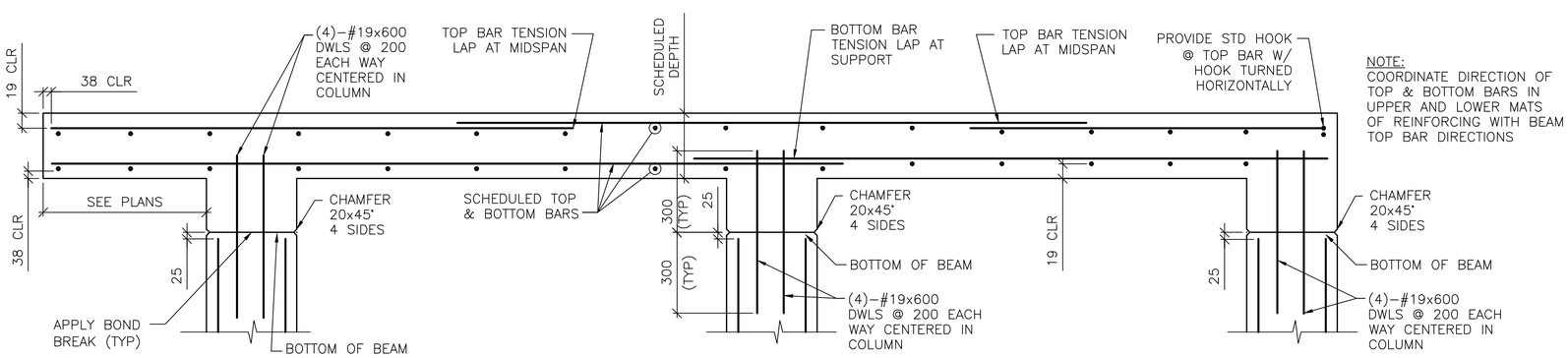

NOTE:
COORDINATE DIRECTION OF TOP & BOTTOM BARS IN UPPER AND LOWER MATS OF REINFORCING WITH BEAM TOP BAR DIRECTIONS

4 / S-504 FRAMED SLAB REINFORCING DETAIL
SCALE: NTS

UNLESS OTHERWISE NOTED, LINEAR DIMENSIONS SHOWN ARE IN MILLIMETERS (mm)

APPROVED:

A/E DESIGNER OF RECORD

SEAL:

US ARMY CORPS OF ENGINEERS
AFGHANISTAN ENGINEER DISTRICT

Mark	Description	Date	Appr.	Mark	Description	Date	Appr.

U.S. ARMY CORPS OF ENGINEERS
AFGHANISTAN ENGINEER DISTRICT
APO AE 96338

Michael Baker Jr., Inc
A unit of Michael Baker Corporation
Airside Business Park
100 Airside Drive
Moon Township, PA 15108
www.mbakercorp.com

Designed by: KMP/MMY
Dwn by: RCG
Ckd by: CWW
Reviewed by: LHM
Submitted by: BAKER
Date: 2/23/10
Design file no.
Rev: 0
Drawing code:
File name: AAMC8255-S0407
Plot date: 2/23/2010
Plot scale: X:X

AFGHAN NATIONAL ARMY
REGIONAL MILITARY TRAINING CENTER
STANDARD DESIGN

200 STUDENT CLASSROOM BUILDING
(8) 25 STUDENT CLASSROOMS

BEAM & COLUMN DETAILS

Sheet reference number:
S-504

CONCRETE REINFORCEMENT TENSION DEVELOPMENT/LAP SPLICE SCHEDULE

f'c = 28 MPa	LAP CLASS	UNCOATED BARS			
		TOP BARS		OTHER BARS	
BAR SIZES		CASE 1	CASE 2	CASE 1	CASE 2
#10 TO #19	A	50 BAR DIA	74 BAR DIA	38 BAR DIA	57 BAR DIA
	B	64 BAR DIA	96 BAR DIA	50 BAR DIA	74 BAR DIA
#22 TO #57	A	62 BAR DIA	93 BAR DIA	48 BAR DIA	71 BAR DIA
	B	80 BAR DIA	121 BAR DIA	62 BAR DIA	93 BAR DIA

NOTES:
1. TABULATED TENSION DEVELOPMENT LENGTH VALUES ARE TAKEN FROM CRSI DESIGN HANDBOOK 2008 10TH ED.
2. TENSION DEVELOPMENT & TENSION LAP SPLICE LENGTHS ARE EXPRESSED AS MULTIPLES OF BAR DIAMETERS.
3. TABULATED VALUES ARE BASED ON MINIMUM YIELD STRENGTH OF REINFORCEMENT, fy, OF 420MPa.
4. CONCRETE IS NORMAL WEIGHT (2400Kg/m^3) AND 28 DAY COMPRESSIVE STRENGTH = 28MPa.
5. TABULATED VALUES FOR BEAMS & COLUMNS ARE BASED ON TRANSVERSE REINFORCEMENT AND CONCRETE COVER MEETING MINIMUM CODE REQUIREMENTS.
6. CASES 1 & 2, WHICH DEPEND ON THE TYPE OF STRUCTURAL MEMBER, CONCRETE COVER, AND CENTER-TO-CENTER SPACING OF THE BARS ARE DEFINED IN THE TABLE BELOW.
7. LAP SPLICE LENGTHS (MINIMUM 300mm) ARE MULTIPLES OF TENSION DEVELOPMENT LENGTHS: CLASS A = 1.0(TENSION DEVELOPMENT LENGTH) & CLASS B = 1.3(TENSION DEVELOPMENT LENGTH)
8. TOP BARS ARE HORIZONTAL REINFORCEMENT WITH MORE THAN 300mm OF CONCRETE CAST BELOW THE BARS.
9. IT SHALL BE PERMISSIBLE TO CALCULATE WALL AND SLAB REINFORCEMENT TENSION DEVELOPMENT/SPLICE LENGTHS IN ACCORDANCE WITH ACI 12.2.3 OR TABLE 5.3(b) OF CRSI 2008 IN LIEU OF VALUES TABULATED ABOVE.

BEAMS, COLUMNS	CASE 1	CONCRETE COVER AT LEAST 1 BAR DIA AND CENTER-TO-CENTER SPACING AT LEAST 2 BAR DIA
	CASE 2	CONCRETE COVER LESS THAN 1 BAR DIA OR CENTER-TO-CENTER SPACING LESS THAN 2 BAR DIA
ALL OTHERS	CASE 1	CONCRETE COVER AT LEAST 1 BAR DIA AND CENTER-TO-CENTER SPACING AT LEAST 3 BAR DIA
	CASE 2	CONCRETE COVER LESS THAN 1 BAR DIA OR CENTER-TO-CENTER SPACING LESS THAN 3 BAR DIA

CONCRETE COVER SCHEDULE

MINIMUM CONCRETE COVER PROTECTION FOR REINFORCEMENT BARS SHALL BE AS LISTED BELOW: (SEE ACI 318M-05, SECTION 7.7 FOR CONDITIONS NOT NOTED). DIMENSIONS FOR BAR PLACEMENT GIVEN IN SECTIONS AND DETAILS SHALL SUPERSEDE MINIMUM COVER REQUIREMENTS GIVEN HERE. DIMENSIONS ARE IN mm. PROVIDE STANDARD BAR CHAIRS AND SUPPORT BARS @1200mm MAXIMUM AS REQUIRED TO MAINTAIN CONCRETE PROTECTION SPECIFIED.

FOOTINGS (EARTH FORMED):		70
COLUMNS / PIERS (TO TIES)		40
GRADE BEAMS OR SLAB TURNED DOWN EDGES:		
TOP		40
BOTTOM (EARTH FORMED)		70
SIDES (EARTH FORMED)		70
SIDES (BOARD FORMED)	#16 BAR & SMALLER	40
	#19 THRU #36 BAR	50
ELEVATED BEAMS & SLABS:		
BEAM TIES & STIRRUPS (NOT EXPOSED TO WEATHER)		40
BEAM TIES & STIRRUPS (EXPOSED TO WEATHER)		50
FLOOR SLABS (NOT EXPOSED TO WEATHER)		20
FLOOR SLABS (EXPOSED TO WEATHER)		
#19 & LARGER		50
#13 & SMALLER		40
ROOF SLAB BARS		25
SLABS ON GRADE		
NOT EXPOSED TO WEATHER (FROM TOP)		20
EXPOSED TO WEATHER (FROM TOP)		40
UTILITY TUNNEL WALLS, RETAINING WALLS AND SHEAR WALLS. (NO SURFACES SHALL BE EARTH FORMED)		
EARTH SIDE AND FRONT SIDE (EXPOSED TO WEATHER)		
#16 BAR AND SMALLER		40
#19 THRU #36 BAR		50

COLUMN FOOTING SCHEDULE

MARK	FOOTING SIZE (mm)			FOOTING REINFORCING	REMARKS
	LENGTH	WIDTH	THICKNESS		
F1	2500	2500	250	(7)-#19 EW BOTT	-----
F2	4100	4100	400	(11)-#25 EW BOTT	-----
F3	3300	3300	300	(10)-#22 EW BOTT	-----

CONCRETE SHEAR WALL SCHEDULE

MARK	TYPE	WALL LENGTH (L) (mm)	WALL REINFORCEMENT		REMARKS
			END ZONE	FIELD	
SW1	C	6400	(6)-#16 @ 150mm OC	#13 @ 300mm OC	-----
SW2	B	3200	(3)-#16 @ 150mm OC	#13 @ 300mm OC	-----
SW3	C	6100	(4)-#16 @ 150mm OC	#13 @ 300mm OC	-----

NOTES:
1. WORK THIS SCHEDULE WITH SHEAR WALL DETAILS ON SHEETS S-702
2. SEE PLAN FOR LOCATION OF SHEAR WALL(S).
3. WALL "FIELD" REINFORCEMENT LISTED APPLIES TO VERTICAL & HORIZONTAL BARS.
4. WALL "FIELD" REINFORCEMENT SHOULD BE CENTERED IN WALL.
5. VERTICAL "FIELD" BARS MAY BE OMITTED IN LOCATION OF "END ZONE" REINFORCEMENT.

STANDARD HOOKS IN TENSION PER (ACI 318M-05)

HOOK DEVELOPMENT LENGTH (mm)	
BAR SIZE	f'c 28 MPa
#10	180
#13	250
#16	300
#19	380
#22	430
#25	480
#29	560
#32	610
#36	690

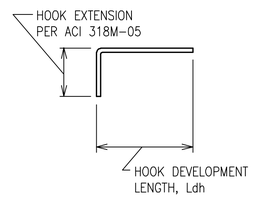

NOTES:
1. CONCRETE IS NORMAL WEIGHT CONCRETE.
2. BAR YIELD STRENGTH, fy = 420 MPa
3. SIDE COVER REQUIREMENTS OF ACI SECT. 12.5.3 ARE ASSUMED TO NOT BE MET.
4. TIE OR STIRRUP REQUIREMENTS OF ACI SECT. 12.5.3 ARE ASSUMED TO NOT BE MET.
5. REDUCTION FOR EXCESS REINFORCEMENT IS NOT TAKEN.
6. HOOK DEVELOPMENT LENGTH IS VALID FOR 180° HOOKS ALSO.

CMU OR CAST IN PLACE CONC LINTEL SCHEDULE (TYP)

OPENING TYPE OR SIZE, BEAM LOCATION OR TYPE	MAX SPAN (mm)	LINTEL DEPTH (mm)	REINFORCING BOTTOM
WALL OPENING	4000	600	(2)-#16 T&B
WALL OPENING	1900	400	(2)-#16 T&B
WALL OPENING	1000	400	(2)-#13 B

1. STRUCTURAL SHEETS DO NOT INDICATE ALL OPENINGS IN MASONRY WALLS. VERIFY NUMBER, SIZE AND LOCATION OF ALL OPENINGS IN MASONRY WALLS FROM ARCHITECTURAL SHEETS AND APPROVED PLUMBING, MECHANICAL, AND ELECTRICAL SHOP DRAWINGS.
2. PROVIDE 200mm BEARING EA END.
3. FOR HEAD DETAILS REFER TO ARCHITECTURAL SHEETS.
4. REINFORCING SHALL BE ASTM A615M, GRADE 420. GROUT FOR CMU LINTELS SHALL HAVE A MINIMUM COMPRESSIVE STRENGTH OF 14 MPa AT 28 DAYS.
5. CONTRACTOR SHALL SUBMIT FOR APPROVAL SHOP DRAWINGS AND SCHEDULES SHOWING SIZE, SPAN, REINFORCEMENT, DETAILS, LOCATIONS, ETC.

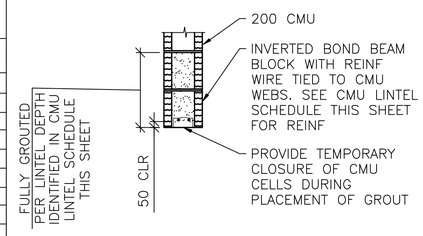

A S-601 **LINTEL DETAIL**
SCALE: NTS

BEAM SCHEDULE

MARK	BEAM SIZE (mm)		BEAM REINFORCING						STIRRUPS			REMARKS
	DEPTH	WIDTH	BL	BS	TL	TS	TC	M	SIZE	TYPE	SPACING	
GRADE BEAMS												
GB1	750	400	(2)-#22	(1)-#22	(2)-#22	---	---	---	#13	S3 +T9	d/2	-----
ROOF BEAMS												
RB1	500	400	(2)-#19	(1)-#19	(2)-#22	---	---	---	#13	S3 +T9	d/2	-----
RB2	500	400	(2)-#19	(1)-#19	(2)-#19	---	---	---	#13	S3 +T9	d/2	

NOTES:
1. WORK THIS SCHEDULE WITH BEAM REINFORCING DETAILS ON SHEETS S-503 AND S-504.
2. HOOKS SHOWN ON SECTIONS AND DETAILS SHALL BE 90° STD UON.
3. USE ONLY (1) TC AT BEAM COLUMN INTERSECTION WHERE REQ'D.

COLUMN SCHEDULE

COLUMN MARK / DESCRIPTION	TYP UON	A3, B2, B3, B4, C3	---	---
TYPE	4-BAR	8-BAR	---	---
DIMENSION	500mm SQ.	600mm SQ.	---	---
VERTICAL REINFORCEMENT	(4)-#29	(8)-#25	---	---
TIES	#13 @ d/2	#13 @ d/2	---	---
TOP OF ROOF ELEVATION	3700mm	3700mm	---	---
TOP OF GRADE BEAM ELEVATION	-200mm	-200mm	---	---
TOP OF FOOTING ELEVATION	-950mm	-950mm	---	---

NOTES:
1. WORK THIS SCHEDULE WITH COLUMN DETAILS ON SHEET S-504.
2. SEE FOOTING SCHEDULE ON THIS SHEET FOR FOOTING INFORMATION.
3. COLUMN TIES: INTERIOR TIES TO MATCH SIZE & SPACING OF PERIMETER TIES.
4. HOOKS SHOWN ON SECTIONS & DETAILS SHALL BE 90° STD UON.

UNLESS OTHERWISE NOTED, LINEAR DIMENSIONS SHOWN ARE IN MILLIMETERS (mm)

APPROVED:

A/E DESIGNER OF RECORD

SEAL:

GEORGIA REGISTERED 7-29-10 No. 27141 PROFESSIONAL ENGINEER CHRISTOPHER W. WHITMORE

US ARMY CORPS OF ENGINEERS
AFGHANISTAN ENGINEER DISTRICT

Mark	Description	Date	Appr.	Mark	Description	Date	Appr.

Rev: 0
Date: 2/23/10
Design file no.
Drawing code:
File name: AN4CB2BS-601SCH
Plot date: 2/23/2010
Plot scale: X:X

Designed by: KMP/MMY
Dwn by: RCG
Ckd by: CWW
Reviewed by: LHM
Submitted by:
BAKER

U.S. ARMY CORPS OF ENGINEERS
AFGHANISTAN ENGINEER DISTRICT
APO AE 96338

Michael Baker Jr., Inc.
A unit of Michael Baker Corporation
Airside Business Park
100 Airside Drive
Moon Township, PA 15108
www.mbakercorp.com

AFGHAN NATIONAL ARMY
REGIONAL MILITARY TRAINING CENTER
STANDARD DESIGN

200 STUDENT CLASSROOM BUILDING
(8) 25 STUDENT CLASSROOMS

SCHEDULES

Sheet reference number:
S-601

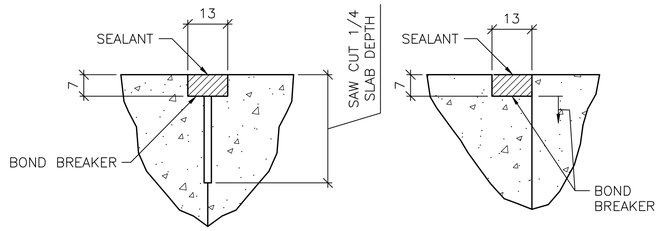

1 / S-701 TYPICAL CONCRETE SLAB JOINT FINISH DETAILS

SCALE: NTS

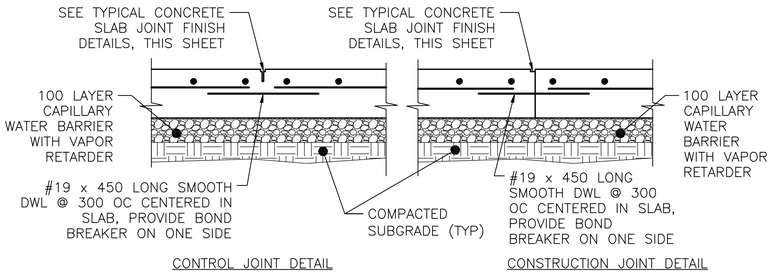

2 / S-701 TYPICAL SLAB ON GRADE JOINT DETAIL

SCALE: NTS

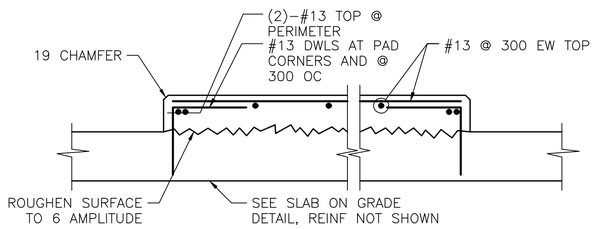

3 / S-701 INTERIOR EQUIPMENT PAD DETAIL

SCALE: NTS

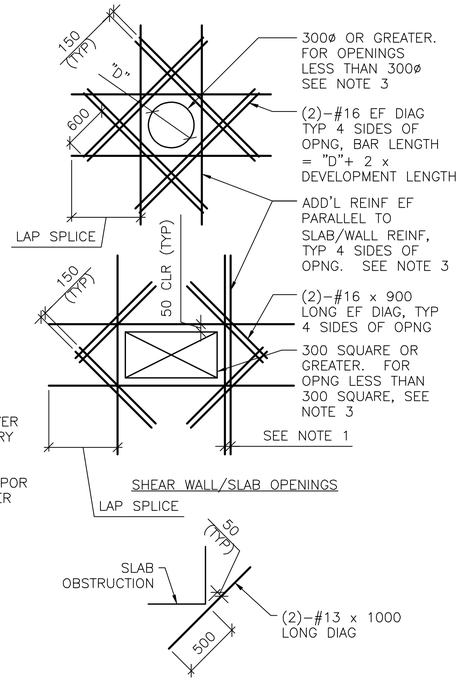

DETAIL NOTES:

1. WHERE MORE THAN ONE ADDITIONAL BAR IS REQUIRED PARALLEL TO THE EXISTING SLAB/WALL REINFORCING THE ADDITIONAL REINFORCING BARS SHALL BE SPACED AT 100 ON CENTER.
2. ADDITIONAL REINFORCING PARALLEL TO THE SLAB/WALL REINFORCING SHALL BE #16 BARS THAT PROVIDE A STEEL AREA ON EACH SIDE OF THE OPENING EQUAL TO 1/2 THE AREA OF THE REINFORCING CUT BY THE OPENING.
3. FOR OPENINGS WITH SIDES OR DIAMETERS LESS THAN 300 SPREAD THE SLAB/WALL REINFORCING TO CLEAR THE OPENING.

4 / S-701 ADD'L CONCRETE REINFORCEMENT DETAILS

SCALE: NTS

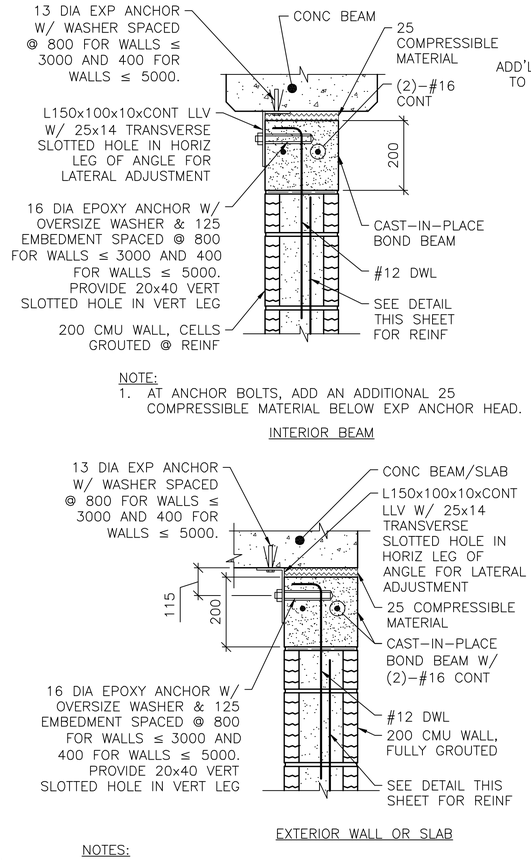

NOTE:

1. AT ANCHOR BOLTS, ADD AN ADDITIONAL 25 COMPRESSIBLE MATERIAL BELOW EXP ANCHOR HEAD.

NOTES:

1. THIS DETAIL IS AN ALTERNATE TOP OF WALL ANCHORAGE DETAIL TO BE USED AT THE CONTRACTOR'S OPTION IN LIEU OF DETAILS SHOWN ON S-400 & S-500 DRAWINGS.
2. CAST-IN-PLACE BOND BEAM SHOWN AT TOP OF WALL IS ALSO APPLICABLE FOR INTERMEDIATE AND STARTER COURSE BOND BEAMS WITHIN WALL.

5 / S-701 ALTERNATE TOP OF CMU WALL BRACING DETAILS

SCALE: NTS

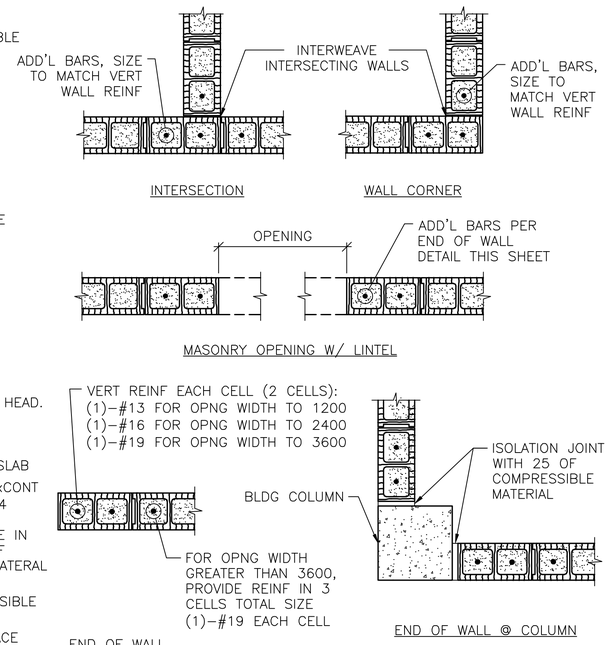

NOTES:

1. OPENING WIDTH SHALL NOT EXCEED 3600 FOR THIS TYPE OF JAMB.
2. ALL CELLS FULLY GROUTED AT EXTERIOR WALLS. AT INTERIOR WALLS, ONLY GROUT CELLS CONTAINING REINF.

6 / S-701 TYP CMU DETAILS

SCALE: NTS

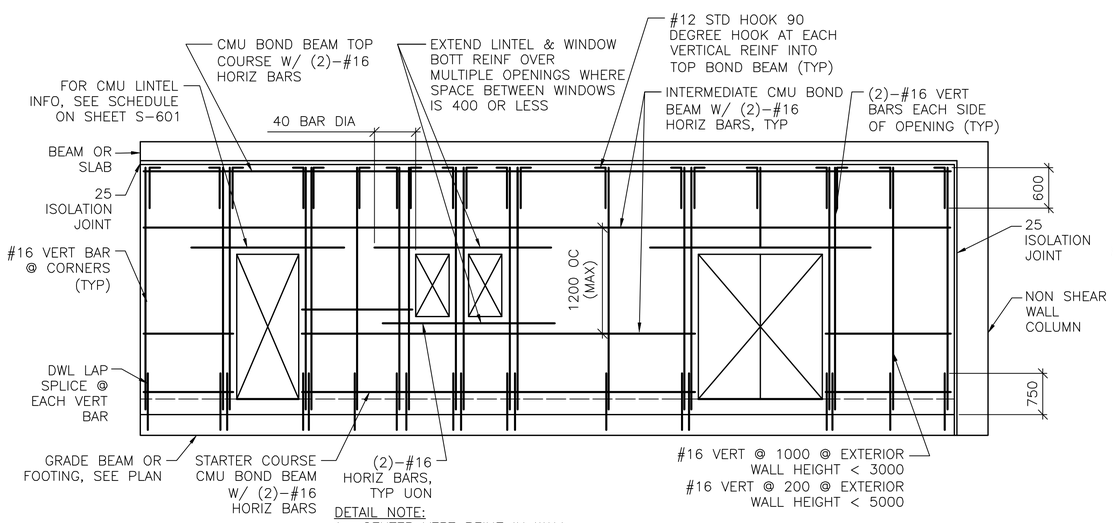

DETAIL NOTE:

1. CENTER VERT REINF IN WALL.
2. GROUT ALL CMU CELLS.
3. REFERENCE ARCH DWGS FOR JOINT INFORMATION
4. DOWELS BETWEEN TOP BOND BEAM AND BEAM/SLAB ABOVE (INCLUDING EMBEDDED PIPE SLEEVE) NOT SHOWN FOR CLARITY. SEE SPECIFIC S-500 SERIES DWGS FOR INFO.
5. FOR INFORMATION ON ALTERNATE CAST-IN-PLACE WALL BOND BEAMS, REFERENCE ALTERNATE TOP OF CMU WALL BRACING DETAILS THIS SHEET.

7 / S-701 TYP EXTERIOR CMU WALL REINF DETAIL

SCALE: NTS

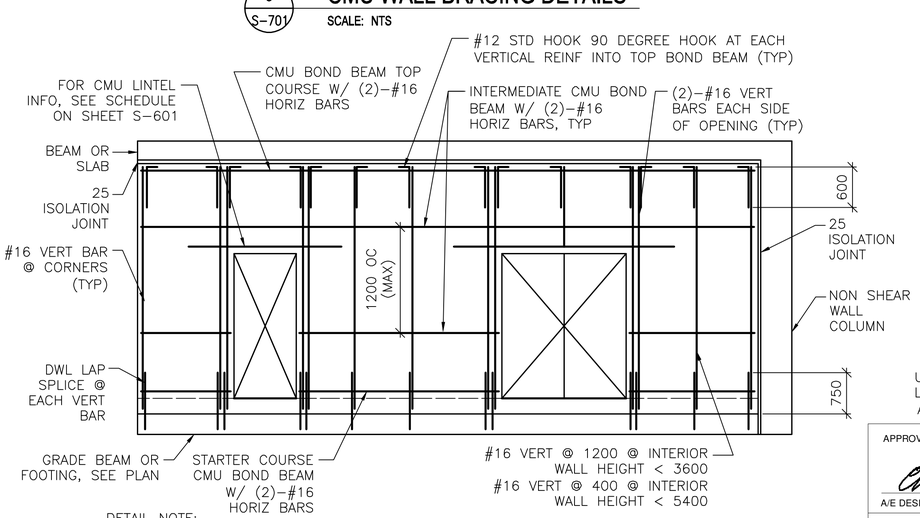

DETAIL NOTE:

1. CENTER VERT REINF IN WALL.
2. GROUT ALL CMU CELLS.
3. REFERENCE ARCH DWGS FOR JOINT INFORMATION
4. DOWELS BETWEEN TOP BOND BEAM AND BEAM/SLAB ABOVE (INCLUDING EMBEDDED PIPE SLEEVE) NOT SHOWN FOR CLARITY. SEE SPECIFIC S-500 SERIES DWGS FOR INFO.
5. FOR INFORMATION ON ALTERNATE CAST-IN-PLACE WALL BOND BEAMS, REFERENCE ALTERNATE TOP OF CMU WALL BRACING DETAILS THIS SHEET.

8 / S-701 TYP INTERIOR CMU WALL REINF DETAIL

SCALE: NTS

UNLESS OTHERWISE NOTED, LINEAR DIMENSIONS SHOWN ARE IN MILLIMETERS (mm)

APPROVED:

A/E DESIGNER OF RECORD

SEAL:

GEORGIA REGISTERED 1-29-10 No. 27141 PROFESSIONAL ENGINEER CHRISTOPHER W. WHITMORE

US ARMY CORPS OF ENGINEERS
AFGHANISTAN ENGINEER DISTRICT

Mark	Description	Date	Appr.	Mark	Description	Date	Appr.

Rev: 0
Date: 2/23/10
Design file no.
Drawing code:
File name: AAAC8285-701DT
Plot date: 2/23/2010
Plot scale: X:X

Designed by: KMF/MMY
Dwn by: RCG
Ckd by: CWW
Reviewed by: LHM
Submitted by: BAKER

U.S. ARMY CORPS OF ENGINEERS
AFGHANISTAN ENGINEER DISTRICT
APO AE 96338

Michael Baker Jr., Inc
A unit of Michael Baker Corporation
Airside Business Park
100 Airside Drive
Moon Township, PA 15108
www.mbakercorp.com

AFGHAN NATIONAL ARMY
REGIONAL MILITARY TRAINING CENTER
STANDARD DESIGN

200 STUDENT CLASSROOM BUILDING
(8) 25 STUDENT CLASSROOMS

TYPICAL DETAILS

Sheet reference number:
S-701

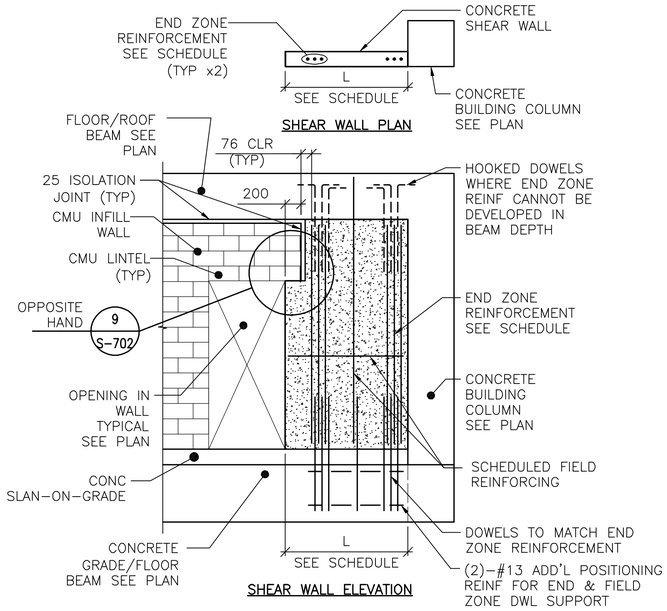

DETAIL NOTES:
1. FIELD REINFORCEMENT IN SHEAR WALL NOT COMPLETELY SHOWN FOR CLARITY.
2. FIELD REINFORCEMENT CENTERED IN WALL.
3. MINIMUM CONC CLEAR DISTANCE FOR END ZONE REINF = 76
4. SEE CONC SHEAR WALL SCHEDULE ON SHEET S-601
5. SEE ARCH DWGS FOR ISOLATION JOINT INFORMATION

1 S-702 TYPE "B" SHEAR WALL DETAIL

SCALE: NTS

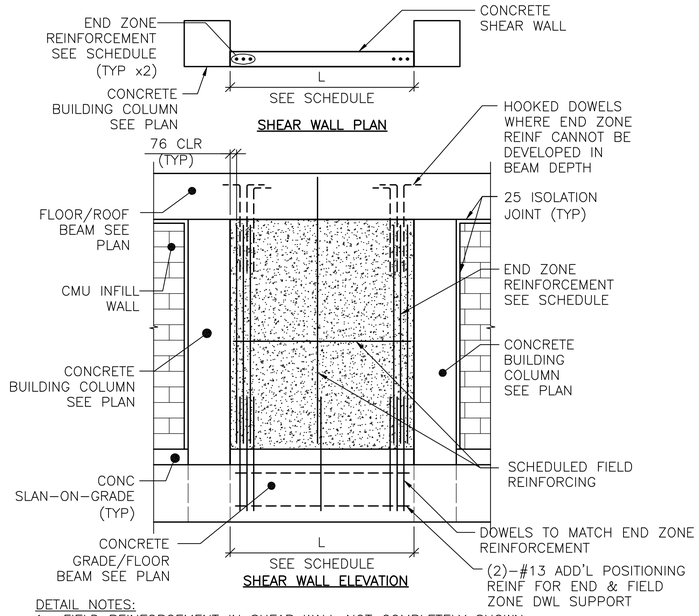

DETAIL NOTES:
1. FIELD REINFORCEMENT IN SHEAR WALL NOT COMPLETELY SHOWN FOR CLARITY.
2. FIELD REINFORCEMENT CENTERED IN WALL.
3. MINIMUM CONC CLEAR DISTANCE FOR END ZONE REINF = 76
4. SEE CONC SHEAR WALL SCHEDULE ON SHEET S-601
5. SEE ARCH DWGS FOR ISOLATION JOINT INFORMATION

2 S-702 TYPE "C" SHEAR WALL DETAIL

SCALE: NTS

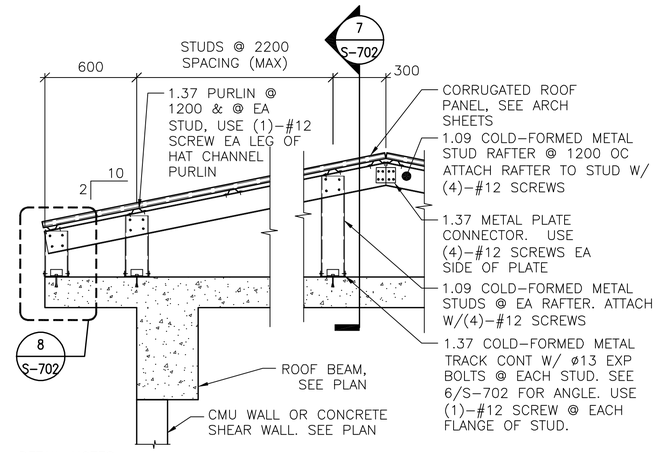

DETAIL NOTES:
1. ALL GABLE END VERTICAL STUDS SHALL BE ORIENTED 90° TO INTERIOR STUDS & SPACED @ 600 OC. GABLE END RAFTER SHALL BE 1.37 METAL TRACK SPANNING CONTINUOUSLY OVER GABLE END STUDS. INSET GIRTS AT GABLE END SHALL BE 1.09 COLD-FORMED METAL STUDS @ 1200 OC ATTACHED VIA 1.37 THICKNESS CLIP ANGLE W/ (2) #12 SCREWS EA LEG.
2. ALL INTERIOR, NON-GABLE END VERTICAL STUDS GREATER THAN 2400 IN LENGTH SHALL BE BACK-TO-BACK W/ #12 SCREWS @ 200 OC STAGGERED.

3 S-702 TYPICAL OVERBUILT ROOF FRAMING DETAIL

SCALE: NTS

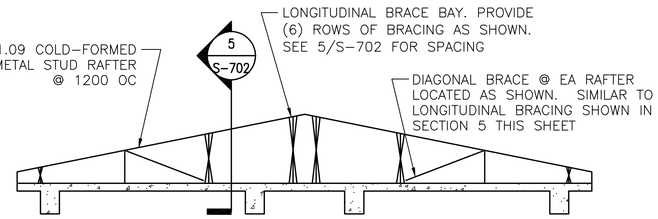

4 S-702 TYPICAL ROOF BRACE LAYOUT

SCALE: NTS

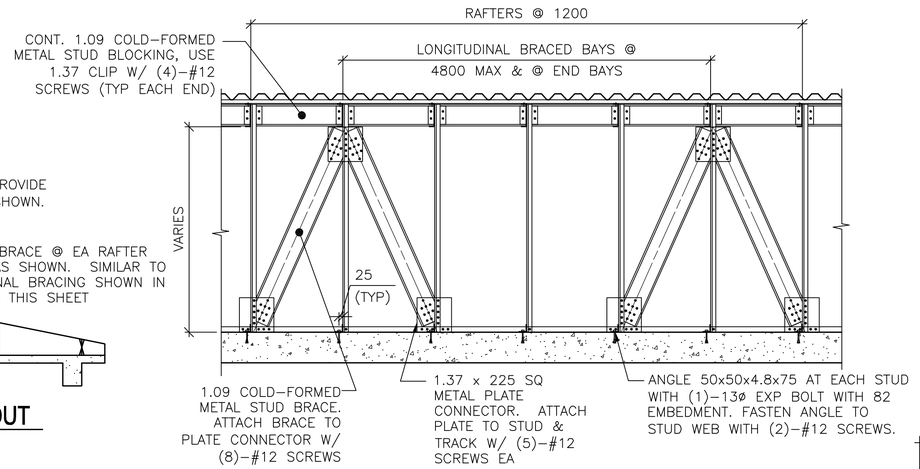

5 S-702 SECTION

SCALE: NTS

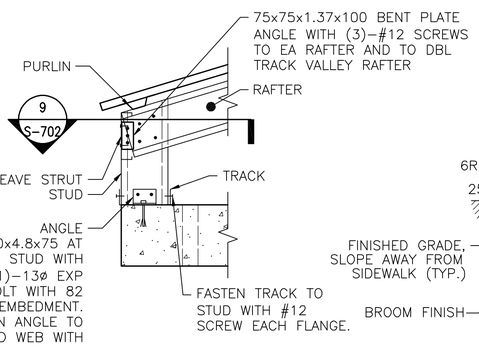

6 S-702 DETAIL

SCALE: NTS

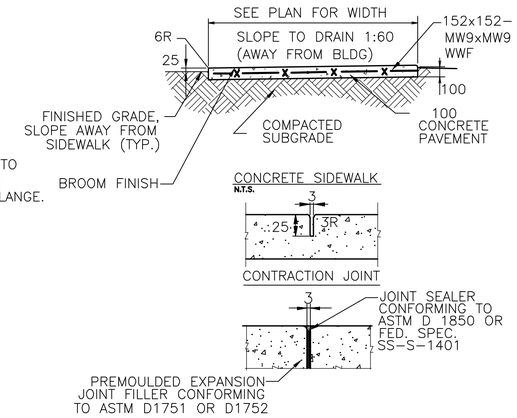

7 S-702 TYPICAL CONCRETE SIDEWALK DETAILS

SCALE: NTS

UNLESS OTHERWISE NOTED, LINEAR DIMENSIONS SHOWN ARE IN MILLIMETERS (mm)

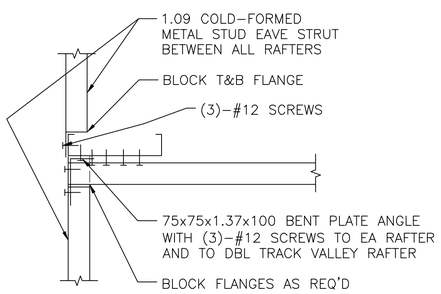

8 S-702 SECTION

SCALE: NTS

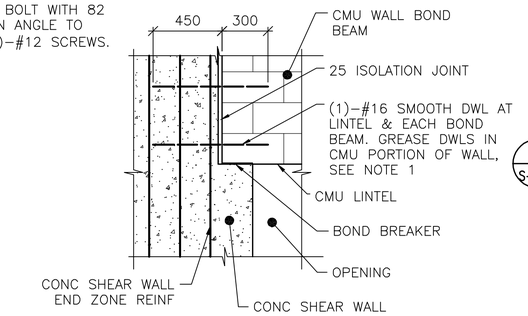

NOTE:
1. TIE SMOOTH DOWEL ROD TO SHEAR WALL END ZONE REINF FOR EACH BOND BEAM AND LINTEL.

9 S-702 SECTION

SCALE: NTS

APPROVED:

A/E DESIGNER OF RECORD

SEAL:

GEORGIA REGISTERED 1-29-10 No. 27141 PROFESSIONAL ENGINEER CHRISTOPHER W. WHITMORE

US ARMY CORPS OF ENGINEERS
AFGHANISTAN ENGINEER DISTRICT

Mark	Description	Date	Appr.	Mark	Description	Date	Appr.

Rev: 0
Date: 2/23/10
Design file no.
Drawing code:
File name: ANACB295-702TDT
Plot date: 2/23/2010
Plot scale: X:X
Designed by: KMP/MMY
Dwn by: RCG
Ckd by: CWW
Reviewed by: LHM
Submitted by: BAKER

U.S. ARMY CORPS OF ENGINEERS
AFGHANISTAN ENGINEER DISTRICT
APO AE 96338

Michael Baker Jr., Inc
A unit of Michael Baker Corporation
Airside Business Park
100 Airside Drive
Moon Township, PA 15108
www.mbakercorp.com

AFGHAN NATIONAL ARMY
REGIONAL MILITARY TRAINING CENTER
STANDARD DESIGN

200 STUDENT CLASSROOM BUILDING
(8) 25 STUDENT CLASSROOMS

TYPICAL DETAILS

Sheet reference number:
S-702

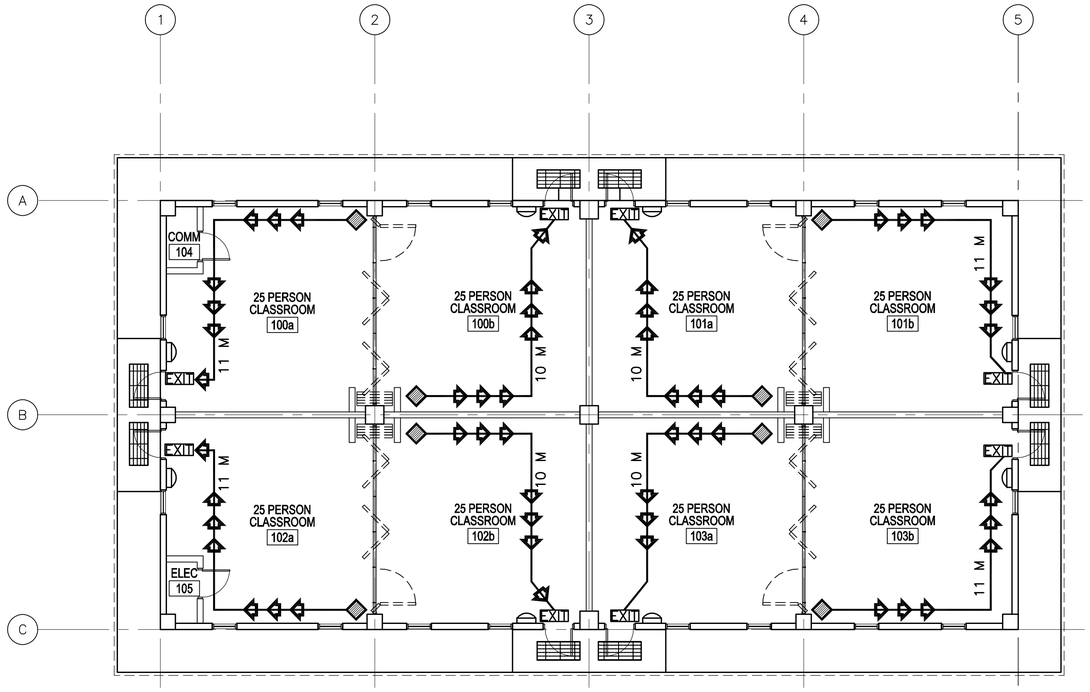

1 A-001 **LIFE SAFETY PLAN**

SCALE: 1:100

CODE ANALYSIS:

1. REFERENCES:
   2006 INTERNATIONAL BUILDING CODE (2006 IBC)
   2006 LIFE SAFETY CODE (2006 NFPA 101)

2. IBC OCCUPANCY CLASSIFICATION:
   GROUP A–3 (ASSEMBLY ≤300 NFPA 101 6.1.2 AND CHAPTER 12)

3. TYPE OF CONSTRUCTION (IBC): TYPE II–B (UNPROTECTED/NONSPRINKLERED)

4. IBC TABLE 503: ALLOWABLE HEIGHT AND BUILDING AREAS:
   GROUP A–3
   ALLOWABLE AREA: 883 SM
   ALLOWABLE HEIGHT: 2 STORIES (16 M)

   GROUP A–3
   PROPOSED AREA: 392 SM
   PROPOSED HEIGHT: 1 STORY (<16 M)

5. IBC TABLE 601 & 602: FIRE RESISTANCE RATING REQUIREMENTS FOR BUILDING ELEMENTS FOR TYPE II–B

BUILDING ELEMENT	RATING (HOUR)	REFERENCE
STRUCTURAL FRAME (COLUMNS, GIRDERS & TRUSSES)	0	TABLE 601
BEARING WALLS		
EXTERIOR	0	TABLE 601
INTERIOR	0	TABLE 601
NONBEARING WALLS & PARTITIONS		
INTERIOR	0	TABLE 601
FLOOR CONSTRUCTION	0	TABLE 601
ROOF CONSTRUCTION	0	TABLE 601
EXTERIOR WALL	0	TABLE 602

6. IBC TABLE 803.5 – INTERIOR WALL AND CEILING FINISH REQUIREMENTS FOR A–3 OCCUPANCY/NONSPRINKLERED

GROUP	EXIT ENCLOSURES AND EXIT PASSAGEWAY	CORRIDORS	ROOMS AND ENCLOSED SPACES
A–3	A	A	C

7. NFPA 101 TABLE 7.3.1.2 – OCCUPANT LOAD
   ASSEMBLY ≤ 300 = 1.4 NET SM/PERSON CALCULATED = 280 OCCUPANTS

8. NFPA 101 TABLE 7.3.3.1 – EGRESS CAPACITY
   ASSEMBLY = 5 MM PER OCCUPANT

   REQUIRED: 1400 MM (280 OCCUPANTS x 5 MM PER OCCUPANT)
   PROPOSED EGRESS CAPACITY: 7200 MM: (8) 900 MM DOORS

9. NFPA 101 PARAGRAPH 12.2.6 – EXIT ACCESS TRAVEL DISTANCE
   REQUIRED: 60 METERS
   PROPOSED: 11 METERS

10. NFPA 101 PARAGRAPH 12.3.6 (1) – CORRIDOR FIRE–RESISTANCE RATING (HOUR)
    CORRIDORS ARE NOT REQUIRED AS DOORS EXIT DIRECTLY TO OUTSIDE

11. NFPA 101 PARAGRAPH 12.2.4.1 AND 7.4.1.1 – MINIMUM NUMBER OF EXITS
    REQUIRED: 1 MINIMUM PER CLASSROOM
    PROPOSED: 1 EXITS PER CLASSROOM

12. NFPA 101 12.2.2.2.3 – EXIT HARDWARE:
    OCCUPANT WAS LESS THAN 100, NO PANIC HARDWARE IS REQUIRED.

LEGEND:

DENOTES PATHS OF EXIT TRAVEL

EXIT DENOTES DOOR AS AN EMERGENCY EXIT

DENOTES STARTING POINT FOR TRAVEL DISTANCE

DENOTES FIRE EXTINGUISHER LOCATIONS

LINEAR DIMENSIONS SHOWN ARE IN MILLIMETERS (MM), UNLESS OTHERWISE NOTED

0 2000 4000
SCALE: 1:100

APPROVED:

A/E DESIGNER OF RECORD

SEAL:

STATE OF SOUTH CAROLINA
KEVIN R. CHAFIN
N. Charleston, SC
6374
REGISTERED ARCHITECT

US ARMY CORPS OF ENGINEERS
AFGHANISTAN ENGINEER DISTRICT

Mark	Description	Date	Appr.	Mark	Description	Date	Appr.

Designed by: KRC
Dwn by: KJG
Ckd by: NLJ
Reviewed by: LHM
Submitted by: BAKER
Date: 2/23/10
Rev: 0
Design file no.
Drawing code:
File name: ANACB25A-001LSP
Plot date: 2/23/2010
Plot scale: x:X

U.S. ARMY CORPS OF ENGINEERS
AFGHANISTAN ENGINEER DISTRICT
APO AE 96338

Michael Baker Jr., Inc.
A unit of Michael Baker Corporation
Airside Business Park
100 Airside Drive
Moon Township, PA 15108
www.mbakercorp.com

AFGHAN NATIONAL ARMY
REGIONAL MILITARY TRAINING CENTER
STANDARD DESIGN

200 STUDENT CLASSROOM BUILDING
(8) 25 STUDENT CLASSROOMS

LIFE SAFETY PLAN

Sheet reference number:
A–001

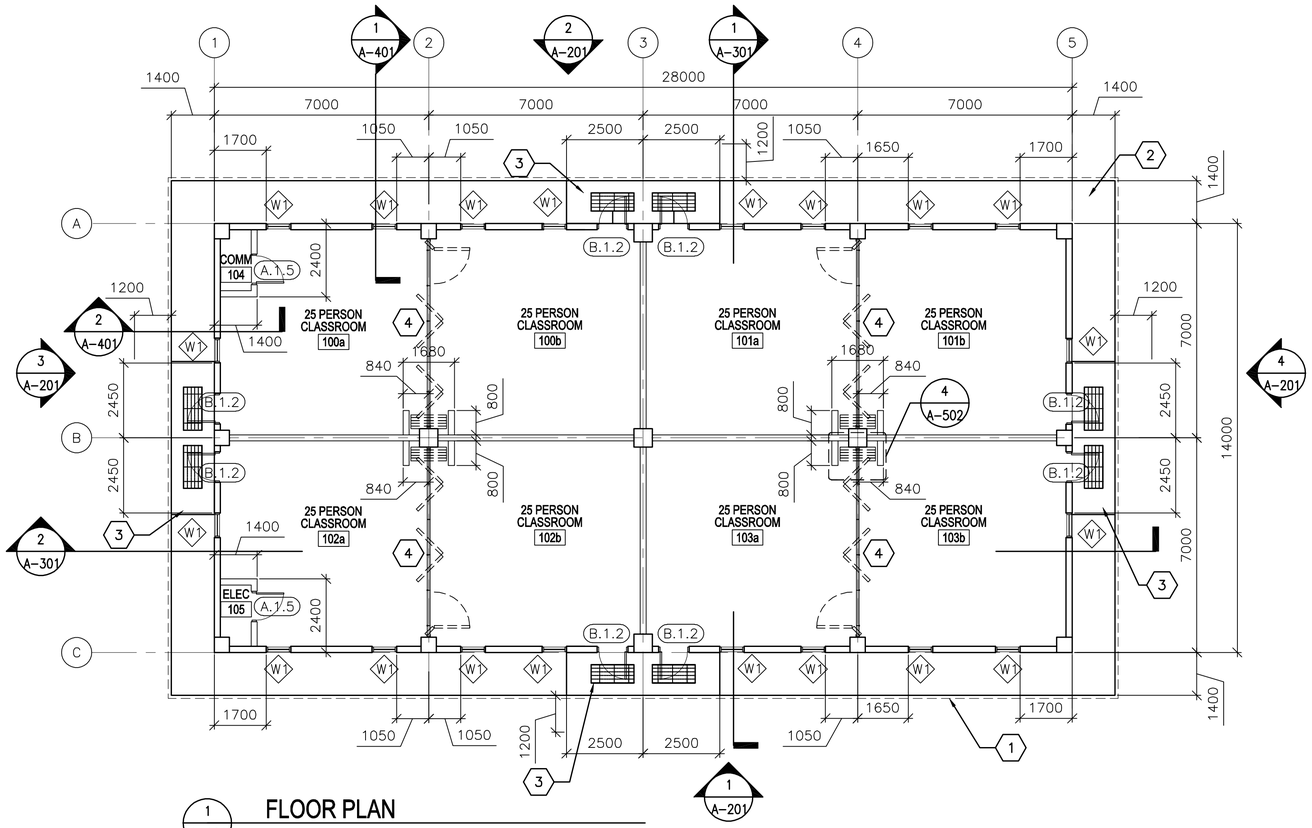

1 A-101 **FLOOR PLAN**

SCALE: 1:100

GENERAL NOTES:

A. DIMENSIONS ARE SHOWN TO OUTER EDGE OF EXTERIOR STRUCTURAL COLUMNS, STRUCTURAL COLUMN GRID, EDGE OF INTERIOR PARTITIONS, EDGE OF WINDOW OPENINGS, AND TO HINGE SIDE OF DOOR FRAME OPENINGS.

B. HINGE SIDE OF OPENINGS FOR DOORS AND FRAMES SHALL BE LOCATED 200 MM FROM ADJACENT WALL OR COLUMN, UNLESS NOTED OTHERWISE.

C. INTERIOR PARTITIONS SHALL BE 200 MM CMU. SEE STRUCTURAL DRAWINGS FOR LOCATION OF CONCRETE SHEAR WALLS.

D. COSMETIC REPAIR OF MINOR DEFECTS: REPAIR OR FILL MORTAR JOINTS AND MINOR DEFECTS, INCLUDING BUT NOT LIMITED TO SPALLS, IN ACCORDANCE WITH MANUFACTURER'S RECOMMENDATIONS AND PRIOR TO COATING APPLICATION. SURFACES TO BE PAINTED SHALL BE CLEAN AND FREE OF FOREIGN MATTER BEFORE APPLICATION OF PAINT. CLEANING SHALL BE SCHEDULED SO THAT DUST AND OTHER CONTAMINANTS WILL NOT FALL ON NEWLY PAINTED SURFACES.

E. CONCRETE, PLASTER AND MASONRY SURFACES SHALL BE ALLOWED TO CURE FOR AT LEAST 30 DAYS BEFORE PAINTING. CONCRETE SLABS–ON–GRADE SHALL BE ALLOWED TO CURE 90 DAYS BEFORE STAINING OR SEALING.

F. DO NOT USE PAINT MATERIALS CONTAINING LEAD CONTENT IN EXCESS OF 0.009 PERCENT OF THE WEIGHT OF THE TOTAL NONVOLATILE CONTENT OF THE PAINT OR THE WEIGHT OF THE DRIED PAINT FILM.

G. DO NOT USE ANY ASBESTOS CONTAINING MATERIALS (ACM) IN PROJECT. ACM IS DEFINED AS 1% OR MORE BY VOLUME.

H. DO NOT USE PAINT MATERIALS CONTAINING MERCURIAL FUNGICIDES.

I. FACTORY PRIMED METAL DOORS AND FRAMES SHALL RECEIVE TWO COATS OF PAINT.

J. FILL REMAINING SPACE AT PENETRATIONS IN FIRE–RATED FLOORS, PARTITIONS AND CEILINGS WITH APPROPRIATE FIRESTOPPING MATERIALS.

K. ALL CEILING FINISHES SHALL BE PAINTED PLASTER APPLIED TO STRUCTURE.

L. ALL WALL FINISHES SHALL BE PAINTED PLASTER APPLIED TO STRUCTURE, UNLESS NOTED OTHERWISE.

M. ALL FLOOR FINISHES SHALL BE EPOXY SEALED CONCRETE, UNLESS NOTED OTHERWISE.

KEY NOTES:

1. LINE OF ROOF OVERHANG ABOVE.
2. CONCRETE SIDEWALK – SEE SHEET S–503.
3. CONCRETE STOOP WITH GRATE – SEE DETAIL 2/A–503.
4. FOLDING PARTITION WITH PERSONNEL DOOR – SEE DETAIL 4/A–502.

LEGEND:

XXX — DOOR FRAME AND HARDWARE TYPE, SEE SHEET A–601

A — WINDOW TYPE, SEE SHEET A–601

X — KEY NOTE

ABBREVIATIONS:

ELEC	ELECTRICAL
MECH	MECHANICAL
JAN	JANITOR
CLOS	CLOSET
COMM	COMMUNICATIONS

LINEAR DIMENSIONS SHOWN ARE IN MILLIMETERS (MM), UNLESS OTHERWISE NOTED

0 2000 4000
SCALE: 1:100

APPROVED:

A/E DESIGNER OF RECORD

SEAL:

STATE OF SOUTH CAROLINA
KEVIN R. CHAFIN
N. Charleston, SC
6374
REGISTERED ARCHITECT

US ARMY CORPS OF ENGINEERS
AFGHANISTAN ENGINEER DISTRICT

Mark	Description	Date	Appr.	Mark	Description	Date	Appr.

Rev: 0
Date: 2/23/10
Design file no.
Drawing code:
File name: ANACB25A-101FP
Plot date: 2/23/2010
Plot scale: X:X

Designed by: KRC
Dwn by: KJG
Ckd by: NLJ
Reviewed by: LHM
Submitted by:
BAKER

U.S. ARMY CORPS OF ENGINEERS
AFGHANISTAN ENGINEER DISTRICT
APO AE 96338

Michael Baker Jr., Inc
A unit of Michael Baker Corporation
Airside Business Park
100 Airside Drive
Moon Township, PA 15108
www.mbakercorp.com

AFGHAN NATIONAL ARMY
REGIONAL MILITARY TRAINING CENTER
STANDARD DESIGN

200 STUDENT CLASSROOM BUILDING
(8) 25 STUDENT CLASSROOMS

FLOOR PLAN

Sheet reference number:
A–101

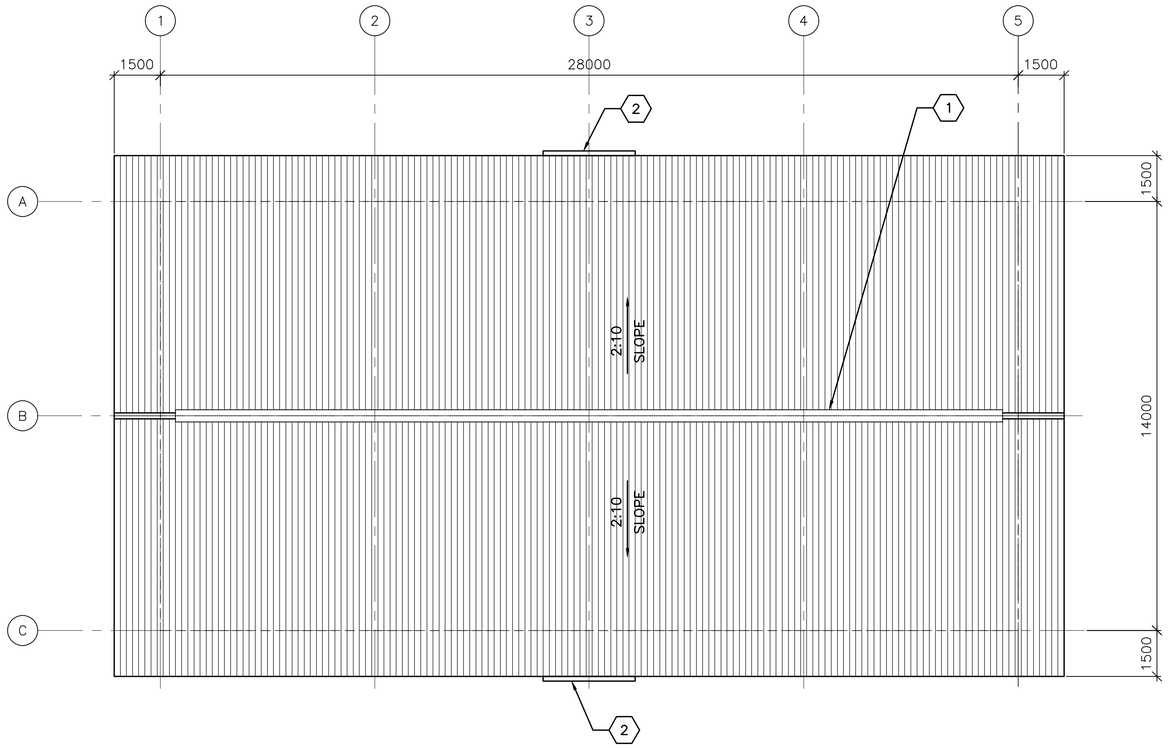

1 / A-102 **ROOF PLAN**

SCALE: 1:100

GENERAL NOTES:

A. THE APPROXIMATE LOCATION OF ROOF DEVICES AND PENETRATIONS ARE SHOWN ON THE ROOF PLAN FOR INFORMATION ONLY. THE CONTRACTOR SHALL BE RESPONSIBLE FOR UNDERSTANDING THE ACTUAL LOCATION OF THESE AND ALL OTHER ITEMS PRIOR TO BEGINNING CONSTRUCTION. COORDINATE ALL ROOF PENETRATIONS WITH STRUCTURAL, MECHANICAL AND PLUMBING WORK.

B. UNLESS OTHERWISE NOTED, NOTES, DETAILS OR FEATURES INDICATED FOR ONE CONDITION SHALL BE APPLICABLE FOR ALL ALIKE AND SIMILAR CONDITIONS.

C. STOCKPILING OF MATERIALS, EQUIPMENT AND ANY OTHER ITEMS ON THE ROOF IS PROHIBITED.

D. ROOFS SHALL BE CORRUGATED METAL ROOF PANELS ON COLD-FORMED METAL FRAMING ON CONCRETE SLAB.

KEY NOTES:

1. CONTINUOUS METAL RIDGE VENT – SEE DETAIL 4/A-501.
2. METAL GUTTER, CENTER ON DOORS, 3000 MM – SEE DETAIL 1A/A-501.

LINEAR DIMENSIONS SHOWN ARE IN MILLIMETERS (MM), UNLESS OTHERWISE NOTED

0 2000 4000
SCALE: 1:100

APPROVED:

A/E DESIGNER OF RECORD

SEAL:

STATE OF SOUTH CAROLINA
KEVIN R. CHAFIN
N. Charleston, SC
6374
REGISTERED ARCHITECT

US ARMY CORPS OF ENGINEERS
AFGHANISTAN ENGINEER DISTRICT

Mark	Description	Date	Appr.	Mark	Description	Date	Appr.

U.S. ARMY CORPS OF ENGINEERS
AFGHANISTAN ENGINEER DISTRICT
APO AE 96338

Michael Baker Jr., Inc
A unit of Michael Baker Corporation
Airside Business Park
100 Airside Drive
Moon Township, PA 15108
www.mbakercorp.com

Designed by: KRC
Dwn by: KJG
Ckd by: NLJ
Reviewed by: LHM
Submitted by: BAKER
Date: 2/23/10
Rev: 0
Design file no.
Drawing code:
File name: ANACB25A-1120P
Plot date: 2/23/2010
Plot scale: x:X

AFGHAN NATIONAL ARMY
REGIONAL MILITARY TRAINING CENTER
STANDARD DESIGN

200 STUDENT CLASSROOM BUILDING
(8) 25 STUDENT CLASSROOMS

ROOF PLAN

Sheet reference number:
A-102

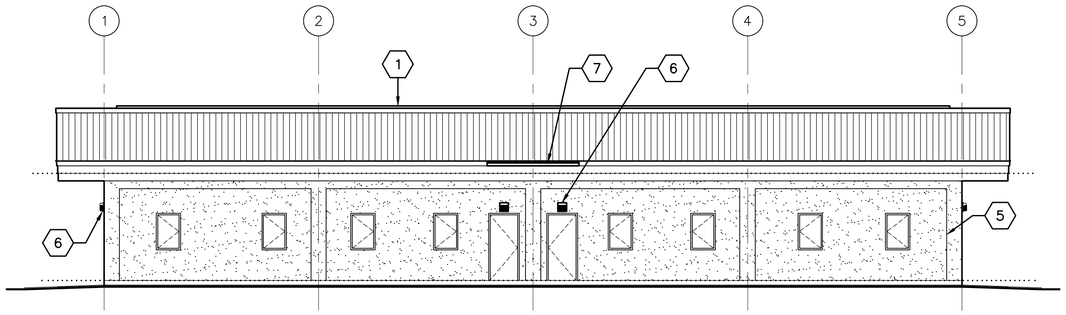

1 A–201 **ELEVATION**
SCALE: 1:100

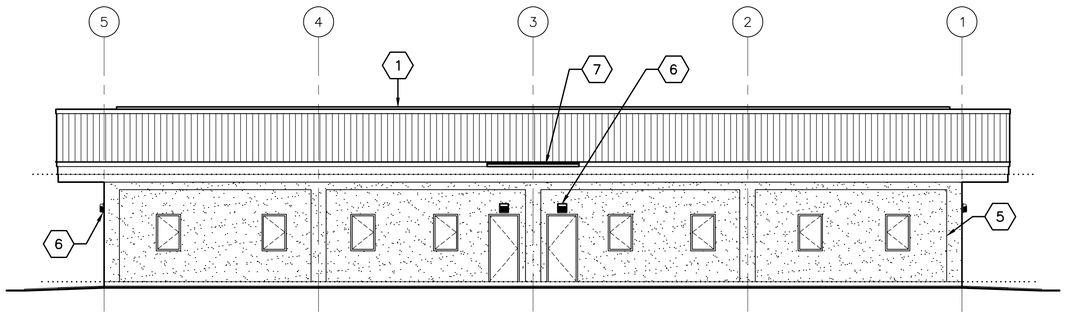

2 A–201 **ELEVATION**
SCALE: 1:100

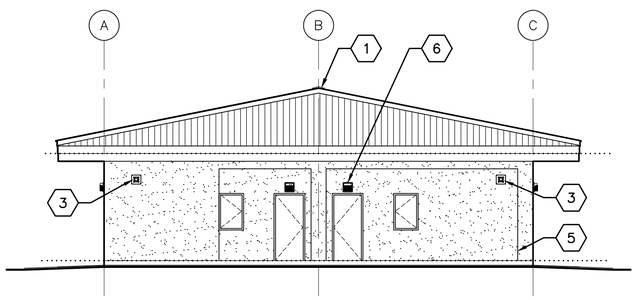

3 A–201 **ELEVATION**
SCALE: 1:100

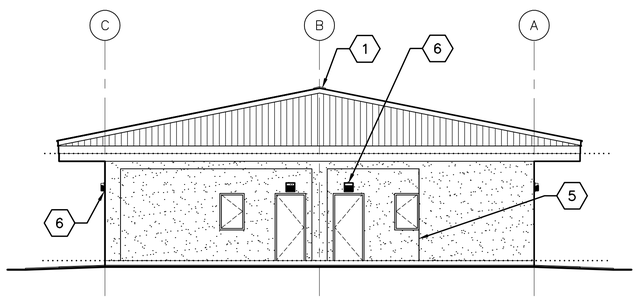

4 A–201 **ELEVATION**
SCALE: 1:100

GENERAL NOTES:

A. COORDINATE SIZE AND LOCATION OF OPENINGS FOR MECHANICAL ITEMS WITH MECHANICAL DRAWINGS.

B. PROVIDE STRUCTURAL LINTELS AS REQUIRED – SEE STRUCTURAL DRAWINGS

C. ALL EXTERIOR WALL FINISHES SHALL BE STUCCO OVER CMU AND CONCRETE SUBSTRATES. PROVIDE CONTROL JOINTS IN STUCCO WALL FINISH AS NOTED.

D. ROOF SHALL BE CORRUGATED METAL ROOF PANELS ON COLD–FORMED METAL FRAMING ON CONCRETE SLAB.

KEY NOTES: (X)

1. CONTINUOUS METAL RIDGE VENT – SEE DETAIL 4/A–501.
2. NOT USED
3. EXHAUST FAN, LOCATE TOP OF WALL PENETRATION 2800 MM ABOVE FINISHED FLOOR – SEE MECHANICAL DRAWINGS.
4. NOT USED
5. STUCCO CONTROL JOINT – SEE DETAIL 2A/A–501.
6. EXTERIOR LIGHT FIXTURE SCHEDULE – SEE ELECTRICAL.
7. METAL GUTTER, CENTER ON DOORS, 3000 MM – SEE DETAIL 1A/A–501.

LINEAR DIMENSIONS SHOWN ARE IN MILLIMETERS (MM), UNLESS OTHERWISE NOTED

0 2000 4000
SCALE: 1:100

APPROVED:

A/E DESIGNER OF RECORD

SEAL:

STATE OF SOUTH CAROLINA
KEVIN R. CHAFIN
N. Charleston, SC
6374
REGISTERED ARCHITECT

US ARMY CORPS OF ENGINEERS
AFGHANISTAN ENGINEER DISTRICT

Mark	Description	Date	Appr.	Mark	Description	Date	Appr.

Date: 2/23/10 Rev: 0
Design file no.
Drawing code:
File name: ANACB25A-201ELEV
Plot date: 2/23/2010
Plot scale: x:X

Designed by: KRC
Dwn by: KJG
Ckd by: NLJ
Reviewed by: LHM
Submitted by: BAKER

U.S. ARMY CORPS OF ENGINEERS
AFGHANISTAN ENGINEER DISTRICT
APO AE 96338

Michael Baker Jr., Inc
A unit of Michael Baker Corporation
Airside Business Park
100 Airside Drive
Moon Township, PA 15108
www.mbakercorp.com

AFGHAN NATIONAL ARMY
REGIONAL MILITARY TRAINING CENTER
STANDARD DESIGN

200 STUDENT CLASSROOM BUILDING
(8) 25 STUDENT CLASSROOMS

ELEVATIONS

Sheet reference number:
A–201

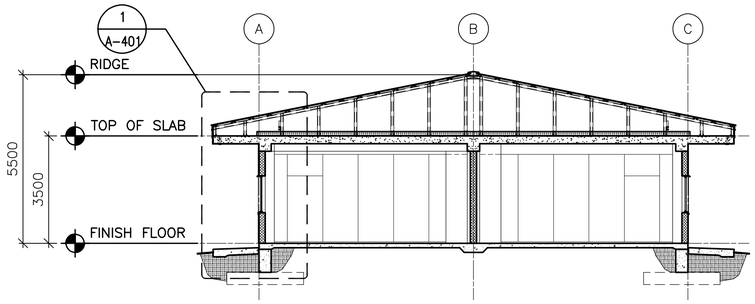

1 A-301 **BUILDING SECTION**

SCALE: 1:100

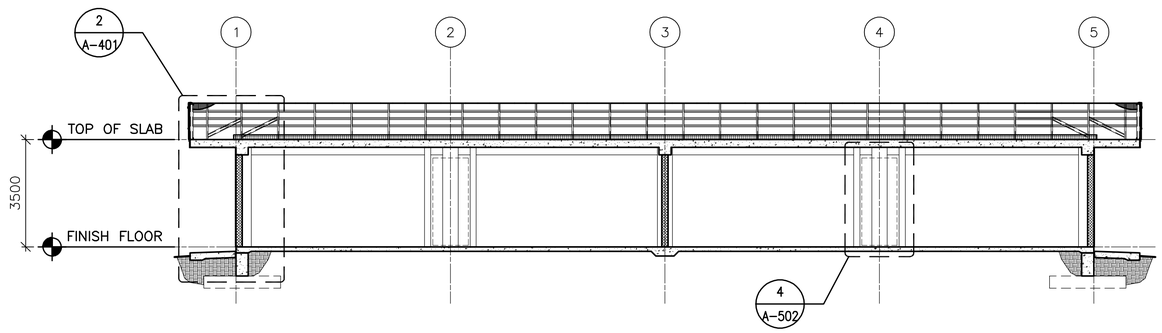

2 A-301 **BUILDING SECTION**

SCALE: 1:100

LINEAR DIMENSIONS SHOWN ARE IN MILLIMETERS (MM), UNLESS OTHERWISE NOTED

0 2000 4000

SCALE: 1:100

APPROVED:

A/E DESIGNER OF RECORD

SEAL:

STATE OF SOUTH CAROLINA
KEVIN R. CHAFIN
N. Charleston, SC
6374
REGISTERED ARCHITECT

US ARMY CORPS OF ENGINEERS
AFGHANISTAN ENGINEER DISTRICT

Mark	Description	Date	Appr.	Mark	Description	Date	Appr.

U.S. ARMY CORPS OF ENGINEERS
AFGHANISTAN ENGINEER DISTRICT
APO AE 96338

Michael Baker Jr., Inc.
A unit of Michael Baker Corporation
Airside Business Park
100 Airside Drive
Moon Township, PA 15108
www.mbakercorp.com

Designed by: KRC
Dwn by: KJG
Ckd by: NLJ
Reviewed by: LHM
Submitted by: BAKER
Date: 2/23/10
Design file no.
Drawing code:
File name: ANACB25A-301BS
Plot date: 2/23/2010
Plot scale: x:X
Rev: 0

AFGHAN NATIONAL ARMY
REGIONAL MILITARY TRAINING CENTER
STANDARD DESIGN

200 STUDENT CLASSROOM BUILDING
(8) 25 STUDENT CLASSROOMS

BUILDING SECTIONS

Sheet reference number:
A-301

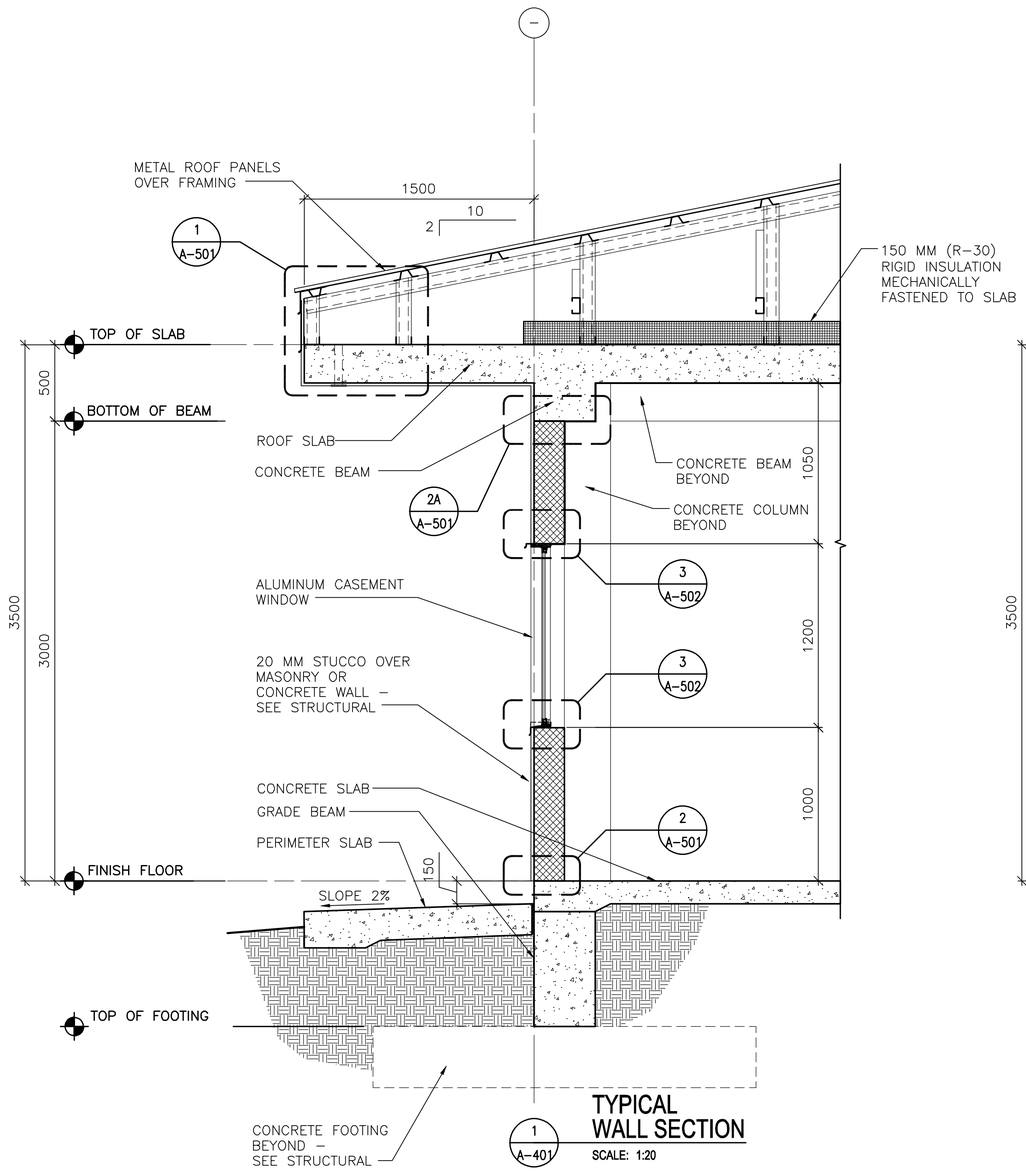

1 A-401 **TYPICAL WALL SECTION**
SCALE: 1:20

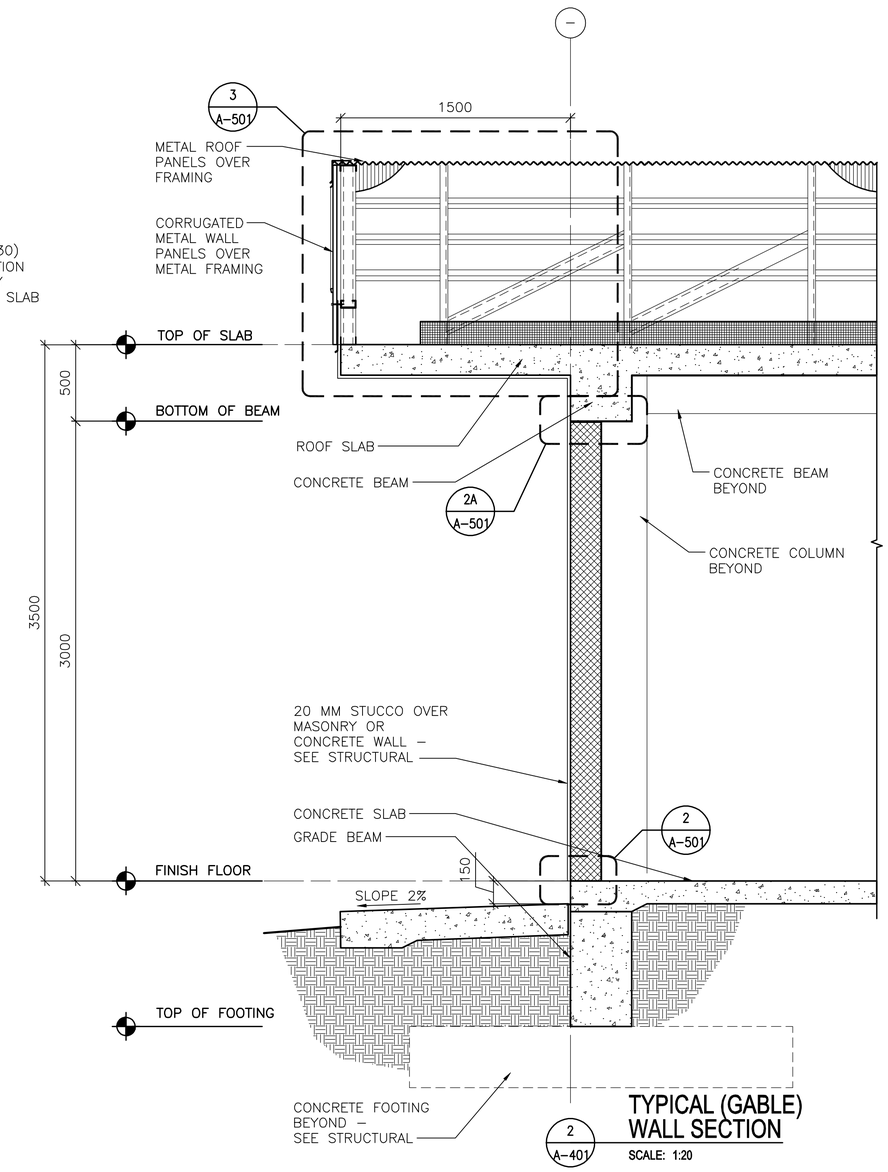

2 A-401 **TYPICAL (GABLE) WALL SECTION**
SCALE: 1:20

LINEAR DIMENSIONS SHOWN ARE IN MILLIMETERS (MM), UNLESS OTHERWISE NOTED

0 400 800
SCALE: 1:20

APPROVED:

A/E DESIGNER OF RECORD

SEAL:

STATE OF SOUTH CAROLINA
KEVIN R. CHAFIN
N. Charleston, SC
6374
REGISTERED ARCHITECT

US ARMY CORPS OF ENGINEERS
AFGHANISTAN ENGINEER DISTRICT

Mark	Description	Date	Appr.	Mark	Description	Date	Appr.

U.S. ARMY CORPS OF ENGINEERS
AFGHANISTAN ENGINEER DISTRICT
APO AE 96338

Michael Baker Jr., Inc
A unit of Michael Baker Corporation
Airside Business Park
100 Airside Drive
Moon Township, PA 15108
www.mbakercorp.com

Designed by: KRC
Dwn by: KJG
Ckd by: NLJ
Reviewed by: LHM
Submitted by: BAKER
Date: 2/23/10
Design file no.
Rev: 0
Drawing code:
File name: ANACB25A-A01WS
Plot date: 2/23/2010
Plot scale: x:X

AFGHAN NATIONAL ARMY
REGIONAL MILITARY TRAINING CENTER
STANDARD DESIGN

200 STUDENT CLASSROOM BUILDING
(8) 25 STUDENT CLASSROOMS

WALL SECTIONS

Sheet reference number:
A-401

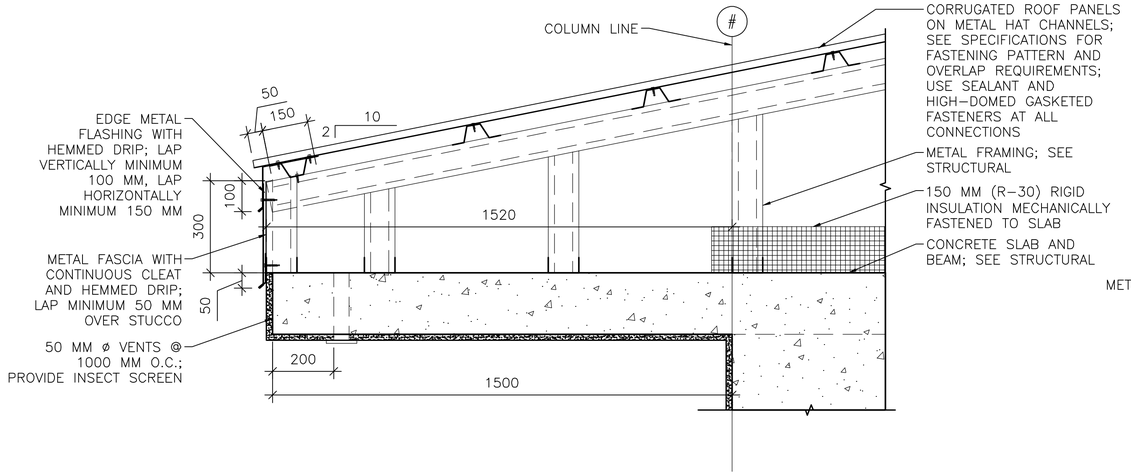

1 A–501 **EAVE DETAIL**
SCALE: 1:10

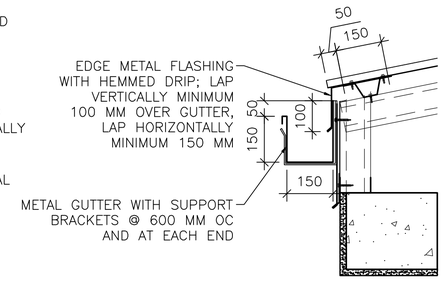

1A A–501 **GUTTER DETAIL**
SCALE: 1:10

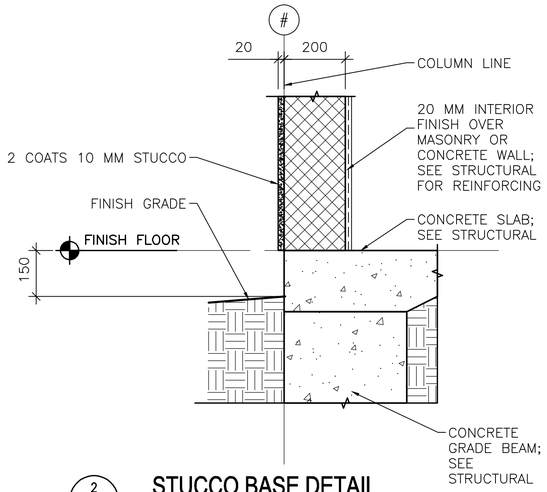

2 A–501 **STUCCO BASE DETAIL**
SCALE: 1:10

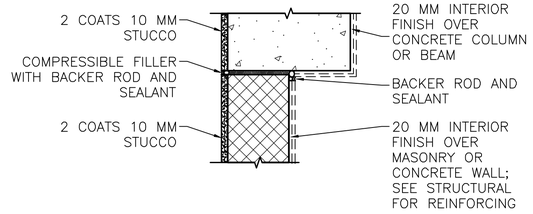

NOTE: DETAIL TYPICAL AT ALL WALL/COLUMN AND WALL/BEAM LOCATIONS, SEE ALTERNATE BRACING DETAIL BELOW. 2B/A–501.

2A A–501 **STUCCO JOINT DETAIL**
SCALE: 1:10

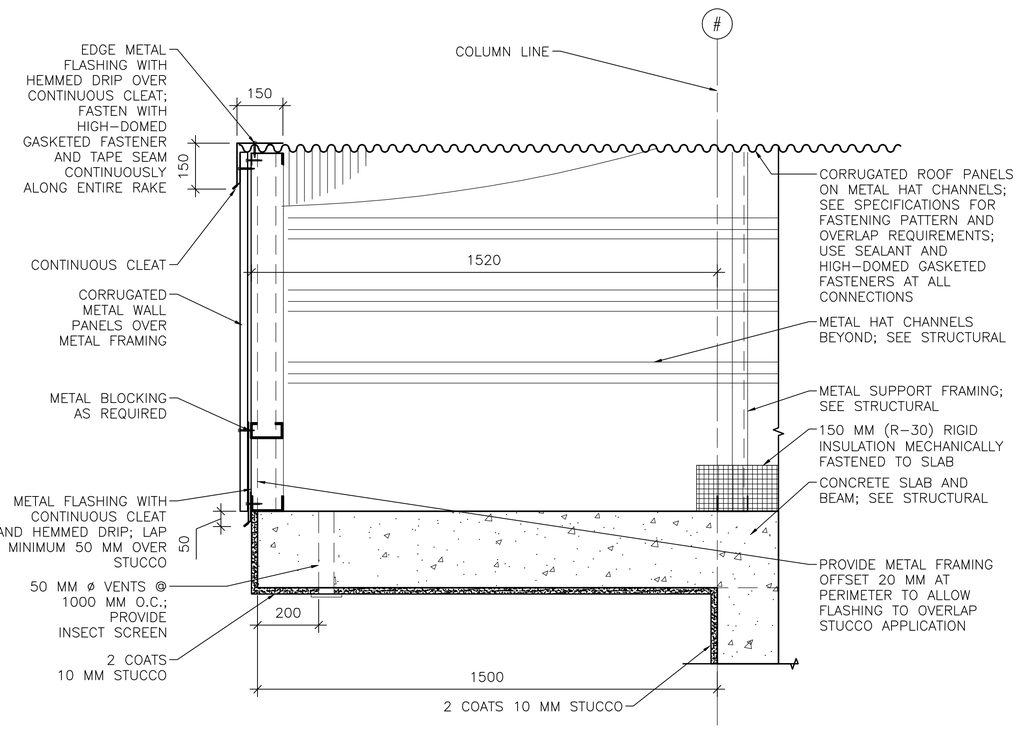

3 A–501 **RAKE/EAVE DETAIL**
SCALE: 1:10

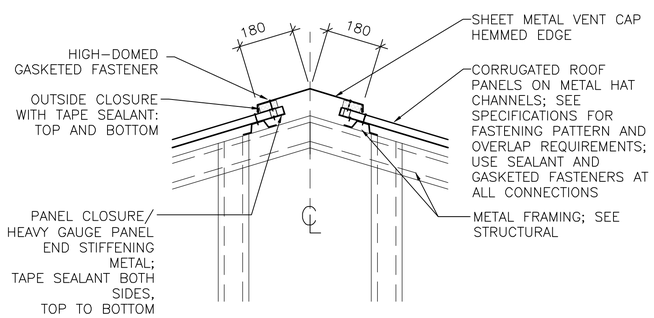

4 A–501 **RIDGE VENT DETAIL**
SCALE: 1:10

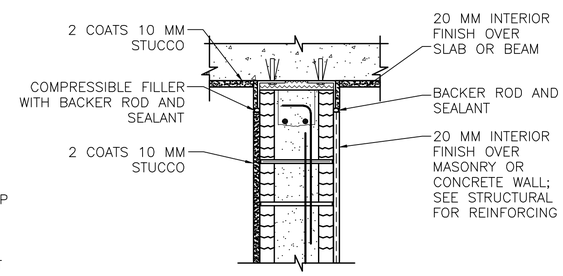

INTERIOR WALL/BEAM

2B A–501 **ALTERNATE BRACING DETAIL**
SCALE: 1:10

LINEAR DIMENSIONS SHOWN ARE IN MILLIMETERS (MM), UNLESS OTHERWISE NOTED

0 200 400
SCALE: 1:10

APPROVED:

A/E DESIGNER OF RECORD

SEAL:

STATE OF SOUTH CAROLINA
KEVIN R. CHAFIN
N. Charleston, SC
6374
REGISTERED ARCHITECT

US ARMY CORPS OF ENGINEERS
AFGHANISTAN ENGINEER DISTRICT

Mark	Description	Date	Appr.	Mark	Description	Date	Appr.

Date: 2/23/10 Rev: 0
Design file no.
Drawing code:
File name: ANACB25A-501DT
Plot date: 2/23/2010
Plot scale: x:X

Designed by: KRC
Dwn by: KJG
Ckd by: NLJ
Reviewed by: LHM
Submitted by: BAKER

U.S. ARMY CORPS OF ENGINEERS
AFGHANISTAN ENGINEER DISTRICT
APO AE 96338

Michael Baker Jr., Inc
A unit of Michael Baker Corporation
Airside Business Park
100 Airside Drive
Moon Township, PA 15108
www.mbakercorp.com

AFGHAN NATIONAL ARMY
REGIONAL MILITARY TRAINING CENTER
STANDARD DESIGN

200 STUDENT CLASSROOM BUILDING
(8) 25 STUDENT CLASSROOMS
EXTERIOR
DETAILS

Sheet reference number:
A–501

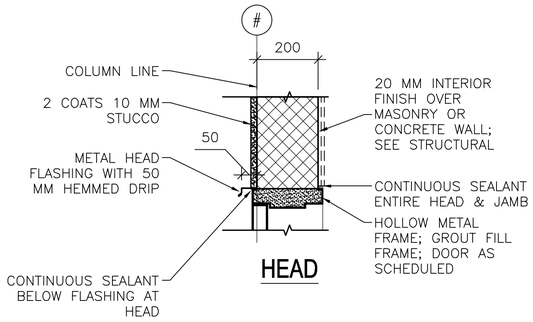

HEAD

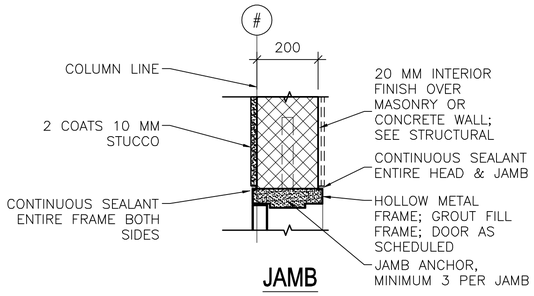

JAMB

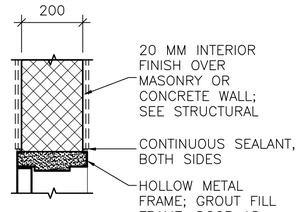

HEAD

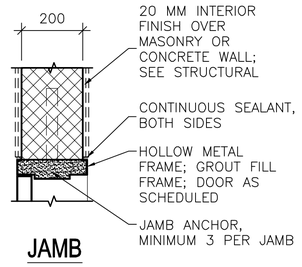

JAMB

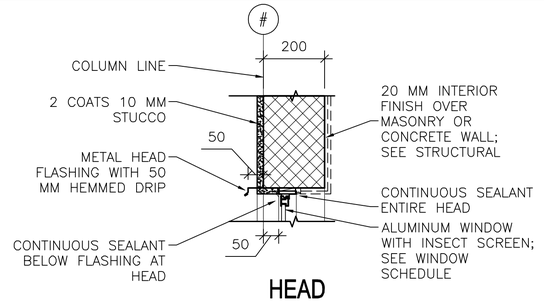

HEAD

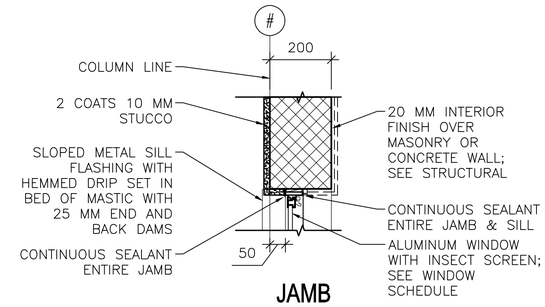

JAMB

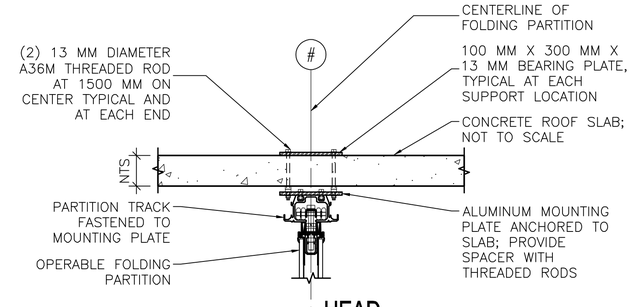

HEAD

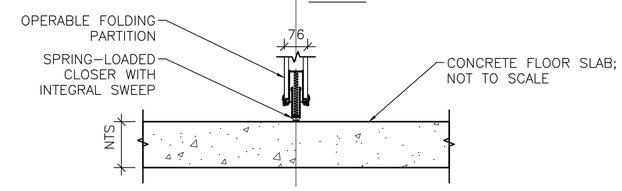

THRESHOLD

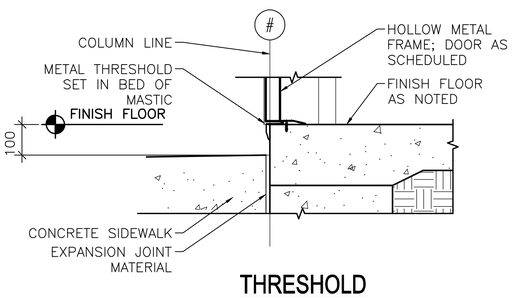

THRESHOLD

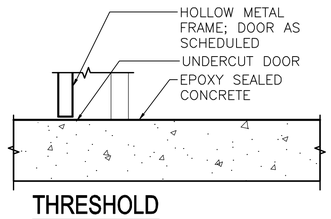

THRESHOLD

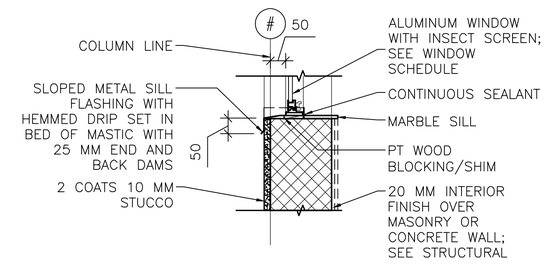

SILL

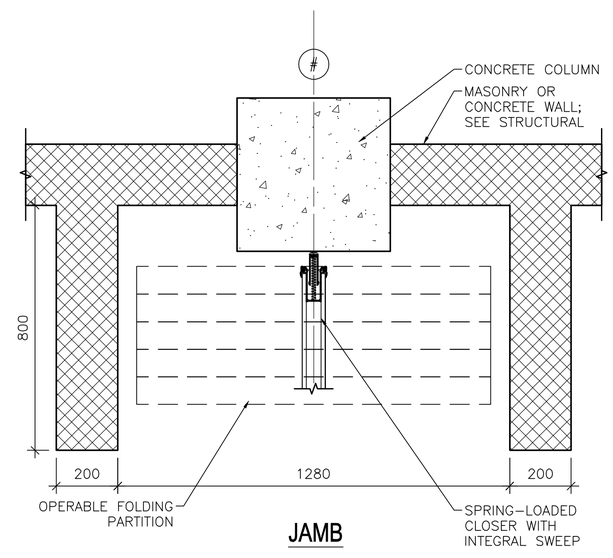

JAMB

1 A–502 **EXTERIOR DOOR DETAILS**
SCALE: 1:10

2 A–502 **INTERIOR DOOR DETAILS**
SCALE: 1:10

3 A–502 **EXTERIOR WINDOW DETAILS**
SCALE: 1:10

4 A–502 **FOLDING PARTITION DETAILS**
SCALE: 1:10

LINEAR DIMENSIONS SHOWN ARE IN MILLIMETERS (MM), UNLESS OTHERWISE NOTED

0 200 400
SCALE: 1:10

APPROVED:

A/E DESIGNER OF RECORD

SEAL:

STATE OF SOUTH CAROLINA
KEVIN R. CHAFIN
N. Charleston, SC
6374
REGISTERED ARCHITECT

US ARMY CORPS OF ENGINEERS
AFGHANISTAN ENGINEER DISTRICT

Mark	Description	Date	Appr.	Mark	Description	Date	Appr.

U.S. ARMY CORPS OF ENGINEERS
AFGHANISTAN ENGINEER DISTRICT
APO AE 96338

Michael Baker Jr., Inc
A unit of Michael Baker Corporation
Airside Business Park
100 Airside Drive
Moon Township, PA 15108
www.mbakercorp.com

Designed by: KRC	Date: 2/23/10
Dwn by: KJG	Ckd by: NLJ
Reviewed by: LHM	Submitted by: BAKER
Rev: 0	
Design file no.	
Drawing code:	
File name: ANACB25A-502HJS	
Plot date: 2/23/2010	
Plot scale: x:X	

AFGHAN NATIONAL ARMY
REGIONAL MILITARY TRAINING CENTER
STANDARD DESIGN

200 STUDENT CLASSROOM BUILDING
(8) 25 STUDENT CLASSROOMS
HEAD, JAMB & SILL DETAILS

Sheet reference number:
A–502

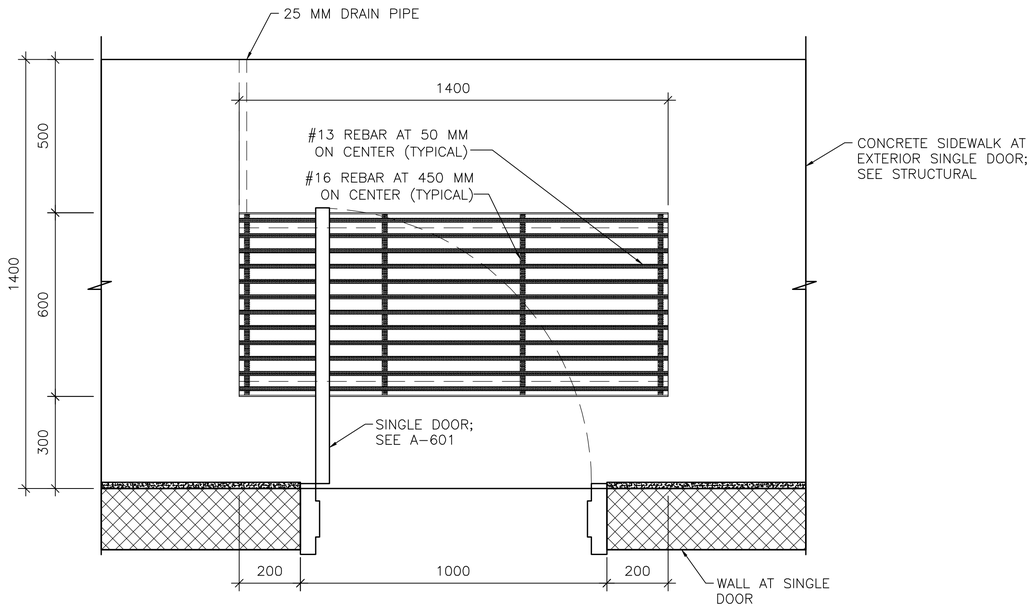

1 A-503 **SIDEWALK GRATE PLAN**

SCALE: 1:10

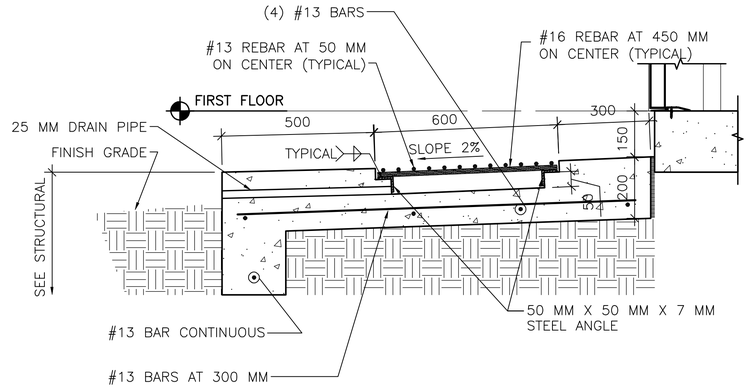

2 A-503 **SIDEWALK DETAIL WITH GRATE**

SCALE: 1:10

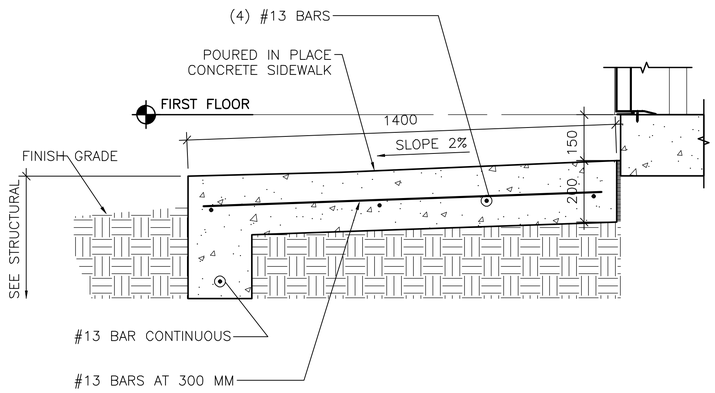

2A A-503 **SIDEWALK DETAIL**

SCALE: 1:10

LINEAR DIMENSIONS SHOWN ARE IN MILLIMETERS (MM), UNLESS OTHERWISE NOTED

0 200 400
SCALE: 1:10

APPROVED:

A/E DESIGNER OF RECORD

SEAL:

STATE OF SOUTH CAROLINA
KEVIN R. CHAFIN
N. Charleston, SC
6374
REGISTERED ARCHITECT

US ARMY CORPS OF ENGINEERS
AFGHANISTAN ENGINEER DISTRICT

Mark	Description	Date	Appr.	Mark	Description	Date	Appr.

Date: 2/23/10
Rev: 0
Design file no.
Drawing code:
File name: ANACB25A-503DT
Plot date: 2/23/2010
Plot scale: x:X

Designed by: KRC
Dwn by: KJG
Ckd by: NLJ
Reviewed by: LHM
Submitted by: BAKER

U.S. ARMY CORPS OF ENGINEERS
AFGHANISTAN ENGINEER DISTRICT
APO AE 96338

Michael Baker Jr., Inc.
A unit of Michael Baker Corporation
Airside Business Park
100 Airside Drive
Moon Township, PA 15108
www.mbakercorp.com

AFGHAN NATIONAL ARMY
REGIONAL MILITARY TRAINING CENTER
STANDARD DESIGN

200 STUDENT CLASSROOM BUILDING
(8) 25 STUDENT CLASSROOMS
STOOP
DETAILS

Sheet reference number:
A-503

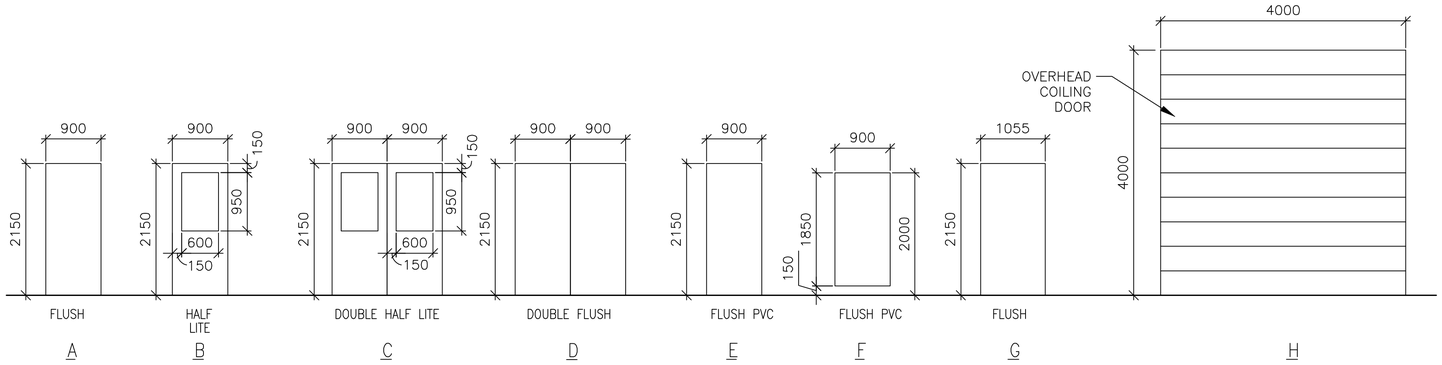

1 A-601 DOOR TYPES

SCALE: 1:50

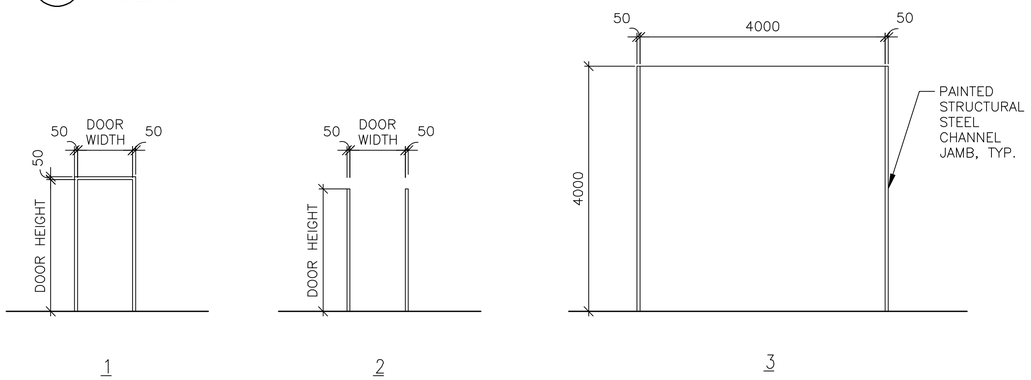

2 A-601 FRAME TYPES

SCALE: 1:50

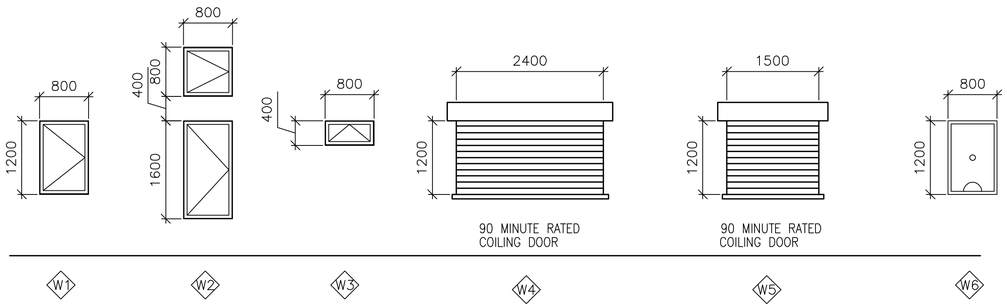

3 A-601 WINDOW TYPES

SCALE: 1:50

WINDOW TYPE NOTES:

1. ALL EXTERIOR WINDOWS SHALL BE ALUMINUM WITH INSECT SCREENS. WINDOWS SHALL BE COMMERCIAL GRADE.
2. ALL EXTERIOR WINDOWS SHALL BE OPERABLE.

4 A-601 DOOR TAG

SCALE: NTS

5 A-601 RATED DOOR TAG

SCALE: NTS

DOOR TAG NOTES:

1. THE DOOR TAG INDICATES THE DOOR TYPE, FRAME TYPE AND HARDWARE SET FOR EACH DOOR.
2. THE DOOR TAG FOR RATED DOORS INCLUDES THE RATING OF THE DOOR IN MINUTES.

EXTERIOR DOOR HARDWARE TYPES:

HW-1
1-1/2 PR HINGES, A5112 114 X 114
1 EA RIM EXIT DEVICE, TYPE 1
1 EA CYLINDER. E09221A, GRADE 1
1 EA OVERHEAD CLOSER, C02061, LOW RESISTANCE
1 EA THRESHOLD, J32130
3 EA DOOR SILENCERS, L03011

HW-2
1-1/2 PR HINGES, A5112 114 X 114
1 EA LOCKSET, F13 ENTRY LOCK W/LEVER HANDLES, GRADE 1
1 EA OVERHEAD CLOSER, C02061, LOW RESISTANCE
1 EA THRESHOLD, J32130
3 EA DOOR SILENCERS, L03011

HW-3
3 PR HINGES, A5112 114 X 114
2 EA RIM EXIT DEVICE, TYPE 1
2 EA CYLINDER. GRADE 1
2 EA OVERHEAD CLOSER, C02061, LOW RESISTANCE
1 EA DOOR COORDINATOR, TYPE 21
1 EA ASTRAGAL
1 EA THRESHOLD, J32130
2 EA DOOR SILENCERS, L03011

HW-4
3 PR HINGES, A5112 114 X 114
1 EA LOCKSET W/LEVER HANDLES. GRADE 1, F13
1 EA OVERHEAD CLOSER, C02061, LOW RESISTANCE
2 EA MAGNETIC HOLDER PIN, ATTACHED TO DOOR LEAF
2 EA MAGNETIC HOLDER RECEIVER, ATTACHED TO STOOP
2 EA LEVER EXTENSION FLUSH BOLTS, L04081
1 EA ASTRAGAL
1 EA THRESHOLD, J32130
2 EA DOOR SILENCERS, L03011

DOOR AND HARDWARE NOTES:

1. INTERIOR AND EXTERIOR METAL DOORS AND FRAME COLORS SHALL MATCH ADJACENT WALL COLORS AS SELECTED BY THE CONTRACTING OFFICER.
2. FRAMES, EXCEPT FIRE-RATED FRAMES, SHALL BE MOUNTED AND ADJUSTED IN ACCORDANCE WITH MANUFACTURER'S INSTRUCTIONS. FRAMES SHALL BE FASTENED WITH MINIMUM OF THREE ANCHORS PER JAMB AT EQUAL INTERVALS.
3. DIMENSIONS SHOWN ON DOOR TYPES DETAIL ARE BASED UPON MODULAR MASONRY (OR ROUGH OPENING), HEIGHT OF 2200 MM FOR STANDARD PERSONNEL DOORS. CONTRACTOR SHALL COORDINATE WITH DOOR SUPPLIER TO ENSURE THAT DIMENSIONS OF DOORS AND FRAMES PROVIDED ARE COMPATIBLE WITH DOOR OPENING DIMENSIONS.
4. HARDWARE SHALL BE HEAVY DUTY, COMMERCIAL GRADE, STAINLESS STEEL WITH A SATIN OR BRUSHED FINISH.
5. HARDWARE TYPES INCLUDE BUILDERS HARDWARE MANUFACTURERS ASSOCIATION (BMHA) NUMBER.
6. DOORS IN 2 HOUR RATED PARTITIONS SHALL BE 1.5 HOUR (90 MINUTE) RATED DOORS IN ACCORDANCE WITH NFPA 101, TABLE 8.3.4.2.
7. DOORS AT STAIR ENCLOSURES SHALL BE 1 HOUR (60 MINUTE) RATED AT 1 HOUR WALL IN ACCORDANCE WITH NFPA 101, TABLE 8.3.4.2.
8. DOORS IN 1 HOUR RATED WALLS SHALL BE 3/4 HOUR (45 MINUTE) RATED DOORS IN ACCORDANCE WITH NFPA 101, TABLE 8.3.4.2.
9. DOORS IN 1 HOUR RATED CORRIDOR WALLS SHALL BE 1/3 HOUR (20 MINUTE) IN ACCORDANCE WITH NFPA 101, TABLE 8.3.4.2.
10. PROVIDE DOOR STOPS TO PROTECT WALLS ON LOCATIONS WHERE DOOR SWING WILL STRIKE WALL.

THIS SHEET IS STANDARD AND IS INCLUSIVE OF ALL THE DOOR/ WINDOW/ HARDWARE TYPES FOR THE ENTIRE RMTC CONTRACT. NOT ALL DOOR/ WINDOW/ HARDWARE TYPES ARE USED FOR ANY PARTICULAR BUILDING DESIGN. CONTRACTOR SHALL REFER TO THE FLOOR PLAN FOR THE TYPES BEING USED.

INTERIOR DOOR HARDWARE TYPES:

HW-5
1-1/2 PR HINGES, A8133 114 X 114
1 EA LOCKSET W/LEVER HANDLES, F08, GRADE 1
1 EA WALL STOP, L02101 OR L02161
3 EA DOOR SILENCERS, L03011

HW-6
1-1/2 PR HINGES, A8112 114 X 114
1 EA LOCKSET W/LEVER HANDLES, F08, GRADE 1
1 EA WALL STOP, L02101 OR L02161
1 EA OVERHEAD CLOSER, C02061, LOW RESISTANCE
3 EA DOOR SILENCERS, L03011

HW-7
1-1/2 PR HINGES, A8133
1 EA LOCKSET W/LEVER HANDLES, F13 GRADE 1
1 EA WALL STOP, L02101 OR L02161
2 EA MOP PLATE, J103
3 EA DOOR SILENCERS, L03011

HW-8
1-1/2 PR HINGES, A8112
1 EA LOCKSET W/LEVER HANDLES, F13 GRADE 1
1 EA WALL STOP, L02101 OR L02161
2 EA MOP PLATE, J103
1 EA OVERHEAD CLOSER, C02061, LOW RESISTANCE
3 EA DOOR SILENCERS, L03011

HW-9
1-1/2 PR HINGES, A5112 114 X 114
1 EA RIM EXIT DEVICE, TYPE 1
1 EA CYLINDER. E09221A, GRADE 1
1 EA OVERHEAD CLOSER, C02061, LOW RESISTANCE
3 EA DOOR SILENCERS, L03011

HW-10
3 PR HINGES, A5112 114 X 114
1 EA LOCKSET W/LEVER HANDLES. GRADE 1, F13
2 EA LEVER EXTENSION FLUSH BOLTS, L04081
1 EA ASTRAGAL
2 EA DOOR SILENCERS, L03011

HW-11
1-1/2 PR HINGES, A8112 114 X 114
1 EA LOCKSET W/LEVER HANDLES, F13, GRADE 1
1 EA WALL STOP, L02101 OR L02161
1 EA OVERHEAD CLOSER, C02061, LOW RESISTANCE
3 EA DOOR SILENCERS, L03011
1 EA ROBE HOOK

HW-12
1-1/2 PR HINGES, A8133
1 EA LATCHSET W/LEVER HANDLES, F76 GRADE 1
1 EA WALL STOP, L02101 OR L02161
2 EA MOP PLATE, J103
3 EA DOOR SILENCERS, L03011
1 EA ROBE HOOK

HW-13
3 PR HINGES, A5112 114 X 114
1 EA LOCKSET W/LEVER HANDLES. GRADE 1, F13
1 EA OVERHEAD CLOSER, C02061, LOW RESISTANCE
2 EA LEVER EXTENSION FLUSH BOLTS, L04081
1 EA ASTRAGAL
2 EA DOOR SILENCERS, L03011

HW-14
3 PR HINGES, A5112 114 X 114
2 EA RIM EXIT DEVICE, TYPE 1
2 EA CYLINDER. GRADE 1
2 EA OVERHEAD CLOSER, C02061, LOW RESISTANCE
1 EA DOOR COORDINATOR, TYPE 21
1 EA ASTRAGAL
2 EA DOOR SILENCERS, L03011

APPROVED:

A/E DESIGNER OF RECORD

SEAL:

STATE OF SOUTH CAROLINA
KEVIN R. CHAFIN
N. Charleston, SC
6374
REGISTERED ARCHITECT

US ARMY CORPS OF ENGINEERS
AFGHANISTAN ENGINEER DISTRICT

Mark	Description	Date	Appr.	Mark	Description	Date	Appr.

Date: 2/23/10 Rev: 0
Design file no.
Drawing code:
File name: ANACB25A-S01SCH
Plot date: 2/23/2010
Plot scale: x:X

Designed by: KRC
Dwn by: KJG
Ckd by: NLJ
Reviewed by: LHM
Submitted by:
BAKER

U.S. ARMY CORPS OF ENGINEERS
AFGHANISTAN ENGINEER DISTRICT
APO AE 96338

Michael Baker Jr., Inc.
A unit of Michael Baker Corporation
Airside Business Park
100 Airside Drive
Moon Township, PA 15108
www.mbakercorp.com

AFGHAN NATIONAL ARMY
REGIONAL MILITARY TRAINING CENTER
STANDARD DESIGN

200 STUDENT CLASSROOM BUILDING
(8) 25 STUDENT CLASSROOMS

WINDOW AND DOOR SCHEDULES

Sheet reference number:
A-601

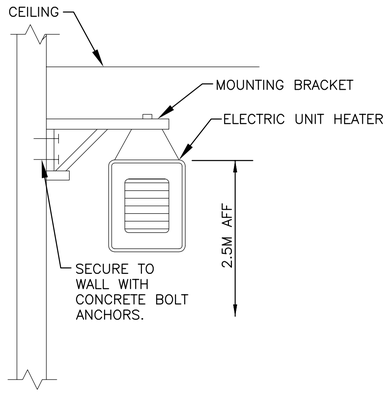

2 M-101 ELECTRIC UNIT HEATER MOUNTING DETAIL
N.T.S.

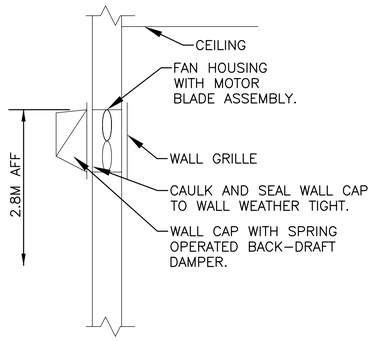

3 M-101 WALL EXHAUST FAN DETAIL
N.T.S.

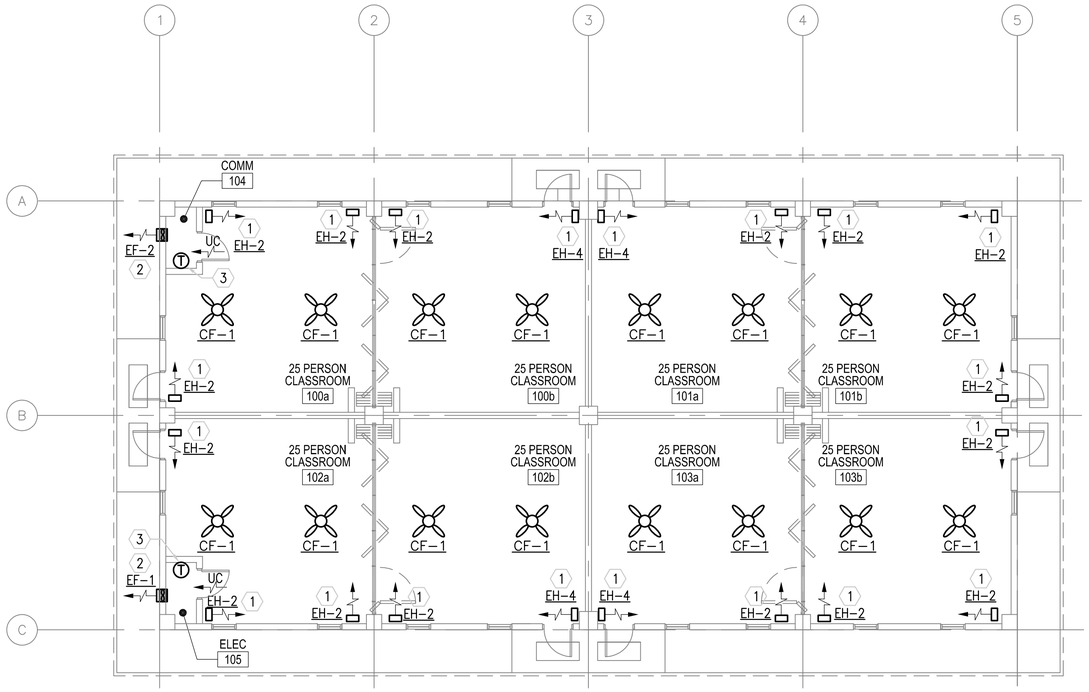

1 M-101 FLOOR PLAN - HVAC
SCALE: 1:100

GENERAL NOTES:

1. DO NOT SCALE DRAWINGS – ALL DIMENSIONS AND CONDITIONS SHALL BE CHECKED AND VERIFIED BY THE CONTRACTOR AT THE SITE.
2. ALL WORK PERFORMED ON THIS BUILDING SHALL BE IN COMPLIANCE WITH ALL PERTINENT CODES, RULES, ORDINANCES AND REGULATIONS OF THE GOVERNING AUTHORITIES.
3. ALL WORK PERFORMED UNDER AND IN CONNECTION WITH THESE DRAWINGS AND SPECIFICATIONS SHALL BE IN STRICT COMPLIANCE WITH THE LATEST SAFETY AND HEALTH STANDARDS.

SYMBOLS:

(X) KEY NOTE

(0.050) AIR VOLUME IN CUBIC METERS PER SECOND (CMS)

UC DOOR UNDERCUT

ABBREVIATIONS:

AFF	ABOVE FINISH FLOOR
CF	CEILING FANS
CMS	CUBIC METERS PER SECOND
STATS	THERMOSTATS

KEY NOTE:

1. UNIT HEATER SECURED FROM WALL. SEE DETAIL THIS SHEET.
2. WALL EXHAUST FAN WITH LOW SPRING OPERATED BACK-DRAFT DAMPER. SEE DETAIL 3 THIS SHEET.
3. THERMOSTAT MOUNTED AS HIGH AS POSSIBLE. INTERLOCK STAT WITH CORRESPONDING EXHAUST FAN, SET FAN TO ENERGIZE ON RISE IN TEMPERATURE ABOVE 25°C (77°F).

EXHAUST FAN SCHEDULE

NO.	TYPE	FAN CMS	DRIVE	HP	SP mmH20	ELECTRICAL DATA	SWITCH
EF-1	WALL	0.035	DIRECT	FRACT	9.5	220/1/50	W/ STAT
EF-2	WALL	0.035	DIRECT	FRACT	9.5	220/1/50	W/ STAT

NOTES:
1. FANS SHALL HAVE SPRING OPERATED BACK-DRAFT DAMPER.

ELECTRIC UNIT HEATER SCHEDULE

NO.	CMS	KW	F.A.T. °C	ELECT. CHAR.	MOUNTING
EH-2	0.200	2.6	38	380/1/50	WALL HUNG
EH-4	0.200	4	38	380/1/50	WALL HUNG

NOTES:
1. UNIT HEATERS SHALL HAVE TAMPER PROOF INTEGRAL STATS.
2. COORDINATE LOCATION AND ORIENTATION IN FIELD.

CEILING FAN

NO.	BLADE SIZE mm	BLADE SIZE IN	VOLTAGE	SWITCH	REMARKS
CF-1	1320	52	220/1/50	@ WALL	3 SPEED REVERSIBLE MOTOR

NOTES:
1. PROVIDE EXTENSION DOWN RODS, INSTALL FANS 2.5M AFF.
2. PROVIDE WITH OUT LIGHT FIXTURE.
3. PROVIDE WITH REMOTE MOUNTED ON-OFF SWITCH SHOWN ON ELECTRICAL DRAWINGS.

LINEAR DIMENSIONS SHOWN ARE IN MILLIMETERS (MM), UNLESS OTHERWISE NOTED

0 2000 4000
SCALE: 1:100

APPROVED:

A/E DESIGNER OF RECORD

SEAL:

COMMONWEALTH OF PENNSYLVANIA
REGISTERED PROFESSIONAL
MATTHEW R. SOTOSKY
ENGINEER
046576-E

US ARMY CORPS OF ENGINEERS
AFGHANISTAN ENGINEER DISTRICT

Mark	Description	Date	Appr.

Mark	Description	Date	Appr.

Rev: 0
Date: 02/23/10
Design file no.
Drawing code:
File name: ANACB25MH-101XXX
Plot date: 02/09/2010
Plot scale: 1:100

Designed by: RML
Dwn by: JJN
Ckd by: CJM
Reviewed by: MRS
Submitted by: BAKER

U.S. ARMY CORPS OF ENGINEERS
AFGHANISTAN ENGINEER DISTRICT
APO AE 96338

Michael Baker Jr., Inc.
A unit of Michael Baker Corporation
Airside Business Park
100 Airside Drive
Moon Township, PA 15108
www.mbakercorp.com

AFGHAN NATIONAL ARMY
REGIONAL MILITARY TRAINING CENTER
STANDARD DESIGN

200 STUDENT CLASSROOM BUILDING
(8) 25 STUDENT CLASSROOMS

HVAC PLANS, SCHEDULES AND DETAILS

Sheet reference number:
M-101

POWER

- DISTRIBUTION PANELBOARD
- NEW PANELBOARD – SURFACE
- NEW PANELBOARD – RECESSED
- GENERATOR
- TRANSFORMER (DRAWN TO SCALE)
- JUNCTION BOX
- JUNCTION BOX – CEILING
- FUSIBLE SAFETY SWITCH
- MOTOR
- ^{M} MOTOR STARTING SWITCH – 220V, 20A RATED UNLESS OTHERWISE STATED
- ELECTRIC WATER HEATER
- CF CEILING FAN – REFER TO SPECIFICATION SECTION 26 20 00

RECEPTACLES

- DUPLEX 20A TYPE CEE 7/7 "SCHUKO STYLE" UNSWITCHED RECEPTACLE
- GF DUPLEX 20A TYPE CEE 7/7 "SCHUKO STYLE" UNSWITCHED RECEPTACLES – 10mA GROUND FAULT INTERRUPTER TYPE
- WP DUPLEX 20A TYPE CEE 7/7 "SCHUKO STYLE" UNSWITCHED TYPE WITH WEATHERPROOF COVER – 10mA GROUND FAULT INTERRUPTER TYPE
- EXP DUPLEX 20A TYPE CEE 7/7 "SCHUKO STYLE" UNSWITCHED RECEPTACLES – EXPLOSION PROOF
- * INDICATES MOUNT DEVICE ABOVE COUNTERTOP OR AT 1070mm ABOVE FINISHED FLOOR WHERE NO COUNTER IS TO BE INSTALLED.

LIGHTING

- LIGHTING FIXTURE – SEE FIXTURE SCHEDULE FOR MORE INFORMATION
- EMERGENCY LIGHTING FIXTURE – SEE FIXTURE SCHEDULE FOR MORE INFORMATION
- DOWNLIGHT
- LIGHTING FIXTURE ON NORMAL/EMERGENCY
- WALL MOUNTED LIGHT FIXTURE
- E EXIT SIGN – DIRECTIONAL ARROWS AS INDICATED ON DRAWINGS
- REMOTE HEAD FOR BATTERY PACK
- $ SINGLE POLE SWITCH – 20A RATED
- $^{3} 3-WAY SWITCH – 20A RATED
- $^{4} 4-WAY SWITCH – 20A RATED
- LC LIGHTING CONTACTOR
- POLE MOUNTED SITE LIGHTING FIXTURE– NUMBER OF FIXTURES PER POLE AS INDICATED ON DRAWINGS
- EXTERIOR DIRECTIONAL LIGHTING FIXTURE
- a SMALL CASE LETTERS REPRESENTS LAMP(S) / SWITCHES.

TELECOMMUNICATIONS

- TELEPHONE OUTLET(S) @ 45cm AFF. U.N.O. WITH 20mm RACEWAY TERMINATED TO TELEDATA TERMINAL BOARD.
- DATA OUTLET(S) @ 45cm AFF. U.N.O. WITH 20mm RACEWAY TERMINATED TO TELEDATA TERMINAL BOARD.

TELECOMMUNICATIONS (CONTINUED)

- COMBINATION TELEPHONE/DATA OUTLET(S) @ 45cm AFF. U.N.O. WITH 27mm RACEWAY TERMINATED TO TELEDATA TERMINAL AREA.
- W WALL MTD. TELEPHONE OUTLET WITH 20mm RACEWAY TO TELEDATA TERMINAL BOARD.
- (x)T INDICATES NUMBER OF TELEPHONE OUTLET(S) AND ASSOCIATED CABLING
- (x)D INDICATES NUMBER OF DATA OUTLET(S) AND ASSOCIATED CABLING
- (x)TF INDICATES NUMBER OF TELEPHONE OUTLETS AND ASSOCIATED CABLING WITH 1 OUTLET AND CABLE DEDICATED FOR FAX

SINGLE LINE SYMBOLS

- SWITCH
- BREAKER
- FUSE
- TRANSFORMER
- GROUND
- CONTACT (NORMALLY OPEN)
- CONTACT (NORMALLY CLOSED)
- TRANSFER SWITCH
- CURRENT TRANSFORMER
- INDICATES NEW ELECTRICAL EQUIPMENT
- C INDICATES NEW CONTROL WIRING AND CONDUIT
- EQUIPMENT OUTLINE

MISCELLANEOUS

- BRANCH CIRCUIT WIRING, SURFACE MOUNTED ON WALLS
- BRANCH CIRCUIT WIRING – 6mm²
- BRANCH CIRCUIT WIRING – UNDER FLOOR
- HOME RUN BACK TO PANEL
- CONDUIT TURNED DOWN
- CONDUIT TURNED UP
- LV LOW VOLTAGE WIRING AND CONDUIT
- ~ INDICATES CONTINUATION OF LINE

FIRE ALARM

- FACP FIRE ALARM CONTROL PANEL WITH BATTERY BACKUP
- F FIRE ALARM PULL STATION

FIRE ALARM (CONTINUED)

- F FIRE ALARM STROBE – WALL MOUNTED
- F FIRE ALARM AUDIBLE/STROBE – WALL MOUNTED
- F FIRE ALARM HORN/STROBE – WALL MOUNTED
- S SMOKE DETECTOR
- H HEAT DETECTOR CEILING MOUNTED
- D DUCT DETECTOR – PROVIDED BY EC, INSTALLED BY MC AND CONNECTED BY EC

DENOTATIONS & ABBREVIATIONS

AFF	ABOVE FINISHED FLOOR
C	CEILING MOUNTED
E	EMERGENCY
EC	ELECTRICAL CONTRACTOR
EPO	EMERGENCY POWER OFF
EXP	EXPLOSION PROOF
F	FIRE ALARM
FF	FLUSH FLOOR MOUNTED
FL	FLUORESCENT
FO	FIBER OPTIC
FSS	FUSED SAFETY SWITCH
GF	GROUND FAULT INTERRUPTER
GC	GENERAL CONTRACTOR
IG	ISOLATED GROUND
K	KEY
LV	LOW VOLTAGE
M	MOTOR
MC	MECHANICAL CONTRACTOR
NE	NORMAL/EMERGENCY
NFSS	NON–FUSED SAFETY SWITCH
PA	PAGING SYSTEM
PLC	PLUMBING CONTRACTOR
SL	SINGLE LINE
T	TELEPHONE

DENOTATIONS & ABBREVIATIONS (CONT.)

TP	TAMPER PROOF
UE	UNDERGROUND ELECTRIC
W	WALL MOUNTED
WP	WEATHERPROOF WITH GROUND FAULT INTERRUPTION
WT	WATER TIGHT

GENERAL PROJECT NOTES:

G1. UNLESS OTHERWISE NOTED, PROVIDE ALL EQUIPMENT SHOWN ON THE PLANS. THE ELECTRICAL CONTRACTOR SHALL COORDINATE ALL SYMBOLS SHOWN ON THE PLANS WITH THE SYMBOL LIST. IT SHALL BE THE RESPONSIBILITY OF THE CONTRACTOR TO VERIFY THE INTENT OF ANY SYMBOL THAT IS SHOWN ON THE PLANS AND NOT INDICATED ON THE SYMBOL LIST WITH THE ENGINEER PRIOR TO BID.

G2. THE CONTRACTOR SHALL VERIFY THE LOCATION OF ALL UNDERGROUND UTILITIES WITHIN THE CONSTRUCTION AREA THREE (3) WORKING DAYS NOTICE BEFORE COMMENCING DIGGING. NOTIFY THE LOCAL AUTHORITY HAVING JURISDICTION AND WAIT THE REQUIRED TIME BEFORE COMMENCING TO DIG.

G3. THE CONTRACTOR SHALL COORDINATE CONDUIT RUNS, LIGHTING FIXTURES AND OTHER EQUIPMENT LOCATIONS WITH THE OTHER TRADE CONTRACTORS TO AVOID CONFLICTS.

G4. WHERE VOLTAGES AND FREQUENCIES ON THE DRAWINGS AND IN THE SPECIFICATIONS DIFFER FROM THE LOCAL ONES, ALL WORK SHALL BE PERFORMED USING THE LOCAL VOLTAGES AND FREQUENCIES.

G5. THE MINIMUM WIRE SIZE ON THE PROJECT SHALL BE 4mm². THE MINIMUM CONDUIT SIZE SHALL BE 20mm. THE MINIMUM BREAKER SIZE SHALL BE 20 AMPS.

G6. THE CONTRACTOR SHALL PUT A MAXIMUM OF 6 DUPLEX RECEPTACLES ON A 20A SINGLE POLE CIRCUIT.

G7. WHERE THE 1010 SCOPE REVIEW, 1015 TECHNICAL REVIEW, DRAWINGS, AND SPECIFICATIONS DIFFER FROM AMERICAN CODES OR STANDARDS, THE 1010, 1015, DRAWINGS, AND SPECIFICATIONS SHALL RULE.

G8. ALL CONDUIT AND DEVICES SHALL BE SURFACE MOUNTED UNLESS OTHERWISE INDICATED.

G9. CONTRACTOR SHALL COORDINATE ALL WORK WITH ALL OTHER TRADES TO ENSURE ALL WORK IS COMPLETED IN A PROFESSIONAL, WORKMAN–LIKE MANNER.

APPROVED:

A/E DESIGNER OF RECORD

SEAL:

COMMONWEALTH OF PENNSYLVANIA
REGISTERED PROFESSIONAL
JOSEPH R. GAUS
1/29/10
ENGINEER
PE-074251

US ARMY CORPS OF ENGINEERS
AFGHANISTAN ENGINEER DISTRICT

Mark	Description	Date	Appr.

Mark	Description	Date	Appr.

Rev: 0

Date: 2/23/10
Design file no.
Drawing code:
File name:
Plot date:
Plot scale:

Designed by: JRG
Dwn by: BJB
Ckd by: JRG
Reviewed by: JRG
Submitted by: BAKER

U.S. ARMY CORPS OF ENGINEERS
AFGHANISTAN ENGINEER DISTRICT
APO AE 96338

Michael Baker Jr., Inc
A unit of Michael Baker Corporation
Airside Business Park
100 Airside Drive
Moon Township, PA 15108
www.mbakercorp.com

AFGHAN NATIONAL ARMY
REGIONAL MILITARY TRAINING CENTER
STANDARD DESIGN

200 STUDENT CLASSROOM BUILDING
(8) 25 STUDENT CLASSROOMS
ELECTRICAL SYMBOLS & ABBREVIATIONS

Sheet reference number:
E–001

GENERAL NOTES:

1. REFER TO DRAWING #E-001 FOR THE ELECTRICAL SYMBOLS LIST.
2. EXIT SIGNS SHALL BE WIRED AHEAD OF ANY LOCAL SWITCHING ON CIRCUITS. SEE WIRING DIAGRAM DETAIL 5, ON DRAWING #E-501.
3. REFER TO DRAWING #E-601 FOR THE LIGHTING FIXTURE SCHEDULE.
4. REFER TO DRAWING #E-501 FOR THE POWER RISER.
5. REFER TO DRAWING #E-602 FOR PANEL SCHEDULES.
6. LIGHT FIXTURES INDICATED AS EMERGENCY SHALL BE PROVIDED WITH A BATTERY BACKUP BALLAST. SEE WIRING DIAGRAM DETAIL 6, ON DRAWING #E-501.

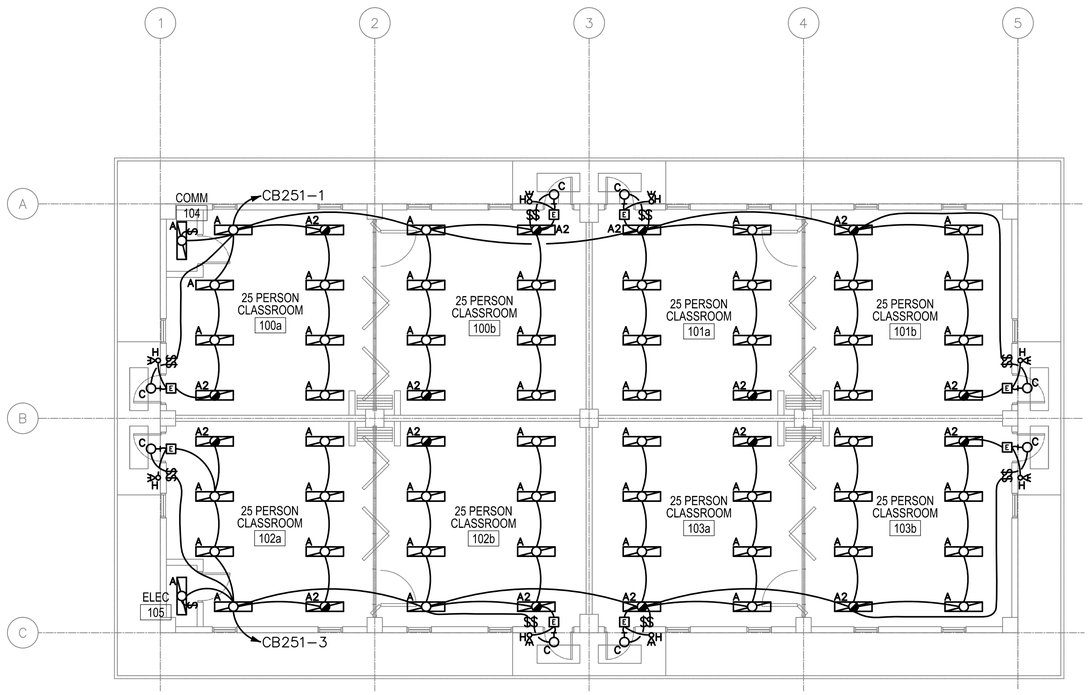

1
E-101

200 STUDENT TOTAL
(8) 25-STUDENT CLASSROOMS - LIGHTING

SCALE: 1:100

0 2000 4000
SCALE: 1:100

APPROVED:

A/E DESIGNER OF RECORD

SEAL:

COMMONWEALTH OF PENNSYLVANIA
REGISTERED PROFESSIONAL
JOSEPH R. GAUS
ENGINEER
PE-074251
1/29/10

US ARMY CORPS OF ENGINEERS
AFGHANISTAN ENGINEER DISTRICT

Mark	Description	Date	Appr.

Mark	Description	Date	Appr.

Designed by: JRG
Dwn by: BJB
Ckd by: JRG
Reviewed by: JRG
Submitted by: BAKER
Date: 2/23/10
Design file no.
Drawing code:
File name:
Plot date:
Plot scale:
Rev: 0

U.S. ARMY CORPS OF ENGINEERS
AFGHANISTAN ENGINEER DISTRICT
APO AE 96338

Michael Baker Jr., Inc
A unit of Michael Baker Corporation
Airside Business Park
100 Airside Drive
Moon Township, PA 15108
www.mbakercorp.com

AFGHAN NATIONAL ARMY
REGIONAL MILITARY TRAINING CENTER
STANDARD DESIGN

200 STUDENT CLASSROOM BUILDING
(8) 25 STUDENT CLASSROOMS
ELECTRICAL LIGHTING PLAN

Sheet reference number:
E-101

GENERAL NOTES:

1. REFER TO DRAWING #E-001 FOR THE ELECTRICAL SYMBOLS LIST.
2. REFER TO DRAWING #E-501 FOR THE POWER RISER.
3. REFER TO DRAWING #E-602 FOR PANEL SCHEDULES.
4. COORDINATE EXACT MOUNTING LOCATION OF DISCONNECTING MEANS FOR MECHANICAL AND PLUMBING EQUIPMENT IN THE FIELD.
5. FUSIBLE SAFETY SWITCHES THAT ARE NOT OTHERWISE IDENTIFIED SHALL BE 380V, 1P, 30A FUSED SAFETY SWITCHES WITH 20A FUSES.

NUMBERED NOTES:

1. PANEL CB251.
2. PANEL CB252.
3. PROVIDE A 1200mm X 2400mm SHEET OF PLYWOOD PAINTED WITH FIRE RESISTANT PAINT FOR MOUNTING TELECOMMUNICATIONS EQUIPMENT.
4. PROVIDE CONDUIT STUB UP IN THE ROOM FOR INCOMING TELECOMMUNICATIONS SERVICES FROM THE CENTRAL COMMUNICATIONS SYSTEM IN THE GARRISON.
5. PROVIDE POWER CONNECTION TO EXHAUST FANS. SEE DRAWINGS #M-101 AND #E-602 FOR MORE INFORMATION.
6. PROVIDE POWER CONNECTION TO ELECTRIC UNIT HEATER #2. SEE DRAWINGS #M-101 AND #E-602 FOR MORE INFORMATION.
7. PROVIDE POWER CONNECTION TO ELECTRIC UNIT HEATER #4. SEE DRAWINGS #M-101 AND #E-602 FOR MORE INFORMATION.

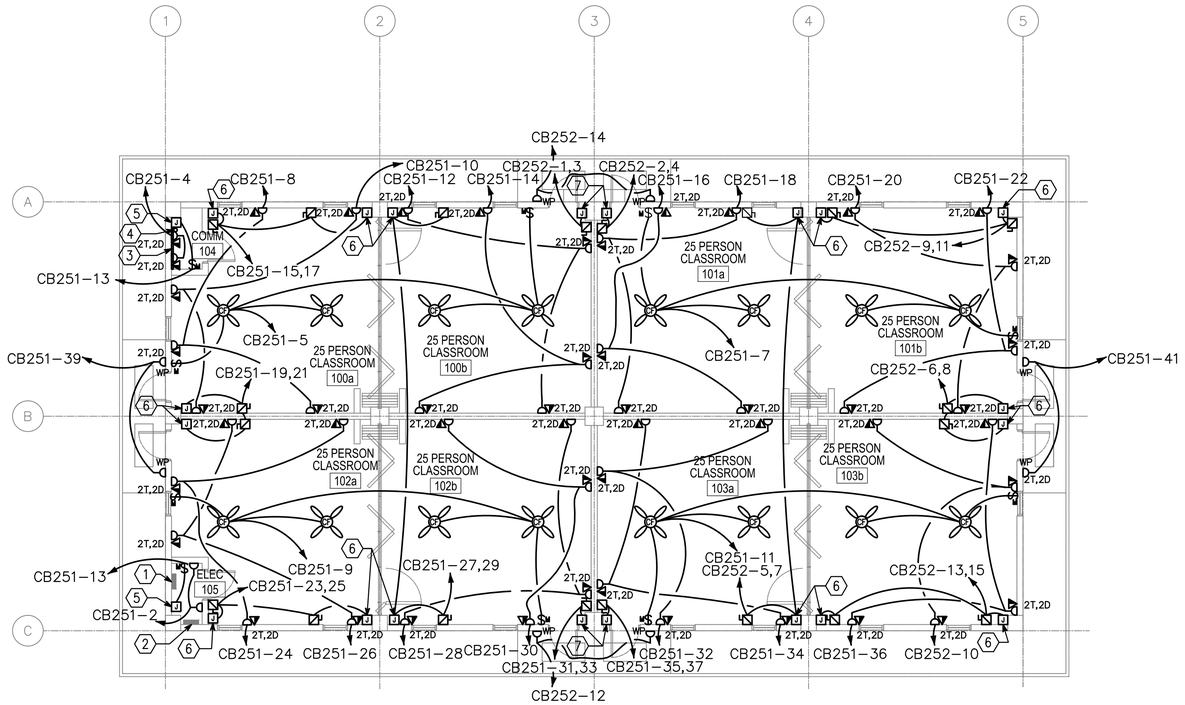

200 STUDENT TOTAL
(8) 25-STUDENT CLASSROOMS - POWER AND SYSTEMS

1 / E-102

SCALE: 1:100

0 2000 4000
SCALE: 1:100

APPROVED:

A/E DESIGNER OF RECORD

SEAL:

COMMONWEALTH OF PENNSYLVANIA
REGISTERED PROFESSIONAL
JOSEPH R. GAUS
ENGINEER
PE-074251
7/29/10

US ARMY CORPS OF ENGINEERS
AFGHANISTAN ENGINEER DISTRICT

Mark	Description	Date	Appr.	Mark	Description	Date	Appr.

Designed by: JRG
Dwn by: BJB
Ckd by: JRG
Reviewed by: JRG
Submitted by: BAKER
Date: 2/23/10
Rev: 0
Design file no.
Drawing code:
File name:
Plot date:
Plot scale:

U.S. ARMY CORPS OF ENGINEERS
AFGHANISTAN ENGINEER DISTRICT
APO AE 96338

Michael Baker Jr., Inc
A unit of Michael Baker Corporation
Airside Business Park
100 Airside Drive
Moon Township, PA 15108
www.mbakercorp.com

AFGHAN NATIONAL ARMY
REGIONAL MILITARY TRAINING CENTER
STANDARD DESIGN

200 STUDENT CLASSROOM BUILDING
(8) 25 STUDENT CLASSROOMS
ELECTRICAL POWER AND SYSTEMS PLAN

Sheet reference number:
E-102

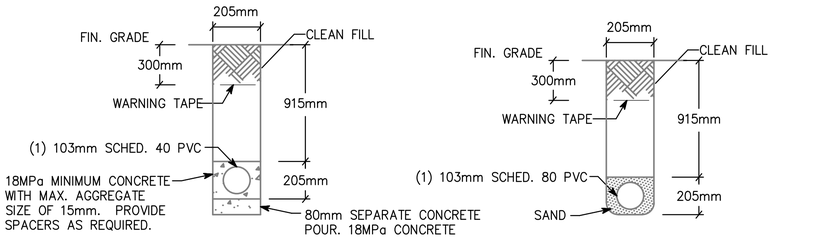

NOTE: PVC CONDUIT SHALL BE DIRECT BURIED SCHEDULE 80 FOR NO TRAFFIC AREAS AND CONCRETE-ENCASED SCHEDULE 40 FOR UNDER ROADWAYS OR TRAFFIC AREAS.

1 / E-501 TYPICAL DUCT BANK DETAILS FOR CONDUIT IN SAND OR CONCRETE

SCALE: N.T.S.

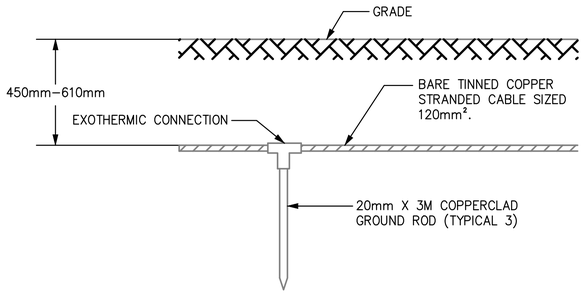

2 / E-501 GROUND TRIPOD SYSTEM DETAIL - ELEVATION

SCALE: N.T.S.

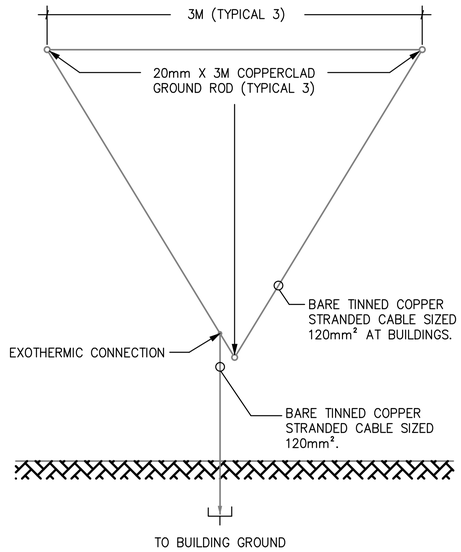

3 / E-501 GROUND TRIPOD SYSTEM DETAIL - PLAN

SCALE: N.T.S.

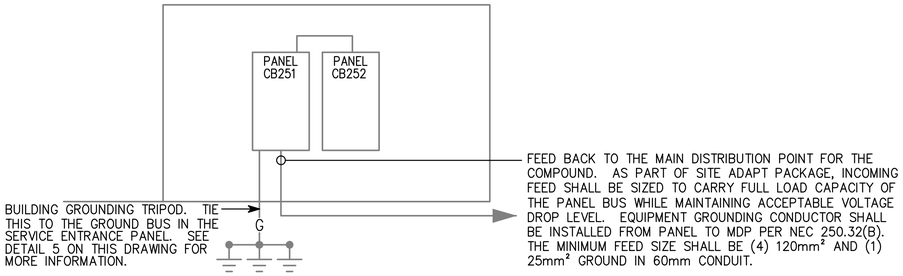

4 / E-501 CB25 RISER DIAGRAM

SCALE: N.T.S.

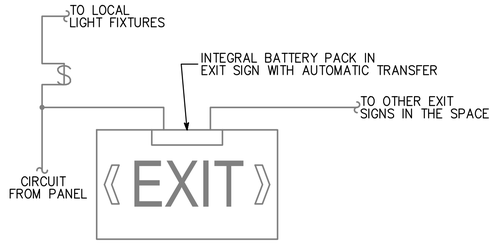

5 / E-501 EXIT SIGN WIRING DIAGRAM

SCALE: N.T.S.

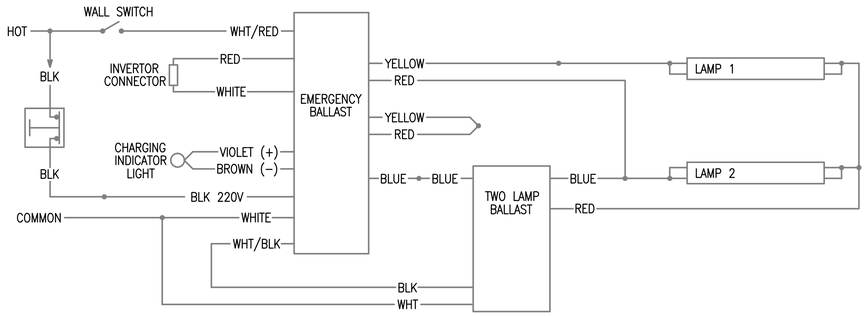

6 / E-501 EMERGENCY FIXTURE WIRING DIAGRAM

SCALE: N.T.S.

APPROVED:

A/E DESIGNER OF RECORD

SEAL:

COMMONWEALTH OF PENNSYLVANIA
REGISTERED PROFESSIONAL ENGINEER
JOSEPH R. GAUS
PE-074251
1/29/10

US ARMY CORPS OF ENGINEERS
AFGHANISTAN ENGINEER DISTRICT

Mark	Description	Date	Appr.	Mark	Description	Date	Appr.

Designed by: JRG
Dwn by: BJB
Ckd by: JRG
Reviewed by: JRG
Submitted by: BAKER
Date: 2/23/10
Rev: 0
Design file no.
Drawing code:
File name:
Plot date:
Plot scale:

U.S. ARMY CORPS OF ENGINEERS
AFGHANISTAN ENGINEER DISTRICT
APO AE 96338

Michael Baker Jr., Inc.
A unit of Michael Baker Corporation
Airside Business Park
100 Airside Drive
Moon Township, PA 15108
www.mbakercorp.com

AFGHAN NATIONAL ARMY
REGIONAL MILITARY TRAINING CENTER
STANDARD DESIGN

200 STUDENT CLASSROOM BUILDING
(8) 25 STUDENT CLASSROOMS
ELECTRICAL DETAILS

Sheet reference number:
E-501

(A) LARGER OF THE TWO SIZES GIVEN IN THE TABLES BELOW	
GROUNDING ELECTRODE CONDUCTOR (BASED ON AIC RATING)	
AIC RATING OF SERVICE EQUIPMENT	NECESSARY GROUNDING ELECTRODE CONDUCTOR SIZE
10K	(1) 35mm²
14K	(1) 50mm²
18K	(1) 70mm²
22K	(1) 70mm²
25K	(1) 70mm²
30K	(1) 95mm²
35K	(1) 120mm²
42K	(1) 150mm²
65K	(1) 185mm²
100K	(1) 300mm²
125K	(2) 185mm²
200K	(2) 300mm²
GROUNDING ELECTRODE CONDUCTOR (BASED ON NEC TABLE 250.66)	
SIZE OF LARGEST UNGROUNDED SERVICE CONDUCTOR OR EQUIVALENT AREA FOR PARALLEL CONDUCTORS	NECESSARY GROUNDING ELECTRODE CONDUCTOR SIZE
350 kcmil OR SMALLER	35mm²
OVER 350 kcmil TO 600 kcmil	70mm²
OVER 600 kcmil TO 1100 kcmil	70mm²
OVER 1100 kcmil	95mm²
NOTE: ALL SIZES ARE BASED ON COPPER CONDUCTORS.	

(B) EQUIPMENT GROUNDING CONDUCTOR	
RATING OR SETTING OF AUTOMATIC OVERCURRENT DEVICE IN CIRCUIT AHEAD OF EQUIPMENT, CONDUIT, ETC, NOT EXCEEDING (AMPERES)	NECESSARY EQUIPMENT GROUNDING CONDUCTOR SIZE
15	2.5mm²
20	4.0mm²
30	6.0mm²
40	6.0mm²
60	6.0mm²
100	10mm²
200	16mm²
300	25mm²
400	25mm²
500	35mm²
600	50mm²
800	70mm²
1000	70mm²
1200	95mm²
1600	120mm²
2000	150mm²
2500	185mm²
3000	240mm²
4000	300mm²
5000	400mm²
6000	400mm²
NOTE: ALL SIZES ARE BASED ON COPPER CONDUCTORS.	

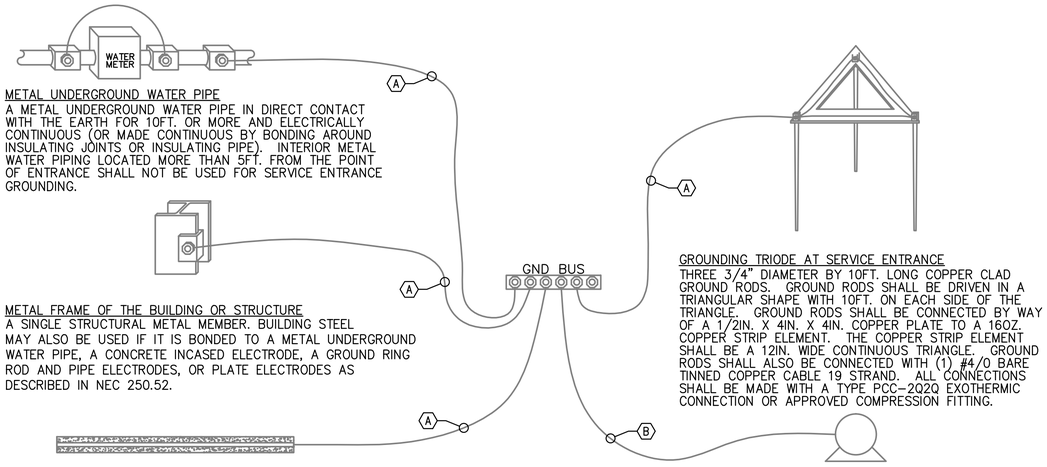

METAL UNDERGROUND WATER PIPE
A METAL UNDERGROUND WATER PIPE IN DIRECT CONTACT WITH THE EARTH FOR 10FT. OR MORE AND ELECTRICALLY CONTINUOUS (OR MADE CONTINUOUS BY BONDING AROUND INSULATING JOINTS OR INSULATING PIPE). INTERIOR METAL WATER PIPING LOCATED MORE THAN 5FT. FROM THE POINT OF ENTRANCE SHALL NOT BE USED FOR SERVICE ENTRANCE GROUNDING.

METAL FRAME OF THE BUILDING OR STRUCTURE
A SINGLE STRUCTURAL METAL MEMBER. BUILDING STEEL MAY ALSO BE USED IF IT IS BONDED TO A METAL UNDERGROUND WATER PIPE, A CONCRETE INCASED ELECTRODE, A GROUND RING ROD AND PIPE ELECTRODES, OR PLATE ELECTRODES AS DESCRIBED IN NEC 250.52.

CONCRETE ENCASED ELECTRODE
AN ELECTRODE ENCASED BY AT LEAST 2IN. OF CONCRETE , LOCATED WITHIN AND NEAR THE BOTTOM OF A CONCRETE FOUNDATION OR FOOTING THAT IS IN DIRECT CONTACT WITH THE EARTH, CONSISTING OF AT LEAST 20FT. OF ONE OR MORE BARE OR ZINC GALVANIZED OR OTHER ELECTRICALLY CONDUCTIVE COATED STEEL REINFORCING BARS OR RODS OF NOT LESS THAN 1/2" DIAMETER OR BARE COPPER CONDUCTOR NOT SMALLER THAN 4AWG.

GROUNDING TRIODE AT SERVICE ENTRANCE
THREE 3/4" DIAMETER BY 10FT. LONG COPPER CLAD GROUND RODS. GROUND RODS SHALL BE DRIVEN IN A TRIANGULAR SHAPE WITH 10FT. ON EACH SIDE OF THE TRIANGLE. GROUND RODS SHALL BE CONNECTED BY WAY OF A 1/2IN. X 4IN. X 4IN. COPPER PLATE TO A 16OZ. COPPER STRIP ELEMENT. THE COPPER STRIP ELEMENT SHALL BE A 12IN. WIDE CONTINUOUS TRIANGLE. GROUND RODS SHALL ALSO BE CONNECTED WITH (1) #4/0 BARE TINNED COPPER CABLE 19 STRAND. ALL CONNECTIONS SHALL BE MADE WITH A TYPE PCC-2Q2Q EXOTHERMIC CONNECTION OR APPROVED COMPRESSION FITTING.

LOAD OR DOWNSTREAM PANEL
ALL LOADS IN THE BUILDING SHALL HAVE AN EQUIPMENT GROUNDING CONDUCTOR PULLED TO THEM.

1
E-502

SERVICE ENTRANCE GROUNDING DETAIL

SCALE: N.T.S.

APPROVED:

A/E DESIGNER OF RECORD

SEAL:

COMMONWEALTH OF PENNSYLVANIA
REGISTERED PROFESSIONAL
JOSEPH R. GAUS
ENGINEER
PE-074251
1/29/10

US ARMY CORPS OF ENGINEERS
AFGHANISTAN ENGINEER DISTRICT

Mark	Description	Date	Appr.	Mark	Description	Date	Appr.

Rev: 0
Date: 2/23/10
Design file no.
Drawing code:
File name:
Plot date:
Plot scale:

Designed by: JRG
Dwn by: BJB
Ckd by: JRG
Reviewed by: JRG
Submitted by: BAKER

U.S. ARMY CORPS OF ENGINEERS
AFGHANISTAN ENGINEER DISTRICT
APO AE 96338

Michael Baker Jr., Inc.
A unit of Michael Baker Corporation
Airside Business Park
100 Airside Drive
Moon Township, PA 15108
www.mbakercorp.com

AFGHAN NATIONAL ARMY
REGIONAL MILITARY TRAINING CENTER
STANDARD DESIGN

200 STUDENT CLASSROOM BUILDING
(8) 25 STUDENT CLASSROOMS
ELECTRICAL DETAILS

Sheet reference number:
E-502

FIXTURE MARK 'A'

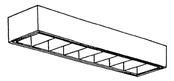

FIXTURE MARK 'C'

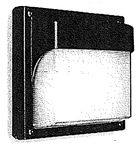

FIXTURE MARK 'H'

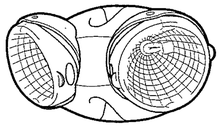

FIXTURE MARK 'E'

LIGHT FIXTURE SCHEDULE

FIXTURE MARK	STYLE NUMBER AND TYPE	NUMBER AND TYPE OF LAMPS	VOLTAGE	MOUNTING	NOTES
A	PARABOLIC SURFACE/PENDANT MOUNTED 300MM X 1200MM FLUORESCENT FIXTURE WITH ELECTRONIC BALLAST	(2) 32W 3500K	220V – 1ø 50HZ	SURFACE MOUNTED	FURNISHED WITH ELECTRONIC BALLAST. PARABOLIC LOUVER SHALL BE SPECULAR LENS IRADESCENCE TYPE.
A2	SAME AS FIXTURE 'A' WITH EMERGENCY BALLAST	(2) 32W 3500K	220V – 1ø 50HZ	SURFACE MOUNTED	FURNISHED WITH ELECTRONIC BALLAST. PARABOLIC LOUVER SHALL BE SPECULAR LENS IRADESCENCE TYPE. EMERGENCY BALLAST SELF TEST.
C	INCANDESCENT ONE PIECE W/ APPROVED LENS STABILIZED HIGH IMPACT POLY CARBONATE.	(1) A19 – 100W INCANDESCENT	220V – 1ø 50HZ	WALL MOUNTED ABOVE EXTERIOR DOORS	
H	REMOTE HEAD EXTERIOR LIGHT HEAD POWERED FROM EXIT SIGN BATTERY– 12V DOUBLE HEAD CORROSION RESISTANT WITH UL34 WEATHERPROOF CONSTRUCTION	(2) 12W/12V HALOGEN LAMP	12V – 1ø 50HZ	EXTERIOR WALL MOUNTED AT TOP OF DOOR HEIGHT	
E	UNIVERSAL MOUNT ENGINEER GRADE THERMOPLASTIC HOUSING EXIT SIGN WITH LED LAMPS, RED LETTERS 6" IN HEIGHT WITH ARROWS AS INDICATED, WITH 12V CADMIUM BATTERY WITH REMOTE HEAD CAPABILITY	LED LAMPS	220V – 1ø 50HZ	UNIVERSAL MOUNTING	

APPROVED:

A/E DESIGNER OF RECORD

SEAL:

COMMONWEALTH OF PENNSYLVANIA
REGISTERED PROFESSIONAL
JOSEPH R. GAUS
ENGINEER
PE-074251
1/29/10

US ARMY CORPS OF ENGINEERS
AFGHANISTAN ENGINEER DISTRICT

Mark	Description	Date	Appr.	Mark	Description	Date	Appr.

Designed by: JRG
Dwn by: BJB
Ckd by: JRG
Reviewed by: JRG
Submitted by: BAKER
Date: 2/23/10
Rev: 0
Design file no.
Drawing code:
File name:
Plot date:
Plot scale:

U.S. ARMY CORPS OF ENGINEERS
AFGHANISTAN ENGINEER DISTRICT
APO AE 96338

Michael Baker Jr., Inc.
A unit of Michael Baker Corporation
Airside Business Park
100 Airside Drive
Moon Township, PA 15108
www.mbakercorp.com

AFGHAN NATIONAL ARMY
REGIONAL MILITARY TRAINING CENTER
STANDARD DESIGN

200 STUDENT CLASSROOM BUILDING
(8) 25 STUDENT CLASSROOMS
ELECTRICAL LIGHTING FIXTURE SCHEDULE

Sheet reference number:
E–601

PANELBOARD CB251 SURFACE MOUNTED
225 AMP. MAIN LUGS (OR) 225 AMP. MAIN BREAKER W/ 225 AMP. TRIP
CIRCUIT BREAKER TYPE 380/220 VOLTS 3 PHASE 4 WIRE 50 HZ 225 AMP. BUS

CKT. NO.	TRIP AMPS	NO. POLES	WIRE MM ²	GND MM ²	CONDUIT MM	LOAD SERVED	LOAD-KVA A0	LOAD-KVA B0	LOAD-KVA C0	LOAD-KVA A0	LOAD-KVA B0	LOAD-KVA C0	LOAD SERVED	CONDUIT MM	GND MM²	WIRE MM²	NO. POLES	TRIP AMPS	CKT. NO.
1	20	1	4.0	4.0	20	LIGHTING – RM 100A,B, 101A,B	2.7			0.4			RECEPTACLES – RM 105	20	4.0	4.0	1	20	2
3	20	1	4.0	4.0	20	LIGHTING – RM 102A,B, 103A,B		2.7			0.4		RECEPTACLES – RM 104	20	4.0	4.0	1	20	4
5	20	1	4.0	4.0	20	CEILING FANS – RM 100A,B			1.6				SPARE				1	20	6
7	20	1	4.0	4.0	20	CEILING FANS – RM 101A,B	1.6			0.6			RECEPTACLES – RM 100A	20	4.0	4.0	1	20	8
9	20	1	4.0	4.0	20	CEILING FANS – RM 102A,B		1.6			0.6		RECEPTACLES – RM 100A	20	4.0	4.0	1	20	10
11	20	1	4.0	4.0	20	CEILING FANS – RM 103A,B			1.6			0.6	RECEPTACLES – RM 100B	20	4.0	4.0	1	20	12
13	20	1	4.0	4.0	20	EXHAUST FANS #1,2 – RM 104,105	0.5			0.6			RECEPTACLES – RM 100B	20	4.0	4.0	1	20	14
15	20	2	4.0	4.0	20	ELECTRIC HEAT #2 – RM 100A		2.6			0.6		RECEPTACLES – RM 101A	20	4.0	4.0	1	20	16
17									2.6			0.6	RECEPTACLES – RM 101A	20	4.0	4.0	1	20	18
19	20	2	4.0	4.0	20	ELEC. HEAT #2 – RM 100A,102A	2.6			0.6			RECEPTACLES – RM 101B	20	4.0	4.0	1	20	20
21								2.6			0.6		RECEPTACLES – RM 101B	20	4.0	4.0	1	20	22
23	20	2	4.0	4.0	20	ELECTRIC HEAT #2 – RM 102A			2.6			0.6	RECEPTACLES – RM 102A	20	4.0	4.0	1	20	24
25							2.6			0.6			RECEPTACLES – RM 102A	20	4.0	4.0	1	20	26
27	20	2	4.0	4.0	20	ELEC. HEAT #2 – RM 100B,102B		2.6			0.6		RECEPTACLES – RM 102B	20	4.0	4.0	1	20	28
29									2.6			0.6	RECEPTACLES – RM 102B	20	4.0	4.0	1	20	30
31	20	2	4.0	4.0	20	ELECTRIC HEAT #4 – RM 102B	2.0			0.6			RECEPTACLES – RM 103A	20	4.0	4.0	1	20	32
33								2.0			0.6		RECEPTACLES – RM 103A	20	4.0	4.0	1	20	34
35	20	2	4.0	4.0	20	ELECTRIC HEAT #4 – RM 103A			2.0			0.6	RECEPTACLES – RM 103B	20	4.0	4.0	1	20	36
37							2.0			12.2			PANEL – CB252	40	10.0	50.0	3	100	38
39	20	1	4.0	4.0	20	RECEPTACLES – EXTERIOR		0.4			9.8								40
41	20	1	4.0	4.0	20	RECEPTACLES – EXTERIOR			0.4			8.2							42
							14.0	14.5	13.4	15.6	13.2	11.2							

TOTAL CONN. LOAD PER PHASE (KVA): A0 29.6 B0 27.7 C0 24.6

TOTAL CONN. LOAD 81.9 KVA. 70 % DEMAND = ESTIMATED DEMAND LOAD 57.33

* MAIN BREAKER SHALL BE 3P EARTH GROUND TYPE

PANELBOARD CB252 SURFACE MOUNTED
225 AMP. MAIN LUGS (OR) 100 AMP. MAIN BREAKER W/ 100 AMP. TRIP
CIRCUIT BREAKER TYPE 380/220 VOLTS 3 PHASE 4 WIRE 50 HZ 100 AMP. BUS

CKT. NO.	TRIP AMPS	NO. POLES	WIRE MM ²	GND MM ²	CONDUIT MM	LOAD SERVED	LOAD-KVA A0	LOAD-KVA B0	LOAD-KVA C0	LOAD-KVA A0	LOAD-KVA B0	LOAD-KVA C0	LOAD SERVED	CONDUIT MM	GND MM²	WIRE MM²	NO. POLES	TRIP AMPS	CKT. NO.
1	20	2	4.0	4.0	20	ELECTRIC HEAT #4 – RM 100B	2.0			2.0			ELECTRIC HEAT #4 – RM 101A	20	4.0	4.0	2	20	2
3								2.0			2.0								4
5	20	2	4.0	4.0	20	ELEC. HEAT #2 – RM 101A,103A			2.6			2.6	ELEC. HEAT #2 – RM 101B,103B	20	4.0	4.0	2	20	6
7							2.6			2.6									8
9	20	2	4.0	4.0	20	ELECTRIC HEAT #2 – RM 101B		2.6			0.6		RECEPTACLES – RM 103B	20	4.0	4.0	1	20	10
11									2.6			0.4	RECEPTACLES – EXTERIOR	20	4.0	4.0	1	20	12
13	20	2	4.0	4.0	20	ELECTRIC HEAT #2 – RM 103B	2.6			0.4			RECEPTACLES – EXTERIOR	20	4.0	4.0	1	20	14
15								2.6					SPARE				1	20	16
17	20	1				SPARE							SPARE				1	20	18
19	20	1				SPARE							SPARE				1	20	20
21	20	1				SPARE							SPARE				1	20	22
23	20	1				SPARE							SPARE				1	20	24
25	20	1				SPARE							SPARE				1	20	26
27	20	1				SPARE							SPARE				1	20	28
29	20	1				SPARE							SPARE				1	20	30
31	20	1				SPARE							SPARE				1	20	32
33	20	1				SPARE							SPARE				1	20	34
35	20	1				SPARE							SPARE				1	20	36
37	20	1				SPARE							SPARE				1	20	38
39	20	1				SPARE							SPARE				1	20	40
41	20	1				SPARE							SPARE				1	20	42
							7.2	7.2	5.2	5.0	2.6	3.0							

TOTAL CONN. LOAD PER PHASE (KVA): A0 12.2 B0 9.8 C0 8.2

TOTAL CONN. LOAD 30.2 KVA. 70 % DEMAND = ESTIMATED DEMAND LOAD 21.14

APPROVED:

A/E DESIGNER OF RECORD

SEAL:

COMMONWEALTH OF PENNSYLVANIA
REGISTERED PROFESSIONAL
JOSEPH R. GAUS
ENGINEER
PE-074251
1/29/10

US ARMY CORPS OF ENGINEERS
AFGHANISTAN ENGINEER DISTRICT

Mark	Description	Date	Appr.

Mark	Description	Date	Appr.

Rev: 0
Date: 2/23/10
Design file no.
Drawing code:
File name:
Plot date:
Plot scale:

Designed by: JRG
Dwn by: BJB
Ckd by: JRG
Reviewed by: JRG
Submitted by: BAKER

U.S. ARMY CORPS OF ENGINEERS
AFGHANISTAN ENGINEER DISTRICT
APO AE 96338

Michael Baker Jr., Inc.
A unit of Michael Baker Corporation
Airside Business Park
100 Airside Drive
Moon Township, PA 15108
www.mbakercorp.com

AFGHAN NATIONAL ARMY
REGIONAL MILITARY TRAINING CENTER
STANDARD DESIGN

200 STUDENT CLASSROOM BUILDING
(8) 25 STUDENT CLASSROOMS
ELECTRICAL PANEL SCHEDULES

Sheet reference number:
E–602

AFGHAN NATIONAL ARMY

STANDARD BUILDING DESIGN

300 STUDENT CLASSROOM BUILDING
(1) 300 STUDENT CLASSROOM

100% FINAL DESIGN SUBMITTAL

SHEET INDEX

G-001 COVER SHEET

STRUCTURAL

S-001 GENERAL NOTES & DESIGN CRITERIA
S-101 FOUNDATION/SLAB & ROOF FRAMING PLAN
S-401 BUILDING SECTIONS
S-501 FOUNDATION SECTIONS
S-502 FRAMING SECTIONS
S-503 BEAM & COLUMN DETAILS
S-504 BEAM & COLUMN DETAILS
S-601 SCHEDULES
S-701 TYPICAL DETAILS
S-702 TYPICAL DETAILS

ARCHITECTURAL

A-001 LIFE SAFETY PLAN
A-101 FLOOR PLAN
A-102 ROOF PLAN
A-201 ELEVATIONS
A-301 BUILDING SECTIONS
A-401 WALL SECTIONS
A-501 EXTERIOR DETAILS
A-502 HEAD, JAMB, & SILL DETAILS
A-503 STOOP DETAILS
A-504 CANOPY DETAILS
A-601 WINDOW & DOOR SCHEDULES

MECHANICAL

M-101 HVAC FLOOR PLAN, SCHEDULES, & DETAILS

ELECTRICAL

E-001 ELECTRICAL SYMBOLS & ABBREVIATIONS
E-101 ELECTRICAL LIGHTING PLAN
E-102 ELECTRICAL POWER & SYSTEMS PLAN
E-103 ELECTRICAL LIGHTNING PROTECTION
E-501 ELECTRICAL DETAILS
E-502 ELECTRICAL DETAILS
E-601 ELECTRICAL LIGHT FIXTURE SCHEDULE
E-602 ELECTRICAL PANEL SCHEDULES

US ARMY CORPS OF ENGINEERS
AFGHANISTAN ENGINEER DISTRICT

Mark	Description	Date	Appr.	Mark	Description	Date	Appr.

U.S. ARMY ENGINEER DISTRICT, AFGHANISTAN
CORPS OF ENGINEERS
APO AE 96338

Michael Baker Jr., Inc.
A unit of Michael Baker Corporation
Airside Business Park
100 Airside Drive
Moon Township, PA 15108
www.mbakercorp.com

Designed by: KMP/MMY
Dwn by: RCG
Ckd by: CWW
Reviewed by: LHM
Submitted by: BAKER

Date: 2/23/10
Rev: 0
Design file no.
Drawing code:
File name: AMC8300G-001CS
Plot date: 2/23/2010
Plot scale:

AFGHAN NATIONAL ARMY
REGIONAL MILITARY TRAINING CENTER
STANDARD DESIGN

300 STUDENT CLASSROOM BUILDING
(1) 300 STUDENT CLASSROOM

COVER SHEET

Sheet reference number:
G-001

STRUCTURAL ABBREVIATIONS:

ACI	AMERICAN CONCRETE INSTITUTE
ADD'L	ADDITIONAL
AISC	AMERICAN INSTITUTE OF STEEL CONSTRUCTION
AISI	AMERICAN IRON AND STEEL INSTITUTE
ASTM	AMERICAN SOCIETY FOR TESTING AND MATERIALS
ARCH	ARCHITECTURAL
B	BOTTOM
BLDG	BUILDING
BOTT	BOTTOM
℄	CENTER LINE
CFMRF	COLD FORM METAL ROOF FRAME
CFMF	COLD FORM METAL FRAME
CFS	COLD FORMED STEEL
CIP	CAST-IN-PLACE
CIPL	CAST-IN-PLACE LINTEL
CJ	CONTROL JOINT
CLR	CLEAR
CMU	CONCRETE MASONRY UNIT
COEFF	COEFFICIENT
COL	COLUMN
CONC	CONCRETE
CONT	CONTINUOUS
COORD	COORDINATE
CSJ	CONSTRUCTION JOINT
CRSI	CONCRETE REINFORCING STEEL INSTITUTE
DIA	DIAMETER
DIAG	DIAGONAL
DIM	DIMENSION
DWG	DRAWING
DWL	DOWEL
EA	EACH
EF	EACH FACE
ELEC	ELECTRICAL
ELEV	ELEVATION
EMBED	EMBEDMENT
EQUIV	EQUIVALENT
ETC	ET CETERA
EW	EACH WAY
EXP	EXPANSION
EXT	EXTERIOR
FTG	FOOTING
GA	GAUGE
GB	GRADE BEAM
HORIZ	HORIZONTAL
h	HOUR
HRS	HOURS
IBC	INTERNATIONAL BUILDING CODE
INFO	INFORMATION
INT	INTERIOR
kg	KILOGRAM
km	KILOMETER
kN	KILONEWTON
kPa	KILOPASCAL
L#	ANGLE (# INDICATES SIZE)
LONG	LONGITUDINAL
LLV	LONG LEG VERTICAL
m	METER
MAX	MAXIMUM
MECH	MECHANICAL
MFG	MANUFACTURER
MID	MIDDLE
MIN	MINIMUM
MISC	MISCELLANEOUS
mm	MILLIMETER
MPa	MEGAPASCAL
MTL	METAL
MWFRS	MAIN WIND FORCE RESISTING SYSTEM
N	NEWTON
N	NORTH
N/A	NOT APPLICABLE
#	NUMBER SYMBOL FOR REBAR SIZE
NTS	NOT TO SCALE
OC	ON CENTER
OD	OUTSIDE DIAMETER
OPNG	OPENING
ℙ or PL	PLATE
PRE-ENG	PRE-ENGINEERED
REINF	REINFORCED
REQ'D	REQUIRED
RB	ROOF BEAM
SIM	SIMILAR
SPECS	SPECIFICATIONS
STD	STANDARD
STRUCT	STRUCTURAL
SW	SHEAR WALL
T	TOP
T/	TOP OF
T/ELEV	TOP ELEVATION
T/SLAB	TOP OF SLAB
T&B	TOP AND BOTTOM
THK	THICK
TYP	TYPICAL
UFC	UNIFIED FACILITIES CRITERIA
UON	UNLESS OTHERWISE NOTED
VERT	VERTICAL
W	WIDTH
W/	WITH

1.0 GENERAL NOTES:

1.1 THIS PROJECT HAS BEEN DESIGNED FOR THE WEIGHTS AND MATERIALS INDICATED ON THE SHEETS AND FOR THE LIVE LOADS INDICATED IN THE DESIGN DATA. IT IS THE CONTRACTOR'S RESPONSIBILITY TO DETERMINE ALLOWABLE CONSTRUCTION LOADS AND TO PROVIDE PROPER DESIGN AND CONSTRUCTION OF FALSEWORK, FORMWORK, STAGING, BRACING, SHEETING AND SHORING, ETC.

1.1 COORDINATE THESE SHEETS WITH THE ARCHITECTURAL, MECHANICAL, ELECTRICAL, PLUMBING, AND CIVIL SHEETS. ALL DIMENSIONS SHOWN ON THE SHEETS ARE MILLIMETERS UNLESS NOTED OTHERWISE.

1.2 THE CONTRACTOR SHALL VERIFY AND COORDINATE ALL FLOOR AND ROOF OPENING SIZES AND LOCATIONS, EQUIPMENT PAD SIZES AND LOCATIONS, ANCHOR BOLT LAYOUTS, ETC WITH EQUIPMENT SELECTED. THE CONTRACTOR SHALL MAKE ANY REQUIRED MODIFICATIONS AT NO ADDITIONAL COST.

1.3 THE CONTRACTOR SHALL REFER TO THE ARCHITECTURAL, MECHANICAL, ELECTRICAL AND PLUMBING SHEETS FOR SLEEVES, CURBS, INSERTS OR OPENINGS, ETC. NOT HEREIN INDICATED.

1.4 WORK NOT INCLUDED ON THE SHEETS BUT IMPLIED TO BE SIMILAR TO THAT SHOWN AT CORRESPONDING PLACES ELSEWHERE ON THE SHEETS SHALL BE REPEATED.

1.5 IN CASE OF CONFLICT BETWEEN THE NOTES, DETAILS AND SPECIFICATIONS THE MOST RIGID REQUIREMENTS SHALL GOVERN.

1.6 SEE ARCHITECTURAL SHEETS FOR LOCATIONS OF MASONRY AND NON-LOAD BEARING PARTITIONS. PROVIDE COMPRESSIBLE FIRESAFING AT TOP OF WALL AS REQUIRED BY ARCHITECTURAL SHEETS.

1.7 COORDINATE FINISHED FLOOR DATUM ELEVATION 0.0m WITH THE CIVIL SHEETS.

2.0 FOUNDATION NOTES

2.1 THE GEOTECHNICAL ANALYSIS FOR THIS PROJECT IS THE RESPONSIBILITY OF THE CONTRACTOR AWARDED THE WORK. AN ASSUMED ALLOWABLE SOIL BEARING VALUE OF 72 kPa HAS BEEN USED IN THE STRUCTURAL ANALYSIS OF THE BUILDING HEREIN AND SHALL BE CONFIRMED AND VERIFIED AS PART OF THE GEOTECHNICAL INVESTIGATION. VALUES WHICH DO NOT MEET THE REQUIREMENTS INDICATED ON THE BASIS OF DESIGN SHEET SHALL BE IMMEDIATELY BROUGHT TO THE ATTENTION OF THE CONTRACTING OFFICER FOR CONSIDERATION AND DETERMINATION ON THE NEXT APPROPRIATE COURSE OF ACTION.

2.2 SEE THE SPECIFICATION FOR ADDITIONAL REQUIREMENTS TO THOSE OUTLINED IN THE GEOTECHNICAL INVESTIGATION FOR EXCAVATION AND PREPARATION OF THE FOUNDATION AND THE SLAB ON GRADE SUBGRADE INCLUDING COMPACTION PROCEDURES.

2.3 EXCAVATIONS FOR FOOTINGS SHALL HAVE THE SIDES AND BOTTOMS TEMPORARILY LINED WITH 0.25mm POLYETHYLENE IF PLACEMENT OF CONCRETE DOES NOT OCCUR WITHIN 24 HRS OF THE EXCAVATION OF THE FOOTING.

2.4 FOUNDATION CONDITIONS NOTED DURING CONSTRUCTION WHICH DIFFER FROM THOSE DESCRIBED IN THE GEOTECHNICAL REPORT SHALL BE REPORTED TO THE GENERAL CONTRACTOR BEFORE FURTHER CONSTRUCTION IS ATTEMPTED. SEE PROJECT SPECIFICATIONS.

2.5 NO FOOTINGS OR SLABS SHALL BE POURED INTO OR AGAINST SUBGRADE CONTAINING FREE WATER, FROST, ICE OR LOOSE MATERIAL. FROST DEPTH ASSUMED TO BE 800mm.

2.6 ALL SLAB-ON-GRADE, TRENCH BOTTOMS AND OTHER ON-GRADE INTERIOR HORIZONTAL SURFACES SHALL BE PLACED OVER A 0.25mm POLYETHYLENE VAPOR RETARDER OVER A 100mm #57 STONE WATER CAPILLARY BARRIER PLACED ON SUBGRADE PROPERLY PREPARED IN ACCORDANCE WITH THE CONTRACT SPECIFICATIONS. (UON)

2.7 PRIOR TO START OF FOUNDATION OR SLAB-ON-GRADE CONSTRUCTION, EXISTING SUBGRADES SHALL BE COMPACTED TO MINIMUM OF 95% MAXIMUM DRY DENSITY OBTAINED THRU ASTM D 1557 MODIFIED PROCTOR TESTING.

2.8 SEE PLUMBING, ELECTRICAL & CIVIL SHEETS FOR REQUIRED UNDERSLAB UTILITIES.

2.9 SEE ARCHITECTURAL SHEETS FOR ALL WATERPROOFING DETAILS AND MATERIALS.

2.10 IF UNDERMINING OF FOOTINGS OCCURS, FILL VOIDS WITH 18 MPa CONCRETE. DO NOT ATTEMPT TO REPLACE AND RE-COMPACT SOIL.

3.0 CONCRETE

3.1 CONCRETE SHALL HAVE THE UNIT WEIGHT OF 2400 kg/m^3 AND A MINIMUM COMPRESSIVE STRENGTH (f'c) OF 28 MPa AT 28 DAYS. ALL CONCRETE SHALL HAVE A WATER-CEMENT RATIO OF 0.45. SEE SPECIFICATIONS FOR ADDITIONAL INFORMATION. ENTRAIN AIR TO PRODUCE TOTAL AIR CONTENT ACCORDING TO THE SPECIFICATIONS FOR CONCRETE EXPOSED TO FREEZING TEMPERATURES (EXTERIOR FOOTINGS, SLAB TURNDOWNS, EXTERIOR SLABS AND SLABS-ON-GRADE, EXTERIOR RETAINING WALLS, AND EXTERIOR GRADE BEAMS.)

3.2 NO CALCIUM CHLORIDE SHALL BE USED IN ANY CONCRETE.

3.3 MIXING, TRANSPORTING AND PLACING OF CONCRETE SHALL CONFORM TO ACI 301M-05.

3.4 ALL CONCRETE WORK SHALL CONFORM TO THE REQUIREMENTS OF THE AMERICAN CONCRETE INSTITUTE (ACI) 318M MANUAL (metric), "BUILDING CODE REQUIREMENTS FOR REINFORCED CONCRETE", AND REQUIREMENTS OUTLINED IN THE CONTRACT SPECIFICATIONS. WHEN THERE IS A CONFLICT BETWEEN ACI AND THE SPECIFICATIONS, THE MORE STRINGENT SHALL GOVERN.

3.5 CHAMFER ALL EXPOSED EXTERNAL CORNERS OF CONCRETE WITH 20mm x45 DEGREE CHAMFER UON.

3.6 CONCRETE REINFORCEMENT BARS SHALL CONFORM TO ASTM A615M-96a, GRADE 420 MPa, REINFORCING BARS SHALL NOT BE TACK WELDED, WELDED, HEATED OR CUT, UNLESS INDICATED ON THE CONTRACT DOCUMENTS. ALL LAP SPLICES SHALL BE CLASS "B" UON.

3.7 HORIZONTAL FOOTING AND HORIZONTAL WALL REINFORCEMENT SHALL BE CONTINUOUS AND SHALL HAVE 90 DEGREE BENDS AND EXTENSIONS, OR CORNER BARS OF EQUIVALENT SIZE LAPPED WITH A CLASS B TENSION SPLICE AT CORNERS AND INTERSECTIONS. TOP BAR CRITERIA SHALL APPLY IF 300mm OR MORE OF FRESH CONCRETE IS PLACED BELOW BAR.

3.8 SLABS-ON-GRADE SHALL HAVE CONSTRUCTION JOINTS OR CRACK CONTROL JOINTS AS SHOWN ON THE DRAWINGS. CONSTRUCTION JOINTS CAN BE USED AT CONTROL JOINT LOCATIONS AT CONTRACTORS OPTION. SEE SLAB PLANS & JOINT DETAILS FOR ADDITIONAL INFORMATION. FOR AREAS NOT SHOWN ON DWGS, THE MAXIMUM SPACING OF CONSTRUCTION/ CRACK CONTROL JOINTS SHALL BE 4800mm

3.9 ALL CONCRETE REINFORCEMENT SHALL BE DETAILED, FABRICATED, LABELED, SUPPORTED, AND SPACED IN FORMS AND SECURED IN PLACE IN ACCORDANCE WITH THE PROCEDURES AND REQUIREMENTS OUTLINED IN THE LATEST EDITION OF THE "BUILDING CODE REQUIREMENTS FOR REINFORCED CONCRETE", ACI 318M, AND THE "MANUAL OF STANDARD PRACTICE FOR DETAILING REINFORCED CONCRETE STRUCTURES", ACI 315M, LATEST EDITION. BASED ON IN COUNTRY REINFORCEMENT AVAILABILITY, IT IS THE CONTRACTOR'S OPTION TO ROUND DESIGNATED ODD NUMBERED REINFORCEMENT SIZES UP (1) ONE BAR SIZE.

3.10 ALL DOWELS SHALL MATCH SIZE AND NUMBER OF MAIN REINFORCING, UNLESS NOTED OTHERWISE ON THE SHEETS.

3.11 ADDITIONAL BARS SHALL BE PROVIDED AROUND ALL FLOOR AND WALL OPENINGS AS SHOWN ON THE SHEETS.

3.12 SEE ARCHITECTURAL SHEETS FOR TYPE AND LOCATION OF ALL FLOOR FINISHES.

3.13 THE CONTRACTOR SHALL COORDINATE ADDITIONAL WALL/SLAB OPENINGS NOT SHOWN ON STRUCTURAL SHEETS. SEE MECHANICAL, ELECTRICAL, PLUMBING AND CIVIL SHEETS.

3.14 UNLESS NOTED OTHERWISE, ALL CURBS SHALL BE REINFORCED WITH AT LEAST (1)-#13 CONTINUOUS AND #13 AT 300mm O.C. DOWELS TO STRUCTURE BELOW.

3.15 THE CONTRACTOR SHALL VERIFY ALL OPENINGS, PAD SIZES, AND ANCHOR BOLTS WITH EQUIPMENT SELECTED.

3.16 FOR ALL WALLS & PIERS, PROVIDE DOWELS INTO FOOTING AT EACH VERT REINF BAR, UON DOWEL SIZE SHALL BE SAME AS VERT REINF.

3.17 PROVIDE CONCRETE POUR STOPS OR FORMED AS REQUIRED FOR INSTALLATION OF ALL CONCRETE WORK.

3.18 PROVIDE ADDITIONAL (2)-#13 x 600mm REINFORCING BARS IN SLAB-ON GRADE AT ALL RE-ENTRANT CORNERS. PLACE BARS AT MID-DEPTH OF SLAB WITH A CLEARANCE OF 50mm FROM CORNER UON.

3.19 COLD-WEATHER PLACEMENT: COMPLY WITH ACI 306.1 AND AS FOLLOWS. PROTECT CONCRETE WORK FROM PHYSICAL DAMAGE OR REDUCED STRENGTH THAT COULD BE CAUSED BY FROST, FREEZING ACTIONS, OR LOW TEMPERATURES. SUBMIT A COLD WEATHER CONCRETING PLAN FOR APPROVAL.

3.20 PROVIDE BONDING COMPOUND PER ASTM C 1059-99: SPECIFICATION FOR LATEX AGENTS FOR BONDING FRESH CONCRETE (GROUT) TO HARDENED CONCRETE.

3.21 THE FORMED SURFACES FOR REINFORCED CONCRETE SHALL ACHIEVE A "CLASS A" FINISH WHEN RECEIVING PAINT OR A "CLASS B" FINISH WHEN RECEIVING PLASTER OR TILE AS PER SPECIFICATION SECTION 03 31 00 CAST-IN-PLACE STRUCTURAL CONCRETE.

3.22 AT INTERSECTING GRADE BEAMS AND SHEAR WALLS, PROVIDE CORNER BARS AT INTERSECTIONS WITH SAME QUANTITY, SIZE AND SPACING AS HORIZONTAL BARS WITH LEG LENGTH = 50db.

3.23 REFER TO S-800 SERIES REINFORCING BAR PLACEMENT DRAWINGS DEFINING LENGTHS, BENDS, AND SPACINGS FOR ALL STRUCTURAL CONCRETE. THE S-800 SERIES DRAWING ARE BASED ON THE S-400, S-500, S-600, AND S-700 SERIES DRAWING SCHEDULES, DETAILS, AND DIAGRAMS.

4.0 CONCRETE MASONRY

4.1 MASONRY CONSTRUCTION SHALL CONFORM TO SPECIFICATION FOR MASONRY STRUCTURES (ACI 530.1) UON.

4.2 STRENGTH OF MASONRY MATERIALS SHALL BE AS FOLLOWS:

a. CONCRETE MASONRY UNITS SHALL BE NORMAL WEIGHT, GRADE N, TYPE 1, CONFORMING TO ASTM C-90 AND HAVE A MINIMUM COMPRESSIVE STRENGTH OF 10.4 MPa ON THE NET AREA.

b. MORTAR SHALL CONFORM TO ASTM C-270 TYPE S.

c. GROUT FOR MASONRY SHALL BE NORMAL WEIGHT AND HAVE A MINIMUM COMPRESSIVE STRENGTH OF 14 MPa AT 28 DAYS. GROUT SHALL CONFORM TO ASTM C476M. GROUT LIFTS SHALL NOT EXCEED 1,400mm.

d. REINFORCED MASONRY SHALL HAVE A STRENGTH F'm = 10 MPa. (F'm IS THE COMPRESSIVE STRENGTH OF THE MASONRY AT 28 DAYS AS DETERMINED BY PRISM TESTS).

4.3 ALL VERTICAL REINFORCEMENT FOR CONCRETE MASONRY SHALL BE ASTM A615M-96a, GRADE 420 MPa. ALL SPLICES SHALL BE LAPPED 48 BAR DIAMETERS MINIMUM.

4.4 BOND BEAMS SHALL BE SPACED AT 1200mm OC VERTICALLY. BOND BEAM REINFORCING SHALL BE CONTINUOUS AND PROVIDED AT WALL INTERSECTIONS AND WALL CORNERS (REFERENCE CONCRETE MASONRY NOTE 4.11). ALL BOND BEAM REINFORCING SHALL BE CONTINUOUS AND HAVE STANDARD ACI HOOKS AT EACH END. PROVIDE STANDARD BAR SPLICES AS SPECIFIED. AS AN ALTERNATE TO CMU BOND BEAMS, IT IS THE CONTRACTOR'S OPTION TO PROVIDE 200mm x 200mm CONTINUOUS CAST-IN-PLACE CONCRETE BOND BEAMS WITH (2)-#16 IN LIEU OF CMU BOND BEAMS INDICATED ON THE DRAWINGS.

4.5 SEE TYPICAL DETAILS FOR MINIMUM REINFORCEMENT REQUIREMENTS FOR CMU WALLS. PROVIDE STANDARD BAR SPLICES AS SPECIFIED. ALL VERTICAL REINFORCEMENT EXTENDS FULL HEIGHT OF WALL.

4.6 CMU CELLS THAT REQUIRE VERTICAL REINFORCING BARS AS INDICATED ON THE CONTRACT DRAWINGS AND/OR SPECS SHALL HAVE REINF BARS PLACED IN CENTERS OF CMU CELLS AND CONTINUOUSLY GROUTED UON.

4.7 ALL CMU CELLS, OPEN CAVITIES, AND AIR SPACES OF ALL EXTERIOR WALLS SHALL BE GROUTED TO STOP FRAGMENTS FROM MORTAR BLAST.

4.8 CONTRACTOR SHALL COORDINATE LOCATION OF ALL OPENINGS SEE ARCH, MECH, ELEC, AND PLUMBING SHEETS FOR SIZE AND LOCATION OF OPENINGS.

4.9 MASONRY WALLS SHALL NOT BE BACK FILLED PRIOR TO THE MORTAR AND GROUT ATTAINING THEIR RESPECTIVE MAXIMUM DESIGN STRENGTHS PER SPECIFICATIONS.

4.10 PROVIDE GALVANIZED MORTAR/GROUT SCREEN W/ 3mm MESH WHERE CELLS BELOW ARE NOT GROUTED.

4.11 AT INTERSECTING BOND BEAMS, PROVIDE CORNER BAR FOR EACH HORIZONTAL BAR IN BOND BEAMS AT INTERSECTING WALLS. USE SAME SIZE AND SPACING AS HORIZONTAL BARS WITH LEG LENGTH = 50db.

4.12 THE ALTERNATE CMU BRACE DETAILS SHOWN ON S-701 CAN BE UTILIZED AT THE CONTRACTOR'S OPTION IN PLACE OF THE "FLOATING PIN" WALL BRACE CONNECTIONS AT TOP OF CMU WALLS DEPICTED ON S-400 AND S-500 SERIES DRAWINGS THESE ALTERNATE DETAILS ALSO SHOW ALTERNATE CAST-IN-PLACE WALL BOND BEAMS THAT CAN BE UTILIZED AT THE CONTRACTOR'S OPTION IN PLACE OF THE STANDARD CMU BOND BEAMS CONSTRUCTED OF CMU BLOCKS.

5.0 COLD-FORMED METAL FRAMING

5.1 ALL COLD-FORMED METAL FRAMING MEMBERS SHALL CONFORM TO ASTM A1003M, STRUCTURAL GRADE ST340 (MPa), WITH A GALVANIZED COATING OF Z275 OR BETTER IN ACCORDANCE WITH ASTM A653M.

5.2 ALL COLD-FORMED METAL FRAMING MEMBERS SHALL HAVE THE FOLLOWING MINIMUM PROPERTIES:

a. MINIMUM METAL THICKNESS:
TRACK = 1.37mm;
STUD/OTHER = 1.09mm

b. MINIMUM FLANGE WIDTH:
TRACK = 38mm;
STUD/OTHER = 35mm

c. MINIMUM MEMBER DEPTH:
ALL SECTIONS = 152.2mm

d. PURLIN (HAT CHANNEL)
DEPTHxWIDTH(FLAT TOP)xTHICK = 25mmx42mmx1.59mm

5.3 ALL CONNECTIONS SHALL BE MADE WITH CORROSION RESISTANT (ASTM A153M), SELF-DRILLING, SELF-TAPPING STEEL DRILL SCREWS IN ACCORDANCE WITH ASTM C1513. SCREWS SHALL HAVE A LOW PROFILE HEAD BENEATH ROOF DECK, AND STANDARD HEAD ALL OTHER LOCATIONS.

5.4 FABRICATE COLD FORMED METAL FRAMING AND ACCESSORIES PLUMB, SQUARE AND TRUE TO LINE, WITH CONNECTIONS SECURELY FASTENED ACCORDING TO AISI STANDARD FOR COLD FORMED STEEL FRAMING.

5.5 CUT FRAMING MEMBERS BY SAWING OR SHEATHING, DO NOT TORCH CUT.

5.6 INSTALL FRAMING MEMBERS IN ONE-PIECE LENGTHS UNLESS SPLICE CONNECTIONS ARE INDICATED FOR TRACK OR TENSION MEMBERS

5.7 INSTALL TEMPORARY BRACING AND SUPPORTS TO SECURE FRAMING DURING CONSTRUCTION. MAINTAIN BRACING AND SUPPORTS IN PLACE UNTIL THE STRUCTURE HAS BEEN COMPLETED WITH ALL CONNECTIONS AND PERMANENT BRACING SECURED.

6.0 STRUCTURAL DESIGN CRITERIA

6.1 ALL DESIGNS SHALL CONFORM TO THE PROVISIONS OF THE IBC 2006 AND UFC AS APPLICABLE.

6.2 DESIGN LOADS

6.2.1 DEAD LOADS (PER IBC 2006 & UFC 3-310-01)

MECH/ELEC/PLUMBING	0.20 kPa
MISCELLANEOUS	0.15 kPa
COLD-FORMED FRAMING	0.20 kPa
INSULATION	0.10 kPa
METAL ROOF PANEL	0.14 kPa
	0.79 kPa
FLOOR PARTITION ALLOWANCE	0.96 kPa

6.2.2 LIVE LOADS (PER IBC 2006 & UFC 3-310-01)

ROOF	1.00 kPa
CORRIDOR (2-STORY BLDG ONLY)	4.80 kPa
ALL OTHERS (2-STORY BLDG ONLY)	2.40 kPa
SLAB ON GRADE	4.80 kPa

6.2.3 SNOW LOADS (PER IBC 2006 & UFC 3-310-01)

GROUND SNOW LOAD (Pg)	1.2 kPa
SNOW IMPORTANCE FACTOR (I)	1.0
SNOW EXPOSURE FACTOR (Ce)	1.0
THERMAL FACTOR (Ct)	1.0

6.2.4 WIND LOADS (PER IBC 2006)

BASIC WIND SPEED	137 km/h
WIND IMPORTANCE FACTOR	1.0
WIND EXPOSURE CATEGORY	D
DIRECTIONALITY COEFFICIENT (Kd)	0.85
TOPOGRAPHIC FACTOR (Kzt)	1.0

6.2.5 SEISMIC LOADS (PER IBC 2006 & UFC 3-310-04)

OCCUPANCY USE CATEGORY	II
SEISMIC IMPORTANCE FACTOR (Ie)	1.0
SEISMIC SITE CLASS	D

S_s = 1.50 (REDUCED FROM 2.40 PER ASCE 7-05, 12.8.1.3 FOR A BUILDING WITHOUT IRREGULARITIES)
S_1 = 1.20
S_{DS} = 1.00
S_{D1} = 1.20

SEISMIC DESIGN CATEGORY	E
SEISMIC RESISTING SYSTEM: -SPECIAL REINFORCED CONCRETE SHEAR WALL	
RESPONSE MODIFICATION FACTOR (R)	6
RESPONSE COEFFICIENT (Cs)	0.167
SEISMIC ANALYTICAL PROCEDURE =	EQUIV LATERAL FORCE
SEISMIC BASE SHEAR	1440 kN

APPROVED:

A/E DESIGNER OF RECORD

SEAL:

GEORGIA REGISTERED 2-23-10 No. 27141 PROFESSIONAL ENGINEER CHRISTOPHER W. WHITMORE

US ARMY CORPS OF ENGINEERS
AFGHANISTAN ENGINEER DISTRICT

Mark	Description	Date	Appr.	Mark	Description	Date	Appr.

U.S. ARMY ENGINEER DISTRICT, AFGHANISTAN
CORPS OF ENGINEERS
APO AE 96338

Michael Baker Jr., Inc
A unit of Michael Baker Corporation
Airside Business Park
100 Airside Drive
Moon Township, PA 15108
www.mbakercorp.com

Designed by: KMF/MMY
Dwn by: RCG
Ckd by: CWW
Reviewed by: LHM
Submitted by: BAKER
Date: 2/23/10
Rev: 0
Design file no.
Drawing code:
File name: AMACB300S.001GN
Plot date: 2/23/2010
Plot scale: X:X

AFGHAN NATIONAL ARMY
REGIONAL MILITARY TRAINING CENTER
STANDARD DESIGN

300 STUDENT CLASSROOM BUILDING
(1) 300 STUDENT CLASSROOM

GENERAL NOTES & DESIGN CRITERIA

Sheet reference number:
S-001

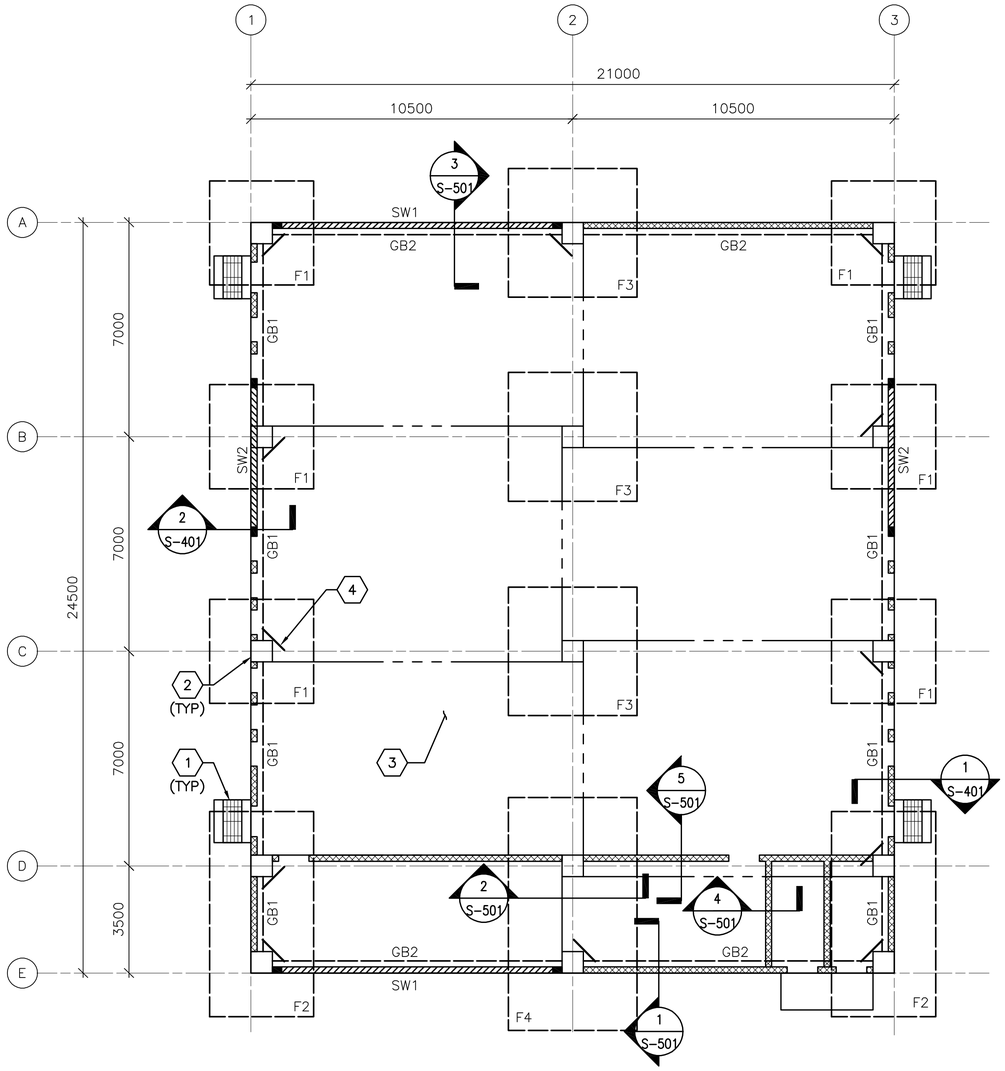

1 S-101 **FOUNDATION/SLAB PLAN**

SCALE: 1:100

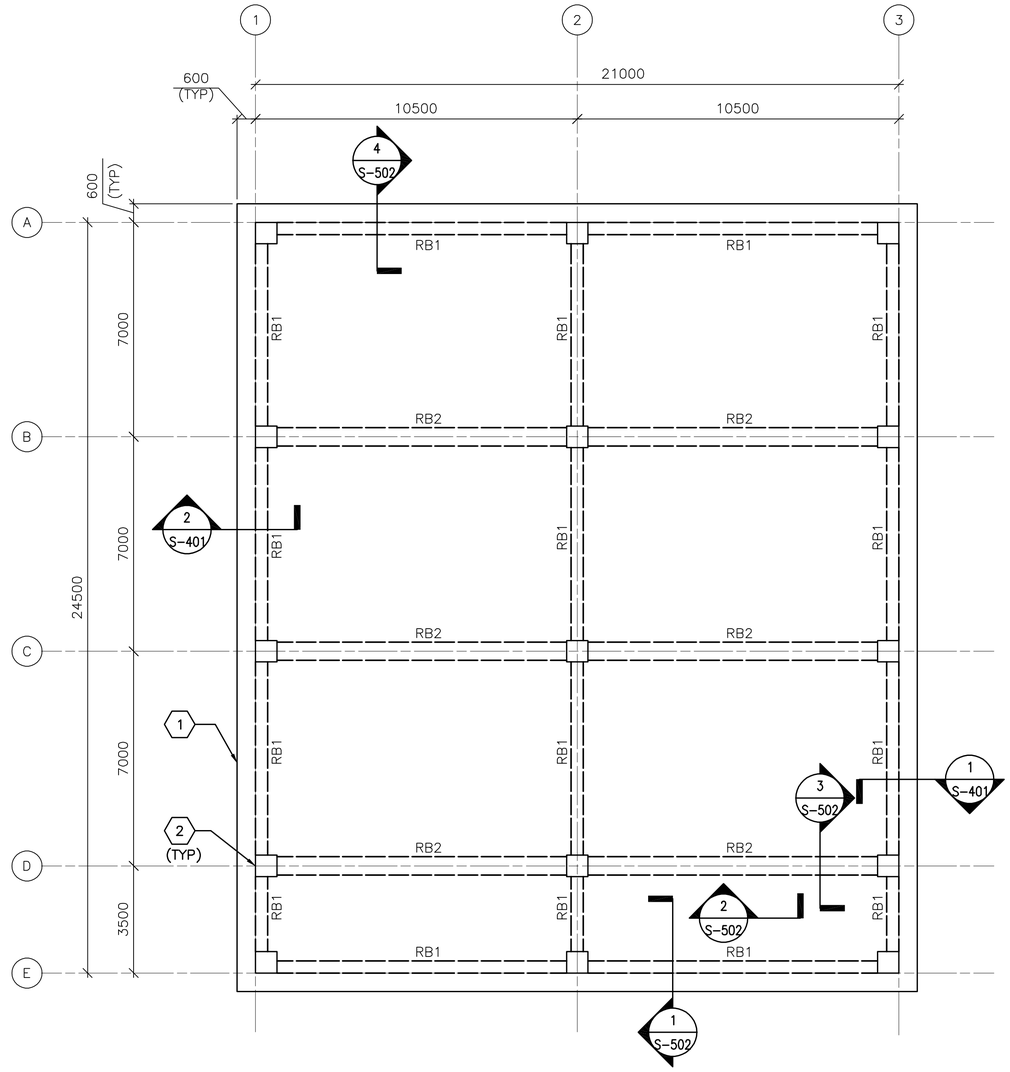

2 S-101 **ROOF FRAMING PLAN**

SCALE: 1:100

FOUNDATION/SLAB PLAN NOTES:

1. REFER TO SHEET S-001 FOR STRUCTURAL NOTES AND DESIGN CRITERIA.
2. FINISH FIRST FLOOR ELEVATION SHALL BE (DATUM 0.00) ALL PLUS OR MINUS DIMENSIONS INDICATED ON PLAN OR REFERRED TO IN NOTES RELATE TO FINISH FIRST FLOOR ELEVATION.
3. SLAB-ON-GRADE IS 150 WITH #13 @ 300 OC EW LOCATED 38 FROM T/SLAB.
4. TOP OF EXTERIOR FOOTINGS SHALL BE -950 UNLESS OTHERWISE INDICATED.
5. TOP OF INTERIOR FOOTINGS WITHOUT GRADE BEAM ABOVE SHALL BE -600.
6. COLUMN FOOTINGS INDICATED BY F# ON PLAN. REFER TO COLUMN FOOTING SCHEDULE ON SHEET S-601.
7. REFER TO COLUMN SCHEDULE ON SHEET S-601.
8. GRADE BEAM INDICATED BY GB# ON PLAN, REFER TO BEAM SCHEDULE ON SHEET S-601.
9. SHEARWALL INDICATED BY SW# ON PLAN, REFER TO SHEARWALL SCHEDULE ON SHEET S-601.
10. FOR CMU WALL REINFORCEMENT, SEE TYP EXTERIOR & INTERIOR CMU WALL REINF DETAILS ON S-701.
11. SEE MECHANICAL AND ELECTRICAL SHEETS FOR CONCRETE PAD LOCATIONS, SIZES, AND THICKNESS NOT SHOWN. SEE SHEET S-701 FOR DETAILS.
12. THICKENED SLAB UNDER CMU PERIMETER/PARTITION WALLS NOT SHOWN FOR CLARITY.

FOUNDATION/SLAB PLAN KEY NOTES: (X)

1. CONC PAD (ENTRANCE)-SEE ARCH DWGS FOR INFORMATION
2. REINF CONC COLUMN
3. REINF CONC SLAB-ON-GRADE
4. (2)-#13 @ RE-ENTRANT CORNERS - SEE S-701 FOR INFORMATION

FOUNDATION/SLAB PLAN LEGEND:

REINF CONC SHEAR WALL

REINF CMU WALL

CONTROL JOINT

ROOF FRAMING PLAN NOTES:

1. REFER TO SHEETS S-001 FOR STRUCTURAL NOTES AND DESIGN CRITERIA.
2. TOP OF SLAB ELEVATION = 5000 UNLESS NOTED OTHERWISE.
3. ROOF SLAB IS 300 WITH #16 @ 300 OC EW T&B.
4. ROOF BEAM INDICATED BY RB# ON PLAN. REFER TO BEAM SCHEDULE ON SHEET S-601.
5. COORDINATE WITH ARCHITECTURAL SHEETS FOR COLD-FORMED STEEL OVERBUILD FRAMING ABOVE ROOF SLAB.
6. COLD-FORMED METAL OVERBUILD ROOF FRAMING NOT SHOWN FOR CLARITY. SEE OVERBUILD ROOF FRAMING DETAILS AND SECTIONS ON SHEET S-702.
7. CMU PARTITION WALLS (BELOW ROOF SLAB) NOT SHOWN FOR CLARITY.
8. OVERHANG AREAS OF ROOF SLAB CONTAIN ROOF VENT PENETRATIONS. REFERENCE ARCHITECTURAL DRAWINGS FOR INFORMATION.

ROOF FRAMING PLAN KEY NOTES: (X)

1. CONC ROOF SLAB (BELOW ROOF OVERBUILD)
2. REINF CONC COLUMN (BELOW CONC ROOF SLAB)

0 2000 4000
SCALE: 1:100

UNLESS OTHERWISE NOTED, LINEAR DIMENSIONS SHOWN ON DRAWINGS ARE IN MILLIMETERS (mm)

APPROVED:

A/E DESIGNER OF RECORD

SEAL:

GEORGIA REGISTERED 1-29-10 No. 27141 PROFESSIONAL ENGINEER CHRISTOPHER W. WHITMORE

US ARMY CORPS OF ENGINEERS
AFGHANISTAN ENGINEER DISTRICT

Mark	Description	Date	Appr.	Mark	Description	Date	Appr.

Date: 2/23/10 | Rev: 0
Design file no.
Drawing code:
File name: ANACB300S-101FFP
Plot date: 2/23/2010
Plot scale: x:X

Designed by: KMP/MMY
Dwn by: RCG | Ckd by: CWW
Reviewed by: LHM
Submitted by: BAKER

U.S. ARMY ENGINEER DISTRICT, AFGHANISTAN
CORPS OF ENGINEERS
APO AE 96338

Michael Baker Jr., Inc
A unit of Michael Baker Corporation
Airside Business Park
100 Airside Drive
Moon Township, PA 15108
www.mbakercorp.com

AFGHAN NATIONAL ARMY
REGIONAL MILITARY TRAINING CENTER
STANDARD DESIGN

300 STUDENT CLASSROOM BUILDING
(1) 300 STUDENT CLASSROOM

FOUNDATION/SLAB PLAN
ROOF FRAMING PLAN

Sheet reference number:
S-101

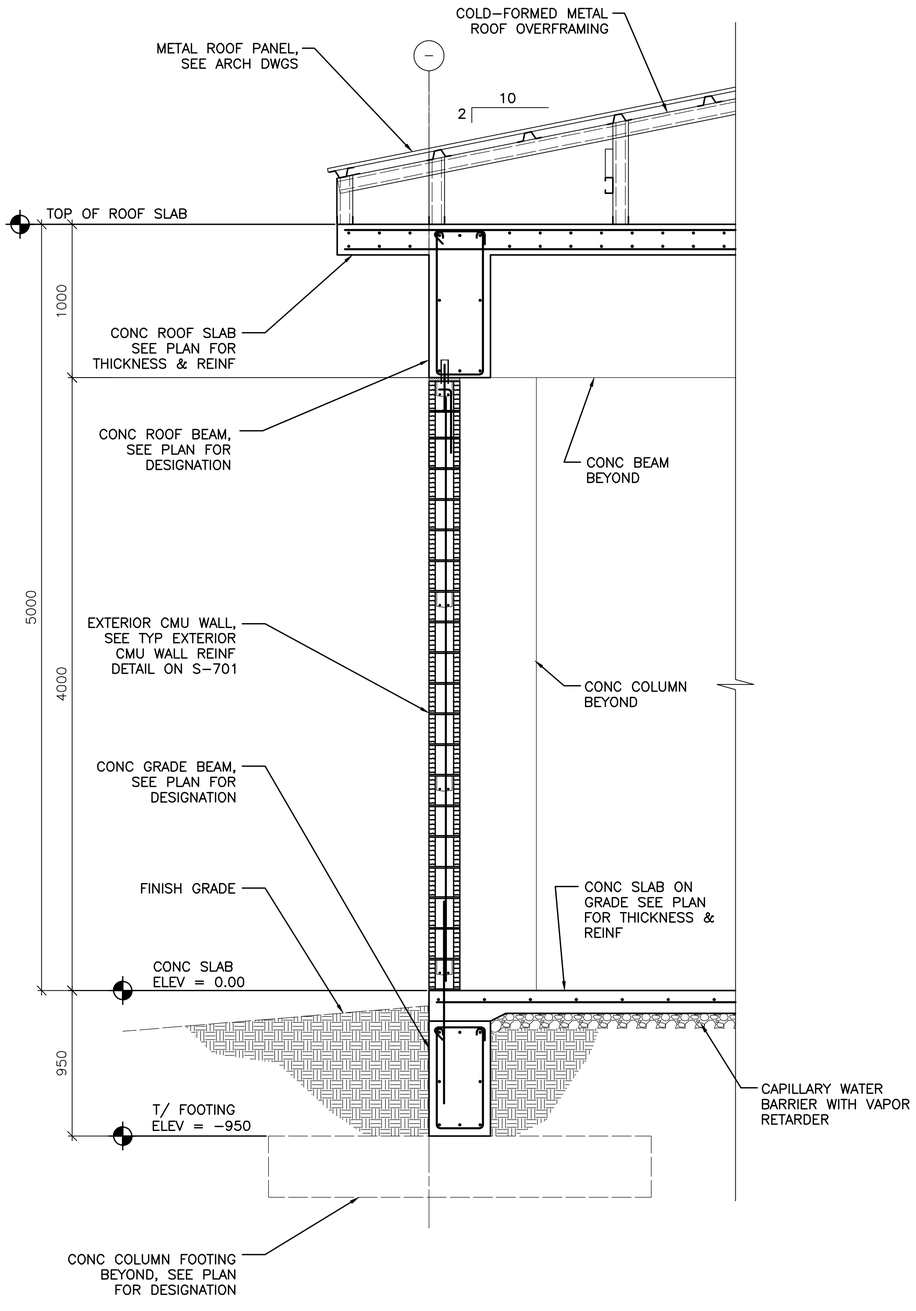

1 S-101 **TYPICAL WALL SECTION AT EXTERIOR MASONRY WALL**

SCALE: 1:20

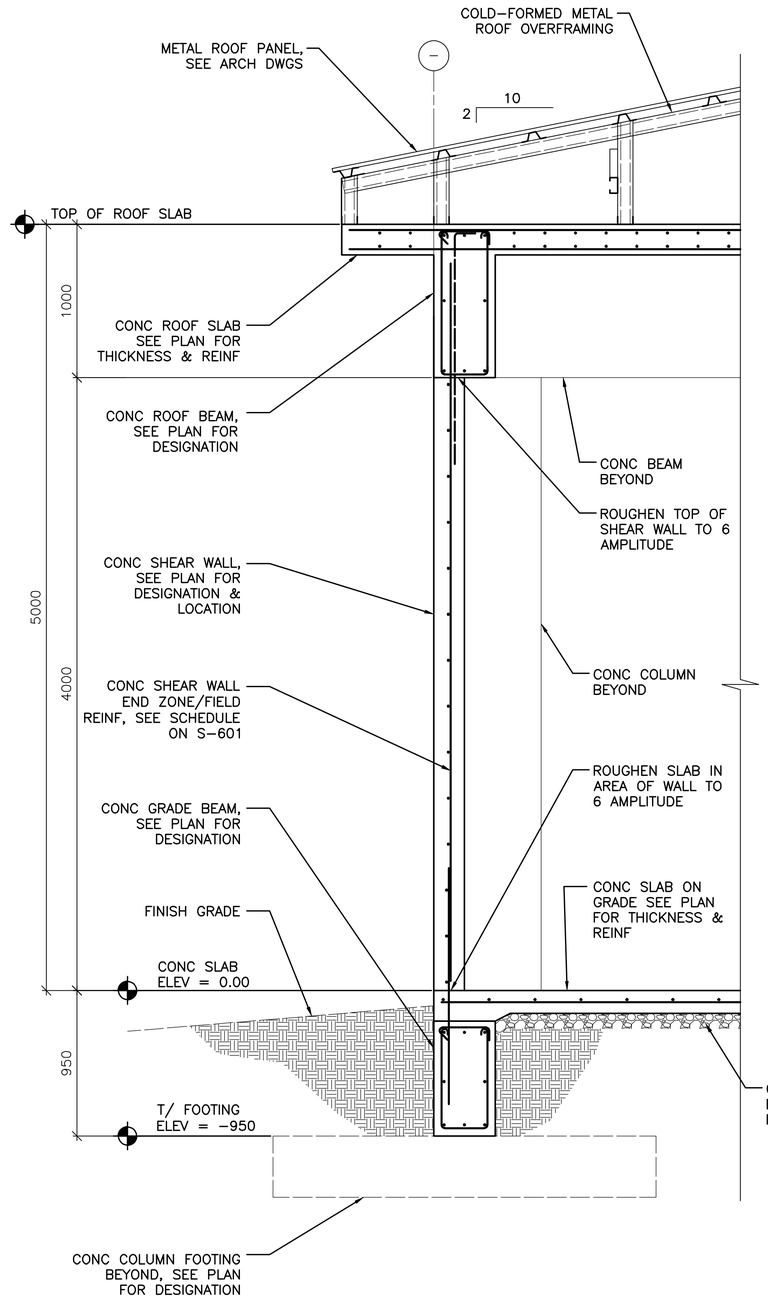

2 S-101 **TYPICAL WALL SECTION AT CONCRETE SHEAR WALL**

SCALE: 1:20

0 400 800
SCALE: 1:20

UNLESS OTHERWISE NOTED, LINEAR DIMENSIONS SHOWN ON DRAWINGS ARE IN MILLIMETERS (mm)

APPROVED:

A/E DESIGNER OF RECORD

SEAL:

GEORGIA REGISTERED 1-23-10 No. 27141 PROFESSIONAL ENGINEER CHRISTOPHER W. WHITMORE

US ARMY CORPS OF ENGINEERS
AFGHANISTAN ENGINEER DISTRICT

Mark	Description	Date	Appr.	Mark	Description	Date	Appr.

Date: 2/23/10 Rev: 0
Design file no.
Drawing code:
File name: ANACB3008-40188
Plot date: 2/23/2010
Plot scale: x:X

Designed by: KMP/MMY
Dwn by: RCG
Ckd by: CWW
Reviewed by: LHM
Submitted by: BAKER

U.S. ARMY ENGINEER DISTRICT, AFGHANISTAN
CORPS OF ENGINEERS
APO AE 96338

Michael Baker Jr., Inc
A unit of Michael Baker Corporation
Airside Business Park
100 Airside Drive
Moon Township, PA 15108
www.mbakercorp.com

AFGHAN NATIONAL ARMY
REGIONAL MILITARY TRAINING CENTER
STANDARD DESIGN

300 STUDENT CLASSROOM BUILDING
(1) 300 STUDENT CLASSROOM

BUILDING SECTIONS

Sheet reference number:
S-401

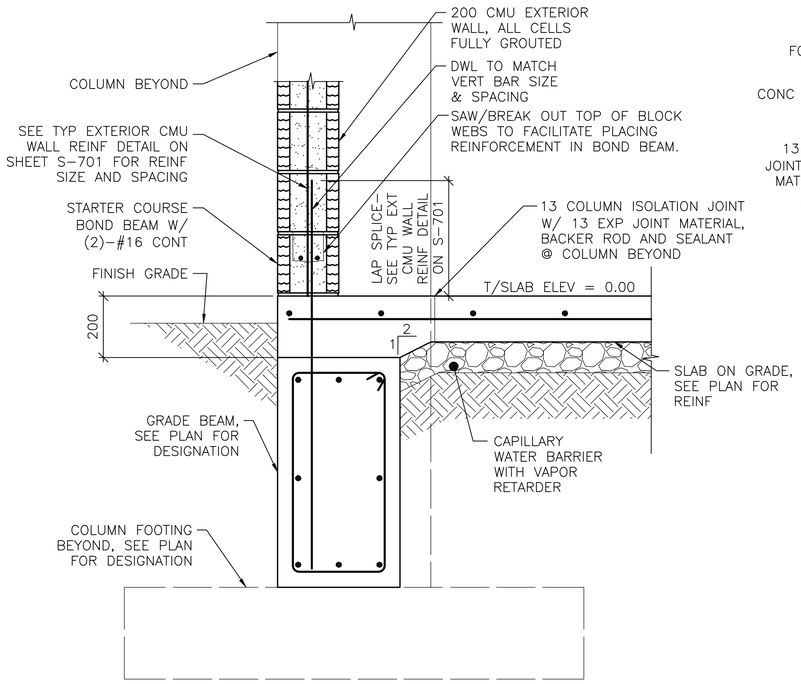

NOTE:
1. SECTION IS SIMILAR FOR INTERIOR CMU PARTITIONS OVER GRADE BEAMS SHOWING THICKENED 200 CONC SLAB AREA.

1 / S-101 **SECTION**
SCALE: 1:10

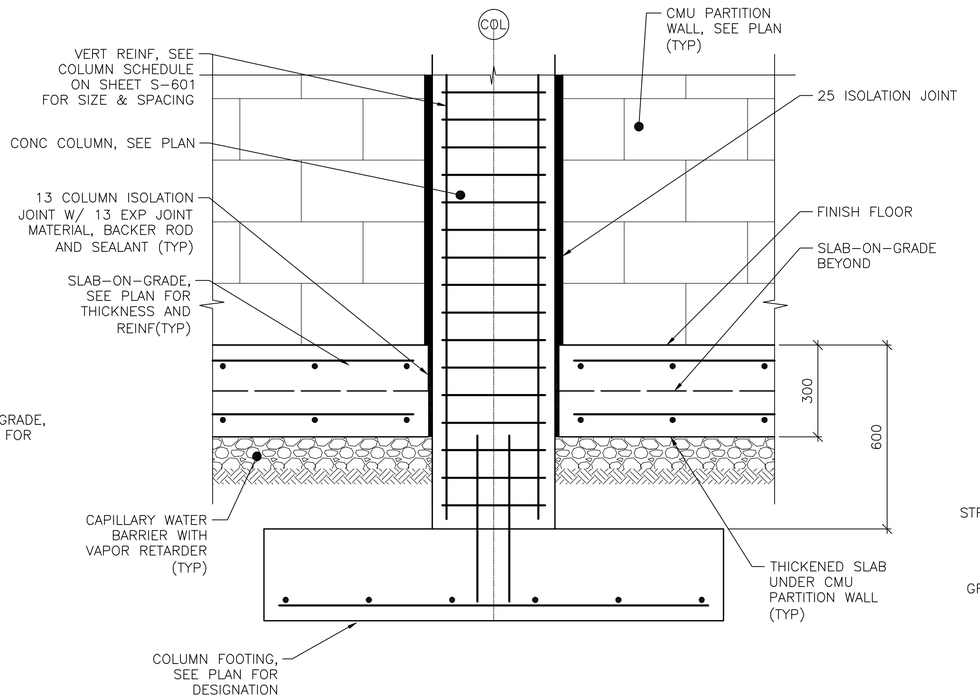

2 / S-101 **SECTION**
SCALE: 1:10

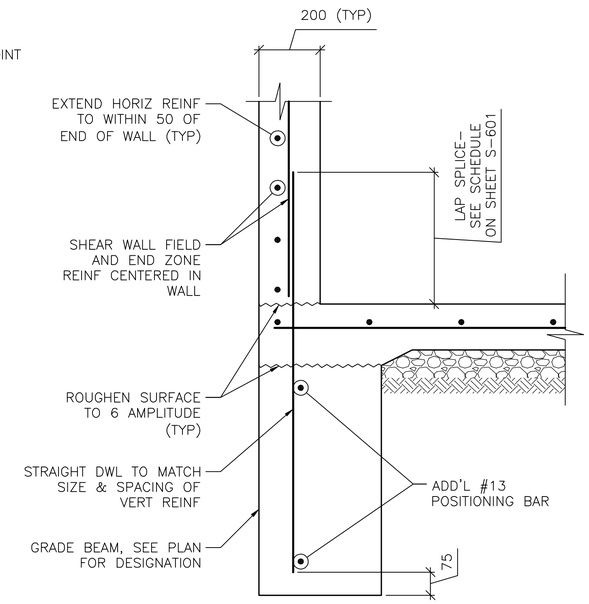

NOTE:
1. SECTION DEPICTS SHEAR WALL TERMINATION ONLY. GRADE BEAM REINFORCING NOT SHOWN FOR CLARITY.
2. SEE SHEET S-601 AND SHEET S-702 FOR SCHEDULED FIELD AND END ZONE REINF.

3 / S-101 **SECTION**
SCALE: 1:10

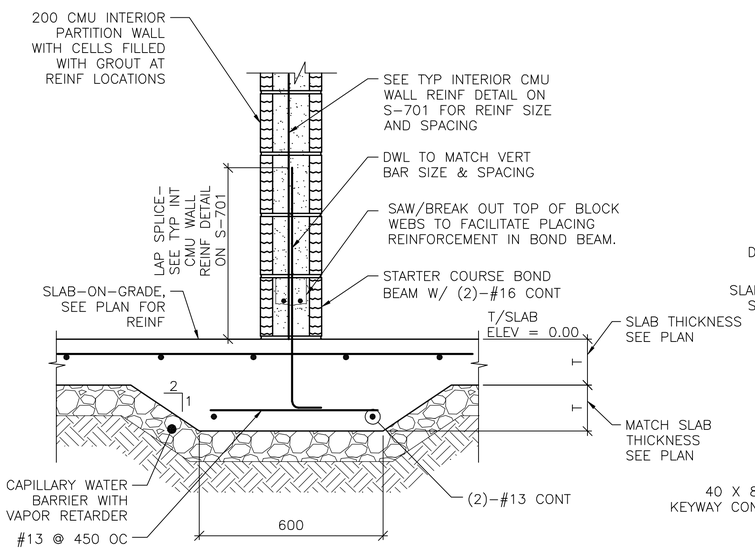

4 / S-101 **SECTION**
SCALE: 1:10

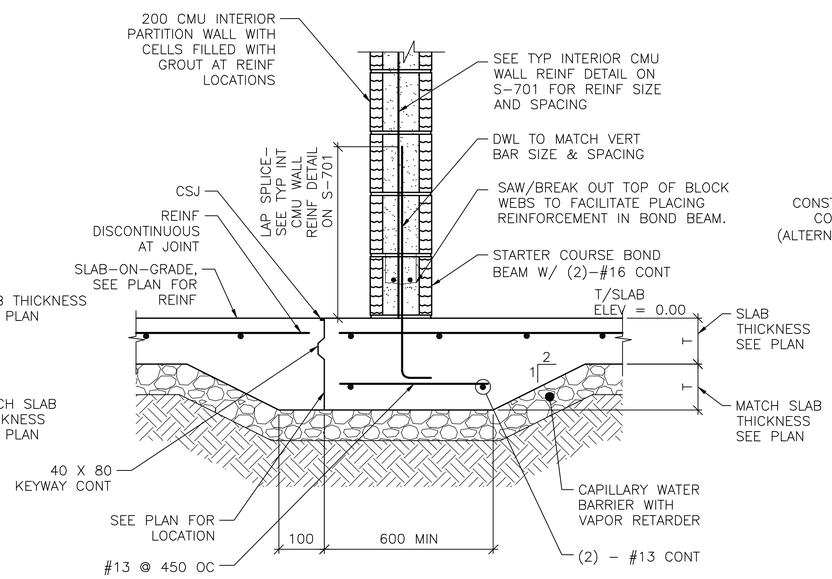

5 / S-101 **SECTION**
SCALE: 1:10

NOTE:
1. DETAIL IS APPLICABLE AT CONTROL JOINTS RUNNING PARALLEL TO CMU WALLS AND WITHIN 300 OF FACE OF WALL.

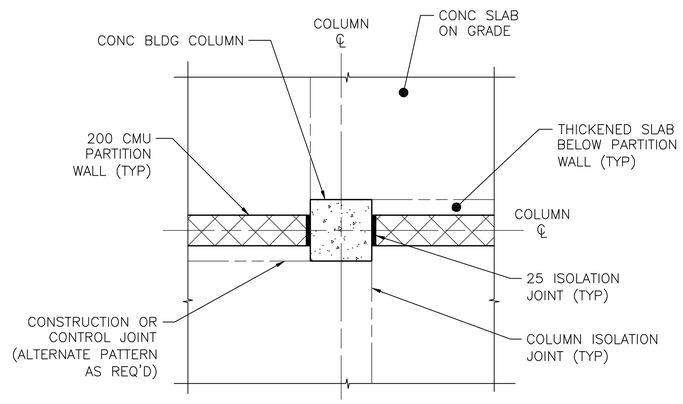

A / S-501 **COLUMN ISOLATION JOINT DETAIL**
SCALE: NTS

0 200 400
SCALE: 1:10

UNLESS OTHERWISE NOTED, LINEAR DIMENSIONS SHOWN ON DRAWINGS ARE IN MILLIMETERS (mm)

APPROVED:

A/E DESIGNER OF RECORD

SEAL:

GEORGIA REGISTERED 1-29-10 No. 27141 PROFESSIONAL ENGINEER CHRISTOPHER W. WHITMORE

US ARMY CORPS OF ENGINEERS
AFGHANISTAN ENGINEER DISTRICT

Mark	Description	Date	Appr.	Mark	Description	Date	Appr.

Date: 2/23/10 Rev: 0
Design file no.
Drawing code:
File name: ANACB3008-50150
Plot date: 2/23/2010
Plot scale: X:X

Designed by: KMP/MMY
Dwn by: RCG Ckd by: CWW
Reviewed by: LHM
Submitted by: BAKER

U.S. ARMY ENGINEER DISTRICT, AFGHANISTAN
CORPS OF ENGINEERS
APO AE 96338

Michael Baker Jr., Inc
A unit of Michael Baker Corporation
Airside Business Park
100 Airside Drive
Moon Township, PA 15108
www.mbakercorp.com

AFGHAN NATIONAL ARMY
REGIONAL MILITARY TRAINING CENTER
STANDARD DESIGN

300 STUDENT CLASSROOM BUILDING
(1) 300 STUDENT CLASSROOM

FOUNDATION SECTIONS

Sheet reference number:
S-501

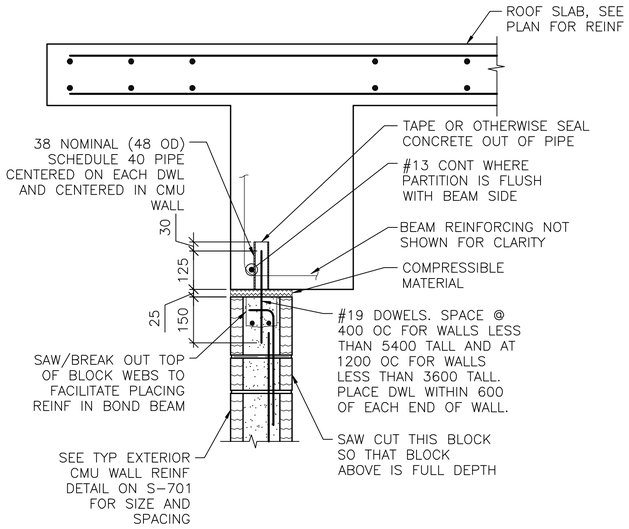

NOTES:
1. EXTEND DOWEL REINF TO 25 CLEAR FROM TOP OF CMU WALL.

1 S-101 **SECTION**
SCALE: 1:10

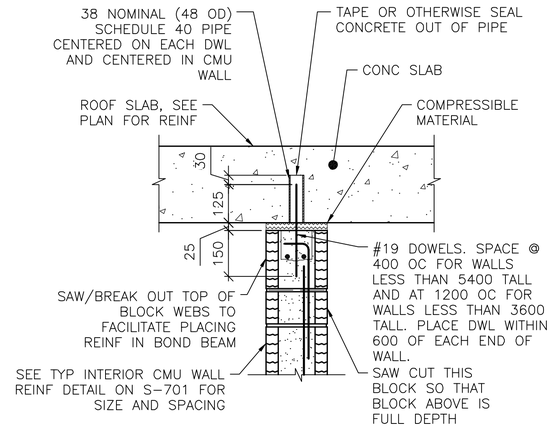

NOTES:
1. EXTEND DOWEL REINF TO 25 CLEAR FROM TOP OF CMU WALL.
2. SLAB REINF NOT SHOWN FOR CLARITY.

2 S-101 **SECTION**
SCALE: 1:10

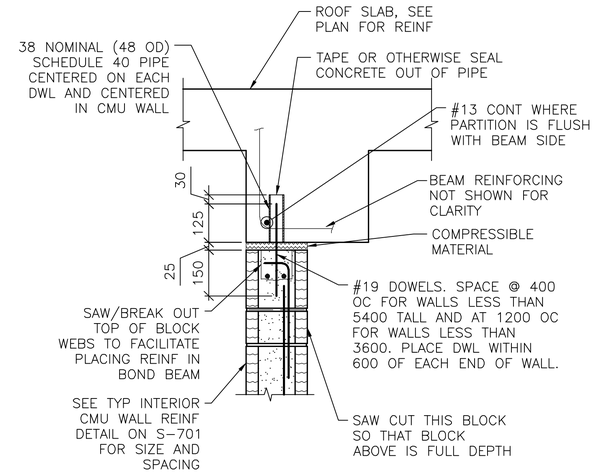

NOTES:
1. EXTEND DOWEL REINF TO 25 CLEAR FROM TOP OF CMU WALL.
2. PARTITION WALL MAY BE CENTERED UNDER THE BEAM OR FLUSH AS SHOWN. SEE PLAN FOR LOCATION.

3 S-101 **SECTION**
SCALE: 1:10

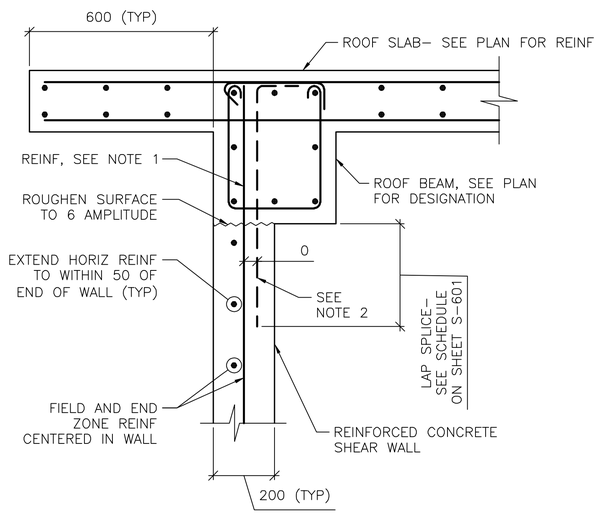

NOTES:
1. TERMINATE "FIELD" VERT REINF & END ZONE REINF @ 50 CLEAR FROM TOP OF ROOF SLAB.
2. WHERE END ZONE REINFORCING CANNOT BE DEVELOPED IN BEAM DEPTH, PROVIDE HOOKED DWLS SAME SIZE & SPACING. PROVIDE TENSION LAP BELOW ROOF BEAM.
3. SEE SHEET S-601 AND SHEET S-702 FOR SCHEDULED FIELD AND END ZONE REINF.

4 S-101 **SECTION**
SCALE: 1:10

0 200 400
SCALE: 1:10

UNLESS OTHERWISE NOTED, LINEAR DIMENSIONS SHOWN ON DRAWINGS ARE IN MILLIMETERS (mm)

APPROVED:

A/E DESIGNER OF RECORD

SEAL:

GEORGIA REGISTERED 1-29-10 No. 27141 PROFESSIONAL ENGINEER CHRISTOPHER W. WHITMORE

US ARMY CORPS OF ENGINEERS
AFGHANISTAN ENGINEER DISTRICT

Mark	Description	Date	Appr.	Mark	Description	Date	Appr.

Date: 2/23/10
Rev: 0
Design file no.
Drawing code:
File name: ANACB3008-5025C
Plot date: 2/23/2010
Plot scale: X:X

Designed by: KMP/MMY
Dwn by: RCG
Ckd by: CWW
Reviewed by: LHM
Submitted by: BAKER

U.S. ARMY ENGINEER DISTRICT, AFGHANISTAN
CORPS OF ENGINEERS
APO AE 96338

Michael Baker Jr., Inc
A unit of Michael Baker Corporation
Airside Business Park
100 Airside Drive
Moon Township, PA 15108
www.mbakercorp.com

AFGHAN NATIONAL ARMY
REGIONAL MILITARY TRAINING CENTER
STANDARD DESIGN

300 STUDENT CLASSROOM BUILDING
(1) 300 STUDENT CLASSROOM

FRAMING SECTIONS

Sheet reference number:
S-502

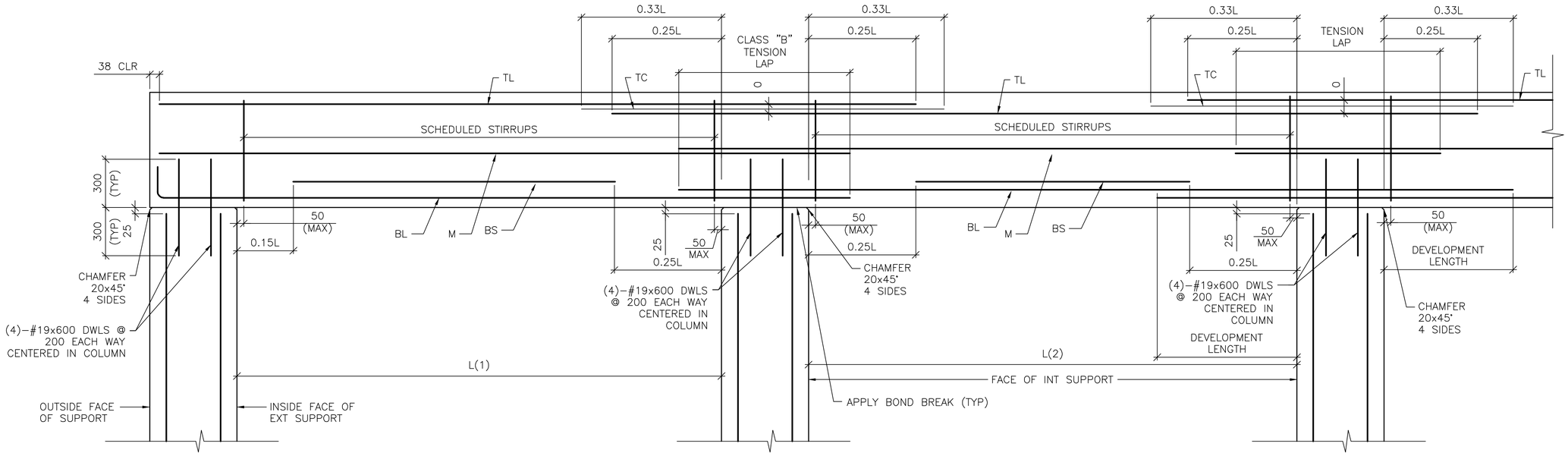

DETAIL NOTE:
1. WORK THIS DETAIL WITH BEAM SCHEDULE ON SHEET S-601.
2. L=GREATEST OF ADJACENT SPANS L(1) OR L(2)
3. ONLY COLUMN CORNER BARS ARE SHOWN

1 / S-503 ROOF BEAM REINFORCING DETAIL

SCALE: NTS

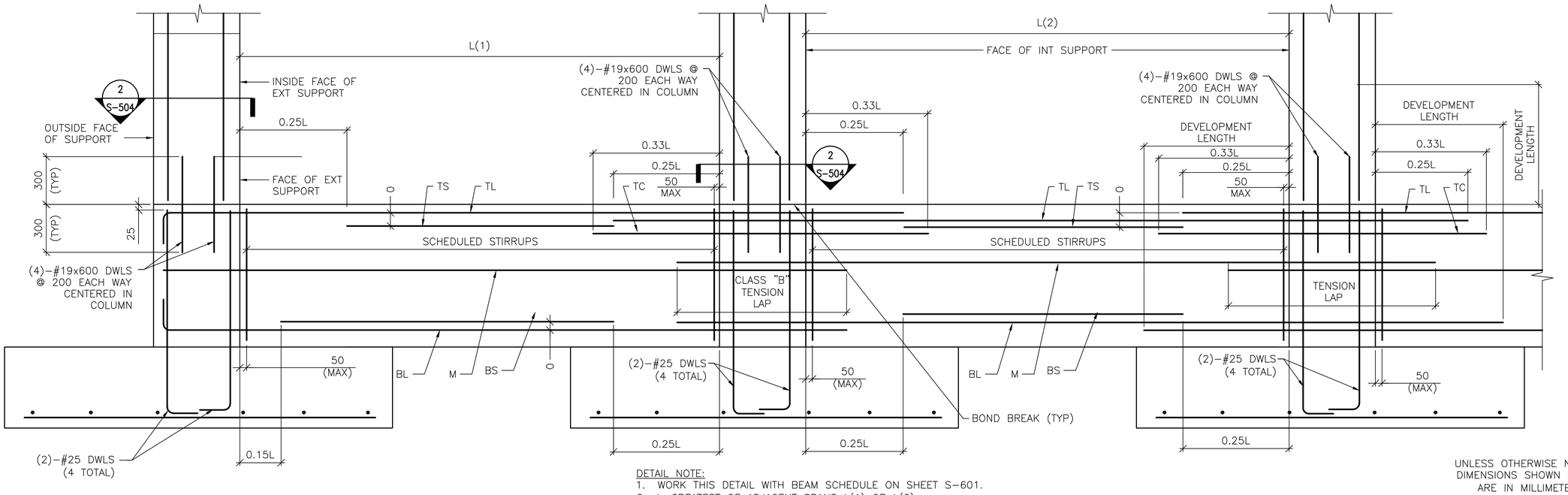

DETAIL NOTE:
1. WORK THIS DETAIL WITH BEAM SCHEDULE ON SHEET S-601.
2. L=GREATEST OF ADJACENT SPANS L(1) OR L(2)
3. ONLY COLUMN CORNER BARS ARE SHOWN.

2 / S-503 GRADE BEAM REINFORCING DETAIL

SCALE: NTS

UNLESS OTHERWISE NOTED, LINEAR DIMENSIONS SHOWN ON DRAWINGS ARE IN MILLIMETERS (mm)

APPROVED:

A/E DESIGNER OF RECORD

SEAL:

GEORGIA REGISTERED 2-23-10 No. 27141 PROFESSIONAL ENGINEER CHRISTOPHER W. WHITMORE

US ARMY CORPS OF ENGINEERS
AFGHANISTAN ENGINEER DISTRICT

Mark	Description	Date	Appr.	Mark	Description	Date	Appr.

U.S. ARMY ENGINEER DISTRICT, AFGHANISTAN
CORPS OF ENGINEERS
APO AE 96338

Michael Baker Jr., Inc.
A unit of Michael Baker Corporation
Airside Business Park
100 Airside Drive
Moon Township, PA 15108
www.mbakercorp.com

Designed by: KMP/MMY
Dwn by: RCG
Ckd by: CWW
Reviewed by: LHM
Submitted by: BAKER
Date: 2/23/10
Design file no.
Drawing code:
File name: ANACB300S-S503T
Plot date: 2/23/2010
Plot scale: X:X
Rev: 0

AFGHAN NATIONAL ARMY
REGIONAL MILITARY TRAINING CENTER
STANDARD DESIGN

300 STUDENT CLASSROOM BUILDING
(1) 300 STUDENT CLASSROOM

BEAM & COLUMN DETAILS

Sheet reference number:
S-503

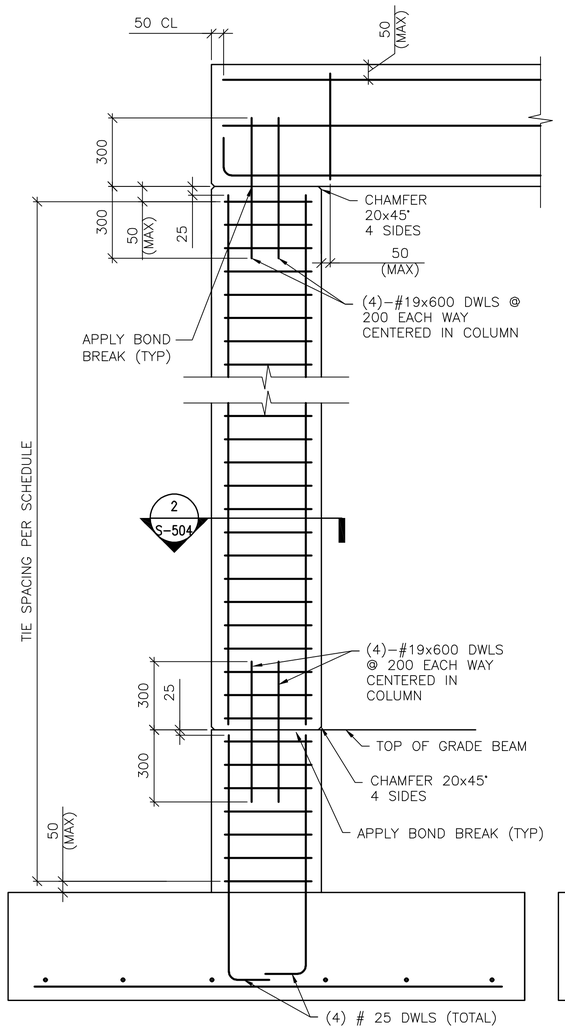

DETAIL NOTE:
1. ONLY COLUMN CORNER BARS ARE SHOWN

1 / S-504 1-STORY COLUMN REINF DETAILS

SCALE: NTS

(WITH GRADE BEAM)

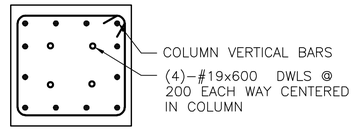

DETAIL NOTE:
1. INTERIOR TIES NOT SHOWN FOR CLARITY. REFER TO DETAIL A THIS SHEET FOR INTERIOR TIE CONFIGURATION.

2 / S-503 2 / S-504 SECTION

SCALE: NTS

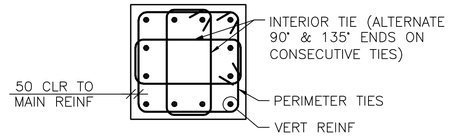

A / S-504 12 BAR COLUMN

SCALE: NTS

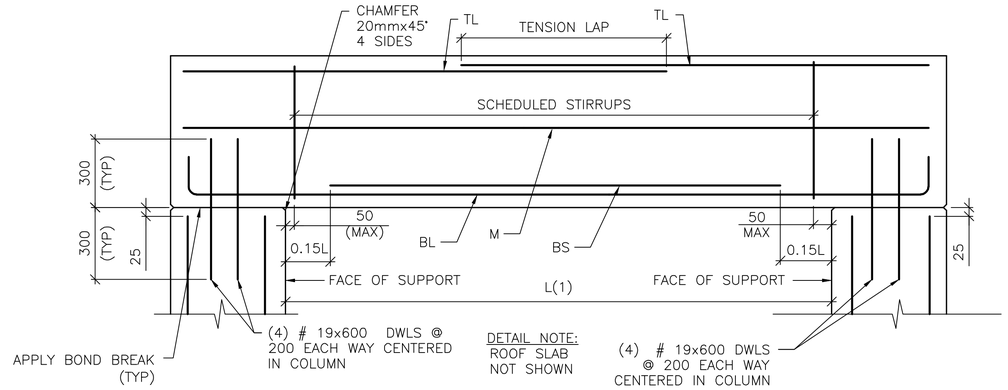

3 / S-504 SINGLE SPAN ROOF BEAM REINFORCING DETAIL

SCALE: NTS

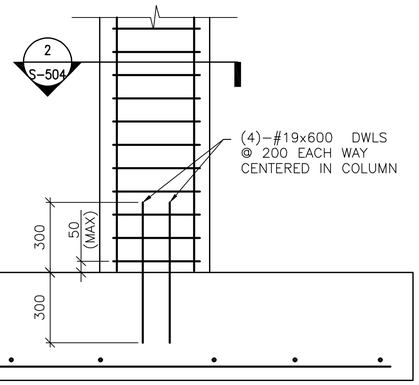

DETAIL NOTE:
1. ONLY COLUMN CORNER BARS ARE SHOWN

1 / S-504 1-STORY COLUMN REINF DETAILS

SCALE: NTS

(WITHOUT GRADE BEAM)

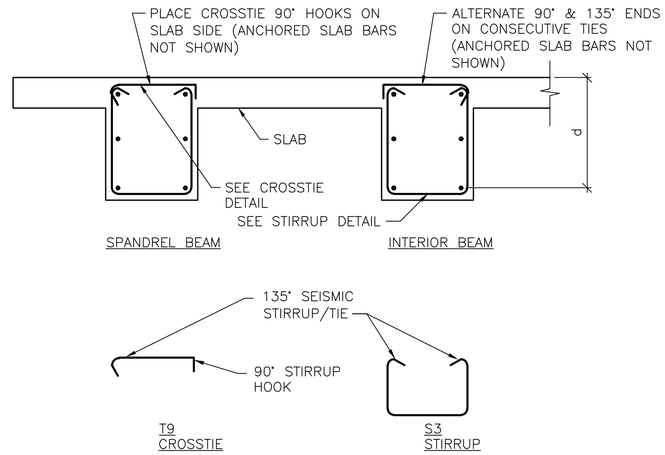

B / S-504 BEAM REINFORCEMENT DETAILS

SCALE: NTS

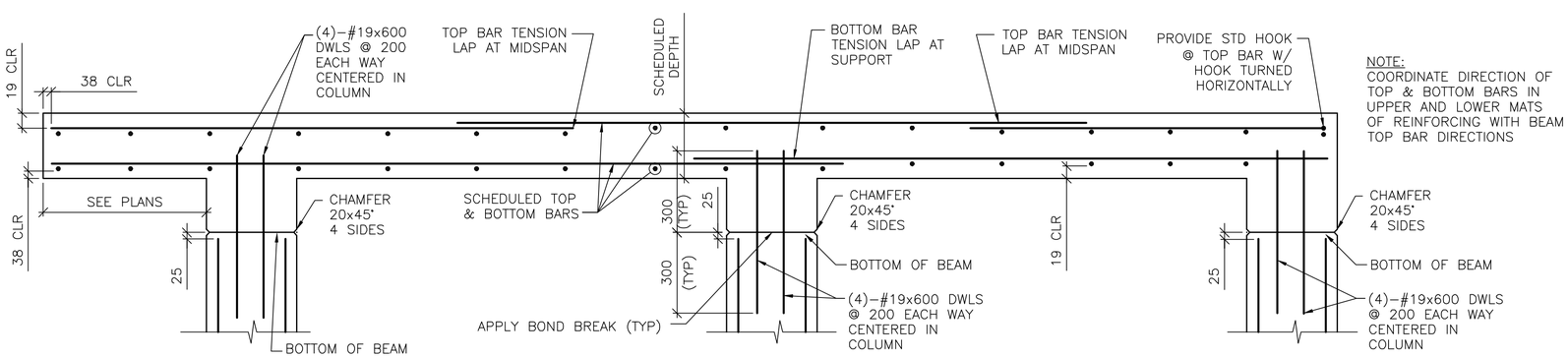

4 / S-504 FRAMED SLAB REINFORCING DETAIL

SCALE: NTS

UNLESS OTHERWISE NOTED, LINEAR DIMENSIONS SHOWN ARE IN MILLIMETERS (mm)

APPROVED:

A/E DESIGNER OF RECORD

SEAL:

GEORGIA REGISTERED 2-23-10 No. 27141 PROFESSIONAL ENGINEER CHRISTOPHER W. WHITMORE

US ARMY CORPS OF ENGINEERS
AFGHANISTAN ENGINEER DISTRICT

Mark	Description	Date	Appr.	Mark	Description	Date	Appr.

U.S. ARMY ENGINEER DISTRICT, AFGHANISTAN
CORPS OF ENGINEERS
APO AE 96338

Michael Baker Jr., Inc
A unit of Michael Baker Corporation
Airside Business Park
100 Airside Drive
Moon Township, PA 15108
www.mbakercorp.com

Designed by: KMP/MMY
Dwn by: RCG
Ckd by: CWW
Reviewed by: LHM
Submitted by: BAKER
Date: 2/23/10
Design file no.
Drawing code:
File name: AMCB300S-S04DT
Plot date: 2/23/2010
Plot scale: X:X
Rev: 0

AFGHAN NATIONAL ARMY
REGIONAL MILITARY TRAINING CENTER
STANDARD DESIGN

300 STUDENT CLASSROOM BUILDING
(1) 300 STUDENT CLASSROOM

BEAM & COLUMN DETAILS

Sheet reference number:
S-504

CONCRETE REINFORCEMENT TENSION DEVELOPMENT/LAP SPLICE SCHEDULE

f'c = 28 MPa	LAP CLASS	UNCOATED BARS			
		TOP BARS		OTHER BARS	
BAR SIZES		CASE 1	CASE 2	CASE 1	CASE 2
#10 TO #19	A	50 BAR DIA	74 BAR DIA	38 BAR DIA	57 BAR DIA
	B	64 BAR DIA	96 BAR DIA	50 BAR DIA	74 BAR DIA
#22 TO #57	A	62 BAR DIA	93 BAR DIA	48 BAR DIA	71 BAR DIA
	B	80 BAR DIA	121 BAR DIA	62 BAR DIA	93 BAR DIA

NOTES:
1. TABULATED TENSION DEVELOPMENT LENGTH VALUES ARE TAKEN FROM CRSI DESIGN HANDBOOK 2008 10TH ED.
2. TENSION DEVELOPMENT & TENSION LAP SPLICE LENGTHS ARE EXPRESSED AS MULTIPLES OF BAR DIAMETERS.
3. TABULATED VALUES ARE BASED ON MINIMUM YIELD STRENGTH OF REINFORCEMENT, fy, OF 420MPa.
4. CONCRETE IS NORMAL WEIGHT (2400Kg/m^3) AND 28 DAY COMPRESSIVE STRENGTH = 28MPa.
5. TABULATED VALUES FOR BEAMS & COLUMNS ARE BASED ON TRANSVERSE REINFORCEMENT AND CONCRETE COVER MEETING MINIMUM CODE REQUIREMENTS.
6. CASES 1 & 2, WHICH DEPEND ON THE TYPE OF STRUCTURAL MEMBER, CONCRETE COVER, AND CENTER–TO–CENTER SPACING OF THE BARS ARE DEFINED IN THE TABLE BELOW.
7. LAP SPLICE LENGTHS (MINIMUM 300mm) ARE MULTIPLES OF TENSION DEVELOPMENT LENGTHS: CLASS A = 1.0(TENSION DEVELOPMENT LENGTH) & CLASS B = 1.3(TENSION DEVELOPMENT LENGTH)
8. TOP BARS ARE HORIZONTAL REINFORCEMENT WITH MORE THAN 300mm OF CONCRETE CAST BELOW THE BARS.
9. IT SHALL BE PERMISSIBLE TO CALCULATE WALL AND SLAB REINFORCEMENT TENSION DEVELOPMENT/SPLICE LENGTHS IN ACCORDANCE WITH ACI 12.2.3 OR TABLE 5.3(b) OF CRSI 2008 IN LIEU OF VALUES TABULATED ABOVE.

BEAMS, COLUMNS	CASE 1	CONCRETE COVER AT LEAST 1 BAR DIA AND CENTER–TO–CENTER SPACING AT LEAST 2 BAR DIA
	CASE 2	CONCRETE COVER LESS THAN 1 BAR DIA OR CENTER–TO–CENTER SPACING LESS THAN 2 BAR DIA
ALL OTHERS	CASE 1	CONCRETE COVER AT LEAST 1 BAR DIA AND CENTER–TO–CENTER SPACING AT LEAST 3 BAR DIA
	CASE 2	CONCRETE COVER LESS THAN 1 BAR DIA OR CENTER–TO–CENTER SPACING LESS THAN 3 BAR DIA

CONCRETE COVER SCHEDULE

MINIMUM CONCRETE COVER PROTECTION FOR REINFORCEMENT BARS SHALL BE AS LISTED BELOW: (SEE ACI 318M–05, SECTION 7.7 FOR CONDITIONS NOT NOTED). DIMENSIONS FOR BAR PLACEMENT GIVEN IN SECTIONS AND DETAILS SHALL SUPERSEDE MINIMUM COVER REQUIREMENTS GIVEN HERE. DIMENSIONS ARE IN mm. PROVIDE STANDARD BAR CHAIRS AND SUPPORT BARS @1200mm MAXIMUM AS REQUIRED TO MAINTAIN CONCRETE PROTECTION SPECIFIED.

FOOTINGS (EARTH FORMED):		70
COLUMNS / PIERS (TO TIES)		40
GRADE BEAMS OR SLAB TURNED DOWN EDGES:		
TOP		40
BOTTOM (EARTH FORMED)		70
SIDES (EARTH FORMED)		70
SIDES (BOARD FORMED)	#16 BAR & SMALLER	40
	#19 THRU #36 BAR	50
ELEVATED BEAMS & SLABS:		
BEAM TIES & STIRRUPS (NOT EXPOSED TO WEATHER)		40
BEAM TIES & STIRRUPS (EXPOSED TO WEATHER)		50
FLOOR SLABS (NOT EXPOSED TO WEATHER)		20
FLOOR SLABS (EXPOSED TO WEATHER)		
#19 & LARGER		50
#13 & SMALLER		40
ROOF SLAB BARS		25
SLABS ON GRADE		
NOT EXPOSED TO WEATHER (FROM TOP)		20
EXPOSED TO WEATHER (FROM TOP)		40
UTILITY TUNNEL WALLS, RETAINING WALLS AND SHEAR WALLS. (NO SURFACES SHALL BE EARTH FORMED)		
EARTH SIDE AND FRONT SIDE (EXPOSED TO WEATHER)		
#16 BAR AND SMALLER		40
#19 THRU #36 BAR		50

COLUMN FOOTING SCHEDULE

MARK	FOOTING SIZE (mm)			FOOTING REINFORCING	REMARKS
	LENGTH	WIDTH	THICKNESS		
F1	3400	3400	300	(10)–#22 EW BOTT	-----
F2	6700	3400	300	(16)–#22 SHORT BOTT (8)–#22 LONG BOTT	-----
F3	4200	4200	400	(11)–#25 EW BOTT	-----
F4	7600	4200	350	(30)–#25 SHORT BOTT (13)–#25 LONG BOTT	-----

CONCRETE SHEAR WALL SCHEDULE

MARK	TYPE	WALL LENGTH (L) (mm)	WALL REINFORCEMENT		REMARKS
			END ZONE	FIELD	
SW1	C	9450	(8)–#16 @ 150mm OC	#13 @ 300mm OC	-----
SW2	D	5150	(16)–#16 @ 150mm OC	#13 @ 300mm OC	-----

NOTES:
1. WORK THIS SCHEDULE WITH SHEAR WALL DETAILS ON SHEETS S–702
2. SEE PLAN FOR LOCATION OF SHEAR WALL(S).
3. VERTICAL "FIELD" BARS MAY BE OMITTED IN LOCATION OF "END ZONE" REINFORCEMENT.
4. WALL FIELD REINF LISTED APPLIES TO VERT & HORIZ BARS.
5. WALL FIELD REINFORCEMENT CENTERED IN WALL.

STANDARD HOOKS IN TENSION PER (ACI 318M–05)

HOOK DEVELOPMENT LENGTH (mm)	
BAR SIZE	f'c 28 MPa
#10	180
#13	250
#16	300
#19	380
#22	430
#25	480
#29	560
#32	610
#36	690

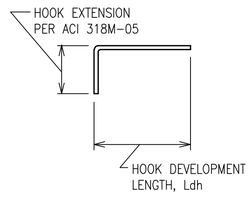

NOTES:
1. CONCRETE IS NORMAL WEIGHT CONCRETE.
2. BAR YIELD STRENGTH, fy = 420 MPa
3. SIDE COVER REQUIREMENTS OF ACI SECT. 12.5.3 ARE ASSUMED TO NOT BE MET.
4. TIE OR STIRRUP REQUIREMENTS OF ACI SECT. 12.5.3 ARE ASSUMED TO NOT BE MET.
5. REDUCTION FOR EXCESS REINFORCEMENT IS NOT TAKEN.
6. HOOK DEVELOPMENT LENGTH IS VALID FOR 180° HOOKS ALSO.

CMU OR CAST IN PLACE CONC LINTEL SCHEDULE (TYP)

OPENING TYPE OR SIZE, BEAM LOCATION OR TYPE	MAX SPAN (mm)	LINTEL DEPTH (mm)	REINFORCING BOTTOM
WALL OPENING	4000	600	(2)–#16 T&B
WALL OPENING	1900	400	(2)–#16 T&B
WALL OPENING	1000	400	(2)–#13 B

1. STRUCTURAL SHEETS DO NOT INDICATE ALL OPENINGS IN MASONRY WALLS. VERIFY NUMBER, SIZE AND LOCATION OF ALL OPENINGS IN MASONRY WALLS FROM ARCHITECTURAL SHEETS AND APPROVED PLUMBING, MECHANICAL, AND ELECTRICAL SHOP DRAWINGS.
2. PROVIDE 200mm BEARING EA END.
3. FOR HEAD DETAILS REFER TO ARCHITECTURAL SHEETS.
4. REINFORCING SHALL BE ASTM A615M, GRADE 420. GROUT FOR CMU LINTELS SHALL HAVE A MINIMUM COMPRESSIVE STRENGTH OF 14 MPa AT 28 DAYS.
5. CONTRACTOR SHALL SUBMIT FOR APPROVAL SHOP DRAWINGS AND SCHEDULES SHOWING SIZE, SPAN, REINFORCEMENT, DETAILS, LOCATIONS, ETC.

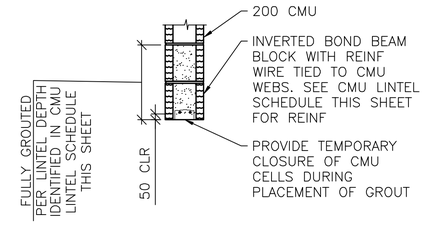

A / S–601 **LINTEL DETAIL**
SCALE: NTS

BEAM SCHEDULE

MARK	BEAM SIZE (mm)		BEAM REINFORCING						STIRRUPS			REMARKS
	DEPTH	WIDTH	BL	BS	TL	TS	TC	M	SIZE	TYPE	SPACING	
GRADE BEAMS												
GB1	750	400	(2)–#29	(1)–#29	(2)–#22	---	---	---	#13	S3 +T9	d/2	-----
GB2	750	400	(2)–#29	(1)–#29	(2)–#19	---	---	---	#13	S3 +T9	d/2	-----
ROOF BEAMS												
RB1	1000	400	(2)–#29	(2)–#29	(2)–#29	---	---	---	#13	S3 +T9	d/2	-----
RB2	1000	600	(2)–#29	(1)–#29	(2)–#29	---	(1)–#29	---	#13	S3 +T9	d/2	

NOTES:
1. WORK THIS SCHEDULE WITH BEAM REINFORCING DETAILS ON SHEETS S–503 AND S–504.
2. HOOKS SHOWN ON SECTIONS AND DETAILS SHALL BE 90° STD UON.
3. USE ONLY (1) TC AT BEAM COLUMN INTERSECTION WHERE REQ'D.

COLUMN SCHEDULE

COLUMN MARK / DESCRIPTION	TYP UON	---	---	---
TYPE	12–BAR	---	---	---
DIMENSION	700mm SQ.	---	---	---
VERTICAL REINFORCEMENT	(12)–#25	---	---	---
TIES	#13 @ d/2	---	---	---
TOP OF ROOF ELEVATION	3600mm	---	---	---
TOP OF GRADE BEAM ELEVATION	–200mm	---	---	---
TOP OF FOOTING ELEVATION	–950mm	---	---	---

NOTES:
1. WORK THIS SCHEDULE WITH COLUMN DETAILS ON SHEET S–504.
2. SEE FOOTING SCHEDULE ON THIS SHEET FOR FOOTING INFORMATION.
3. COLUMN TIES: INTERIOR TIES TO MATCH SIZE & SPACING OF PERIMETER TIES.
4. HOOKS SHOWN ON SECTIONS & DETAILS SHALL BE 90° STD UON.

UNLESS OTHERWISE NOTED, LINEAR DIMENSIONS SHOWN ARE IN MILLIMETERS (mm)

APPROVED:

A/E DESIGNER OF RECORD

SEAL:

GEORGIA REGISTERED 1-29-10 No. 27141 PROFESSIONAL ENGINEER CHRISTOPHER W. WHITMORE

US ARMY CORPS OF ENGINEERS
AFGHANISTAN ENGINEER DISTRICT

Mark	Description	Date	Appr.	Mark	Description	Date	Appr.

U.S. ARMY ENGINEER DISTRICT, AFGHANISTAN
CORPS OF ENGINEERS
APO AE 96338

Michael Baker Jr., Inc
A unit of Michael Baker Corporation
Airside Business Park
100 Airside Drive
Moon Township, PA 15108
www.mbakercorp.com

Designed by: KMP/MMY
Dwn by: RCG
Ckd by: CWW
Reviewed by: LHM
Submitted by: BAKER
Date: 2/23/10
Rev: 0
Design file no.
Drawing code:
File name: ANACB3005-6015CH
Plot date: 2/23/2010
Plot scale: X:X

AFGHAN NATIONAL ARMY
REGIONAL MILITARY TRAINING CENTER
STANDARD DESIGN

300 STUDENT CLASSROOM BUILDING
(1) 300 STUDENT CLASSROOM

SCHEDULES

Sheet reference number:
S–601

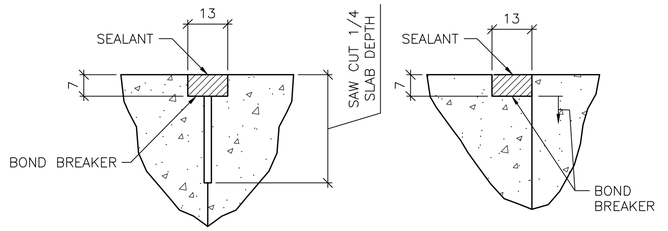

CONTROL JOINT DETAIL

CONSTRUCTION JOINT DETAIL

TYPICAL CONCRETE SLAB JOINT FINISH DETAILS

1 / S-701 SCALE: NTS

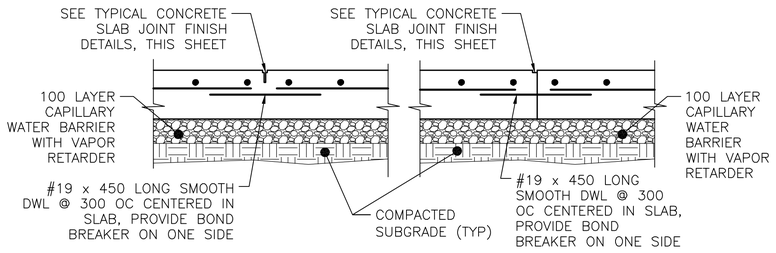

CONTROL JOINT DETAIL

CONSTRUCTION JOINT DETAIL

TYPICAL SLAB ON GRADE JOINT DETAIL

2 / S-701 SCALE: NTS

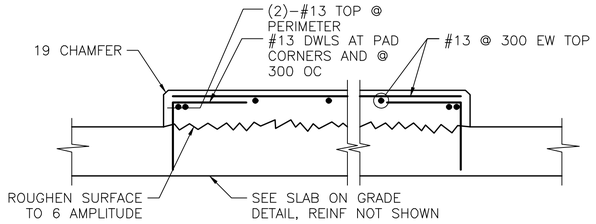

INTERIOR EQUIPMENT PAD DETAIL

3 / S-701 SCALE: NTS

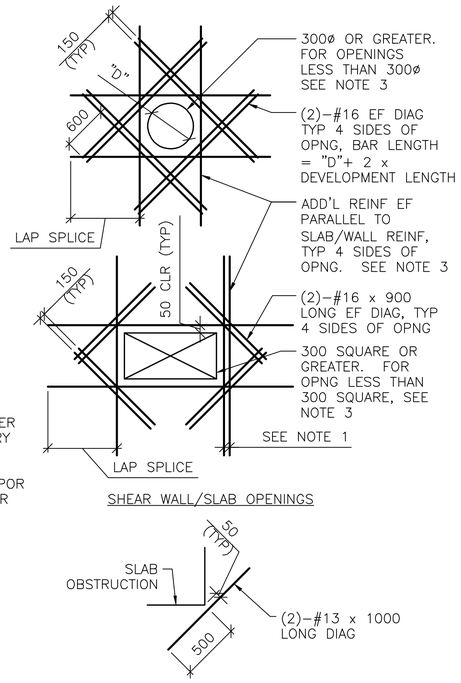

SHEAR WALL/SLAB OPENINGS

RE-ENTRANT CORNERS

DETAIL NOTES:
1. WHERE MORE THAN ONE ADDITIONAL BAR IS REQUIRED PARALLEL TO THE EXISTING SLAB/WALL REINFORCING THE ADDITIONAL REINFORCING BARS SHALL BE SPACED AT 100 ON CENTER.
2. ADDITIONAL REINFORCING PARALLEL TO THE SLAB/WALL REINFORCING SHALL BE #16 BARS THAT PROVIDE A STEEL AREA ON EACH SIDE OF THE OPENING EQUAL TO 1/2 THE AREA OF THE REINFORCING CUT BY THE OPENING.
3. FOR OPENINGS WITH SIDES OR DIAMETERS LESS THAN 300 SPREAD THE SLAB/WALL REINFORCING TO CLEAR THE OPENING.

ADD'L CONCRETE REINFORCEMENT DETAILS

4 / S-701 SCALE: NTS

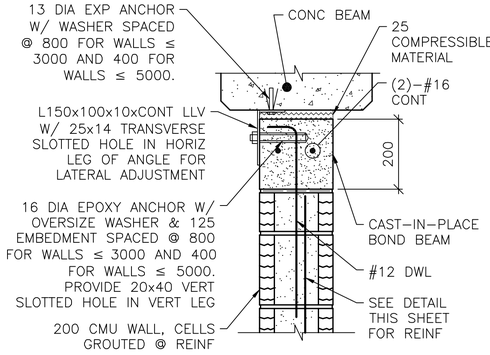

NOTE:
1. AT ANCHOR BOLTS, ADD AN ADDITIONAL 25 COMPRESSIBLE MATERIAL BELOW EXP ANCHOR HEAD.

INTERIOR BEAM

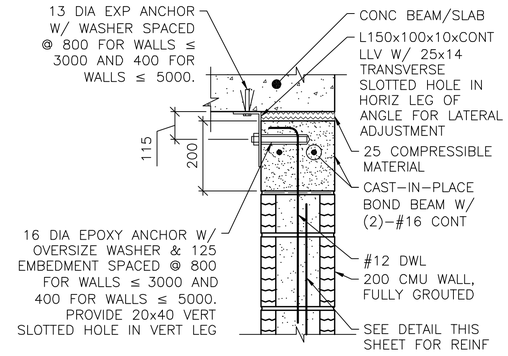

EXTERIOR WALL OR SLAB

NOTES:
1. THIS DETAIL IS AN ALTERNATE TOP OF WALL ANCHORAGE DETAIL TO BE USED AT THE CONTRACTOR'S OPTION IN LIEU OF DETAILS SHOWN ON S-400 & S-500 DRAWINGS.
2. CAST-IN-PLACE BOND BEAM SHOWN AT TOP OF WALL IS ALSO APPLICABLE FOR INTERMEDIATE AND STARTER COURSE BOND BEAMS WITHIN WALL.

ALTERNATE TOP OF CMU WALL BRACING DETAILS

5 / S-701 SCALE: NTS

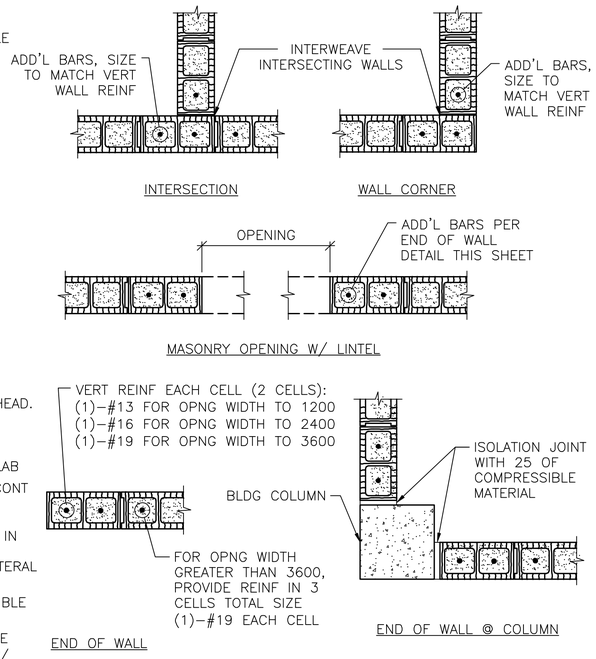

NOTES:
1. OPENING WIDTH SHALL NOT EXCEED 3600 FOR THIS TYPE OF JAMB.
2. ALL CELLS FULLY GROUTED AT EXTERIOR WALLS. AT INTERIOR WALLS, ONLY GROUT CELLS CONTAINING REINF.

TYP CMU DETAILS

6 / S-701 SCALE: NTS

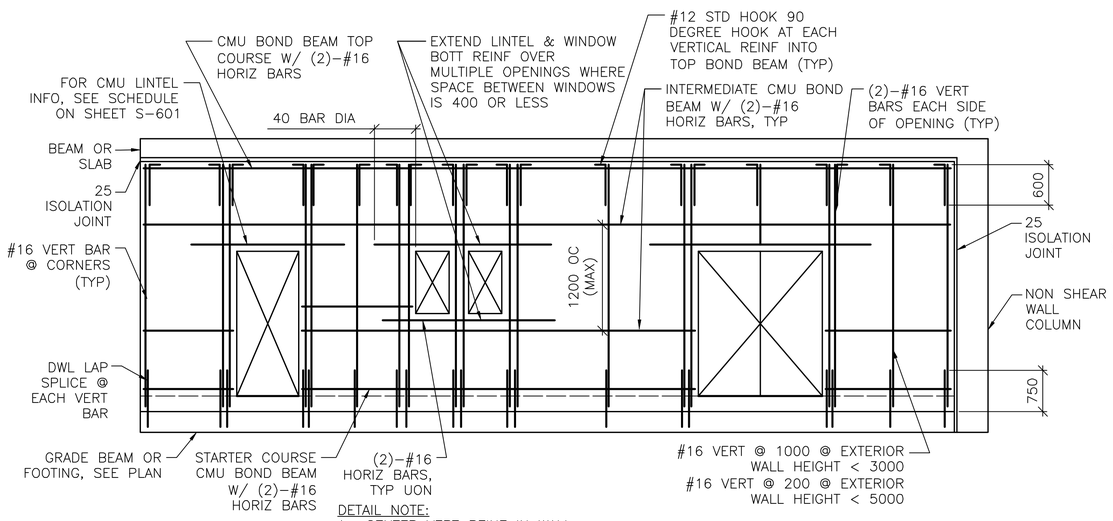

DETAIL NOTE:
1. CENTER VERT REINF IN WALL.
2. GROUT ALL CMU CELLS.
3. REFERENCE ARCH DWGS FOR JOINT INFORMATION
4. DOWELS BETWEEN TOP BOND BEAM AND BEAM/SLAB ABOVE (INCLUDING EMBEDDED PIPE SLEEVE) NOT SHOWN FOR CLARITY. SEE SPECIFIC S-500 SERIES DWGS FOR INFO.
5. FOR INFORMATION ON ALTERNATE CAST-IN-PLACE WALL BOND BEAMS, REFERENCE ALTERNATE TOP OF CMU WALL BRACING DETAILS THIS SHEET.

TYP EXTERIOR CMU WALL REINF DETAIL

7 / S-701 SCALE: NTS

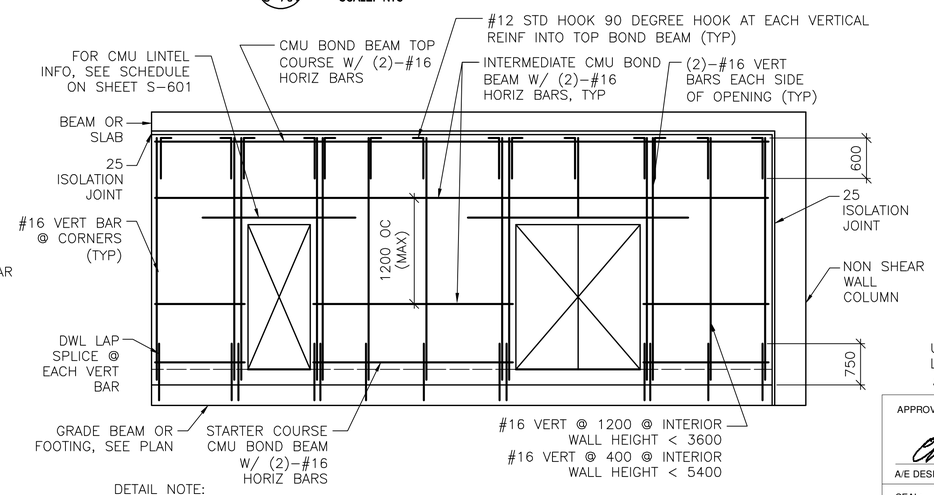

DETAIL NOTE:
1. CENTER VERT REINF IN WALL.
2. GROUT ALL CMU CELLS.
3. REFERENCE ARCH DWGS FOR JOINT INFORMATION
4. DOWELS BETWEEN TOP BOND BEAM AND BEAM/SLAB ABOVE (INCLUDING EMBEDDED PIPE SLEEVE) NOT SHOWN FOR CLARITY. SEE SPECIFIC S-500 SERIES DWGS FOR INFO.
5. FOR INFORMATION ON ALTERNATE CAST-IN-PLACE WALL BOND BEAMS, REFERENCE ALTERNATE TOP OF CMU WALL BRACING DETAILS THIS SHEET.

TYP INTERIOR CMU WALL REINF DETAIL

8 / S-701 SCALE: NTS

UNLESS OTHERWISE NOTED, LINEAR DIMENSIONS SHOWN ARE IN MILLIMETERS (mm)

APPROVED:

A/E DESIGNER OF RECORD

SEAL:

GEORGIA REGISTERED 1-29-10 No. 27141 PROFESSIONAL ENGINEER CHRISTOPHER W. WHITMORE

US ARMY CORPS OF ENGINEERS
AFGHANISTAN ENGINEER DISTRICT

Mark	Description	Date	Appr.	Mark	Description	Date	Appr.

Designed by: KMP/MMY
Dwn by: RCG
Ckd by: CWW
Reviewed by: LHM
Submitted by: BAKER
Date: 2/23/10
Rev: 0
Design file no.
Drawing code:
File name: AMADB3905-701T01T
Plot date: 2/23/2010
Plot scale: X:X

U.S. ARMY ENGINEER DISTRICT, AFGHANISTAN
CORPS OF ENGINEERS
APO AE 96338

Michael Baker Jr., Inc
A unit of Michael Baker Corporation
Airside Business Park
100 Airside Drive
Moon Township, PA 15108
www.mbakercorp.com

AFGHAN NATIONAL ARMY
REGIONAL MILITARY TRAINING CENTER
STANDARD DESIGN

300 STUDENT CLASSROOM BUILDING
(1) 300 STUDENT CLASSROOM

TYPICAL DETAILS

Sheet reference number:
S-701

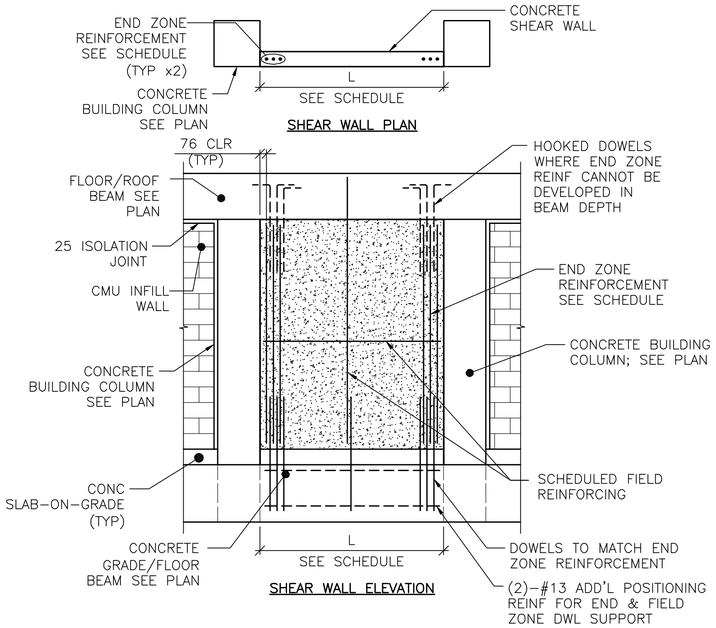

DETAIL NOTES:
1. FIELD REINFORCEMENT IN SHEAR WALL NOT SHOWN COMPLETELY FOR CLARITY.
2. FIELD REINFORCEMENT CENTERED IN WALL.
3. MINIMUM CONC CLEAR DISTANCE FOR END ZONE REINF = 76
4. SEE CONC SHEAR WALL SCHEDULE ON SHEET S-601
5. SEE ARCH DWGS FOR ISOLATION JOINT INFORMATION

1 S-702 TYPE "C" SHEAR WALL DETAIL
SCALE: NTS

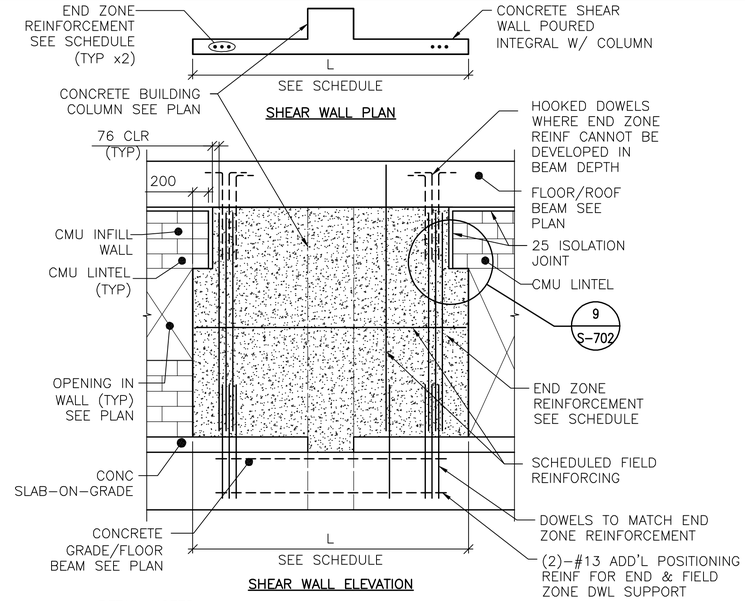

DETAIL NOTES:
1. FIELD REINFORCEMENT IN SHEAR WALL NOT COMPLETELY SHOWN COMPLETELY FOR CLARITY.
2. FIELD REINFORCEMENT CENTERED IN WALL.
3. MINIMUM CONC CLEAR DISTANCE FOR END ZONE REINF = 76
4. SEE CONC SHEAR WALL SCHEDULE ON SHEET S-601
5. SEE ARCH DWGS FOR ISOLATION JOINT INFORMATION

2 S-702 TYPE "D" SHEAR WALL DETAIL
SCALE: NTS

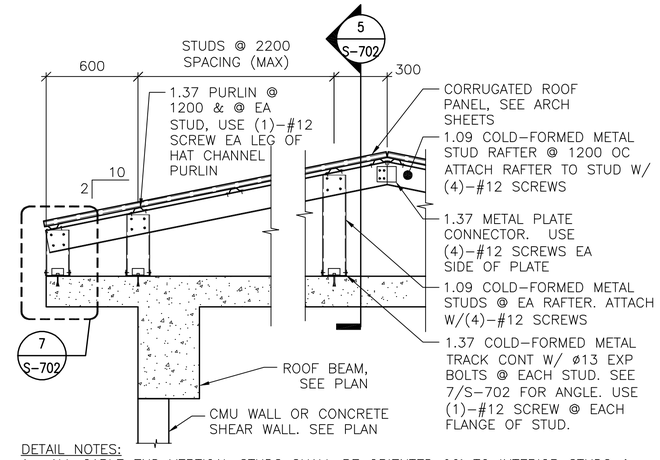

DETAIL NOTES:
1. ALL GABLE END VERTICAL STUDS SHALL BE ORIENTED 90° TO INTERIOR STUDS & SPACED @ 600 OC. GABLE END RAFTER SHALL BE 1.37 METAL TRACK SPANNING CONTINUOUSLY OVER GABLE END STUDS. INSET GIRTS AT GABLE END SHALL BE 1.09 COLD-FORMED METAL STUDS @ 1200 OC ATTACHED VIA 1.37 THICKNESS CLIP ANGLE W/ (2) #12 SCREWS EA LEG.
2. ALL INTERIOR, NON-GABLE END VERTICAL STUDS GREATER THAN 2400 IN LENGTH SHALL BE BACK-TO-BACK W/ #12 SCREWS @ 200 OC STAGGERED.

3 S-702 TYPICAL OVERBUILT ROOF FRAMING DETAIL
SCALE: NTS

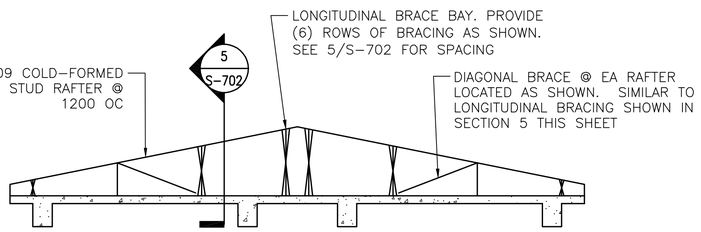

4 S-702 TYPICAL ROOF BRACE LAYOUT
SCALE: NTS

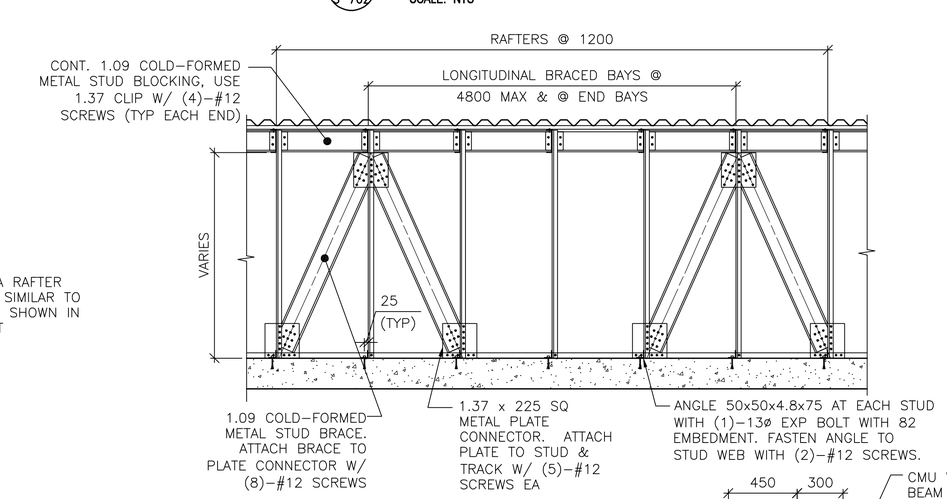

5 S-702 SECTION
SCALE: NTS

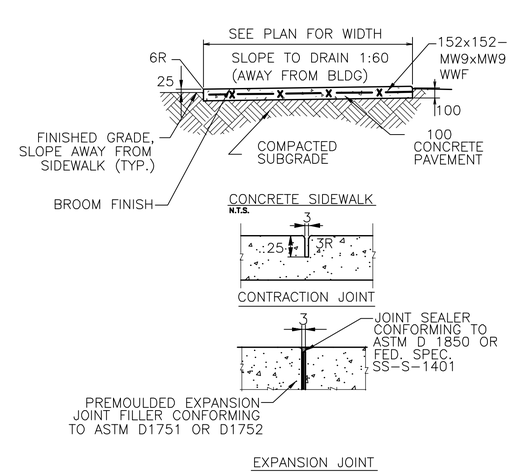

6 S-702 TYPICAL CONCRETE SIDEWALK DETAILS
SCALE: NTS

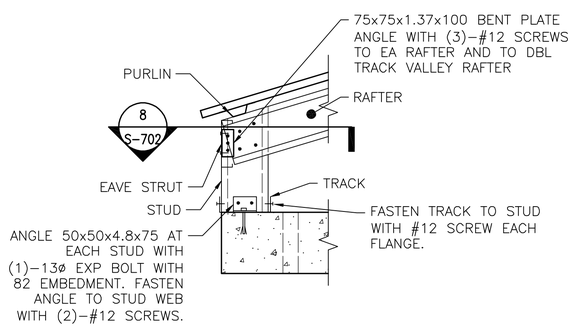

7 S-702 DETAIL
SCALE: NTS

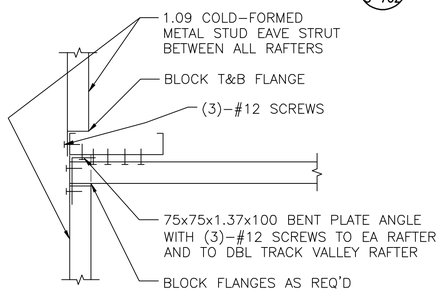

8 S-702 SECTION
SCALE: NTS

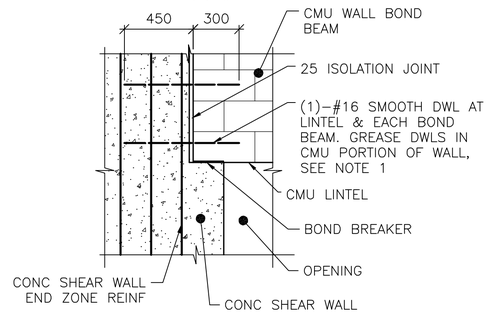

NOTE:
1. TIE SMOOTH DOWEL ROD TO SHEAR WALL END ZONE REINF FOR EACH BOND BEAM AND LINTEL.

9 S-702 SECTION
SCALE: NTS

UNLESS OTHERWISE NOTED, LINEAR DIMENSIONS SHOWN ARE IN MILLIMETERS (mm)

APPROVED:

A/E DESIGNER OF RECORD

SEAL:

GEORGIA REGISTERED 2-23-10 No. 27141 PROFESSIONAL ENGINEER CHRISTOPHER W. WHITMORE

US ARMY CORPS OF ENGINEERS
AFGHANISTAN ENGINEER DISTRICT

Mark	Description	Date	Appr.	Mark	Description	Date	Appr.

U.S. ARMY ENGINEER DISTRICT, AFGHANISTAN
CORPS OF ENGINEERS
APO AE 96338

Michael Baker Jr., Inc.
A unit of Michael Baker Corporation
Airside Business Park
100 Airside Drive
Moon Township, PA 15108
www.mbakercorp.com

Designed by: KMP/MMY
Dwn by: RCG
Ckd by: CWW
Reviewed by: LHM
Submitted by: BAKER
Date: 2/23/10
Rev: 0
Design file no.
Drawing code:
File name: ANACB300S-702TDT
Plot date: 2/23/2010
Plot scale: X:X

AFGHAN NATIONAL ARMY
REGIONAL MILITARY TRAINING CENTER
STANDARD DESIGN

300 STUDENT CLASSROOM BUILDING
(1) 300 STUDENT CLASSROOM

TYPICAL DETAILS

Sheet reference number:
S-702

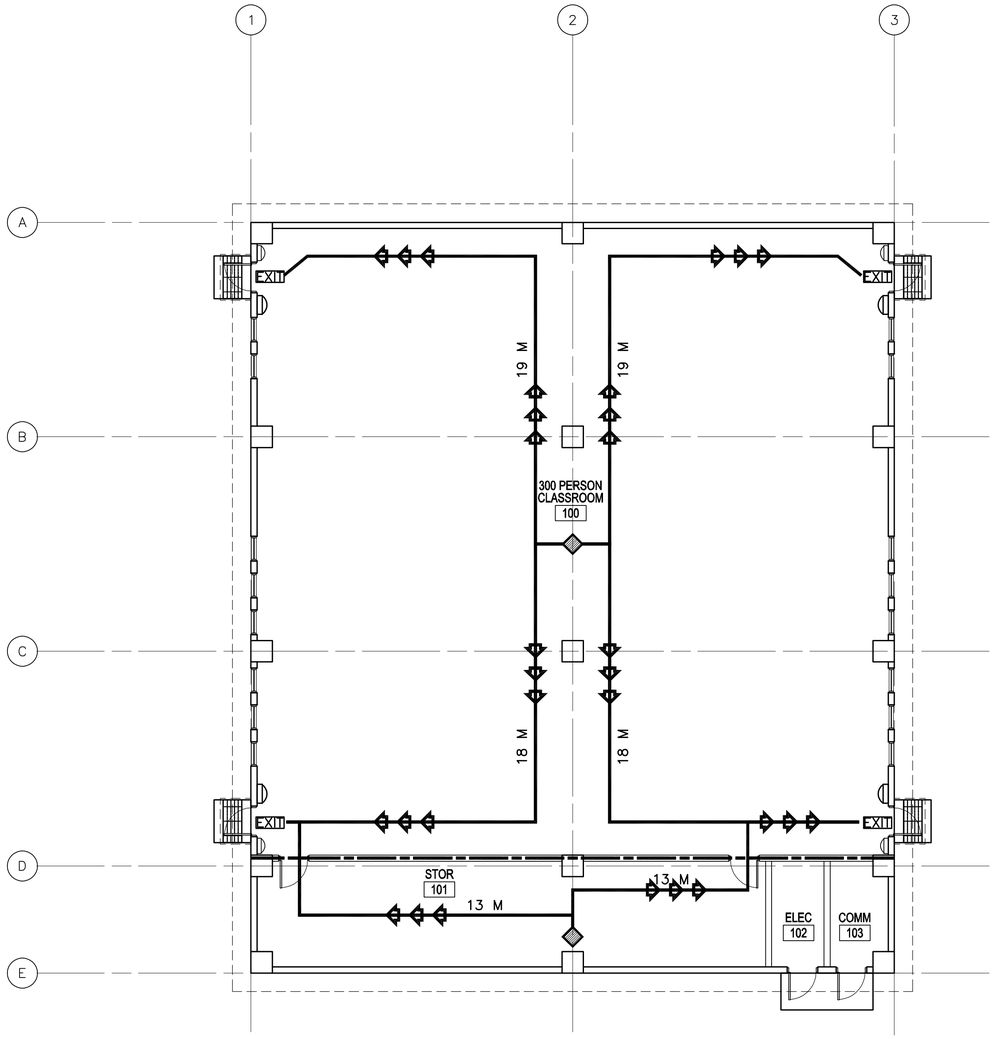

1 A-001 **LIFE SAFETY PLAN**

SCALE: 1:100

CODE ANALYSIS:

1. REFERENCES:
   2006 INTERNATIONAL BUILDING CODE (2006 IBC)
   2006 LIFE SAFETY CODE (2006 NFPA 101)

2. IBC OCCUPANCY CLASSIFICATION:
   GROUP A–3 (ASSEMBLY ≤300 NFPA 101 6.1.2 AND CHAPTER 12)

3. TYPE OF CONSTRUCTION (IBC): TYPE II–B (UNPROTECTED/NONSPRINKLERED)

4. IBC TABLE 503: ALLOWABLE HEIGHT AND BUILDING AREAS:
   GROUP A–3
   ALLOWABLE AREA: 883 SM
   ALLOWABLE HEIGHT: 2 STORIES (16 M)

   GROUP A–3
   PROPOSED AREA: 515 SM
   PROPOSED HEIGHT: 1 STORY (<16 M)

5. IBC TABLE 601 & 602: FIRE RESISTANCE RATING REQUIREMENTS FOR BUILDING ELEMENTS FOR TYPE II–B

BUILDING ELEMENT	RATING (HOUR)	REFERENCE
STRUCTURAL FRAME (COLUMNS, GIRDERS & TRUSSES)	0	TABLE 601
BEARING WALLS		
EXTERIOR	0	TABLE 601
INTERIOR	0	TABLE 601
NONBEARING WALLS & PARTITIONS		
INTERIOR	0	TABLE 601
FLOOR CONSTRUCTION	0	TABLE 601
ROOF CONSTRUCTION	0	TABLE 601
EXTERIOR WALL	0	TABLE 602

6. IBC TABLE 803.5 – INTERIOR WALL AND CEILING FINISH REQUIREMENTS FOR A–3 OCCUPANCY/NONSPRINKLERED

GROUP	EXIT ENCLOSURES AND EXIT PASSAGEWAY	CORRIDORS	ROOMS AND ENCLOSED SPACES
A–3	A	A	C

7. NFPA 101 TABLE 7.3.1.2 – OCCUPANT LOAD
   ASSEMBLY ≤ 300 = 1.4 NET SM/PERSON CALCULATED = 367 OCCUPANTS

8. NFPA 101 TABLE 7.3.3.1 – EGRESS CAPACITY
   ASSEMBLY = 5 MM PER OCCUPANT

   REQUIRED: 1835 MM (367 OCCUPANTS x 5 MM PER OCCUPANT)
   PROPOSED EGRESS CAPACITY: 3600 MM: (4) 900 MM DOORS

9. NFPA 101 PARAGRAPH 12.2.6 – EXIT ACCESS TRAVEL DISTANCE
   REQUIRED: 60 METERS
   PROPOSED: 19 METERS

10. NFPA 101 PARAGRAPH 12.3.6 (1) – CORRIDOR FIRE–RESISTANCE RATING (HOUR)
    CORRIDORS ARE NOT REQUIRED AS DOORS EXIT DIRECTLY TO OUTSIDE

11. NFPA 101 PARAGRAPH 12.2.4.1 AND 7.4.1.1 – MINIMUM NUMBER OF EXITS
    REQUIRED: 2 MINIMUM
    PROPOSED: 4 EXITS

12. INCIDENTAL USE AREAS: IBC TABLES 508.2
    1 HOUR SEPARATION FOR STORAGE ROOMS OVER 9.3 SM
    DOOR SHALL BE 45 MINUTE (IBC TABLE 715.4 AND NFPA 101 TABLE 8.3.42)

LEGEND:

- DENOTES PATHS OF EXIT TRAVEL
- EXIT — DENOTES DOOR AS AN EMERGENCY EXIT
- DENOTES STARTING POINT FOR TRAVEL DISTANCE
- DENOTES FIRE EXTINGUISHER LOCATIONS
- (1) HOUR RATED WALL
- (2) HOUR RATED WALL
- (3) HOUR RATED WALL

LINEAR DIMENSIONS SHOWN ARE IN MILLIMETERS (MM), UNLESS OTHERWISE NOTED

0 2000 4000
SCALE: 1:100

APPROVED:

A/E DESIGNER OF RECORD

SEAL:

STATE OF SOUTH CAROLINA
KEVIN R. CHAFIN
N. Charleston, SC
6374
REGISTERED ARCHITECT

US ARMY CORPS OF ENGINEERS
AFGHANISTAN ENGINEER DISTRICT

Mark	Description	Date	Appr.	Mark	Description	Date	Appr.

U.S. ARMY ENGINEER DISTRICT, AFGHANISTAN
CORPS OF ENGINEERS
APO AE 96338

Michael Baker Jr., Inc
A unit of Michael Baker Corporation
Airside Business Park
100 Airside Drive
Moon Township, PA 15108
www.mbakercorp.com

Designed by: KRC
Dwn by: KJG
Ckd by: NLJ
Reviewed by: LHM
Submitted by: BAKER
Date: 2/23/10
Rev: 0
Design file no.
Drawing code:
File name: ANACB300A-001LSP
Plot date: 2/23/2010
Plot scale:

AFGHAN NATIONAL ARMY
REGIONAL MILITARY TRAINING CENTER
STANDARD DESIGN

300 STUDENT CLASSROOM BUILDING
(1) 300 STUDENT CLASSROOM

LIFE SAFETY PLAN

Sheet reference number:
A–001

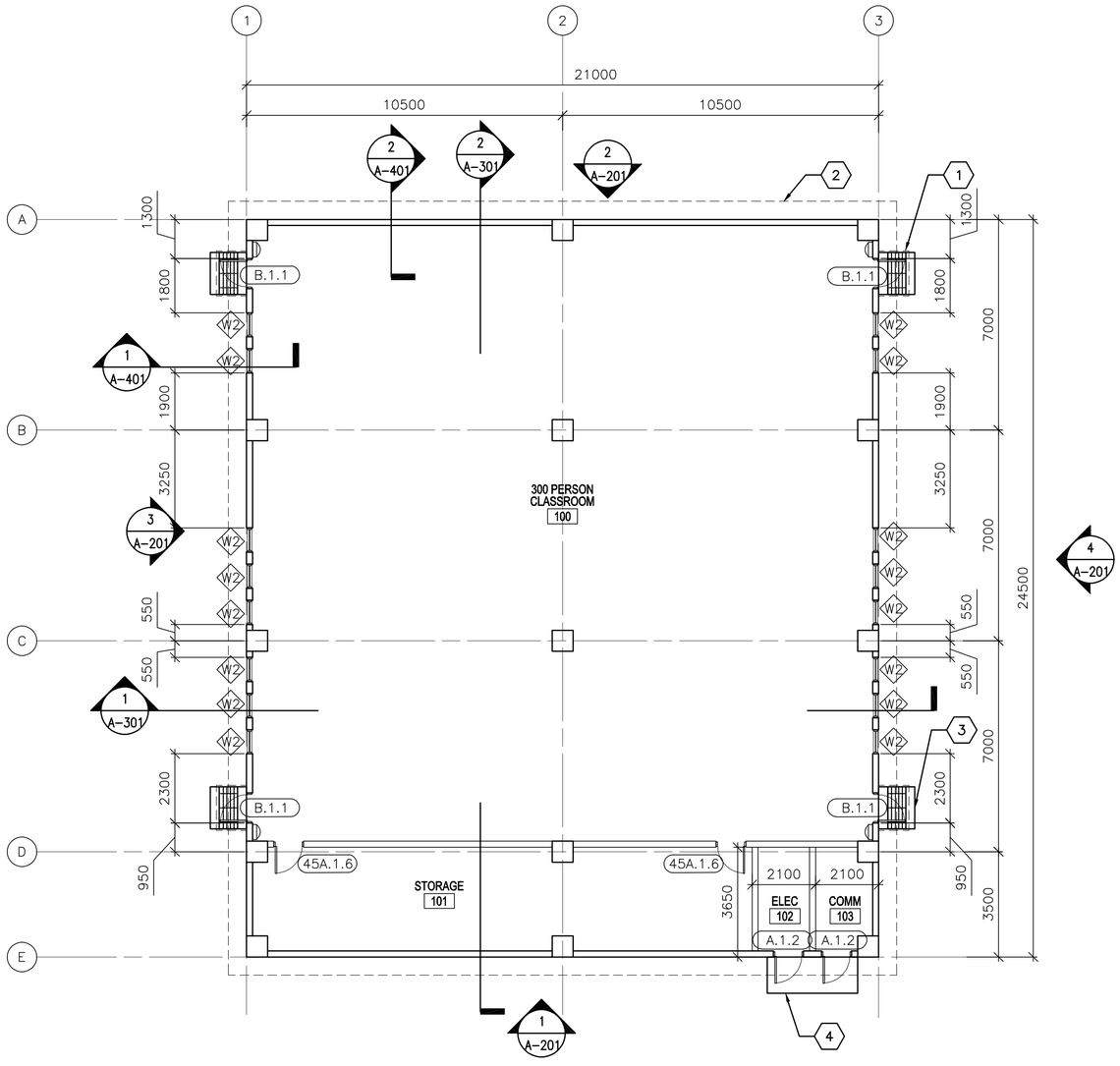

1 A-101 FLOOR PLAN

SCALE: 1:100

GENERAL NOTES:

A. DIMENSIONS ARE SHOWN TO OUTER EDGE OF EXTERIOR STRUCTURAL COLUMNS, STRUCTURAL COLUMN GRID, EDGE OF INTERIOR PARTITIONS, EDGE OF WINDOW OPENINGS, AND TO HINGE SIDE OF DOOR FRAME OPENINGS.

B. HINGE SIDE OF OPENINGS FOR DOORS AND FRAMES SHALL BE LOCATED 200 MM FROM THE ADJACENT WALL OR COLUMN, UNLESS NOTED OTHERWISE.

C. INTERIOR PARTITIONS SHALL BE 200 MM CMU. SEE STRUCTURAL DRAWINGS FOR LOCATION OF CONCRETE SHEAR WALLS.

D. COSMETIC REPAIR OF MINOR DEFECTS: REPAIR OR FILL MORTAR JOINTS AND MINOR DEFECTS, INCLUDING BUT NOT LIMITED TO SPALLS, IN ACCORDANCE WITH MANUFACTURER'S RECOMMENDATIONS AND PRIOR TO COATING APPLICATION. SURFACES TO BE PAINTED SHALL BE CLEAN AND FREE OF FOREIGN MATTER BEFORE APPLICATION OF PAINT. CLEANING SHALL BE SCHEDULED SO THAT DUST AND OTHER CONTAMINANTS WILL NOT FALL ON NEWLY PAINTED SURFACES.

E. CONCRETE, PLASTER AND MASONRY SURFACES SHALL BE ALLOWED TO CURE FOR AT LEAST 30 DAYS BEFORE PAINTING. CONCRETE SLABS–ON–GRADE SHALL BE ALLOWED TO CURE 90 DAYS BEFORE STAINING OR SEALING.

F. DO NOT USE PAINT MATERIALS CONTAINING LEAD CONTENT IN EXCESS OF 0.009 PERCENT OF THE WEIGHT OF THE TOTAL NONVOLATILE CONTENT OF THE PAINT OR THE WEIGHT OF THE DRIED PAINT FILM.

G. DO NOT USE ANY ASBESTOS CONTAINING MATERIALS (ACM) IN PROJECT. ACM IS DEFINED AS 1% OR MORE BY VOLUME.

H. DO NOT USE PAINT MATERIALS CONTAINING MERCURIAL FUNGICIDES.

I. FACTORY PRIMED METAL DOORS AND FRAMES SHALL RECEIVE TWO COATS OF PAINT.

J. FILL REMAINING SPACE AT PENETRATIONS IN FIRE–RATED FLOORS, PARTITIONS AND CEILINGS WITH APPROPRIATE FIRESTOPPING MATERIALS.

K. ALL CEILING FINISHES SHALL BE PAINTED PLASTER APPLIED TO STRUCTURE.

L. ALL WALL FINISHES SHALL BE PAINTED PLASTER APPLIED TO STRUCTURE, UNLESS NOTED OTHERWISE.

M. ALL FLOOR FINISHES SHALL BE EPOXY SEALED CONCRETE, UNLESS NOTED OTHERWISE.

KEY NOTES: (X)

1. CANOPY – SEE DETAIL 2/A–504.
2. LINE OF ROOF OVERHANG ABOVE.
3. CONCRETE STOOP WITH GRATE – SEE DETAIL 1/A–503.
4. CONCRETE STOOP – SEE DETAIL 3/A–503.

LEGEND:

(XXX) DOOR FRAME AND HARDWARE TYPE, SEE SHEET A–601

(A) WINDOW TYPE, SEE SHEET A–601

(X) KEY NOTE

ABBREVIATIONS:

ELEC	ELECTRICAL
MECH	MECHANICAL
JAN	JANITOR
CLOS	CLOSET
COMM	COMMUNICATIONS

LINEAR DIMENSIONS SHOWN ARE IN MILLIMETERS (MM), UNLESS OTHERWISE NOTED

0 2000 4000
SCALE: 1:100

APPROVED:

A/E DESIGNER OF RECORD

SEAL:

STATE OF SOUTH CAROLINA
KEVIN R. CHAFIN
N. Charleston, SC
6374
REGISTERED ARCHITECT

US ARMY CORPS OF ENGINEERS
AFGHANISTAN ENGINEER DISTRICT

Mark	Description	Date	Appr.	Mark	Description	Date	Appr.

Rev: 0
Date: 2/23/10
Design file no.
Drawing code:
File name: ANACB300A-101FP
Plot date: 2/23/2010
Plot scale:

Designed by: KRC
Dwn by: KJG
Ckd by: NLJ
Reviewed by: LHM
Submitted by:
BAKER

U.S. ARMY ENGINEER DISTRICT, AFGHANISTAN
CORPS OF ENGINEERS
APO AE 96338

Michael Baker Jr., Inc
A unit of Michael Baker Corporation
Airside Business Park
100 Airside Drive
Moon Township, PA 15108
www.mbakercorp.com

AFGHAN NATIONAL ARMY
REGIONAL MILITARY TRAINING CENTER
STANDARD DESIGN

300 STUDENT CLASSROOM BUILDING
(1) 300 STUDENT CLASSROOM

FLOOR PLAN

Sheet reference number:
A–101

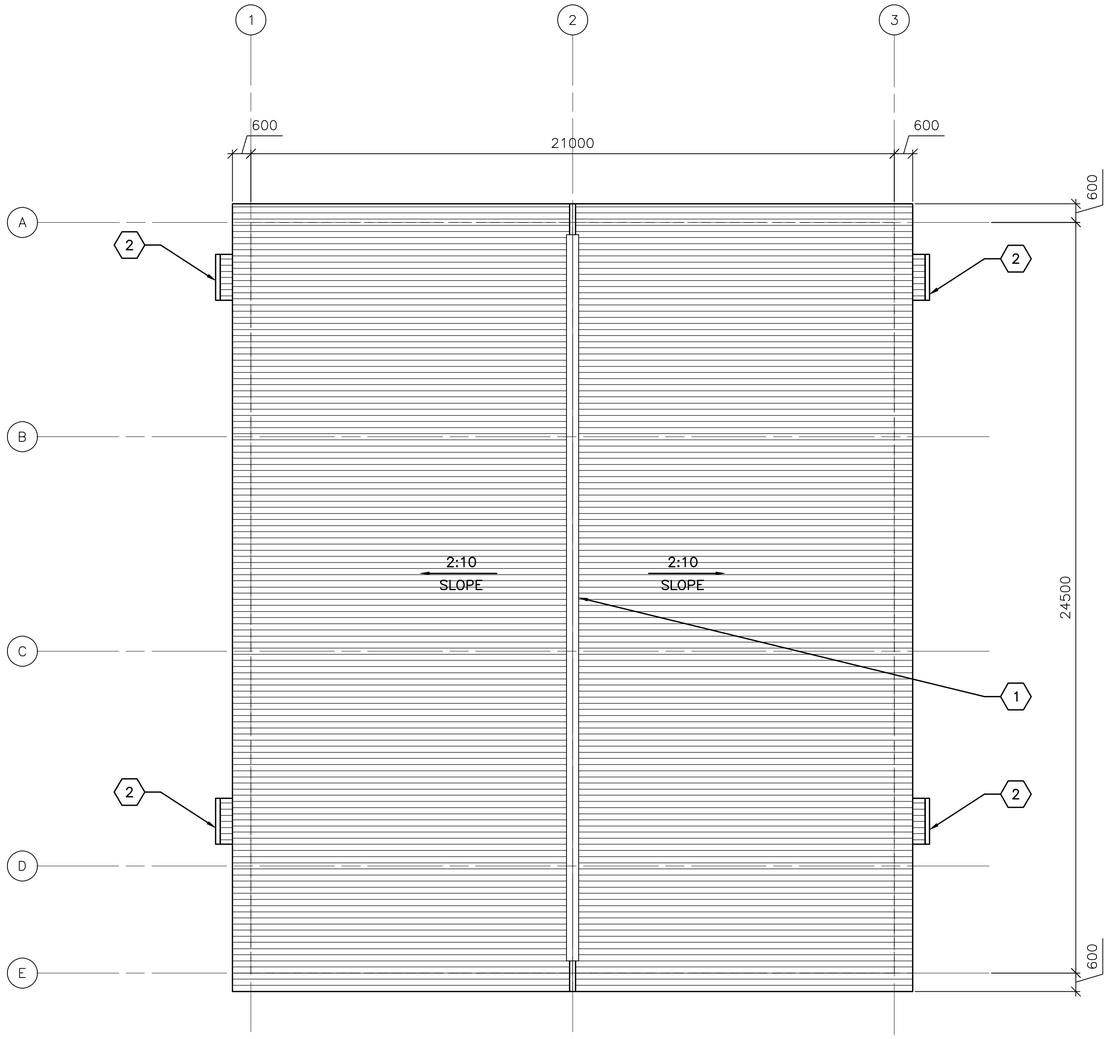

1 / A–102 **ROOF PLAN**

SCALE: 1:100

GENERAL NOTES:

A. THE APPROXIMATE LOCATION OF ROOF DEVICES AND PENETRATIONS ARE SHOWN ON THE ROOF PLAN FOR INFORMATION ONLY. THE CONTRACTOR SHALL BE RESPONSIBLE FOR UNDERSTANDING THE ACTUAL LOCATION OF THESE AND ALL OTHER ITEMS PRIOR TO BEGINNING CONSTRUCTION. COORDINATE ALL ROOF PENETRATIONS WITH STRUCTURAL, MECHANICAL AND PLUMBING WORK.

B. UNLESS OTHERWISE NOTED, NOTES, DETAILS OR FEATURES INDICATED FOR ONE CONDITION SHALL BE APPLICABLE FOR ALL ALIKE AND SIMILAR CONDITIONS.

C. STOCKPILING OF MATERIALS, EQUIPMENT AND ANY OTHER ITEMS ON THE ROOF IS PROHIBITED.

D. ROOFS SHALL BE CORRUGATED METAL ROOF PANELS ON COLD–FORMED METAL FRAMING ON CONCRETE SLAB.

KEY NOTES: (X)

1. CONTINUOUS METAL RIDGE VENT – SEE DETAIL 4/A–501.
2. CANOPY – SEE DETAIL 2/A–504.

LINEAR DIMENSIONS SHOWN ARE IN MILLIMETERS (MM), UNLESS OTHERWISE NOTED

0 2000 4000
SCALE: 1:100

APPROVED:

A/E DESIGNER OF RECORD

SEAL:

STATE OF SOUTH CAROLINA
KEVIN R. CHAFIN
N. Charleston, SC
6374
REGISTERED ARCHITECT

US ARMY CORPS OF ENGINEERS
AFGHANISTAN ENGINEER DISTRICT

Mark	Description	Date	Appr.	Mark	Description	Date	Appr.

Designed by: KRC
Dwn by: KJG
Ckd by: NLJ
Reviewed by: LHM
Submitted by: BAKER
Date: 2/23/10
Rev: 0
Design file no.
Drawing code:
File name: ANACB300A-102RP
Plot date: 2/23/2010
Plot scale:

U.S. ARMY ENGINEER DISTRICT, AFGHANISTAN
CORPS OF ENGINEERS
APO AE 96338

Michael Baker Jr., Inc
A unit of Michael Baker Corporation
Airside Business Park
100 Airside Drive
Moon Township, PA 15108
www.mbakercorp.com

AFGHAN NATIONAL ARMY
REGIONAL MILITARY TRAINING CENTER
STANDARD DESIGN

300 STUDENT CLASSROOM BUILDING
(1) 300 STUDENT CLASSROOM

ROOF PLAN

Sheet reference number:
A–102

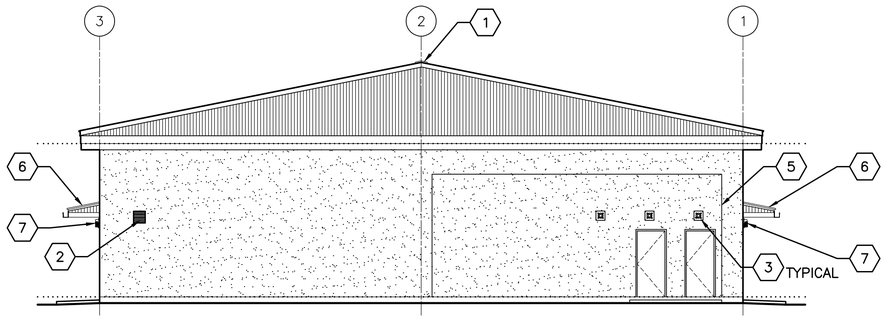

1 A-201 **ELEVATION**
SCALE: 1:100

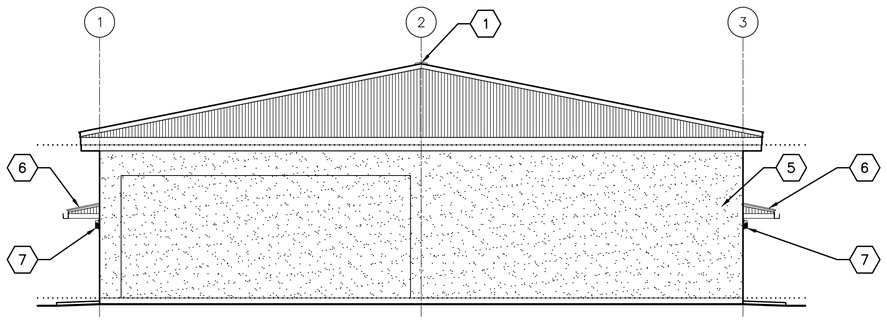

2 A-201 **ELEVATION**
SCALE: 1:100

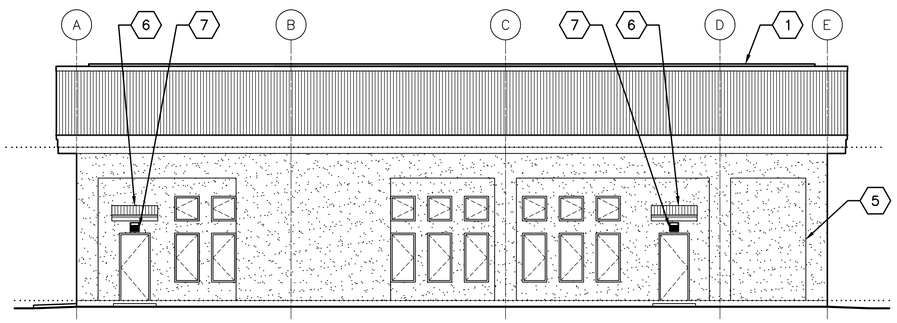

3 A-201 **ELEVATION**
SCALE: 1:100

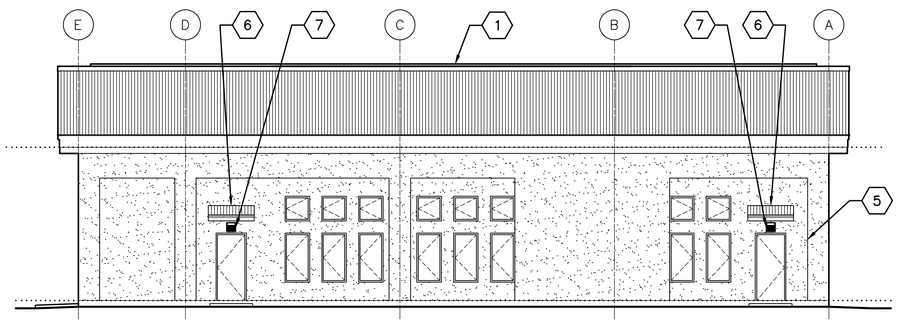

4 A-201 **ELEVATION**
SCALE: 1:100

GENERAL NOTES:

A. COORDINATE SIZE AND LOCATION OF OPENINGS FOR MECHANICAL ITEMS WITH MECHANICAL DRAWINGS.

B. PROVIDE STRUCTURAL LINTELS AS REQUIRED – SEE STRUCTURAL DRAWINGS

C. ALL EXTERIOR WALL FINISHES SHALL BE STUCCO OVER CMU AND CONCRETE SUBSTRATES. PROVIDE CONTROL JOINTS IN STUCCO WALL FINISH AS NOTED

D. ROOF SHALL BE CORRUGATED METAL ROOF PANELS ON COLD-FORMED METAL FRAMING ON CONCRETE SLAB.

KEY NOTES: (X)

1. CONTINUOUS METAL RIDGE VENT – SEE DETAIL 4/A-501.
2. LOUVER, LOCATE TOP OF WALL PENETRATION 2800 MM ABOVE FINISHED FLOOR – SEE MECHANICAL DRAWINGS.
3. EXHAUST FAN, LOCATE TOP OF WALL PENETRATION 2800 MM ABOVE FINISHED FLOOR – SEE MECHANICAL DRAWINGS.
4. NOT USED
5. STUCCO CONTROL JOINT – SEE DETAIL 2A/A-501.
6. CANOPY – SEE DETAIL 1/A-504.
7. EXTERIOR LIGHT – SEE ELECTRICAL.

LINEAR DIMENSIONS SHOWN ARE IN MILLIMETERS (MM), UNLESS OTHERWISE NOTED

0 2000 4000
SCALE: 1:100

APPROVED:

A/E DESIGNER OF RECORD

SEAL:

STATE OF SOUTH CAROLINA
KEVIN R. CHAFIN
N. Charleston, SC
6374
REGISTERED ARCHITECT

US ARMY CORPS OF ENGINEERS
AFGHANISTAN ENGINEER DISTRICT

Mark	Description	Date	Appr.	Mark	Description	Date	Appr.

Date: 2/23/10
Rev: 0
Design file no.
Drawing code:
File name: ANACB300A-201ELV
Plot date: 2/23/2010
Plot scale:

Designed by: KRC
Dwn by: KJG
Ckd by: NLJ
Reviewed by: LHM
Submitted by: BAKER

U.S. ARMY ENGINEER DISTRICT, AFGHANISTAN
CORPS OF ENGINEERS
APO AE 96338

Michael Baker Jr., Inc
A unit of Michael Baker Corporation
Airside Business Park
100 Airside Drive
Moon Township, PA 15108
www.mbakercorp.com

AFGHAN NATIONAL ARMY
REGIONAL MILITARY TRAINING CENTER
STANDARD DESIGN

300 STUDENT CLASSROOM BUILDING
(1) 300 STUDENT CLASSROOM

ELEVATIONS

Sheet reference number:
A-201

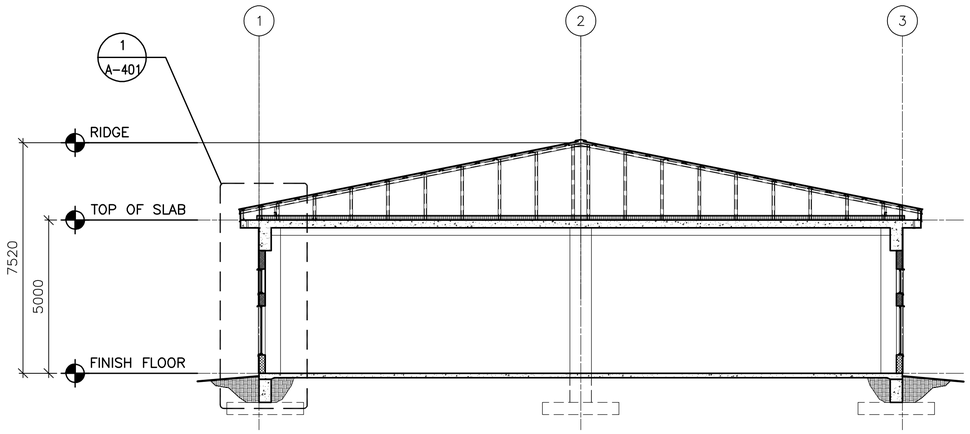

1 A-301 **BUILDING SECTION**
SCALE: 1:100

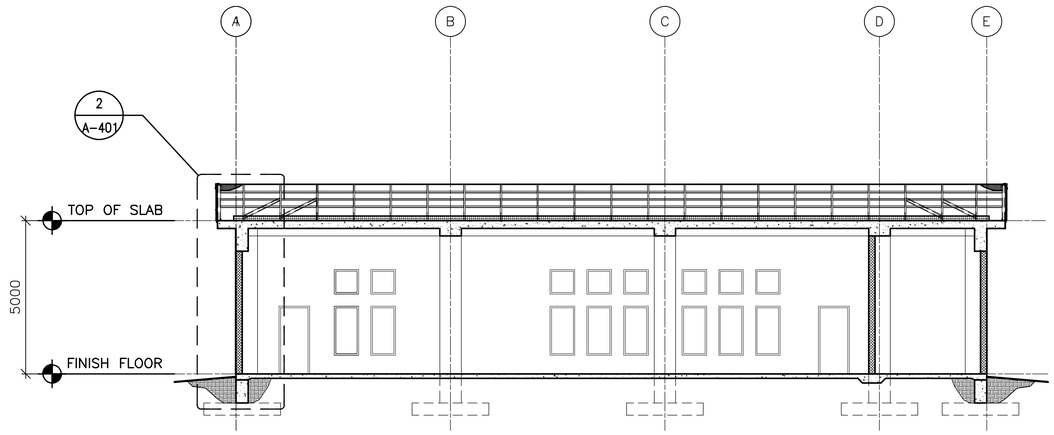

2 A-301 **BUILDING SECTION**
SCALE: 1:100

LINEAR DIMENSIONS SHOWN ARE IN MILLIMETERS (MM), UNLESS OTHERWISE NOTED

0 2000 4000
SCALE: 1:100

APPROVED:

A/E DESIGNER OF RECORD

SEAL:

STATE OF SOUTH CAROLINA
KEVIN R. CHAFIN
N. Charleston, SC
6374
REGISTERED ARCHITECT

US ARMY CORPS OF ENGINEERS
AFGHANISTAN ENGINEER DISTRICT

Mark	Description	Date	Appr.	Mark	Description	Date	Appr.

U.S. ARMY ENGINEER DISTRICT, AFGHANISTAN
CORPS OF ENGINEERS
APO AE 96338

Michael Baker Jr., Inc.
A unit of Michael Baker Corporation
Airside Business Park
100 Airside Drive
Moon Township, PA 15108
www.mbakercorp.com

Designed by: KRC
Dwn by: KJG
Ckd by: NLJ
Reviewed by: LHM
Submitted by: BAKER
Date: 2/23/10
Rev: 0
Design file no.
Drawing code:
File name: ANACB300A-301BS
Plot date: 2/23/2010
Plot scale:

AFGHAN NATIONAL ARMY
REGIONAL MILITARY TRAINING CENTER
STANDARD DESIGN

300 STUDENT CLASSROOM BUILDING
(1) 300 STUDENT CLASSROOM

BUILDING SECTIONS

Sheet reference number:
A-301

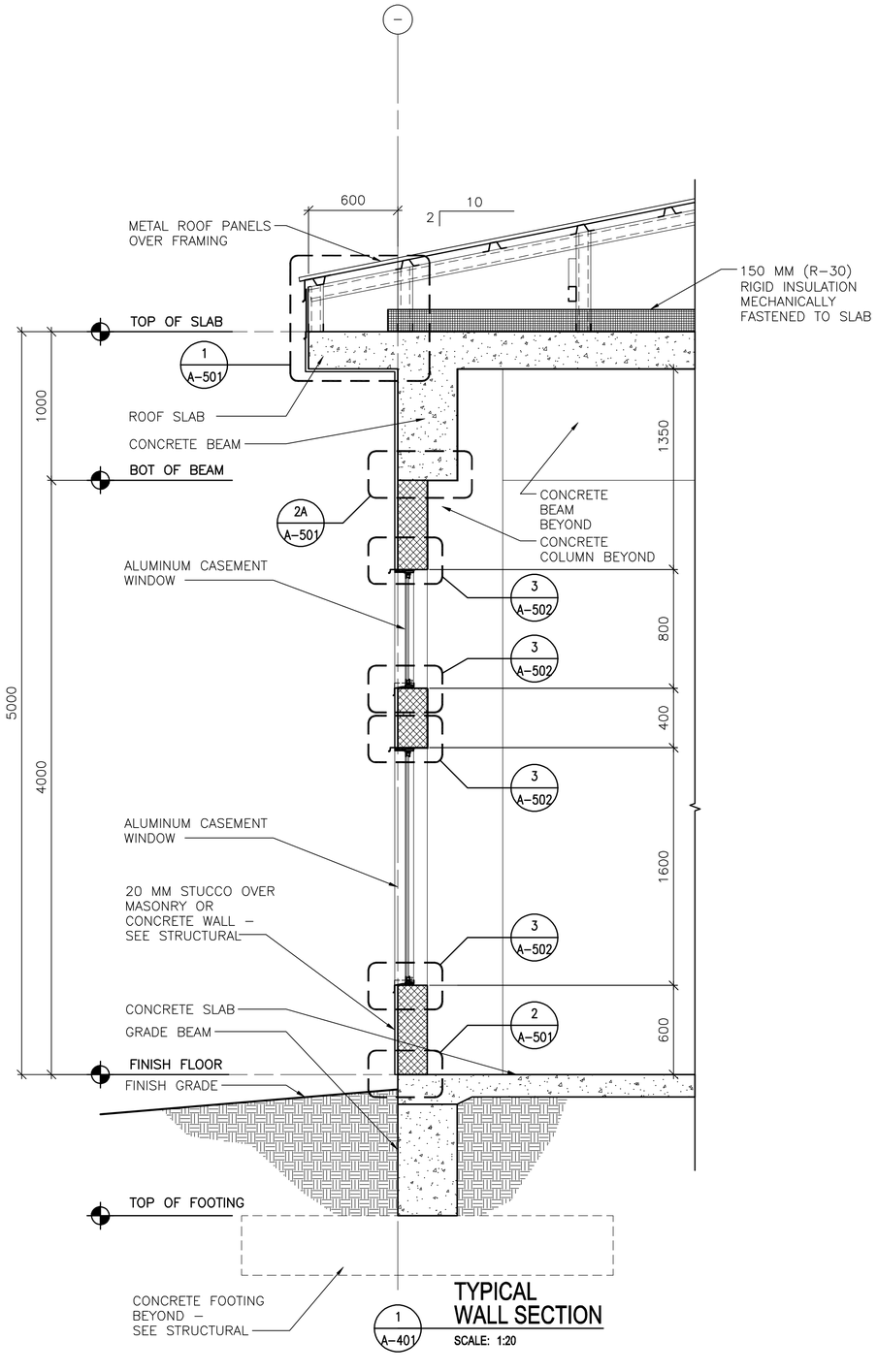

1
A-401

TYPICAL WALL SECTION

SCALE: 1:20

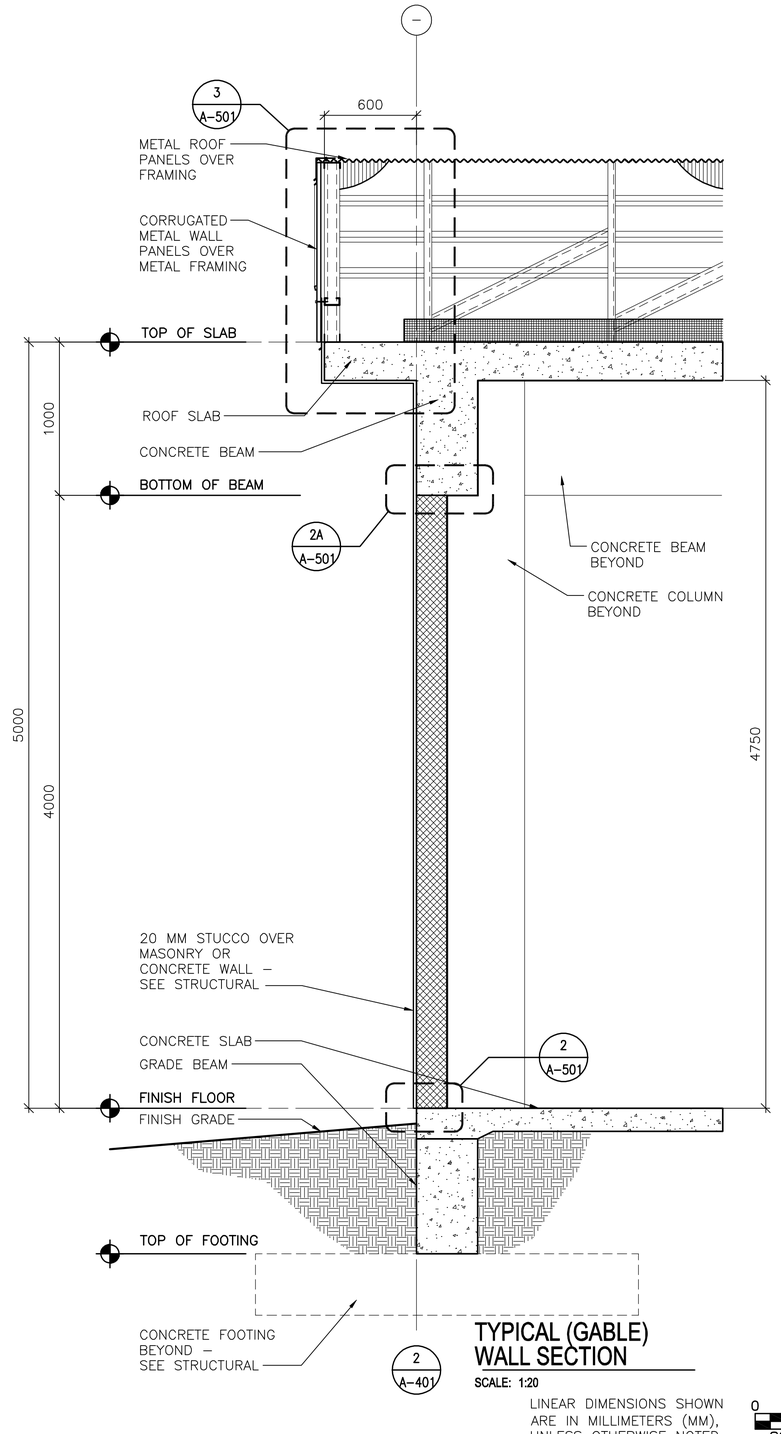

2
A-401

TYPICAL (GABLE) WALL SECTION

SCALE: 1:20

LINEAR DIMENSIONS SHOWN ARE IN MILLIMETERS (MM), UNLESS OTHERWISE NOTED

0 400 800
SCALE: 1:20

APPROVED:

A/E DESIGNER OF RECORD

SEAL:

STATE OF SOUTH CAROLINA
KEVIN R. CHAFIN
N. Charleston, SC
6374
REGISTERED ARCHITECT

US ARMY CORPS OF ENGINEERS
AFGHANISTAN ENGINEER DISTRICT

Mark	Description	Date	Appr.	Mark	Description	Date	Appr.

Date: 2/23/10
Rev: 0
Design file no.
Drawing code:
File name: ANACB500A-401WS
Plot date: 2/23/2010
Plot scale:

Designed by: KRC
Dwn by: KJG
Ckd by: NLJ
Reviewed by: LHM
Submitted by: BAKER

U.S. ARMY ENGINEER DISTRICT, AFGHANISTAN
CORPS OF ENGINEERS
APO AE 96338

Michael Baker Jr., Inc
A unit of Michael Baker Corporation
Airside Business Park
100 Airside Drive
Moon Township, PA 15108
www.mbakercorp.com

AFGHAN NATIONAL ARMY
REGIONAL MILITARY TRAINING CENTER
STANDARD DESIGN

300 STUDENT CLASSROOM BUILDING
(1) 300 STUDENT CLASSROOM

WALL SECTIONS

Sheet reference number:
A-401

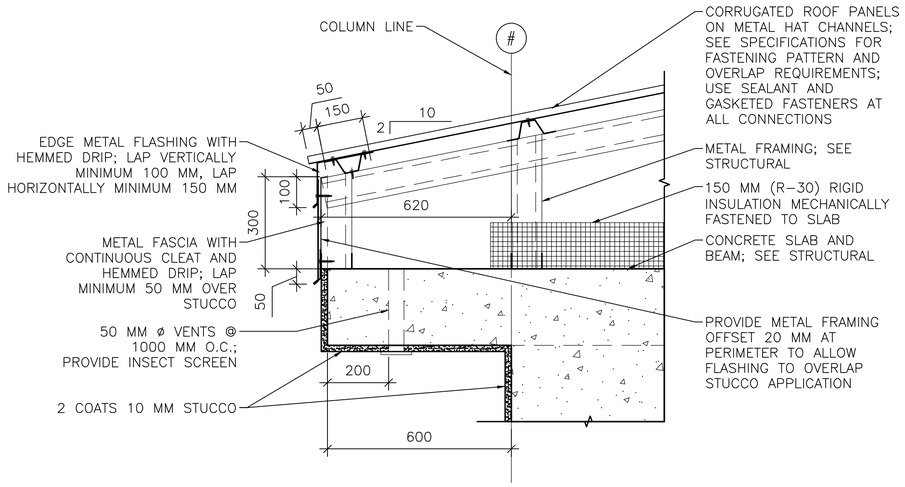

1 / A–501 **EAVE DETAIL**
SCALE: 1:10

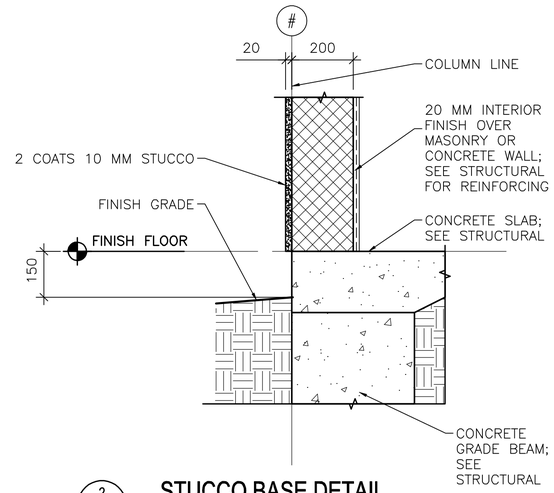

2 / A–501 **STUCCO BASE DETAIL**
SCALE: 1:10

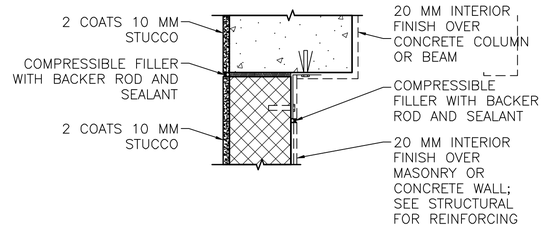

NOTE: DETAIL TYPICAL AT ALL WALL/COLUMN AND WALL/BEAM LOCATIONS, SEE ALTERNATE BRACING DETAIL BELOW 2B/A–501.

2A / A–501 **STUCCO JOINT DETAIL**
SCALE: 1:10

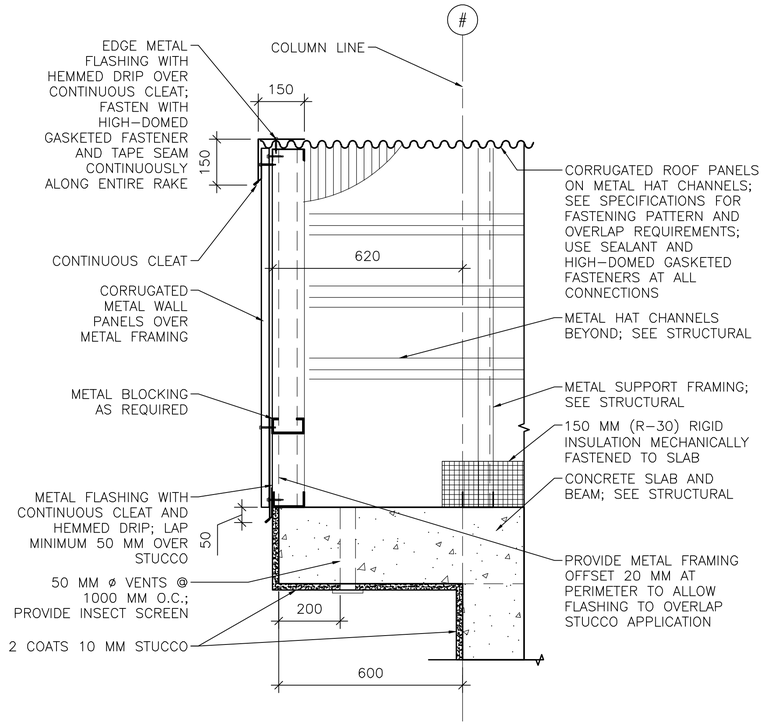

3 / A–501 **RAKE/EAVE DETAIL**
SCALE: 1:10

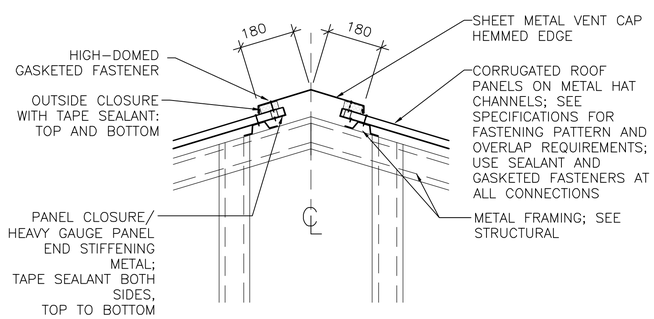

4 / A–501 **RIDGE VENT DETAIL**
SCALE: 1:10

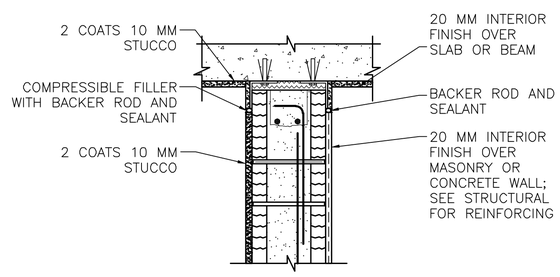

INTERIOR WALL/BEAM

2B / A–501 **ALTERNATE BRACING DETAIL**
SCALE: 1:10

LINEAR DIMENSIONS SHOWN ARE IN MILLIMETERS (MM), UNLESS OTHERWISE NOTED

0 200 400
SCALE: 1:10

APPROVED:

A/E DESIGNER OF RECORD

SEAL:

STATE OF SOUTH CAROLINA
KEVIN R. CHAFIN
N. Charleston, SC
6374
REGISTERED ARCHITECT

US ARMY CORPS OF ENGINEERS
AFGHANISTAN ENGINEER DISTRICT

Mark	Description	Date	Appr.	Mark	Description	Date	Appr.

U.S. ARMY ENGINEER DISTRICT, AFGHANISTAN
CORPS OF ENGINEERS
APO AE 96338

Michael Baker Jr., Inc.
A unit of Michael Baker Corporation
Airside Business Park
100 Airside Drive
Moon Township, PA 15108
www.mbakercorp.com

Designed by: KRC
Dwn by: KJG
Ckd by: NLJ
Reviewed by: LHM
Submitted by: BAKER
Date: 2/23/10
Design file no.
Drawing code:
Rev: 0
File name: ANACB300A-501DT
Plot date: 2/23/2010
Plot scale: x:X

AFGHAN NATIONAL ARMY
REGIONAL MILITARY TRAINING CENTER
STANDARD DESIGN

300 STUDENT CLASSROOM BUILDING
(1) 300 STUDENT CLASSROOM

EXTERIOR DETAILS

Sheet reference number:
A–501

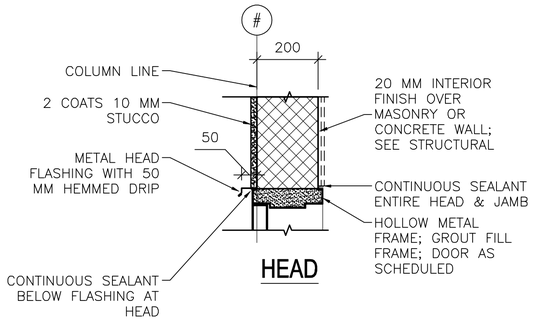

HEAD

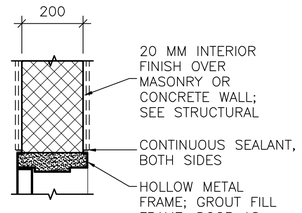

HEAD

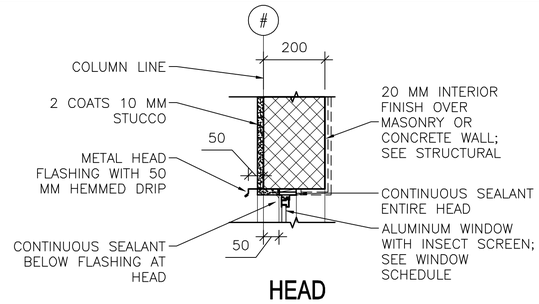

HEAD

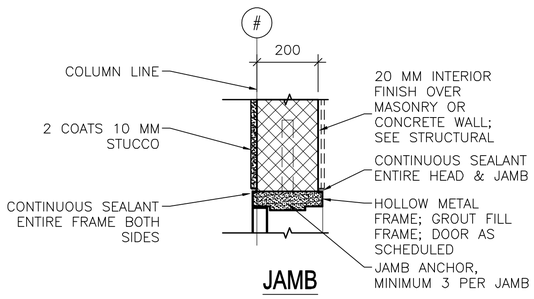

JAMB

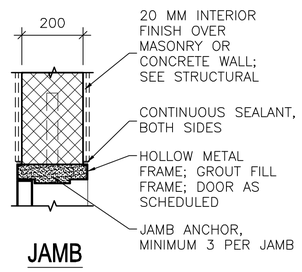

JAMB

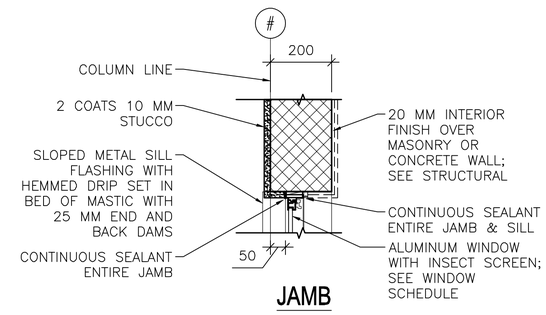

JAMB

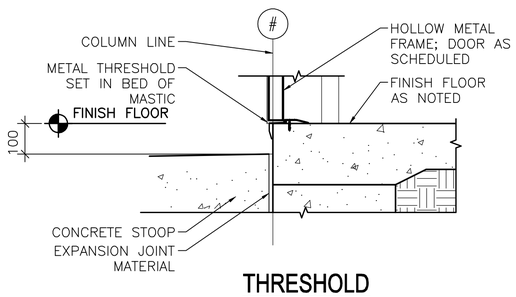

THRESHOLD

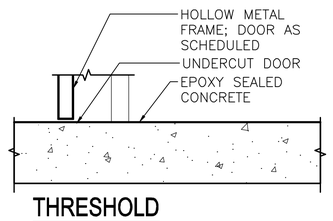

THRESHOLD

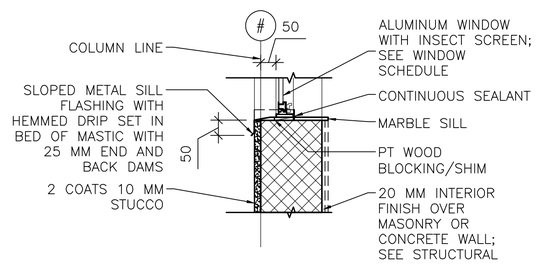

SILL

1 A-502 **EXTERIOR DOOR DETAILS**
SCALE: 1:10

2 A-502 **INTERIOR DOOR DETAILS**
SCALE: 1:10

3 A-502 **EXTERIOR WINDOW DETAILS**
SCALE: 1:10

LINEAR DIMENSIONS SHOWN ARE IN MILLIMETERS (MM), UNLESS OTHERWISE NOTED

0 200 400
SCALE: 1:10

APPROVED:

A/E DESIGNER OF RECORD

SEAL:

STATE OF SOUTH CAROLINA
KEVIN R. CHAFIN
N. Charleston, SC
6374
REGISTERED ARCHITECT

US ARMY CORPS OF ENGINEERS
AFGHANISTAN ENGINEER DISTRICT

Mark	Description	Date	Appr.	Mark	Description	Date	Appr.

Rev: 0
Date: 2/23/10
Design file no.
Drawing code:
File name: AAACB300A-502H-US
Plot date: 2/23/2010
Plot scale: x:X

Designed by: KRC
Dwn by: KJG
Ckd by: NLJ
Reviewed by: LHM
Submitted by: BAKER

U.S. ARMY ENGINEER DISTRICT, AFGHANISTAN
CORPS OF ENGINEERS
APO AE 96338

Michael Baker Jr., Inc
A unit of Michael Baker Corporation
Airside Business Park
100 Airside Drive
Moon Township, PA 15108
www.mbakercorp.com

AFGHAN NATIONAL ARMY
REGIONAL MILITARY TRAINING CENTER
STANDARD DESIGN

300 STUDENT CLASSROOM BUILDING
(1) 300 STUDENT CLASSROOM

HEAD, JAMB & SILL DETAILS

Sheet reference number:
A-502

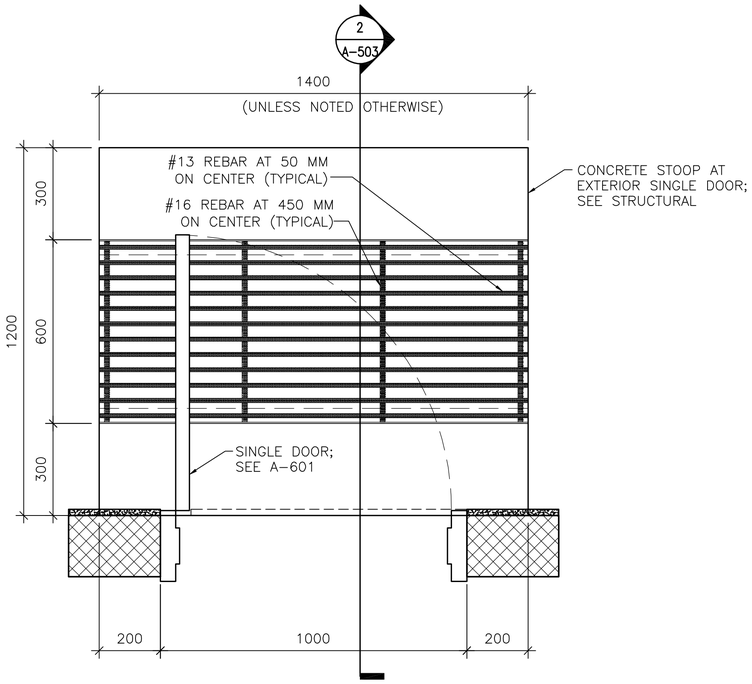

1 A-503 **DOOR STOOP PLAN (WITH GRATE)**

SCALE: 1:10

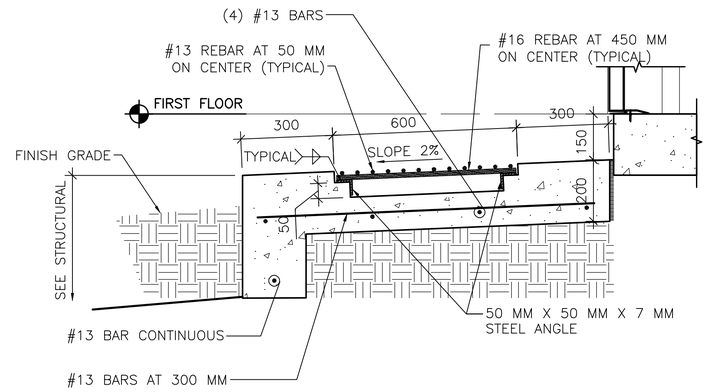

2 A-503 **DOOR STOOP DETAIL**

SCALE: 1:10

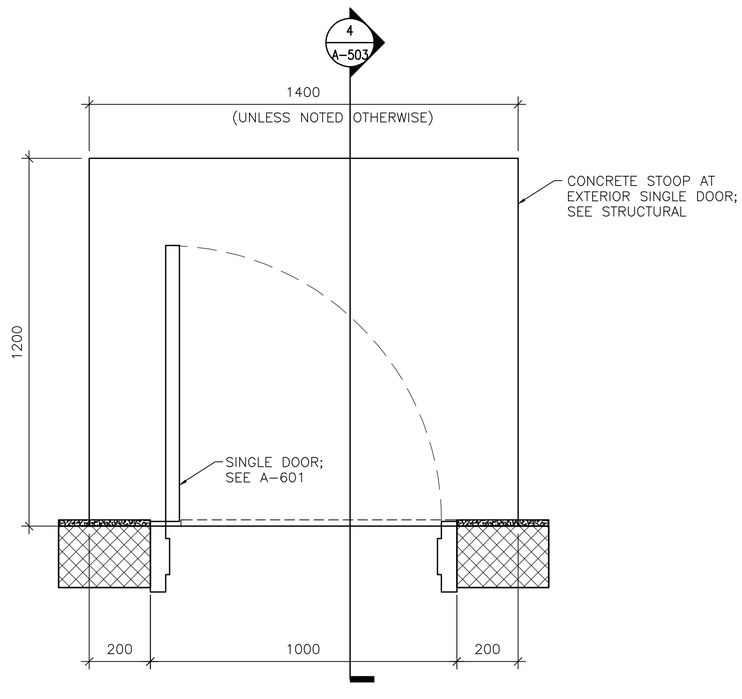

3 A-503 **DOOR STOOP PLAN (WITHOUT GRATE)**

SCALE: 1:10

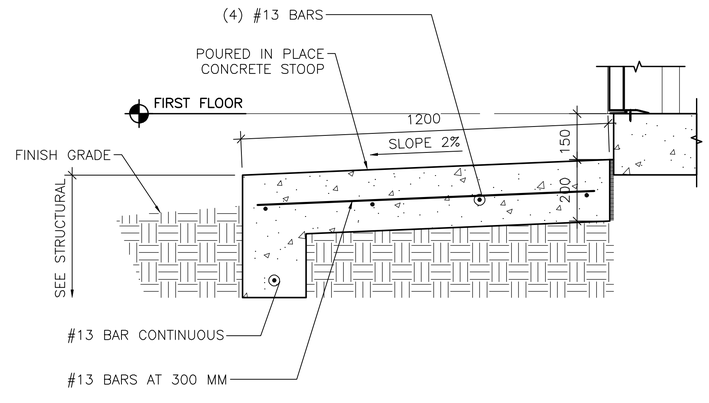

4 A-503 **DOOR STOOP DETAIL**

SCALE: 1:10

LINEAR DIMENSIONS SHOWN ARE IN MILLIMETERS (MM), UNLESS OTHERWISE NOTED

0 200 400
SCALE: 1:10

APPROVED:

A/E DESIGNER OF RECORD

SEAL:

STATE OF SOUTH CAROLINA
KEVIN R. CHAFIN
N. Charleston, SC
6374
REGISTERED ARCHITECT

US ARMY CORPS OF ENGINEERS
AFGHANISTAN ENGINEER DISTRICT

Mark	Description	Date	Appr.	Mark	Description	Date	Appr.

U.S. ARMY ENGINEER DISTRICT, AFGHANISTAN
CORPS OF ENGINEERS
APO AE 96338

Michael Baker Jr., Inc
A unit of Michael Baker Corporation
Airside Business Park
100 Airside Drive
Moon Township, PA 15108
www.mbakercorp.com

Designed by: KRC		Date: 2/23/10	Rev: 0
Dwn by: KJG	Ckd by: NLJ	Design file no.	
		Drawing code:	
Reviewed by: LHM		File name: ANACB300A-503DT	
Submitted by: BAKER		Plot date: 2/23/2010	
		Plot scale: x:X	

AFGHAN NATIONAL ARMY
REGIONAL MILITARY TRAINING CENTER
STANDARD DESIGN

300 STUDENT CLASSROOM BUILDING
(1) 300 STUDENT CLASSROOM

STOOP DETAILS

Sheet reference number:
A-503

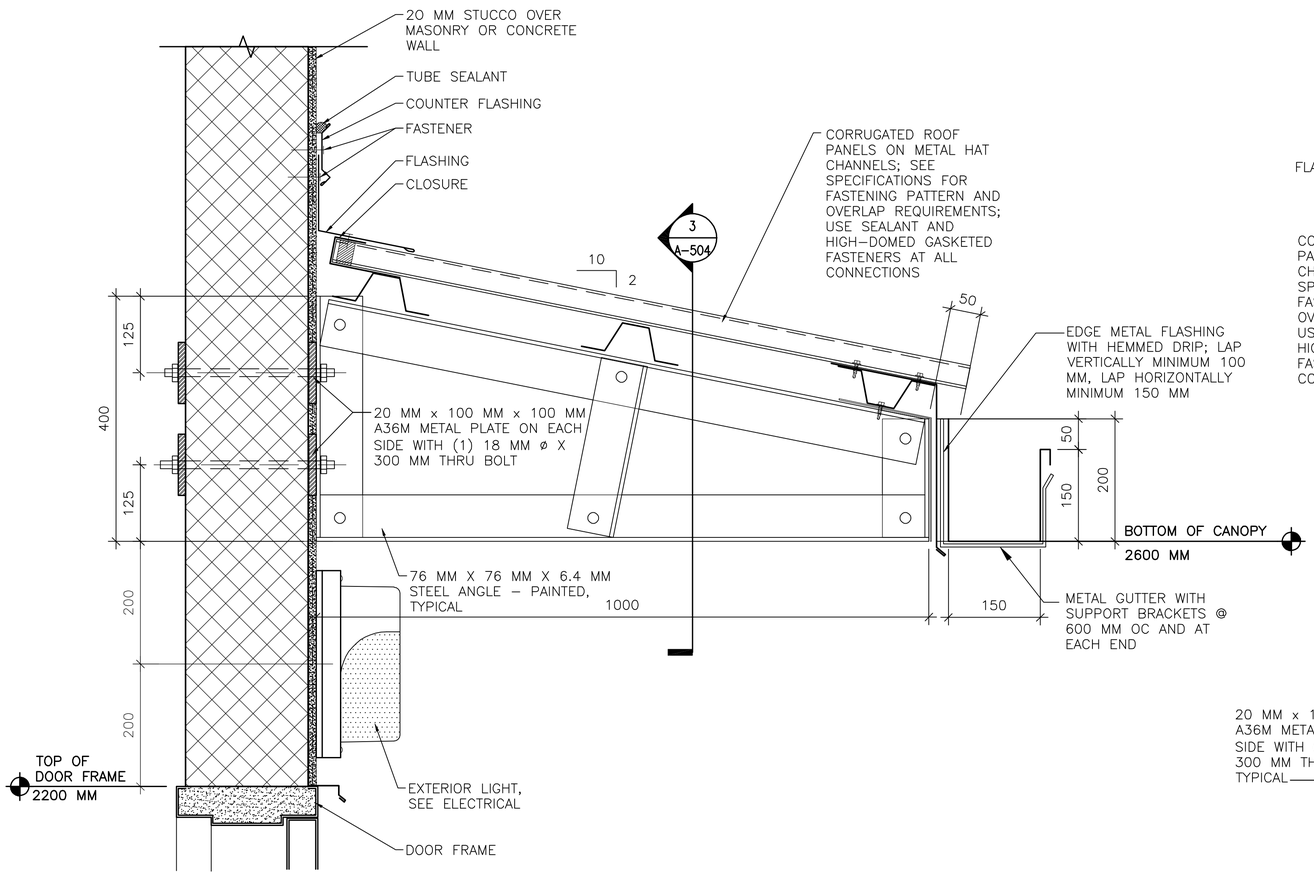

1 A-504 **CANOPY CONNECTION DETAILS**

SCALE: 1:5

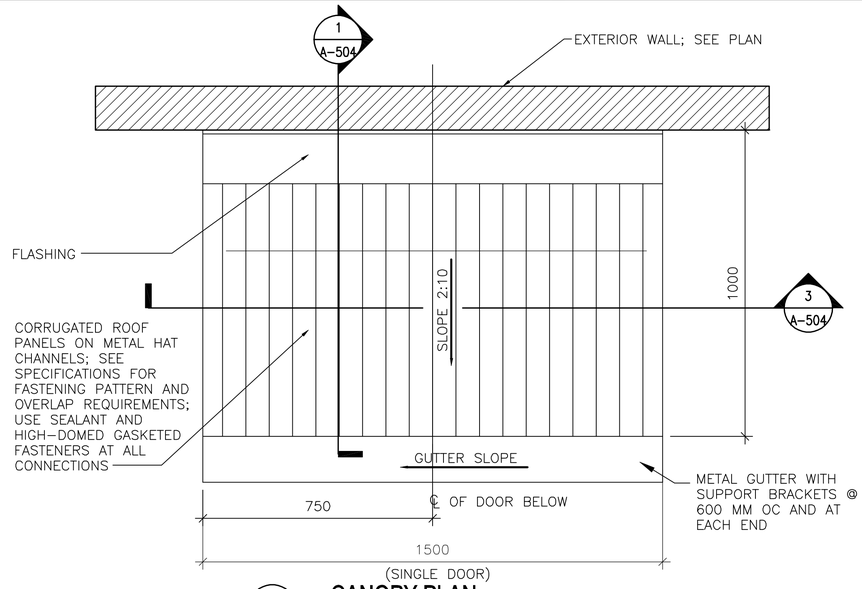

2 A-504 **CANOPY PLAN**

SCALE: 1:10

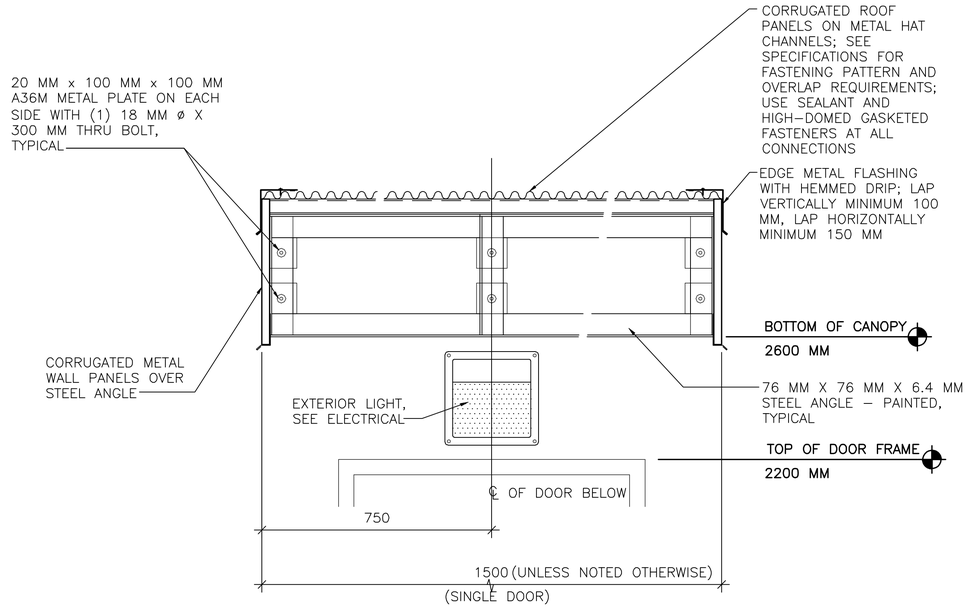

3 A-504 **CANOPY CONNECTION DETAILS**

SCALE: 1:10

SHEET NOTES:

1. SEE A-101 FOR FLOOR PLANS AND CANOPY LOCATIONS.

APPROVED:

A/E DESIGNER OF RECORD

SEAL:

STATE OF SOUTH CAROLINA
KEVIN R. CHAFIN
N. Charleston, SC
6374
REGISTERED ARCHITECT

LINEAR DIMENSIONS SHOWN ARE IN MILLIMETERS (MM), UNLESS OTHERWISE NOTED

0 100 200
SCALE: 1:5

US ARMY CORPS OF ENGINEERS
AFGHANISTAN ENGINEER DISTRICT

Mark	Description	Date	Appr.	Mark	Description	Date	Appr.

Date: 2/23/10 | Rev: 0
Design file no.
Drawing code:
File name: ANACB300A-5040T
Plot date: 2/23/2010
Plot scale: x:X

Designed by: KRC
Dwn by: KJG
Ckd by: NLJ
Reviewed by: LHM
Submitted by: BAKER

U.S. ARMY ENGINEER DISTRICT, AFGHANISTAN
CORPS OF ENGINEERS
APO AE 96338

Michael Baker Jr., Inc
A unit of Michael Baker Corporation
Airside Business Park
100 Airside Drive
Moon Township, PA 15108
www.mbakercorp.com

AFGHAN NATIONAL ARMY
REGIONAL MILITARY TRAINING CENTER
STANDARD DESIGN

300 STUDENT CLASSROOM BUILDING
(1) 300 STUDENT CLASSROOM

CANOPY DETAILS

Sheet reference number:
A-504

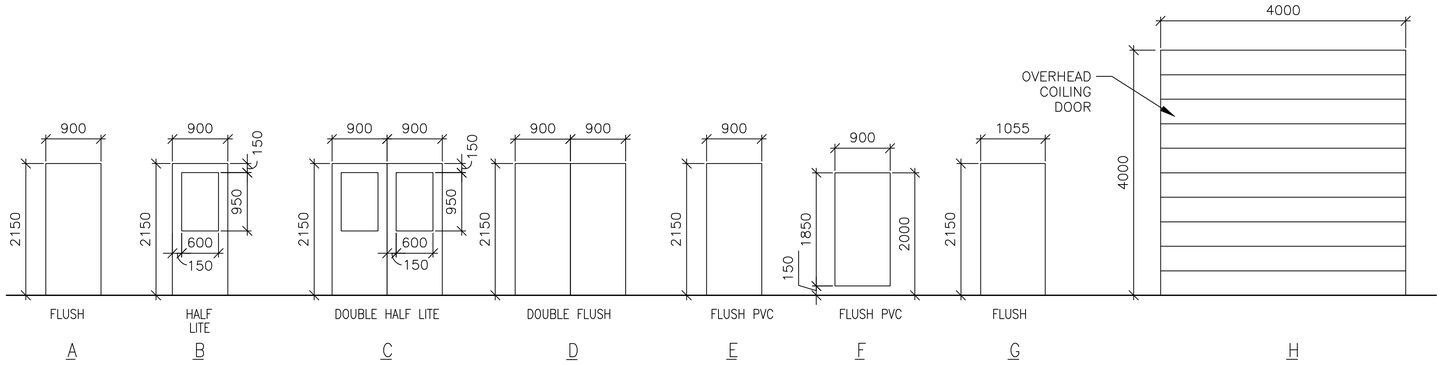

1 A-601 DOOR TYPES

SCALE: 1:50

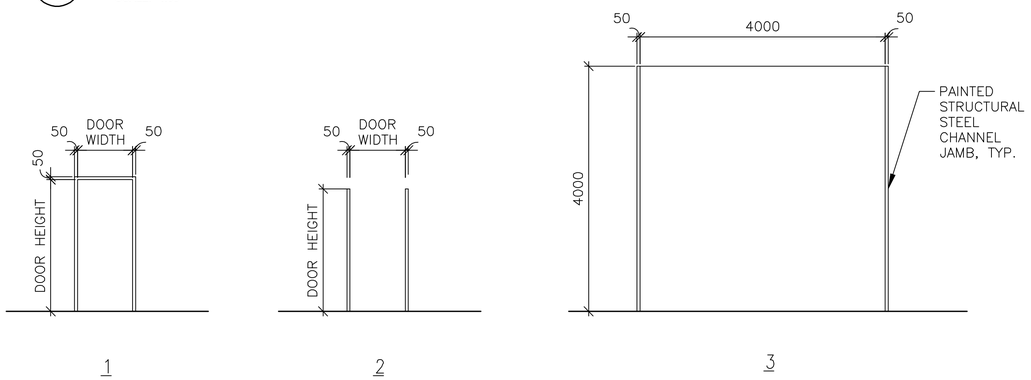

2 A-601 FRAME TYPES

SCALE: 1:50

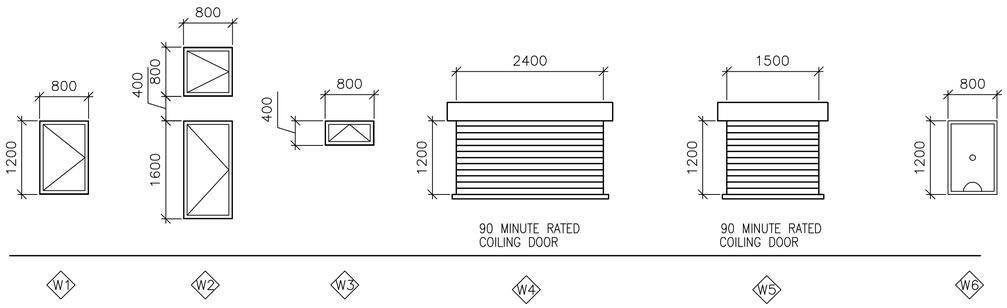

3 A-601 WINDOW TYPES

SCALE: 1:50

WINDOW TYPE NOTES:

1. ALL EXTERIOR WINDOWS SHALL BE ALUMINUM WITH INSECT SCREENS. WINDOWS SHALL BE COMMERCIAL GRADE.
2. ALL EXTERIOR WINDOWS SHALL BE OPERABLE.

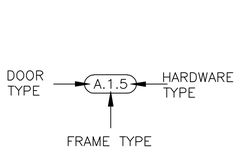

4 A-601 DOOR TAG

SCALE: NTS

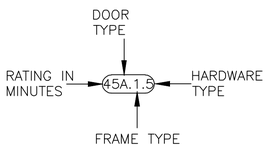

5 A-601 RATED DOOR TAG

SCALE: NTS

DOOR TAG NOTES:

1. THE DOOR TAG INDICATES THE DOOR TYPE, FRAME TYPE AND HARDWARE SET FOR EACH DOOR.
2. THE DOOR TAG FOR RATED DOORS INCLUDES THE RATING OF THE DOOR IN MINUTES.

EXTERIOR DOOR HARDWARE TYPES:

HW-1
1-1/2 PR HINGES, A5112 114 X 114
1 EA RIM EXIT DEVICE, TYPE 1
1 EA CYLINDER. E09221A, GRADE 1
1 EA OVERHEAD CLOSER, C02061, LOW RESISTANCE
1 EA THRESHOLD, J32130
3 EA DOOR SILENCERS, L03011

HW-2
1-1/2 PR HINGES, A5112 114 X 114
1 EA LOCKSET, F13 ENTRY LOCK W/LEVER HANDLES, GRADE 1
1 EA OVERHEAD CLOSER, C02061, LOW RESISTANCE
1 EA THRESHOLD, J32130
3 EA DOOR SILENCERS, L03011

HW-3
3 PR HINGES, A5112 114 X 114
2 EA RIM EXIT DEVICE, TYPE 1
2 EA CYLINDER. GRADE 1
2 EA OVERHEAD CLOSER, C02061, LOW RESISTANCE
1 EA DOOR COORDINATOR, TYPE 21
1 EA ASTRAGAL
1 EA THRESHOLD, J32130
2 EA DOOR SILENCERS, L03011

HW-4
3 PR HINGES, A5112 114 X 114
1 EA LOCKSET W/LEVER HANDLES. GRADE 1, F13
1 EA OVERHEAD CLOSER, C02061, LOW RESISTANCE
2 EA MAGNETIC HOLDER PIN, ATTACHED TO DOOR LEAF
2 EA MAGNETIC HOLDER RECEIVER, ATTACHED TO STOOP
2 EA LEVER EXTENSION FLUSH BOLTS, L04081
1 EA ASTRAGAL
1 EA THRESHOLD, J32130
2 EA DOOR SILENCERS, L03011

DOOR AND HARDWARE NOTES:

1. INTERIOR AND EXTERIOR METAL DOORS AND FRAME COLORS SHALL MATCH ADJACENT WALL COLORS AS SELECTED BY THE CONTRACTING OFFICER.
2. FRAMES, EXCEPT FIRE-RATED FRAMES, SHALL BE MOUNTED AND ADJUSTED IN ACCORDANCE WITH MANUFACTURER'S INSTRUCTIONS. FRAMES SHALL BE FASTENED WITH MINIMUM OF THREE ANCHORS PER JAMB AT EQUAL INTERVALS.
3. DIMENSIONS SHOWN ON DOOR TYPES DETAIL ARE BASED UPON MODULAR MASONRY (OR ROUGH OPENING), HEIGHT OF 2200 MM FOR STANDARD PERSONNEL DOORS. CONTRACTOR SHALL COORDINATE WITH DOOR SUPPLIER TO ENSURE THAT DIMENSIONS OF DOORS AND FRAMES PROVIDED ARE COMPATIBLE WITH DOOR OPENING DIMENSIONS.
4. HARDWARE SHALL BE HEAVY DUTY, COMMERCIAL GRADE, STAINLESS STEEL WITH A SATIN OR BRUSHED FINISH.
5. HARDWARE TYPES INCLUDE BUILDERS HARDWARE MANUFACTURERS ASSOCIATION (BMHA) NUMBER.
6. DOORS IN 2 HOUR RATED PARTITIONS SHALL BE 1.5 HOUR (90 MINUTE) RATED DOORS IN ACCORDANCE WITH NFPA 101, TABLE 8.3.4.2.
7. DOORS AT STAIR ENCLOSURES SHALL BE 1 HOUR (60 MINUTE) RATED AT 1 HOUR WALL IN ACCORDANCE WITH NFPA 101, TABLE 8.3.4.2.
8. DOORS IN 1 HOUR RATED WALLS SHALL BE 3/4 HOUR (45 MINUTE) RATED DOORS IN ACCORDANCE WITH NFPA 101, TABLE 8.3.4.2.
9. DOORS IN 1 HOUR RATED CORRIDOR WALLS SHALL BE 1/3 HOUR (20 MINUTE) IN ACCORDANCE WITH NFPA 101, TABLE 8.3.4.2.
10. PROVIDE DOOR STOPS TO PROTECT WALLS ON LOCATIONS WHERE DOOR SWING WILL STRIKE WALL.

THIS SHEET IS STANDARD AND IS INCLUSIVE OF ALL THE DOOR/ WINDOW/ HARDWARE TYPES FOR THE ENTIRE RMTC CONTRACT. NOT ALL DOOR/ WINDOW/ HARDWARE TYPES ARE USED FOR ANY PARTICULAR BUILDING DESIGN. CONTRACTOR SHALL REFER TO THE FLOOR PLAN FOR THE TYPES BEING USED.

INTERIOR DOOR HARDWARE TYPES:

HW-5
1-1/2 PR HINGES, A8133 114 X 114
1 EA LOCKSET W/LEVER HANDLES, F08, GRADE 1
1 EA WALL STOP, L02101 OR L02161
3 EA DOOR SILENCERS, L03011

HW-6
1-1/2 PR HINGES, A8112 114 X 114
1 EA LOCKSET W/LEVER HANDLES, F08, GRADE 1
1 EA WALL STOP, L02101 OR L02161
1 EA OVERHEAD CLOSER, C02061, LOW RESISTANCE
3 EA DOOR SILENCERS, L03011

HW-7
1-1/2 PR HINGES, A8133
1 EA LOCKSET W/LEVER HANDLES, F13 GRADE 1
1 EA WALL STOP, L02101 OR L02161
2 EA MOP PLATE, J103
3 EA DOOR SILENCERS, L03011

HW-8
1-1/2 PR HINGES, A8112
1 EA LOCKSET W/LEVER HANDLES, F13 GRADE 1
1 EA WALL STOP, L02101 OR L02161
2 EA MOP PLATE, J103
1 EA OVERHEAD CLOSER, C02061, LOW RESISTANCE
3 EA DOOR SILENCERS, L03011

HW-9
1-1/2 PR HINGES, A5112 114 X 114
1 EA RIM EXIT DEVICE, TYPE 1
1 EA CYLINDER. E09221A, GRADE 1
1 EA OVERHEAD CLOSER, C02061, LOW RESISTANCE
3 EA DOOR SILENCERS, L03011

HW-10
3 PR HINGES, A5112 114 X 114
1 EA LOCKSET W/LEVER HANDLES. GRADE 1, F13
2 EA LEVER EXTENSION FLUSH BOLTS, L04081
1 EA ASTRAGAL
2 EA DOOR SILENCERS, L03011

HW-11
1-1/2 PR HINGES, A8112 114 X 114
1 EA LOCKSET W/LEVER HANDLES, F13, GRADE 1
1 EA WALL STOP, L02101 OR L02161
1 EA OVERHEAD CLOSER, C02061, LOW RESISTANCE
3 EA DOOR SILENCERS, L03011
1 EA ROBE HOOK

HW-12
1-1/2 PR HINGES, A8133
1 EA LATCHSET W/LEVER HANDLES, F76 GRADE 1
1 EA WALL STOP, L02101 OR L02161
2 EA MOP PLATE, J103
3 EA DOOR SILENCERS, L03011
1 EA ROBE HOOK

HW-13
3 PR HINGES, A5112 114 X 114
1 EA LOCKSET W/LEVER HANDLES. GRADE 1, F13
1 EA OVERHEAD CLOSER, C02061, LOW RESISTANCE
2 EA LEVER EXTENSION FLUSH BOLTS, L04081
1 EA ASTRAGAL
2 EA DOOR SILENCERS, L03011

HW-14
3 PR HINGES, A5112 114 X 114
2 EA RIM EXIT DEVICE, TYPE 1
2 EA CYLINDER. GRADE 1
2 EA OVERHEAD CLOSER, C02061, LOW RESISTANCE
1 EA DOOR COORDINATOR, TYPE 21
1 EA ASTRAGAL
2 EA DOOR SILENCERS, L03011

APPROVED:

A/E DESIGNER OF RECORD

SEAL:

STATE OF SOUTH CAROLINA
KEVIN R. CHAFIN
N. Charleston, SC
6374
REGISTERED ARCHITECT

US ARMY CORPS OF ENGINEERS
AFGHANISTAN ENGINEER DISTRICT

Mark	Description	Date	Appr.	Mark	Description	Date	Appr.

Rev: 0
Date: 2/23/10
Design file no.
Drawing code:
File name: ANACB330A-601SCH
Plot date: 2/23/2010
Plot scale: x:X

Designed by: KRC
Dwn by: KJG
Ckd by: NLJ
Reviewed by: LHM
Submitted by:
BAKER

U.S. ARMY ENGINEER DISTRICT, AFGHANISTAN
CORPS OF ENGINEERS
APO AE 96338

Michael Baker Jr., Inc.
A unit of Michael Baker Corporation
Airside Business Park
100 Airside Drive
Moon Township, PA 15108
www.mbakercorp.com

AFGHAN NATIONAL ARMY
REGIONAL MILITARY TRAINING CENTER
STANDARD DESIGN

300 STUDENT CLASSROOM BUILDING
(1) 300 STUDENT CLASSROOM

WINDOW AND DOOR SCHEDULES

Sheet reference number:
A-601

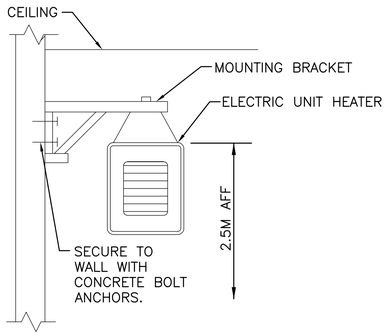

2 M-101 ELECTRIC UNIT HEATER MOUNTING DETAIL
N.T.S.

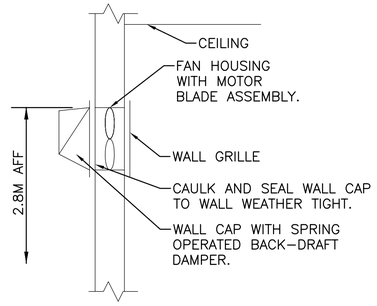

3 M-101 THROUGH THE WALL EXHAUST FAN DETAIL
N.T.S.

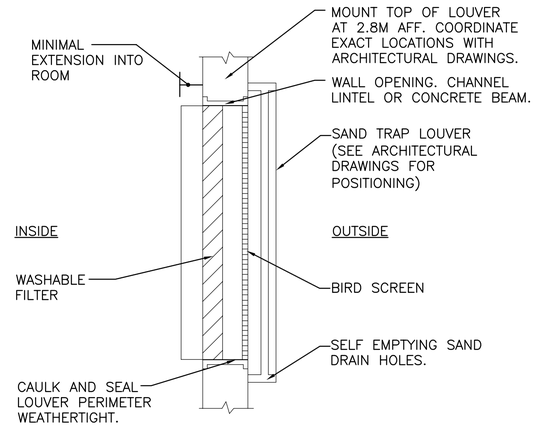

4 M-101 FILTERED SAND TRAP LOUVER
N.T.S.

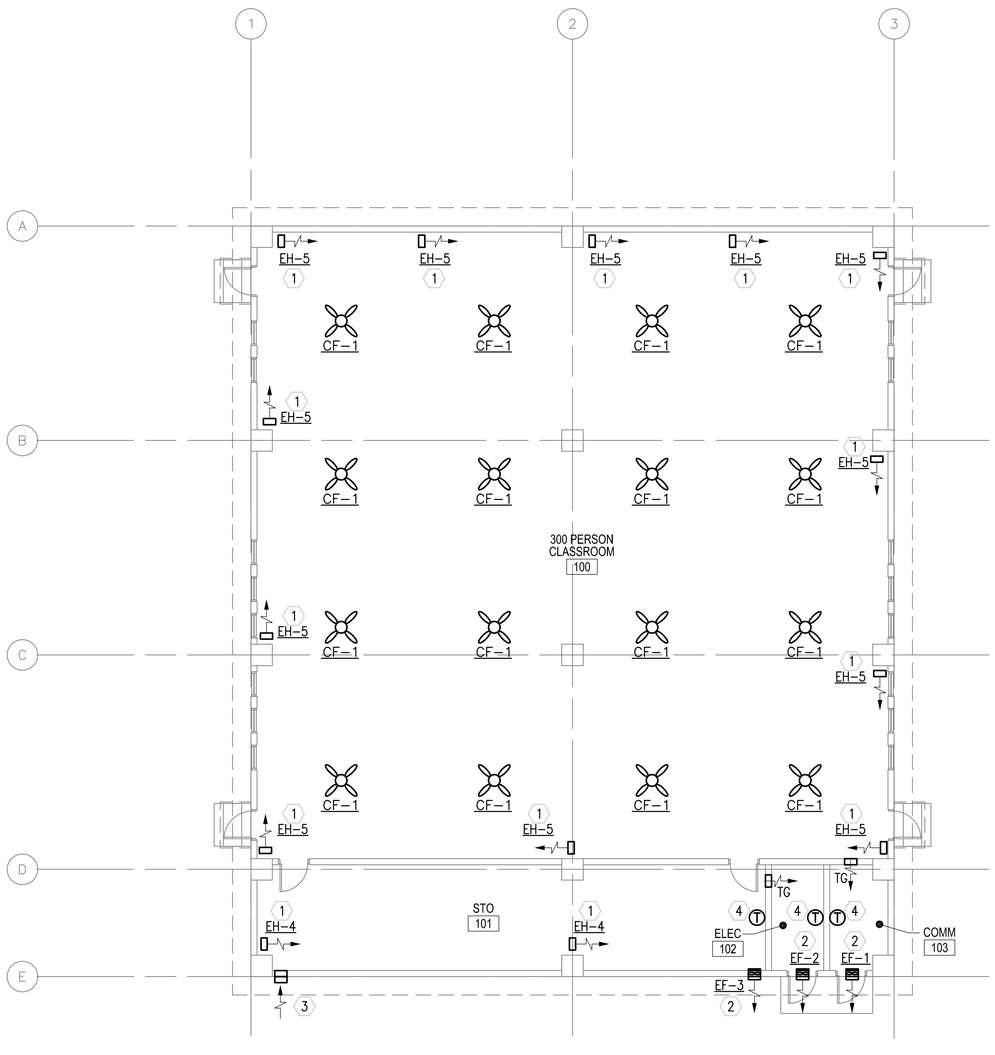

1 M-101 FLOOR PLAN - HVAC
SCALE: 1:100

GENERAL NOTES:

1. DO NOT SCALE DRAWINGS – ALL DIMENSIONS AND CONDITIONS SHALL BE CHECKED AND VERIFIED BY THE CONTRACTOR AT THE SITE.
2. ALL WORK PERFORMED ON THIS BUILDING SHALL BE IN COMPLIANCE WITH ALL PERTINENT CODES, RULES, ORDINANCES AND REGULATIONS OF THE GOVERNING AUTHORITIES.
3. ALL WORK PERFORMED UNDER AND IN CONNECTION WITH THESE DRAWINGS AND SPECIFICATIONS SHALL BE IN STRICT COMPLIANCE WITH THE LATEST SAFETY AND HEALTH STANDARDS.

SYMBOLS:

(X) KEY NOTE

(0.050) AIR VOLUME IN CUBIC METERS PER SECOND (CMS)

UC DOOR UNDERCUT

TG 200x400 (8x16) TRANSFER GRILLE

ABBREVIATIONS:

AFF	ABOVE FINISH FLOOR
CF	CEILING FANS
CMS	CUBIC METERS PER SECOND
STATS	THERMOSTATS

KEY NOTE:

1. UNIT HEATER SECURED FROM WALL. SEE DETAIL THIS SHEET.
2. WALL EXHAUST FAN WITH LOW SPRING OPERATED BACK-DRAFT DAMPER. SEE DETAIL 3 THIS SHEET.
3. 400x400 (16x16) INTAKE LOUVER. PROVIDE WEATHER PROOF LOUVER W/0.05mm (2") WASHABLE FILTER AND SAND TRAP. SEE DETAIL 4 THIS SHEET.
4. THERMOSTAT MOUNTED AS HIGH AS POSSIBLE. INTERLOCK STAT WITH CORRESPONDING EXHAUST FAN, SET FAN TO ENERGIZE ON RISE IN TEMPERATURE ABOVE 25°C (77°F).

EXHAUST FAN SCHEDULE

NO.	TYPE	FAN CMS	DRIVE	HP	SP mmH20	ELECTRICAL DATA	SWITCH
EF-1	WALL	0.035	DIRECT	FRACT	9.5	220/1/50	W/ STAT
EF-2	WALL	0.035	DIRECT	FRACT	9.5	220/1/50	W/ STAT
EF-3	WALL	0.035	DIRECT	FRACT	9.5	220/1/50	W/ STAT

NOTES:
1. FANS SHALL HAVE SPRING OPERATED BACK-DRAFT DAMPER.

ELECTRIC UNIT HEATER SCHEDULE

NO.	CMS	KW	F.A.T. °C	ELECT. CHAR.	MOUNTING
EH-4	0.200	4	38	380/1/50	WALL HUNG
EH-5	0.200	5	38	380/1/50	WALL HUNG

NOTES:
1. UNIT HEATERS SHALL HAVE TAMPER PROOF INTEGRAL STATS.
2. COORDINATE LOCATION AND ORIENTATION IN FIELD.

CEILING FAN

NO.	BLADE SIZE mm	BLADE SIZE IN	VOLTAGE	SWITCH	REMARKS
CF-1	1320	52	220/1/50	@ WALL	3 SPEED REVERSIBLE MOTOR

NOTES:
1. PROVIDE EXTENSION DOWN RODS, INSTALL FANS 2.5M AFF.
2. PROVIDE WITH OUT LIGHT FIXTURE.
3. PROVIDE WITH REMOTE MOUNTED ON-OFF SWITCH SHOWN ON ELECTRICAL DRAWINGS.

LINEAR DIMENSIONS SHOWN ARE IN MILLIMETERS (MM), UNLESS OTHERWISE NOTED

0 2000 4000
SCALE: 1:100

APPROVED:

A/E DESIGNER OF RECORD

SEAL:

COMMONWEALTH OF PENNSYLVANIA
REGISTERED PROFESSIONAL
MATTHEW R. SOTOSKY
ENGINEER
045576-E

US ARMY CORPS OF ENGINEERS
AFGHANISTAN ENGINEER DISTRICT

Mark	Description	Date	Appr.

Mark	Description	Date	Appr.

Rev: 0
Date: 02/23/10
Design file no.
Drawing code:
File name: ANACE8300MH-101XXX
Plot date: 02/08/2010
Plot scale: 1:100

Designed by: RML
Dwn by: JJN
Ckd by: CJM
Reviewed by: MRS
Submitted by: BAKER

U.S. ARMY ENGINEER DISTRICT, AFGHANISTAN
CORPS OF ENGINEERS
APO AE 96338

Michael Baker Jr., Inc
A unit of Michael Baker Corporation
Airside Business Park
100 Airside Drive
Moon Township, PA 15108
www.mbakercorp.com

AFGHAN NATIONAL ARMY
REGIONAL MILITARY TRAINING CENTER
STANDARD DESIGN

300 STUDENT CLASSROOM BUILDING
(1) 300 STUDENT CLASSROOMS

HVAC PLANS, SCHEDULES AND DETAILS

Sheet reference number:
M-101

POWER

- DISTRIBUTION PANELBOARD
- NEW PANELBOARD – SURFACE
- NEW PANELBOARD – RECESSED
- GENERATOR
- TRANSFORMER (DRAWN TO SIZE)
- JUNCTION BOX
- JUNCTION BOX – CEILING
- FUSIBLE SAFETY SWITCH
- MOTOR
- MOTOR STARTING SWITCH – 220V, 20A RATED UNLESS OTHERWISE NOTED
- ELECTRIC WATER HEATER
- CEILING FAN – REFER TO SPECIFICATION SECTION 26 20 00

RECEPTACLES

- DUPLEX 20A TYPE CEE 7/7 "SCHUKO STYLE" UNSWITCHED RECEPTACLE
- GF DUPLEX 20A TYPE CEE 7/7 "SCHUKO STYLE" UNSWITCHED RECEPTACLES – 10mA GROUND FAULT INTERRUPTER TYPE
- WP DUPLEX 20A TYPE CEE 7/7 "SCHUKO STYLE" UNSWITCHED TYPE WITH WEATHERPROOF COVER – 10mA GROUND FAULT INTERRUPTER TYPE
- EXP DUPLEX 20A TYPE CEE 7/7 "SCHUKO STYLE" UNSWITCHED RECEPTACLES – EXPLOSION PROOF
- * INDICATES MOUNT DEVICE ABOVE COUNTERTOP OR AT 1070mm ABOVE FINISHED FLOOR WHERE NO COUNTER IS TO BE INSTALLED.

LIGHTNING PROTECTION

- AIR TERMINAL 20mm O.D. X 450mm SOLID COPPER, NICKEL PLATED ON ADHESIVE BASE
- EQ EQUIPMENT AIR TERMINAL
- TEST WELL WITH GROUND ROD(S)
- GROUND ROD
- G GROUND PLATE
- G MAIN GROUND CONDUCTER CONCEALED WITHIN CONSTRUCTION
- G MAIN GROUND CONDUCTOR EXPOSED ON EXPOSED ON BUILDING EXTERIOR SURFACE
- G GROUND CONDUCTOR CAD WELDED TO GROUND CABLE OR EQUIPMENT
- GROUND ROD TRIPOD, SPACED 3 METERS APART.
- LEVEL TO LEVEL CABLE

LIGHTING

- LIGHTING FIXTURE – SEE FIXTURE SCHEDULE FOR MORE INFORMATION
- EMERGENCY LIGHTING FIXTURE – SEE FIXTURE SCHEDULE FOR MORE INFORMATION
- DOWNLIGHT
- LIGHTING FIXTURE ON NORMAL/EMERGENCY
- WALL MOUNTED LIGHT FIXTURE
- E EXIT SIGN – DIRECTIONAL ARROWS AS INDICATED ON DRAWINGS
- REMOTE HEAD FOR BATTERY PACK
- $ SINGLE POLE SWITCH – 20A RATED
- $3 3-WAY SWITCH – 20A RATED
- $4 4-WAY SWITCH – 20A RATED
- LC LIGHTING CONTACTOR
- POLE MOUNTED SITE LIGHTING FIXTURE– NUMBER OF FIXTURES PER POLE AS INDICATED ON DRAWINGS
- EXTERIOR DIRECTIONAL LIGHTING FIXTURE
- a SMALL CASE LETTERS REPRESENTS LAMP(S) / SWITCHES.

TELECOMMUNICATIONS

- TELEPHONE OUTLET(S) @ 45cm AFF. U.N.O. WITH 20mm RACEWAY TERMINATED TO TELEDATA TERMINAL BOARD.
- DATA OUTLET(S) @ 45cm AFF. U.N.O. WITH 20mm RACEWAY TERMINATED TO TELEDATA TERMINAL BOARD.

TELECOMMUNICATIONS (CONTINUED)

- COMBINATION TELEPHONE/DATA OUTLET(S) @ 45cm AFF. U.N.O. WITH 27mm RACEWAY TERMINATED TO TELEDATA TERMINAL AREA.
- W WALL MTD. TELEPHONE OUTLET WITH 20mm RACEWAY TO TELEDATA TERMINAL BOARD.
- (x)T INDICATES NUMBER OF TELEPHONE OUTLET(S) AND ASSOCIATED CABLING
- (x)D INDICATES NUMBER OF DATA OUTLET(S) AND ASSOCIATED CABLING
- (x)TF INDICATES NUMBER OF TELEPHONE OUTLETS AND ASSOCIATED CABLING WITH 1 OUTLET AND CABLE DEDICATED FOR FAX

SINGLE LINE SYMBOLS

- SWITCH
- BREAKER
- FUSE
- TRANSFORMER
- GROUND
- CONTACT (NORMALLY OPEN)
- CONTACT (NORMALLY CLOSED)
- TRANSFER SWITCH
- CURRENT TRANSFORMER
- INDICATES NEW ELECTRICAL EQUIPMENT
- C INDICATES NEW CONTROL WIRING AND CONDUIT
- EQUIPMENT OUTLINE

MISCELLANEOUS

- BRANCH CIRCUIT WIRING, SURFACE MOUNTED ON WALLS
- BRANCH CIRCUIT WIRING – 6mm²
- BRANCH CIRCUIT WIRING – UNDER FLOOR
- HOME RUN BACK TO PANEL
- CONDUIT TURNED DOWN
- CONDUIT TURNED UP
- LV LOW VOLTAGE WIRING AND CONDUIT
- INDICATES CONTINUATION OF LINE

FIRE ALARM

- FACP FIRE ALARM CONTROL PANEL WITH BATTERY BACKUP
- F FIRE ALARM PULL STATION

FIRE ALARM (CONTINUED)

- F FIRE ALARM STROBE – WALL MOUNTED
- F FIRE ALARM AUDIBLE/STROBE – WALL MOUNTED
- F FIRE ALARM HORN/STROBE – WALL MOUNTED
- S SMOKE DETECTOR
- H HEAT DETECTOR CEILING MOUNTED
- D DUCT DETECTOR – PROVIDED BY EC, INSTALLED BY MC AND CONNECTED BY EC

DENOTATIONS & ABBREVIATIONS

AFF	ABOVE FINISHED FLOOR
C	CEILING MOUNTED
E	EMERGENCY
EC	ELECTRICAL CONTRACTOR
EPO	EMERGENCY POWER OFF
EXP	EXPLOSION PROOF
F	FIRE ALARM
FF	FLUSH FLOOR MOUNTED
FL	FLUORESCENT
FO	FIBER OPTIC
FSS	FUSED SAFETY SWITCH
GF	GROUND FAULT INTERRUPTER
GC	GENERAL CONTRACTOR
IG	ISOLATED GROUND
K	KEY
LV	LOW VOLTAGE
M	MOTOR
MC	MECHANICAL CONTRACTOR
NE	NORMAL/EMERGENCY
NFSS	NON-FUSED SAFETY SWITCH
PA	PAGING SYSTEM
PLC	PLUMBING CONTRACTOR
SL	SINGLE LINE
T	TELEPHONE

DENOTATIONS & ABBREVIATIONS (CONT.)

TP	TAMPER PROOF
UE	UNDERGROUND ELECTRIC
W	WALL MOUNTED
WP	WEATHERPROOF WITH GROUND FAULT INTERRUPTION
WT	WATER TIGHT

GENERAL PROJECT NOTES:

G1. UNLESS OTHERWISE NOTED, PROVIDE ALL EQUIPMENT SHOWN ON THE PLANS. THE ELECTRICAL CONTRACTOR SHALL COORDINATE ALL SYMBOLS SHOWN ON THE PLANS WITH THE SYMBOL LIST. IT SHALL BE THE RESPONSIBILITY OF THE CONTRACTOR TO VERIFY THE INTENT OF ANY SYMBOL THAT IS SHOWN ON THE PLANS AND NOT INDICATED ON THE SYMBOL LIST WITH THE ENGINEER PRIOR TO BID.

G2. THE CONTRACTOR SHALL VERIFY THE LOCATION OF ALL UNDERGROUND UTILITIES WITHIN THE CONSTRUCTION AREA THREE (3) WORKING DAYS NOTICE BEFORE COMMENCING DIGGING. NOTIFY THE LOCAL AUTHORITY HAVING JURISDICTION AND WAIT THE REQUIRED TIME BEFORE COMMENCING TO DIG.

G3. THE CONTRACTOR SHALL COORDINATE CONDUIT RUNS, LIGHTING FIXTURES AND OTHER EQUIPMENT LOCATIONS WITH THE OTHER TRADE CONTRACTORS TO AVOID CONFLICTS.

G4. WHERE VOLTAGES AND FREQUENCIES ON THE DRAWINGS AND IN THE SPECIFICATIONS DIFFER FROM THE LOCAL ONES, ALL WORK SHALL BE PERFORMED USING THE LOCAL VOLTAGES AND FREQUENCIES.

G5. THE MINIMUM WIRE SIZE ON THE PROJECT SHALL BE 4mm². THE MINIMUM CONDUIT SIZE SHALL BE 20mm. THE MINIMUM BREAKER SIZE SHALL BE 20 AMPS.

G6. THE CONTRACTOR SHALL PUT A MAXIMUM OF 6 DUPLEX RECEPTACLES ON A 20A SINGLE POLE CIRCUIT.

G7. WHERE THE 1010 SCOPE REVIEW, 1015 TECHNICAL REVIEW, DRAWINGS, AND SPECIFICATIONS DIFFER FROM AMERICAN CODES OR STANDARDS, THE 1010, 1015, DRAWINGS, AND SPECIFICATIONS SHALL RULE.

G8. ALL CONDUIT AND DEVICES SHALL BE SURFACE MOUNTED UNLESS OTHERWISE INDICATED.

G9. CONTRACTOR SHALL COORDINATE ALL WORK WITH ALL OTHER TRADES TO ENSURE ALL WORK IS COMPLETED IN A PROFESSIONAL, WORKMAN-LIKE MANNER.

APPROVED:

A/E DESIGNER OF RECORD

SEAL:

COMMONWEALTH OF PENNSYLVANIA
REGISTERED PROFESSIONAL
JOSEPH R. GAUS
1/29/10
ENGINEER
PE-074251

US ARMY CORPS OF ENGINEERS
AFGHANISTAN ENGINEER DISTRICT

Mark	Description	Date	Appr.	Mark	Description	Date	Appr.

Date: 0
Date: 2/23/10
Design file no.
Drawing code:
File name:
Plot date:
Plot scale:

Designed by: JRG
Ckd by: JRG
Dwn by: BJB
Reviewed by: JRG
Submitted by: BAKER

U.S. ARMY ENGINEER DISTRICT, AFGHANISTAN
CORPS OF ENGINEERS
APO AE 96338

Michael Baker Jr., Inc
A unit of Michael Baker Corporation
Airside Business Park
100 Airside Drive
Moon Township, PA 15108
www.mbakercorp.com

AFGHAN NATIONAL ARMY
REGIONAL MILITARY TRAINING CENTER
STANDARD DESIGN

300 STUDENT CLASSROOM BUILDING
(1) 300 STUDENT CLASSROOMS

ELECTRICAL SYMBOLS & ABBREVIATIONS

Sheet reference number:
E-001

GENERAL NOTES:

1. REFER TO DRAWING #E-001 FOR THE ELECTRICAL SYMBOLS LIST.
2. EXIT SIGNS SHALL BE WIRED AHEAD OF ANY LOCAL SWITCHING ON CIRCUITS. SEE WIRING DIAGRAM DETAIL 8, ON DRAWING #E-501.
3. REFER TO DRAWING #E-601 FOR THE LIGHTING FIXTURE SCHEDULE.
4. REFER TO DRAWING #E-501 FOR THE POWER RISER.
5. REFER TO DRAWING #E-602 FOR PANEL SCHEDULES.
6. LIGHT FIXTURES INDICATED AS EMERGENCY SHALL BE PROVIDED WITH A BATTERY BACKUP BALLAST. SEE WIRING DIAGRAM DETAIL 7, ON DRAWING #E-501.

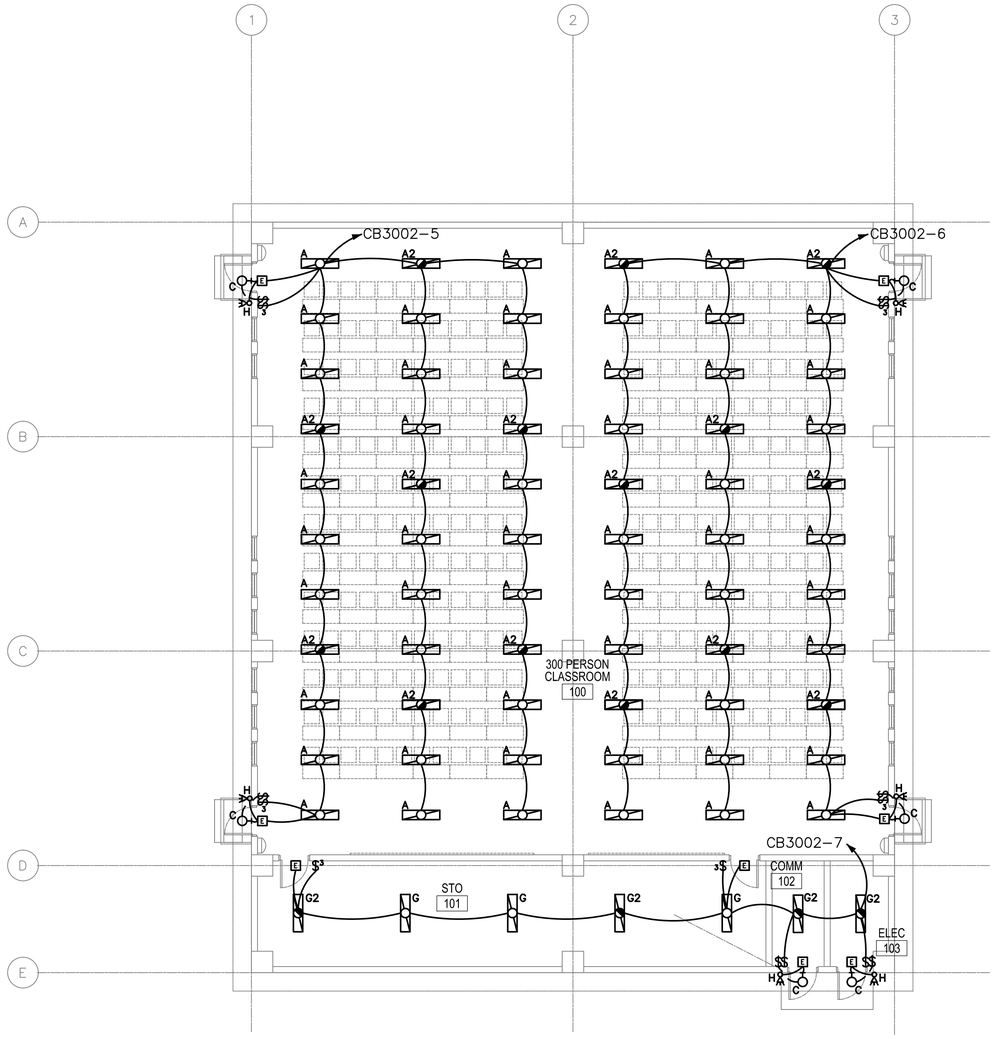

1 / E-101

300 STUDENT TOTAL
(1) 300-STUDENT CLASSROOMS - LIGHTING

SCALE: 1:100

0 2000 4000
SCALE: 1:100

APPROVED:

A/E DESIGNER OF RECORD

SEAL:

COMMONWEALTH OF PENNSYLVANIA
REGISTERED PROFESSIONAL
JOSEPH R. GAUS
1/29/10
ENGINEER
PE-074251

US ARMY CORPS OF ENGINEERS
AFGHANISTAN ENGINEER DISTRICT

Mark	Description	Date	Appr.

Mark	Description	Date	Appr.

Designed by: JRG
Dwn by: BJB
Ckd by: JRG
Reviewed by: JRG
Submitted by: BAKER
Date: 2/23/10
Design file no.
Drawing code:
File name:
Plot date:
Plot scale:
Date: 0

U.S. ARMY ENGINEER DISTRICT, AFGHANISTAN
CORPS OF ENGINEERS
APO AE 96338

Michael Baker Jr., Inc.
A unit of Michael Baker Corporation
Airside Business Park
100 Airside Drive
Moon Township, PA 15108
www.mbakercorp.com

AFGHAN NATIONAL ARMY
REGIONAL MILITARY TRAINING CENTER
STANDARD DESIGN

300 STUDENT CLASSROOM BUILDING
(1) 300 STUDENT CLASSROOMS
ELECTRICAL LIGHTING PLAN

Sheet reference number:
E-101

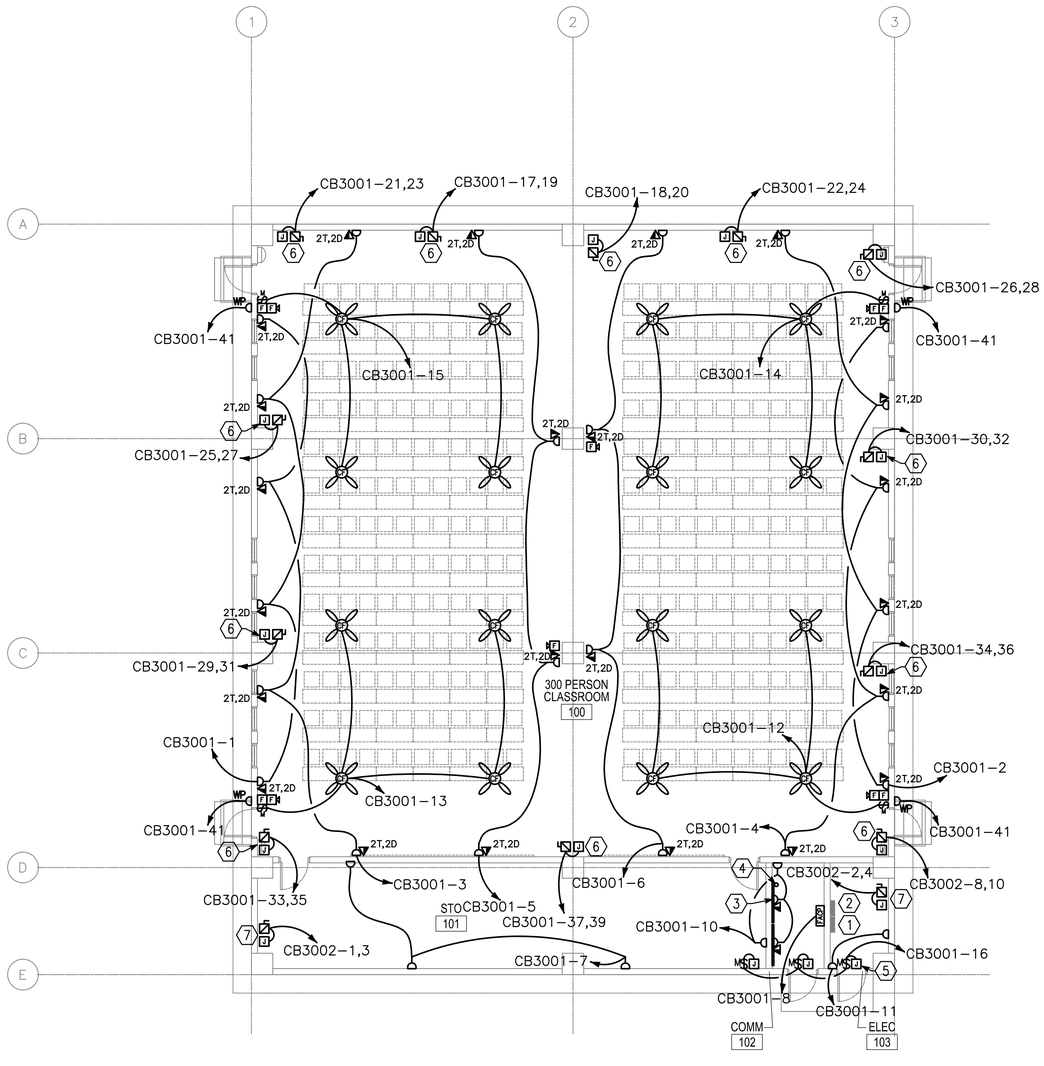

1
E-102

300 STUDENT TOTAL
(1) 300-STUDENT CLASSROOMS - POWER AND SYSTEMS

SCALE: 1:100

GENERAL NOTES:

1. REFER TO DRAWING #E-001 FOR THE ELECTRICAL SYMBOLS LIST.
2. REFER TO DRAWING #E-501 FOR THE POWER RISER.
3. REFER TO DRAWING #E-602 FOR PANEL SCHEDULES.
4. COORDINATE EXACT MOUNTING LOCATION OF DISCONNECTING MEANS FOR MECHANICAL AND PLUMBING EQUIPMENT IN THE FIELD.
5. FUSIBLE SAFETY SWITCHES THAT ARE NOT OTHERWISE IDENTIFIED SHALL BE 380V, 1P, 30A FUSED SAFETY SWITCHES WITH 20A FUSES.

NUMBERED NOTES:

1. PANEL CB3001.
2. PANEL CB3002.
3. PROVIDE A 1200mm X 2400mm SHEET OF PLYWOOD PAINTED WITH FIRE RESISTANT PAINT FOR MOUNTING TELECOMMUNICATIONS EQUIPMENT.
4. PROVIDE CONDUIT STUB UP IN THE ROOM FOR INCOMING TELECOMMUNICATIONS SERVICES FROM THE CENTRAL COMMUNICATIONS SYSTEM IN THE GARRISON.
5. PROVIDE POWER CONNECTION TO EXHAUST FANS. SEE DRAWINGS #M-101 AND #E-602 FOR MORE INFORMATION.
6. PROVIDE POWER CONNECTION TO ELECTRIC UNIT HEATER #5. SEE DRAWINGS #M-101 AND #E-602 FOR MORE INFORMATION.
7. PROVIDE POWER CONNECTION TO ELECTRIC UNIT HEATER #4. SEE DRAWINGS #M-101 AND #E-602 FOR MORE INFORMATION.

0 2000 4000
SCALE: 1:100

APPROVED:

A/E DESIGNER OF RECORD

SEAL:

COMMONWEALTH OF PENNSYLVANIA
REGISTERED PROFESSIONAL ENGINEER
JOSEPH R. GAUS
PE-074251
1/29/10

US ARMY CORPS OF ENGINEERS
AFGHANISTAN ENGINEER DISTRICT

Mark	Description	Date	Appr.	Mark	Description	Date	Appr.

Designed by: KJR
Dwn by: BJB
Ckd by: JRG
Reviewed by: JRG
Submitted by: BAKER
Date: 2/23/10
Design file no.
Drawing code:
File name:
Plot date:
Plot scale:
Date: 0

U.S. ARMY ENGINEER DISTRICT, AFGHANISTAN
CORPS OF ENGINEERS
APO AE 96338

Michael Baker Jr., Inc
A unit of Michael Baker Corporation
Airside Business Park
100 Airside Drive
Moon Township, PA 15108
www.mbakercorp.com

AFGHAN NATIONAL ARMY
REGIONAL MILITARY TRAINING CENTER
STANDARD DESIGN

300 STUDENT CLASSROOM BUILDING
(1) 300 STUDENT CLASSROOMS
ELECTRICAL POWER AND SYSTEMS PLAN

Sheet reference number:
E-102

GENERAL NOTES:

1. REFER TO DRAWING #E-001 FOR THE ELECTRICAL SYMBOLS LIST.

NUMBERED NOTES:

1. (1) 120.0mm² BARE, TINNED, COPPER COUNTERPOISE GROUND 700mm BELOW GRADE.
2. INSTALL DOWN CONDUCTOR IN 25mm SCHEDULE 80 PVC CONDUIT TO 20mm DIAMETER X 3 METERS SOLID COPPER TINNED GROUND ROD. (TYPICAL)
3. CADWELD TO BUILDING STRUCTURE AT 18 METERS ON CENTER AROUND THE ENTIRE PERIMETER OF THE BUILDING. (TYPICAL)
4. 120mm² LIGHTNING PROTECTION CABLE.
5. AIR TERMINAL. TERMINALS SHALL BE PLACED ATA MAXIMUM OF 6M ON CENTER PER NFPA PARA. 4.8.2.1, AND WITHIN 0.6M OF RIDGE ENDS PER NFPA 780 PARA. 4.8 (TYPICAL)
6. 700mm MIN. (TYP) BETWEEN FOUNDATION AND GROUND LOOP.

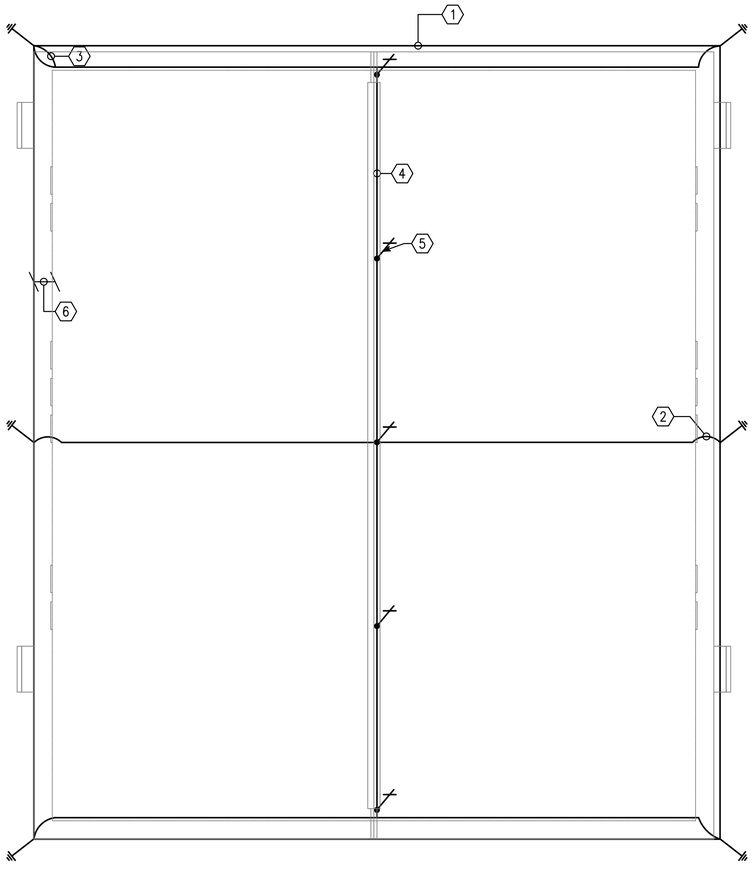

1 / 103 300 STUDENT TOTAL - (1) 300-STUDENT CLASSROOMS - LIGHTNING PROTECTION

SCALE: 1:100

0 2000 4000
SCALE: 1:100

APPROVED:

A/E DESIGNER OF RECORD

SEAL:

COMMONWEALTH OF PENNSYLVANIA
REGISTERED PROFESSIONAL
JOSEPH R. GAUS
1/29/10
ENGINEER
PE-074251

US ARMY CORPS OF ENGINEERS
AFGHANISTAN ENGINEER DISTRICT

Mark	Description	Date	Appr.

Mark	Description	Date	Appr.

Designed by: JRG
Dwn by: BJB
Ckd by: JRG
Reviewed by: JRG
Submitted by: BAKER
Date: 2/23/10
Design file no.
Drawing code:
File name:
Plot date:
Plot scale:
Date: 0

U.S. ARMY ENGINEER DISTRICT, AFGHANISTAN
CORPS OF ENGINEERS
APO AE 96338

Michael Baker Jr., Inc
A unit of Michael Baker Corporation
Airside Business Park
100 Airside Drive
Moon Township, PA 15108
www.mbakercorp.com

AFGHAN NATIONAL ARMY
REGIONAL MILITARY TRAINING CENTER
STANDARD DESIGN

300 STUDENT CLASSROOM BUILDING
(1) 300 STUDENT CLASSROOMS

ELECTRICAL LIGHTNING PROTECTION PLAN

Sheet reference number:
E-103

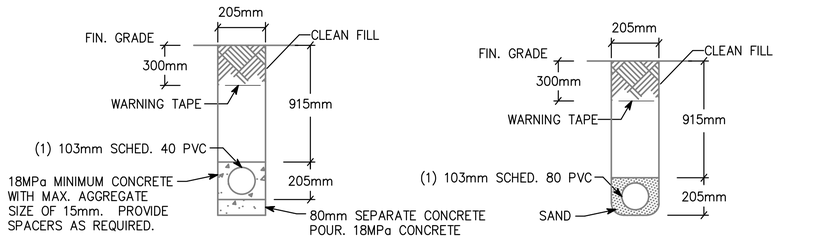

NOTE: PVC CONDUIT SHALL BE DIRECT BURIED SCHEDULE 80 FOR NO TRAFFIC AREAS AND CONCRETE-ENCASED SCHEDULE 40 FOR UNDER ROADWAYS OR TRAFFIC AREAS.

1 / E-501 TYPICAL DUCT BANK DETAILS FOR CONDUIT IN SAND OR CONCRETE

SCALE: N.T.S.

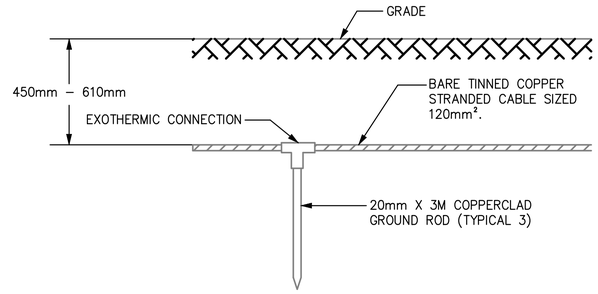

2 / E-501 GROUND TRIPOD SYSTEM DETAIL - ELEVATION

SCALE: N.T.S.

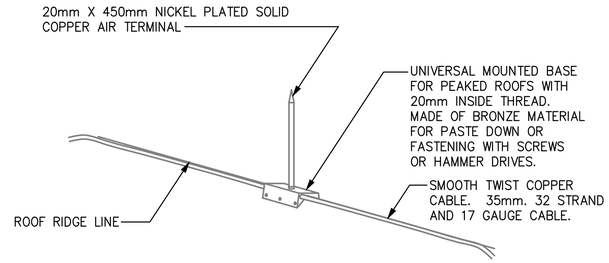

3 / E-501 LIGHTNING PROTECTION AIR TERMINAL DETAIL

SCALE: N.T.S.

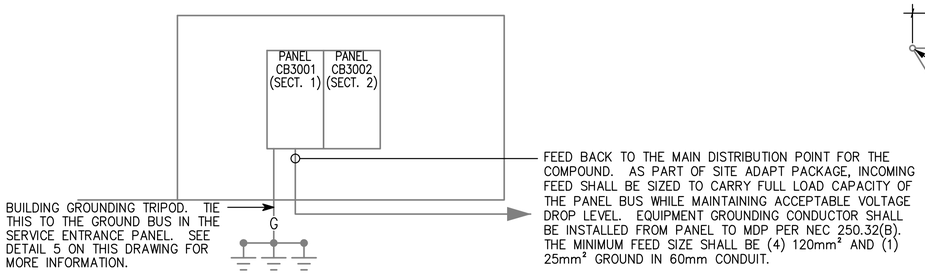

4 / E-501 CB300 RISER DIAGRAM

SCALE: N.T.S.

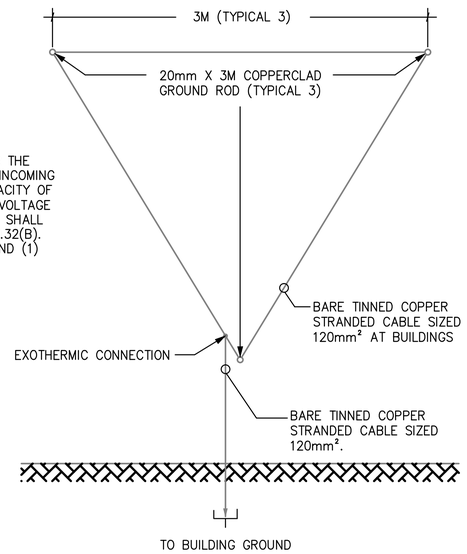

5 / E-501 GROUND TRIPOD SYSTEM DETAIL - PLAN

SCALE: N.T.S.

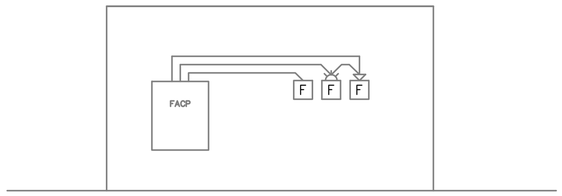

6 / E-501 TYPICAL ONE STORY FIRE ALARM RISER

SCALE: N.T.S.

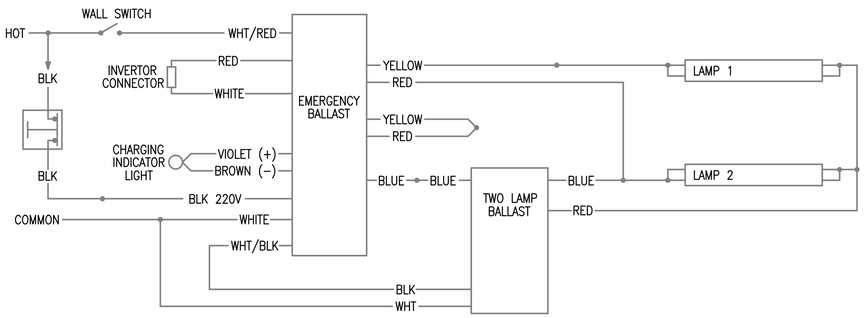

7 / E-501 EMERGENCY FIXTURE WIRING DIAGRAM

SCALE: N.T.S.

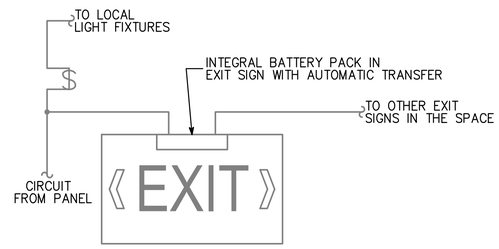

8 / E-501 EXIT SIGN WIRING DIAGRAM

SCALE: N.T.S.

US ARMY CORPS OF ENGINEERS
AFGHANISTAN ENGINEER DISTRICT

Mark	Description	Date	Appr.	Mark	Description	Date	Appr.

Designed by: JRG
Dwn by: BJB
Ckd by: JRG
Reviewed by: JRG
Submitted by: BAKER
Date: 2/23/10
Design file no.
Drawing code:
File name:
Plot date:
Plot scale:
Date: 0

U.S. ARMY ENGINEER DISTRICT, AFGHANISTAN
CORPS OF ENGINEERS
APO AE 96338

Michael Baker Jr., Inc.
A unit of Michael Baker Corporation
Airside Business Park
100 Airside Drive
Moon Township, PA 15108
www.mbakercorp.com

AFGHAN NATIONAL ARMY
REGIONAL MILITARY TRAINING CENTER
STANDARD DESIGN

300 STUDENT CLASSROOM BUILDING
(1) 300 STUDENT CLASSROOMS
ELECTRICAL DETAILS

APPROVED:

A/E DESIGNER OF RECORD

SEAL:

COMMONWEALTH OF PENNSYLVANIA
REGISTERED PROFESSIONAL
JOSEPH R. GAUS
ENGINEER
PE-074251

Sheet reference number:
E-501

(A) LARGER OF THE TWO SIZES GIVEN IN THE TABLES BELOW	
GROUNDING ELECTRODE CONDUCTOR (BASED ON AIC RATING)	
AIC RATING OF SERVICE EQUIPMENT	NECESSARY GROUNDING ELECTRODE CONDUCTOR SIZE
10K	(1) 35mm²
14K	(1) 50mm²
18K	(1) 70mm²
22K	(1) 70mm²
25K	(1) 70mm²
30K	(1) 95mm²
35K	(1) 120mm²
42K	(1) 150mm²
65K	(1) 185mm²
100K	(1) 300mm²
125K	(2) 185mm²
200K	(2) 300mm²
GROUNDING ELECTRODE CONDUCTOR (BASED ON NEC TABLE 250.66)	
SIZE OF LARGEST UNGROUNDED SERVICE CONDUCTOR OR EQUIVALENT AREA FOR PARALLEL CONDUCTORS	NECESSARY GROUNDING ELECTRODE CONDUCTOR SIZE
350 kcmil OR SMALLER	35mm²
OVER 350 kcmil TO 600 kcmil	70mm²
OVER 600 kcmil TO 1100 kcmil	70mm²
OVER 1100 kcmil	95mm²
NOTE: ALL SIZES ARE BASED ON COPPER CONDUCTORS.	

(B) EQUIPMENT GROUNDING CONDUCTOR	
RATING OR SETTING OF AUTOMATIC OVERCURRENT DEVICE IN CIRCUIT AHEAD OF EQUIPMENT, CONDUIT, ETC, NOT EXCEEDING (AMPERES)	NECESSARY EQUIPMENT GROUNDING CONDUCTOR SIZE
15	2.5mm²
20	4.0mm²
30	6.0mm²
40	6.0mm²
60	6.0mm²
100	10mm²
200	16mm²
300	25mm²
400	25mm²
500	35mm²
600	50mm²
800	70mm²
1000	70mm²
1200	95mm²
1600	120mm²
2000	150mm²
2500	185mm²
3000	240mm²
4000	300mm²
5000	400mm²
6000	400mm²
NOTE: ALL SIZES ARE BASED ON COPPER CONDUCTORS.	

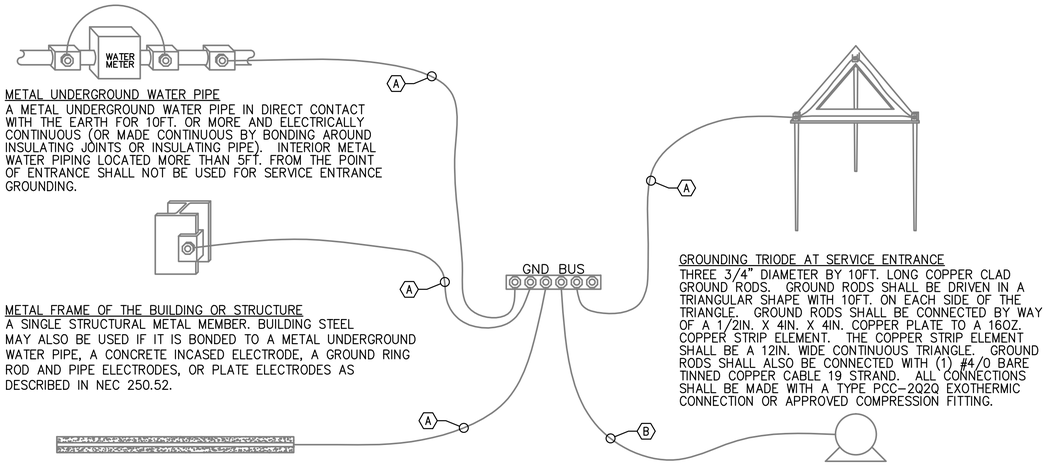

METAL UNDERGROUND WATER PIPE
A METAL UNDERGROUND WATER PIPE IN DIRECT CONTACT WITH THE EARTH FOR 10FT. OR MORE AND ELECTRICALLY CONTINUOUS (OR MADE CONTINUOUS BY BONDING AROUND INSULATING JOINTS OR INSULATING PIPE). INTERIOR METAL WATER PIPING LOCATED MORE THAN 5FT. FROM THE POINT OF ENTRANCE SHALL NOT BE USED FOR SERVICE ENTRANCE GROUNDING.

METAL FRAME OF THE BUILDING OR STRUCTURE
A SINGLE STRUCTURAL METAL MEMBER. BUILDING STEEL MAY ALSO BE USED IF IT IS BONDED TO A METAL UNDERGROUND WATER PIPE, A CONCRETE INCASED ELECTRODE, A GROUND RING ROD AND PIPE ELECTRODES, OR PLATE ELECTRODES AS DESCRIBED IN NEC 250.52.

CONCRETE ENCASED ELECTRODE
AN ELECTRODE ENCASED BY AT LEAST 2IN. OF CONCRETE , LOCATED WITHIN AND NEAR THE BOTTOM OF A CONCRETE FOUNDATION OR FOOTING THAT IS IN DIRECT CONTACT WITH THE EARTH, CONSISTING OF AT LEAST 20FT. OF ONE OR MORE BARE OR ZINC GALVANIZED OR OTHER ELECTRICALLY CONDUCTIVE COATED STEEL REINFORCING BARS OR RODS OF NOT LESS THAN 1/2" DIAMETER OR BARE COPPER CONDUCTOR NOT SMALLER THAN 4AWG.

GROUNDING TRIODE AT SERVICE ENTRANCE
THREE 3/4" DIAMETER BY 10FT. LONG COPPER CLAD GROUND RODS. GROUND RODS SHALL BE DRIVEN IN A TRIANGULAR SHAPE WITH 10FT. ON EACH SIDE OF THE TRIANGLE. GROUND RODS SHALL BE CONNECTED BY WAY OF A 1/2IN. X 4IN. X 4IN. COPPER PLATE TO A 16OZ. COPPER STRIP ELEMENT. THE COPPER STRIP ELEMENT SHALL BE A 12IN. WIDE CONTINUOUS TRIANGLE. GROUND RODS SHALL ALSO BE CONNECTED WITH (1) #4/0 BARE TINNED COPPER CABLE 19 STRAND. ALL CONNECTIONS SHALL BE MADE WITH A TYPE PCC-2Q2Q EXOTHERMIC CONNECTION OR APPROVED COMPRESSION FITTING.

LOAD OR DOWNSTREAM PANEL
ALL LOADS IN THE BUILDING SHALL HAVE AN EQUIPMENT GROUNDING CONDUCTOR PULLED TO THEM.

1
E-502

SERVICE ENTRANCE GROUNDING DETAIL

SCALE: N.T.S.

APPROVED:

A/E DESIGNER OF RECORD

SEAL:

COMMONWEALTH OF PENNSYLVANIA
REGISTERED PROFESSIONAL
JOSEPH R. GAUS
ENGINEER
PE-074251
1/29/10

US ARMY CORPS OF ENGINEERS
AFGHANISTAN ENGINEER DISTRICT

Mark	Description	Date	Appr.	Mark	Description	Date	Appr.

U.S. ARMY ENGINEER DISTRICT, AFGHANISTAN
CORPS OF ENGINEERS
APO AE 96338

Michael Baker Jr., Inc.
A unit of Michael Baker Corporation
Airside Business Park
100 Airside Drive
Moon Township, PA 15108
www.mbakercorp.com

Designed by: JRG
Dwn by: BJB
Ckd by: JRG
Reviewed by: JRG
Submitted by: BAKER
Date: 2/23/10
Design file no.
Drawing code:
File name:
Plot date:
Plot scale:
Date: 0

AFGHAN NATIONAL ARMY
REGIONAL MILITARY TRAINING CENTER
STANDARD DESIGN

300 STUDENT CLASSROOM BUILDING
(1) 300 STUDENT CLASSROOMS
ELECTRICAL DETAILS

Sheet reference number:
E-502

FIXTURE MARK 'A'

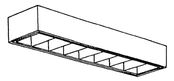

FIXTURE MARK 'C'

FIXTURE MARK 'G'

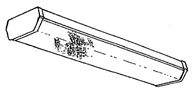

FIXTURE MARK 'H'

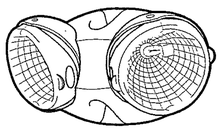

FIXTURE MARK 'E'

LIGHT FIXTURE SCHEDULE

FIXTURE MARK	STYLE NUMBER AND TYPE	NUMBER AND TYPE OF LAMPS	VOLTAGE	MOUNTING	NOTES
A	PARABOLIC SURFACE/PENDANT MOUNTED 300MM X 1200MM FLUORESCENT FIXTURE WITH ELECTRONIC BALLAST	(2) 32W 3500K	220V – 1ø 50HZ	SURFACE MOUNTED	FURNISHED WITH ELECTRONIC BALLAST. PARABOLIC LOUVER SHALL BE SPECULAR LENS IRADESCENCE TYPE.
A2	SAME AS FIXTURE 'A' WITH EMERGENCY BALLAST	(2) 32W 3500K	220V – 1ø 50HZ	SURFACE MOUNTED	FURNISHED WITH ELECTRONIC BALLAST. PARABOLIC LOUVER SHALL BE SPECULAR LENS IRADESCENCE TYPE. EMERGENCY BALLAST SELF TEST.
C	INCANDESCENT ONE PIECE W/ APPROVED LENS STABILIZED HIGH IMPACT POLY CARBONATE.	(1) A19 – 100W INCANDESCENT	220V – 1ø 50HZ	WALL MOUNTED ABOVE EXTERIOR DOORS	
G	WRAP AROUND SURFACE/PENDANT MOUNTED FLUORESCENT FIXTURE WITH PRISMATIC ACRYLIC LENS AND ELECTRONIC BALLAST	(2) 32W 3500K	220V – 1ø 50HZ	SURFACE MOUNTED	FURNISHED WITH ELECTRONIC BALLAST, VIRGIN ACRYLIC WRAP AROUND LENS.
G2	SAME AS FIXTURE 'G' WITH EMERGENCY BALLAST	(2) 32W 3500K	220V – 1ø 50HZ	SURFACE MOUNTED	FURNISHED WITH ELECTRONIC BALLAST, VIRGIN ACRYLIC WRAP AROUND LENS. EMERGENCY BALLAST WITH SELF TEST SWITCH.
H	REMOTE HEAD EXTERIOR LIGHT HEAD POWERED FROM EXIT SIGN BATTERY– 12V DOUBLE HEAD CORROSION RESISTANT WITH UL34 WEATHERPROOF CONSTRUCTION	(2) 12W/12V HALOGEN LAMP	12V – 1ø 50HZ	EXTERIOR WALL MOUNTED AT TOP OF DOOR HEIGHT	
E	UNIVERSAL MOUNT ENGINEER GRADE THERMOPLASTIC HOUSING EXIT SIGN WITH LED LAMPS, RED LETTERS 6" IN HEIGHT WITH ARROWS AS INDICATED, WITH 12V CADMIUM BATTERY WITH REMOTE HEAD CAPABILITY	LED LAMPS	220V – 1ø 50HZ	UNIVERSAL MOUNTING	

APPROVED:

A/E DESIGNER OF RECORD

SEAL:

COMMONWEALTH OF PENNSYLVANIA
REGISTERED PROFESSIONAL
JOSEPH R. GAUS
ENGINEER
PE-074251
1/29/10

US ARMY CORPS OF ENGINEERS
AFGHANISTAN ENGINEER DISTRICT

Mark	Description	Date	Appr.

Mark	Description	Date	Appr.

U.S. ARMY ENGINEER DISTRICT, AFGHANISTAN
CORPS OF ENGINEERS
APO AE 96338

Michael Baker Jr., Inc.
A unit of Michael Baker Corporation
Airside Business Park
100 Airside Drive
Moon Township, PA 15108
www.mbakercorp.com

Designed by: JRG
Dwn by: BJB
Ckd by: JRG
Reviewed by: JRG
Submitted by: BAKER
Date: 2/23/10
Design file no.
Drawing code:
File name:
Plot date:
Plot scale:
Date: 0

AFGHAN NATIONAL ARMY
REGIONAL MILITARY TRAINING CENTER
STANDARD DESIGN

300 STUDENT CLASSROOM BUILDING
(1) 300 STUDENT CLASSROOMS

ELECTRICAL LIGHTING FIXTURE SCHEDULE

Sheet reference number:
E–601

PANELBOARD CB3001 SURFACE MOUNTED
AMP. MAIN LUGS (OR) 225 AMP. MAIN BREAKER W/ 225 AMP. TRIP
CIRCUIT BREAKER TYPE 380/220 VOLTS 3 PHASE 4 WIRE 50 HZ 225 AMP. BUS

CKT. NO.	TRIP AMPS	NO. POLES	WIRE MM ²	GND MM²	CONDUIT MM	LOAD SERVED	LOAD-KVA A0	LOAD-KVA B0	LOAD-KVA C0	LOAD-KVA A0	LOAD-KVA B0	LOAD-KVA C0	LOAD SERVED	CONDUIT MM	GND MM²	WIRE MM²	NO. POLES	TRIP AMPS	CKT. NO.
1	20	1	4.0	4.0	20	RECEPTACLES – RM 100	0.8			0.8			RECEPTACLES – RM 100	20	4.0	4.0	1	20	2
3	20	1	4.0	4.0	20	RECEPTACLES – RM 100		0.8			0.8		RECEPTACLES – RM 100	20	4.0	4.0	1	20	4
5	20	1	4.0	4.0	20	RECEPTACLES – RM 100			0.8			0.8	RECEPTACLES – RM 100	20	4.0	4.0	1	20	6
7	20	1	4.0	4.0	20	RECEPTACLES – RM 101	0.8			0.5			FACP – RM 103	20	4.0	4.0	1	20	8
9	20	1	4.0	4.0	20	RECEPTACLES – RM 102		0.6			0.4		RECEPTACLES – RM 103	20	4.0	4.0	1	20	10
11	20	1	4.0	4.0	20	RECEPTACLES – ELEC			0.6			1.6	CEILING FANS – RM 100	20	4.0	4.0	1	20	12
13	20	1	4.0	4.0	20	CEILING FANS – RM 100	1.6			1.6			CEILING FANS – RM 100	20	4.0	4.0	1	20	14
15	20	1	4.0	4.0	20	CEILING FANS – RM 100		1.6			0.4		EX. FANS #1,2,3 – RM 101–103	20	4.0	4.0	1	20	16
17	20	2	4.0	4.0	20	ELECTRIC HEAET #5 – RM 100			2.5			2.5	ELECTRIC HEAT #5 – RM 100	20	4.0	4.0	2	20	18
19							2.5			2.5									20
21	20	2	4.0	4.0	20	ELECTRIC HEAET #5 – RM 100		2.5			2.5		ELECTRIC HEAT #5 – RM 100	20	4.0	4.0	2	20	22
23									2.5			2.5							24
25	20	2	4.0	4.0	20	ELECTRIC HEAET #5 – RM 100	2.5			2.5			ELECTRIC HEAT #5 – RM 100	20	4.0	4.0	2	20	26
27								2.5			2.5								28
29	20	2	4.0	4.0	20	ELECTRIC HEAET #5 – RM 100			2.5			2.5	ELECTRIC HEAT #5 – RM 100	20	4.0	4.0	2	20	30
31							2.5			2.5									32
33	20	2	4.0	4.0	20	ELECTRIC HEAET #5 – RM 100		2.5			2.5		ELECTRIC HEAT #5 – RM 100	20	4.0	4.0	2	20	34
35									2.5			2.5							36
37	20	2	4.0	4.0	20	ELECTRIC HEAET #5 – RM 100	2.5			7.7			PANEL – CB3002	40	10.0	50.0	3	100	38
39								2.5			6.5								40
41	20	1	4.0	4.0	20	RECEPTACLES – EXTERIOR			0.8			5.2							42
							13.2	13.0	12.2	12.9	11.6	12.4							

TOTAL CONN. LOAD PER PHASE (KVA): A0 31.3 B0 28.6 C0 29.8

TOTAL CONN. LOAD 89.7 KVA. 70 % DEMAND = ESTIMATED DEMAND LOAD 62.79

* MAIN BREAKER SHALL BE 3P EARTH GROUND TYPE

PANELBOARD CB3002 SURFACE MOUNTED
225 AMP. MAIN LUGS (OR) 100 AMP. MAIN BREAKER W/ 100 AMP. TRIP
CIRCUIT BREAKER TYPE 380/220 VOLTS 3 PHASE 4 WIRE 50 HZ 100 AMP. BUS

CKT. NO.	TRIP AMPS	NO. POLES	WIRE MM ²	GND MM²	CONDUIT MM	LOAD SERVED	LOAD-KVA A0	LOAD-KVA B0	LOAD-KVA C0	LOAD-KVA A0	LOAD-KVA B0	LOAD-KVA C0	LOAD SERVED	CONDUIT MM	GND MM²	WIRE MM²	NO. POLES	TRIP AMPS	CKT. NO.
1	20	2	4.0	4.0	20	ELECTRIC HEAT #4 – RM 101	2.0			2.0			ELECTRIC HEAT #4 – RM 101	20	4.0	4.0	2	20	2
3								2.0			2.0								4
5	20	1	4.0	4.0	20	LIGHTING – RM 100			2.6			2.6	LIGHTING – RM 100	20	4.0	4.0	1	20	6
7	20	1	4.0	4.0	20	LIGHTING – RM 101–103	1.2			2.5			ELECTRIC HEAT #5 – RM 100	20	4.0	4.0	2	20	8
9	20	1				SPARE					2.5								10
11	20	1				SPARE							SPARE				1	20	12
13	20	1				SPARE							SPARE				1	20	14
15	20	1				SPARE							SPARE				1	20	16
17	20	1				SPARE							SPARE				1	20	18
19	20	1				SPARE							SPARE				1	20	20
21	20	1				SPARE							SPARE				1	20	22
23	20	1				SPARE							SPARE				1	20	24
25	20	1				SPARE							SPARE				1	20	26
27	20	1				SPARE							SPARE				1	20	28
29	20	1				SPARE							SPARE				1	20	30
31	20	1				SPARE							SPARE				1	20	32
33	20	1				SPARE							SPARE				1	20	34
35	20	1				SPARE							SPARE				1	20	36
37	20	1				SPARE							SPARE				1	20	38
39	20	1				SPARE							SPARE				1	20	40
41	20	1				SPARE							SPARE				1	20	42
							3.2	2.0	2.6	4.5	4.5	2.6							

TOTAL CONN. LOAD PER PHASE (KVA): A0 7.7 B0 6.5 C0 5.2

TOTAL CONN. LOAD 19.4 KVA. 70 % DEMAND = ESTIMATED DEMAND LOAD 13.6

* MAIN BREAKER SHALL BE 3P EARTH GROUND TYPE

APPROVED:

A/E DESIGNER OF RECORD

SEAL:

COMMONWEALTH OF PENNSYLVANIA
REGISTERED PROFESSIONAL
JOSEPH R. GAUS
ENGINEER
PE-074251
1/29/10

US ARMY CORPS OF ENGINEERS
AFGHANISTAN ENGINEER DISTRICT

Mark	Description	Date	Appr.

Mark	Description	Date	Appr.

Designed by: JRG
Dwn by: BJB
Ckd by: JRG
Reviewed by: JRG
Submitted by: BAKER
Date: 2/23/10
Design file no.
Drawing code:
File name:
Plot date:
Plot scale:
Date: 0

U.S. ARMY ENGINEER DISTRICT, AFGHANISTAN
CORPS OF ENGINEERS
APO AE 96338

Michael Baker Jr., Inc.
A unit of Michael Baker Corporation
Airside Business Park
100 Airside Drive
Moon Township, PA 15108
www.mbakercorp.com

AFGHAN NATIONAL ARMY
REGIONAL MILITARY TRAINING CENTER
STANDARD DESIGN

300 STUDENT CLASSROOM BUILDING
(1) 300 STUDENT CLASSROOMS
ELECTRICAL PANEL SCHEDULES

Sheet reference number:
E–602

AFGHAN NATIONAL ARMY

STANDARD BUILDING DESIGN

ADMIN INSTRUCTORS OFFICE

100% FINAL DESIGN SUBMITTAL

SHEET INDEX

G–001 COVER SHEET

STRUCTURAL

S–001 GENERAL NOTES & DESIGN CRITERIA
S–101 FOUNDATION/SLAB & ROOF FRAMING PLANS
S–401 BUILDING SECTIONS
S–501 FOUNDATION SECTIONS
S–502 FRAMING SECTIONS
S–503 BEAM & COLUMN DETAILS
S–504 BEAM & COLUMN DETAILS
S–601 SCHEDULES
S–701 TYPICAL DETAILS
S–702 TYPICAL DETAILS

ARCHITECTURAL

A–001 LIFE SAFETY PLAN
A–101 FLOOR PLAN
A–102 ROOF PLAN
A–201 ELEVATIONS
A–301 BUILDING SECTIONS
A–401 WALL SECTIONS
A–501 EXTERIOR DETAILS
A–502 HEAD, JAMB, & SILL DETAILS
A–503 STOOP DETAILS
A–601 WINDOW & DOOR SCHEDULES

MECHANICAL

M–101 HVAC FLOOR PLAN, SCHEDULES, & DETAILS

ELECTRICAL

E–001 ELECTRICAL SYMBOLS & ABBREVIATIONS
E–101 ELECTRICAL LIGHTING PLAN
E–102 ELECTRICAL POWER & SYSTEMS PLAN
E–501 ELECTRICAL DETAILS
E–502 ELECTRICAL DETAILS
E–601 ELECTRICAL LIGHT FIXTURE SCHEDULE
E–602 ELECTRICAL PANEL SCHEDULES

US ARMY CORPS OF ENGINEERS
AFGHANISTAN ENGINEER DISTRICT

Mark	Description	Date	Appr.	Mark	Description	Date	Appr.

U.S. ARMY CORPS OF ENGINEERS
AFGHANISTAN ENGINEER DISTRICT
APO AE 96338

Michael Baker Jr., Inc.
A unit of Michael Baker Corporation
Airside Business Park
100 Airside Drive
Moon Township, PA 15108
www.mbakercorp.com

Designed by: KMP/MMY
Dwn by: RCG
Ckd by: CWW
Reviewed by: LHM
Submitted by: BAKER
Date: 2/23/10
Rev: 0
Design file no.
Drawing code:
File name: ANMAOFG.001CS
Plot date: 2/23/2010
Plot scale: X:X

AFGHAN NATIONAL ARMY
REGIONAL MILITARY TRAINING CENTER
STANDARD DESIGN

ADMIN INSTRUCTORS OFFICE

COVER SHEET

Sheet reference number:
G–001

STRUCTURAL ABBREVIATIONS:

ACI	AMERICAN CONCRETE INSTITUTE
ADD'L	ADDITIONAL
AISC	AMERICAN INSTITUTE OF STEEL CONSTRUCTION
AISI	AMERICAN IRON AND STEEL INSTITUTE
ASTM	AMERICAN SOCIETY FOR TESTING AND MATERIALS
ARCH	ARCHITECTURAL
B	BOTTOM
BLDG	BUILDING
BOTT	BOTTOM
℄	CENTER LINE
CFMRF	COLD FORM METAL ROOF FRAME
CFMF	COLD FORM METAL FRAME
CFS	COLD FORMED STEEL
CIP	CAST-IN-PLACE
CIPL	CAST-IN-PLACE LINTEL
CJ	CONTROL JOINT
CLR	CLEAR
CMU	CONCRETE MASONRY UNIT
COEFF	COEFFICIENT
COL	COLUMN
CONC	CONCRETE
CONT	CONTINUOUS
COORD	COORDINATE
CRSI	CONCRETE REINFORCING STEEL INSTITUTE
CSJ	CONSTRUCTION JOINT
DIA	DIAMETER
DIAG	DIAGONAL
DIM	DIMENSION
DWG	DRAWING
DWL	DOWEL
EA	EACH
EF	EACH FACE
ELEC	ELECTRICAL
ELEV	ELEVATION
EMBED	EMBEDMENT
EQUIV	EQUIVALENT
ETC	ET CETERA
EW	EACH WAY
EXP	EXPANSION
EXT	EXTERIOR
FTG	FOOTING
GA	GAUGE
GB	GRADE BEAM
HORIZ	HORIZONTAL
h	HOUR
HRS	HOURS
IBC	INTERNATIONAL BUILDING CODE
ID	INSIDE DIAMETER
INFO	INFORMATION
INT	INTERIOR
kg	KILOGRAM
km	KILOMETER
kN	KILONEWTON
kPa	KILOPASCAL
L#	ANGLE (# INDICATES SIZE)
LONG	LONGITUDINAL
LLV	LONG LEG VERTICAL
m	METER
MAX	MAXIMUM
MECH	MECHANICAL
MFG	MANUFACTURER
MID	MIDDLE
MIN	MINIMUM
MISC	MISCELLANEOUS
mm	MILLIMETER
MPa	MEGAPASCAL
MTL	METAL
MWFRS	MAIN WIND FORCE RESISTING SYSTEM
N	NEWTON
N	NORTH
N/A	NOT APPLICABLE
#	NUMBER SYMBOL FOR REBAR SIZE
NTS	NOT TO SCALE
OC	ON CENTER
OD	OUTSIDE DIAMETER
OPNG	OPENING
ℙ or PL	PLATE
PRE-ENG	PRE-ENGINEERED
RB	ROOF BEAM
REINF	REINFORCED
REQ'D	REQUIRED
SIM	SIMILAR
SPECS	SPECIFICATIONS
STD	STANDARD
STRUCT	STRUCTURAL
SW	SHEAR WALL
T	TOP
T/	TOP OF
T/ELEV	TOP ELEVATION
T/SLAB	TOP OF SLAB
T&B	TOP AND BOTTOM
THK	THICK
TYP	TYPICAL
UFC	UNIFIED FACILITIES CRITERIA
UON	UNLESS OTHERWISE NOTED
VERT	VERTICAL
W	WIDTH
W/	WITH

1.0 GENERAL NOTES:

1.1 THIS PROJECT HAS BEEN DESIGNED FOR THE WEIGHTS AND MATERIALS INDICATED ON THE SHEETS AND FOR THE LIVE LOADS INDICATED IN THE DESIGN DATA. IT IS THE CONTRACTOR'S RESPONSIBILITY TO DETERMINE ALLOWABLE CONSTRUCTION LOADS AND TO PROVIDE PROPER DESIGN AND CONSTRUCTION OF FALSEWORK, FORMWORK, STAGING, BRACING, SHEETING AND SHORING, ETC.

1.1 COORDINATE THESE SHEETS WITH THE ARCHITECTURAL, MECHANICAL, ELECTRICAL, PLUMBING, AND CIVIL SHEETS. ALL DIMENSIONS SHOWN ON THE SHEETS ARE MILLIMETERS UNLESS NOTED OTHERWISE.

1.2 THE CONTRACTOR SHALL VERIFY AND COORDINATE ALL FLOOR AND ROOF OPENING SIZES AND LOCATIONS, EQUIPMENT PAD SIZES AND LOCATIONS, ANCHOR BOLT LAYOUTS, ETC WITH EQUIPMENT SELECTED. THE CONTRACTOR SHALL MAKE ANY REQUIRED MODIFICATIONS AT NO ADDITIONAL COST.

1.3 THE CONTRACTOR SHALL REFER TO THE ARCHITECTURAL, MECHANICAL, ELECTRICAL AND PLUMBING SHEETS FOR SLEEVES, CURBS, INSERTS OR OPENINGS, ETC. NOT HEREIN INDICATED.

1.4 WORK NOT INCLUDED ON THE SHEETS BUT IMPLIED TO BE SIMILAR TO THAT SHOWN AT CORRESPONDING PLACES ELSEWHERE ON THE SHEETS SHALL BE REPEATED.

1.5 IN CASE OF CONFLICT BETWEEN THE NOTES, DETAILS AND SPECIFICATIONS THE MOST RIGID REQUIREMENTS SHALL GOVERN.

1.6 SEE ARCHITECTURAL SHEETS FOR LOCATIONS OF MASONRY AND NON-LOAD BEARING PARTITIONS. PROVIDE COMPRESSIBLE FIRESAFING AT TOP OF WALL AS REQUIRED BY ARCHITECTURAL SHEETS.

1.7 COORDINATE FINISHED FLOOR DATUM ELEVATION 0.0m WITH THE CIVIL SHEETS.

2.0 FOUNDATION NOTES

2.1 THE GEOTECHNICAL ANALYSIS FOR THIS PROJECT IS THE RESPONSIBILITY OF THE CONTRACTOR AWARDED THE WORK. AN ASSUMED ALLOWABLE SOIL BEARING VALUE OF 72 kPa HAS BEEN USED IN THE STRUCTURAL ANALYSIS OF THE BUILDING HEREIN AND SHALL BE CONFIRMED AND VERIFIED AS PART OF THE GEOTECHNICAL INVESTIGATION. VALUES WHICH DO NOT MEET THE REQUIREMENTS INDICATED ON THE BASIS OF DESIGN SHEET SHALL BE IMMEDIATELY BROUGHT TO THE ATTENTION OF THE CONTRACTING OFFICER FOR CONSIDERATION AND DETERMINATION ON THE NEXT APPROPRIATE COURSE OF ACTION.

2.2 SEE THE SPECIFICATION FOR ADDITIONAL REQUIREMENTS TO THOSE OUTLINED IN THE GEOTECHNICAL INVESTIGATION FOR EXCAVATION AND PREPARATION OF THE FOUNDATION AND THE SLAB ON GRADE SUBGRADE INCLUDING COMPACTION PROCEDURES.

2.3 EXCAVATIONS FOR FOOTINGS SHALL HAVE THE SIDES AND BOTTOMS TEMPORARILY LINED WITH 0.25mm POLYETHYLENE IF PLACEMENT OF CONCRETE DOES NOT OCCUR WITHIN 24 HRS OF THE EXCAVATION OF THE FOOTING.

2.4 FOUNDATION CONDITIONS NOTED DURING CONSTRUCTION WHICH DIFFER FROM THOSE DESCRIBED IN THE GEOTECHNICAL REPORT SHALL BE REPORTED TO THE GENERAL CONTRACTOR BEFORE FURTHER CONSTRUCTION IS ATTEMPTED. SEE PROJECT SPECIFICATIONS.

2.5 NO FOOTINGS OR SLABS SHALL BE POURED INTO OR AGAINST SUBGRADE CONTAINING FREE WATER, FROST, ICE OR LOOSE MATERIAL. FROST DEPTH ASSUMED TO BE 800mm.

2.6 ALL SLAB-ON-GRADE, TRENCH BOTTOMS AND OTHER ON-GRADE INTERIOR HORIZONTAL SURFACES SHALL BE PLACED OVER A 0.25mm POLYETHYLENE VAPOR RETARDER OVER A 100mm #57 STONE WATER CAPILLARY BARRIER PLACED ON SUBGRADE PROPERLY PREPARED IN ACCORDANCE WITH THE CONTRACT SPECIFICATIONS. (UON)

2.7 PRIOR TO START OF FOUNDATION OR SLAB-ON-GRADE CONSTRUCTION, EXISTING SUBGRADES SHALL BE COMPACTED TO MINIMUM OF 95% MAXIMUM DRY DENSITY OBTAINED THRU ASTM D 1557 MODIFIED PROCTOR TESTING.

2.8 SEE PLUMBING, ELECTRICAL & CIVIL SHEETS FOR REQUIRED UNDERSLAB UTILITIES.

2.9 SEE ARCHITECTURAL SHEETS FOR ALL WATERPROOFING DETAILS AND MATERIALS.

2.10 IF UNDERMINING OF FOOTINGS OCCURS, FILL VOIDS WITH 18 MPa CONCRETE. DO NOT ATTEMPT TO REPLACE AND RE-COMPACT SOIL.

3.0 CONCRETE

3.1 CONCRETE SHALL HAVE THE UNIT WEIGHT OF 2400 kg/m^3 AND A MINIMUM COMPRESSIVE STRENGTH (f'c) OF 28 MPa AT 28 DAYS. ALL CONCRETE SHALL HAVE A WATER-CEMENT RATIO OF 0.45. SEE SPECIFICATIONS FOR ADDITIONAL INFORMATION. ENTRAIN AIR TO PRODUCE TOTAL AIR CONTENT ACCORDING TO THE SPECIFICATIONS FOR CONCRETE EXPOSED TO FREEZING TEMPERATURES (EXTERIOR FOOTINGS, SLAB TURNDOWNS, EXTERIOR SLABS AND SLABS-ON-GRADE, EXTERIOR RETAINING WALLS, AND EXTERIOR GRADE BEAMS.)

3.2 NO CALCIUM CHLORIDE SHALL BE USED IN ANY CONCRETE.

3.3 MIXING, TRANSPORTING AND PLACING OF CONCRETE SHALL CONFORM TO ACI 301M-05.

3.4 ALL CONCRETE WORK SHALL CONFORM TO THE REQUIREMENTS OF THE AMERICAN CONCRETE INSTITUTE (ACI) 318M MANUAL (metric), "BUILDING CODE REQUIREMENTS FOR REINFORCED CONCRETE", AND REQUIREMENTS OUTLINED IN THE CONTRACT SPECIFICATIONS. WHEN THERE IS A CONFLICT BETWEEN ACI AND THE SPECIFICATIONS, THE MORE STRINGENT SHALL GOVERN.

3.5 CHAMFER ALL EXPOSED EXTERNAL CORNERS OF CONCRETE WITH 20mm x45 DEGREE CHAMFER UON.

3.6 CONCRETE REINFORCEMENT BARS SHALL CONFORM TO ASTM A615M-96a, GRADE 420 MPa, REINFORCING BARS SHALL NOT BE TACK WELDED, WELDED, HEATED OR CUT, UNLESS INDICATED ON THE CONTRACT DOCUMENTS. ALL LAP SPLICES SHALL BE CLASS "B" UON.

3.7 HORIZONTAL FOOTING AND HORIZONTAL WALL REINFORCEMENT SHALL BE CONTINUOUS AND SHALL HAVE 90 DEGREE BENDS AND EXTENSIONS, OR CORNER BARS OF EQUIVALENT SIZE LAPPED WITH A CLASS B TENSION SPLICE AT CORNERS AND INTERSECTIONS. TOP BAR CRITERIA SHALL APPLY IF 300mm OR MORE OF FRESH CONCRETE IS PLACED BELOW BAR.

3.8 SLABS-ON-GRADE SHALL HAVE CONSTRUCTION JOINTS OR CRACK CONTROL JOINTS AS SHOWN ON THE DRAWINGS. CONSTRUCTION JOINTS CAN BE USED AT CONTROL JOINT LOCATIONS AT CONTRACTORS OPTION. SEE SLAB PLANS & JOINT DETAILS FOR ADDITIONAL INFORMATION. FOR AREAS NOT SHOWN ON DWGS, THE MAXIMUM SPACING OF CONSTRUCTION/ CRACK CONTROL JOINTS SHALL BE 4800mm

3.9 ALL CONCRETE REINFORCEMENT SHALL BE DETAILED, FABRICATED, LABELED, SUPPORTED, AND SPACED IN FORMS AND SECURED IN PLACE IN ACCORDANCE WITH THE PROCEDURES AND REQUIREMENTS OUTLINED IN THE LATEST EDITION OF THE "BUILDING CODE REQUIREMENTS FOR REINFORCED CONCRETE", ACI 318M, AND THE "MANUAL OF STANDARD PRACTICE FOR DETAILING REINFORCED CONCRETE STRUCTURES", ACI 315M, LATEST EDITION. BASED ON IN COUNTRY REINFORCEMENT AVAILABILITY, IT IS THE CONTRACTOR'S OPTION TO ROUND DESIGNATED ODD NUMBERED REINFORCEMENT SIZES UP (1) ONE BAR SIZE.

3.10 ALL DOWELS SHALL MATCH SIZE AND NUMBER OF MAIN REINFORCING, UNLESS NOTED OTHERWISE ON THE SHEETS.

3.11 ADDITIONAL BARS SHALL BE PROVIDED AROUND ALL FLOOR AND WALL OPENINGS AS SHOWN ON THE SHEETS.

3.12 SEE ARCHITECTURAL SHEETS FOR TYPE AND LOCATION OF ALL FLOOR FINISHES.

3.13 THE CONTRACTOR SHALL COORDINATE ADDITIONAL WALL/SLAB OPENINGS NOT SHOWN ON STRUCTURAL SHEETS. SEE MECHANICAL, ELECTRICAL, PLUMBING AND CIVIL SHEETS.

3.14 UNLESS NOTED OTHERWISE, ALL CURBS SHALL BE REINFORCED WITH AT LEAST (1)-#13 CONTINUOUS AND #13 AT 300mm O.C. DOWELS TO STRUCTURE BELOW.

3.15 THE CONTRACTOR SHALL VERIFY ALL OPENINGS, PAD SIZES, AND ANCHOR BOLTS WITH EQUIPMENT SELECTED.

3.16 FOR ALL WALLS & PIERS, PROVIDE DOWELS INTO FOOTING AT EACH VERT REINF BAR, UON DOWEL SIZE SHALL BE SAME AS VERT REINF.

3.17 PROVIDE CONCRETE POUR STOPS OR FORMED AS REQUIRED FOR INSTALLATION OF ALL CONCRETE WORK.

3.18 PROVIDE ADDITIONAL (2)-#13 x 600mm REINFORCING BARS IN SLAB-ON GRADE AT ALL RE-ENTRANT CORNERS. PLACE BARS AT MID-DEPTH OF SLAB WITH A CLEARANCE OF 50mm FROM CORNER UON.

3.19 COLD-WEATHER PLACEMENT: COMPLY WITH ACI 306.1 AND AS FOLLOWS. PROTECT CONCRETE WORK FROM PHYSICAL DAMAGE OR REDUCED STRENGTH THAT COULD BE CAUSED BY FROST, FREEZING ACTIONS, OR LOW TEMPERATURES. SUBMIT A COLD WEATHER CONCRETING PLAN FOR APPROVAL.

3.20 PROVIDE BONDING COMPOUND PER ASTM C 1059-99: SPECIFICATION FOR LATEX AGENTS FOR BONDING FRESH CONCRETE (GROUT) TO HARDENED CONCRETE.

3.21 THE FORMED SURFACES FOR REINFORCED CONCRETE SHALL ACHIEVE A "CLASS A" FINISH WHEN RECEIVING PAINT OR A "CLASS B" FINISH WHEN RECEIVING PLASTER OR TILE AS PER SPECIFICATION SECTION 03 31 00 CAST-IN-PLACE STRUCTURAL CONCRETE.

3.22 AT INTERSECTING GRADE BEAMS AND SHEAR WALLS, PROVIDE CORNER BARS AT INTERSECTIONS WITH SAME QUANTITY, SIZE AND SPACING AS HORIZONTAL BARS WITH LEG LENGTH = 50db.

3.23 REFER TO S-800 SERIES REINFORCING BAR PLACEMENT DRAWINGS DEFINING LENGTHS, BENDS, AND SPACINGS FOR ALL STRUCTURAL CONCRETE. THE S-800 SERIES DRAWING ARE BASED ON THE S-400, S-500, S-600, AND S-700 SERIES DRAWING SCHEDULES, DETAILS, AND DIAGRAMS.

4.0 CONCRETE MASONRY

4.1 MASONRY CONSTRUCTION SHALL CONFORM TO SPECIFICATION FOR MASONRY STRUCTURES (ACI 530.1) UON.

4.2 STRENGTH OF MASONRY MATERIALS SHALL BE AS FOLLOWS:

a. CONCRETE MASONRY UNITS SHALL BE NORMAL WEIGHT, GRADE N, TYPE 1, CONFORMING TO ASTM C-90 AND HAVE A MINIMUM COMPRESSIVE STRENGTH OF 10.4 MPa ON THE NET AREA.

b. MORTAR SHALL CONFORM TO ASTM C-270 TYPE S.

c. GROUT FOR MASONRY SHALL BE NORMAL WEIGHT AND HAVE A MINIMUM COMPRESSIVE STRENGTH OF 14 MPa AT 28 DAYS. GROUT SHALL CONFORM TO ASTM C476M. GROUT LIFTS SHALL NOT EXCEED 1,400mm.

d. REINFORCED MASONRY SHALL HAVE A STRENGTH F'm = 10 MPa. (F'm IS THE COMPRESSIVE STRENGTH OF THE MASONRY AT 28 DAYS AS DETERMINED BY PRISM TESTS).

4.3 ALL VERTICAL REINFORCEMENT FOR CONCRETE MASONRY SHALL BE ASTM A615M-96a, GRADE 420 MPa. ALL SPLICES SHALL BE LAPPED 48 BAR DIAMETERS MINIMUM.

4.4 BOND BEAMS SHALL BE SPACED AT 1200mm OC VERTICALLY. BOND BEAM REINFORCING SHALL BE CONTINUOUS AND PROVIDED AT WALL INTERSECTIONS AND WALL CORNERS (REFERENCE CONCRETE MASONRY NOTE 4.11). ALL BOND BEAM REINFORCING SHALL BE CONTINUOUS AND HAVE STANDARD ACI HOOKS AT EACH END. PROVIDE STANDARD BAR SPLICES AS SPECIFIED. AS AN ALTERNATE TO CMU BOND BEAMS, IT IS THE CONTRACTOR'S OPTION TO PROVIDE 200mm x 200mm CONTINUOUS CAST-IN-PLACE CONCRETE BOND BEAMS WITH (2)-#16 IN LIEU OF CMU BOND BEAMS INDICATED ON THE DRAWINGS.

4.5 SEE TYPICAL DETAILS FOR MINIMUM REINFORCEMENT REQUIREMENTS FOR CMU WALLS. PROVIDE STANDARD BAR SPLICES AS SPECIFIED. ALL VERTICAL REINFORCEMENT EXTENDS FULL HEIGHT OF WALL.

4.6 CMU CELLS THAT REQUIRE VERTICAL REINFORCING BARS AS INDICATED ON THE CONTRACT DRAWINGS AND/OR SPECS SHALL HAVE REINF BARS PLACED IN CENTERS OF CMU CELLS AND CONTINUOUSLY GROUTED UON.

4.7 ALL CMU CELLS, OPEN CAVITIES, AND AIR SPACES OF ALL EXTERIOR WALLS SHALL BE GROUTED TO STOP FRAGMENTS FROM MORTAR BLAST.

4.8 CONTRACTOR SHALL COORDINATE LOCATION OF ALL OPENINGS SEE ARCH, MECH, ELEC, AND PLUMBING SHEETS FOR SIZE AND LOCATION OF OPENINGS.

4.9 MASONRY WALLS SHALL NOT BE BACK FILLED PRIOR TO THE MORTAR AND GROUT ATTAINING THEIR RESPECTIVE MAXIMUM DESIGN STRENGTHS PER SPECIFICATIONS.

4.10 PROVIDE GALVANIZED MORTAR/GROUT SCREEN W/ 3mm MESH WHERE CELLS BELOW ARE NOT GROUTED.

4.11 AT INTERSECTING BOND BEAMS, PROVIDE CORNER BAR FOR EACH HORIZONTAL BAR IN BOND BEAMS AT INTERSECTING WALLS. USE SAME SIZE AND SPACING AS HORIZONTAL BARS WITH LEG LENGTH = 50db.

4.12 THE ALTERNATE TOP OF CMU WALL BRACING DETAIL(S) SHOWN ON S-701 CAN BE UTILIZED AT THE CONTRACTOR'S OPTION IN PLACE OF THE "SLEEVED DOWEL" WALL CONNECTIONS DEPICTED ON S-400 AND S-500 SERIES DRAWINGS. IN ADDITION, ALTERNATE DETAIL(S) SHOW CAST-IN-PLACE WALL BOND BEAMS THAT CAN BE UTILIZED AT THE CONTRACTOR'S OPTION IN PLACE OF THE STANDARD CMU BOND BEAMS CONSTRUCTED OF CMU BLOCKS.

5.0 COLD-FORMED METAL FRAMING

5.1 ALL COLD-FORMED METAL FRAMING MEMBERS SHALL CONFORM TO ASTM A1003M, STRUCTURAL GRADE ST340 (MPa), WITH A GALVANIZED COATING OF Z275 OR BETTER IN ACCORDANCE WITH ASTM A653M.

5.2 ALL COLD-FORMED METAL FRAMING MEMBERS SHALL HAVE THE FOLLOWING MINIMUM PROPERTIES:

a. MINIMUM METAL THICKNESS:
TRACK = 1.37mm;
STUD/OTHER = 1.09mm

b. MINIMUM FLANGE WIDTH:
TRACK = 38mm;
STUD/OTHER = 35mm

c. MINIMUM MEMBER DEPTH:
ALL SECTIONS = 152.2mm

d. PURLIN (HAT CHANNEL)
DEPTHxWIDTH(FLAT TOP)xTHICK = 25mmx42mmx1.59mm

5.3 ALL CONNECTIONS SHALL BE MADE WITH CORROSION RESISTANT (ASTM A153M), SELF-DRILLING, SELF-TAPPING STEEL DRILL SCREWS IN ACCORDANCE WITH ASTM C1513. SCREWS SHALL HAVE A LOW PROFILE HEAD BENEATH ROOF DECK, AND STANDARD HEAD ALL OTHER LOCATIONS.

5.4 FABRICATE COLD FORMED METAL FRAMING AND ACCESSORIES PLUMB, SQUARE AND TRUE TO LINE, WITH CONNECTIONS SECURELY FASTENED ACCORDING TO AISI STANDARD FOR COLD FORMED STEEL FRAMING.

5.5 CUT FRAMING MEMBERS BY SAWING OR SHEATHING, DO NOT TORCH CUT.

5.6 INSTALL FRAMING MEMBERS IN ONE-PIECE LENGTHS UNLESS SPLICE CONNECTIONS ARE INDICATED FOR TRACK OR TENSION MEMBERS

5.7 INSTALL TEMPORARY BRACING AND SUPPORTS TO SECURE FRAMING DURING CONSTRUCTION. MAINTAIN BRACING AND SUPPORTS IN PLACE UNTIL THE STRUCTURE HAS BEEN COMPLETED WITH ALL CONNECTIONS AND PERMANENT BRACING SECURED.

6.0 STRUCTURAL DESIGN CRITERIA

6.1 ALL DESIGNS SHALL CONFORM TO THE PROVISIONS OF THE IBC 2006 AND UFC AS APPLICABLE.

6.2 DESIGN LOADS

6.2.1 DEAD LOADS (PER IBC 2006 & UFC 3-310-01)

MECH/ELEC/PLUMBING	0.20 kPa
MISCELLANEOUS	0.15 kPa
COLD-FORMED FRAMING	0.20 kPa
INSULATION	0.10 kPa
METAL ROOF PANEL	0.14 kPa
	0.79 kPa
FLOOR PARTITION ALLOWANCE	0.96 kPa

6.2.2 LIVE LOADS (PER IBC 2006 & UFC 3-310-01)

ROOF	1.00 kPa
CORRIDOR (2-STORY BLDG ONLY)	4.80 kPa
ALL OTHERS (2-STORY BLDG ONLY)	2.40 kPa
SLAB ON GRADE	4.80 kPa

6.2.3 SNOW LOADS (PER IBC 2006 & UFC 3-310-01)

GROUND SNOW LOAD (Pg)	1.2 kPa
SNOW IMPORTANCE FACTOR (I)	1.0
SNOW EXPOSURE FACTOR (Ce)	1.0
THERMAL FACTOR (Ct)	1.0

6.2.4 WIND LOADS (PER IBC 2006)

BASIC WIND SPEED	137 km/h
WIND IMPORTANCE FACTOR	1.0
WIND EXPOSURE CATEGORY	D
DIRECTIONALITY COEFFICIENT (Kd)	0.85
TOPOGRAPHIC FACTOR (Kzt)	1.0

6.2.5 SEISMIC LOADS (PER IBC 2006 & UFC 3-310-04)

OCCUPANCY USE CATEGORY	II
SEISMIC IMPORTANCE FACTOR (Ie)	1.0
SEISMIC SITE CLASS	D

S_s = 1.50 (REDUCED FROM 2.40 PER ASCE 7-05, 12.8.1.3 FOR A BUILDING WITHOUT IRREGULARITIES)
S_1 = 1.20
S_{DS} = 1.0
S_{D1} = 1.20

SEISMIC DESIGN CATEGORY	E
SEISMIC RESISTING SYSTEM: -SPECIAL REINFORCED CONCRETE SHEAR WALL	
RESPONSE MODIFICATION FACTOR (R)	6
RESPONSE COEFFICIENT (Cs)	0.167
SEISMIC ANALYTICAL PROCEDURE =	EQUIV LATERAL FORCE
SEISMIC BASE SHEAR	595 kN

APPROVED:

A/E DESIGNER OF RECORD

SEAL:

GEORGIA REGISTERED 5-29-10 No. 27141 PROFESSIONAL ENGINEER CHRISTOPHER W. WHITMORE

US ARMY CORPS OF ENGINEERS
AFGHANISTAN ENGINEER DISTRICT

Mark	Description	Date	Appr.	Mark	Description	Date	Appr.

Date: 2/23/10 | Rev: 0
Design file no.
Drawing code:
File name: ANAMOFS-001GN
Plot date: 2/23/2010
Plot scale: X:X

Designed by: KMF/MMY
Dwn by: RCG | Ckd by: CWW
Reviewed by: LHM
Submitted by:
BAKER

U.S. ARMY CORPS OF ENGINEERS
AFGHANISTAN ENGINEER DISTRICT
APO AE 96338

Michael Baker Jr., Inc
A unit of Michael Baker Corporation
Airside Business Park
100 Airside Drive
Moon Township, PA 15108
www.mbakercorp.com

AFGHAN NATIONAL ARMY
REGIONAL MILITARY TRAINING CENTER
STANDARD DESIGN

ADMIN INSTRUCTORS OFFICE

GENERAL NOTES & DESIGN CRITERIA

Sheet reference number:
S-001

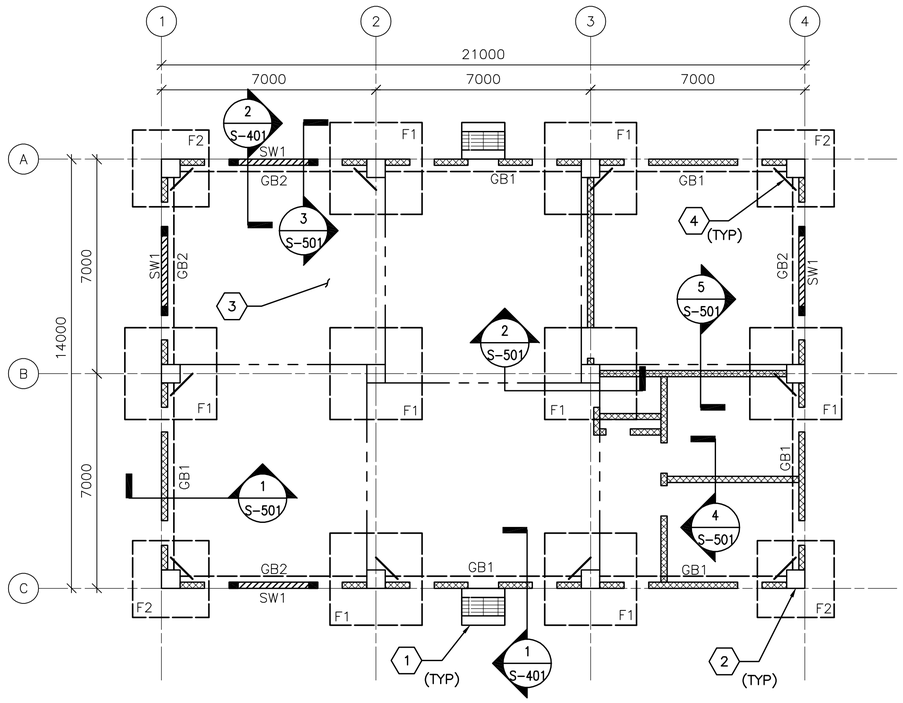

1 S-101 **FOUNDATION/SLAB PLAN**

SCALE: 1:100

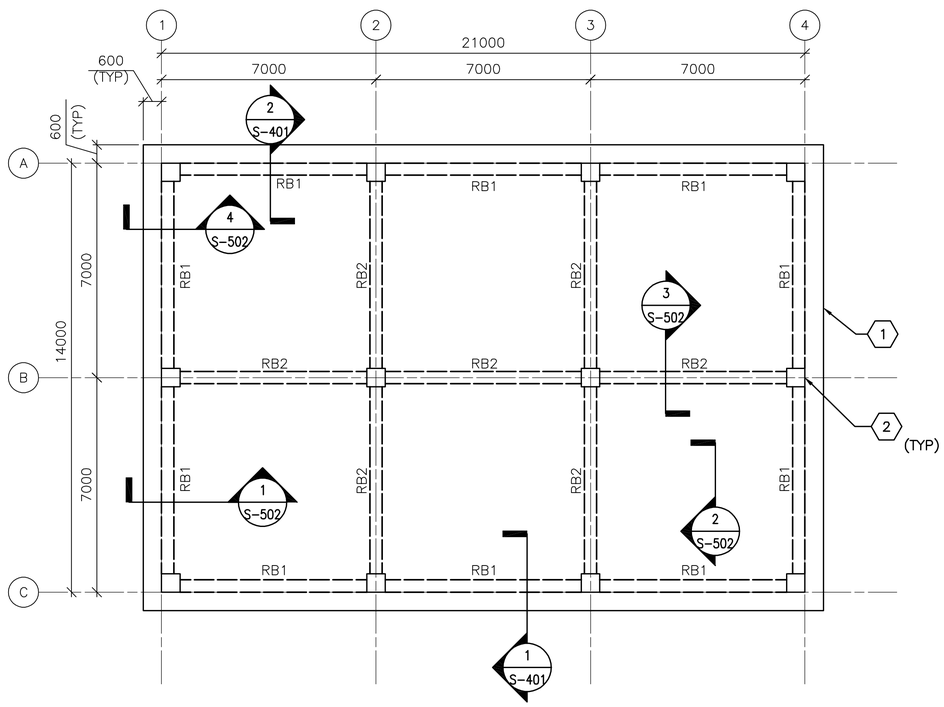

2 S-101 **ROOF FRAMING PLAN**

SCALE: 1:100

FOUNDATION/SLAB PLAN NOTES:

1. REFER TO SHEET S-001 FOR STRUCTURAL NOTES AND DESIGN CRITERIA.
2. FINISH FIRST FLOOR ELEVATION SHALL BE (DATUM 0.00) ALL PLUS OR MINUS DIMENSIONS INDICATED ON PLAN OR REFERRED TO IN NOTES RELATE TO FINISH FLOOR ELEVATION.
3. SLAB-ON-GRADE IS 150 WITH #13 @ 300 OC EW LOCATED 38 FROM T/SLAB.
4. TOP OF EXTERIOR FOOTINGS SHALL BE -950 UNLESS OTHERWISE INDICATED.
5. TOP OF INTERIOR FOOTINGS WITHOUT GRADE BEAM ABOVE SHALL BE -600.
6. COLUMN FOOTINGS INDICATED BY F# ON PLAN. REFER TO COLUMN FOOTING SCHEDULE ON SHEET S-601.
7. REFER TO COLUMN SCHEDULE ON SHEET S-601.
8. GRADE BEAM INDICATED BY GB# ON PLAN, REFER TO BEAM SCHEDULE ON SHEET S-601.
9. SHEARWALL INDICATED BY SW# ON PLAN, REFER TO SHEARWALL SCHEDULE ON SHEET S-601.
10. SEE TYP EXTERIOR AND INTERIOR CMU WALL REINFORCING DETAILS ON SHEET S-701.
11. SEE MECHANICAL AND ELECTRICAL SHEETS FOR CONCRETE PAD LOCATIONS, SIZES, AND THICKNESS NOT SHOWN. SEE SHEET S-701 FOR DETAILS.
12. THICKENED SLAB UNDER CMU PERIMETER & PARTITION WALLS NOT SHOWN FOR CLARITY.

FOUNDATION/SLAB PLAN KEY NOTES: (X)

1. CONC SLAB (ENTRANCE)-SEE ARCH DWGS FOR INFORMATION
2. REINF CONC COLUMN
3. REINF CONC SLAB-ON-GRADE
4. (2)-#13 RE-ENTRANT CORNER BARS (TYP) - SEE S-701 FOR INFORMATION

FOUNDATION/SLAB PLAN LEGEND:

REINF CONC SHEAR WALL

REINF CMU WALL

CONTROL JOINT

ROOF FRAMING PLAN NOTES:

1. REFER TO SHEETS S-001 FOR STRUCTURAL NOTES AND DESIGN CRITERIA.
2. TOP OF SLAB ELEVATION = 3600 UNLESS NOTED OTHERWISE.
3. ROOF SLAB IS 250 WITH #16 @ 300 OC EW T&B.
4. ROOF BEAM INDICATED BY RB# ON PLAN. REFER TO BEAM SCHEDULE ON SHEET S-601.
5. COORDINATE WITH ARCHITECTURAL SHEETS FOR COLD-FORMED STEEL OVERBUILD FRAMING ABOVE ROOF SLAB.
6. COLD-FORMED METAL OVERBUILD ROOF FRAMING NOT SHOWN FOR CLARITY. SEE OVERBUILD ROOF FRAMING DETAILS AND SECTIONS ON SHEET S-702.
7. CMU PARTITION WALLS (BELOW ROOF SLAB) NOT SHOWN FOR CLARITY.
8. OVERHANG AREAS OF ROOF SLAB CONTAIN ROOF VENT PENETRATIONS. REFERENCE ARCHITECTURAL DRAWINGS FOR INFORMATION.

ROOF FRAMING KEY NOTES: (X)

1. CONC ROOF SLAB (BELOW ROOF OVERBUILD)
2. REINF CONC COLUMN (BELOW CONC ROOF SLAB)

0 2000 4000
SCALE: 1:100

UNLESS OTHERWISE NOTED, LINEAR DIMENSIONS SHOWN ON DRAWINGS ARE IN MILLIMETERS (mm)

APPROVED:

A/E DESIGNER OF RECORD

SEAL:

GEORGIA REGISTERED 1-27-10 No. 27141 PROFESSIONAL ENGINEER CHRISTOPHER W. WHITMORE

US ARMY CORPS OF ENGINEERS
AFGHANISTAN ENGINEER DISTRICT

Mark	Description	Date	Appr.	Mark	Description	Date	Appr.

Designed by: KMP/MMY
Dwn by: RCG
Ckd by: CWW
Reviewed by: LHM
Submitted by: BAKER
Date: 2/23/10
Design file no.
Rev: 0
Drawing code:
File name: ANAAOFS-101FFP
Plot date: 2/23/2010
Plot scale: x:X

U.S. ARMY CORPS OF ENGINEERS
AFGHANISTAN ENGINEER DISTRICT
APO AE 96338

Michael Baker Jr., Inc
A unit of Michael Baker Corporation
Airside Business Park
100 Airside Drive
Moon Township, PA 15108
www.mbakercorp.com

AFGHAN NATIONAL ARMY
REGIONAL MILITARY TRAINING CENTER
STANDARD DESIGN

ADMIN INSTRUCTORS OFFICE

FOUNDATION/SLAB & ROOF FRAMING PLANS

Sheet reference number:
S-101

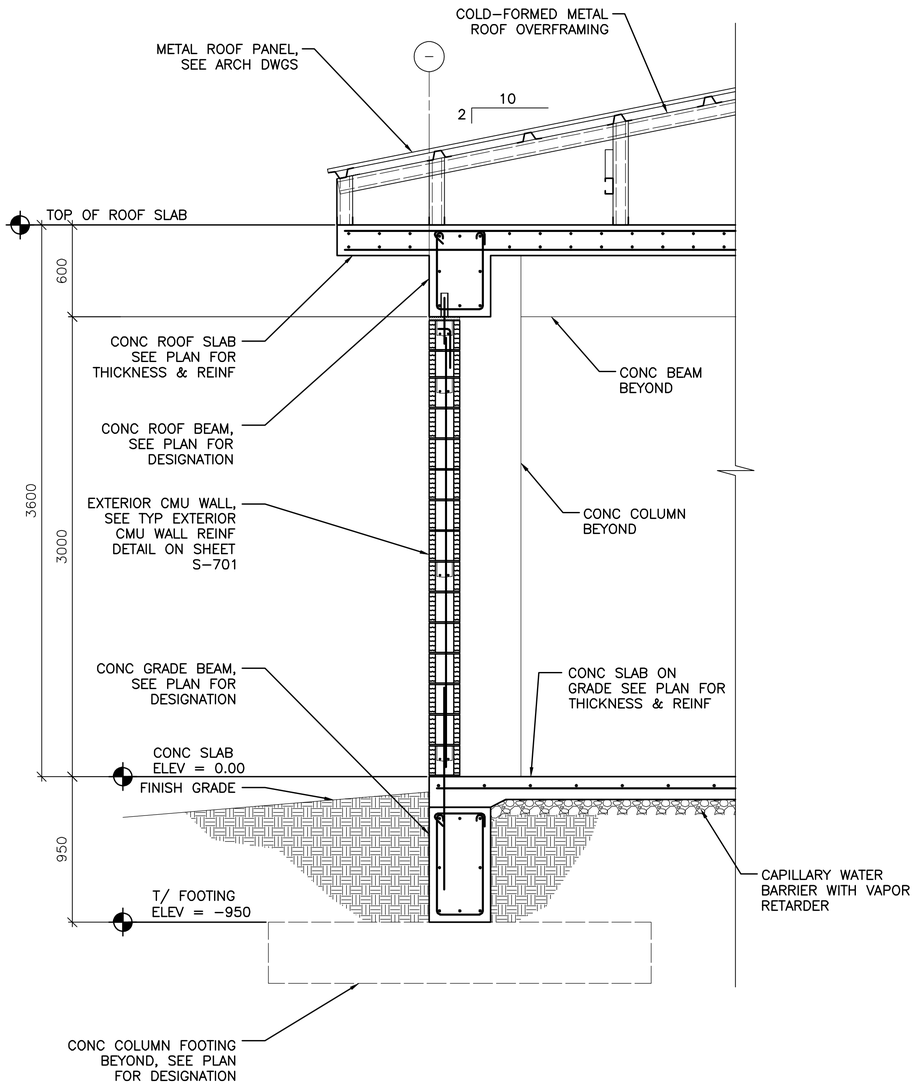

1 S-101 **TYPICAL WALL SECTION AT EXTERIOR MASONRY WALL**

SCALE: 1:20

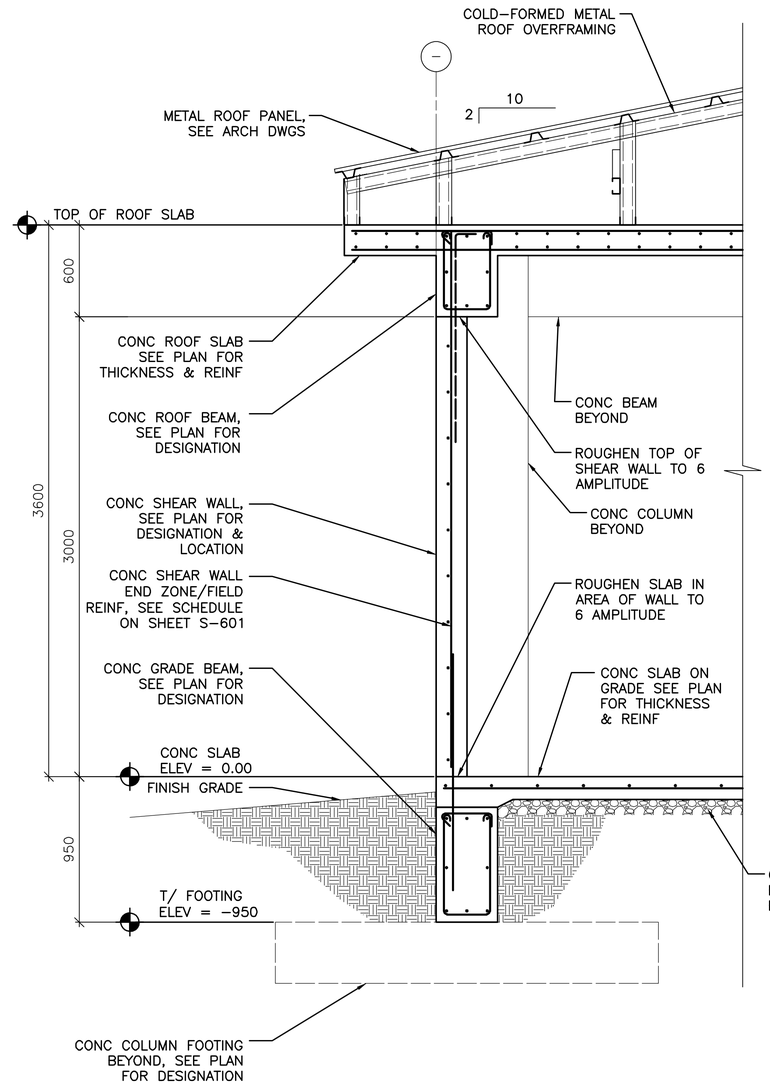

2 S-101 **TYPICAL WALL SECTION AT CONCRETE SHEAR WALL**

SCALE: 1:20

0 400 800
SCALE: 1:20

UNLESS OTHERWISE NOTED, LINEAR DIMENSIONS SHOWN ON DRAWINGS ARE IN MILLIMETERS (mm)

APPROVED:

A/E DESIGNER OF RECORD

SEAL:

GEORGIA REGISTERED 1-29-10 No. 27141 PROFESSIONAL ENGINEER CHRISTOPHER W. WHITMORE

US ARMY CORPS OF ENGINEERS
AFGHANISTAN ENGINEER DISTRICT

Mark	Description	Date	Appr.	Mark	Description	Date	Appr.

U.S. ARMY CORPS OF ENGINEERS
AFGHANISTAN ENGINEER DISTRICT
APO AE 96338

Michael Baker Jr., Inc
A unit of Michael Baker Corporation
Airside Business Park
100 Airside Drive
Moon Township, PA 15108
www.mbakercorp.com

Designed by: KMP/MMY
Dwn by: RCG
Ckd by: CWW
Reviewed by: LHM
Submitted by: BAKER
Date: 2/23/10
Rev: 0
Design file no.
Drawing code:
File name: ANAAOFS-401B3
Plot date: 2/23/2010
Plot scale: x:X

AFGHAN NATIONAL ARMY
REGIONAL MILITARY TRAINING CENTER
STANDARD DESIGN

ADMIN INSTRUCTORS OFFICE

BUILDING SECTIONS

Sheet reference number:
S-401

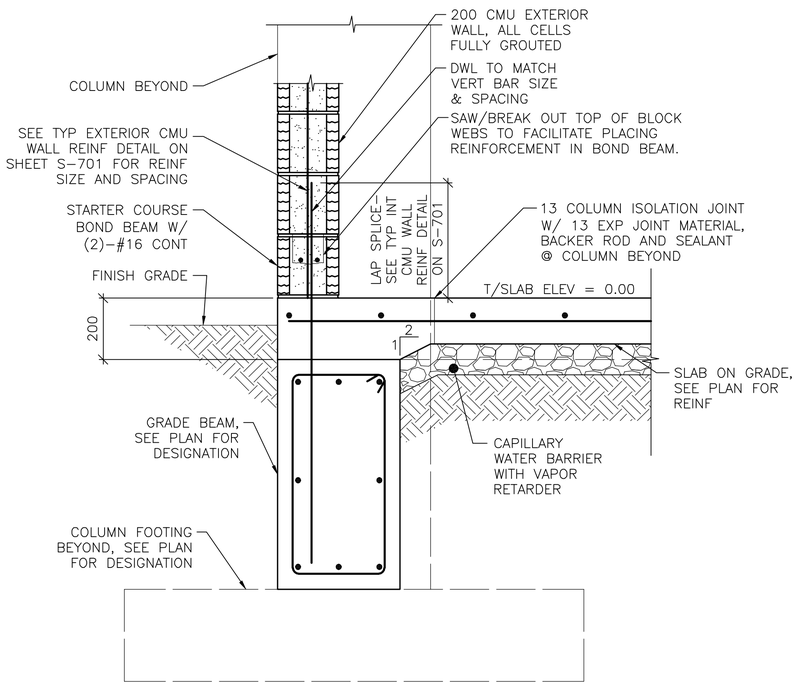

NOTE:
1. SECTION IS SIMILAR FOR INTERIOR CMU PARTITIONS OVER GRADE BEAMS SHOWING THICKENED 200 CONC SLAB AREA.

1 / S-101 **SECTION** SCALE: 1:10

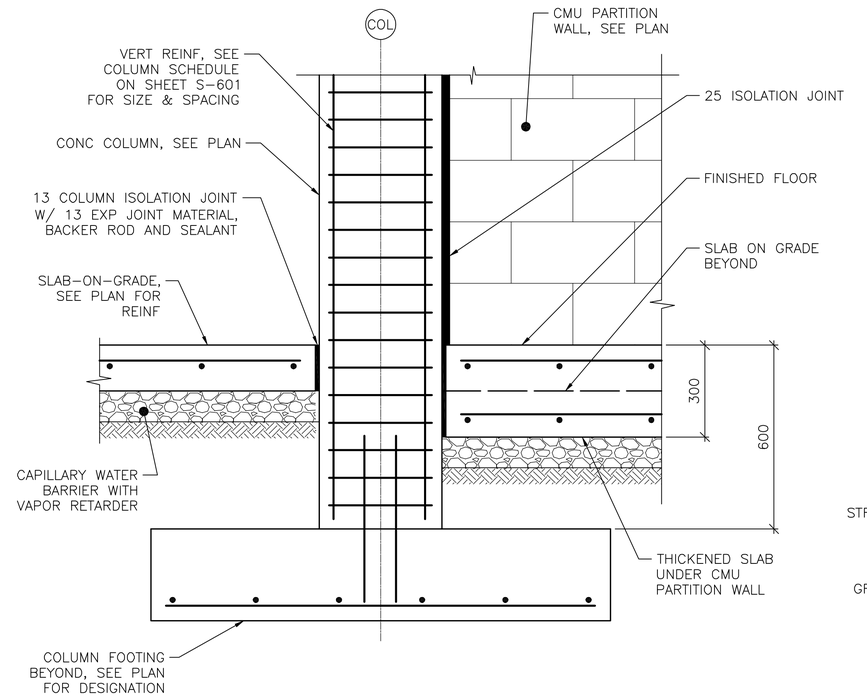

2 / S-101 **SECTION** SCALE: 1:10

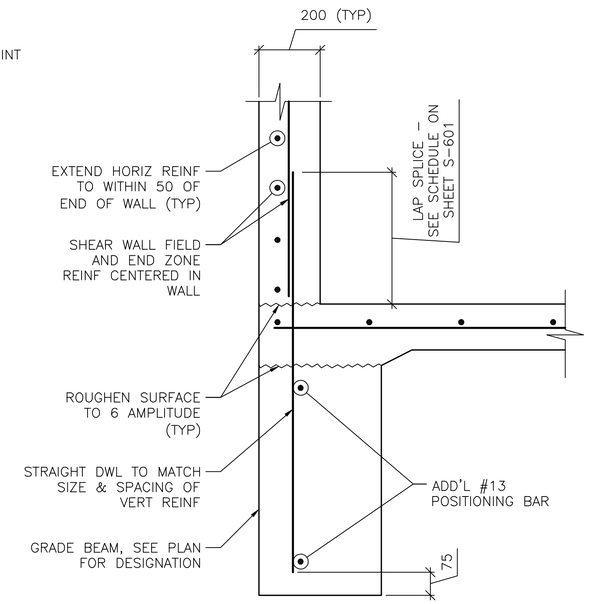

NOTE:
1. SECTION DEPICTS SHEAR WALL TERMINATION ONLY. GRADE BEAM REINFORCING NOT SHOWN FOR CLARITY
2. SEE SHEET S-601 AND SHEET S-702 FOR SCHEDULED FIELD AND END ZONE REINF.

3 / S-101 **SECTION** SCALE: 1:10

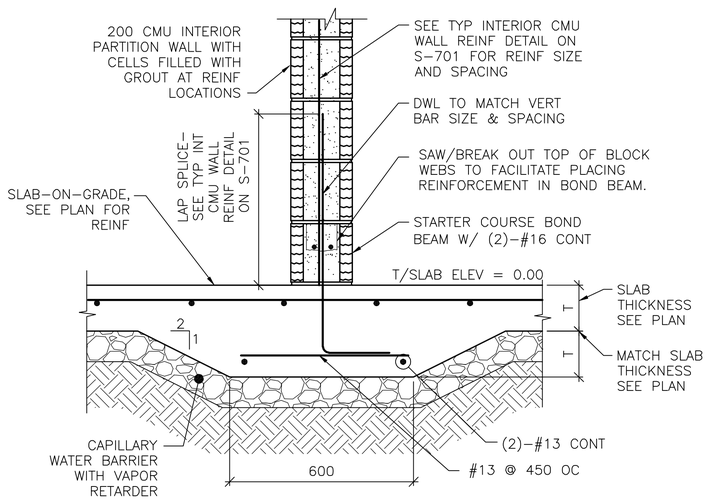

4 / S-101 **SECTION** SCALE: 1:10

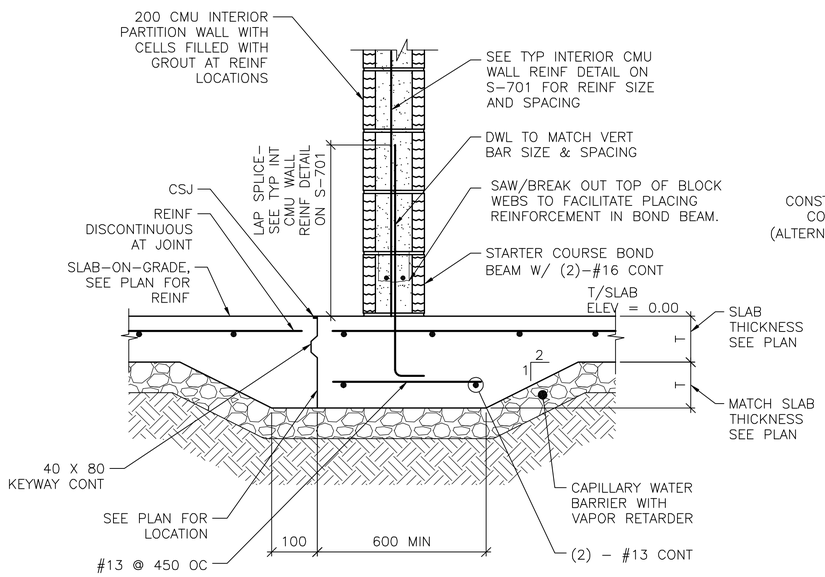

5 / S-101 **SECTION** SCALE: 1:10

NOTE:
1. DETAIL IS APPLICABLE AT CONTROL JOINTS RUNNING PARALLEL TO CMU WALLS AND WITHIN 300 OF FACE OF WALL.

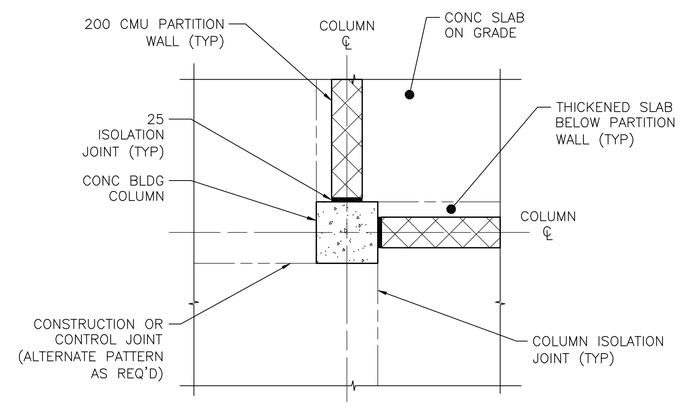

A / S-501 **COLUMN ISOLATION JOINT DETAIL** SCALE: NTS

0 200 400
SCALE: 1:10

UNLESS OTHERWISE NOTED, LINEAR DIMENSIONS SHOWN ON DRAWINGS ARE IN MILLIMETERS (mm)

APPROVED:

A/E DESIGNER OF RECORD

SEAL:

GEORGIA REGISTERED PROFESSIONAL ENGINEER No. 27141 CHRISTOPHER W. WHITMORE 1-29-10

US ARMY CORPS OF ENGINEERS
AFGHANISTAN ENGINEER DISTRICT

Mark	Description	Date	Appr.	Mark	Description	Date	Appr.

Date: 2/23/10 Rev: 0
Design file no.
Drawing code:
File name: AANAOFS-S01SC
Plot date: 2/23/2010
Plot scale: x:X

Designed by: KCP/MMY
Dwn by: RCG
Ckd by: CWW
Reviewed by: LHM
Submitted by:
BAKER

U.S. ARMY CORPS OF ENGINEERS
AFGHANISTAN ENGINEER DISTRICT
APO AE 96338

Michael Baker Jr., Inc.
A unit of Michael Baker Corporation
Airside Business Park
100 Airside Drive
Moon Township, PA 15108
www.mbakercorp.com

AFGHAN NATIONAL ARMY
REGIONAL MILITARY TRAINING CENTER
STANDARD DESIGN

ADMIN INSTRUCTORS OFFICE

FOUNDATION SECTIONS

Sheet reference number:
S-501

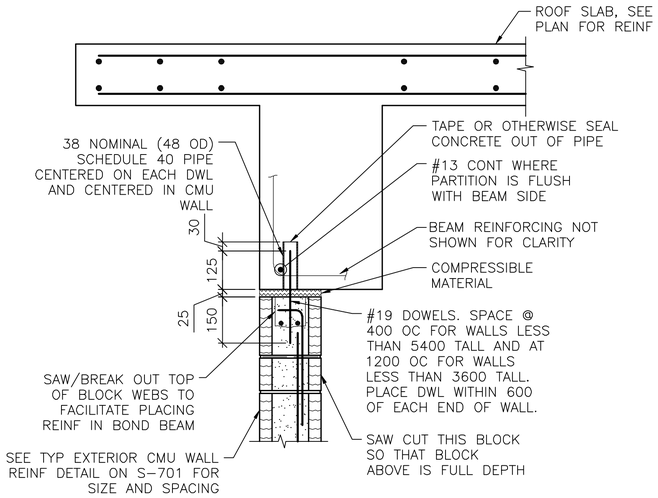

NOTES:
1. EXTEND DOWEL REINF TO 25 CLEAR FROM TOP OF CMU WALL.

1 S-101 **SECTION**
SCALE: 1:10

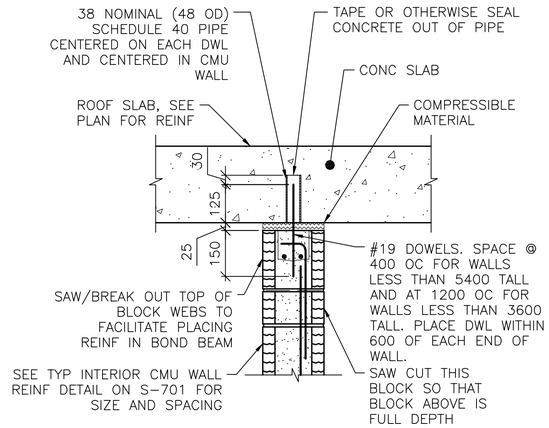

NOTES:
1. EXTEND DOWEL REINF TO 25 CLEAR FROM TOP OF CMU WALL.
2. SLAB REINF NOT SHOWN FOR CLARITY.

2 S-101 **SECTION**
SCALE: 1:10

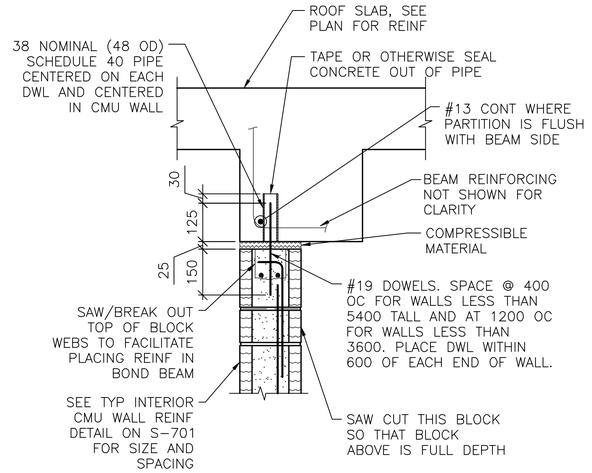

NOTES:
1. EXTEND DOWEL REINF TO 25 CLEAR FROM TOP OF CMU WALL.
2. PARTITION WALL MAY BE CENTERED UNDER THE BEAM OR FLUSH AS SHOWN. SEE PLAN FOR LOCATION.
3. SLAB REINF NOT SHOWN FOR CLARITY.

3 S-101 **SECTION**
SCALE: 1:10

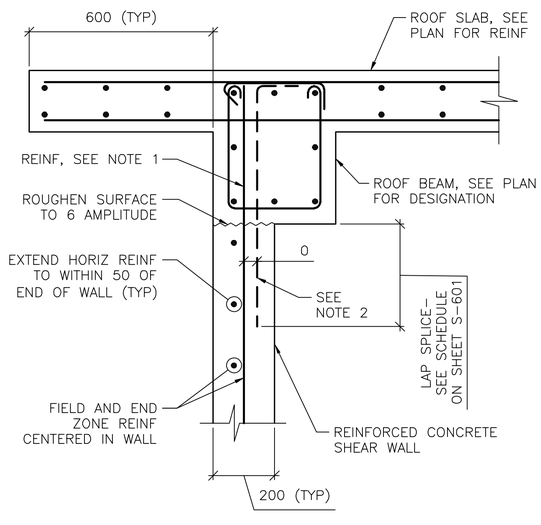

NOTES:
1. TERMINATE "FIELD" VERT REINF & END ZONE REINF @ 50 CLEAR FROM TOP OF ROOF SLAB.
2. WHERE END ZONE REINFORCING CANNOT BE DEVELOPED IN BEAM DEPTH, PROVIDE HOOKED DWLS SAME SIZE & SPACING. PROVIDE TENSION LAP BELOW ROOF BEAM.
3. SEE SHEET S-601 AND SHEET S-702 FOR SCHEDULED FIELD AND END ZONE REINF.

4 S-101 **SECTION**
SCALE: 1:10

0 200 400
SCALE: 1:10

UNLESS OTHERWISE NOTED, LINEAR DIMENSIONS SHOWN ON DRAWINGS ARE IN MILLIMETERS (mm)

APPROVED:

A/E DESIGNER OF RECORD

SEAL:

GEORGIA REGISTERED 2-27-10 No. 27141 PROFESSIONAL ENGINEER CHRISTOPHER W. WHITMORE

US ARMY CORPS OF ENGINEERS
AFGHANISTAN ENGINEER DISTRICT

Mark	Description	Date	Appr.	Mark	Description	Date	Appr.

Date: 2/23/10 Rev: 0
Design file no.
Drawing code:
File name: ANAAOFS-S023C
Plot date: 2/23/2010
Plot scale: X:X

Designed by: KMP/MMY
Dwn by: RCG Ckd by: CWW
Reviewed by: LHM
Submitted by: BAKER

U.S. ARMY CORPS OF ENGINEERS
AFGHANISTAN ENGINEER DISTRICT
APO AE 96338

Michael Baker Jr., Inc
A unit of Michael Baker Corporation
Airside Business Park
100 Airside Drive
Moon Township, PA 15108
www.mbakercorp.com

AFGHAN NATIONAL ARMY
REGIONAL MILITARY TRAINING CENTER
STANDARD DESIGN

ADMIN INSTRUCTORS OFFICE

FRAMING SECTIONS

Sheet reference number:
S-502

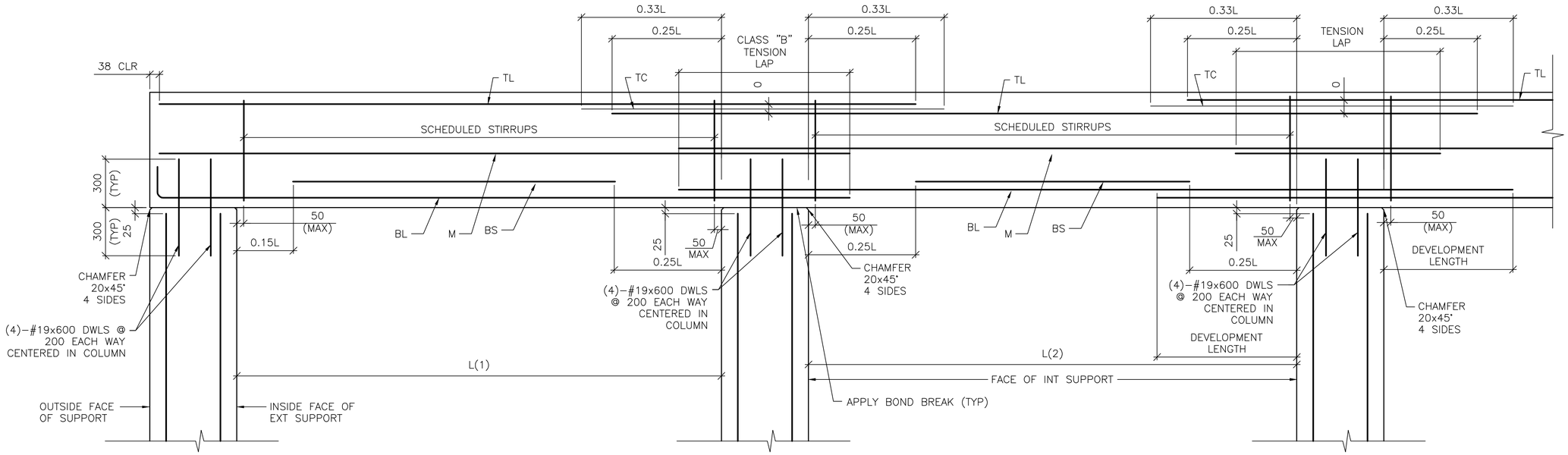

DETAIL NOTE:
1. WORK THIS DETAIL WITH BEAM SCHEDULE ON SHEET S-601.
2. L=GREATEST OF ADJACENT SPANS L(1) OR L(2)
3. ONLY COLUMN CORNER BARS ARE SHOWN

1 / S-503 ROOF BEAM REINFORCING DETAIL

SCALE: NTS

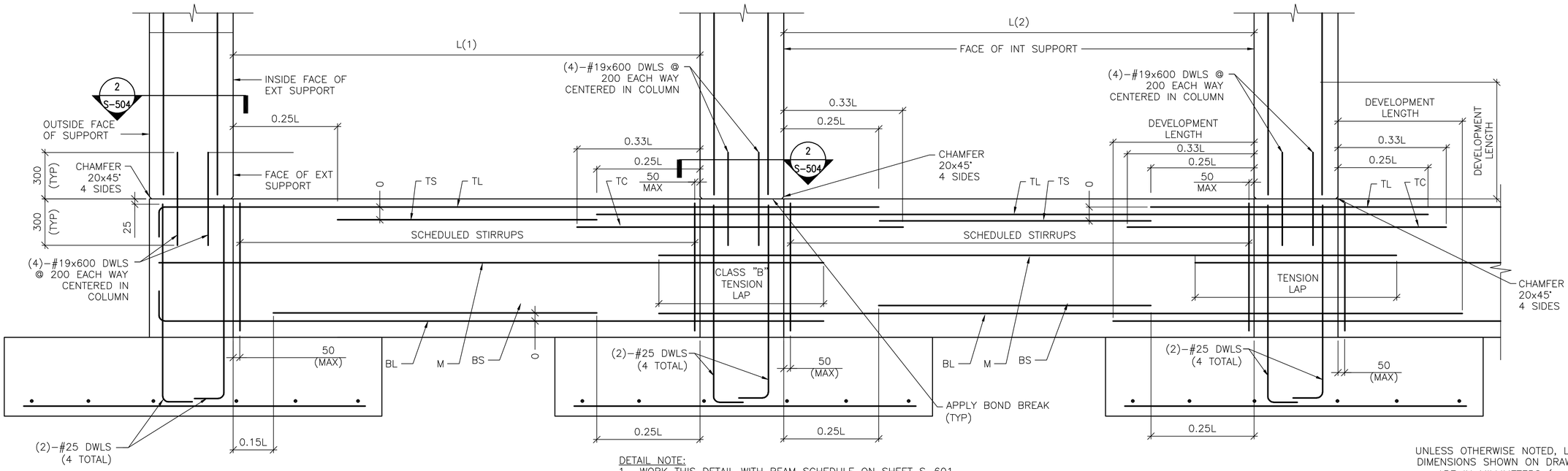

DETAIL NOTE:
1. WORK THIS DETAIL WITH BEAM SCHEDULE ON SHEET S-601.
2. L=GREATEST OF ADJACENT SPANS L(1) OR L(2)
3. ONLY COLUMN CORNER BARS ARE SHOWN.

2 / S-503 GRADE BEAM REINFORCING DETAIL

SCALE: NTS

UNLESS OTHERWISE NOTED, LINEAR DIMENSIONS SHOWN ON DRAWINGS ARE IN MILLIMETERS (mm)

APPROVED:

A/E DESIGNER OF RECORD

SEAL:

GEORGIA REGISTERED 1-29-10 No. 27141 PROFESSIONAL ENGINEER CHRISTOPHER W. WHITMORE

US ARMY CORPS OF ENGINEERS
AFGHANISTAN ENGINEER DISTRICT

Mark	Description	Date	Appr.	Mark	Description	Date	Appr.

Rev: 0
Date: 2/23/10
Designed by: KMP/MMY
Dwn by: RCG
Ckd by: CWW
Reviewed by: LHM
Submitted by: BAKER
Design file no.
Drawing code:
File name: ANAAIOFS-503DT
Plot date: 2/23/2010
Plot scale: X:X

U.S. ARMY CORPS OF ENGINEERS
AFGHANISTAN ENGINEER DISTRICT
APO AE 96338

Michael Baker Jr., Inc.
A unit of Michael Baker Corporation
Airside Business Park
100 Airside Drive
Moon Township, PA 15108
www.mbakercorp.com

AFGHAN NATIONAL ARMY
REGIONAL MILITARY TRAINING CENTER
STANDARD DESIGN

ADMIN INSTRUCTORS OFFICE

BEAM & COLUMN DETAILS

Sheet reference number:
S-503

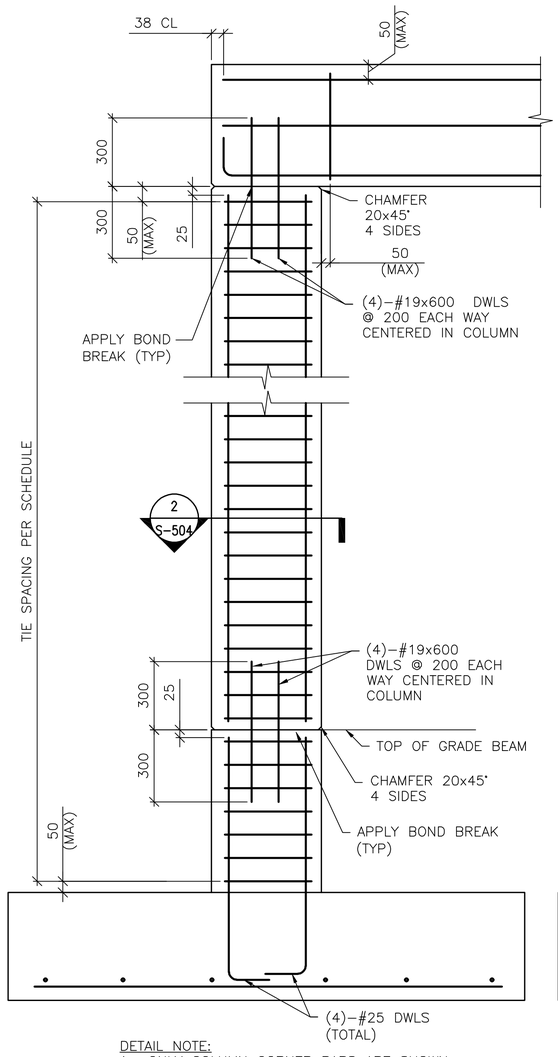

DETAIL NOTE:
1. ONLY COLUMN CORNER BARS ARE SHOWN

1 S-504 **1-STORY COLUMN REINF DETAILS**
SCALE: NTS
(WITH GRADE BEAM)

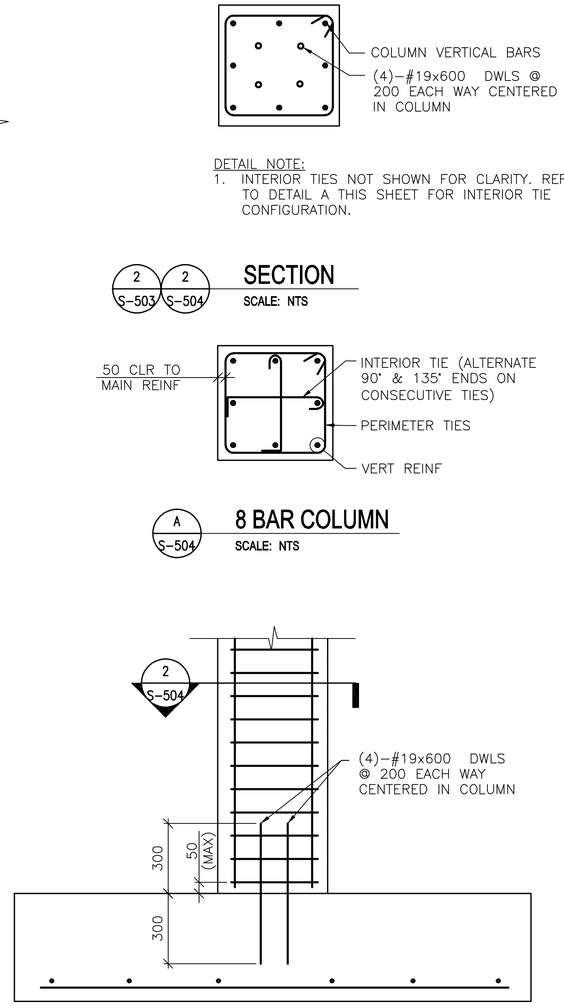

DETAIL NOTE:
1. ONLY COLUMN CORNER BARS ARE SHOWN

1 S-504 **1-STORY COLUMN REINF DETAILS**
SCALE: NTS
(WITHOUT GRADE BEAM)

DETAIL NOTE:
1. INTERIOR TIES NOT SHOWN FOR CLARITY. REFER TO DETAIL A THIS SHEET FOR INTERIOR TIE CONFIGURATION.

2 2 S-503 S-504 **SECTION**
SCALE: NTS

A S-504 **8 BAR COLUMN**
SCALE: NTS

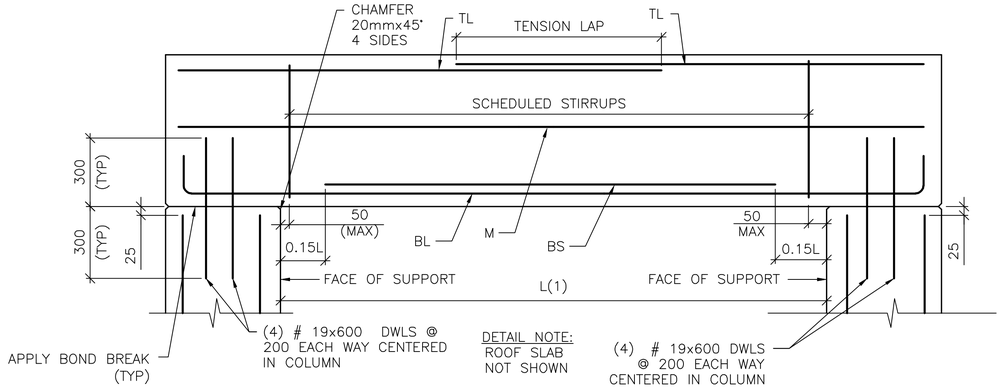

3 S-504 **SINGLE SPAN ROOF BEAM REINFORCING DETAIL**
SCALE: NTS

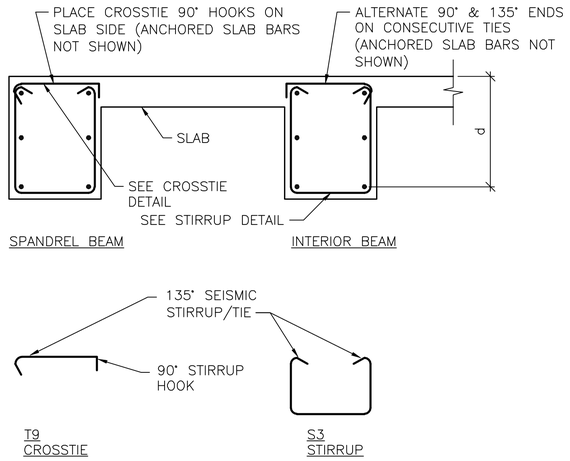

B S-504 **BEAM REINFORCEMENT DETAILS**
SCALE: NTS

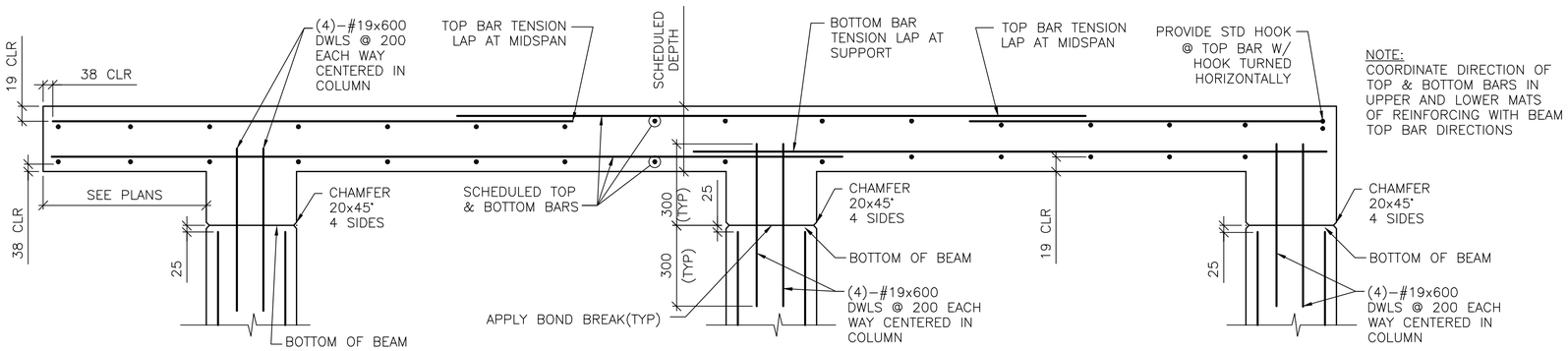

NOTE:
COORDINATE DIRECTION OF TOP & BOTTOM BARS IN UPPER AND LOWER MATS OF REINFORCING WITH BEAM TOP BAR DIRECTIONS

4 S-504 **FRAMED SLAB REINFORCING DETAIL**
SCALE: NTS

UNLESS OTHERWISE NOTED, LINEAR DIMENSIONS SHOWN ARE IN MILLIMETERS (mm)

APPROVED:

A/E DESIGNER OF RECORD

SEAL:

GEORGIA REGISTERED 1-29-10 No. 27141 PROFESSIONAL ENGINEER CHRISTOPHER W. WHITMORE

US ARMY CORPS OF ENGINEERS
AFGHANISTAN ENGINEER DISTRICT

Mark	Description	Date	Appr.	Mark	Description	Date	Appr.

Designed by: KMP/MMY
Dwn by: RCG
Ckd by: CWW
Reviewed by: LHM
Submitted by: BAKER
Date: 2/23/10
Design file no.
Rev: 0
Drawing code:
File name: ANAIOFS-504DT
Plot date: 2/23/2010
Plot scale: X:X

U.S. ARMY CORPS OF ENGINEERS
AFGHANISTAN ENGINEER DISTRICT
APO AE 96338

Michael Baker Jr., Inc
A unit of Michael Baker Corporation
Airside Business Park
100 Airside Drive
Moon Township, PA 15108
www.mbakercorp.com

AFGHAN NATIONAL ARMY
REGIONAL MILITARY TRAINING CENTER
STANDARD DESIGN

ADMIN INSTRUCTORS OFFICE

BEAM & COLUMN DETAILS

Sheet reference number:
S-504

CONCRETE REINFORCEMENT TENSION DEVELOPMENT/LAP SPLICE SCHEDULE

f'c = 28 MPa	LAP CLASS	UNCOATED BARS			
		TOP BARS		OTHER BARS	
BAR SIZES		CASE 1	CASE 2	CASE 1	CASE 2
#10 TO #19	A	50 BAR DIA	74 BAR DIA	38 BAR DIA	57 BAR DIA
	B	64 BAR DIA	96 BAR DIA	50 BAR DIA	74 BAR DIA
#22 TO #57	A	62 BAR DIA	93 BAR DIA	48 BAR DIA	71 BAR DIA
	B	80 BAR DIA	121 BAR DIA	62 BAR DIA	93 BAR DIA

NOTES:
1. TABULATED TENSION DEVELOPMENT LENGTH VALUES ARE TAKEN FROM CRSI DESIGN HANDBOOK 2008 10TH ED.
2. TENSION DEVELOPMENT & TENSION LAP SPLICE LENGTHS ARE EXPRESSED AS MULTIPLES OF BAR DIAMETERS.
3. TABULATED VALUES ARE BASED ON MINIMUM YIELD STRENGTH OF REINFORCEMENT, fy, OF 420MPa.
4. CONCRETE IS NORMAL WEIGHT (2400Kg/m^3) AND 28 DAY COMPRESSIVE STRENGTH = 28MPa.
5. TABULATED VALUES FOR BEAMS & COLUMNS ARE BASED ON TRANSVERSE REINFORCEMENT AND CONCRETE COVER MEETING MINIMUM CODE REQUIREMENTS.
6. CASES 1 & 2, WHICH DEPEND ON THE TYPE OF STRUCTURAL MEMBER, CONCRETE COVER, AND CENTER-TO-CENTER SPACING OF THE BARS ARE DEFINED IN THE TABLE BELOW.
7. LAP SPLICE LENGTHS (MINIMUM 300mm) ARE MULTIPLES OF TENSION DEVELOPMENT LENGTHS: CLASS A = 1.0(TENSION DEVELOPMENT LENGTH) & CLASS B = 1.3(TENSION DEVELOPMENT LENGTH)
8. TOP BARS ARE HORIZONTAL REINFORCEMENT WITH MORE THAN 300mm OF CONCRETE CAST BELOW THE BARS.
9. IT SHALL BE PERMISSIBLE TO CALCULATE WALL AND SLAB REINFORCEMENT TENSION DEVELOPMENT/SPLICE LENGTHS IN ACCORDANCE WITH ACI 12.2.3 OR TABLE 5.3(b) OF CRSI 2008 IN LIEU OF VALUES TABULATED ABOVE.

BEAMS, COLUMNS	CASE 1	CONCRETE COVER AT LEAST 1 BAR DIA AND CENTER-TO-CENTER SPACING AT LEAST 2 BAR DIA
	CASE 2	CONCRETE COVER LESS THAN 1 BAR DIA OR CENTER-TO-CENTER SPACING LESS THAN 2 BAR DIA
ALL OTHERS	CASE 1	CONCRETE COVER AT LEAST 1 BAR DIA AND CENTER-TO-CENTER SPACING AT LEAST 3 BAR DIA
	CASE 2	CONCRETE COVER LESS THAN 1 BAR DIA OR CENTER-TO-CENTER SPACING LESS THAN 3 BAR DIA

CONCRETE COVER SCHEDULE

MINIMUM CONCRETE COVER PROTECTION FOR REINFORCEMENT BARS SHALL BE AS LISTED BELOW: (SEE ACI 318M-05, SECTION 7.7 FOR CONDITIONS NOT NOTED). DIMENSIONS FOR BAR PLACEMENT GIVEN IN SECTIONS AND DETAILS SHALL SUPERSEDE MINIMUM COVER REQUIREMENTS GIVEN HERE. DIMENSIONS ARE IN mm. PROVIDE STANDARD BAR CHAIRS AND SUPPORT BARS @1200mm MAXIMUM AS REQUIRED TO MAINTAIN CONCRETE PROTECTION SPECIFIED.

FOOTINGS (EARTH FORMED):		70
COLUMNS / PIERS (TO TIES)		40
GRADE BEAMS OR SLAB TURNED DOWN EDGES:		
TOP		40
BOTTOM (EARTH FORMED)		70
SIDES (EARTH FORMED)		70
SIDES (BOARD FORMED)	#16 BAR & SMALLER	40
	#19 THRU #36 BAR	50
ELEVATED BEAMS & SLABS:		
BEAM TIES & STIRRUPS (NOT EXPOSED TO WEATHER)		40
BEAM TIES & STIRRUPS (EXPOSED TO WEATHER)		50
FLOOR SLABS (NOT EXPOSED TO WEATHER)		20
FLOOR SLABS (EXPOSED TO WEATHER)		
#19 & LARGER		50
#13 & SMALLER		40
ROOF SLAB BARS		25
SLABS ON GRADE		
NOT EXPOSED TO WEATHER (FROM TOP)		20
EXPOSED TO WEATHER (FROM TOP)		40
UTILITY TUNNEL WALLS, RETAINING WALLS AND SHEAR WALLS. (NO SURFACES SHALL BE EARTH FORMED)		
EARTH SIDE AND FRONT SIDE (EXPOSED TO WEATHER)		
#16 BAR AND SMALLER		40
#19 THRU #36 BAR		50

COLUMN FOOTING SCHEDULE

MARK	FOOTING SIZE (mm)			FOOTING REINFORCING	REMARKS
	LENGTH	WIDTH	THICKNESS		
F1	3000	3000	300	(8)-#22 EW BOTT	-----
F2	2500	2500	250	(7)-#19 EW BOTT	-----

CONCRETE SHEAR WALL SCHEDULE

MARK	TYPE	WALL LENGTH (L) (mm)	WALL REINFORCEMENT		REMARKS
			END ZONE	FIELD	
SW1	A	2900	(5)-#19 @ 220mm OC	#13 @ 300mm OC	-----

NOTES:
1. WORK THIS SCHEDULE WITH SHEAR WALL DETAILS ON SHEETS S-702
2. SEE PLAN FOR LOCATION OF SHEAR WALL(S).
3. VERTICAL "FIELD" BARS MAY BE OMITTED IN LOCATION OF "END ZONE" REINFORCEMENT.
4. WALL FIELD REINF LISTED APPLIES TO VERT & HORIZ BARS.
5. WALL FIELD REINFORCEMENT CENTERED IN WALL.

STANDARD HOOKS IN TENSION PER (ACI 318M-05)

HOOK DEVELOPMENT LENGTH (mm)

BAR SIZE	f'c 28 MPa
#10	180
#13	250
#16	300
#19	380
#22	430
#25	480
#29	560
#32	610
#36	690

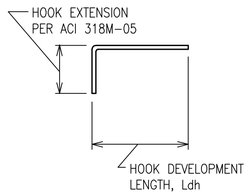

NOTES:
1. CONCRETE IS NORMAL WEIGHT CONCRETE.
2. BAR YIELD STRENGTH, fy = 420 MPa
3. SIDE COVER REQUIREMENTS OF ACI SECT. 12.5.3 ARE ASSUMED TO NOT BE MET.
4. TIE OR STIRRUP REQUIREMENTS OF ACI SECT. 12.5.3 ARE ASSUMED TO NOT BE MET.
5. REDUCTION FOR EXCESS REINFORCEMENT IS NOT TAKEN.
6. HOOK DEVELOPMENT LENGTH IS VALID FOR 180° HOOKS ALSO.

CMU OR CAST IN PLACE CONC LINTEL SCHEDULE (TYP)

OPENING TYPE OR SIZE, BEAM LOCATION OR TYPE	MAX SPAN (mm)	LINTEL DEPTH (mm)	REINFORCING BOTTOM
WALL OPENING	4000	600	(2)-#16 T&B
WALL OPENING	1900	400	(2)-#16 T&B
WALL OPENING	1000	400	(2)-#13 B

1. STRUCTURAL SHEETS DO NOT INDICATE ALL OPENINGS IN MASONRY WALLS. VERIFY NUMBER, SIZE AND LOCATION OF ALL OPENINGS IN MASONRY WALLS FROM ARCHITECTURAL SHEETS AND APPROVED PLUMBING, MECHANICAL, AND ELECTRICAL SHOP DRAWINGS.
2. PROVIDE 200mm BEARING EA END.
3. FOR HEAD DETAILS REFER TO ARCHITECTURAL SHEETS.
4. REINFORCING SHALL BE ASTM A615M, GRADE 420. GROUT FOR CMU LINTELS SHALL HAVE A MINIMUM COMPRESSIVE STRENGTH OF 14 MPa AT 28 DAYS.
5. CONTRACTOR SHALL SUBMIT FOR APPROVAL SHOP DRAWINGS AND SCHEDULES SHOWING SIZE, SPAN, REINFORCEMENT, DETAILS, LOCATIONS, ETC.

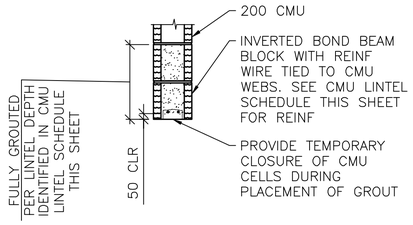

A
S-601

LINTEL DETAIL

SCALE: NTS

BEAM SCHEDULE

MARK	BEAM SIZE (mm)		BEAM REINFORCING						STIRRUPS			REMARKS
	DEPTH	WIDTH	BL	BS	TL	TS	TC	M	SIZE	TYPE	SPACING	
GRADE BEAMS												
GB1	750	400	(2)-#16	(1)-#16	(2)-#16	---	---	---	#13	S3 + T9	d/2	-----
GB2	750	400	(2)-#25	(1)-#25	(2)-#25	---	---	---	#13	S3 + T9	d/2	-----
ROOF BEAMS												
RB1	600	400	(2)-#22	(1)-#22	(2)-#19	---	---	---	#13	S3 + T9	d/2	-----
RB2	600	400	(2)-#19	(1)-#19	(2)-#19	---	---	---	#13	S3 + T9	d/2	OMIT "M" BARS IN INTERIOR BEAMS

NOTES:
1. WORK THIS SCHEDULE WITH BEAM REINFORCING DETAILS ON SHEETS S-503 AND S-504.
2. HOOKS SHOWN ON SECTIONS AND DETAILS SHALL BE 90° STD UON.
3. USE ONLY (1) TC AT BEAM COLUMN INTERSECTION WHERE REQ'D.

COLUMN SCHEDULE

COLUMN MARK / DESCRIPTION	TYP UON	---	---	---
TYPE	8-BAR	---	---	---
DIMENSIONS	600mm SQ	---	---	---
VERTICAL REINFORCEMENT	(8)-#25	---	---	---
TIES	#13 @ d/2	---	---	---
TOP OF ROOF ELEVATION	3600mm	---	---	---
TOP OF GRADE BEAM ELEVATION	-200mm	---	---	---
TOP OF FOOTING ELEVATION	-950mm	---	---	---

NOTES:
1. WORK THIS SCHEDULE WITH COLUMN DETAILS ON SHEET S-504.
2. SEE FOOTING SCHEDULE ON THIS SHEET FOR FOOTING INFORMATION.
3. COLUMN TIES: INTERIOR TIES TO MATCH SIZE & SPACING OF PERIMETER TIES.
4. HOOKS SHOWN ON SECTIONS & DETAILS SHALL BE 90° STD UON.

UNLESS OTHERWISE NOTED, LINEAR DIMENSIONS SHOWN ARE IN MILLIMETERS (mm)

APPROVED:

A/E DESIGNER OF RECORD

SEAL:

GEORGIA REGISTERED 3-22-10 No. 27141 PROFESSIONAL ENGINEER CHRISTOPHER W. WHITMORE

US ARMY CORPS OF ENGINEERS
AFGHANISTAN ENGINEER DISTRICT

Mark	Description	Date	Appr.	Mark	Description	Date	Appr.

Date: 2/23/10 | Rev: 0
Design file no.
Drawing code:
File name: ANMAOFS-601SCH
Plot date: 2/23/2010
Plot scale: X:X

Designed by: KMP/MMY
Dwn by: RCG | Ckd by: CWW
Reviewed by: LHM
Submitted by:
BAKER

U.S. ARMY CORPS OF ENGINEERS
AFGHANISTAN ENGINEER DISTRICT
APO AE 96338

Michael Baker Jr., Inc
A unit of Michael Baker Corporation
Airside Business Park
100 Airside Drive
Moon Township, PA 15108
www.mbakercorp.com

AFGHAN NATIONAL ARMY
REGIONAL MILITARY TRAINING CENTER
STANDARD DESIGN

ADMIN INSTRUCTORS OFFICE

SCHEDULES

Sheet reference number:
S-601

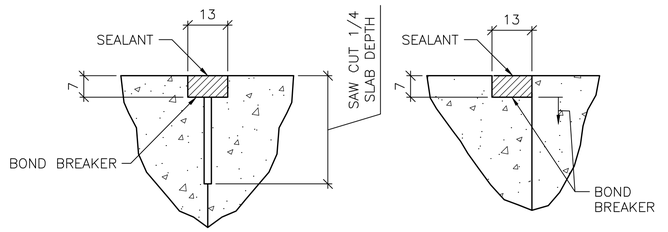

CONTROL JOINT DETAIL

CONSTRUCTION JOINT DETAIL

TYPICAL CONCRETE SLAB JOINT FINISH DETAILS

1 / S-701 SCALE: NTS

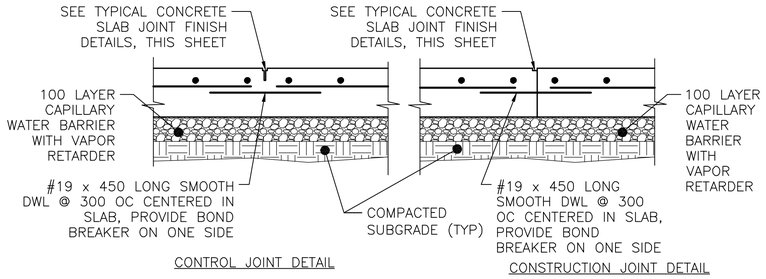

CONTROL JOINT DETAIL

CONSTRUCTION JOINT DETAIL

TYPICAL SLAB ON GRADE JOINT DETAIL

2 / S-701 SCALE: NTS

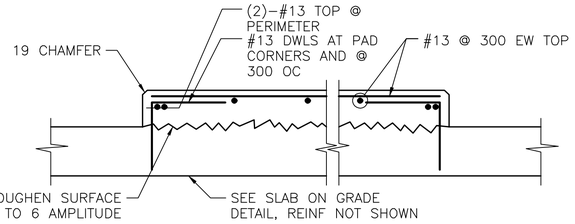

INTERIOR EQUIPMENT PAD DETAIL

3 / S-701 SCALE: NTS

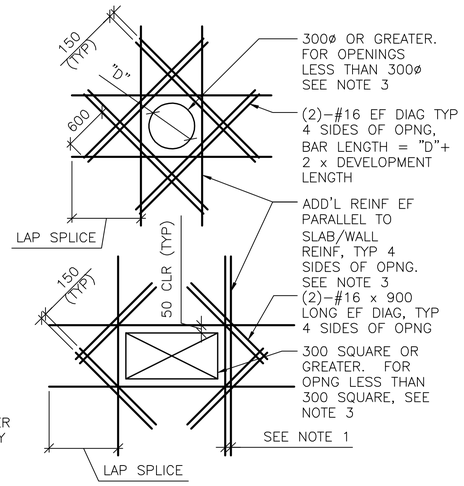

SHEAR WALL/SLAB OPENINGS

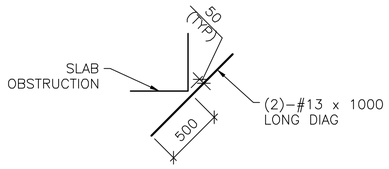

RE-ENTRANT CORNERS

DETAIL NOTES:

1. WHERE MORE THAN ONE ADDITIONAL BAR IS REQUIRED PARALLEL TO THE EXISTING SLAB/WALL REINFORCING THE ADDITIONAL REINFORCING BARS SHALL BE SPACED AT 100 ON CENTER.
2. ADDITIONAL REINFORCING PARALLEL TO THE SLAB/WALL REINFORCING SHALL BE #16 BARS THAT PROVIDE A STEEL AREA ON EACH SIDE OF THE OPENING EQUAL TO 1/2 THE AREA OF THE REINFORCING CUT BY THE OPENING.
3. FOR OPENINGS WITH SIDES OR DIAMETERS LESS THAN 300 SPREAD THE SLAB/WALL REINFORCING TO CLEAR THE OPENING.

ADD'L CONCRETE REINFORCEMENT DETAILS

4 / S-701 SCALE: NTS

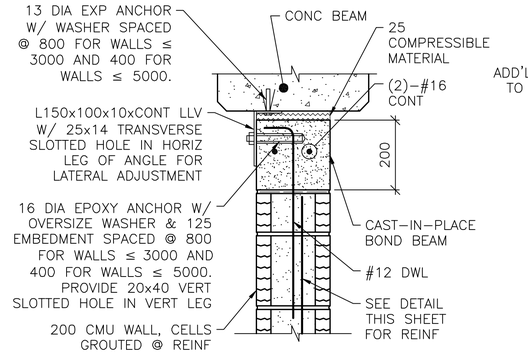

NOTE:

1. AT ANCHOR BOLTS, ADD AN ADDITIONAL 25 COMPRESSIBLE MATERIAL BELOW EXP ANCHOR HEAD.

INTERIOR BEAM

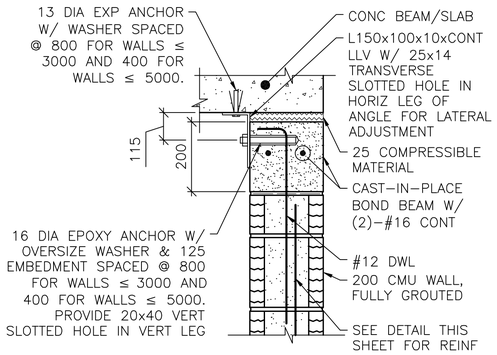

EXTERIOR WALL OR SLAB

NOTES:

1. THIS DETAIL IS AN ALTERNATE TOP OF WALL ANCHORAGE DETAIL TO BE USED AT THE CONTRACTOR'S OPTION IN LIEU OF DETAILS SHOWN ON S-400 & S-500 DRAWINGS.
2. CAST-IN-PLACE BOND BEAM SHOWN AT TOP OF WALL IS ALSO APPLICABLE FOR INTERMEDIATE AND STARTER COURSE BOND BEAMS WITHIN WALL.

ALTERNATE TOP OF CMU WALL BRACING DETAILS

5 / S-701 SCALE: NTS

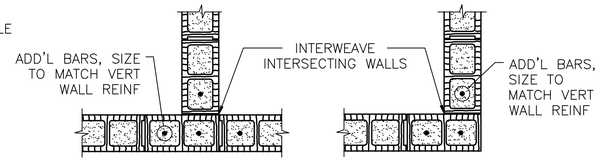

INTERSECTION

WALL CORNER

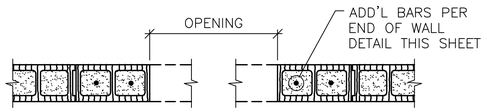

MASONRY OPENING W/ LINTEL

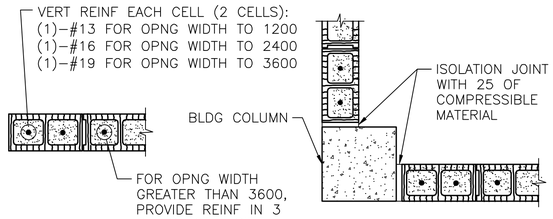

END OF WALL

END OF WALL @ COLUMN

NOTES:

1. OPENING WIDTH SHALL NOT EXCEED 3600 FOR THIS TYPE OF JAMB.
2. ALL CELLS FULLY GROUTED AT EXTERIOR WALLS. AT INTERIOR WALLS, ONLY GROUT CELLS CONTAINING REINF.

TYP CMU DETAILS

6 / S-701 SCALE: NTS

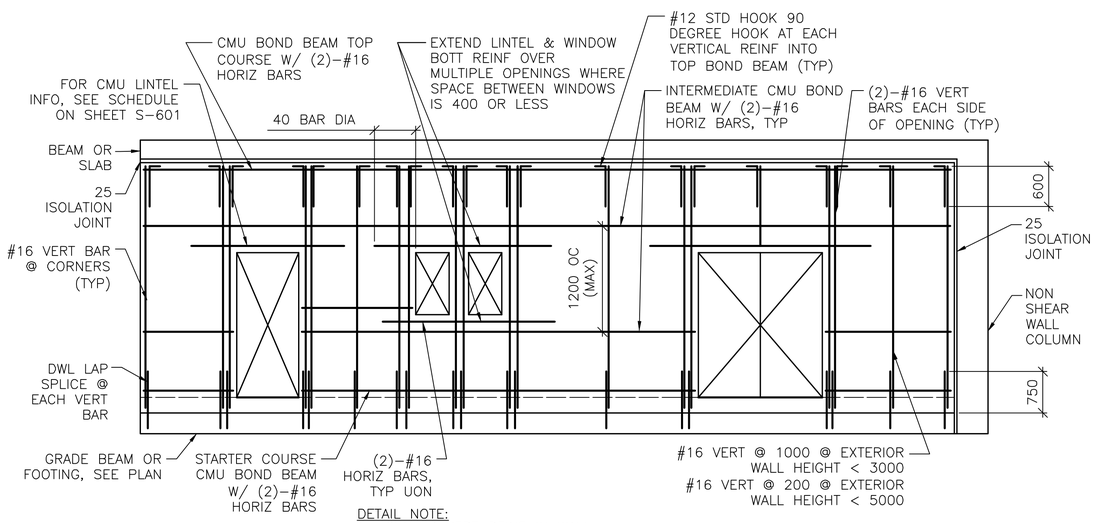

DETAIL NOTE:

1. CENTER VERT REINF IN WALL.
2. GROUT ALL CMU CELLS.
3. REFERENCE ARCH DWGS FOR JOINT INFORMATION
4. DOWELS BETWEEN TOP BOND BEAM AND BEAM/SLAB ABOVE (INCLUDING EMBEDDED PIPE SLEEVE) NOT SHOWN FOR CLARITY. SEE SPECIFIC S-500 SERIES DWGS FOR INFO.
5. FOR INFORMATION ON ALTERNATE CAST-IN-PLACE WALL BOND BEAMS, REFERENCE ALTERNATE TOP OF CMU WALL BRACING DETAILS THIS SHEET.

TYP EXTERIOR CMU WALL REINF DETAIL

7 / S-701 SCALE: NTS

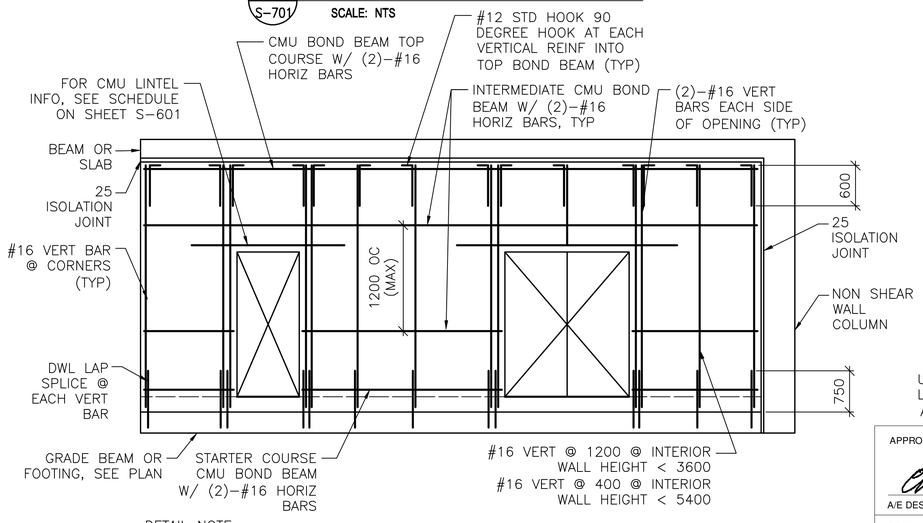

DETAIL NOTE:

1. CENTER VERT REINF IN WALL.
2. GROUT ALL CMU CELLS.
3. REFERENCE ARCH DWGS FOR JOINT INFORMATION
4. DOWELS BETWEEN TOP BOND BEAM AND BEAM/SLAB ABOVE (INCLUDING EMBEDDED PIPE SLEEVE) NOT SHOWN FOR CLARITY. SEE SPECIFIC S-500 SERIES DWGS FOR INFO.
5. FOR INFORMATION ON ALTERNATE CAST-IN-PLACE WALL BOND BEAMS, REFERENCE ALTERNATE TOP OF CMU WALL BRACING DETAILS THIS SHEET.

TYP INTERIOR CMU WALL REINF DETAIL

8 / S-701 SCALE: NTS

UNLESS OTHERWISE NOTED, LINEAR DIMENSIONS SHOWN ARE IN MILLIMETERS (mm)

APPROVED:

A/E DESIGNER OF RECORD

SEAL:

GEORGIA REGISTERED 1-29-10 No. 27141 PROFESSIONAL ENGINEER CHRISTOPHER W. WHITMORE

US ARMY CORPS OF ENGINEERS
AFGHANISTAN ENGINEER DISTRICT

Mark	Description	Date	Appr.	Mark	Description	Date	Appr.

Date: 2/23/10 | Rev: 0
Design file no.
Drawing code:
File name: ANAMDFS7011DT
Plot date: 2/23/2010
Plot scale: X:X

Designed by: KMP/MMY
Dwn by: RCG | Ckd by: CWW
Reviewed by: LHM
Submitted by:
BAKER

U.S. ARMY CORPS OF ENGINEERS
AFGHANISTAN ENGINEER DISTRICT
APO AE 96338

Michael Baker Jr., Inc.
A unit of Michael Baker Corporation
Airside Business Park
100 Airside Drive
Moon Township, PA 15108
www.mbakercorp.com

AFGHAN NATIONAL ARMY
REGIONAL MILITARY TRAINING CENTER
STANDARD DESIGN

ADMIN INSTRUCTORS OFFICE

TYPICAL DETAILS

Sheet reference number:
S-701

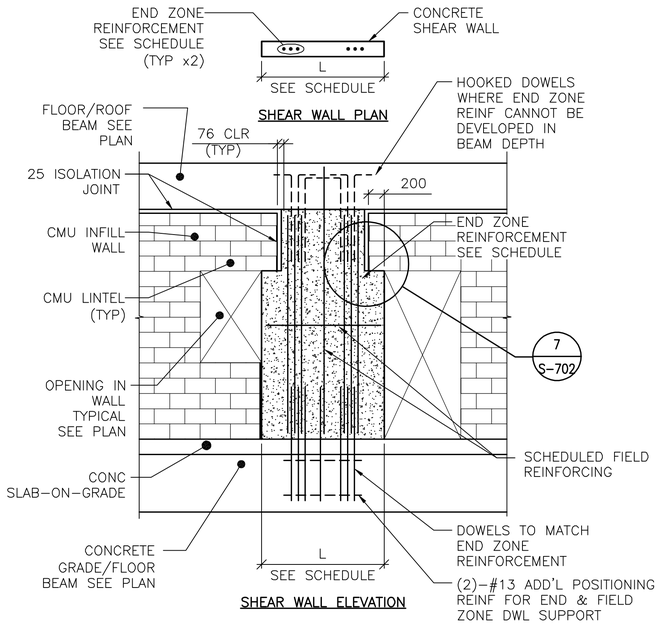

DETAIL NOTES:
1. FIELD REINFORCEMENT IN SHEAR WALL NOT SHOWN FOR CLARITY.
2. FIELD REINFORCEMENT CENTERED IN WALL.
3. MINIMUM CONC CLEAR DISTANCE FOR END ZONE REINF = 76
4. SEE CONC SHEAR WALL SCHEDULE ON SHEET S-601
5. SEE ARCH DWGS FOR JOINT INFORMATION

1 S-702 TYPE "A" SHEAR WALL DETAIL

SCALE: NTS

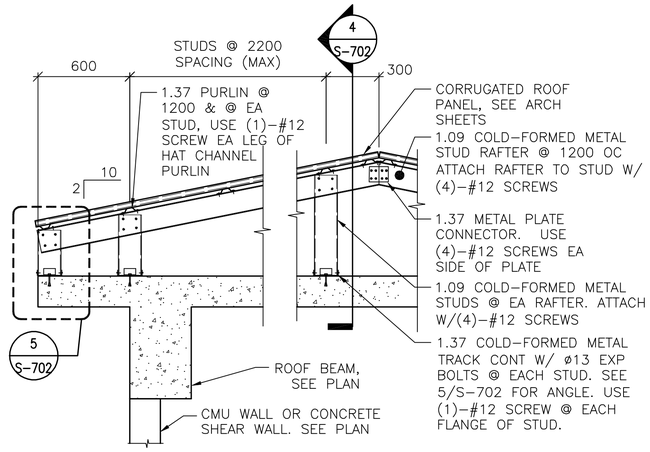

DETAIL NOTES:
1. ALL GABLE END VERTICAL STUDS SHALL BE ORIENTED 90° TO INTERIOR STUDS & SPACED @ 600 OC. GABLE END RAFTER SHALL BE 1.37 METAL TRACK SPANNING CONTINUOUSLY OVER GABLE END STUDS. INSET GIRTS AT GABLE END SHALL BE 1.09 COLD-FORMED METAL STUDS @ 1200 OC ATTACHED VIA 1.37 THICKNESS CLIP ANGLE W/ (2) #12 SCREWS EA LEG.
2. ALL INTERIOR, NON-GABLE END VERTICAL STUDS GREATER THAN 2400 IN LENGTH SHALL BE BACK-TO-BACK W/ #12 SCREWS @ 200 OC STAGGERED.

2 S-702 TYPICAL OVERBUILT ROOF FRAMING DETAIL

SCALE: NTS

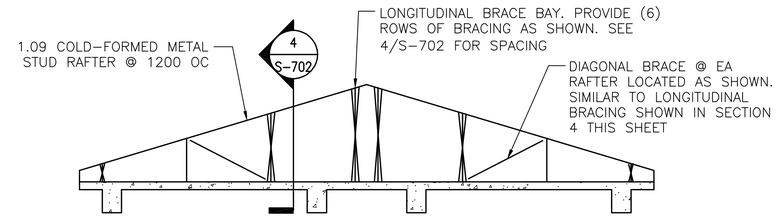

3 S-702 TYPICAL ROOF BRACE LAYOUT

SCALE: NTS

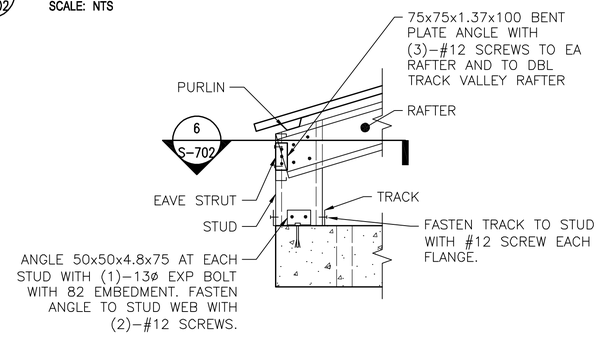

5 S-702 DETAIL

SCALE: NTS

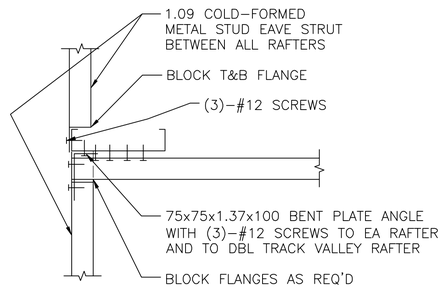

6 S-702 SECTION

SCALE: NTS

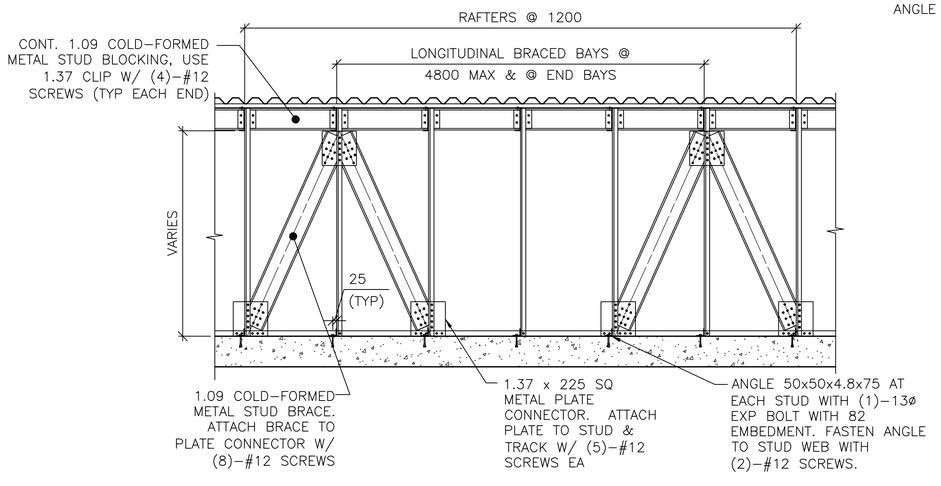

4 S-702 SECTION

SCALE: NTS

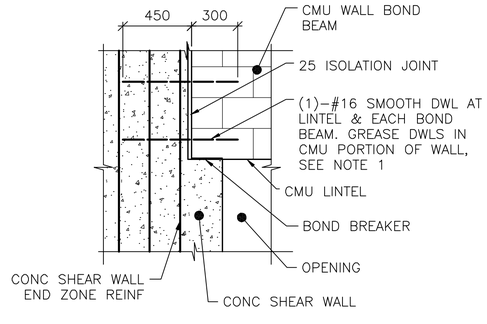

NOTE:
1. TIE SMOOTH DOWEL ROD TO SHEAR WALL END ZONE REINF FOR EACH BOND BEAM AND LINTEL.

7 S-702 SECTION

SCALE: NTS

UNLESS OTHERWISE NOTED, LINEAR DIMENSIONS SHOWN ARE IN MILLIMETERS (mm)

APPROVED:

A/E DESIGNER OF RECORD

SEAL:

US ARMY CORPS OF ENGINEERS
AFGHANISTAN ENGINEER DISTRICT

Mark	Description	Date	Appr.	Mark	Description	Date	Appr.

Designed by: KMP/MMY
Dwn by: RCG
Ckd by: CWW
Reviewed by: LHM
Submitted by: BAKER
Date: 2/23/10
Design file no.
Rev: 0
Drawing code:
File name: ANAAOFS-702TDT
Plot date: 2/23/2010
Plot scale: X:X

U.S. ARMY CORPS OF ENGINEERS
AFGHANISTAN ENGINEER DISTRICT
APO AE 96338

Michael Baker Jr, Inc
A unit of Michael Baker Corporation
Airside Business Park
100 Airside Drive
Moon Township, PA 15108
www.mbakercorp.com

AFGHAN NATIONAL ARMY
REGIONAL MILITARY TRAINING CENTER
STANDARD DESIGN

ADMIN INSTRUCTORS OFFICE

TYPICAL DETAILS

Sheet reference number:
S-702

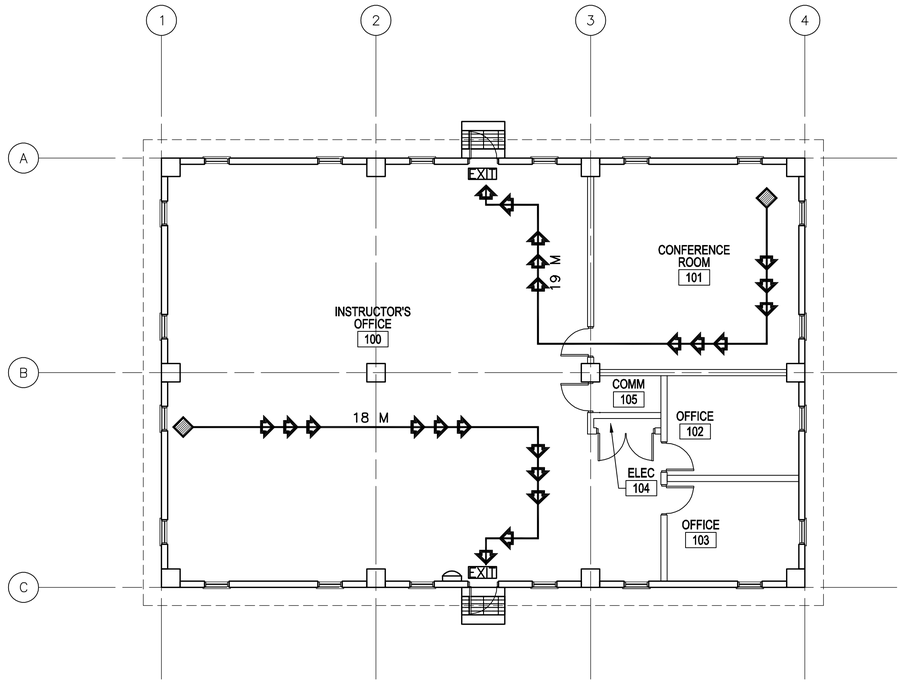

1 A-001 **LIFE SAFETY PLAN**

SCALE: 1:100

CODE ANALYSIS:

1. REFERENCES:
   2006 INTERNATIONAL BUILDING CODE (2006 IBC)
   2006 LIFE SAFETY CODE (2006 NFPA 101)

2. IBC OCCUPANCY CLASSIFICATION:
   GROUP B (BUSINESS NFPA 101 6.1.11 AND CHAPTER 38)

3. TYPE OF CONSTRUCTION (IBC): TYPE II–B (UNPROTECTED/NONSPRINKLERED)

4. IBC TABLE 503: ALLOWABLE HEIGHT AND BUILDING AREAS:
   GROUP B
   ALLOWABLE AREA: 2,137 SM
   ALLOWABLE HEIGHT: 3 STORIES (16 M)

   GROUP B
   PROPOSED AREA: 294 SM
   PROPOSED HEIGHT: 1 STORY (<16 M)

5. IBC TABLE 601 & 602: FIRE RESISTANCE RATING REQUIREMENTS FOR BUILDING ELEMENTS FOR TYPE II–B

BUILDING ELEMENT	RATING (HOUR)	REFERENCE
STRUCTURAL FRAME (COLUMNS, GIRDERS & TRUSSES)	0	TABLE 601
BEARING WALLS		
EXTERIOR	0	TABLE 601
INTERIOR	0	TABLE 601
NONBEARING WALLS & PARTITIONS		
INTERIOR	0	TABLE 601
FLOOR CONSTRUCTION	0	TABLE 601
ROOF CONSTRUCTION	0	TABLE 601
EXTERIOR WALL	0	TABLE 602

6. IBC TABLE 803.5 – INTERIOR WALL AND CEILING FINISH REQUIREMENTS FOR B OCCUPANCY/NONSPRINKLERED

GROUP	EXIT ENCLOSURES AND EXIT PASSAGEWAY	CORRIDORS	ROOMS AND ENCLOSED SPACES
B	A	B	C

7. NFPA 101 TABLE 7.3.1.2 – OCCUPANT LOAD
   BUSINESS = 9.3 SM/PERSON BUSINESS PROPOSED = 32 OCCUPANTS

8. NFPA 101 TABLE 7.3.3.1 – EGRESS CAPACITY
   BUSINESS = 5 MM PER OCCUPANT

   REQUIRED: 160 MM (32 OCCUPANTS x 5 MM PER OCCUPANT)
   PROPOSED EGRESS CAPACITY: 900 MM: (2) 900 MM DOORS

9. NFPA 101 PARAGRAPH 38.2.6.2 – EXIT ACCESS TRAVEL DISTANCE (NONSPRINKLERED)
   REQUIRED: 60 METERS
   PROPOSED: 19 METERS

10. NFPA 101 PARAGRAPH 38.3.6.1(1) & (2) – CORRIDORS
    NO RATED CORRIDOR REQUIRED (NONSPRINKLERED):
    (1) ALL EXITS ARE AVAILABLE FROM AN OPEN FLOOR AREA
    (2) SPACE IS OCCUPIED BY A SINGLE TENANT

11. NFPA 101 PARAGRAPH 38.2.4.1 – NUMBER OF EXITS
    BUSINESS REQUIRED: 1 MINIMUM
    BUSINESS PROPOSED: 2 EXITS

LEGEND:

- DENOTES PATHS OF EXIT TRAVEL
- EXIT — DENOTES DOOR AS AN EMERGENCY EXIT
- DENOTES STARTING POINT FOR TRAVEL DISTANCE
- DENOTES FIRE EXTINGUISHER LOCATIONS

LINEAR DIMENSIONS SHOWN ARE IN MILLIMETERS (MM), UNLESS OTHERWISE NOTED

0 2000 4000
SCALE: 1:100

APPROVED:

A/E DESIGNER OF RECORD

SEAL:

STATE OF SOUTH CAROLINA
KEVIN R. CHAFIN
N. Charleston, SC
6374
REGISTERED ARCHITECT

US ARMY CORPS OF ENGINEERS
AFGHANISTAN ENGINEER DISTRICT

Mark	Description	Date	Appr.	Mark	Description	Date	Appr.

Date: 2/23/10 Rev: 0
Design file no.
Drawing code:
File name: ANAAOFA-001LSP
Plot date: 2/23/2010
Plot scale: x:X

Designed by: KRC
Dwn by: EBB
Ckd by: NLJ
Reviewed by: LHM
Submitted by: BAKER

U.S. ARMY CORPS OF ENGINEERS
AFGHANISTAN ENGINEER DISTRICT
APO AE 96338

Michael Baker Jr., Inc.
A unit of Michael Baker Corporation
Airside Business Park
100 Airside Drive
Moon Township, PA 15108
www.mbakercorp.com

AFGHAN NATIONAL ARMY
REGIONAL MILITARY TRAINING CENTER
STANDARD DESIGN

ADMIN INSTRUCTORS OFFICE

LIFE SAFETY PLAN

Sheet reference number:
A–001

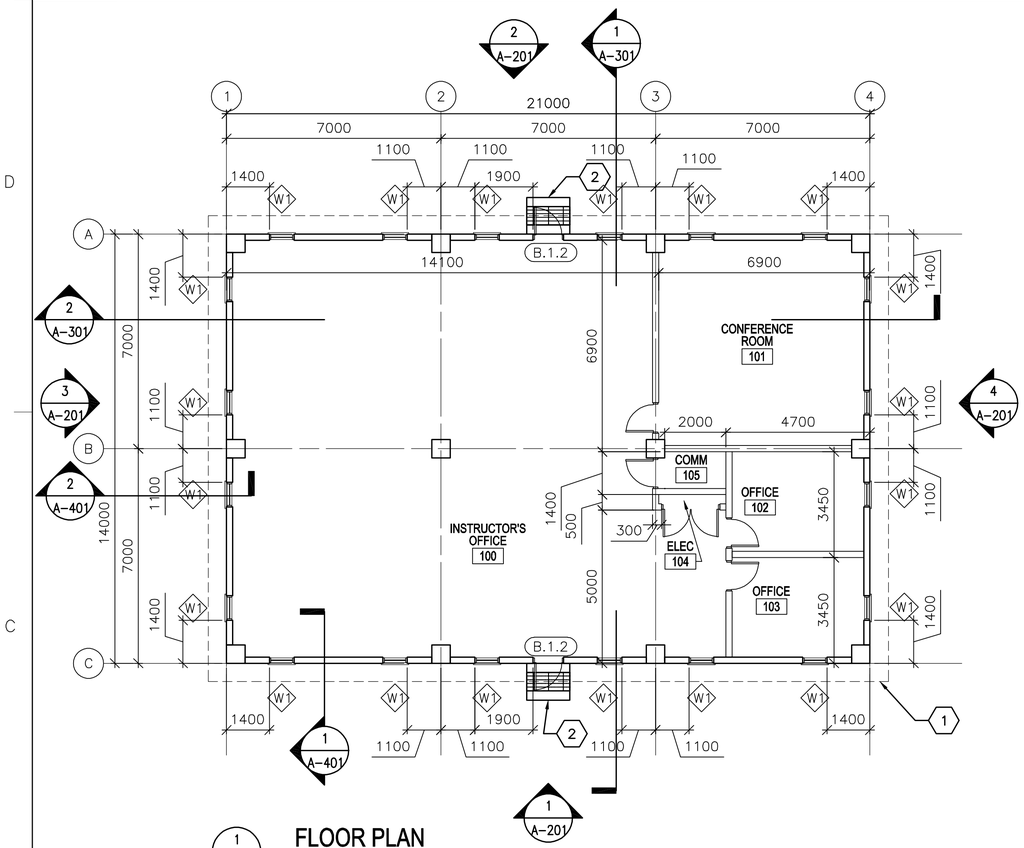

1 A-101 FLOOR PLAN

SCALE: 1:100

GENERAL NOTES:

A. DIMENSIONS ARE SHOWN TO OUTER EDGE OF EXTERIOR STRUCTURAL COLUMNS, STRUCTURAL COLUMN GRID, EDGE OF INTERIOR PARTITIONS, EDGE OF WINDOW OPENINGS, AND TO HINGE SIDE OF DOOR FRAME OPENINGS.

B. HINGE SIDE OF OPENINGS FOR DOORS AND FRAMES SHALL BE LOCATED 200 MM FROM THE ADJACENT WALL OR COLUMN, UNLESS NOTED OTHERWISE.

C. INTERIOR PARTITIONS SHALL BE 200 MM CMU. SEE STRUCTURAL DRAWINGS FOR LOCATION OF CONCRETE SHEAR WALLS.

D. COSMETIC REPAIR OF MINOR DEFECTS: REPAIR OR FILL MORTAR JOINTS AND MINOR DEFECTS, INCLUDING BUT NOT LIMITED TO SPALLS, IN ACCORDANCE WITH MANUFACTURER'S RECOMMENDATIONS AND PRIOR TO COATING APPLICATION. SURFACES TO BE PAINTED SHALL BE CLEAN AND FREE OF FOREIGN MATTER BEFORE APPLICATION OF PAINT. CLEANING SHALL BE SCHEDULED SO THAT DUST AND OTHER CONTAMINANTS WILL NOT FALL ON NEWLY PAINTED SURFACES.

E. CONCRETE, PLASTER AND MASONRY SURFACES SHALL BE ALLOWED TO CURE FOR AT LEAST 30 DAYS BEFORE PAINTING. CONCRETE SLABS-ON-GRADE SHALL BE ALLOWED TO CURE 90 DAYS BEFORE STAINING OR SEALING.

F. DO NOT USE PAINT MATERIALS CONTAINING LEAD CONTENT IN EXCESS OF 0.009 PERCENT OF THE WEIGHT OF THE TOTAL NONVOLATILE CONTENT OF THE PAINT OR THE WEIGHT OF THE DRIED PAINT FILM.

G. DO NOT USE ANY ASBESTOS CONTAINING MATERIALS (ACM) IN PROJECT. ACM IS DEFINED AS 1% OR MORE BY VOLUME.

H. DO NOT USE PAINT MATERIALS CONTAINING MERCURIAL FUNGICIDES.

I. FACTORY PRIMED METAL DOORS AND FRAMES SHALL RECEIVE TWO COATS OF PAINT.

J. FILL REMAINING SPACE AT PENETRATIONS IN FIRE-RATED FLOORS, PARTITIONS AND CEILINGS WITH APPROPRIATE FIRESTOPPING MATERIALS.

K. ALL CEILING FINISHES SHALL BE PAINTED PLASTER APPLIED TO STRUCTURE.

L. ALL WALL FINISHES SHALL BE PAINTED PLASTER APPLIED TO STRUCTURE.

M. ALL FLOOR FINISHES SHALL BE EPOXY SEALED CONCRETE.

N. ALL DOOR FRAMES & HARDWARE TYPES SHALL BE A.1.5 UNLESS NOTED OTHERWISE.

KEY NOTES:

1. LINE OF ROOF OVERHANG ABOVE.
2. CONCRETE STOOP WITH GRATE – SEE DETAIL 1/A-503

LEGEND:

XXX DOOR FRAME AND HARDWARE TYPE, SEE SHEET A-601

A WINDOW TYPE, SEE SHEET A-601

X KEY NOTE

ABBREVIATIONS:

ELEC	ELECTRICAL
MECH	MECHANICAL
JAN	JANITOR
CLOS	CLOSET
COMM	COMMUNICATIONS

LINEAR DIMENSIONS SHOWN ARE IN MILLIMETERS (MM), UNLESS OTHERWISE NOTED

0 2000 4000
SCALE: 1:100

APPROVED:

A/E DESIGNER OF RECORD

SEAL:

STATE OF SOUTH CAROLINA
KEVIN R. CHAFIN
N. Charleston, SC
6374
REGISTERED ARCHITECT

US ARMY CORPS OF ENGINEERS
AFGHANISTAN ENGINEER DISTRICT

Mark	Description	Date	Appr.	Mark	Description	Date	Appr.

Date: 2/23/10 Rev: 0
Design file no.
Drawing code:
File name: ANAAOFA-101FP
Plot date: 2/23/2010
Plot scale: x:X

Designed by: KRC
Dwn by: EBB
Ckd by: NLJ
Reviewed by: LHM
Submitted by:
BAKER

U.S. ARMY CORPS OF ENGINEERS
AFGHANISTAN ENGINEER DISTRICT
APO AE 96338

Michael Baker Jr., Inc.
A unit of Michael Baker Corporation
Airside Business Park
100 Airside Drive
Moon Township, PA 15108
www.mbakercorp.com

AFGHAN NATIONAL ARMY
REGIONAL MILITARY TRAINING CENTER
STANDARD DESIGN

ADMIN INSTRUCTORS OFFICE

FLOOR PLAN

Sheet reference number:
A-101

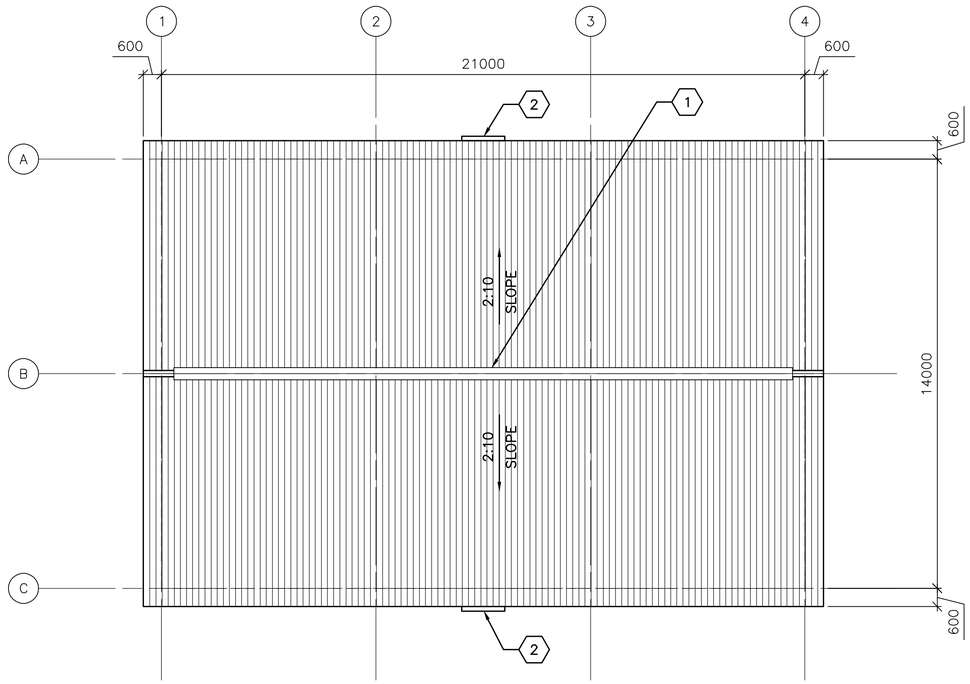

1 A-201 **ROOF PLAN**

SCALE: 1:100

GENERAL NOTES:

A. THE APPROXIMATE LOCATION OF ROOF DEVICES AND PENETRATIONS ARE SHOWN ON THE ROOF PLAN FOR INFORMATION ONLY. THE CONTRACTOR SHALL BE RESPONSIBLE FOR UNDERSTANDING THE ACTUAL LOCATION OF THESE AND ALL OTHER ITEMS PRIOR TO BEGINNING CONSTRUCTION. COORDINATE ALL ROOF PENETRATIONS WITH STRUCTURAL, MECHANICAL AND PLUMBING WORK.

B. UNLESS OTHERWISE NOTED, NOTES, DETAILS OR FEATURES INDICATED FOR ONE CONDITION SHALL BE APPLICABLE FOR ALL ALIKE AND SIMILAR CONDITIONS.

C. STOCKPILING OF MATERIALS, EQUIPMENT AND ANY OTHER ITEMS ON THE ROOF IS PROHIBITED.

D. ROOFS SHALL BE CORRUGATED METAL ROOF PANELS ON COLD-FORMED METAL FRAMING ON CONCRETE SLAB.

KEY NOTES:

1. CONTINUOUS METAL RIDGE VENT SEE DETAIL 4/A-501.
2. METAL GUTTER, 1400 MM – SEE DETAIL 1A/A-501.

LINEAR DIMENSIONS SHOWN ARE IN MILLIMETERS (MM), UNLESS OTHERWISE NOTED

0 2000 4000
SCALE: 1:100

APPROVED:

A/E DESIGNER OF RECORD

SEAL:

STATE OF SOUTH CAROLINA
KEVIN R. CHAFIN
N. Charleston, SC
6374
REGISTERED ARCHITECT

US ARMY CORPS OF ENGINEERS
AFGHANISTAN ENGINEER DISTRICT

Mark	Description	Date	Appr.	Mark	Description	Date	Appr.

Rev: 0
Date: 2/23/10
Design file no.
Drawing code:
File name: ANAAOFA-1028P
Plot date: 2/23/2010
Plot scale: x:X

Designed by: KRC
Dwn by: EBB
Ckd by: NLJ
Reviewed by: LHM
Submitted by: BAKER

U.S. ARMY CORPS OF ENGINEERS
AFGHANISTAN ENGINEER DISTRICT
APO AE 96338

Michael Baker Jr., Inc
A unit of Michael Baker Corporation
Airside Business Park
100 Airside Drive
Moon Township, PA 15108
www.mbakercorp.com

AFGHAN NATIONAL ARMY
REGIONAL MILITARY TRAINING CENTER
STANDARD DESIGN

ADMIN INSTRUCTORS OFFICE

ROOF PLAN

Sheet reference number:
A-102

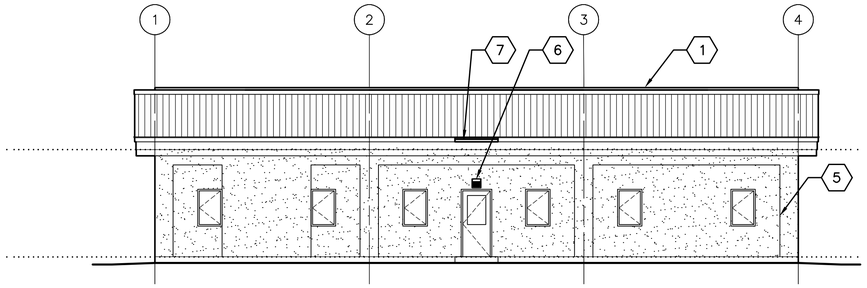

1 A-201 **ELEVATION**
SCALE: 1:100

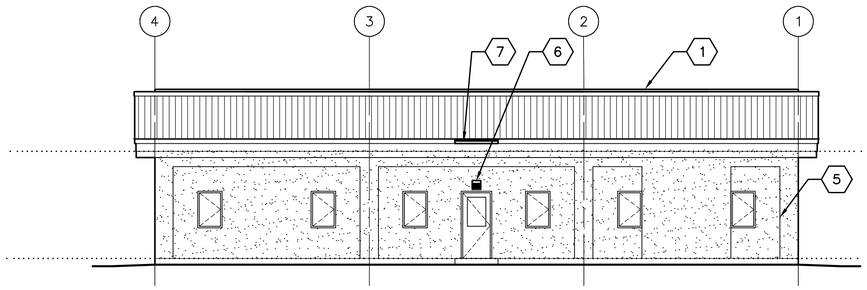

2 A-201 **ELEVATION**
SCALE: 1:100

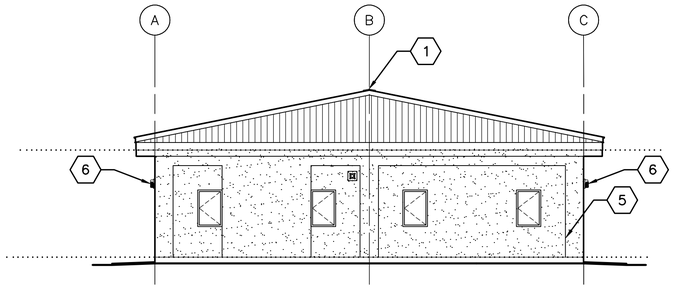

3 A-201 **ELEVATION**
SCALE: 1:100

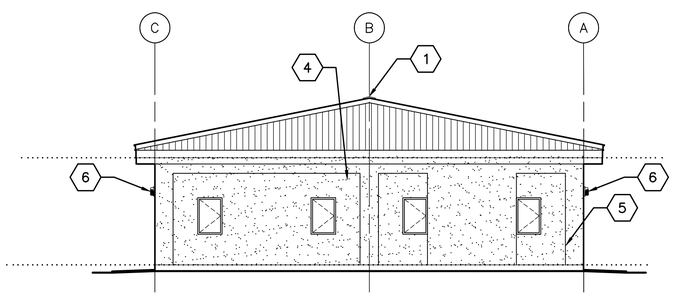

4 A-201 **ELEVATION**
SCALE: 1:100

GENERAL NOTES:

A. COORDINATE SIZE AND LOCATION OF OPENINGS FOR MECHANICAL ITEMS WITH MECHANICAL DRAWINGS.

B. PROVIDE STRUCTURAL LINTELS AS REQUIRED – SEE STRUCTURAL DRAWINGS

C. ALL EXTERIOR WALL FINISHES SHALL BE STUCCO OVER CMU AND CONCRETE SUBSTRATES. PROVIDE CONTROL JOINTS IN STUCCO WALL FINISH AS NOTED.

D. ROOF SHALL BE CORRUGATED METAL ROOF PANELS ON COLD-FORMED METAL FRAMING ON CONCRETE SLAB.

KEY NOTES:

1. CONTINUOUS METAL RIDGE VENT – SEE DETAIL 4/A-501.
2. NOT USED
3. EXHAUST FAN, LOCATE TOP OF WALL PENETRATION 2800 MM ABOVE FINISHED FLOOR – SEE MECHANICAL DRAWINGS.
4. NOT USED
5. STUCCO CONTROL JOINT – SEE DETAIL 2A/A-501.
6. EXTERIOR LIGHT – SEE ELECTRICAL.
7. METAL GUTTER, CENTER ON DOOR, 1400 MM – SEE DETAIL 1A/A-501.

LINEAR DIMENSIONS SHOWN ARE IN MILLIMETERS (MM), UNLESS OTHERWISE NOTED

0 2000 4000
SCALE: 1:100

APPROVED:

A/E DESIGNER OF RECORD

SEAL:

STATE OF SOUTH CAROLINA
KEVIN R. CHAFIN
N. Charleston, SC
5374
REGISTERED ARCHITECT

US ARMY CORPS OF ENGINEERS
AFGHANISTAN ENGINEER DISTRICT

Mark	Description	Date	Appr.	Mark	Description	Date	Appr.

U.S. ARMY CORPS OF ENGINEERS
AFGHANISTAN ENGINEER DISTRICT
APO AE 96338

Michael Baker Jr., Inc
A unit of Michael Baker Corporation
Airside Business Park
100 Airside Drive
Moon Township, PA 15108
www.mbakercorp.com

Designed by: KRC	Date: 2/23/10
Dwn by: EBB	Ckd by: NLJ	Design file no.
Reviewed by: LHM	Drawing code:
Submitted by: BAKER	File name: ANAAOFA-201ELV Plot date: 2/23/2010 Plot scale: X:X

Rev: 0

AFGHAN NATIONAL ARMY
REGIONAL MILITARY TRAINING CENTER
STANDARD DESIGN

ADMIN INSTRUCTORS OFFICE

ELEVATIONS

Sheet reference number:
A-201

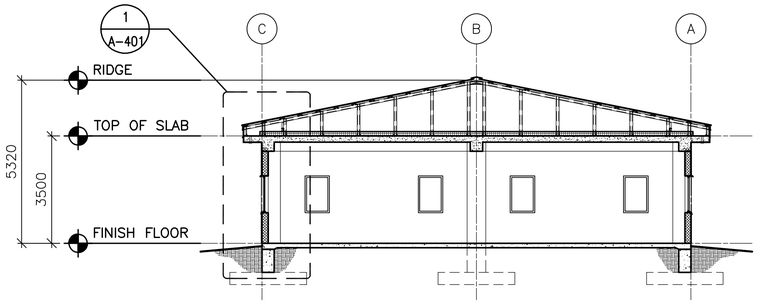

1 A-301 **BUILDING SECTION**
SCALE: 1:100

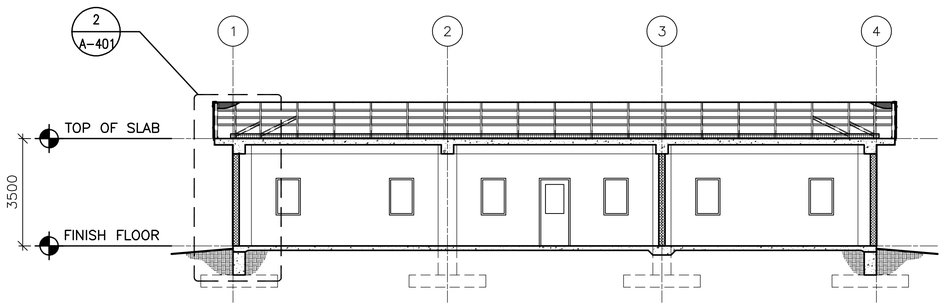

2 A-301 **BUILDING SECTION**
SCALE: 1:100

LINEAR DIMENSIONS SHOWN ARE IN MILLIMETERS (MM), UNLESS OTHERWISE NOTED

0 2000 4000
SCALE: 1:100

APPROVED:

A/E DESIGNER OF RECORD

SEAL:

STATE OF SOUTH CAROLINA
KEVIN R. CHAFIN
N. Charleston, SC
6374
REGISTERED ARCHITECT

US ARMY CORPS OF ENGINEERS
AFGHANISTAN ENGINEER DISTRICT

Mark	Description	Date	Appr.	Mark	Description	Date	Appr.

U.S. ARMY CORPS OF ENGINEERS
AFGHANISTAN ENGINEER DISTRICT
APO AE 96338

Michael Baker Jr., Inc.
A unit of Michael Baker Corporation
Airside Business Park
100 Airside Drive
Moon Township, PA 15108
www.mbakercorp.com

Designed by: KRC
Dwn by: EBB
Ckd by: NLJ
Reviewed by: LHM
Submitted by: BAKER
Date: 2/23/10
Rev: 0
Design file no.
Drawing code:
File name: ANAAOFA-301BS
Plot date: 2/23/2010
Plot scale: x:X

AFGHAN NATIONAL ARMY
REGIONAL MILITARY TRAINING CENTER
STANDARD DESIGN

ADMIN INSTRUCTORS OFFICE

BUILDING SECTIONS

Sheet reference number:
A-301

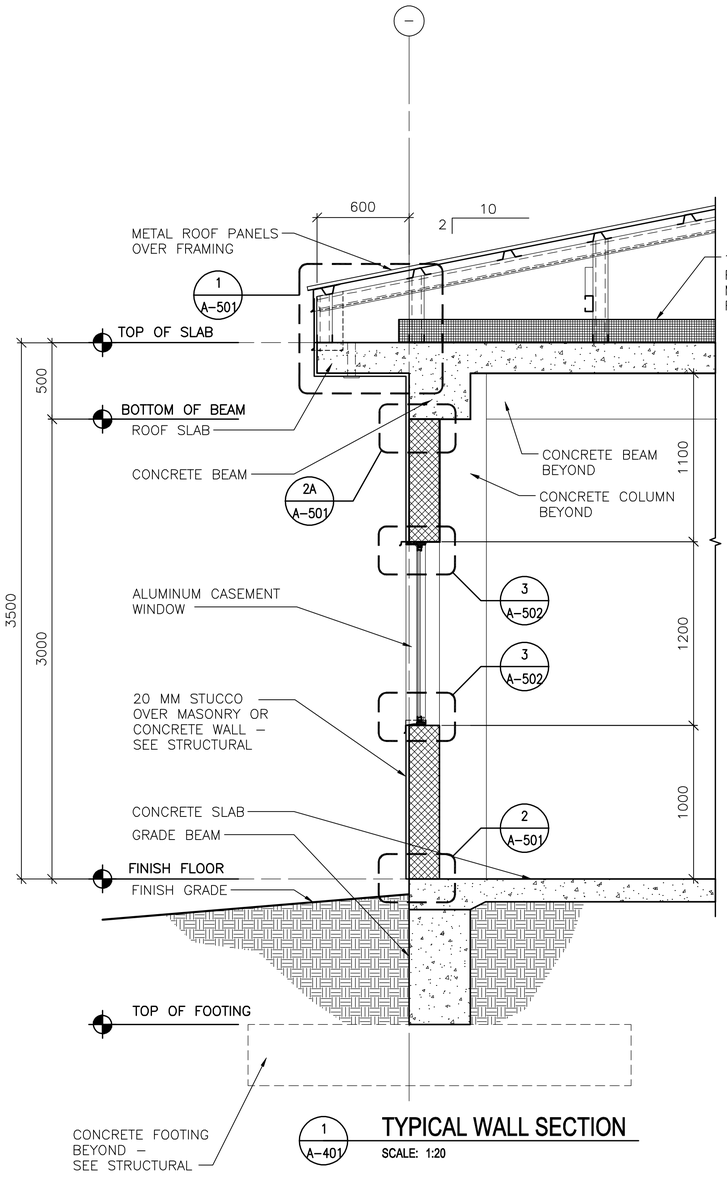

1 A-401 **TYPICAL WALL SECTION**

SCALE: 1:20

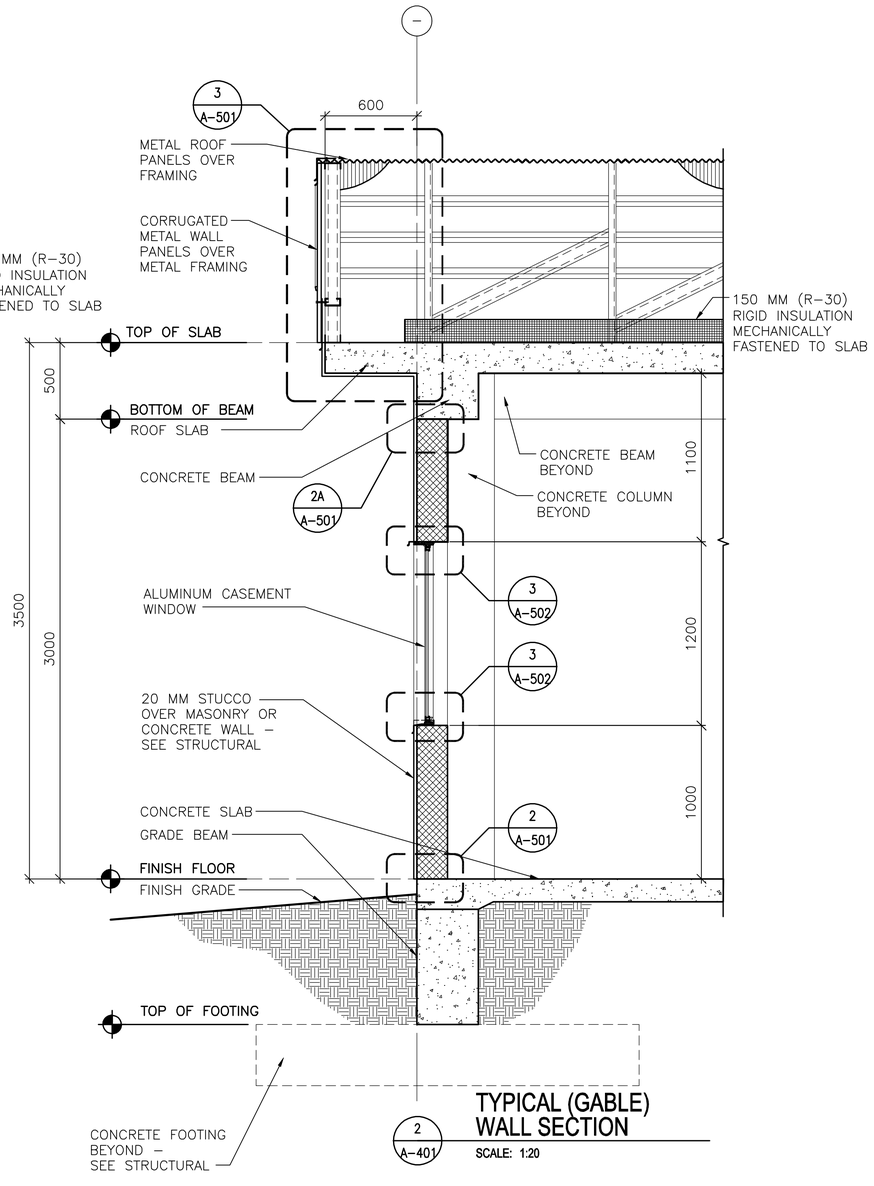

2 A-401 **TYPICAL (GABLE) WALL SECTION**

SCALE: 1:20

LINEAR DIMENSIONS SHOWN ARE IN MILLIMETERS (MM), UNLESS OTHERWISE NOTED

0 400 800

SCALE: 1:20

APPROVED:

A/E DESIGNER OF RECORD

SEAL:

STATE OF SOUTH CAROLINA
KEVIN R. CHAFIN
N. Charleston, SC
6374
REGISTERED ARCHITECT

US ARMY CORPS OF ENGINEERS
AFGHANISTAN ENGINEER DISTRICT

Mark	Description	Date	Appr.	Mark	Description	Date	Appr.

Date: 2/23/10
Rev: 0
Design file no.
Drawing code:
File name: ANAAOFA-401WS
Plot date: 2/23/2010
Plot scale: x:X

Designed by: KRC
Dwn by: EBB
Ckd by: NLJ
Reviewed by: LHM
Submitted by: BAKER

U.S. ARMY CORPS OF ENGINEERS
AFGHANISTAN ENGINEER DISTRICT
APO AE 96338

Michael Baker Jr., Inc
A unit of Michael Baker Corporation
Airside Business Park
100 Airside Drive
Moon Township, PA 15108
www.mbakercorp.com

AFGHAN NATIONAL ARMY
REGIONAL MILITARY TRAINING CENTER
STANDARD DESIGN

ADMIN INSTRUCTORS OFFICE

WALL SECTIONS

Sheet reference number:
A-401

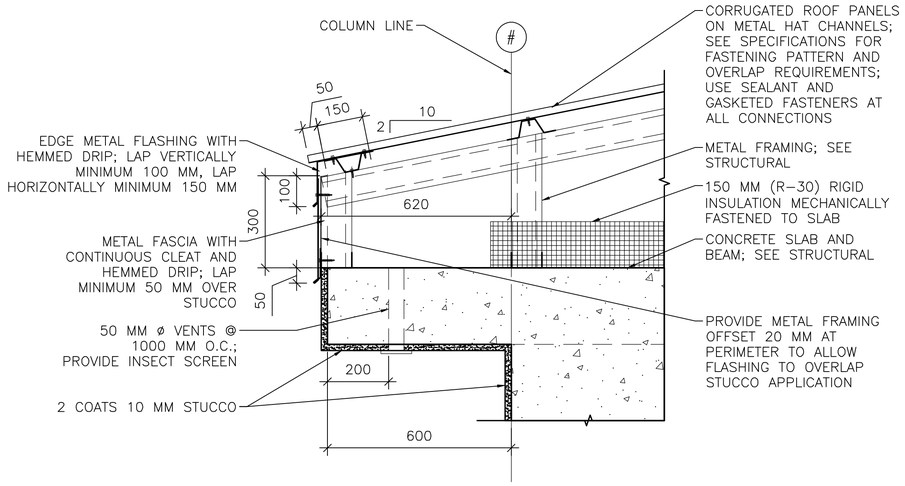

1 / A–501 **EAVE DETAIL**
SCALE 1:10

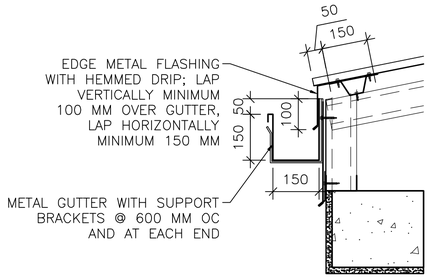

1A / A–501 **GUTTER DETAIL**
SCALE 1:10

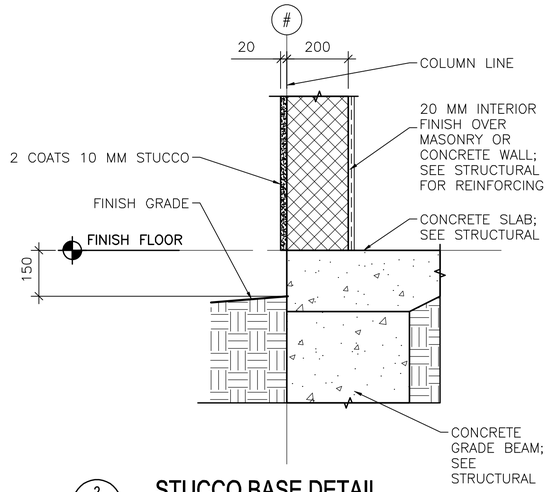

2 / A–501 **STUCCO BASE DETAIL**
SCALE 1:10

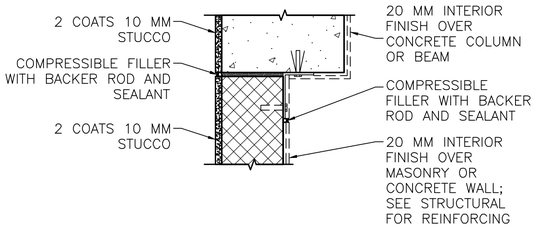

NOTE: DETAIL TYPICAL AT ALL WALL/COLUMN AND WALL/BEAM LOCATIONS, SEE ALTERNATE BRACING DETAIL BELOW 2B/A–501.

2A / A–501 **STUCCO JOINT DETAIL**
SCALE 1:10

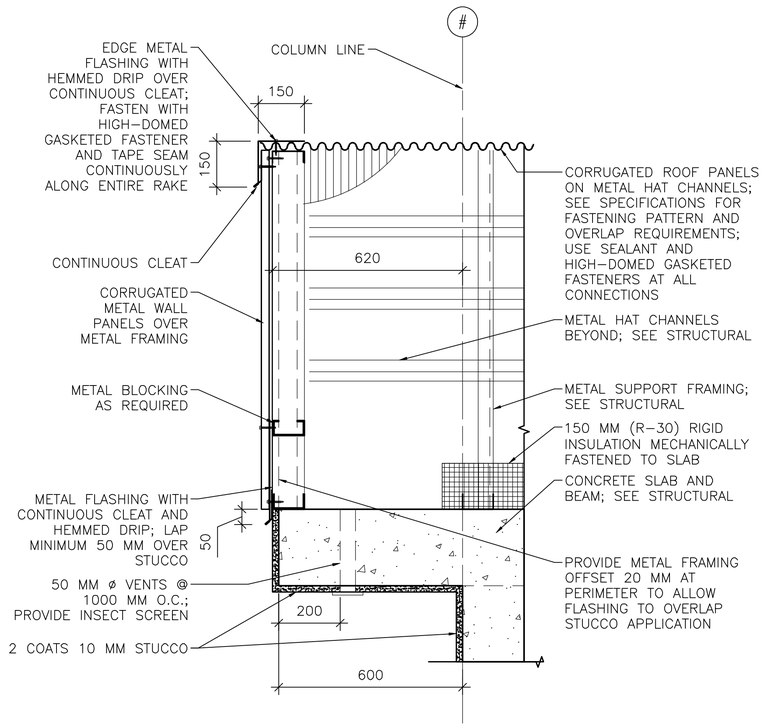

3 / A–501 **RAKE/EAVE DETAIL**
SCALE 1:10

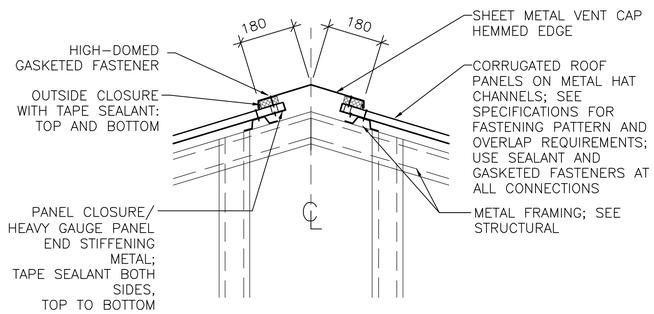

4 / A–501 **RIDGE VENT DETAIL**
SCALE 1:10

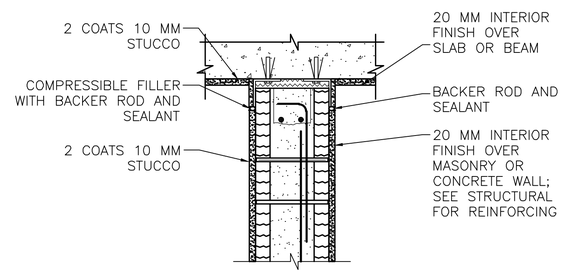

INTERIOR WALL/BEAM

2B / A–501 **ALTERNATE BRACING DETAIL**
SCALE 1:10

LINEAR DIMENSIONS SHOWN ARE IN MILLIMETERS (MM), UNLESS OTHERWISE NOTED

0 200 400
SCALE: 1:10

APPROVED:

A/E DESIGNER OF RECORD

SEAL:

STATE OF SOUTH CAROLINA
KEVIN R. CHAFIN
N. Charleston, SC
6374
REGISTERED ARCHITECT

US ARMY CORPS OF ENGINEERS
AFGHANISTAN ENGINEER DISTRICT

Mark	Description	Date	Appr.	Mark	Description	Date	Appr.

Date: 2/23/10
Rev: 0
Design file no.
Drawing code:
File name: ANAAOFA-501DT
Plot date: 2/23/2010
Plot scale: x:X

Designed by: KRC
Dwn by: EBB
Ckd by: NLJ
Reviewed by: LHM
Submitted by:
BAKER

U.S. ARMY CORPS OF ENGINEERS
AFGHANISTAN ENGINEER DISTRICT
APO AE 96338

Michael Baker Jr., Inc
A unit of Michael Baker Corporation
Airside Business Park
100 Airside Drive
Moon Township, PA 15108
www.mbakercorp.com

AFGHAN NATIONAL ARMY
REGIONAL MILITARY TRAINING CENTER
STANDARD DESIGN

ADMIN INSTRUCTORS OFFICE

EXTERIOR DETAILS

Sheet reference number:
A–501

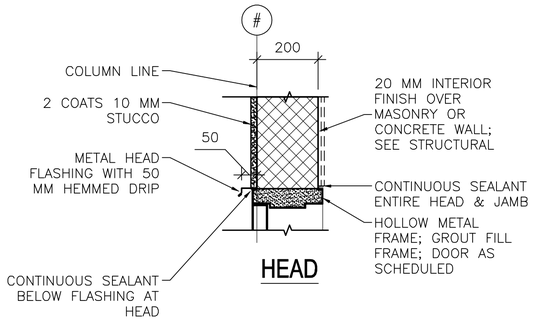

HEAD

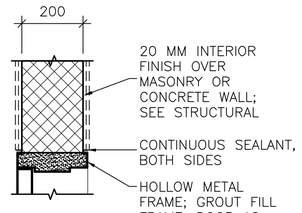

HEAD

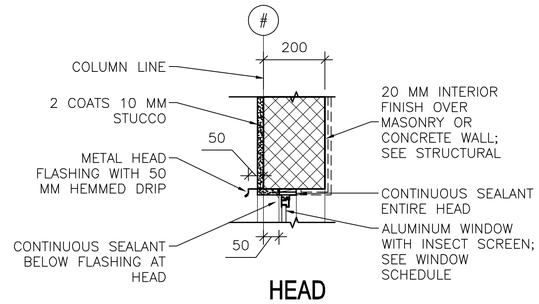

HEAD

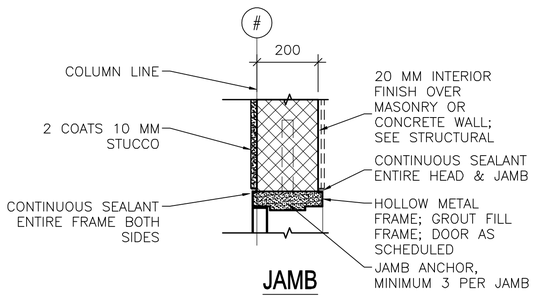

JAMB

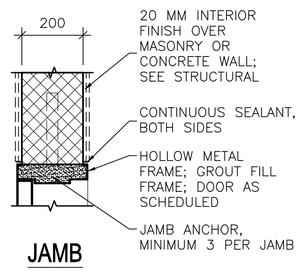

JAMB

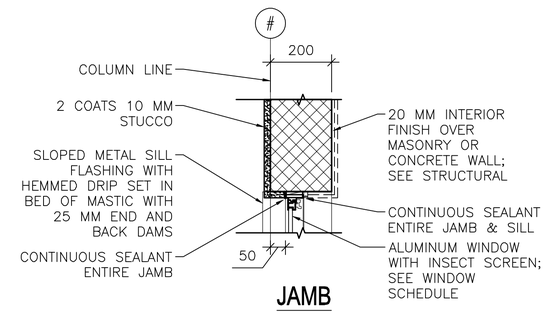

JAMB

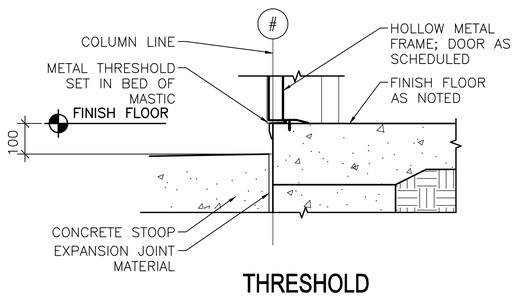

THRESHOLD

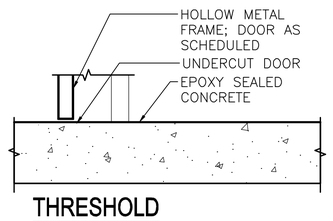

THRESHOLD

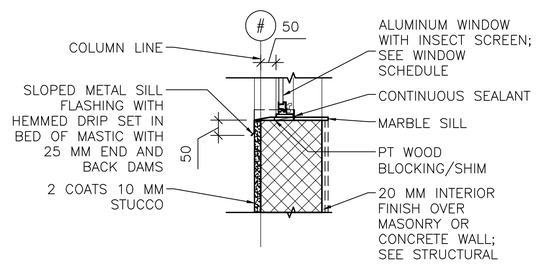

SILL

1 A-502 **EXTERIOR DOOR DETAILS**
SCALE: 1:10

2 A-502 **INTERIOR DOOR DETAILS**
SCALE: 1:10

3 A-502 **EXTERIOR WINDOW DETAILS**
SCALE: 1:10

LINEAR DIMENSIONS SHOWN ARE IN MILLIMETERS (MM), UNLESS OTHERWISE NOTED

0 200 400
SCALE: 1:10

APPROVED:

A/E DESIGNER OF RECORD

SEAL:

STATE OF SOUTH CAROLINA
KEVIN R. CHAFIN
N. Charleston, SC
6374
REGISTERED ARCHITECT

US ARMY CORPS OF ENGINEERS
AFGHANISTAN ENGINEER DISTRICT

Mark	Description	Date	Appr.	Mark	Description	Date	Appr.

Date: 2/23/10
Rev: 0
Design file no.
Drawing code:
File name: ANAAOFA-502HJS
Plot date: 2/23/2010
Plot scale: x:X

Designed by: KRC
Dwn by: EBB
Ckd by: NLJ
Reviewed by: LHM
Submitted by: BAKER

U.S. ARMY CORPS OF ENGINEERS
AFGHANISTAN ENGINEER DISTRICT
APO AE 96338

Michael Baker Jr., Inc
A unit of Michael Baker Corporation
Airside Business Park
100 Airside Drive
Moon Township, PA 15108
www.mbakercorp.com

AFGHAN NATIONAL ARMY
REGIONAL MILITARY TRAINING CENTER
STANDARD DESIGN

ADMIN INSTRUCTORS OFFICE

HEAD, JAMB & SILL DETAILS

Sheet reference number:
A-502

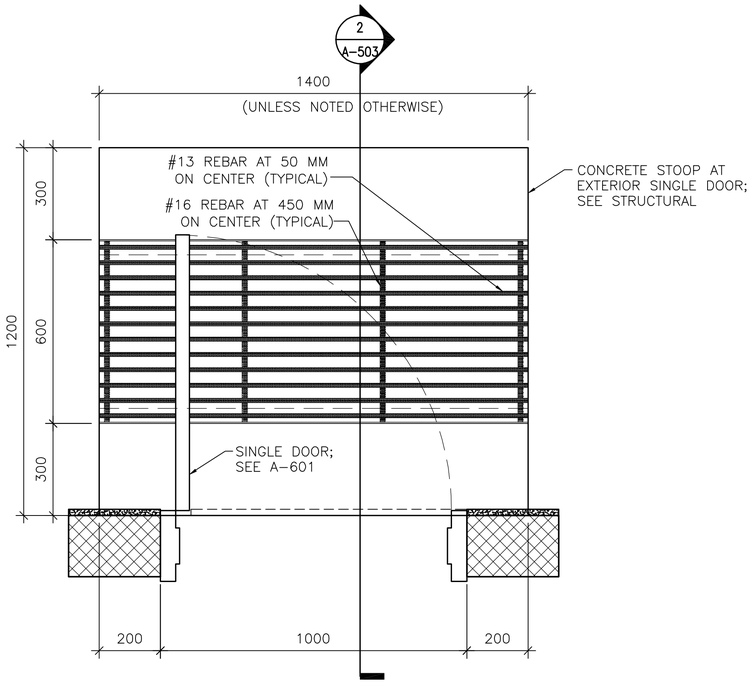

1 A-503 **DOOR STOOP PLAN (WITH GRATE)**

SCALE: 1:10

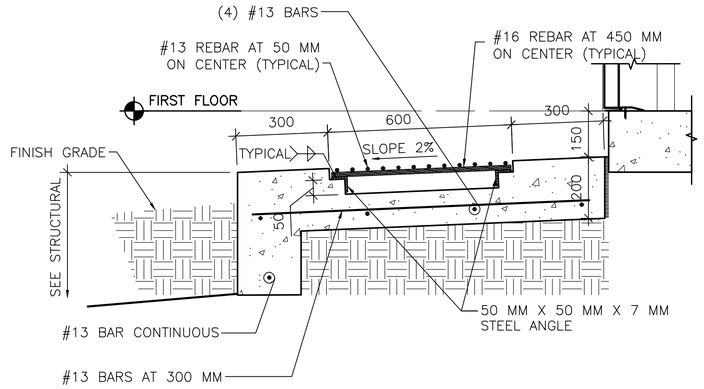

2 A-503 **DOOR STOOP DETAIL**

SCALE: 1:10

LINEAR DIMENSIONS SHOWN ARE IN MILLIMETERS (MM), UNLESS OTHERWISE NOTED

0 200 400
SCALE: 1:10

APPROVED:

A/E DESIGNER OF RECORD

SEAL:

STATE OF SOUTH CAROLINA
KEVIN R. CHAFIN
N. Charleston, SC
6374
REGISTERED ARCHITECT

US ARMY CORPS OF ENGINEERS
AFGHANISTAN ENGINEER DISTRICT

Mark	Description	Date	Appr.	Mark	Description	Date	Appr.

Date: 2/23/10
Rev: 0
Design file no.
Drawing code:
File name: ANAAOFA-5033T
Plot date: 2/23/2010
Plot scale: x:X

Designed by: KRC
Dwn by: EBB
Ckd by: NLJ
Reviewed by: LHM
Submitted by: BAKER

U.S. ARMY CORPS OF ENGINEERS
AFGHANISTAN ENGINEER DISTRICT
APO AE 96338

Michael Baker Jr., Inc.
A unit of Michael Baker Corporation
Airside Business Park
100 Airside Drive
Moon Township, PA 15108
www.mbakercorp.com

AFGHAN NATIONAL ARMY
REGIONAL MILITARY TRAINING CENTER
STANDARD DESIGN

ADMIN INSTRUCTORS OFFICE

STOOP DETAILS

Sheet reference number:
A-503

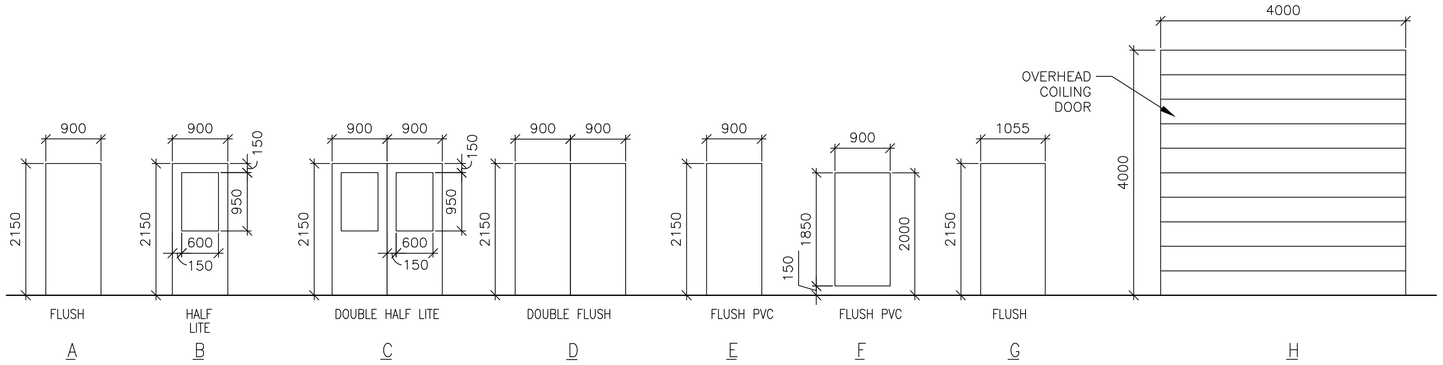

1 A-601 DOOR TYPES

SCALE: 1:50

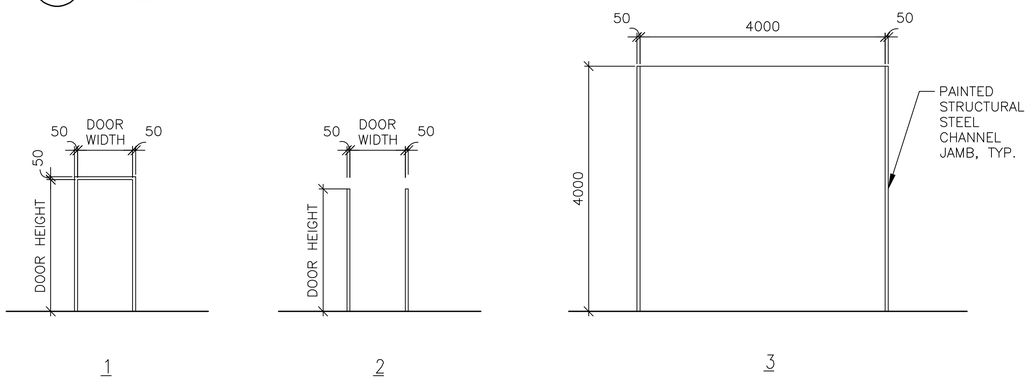

2 A-601 FRAME TYPES

SCALE: 1:50

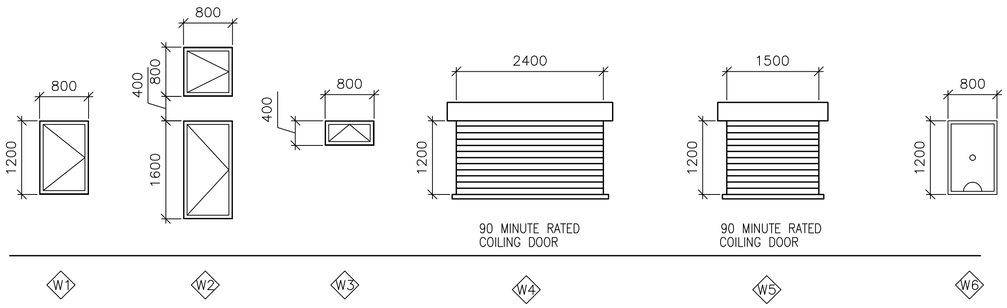

3 A-601 WINDOW TYPES

SCALE: 1:50

WINDOW TYPE NOTES:

1. ALL EXTERIOR WINDOWS SHALL BE ALUMINUM WITH INSECT SCREENS. WINDOWS SHALL BE COMMERCIAL GRADE.
2. ALL EXTERIOR WINDOWS SHALL BE OPERABLE.

4 A-601 DOOR TAG

SCALE: NTS

5 A-601 RATED DOOR TAG

SCALE: NTS

DOOR TAG NOTES:

1. THE DOOR TAG INDICATES THE DOOR TYPE, FRAME TYPE AND HARDWARE SET FOR EACH DOOR.
2. THE DOOR TAG FOR RATED DOORS INCLUDES THE RATING OF THE DOOR IN MINUTES.

EXTERIOR DOOR HARDWARE TYPES:

HW-1 1-1/2 PR HINGES, A5112 114 X 114
1 EA RIM EXIT DEVICE, TYPE 1
1 EA CYLINDER. E09221A, GRADE 1
1 EA OVERHEAD CLOSER, C02061, LOW RESISTANCE
1 EA THRESHOLD, J32130
3 EA DOOR SILENCERS, L03011

HW-2 1-1/2 PR HINGES, A5112 114 X 114
1 EA LOCKSET, F13 ENTRY LOCK W/LEVER HANDLES, GRADE 1
1 EA OVERHEAD CLOSER, C02061, LOW RESISTANCE
1 EA THRESHOLD, J32130
3 EA DOOR SILENCERS, L03011

HW-3 3 PR HINGES, A5112 114 X 114
2 EA RIM EXIT DEVICE, TYPE 1
2 EA CYLINDER. GRADE 1
2 EA OVERHEAD CLOSER, C02061, LOW RESISTANCE
1 EA DOOR COORDINATOR, TYPE 21
1 EA ASTRAGAL
1 EA THRESHOLD, J32130
2 EA DOOR SILENCERS, L03011

HW-4 3 PR HINGES, A5112 114 X 114
1 EA LOCKSET W/LEVER HANDLES. GRADE 1, F13
1 EA OVERHEAD CLOSER, C02061, LOW RESISTANCE
2 EA MAGNETIC HOLDER PIN, ATTACHED TO DOOR LEAF
2 EA MAGNETIC HOLDER RECEIVER, ATTACHED TO STOOP
2 EA LEVER EXTENSION FLUSH BOLTS, L04081
1 EA ASTRAGAL
1 EA THRESHOLD, J32130
2 EA DOOR SILENCERS, L03011

DOOR AND HARDWARE NOTES:

1. INTERIOR AND EXTERIOR METAL DOORS AND FRAME COLORS SHALL MATCH ADJACENT WALL COLORS AS SELECTED BY THE CONTRACTING OFFICER.
2. FRAMES, EXCEPT FIRE-RATED FRAMES, SHALL BE MOUNTED AND ADJUSTED IN ACCORDANCE WITH MANUFACTURER'S INSTRUCTIONS. FRAMES SHALL BE FASTENED WITH MINIMUM OF THREE ANCHORS PER JAMB AT EQUAL INTERVALS.
3. DIMENSIONS SHOWN ON DOOR TYPES DETAIL ARE BASED UPON MODULAR MASONRY (OR ROUGH OPENING), HEIGHT OF 2200 MM FOR STANDARD PERSONNEL DOORS. CONTRACTOR SHALL COORDINATE WITH DOOR SUPPLIER TO ENSURE THAT DIMENSIONS OF DOORS AND FRAMES PROVIDED ARE COMPATIBLE WITH DOOR OPENING DIMENSIONS.
4. HARDWARE SHALL BE HEAVY DUTY, COMMERCIAL GRADE, STAINLESS STEEL WITH A SATIN OR BRUSHED FINISH.
5. HARDWARE TYPES INCLUDE BUILDERS HARDWARE MANUFACTURERS ASSOCIATION (BMHA) NUMBER.
6. DOORS IN 2 HOUR RATED PARTITIONS SHALL BE 1.5 HOUR (90 MINUTE) RATED DOORS IN ACCORDANCE WITH NFPA 101, TABLE 8.3.4.2.
7. DOORS AT STAIR ENCLOSURES SHALL BE 1 HOUR (60 MINUTE) RATED AT 1 HOUR WALL IN ACCORDANCE WITH NFPA 101, TABLE 8.3.4.2.
8. DOORS IN 1 HOUR RATED WALLS SHALL BE 3/4 HOUR (45 MINUTE) RATED DOORS IN ACCORDANCE WITH NFPA 101, TABLE 8.3.4.2.
9. DOORS IN 1 HOUR RATED CORRIDOR WALLS SHALL BE 1/3 HOUR (20 MINUTE) IN ACCORDANCE WITH NFPA 101, TABLE 8.3.4.2.
10. PROVIDE DOOR STOPS TO PROTECT WALLS ON LOCATIONS WHERE DOOR SWING WILL STRIKE WALL.

THIS SHEET IS STANDARD AND IS INCLUSIVE OF ALL THE DOOR/ WINDOW/ HARDWARE TYPES FOR THE ENTIRE RMTC CONTRACT. NOT ALL DOOR/ WINDOW/ HARDWARE TYPES ARE USED FOR ANY PARTICULAR BUILDING DESIGN. CONTRACTOR SHALL REFER TO THE FLOOR PLAN FOR THE TYPES BEING USED.

INTERIOR DOOR HARDWARE TYPES:

HW-5 1-1/2 PR HINGES, A8133 114 X 114
1 EA LOCKSET W/LEVER HANDLES, F08, GRADE 1
1 EA WALL STOP, L02101 OR L02161
3 EA DOOR SILENCERS, L03011

HW-6 1-1/2 PR HINGES, A8112 114 X 114
1 EA LOCKSET W/LEVER HANDLES, F08, GRADE 1
1 EA WALL STOP, L02101 OR L02161
1 EA OVERHEAD CLOSER, C02061, LOW RESISTANCE
3 EA DOOR SILENCERS, L03011

HW-7 1-1/2 PR HINGES, A8133
1 EA LOCKSET W/LEVER HANDLES, F13 GRADE 1
1 EA WALL STOP, L02101 OR L02161
2 EA MOP PLATE, J103
3 EA DOOR SILENCERS, L03011

HW-8 1-1/2 PR HINGES, A8112
1 EA LOCKSET W/LEVER HANDLES, F13 GRADE 1
1 EA WALL STOP, L02101 OR L02161
2 EA MOP PLATE, J103
1 EA OVERHEAD CLOSER, C02061, LOW RESISTANCE
3 EA DOOR SILENCERS, L03011

HW-9 1-1/2 PR HINGES, A5112 114 X 114
1 EA RIM EXIT DEVICE, TYPE 1
1 EA CYLINDER. E09221A, GRADE 1
1 EA OVERHEAD CLOSER, C02061, LOW RESISTANCE
3 EA DOOR SILENCERS, L03011

HW-10 3 PR HINGES, A5112 114 X 114
1 EA LOCKSET W/LEVER HANDLES. GRADE 1, F13
2 EA LEVER EXTENSION FLUSH BOLTS, L04081
1 EA ASTRAGAL
2 EA DOOR SILENCERS, L03011

HW-11 1-1/2 PR HINGES, A8112 114 X 114
1 EA LOCKSET W/LEVER HANDLES, F13, GRADE 1
1 EA WALL STOP, L02101 OR L02161
1 EA OVERHEAD CLOSER, C02061, LOW RESISTANCE
3 EA DOOR SILENCERS, L03011
1 EA ROBE HOOK

HW-12 1-1/2 PR HINGES, A8133
1 EA LATCHSET W/LEVER HANDLES, F76 GRADE 1
1 EA WALL STOP, L02101 OR L02161
2 EA MOP PLATE, J103
3 EA DOOR SILENCERS, L03011
1 EA ROBE HOOK

HW-13 3 PR HINGES, A5112 114 X 114
1 EA LOCKSET W/LEVER HANDLES. GRADE 1, F13
1 EA OVERHEAD CLOSER, C02061, LOW RESISTANCE
2 EA LEVER EXTENSION FLUSH BOLTS, L04081
1 EA ASTRAGAL
2 EA DOOR SILENCERS, L03011

HW-14 3 PR HINGES, A5112 114 X 114
2 EA RIM EXIT DEVICE, TYPE 1
2 EA CYLINDER. GRADE 1
2 EA OVERHEAD CLOSER, C02061, LOW RESISTANCE
1 EA DOOR COORDINATOR, TYPE 21
1 EA ASTRAGAL
2 EA DOOR SILENCERS, L03011

APPROVED:

A/E DESIGNER OF RECORD

SEAL:

STATE OF SOUTH CAROLINA
KEVIN R. CHAFIN
N. Charleston, SC
6374
REGISTERED ARCHITECT

US ARMY CORPS OF ENGINEERS
AFGHANISTAN ENGINEER DISTRICT

Mark	Description	Date	Appr.	Mark	Description	Date	Appr.

Date: 2/23/10 Rev: 0
Design file no.
Drawing code:
File name: ANAAOFA-601SCH
Plot date: 2/23/2010
Plot scale: x:X

Designed by: KRC
Dwn by: EBB
Ckd by: NLJ
Reviewed by: LHM
Submitted by:
BAKER

U.S. ARMY CORPS OF ENGINEERS
AFGHANISTAN ENGINEER DISTRICT
APO AE 96338

Michael Baker Jr., Inc.
A unit of Michael Baker Corporation
Airside Business Park
100 Airside Drive
Moon Township, PA 15108
www.mbakercorp.com

AFGHAN NATIONAL ARMY
REGIONAL MILITARY TRAINING CENTER
STANDARD DESIGN

ADMIN INSTRUCTORS OFFICE

WINDOW AND DOOR SCHEDULES

Sheet reference number:
A-601

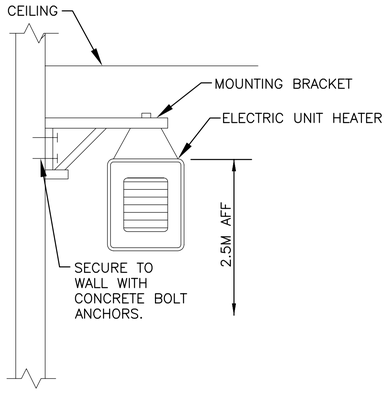

2 M-101 ELECTRIC UNIT HEATER MOUNTING DETAIL
N.T.S.

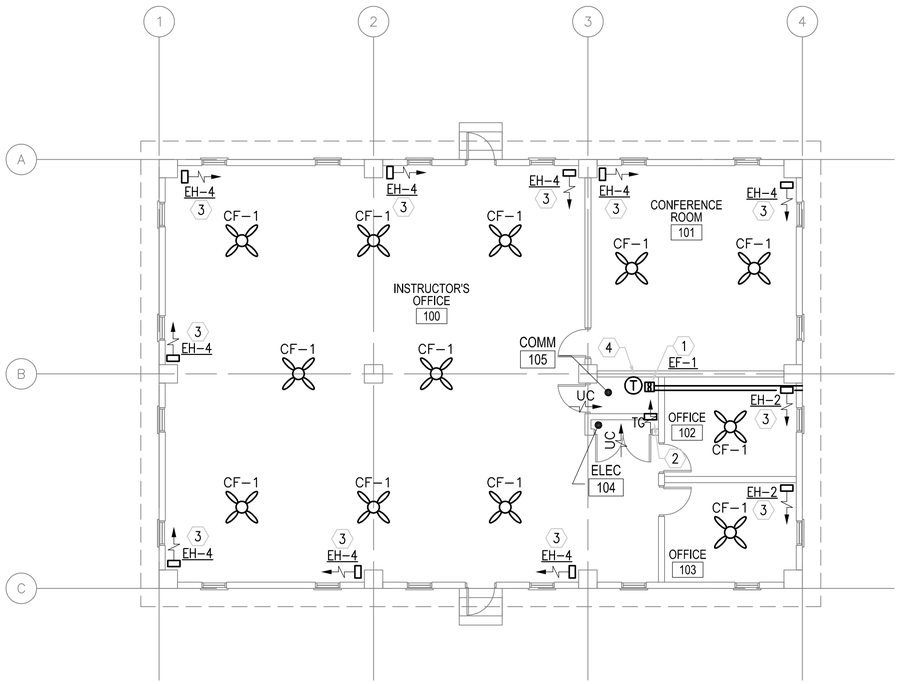

1 M-101 FLOOR PLAN - HVAC
SCALE: 1:100

GENERAL NOTES:

1. DO NOT SCALE DRAWINGS – ALL DIMENSIONS AND CONDITIONS SHALL BE CHECKED AND VERIFIED BY THE CONTRACTOR AT THE SITE.
2. ALL WORK PERFORMED ON THIS BUILDING SHALL BE IN COMPLIANCE WITH ALL PERTINENT CODES, RULES, ORDINANCES AND REGULATIONS OF THE GOVERNING AUTHORITIES.
3. ALL WORK PERFORMED UNDER AND IN CONNECTION WITH THESE DRAWINGS AND SPECIFICATIONS SHALL BE IN STRICT COMPLIANCE WITH THE LATEST SAFETY AND HEALTH STANDARDS.

SYMBOLS:

- (X) KEY NOTE
- (.050) AIR VOLUME IN CUBIC METERS PER SECOND (CMS)
- ¬ VOLUME DAMPER
- (T) THERMOSTAT WITH LOCKING COVER
- UC DOOR UNDERCUT
- TG TRANSFER GRILLE

ABBREVIATIONS:

AFF	ABOVE FINISH FLOOR
CF	CEILING FANS
CMS	CUBIC METERS PER SECOND
STATS	THERMOSTATS

KEY NOTE:

1. INLINE EXHAUST FAN DUCTED TO WALL CAP WITH LOW LEAKAGE GRAVITY BACK-DRAFT DAMPER. SECURE FAN TO STRUCTURE.
2. 200x150 (8x6) TRANSFER GRILLE. MOUNT GRILLE 800mm BELOW CEILING. COORDINATE LOCATION IN FIELD WITH OTHER TRADES.
3. UNIT HEATER SECURED FROM WALL. SEE DETAIL THIS SHEET.
8. THERMOSTAT MOUNTED AS HIGH AS POSSIBLE. INTERLOCK STAT WITH CORRESPONDING EXHAUST FAN, SET FAN TO ENERGIZE ON RISE IN TEMPERATURE ABOVE 25°C (77°F).

ELECTRIC UNIT HEATER SCHEDULE

NO.	CMS	KW	F.A.T. °C	ELECT. CHAR.	MOUNTING
EH-2	0.200	2.6	38	380/1/50	WALL HUNG
EH-4	0.200	4	38	380/1/50	WALL HUNG

NOTES:
1. UNIT HEATERS SHALL HAVE TAMPER PROOF INTEGRAL STATS.
2. COORDINATE LOCATION AND ORIENTATION IN FIELD.

EXHAUST FAN SCHEDULE

NO.	TYPE	FAN CMS	DRIVE	HP	SP mmH2O	ELECTRICAL DATA	SWITCH
EF-1	INLINE	0.035	DIRECT	FRACT	13	220/1/50	W/ STAT

NOTE:
1. FANS SHALL HAVE SPRING OPERATED BACK DRAFT DAMPER.

CEILING FAN

NO.	BLADE SIZE mm	BLADE SIZE IN	VOLTAGE	SWITCH	REMARKS
CF-1	1320	52	220/1/50	@ WALL	3 SPEED REVERSIBLE MOTOR

NOTES:
1. INSTALL FANS 2.5M AFF.
2. PROVIDE WITH OUT LIGHT FIXTURE.
3. PROVIDE WITH REMOTE MOUNTED ON-OFF SWITCH SHOWN ON ELECTRICAL DRAWINGS.

LINEAR DIMENSIONS SHOWN ARE IN MILLIMETERS (MM), UNLESS OTHERWISE NOTED

0 2000 4000
SCALE: 1:100

APPROVED:

A/E DESIGNER OF RECORD

SEAL:

COMMONWEALTH OF PENNSYLVANIA
REGISTERED PROFESSIONAL
MATTHEW R. SOTOSKY
ENGINEER
045576-E

US ARMY CORPS OF ENGINEERS
AFGHANISTAN ENGINEER DISTRICT

Mark	Description	Date	Appr.	Mark	Description	Date	Appr.

Designed by: RMI
Dwn by: JJN
Ckd by: CJM
Reviewed by: MRS
Submitted by: BAKER
Date: 02/23/10
Rev: 0
Design file no.
Drawing code:
File name: ANAAIOFMH-101XXX
Plot date: 02/08/2010
Plot scale: 1:100

U.S. ARMY CORPS OF ENGINEERS
AFGHANISTAN ENGINEER DISTRICT
APO AE 96338

Michael Baker Jr., Inc
A unit of Michael Baker Corporation
Airside Business Park
100 Airside Drive
Moon Township PA 15108
www.mbakercorp.com

AFGHAN NATIONAL ARMY
REGIONAL MILITARY TRAINING CENTER
STANDARD DESIGN

ADMIN INSTRUCTORS OFFICE
HVAC – FLOOR PLAN, SCHEDULES AND DETAILS

Sheet reference number:
M-101

POWER

- DISTRIBUTION PANELBOARD
- NEW PANELBOARD – SURFACE
- NEW PANELBOARD – RECESSED
- (G) GENERATOR
- TRANSFORMER (DRAWN TO SCALE)
- (J) JUNCTION BOX
- (J) JUNCTION BOX – CEILING
- FUSIBLE SAFETY SWITCH
- (M) MOTOR
- $M MOTOR STARTING SWITCH – 220V, 20A RATED UNLESS OTHERWISE NOTED.
- ELECTRIC WATER HEATER
- (CF) CEILING FAN – REFER TO SPECIFICATION SECTION 26 20 00

RECEPTACLES

- DUPLEX 20A TYPE CEE 7/7 "SCHUKO STYLE" UNSWITCHED RECEPTACLE
- GF DUPLEX 20A TYPE CEE 7/7 "SCHUKO STYLE" UNSWITCHED RECEPTACLES – 10mA GROUND FAULT INTERRUPTER TYPE
- WP DUPLEX 20A TYPE CEE 7/7 "SCHUKO STYLE" UNSWITCHED TYPE WITH WEATHERPROOF COVER – 10mA GROUND FAULT INTERRUPTER TYPE
- EXP DUPLEX 20A TYPE CEE 7/7 "SCHUKO STYLE" UNSWITCHED RECEPTACLES – EXPLOSION PROOF
- * INDICATES MOUNT DEVICE ABOVE COUNTERTOP OR AT 1070mm ABOVE FINISHED FLOOR WHERE NO COUNTER IS TO BE INSTALLED.

LIGHTING

- LIGHTING FIXTURE – SEE FIXTURE SCHEDULE FOR MORE INFORMATION
- EMERGENCY LIGHTING FIXTURE – SEE FIXTURE SCHEDULE FOR MORE INFORMATION
- DOWNLIGHT
- LIGHTING FIXTURE ON NORMAL/EMERGENCY
- WALL MOUNTED LIGHT FIXTURE
- E EXIT SIGN – DIRECTIONAL ARROWS AS INDICATED ON DRAWINGS
- REMOTE HEAD FOR BATTERY PACK
- $ SINGLE POLE SWITCH – 20A RATED
- $3 3–WAY SWITCH – 20A RATED
- $4 4–WAY SWITCH – 20A RATED
- LC LIGHTING CONTACTOR
- POLE MOUNTED SITE LIGHTING FIXTURE– NUMBER OF FIXTURES PER POLE AS INDICATED ON DRAWINGS
- EXTERIOR DIRECTIONAL LIGHTING FIXTURE
- a SMALL CASE LETTERS REPRESENTS LAMP(S) / SWITCHES.

TELECOMMUNICATIONS

- ▼ TELEPHONE OUTLET(S) @ 45cm AFF. U.N.O. WITH 20mm RACEWAY TERMINATED TO TELEDATA TERMINAL BOARD.
- ▽ DATA OUTLET(S) @ 45cm AFF. U.N.O. WITH 20mm RACEWAY TERMINATED TO TELEDATA TERMINAL BOARD.

TELECOMMUNICATIONS (CONTINUED)

- ▼ COMBINATION TELEPHONE/DATA OUTLET(S) @ 45cm AFF. U.N.O. WITH 27mm RACEWAY TERMINATED TO TELEDATA TERMINAL BOARD.
- W▼ WALL MTD. TELEPHONE OUTLET WITH 20mm RACEWAY TO TELEDATA TERMINAL BOARD.
- (x)T INDICATES NUMBER OF TELEPHONE OUTLET(S) AND ASSOCIATED CABLING
- (x)D INDICATES NUMBER OF DATA OUTLET(S) AND ASSOCIATED CABLING
- (x)TF INDICATES NUMBER OF TELEPHONE OUTLETS AND ASSOCIATED CABLING WITH 1 OUTLET AND CABLE DEDICATED FOR FAX

SINGLE LINE SYMBOLS

- SWITCH
- BREAKER
- FUSE
- TRANSFORMER
- GROUND
- CONTACT (NORMALLY OPEN)
- CONTACT (NORMALLY CLOSED)
- TRANSFER SWITCH
- CURRENT TRANSFORMER
- INDICATES NEW ELECTRICAL EQUIPMENT
- C INDICATES NEW CONTROL WIRING AND CONDUIT
- EQUIPMENT OUTLINE

MISCELLANEOUS

- BRANCH CIRCUIT WIRING, SURFACE MOUNTED ON WALLS
- BRANCH CIRCUIT WIRING – 6mm²
- BRANCH CIRCUIT WIRING – UNDER FLOOR
- HOME RUN BACK TO PANEL
- CONDUIT TURNED DOWN
- CONDUIT TURNED UP
- LV LOW VOLTAGE WIRING AND CONDUIT
- ~ INDICATES CONTINUATION OF LINE

FIRE ALARM

- FACP FIRE ALARM CONTROL PANEL WITH BATTERY BACKUP
- F FIRE ALARM PULL STATION

FIRE ALARM (CONTINUED)

- F FIRE ALARM STROBE – WALL MOUNTED
- F FIRE ALARM AUDIBLE/STROBE – WALL MOUNTED
- F FIRE ALARM HORN/STROBE – WALL MOUNTED
- S SMOKE DETECTOR
- H HEAT DETECTOR CEILING MOUNTED
- D DUCT DETECTOR – PROVIDED BY EC, INSTALLED BY MC AND CONNECTED BY EC

DENOTATIONS & ABBREVIATIONS

AFF	ABOVE FINISHED FLOOR
C	CEILING MOUNTED
E	EMERGENCY
EC	ELECTRICAL CONTRACTOR
EPO	EMERGENCY POWER OFF
EXP	EXPLOSION PROOF
F	FIRE ALARM
FF	FLUSH FLOOR MOUNTED
FL	FLUORESCENT
FO	FIBER OPTIC
FSS	FUSED SAFETY SWITCH
GF	GROUND FAULT INTERRUPTER
GC	GENERAL CONTRACTOR
IG	ISOLATED GROUND
K	KEY
LV	LOW VOLTAGE
M	MOTOR
MC	MECHANICAL CONTRACTOR
NE	NORMAL/EMERGENCY
NFSS	NON–FUSED SAFETY SWITCH
PA	PAGING SYSTEM
PLC	PLUMBING CONTRACTOR
SL	SINGLE LINE
T	TELEPHONE

DENOTATIONS & ABBREVIATIONS (CONT.)

TP	TAMPER PROOF
UE	UNDERGROUND ELECTRIC
W	WALL MOUNTED
WP	WEATHERPROOF WITH GROUND FAULT INTERRUPTION
WT	WATER TIGHT

GENERAL PROJECT NOTES:

G1. UNLESS OTHERWISE NOTED, PROVIDE ALL EQUIPMENT SHOWN ON THE PLANS. THE ELECTRICAL CONTRACTOR SHALL COORDINATE ALL SYMBOLS SHOWN ON THE PLANS WITH THE SYMBOL LIST. IT SHALL BE THE RESPONSIBILITY OF THE CONTRACTOR TO VERIFY THE INTENT OF ANY SYMBOL THAT IS SHOWN ON THE PLANS AND NOT INDICATED ON THE SYMBOL LIST WITH THE ENGINEER PRIOR TO BID.

G2. THE CONTRACTOR SHALL VERIFY THE LOCATION OF ALL UNDERGROUND UTILITIES WITHIN THE CONSTRUCTION AREA THREE (3) WORKING DAYS NOTICE BEFORE COMMENCING DIGGING. NOTIFY THE LOCAL AUTHORITY HAVING JURISDICTION AND WAIT THE REQUIRED TIME BEFORE COMMENCING TO DIG.

G3. THE CONTRACTOR SHALL COORDINATE CONDUIT RUNS, LIGHTING FIXTURES AND OTHER EQUIPMENT LOCATIONS WITH THE OTHER TRADE CONTRACTORS TO AVOID CONFLICTS.

G4. WHERE VOLTAGES AND FREQUENCIES ON THE DRAWINGS AND IN THE SPECIFICATIONS DIFFER FROM THE LOCAL ONES, ALL WORK SHALL BE PERFORMED USING THE LOCAL VOLTAGES AND FREQUENCIES.

G5. THE MINIMUM WIRE SIZE ON THE PROJECT SHALL BE 4mm². THE MINIMUM CONDUIT SIZE SHALL BE 20mm. THE MINIMUM BREAKER SIZE SHALL BE 20 AMPS.

G6. THE CONTRACTOR SHALL PUT A MAXIMUM OF 6 DUPLEX RECEPTACLES ON A 20A SINGLE POLE CIRCUIT.

G7. WHERE THE 1010 SCOPE REVIEW, 1015 TECHNICAL REVIEW, DRAWINGS, AND SPECIFICATIONS DIFFER FROM AMERICAN CODES OR STANDARDS, THE 1010, 1015, DRAWINGS, AND SPECIFICATIONS SHALL RULE.

G8. ALL CONDUIT AND DEVICES SHALL BE SURFACE MOUNTED UNLESS OTHERWISE INDICATED.

G9. CONTRACTOR SHALL COORDINATE ALL WORK WITH ALL OTHER TRADES TO ENSURE ALL WORK IS COMPLETED IN A PROFESSIONAL, WORKMAN–LIKE MANNER.

APPROVED:

A/E DESIGNER OF RECORD

SEAL:

COMMONWEALTH OF PENNSYLVANIA
REGISTERED PROFESSIONAL
JOSEPH R. GAUS
1/29/10
ENGINEER
PE-074251

US ARMY CORPS OF ENGINEERS
AFGHANISTAN ENGINEER DISTRICT

Mark	Description	Date	Appr.

Mark	Description	Date	Appr.

Designed by: JRG
Dwn by: BJB
Ckd by: JRG
Reviewed by: JRG
Submitted by: BAKER
Date: 2/23/10
Rev: 0
Design file no.
Drawing code:
File name:
Plot date:
Plot scale:

U.S. ARMY CORPS OF ENGINEERS
AFGHANISTAN ENGINEER DISTRICT
APO AE 96338

Michael Baker Jr., Inc
A unit of Michael Baker Corporation
Airside Business Park
100 Airside Drive
Moon Township, PA 15108
www.mbakercorp.com

AFGHAN NATIONAL ARMY
REGIONAL MILITARY TRAINING CENTER
STANDARD DESIGN

ADMIN INSTRUCTORS OFFICE
ELECTRICAL SYMBOLS & ABBREVIATIONS

Sheet reference number:
E–001

GENERAL NOTES:

1. REFER TO DRAWING #E-001 FOR THE ELECTRICAL SYMBOLS LIST.
2. EXIT SIGNS SHALL BE WIRED AHEAD OF ANY LOCAL SWITCHING ON CIRCUITS. SEE WIRING DIAGRAM DETAIL 6, ON DRAWING #E-501.
3. REFER TO DRAWING #E-601 FOR THE LIGHTING FIXTURE SCHEDULE.
4. REFER TO DRAWING #E-501 FOR THE POWER RISER.
5. REFER TO DRAWING #E-602 FOR PANEL SCHEDULES.
6. LIGHT FIXTURES INDICATED AS EMERGENCY SHALL BE PROVIDED WITH A BATTERY BACKUP BALLAST. SEE WIRING DIAGRAM DETAIL 5, DRAWING #E-501.

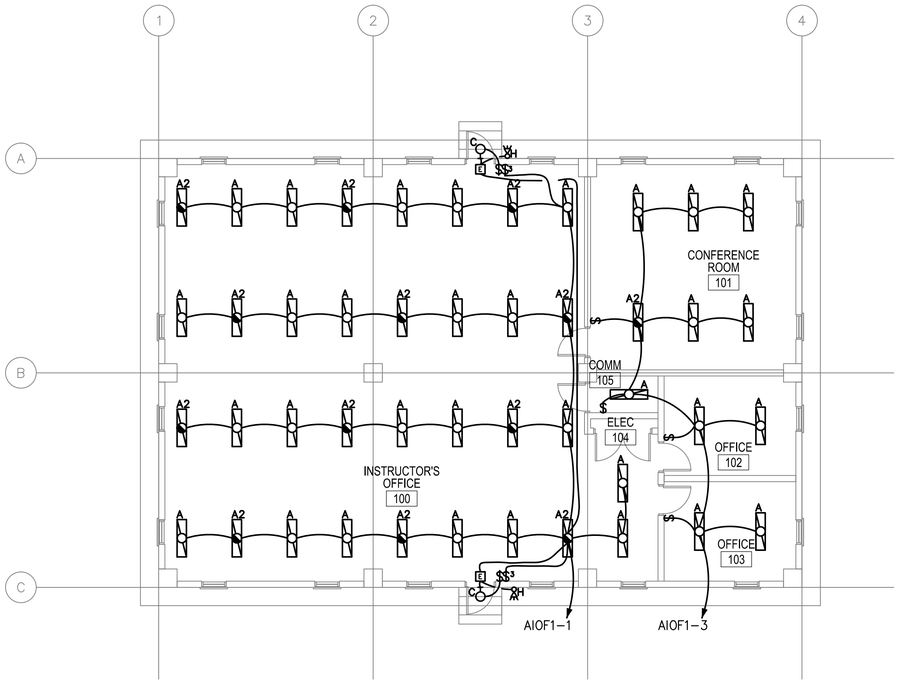

1
E-101

ADMIN INSTRUCTOR'S OFFICE LIGHTING PLAN

SCALE: 1:100

0 2000 4000
SCALE: 1:100

APPROVED:

A/E DESIGNER OF RECORD

SEAL:

COMMONWEALTH OF PENNSYLVANIA
REGISTERED PROFESSIONAL
JOSEPH R. GAUS
ENGINEER
PE-074251

US ARMY CORPS OF ENGINEERS
AFGHANISTAN ENGINEER DISTRICT

Mark	Description	Date	Appr.

Mark	Description	Date	Appr.

U.S. ARMY CORPS OF ENGINEERS
AFGHANISTAN ENGINEER DISTRICT
APO AE 96338

Michael Baker Jr., Inc
A unit of Michael Baker Corporation
Airside Business Park
100 Airside Drive
Moon Township, PA 15108
www.mbakercorp.com

Designed by: JRG	Date: 2/23/10
Dwn by: BJB	Ckd by: JRG
Reviewed by: JRG	Drawing code:
Submitted by: BAKER	File name:
	Plot date:
	Plot scale:
	Design file no.
	Rev: 0

AFGHAN NATIONAL ARMY
REGIONAL MILITARY TRAINING CENTER
STANDARD DESIGN

ADMIN INSTRUCTORS OFFICE
ELECTRICAL LIGHTING PLAN

Sheet reference number:
E-101

GENERAL NOTES:

1. REFER TO DRAWING #E-001 FOR THE ELECTRICAL SYMBOLS LIST.
2. REFER TO DRAWING #E-501 FOR THE POWER RISER.
3. REFER TO DRAWING #E-602 FOR PANEL SCHEDULES.
4. COORDINATE EXACT MOUNTING LOCATION OF DISCONNECTING MEANS FOR MECHANICAL AND PLUMBING EQUIPMENT IN THE FIELD.
5. FUSIBLE SAFETY SWITCHES THAT ARE NOT OTHERWISE IDENTIFIED SHALL BE 380V, 1P, 30A FUSED SAFETY SWITCHES WITH 20A FUSES.

NUMBERED NOTES:

1. PANEL AIOF1.
2. PROVIDE 1200mm X 2400mm SHEET OF PLYWOOD PAINTED WITH FIRE RESISTANT PAINT FOR MOUNTING TELECOMMUNICATIONS EQUIPMENT.
3. PROVIDE CONDUIT STUB UP IN THE ROOM FOR INCOMING TELECOMMUNICATIONS SERVICES FROM THE CENTRAL COMMUNICATIONS SYSTEM IN THE GARRISON.
4. PROVIDE POWER CONNECTION TO EXHAUST FANS. SEE DRAWINGS #M-101 AND #E-602 FOR MORE INFORMATION.
5. PROVIDE POWER CONNECTION TO ELECTRIC UNIT HEATER #2. SEE DRAWINGS #M-101 AND #E-602 FOR MORE INFORMATION.
6. PROVIDE POWER CONNECTION TO ELECTRIC UNIT HEATER #4. SEE DRAWINGS #M-101 AND #E-602 FOR MORE INFORMATION.

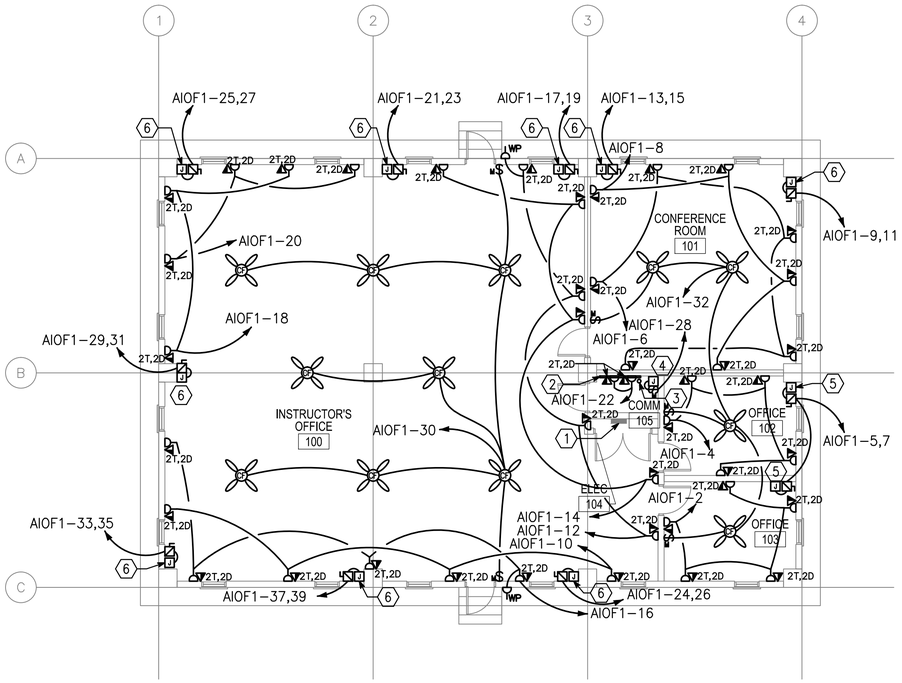

1 / E-102 ADMIN INSTRUCTOR'S OFFICE POWER AND SYSTEMS PLAN

SCALE: 1:100

0 2000 4000
SCALE: 1:100

APPROVED:

A/E DESIGNER OF RECORD

SEAL:

COMMONWEALTH OF PENNSYLVANIA
REGISTERED PROFESSIONAL
JOSEPH R. GAUS
ENGINEER
PE-074251

US ARMY CORPS OF ENGINEERS
AFGHANISTAN ENGINEER DISTRICT

Mark	Description	Date	Appr.

Mark	Description	Date	Appr.

U.S. ARMY CORPS OF ENGINEERS
AFGHANISTAN ENGINEER DISTRICT
APO AE 96338

Michael Baker Jr., Inc
A unit of Michael Baker Corporation
Airside Business Park
100 Airside Drive
Moon Township, PA 15108
www.mbakercorp.com

Designed by: JRG	Date: 2/23/10
Dwn by: BJB	Ckd by: JRG
Reviewed by: JRG	Drawing code:
Submitted by: BAKER	File name: Plot date: Plot scale:
	Design file no.
	Rev: 0

AFGHAN NATIONAL ARMY
REGIONAL MILITARY TRAINING CENTER
STANDARD DESIGN

ADMIN INSTRUCTORS OFFICE
ELECTRICAL POWER AND SYSTEMS PLAN

Sheet reference number:
E-102

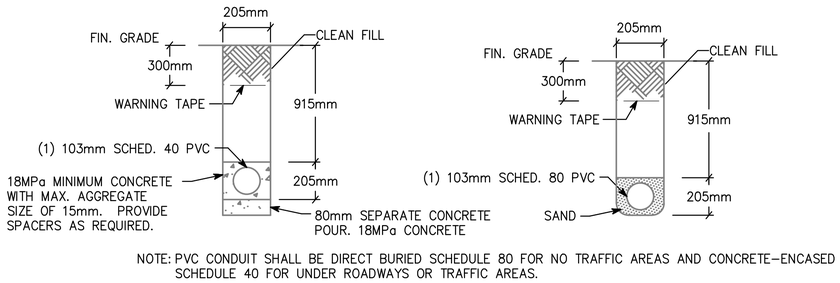

NOTE: PVC CONDUIT SHALL BE DIRECT BURIED SCHEDULE 80 FOR NO TRAFFIC AREAS AND CONCRETE-ENCASED SCHEDULE 40 FOR UNDER ROADWAYS OR TRAFFIC AREAS.

1 / E-501 TYPICAL DUCT BANK DETAILS FOR CONDUIT IN SAND OR CONCRETE

SCALE: N.T.S.

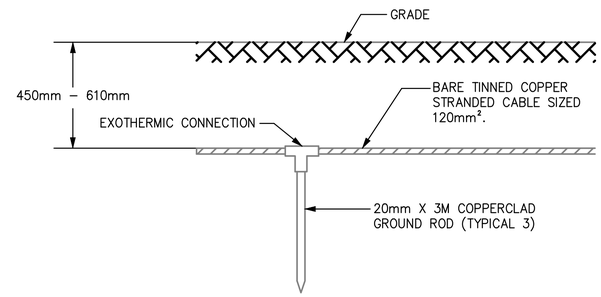

2 / E-501 GROUND TRIPOD SYSTEM DETAIL - ELEVATION

SCALE: N.T.S.

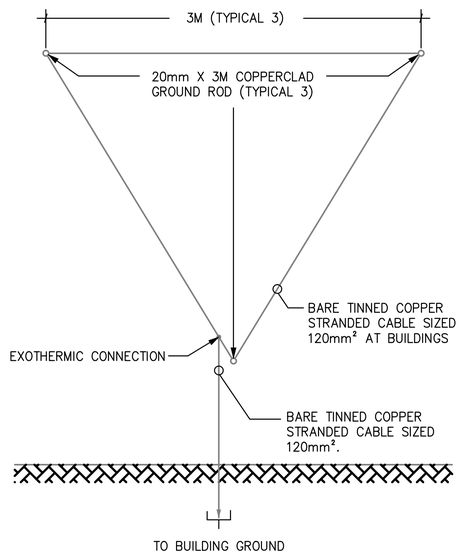

3 / E-501 GROUND TRIPOD SYSTEM DETAIL - PLAN

SCALE: N.T.S.

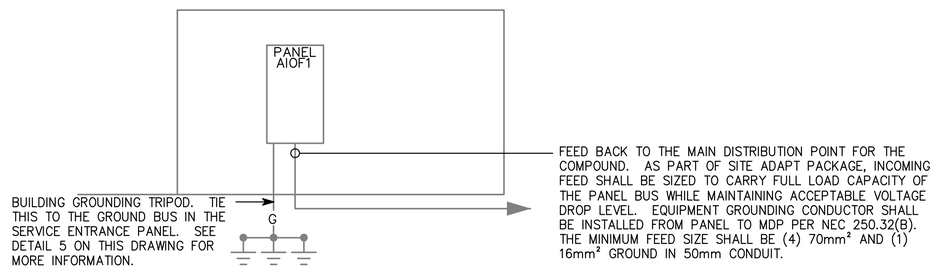

4 / E-501 ADMIN INSTRUCTORS OFFICE (AIOF) RISER DIAGRAM

SCALE: N.T.S.

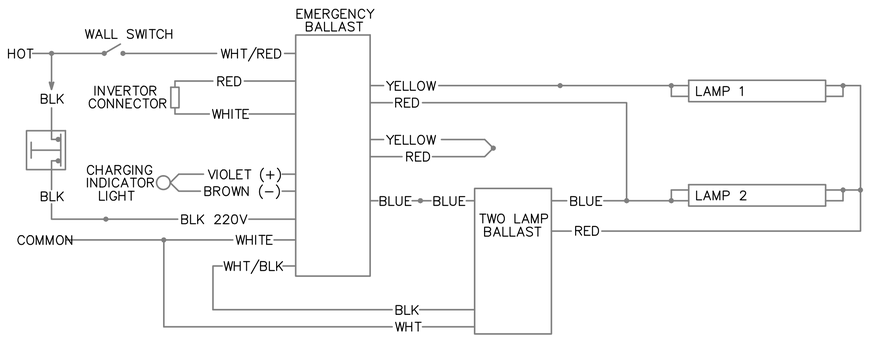

5 / E-501 EMERGENCY FIXTURE WIRING DIAGRAM

SCALE: N.T.S.

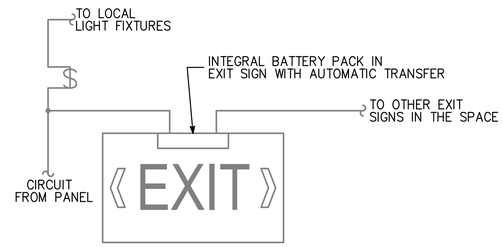

6 / E-501 EXIT SIGN WIRING DIAGRAM

SCALE: N.T.S.

APPROVED:

A/E DESIGNER OF RECORD

SEAL:

COMMONWEALTH OF PENNSYLVANIA
REGISTERED PROFESSIONAL
JOSEPH R. GAUS
1/29/10
ENGINEER
PE-074251

US ARMY CORPS OF ENGINEERS
AFGHANISTAN ENGINEER DISTRICT

Mark	Description	Date	Appr.

Mark	Description	Date	Appr.

Designed by: JRG
Dwn by: BJB
Ckd by: JRG
Reviewed by: JRG
Submitted by: BAKER
Date: 2/23/10
Rev: 0
Design file no.
Drawing code:
File name:
Plot date:
Plot scale:

U.S. ARMY CORPS OF ENGINEERS
AFGHANISTAN ENGINEER DISTRICT
APO AE 96338

Michael Baker Jr., Inc
A unit of Michael Baker Corporation
Airside Business Park
100 Airside Drive
Moon Township, PA 15108
www.mbakercorp.com

AFGHAN NATIONAL ARMY
REGIONAL MILITARY TRAINING CENTER
STANDARD DESIGN

ADMIN INSTRUCTORS OFFICE
ELECTRICAL DETAILS

Sheet reference number:
E-501

(A) LARGER OF THE TWO SIZES GIVEN IN THE TABLES BELOW	
GROUNDING ELECTRODE CONDUCTOR (BASED ON AIC RATING)	
AIC RATING OF SERVICE EQUIPMENT	NECESSARY GROUNDING ELECTRODE CONDUCTOR SIZE
10K	(1) 35mm²
14K	(1) 50mm²
18K	(1) 70mm²
22K	(1) 70mm²
25K	(1) 70mm²
30K	(1) 95mm²
35K	(1) 120mm²
42K	(1) 150mm²
65K	(1) 185mm²
100K	(1) 300mm²
125K	(2) 185mm²
200K	(2) 300mm²
GROUNDING ELECTRODE CONDUCTOR (BASED ON NEC TABLE 250.66)	
SIZE OF LARGEST UNGROUNDED SERVICE CONDUCTOR OR EQUIVALENT AREA FOR PARALLEL CONDUCTORS	NECESSARY GROUNDING ELECTRODE CONDUCTOR SIZE
350 kcmil OR SMALLER	35mm²
OVER 350 kcmil TO 600 kcmil	70mm²
OVER 600 kcmil TO 1100 kcmil	70mm²
OVER 1100 kcmil	95mm²
NOTE: ALL SIZES ARE BASED ON COPPER CONDUCTORS.	

(B) EQUIPMENT GROUNDING CONDUCTOR	
RATING OR SETTING OF AUTOMATIC OVERCURRENT DEVICE IN CIRCUIT AHEAD OF EQUIPMENT, CONDUIT, ETC, NOT EXCEEDING (AMPERES)	NECESSARY EQUIPMENT GROUNDING CONDUCTOR SIZE
15	2.5mm²
20	4.0mm²
30	6.0mm²
40	6.0mm²
60	6.0mm²
100	10mm²
200	16mm²
300	25mm²
400	25mm²
500	35mm²
600	50mm²
800	70mm²
1000	70mm²
1200	95mm²
1600	120mm²
2000	150mm²
2500	185mm²
3000	240mm²
4000	300mm²
5000	400mm²
6000	400mm²
NOTE: ALL SIZES ARE BASED ON COPPER CONDUCTORS.	

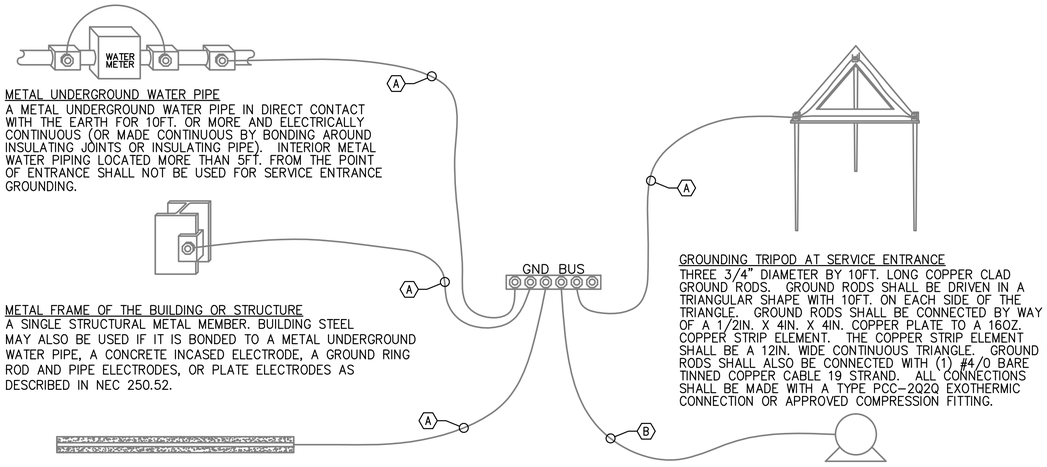

METAL UNDERGROUND WATER PIPE
A METAL UNDERGROUND WATER PIPE IN DIRECT CONTACT WITH THE EARTH FOR 10FT. OR MORE AND ELECTRICALLY CONTINUOUS (OR MADE CONTINUOUS BY BONDING AROUND INSULATING JOINTS OR INSULATING PIPE). INTERIOR METAL WATER PIPING LOCATED MORE THAN 5FT. FROM THE POINT OF ENTRANCE SHALL NOT BE USED FOR SERVICE ENTRANCE GROUNDING.

METAL FRAME OF THE BUILDING OR STRUCTURE
A SINGLE STRUCTURAL METAL MEMBER. BUILDING STEEL MAY ALSO BE USED IF IT IS BONDED TO A METAL UNDERGROUND WATER PIPE, A CONCRETE INCASED ELECTRODE, A GROUND RING ROD AND PIPE ELECTRODES, OR PLATE ELECTRODES AS DESCRIBED IN NEC 250.52.

CONCRETE ENCASED ELECTRODE
AN ELECTRODE ENCASED BY AT LEAST 2IN. OF CONCRETE , LOCATED WITHIN AND NEAR THE BOTTOM OF A CONCRETE FOUNDATION OR FOOTING THAT IS IN DIRECT CONTACT WITH THE EARTH, CONSISTING OF AT LEAST 20FT. OF ONE OR MORE BARE OR ZINC GALVANIZED OR OTHER ELECTRICALLY CONDUCTIVE COATED STEEL REINFORCING BARS OR RODS OF NOT LESS THAN 1/2" DIAMETER OR BARE COPPER CONDUCTOR NOT SMALLER THAN 4AWG.

GROUNDING TRIPOD AT SERVICE ENTRANCE
THREE 3/4" DIAMETER BY 10FT. LONG COPPER CLAD GROUND RODS. GROUND RODS SHALL BE DRIVEN IN A TRIANGULAR SHAPE WITH 10FT. ON EACH SIDE OF THE TRIANGLE. GROUND RODS SHALL BE CONNECTED BY WAY OF A 1/2IN. X 4IN. X 4IN. COPPER PLATE TO A 16OZ. COPPER STRIP ELEMENT. THE COPPER STRIP ELEMENT SHALL BE A 12IN. WIDE CONTINUOUS TRIANGLE. GROUND RODS SHALL ALSO BE CONNECTED WITH (1) #4/0 BARE TINNED COPPER CABLE 19 STRAND. ALL CONNECTIONS SHALL BE MADE WITH A TYPE PCC-2Q2Q EXOTHERMIC CONNECTION OR APPROVED COMPRESSION FITTING.

LOAD OR DOWNSTREAM PANEL
ALL LOADS IN THE BUILDING SHALL HAVE AN EQUIPMENT GROUNDING CONDUCTOR PULLED TO THEM.

1
E-502

SERVICE ENTRANCE GROUNDING DETAIL

SCALE: N.T.S.

APPROVED:

A/E DESIGNER OF RECORD

SEAL:

COMMONWEALTH OF PENNSYLVANIA
REGISTERED PROFESSIONAL
JOSEPH R. GAUS
ENGINEER
PE-074251
1/29/10

US ARMY CORPS OF ENGINEERS
AFGHANISTAN ENGINEER DISTRICT

Mark	Description	Date	Appr.	Mark	Description	Date	Appr.

Rev: 0
Date: 2/23/10
Design file no.
Drawing code:
File name:
Plot date:
Plot scale:

Designed by: JRG
Dwn by: BJB
Ckd by: JRG
Reviewed by: JRG
Submitted by: BAKER

U.S. ARMY CORPS OF ENGINEERS
AFGHANISTAN ENGINEER DISTRICT
APO AE 96338

Michael Baker Jr., Inc.
A unit of Michael Baker Corporation
Airside Business Park
100 Airside Drive
Moon Township, PA 15108
www.mbakercorp.com

AFGHAN NATIONAL ARMY
REGIONAL MILITARY TRAINING CENTER
STANDARD DESIGN

ADMIN INSTRUCTORS OFFICE
ELECTRICAL DETAILS

Sheet reference number:
E-502

FIXTURE MARK 'A'

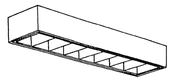

FIXTURE MARK 'C'

FIXTURE MARK 'H'

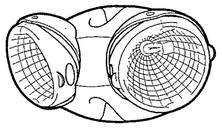

FIXTURE MARK 'E'

LIGHT FIXTURE SCHEDULE

FIXTURE MARK	STYLE NUMBER AND TYPE	NUMBER AND TYPE OF LAMPS	VOLTAGE	MOUNTING	NOTES
A	PARABOLIC SURFACE/PENDANT MOUNTED 300MM X 1200MM FLUORESCENT FIXTURE WITH ELECTRONIC BALLAST	(2) 32W 3500K	220V – 1ø 50HZ	PENDANT MOUNTED FROM CEILINGS	FURNISHED WITH ELECTRONIC BALLAST. PARABOLIC LOUVER SHALL BE SPECULAR LENS IRIDESCENCE TYPE.
A2	SAME AS FIXTURE 'A' WITH EMERGENCY BALLAST	(2) 32W 3500K	220V – 1ø 50HZ	PENDANT MOUNTED FROM CEILINGS	FURNISHED WITH ELECTRONIC BALLAST. PARABOLIC LOUVER SHALL BE SPECULAR LENS IRIDESCENCE TYPE. EMERGENCY BALLAST SELF TEST.
C	INCANDESCENT ONE PIECE W/ APPROVED LENS STABILIZED HIGH IMPACT POLY CARBONATE.	(1) A19 – 100W INCANDESCENT	220V – 1ø 50HZ	WALL MOUNTED ABOVE EXTERIOR DOORS	
H	REMOTE HEAD EXTERIOR LIGHT HEAD POWERED FROM EXIT SIGN BATTERY– 12V DOUBLE HEAD CORROSION RESISTANT WITH UL34 WEATHERPROOF CONSTRUCTION	(2) 12W/12V HALOGEN LAMP	12V – 1ø 50HZ	EXTERIOR WALL MOUNTED AT TOP OF DOOR HEIGHT	
E	UNIVERSAL MOUNT ENGINEER GRADE THERMOPLASTIC HOUSING EXIT SIGN WITH LED LAMPS, RED LETTERS 6" IN HEIGHT WITH ARROWS AS INDICATED, WITH 12V CADMIUM BATTERY WITH REMOTE HEAD CAPABILITY	LED LAMPS	220V – 1ø 50HZ	UNIVERSAL MOUNTING	

APPROVED:

A/E DESIGNER OF RECORD

SEAL:

COMMONWEALTH OF PENNSYLVANIA
REGISTERED PROFESSIONAL
JOSEPH R. GAUS
1/29/10
ENGINEER
PE-074251

US ARMY CORPS OF ENGINEERS
AFGHANISTAN ENGINEER DISTRICT

Mark	Description	Date	Appr.

Mark	Description	Date	Appr.

Designed by: JRG
Dwn by: BJB
Ckd by: JRG
Reviewed by: JRG
Submitted by: BAKER
Date: 2/23/10
Rev: 0
Design file no.
Drawing code:
File name:
Plot date:
Plot scale:

U.S. ARMY CORPS OF ENGINEERS
AFGHANISTAN ENGINEER DISTRICT
APO AE 96338

Michael Baker Jr., Inc.
A unit of Michael Baker Corporation
Airside Business Park
100 Airside Drive
Moon Township, PA 15108
www.mbakercorp.com

AFGHAN NATIONAL ARMY
REGIONAL MILITARY TRAINING CENTER
STANDARD DESIGN

ADMIN INSTRUCTORS OFFICE
ELECTRICAL LIGHT FIXTURE SCHEDULE

Sheet reference number:
E–601

PANELBOARD AIOF1 SURFACE MOUNTED

AMP. MAIN LUGS (OR) 150 AMP. MAIN BREAKER W/ 150 AMP. TRIP

CIRCUIT BREAKER TYPE 380/220 VOLTS 3 PHASE 4 WIRE 50 HZ 225 AMP. BUS

CKT. NO.	TRIP AMPS	NO. POLES	WIRE MM ²	GND MM ²	CONDUIT MM	LOAD SERVED	LOAD-KVA A0	LOAD-KVA B0	LOAD-KVA C0	LOAD-KVA A0	LOAD-KVA B0	LOAD-KVA C0	LOAD SERVED	CONDUIT MM	GND MM²	WIRE MM²	NO. POLES	TRIP AMPS	CKT. NO.
1	20	1	4.0	4.0	20	LIGHTING – RM 100	2.6			1.0			RECEPTACLES – RM 103	20	4.0	4.0	1	20	2
3	20	1	4.0	4.0	20	LIGHTING – RM 101–105		0.8			1.0		RECEPTACLES – RM 102	20	4.0	4.0	1	20	4
5	20	2	4.0	4.0	20	ELECTRIC HEAT #2 – RM 102,103			2.6			1.0	RECEPTACLES – RM 101	20	4.0	4.0	1	20	6
7							2.6			0.8			RECEPTACLES – RM 100	20	4.0	4.0	1	20	8
9	20	2	4.0	4.0	20	ELECTRIC HEAT #4 – RM 101		2.0			0.8		RECEPTACLES – RM 100	20	4.0	4.0	1	20	10
11									2.0			1.0	RECEPTACLES – RM 100	20	4.0	4.0	1	20	12
13	20	2	4.0	4.0	20	ELECTRIC HEAT #4 – RM 101	2.0			0.8			RECEPTACLES – RM 100	20	4.0	4.0	1	20	14
15								2.0			1.0		RECEPTACLES – RM 100	20	4.0	4.0	1	20	16
17	20	2	4.0	4.0	20	ELECTRIC HEAT #4 – RM 100			2.0			0.6	RECEPTACLES – RM 100	20	4.0	4.0	1	20	18
19							2.0			0.6			RECEPTACLES – RM 100	20	4.0	4.0	1	20	20
21	20	2	4.0	4.0	20	ELECTRIC HEAT #4 – RM 100		2.0			0.4		RECEPTACLES – RM 105	20	4.0	4.0	1	20	22
23									2.0			2.0	ELECTRIC HEAT #4 – RM 100	20	4.0	4.0	1	20	24
25	20	2	4.0	4.0	20	ELECTRIC HEAT #4 – RM 100	2.0			2.0									26
27								2.0			0.5		EXHAUST FAN – RM 105	20	4.0	4.0	1	20	28
29	20	2	4.0	4.0	20	ELECTRIC HEAT #4 – RM 100			2.0			1.2	CEILING FANS – RM 100	20	4.0	4.0	1	20	30
31							2.0			0.6			CEILING FANS – RM 101–103	20	4.0	4.0	1	20	32
33	20	2	4.0	4.0	20	ELECTRIC HEAT #4 – RM 100		2.0					SPARE				1	20	34
35									2.0				SPARE				1	20	36
37	20	2	4.0	4.0	20	ELECTRIC HEAT #4 – RM 100	2.0						SPARE				1	20	38
39								2.0					SPARE				1	20	40
41	20	1				SPARE							SPARE				1	20	42
							15.2	12.8	12.6	5.8	3.7	5.8							

TOTAL CONN. LOAD PER PHASE (KVA): A0 21.0 B0 16.5 C0 18.4

TOTAL CONN. LOAD 55.9 KVA. 70 % DEMAND = ESTIMATED DEMAND LOAD 39.13

* MAIN BREAKER SHALL BE 3P EARTH GROUND TYPE

APPROVED:

A/E DESIGNER OF RECORD

SEAL:

COMMONWEALTH OF PENNSYLVANIA
REGISTERED PROFESSIONAL
JOSEPH R. GAUS
ENGINEER
PE-074251
1/29/10

US ARMY CORPS OF ENGINEERS
AFGHANISTAN ENGINEER DISTRICT

Mark	Description	Date	Appr.

Mark	Description	Date	Appr.

Designed by: JRG
Dwn by: BJB
Ckd by: JRG
Reviewed by: JRG
Submitted by: BAKER
Date: 2/23/10
Rev: 0
Design file no.
Drawing code:
File name:
Plot date:
Plot scale:

U.S. ARMY CORPS OF ENGINEERS
AFGHANISTAN ENGINEER DISTRICT
APO AE 96338

Michael Baker Jr., Inc.
A unit of Michael Baker Corporation
Airside Business Park
100 Airside Drive
Moon Township, PA 15108
www.mbakercorp.com

AFGHAN NATIONAL ARMY
REGIONAL MILITARY TRAINING CENTER
STANDARD DESIGN

ADMIN INSTRUCTORS OFFICE
ELECTRICAL PANEL SCHEDULES

Sheet reference number:
E–602

AFGHAN NATIONAL ARMY

STANDARD BUILDING DESIGN

ADMIN TRAINING COMPANY

100% FINAL DESIGN SUBMITTAL

SHEET INDEX

G–001 COVER SHEET

STRUCTURAL

S–001 GENERAL NOTES & DESIGN CRITERIA
S–101 FOUNDATION/SLAB & ROOF FRAMING PLANS
S–401 BUILDING SECTIONS
S–501 FOUNDATION SECTIONS
S–502 FRAMING SECTIONS
S–503 BEAM & COLUMN DETAILS
S–504 BEAM & COLUMN DETAILS
S–601 SCHEDULES
S–701 TYPICAL DETAILS
S–702 TYPICAL DETAILS

ARCHITECTURAL

A–001 LIFE SAFETY PLAN
A–101 FLOOR PLAN
A–102 ROOF PLAN
A–201 ELEVATIONS
A–301 BUILDING SECTIONS
A–401 WALL SECTIONS
A–501 EXTERIOR DETAILS
A–502 HEAD, JAMB, & SILL DETAILS
A–503 STOOP DETAILS
A–601 WINDOW & DOOR SCHEDULES

MECHANICAL

M–101 HVAC FLOOR PLAN, SCHEDULES, & DETAILS

ELECTRICAL

E–001 ELECTRICAL SYMBOLS & ABBREVIATIONS
E–101 ELECTRICAL LIGHTING PLAN
E–102 ELECTRICAL POWER & SYSTEMS PLAN
E–501 ELECTRICAL DETAILS
E–502 ELECTRICAL DETAILS
E–601 ELECTRICAL LIGHT FIXTURE AND PANEL SCHEDULES

US ARMY CORPS OF ENGINEERS
AFGHANISTAN ENGINEER DISTRICT

Mark	Description	Date	Appr.	Mark	Description	Date	Appr.

U.S. ARMY CORPS OF ENGINEERS
AFGHANISTAN ENGINEER DISTRICT
APO AE 96338

Michael Baker Jr., Inc.
A unit of Michael Baker Corporation
Airside Business Park
100 Airside Drive
Moon Township, PA 15108
www.mbakercorp.com

Designed by: KMF/MMY
Dwn by: RCG
Ckd by: CWW
Reviewed by: LHM
Submitted by: BAKER
Date: 2/23/10
Rev: 0
Design file no.
Drawing code:
File name: ANMATCOG.001CS
Plot date: 2/23/2010
Plot scale: X:X

AFGHAN NATIONAL ARMY
REGIONAL MILITARY TRAINING CENTER
STANDARD DESIGN

ADMIN TRAINING COMPANY

COVER SHEET

Sheet reference number:
G–001

STRUCTURAL ABBREVIATIONS:

ACI	AMERICAN CONCRETE INSTITUTE
ADD'L	ADDITIONAL
AISC	AMERICAN INSTITUTE OF STEEL CONSTRUCTION
AISI	AMERICAN IRON AND STEEL INSTITUTE
ASTM	AMERICAN SOCIETY FOR TESTING AND MATERIALS
ARCH	ARCHITECTURAL
B	BOTTOM
BLDG	BUILDING
BOTT	BOTTOM
℄	CENTER LINE
CFMRF	COLD FORM METAL ROOF FRAME
CFMF	COLD FORM METAL FRAME
CFS	COLD FORMED STEEL
CIP	CAST-IN-PLACE
CIPL	CAST-IN-PLACE LINTEL
CJ	CONTROL JOINT
CLR	CLEAR
CMU	CONCRETE MASONRY UNIT
COEFF	COEFFICIENT
COL	COLUMN
CONC	CONCRETE
CONT	CONTINUOUS
COORD	COORDINATE
CRSI	CONCRETE REINFORCING STEEL INSTITUTE
CSJ	CONSTRUCTION JOINT
DIA	DIAMETER
DIAG	DIAGONAL
DIM	DIMENSION
DWG	DRAWING
DWL	DOWEL
EA	EACH
EF	EACH FACE
ELEC	ELECTRICAL
ELEV	ELEVATION
EMBED	EMBEDMENT
EQUIV	EQUIVALENT
ETC	ET CETERA
EW	EACH WAY
EXP	EXPANSION
EXT	EXTERIOR
FTG	FOOTING
GA	GAUGE
GB	GRADE BEAM
HORIZ	HORIZONTAL
h	HOUR
HRS	HOURS
IBC	INTERNATIONAL BUILDING CODE
INFO	INFORMATION
INT	INTERIOR
kg	KILOGRAM
km	KILOMETER
kN	KILONEWTON
kPa	KILOPASCAL
L#	ANGLE (# INDICATES SIZE)
LONG	LONGITUDINAL
LLV	LONG LEG VERTICAL
m	METER
MAX	MAXIMUM
MECH	MECHANICAL
MFG	MANUFACTURER
MID	MIDDLE
MIN	MINIMUM
MISC	MISCELLANEOUS
mm	MILLIMETER
MPa	MEGAPASCAL
MTL	METAL
MWFRS	MAIN WIND FORCE RESISTING SYSTEM
N	NEWTON
N	NORTH
N/A	NOT APPLICABLE
#	NUMBER SYMBOL FOR REBAR SIZE
NTS	NOT TO SCALE
OC	ON CENTER
OPNG	OPENING
ℙ or PL	PLATE
PRE-ENG	PRE-ENGINEERED
REINF	REINFORCED
REQ'D	REQUIRED
RB	ROOF BEAM
SIM	SIMILAR
SPECS	SPECIFICATIONS
STD	STANDARD
STRUCT	STRUCTURAL
SW	SHEAR WALL
T	TOP
T/	TOP OF
T/ELEV	TOP ELEVATION
T/SLAB	TOP OF SLAB
T&B	TOP AND BOTTOM
THK	THICK
TYP	TYPICAL
UFC	UNIFIED FACILITIES CRITERIA
UON	UNLESS OTHERWISE NOTED
VERT	VERTICAL
W	WIDTH
W/	WITH

1.0 GENERAL NOTES:

1.1 THIS PROJECT HAS BEEN DESIGNED FOR THE WEIGHTS AND MATERIALS INDICATED ON THE SHEETS AND FOR THE LIVE LOADS INDICATED IN THE DESIGN DATA. IT IS THE CONTRACTOR'S RESPONSIBILITY TO DETERMINE ALLOWABLE CONSTRUCTION LOADS AND TO PROVIDE PROPER DESIGN AND CONSTRUCTION OF FALSEWORK, FORMWORK, STAGING, BRACING, SHEETING AND SHORING, ETC.

1.1 COORDINATE THESE SHEETS WITH THE ARCHITECTURAL, MECHANICAL, ELECTRICAL, PLUMBING, AND CIVIL SHEETS. ALL DIMENSIONS SHOWN ON THE SHEETS ARE MILLIMETERS UNLESS NOTED OTHERWISE.

1.2 THE CONTRACTOR SHALL VERIFY AND COORDINATE ALL FLOOR AND ROOF OPENING SIZES AND LOCATIONS, EQUIPMENT PAD SIZES AND LOCATIONS, ANCHOR BOLT LAYOUTS, ETC WITH EQUIPMENT SELECTED. THE CONTRACTOR SHALL MAKE ANY REQUIRED MODIFICATIONS AT NO ADDITIONAL COST.

1.3 THE CONTRACTOR SHALL REFER TO THE ARCHITECTURAL, MECHANICAL, ELECTRICAL AND PLUMBING SHEETS FOR SLEEVES, CURBS, INSERTS OR OPENINGS, ETC. NOT HEREIN INDICATED.

1.4 WORK NOT INCLUDED ON THE SHEETS BUT IMPLIED TO BE SIMILAR TO THAT SHOWN AT CORRESPONDING PLACES ELSEWHERE ON THE SHEETS SHALL BE REPEATED.

1.5 IN CASE OF CONFLICT BETWEEN THE NOTES, DETAILS AND SPECIFICATIONS THE MOST RIGID REQUIREMENTS SHALL GOVERN.

1.6 SEE ARCHITECTURAL SHEETS FOR LOCATIONS OF MASONRY AND NON-LOAD BEARING PARTITIONS. PROVIDE COMPRESSIBLE FIRESAFING AT TOP OF WALL AS REQUIRED BY ARCHITECTURAL SHEETS.

1.7 COORDINATE FINISHED FLOOR DATUM ELEVATION 0.0m WITH THE CIVIL SHEETS.

2.0 FOUNDATION NOTES

2.1 THE GEOTECHNICAL ANALYSIS FOR THIS PROJECT IS THE RESPONSIBILITY OF THE CONTRACTOR AWARDED THE WORK. AN ASSUMED ALLOWABLE SOIL BEARING VALUE OF 72 kPa HAS BEEN USED IN THE STRUCTURAL ANALYSIS OF THE BUILDING HEREIN AND SHALL BE CONFIRMED AND VERIFIED AS PART OF THE GEOTECHNICAL INVESTIGATION. VALUES WHICH DO NOT MEET THE REQUIREMENTS INDICATED ON THE BASIS OF DESIGN SHEET SHALL BE IMMEDIATELY BROUGHT TO THE ATTENTION OF THE CONTRACTING OFFICER FOR CONSIDERATION AND DETERMINATION ON THE NEXT APPROPRIATE COURSE OF ACTION.

2.2 SEE THE SPECIFICATION FOR ADDITIONAL REQUIREMENTS TO THOSE OUTLINED IN THE GEOTECHNICAL INVESTIGATION FOR EXCAVATION AND PREPARATION OF THE FOUNDATION AND THE SLAB ON GRADE SUBGRADE INCLUDING COMPACTION PROCEDURES.

2.3 EXCAVATIONS FOR FOOTINGS SHALL HAVE THE SIDES AND BOTTOMS TEMPORARILY LINED WITH 0.25mm POLYETHYLENE IF PLACEMENT OF CONCRETE DOES NOT OCCUR WITHIN 24 HRS OF THE EXCAVATION OF THE FOOTING.

2.4 FOUNDATION CONDITIONS NOTED DURING CONSTRUCTION WHICH DIFFER FROM THOSE DESCRIBED IN THE GEOTECHNICAL REPORT SHALL BE REPORTED TO THE GENERAL CONTRACTOR BEFORE FURTHER CONSTRUCTION IS ATTEMPTED. SEE PROJECT SPECIFICATIONS.

2.5 NO FOOTINGS OR SLABS SHALL BE POURED INTO OR AGAINST SUBGRADE CONTAINING FREE WATER, FROST, ICE OR LOOSE MATERIAL. FROST DEPTH ASSUMED TO BE 800mm.

2.6 ALL SLAB-ON-GRADE, TRENCH BOTTOMS AND OTHER ON-GRADE INTERIOR HORIZONTAL SURFACES SHALL BE PLACED OVER A 0.25mm POLYETHYLENE VAPOR RETARDER OVER A 100mm #57 STONE WATER CAPILLARY BARRIER PLACED ON SUBGRADE PROPERLY PREPARED IN ACCORDANCE WITH THE CONTRACT SPECIFICATIONS. (UON)

2.7 PRIOR TO START OF FOUNDATION OR SLAB-ON-GRADE CONSTRUCTION, EXISTING SUBGRADES SHALL BE COMPACTED TO MINIMUM OF 95% MAXIMUM DRY DENSITY OBTAINED THRU ASTM D 1557 MODIFIED PROCTOR TESTING.

2.8 SEE PLUMBING, ELECTRICAL & CIVIL SHEETS FOR REQUIRED UNDERSLAB UTILITIES.

2.9 SEE ARCHITECTURAL SHEETS FOR ALL WATERPROOFING DETAILS AND MATERIALS.

2.10 IF UNDERMINING OF FOOTINGS OCCURS, FILL VOIDS WITH 18 MPa CONCRETE. DO NOT ATTEMPT TO REPLACE AND RE-COMPACT SOIL.

3.0 CONCRETE

3.1 CONCRETE SHALL HAVE THE UNIT WEIGHT OF 2400 kg/m^3 AND A MINIMUM COMPRESSIVE STRENGTH (f'c) OF 28 MPa AT 28 DAYS. ALL CONCRETE SHALL HAVE A WATER-CEMENT RATIO OF 0.45. SEE SPECIFICATIONS FOR ADDITIONAL INFORMATION. ENTRAIN AIR TO PRODUCE TOTAL AIR CONTENT ACCORDING TO THE SPECIFICATIONS FOR CONCRETE EXPOSED TO FREEZING TEMPERATURES (EXTERIOR FOOTINGS, SLAB TURNDOWNS, EXTERIOR SLABS AND SLABS-ON-GRADE, EXTERIOR RETAINING WALLS, AND EXTERIOR GRADE BEAMS.)

3.2 NO CALCIUM CHLORIDE SHALL BE USED IN ANY CONCRETE.

3.3 MIXING, TRANSPORTING AND PLACING OF CONCRETE SHALL CONFORM TO ACI 301M-05.

3.4 ALL CONCRETE WORK SHALL CONFORM TO THE REQUIREMENTS OF THE AMERICAN CONCRETE INSTITUTE (ACI) 318M MANUAL (metric), "BUILDING CODE REQUIREMENTS FOR REINFORCED CONCRETE", AND REQUIREMENTS OUTLINED IN THE CONTRACT SPECIFICATIONS. WHEN THERE IS A CONFLICT BETWEEN ACI AND THE SPECIFICATIONS, THE MORE STRINGENT SHALL GOVERN.

3.5 CHAMFER ALL EXPOSED EXTERNAL CORNERS OF CONCRETE WITH 20mm x45 DEGREE CHAMFER UON.

3.6 CONCRETE REINFORCEMENT BARS SHALL CONFORM TO ASTM A615M-96a, GRADE 420 MPa, REINFORCING BARS SHALL NOT BE TACK WELDED, WELDED, HEATED OR CUT, UNLESS INDICATED ON THE CONTRACT DOCUMENTS. ALL LAP SPLICES SHALL BE CLASS "B" UON.

3.7 HORIZONTAL FOOTING AND HORIZONTAL WALL REINFORCEMENT SHALL BE CONTINUOUS AND SHALL HAVE 90 DEGREE BENDS AND EXTENSIONS, OR CORNER BARS OF EQUIVALENT SIZE LAPPED WITH A CLASS B TENSION SPLICE AT CORNERS AND INTERSECTIONS. TOP BAR CRITERIA SHALL APPLY IF 300mm OR MORE OF FRESH CONCRETE IS PLACED BELOW BAR.

3.8 SLABS-ON-GRADE SHALL HAVE CONSTRUCTION JOINTS OR CRACK CONTROL JOINTS AS SHOWN ON THE DRAWINGS. CONSTRUCTION JOINTS CAN BE USED AT CONTROL JOINT LOCATIONS AT CONTRACTORS OPTION. SEE SLAB PLANS & JOINT DETAILS FOR ADDITIONAL INFORMATION. FOR AREAS NOT SHOWN ON DWGS, THE MAXIMUM SPACING OF CONSTRUCTION/ CRACK CONTROL JOINTS SHALL BE 4800mm

3.9 ALL CONCRETE REINFORCEMENT SHALL BE DETAILED, FABRICATED, LABELED, SUPPORTED, AND SPACED IN FORMS AND SECURED IN PLACE IN ACCORDANCE WITH THE PROCEDURES AND REQUIREMENTS OUTLINED IN THE LATEST EDITION OF THE "BUILDING CODE REQUIREMENTS FOR REINFORCED CONCRETE", ACI 318M, AND THE "MANUAL OF STANDARD PRACTICE FOR DETAILING REINFORCED CONCRETE STRUCTURES", ACI 315M, LATEST EDITION. BASED ON IN COUNTRY REINFORCEMENT AVAILABILITY, IT IS THE CONTRACTOR'S OPTION TO ROUND DESIGNATED ODD NUMBERED REINFORCEMENT SIZES UP (1) ONE BAR SIZE.

3.10 ALL DOWELS SHALL MATCH SIZE AND NUMBER OF MAIN REINFORCING, UNLESS NOTED OTHERWISE ON THE SHEETS.

3.11 ADDITIONAL BARS SHALL BE PROVIDED AROUND ALL FLOOR AND WALL OPENINGS AS SHOWN ON THE SHEETS.

3.12 SEE ARCHITECTURAL SHEETS FOR TYPE AND LOCATION OF ALL FLOOR FINISHES.

3.13 THE CONTRACTOR SHALL COORDINATE ADDITIONAL WALL/SLAB OPENINGS NOT SHOWN ON STRUCTURAL SHEETS. SEE MECHANICAL, ELECTRICAL, PLUMBING AND CIVIL SHEETS.

3.14 UNLESS NOTED OTHERWISE, ALL CURBS SHALL BE REINFORCED WITH AT LEAST (1)-#13 CONTINUOUS AND #13 AT 300mm O.C. DOWELS TO STRUCTURE BELOW.

3.15 THE CONTRACTOR SHALL VERIFY ALL OPENINGS, PAD SIZES, AND ANCHOR BOLTS WITH EQUIPMENT SELECTED.

3.16 FOR ALL WALLS & PIERS, PROVIDE DOWELS INTO FOOTING AT EACH VERT REINF BAR, UON DOWEL SIZE SHALL BE SAME AS VERT REINF.

3.17 PROVIDE CONCRETE POUR STOPS OR FORMED AS REQUIRED FOR INSTALLATION OF ALL CONCRETE WORK.

3.18 PROVIDE ADDITIONAL (2)-#13 x 600mm REINFORCING BARS IN SLAB-ON GRADE AT ALL RE-ENTRANT CORNERS. PLACE BARS AT MID-DEPTH OF SLAB WITH A CLEARANCE OF 50mm FROM CORNER UON.

3.19 COLD-WEATHER PLACEMENT: COMPLY WITH ACI 306.1 AND AS FOLLOWS. PROTECT CONCRETE WORK FROM PHYSICAL DAMAGE OR REDUCED STRENGTH THAT COULD BE CAUSED BY FROST, FREEZING ACTIONS, OR LOW TEMPERATURES. SUBMIT A COLD WEATHER CONCRETING PLAN FOR APPROVAL.

3.20 PROVIDE BONDING COMPOUND PER ASTM C 1059-99: SPECIFICATION FOR LATEX AGENTS FOR BONDING FRESH CONCRETE (GROUT) TO HARDENED CONCRETE.

3.21 THE FORMED SURFACES FOR REINFORCED CONCRETE SHALL ACHIEVE A "CLASS A" FINISH WHEN RECEIVING PAINT OR A "CLASS B" FINISH WHEN RECEIVING PLASTER OR TILE AS PER SPECIFICATION SECTION 03 31 00 CAST-IN-PLACE STRUCTURAL CONCRETE.

3.22 AT INTERSECTING GRADE BEAMS AND SHEAR WALLS, PROVIDE CORNER BARS AT INTERSECTIONS WITH SAME QUANTITY, SIZE AND SPACING AS HORIZONTAL BARS WITH LEG LENGTH = 50db.

3.23 REFER TO S-800 SERIES REINFORCING BAR PLACEMENT DRAWINGS DEFINING LENGTHS, BENDS, AND SPACINGS FOR ALL STRUCTURAL CONCRETE. THE S-800 SERIES DRAWING ARE BASED ON THE S-400, S-500, S-600, AND S-700 SERIES DRAWING SCHEDULES, DETAILS, AND DIAGRAMS.

4.0 CONCRETE MASONRY

4.1 MASONRY CONSTRUCTION SHALL CONFORM TO SPECIFICATION FOR MASONRY STRUCTURES (ACI 530.1) UON.

4.2 STRENGTH OF MASONRY MATERIALS SHALL BE AS FOLLOWS:

a. CONCRETE MASONRY UNITS SHALL BE NORMAL WEIGHT, GRADE N, TYPE 1, CONFORMING TO ASTM C-90 AND HAVE A MINIMUM COMPRESSIVE STRENGTH OF 10.4 MPa ON THE NET AREA.

b. MORTAR SHALL CONFORM TO ASTM C-270 TYPE S.

c. GROUT FOR MASONRY SHALL BE NORMAL WEIGHT AND HAVE A MINIMUM COMPRESSIVE STRENGTH OF 14 MPa AT 28 DAYS. GROUT SHALL CONFORM TO ASTM C476M. GROUT LIFTS SHALL NOT EXCEED 1,400mm.

d. REINFORCED MASONRY SHALL HAVE A STRENGTH F'm = 10 MPa. (F'm IS THE COMPRESSIVE STRENGTH OF THE MASONRY AT 28 DAYS AS DETERMINED BY PRISM TESTS).

4.3 ALL VERTICAL REINFORCEMENT FOR CONCRETE MASONRY SHALL BE ASTM A615M-96a, GRADE 420 MPa. ALL SPLICES SHALL BE LAPPED 48 BAR DIAMETERS MINIMUM.

4.4 BOND BEAMS SHALL BE SPACED AT 1200mm OC VERTICALLY. BOND BEAM REINFORCING SHALL BE CONTINUOUS AND PROVIDED AT WALL INTERSECTIONS AND WALL CORNERS (REFERENCE CONCRETE MASONRY NOTE 4.11). ALL BOND BEAM REINFORCING SHALL BE CONTINUOUS AND HAVE STANDARD ACI HOOKS AT EACH END. PROVIDE STANDARD BAR SPLICES AS SPECIFIED. AS AN ALTERNATE TO CMU BOND BEAMS, IT IS THE CONTRACTOR'S OPTION TO PROVIDE 200mm x 200mm CONTINUOUS CAST-IN-PLACE CONCRETE BOND BEAMS WITH (2)-#16 IN LIEU OF CMU BOND BEAMS INDICATED ON THE DRAWINGS.

4.5 SEE TYPICAL DETAILS FOR MINIMUM REINFORCEMENT REQUIREMENTS FOR CMU WALLS. PROVIDE STANDARD BAR SPLICES AS SPECIFIED. ALL VERTICAL REINFORCEMENT EXTENDS FULL HEIGHT OF WALL.

4.6 CMU CELLS THAT REQUIRE VERTICAL REINFORCING BARS AS INDICATED ON THE CONTRACT DRAWINGS AND/OR SPECS SHALL HAVE REINF BARS PLACED IN CENTERS OF CMU CELLS AND CONTINUOUSLY GROUTED UON.

4.7 ALL CMU CELLS, OPEN CAVITIES, AND AIR SPACES OF ALL EXTERIOR WALLS SHALL BE GROUTED TO STOP FRAGMENTS FROM MORTAR BLAST.

4.8 CONTRACTOR SHALL COORDINATE LOCATION OF ALL OPENINGS SEE ARCH, MECH, ELEC, AND PLUMBING SHEETS FOR SIZE AND LOCATION OF OPENINGS.

4.9 MASONRY WALLS SHALL NOT BE BACK FILLED PRIOR TO THE MORTAR AND GROUT ATTAINING THEIR RESPECTIVE MAXIMUM DESIGN STRENGTHS PER SPECIFICATIONS.

4.10 PROVIDE GALVANIZED MORTAR/GROUT SCREEN W/ 3mm MESH WHERE CELLS BELOW ARE NOT GROUTED.

4.11 AT INTERSECTING BOND BEAMS, PROVIDE CORNER BAR FOR EACH HORIZONTAL BAR IN BOND BEAMS AT INTERSECTING WALLS. USE SAME SIZE AND SPACING AS HORIZONTAL BARS WITH LEG LENGTH = 50db.

4.12 THE ALTERNATE TOP OF CMU WALL BRACING DETAIL(S) SHOWN ON S-701 CAN BE UTILIZED AT THE CONTRACTOR'S OPTION IN PLACE OF THE "SLEEVED DOWEL" WALL CONNECTIONS DEPICTED ON S-400 AND S-500 SERIES DRAWINGS. IN ADDITION, ALTERNATE DETAIL(S) SHOW CAST-IN-PLACE WALL BOND BEAMS THAT CAN BE UTILIZED AT THE CONTRACTOR'S OPTION IN PLACE OF THE STANDARD CMU BOND BEAMS CONSTRUCTED OF CMU BLOCKS.

5.0 COLD-FORMED METAL FRAMING

5.1 ALL COLD-FORMED METAL FRAMING MEMBERS SHALL CONFORM TO ASTM A1003M, STRUCTURAL GRADE ST340 (MPa), WITH A GALVANIZED COATING OF Z275 OR BETTER IN ACCORDANCE WITH ASTM A653M.

5.2 ALL COLD-FORMED METAL FRAMING MEMBERS SHALL HAVE THE FOLLOWING MINIMUM PROPERTIES:

a. MINIMUM METAL THICKNESS:
TRACK = 1.37mm;
STUD/OTHER = 1.09mm

b. MINIMUM FLANGE WIDTH:
TRACK = 38mm;
STUD/OTHER = 35mm

c. MINIMUM MEMBER DEPTH:
ALL SECTIONS = 152.2mm

d. PURLIN (HAT CHANNEL)
DEPTHxWIDTH(FLAT TOP)xTHICK = 25mmx42mmx1.59mm

5.3 ALL CONNECTIONS SHALL BE MADE WITH CORROSION RESISTANT (ASTM A153M), SELF-DRILLING, SELF-TAPPING STEEL DRILL SCREWS IN ACCORDANCE WITH ASTM C1513. SCREWS SHALL HAVE A LOW PROFILE HEAD BENEATH ROOF DECK, AND STANDARD HEAD ALL OTHER LOCATIONS.

5.4 FABRICATE COLD FORMED METAL FRAMING AND ACCESSORIES PLUMB, SQUARE AND TRUE TO LINE, WITH CONNECTIONS SECURELY FASTENED ACCORDING TO AISI STANDARD FOR COLD FORMED STEEL FRAMING.

5.5 CUT FRAMING MEMBERS BY SAWING OR SHEATHING, DO NOT TORCH CUT.

5.6 INSTALL FRAMING MEMBERS IN ONE-PIECE LENGTHS UNLESS SPLICE CONNECTIONS ARE INDICATED FOR TRACK OR TENSION MEMBERS

5.7 INSTALL TEMPORARY BRACING AND SUPPORTS TO SECURE FRAMING DURING CONSTRUCTION. MAINTAIN BRACING AND SUPPORTS IN PLACE UNTIL THE STRUCTURE HAS BEEN COMPLETED WITH ALL CONNECTIONS AND PERMANENT BRACING SECURED.

6.0 STRUCTURAL DESIGN CRITERIA

6.1 ALL DESIGNS SHALL CONFORM TO THE PROVISIONS OF THE IBC 2006 AND UFC AS APPLICABLE.

6.2 DESIGN LOADS

6.2.1 DEAD LOADS (PER IBC 2006 & UFC 3-310-01)

MECH/ELEC/PLUMBING	0.20 kPa
MISCELLANEOUS	0.15 kPa
COLD-FORMED FRAMING	0.20 kPa
INSULATION	0.10 kPa
METAL ROOF PANEL	0.14 kPa
	0.79 kPa
FLOOR PARTITION ALLOWANCE	0.96 kPa

6.2.2 LIVE LOADS (PER IBC 2006 & UFC 3-310-01)

ROOF	1.00 kPa
CORRIDOR (2-STORY BLDG ONLY)	4.80 kPa
ALL OTHERS (2-STORY BLDG ONLY)	2.40 kPa
SLAB ON GRADE	4.80 kPa

6.2.3 SNOW LOADS (PER IBC 2006 & UFC 3-310-01)

GROUND SNOW LOAD (Pg)	1.2 kPa
SNOW IMPORTANCE FACTOR (I)	1.0
SNOW EXPOSURE FACTOR (Ce)	1.0
THERMAL FACTOR (Ct)	1.0

6.2.4 WIND LOADS (PER IBC 2006)

BASIC WIND SPEED	137 km/h
WIND IMPORTANCE FACTOR	1.0
WIND EXPOSURE CATEGORY	D
DIRECTIONALITY COEFFICIENT (Kd)	0.85
TOPOGRAPHIC FACTOR (Kzt)	1.0

6.2.5 SEISMIC LOADS (PER IBC 2006 & UFC 3-310-04)

OCCUPANCY USE CATEGORY	II
SEISMIC IMPORTANCE FACTOR (Ie)	1.0
SEISMIC SITE CLASS	D

S_s = 1.50 (REDUCED FROM 2.40 PER ASCE 7-05, 12.8.1.3 FOR A BUILDING WITHOUT IRREGULARITIES)
S_1 = 1.20
S_{DS} = 1.0
S_{D1} = 1.20

SEISMIC DESIGN CATEGORY	E
SEISMIC RESISTING SYSTEM: -SPECIAL REINFORCED CONCRETE SHEAR WALL	
RESPONSE MODIFICATION FACTOR (R)	6
RESPONSE COEFFICIENT (Cs)	0.167
SEISMIC ANALYTICAL PROCEDURE =	EQUIV LATERAL FORCE
SEISMIC BASE SHEAR	690 kN

APPROVED:

A/E DESIGNER OF RECORD

SEAL:

GEORGIA REGISTERED 1-29-10 No. 27141 PROFESSIONAL ENGINEER CHRISTOPHER W. WHITMORE

US ARMY CORPS OF ENGINEERS
AFGHANISTAN ENGINEER DISTRICT

Mark	Description	Date	Appr.	Mark	Description	Date	Appr.

Date: 2/23/10 | Rev: 0
Design file no.
Drawing code:
File name: ANAATCDS-001GN
Plot date: 2/23/2010
Plot scale: X:X

Designed by: KMF/MMY
Dwn by: RCG | Ckd by: CWW
Reviewed by: LHM
Submitted by:
BAKER

U.S. ARMY CORPS OF ENGINEERS
AFGHANISTAN ENGINEER DISTRICT
APO AE 96338

Michael Baker Jr., Inc
A unit of Michael Baker Corporation
Airside Business Park
100 Airside Drive
Moon Township, PA 15108
www.mbakercorp.com

AFGHAN NATIONAL ARMY
REGIONAL MILITARY TRAINING CENTER
STANDARD DESIGN

ADMIN TRAINING COMPANY

GENERAL NOTES & DESIGN CRITERIA

Sheet reference number:
S-001

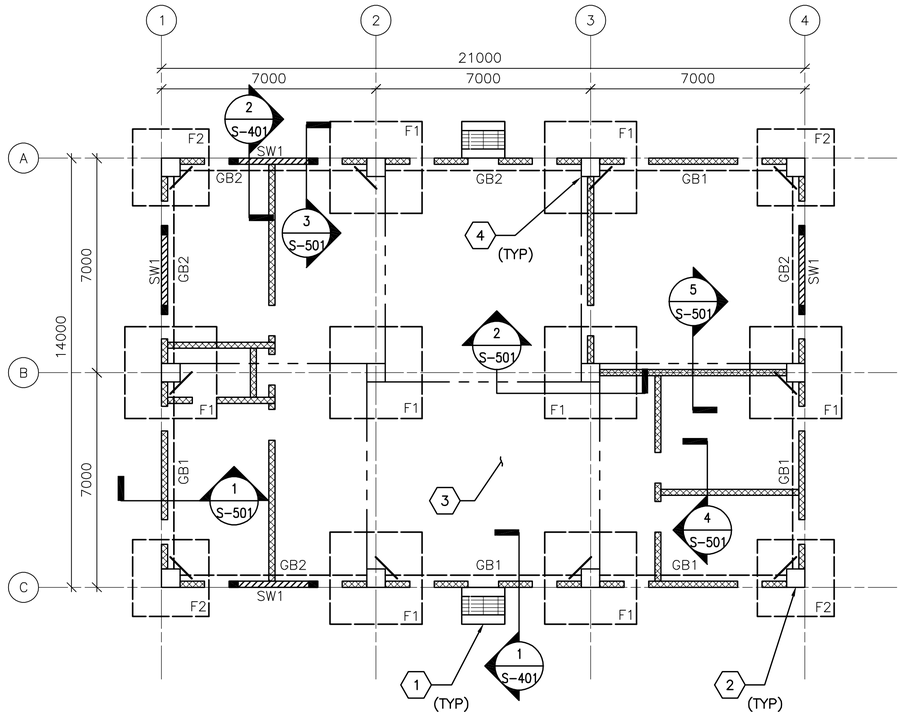

1 S-101 **FOUNDATION/SLAB PLAN**
SCALE: 1:100

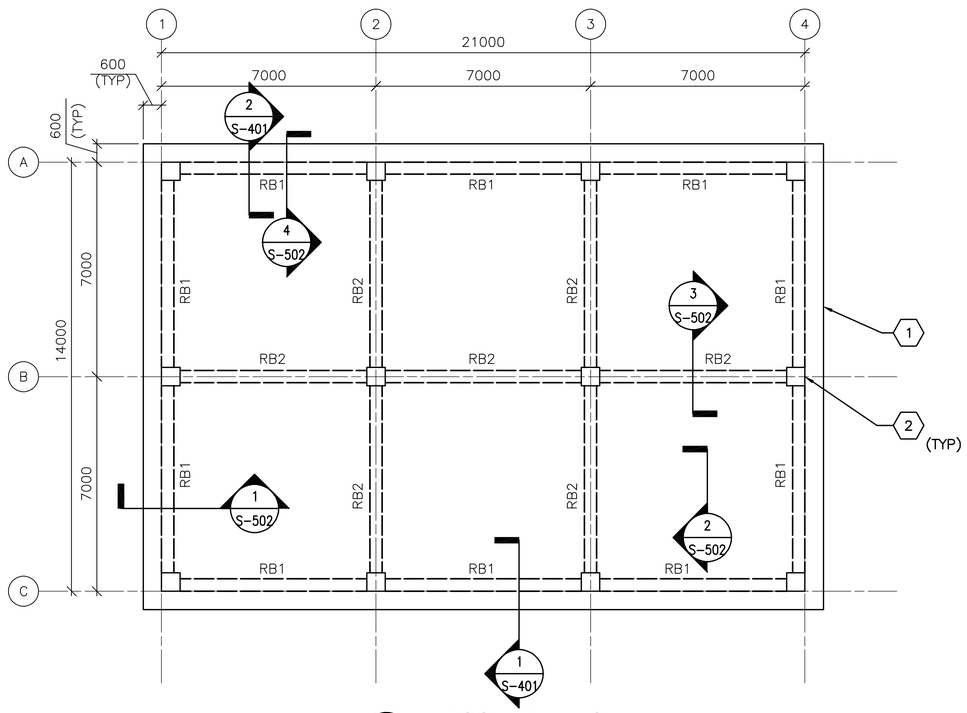

2 S-101 **ROOF FRAMING PLAN**
SCALE: 1:100

FOUNDATION/SLAB PLAN NOTES:

1. REFER TO SHEET S-001 FOR STRUCTURAL NOTES AND DESIGN CRITERIA.
2. FINISH FIRST FLOOR ELEVATION SHALL BE (DATUM 0.00) ALL PLUS OR MINUS DIMENSIONS INDICATED ON PLAN OR REFERRED TO IN NOTES RELATE TO FINISH FLOOR ELEVATION.
3. SLAB-ON-GRADE IS 150 WITH #13 @ 300 OC EW LOCATED 38 FROM T/SLAB.
4. TOP OF EXTERIOR FOOTINGS SHALL BE -950 UNLESS OTHERWISE INDICATED.
5. TOP OF INTERIOR FOOTINGS WITHOUT GRADE BEAM ABOVE SHALL BE -600.
6. COLUMN FOOTINGS INDICATED BY F# ON PLAN. REFER TO COLUMN FOOTING SCHEDULE ON SHEET S-601.
7. REFER TO COLUMN SCHEDULE ON SHEET S-601.
8. GRADE BEAM INDICATED BY GB# ON PLAN, REFER TO BEAM SCHEDULE ON SHEET S-601.
9. SHEARWALL INDICATED BY SW# ON PLAN, REFER TO SHEARWALL SCHEDULE ON SHEET S-601.
10. SEE TYP EXTERIOR AND INTERIOR CMU WALL REINF DETAIL ON SHEET S-701.
11. SEE MECHANICAL AND ELECTRICAL SHEETS FOR CONCRETE PAD LOCATIONS, SIZES, AND THICKNESS NOT SHOWN. SEE SHEET S-701 FOR DETAILS.
12. THICKENED SLAB UNDER CMU PERIMETER/PARTITION WALLS NOT SHOWN FOR CLARITY.

FOUNDATION/SLAB PLAN KEY NOTES: (X)

1. CONC SLAB (ENTRANCE)-SEE ARCH DWGS FOR INFORMATION
2. REINF CONC COLUMN
3. REINF CONC SLAB-ON-GRADE
4. (2)-#13 RE-ENTRANT CORNER BARS - SEE S-701 FOR INFORMATION

FOUNDATION/SLAB PLAN LEGEND:

REINF CONC SHEAR WALL

REINF CMU WALL

CONTROL JOINT

ROOF FRAMING PLAN NOTES:

1. REFER TO SHEETS S-001 FOR STRUCTURAL NOTES AND DESIGN CRITERIA.
2. TOP OF SLAB ELEVATION = 3600 UNLESS NOTED OTHERWISE.
3. ROOF SLAB IS 250 WITH #16 @ 300 OC EW T&B.
4. ROOF BEAM INDICATED BY RB# ON PLAN. REFER TO BEAM SCHEDULE ON SHEET S-601.
5. COORDINATE WITH ARCHITECTURAL SHEETS FOR COLD-FORMED STEEL OVERBUILD FRAMING ABOVE ROOF SLAB.
6. COLD-FORMED METAL OVERBUILD ROOF FRAMING NOT SHOWN FOR CLARITY. SEE OVERBUILD ROOF FRAMING DETAILS AND SECTIONS ON SHEET S-702.
7. CMU PERIMETER/PARTITION WALLS (BELOW ROOF SLAB) NOT SHOWN FOR CLARITY.
8. OVERHANG AREAS OF ROOF SLAB CONTAIN ROOF VENT PENETRATIONS. REFERENCE ARCHITECTURAL DRAWINGS FOR INFORMATION.

ROOF FRAMING PLAN KEY NOTES: (X)

1. CONC ROOF SLAB (BELOW ROOF OVERBUILD)
2. REINF CONC COLUMN (BELOW CONC ROOF SLAB)

0 2000 4000
SCALE: 1:100

UNLESS OTHERWISE NOTED, LINEAR DIMENSIONS SHOWN ON DRAWINGS ARE IN MILLIMETERS (mm)

APPROVED:

A/E DESIGNER OF RECORD

SEAL:

GEORGIA REGISTERED 1-29-10 No. 27141 PROFESSIONAL ENGINEER CHRISTOPHER W. WHITMORE

US ARMY CORPS OF ENGINEERS
AFGHANISTAN ENGINEER DISTRICT

Mark	Description	Date	Appr.	Mark	Description	Date	Appr.

Date: 2/23/10 | Rev: 0
Design file no.
Drawing code:
File name: ANAATCOS-101FFP
Plot date: 2/23/2010
Plot scale: x:X

Designed by: KMF/MMY
Dwn by: RCG | Ckd by: CWW
Reviewed by: LHM
Submitted by:
BAKER

U.S. ARMY CORPS OF ENGINEERS
AFGHANISTAN ENGINEER DISTRICT
APO AE 96338

Michael Baker Jr., Inc.
A unit of Michael Baker Corporation
Airside Business Park
100 Airside Drive
Moon Township, PA 15108
www.mbakercorp.com

AFGHAN NATIONAL ARMY
REGIONAL MILITARY TRAINING CENTER
STANDARD DESIGN

ADMIN TRAINING COMPANY

FOUNDATION/SLAB & ROOF FRAMING PLANS

Sheet reference number:
S-101

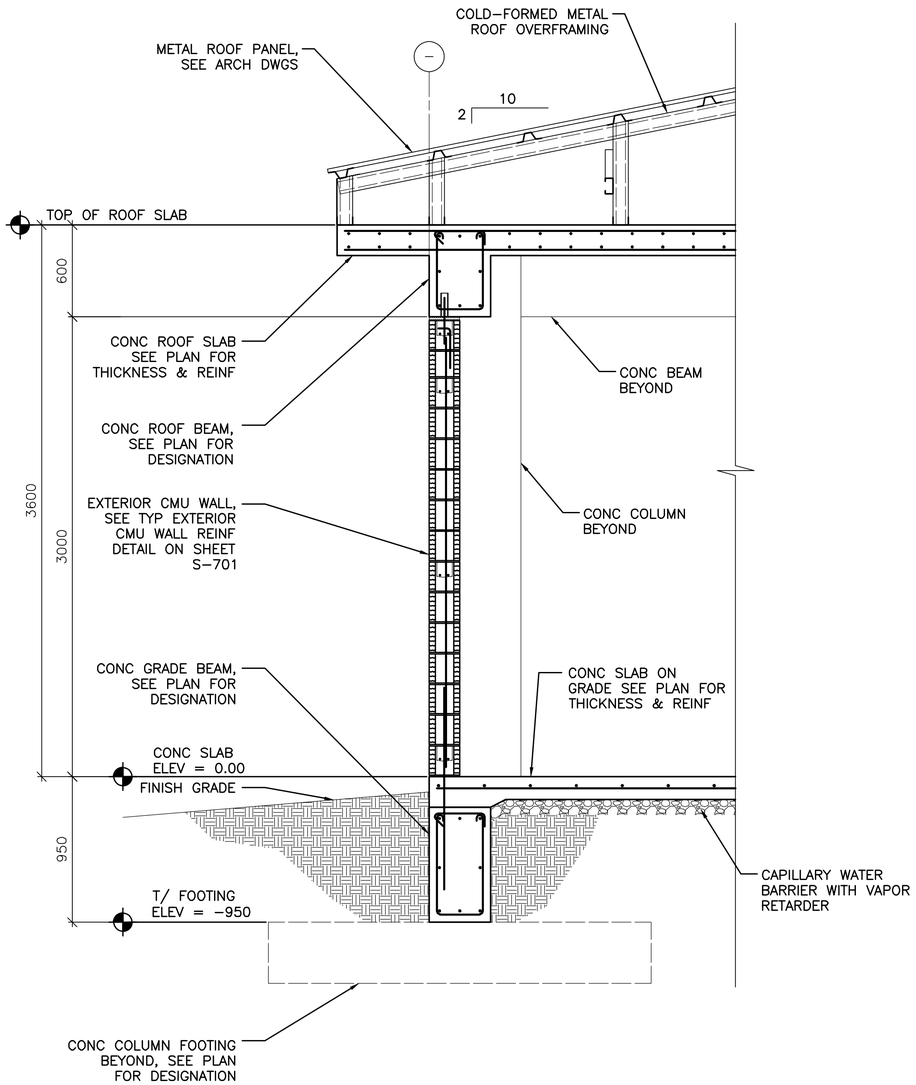

1 S-101 TYPICAL WALL SECTION AT EXTERIOR MASONRY WALL

SCALE: 1:20

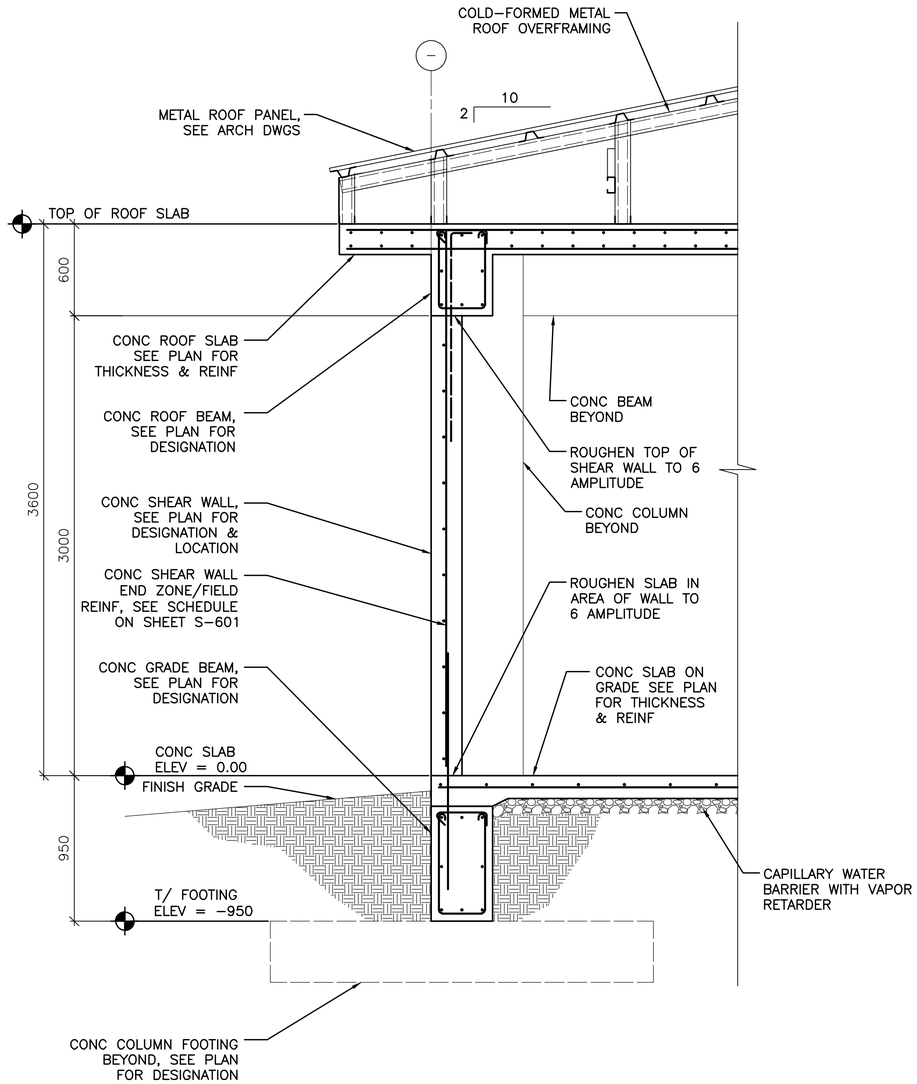

2 S-101 TYPICAL WALL SECTION AT CONCRETE SHEAR WALL

SCALE: 1:20

0 400 800

SCALE: 1:20

UNLESS OTHERWISE NOTED, LINEAR DIMENSIONS SHOWN ON DRAWINGS ARE IN MILLIMETERS (mm)

APPROVED:

A/E DESIGNER OF RECORD

SEAL:

GEORGIA REGISTERED No. 27141 PROFESSIONAL ENGINEER CHRISTOPHER W. WHITMORE 1-29-10

US ARMY CORPS OF ENGINEERS
AFGHANISTAN ENGINEER DISTRICT

Mark	Description	Date	Appr.	Mark	Description	Date	Appr.

Designed by: KMP/MMY
Dwn by: RCG
Ckd by: CWW
Reviewed by: LHM
Submitted by: BAKER
Date: 2/23/10
Rev: 0
Design file no.
Drawing code:
File name: ANAATCOS-401BS
Plot date: 2/23/2010
Plot scale: X:X

U.S. ARMY CORPS OF ENGINEERS
AFGHANISTAN ENGINEER DISTRICT
APO AE 96338

Michael Baker Jr., Inc
A unit of Michael Baker Corporation
Airside Business Park
100 Airside Drive
Moon Township PA 15108
www.mbakercorp.com

AFGHAN NATIONAL ARMY
REGIONAL MILITARY TRAINING CENTER
STANDARD DESIGN

ADMIN TRAINING COMPANY

BUILDING SECTIONS

Sheet reference number:
S-401

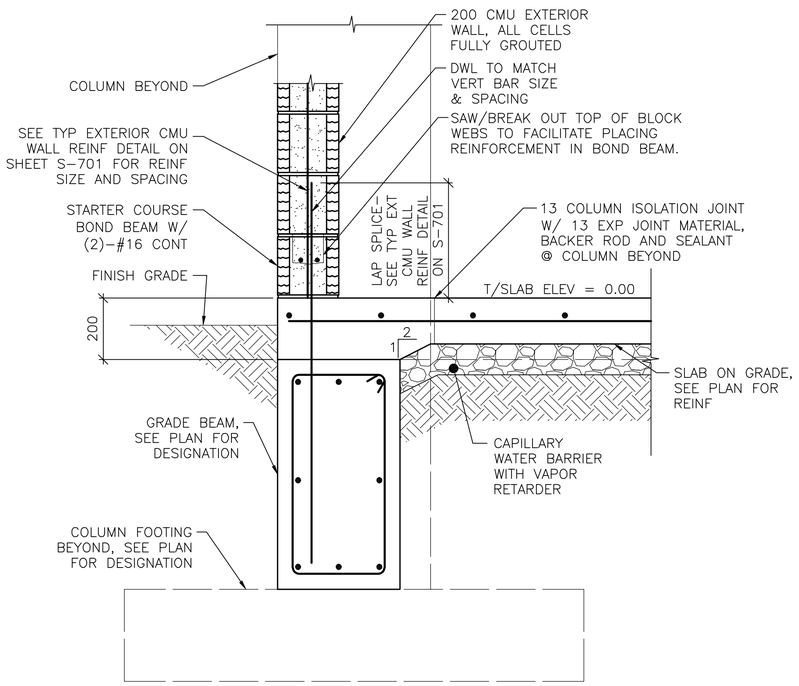

NOTE:
1. SECTION IS SIMILAR FOR INTERIOR CMU PARTITIONS OVER GRADE BEAMS SHOWING THICKENED 200 CONC SLAB AREA.

1 S-101 **SECTION**
SCALE: 1:10

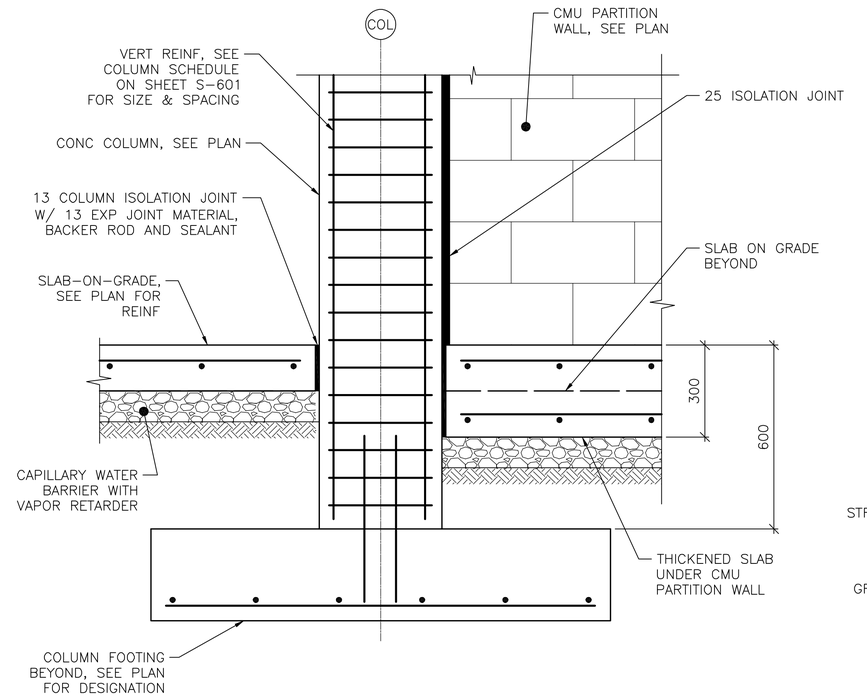

2 S-101 **SECTION**
SCALE: 1:10

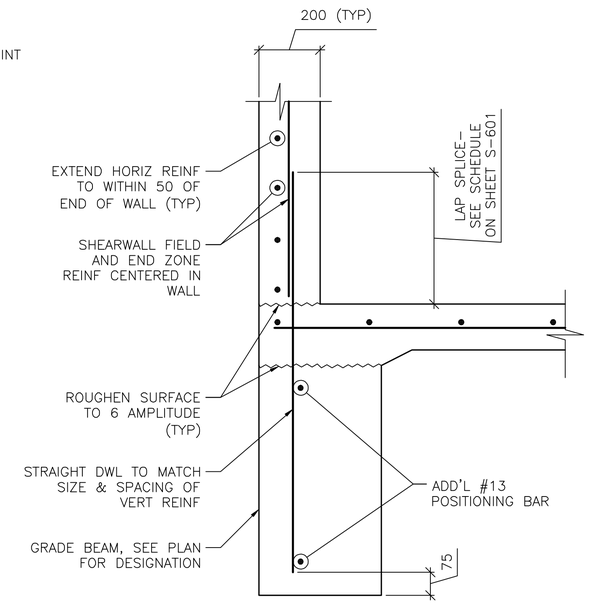

NOTE:
1. SECTION DEPICTS SHEAR WALL TERMINATION ONLY. GRADE BEAM REINFORCING NOT SHOWN FOR CLARITY
2. SEE SHEET S-601 AND SHEET S-702 FOR SCHEDULED FIELD AND END ZONE REINF.

3 S-101 **SECTION**
SCALE: 1:10

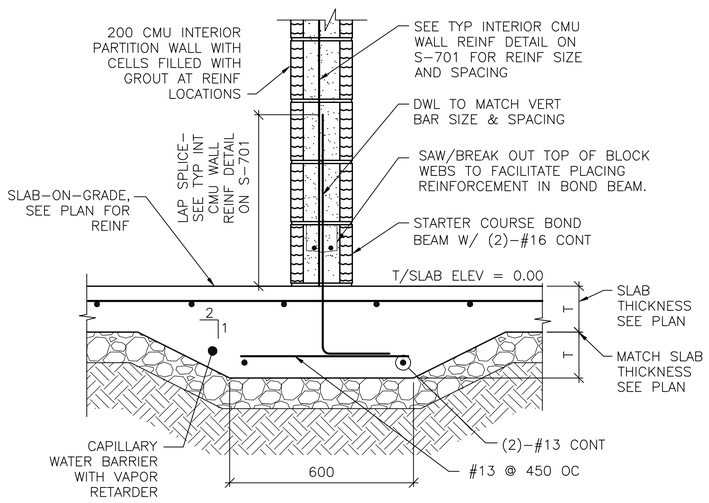

4 S-101 **SECTION**
SCALE: 1:10

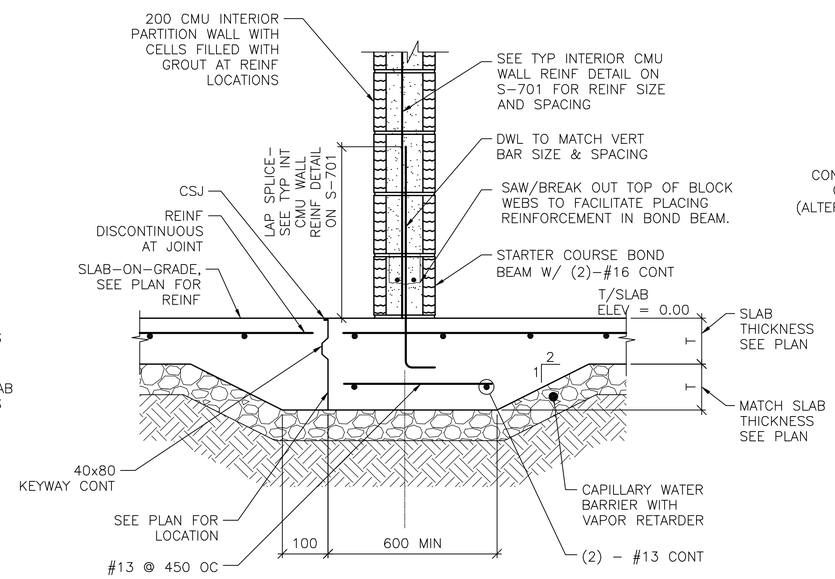

5 S-101 **SECTION**
SCALE: 1:10

NOTE:
1. DETAIL IS APPLICABLE AT CONTROL JOINTS RUNNING PARALLEL TO CMU WALLS AND WITHIN 300 OF FACE OF WALL.

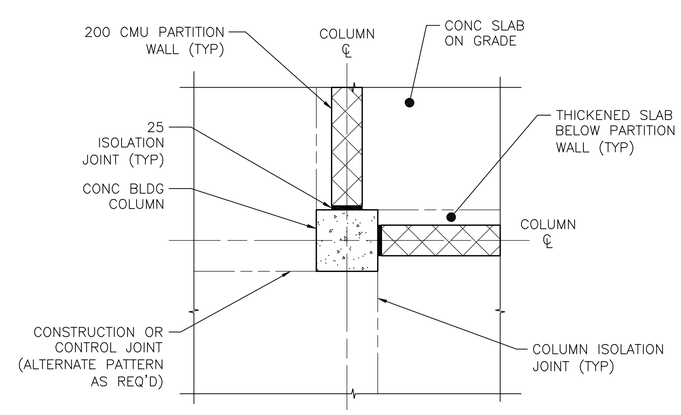

A S-501 **COLUMN ISOLATION JOINT DETAIL**
SCALE: NTS

0 200 400
SCALE: 1:10

UNLESS OTHERWISE NOTED, LINEAR DIMENSIONS SHOWN ON DRAWINGS ARE IN MILLIMETERS (mm)

APPROVED:

A/E DESIGNER OF RECORD

SEAL:

GEORGIA REGISTERED 1-29-10 No. 27141 PROFESSIONAL ENGINEER CHRISTOPHER W. WHITMORE

US ARMY CORPS OF ENGINEERS
AFGHANISTAN ENGINEER DISTRICT

Mark	Description	Date	Appr.	Mark	Description	Date	Appr.

Date: 2/23/10 | Rev: 0
Design file no.
Drawing code:
File name: AMAATCOS-501SC
Plot date: 2/23/2010
Plot scale: x:X

Designed by: KCP/MMY
Dwn by: RCG | Ckd by: CWW
Reviewed by: LHM
Submitted by:
BAKER

U.S. ARMY CORPS OF ENGINEERS
AFGHANISTAN ENGINEER DISTRICT
APO AE 96338

Michael Baker Jr., Inc.
A unit of Michael Baker Corporation
Airside Business Park
100 Airside Drive
Moon Township, PA 15108
www.mbakercorp.com

AFGHAN NATIONAL ARMY
REGIONAL MILITARY TRAINING CENTER
STANDARD DESIGN

ADMIN TRAINING COMPANY

FOUNDATION SECTIONS

Sheet reference number:
S-501

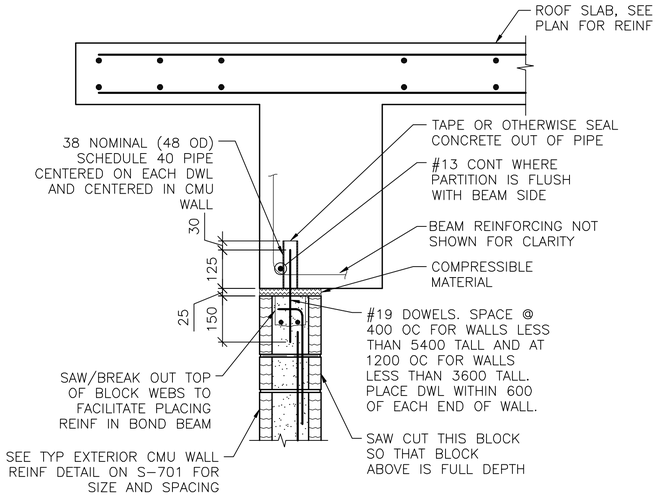

NOTES:
1. EXTEND DOWEL REINF TO 25 CLEAR FROM TOP OF CMU WALL.

1 S-101 **SECTION**
SCALE: 1:10

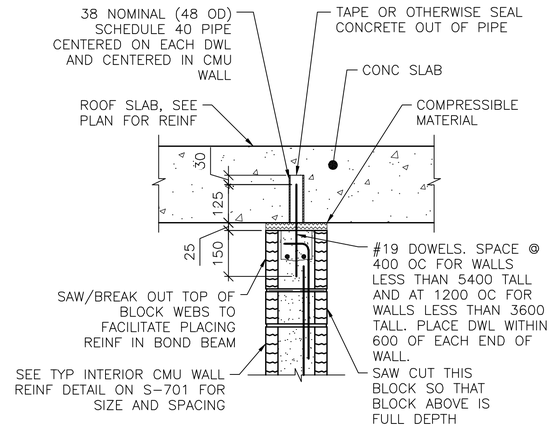

NOTES:
1. EXTEND DOWEL REINF TO 25 CLEAR FROM TOP OF CMU WALL.
2. SLAB REINF NOT SHOWN FOR CLARITY.

2 S-101 **SECTION**
SCALE: 1:10

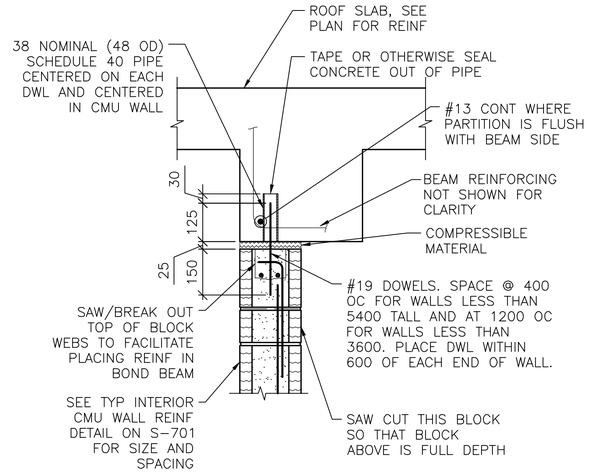

NOTES:
1. EXTEND DOWEL REINF TO 25 CLEAR FROM TOP OF CMU WALL.
2. PARTITION WALL MAY BE CENTERED UNDER THE BEAM OR FLUSH AS SHOWN. SEE PLAN FOR LOCATION.
3. SLAB REINF NOT SHOWN FOR CLARITY.

3 S-101 **SECTION**
SCALE: 1:10

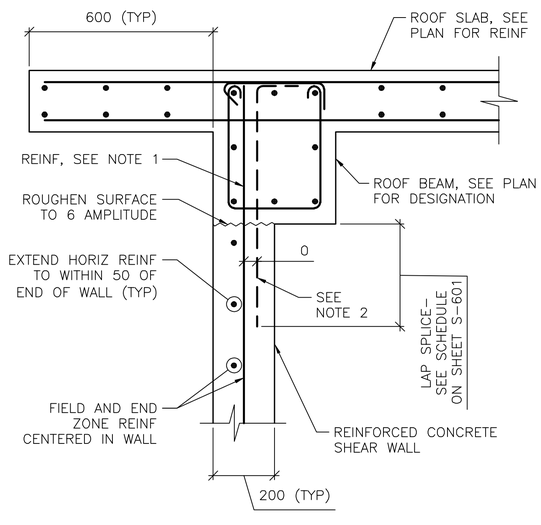

NOTES:
1. TERMINATE "FIELD" VERT REINF & END ZONE REINF @ 50 CLEAR FROM TOP OF ROOF SLAB.
2. WHERE END ZONE REINFORCING CANNOT BE DEVELOPED IN BEAM DEPTH, PROVIDE HOOKED DWLS SAME SIZE & SPACING. PROVIDE TENSION LAP BELOW ROOF BEAM.
3. SEE SHEET S-601 AND SHEET S-702 FOR SCHEDULED FIELD AND END ZONE REINF.

4 S-101 **SECTION**
SCALE: 1:10

0 200 400
SCALE: 1:10

UNLESS OTHERWISE NOTED, LINEAR DIMENSIONS SHOWN ON DRAWINGS ARE IN MILLIMETERS (mm)

APPROVED:

A/E DESIGNER OF RECORD

SEAL:

GEORGIA REGISTERED 2-27-10 No. 27141 PROFESSIONAL ENGINEER CHRISTOPHER W. WHITMORE

US ARMY CORPS OF ENGINEERS
AFGHANISTAN ENGINEER DISTRICT

Mark	Description	Date	Appr.	Mark	Description	Date	Appr.

Date: 2/23/10
Rev: 0
Design file no.
Drawing code:
File name: AMAATCOS-S025C
Plot date: 2/23/2010
Plot scale: X:X

Designed by: KMP/MMY
Dwn by: RCG
Ckd by: CWW
Reviewed by: LHM
Submitted by: BAKER

U.S. ARMY CORPS OF ENGINEERS
AFGHANISTAN ENGINEER DISTRICT
APO AE 96338

Michael Baker Jr., Inc
A unit of Michael Baker Corporation
Airside Business Park
100 Airside Drive
Moon Township, PA 15108
www.mbakercorp.com

AFGHAN NATIONAL ARMY
REGIONAL MILITARY TRAINING CENTER
STANDARD DESIGN

ADMIN TRAINING COMPANY

FRAMING SECTIONS

Sheet reference number:
S-502

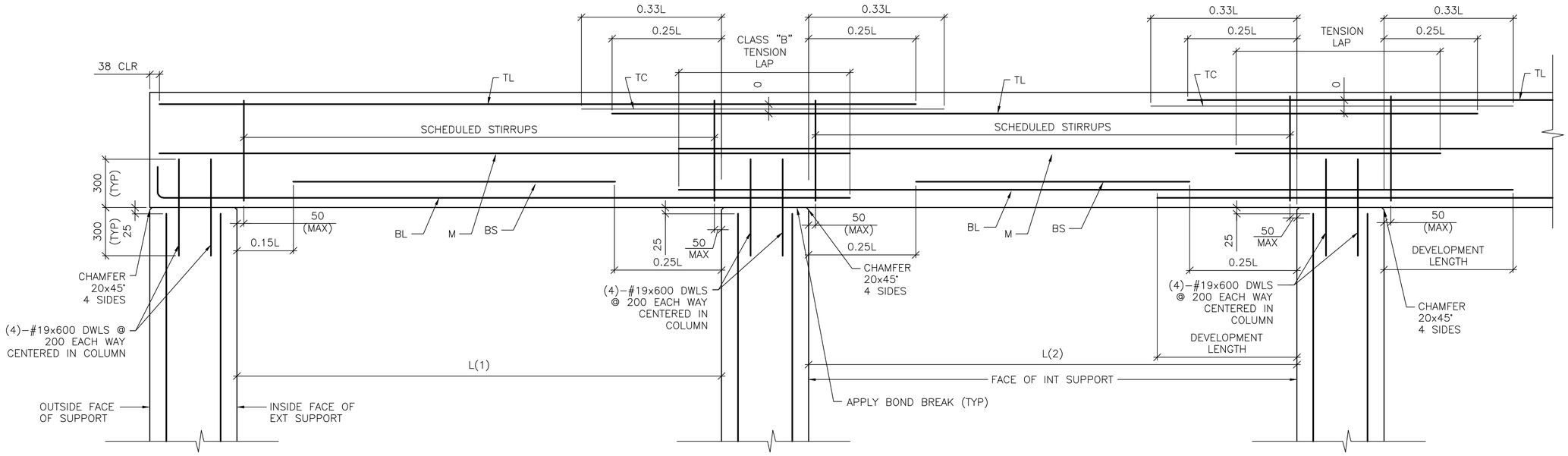

DETAIL NOTE:
1. WORK THIS DETAIL WITH BEAM SCHEDULE ON SHEET S-601.
2. L=GREATEST OF ADJACENT SPANS L(1) OR L(2)
3. ONLY COLUMN CORNER BARS ARE SHOWN

1 / S-503 ROOF BEAM REINFORCING DETAIL

SCALE: NTS

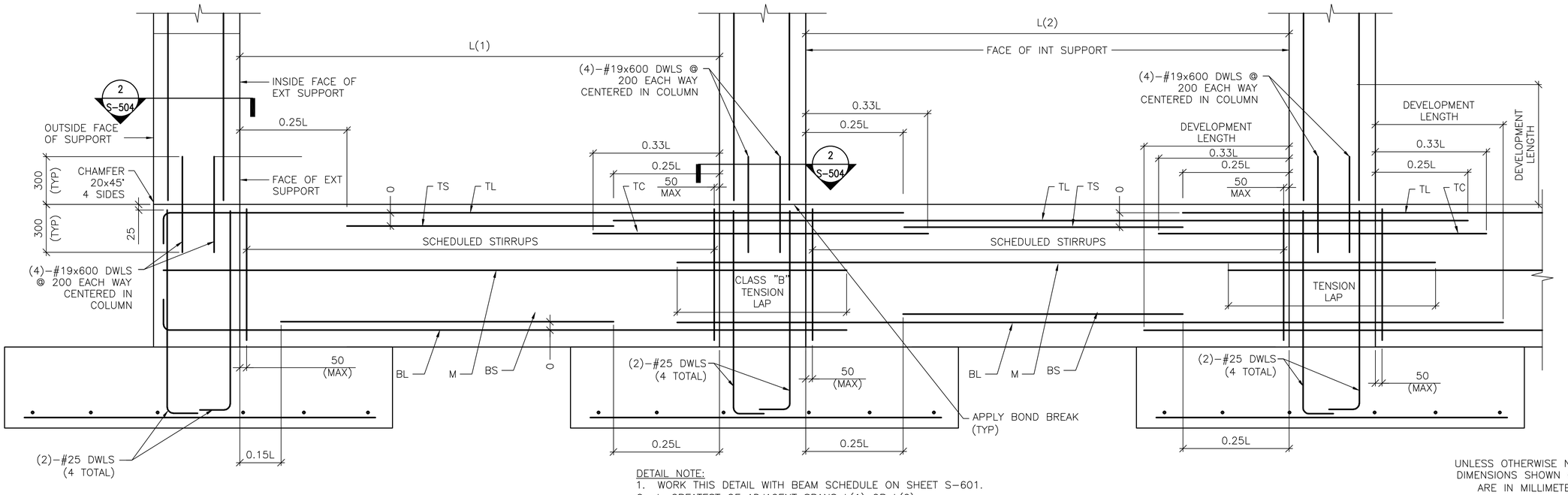

DETAIL NOTE:
1. WORK THIS DETAIL WITH BEAM SCHEDULE ON SHEET S-601.
2. L=GREATEST OF ADJACENT SPANS L(1) OR L(2)
3. ONLY COLUMN CORNER BARS ARE SHOWN.

2 / S-503 GRADE BEAM REINFORCING DETAIL

SCALE: NTS

UNLESS OTHERWISE NOTED, LINEAR DIMENSIONS SHOWN ON DRAWINGS ARE IN MILLIMETERS (mm)

APPROVED:

A/E DESIGNER OF RECORD

SEAL:

GEORGIA REGISTERED 1-27-10 No. 27141 PROFESSIONAL ENGINEER CHRISTOPHER W. WHITMORE

US ARMY CORPS OF ENGINEERS
AFGHANISTAN ENGINEER DISTRICT

Mark	Description	Date	Appr.	Mark	Description	Date	Appr.

Rev: 0
Date: 2/23/10
Designed by: KMP/MMY
Dwn by: RCG
Ckd by: CWW
Reviewed by: LHM
Submitted by: BAKER
Design file no.
Drawing code:
File name: ANAATCOS-S503DT
Plot date: 2/23/2010
Plot scale: X/X

U.S. ARMY CORPS OF ENGINEERS
AFGHANISTAN ENGINEER DISTRICT
APO AE 96338

Michael Baker Jr., Inc.
A unit of Michael Baker Corporation
Airside Business Park
100 Airside Drive
Moon Township, PA 15108
www.mbakercorp.com

AFGHAN NATIONAL ARMY
REGIONAL MILITARY TRAINING CENTER
STANDARD DESIGN

ADMIN TRAINING COMPANY

BEAM & COLUMN DETAILS

Sheet reference number:
S-503

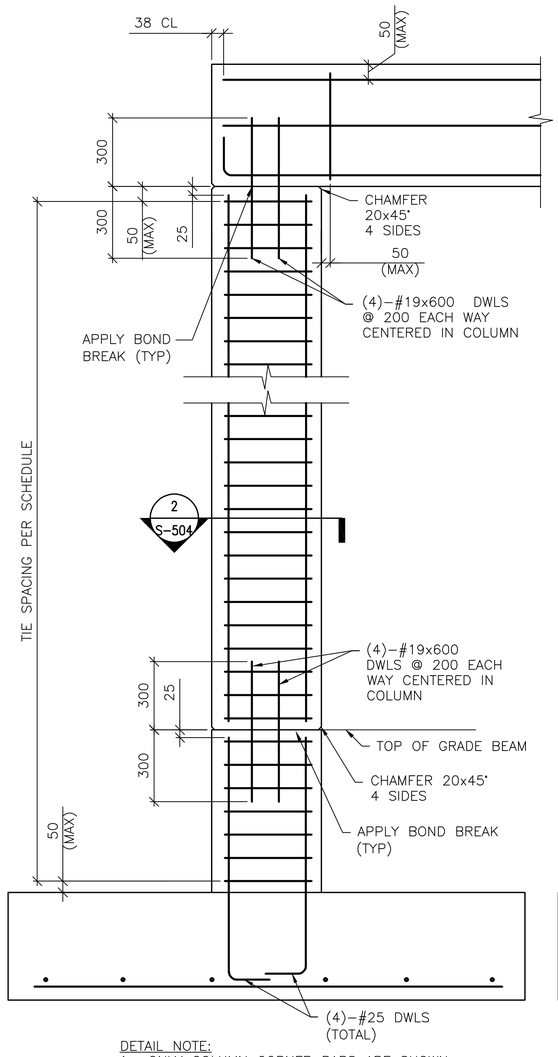

DETAIL NOTE:
1. ONLY COLUMN CORNER BARS ARE SHOWN

1 S-504 1-STORY COLUMN REINF DETAILS
SCALE: NTS
(WITH GRADE BEAM)

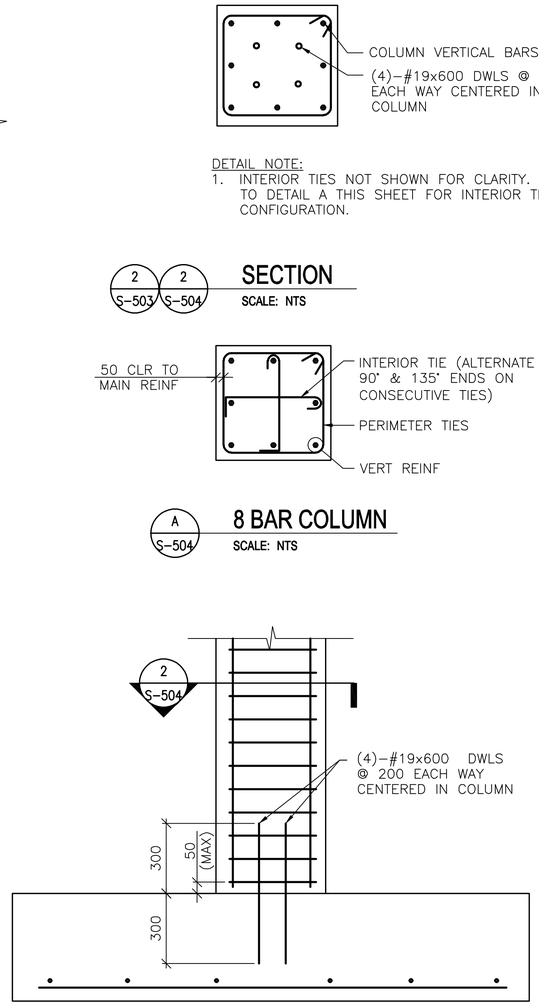

DETAIL NOTE:
1. ONLY COLUMN CORNER BARS ARE SHOWN

1 S-504 1-STORY COLUMN REINF DETAILS
SCALE: NTS
(WITHOUT GRADE BEAM)

DETAIL NOTE:
1. INTERIOR TIES NOT SHOWN FOR CLARITY. REFER TO DETAIL A THIS SHEET FOR INTERIOR TIE CONFIGURATION.

2 S-503 2 S-504 SECTION
SCALE: NTS

A S-504 8 BAR COLUMN
SCALE: NTS

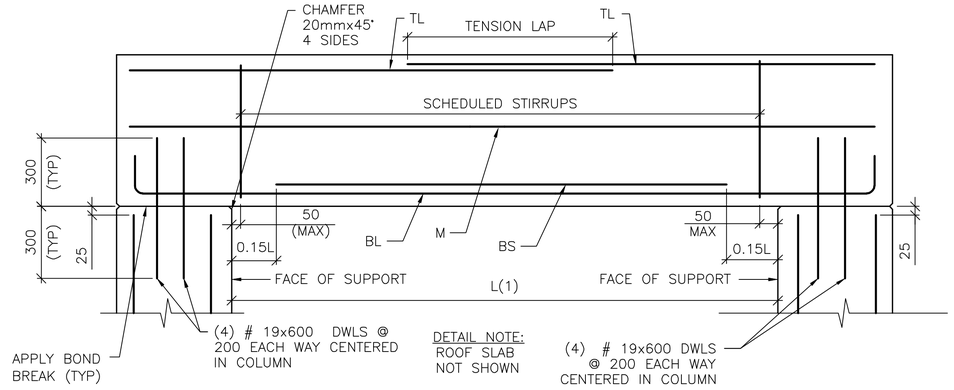

3 S-504 SINGLE SPAN ROOF BEAM REINFORCING DETAIL
SCALE: NTS

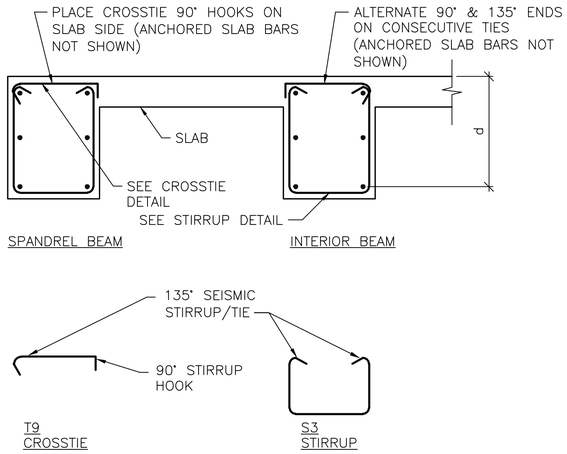

B S-504 BEAM REINFORCEMENT DETAILS
SCALE: NTS

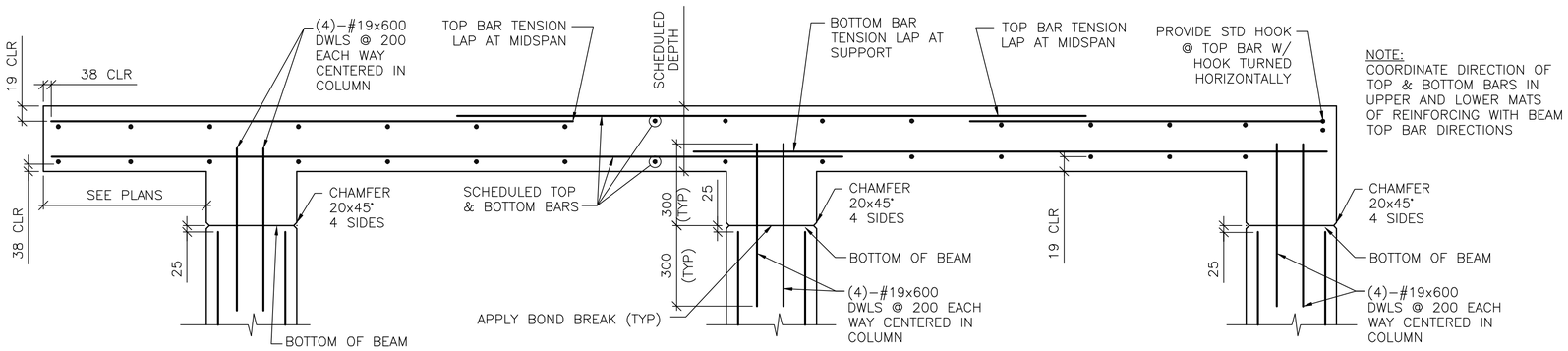

4 S-504 FRAMED SLAB REINFORCING DETAIL
SCALE: NTS

UNLESS OTHERWISE NOTED, LINEAR DIMENSIONS SHOWN ARE IN MILLIMETERS (mm)

APPROVED:

A/E DESIGNER OF RECORD

SEAL:

GEORGIA REGISTERED 7-23-10 No. 27141 PROFESSIONAL ENGINEER CHRISTOPHER W. WHITMORE

US ARMY CORPS OF ENGINEERS
AFGHANISTAN ENGINEER DISTRICT

Mark	Description	Date	Appr.	Mark	Description	Date	Appr.

Designed by: KMP/MMY
Dwn by: RCG
Ckd by: CWW
Reviewed by: LHM
Submitted by: BAKER
Date: 2/23/10
Design file no.
Rev: 0
Drawing code:
File name: AMATCOS-S04DT
Plot date: 2/23/2010
Plot scale: X:X

U.S. ARMY CORPS OF ENGINEERS
AFGHANISTAN ENGINEER DISTRICT
APO AE 96338

Michael Baker Jr., Inc
A unit of Michael Baker Corporation
Airside Business Park
100 Airside Drive
Moon Township, PA 15108
www.mbakercorp.com

AFGHAN NATIONAL ARMY
REGIONAL MILITARY TRAINING CENTER
STANDARD DESIGN

ADMIN TRAINING COMPANY

BEAM & COLUMN DETAILS

Sheet reference number:
S-504

CONCRETE REINFORCEMENT TENSION DEVELOPMENT/LAP SPLICE SCHEDULE

f'c = 28 MPa	LAP CLASS	UNCOATED BARS			
		TOP BARS		OTHER BARS	
BAR SIZES		CASE 1	CASE 2	CASE 1	CASE 2
#10 TO #19	A	50 BAR DIA	74 BAR DIA	38 BAR DIA	57 BAR DIA
	B	64 BAR DIA	96 BAR DIA	50 BAR DIA	74 BAR DIA
#22 TO #57	A	62 BAR DIA	93 BAR DIA	48 BAR DIA	71 BAR DIA
	B	80 BAR DIA	121 BAR DIA	62 BAR DIA	93 BAR DIA

NOTES:
1. TABULATED TENSION DEVELOPMENT LENGTH VALUES ARE TAKEN FROM CRSI DESIGN HANDBOOK 2008 10TH ED.
2. TENSION DEVELOPMENT & TENSION LAP SPLICE LENGTHS ARE EXPRESSED AS MULTIPLES OF BAR DIAMETERS.
3. TABULATED VALUES ARE BASED ON MINIMUM YIELD STRENGTH OF REINFORCEMENT, fy, OF 420MPa.
4. CONCRETE IS NORMAL WEIGHT (2400Kg/m³) AND 28 DAY COMPRESSIVE STRENGTH = 28MPa.
5. TABULATED VALUES FOR BEAMS & COLUMNS ARE BASED ON TRANSVERSE REINFORCEMENT AND CONCRETE COVER MEETING MINIMUM CODE REQUIREMENTS.
6. CASES 1 & 2, WHICH DEPEND ON THE TYPE OF STRUCTURAL MEMBER, CONCRETE COVER, AND CENTER-TO-CENTER SPACING OF THE BARS ARE DEFINED IN THE TABLE BELOW.
7. LAP SPLICE LENGTHS (MINIMUM 300mm) ARE MULTIPLES OF TENSION DEVELOPMENT LENGTHS: CLASS A = 1.0(TENSION DEVELOPMENT LENGTH) & CLASS B = 1.3(TENSION DEVELOPMENT LENGTH)
8. TOP BARS ARE HORIZONTAL REINFORCEMENT WITH MORE THAN 300mm OF CONCRETE CAST BELOW THE BARS.
9. IT SHALL BE PERMISSIBLE TO CALCULATE WALL AND SLAB REINFORCEMENT TENSION DEVELOPMENT/SPLICE LENGTHS IN ACCORDANCE WITH ACI 12.2.3 OR TABLE 5.3(b) OF CRSI 2008 IN LIEU OF VALUES TABULATED ABOVE.

BEAMS, COLUMNS	CASE 1	CONCRETE COVER AT LEAST 1 BAR DIA AND CENTER-TO-CENTER SPACING AT LEAST 2 BAR DIA
	CASE 2	CONCRETE COVER LESS THAN 1 BAR DIA OR CENTER-TO-CENTER SPACING LESS THAN 2 BAR DIA
ALL OTHERS	CASE 1	CONCRETE COVER AT LEAST 1 BAR DIA AND CENTER-TO-CENTER SPACING AT LEAST 3 BAR DIA
	CASE 2	CONCRETE COVER LESS THAN 1 BAR DIA OR CENTER-TO-CENTER SPACING LESS THAN 3 BAR DIA

CONCRETE COVER SCHEDULE

MINIMUM CONCRETE COVER PROTECTION FOR REINFORCEMENT BARS SHALL BE AS LISTED BELOW: (SEE ACI 318M-05, SECTION 7.7 FOR CONDITIONS NOT NOTED). DIMENSIONS FOR BAR PLACEMENT GIVEN IN SECTIONS AND DETAILS SHALL SUPERSEDE MINIMUM COVER REQUIREMENTS GIVEN HERE. DIMENSIONS ARE IN mm. PROVIDE STANDARD BAR CHAIRS AND SUPPORT BARS @1200mm MAXIMUM AS REQUIRED TO MAINTAIN CONCRETE PROTECTION SPECIFIED.

FOOTINGS (EARTH FORMED):		70
COLUMNS / PIERS (TO TIES)		40
GRADE BEAMS OR SLAB TURNED DOWN EDGES:		
TOP		40
BOTTOM (EARTH FORMED)		70
SIDES (EARTH FORMED)		70
SIDES (BOARD FORMED)	#16 BAR & SMALLER	40
	#19 THRU #36 BAR	50
ELEVATED BEAMS & SLABS:		
BEAM TIES & STIRRUPS (NOT EXPOSED TO WEATHER)		40
BEAM TIES & STIRRUPS (EXPOSED TO WEATHER)		50
FLOOR SLABS (NOT EXPOSED TO WEATHER)		20
FLOOR SLABS (EXPOSED TO WEATHER)		
#19 & LARGER		50
#13 & SMALLER		40
ROOF SLAB BARS		25
SLABS ON GRADE		
NOT EXPOSED TO WEATHER (FROM TOP)		20
EXPOSED TO WEATHER (FROM TOP)		40
UTILITY TUNNEL WALLS, RETAINING WALLS AND SHEAR WALLS. (NO SURFACES SHALL BE EARTH FORMED)		
EARTH SIDE AND FRONT SIDE (EXPOSED TO WEATHER)		
#16 BAR AND SMALLER		40
#19 THRU #36 BAR		50

COLUMN FOOTING SCHEDULE

MARK	FOOTING SIZE (mm)			FOOTING REINFORCING	REMARKS
	LENGTH	WIDTH	THICKNESS		
F1	3000	3000	300	(8)-#22 EW BOTT	-----
F2	2500	2500	250	(7)-#19 EW BOTT	-----

CONCRETE SHEAR WALL SCHEDULE

MARK	TYPE	WALL LENGTH (L) (mm)	WALL REINFORCEMENT		REMARKS
			END ZONE	FIELD	
SW1	A	2900	(5)-#19 @ 220mm OC	#13 @ 300mm OC	-----

NOTES:
1. WORK THIS SCHEDULE WITH SHEAR WALL DETAILS ON SHEETS S-702
2. SEE PLAN FOR LOCATION OF SHEAR WALL(S).
3. VERTICAL "FIELD" BARS MAY BE OMITTED IN LOCATION OF "END ZONE" REINFORCEMENT.
4. WALL FIELD REINF LISTED APPLIES TO VERT & HORIZ BARS.
5. WALL FIELD REINFORCEMENT CENTERED IN WALL.

STANDARD HOOKS IN TENSION PER (ACI 318M-05)

HOOK DEVELOPMENT LENGTH (mm)	
BAR SIZE	f'c 28 MPa
#10	180
#13	250
#16	300
#19	380
#22	430
#25	480
#29	560
#32	610
#36	690

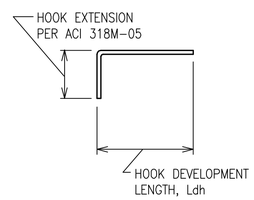

NOTES:
1. CONCRETE IS NORMAL WEIGHT CONCRETE.
2. BAR YIELD STRENGTH, fy = 420 MPa
3. SIDE COVER REQUIREMENTS OF ACI SECT. 12.5.3 ARE ASSUMED TO NOT BE MET.
4. TIE OR STIRRUP REQUIREMENTS OF ACI SECT. 12.5.3 ARE ASSUMED TO NOT BE MET.
5. REDUCTION FOR EXCESS REINFORCEMENT IS NOT TAKEN.
6. HOOK DEVELOPMENT LENGTH IS VALID FOR 180° HOOKS ALSO.

MASONRY LAP SPLICE SCHEDULE

BAR SIZE	MINIMUM LAP SPLICE (Ld) FOR CMU REINFORCING
#10	450
#13	600
#16	750
#19	900
#22	1050
#25	1200

CMU OR CAST IN PLACE CONC LINTEL SCHEDULE (TYP)

OPENING TYPE OR SIZE, BEAM LOCATION OR TYPE	MAX SPAN (mm)	LINTEL DEPTH (mm)	REINFORCING BOTTOM
WALL OPENING	4000	600	(2)-#16 T&B
WALL OPENING	1900	400	(2)-#16 T&B
WALL OPENING	1000	400	(2)-#13 B

1. STRUCTURAL SHEETS DO NOT INDICATE ALL OPENINGS IN MASONRY WALLS. VERIFY NUMBER, SIZE AND LOCATION OF ALL OPENINGS IN MASONRY WALLS FROM ARCHITECTURAL SHEETS AND APPROVED PLUMBING, MECHANICAL, AND ELECTRICAL SHOP DRAWINGS.
2. PROVIDE 200mm BEARING EA END.
3. FOR HEAD DETAILS REFER TO ARCHITECTURAL SHEETS.
4. REINFORCING SHALL BE ASTM A615M, GRADE 420. GROUT FOR CMU LINTELS SHALL HAVE A MINIMUM COMPRESSIVE STRENGTH OF 14 MPa AT 28 DAYS.
5. CONTRACTOR SHALL SUBMIT FOR APPROVAL SHOP DRAWINGS AND SCHEDULES SHOWING SIZE, SPAN, REINFORCEMENT, DETAILS, LOCATIONS, ETC.

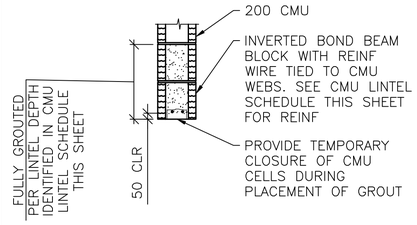

A S-601 **LINTEL DETAIL**
SCALE: NTS

BEAM SCHEDULE

MARK	BEAM SIZE (mm)		BEAM REINFORCING						STIRRUPS			REMARKS
	DEPTH	WIDTH	BL	BS	TL	TS	TC	M	SIZE	TYPE	SPACING	-----
GRADE BEAMS												
GB1	750	400	(2)-#16	(1)-#16	(2)-#16	---	---	---	#13	S3 + T9	d/2	-----
GB2	750	400	(2)-#25	(1)-#25	(2)-#25	---	---	---	#13	S3 + T9	d/2	-----
ROOF BEAMS												
RB1	600	400	(2)-#22	(1)-#22	(2)-#19	---	---	---	#13	S3 + T9	d/2	-----
RB2	600	400	(2)-#19	(1)-#19	(2)-#19	---	---	---	#13	S3 + T9	d/2	OMIT "M" BARS IN INTERIOR BEAMS

NOTES:
1. WORK THIS SCHEDULE WITH BEAM REINFORCING DETAILS ON SHEETS S-503 AND S-504.
2. HOOKS SHOWN ON SECTIONS AND DETAILS SHALL BE 90° STD UON.
3. USE ONLY (1) TC AT BEAM COLUMN INTERSECTION WHERE REQ'D.

COLUMN SCHEDULE

DESCRIPTION \ COLUMN MARK	TYP UON	---	---	---
TYPE	8-BAR	---	---	---
DIMENSIONS	600mm SQ	---	---	---
VERTICAL REINFORCEMENT	(8)-#25	---	---	---
TIES	#13 @ d/2	---	---	---
TOP OF ROOF ELEVATION	3600mm	---	---	---
TOP OF GRADE BEAM ELEVATION	-200mm	---	---	---
TOP OF FOOTING ELEVATION	-950mm	---	---	---

NOTES:
1. WORK THIS SCHEDULE WITH COLUMN DETAILS ON SHEET S-504.
2. SEE FOOTING SCHEDULE ON THIS SHEET FOR FOOTING INFORMATION.
3. COLUMN TIES: INTERIOR TIES TO MATCH SIZE & SPACING OF PERIMETER TIES.
4. HOOKS SHOWN ON SECTIONS & DETAILS SHALL BE 90° STD UON.

UNLESS OTHERWISE NOTED, LINEAR DIMENSIONS SHOWN ARE IN MILLIMETERS (mm)

APPROVED:

A/E DESIGNER OF RECORD

SEAL:

GEORGIA REGISTERED 7-29-10 No. 27141 PROFESSIONAL ENGINEER CHRISTOPHER W. WHITMORE

US ARMY CORPS OF ENGINEERS
AFGHANISTAN ENGINEER DISTRICT

Mark	Description	Date	Appr.	Mark	Description	Date	Appr.

Date: 2/23/10 Rev: 0
Design file no.
Drawing code:
File name: ANMATCDS-S01SCH
Plot date: 2/23/2010
Plot scale: X:X

Designed by: KMP/MMY
Dwn by: RCG Ckd by: CWW
Reviewed by: LHM
Submitted by:
BAKER

U.S. ARMY CORPS OF ENGINEERS
AFGHANISTAN ENGINEER DISTRICT
APO AE 96338

Michael Baker Jr., Inc
A unit of Michael Baker Corporation
Airside Business Park
100 Airside Drive
Moon Township, PA 15108
www.mbakercorp.com

AFGHAN NATIONAL ARMY
REGIONAL MILITARY TRAINING CENTER
STANDARD DESIGN

ADMIN TRAINING COMPANY

SCHEDULES

Sheet reference number:
S-601

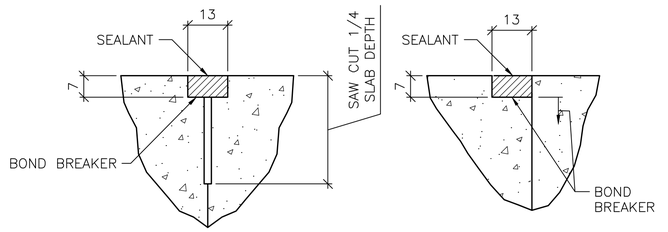

CONTROL JOINT DETAIL

CONSTRUCTION JOINT DETAIL

TYPICAL CONCRETE SLAB JOINT FINISH DETAILS

1 / S-701 SCALE: NTS

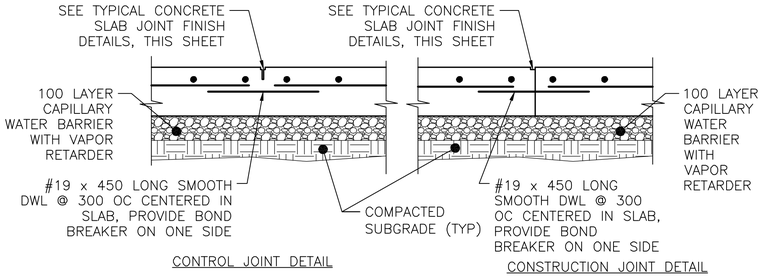

CONTROL JOINT DETAIL

CONSTRUCTION JOINT DETAIL

TYPICAL SLAB ON GRADE JOINT DETAIL

2 / S-701 SCALE: NTS

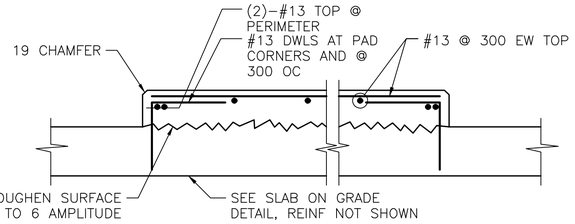

INTERIOR EQUIPMENT PAD DETAIL

3 / S-701 SCALE: NTS

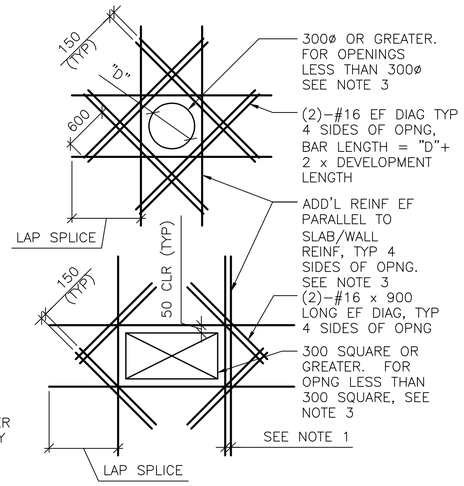

SHEAR WALL/SLAB OPENINGS

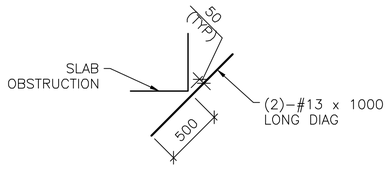

RE-ENTRANT CORNERS

DETAIL NOTES:

1. WHERE MORE THAN ONE ADDITIONAL BAR IS REQUIRED PARALLEL TO THE EXISTING SLAB/WALL REINFORCING THE ADDITIONAL REINFORCING BARS SHALL BE SPACED AT 100 ON CENTER.
2. ADDITIONAL REINFORCING PARALLEL TO THE SLAB/WALL REINFORCING SHALL BE #16 BARS THAT PROVIDE A STEEL AREA ON EACH SIDE OF THE OPENING EQUAL TO 1/2 THE AREA OF THE REINFORCING CUT BY THE OPENING.
3. FOR OPENINGS WITH SIDES OR DIAMETERS LESS THAN 300 SPREAD THE SLAB/WALL REINFORCING TO CLEAR THE OPENING.

ADD'L CONCRETE REINFORCEMENT DETAILS

4 / S-701 SCALE: NTS

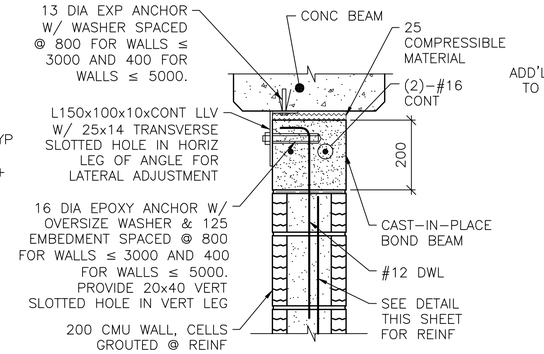

NOTE:

1. AT ANCHOR BOLTS, ADD AN ADDITIONAL 25 COMPRESSIBLE MATERIAL BELOW EXP ANCHOR HEAD.

INTERIOR BEAM

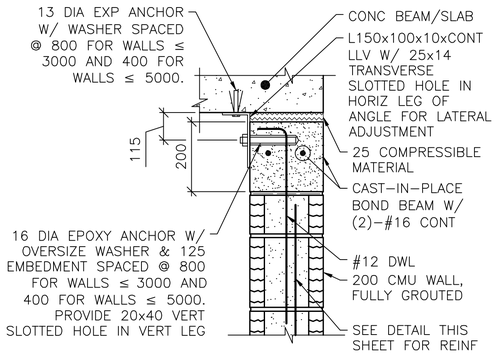

EXTERIOR WALL OR SLAB

NOTES:

1. THIS DETAIL IS AN ALTERNATE TOP OF WALL ANCHORAGE DETAIL TO BE USED AT THE CONTRACTOR'S OPTION IN LIEU OF DETAILS SHOWN ON S-400 & S-500 DRAWINGS.
2. CAST-IN-PLACE BOND BEAM SHOWN AT TOP OF WALL IS ALSO APPLICABLE FOR INTERMEDIATE AND STARTER COURSE BOND BEAMS WITHIN WALL.

ALTERNATE TOP OF CMU WALL BRACING DETAILS

5 / S-701 SCALE: NTS

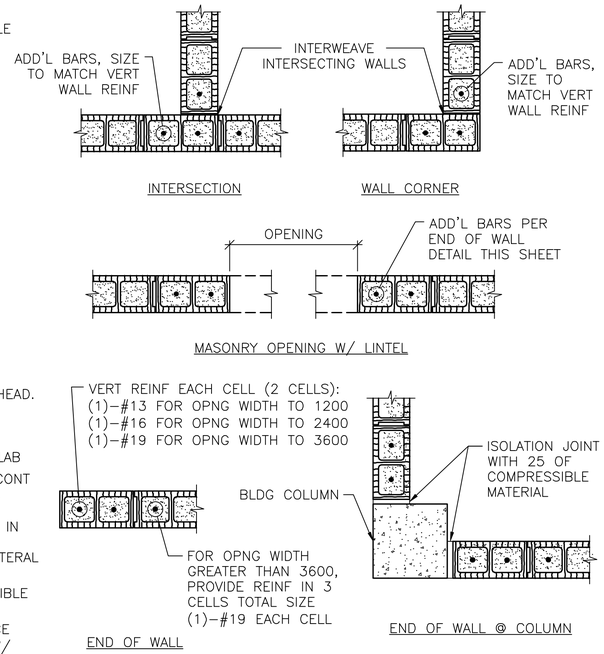

NOTES:

1. OPENING WIDTH SHALL NOT EXCEED 3600 FOR THIS TYPE OF JAMB.
2. ALL CELLS FULLY GROUTED AT EXTERIOR WALLS. AT INTERIOR WALLS, ONLY GROUT CELLS CONTAINING REINF.

TYP CMU DETAILS

6 / S-701 SCALE: NTS

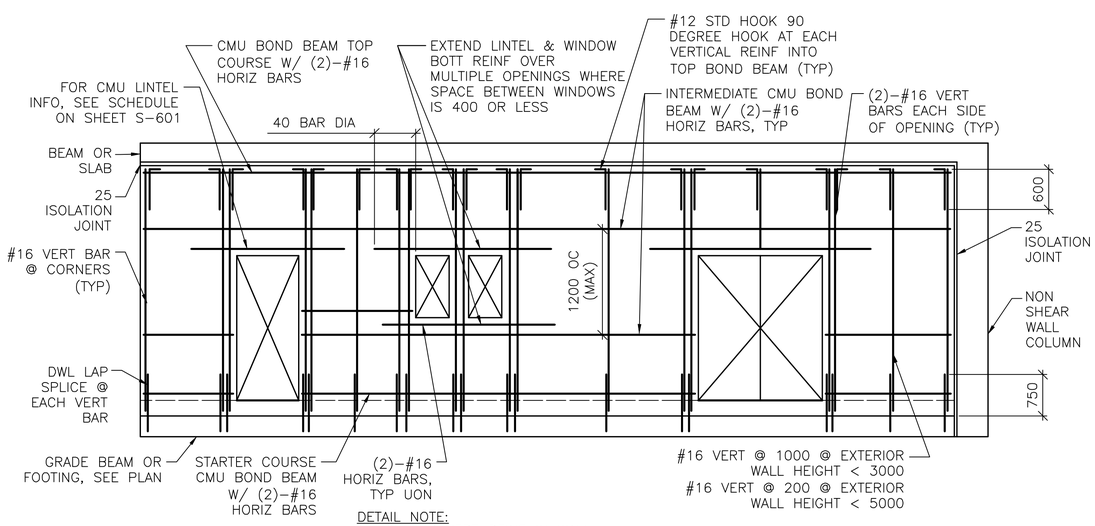

DETAIL NOTE:

1. CENTER VERT REINF IN WALL.
2. GROUT ALL CMU CELLS.
3. REFERENCE ARCH DWGS FOR JOINT INFORMATION
4. DOWELS BETWEEN TOP BOND BEAM AND BEAM/SLAB ABOVE (INCLUDING EMBEDDED PIPE SLEEVE) NOT SHOWN FOR CLARITY. SEE SPECIFIC S-500 SERIES DWGS FOR INFO.
5. FOR INFORMATION ON ALTERNATE CAST-IN-PLACE WALL BOND BEAMS, REFERENCE ALTERNATE TOP OF CMU WALL BRACING DETAILS THIS SHEET.

TYP EXTERIOR CMU WALL REINF DETAIL

7 / S-701 SCALE: NTS

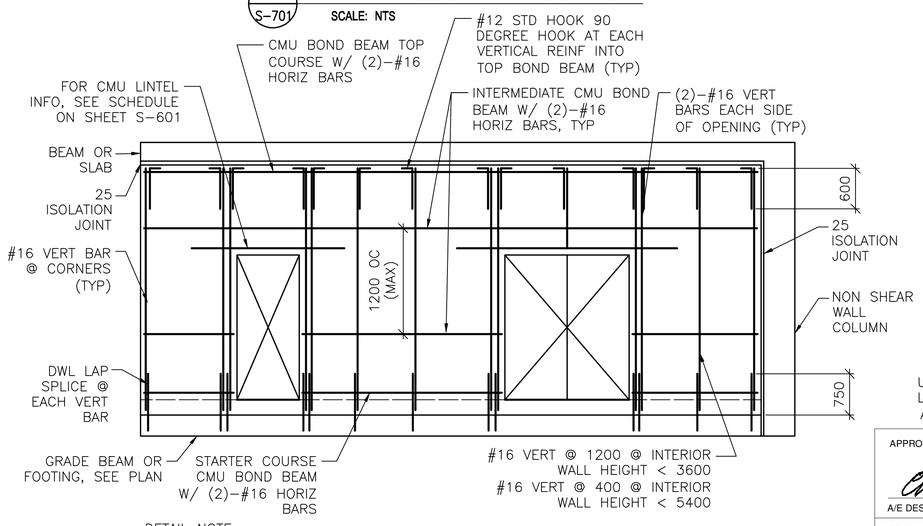

DETAIL NOTE:

1. CENTER VERT REINF IN WALL.
2. GROUT ALL CMU CELLS.
3. REFERENCE ARCH DWGS FOR JOINT INFORMATION
4. DOWELS BETWEEN TOP BOND BEAM AND BEAM/SLAB ABOVE (INCLUDING EMBEDDED PIPE SLEEVE) NOT SHOWN FOR CLARITY. SEE SPECIFIC S-500 SERIES DWGS FOR INFO.
5. FOR INFORMATION ON ALTERNATE CAST-IN-PLACE WALL BOND BEAMS, REFERENCE ALTERNATE TOP OF CMU WALL BRACING DETAILS THIS SHEET.

TYP INTERIOR CMU WALL REINF DETAIL

8 / S-701 SCALE: NTS

UNLESS OTHERWISE NOTED, LINEAR DIMENSIONS SHOWN ARE IN MILLIMETERS (mm)

APPROVED:

A/E DESIGNER OF RECORD

SEAL:

GEORGIA REGISTERED 1-29-10 No. 27141 PROFESSIONAL ENGINEER CHRISTOPHER W. WHITMORE

US ARMY CORPS OF ENGINEERS
AFGHANISTAN ENGINEER DISTRICT

Mark	Description	Date	Appr.	Mark	Description	Date	Appr.

Date: 2/23/10 | Rev: 0
Design file no.
Drawing code:
Designed by: KMP/MMY
Dwn by: RCG | Ckd by: CWW
Reviewed by: LHM
Submitted by:
File name: AMAATCDS-701TDT
Plot date: 2/23/2010
Plot scale: X:X

U.S. ARMY CORPS OF ENGINEERS
AFGHANISTAN ENGINEER DISTRICT
APO AE 96338

Michael Baker Jr., Inc.
A unit of Michael Baker Corporation
Airside Business Park
100 Airside Drive
Moon Township, PA 15108
www.mbakercorp.com

BAKER

AFGHAN NATIONAL ARMY
REGIONAL MILITARY TRAINING CENTER
STANDARD DESIGN

ADMIN TRAINING COMPANY

TYPICAL DETAILS

Sheet reference number:
S-701

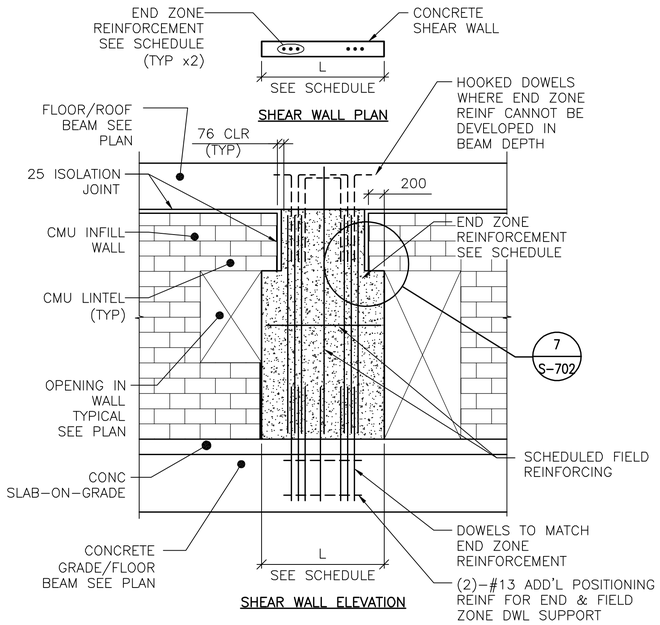

DETAIL NOTES:
1. FIELD REINFORCEMENT IN SHEAR WALL NOT SHOWN FOR CLARITY.
2. FIELD REINFORCEMENT CENTERED IN WALL.
3. MINIMUM CONC CLEAR DISTANCE FOR END ZONE REINF = 76
4. SEE CONC SHEAR WALL SCHEDULE ON SHEET S-601
5. SEE ARCH DWGS FOR JOINT INFORMATION

1 S-702 TYPE "A" SHEAR WALL DETAIL

SCALE: NTS

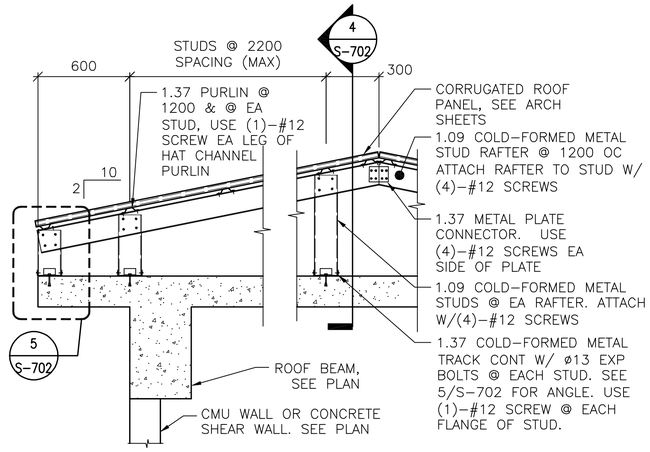

DETAIL NOTES:
1. ALL GABLE END VERTICAL STUDS SHALL BE ORIENTED 90° TO INTERIOR STUDS & SPACED @ 600 OC. GABLE END RAFTER SHALL BE 1.37 METAL TRACK SPANNING CONTINUOUSLY OVER GABLE END STUDS. INSET GIRTS AT GABLE END SHALL BE 1.09 COLD-FORMED METAL STUDS @ 1200 OC ATTACHED VIA 1.37 THICKNESS CLIP ANGLE W/ (2) #12 SCREWS EA LEG.
2. ALL INTERIOR, NON-GABLE END VERTICAL STUDS GREATER THAN 2400 IN LENGTH SHALL BE BACK-TO-BACK W/ #12 SCREWS @ 200 OC STAGGERED.

2 S-702 TYPICAL OVERBUILT ROOF FRAMING DETAIL

SCALE: NTS

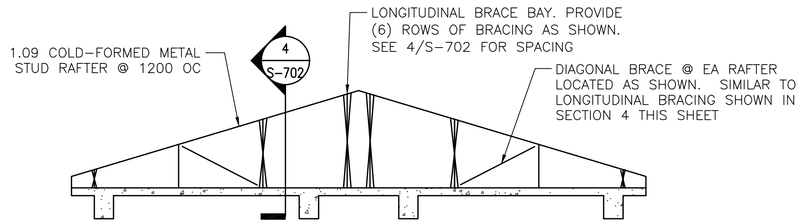

3 S-702 TYPICAL ROOF BRACE LAYOUT

SCALE: NTS

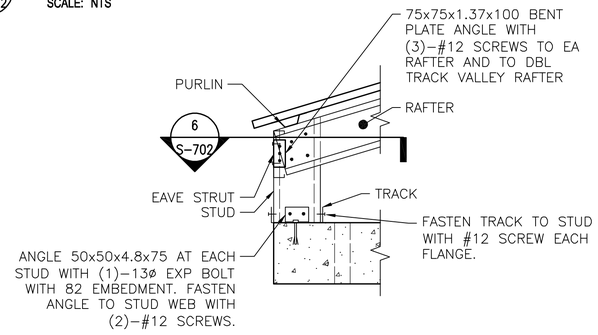

5 S-702 DETAIL

SCALE: NTS

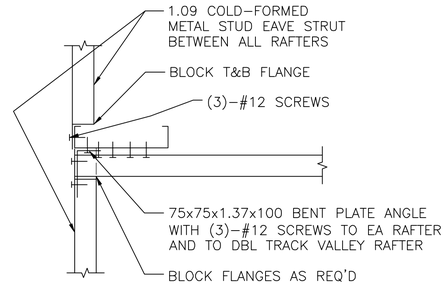

6 S-702 SECTION

SCALE: NTS

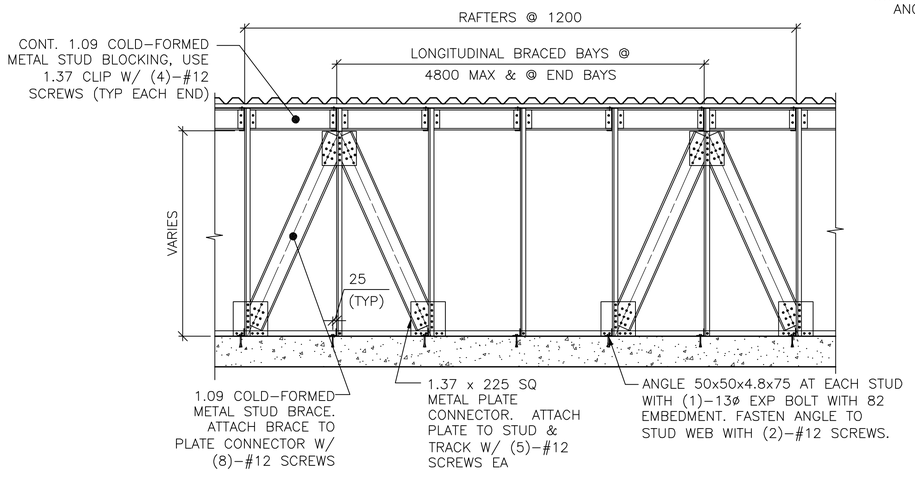

4 S-702 SECTION

SCALE: NTS

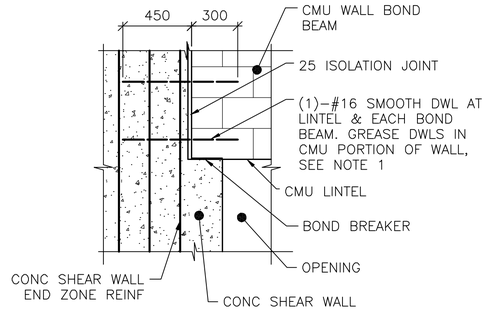

NOTE:
1. TIE SMOOTH DOWEL ROD TO SHEAR WALL END ZONE REINF FOR EACH BOND BEAM AND LINTEL.

7 S-702 SECTION

SCALE: NTS

UNLESS OTHERWISE NOTED, LINEAR DIMENSIONS SHOWN ARE IN MILLIMETERS (mm)

APPROVED:

A/E DESIGNER OF RECORD

SEAL:

GEORGIA REGISTERED 27-10 No. 27141 PROFESSIONAL ENGINEER CHRISTOPHER W. WHITMORE

US ARMY CORPS OF ENGINEERS
AFGHANISTAN ENGINEER DISTRICT

Mark	Description	Date	Appr.	Mark	Description	Date	Appr.

Designed by: KMP/MMY
Dwn by: RCG
Ckd by: CWW
Reviewed by: LHM
Submitted by: BAKER
Date: 2/23/10
Design file no.
Rev: 0
Drawing code:
File name: AMAATCOE-702TDT
Plot date: 2/23/2010
Plot scale: X:X

U.S. ARMY CORPS OF ENGINEERS
AFGHANISTAN ENGINEER DISTRICT
APO AE 96338

Michael Baker Jr, Inc
A unit of Michael Baker Corporation
Airside Business Park
100 Airside Drive
Moon Township, PA 15108
www.mbakercorp.com

AFGHAN NATIONAL ARMY
REGIONAL MILITARY TRAINING CENTER
STANDARD DESIGN

ADMIN TRAINING COMPANY

TYPICAL DETAILS

Sheet reference number:
S-702

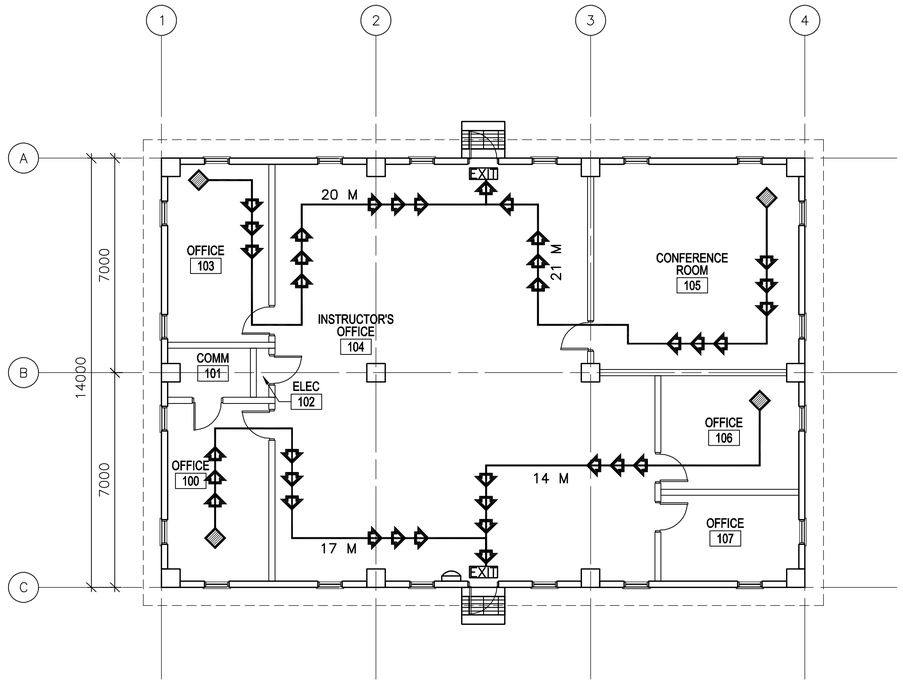

1
A–001

LIFE SAFETY PLAN

SCALE: 1:100

CODE ANALYSIS:

1. REFERENCES:
   2006 INTERNATIONAL BUILDING CODE (2006 IBC)
   2006 LIFE SAFETY CODE (2006 NFPA 101)

2. IBC OCCUPANCY CLASSIFICATION:
   GROUP B (BUSINESS NFPA 101 6.1.11 AND CHAPTER 38)

3. TYPE OF CONSTRUCTION (IBC): TYPE II–B (UNPROTECTED/NONSPRINKLERED)

4. IBC TABLE 503: ALLOWABLE HEIGHT AND BUILDING AREAS:
   GROUP B
   ALLOWABLE AREA: 2,137 SM
   ALLOWABLE HEIGHT: 3 STORIES (16 M)

   GROUP B
   PROPOSED AREA: 294 SM
   PROPOSED HEIGHT: 1 STORY (<16 M)

5. IBC TABLE 601 & 602: FIRE RESISTANCE RATING REQUIREMENTS FOR BUILDING ELEMENTS FOR TYPE II–B

BUILDING ELEMENT	RATING (HOUR)	REFERENCE
STRUCTURAL FRAME (COLUMNS, GIRDERS & TRUSSES)	0	TABLE 601
BEARING WALLS		
EXTERIOR	0	TABLE 601
INTERIOR	0	TABLE 601
NONBEARING WALLS & PARTITIONS		
INTERIOR	0	TABLE 601
FLOOR CONSTRUCTION	0	TABLE 601
ROOF CONSTRUCTION	0	TABLE 601
EXTERIOR WALL	0	TABLE 602

6. IBC TABLE 803.5 – INTERIOR WALL AND CEILING FINISH REQUIREMENTS FOR B OCCUPANCY/NONSPRINKLERED

GROUP	EXIT ENCLOSURES AND EXIT PASSAGEWAY	CORRIDORS	ROOMS AND ENCLOSED SPACES
B	A	B	C

7. NFPA 101 TABLE 7.3.1.2 – OCCUPANT LOAD
   BUSINESS = 9.3 SM/PERSON BUSINESS PROPOSED = 32 OCCUPANTS

8. NFPA 101 TABLE 7.3.3.1 – EGRESS CAPACITY
   BUSINESS = 5 MM PER OCCUPANT

   REQUIRED: 160 MM (32 OCCUPANTS x 5 MM PER OCCUPANT)
   PROPOSED EGRESS CAPACITY: 900 MM: (2) 900 MM DOORS

9. NFPA 101 PARAGRAPH 38.2.6.2 – EXIT ACCESS TRAVEL DISTANCE (NONSPRINKLERED)
   REQUIRED: 60 METERS
   PROPOSED: 23 METERS

10. NFPA 101 PARAGRAPH 38.3.6.1(1) & (2) – CORRIDORS
    NO RATED CORRIDOR REQUIRED (NONSPRINKLERED):
    (1) ALL EXITS ARE AVAILABLE FROM AN OPEN FLOOR AREA
    (2) SPACE IS OCCUPIED BY A SINGLE TENANT

11. NFPA 101 PARAGRAPH 38.2.4.1 – NUMBER OF EXITS
    BUSINESS REQUIRED: 1 MINIMUM
    BUSINESS PROPOSED: 2 EXITS

LEGEND:

- DENOTES PATHS OF EXIT TRAVEL
- EXIT — DENOTES DOOR AS AN EMERGENCY EXIT
- DENOTES STARTING POINT FOR TRAVEL DISTANCE
- DENOTES FIRE EXTINGUISHER LOCATIONS

LINEAR DIMENSIONS SHOWN ARE IN MILLIMETERS (MM), UNLESS OTHERWISE NOTED

0 2000 4000
SCALE: 1:100

APPROVED:

A/E DESIGNER OF RECORD

SEAL:

STATE OF SOUTH CAROLINA
KEVIN R. CHAFIN
N. Charleston, SC
6374
REGISTERED ARCHITECT

US ARMY CORPS OF ENGINEERS
AFGHANISTAN ENGINEER DISTRICT

Mark	Description	Date	Appr.	Mark	Description	Date	Appr.

Date: 2/23/10
Design file no.
Rev: 0
Drawing code:
File name: ANAATCOA001LSP
Plot date: 2/23/2010
Plot scale:

Designed by: KRC
Dwn by: KJG
Ckd by: NLJ
Reviewed by: LHM
Submitted by: BAKER

U.S. ARMY CORPS OF ENGINEERS
AFGHANISTAN ENGINEER DISTRICT
APO AE 96338

Michael Baker Jr., Inc
A unit of Michael Baker Corporation
Airside Business Park
100 Airside Drive
Moon Township, PA 15108
www.mbakercorp.com

AFGHAN NATIONAL ARMY
REGIONAL MILITARY TRAINING CENTER
STANDARD DESIGN

ADMIN TRAINING COMPANY

LIFE SAFETY PLAN

Sheet reference number:
A–001

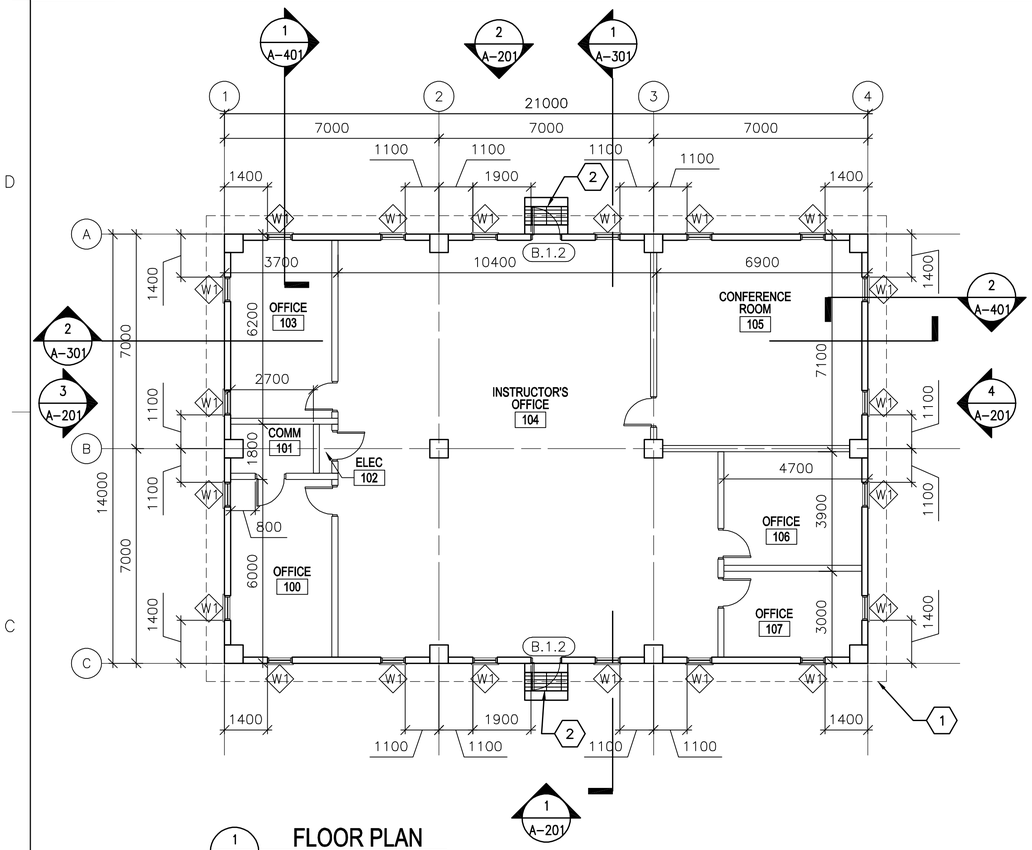

1 A-101 **FLOOR PLAN**

SCALE: 1:100

GENERAL NOTES:

A. DIMENSIONS ARE SHOWN TO OUTER EDGE OF EXTERIOR STRUCTURAL COLUMNS, STRUCTURAL COLUMN GRID, EDGE OF INTERIOR PARTITIONS, EDGE OF WINDOW OPENINGS, AND TO HINGE SIDE OF DOOR FRAME OPENINGS.

B. HINGE SIDE OF OPENINGS FOR DOORS AND FRAMES SHALL BE LOCATED 200 MM FROM THE ADJACENT WALL OR COLUMN, UNLESS NOTED OTHERWISE.

C. INTERIOR PARTITIONS SHALL BE 200 MM CMU. SEE STRUCTURAL DRAWINGS FOR LOCATION OF CONCRETE SHEAR WALLS.

D. COSMETIC REPAIR OF MINOR DEFECTS: REPAIR OR FILL MORTAR JOINTS AND MINOR DEFECTS, INCLUDING BUT NOT LIMITED TO SPALLS, IN ACCORDANCE WITH MANUFACTURER'S RECOMMENDATIONS AND PRIOR TO COATING APPLICATION. SURFACES TO BE PAINTED SHALL BE CLEAN AND FREE OF FOREIGN MATTER BEFORE APPLICATION OF PAINT. CLEANING SHALL BE SCHEDULED SO THAT DUST AND OTHER CONTAMINANTS WILL NOT FALL ON NEWLY PAINTED SURFACES.

E. INTERIOR CONCRETE, PLASTER AND MASONRY SURFACES SHALL BE ALLOWED TO CURE FOR AT LEAST 30 DAYS BEFORE PAINTING. CONCRETE SLABS–ON–GRADE SHALL BE ALLOWED TO CURE 90 DAYS BEFORE STAINING OR SEALING.

F. DO NOT USE PAINT MATERIALS CONTAINING LEAD CONTENT IN EXCESS OF 0.009 PERCENT OF THE WEIGHT OF THE TOTAL NONVOLATILE CONTENT OF THE PAINT OR THE WEIGHT OF THE DRIED PAINT FILM.

G. DO NOT USE ANY ASBESTOS CONTAINING MATERIALS (ACM) IN PROJECT. ACM IS DEFINED AS 1% OR MORE BY VOLUME.

H. DO NOT USE PAINT MATERIALS CONTAINING MERCURIAL FUNGICIDES.

I. FACTORY PRIMED METAL DOORS AND FRAMES SHALL RECEIVE TWO COATS OF PAINT.

J. FILL REMAINING SPACE AT PENETRATIONS IN FIRE–RATED FLOORS, PARTITIONS AND CEILINGS WITH APPROPRIATE FIRESTOPPING MATERIALS.

K. ALL CEILING FINISHES SHALL BE PAINTED PLASTER APPLIED TO STRUCTURE.

L. ALL WALL FINISHES SHALL BE PAINTED PLASTER APPLIED TO STRUCTURE.

M. ALL FLOOR FINISHES SHALL BE EPOXY SEALED CONCRETE.

N. ALL DOOR FRAME & HARDWARE TYPES SHALL BE A.1.5 UNLESS NOTED OTHERWISE.

KEY NOTES:

1. LINE OF ROOF OVERHANG ABOVE.
2. CONCRETE STOOP WITH GRATE – SEE DETAIL 1/A–503.

LEGEND:

XXX DOOR FRAME AND HARDWARE TYPE, SEE SHEET A–601

A WINDOW TYPE, SEE SHEET A–601

X KEY NOTE

ABBREVIATIONS:

ELEC	ELECTRICAL
MECH	MECHANICAL
JAN	JANITOR
CLOS	CLOSET
COMM	COMMUNICATIONS

LINEAR DIMENSIONS SHOWN ARE IN MILLIMETERS (MM), UNLESS OTHERWISE NOTED

0 2000 4000
SCALE: 1:100

APPROVED:

A/E DESIGNER OF RECORD

SEAL:

STATE OF SOUTH CAROLINA
KEVIN R. CHAFIN
N. Charleston, SC
6374
REGISTERED ARCHITECT

US ARMY CORPS OF ENGINEERS
AFGHANISTAN ENGINEER DISTRICT

Mark	Description	Date	Appr.	Mark	Description	Date	Appr.

Date: 2/08/10
Rev: 0
Design file no.
Drawing code:
File name: ANAATCOA-101FP
Plot date: 2/23/2010
Plot scale:

Designed by: KRC
Dwn by: KJG
Ckd by: NLJ
Reviewed by: LHM
Submitted by:
BAKER

U.S. ARMY CORPS OF ENGINEERS
AFGHANISTAN ENGINEER DISTRICT
APO AE 96338

Michael Baker Jr., Inc.
A unit of Michael Baker Corporation
Airside Business Park
100 Airside Drive
Moon Township, PA 15108
www.mbakercorp.com

AFGHAN NATIONAL ARMY
REGIONAL MILITARY TRAINING CENTER
STANDARD DESIGN

ADMIN TRAINING COMPANY

FLOOR PLAN

Sheet reference number:
A–101

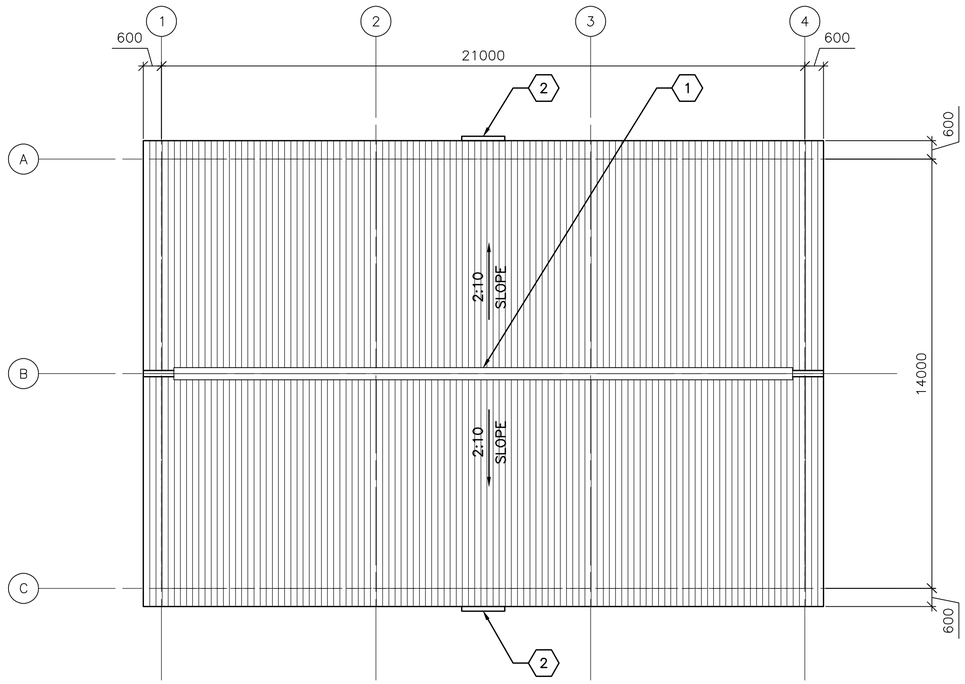

1 A-102 **ROOF PLAN**

SCALE: 1:100

GENERAL NOTES:

A. THE APPROXIMATE LOCATION OF ROOF DEVICES AND PENETRATIONS ARE SHOWN ON THE ROOF PLAN FOR INFORMATION ONLY. THE CONTRACTOR SHALL BE RESPONSIBLE FOR UNDERSTANDING THE ACTUAL LOCATION OF THESE AND ALL OTHER ITEMS PRIOR TO BEGINNING CONSTRUCTION. COORDINATE ALL ROOF PENETRATIONS WITH STRUCTURAL, MECHANICAL AND PLUMBING WORK.

B. UNLESS OTHERWISE NOTED, NOTES, DETAILS OR FEATURES INDICATED FOR ONE CONDITION SHALL BE APPLICABLE FOR ALL ALIKE AND SIMILAR CONDITIONS.

C. STOCKPILING OF MATERIALS, EQUIPMENT AND ANY OTHER ITEMS ON THE ROOF IS PROHIBITED.

D. ROOFS SHALL BE CORRUGATED METAL ROOF PANELS ON COLD-FORMED METAL FRAMING ON CONCRETE SLAB.

KEY NOTES:

1. CONTINUOUS METAL RIDGE VENT SEE DETAIL 4/A-501.
2. METAL GUTTER, 1400 MM – SEE DETAIL 1A/A-501.

LINEAR DIMENSIONS SHOWN ARE IN MILLIMETERS (MM), UNLESS OTHERWISE NOTED

0 2000 4000
SCALE: 1:100

APPROVED:

A/E DESIGNER OF RECORD

SEAL:

STATE OF SOUTH CAROLINA
KEVIN R. CHAFIN
N. Charleston, SC
6374
REGISTERED ARCHITECT

US ARMY CORPS OF ENGINEERS
AFGHANISTAN ENGINEER DISTRICT

Mark	Description	Date	Appr.	Mark	Description	Date	Appr.

U.S. ARMY CORPS OF ENGINEERS
AFGHANISTAN ENGINEER DISTRICT
APO AE 96338

Michael Baker Jr., Inc
A unit of Michael Baker Corporation
Airside Business Park
100 Airside Drive
Moon Township, PA 15108
www.mbakercorp.com

Designed by: KRC
Dwn by: KJG
Ckd by: NLJ
Reviewed by: LHM
Submitted by: BAKER
Date: 2/23/10
Rev: 0
Design file no.
Drawing code:
File name: ANAATCOA-1025P
Plot date: 2/23/2010
Plot scale:

AFGHAN NATIONAL ARMY
REGIONAL MILITARY TRAINING CENTER
STANDARD DESIGN

ADMIN TRAINING COMPANY

ROOF PLAN

Sheet reference number:
A-102

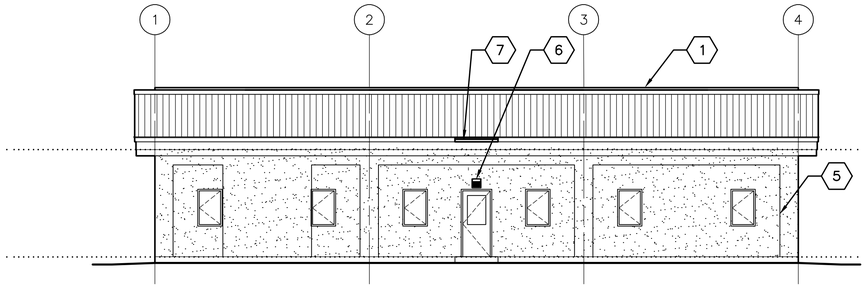

1 A-201 **ELEVATION**
SCALE: 1:100

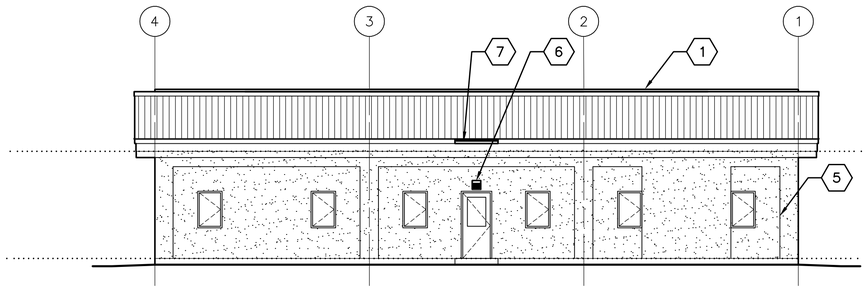

2 A-201 **ELEVATION**
SCALE: 1:100

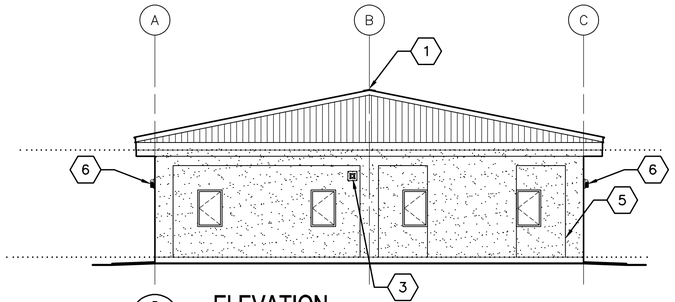

3 A-201 **ELEVATION**
SCALE: 1:100

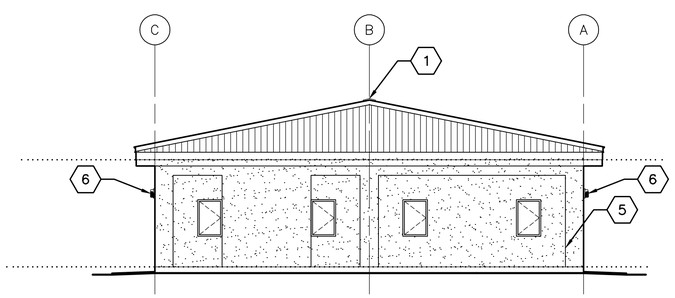

4 A-201 **ELEVATION**
SCALE: 1:100

GENERAL NOTES:

A. COORDINATE SIZE AND LOCATION OF OPENINGS FOR MECHANICAL ITEMS WITH MECHANICAL DRAWINGS.

B. PROVIDE STRUCTURAL LINTELS AS REQUIRED – SEE STRUCTURAL DRAWINGS.

C. ALL EXTERIOR WALL FINISHES SHALL BE STUCCO OVER CMU AND CONCRETE SUBSTRATES. PROVIDE CONTROL JOINTS IN STUCCO WALL FINISH AS NOTED.

D. ROOF SHALL BE CORRUGATED METAL ROOF PANELS ON COLD–FORMED METAL FRAMING ON CONCRETE SLAB.

KEY NOTES:

(X)

1. CONTINUOUS METAL RIDGE VENT – SEE DETAIL 4/A–501.
2. NOT USED
3. EXHAUST FAN, LOCATE TOP OF WALL PENETRATION 2800 MM ABOVE FINISHED FLOOR – SEE MECHANICAL DRAWINGS.
4. NOT USED
5. STUCCO CONTROL JOINT – SEE DETAIL 2A/A–501.
6. EXTERIOR LIGHT – SEE ELECTRICAL.
7. METAL GUTTER, CENTER ON DOOR, 1400 MM – SEE DETAIL 1A/A–501.

LINEAR DIMENSIONS SHOWN ARE IN MILLIMETERS (MM), UNLESS OTHERWISE NOTED

0 2000 4000
SCALE: 1:100

APPROVED:

A/E DESIGNER OF RECORD

SEAL:

STATE OF SOUTH CAROLINA
KEVIN R. CHAFIN
N. Charleston, SC
6374
REGISTERED ARCHITECT

US ARMY CORPS OF ENGINEERS
AFGHANISTAN ENGINEER DISTRICT

Mark	Description	Date	Appr.	Mark	Description	Date	Appr.

Date: 2/23/10 | Rev: 0
Design file no.
Drawing code:
File name: ANAATCOA-201ELV
Plot date: 2/23/2010
Plot scale:

Designed by: KRC
Dwn by: KJG | Ckd by: NLJ
Reviewed by: LHM
Submitted by: BAKER

U.S. ARMY CORPS OF ENGINEERS
AFGHANISTAN ENGINEER DISTRICT
APO AE 96338

Michael Baker Jr., Inc
A unit of Michael Baker Corporation
Airside Business Park
100 Airside Drive
Moon Township, PA 15108
www.mbakercorp.com

AFGHAN NATIONAL ARMY
REGIONAL MILITARY TRAINING CENTER
STANDARD DESIGN

ADMIN TRAINING COMPANY

ELEVATIONS

Sheet reference number:
A–201

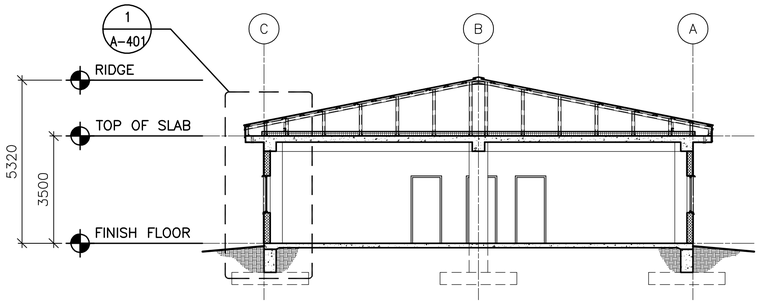

1 A-301 **BUILDING SECTION**
SCALE: 1:100

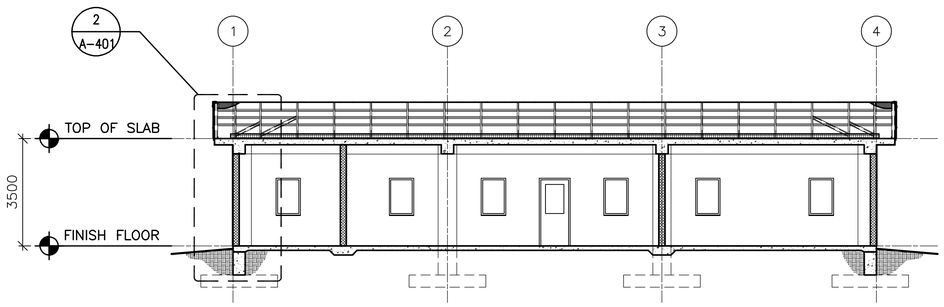

2 A-301 **BUILDING SECTION**
SCALE: 1:100

LINEAR DIMENSIONS SHOWN ARE IN MILLIMETERS (MM), UNLESS OTHERWISE NOTED

0 2000 4000
SCALE: 1:100

APPROVED:

A/E DESIGNER OF RECORD

SEAL:

STATE OF SOUTH CAROLINA
KEVIN R. CHAFIN
N. Charleston, SC
6374
REGISTERED ARCHITECT

US ARMY CORPS OF ENGINEERS
AFGHANISTAN ENGINEER DISTRICT

Mark	Description	Date	Appr.	Mark	Description	Date	Appr.

U.S. ARMY CORPS OF ENGINEERS
AFGHANISTAN ENGINEER DISTRICT
APO AE 96338

Michael Baker Jr., Inc.
A unit of Michael Baker Corporation
Airside Business Park
100 Airside Drive
Moon Township, PA 15108
www.mbakercorp.com

Designed by: KRC
Dwn by: KJG
Ckd by: NLJ
Reviewed by: LHM
Submitted by: BAKER
Date: 2/23/10
Rev: 0
Design file no.
Drawing code:
File name: ANAATCOA-301BS
Plot date: 2/23/2010
Plot scale:

AFGHAN NATIONAL ARMY
REGIONAL MILITARY TRAINING CENTER
STANDARD DESIGN

ADMIN TRAINING COMPANY

BUILDING SECTIONS

Sheet reference number:
A-301

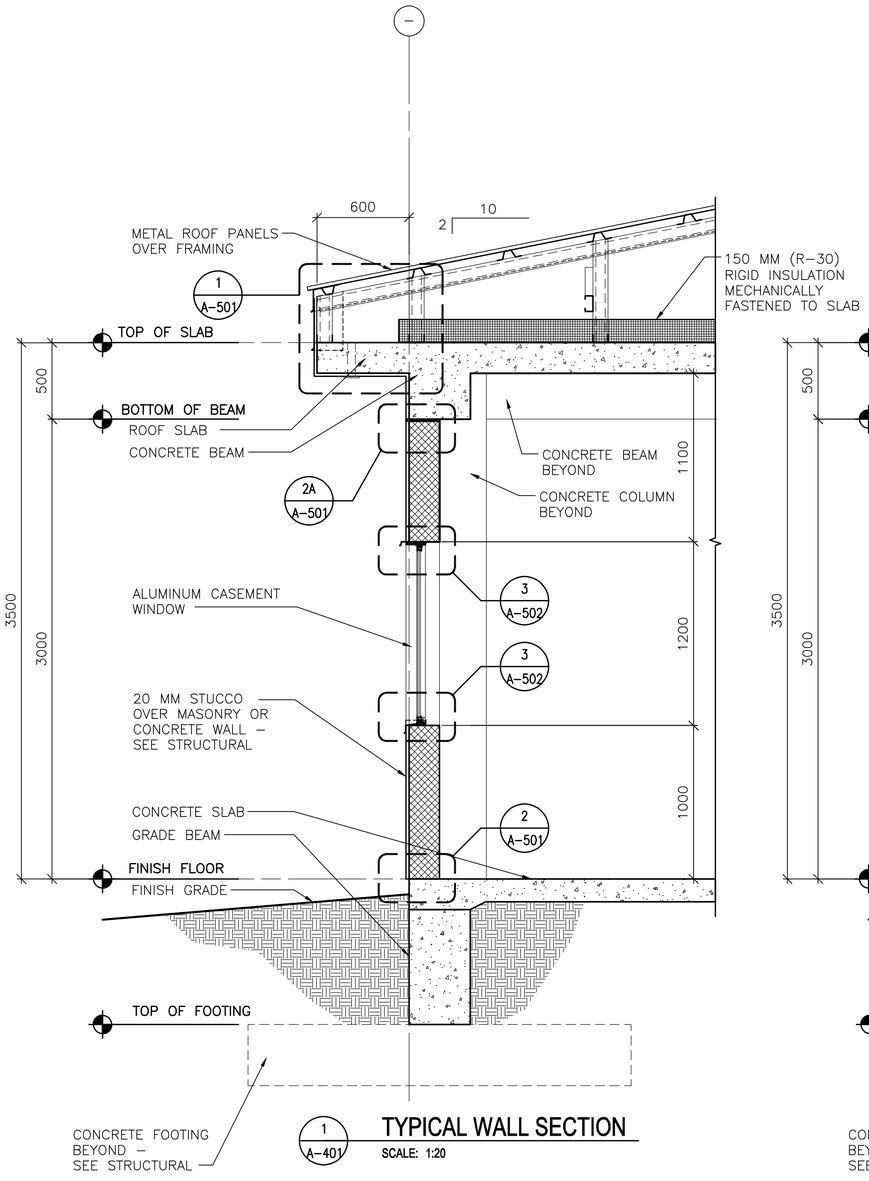

1 A-401 **TYPICAL WALL SECTION**

SCALE: 1:20

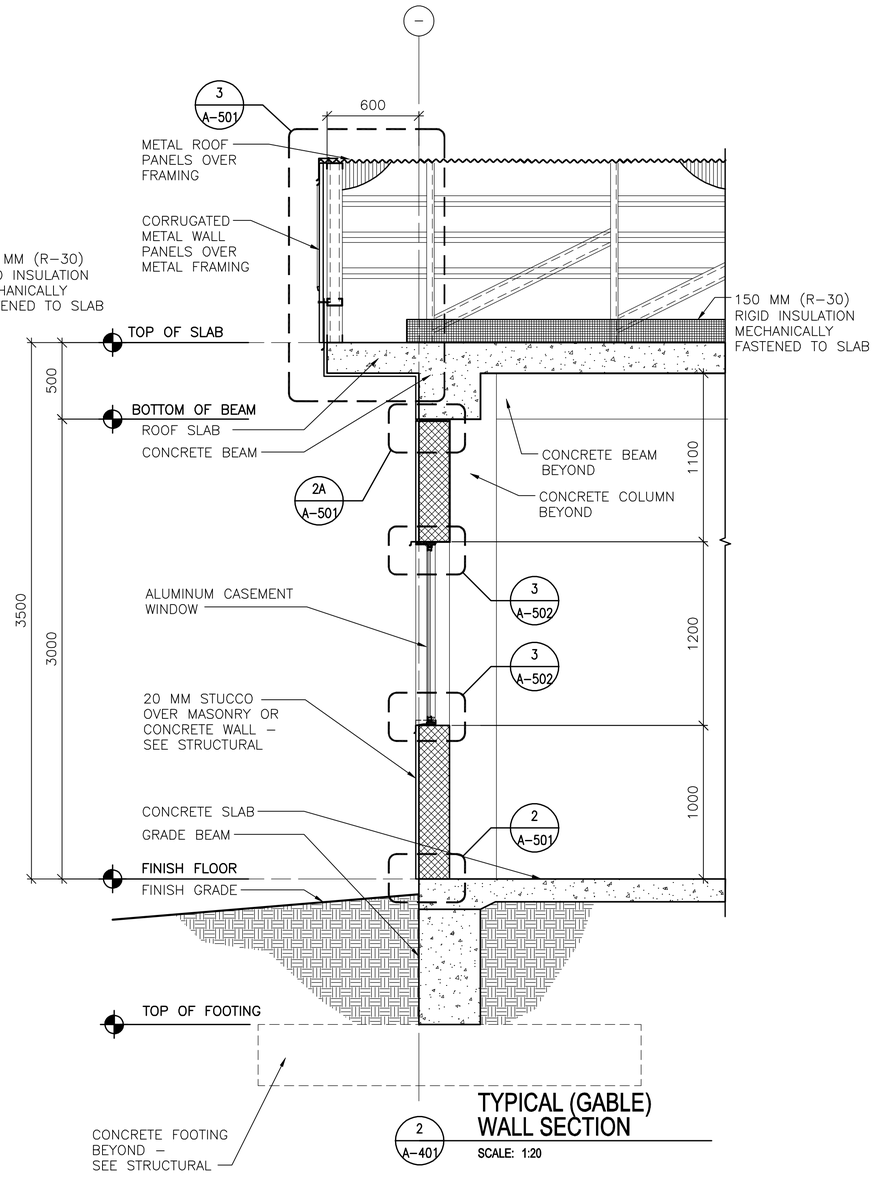

2 A-401 **TYPICAL (GABLE) WALL SECTION**

SCALE: 1:20

LINEAR DIMENSIONS SHOWN ARE IN MILLIMETERS (MM), UNLESS OTHERWISE NOTED

0 400 800
SCALE: 1:20

APPROVED:

A/E DESIGNER OF RECORD

SEAL:

STATE OF SOUTH CAROLINA
KEVIN R. CHAFIN
N. Charleston, SC
6374
REGISTERED ARCHITECT

US ARMY CORPS OF ENGINEERS
AFGHANISTAN ENGINEER DISTRICT

Mark	Description	Date	Appr.	Mark	Description	Date	Appr.

Date: 2/23/10
Rev: 0
Design file no.
Drawing code:
File name: ANAATCOA-401WS
Plot date: 2/23/2010
Plot scale:

Designed by: KRC
Dwn by: KJG
Ckd by: NLJ
Reviewed by: LHM
Submitted by: BAKER

U.S. ARMY CORPS OF ENGINEERS
AFGHANISTAN ENGINEER DISTRICT
APO AE 96338

Michael Baker Jr., Inc
A unit of Michael Baker Corporation
Airside Business Park
100 Airside Drive
Moon Township, PA 15108
www.mbakercorp.com

AFGHAN NATIONAL ARMY
REGIONAL MILITARY TRAINING CENTER
STANDARD DESIGN

ADMIN TRAINING COMPANY

WALL SECTIONS

Sheet reference number:
A-401

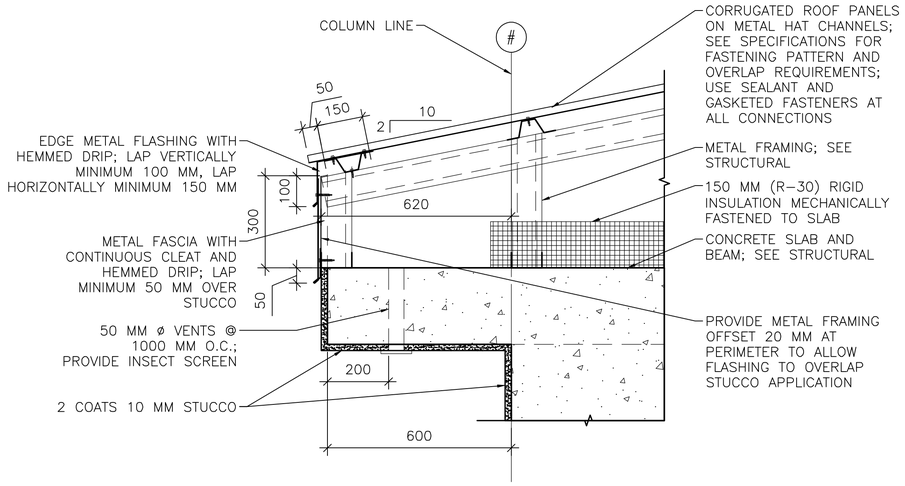

1 / A–501 **EAVE DETAIL**
SCALE 1:10

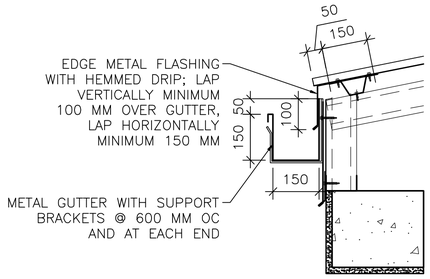

1A / A–501 **GUTTER DETAIL**
SCALE 1:10

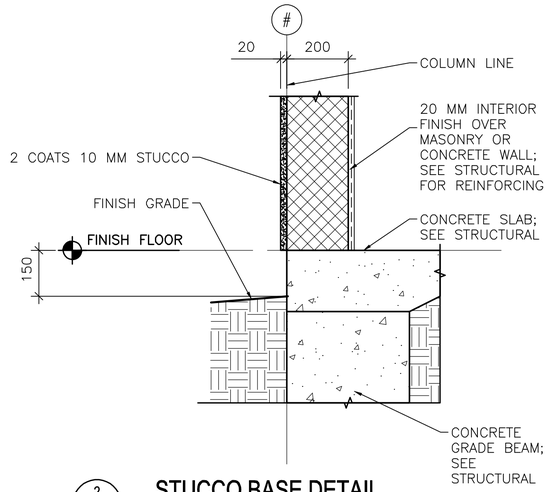

2 / A–501 **STUCCO BASE DETAIL**
SCALE 1:10

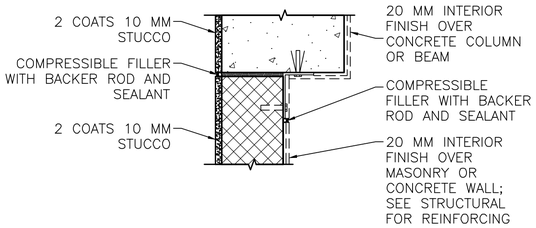

NOTE: DETAIL TYPICAL AT ALL WALL/COLUMN AND WALL/BEAM LOCATIONS, SEE ALTERNATE BRACING DETAIL BELOW 2B/A–501.

2A / A–501 **STUCCO JOINT DETAIL**
SCALE 1:10

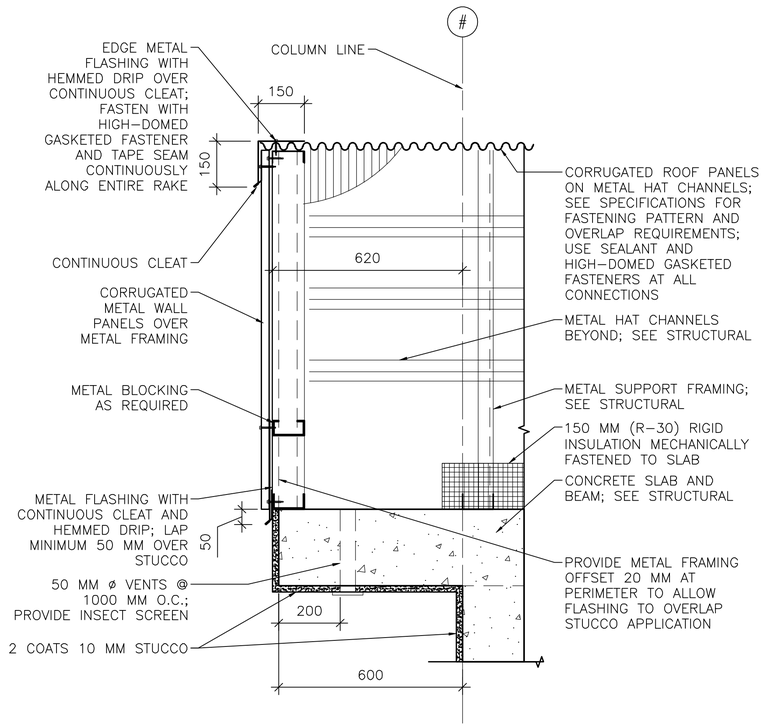

3 / A–501 **RAKE/EAVE DETAIL**
SCALE 1:10

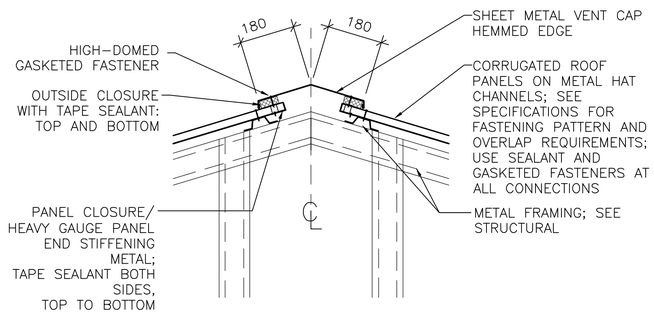

4 / A–501 **RIDGE VENT DETAIL**
SCALE 1:10

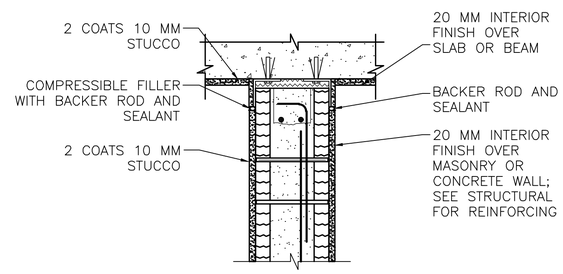

INTERIOR WALL/BEAM

2B / A–501 **ALTERNATE BRACING DETAIL**
SCALE 1:10

LINEAR DIMENSIONS SHOWN ARE IN MILLIMETERS (MM), UNLESS OTHERWISE NOTED

0 200 400
SCALE: 1:10

APPROVED:

A/E DESIGNER OF RECORD

SEAL:

STATE OF SOUTH CAROLINA
KEVIN R. CHAFIN
N. Charleston, SC
6374
REGISTERED ARCHITECT

US ARMY CORPS OF ENGINEERS
AFGHANISTAN ENGINEER DISTRICT

Mark	Description	Date	Appr.	Mark	Description	Date	Appr.

Date: 2/23/10
Rev: 0
Design file no.
Drawing code:
File name: ANAATCOA-501DT
Plot date: 2/23/2010
Plot scale:

Designed by: KRC
Dwn by: KJG
Ckd by: NLJ
Reviewed by: LHM
Submitted by:
BAKER

U.S. ARMY CORPS OF ENGINEERS
AFGHANISTAN ENGINEER DISTRICT
APO AE 96338

Michael Baker Jr., Inc
A unit of Michael Baker Corporation
Airside Business Park
100 Airside Drive
Moon Township, PA 15108
www.mbakercorp.com

AFGHAN NATIONAL ARMY
REGIONAL MILITARY TRAINING CENTER
STANDARD DESIGN

ADMIN TRAINING COMPANY

EXTERIOR DETAILS

Sheet reference number:
A–501

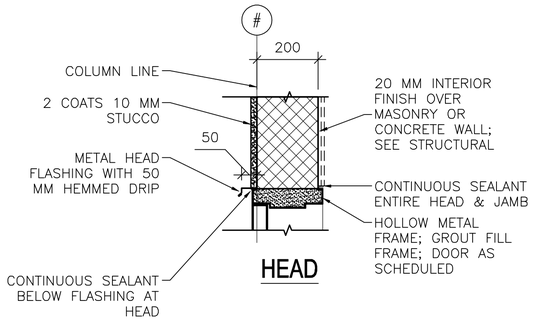

HEAD

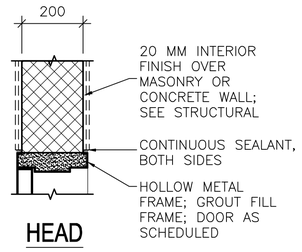

HEAD

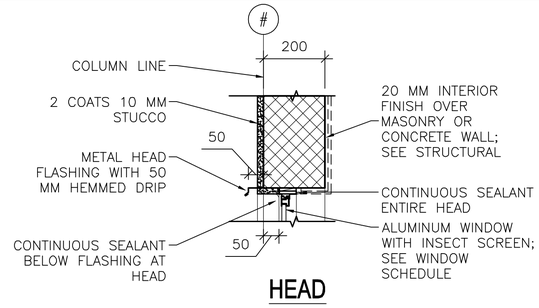

HEAD

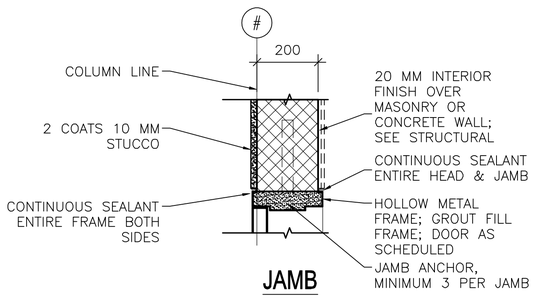

JAMB

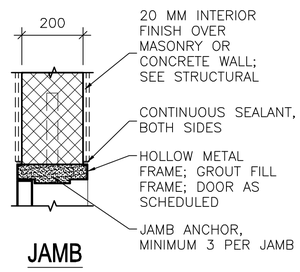

JAMB

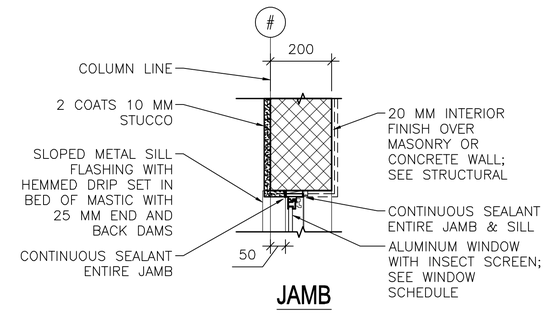

JAMB

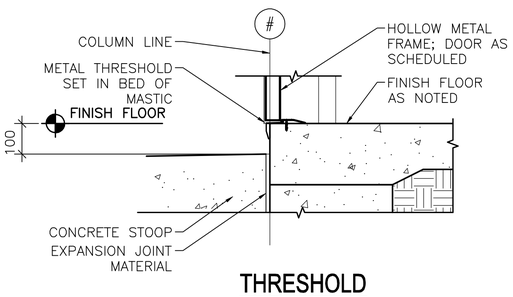

THRESHOLD

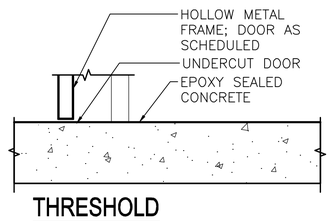

THRESHOLD

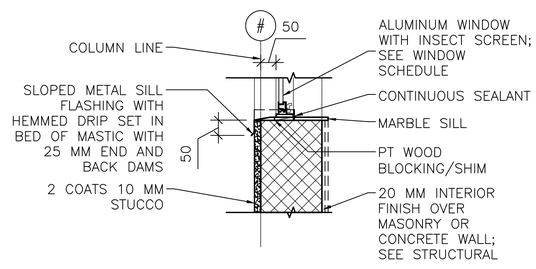

SILL

1 A-502 **EXTERIOR DOOR DETAILS**
SCALE: 1:10

2 A-502 **INTERIOR DOOR DETAILS**
SCALE: 1:10

3 A-502 **EXTERIOR WINDOW DETAILS**
SCALE: 1:10

LINEAR DIMENSIONS SHOWN ARE IN MILLIMETERS (MM), UNLESS OTHERWISE NOTED

0 200 400
SCALE: 1:10

APPROVED:

A/E DESIGNER OF RECORD

SEAL:

STATE OF SOUTH CAROLINA
KEVIN R. CHAFIN
N. Charleston, SC
6374
REGISTERED ARCHITECT

US ARMY CORPS OF ENGINEERS
AFGHANISTAN ENGINEER DISTRICT

Mark	Description	Date	Appr.	Mark	Description	Date	Appr.

U.S. ARMY CORPS OF ENGINEERS
AFGHANISTAN ENGINEER DISTRICT
APO AE 96338

Michael Baker Jr., Inc
A unit of Michael Baker Corporation
Airside Business Park
100 Airside Drive
Moon Township, PA 15108
www.mbakercorp.com

Designed by: KRC		Date: 2/23/10	Rev: 0
Dwn by: KJG	Ckd by: NLJ	Design file no.	
Reviewed by: LHM		Drawing code:	
Submitted by: BAKER		File name: ANAATCOA-5029-NS Plot date: 2/23/2010 Plot scale:	

AFGHAN NATIONAL ARMY
REGIONAL MILITARY TRAINING CENTER
STANDARD DESIGN

ADMIN TRAINING COMPANY

HEAD, JAMB & SILL DETAILS

Sheet reference number:
A-502

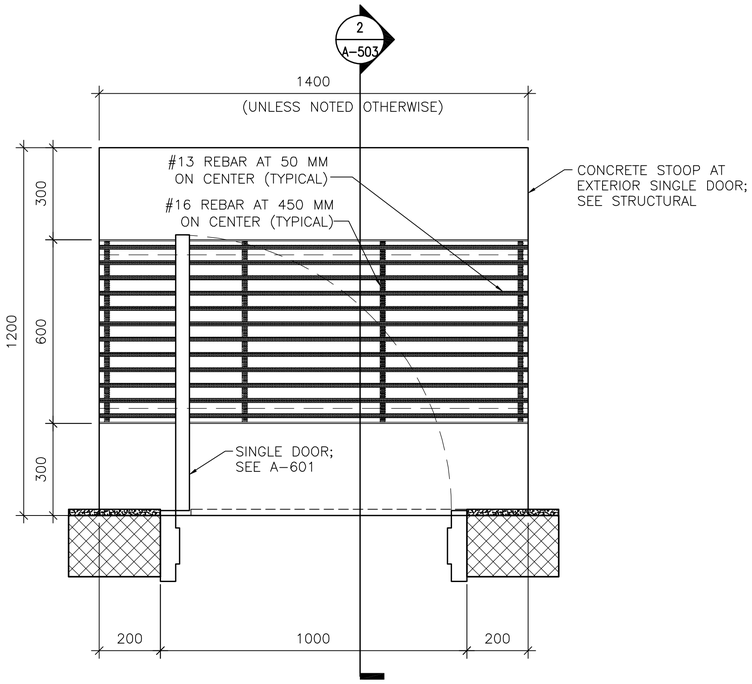

1 A-503 **DOOR STOOP PLAN (WITH GRATE)**

SCALE: 1:10

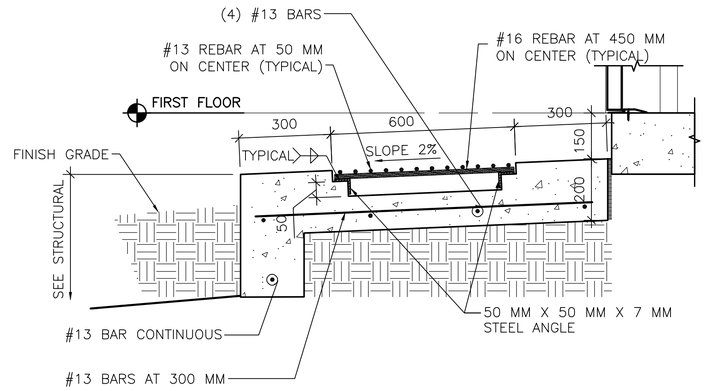

2 A-503 **DOOR STOOP DETAIL**

SCALE: 1:10

LINEAR DIMENSIONS SHOWN ARE IN MILLIMETERS (MM), UNLESS OTHERWISE NOTED

0 200 400
SCALE: 1:10

APPROVED:

A/E DESIGNER OF RECORD

SEAL:

STATE OF SOUTH CAROLINA
KEVIN R. CHAFIN
N. Charleston, SC
6374
REGISTERED ARCHITECT

US ARMY CORPS OF ENGINEERS
AFGHANISTAN ENGINEER DISTRICT

Mark	Description	Date	Appr.	Mark	Description	Date	Appr.

U.S. ARMY CORPS OF ENGINEERS
AFGHANISTAN ENGINEER DISTRICT
APO AE 96338

Michael Baker Jr., Inc.
A unit of Michael Baker Corporation
Airside Business Park
100 Airside Drive
Moon Township, PA 15108
www.mbakercorp.com

Designed by: KRC	Date: 2/23/10
Dwn by: KJG	Ckd by: NLJ
Reviewed by: LHM	Design file no.
Submitted by: BAKER	Drawing code:
File name: ANAATCOA-5535DT	Rev: 0
Plot date: 2/23/2010	
Plot scale:	

AFGHAN NATIONAL ARMY
REGIONAL MILITARY TRAINING CENTER
STANDARD DESIGN

ADMIN TRAINING COMPANY

STOOP DETAILS

Sheet reference number:
A-503

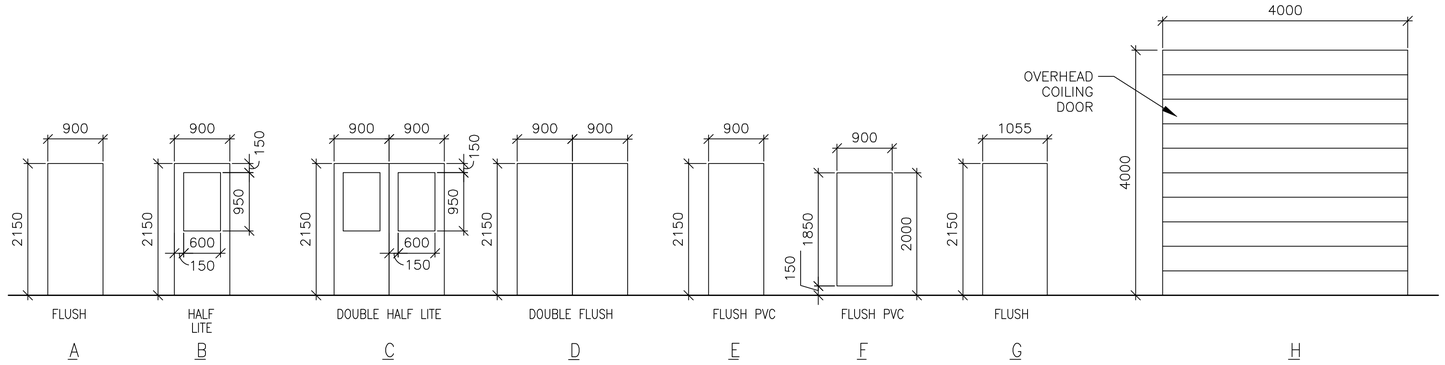

1 A-601 DOOR TYPES

SCALE: 1:50

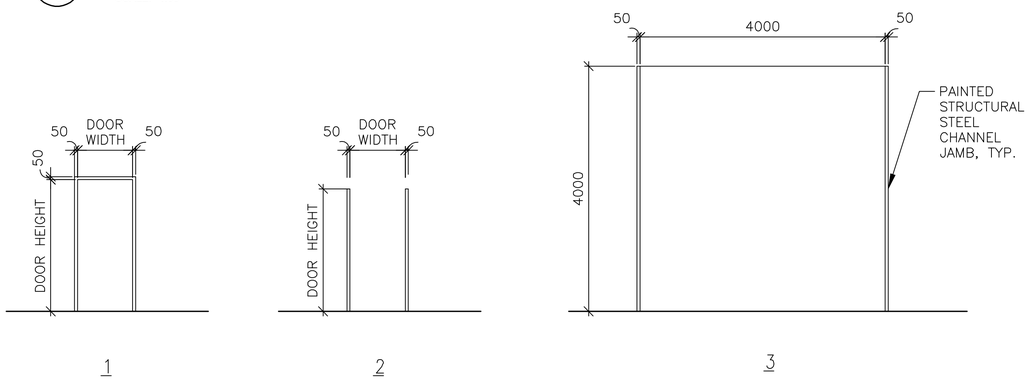

2 A-601 FRAME TYPES

SCALE: 1:50

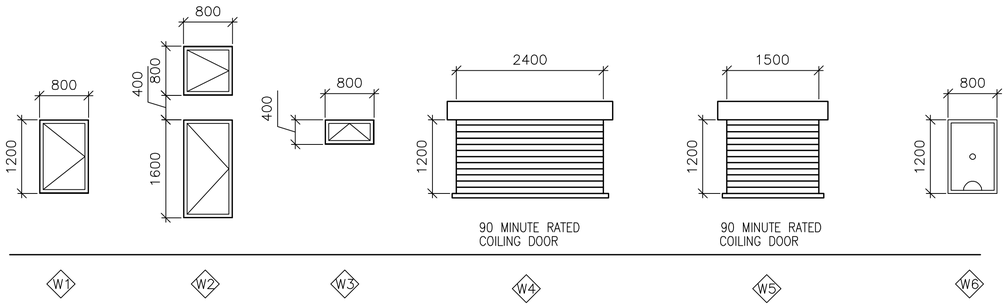

3 A-601 WINDOW TYPES

SCALE: 1:50

WINDOW TYPE NOTES:

1. ALL EXTERIOR WINDOWS SHALL BE ALUMINUM WITH INSECT SCREENS. WINDOWS SHALL BE COMMERCIAL GRADE.
2. ALL EXTERIOR WINDOWS SHALL BE OPERABLE.

4 A-601 DOOR TAG

SCALE: NTS

5 A-601 RATED DOOR TAG

SCALE: NTS

DOOR TAG NOTES:

1. THE DOOR TAG INDICATES THE DOOR TYPE, FRAME TYPE AND HARDWARE SET FOR EACH DOOR.
2. THE DOOR TAG FOR RATED DOORS INCLUDES THE RATING OF THE DOOR IN MINUTES.

EXTERIOR DOOR HARDWARE TYPES:

HW-1 1-1/2 PR HINGES, A5112 114 X 114
1 EA RIM EXIT DEVICE, TYPE 1
1 EA CYLINDER. E09221A, GRADE 1
1 EA OVERHEAD CLOSER, C02061, LOW RESISTANCE
1 EA THRESHOLD, J32130
3 EA DOOR SILENCERS, L03011

HW-2 1-1/2 PR HINGES, A5112 114 X 114
1 EA LOCKSET, F13 ENTRY LOCK W/LEVER HANDLES, GRADE 1
1 EA OVERHEAD CLOSER, C02061, LOW RESISTANCE
1 EA THRESHOLD, J32130
3 EA DOOR SILENCERS, L03011

HW-3 3 PR HINGES, A5112 114 X 114
2 EA RIM EXIT DEVICE, TYPE 1
2 EA CYLINDER. GRADE 1
2 EA OVERHEAD CLOSER, C02061, LOW RESISTANCE
1 EA DOOR COORDINATOR, TYPE 21
1 EA ASTRAGAL
1 EA THRESHOLD, J32130
2 EA DOOR SILENCERS, L03011

HW-4 3 PR HINGES, A5112 114 X 114
1 EA LOCKSET W/LEVER HANDLES. GRADE 1, F13
1 EA OVERHEAD CLOSER, C02061, LOW RESISTANCE
2 EA MAGNETIC HOLDER PIN, ATTACHED TO DOOR LEAF
2 EA MAGNETIC HOLDER RECEIVER, ATTACHED TO STOOP
2 EA LEVER EXTENSION FLUSH BOLTS, L04081
1 EA ASTRAGAL
1 EA THRESHOLD, J32130
2 EA DOOR SILENCERS, L03011

DOOR AND HARDWARE NOTES:

1. INTERIOR AND EXTERIOR METAL DOORS AND FRAME COLORS SHALL MATCH ADJACENT WALL COLORS AS SELECTED BY THE CONTRACTING OFFICER.
2. FRAMES, EXCEPT FIRE-RATED FRAMES, SHALL BE MOUNTED AND ADJUSTED IN ACCORDANCE WITH MANUFACTURER'S INSTRUCTIONS. FRAMES SHALL BE FASTENED WITH MINIMUM OF THREE ANCHORS PER JAMB AT EQUAL INTERVALS.
3. DIMENSIONS SHOWN ON DOOR TYPES DETAIL ARE BASED UPON MODULAR MASONRY (OR ROUGH OPENING), HEIGHT OF 2200 MM FOR STANDARD PERSONNEL DOORS. CONTRACTOR SHALL COORDINATE WITH DOOR SUPPLIER TO ENSURE THAT DIMENSIONS OF DOORS AND FRAMES PROVIDED ARE COMPATIBLE WITH DOOR OPENING DIMENSIONS.
4. HARDWARE SHALL BE HEAVY DUTY, COMMERCIAL GRADE, STAINLESS STEEL WITH A SATIN OR BRUSHED FINISH.
5. HARDWARE TYPES INCLUDE BUILDERS HARDWARE MANUFACTURERS ASSOCIATION (BMHA) NUMBER.
6. DOORS IN 2 HOUR RATED PARTITIONS SHALL BE 1.5 HOUR (90 MINUTE) RATED DOORS IN ACCORDANCE WITH NFPA 101, TABLE 8.3.4.2.
7. DOORS AT STAIR ENCLOSURES SHALL BE 1 HOUR (60 MINUTE) RATED AT 1 HOUR WALL IN ACCORDANCE WITH NFPA 101, TABLE 8.3.4.2.
8. DOORS IN 1 HOUR RATED WALLS SHALL BE 3/4 HOUR (45 MINUTE) RATED DOORS IN ACCORDANCE WITH NFPA 101, TABLE 8.3.4.2.
9. DOORS IN 1 HOUR RATED CORRIDOR WALLS SHALL BE 1/3 HOUR (20 MINUTE) IN ACCORDANCE WITH NFPA 101, TABLE 8.3.4.2.
10. PROVIDE DOOR STOPS TO PROTECT WALLS ON LOCATIONS WHERE DOOR SWING WILL STRIKE WALL.

THIS SHEET IS STANDARD AND IS INCLUSIVE OF ALL THE DOOR/ WINDOW/ HARDWARE TYPES FOR THE ENTIRE RMTC CONTRACT. NOT ALL DOOR/ WINDOW/ HARDWARE TYPES ARE USED FOR ANY PARTICULAR BUILDING DESIGN. CONTRACTOR SHALL REFER TO THE FLOOR PLAN FOR THE TYPES BEING USED.

INTERIOR DOOR HARDWARE TYPES:

HW-5 1-1/2 PR HINGES, A8133 114 X 114
1 EA LOCKSET W/LEVER HANDLES, F08, GRADE 1
1 EA WALL STOP, L02101 OR L02161
3 EA DOOR SILENCERS, L03011

HW-6 1-1/2 PR HINGES, A8112 114 X 114
1 EA LOCKSET W/LEVER HANDLES, F08, GRADE 1
1 EA WALL STOP, L02101 OR L02161
1 EA OVERHEAD CLOSER, C02061, LOW RESISTANCE
3 EA DOOR SILENCERS, L03011

HW-7 1-1/2 PR HINGES, A8133
1 EA LOCKSET W/LEVER HANDLES, F13 GRADE 1
1 EA WALL STOP, L02101 OR L02161
2 EA MOP PLATE, J103
3 EA DOOR SILENCERS, L03011

HW-8 1-1/2 PR HINGES, A8112
1 EA LOCKSET W/LEVER HANDLES, F13 GRADE 1
1 EA WALL STOP, L02101 OR L02161
2 EA MOP PLATE, J103
1 EA OVERHEAD CLOSER, C02061, LOW RESISTANCE
3 EA DOOR SILENCERS, L03011

HW-9 1-1/2 PR HINGES, A5112 114 X 114
1 EA RIM EXIT DEVICE, TYPE 1
1 EA CYLINDER. E09221A, GRADE 1
1 EA OVERHEAD CLOSER, C02061, LOW RESISTANCE
3 EA DOOR SILENCERS, L03011

HW-10 3 PR HINGES, A5112 114 X 114
1 EA LOCKSET W/LEVER HANDLES. GRADE 1, F13
2 EA LEVER EXTENSION FLUSH BOLTS, L04081
1 EA ASTRAGAL
2 EA DOOR SILENCERS, L03011

HW-11 1-1/2 PR HINGES, A8112 114 X 114
1 EA LOCKSET W/LEVER HANDLES, F13, GRADE 1
1 EA WALL STOP, L02101 OR L02161
1 EA OVERHEAD CLOSER, C02061, LOW RESISTANCE
3 EA DOOR SILENCERS, L03011
1 EA ROBE HOOK

HW-12 1-1/2 PR HINGES, A8133
1 EA LATCHSET W/LEVER HANDLES, F76 GRADE 1
1 EA WALL STOP, L02101 OR L02161
2 EA MOP PLATE, J103
3 EA DOOR SILENCERS, L03011
1 EA ROBE HOOK

HW-13 3 PR HINGES, A5112 114 X 114
1 EA LOCKSET W/LEVER HANDLES. GRADE 1, F13
1 EA OVERHEAD CLOSER, C02061, LOW RESISTANCE
2 EA LEVER EXTENSION FLUSH BOLTS, L04081
1 EA ASTRAGAL
2 EA DOOR SILENCERS, L03011

HW-14 3 PR HINGES, A5112 114 X 114
2 EA RIM EXIT DEVICE, TYPE 1
2 EA CYLINDER. GRADE 1
2 EA OVERHEAD CLOSER, C02061, LOW RESISTANCE
1 EA DOOR COORDINATOR, TYPE 21
1 EA ASTRAGAL
2 EA DOOR SILENCERS, L03011

APPROVED:

A/E DESIGNER OF RECORD

SEAL:

STATE OF SOUTH CAROLINA
KEVIN R. CHAFIN
N. Charleston, SC
6374
REGISTERED ARCHITECT

US ARMY CORPS OF ENGINEERS
AFGHANISTAN ENGINEER DISTRICT

Mark	Description	Date	Appr.	Mark	Description	Date	Appr.

Rev: 0
Date: 2/23/10
Design file no.
Drawing code:
File name: ANAATCOA-601SCH
Plot date: 2/23/2010
Plot scale:

Designed by: KRC
Dwn by: KJG
Ckd by: NLJ
Reviewed by: LHM
Submitted by:
BAKER

U.S. ARMY CORPS OF ENGINEERS
AFGHANISTAN ENGINEER DISTRICT
APO AE 96338

Michael Baker Jr., Inc.
A unit of Michael Baker Corporation
Airside Business Park
100 Airside Drive
Moon Township, PA 15108
www.mbakercorp.com

AFGHAN NATIONAL ARMY
REGIONAL MILITARY TRAINING CENTER
STANDARD DESIGN

ADMIN TRAINING COMPANY

WINDOW AND DOOR SCHEDULES

Sheet reference number:
A-601

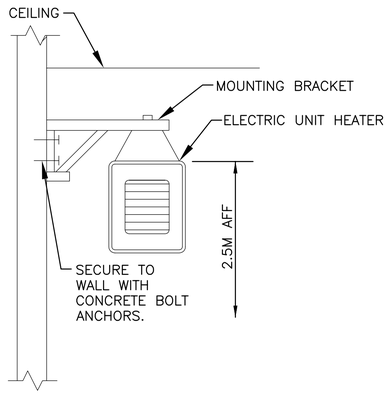

2 M-101 ELECTRIC UNIT HEATER MOUNTING DETAIL
N.T.S.

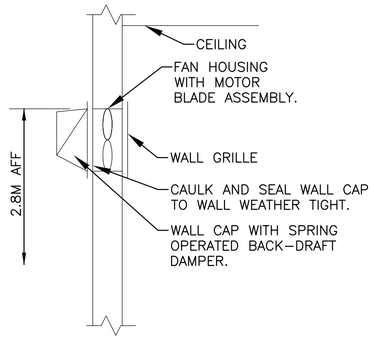

3 M-101 EXHAUST FAN DETAIL
N.T.S.

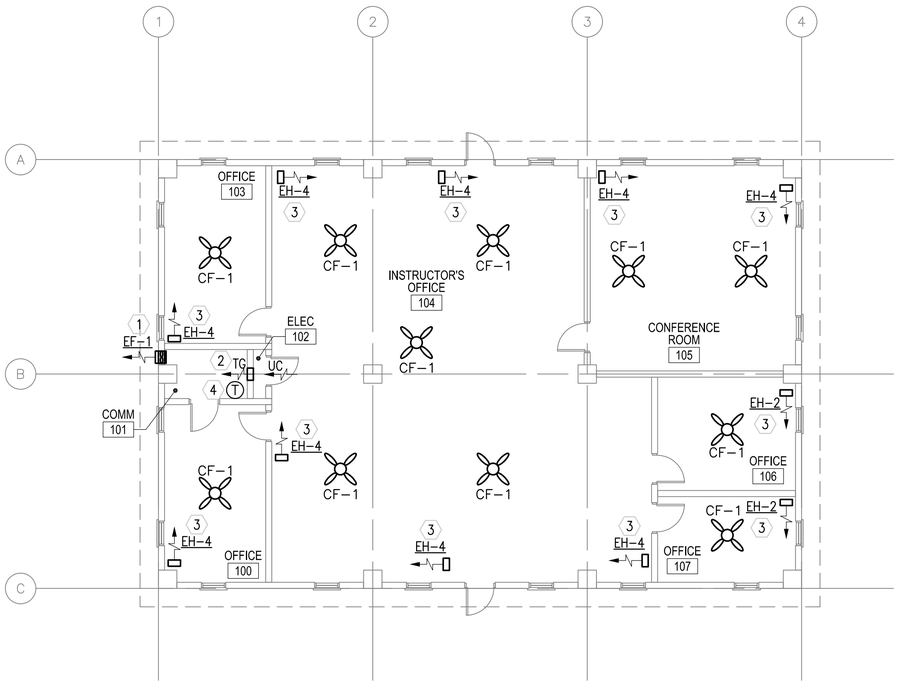

1 M-101 FLOOR PLAN - HVAC
SCALE: 1:100

GENERAL NOTES:

1. DO NOT SCALE DRAWINGS – ALL DIMENSIONS AND CONDITIONS SHALL BE CHECKED AND VERIFIED BY THE CONTRACTOR AT THE SITE.
2. ALL WORK PERFORMED ON THIS BUILDING SHALL BE IN COMPLIANCE WITH ALL PERTINENT CODES, RULES, ORDINANCES AND REGULATIONS OF THE GOVERNING AUTHORITIES.
3. ALL WORK PERFORMED UNDER AND IN CONNECTION WITH THESE DRAWINGS AND SPECIFICATIONS SHALL BE IN STRICT COMPLIANCE WITH THE LATEST SAFETY AND HEALTH STANDARDS.

SYMBOLS:

- (X) KEY NOTE
- (.050) AIR VOLUME IN CUBIC METERS PER SECOND (CMS)
- VOLUME DAMPER
- (T) THERMOSTAT WITH LOCKING COVER
- UC DOOR UNDERCUT
- TG TRANSFER GRILLE

ABBREVIATIONS:

AFF	ABOVE FINISH FLOOR
CF	CEILING FANS
CMS	CUBIC METERS PER SECOND
STATS	THERMOSTATS

KEY NOTE:

1. WALL EXHAUST FAN WITH SPRING OPERATED BACK-DRAFT DAMPER.
2. 200x150 (8x6) TRANSFER GRILLE. MOUNT GRILLE 800mm BELOW CEILING. COORDINATE LOCATION IN FIELD WITH OTHER TRADES.
3. UNIT HEATER SECURED FROM WALL. SEE DETAIL THIS SHEET.
4. THERMOSTAT MOUNTED AS HIGH AS POSSIBLE. INTERLOCK STAT WITH CORRESPONDING EXHAUST FAN, SET FAN TO ENERGIZE ON RISE IN TEMPERATURE ABOVE 25°C (77°F).

ELECTRIC UNIT HEATER SCHEDULE

NO.	CMS	KW	F.A.T. °C	ELECT. CHAR.	MOUNTING
EH-2	0.200	2.6	38	380/1/50	WALL HUNG
EH-4	0.200	4	38	380/1/50	WALL HUNG

NOTES:
1. UNIT HEATERS SHALL HAVE TAMPER PROOF INTEGRAL STATS.
2. COORDINATE LOCATION AND ORIENTATION IN FIELD

EXHAUST FAN SCHEDULE

NO.	TYPE	FAN CMS	DRIVE	HP	SP mmH2O	ELECTRICAL DATA	SWITCH
EF-1	WALL	0.035	DIRECT	FRACT	13	220/1/50	W/ STAT

NOTE:
1. FANS SHALL HAVE SPRING OPERATED BACK DRAFT DAMPER.

CEILING FAN

NO.	BLADE SIZE mm	BLADE SIZE IN	VOLTAGE	SWITCH	REMARKS
CF-1	1320	52	220/1/50	@ WALL	3 SPEED REVERSIBLE MOTOR

NOTES:
1. INSTALL FANS 2.5M AFF.
2. PROVIDE WITH OUT LIGHT FIXTURE.
3. PROVIDE WITH REMOTE MOUNTED ON-OFF SWITCH SHOWN ON ELECTRICAL DRAWINGS.

LINEAR DIMENSIONS SHOWN ARE IN MILLIMETERS (MM), UNLESS OTHERWISE NOTED

0 2000 4000
SCALE: 1:100

APPROVED:

A/E DESIGNER OF RECORD

SEAL:

COMMONWEALTH OF PENNSYLVANIA
REGISTERED PROFESSIONAL
MATTHEW R. SOTOSKY
ENGINEER
046576-E

US ARMY CORPS OF ENGINEERS
AFGHANISTAN ENGINEER DISTRICT

Mark	Description	Date	Appr.

Mark	Description	Date	Appr.

Date: 02/23/10
Rev: 0
Design file no.
Drawing code:
File name: ANAATCOMM-107XXX
Plot date: 02/26/2010
Plot scale: 1:100

Designed by: RML
Dwn by: JJN
Ckd by: CJM
Reviewed by: MRS
Submitted by: BAKER

U.S. ARMY CORPS OF ENGINEERS
AFGHANISTAN ENGINEER DISTRICT
APO AE 96338

Michael Baker Jr., Inc.
A unit of Michael Baker Corporation
Airside Business Park
100 Airside Drive
Moon Township, PA 15108
www.mbakercorp.com

AFGHAN NATIONAL ARMY
REGIONAL MILITARY TRAINING CENTER
STANDARD DESIGN

ADMIN TRAINING COMPANY

HVAC – FLOOR PLAN, SCHEDULES AND DETAILS

Sheet reference number:
M-101

POWER

- DISTRIBUTION PANELBOARD
- NEW PANELBOARD – SURFACE
- NEW PANELBOARD – RECESSED
- GENERATOR
- TRANSFORMER (DRAWN TO SCALE)
- JUNCTION BOX
- JUNCTION BOX – CEILING
- FUSIBLE SAFETY SWITCH
- MOTOR
- MOTOR STARTING SWITCH – 220V, 20A RATED UNLESS OTHERWISE STATED
- ELECTRIC WATER HEATER
- CEILING FAN – REFER TO SPECIFICATION SECTION 26 20 00

RECEPTACLES

- DUPLEX 20A TYPE CEE 7/7 "SCHUKO STYLE" UNSWITCHED RECEPTACLE
- GF — DUPLEX 20A TYPE CEE 7/7 "SCHUKO STYLE" UNSWITCHED RECEPTACLES – 10mA GROUND FAULT INTERRUPTER TYPE
- WP — DUPLEX 20A TYPE CEE 7/7 "SCHUKO STYLE" UNSWITCHED TYPE WITH WEATHERPROOF COVER – 10mA GROUND FAULT INTERRUPTER TYPE
- EXP — DUPLEX 20A TYPE CEE 7/7 "SCHUKO STYLE" UNSWITCHED RECEPTACLES – EXPLOSION PROOF
- * — INDICATES MOUNT DEVICE ABOVE COUNTERTOP OR AT 1070mm ABOVE FINISHED FLOOR WHERE NO COUNTER IS TO BE INSTALLED.

LIGHTING

- LIGHTING FIXTURE – SEE FIXTURE SCHEDULE FOR MORE INFORMATION
- EMERGENCY LIGHTING FIXTURE – SEE FIXTURE SCHEDULE FOR MORE INFORMATION
- DOWNLIGHT
- LIGHTING FIXTURE ON NORMAL/EMERGENCY
- WALL MOUNTED LIGHT FIXTURE
- E — EXIT SIGN – DIRECTIONAL ARROWS AS INDICATED ON DRAWINGS
- REMOTE HEAD FOR BATTERY PACK
- $ — SINGLE POLE SWITCH – 20A RATED
- $3 — 3–WAY SWITCH – 20A RATED
- $4 — 4–WAY SWITCH – 20A RATED
- LC — LIGHTING CONTACTOR
- POLE MOUNTED SITE LIGHTING FIXTURE– NUMBER OF FIXTURES PER POLE AS INDICATED ON DRAWINGS
- EXTERIOR DIRECTIONAL LIGHTING FIXTURE
- a — SMALL CASE LETTERS REPRESENTS LAMP(S) / SWITCHES.

TELECOMMUNICATIONS

- TELEPHONE OUTLET(S) @ 45cm AFF. U.N.O. WITH 20mm RACEWAY TERMINATED TO TELEDATA TERMINAL BOARD.
- DATA OUTLET(S) @ 45cm AFF. U.N.O. WITH 20mm RACEWAY TERMINATED TO TELEDATA TERMINAL BOARD.

TELECOMMUNICATIONS (CONTINUED)

- COMBINATION TELEPHONE/DATA OUTLET(S) @ 45cm AFF. U.N.O. WITH 27mm RACEWAY TERMINATED TO TELEDATA TERMINAL BOARD.
- W — WALL MTD. TELEPHONE OUTLET WITH 20mm RACEWAY TO TELEDATA TERMINAL BOARD.
- (x)T — INDICATES NUMBER OF TELEPHONE OUTLET(S) AND ASSOCIATED CABLING
- (x)D — INDICATES NUMBER OF DATA OUTLET(S) AND ASSOCIATED CABLING
- (x)TF — INDICATES NUMBER OF TELEPHONE OUTLETS AND ASSOCIATED CABLING WITH 1 OUTLET AND CABLE DEDICATED FOR FAX

SINGLE LINE SYMBOLS

- SWITCH
- BREAKER
- FUSE
- TRANSFORMER
- GROUND
- CONTACT (NORMALLY OPEN)
- CONTACT (NORMALLY CLOSED)
- TRANSFER SWITCH
- CURRENT TRANSFORMER
- INDICATES NEW ELECTRICAL EQUIPMENT
- C — INDICATES NEW CONTROL WIRING AND CONDUIT
- EQUIPMENT OUTLINE

MISCELLANEOUS

- BRANCH CIRCUIT WIRING, SURFACE MOUNTED ON WALLS
- BRANCH CIRCUIT WIRING – 6mm²
- BRANCH CIRCUIT WIRING – UNDER FLOOR
- HOME RUN BACK TO PANEL
- CONDUIT TURNED DOWN
- CONDUIT TURNED UP
- LV — LOW VOLTAGE WIRING AND CONDUIT
- INDICATES CONTINUATION OF LINE

FIRE ALARM

- FACP — FIRE ALARM CONTROL PANEL WITH BATTERY BACKUP
- F — FIRE ALARM PULL STATION

FIRE ALARM (CONTINUED)

- F — FIRE ALARM STROBE – WALL MOUNTED
- F — FIRE ALARM AUDIBLE/STROBE – WALL MOUNTED
- F — FIRE ALARM HORN/STROBE – WALL MOUNTED
- S — SMOKE DETECTOR
- H — HEAT DETECTOR CEILING MOUNTED
- D — DUCT DETECTOR – PROVIDED BY EC, INSTALLED BY MC AND CONNECTED BY EC

DENOTATIONS & ABBREVIATIONS

AFF	ABOVE FINISHED FLOOR
C	CEILING MOUNTED
E	EMERGENCY
EC	ELECTRICAL CONTRACTOR
EPO	EMERGENCY POWER OFF
EXP	EXPLOSION PROOF
F	FIRE ALARM
FF	FLUSH FLOOR MOUNTED
FL	FLUORESCENT
FO	FIBER OPTIC
FSS	FUSED SAFETY SWITCH
GF	GROUND FAULT INTERRUPTER
GC	GENERAL CONTRACTOR
IG	ISOLATED GROUND
K	KEY
LV	LOW VOLTAGE
M	MOTOR
MC	MECHANICAL CONTRACTOR
NE	NORMAL/EMERGENCY
NFSS	NON–FUSED SAFETY SWITCH
PA	PAGING SYSTEM
PLC	PLUMBING CONTRACTOR
SL	SINGLE LINE
T	TELEPHONE

DENOTATIONS & ABBREVIATIONS (CONT.)

TP	TAMPER PROOF
UE	UNDERGROUND ELECTRIC
W	WALL MOUNTED
WP	WEATHERPROOF WITH GROUND FAULT INTERRUPTION
WT	WATER TIGHT

GENERAL PROJECT NOTES:

G1. UNLESS OTHERWISE NOTED, PROVIDE ALL EQUIPMENT SHOWN ON THE PLANS. THE ELECTRICAL CONTRACTOR SHALL COORDINATE ALL SYMBOLS SHOWN ON THE PLANS WITH THE SYMBOL LIST. IT SHALL BE THE RESPONSIBILITY OF THE CONTRACTOR TO VERIFY THE INTENT OF ANY SYMBOL THAT IS SHOWN ON THE PLANS AND NOT INDICATED ON THE SYMBOL LIST WITH THE ENGINEER PRIOR TO BID.

G2. THE CONTRACTOR SHALL VERIFY THE LOCATION OF ALL UNDERGROUND UTILITIES WITHIN THE CONSTRUCTION AREA THREE (3) WORKING DAYS NOTICE BEFORE COMMENCING DIGGING. NOTIFY THE LOCAL AUTHORITY HAVING JURISDICTION AND WAIT THE REQUIRED TIME BEFORE COMMENCING TO DIG.

G3. THE CONTRACTOR SHALL COORDINATE CONDUIT RUNS, LIGHTING FIXTURES AND OTHER EQUIPMENT LOCATIONS WITH THE OTHER TRADE CONTRACTORS TO AVOID CONFLICTS.

G4. WHERE VOLTAGES AND FREQUENCIES ON THE DRAWINGS AND IN THE SPECIFICATIONS DIFFER FROM THE LOCAL ONES, ALL WORK SHALL BE PERFORMED USING THE LOCAL VOLTAGES AND FREQUENCIES.

G5. THE MINIMUM WIRE SIZE ON THE PROJECT SHALL BE 4mm². THE MINIMUM CONDUIT SIZE SHALL BE 20mm. THE MINIMUM BREAKER SIZE SHALL BE 20 AMPS.

G6. THE CONTRACTOR SHALL PUT A MAXIMUM OF 6 DUPLEX RECEPTACLES ON A 20A SINGLE POLE CIRCUIT.

G7. WHERE THE 1010 SCOPE REVIEW, 1015 TECHNICAL REVIEW, DRAWINGS, AND SPECIFICATIONS DIFFER FROM AMERICAN CODES OR STANDARDS, THE 1010, 1015, DRAWINGS, AND SPECIFICATIONS SHALL RULE.

G8. ALL CONDUIT AND DEVICES SHALL BE SURFACE MOUNTED UNLESS OTHERWISE INDICATED.

G9. CONTRACTOR SHALL COORDINATE ALL WORK WITH ALL OTHER TRADES TO ENSURE ALL WORK IS COMPLETED IN A PROFESSIONAL, WORKMAN–LIKE MANNER.

APPROVED:

A/E DESIGNER OF RECORD

SEAL:

COMMONWEALTH OF PENNSYLVANIA
REGISTERED PROFESSIONAL
JOSEPH R. GAUS
1/29/10
ENGINEER
PE-074251

US ARMY CORPS OF ENGINEERS
AFGHANISTAN ENGINEER DISTRICT

Mark	Description	Date	Appr.	Mark	Description	Date	Appr.

Rev: 0
Date: 2/23/10
Design file no.
Drawing code:
File name:
Plot date:
Plot scale:

Designed by:
Dwn by: BOB
Ckd by: JRG
Reviewed by: JRG
Submitted by: BAKER

U.S. ARMY CORPS OF ENGINEERS
AFGHANISTAN ENGINEER DISTRICT
APO AE 96338

Michael Baker Jr., Inc
A unit of Michael Baker Corporation
Airside Business Park
100 Airside Drive
Moon Township, PA 15108
www.mbakercorp.com

AFGHAN NATIONAL ARMY
REGIONAL MILITARY TRAINING CENTER
STANDARD DESIGN

ADMIN TRAINING COMPANY
ELECTRICAL SYMBOLS & ABBREVIATIONS

Sheet reference number:
E–001

GENERAL NOTES:

1. REFER TO DRAWING #E-001 FOR THE ELECTRICAL SYMBOLS LIST.
2. EXIT SIGNS SHALL BE WIRED AHEAD OF ANY LOCAL SWITCHING ON CIRCUITS. SEE WIRING DIAGRAM DETAIL 5, DRAWING #E-501.
3. REFER TO DRAWING #E-601 FOR THE LIGHTING FIXTURE SCHEDULE.
4. REFER TO DRAWING #E-501 FOR THE POWER RISER.
5. REFER TO DRAWING #E-601 FOR PANEL SCHEDULES.
6. LIGHT FIXTURES INDICATED AS EMERGENCY SHALL BE PROVIDED WITH A BATTERY BACKUP BALLAST. SEE WIRING DIAGRAM DETAIL 6, DRAWING #E-501.

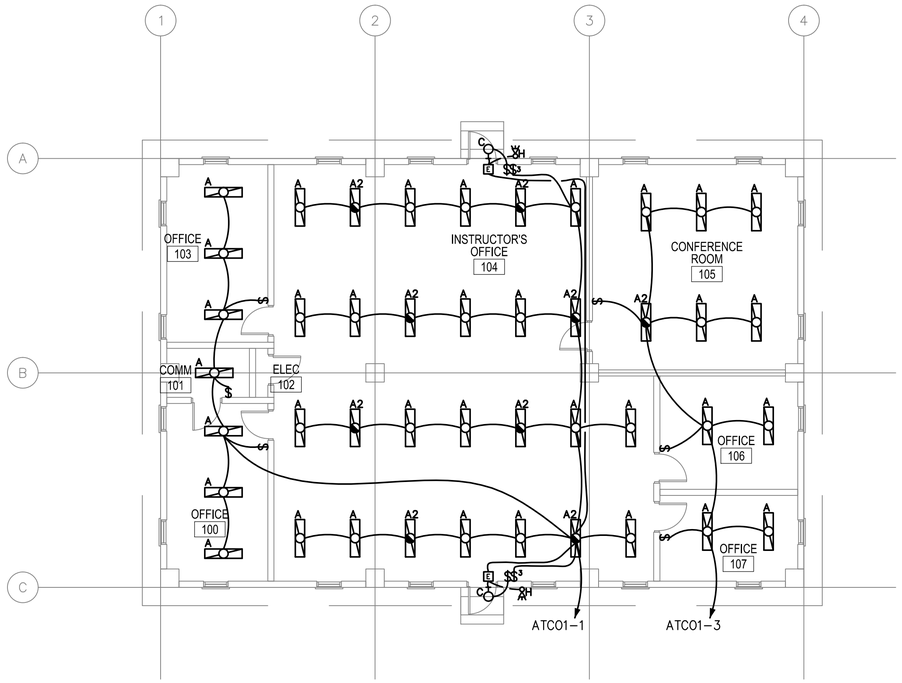

1
E-101

ADMIN TRAINING COMPANY
LIGHTING PLAN

SCALE: 1:50

0 2000 4000
SCALE: 1:100

APPROVED:

A/E DESIGNER OF RECORD

SEAL:

COMMONWEALTH OF PENNSYLVANIA
REGISTERED PROFESSIONAL
JOSEPH R. GAUS
ENGINEER
PE-074251

US ARMY CORPS OF ENGINEERS
AFGHANISTAN ENGINEER DISTRICT

Mark	Description	Date	Appr.

Mark	Description	Date	Appr.

U.S. ARMY CORPS OF ENGINEERS
AFGHANISTAN ENGINEER DISTRICT
APO AE 96338

Michael Baker Jr., Inc
A unit of Michael Baker Corporation
Airside Business Park
100 Airside Drive
Moon Township, PA 15108
www.mbakercorp.com

Designed by: JRG
Dwn by: BJB
Ckd by: JRG
Reviewed by: JRG
Submitted by: BAKER
Date: 2/23/10
Rev: 0
Design file no.
Drawing code:
File name:
Plot date:
Plot scale:

AFGHAN NATIONAL ARMY
REGIONAL MILITARY TRAINING CENTER
STANDARD DESIGN

ADMIN TRAINING COMPANY
ELECTRICAL LIGHTING PLAN

Sheet reference number:
E-101

GENERAL NOTES:

1. REFER TO DRAWING #E-001 FOR THE ELECTRICAL SYMBOLS LIST.
2. REFER TO DRAWING #E-501 FOR THE POWER RISER.
3. REFER TO DRAWING #E-601 FOR PANEL SCHEDULES.
4. COORDINATE EXACT MOUNTING LOCATION OF DISCONNECTING MEANS FOR MECHANICAL AND PLUMBING EQUIPMENT IN THE FIELD.
5. FUSIBLE SAFETY SWITCHES THAT ARE NOT OTHERWISE IDENTIFIED SHALL BE 380V, 1P, 30A FUSED SAFETY SWITCHES WITH 20A FUSES.

NUMBERED NOTES:

1. PANEL ATCO1.
2. PROVIDE A 1200mm X 2400mm SHEET OF PLYWOOD PAINTED WITH FIRE RESISTANT PAINT FOR MOUNTING TELECOMMUNICATIONS EQUIPMENT.
3. PROVIDE CONDUIT STUB UP IN THE ROOM FOR INCOMING TELECOMMUNICATIONS SERVICES FROM THE CENTRAL COMMUNICATIONS SYSTEM IN THE GARRISON.
4. PROVIDE POWER CONNECTION TO EXHAUST FANS. SEE DRAWINGS #M-101 AND #E-601 FOR MORE INFORMATION.
5. PROVIDE POWER CONNECTION TO ELECTRIC UNIT HEATER #2. SEE DRAWINGS #M-101 AND #E-601 FOR MORE INFORMATION.
6. PROVIDE POWER CONNECTION TO ELECTRIC UNIT HEATER #4. SEE DRAWINGS #M-101 AND #E-601 FOR MORE INFORMATION.

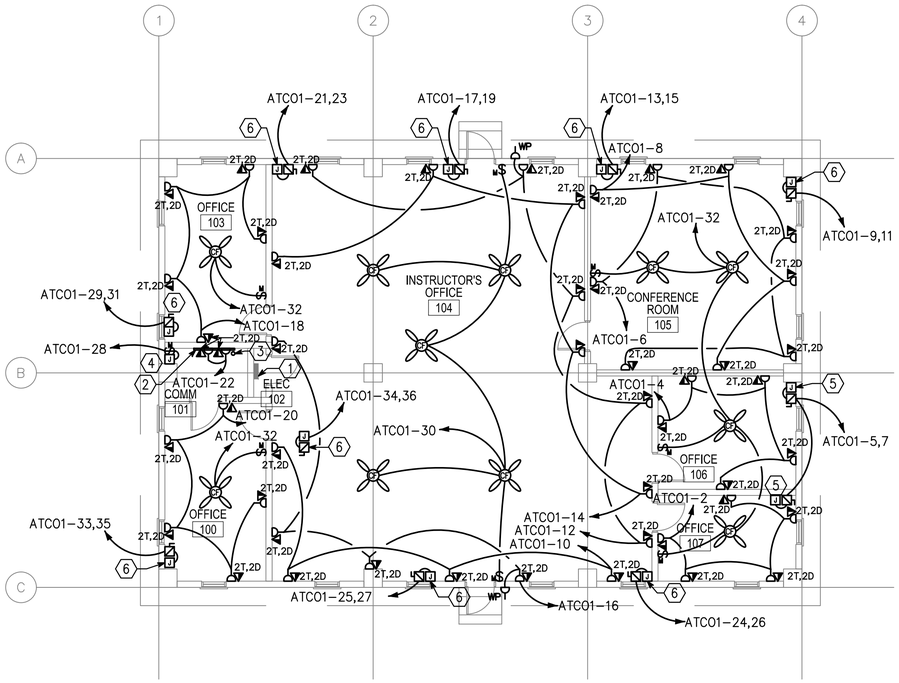

1 / E-102

ADMIN TRAINING COMPANY POWER AND SYSTEMS PLAN

SCALE: 1:100

0 2000 4000
SCALE: 1:100

APPROVED:

A/E DESIGNER OF RECORD

SEAL:

COMMONWEALTH OF PENNSYLVANIA
REGISTERED PROFESSIONAL
JOSEPH R. GAUS
ENGINEER
PE-074251

US ARMY CORPS OF ENGINEERS
AFGHANISTAN ENGINEER DISTRICT

Mark	Description	Date	Appr.

Mark	Description	Date	Appr.

U.S. ARMY CORPS OF ENGINEERS
AFGHANISTAN ENGINEER DISTRICT
APO AE 96338

Michael Baker Jr., Inc
A unit of Michael Baker Corporation
Airside Business Park
100 Airside Drive
Moon Township, PA 15108
www.mbakercorp.com

Designed by: JRG	Date: 2/23/10
Dwn by: BJB	Ckd by: JRG
Reviewed by: JRG	Drawing code:
Submitted by: BAKER	File name: Plot date: Plot scale:
	Design file no.
	Rev: 0

AFGHAN NATIONAL ARMY
REGIONAL MILITARY TRAINING CENTER
STANDARD DESIGN

ADMIN TRAINING COMPANY
ELECTRICAL POWER AND SYSTEMS PLAN

Sheet reference number:
E-102

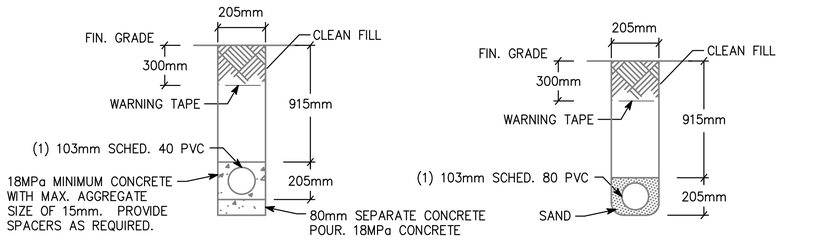

NOTE: PVC CONDUIT SHALL BE DIRECT BURIED SCHEDULE 80 FOR NO TRAFFIC AREAS AND CONCRETE-ENCASED SCHEDULE 40 FOR UNDER ROADWAYS OR TRAFFIC AREAS.

1 / E-501 TYPICAL DUCT BANK DETAILS FOR CONDUIT IN SAND OR CONCRETE

SCALE: N.T.S.

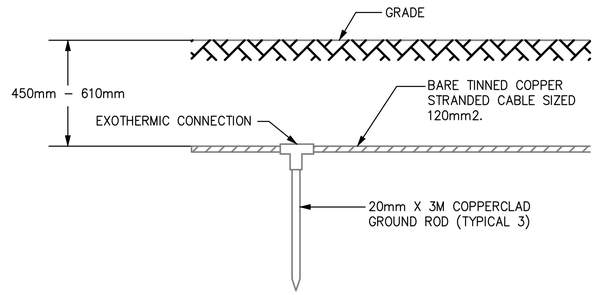

2 / E-501 GROUND TRIPOD SYSTEM DETAIL - ELEVATION

SCALE: N.T.S.

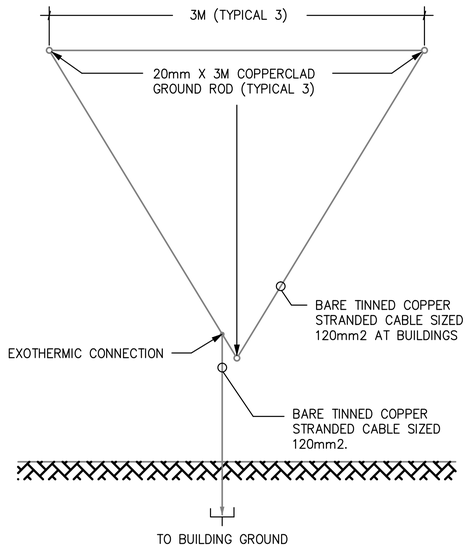

3 / E-501 GROUND TRIPOD SYSTEM DETAIL - PLAN

SCALE: N.T.S.

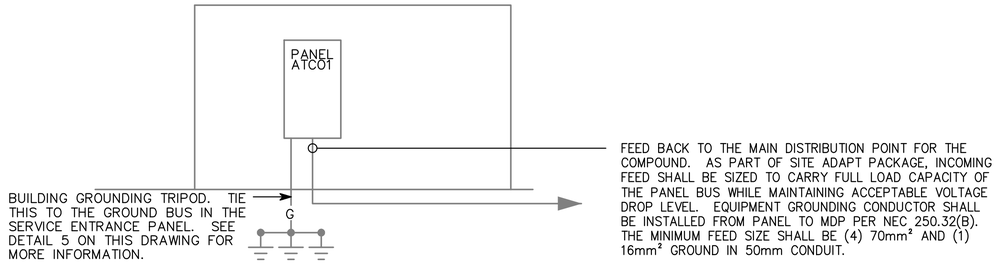

4 / E-501 ATCO RISER DIAGRAM

SCALE: N.T.S.

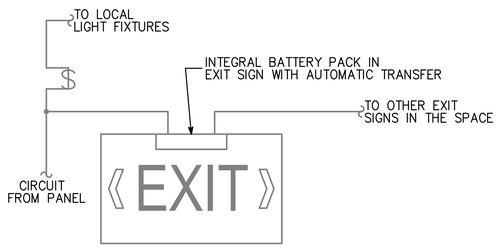

5 / E-501 EXIT SIGN WIRING DIAGRAM

SCALE: N.T.S.

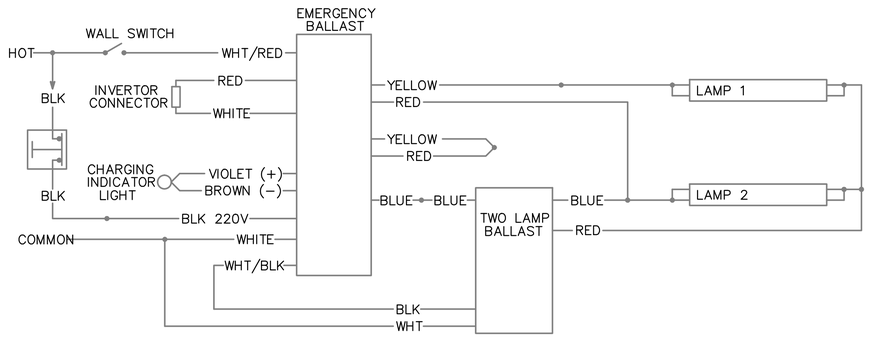

6 / E-501 EMERGENCY FIXTURE WIRING DIAGRAM

SCALE: N.T.S.

US ARMY CORPS OF ENGINEERS
AFGHANISTAN ENGINEER DISTRICT

Mark	Description	Date	Appr.	Mark	Description	Date	Appr.

Designed by: JRG
Dwn by: BJB
Ckd by: JRG
Reviewed by: JRG
Submitted by: BAKER
Date: 2/23/10
Rev: 0
Design file no.
Drawing code:
File name:
Plot date:
Plot scale:

U.S. ARMY CORPS OF ENGINEERS
AFGHANISTAN ENGINEER DISTRICT
APO AE 96338

Michael Baker Jr., Inc.
A unit of Michael Baker Corporation
Airside Business Park
100 Airside Drive
Moon Township, PA 15108
www.mbakercorp.com

AFGHAN NATIONAL ARMY
REGIONAL MILITARY TRAINING CENTER
STANDARD DESIGN

ADMIN TRAINING COMPANY
ELECTRICAL DETAILS

APPROVED:

A/E DESIGNER OF RECORD

SEAL:

COMMONWEALTH OF PENNSYLVANIA
REGISTERED PROFESSIONAL
JOSEPH R. GAUS
ENGINEER
PE-074251
1/29/10

Sheet reference number:
E-501

(A) LARGER OF THE TWO SIZES GIVEN IN THE TABLES BELOW	
GROUNDING ELECTRODE CONDUCTOR (BASED ON AIC RATING)	
AIC RATING OF SERVICE EQUIPMENT	NECESSARY GROUNDING ELECTRODE CONDUCTOR SIZE
10K	(1) 35mm²
14K	(1) 50mm²
18K	(1) 70mm²
22K	(1) 70mm²
25K	(1) 70mm²
30K	(1) 95mm²
35K	(1) 120mm²
42K	(1) 150mm²
65K	(1) 185mm²
100K	(1) 300mm²
125K	(2) 185mm²
200K	(2) 300mm²
GROUNDING ELECTRODE CONDUCTOR (BASED ON NEC TABLE 250.66)	
SIZE OF LARGEST UNGROUNDED SERVICE CONDUCTOR OR EQUIVALENT AREA FOR PARALLEL CONDUCTORS	NECESSARY GROUNDING ELECTRODE CONDUCTOR SIZE
350 kcmil OR SMALLER	35mm²
OVER 350 kcmil TO 600 kcmil	70mm²
OVER 600 kcmil TO 1100 kcmil	70mm²
OVER 1100 kcmil	95mm²
NOTE: ALL SIZES ARE BASED ON COPPER CONDUCTORS.	

(B) EQUIPMENT GROUNDING CONDUCTOR	
RATING OR SETTING OF AUTOMATIC OVERCURRENT DEVICE IN CIRCUIT AHEAD OF EQUIPMENT, CONDUIT, ETC, NOT EXCEEDING (AMPERES)	NECESSARY EQUIPMENT GROUNDING CONDUCTOR SIZE
15	2.5mm²
20	4.0mm²
30	6.0mm²
40	6.0mm²
60	6.0mm²
100	10mm²
200	16mm²
300	25mm²
400	25mm²
500	35mm²
600	50mm²
800	70mm²
1000	70mm²
1200	95mm²
1600	120mm²
2000	150mm²
2500	185mm²
3000	240mm²
4000	300mm²
5000	400mm²
6000	400mm²
NOTE: ALL SIZES ARE BASED ON COPPER CONDUCTORS.	

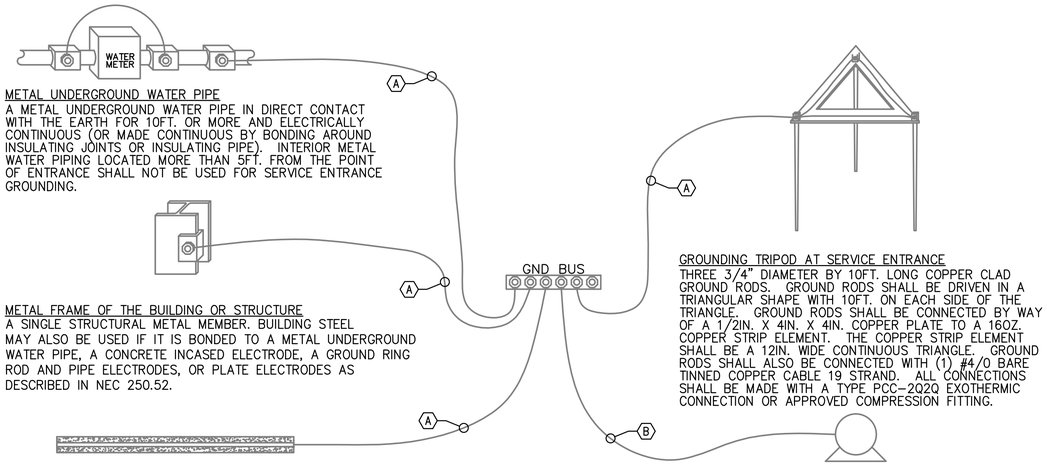

METAL UNDERGROUND WATER PIPE
A METAL UNDERGROUND WATER PIPE IN DIRECT CONTACT WITH THE EARTH FOR 10FT. OR MORE AND ELECTRICALLY CONTINUOUS (OR MADE CONTINUOUS BY BONDING AROUND INSULATING JOINTS OR INSULATING PIPE). INTERIOR METAL WATER PIPING LOCATED MORE THAN 5FT. FROM THE POINT OF ENTRANCE SHALL NOT BE USED FOR SERVICE ENTRANCE GROUNDING.

METAL FRAME OF THE BUILDING OR STRUCTURE
A SINGLE STRUCTURAL METAL MEMBER. BUILDING STEEL MAY ALSO BE USED IF IT IS BONDED TO A METAL UNDERGROUND WATER PIPE, A CONCRETE INCASED ELECTRODE, A GROUND RING ROD AND PIPE ELECTRODES, OR PLATE ELECTRODES AS DESCRIBED IN NEC 250.52.

CONCRETE ENCASED ELECTRODE
AN ELECTRODE ENCASED BY AT LEAST 2IN. OF CONCRETE , LOCATED WITHIN AND NEAR THE BOTTOM OF A CONCRETE FOUNDATION OR FOOTING THAT IS IN DIRECT CONTACT WITH THE EARTH, CONSISTING OF AT LEAST 20FT. OF ONE OR MORE BARE OR ZINC GALVANIZED OR OTHER ELECTRICALLY CONDUCTIVE COATED STEEL REINFORCING BARS OR RODS OF NOT LESS THAN 1/2" DIAMETER OR BARE COPPER CONDUCTOR NOT SMALLER THAN 4AWG.

GROUNDING TRIPOD AT SERVICE ENTRANCE
THREE 3/4" DIAMETER BY 10FT. LONG COPPER CLAD GROUND RODS. GROUND RODS SHALL BE DRIVEN IN A TRIANGULAR SHAPE WITH 10FT. ON EACH SIDE OF THE TRIANGLE. GROUND RODS SHALL BE CONNECTED BY WAY OF A 1/2IN. X 4IN. X 4IN. COPPER PLATE TO A 16OZ. COPPER STRIP ELEMENT. THE COPPER STRIP ELEMENT SHALL BE A 12IN. WIDE CONTINUOUS TRIANGLE. GROUND RODS SHALL ALSO BE CONNECTED WITH (1) #4/0 BARE TINNED COPPER CABLE 19 STRAND. ALL CONNECTIONS SHALL BE MADE WITH A TYPE PCC-2Q2Q EXOTHERMIC CONNECTION OR APPROVED COMPRESSION FITTING.

LOAD OR DOWNSTREAM PANEL
ALL LOADS IN THE BUILDING SHALL HAVE AN EQUIPMENT GROUNDING CONDUCTOR PULLED TO THEM.

1
E-502

SERVICE ENTRANCE GROUNDING DETAIL

SCALE: N.T.S.

APPROVED:

A/E DESIGNER OF RECORD

SEAL:

COMMONWEALTH OF PENNSYLVANIA
REGISTERED PROFESSIONAL
JOSEPH R. GAUS
ENGINEER
PE-074251
1/29/10

US ARMY CORPS OF ENGINEERS
AFGHANISTAN ENGINEER DISTRICT

Mark	Description	Date	Appr.	Mark	Description	Date	Appr.

Designed by: JRG
Dwn by: BJB
Ckd by: JRG
Reviewed by: JRG
Submitted by: BAKER
Date: 2/23/10
Rev: 0
Design file no.
Drawing code:
File name:
Plot date:
Plot scale:

U.S. ARMY CORPS OF ENGINEERS
AFGHANISTAN ENGINEER DISTRICT
APO AE 96338

Michael Baker Jr., Inc.
A unit of Michael Baker Corporation
Airside Business Park
100 Airside Drive
Moon Township, PA 15108
www.mbakercorp.com

AFGHAN NATIONAL ARMY
REGIONAL MILITARY TRAINING CENTER
STANDARD DESIGN

ADMIN TRAINING COMPANY
ELECTRICAL DETAILS

Sheet reference number:
E-502

FIXTURE MARK 'A' & 'A2'

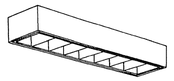

FIXTURE MARK 'C'

FIXTURE MARK 'H'

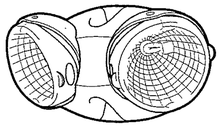

FIXTURE MARK 'E'

LIGHT FIXTURE SCHEDULE

FIXTURE MARK	STYLE NUMBER AND TYPE	NUMBER AND TYPE OF LAMPS	VOLTAGE	MOUNTING	NOTES
A	PARABOLIC SURFACE/PENDANT MOUNTED 300MM X 1200MM FLUORESCENT FIXTURE WITH ELECTRONIC BALLAST	(2) 32W 3500K	220V – 1ø 50HZ	PENDANT MOUNTED FROM CEILINGS	FURNISHED WITH ELECTRONIC BALLAST. PARABOLIC LOUVER SHALL BE SPECULAR LENS IRIDESCENCE TYPE.
A2	SAME AS FIXTURE 'A' WITH EMERGENCY BALLAST	(2) 32W 3500K	220V – 1ø 50HZ	PENDANT MOUNTED FROM CEILINGS	FURNISHED WITH ELECTRONIC BALLAST. PARABOLIC LOUVER SHALL BE SPECULAR LENS IRIDESCENCE TYPE. EMERGENCY BALLAST SELF TEST.
C	INCANDESCENT ONE PIECE W/ APPROVED LENS STABILIZED HIGH IMPACT POLY CARBONATE.	(1) A19 – 100W INCANDESCENT	220V – 1ø 50HZ	WALL MOUNTED ABOVE EXTERIOR DOORS	
H	REMOTE HEAD EXTERIOR LIGHT HEAD POWERED FROM EXIT SIGN BATTERY– 12V DOUBLE HEAD CORROSION RESISTANT WITH UL34 WEATHERPROOF CONSTRUCTION	(2) 12W/12V HALOGEN LAMP	12V – 1ø 50HZ	EXTERIOR WALL MOUNTED AT TOP OF DOOR HEIGHT	
E	UNIVERSAL MOUNT ENGINEER GRADE THERMOPLASTIC HOUSING EXIT SIGN WITH LED LAMPS, RED LETTERS 6" IN HEIGHT WITH ARROWS AS INDICATED, WITH 12V CADMIUM BATTERY WITH REMOTE HEAD CAPABILITY	LED LAMPS	220V – 1ø 50HZ	UNIVERSAL MOUNTING	

PANELBOARD ATC01 SURFACE MOUNTED
_____ AMP. MAIN LUGS (OR) 150 AMP. MAIN BREAKER W/ 150 AMP. TRIP
CIRCUIT BREAKER TYPE 380/220 VOLTS 3 PHASE 4 WIRE 50 HZ 225 AMP. BUS

CKT. NO.	TRIP AMPS	NO. POLES	WIRE MM²	GND MM²	CONDUIT MM	LOAD SERVED	LOAD-KVA A0	LOAD-KVA B0	LOAD-KVA C0	LOAD-KVA A0	LOAD-KVA B0	LOAD-KVA C0	LOAD SERVED	CONDUIT MM	GND MM²	WIRE MM²	NO. POLES	TRIP AMPS	CKT. NO.
1	20	1	4.0	4.0	20	LIGHTING – RM 100–104	2.6			1.0			RECEPTACLES – RM 107	20	4.0	4.0	1	20	2
3	20	1	4.0	4.0	20	LIGHTING – RM 105–107		0.7			1.0		RECEPTACLES – RM 106	20	4.0	4.0	1	20	4
5	20	2	4.0	4.0	20	ELECTRIC HEAT #2 – RM 106,107			2.6			1.0	RECEPTACLES – RM 106	20	4.0	4.0	1	20	6
7							2.6			0.8			RECEPTACLES – RM 106	20	4.0	4.0	1	20	8
9	20	2	4.0	4.0	20	ELECTRIC HEAT #4 – RM 105		2.0			0.8		RECEPTACLES – RM 104	20	4.0	4.0	1	20	10
11									2.0			1.2	RECEPTACLES – RM 104	20	4.0	4.0	1	20	12
13	20	2	4.0	4.0	20	ELECTRIC HEAT #4 – RM 105	2.0			1.0			RECEPTACLES – RM 104	20	4.0	4.0	1	20	14
15								2.0			1.0		RECEPTACLES – RM 104	20	4.0	4.0	1	20	16
17	20	2	4.0	4.0	20	ELECTRIC HEAT #4 – RM 104			2.0			1.0	RECEPTACLES – RM 103	20	4.0	4.0	1	20	18
19							2.0			1.0			RECEPTACLES – RM 106	20	4.0	4.0	1	20	20
21	20	2	4.0	4.0	20	ELECTRIC HEAT #4 – RM 104		2.0			0.4		RECEPTACLES – RM 101	20	4.0	4.0	1	20	22
23									2.0			2.0	ELECTRIC HEAT #4 – RM 104	20	4.0	4.0	2	20	24
25	20	2	4.0	4.0	20	ELECTRIC HEAT #4 – RM 104	2.0			2.0									26
27								2.0			0.5		EXHAUST FAN – RM 105	20	4.0	4.0	1	20	28
29	20	2	4.0	4.0	20	ELECTRIC HEAT #4 – RM 103			2.0			1.0	CEILING FANS – RM 104	20	4.0	4.0	1	20	30
31							2.0			1.0			CEILING FANS – RM 105–107	20	4.0	4.0	1	20	32
33	20	2	4.0	4.0	20	ELECTRIC HEAT #4 – RM 106		2.0			2.0		ELECTRIC HEAT #4 – RM 104	20	4.0	4.0	2	20	34
35									2.0			2.0							36
37	20	1				SPARE							SPARE				1	20	38
39	20	1				SPARE							SPARE				1	20	40
41	20	1				SPARE							SPARE				1	20	42
							13.2	10.7	12.6	6.8	5.7	8.2							

TOTAL CONN. LOAD PER PHASE (KVA): A0 20.0 B0 16.4 C0 20.8

TOTAL CONN. LOAD 57.2 KVA. 70 % DEMAND = ESTIMATED DEMAND LOAD 40.0

* MAIN BREAKER SHALL BE 3P EARTH GROUND TYPE

US ARMY CORPS OF ENGINEERS
AFGHANISTAN ENGINEER DISTRICT

Mark	Description	Date	Appr.

Mark	Description	Date	Appr.

Rev: 0
Date: 2/23/10
Design file no.
Drawing code:
File name:
Plot date:
Plot scale:

Designed by: JRG
Dwn by: BJB
Ckd by: JRG
Reviewed by: JRG
Submitted by: BAKER

U.S. ARMY CORPS OF ENGINEERS
AFGHANISTAN ENGINEER DISTRICT
APO AE 96338

Michael Baker Jr., Inc
A unit of Michael Baker Corporation
Airside Business Park
100 Airside Drive
Moon Township, PA 15108
www.mbakercorp.com

AFGHAN NATIONAL ARMY
REGIONAL MILITARY TRAINING CENTER
STANDARD DESIGN

ADMIN TRAINING COMPANY
ELECTRICAL LIGHT FIXTURE AND PANEL SCHEDULES

Sheet reference number:
E–601

APPROVED:

A/E DESIGNER OF RECORD

SEAL:

COMMONWEALTH OF PENNSYLVANIA
REGISTERED PROFESSIONAL
JOSEPH R. GAUS
1/29/10
ENGINEER
PE-074251

AFGHAN NATIONAL ARMY

STANDARD BUILDING DESIGN

WEAPONS STORAGE (ASP) AND SMALL ARMS STORAGE (SAS) AREA

100% FINAL DESIGN SUBMITTAL

SHEET INDEX

G–001 COVER SHEET

CIVIL

C–101 SITE PLAN
C–501 3000 mm FENCING DETAILS
C–502 FENCING DETAILS

ELECTRICAL

ES–101 ELECTRICAL SITE LIGHTING PLAN
ES–601 ELECTRICAL SITE LIGHT FIXTURE SCHEDULE

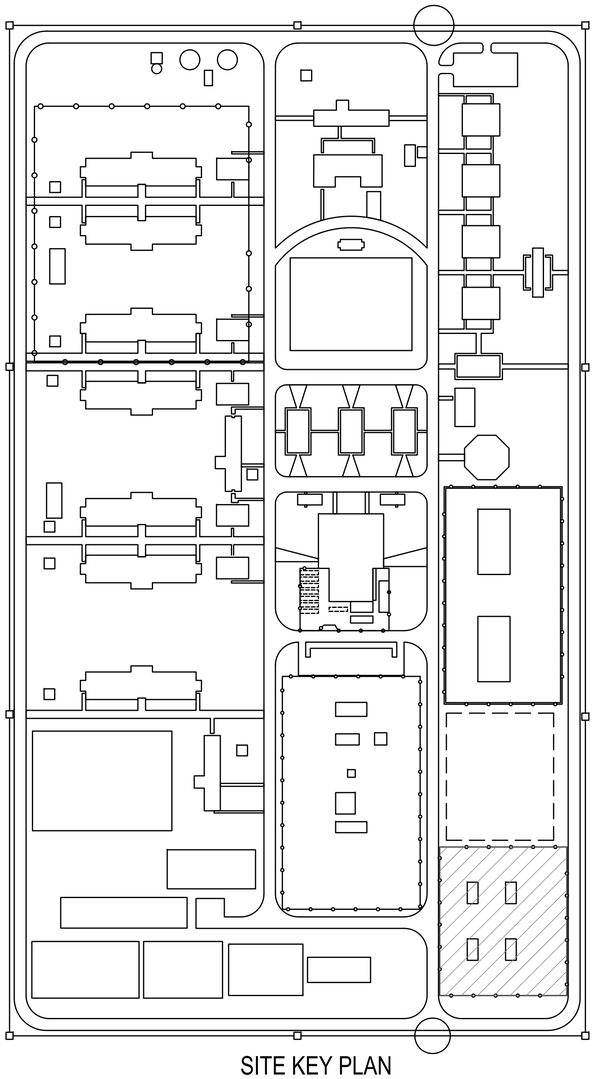

SITE KEY PLAN
NTS

US ARMY CORPS OF ENGINEERS
AFGHANISTAN ENGINEER DISTRICT

Mark	Description	Date	Appr.	Mark	Description	Date	Appr.

U.S. ARMY ENGINEER DISTRICT, AFGHANISTAN
CORPS OF ENGINEERS
APO AE 96338

Michael Baker Jr., Inc
A unit of Michael Baker Corporation
Airside Business Park
100 Airside Drive
Moon Township, PA 15108
www.mbakercorp.com

Designed by:
Dwn by: JDS
Ckd by: JDS
Reviewed by: LHM
Submitted by: BAKER
Date: 2/23/2010
Rev: 0
Design file no. G–001
Drawing code:
File name: ANAASP-C-001XXX
Plot date: 2/23/2010
Plot scale: 1:1

AFGHAN NATIONAL ARMY
REGIONAL MILITARY TRAINING CENTER
STANDARD DESIGN

(ASP) AND (SAS) AREA

COVER SHEET

Sheet reference number:
G–001

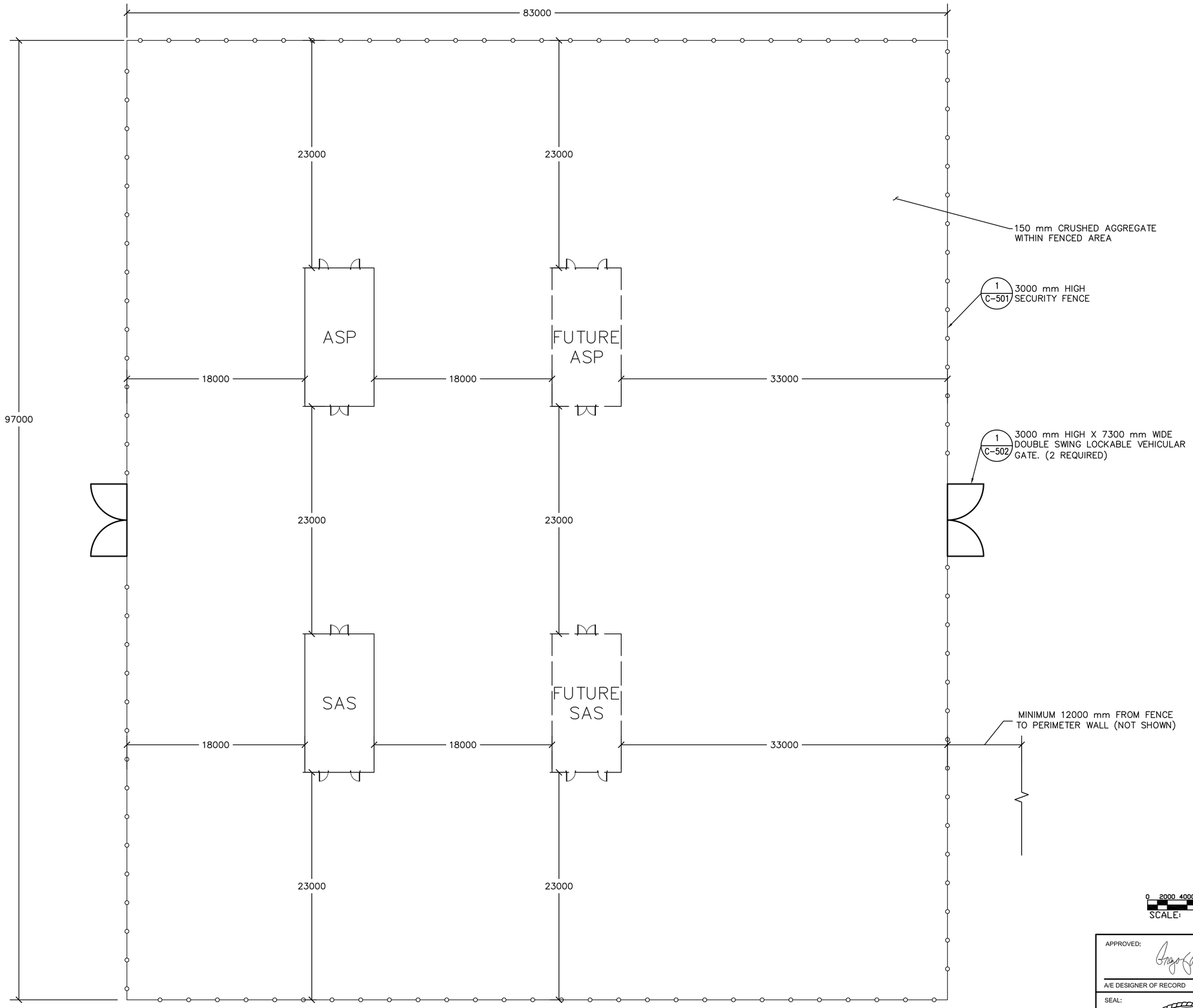

0 2000 4000 8000
SCALE: 1: 200

1 C-101 WEAPONS STORAGE (ASP) AND SMALL ARMS STORAGE (SAS) AREA
SCALE: 1:200

APPROVED:

A/E DESIGNER OF RECORD

SEAL:

COMMONWEALTH OF PENNSYLVANIA
REGISTERED PROFESSIONAL
GREGORY P. HYNES
ENGINEER
044310-E

US ARMY CORPS OF ENGINEERS
AFGHANISTAN ENGINEER DISTRICT

Mark	Description	Date	Appr.

Mark	Description	Date	Appr.

U.S. ARMY ENGINEER DISTRICT, AFGHANISTAN
CORPS OF ENGINEERS
APO AE 96338

Michael Baker Jr., Inc.
A unit of Michael Baker Corporation
Airside Business Park
100 Airside Drive
Moon Township, PA 15108
www.mbakercorp.com

Designed by: GPH
Dwn by: JDS
Ckd by: JMB
Reviewed by: LHM
Submitted by: BAKER
Date: 2/23/2010
Rev: 0
Design file no. C-101
Drawing code:
File name: ANASP-C-101XXX
Plot date: 2/23/2010
Plot scale: 1:200

AFGHAN NATIONAL ARMY
REGIONAL MILITARY TRAINING CENTER
STANDARD DESIGN

(ASP) AND (SAS) AREA
SITE PLAN

Sheet reference number:
C-101

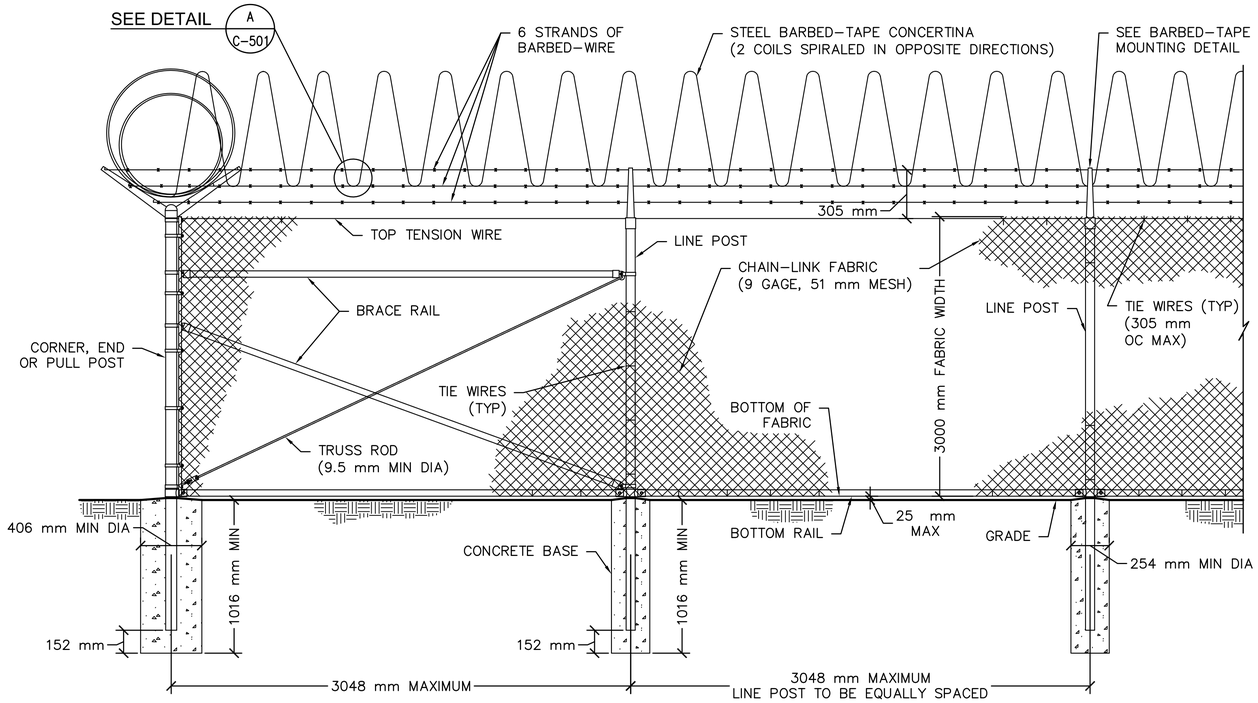

1 C-501 3000 mm CHAIN-LINK SECURITY FENCE DETAIL
SCALE: NTS

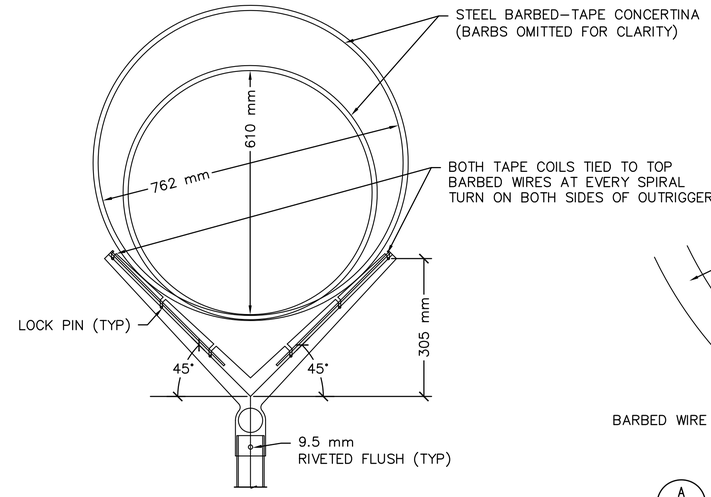

BARBED-TAPE MOUNTING DETAIL
NO SCALE

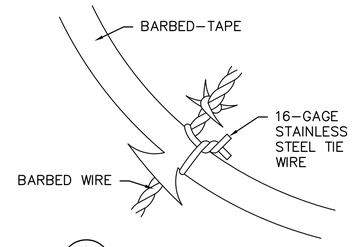

A C-501 DETAIL
NO SCALE

STEEL POST SCHEDULE	
USE AND SECTION	MINIMUM OUTSIDE DIMENSIONS (NOMINAL) FABRIC WIDTH 2440 mm AND OVER
CORNER, END & PULL POSTS	
TUBULAR – ROUND	102 mm O.D.
LINE POSTS	
TUBULAR – ROUND	73 mm O.D.
BOTTOM & BRACE RAILS	
TUBULAR – ROUND	42 mm O.D.
TUBULAR – SQUARE	38 mm SQ.
H–SECTION	41 mm x 38 mm
C–SECTION (ROLL–FORMED)	41 mm x 32 mm

NOTES:

1. WIRE TIES, RAILS, POSTS, AND BRACES SHALL BE CONSTRUCTED ON THE SECURE SIDE OF THE FENCE ALIGNMENT. CHAIN–LINK FABRIC SHALL BE PLACED ON THE SIDE OPPOSITE THE SECURE AREA.
2. ONLY 9–GAGE GALVANIZED STEEL TIE WIRES SHALL BE USED FOR FASTENING THE FENCE FABRIC TO FENCE POSTS AND RAILS. 16–GAGE, STAINLESS STEEL TIE WIRES SHALL BE USED FOR FASTENING FENCE FABRIC TO TENSION WIRES. HOG RINGS SHALL NOT BE ALLOWED ON SENSORED FENCES.
3. BOTTOM RAIL SHALL BE ATTACHED TO DOUBLE RAIL ENDS USING 9.5 mm CARRIAGE BOLTS AS SHOWN. ADDITIONAL HOLES SHALL BE DRILLED THROUGH THE BOTTOM RAIL ENDS TO INSURE THAT CARRIAGE BOLTS PASS THROUGH THE BOTTOM RAIL AS SHOWN.

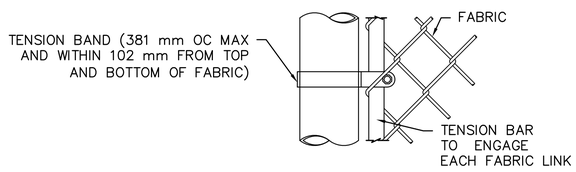

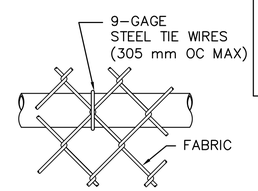

BRACE RAIL ATTACHMENT

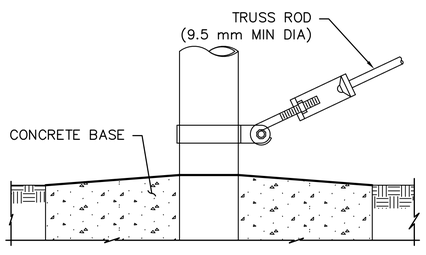

TRUSS ROD AND BAND

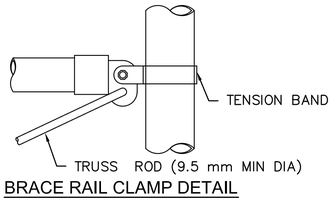

BRACE RAIL CLAMP DETAIL

END OR GATE POST DETAIL

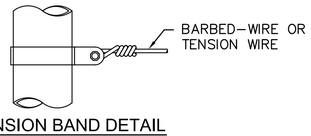

TENSION BAND DETAIL

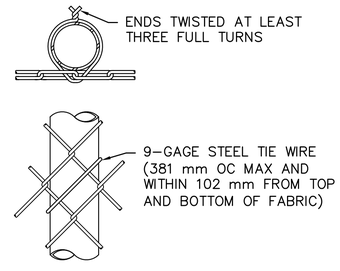

LINE POST ATTACHMENTS

FASTENING DETAILS
NO SCALE

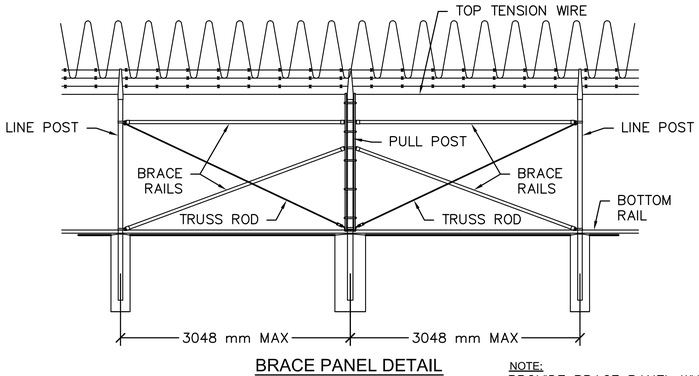

BRACE PANEL DETAIL
NO SCALE

NOTE:
PROVIDE BRACE PANEL WHENEVER STRAIGHT RUNS EXCEED 152 METERS.

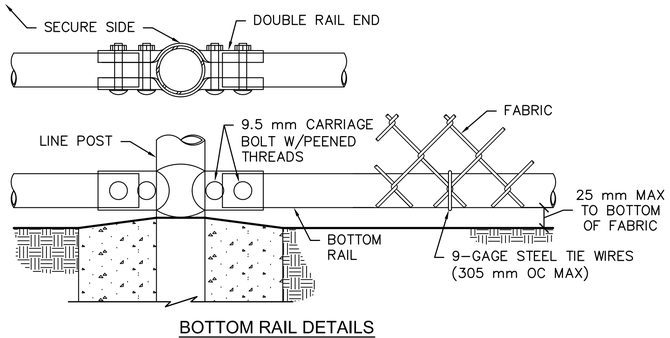

BOTTOM RAIL DETAILS
NO SCALE

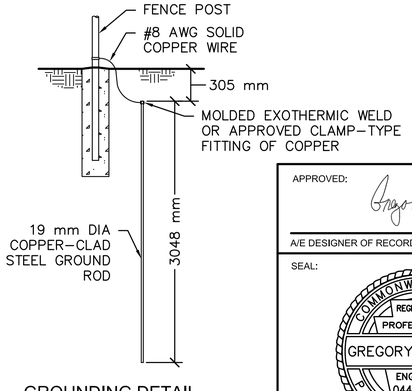

GROUNDING DETAIL
NO SCALE

APPROVED:
A/E DESIGNER OF RECORD
SEAL:
COMMONWEALTH OF PENNSYLVANIA
REGISTERED PROFESSIONAL
GREGORY P. HYNES
ENGINEER 044310–E

US ARMY CORPS OF ENGINEERS
AFGHANISTAN ENGINEER DISTRICT

Mark	Description	Date	Appr.	Mark	Description	Date	Appr.

Date: 2/23/2010 Rev: 0
Design file no. C–501
Drawing code:
File name: ANAASP-C-501XXX
Plot date: 2/23/2010
Plot scale: 1:1

Designed by: GPH
Dwn by: JDS
Ckd by: JMB
Reviewed by: LHM
Submitted by:
BAKER

U.S. ARMY ENGINEER DISTRICT, AFGHANISTAN
CORPS OF ENGINEERS
APO AE 96338

Michael Baker Jr., Inc.
A unit of Michael Baker Corporation
Airside Business Park
100 Airside Drive
Moon Township, PA 15108
www.mbakercorp.com

AFGHAN NATIONAL ARMY
REGIONAL MILITARY TRAINING CENTER
STANDARD DESIGN

(ASP) AND (SAS) AREA

3000 mm FENCING DETAILS

Sheet reference number:
C–501

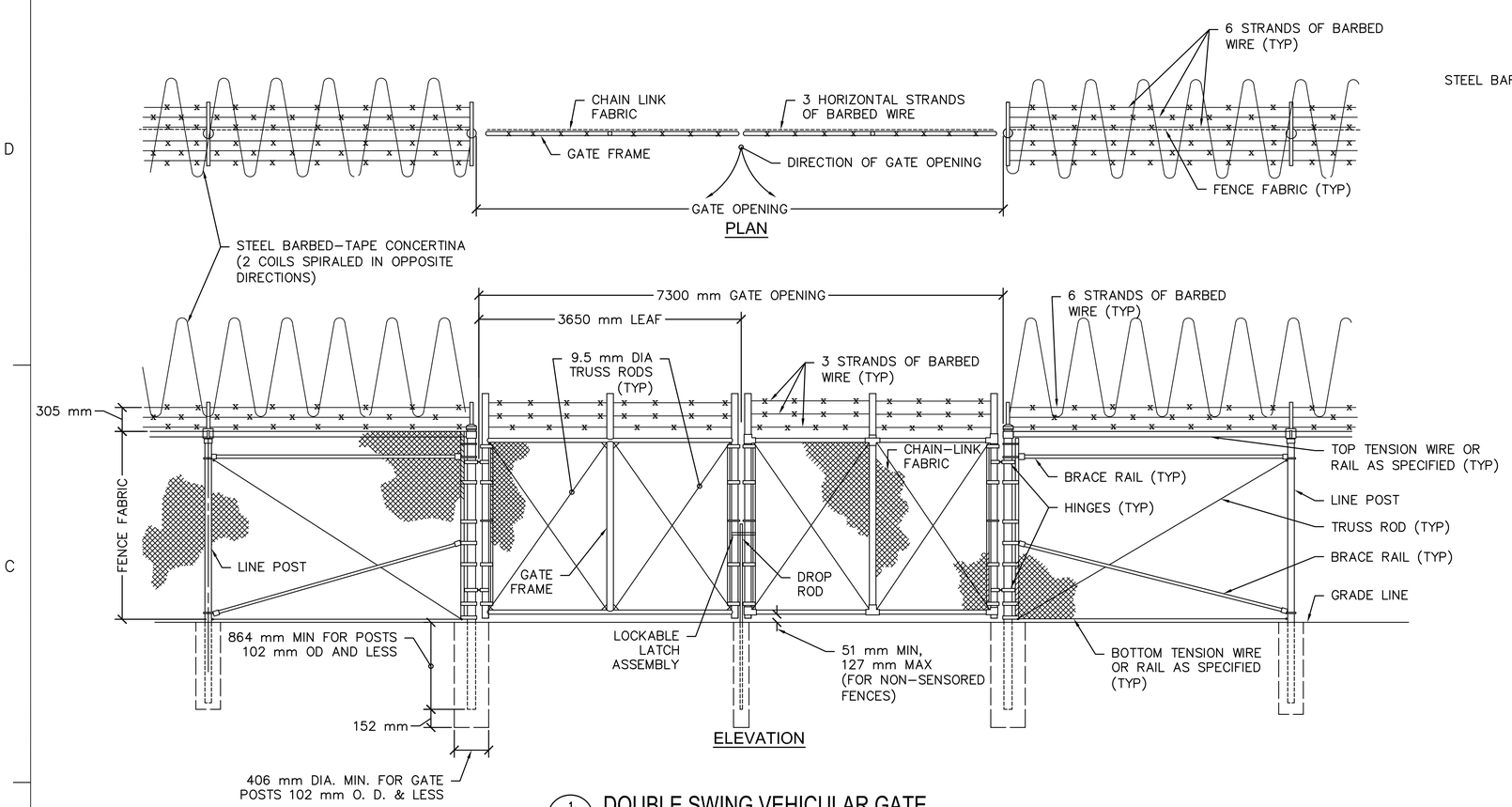

1 C–502 DOUBLE SWING VEHICULAR GATE
SCALE: NTS

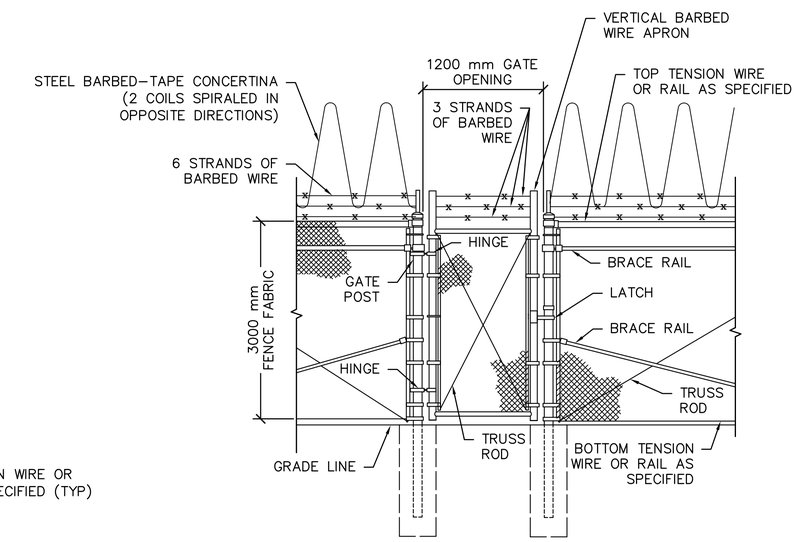

2 C–502 PERSONNEL GATE
NO SCALE

NOTES:

1. FOR NON–SENSORED FENCES, DETAILS SHOWN ARE TO CLARIFY REQUIREMENTS AND ARE NOT INTENDED TO LIMIT OTHER TYPE OF FENCE SECTIONS AND METHODS OF INSTALLATION THAT COMPLY WITH THE SPECIFICATIONS.
2. SWING GATES SHALL BE CONSTRUCTED WITH DROP RODS, PADLOCKS, LATCH ASSEMBLY AND GATE KEEPERS EXCEPT AS NOTED.
3. ALL GATE FRAMES SHALL MEET THE MINIMUM REQUIREMENTS OF ASTM F900 48 mm NOMINAL (ROUND) OR 51 mm NOMINAL (SQUARE). GATE FRAMES SHALL BE OF WELDED CONSTRUCTION OR SHALL BE ASSEMBLED USING HEAVY FITTINGS. AT CONTRACTOR'S OPTION A WELDED HORIZONTAL BRACE MAY BE USED IN LIEU OF TRUSS RODS TO BRACE ALL–WELDED GATE FRAMES. THE CONTRACTOR SHALL BE RESPONSIBLE FOR THE PROPER RIGID CONSTRUCTION OF ALL GATES SUPPLIED.

GATE POST SCHEDULE	
GATE LEAF WIDTH (NOMINAL)	OUTSIDE DIMENSION (NOMINAL)
1830 mm OR LESS	73 mm OD 64 mm SQ
GREATER THAN 1830 mm TO 3660 mm	102 mm OD

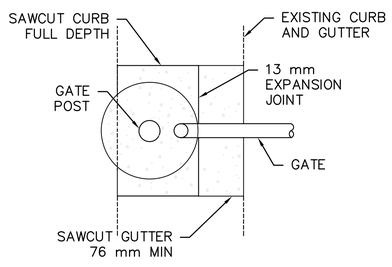

PLAN

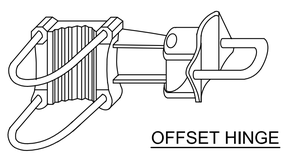

OFFSET HINGE

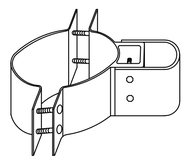

STANDARD HINGE

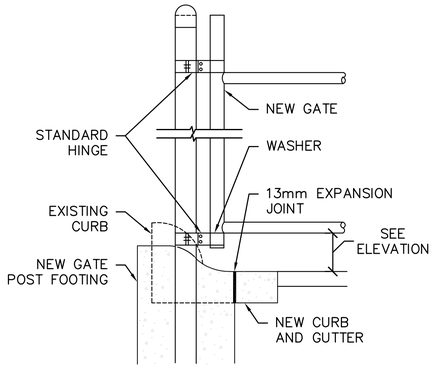

GATE POST SECTION AT CURB AND GUTTER
NO SCALE

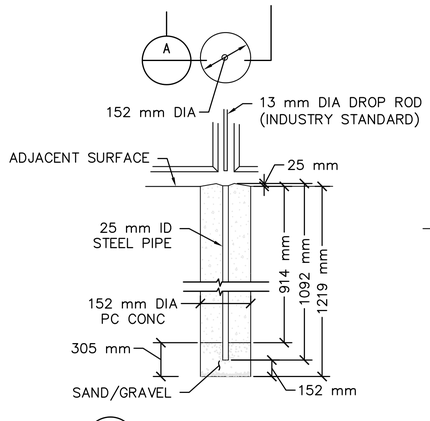

A DROP ROD FOUNDATION

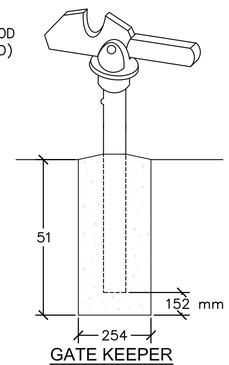

GATE KEEPER
(TO HOLD GATE OPEN)

SWING GATE DETAILS
NO SCALE

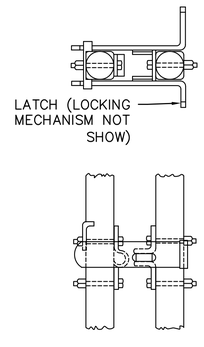

LOCKABLE LATCH ASSEMBLY

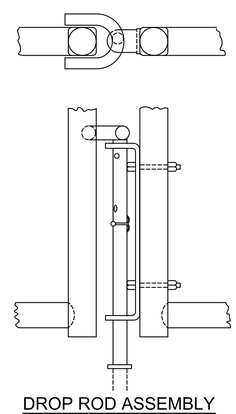

DROP ROD ASSEMBLY

APPROVED:

A/E DESIGNER OF RECORD

SEAL:

COMMONWEALTH OF PENNSYLVANIA
REGISTERED PROFESSIONAL
GREGORY P. HYNES
ENGINEER 044310–E

US ARMY CORPS OF ENGINEERS
AFGHANISTAN ENGINEER DISTRICT

Mark	Description	Date	Appr.

Mark	Description	Date	Appr.

Date: 2/23/2010 | Rev: 0
Design file no. C–502
Drawing code:
File name: ANASP-C-502XXX
Plot date: 2/23/2010
Plot scale: 1:1

Designed by: GPH | Dwn by: JDS | Ckd by: JMB
Reviewed by: LHM
Submitted by:
BAKER

U.S. ARMY ENGINEER DISTRICT, AFGHANISTAN
CORPS OF ENGINEERS
APO AE 96338

Michael Baker Jr., Inc.
A unit of Michael Baker Corporation
Airside Business Park
100 Airside Drive
Moon Township, PA 15108
www.mbakercorp.com

AFGHAN NATIONAL ARMY
REGIONAL MILITARY TRAINING CENTER
STANDARD DESIGN

(ASP) AND (SAS) AREA

FENCING DETAILS

Sheet reference number:
C–502

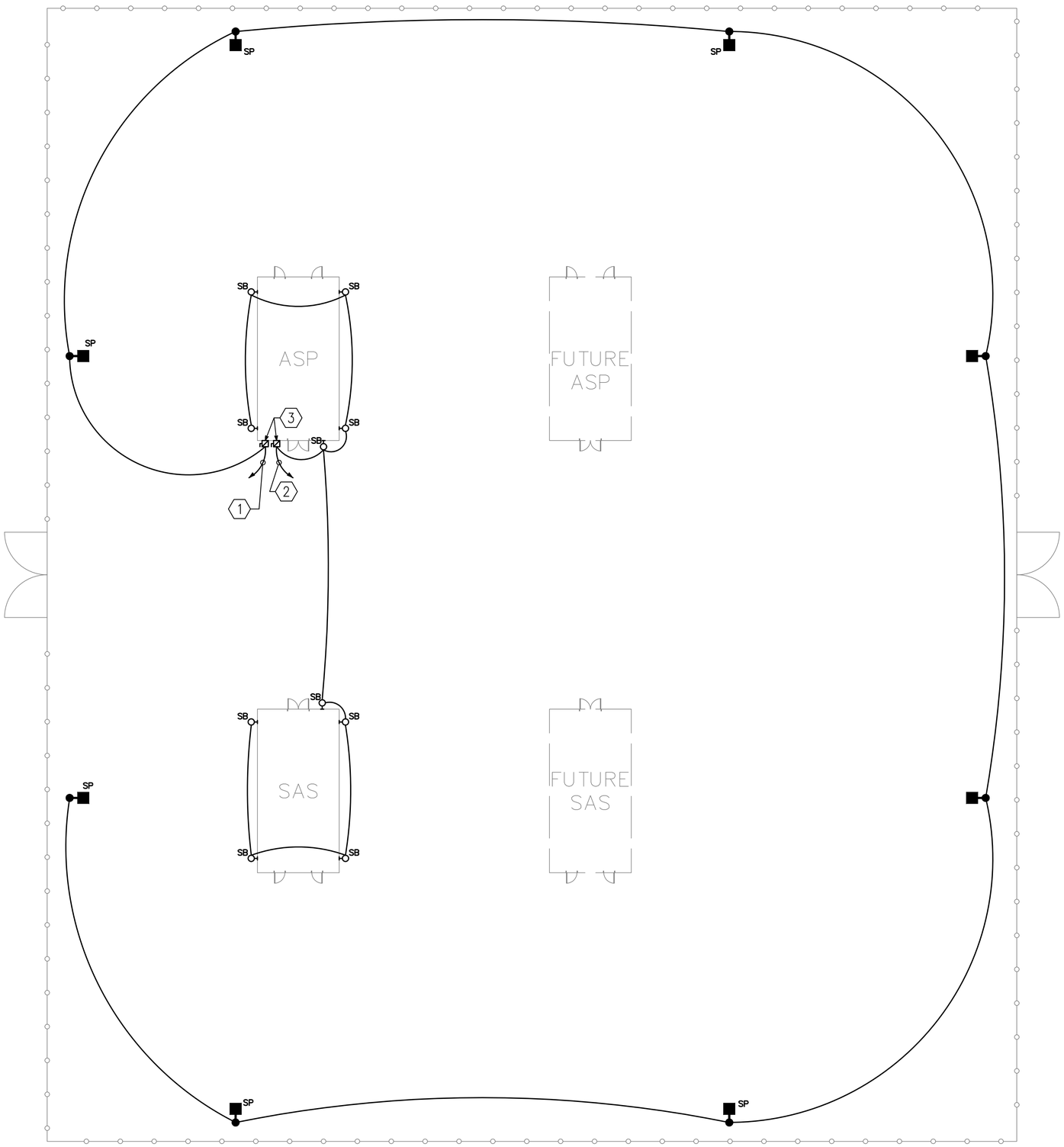

NUMBERED NOTES:

1. 2 – 16mm & 1 – 6mm IN 20mm CONDUIT TO 20A/1P CIRCUIT BREAKER IN SITE DISTRIBUTION PANEL. SITE ADAPT CONTRACTOR SHALL ADJUST CONDUCTOR SIZE AND SOURCE PANEL BASED ON SITE CONFIGURATION.
2. 2 – 6mm & 1 – 6mm IN 20mm CONDUIT TO 20A/1P CIRCUIT BREAKER IN SITE DISTRIBUTION PANEL. SITE ADAPT CONTRACTOR SHALL ADJUST CONDUCTOR SIZE AND SOURCE PANEL BASED ON SITE CONFIGURATION.
3. 30A/3P NEMA 3R FUSED DISCONNECT SWITCH FUSED AT 20A.

0 2000 4000 8000
SCALE: 1:200

APPROVED:

A/E DESIGNER OF RECORD

SEAL:

COMMONWEALTH OF PENNSYLVANIA
REGISTERED PROFESSIONAL
JOSEPH R. GAUS
1/29/10
ENGINEER
PE-074251

US ARMY CORPS OF ENGINEERS
AFGHANISTAN ENGINEER DISTRICT

Mark	Description	Date	Appr.	Mark	Description	Date	Appr.

U.S. ARMY ENGINEER DISTRICT, AFGHANISTAN
CORPS OF ENGINEERS
APO AE 96338

Michael Baker Jr., Inc
A unit of Michael Baker Corporation
Airside Business Park
100 Airside Drive
Moon Township, PA 15108
www.mbakercorp.com

Designed by: KJR	Date: 2/23/10	Rev. 0
Dwn by: KJR	Ckd by: JRG	Design file no.
Reviewed by: JRG	Drawing code:	
Submitted by: BAKER	File name: Plot date: Plot scale:	

AFGHAN NATIONAL ARMY
REGIONAL MILITARY TRAINING CENTER
STANDARD DESIGN

(ASP) AND (SAS) AREA

ELECTRICAL SITE LIGHTING PLAN

Sheet reference number:
ES–101

FIXTURE MARK 'SB'

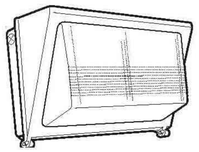

FIXTURE MARK 'SP'

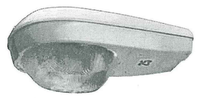

LIGHT FIXTURE SCHEDULE

FIXTURE MARK	STYLE NUMBER AND TYPE	NUMBER AND TYPE OF LAMPS	VOLTAGE	MOUNTING	NOTES
SB	METAL HALIDE WALL MOUNTED EXTERIOR AREA LIGHT WITH PRISMATIC ACRYLIC LENS – CORROSION RESISTANT CONSTRUCTION	(1) 250W METAL HALIDE LAMP	220V – 1ø 50HZ	EXTERIOR WALL MOUNTED 500mm BELOW ROOF	
SP	LIGHT POLE MOUNTED COBRA HEAD STYLE METAL HALIDE FIXTURE WITH WOOD POLE ARM AND MOUNTING BRACKET	(1) 250W METAL HALIDE LAMP	220V – 1ø 50HZ	POLE MOUNTED ON WOODEN POLE 7.7 METERS ABOVE GRADE	

APPROVED:

A/E DESIGNER OF RECORD

SEAL:

COMMONWEALTH OF PENNSYLVANIA
REGISTERED PROFESSIONAL
JOSEPH R. GAUS
ENGINEER
PE-074251
1/29/10

US ARMY CORPS OF ENGINEERS
AFGHANISTAN ENGINEER DISTRICT

Mark	Description	Date	Appr.

Mark	Description	Date	Appr.

U.S. ARMY ENGINEER DISTRICT, AFGHANISTAN
CORPS OF ENGINEERS
APO AE 96338

Michael Baker Jr., Inc.
A unit of Michael Baker Corporation
Airside Business Park
100 Airside Drive
Moon Township, PA 15108
www.mbakercorp.com

Designed by: KJR
Dwn by: KJR
Ckd by: JRG
Reviewed by: JRG
Submitted by: BAKER
Date: 2/23/10
Rev. 0
Design file no.
Drawing code:
File name:
Plot date:
Plot scale:

AFGHAN NATIONAL ARMY
REGIONAL MILITARY TRAINING CENTER
STANDARD DESIGN

(ASP) AND (SAS) AREA

ELECTRICAL SITE LIGHT FIXTURE SCHEDULE

Sheet reference number:
ES–601