# AFGHAN NATIONAL ARMY

## STANDARD BUILDING DESIGN

## BOQ OFFICER BARRACKS

## 100% FINAL DESIGN SUBMITTAL

### SHEET INDEX


G–001 COVER SHEET

STRUCTURAL

S–001 GENERAL NOTES & DESIGN CRITERIA
S–101 FOUNDATION/SLAB PLAN
S–102 ROOF FRAMING PLAN
S–401 BUILDING SECTIONS
S–402 ENLARGED LATRINE SLAB PLAN
S–501 FOUNDATION SECTIONS
S–502 FOUNDATION & FRAMING SECTIONS
S–503 BEAM & COLUMN DETAILS
S–504 BEAM & COLUMN DETAILS
S–505 MISCELLANEOUS SECTIONS
S–601 SCHEDULES
S–701 TYPICAL DETAILS
S–702 TYPICAL DETAILS

ARCHITECTURAL

A–001 LIFE SAFETY PLAN
A–101 FLOOR PLAN
A–102 ROOF PLAN
A–201 ELEVATIONS
A–301 BUILDING SECTIONS
A–401 WALL SECTIONS
A–402 ENLARGED PLAN
A–501 EXTERIOR DETAILS
A–502 HEAD, JAMB, & SILL DETAILS
A–503 STOOP DETAILS
A–504 TOILET, LAVATORY, & ABLUTION DETAILS
A–505 SHOWER DETAILS
A–506 ISOLATION JOINT DETAILS
A–601 WINDOW & DOOR SCHEDULES

MECHANICAL

P–101 FLOOR PLAN–PLUMBING
P–501 PLUMBING DETAILS
P–502 PLUMBING DETAILS
P–503 PLUMBING DETAILS
P–901 PLUMBING ISOMETRICS

M–101 HVAC FLOOR PLAN SCHEDULES & DETAILS

ELECTRICAL

E–001 ELECTRICAL SYMBOLS & ABBREVIATIONS
E–101 ELECTRICAL LIGHTING PLAN
E–102 ELECTRICAL POWER & SYSTEMS PLAN
E–103 ELECTRICAL LIGHTNING PROTECTION
E–501 ELECTRICAL DETAILS
E–502 ELECTRICAL DETAILS
E–601 ELECTRICAL LIGHT FIXTURE SCHEDULE
E–602 ELECTRICAL PANEL SCHEDULES


US ARMY CORPS OF ENGINEERS
AFGHANISTAN ENGINEER DISTRICT

| Mark | Description | Date | Appr. | Mark | Description | Date | Appr. |
|---|---|---|---|---|---|---|---|

U.S. ARMY CORPS OF ENGINEERS
AFGHANISTAN ENGINEER DISTRICT
APO AE 96338

Michael Baker Jr., Inc.
A unit of Michael Baker Corporation
Airside Business Park
100 Airside Drive
Moon Township, PA 15108
www.mbakercorp.com

Designed by: KMF/MMY
Dwn by: RCG
Ckd by: CWW
Reviewed by: LHM
Submitted by: BAKER
Date: 2/23/10
Rev: 0
Design file no.
Drawing code:
File name: ANABOQG001CS
Plot date: 2/23/2010
Plot scale: X:X

AFGHAN NATIONAL ARMY
REGIONAL MILITARY TRAINING CENTER
STANDARD DESIGN

BOQ OFFICER BARRACKS

COVER SHEET

Sheet reference number:
G–001

STRUCTURAL ABBREVIATIONS:

| | |
|---|---|
| ACI | AMERICAN CONCRETE INSTITUTE |
| ADD'L | ADDITIONAL |
| AISC | AMERICAN INSTITUTE OF STEEL CONSTRUCTION |
| AISI | AMERICAN IRON AND STEEL INSTITUTE |
| ASTM | AMERICAN SOCIETY FOR TESTING AND MATERIALS |
| ARCH | ARCHITECTURAL |
| B | BOTTOM |
| BLDG | BUILDING |
| BOTT | BOTTOM |
| ℄ | CENTER LINE |
| CFMRF | COLD FORM METAL ROOF FRAME |
| CFMF | COLD FORM METAL FRAME |
| CFS | COLD FORMED STEEL |
| CIP | CAST–IN–PLACE |
| CIPL | CAST–IN–PLACE LINTEL |
| CJ | CONTROL JOINT |
| CLR | CLEAR |
| CMU | CONCRETE MASONRY UNIT |
| COEFF | COEFFICIENT |
| COL | COLUMN |
| CONC | CONCRETE |
| CONT | CONTINUOUS |
| COORD | COORDINATE |
| CRSI | CONCRETE REINFORCING STEEL INSTITUTE |
| CSJ | CONSTRUCTION JOINT |
| DIA | DIAMETER |
| DIAG | DIAGONAL |
| DIM | DIMENSION |
| DWG | DRAWING |
| DWL | DOWEL |
| EA | EACH |
| EF | EACH FACE |
| ELEC | ELECTRICAL |
| ELEV | ELEVATION |
| EMBED | EMBEDMENT |
| EQUIV | EQUIVALENT |
| ETC | ET CETERA |
| EW | EACH WAY |
| EXP | EXPANSION |
| EXT | EXTERIOR |
| FTG | FOOTING |
| GA | GAUGE |
| GB | GRADE BEAM |
| HORIZ | HORIZONTAL |
| h | HOUR |
| HRS | HOURS |
| IBC | INTERNATIONAL BUILDING CODE |
| INFO | INFORMATION |
| INT | INTERIOR |
| kg | KILOGRAM |
| km | KILOMETER |
| kN | KILONEWTON |
| kPa | KILOPASCAL |
| L# | ANGLE (# INDICATES SIZE) |
| LONG | LONGITUDINAL |
| LLV | LONG LEG VERTICAL |
| m | METER |
| MAX | MAXIMUM |
| MECH | MECHANICAL |
| MFG | MANUFACTURER |
| MID | MIDDLE |
| MIN | MINIMUM |
| MISC | MISCELLANEOUS |
| mm | MILLIMETER |
| MPa | MEGAPASCAL |
| MTL | METAL |
| MWFRS | MAIN WIND FORCE RESISTING SYSTEM |
| N | NEWTON |
| N | NORTH |
| N/A | NOT APPLICABLE |
| # | NUMBER SYMBOL FOR REBAR SIZE |
| NTS | NOT TO SCALE |
| OC | ON CENTER |
| OD | OUTSIDE DIAMETER |
| OPNG | OPENING |
| PL or PL | PLATE |
| PRE–ENG | PRE–ENGINEERED |
| RB | ROOF BEAM |
| REINF | REINFORCED |
| REQ'D | REQUIRED |
| SIM | SIMILAR |
| SPECS | SPECIFICATIONS |
| STD | STANDARD |
| STRUCT | STRUCTURAL |
| SW | SHEAR WALL |
| T | TOP |
| T/ | TOP OF |
| T/ELEV | TOP ELEVATION |
| T/SLAB | TOP OF SLAB |
| T&B | TOP AND BOTTOM |
| THK | THICK |
| TYP | TYPICAL |
| UFC | UNIFIED FACILITIES CRITERIA |
| UON | UNLESS OTHERWISE NOTED |
| VERT | VERTICAL |
| W | WIDTH |
| W/ | WITH |

1.0 GENERAL NOTES:

1.1 THIS PROJECT HAS BEEN DESIGNED FOR THE WEIGHTS AND MATERIALS INDICATED ON THE SHEETS AND FOR THE LIVE LOADS INDICATED IN THE DESIGN DATA. IT IS THE CONTRACTOR'S RESPONSIBILITY TO DETERMINE ALLOWABLE CONSTRUCTION LOADS AND TO PROVIDE PROPER DESIGN AND CONSTRUCTION OF FALSEWORK, FORMWORK, STAGING, BRACING, SHEETING AND SHORING, ETC.

1.1 COORDINATE THESE SHEETS WITH THE ARCHITECTURAL, MECHANICAL, ELECTRICAL, PLUMBING, AND CIVIL SHEETS. ALL DIMENSIONS SHOWN ON THE SHEETS ARE MILLIMETERS UNLESS NOTED OTHERWISE.

1.2 THE CONTRACTOR SHALL VERIFY AND COORDINATE ALL FLOOR AND ROOF OPENING SIZES AND LOCATIONS, EQUIPMENT PAD SIZES AND LOCATIONS, ANCHOR BOLT LAYOUTS, ETC WITH EQUIPMENT SELECTED. THE CONTRACTOR SHALL MAKE ANY REQUIRED MODIFICATIONS AT NO ADDITIONAL COST.

1.3 THE CONTRACTOR SHALL REFER TO THE ARCHITECTURAL, MECHANICAL, ELECTRICAL AND PLUMBING SHEETS FOR SLEEVES, CURBS, INSERTS OR OPENINGS, ETC. NOT HEREIN INDICATED.

1.4 WORK NOT INCLUDED ON THE SHEETS BUT IMPLIED TO BE SIMILAR TO THAT SHOWN AT CORRESPONDING PLACES ELSEWHERE ON THE SHEETS SHALL BE REPEATED.

1.5 IN CASE OF CONFLICT BETWEEN THE NOTES, DETAILS AND SPECIFICATIONS THE MOST RIGID REQUIREMENTS SHALL GOVERN.

1.6 SEE ARCHITECTURAL SHEETS FOR LOCATIONS OF MASONRY AND NON–LOAD BEARING PARTITIONS. PROVIDE COMPRESSIBLE FIRESAFING AT TOP OF WALL AS REQUIRED BY ARCHITECTURAL SHEETS.

1.7 COORDINATE FINISHED FLOOR DATUM ELEVATION 0.0m WITH THE CIVIL SHEETS.

2.0 FOUNDATION NOTES

2.1 THE GEOTECHNICAL ANALYSIS FOR THIS PROJECT IS THE RESPONSIBILITY OF THE CONTRACTOR AWARDED THE WORK. AN ASSUMED ALLOWABLE SOIL BEARING VALUE OF 72 kPa HAS BEEN USED IN THE STRUCTURAL ANALYSIS OF THE BUILDING HEREIN AND SHALL BE CONFIRMED AND VERIFIED AS PART OF THE GEOTECHNICAL INVESTIGATION. VALUES WHICH DO NOT MEET THE REQUIREMENTS INDICATED ON THE BASIS OF DESIGN SHEET SHALL BE IMMEDIATELY BROUGHT TO THE ATTENTION OF THE CONTRACTING OFFICER FOR CONSIDERATION AND DETERMINATION ON THE NEXT APPROPRIATE COURSE OF ACTION.

2.2 SEE THE SPECIFICATION FOR ADDITIONAL REQUIREMENTS TO THOSE OUTLINED IN THE GEOTECHNICAL INVESTIGATION FOR EXCAVATION AND PREPARATION OF THE FOUNDATION AND THE SLAB ON GRADE SUBGRADE INCLUDING COMPACTION PROCEDURES.

2.3 EXCAVATIONS FOR FOOTINGS SHALL HAVE THE SIDES AND BOTTOMS TEMPORARILY LINED WITH 0.25mm POLYETHYLENE IF PLACEMENT OF CONCRETE DOES NOT OCCUR WITHIN 24 HRS OF THE EXCAVATION OF THE FOOTING.

2.4 FOUNDATION CONDITIONS NOTED DURING CONSTRUCTION WHICH DIFFER FROM THOSE DESCRIBED IN THE GEOTECHNICAL REPORT SHALL BE REPORTED TO THE GENERAL CONTRACTOR BEFORE FURTHER CONSTRUCTION IS ATTEMPTED. SEE PROJECT SPECIFICATIONS.

2.5 NO FOOTINGS OR SLABS SHALL BE POURED INTO OR AGAINST SUBGRADE CONTAINING FREE WATER, FROST, ICE OR LOOSE MATERIAL. FROST DEPTH ASSUMED TO BE 800mm.

2.6 ALL SLAB–ON–GRADE, TRENCH BOTTOMS AND OTHER ON–GRADE INTERIOR HORIZONTAL SURFACES SHALL BE PLACED OVER A 0.25mm POLYETHYLENE VAPOR RETARDER OVER A 100mm #57 STONE WATER CAPILLARY BARRIER PLACED ON SUBGRADE PROPERLY PREPARED IN ACCORDANCE WITH THE CONTRACT SPECIFICATIONS. (UON)

2.7 PRIOR TO START OF FOUNDATION OR SLAB–ON–GRADE CONSTRUCTION, EXISTING SUBGRADES SHALL BE COMPACTED TO MINIMUM OF 95% MAXIMUM DRY DENSITY OBTAINED THRU ASTM D 1557 MODIFIED PROCTOR TESTING.

2.8 SEE PLUMBING, ELECTRICAL & CIVIL SHEETS FOR REQUIRED UNDERSLAB UTILITIES.

2.9 SEE ARCHITECTURAL SHEETS FOR ALL WATERPROOFING DETAILS AND MATERIALS.

2.10 IF UNDERMINING OF FOOTINGS OCCURS, FILL VOIDS WITH 18 MPa CONCRETE. DO NOT ATTEMPT TO REPLACE AND RE–COMPACT SOIL.

3.0 CONCRETE

3.1 CONCRETE SHALL HAVE THE UNIT WEIGHT OF 2400 $kg/m^3$ AND A MINIMUM COMPRESSIVE STRENGTH (f'c) OF 28 MPa AT 28 DAYS. ALL CONCRETE SHALL HAVE A WATER–CEMENT RATIO OF 0.45. SEE SPECIFICATIONS FOR ADDITIONAL INFORMATION. ENTRAIN AIR TO PRODUCE TOTAL AIR CONTENT ACCORDING TO THE SPECIFICATIONS FOR CONCRETE EXPOSED TO FREEZING TEMPERATURES (EXTERIOR FOOTINGS, SLAB TURNDOWNS, EXTERIOR SLABS AND SLABS–ON–GRADE, EXTERIOR RETAINING WALLS, AND EXTERIOR GRADE BEAMS.)

3.2 NO CALCIUM CHLORIDE SHALL BE USED IN ANY CONCRETE.

3.3 MIXING, TRANSPORTING AND PLACING OF CONCRETE SHALL CONFORM TO ACI 301M–05.

3.4 ALL CONCRETE WORK SHALL CONFORM TO THE REQUIREMENTS OF THE AMERICAN CONCRETE INSTITUTE (ACI) 318M MANUAL (metric), "BUILDING CODE REQUIREMENTS FOR REINFORCED CONCRETE", AND REQUIREMENTS OUTLINED IN THE CONTRACT SPECIFICATIONS. WHEN THERE IS A CONFLICT BETWEEN ACI AND THE SPECIFICATIONS, THE MORE STRINGENT SHALL GOVERN.

3.5 CHAMFER ALL EXPOSED EXTERNAL CORNERS OF CONCRETE WITH 20mm x45 DEGREE CHAMFER UON.

3.6 CONCRETE REINFORCEMENT BARS SHALL CONFORM TO ASTM A615M–96a, GRADE 420 MPa, REINFORCING BARS SHALL NOT BE TACK WELDED, WELDED, HEATED OR CUT, UNLESS INDICATED ON THE CONTRACT DOCUMENTS. ALL LAP SPLICES SHALL BE CLASS "B" UON.

3.7 HORIZONTAL FOOTING AND HORIZONTAL WALL REINFORCEMENT SHALL BE CONTINUOUS AND SHALL HAVE 90 DEGREE BENDS AND EXTENSIONS, OR CORNER BARS OF EQUIVALENT SIZE LAPPED WITH A CLASS B TENSION SPLICE AT CORNERS AND INTERSECTIONS. TOP BAR CRITERIA SHALL APPLY IF 300mm OR MORE OF FRESH CONCRETE IS PLACED BELOW BAR.

3.8 SLABS–ON–GRADE SHALL HAVE CONSTRUCTION JOINTS OR CRACK CONTROL JOINTS AS SHOWN ON THE DRAWINGS. CONSTRUCTION JOINTS CAN BE USED AT CONTROL JOINT LOCATIONS AT CONTRACTORS OPTION. SEE SLAB PLANS & JOINT DETAILS FOR ADDITIONAL INFORMATION. FOR AREAS NOT SHOWN ON DWGS, THE MAXIMUM SPACING OF CONSTRUCTION/ CRACK CONTROL JOINTS SHALL BE 4800mm

3.9 ALL CONCRETE REINFORCEMENT SHALL BE DETAILED, FABRICATED, LABELED, SUPPORTED, AND SPACED IN FORMS AND SECURED IN PLACE IN ACCORDANCE WITH THE PROCEDURES AND REQUIREMENTS OUTLINED IN THE LATEST EDITION OF THE "BUILDING CODE REQUIREMENTS FOR REINFORCED CONCRETE", ACI 318M, AND THE "MANUAL OF STANDARD PRACTICE FOR DETAILING REINFORCED CONCRETE STRUCTURES", ACI 315M, LATEST EDITION. BASED ON IN COUNTRY REINFORCEMENT AVAILABILITY, IT IS THE CONTRACTOR'S OPTION TO ROUND DESIGNATED ODD NUMBERED REINFORCEMENT SIZES UP (1) ONE BAR SIZE.

3.10 ALL DOWELS SHALL MATCH SIZE AND NUMBER OF MAIN REINFORCING, UNLESS NOTED OTHERWISE ON THE SHEETS.

3.11 ADDITIONAL BARS SHALL BE PROVIDED AROUND ALL FLOOR AND WALL OPENINGS AS SHOWN ON THE SHEETS.

3.12 SEE ARCHITECTURAL SHEETS FOR TYPE AND LOCATION OF ALL FLOOR FINISHES.

3.13 THE CONTRACTOR SHALL COORDINATE ADDITIONAL WALL/SLAB OPENINGS NOT SHOWN ON STRUCTURAL SHEETS. SEE MECHANICAL, ELECTRICAL, PLUMBING AND CIVIL SHEETS.

3.14 UNLESS NOTED OTHERWISE, ALL CURBS SHALL BE REINFORCED WITH AT LEAST (1)–#13 CONTINUOUS AND #13 AT 300mm O.C. DOWELS TO STRUCTURE BELOW.

3.15 THE CONTRACTOR SHALL VERIFY ALL OPENINGS, PAD SIZES, AND ANCHOR BOLTS WITH EQUIPMENT SELECTED.

3.16 FOR ALL WALLS & PIERS, PROVIDE DOWELS INTO FOOTING AT EACH VERT REINF BAR, UON DOWEL SIZE SHALL BE SAME AS VERT REINF.

3.17 PROVIDE CONCRETE POUR STOPS OR FORMED AS REQUIRED FOR INSTALLATION OF ALL CONCRETE WORK.

3.18 PROVIDE ADDITIONAL (2)–#13 x 600mm REINFORCING BARS IN SLAB–ON GRADE AT ALL RE–ENTRANT CORNERS. PLACE BARS AT MID–DEPTH OF SLAB WITH A CLEARANCE OF 50mm FROM CORNER UON.

3.19 COLD–WEATHER PLACEMENT: COMPLY WITH ACI 306.1 AND AS FOLLOWS. PROTECT CONCRETE WORK FROM PHYSICAL DAMAGE OR REDUCED STRENGTH THAT COULD BE CAUSED BY FROST, FREEZING ACTIONS, OR LOW TEMPERATURES. SUBMIT A COLD WEATHER CONCRETING PLAN FOR APPROVAL.

3.20 PROVIDE BONDING COMPOUND PER ASTM C 1059–99: SPECIFICATION FOR LATEX AGENTS FOR BONDING FRESH CONCRETE (GROUT) TO HARDENED CONCRETE.

3.21 THE FORMED SURFACES FOR REINFORCED CONCRETE SHALL ACHIEVE A "CLASS A" FINISH WHEN RECEIVING PAINT OR A "CLASS B" FINISH WHEN RECEIVING PLASTER OR TILE AS PER SPECIFICATION SECTION 03 31 00 CAST–IN–PLACE STRUCTURAL CONCRETE.

3.22 AT INTERSECTING GRADE BEAMS AND SHEAR WALLS, PROVIDE CORNER BARS AT INTERSECTIONS WITH SAME QUANTITY, SIZE AND SPACING AS HORIZONTAL BARS WITH LEG LENGTH = 50db.

3.23 REFER TO S–800 SERIES REINFORCING BAR PLACEMENT DRAWINGS DEFINING LENGTHS, BENDS, AND SPACINGS FOR ALL STRUCTURAL CONCRETE. THE S–800 SERIES DRAWING ARE BASED ON THE S–400, S–500, S–600, AND S–700 SERIES DRAWING SCHEDULES, DETAILS, AND DIAGRAMS.

4.0 CONCRETE MASONRY

4.1 MASONRY CONSTRUCTION SHALL CONFORM TO SPECIFICATION FOR MASONRY STRUCTURES (ACI 530.1) UON.

4.2 STRENGTH OF MASONRY MATERIALS SHALL BE AS FOLLOWS:

a. CONCRETE MASONRY UNITS SHALL BE NORMAL WEIGHT, GRADE N, TYPE 1, CONFORMING TO ASTM C–90 AND HAVE A MINIMUM COMPRESSIVE STRENGTH OF 10.4 MPa ON THE NET AREA.

b. MORTAR SHALL CONFORM TO ASTM C–270 TYPE S.

c. GROUT FOR MASONRY SHALL BE NORMAL WEIGHT AND HAVE A MINIMUM COMPRESSIVE STRENGTH OF 14 MPa AT 28 DAYS. GROUT SHALL CONFORM TO ASTM C476M. GROUT LIFTS SHALL NOT EXCEED 1,400mm.

d. REINFORCED MASONRY SHALL HAVE A STRENGTH F'm = 10 MPa. (F'm IS THE COMPRESSIVE STRENGTH OF THE MASONRY AT 28 DAYS AS DETERMINED BY PRISM TESTS).

4.3 ALL VERTICAL REINFORCEMENT FOR CONCRETE MASONRY SHALL BE ASTM A615M–96a, GRADE 420 MPa. ALL SPLICES SHALL BE LAPPED 48 BAR DIAMETERS MINIMUM.

4.4 BOND BEAMS SHALL BE SPACED AT 1200mm OC VERTICALLY. BOND BEAM REINFORCING SHALL BE CONTINUOUS AND PROVIDED AT WALL INTERSECTIONS AND WALL CORNERS (REFERENCE CONCRETE MASONRY NOTE 4.11). ALL BOND BEAM REINFORCING SHALL BE CONTINUOUS AND HAVE STANDARD ACI HOOKS AT EACH END. PROVIDE STANDARD BAR SPLICES AS SPECIFIED. AS AN ALTERNATE TO CMU BOND BEAMS, IT IS THE CONTRACTOR'S OPTION TO PROVIDE 200mm x 200mm CONTINUOUS CAST–IN–PLACE CONCRETE BOND BEAMS WITH (2)–#16 IN LIEU OF CMU BOND BEAMS INDICATED ON THE DRAWINGS.

4.5 SEE TYPICAL DETAILS FOR MINIMUM REINFORCEMENT REQUIREMENTS FOR CMU WALLS. PROVIDE STANDARD BAR SPLICES AS SPECIFIED. ALL VERTICAL REINFORCEMENT EXTENDS FULL HEIGHT OF WALL.

4.6 CMU CELLS THAT REQUIRE VERTICAL REINFORCING BARS AS INDICATED ON THE CONTRACT DRAWINGS AND/OR SPECS SHALL HAVE REINF BARS PLACED IN CENTERS OF CMU CELLS AND CONTINUOUSLY GROUTED UON.

4.7 ALL CMU CELLS, OPEN CAVITIES, AND AIR SPACES OF ALL EXTERIOR WALLS SHALL BE GROUTED TO STOP FRAGMENTS FROM MORTAR BLAST.

4.8 CONTRACTOR SHALL COORDINATE LOCATION OF ALL OPENINGS SEE ARCH, MECH, ELEC, AND PLUMBING SHEETS FOR SIZE AND LOCATION OF OPENINGS.

4.9 MASONRY WALLS SHALL NOT BE BACK FILLED PRIOR TO THE MORTAR AND GROUT ATTAINING THEIR RESPECTIVE MAXIMUM DESIGN STRENGTHS PER SPECIFICATIONS.

4.10 PROVIDE GALVANIZED MORTAR/GROUT SCREEN W/ 3mm MESH WHERE CELLS BELOW ARE NOT GROUTED.

4.11 AT INTERSECTING BOND BEAMS, PROVIDE CORNER BAR FOR EACH HORIZONTAL BAR IN BOND BEAMS AT INTERSECTING WALLS. USE SAME SIZE AND SPACING AS HORIZONTAL BARS WITH LEG LENGTH = 50db.

4.12 THE ALTERNATE TOP OF CMU WALL BRACING DETAIL(S) SHOWN ON S–701 CAN BE UTILIZED AT THE CONTRACTOR'S OPTION IN PLACE OF THE "SLEEVED DOWEL" WALL CONNECTIONS DEPICTED ON S–400 AND S–500 SERIES DRAWINGS. IN ADDITION, ALTERNATE DETAIL(S) SHOW CAST–IN–PLACE WALL BOND BEAMS THAT CAN BE UTILIZED AT THE CONTRACTOR'S OPTION IN PLACE OF THE STANDARD CMU BOND BEAMS CONSTRUCTED OF CMU BLOCKS.

5.0 COLD–FORMED METAL FRAMING

5.1 ALL COLD–FORMED METAL FRAMING MEMBERS SHALL CONFORM TO ASTM A1003M, STRUCTURAL GRADE ST340 (MPa), WITH A GALVANIZED COATING OF Z275 OR BETTER IN ACCORDANCE WITH ASTM A653M.

5.2 ALL COLD–FORMED METAL FRAMING MEMBERS SHALL HAVE THE FOLLOWING MINIMUM PROPERTIES:

a. MINIMUM METAL THICKNESS:
TRACK = 1.37mm;
STUD/OTHER = 1.09mm

b. MINIMUM FLANGE WIDTH:
TRACK = 38mm;
STUD/OTHER = 35mm

c. MINIMUM MEMBER DEPTH:
ALL SECTIONS = 152.2mm

d. PURLIN (HAT CHANNEL)
DEPTHxWIDTH(FLAT TOP)xTHICK = 25mmx42mmx1.59mm

5.3 ALL CONNECTIONS SHALL BE MADE WITH CORROSION RESISTANT (ASTM A153M), SELF–DRILLING, SELF–TAPPING STEEL DRILL SCREWS IN ACCORDANCE WITH ASTM C1513. SCREWS SHALL HAVE A LOW PROFILE HEAD BENEATH ROOF DECK, AND STANDARD HEAD ALL OTHER LOCATIONS.

5.4 FABRICATE COLD FORMED METAL FRAMING AND ACCESSORIES PLUMB, SQUARE AND TRUE TO LINE, WITH CONNECTIONS SECURELY FASTENED ACCORDING TO AISI STANDARD FOR COLD FORMED STEEL FRAMING.

5.5 CUT FRAMING MEMBERS BY SAWING OR SHEATHING, DO NOT TORCH CUT.

5.6 INSTALL FRAMING MEMBERS IN ONE–PIECE LENGTHS UNLESS SPLICE CONNECTIONS ARE INDICATED FOR TRACK OR TENSION MEMBERS

5.7 INSTALL TEMPORARY BRACING AND SUPPORTS TO SECURE FRAMING DURING CONSTRUCTION. MAINTAIN BRACING AND SUPPORTS IN PLACE UNTIL THE STRUCTURE HAS BEEN COMPLETED WITH ALL CONNECTIONS AND PERMANENT BRACING SECURED.

6.0 STRUCTURAL DESIGN CRITERIA

6.1 ALL DESIGNS SHALL CONFORM TO THE PROVISIONS OF THE IBC 2006 AND UFC AS APPLICABLE.

6.2 DESIGN LOADS

6.2.1 DEAD LOADS (PER IBC 2006 & UFC 3–310–01)

| | |
|---|---|
| MECH/ELEC/PLUMBING | 0.20 kPa |
| MISCELLANEOUS | 0.15 kPa |
| COLD–FORMED FRAMING | 0.20 kPa |
| INSULATION | 0.10 kPa |
| METAL ROOF PANEL | 0.14 kPa |
| | 0.79 kPa |
| FLOOR PARTITION ALLOWANCE | 0.96 kPa |

6.2.2 LIVE LOADS (PER IBC 2006 & UFC 3–310–01)

| | |
|---|---|
| ROOF | 1.00 kPa |
| CORRIDOR (2–STORY BLDG ONLY) | 4.80 kPa |
| ALL OTHERS (2–STORY BLDG ONLY) | 2.40 kPa |
| SLAB ON GRADE | 4.80 kPa |

6.2.3 SNOW LOADS (PER IBC 2006 & UFC 3–310–01)

| | |
|---|---|
| GROUND SNOW LOAD (Pg) | 1.2 kPa |
| SNOW IMPORTANCE FACTOR (I) | 1.0 |
| SNOW EXPOSURE FACTOR (Ce) | 1.0 |
| THERMAL FACTOR (Ct) | 1.0 |

6.2.4 WIND LOADS (PER IBC 2006)

| | |
|---|---|
| BASIC WIND SPEED | 137 km/h |
| WIND IMPORTANCE FACTOR | 1.0 |
| WIND EXPOSURE CATEGORY | D |
| DIRECTIONALITY COEFFICIENT (Kd) | 0.85 |
| TOPOGRAPHIC FACTOR (Kzt) | 1.0 |

6.2.5 SEISMIC LOADS (PER IBC 2006 & UFC 3–310–04)

OCCUPANCY USE CATEGORY II
SEISMIC IMPORTANCE FACTOR (Ie) 1.0
SEISMIC SITE CLASS D
$S_s$ = 2.40 (FOR IRREGULAR PORTION OF BLDG – COLUMN LINES 1 THRU 5)
$S_S$ = 1.50 (REDUCED FROM 2.40 PER ASCE 7–05, 12.8.1.3 FOR A BUILDING WITHOUT IRREGULARITIES – COLUMN LINES 6 THRU 11)
$S_1$ = 1.20
$S_{DS}$ = 1.00 WHEN $S_s$ = 1.50
$S_{DS}$ = 1.60 WHEN $S_s$ = 2.40
$S_{D1}$ = 1.20
SEISMIC DESIGN CATEGORY E
SEISMIC RESISTING SYSTEM:
–SPECIAL REINFORCED CONCRETE SHEAR WALL
RESPONSE MODIFICATION FACTOR (R) 6
RESPONSE COEFFICIENT (Cs) – IRREGULAR 0.267
RESPONSE COEFFICIENT (Cs) – REGULAR 0.167
SEISMIC ANALYTICAL PROCEDURE = EQUIV LATERAL FORCE
SEISMIC BASE SHEAR – IRREGULAR 1870 kN
SEISMIC BASE SHEAR – REGULAR 740 kN

APPROVED:
A/E DESIGNER OF RECORD
SEAL:
GEORGIA REGISTERED 1-29-10 No. 27141 PROFESSIONAL ENGINEER CHRISTOPHER W. WHITMORE

US ARMY CORPS OF ENGINEERS
AFGHANISTAN ENGINEER DISTRICT

| Mark | Description | Date | Appr. |
|---|---|---|---|

| Mark | Description | Date | Appr. |
|---|---|---|---|

Designed by: KMP/MMY
Dwn by: RCG
Ckd by: CWW
Reviewed by: LHM
Submitted by: BAKER
Date: 2/23/10
Rev: 0
Design file no.
Drawing code:
File name: ANABOQS-001GN
Plot date: 2/23/2010
Plot scale: X:X

U.S. ARMY CORPS OF ENGINEERS
AFGHANISTAN ENGINEER DISTRICT
APO AE 96338

*Michael Baker Jr., Inc*
*A unit of Michael Baker Corporation*
Airside Business Park
100 Airside Drive
Moon Township PA 15108
www.mbakercorp.com

AFGHAN NATIONAL ARMY
REGIONAL MILITARY TRAINING CENTER
STANDARD DESIGN

BOQ OFFICER BARRACKS

GENERAL NOTES & DESIGN CRITERIA

Sheet reference number:
S–001

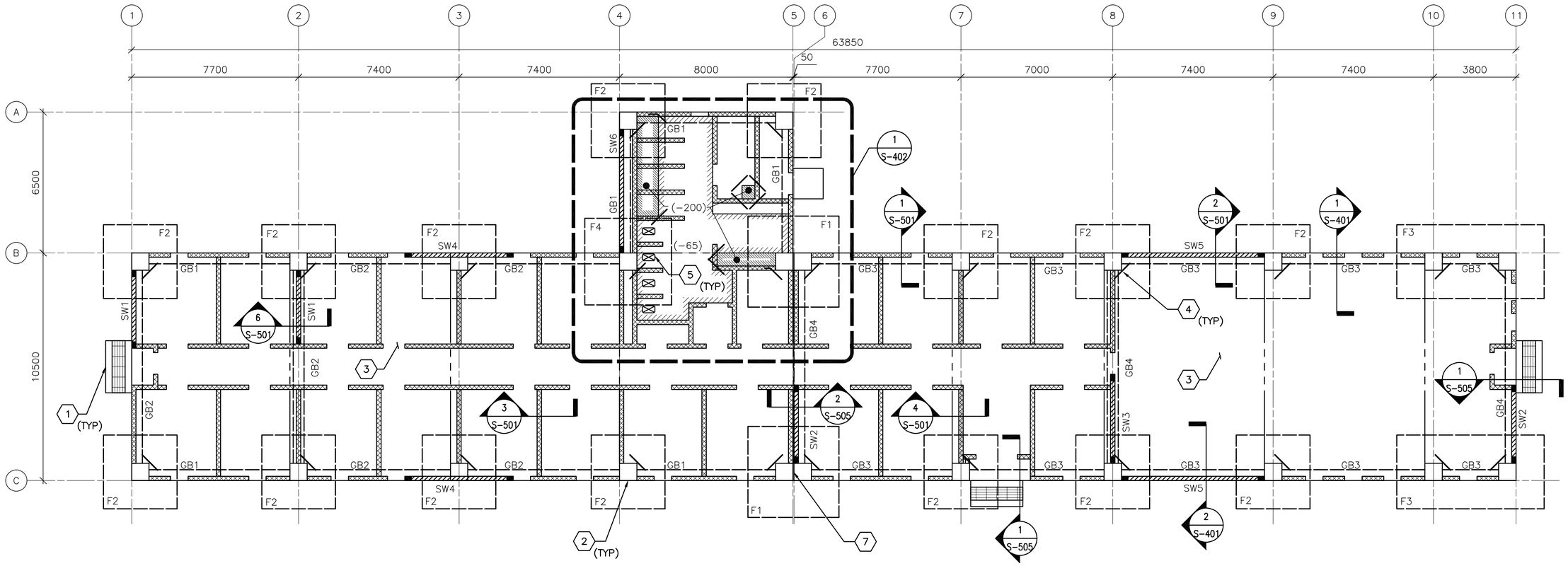


## 1 / S-101 FOUNDATION/SLAB PLAN

SCALE: 1:100

## FOUNDATION/SLAB PLAN NOTES:

1. REFER TO SHEET S-001 FOR STRUCTURAL NOTES AND DESIGN CRITERIA.
2. FINISH FIRST FLOOR ELEVATION SHALL BE (DATUM 0.00) ALL PLUS OR MINUS DIMENSIONS INDICATED ON PLAN OR REFERRED TO IN NOTES RELATE TO FINISH FIRST FLOOR ELEVATION.
3. SLAB-ON-GRADE IS 150 WITH #13 @ 300 OC EW LOCATED 38 FROM T/SLAB UON. WHERE NOTED 300 SLAB-ON-GRADE SHALL BE REINFORCED W/ #13 @ 300 OC EW T&B.
4. TOP OF EXTERIOR FOOTINGS SHALL BE -950 UNLESS OTHERWISE INDICATED.
5. SPREAD FOOTINGS INDICATED BY F# ON PLAN. REFER TO SPREAD FOOTING SCHEDULE ON SHEET S-601.
6. REFER TO COLUMN SCHEDULE ON SHEET S-601.
7. GRADE BEAM INDICATED BY GB# ON PLAN, REFER TO BEAM SCHEDULE ON SHEET S-601.
8. SHEARWALL INDICATED BY SW# ON PLAN, REFER TO SHEARWALL SCHEDULE ON SHEET S-601.
9. SEE TYP EXTERIOR AND INTERIOR CMU WALL REINF DETAILS ON SHEET S-701.
10. SEE MECHANICAL AND ELECTRICAL SHEETS FOR CONCRETE PAD LOCATIONS, SIZES, AND THICKNESS NOT SHOWN. SEE SHEET S-701 FOR DETAILS.
11. THICKENED SLAB UNDER PERIMETER/PARTITION CMU WALLS NOT SHOWN FOR CLARITY.

## FOUNDATION/SLAB PLAN KEY NOTES: (X)

1. CONC PAD (ENTRANCE) – SEE ARCH DWGS FOR INFORMATION
2. REINF CONC COLUMN
3. REINF CONC SLAB-ON-GRADE
4. (2)-#13 RE-ENTRANT CORNER BARS – SEE S-701 FOR INFORMATION
5. SLAB OPENING – COORDINATE W/ ARCH AND PLUMB DWGS.
6. NOT USED
7. 50 ISOLATION JOINT BETWEEN STRUCTURES LOCATED ABOVE FIRST FLOOR SLAB-ON-GRADE

## FOUNDATION/SLAB PLAN LEGEND:

- REINF CONC SHEAR WALL
- REINF CMU WALL
- CONTROL JOINT
- INDICATES DROP SLAB 65 BELOW FINISH FLOOR
- INDICATES DROP SLAB 200 BELOW FINISH FLOOR
- SLAB OPENING

0 2000 4000
SCALE: 1:100

UNLESS OTHERWISE NOTED, LINEAR DIMENSIONS SHOWN ON DRAWINGS ARE IN MILLIMETERS (mm)

APPROVED:

A/E DESIGNER OF RECORD

SEAL:

GEORGIA REGISTERED 1-29-10 No. 27141 PROFESSIONAL ENGINEER CHRISTOPHER W. WHITMORE

US ARMY CORPS OF ENGINEERS
AFGHANISTAN ENGINEER DISTRICT

| Mark | Description | Date | Appr. | Mark | Description | Date | Appr. |
|---|---|---|---|---|---|---|---|

Date: 2/23/10
Rev: 0
Design file no.
Drawing code:
File name: AN4BOQS-101FNP
Plot date: 2/23/2010
Plot scale: X:X

Designed by: KMP/MMY
Dwn by: RCG
Ckd by: CWW
Reviewed by: LHM
Submitted by:
BAKER

U.S. ARMY CORPS OF ENGINEERS
AFGHANISTAN ENGINEER DISTRICT
APO AE 96338

Michael Baker Jr., Inc.
A unit of Michael Baker Corporation
Airside Business Park
100 Airside Drive
Moon Township, PA 15108
www.mbakercorp.com

AFGHAN NATIONAL ARMY
REGIONAL MILITARY TRAINING CENTER
STANDARD DESIGN

BOQ OFFICER BARRACKS

FOUNDATION/SLAB PLAN

Sheet reference number:
S-101

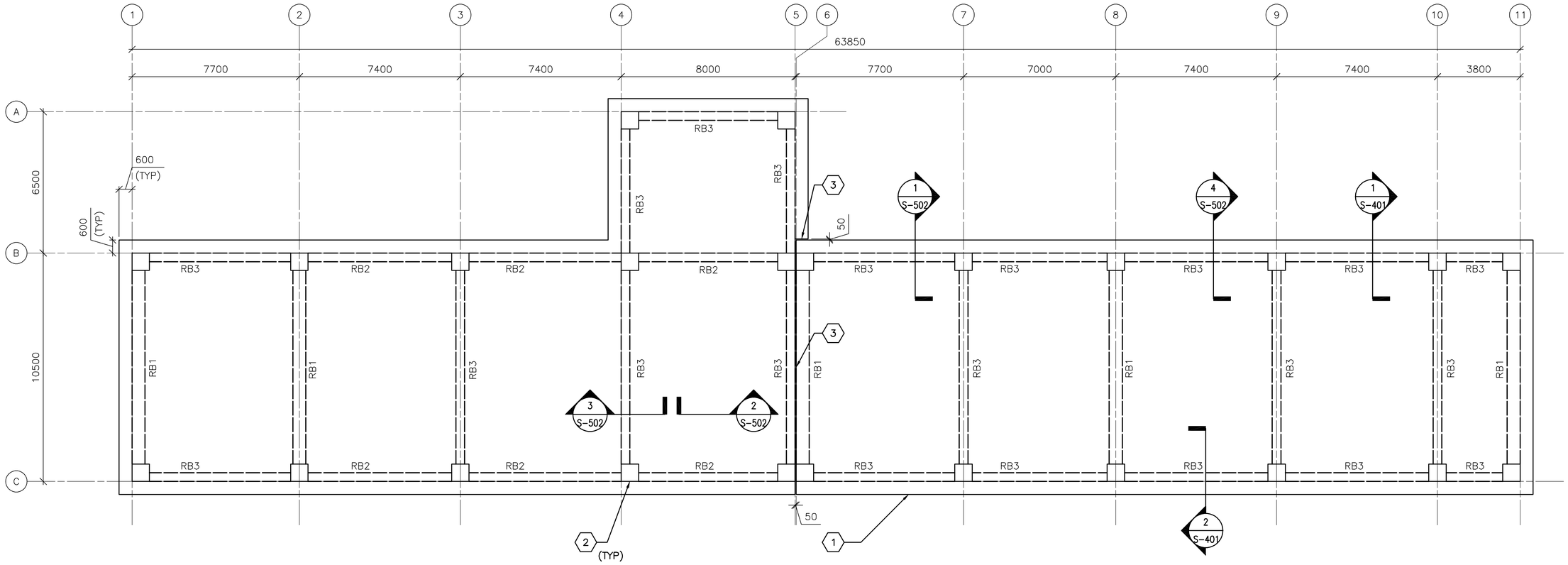


## 1 S-102 ROOF FRAMING PLAN

SCALE: 1:100

## ROOF FRAMING PLAN NOTES:

1. REFER TO SHEETS S-001 FOR STRUCTURAL NOTES AND DESIGN CRITERIA.
2. TOP OF SLAB ELEVATION = 3800 UNLESS NOTED OTHERWISE.
3. ROOF SLAB IS 300 WITH #19 @ 300 OC EW T&B.
4. ROOF BEAM INDICATED BY RB# ON PLAN. REFER TO BEAM SCHEDULE ON SHEET S-601
5. COORDINATE WITH ARCHITECTURAL SHEETS FOR COLD-FORMED STEEL OVERBUILD FRAMING ABOVE ROOF SLAB.
6. COLD-FORMED METAL OVERBUILD ROOF FRAMING NOT SHOWN FOR CLARITY. SEE OVERBUILD ROOF FRAMING DETAILS AND SECTIONS ON SHEET S-702.
7. CMU PARTITION WALLS (BELOW ROOF SLAB) NOT SHOWN FOR CLARITY.
8. OVERHANG AREAS OF ROOF SLAB CONTAIN ROOF VENT PENETRATIONS. REFERENCE ARCHITECTURAL DRAWINGS FOR INFORMATION.
9. DISCONTINUE ALL ROOF FRAMING AT BUILDING EXPANSION JOINT. REFER TO ARCHITECTURAL SHEETS FOR COLD-FORMED ROOF OVERBUILD FRAMING EXPANSION JOINT DETAIL.

## ROOF FRAMING PLAN KEY NOTES: (X)

1. CONC ROOF SLAB (BELOW ROOF OVERBUILD)
2. REINF CONC COLUMN (BELOW CONC ROOF SLAB)
3. 50 ISOLATION JOINT BETWEEN STRUCTURES LOCATED ABOVE FIRST FLOOR SLAB-ON-GRADE

0 2000 4000
SCALE: 1:100

UNLESS OTHERWISE NOTED, LINEAR DIMENSIONS SHOWN ON DRAWINGS ARE IN MILLIMETERS (mm)

APPROVED:

A/E DESIGNER OF RECORD

SEAL:

GEORGIA REGISTERED PROFESSIONAL ENGINEER No. 27141 1-27-10 CHRISTOPHER W. WHITMORE

US ARMY CORPS OF ENGINEERS
AFGHANISTAN ENGINEER DISTRICT

| Mark | Description | Date | Appr. | Mark | Description | Date | Appr. |
|---|---|---|---|---|---|---|---|

U.S. ARMY CORPS OF ENGINEERS
AFGHANISTAN ENGINEER DISTRICT
APO AE 96338

Michael Baker Jr., Inc.
A unit of Michael Baker Corporation
Airside Business Park
100 Airside Drive
Moon Township, PA 15108
www.mbakercorp.com

Designed by: KMP/MMY
Dwn by: RCG
Ckd by: CWW
Reviewed by: LHM
Submitted by: BAKER
Date: 2/23/10
Rev: 0
Design file no.
Drawing code:
File name: AN4BOQS-102FRP
Plot date: 2/23/2010
Plot scale: x:X

AFGHAN NATIONAL ARMY
REGIONAL MILITARY TRAINING CENTER
STANDARD DESIGN

BOQ OFFICER BARRACKS

ROOF FRAMING PLAN

Sheet reference number:
S-102

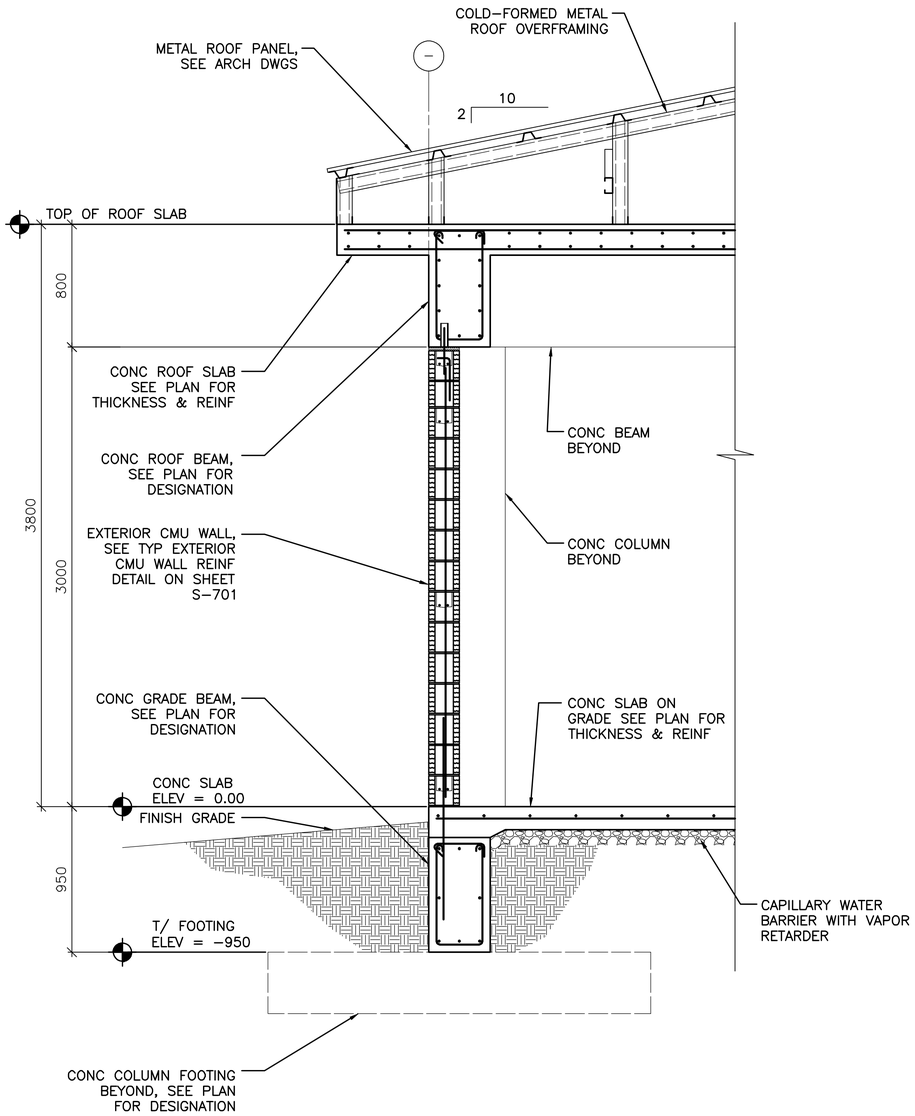


1 S-101 1 S-102

## TYPICAL WALL SECTION AT EXTERIOR MASONRY WALL

SCALE: 1:20

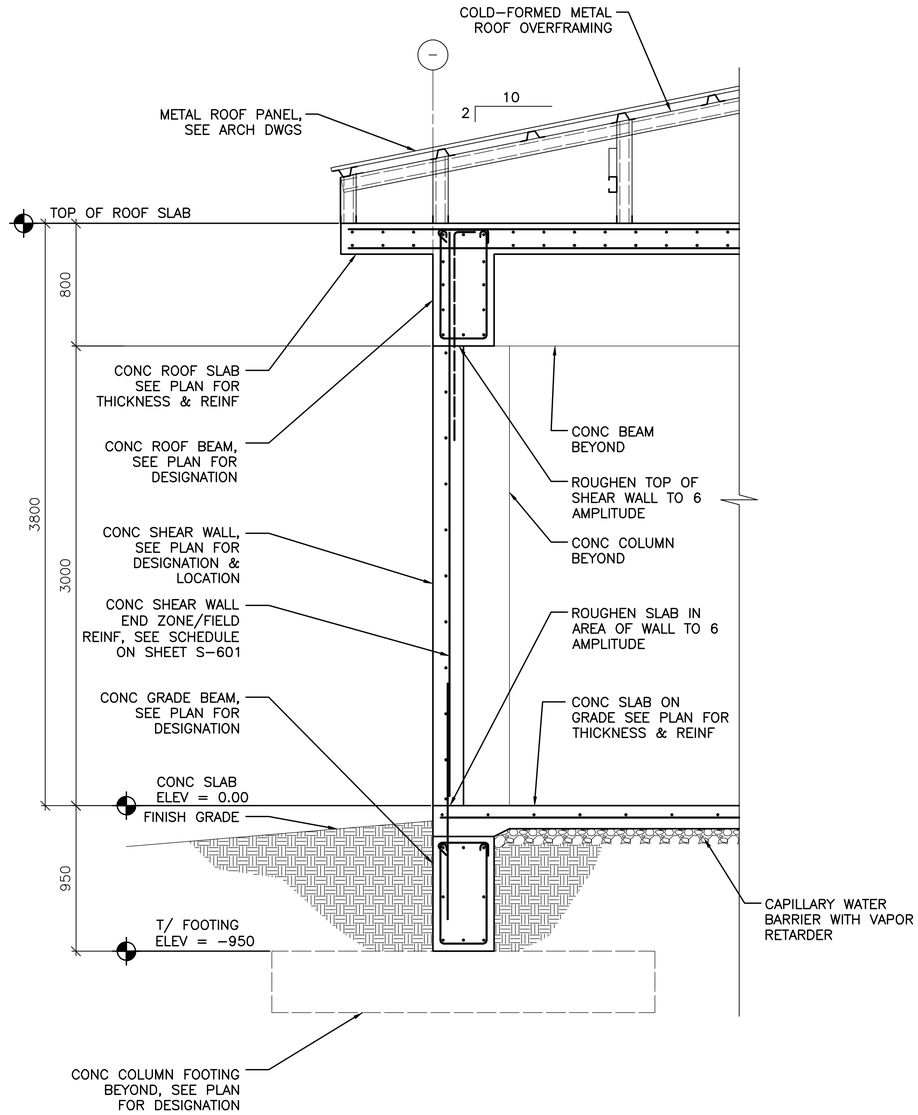


2 S-101 2 S-102

## TYPICAL WALL SECTION AT CONCRETE SHEAR WALL

SCALE: 1:20

0 400 800
SCALE: 1:20

UNLESS OTHERWISE NOTED, LINEAR DIMENSIONS SHOWN ON DRAWINGS ARE IN MILLIMETERS (mm)

APPROVED:

A/E DESIGNER OF RECORD

SEAL:

GEORGIA REGISTERED 1-29-10 No. 27141 PROFESSIONAL ENGINEER CHRISTOPHER W. WHITMORE

US ARMY CORPS OF ENGINEERS
AFGHANISTAN ENGINEER DISTRICT

| Mark | Description | Date | Appr. | Mark | Description | Date | Appr. |
|---|---|---|---|---|---|---|---|

Designed by: KMP/MMY
Dwn by: RCG
Ckd by: CWW
Reviewed by: LHM
Submitted by: BAKER
Date: 2/23/10
Rev: 0
Design file no.
Drawing code:
File name: ANABOQS-401BS
Plot date: 2/23/2010
Plot scale: X:X

U.S. ARMY CORPS OF ENGINEERS
AFGHANISTAN ENGINEER DISTRICT
APO AE 96338

Michael Baker Jr., Inc
A unit of Michael Baker Corporation
Airside Business Park
100 Airside Drive
Moon Township PA 15108
www.mbakercorp.com

AFGHAN NATIONAL ARMY
REGIONAL MILITARY TRAINING CENTER
STANDARD DESIGN

BOQ OFFICER BARRACKS

BUILDING SECTIONS

Sheet reference number:
S-401

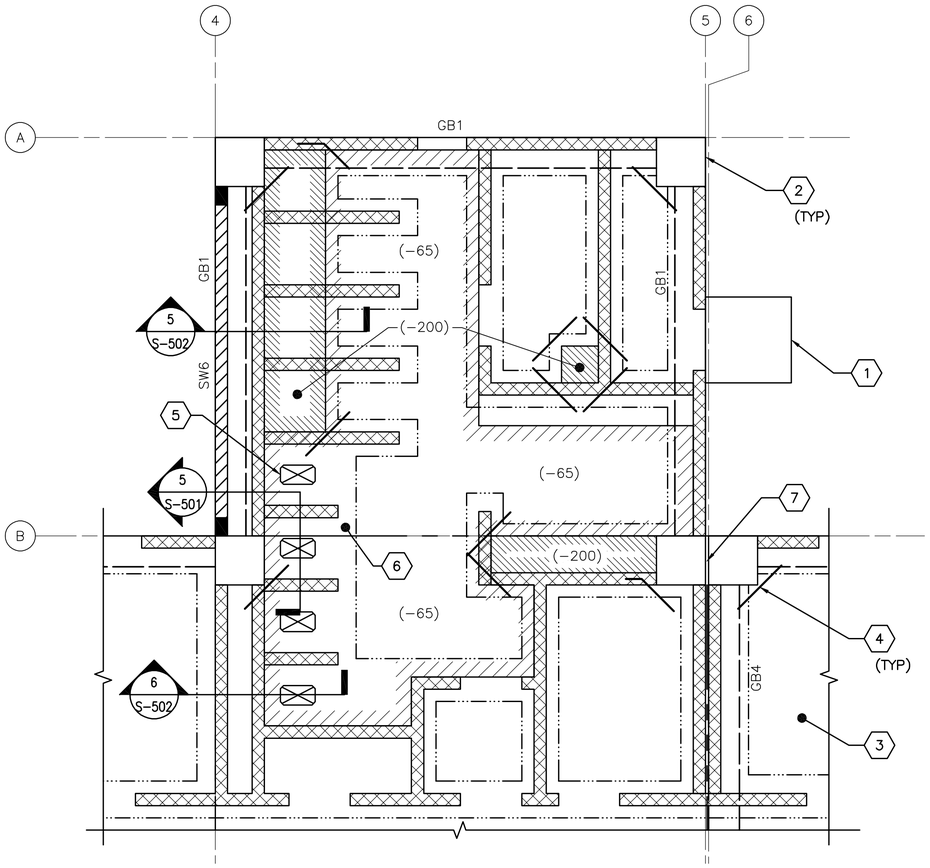


1
S-101

## ENLARGED LATRINE SLAB PLAN

SCALE: 1:50

## ENLARGED PLAN NOTES:

1. REFER TO SHEET S-001 FOR STRUCTURAL NOTES AND DESIGN CRITERIA.
2. FINISH FIRST FLOOR ELEVATION SHALL BE (DATUM 0.00MM) ALL PLUS OR MINUS DIMENSIONS INDICATED ON PLAN OR REFERRED TO IN NOTES RELATE TO FINISH FIRST FLOOR ELEVATION.
3. SLAB-ON-GRADE IS 150 WITH #13 @ 300 OC EW LOCATED 38 FROM T/SLAB UON. WHERE NOTED, 300 SLAB-ON-GRADE SHALL BE REINFORCED W/ #13 @300 OC EW T&B.
4. REFER TO FOUNDATION/SLAB PLAN ON SHEET S-101 FOR COLUMN DESIGNATION AND COLUMN SCHEDULE ON SHEET S-601.
5. REFER TO FOUNDATION/SLAB PLAN ON SHEET S-101 FOR SHEARWALL DESIGNATION AND SHEARWALL SCHEDULE ON SHEET S-601.
6. REFER TO FOUNDATION/SLAB PLAN ON SHEET S-101 FOR GRADE BEAM DESIGNATION AND GRADE BEAM SCHEDULE ON SHEET S-601.
7. SEE TYP EXTERIOR AND INTERIOR CMU WALL REINFORCING DETAILS ON SHEET S-701.

## ENLARGED PLAN KEYNOTES: (X)

1. CONC PAD (ENTRANCE) – SEE ARCH DWGS FOR INFORMATION
2. REINF CONC COLUMN
3. REINF CONC SLAB-ON-GRADE
4. (2)-#13 RE-ENTRANT CORNER BARS – SEE S-701 FOR INFORMATION
5. SLAB OPENING – COORDINATE W/ ARCH AND PLUMBING DWGS.
6. 300 SLAB-ON-GRADE
7. 50 ISOLATION JOINT BETWEEN STRUCTURES LOCATED ABOVE FIRST FLOOR SLAB-ON-GRADE

## PLAN LEGEND:

- REINF CONC SHEAR WALL
- REINF CMU WALL
- CONTROL JOINT
- INDICATES DROP SLAB 65 BELOW FINISH FLOOR
- INDICATES DROP SLAB 200 BELOW FINISH FLOOR
- SLAB OPENING
- OUTLINE OF THICKENED SLAB AREAS
- GRADE BEAM

0 1000 2000
SCALE: 1:50

UNLESS OTHERWISE NOTED, LINEAR DIMENSIONS SHOWN ON DRAWINGS ARE IN MILLIMETERS (mm)

APPROVED:

A/E DESIGNER OF RECORD

SEAL:

GEORGIA REGISTERED 1-29-10 No. 27141 PROFESSIONAL ENGINEER CHRISTOPHER W. WHITMORE

US ARMY CORPS OF ENGINEERS
AFGHANISTAN ENGINEER DISTRICT

| Mark | Description | Date | Appr. | Mark | Description | Date | Appr. |
|---|---|---|---|---|---|---|---|

U.S. ARMY CORPS OF ENGINEERS
AFGHANISTAN ENGINEER DISTRICT
APO AE 96338

Michael Baker Jr., Inc
A unit of Michael Baker Corporation
Airside Business Park
100 Airside Drive
Moon Township, PA 15108
www.mbakercorp.com

Designed by: KMP/MMY
Dwn by: RCG
Ckd by: CWW
Reviewed by: LHM
Submitted by: BAKER
Date: 2/23/10
Design file no.
Drawing code:
File name: AN4B005-402SP
Plot date: 2/23/2010
Plot scale: X:X
Rev: 0

AFGHAN NATIONAL ARMY
REGIONAL MILITARY TRAINING CENTER
STANDARD DESIGN

BOQ OFFICER BARRACKS

ENLARGED LATRINE SLAB PLAN

Sheet reference number:
S-402

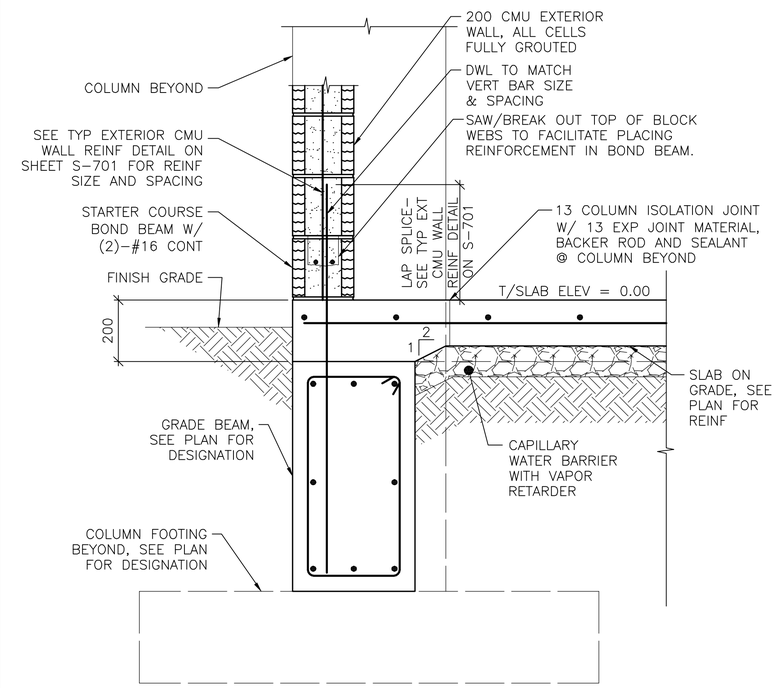


NOTE:
1. SECTION IS SIMILAR FOR INTERIOR CMU PARTITIONS OVER GRADE BEAMS SHOWING THICKENED 200 CONC SLAB AREA.

1 S-101 **SECTION**
SCALE: 1:10

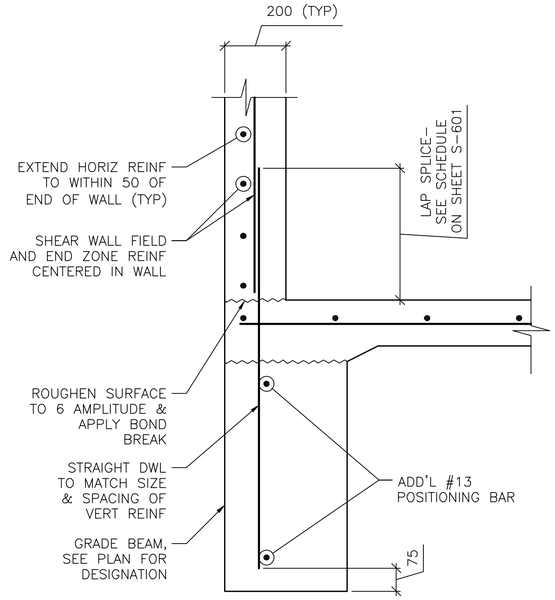


NOTE:
1. SECTION DEPICTS SHEAR WALL TERMINATION ONLY. GRADE BEAM REINFORCING NOT SHOWN FOR CLARITY.
2. SEE SHEET S-601 AND SHEET S-702 FOR SCHEDULED FIELD AND END ZONE REINF.

2 S-101 **SECTION**
SCALE: 1:10

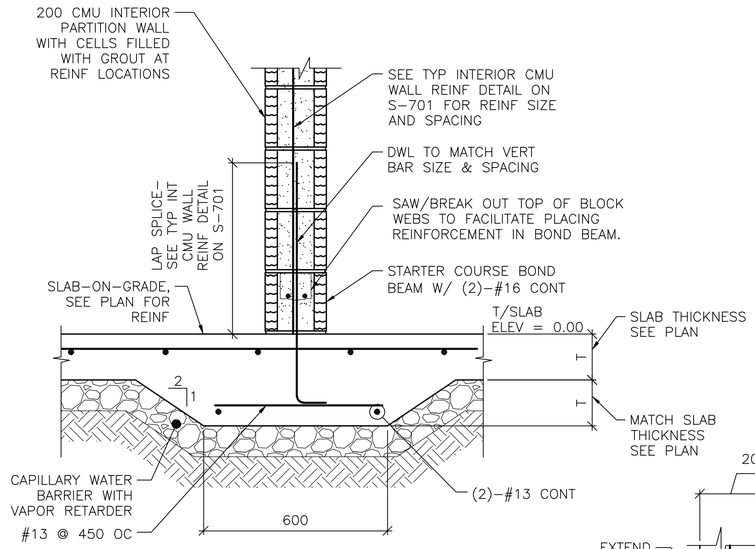


3 S-101 **SECTION**
SCALE: 1:10

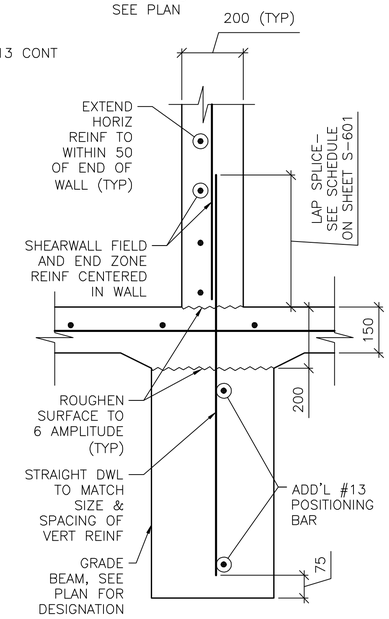


NOTE:
1. SECTION DEPICTS SHEAR WALL TERMINATION ONLY. GRADE BEAM REINFORCING NOT SHOWN FOR CLARITY
2. SEE SHEET S-601 AND SHEET S-702 FOR SCHEDULED FIELD AND END ZONE REINF.

6 S-101 **SECTION**
SCALE: 1:10

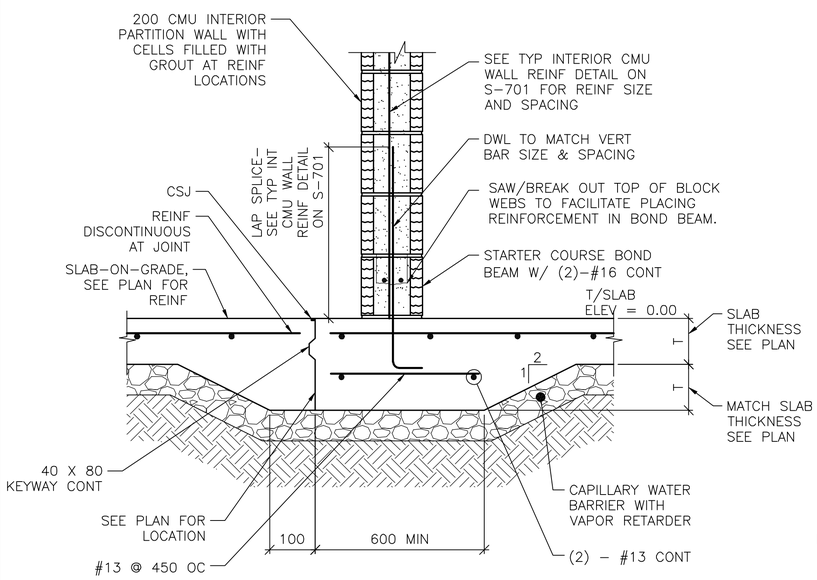


NOTE:
1. DETAIL IS APPLICABLE AT CONTROL JOINTS RUNNING PARALLEL TO CMU WALLS AND WITHIN 300 OF FACE OF WALL.

4 S-101 **SECTION**
SCALE: 1:10

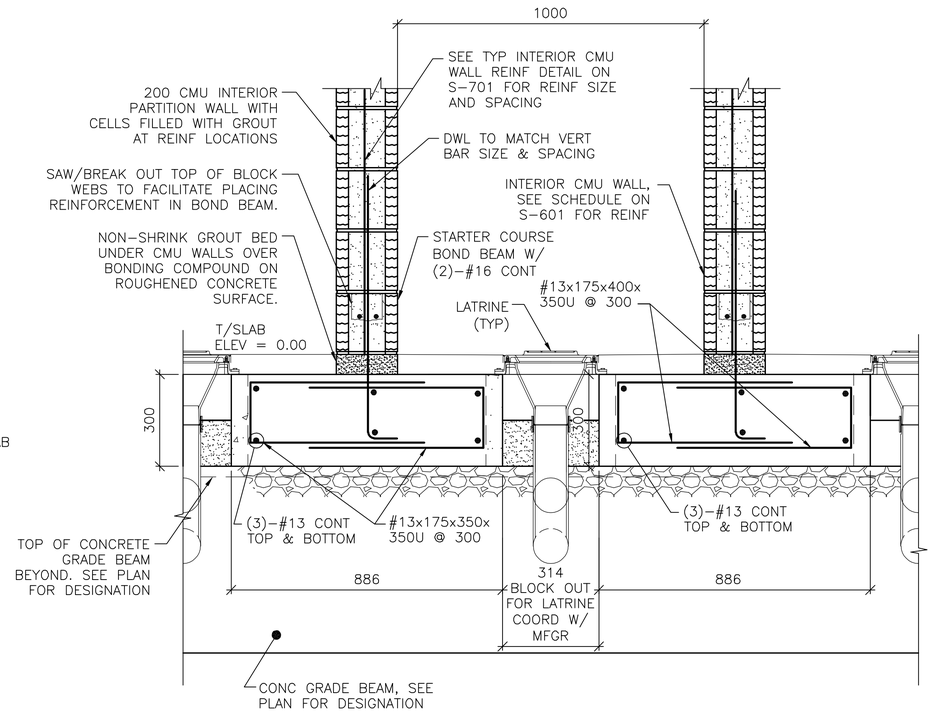


5 S-403 **SECTION**
SCALE: 1:10

UNLESS OTHERWISE NOTED, LINEAR DIMENSIONS SHOWN ON DRAWINGS ARE IN MILLIMETERS (mm)

0 200 400
SCALE: 1:10

APPROVED:

A/E DESIGNER OF RECORD

SEAL:

GEORGIA REGISTERED 1-29-10 No. 27141 PROFESSIONAL ENGINEER CHRISTOPHER W. WHITMORE

US ARMY CORPS OF ENGINEERS
AFGHANISTAN ENGINEER DISTRICT

| Mark | Description | Date | Appr. | Mark | Description | Date | Appr. |
|---|---|---|---|---|---|---|---|

Rev: 0
Date: 2/23/10
Design file no.
Drawing code:
File name: ANABOQS-501SC
Plot date: 2/23/2010
Plot scale: X:X

Designed by: KMP/MMY
Dwn by: RCG
Ckd by: CWW
Reviewed by: LHM
Submitted by: BAKER

U.S. ARMY CORPS OF ENGINEERS
AFGHANISTAN ENGINEER DISTRICT
APO AE 96338

Michael Baker Jr., Inc
A unit of Michael Baker Corporation
Airside Business Park
100 Airside Drive
Moon Township, PA 15108
www.mbakercorp.com

AFGHAN NATIONAL ARMY
REGIONAL MILITARY TRAINING CENTER
STANDARD DESIGN

BOQ OFFICER BARRACKS

FOUNDATION SECTIONS

Sheet reference number:
S-501

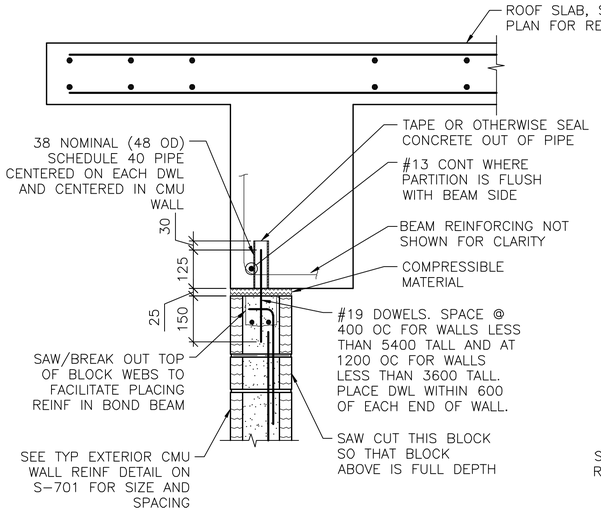


NOTES:
1. EXTEND DOWEL REINF TO 25 CLEAR FROM TOP OF CMU WALL.

1 S-102 **SECTION**
SCALE: 1:10

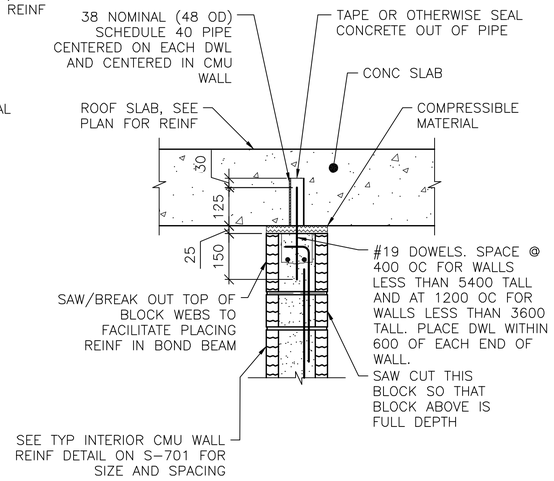


NOTES:
1. EXTEND DOWEL REINF TO 25 CLEAR FROM TOP OF CMU WALL.
2. SLAB REINF NOT SHOWN FOR CLARITY.

2 S-102 **SECTION**
SCALE: 1:10

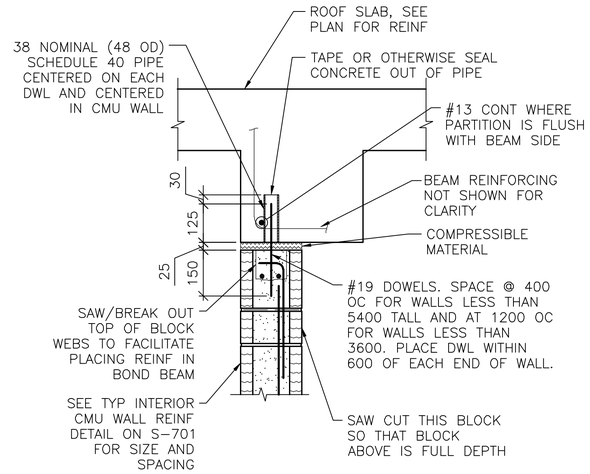


NOTES:
1. EXTEND DOWEL REINF TO 25 CLEAR FROM TOP OF CMU WALL.
2. PARTITION WALL MAY BE CENTERED UNDER THE BEAM OR FLUSH AS SHOWN. SEE PLAN FOR LOCATION.
3. SLAB REINF NOT SHOWN FOR CLARITY.

3 S-102 **SECTION**
SCALE: 1:10

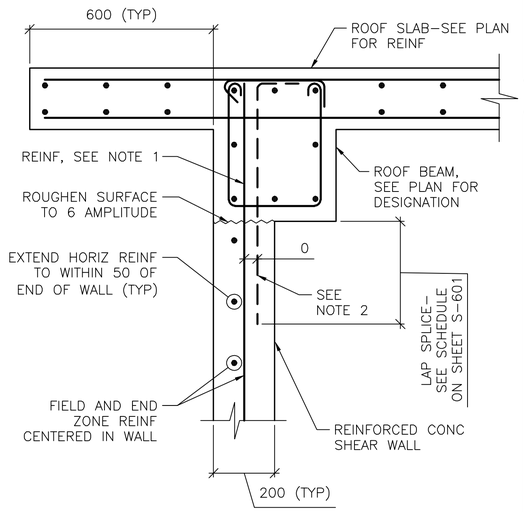


NOTES:
1. TERMINATE "FIELD" VERT REINF & END ZONE REINF @ 50 CLEAR FROM TOP OF ROOF SLAB.
2. WHERE END ZONE REINFORCING CANNOT BE DEVELOPED IN BEAM DEPTH, PROVIDE HOOKED DWLS SAME SIZE & SPACING. PROVIDE TENSION LAP BELOW ROOF BEAM.
3. SEE SHEET S-601 AND SHEET S-702 FOR SCHEDULED FIELD AND END ZONE REINF.

4 S-102 **SECTION**
SCALE: 1:10

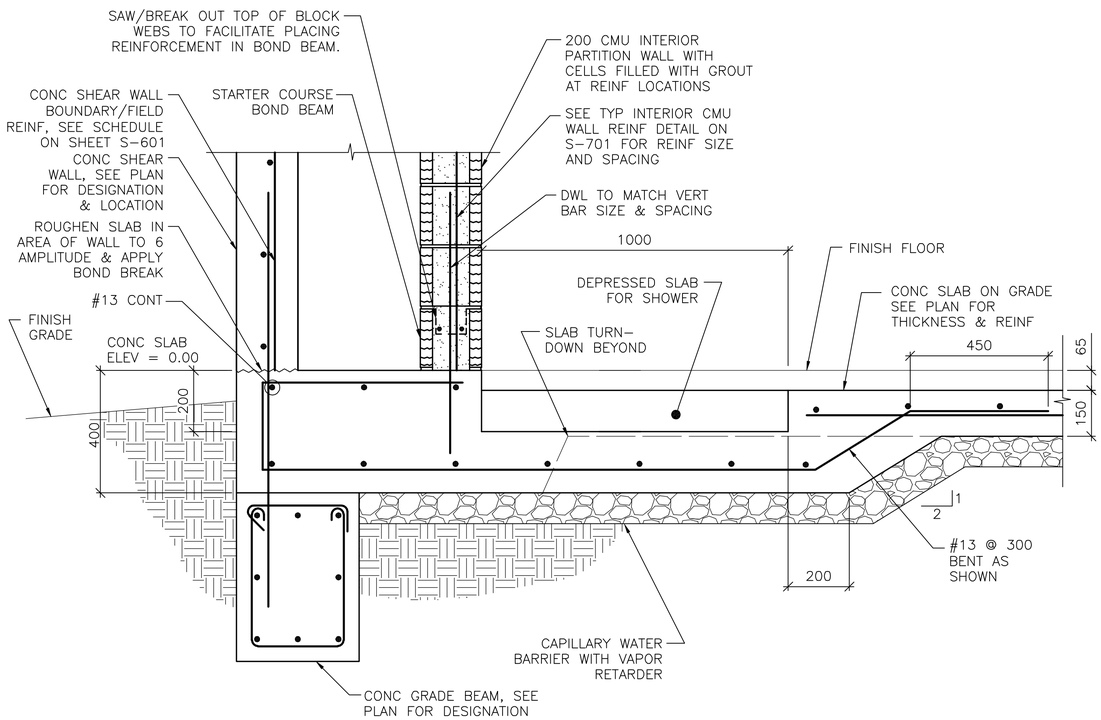


5 S-402 **SECTION**
SCALE: 1:10

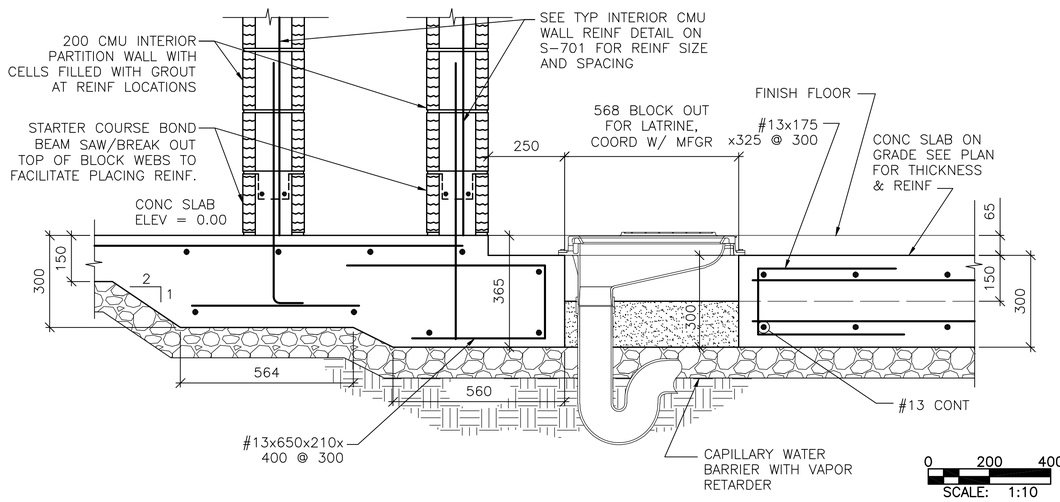


6 S-402 **SECTION**
SCALE: 1:10

0 200 400
SCALE: 1:10

UNLESS OTHERWISE NOTED, LINEAR DIMENSIONS SHOWN ON DRAWINGS ARE IN MILLIMETERS (mm)

APPROVED:

A/E DESIGNER OF RECORD

SEAL:

GEORGIA REGISTERED 1-29-10 No. 27141 PROFESSIONAL ENGINEER CHRISTOPHER W. WHITMORE

US ARMY CORPS OF ENGINEERS
AFGHANISTAN ENGINEER DISTRICT

| Mark | Description | Date | Appr. | Mark | Description | Date | Appr. |
|---|---|---|---|---|---|---|---|

Date: 2/23/10 | Rev: 0
Design file no.
Drawing code:
File name: AN&BOQS-S0250C
Plot date: 2/23/2010
Plot scale: X:X

Designed by: KMP/MMY
Dwn by: RCG | Ckd by: CWW
Reviewed by: LHM
Submitted by:
BAKER

U.S. ARMY CORPS OF ENGINEERS
AFGHANISTAN ENGINEER DISTRICT
APO AE 96338

*Michael Baker Jr., Inc.*
*A unit of Michael Baker Corporation*
Airside Business Park
100 Airside Drive
Moon Township, PA 15108
www.mbakercorp.com

AFGHAN NATIONAL ARMY
REGIONAL MILITARY TRAINING CENTER
STANDARD DESIGN

BOQ OFFICER BARRACKS

FOUNDATION & FRAMING SECTIONS

Sheet reference number:
S-502

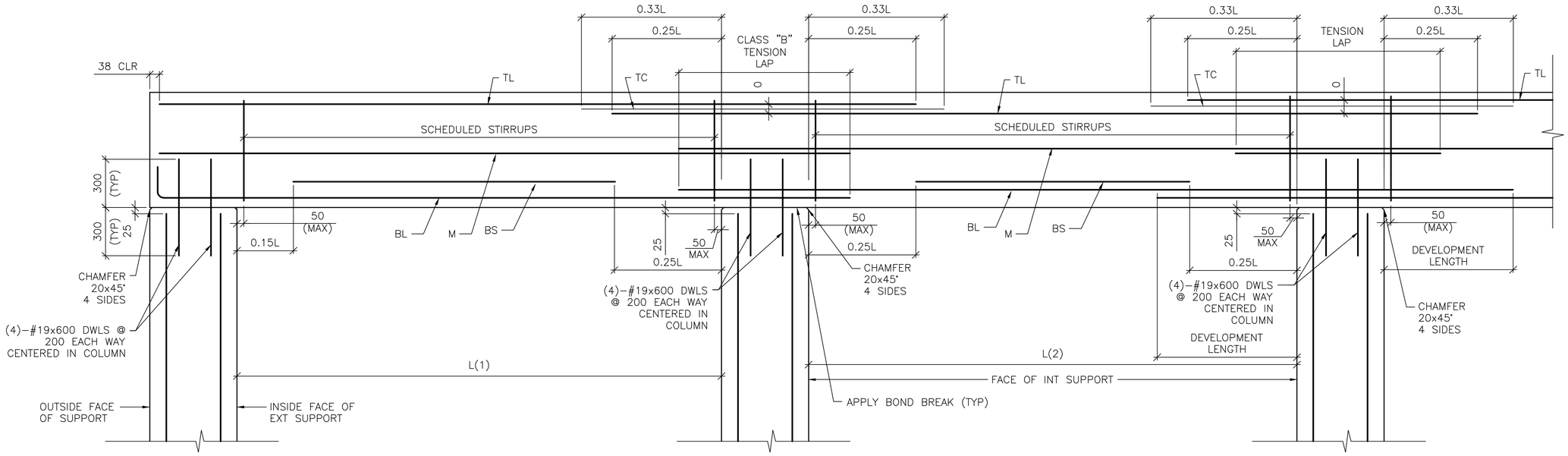


DETAIL NOTE:
1. WORK THIS DETAIL WITH BEAM SCHEDULE ON SHEET S-601.
2. L=GREATEST OF ADJACENT SPANS L(1) OR L(2)
3. ONLY COLUMN CORNER BARS ARE SHOWN

## 1 / S-503 ROOF BEAM REINFORCING DETAIL

SCALE: NTS

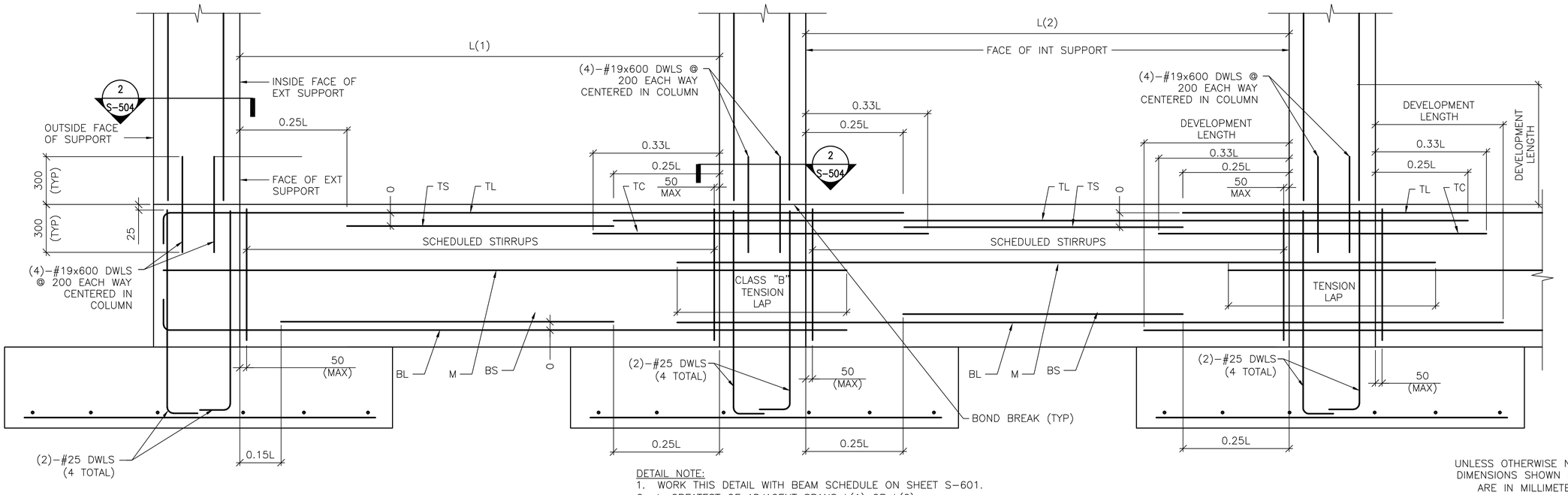


DETAIL NOTE:
1. WORK THIS DETAIL WITH BEAM SCHEDULE ON SHEET S-601.
2. L=GREATEST OF ADJACENT SPANS L(1) OR L(2)
3. ONLY COLUMN CORNER BARS ARE SHOWN.

## 2 / S-503 GRADE BEAM REINFORCING DETAIL

SCALE: NTS

UNLESS OTHERWISE NOTED, LINEAR DIMENSIONS SHOWN ON DRAWINGS ARE IN MILLIMETERS (mm)

APPROVED:

A/E DESIGNER OF RECORD

SEAL:

GEORGIA REGISTERED 1-29-10 No. 27141 PROFESSIONAL ENGINEER CHRISTOPHER W. WHITMORE

US ARMY CORPS OF ENGINEERS
AFGHANISTAN ENGINEER DISTRICT

| Mark | Description | Date | Appr. | Mark | Description | Date | Appr. |
|---|---|---|---|---|---|---|---|

Rev: 0
Date: 2/23/10
Design file no.
Drawing code:
File name: ANABOQS-503DT
Plot date: 2/23/2010
Plot scale: X:X

Designed by: KMP/MMY
Dwn by: RCG
Ckd by: CWW
Reviewed by: LHM
Submitted by:
BAKER

U.S. ARMY CORPS OF ENGINEERS
AFGHANISTAN ENGINEER DISTRICT
APO AE 96338

Michael Baker Jr., Inc.
A unit of Michael Baker Corporation
Airside Business Park
100 Airside Drive
Moon Township, PA 15108
www.mbakercorp.com

AFGHAN NATIONAL ARMY
REGIONAL MILITARY TRAINING CENTER
STANDARD DESIGN

BOQ OFFICER BARRACKS

BEAM & COLUMN DETAILS

Sheet reference number:
S-503

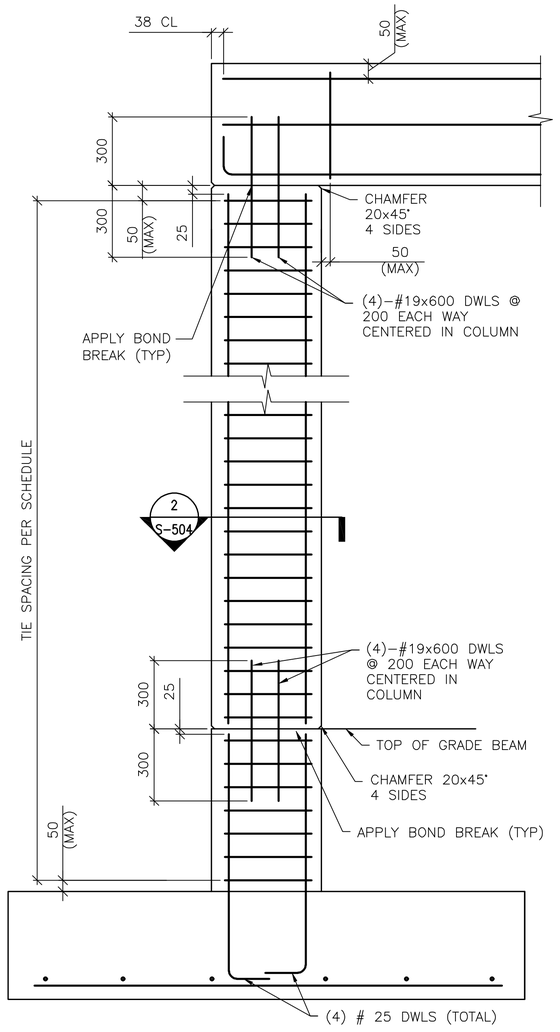


DETAIL NOTE:
1. ONLY COLUMN CORNER BARS ARE SHOWN

1 / S-504 **1-STORY COLUMN REINF DETAILS**
SCALE: NTS
(WITH GRADE BEAM)

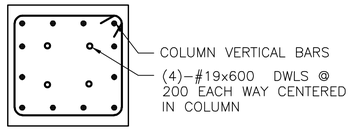


DETAIL NOTE:
1. INTERIOR TIES NOT SHOWN FOR CLARITY. REFER TO DETAIL A THIS SHEET FOR INTERIOR TIE CONFIGURATION.

2 / S-503 2 / S-504 **SECTION**
SCALE: NTS

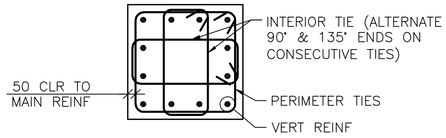


A / S-504 **12 BAR COLUMN**
SCALE: NTS

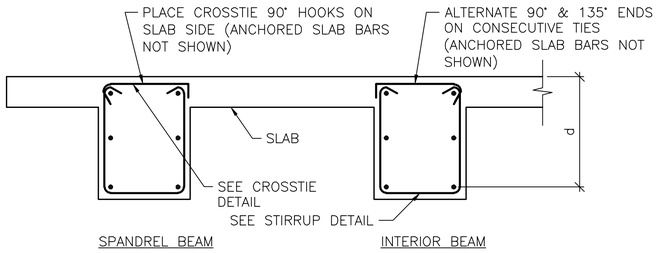


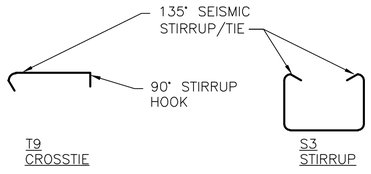


B / S-504 **BEAM REINFORCEMENT DETAILS**
SCALE: NTS

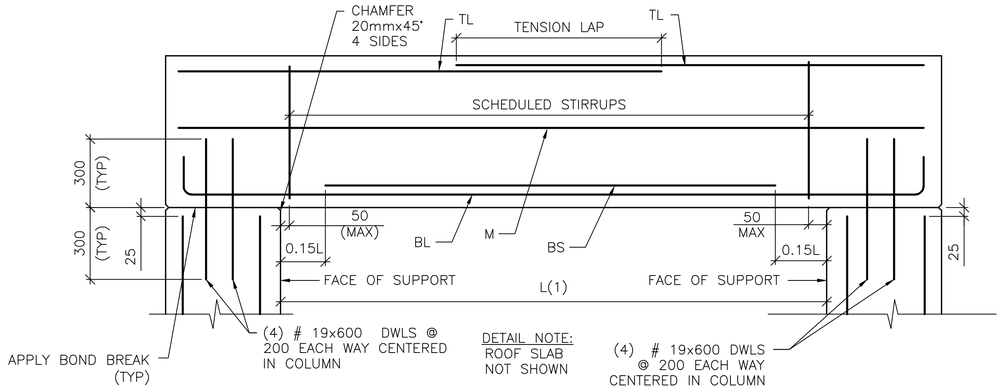


3 / S-504 **SINGLE SPAN ROOF BEAM REINFORCING DETAIL**
SCALE: NTS

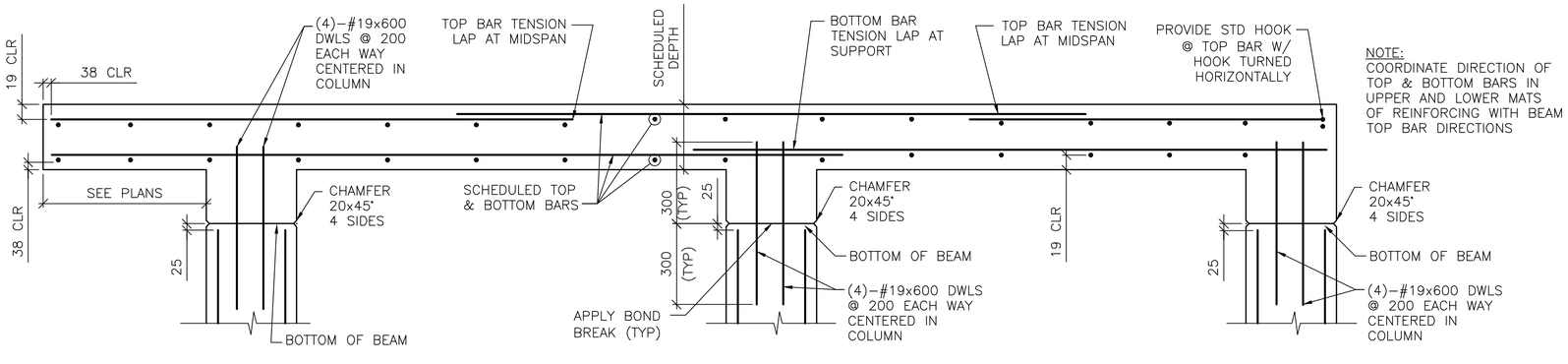


4 / S-504 **FRAMED SLAB REINFORCING DETAIL**
SCALE: NTS

UNLESS OTHERWISE NOTED, LINEAR DIMENSIONS SHOWN ARE IN MILLIMETERS (mm)

APPROVED:
A/E DESIGNER OF RECORD
SEAL:

GEORGIA REGISTERED 1-29-10 No. 27141 PROFESSIONAL ENGINEER CHRISTOPHER W. WHITMORE

US ARMY CORPS OF ENGINEERS
AFGHANISTAN ENGINEER DISTRICT

| Mark | Description | Date | Appr. | Mark | Description | Date | Appr. |
|---|---|---|---|---|---|---|---|

Date: 2/23/10 | Rev: 0
Design file no.
Drawing code:
File name: ANMBOQS-504DT
Plot date: 2/23/2010
Plot scale: X:X

Designed by: KMP/MMY
Dwn by: RCG | Ckd by: CWW
Reviewed by: LHM
Submitted by:
BAKER

U.S. ARMY CORPS OF ENGINEERS
AFGHANISTAN ENGINEER DISTRICT
APO AE 96338

Michael Baker Jr., Inc.
A unit of Michael Baker Corporation
Airside Business Park
100 Airside Drive
Moon Township, PA 15108
www.mbakercorp.com

AFGHAN NATIONAL ARMY
REGIONAL MILITARY TRAINING CENTER
STANDARD DESIGN

BOQ OFFICER BARRACKS

BEAM & COLUMN DETAILS

Sheet reference number:
S-504

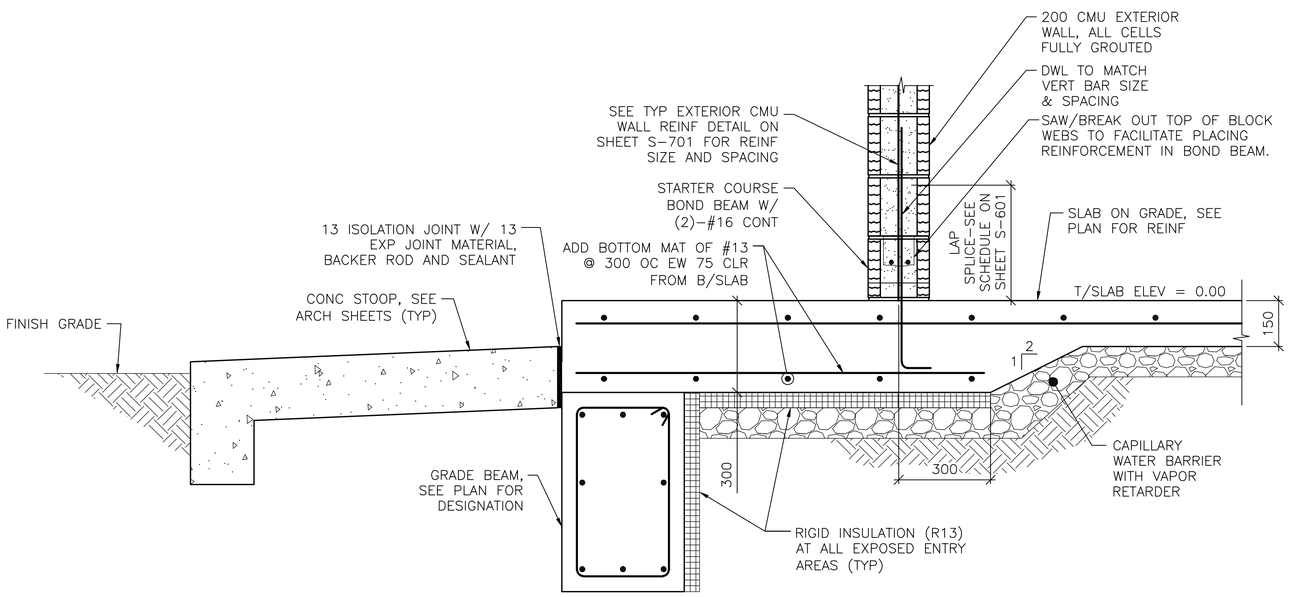


1 S-101 **SECTION**
SCALE: 1:10

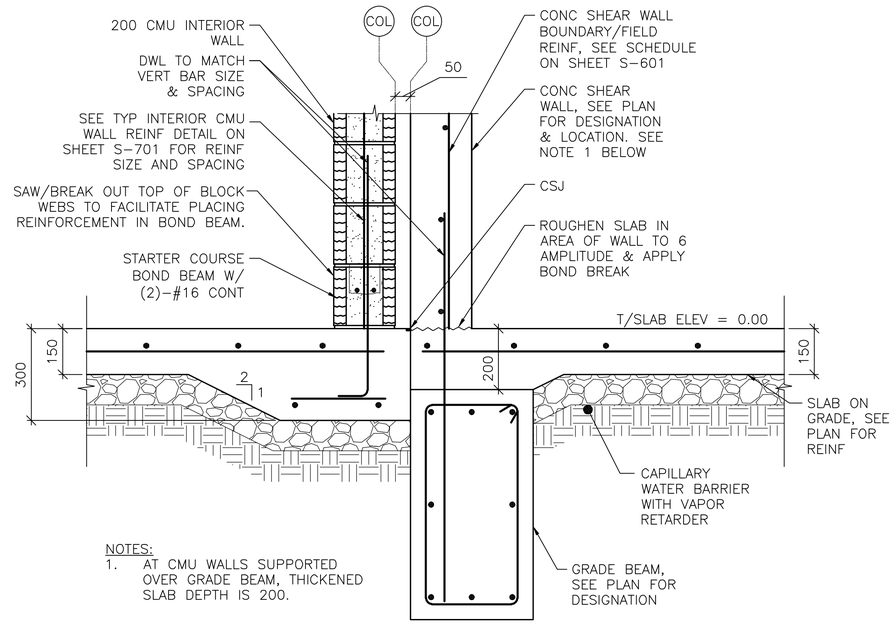


NOTES:
1. AT CMU WALLS SUPPORTED OVER GRADE BEAM, THICKENED SLAB DEPTH IS 200.

2 S-101 **SECTION**
SCALE: 1:10

0 200 400
SCALE: 1:10

UNLESS OTHERWISE NOTED, LINEAR DIMENSIONS SHOWN ON DRAWINGS ARE IN MILLIMETERS (mm)

APPROVED:

A/E DESIGNER OF RECORD

SEAL:

GEORGIA REGISTERED 1-29-10 No. 27141 PROFESSIONAL ENGINEER CHRISTOPHER W. WHITMORE

US ARMY CORPS OF ENGINEERS
AFGHANISTAN ENGINEER DISTRICT

| Mark | Description | Date | Appr. | Mark | Description | Date | Appr. |
|---|---|---|---|---|---|---|---|

Designed by: KMP/MMY
Dwn by: RCG
Ckd by: CWW
Reviewed by: LHM
Submitted by: BAKER
Date: 2/23/10
Rev: 0
Design file no.
Drawing code:
File name: ANABOQS-505SC
Plot date: 2/23/2010
Plot scale: X:X

U.S. ARMY CORPS OF ENGINEERS
AFGHANISTAN ENGINEER DISTRICT
APO AE 96338

*Michael Baker Jr., Inc*
*A unit of Michael Baker Corporation*
Airside Business Park
100 Airside Drive
Moon Township PA 15108
www.mbakercorp.com

AFGHAN NATIONAL ARMY
REGIONAL MILITARY TRAINING CENTER
STANDARD DESIGN

BOQ OFFICER BARRACKS

MISCELLANEOUS SECTIONS

Sheet reference number:
S-505

# CONCRETE REINFORCEMENT TENSION DEVELOPMENT/LAP SPLICE SCHEDULE

| f'c = 28 MPa | LAP CLASS | UNCOATED BARS | | | |
|---|---|---|---|---|---|
| | | TOP BARS | | OTHER BARS | |
| BAR SIZES | | CASE 1 | CASE 2 | CASE 1 | CASE 2 |
| #10 TO #19 | A | 50 BAR DIA | 74 BAR DIA | 38 BAR DIA | 57 BAR DIA |
| | B | 64 BAR DIA | 96 BAR DIA | 50 BAR DIA | 74 BAR DIA |
| #22 TO #57 | A | 62 BAR DIA | 93 BAR DIA | 48 BAR DIA | 71 BAR DIA |
| | B | 80 BAR DIA | 121 BAR DIA | 62 BAR DIA | 93 BAR DIA |

NOTES:
1. TABULATED TENSION DEVELOPMENT LENGTH VALUES ARE TAKEN FROM CRSI DESIGN HANDBOOK 2008 10TH ED.
2. TENSION DEVELOPMENT & TENSION LAP SPLICE LENGTHS ARE EXPRESSED AS MULTIPLES OF BAR DIAMETERS.
3. TABULATED VALUES ARE BASED ON MINIMUM YIELD STRENGTH OF REINFORCEMENT, fy, OF 420MPa.
4. CONCRETE IS NORMAL WEIGHT (2400Kg/m$^3$) AND 28 DAY COMPRESSIVE STRENGTH = 28MPa.
5. TABULATED VALUES FOR BEAMS & COLUMNS ARE BASED ON TRANSVERSE REINFORCEMENT AND CONCRETE COVER MEETING MINIMUM CODE REQUIREMENTS.
6. CASES 1 & 2, WHICH DEPEND ON THE TYPE OF STRUCTURAL MEMBER, CONCRETE COVER, AND CENTER-TO-CENTER SPACING OF THE BARS ARE DEFINED IN THE TABLE BELOW.
7. LAP SPLICE LENGTHS (MINIMUM 300mm) ARE MULTIPLES OF TENSION DEVELOPMENT LENGTHS: CLASS A = 1.0(TENSION DEVELOPMENT LENGTH) & CLASS B = 1.3(TENSION DEVELOPMENT LENGTH)
8. TOP BARS ARE HORIZONTAL REINFORCEMENT WITH MORE THAN 300mm OF CONCRETE CAST BELOW THE BARS.
9. IT SHALL BE PERMISSIBLE TO CALCULATE WALL AND SLAB REINFORCEMENT TENSION DEVELOPMENT/SPLICE LENGTHS IN ACCORDANCE WITH ACI 12.2.3 OR TABLE 5.3(b) OF CRSI 2008 IN LIEU OF VALUES TABULATED ABOVE.

| | | |
|---|---|---|
| BEAMS, COLUMNS | CASE 1 | CONCRETE COVER AT LEAST 1 BAR DIA AND CENTER-TO-CENTER SPACING AT LEAST 2 BAR DIA |
| | CASE 2 | CONCRETE COVER LESS THAN 1 BAR DIA OR CENTER-TO-CENTER SPACING LESS THAN 2 BAR DIA |
| ALL OTHERS | CASE 1 | CONCRETE COVER AT LEAST 1 BAR DIA AND CENTER-TO-CENTER SPACING AT LEAST 3 BAR DIA |
| | CASE 2 | CONCRETE COVER LESS THAN 1 BAR DIA OR CENTER-TO-CENTER SPACING LESS THAN 3 BAR DIA |

# CONCRETE COVER SCHEDULE

MINIMUM CONCRETE COVER PROTECTION FOR REINFORCEMENT BARS SHALL BE AS LISTED BELOW: (SEE ACI 318M-05, SECTION 7.7 FOR CONDITIONS NOT NOTED). DIMENSIONS FOR BAR PLACEMENT GIVEN IN SECTIONS AND DETAILS SHALL SUPERSEDE MINIMUM COVER REQUIREMENTS GIVEN HERE. DIMENSIONS ARE IN mm. PROVIDE STANDARD BAR CHAIRS AND SUPPORT BARS @1200mm MAXIMUM AS REQUIRED TO MAINTAIN CONCRETE PROTECTION SPECIFIED.

| | | |
|---|---|---|
| FOOTINGS (EARTH FORMED): | | 70 |
| COLUMNS / PIERS (TO TIES) | | 40 |
| GRADE BEAMS OR SLAB TURNED DOWN EDGES: | | |
| TOP | | 40 |
| BOTTOM (EARTH FORMED) | | 70 |
| SIDES (EARTH FORMED) | | 70 |
| SIDES (BOARD FORMED) | #16 BAR & SMALLER | 40 |
| | #19 THRU #36 BAR | 50 |
| ELEVATED BEAMS & SLABS: | | |
| BEAM TIES & STIRRUPS (NOT EXPOSED TO WEATHER) | | 40 |
| BEAM TIES & STIRRUPS (EXPOSED TO WEATHER) | | 50 |
| FLOOR SLABS (NOT EXPOSED TO WEATHER) | | 20 |
| FLOOR SLABS (EXPOSED TO WEATHER) | | |
| #19 & LARGER | | 50 |
| #13 & SMALLER | | 40 |
| ROOF SLAB BARS | | 25 |
| SLABS ON GRADE | | |
| NOT EXPOSED TO WEATHER (FROM TOP) | | 20 |
| EXPOSED TO WEATHER (FROM TOP) | | 40 |
| UTILITY TUNNEL WALLS, RETAINING WALLS AND SHEAR WALLS. (NO SURFACES SHALL BE EARTH FORMED) | | |
| EARTH SIDE AND FRONT SIDE (EXPOSED TO WEATHER) | | |
| #16 BAR AND SMALLER | | 40 |
| #19 THRU #36 BAR | | 50 |

# COLUMN FOOTING SCHEDULE

| MARK | FOOTING SIZE (mm) | | | FOOTING REINFORCING | REMARKS |
|---|---|---|---|---|---|
| | LENGTH | WIDTH | THICKNESS | | |
| F1 | 4200 | 4200 | 350 | (14)-#25 EW BOTT | ----- |
| F2 | 3800 | 3800 | 300 | (10)-#25 EW BOTT | ----- |
| F3 | 6000 | 3100 | 300 | (20)-#25 SHORT, BOTT<br>(11)-#25 LONG, BOTT | ----- |
| F4 | 5200 | 5200 | 450 | (14)-#29 EW BOTT | ----- |
| F5 | 4200 | 4200 | 350 | (12)-#25 EW BOTT | ----- |

# CONCRETE SHEAR WALL SCHEDULE

| MARK | TYPE | WALL LENGTH (L) (mm) | WALL REINFORCEMENT | | REMARKS |
|---|---|---|---|---|---|
| | | | END ZONE | FIELD | |
| SW1 | B | 3600 | (7)-#16 @ 150mm OC | #13 @ 300mm OC | ----- |
| SW2 | B | 3600 | (6)-#16 @ 150mm OC | #13 @ 300mm OC | ----- |
| SW3 | B | 4100 | (6)-#16 @ 150mm OC | #13 @ 300mm OC | ----- |
| SW4 | D | 5000 | (8)-#19 @ 220mm OC | #13 @ 300mm OC | ----- |
| SW5 | C | 6600 | (4)-#16 @ 150mm OC | #13 @ 300mm OC | ----- |
| SW6 | C | 5700 | (7)-#19 @ 220mm OC | #13 @ 300mm OC | ----- |

NOTES:
1. WORK THIS SCHEDULE WITH SHEAR WALL DETAILS ON SHEETS S-702
2. SEE PLAN FOR LOCATION OF SHEAR WALL(S).
3. VERTICAL "FIELD" BARS MAY BE OMITTED IN LOCATION OF "END ZONE" REINFORCEMENT.
4. WALL FIELD REINF LISTED APPLIES TO VERT & HORIZ BARS.
5. WALL FIELD REINFORCEMENT CENTERED IN WALL.

# STANDARD HOOKS IN TENSION PER (ACI 318M-05)

| HOOK DEVELOPMENT LENGTH (mm) | |
|---|---|
| BAR SIZE | f'c 28 MPa |
| #10 | 180 |
| #13 | 250 |
| #16 | 300 |
| #19 | 380 |
| #22 | 430 |
| #25 | 480 |
| #29 | 560 |
| #32 | 610 |
| #36 | 690 |

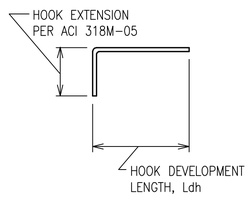


NOTES:
1. CONCRETE IS NORMAL WEIGHT CONCRETE.
2. BAR YIELD STRENGTH, fy = 420 MPa
3. SIDE COVER REQUIREMENTS OF ACI SECT. 12.5.3 ARE ASSUMED TO NOT BE MET.
4. TIE OR STIRRUP REQUIREMENTS OF ACI SECT. 12.5.3 ARE ASSUMED TO NOT BE MET.
5. REDUCTION FOR EXCESS REINFORCEMENT IS NOT TAKEN.
6. HOOK DEVELOPMENT LENGTH IS VALID FOR 180° HOOKS ALSO.

# CMU OR CAST IN PLACE CONC LINTEL SCHEDULE (TYP)

| OPENING TYPE OR SIZE, BEAM LOCATION OR TYPE | MAX SPAN (mm) | LINTEL DEPTH (mm) | REINFORCING BOTTOM |
|---|---|---|---|
| WALL OPENING | 4000 | 600 | (2)-#16 T&B |
| WALL OPENING | 1900 | 400 | (2)-#16 T&B |
| WALL OPENING | 1000 | 400 | (2)-#13 B |
| | | | |
| | | | |
| | | | |
| | | | |
| | | | |
| | | | |
| | | | |

1. STRUCTURAL SHEETS DO NOT INDICATE ALL OPENINGS IN MASONRY WALLS. VERIFY NUMBER, SIZE AND LOCATION OF ALL OPENINGS IN MASONRY WALLS FROM ARCHITECTURAL SHEETS AND APPROVED PLUMBING, MECHANICAL, AND ELECTRICAL SHOP DRAWINGS.
2. PROVIDE 200mm BEARING EA END.
3. FOR HEAD DETAILS REFER TO ARCHITECTURAL SHEETS.
4. REINFORCING SHALL BE ASTM A615M, GRADE 420. GROUT FOR CMU LINTELS SHALL HAVE A MINIMUM COMPRESSIVE STRENGTH OF 14 MPa AT 28 DAYS.
5. CONTRACTOR SHALL SUBMIT FOR APPROVAL SHOP DRAWINGS AND SCHEDULES SHOWING SIZE, SPAN, REINFORCEMENT, DETAILS, LOCATIONS, ETC.

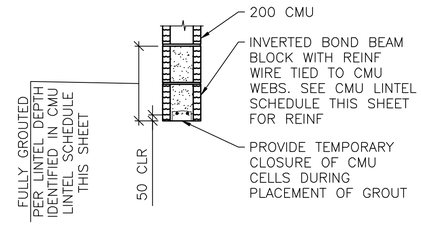


A
S-601
## LINTEL DETAIL
SCALE: NTS

# BEAM SCHEDULE

| MARK | BEAM SIZE (mm) | | BEAM REINFORCING | | | | | | STIRRUPS | | | REMARKS |
|---|---|---|---|---|---|---|---|---|---|---|---|---|
| | DEPTH | WIDTH | BL | BS | TL | TS | TC | M | SIZE | TYPE | SPACING | ----- |
| GRADE BEAMS | | | | | | | | | | | | |
| GB1 | 750/550 /735 | 400 | (2)-#25 | (1)-#25 | (2)-#22 | --- | --- | --- | #13 | S3 +T9 | d/2 | LOWER TOP TO 735 BETWEEN A5-B5; TO 550 BETWEEN A4-B4 & A4-A5 |
| GB2 | 750/650 | 400 | (3)-#29 | (2)-#29 | (2)-#25 | --- | --- | (2)-#13 | #13 | S3 +T9 | d/2 | LOWER TOP BETWEEN B1-C1 |
| GB3 | 750 | 400 | (2)-#22 | (1)-#22 | (2)-#19 | --- | --- | (2)-#22 | #13 | S3 +T9 | d/2 | ----- |
| GB4 | 750/650 | 400 | (3)-#29 | (3)-#29 | (2)-#19 | --- | --- | --- | #13 | S3 +T9 | d/2 | LOWER TOP BETWEEN B11-C11 |
| ROOF BEAMS | | | | | | | | | | | | |
| RB1 | 800 | 600 | (3)-#29 | (4)-#29 | (2)-#22 | --- | --- | --- | #13 | S3 +T9 | d/2 | ----- |
| RB2 | 800 | 400 | (3)-#29 | (2)-#29 | (2)-#29 | --- | --- | --- | #13 | S3 +T9 | d/2 | ----- |
| RB3 | 800 | 400 | (3)-#29 | (2)-#29 | (2)-#25 | --- | --- | --- | #13 | S3 +T9 | d/2 | ----- |

NOTES:
1. WORK THIS SCHEDULE WITH BEAM REINFORCING DETAILS ON SHEETS S-503 AND S-504.
2. HOOKS SHOWN ON SECTIONS AND DETAILS SHALL BE 90° STD UON.
3. USE ONLY (1) TC AT BEAM COLUMN INTERSECTION WHERE REQ'D.

# COLUMN SCHEDULE

| COLUMN MARK / DESCRIPTION | TYP UON | --- | --- | --- |
|---|---|---|---|---|
| TYPE | 12-BAR | --- | --- | --- |
| DIMENSION | 800mm SQ. | --- | --- | --- |
| VERTICAL REINFORCEMENT | (12)-#29 | --- | --- | --- |
| TIES | #13 @ d/2 | --- | --- | --- |
| TOP OF ROOF ELEVATION | 3800mm | --- | --- | --- |
| TOP OF GRADE BEAM ELEVATION | -200mm | --- | --- | --- |
| TOP OF FOOTING ELEVATION | -950mm | --- | --- | --- |

NOTES:
1. WORK THIS SCHEDULE WITH COLUMN DETAILS ON SHEET S-504.
2. SEE FOOTING SCHEDULE ON THIS SHEET FOR FOOTING INFORMATION.
3. COLUMN TIES: INTERIOR TIES TO MATCH SIZE & SPACING OF PERIMETER TIES.
4. HOOKS SHOWN ON SECTIONS & DETAILS SHALL BE 90° STD UON.

UNLESS OTHERWISE NOTED, LINEAR DIMENSIONS SHOWN ARE IN MILLIMETERS (mm)

APPROVED:

A/E DESIGNER OF RECORD

SEAL:

GEORGIA REGISTERED 1-29-10 No. 27141 PROFESSIONAL ENGINEER CHRISTOPHER W. WHITMORE

US ARMY CORPS OF ENGINEERS
AFGHANISTAN ENGINEER DISTRICT

| Mark | Description | Date | Appr. | Mark | Description | Date | Appr. |
|---|---|---|---|---|---|---|---|

Rev: 0
Date: 2/23/10
Design file no.
Drawing code:
File name: AN8BOQS-601SCH
Plot date: 2/23/2010
Plot scale: X:X

Designed by: KMP/MMY
Dwn by: RCG
Ckd by: CWW
Reviewed by: LHM
Submitted by:
BAKER

U.S. ARMY CORPS OF ENGINEERS
AFGHANISTAN ENGINEER DISTRICT
APO AE 96338

Michael Baker Jr., Inc.
A unit of Michael Baker Corporation
Airside Business Park
100 Airside Drive
Moon Township, PA 15108
www.mbakercorp.com

AFGHAN NATIONAL ARMY
REGIONAL MILITARY TRAINING CENTER
STANDARD DESIGN

BOQ OFFICER BARRACKS

SCHEDULES

Sheet reference number:
S-601

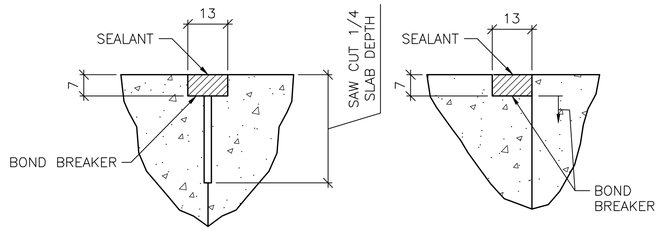


## 1 S-701 TYPICAL CONCRETE SLAB JOINT FINISH DETAILS

SCALE: NTS

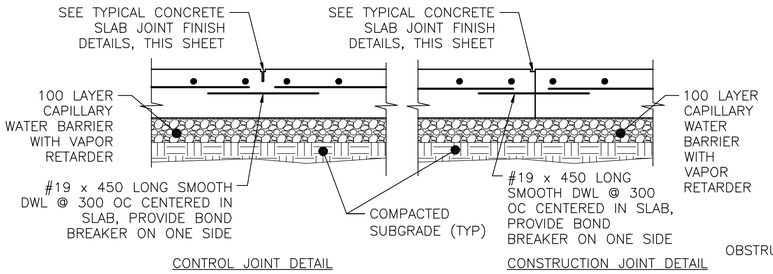


## 2 S-701 TYPICAL SLAB ON GRADE JOINT DETAIL

SCALE: NTS

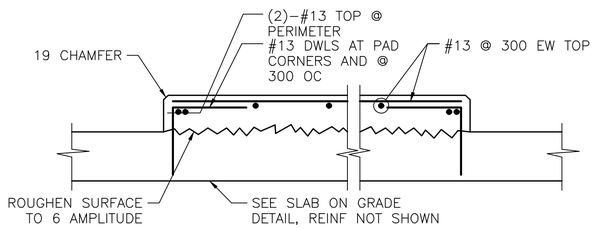


## 3 S-701 INTERIOR EQUIPMENT PAD DETAIL

SCALE: NTS

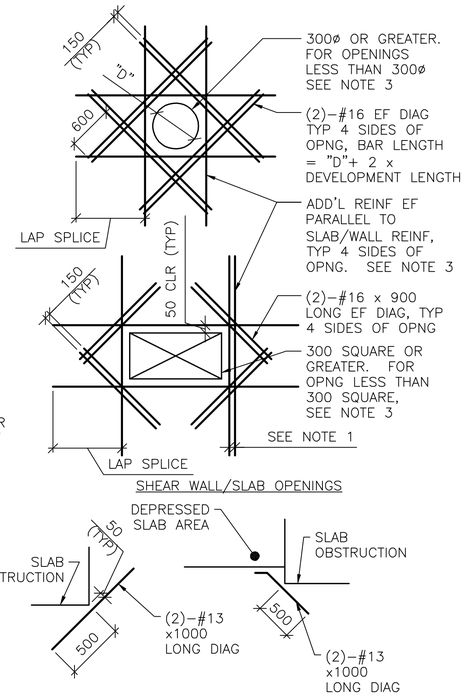


DETAIL NOTES:

1. WHERE MORE THAN ONE ADDITIONAL BAR IS REQUIRED PARALLEL TO THE EXISTING SLAB/WALL REINFORCING THE ADDITIONAL REINFORCING BARS SHALL BE SPACED AT 100 ON CENTER.
2. ADDITIONAL REINFORCING PARALLEL TO THE SLAB/WALL REINFORCING SHALL BE #16 BARS THAT PROVIDE A STEEL AREA ON EACH SIDE OF THE OPENING EQUAL TO 1/2 THE AREA OF THE REINFORCING CUT BY THE OPENING.
3. FOR OPENINGS WITH SIDES OR DIAMETERS LESS THAN 300 SPREAD THE SLAB/WALL REINFORCING TO CLEAR THE OPENING.

## 4 S-701 ADD'L CONCRETE REINFORCEMENT DETAILS

SCALE: NTS

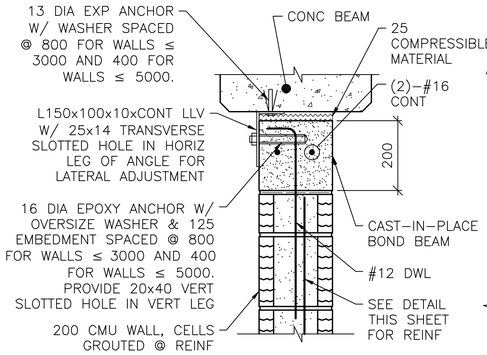


NOTE:

1. AT ANCHOR BOLTS, ADD AN ADDITIONAL 25 COMPRESSIBLE MATERIAL BELOW EXP ANCHOR HEAD.

INTERIOR BEAM

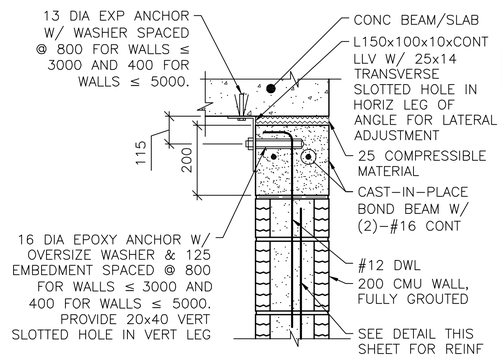


EXTERIOR WALL OR SLAB

NOTES:

1. THIS DETAIL IS AN ALTERNATE TOP OF WALL ANCHORAGE DETAIL TO BE USED AT THE CONTRACTOR'S OPTION IN LIEU OF DETAILS SHOWN ON S-400 & S-500 DRAWINGS.
2. CAST-IN-PLACE BOND BEAM SHOWN AT TOP OF WALL IS ALSO APPLICABLE FOR INTERMEDIATE AND STARTER COURSE BOND BEAMS WITHIN WALL.

## 5 S-701 ALTERNATE TOP OF CMU WALL BRACING DETAILS

SCALE: NTS

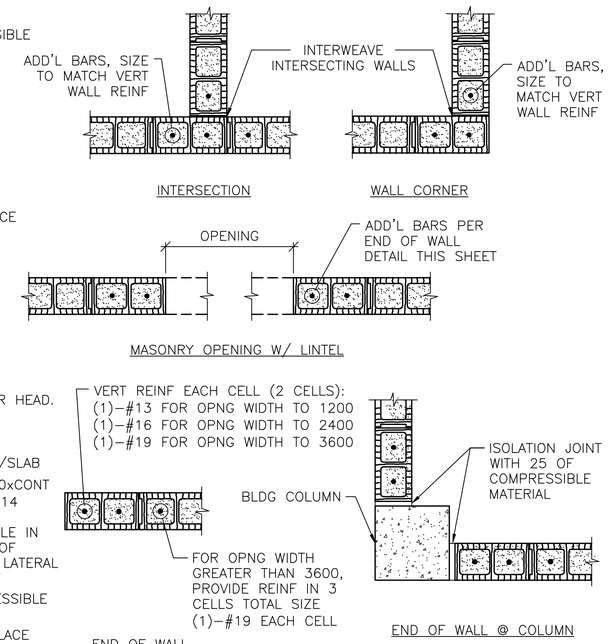


NOTES:

1. OPENING WIDTH SHALL NOT EXCEED 3600 FOR THIS TYPE OF JAMB.
2. ALL CELLS FULLY GROUTED AT EXTERIOR WALLS. AT INTERIOR WALLS, ONLY GROUT CELLS CONTAINING REINF.

## 6 S-701 TYP CMU DETAILS

SCALE: NTS

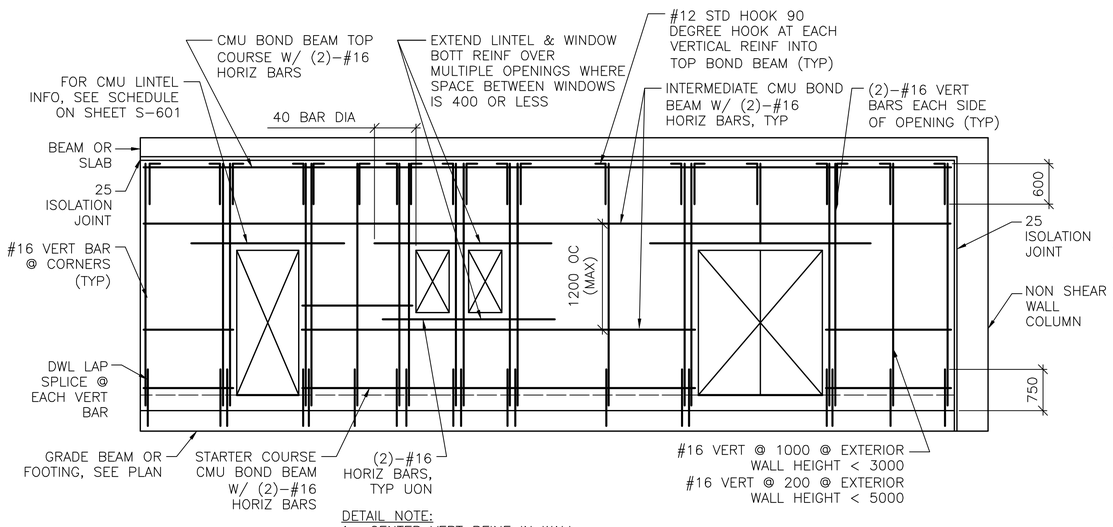


DETAIL NOTE:

1. CENTER VERT REINF IN WALL.
2. GROUT ALL CMU CELLS.
3. REFERENCE ARCH DWGS FOR JOINT INFORMATION
4. DOWELS BETWEEN TOP BOND BEAM AND BEAM/SLAB ABOVE (INCLUDING EMBEDDED PIPE SLEEVE) NOT SHOWN FOR CLARITY. SEE SPECIFIC S-500 SERIES DWGS FOR INFO.
5. FOR INFORMATION ON ALTERNATE CAST-IN-PLACE WALL BOND BEAMS, REFERENCE ALTERNATE TOP OF CMU WALL BRACING DETAILS THIS SHEET.

## 7 S-701 TYP EXTERIOR CMU WALL REINF DETAIL

SCALE: NTS

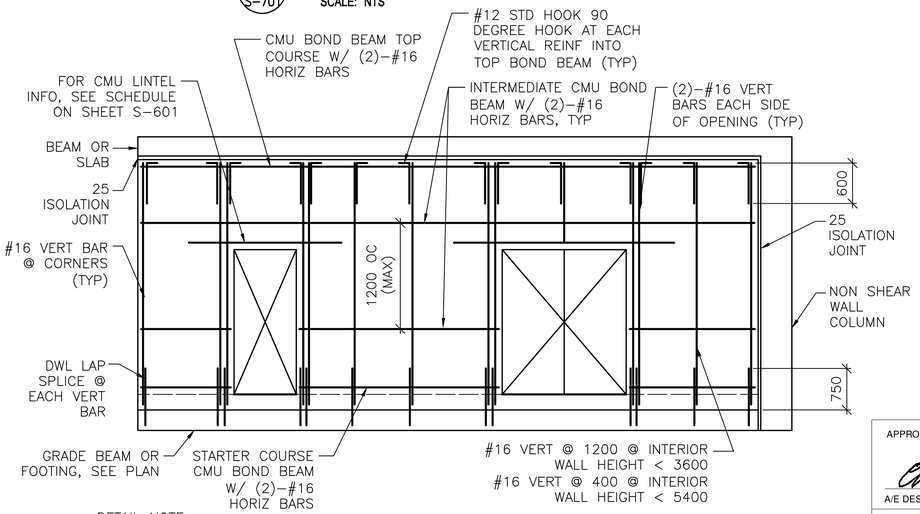


DETAIL NOTE:

1. CENTER VERT REINF IN WALL.
2. GROUT ALL CMU CELLS.
3. REFERENCE ARCH DWGS FOR JOINT INFORMATION
4. DOWELS BETWEEN TOP BOND BEAM AND BEAM/SLAB ABOVE (INCLUDING EMBEDDED PIPE SLEEVE) NOT SHOWN FOR CLARITY. SEE SPECIFIC S-500 SERIES DWGS FOR INFO.
5. FOR INFORMATION ON ALTERNATE CAST-IN-PLACE WALL BOND BEAMS, REFERENCE ALTERNATE TOP OF CMU WALL BRACING DETAILS THIS SHEET.

## 8 S-701 TYP INTERIOR CMU WALL REINF DETAIL

SCALE: NTS

UNLESS OTHERWISE NOTED, LINEAR DIMENSIONS SHOWN ARE IN MILLIMETERS (mm)

APPROVED:

A/E DESIGNER OF RECORD

SEAL:

GEORGIA REGISTERED 1-29-10 No. 27141 PROFESSIONAL ENGINEER CHRISTOPHER W. WHITMORE

US ARMY CORPS OF ENGINEERS
AFGHANISTAN ENGINEER DISTRICT

| Mark | Description | Date | Appr. | Mark | Description | Date | Appr. |
|---|---|---|---|---|---|---|---|
| | | | | | | | |

Rev: 0
Date: 2/23/10
Design file no.
Drawing code:
File name: AMB9OS-701DT
Plot date: 2/23/2010
Plot scale: X:X

Designed by: KMP/MMY
Dwn by: RCG
Ckd by: CWW
Reviewed by: LHM
Submitted by: BAKER

U.S. ARMY CORPS OF ENGINEERS
AFGHANISTAN ENGINEER DISTRICT
APO AE 96338

Michael Baker Jr., Inc
A unit of Michael Baker Corporation
Airside Business Park
100 Airside Drive
Moon Township, PA 15108
www.mbakercorp.com

AFGHAN NATIONAL ARMY
REGIONAL MILITARY TRAINING CENTER
STANDARD DESIGN

BOQ OFFICER BARRACKS

TYPICAL DETAILS

Sheet reference number:
S-701

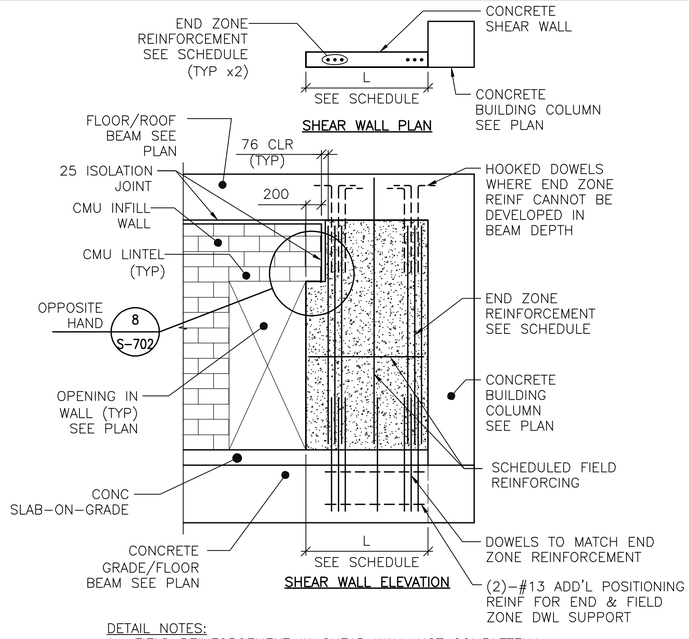


DETAIL NOTES:
1. FIELD REINFORCEMENT IN SHEAR WALL NOT COMPLETELY SHOWN FOR CLARITY.
2. FIELD REINFORCEMENT CENTERED IN WALL.
3. MINIMUM CONC CLEAR DISTANCE FOR END ZONE REINF = 76
4. SEE CONC SHEAR WALL SCHEDULE ON SHEET S-601
5. SEE ARCH DWGS FOR ISOLATION JOINT INFORMATION

## TYPE "B" SHEAR WALL DETAIL

1 S-702 SCALE: NTS

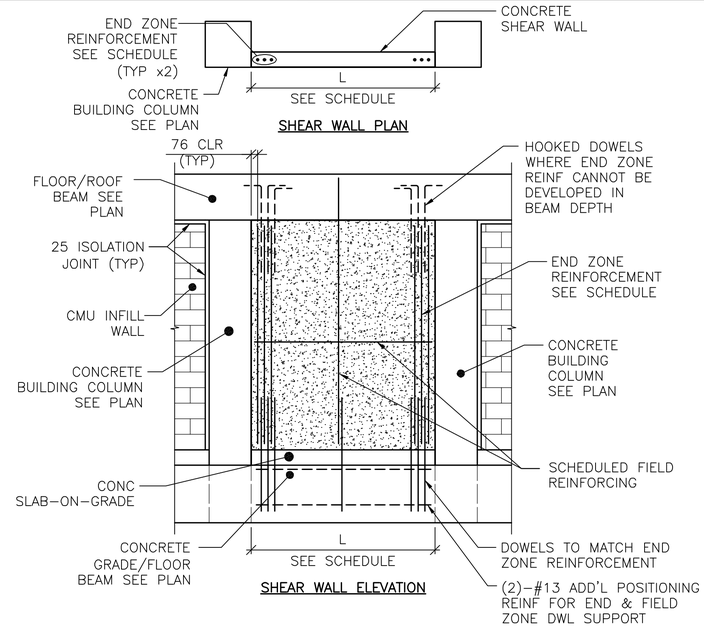


DETAIL NOTES:
1. FIELD REINFORCEMENT IN SHEAR WALL NOT COMPLETELY SHOWN FOR CLARITY.
2. FIELD REINFORCEMENT CENTERED IN WALL.
3. MINIMUM CONC CLEAR DISTANCE FOR END ZONE REINF = 76
4. SEE CONC SHEAR WALL SCHEDULE ON SHEET S-601
5. SEE ARCH DWGS FOR ISOLATION JOINT INFORMATION

## TYPE "C" SHEAR WALL DETAIL

2 S-702 SCALE: NTS

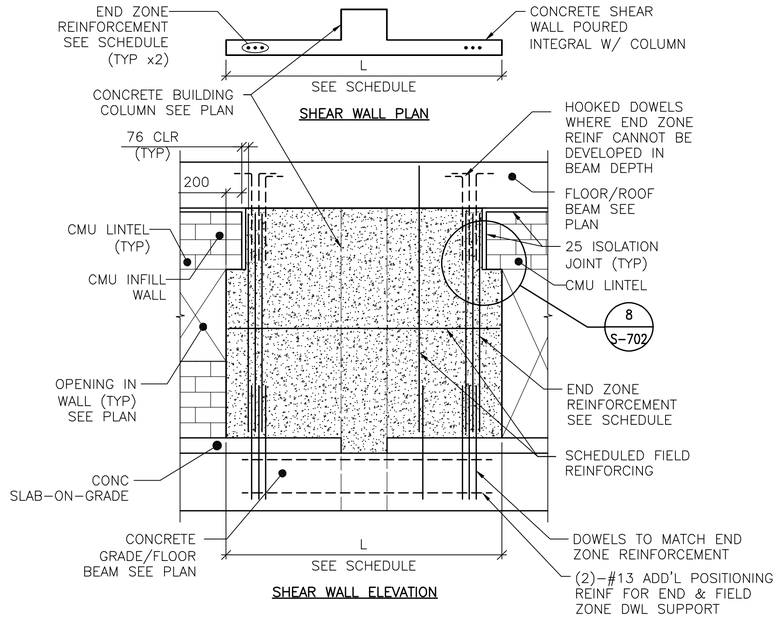


DETAIL NOTES:
1. FIELD REINFORCEMENT IN SHEAR WALL NOT COMPLETELY SHOWN FOR CLARITY.
2. FIELD REINFORCEMENT CENTERED IN WALL.
3. MINIMUM CONC CLEAR DISTANCE FOR END ZONE REINF = 76
4. SEE CONC SHEAR WALL SCHEDULE ON SHEET S-601
5. SEE ARCH DWGS FOR ISOLATION JOINT INFORMATION

## TYPE "D" SHEAR WALL DETAIL

3 S-702 SCALE: NTS

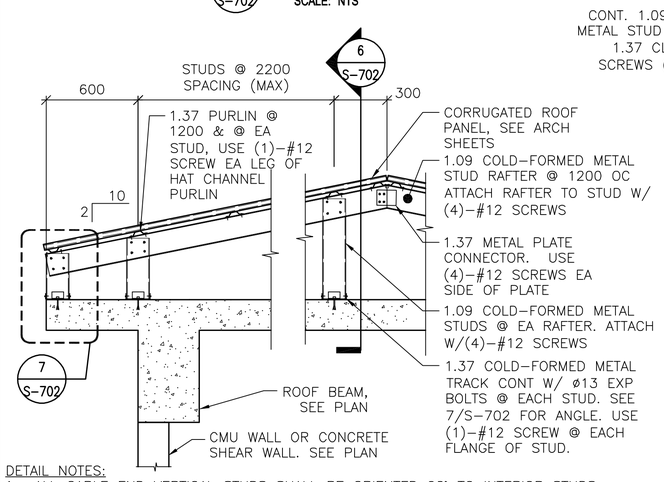


DETAIL NOTES:
1. ALL GABLE END VERTICAL STUDS SHALL BE ORIENTED 90° TO INTERIOR STUDS & SPACED @ 600 OC. GABLE END RAFTER SHALL BE 1.37 METAL TRACK SPANNING CONTINUOUSLY OVER GABLE END STUDS. INSET GIRTS AT GABLE END SHALL BE 1.09 COLD-FORMED METAL STUDS @ 1200 OC ATTACHED VIA 1.37 THICKNESS CLIP ANGLE W/ (2) #12 SCREWS EA LEG.
2. ALL INTERIOR, NON-GABLE END VERTICAL STUDS GREATER THAN 2400 IN LENGTH SHALL BE BACK-TO-BACK W/ #12 SCREWS @ 200 OC STAGGERED.

## TYPICAL OVERBUILT ROOF FRAMING DETAIL

4 S-702 SCALE: NTS

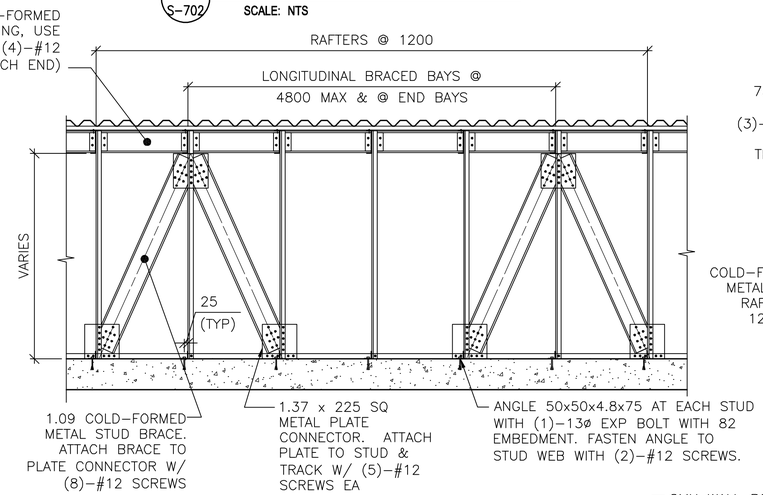


## SECTION

6 S-702 SCALE: NTS

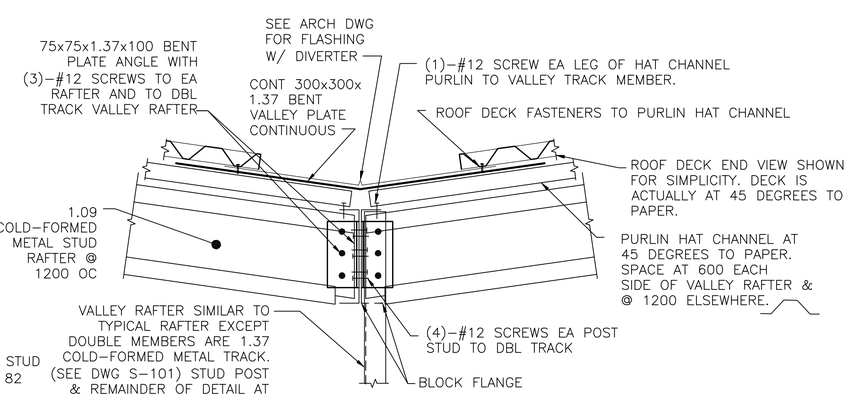


## TYPICAL OVERBUILT ROOF SECTION THROUGH VALLEY

9 S-702 SCALE: NTS

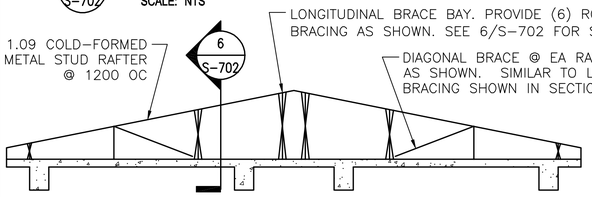


## TYPICAL ROOF BRACE LAYOUT

5 S-702 SCALE: NTS

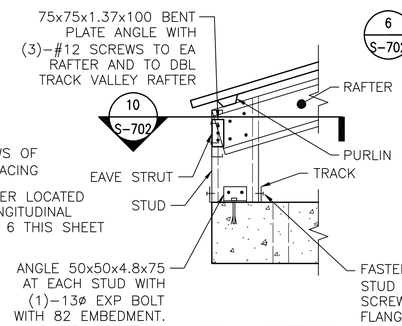


## DETAIL

7 S-702 SCALE: NTS

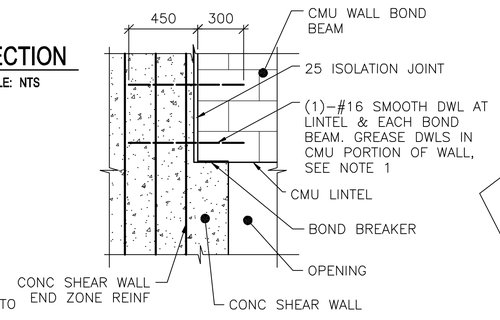


NOTE:
1. TIE SMOOTH DOWEL ROD TO SHEAR WALL END ZONE REINF FOR EACH BOND BEAM AND LINTEL.

## SECTION

8 S-702 SCALE: NTS

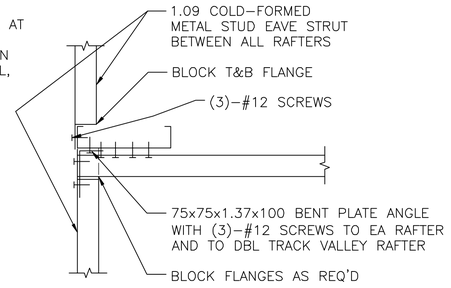


## SECTION

10 S-702 SCALE: NTS

UNLESS OTHERWISE NOTED, LINEAR DIMENSIONS SHOWN ARE IN MILLIMETERS (mm)

APPROVED:

A/E DESIGNER OF RECORD

SEAL:

GEORGIA REGISTERED 1-29-10 No. 27141 PROFESSIONAL ENGINEER CHRISTOPHER W. WHITMORE

US ARMY CORPS OF ENGINEERS
AFGHANISTAN ENGINEER DISTRICT

| Mark | Description | Date | Appr. | Mark | Description | Date | Appr. |
|---|---|---|---|---|---|---|---|

Date: 2/23/10 | Rev: 0
Design file no.
Drawing code:
File name: AN4BOQS-702TDT
Plot date: 2/23/2010
Plot scale: X:X

Designed by: KMP/MMY
Dwn by: RCG | Ckd by: CWW
Reviewed by: LHM
Submitted by: BAKER

U.S. ARMY CORPS OF ENGINEERS
AFGHANISTAN ENGINEER DISTRICT
APO AE 96338

Michael Baker Jr., Inc
A unit of Michael Baker Corporation
Airside Business Park
100 Airside Drive
Moon Township, PA 15108
www.mbakercorp.com

AFGHAN NATIONAL ARMY
REGIONAL MILITARY TRAINING CENTER
STANDARD DESIGN

BOQ OFFICER BARRACKS

TYPICAL DETAILS

Sheet reference number:
S-702

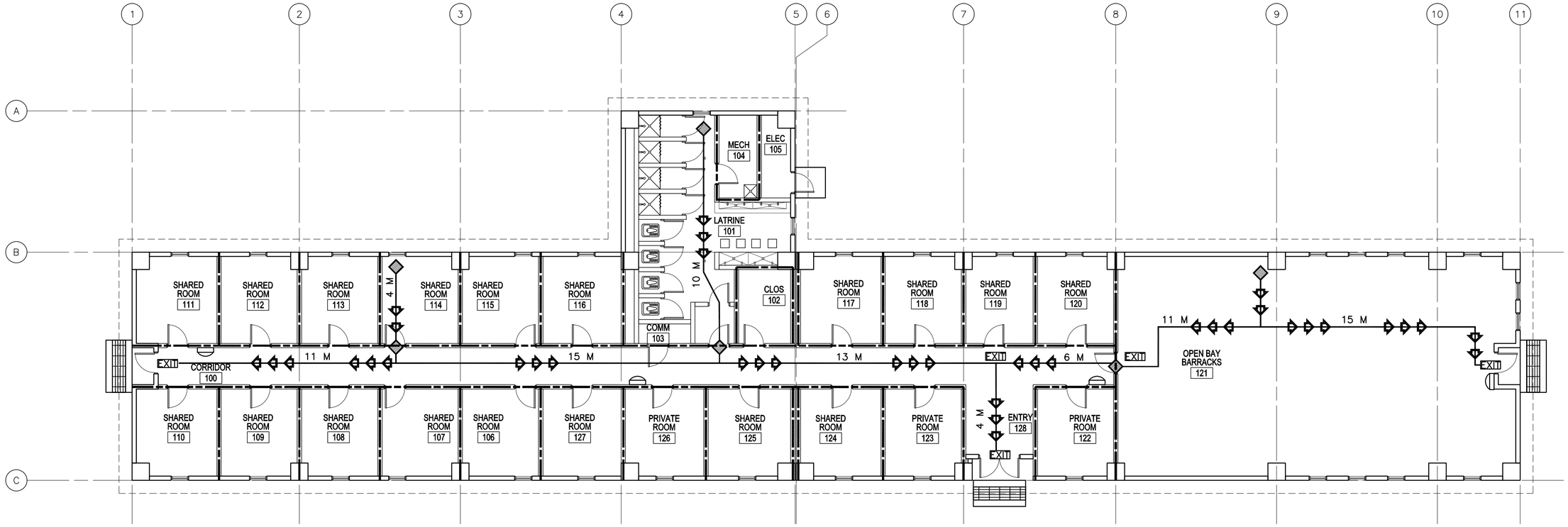


1 A-001 **LIFE SAFETY PLAN**

SCALE: 1:100

## CODE ANALYSIS:

1. REFERENCES:
   2006 INTERNATIONAL BUILDING CODE (2006 IBC)
   2006 LIFE SAFETY CODE (2006 NFPA 101)

2. IBC OCCUPANCY CLASSIFICATION:
   GROUP R–2 (NEW HOTELS AND DORMITORIES NFPA 101 6.1.8 AND CHAPTER 28)

3. TYPE OF CONSTRUCTION (IBC): TYPE II–B (UNPROTECTED/NONSPRINKLERED)

4. IBC TABLE 503: ALLOWABLE HEIGHT AND BUILDING AREAS:
   GROUP R–2
   ALLOWABLE AREA: 1486 SM
   ALLOWABLE HEIGHT: 4 STORIES (16 M)

   GROUP R–2
   PROPOSED AREA: 723 SM
   PROPOSED HEIGHT: 1 STORY (<16 M)

5. IBC TABLE 601 & 602: FIRE RESISTANCE RATING REQUIREMENTS FOR BUILDING ELEMENTS FOR TYPE II–B

| BUILDING ELEMENT | RATING (HOUR) | REFERENCE |
|---|---|---|
| STRUCTURAL FRAME (COLUMNS, GIRDERS & TRUSSES) | 0 | TABLE 601 |
| BEARING WALLS | | |
| EXTERIOR | 0 | TABLE 601 |
| INTERIOR | 0 | TABLE 601 |
| NONBEARING WALLS & PARTITIONS | | |
| INTERIOR | 0 | TABLE 601 |
| FLOOR CONSTRUCTION | 0 | TABLE 601 |
| ROOF CONSTRUCTION | 0 | TABLE 601 |
| EXTERIOR WALL | 0 | TABLE 602 |

6. IBC TABLE 803.5 – INTERIOR WALL AND CEILING FINISH REQUIREMENTS FOR R–2 OCCUPANCY/NONSPRINKLERED

| GROUP | EXIT ENCLOSURES AND EXIT PASSAGEWAY | CORRIDORS | ROOMS AND ENCLOSED SPACES |
|---|---|---|---|
| R–2 | B | B | C |

7. NFPA 101 TABLE 7.3.1.2 – OCCUPANT LOAD
   HOTELS AND DORMITORIES = 18.6 SM/PERSON  CALCULATED = 39 OCCUPANTS
   ACTUAL = 61 OCCUPANTS

8. NFPA 101 TABLE 7.3.3.1 – EGRESS CAPACITY
   HOTELS AND DORMITORIES = 5 MM PER OCCUPANT

   MINIMUM REQUIRED: 305 MM (61 OCCUPANTS x 5 MM PER OCCUPANT)
   PROPOSED EGRESS CAPACITY: 3600 MM: (4) 900 MM DOORS

9. NFPA 101 PARAGRAPH 28.2.6 – EXIT ACCESS TRAVEL DISTANCE
   MAXIMUM ALLOWED WITHIN ROOM OR SUITE TO CORRIDOR: 23 METERS
   MAXIMUM ALLOWED CORRIDOR DOOR OF ANY ROOM OR SUITE TO NEAREST EXIT: 30 METERS

   PROPOSED WITHIN ROOM OR SUITE TO CORRIDOR: 4 METERS MOST ROOMS, 15 METERS ROOM 121
   PROPOSED CORRIDOR DOOR OF ANY ROOM OR SUITE TO NEAREST EXIT: 26 METERS

   STORAGE ROOMS: 1 HOUR SEPARATION REQUIRED.

10. NFPA 101 PARAGRAPH 28.3.6.1.2 – CORRIDOR FIRE–RESISTANCE RATING (HOUR)
    REQUIRED: WALLS NOT LESS THAN ONE HOUR FIRE RESISTANCE RATING
    PROPOSED: 1 HOUR RATING.

11. NFPA 101 PARAGRAPH 28.3.6.2 & TABLE 8.3.4.2 – DOORS INTO EXIT ACCESS CORRIDORS
    REQUIRED MINIMUM: 20 MINUTE FIRE PROTECTION RATING
    PROPOSED: 20 MINUTE DOORS

12. NFPA 101 PARAGRAPH 28.2.3.3 – CORRIDOR WIDTH
    REQUIRED: SUFFICIENT FOR OCCUPANT LOAD, BUT NOT LESS THAN 1120 MM
    CALCULATED WIDTH REQUIRED PER OCCUPANT LOAD: 305 MM (61 OCCUPANTS X 5 MM)
    PROVIDED: 1700 MM

13. NFPA 101 PARAGRAPH 28.2.5.3 – COMMON PATH OF TRAVEL
    MAXIMUM ALLOWED: 10.7 METERS
    PROVIDED: 6 METERS

14. NFPA 101 PARAGRAPH 28.2.5.5 – DEAD END CORRIDORS
    PERMITTED: 10.7 METERS
    PROPOSED: 6 METERS

15. NFPA 101 PARAGRAPH 28.2.4.1 AND 7.4.1.1 – MINIMUM NUMBER OF EXITS
    REQUIRED: 2 MINIMUM
    PROPOSED: 3 EXITS

16. NFPA 101 PARAGRAPH 28.2.1.2 & 24.2 – SECONDARY MEANS OF ESCAPE
    ONE OF THE FOLLOWING REQUIRED:
    1)DOOR, SIMILAR TO PRIMARY, BUT REMOTE FROM PRIMARY
    2) OPERABLE WINDOW, 0.53 SM, NOT LESS THAN 510 MM WIDE, 610 MM HIGH, NOT MORE THAN 1120 MM AFF, WITHIN 6100 MM OF GRADE
    PROVIDED: OPERABLE WINDOWS, 0.96 SM EACH PER SLEEPING ROOM

17. NFPA 101 PARAGRAPH 24.2.2.4 – TWO PRIMARY MEANS OF ESCAPE
    AREA WITH DWELLING UNIT EXCEEDS 185 SM PER STORY
    ALLOWED AREA PER STORY WITHIN DWELLING UNIT: 185 SM
    PROVIDED AREA WITHIN DWELLING UNIT: 195 SM WITHIN ROOM 121
    REQUIRED PRIMARY EXITS: 2
    PROVIDED PRIMARY EXITS: 2

18. NFPA 101 PARAGRAPH 28.3.7.1 – SUBDIVISION OF BUILDING SPACES – NONSPRINKLERED
    REQUIRED: EACH GUEST ROOM OR DORMITORY ROOM SHALL BE SEPARATED FROM OTHER GUEST OR DORMITORY ROOMS BY FIRE BARRIERS HAVING FIRE RESISTANCE RATING OF NOT LESS THAN 1 HOUR
    PROVIDED: 1 HOUR SEPARATION

19. HAZARDOUS AREA PROTECTION TABLE 28.3.2.2.2
    STORAGE ROOMS: 1 HOUR SEPARATION REQUIRED

20. NFPA 101 A.3.3.53 DORMITORY: ROOMS WITHIN DORMITORIES INTENDED FOR THE USE OF INDIVIDUALS FOR COMBINED LIVING AND SLEEPING PURPOSES ARE GUEST ROOMS OR GUEST SUITES. EXAMPLES OF DORMITORIES ARE COLLEGE DORMITORIES, FRATERNITY AND SORORITY HOUSES AND MILITARY BARRACKS.

21. NFPA 101 28.3.5.2 EXTINGUISHMENT REQUIREMENTS: AUTOMATIC SPRINKLER PROTECTION REQUIRED UNLESS SLEEPING ROOMS HAVE DOORS DIRECTLY TO OUTSIDE.
    DUE TO AUSTERE DESIGN CRITERIA, THE GOVERNMENT HAS A FIRE PROTECTION WAIVER FOR THIS REQUIREMENT.

## LEGEND:

- DENOTES PATHS OF EXIT TRAVEL
- EXIT — DENOTES DOOR AS AN EMERGENCY EXIT
- DENOTES STARTING POINT FOR TRAVEL DISTANCE
- DENOTES FIRE EXTINGUISHER LOCATIONS
- (1) HOUR RATED WALL
- (2) HOUR RATED WALL
- (3) HOUR RATED WALL

LINEAR DIMENSIONS SHOWN ARE IN MILLIMETERS (MM), UNLESS OTHERWISE NOTED

0 2000 4000
SCALE: 1:100

APPROVED:

A/E DESIGNER OF RECORD

SEAL:

STATE OF SOUTH CAROLINA
KEVIN R. CHAFIN
N. Charleston, SC
6374
REGISTERED ARCHITECT

US ARMY CORPS OF ENGINEERS
AFGHANISTAN ENGINEER DISTRICT

| Mark | Description | Date | Appr. | Mark | Description | Date | Appr. |
|---|---|---|---|---|---|---|---|

Date: 2/23/10 Rev: 0
Design file no.
Drawing code:
File name: ANABOQA-001LSP
Plot date: 2/23/2010
Plot scale: x:X

Designed by: KRC
Dwn by: KJG
Ckd by: NLJ
Reviewed by: LHM
Submitted by:
BAKER

U.S. ARMY CORPS OF ENGINEERS
AFGHANISTAN ENGINEER DISTRICT
APO AE 96338

Michael Baker Jr., Inc
A unit of Michael Baker Corporation
Airside Business Park
100 Airside Drive
Moon Township, PA 15108
www.mbakercorp.com

AFGHAN NATIONAL ARMY
REGIONAL MILITARY TRAINING CENTER
STANDARD DESIGN

BOQ OFFICER BARRACKS

LIFE SAFETY PLAN

Sheet reference number:
A–001

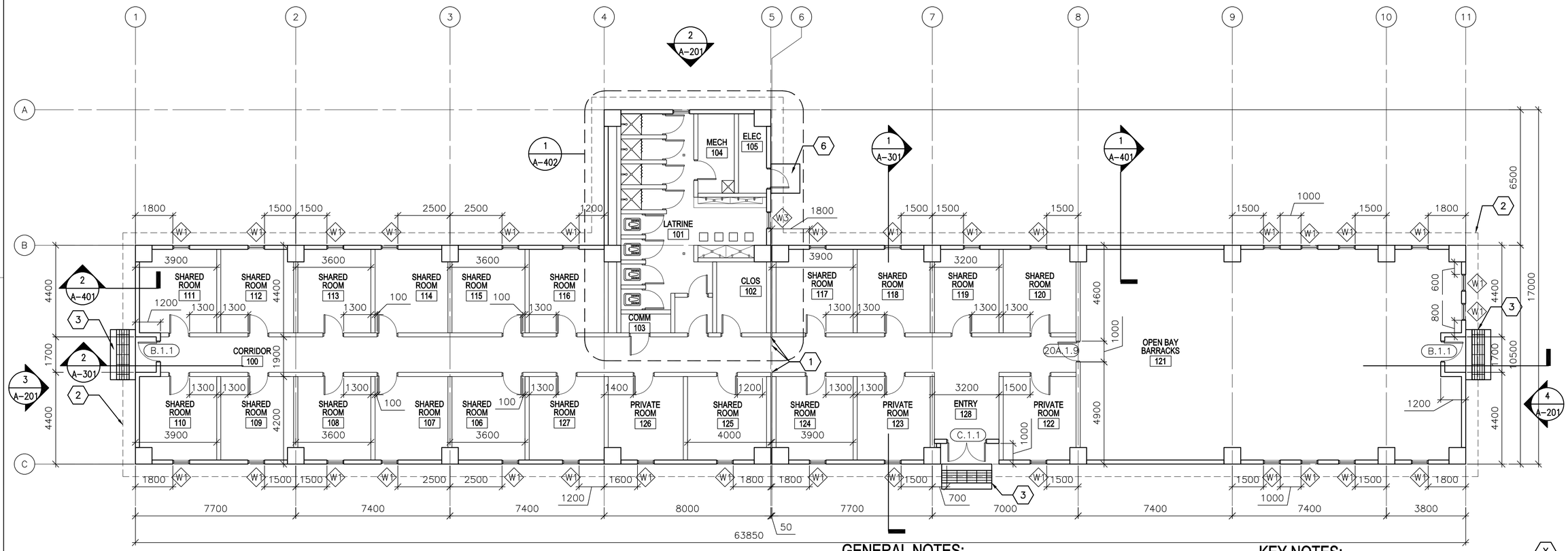


1 A-101 **FLOOR PLAN**

SCALE: 1:100

## GENERAL NOTES:

A. DIMENSIONS ARE SHOWN TO OUTER EDGE OF EXTERIOR STRUCTURAL COLUMNS, STRUCTURAL COLUMN GRID, EDGE OF INTERIOR PARTITIONS, EDGE OF WINDOW OPENINGS, AND TO HINGE SIDE OF DOOR FRAME OPENINGS.

B. HINGE SIDE OF OPENINGS FOR DOORS AND FRAMES SHALL BE LOCATED 200 MM FROM THE ADJACENT WALL OR COLUMN, UNLESS NOTED OTHERWISE.

C. INTERIOR PARTITIONS SHALL BE 200 MM CMU, UNLESS NOTED OTHERWISE.

D. COSMETIC REPAIR OF MINOR DEFECTS: REPAIR OR FILL MORTAR JOINTS AND MINOR DEFECTS, INCLUDING BUT NOT LIMITED TO SPALLS, IN ACCORDANCE WITH MANUFACTURER'S RECOMMENDATIONS AND PRIOR TO COATING APPLICATION. SURFACES TO BE PAINTED SHALL BE CLEAN AND FREE OF FOREIGN MATTER BEFORE APPLICATION OF PAINT. CLEANING SHALL BE SCHEDULED SO THAT DUST AND OTHER CONTAMINANTS WILL NOT FALL ON NEWLY PAINTED SURFACES.

E. CONCRETE, PLASTER AND MASONRY SURFACES SHALL BE ALLOWED TO CURE FOR AT LEAST 30 DAYS BEFORE PAINTING. CONCRETE SLABS-ON-GRADE SHALL BE ALLOWED TO CURE 90 DAYS BEFORE STAINING OR SEALING.

F. DO NOT USE PAINT MATERIALS CONTAINING LEAD CONTENT IN EXCESS OF 0.009 PERCENT OF THE WEIGHT OF THE TOTAL NONVOLATILE CONTENT OF THE PAINT OR THE WEIGHT OF THE DRIED PAINT FILM.

G. DO NOT USE ANY ASBESTOS CONTAINING MATERIALS (ACM) IN PROJECT. ACM IS DEFINED AS 1% OR MORE BY VOLUME.

H. DO NOT USE PAINT MATERIALS CONTAINING MERCURIAL FUNGICIDES.

I. FACTORY PRIMED METAL DOORS AND FRAMES SHALL RECEIVE TWO COATS OF PAINT.

J. FILL REMAINING SPACE AT PENETRATIONS IN FIRE-RATED FLOORS, PARTITIONS AND CEILINGS WITH APPROPRIATE FIRESTOPPING MATERIALS.

K. ALL CEILING FINISHES SHALL BE PAINTED PLASTER APPLIED TO STRUCTURE.

L. ALL WALL FINISHES SHALL BE PAINTED PLASTER APPLIED TO STRUCTURE UNLESS OTHERWISE NOTED.

M. ALL FLOOR FINISHES SHALL BE SEALED CONCRETE, UNLESS NOTED OTHERWISE.

N. PROVIDE TILE FINISHES AS INDICATED IN DETAILS & KEY NOTES.

O. ALL DOOR, FRAME AND HARDWARE TYPES SHALL BE 20A.1.11 UNLESS NOTED OTHERWISE.

P. TOILET STALL DOORS SHALL BE F.2.12

Q. SHOWER STALL DOOR, FRAME AND HARDWARE TYPE SHALL BE E.1.12.

R. PROVIDE POLISHED STAINLESS STEEL MIRROR 600 X 900 ABOVE EVERY LAVATORY FAUCET.

## KEY NOTES:

1. ISOLATION JOINT COVER– SEE SHEET A–506.
2. LINE OF ROOF OVERHANG ABOVE.
3. CONCRETE STOOP WITH GRATE – SEE DETAIL 1/A–503.
4. NOT USED.
5. NOT USED.
6. CONCRETE STOOP – SEE DETAIL 3/A–503.

## LEGEND:

(XXX) DOOR FRAME AND HARDWARE TYPE, SEE SHEET A–601

(A) WINDOW TYPE, SEE SHEET A–601

(X) KEY NOTE

## ABBREVIATIONS:

| | |
|---|---|
| COMM | COMMUNICATIONS |
| ELEC | ELECTRICAL |
| MECH | MECHANICAL |
| JAN | JANITOR |
| CLOS | CLOSET |

LINEAR DIMENSIONS SHOWN ARE IN MILLIMETERS (MM), UNLESS OTHERWISE NOTED

0 2000 4000
SCALE: 1:100

APPROVED:

A/E DESIGNER OF RECORD

SEAL:

STATE OF SOUTH CAROLINA
KEVIN R. CHAFIN
N. Charleston, SC
6374
REGISTERED ARCHITECT

US ARMY CORPS OF ENGINEERS
AFGHANISTAN ENGINEER DISTRICT

| Mark | Description | Date | Appr. | Mark | Description | Date | Appr. |
|---|---|---|---|---|---|---|---|

U.S. ARMY CORPS OF ENGINEERS
AFGHANISTAN ENGINEER DISTRICT
APO AE 96338

Michael Baker Jr., Inc
A unit of Michael Baker Corporation
Airside Business Park
100 Airside Drive
Moon Township, PA 15108
www.mbakercorp.com

Designed by: KRC
Dwn by: KJG
Ckd by: NLJ
Reviewed by: LHM
Submitted by: BAKER
Date: 2/23/10
Rev: 0
Design file no.
Drawing code:
File name: AN4BOQA-101FP
Plot date: 2/23/2010
Plot scale: X:X

AFGHAN NATIONAL ARMY
REGIONAL MILITARY TRAINING CENTER
STANDARD DESIGN

BOQ OFFICER BARRACKS

FLOOR PLAN

Sheet reference number:
A–101

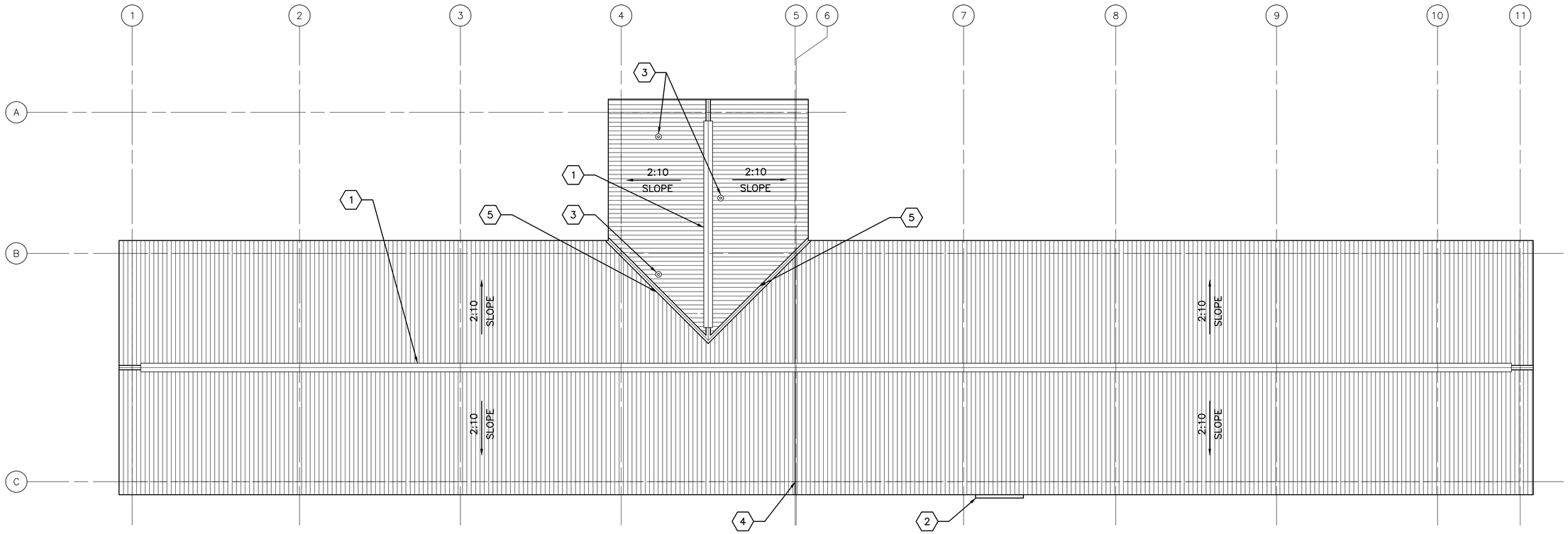


1 A-102 **ROOF PLAN**
SCALE: 1:100

## GENERAL NOTES:

A. THE APPROXIMATE LOCATION OF ROOF DEVICES AND PENETRATIONS ARE SHOWN ON THE ROOF PLAN FOR INFORMATION ONLY. THE CONTRACTOR SHALL BE RESPONSIBLE FOR UNDERSTANDING THE ACTUAL LOCATION OF THESE AND ALL OTHER ITEMS PRIOR TO BEGINNING CONSTRUCTION. COORDINATE ALL ROOF PENETRATIONS WITH STRUCTURAL, MECHANICAL AND PLUMBING WORK.

B. PLUMBING VENT PENETRATIONS SHALL TERMINATE 300 MM MINIMUM ABOVE THE ROOF.

C. UNLESS OTHERWISE NOTED, NOTES, DETAILS OR FEATURES INDICATED FOR ONE CONDITION SHALL BE APPLICABLE FOR ALL ALIKE AND SIMILAR CONDITIONS.

D. STOCKPILING OF MATERIALS, EQUIPMENT AND ANY OTHER ITEMS ON THE ROOF IS PROHIBITED.

E. ROOFS SHALL BE CORRUGATED METAL ROOF PANELS ON COLD-FORMED METAL FRAMING ON CONCRETE SLAB.

## KEY NOTES: (X)

1. CONTINUOUS METAL RIDGE VENT SEE DETAIL 4/A-501.
2. METAL GUTTER, CENTER ON DOOR, 2300 MM – SEE DETAIL 1A/A-501.
3. PLUMBING VENT – SEE DETAIL 5/A-501.
4. ROOF EXPANSION JOINT – SEE DETAIL 4A/A-501.
5. VALLEY – SEE DETAIL 6/A-501.

LINEAR DIMENSIONS SHOWN ARE IN MILLIMETERS (MM), UNLESS OTHERWISE NOTED

APPROVED:

A/E DESIGNER OF RECORD

SEAL:

STATE OF SOUTH CAROLINA
KEVIN R. CHAFIN
N. Charleston, SC
6374
REGISTERED ARCHITECT

0 2000 4000
SCALE: 1:100

US ARMY CORPS OF ENGINEERS
AFGHANISTAN ENGINEER DISTRICT

| Mark | Description | Date | Appr. | Mark | Description | Date | Appr. |
|---|---|---|---|---|---|---|---|

Designed by: KRC
Dwn by: KJG
Ckd by: NLJ
Reviewed by: LHM
Submitted by: BAKER
Date: 2/23/10
Rev: 0
Design file no.
Drawing code:
File name: ANABOQA-102RP
Plot date: 2/23/2010
Plot scale: X:X

U.S. ARMY CORPS OF ENGINEERS
AFGHANISTAN ENGINEER DISTRICT
APO AE 96338

*Michael Baker Jr., Inc*
*A unit of Michael Baker Corporation*
Airside Business Park
100 Airside Drive
Moon Township, PA 15108
www.mbakercorp.com

AFGHAN NATIONAL ARMY
REGIONAL MILITARY TRAINING CENTER
STANDARD DESIGN

BOQ OFFICER BARRACKS

ROOF PLAN

Sheet reference number:
A-102

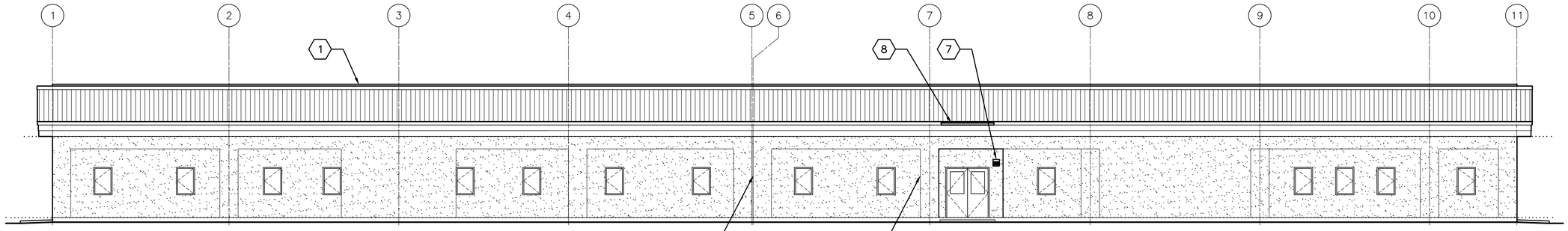


1 A-201 **ELEVATION**
SCALE: 1:100

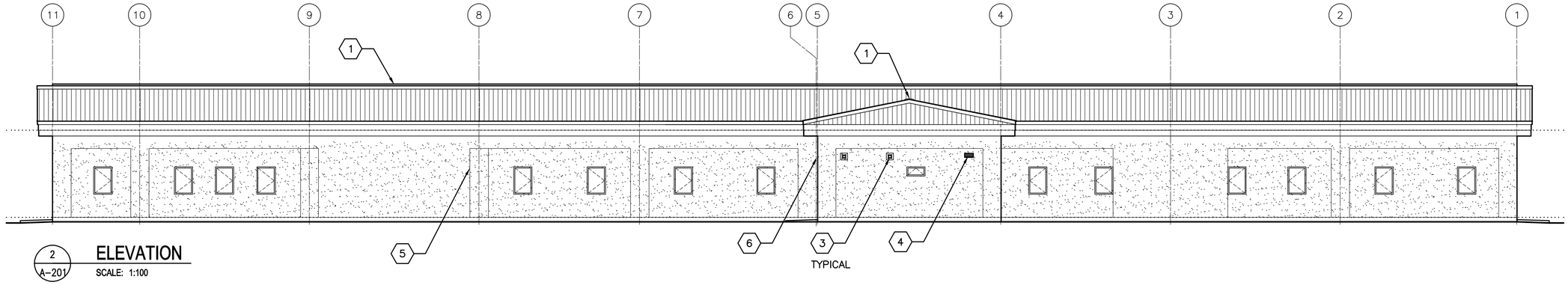


2 A-201 **ELEVATION**
SCALE: 1:100

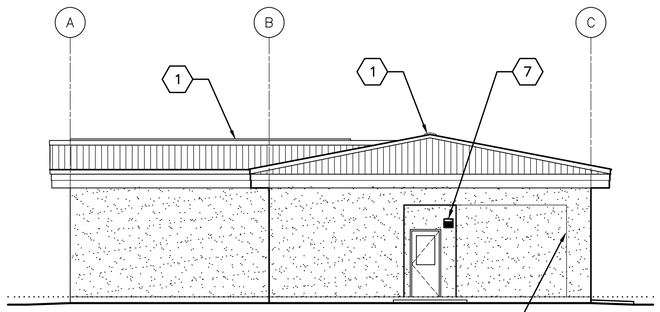

3 A-201 **ELEVATION**
SCALE: 1:100

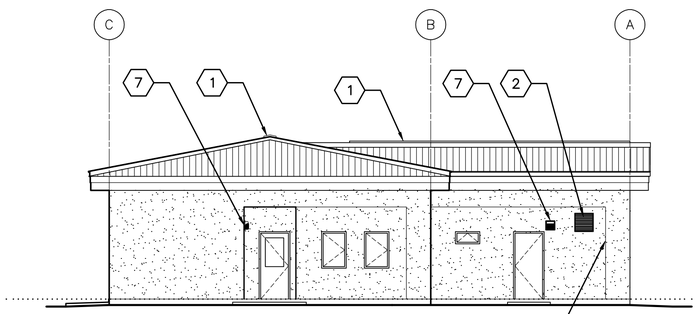

4 A-201 **ELEVATION**
SCALE: 1:100

## GENERAL NOTES:

A. COORDINATE SIZE AND LOCATION OF OPENINGS FOR MECHANICAL ITEMS WITH MECHANICAL DRAWINGS.

B. PROVIDE STRUCTURAL LINTELS AS REQUIRED – SEE STRUCTURAL DRAWINGS

C. ALL EXTERIOR WALL FINISHES SHALL BE STUCCO OVER CMU AND CONCRETE SUBSTRATES. PROVIDE CONTROL JOINTS IN STUCCO WALL FINISH AS NOTED.

D. ROOF SHALL BE CORRUGATED METAL ROOF PANELS ON COLD–FORMED METAL FRAMING ON CONCRETE SLAB.

## KEY NOTES:

1. CONTINUOUS METAL RIDGE VENT – SEE DETAIL 4/A–501.
2. LOUVER, LOCATE TOP OF WALL PENETRATION 2800 MM ABOVE FINISHED FLOOR – SEE MECHANICAL DRAWINGS.
3. EXHAUST FAN, LOCATE TOP OF WALL PENETRATION 2800 MM ABOVE FINISHED FLOOR – SEE MECHANICAL DRAWINGS.
4. EXHAUST FAN WITH WALL GRILL, LOCATE TOP OF WALL PENETRATION 2800 MM ABOVE FINISHED FLOOR – SEE MECHANICAL DRAWINGS.
5. STUCCO CONTROL JOINT – SEE DETAIL 2A/A–501.
6. EXPANSION JOINT COVER – SEE SHEET A–506
7. EXTERIOR LIGHT FIXTURE – SEE ELECTRICAL.
8. METAL GUTTER, CENTER ON DOOR, 2300 MM – SEE DETAIL 1A/A–501.

LINEAR DIMENSIONS SHOWN ARE IN MILLIMETERS (MM), UNLESS OTHERWISE NOTED

APPROVED:

A/E DESIGNER OF RECORD

SEAL:

STATE OF SOUTH CAROLINA
KEVIN R. CHAFIN
N. Charleston, SC
6374
REGISTERED ARCHITECT

0 2000 4000
SCALE: 1:100

US ARMY CORPS OF ENGINEERS
AFGHANISTAN ENGINEER DISTRICT

| Mark | Description | Date | Appr. | Mark | Description | Date | Appr. |
|---|---|---|---|---|---|---|---|
| | | | | | | | |

U.S. ARMY CORPS OF ENGINEERS
AFGHANISTAN ENGINEER DISTRICT
APO AE 96338

Michael Baker Jr., Inc
A unit of Michael Baker Corporation
Airside Business Park
100 Airside Drive
Moon Township, PA 15108
www.mbakercorp.com

Designed by: KRC
Dwn by: KJG
Ckd by: NLJ
Reviewed by: LHM
Submitted by: BAKER

Date: 2/23/10
Design file no.
Drawing code:
File name: AN4BOQA-201ELV
Plot date: 2/23/2010
Plot scale: x:X
Rev: 0

AFGHAN NATIONAL ARMY
REGIONAL MILITARY TRAINING CENTER
STANDARD DESIGN

BOQ OFFICER BARRACKS

ELEVATIONS

Sheet reference number:
A–201

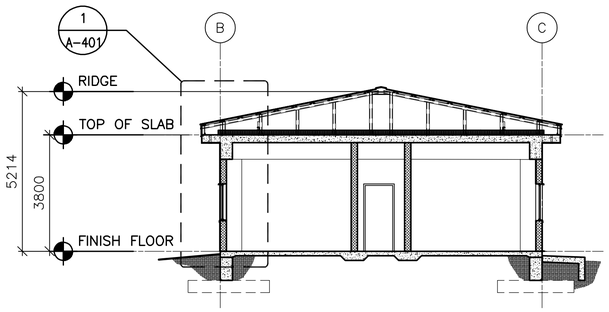


1 A-301 **SECTION**
SCALE: 1:100

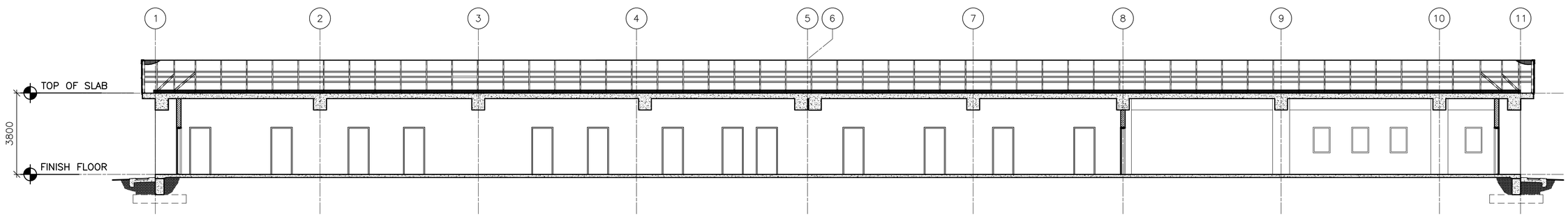


2 A-301 **SECTION**
SCALE: 1:100

LINEAR DIMENSIONS SHOWN ARE IN MILLIMETERS (MM), UNLESS OTHERWISE NOTED

0 2000 4000
SCALE: 1:100

APPROVED:

A/E DESIGNER OF RECORD

SEAL:

STATE OF SOUTH CAROLINA
KEVIN R. CHAFIN
N. Charleston, SC
6374
REGISTERED ARCHITECT

US ARMY CORPS OF ENGINEERS
AFGHANISTAN ENGINEER DISTRICT

| Mark | Description | Date | Appr. | Mark | Description | Date | Appr. |
|---|---|---|---|---|---|---|---|

U.S. ARMY CORPS OF ENGINEERS
AFGHANISTAN ENGINEER DISTRICT
APO AE 96338

*Michael Baker Jr., Inc.*
*A unit of Michael Baker Corporation*
Airside Business Park
100 Airside Drive
Moon Township, PA 15108
www.mbakercorp.com

| | |
|---|---|
| Designed by: KRC | Date: 2/23/10 |
| Dwn by: KJG | Ckd by: NLJ |
| Reviewed by: LHM | Design file no. |
| Submitted by: BAKER | Drawing code: |
| | File name: ANABOQA-301BS |
| | Plot date: 2/23/2010 |
| | Plot scale: x:X |
| | Rev: 0 |

AFGHAN NATIONAL ARMY
REGIONAL MILITARY TRAINING CENTER
STANDARD DESIGN

BOQ OFFICER BARRACKS

BUILDING SECTIONS

Sheet reference number:
A-301

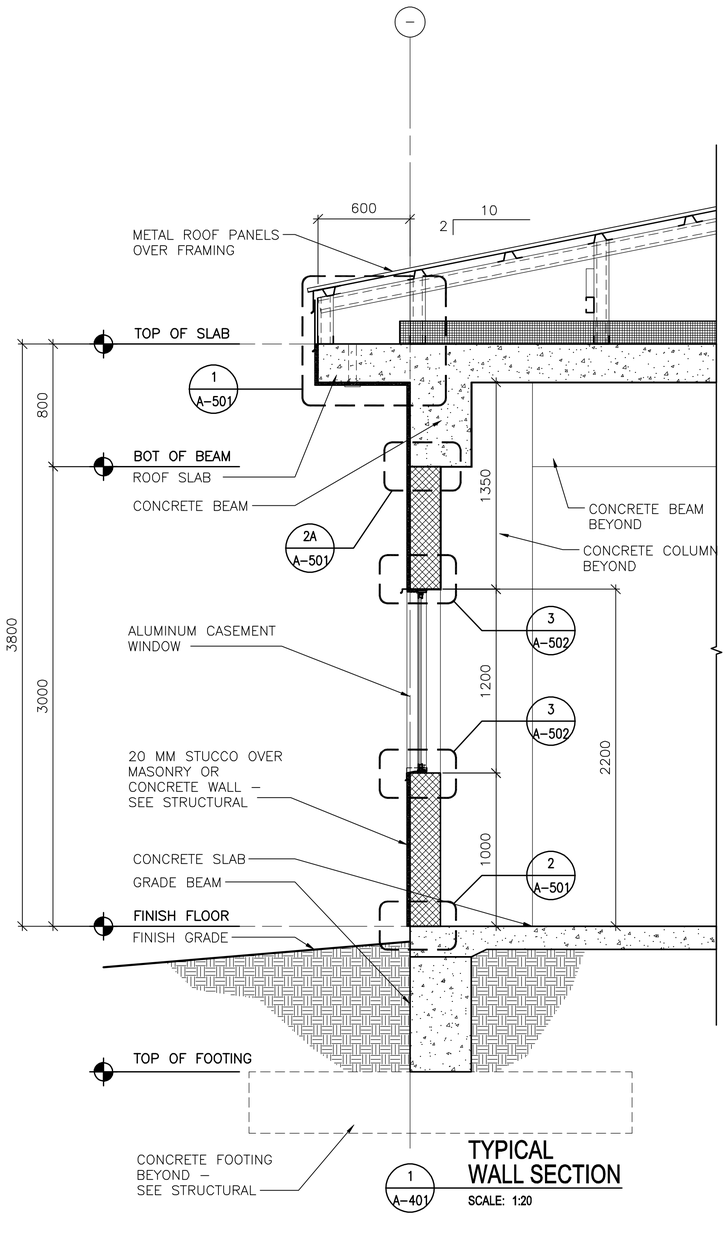


1 A-401 TYPICAL WALL SECTION
SCALE: 1:20

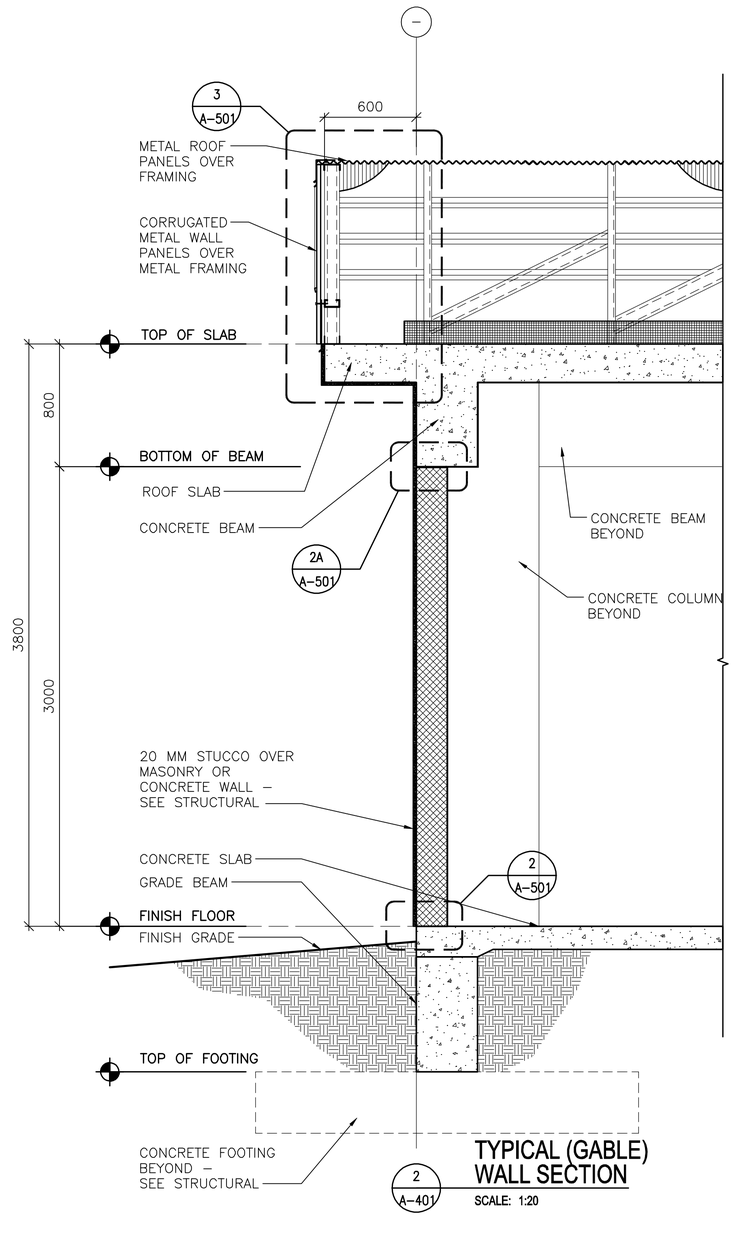


2 A-401 TYPICAL (GABLE) WALL SECTION
SCALE: 1:20

0 400 800
SCALE: 1:20

LINEAR DIMENSIONS SHOWN ARE IN MILLIMETERS (MM), UNLESS OTHERWISE NOTED

APPROVED:

A/E DESIGNER OF RECORD

SEAL:

STATE OF SOUTH CAROLINA
KEVIN R. CHAFIN
N. Charleston, SC
6374
REGISTERED ARCHITECT

US ARMY CORPS OF ENGINEERS
AFGHANISTAN ENGINEER DISTRICT

| Mark | Description | Date | Appr. | Mark | Description | Date | Appr. |
|---|---|---|---|---|---|---|---|

Designed by: KRC
Dwn by: KJG
Ckd by: NLJ
Reviewed by: LHM
Submitted by: BAKER
Date: 2/23/10
Rev: 0
Design file no.
Drawing code:
File name: ANABOQA-401WS
Plot date: 2/23/2010
Plot scale: X:X

U.S. ARMY CORPS OF ENGINEERS
AFGHANISTAN ENGINEER DISTRICT
APO AE 96338

Michael Baker Jr., Inc.
A unit of Michael Baker Corporation
Airside Business Park
100 Airside Drive
Moon Township PA 15108
www.mbakercorp.com

AFGHAN NATIONAL ARMY
REGIONAL MILITARY TRAINING CENTER
STANDARD DESIGN

BOQ OFFICER BARRACKS

WALL SECTIONS

Sheet reference number:
A-401

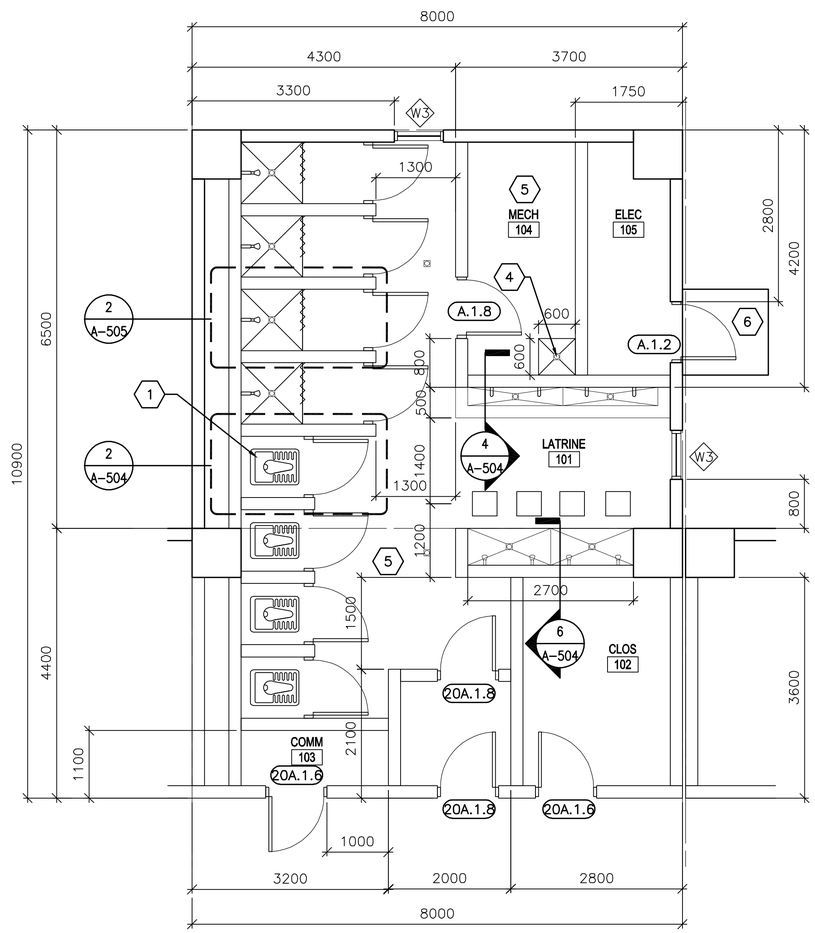


1 A-402 **ENLARGED PLAN**

SCALE: 1:50

## GENERAL NOTES:

A. DIMENSIONS ARE SHOWN TO OUTER EDGE OF EXTERIOR STRUCTURAL COLUMNS, STRUCTURAL COLUMN GRID, EDGE OF INTERIOR PARTITIONS, EDGE OF WINDOW OPENINGS, AND TO HINGE SIDE OF DOOR FRAME OPENINGS.

B. HINGE SIDE OF OPENINGS FOR DOORS AND FRAMES SHALL BE LOCATED 200 MM FROM THE ADJACENT WALL OR COLUMN, UNLESS NOTED OTHERWISE.

C. INTERIOR PARTITIONS SHALL BE 200 MM CMU, UNLESS NOTED OTHERWISE.

D. COSMETIC REPAIR OF MINOR DEFECTS: REPAIR OR FILL MORTAR JOINTS AND MINOR DEFECTS, INCLUDING BUT NOT LIMITED TO SPALLS, IN ACCORDANCE WITH MANUFACTURER'S RECOMMENDATIONS AND PRIOR TO COATING APPLICATION. SURFACES TO BE PAINTED SHALL BE CLEAN AND FREE OF FOREIGN MATTER BEFORE APPLICATION OF PAINT. CLEANING SHALL BE SCHEDULED SO THAT DUST AND OTHER CONTAMINANTS WILL NOT FALL ON NEWLY PAINTED SURFACES.

E. CONCRETE, PLASTER AND MASONRY SURFACES SHALL BE ALLOWED TO CURE FOR AT LEAST 30 DAYS BEFORE PAINTING. CONCRETE SLABS-ON-GRADE SHALL BE ALLOWED TO CURE 90 DAYS BEFORE STAINING OR SEALING.

F. DO NOT USE PAINT MATERIALS CONTAINING LEAD CONTENT IN EXCESS OF 0.009 PERCENT OF THE WEIGHT OF THE TOTAL NONVOLATILE CONTENT OF THE PAINT OR THE WEIGHT OF THE DRIED PAINT FILM.

G. DO NOT USE ANY ASBESTOS CONTAINING MATERIALS (ACM) IN PROJECT. ACM IS DEFINED AS 1% OR MORE BY VOLUME.

H. DO NOT USE PAINT MATERIALS CONTAINING MERCURIAL FUNGICIDES.

I. FACTORY PRIMED METAL DOORS AND FRAMES SHALL RECEIVE TWO COATS OF PAINT.

J. FILL REMAINING SPACE AT PENETRATIONS IN FIRE-RATED FLOORS, PARTITIONS AND CEILINGS WITH APPROPRIATE FIRESTOPPING MATERIALS.

K. ALL CEILING FINISHES SHALL BE PAINTED PLASTER APPLIED TO STRUCTURE.

L. ALL WALL FINISHES SHALL BE PAINTED PLASTER APPLIED TO STRUCTURE UNLESS OTHERWISE NOTED.

M. ALL FLOOR FINISHES SHALL BE SEALED CONCRETE, UNLESS NOTED OTHERWISE.

N. PROVIDE TILE FINISHES AS INDICATED IN Details & KEY NOTES.

O. ALL DOOR, FRAME AND HARDWARE TYPES SHALL BE 20A.1.11 UNLESS NOTED OTHERWISE.

P. TOILET STALL DOORS SHALL BE F.2.12

Q. SHOWER STALL DOOR, FRAME AND HARDWARE TYPE SHALL BE E.1.12

R. PROVIDE POLISHED STAINLESS MIRROR 600 X 900 ABOVE EVERY LAVATORY FAUCET

## KEY NOTES: (X)

1. TYPICAL TOILET STALL LAYOUT – SEE DETAIL 2/A-504.
2. NOT USED
3. NOT USED
4. RECESSED TROUGH – SEE DETAIL 7/A-504.
5. TERRAZZO FLOOR TILE AND CERAMIC WALL TILE TO 2000 MM ABOVE FINISHED FLOOR UNLESS OTHERWISE NOTED.
6. CONCRETE STOOP – SEE DETAIL 3/A-503.

## LEGEND:

(XXX) DOOR FRAME AND HARDWARE TYPE, SEE SHEET A-601

(A) WINDOW TYPE, SEE SHEET A-601

(X) KEY NOTE

## ABBREVIATIONS:

| | |
|---|---|
| COMM | COMMUNICATIONS |
| ELEC | ELECTRICAL |
| MECH | MECHANICAL |
| JAN | JANITOR |
| CLOS | CLOSET |

LINEAR DIMENSIONS SHOWN ARE IN MILLIMETERS (MM), UNLESS OTHERWISE NOTED

0 1000 2000
SCALE: 1:50

APPROVED:

A/E DESIGNER OF RECORD

SEAL:

STATE OF SOUTH CAROLINA
KEVIN R. CHAFIN
N. Charleston, SC
6374
REGISTERED ARCHITECT

US ARMY CORPS OF ENGINEERS
AFGHANISTAN ENGINEER DISTRICT

| Mark | Description | Date | Appr. | Mark | Description | Date | Appr. |
|---|---|---|---|---|---|---|---|
| | | | | | | | |

Rev: 0
Date: 2/23/10
Design file no.
Drawing code:
File name: AN4BOQA-602EP
Plot date: 2/23/2010
Plot scale: X:X

Designed by: KRC
Dwn by: KJG
Ckd by: NLJ
Reviewed by: LHM
Submitted by: BAKER

U.S. ARMY CORPS OF ENGINEERS
AFGHANISTAN ENGINEER DISTRICT
APO AE 96338

*Michael Baker Jr., Inc*
*A unit of Michael Baker Corporation*
Airside Business Park
100 Airside Drive
Moon Township, PA 15108
www.mbakercorp.com

AFGHAN NATIONAL ARMY
REGIONAL MILITARY TRAINING CENTER
STANDARD DESIGN

BOQ OFFICER BARRACKS

ENLARGED PLAN

Sheet reference number:
A-402

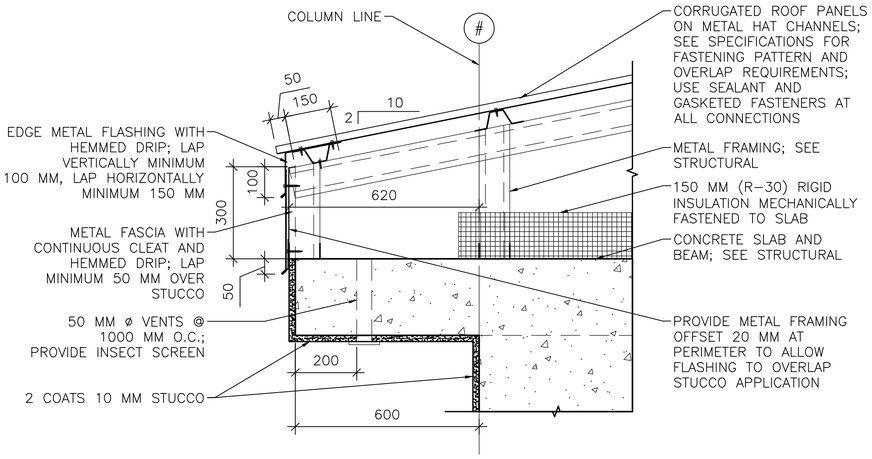


1 / A–501 **EAVE DETAIL**
SCALE: 1:10

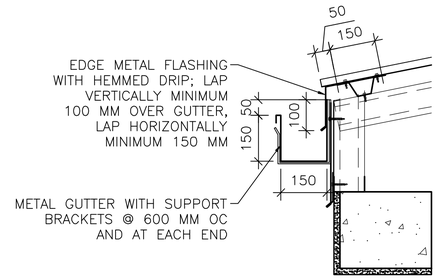


1A / A–501 **GUTTER DETAIL**
SCALE: 1:10

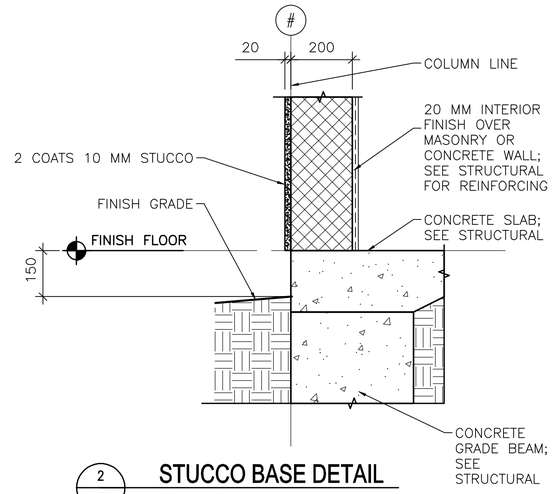


2 / A–501 **STUCCO BASE DETAIL**
SCALE: 1:10

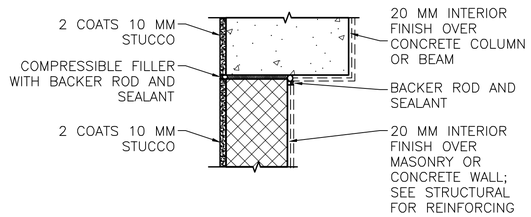


NOTE: DETAIL TYPICAL AT ALL WALL/COLUMN AND WALL/BEAM LOCATIONS, SEE ALTERNATE BRACING DETAIL BELOW 2B/A–501.

2A / A–501 **STUCCO JOINT DETAIL**
SCALE: 1:10

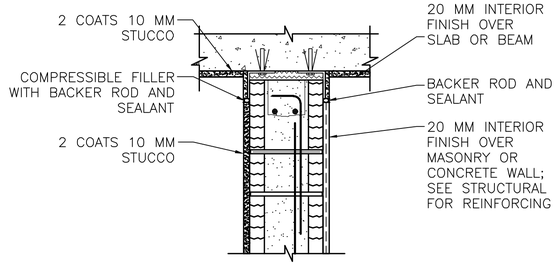


INTERIOR WALL/BEAM

2B / A–501 **ALTERNATE BRACING DETAIL**
SCALE: 1:10

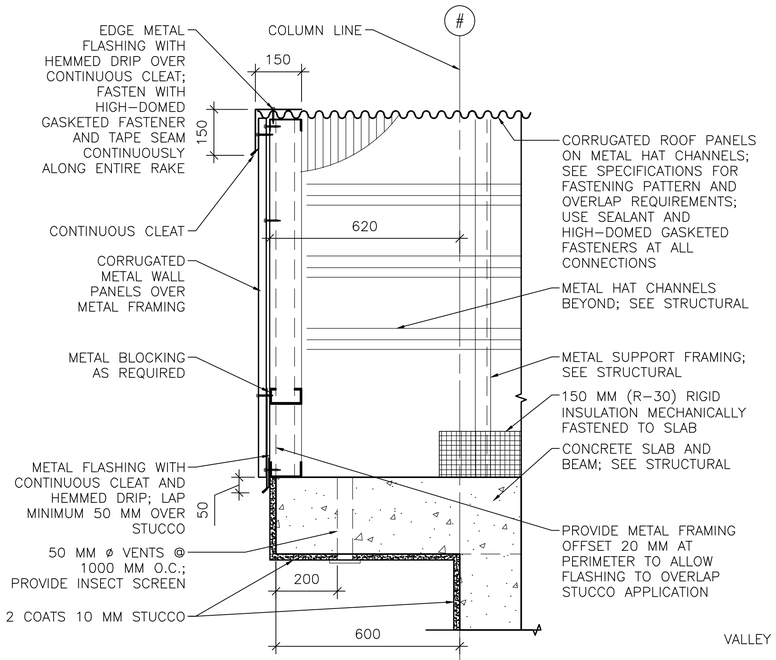


3 / A–501 **RAKE/EAVE DETAIL**
SCALE: 1:10

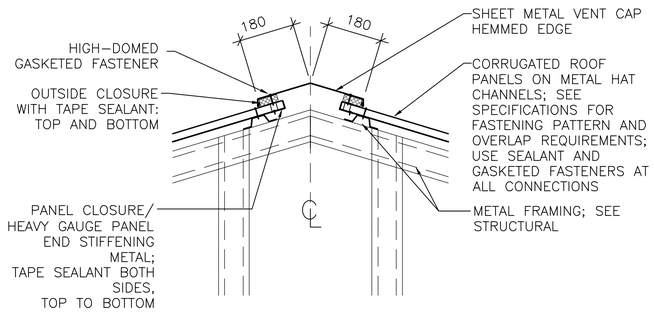


4 / A–501 **RIDGE VENT DETAIL**
SCALE: 1:10

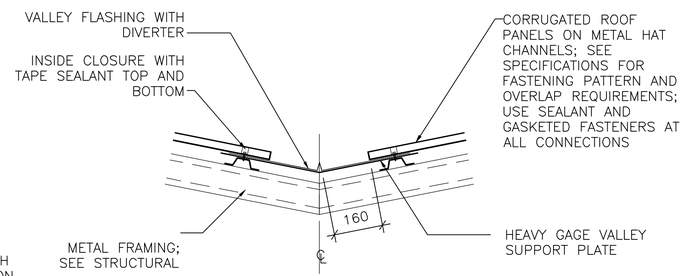


6 / A–501 **VALLEY DETAIL**
SCALE: 1:10

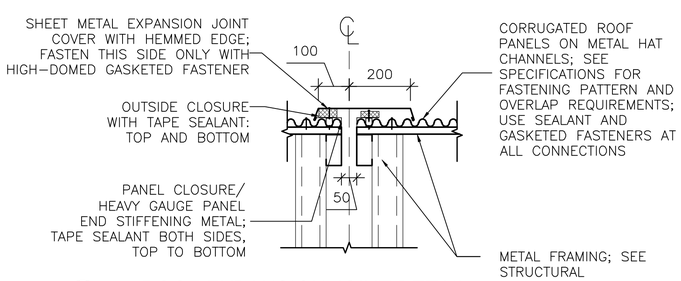


4A / A–501 **ROOF EXPANSION JOINT DETAIL**
SCALE: 1:10

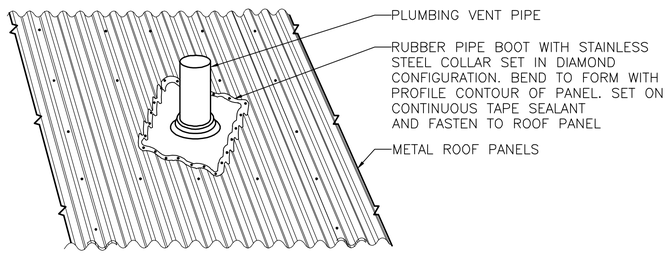


5 / A–501 **PLUMBING VENT DETAIL**
SCALE: NTS

LINEAR DIMENSIONS SHOWN ARE IN MILLIMETERS (MM), UNLESS OTHERWISE NOTED

0 200 400
SCALE: 1:10

APPROVED:

A/E DESIGNER OF RECORD

SEAL:

STATE OF SOUTH CAROLINA
KEVIN R. CHARIN
N. Charleston, SC
6374
REGISTERED ARCHITECT

US ARMY CORPS OF ENGINEERS
AFGHANISTAN ENGINEER DISTRICT

| Mark | Description | Date | Appr. | Mark | Description | Date | Appr. |
|---|---|---|---|---|---|---|---|
| | | | | | | | |

U.S. ARMY CORPS OF ENGINEERS
AFGHANISTAN ENGINEER DISTRICT
APO AE 96338

Michael Baker Jr., Inc
A unit of Michael Baker Corporation
Airside Business Park
100 Airside Drive
Moon Township, PA 15108
www.mbakercorp.com

| | | | |
|---|---|---|---|
| Designed by: KRC | | Date: 2/23/10 | Rev: 0 |
| Dwn by: KJG | Ckd by: NLJ | Design file no. | |
| Reviewed by: LHM | | Drawing code: | |
| Submitted by: BAKER | | File name: ANA8OOA-501DT<br>Plot date: 2/23/2010<br>Plot scale: x:X | |

AFGHAN NATIONAL ARMY
REGIONAL MILITARY TRAINING CENTER
STANDARD DESIGN

BOQ OFFICER BARRACKS

EXTERIOR DETAILS

Sheet reference number:
A–501

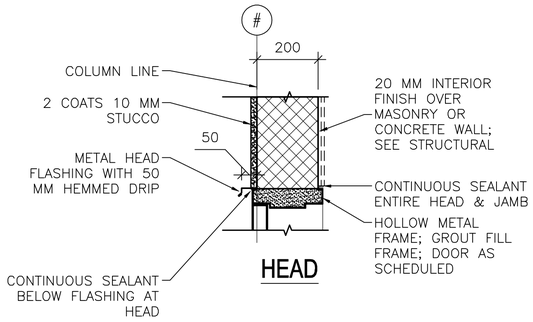


HEAD

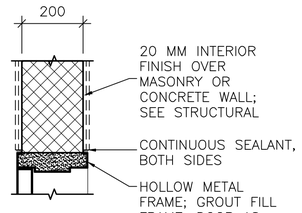


HEAD

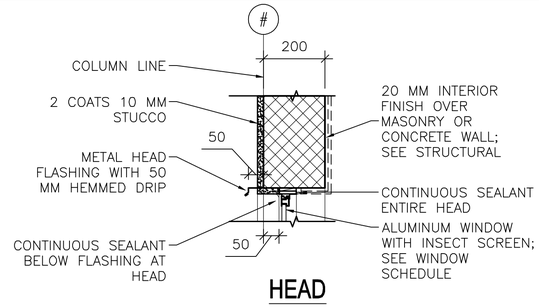


HEAD

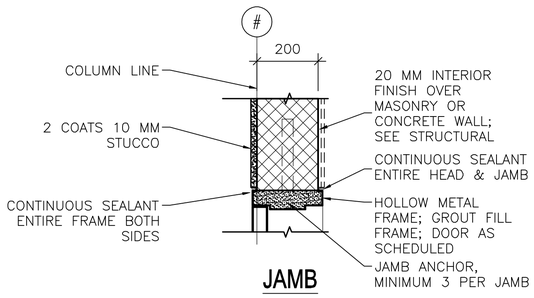


JAMB

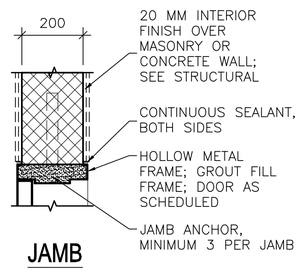


JAMB

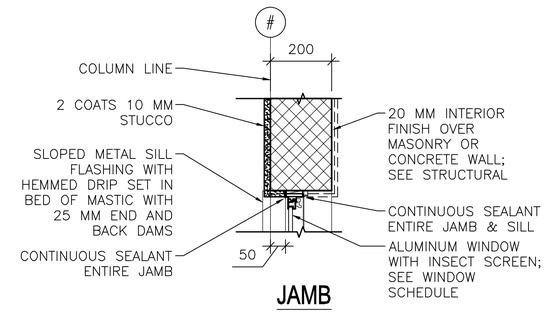


JAMB

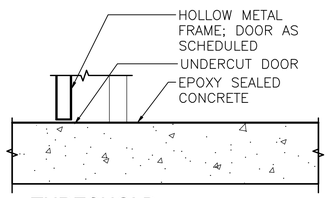


THRESHOLD

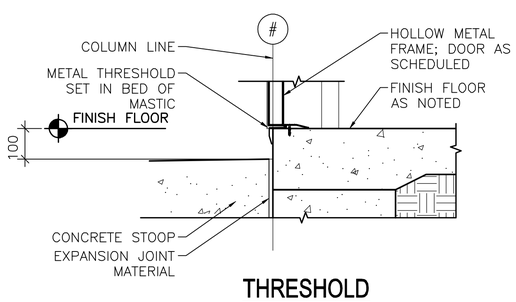


THRESHOLD

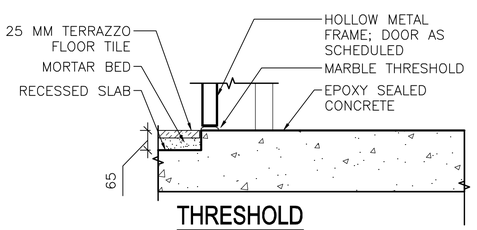


THRESHOLD

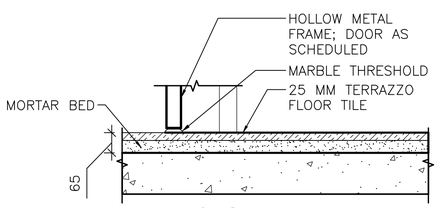


THRESHOLD

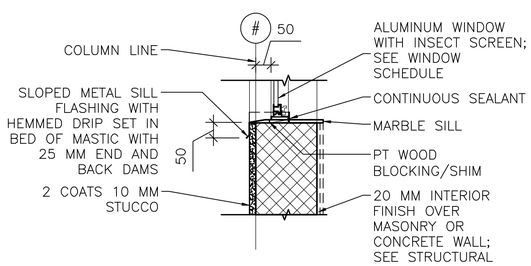


SILL

1 A-502 **EXTERIOR DOOR DETAILS**
SCALE: 1:10

2 A-502 **INTERIOR DOOR DETAILS**
SCALE: 1:10

3 A-502 **EXTERIOR WINDOW DETAILS**
SCALE: 1:10

LINEAR DIMENSIONS SHOWN ARE IN MILLIMETERS (MM), UNLESS OTHERWISE NOTED

0 200 400
SCALE: 1:10

APPROVED:

A/E DESIGNER OF RECORD

SEAL:

STATE OF SOUTH CAROLINA
KEVIN R. CHAFIN
N. Charleston, SC
6374
REGISTERED ARCHITECT

US ARMY CORPS OF ENGINEERS
AFGHANISTAN ENGINEER DISTRICT

| Mark | Description | Date | Appr. | Mark | Description | Date | Appr. |
|---|---|---|---|---|---|---|---|

Rev: 0
Date: 2/23/10
Design file no.
Drawing code:
File name: ANABOQA-502HJS
Plot date: 2/23/2010
Plot scale: x:x

Designed by: KRC
Dwn by: KJG
Ckd by: NLJ
Reviewed by: LHM
Submitted by: BAKER

U.S. ARMY CORPS OF ENGINEERS
AFGHANISTAN ENGINEER DISTRICT
APO AE 96338

Michael Baker Jr., Inc
A unit of Michael Baker Corporation
Airside Business Park
100 Airside Drive
Moon Township, PA 15108
www.mbakercorp.com

AFGHAN NATIONAL ARMY
REGIONAL MILITARY TRAINING CENTER
STANDARD DESIGN

BOQ OFFICER BARRACKS

HEAD, JAMB & SILL DETAILS

Sheet reference number:
A-502

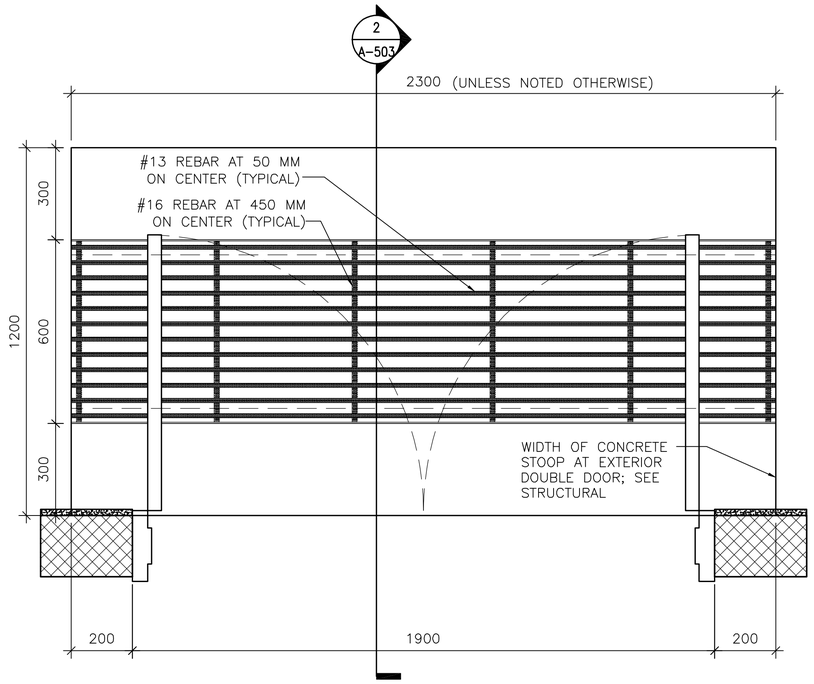


1 A-503 **DOOR STOOP PLAN (WITH GRATE)**

SCALE: 1:10

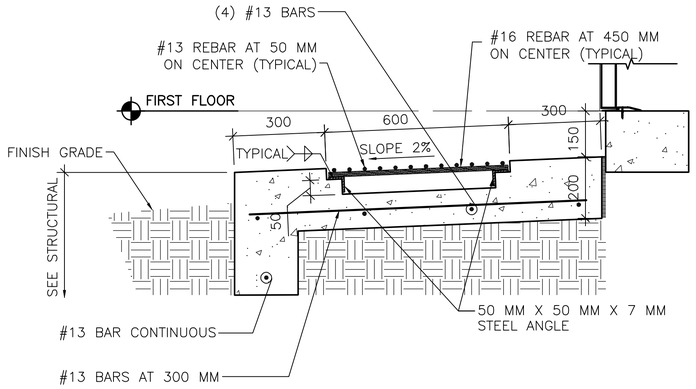


2 A-503 **DOOR STOOP DETAIL**

SCALE: 1:10

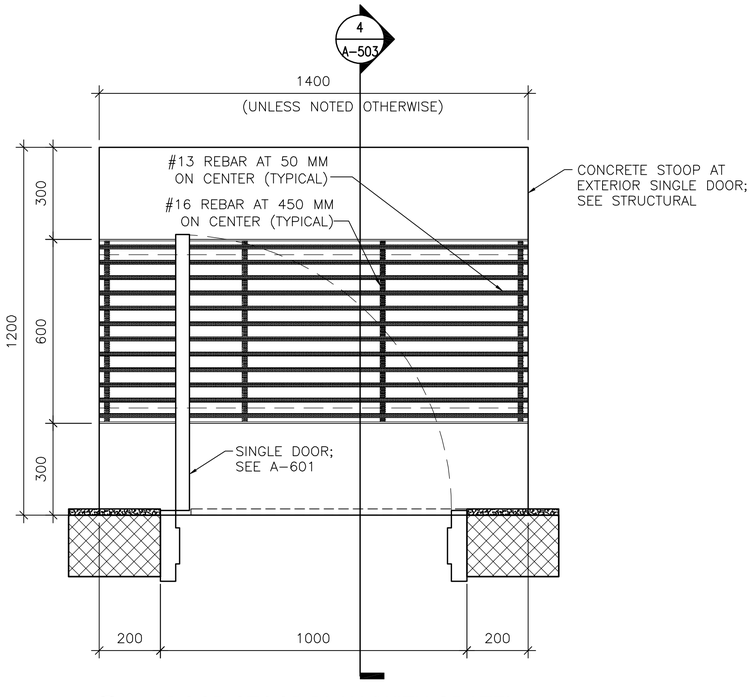


3 A-503 **DOOR STOOP PLAN (WITH GRATE)**

SCALE: 1:10

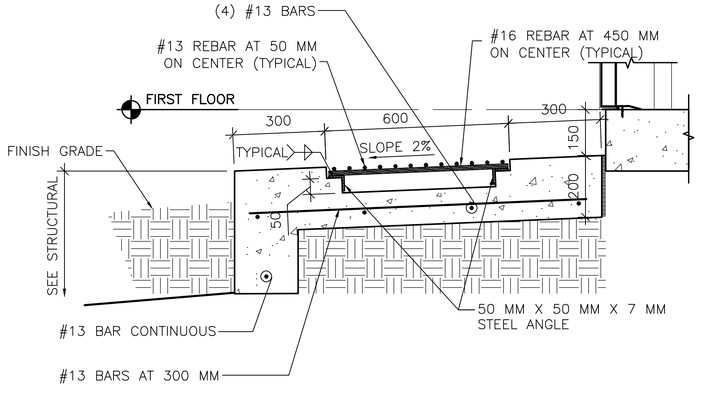


4 A-503 **DOOR STOOP DETAIL**

SCALE: 1:10

APPROVED:

A/E DESIGNER OF RECORD

SEAL:

STATE OF SOUTH CAROLINA
KEVIN R. CHAFIN
N. Charleston, SC
6374
REGISTERED ARCHITECT

US ARMY CORPS OF ENGINEERS
AFGHANISTAN ENGINEER DISTRICT

| Mark | Description | Date | Appr. | Mark | Description | Date | Appr. |
|---|---|---|---|---|---|---|---|

Date: 2/23/10 Rev: 0
Design file no.
Drawing code:
File name: ANABOQA-503ST
Plot date: 2/23/2010
Plot scale: X:X

Designed by: KRC
Dwn by: KJG
Ckd by: NLJ
Reviewed by: LHM
Submitted by: BAKER

U.S. ARMY CORPS OF ENGINEERS
AFGHANISTAN ENGINEER DISTRICT
APO AE 96338

*Michael Baker Jr., Inc*
*A unit of Michael Baker Corporation*
Airside Business Park
100 Airside Drive
Moon Township, PA 15108
www.mbakercorp.com

AFGHAN NATIONAL ARMY
REGIONAL MILITARY TRAINING CENTER
STANDARD DESIGN

BOQ OFFICER BARRACKS

STOOP DETAILS

Sheet reference number:
A-503

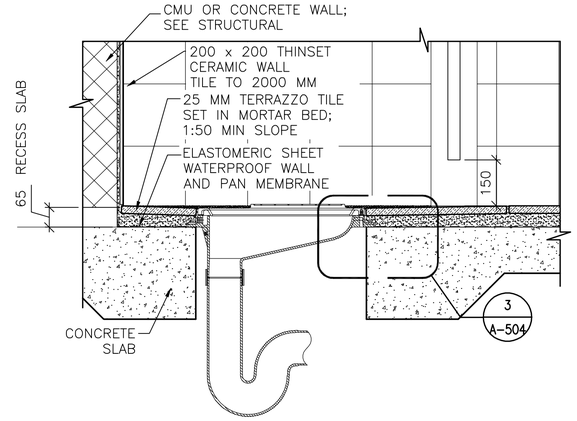


1 A-504 **LATRINE DETAIL**
SCALE: 1:10

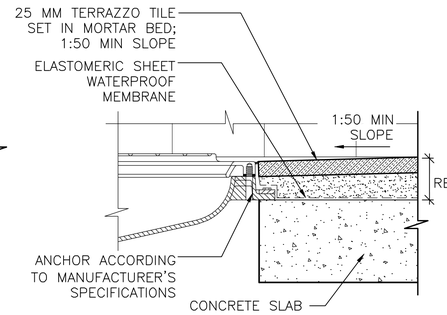


3 A-504 **MOUNTING DETAIL**
SCALE: 1:5

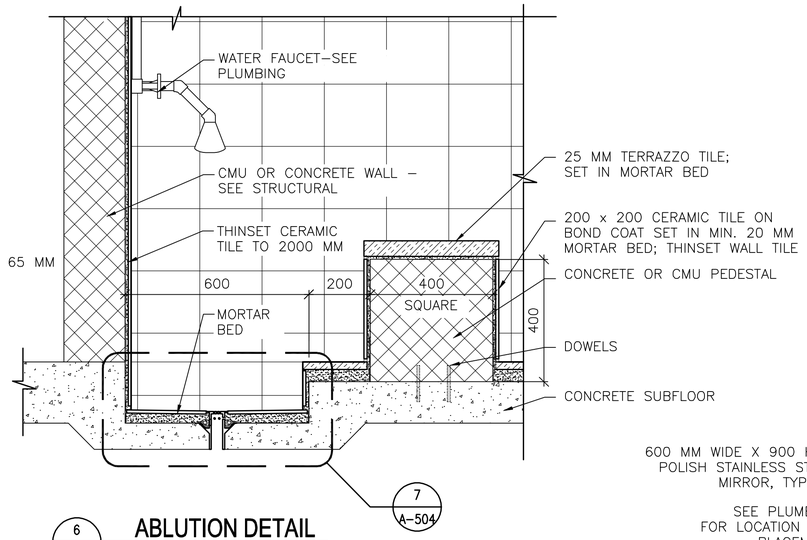


6 A-504 **ABLUTION DETAIL**
SCALE: 1:10

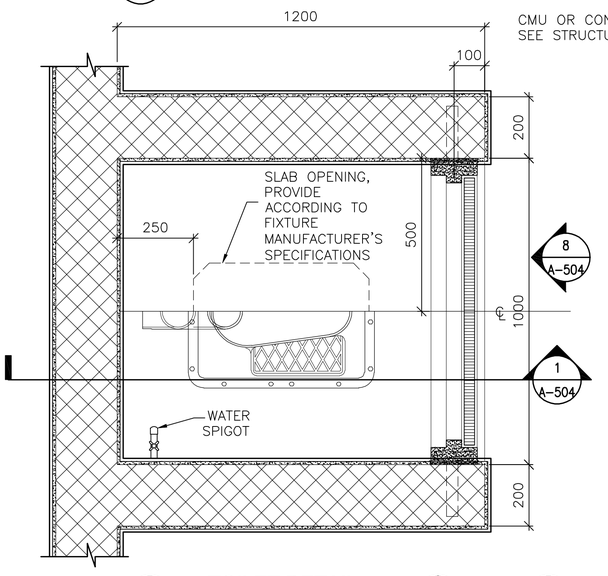


2 A-504 **TOILET DETAIL**
SCALE: 1:10

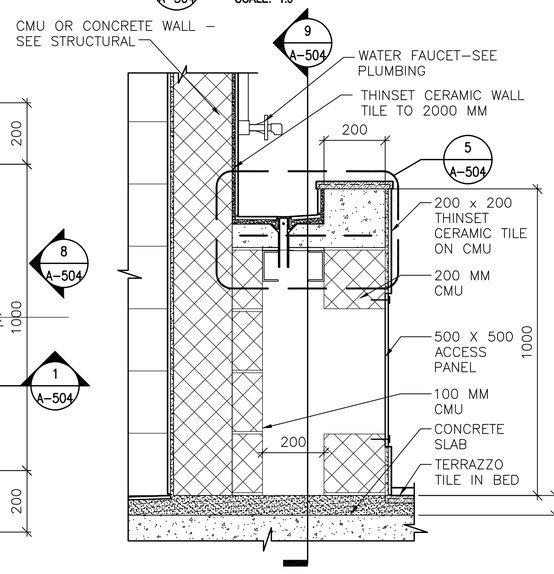


4 A-504 **LAVATORY SECTION**
SCALE: 1:10

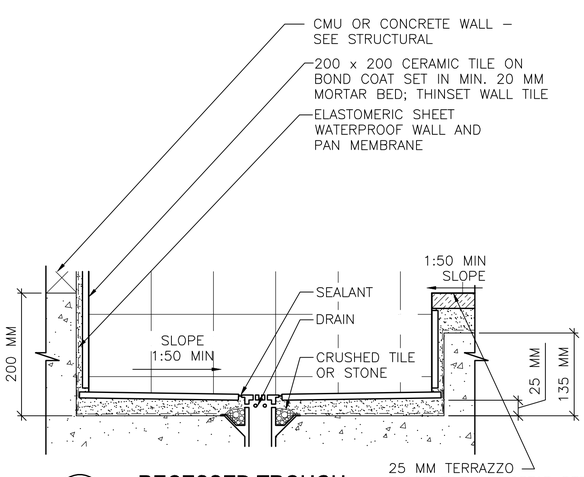


7 A-504 **RECESSED TROUGH**
SCALE: 1:5

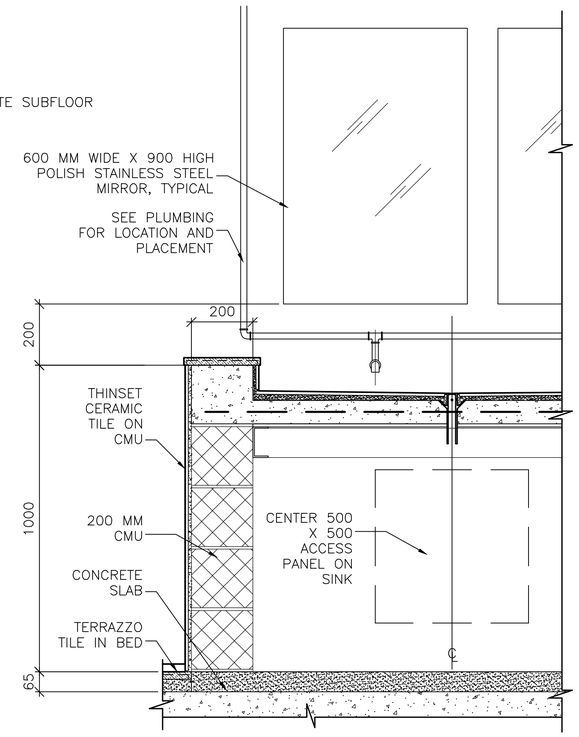


9 A-504 **LAVATORY SECTION**
SCALE: 1:10

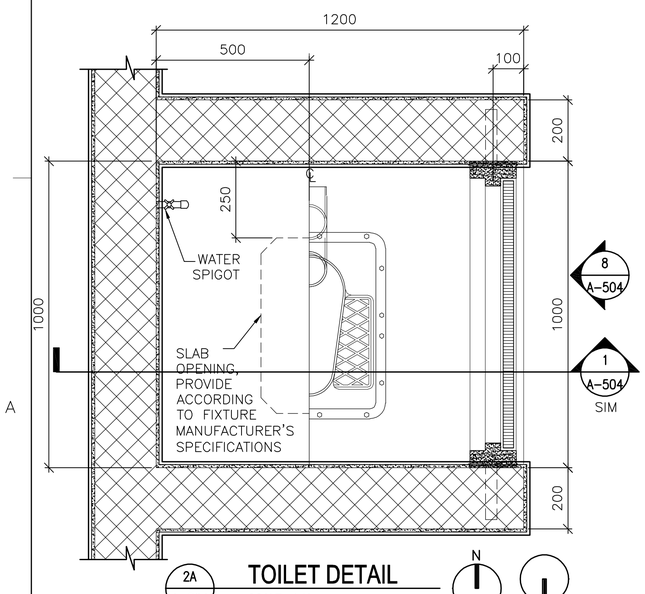


2A A-504 **TOILET DETAIL**
SCALE: 1:10

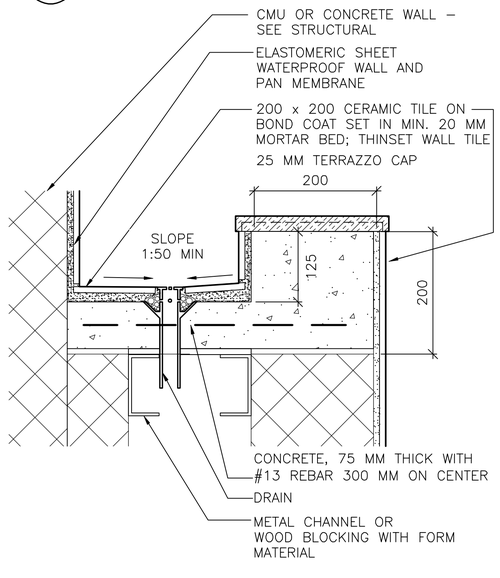


5 A-504 **LAVATORY DETAIL**
SCALE: 1:5

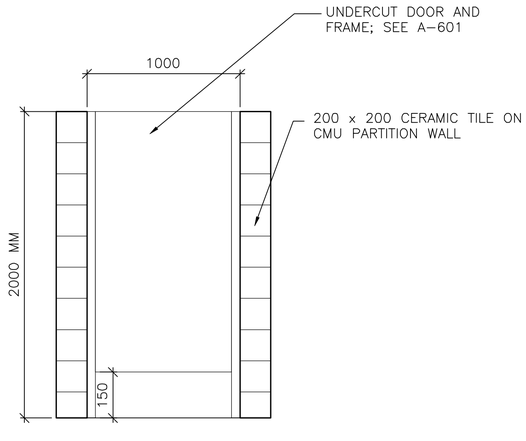


8 A-504 **TOILET PARTITION DOOR ELEVATION**
SCALE: 1:20

LINEAR DIMENSIONS SHOWN ARE IN MILLIMETERS (MM), UNLESS OTHERWISE NOTED

0 100 200
SCALE: 1:5

0 200 400
SCALE: 1:10

0 400 800
SCALE: 1:20

APPROVED:

A/E DESIGNER OF RECORD

SEAL:

STATE OF SOUTH CAROLINA
KEVIN R. CHAFIN
N. Charleston, SC
6374
REGISTERED ARCHITECT

US ARMY CORPS OF ENGINEERS
AFGHANISTAN ENGINEER DISTRICT

| Mark | Description | Date | Appr. | Mark | Description | Date | Appr. |
|---|---|---|---|---|---|---|---|

Date: 2/23/10
Rev: 0
Design file no.
Drawing code:
File name: AN4BOQA-504DT
Plot date: 2/23/2010
Plot scale: X:X

Designed by: KRC
Dwn by: KJG
Ckd by: NLJ
Reviewed by: LHM
Submitted by:
BAKER

U.S. ARMY CORPS OF ENGINEERS
AFGHANISTAN ENGINEER DISTRICT
APO AE 96338

*Michael Baker Jr., Inc*
*A unit of Michael Baker Corporation*
Airside Business Park
100 Airside Drive
Moon Township, PA 15108
www.mbakercorp.com

AFGHAN NATIONAL ARMY
REGIONAL MILITARY TRAINING CENTER
STANDARD DESIGN

BOQ OFFICER BARRACKS

TOILET, LAVATORY & ABLUTION DETAILS

Sheet reference number:
A-504

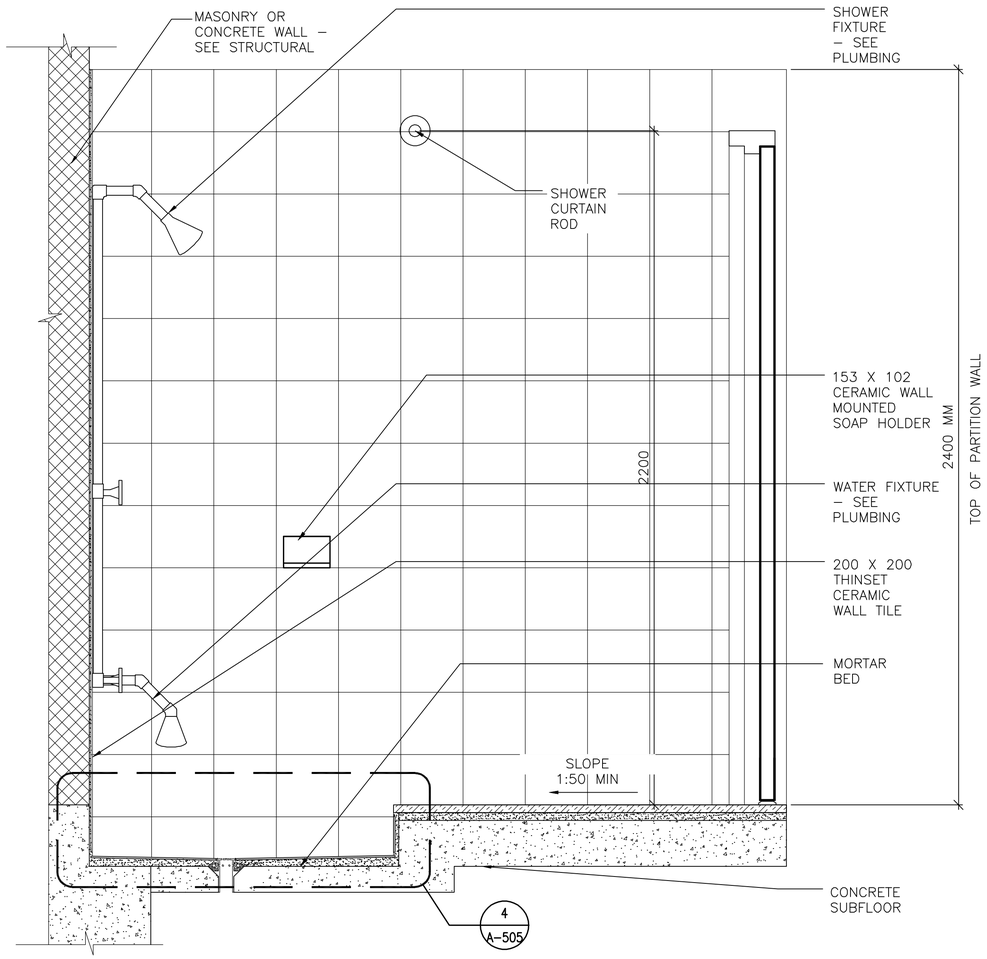


1 A-505 **SHOWER DETAIL**
SCALE: 1:10

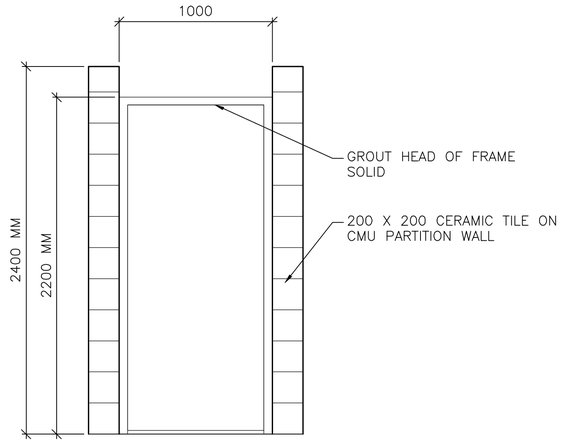


3 A-505 **SHOWER PARTITION DOOR ELEVATION**
SCALE: 1:20

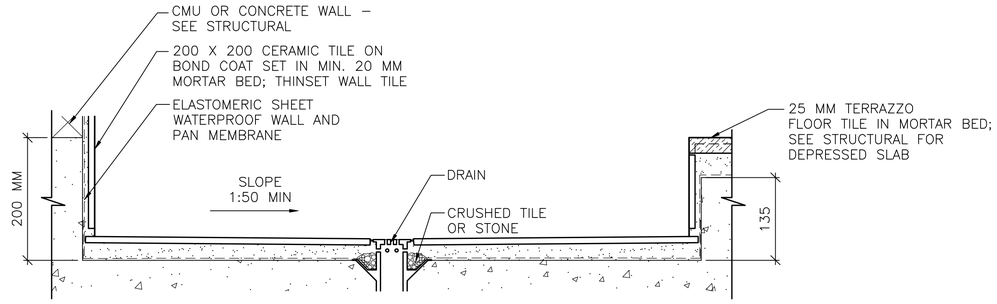


4 A-505 **SHOWER RECESS**
SCALE: 1:5

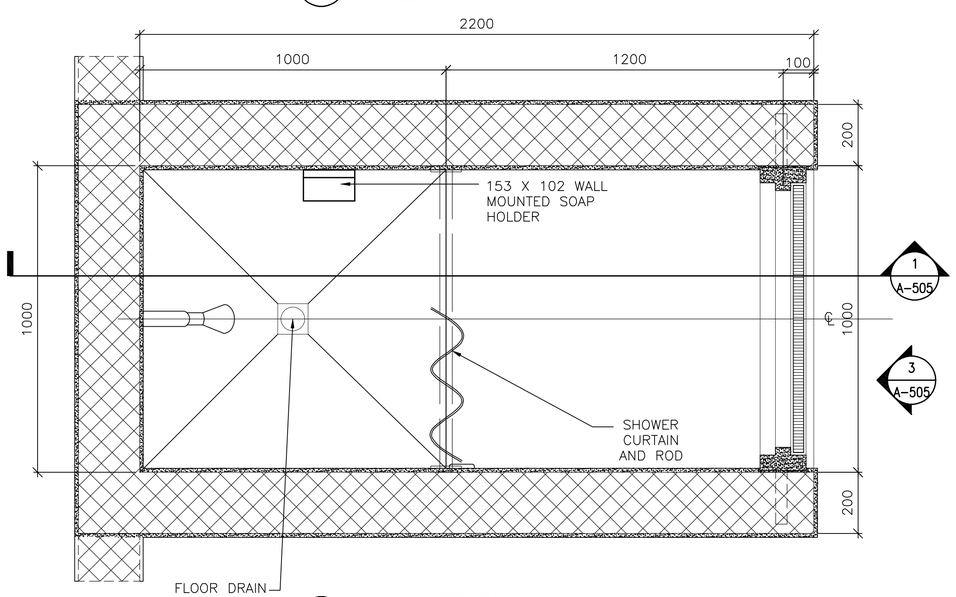


2 A-505 **SHOWER PLAN**
SCALE: 1:10

0 100 200
SCALE: 1:5

0 200 400
SCALE: 1:10

0 400 800
SCALE: 1:20

LINEAR DIMENSIONS SHOWN ARE IN MILLIMETERS (MM), UNLESS OTHERWISE NOTED

APPROVED:

A/E DESIGNER OF RECORD

SEAL:

STATE OF SOUTH CAROLINA
KEVIN R. CHAFIN
N. Charleston, SC
6374
REGISTERED ARCHITECT

US ARMY CORPS OF ENGINEERS
AFGHANISTAN ENGINEER DISTRICT

| Mark | Description | Date | Appr. | Mark | Description | Date | Appr. |
|---|---|---|---|---|---|---|---|

Designed by: KRC
Dwn by: KJG
Ckd by: NLJ
Reviewed by: LHM
Submitted by: BAKER
Date: 2/23/10
Rev: 0
Design file no.
Drawing code:
File name: ANABOQA-505DT
Plot date: 2/23/2010
Plot scale: X:X

U.S. ARMY CORPS OF ENGINEERS
AFGHANISTAN ENGINEER DISTRICT
APO AE 96338

Michael Baker Jr., Inc
A unit of Michael Baker Corporation
Airside Business Park
100 Airside Drive
Moon Township, PA 15108
www.mbakercorp.com

AFGHAN NATIONAL ARMY
REGIONAL MILITARY TRAINING CENTER
STANDARD DESIGN

BOQ OFFICER BARRACKS

SHOWER DETAILS

Sheet reference number:
A-505

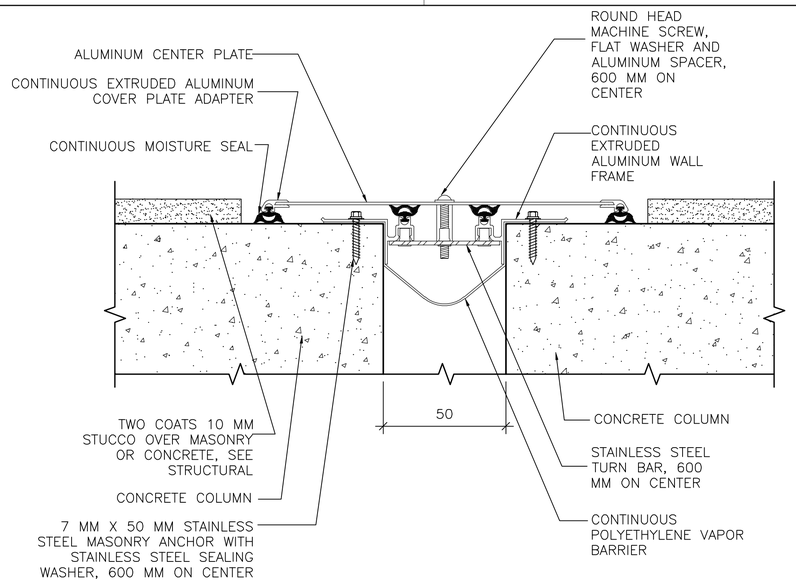


1 / A–506 **EXTERIOR ISOLATION JOINT COVER**

SCALE: NTS

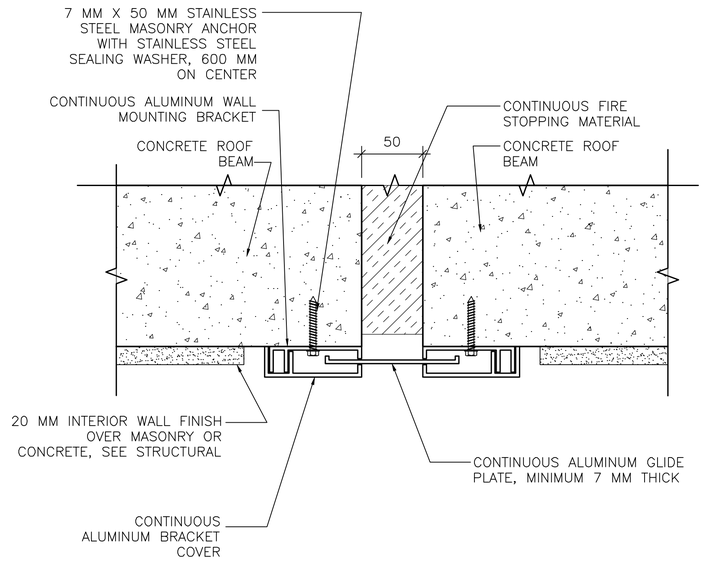


3 / A–506 **CEILING ISOLATION JOINT COVER**

SCALE: NTS

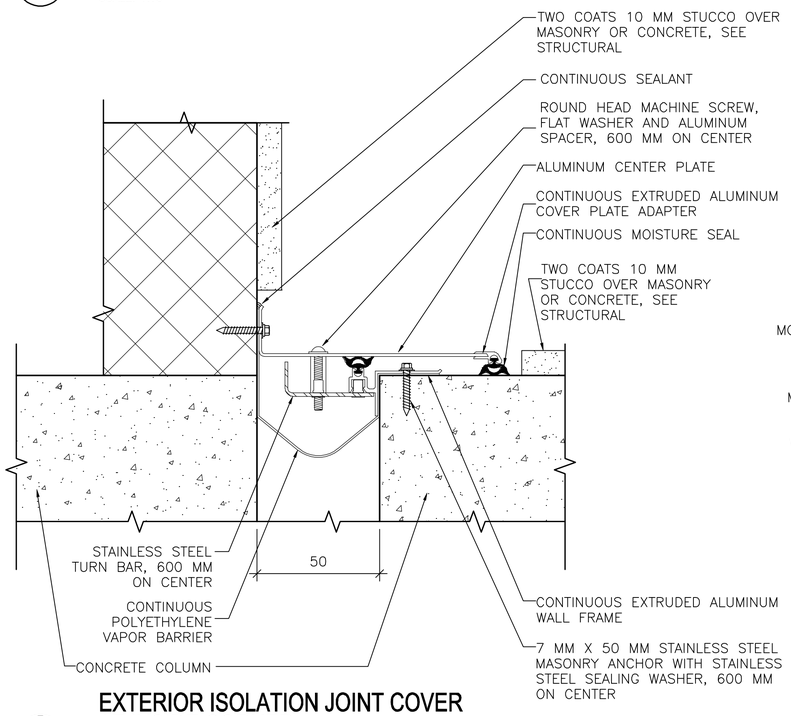


2 / A–506 **EXTERIOR ISOLATION JOINT COVER AT INSIDE CORNER**

SCALE: NTS

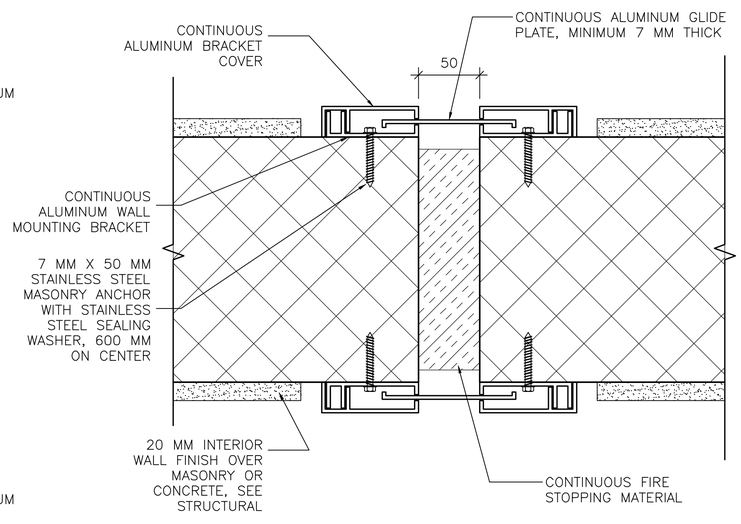


4 / A–506 **INTERIOR ISOLATION JOINT COVER**

SCALE: NTS

LINEAR DIMENSIONS SHOWN ARE IN MILLIMETERS (MM), UNLESS OTHERWISE NOTED

APPROVED:

A/E DESIGNER OF RECORD

SEAL:

STATE OF SOUTH CAROLINA
KEVIN R. CHAFIN
N. Charleston, SC
6374
REGISTERED ARCHITECT

US ARMY CORPS OF ENGINEERS
AFGHANISTAN ENGINEER DISTRICT

| Mark | Description | Date | Appr. | Mark | Description | Date | Appr. |
|---|---|---|---|---|---|---|---|
| | | | | | | | |

U.S. ARMY CORPS OF ENGINEERS
AFGHANISTAN ENGINEER DISTRICT
APO AE 96338

*Michael Baker Jr., Inc*
*A unit of Michael Baker Corporation*
Airside Business Park
100 Airside Drive
Moon Township, PA 15108
www.mbakercorp.com

| | | | |
|---|---|---|---|
| Designed by: KRC | | Date: 2/23/10 | Rev: 0 |
| Dwn by: KJG | Ckd by: NLJ | Design file no. | |
| Reviewed by: LHM | | Drawing code: | |
| Submitted by: BAKER | | File name: ANABOQA-5056T<br>Plot date: 2/23/2010<br>Plot scale: X:X | |

AFGHAN NATIONAL ARMY
REGIONAL MILITARY TRAINING CENTER
STANDARD DESIGN

BOQ OFFICER BARRACKS

ISOLATION JOINT DETAILS

Sheet reference number:
A–506

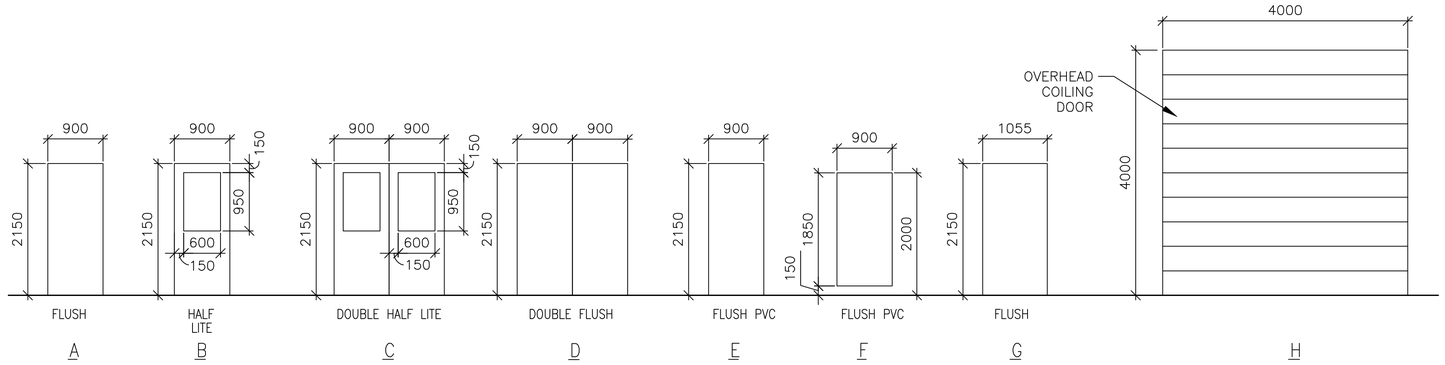


## DOOR TYPES

1 / A-601 SCALE: 1:50

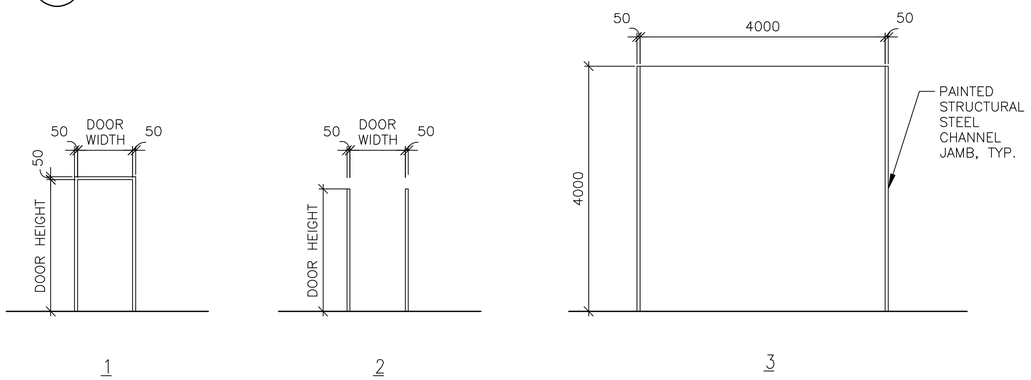


## FRAME TYPES

2 / A-601 SCALE: 1:50

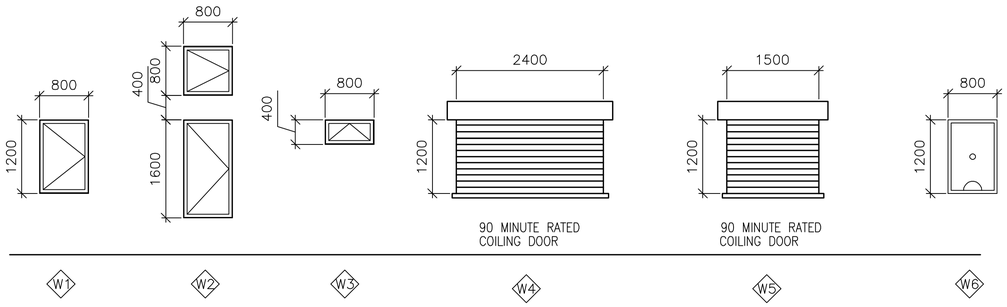


## WINDOW TYPES

3 / A-601 SCALE: 1:50

## WINDOW TYPE NOTES:

1. ALL EXTERIOR WINDOWS SHALL BE ALUMINUM WITH INSECT SCREENS. WINDOWS SHALL BE COMMERCIAL GRADE.
2. ALL EXTERIOR WINDOWS SHALL BE OPERABLE.

## DOOR TAG

4 / A-601 SCALE: NTS

## RATED DOOR TAG

5 / A-601 SCALE: NTS

## DOOR TAG NOTES:

1. THE DOOR TAG INDICATES THE DOOR TYPE, FRAME TYPE AND HARDWARE SET FOR EACH DOOR.
2. THE DOOR TAG FOR RATED DOORS INCLUDES THE RATING OF THE DOOR IN MINUTES.

## EXTERIOR DOOR HARDWARE TYPES:

HW-1
1-1/2 PR HINGES, A5112 114 X 114
1 EA RIM EXIT DEVICE, TYPE 1
1 EA CYLINDER. E09221A, GRADE 1
1 EA OVERHEAD CLOSER, C02061, LOW RESISTANCE
1 EA THRESHOLD, J32130
3 EA DOOR SILENCERS, L03011

HW-2
1-1/2 PR HINGES, A5112 114 X 114
1 EA LOCKSET, F13 ENTRY LOCK W/LEVER HANDLES, GRADE 1
1 EA OVERHEAD CLOSER, C02061, LOW RESISTANCE
1 EA THRESHOLD, J32130
3 EA DOOR SILENCERS, L03011

HW-3
3 PR HINGES, A5112 114 X 114
2 EA RIM EXIT DEVICE, TYPE 1
2 EA CYLINDER. GRADE 1
2 EA OVERHEAD CLOSER, C02061, LOW RESISTANCE
1 EA DOOR COORDINATOR, TYPE 21
1 EA ASTRAGAL
1 EA THRESHOLD, J32130
2 EA DOOR SILENCERS, L03011

HW-4
3 PR HINGES, A5112 114 X 114
1 EA LOCKSET W/LEVER HANDLES. GRADE 1, F13
1 EA OVERHEAD CLOSER, C02061, LOW RESISTANCE
2 EA MAGNETIC HOLDER PIN, ATTACHED TO DOOR LEAF
2 EA MAGNETIC HOLDER RECEIVER, ATTACHED TO STOOP
2 EA LEVER EXTENSION FLUSH BOLTS, L04081
1 EA ASTRAGAL
1 EA THRESHOLD, J32130
2 EA DOOR SILENCERS, L03011

## DOOR AND HARDWARE NOTES:

1. INTERIOR AND EXTERIOR METAL DOORS AND FRAME COLORS SHALL MATCH ADJACENT WALL COLORS AS SELECTED BY THE CONTRACTING OFFICER.
2. FRAMES, EXCEPT FIRE-RATED FRAMES, SHALL BE MOUNTED AND ADJUSTED IN ACCORDANCE WITH MANUFACTURER'S INSTRUCTIONS. FRAMES SHALL BE FASTENED WITH MINIMUM OF THREE ANCHORS PER JAMB AT EQUAL INTERVALS.
3. DIMENSIONS SHOWN ON DOOR TYPES DETAIL ARE BASED UPON MODULAR MASONRY (OR ROUGH OPENING), HEIGHT OF 2200 MM FOR STANDARD PERSONNEL DOORS. CONTRACTOR SHALL COORDINATE WITH DOOR SUPPLIER TO ENSURE THAT DIMENSIONS OF DOORS AND FRAMES PROVIDED ARE COMPATIBLE WITH DOOR OPENING DIMENSIONS.
4. HARDWARE SHALL BE HEAVY DUTY, COMMERCIAL GRADE, STAINLESS STEEL WITH A SATIN OR BRUSHED FINISH.
5. HARDWARE TYPES INCLUDE BUILDERS HARDWARE MANUFACTURERS ASSOCIATION (BMHA) NUMBER.
6. DOORS IN 2 HOUR RATED PARTITIONS SHALL BE 1.5 HOUR (90 MINUTE) RATED DOORS IN ACCORDANCE WITH NFPA 101, TABLE 8.3.4.2.
7. DOORS AT STAIR ENCLOSURES SHALL BE 1 HOUR (60 MINUTE) RATED AT 1 HOUR WALL IN ACCORDANCE WITH NFPA 101, TABLE 8.3.4.2.
8. DOORS IN 1 HOUR RATED WALLS SHALL BE 3/4 HOUR (45 MINUTE) RATED DOORS IN ACCORDANCE WITH NFPA 101, TABLE 8.3.4.2.
9. DOORS IN 1 HOUR RATED CORRIDOR WALLS SHALL BE 1/3 HOUR (20 MINUTE) IN ACCORDANCE WITH NFPA 101, TABLE 8.3.4.2.
10. PROVIDE DOOR STOPS TO PROTECT WALLS ON LOCATIONS WHERE DOOR SWING WILL STRIKE WALL.

THIS SHEET IS STANDARD AND IS INCLUSIVE OF ALL THE DOOR/ WINDOW/ HARDWARE TYPES FOR THE ENTIRE RMTC CONTRACT. NOT ALL DOOR/ WINDOW/ HARDWARE TYPES ARE USED FOR ANY PARTICULAR BUILDING DESIGN. CONTRACTOR SHALL REFER TO THE FLOOR PLAN FOR THE TYPES BEING USED.

## INTERIOR DOOR HARDWARE TYPES:

HW-5
1-1/2 PR HINGES, A8133 114 X 114
1 EA LOCKSET W/LEVER HANDLES, F08, GRADE 1
1 EA WALL STOP, L02101 OR L02161
3 EA DOOR SILENCERS, L03011

HW-6
1-1/2 PR HINGES, A8112 114 X 114
1 EA LOCKSET W/LEVER HANDLES, F08, GRADE 1
1 EA WALL STOP, L02101 OR L02161
1 EA OVERHEAD CLOSER, C02061, LOW RESISTANCE
3 EA DOOR SILENCERS, L03011

HW-7
1-1/2 PR HINGES, A8133
1 EA LOCKSET W/LEVER HANDLES, F13 GRADE 1
1 EA WALL STOP, L02101 OR L02161
2 EA MOP PLATE, J103
3 EA DOOR SILENCERS, L03011

HW-8
1-1/2 PR HINGES, A8112
1 EA LOCKSET W/LEVER HANDLES, F13 GRADE 1
1 EA WALL STOP, L02101 OR L02161
2 EA MOP PLATE, J103
1 EA OVERHEAD CLOSER, C02061, LOW RESISTANCE
3 EA DOOR SILENCERS, L03011

HW-9
1-1/2 PR HINGES, A5112 114 X 114
1 EA RIM EXIT DEVICE, TYPE 1
1 EA CYLINDER. E09221A, GRADE 1
1 EA OVERHEAD CLOSER, C02061, LOW RESISTANCE
3 EA DOOR SILENCERS, L03011

HW-10
3 PR HINGES, A5112 114 X 114
1 EA LOCKSET W/LEVER HANDLES. GRADE 1, F13
2 EA LEVER EXTENSION FLUSH BOLTS, L04081
1 EA ASTRAGAL
2 EA DOOR SILENCERS, L03011

HW-11
1-1/2 PR HINGES, A8112 114 X 114
1 EA LOCKSET W/LEVER HANDLES, F13, GRADE 1
1 EA WALL STOP, L02101 OR L02161
1 EA OVERHEAD CLOSER, C02061, LOW RESISTANCE
3 EA DOOR SILENCERS, L03011
1 EA ROBE HOOK

HW-12
1-1/2 PR HINGES, A8133
1 EA LATCHSET W/LEVER HANDLES, F76 GRADE 1
1 EA WALL STOP, L02101 OR L02161
2 EA MOP PLATE, J103
3 EA DOOR SILENCERS, L03011
1 EA ROBE HOOK

HW-13
3 PR HINGES, A5112 114 X 114
1 EA LOCKSET W/LEVER HANDLES. GRADE 1, F13
1 EA OVERHEAD CLOSER, C02061, LOW RESISTANCE
2 EA LEVER EXTENSION FLUSH BOLTS, L04081
1 EA ASTRAGAL
2 EA DOOR SILENCERS, L03011

HW-14
3 PR HINGES, A5112 114 X 114
2 EA RIM EXIT DEVICE, TYPE 1
2 EA CYLINDER. GRADE 1
2 EA OVERHEAD CLOSER, C02061, LOW RESISTANCE
1 EA DOOR COORDINATOR, TYPE 21
1 EA ASTRAGAL
2 EA DOOR SILENCERS, L03011

APPROVED:

A/E DESIGNER OF RECORD

SEAL:

STATE OF SOUTH CAROLINA
KEVIN R. CHAFIN
N. Charleston, SC
6374
REGISTERED ARCHITECT

US ARMY CORPS OF ENGINEERS
AFGHANISTAN ENGINEER DISTRICT

| Mark | Description | Date | Appr. | Mark | Description | Date | Appr. |
|---|---|---|---|---|---|---|---|

Date: 2/23/10 Rev: 0
Design file no.
Drawing code:
File name: AN4BOQA-601SCH
Plot date: 2/23/2010
Plot scale: X:X

Designed by: KRC
Dwn by: KJG
Ckd by: NLJ
Reviewed by: LHM
Submitted by:
BAKER

U.S. ARMY CORPS OF ENGINEERS
AFGHANISTAN ENGINEER DISTRICT
APO AE 96338

Michael Baker Jr., Inc.
A unit of Michael Baker Corporation
Airside Business Park
100 Airside Drive
Moon Township, PA 15108
www.mbakercorp.com

AFGHAN NATIONAL ARMY
REGIONAL MILITARY TRAINING CENTER
STANDARD DESIGN

BOQ OFFICER BARRACKS

WINDOW AND DOOR SCHEDULES

Sheet reference number:
A-601

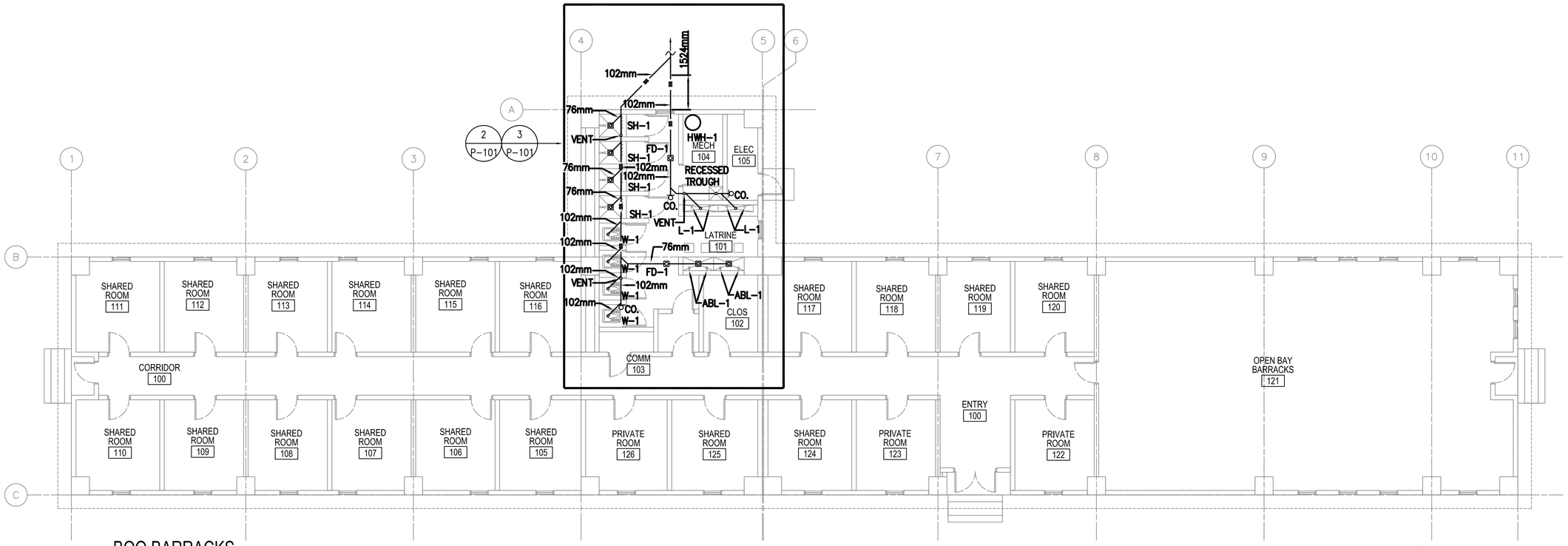


1 P-101

## BOQ BARRACKS
## FLOOR PLAN - PLUMBING (SANITARY)

SCALE: 1:100

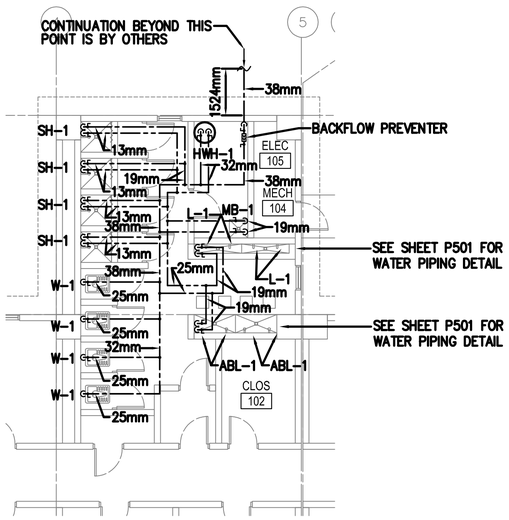


2 P-101

## PARTIAL BOQ BARRACKS
## FLOOR PLAN - PLUMBING (HOT AND COLD WATER)

SCALE: 1:100

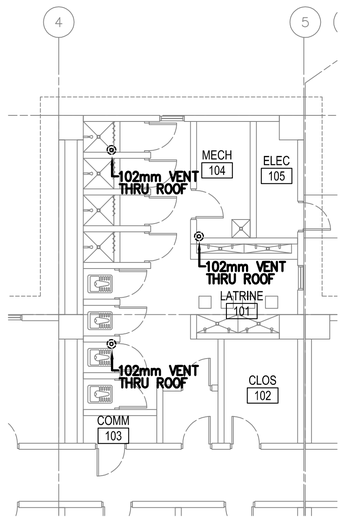


3 P-101

## PARTIAL BOQ BARRACKS
## FLOOR PLAN - PLUMBING (VENT PIPING)

SCALE: 1:100

## FLOOR PLAN NOTES:

1. DO NOT SCALE DRAWINGS – ALL DIMENSIONS AND CONDITIONS SHALL BE CHECKED AND VERIFIED BY THE CONTRACTOR AT THE SITE.
2. ALL WORK PERFORMED ON THIS BUILDING SHALL BE IN COMPLIANCE WITH ALL PERTINENT CODES, RULES, ORDINANCES AND REGULATIONS OF THE GOVERNING AUTHORITIES.
3. ALL WORK PERFORMED UNDER AND IN CONNECTION WITH THESE DRAWINGS AND SPECIFICATIONS SHALL BE IN STRICT COMPLIANCE WITH THE LATEST SAFETY AND HEALTH STANDARDS.
4. REPORT ANY DISCREPANCIES FOUND IN THE PLUMBING DRAWINGS AND/OR IN THE SPECIFICATIONS DURING THE BIDDING PROCESS FOR CLARIFICATION BY THE ENGINEER.
5. ALL EASTERN STYLE WATER CLOSETS IN THIS FACILITY ARE TO HAVE THE FIXTURE DESIGNATION OF W-1. EACH FIXTURE SHALL HAVE A 25mm (1 INCH) COLD WATER LINE EXTENDED TO IT AND THEN BE REDUCED TO 13mm (1/2 INCH) FOR A FINAL CONNECTION TO THE FLUSH TANK AND A 102mm (4) INCH SANITARY CONNECTION.
6. ALL LAV FIXTURES IN THIS FACILITY ARE TO HAVE THE FIXTURE DESIGNATION OF L-1. EACH FIXTURE SHALL HAVE A 13mm (1/2 INCH) COLD WATER, 13mm (1/2 INCH) HOT WATER CONNECTION AND A 76mm (3 INCH) SANITARY CONNECTION.
7. ALL ABLUTION FIXTURES IN THIS FACILITY ARE TO HAVE THE FIXTURE DESIGNATION OF ABL-1. EACH FIXTURE SHALL HAVE A 13mm (1/2 INCH) COLD WATER, 13mm (1/2 INCH) HOT WATER CONNECTION AND A 76mm (3 INCH) SANITARY CONNECTION.
8. REFER TO SHEET P501, P502, AND P503 FOR DETAILS AND SYMBOLS.
9. ALL WATER, SANITARY AND VENT LINES TO BE EXPOSED. RUN LINES TIGHT TO CEILING AND WALL.

## PLUMBING SYMBOLS

- SANITARY SEWER PIPING (BELOW GROUND)
- SANITARY SEWER PIPING (ABOVE GROUND)
- VENT PIPING (V)
- COLD WATER PIPING (CW)
- HOT WATER PIPING (HW)
- BALL VALVE
- BACKFLOW PREVENTER
- CLEANOUT (CO.) — OR
- ROOF PENETRATION

LINEAR DIMENSIONS SHOWN ARE IN MILLIMETERS (MM), UNLESS OTHERWISE NOTED

0 2000 4000
SCALE: 1:100

APPROVED:

A/E DESIGNER OF RECORD

SEAL:

COMMONWEALTH OF PENNSYLVANIA REGISTERED PROFESSIONAL ENGINEER MATTHEW R. SOTOSKY 065570-E

US ARMY CORPS OF ENGINEERS
AFGHANISTAN ENGINEER DISTRICT

| Mark | Description | Date | Appr. | Mark | Description | Date | Appr. |
|---|---|---|---|---|---|---|---|

Designed by: RMH
Dwn by: RMH
Ckd by: CJM
Reviewed by:
Submitted by: BAKER
Date: 02/23/10
Design file no.
Drawing code:
Rev: 0
File name: ANABOQPL-101XXX
Plot date: 02/26/2010
Plot scale: 1:50

U.S. ARMY CORPS OF ENGINEERS
AFGHANISTAN ENGINEER DISTRICT
APO AE 96338

*Michael Baker Jr., Inc*
*A unit of Michael Baker Corporation*
Airside Business Park
100 Airside Drive
Moon Township, PA 15108
www.mbakercorp.com

AFGHAN NATIONAL ARMY
REGIONAL MILITARY TRAINING CENTER
STANDARD DESIGN

BOQ OFFICER BARRACKS
FLOOR PLAN – PLUMBING

Sheet reference number:
P-101

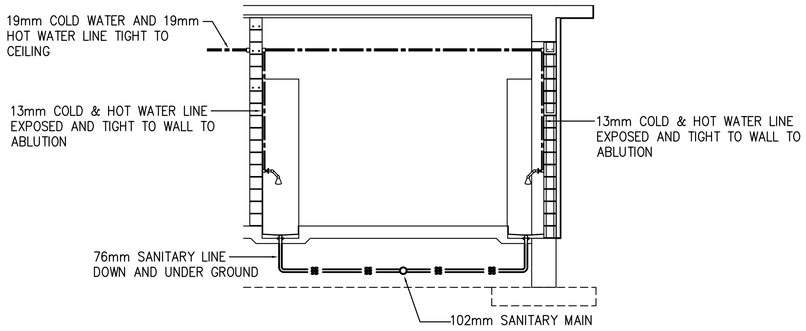


## TYPICAL ABLUTION SANITARY & WATER INSTALLATION SCHEMATIC

SCALE: N.T.S.

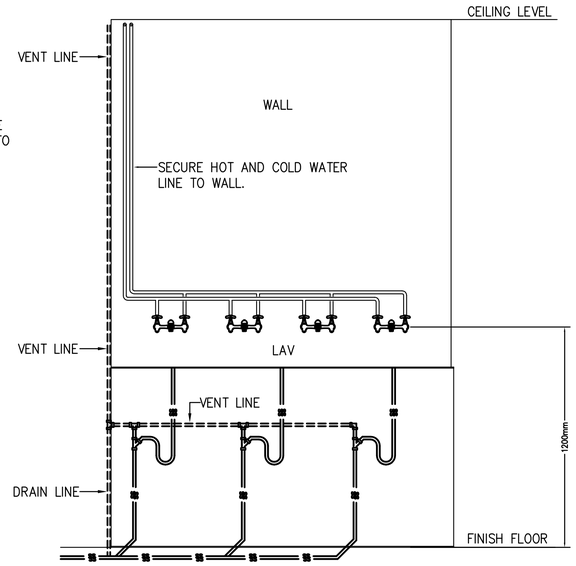


## LAVATORY ELEVATION PLAN - PLUMBING

SCALE: N.T.S.

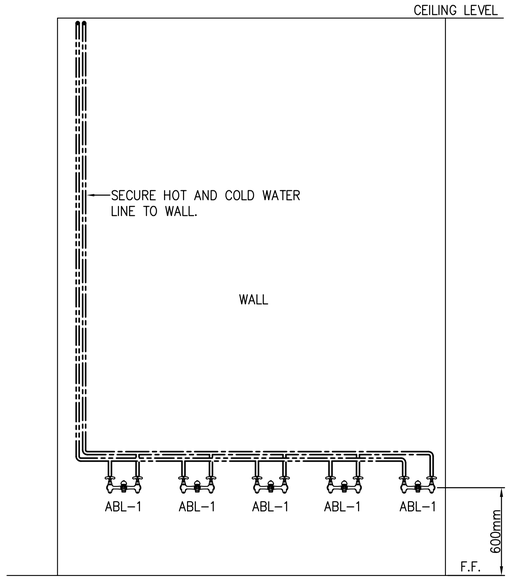


## TYPICAL ABLUTION ELEVATION PLUMBING PLAN - WATER INSTALLATION SCHEMATIC

SCALE: N.T.S.

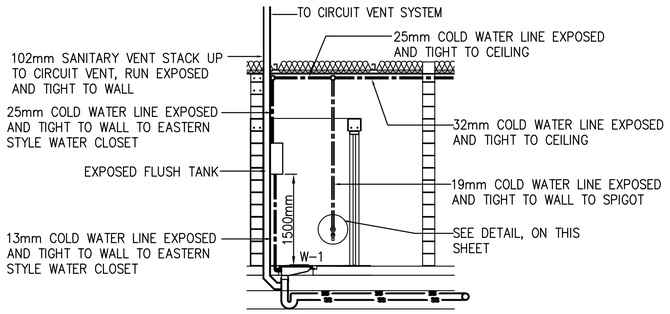


## TYPICAL EASTERN STYLE WATER CLOSET SANITARY & WATER INSTALLATION SCHEMATIC

SCALE: N.T.S.

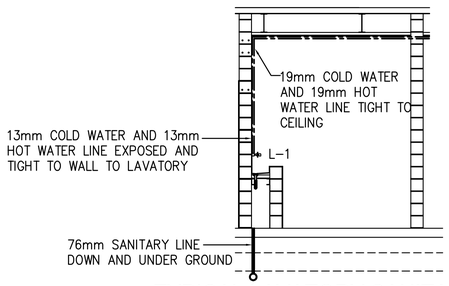


## TYPICAL LAVATORY SANITARY & WATER INSTALLATION SCHEMATIC

SCALE: N.T.S.

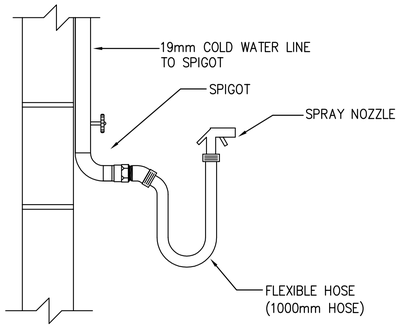


## TYPICAL DETAIL - SPIGOT, FLEXIBLE HOSE, AND SPRAY NOZZLE

SCALE: N.T.S.

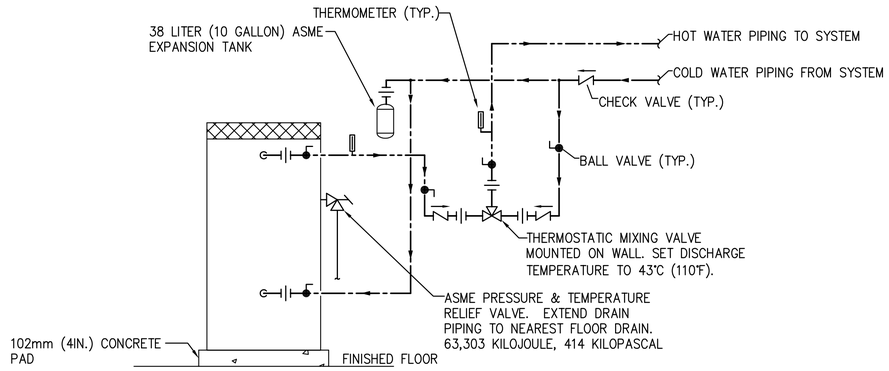


## ELECTRIC WATER HEATER PIPING SCHEMATIC

SCALE: N.T.S.

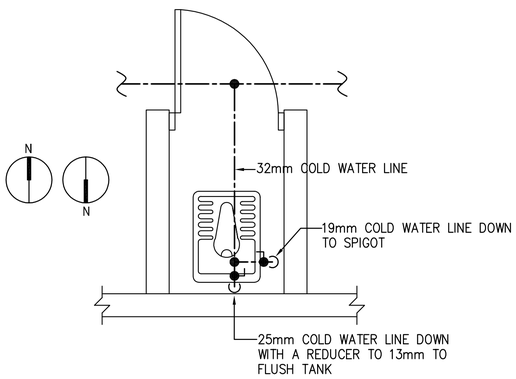


## TYPICAL EASTERN STYLE WATER CLOSET WITH SPIGOT WATER PIPING DETAIL

SCALE: N.T.S.

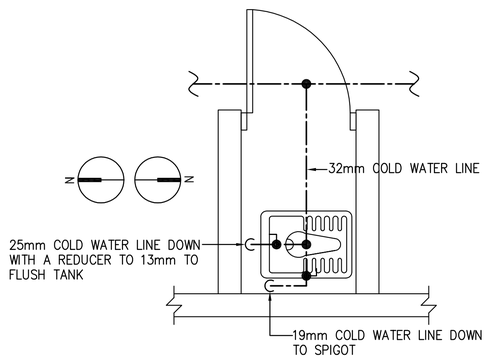


## TYPICAL EASTERN STYLE WATER CLOSET WITH SPIGOT WATER PIPING DETAIL

SCALE: N.T.S.

## GENERAL PLUMBING NOTES:

1. ALL SANITARY PIPING SHALL BE BELOW FLOOR, AND ALL WATER, AND VENT PIPING SHALL BE TIGHT TO CEILING, UNLESS OTHERWISE NOTED.

2. CONTRACTOR SHALL COORDINATE PLUMBING WORK WITH THE WORK OF ALL OTHER TRADES. VERIFY THE LOCATIONS OF ALL UTILITIES AT THE SITE PRIOR TO THE START OF ANY PLUMBING WORK.

3. COORDINATE ALL ACCESS PANEL LOCATIONS WITH THE ARCHITECT AND GENERAL CONTRACTOR.

4. ALL SANITARY PIPING BELOW SLAB SHALL BE A MINIMUM OF 51mm, UNLESS OTHERWISE NOTED OR AS REQUIRED BY THE LOCAL AUTHORITY HAVING JURISDICTION.

5. ALL SANITARY BRANCH LINES SHALL BE SLOPED AT 6mm PER 305mm, AND ALL MAIN LINES SHALL BE SLOPED AT 3mm PER 305mm, UNLESS OTHERWISE NOTED OR AS REQUIRED BY THE LOCAL AUTHORITY HAVING JURISDICTION.

6. THE CONTRACTOR SHALL BE RESPONSIBLE FOR COORDINATION WITH ALL UTILITY AUTHORITIES FOR INSTALLATION REQUIREMENTS, REGULATIONS, FEES, PERMITS, AND APPROVALS BEFORE THE START OF CONSTRUCTION.

7. THE CONTRACTOR SHALL ROUGH-IN AND CONNECT ALL EQUIPMENT REQUIRING WATER, WASTE, AND/OR VENT WHETHER OR NOT FURNISHED UNDER THIS CONTRACT. THE CONTRACTOR SHALL ALSO FURNISH AND INSTALL ALL NECESSARY PIPE, FITTINGS, VALVES, TRAPS, ETC., REQUIRED FOR A COMPLETE INSTALLATION, LEAVING SAME READY FOR SERVICE.

APPROVED:

A/E DESIGNER OF RECORD

SEAL:

COMMONWEALTH OF PENNSYLVANIA
REGISTERED PROFESSIONAL
MATTHEW R. SOTOSKY
ENGINEER
065570-E

US ARMY CORPS OF ENGINEERS
AFGHANISTAN ENGINEER DISTRICT

| Mark | Description | Date | Appr. | Mark | Description | Date | Appr. |
|---|---|---|---|---|---|---|---|
| | | | | | | | |

Rev: 0
Date: 02/23/10
Designed by: RMH
Dwn by: RMH
Ckd by: CJM
Reviewed by:
Submitted by: MRS
Drawing code:
Design file no.
File name: ANABSOOPL-P501XXX
Plot date: 02/09/2010
Plot scale: 1:100

U.S. ARMY CORPS OF ENGINEERS
AFGHANISTAN ENGINEER DISTRICT
APO AE 96338

Michael Baker Jr., Inc
A unit of Michael Baker Corporation
Airside Business Park
100 Airside Drive
Moon Township, PA 15108
www.mbakercorp.com

AFGHAN NATIONAL ARMY
REGIONAL MILITARY TRAINING CENTER
STANDARD DESIGN

BOQ OFFICER BARRACKS
PLUMBING DETAILS

Sheet reference number:
P-501

## FIXTURE LIST

| TYPE | ITEM | SOIL & WASTE | VENT | COLD WATER | HOT WATER | REMARKS | REMARKS 2 |
|---|---|---|---|---|---|---|---|
| W-1 | EASTERN STYLE WATER CLOSET | 102mm | 51mm | 13mm | ------ | FLUSH TANK | LOW FLOW EFFICIENT TYPE |
| L-1 | TROUGH FIXTURE | 38mm | 38mm | 13mm | 13mm | FABRICATED IN FIELD | LOW FLOW EFFICIENT TYPE |
| ABL-1 | ABLUTION | FLOOR DRAIN | ------ | 13mm | 13mm | FABRICATED IN FIELD | ---------- |
| HWH-1 | WATER HEATER | --- | --- | SEE DWG. | SEE DWG. | 151 LITER ELECTRIC WATER HEATER, 380/3ø, 9KW | ---------- |
| SH-1 | SHOWER | 76mm | --- | 13mm | 13mm | DRAIN AND SHOWER CONTROLS | ---------- |

## GENERAL PLUMBING NOTES:

1. ALL SANITARY PIPING SHALL BE BELOW FLOOR, AND ALL WATER, AND VENT PIPING SHALL BE TIGHT TO CEILING, UNLESS OTHERWISE NOTED.

2. PLUMBING CONTRACTOR SHALL COORDINATE PLUMBING WORK WITH THE WORK OF ALL OTHER TRADES. VERIFY THE LOCATIONS OF ALL UTILITIES AT THE SITE PRIOR TO THE START OF ANY PLUMBING WORK.

3. ALL SANITARY PIPING BELOW SLAB SHALL BE A MINIMUM OF 51mm, UNLESS OTHERWISE NOTED OR AS REQUIRED BY THE LOCAL AUTHORITY HAVING JURISDICTION.

4. ALL SANITARY BRANCH LINES SHALL BE SLOPED AT 6mm PER 305mm, AND ALL MAIN LINES SHALL BE SLOPED AT 3mm PER 305mm, UNLESS OTHERWISE NOTED OR AS REQUIRED BY THE LOCAL AUTHORITY HAVING JURISDICTION.

5. THE CONTRACTOR SHALL BE RESPONSIBLE FOR COORDINATION WITH ALL UTILITY AUTHORITIES FOR INSTALLATION REQUIREMENTS, REGULATIONS, FEES, PERMITS, AND APPROVALS BEFORE THE START OF CONSTRUCTION.

6. THE CONTRACTOR SHALL ROUGH-IN AND CONNECT ALL EQUIPMENT REQUIRING WATER, WASTE, AND/OR VENT WHETHER OR NOT FURNISHED UNDER THIS CONTRACT. THE CONTRACTOR SHALL ALSO FURNISH AND INSTALL ALL NECESSARY PIPE, FITTINGS, VALVES, TRAPS, ETC., REQUIRED FOR A COMPLETE INSTALLATION, LEAVING SAME READY FOR SERVICE.

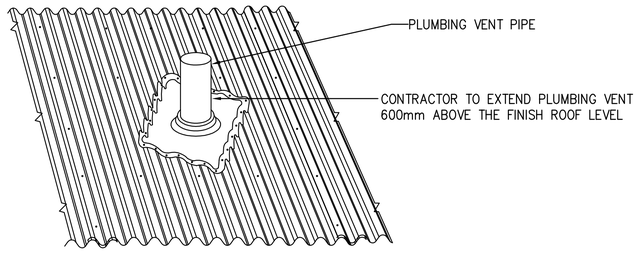


PLUMBING VENT THRU ROOF DETAIL

SCALE: NTS

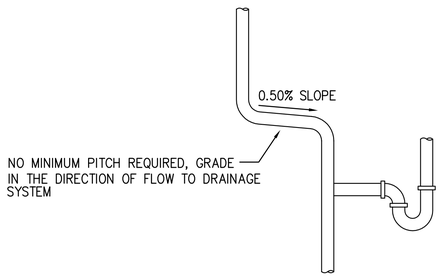


TYPICAL VENT GRADE DETAILS

SCALE: N.T.S.

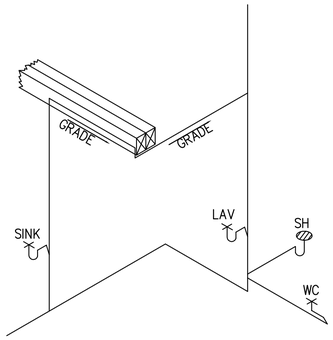


TYPICAL VENT GRADE DETAILS

SCALE: N.T.S.

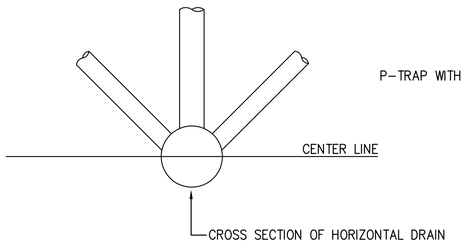


ACCEPTABLE VENT CONNECTIONS TO HORIZONTAL DRAIN - DETAIL

SCALE: N.T.S.

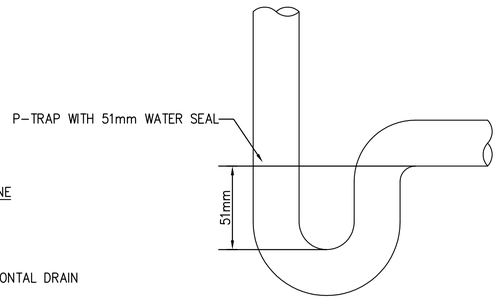


P-TRAP WITH 51mm WATER SEAL DETAIL

SCALE: N.T.S.

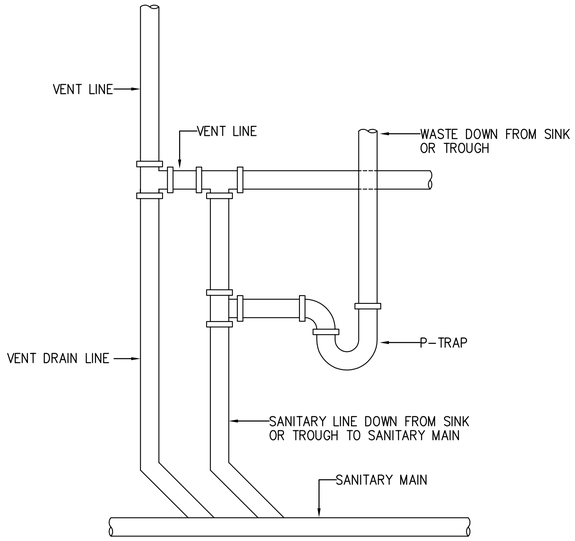


TYPICAL LAVATORY/LAUNDRY VENT DETAIL

SCALE: N.T.S.

US ARMY CORPS OF ENGINEERS
AFGHANISTAN ENGINEER DISTRICT

| Mark | Description | Date | Appr. |
|---|---|---|---|
| | | | |

| Mark | Description | Date | Appr. |
|---|---|---|---|
| | | | |

Date: 02/23/10 | Rev: 0
Design file no.
Drawing code:
File name: ANABSOOPL-B502XXX
Plot date: 02/09/2010
Plot scale: 1:100

Designed by: RMH | Ckd by: CJM
Dwn by: RMH | Reviewed by:
Submitted by: MRS

U.S. ARMY CORPS OF ENGINEERS
AFGHANISTAN ENGINEER DISTRICT
APO AE 96338

Michael Baker Jr., Inc
A unit of Michael Baker Corporation
Airside Business Park
100 Airside Drive
Moon Township, PA 15108
www.mbakercorp.com

AFGHAN NATIONAL ARMY
REGIONAL MILITARY TRAINING CENTER
STANDARD DESIGN

BOQ OFFICER BARRACKS
PLUMBING DETAILS

APPROVED:

A/E DESIGNER OF RECORD

SEAL:

COMMONWEALTH OF PENNSYLVANIA
REGISTERED PROFESSIONAL
MATTHEW R. SOTOSKY
ENGINEER
065570-E

Sheet reference number:
P-502

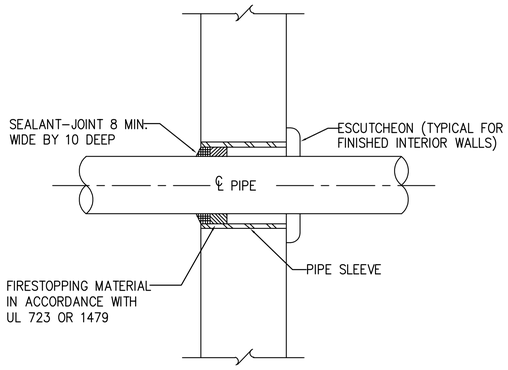


## TYPICAL WALL PENETRATION DETAIL

SCALE: N.T.S.

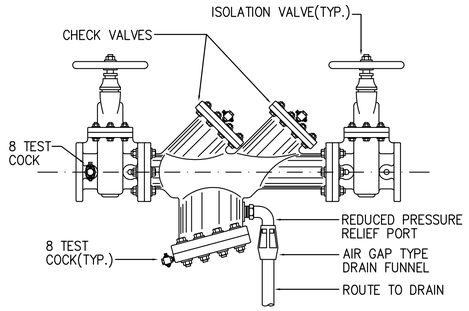


## TYPICAL BACKFLOW PREVENTER DETAIL

SCALE: N.T.S.

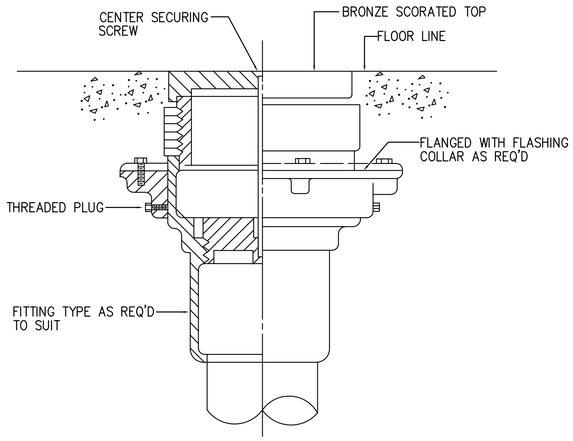


## TYPICAL FLOOR CLEANOUT DETAIL

SCALE: N.T.S.

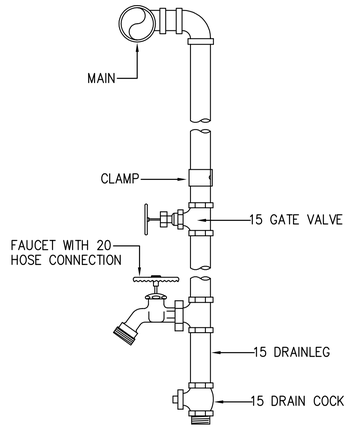


## TYPICAL WATER DROP DETAIL

SCALE: N.T.S.

US ARMY CORPS OF ENGINEERS
AFGHANISTAN ENGINEER DISTRICT

| Mark | Description | Date | Appr. | Mark | Description | Date | Appr. |
|---|---|---|---|---|---|---|---|
| | | | | | | | |

Designed by: RMH
Dwn by: RMH
Ckd by: CJM
Reviewed by:
Submitted by: MRS
Date: 02/23/10
Rev: 0
Design file no.
Drawing code:
File name: ANABSOOPL-P503XXX
Plot date: 02/09/2010
Plot scale:1:100

U.S. ARMY CORPS OF ENGINEERS
AFGHANISTAN ENGINEER DISTRICT
APO AE 96338

Michael Baker Jr., Inc
A unit of Michael Baker Corporation
Airside Business Park
100 Airside Drive
Moon Township, PA 15108
www.mbakercorp.com

AFGHAN NATIONAL ARMY
REGIONAL MILITARY TRAINING CENTER
STANDARD DESIGN

BOQ OFFICER BARRACKS
PLUMBING DETAILS

APPROVED:

A/E DESIGNER OF RECORD

SEAL:

COMMONWEALTH OF PENNSYLVANIA
REGISTERED PROFESSIONAL
MATTHEW R. SOTOSKY
ENGINEER
046570-E

Sheet reference number:
P–503

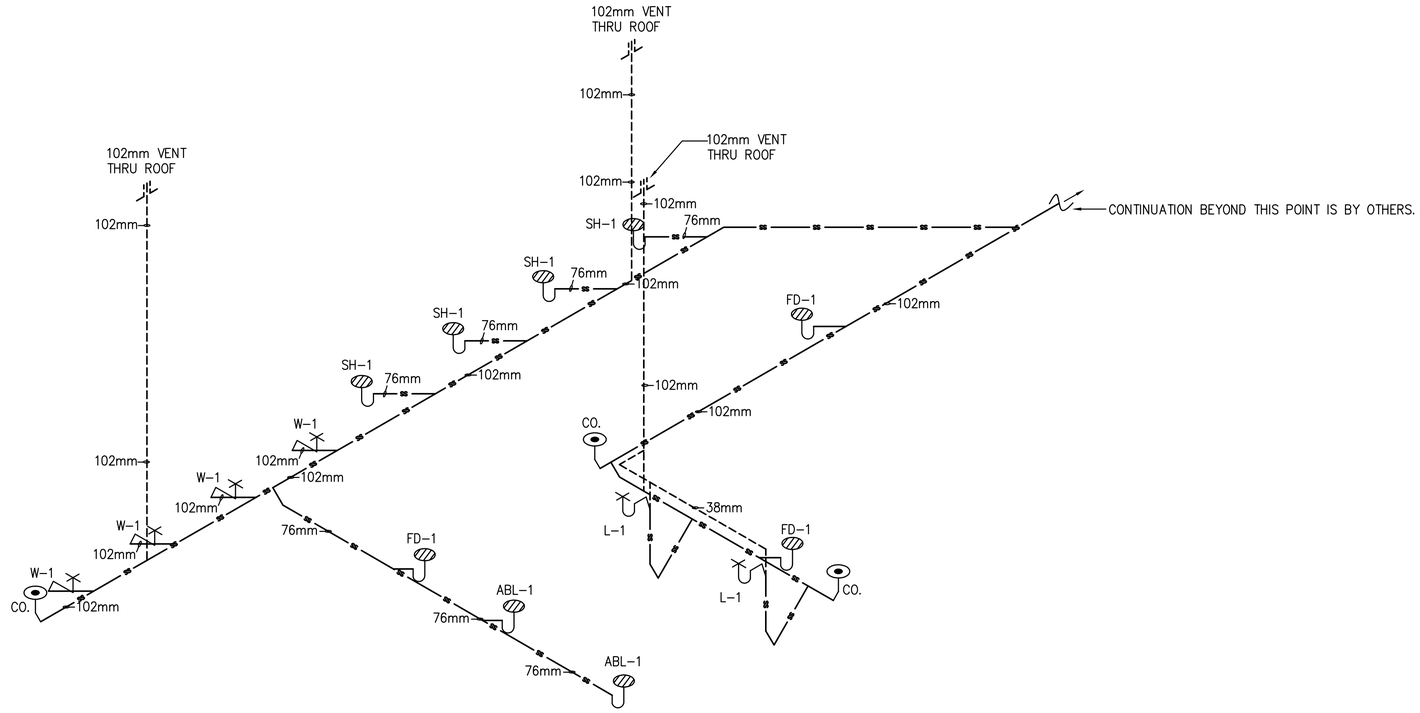


1 P-901 BOQ DRAINAGE ISOMETRIC

SCALE: N.T.S.

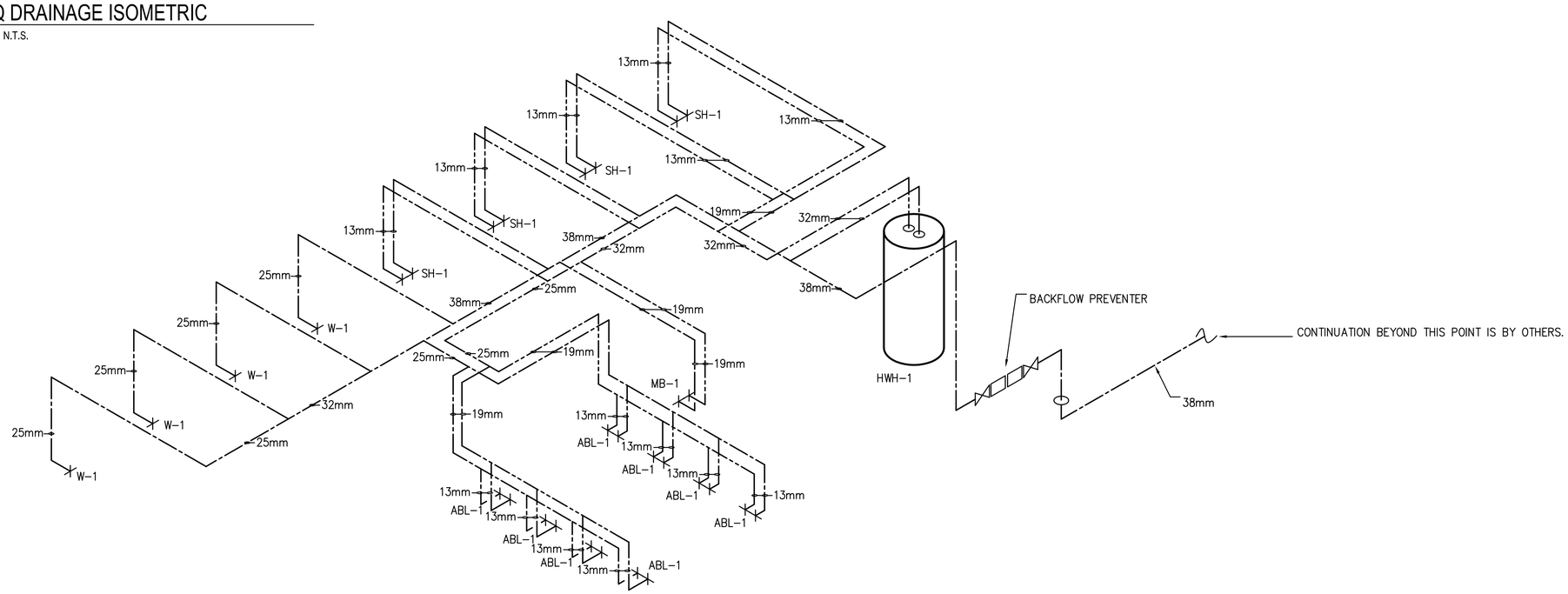


2 P-901 BOQ HOT AND COLD WATER ISOMETRIC

SCALE: N.T.S.

## PLUMBING SYMBOLS

- SANITARY SEWER PIPING (BELOW GROUND)
- SANITARY SEWER PIPING (ABOVE GROUND)
- VENT PIPING (V)
- COLD WATER PIPING (CW)
- HOT WATER PIPING (HW)
- BALL VALVE
- BACKFLOW PREVENTER
- OR CLEANOUT (CO.)
- ROOF PENETRATION

US ARMY CORPS OF ENGINEERS
AFGHANISTAN ENGINEER DISTRICT

| Mark | Description | Date | Appr. | Mark | Description | Date | Appr. |
|---|---|---|---|---|---|---|---|

Designed by: RMH
Dwn by: RMH
Ckd by: CJM
Reviewed by:
Submitted by: BAKER
Date: 02/23/10
Rev: 0
Design file no.
Drawing code:
File name: ANABOQPL-901XXX
Plot date: 02/08/2010
Plot scale: N.T.S.

U.S. ARMY CORPS OF ENGINEERS
AFGHANISTAN ENGINEER DISTRICT
APO AE 96338

Michael Baker Jr., Inc
A unit of Michael Baker Corporation
Airside Business Park
100 Airside Drive
Moon Township, PA 15108
www.mbakercorp.com

AFGHAN NATIONAL ARMY
REGIONAL MILITARY TRAINING CENTER
STANDARD DESIGN

BOQ OFFICER BARRACKS
PLUMBING ISOMETRICS

APPROVED:

A/E DESIGNER OF RECORD

SEAL:

COMMONWEALTH OF PENNSYLVANIA
REGISTERED PROFESSIONAL
MATTHEW R. SOTOSKY
ENGINEER
046576-E

Sheet reference number:
P-901

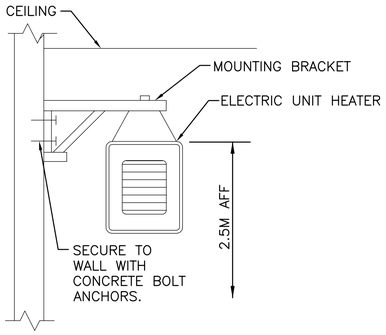


## 2 / M-101 ELECTRIC UNIT HEATER MOUNTING DETAIL

N.T.S.

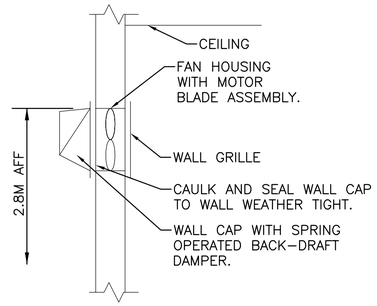


## 3 / M-101 WALL EXHAUST FAN DETAIL

N.T.S.

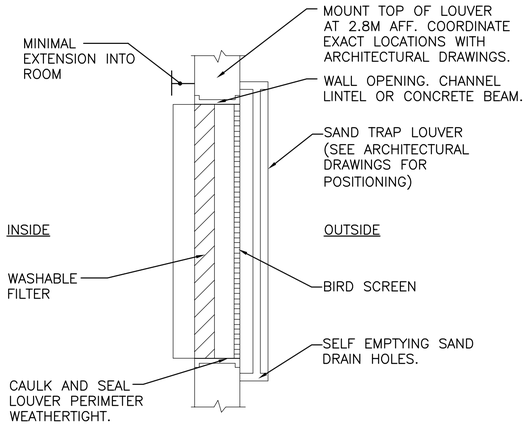


## 4 / M-101 FILTERED SAND TRAP LOUVER

N.T.S.

## GENERAL NOTES:

1. DO NOT SCALE DRAWINGS – ALL DIMENSIONS AND CONDITIONS SHALL BE CHECKED AND VERIFIED BY THE CONTRACTOR AT THE SITE.
2. ALL WORK PERFORMED ON THIS BUILDING SHALL BE IN COMPLIANCE WITH ALL PERTINENT CODES, RULES, ORDINANCES AND REGULATIONS OF THE GOVERNING AUTHORITIES.
3. ALL WORK PERFORMED UNDER AND IN CONNECTION WITH THESE DRAWINGS AND SPECIFICATIONS SHALL BE IN STRICT COMPLIANCE WITH THE LATEST SAFETY AND HEALTH STANDARDS.

## SYMBOLS:

- (X) KEY NOTE
- (0.050) AIR VOLUME IN CUBIC METERS PER SECOND (CMS)
- UC DOOR UNDERCUT
- TG 200x400 (8x16) TRANSFER GRILLE
- $ SINGLE POLE SWITCH – 20A RATED

## ABBREVIATIONS:

| | |
|---|---|
| AFF | ABOVE FINISH FLOOR |
| CF | CEILING FANS |
| CMS | CUBIC METERS PER SECOND |
| STATS | THERMOSTATS |

## KEY NOTE:

1. INLINE EXHAUST FAN DUCTED TO WALL CAP. SECURE FAN TO STRUCTURE ABOVE AND INTERLOCK WITH MAKE UP AIR HEATER.
2. ELECTRIC MAKE UP AIR HEATER SECURED TO STRUCTURE ABOVE. BLOWER SHALL BE SET TO ENERGIZE WITH EXHAUST FAN EF–1 & WITH STAT, HEAT SHALL BE CONTROLLED BY THERMOSTAT.
3. WALL EXHAUST FAN WITH LOW SPRING OPERATED BACK–DRAFT DAMPER. SEE DETAIL 3 THIS SHEET.
4. 600X600 (24X24) INTAKE LOUVER FOR MAKE UP AIR UNIT. PROVIDE WEATHER PROOF LOUVER WITH 50mm (2") WASHABLE FILTER AND SAND TRAP.
5. 200x150 (8x6) ALUMINUM DUCT MOUNTED SUPPLY GRILLE WITH ADJUSTABLE OPPOSED BLADE DAMPERS. BALANCE EACH GRILLE TO 0.070 CMS.
6. 150x150 (6x6) ALUMINUM DUCT MOUNTED EXHAUST GRILLE WITH ADJUSTABLE OPPOSED BLADE DAMPERS. BALANCE EACH GRILLE TO 0.075 CMS.
7. 150x150 (6x6) ALUMINUM WALL MOUNTED EXHAUST GRILLE WITH ADJUSTABLE OPPOSED BLADE DAMPERS. BALANCE GRILLE TO 0.030 CMS.
8. THERMOSTAT MOUNTED AS HIGH AS POSSIBLE. INTERLOCK STAT WITH CORRESPONDING EXHAUST FAN, SET FAN TO ENERGIZE ON RISE IN TEMPERATURE ABOVE 25°C (77°F).

## EXHAUST FAN SCHEDULE

| NO. | TYPE | FAN CMS | DRIVE | HP | SP mmH20 | ELECTRICAL DATA | SWITCH |
|---|---|---|---|---|---|---|---|
| EF–1 | WALL | 0.330 | DIRECT | 1/6 | 13 | 220/1/50 | @ WALL |
| EF–2 | WALL | 0.035 | DIRECT | FRACT | 9.5 | 220/1/50 | @ WALL |
| EF–3 | WALL | 0.035 | DIRECT | FRACT | 9.5 | 220/1/50 | W/ STAT |

NOTES:
1. FANS SHALL HAVE LOW LEAKAGE GRAVITY LOUVER.

## MAKE UP AIR HEATERS

| NO. | BLOWER CMS | FUSE | KW | MIN. TEMP RISE °C | SP mmH20 | ELECTRICAL DATA | CONTROL |
|---|---|---|---|---|---|---|---|
| MUA–1 | 0.280 | 60 | 10 | 20 | 13 | 220/1/50 | REMOTE |

NOTES:
1. PROVIDE REMOTE MOUNTED THERMOSTAT WITH LOCKING COVER.
2. INTERLOCK BLOWER OPERATION WITH EXHAUST FANS EF–1 & STAT.
3. PROVIDE AIR SENSING SWITCH FOR HEATING OPERATION.

## ELECTRIC UNIT HEATER SCHEDULE

| NO. | CMS | KW | F.A.T. °C | ELECT. CHAR. | MOUNTING |
|---|---|---|---|---|---|
| EH–2 | 0.200 | 2.6 | 38 | 380/1/50 | WALL HUNG |

NOTES:
1. UNIT HEATERS SHALL HAVE TAMPER PROOF INTEGRAL STATS.
2. COORDINATE LOCATION AND ORIENTATION IN FIELD.

## CEILING FAN

| NO. | BLADE SIZE mm | BLADE SIZE IN | VOLTAGE | SWITCH | REMARKS |
|---|---|---|---|---|---|
| CF–1 | 1320 | 52 | 220/1/50 | @ WALL | 3 SPEED REVERSIBLE MOTOR |

NOTES:
1 INSTALL FANS 2.5M AFF.
2. PROVIDE WITH OUT LIGHT FIXTURE.
3. PROVIDE WITH REMOTE MOUNTED ON–OFF SWITCH SHOWN ON ELECTRICAL DRAWINGS.

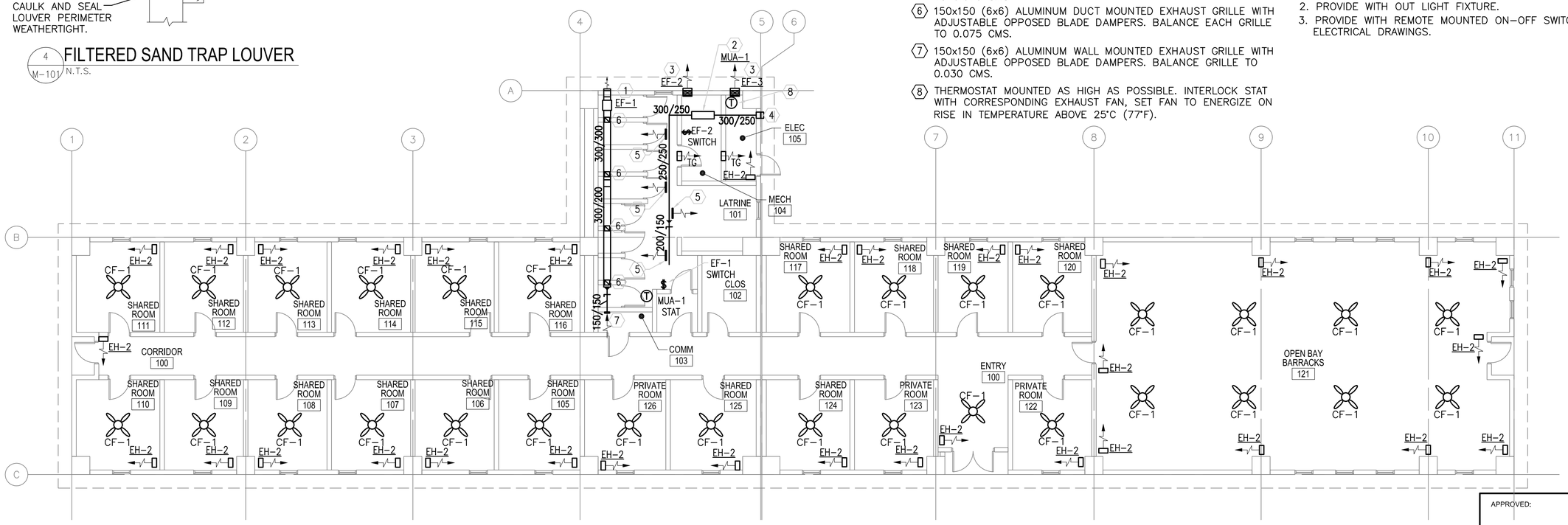


## 1 / M-101 FLOOR PLAN - HVAC

SCALE: 1:100

LINEAR DIMENSIONS SHOWN ARE IN MILLIMETERS (MM), UNLESS OTHERWISE NOTED

0 2000 4000
SCALE: 1:100

APPROVED:

A/E DESIGNER OF RECORD

SEAL:

COMMONWEALTH OF PENNSYLVANIA
REGISTERED PROFESSIONAL
MATTHEW R. SOTOSKY
ENGINEER
045576-E

US ARMY CORPS OF ENGINEERS
AFGHANISTAN ENGINEER DISTRICT

| Mark | Description | Date | Appr. |
|---|---|---|---|
| | | | |

Rev: 0
Date: 02/23/10
Design file no.
Drawing code:
File name: ANABOQMH-101XXX
Plot date: 02/09/2010
Plot scale: 1:100

Designed by: RML
Dwn by: JJN
Ckd by: CJM
Reviewed by: MRS
Submitted by: BAKER

U.S. ARMY CORPS OF ENGINEERS
AFGHANISTAN ENGINEER DISTRICT
APO AE 96338

Michael Baker Jr., Inc
A unit of Michael Baker Corporation
Airside Business Park
100 Airside Drive
Moon Township, PA 15108
www.mbakercorp.com

AFGHAN NATIONAL ARMY
REGIONAL MILITARY TRAINING CENTER
STANDARD DESIGN

BOQ OFFICER BARRACKS
HVAC – FLOOR PLAN, SCHEDULES AND DETAILS

Sheet reference number:
M–101

## POWER

- DISTRIBUTION PANELBOARD
- NEW PANELBOARD – SURFACE
- NEW PANELBOARD – RECESSED
- GENERATOR
- TRANSFORMER (DRAWN TO SCALE)
- JUNCTION BOX
- JUNCTION BOX – CEILING
- FUSIBLE SAFETY SWITCH
- MOTOR
- MOTOR STARTING SWITCH – 220V, 20A RATED UNLESS OTHERWISE NOTED
- ELECTRIC WATER HEATER
- CEILING FAN – REFER TO SPECIFICATION SECTION 26 20 00

## RECEPTACLES

- DUPLEX 20A TYPE CEE 7/7 "SCHUKO STYLE" UNSWITCHED RECEPTACLE
- GF DUPLEX 20A TYPE CEE 7/7 "SCHUKO STYLE" UNSWITCHED RECEPTACLES – 10mA GROUND FAULT INTERRUPTER TYPE
- WP DUPLEX 20A TYPE CEE 7/7 "SCHUKO STYLE" UNSWITCHED TYPE WITH WEATHERPROOF COVER – 10mA GROUND FAULT INTERRUPTER TYPE
- EXP DUPLEX 20A TYPE CEE 7/7 "SCHUKO STYLE" UNSWITCHED RECEPTACLES – EXPLOSION PROOF
- * INDICATES MOUNT DEVICE ABOVE COUNTERTOP OR AT 1070mm ABOVE FINISHED FLOOR WHERE NO COUNTER IS TO BE INSTALLED.

## LIGHTNING PROTECTION

- AIR TERMINAL 20mm O.D. X 450mm SOLID COPPER, NICKEL PLATED ON ADHESIVE BASE
- EQ EQUIPMENT AIR TERMINAL
- TEST WELL WITH GROUND ROD(S)
- GROUND ROD
- G GROUND PLATE
- MAIN GROUND CONDUCTER CONCEALED WITHIN CONSTRUCTION
- MAIN GROUND CONDUCTOR EXPOSED ON EXPOSED ON BUILDING EXTERIOR SURFACE
- GROUND CONDUCTOR CAD WELDED TO GROUND CABLE OR EQUIPMENT
- GROUND ROD TRIPOD, SPACED 3 METERS APART.
- LEVEL TO LEVEL CABLE

## LIGHTING

- LIGHTING FIXTURE – SEE FIXTURE SCHEDULE FOR MORE INFORMATION
- EMERGENCY LIGHTING FIXTURE – SEE FIXTURE SCHEDULE FOR MORE INFORMATION
- DOWNLIGHT
- LIGHTING FIXTURE ON NORMAL/EMERGENCY
- WALL MOUNTED LIGHT FIXTURE
- E EXIT SIGN – DIRECTIONAL ARROWS AS INDICATED ON DRAWINGS
- REMOTE HEAD FOR BATTERY PACK
- $ SINGLE POLE SWITCH – 20A RATED
- $3 3-WAY SWITCH – 20A RATED
- $4 4-WAY SWITCH – 20A RATED
- LC LIGHTING CONTACTOR
- POLE MOUNTED SITE LIGHTING FIXTURE– NUMBER OF FIXTURES PER POLE AS INDICATED ON DRAWINGS
- EXTERIOR DIRECTIONAL LIGHTING FIXTURE
- a SMALL CASE LETTERS REPRESENTS LAMP(S) / SWITCHES.

## TELECOMMUNICATIONS

- TELEPHONE OUTLET(S) @ 45cm AFF. U.N.O. WITH 20mm RACEWAY TERMINATED TO TELEDATA TERMINAL BOARD.
- DATA OUTLET(S) @ 45cm AFF. U.N.O. WITH 20mm RACEWAY TERMINATED TO TELEDATA TERMINAL BOARD.

## TELECOMMUNICATIONS (CONTINUED)

- COMBINATION TELEPHONE/DATA OUTLET(S) @ 45cm AFF. U.N.O. WITH 27mm RACEWAY TERMINATED TO TELEDATA TERMINAL BOARD.
- W WALL MTD. TELEPHONE OUTLET WITH 20mm RACEWAY TO TELEDATA TERMINAL BOARD.
- (x)T INDICATES NUMBER OF TELEPHONE OUTLET(S) AND ASSOCIATED CABLING
- (x)D INDICATES NUMBER OF DATA OUTLET(S) AND ASSOCIATED CABLING
- (x)TF INDICATES NUMBER OF TELEPHONE OUTLETS AND ASSOCIATED CABLING WITH 1 OUTLET AND CABLE DEDICATED FOR FAX

## SINGLE LINE SYMBOLS

- SWITCH
- BREAKER
- FUSE
- TRANSFORMER
- GROUND
- CONTACT (NORMALLY OPEN)
- CONTACT (NORMALLY CLOSED)
- TRANSFER SWITCH
- CURRENT TRANSFORMER
- INDICATES NEW ELECTRICAL EQUIPMENT
- C INDICATES NEW CONTROL WIRING AND CONDUIT
- EQUIPMENT OUTLINE

## MISCELLANEOUS

- BRANCH CIRCUIT WIRING, SURFACE MOUNTED ON WALLS
- BRANCH CIRCUIT WIRING – 6mm²
- BRANCH CIRCUIT WIRING – UNDER FLOOR
- HOME RUN BACK TO PANEL
- CONDUIT TURNED DOWN
- CONDUIT TURNED UP
- LV LOW VOLTAGE WIRING AND CONDUIT
- INDICATES CONTINUATION OF LINE

## FIRE ALARM

- FACP FIRE ALARM CONTROL PANEL WITH BATTERY BACKUP
- F FIRE ALARM PULL STATION

## FIRE ALARM (CONTINUED)

- F FIRE ALARM STROBE – WALL MOUNTED
- F FIRE ALARM AUDIBLE/STROBE – WALL MOUNTED
- F FIRE ALARM HORN/STROBE – WALL MOUNTED
- S SMOKE DETECTOR
- H HEAT DETECTOR CEILING MOUNTED
- D DUCT DETECTOR – PROVIDED BY EC, INSTALLED BY MC AND CONNECTED BY EC

## DENOTATIONS & ABBREVIATIONS

| | |
|---|---|
| AFF | ABOVE FINISHED FLOOR |
| C | CEILING MOUNTED |
| E | EMERGENCY |
| EC | ELECTRICAL CONTRACTOR |
| EPO | EMERGENCY POWER OFF |
| EXP | EXPLOSION PROOF |
| F | FIRE ALARM |
| FF | FLUSH FLOOR MOUNTED |
| FL | FLUORESCENT |
| FO | FIBER OPTIC |
| FSS | FUSED SAFETY SWITCH |
| GF | GROUND FAULT INTERRUPTER |
| GC | GENERAL CONTRACTOR |
| IG | ISOLATED GROUND |
| K | KEY |
| LV | LOW VOLTAGE |
| M | MOTOR |
| MC | MECHANICAL CONTRACTOR |
| NE | NORMAL/EMERGENCY |
| NFSS | NON-FUSED SAFETY SWITCH |
| PA | PAGING SYSTEM |
| PLC | PLUMBING CONTRACTOR |
| SL | SINGLE LINE |
| T | TELEPHONE |

## DENOTATIONS & ABBREVIATIONS (CONT.)

| | |
|---|---|
| TP | TAMPER PROOF |
| UE | UNDERGROUND ELECTRIC |
| W | WALL MOUNTED |
| WP | WEATHERPROOF WITH GROUND FAULT INTERRUPTION |
| WT | WATER TIGHT |

## GENERAL PROJECT NOTES:

G1. UNLESS OTHERWISE NOTED, PROVIDE ALL EQUIPMENT SHOWN ON THE PLANS. THE ELECTRICAL CONTRACTOR SHALL COORDINATE ALL SYMBOLS SHOWN ON THE PLANS WITH THE SYMBOL LIST. IT SHALL BE THE RESPONSIBILITY OF THE CONTRACTOR TO VERIFY THE INTENT OF ANY SYMBOL THAT IS SHOWN ON THE PLANS AND NOT INDICATED ON THE SYMBOL LIST WITH THE ENGINEER PRIOR TO BID.

G2. THE CONTRACTOR SHALL VERIFY THE LOCATION OF ALL UNDERGROUND UTILITIES WITHIN THE CONSTRUCTION AREA THREE (3) WORKING DAYS NOTICE BEFORE COMMENCING DIGGING. NOTIFY THE LOCAL AUTHORITY HAVING JURISDICTION AND WAIT THE REQUIRED TIME BEFORE COMMENCING TO DIG.

G3. THE CONTRACTOR SHALL COORDINATE CONDUIT RUNS, LIGHTING FIXTURES AND OTHER EQUIPMENT LOCATIONS WITH THE OTHER TRADE CONTRACTORS TO AVOID CONFLICTS.

G4. WHERE VOLTAGES AND FREQUENCIES ON THE DRAWINGS AND IN THE SPECIFICATIONS DIFFER FROM THE LOCAL ONES, ALL WORK SHALL BE PERFORMED USING THE LOCAL VOLTAGES AND FREQUENCIES.

G5. THE MINIMUM WIRE SIZE ON THE PROJECT SHALL BE 4mm². THE MINIMUM CONDUIT SIZE SHALL BE 20mm. THE MINIMUM BREAKER SIZE SHALL BE 20 AMPS.

G6. THE CONTRACTOR SHALL PUT A MAXIMUM OF 6 DUPLEX RECEPTACLES ON A 20A SINGLE POLE CIRCUIT.

G7. WHERE THE 1010 SCOPE REVIEW, 1015 TECHNICAL REVIEW, DRAWINGS, AND SPECIFICATIONS DIFFER FROM AMERICAN CODES OR STANDARDS, THE 1010, 1015, DRAWINGS, AND SPECIFICATIONS SHALL RULE.

G8. ALL CONDUIT AND DEVICES SHALL BE SURFACE MOUNTED UNLESS OTHERWISE INDICATED.

G9. CONTRACTOR SHALL COORDINATE ALL WORK WITH ALL OTHER TRADES TO ENSURE ALL WORK IS COMPLETED IN A PROFESSIONAL, WORKMAN-LIKE MANNER.

APPROVED:

A/E DESIGNER OF RECORD

SEAL:

COMMONWEALTH OF PENNSYLVANIA
REGISTERED PROFESSIONAL
JOSEPH R. GAUS
1/29/10
ENGINEER
PE-074251

US ARMY CORPS OF ENGINEERS
AFGHANISTAN ENGINEER DISTRICT

| Mark | Description | Date | Appr. | Mark | Description | Date | Appr. |
|---|---|---|---|---|---|---|---|
| | | | | | | | |

Rev: 0
Date: 2/23/10
Designed by: RAJ
Dwn by: BJB
Ckd by: JRG
Reviewed by: JRG
Submitted by: BAKER
Design file no.
Drawing code:
File name:
Plot date:
Plot scale:

U.S. ARMY CORPS OF ENGINEERS
AFGHANISTAN ENGINEER DISTRICT
APO AE 96338

Michael Baker Jr., Inc
A unit of Michael Baker Corporation
Airside Business Park
100 Airside Drive
Moon Township, PA 15108
www.mbakercorp.com

AFGHAN NATIONAL ARMY
REGIONAL MILITARY TRAINING CENTER
STANDARD DESIGN

BOQ OFFICER BARRACKS
ELECTRICAL SYMBOLS & ABBREVIATIONS

Sheet reference number:
E-001

## GENERAL NOTES:

1. REFER TO DRAWING #E-001 FOR THE ELECTRICAL SYMBOLS LIST.
2. EXIT SIGNS SHALL BE WIRED AHEAD OF ANY LOCAL SWITCHING ON CIRCUITS. SEE WIRING DIAGRAM DETAIL 8, DRAWING #E-501.
3. REFER TO DRAWING #E-601 FOR THE LIGHTING FIXTURE SCHEDULE.
4. REFER TO DRAWING #E-501 FOR THE POWER RISER.
5. REFER TO DRAWING #E-602 FOR PANEL SCHEDULES.
6. LIGHT FIXTURES INDICATED AS EMERGENCY SHALL BE PROVIDED WITH A BATTERY BACKUP BALLAST. SEE WIRING DIAGRAM DETAIL 7, DRAWING #E-501.

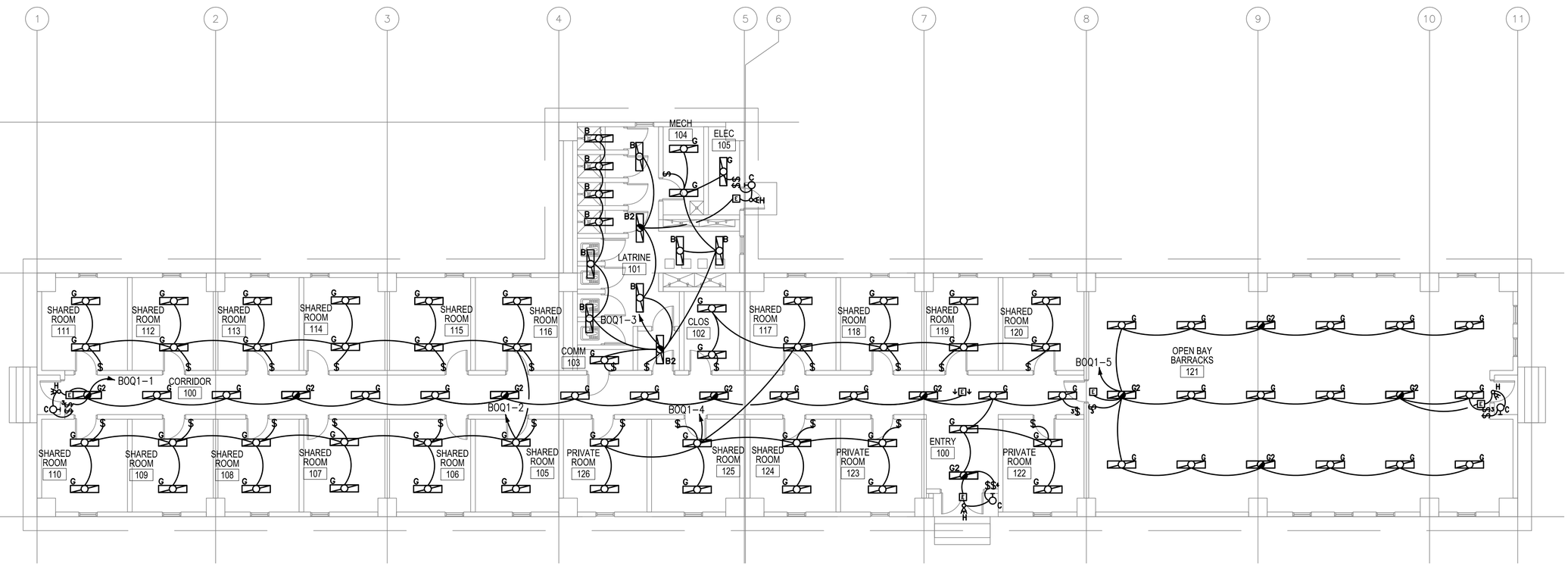


1 / E-101 OFFICER BARRACKS (BOQ) FLOOR PLAN - LIGHTING

SCALE: 1:100

0 2000 4000
SCALE: 1:100

APPROVED:

A/E DESIGNER OF RECORD

SEAL:

COMMONWEALTH OF PENNSYLVANIA REGISTERED PROFESSIONAL JOSEPH R. GAUS 1/29/10 ENGINEER PE-074251

US ARMY CORPS OF ENGINEERS
AFGHANISTAN ENGINEER DISTRICT

| Mark | Description | Date | Appr. |
|---|---|---|---|
| | | | |

| Mark | Description | Date | Appr. |
|---|---|---|---|
| | | | |

Rev: 0
Date: 2/23/10
Design file no.
Drawing code:
File name:
Plot date:
Plot scale:

Designed by: RAJ
Dwn by: BJB
Ckd by: JRG
Reviewed by: JRG
Submitted by: BAKER

U.S. ARMY CORPS OF ENGINEERS
AFGHANISTAN ENGINEER DISTRICT
APO AE 96338

Michael Baker Jr., Inc
A unit of Michael Baker Corporation
Airside Business Park
100 Airside Drive
Moon Township, PA 15108
www.mbakercorp.com

AFGHAN NATIONAL ARMY
REGIONAL MILITARY TRAINING CENTER
STANDARD DESIGN

BOQ OFFICER BARRACKS
ELECTRICAL LIGHTING PLAN

Sheet reference number:
E-101

## GENERAL NOTES:

1. REFER TO DRAWING #E-001 FOR THE ELECTRICAL SYMBOLS LIST.
2. REFER TO DRAWING #E-501 FOR THE POWER RISER.
3. REFER TO DRAWING #E-602 FOR PANEL SCHEDULES.
4. COORDINATE EXACT MOUNTING LOCATION OF DISCONNECTING MEANS FOR MECHANICAL AND PLUMBING EQUIPMENT IN THE FIELD.
5. FUSIBLE SAFETY SWITCHES THAT ARE NOT OTHERWISE IDENTIFIED SHALL BE 380V, 1P, 30A FUSED SAFETY SWITCHES WITH 20A FUSES.

## NUMBERED NOTES:

1. PROVIDE POWER CONNECTION TO MAKE-UP AIR UNIT #1. SEE DRAWINGS #E-602 AND #M-101 FOR MORE INFORMATION.
2. SEE DRAWING #E-602 FOR WIRE AND CONDUIT SIZE.
3. PROVIDE POWER CONNECTION TO ELECTRIC UNIT HEATER #2. SEE DRAWINGS #E-602 AND #M-101 FOR MORE INFORMATION.
4. PROVIDE POWER CONNECTION TO EXHAUST FAN #1. SEE DRAWINGS #E-602 AND #M-101 FOR MORE INFORMATION.
5. PROVIDE POWER CONNECTION TO EXHAUST FAN #2. SEE DRAWINGS #E-602 AND #M-101 FOR MORE INFORMATION.
6. PROVIDE POWER CONNECTION TO EXHAUST FAN #3. SEE DRAWINGS #E-602 AND #M-101 FOR MORE INFORMATION.
7. PANEL BOQ1, BOQ2, & BOQ3
8. NEMA 3R, 380V, 3P, 30A FUSED DISCONNECT FUSED AT 30A. SEE PLUMBING DRAWINGS FOR EXACT LOCATION OF WATER HEATER.
9. PROVIDE A 1,200mm X 2,400mm PIECE OF PLYWOOD PAINTED WITH FIRE RESISTANT PAINT FOR MOUNTING TELECOMMUNICATIONS EQUIPMENT.
10. PROVIDE CONDUIT STUB UP IN THE ROOM FOR INCOMMING TELECOMMUNICATIONS SERVICES FROM THE CENTRAL COMMUNICATIONS SYSTEM IN THE GARRISON.
11. PROVIDE 220V, 1ø, 60A MOTOR SNAP SWITCH IN NEMA 3R ENCLOSURE.

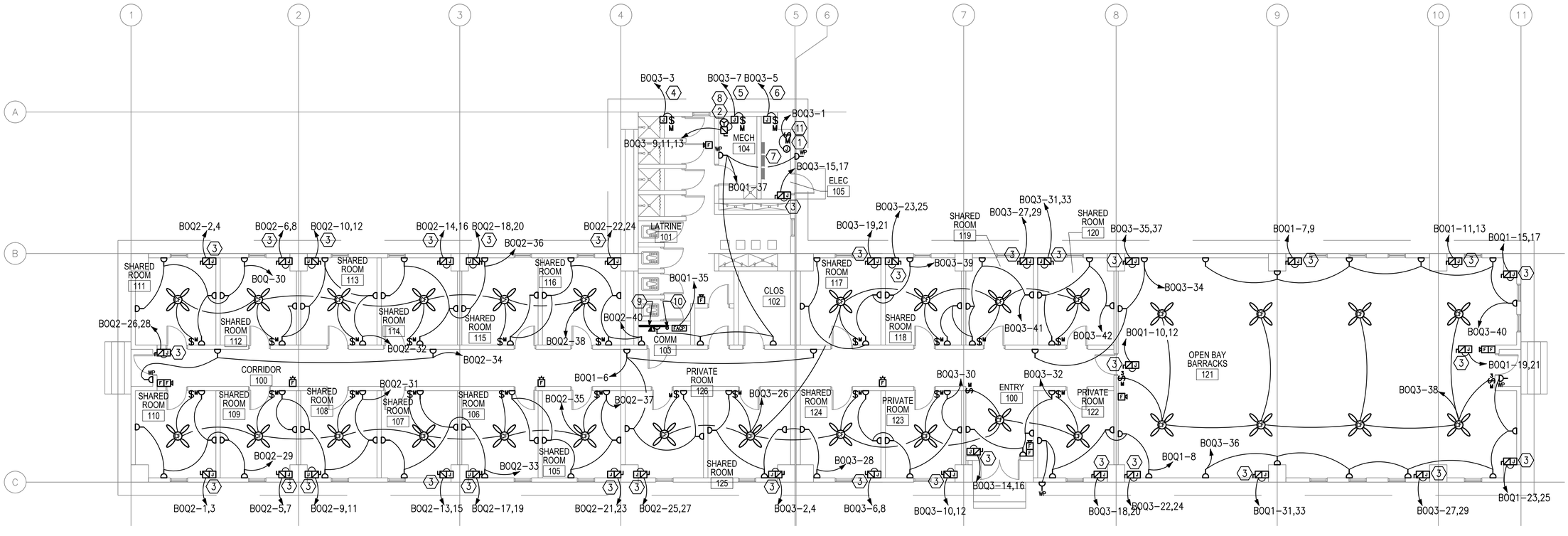


1 / E-102

## OFFICER BARRACKS (BOQ) FLOOR PLAN - POWER & SYSTEMS

SCALE: 1:100

0 2000 4000
SCALE: 1:100

APPROVED:

A/E DESIGNER OF RECORD

SEAL:

COMMONWEALTH OF PENNSYLVANIA
REGISTERED PROFESSIONAL
JOSEPH R. GAUS
1/29/10
ENGINEER
PE-074251

US ARMY CORPS OF ENGINEERS
AFGHANISTAN ENGINEER DISTRICT

| Mark | Description | Date | Appr. |
|---|---|---|---|
| | | | |

| Mark | Description | Date | Appr. |
|---|---|---|---|
| | | | |

Rev: 0
Date: 2/23/10
Design file no.
Drawing code:
Designed by: RAJ
Dwn by: BJB
Ckd by: JRG
Reviewed by: JRG
Submitted by: BAKER
File name:
Plot date:
Plot scale:

U.S. ARMY CORPS OF ENGINEERS
AFGHANISTAN ENGINEER DISTRICT
APO AE 96338

*Michael Baker Jr., Inc*
*A unit of Michael Baker Corporation*
Airside Business Park
100 Airside Drive
Moon Township, PA 15108
www.mbakercorp.com

AFGHAN NATIONAL ARMY
REGIONAL MILITARY TRAINING CENTER
STANDARD DESIGN

BOQ OFFICER BARRACKS
ELECTRICAL POWER & SYSTEMS PLAN

Sheet reference number:
E-102

## GENERAL NOTES:

1. REFER TO DRAWING #E-001 FOR THE ELECTRICAL SYMBOLS LIST.

## NUMBERED NOTES:

1. (1) 120.0mm² BARE, TINNED, COPPER COUNTERPOISE GROUND 700mm BELOW GRADE.
2. INSTALL DOWN CONDUCTOR IN 25mm SCHEDULE 80 PVC CONDUIT TO 20mm DIAMETER X 3 METERS SOLID COPPER TINNED GROUND ROD. (TYPICAL)
3. CADWELD TO BUILDING STRUCTURE AT 18 METERS ON CENTER AROUND THE ENTIRE PERIMETER OF THE BUILDING. (TYPICAL)
4. 120mm² LIGHTNING PROTECTION CABLE.
5. AIR TERMINAL. TERMINALS SHALL BE PLACED AT A MAXIMUM OF 6M ON CENTER PER NFPA 780 PARA. 4.8.2.1, AND WITHIN 0.6M OF RIDGE ENDS PER NFPA 780 PARA. 4.8 (TYPICAL)
6. 700mm MIN. (TYP) BETWEEN FOUNDATION AND GROUND LOOP.

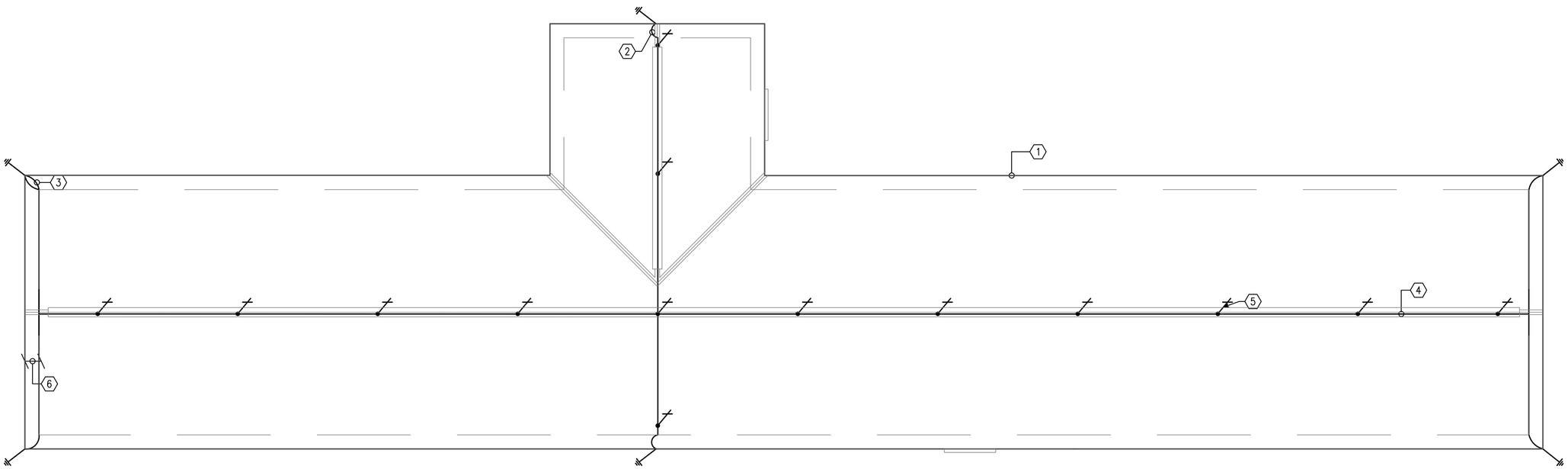


1 / E-103 OFFICER BARRACKS (BOQ)
FLOOR PLAN - LIGHTNING PROTECTION

SCALE: 1:100

0 2000 4000
SCALE: 1:100

APPROVED:

A/E DESIGNER OF RECORD

SEAL:

COMMONWEALTH OF PENNSYLVANIA
REGISTERED PROFESSIONAL
JOSEPH R. GAUS
1/29/10
ENGINEER
PE-074251

US ARMY CORPS OF ENGINEERS
AFGHANISTAN ENGINEER DISTRICT

| Mark | Description | Date | Appr. |
|---|---|---|---|
| | | | |

| Mark | Description | Date | Appr. |
|---|---|---|---|
| | | | |

Designed by: RAJ
Dwn by: BJB
Ckd by: JRG
Reviewed by: JRG
Submitted by: BAKER
Date: 2/23/10
Rev: 0
Design file no.
Drawing code:
File name:
Plot date:
Plot scale:

U.S. ARMY CORPS OF ENGINEERS
AFGHANISTAN ENGINEER DISTRICT
APO AE 96338

*Michael Baker Jr., Inc*
*A unit of Michael Baker Corporation*
Airside Business Park
100 Airside Drive
Moon Township, PA 15108
www.mbakercorp.com

AFGHAN NATIONAL ARMY
REGIONAL MILITARY TRAINING CENTER
STANDARD DESIGN

BOQ OFFICER BARRACKS
ELECTRICAL LIGHTNING PROTECTION PLAN

Sheet reference number:
E-103

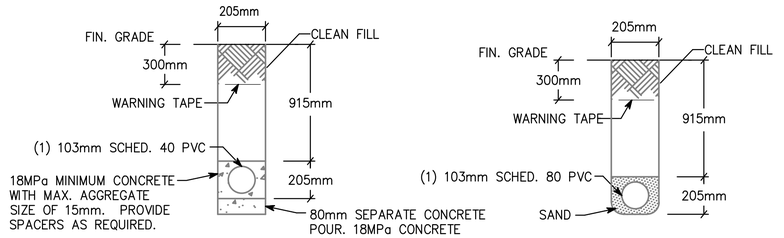


NOTE: PVC CONDUIT SHALL BE DIRECT BURIED SCHEDULE 80 FOR NO TRAFFIC AREAS AND CONCRETE-ENCASED SCHEDULE 40 FOR UNDER ROADWAYS OR TRAFFIC AREAS.

1 / E-501 TYPICAL DUCT BANK DETAILS FOR CONDUIT IN SAND OR CONCRETE

SCALE: N.T.S.

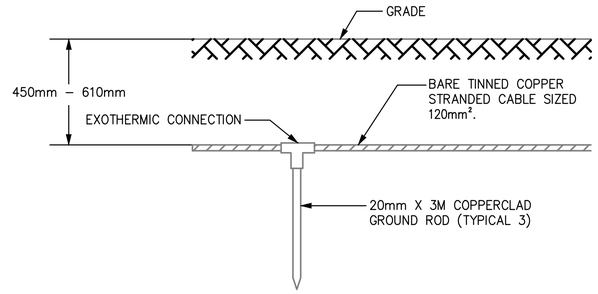


2 / E-501 GROUND TRIPOD SYSTEM DETAIL - ELEVATION

SCALE: N.T.S.

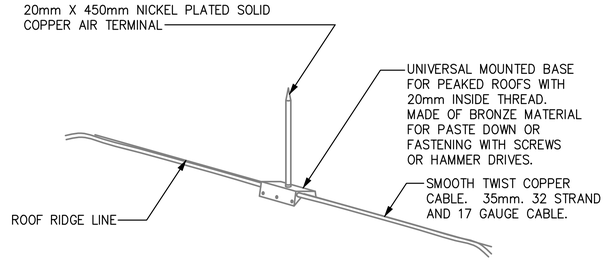


3 / E-501 LIGHTNING PROTECTION AIR TERMINAL DETAIL

SCALE: N.T.S.

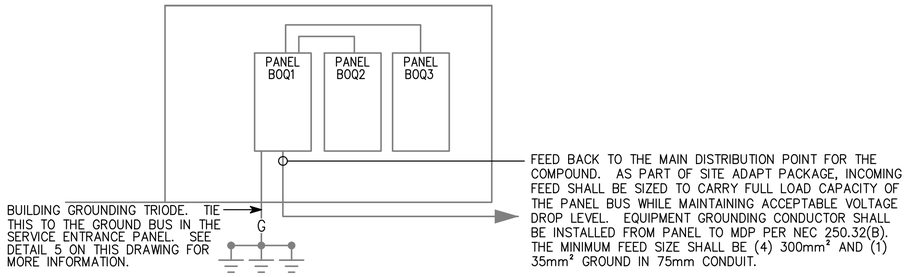


4 / E-501 BOQ RISER DIAGRAM

SCALE: N.T.S.

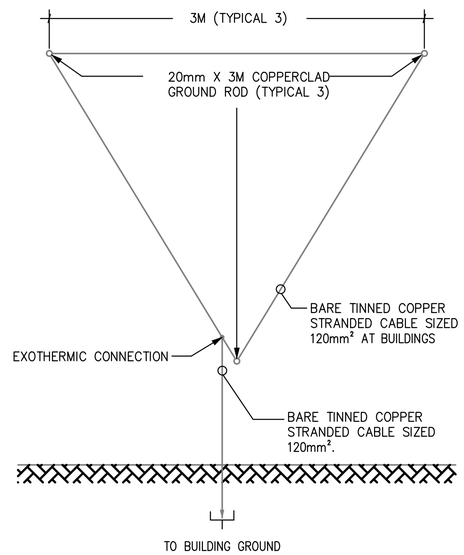


5 / E-501 GROUND TRIPOD SYSTEM DETAIL - PLAN

SCALE: N.T.S.

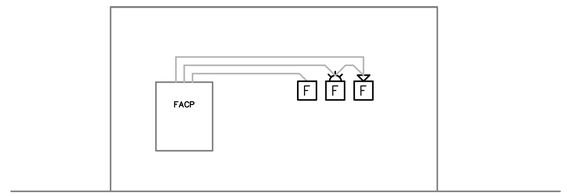


6 / E-501 TYPICAL ONE STORY FIRE ALARM RISER

SCALE: N.T.S.

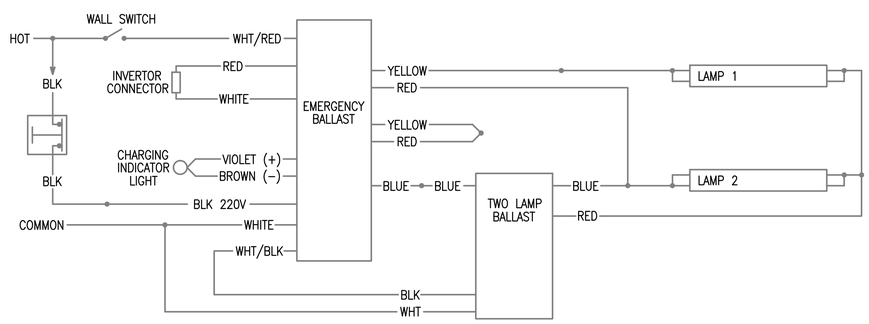


7 / E-501 EMERGENCY FIXTURE WIRING DIAGRAM

SCALE: N.T.S.

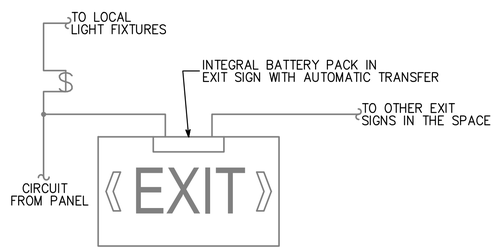


8 / E-501 EXIT SIGN WIRING DIAGRAM

SCALE: N.T.S.

APPROVED:

A/E DESIGNER OF RECORD

SEAL:

COMMONWEALTH OF PENNSYLVANIA
REGISTERED PROFESSIONAL ENGINEER
JOSEPH R. GAUS
PE-074251
1/21/10

US ARMY CORPS OF ENGINEERS
AFGHANISTAN ENGINEER DISTRICT

| Mark | Description | Date | Appr. | Mark | Description | Date | Appr. |
|---|---|---|---|---|---|---|---|

Rev: 0
Date: 2/23/10
Design file no.
Drawing code:
File name:
Plot date:
Plot scale:

Designed by: RAJ
Ckd by: JRG
Dwn by: BJB
Reviewed by: JRG
Submitted by: BAKER

U.S. ARMY CORPS OF ENGINEERS
AFGHANISTAN ENGINEER DISTRICT
APO AE 96338

Michael Baker Jr., Inc
A unit of Michael Baker Corporation
Airside Business Park
100 Airside Drive
Moon Township, PA 15108
www.mbakercorp.com

AFGHAN NATIONAL ARMY
REGIONAL MILITARY TRAINING CENTER
STANDARD DESIGN

BOQ OFFICER BARRACKS
ELECTRICAL DETAILS

Sheet reference number:
E-501

| (A) LARGER OF THE TWO SIZES GIVEN IN THE TABLES BELOW | |
|---|---|
| GROUNDING ELECTRODE CONDUCTOR (BASED ON AIC RATING) | |
| AIC RATING OF SERVICE EQUIPMENT | NECESSARY GROUNDING ELECTRODE CONDUCTOR SIZE |
| 10K | (1) 35mm² |
| 14K | (1) 50mm² |
| 18K | (1) 70mm² |
| 22K | (1) 70mm² |
| 25K | (1) 70mm² |
| 30K | (1) 95mm² |
| 35K | (1) 120mm² |
| 42K | (1) 150mm² |
| 65K | (1) 185mm² |
| 100K | (1) 300mm² |
| 125K | (2) 185mm² |
| 200K | (2) 300mm² |
| GROUNDING ELECTRODE CONDUCTOR (BASED ON NEC TABLE 250.66) | |
| SIZE OF LARGEST UNGROUNDED SERVICE CONDUCTOR OR EQUIVALENT AREA FOR PARALLEL CONDUCTORS | NECESSARY GROUNDING ELECTRODE CONDUCTOR SIZE |
| 350 kcmil OR SMALLER | 35mm² |
| OVER 350 kcmil TO 600 kcmil | 70mm² |
| OVER 600 kcmil TO 1100 kcmil | 70mm² |
| OVER 1100 kcmil | 95mm² |
| NOTE: ALL SIZES ARE BASED ON COPPER CONDUCTORS. | |

| (B) EQUIPMENT GROUNDING CONDUCTOR | |
|---|---|
| RATING OR SETTING OF AUTOMATIC OVERCURRENT DEVICE IN CIRCUIT AHEAD OF EQUIPMENT, CONDUIT, ETC, NOT EXCEEDING (AMPERES) | NECESSARY EQUIPMENT GROUNDING CONDUCTOR SIZE |
| 15 | 2.5mm² |
| 20 | 4.0mm² |
| 30 | 6.0mm² |
| 40 | 6.0mm² |
| 60 | 6.0mm² |
| 100 | 10mm² |
| 200 | 16mm² |
| 300 | 25mm² |
| 400 | 25mm² |
| 500 | 35mm² |
| 600 | 50mm² |
| 800 | 70mm² |
| 1000 | 70mm² |
| 1200 | 95mm² |
| 1600 | 120mm² |
| 2000 | 150mm² |
| 2500 | 185mm² |
| 3000 | 240mm² |
| 4000 | 300mm² |
| 5000 | 400mm² |
| 6000 | 400mm² |
| NOTE: ALL SIZES ARE BASED ON COPPER CONDUCTORS. | |

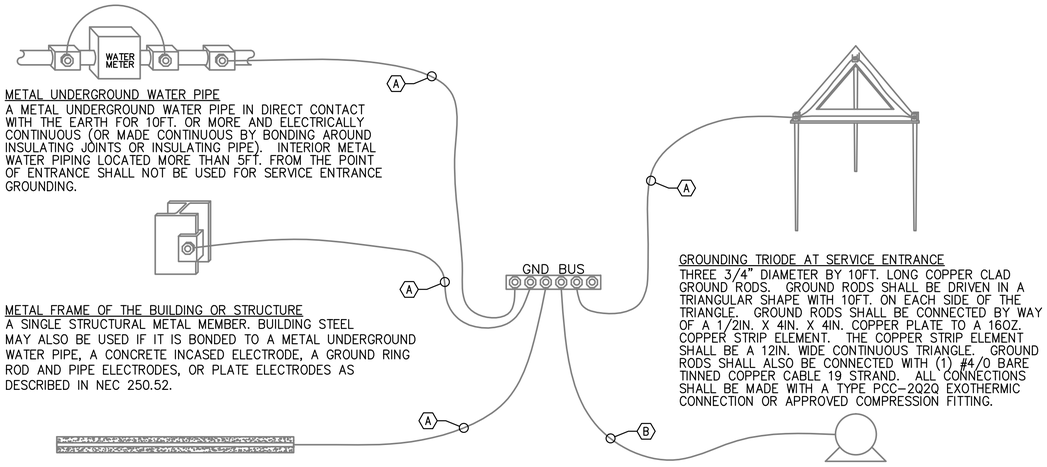


METAL UNDERGROUND WATER PIPE
A METAL UNDERGROUND WATER PIPE IN DIRECT CONTACT WITH THE EARTH FOR 10FT. OR MORE AND ELECTRICALLY CONTINUOUS (OR MADE CONTINUOUS BY BONDING AROUND INSULATING JOINTS OR INSULATING PIPE). INTERIOR METAL WATER PIPING LOCATED MORE THAN 5FT. FROM THE POINT OF ENTRANCE SHALL NOT BE USED FOR SERVICE ENTRANCE GROUNDING.

METAL FRAME OF THE BUILDING OR STRUCTURE
A SINGLE STRUCTURAL METAL MEMBER. BUILDING STEEL MAY ALSO BE USED IF IT IS BONDED TO A METAL UNDERGROUND WATER PIPE, A CONCRETE INCASED ELECTRODE, A GROUND RING ROD AND PIPE ELECTRODES, OR PLATE ELECTRODES AS DESCRIBED IN NEC 250.52.

CONCRETE ENCASED ELECTRODE
AN ELECTRODE ENCASED BY AT LEAST 2IN. OF CONCRETE , LOCATED WITHIN AND NEAR THE BOTTOM OF A CONCRETE FOUNDATION OR FOOTING THAT IS IN DIRECT CONTACT WITH THE EARTH, CONSISTING OF AT LEAST 20FT. OF ONE OR MORE BARE OR ZINC GALVANIZED OR OTHER ELECTRICALLY CONDUCTIVE COATED STEEL REINFORCING BARS OR RODS OF NOT LESS THAN 1/2" DIAMETER OR BARE COPPER CONDUCTOR NOT SMALLER THAN 4AWG.

GROUNDING TRIODE AT SERVICE ENTRANCE
THREE 3/4" DIAMETER BY 10FT. LONG COPPER CLAD GROUND RODS. GROUND RODS SHALL BE DRIVEN IN A TRIANGULAR SHAPE WITH 10FT. ON EACH SIDE OF THE TRIANGLE. GROUND RODS SHALL BE CONNECTED BY WAY OF A 1/2IN. X 4IN. X 4IN. COPPER PLATE TO A 16OZ. COPPER STRIP ELEMENT. THE COPPER STRIP ELEMENT SHALL BE A 12IN. WIDE CONTINUOUS TRIANGLE. GROUND RODS SHALL ALSO BE CONNECTED WITH (1) #4/0 BARE TINNED COPPER CABLE 19 STRAND. ALL CONNECTIONS SHALL BE MADE WITH A TYPE PCC-2Q2Q EXOTHERMIC CONNECTION OR APPROVED COMPRESSION FITTING.

LOAD OR DOWNSTREAM PANEL
ALL LOADS IN THE BUILDING SHALL HAVE AN EQUIPMENT GROUNDING CONDUCTOR PULLED TO THEM.

1
E-502

## SERVICE ENTRANCE GROUNDING DETAIL

SCALE: N.T.S.

APPROVED:

A/E DESIGNER OF RECORD

SEAL:

COMMONWEALTH OF PENNSYLVANIA
REGISTERED PROFESSIONAL
JOSEPH R. GAUS
ENGINEER
PE-074251
1/29/10

US ARMY CORPS OF ENGINEERS
AFGHANISTAN ENGINEER DISTRICT

| Mark | Description | Date | Appr. |
|---|---|---|---|
| | | | |

| Mark | Description | Date | Appr. |
|---|---|---|---|
| | | | |

U.S. ARMY CORPS OF ENGINEERS
AFGHANISTAN ENGINEER DISTRICT
APO AE 96338

Michael Baker Jr., Inc.
A unit of Michael Baker Corporation
Airside Business Park
100 Airside Drive
Moon Township, PA 15108
www.mbakercorp.com

Designed by: RAJ
Dwn by: BJB
Ckd by: JRG
Reviewed by: JRG
Submitted by: BAKER
Date: 2/23/10
Rev: 0
Design file no.
Drawing code:
File name:
Plot date:
Plot scale:

AFGHAN NATIONAL ARMY
REGIONAL MILITARY TRAINING CENTER
STANDARD DESIGN

BOQ OFFICER BARRACKS
ELECTRICAL DETAILS

Sheet reference number:
E-502

FIXTURE MARK 'B'

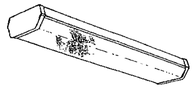

FIXTURE MARK 'C'

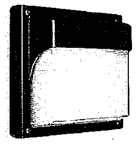

FIXTURE MARK 'G'

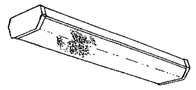

FIXTURE MARK 'H'

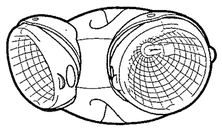

FIXTURE MARK 'E'

# LIGHT FIXTURE SCHEDULE

| FIXTURE MARK | STYLE NUMBER AND TYPE | NUMBER AND TYPE OF LAMPS | VOLTAGE | MOUNTING | NOTES |
|---|---|---|---|---|---|
| B | WET LOCATION WRAP AROUND SURFACE/PENDANT MOUNTED FLUORESCENT FIXTURE WITH PRISMATIC ACRYLIC LENS AND ELECTRONIC BALLAST | (2) 32W 3500K | 220V – 1ø 50HZ | SURFACE MOUNTED | FURNISHED WITH ELECTRONIC BALLAST, VIRGIN ACRYLIC WRAP AROUND LENS. |
| B2 | SAME AS FIXTURE 'B' WITH EMERGENCY BALLAST | (2) 32W 3500K | 220V – 1ø 50HZ | SURFACE MOUNTED | FURNISHED WITH ELECTRONIC BALLAST, VIRGIN ACRYLIC WRAP AROUND LENS. EMERGENCY BALLAST WITH SELF TEST SWITCH. |
| C | INCANDESCENT ONE PIECE W/ APPROVED LENS STABILIZED HIGH IMPACT POLY CARBONATE. | (1) A19 – 100W INCANDESCENT | 220V – 1ø 50HZ | WALL MOUNTED ABOVE EXTERIOR DOORS | |
| G | WRAP AROUND SURFACE/PENDANT MOUNTED FLUORESCENT FIXTURE WITH PRISMATIC ACRYLIC LENS AND ELECTRONIC BALLAST | (2) 32W 3500K | 220V – 1ø 50HZ | SURFACE MOUNTED | FURNISHED WITH ELECTRONIC BALLAST, VIRGIN ACRYLIC WRAP AROUND LENS. |
| G2 | SAME AS FIXTURE 'G' WITH EMERGENCY BALLAST | (2) 32W 3500K | 220V – 1ø 50HZ | SURFACE MOUNTED | FURNISHED WITH ELECTRONIC BALLAST, VIRGIN ACRYLIC WRAP AROUND LENS. EMERGENCY BALLAST WITH SELF TEST SWITCH. |
| H | REMOTE HEAD EXTERIOR LIGHT HEAD POWERED FROM EXIT SIGN BATTERY– 12V DOUBLE HEAD CORROSION RESISTANT WITH UL34 WEATHERPROOF CONSTRUCTION | (2) 12W/12V HALOGEN LAMP | 12V – 1ø 50HZ | EXTERIOR WALL MOUNTED AT TOP OF DOOR HEIGHT | |
| E | UNIVERSAL MOUNT ENGINEER GRADE THERMOPLASTIC HOUSING EXIT SIGN WITH LED LAMPS, RED LETTERS 6" IN HEIGHT WITH ARROWS AS INDICATED, WITH 12V CADMIUM BATTERY WITH REMOTE HEAD CAPABILITY | LED LAMPS | 220V – 1ø 50HZ | UNIVERSAL MOUNTING | |

APPROVED:

A/E DESIGNER OF RECORD

SEAL:

COMMONWEALTH OF PENNSYLVANIA
REGISTERED PROFESSIONAL
JOSEPH R. GAUS
1/29/10
ENGINEER
PE-074251

US ARMY CORPS OF ENGINEERS
AFGHANISTAN ENGINEER DISTRICT

| Mark | Description | Date | Appr. | Mark | Description | Date | Appr. |
|---|---|---|---|---|---|---|---|

Designed by: RAJ
Dwn by: BJB
Ckd by: JRG
Reviewed by: JRG
Submitted by: BAKER
Date: 2/23/10
Rev: 0
Design file no.
Drawing code:
File name:
Plot date:
Plot scale:

U.S. ARMY CORPS OF ENGINEERS
AFGHANISTAN ENGINEER DISTRICT
APO AE 96338

Michael Baker Jr., Inc
A unit of Michael Baker Corporation
Airside Business Park
100 Airside Drive
Moon Township, PA 15108
www.mbakercorp.com

AFGHAN NATIONAL ARMY
REGIONAL MILITARY TRAINING CENTER
STANDARD DESIGN

BOQ OFFICER BARRACKS
ELECTRICAL LIGHT FIXTURE SCHEDULE

Sheet reference number:
E–601

PANELBOARD BOQ1 SURFACE MOUNTED
400 AMP. MAIN LUGS (OR) 400 AMP. MAIN BREAKER W/ 400 AMP. TRIP
CIRCUIT BREAKER TYPE 380/220 VOLTS 3 PHASE 4 WIRE 50 HZ 400 AMP. BUS

| CKT. NO. | TRIP AMPS | NO. POLES | WIRE MM 2 | GND MM² | CONDUIT MM | LOAD SERVED | LOAD-KVA A0 | LOAD-KVA B0 | LOAD-KVA C0 | LOAD-KVA A0 | LOAD-KVA B0 | LOAD-KVA C0 | LOAD SERVED | CONDUIT MM | GND MM² | WIRE MM² | NO. POLES | TRIP AMPS | CKT. NO. |
|---|---|---|---|---|---|---|---|---|---|---|---|---|---|---|---|---|---|---|---|
| 1 | 20 | 1 | 4.0 | 4.0 | 20 | LIGHTING – RM 100,122 | 1.1 | | | 1.6 | | | LIGHTING – RM 105–116 | 20 | 4.0 | 4.0 | 1 | 20 | 2 |
| 3 | 20 | 1 | 4.0 | 4.0 | 20 | LIGHTING – RM 101, 104, 105 | | 0.9 | | | 1.2 | | LTNG – RM 102,117–120,123–126 | 20 | 4.0 | 4.0 | 1 | 20 | 4 |
| 5 | 20 | 1 | 4.0 | 4.0 | 20 | LIGHTING – RM 121 | | | 1.2 | | | 1.0 | RECEPTACLES – RM 100, 126 | 20 | 4.0 | 4.0 | 1 | 20 | 6 |
| 7 | 20 | 2 | 4.0 | 4.0 | 20 | ELECTRIC HEAT #2 – RM 121 | 1.3 | | | 1.0 | | | RECEPTACLES – EXT., RM 121,122 | 20 | 4.0 | 4.0 | 1 | 20 | 8 |
| 9 | | | | | | | | 1.3 | | | 1.3 | | ELECTRIC HEAT #2 – RM 121 | 20 | 4.0 | 4.0 | 2 | 20 | 10 |
| 11 | 20 | 2 | 4.0 | 4.0 | 20 | ELECTRIC HEAT #2 – RM 121 | | | 1.3 | | | 1.3 | | | | | | | 12 |
| 13 | | | | | | | 1.3 | | | | | | SPARE | | | | 1 | 20 | 14 |
| 15 | 20 | 2 | 4.0 | 4.0 | 20 | ELECTRIC HEAT #2 – RM 121 | | 1.3 | | | | | SPARE | | | | 1 | 20 | 16 |
| 17 | | | | | | | | | 1.3 | | | | SPARE | | | | 1 | 20 | 18 |
| 19 | 20 | 2 | 4.0 | 4.0 | 20 | ELECTRIC HEAT #2 – RM 121 | 1.3 | | | | | | SPARE | | | | 1 | 20 | 20 |
| 21 | | | | | | | | 1.3 | | | | | SPARE | | | | 1 | 20 | 22 |
| 23 | 20 | 2 | 4.0 | 4.0 | 20 | ELECTRIC HEAT #2 – RM 121 | | | 1.3 | | | | SPARE | | | | 1 | 20 | 24 |
| 25 | | | | | | | 1.3 | | | | | | SPARE | | | | 1 | 20 | 26 |
| 27 | 20 | 2 | 4.0 | 4.0 | 20 | ELECTRIC HEAT #2 – RM 121 | | 1.3 | | | | | SPARE | | | | 1 | 20 | 28 |
| 29 | | | | | | | | | 1.3 | | | | SPARE | | | | 1 | 20 | 30 |
| 31 | 20 | 2 | 4.0 | 4.0 | 20 | ELECTRIC HEAT #2 – RM 121 | 1.3 | | | 30.1 | | | PANEL 'BOQ3' | 50 | 16.0 | 70.0 | 3 | 175 | 32 |
| 33 | | | | | | | | 1.3 | | | 20.7 | | | | | | | | 34 |
| 35 | 20 | 1 | 4.0 | 4.0 | 20 | FACP – RM 103 | | | 0.5 | | | 20.7 | | | | | | | 36 |
| 37 | 20 | 1 | 4.0 | 4.0 | 20 | RECEPTACLES – 100,102,104,EXT | 1.0 | | | 18.1 | | | PANEL 'BOQ2' | 40 | 16.0 | 50.0 | 3 | 125 | 38 |
| 39 | 20 | 1 | | | | SPARE | | | | | 16.4 | | | | | | | | 40 |
| 41 | 20 | 1 | | | | SPARE | | | | | | 15.5 | | | | | | | 42 |
| | | | | | | | 8.6 | 7.4 | 6.9 | 50.8 | 39.6 | 38.5 | | | | | | | |

TOTAL CONN. LOAD PER PHASE (KVA): A0 59.4 B0 47.0 C0 45.4

TOTAL CONN. LOAD 151.8 KVA. 70 % DEMAND = ESTIMATED DEMAND LOAD 106.26

* MAIN BREAKER SHALL BE 3P EARTH GROUND TYPE

PANELBOARD BOQ2 SURFACE MOUNTED
400 AMP. MAIN LUGS (OR) AMP. MAIN BREAKER W/ AMP. TRIP
CIRCUIT BREAKER TYPE 380/220 VOLTS 3 PHASE 4 WIRE 50 HZ 400 AMP. BUS

| CKT. NO. | TRIP AMPS | NO. POLES | WIRE MM 2 | GND MM² | CONDUIT MM | LOAD SERVED | LOAD-KVA A0 | LOAD-KVA B0 | LOAD-KVA C0 | LOAD-KVA A0 | LOAD-KVA B0 | LOAD-KVA C0 | LOAD SERVED | CONDUIT MM | GND MM² | WIRE MM² | NO. POLES | TRIP AMPS | CKT. NO. |
|---|---|---|---|---|---|---|---|---|---|---|---|---|---|---|---|---|---|---|---|
| 1 | 20 | 2 | 4.0 | 4.0 | 20 | ELECTRIC HEAT #2 – RM 110 | 1.3 | | | 1.3 | | | ELECTRIC HEAT #2 – RM 111 | 20 | 4.0 | 4.0 | 2 | 20 | 2 |
| 3 | | | | | | | | 1.3 | | | 1.3 | | | | | | | | 4 |
| 5 | 20 | 2 | 4.0 | 4.0 | 20 | ELECTRIC HEAT #2 – RM 109 | | | 1.3 | | | 1.3 | ELECTRIC HEAT #2 – RM 112 | 20 | 4.0 | 4.0 | 2 | 20 | 6 |
| 7 | | | | | | | 1.3 | | | 1.3 | | | | | | | | | 8 |
| 9 | 20 | 2 | 4.0 | 4.0 | 20 | ELECTRIC HEAT #2 – RM 108 | | 1.3 | | | 1.3 | | ELECTRIC HEAT #2 – RM 113 | 20 | 4.0 | 4.0 | 2 | 20 | 10 |
| 11 | | | | | | | | | 1.3 | | | 1.3 | | | | | | | 12 |
| 13 | 20 | 2 | 4.0 | 4.0 | 20 | ELECTRIC HEAT #2 – RM 107 | 1.3 | | | 1.3 | | | ELECTRIC HEAT #2 – RM 114 | 20 | 4.0 | 4.0 | 2 | 20 | 14 |
| 15 | | | | | | | | 1.3 | | | 1.3 | | | | | | | | 16 |
| 17 | 20 | 2 | 4.0 | 4.0 | 20 | ELECTRIC HEAT #2 – RM 106 | | | 1.3 | | | 1.3 | ELECTRIC HEAT #2 – RM 115 | 20 | 4.0 | 4.0 | 2 | 20 | 18 |
| 19 | | | | | | | 1.3 | | | 1.3 | | | | | | | | | 20 |
| 21 | 20 | 2 | 4.0 | 4.0 | 20 | ELECTRIC HEAT #2 – RM 105 | | 1.3 | | | 1.3 | | ELECTRIC HEAT #2 – RM 116 | 20 | 4.0 | 4.0 | 2 | 20 | 22 |
| 23 | | | | | | | | | 1.3 | | | 1.3 | | | | | | | 24 |
| 25 | 20 | 2 | 4.0 | 4.0 | 20 | ELECTRIC HEAT #2 – RM 126 | 1.3 | | | 1.3 | | | ELECTRIC HEAT #2 – RM 100 | 20 | 4.0 | 4.0 | 2 | 20 | 26 |
| 27 | | | | | | | | 1.3 | | | 1.3 | | | | | | | | 28 |
| 29 | 20 | 1 | 4.0 | 4.0 | 20 | RECEPTACLES – RM 109,110 | | | 1.2 | | | 1.2 | RECEPTACLES – RM 111,,112 | 20 | 4.0 | 4.0 | 1 | 20 | 30 |
| 31 | 20 | 1 | 4.0 | 4.0 | 20 | RECEPTACLES – RM 108 | 1.2 | | | 1.2 | | | RECEPTACLES – RM 112,113 | 20 | 4.0 | 4.0 | 1 | 20 | 32 |
| 33 | 20 | 1 | 4.0 | 4.0 | 20 | RECEPTACLES – RM 106,107 | | 1.2 | | | 1.0 | | RECEPTACLES – RM 100, EXT. | 20 | 4.0 | 4.0 | 1 | 20 | 34 |
| 35 | 20 | 1 | 4.0 | 4.0 | 20 | CEILING FANS – RM 105–110 | | | 1.5 | | | 1.2 | RECEPTACLES – RM 114,115 | 20 | 4.0 | 4.0 | 1 | 20 | 36 |
| 37 | 20 | 1 | 4.0 | 4.0 | 20 | RECEPTACLES – RM 105,106 | 1.2 | | | 1.5 | | | CEILING FANS – RM 111–116 | 20 | 4.0 | 4.0 | 1 | 20 | 38 |
| 39 | 20 | 1 | | | | SPARE | | | | | 1.2 | | RECEPTACLES – RM 115,116 | 20 | 4.0 | 4.0 | 1 | 20 | 40 |
| 41 | 20 | 1 | | | | SPARE | | | | | | | SPARE | 20 | 4.0 | 4.0 | 1 | 20 | 42 |
| | | | | | | | 8.9 | 7.7 | 7.9 | 9.2 | 8.7 | 7.6 | | | | | | | |

TOTAL CONN. LOAD PER PHASE (KVA): A0 18.1 B0 16.4 C0 15.5

TOTAL CONN. LOAD 50 KVA. 70 % DEMAND = ESTIMATED DEMAND LOAD 35

* MAIN BREAKER SHALL BE 3P EARTH GROUND TYPE

PANELBOARD BOQ3 SURFACE MOUNTED
400 AMP. MAIN LUGS (OR) 175 AMP. MAIN BREAKER W/ 175 AMP. TRIP
CIRCUIT BREAKER TYPE 380/220 VOLTS 3 PHASE 4 WIRE 50 HZ 225 AMP. BUS

| CKT. NO. | TRIP AMPS | NO. POLES | WIRE MM 2 | GND MM² | CONDUIT MM | LOAD SERVED | LOAD-KVA A0 | LOAD-KVA B0 | LOAD-KVA C0 | LOAD-KVA A0 | LOAD-KVA B0 | LOAD-KVA C0 | LOAD SERVED | CONDUIT MM | GND MM² | WIRE MM² | NO. POLES | TRIP AMPS | CKT. NO. |
|---|---|---|---|---|---|---|---|---|---|---|---|---|---|---|---|---|---|---|---|
| 1 | 60 | 1 | 25.0 | 6.0 | 25 | MAKE UP AIR #1 – RM 105 | 10.0 | | | 1.3 | | | ELECTRIC HEAT #2 – RM 125 | 20 | 4.0 | 4.0 | 2 | 20 | 2 |
| 3 | 20 | 1 | 4.0 | 4.0 | 20 | EXHAUST FAN #1 – RM 101 | | 0.5 | | | 1.3 | | | | | | | | 4 |
| 5 | 20 | 1 | 4.0 | 4.0 | 20 | EXHAUST FAN #3 – RM 105 | | | 0.5 | | | 1.3 | ELECTRIC HEAT #2 – RM 124 | 20 | 4.0 | 4.0 | 2 | 20 | 6 |
| 7 | 20 | 1 | 4.0 | 4.0 | 20 | EXHAUST FAN #2 – RM 104 | 0.5 | | | 1.3 | | | | | | | | | 8 |
| 9 | 30 | 3 | 6.0 | 6.0 | 20 | WATER HEATER – RM 104 | | 5.0 | | | 1.3 | | ELECTRIC HEAT #2 – RM 123 | 20 | 4.0 | 4.0 | 2 | 20 | 10 |
| 11 | | | | | | | | | 5.0 | | | 1.3 | | | | | | | 12 |
| 13 | | | | | | | 5.0 | | | 1.3 | | | ELECTRIC HEAT #2 – RM 100 | 20 | 4.0 | 4.0 | 2 | 20 | 14 |
| 15 | 20 | 2 | 4.0 | 4.0 | 20 | ELECTRIC HEAT #2 – RM 105 | | 1.3 | | | 1.3 | | | | | | | | 16 |
| 17 | | | | | | | | | 1.3 | | | 1.3 | ELECTRIC HEAT #2 – RM 122 | 20 | 4.0 | 4.0 | 2 | 20 | 18 |
| 19 | 20 | 2 | 4.0 | 4.0 | 20 | ELECTRIC HEAT #2 – RM 117 | 1.3 | | | 1.3 | | | | | | | | | 20 |
| 21 | | | | | | | | 1.3 | | | 1.3 | | ELECTRIC HEAT #2 – RM 121 | 20 | 4.0 | 4.0 | 2 | 20 | 22 |
| 23 | 20 | 2 | 4.0 | 4.0 | 20 | ELECTRIC HEAT #2 – RM 118 | | | 1.3 | | | 1.3 | | | | | | | 24 |
| 25 | | | | | | | 1.3 | | | 1.5 | | | CEILING FANS – RM 122–125, 117–120 | 20 | 4.0 | 4.0 | 1 | 20 | 26 |
| 27 | 20 | 2 | 4.0 | 4.0 | 20 | ELECTRIC HEAT #2 – RM 119 | | 1.3 | | | 1.2 | | RECEPTACLES – RM 125, 125 | 20 | 4.0 | 4.0 | 1 | 20 | 28 |
| 29 | | | | | | | | | 1.3 | | | 1.2 | RECEPTACLES – RM 123, 124 | 20 | 4.0 | 4.0 | 1 | 20 | 30 |
| 31 | 20 | 2 | 4.0 | 4.0 | 20 | ELECTRIC HEAT #2 – RM 120 | 1.3 | | | 1.2 | | | RECEPTACLES – RM 100, 122 | 20 | 4.0 | 4.0 | 1 | 20 | 32 |
| 33 | | | | | | | | 1.3 | | | 1.2 | | RECEPTACLES – RM 121 | 20 | 4.0 | 4.0 | 1 | 20 | 34 |
| 35 | 20 | 2 | 4.0 | 4.0 | 20 | ELECTRIC HEAT #2 – RM 121 | | | 1.3 | | | 1.2 | RECEPTACLES – RM 121 | 20 | 4.0 | 4.0 | 1 | 20 | 36 |
| 37 | | | | | | | 1.3 | | | 1.5 | | | CEILING FANS – RM 121 | 20 | 4.0 | 4.0 | 1 | 20 | 38 |
| 39 | 20 | 1 | 4.0 | 4.0 | 20 | RECEPTACLES – RM 117, 118 | | 1.2 | | | 1.2 | | RECEPTACLES – RM 121 | 20 | 4.0 | 4.0 | 1 | 20 | 40 |
| 41 | 20 | 1 | 4.0 | 4.0 | 20 | RECEPTACLES – RM 118, 119 | | | 1.2 | | | 1.2 | RECEPTACLES – RM 120 | 20 | 4.0 | 4.0 | 1 | 20 | 42 |
| | | | | | | | 20.7 | 11.9 | 11.9 | 9.4 | 8.8 | 8.8 | | | | | | | |

TOTAL CONN. LOAD PER PHASE (KVA): A0 30.1 B0 20.7 C0 20.7

TOTAL CONN. LOAD 71.5 KVA. 63 % DEMAND = ESTIMATED DEMAND LOAD 50.05

* MAIN BREAKER SHALL BE 3P EARTH GROUND TYPE

APPROVED:

A/E DESIGNER OF RECORD

SEAL:

COMMONWEALTH OF PENNSYLVANIA
REGISTERED PROFESSIONAL
JOSEPH R. GAUS
ENGINEER
PE-074251

US ARMY CORPS OF ENGINEERS
AFGHANISTAN ENGINEER DISTRICT

| Mark | Description | Date | Appr. |
|---|---|---|---|
| | | | |

| Mark | Description | Date | Appr. |
|---|---|---|---|
| | | | |

Rev: 0
Date: 2/23/10
Designed by: RAJ
Dwn by: BJB
Ckd by: JRG
Reviewed by: JRG
Submitted by: BAKER
Design file no.
Drawing code:
File name:
Plot date:
Plot scale:

U.S. ARMY CORPS OF ENGINEERS
AFGHANISTAN ENGINEER DISTRICT
APO AE 96338

Michael Baker Jr., Inc.
A unit of Michael Baker Corporation
Airside Business Park
100 Airside Drive
Moon Township, PA 15108
www.mbakercorp.com

AFGHAN NATIONAL ARMY
REGIONAL MILITARY TRAINING CENTER
STANDARD DESIGN

BOQ OFFICER BARRACKS
ELECTRICAL PANEL SCHEDULES

Sheet reference number:
E–602

# AFGHAN NATIONAL ARMY

## STANDARD BUILDING DESIGN

## BRIDMALS AND BWT STORAGE

## 100% FINAL DESIGN SUBMITTAL

### SHEET INDEX


G–001 COVER SHEET

STRUCTURAL

S–001 GENERAL NOTES & DESIGN CRITERIA
S–101 FOUNDATION/SLAB PLAN
S–102 ROOF FRAMING PLAN
S–401 BUILDING SECTIONS
S–402 ENLARGED ELEVATED SLAB PLAN
S–501 FOUNDATION SECTIONS
S–502 FRAMING SECTIONS
S–503 BEAM & COLUMN DETAILS
S–504 BEAM & COLUMN DETAILS
S–601 SCHEDULES
S–701 TYPICAL DETAILS
S–702 TYPICAL DETAILS

ARCHITECTURAL

A–001 LIFE SAFETY PLAN
A–101 FLOOR PLAN
A–102 ROOF PLAN
A–201 ELEVATIONS
A–301 BUILDING SECTIONS
A–401 WALL SECTIONS
A–501 EXTERIOR DETAILS
A–502 HEAD, JAMB, & SILL DETAILS
A–503 STOOP DETAILS
A–504 CANOPY DETAILS
A–601 WINDOW & DOOR SCHEDULES

MECHANICAL

M–101 HVAC FLOOR PLANS SCHEDULES & DETAILS

ELECTRICAL

E–001 ELECTRICAL SYMBOLS & ABBREVIATIONS
E–101 ELECTRICAL LIGHTING PLAN
E–102 ELECTRICAL POWER & SYSTEMS PLAN
E–103 ELECTRICAL LIGHTNING PROTECTION
E–501 ELECTRICAL DETAILS
E–502 ELECTRICAL DETAILS
E–601 ELECTRICAL LIGHT FIXTURE SCHEDULES
E–602 ELECTRICAL PANEL SCHEDULES


US ARMY CORPS OF ENGINEERS
AFGHANISTAN ENGINEER DISTRICT

| Mark | Description | Date | Appr. | Mark | Description | Date | Appr. |
|---|---|---|---|---|---|---|---|

U.S. ARMY CORPS OF ENGINEERS
AFGHANISTAN ENGINEER DISTRICT
APO AE 96338

Michael Baker Jr., Inc.
A unit of Michael Baker Corporation
Airside Business Park
100 Airside Drive
Moon Township, PA 15108
www.mbakercorp.com

Designed by: KMF/MMY
Dwn by: RCG
Ckd by: CWW
Reviewed by: LMH
Submitted by: BAKER
Date: 2/23/10
Rev: 0
Design file no.
Drawing code:
File name: AMASBRIDG001CS
Plot date: 2/23/2010
Plot scale: X:X

AFGHAN NATIONAL ARMY
REGIONAL MILITARY TRAINING CENTER
STANDARD DESIGN

BRIDMALS AND BWT STORAGE

COVER SHEET

Sheet reference number:
G–001

STRUCTURAL ABBREVIATIONS:

| | |
|---|---|
| ACI | AMERICAN CONCRETE INSTITUTE |
| ADD'L | ADDITIONAL |
| AISC | AMERICAN INSTITUTE OF STEEL CONSTRUCTION |
| AISI | AMERICAN IRON AND STEEL INSTITUTE |
| ASTM | AMERICAN SOCIETY FOR TESTING AND MATERIALS |
| ARCH | ARCHITECTURAL |
| B | BOTTOM |
| BLDG | BUILDING |
| BOTT | BOTTOM |
| ℄ | CENTER LINE |
| CFMRF | COLD FORM METAL ROOF FRAME |
| CFMF | COLD FORM METAL FRAME |
| CFS | COLD FORMED STEEL |
| CIP | CAST–IN–PLACE |
| CIPL | CAST–IN–PLACE LINTEL |
| CJ | CONTROL JOINT |
| CLR | CLEAR |
| CMU | CONCRETE MASONRY UNIT |
| COEFF | COEFFICIENT |
| COL | COLUMN |
| CONC | CONCRETE |
| CONT | CONTINUOUS |
| COORD | COORDINATE |
| CRSI | CONCRETE REINFORCING STEEL INSTITUTE |
| CSJ | CONSTRUCTION JOINT |
| DIA | DIAMETER |
| DIAG | DIAGONAL |
| DIM | DIMENSION |
| DWG | DRAWING |
| DWL | DOWEL |
| EA | EACH |
| EF | EACH FACE |
| ELEC | ELECTRICAL |
| ELEV | ELEVATION |
| EMBED | EMBEDMENT |
| EQUIV | EQUIVALENT |
| ETC | ET CETERA |
| EW | EACH WAY |
| EXP | EXPANSION |
| EXT | EXTERIOR |
| FTG | FOOTING |
| GA | GAUGE |
| GB | GRADE BEAM |
| HORIZ | HORIZONTAL |
| h | HOUR |
| HRS | HOURS |
| IBC | INTERNATIONAL BUILDING CODE |
| INFO | INFORMATION |
| INT | INTERIOR |
| kg | KILOGRAM |
| km | KILOMETER |
| kN | KILONEWTON |
| kPa | KILOPASCAL |
| L# | ANGLE (# INDICATES SIZE) |
| LONG | LONGITUDINAL |
| LLV | LONG LEG VERTICAL |
| m | METER |
| MAX | MAXIMUM |
| MECH | MECHANICAL |
| MFG | MANUFACTURER |
| MID | MIDDLE |
| MIN | MINIMUM |
| MISC | MISCELLANEOUS |
| mm | MILLIMETER |
| MPa | MEGAPASCAL |
| MTL | METAL |
| MWFRS | MAIN WIND FORCE RESISTING SYSTEM |
| N | NEWTON |
| N | NORTH |
| N/A | NOT APPLICABLE |
| # | NUMBER SYMBOL FOR REBAR SIZE |
| NTS | NOT TO SCALE |
| OC | ON CENTER |
| OD | OUTSIDE DIAMETER |
| OPNG | OPENING |
| PL or PL | PLATE |
| PRE–ENG | PRE–ENGINEERED |
| REINF | REINFORCED |
| REQ'D | REQUIRED |
| RB | ROOF BEAM |
| SIM | SIMILAR |
| SPECS | SPECIFICATIONS |
| STD | STANDARD |
| STRUCT | STRUCTURAL |
| SW | SHEAR WALL |
| T | TOP |
| T/ | TOP OF |
| T/ELEV | TOP ELEVATION |
| T/SLAB | TOP OF SLAB |
| T&B | TOP AND BOTTOM |
| THK | THICK |
| TYP | TYPICAL |
| UFC | UNIFIED FACILITIES CRITERIA |
| UON | UNLESS OTHERWISE NOTED |
| VERT | VERTICAL |
| W | WIDTH |
| W/ | WITH |

1.0 GENERAL NOTES:

1.1 THIS PROJECT HAS BEEN DESIGNED FOR THE WEIGHTS AND MATERIALS INDICATED ON THE SHEETS AND FOR THE LIVE LOADS INDICATED IN THE DESIGN DATA. IT IS THE CONTRACTOR'S RESPONSIBILITY TO DETERMINE ALLOWABLE CONSTRUCTION LOADS AND TO PROVIDE PROPER DESIGN AND CONSTRUCTION OF FALSEWORK, FORMWORK, STAGING, BRACING, SHEETING AND SHORING, ETC.

1.1 COORDINATE THESE SHEETS WITH THE ARCHITECTURAL, MECHANICAL, ELECTRICAL, PLUMBING, AND CIVIL SHEETS. ALL DIMENSIONS SHOWN ON THE SHEETS ARE MILLIMETERS UNLESS NOTED OTHERWISE.

1.2 THE CONTRACTOR SHALL VERIFY AND COORDINATE ALL FLOOR AND ROOF OPENING SIZES AND LOCATIONS, EQUIPMENT PAD SIZES AND LOCATIONS, ANCHOR BOLT LAYOUTS, ETC WITH EQUIPMENT SELECTED. THE CONTRACTOR SHALL MAKE ANY REQUIRED MODIFICATIONS AT NO ADDITIONAL COST.

1.3 THE CONTRACTOR SHALL REFER TO THE ARCHITECTURAL, MECHANICAL, ELECTRICAL AND PLUMBING SHEETS FOR SLEEVES, CURBS, INSERTS OR OPENINGS, ETC. NOT HEREIN INDICATED.

1.4 WORK NOT INCLUDED ON THE SHEETS BUT IMPLIED TO BE SIMILAR TO THAT SHOWN AT CORRESPONDING PLACES ELSEWHERE ON THE SHEETS SHALL BE REPEATED.

1.5 IN CASE OF CONFLICT BETWEEN THE NOTES, DETAILS AND SPECIFICATIONS THE MOST RIGID REQUIREMENTS SHALL GOVERN.

1.6 SEE ARCHITECTURAL SHEETS FOR LOCATIONS OF MASONRY AND NON–LOAD BEARING PARTITIONS. PROVIDE COMPRESSIBLE FIRESAFING AT TOP OF WALL AS REQUIRED BY ARCHITECTURAL SHEETS.

1.7 COORDINATE FINISHED FLOOR DATUM ELEVATION 0.0m WITH THE CIVIL SHEETS.

2.0 FOUNDATION NOTES

2.1 THE GEOTECHNICAL ANALYSIS FOR THIS PROJECT IS THE RESPONSIBILITY OF THE CONTRACTOR AWARDED THE WORK. AN ASSUMED ALLOWABLE SOIL BEARING VALUE OF 72 kPa HAS BEEN USED IN THE STRUCTURAL ANALYSIS OF THE BUILDING HEREIN AND SHALL BE CONFIRMED AND VERIFIED AS PART OF THE GEOTECHNICAL INVESTIGATION. VALUES WHICH DO NOT MEET THE REQUIREMENTS INDICATED ON THE BASIS OF DESIGN SHEET SHALL BE IMMEDIATELY BROUGHT TO THE ATTENTION OF THE CONTRACTING OFFICER FOR CONSIDERATION AND DETERMINATION ON THE NEXT APPROPRIATE COURSE OF ACTION.

2.2 SEE THE SPECIFICATION FOR ADDITIONAL REQUIREMENTS TO THOSE OUTLINED IN THE GEOTECHNICAL INVESTIGATION FOR EXCAVATION AND PREPARATION OF THE FOUNDATION AND THE SLAB ON GRADE SUBGRADE INCLUDING COMPACTION PROCEDURES.

2.3 EXCAVATIONS FOR FOOTINGS SHALL HAVE THE SIDES AND BOTTOMS TEMPORARILY LINED WITH 0.25mm POLYETHYLENE IF PLACEMENT OF CONCRETE DOES NOT OCCUR WITHIN 24 HRS OF THE EXCAVATION OF THE FOOTING.

2.4 FOUNDATION CONDITIONS NOTED DURING CONSTRUCTION WHICH DIFFER FROM THOSE DESCRIBED IN THE GEOTECHNICAL REPORT SHALL BE REPORTED TO THE GENERAL CONTRACTOR BEFORE FURTHER CONSTRUCTION IS ATTEMPTED. SEE PROJECT SPECIFICATIONS.

2.5 NO FOOTINGS OR SLABS SHALL BE POURED INTO OR AGAINST SUBGRADE CONTAINING FREE WATER, FROST, ICE OR LOOSE MATERIAL. FROST DEPTH ASSUMED TO BE 800mm.

2.6 ALL SLAB–ON–GRADE, TRENCH BOTTOMS AND OTHER ON–GRADE INTERIOR HORIZONTAL SURFACES SHALL BE PLACED OVER A 0.25mm POLYETHYLENE VAPOR RETARDER OVER A 100mm #57 STONE WATER CAPILLARY BARRIER PLACED ON SUBGRADE PROPERLY PREPARED IN ACCORDANCE WITH THE CONTRACT SPECIFICATIONS. (UON)

2.7 PRIOR TO START OF FOUNDATION OR SLAB–ON–GRADE CONSTRUCTION, EXISTING SUBGRADES SHALL BE COMPACTED TO MINIMUM OF 95% MAXIMUM DRY DENSITY OBTAINED THRU ASTM D 1557 MODIFIED PROCTOR TESTING.

2.8 SEE PLUMBING, ELECTRICAL & CIVIL SHEETS FOR REQUIRED UNDERSLAB UTILITIES.

2.9 SEE ARCHITECTURAL SHEETS FOR ALL WATERPROOFING DETAILS AND MATERIALS.

2.10 IF UNDERMINING OF FOOTINGS OCCURS, FILL VOIDS WITH 18 MPa CONCRETE. DO NOT ATTEMPT TO REPLACE AND RE–COMPACT SOIL.

3.0 CONCRETE

3.1 CONCRETE SHALL HAVE THE UNIT WEIGHT OF 2400 $kg/m^3$ AND A MINIMUM COMPRESSIVE STRENGTH (f'c) OF 28 MPa AT 28 DAYS. ALL CONCRETE SHALL HAVE A WATER–CEMENT RATIO OF 0.45. SEE SPECIFICATIONS FOR ADDITIONAL INFORMATION. ENTRAIN AIR TO PRODUCE TOTAL AIR CONTENT ACCORDING TO THE SPECIFICATIONS FOR CONCRETE EXPOSED TO FREEZING TEMPERATURES (EXTERIOR FOOTINGS, SLAB TURNDOWNS, EXTERIOR SLABS AND SLABS–ON–GRADE, EXTERIOR RETAINING WALLS, AND EXTERIOR GRADE BEAMS.)

3.2 NO CALCIUM CHLORIDE SHALL BE USED IN ANY CONCRETE.

3.3 MIXING, TRANSPORTING AND PLACING OF CONCRETE SHALL CONFORM TO ACI 301M–05.

3.4 ALL CONCRETE WORK SHALL CONFORM TO THE REQUIREMENTS OF THE AMERICAN CONCRETE INSTITUTE (ACI) 318M MANUAL (metric), "BUILDING CODE REQUIREMENTS FOR REINFORCED CONCRETE", AND REQUIREMENTS OUTLINED IN THE CONTRACT SPECIFICATIONS. WHEN THERE IS A CONFLICT BETWEEN ACI AND THE SPECIFICATIONS, THE MORE STRINGENT SHALL GOVERN.

3.5 CHAMFER ALL EXPOSED EXTERNAL CORNERS OF CONCRETE WITH 20mm x45 DEGREE CHAMFER UON.

3.6 CONCRETE REINFORCEMENT BARS SHALL CONFORM TO ASTM A615M–96a, GRADE 420 MPa, REINFORCING BARS SHALL NOT BE TACK WELDED, WELDED, HEATED OR CUT, UNLESS INDICATED ON THE CONTRACT DOCUMENTS. ALL LAP SPLICES SHALL BE CLASS "B" UON.

3.7 HORIZONTAL FOOTING AND HORIZONTAL WALL REINFORCEMENT SHALL BE CONTINUOUS AND SHALL HAVE 90 DEGREE BENDS AND EXTENSIONS, OR CORNER BARS OF EQUIVALENT SIZE LAPPED WITH A CLASS B TENSION SPLICE AT CORNERS AND INTERSECTIONS. TOP BAR CRITERIA SHALL APPLY IF 300mm OR MORE OF FRESH CONCRETE IS PLACED BELOW BAR.

3.8 SLABS–ON–GRADE SHALL HAVE CONSTRUCTION JOINTS OR CRACK CONTROL JOINTS AS SHOWN ON THE DRAWINGS. CONSTRUCTION JOINTS CAN BE USED AT CONTROL JOINT LOCATIONS AT CONTRACTORS OPTION. SEE SLAB PLANS & JOINT DETAILS FOR ADDITIONAL INFORMATION. FOR AREAS NOT SHOWN ON DWGS, THE MAXIMUM SPACING OF CONSTRUCTION/ CRACK CONTROL JOINTS SHALL BE 4800mm

3.9 ALL CONCRETE REINFORCEMENT SHALL BE DETAILED, FABRICATED, LABELED, SUPPORTED, AND SPACED IN FORMS AND SECURED IN PLACE IN ACCORDANCE WITH THE PROCEDURES AND REQUIREMENTS OUTLINED IN THE LATEST EDITION OF THE "BUILDING CODE REQUIREMENTS FOR REINFORCED CONCRETE", ACI 318M, AND THE "MANUAL OF STANDARD PRACTICE FOR DETAILING REINFORCED CONCRETE STRUCTURES", ACI 315M, LATEST EDITION. BASED ON IN COUNTRY REINFORCEMENT AVAILABILITY, IT IS THE CONTRACTOR'S OPTION TO ROUND DESIGNATED ODD NUMBERED REINFORCEMENT SIZES UP (1) ONE BAR SIZE.

3.10 ALL DOWELS SHALL MATCH SIZE AND NUMBER OF MAIN REINFORCING, UNLESS NOTED OTHERWISE ON THE SHEETS.

3.11 ADDITIONAL BARS SHALL BE PROVIDED AROUND ALL FLOOR AND WALL OPENINGS AS SHOWN ON THE SHEETS.

3.12 SEE ARCHITECTURAL SHEETS FOR TYPE AND LOCATION OF ALL FLOOR FINISHES.

3.13 THE CONTRACTOR SHALL COORDINATE ADDITIONAL WALL/SLAB OPENINGS NOT SHOWN ON STRUCTURAL SHEETS. SEE MECHANICAL, ELECTRICAL, PLUMBING AND CIVIL SHEETS.

3.14 UNLESS NOTED OTHERWISE, ALL CURBS SHALL BE REINFORCED WITH AT LEAST (1)–#13 CONTINUOUS AND #13 AT 300mm O.C. DOWELS TO STRUCTURE BELOW.

3.15 THE CONTRACTOR SHALL VERIFY ALL OPENINGS, PAD SIZES, AND ANCHOR BOLTS WITH EQUIPMENT SELECTED.

3.16 FOR ALL WALLS & PIERS, PROVIDE DOWELS INTO FOOTING AT EACH VERT REINF BAR, UON DOWEL SIZE SHALL BE SAME AS VERT REINF.

3.17 PROVIDE CONCRETE POUR STOPS OR FORMED AS REQUIRED FOR INSTALLATION OF ALL CONCRETE WORK.

3.18 PROVIDE ADDITIONAL (2)–#13 x 600mm REINFORCING BARS IN SLAB–ON GRADE AT ALL RE–ENTRANT CORNERS. PLACE BARS AT MID–DEPTH OF SLAB WITH A CLEARANCE OF 50mm FROM CORNER UON.

3.19 COLD–WEATHER PLACEMENT: COMPLY WITH ACI 306.1 AND AS FOLLOWS. PROTECT CONCRETE WORK FROM PHYSICAL DAMAGE OR REDUCED STRENGTH THAT COULD BE CAUSED BY FROST, FREEZING ACTIONS, OR LOW TEMPERATURES. SUBMIT A COLD WEATHER CONCRETING PLAN FOR APPROVAL.

3.20 PROVIDE BONDING COMPOUND PER ASTM C 1059–99: SPECIFICATION FOR LATEX AGENTS FOR BONDING FRESH CONCRETE (GROUT) TO HARDENED CONCRETE.

3.21 THE FORMED SURFACES FOR REINFORCED CONCRETE SHALL ACHIEVE A "CLASS A" FINISH WHEN RECEIVING PAINT OR A "CLASS B" FINISH WHEN RECEIVING PLASTER OR TILE AS PER SPECIFICATION SECTION 03 31 00 CAST–IN–PLACE STRUCTURAL CONCRETE.

3.22 AT INTERSECTING GRADE BEAMS AND SHEAR WALLS, PROVIDE CORNER BARS AT INTERSECTIONS WITH SAME QUANTITY, SIZE AND SPACING AS HORIZONTAL BARS WITH LEG LENGTH = 50db.

3.23 REFER TO S–800 SERIES REINFORCING BAR PLACEMENT DRAWINGS DEFINING LENGTHS, BENDS, AND SPACINGS FOR ALL STRUCTURAL CONCRETE. THE S–800 SERIES DRAWING ARE BASED ON THE S–400, S–500, S–600, AND S–700 SERIES DRAWING SCHEDULES, DETAILS, AND DIAGRAMS.

4.0 CONCRETE MASONRY

4.1 MASONRY CONSTRUCTION SHALL CONFORM TO SPECIFICATION FOR MASONRY STRUCTURES (ACI 530.1) UON.

4.2 STRENGTH OF MASONRY MATERIALS SHALL BE AS FOLLOWS:

a. CONCRETE MASONRY UNITS SHALL BE NORMAL WEIGHT, GRADE N, TYPE 1, CONFORMING TO ASTM C–90 AND HAVE A MINIMUM COMPRESSIVE STRENGTH OF 10.4 MPa ON THE NET AREA.

b. MORTAR SHALL CONFORM TO ASTM C–270 TYPE S.

c. GROUT FOR MASONRY SHALL BE NORMAL WEIGHT AND HAVE A MINIMUM COMPRESSIVE STRENGTH OF 14 MPa AT 28 DAYS. GROUT SHALL CONFORM TO ASTM C476M. GROUT LIFTS SHALL NOT EXCEED 1,400mm.

d. REINFORCED MASONRY SHALL HAVE A STRENGTH F'm = 10 MPa. (F'm IS THE COMPRESSIVE STRENGTH OF THE MASONRY AT 28 DAYS AS DETERMINED BY PRISM TESTS).

4.3 ALL VERTICAL REINFORCEMENT FOR CONCRETE MASONRY SHALL BE ASTM A615M–96a, GRADE 420 MPa. ALL SPLICES SHALL BE LAPPED 48 BAR DIAMETERS MINIMUM.

4.4 BOND BEAMS SHALL BE SPACED AT 1200mm OC VERTICALLY. BOND BEAM REINFORCING SHALL BE CONTINUOUS AND PROVIDED AT WALL INTERSECTIONS AND WALL CORNERS (REFERENCE CONCRETE MASONRY NOTE 4.11). ALL BOND BEAM REINFORCING SHALL BE CONTINUOUS AND HAVE STANDARD ACI HOOKS AT EACH END. PROVIDE STANDARD BAR SPLICES AS SPECIFIED. AS AN ALTERNATE TO CMU BOND BEAMS, IT IS THE CONTRACTOR'S OPTION TO PROVIDE 200mm x 200mm CONTINUOUS CAST–IN–PLACE CONCRETE BOND BEAMS WITH (2)–#16 IN LIEU OF CMU BOND BEAMS INDICATED ON THE DRAWINGS.

4.5 SEE TYPICAL DETAILS FOR MINIMUM REINFORCEMENT REQUIREMENTS FOR CMU WALLS. PROVIDE STANDARD BAR SPLICES AS SPECIFIED. ALL VERTICAL REINFORCEMENT EXTENDS FULL HEIGHT OF WALL.

4.6 CMU CELLS THAT REQUIRE VERTICAL REINFORCING BARS AS INDICATED ON THE CONTRACT DRAWINGS AND/OR SPECS SHALL HAVE REINF BARS PLACED IN CENTERS OF CMU CELLS AND CONTINUOUSLY GROUTED UON.

4.7 ALL CMU CELLS, OPEN CAVITIES, AND AIR SPACES OF ALL EXTERIOR WALLS SHALL BE GROUTED TO STOP FRAGMENTS FROM MORTAR BLAST.

4.8 CONTRACTOR SHALL COORDINATE LOCATION OF ALL OPENINGS SEE ARCH, MECH, ELEC, AND PLUMBING SHEETS FOR SIZE AND LOCATION OF OPENINGS.

4.9 MASONRY WALLS SHALL NOT BE BACK FILLED PRIOR TO THE MORTAR AND GROUT ATTAINING THEIR RESPECTIVE MAXIMUM DESIGN STRENGTHS PER SPECIFICATIONS.

4.10 PROVIDE GALVANIZED MORTAR/GROUT SCREEN W/ 3mm MESH WHERE CELLS BELOW ARE NOT GROUTED.

4.11 AT INTERSECTING BOND BEAMS, PROVIDE CORNER BAR FOR EACH HORIZONTAL BAR IN BOND BEAMS AT INTERSECTING WALLS. USE SAME SIZE AND SPACING AS HORIZONTAL BARS WITH LEG LENGTH = 50db.

4.12 THE ALTERNATE CMU BRACE DETAILS SHOWN ON S–701 CAN BE UTILIZED AT THE CONTRACTOR'S OPTION IN PLACE OF THE "FLOATING PIN" WALL BRACE CONNECTIONS AT TOP OF CMU WALLS DEPICTED ON S–400 AND S–500 SERIES DRAWINGS THESE ALTERNATE DETAILS ALSO SHOW ALTERNATE CAST–IN–PLACE WALL BOND BEAMS THAT CAN BE UTILIZED AT THE CONTRACTOR'S OPTION IN PLACE OF THE STANDARD CMU BOND BEAMS CONSTRUCTED OF CMU BLOCKS.

5.0 COLD–FORMED METAL FRAMING

5.1 ALL COLD–FORMED METAL FRAMING MEMBERS SHALL CONFORM TO ASTM A1003M, STRUCTURAL GRADE ST340 (MPa), WITH A GALVANIZED COATING OF Z275 OR BETTER IN ACCORDANCE WITH ASTM A653M.

5.2 ALL COLD–FORMED METAL FRAMING MEMBERS SHALL HAVE THE FOLLOWING MINIMUM PROPERTIES:

a. MINIMUM METAL THICKNESS:
TRACK = 1.37mm;
STUD/OTHER = 1.09mm

b. MINIMUM FLANGE WIDTH:
TRACK = 38mm;
STUD/OTHER = 35mm

c. MINIMUM MEMBER DEPTH:
ALL SECTIONS = 152.2mm

d. PURLIN (HAT CHANNEL)
DEPTHxWIDTH(FLAT TOP)xTHICK=25mmx42mmx1.59mm

5.3 ALL CONNECTIONS SHALL BE MADE WITH CORROSION RESISTANT (ASTM A153M), SELF–DRILLING, SELF–TAPPING STEEL DRILL SCREWS IN ACCORDANCE WITH ASTM C1513. SCREWS SHALL HAVE A LOW PROFILE HEAD BENEATH ROOF DECK, AND STANDARD HEAD ALL OTHER LOCATIONS.

5.4 FABRICATE COLD FORMED METAL FRAMING AND ACCESSORIES PLUMB, SQUARE AND TRUE TO LINE, WITH CONNECTIONS SECURELY FASTENED ACCORDING TO AISI STANDARD FOR COLD FORMED STEEL FRAMING.

5.5 CUT FRAMING MEMBERS BY SAWING OR SHEATHING, DO NOT TORCH CUT.

5.6 INSTALL FRAMING MEMBERS IN ONE–PIECE LENGTHS UNLESS SPLICE CONNECTIONS ARE INDICATED FOR TRACK OR TENSION MEMBERS

5.7 INSTALL TEMPORARY BRACING AND SUPPORTS TO SECURE FRAMING DURING CONSTRUCTION. MAINTAIN BRACING AND SUPPORTS IN PLACE UNTIL THE STRUCTURE HAS BEEN COMPLETED WITH ALL CONNECTIONS AND PERMANENT BRACING SECURED.

6.0 STRUCTURAL DESIGN CRITERIA

6.1 ALL DESIGNS SHALL CONFORM TO THE PROVISIONS OF THE IBC 2006 AND UFC AS APPLICABLE.

6.2 DESIGN LOADS

6.2.1 DEAD LOADS (PER IBC 2006 & UFC 3–310–01)

| | |
|---|---|
| MECH/ELEC/PLUMBING | 0.20 kPa |
| MISCELLANEOUS | 0.15 kPa |
| COLD–FORMED FRAMING | 0.20 kPa |
| INSULATION | 0.10 kPa |
| METAL ROOF PANEL | 0.14 kPa |
| | 0.79 kPa |
| FLOOR PARTITION ALLOWANCE | 0.96 kPa |

6.2.2 LIVE LOADS (PER IBC 2006 & UFC 3–310–01)

| | |
|---|---|
| ROOF | 1.00 kPa |
| CORRIDOR (2–STORY BLDG ONLY) | 4.80 kPa |
| ALL OTHERS (2–STORY BLDG ONLY) | 2.40 kPa |
| SLAB ON GRADE | 4.80 kPa |

6.2.3 SNOW LOADS (PER IBC 2006 & UFC 3–310–01)

| | |
|---|---|
| GROUND SNOW LOAD (Pg) | 1.2 kPa |
| SNOW IMPORTANCE FACTOR (I) | 1.0 |
| SNOW EXPOSURE FACTOR (Ce) | 1.0 |
| THERMAL FACTOR (Ct) | 1.0 |

6.2.4 WIND LOADS (PER IBC 2006)

| | |
|---|---|
| BASIC WIND SPEED | 137 km/h |
| WIND IMPORTANCE FACTOR | 1.0 |
| WIND EXPOSURE CATEGORY | D |
| DIRECTIONALITY COEFFICIENT (Kd) | 0.85 |
| TOPOGRAPHIC FACTOR (Kzt) | 1.0 |

6.2.5 SEISMIC LOADS (PER IBC 2006 & UFC 3–310–04)

OCCUPANCY USE CATEGORY II
SEISMIC IMPORTANCE FACTOR (Ie) 1.0
SEISMIC SITE CLASS D
$S_s$ = 1.50 (REDUCED FROM 2.40 PER ASCE 7–05, 12.8.1.3 FOR A BUILDING WITHOUT IRREGULARITIES)
$S_1$ = 1.20
$S_{DS}$ = 1.00
$S_{D1}$ = 1.20
SEISMIC DESIGN CATEGORY E
SEISMIC RESISTING SYSTEM:
–SPECIAL REINFORCED CONCRETE SHEAR WALL
RESPONSE MODIFICATION FACTOR (R) 6
RESPONSE COEFFICIENT (Cs) 0.167
SEISMIC ANALYTICAL PROCEDURE = EQUIV LATERAL FORCE
SEISMIC BASE SHEAR 1900 kN

APPROVED:
A/E DESIGNER OF RECORD
SEAL:
GEORGIA REGISTERED 1-29-10 No. 27141 PROFESSIONAL ENGINEER CHRISTOPHER W. WHITMORE

US ARMY CORPS OF ENGINEERS
AFGHANISTAN ENGINEER DISTRICT

Mark | Description | Date | Appr.

Date: 2/23/10
Rev: 0
Design file no.
Drawing code:
File name: ANASBRDS-001GN
Plot date: 2/23/2010
Plot scale: X:X
Designed by: KMP/MMY
Dwn by: RCG
Ckd by: CWW
Reviewed by: LHM
Submitted by: BAKER

U.S. ARMY CORPS OF ENGINEERS
AFGHANISTAN ENGINEER DISTRICT
APO AE 96338

*Michael Baker Jr., Inc*
*A unit of Michael Baker Corporation*
Airside Business Park
100 Airside Drive
Moon Township PA 15108
www.mbakercorp.com

AFGHAN NATIONAL ARMY
REGIONAL MILITARY TRAINING CENTER
STANDARD DESIGN

BRIDMALS AND BWT STORAGE

GENERAL NOTES & DESIGN CRITERIA

Sheet reference number:
S–001

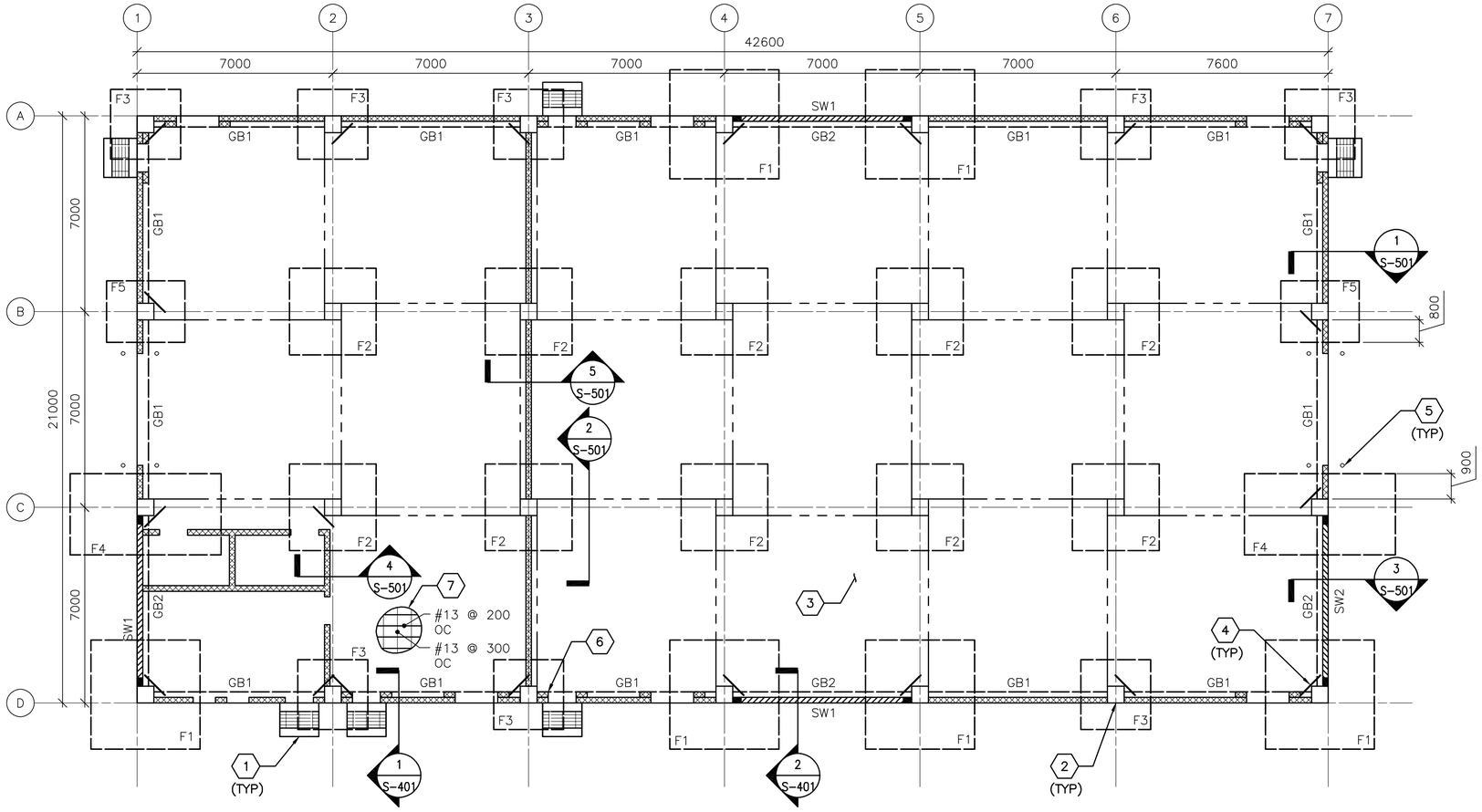


1 S-101 **FOUNDATION/SLAB PLAN**

SCALE: 1:100

## FOUNDATION/SLAB PLAN NOTES:

1. REFER TO SHEET S-001 FOR STRUCTURAL NOTES AND DESIGN CRITERIA.
2. FINISH FIRST FLOOR ELEVATION SHALL BE (DATUM 0.00MM) ALL PLUS OR MINUS DIMENSIONS INDICATED ON PLAN OR REFERRED TO IN NOTES RELATE TO FINISH FIRST FLOOR ELEVATION.
3. SLAB-ON-GRADE IS 150 WITH #13 @ 300 OC EW LOCATED 38 FROM T/SLAB.
4. TOP OF EXTERIOR FOOTINGS SHALL BE -950 UNLESS OTHERWISE INDICATED.
5. TOP OF INTERIOR FOOTINGS WITHOUT GRADE BEAM ABOVE SHALL BE -600.
6. COLUMN FOOTINGS INDICATED THUS F# ON PLAN. REFER TO COLUMN FOOTING SCHEDULE ON SHEET S-601.
7. REFER TO COLUMN SCHEDULE ON SHEET S-601.
8. GRADE BEAM INDICATED THUS GB# ON PLAN, REFER TO BEAM SCHEDULE ON SHEET S-601.
9. SHEARWALL INDICATED THUS SW# ON PLAN, REFER TO SHEARWALL SCHEDULE ON SHEET S-601.
10. SEE TYP EXTERIOR AND INTERIOR CMU WALL REINF DETAILS ON SHEET S-701.
11. SEE MECHANICAL AND ELECTRICAL SHEETS FOR CONCRETE PAD LOCATIONS, SIZES, AND THICKNESS NOT SHOWN. SEE SHEET S-701 FOR DETAILS.
12. THICKENED SLAB UNDER CMU WALLS NOT SHOWN FOR CLARITY.

## FOUNDATION/SLAB PLAN KEY NOTES: (X)

1. CONC PAD (ENTRANCE)-SEE ARCH DWGS FOR INFORMATION
2. REINF CONC COLUMN
3. REINF CONC SLAB-ON-GRADE
4. (2)-#13 @ RE-ENTRANT CORNERS - SEE S-701 FOR INFORMATION
5. BOLLARD- SEE SECTION 8/S-502
6. WALL STIFFENER EACH SIDE OF PEDESTRIAN DOOR AND LOUVER WHERE NO BOTTOM OF SLAB EXISTS AT ELEVATION 3000 - SEE DETAIL 9/S-502.
7. SPACE #13 LONGITUDINAL SLAB REINF @ 200 OC BETWEEN COLUMN LINES 1 & 3 FROM C TO D

## FOUNDATION/SLAB PLAN LEGEND:

- REINF CONC SHEAR WALL
- REINF CMU WALL
- CONTROL JOINT

0 2000 4000

SCALE: 1:100

UNLESS OTHERWISE NOTED, LINEAR DIMENSIONS SHOWN ON DRAWINGS ARE IN MILLIMETERS (mm)

APPROVED:

A/E DESIGNER OF RECORD

SEAL:

GEORGIA REGISTERED 1-29-10 No. 27141 PROFESSIONAL ENGINEER CHRISTOPHER W. WHITMORE

US ARMY CORPS OF ENGINEERS
AFGHANISTAN ENGINEER DISTRICT

| Mark | Description | Date | Appr. | Mark | Description | Date | Appr. |
|---|---|---|---|---|---|---|---|

Designed by: KMP/MMY
Dwn by: RCG
Ckd by: CWW
Reviewed by: LHM
Submitted by: BAKER
Date: 2/23/10
Rev: 0
Design file no.
Drawing code:
File name: ANASBRDS-101FNP
Plot date: 2/23/2010
Plot scale: X:X

U.S. ARMY CORPS OF ENGINEERS
AFGHANISTAN ENGINEER DISTRICT
APO AE 96338

Michael Baker Jr., Inc
A unit of Michael Baker Corporation
Airside Business Park
100 Airside Drive
Moon Township, PA 15108
www.mbakercorp.com

AFGHAN NATIONAL ARMY
REGIONAL MILITARY TRAINING CENTER
STANDARD DESIGN

BRIDMALS AND BWT STORAGE

FOUNDATION/SLAB PLAN

Sheet reference number:
S-101

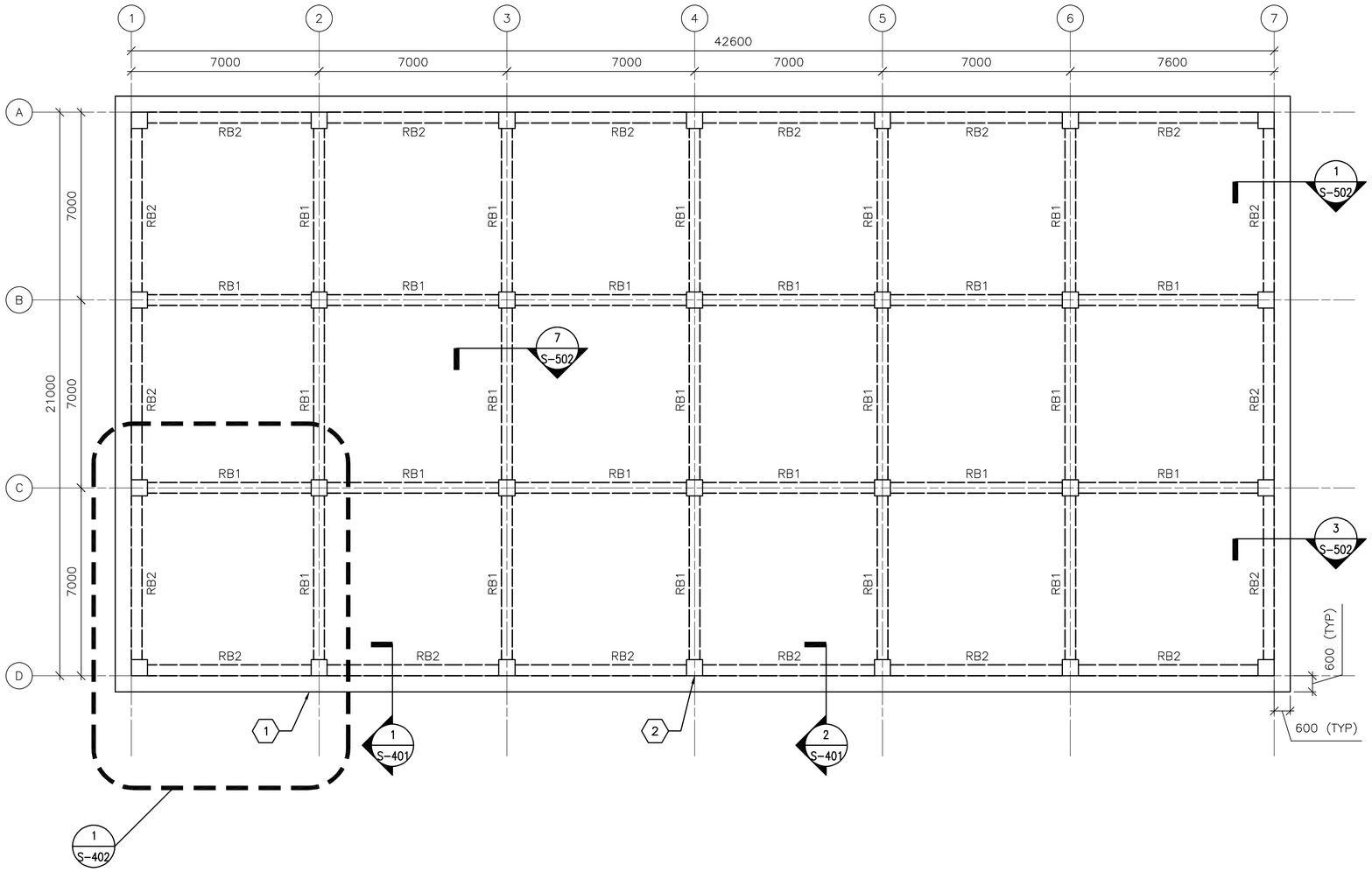


1 S-102 ROOF FRAMING PLAN
SCALE: 1:100

## ROOF FRAMING PLAN NOTES:

1. REFER TO SHEETS S-001 FOR STRUCTURAL NOTES AND DESIGN CRITERIA.
2. TOP OF SLAB ELEVATION = 5600 UNLESS NOTED OTHERWISE.
3. ROOF SLAB IS 250 WITH #16 @ 300 OC EW T&B.
4. ROOF BEAM INDICATED BY RB# ON PLAN. REFER TO BEAM SCHEDULE ON SHEET S-601.
5. COORDINATE WITH ARCHITECTURAL SHEETS FOR COLD-FORMED STEEL OVERBUILD FRAMING ABOVE ROOF SLAB.
6. COLD-FORMED METAL OVERBUILD ROOF FRAMING NOT SHOWN FOR CLARITY. SEE OVERBUILD ROOF FRAMING DETAILS AND SECTIONS ON SHEET S-702.
7. CMU PARTITION WALLS (BELOW ROOF SLAB) NOT SHOWN FOR CLARITY.
8. OVERHANG AREAS OF ROOF SLAB CONTAIN ROOF VENT PENETRATIONS. REFERENCE ARCHITECTURAL DRAWINGS FOR INFORMATION.

## ROOF FRAMING PLAN KEY NOTES: (X)

1. CONC ROOF SLAB (BELOW ROOF OVERBUILD)
2. REINF CONC COLUMN (BELOW CONC ROOF SLAB)-SEE S-701

0 2000 4000
SCALE: 1:100

UNLESS OTHERWISE NOTED, LINEAR DIMENSIONS SHOWN ON DRAWINGS ARE IN MILLIMETERS (mm)

APPROVED:

A/E DESIGNER OF RECORD

SEAL:

GEORGIA REGISTERED No. 27141 PROFESSIONAL ENGINEER CHRISTOPHER W. WHITMORE

US ARMY CORPS OF ENGINEERS
AFGHANISTAN ENGINEER DISTRICT

| Mark | Description | Date | Appr. | Mark | Description | Date | Appr. |
|---|---|---|---|---|---|---|---|

U.S. ARMY CORPS OF ENGINEERS
AFGHANISTAN ENGINEER DISTRICT
APO AE 96338

Michael Baker Jr., Inc
A unit of Michael Baker Corporation
Airside Business Park
100 Airside Drive
Moon Township, PA 15108
www.mbakercorp.com

Designed by: KMP/MMY
Dwn by: RCG
Ckd by: CWW
Reviewed by: LHM
Submitted by: BAKER
Date: 2/23/10
Rev: 0
Design file no.
Drawing code:
File name: ANASBRDS-102FRP
Plot date: 2/23/2010
Plot scale: X:X

AFGHAN NATIONAL ARMY
REGIONAL MILITARY TRAINING CENTER
STANDARD DESIGN

BRIDMALS AND BWT STORAGE

ROOF FRAMING PLAN

Sheet reference number:
S-102

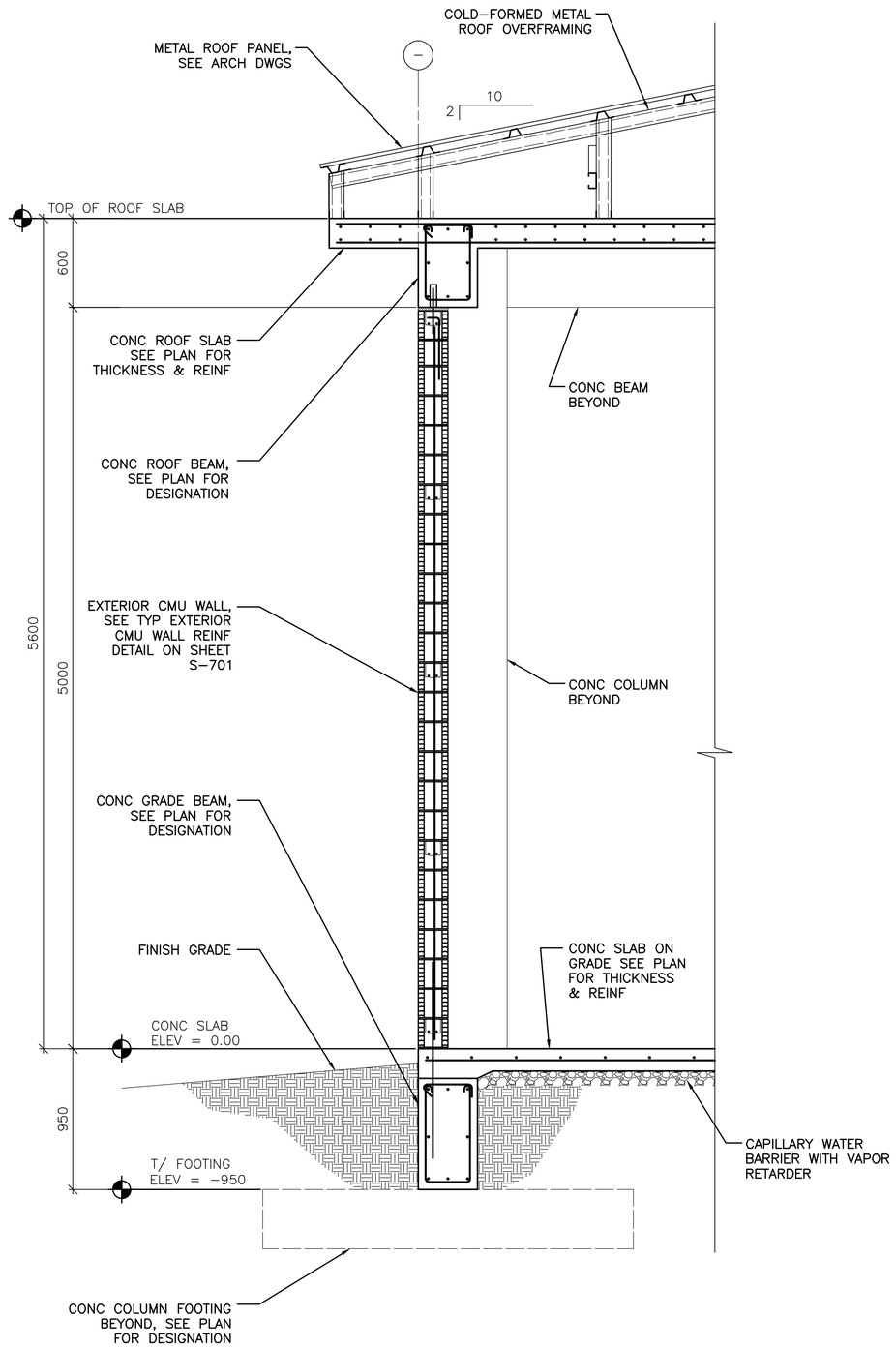


1 S-101 1 S-102

## TYPICAL WALL SECTION AT EXTERIOR MASONRY WALL

SCALE: 1:20

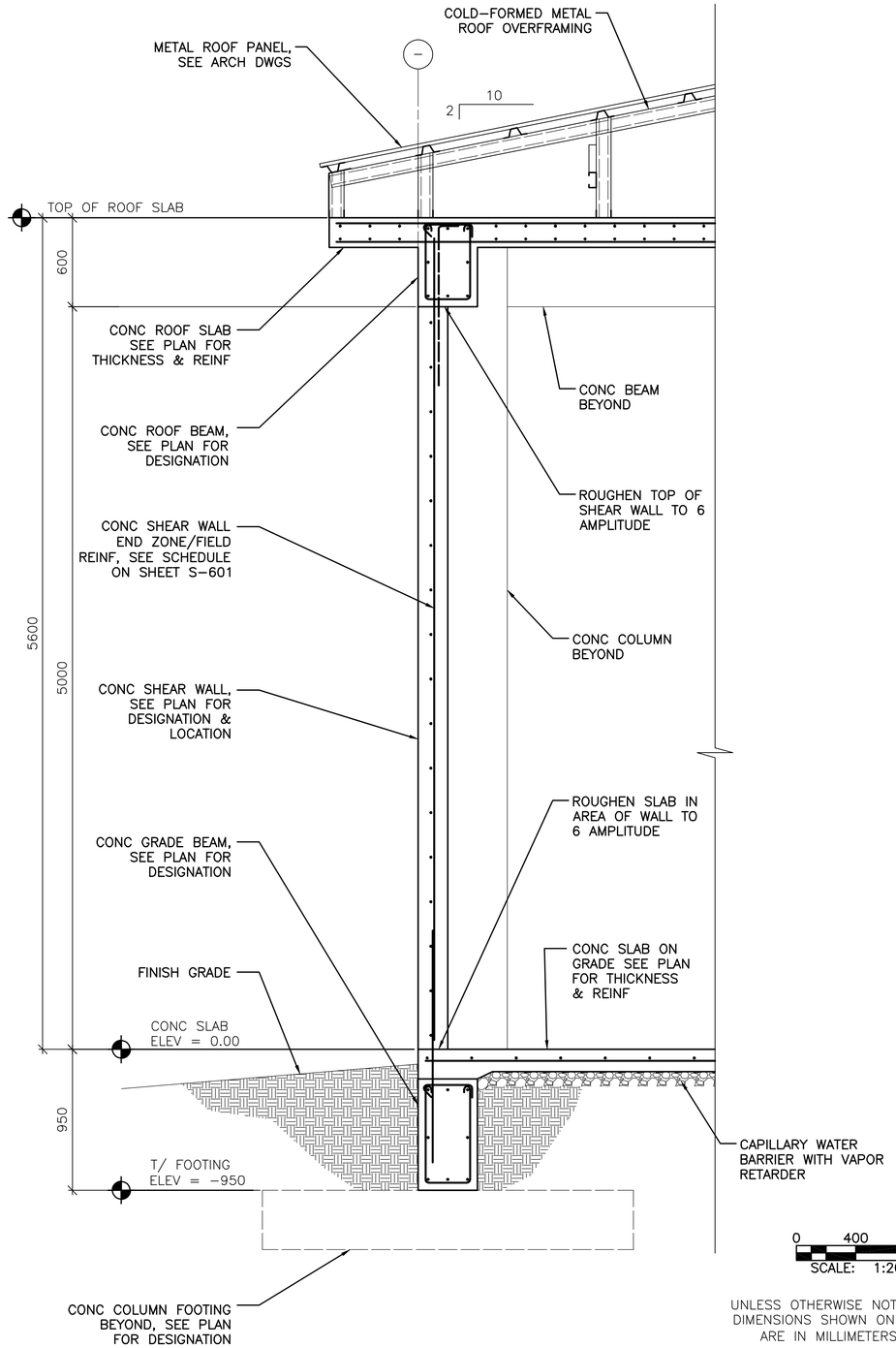


2 S-101 2 S-102

## TYPICAL WALL SECTION AT CONCRETE SHEAR WALL

SCALE: 1:20

0 400 800
SCALE: 1:20

UNLESS OTHERWISE NOTED, LINEAR DIMENSIONS SHOWN ON DRAWINGS ARE IN MILLIMETERS (mm)

APPROVED:

A/E DESIGNER OF RECORD

SEAL:

GEORGIA REGISTERED No. 27141 PROFESSIONAL ENGINEER CHRISTOPHER W. WHITMORE

US ARMY CORPS OF ENGINEERS
AFGHANISTAN ENGINEER DISTRICT

| Mark | Description | Date | Appr. | Mark | Description | Date | Appr. |
|---|---|---|---|---|---|---|---|

Designed by: KMP/MMY
Dwn by: RCG
Ckd by: CWW
Reviewed by: LHM
Submitted by: BAKER
Date: 2/23/10
Rev: 0
Design file no.
Drawing code:
File name: ANASBRDS-401BS
Plot date: 2/23/2010
Plot scale: X:X

U.S. ARMY CORPS OF ENGINEERS
AFGHANISTAN ENGINEER DISTRICT
APO AE 96338

Michael Baker Jr., Inc
A unit of Michael Baker Corporation
Airside Business Park
100 Airside Drive
Moon Township PA 15108
www.mbakercorp.com

AFGHAN NATIONAL ARMY
REGIONAL MILITARY TRAINING CENTER
STANDARD DESIGN

BRIDMALS AND BWT STORAGE

BUILDING SECTIONS

Sheet reference number:
S-401

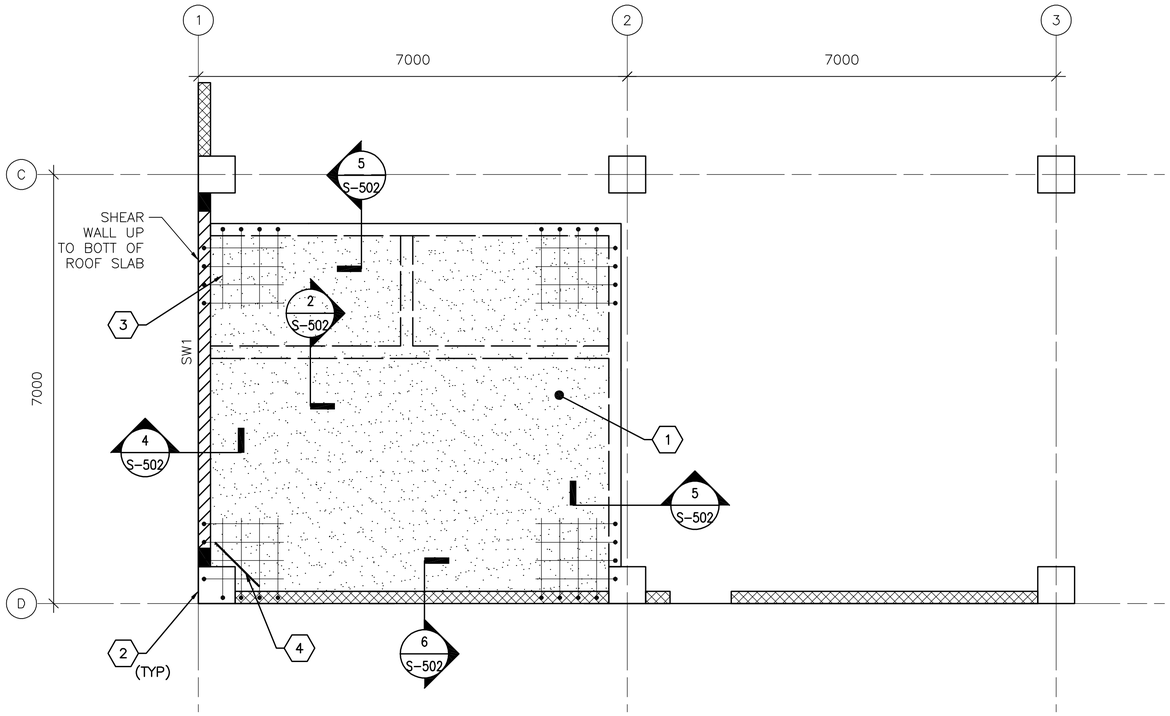


1 S-102 ENLARGED ELEVATED SLAB PLAN @ 3250

SCALE: 1:50

## ROOF/ELEVATED SLAB FRAMING PLAN NOTES:

1. REFER TO SHEETS S-001 FOR STRUCTURAL NOTES AND DESIGN CRITERIA.
2. ELEVATED SLAB IS 250 W/ #13 @ 250 OC EW
3. TOP OF ELEVATED SLAB IS 3250.

## ELEVATED SLAB PLAN LEGEND:

REINF CONC SHEAR WALL

REINF CMU WALL

## ELEVATED SLAB FRAMING PLAN KEY NOTES: (X)

1. ELEVATED CONCRETE SLAB
2. REINF CONC COLUMN (ABOVE AND BELOW CONC SLAB)
3. ADD'L REINF @ CONCRETE SLAB CORNERS-SEE S-701 FOR INFORMATION
4. (2)-#13 @ RE-ENTRANT CORNERS - SEE S-701 FOR INFORMATION

0 1000 2000

SCALE: 1:50

UNLESS OTHERWISE NOTED, LINEAR DIMENSIONS SHOWN ON DRAWINGS ARE IN MILLIMETERS (mm)

APPROVED:

A/E DESIGNER OF RECORD

SEAL:

GEORGIA REGISTERED 1-29-10 No. 27141 PROFESSIONAL ENGINEER CHRISTOPHER W. WHITMORE

US ARMY CORPS OF ENGINEERS
AFGHANISTAN ENGINEER DISTRICT

| Mark | Description | Date | Appr. | Mark | Description | Date | Appr. |
|---|---|---|---|---|---|---|---|

Designed by: KMP/MMY
Dwn by: RCG
Ckd by: CWW
Reviewed by: LHM
Submitted by: BAKER
Date: 2/23/10
Rev: 0
Design file no.
Drawing code:
File name: ANASBRDS-402EP
Plot date: 2/23/2010
Plot scale: X:X

U.S. ARMY CORPS OF ENGINEERS
AFGHANISTAN ENGINEER DISTRICT
APO AE 96338

Michael Baker Jr., Inc
A unit of Michael Baker Corporation
Airside Business Park
100 Airside Drive
Moon Township, PA 15108
www.mbakercorp.com

AFGHAN NATIONAL ARMY
REGIONAL MILITARY TRAINING CENTER
STANDARD DESIGN

BRIDMALS AND BWT STORAGE

ENLARGED ELEVATED SLAB PLAN

Sheet reference number:
S-402

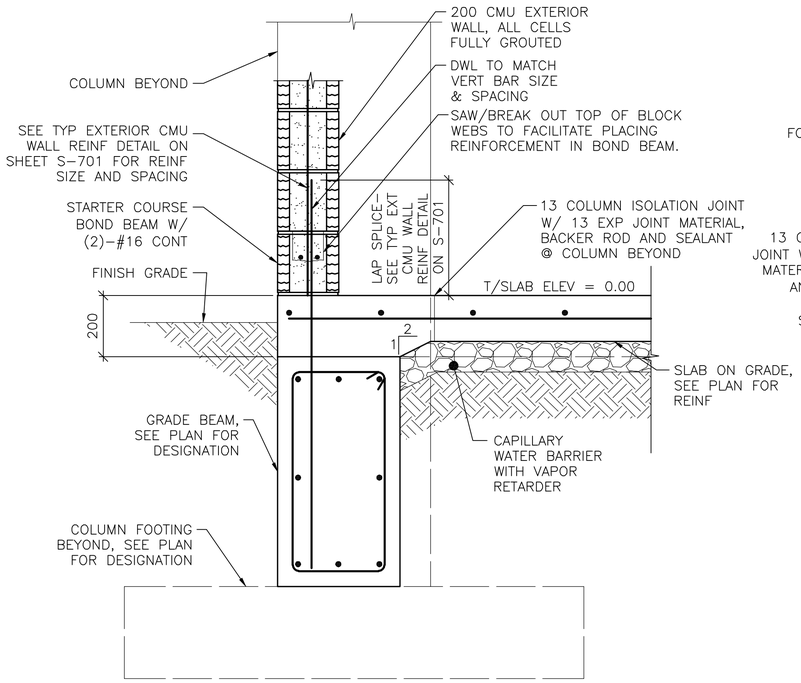


NOTE:
1. SECTION IS SIMILAR FOR INTERIOR CMU PARTITIONS OVER GRADE BEAMS SHOWING THICKENED 200 CONC SLAB AREA.

1 S-101 **SECTION**
SCALE: 1:10

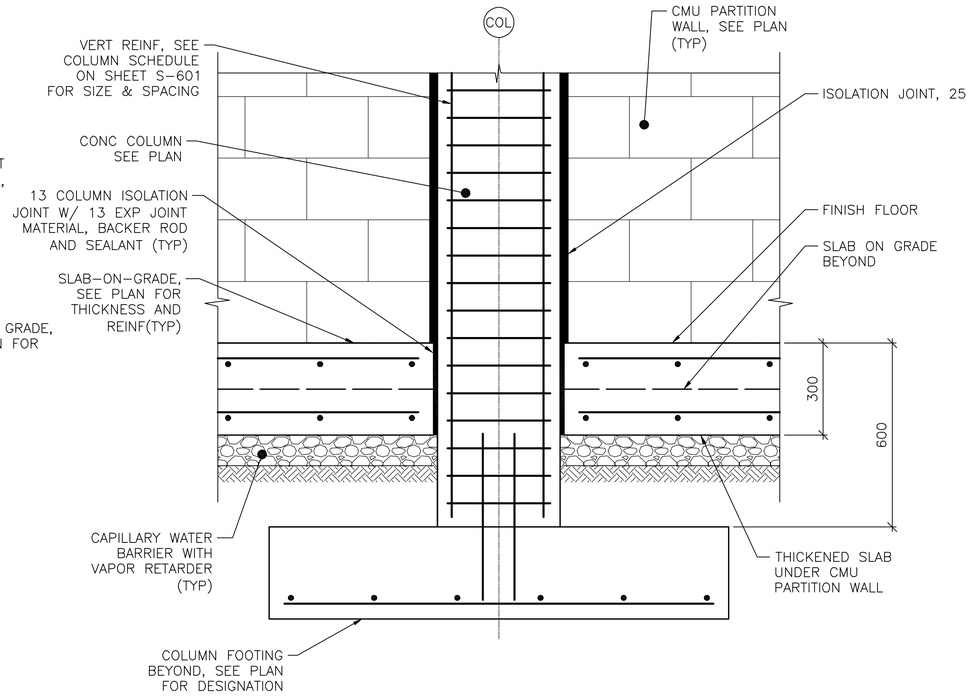


2 S-101 **SECTION**
SCALE: 1:10

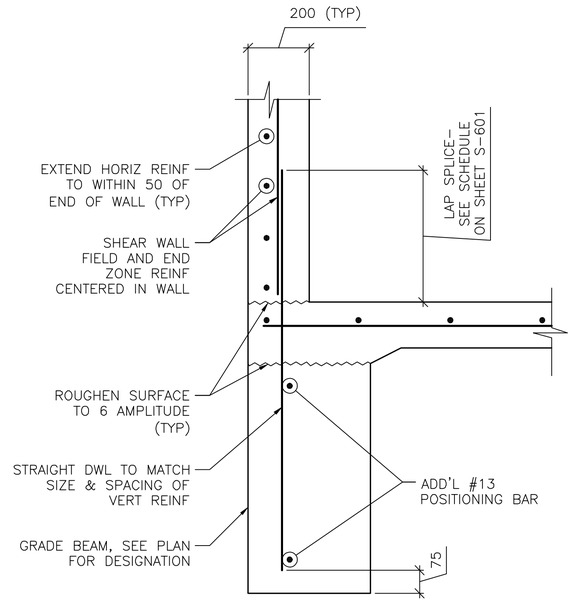


NOTE:
1. SECTION DEPICTS SHEAR WALL TERMINATION ONLY. GRADE BEAM REINFORCING NOT SHOWN FOR CLARITY.
2. SEE SHEET S-601 AND SHEET S-702 FOR SCHEDULED FIELD AND END ZONE REINF.

3 S-101 **SECTION**
SCALE: 1:10

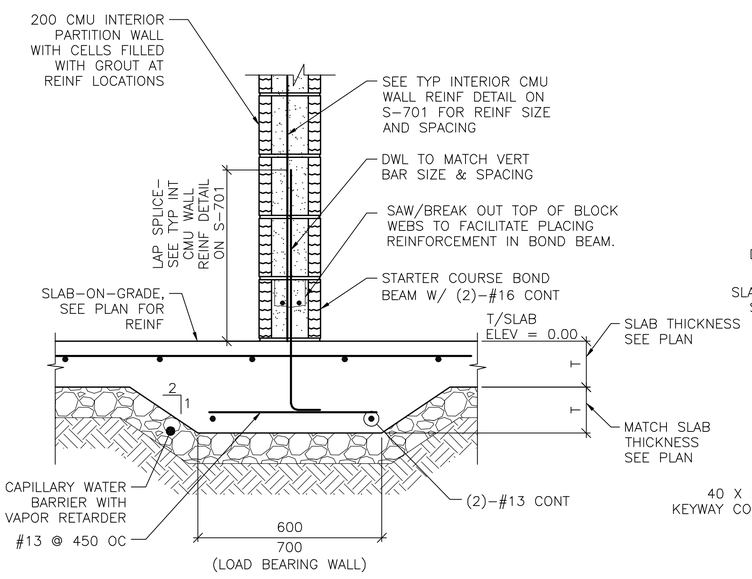


4 S-101 **SECTION**
SCALE: 1:10

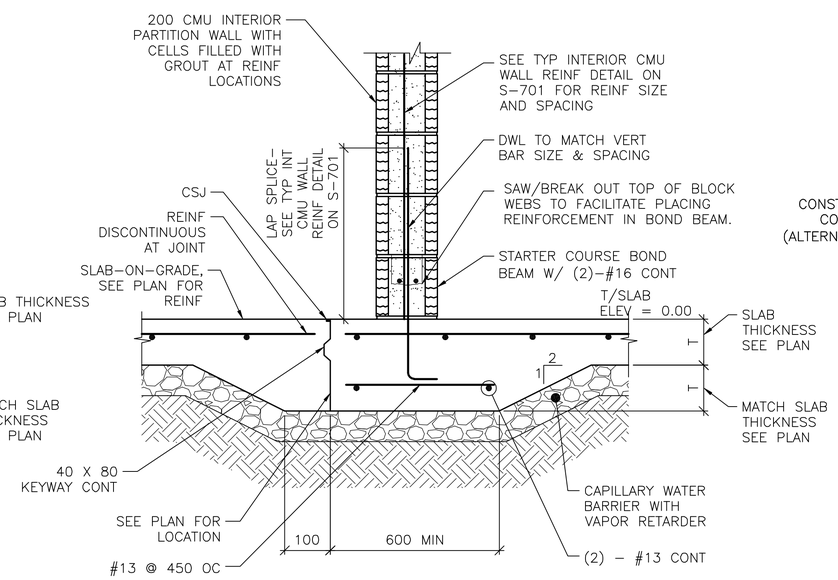


5 S-101 **SECTION**
SCALE: 1:10

NOTE:
1. DETAIL IS APPLICABLE AT CONTROL JOINTS RUNNING PARALLEL TO CMU WALLS AND WITHIN 300 OF FACE OF WALL.

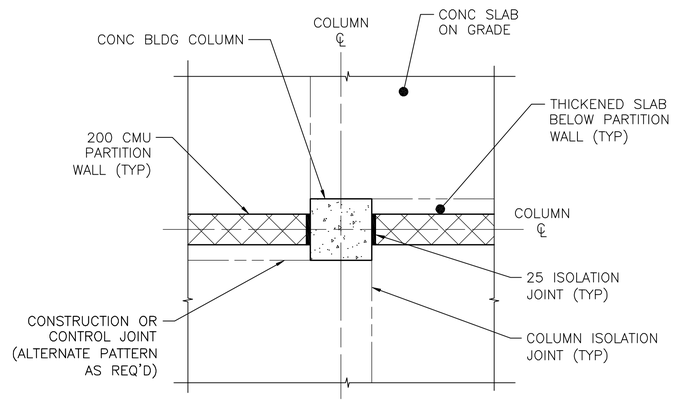


A S-501 **COLUMN ISOLATION JOINT DETAIL**
SCALE: NTS

0 200 400
SCALE: 1:10

UNLESS OTHERWISE NOTED, LINEAR DIMENSIONS SHOWN ON DRAWINGS ARE IN MILLIMETERS (mm)

APPROVED:

A/E DESIGNER OF RECORD

SEAL:

GEORGIA REGISTERED 1-29-10 No. 27141 PROFESSIONAL ENGINEER CHRISTOPHER W. WHITMORE

US ARMY CORPS OF ENGINEERS
AFGHANISTAN ENGINEER DISTRICT

| Mark | Description | Date | Appr. | Mark | Description | Date | Appr. |
|---|---|---|---|---|---|---|---|
| | | | | | | | |

Date: 2/23/10
Rev: 0
Design file no.
Drawing code:
File name: AN4SR9DS-501SC
Plot date: 2/23/2010
Plot scale: x:X

Designed by: KMP/MMY
Dwn by: RCG
Ckd by: CWW
Reviewed by: LHM
Submitted by:
BAKER

U.S. ARMY CORPS OF ENGINEERS
AFGHANISTAN ENGINEER DISTRICT
APO AE 96338

*Michael Baker Jr., Inc*
*A unit of Michael Baker Corporation*
Airside Business Park
100 Airside Drive
Moon Township, PA 15108
www.mbakercorp.com

AFGHAN NATIONAL ARMY
REGIONAL MILITARY TRAINING CENTER
STANDARD DESIGN

BRIDMALS AND BWT STORAGE

FOUNDATION SECTIONS

Sheet reference number:
S-501

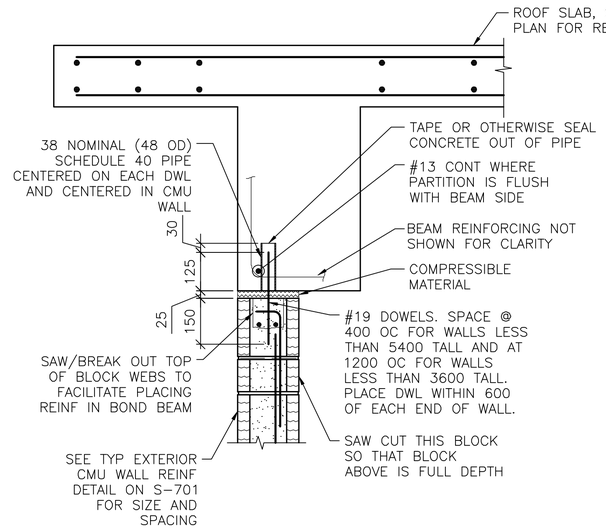


NOTES:
1. EXTEND DOWEL REINF TO 25 CLEAR FROM TOP OF CMU WALL.

1 S-102 **SECTION**
SCALE: 1:10

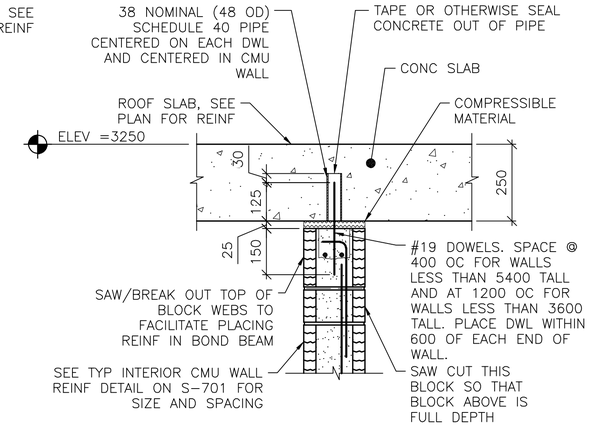


NOTES:
1. EXTEND DOWEL REINF TO 25 CLEAR FROM TOP OF CMU WALL.
2. SLAB REINF NOT SHOWN FOR CLARITY.

2 S-402 **SECTION**
SCALE: 1:10

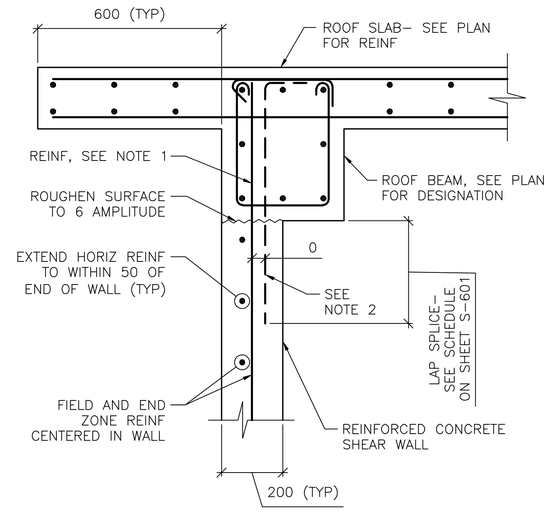


NOTES:
1. TERMINATE "FIELD" VERT REINF & END ZONE REINF @ 50 CLEAR FROM TOP OF ROOF SLAB.
2. WHERE END ZONE REINFORCING CANNOT BE DEVELOPED IN BEAM DEPTH, PROVIDE HOOKED DWLS SAME SIZE & SPACING. PROVIDE TENSION LAP BELOW ROOF BEAM.
3. SEE SHEET S-601 AND SHEET S-702 FOR SCHEDULED FIELD AND END ZONE REINF.

3 S-102 **SECTION**
SCALE: 1:10

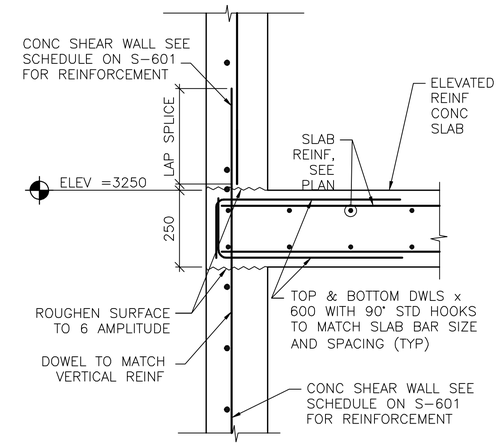


4 S-402 **SECTION**
SCALE: 1:10

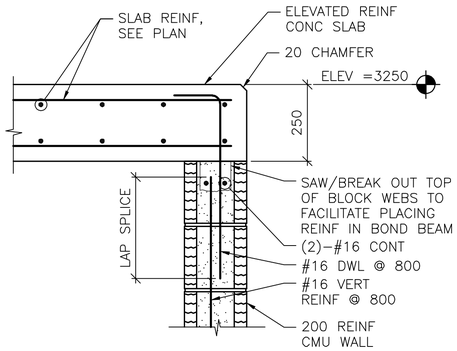


5 S-402 **SECTION**
SCALE: 1:10

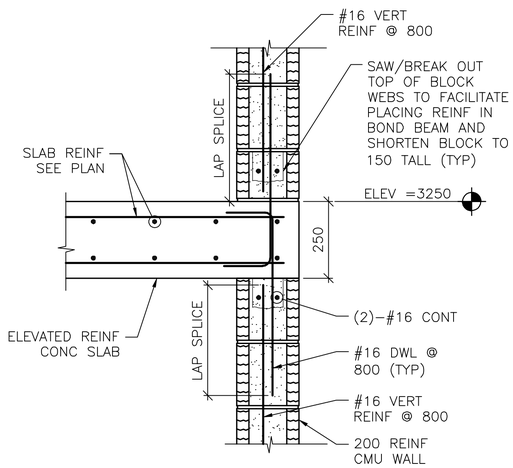


6 S-402 **SECTION**
SCALE: 1:10

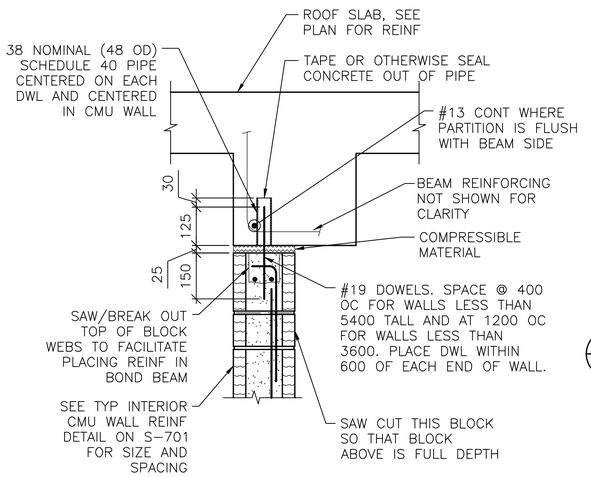


NOTES:
1. EXTEND DOWEL REINF TO 25 CLEAR FROM TOP OF CMU WALL.
2. PARTITION WALL MAY BE CENTERED UNDER THE BEAM OR FLUSH AS SHOWN. SEE PLAN FOR LOCATION.
3. SLAB REINF NOT SHOWN FOR CLARITY.

7 S-102 **SECTION**
SCALE: 1:10

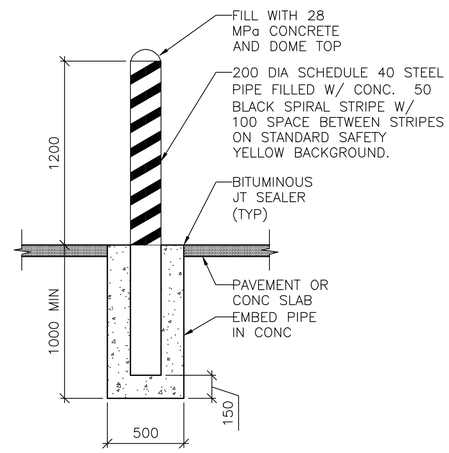


8 S-101 **SECTION AT BOLLARD**
SCALE: 1:20

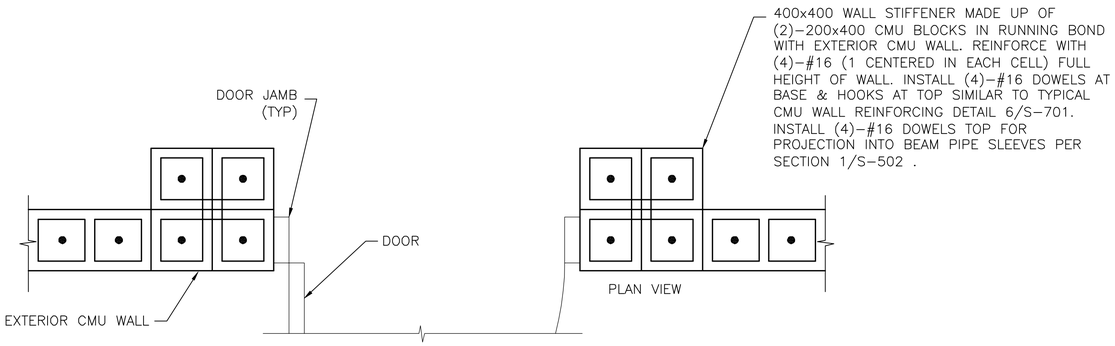


9 S-101 **DETAIL**
SCALE: 1:10

0 400 800
SCALE: 1:20

0 200 400
SCALE: 1:10

UNLESS OTHERWISE NOTED, LINEAR DIMENSIONS SHOWN ON DRAWINGS ARE IN MILLIMETERS (mm)

APPROVED:

A/E DESIGNER OF RECORD

SEAL:

GEORGIA REGISTERED PROFESSIONAL ENGINEER No. 27141 CHRISTOPHER W. WHITMORE

US ARMY CORPS OF ENGINEERS
AFGHANISTAN ENGINEER DISTRICT

| Mark | Description | Date | Appr. | Mark | Description | Date | Appr. |
|---|---|---|---|---|---|---|---|

Rev: 0
Date: 2/23/10
Design file no.
Drawing code:
File name: ANASBR05-502SC
Plot date: 2/23/2010
Plot scale: X:X

Designed by: KMF/MMY
Dwn by: RCG
Ckd by: CWW
Reviewed by: LHM
Submitted by: BAKER

U.S. ARMY CORPS OF ENGINEERS
AFGHANISTAN ENGINEER DISTRICT
APO AE 96338

Michael Baker Jr., Inc
A unit of Michael Baker Corporation
Airside Business Park
100 Airside Drive
Moon Township, PA 15108
www.mbakercorp.com

AFGHAN NATIONAL ARMY
REGIONAL MILITARY TRAINING CENTER
STANDARD DESIGN

BRIDMALS AND BWT STORAGE

FRAMING SECTIONS

Sheet reference number:
S-502

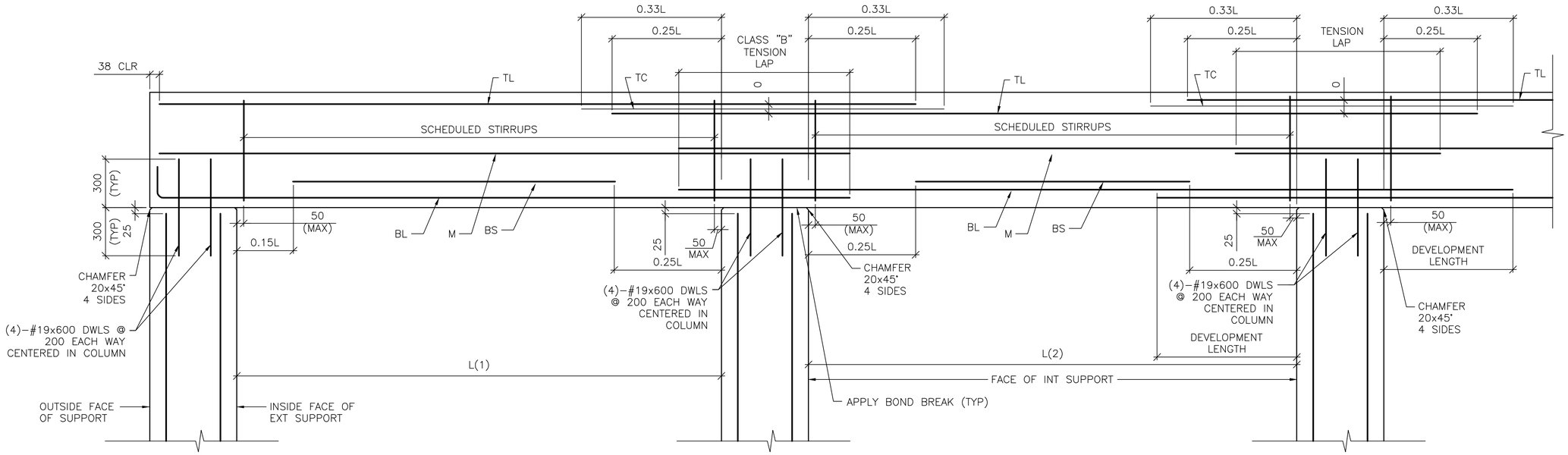


DETAIL NOTE:
1. WORK THIS DETAIL WITH BEAM SCHEDULE ON SHEET S-601.
2. L=GREATEST OF ADJACENT SPANS L(1) OR L(2)
3. ONLY COLUMN CORNER BARS ARE SHOWN

## 1 / S-503 ROOF BEAM REINFORCING DETAIL

SCALE: NTS

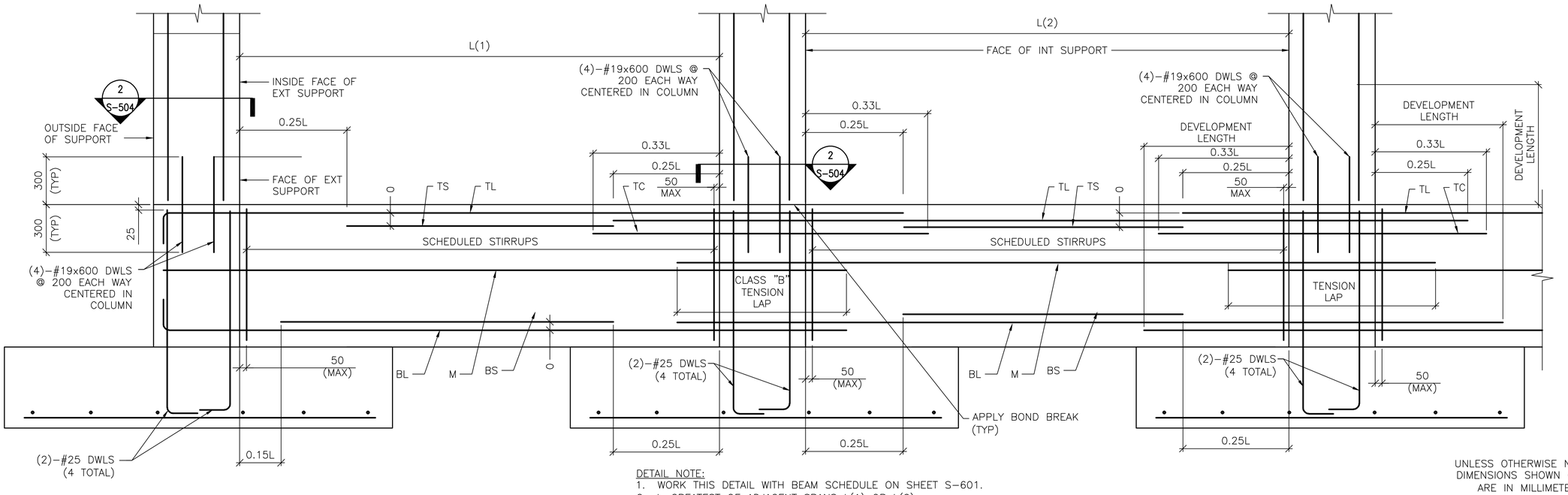


DETAIL NOTE:
1. WORK THIS DETAIL WITH BEAM SCHEDULE ON SHEET S-601.
2. L=GREATEST OF ADJACENT SPANS L(1) OR L(2)
3. ONLY COLUMN CORNER BARS ARE SHOWN.

## 2 / S-503 GRADE BEAM REINFORCING DETAIL

SCALE: NTS

UNLESS OTHERWISE NOTED, LINEAR DIMENSIONS SHOWN ON DRAWINGS ARE IN MILLIMETERS (mm)

APPROVED:

A/E DESIGNER OF RECORD

SEAL:

GEORGIA REGISTERED 2-23-10 No. 27141 PROFESSIONAL ENGINEER CHRISTOPHER W. WHITMORE

US ARMY CORPS OF ENGINEERS
AFGHANISTAN ENGINEER DISTRICT

| Mark | Description | Date | Appr. | Mark | Description | Date | Appr. |
|---|---|---|---|---|---|---|---|

Rev: 0
Date: 2/23/10
Designed by: KMP/MMY
Dwn by: RCG
Ckd by: CWW
Reviewed by: LHM
Submitted by: BAKER
Design file no.
Drawing code:
File name: ANASBR05-S503DT
Plot date: 2/23/2010
Plot scale: X:X

U.S. ARMY CORPS OF ENGINEERS
AFGHANISTAN ENGINEER DISTRICT
APO AE 96338

Michael Baker Jr., Inc.
A unit of Michael Baker Corporation
Airside Business Park
100 Airside Drive
Moon Township, PA 15108
www.mbakercorp.com

AFGHAN NATIONAL ARMY
REGIONAL MILITARY TRAINING CENTER
STANDARD DESIGN

BRIDMALS AND BWT STORAGE

BEAM & COLUMN DETAILS

Sheet reference number:
S-503

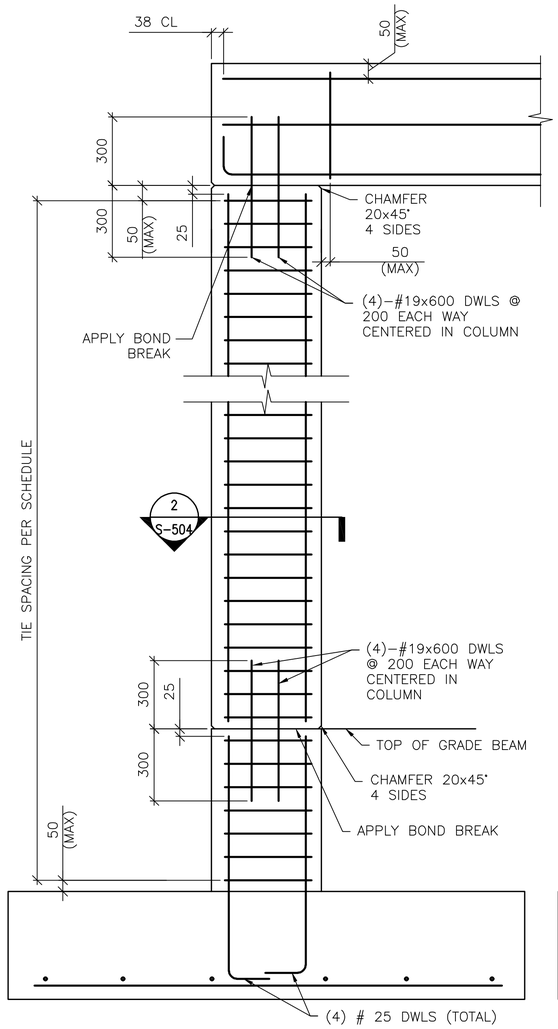


DETAIL NOTE:
1. ONLY COLUMN CORNER BARS ARE SHOWN

1 S-504 **1-STORY COLUMN REINF DETAILS**
SCALE: NTS
(WITH GRADE BEAM)

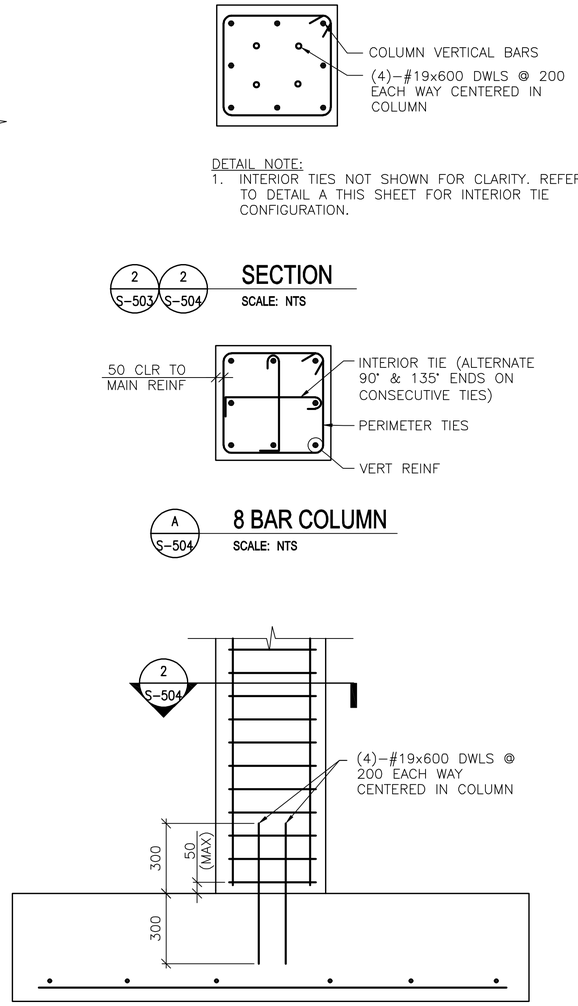


DETAIL NOTE:
1. ONLY COLUMN CORNER BARS ARE SHOWN

1 S-504 **1-STORY COLUMN REINF DETAILS**
SCALE: NTS
(WITHOUT GRADE BEAM)

DETAIL NOTE:
1. INTERIOR TIES NOT SHOWN FOR CLARITY. REFER TO DETAIL A THIS SHEET FOR INTERIOR TIE CONFIGURATION.

2 S-503 2 S-504 **SECTION**
SCALE: NTS




A S-504 **8 BAR COLUMN**
SCALE: NTS

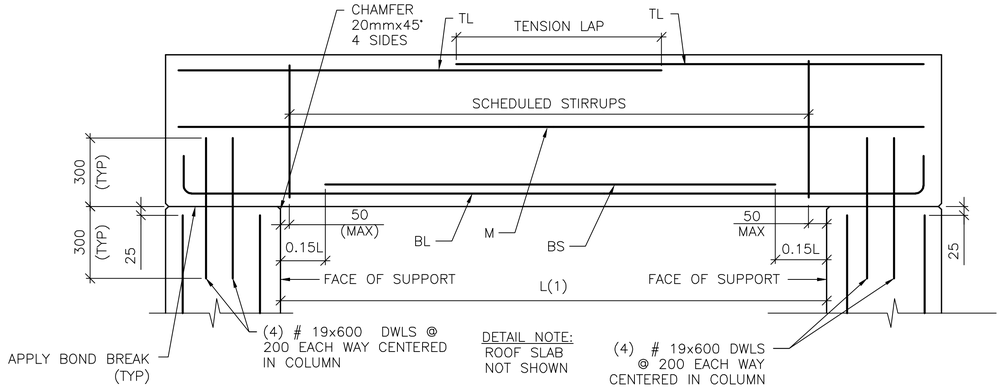


3 S-504 **SINGLE SPAN ROOF BEAM REINFORCING DETAIL**
SCALE: NTS

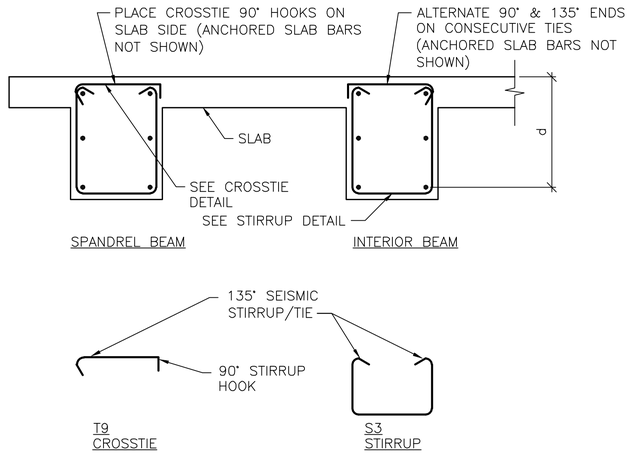


B S-504 **BEAM REINFORCEMENT DETAILS**
SCALE: NTS

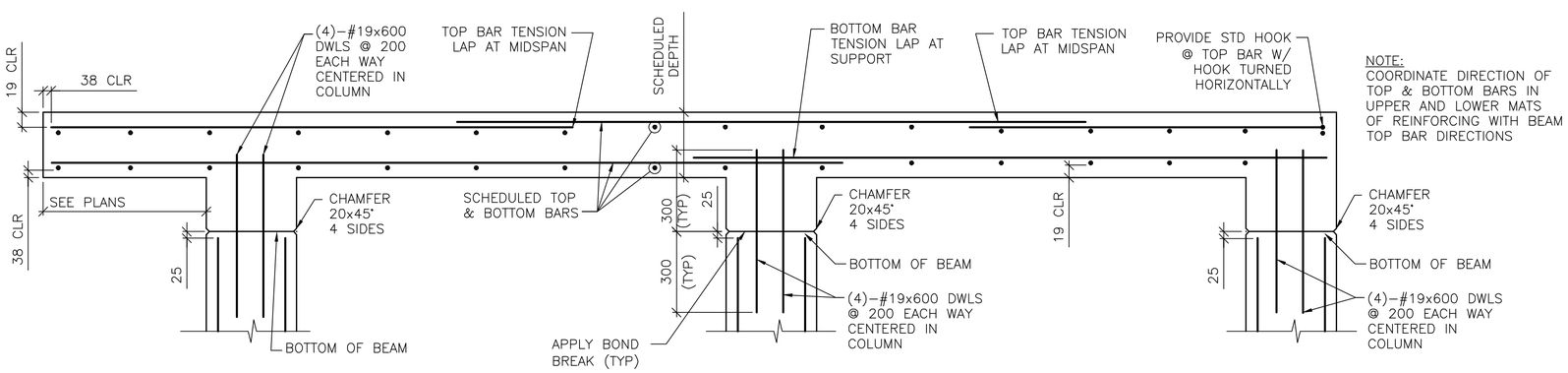


4 S-504 **FRAMED SLAB REINFORCING DETAIL**
SCALE: NTS

UNLESS OTHERWISE NOTED, LINEAR DIMENSIONS SHOWN ON DRAWINGS ARE IN MILLIMETERS (mm)

APPROVED:

A/E DESIGNER OF RECORD

SEAL:

GEORGIA REGISTERED 7-29-10 No. 27141 PROFESSIONAL ENGINEER CHRISTOPHER W. WHITMORE

US ARMY CORPS OF ENGINEERS
AFGHANISTAN ENGINEER DISTRICT

| Mark | Description | Date | Appr. | Mark | Description | Date | Appr. |
|---|---|---|---|---|---|---|---|

Designed by: KMP/MMY
Dwn by: RCG
Ckd by: CWW
Reviewed by: LHM
Submitted by: BAKER
Date: 2/23/10
Rev: 0
Design file no.
Drawing code:
File name: AN4S8R3DS-S04DT
Plot date: 2/23/2010
Plot scale: X:X

U.S. ARMY CORPS OF ENGINEERS
AFGHANISTAN ENGINEER DISTRICT
APO AE 96338

Michael Baker Jr., Inc
A unit of Michael Baker Corporation
Airside Business Park
100 Airside Drive
Moon Township, PA 15108
www.mbakercorp.com

AFGHAN NATIONAL ARMY
REGIONAL MILITARY TRAINING CENTER
STANDARD DESIGN

BRIDMALS AND BWT STORAGE

BEAM & COLUMN DETAILS

Sheet reference number:
S-504

# CONCRETE REINFORCEMENT TENSION DEVELOPMENT/LAP SPLICE SCHEDULE

| f'c = 28 MPa | LAP CLASS | UNCOATED BARS | | | |
|---|---|---|---|---|---|
| | | TOP BARS | | OTHER BARS | |
| BAR SIZES | | CASE 1 | CASE 2 | CASE 1 | CASE 2 |
| #10 TO #19 | A | 50 BAR DIA | 74 BAR DIA | 38 BAR DIA | 57 BAR DIA |
| | B | 64 BAR DIA | 96 BAR DIA | 50 BAR DIA | 74 BAR DIA |
| #22 TO #57 | A | 62 BAR DIA | 93 BAR DIA | 48 BAR DIA | 71 BAR DIA |
| | B | 80 BAR DIA | 121 BAR DIA | 62 BAR DIA | 93 BAR DIA |

NOTES:
1. TABULATED TENSION DEVELOPMENT LENGTH VALUES ARE TAKEN FROM CRSI DESIGN HANDBOOK 2008 10TH ED.
2. TENSION DEVELOPMENT & TENSION LAP SPLICE LENGTHS ARE EXPRESSED AS MULTIPLES OF BAR DIAMETERS.
3. TABULATED VALUES ARE BASED ON MINIMUM YIELD STRENGTH OF REINFORCEMENT, fy, OF 420MPa.
4. CONCRETE IS NORMAL WEIGHT (2400Kg/m³) AND 28 DAY COMPRESSIVE STRENGTH = 28MPa.
5. TABULATED VALUES FOR BEAMS & COLUMNS ARE BASED ON TRANSVERSE REINFORCEMENT AND CONCRETE COVER MEETING MINIMUM CODE REQUIREMENTS.
6. CASES 1 & 2, WHICH DEPEND ON THE TYPE OF STRUCTURAL MEMBER, CONCRETE COVER, AND CENTER-TO-CENTER SPACING OF THE BARS ARE DEFINED IN THE TABLE BELOW.
7. LAP SPLICE LENGTHS (MINIMUM 300mm) ARE MULTIPLES OF TENSION DEVELOPMENT LENGTHS: CLASS A = 1.0(TENSION DEVELOPMENT LENGTH) & CLASS B = 1.3(TENSION DEVELOPMENT LENGTH)
8. TOP BARS ARE HORIZONTAL REINFORCEMENT WITH MORE THAN 300mm OF CONCRETE CAST BELOW THE BARS.
9. IT SHALL BE PERMISSIBLE TO CALCULATE WALL AND SLAB REINFORCEMENT TENSION DEVELOPMENT/SPLICE LENGTHS IN ACCORDANCE WITH ACI 12.2.3 OR TABLE 5.3(b) OF CRSI 2008 IN LIEU OF VALUES TABULATED ABOVE.

| | | |
|---|---|---|
| BEAMS, COLUMNS | CASE 1 | CONCRETE COVER AT LEAST 1 BAR DIA AND CENTER-TO-CENTER SPACING AT LEAST 2 BAR DIA |
| | CASE 2 | CONCRETE COVER LESS THAN 1 BAR DIA OR CENTER-TO-CENTER SPACING LESS THAN 2 BAR DIA |
| ALL OTHERS | CASE 1 | CONCRETE COVER AT LEAST 1 BAR DIA AND CENTER-TO-CENTER SPACING AT LEAST 3 BAR DIA |
| | CASE 2 | CONCRETE COVER LESS THAN 1 BAR DIA OR CENTER-TO-CENTER SPACING LESS THAN 3 BAR DIA |

# CONCRETE COVER SCHEDULE

MINIMUM CONCRETE COVER PROTECTION FOR REINFORCEMENT BARS SHALL BE AS LISTED BELOW: (SEE ACI 318M-05, SECTION 7.7 FOR CONDITIONS NOT NOTED). DIMENSIONS FOR BAR PLACEMENT GIVEN IN SECTIONS AND DETAILS SHALL SUPERSEDE MINIMUM COVER REQUIREMENTS GIVEN HERE. DIMENSIONS ARE IN mm. PROVIDE STANDARD BAR CHAIRS AND SUPPORT BARS @1200mm MAXIMUM AS REQUIRED TO MAINTAIN CONCRETE PROTECTION SPECIFIED.

| | | |
|---|---|---|
| FOOTINGS (EARTH FORMED): | | 70 |
| COLUMNS / PIERS (TO TIES) | | 40 |
| GRADE BEAMS OR SLAB TURNED DOWN EDGES: | | |
| TOP | | 40 |
| BOTTOM (EARTH FORMED) | | 70 |
| SIDES (EARTH FORMED) | | 70 |
| SIDES (BOARD FORMED) | #16 BAR & SMALLER | 40 |
| | #19 THRU #36 BAR | 50 |
| ELEVATED BEAMS & SLABS: | | |
| BEAM TIES & STIRRUPS (NOT EXPOSED TO WEATHER) | | 40 |
| BEAM TIES & STIRRUPS (EXPOSED TO WEATHER) | | 50 |
| FLOOR SLABS (NOT EXPOSED TO WEATHER) | | 20 |
| FLOOR SLABS (EXPOSED TO WEATHER) | | |
| #19 & LARGER | | 50 |
| #13 & SMALLER | | 40 |
| ROOF SLAB BARS | | 25 |
| SLABS ON GRADE | | |
| NOT EXPOSED TO WEATHER (FROM TOP) | | 20 |
| EXPOSED TO WEATHER (FROM TOP) | | 40 |
| UTILITY TUNNEL WALLS, RETAINING WALLS AND SHEAR WALLS. (NO SURFACES SHALL BE EARTH FORMED) | | |
| EARTH SIDE AND FRONT SIDE (EXPOSED TO WEATHER) | | |
| #16 BAR AND SMALLER | | 40 |
| #19 THRU #36 BAR | | 50 |

# COLUMN FOOTING SCHEDULE

| MARK | FOOTING SIZE (mm) | | | FOOTING REINFORCING | REMARKS |
|---|---|---|---|---|---|
| | LENGTH | WIDTH | THICKNESS | | |
| F1 | 3900 | 3900 | 400 | (9)-#25 EW BOTT | ----- |
| F2 | 3100 | 3100 | 300 | (8)-#22 EW BOTT | ----- |
| F3 | 2500 | 2500 | 250 | (6)-#19 EW BOTT | ----- |
| F4 | 5400 | 2900 | 450 | (12)-#22 SHORT BOTT<br>(12)-#25 LONG BOTT | ----- |
| F5 | 2800 | 2200 | 250 | (7)-#16 SHORT BOTT<br>(7)-#19 LONG BOTT | ----- |

# CONCRETE SHEAR WALL SCHEDULE

| MARK | TYPE | WALL LENGTH (L) (mm) | WALL REINFORCEMENT | | REMARKS |
|---|---|---|---|---|---|
| | | | END ZONE | FIELD | |
| SW1 | C | 6400 | (5)-#19 @ 225mm OC | #13 @ 300mm OC | ----- |
| SW2 | C | 6100 | (5)-#19 @ 225mm OC | #13 @ 300mm OC | ----- |

NOTES:
1. WORK THIS SCHEDULE WITH SHEAR WALL DETAILS ON SHEETS S-702
2. SEE PLAN FOR LOCATION OF SHEAR WALL(S).
3. VERTICAL "FIELD" BARS MAY BE OMITTED IN LOCATION OF "END ZONE" REINFORCEMENT.
4. WALL FIELD REINF LISTED APPLIES TO VERT & HORIZ BARS.
5. WALL FIELD REINFORCEMENT CENTERED IN WALL.

# STANDARD HOOKS IN TENSION PER (ACI 318M-05)

| HOOK DEVELOPMENT LENGTH (mm) | |
|---|---|
| BAR SIZE | f'c 28 MPa |
| #10 | 180 |
| #13 | 250 |
| #16 | 300 |
| #19 | 380 |
| #22 | 430 |
| #25 | 480 |
| #29 | 560 |
| #32 | 610 |
| #36 | 690 |

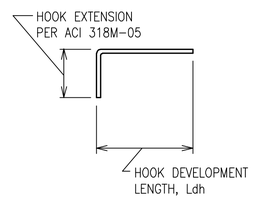


NOTES:
1. CONCRETE IS NORMAL WEIGHT CONCRETE.
2. BAR YIELD STRENGTH, fy = 420 MPa
3. SIDE COVER REQUIREMENTS OF ACI SECT. 12.5.3 ARE ASSUMED TO NOT BE MET.
4. TIE OR STIRRUP REQUIREMENTS OF ACI SECT. 12.5.3 ARE ASSUMED TO NOT BE MET.
5. REDUCTION FOR EXCESS REINFORCEMENT IS NOT TAKEN.
6. HOOK DEVELOPMENT LENGTH IS VALID FOR 180° HOOKS ALSO.

# CMU OR CAST IN PLACE CONC LINTEL SCHEDULE (TYP)

| OPENING TYPE OR SIZE, BEAM LOCATION OR TYPE | MAX SPAN (mm) | LINTEL DEPTH (mm) | REINFORCING BOTTOM |
|---|---|---|---|
| WALL OPENING | 4000 | 600 | (2)-#16 T&B |
| WALL OPENING | 1900 | 400 | (2)-#16 T&B |
| WALL OPENING | 1000 | 400 | (2)-#13 B |

1. STRUCTURAL SHEETS DO NOT INDICATE ALL OPENINGS IN MASONRY WALLS. VERIFY NUMBER, SIZE AND LOCATION OF ALL OPENINGS IN MASONRY WALLS FROM ARCHITECTURAL SHEETS AND APPROVED PLUMBING, MECHANICAL, AND ELECTRICAL SHOP DRAWINGS.
2. PROVIDE 200mm BEARING EA END.
3. FOR HEAD DETAILS REFER TO ARCHITECTURAL SHEETS.
4. REINFORCING SHALL BE ASTM A615M, GRADE 420. GROUT FOR CMU LINTELS SHALL HAVE A MINIMUM COMPRESSIVE STRENGTH OF 14 MPa AT 28 DAYS.
5. CONTRACTOR SHALL SUBMIT FOR APPROVAL SHOP DRAWINGS AND SCHEDULES SHOWING SIZE, SPAN, REINFORCEMENT, DETAILS, LOCATIONS, ETC.

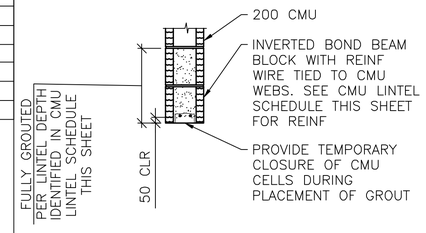


A
S-601
## LINTEL DETAIL
SCALE: NTS

# BEAM SCHEDULE

| MARK | BEAM SIZE (mm) | | BEAM REINFORCING | | | | | | STIRRUPS | | | REMARKS |
|---|---|---|---|---|---|---|---|---|---|---|---|---|
| | DEPTH | WIDTH | BL | BS | TL | TS | TC | M | SIZE | TYPE | SPACING | |
| GRADE BEAMS | | | | | | | | | | | | |
| GB1 | 750 | 400 | (2)-#22 | (1)-#22 | (2)-#19 | --- | --- | --- | #13 | S3 +T9 | d/2 | ----- |
| GB2 | 750 | 400 | (2)-#25 | (2)-#25 | (2)-#25 | --- | --- | --- | #13 | S3 +T9 | d/2 | ----- |
| ROOF BEAMS | | | | | | | | | | | | |
| RB1 | 600 | 400 | (2)-#22 | (1)-#22 | (2)-#19 | --- | --- | --- | #13 | S3+T9 | d/2 | ----- |
| RB2 | 600 | 400 | (2)-#22 | (1)-#22 | (2)-#22 | --- | --- | --- | #13 | S3+T9 | d/2 | |

NOTES:
1. WORK THIS SCHEDULE WITH BEAM REINFORCING DETAILS ON SHEETS S-503 AND S-504.
2. HOOKS SHOWN ON SECTIONS AND DETAILS SHALL BE 90° STD UON.
3. USE ONLY (1) TC AT BEAM COLUMN INTERSECTION WHERE REQ'D.

# COLUMN SCHEDULE

| COLUMN MARK / DESCRIPTION | TYP UON | --- | --- | --- |
|---|---|---|---|---|
| TYPE | 8-BAR | --- | --- | --- |
| DIMENSIONS | 600mm SQ | --- | --- | --- |
| VERTICAL REINFORCEMENT | (8)-#25 | --- | --- | --- |
| TIES | #13 @ d/2 | --- | --- | --- |
| TOP OF ROOF ELEVATION | 5600mm | --- | --- | --- |
| TOP OF GRADE BEAM ELEVATION | -200mm | --- | --- | --- |
| TOP OF FOOTING ELEVATION | -950mm | --- | --- | --- |

NOTES:
1. WORK THIS SCHEDULE WITH COLUMN DETAILS ON SHEET S-504.
2. SEE FOOTING SCHEDULE ON THIS SHEET FOR FOOTING INFORMATION.
3. COLUMN TIES: INTERIOR TIES TO MATCH SIZE & SPACING OF PERIMETER TIES.
4. HOOKS SHOWN ON SECTIONS & DETAILS SHALL BE 90° STD UON.

UNLESS OTHERWISE NOTED, LINEAR DIMENSIONS SHOWN ON DRAWINGS ARE IN MILLIMETERS (mm)

APPROVED:

A/E DESIGNER OF RECORD

SEAL:

GEORGIA REGISTERED 1-29-10 No. 27141 PROFESSIONAL ENGINEER CHRISTOPHER W. WHITMORE

US ARMY CORPS OF ENGINEERS
AFGHANISTAN ENGINEER DISTRICT

| Mark | Description | Date | Appr. | Mark | Description | Date | Appr. |
|---|---|---|---|---|---|---|---|
| | | | | | | | |

U.S. ARMY CORPS OF ENGINEERS
AFGHANISTAN ENGINEER DISTRICT
APO AE 96338

Michael Baker Jr., Inc
A unit of Michael Baker Corporation
Airside Business Park
100 Airside Drive
Moon Township, PA 15108
www.mbakercorp.com

Designed by: KMP/MMY
Dwn by: RCG
Ckd by: CWW
Reviewed by: LHM
Submitted by: BAKER
Date: 2/23/10
Rev: 0
Design file no.
Drawing code:
File name: AMASBR1DS-S01SCH
Plot date: 2/23/2010
Plot scale: X:X

AFGHAN NATIONAL ARMY
REGIONAL MILITARY TRAINING CENTER
STANDARD DESIGN

BRIDMALS AND BWT STORAGE

SCHEDULES

Sheet reference number:
S-601

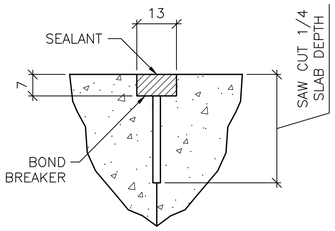


CONTROL JOINT DETAIL

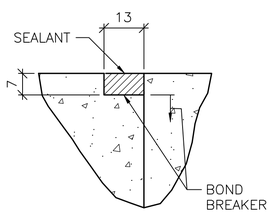


CONSTRUCTION JOINT DETAIL

## 1 S-701 TYPICAL CONCRETE SLAB JOINT FINISH DETAILS

SCALE: NTS

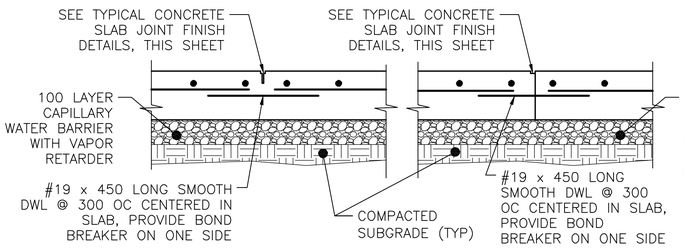


CONTROL JOINT DETAIL

CONSTRUCTION JOINT DETAIL

## 2 S-701 TYPICAL SLAB ON GRADE JOINT DETAIL

SCALE: NTS

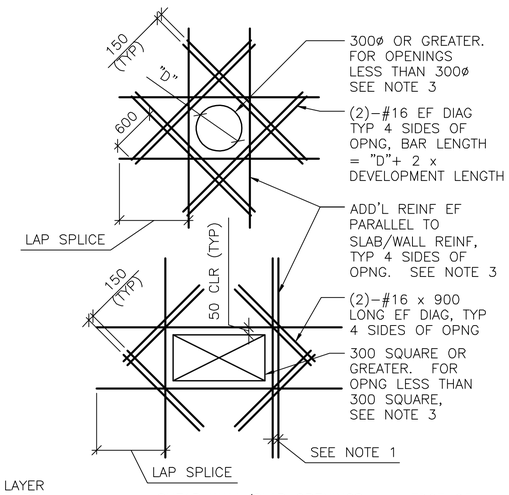


SHEAR WALL/SLAB OPENINGS

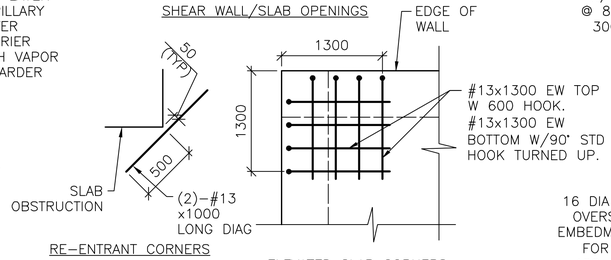


RE-ENTRANT CORNERS

ELEVATED SLAB CORNERS

DETAIL NOTES:

1. WHERE MORE THAN ONE ADDITIONAL BAR IS REQUIRED PARALLEL TO THE EXISTING SLAB/WALL REINFORCING THE ADDITIONAL REINFORCING BARS SHALL BE SPACED AT 100 ON CENTER.
2. ADDITIONAL REINFORCING PARALLEL TO THE SLAB/WALL REINFORCING SHALL BE #16 BARS THAT PROVIDE A STEEL AREA ON EACH SIDE OF THE OPENING EQUAL TO 1/2 THE AREA OF THE REINFORCING CUT BY THE OPENING.
3. FOR OPENINGS WITH SIDES OR DIAMETERS LESS THAN 300 SPREAD THE SLAB/WALL REINFORCING TO CLEAR THE OPENING.

## 4 S-701 ADD'L CONCRETE REINFORCEMENT DETAILS

SCALE: NTS

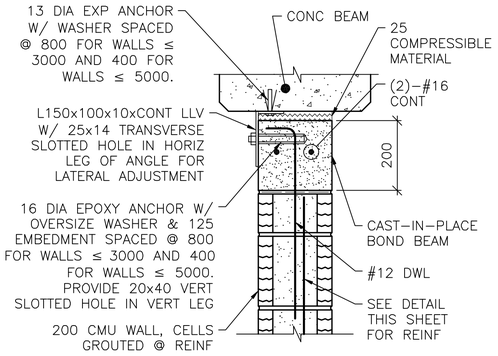


NOTE:

1. AT ANCHOR BOLTS, ADD AN ADDITIONAL 25 COMPRESSIBLE MATERIAL BELOW EXP ANCHOR HEAD.

INTERIOR BEAM

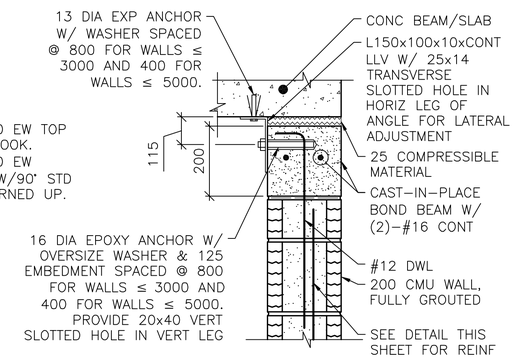


EXTERIOR WALL OR SLAB

NOTES:

1. THIS DETAIL IS AN ALTERNATE TOP OF WALL ANCHORAGE DETAIL TO BE USED AT THE CONTRACTOR'S OPTION IN LIEU OF DETAILS SHOWN ON S-400 & S-500 DRAWINGS.
2. CAST-IN-PLACE BOND BEAM SHOWN AT TOP OF WALL IS ALSO APPLICABLE FOR INTERMEDIATE AND STARTER COURSE BOND BEAMS WITHIN WALL.

## 5 S-701 ALTERNATE TOP OF CMU WALL BRACING DETAILS

SCALE: NTS

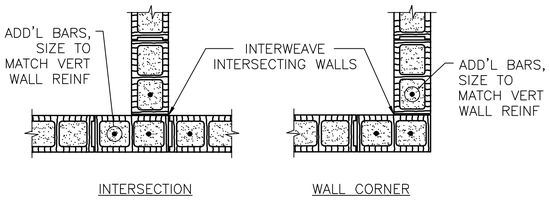


INTERSECTION

WALL CORNER

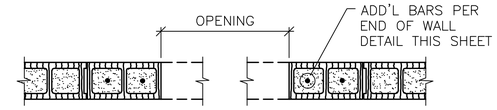


MASONRY OPENING W/ LINTEL

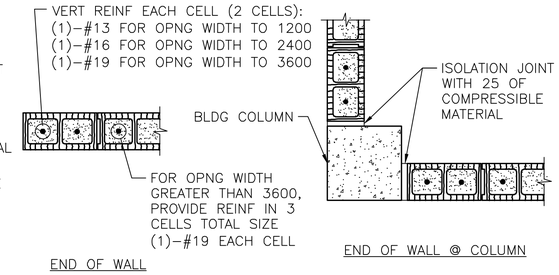


END OF WALL

END OF WALL @ COLUMN

NOTES:

1. OPENING WIDTH SHALL NOT EXCEED 3600 FOR THIS TYPE OF JAMB.
2. ALL CELLS FULLY GROUTED AT EXTERIOR WALLS. AT INTERIOR WALLS, ONLY GROUT CELLS CONTAINING REINF.

## 6 S-701 TYP CMU DETAILS

SCALE: NTS

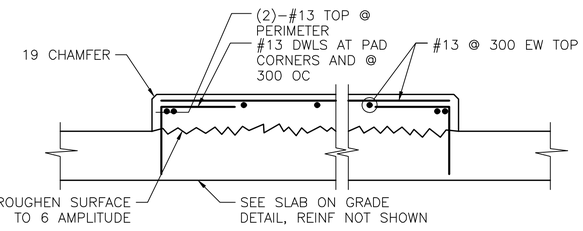


## 3 S-701 INTERIOR EQUIPMENT PAD DETAIL

SCALE: NTS

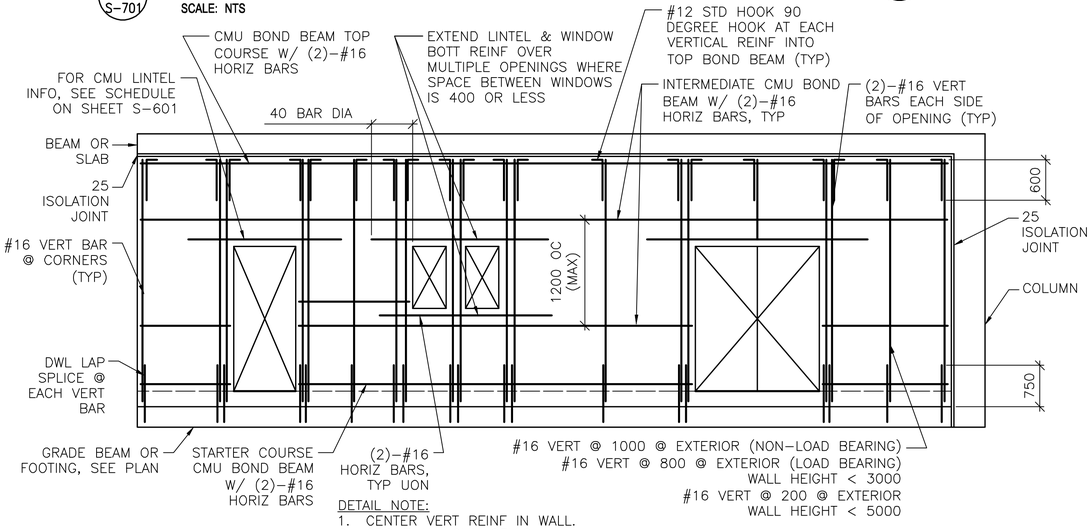


DETAIL NOTE:

1. CENTER VERT REINF IN WALL.
2. GROUT ALL CMU CELLS.
3. REFERENCE ARCH DWGS FOR JOINT INFORMATION
4. DOWELS BETWEEN TOP BOND BEAM AND BEAM/SLAB ABOVE (INCLUDING EMBEDDED PIPE SLEEVE) NOT SHOWN FOR CLARITY. SEE SPECIFIC S-500 SERIES DWGS FOR INFO.
5. FOR INFORMATION ON ALTERNATE CAST-IN-PLACE WALL BOND BEAMS, REFERENCE ALTERNATE TOP OF CMU WALL BRACING DETAILS THIS SHEET.

## 7 S-701 TYP EXTERIOR CMU WALL REINF DETAIL

SCALE: NTS

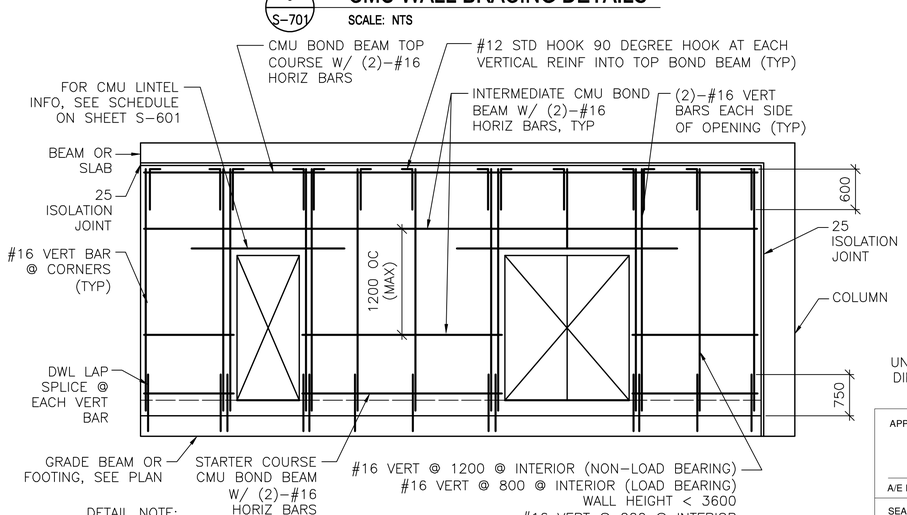


DETAIL NOTE:

1. CENTER VERT REINF IN WALL.
2. GROUT ALL CMU CELLS.
3. REFERENCE ARCH DWGS FOR JOINT INFORMATION
4. DOWELS BETWEEN TOP BOND BEAM AND BEAM/SLAB ABOVE (INCLUDING EMBEDDED PIPE SLEEVE) NOT SHOWN FOR CLARITY. SEE SPECIFIC S-500 SERIES DWGS FOR INFO.
5. FOR INFORMATION ON ALTERNATE CAST-IN-PLACE WALL BOND BEAMS, REFERENCE ALTERNATE TOP OF CMU WALL BRACING DETAILS THIS SHEET.

## 8 S-701 TYP INTERIOR CMU WALL REINF DETAIL

SCALE: NTS

UNLESS OTHERWISE NOTED, LINEAR DIMENSIONS SHOWN ON DRAWINGS ARE IN MILLIMETERS (mm)

APPROVED:

A/E DESIGNER OF RECORD

SEAL:

GEORGIA REGISTERED No. 27141 PROFESSIONAL ENGINEER CHRISTOPHER W. WHITMORE 1-29-10

US ARMY CORPS OF ENGINEERS
AFGHANISTAN ENGINEER DISTRICT

| Mark | Description | Date | Appr. | Mark | Description | Date | Appr. |
|---|---|---|---|---|---|---|---|
| | | | | | | | |

Rev: 0
Date: 2/23/10
Design file no.
Drawing code:
File name: AMASBR05-701T01T
Plot date: 2/23/2010
Plot scale: X:X

Designed by: KMP/MMY
Dwn by: RCG
Ckd by: CWW
Reviewed by: LHM
Submitted by:
BAKER

U.S. ARMY CORPS OF ENGINEERS
AFGHANISTAN ENGINEER DISTRICT
APO AE 96338

Michael Baker Jr., Inc
A unit of Michael Baker Corporation
Airside Business Park
100 Airside Drive
Moon Township, PA 15108
www.mbakercorp.com

AFGHAN NATIONAL ARMY
REGIONAL MILITARY TRAINING CENTER
STANDARD DESIGN

BRIDMALS AND BWT STORAGE

TYPICAL DETAILS

Sheet reference number:
S-701

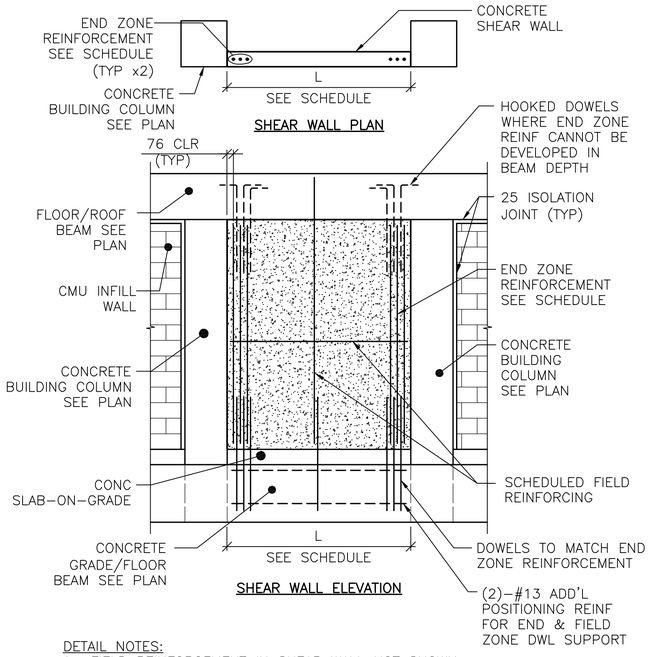


DETAIL NOTES:
1. FIELD REINFORCEMENT IN SHEAR WALL NOT SHOWN COMPLETELY FOR CLARITY.
2. FIELD REINFORCEMENT CENTERED IN WALL.
3. MINIMUM CONC CLEAR DISTANCE FOR END ZONE REINF = 76
4. SEE CONC SHEAR WALL SCHEDULE ON SHEET S-601
5. SEE ARCH DWGS FOR ISOLATION JOINT INFORMATION

## 1 S-702 TYPE "C" SHEAR WALL DETAIL
SCALE: NTS

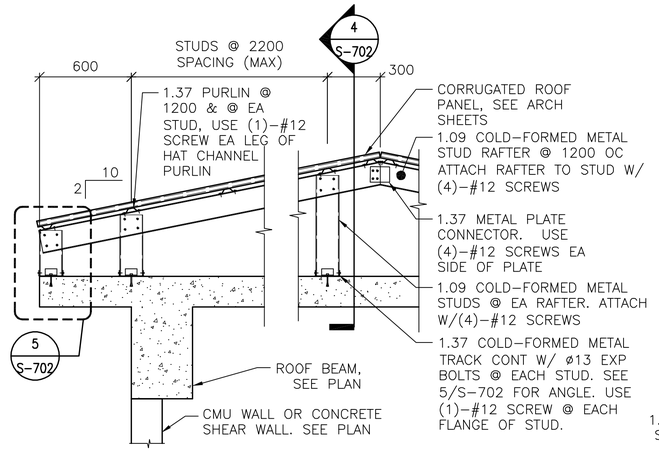


DETAIL NOTES:
1. ALL GABLE END VERTICAL STUDS SHALL BE ORIENTED 90° TO INTERIOR STUDS & SPACED @ 600 OC. GABLE END RAFTER SHALL BE 1.37 METAL TRACK SPANNING CONTINUOUSLY OVER GABLE END STUDS. INSET GIRTS AT GABLE END SHALL BE 1.09 COLD-FORMED METAL STUDS @ 1200 OC ATTACHED VIA 1.37 THICKNESS CLIP ANGLE W/ (2) #12 SCREWS EA LEG.
2. ALL INTERIOR, NON-GABLE END VERTICAL STUDS GREATER THAN 2400 IN LENGTH SHALL BE BACK-TO-BACK W/ #12 SCREWS @ 200 OC STAGGERED.

## 2 S-702 TYPICAL OVERBUILT ROOF FRAMING DETAIL
SCALE: NTS

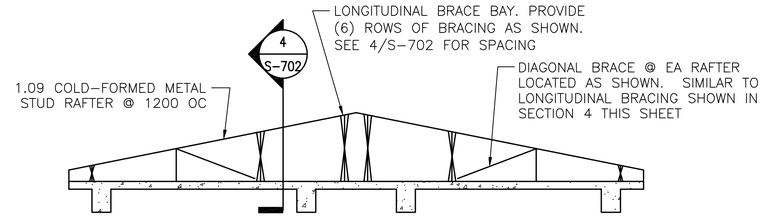


## 3 S-702 TYPICAL ROOF BRACE LAYOUT
SCALE: NTS

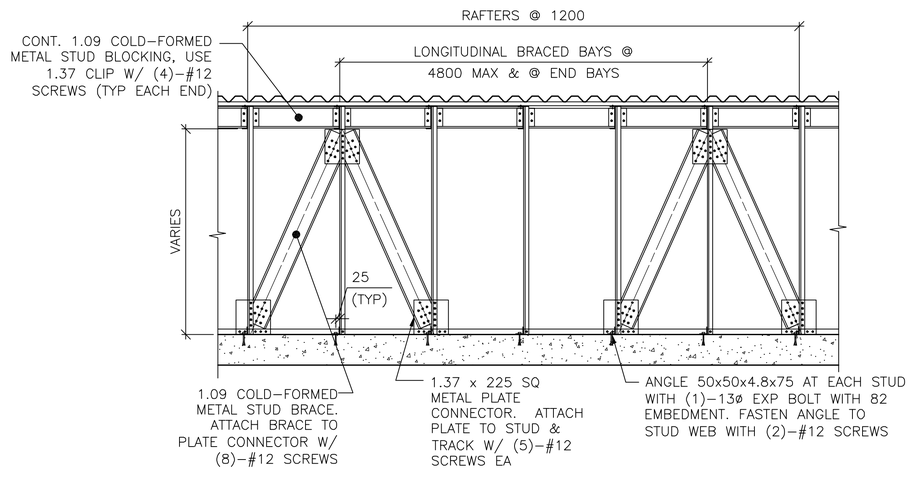


## 4 S-702 SECTION
SCALE: NTS

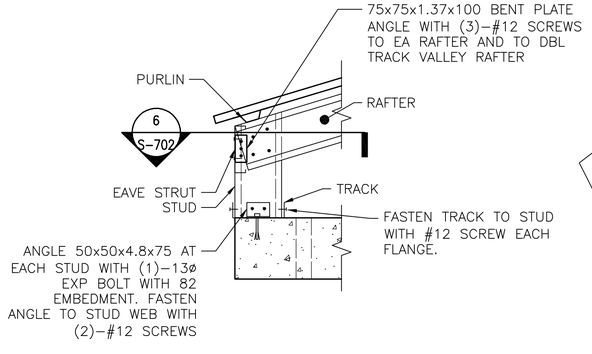


## 5 S-702 DETAIL
SCALE: NTS

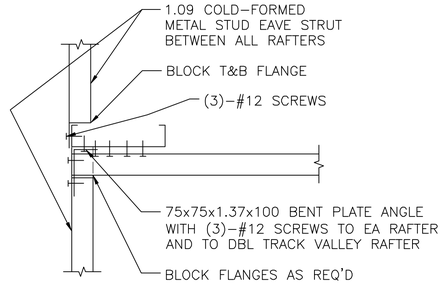


## 6 S-702 SECTION
SCALE: NTS

UNLESS OTHERWISE NOTED, LINEAR DIMENSIONS SHOWN ARE IN MILLIMETERS (mm)

APPROVED:

A/E DESIGNER OF RECORD

SEAL:

GEORGIA REGISTERED PROFESSIONAL ENGINEER No. 27141 CHRISTOPHER W. WHITMORE 2-23-10

US ARMY CORPS OF ENGINEERS
AFGHANISTAN ENGINEER DISTRICT

| Mark | Description | Date | Appr. | Mark | Description | Date | Appr. |
|---|---|---|---|---|---|---|---|

Designed by: KMP/MMY
Dwn by: RCG
Ckd by: CWW
Reviewed by: LHM
Submitted by: BAKER
Date: 2/23/10
Rev: 0
Design file no.
Drawing code:
File name: AAASBSDS-702TDT
Plot date: 2/23/2010
Plot scale: x:X

U.S. ARMY CORPS OF ENGINEERS
AFGHANISTAN ENGINEER DISTRICT
APO AE 96338

Michael Baker Jr., Inc.
A unit of Michael Baker Corporation
Airside Business Park
100 Airside Drive
Moon Township, PA 15108
www.mbakercorp.com

AFGHAN NATIONAL ARMY
REGIONAL MILITARY TRAINING CENTER
STANDARD DESIGN

BRIDMALS AND BWT STORAGE

TYPICAL DETAILS

Sheet reference number:
S-702

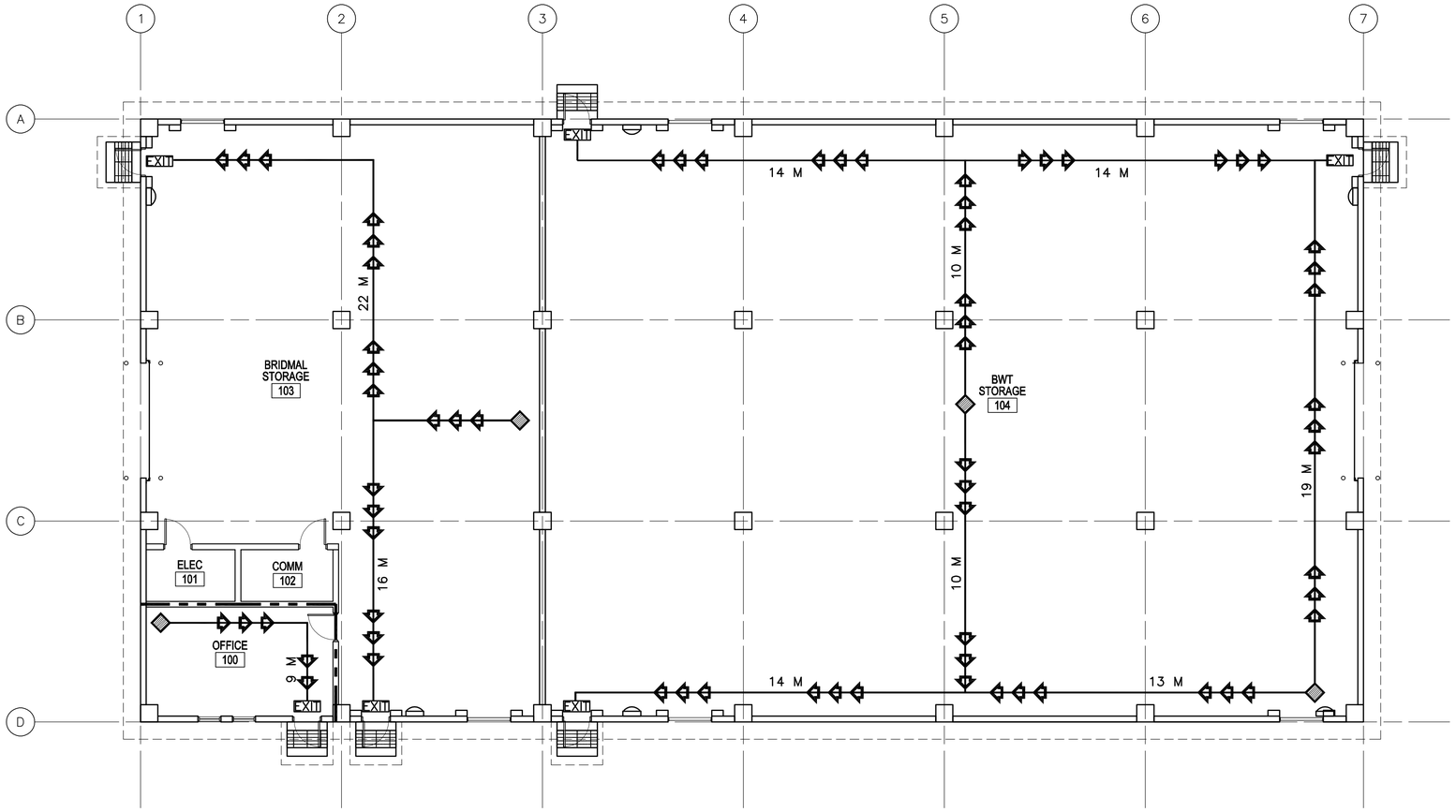


1 A001 **LIFE SAFETY PLAN**

SCALE: 1:100

## CODE ANALYSIS:

1. REFERENCES:
   2006 INTERNATIONAL BUILDING CODE (2006 IBC)
   2006 LIFE SAFETY CODE (2006 NFPA 101)

2. IBC OCCUPANCY CLASSIFICATION:
   GROUP S–1
   (STORAGE, ORDINARY HAZARD NFPA 101 6.1.13.1 & 6.2.2 AND CHAPTER 42)

3. TYPE OF CONSTRUCTION (IBC): TYPE II–B (UNPROTECTED/NONSPRINKLERED)

4. IBC TABLE 503: ALLOWABLE HEIGHT AND BUILDING AREAS:
   GROUP S–1
   ALLOWABLE AREA: 1625 SM
   ALLOWABLE HEIGHT: 2 STORIES (16 M)

   GROUP S–1
   PROPOSED AREA: 895 SM
   PROPOSED HEIGHT: 1 STORY (<16 M)

5. IBC TABLE 601 & 602: FIRE RESISTANCE RATING REQUIREMENTS FOR BUILDING ELEMENTS FOR TYPE II–B

| BUILDING ELEMENT | RATING (HOUR) | REFERENCE |
|---|---|---|
| STRUCTURAL FRAME (COLUMNS, GIRDERS & TRUSSES) | 0 | TABLE 601 |
| BEARING WALLS | | |
| EXTERIOR | 0 | TABLE 601 |
| INTERIOR | 0 | TABLE 601 |
| NONBEARING WALLS & PARTITIONS | | |
| INTERIOR | 0 | TABLE 601 |
| FLOOR CONSTRUCTION | 0 | TABLE 601 |
| ROOF CONSTRUCTION | 0 | TABLE 601 |
| EXTERIOR WALL | 0 | TABLE 602 |

6. IBC TABLE 803.5 – INTERIOR WALL AND CEILING FINISH REQUIREMENTS FOR S–1 OCCUPANCY/NONSPRINKLERED

| GROUP | EXIT ENCLOSURES AND EXIT PASSAGEWAY | CORRIDORS | ROOMS AND ENCLOSED SPACES |
|---|---|---|---|
| S | B | B | C |

7. NFPA 101 TABLE 7.3.1.2 – OCCUPANT LOAD
   STORAGE = N/A
   NFPA 101 42.1.7: USE THE PROBABLE POPULATION: 5

8. NFPA 101 TABLE 7.3.3.1 – EGRESS CAPACITY
   STORAGE = 5 MM PER OCCUPANT

   REQUIRED: 25 MM (5 OCCUPANTS x 5 MM PER OCCUPANT)
   PROPOSED EGRESS CAPACITY: 4500 MM: (5) 900 MM DOORS

9. NFPA 101 PARAGRAPH 42.2.6 AND TABLE 42.2.6 – EXIT ACCESS TRAVEL DISTANCE
   REQUIRED: 61 METERS
   PROPOSED: 26 METERS

10. NFPA 101 PARAGRAPH 42.3.6 – CORRIDORS
    CORRIDORS ARE NOT REQUIRED AS DOORS EXIT DIRECTLY TO OUTSIDE

11. NFPA 101 PARAGRAPH 42.2.4.1 AND 7.4.1.1 – MINIMUM NUMBER OF EXITS
    REQUIRED: 1 MINIMUM
    PROPOSED: 4 EXIT

12. NFPA 101, TABLE 6.1.14.4.1 – REQUIRED SEPARATION OF OCCUPANCIES
    BUSINESS TO ORDINARY HAZARD STORAGE
    REQUIRED: 2 HOUR
    PROVIDED: 2 HOUR

13. NFPA 101, TABLE 8.3.4.2 –OPENING PROTECTIVE
    REQUIRED: 90 MINUTE DOOR IN 2 HOUR FIRE BARRIER
    PROVIDED: 90 MINUTE DOOR IN 2 HOUR FIRE BARRIER

## LEGEND:

- DENOTES PATHS OF EXIT TRAVEL
- EXIT — DENOTES DOOR AS AN EMERGENCY EXIT
- DENOTES STARTING POINT FOR TRAVEL DISTANCE
- DENOTES FIRE EXTINGUISHER LOCATIONS
- (1) HOUR RATED WALL
- (2) HOUR RATED WALL
- (3) HOUR RATED WALL

LINEAR DIMENSIONS SHOWN ARE IN MILLIMETERS (MM), UNLESS OTHERWISE NOTED

0 2000 4000
SCALE: 1:100

APPROVED:

A/E DESIGNER OF RECORD

SEAL:

STATE OF SOUTH CAROLINA
KEVIN R. CHAFIN
N. Charleston, SC
6374
REGISTERED ARCHITECT

US ARMY CORPS OF ENGINEERS
AFGHANISTAN ENGINEER DISTRICT

| Mark | Description | Date | Appr. | Mark | Description | Date | Appr. |
|---|---|---|---|---|---|---|---|

Date: 2/23/10 Rev: 0
Design file no.
Drawing code:
File name: ANASBSDA-0011.SP
Plot date: 2/23/2010
Plot scale: x:X

Designed by: KRC
Dwn by: KJG
Ckd by: NLJ
Reviewed by: LHM
Submitted by:
BAKER

U.S. ARMY CORPS OF ENGINEERS
AFGHANISTAN ENGINEER DISTRICT
APO AE 96338

Michael Baker Jr., Inc
A unit of Michael Baker Corporation
Airside Business Park
100 Airside Drive
Moon Township, PA 15108
www.mbakercorp.com

AFGHAN NATIONAL ARMY
REGIONAL MILITARY TRAINING CENTER
STANDARD DESIGN

BRIDMALS AND BWT STORAGE

LIFE SAFETY PLAN

Sheet reference number:
A–001

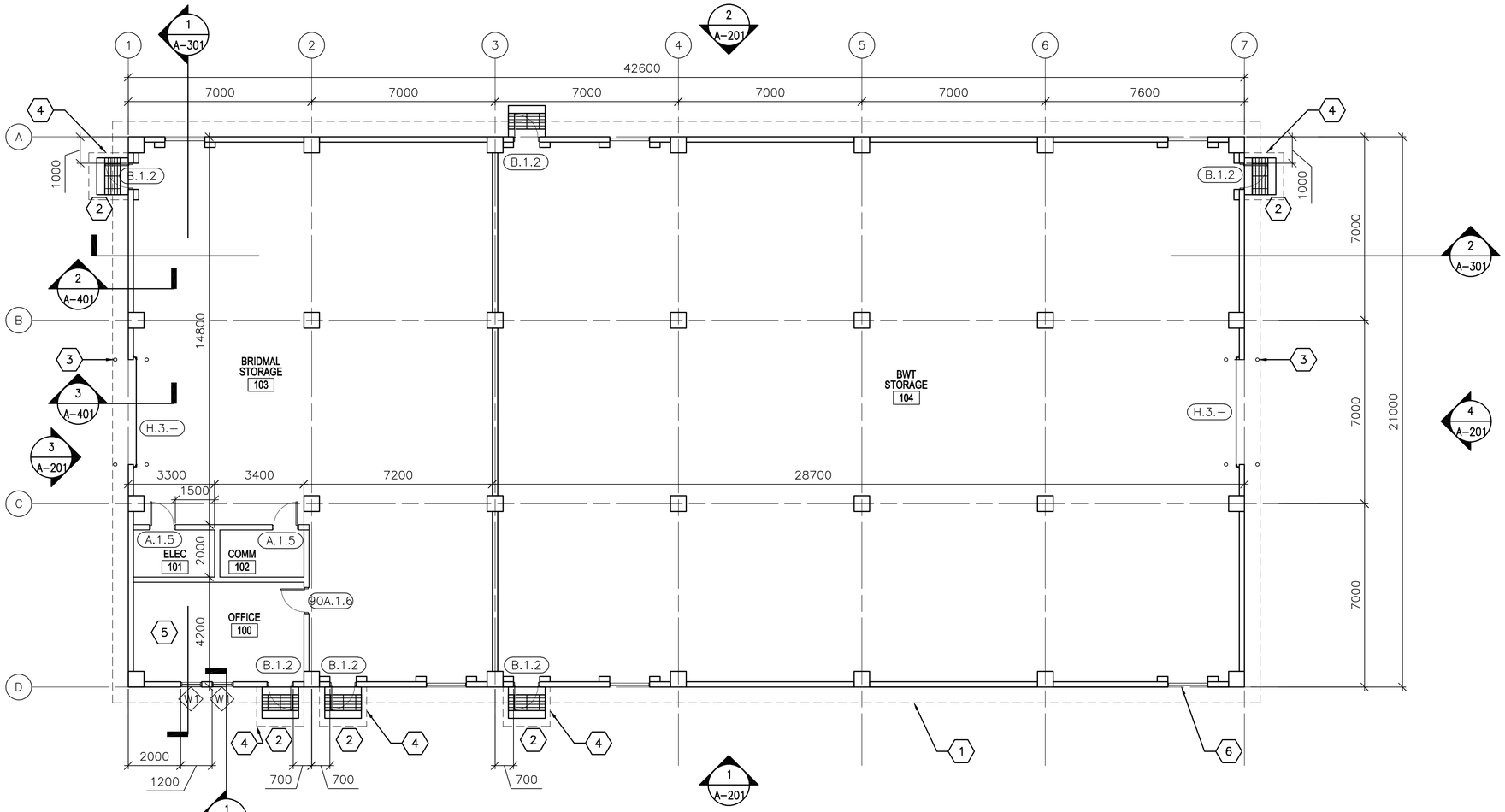


## FLOOR PLAN

SCALE: SCALE

## GENERAL NOTES:

A. DIMENSIONS ARE SHOWN TO OUTER EDGE OF EXTERIOR STRUCTURAL COLUMNS, STRUCTURAL COLUMN GRID, EDGE OF INTERIOR PARTITIONS, EDGE OF WINDOW OPENINGS, AND TO HINGE SIDE OF DOOR FRAME OPENINGS.

B. HINGE SIDE OF OPENINGS FOR DOORS AND FRAMES SHALL BE LOCATED 200 MM FROM ADJACENT WALL OR COLUMN, UNLESS NOTED OTHERWISE.

C. INTERIOR PARTITIONS SHALL BE 200 MM CMU. SEE STRUCTURAL DRAWINGS FOR LOCATION OF CONCRETE SHEAR WALLS.

D. COSMETIC REPAIR OF MINOR DEFECTS: REPAIR OR FILL MORTAR JOINTS AND MINOR DEFECTS, INCLUDING BUT NOT LIMITED TO SPALLS, IN ACCORDANCE WITH MANUFACTURER'S RECOMMENDATIONS AND PRIOR TO COATING APPLICATION. SURFACES TO BE PAINTED SHALL BE CLEAN AND FREE OF FOREIGN MATTER BEFORE APPLICATION OF PAINT. CLEANING SHALL BE SCHEDULED SO THAT DUST AND OTHER CONTAMINANTS WILL NOT FALL ON NEWLY PAINTED SURFACES.

E. CONCRETE, PLASTER AND MASONRY SURFACES SHALL BE ALLOWED TO CURE FOR AT LEAST 30 DAYS BEFORE PAINTING. CONCRETE SLABS–ON–GRADE SHALL BE ALLOWED TO CURE 90 DAYS BEFORE STAINING OR SEALING.

F. DO NOT USE PAINT MATERIALS CONTAINING LEAD CONTENT IN EXCESS OF 0.009 PERCENT OF THE WEIGHT OF THE TOTAL NONVOLATILE CONTENT OF THE PAINT OR THE WEIGHT OF THE DRIED PAINT FILM.

G. DO NOT USE ANY ASBESTOS CONTAINING MATERIALS (ACM) IN PROJECT. ACM IS DEFINED AS 1% OR MORE BY VOLUME.

H. DO NOT USE PAINT MATERIALS CONTAINING MERCURIAL FUNGICIDES.

I. FACTORY PRIMED METAL DOORS AND FRAMES SHALL RECEIVE TWO COATS OF PAINT.

J. FILL ANULAR SPACE AT PENETRATIONS IN FIRE–RATED FLOORS, PARTITIONS AND CEILINGS WITH APPROPRIATE FIRESTOPPING MATERIALS.

K. ALL CEILING FINISHES SHALL BE PAINTED STRUCTURE UNLESS OTHERWISE NOTED.

L. ALL WALL FINISHES SHALL BE PAINTED STRUCTURE UNLESS OTHERWISE NOTED.

M. ALL FLOOR FINISHES SHALL BE EPOXY SEALED CONCRETE.

## KEY NOTES: (X)

1. LINE OF ROOF OVERHANG ABOVE.
2. CONCRETE STOOP WITH GRATE – SEE DETAIL 1/A–503.
3. BOLLARD – SEE STRUCTURAL DRAWINGS FOR TYPICAL DETAIL.
4. CANOPY – SEE DETAIL 2/A–504.
5. OFFICE WALLS & CEILINGS TO BE PAINTED PLASTER.
6. LOUVER – SEE SHEET M–101.

## LEGEND:

(XXX) DOOR FRAME AND HARDWARE TYPE, SEE SHEET A–601

(A) WINDOW TYPE, SEE SHEET A–601

(X) KEY NOTE

## ABBREVIATIONS:

| | | | |
|---|---|---|---|
| ELEC | ELECTRICAL | CLOS | CLOSET |
| MECH | MECHANICAL | COMM | COMMUNICATIONS |
| JAN | JANITOR | | |

LINEAR DIMENSIONS SHOWN ARE IN MILLIMETERS (MM), UNLESS OTHERWISE NOTED

0 2000 4000
SCALE: 1:100

APPROVED:

A/E DESIGNER OF RECORD

SEAL:

STATE OF SOUTH CAROLINA
KEVIN R. CHAFIN
N. Charleston, SC
6374
REGISTERED ARCHITECT

US ARMY CORPS OF ENGINEERS
AFGHANISTAN ENGINEER DISTRICT

| Mark | Description | Date | Appr. | Mark | Description | Date | Appr. |
|---|---|---|---|---|---|---|---|

Date: 2/23/10
Design file no.
Drawing code:
Rev: 0
File name: ANASBSDA-101FP
Plot date: 2/23/2010
Plot scale: x:X

Designed by: KRC
Dwn by: KJG
Ckd by: NLJ
Reviewed by: LHM
Submitted by:
BAKER

U.S. ARMY CORPS OF ENGINEERS
AFGHANISTAN ENGINEER DISTRICT
APO AE 96338

Michael Baker Jr., Inc
A unit of Michael Baker Corporation
Airside Business Park
100 Airside Drive
Moon Township, PA 15108
www.mbakercorp.com

AFGHAN NATIONAL ARMY
REGIONAL MILITARY TRAINING CENTER
STANDARD DESIGN

BRIDMALS AND BWT STORAGE

FLOOR PLAN

Sheet reference number:
A–101

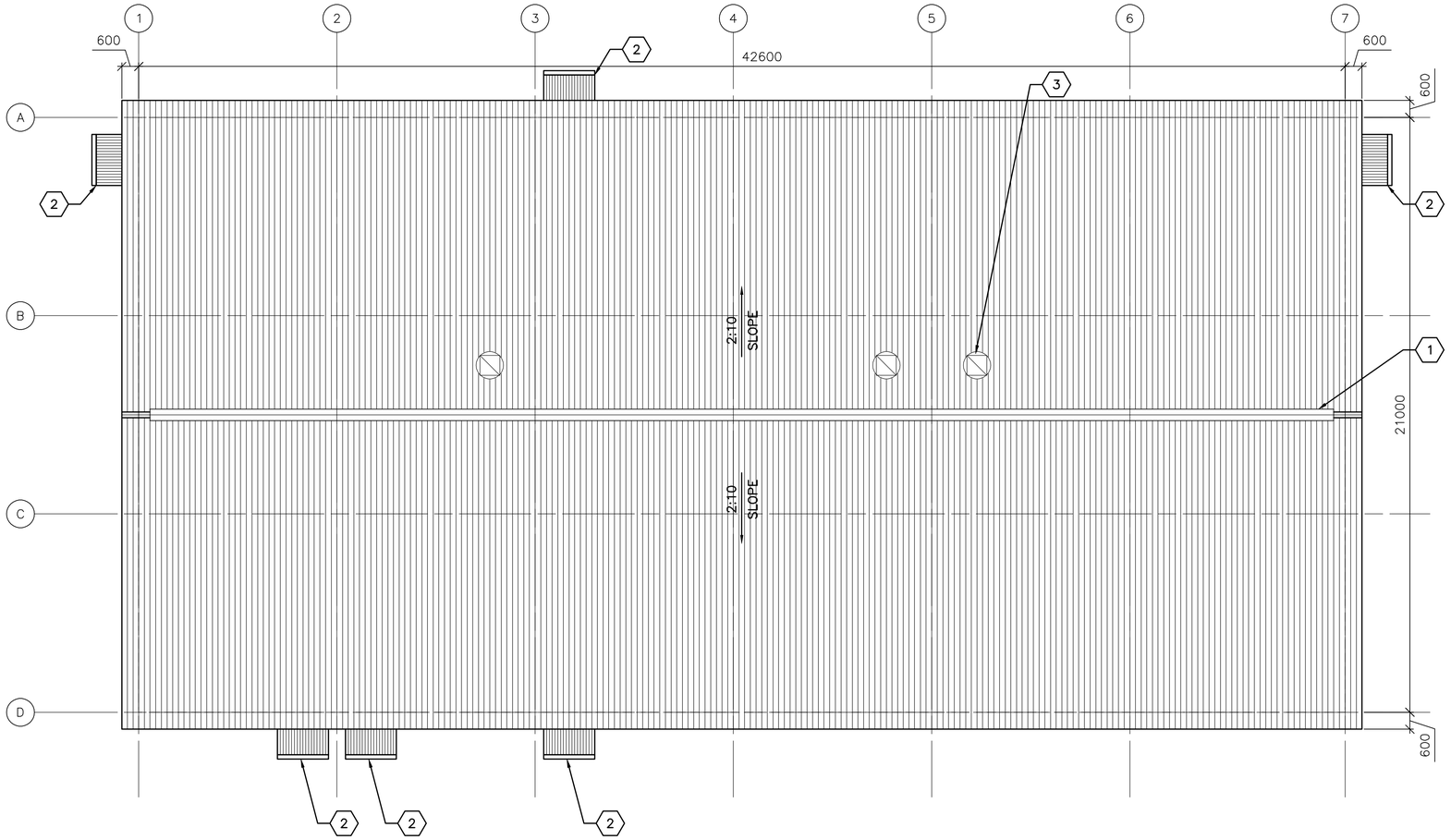


1 / A–102 **ROOF PLAN**

SCALE: SCALE

## GENERAL NOTES:

A. THE APPROXIMATE LOCATION OF ROOF DEVICES AND PENETRATIONS ARE SHOWN ON THE ROOF PLAN FOR INFORMATION ONLY. THE CONTRACTOR SHALL BE RESPONSIBLE FOR UNDERSTANDING THE ACTUAL LOCATION OF THESE AND ALL OTHER ITEMS PRIOR TO BEGINNING CONSTRUCTION. COORDINATE ALL ROOF PENETRATIONS WITH STRUCTURAL, MECHANICAL AND PLUMBING WORK.

B. UNLESS OTHERWISE NOTED, NOTES, DETAILS OR FEATURES INDICATED FOR ONE CONDITION SHALL BE APPLICABLE FOR ALL ALIKE AND SIMILAR CONDITIONS.

C. STOCKPILING OF MATERIALS, EQUIPMENT AND ANY OTHER ITEMS ON THE ROOF IS PROHIBITED.

D. ROOFS SHALL BE CORRUGATED METAL ROOF PANELS ON COLD–FORMED METAL FRAMING ON CONCRETE SLAB.

## KEY NOTES:

1. CONTINUOUS METAL RIDGE VENT SEE DETAIL 4/A–501.
2. CANOPY – SEE DETAIL 2/A–504.
3. EXHAUST FAN – SEE SHEET M–101.

LINEAR DIMENSIONS SHOWN ARE IN MILLIMETERS (MM), UNLESS OTHERWISE NOTED

0 2000 4000
SCALE: 1:100

APPROVED:

A/E DESIGNER OF RECORD

SEAL:

STATE OF SOUTH CAROLINA
KEVIN R. CHAFIN
N. Charleston, SC
6374
REGISTERED ARCHITECT

US ARMY CORPS OF ENGINEERS
AFGHANISTAN ENGINEER DISTRICT

| Mark | Description | Date | Appr. | Mark | Description | Date | Appr. |
|---|---|---|---|---|---|---|---|

U.S. ARMY CORPS OF ENGINEERS
AFGHANISTAN ENGINEER DISTRICT
APO AE 96338

Michael Baker Jr., Inc
A unit of Michael Baker Corporation
Airside Business Park
100 Airside Drive
Moon Township, PA 15108
www.mbakercorp.com

| | |
|---|---|
| Designed by: KRC | Date: 2/23/10 |
| Dwn by: KJG | Ckd by: NLJ |
| Reviewed by: LHM | Drawing code: |
| Submitted by: BAKER | File name: ANASBRDA-1020P<br>Plot date: 2/23/2010<br>Plot scale: X:X |
| | Design file no. |
| | Rev: 0 |

AFGHAN NATIONAL ARMY
REGIONAL MILITARY TRAINING CENTER
STANDARD DESIGN

BRIDMALS AND BWT STORAGE

ROOF PLAN

Sheet reference number:
A–102

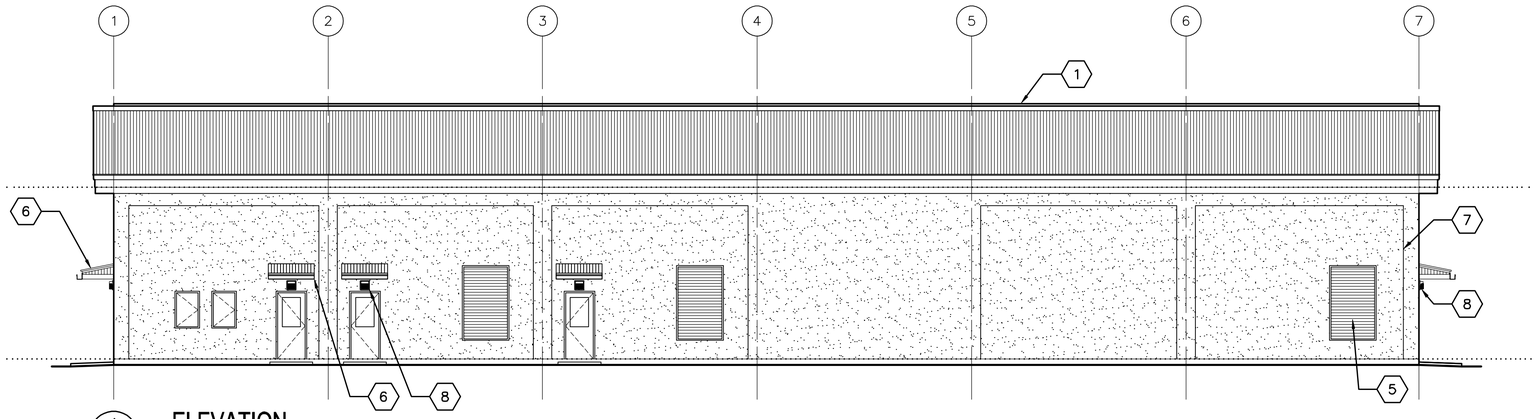

1 A-201 **ELEVATION**
SCALE: 1:100

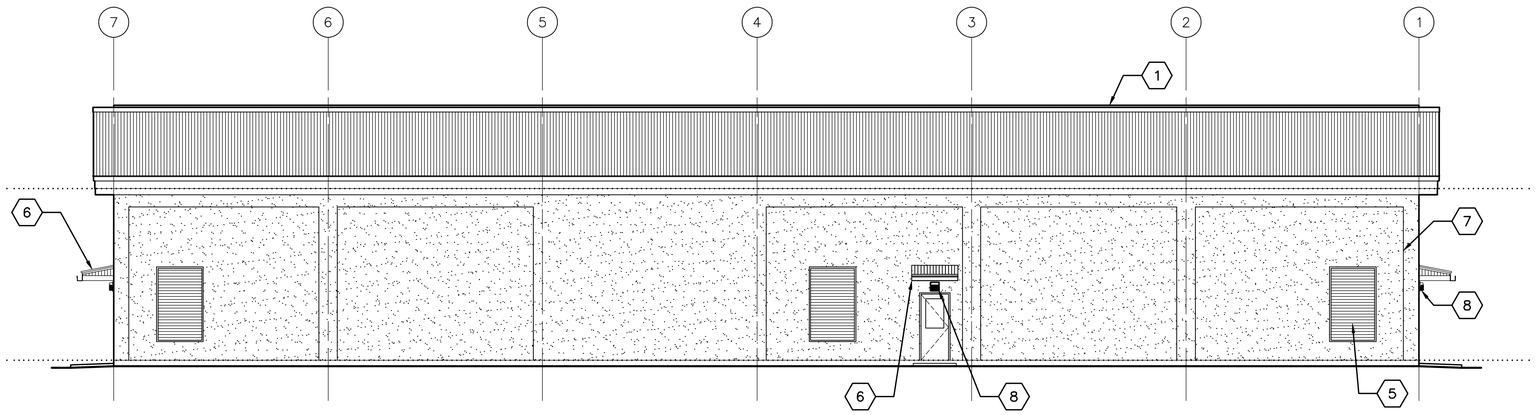

2 A-201 **ELEVATION**
SCALE: 1:100

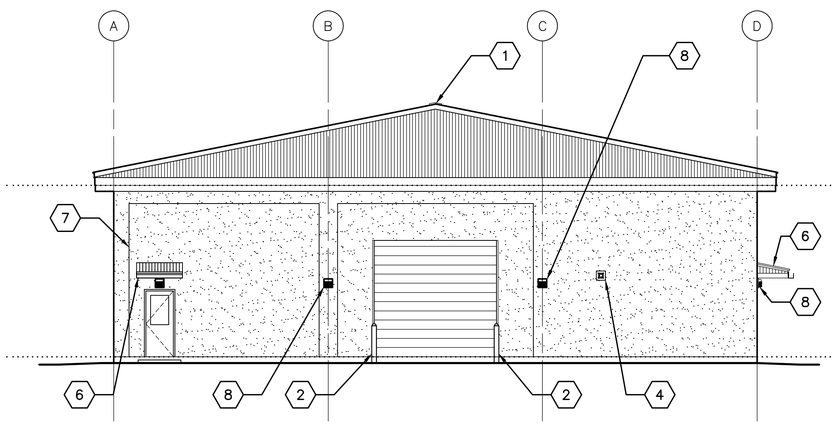

3 A-201 **ELEVATION**
SCALE: 1:100

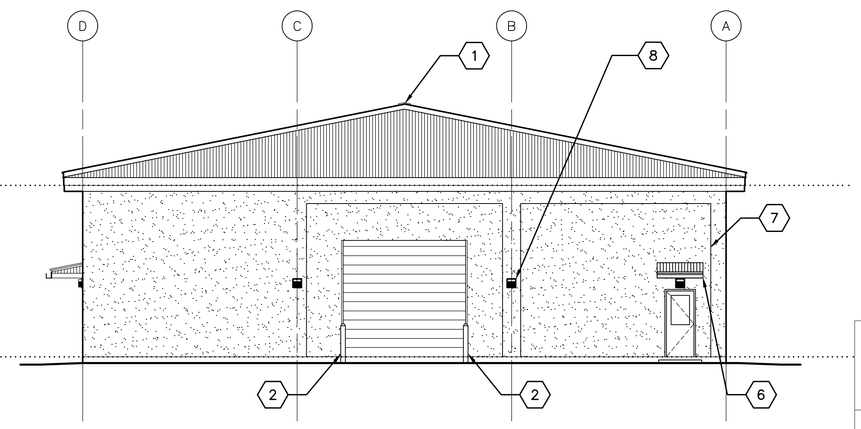

4 A-201 **ELEVATION**
SCALE: 1:100

## GENERAL NOTES:

A. COORDINATE SIZE AND LOCATION OF OPENINGS FOR MECHANICAL ITEMS WITH MECHANICAL DRAWINGS.

B. PROVIDE STRUCTURAL LINTELS AS REQUIRED – SEE STRUCTURAL DRAWINGS

C. ALL EXTERIOR WALL FINISHES SHALL BE STUCCO OVER CMU AND CONCRETE SUBSTRATES. PROVIDE CONTROL JOINTS IN STUCCO WALL FINISH AS NOTED.

D. ROOF SHALL BE CORRUGATED METAL ROOF PANELS ON COLD–FORMED METAL FRAMING ON CONCRETE SLAB.

## KEY NOTES:

1. CONTINUOUS METAL RIDGE VENT – SEE DETAIL 4/A–501.
2. BOLLARD – SEE STRUCTURAL DRAWINGS FOR TYPICAL DETAIL.
3. NOT USED
4. EXHAUST FAN, LOCATE TOP OF WALL PENETRATION 2800 MM ABOVE FINISHED FLOOR – SEE MECHANICAL DRAWINGS.
5. LOUVER – SEE SHEET M–101.
6. CANOPY – SEE DETAIL 1/A–504.
7. STUCCO CONTROL JOINT – SEE DETAIL 2A/A–501.
8. EXTERIOR LIGHT FIXTURE – SEE ELECTRICAL

LINEAR DIMENSIONS SHOWN ARE IN MILLIMETERS (MM), UNLESS OTHERWISE NOTED

0 2000 4000
SCALE: 1:100

APPROVED:

A/E DESIGNER OF RECORD

SEAL:

STATE OF SOUTH CAROLINA
KEVIN R. CHAFIN
N. Charleston, SC
6374
REGISTERED ARCHITECT

US ARMY CORPS OF ENGINEERS
AFGHANISTAN ENGINEER DISTRICT

| Mark | Description | Date | Appr. | Mark | Description | Date | Appr. |
|---|---|---|---|---|---|---|---|

Rev: 0
Date: 2/23/10
Design file no.
Drawing code:
File name: ANASBRDA-201ELV
Plot date: 2/23/2010
Plot scale: X:X

Designed by: KRC
Dwn by: KJG
Ckd by: NLJ
Reviewed by: LHM
Submitted by: BAKER

U.S. ARMY CORPS OF ENGINEERS
AFGHANISTAN ENGINEER DISTRICT
APO AE 96338

*Michael Baker Jr., Inc*
*A unit of Michael Baker Corporation*
Airside Business Park
100 Airside Drive
Moon Township, Pa. 15108
www.mbakercorp.com

AFGHAN NATIONAL ARMY
REGIONAL MILITARY TRAINING CENTER
STANDARD DESIGN

BRIDMALS AND BWT STORAGE

ELEVATIONS

Sheet reference number:
A–201

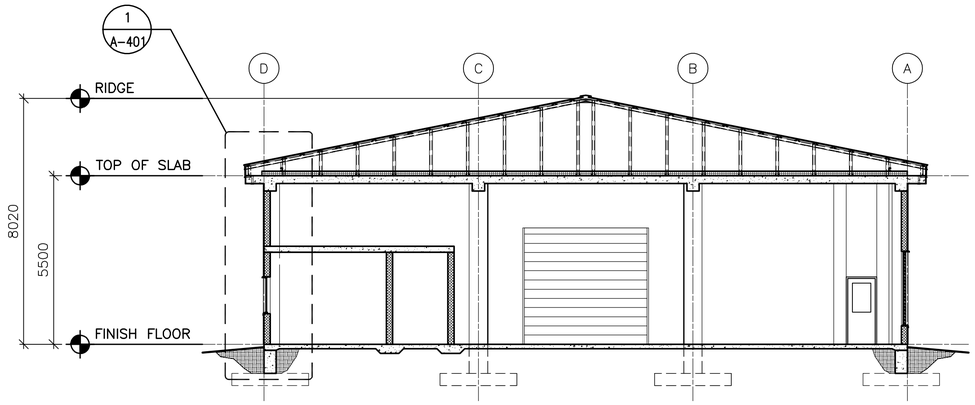


1 A-301 **BUILDING SECTION**
SCALE: 1:100

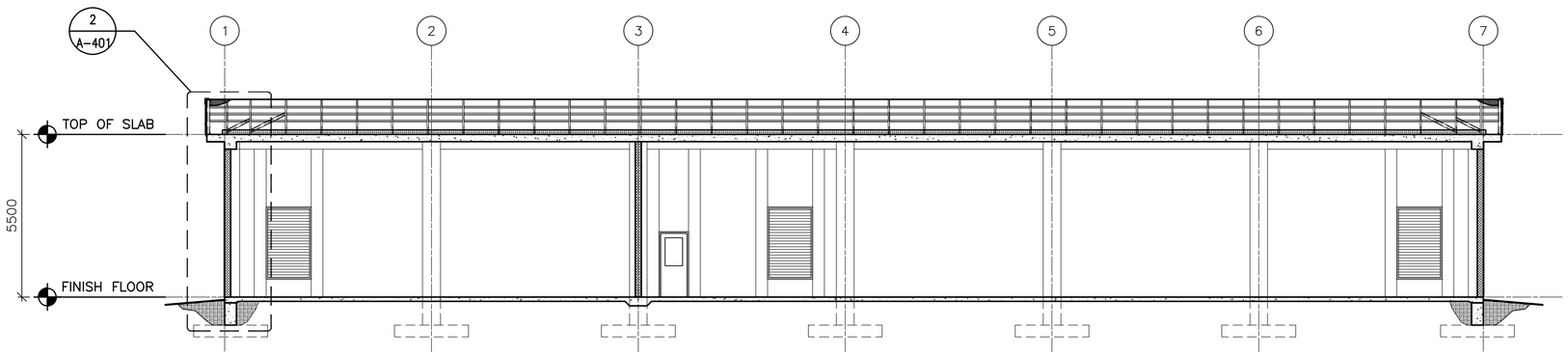


2 A-301 **BUILDING SECTION**
SCALE: 1:100

LINEAR DIMENSIONS SHOWN ARE IN MILLIMETERS (MM), UNLESS OTHERWISE NOTED

0 2000 4000
SCALE: 1:100

APPROVED:

A/E DESIGNER OF RECORD

SEAL:

STATE OF SOUTH CAROLINA
KEVIN R. CHAFIN
N. Charleston, SC
6374
REGISTERED ARCHITECT

US ARMY CORPS OF ENGINEERS
AFGHANISTAN ENGINEER DISTRICT

| Mark | Description | Date | Appr. | Mark | Description | Date | Appr. |
|---|---|---|---|---|---|---|---|

U.S. ARMY CORPS OF ENGINEERS
AFGHANISTAN ENGINEER DISTRICT
APO AE 96338

*Michael Baker Jr., Inc.*
*A unit of Michael Baker Corporation*
Airside Business Park
100 Airside Drive
Moon Township, PA 15108
www.mbakercorp.com

Designed by: KRC
Dwn by: KJG
Ckd by: NLJ
Reviewed by: LHM
Submitted by: BAKER
Date: 2/23/10
Rev: 0
Design file no.
Drawing code:
File name: ANASBSDA-301BS
Plot date: 2/23/2010
Plot scale: x:X

AFGHAN NATIONAL ARMY
REGIONAL MILITARY TRAINING CENTER
STANDARD DESIGN

BRIDMALS AND BWT STORAGE

BUILDING SECTIONS

Sheet reference number:
A-301

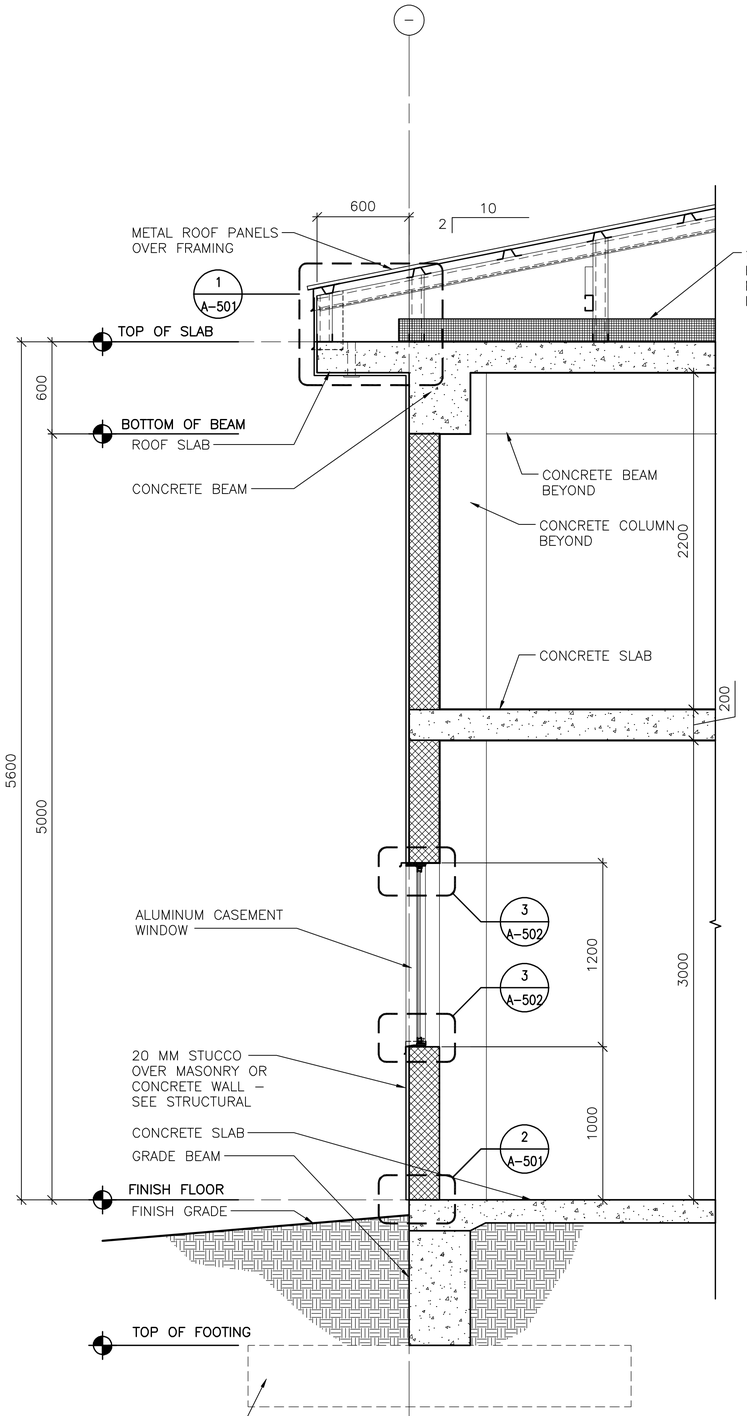


1 A-401 **TYPICAL WALL SECTION**
SCALE: 1:20

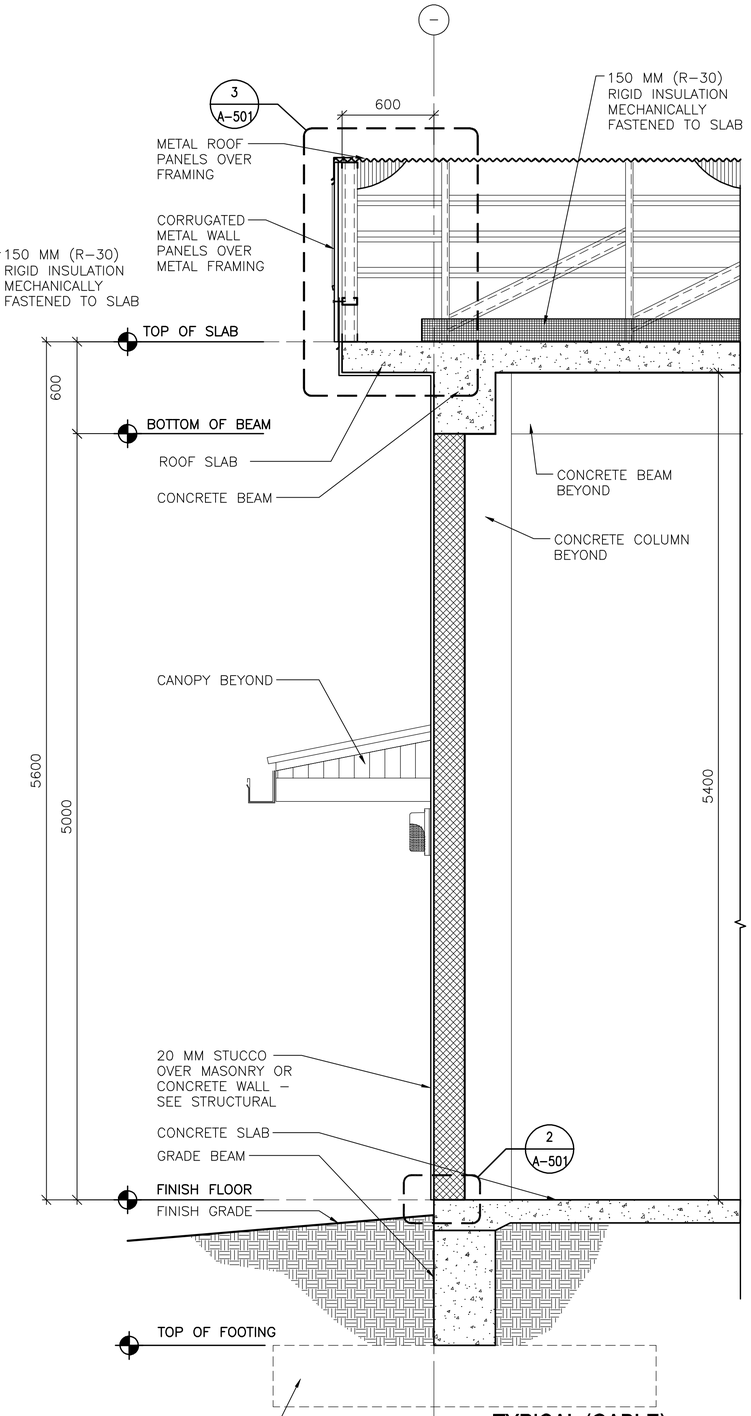


2 A-401 **TYPICAL (GABLE) WALL SECTION**
SCALE: 1:20

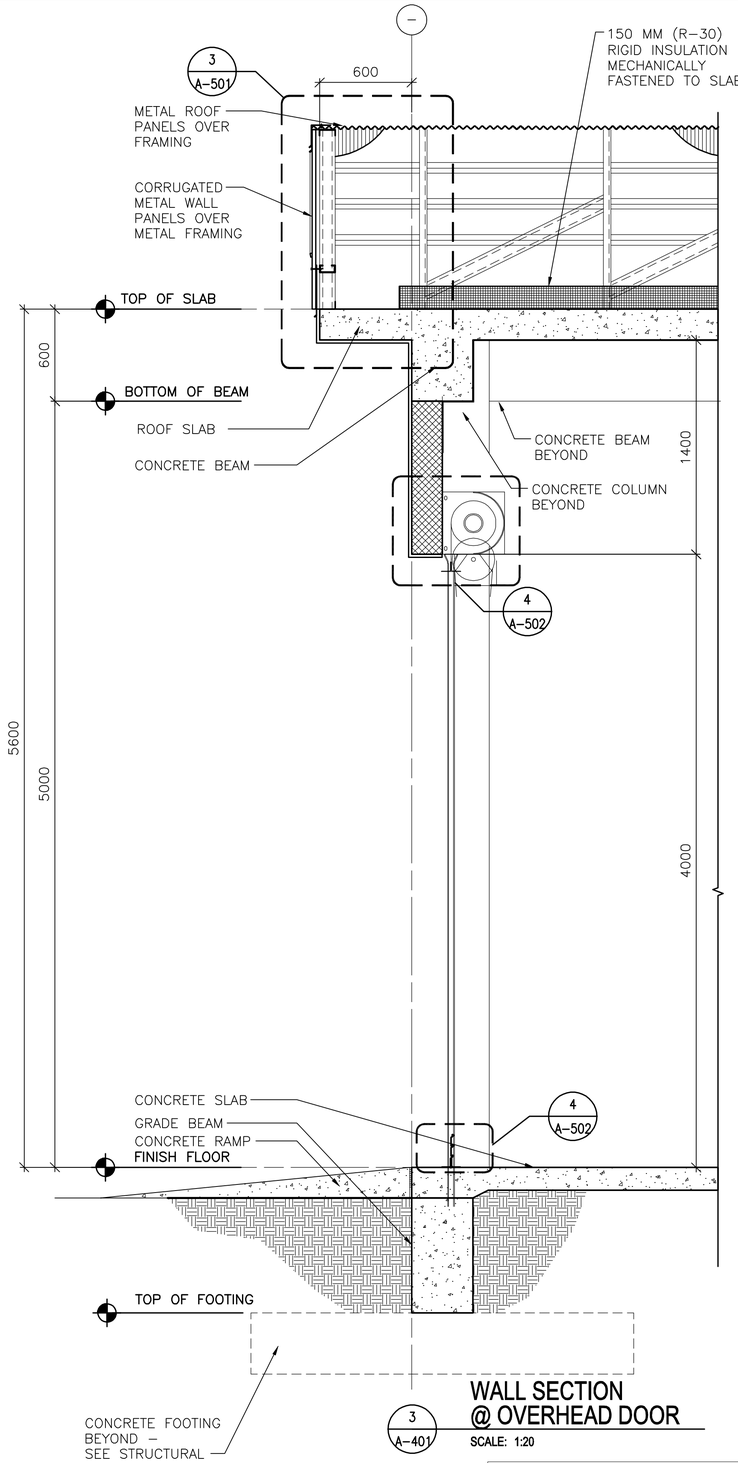


3 A-401 **WALL SECTION @ OVERHEAD DOOR**
SCALE: 1:20

LINEAR DIMENSIONS SHOWN ARE IN MILLIMETERS (MM), UNLESS OTHERWISE NOTED

0 400 800
SCALE: 1:20

APPROVED:

A/E DESIGNER OF RECORD

SEAL:

STATE OF SOUTH CAROLINA
KEVIN R. CHAFIN
N. Charleston, SC
6374
REGISTERED ARCHITECT

US ARMY CORPS OF ENGINEERS
AFGHANISTAN ENGINEER DISTRICT

| Mark | Description | Date | Appr. | Mark | Description | Date | Appr. |
|---|---|---|---|---|---|---|---|

Date: 2/23/10
Rev: 0
Design file no.
Drawing code:
File name: ANASBSDA-4011WS
Plot date: 2/23/2010
Plot scale: x:X

Designed by: KRC
Dwn by: KJG
Ckd by: NLJ
Reviewed by: LHM
Submitted by: BAKER

U.S. ARMY CORPS OF ENGINEERS
AFGHANISTAN ENGINEER DISTRICT
APO AE 96338

Michael Baker Jr., Inc
A unit of Michael Baker Corporation
Airside Business Park
100 Airside Drive
Moon Township, PA 15108
www.mbakercorp.com

AFGHAN NATIONAL ARMY
REGIONAL MILITARY TRAINING CENTER
STANDARD DESIGN

BRIDMALS AND BWT STORAGE

WALL SECTIONS

Sheet reference number:
A-401

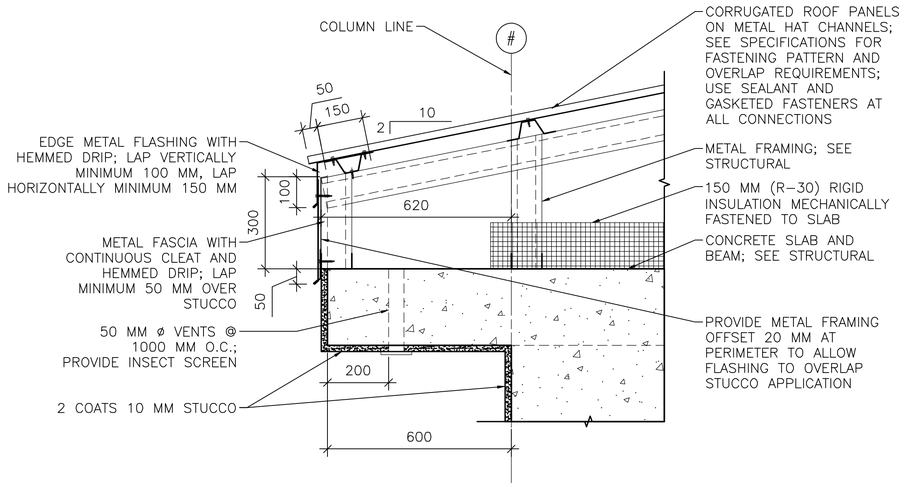


1 / A–501 **EAVE DETAIL**
SCALE: 1:10

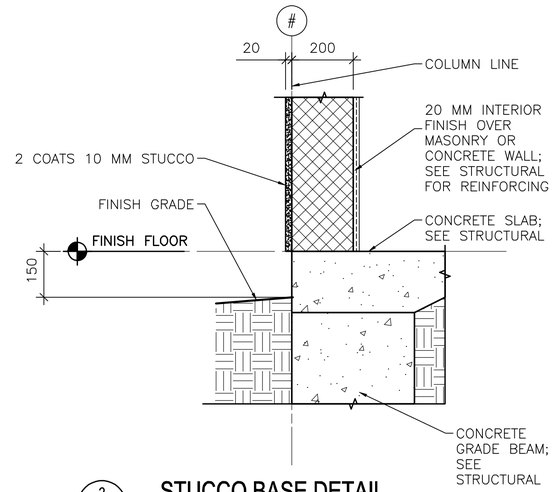


2 / A–501 **STUCCO BASE DETAIL**
SCALE: 1:10

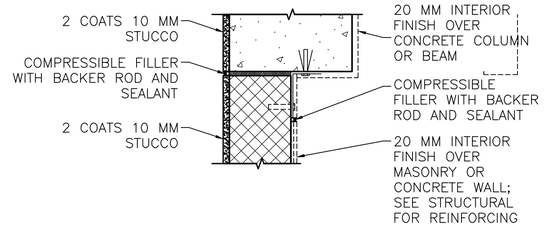


NOTE: DETAIL TYPICAL AT ALL WALL/COLUMN AND WALL/BEAM LOCATIONS, SEE ALTERNATE BRACING DETAIL BELOW 2B/A–501.

2A / A–501 **STUCCO JOINT DETAIL**
SCALE: 1:10

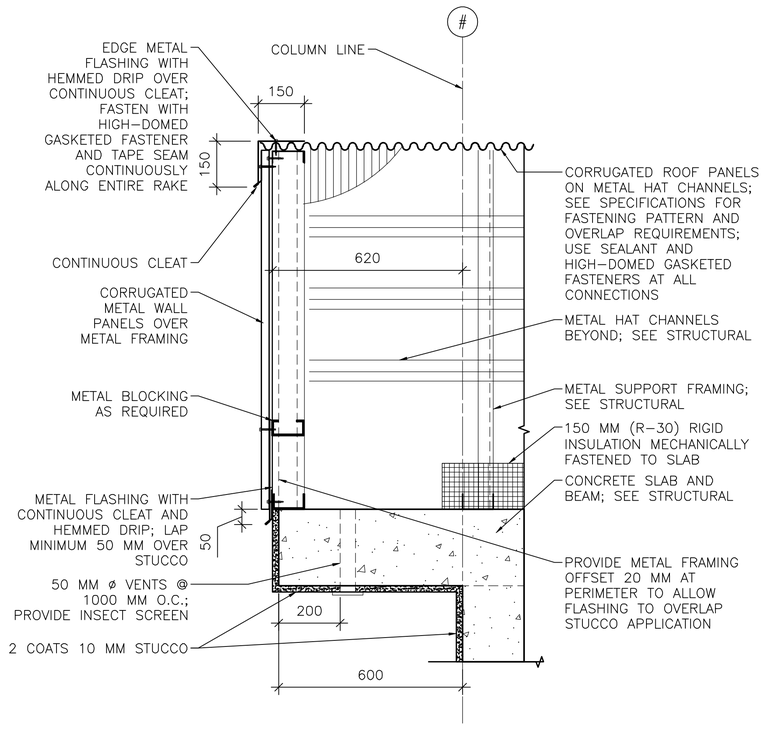


3 / A–501 **RAKE/EAVE DETAIL**
SCALE: 1:10

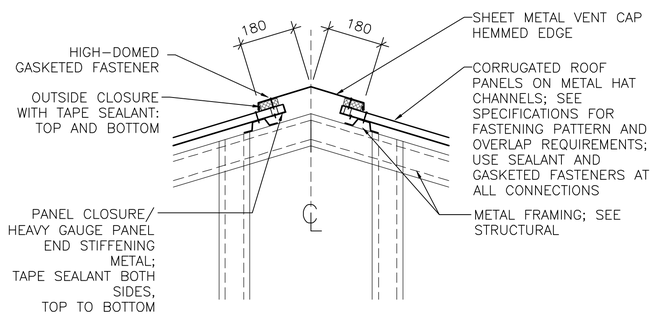


4 / A–501 **RIDGE VENT DETAIL**
SCALE: 1:10

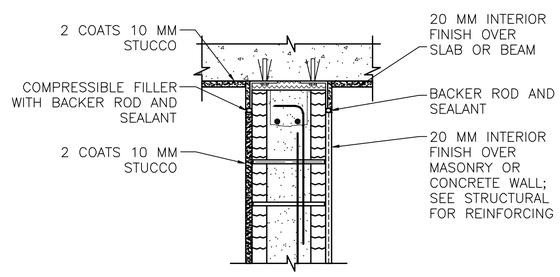


INTERIOR WALL/BEAM

2B / A–501 **ALTERNATE BRACING DETAIL**
SCALE: 1:10

LINEAR DIMENSIONS SHOWN ARE IN MILLIMETERS (MM), UNLESS OTHERWISE NOTED

0 200 400
SCALE: 1:10

APPROVED:

A/E DESIGNER OF RECORD

SEAL:

STATE OF SOUTH CAROLINA
KEVIN R. CHAFIN
N. Charleston, SC
6374
REGISTERED ARCHITECT

US ARMY CORPS OF ENGINEERS
AFGHANISTAN ENGINEER DISTRICT

| Mark | Description | Date | Appr. | Mark | Description | Date | Appr. |
|---|---|---|---|---|---|---|---|
| | | | | | | | |

Date: 2/23/10
Rev: 0
Design file no.
Drawing code:
File name: ANASRSDA-501DT
Plot date: 2/23/2010
Plot scale: x:X

Designed by: KRC
Dwn by: KJG
Ckd by: NLJ
Reviewed by: LHM
Submitted by:
BAKER

U.S. ARMY CORPS OF ENGINEERS
AFGHANISTAN ENGINEER DISTRICT
APO AE 96338

*Michael Baker Jr., Inc.*
*A unit of Michael Baker Corporation*
Airside Business Park
100 Airside Drive
Moon Township, PA 15108
www.mbakercorp.com

AFGHAN NATIONAL ARMY
REGIONAL MILITARY TRAINING CENTER
STANDARD DESIGN

BRIDMALS AND BWT STORAGE

EXTERIOR DETAILS

Sheet reference number:
A–501

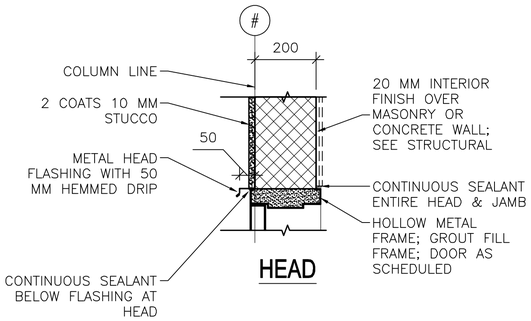


HEAD

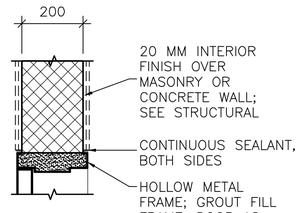


HEAD

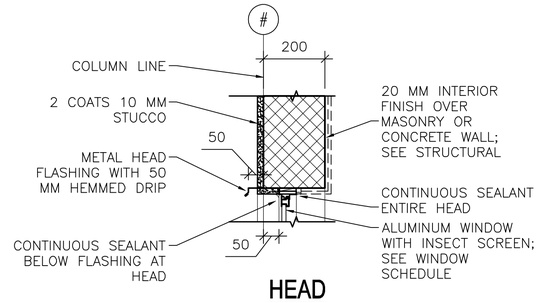


HEAD

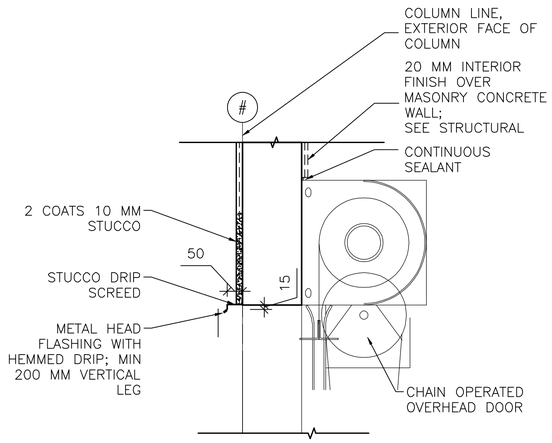


HEAD

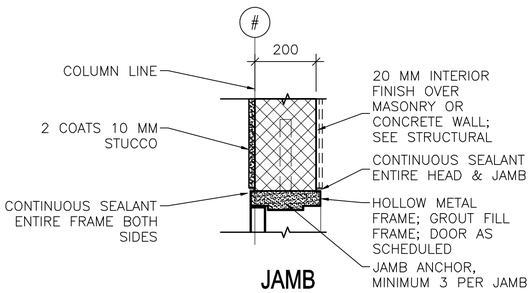


JAMB

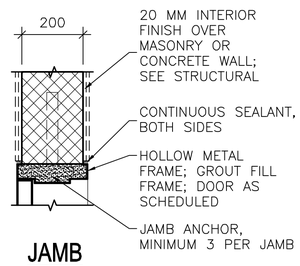


JAMB

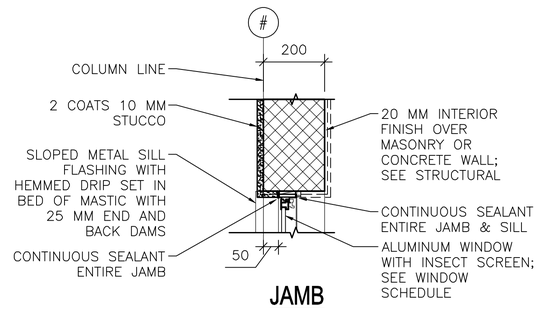


JAMB

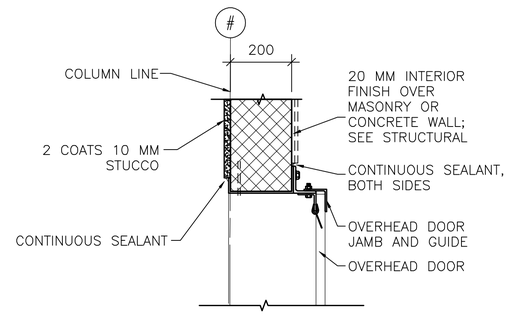


JAMB

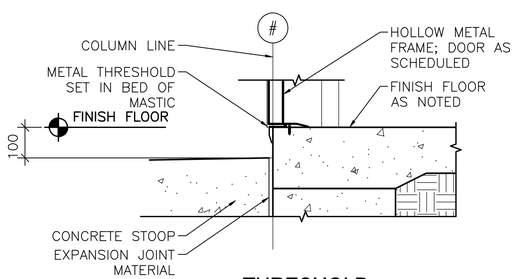


THRESHOLD

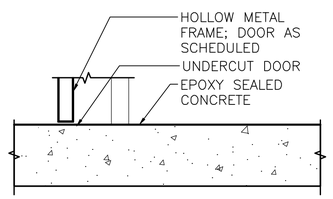


THRESHOLD

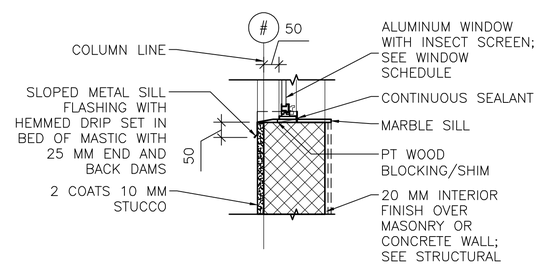


SILL

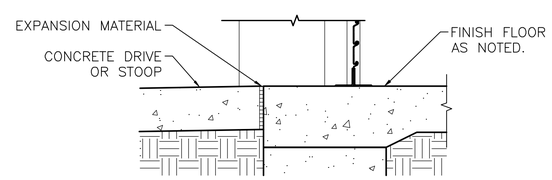


THRESHOLD

1 A-502 **EXTERIOR DOOR DETAILS**
SCALE: 1:10

2 A-502 **INTERIOR DOOR DETAILS**
SCALE: 1:10

3 A-502 **EXTERIOR WINDOW DETAILS**
SCALE: 1:10

4 A-502 **OVERHEAD DOOR DETAILS**
SCALE: 1:10

LINEAR DIMENSIONS SHOWN ARE IN MILLIMETERS (MM), UNLESS OTHERWISE NOTED

0 200 400
SCALE: 1:10

APPROVED:

A/E DESIGNER OF RECORD

SEAL:

STATE OF SOUTH CAROLINA
KEVIN R. CHAFIN
N. Charleston, SC
6374
REGISTERED ARCHITECT

US ARMY CORPS OF ENGINEERS
AFGHANISTAN ENGINEER DISTRICT

| Mark | Description | Date | Appr. | Mark | Description | Date | Appr. |
|---|---|---|---|---|---|---|---|
| | | | | | | | |

Designed by: KRC
Dwn by: KJG
Ckd by: NLJ
Reviewed by: LHM
Submitted by: BAKER
Date: 2/23/10
Rev: 0
Design file no.
Drawing code:
File name: ANASBSDA-502HAS
Plot date: 2/23/2010
Plot scale: x:X

U.S. ARMY CORPS OF ENGINEERS
AFGHANISTAN ENGINEER DISTRICT
APO AE 96338

Michael Baker Jr., Inc
A unit of Michael Baker Corporation
Airside Business Park
100 Airside Drive
Moon Township, PA 15108
www.mbakercorp.com

AFGHAN NATIONAL ARMY
REGIONAL MILITARY TRAINING CENTER
STANDARD DESIGN

BRIDMALS AND BWT STORAGE

HEAD, JAMB & SILL DETAILS

Sheet reference number:
A-502

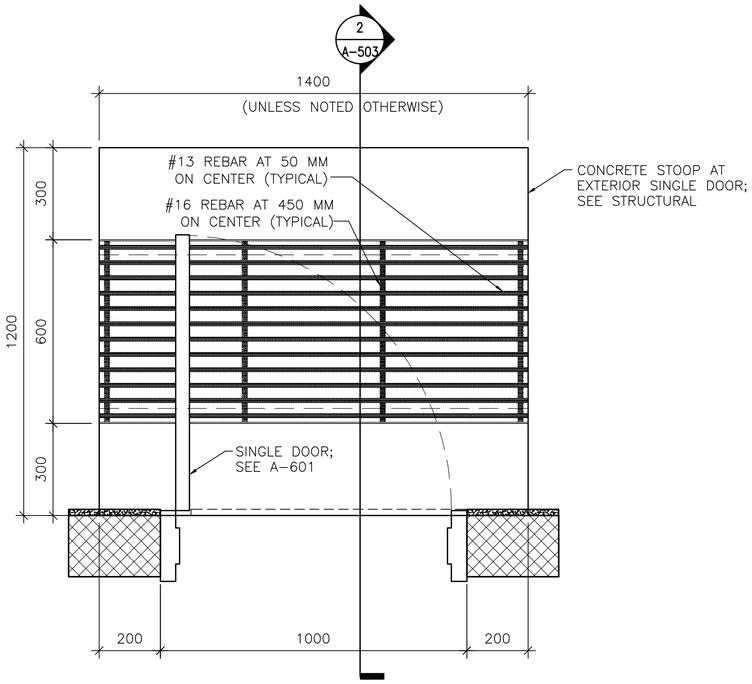


1 A-503 **DOOR STOOP PLAN (WITH GRATE)**

SCALE: 1:10

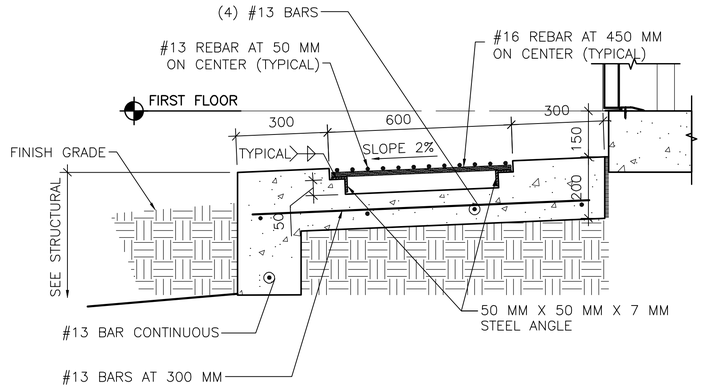


2 A-503 **DOOR STOOP DETAIL**

SCALE: 1:10

LINEAR DIMENSIONS SHOWN ARE IN MILLIMETERS (MM), UNLESS OTHERWISE NOTED

0 200 400
SCALE: 1:10

APPROVED:

A/E DESIGNER OF RECORD

SEAL:

STATE OF SOUTH CAROLINA
KEVIN R. CHAFIN
N. Charleston, SC
6374
REGISTERED ARCHITECT

US ARMY CORPS OF ENGINEERS
AFGHANISTAN ENGINEER DISTRICT

| Mark | Description | Date | Appr. | Mark | Description | Date | Appr. |
|---|---|---|---|---|---|---|---|

Date: 2/23/10 | Rev: 0
Design file no.
Drawing code:
File name: ANASRSDA-503DT
Plot date: 2/23/2010
Plot scale: x:X

Designed by: KRC
Dwn by: KJG | Ckd by: NLJ
Reviewed by: LHM
Submitted by: BAKER

U.S. ARMY CORPS OF ENGINEERS
AFGHANISTAN ENGINEER DISTRICT
APO AE 96338

*Michael Baker Jr., Inc.*
*A unit of Michael Baker Corporation*
Airside Business Park
100 Airside Drive
Moon Township, PA 15108
www.mbakercorp.com

AFGHAN NATIONAL ARMY
REGIONAL MILITARY TRAINING CENTER
STANDARD DESIGN

BRIDMALS AND BWT STORAGE

STOOP DETAILS

Sheet reference number:
A-503

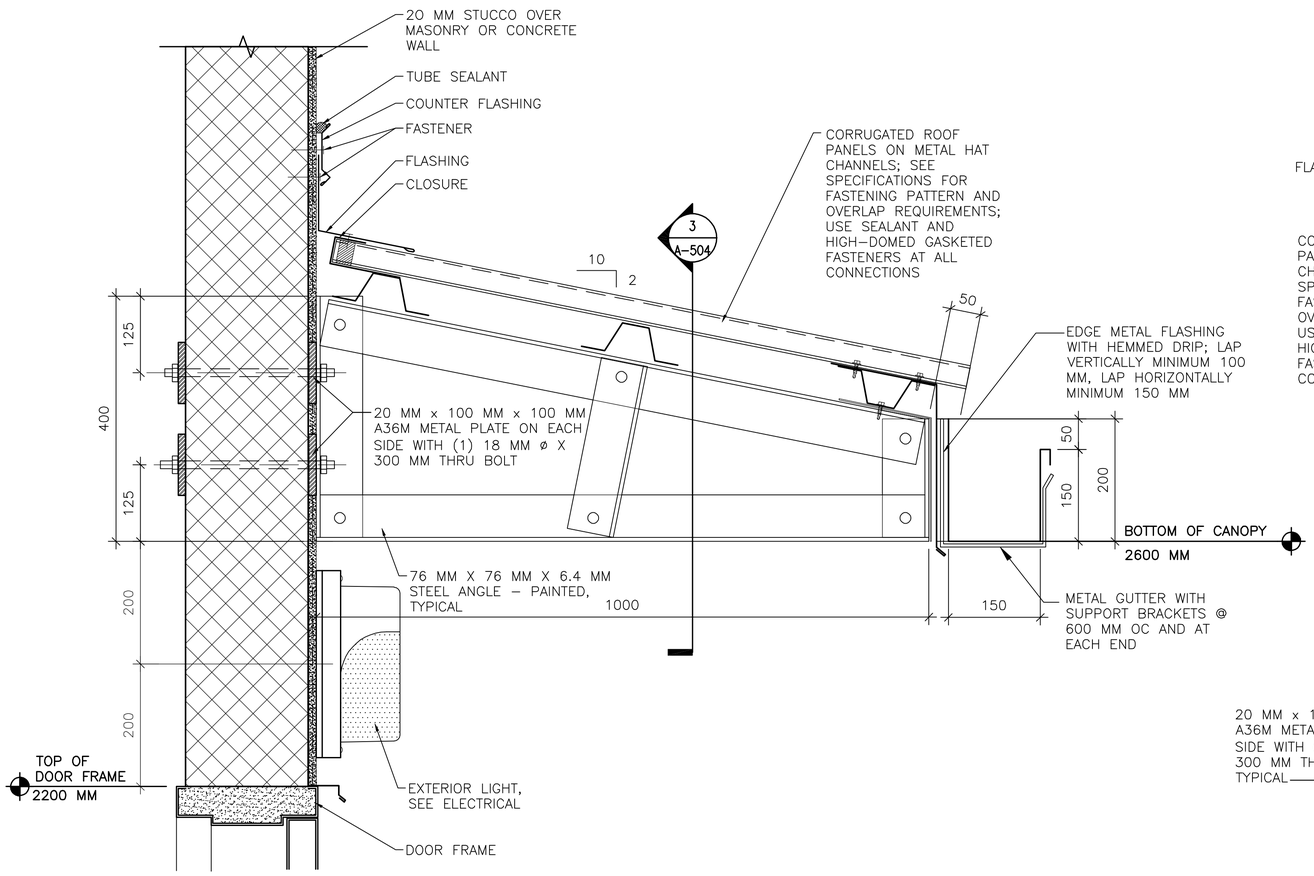


1 A-504 **CANOPY CONNECTION DETAILS**

SCALE: 1:5

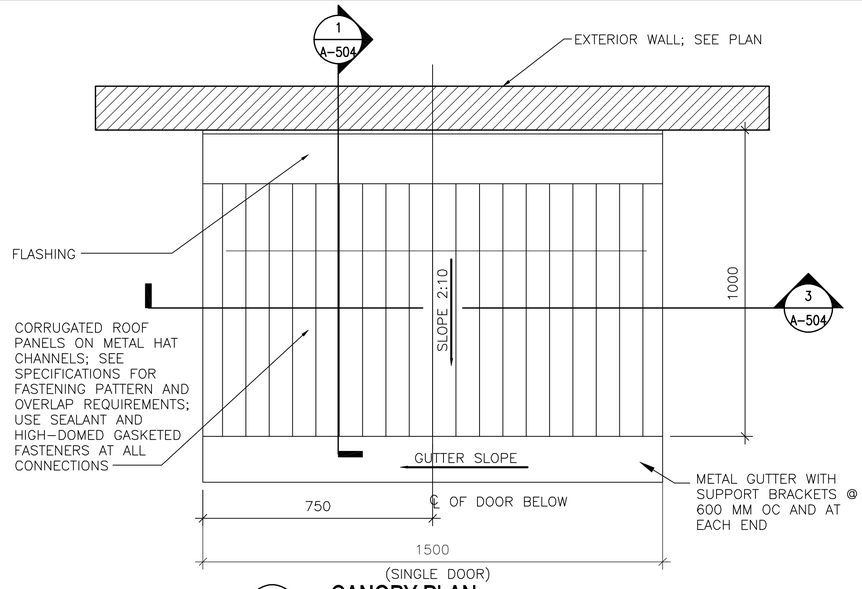


2 A-504 **CANOPY PLAN**

SCALE: 1:10

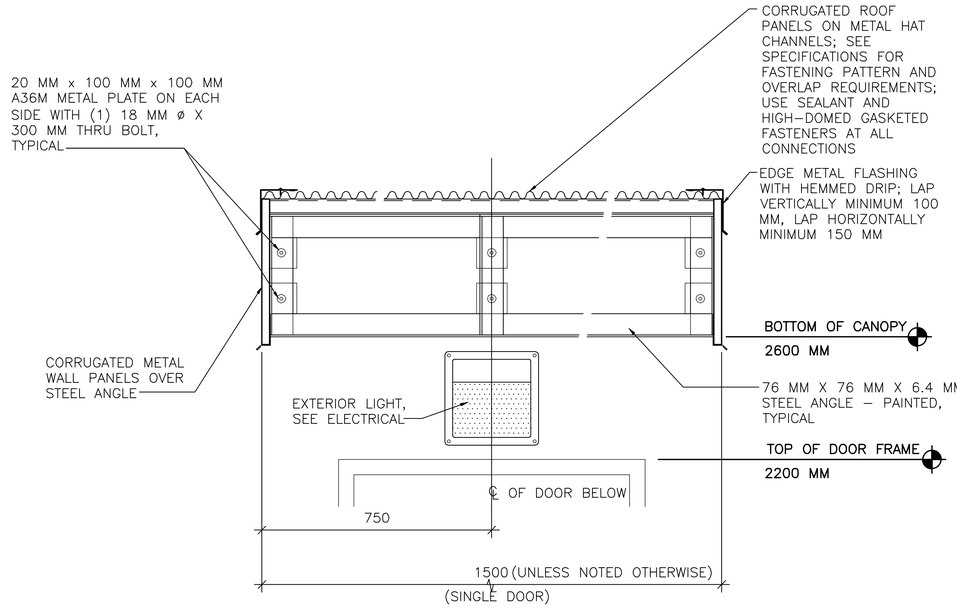


3 A-504 **CANOPY CONNECTION DETAILS**

SCALE: 1:10

## SHEET NOTES:

1. SEE A-101 FOR FLOOR PLANS AND CANOPY LOCATIONS.

LINEAR DIMENSIONS SHOWN ARE IN MILLIMETERS (MM), UNLESS OTHERWISE NOTED

0 100 200
SCALE: 1:5

APPROVED:

A/E DESIGNER OF RECORD

SEAL:

STATE OF SOUTH CAROLINA
KEVIN R. CHAFIN
N. Charleston, SC
6374
REGISTERED ARCHITECT

US ARMY CORPS OF ENGINEERS
AFGHANISTAN ENGINEER DISTRICT

| Mark | Description | Date | Appr. | Mark | Description | Date | Appr. |
|---|---|---|---|---|---|---|---|
| | | | | | | | |

Date: 2/23/10
Rev: 0
Design file no.
Drawing code:
File name: ANASRSDA-5040T
Plot date: 2/23/2010
Plot scale: x:X

Designed by: KRC
Dwn by: KJG
Ckd by: NLJ
Reviewed by: LHM
Submitted by: BAKER

U.S. ARMY CORPS OF ENGINEERS
AFGHANISTAN ENGINEER DISTRICT
APO AE 96338

Michael Baker Jr., Inc
A unit of Michael Baker Corporation
Airside Business Park
100 Airside Drive
Moon Township, PA 15108
www.mbakercorp.com

AFGHAN NATIONAL ARMY
REGIONAL MILITARY TRAINING CENTER
STANDARD DESIGN

BRIDMALS AND BWT STORAGE

CANOPY DETAILS

Sheet reference number:
A-504

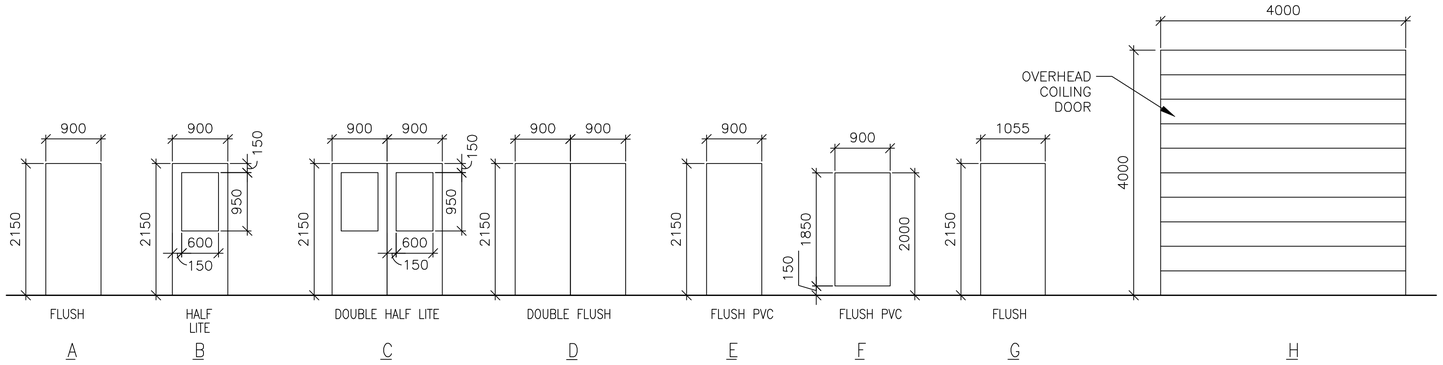


## 1 A-601 DOOR TYPES

SCALE: 1:50

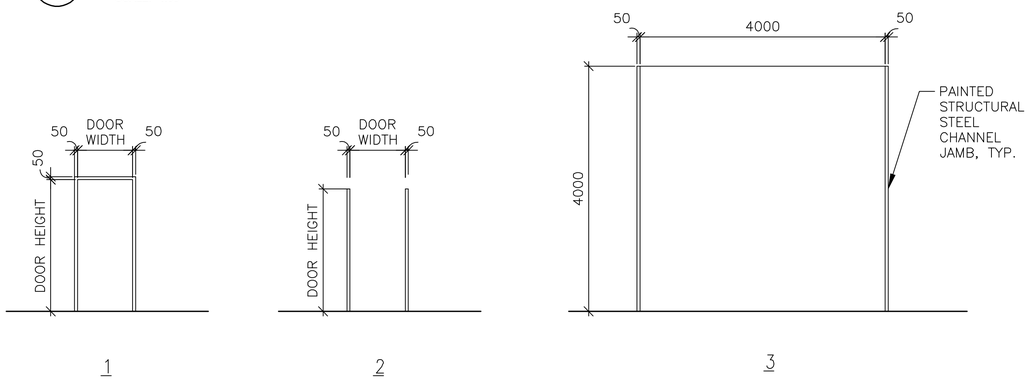


## 2 A-601 FRAME TYPES

SCALE: 1:50

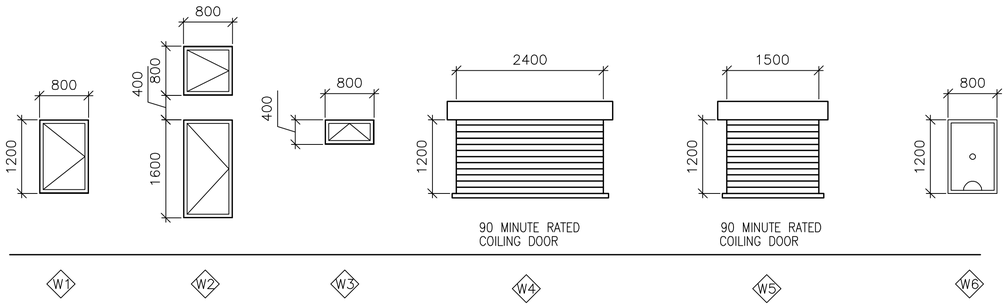


## 3 A-601 WINDOW TYPES

SCALE: 1:50

## WINDOW TYPE NOTES:

1. ALL EXTERIOR WINDOWS SHALL BE ALUMINUM WITH INSECT SCREENS. WINDOWS SHALL BE COMMERCIAL GRADE.
2. ALL EXTERIOR WINDOWS SHALL BE OPERABLE.

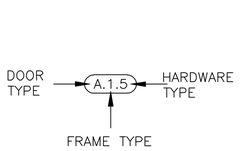


## 4 A-601 DOOR TAG

SCALE: NTS

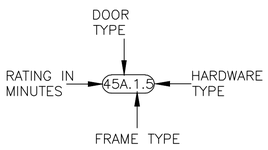


## 5 A-601 RATED DOOR TAG

SCALE: NTS

## DOOR TAG NOTES:

1. THE DOOR TAG INDICATES THE DOOR TYPE, FRAME TYPE AND HARDWARE SET FOR EACH DOOR.
2. THE DOOR TAG FOR RATED DOORS INCLUDES THE RATING OF THE DOOR IN MINUTES.

## EXTERIOR DOOR HARDWARE TYPES:

HW-1
1-1/2 PR HINGES, A5112 114 X 114
1 EA RIM EXIT DEVICE, TYPE 1
1 EA CYLINDER. E09221A, GRADE 1
1 EA OVERHEAD CLOSER, C02061, LOW RESISTANCE
1 EA THRESHOLD, J32130
3 EA DOOR SILENCERS, L03011

HW-2
1-1/2 PR HINGES, A5112 114 X 114
1 EA LOCKSET, F13 ENTRY LOCK W/LEVER HANDLES, GRADE 1
1 EA OVERHEAD CLOSER, C02061, LOW RESISTANCE
1 EA THRESHOLD, J32130
3 EA DOOR SILENCERS, L03011

HW-3
3 PR HINGES, A5112 114 X 114
2 EA RIM EXIT DEVICE, TYPE 1
2 EA CYLINDER. GRADE 1
2 EA OVERHEAD CLOSER, C02061, LOW RESISTANCE
1 EA DOOR COORDINATOR, TYPE 21
1 EA ASTRAGAL
1 EA THRESHOLD, J32130
2 EA DOOR SILENCERS, L03011

HW-4
3 PR HINGES, A5112 114 X 114
1 EA LOCKSET W/LEVER HANDLES. GRADE 1, F13
1 EA OVERHEAD CLOSER, C02061, LOW RESISTANCE
2 EA MAGNETIC HOLDER PIN, ATTACHED TO DOOR LEAF
2 EA MAGNETIC HOLDER RECEIVER, ATTACHED TO STOOP
2 EA LEVER EXTENSION FLUSH BOLTS, L04081
1 EA ASTRAGAL
1 EA THRESHOLD, J32130
2 EA DOOR SILENCERS, L03011

## DOOR AND HARDWARE NOTES:

1. INTERIOR AND EXTERIOR METAL DOORS AND FRAME COLORS SHALL MATCH ADJACENT WALL COLORS AS SELECTED BY THE CONTRACTING OFFICER.
2. FRAMES, EXCEPT FIRE-RATED FRAMES, SHALL BE MOUNTED AND ADJUSTED IN ACCORDANCE WITH MANUFACTURER'S INSTRUCTIONS. FRAMES SHALL BE FASTENED WITH MINIMUM OF THREE ANCHORS PER JAMB AT EQUAL INTERVALS.
3. DIMENSIONS SHOWN ON DOOR TYPES DETAIL ARE BASED UPON MODULAR MASONRY (OR ROUGH OPENING), HEIGHT OF 2200 MM FOR STANDARD PERSONNEL DOORS. CONTRACTOR SHALL COORDINATE WITH DOOR SUPPLIER TO ENSURE THAT DIMENSIONS OF DOORS AND FRAMES PROVIDED ARE COMPATIBLE WITH DOOR OPENING DIMENSIONS.
4. HARDWARE SHALL BE HEAVY DUTY, COMMERCIAL GRADE, STAINLESS STEEL WITH A SATIN OR BRUSHED FINISH.
5. HARDWARE TYPES INCLUDE BUILDERS HARDWARE MANUFACTURERS ASSOCIATION (BMHA) NUMBER.
6. DOORS IN 2 HOUR RATED PARTITIONS SHALL BE 1.5 HOUR (90 MINUTE) RATED DOORS IN ACCORDANCE WITH NFPA 101, TABLE 8.3.4.2.
7. DOORS AT STAIR ENCLOSURES SHALL BE 1 HOUR (60 MINUTE) RATED AT 1 HOUR WALL IN ACCORDANCE WITH NFPA 101, TABLE 8.3.4.2.
8. DOORS IN 1 HOUR RATED WALLS SHALL BE 3/4 HOUR (45 MINUTE) RATED DOORS IN ACCORDANCE WITH NFPA 101, TABLE 8.3.4.2.
9. DOORS IN 1 HOUR RATED CORRIDOR WALLS SHALL BE 1/3 HOUR (20 MINUTE) IN ACCORDANCE WITH NFPA 101, TABLE 8.3.4.2.
10. PROVIDE DOOR STOPS TO PROTECT WALLS ON LOCATIONS WHERE DOOR SWING WILL STRIKE WALL.

THIS SHEET IS STANDARD AND IS INCLUSIVE OF ALL THE DOOR/ WINDOW/ HARDWARE TYPES FOR THE ENTIRE RMTC CONTRACT. NOT ALL DOOR/ WINDOW/ HARDWARE TYPES ARE USED FOR ANY PARTICULAR BUILDING DESIGN. CONTRACTOR SHALL REFER TO THE FLOOR PLAN FOR THE TYPES BEING USED.

## INTERIOR DOOR HARDWARE TYPES:

HW-5
1-1/2 PR HINGES, A8133 114 X 114
1 EA LOCKSET W/LEVER HANDLES, F08, GRADE 1
1 EA WALL STOP, L02101 OR L02161
3 EA DOOR SILENCERS, L03011

HW-6
1-1/2 PR HINGES, A8112 114 X 114
1 EA LOCKSET W/LEVER HANDLES, F08, GRADE 1
1 EA WALL STOP, L02101 OR L02161
1 EA OVERHEAD CLOSER, C02061, LOW RESISTANCE
3 EA DOOR SILENCERS, L03011

HW-7
1-1/2 PR HINGES, A8133
1 EA LOCKSET W/LEVER HANDLES, F13 GRADE 1
1 EA WALL STOP, L02101 OR L02161
2 EA MOP PLATE, J103
3 EA DOOR SILENCERS, L03011

HW-8
1-1/2 PR HINGES, A8112
1 EA LOCKSET W/LEVER HANDLES, F13 GRADE 1
1 EA WALL STOP, L02101 OR L02161
2 EA MOP PLATE, J103
1 EA OVERHEAD CLOSER, C02061, LOW RESISTANCE
3 EA DOOR SILENCERS, L03011

HW-9
1-1/2 PR HINGES, A5112 114 X 114
1 EA RIM EXIT DEVICE, TYPE 1
1 EA CYLINDER. E09221A, GRADE 1
1 EA OVERHEAD CLOSER, C02061, LOW RESISTANCE
3 EA DOOR SILENCERS, L03011

HW-10
3 PR HINGES, A5112 114 X 114
1 EA LOCKSET W/LEVER HANDLES. GRADE 1, F13
2 EA LEVER EXTENSION FLUSH BOLTS, L04081
1 EA ASTRAGAL
2 EA DOOR SILENCERS, L03011

HW-11
1-1/2 PR HINGES, A8112 114 X 114
1 EA LOCKSET W/LEVER HANDLES, F13, GRADE 1
1 EA WALL STOP, L02101 OR L02161
1 EA OVERHEAD CLOSER, C02061, LOW RESISTANCE
3 EA DOOR SILENCERS, L03011
1 EA ROBE HOOK

HW-12
1-1/2 PR HINGES, A8133
1 EA LATCHSET W/LEVER HANDLES, F76 GRADE 1
1 EA WALL STOP, L02101 OR L02161
2 EA MOP PLATE, J103
3 EA DOOR SILENCERS, L03011
1 EA ROBE HOOK

HW-13
3 PR HINGES, A5112 114 X 114
1 EA LOCKSET W/LEVER HANDLES. GRADE 1, F13
1 EA OVERHEAD CLOSER, C02061, LOW RESISTANCE
2 EA LEVER EXTENSION FLUSH BOLTS, L04081
1 EA ASTRAGAL
2 EA DOOR SILENCERS, L03011

HW-14
3 PR HINGES, A5112 114 X 114
2 EA RIM EXIT DEVICE, TYPE 1
2 EA CYLINDER. GRADE 1
2 EA OVERHEAD CLOSER, C02061, LOW RESISTANCE
1 EA DOOR COORDINATOR, TYPE 21
1 EA ASTRAGAL
2 EA DOOR SILENCERS, L03011

APPROVED:

A/E DESIGNER OF RECORD

SEAL:

STATE OF SOUTH CAROLINA
KEVIN R. CHAFIN
N. Charleston, SC
6374
REGISTERED ARCHITECT

US ARMY CORPS OF ENGINEERS
AFGHANISTAN ENGINEER DISTRICT

| Mark | Description | Date | Appr. | Mark | Description | Date | Appr. |
|---|---|---|---|---|---|---|---|

Date: 2/23/10 | Rev: 0
Design file no.
Drawing code:
File name: ANASBRSDA-B01SCH
Plot date: 2/23/2010
Plot scale: x:X

Designed by: KRC | Dwn by: KJG | Ckd by: NLJ
Reviewed by: LHM
Submitted by:
BAKER

U.S. ARMY CORPS OF ENGINEERS
AFGHANISTAN ENGINEER DISTRICT
APO AE 96338

Michael Baker Jr., Inc.
A unit of Michael Baker Corporation
Airside Business Park
100 Airside Drive
Moon Township, PA 15108
www.mbakercorp.com

AFGHAN NATIONAL ARMY
REGIONAL MILITARY TRAINING CENTER
STANDARD DESIGN

BRIDMALS AND BWT STORAGE

WINDOW AND DOOR SCHEDULES

Sheet reference number:
A-601

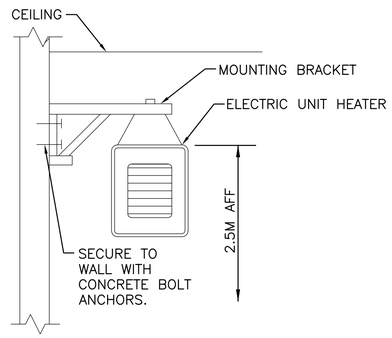


1 M-101 ELECTRIC UNIT HEATER MOUNTING DETAIL
N.T.S.

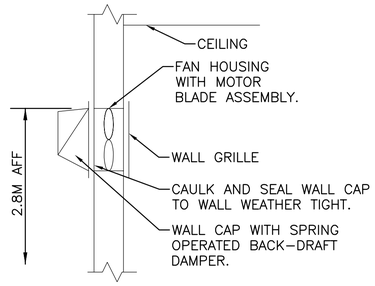


2 M-101 WALL EXHAUST FAN DETAIL
N.T.S.

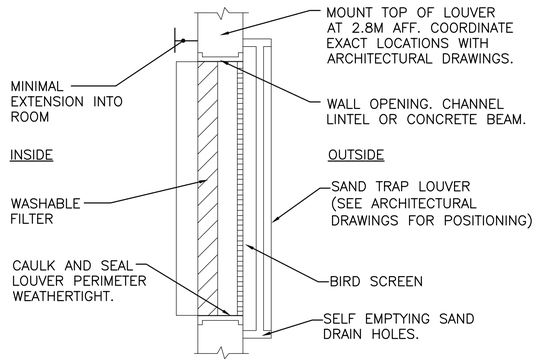


3 M-101 FILTERED SAND TRAP LOUVER
N.T.S.

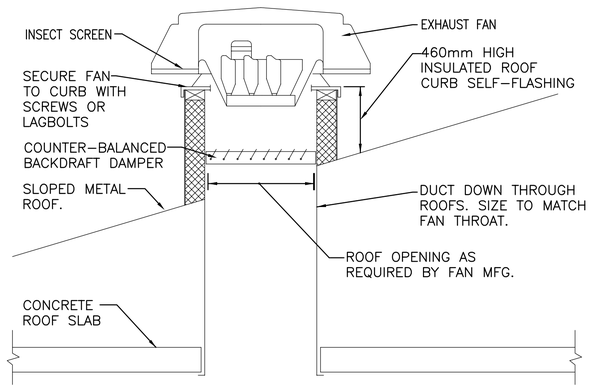


4 M-101 ROOF MOUNTED EXHAUST FAN
N.T.S.

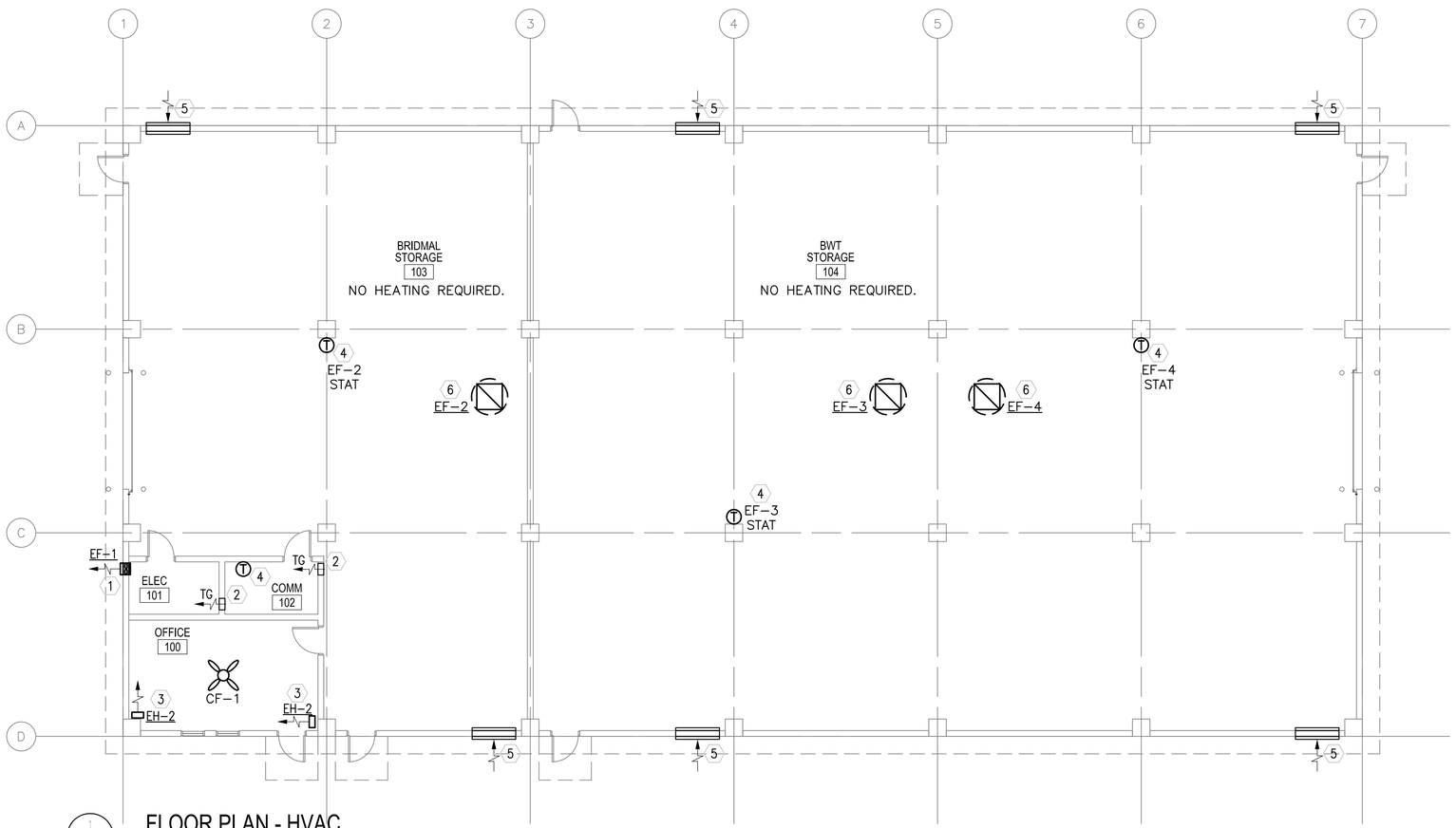


1 M-101 FLOOR PLAN - HVAC
SCALE: 1:100

## GENERAL NOTES:

1. DO NOT SCALE DRAWINGS – ALL DIMENSIONS AND CONDITIONS SHALL BE CHECKED AND VERIFIED BY THE CONTRACTOR AT THE SITE.
2. ALL WORK PERFORMED ON THIS BUILDING SHALL BE IN COMPLIANCE WITH ALL PERTINENT CODES, RULES, ORDINANCES AND REGULATIONS OF THE GOVERNING AUTHORITIES.
3. ALL WORK PERFORMED UNDER AND IN CONNECTION WITH THESE DRAWINGS AND SPECIFICATIONS SHALL BE IN STRICT COMPLIANCE WITH THE LATEST SAFETY AND HEALTH STANDARDS.

## SYMBOLS:

- (X) KEY NOTE
- (.050) AIR VOLUME IN CUBIC METERS PER SECOND (CMS)
- ¬ VOLUME DAMPER
- (T) THERMOSTAT WITH LOCKING COVER
- UC DOOR UNDERCUT
- TG TRANSFER GRILLE

## ABBREVIATIONS:

| | |
|---|---|
| AFF | ABOVE FINISH FLOOR |
| CF | CEILING FANS |
| CMS | CUBIC METERS PER SECOND |
| STATS | THERMOSTATS |

## KEY NOTE:

1. WALL EXHAUST FAN WITH SPRING OPERATED BACK-DRAFT DAMPER.
2. 200x150 (8x6) TRANSFER GRILLE. MOUNT GRILLE 800mm BELOW CEILING. COORDINATE LOCATION IN FIELD WITH EC.
3. UNIT HEATER SECURED FROM WALL. SEE DETAIL THIS SHEET.
4. THERMOSTAT MOUNTED 2M (6.5') AFF, STAT SHALL BE INTERLOCKED WITH CORRESPONDING EXHAUST FAN, SET FAN TO ENERGIZE ON RISE IN TEMPERATURE ABOVE 35°C (95°F).
5. (2) 1.5x1.2 (60x48) INTAKE LOUVERS 1 STACKED ON TOP OF THE OTHER. SEE ARCHITECTURAL ELEVATIONS FOR EXACT LOCATIONS HOLD BOTTOM LOUVER 600mm AFF. PROVIDE WEATHER PROOF LOUVERS W/ 50mm (2") WASHABLE FILTER AND SAND TRAP. SEE DETAIL 3 THIS SHEET.
6. ROOF MOUNTED EXHAUST FAN ON FACTORY CURB. EXTEND DUCT DOWN THROUGH CONCRETE ROOF SLAB. DUCT SIZE SHALL MATCH FAN THROAT.

## ELECTRIC UNIT HEATER SCHEDULE

| NO. | CMS | KW | F.A.T. °C | ELECT. CHAR. | MOUNTING |
|---|---|---|---|---|---|
| EH-2 | 0.200 | 2.6 | 38 | 380/1/50 | WALL HUNG |

NOTES:
1. UNIT HEATERS SHALL HAVE TAMPER PROOF INTEGRAL STATS.
2. COORDINATE LOCATION AND ORIENTATION IN FIELD.

## EXHAUST FAN SCHEDULE

| NO. | TYPE | FAN CMS | DRIVE | HP | SP mmH2O | ELECTRICAL DATA | SWITCH |
|---|---|---|---|---|---|---|---|
| EF-1 | WALL | 0.045 | DIRECT | FRACT | 13 | 220/1/50 | W/ STAT |
| EF-2 | ROOF | 3.300 | DIRECT | 3 | 9.5 | 220/1/50 | W/ STAT |
| EF-3 | ROOF | 3.300 | DIRECT | 3 | 9.5 | 220/1/50 | W/ STAT |
| EF-4 | ROOF | 3.300 | DIRECT | 3 | 9.5 | 220/1/50 | W/ STAT |

NOTE:
1. FANS SHALL HAVE SPRING OPERATED BACK DRAFT DAMPER.

## CEILING FAN

| NO. | BLADE SIZE mm | BLADE SIZE IN | VOLTAGE | SWITCH | REMARKS |
|---|---|---|---|---|---|
| CF-1 | 1320 | 52 | 220/1/50 | @ WALL | 3 SPEED REVERSIBLE MOTOR |

NOTES:
1. INSTALL FANS 2.5M AFF.
2. PROVIDE WITH OUT LIGHT FIXTURE.
3. PROVIDE WITH REMOTE MOUNTED ON-OFF SWITCH SHOWN ON ELECTRICAL DRAWINGS.

LINEAR DIMENSIONS SHOWN ARE IN MILLIMETERS (MM), UNLESS OTHERWISE NOTED

0 2000 4000
SCALE: 1:100

APPROVED:

A/E DESIGNER OF RECORD

SEAL:

COMMONWEALTH OF PENNSYLVANIA
REGISTERED PROFESSIONAL
MATTHEW R. SOTOSKY
ENGINEER
046576-E

US ARMY CORPS OF ENGINEERS
AFGHANISTAN ENGINEER DISTRICT

| Mark | Description | Date | Appr. |
|---|---|---|---|
| | | | |

| Mark | Description | Date | Appr. |
|---|---|---|---|
| | | | |

Designed by: RML
Dwn by: JJN
Ckd by: CJM
Reviewed by: MRS
Submitted by: BAKER
Date: 02/23/10
Rev: 0
Design file no.
Drawing code:
File name: ANASBRDMH-101XXX
Plot date: 02/26/2010
Plot scale: 1:100

U.S. ARMY CORPS OF ENGINEERS
AFGHANISTAN ENGINEER DISTRICT
APO AE 96338

Michael Baker Jr., Inc.
A unit of Michael Baker Corporation
Airside Business Park
100 Airside Drive
Moon Township, PA 15108
www.mbakercorp.com

AFGHAN NATIONAL ARMY
REGIONAL MILITARY TRAINING CENTER
STANDARD DESIGN

BRIDMALS AND BWT STORAGE
HVAC – FLOOR PLAN,
SCHEDULES AND DETAILS

Sheet reference number:
M-101

## POWER

- DISTRIBUTION PANELBOARD
- NEW PANELBOARD – SURFACE
- NEW PANELBOARD – RECESSED
- GENERATOR
- TRANSFORMER (DRAWN TO SIZE)
- JUNCTION BOX
- JUNCTION BOX – CEILING
- FUSIBLE SAFETY SWITCH
- MOTOR
- MOTOR STARTING SWITCH – 220V, 20A RATED UNLESS OTHERWISE NOTED
- ELECTRIC WATER HEATER
- CEILING FAN – REFER TO SPECIFICATION SECTION 26 20 00

## RECEPTACLES

- DUPLEX 20A TYPE CEE 7/7 "SCHUKO STYLE" UNSWITCHED RECEPTACLE
- GF DUPLEX 20A TYPE CEE 7/7 "SCHUKO STYLE" UNSWITCHED RECEPTACLES – 10mA GROUND FAULT INTERRUPTER TYPE
- WP DUPLEX 20A TYPE CEE 7/7 "SCHUKO STYLE" UNSWITCHED TYPE WITH WEATHERPROOF COVER – 10mA GROUND FAULT INTERRUPTER TYPE
- EXP DUPLEX 20A TYPE CEE 7/7 "SCHUKO STYLE" UNSWITCHED RECEPTACLES – EXPLOSION PROOF
- * INDICATES MOUNT DEVICE ABOVE COUNTERTOP OR AT 1070mm ABOVE FINISHED FLOOR WHERE NO COUNTER IS TO BE INSTALLED.

## LIGHTNING PROTECTION

- AIR TERMINAL 20mm O.D. X 450mm SOLID COPPER, NICKEL PLATED ON ADHESIVE BASE
- EQ EQUIPMENT AIR TERMINAL
- TEST WELL WITH GROUND ROD(S)
- GROUND ROD
- G GROUND PLATE
- G MAIN GROUND CONDUCTER CONCEALED WITHIN CONSTRUCTION
- G MAIN GROUND CONDUCTOR EXPOSED ON EXPOSED ON BUILDING EXTERIOR SURFACE
- G GROUND CONDUCTOR CAD WELDED TO GROUND CABLE OR EQUIPMENT
- GROUND ROD TRIPOD, SPACED 3 METERS APART.
- LEVEL TO LEVEL CABLE

## LIGHTING

- LIGHTING FIXTURE – SEE FIXTURE SCHEDULE FOR MORE INFORMATION
- EMERGENCY LIGHTING FIXTURE – SEE FIXTURE SCHEDULE FOR MORE INFORMATION
- DOWNLIGHT
- LIGHTING FIXTURE ON NORMAL/EMERGENCY
- WALL MOUNTED LIGHT FIXTURE
- E EXIT SIGN – DIRECTIONAL ARROWS AS INDICATED ON DRAWINGS
- REMOTE HEAD FOR BATTERY PACK
- $ SINGLE POLE SWITCH – 20A RATED
- $3 3-WAY SWITCH – 20A RATED
- $4 4-WAY SWITCH – 20A RATED
- LC LIGHTING CONTACTOR
- POLE MOUNTED SITE LIGHTING FIXTURE– NUMBER OF FIXTURES PER POLE AS INDICATED ON DRAWINGS
- EXTERIOR DIRECTIONAL LIGHTING FIXTURE
- a SMALL CASE LETTERS REPRESENTS LAMP(S) / SWITCHES.

## TELECOMMUNICATIONS

- TELEPHONE OUTLET(S) @ 45cm AFF. U.N.O. WITH 20mm RACEWAY TERMINATED TO TELEDATA TERMINAL BOARD.
- DATA OUTLET(S) @ 45cm AFF. U.N.O. WITH 20mm RACEWAY TERMINATED TO TELEDATA TERMINAL BOARD.

## TELECOMMUNICATIONS (CONTINUED)

- COMBINATION TELEPHONE/DATA OUTLET(S) @ 45cm AFF. U.N.O. WITH 27mm RACEWAY TERMINATED TO TELEDATA TERMINAL AREA.
- W WALL MTD. TELEPHONE OUTLET WITH 20mm RACEWAY TO TELEDATA TERMINAL BOARD.
- (x)T INDICATES NUMBER OF TELEPHONE OUTLET(S) AND ASSOCIATED CABLING
- (x)D INDICATES NUMBER OF DATA OUTLET(S) AND ASSOCIATED CABLING
- (x)TF INDICATES NUMBER OF TELEPHONE OUTLETS AND ASSOCIATED CABLING WITH 1 OUTLET AND CABLE DEDICATED FOR FAX

## SINGLE LINE SYMBOLS

- SWITCH
- BREAKER
- FUSE
- TRANSFORMER
- GROUND
- CONTACT (NORMALLY OPEN)
- CONTACT (NORMALLY CLOSED)
- TRANSFER SWITCH
- CURRENT TRANSFORMER
- INDICATES NEW ELECTRICAL EQUIPMENT
- C INDICATES NEW CONTROL WIRING AND CONDUIT
- EQUIPMENT OUTLINE

## MISCELLANEOUS

- BRANCH CIRCUIT WIRING, SURFACE MOUNTED ON WALLS
- BRANCH CIRCUIT WIRING – 6mm²
- BRANCH CIRCUIT WIRING – UNDER FLOOR
- HOME RUN BACK TO PANEL
- CONDUIT TURNED DOWN
- CONDUIT TURNED UP
- LV LOW VOLTAGE WIRING AND CONDUIT
- INDICATES CONTINUATION OF LINE

## FIRE ALARM

- FACP FIRE ALARM CONTROL PANEL WITH BATTERY BACKUP
- F FIRE ALARM PULL STATION

## FIRE ALARM (CONTINUED)

- F FIRE ALARM STROBE – WALL MOUNTED
- F FIRE ALARM AUDIBLE/STROBE – WALL MOUNTED
- F FIRE ALARM HORN/STROBE – WALL MOUNTED
- S SMOKE DETECTOR
- H HEAT DETECTOR CEILING MOUNTED
- D DUCT DETECTOR – PROVIDED BY EC, INSTALLED BY MC AND CONNECTED BY EC

## DENOTATIONS & ABBREVIATIONS

| | |
|---|---|
| AFF | ABOVE FINISHED FLOOR |
| C | CEILING MOUNTED |
| E | EMERGENCY |
| EC | ELECTRICAL CONTRACTOR |
| EPO | EMERGENCY POWER OFF |
| EXP | EXPLOSION PROOF |
| F | FIRE ALARM |
| FF | FLUSH FLOOR MOUNTED |
| FL | FLUORESCENT |
| FO | FIBER OPTIC |
| FSS | FUSED SAFETY SWITCH |
| GF | GROUND FAULT INTERRUPTER |
| GC | GENERAL CONTRACTOR |
| IG | ISOLATED GROUND |
| K | KEY |
| LV | LOW VOLTAGE |
| M | MOTOR |
| MC | MECHANICAL CONTRACTOR |
| NE | NORMAL/EMERGENCY |
| NFSS | NON-FUSED SAFETY SWITCH |
| PA | PAGING SYSTEM |
| PLC | PLUMBING CONTRACTOR |
| SL | SINGLE LINE |
| T | TELEPHONE |

## DENOTATIONS & ABBREVIATIONS (CONT.)

| | |
|---|---|
| TP | TAMPER PROOF |
| UE | UNDERGROUND ELECTRIC |
| W | WALL MOUNTED |
| WP | WEATHERPROOF |
| WPG | WEATHERPROOF/GROUND FAULT INTERRUPTER |
| WT | WATER TIGHT |

## GENERAL PROJECT NOTES:

G1. UNLESS OTHERWISE NOTED, PROVIDE ALL EQUIPMENT SHOWN ON THE PLANS. THE ELECTRICAL CONTRACTOR SHALL COORDINATE ALL SYMBOLS SHOWN ON THE PLANS WITH THE SYMBOL LIST. IT SHALL BE THE RESPONSIBILITY OF THE CONTRACTOR TO VERIFY THE INTENT OF ANY SYMBOL THAT IS SHOWN ON THE PLANS AND NOT INDICATED ON THE SYMBOL LIST WITH THE ENGINEER PRIOR TO BID.

G2. THE CONTRACTOR SHALL VERIFY THE LOCATION OF ALL UNDERGROUND UTILITIES WITHIN THE CONSTRUCTION AREA THREE (3) WORKING DAYS NOTICE BEFORE COMMENCING DIGGING. NOTIFY THE LOCAL AUTHORITY HAVING JURISDICTION AND WAIT THE REQUIRED TIME BEFORE COMMENCING TO DIG.

G3. THE CONTRACTOR SHALL COORDINATE CONDUIT RUNS, LIGHTING FIXTURES AND OTHER EQUIPMENT LOCATIONS WITH THE OTHER TRADE CONTRACTORS TO AVOID CONFLICTS.

G4. WHERE VOLTAGES AND FREQUENCIES ON THE DRAWINGS AND IN THE SPECIFICATIONS DIFFER FROM THE LOCAL ONES, ALL WORK SHALL BE PERFORMED USING THE LOCAL VOLTAGES AND FREQUENCIES.

G5. THE MINIMUM WIRE SIZE ON THE PROJECT SHALL BE 4mm². THE MINIMUM CONDUIT SIZE SHALL BE 20mm. THE MINIMUM BREAKER SIZE SHALL BE 20 AMPS.

G6. THE CONTRACTOR SHALL PUT A MAXIMUM OF 6 DUPLEX RECEPTACLES ON A 20A SINGLE POLE CIRCUIT.

G7. WHERE THE 1010 SCOPE REVIEW, 1015 TECHNICAL REVIEW, DRAWINGS, AND SPECIFICATIONS DIFFER FROM AMERICAN CODES OR STANDARDS, THE 1010, 1015, DRAWINGS, AND SPECIFICATIONS SHALL RULE.

G8. ALL CONDUIT AND DEVICES SHALL BE SURFACE MOUNTED UNLESS OTHERWISE INDICATED.

G9. CONTRACTOR SHALL COORDINATE ALL WORK WITH ALL OTHER TRADES TO ENSURE ALL WORK IS COMPLETED IN A PROFESSIONAL, WORKMAN-LIKE MANNER.

APPROVED:

A/E DESIGNER OF RECORD

SEAL:

COMMONWEALTH OF PENNSYLVANIA
REGISTERED PROFESSIONAL
JOSEPH R. GAUS
ENGINEER
PE-074251
1/29/10

US ARMY CORPS OF ENGINEERS
AFGHANISTAN ENGINEER DISTRICT

| Mark | Description | Date | Appr. | Mark | Description | Date | Appr. |
|---|---|---|---|---|---|---|---|

Rev: 0
Date: 2/23/10
Designed by: KJR
Dwn by: BJB
Ckd by: JRG
Reviewed by: JRG
Submitted by: BAKER
Design file no.
Drawing code:
File name:
Plot date:
Plot scale:

U.S. ARMY CORPS OF ENGINEERS
AFGHANISTAN ENGINEER DISTRICT
APO AE 96338

Michael Baker Jr., Inc
A unit of Michael Baker Corporation
Airside Business Park
100 Airside Drive
Moon Township, PA 15108
www.mbakercorp.com

AFGHAN NATIONAL ARMY
REGIONAL MILITARY TRAINING CENTER
STANDARD DESIGN

BRIDMALS AND BWT STORAGE
ELECTRICAL SYMBOLS & ABBREVIATIONS

Sheet reference number:
E-001

## GENERAL NOTES:

1. REFER TO DRAWING #E-001 FOR THE ELECTRICAL SYMBOLS LIST.
2. EXIT SIGNS SHALL BE WIRED AHEAD OF ANY LOCAL SWITCHING ON CIRCUITS. SEE WIRING DIAGRAM DETAIL 8, ON DRAWING #E-501.
3. REFER TO DRAWING #E-601 FOR THE LIGHTING FIXTURE SCHEDULE.
4. REFER TO DRAWING #E-501 FOR THE POWER RISER.
5. REFER TO DRAWING #E-602 FOR PANEL SCHEDULES.
6. LIGHT FIXTURES INDICATED AS EMERGENCY SHALL BE PROVIDED WITH A BATTERY BACKUP BALLAST. SEE WIRING DIAGRAM 7, ON DRAWING #E-501.

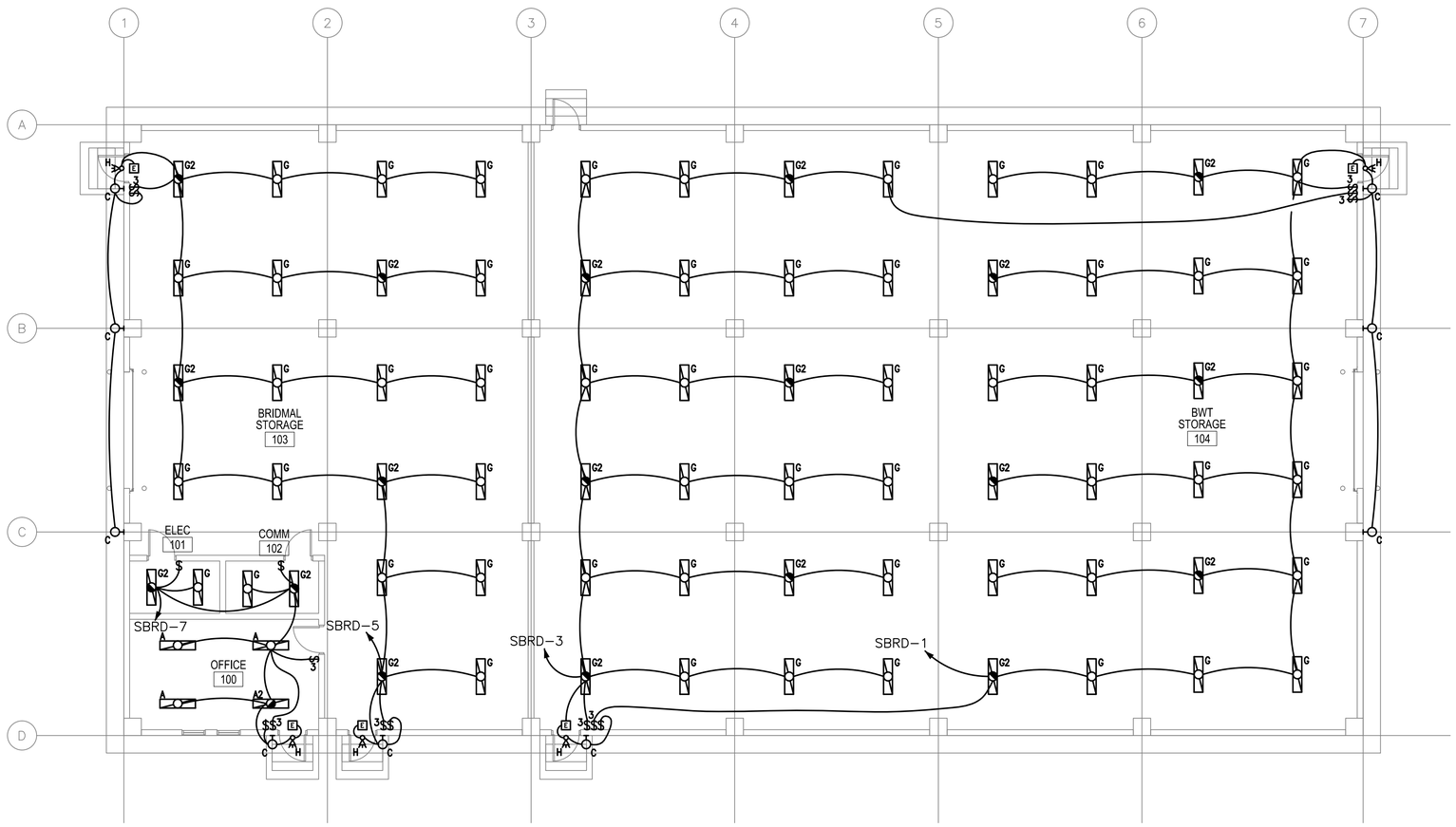


1
E-101

BRIDMAL STORAGE/BWT STORAGE
FLOOR PLAN - LIGHTING

SCALE: 1:100

0 2000 4000
SCALE: 1:100

APPROVED:

A/E DESIGNER OF RECORD

SEAL:

COMMONWEALTH OF PENNSYLVANIA
REGISTERED PROFESSIONAL
JOSEPH R. GAUS
ENGINEER
PE-074251

US ARMY CORPS OF ENGINEERS
AFGHANISTAN ENGINEER DISTRICT

| Mark | Description | Date | Appr. |
|---|---|---|---|
| | | | |

| Mark | Description | Date | Appr. |
|---|---|---|---|
| | | | |

Rev: 0
Date: 2/23/10
Designed by: KJR
Dwn by: BJB
Ckd by: JRG
Reviewed by: JRG
Submitted by: BAKER
Design file no.
Drawing code:
File name:
Plot date:
Plot scale:

U.S. ARMY CORPS OF ENGINEERS
AFGHANISTAN ENGINEER DISTRICT
APO AE 96338

Michael Baker Jr., Inc.
A unit of Michael Baker Corporation
Airside Business Park
100 Airside Drive
Moon Township, PA 15108
www.mbakercorp.com

AFGHAN NATIONAL ARMY
REGIONAL MILITARY TRAINING CENTER
STANDARD DESIGN

BRIDMALS AND BWT STORAGE
ELECTRICAL LIGHTING PLAN

Sheet reference number:
E-101

## GENERAL NOTES:

1. REFER TO DRAWING #E-001 FOR THE ELECTRICAL SYMBOLS LIST.
2. REFER TO DRAWING #E-501 FOR THE POWER RISER.
3. REFER TO DRAWING #E-602 FOR PANEL SCHEDULES.
4. COORDINATE EXACT MOUNTING LOCATION OF DISCONNECTING MEANS FOR MECHANICAL AND PLUMBING EQUIPMENT IN THE FIELD.
5. FUSIBLE SAFETY SWITCHES THAT ARE NOT OTHERWISE IDENTIFIED SHALL BE 380V, 1P, 30A FUSED SAFETY SWITCHES WITH 20A FUSES.

## NUMBERED NOTES:

(1) PANEL SBRD.

(2) PROVIDE 1200mm X 2400mm SHEET OF PLYWOOD PAINTED WITH FIRE RESISTANT PAINT FOR MOUNTING TELECOMMUNICATIONS EQUIPMENT.

(3) PROVIDE CONDUIT STUB UP IN THE ROOM FOR INCOMING TELECOMMUNICATIONS SERVICES FROM THE CENTRAL COMMUNICATIONS SYSTEM IN THE GARRISON.

(4) PROVIDE POWER CONNECTION TO EXHAUST FANS. SEE DRAWINGS #M-101 AND #E-602 FOR MORE INFORMATION.

(5) PROVIDE POWER CONNECTION TO ELECTRIC UNIT HEATER #2. SEE DRAWINGS #M-101 AND #E-602 FOR MORE INFORMATION.

(6) CONTRACTOR SHALL PROVIDE WEATHER PROOF RECEPTACLE AT 18" ABOVE FINISHED ROOF MOUNTED TO MECHANICAL EQUIPMENT HOUSING. RECEPTACLE SHALL BE WITHIN 7M OF ALL ROOFTOP EQUIPMENT.

(7) PROVIDE 220V, 1P, 30A FUSED SAFETY SWITCH WITH 30A FUSES.

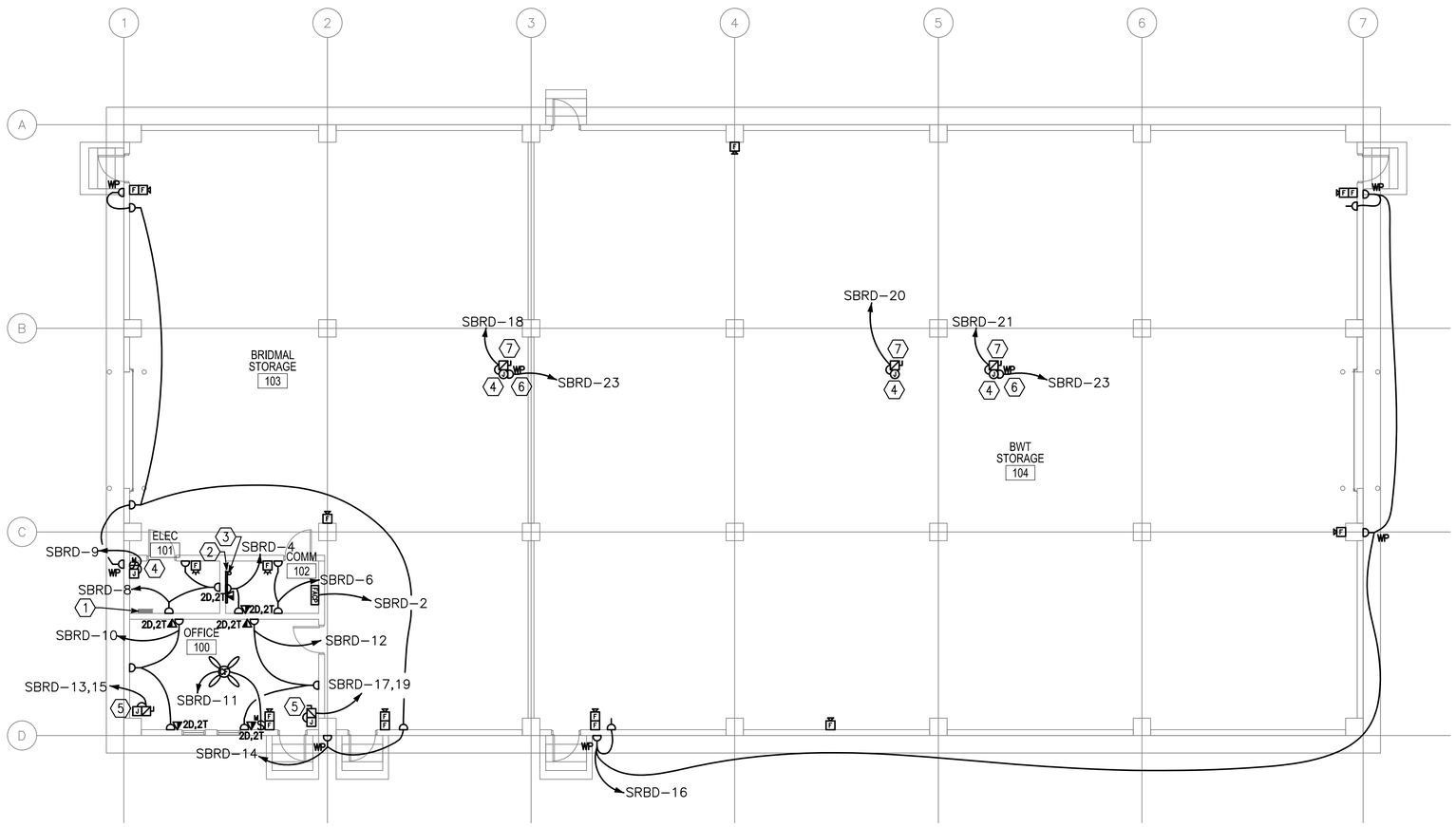


1
E-102

## BRIDMAL STORAGE/BWT STORAGE FLOOR PLAN - POWER & SYSTEMS

SCALE: 1:100

0 2000 4000
SCALE: 1:100

APPROVED:

A/E DESIGNER OF RECORD

SEAL:

COMMONWEALTH OF PENNSYLVANIA
REGISTERED PROFESSIONAL
JOSEPH R. GAUS
ENGINEER
PE-074251

US ARMY CORPS OF ENGINEERS
AFGHANISTAN ENGINEER DISTRICT

| Mark | Description | Date | Appr. |
|---|---|---|---|
| | | | |

| Mark | Description | Date | Appr. |
|---|---|---|---|
| | | | |

Designed by: KJR
Dwn by: BJB
Ckd by: JRG
Reviewed by: JRG
Submitted by: BAKER
Date: 2/23/10
Rev: 0
Design file no.
Drawing code:
File name:
Plot date:
Plot scale:

U.S. ARMY CORPS OF ENGINEERS
AFGHANISTAN ENGINEER DISTRICT
APO AE 96338

Michael Baker Jr., Inc.
A unit of Michael Baker Corporation
Airside Business Park
100 Airside Drive
Moon Township, PA 15108
www.mbakercorp.com

AFGHAN NATIONAL ARMY
REGIONAL MILITARY TRAINING CENTER
STANDARD DESIGN

BRIDMALS AND BWT STORAGE
ELECTRICAL POWER AND SYSTEMS PLAN

Sheet reference number:
E-102

## GENERAL NOTES:

1. REFER TO DRAWING #E-001 FOR THE ELECTRICAL SYMBOLS LIST.

## NUMBERED NOTES:

1. (1) 120.0mm² BARE, TINNED, COPPER COUNTERPOISE GROUND 700mm BELOW GRADE.
2. INSTALL DOWN CONDUCTOR IN 25mm SCHEDULE 80 PVC CONDUIT TO 20mm DIAMETER X 3 METERS SOLID COPPER TINNED GROUND ROD. (TYPICAL)
3. CADWELD TO BUILDING STRUCTURE AT 18 METERS ON CENTER AROUND THE ENTIRE PERIMETER OF THE BUILDING. (TYPICAL)
4. 120mm² LIGHTNING PROTECTION CABLE.
5. AIR TERMINAL. TERMINALS SHALL BE PLACED AT OR WITHIN 0.6M OF RIDGE VENTS PER NFPA 780 PARA. 4.8. (TYPICAL)
6. 700mm MIN. (TYP) BETWEEN FOUNDATION AND GROUND LOOP.
7. AIR TERMINAL ON ROOFTOP FAN.

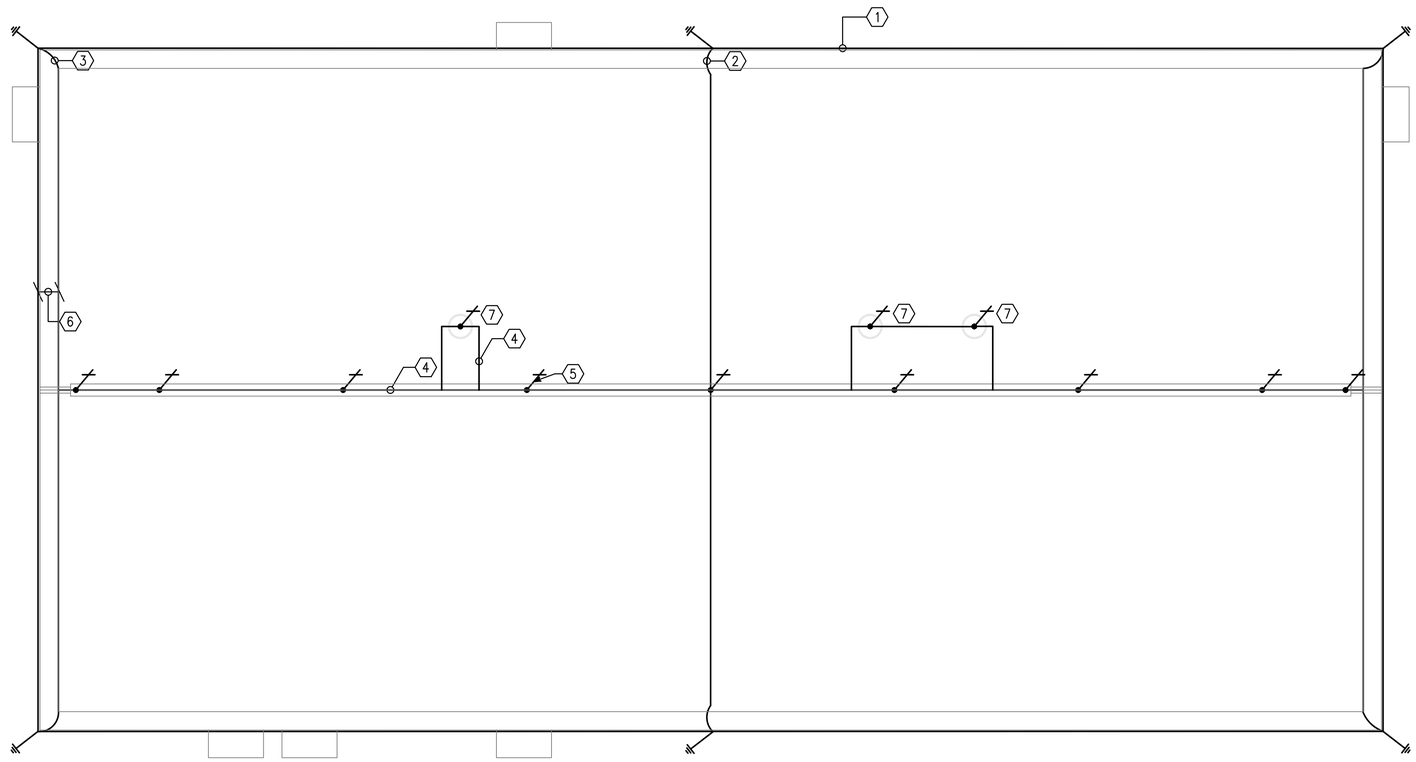


1
E-103

BRIDMAL STORAGE/BWT STORAGE
FLOOR PLAN - LIGHTNING PROTECTION

SCALE: 1:100

0 2000 4000
SCALE: 1:100

APPROVED:

A/E DESIGNER OF RECORD

SEAL:

COMMONWEALTH OF PENNSYLVANIA
REGISTERED PROFESSIONAL
JOSEPH R. GAUS
1/29/10
ENGINEER
PE-074251

US ARMY CORPS OF ENGINEERS
AFGHANISTAN ENGINEER DISTRICT

| Mark | Description | Date | Appr. |
|---|---|---|---|
| | | | |

| Mark | Description | Date | Appr. |
|---|---|---|---|
| | | | |

Designed by: KJR
Dwn by: BJB
Ckd by: JRG
Reviewed by: JRG
Submitted by: BAKER
Date: 2/23/10
Rev: 0
Design file no.
Drawing code:
File name:
Plot date:
Plot scale:

U.S. ARMY CORPS OF ENGINEERS
AFGHANISTAN ENGINEER DISTRICT
APO AE 96338

Michael Baker Jr., Inc
A unit of Michael Baker Corporation
Airside Business Park
100 Airside Drive
Moon Township, PA 15108
www.mbakercorp.com

AFGHAN NATIONAL ARMY
REGIONAL MILITARY TRAINING CENTER
STANDARD DESIGN

BRIDMALS AND BWT STORAGE
ELECTRICAL LIGHTNING PROTECTION PLAN

Sheet reference number:
E-103

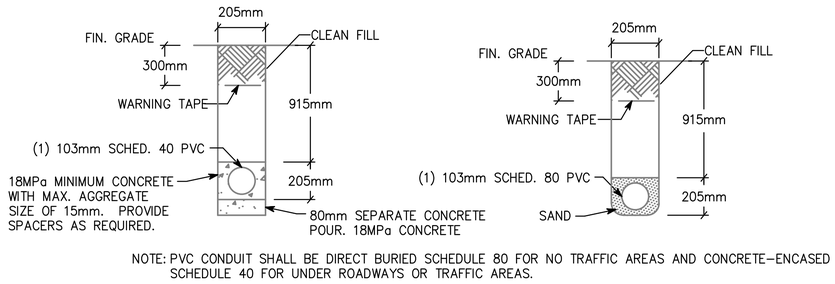


NOTE: PVC CONDUIT SHALL BE DIRECT BURIED SCHEDULE 80 FOR NO TRAFFIC AREAS AND CONCRETE-ENCASED SCHEDULE 40 FOR UNDER ROADWAYS OR TRAFFIC AREAS.

1 / E-501 TYPICAL DUCT BANK DETAILS FOR CONDUIT IN SAND OR CONCRETE

SCALE: N.T.S.

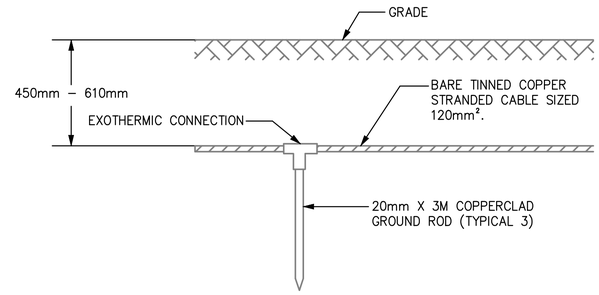


2 / E-501 GROUND TRIPOD SYSTEM DETAIL - ELEVATION

SCALE: N.T.S.

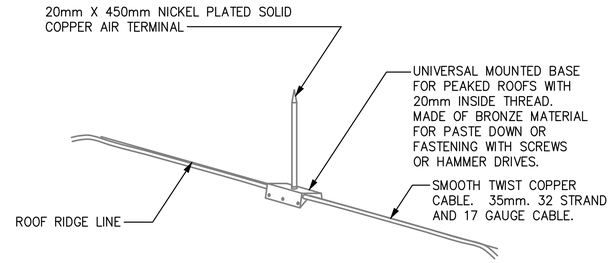


3 / E-501 LIGHTNING PROTECTION AIR TERMINAL DETAIL

SCALE: N.T.S.

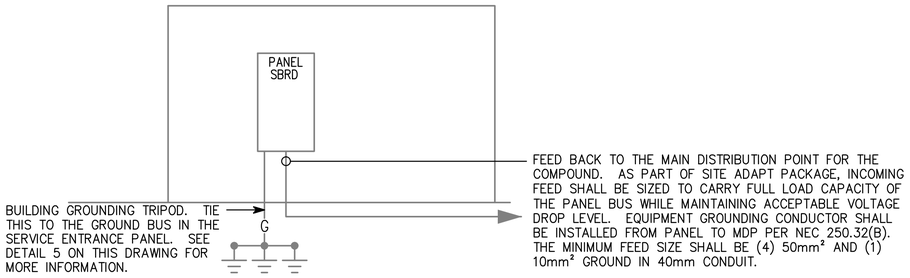


4 / E-501 SBRD RISER DIAGRAM

SCALE: N.T.S.

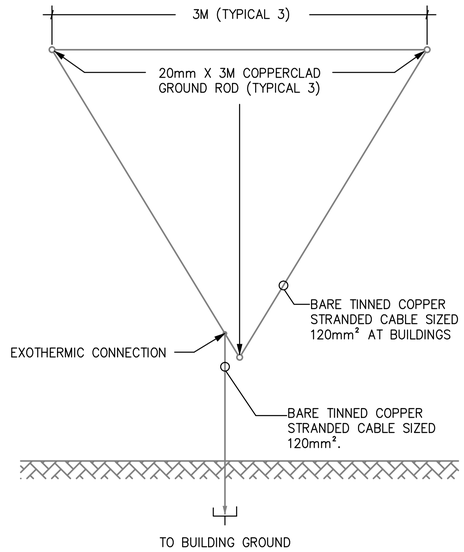


5 / E-501 GROUND TRIPOD SYSTEM DETAIL - PLAN

SCALE: N.T.S.

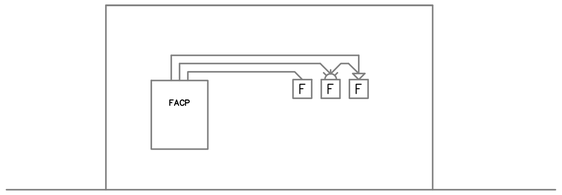


6 / E-501 TYPICAL ONE STORY FIRE ALARM RISER

SCALE: N.T.S.

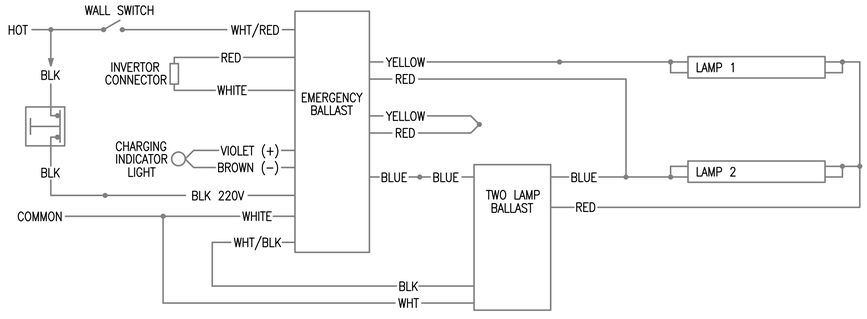


7 / E-501 EMERGENCY FIXTURE WIRING DIAGRAM

SCALE: N.T.S.

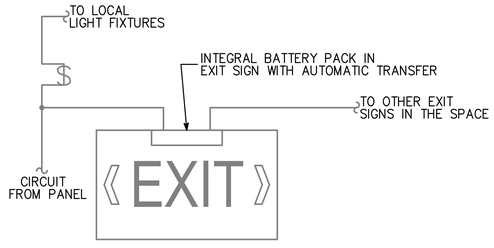


8 / E-501 EXIT SIGN WIRING DIAGRAM

SCALE: N.T.S.

APPROVED:

A/E DESIGNER OF RECORD

SEAL:

COMMONWEALTH OF PENNSYLVANIA
REGISTERED PROFESSIONAL ENGINEER
JOSEPH R. GAUS
PE-074251
1/29/10

US ARMY CORPS OF ENGINEERS
AFGHANISTAN ENGINEER DISTRICT

| Mark | Description | Date | Appr. | Mark | Description | Date | Appr. |
|---|---|---|---|---|---|---|---|
| | | | | | | | |

Designed by: KJR
Dwn by: BJB
Ckd by: JRG
Reviewed by: JRG
Submitted by: BAKER
Date: 2/23/10
Rev: 0
Design file no.
Drawing code:
File name:
Plot date:
Plot scale:

U.S. ARMY CORPS OF ENGINEERS
AFGHANISTAN ENGINEER DISTRICT
APO AE 96338

Michael Baker Jr., Inc.
A unit of Michael Baker Corporation
Airside Business Park
100 Airside Drive
Moon Township, PA 15108
www.mbakercorp.com

AFGHAN NATIONAL ARMY
REGIONAL MILITARY TRAINING CENTER
STANDARD DESIGN

BRIDMALS AND BWT STORAGE
ELECTRICAL DETAILS

Sheet reference number:
E-501

| (A) LARGER OF THE TWO SIZES GIVEN IN THE TABLES BELOW | |
|---|---|
| GROUNDING ELECTRODE CONDUCTOR (BASED ON AIC RATING) | |
| AIC RATING OF SERVICE EQUIPMENT | NECESSARY GROUNDING ELECTRODE CONDUCTOR SIZE |
| 10K | (1) 35mm² |
| 14K | (1) 50mm² |
| 18K | (1) 70mm² |
| 22K | (1) 70mm² |
| 25K | (1) 70mm² |
| 30K | (1) 95mm² |
| 35K | (1) 120mm² |
| 42K | (1) 150mm² |
| 65K | (1) 185mm² |
| 100K | (1) 300mm² |
| 125K | (2) 185mm² |
| 200K | (2) 300mm² |
| GROUNDING ELECTRODE CONDUCTOR (BASED ON NEC TABLE 250.66) | |
| SIZE OF LARGEST UNGROUNDED SERVICE CONDUCTOR OR EQUIVALENT AREA FOR PARALLEL CONDUCTORS | NECESSARY GROUNDING ELECTRODE CONDUCTOR SIZE |
| 350 kcmil OR SMALLER | 35mm² |
| OVER 350 kcmil TO 600 kcmil | 70mm² |
| OVER 600 kcmil TO 1100 kcmil | 70mm² |
| OVER 1100 kcmil | 95mm² |
| NOTE: ALL SIZES ARE BASED ON COPPER CONDUCTORS. | |

| (B) EQUIPMENT GROUNDING CONDUCTOR | |
|---|---|
| RATING OR SETTING OF AUTOMATIC OVERCURRENT DEVICE IN CIRCUIT AHEAD OF EQUIPMENT, CONDUIT, ETC, NOT EXCEEDING (AMPERES) | NECESSARY EQUIPMENT GROUNDING CONDUCTOR SIZE |
| 15 | 2.5mm² |
| 20 | 4.0mm² |
| 30 | 6.0mm² |
| 40 | 6.0mm² |
| 60 | 6.0mm² |
| 100 | 10mm² |
| 200 | 16mm² |
| 300 | 25mm² |
| 400 | 25mm² |
| 500 | 35mm² |
| 600 | 50mm² |
| 800 | 70mm² |
| 1000 | 70mm² |
| 1200 | 95mm² |
| 1600 | 120mm² |
| 2000 | 150mm² |
| 2500 | 185mm² |
| 3000 | 240mm² |
| 4000 | 300mm² |
| 5000 | 400mm² |
| 6000 | 400mm² |
| NOTE: ALL SIZES ARE BASED ON COPPER CONDUCTORS. | |

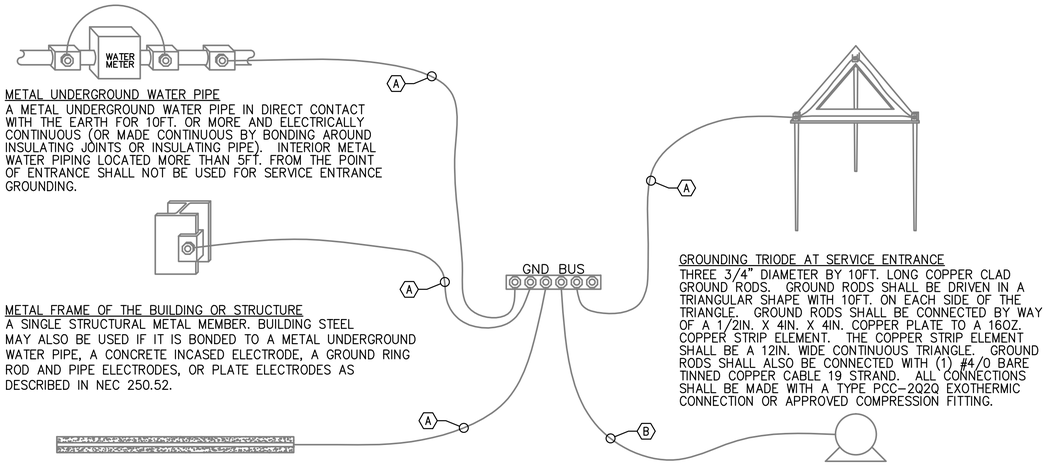


METAL UNDERGROUND WATER PIPE
A METAL UNDERGROUND WATER PIPE IN DIRECT CONTACT WITH THE EARTH FOR 10FT. OR MORE AND ELECTRICALLY CONTINUOUS (OR MADE CONTINUOUS BY BONDING AROUND INSULATING JOINTS OR INSULATING PIPE). INTERIOR METAL WATER PIPING LOCATED MORE THAN 5FT. FROM THE POINT OF ENTRANCE SHALL NOT BE USED FOR SERVICE ENTRANCE GROUNDING.

METAL FRAME OF THE BUILDING OR STRUCTURE
A SINGLE STRUCTURAL METAL MEMBER. BUILDING STEEL MAY ALSO BE USED IF IT IS BONDED TO A METAL UNDERGROUND WATER PIPE, A CONCRETE INCASED ELECTRODE, A GROUND RING ROD AND PIPE ELECTRODES, OR PLATE ELECTRODES AS DESCRIBED IN NEC 250.52.

CONCRETE ENCASED ELECTRODE
AN ELECTRODE ENCASED BY AT LEAST 2IN. OF CONCRETE , LOCATED WITHIN AND NEAR THE BOTTOM OF A CONCRETE FOUNDATION OR FOOTING THAT IS IN DIRECT CONTACT WITH THE EARTH, CONSISTING OF AT LEAST 20FT. OF ONE OR MORE BARE OR ZINC GALVANIZED OR OTHER ELECTRICALLY CONDUCTIVE COATED STEEL REINFORCING BARS OR RODS OF NOT LESS THAN 1/2" DIAMETER OR BARE COPPER CONDUCTOR NOT SMALLER THAN 4AWG.

GROUNDING TRIODE AT SERVICE ENTRANCE
THREE 3/4" DIAMETER BY 10FT. LONG COPPER CLAD GROUND RODS. GROUND RODS SHALL BE DRIVEN IN A TRIANGULAR SHAPE WITH 10FT. ON EACH SIDE OF THE TRIANGLE. GROUND RODS SHALL BE CONNECTED BY WAY OF A 1/2IN. X 4IN. X 4IN. COPPER PLATE TO A 16OZ. COPPER STRIP ELEMENT. THE COPPER STRIP ELEMENT SHALL BE A 12IN. WIDE CONTINUOUS TRIANGLE. GROUND RODS SHALL ALSO BE CONNECTED WITH (1) #4/0 BARE TINNED COPPER CABLE 19 STRAND. ALL CONNECTIONS SHALL BE MADE WITH A TYPE PCC-2Q2Q EXOTHERMIC CONNECTION OR APPROVED COMPRESSION FITTING.

LOAD OR DOWNSTREAM PANEL
ALL LOADS IN THE BUILDING SHALL HAVE AN EQUIPMENT GROUNDING CONDUCTOR PULLED TO THEM.

1
E-502

## SERVICE ENTRANCE GROUNDING DETAIL

SCALE: N.T.S.

APPROVED:

A/E DESIGNER OF RECORD

SEAL:

COMMONWEALTH OF PENNSYLVANIA
REGISTERED PROFESSIONAL
JOSEPH R. GAUS
ENGINEER
PE-074251
1/29/10

US ARMY CORPS OF ENGINEERS
AFGHANISTAN ENGINEER DISTRICT

| Mark | Description | Date | Appr. | Mark | Description | Date | Appr. |
|---|---|---|---|---|---|---|---|

Rev: 0
Date: 2/23/10
Design file no.
Drawing code:
File name:
Plot date:
Plot scale:

Designed by: KJR
Dwn by: BJB
Ckd by: JRG
Reviewed by: JRG
Submitted by: BAKER

U.S. ARMY CORPS OF ENGINEERS
AFGHANISTAN ENGINEER DISTRICT
APO AE 96338

Michael Baker Jr., Inc.
A unit of Michael Baker Corporation
Airside Business Park
100 Airside Drive
Moon Township, PA 15108
www.mbakercorp.com

AFGHAN NATIONAL ARMY
REGIONAL MILITARY TRAINING CENTER
STANDARD DESIGN

BRIDMALS AND BWT STORAGE
ELECTRICAL DETAILS

Sheet reference number:
E-502

FIXTURE MARK 'A'

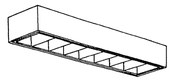

FIXTURE MARK 'C'

FIXTURE MARK 'G'

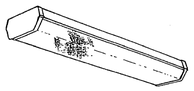

FIXTURE MARK 'H'

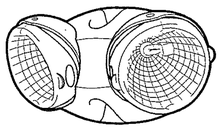

FIXTURE MARK 'E'

# LIGHT FIXTURE SCHEDULE

| FIXTURE MARK | STYLE NUMBER AND TYPE | NUMBER AND TYPE OF LAMPS | VOLTAGE | MOUNTING | NOTES |
|---|---|---|---|---|---|
| A | PARABOLIC SURFACE/PENDANT MOUNTED 300MM X 1200MM FLUORESCENT FIXTURE WITH ELECTRONIC BALLAST | (2) 32W 3500K | 220V – 1ø 50HZ | SURFACE MOUNTED | FURNISHED WITH ELECTRONIC BALLAST. PARABOLIC LOUVER SHALL BE SPECULAR LENS IRADESCENCE TYPE. |
| A2 | SAME AS FIXTURE 'A' WITH EMERGENCY BALLAST | (2) 32W 3500K | 220V – 1ø 50HZ | SURFACE MOUNTED | FURNISHED WITH ELECTRONIC BALLAST. PARABOLIC LOUVER SHALL BE SPECULAR LENS IRADESCENCE TYPE. EMERGENCY BALLAST SELF TEST. |
| C | INCANDESCENT ONE PIECE W/ APPROVED LENS STABILIZED HIGH IMPACT POLY CARBONATE. | (1) A19 – 100W INCANDESCENT | 220V – 1ø 50HZ | WALL MOUNTED ABOVE EXTERIOR DOORS | |
| G | WRAP AROUND SURFACE/PENDANT MOUNTED FLUORESCENT FIXTURE WITH PRISMATIC ACRYLIC LENS AND ELECTRONIC BALLAST | (2) 32W 3500K | 220V – 1ø 50HZ | SURFACE MOUNTED | FURNISHED WITH ELECTRONIC BALLAST, VIRGIN ACRYLIC WRAP AROUND LENS. |
| G2 | SAME AS FIXTURE 'G' WITH EMERGENCY BALLAST | (2) 32W 3500K | 220V – 1ø 50HZ | SURFACE MOUNTED | FURNISHED WITH ELECTRONIC BALLAST, VIRGIN ACRYLIC WRAP AROUND LENS. EMERGENCY BALLAST WITH SELF TEST SWITCH. |
| H | REMOTE HEAD EXTERIOR LIGHT HEAD POWERED FROM EXIT SIGN BATTERY– 12V DOUBLE HEAD CORROSION RESISTANT WITH UL34 WEATHERPROOF CONSTRUCTION | (2) 12W/12V HALOGEN LAMP | 12V – 1ø 50HZ | EXTERIOR WALL MOUNTED AT TOP OF DOOR HEIGHT | |
| E | UNIVERSAL MOUNT ENGINEER GRADE THERMOPLASTIC HOUSING EXIT SIGN WITH LED LAMPS, RED LETTERS 6" IN HEIGHT WITH ARROWS AS INDICATED, WITH 12V CADMIUM BATTERY WITH REMOTE HEAD CAPABILITY | LED LAMPS | 220V – 1ø 50HZ | UNIVERSAL MOUNTING | |

APPROVED:

A/E DESIGNER OF RECORD

SEAL:

US ARMY CORPS OF ENGINEERS
AFGHANISTAN ENGINEER DISTRICT

| Mark | Description | Date | Appr. | Mark | Description | Date | Appr. |
|---|---|---|---|---|---|---|---|
| | | | | | | | |

U.S. ARMY CORPS OF ENGINEERS
AFGHANISTAN ENGINEER DISTRICT
APO AE 96338

*Michael Baker Jr., Inc*
*A unit of Michael Baker Corporation*
Airside Business Park
100 Airside Drive
Moon Township, PA 15108
www.mbakercorp.com

Designed by: KJR
Dwn by: BJB
Ckd by: JRG
Reviewed by: JRG
Submitted by: BAKER
Date: 2/23/10
Rev: 0
Design file no.
Drawing code:
File name:
Plot date:
Plot scale:

AFGHAN NATIONAL ARMY
REGIONAL MILITARY TRAINING CENTER
STANDARD DESIGN

BRIDMALS AND BWT STORAGE
ELECTRICAL LIGHTING FIXTURE SCHEDULE

Sheet reference number:
E–601

PANELBOARD SBRD SURFACE MOUNTED

AMP. MAIN LUGS (OR) 100 AMP. MAIN BREAKER W/ 100 AMP. TRIP

CIRCUIT BREAKER TYPE 380/220 VOLTS 3 PHASE 4 WIRE 50 HZ 100 AMP. BUS

| CKT. NO. | TRIP AMPS | NO. POLES | WIRE MM ² | GND MM ² | CONDUIT MM | LOAD SERVED | LOAD-KVA A0 | LOAD-KVA B0 | LOAD-KVA C0 | LOAD-KVA A0 | LOAD-KVA B0 | LOAD-KVA C0 | LOAD SERVED | CONDUIT MM | GND MM² | WIRE MM² | NO. POLES | TRIP AMPS | CKT. NO. |
|---|---|---|---|---|---|---|---|---|---|---|---|---|---|---|---|---|---|---|---|
| 1 | 20 | 1 | 4.0 | 4.0 | 20 | LIGHTING – RM 104 | 1.7 | | | 0.5 | | | FACP – RM 102 | 20 | 4.0 | 4.0 | 1 | 20 | 2 |
| 3 | 20 | 1 | 4.0 | 4.0 | 20 | LIGHTING – RM 104 | | 1.7 | | | 0.4 | | RECEPTACLES – RM 102 | 20 | 4.0 | 4.0 | 1 | 20 | 4 |
| 5 | 20 | 1 | 4.0 | 4.0 | 20 | LIGHTING – RM 103 | | | 1.4 | | | 0.4 | RECEPTACLES – RM 102 | 20 | 4.0 | 4.0 | 1 | 20 | 6 |
| 7 | 20 | 1 | 4.0 | 4.0 | 20 | LIGHTING – RM 100–102 | 0.7 | | | 0.6 | | | RECEPTACLES – RM 101 | 20 | 4.0 | 4.0 | 1 | 20 | 8 |
| 9 | 20 | 1 | 4.0 | 4.0 | 20 | EXHAUST FAN #1 – RM 101 | | 0.5 | | | 0.6 | | RECEPTACLES – RM 100 | 20 | 4.0 | 4.0 | 1 | 20 | 10 |
| 11 | 20 | 1 | 4.0 | 4.0 | 20 | CEILING FANS – RM 100 | | | 0.3 | | | 0.6 | RECEPTACLES – RM 100 | 20 | 4.0 | 4.0 | 1 | 20 | 12 |
| 13 | 20 | 2 | 4.0 | 4.0 | 20 | ELECTRIC HEAT #2 – RM 100 | 1.3 | | | 1.2 | | | RECEPTACLES – RM 103, EXTERIOR | 20 | 4.0 | 4.0 | 1 | 20 | 14 |
| 15 | | | | | | | | 1.3 | | | 1.0 | | RECEPTACLES – RM 104, EXTERIOR | 20 | 4.0 | 4.0 | 1 | 20 | 16 |
| 17 | 20 | 2 | 4.0 | 4.0 | 20 | ELECTRIC HEAT #2 – RM 100 | | | 1.3 | | | 3.9 | EXHAUST FAN #2 – RM 103 | 20 | 6.0 | 6.0 | 1 | 30 | 18 |
| 19 | | | | | | | 1.3 | | | 3.9 | | | EXHAUST FAN #3 – RM 104 | 20 | 6.0 | 6.0 | 1 | 30 | 20 |
| 21 | 30 | 1 | 6.0 | 6.0 | 20 | EXHAUST FAN #4 – RM 104 | | 3.9 | | | | | SPARE | | | | 1 | 20 | 22 |
| 23 | 20 | 1 | 4.0 | 4.0 | 20 | ROOFTOP RECEPTACLES | | | 0.4 | | | | SPARE | | | | 1 | 20 | 24 |
| | | | | | | | 5.0 | 7.4 | 3.4 | 6.2 | 2.0 | 4.9 | | | | | | | |

TOTAL CONN. LOAD PER PHASE (KVA): A0 11.2 B0 9.4 C0 8.3

TOTAL CONN. LOAD 28.9 KVA. 70 % DEMAND = ESTIMATED DEMAND LOAD 20.3

* MAIN BREAKER SHALL BE 3P EARTH GROUND TYPE

APPROVED:

A/E DESIGNER OF RECORD

SEAL:

COMMONWEALTH OF PENNSYLVANIA
REGISTERED PROFESSIONAL
JOSEPH R. GAUS
ENGINEER
PE-074251
1/29/10

US ARMY CORPS OF ENGINEERS
AFGHANISTAN ENGINEER DISTRICT

| Mark | Description | Date | Appr. |
|---|---|---|---|
| | | | |

| Mark | Description | Date | Appr. |
|---|---|---|---|
| | | | |

Designed by: KJR
Dwn by: BJB
Ckd by: JRG
Reviewed by: JRG
Submitted by: BAKER
Date: 2/23/10
Rev: 0
Design file no.
Drawing code:
File name:
Plot date:
Plot scale:

U.S. ARMY CORPS OF ENGINEERS
AFGHANISTAN ENGINEER DISTRICT
APO AE 96338

Michael Baker Jr., Inc.
A unit of Michael Baker Corporation
Airside Business Park
100 Airside Drive
Moon Township, PA 15108
www.mbakercorp.com

AFGHAN NATIONAL ARMY
REGIONAL MILITARY TRAINING CENTER
STANDARD DESIGN

BRIDMALS AND BWT STORAGE
ELECTRICAL PANEL SCHEDULES

Sheet reference number:
E–602

# AFGHAN NATIONAL ARMY

## STANDARD BUILDING DESIGN

## BWT BARRACKS COMPOUND AREA

## 100% FINAL DESIGN SUBMITTAL

### SHEET INDEX


G–001 COVER SHEET

CIVIL

C–101 SITE PLAN
C–501 3000 mm FENCING DETAILS
C–502 FENCING DETAILS


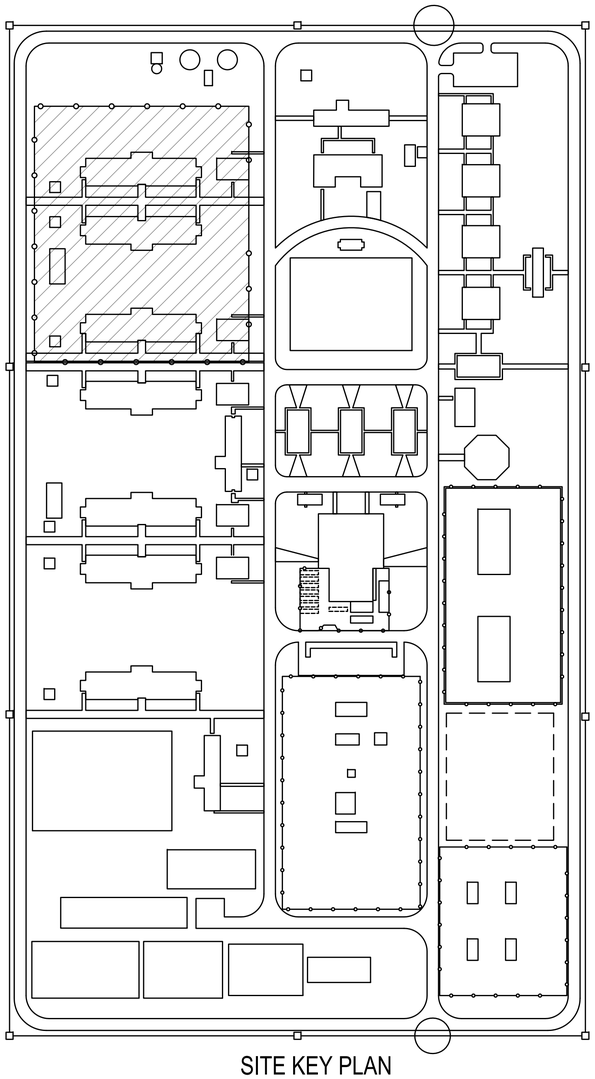

SITE KEY PLAN
NTS

US ARMY CORPS OF ENGINEERS
AFGHANISTAN ENGINEER DISTRICT

| Mark | Description | Date | Appr. | Mark | Description | Date | Appr. |
|---|---|---|---|---|---|---|---|
| | | | | | | | |

Designed by: Dwn by: JDS Ckd by: JDS
Reviewed by: LHM
Submitted by: BAKER
Date: 2/23/2010
Rev: 0
Design file no. G–001
Drawing code:
File name: ANABWT-G-001XXX
Plot date: 2/23/2010
Plot scale: 1:1

U.S. ARMY ENGINEER DISTRICT, AFGHANISTAN
CORPS OF ENGINEERS
APO AE 96338

Michael Baker Jr., Inc
A unit of Michael Baker Corporation
Airside Business Park
100 Airside Drive
Moon Township, PA 15108
www.mbakercorp.com

AFGHAN NATIONAL ARMY
REGIONAL MILITARY TRAINING CENTER
STANDARD DESIGN

BWT BARRACKS COMPOUND

COVER SHEET

Sheet reference number:
G–001

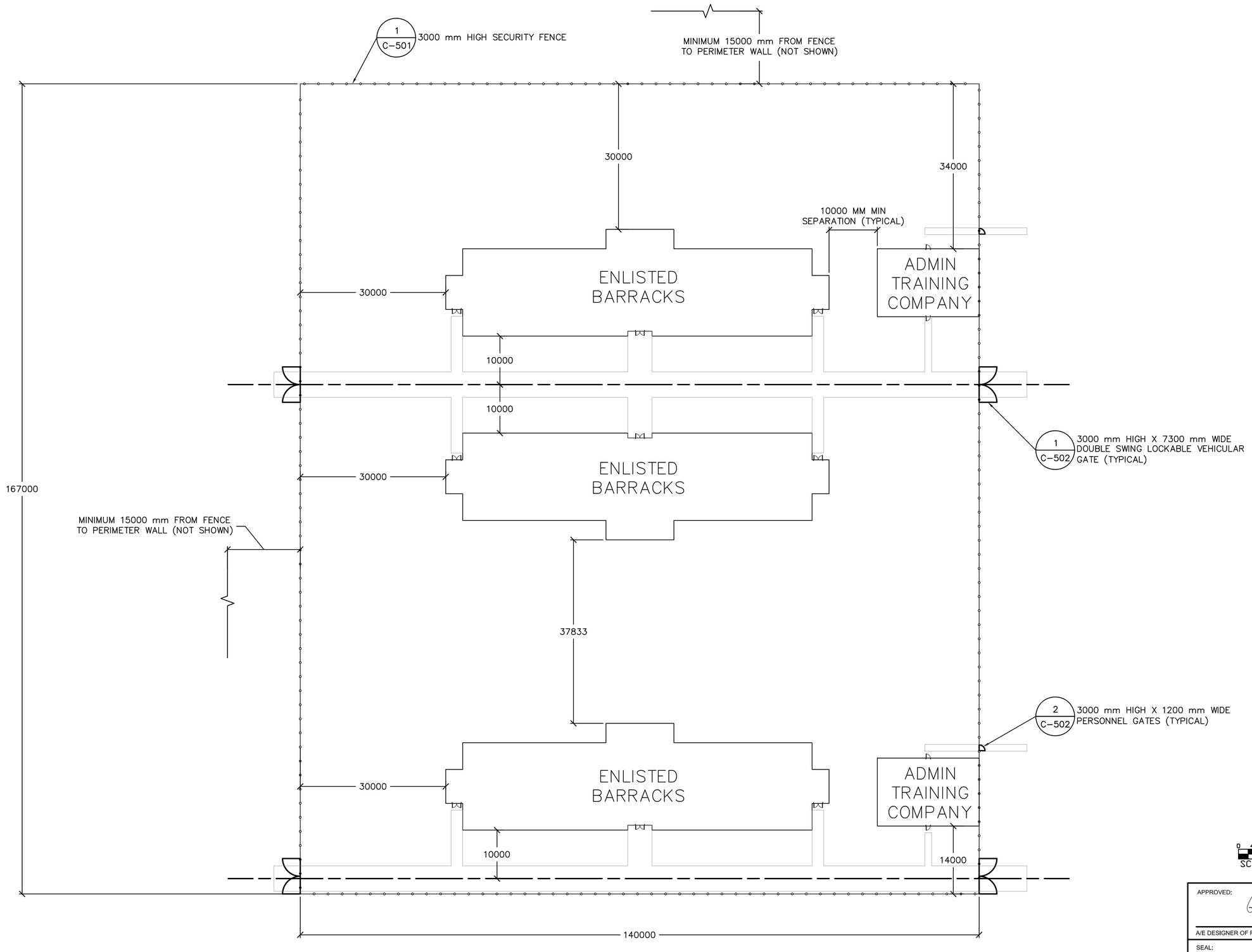


1 C-101 **BWT COMPOUND**
SCALE: 1:400

0 4000 8000 16000
SCALE: 1: 400

APPROVED:

A/E DESIGNER OF RECORD

SEAL:

COMMONWEALTH OF PENNSYLVANIA
REGISTERED PROFESSIONAL
GREGORY P. HYNES
ENGINEER
044310-E

US ARMY CORPS OF ENGINEERS
AFGHANISTAN ENGINEER DISTRICT

| Mark | Description | Date | Appr. | Mark | Description | Date | Appr. |
|---|---|---|---|---|---|---|---|

U.S. ARMY ENGINEER DISTRICT, AFGHANISTAN
CORPS OF ENGINEERS
APO AE 96338

Michael Baker Jr., Inc.
A unit of Michael Baker Corporation
Airside Business Park
100 Airside Drive
Moon Township, PA 15108
www.mbakercorp.com

Designed by: GPH
Dwn by: JDS
Ckd by: JMB
Reviewed by: LHM
Submitted by: BAKER
Date: 2/23/2010
Rev: 0
Design file no. C-101
Drawing code:
File name: ANABWT-C-101XXX
Plot date: 2/23/2010
Plot scale: 1:400

AFGHAN NATIONAL ARMY
REGIONAL MILITARY TRAINING CENTER
STANDARD DESIGN

BWT BARRACKS COMPOUND
SITE PLAN

Sheet reference number:
C-101

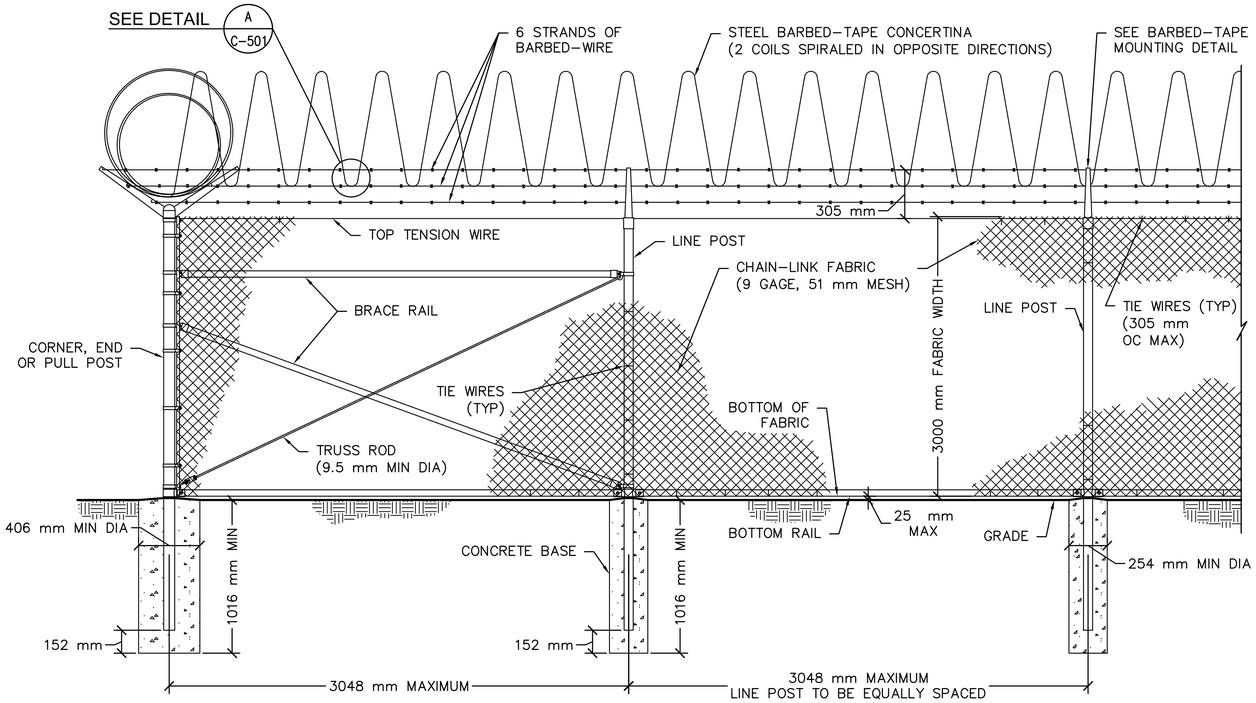


1 C-501 3000 mm CHAIN-LINK SECURITY FENCE DETAIL
SCALE: NTS

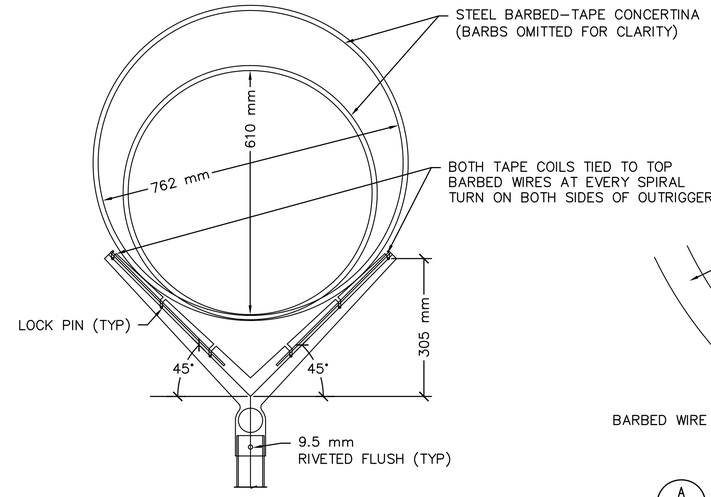


BARBED-TAPE MOUNTING DETAIL
NO SCALE

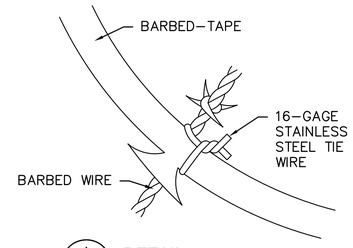


A C-501 DETAIL
NO SCALE

| STEEL POST SCHEDULE | |
|---|---|
| USE AND SECTION | MINIMUM OUTSIDE DIMENSIONS (NOMINAL) FABRIC WIDTH 2440 mm AND OVER |
| CORNER, END & PULL POSTS | |
| TUBULAR – ROUND | 102 mm O.D. |
| LINE POSTS | |
| TUBULAR – ROUND | 73 mm O.D. |
| BOTTOM & BRACE RAILS | |
| TUBULAR – ROUND | 42 mm O.D. |
| TUBULAR – SQUARE | 38 mm SQ. |
| H–SECTION | 41 mm x 38 mm |
| C–SECTION (ROLL–FORMED) | 41 mm x 32 mm |

NOTES:

1. WIRE TIES, RAILS, POSTS, AND BRACES SHALL BE CONSTRUCTED ON THE SECURE SIDE OF THE FENCE ALIGNMENT. CHAIN–LINK FABRIC SHALL BE PLACED ON THE SIDE OPPOSITE THE SECURE AREA.
2. ONLY 9–GAGE GALVANIZED STEEL TIE WIRES SHALL BE USED FOR FASTENING THE FENCE FABRIC TO FENCE POSTS AND RAILS. 16–GAGE, STAINLESS STEEL TIE WIRES SHALL BE USED FOR FASTENING FENCE FABRIC TO TENSION WIRES. HOG RINGS SHALL NOT BE ALLOWED ON SENSORED FENCES.
3. BOTTOM RAIL SHALL BE ATTACHED TO DOUBLE RAIL ENDS USING 9.5 mm CARRIAGE BOLTS AS SHOWN. ADDITIONAL HOLES SHALL BE DRILLED THROUGH THE BOTTOM RAIL ENDS TO INSURE THAT CARRIAGE BOLTS PASS THROUGH THE BOTTOM RAIL AS SHOWN.

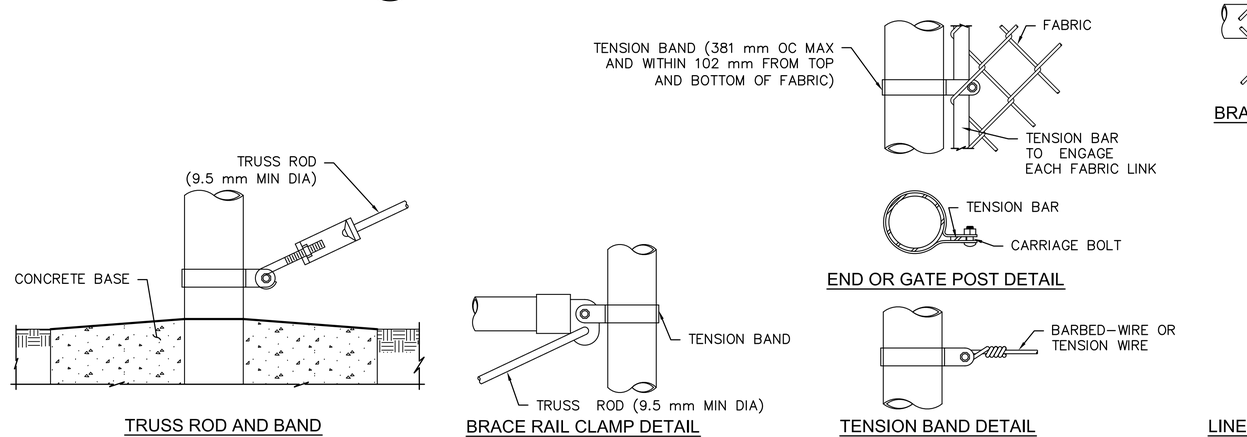


TRUSS ROD AND BAND
BRACE RAIL CLAMP DETAIL
END OR GATE POST DETAIL
TENSION BAND DETAIL

FASTENING DETAILS
NO SCALE

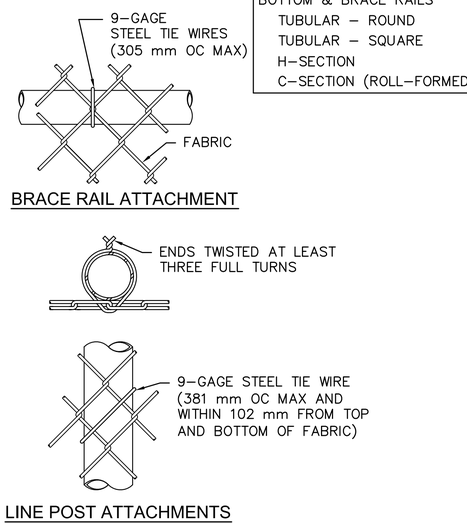


BRACE RAIL ATTACHMENT
LINE POST ATTACHMENTS

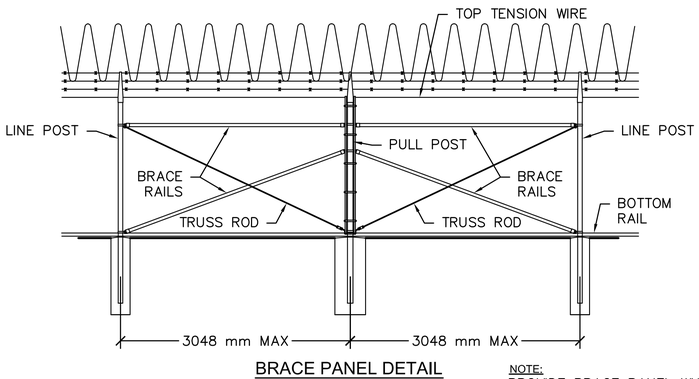


BRACE PANEL DETAIL
NO SCALE

NOTE:
PROVIDE BRACE PANEL WHENEVER STRAIGHT RUNS EXCEED 152 METERS.

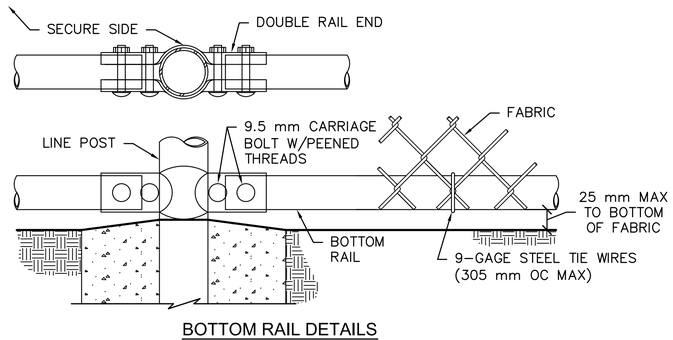


BOTTOM RAIL DETAILS
NO SCALE

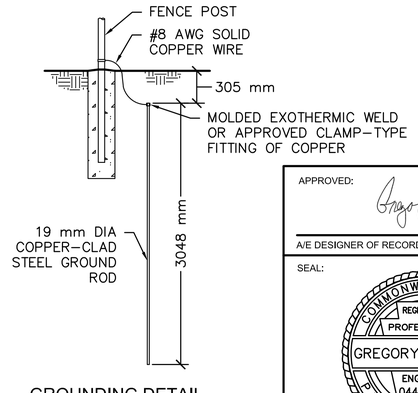


GROUNDING DETAIL
NO SCALE

APPROVED:
A/E DESIGNER OF RECORD
SEAL:
COMMONWEALTH OF PENNSYLVANIA
REGISTERED PROFESSIONAL
GREGORY P. HYNES
ENGINEER 044310–E

US ARMY CORPS OF ENGINEERS
AFGHANISTAN ENGINEER DISTRICT

| Mark | Description | Date | Appr. | Mark | Description | Date | Appr. |
|---|---|---|---|---|---|---|---|
| | | | | | | | |

Rev: 0
Date: 2/23/2010
Design file no. C–501
Drawing code:
File name: ANABWT-C-501XXX
Plot date: 2/23/2010
Plot scale: 1:1

Designed by: GPH
Dwn by: JDS
Ckd by: JMB
Reviewed by: LHM
Submitted by:
BAKER

U.S. ARMY ENGINEER DISTRICT, AFGHANISTAN
CORPS OF ENGINEERS
APO AE 96338

Michael Baker Jr., Inc.
A unit of Michael Baker Corporation
Airside Business Park
100 Airside Drive
Moon Township, PA 15108
www.mbakercorp.com

AFGHAN NATIONAL ARMY
REGIONAL MILITARY TRAINING CENTER
STANDARD DESIGN

BWT BARRACKS COMPOUND

3000 mm FENCING DETAILS

Sheet reference number:
C–501

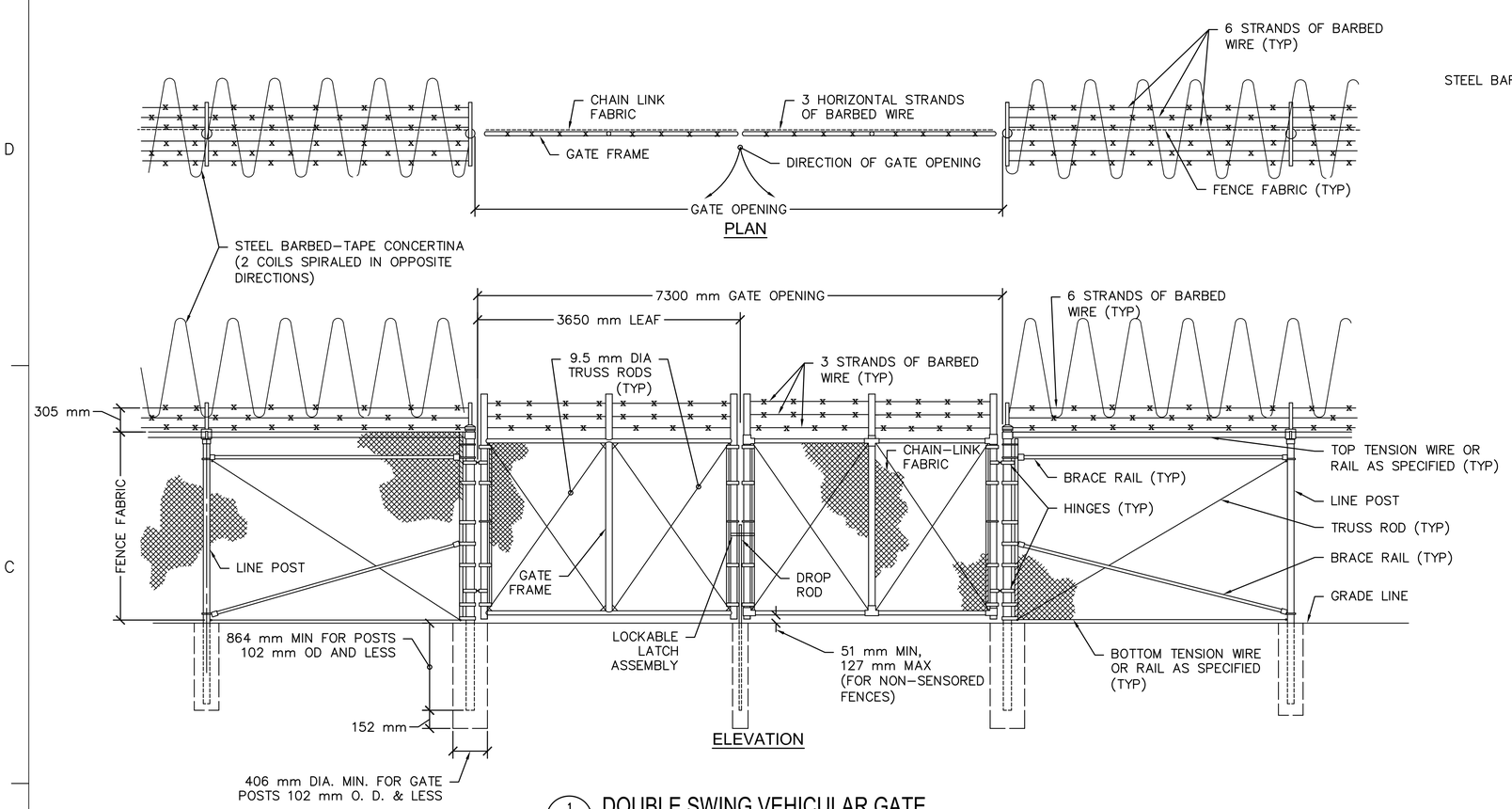


1 C–502 DOUBLE SWING VEHICULAR GATE
SCALE: NTS

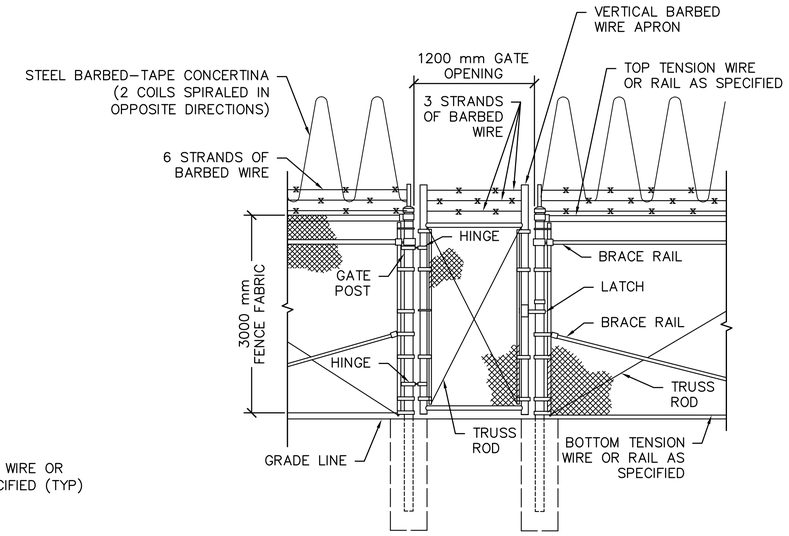


2 C–502 PERSONNEL GATE
NO SCALE

NOTES:

1. FOR NON–SENSORED FENCES, DETAILS SHOWN ARE TO CLARIFY REQUIREMENTS AND ARE NOT INTENDED TO LIMIT OTHER TYPE OF FENCE SECTIONS AND METHODS OF INSTALLATION THAT COMPLY WITH THE SPECIFICATIONS.
2. SWING GATES SHALL BE CONSTRUCTED WITH DROP RODS, PADLOCKS, LATCH ASSEMBLY AND GATE KEEPERS EXCEPT AS NOTED.
3. ALL GATE FRAMES SHALL MEET THE MINIMUM REQUIREMENTS OF ASTM F900 48 mm NOMINAL (ROUND) OR 51 mm NOMINAL (SQUARE). GATE FRAMES SHALL BE OF WELDED CONSTRUCTION OR SHALL BE ASSEMBLED USING HEAVY FITTINGS. AT CONTRACTOR'S OPTION A WELDED HORIZONTAL BRACE MAY BE USED IN LIEU OF TRUSS RODS TO BRACE ALL–WELDED GATE FRAMES. THE CONTRACTOR SHALL BE RESPONSIBLE FOR THE PROPER RIGID CONSTRUCTION OF ALL GATES SUPPLIED.

| GATE POST SCHEDULE | |
|---|---|
| GATE LEAF WIDTH (NOMINAL) | OUTSIDE DIMENSION (NOMINAL) |
| 1830 mm OR LESS | 73 mm OD<br>64 mm SQ |
| GREATER THAN 1830 mm TO 3660 mm | 102 mm OD |

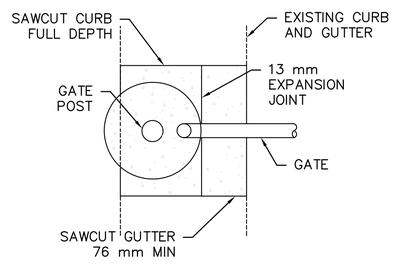


PLAN

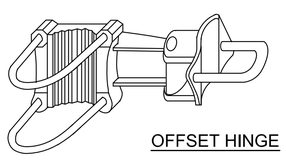

OFFSET HINGE

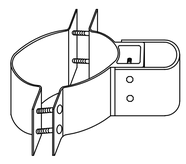

STANDARD HINGE

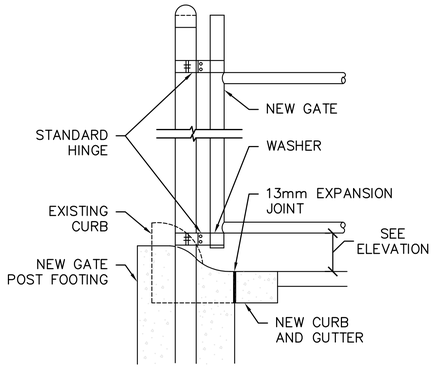


GATE POST SECTION AT CURB AND GUTTER
NO SCALE

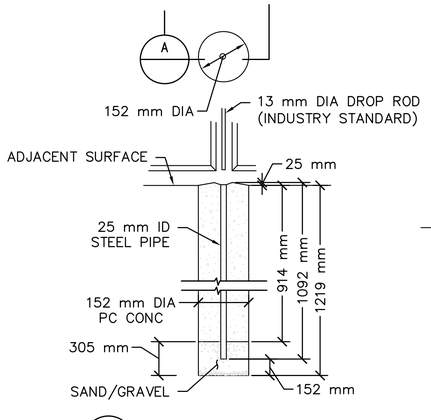


A DROP ROD FOUNDATION

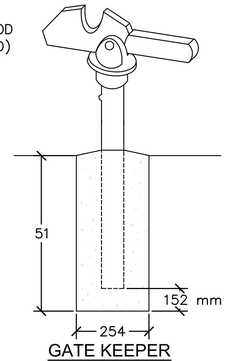


GATE KEEPER
(TO HOLD GATE OPEN)

SWING GATE DETAILS
NO SCALE

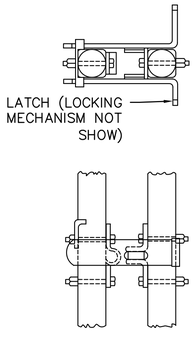


LOCKABLE LATCH ASSEMBLY

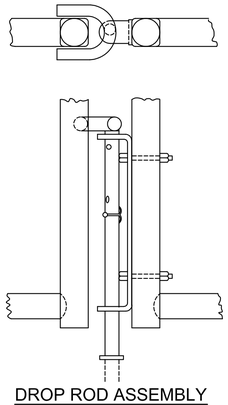

DROP ROD ASSEMBLY

APPROVED:

A/E DESIGNER OF RECORD

SEAL:

COMMONWEALTH OF PENNSYLVANIA
REGISTERED PROFESSIONAL
GREGORY P. HYNES
ENGINEER 044310–E

US ARMY CORPS OF ENGINEERS
AFGHANISTAN ENGINEER DISTRICT

| Mark | Description | Date | Appr. |
|---|---|---|---|
| | | | |

| Mark | Description | Date | Appr. |
|---|---|---|---|
| | | | |

Designed by: GPH
Dwn by: JDS
Ckd by: JMB
Reviewed by: LHM
Submitted by: BAKER
Date: 2/23/2010
Rev: 0
Design file no. C–502
Drawing code:
File name: ANABWT-C-502XXX
Plot date: 2/23/2010
Plot scale: 1:1

U.S. ARMY ENGINEER DISTRICT, AFGHANISTAN
CORPS OF ENGINEERS
APO AE 96338

Michael Baker Jr., Inc.
A unit of Michael Baker Corporation
Airside Business Park
100 Airside Drive
Moon Township, PA 15108
www.mbakercorp.com

AFGHAN NATIONAL ARMY
REGIONAL MILITARY TRAINING CENTER
STANDARD DESIGN

BWT BARRACKS COMPOUND

FENCING DETAILS

Sheet reference number:
C–502

# AFGHAN NATIONAL ARMY

## STANDARD BUILDING DESIGN

## DINING FACILITY

## 100% FINAL DESIGN SUBMITTAL

### SHEET INDEX


G–001 COVER SHEET

CIVIL

C–101 SITE PLAN
C–501 FENCING DETAILS
C–502 FENCING DETAILS
C–503 FENCING DETAILS
C–504 FENCING DETAILS

STRUCTURAL

S–001 GENERAL NOTES & DESIGN CRITERIA
S–101 FOUNDATION/SLAB PLAN
S–102 FOUNDATION/SLAB PLAN
S–103 ROOF FRAMING PLAN
S–104 ROOF FRAMING PLAN
S–105 PROPANE STORAGE FND/SLAB & ROOF FRAMING PLANS
S–106 WOOD STORAGE FND/SLAB & ROOF FRAMING PLANS
S–401 BUILDING SECTIONS
S–402 BUILDING SECTIONS
S–403 BUILDING SECTIONS
S–501 FOUNDATION SECTIONS
S–502 SECTIONS
S–503 BEAM & COLUMN DETAILS
S–504 BEAM & COLUMN DETAILS
S–505 MISCELLANEOUS SECTIONS
S–506 MISCELLANEOUS SECTIONS
S–507 SECTIONS
S–601 SCHEDULES
S–701 TYPICAL DETAILS
S–702 TYPICAL DETAILS

ARCHITECTURAL

A–001 LIFE SAFETY PLAN
A–101 FLOOR PLAN
A–102 FLOOR PLAN
A–103 ROOF PLAN
A–201 ELEVATIONS
A–301 BUILDING SECTIONS
A–401 WALL SECTIONS
A–402 WALL SECTIONS
A–403 ENLARGED PLAN
A–404 PROPANE STOVE PLAN & SECTION
A–405 WOOD BURNING STOVE DETAILS
A–406 WOOD BURNING STOVE DETAILS
A–501 EXTERIOR DETAILS
A–502 HEAD, JAMB, & SILL DETAILS
A–503 STOOP DETAILS
A–504 CANOPY DETAILS
A–505 TOILET & LAVATORY DETAILS
A–506 DETAILS
A–507 ISOLATION JOINT DETAILS
A–601 WINDOW & DOOR SCHEDULES

MECHANICAL

P–101 DFAC FLOOR PLAN–PLUMBING(SANITARY)
P–102 DFAC FLOOR PLAN–PLUMBING(SANITARY)
P–103 DFAC FLOOR PLAN–PLUMBING(HOT & COLD WATER)
P–104 DFAC FLOOR PLAN–PLUMBING(HOT & COLD WATER)
P–105 DFAC FLOOR PLAN–PLUMBING(PROPANE)
P–501 PLUMBING DETAILS
P–502 PLUMBING DETAILS
P–901 DFAC DRAINAGE ISOMETRIC
P–902 DFAC WATER ISOMETRIC
P–903 DFAC PROPANE ISOMETRIC

M–101 HVAC PARTIAL FLOOR PLAN
M–102 HVAC PARTIAL FLOOR PLAN
M–501 HVAC SCHEDULES AND DETAILS
M–502 KITCHEN EXHAUST HOOD DETAILS

ELECTRICAL

E–001 ELECTRICAL SYMBOLS & ABBREVIATIONS
E–101 ELECTRICAL LIGHTING PLAN– PART A
E–102 ELECTRICAL LIGHTING PLAN– PART B
E–103 ELECTRICAL POWER & SYSTEMS PLAN– PART A
E–104 ELECTRICAL POWER & SYSTEMS PLAN– PART B
E–105 ELECTRICAL LIGHTNING PROTECTION
E–501 ELECTRICAL DETAILS
E–502 ELECTRICAL DETAILS
E–601 ELECTRICAL LIGHT FIXTURE SCHEDULE
E–602 ELECTRICAL PANEL SCHEDULES



US ARMY CORPS OF ENGINEERS
AFGHANISTAN ENGINEER DISTRICT


| Mark | Description | Date | Appr. | Mark | Description | Date | Appr. |
|---|---|---|---|---|---|---|---|

Date: 2/23/10 Rev: 0
Design file no.
Drawing code:
File name: ANMSFACG-001CS
Plot date: 2/23/2010
Plot scale: X:X

Designed by: KMF/MMY
Dwn by: RCG Ckd by: CWW
Reviewed by: LHM
Submitted by: BAKER


U.S. ARMY CORPS OF ENGINEERS
AFGHANISTAN ENGINEER DISTRICT
APO AE 96338

Michael Baker Jr., Inc.
A unit of Michael Baker Corporation
Airside Business Park
100 Airside Drive
Moon Township, PA 15108
www.mbakercorp.com


AFGHAN NATIONAL ARMY
REGIONAL MILITARY TRAINING CENTER
STANDARD DESIGN

DINING FACILITY

COVER SHEET

Sheet reference number:
G–001

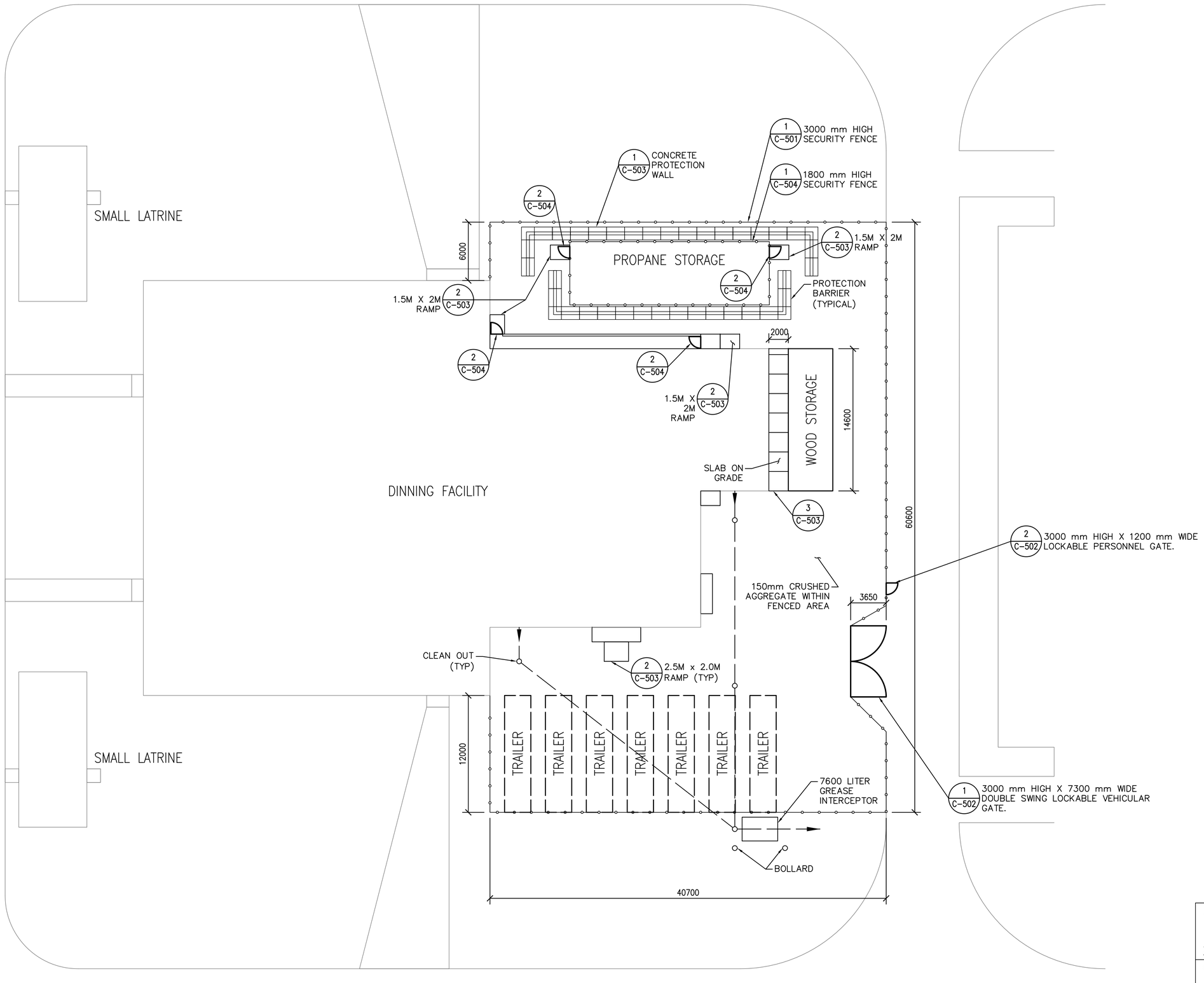


1 C-101 DFAC STORAGE AREA
SCALE: 1:200

0 2000 4000 8000
SCALE: 1: 200

APPROVED:

A/E DESIGNER OF RECORD

SEAL:

COMMONWEALTH OF PENNSYLVANIA
REGISTERED PROFESSIONAL
GREGORY P. HYNES
ENGINEER
044310-E

US ARMY CORPS OF ENGINEERS
AFGHANISTAN ENGINEER DISTRICT

| Mark | Description | Date | Appr. | Mark | Description | Date | Appr. |
|---|---|---|---|---|---|---|---|

Designed by: GPH
Dwn by: JDS
Ckd by: LHM
Reviewed by: LHM
Submitted by: BAKER
Date: 2/23/2010
Rev: 0
Design file no. C-101
Drawing code:
File name: ANADINS-C-101XXX
Plot date: 2/23/2010
Plot scale: 1:200

U.S. ARMY ENGINEER DISTRICT, AFGHANISTAN
CORPS OF ENGINEERS
APO AE 96338

Michael Baker Jr., Inc
A unit of Michael Baker Corporation
Airside Business Park
100 Airside Drive
Moon Township PA 15108
www.mbakercorp.com

AFGHAN NATIONAL ARMY
REGIONAL MILITARY TRAINING CENTER
STANDARD DESIGN

DFAC STORAGE AREA

SITE PLAN

Sheet reference number:
C-101

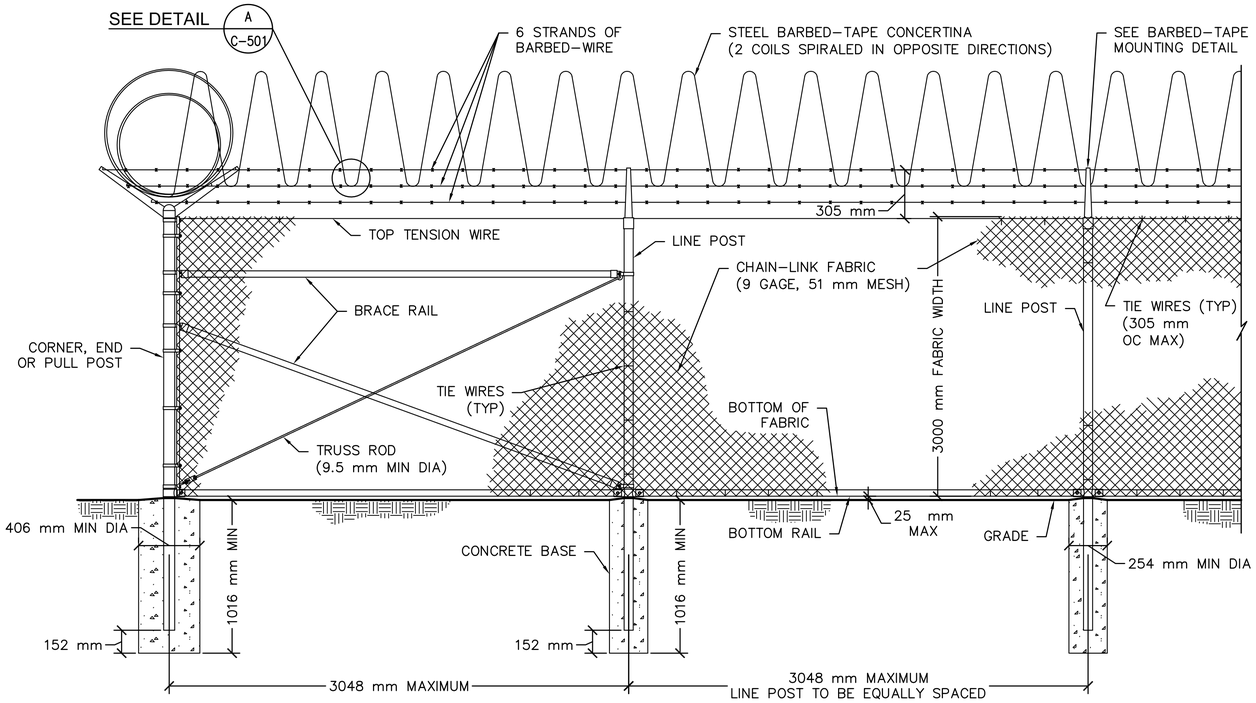


1 C-501 3000 mm CHAIN-LINK SECURITY FENCE DETAIL
SCALE: NTS

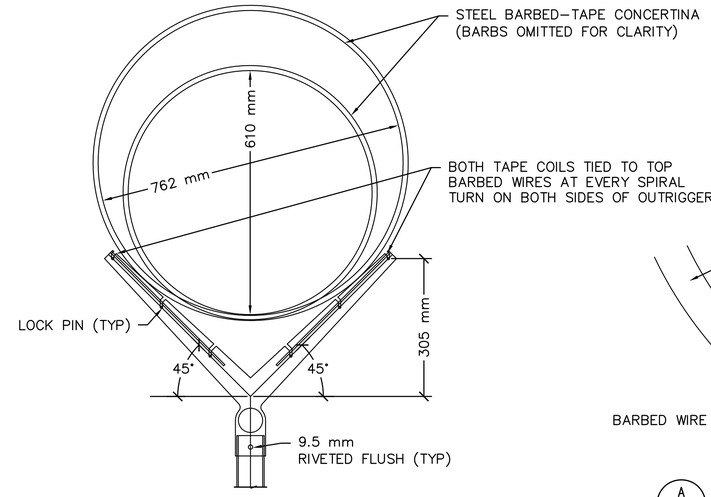


BARBED-TAPE MOUNTING DETAIL
NO SCALE

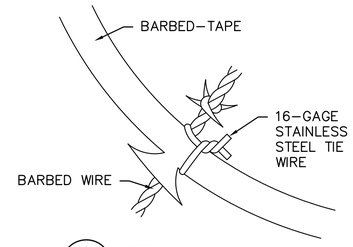


A C-501 DETAIL
NO SCALE

| STEEL POST SCHEDULE | |
|---|---|
| USE AND SECTION | MINIMUM OUTSIDE DIMENSIONS (NOMINAL) FABRIC WIDTH 2440 mm AND OVER |
| CORNER, END & PULL POSTS | |
| TUBULAR – ROUND | 102 mm O.D. |
| LINE POSTS | |
| TUBULAR – ROUND | 73 mm O.D. |
| BOTTOM & BRACE RAILS | |
| TUBULAR – ROUND | 42 mm O.D. |
| TUBULAR – SQUARE | 38 mm SQ. |
| H–SECTION | 41 mm x 38 mm |
| C–SECTION (ROLL–FORMED) | 41 mm x 32 mm |

NOTES:

1. WIRE TIES, RAILS, POSTS, AND BRACES SHALL BE CONSTRUCTED ON THE SECURE SIDE OF THE FENCE ALIGNMENT. CHAIN–LINK FABRIC SHALL BE PLACED ON THE SIDE OPPOSITE THE SECURE AREA.
2. ONLY 9–GAGE GALVANIZED STEEL TIE WIRES SHALL BE USED FOR FASTENING THE FENCE FABRIC TO FENCE POSTS AND RAILS. 16–GAGE, STAINLESS STEEL TIE WIRES SHALL BE USED FOR FASTENING FENCE FABRIC TO TENSION WIRES. HOG RINGS SHALL NOT BE ALLOWED ON SENSORED FENCES.
3. BOTTOM RAIL SHALL BE ATTACHED TO DOUBLE RAIL ENDS USING 9.5 mm CARRIAGE BOLTS AS SHOWN. ADDITIONAL HOLES SHALL BE DRILLED THROUGH THE BOTTOM RAIL ENDS TO INSURE THAT CARRIAGE BOLTS PASS THROUGH THE BOTTOM RAIL AS SHOWN.

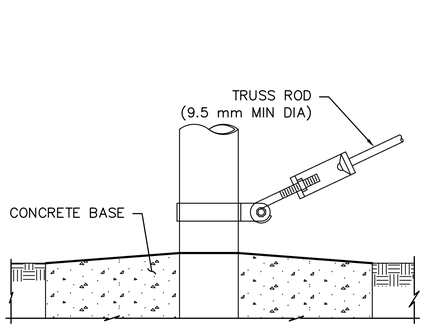


TRUSS ROD AND BAND

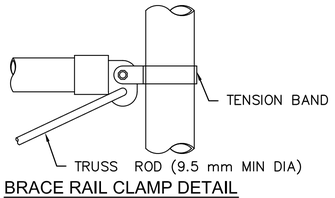


BRACE RAIL CLAMP DETAIL

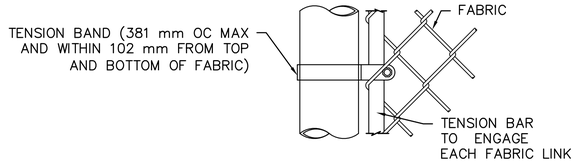

END OR GATE POST DETAIL

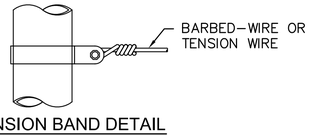


TENSION BAND DETAIL

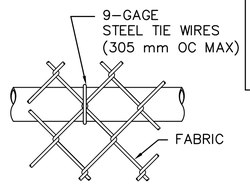


BRACE RAIL ATTACHMENT

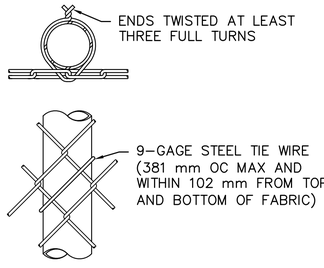


LINE POST ATTACHMENTS

FASTENING DETAILS
NO SCALE

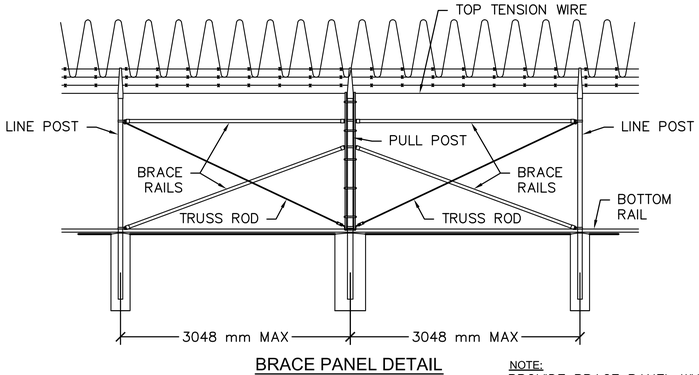


BRACE PANEL DETAIL
NO SCALE

NOTE:
PROVIDE BRACE PANEL WHENEVER STRAIGHT RUNS EXCEED 152 METERS.

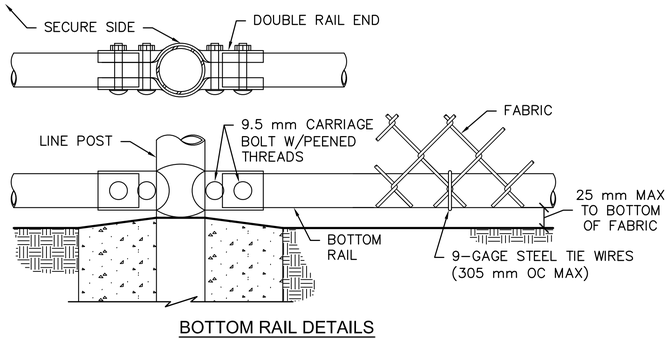


BOTTOM RAIL DETAILS
NO SCALE

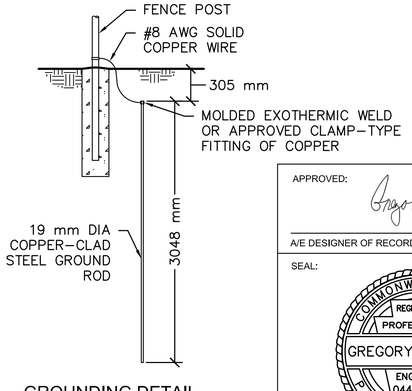


GROUNDING DETAIL
NO SCALE

APPROVED:
A/E DESIGNER OF RECORD
SEAL:
COMMONWEALTH OF PENNSYLVANIA
REGISTERED PROFESSIONAL
GREGORY P. HYNES
ENGINEER 044310–E

US ARMY CORPS OF ENGINEERS
AFGHANISTAN ENGINEER DISTRICT

| Mark | Description | Date | Appr. |
|---|---|---|---|
| | | | |

| Mark | Description | Date | Appr. |
|---|---|---|---|
| | | | |

Date: 2/23/2010 Rev: 0
Design file no. C-501
Drawing code:
File name: AN4DN8-C-501XXX
Plot date: 2/23/2010
Plot scale: 1:1

Designed by: GPH
Dwn by: JDS
Ckd by: JMB
Reviewed by: LHM
Submitted by:
BAKER

U.S. ARMY ENGINEER DISTRICT, AFGHANISTAN
CORPS OF ENGINEERS
APO AE 96338

Michael Baker Jr., Inc.
A unit of Michael Baker Corporation
Airside Business Park
100 Airside Drive
Moon Township, PA 15108
www.mbakercorp.com

AFGHAN NATIONAL ARMY
REGIONAL MILITARY TRAINING CENTER
STANDARD DESIGN

DFAC STORAGE AREA

3000 mm FENCING DETAILS

Sheet reference number:
C-501

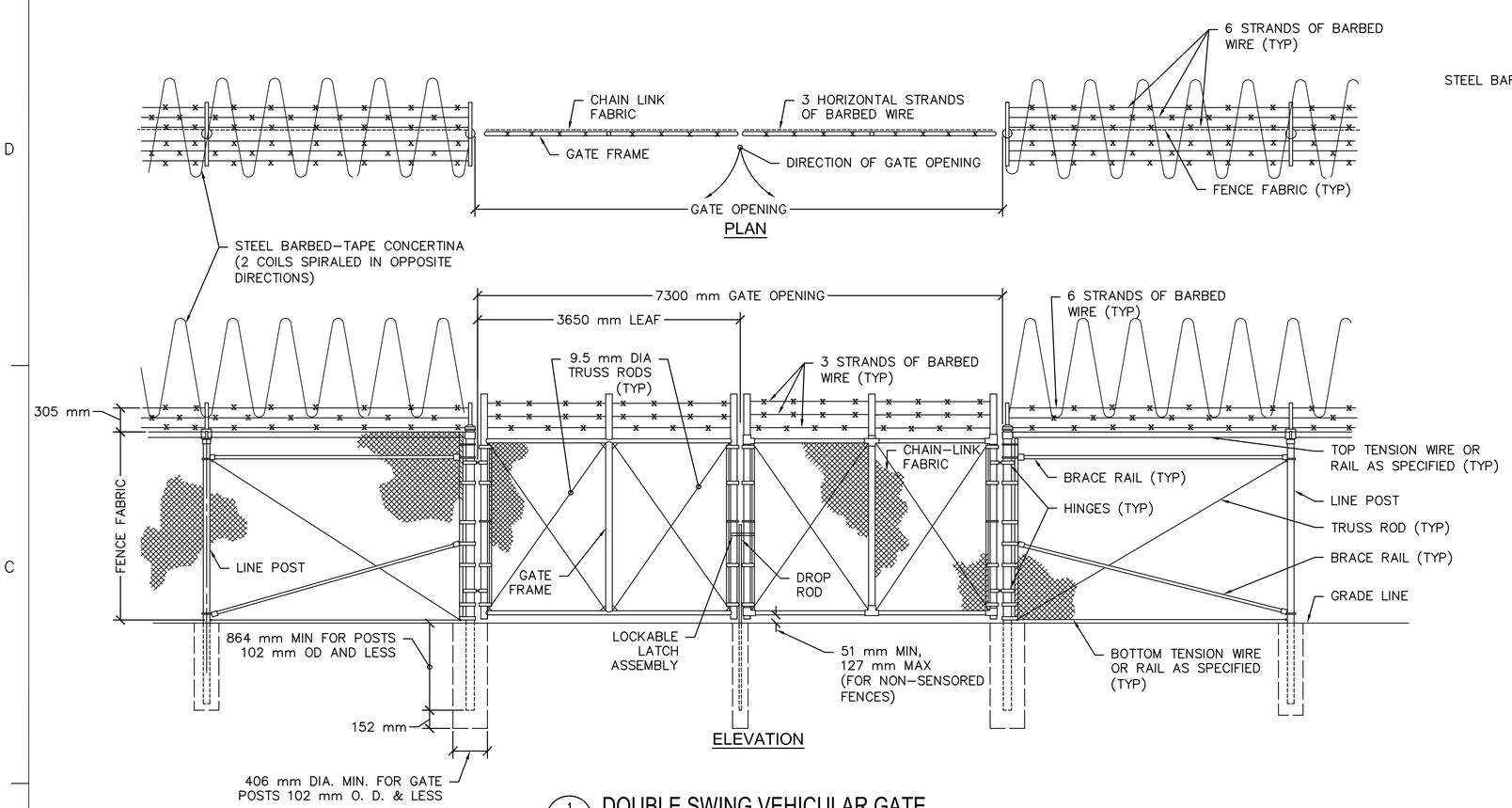


1 C–502 DOUBLE SWING VEHICULAR GATE
SCALE: NTS

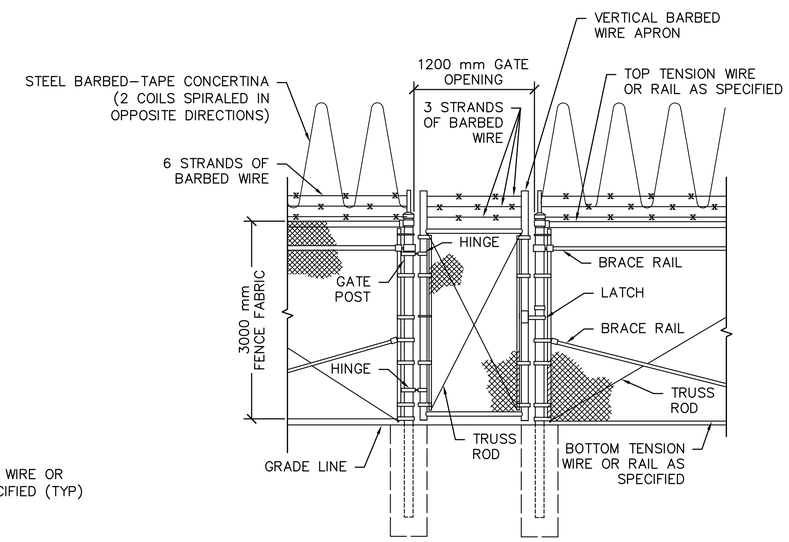


2 C–502 PERSONNEL GATE
NO SCALE

NOTES:

1. FOR NON–SENSORED FENCES, DETAILS SHOWN ARE TO CLARIFY REQUIREMENTS AND ARE NOT INTENDED TO LIMIT OTHER TYPE OF FENCE SECTIONS AND METHODS OF INSTALLATION THAT COMPLY WITH THE SPECIFICATIONS.
2. SWING GATES SHALL BE CONSTRUCTED WITH DROP RODS, PADLOCKS, LATCH ASSEMBLY AND GATE KEEPERS EXCEPT AS NOTED.
3. ALL GATE FRAMES SHALL MEET THE MINIMUM REQUIREMENTS OF ASTM F900 48 mm NOMINAL (ROUND) OR 51 mm NOMINAL (SQUARE). GATE FRAMES SHALL BE OF WELDED CONSTRUCTION OR SHALL BE ASSEMBLED USING HEAVY FITTINGS. AT CONTRACTOR'S OPTION A WELDED HORIZONTAL BRACE MAY BE USED IN LIEU OF TRUSS RODS TO BRACE ALL–WELDED GATE FRAMES. THE CONTRACTOR SHALL BE RESPONSIBLE FOR THE PROPER RIGID CONSTRUCTION OF ALL GATES SUPPLIED.

| GATE POST SCHEDULE | |
|---|---|
| GATE LEAF WIDTH (NOMINAL) | OUTSIDE DIMENSION (NOMINAL) |
| 1830 mm OR LESS | 73 mm OD<br>64 mm SQ |
| GREATER THAN 1830 mm TO 3660 mm | 102 mm OD |

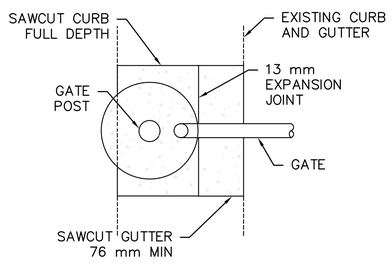


PLAN

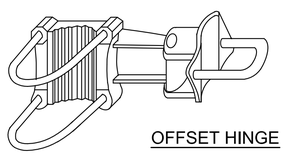

OFFSET HINGE

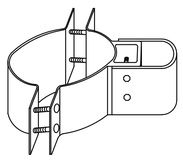

STANDARD HINGE

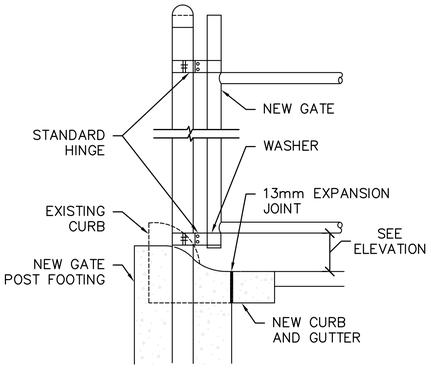


GATE POST SECTION AT CURB AND GUTTER
NO SCALE

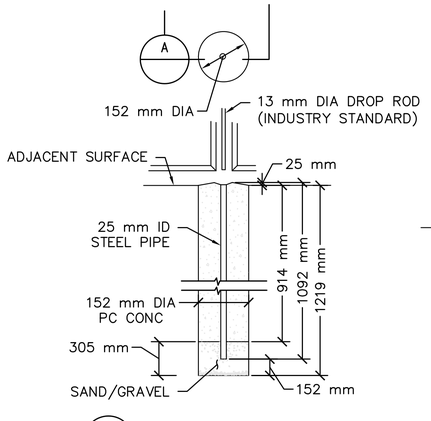


A DROP ROD FOUNDATION

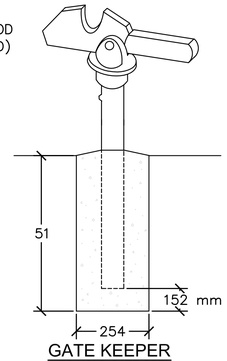


GATE KEEPER
(TO HOLD GATE OPEN)

SWING GATE DETAILS
NO SCALE

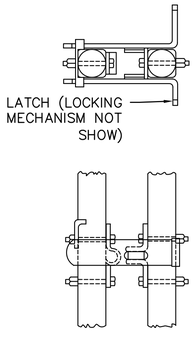


LOCKABLE LATCH ASSEMBLY

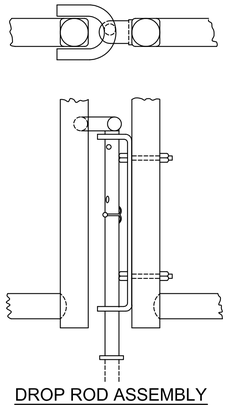

DROP ROD ASSEMBLY

APPROVED:

A/E DESIGNER OF RECORD

SEAL:

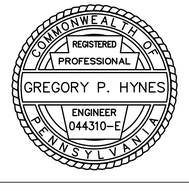


US ARMY CORPS OF ENGINEERS
AFGHANISTAN ENGINEER DISTRICT

| Mark | Description | Date | Appr. | Mark | Description | Date | Appr. |
|---|---|---|---|---|---|---|---|
| | | | | | | | |

Date: 2/23/2010 Rev: 0
Design file no. C–502
Drawing code:
File name: AN/AD/NES-C-502XXX
Plot date: 2/23/2010
Plot scale: 1:1

Designed by: GPH
Dwn by: JDS
Ckd by: JMB
Reviewed by: LHM
Submitted by:
BAKER

U.S. ARMY ENGINEER DISTRICT, AFGHANISTAN
CORPS OF ENGINEERS
APO AE 96338

Michael Baker Jr., Inc.
A unit of Michael Baker Corporation
Airside Business Park
100 Airside Drive
Moon Township, PA 15108
www.mbakercorp.com

AFGHAN NATIONAL ARMY
REGIONAL MILITARY TRAINING CENTER
STANDARD DESIGN

DFAC STORAGE AREA

FENCING DETAILS

Sheet reference number:
C–502

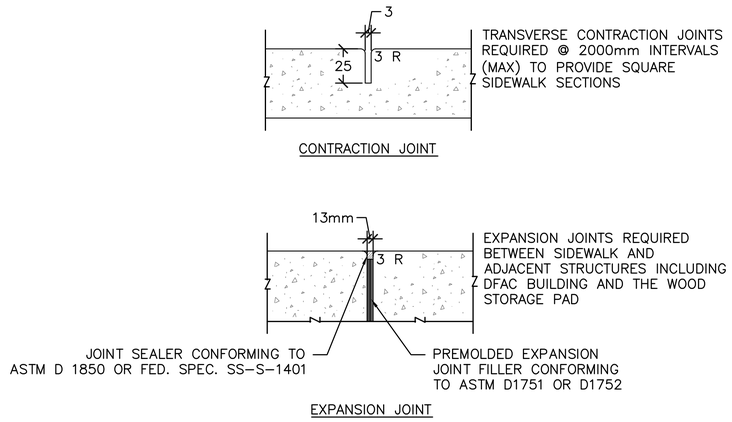


4 C-503 TYPICAL CONCRETE SIDEWALK DETAILS
SCALE: NTS

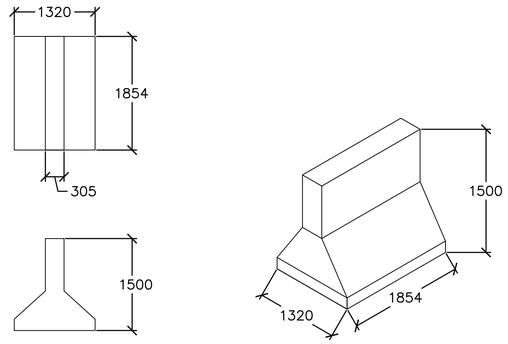


1 C-503 PROTECTION WALL DETAIL
SCALE: NTS

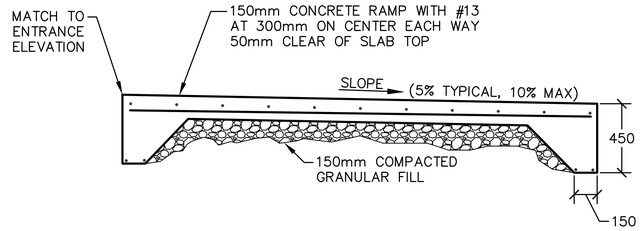


2 C-503 CONCRETE ENTRANCE RAMP DETAIL
SCALE: NTS

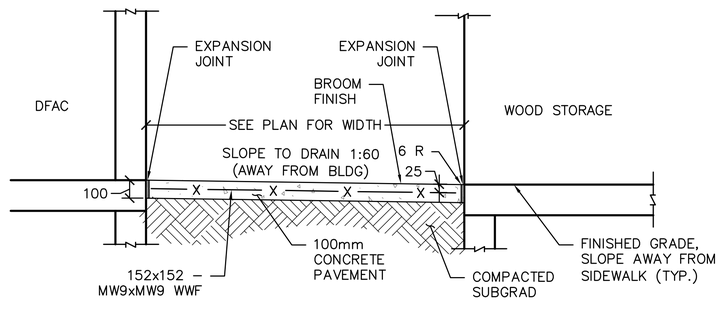


3 C-503 CONCRETE SIDEWALK DETAIL
SCALE: NTS

APPROVED:

A/E DESIGNER OF RECORD

SEAL:

COMMONWEALTH OF PENNSYLVANIA
REGISTERED PROFESSIONAL
GREGORY P. HYNES
ENGINEER
044310-E

US ARMY CORPS OF ENGINEERS
AFGHANISTAN ENGINEER DISTRICT

| Mark | Description | Date | Appr. | Mark | Description | Date | Appr. |
|---|---|---|---|---|---|---|---|

U.S. ARMY ENGINEER DISTRICT, AFGHANISTAN
CORPS OF ENGINEERS
APO AE 96338

Michael Baker Jr., Inc
A unit of Michael Baker Corporation
Airside Business Park
100 Airside Drive
Moon Township PA 15108
www.mbakercorp.com

Designed by: GPH
Dwn by: JDS
Ckd by:
Reviewed by: LHM
Submitted by: BAKER
Date: 2/23/2010
Rev: 0
Design file no. C-503
Drawing code:
File name: ANADINS-C-503XXX
Plot date: 2/23/2010
Plot scale:1:1

AFGHAN NATIONAL ARMY
REGIONAL MILITARY TRAINING CENTER
STANDARD DESIGN

DFAC STORAGE AREA

3000 mm FENCING DETAILS

Sheet reference number:
C-503

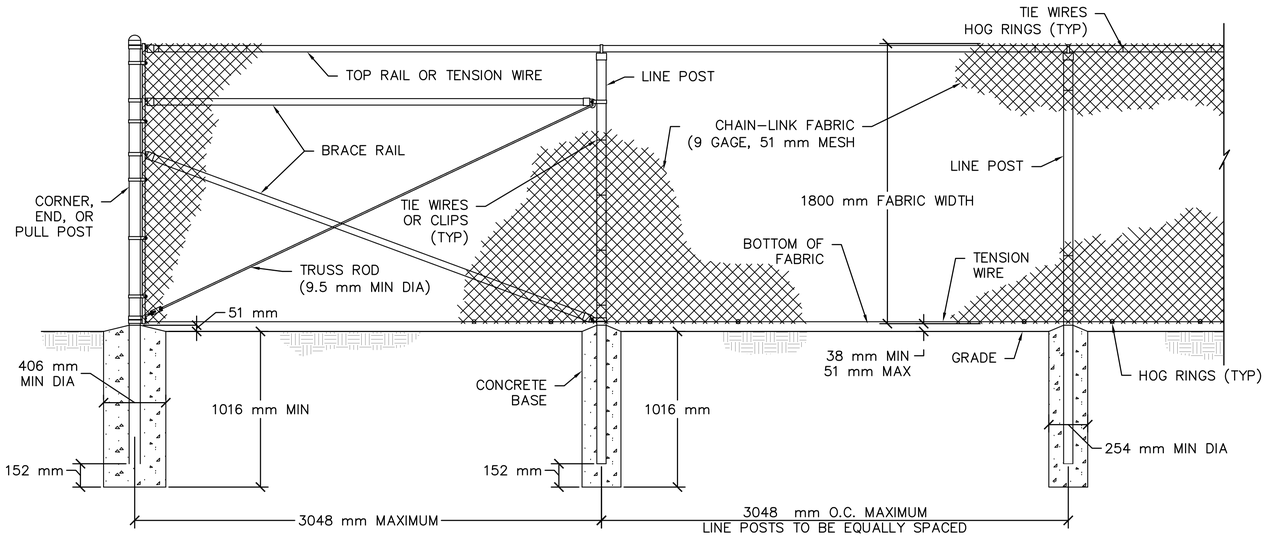


1 / C–504 1800 mm CHAIN-LINK SECURITY FENCE DETAIL
SCALE: NTS

| STEEL POST SCHEDULE | |
|---|---|
| USE AND SECTION | MINIMUM OUTSIDE DIMENSIONS (NOMINAL) |
| | FABRIC WIDTH 1829 mm OR LESS |
| CORNER, END & PULL POSTS | |
| TUBULAR – ROUND | 60 mm O.D. |
| TUBULAR – SQUARE | 51 mm SQ. |
| C–SECTION (ROLL–FORMED) | 89 mm X 89 mm |
| LINE POSTS | |
| TUBULAR – ROUND | 48 mm O.D. |
| H–SECTION | 57 mm X 43 mm |
| C–SECTION (ROLL–FORMED) | 48 mm X 41 mm |
| TOP, BOTTOM & BRACE RAILS | |
| TUBULAR – ROUND | 42 mm O.D. |
| TUBULAR – SQUARE | 38 mm SQ. |
| H–SECTION | 41 mm X 38 mm |
| C–SECTION (ROLL–FORMED) | 41 mm X 32 mm |

NOTES:

1. DETAILS SHOWN ARE TO CLARIFY REQUIREMENTS AND ARE NOT INTENDED TO LIMIT OTHER TYPES OF FENCE SECTIONS AND METHODS OF INSTALLATION THAT COMPLY WITH THE SPECIFICATIONS.

2. WIRE TIES, RAILS, POSTS, AND BRACES SHALL BE CONSTRUCTED ON THE SECURE SIDE OF THE FENCE ALIGNMENT. CHAIN–LINK FABRIC SHALL BE PLACED ON THE SIDE OPPOSITE THE SECURE AREA.

3. C–SECTION POSTS SHALL BE INSTALLED SO THAT THE VOID INSIDE THE POST IS COMPLETELY FILLED WITH CONCRETE UP TO THE TOP OF THE FOUNDATION.

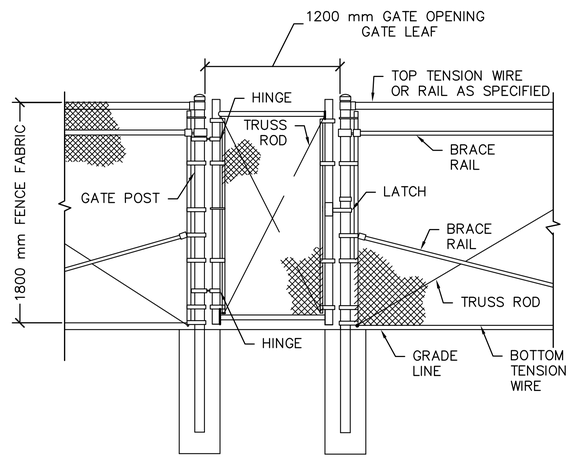


2 / C–504 PERSONNEL GATE 1800 mm FENCE
SCALE: NTS

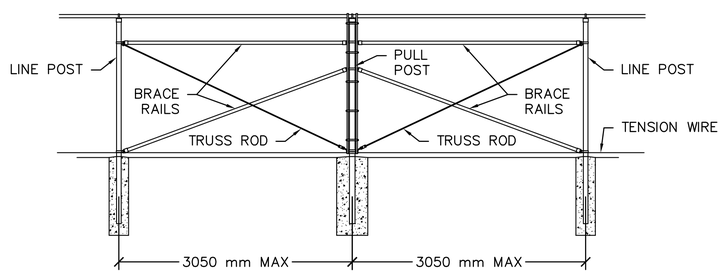


BRACE PANEL DETAIL
NTS

NOTE:
PROVIDE BRACE PANEL WHENEVER STRAIGHT RUNS EXCEED 152 METERS.

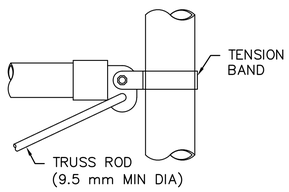


ROUND POST

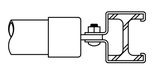

H-BEAM

BRACE RAIL CLAMP DETAILS

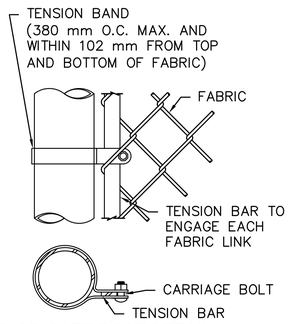


END OR GATE POST DETAIL

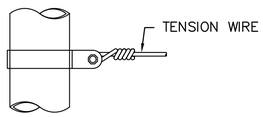


TENSION BAND DETAIL

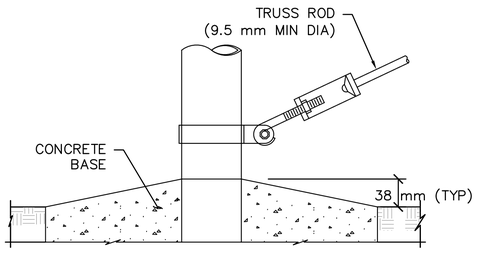


TRUSS ROD AND BAND

FASTENING DETAILS
NTS

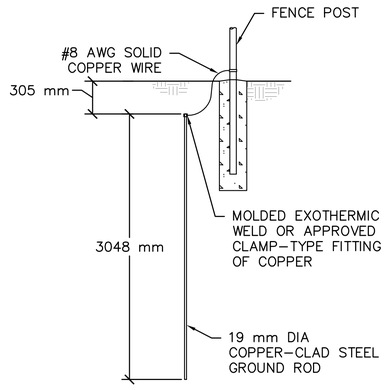


GROUNDING DETAIL
NTS

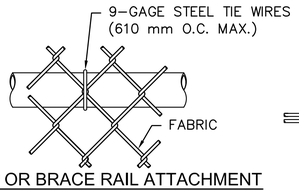


TOP OR BRACE RAIL ATTACHMENT

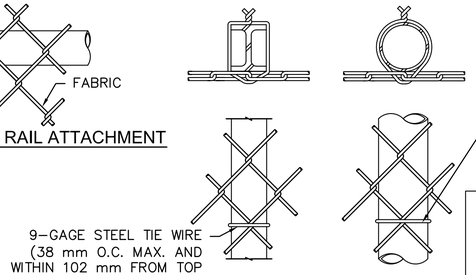


H-BEAM ROUND POST

LINE POST ATTACHMENTS
NTS

APPROVED:

A/E DESIGNER OF RECORD

SEAL:

COMMONWEALTH OF PENNSYLVANIA
REGISTERED PROFESSIONAL
GREGORY P. HYNES
ENGINEER
044310–E

US ARMY CORPS OF ENGINEERS
AFGHANISTAN ENGINEER DISTRICT

| Mark | Description | Date | Appr. | Mark | Description | Date | Appr. |
|---|---|---|---|---|---|---|---|
| | | | | | | | |

Rev: 0
Date: 2/23/2010
Design file no. C–504
Drawing code:
File name: ANA0INS-C-504XXX
Plot date: 2/23/2010
Plot scale: 1:1

Designed by: GPH
Dwn by: JDS
Ckd by: JMB
Reviewed by: LHM
Submitted by:
BAKER

U.S. ARMY ENGINEER DISTRICT, AFGHANISTAN
CORPS OF ENGINEERS
APO AE 96338

Michael Baker Jr., Inc.
A unit of Michael Baker Corporation
Airside Business Park
100 Airside Drive
Moon Township, PA 15108
www.mbakercorp.com

AFGHAN NATIONAL ARMY
REGIONAL MILITARY TRAINING CENTER
STANDARD DESIGN

DFAC STORAGE AREA

1800 mm FENCING DETAILS

Sheet reference number:
C–504

STRUCTURAL ABBREVIATIONS:

| | |
|---|---|
| ACI | AMERICAN CONCRETE INSTITUTE |
| ADD'L | ADDITIONAL |
| AISC | AMERICAN INSTITUTE OF STEEL CONSTRUCTION |
| AISI | AMERICAN IRON AND STEEL INSTITUTE |
| ASTM | AMERICAN SOCIETY FOR TESTING AND MATERIALS |
| ARCH | ARCHITECTURAL |
| B | BOTTOM |
| BLDG | BUILDING |
| BOTT | BOTTOM |
| ℄ | CENTER LINE |
| CFMRF | COLD FORM METAL ROOF FRAME |
| CFMF | COLD FORM METAL FRAME |
| CFS | COLD FORMED STEEL |
| CIP | CAST-IN-PLACE |
| CIPL | CAST-IN-PLACE LINTEL |
| CJ | CONTROL JOINT |
| CLR | CLEAR |
| CMU | CONCRETE MASONRY UNIT |
| COEFF | COEFFICIENT |
| COL | COLUMN |
| CONC | CONCRETE |
| CONT | CONTINUOUS |
| COORD | COORDINATE |
| CRSI | CONCRETE REINFORCING STEEL INSTITUTE |
| CSJ | CONSTRUCTION JOINT |
| DIA | DIAMETER |
| DIAG | DIAGONAL |
| DIM | DIMENSION |
| DWG | DRAWING |
| DWL | DOWEL |
| EA | EACH |
| EF | EACH FACE |
| ELEC | ELECTRICAL |
| ELEV | ELEVATION |
| EMBED | EMBEDMENT |
| EQUIV | EQUIVALENT |
| ETC | ET CETERA |
| EW | EACH WAY |
| EXP | EXPANSION |
| EXT | EXTERIOR |
| FND | FOUNDATION |
| FTG | FOOTING |
| GA | GAUGE |
| GB | GRADE BEAM |
| HORIZ | HORIZONTAL |
| h | HOUR |
| HRS | HOURS |
| IBC | INTERNATIONAL BUILDING CODE |
| INFO | INFORMATION |
| INT | INTERIOR |
| kg | KILOGRAM |
| km | KILOMETER |
| kN | KILONEWTON |
| kPa | KILOPASCAL |
| L# | ANGLE (# INDICATES SIZE) |
| LONG | LONGITUDINAL |
| LLV | LONG LEG VERTICAL |
| m | METER |
| MAX | MAXIMUM |
| MECH | MECHANICAL |
| MFG | MANUFACTURER |
| MID | MIDDLE |
| MIN | MINIMUM |
| MISC | MISCELLANEOUS |
| mm | MILLIMETER |
| MPa | MEGAPASCAL |
| MTL | METAL |
| MWFRS | MAIN WIND FORCE RESISTING SYSTEM |
| N | NEWTON |
| N | NORTH |
| N/A | NOT APPLICABLE |
| # | NUMBER SYMBOL FOR REBAR SIZE |
| NTS | NOT TO SCALE |
| OC | ON CENTER |
| OPNG | OPENING |
| ℙ or PL | PLATE |
| PRE-ENG | PRE-ENGINEERED |
| RB | ROOF BEAM |
| REINF | REINFORCED |
| REQ'D | REQUIRED |
| SIM | SIMILAR |
| SPECS | SPECIFICATIONS |
| STD | STANDARD |
| STRUCT | STRUCTURAL |
| SW | SHEAR WALL |
| T | TOP |
| T/ | TOP OF |
| T/ELEV | TOP ELEVATION |
| T/SLAB | TOP OF SLAB |
| T&B | TOP AND BOTTOM |
| THK | THICK |
| TYP | TYPICAL |
| UFC | UNIFIED FACILITIES CRITERIA |
| UON | UNLESS OTHERWISE NOTED |
| VERT | VERTICAL |
| W | WIDTH |
| W/ | WITH |

1.0 GENERAL NOTES:

1.1 THIS PROJECT HAS BEEN DESIGNED FOR THE WEIGHTS AND MATERIALS INDICATED ON THE SHEETS AND FOR THE LIVE LOADS INDICATED IN THE DESIGN DATA. IT IS THE CONTRACTOR'S RESPONSIBILITY TO DETERMINE ALLOWABLE CONSTRUCTION LOADS AND TO PROVIDE PROPER DESIGN AND CONSTRUCTION OF FALSEWORK, FORMWORK, STAGING, BRACING, SHEETING AND SHORING, ETC.

1.1 COORDINATE THESE SHEETS WITH THE ARCHITECTURAL, MECHANICAL, ELECTRICAL, PLUMBING, AND CIVIL SHEETS. ALL DIMENSIONS SHOWN ON THE SHEETS ARE MILLIMETERS UNLESS NOTED OTHERWISE.

1.2 THE CONTRACTOR SHALL VERIFY AND COORDINATE ALL FLOOR AND ROOF OPENING SIZES AND LOCATIONS, EQUIPMENT PAD SIZES AND LOCATIONS, ANCHOR BOLT LAYOUTS, ETC WITH EQUIPMENT SELECTED. THE CONTRACTOR SHALL MAKE ANY REQUIRED MODIFICATIONS AT NO ADDITIONAL COST.

1.3 THE CONTRACTOR SHALL REFER TO THE ARCHITECTURAL, MECHANICAL, ELECTRICAL AND PLUMBING SHEETS FOR SLEEVES, CURBS, INSERTS OR OPENINGS, ETC. NOT HEREIN INDICATED.

1.4 WORK NOT INCLUDED ON THE SHEETS BUT IMPLIED TO BE SIMILAR TO THAT SHOWN AT CORRESPONDING PLACES ELSEWHERE ON THE SHEETS SHALL BE REPEATED.

1.5 IN CASE OF CONFLICT BETWEEN THE NOTES, DETAILS AND SPECIFICATIONS THE MOST RIGID REQUIREMENTS SHALL GOVERN.

1.6 SEE ARCHITECTURAL SHEETS FOR LOCATIONS OF MASONRY AND NON-LOAD BEARING PARTITIONS. PROVIDE COMPRESSIBLE FIRESAFING AT TOP OF WALL AS REQUIRED BY ARCHITECTURAL SHEETS.

1.7 COORDINATE FINISHED FLOOR DATUM ELEVATION 0.0m WITH THE CIVIL SHEETS.

2.0 FOUNDATION NOTES

2.1 THE GEOTECHNICAL ANALYSIS FOR THIS PROJECT IS THE RESPONSIBILITY OF THE CONTRACTOR AWARDED THE WORK. AN ASSUMED ALLOWABLE SOIL BEARING VALUE OF 72 kPa HAS BEEN USED IN THE STRUCTURAL ANALYSIS OF THE BUILDING HEREIN AND SHALL BE CONFIRMED AND VERIFIED AS PART OF THE GEOTECHNICAL INVESTIGATION. VALUES WHICH DO NOT MEET THE REQUIREMENTS INDICATED ON THE BASIS OF DESIGN SHEET SHALL BE IMMEDIATELY BROUGHT TO THE ATTENTION OF THE CONTRACTING OFFICER FOR CONSIDERATION AND DETERMINATION ON THE NEXT APPROPRIATE COURSE OF ACTION.

2.2 SEE THE SPECIFICATION FOR ADDITIONAL REQUIREMENTS TO THOSE OUTLINED IN THE GEOTECHNICAL INVESTIGATION FOR EXCAVATION AND PREPARATION OF THE FOUNDATION AND THE SLAB ON GRADE SUBGRADE INCLUDING COMPACTION PROCEDURES.

2.3 EXCAVATIONS FOR FOOTINGS SHALL HAVE THE SIDES AND BOTTOMS TEMPORARILY LINED WITH 0.25mm POLYETHYLENE IF PLACEMENT OF CONCRETE DOES NOT OCCUR WITHIN 24 HRS OF THE EXCAVATION OF THE FOOTING.

2.4 FOUNDATION CONDITIONS NOTED DURING CONSTRUCTION WHICH DIFFER FROM THOSE DESCRIBED IN THE GEOTECHNICAL REPORT SHALL BE REPORTED TO THE GENERAL CONTRACTOR BEFORE FURTHER CONSTRUCTION IS ATTEMPTED. SEE PROJECT SPECIFICATIONS.

2.5 NO FOOTINGS OR SLABS SHALL BE POURED INTO OR AGAINST SUBGRADE CONTAINING FREE WATER, FROST, ICE OR LOOSE MATERIAL. FROST DEPTH ASSUMED TO BE 800mm.

2.6 ALL SLAB-ON-GRADE, TRENCH BOTTOMS AND OTHER ON-GRADE INTERIOR HORIZONTAL SURFACES SHALL BE PLACED OVER A 0.25mm POLYETHYLENE VAPOR RETARDER OVER A 100mm #57 STONE WATER CAPILLARY BARRIER PLACED ON SUBGRADE PROPERLY PREPARED IN ACCORDANCE WITH THE CONTRACT SPECIFICATIONS. (UON)

2.7 PRIOR TO START OF FOUNDATION OR SLAB-ON-GRADE CONSTRUCTION, EXISTING SUBGRADES SHALL BE COMPACTED TO MINIMUM OF 95% MAXIMUM DRY DENSITY OBTAINED THRU ASTM D 1557 MODIFIED PROCTOR TESTING.

2.8 SEE PLUMBING, ELECTRICAL & CIVIL SHEETS FOR REQUIRED UNDERSLAB UTILITIES.

2.9 SEE ARCHITECTURAL SHEETS FOR ALL WATERPROOFING DETAILS AND MATERIALS.

2.10 IF UNDERMINING OF FOOTINGS OCCURS, FILL VOIDS WITH 18 MPa CONCRETE. DO NOT ATTEMPT TO REPLACE AND RE-COMPACT SOIL.

3.0 CONCRETE

3.1 CONCRETE SHALL HAVE THE UNIT WEIGHT OF 2400 $kg/m^3$ AND A MINIMUM COMPRESSIVE STRENGTH (f'c) OF 28 MPa AT 28 DAYS. ALL CONCRETE SHALL HAVE A WATER-CEMENT RATIO OF 0.45. SEE SPECIFICATIONS FOR ADDITIONAL INFORMATION. ENTRAIN AIR TO PRODUCE TOTAL AIR CONTENT ACCORDING TO THE SPECIFICATIONS FOR CONCRETE EXPOSED TO FREEZING TEMPERATURES (EXTERIOR FOOTINGS, SLAB TURNDOWNS, EXTERIOR SLABS AND SLABS-ON-GRADE, EXTERIOR RETAINING WALLS, AND EXTERIOR GRADE BEAMS.)

3.2 NO CALCIUM CHLORIDE SHALL BE USED IN ANY CONCRETE.

3.3 MIXING, TRANSPORTING AND PLACING OF CONCRETE SHALL CONFORM TO ACI 301M-05.

3.4 ALL CONCRETE WORK SHALL CONFORM TO THE REQUIREMENTS OF THE AMERICAN CONCRETE INSTITUTE (ACI) 318M MANUAL (metric), "BUILDING CODE REQUIREMENTS FOR REINFORCED CONCRETE", AND REQUIREMENTS OUTLINED IN THE CONTRACT SPECIFICATIONS. WHEN THERE IS A CONFLICT BETWEEN ACI AND THE SPECIFICATIONS, THE MORE STRINGENT SHALL GOVERN.

3.5 CHAMFER ALL EXPOSED EXTERNAL CORNERS OF CONCRETE WITH 20mm x45 DEGREE CHAMFER UON.

3.6 CONCRETE REINFORCEMENT BARS SHALL CONFORM TO ASTM A615M-96a, GRADE 420 MPa, REINFORCING BARS SHALL NOT BE TACK WELDED, WELDED, HEATED OR CUT, UNLESS INDICATED ON THE CONTRACT DOCUMENTS. ALL LAP SPLICES SHALL BE CLASS "B" UON.

3.7 HORIZONTAL FOOTING AND HORIZONTAL WALL REINFORCEMENT SHALL BE CONTINUOUS AND SHALL HAVE 90 DEGREE BENDS AND EXTENSIONS, OR CORNER BARS OF EQUIVALENT SIZE LAPPED WITH A CLASS B TENSION SPLICE AT CORNERS AND INTERSECTIONS. TOP BAR CRITERIA SHALL APPLY IF 300mm OR MORE OF FRESH CONCRETE IS PLACED BELOW BAR.

3.8 SLABS-ON-GRADE SHALL HAVE CONSTRUCTION JOINTS OR CRACK CONTROL JOINTS AS SHOWN ON THE DRAWINGS. CONSTRUCTION JOINTS CAN BE USED AT CONTROL JOINT LOCATIONS AT CONTRACTORS OPTION. SEE SLAB PLANS & JOINT DETAILS FOR ADDITIONAL INFORMATION. FOR AREAS NOT SHOWN ON DWGS, THE MAXIMUM SPACING OF CONSTRUCTION/ CRACK CONTROL JOINTS SHALL BE 4800mm

3.9 ALL CONCRETE REINFORCEMENT SHALL BE DETAILED, FABRICATED, LABELED, SUPPORTED, AND SPACED IN FORMS AND SECURED IN PLACE IN ACCORDANCE WITH THE PROCEDURES AND REQUIREMENTS OUTLINED IN THE LATEST EDITION OF THE "BUILDING CODE REQUIREMENTS FOR REINFORCED CONCRETE", ACI 318M, AND THE "MANUAL OF STANDARD PRACTICE FOR DETAILING REINFORCED CONCRETE STRUCTURES", ACI 315M, LATEST EDITION. BASED ON IN COUNTRY REINFORCEMENT AVAILABILITY, IT IS THE CONTRACTOR'S OPTION TO ROUND DESIGNATED ODD NUMBERED REINFORCEMENT SIZES UP (1) ONE BAR SIZE.

3.10 ALL DOWELS SHALL MATCH SIZE AND NUMBER OF MAIN REINFORCING, UNLESS NOTED OTHERWISE ON THE SHEETS.

3.11 ADDITIONAL BARS SHALL BE PROVIDED AROUND ALL FLOOR AND WALL OPENINGS AS SHOWN ON THE SHEETS.

3.12 SEE ARCHITECTURAL SHEETS FOR TYPE AND LOCATION OF ALL FLOOR FINISHES.

3.13 THE CONTRACTOR SHALL COORDINATE ADDITIONAL WALL/SLAB OPENINGS NOT SHOWN ON STRUCTURAL SHEETS. SEE MECHANICAL, ELECTRICAL, PLUMBING AND CIVIL SHEETS.

3.14 UNLESS NOTED OTHERWISE, ALL CURBS SHALL BE REINFORCED WITH AT LEAST (1)-#13 CONTINUOUS AND #13 AT 300mm O.C. DOWELS TO STRUCTURE BELOW.

3.15 THE CONTRACTOR SHALL VERIFY ALL OPENINGS, PAD SIZES, AND ANCHOR BOLTS WITH EQUIPMENT SELECTED.

3.16 FOR ALL WALLS & PIERS, PROVIDE DOWELS INTO FOOTING AT EACH VERT REINF BAR, UON DOWEL SIZE SHALL BE SAME AS VERT REINF.

3.17 PROVIDE CONCRETE POUR STOPS OR FORMED AS REQUIRED FOR INSTALLATION OF ALL CONCRETE WORK.

3.18 PROVIDE ADDITIONAL (2)-#13 x 600mm REINFORCING BARS IN SLAB-ON GRADE AT ALL RE-ENTRANT CORNERS. PLACE BARS AT MID-DEPTH OF SLAB WITH A CLEARANCE OF 50mm FROM CORNER UON.

3.19 COLD-WEATHER PLACEMENT: COMPLY WITH ACI 306.1 AND AS FOLLOWS. PROTECT CONCRETE WORK FROM PHYSICAL DAMAGE OR REDUCED STRENGTH THAT COULD BE CAUSED BY FROST, FREEZING ACTIONS, OR LOW TEMPERATURES. SUBMIT A COLD WEATHER CONCRETING PLAN FOR APPROVAL.

3.20 PROVIDE BONDING COMPOUND PER ASTM C 1059-99: SPECIFICATION FOR LATEX AGENTS FOR BONDING FRESH CONCRETE (GROUT) TO HARDENED CONCRETE.

3.21 THE FORMED SURFACES FOR REINFORCED CONCRETE SHALL ACHIEVE A "CLASS A" FINISH WHEN RECEIVING PAINT OR A "CLASS B" FINISH WHEN RECEIVING PLASTER OR TILE AS PER SPECIFICATION SECTION 03 31 00 CAST-IN-PLACE STRUCTURAL CONCRETE.

3.22 AT INTERSECTING GRADE BEAMS AND SHEAR WALLS, PROVIDE CORNER BARS AT INTERSECTIONS WITH SAME QUANTITY, SIZE AND SPACING AS HORIZONTAL BARS WITH LEG LENGTH = 50db.

3.23 REFER TO S-800 SERIES REINFORCING BAR PLACEMENT DRAWINGS DEFINING LENGTHS, BENDS, AND SPACINGS FOR ALL STRUCTURAL CONCRETE. THE S-800 SERIES DRAWING ARE BASED ON THE S-400, S-500, S-600, AND S-700 SERIES DRAWING SCHEDULES, DETAILS, AND DIAGRAMS.

4.0 CONCRETE MASONRY

4.1 MASONRY CONSTRUCTION SHALL CONFORM TO SPECIFICATION FOR MASONRY STRUCTURES (ACI 530.1) UON.

4.2 STRENGTH OF MASONRY MATERIALS SHALL BE AS FOLLOWS:

a. CONCRETE MASONRY UNITS SHALL BE NORMAL WEIGHT, GRADE N, TYPE 1, CONFORMING TO ASTM C-90 AND HAVE A MINIMUM COMPRESSIVE STRENGTH OF 10.4 MPa ON THE NET AREA.

b. MORTAR SHALL CONFORM TO ASTM C-270 TYPE S.

c. GROUT FOR MASONRY SHALL BE NORMAL WEIGHT AND HAVE A MINIMUM COMPRESSIVE STRENGTH OF 14 MPa AT 28 DAYS. GROUT SHALL CONFORM TO ASTM C476M. GROUT LIFTS SHALL NOT EXCEED 1,400mm.

d. REINFORCED MASONRY SHALL HAVE A STRENGTH F'm = 10 MPa. (F'm IS THE COMPRESSIVE STRENGTH OF THE MASONRY AT 28 DAYS AS DETERMINED BY PRISM TESTS).

4.3 ALL VERTICAL REINFORCEMENT FOR CONCRETE MASONRY SHALL BE ASTM A615M-96a, GRADE 420 MPa. ALL SPLICES SHALL BE LAPPED 48 BAR DIAMETERS MINIMUM.

4.4 BOND BEAMS SHALL BE SPACED AT 1200mm OC VERTICALLY. BOND BEAM REINFORCING SHALL BE CONTINUOUS AND PROVIDED AT WALL INTERSECTIONS AND WALL CORNERS (REFERENCE CONCRETE MASONRY NOTE 4.11). ALL BOND BEAM REINFORCING SHALL BE CONTINUOUS AND HAVE STANDARD ACI HOOKS AT EACH END. PROVIDE STANDARD BAR SPLICES AS SPECIFIED. AS AN ALTERNATE TO CMU BOND BEAMS, IT IS THE CONTRACTOR'S OPTION TO PROVIDE 200mm x 200mm CONTINUOUS CAST-IN-PLACE CONCRETE BOND BEAMS WITH (2)-#16 IN LIEU OF CMU BOND BEAMS INDICATED ON THE DRAWINGS.

4.5 SEE TYPICAL DETAILS FOR MINIMUM REINFORCEMENT REQUIREMENTS FOR CMU WALLS. PROVIDE STANDARD BAR SPLICES AS SPECIFIED. ALL VERTICAL REINFORCEMENT EXTENDS FULL HEIGHT OF WALL.

4.6 CMU CELLS THAT REQUIRE VERTICAL REINFORCING BARS AS INDICATED ON THE CONTRACT DRAWINGS AND/OR SPECS SHALL HAVE REINF BARS PLACED IN CENTERS OF CMU CELLS AND CONTINUOUSLY GROUTED UON.

4.7 ALL CMU CELLS, OPEN CAVITIES, AND AIR SPACES OF ALL EXTERIOR WALLS SHALL BE GROUTED TO STOP FRAGMENTS FROM MORTAR BLAST.

4.8 CONTRACTOR SHALL COORDINATE LOCATION OF ALL OPENINGS SEE ARCH, MECH, ELEC, AND PLUMBING SHEETS FOR SIZE AND LOCATION OF OPENINGS.

4.9 MASONRY WALLS SHALL NOT BE BACK FILLED PRIOR TO THE MORTAR AND GROUT ATTAINING THEIR RESPECTIVE MAXIMUM DESIGN STRENGTHS PER SPECIFICATIONS.

4.10 PROVIDE GALVANIZED MORTAR/GROUT SCREEN W/ 3mm MESH WHERE CELLS BELOW ARE NOT GROUTED.

4.11 AT INTERSECTING BOND BEAMS, PROVIDE CORNER BAR FOR EACH HORIZONTAL BAR IN BOND BEAMS AT INTERSECTING WALLS. USE SAME SIZE AND SPACING AS HORIZONTAL BARS WITH LEG LENGTH = 50db.

4.12 THE ALTERNATE TOP OF CMU WALL BRACING DETAIL(S) SHOWN ON S-701 CAN BE UTILIZED AT THE CONTRACTOR'S OPTION IN PLACE OF THE "SLEEVED DOWEL" WALL CONNECTIONS DEPICTED ON S-400 AND S-500 SERIES DRAWINGS. IN ADDITION, ALTERNATE DETAIL(S) SHOW CAST-IN-PLACE WALL BOND BEAMS THAT CAN BE UTILIZED AT THE CONTRACTOR'S OPTION IN PLACE OF THE STANDARD CMU BOND BEAMS CONSTRUCTED OF CMU BLOCKS.

5.0 COLD-FORMED METAL FRAMING

5.1 ALL COLD-FORMED METAL FRAMING MEMBERS SHALL CONFORM TO ASTM A1003M, STRUCTURAL GRADE ST340 (MPa), WITH A GALVANIZED COATING OF Z275 OR BETTER IN ACCORDANCE WITH ASTM A653M.

5.2 ALL COLD-FORMED METAL FRAMING MEMBERS SHALL HAVE THE FOLLOWING MINIMUM PROPERTIES:

a. MINIMUM METAL THICKNESS:
TRACK = 1.37mm;
STUD/OTHER = 1.09mm

b. MINIMUM FLANGE WIDTH:
TRACK = 38mm;
STUD/OTHER = 35mm

c. MINIMUM MEMBER DEPTH:
ALL SECTIONS = 152.2mm

d. PURLIN (HAT CHANNEL)
DEPTHxWIDTH(FLAT TOP)xTHICK = 25mmx42mmx1.59mm

5.3 ALL CONNECTIONS SHALL BE MADE WITH CORROSION RESISTANT (ASTM A153M), SELF-DRILLING, SELF-TAPPING STEEL DRILL SCREWS IN ACCORDANCE WITH ASTM C1513. SCREWS SHALL HAVE A LOW PROFILE HEAD BENEATH ROOF DECK, AND STANDARD HEAD ALL OTHER LOCATIONS.

5.4 FABRICATE COLD FORMED METAL FRAMING AND ACCESSORIES PLUMB, SQUARE AND TRUE TO LINE, WITH CONNECTIONS SECURELY FASTENED ACCORDING TO AISI STANDARD FOR COLD FORMED STEEL FRAMING.

5.5 CUT FRAMING MEMBERS BY SAWING OR SHEATHING, DO NOT TORCH CUT.

5.6 INSTALL FRAMING MEMBERS IN ONE-PIECE LENGTHS UNLESS SPLICE CONNECTIONS ARE INDICATED FOR TRACK OR TENSION MEMBERS

5.7 INSTALL TEMPORARY BRACING AND SUPPORTS TO SECURE FRAMING DURING CONSTRUCTION. MAINTAIN BRACING AND SUPPORTS IN PLACE UNTIL THE STRUCTURE HAS BEEN COMPLETED WITH ALL CONNECTIONS AND PERMANENT BRACING SECURED.

6.0 STRUCTURAL DESIGN CRITERIA

6.1 ALL DESIGNS SHALL CONFORM TO THE PROVISIONS OF THE IBC 2006 AND UFC AS APPLICABLE.

6.2 DESIGN LOADS

6.2.1 DEAD LOADS (PER IBC 2006 & UFC 3-310-01)

| | |
|---|---|
| MECH/ELEC/PLUMBING | 0.20 kPa |
| MISCELLANEOUS | 0.15 kPa |
| COLD-FORMED FRAMING | 0.20 kPa |
| INSULATION | 0.10 kPa |
| METAL ROOF PANEL | 0.14 kPa |
| | 0.79 kPa |
| FLOOR PARTITION ALLOWANCE | 0.96 kPa |

6.2.2 LIVE LOADS (PER IBC 2006 & UFC 3-310-01)

| | |
|---|---|
| ROOF | 1.00 kPa |
| SLAB ON GRADE | 4.80 kPa |

6.2.3 SNOW LOADS (PER IBC 2006 & UFC 3-310-01)

| | |
|---|---|
| GROUND SNOW LOAD (Pg) | 1.2 kPa |
| SNOW IMPORTANCE FACTOR (I) | 1.0 |
| SNOW EXPOSURE FACTOR (Ce) | 1.0 |
| THERMAL FACTOR (Ct) | 1.0 |

6.2.4 WIND LOADS (PER IBC 2006)

| | |
|---|---|
| BASIC WIND SPEED | 137 km/h |
| WIND IMPORTANCE FACTOR | 1.0 |
| WIND EXPOSURE CATEGORY | D |
| DIRECTIONALITY COEFFICIENT (Kd) | 0.85 |
| TOPOGRAPHIC FACTOR (Kzt) | 1.0 |

6.2.5 SEISMIC LOADS (PER IBC 2006 & UFC 3-310-04)

| | |
|---|---|
| OCCUPANCY USE CATEGORY | |
| IRREGUALR PORTION | II |
| REGULAR PORTION | III |
| SEISMIC IMPORTANCE FACTOR (Ie) | 1.0 |
| SEISMIC SITE CLASS | D |

DFAC REGULAR PORTION: (COLUMN LINES 1 THRU 6)
$S_s$ = 1.50 (REDUCED FROM 2.40 PER ASCE 7-05 12.8.1.3 FOR BLDGS WITHOUT IRREGULARITIES)
$S_1$ = 1.20
$S_{DS}$ = 1.0 $S_{D1}$ = 1.20

| | |
|---|---|
| SEISMIC DESIGN CATEGORY | E |
| SEISMIC RESISTING SYSTEM: -SPECIAL REINFORCED CONCRETE SHEAR WALL | |
| RESPONSE MODIFICATION FACTOR (R) | 6 |
| RESPONSE COEFFICIENT (Cs) | 0.167 |
| SEISMIC ANALYTICAL PROCEDURE: -EQUIVALENT LATERAL FORCE | |
| SEISMIC BASE SHEAR | 2675 kN |

DFAC IRREGULAR PORTION: (COLUMN LINES 7 THRU 11)
$S_s$ = 2.40 $S_1$ = 1.20
$S_{DS}$ = 1.60 $S_{D1}$ = 1.20

| | |
|---|---|
| SEISMIC DESIGN CATEGORY | E |
| SEISMIC RESISTING SYSTEM: -SPECIAL REINFORCED CONCRETE SHEAR WALL | |
| RESPONSE MODIFICATION FACTOR (R) | 6 |
| RESPONSE COEFFICIENT (Cs) | 0.267 |
| SEISMIC ANALYTICAL PROCEDURE: -EQUIVALENT LATERAL FORCE | |
| SEISMIC BASE SHEAR | 2395 kN |

PROPANE CYLINDER STORAGE:
$S_s$ = 1.50 (REDUCED FROM 2.40 PER ASCE 7-05 12.8.1.3 FOR BLDGS WITHOUT IRREGULARITIES)
$S_1$ = 1.20
$S_{DS}$ = 1.0 $S_{D1}$ = 1.20

| | |
|---|---|
| SEISMIC DESIGN CATEGORY | E |
| SEISMIC RESISTING SYSTEM: -SPECIAL REINFORCED CONCRETE SHEAR WALL | |
| RESPONSE MODIFICATION FACTOR (R) | 6 |
| RESPONSE COEFFICIENT (Cs) | 0.167 |
| SEISMIC ANALYTICAL PROCEDURE: -EQUIVALENT LATERAL FORCE | |
| SEISMIC BASE SHEAR | 410 kN |

WOOD STORAGE:
$S_s$ = 2.40
$S_1$ = 1.20
$S_{DS}$ = 1.6 $S_{D1}$ = 1.20

| | |
|---|---|
| SEISMIC DESIGN CATEGORY | E |
| SEISMIC RESISTING SYSTEM: -SPECIAL REINFORCED CONCRETE SHEAR WALL | |
| RESPONSE MODIFICATION FACTOR (R) | 6 |
| RESPONSE COEFFICIENT (Cs) | 0.267 |
| SEISMIC ANALYTICAL PROCEDURE: -EQUIVALENT LATERAL FORCE | |
| SEISMIC BASE SHEAR | 292 kN |

APPROVED:
Chris Whitmore
A/E DESIGNER OF RECORD

SEAL:
GEORGIA REGISTERED 1-29-10 No. 27141 PROFESSIONAL ENGINEER CHRISTOPHER W. WHITMORE

US ARMY CORPS OF ENGINEERS
AFGHANISTAN ENGINEER DISTRICT

Mark | Date | Appr. | Description

U.S. ARMY CORPS OF ENGINEERS
AFGHANISTAN ENGINEER DISTRICT
APO AE 96338

Michael Baker Jr., Inc
A unit of Michael Baker Corporation
Airside Business Park
100 Airside Drive
Moon Township PA 15108
www.mbakercorp.com

Designed by: KMP/MMY
Dwn by: RCG
Ckd by: CWW
Reviewed by: LHM
Submitted by: BAKER
Date: 2/23/10
Rev: 0
Design file no.
Drawing code:
File name: ANADFACS-001GN
Plot date: 2/23/2010
Plot scale: X:X

AFGHAN NATIONAL ARMY
REGIONAL MILITARY TRAINING CENTER
STANDARD DESIGN

DINING FACILITY

GENERAL NOTES & DESIGN CRITERIA

Sheet reference number:
S-001

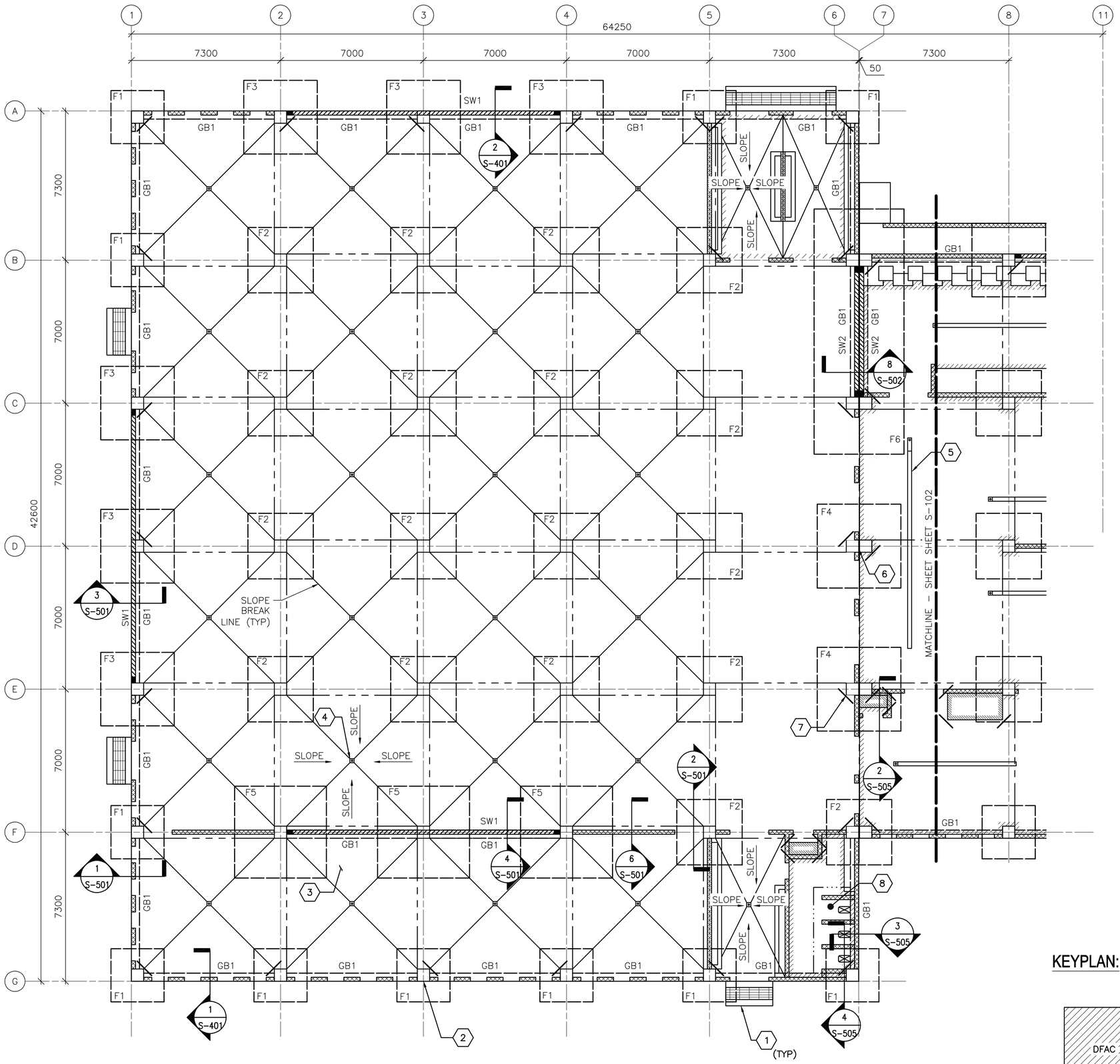


1 S-101 FOUNDATION/SLAB PLAN

SCALE: 1:100

## FOUNDATION/SLAB PLAN NOTES:

1. REFER TO SHEET S-001 FOR STRUCTURAL NOTES AND DESIGN CRITERIA.
2. FINISH FIRST FLOOR ELEVATION SHALL BE (DATUM 0.00). ALL PLUS OR MINUS DIMENSIONS INDICATED ON PLAN OR REFERRED TO IN NOTES RELATE TO FINISH FLOOR ELEVATION.
3. SLAB-ON-GRADE IS 150 WITH #13 @ 300 OC EW LOCATED 38 FROM T/SLAB UON. WHERE NOTED, 300 SLAB-ON-GRADE SHALL BE REINF W/ 13 @ 300 OC EW T&B.
4. TOP OF EXTERIOR FOOTINGS SHALL BE -950 UNLESS OTHERWISE INDICATED.
5. TOP OF INTERIOR FOOTINGS WITHOUT GRADE BEAM ABOVE SHALL BE -600.
6. TOP OF INTERIOR FOOTINGS WITH GRADE BEAM ABOVE SHALL BE -950.
7. COLUMN FOOTINGS INDICATED BY F# ON PLAN. REFER TO COLUMN FOOTING SCHEDULE ON SHEET S-601.
8. REFER TO COLUMN SCHEDULE ON SHEET S-601.
9. GRADE BEAM INDICATED BY GB# ON PLAN, REFER TO BEAM SCHEDULE ON SHEET S-601.
10. SHEARWALL INDICATED BY SW# ON PLAN, REFER TO SHEARWALL SCHEDULE ON SHEET S-601.
11. SEE TYP EXTERIOR AND INTERIOR CMU WALL REINF DETAILS ON SHEET S-701.
12. SEE MECHANICAL AND ELECTRICAL SHEETS FOR CONCRETE PAD LOCATIONS, SIZES, AND THICKNESS NOT SHOWN. SEE SHEET S-701 FOR DETAILS.
13. THICKENED SLAB UNDER PERIMETER/PARTITION WALLS NOT SHOWN FOR CLARITY EXCEPT AT LATRINE AREAS.
14. SLOPE FINISH FLOOR TO FLOOR DRAINS (TYPICAL AS SHOWN ON PLAN). FINISH FLOOR ELEV @ FLOOR DRAIN SHALL BE -75 UNLESS OTHERWISE INDICATED.

## FOUNDATION/SLAB PLAN KEY NOTES: (X)

1. CONC PAD (ENTRANCE)-SEE ARCH DWGS FOR INFORMATION
2. REINF CONC COLUMN
3. REINF CONC SLAB-ON-GRADE
4. FLOOR DRAIN (SLOPE SLAB TOWARDS DRAIN)
5. TRENCH DRAIN
6. 50 ISOLATION JOINT BETWEEN STRUCTURES LOCATED ABOVE FIRST FLOOR SLAB-ON-GRADE
7. (2)-#13 @ RE-ENTRANT CORNERS - SEE SHEET S-701 FOR INFORMATION
8. 300 SLAB-ON-GRADE

## FOUNDATION/SLAB PLAN LEGEND:

- REINF CONC SHEAR WALL
- REINF CMU WALL
- CONTROL JOINT
- MATCHLINE
- INDICATES DROP SLAB 65 BELOW FINISH FLOOR
- INDICATES DROP SLAB 200 BELOW FINISH FLOOR
- SLAB OPENING
- TRENCH DRAIN
- TRANSITION BETWEEN 150 & 300 THICK SLAB AREAS

## KEYPLAN:

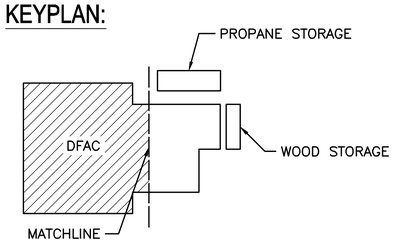


0 2000 4000
SCALE: 1:100

UNLESS OTHERWISE NOTED, LINEAR DIMENSIONS SHOWN ON DRAWINGS ARE IN MILLIMETERS (mm)

APPROVED:

A/E DESIGNER OF RECORD

SEAL:

GEORGIA REGISTERED PROFESSIONAL ENGINEER CHRISTOPHER W. WHITMORE No. 27141 1-21-10

US ARMY CORPS OF ENGINEERS
AFGHANISTAN ENGINEER DISTRICT

| Mark | Description | Date | Appr. | Mark | Description | Date | Appr. |
|---|---|---|---|---|---|---|---|

Date: 2/23/10
Design file no.
Rev: 0
Drawing code:
File name: AAADFACS-101FNP
Plot date: 2/23/2010
Plot scale: x:X

Designed by: KMP/MMY
Dwn by: RCG
Ckd by: CWW
Reviewed by: LHM
Submitted by: BAKER

U.S. ARMY CORPS OF ENGINEERS
AFGHANISTAN ENGINEER DISTRICT
APO AE 96338

Michael Baker Jr., Inc
A unit of Michael Baker Corporation
Airside Business Park
100 Airside Drive
Moon Township, PA 15108
www.mbakercorp.com

AFGHAN NATIONAL ARMY
REGIONAL MILITARY TRAINING CENTER
STANDARD DESIGN

DINING FACILITY

FOUNDATION/SLAB PLAN

Sheet reference number:
S-101

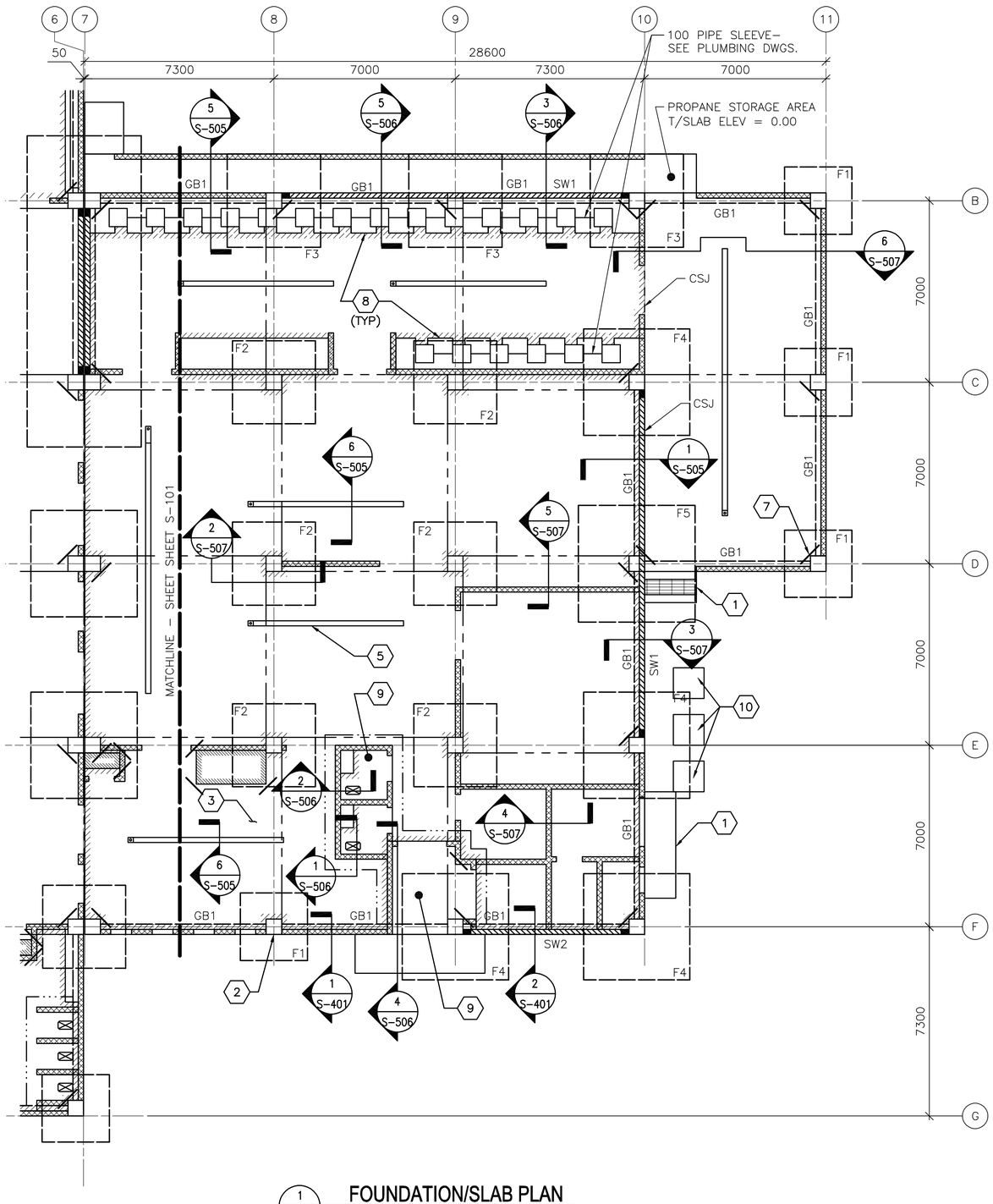


1 S–102 **FOUNDATION/SLAB PLAN**

SCALE: 1:100

## FOUNDATION/SLAB PLAN NOTES:

1. REFER TO SHEET S–001 FOR STRUCTURAL NOTES AND DESIGN CRITERIA.
2. FINISH FIRST FLOOR ELEVATION SHALL BE (DATUM 0.00). ALL PLUS OR MINUS DIMENSIONS INDICATED ON PLAN OR REFERRED TO IN NOTES RELATE TO FINISH FLOOR ELEVATION.
3. SLAB–ON–GRADE IS 150 WITH #13 @ 300 OC EW LOCATED 38 FROM T/SLAB UON. WHERE NOTED, 300 SLAB–ON–GRADE SHALL BE REINF W/ 13 @ 300 OC EW T&B.
4. TOP OF EXTERIOR FOOTINGS SHALL BE –950 UNLESS OTHERWISE INDICATED.
5. TOP OF INTERIOR FOOTINGS WITHOUT GRADE BEAM ABOVE SHALL BE –600.
6. TOP OF INTERIOR FOOTINGS WITH GRADE BEAM ABOVE SHALL BE –950.
7. COLUMN FOOTINGS INDICATED BY F# ON PLAN. REFER TO COLUMN FOOTING SCHEDULE ON SHEET S–601.
8. REFER TO COLUMN SCHEDULE ON SHEET S–601.
9. GRADE BEAM INDICATED BY GB# ON PLAN, REFER TO BEAM SCHEDULE ON SHEET S–601.
10. SHEARWALL INDICATED BY SW# ON PLAN, REFER TO SHEARWALL SCHEDULE ON SHEET S–601.
11. SEE TYP EXTERIOR AND INTERIOR CMU WALL REINF DETAILS ON SHEET S–701.
12. SEE MECHANICAL AND ELECTRICAL SHEETS FOR CONCRETE PAD LOCATIONS, SIZES, AND THICKNESS NOT SHOWN. SEE SHEET S–701 FOR DETAILS.
13. THICKENED SLAB UNDER PERIMETER/PARTITION WALLS NOT SHOWN FOR CLARITY EXCEPT AT LATRINE AREAS.
14. SLOPE FINISH FLOOR TO FLOOR DRAINS (TYPICAL AS SHOWN ON PLAN). FINISH FLOOR ELEV @ FLOOR DRAIN SHALL BE –75 UNLESS OTHERWISE INDICATED.

## FOUNDATION/SLAB PLAN KEY NOTES: (X)

1. CONC PAD (ENTRANCE)–SEE ARCH DWGS FOR INFORMATION
2. REINF CONC COLUMN
3. REINF CONC SLAB–ON–GRADE
4. NOT USED
5. TRENCH DRAIN
6. NOT USED
7. (2)–#13 @ RE–ENTRANT CORNERS – SEE S–701 FOR INFORMATION
8. CONC STEP FOR STOVE, SEE SECTION 3/S–506.
9. 300 SLAB–ON–GRADE
10. CONDENSING UNIT SLABS– SEE 9/S–701.

## FOUNDATION/SLAB PLAN LEGEND:

- REINF CONC SHEAR WALL
- REINF CMU WALL
- CONTROL JOINT
- MATCHLINE
- INDICATES DROP SLAB 65 BELOW FINISH FLOOR
- INDICATES DROP SLAB 200 BELOW FINISH FLOOR
- SLAB OPENING
- TRENCH DRAIN
- TRANSITION BETWEEN 150 & 300 THICK SLAB AREAS

## KEYPLAN:

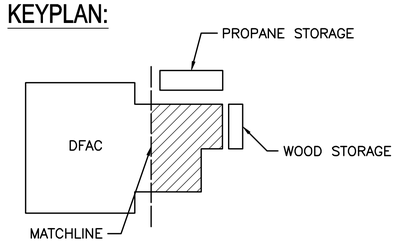


0 2000 4000
SCALE: 1:100

UNLESS OTHERWISE NOTED, LINEAR DIMENSIONS SHOWN ON DRAWINGS ARE IN MILLIMETERS (mm)

APPROVED:

A/E DESIGNER OF RECORD

SEAL:

GEORGIA REGISTERED 1-29-10 No. 27141 PROFESSIONAL ENGINEER CHRISTOPHER W. WHITMORE

US ARMY CORPS OF ENGINEERS
AFGHANISTAN ENGINEER DISTRICT

| Mark | Description | Date | Appr. | Mark | Description | Date | Appr. |
|---|---|---|---|---|---|---|---|
| | | | | | | | |

U.S. ARMY CORPS OF ENGINEERS
AFGHANISTAN ENGINEER DISTRICT
APO AE 96338

Michael Baker Jr., Inc
A unit of Michael Baker Corporation
Airside Business Park
100 Airside Drive
Moon Township, PA 15108
www.mbakercorp.com

Designed by: KMP/MMY
Dwn by: RCG
Ckd by: CWW
Reviewed by: LHM
Submitted by: BAKER
Date: 2/23/10
Design file no.
Rev: 0
Drawing code:
File name: AAADFACS-102FNP
Plot date: 2/23/2010
Plot scale: x:X

AFGHAN NATIONAL ARMY
REGIONAL MILITARY TRAINING CENTER
STANDARD DESIGN

DINING FACILITY

FOUNDATION/SLAB PLAN

Sheet reference number:
S–102

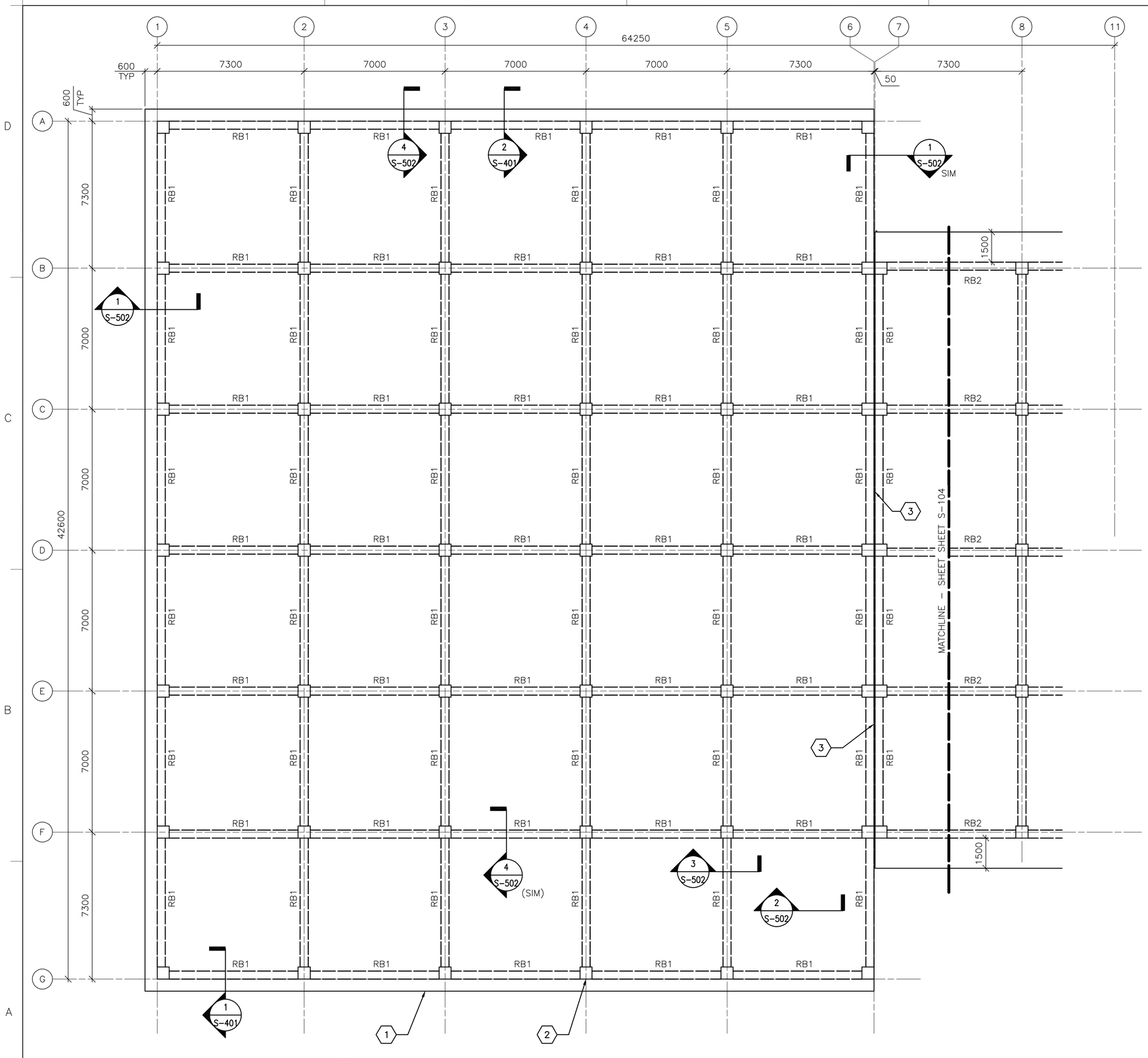


1 S-103 **ROOF FRAMING PLAN**
SCALE: 1:100

## ROOF FRAMING PLAN NOTES:

1. REFER TO SHEETS S-001 FOR STRUCTURAL NOTES AND DESIGN CRITERIA.
2. TOP OF SLAB ELEVATION = 4600 (COL 1-6) & 3800 (COL 7-11) UNLESS NOTED OTHERWISE.
3. ROOF SLAB IS 250 WITH #16 @ 300 OC EW T&B.
4. ROOF BEAM INDICATED BY RB# ON PLAN. REFER TO BEAM SCHEDULE ON SHEET S-601.
5. COORDINATE WITH ARCHITECTURAL SHEETS FOR COLD-FORMED STEEL OVERBUILD FRAMING ABOVE ROOF SLAB.
6. COLD-FORMED METAL OVERBUILD ROOF FRAMING NOT SHOWN FOR CLARITY. SEE OVERBUILD ROOF FRAMING DETAILS AND SECTIONS ON SHEET S-702.
7. CMU PERIMETER/PARTITION WALLS (BELOW ROOF SLAB) NOT SHOWN FOR CLARITY.
8. OVERHANG AREAS OF ROOF SLAB CONTAIN ROOF VENT PENETRATIONS. REFERENCE ARCHITECTURAL DRAWINGS FOR INFORMATION.
9. DISCONTINUE ALL ROOF FRAMING AT BUILDING EXPANSION JOINT. REFER TO ARCHITECTURAL SHEETS FOR COLD-FORMED ROOF OVERBUILD FRAMING EXPANSION JOINT DETAIL.

## ROOF FRAMING PLAN KEY NOTES: (X)

1. CONC ROOF SLAB (BELOW ROOF OVERBUILD)
2. REINF CONC COLUMN (BELOW CONC ROOF SLAB)
3. 50 ISOLATION JOINT BETWEEN STRUCTURES LOCATED ABOVE FIRST FLOOR SLAB-ON-GRADE

## KEYPLAN:

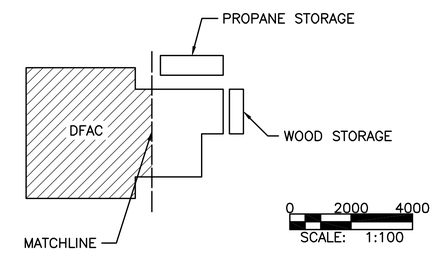


UNLESS OTHERWISE NOTED, LINEAR DIMENSIONS SHOWN ON DRAWINGS ARE IN MILLIMETERS (mm)

APPROVED:

A/E DESIGNER OF RECORD

SEAL:

GEORGIA REGISTERED 1-27-10 No. 27141 PROFESSIONAL ENGINEER CHRISTOPHER W. WHITMORE

US ARMY CORPS OF ENGINEERS
AFGHANISTAN ENGINEER DISTRICT

| Mark | Description | Date | Appr. | Mark | Description | Date | Appr. |
|---|---|---|---|---|---|---|---|

Designed by: KMP/MMY
Dwn by: RCG
Ckd by: CWW
Reviewed by: LHM
Submitted by: BAKER
Date: 2/23/10
Design file no.
Rev: 0
Drawing code:
File name: ANADFACS-103FRP
Plot date: 2/23/2010
Plot scale: X:X

U.S. ARMY CORPS OF ENGINEERS
AFGHANISTAN ENGINEER DISTRICT
APO AE 96338

Michael Baker Jr., Inc.
A unit of Michael Baker Corporation
Airside Business Park
100 Airside Drive
Moon Township, PA 15108
www.mbakercorp.com

AFGHAN NATIONAL ARMY
REGIONAL MILITARY TRAINING CENTER
STANDARD DESIGN

DINING FACILITY

ROOF FRAMING PLAN

Sheet reference number:
S-103

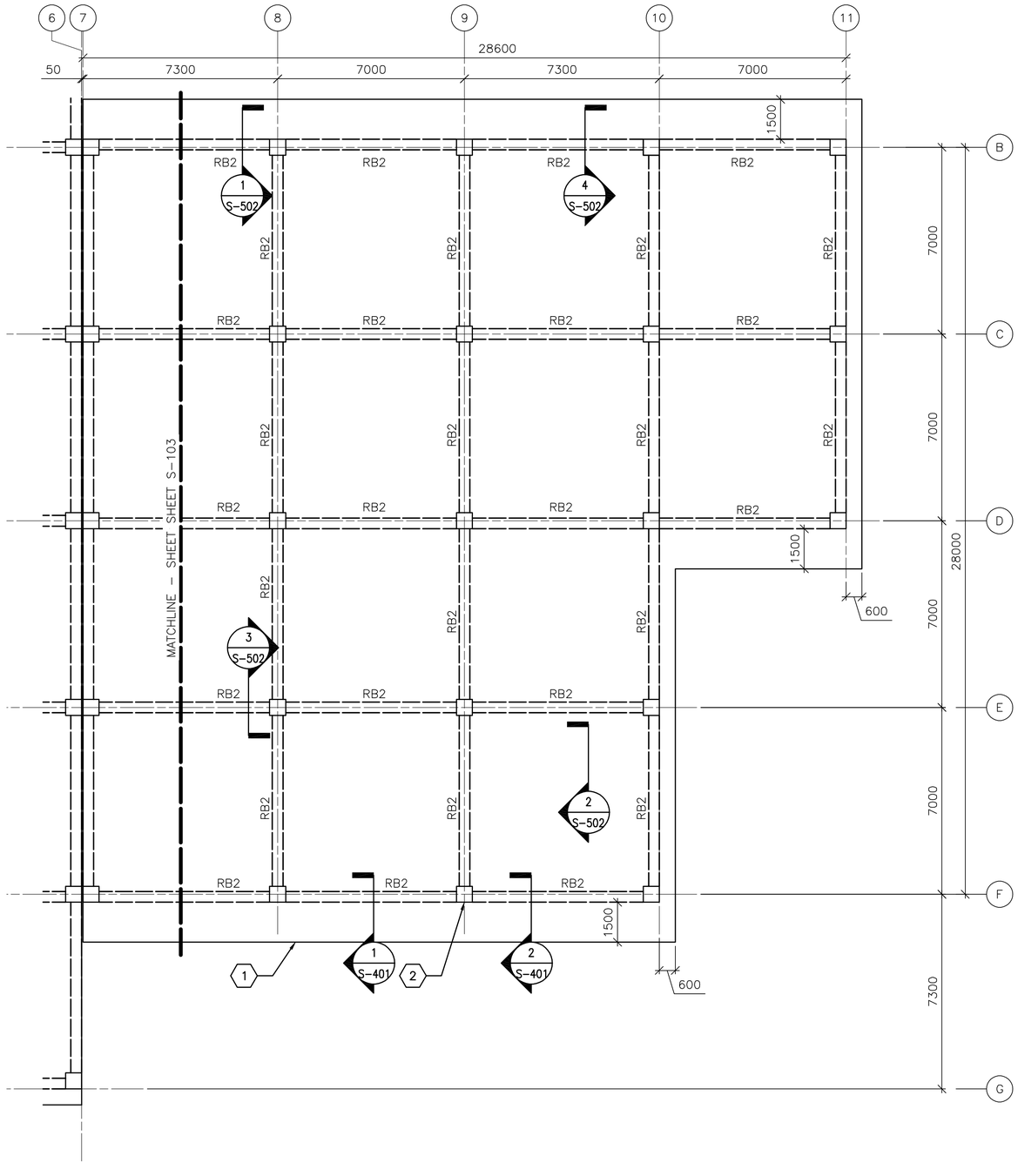


1 / S-104 **ROOF FRAMING PLAN**

SCALE: 1:100

## ROOF FRAMING PLAN NOTES:

1. REFER TO SHEETS S-001 FOR STRUCTURAL NOTES AND DESIGN CRITERIA.
2. TOP OF SLAB ELEVATION = 4600 (COL 1-6) & 3800 (COL 7-11) UNLESS NOTED OTHERWISE.
3. ROOF SLAB IS 250 WITH #16 @ 300 OC EW T&B.
4. ROOF BEAM INDICATED BY RB# ON PLAN. REFER TO BEAM SCHEDULE ON SHEET S-601.
5. COORDINATE WITH ARCHITECTURAL SHEETS FOR COLD-FORMED STEEL OVERBUILD FRAMING ABOVE ROOF SLAB.
6. COLD-FORMED METAL OVERBUILD ROOF FRAMING NOT SHOWN FOR CLARITY. SEE OVERBUILD ROOF FRAMING DETAILS AND SECTIONS ON SHEET S-702.
7. CMU PERIMETER/PARTITION WALLS (BELOW ROOF SLAB) NOT SHOWN FOR CLARITY.
8. OVERHANG AREAS OF ROOF SLAB CONTAIN ROOF VENT PENETRATIONS. REFERENCE ARCHITECTURAL DRAWINGS FOR INFORMATION.
9. DISCONTINUE ALL ROOF FRAMING AT BUILDING EXPANSION JOINT. REFER TO ARCHITECTURAL SHEETS FOR COLD-FORMED ROOF OVERBUILD FRAMING EXPANSION JOINT DETAIL.

## ROOF FRAMING PLAN KEY NOTES: (X)

1. CONC ROOF SLAB (BELOW ROOF OVERBUILD)
2. REINF CONC COLUMN (BELOW CONC ROOF SLAB)

## KEYPLAN:

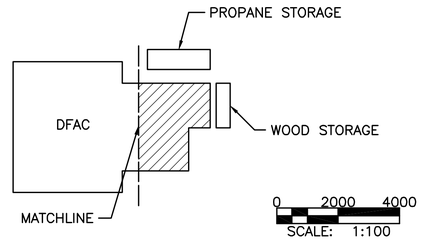


UNLESS OTHERWISE NOTED, LINEAR DIMENSIONS SHOWN ON DRAWINGS ARE IN MILLIMETERS (mm)

APPROVED:

A/E DESIGNER OF RECORD

SEAL:

GEORGIA REGISTERED 1-29-10 No. 27141 PROFESSIONAL ENGINEER CHRISTOPHER W. WHITMORE

US ARMY CORPS OF ENGINEERS
AFGHANISTAN ENGINEER DISTRICT

| Mark | Description | Date | Appr. | Mark | Description | Date | Appr. |
|---|---|---|---|---|---|---|---|

Designed by: KMP/MMY
Dwn by: RCG
Ckd by: CWW
Reviewed by: LHM
Submitted by: BAKER
Date: 2/23/10
Design file no.
Rev: 0
Drawing code:
File name: ANADFACS-104FRP
Plot date: 2/23/2010
Plot scale: x:X

U.S. ARMY CORPS OF ENGINEERS
AFGHANISTAN ENGINEER DISTRICT
APO AE 96338

Michael Baker Jr., Inc
A unit of Michael Baker Corporation
Airside Business Park
100 Airside Drive
Moon Township, PA 15108
www.mbakercorp.com

AFGHAN NATIONAL ARMY
REGIONAL MILITARY TRAINING CENTER
STANDARD DESIGN

DINING FACILITY

ROOF FRAMING PLAN

Sheet reference number:
S-104

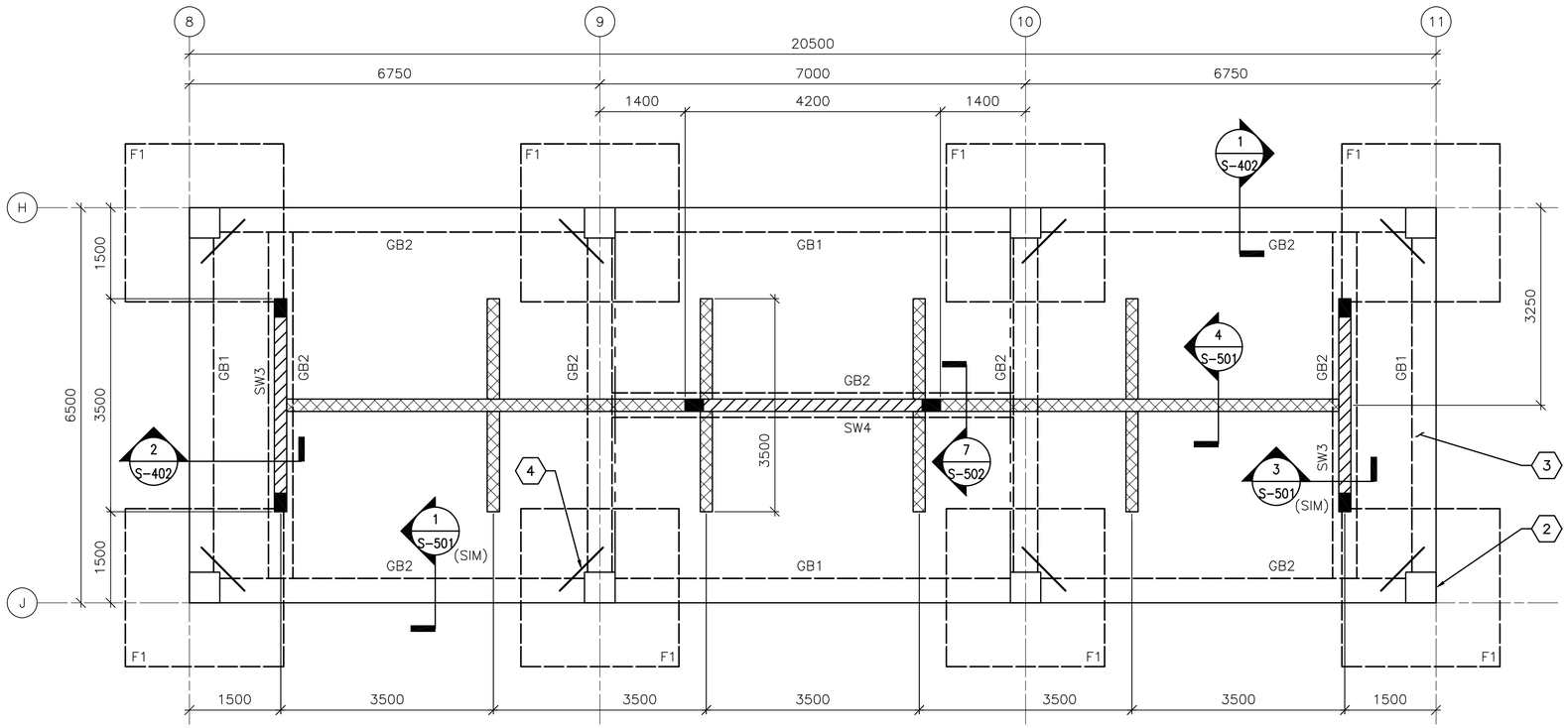


1 S-105 FOUNDATION/SLAB PLAN
SCALE: 1:50

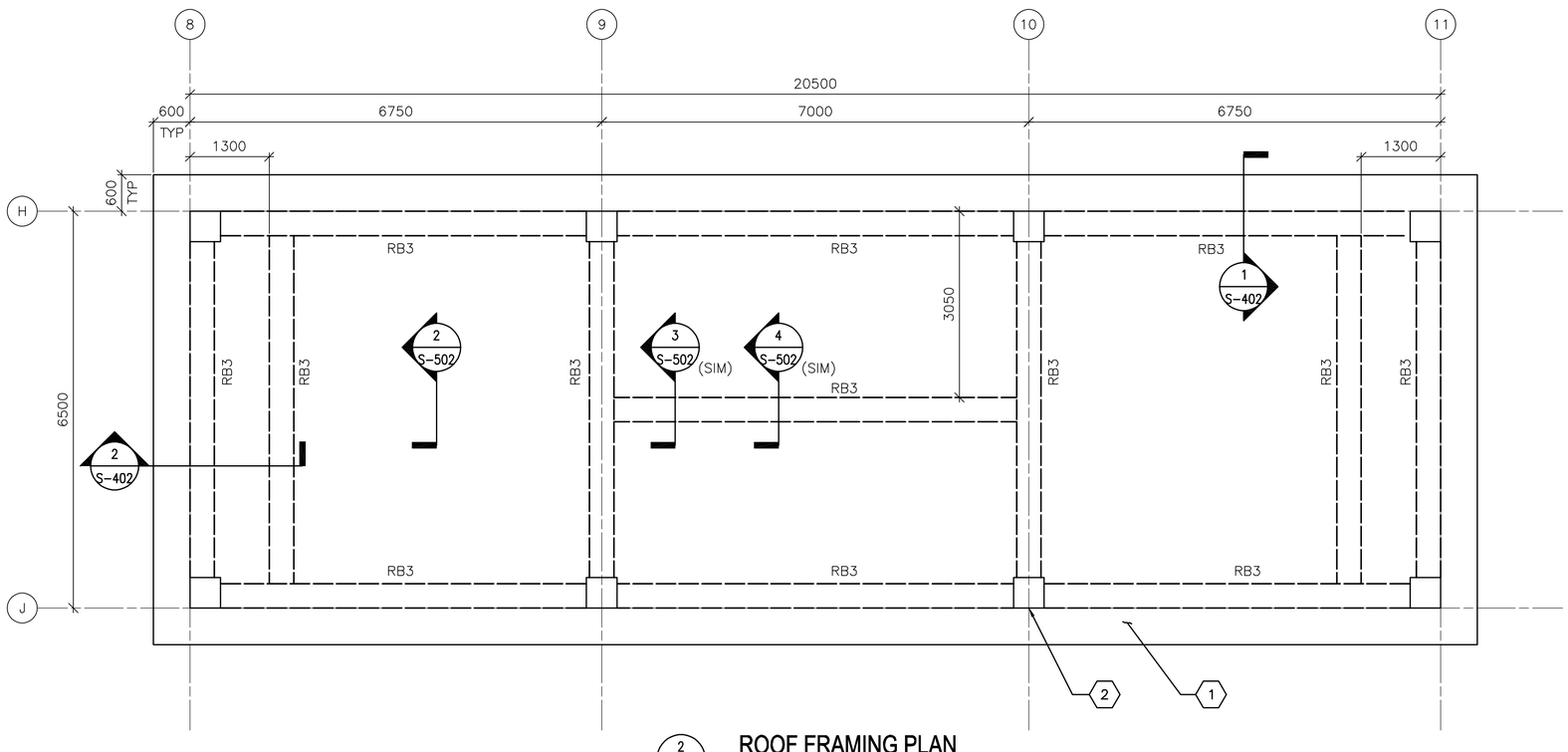


2 S-105 ROOF FRAMING PLAN
SCALE: 1:50

## FOUNDATION/SLAB PLAN NOTES:

1. REFER TO SHEET S-001 FOR STRUCTURAL NOTES AND DESIGN CRITERIA.
2. FINISH SLAB-ON-GRADER ELEVATION SHALL BE (DATUM 0.00). ALL PLUS OR MINUS DIMENSIONS INDICATED ON PLAN OR REFERRED TO IN NOTES RELATE TO SLAB-ON-GRADE ELEVATION.
3. SLAB-ON-GRADE IS 150 WITH #13 @ 300 OC EW LOCATED 38 FROM T/SLAB.
4. TOP OF EXTERIOR FOOTINGS SHALL BE -950 UNLESS OTHERWISE INDICATED.
5. COLUMN FOOTINGS INDICATED BY F# ON PLAN. REFER TO COLUMN FOOTING SCHEDULE ON SHEET S-601.
6. REFER TO COLUMN SCHEDULE ON SHEET S-601.
7. GRADE BEAM INDICATED BY GB# ON PLAN, REFER TO BEAM SCHEDULE ON SHEET S-601.
8. SHEARWALL INDICATED BY SW# ON PLAN, REFER TO SHEARWALL SCHEDULE ON SHEET S-601.
9. SEE TYP EXTERIOR CMU WALL DETAIL ON SHEET S-701.
10. SEE MECHANICAL AND ELECTRICAL SHEETS FOR CONCRETE PAD LOCATIONS, SIZES, AND THICKNESS NOT SHOWN. SEE SHEET S-701 FOR DETAILS.
11. THICKENED SLAB UNDER PARTITION WALLS NOT SHOWN FOR CLARITY.

## FOUNDATION/SLAB PLAN KEY NOTES: (X)

1. NOT USED
2. REINF CONC COLUMN
3. REINF CONC SLAB-ON-GRADE
4. (2)-#13 @ RE-ENTRANT CORNERS - SEE S-701 FOR INFORMATION

## FOUNDATION/SLAB PLAN LEGEND:

REINF CONC SHEAR WALL
REINF CMU WALL
CONTROL JOINT

## ROOF FRAMING PLAN NOTES:

1. REFER TO SHEETS S-001 FOR STRUCTURAL NOTES AND BASIS OF DESIGN.
2. TOP OF ROOF SLAB ELEVATION = 3500 UNLESS NOTED OTHERWISE.
3. ROOF SLAB IS 200 WITH #16 @ 300 OC EW T&B.
4. ROOF BEAM INDICATED BY RB# ON PLAN. REFER TO BEAM SCHEDULE ON SHEET S-601.
5. CMU PARTITION WALLS (BELOW ROOF SLAB) NOT SHOWN FOR CLARITY.
6. OVERHANG AREAS OF ROOF SLAB CONTAIN ROOF VENT PENETRATIONS. REFERENCE ARCHITECTURAL DRAWINGS FOR INFORMATION.

## ROOF FRAMING PLAN KEY NOTES: (X)

1. CONC ROOF SLAB
2. REINF CONC COLUMN (BELOW CONC ROOF SLAB)

## KEYPLAN:

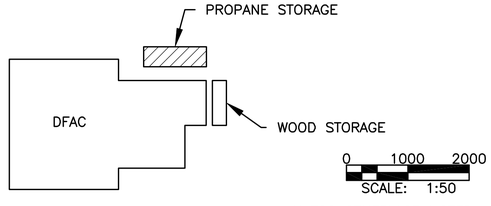


UNLESS OTHERWISE NOTED, LINEAR DIMENSIONS SHOWN ON DRAWINGS ARE IN MILLIMETERS (mm)

APPROVED:

A/E DESIGNER OF RECORD

SEAL:

GEORGIA REGISTERED 1-29-10 No. 27141 PROFESSIONAL ENGINEER CHRISTOPHER W. WHITMORE

US ARMY CORPS OF ENGINEERS
AFGHANISTAN ENGINEER DISTRICT

| Mark | Description | Date | Appr. | Mark | Description | Date | Appr. |
|---|---|---|---|---|---|---|---|

Designed by: KMP/MMY
Dwn by: RCG
Ckd by: CWW
Reviewed by: LHM
Submitted by: BAKER
Date: 2/23/10
Rev: 0
Design file no.
Drawing code:
File name: ANADFACS-105FFP
Plot date: 2/23/2010
Plot scale: X:X

U.S. ARMY CORPS OF ENGINEERS
AFGHANISTAN ENGINEER DISTRICT
APO AE 96338

Michael Baker Jr., Inc
A unit of Michael Baker Corporation
Airside Business Park
100 Airside Drive
Moon Township PA 15108
www.mbakercorp.com

AFGHAN NATIONAL ARMY
REGIONAL MILITARY TRAINING CENTER
STANDARD DESIGN

DINING FACILITY

PROPANE CYLINDER STORAGE
FND/SLAB & ROOF FRAMING PLAN

Sheet reference number:
S-105

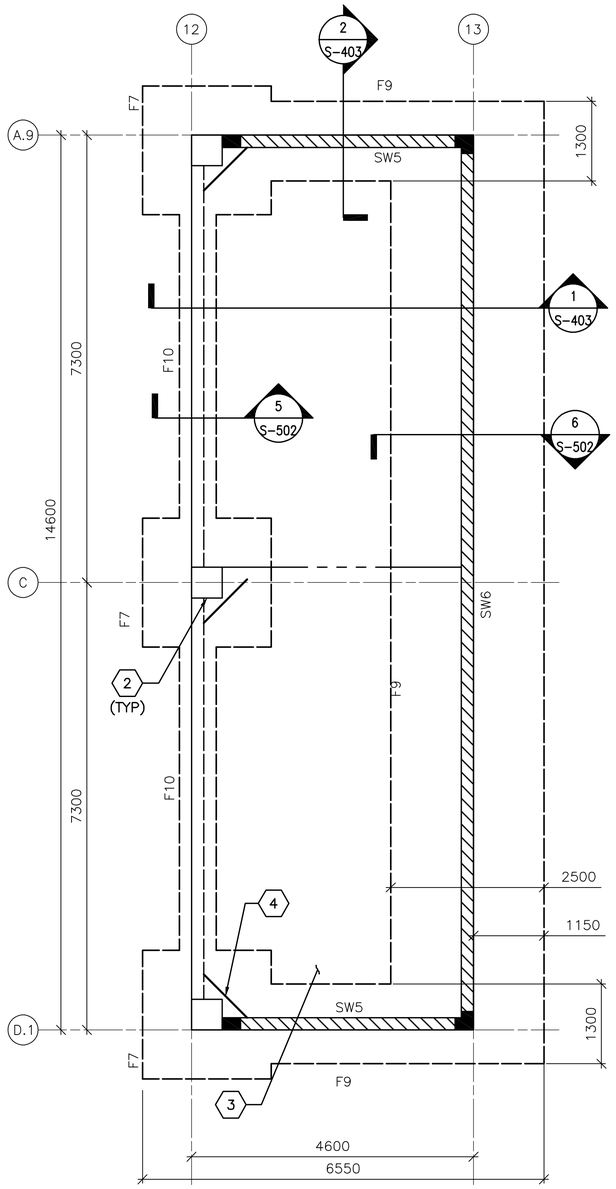


1 S-106 FOUNDATION/SLAB PLAN

SCALE: 1:50

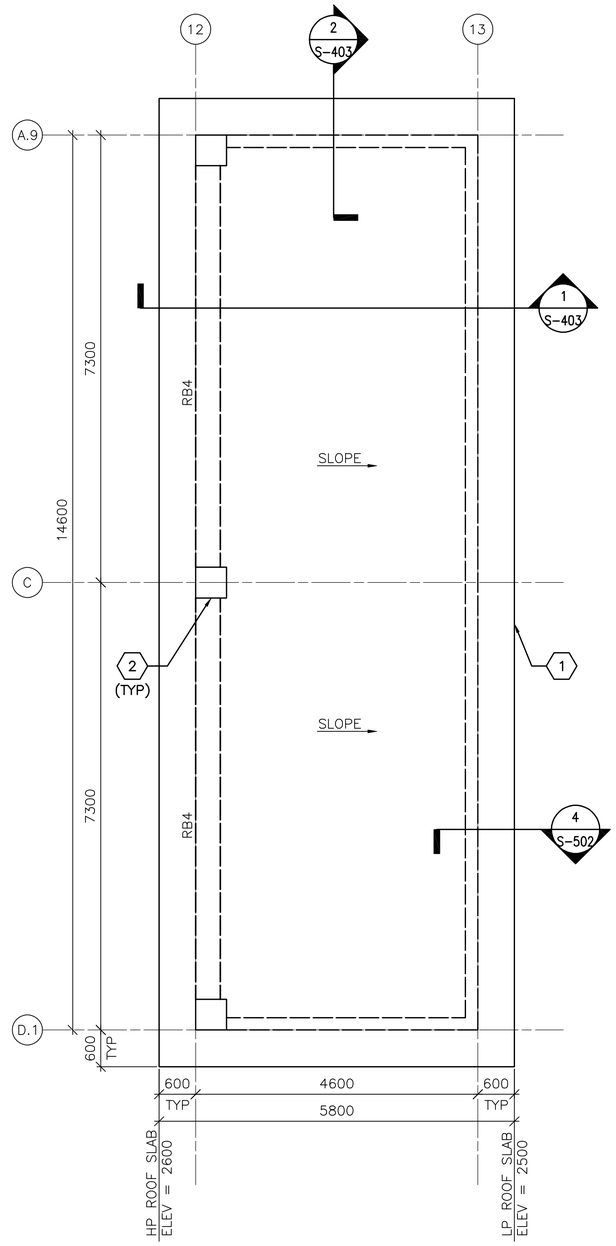


2 S-106 ROOF FRAMING PLAN

SCALE: 1:50

## FOUNDATION/SLAB PLAN NOTES:

1. REFER TO SHEET S-001 FOR STRUCTURAL NOTES AND DESIGN CRITERIA.
2. SLAB-ON-GRADE ELEVATION SHALL BE (DATUM 0.00). ALL PLUS OR MINUS DIMENSIONS INDICATED ON PLAN OR REFERRED TO IN NOTES RELATE TO SLAB-ON-GRADE ELEVATION.
3. SLAB-ON-GRADE IS 150 WITH #13 @ 300 OC EW LOCATED 38 FROM T/SLAB.
4. BOT OF EXTERIOR FOOTINGS SHALL BE -950 UNLESS OTHERWISE INDICATED.
5. COLUMN FOOTINGS INDICATED BY F# ON PLAN. REFER TO COLUMN FOOTING SCHEDULE ON SHEET S-601.
6. REFER TO COLUMN SCHEDULE ON SHEET S-601.
7. SHEARWALL INDICATED BY SW# ON PLAN, REFER TO SHEARWALL SCHEDULE ON SHEET S-601.
8. SEE MECHANICAL AND ELECTRICAL SHEETS FOR CONCRETE PAD LOCATIONS, SIZES, AND THICKNESS NOT SHOWN. SEE SHEET S-701 FOR DETAILS.

## FOUNDATION/SLAB PLAN KEY NOTES: (X)

1. NOT USED
2. REINF CONC COLUMN
3. REINF CONC SLAB-ON-GRADE
4. (2)-#13 @ RE-ENTRANT CORNERS - SEE S-701 FOR INFORMATION

## FOUNDATION/SLAB PLAN LEGEND:

REINF CONC SHEAR WALL

CONTROL JOINT

## ROOF FRAMING PLAN NOTES:

1. REFER TO SHEETS S-001 FOR STRUCTURAL NOTES AND BASIS OF DESIGN.
2. TOP OF ROOF SLAB ELEVATION = 2500 UNLESS NOTED OTHERWISE.
3. ROOF SLAB IS 250 WITH #16 @ 300 OC EW T&B.
4. ROOF BEAM INDICATED BY RB# ON PLAN. REFER TO BEAM SCHEDULE ON SHEET S-601.

## ROOF FRAMING PLAN KEY NOTES: (X)

1. CONC ROOF SLAB
2. REINF CONC COLUMN (BELOW CONC ROOF SLAB)

## KEYPLAN:

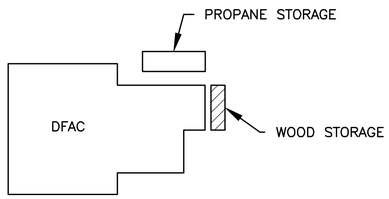


0 1000 2000

SCALE: 1:50

UNLESS OTHERWISE NOTED, LINEAR DIMENSIONS SHOWN ON DRAWINGS ARE IN MILLIMETERS (mm)

APPROVED:

A/E DESIGNER OF RECORD

SEAL:

GEORGIA REGISTERED 1-29-10 No. 27141 PROFESSIONAL ENGINEER CHRISTOPHER W. WHITMORE

US ARMY CORPS OF ENGINEERS
AFGHANISTAN ENGINEER DISTRICT

| Mark | Description | Date | Appr. | Mark | Description | Date | Appr. |
|---|---|---|---|---|---|---|---|

Date: 2/23/10 Rev: 0
Design file no.
Drawing code:
File name: ANADFACS-106FFP
Plot date: 2/23/2010
Plot scale: x:X

Designed by: KMP/MMY
Dwn by: RCG Ckd by: CWW
Reviewed by: LHM
Submitted by: BAKER

U.S. ARMY CORPS OF ENGINEERS
AFGHANISTAN ENGINEER DISTRICT
APO AE 96338

Michael Baker Jr., Inc
A unit of Michael Baker Corporation
Airside Business Park
100 Airside Drive
Moon Township, PA 15108
www.mbakercorp.com

AFGHAN NATIONAL ARMY
REGIONAL MILITARY TRAINING CENTER
STANDARD DESIGN

DINING FACILITY

WOOD STORAGE
FND/SLAB & ROOF FRAMING PLAN

Sheet reference number:
S-106

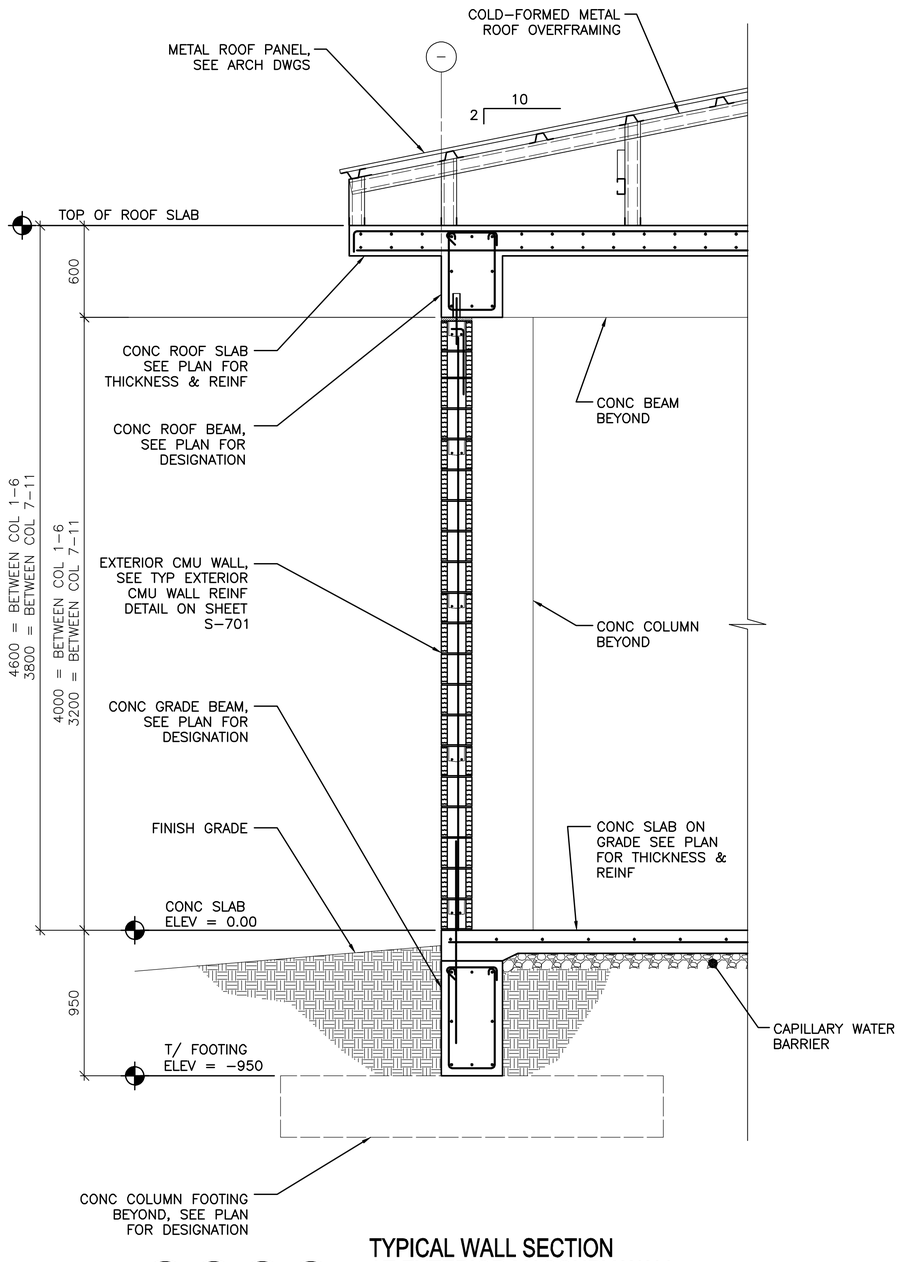


1 S-101 1 S-102 1 S-103 1 S-104

## TYPICAL WALL SECTION AT EXTERIOR MASONRY WALL

SCALE: 1:20

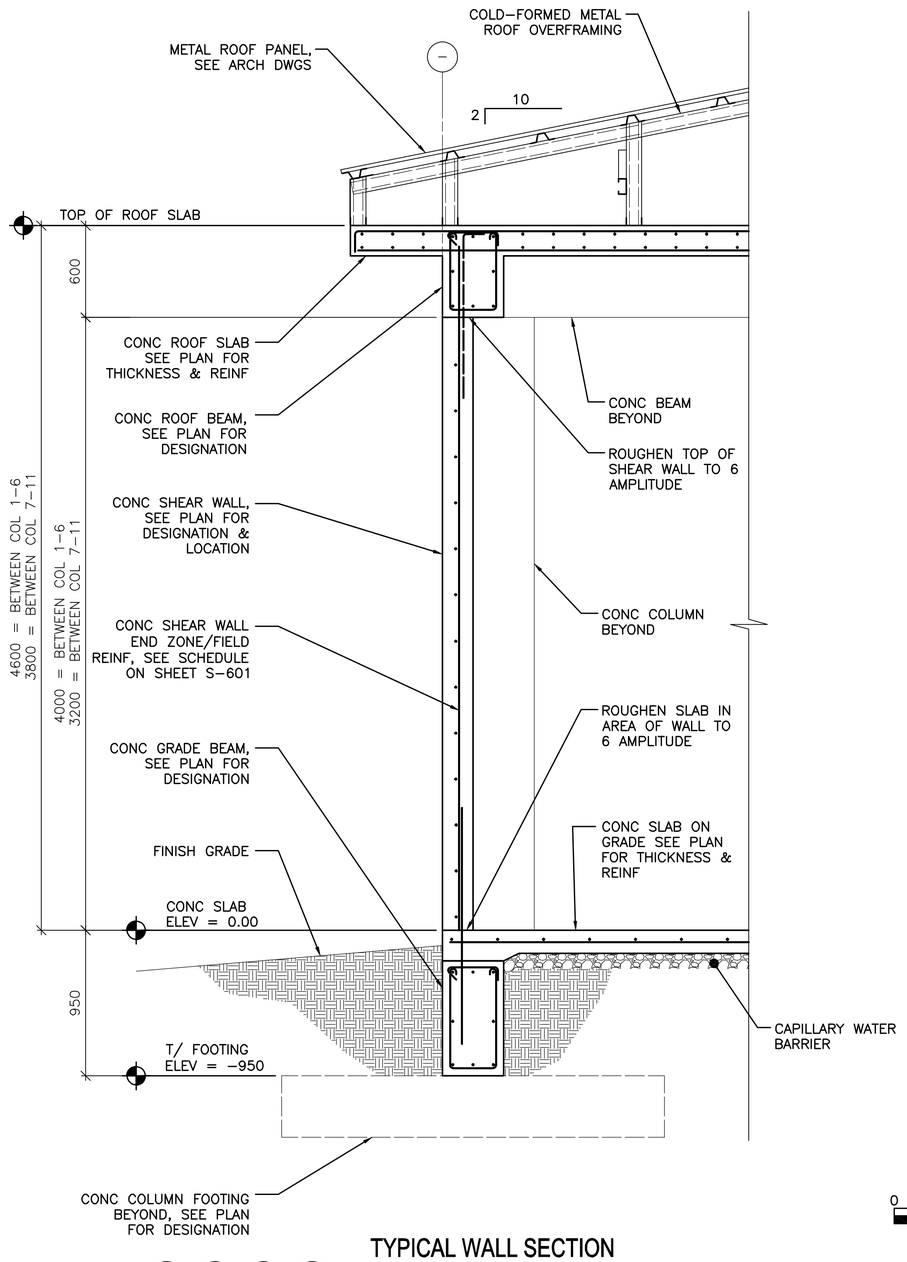


2 S-101 2 S-102 2 S-103 2 S-104

## TYPICAL WALL SECTION AT CONCRETE SHEAR WALL

SCALE: 1:20

0 400 800
SCALE: 1:20

UNLESS OTHERWISE NOTED, LINEAR DIMENSIONS SHOWN ON DRAWINGS ARE IN MILLIMETERS (mm)

APPROVED:

A/E DESIGNER OF RECORD

SEAL:

GEORGIA REGISTERED PROFESSIONAL ENGINEER CHRISTOPHER W. WHITMORE No. 27141 1-29-10

US ARMY CORPS OF ENGINEERS
AFGHANISTAN ENGINEER DISTRICT

| Mark | Description | Date | Appr. | Mark | Description | Date | Appr. |
|---|---|---|---|---|---|---|---|

Designed by: KMF/MMY
Dwn by: RCG
Ckd by: CWW
Reviewed by: LHM
Submitted by: BAKER
Date: 2/23/10
Rev: 0
Design file no.
Drawing code:
File name: ANADFACS-401BS
Plot date: 2/23/2010
Plot scale: x:X

U.S. ARMY CORPS OF ENGINEERS
AFGHANISTAN ENGINEER DISTRICT
APO AE 96338

Michael Baker Jr., Inc
A unit of Michael Baker Corporation
Airside Business Park
100 Airside Drive
Moon Township, PA 15108
www.mbakercorp.com

AFGHAN NATIONAL ARMY
REGIONAL MILITARY TRAINING CENTER
STANDARD DESIGN

DINING FACILITY

BUILDING SECTIONS

Sheet reference number:
S-401

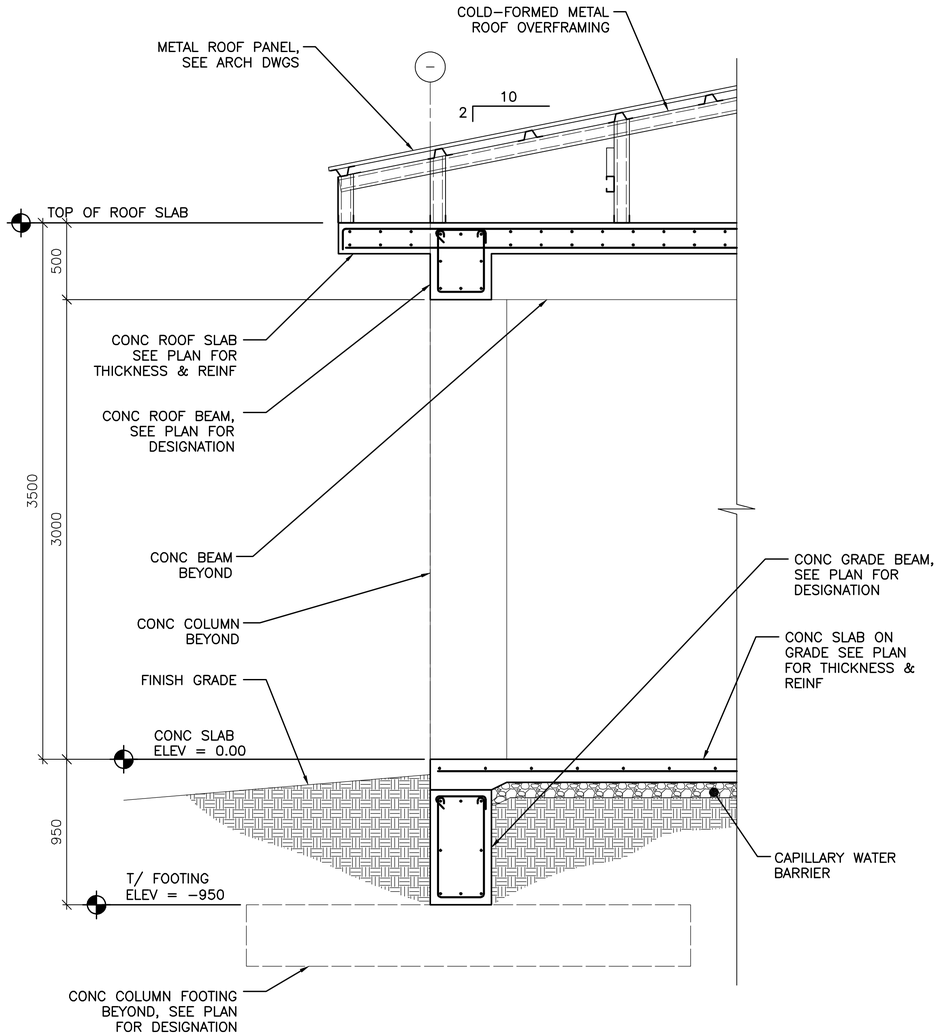


1 S-105 TYPICAL WALL SECTION
SCALE: 1:20

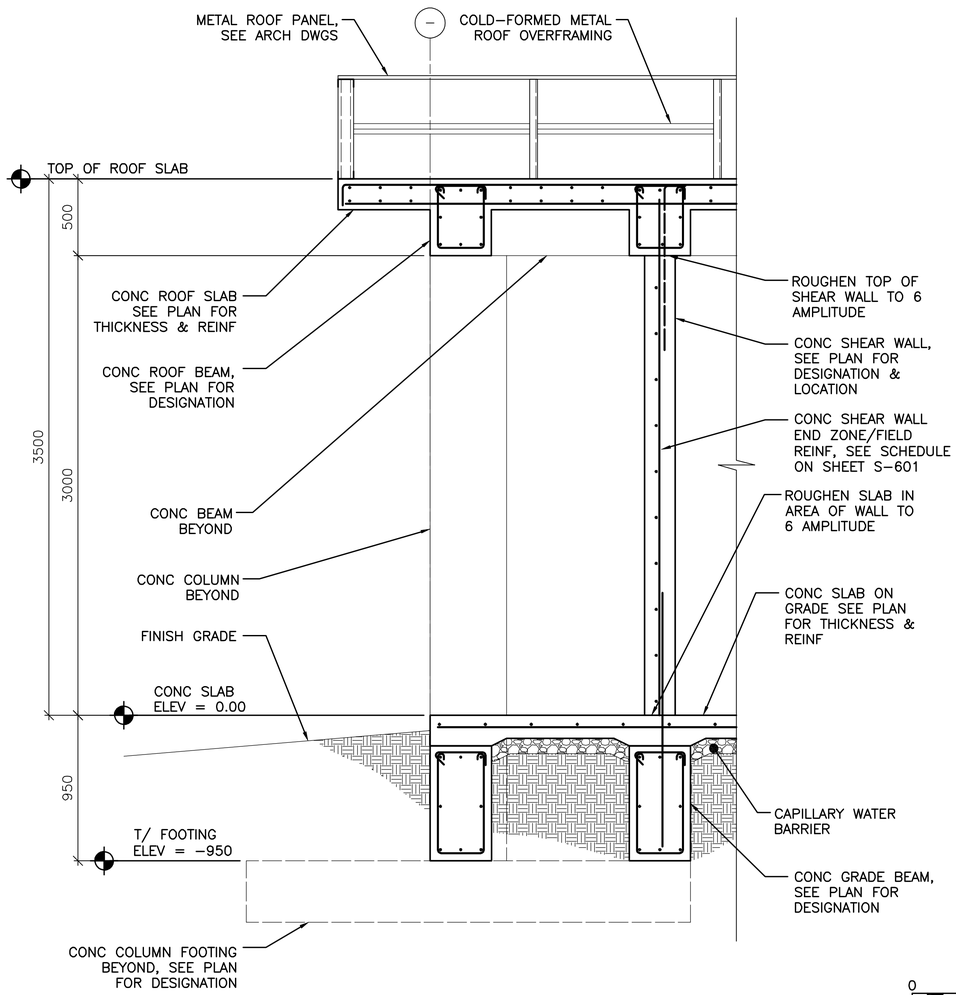


2 S-105 TYPICAL WALL SECTION AT CONCRETE SHEAR WALL
SCALE: 1:20

0 400 800
SCALE: 1:20

UNLESS OTHERWISE NOTED, LINEAR DIMENSIONS SHOWN ON DRAWINGS ARE IN MILLIMETERS (mm)

APPROVED:

A/E DESIGNER OF RECORD

SEAL:

GEORGIA REGISTERED 1-29-10 No. 27141 PROFESSIONAL ENGINEER CHRISTOPHER W. WHITMORE

US ARMY CORPS OF ENGINEERS
AFGHANISTAN ENGINEER DISTRICT

| Mark | Description | Date | Appr. | Mark | Description | Date | Appr. |
|---|---|---|---|---|---|---|---|

U.S. ARMY CORPS OF ENGINEERS
AFGHANISTAN ENGINEER DISTRICT
APO AE 96338

Michael Baker Jr., Inc
A unit of Michael Baker Corporation
Airside Business Park
100 Airside Drive
Moon Township, PA 15108
www.mbakercorp.com

Designed by: KMP/MMY
Dwn by: RCG
Ckd by: CWW
Reviewed by: LHM
Submitted by: BAKER
Date: 2/23/10
Rev: 0
Design file no.
Drawing code:
File name: ANADFACS-402BS
Plot date: 2/23/2010
Plot scale: X:X

AFGHAN NATIONAL ARMY
REGIONAL MILITARY TRAINING CENTER
STANDARD DESIGN

DINING FACILITY

BUILDING SECTIONS

Sheet reference number:
S-402

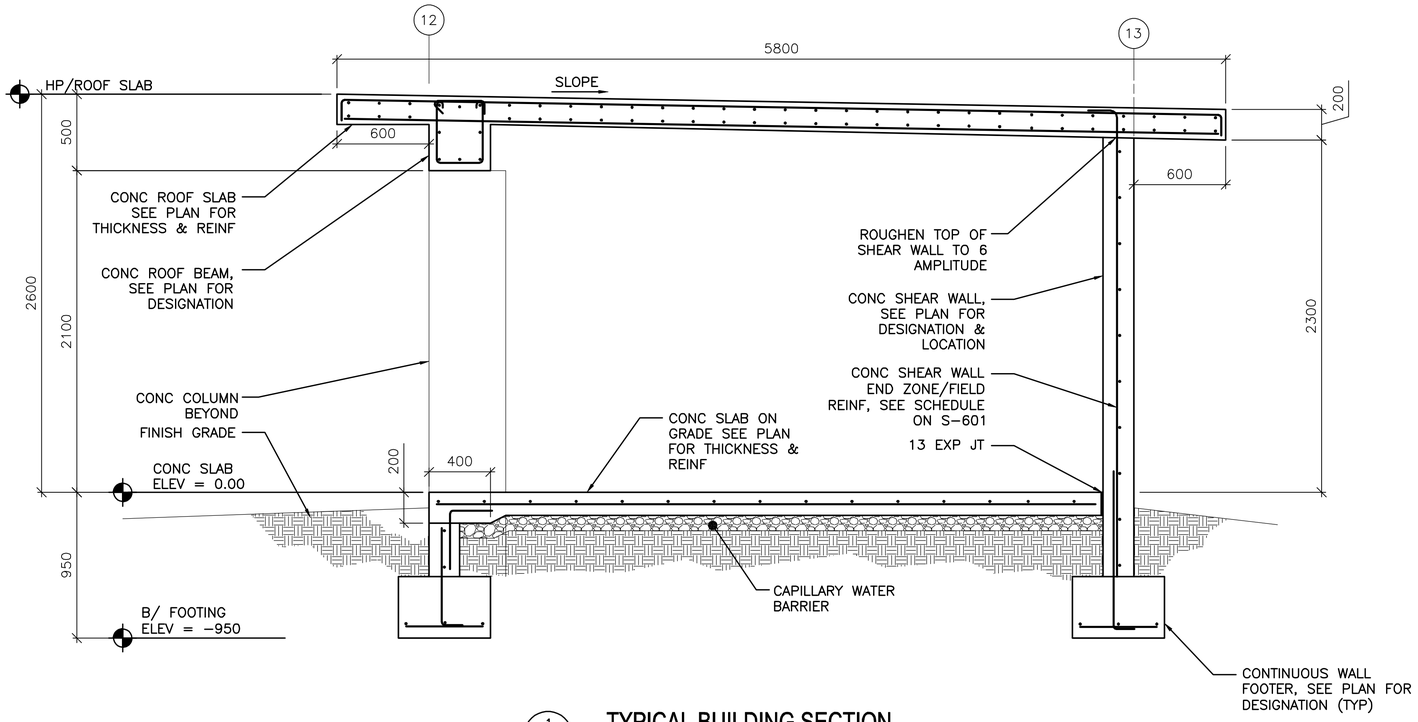


1 / S-106 **TYPICAL BUILDING SECTION**

SCALE: 1:20

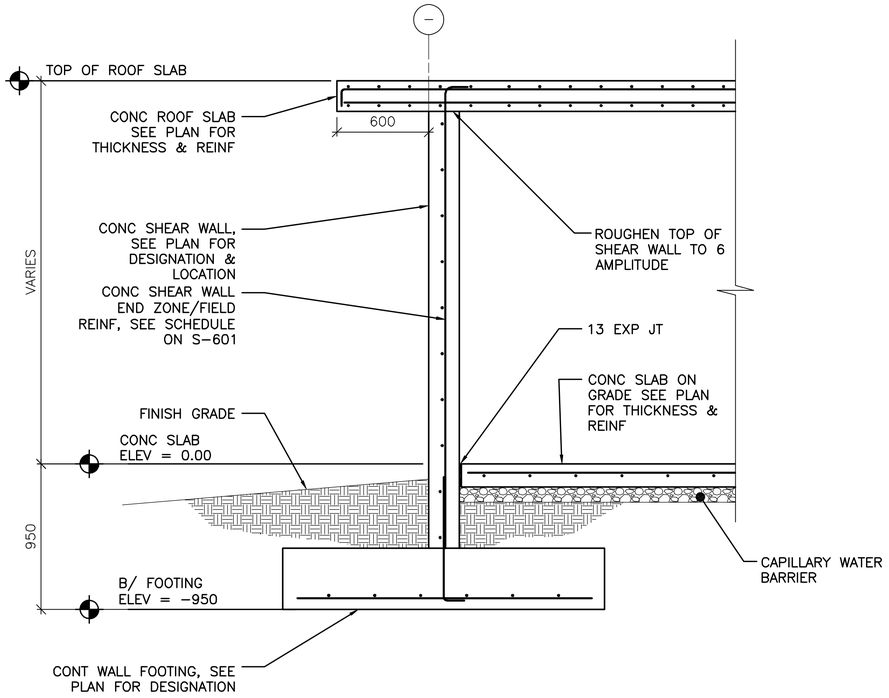


2 / S-106 **TYPICAL WALL SECTION AT CONCRETE SHEAR WALL**

SCALE: 1:20

0 400 800

SCALE: 1:20

UNLESS OTHERWISE NOTED, LINEAR DIMENSIONS SHOWN ON DRAWINGS ARE IN MILLIMETERS (mm)

APPROVED:

A/E DESIGNER OF RECORD

SEAL:

GEORGIA REGISTERED 1-29-10 No. 27141 PROFESSIONAL ENGINEER CHRISTOPHER W. WHITMORE

US ARMY CORPS OF ENGINEERS
AFGHANISTAN ENGINEER DISTRICT

| Mark | Description | Date | Appr. | Mark | Description | Date | Appr. |
|---|---|---|---|---|---|---|---|

Designed by: KMP/MMY
Dwn by: RCG
Ckd by: CWW
Reviewed by: LHM
Submitted by: BAKER
Date: 2/23/10
Rev: 0
Design file no.
Drawing code:
File name: ANADFACS-403BS
Plot date: 2/23/2010
Plot scale: X:X

U.S. ARMY CORPS OF ENGINEERS
AFGHANISTAN ENGINEER DISTRICT
APO AE 96338

Michael Baker Jr., Inc
A unit of Michael Baker Corporation
Airside Business Park
100 Airside Drive
Moon Township PA 15108
www.mbakercorp.com

AFGHAN NATIONAL ARMY
REGIONAL MILITARY TRAINING CENTER
STANDARD DESIGN

DINING FACILITY

BUILDING SECTIONS

Sheet reference number:
S-403

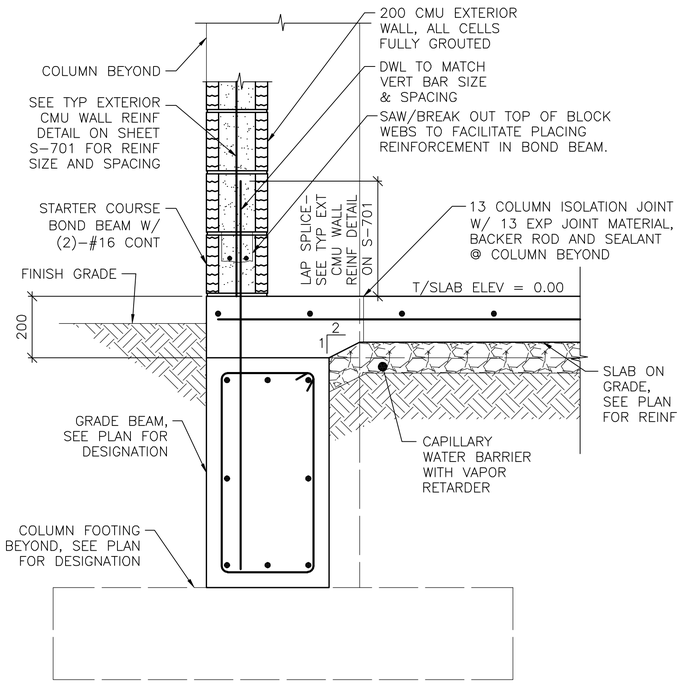


NOTE:
1. SECTION IS SIMILAR FOR INTERIOR CMU PARTITIONS OVER GRADE BEAMS SHOWING THICKENED 200 CONC SLAB AREA.

1 S-101 **SECTION** SCALE: 1:10

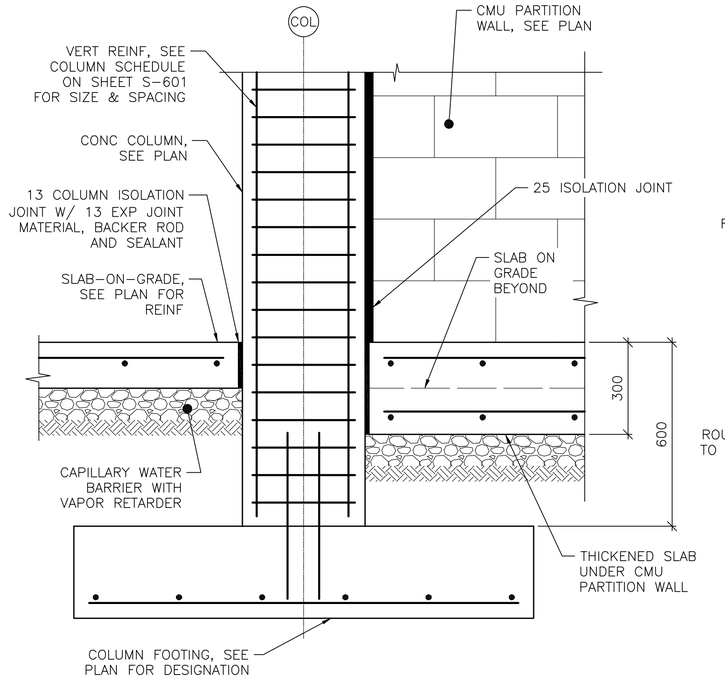


2 S-101 **SECTION** SCALE: 1:10

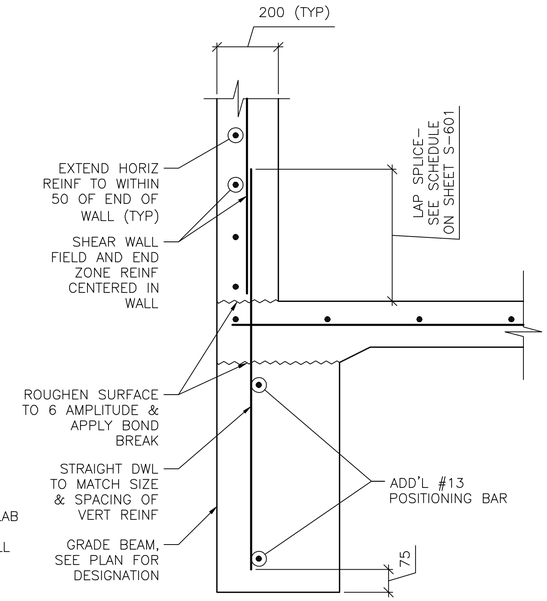


NOTES:
1. SECTION DEPICTS SHEAR WALL TERMINATION ONLY. GRADE BEAM REINFORCING NOT SHOWN FOR CLARITY
2. SEE SHEET S-601 AND SHEET S-702 FOR SCHEDULED FIELD AND END ZONE REINF.

3 S-101 **SECTION** SCALE: 1:10

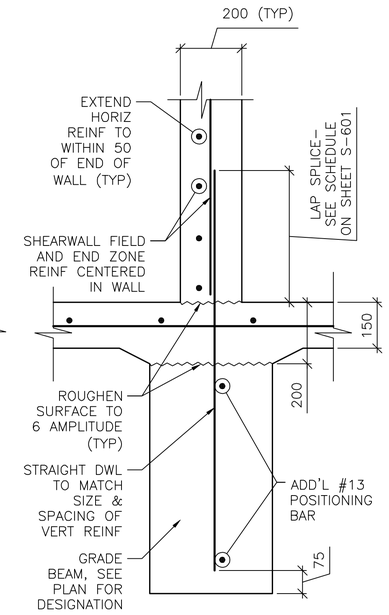


NOTE:
1. SECTION DEPICTS SHEAR WALL TERMINATION ONLY. GRADE BEAM REINFORCING NOT SHOWN FOR CLARITY
2. SEE SHEET S-601 AND SHEET S-702 FOR SCHEDULED FIELD AND END ZONE REINF.

4 S-101 **SECTION** SCALE: 1:10

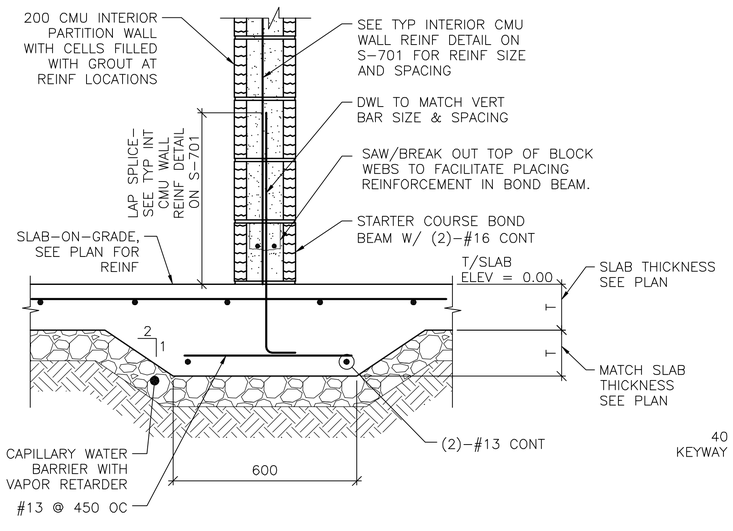


5 S-101 **SECTION** SCALE: 1:10

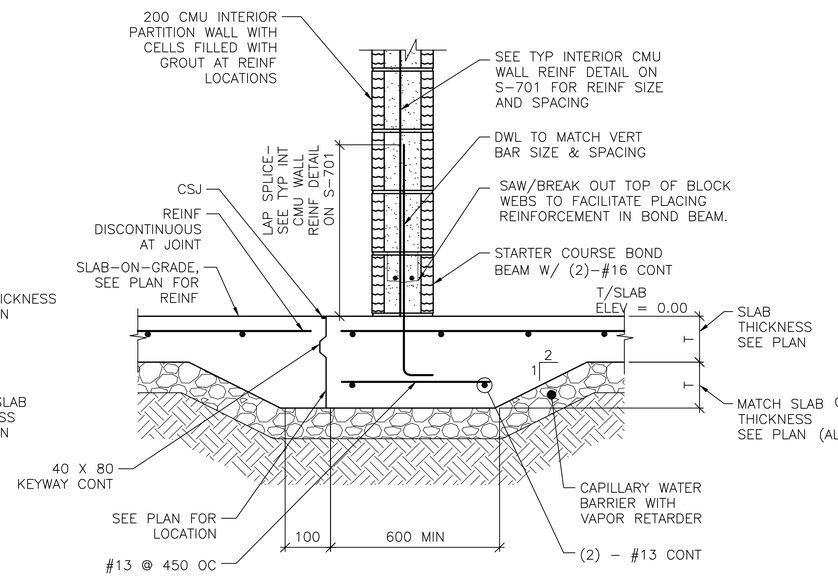


NOTE:
1. DETAIL IS APPLICABLE AT CONTROL JOINTS RUNNING PARALLEL TO CMU WALLS AND WITHIN 300 OF FACE OF WALL.

6 S-101 **SECTION** SCALE: 1:10

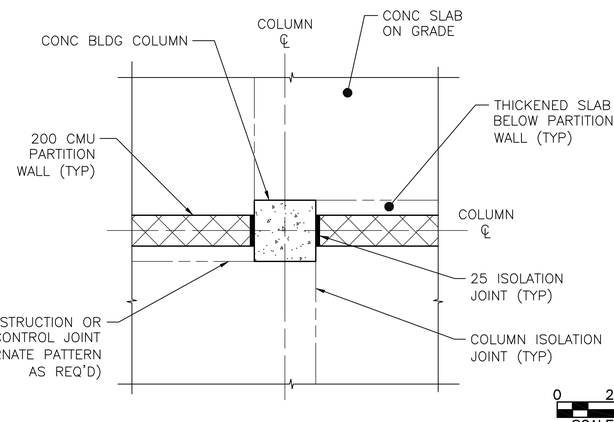


A S-501 **COLUMN ISOLATION JOINT DETAIL** SCALE: NTS

0 200 400
SCALE: 1:10

UNLESS OTHERWISE NOTED, LINEAR DIMENSIONS SHOWN ON DRAWINGS ARE IN MILLIMETERS (mm)

APPROVED:

A/E DESIGNER OF RECORD

SEAL:

GEORGIA REGISTERED 1-22-10 No. 27141 PROFESSIONAL ENGINEER CHRISTOPHER W. WHITMORE

US ARMY CORPS OF ENGINEERS
AFGHANISTAN ENGINEER DISTRICT

| Mark | Description | Date | Appr. | Mark | Description | Date | Appr. |
|---|---|---|---|---|---|---|---|

Rev: 0
Date: 2/23/10
Design file no.
Drawing code:
File name: ANADFACS-S01SC
Plot date: 2/23/2010
Plot scale: x:X

Designed by: KMP/MMY
Dwn by: RCG
Ckd by: CWW
Reviewed by: LHM
Submitted by: BAKER

U.S. ARMY CORPS OF ENGINEERS
AFGHANISTAN ENGINEER DISTRICT
APO AE 96338

Michael Baker Jr., Inc
A unit of Michael Baker Corporation
Airside Business Park
100 Airside Drive
Moon Township, PA 15108
www.mbakercorp.com

AFGHAN NATIONAL ARMY
REGIONAL MILITARY TRAINING CENTER
STANDARD DESIGN

DINING FACILITY

FOUNDATION SECTIONS

Sheet reference number:
S-501

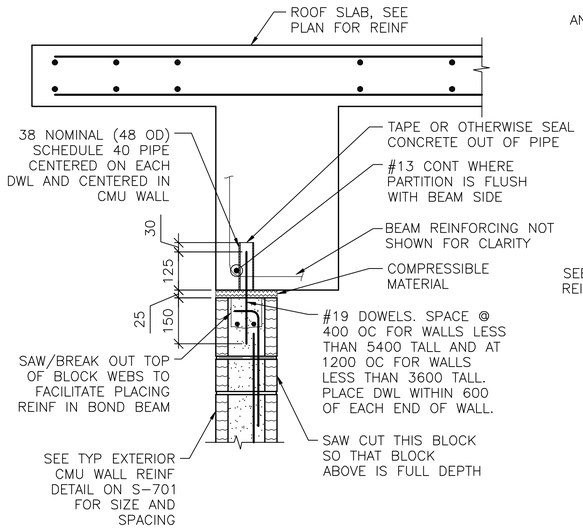


NOTES:
1. EXTEND DOWEL REINF TO 25 CLEAR FROM TOP OF CMU WALL.

1 / S-103 1 / S-104 **SECTION** SCALE: 1:10

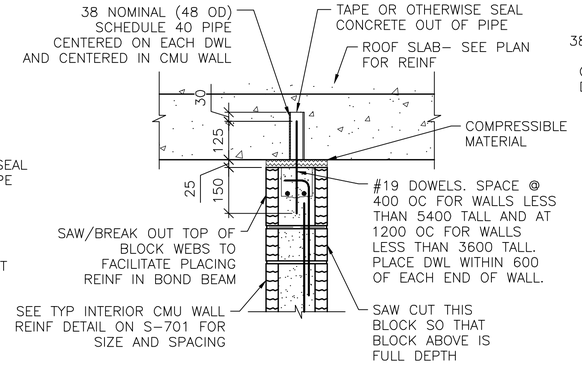


NOTES:
1. EXTEND DOWEL REINF TO 25 CLEAR FROM TOP OF CMU WALL.
2. SLAB REINF NOT SHOWN FOR CLARITY.

2 / S-103 2 / S-104 2 / S-105 **SECTION** SCALE: 1:10

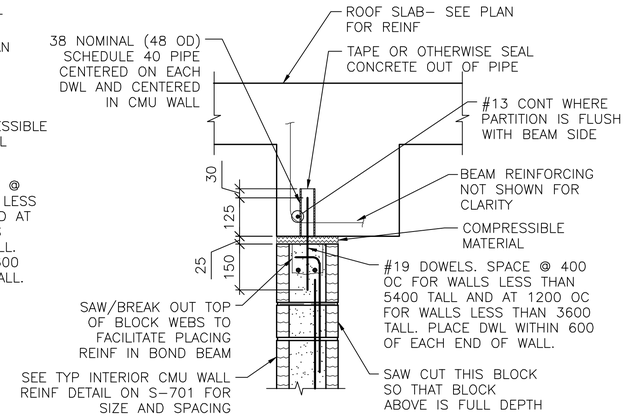


NOTES:
1. EXTEND DOWEL REINF TO 25 CLEAR FROM TOP OF CMU WALL.
2. PARTITION WALL MAY BE CENTERED UNDER THE BEAM OR FLUSH AS SHOWN. SEE PLAN FOR LOCATION.
3. SLAB REINF NOT SHOWN FOR CLARITY.

3 / S-103 3 / S-104 3 / S-105 **SECTION** SCALE: 1:10

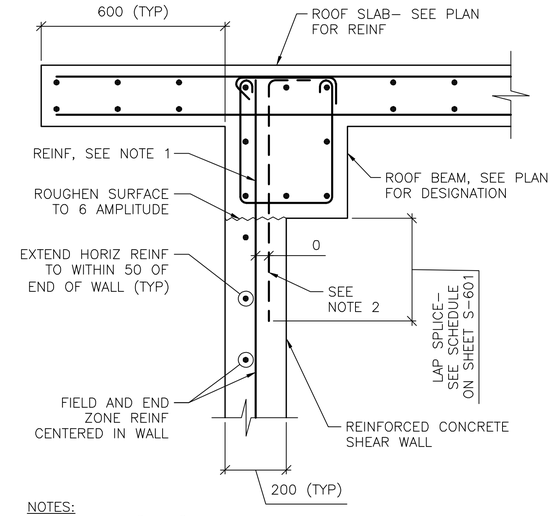


NOTES:
1. TERMINATE "FIELD" VERT REINF & END ZONE REINF @ 50 CLEAR FROM TOP OF ROOF SLAB.
2. WHERE END ZONE REINFORCING CANNOT BE DEVELOPED IN BEAM DEPTH, PROVIDE HOOKED DWLS SAME SIZE & SPACING. PROVIDE TENSION LAP BELOW ROOF BEAM.
3. SEE SHEET S-601 AND SHEET S-702 FOR SCHEDULED FIELD AND END ZONE REINF.
4. CAST SHEAR WALL BEFORE PLACING BEAM/SLAB.

4 / S-103 4 / S-104 4 / S-105 4 / S-106 **SECTION** SCALE: 1:10

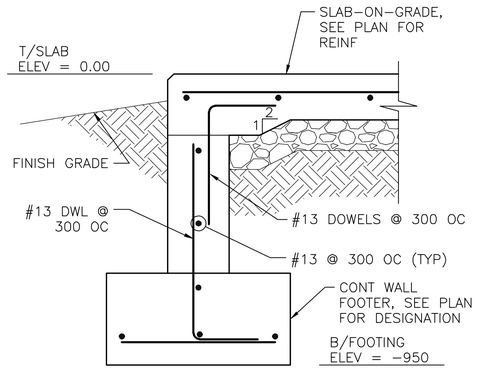


5 / S-106 **SECTION** SCALE: 1:10

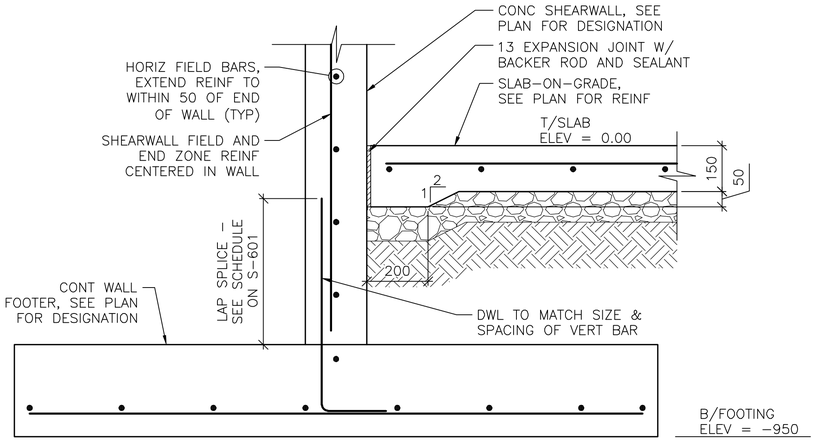


6 / S-106 **SECTION** SCALE: 1:10

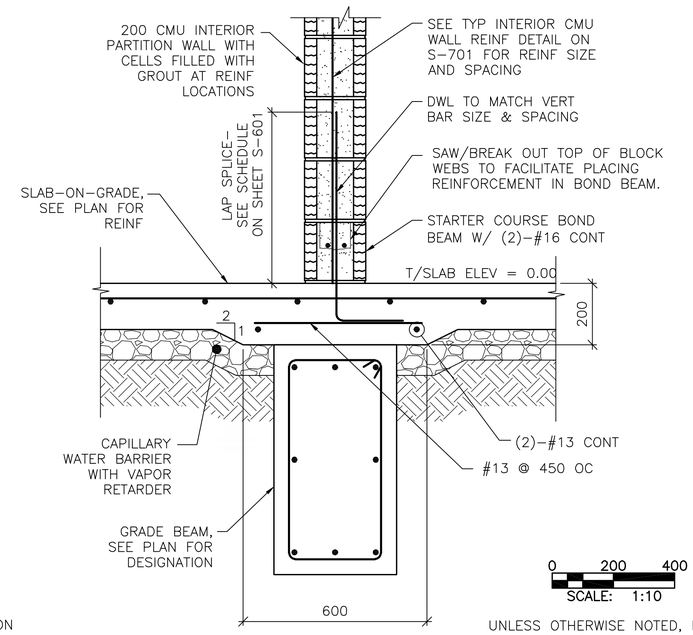


7 / S-105 **SECTION** SCALE: 1:10

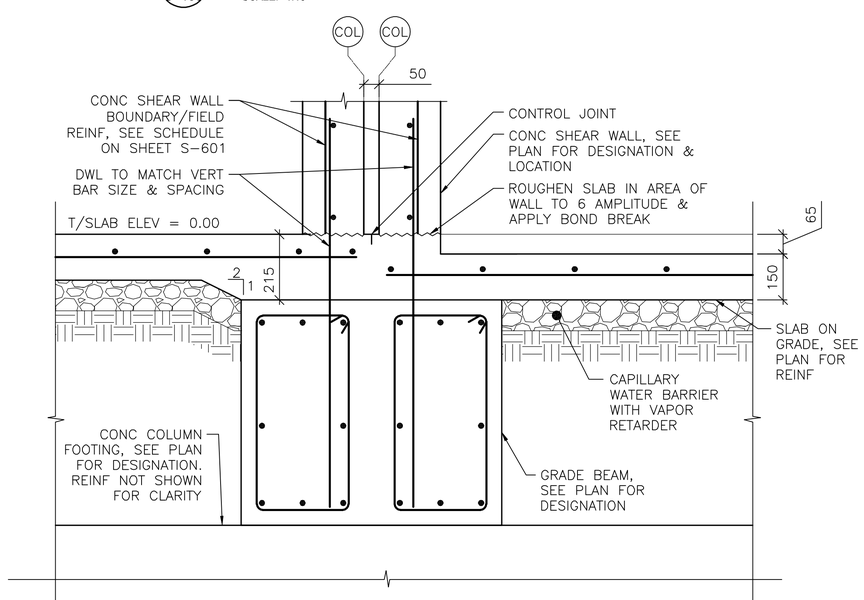


8 / S-101 **SECTION** SCALE: 1:10

0 200 400
SCALE: 1:10

UNLESS OTHERWISE NOTED, LINEAR DIMENSIONS SHOWN ON DRAWINGS ARE IN MILLIMETERS (mm)

APPROVED:

A/E DESIGNER OF RECORD

SEAL:

GEORGIA REGISTERED PROFESSIONAL ENGINEER No. 27141 CHRISTOPHER W. WHITMORE

US ARMY CORPS OF ENGINEERS
AFGHANISTAN ENGINEER DISTRICT

| Mark | Description | Date | Appr. | Mark | Description | Date | Appr. |
|---|---|---|---|---|---|---|---|

U.S. ARMY CORPS OF ENGINEERS
AFGHANISTAN ENGINEER DISTRICT
APO AE 96338

Michael Baker Jr., Inc.
A unit of Michael Baker Corporation
Airside Business Park
100 Airside Drive
Moon Township, PA 15108
www.mbakercorp.com

Designed by: KMP/MMY
Dwn by: RCG
Ckd by: CWW
Reviewed by: LHM
Submitted by: BAKER
Date: 2/23/10
Rev: 0
Design file no.
Drawing code:
File name: AAADFAC8-S025G
Plot date: 2/23/2010
Plot scale: x:X

AFGHAN NATIONAL ARMY
REGIONAL MILITARY TRAINING CENTER
STANDARD DESIGN

DINING FACILITY

SECTIONS

Sheet reference number:
S-502

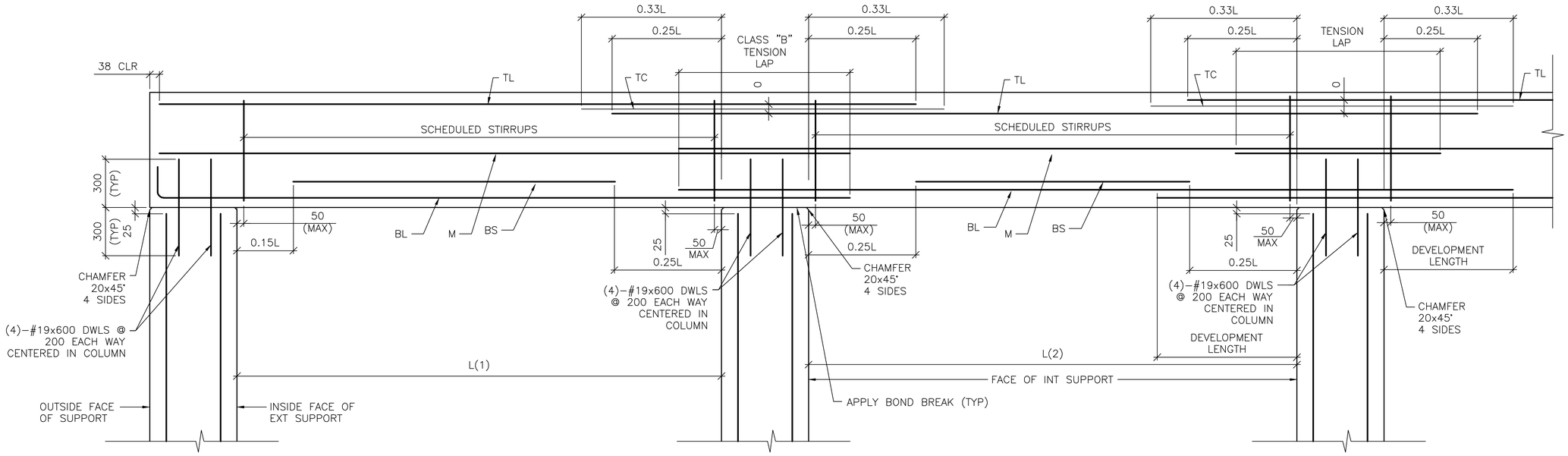


DETAIL NOTE:
1. WORK THIS DETAIL WITH BEAM SCHEDULE ON SHEET S-601.
2. L=GREATEST OF ADJACENT SPANS L(1) OR L(2)
3. ONLY COLUMN CORNER BARS ARE SHOWN

## 1 / S-503 ROOF BEAM REINFORCING DETAIL

SCALE: NTS

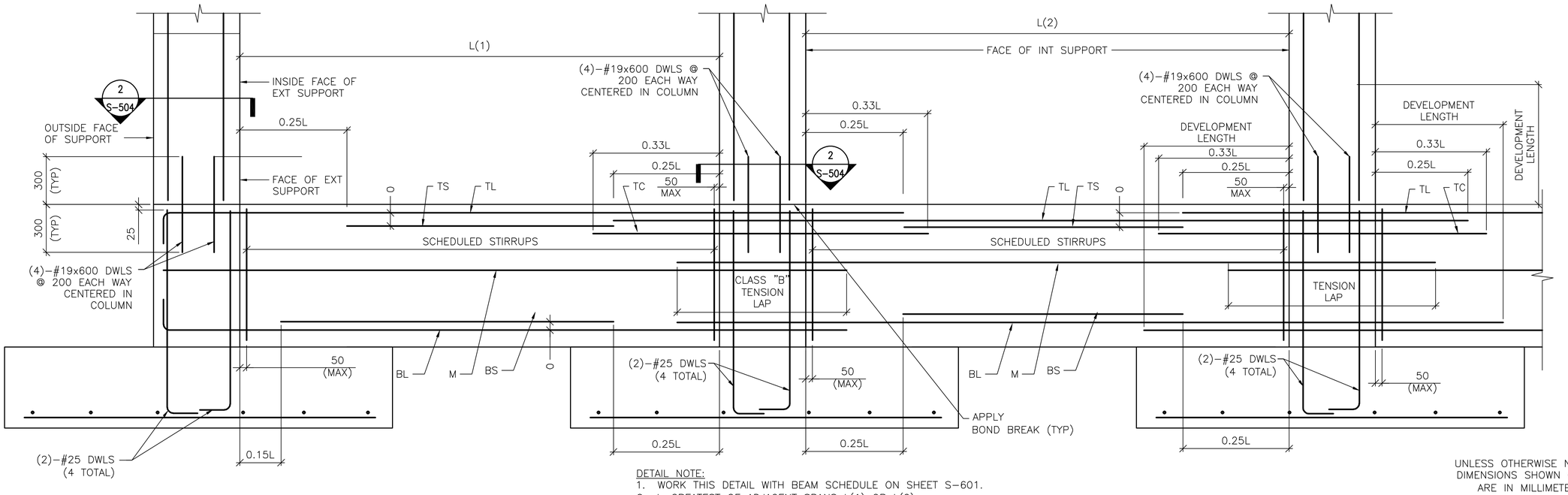


DETAIL NOTE:
1. WORK THIS DETAIL WITH BEAM SCHEDULE ON SHEET S-601.
2. L=GREATEST OF ADJACENT SPANS L(1) OR L(2)
3. ONLY COLUMN CORNER BARS ARE SHOWN.

## 2 / S-503 GRADE BEAM REINFORCING DETAIL

SCALE: NTS

UNLESS OTHERWISE NOTED, LINEAR DIMENSIONS SHOWN ON DRAWINGS ARE IN MILLIMETERS (mm)

APPROVED:

A/E DESIGNER OF RECORD

SEAL:

GEORGIA REGISTERED 1-29-10 No. 27141 PROFESSIONAL ENGINEER CHRISTOPHER W. WHITMORE

US ARMY CORPS OF ENGINEERS
AFGHANISTAN ENGINEER DISTRICT

| Mark | Description | Date | Appr. | Mark | Description | Date | Appr. |
|---|---|---|---|---|---|---|---|

Rev: 0
Date: 2/23/10
Designed by: KMP/MMY
Dwn by: RCG
Ckd by: CWW
Reviewed by: LHM
Submitted by: BAKER
Design file no.
Drawing code:
File name: ANA07ACS-S003T
Plot date: 2/23/2010
Plot scale: X/X

U.S. ARMY CORPS OF ENGINEERS
AFGHANISTAN ENGINEER DISTRICT
APO AE 96338

Michael Baker Jr., Inc.
A unit of Michael Baker Corporation
Airside Business Park
100 Airside Drive
Moon Township, PA 15108
www.mbakercorp.com

AFGHAN NATIONAL ARMY
REGIONAL MILITARY TRAINING CENTER
STANDARD DESIGN

DINING FACILITY

BEAM & COLUMN DETAILS

Sheet reference number:
S-503

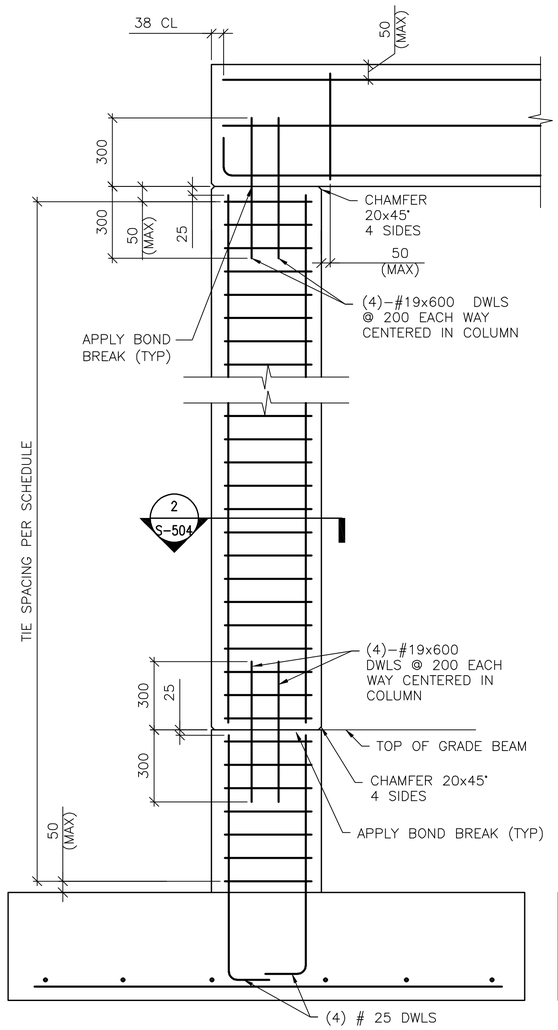


DETAIL NOTE:
1. ONLY COLUMN CORNER BARS ARE SHOWN

## 1 S-504 1-STORY COLUMN REINF DETAILS
SCALE: NTS
(WITH GRADE BEAM)

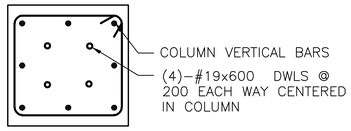


DETAIL NOTE:
1. 8 BAR COLUMN SHOWN, 4 BAR COLUMN SIMILAR
2. INTERIOR TIES NOT SHOWN FOR CLARITY. REFER TO DETAIL A THIS SHEET FOR INTERIOR TIE CONFIGURATION.

## 2 S-503 2 S-504 SECTION
SCALE: NTS

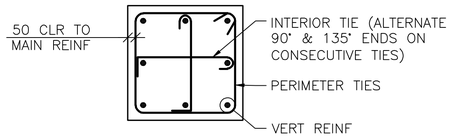


## A S-504 8 BAR COLUMN
SCALE: NTS

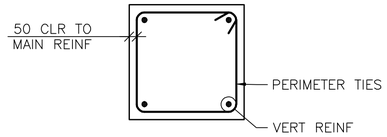


## B S-504 4 BAR COLUMN
SCALE: NTS

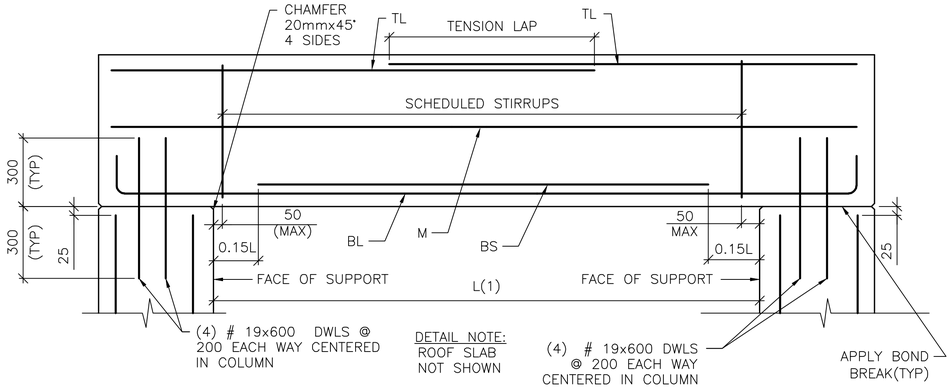


## 3 S-504 SINGLE SPAN ROOF BEAM REINFORCING DETAIL
SCALE: NTS

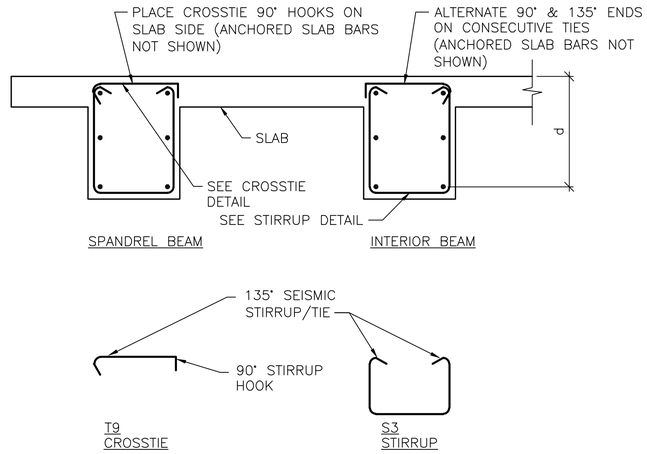


## C S-504 BEAM REINFORCEMENT DETAILS
SCALE: NTS

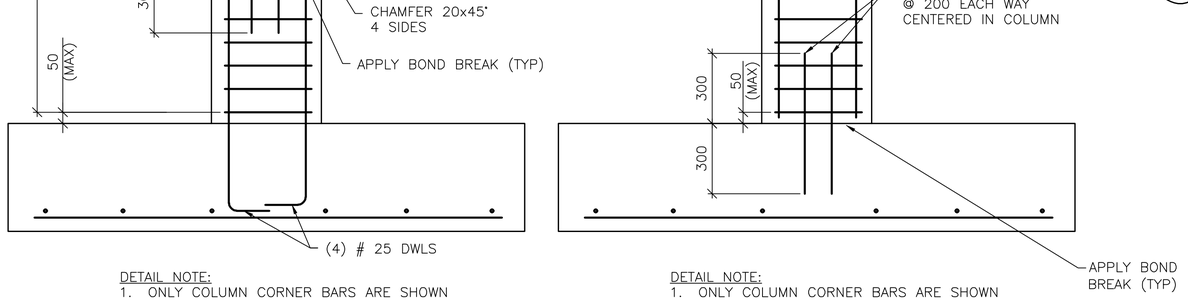


DETAIL NOTE:
1. ONLY COLUMN CORNER BARS ARE SHOWN

## 1 S-504 1-STORY COLUMN REINF DETAILS
SCALE: NTS
(WITHOUT GRADE BEAM)

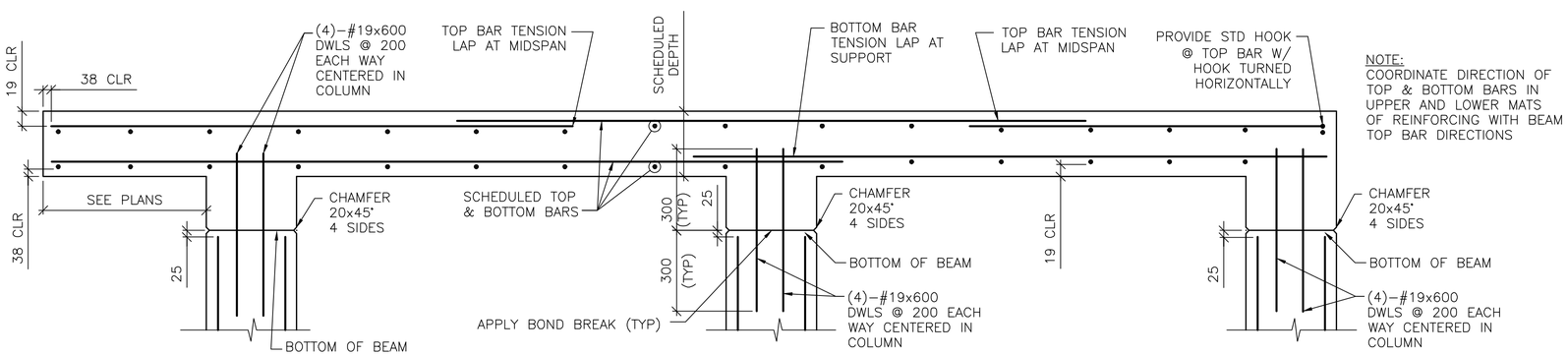


NOTE:
COORDINATE DIRECTION OF TOP & BOTTOM BARS IN UPPER AND LOWER MATS OF REINFORCING WITH BEAM TOP BAR DIRECTIONS

## 4 S-504 FRAMED SLAB REINFORCING DETAIL
SCALE: NTS

UNLESS OTHERWISE NOTED, LINEAR DIMENSIONS SHOWN ARE IN MILLIMETERS (mm)

APPROVED:

A/E DESIGNER OF RECORD

SEAL:

GEORGIA REGISTERED 1-27-10 No. 27141 PROFESSIONAL ENGINEER CHRISTOPHER W. WHITMORE

US ARMY CORPS OF ENGINEERS
AFGHANISTAN ENGINEER DISTRICT

| Mark | Description | Date | Appr. | Mark | Description | Date | Appr. |
|---|---|---|---|---|---|---|---|

Rev: 0
Date: 2/23/10
Design file no.
Drawing code:
File name: AN4SFACS-S04DT
Plot date: 2/23/2010
Plot scale: X:X

Designed by: KMP/MMY
Dwn by: RCG
Ckd by: CWW
Reviewed by: LHM
Submitted by: BAKER

U.S. ARMY CORPS OF ENGINEERS
AFGHANISTAN ENGINEER DISTRICT
APO AE 96338

Michael Baker Jr., Inc
A unit of Michael Baker Corporation
Airside Business Park
100 Airside Drive
Moon Township, PA 15108
www.mbakercorp.com

AFGHAN NATIONAL ARMY
REGIONAL MILITARY TRAINING CENTER
STANDARD DESIGN

DINING FACILITY

BEAM & COLUMN DETAILS

Sheet reference number:
S-504

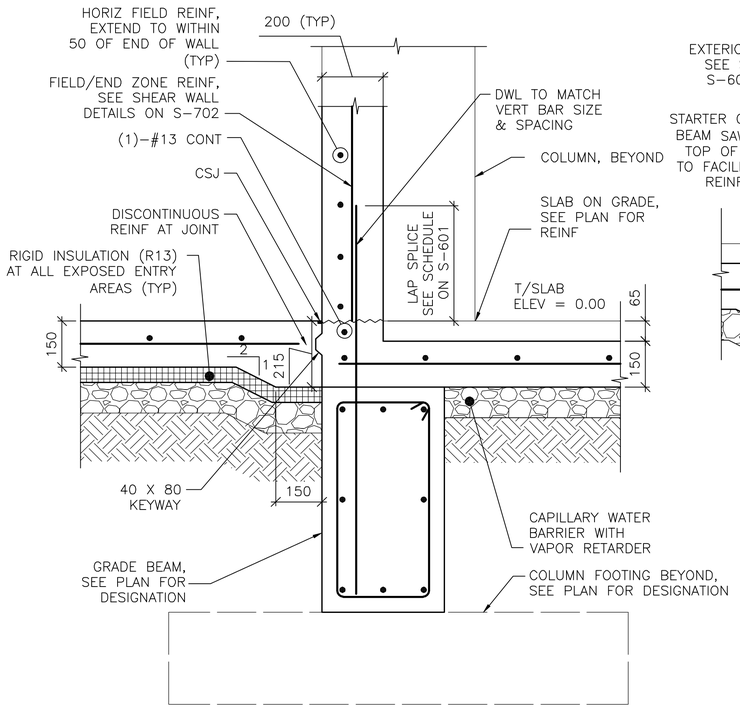


1 S-102 **SECTION**
SCALE: 1:10

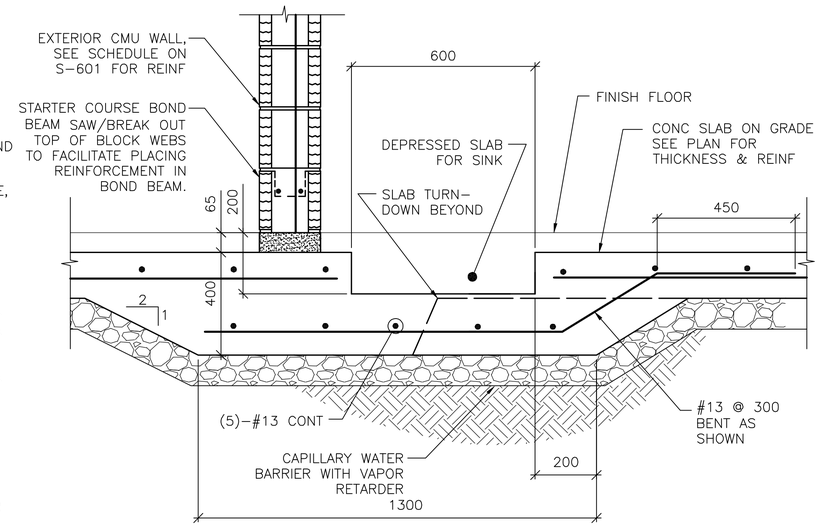


2 S-102 **SECTION**
SCALE: 1:10

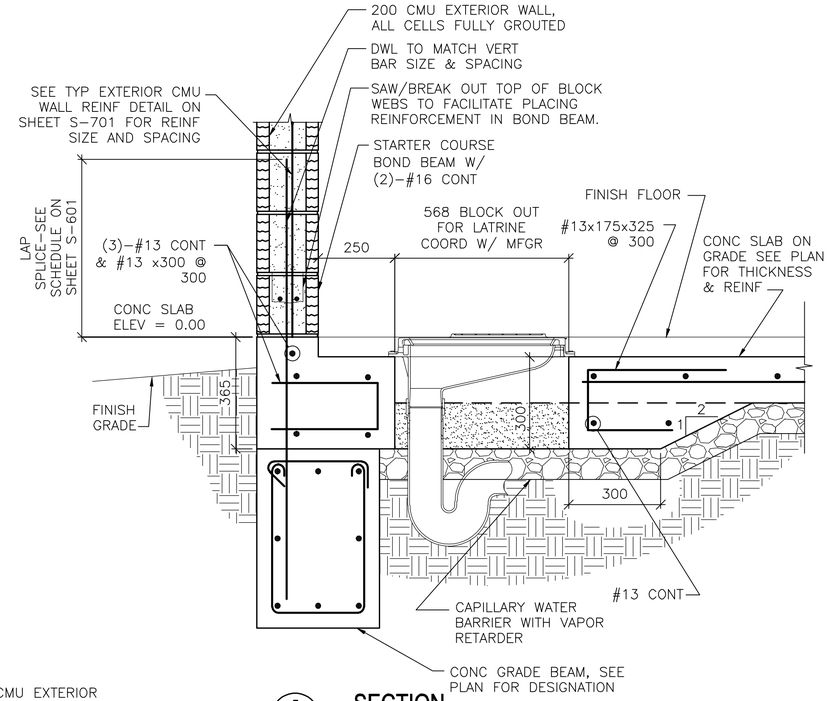


3 S-101 **SECTION**
SCALE: 1:10

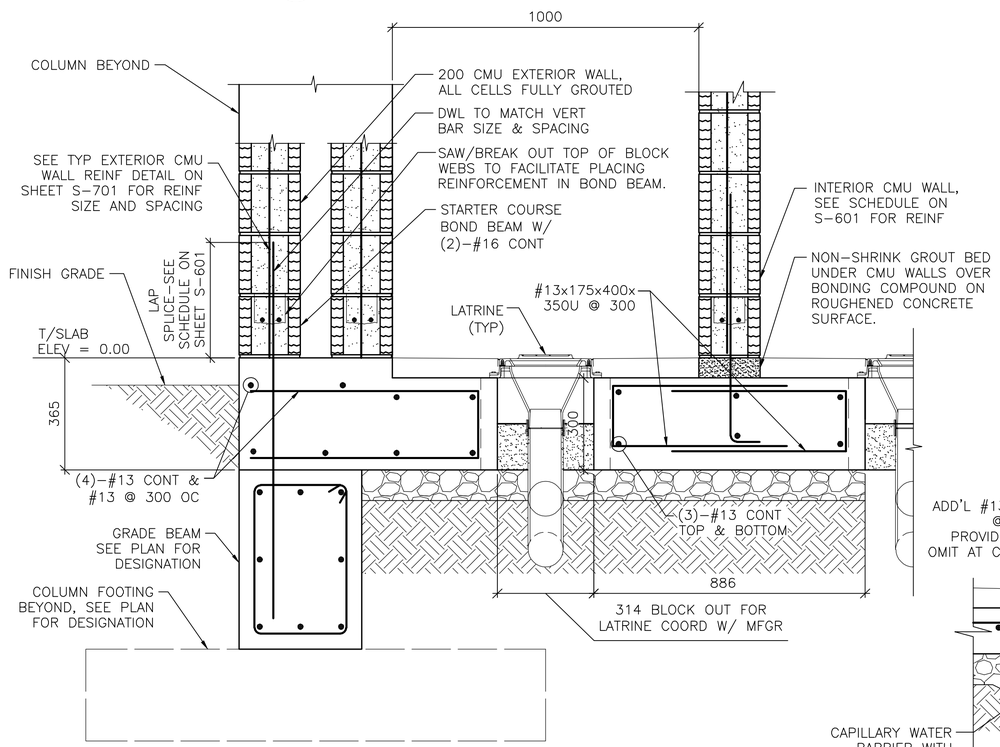


4 S-101 **SECTION**
SCALE: 1:10

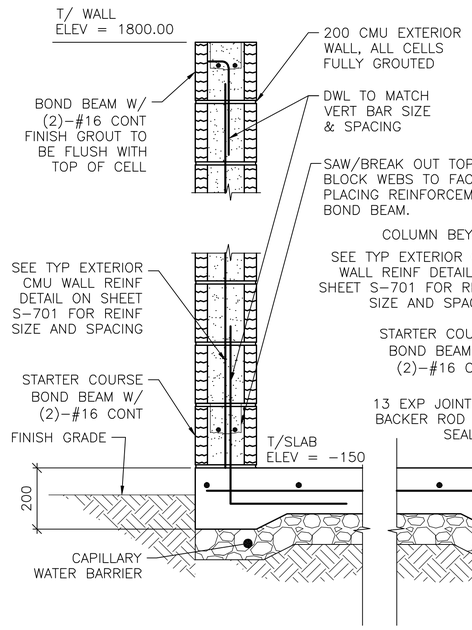


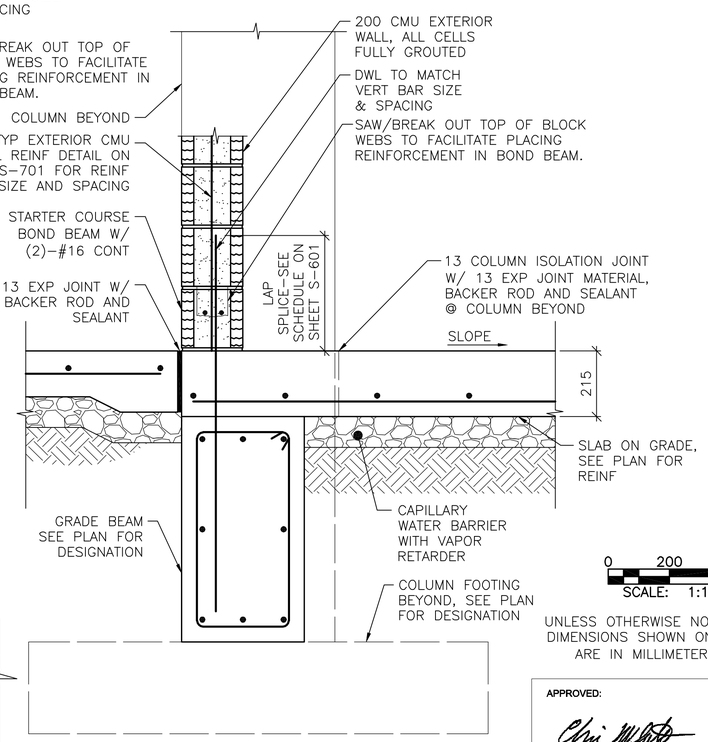


NOTE:
1. STOVE OMITED FOR CLARITY.

5 S-102 **SECTION**
SCALE: 1:10

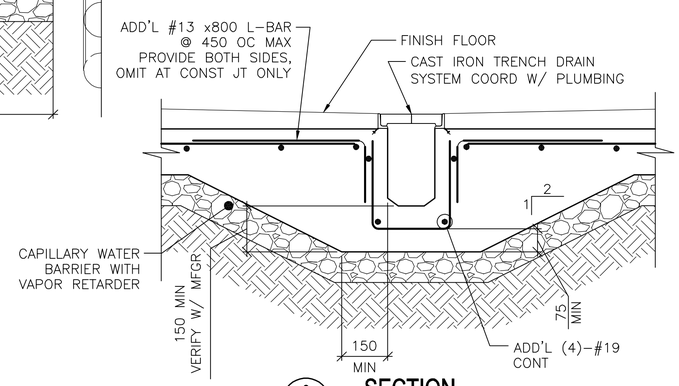


6 S-102 **SECTION**
SCALE: 1:10

0 200 400
SCALE: 1:10

UNLESS OTHERWISE NOTED, LINEAR DIMENSIONS SHOWN ON DRAWINGS ARE IN MILLIMETERS (mm)

APPROVED:

A/E DESIGNER OF RECORD

SEAL:

GEORGIA REGISTERED PROFESSIONAL ENGINEER No. 27141 CHRISTOPHER W. WHITMORE 1-29-10

US ARMY CORPS OF ENGINEERS
AFGHANISTAN ENGINEER DISTRICT

| Mark | Description | Date | Appr. | Mark | Description | Date | Appr. |
|---|---|---|---|---|---|---|---|

Date: 2/23/10 Rev: 0
Design file no.
Drawing code:
File name: AAADFACS-S505G
Plot date: 2/23/2010
Plot scale: x:X

Designed by: KMP/MMY
Dwn by: RCG
Ckd by: CWW
Reviewed by: LHM
Submitted by:
BAKER

U.S. ARMY CORPS OF ENGINEERS
AFGHANISTAN ENGINEER DISTRICT
APO AE 96338

Michael Baker Jr., Inc.
A unit of Michael Baker Corporation
Airside Business Park
100 Airside Drive
Moon Township, PA 15108
www.mbakercorp.com

AFGHAN NATIONAL ARMY
REGIONAL MILITARY TRAINING CENTER
STANDARD DESIGN

DINING FACILITY

MISCELLANEOUS SECTIONS

Sheet reference number:
S-505

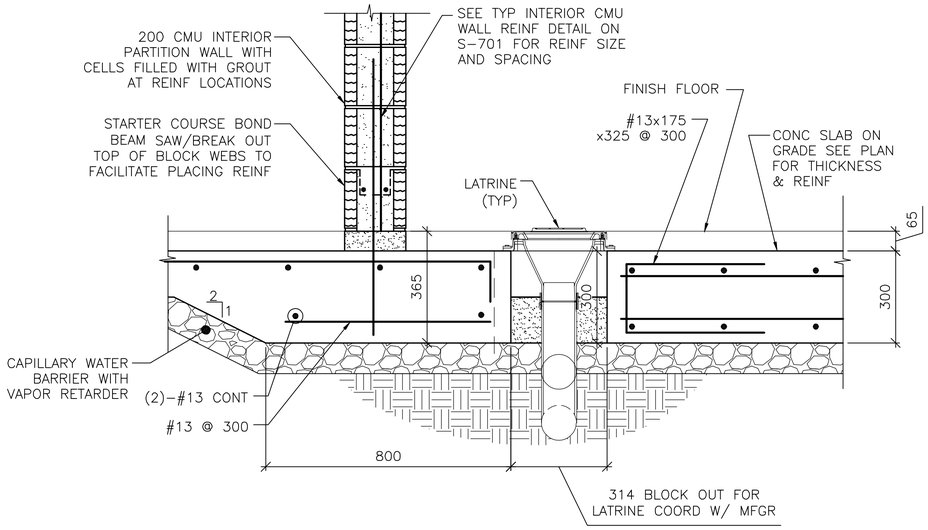


1 S-102 **SECTION**
SCALE: 1:10

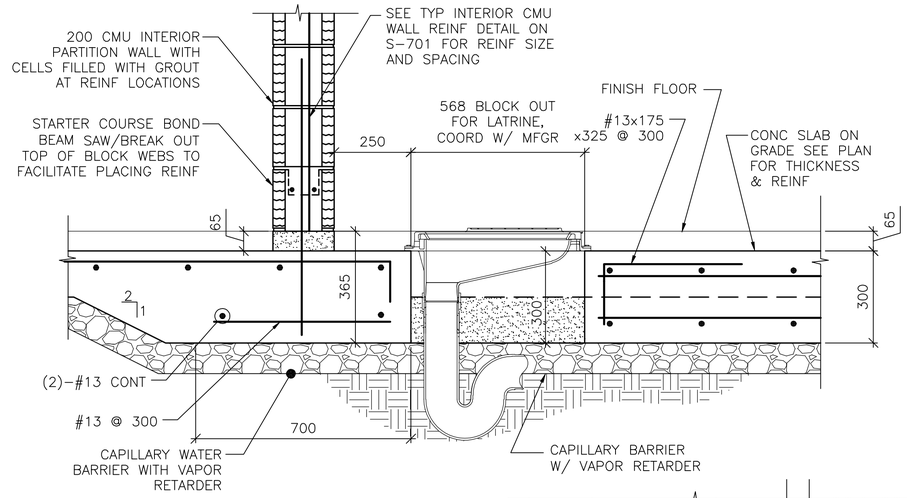


2 S-102 **SECTION**
SCALE: 1:10

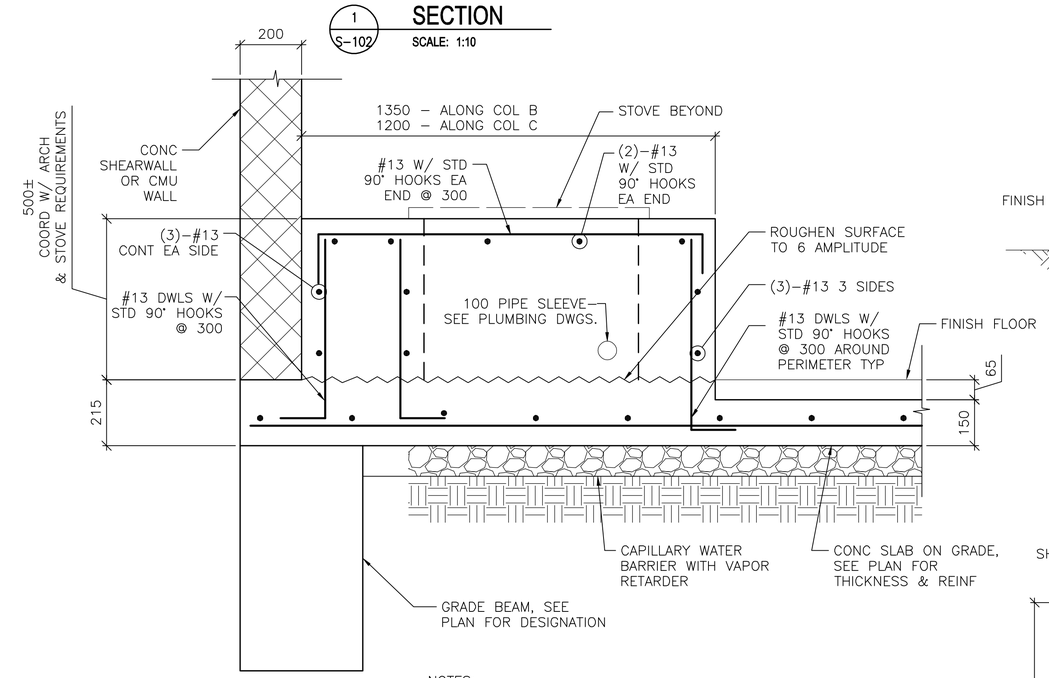


3 S-102 **SECTION**
SCALE: 1:10

NOTES:
1. GRADE BEAM REINF NOT SHOWN FOR CLARITY.
2. OMIT GRADE BEAM FOR STOVE AT INTERIOR WALLS.
3. PROVIDE #3x450x450 CORNER BARS TO MATCH HORIZONTAL REINFORCING AT ALL EXTERNAL CORNERS.

PROVIDE #3x450x450 CORNER BARS TO MATCH HORIZONTAL REINFORCING AT ALL CORNERS.

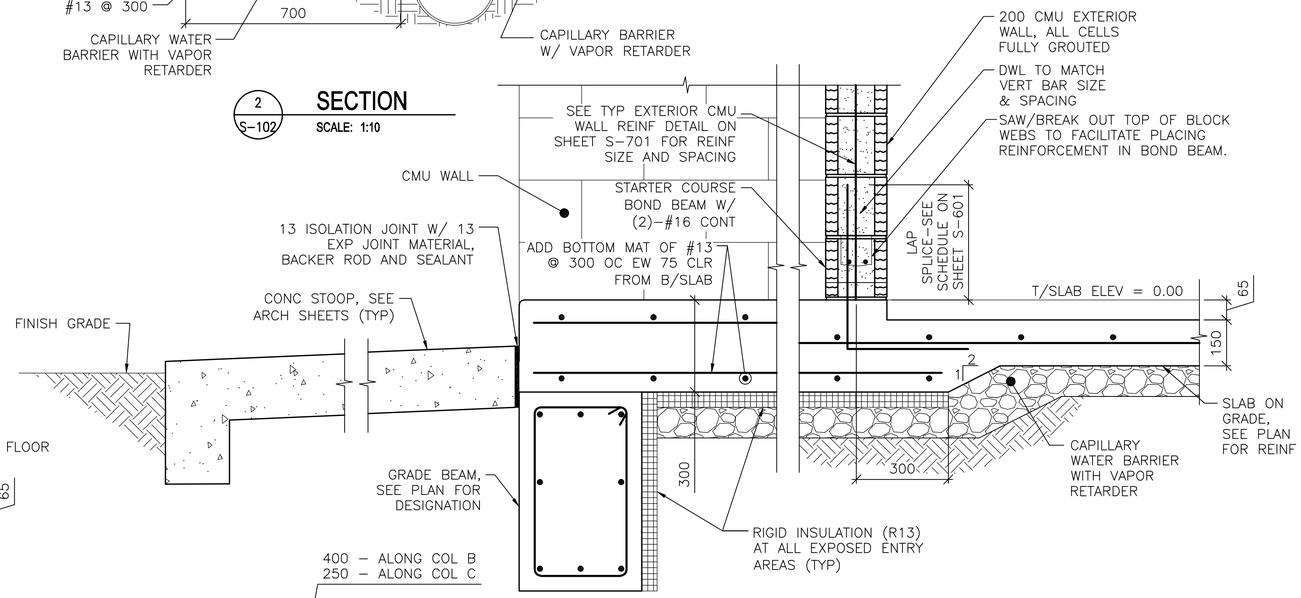


4 S-102 **SECTION**
SCALE: 1:10

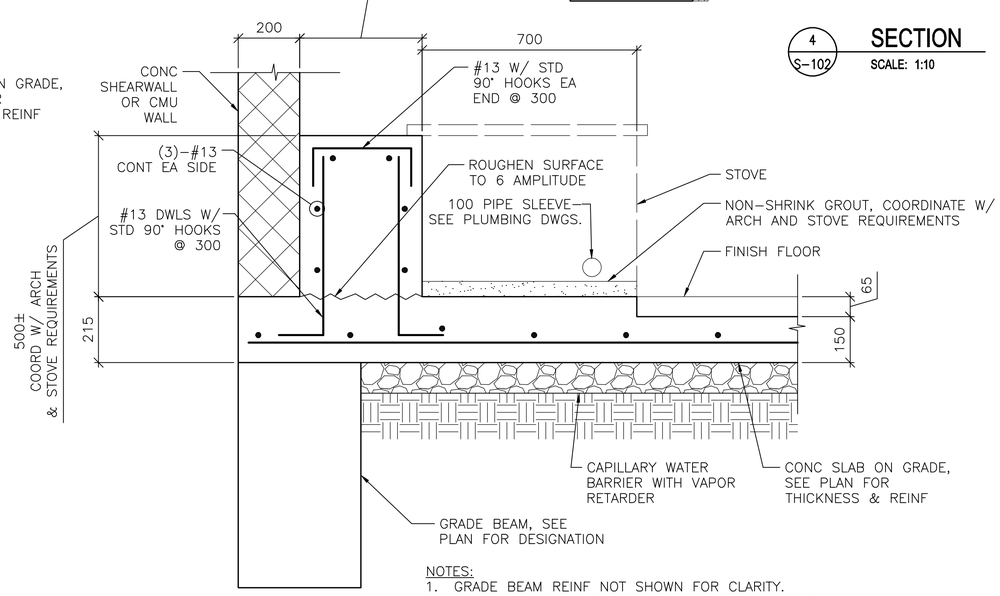


NOTES:
1. GRADE BEAM REINF NOT SHOWN FOR CLARITY.
2. OMIT GRADE BEAM FOR STOVE AT INTERIOR WALLS.

5 S-102 **SECTION**
SCALE: 1:10

0 200 400
SCALE: 1:10

UNLESS OTHERWISE NOTED, LINEAR DIMENSIONS SHOWN ON DRAWINGS ARE IN MILLIMETERS (mm)

APPROVED:

A/E DESIGNER OF RECORD

SEAL:

GEORGIA REGISTERED 1-29-10 No. 27141 PROFESSIONAL ENGINEER CHRISTOPHER W. WHITMORE

US ARMY CORPS OF ENGINEERS
AFGHANISTAN ENGINEER DISTRICT

| Mark | Description | Date | Appr. | Mark | Description | Date | Appr. |
|---|---|---|---|---|---|---|---|

U.S. ARMY CORPS OF ENGINEERS
AFGHANISTAN ENGINEER DISTRICT
APO AE 96338

Michael Baker Jr., Inc
A unit of Michael Baker Corporation
Airside Business Park
100 Airside Drive
Moon Township, PA 15108
www.mbakercorp.com

Designed by: KMP/MMY
Dwn by: RCG
Ckd by: CWW
Reviewed by: LHM
Submitted by: BAKER
Date: 2/23/10
Rev: 0
Design file no.
Drawing code:
File name: ANAFAC8-S065G
Plot date: 2/23/2010
Plot scale: x:X

AFGHAN NATIONAL ARMY
REGIONAL MILITARY TRAINING CENTER
STANDARD DESIGN

DINING FACILITY

MISCELLANEOUS SECTIONS

Sheet reference number:
S-506

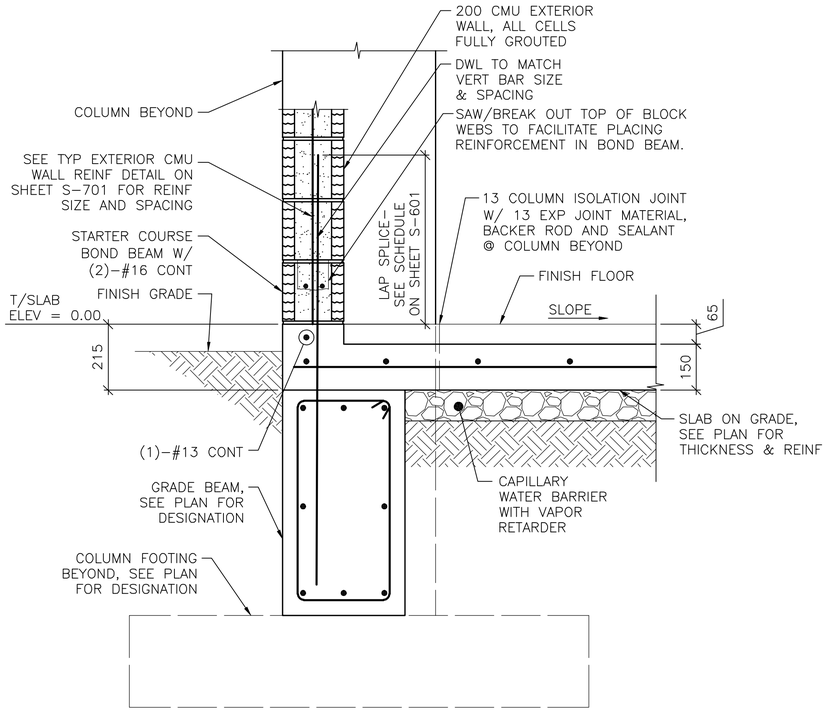


NOTE:
1. OMIT WALL FOR PROPANE CYLINDER STORAGE.
2. AT WOOD STOVE KITCHEN (RM 124), PROVIDE CAPILLARY WATER BARRIER FULL DEPTH OF GRADE BEAM.

1 S-102 **SECTION**
SCALE: 1:10

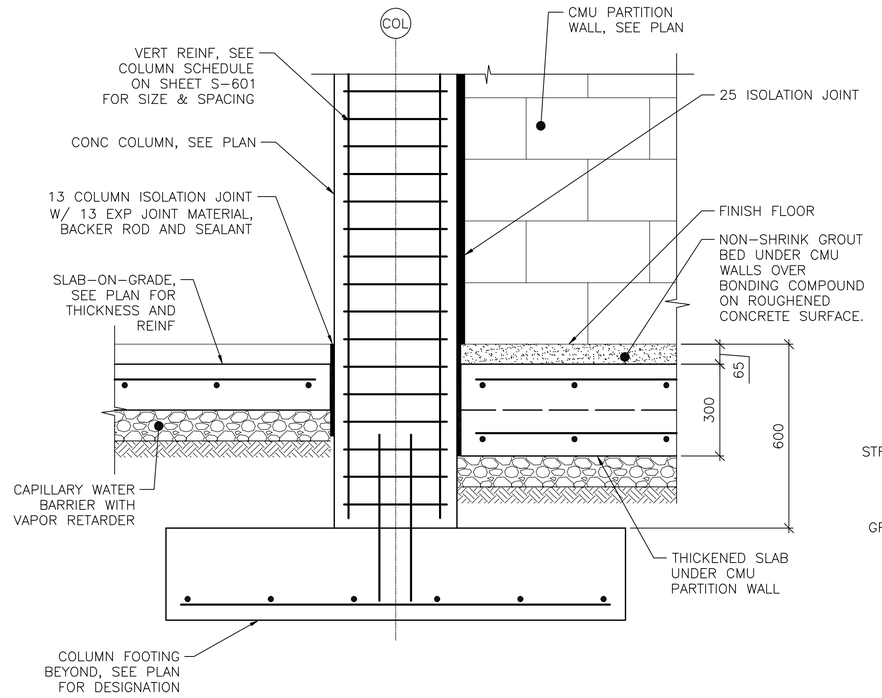


2 S-102 **SECTION**
SCALE: 1:10

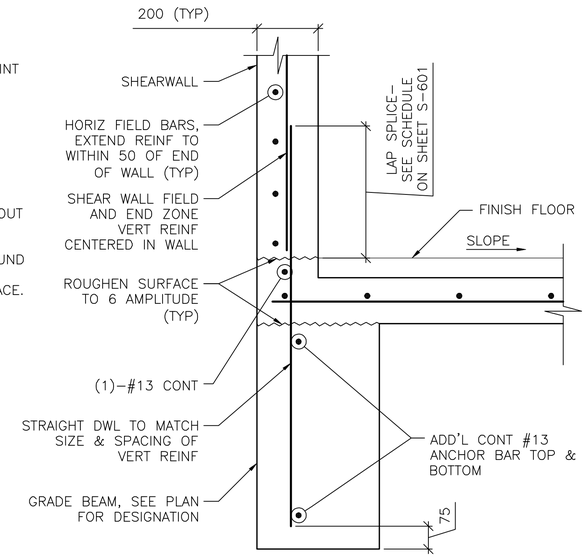


NOTE:
1. SECTION DEPICTS SHEAR WALL TERMINATION ONLY. GRADE BEAM REINFORCING NOT SHOWN FOR CLARITY
2. SEE SHEET S-601 AND SHEET S-702 FOR SCHEDULED SHEAR WALL FIELD AND END ZONE REINF.

3 S-102 **SECTION**
SCALE: 1:10

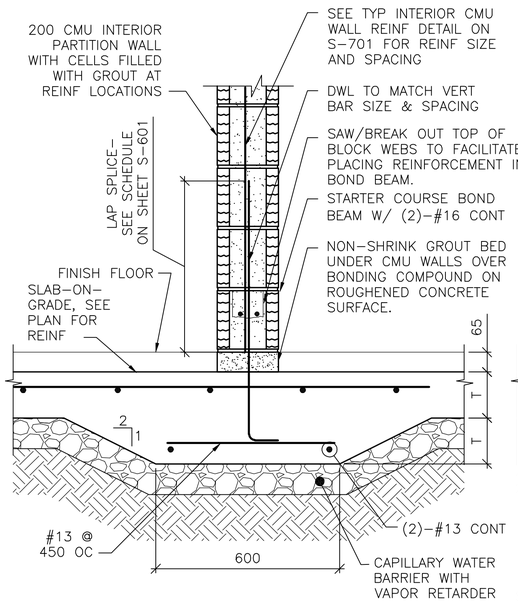


4 S-102 **SECTION**
SCALE: 1:10

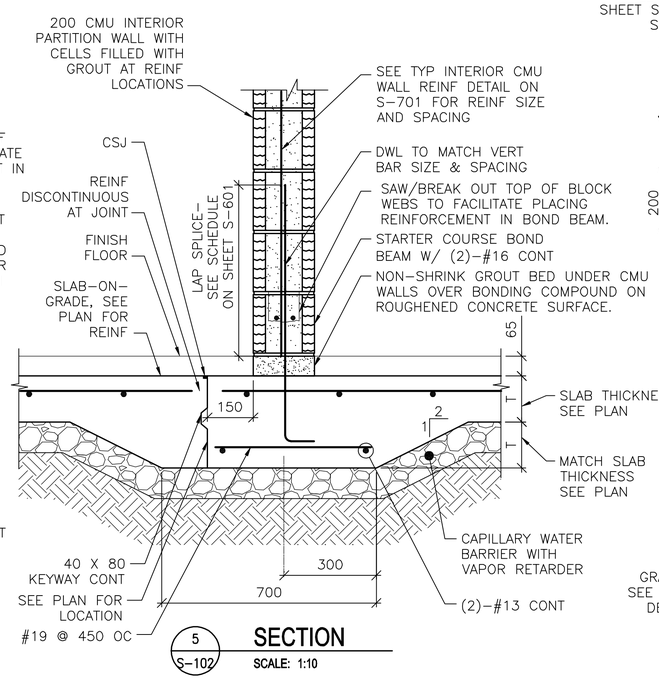


5 S-102 **SECTION**
SCALE: 1:10

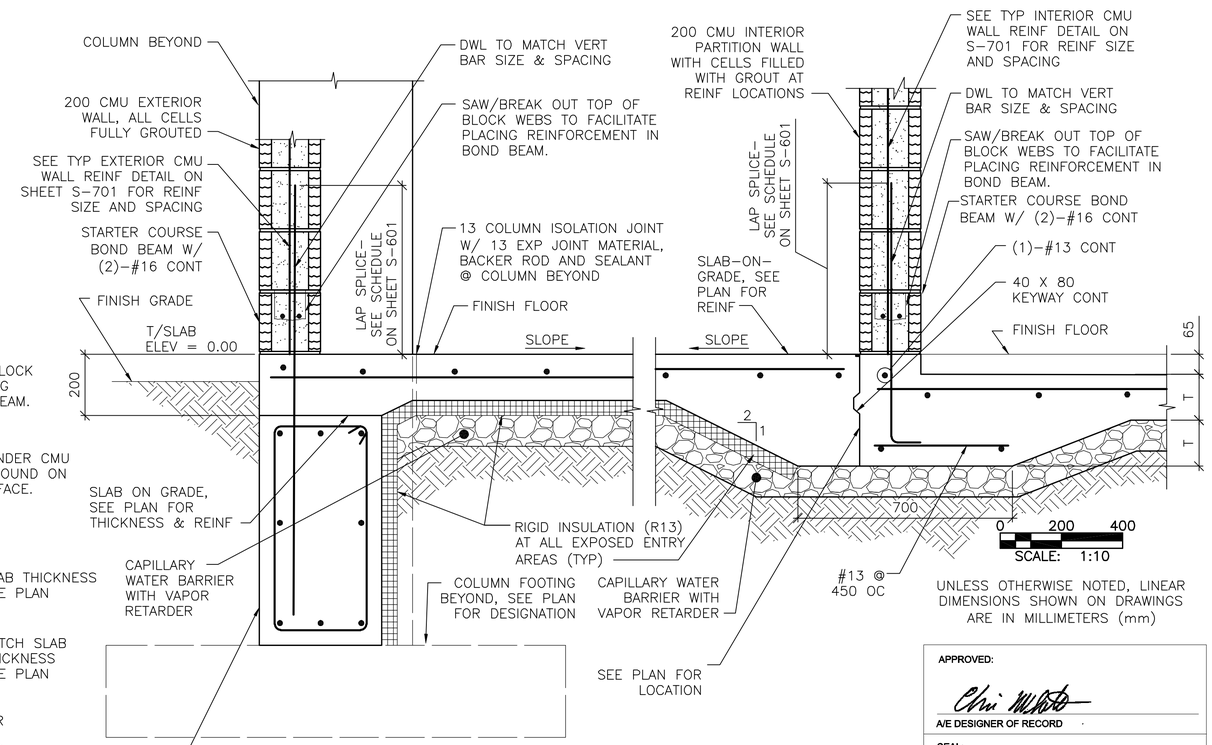


NOTE:
1. OMIT WALL FOR PROPANE CYLINDER STORAGE.
2. AT WOOD STOVE KITCHEN (RM 124), PROVIDE CAPILLARY WATER BARRIER FULL DEPTH OF GRADE BEAM.

6 S-102 **SECTION**
SCALE: 1:10

APPROVED:

A/E DESIGNER OF RECORD

SEAL:

GEORGIA REGISTERED PROFESSIONAL ENGINEER No. 27141 CHRISTOPHER W. WHITMORE

US ARMY CORPS OF ENGINEERS
AFGHANISTAN ENGINEER DISTRICT

| Mark | Description | Date | Appr. | Mark | Description | Date | Appr. |
|---|---|---|---|---|---|---|---|

Rev: 0
Date: 2/23/10
Design file no.
Drawing code:
File name: AN4DFAC8-S0750
Plot date: 2/23/2010
Plot scale: X:X

Designed by: KMP/MMY
Dwn by: RCG
Ckd by: CWW
Reviewed by: LHM
Submitted by: BAKER

U.S. ARMY CORPS OF ENGINEERS
AFGHANISTAN ENGINEER DISTRICT
APO AE 96338

Michael Baker Jr., Inc
A unit of Michael Baker Corporation
Airside Business Park
100 Airside Drive
Moon Township, PA 15108
www.mbakercorp.com

AFGHAN NATIONAL ARMY
REGIONAL MILITARY TRAINING CENTER
STANDARD DESIGN

DINING FACILITY

SECTIONS

Sheet reference number:
S-507

# CONCRETE REINFORCEMENT TENSION DEVELOPMENT/LAP SPLICE SCHEDULE

| f'c = 28 MPa | LAP CLASS | UNCOATED BARS | | | |
|---|---|---|---|---|---|
| | | TOP BARS | | OTHER BARS | |
| BAR SIZES | | CASE 1 | CASE 2 | CASE 1 | CASE 2 |
| #10 TO #19 | A | 50 BAR DIA | 74 BAR DIA | 38 BAR DIA | 57 BAR DIA |
| | B | 64 BAR DIA | 96 BAR DIA | 50 BAR DIA | 74 BAR DIA |
| #22 TO #57 | A | 62 BAR DIA | 93 BAR DIA | 48 BAR DIA | 71 BAR DIA |
| | B | 80 BAR DIA | 121 BAR DIA | 62 BAR DIA | 93 BAR DIA |

NOTES:
1. TABULATED TENSION DEVELOPMENT LENGTH VALUES ARE TAKEN FROM CRSI DESIGN HANDBOOK 2008 10TH ED.
2. TENSION DEVELOPMENT & TENSION LAP SPLICE LENGTHS ARE EXPRESSED AS MULTIPLES OF BAR DIAMETERS.
3. TABULATED VALUES ARE BASED ON MINIMUM YIELD STRENGTH OF REINFORCEMENT, fy, OF 420MPa.
4. CONCRETE IS NORMAL WEIGHT (2400Kg/m$^3$) AND 28 DAY COMPRESSIVE STRENGTH = 28MPa.
5. TABULATED VALUES FOR BEAMS & COLUMNS ARE BASED ON TRANSVERSE REINFORCEMENT AND CONCRETE COVER MEETING MINIMUM CODE REQUIREMENTS.
6. CASES 1 & 2, WHICH DEPEND ON THE TYPE OF STRUCTURAL MEMBER, CONCRETE COVER, AND CENTER-TO-CENTER SPACING OF THE BARS ARE DEFINED IN THE TABLE BELOW.
7. LAP SPLICE LENGTHS (MINIMUM 300mm) ARE MULTIPLES OF TENSION DEVELOPMENT LENGTHS: CLASS A = 1.0(TENSION DEVELOPMENT LENGTH) & CLASS B = 1.3(TENSION DEVELOPMENT LENGTH)
8. TOP BARS ARE HORIZONTAL REINFORCEMENT WITH MORE THAN 300mm OF CONCRETE CAST BELOW THE BARS.
9. IT SHALL BE PERMISSIBLE TO CALCULATE WALL AND SLAB REINFORCEMENT TENSION DEVELOPMENT/SPLICE LENGTHS IN ACCORDANCE WITH ACI 12.2.3 OR TABLE 5.3(b) OF CRSI 2008 IN LIEU OF VALUES TABULATED ABOVE.

| | | |
|---|---|---|
| BEAMS, COLUMNS | CASE 1 | CONCRETE COVER AT LEAST 1 BAR DIA AND CENTER-TO-CENTER SPACING AT LEAST 2 BAR DIA |
| | CASE 2 | CONCRETE COVER LESS THAN 1 BAR DIA OR CENTER-TO-CENTER SPACING LESS THAN 2 BAR DIA |
| ALL OTHERS | CASE 1 | CONCRETE COVER AT LEAST 1 BAR DIA AND CENTER-TO-CENTER SPACING AT LEAST 3 BAR DIA |
| | CASE 2 | CONCRETE COVER LESS THAN 1 BAR DIA OR CENTER-TO-CENTER SPACING LESS THAN 3 BAR DIA |

# CONCRETE COVER SCHEDULE

MINIMUM CONCRETE COVER PROTECTION FOR REINFORCEMENT BARS SHALL BE AS LISTED BELOW: (SEE ACI 318M-05, SECTION 7.7 FOR CONDITIONS NOT NOTED). DIMENSIONS FOR BAR PLACEMENT GIVEN IN SECTIONS AND DETAILS SHALL SUPERSEDE MINIMUM COVER REQUIREMENTS GIVEN HERE. DIMENSIONS ARE IN mm. PROVIDE STANDARD BAR CHAIRS AND SUPPORT BARS @1200mm MAXIMUM AS REQUIRED TO MAINTAIN CONCRETE PROTECTION SPECIFIED.

| | | |
|---|---|---|
| FOOTINGS (EARTH FORMED): | | 70 |
| COLUMNS / PIERS (TO TIES) | | 40 |
| GRADE BEAMS OR SLAB TURNED DOWN EDGES: | | |
| TOP | | 40 |
| BOTTOM (EARTH FORMED) | | 70 |
| SIDES (EARTH FORMED) | | 70 |
| SIDES (BOARD FORMED) | #16 BAR & SMALLER | 40 |
| | #19 THRU #36 BAR | 50 |
| ELEVATED BEAMS & SLABS: | | |
| BEAM TIES & STIRRUPS (NOT EXPOSED TO WEATHER) | | 40 |
| BEAM TIES & STIRRUPS (EXPOSED TO WEATHER) | | 50 |
| FLOOR SLABS (NOT EXPOSED TO WEATHER) | | 20 |
| FLOOR SLABS (EXPOSED TO WEATHER) | | |
| #19 & LARGER | | 50 |
| #13 & SMALLER | | 40 |
| ROOF SLAB BARS | | 25 |
| SLABS ON GRADE | | |
| NOT EXPOSED TO WEATHER (FROM TOP) | | 20 |
| EXPOSED TO WEATHER (FROM TOP) | | 40 |
| UTILITY TUNNEL WALLS, RETAINING WALLS AND SHEAR WALLS. (NO SURFACES SHALL BE EARTH FORMED) | | |
| EARTH SIDE AND FRONT SIDE (EXPOSED TO WEATHER) | | |
| #16 BAR AND SMALLER | | 40 |
| #19 THRU #36 BAR | | 50 |

# FOOTING SCHEDULE

| MARK | FOOTING SIZE (mm) | | | FOOTING REINFORCING | REMARKS |
|---|---|---|---|---|---|
| | LENGTH | WIDTH | THICKNESS | | |
| F1 | 2600 | 2600 | 300 | (9)-#16 EW BOTT | ----- |
| F2 | 3200 | 3200 | 300 | (11)-#16 EW BOTT | ----- |
| F3 | 3600 | 3600 | 350 | (13)-#22 EW BOTT | ----- |
| F4 | 4100 | 4100 | 350 | (14)-#22 EW BOTT | ----- |
| F5 | 4500 | 4500 | 400 | (16)-#22 EW BOTT | ----- |
| F6 | 4400 | 12000 | 500 | (40)-#29 SHORT BOTT (16)-#29 LONG BOTT | PROVIDE #25 DWL @ 300mm OC W/ STD 90° HOOK 75mm FROM B/FTG. CUT OFF DWL 50mm FROM T/GB |
| F7 | 2100 | 2100 | 400 | #16 @ 300mm EW | ----- |
| F8 | – | 2500 | 400 | #13 @ 300mm EW | ----- |
| F9 | – | 1300 | 400 | #13 @ 300mm EW | ----- |
| F10 | – | 600 | 400 | (17)-#16 SHORT BOTT (3)-#13 LONG BOTT | ----- |

# CONCRETE SHEAR WALL SCHEDULE

| MARK | TYPE | WALL LENGTH (L) (mm) | WALL REINFORCEMENT | | REMARKS |
|---|---|---|---|---|---|
| | | | END ZONE (EACH END) | FIELD | |
| SW1 | D | 13400 | (7)-#19 @ 230mm OC | #13 @ 300mm OC | ----- |
| SW2 | C | 6400 | (9)-#22 @ 300mm OC | #13 @ 300mm OC | ----- |
| SW3 | A | 3500 | (4)-#16 @ 150mm OC | #13 @ 300mm OC | ----- |
| SW4 | A | 4200 | (5)-#16 @ 230mm OC | #13 @ 300mm OC | ----- |
| SW5 | B | 4100 | (3)-#16 @ 150mm OC | #13 @ 300mm OC | ----- |
| SW6 | A | 15000 | N/A | #13 @ 300mm OC | ----- |

NOTES:
1. WORK THIS SCHEDULE WITH SHEAR WALL DETAILS ON SHEETS S-702
2. SEE PLAN FOR LOCATION OF SHEAR WALL(S).
3. VERTICAL "FIELD" BARS MAY BE OMITTED IN LOCATION OF "END ZONE" REINFORCEMENT.
4. WALL FIELD REINF LISTED APPLIES TO VERT & HORIZ BARS.
5. WALL FIELD REINFORCEMENT CENTERED IN WALL.

# STANDARD HOOKS IN TENSION PER (ACI 318M-05)

| HOOK DEVELOPMENT LENGTH (mm) | |
|---|---|
| BAR SIZE | f'c 28 MPa |
| #10 | 180 |
| #13 | 250 |
| #16 | 300 |
| #19 | 380 |
| #22 | 430 |
| #25 | 480 |
| #29 | 560 |
| #32 | 610 |
| #36 | 690 |

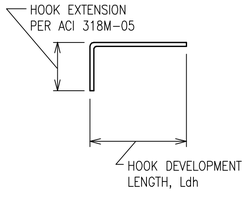


NOTES:
1. CONCRETE IS NORMAL WEIGHT CONCRETE.
2. BAR YIELD STRENGTH, fy = 420 MPa
3. SIDE COVER REQUIREMENTS OF ACI SECT. 12.5.3 ARE ASSUMED TO NOT BE MET.
4. TIE OR STIRRUP REQUIREMENTS OF ACI SECT. 12.5.3 ARE ASSUMED TO NOT BE MET.
5. REDUCTION FOR EXCESS REINFORCEMENT IS NOT TAKEN.
6. HOOK DEVELOPMENT LENGTH IS VALID FOR 180° HOOKS ALSO.

# CMU OR CAST IN PLACE CONC LINTEL SCHEDULE (TYP)

| OPENING TYPE OR SIZE, BEAM LOCATION OR TYPE | MAX SPAN (mm) | LINTEL DEPTH (mm) | REINFORCING BOTTOM |
|---|---|---|---|
| WALL OPENING | 4000 | 600 | (2)-#16 T&B |
| WALL OPENING | 1900 | 400 | (2)-#16 T&B |
| WALL OPENING | 1000 | 400 | (2)-#13 B |

1. STRUCTURAL SHEETS DO NOT INDICATE ALL OPENINGS IN MASONRY WALLS. VERIFY NUMBER, SIZE AND LOCATION OF ALL OPENINGS IN MASONRY WALLS FROM ARCHITECTURAL SHEETS AND APPROVED PLUMBING, MECHANICAL, AND ELECTRICAL SHOP DRAWINGS.
2. PROVIDE 200mm BEARING EA END.
3. FOR HEAD DETAILS REFER TO ARCHITECTURAL SHEETS.
4. REINFORCING SHALL BE ASTM A615M, GRADE 420. GROUT FOR CMU LINTELS SHALL HAVE A MINIMUM COMPRESSIVE STRENGTH OF 14 MPa AT 28 DAYS.
5. CONTRACTOR SHALL SUBMIT FOR APPROVAL SHOP DRAWINGS AND SCHEDULES SHOWING SIZE, SPAN, REINFORCEMENT, DETAILS, LOCATIONS, ETC.

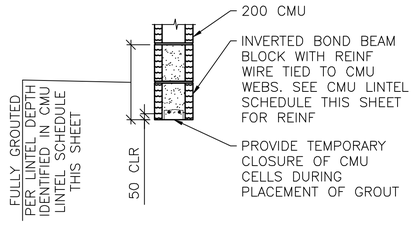


A S-601 **LINTEL DETAIL**
SCALE: NTS

# BEAM SCHEDULE

| MARK | BEAM SIZE (mm) | | BEAM REINFORCING | | | | | | STIRRUPS | | | REMARKS |
|---|---|---|---|---|---|---|---|---|---|---|---|---|
| | DEPTH | WIDTH | BL | BS | TL | TS | TC | M | SIZE | TYPE | SPACING | |
| GRADE BEAMS | | | | | | | | | | | | |
| GB1 | 750/ 735/ 585/ 650 | 400 | (2)-#25 | --- | (2)-#19 | --- | --- | --- | #13 | S3 + T9 | d/2 | LOWER TOP TO 735 BETWEEN A5-A6, A6-B6, B6-C6, B7-C7, B7-B10, C10-D10, D10-E10, E10-F10, F7-F8, F9-F10; TO 585 BETWEEN G5-G6 & F6-G6; TO 650 BETWEEN F8-F9 |
| GB2 | 750 | 400 | (2)-#25 | (1)-#25 | (2)-#19 | --- | --- | (2)-#25 | #13 | S3 + T9 | d/2 | --- |
| ROOF BEAMS | | | | | | | | | | | | |
| RB1 | 600 | 400 | (2)-#19 | (1)-#19 | (2)-#19 | --- | --- | --- | #13 | S3 + T9 | d/2 | --- |
| RB2 | 600 | 400 | (2)-#19 | (1)-#19 | (2)-#22 | --- | --- | --- | #13 | S3 + T9 | d/2 | --- |
| RB3 | 500 | 400 | (2)-#19 | (1)-#19 | (2)-#16 | --- | --- | --- | #13 | S3 + T9 | d/2 | --- |
| RB4 | 500 | 400 | (2)-#16 | --- | (2)-#19 | --- | --- | --- | #13 | S3 + T9 | d/2 | --- |

NOTES:
1. WORK THIS SCHEDULE WITH BEAM REINFORCING DETAILS ON SHEETS S-503 AND S-504.
2. HOOKS SHOWN ON SECTIONS AND DETAILS SHALL BE 90° STD UON.
3. USE ONLY (1) TC AT BEAM COLUMN INTERSECTION WHERE REQ'D.

# COLUMN SCHEDULE

| COLUMN MARK / DESCRIPTION | TYP UON | H/8,9,10,11 J/8,9,10,11 | A.9/12,13 C/12,13 D.1/12,13 | --- |
|---|---|---|---|---|
| TYPE | 8-BAR | 4-BAR | 4-BAR | --- |
| DIMENSION | 600mm SQ. | 500mm SQ. | 500mm SQ. | --- |
| VERTICAL REINFORCEMENT | (8)-#25 | (4)-#29 | (4)-#29 | --- |
| TIES | #13 @ d/2 | #13 @ d/2 | #13 @ d/2 | --- |
| TOP OF ROOF ELEVATION | 4600mm | 3800mm | 3800mm | --- |
| TOP OF GRADE BEAM ELEVATION | -200mm | -200mm | -200mm | --- |
| TOP OF FOOTING ELEVATION | -950mm | -950mm | -950mm | --- |

NOTES:
1. WORK THIS SCHEDULE WITH COLUMN DETAILS ON SHEET S-504.
2. SEE FOOTING SCHEDULE ON THIS SHEET FOR FOOTING INFORMATION.
3. COLUMN TIES: INTERIOR TIES TO MATCH SIZE & SPACING OF PERIMETER TIES.
4. HOOKS SHOWN ON SECTIONS & DETAILS SHALL BE 90° STD UON.

UNLESS OTHERWISE NOTED, LINEAR DIMENSIONS SHOWN ARE IN MILLIMETERS (mm)

APPROVED:

A/E DESIGNER OF RECORD .

SEAL: .

GEORGIA REGISTERED 1-27-10 No. 27141 PROFESSIONAL ENGINEER CHRISTOPHER W. WHITMORE

US ARMY CORPS OF ENGINEERS
AFGHANISTAN ENGINEER DISTRICT

| Mark | Description | Date | Appr. | Mark | Description | Date | Appr. |
|---|---|---|---|---|---|---|---|

Date: 2/23/10 | Rev: 0
Design file no.
Drawing code:
File name: AN40FACS-601SCH
Plot date: 2/23/2010
Plot scale: X:X

Designed by: KMP/MMY | Ckd by: CWW
Dwn by: RCG
Reviewed by: LHM
Submitted by:
BAKER

U.S. ARMY CORPS OF ENGINEERS
AFGHANISTAN ENGINEER DISTRICT
APO AE 96338

Michael Baker Jr., Inc
A unit of Michael Baker Corporation
Airside Business Park
100 Airside Drive
Moon Township, PA 15108
www.mbakercorp.com

AFGHAN NATIONAL ARMY
REGIONAL MILITARY TRAINING CENTER
STANDARD DESIGN

DINING FACILITY

SCHEDULES

Sheet reference number:
S-601

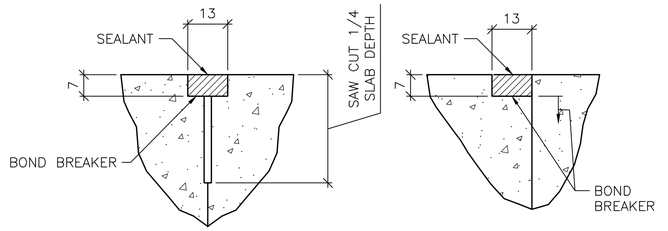


CONTROL JOINT DETAIL

CONSTRUCTION JOINT DETAIL

## 1 / S-701 TYPICAL CONCRETE SLAB JOINT FINISH DETAILS

SCALE: NTS

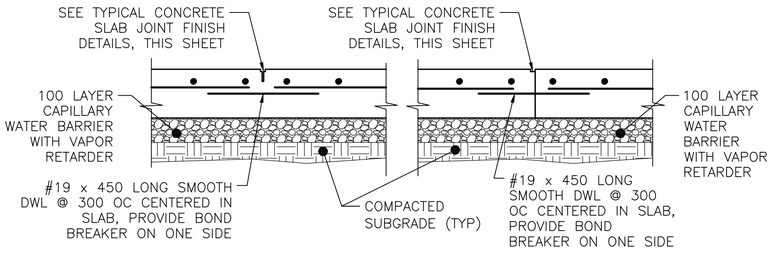


CONTROL JOINT DETAIL

CONSTRUCTION JOINT DETAIL

## 2 / S-701 TYPICAL SLAB ON GRADE JOINT DETAIL

SCALE: NTS

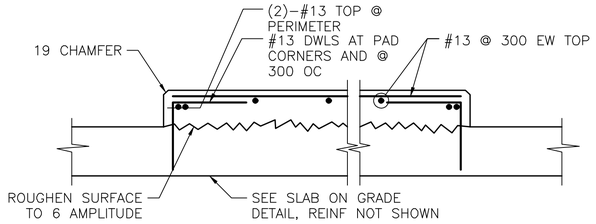


## 3 / S-701 INTERIOR EQUIPMENT PAD DETAIL

SCALE: NTS

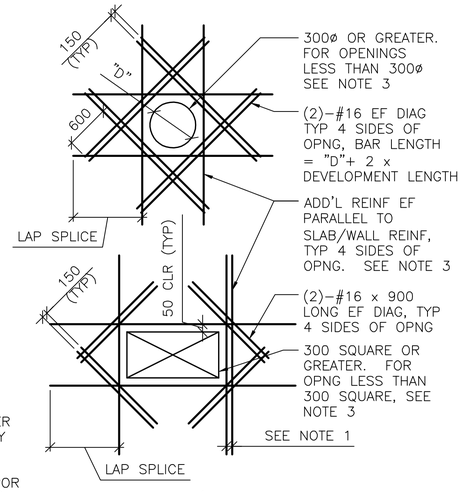


SHEAR WALL/SLAB OPENINGS

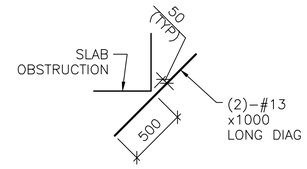


RE-ENTRANT CORNERS

DETAIL NOTES:

1. WHERE MORE THAN ONE ADDITIONAL BAR IS REQUIRED PARALLEL TO THE EXISTING SLAB/WALL REINFORCING THE ADDITIONAL REINFORCING BARS SHALL BE SPACED AT 100 ON CENTER.
2. ADDITIONAL REINFORCING PARALLEL TO THE SLAB/WALL REINFORCING SHALL BE #16 BARS THAT PROVIDE A STEEL AREA ON EACH SIDE OF THE OPENING EQUAL TO 1/2 THE AREA OF THE REINFORCING CUT BY THE OPENING.
3. FOR OPENINGS WITH SIDES OR DIAMETERS LESS THAN 300 SPREAD THE SLAB/WALL REINFORCING TO CLEAR THE OPENING.

## 4 / S-701 ADD'L CONCRETE REINFORCEMENT DETAILS

SCALE: NTS

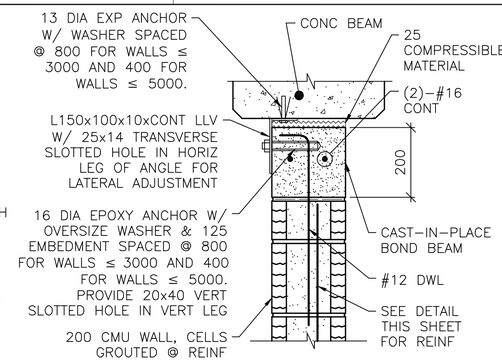


NOTE:

1. AT ANCHOR BOLTS, ADD AN ADDITIONAL 25 COMPRESSIBLE MATERIAL BELOW EXP ANCHOR HEAD.

INTERIOR BEAM

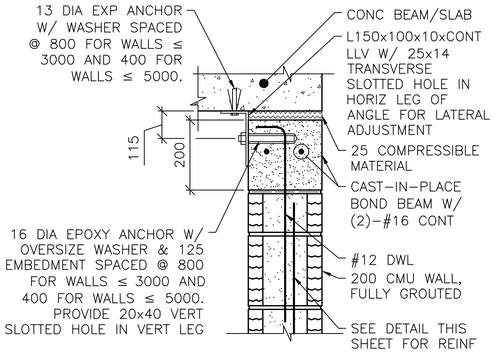


EXTERIOR WALL OR SLAB

NOTES:

1. THIS DETAIL IS AN ALTERNATE TOP OF WALL ANCHORAGE DETAIL TO BE USED AT THE CONTRACTOR'S OPTION IN LIEU OF DETAILS SHOWN ON S-400 & S-500 DRAWINGS.
2. CAST-IN-PLACE BOND BEAM SHOWN AT TOP OF WALL IS ALSO APPLICABLE FOR INTERMEDIATE AND STARTER COURSE BOND BEAMS WITHIN WALL.

## 5 / S-701 ALTERNATE TOP OF CMU WALL BRACING DETAILS

SCALE: NTS

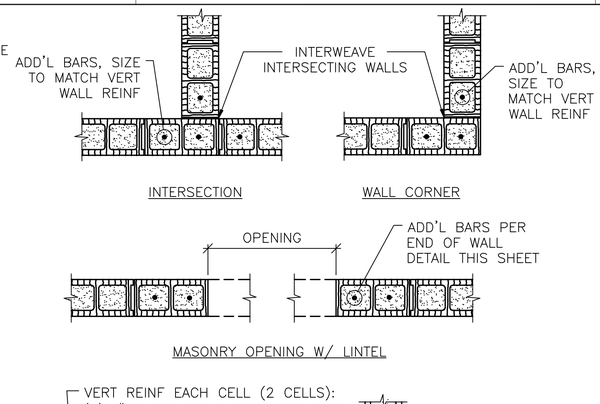


MASONRY OPENING W/ LINTEL

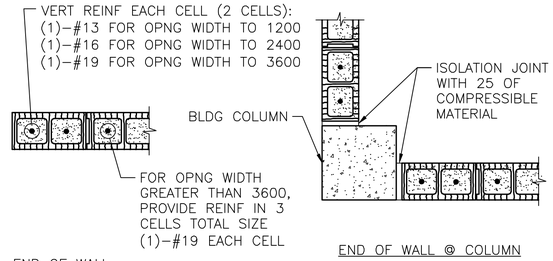


END OF WALL

END OF WALL @ COLUMN

NOTES:

1. OPENING WIDTH SHALL NOT EXCEED 3600 FOR THIS TYPE OF JAMB.
2. ALL CELLS FULLY GROUTED AT EXTERIOR WALLS. AT INTERIOR WALLS, ONLY GROUT CELLS CONTAINING REINF.

## 6 / S-701 TYP CMU DETAILS

SCALE: NTS

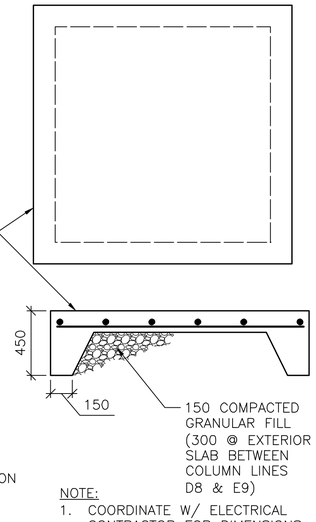


NOTE:

1. COORDINATE W/ ELECTRICAL CONTRACTOR FOR DIMENSIONS @ ELECTRICAL EQUIPMENT

## 9 / S-701 SLAB ON GRADE

SCALE: NTS

UNLESS OTHERWISE NOTED, LINEAR DIMENSIONS SHOWN ARE IN MILLIMETERS (mm)

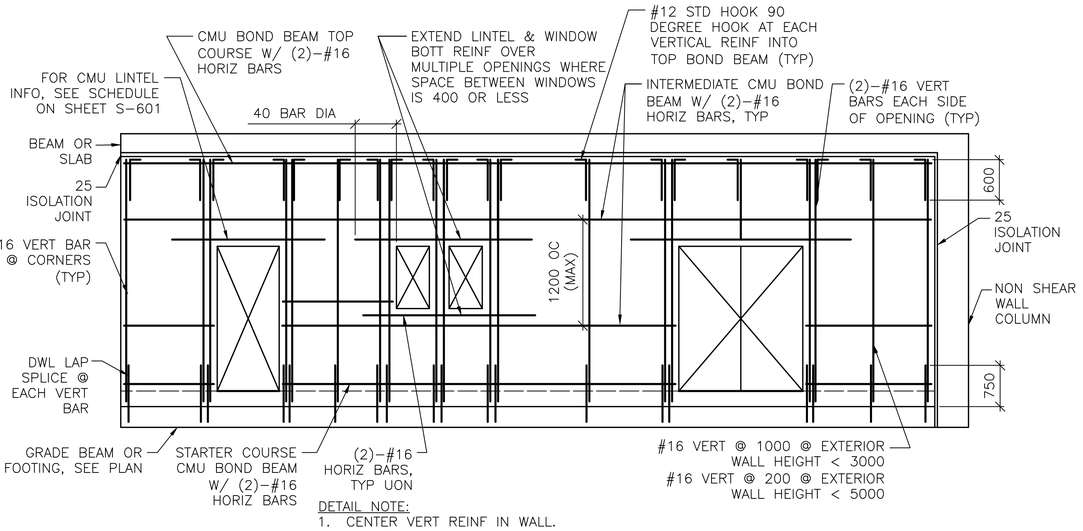


DETAIL NOTE:

1. CENTER VERT REINF IN WALL.
2. GROUT ALL CMU CELLS.
3. REFERENCE ARCH DWGS FOR JOINT INFORMATION
4. DOWELS BETWEEN TOP BOND BEAM AND BEAM/SLAB ABOVE (INCLUDING EMBEDDED PIPE SLEEVE) NOT SHOWN FOR CLARITY. SEE SPECIFIC S-500 SERIES DWGS FOR INFO.
5. FOR INFORMATION ON ALTERNATE CAST-IN-PLACE WALL BOND BEAMS, REFERENCE ALTERNATE TOP OF CMU WALL BRACING DETAILS THIS SHEET.

## 7 / S-701 TYP EXTERIOR CMU WALL REINF DETAIL

SCALE: NTS

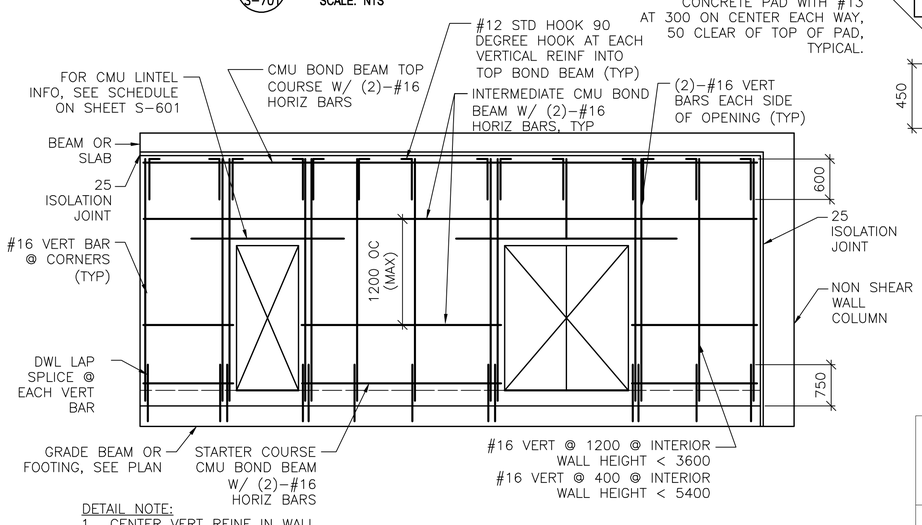


DETAIL NOTE:

1. CENTER VERT REINF IN WALL.
2. GROUT ALL CMU CELLS.
3. REFERENCE ARCH DWGS FOR JOINT INFORMATION
4. DOWELS BETWEEN TOP BOND BEAM AND BEAM/SLAB ABOVE (INCLUDING EMBEDDED PIPE SLEEVE) NOT SHOWN FOR CLARITY. SEE SPECIFIC S-500 SERIES DWGS FOR INFO.
5. FOR INFORMATION ON ALTERNATE CAST-IN-PLACE WALL BOND BEAMS, REFERENCE ALTERNATE TOP OF CMU WALL BRACING DETAILS THIS SHEET.

## 8 / S-701 TYP INTERIOR CMU WALL REINF DETAIL

SCALE: NTS

US ARMY CORPS OF ENGINEERS
AFGHANISTAN ENGINEER DISTRICT

| Mark | Description | Date | Appr. | Mark | Description | Date | Appr. |
|---|---|---|---|---|---|---|---|

Designed by: KMP/MMY
Dwn by: RCG
Ckd by: CWW
Reviewed by: LHM
Submitted by:
BAKER

Date: 2/23/10
Design file no.
Rev: 0
Drawing code:
File name: AN40FACS-701TDT
Plot date: 2/23/2010
Plot scale: X:X

U.S. ARMY CORPS OF ENGINEERS
AFGHANISTAN ENGINEER DISTRICT
APO AE 96338

Michael Baker Jr., Inc.
A unit of Michael Baker Corporation
Airside Business Park
100 Airside Drive
Moon Township, PA 15108
www.mbakercorp.com

AFGHAN NATIONAL ARMY
REGIONAL MILITARY TRAINING CENTER
STANDARD DESIGN

DINING FACILITY

TYPICAL DETAILS

APPROVED:

A/E DESIGNER OF RECORD

SEAL:

GEORGIA REGISTERED 1-29-10 No. 27141 PROFESSIONAL ENGINEER CHRISTOPHER W. WHITMORE

Sheet reference number:
S-701

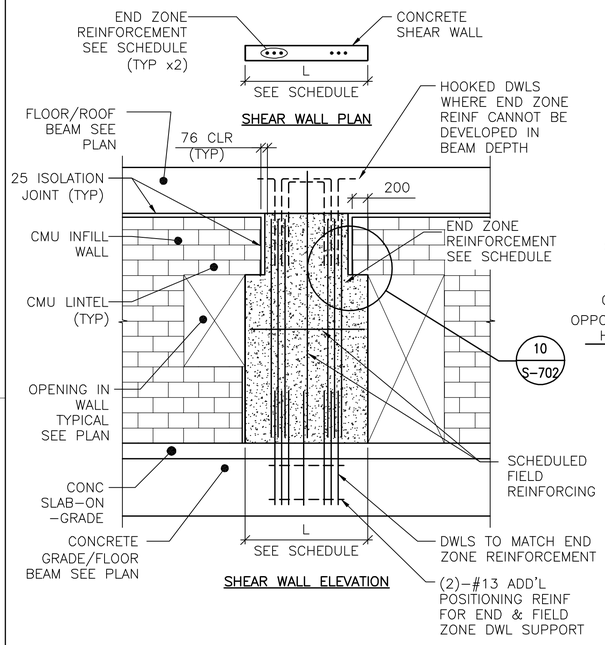


DETAIL NOTES:
1. FIELD REINFORCEMENT IN SHEAR WALL NOT SHOWN COMPLETELY FOR CLARITY.
2. FIELD REINFORCEMENT CENTERED IN WALL.
3. MINIMUM CONC CLEAR DISTANCE FOR END ZONE REINF = 76
4. SEE CONC SHEAR WALL SCHEDULE ON SHEET S-601
5. SEE ARCH DWGS FOR JOINT INFORMATION

## TYPE "A" SHEAR WALL DETAIL

1 / S-702 SCALE: NTS

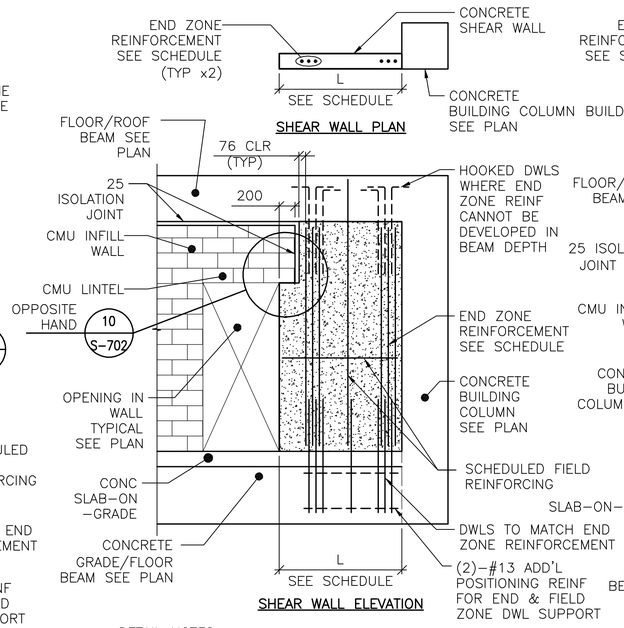


DETAIL NOTES:
1. FIELD REINFORCEMENT IN SHEAR WALL NOT SHOWN COMPLETELY FOR CLARITY.
2. FIELD REINFORCEMENT CENTERED IN WALL.
3. MINIMUM CONC CLEAR DISTANCE FOR END ZONE REINF = 76
4. SEE CONC SHEAR WALL SCHEDULE ON SHEET S-601
5. SEE ARCH DWGS FOR JOINT INFORMATION

## TYPE "B" SHEAR WALL DETAIL

2 / S-702 SCALE: NTS

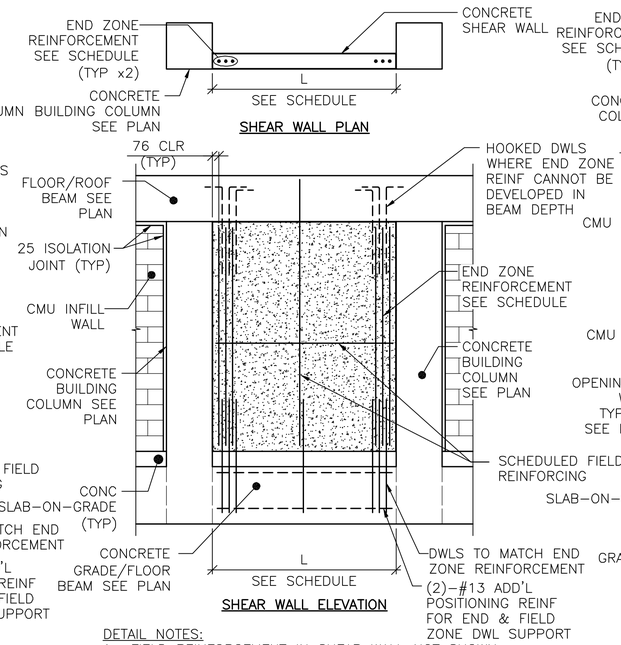


DETAIL NOTES:
1. FIELD REINFORCEMENT IN SHEAR WALL NOT SHOWN COMPLETELY FOR CLARITY.
2. FIELD REINFORCEMENT CENTERED IN WALL.
3. MINIMUM CONC CLEAR DISTANCE FOR END ZONE REINF = 76
4. SEE CONC SHEAR WALL SCHEDULE ON SHEET S-601
5. SEE ARCH DWGS FOR JOINT INFORMATION

## TYPE "C" SHEAR WALL DETAIL

3 / S-702 SCALE: NTS

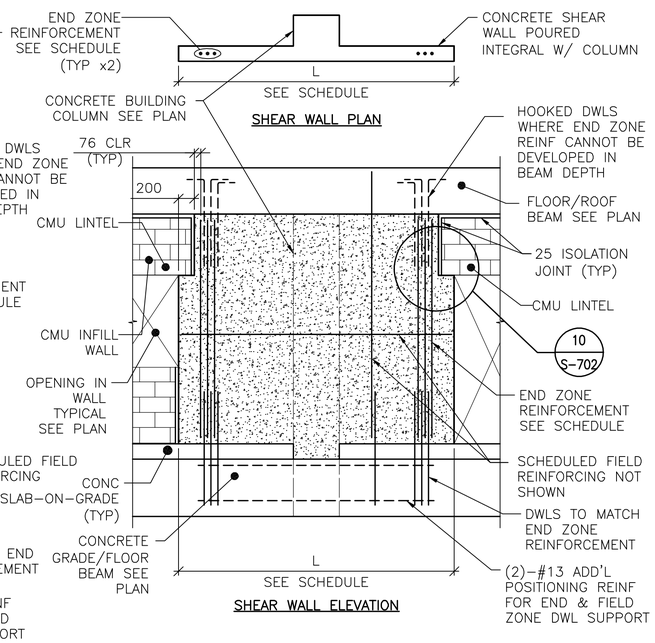


DETAIL NOTES:
1. FIELD REINFORCEMENT IN SHEAR WALL NOT SHOWN COMPLETELY FOR CLARITY.
2. FIELD REINFORCEMENT CENTERED IN WALL.
3. MINIMUM CONC CLEAR DISTANCE FOR END ZONE REINF = 76
4. SEE CONC SHEAR WALL SCHEDULE ON SHEET S-601
5. SEE ARCH DWGS FOR JOINT INFORMATION

## TYPE "D" SHEAR WALL DETAIL

4 / S-702 SCALE: NTS

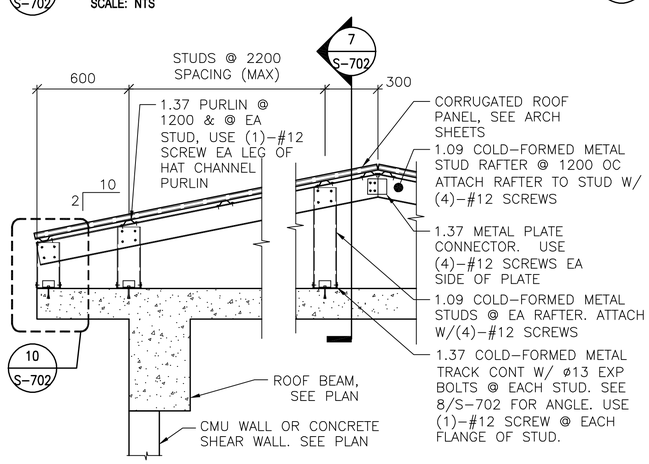


NOTE:
1. ALL GABLE END VERTICAL STUDS SHALL BE ORIENTED 90° TO INTERIOR STUDS & SPACED @ 600 OC. GABLE STUDS GREATER THAN 3800 IN LENGTH SHALL BE BACK-TO-BACK W/ #12 SCREWS @ 200 OC STAGGERED. GABLE END RAFTER SHALL BE 1.37 METAL TRACK SPANNING CONTINUOUSLY OVER GABLE END STUDS. INSET GIRTS AT GABLE END SHALL BE 1.09 COLD-FORMED METAL STUDS @ 1200 OC ATTACHED VIA 1.37 THICKNESS CLIP ANGLE W/ (2) #12 SCREWS EA LEG.
2. ALL INTERIOR, NON-GABLE END VERTICAL STUDS GREATER THAN 2400 IN LENGTH SHALL BE BACK-TO-BACK W/ #12 SCREWS @ 200 OC STAGGERED.

## TYPICAL OVERBUILT ROOF FRAMING DETAIL

5 / S-702 SCALE: NTS




## SECTION

7 / S-702 SCALE: NTS

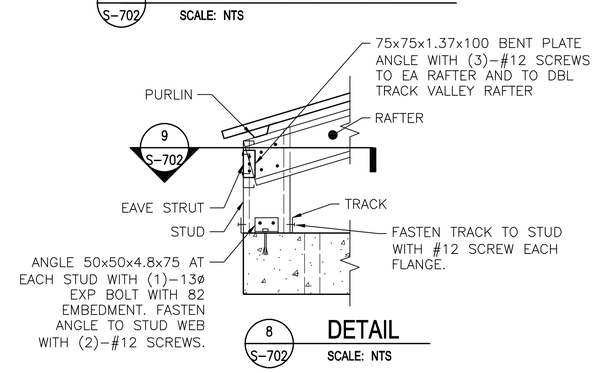


## DETAIL

8 / S-702 SCALE: NTS

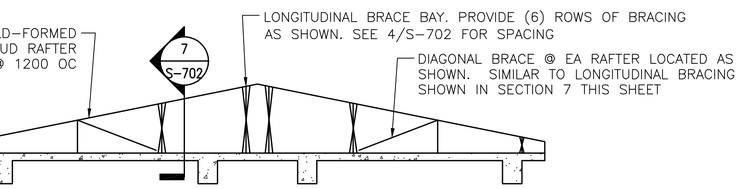


## TYPICAL ROOF BRACE LAYOUT

6 / S-702 SCALE: NTS

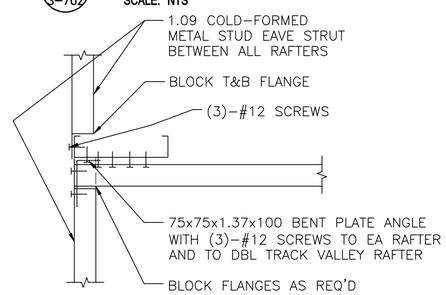


## SECTION

9 / S-702 SCALE: NTS

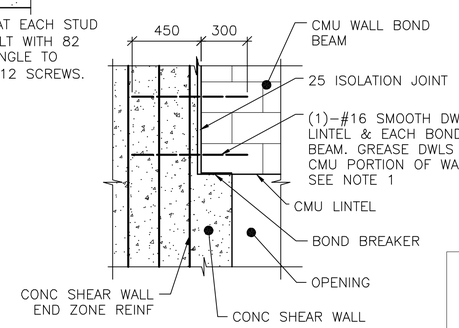


NOTE:
1. TIE SMOOTH DOWEL ROD TO SHEAR WALL END ZONE REINF FOR EACH BOND BEAM AND LINTEL.

## SECTION

10 / S-702 SCALE: NTS

UNLESS OTHERWISE NOTED, LINEAR DIMENSIONS SHOWN ARE IN MILLIMETERS (mm)

APPROVED:

A/E DESIGNER OF RECORD

SEAL:

GEORGIA REGISTERED 1-29-10 No. 27141 PROFESSIONAL ENGINEER CHRISTOPHER W. WHITMORE

US ARMY CORPS OF ENGINEERS
AFGHANISTAN ENGINEER DISTRICT

| Mark | Description | Date | Appr. | Mark | Description | Date | Appr. |
|---|---|---|---|---|---|---|---|

Rev: 0
Date: 2/23/10
Design file no.
Drawing code:
File name: AAADFAC8-702T0T
Plot date: 2/23/2010
Plot scale: x:X

Designed by: KMP/MMY
Dwn by: RCG
Ckd by: CWW
Reviewed by: LHM
Submitted by: BAKER

U.S. ARMY CORPS OF ENGINEERS
AFGHANISTAN ENGINEER DISTRICT
APO AE 96338

Michael Baker Jr., Inc
A unit of Michael Baker Corporation
Airside Business Park
100 Airside Drive
Moon Township, PA 15108
www.mbakercorp.com

AFGHAN NATIONAL ARMY
REGIONAL MILITARY TRAINING CENTER
STANDARD DESIGN

DINING FACILITY

TYPICAL DETAILS

Sheet reference number:
S-702

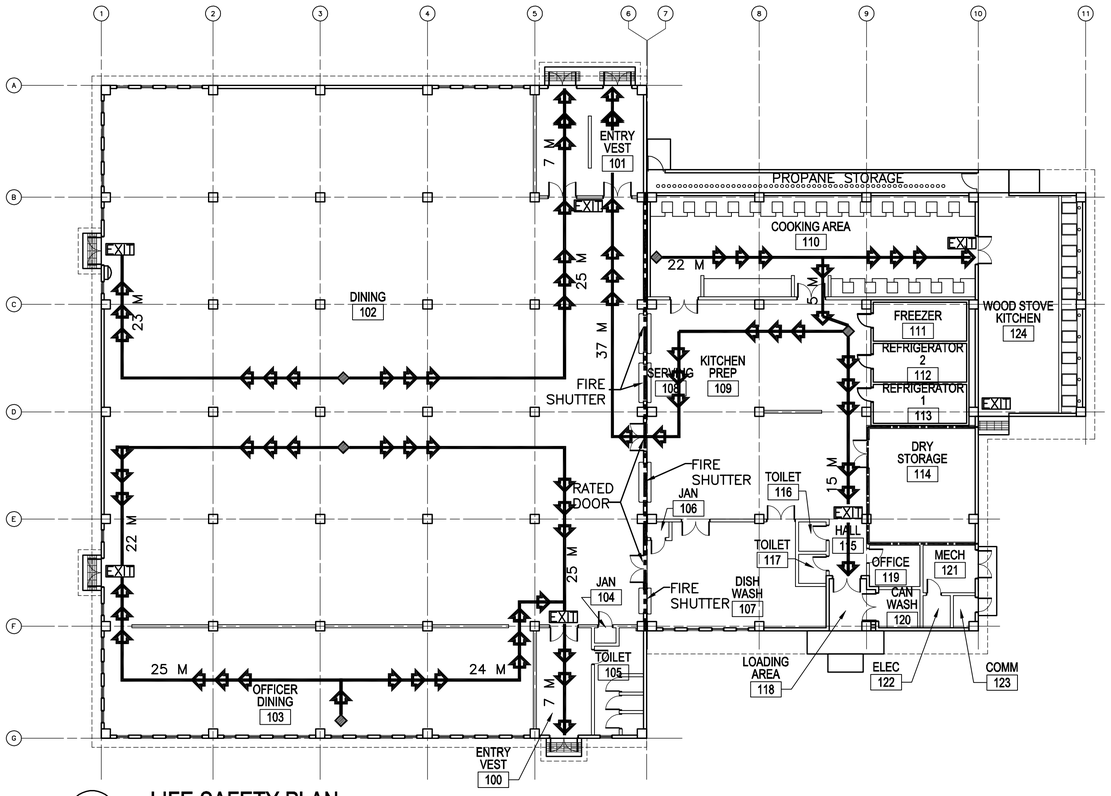


1 A-001 **LIFE SAFETY PLAN**

SCALE: 1:200

## LEGEND:

- DENOTES PATHS OF EXIT TRAVEL
- EXIT — DENOTES DOOR AS AN EMERGENCY EXIT
- DENOTES STARTING POINT FOR TRAVEL DISTANCE
- DENOTES FIRE EXTINGUISHER LOCATIONS
- (1) HOUR RATED WALL
- (2) HOUR RATED WALL
- (3) HOUR RATED WALL

# CODE ANALYSIS:

1. REFERENCES:
   2006 INTERNATIONAL BUILDING CODE (2006 IBC)
   2006 LIFE SAFETY CODE (2006 NFPA 101)

2. IBC OCCUPANCY CLASSIFICATION:
   GROUP A–2 (ASSEMBLY >1000 NFPA 101 6.1.2 AND CHAPTER 12)

3. TYPE OF CONSTRUCTION (IBC): TYPE II–A (NONSPRINKLERED)

4. IBC TABLE 503: ALLOWABLE HEIGHT AND BUILDING AREAS:
   GROUP A–2
   ALLOWABLE AREA: 2518 (1439 X 0.75 FRONTAGE INCREASE)
   FRONTAGE INCREASE FOR 9M (30') FRONTAGE: 0.5 = [199.6 M/199.6 M –0.25] 9 M/9 M

   ALLOWABLE HEIGHT: 3 STORIES (19 M)

   GROUP A–2
   PROPOSED TOTAL AREA: 2341 SM
   PROPOSED DINING AREA: 1382 SM
   PROPOSED INTERIOR KITCHEN AREA: 449 SM

   PROPOSED HEIGHT: 1 STORY (<19 M)

5. IBC TABLE 601 & 602: FIRE RESISTANCE RATING REQUIREMENTS FOR BUILDING ELEMENTS FOR TYPE II–A

| BUILDING ELEMENT | RATING (HOUR) | REFERENCE |
|---|---|---|
| STRUCTURAL FRAME (COLUMNS, GIRDERS & TRUSSES) | 1 | TABLE 601 |
| BEARING WALLS | | |
| EXTERIOR | 1 | TABLE 601 |
| INTERIOR | 1 | TABLE 601 |
| NONBEARING WALLS & PARTITIONS | | |
| INTERIOR | 0 | TABLE 601 |
| FLOOR CONSTRUCTION | 1 | TABLE 601 |
| ROOF CONSTRUCTION | 1 | TABLE 601 |
| EXTERIOR WALL | 0 | TABLE 602 (9M SEPARATION) |

6. IBC TABLE 803.5 – INTERIOR WALL AND CEILING FINISH REQUIREMENTS FOR A–2 OCCUPANCY/NONSPRINKLERED

| GROUP | EXIT ENCLOSURES AND EXIT PASSAGEWAY | CORRIDORS | ROOMS AND ENCLOSED SPACES |
|---|---|---|---|
| A–2 | A | A | B |

7. NFPA 101 TABLE 7.3.1.2 – OCCUPANT LOAD
   ASSEMBLY >1000 = 1.4 NET SM/PERSON — CALCULATED = 988 OCCUPANTS
   KITCHEN = 9.3 SM/PERSON — CALCULATED = 49 OCCUPANTS
   TOTAL = 1037 OCCUPANTS

8. NFPA 101 TABLE 7.3.3.1 – EGRESS CAPACITY
   ASSEMBLY = 5 MM PER OCCUPANT

   REQUIRED: 5185 MM (1037 OCCUPANTS x 5 MM PER OCCUPANT)
   PROPOSED EGRESS CAPACITY: 12,600 MM: (7) PAIRS 900 MM DOUBLE DOORS

9. NFPA 101 PARAGRAPH 12.2.6 – EXIT ACCESS TRAVEL DISTANCE
   REQUIRED: 61 METERS
   PROPOSED: 44 METERS

10. NFPA 101 PARAGRAPH 12.3.6 (1) – CORRIDOR FIRE–RESISTANCE RATING (HOUR)
    CORRIDORS ARE NOT REQUIRED AS DOORS EXIT DIRECTLY TO OUTSIDE

11. NFPA 101 PARAGRAPH 12.2.4.1 AND 7.4.1.1 AND 7.4.1.2 –
    MINIMUM NUMBER OF EXITS
    REQUIRED DINING: 4 MINIMUM
    PROPOSED DINING: 5

    REQUIRED KITCHEN: 2 MINIMUM
    PROPOSED KITCHEN: 2

    TOTAL PROPOSED: 7

12. NFPA 101 PARAGRAPH 12.3.2.1(2) PROTECTION FROM HAZARDS
    DINING TO KITCHEN: 1 HOUR SEPARATION
    DOOR SHALL BE 45 MINUTE (NFPA 101 TABLE 8.3.42)

    NOTE: AFGHAN DFAC'S TYPICALLY USE A 2 HOUR SEPARATION, AS THE KITCHEN IS CONSIDERED A HIGHER HAZARD DUE TO LACK OF PROTECTION REQUIRED BY NFPA 96. THEREFORE, A 2 HOUR SEPARATION WITH 90 MINUTE DOORS IS PROVIDED TO SEPARATE THE KITCHEN AND DINING AREAS.

LINEAR DIMENSIONS SHOWN ARE IN MILLIMETERS (MM), UNLESS OTHERWISE NOTED

0 4000 8000
SCALE: 1:200

APPROVED:

A/E DESIGNER OF RECORD

SEAL:

STATE OF SOUTH CAROLINA
KEVIN R. CHARIN
N. Charleston, SC
6374
REGISTERED ARCHITECT

US ARMY CORPS OF ENGINEERS
AFGHANISTAN ENGINEER DISTRICT

| Mark | Description | Date | Appr. | Mark | Description | Date | Appr. |
|---|---|---|---|---|---|---|---|

Date: 2/23/10 — Rev: 0
Design file no.
Drawing code:
File name: ANADFACA001LSP
Plot date: 2/23/2010
Plot scale: x:X

Designed by: KRC
Dwn by: KJG
Ckd by: NLJ
Reviewed by: LHM
Submitted by: BAKER

U.S. ARMY CORPS OF ENGINEERS
AFGHANISTAN ENGINEER DISTRICT
APO AE 96338

Michael Baker Jr., Inc
A unit of Michael Baker Corporation
Airside Business Park
100 Airside Drive
Moon Township, PA 15108
www.mbakercorp.com

AFGHAN NATIONAL ARMY
REGIONAL MILITARY TRAINING CENTER
STANDARD DESIGN

DINING FACILITY

LIFE SAFETY PLAN

Sheet reference number:
A–001

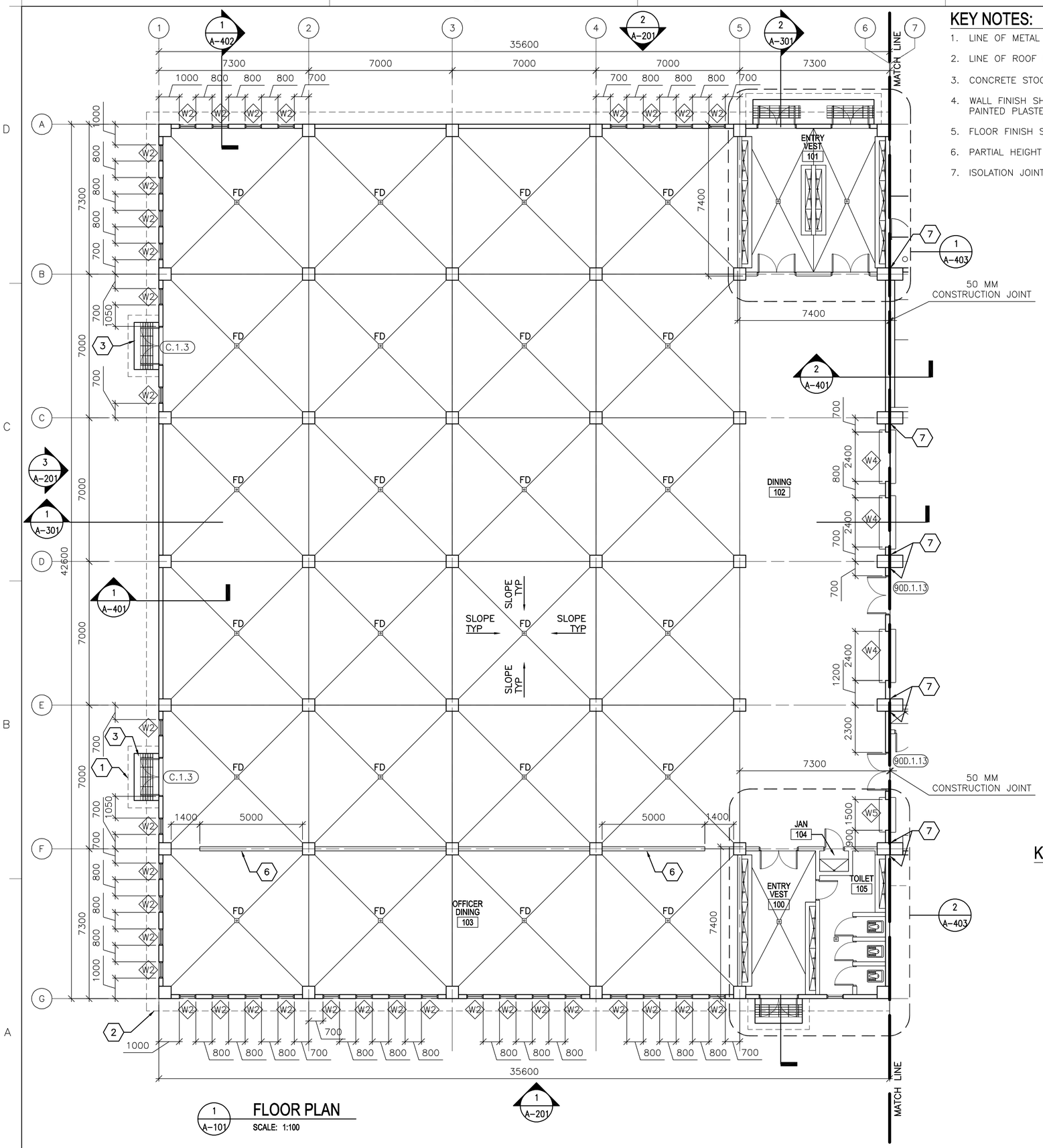


1 A-101 **FLOOR PLAN**

SCALE: 1:100

## KEY NOTES:

1. LINE OF METAL ENTRANCE CANOPY ABOVE.
2. LINE OF ROOF OVERHANG ABOVE.
3. CONCRETE STOOP WITH GRATE – SEE DETAIL 1/A-503.
4. WALL FINISH SHALL BE CERAMIC TILE TO 2000 MM WITH PAINTED PLASTER APPLIED TO STRUCTURE ABOVE.
5. FLOOR FINISH SHALL BE TERRAZZO TILE.
6. PARTIAL HEIGHT WALL –2600 MM ABOVE FINISH FLOOR.
7. ISOLATION JOINT COVER – SEE SHEET A-507.

## GENERAL NOTES:

A. DIMENSIONS ARE SHOWN TO OUTER EDGE OF EXTERIOR STRUCTURAL COLUMNS, STRUCTURAL COLUMN GRID, EDGE OF INTERIOR PARTITIONS, EDGE OF WINDOW OPENINGS, AND TO HINGE SIDE OF DOOR FRAME OPENINGS.

B. HINGE SIDE OF OPENINGS FOR DOORS AND FRAMES SHALL BE LOCATED 200 MM FROM THE ADJACENT WALL OR COLUMN, UNLESS NOTED OTHERWISE.

C. INTERIOR PARTITIONS SHALL BE 200 MM CMU. SEE STRUCTURAL DRAWINGS FOR LOCATION OF CONCRETE SHEAR WALLS.

D. COSMETIC REPAIR OF MINOR DEFECTS: REPAIR OR FILL MORTAR JOINTS AND MINOR DEFECTS, INCLUDING BUT NOT LIMITED TO SPALLS, IN ACCORDANCE WITH MANUFACTURER'S RECOMMENDATIONS AND PRIOR TO COATING APPLICATION. SURFACES TO BE PAINTED SHALL BE CLEAN AND FREE OF FOREIGN MATTER BEFORE APPLICATION OF PAINT. CLEANING SHALL BE SCHEDULED SO THAT DUST AND OTHER CONTAMINANTS WILL NOT FALL ON NEWLY PAINTED SURFACES.

E. CONCRETE, PLASTER AND MASONRY SURFACES SHALL BE ALLOWED TO CURE FOR AT LEAST 30 DAYS BEFORE PAINTING. CONCRETE SLABS–ON–GRADE SHALL BE ALLOWED TO CURE 90 DAYS BEFORE STAINING OR SEALING.

F. DO NOT USE PAINT MATERIALS CONTAINING LEAD CONTENT IN EXCESS OF 0.009 PERCENT OF THE WEIGHT OF THE TOTAL NONVOLATILE CONTENT OF THE PAINT OR THE WEIGHT OF THE DRIED PAINT FILM.

G. DO NOT USE ANY ASBESTOS CONTAINING MATERIALS (ACM) IN PROJECT. ACM IS DEFINED AS 1% OR MORE BY VOLUME.

H. DO NOT USE PAINT MATERIALS CONTAINING MERCURIAL FUNGICIDES.

I. FACTORY PRIMED METAL DOORS AND FRAMES SHALL RECEIVE TWO COATS OF PAINT.

J. FILL REMAINING SPACE AT PENETRATIONS IN FIRE–RATED FLOORS, PARTITIONS AND CEILINGS WITH APPROPRIATE FIRESTOPPING MATERIALS.

K. ALL CEILING FINISHES SHALL BE PAINTED PLASTER APPLIED TO STRUCTURE.

L. ALL WALL FINISHES SHALL BE PAINTED PLASTER APPLIED TO STRUCTURE, UNLESS NOTED OTHERWISE.

M. ALL FLOOR FINISHES SHALL BE EPOXY SEALED CONCRETE, UNLESS NOTED OTHERWISE.

N. PROVIDE TILE FINISHES AS INDICATED IN DETAILS

O. ALL TOILET STALL DOOR FRAMES AND HARDWARE SHALL BE F.2.12.

P. HEIGHT OF ALL TOILET PARTITIONS SHALL BE 2000 MM ABOVE FINISHED FLOOR.

## LEGEND:

XXX — DOOR FRAME AND HARDWARE TYPE, SEE SHEET A–601

A — WINDOW TYPE, SEE SHEET A–601

X — KEY NOTE

## ABBREVIATIONS:

| | |
|---|---|
| ELEC | ELECTRICAL |
| MECH | MECHANICAL |
| JAN | JANITOR |
| CLOS | CLOSET |
| COMM | COMMUNICATIONS |

## KEY PLAN:

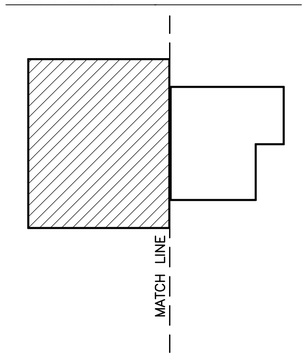


LINEAR DIMENSIONS SHOWN ARE IN MILLIMETERS (MM), UNLESS OTHERWISE NOTED

0 2000 4000
SCALE: 1:100

APPROVED:

A/E DESIGNER OF RECORD

SEAL:

STATE OF SOUTH CAROLINA
KEVIN R. CHAFIN
N. Charleston, SC
6374
REGISTERED ARCHITECT

US ARMY CORPS OF ENGINEERS
AFGHANISTAN ENGINEER DISTRICT

| Mark | Description | Date | Appr. | Mark | Description | Date | Appr. |
|---|---|---|---|---|---|---|---|
| | | | | | | | |

Designed by: KRC
Dwn by: KJG
Ckd by: NLJ
Reviewed by: LHM
Submitted by: BAKER
Date: 2/23/10
Design file no.
Drawing code:
Rev: 0
File name: ANAFACA-101FP
Plot date: 2/23/2010
Plot scale: X:X

U.S. ARMY CORPS OF ENGINEERS
AFGHANISTAN ENGINEER DISTRICT
APO AE 96338

Michael Baker Jr., Inc.
A unit of Michael Baker Corporation
Airside Business Park
100 Airside Drive
Moon Township, PA 15108
www.mbakercorp.com

AFGHAN NATIONAL ARMY
REGIONAL MILITARY TRAINING CENTER
STANDARD DESIGN

DINING FACILITY

FLOOR PLAN–A

Sheet reference number:
A–101

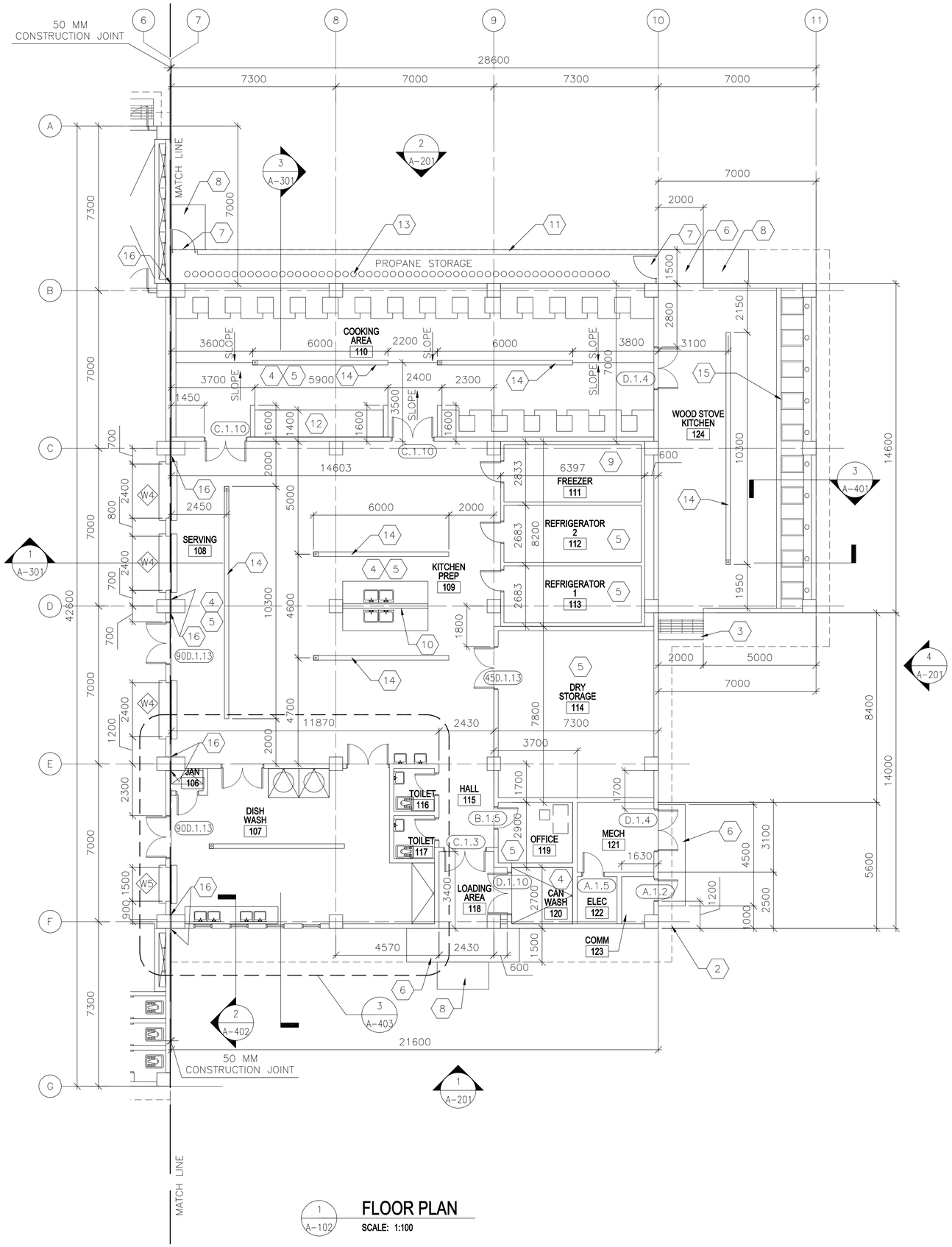


1 A-102 **FLOOR PLAN**

SCALE: 1:100

## KEY NOTES:

1. NOT USED.
2. LINE OF ROOF OVERHANG ABOVE.
3. CONCRETE STOOP WITH GRATE – SEE DETAIL 1/A-503.
4. WALL FINISH SHALL BE CERAMIC TILE TO 2000 MM WITH PAINTED PLASTER APPLIED TO STRUCTURE ABOVE.
5. FLOOR FINISH SHALL BE TERRAZZO TILE.
6. CONCRETE STOOP – SEE DETAIL 3/A-503.
7. CHAIN LINK FENCE GATE.
8. RAMP – SLOPE TO GRADE, SEE CIVIL DRAWINGS FOR TYPICAL DETAIL.
9. FLOOR FINISH SHALL BE EPOXY SEALED CONCRETE.
10. PARTIAL HEIGHT WALL – 1500 MM ABOVE FINISH FLOOR.
11. PARTIAL HEIGHT WALL – 1800 MM ABOVE FINISH FLOOR.
12. CHAI BOILER WITH TERRAZZO TILES ON TOP – 1000 MM ABOVE FINISH FLOOR – SEE DETAIL 5/A-506.
13. WALL MOUNTED RACK FOR PROPANE CYLINDERS – SEE P-501 FOR DETAIL.
14. CONTINUOUS TRENCH DRAIN – SEE SHEET S-505.
15. WOOD BURNING STOVE – SEE SHEETS A-405 AND A-406.
16. ISOLATION JOINT COVER – SEE SHEET A-507.

## GENERAL NOTES:

A. DIMENSIONS ARE SHOWN TO OUTER EDGE OF EXTERIOR STRUCTURAL COLUMNS, STRUCTURAL COLUMN GRID, EDGE OF INTERIOR PARTITIONS, EDGE OF WINDOW OPENINGS, AND TO HINGE SIDE OF DOOR FRAME OPENINGS.

B. HINGE SIDE OF OPENINGS FOR DOORS AND FRAMES SHALL BE LOCATED 200 MM FROM THE ADJACENT WALL OR COLUMN, UNLESS NOTED OTHERWISE.

C. INTERIOR PARTITIONS SHALL BE 200 MM CMU. SEE STRUCTURAL DRAWINGS FOR LOCATION OF CONCRETE SHEAR WALLS.

D. COSMETIC REPAIR OF MINOR DEFECTS: REPAIR OR FILL MORTAR JOINTS AND MINOR DEFECTS, INCLUDING BUT NOT LIMITED TO SPALLS, IN ACCORDANCE WITH MANUFACTURER'S RECOMMENDATIONS AND PRIOR TO COATING APPLICATION. SURFACES TO BE PAINTED SHALL BE CLEAN AND FREE OF FOREIGN MATTER BEFORE APPLICATION OF PAINT. CLEANING SHALL BE SCHEDULED SO THAT DUST AND OTHER CONTAMINANTS WILL NOT FALL ON NEWLY PAINTED SURFACES.

E. CONCRETE, PLASTER AND MASONRY SURFACES SHALL BE ALLOWED TO CURE FOR AT LEAST 30 DAYS BEFORE PAINTING. CONCRETE SLABS-ON-GRADE SHALL BE ALLOWED TO CURE 90 DAYS BEFORE STAINING OR SEALING.

F. DO NOT USE PAINT MATERIALS CONTAINING LEAD CONTENT IN EXCESS OF 0.009 PERCENT OF THE WEIGHT OF THE TOTAL NONVOLATILE CONTENT OF THE PAINT OR THE WEIGHT OF THE DRIED PAINT FILM.

G. DO NOT USE ANY ASBESTOS CONTAINING MATERIALS (ACM) IN PROJECT. ACM IS DEFINED AS 1% OR LESS BY VOLUME.

H. DO NOT USE PAINT MATERIALS CONTAINING MERCURIAL FUNGICIDES.

I. FACTORY PRIMED METAL DOORS AND FRAMES SHALL RECEIVE TWO COATS OF PAINT.

J. FILL REMAINING SPACE AT PENETRATIONS IN FIRE-RATED FLOORS, PARTITIONS AND CEILINGS WITH APPROPRIATE FIRESTOPPING MATERIALS.

K. ALL CEILING FINISHES SHALL BE PAINTED PLASTER APPLIED TO STRUCTURE.

L. ALL WALL FINISHES SHALL BE PAINTED PLASTER APPLIED TO STRUCTURE, UNLESS NOTED OTHERWISE.

M. ALL FLOOR FINISHES SHALL BE EPOXY SEALED CONCRETE, UNLESS NOTED OTHERWISE.

N. PROVIDE TILE FINISHES AS INDICATED IN DETAILS.

O. REFER TO SPECIFICATION SECTION 13 21 26 FOR REFRIGERATORS AND FREEZER.

## LEGEND:

XXX — DOOR FRAME AND HARDWARE TYPE, SEE SHEET A-601

A — WINDOW TYPE, SEE SHEET A-601

X — KEY NOTE

## ABBREVIATIONS:

ELEC ELECTRICAL

MECH

JAN

CLOS

COMM

## KEY PLAN:

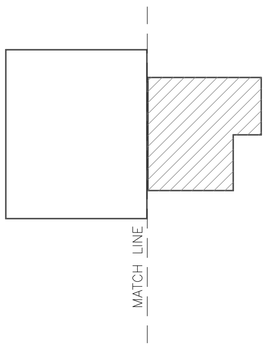


LINEAR DIMENSIONS SHOWN ARE IN MILLIMETERS (MM), UNLESS OTHERWISE NOTED

0 2000 4000
SCALE: 1:100

APPROVED:

A/E DESIGNER OF RECORD

SEAL:

STATE OF SOUTH CAROLINA
KEVIN R. CHAFIN
N. Charleston, SC
6374
REGISTERED ARCHITECT

US ARMY CORPS OF ENGINEERS
AFGHANISTAN ENGINEER DISTRICT

| Mark | Description | Date | Appr. | Mark | Description | Date | Appr. |
|---|---|---|---|---|---|---|---|
| | | | | | | | |

Rev: 0

Date: 2/23/10

Design file no.

Drawing code:

File name: ANADFACA-102FP

Plot date: 2/23/2010

Plot scale: X:X

Designed by: KRC

Dwn by: KJG

Ckd by: NLJ

Reviewed by: LHM

Submitted by: BAKER

U.S. ARMY CORPS OF ENGINEERS
AFGHANISTAN ENGINEER DISTRICT
APO AE 96338

Michael Baker Jr., Inc
A unit of Michael Baker Corporation
Airside Business Park
100 Airside Drive
Moon Township, PA 15108
www.mbakercorp.com

AFGHAN NATIONAL ARMY
REGIONAL MILITARY TRAINING CENTER
STANDARD DESIGN

DINING FACILITY

FLOOR PLAN–B

Sheet reference number:
A–102

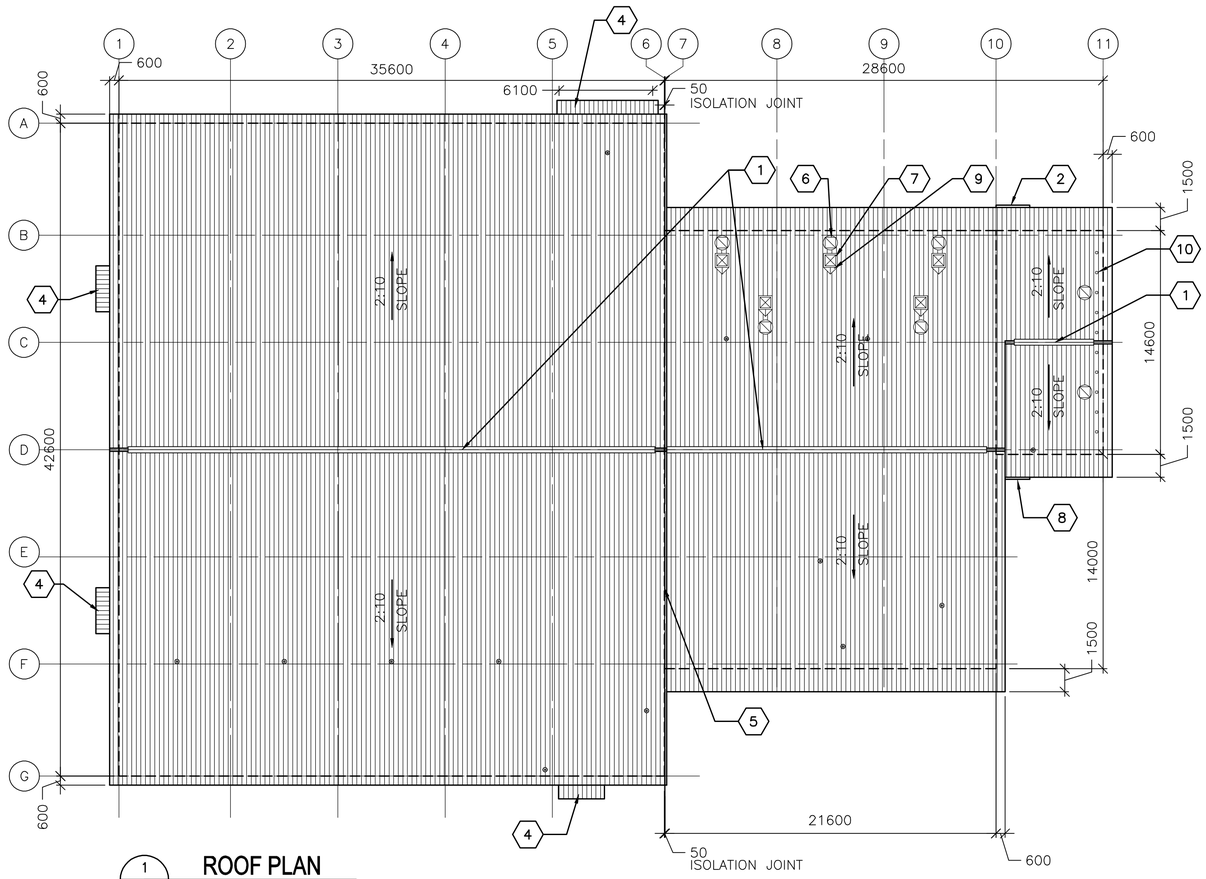


1 A-103 **ROOF PLAN**

SCALE: 1:200

## GENERAL NOTES:

A. THE APPROXIMATE LOCATION OF ROOF DEVICES AND PENETRATIONS ARE SHOWN ON THE ROOF PLAN FOR INFORMATION ONLY. THE CONTRACTOR SHALL BE RESPONSIBLE FOR UNDERSTANDING THE ACTUAL LOCATION OF THESE AND ALL OTHER ITEMS PRIOR TO BEGINNING CONSTRUCTION. COORDINATE ALL ROOF PENETRATIONS WITH STRUCTURAL, MECHANICAL AND PLUMBING WORK.

B. PLUMBING VENT PENETRATIONS SHALL TERMINATE 300 MM MINIMUM ABOVE THE ROOF.

C. UNLESS OTHERWISE NOTED, NOTES, DETAILS OR FEATURES INDICATED FOR ONE CONDITION SHALL BE APPLICABLE FOR ALL ALIKE AND SIMILAR CONDITIONS.

D. STOCKPILING OF MATERIALS, EQUIPMENT AND ANY OTHER ITEMS ON THE ROOF IS PROHIBITED.

E. ROOFS SHALL BE CORRUGATED METAL ROOF PANELS ON COLD-FORMED METAL FRAMING ON CONCRETE SLAB.

## KEY NOTES:

(X)

1. CONTINUOUS METAL RIDGE VENT – SEE DETAIL 4/A-501.
2. METAL GUTTER, 2200 MM – SEE DETAIL 1B/A-501.
3. PLUMBING VENT – SEE DETAIL 5/A-501.
4. CANOPY – SEE DETAIL 2/A-504.
5. ROOF EXPANSION JOINT – SEE DETAIL 4/A-506.
6. EXHAUST FAN – SEE SHEET M-102.
7. MAKE-UP AIR FAN – SEE SHEET M-102.
8. METAL GUTTER, 1600 MM – SEE DETAIL 1B/A-501.
9. ROOF CURB AND METAL CRICKET – SEE DETAIL 6/A-506.
10. WOOD STOVE FLUE – SEE SHEETS A-405 AND A-406.

LINEAR DIMENSIONS SHOWN ARE IN MILLIMETERS (MM), UNLESS OTHERWISE NOTED

0 4000 8000
SCALE: 1:200

APPROVED:

A/E DESIGNER OF RECORD

SEAL:

STATE OF SOUTH CAROLINA
KEVIN R. CHAFIN
N. Charleston, SC
6374
REGISTERED ARCHITECT

US ARMY CORPS OF ENGINEERS
AFGHANISTAN ENGINEER DISTRICT

| Mark | Description | Date | Appr. | Mark | Description | Date | Appr. |
|---|---|---|---|---|---|---|---|

Designed by: KRC
Dwn by: KJG
Ckd by: NLJ
Reviewed by: LHM
Submitted by:
BAKER

Date: 2/23/10
Rev: 0
Design file no.
Drawing code:
File name: ANADFACA-1035P
Plot date: 2/23/2010
Plot scale: x:X

U.S. ARMY CORPS OF ENGINEERS
AFGHANISTAN ENGINEER DISTRICT
APO AE 96338

*Michael Baker Jr., Inc.*
*A unit of Michael Baker Corporation*
Airside Business Park
100 Airside Drive
Moon Township, PA 15108
www.mbakercorp.com

AFGHAN NATIONAL ARMY
REGIONAL MILITARY TRAINING CENTER
STANDARD DESIGN

DINING FACILITY

ROOF PLAN

Sheet reference number:
A-103

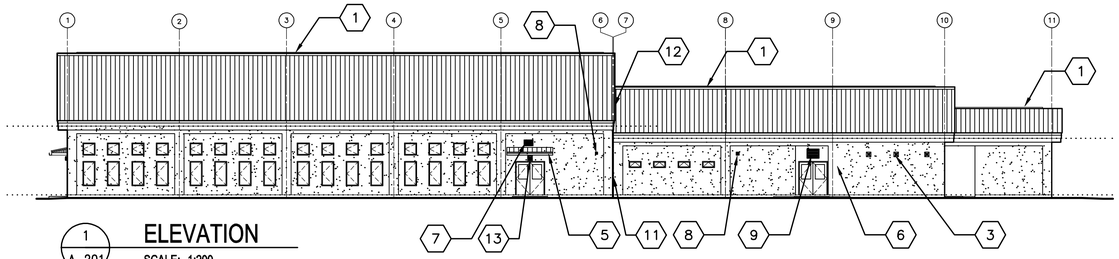

1 A-201 **ELEVATION**
SCALE: 1:200

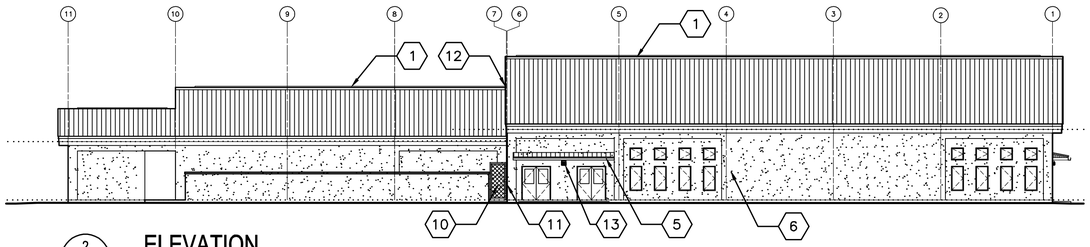

2 A-201 **ELEVATION**
SCALE: 1:200

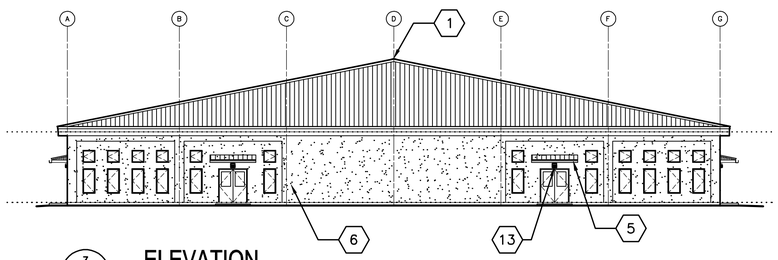

3 A-201 **ELEVATION**
SCALE: 1:200

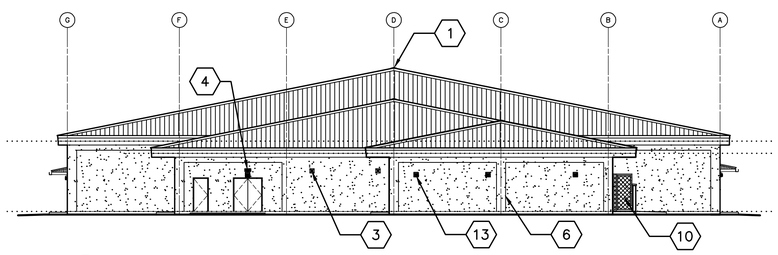

4 A-201 **ELEVATION**
SCALE: 1:200

## GENERAL NOTES:

A. COORDINATE SIZE AND LOCATION OF OPENINGS FOR MECHANICAL ITEMS WITH MECHANICAL DRAWINGS.

B. PROVIDE STRUCTURAL LINTELS AS REQUIRED – SEE STRUCTURAL DRAWINGS

C. ALL EXTERIOR WALL FINISHES SHALL BE STUCCO OVER CMU AND CONCRETE SUBSTRATES. PROVIDE CONTROL JOINTS IN STUCCO WALL FINISH AS NOTED.

D. ROOF SHALL BE CORRUGATED METAL ROOF PANELS ON COLD–FORMED METAL FRAMING ON CONCRETE SLAB.

## KEY NOTES:

1. CONTINUOUS METAL RIDGE VENT – SEE DETAIL 4/A–501.
2. METAL LOUVER – SEE MECHANICAL DRAWINGS.
3. EXHAUST FAN, LOCATE TOP OF WALL PENETRATION 2800 MM ABOVE FINISHED FLOOR – SEE MECHANICAL DRAWINGS.
4. LOUVER, LOCATE TOP OF WALL PENETRATION 2800 MM ABOVE FINISHED FLOOR – SEE MECHANICAL DRAWINGS.
5. CANOPY – SEE DETAIL 1/A–504.
6. STUCCO CONTROL JOINT – SEE DETAIL 2A/A–501.
7. LOUVER, LOCATE TOP OF WALL PENETRATION 3600 MM ABOVE FINISHED FLOOR – SEE MECHANICAL DRAWINGS.
8. WALL GRILL, LOCATE TOP OF WALL PENETRATION 2800 MM ABOVE FINISHED FLOOR – SEE MECHANICAL DRAWINGS.
9. LOUVER, LOCATE TOP OF WALL PENETRATION 3000 MM ABOVE FINISHED FLOOR – SEE MECHANICAL DRAWINGS.
10. CHAIN LINK FENCE GATE.
11. EXPANSION JOINT COVER – SEE SHEET A–507.
12. ROOF EXPANSION JOINT – SEE DETAIL 4/A–506.
13. EXTERIOR LIGHT – SEE SHEETS E–101 AND E–102.

LINEAR DIMENSIONS SHOWN ARE IN MILLIMETERS (MM), UNLESS OTHERWISE NOTED

0 4000 8000
SCALE: 1:200

APPROVED:

A/E DESIGNER OF RECORD

SEAL:

STATE OF SOUTH CAROLINA
KEVIN R. CHAFIN
N. Charleston, SC
6374
REGISTERED ARCHITECT

US ARMY CORPS OF ENGINEERS
AFGHANISTAN ENGINEER DISTRICT

| Mark | Description | Date | Appr. | Mark | Description | Date | Appr. |
|---|---|---|---|---|---|---|---|

U.S. ARMY CORPS OF ENGINEERS
AFGHANISTAN ENGINEER DISTRICT
APO AE 96338

*Michael Baker Jr., Inc.*
*A unit of Michael Baker Corporation*
Airside Business Park
100 Airside Drive
Moon Township, PA 15108
www.mbakercorp.com

Designed by: KRC
Dwn by: KJG
Ckd by: NLJ
Reviewed by: LHM
Submitted by: BAKER
Date: 2/23/10
Rev: 0
Design file no.
Drawing code:
File name: ANASFACA-201ELV
Plot date: 2/23/2010
Plot scale: x:X

AFGHAN NATIONAL ARMY
REGIONAL MILITARY TRAINING CENTER
STANDARD DESIGN

DINING FACILITY

ELEVATIONS

Sheet reference number:
A–201

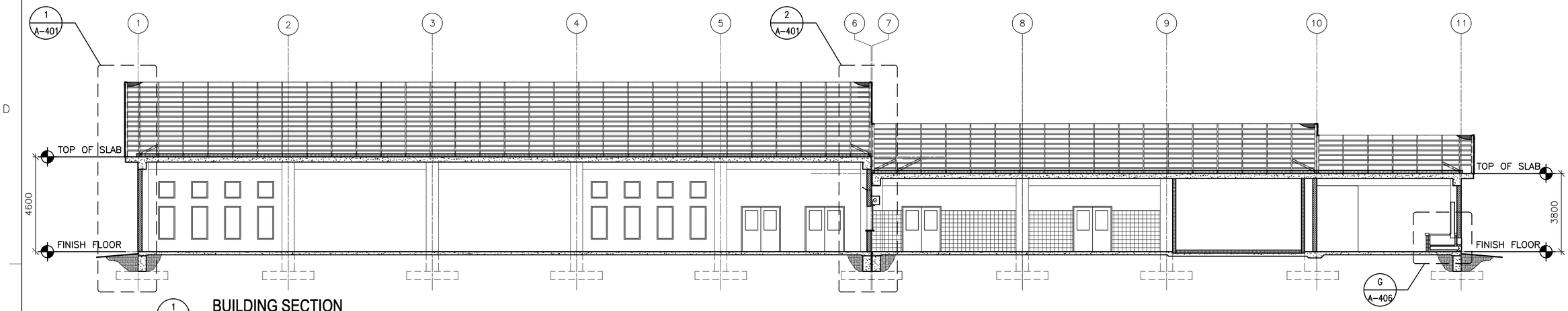


1 A-301 **BUILDING SECTION**
SCALE: 1:100

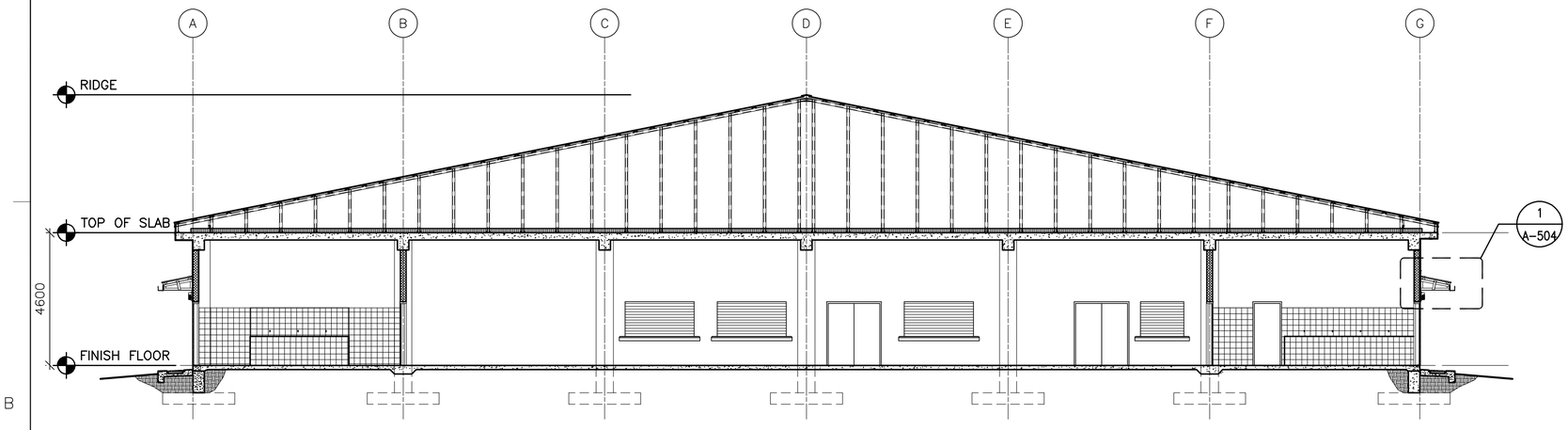


2 A-301 **BUILDING SECTION**
SCALE: 1:100

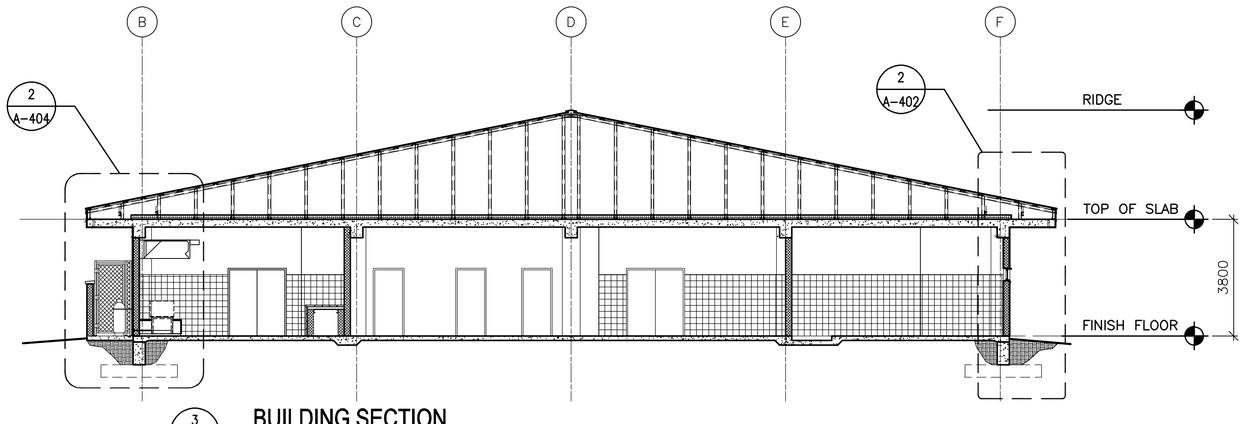


3 A-301 **BUILDING SECTION**
SCALE: 1:100

LINEAR DIMENSIONS SHOWN ARE IN MILLIMETERS (MM), UNLESS OTHERWISE NOTED

0 2000 4000
SCALE: 1:100

APPROVED:

A/E DESIGNER OF RECORD

SEAL:

STATE OF SOUTH CAROLINA
KEVIN R. CHAFIN
N. Charleston, SC
6374
REGISTERED ARCHITECT

US ARMY CORPS OF ENGINEERS
AFGHANISTAN ENGINEER DISTRICT

| Mark | Description | Date | Appr. | Mark | Description | Date | Appr. |
|---|---|---|---|---|---|---|---|
| | | | | | | | |

U.S. ARMY CORPS OF ENGINEERS
AFGHANISTAN ENGINEER DISTRICT
APO AE 96338

Michael Baker Jr., Inc
A unit of Michael Baker Corporation
Airside Business Park
100 Airside Drive
Moon Township, PA 15108
www.mbakercorp.com

Designed by: KRC
Dwn by: KJG
Ckd by: NLJ
Reviewed by: LHM
Submitted by: BAKER
Date: 2/23/10
Design file no.
Rev: 0
Drawing code:
File name: ANASFACA-301BS
Plot date: 2/23/2010
Plot scale: x:X

AFGHAN NATIONAL ARMY
REGIONAL MILITARY TRAINING CENTER
STANDARD DESIGN

DINING FACILITY

BUILDING SECTIONS

Sheet reference number:
A-301

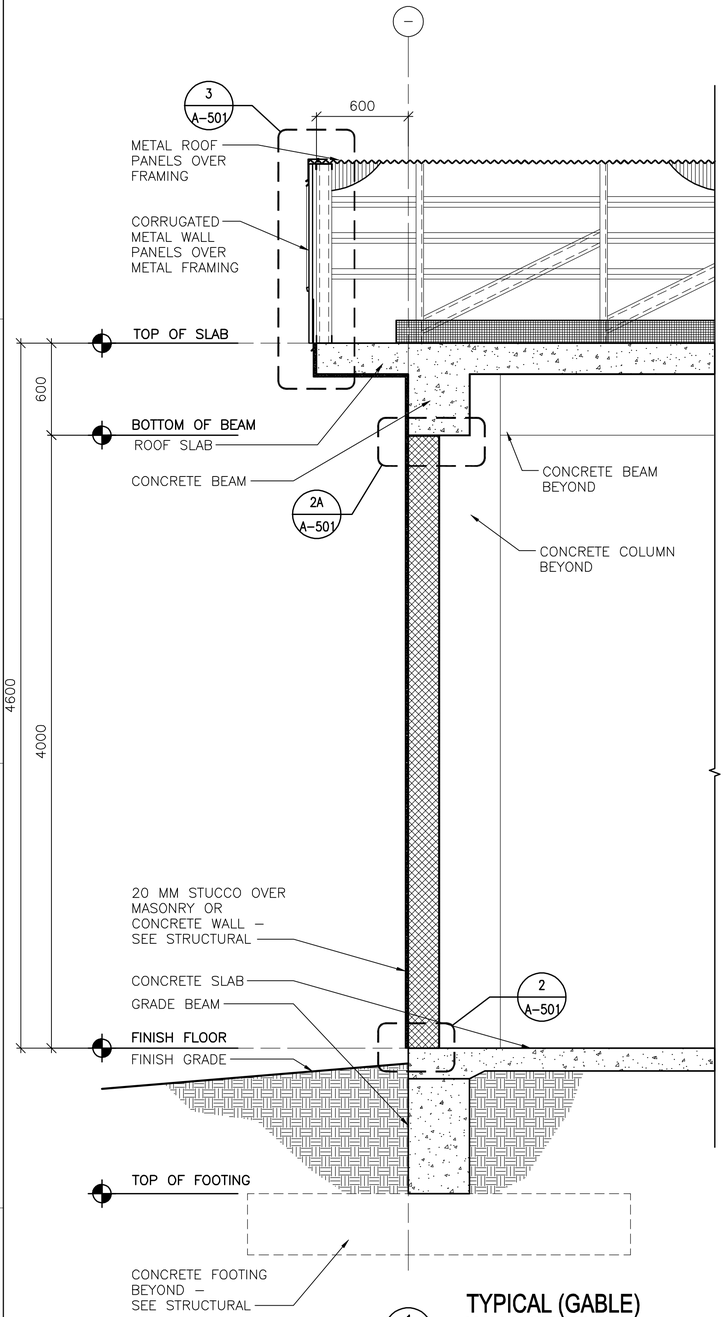


1 A-401 **TYPICAL (GABLE) WALL SECTION**

SCALE: 1:20

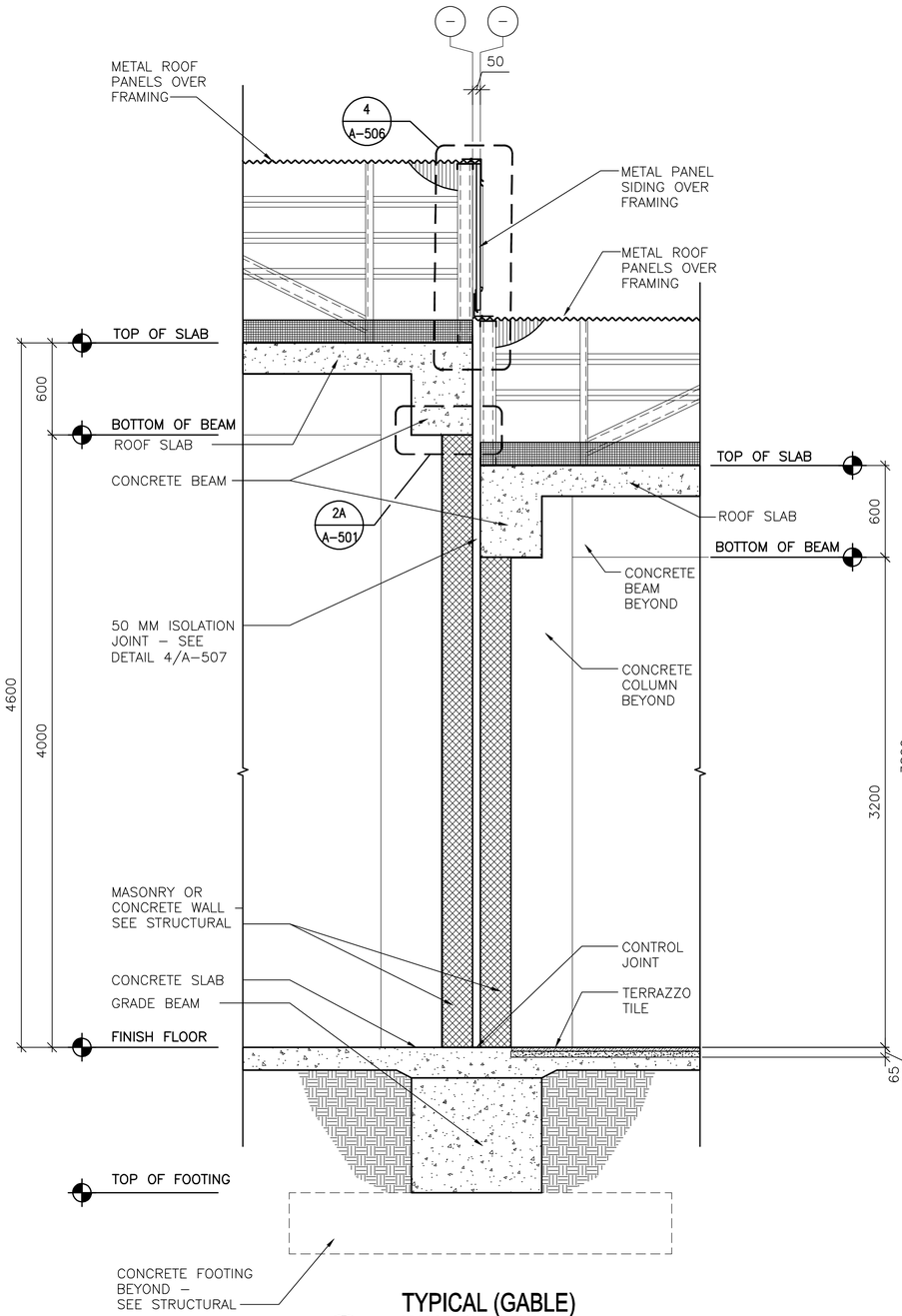


2 A-401 **TYPICAL (GABLE) WALL SECTION**

SCALE: 1:20

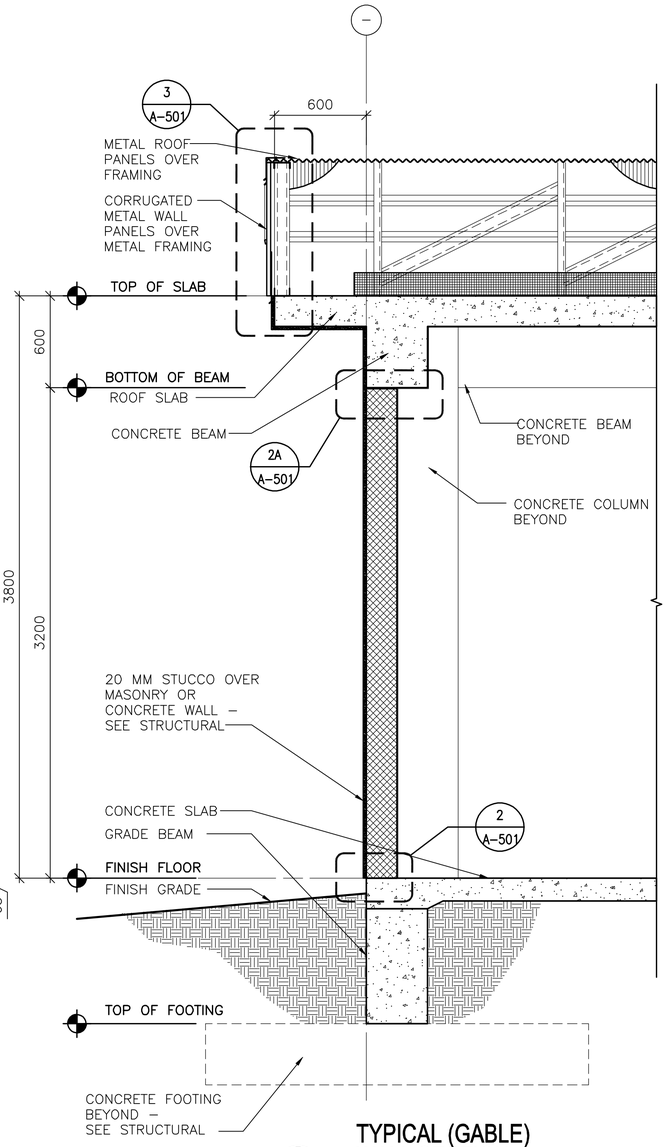


3 A-401 **TYPICAL (GABLE) WALL SECTION**

SCALE: 1:20

LINEAR DIMENSIONS SHOWN ARE IN MILLIMETERS (MM), UNLESS OTHERWISE NOTED

0 400 800
SCALE: 1:20

APPROVED:

A/E DESIGNER OF RECORD

SEAL:

STATE OF SOUTH CAROLINA
KEVIN R. CHAFIN
N. Charleston, SC
6374
REGISTERED ARCHITECT

US ARMY CORPS OF ENGINEERS
AFGHANISTAN ENGINEER DISTRICT

| Mark | Description | Date | Appr. | Mark | Description | Date | Appr. |
|---|---|---|---|---|---|---|---|

Date: 2/23/10 | Rev: 0
Design file no.
Drawing code:
File name: ANADFACA401WS
Plot date: 2/23/2010
Plot scale: x:X

Designed by: KRC
Dwn by: KJG
Ckd by: NLJ
Reviewed by: LHM
Submitted by:
BAKER

U.S. ARMY CORPS OF ENGINEERS
AFGHANISTAN ENGINEER DISTRICT
APO AE 96338

*Michael Baker Jr., Inc*
*A unit of Michael Baker Corporation*
Airside Business Park
100 Airside Drive
Moon Township, PA 15108
www.mbakercorp.com

AFGHAN NATIONAL ARMY
REGIONAL MILITARY TRAINING CENTER
STANDARD DESIGN

DINING FACILITY

WALL SECTIONS

Sheet reference number:
A-401

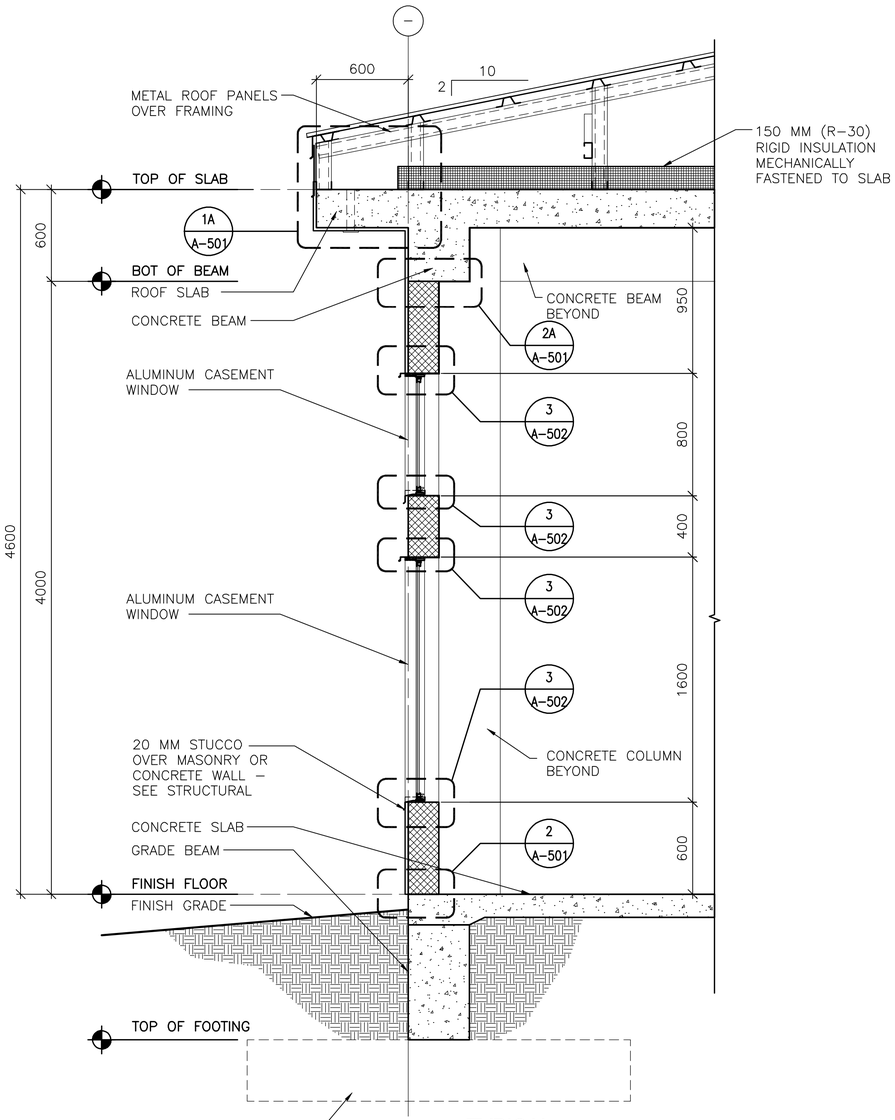


1 A-402 TYPICAL WALL SECTION
SCALE: 1:20

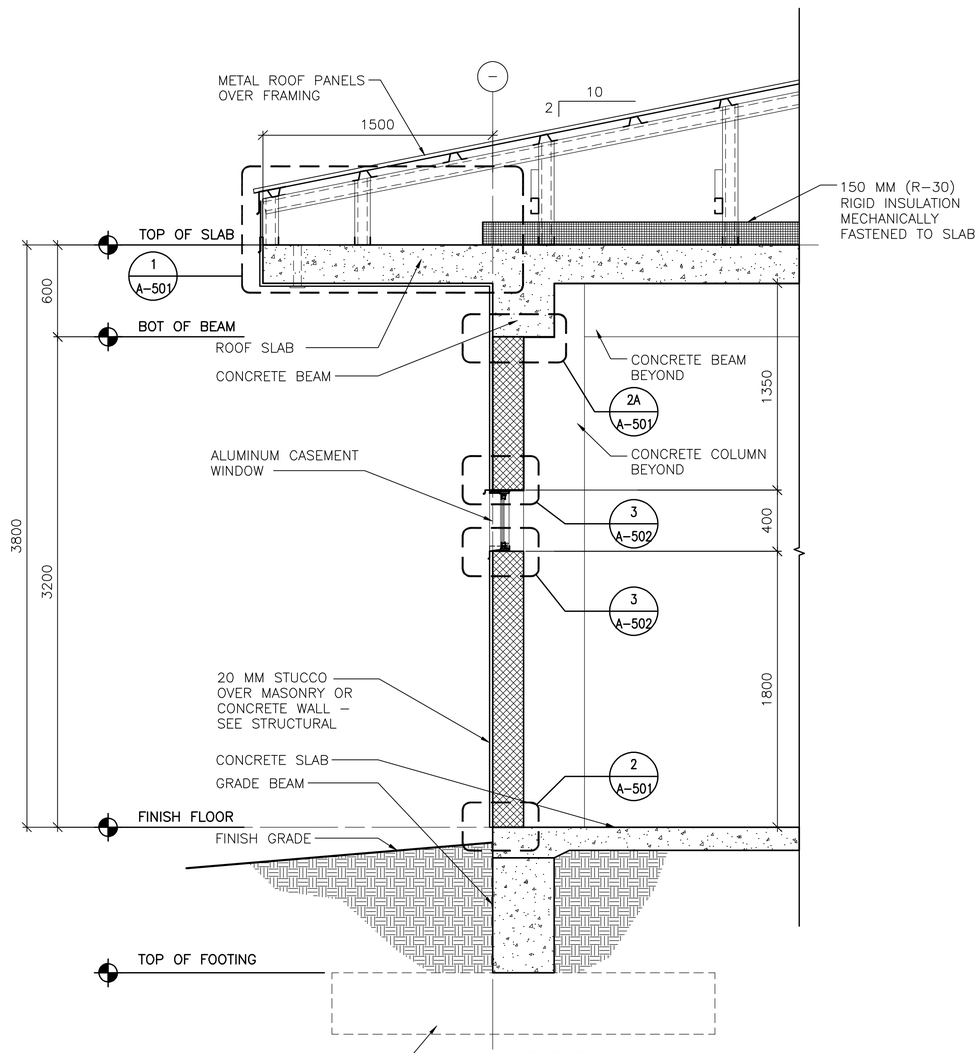


2 A-402 TYPICAL WALL SECTION
SCALE: 1:20

LINEAR DIMENSIONS SHOWN ARE IN MILLIMETERS (MM), UNLESS OTHERWISE NOTED

0 400 800
SCALE: 1:20

APPROVED:

A/E DESIGNER OF RECORD

SEAL:

STATE OF SOUTH CAROLINA
KEVIN R. CHAFIN
N. Charleston, SC
6374
REGISTERED ARCHITECT

US ARMY CORPS OF ENGINEERS
AFGHANISTAN ENGINEER DISTRICT

| Mark | Description | Date | Appr. | Mark | Description | Date | Appr. |
|---|---|---|---|---|---|---|---|

Designed by: KRC
Dwn by: KJG
Ckd by: NLJ
Reviewed by: LHM
Submitted by: BAKER
Date: 2/23/10
Rev: 0
Design file no.
Drawing code:
File name: ANADFACA-402WS
Plot date: 2/23/2010
Plot scale: X:X

U.S. ARMY CORPS OF ENGINEERS
AFGHANISTAN ENGINEER DISTRICT
APO AE 96338

Michael Baker Jr., Inc
A unit of Michael Baker Corporation
Airside Business Park
100 Airside Drive
Moon Township PA 15108
www.mbakercorp.com

AFGHAN NATIONAL ARMY
REGIONAL MILITARY TRAINING CENTER
STANDARD DESIGN

DINING FACILITY

WALL SECTIONS

Sheet reference number:
A-402

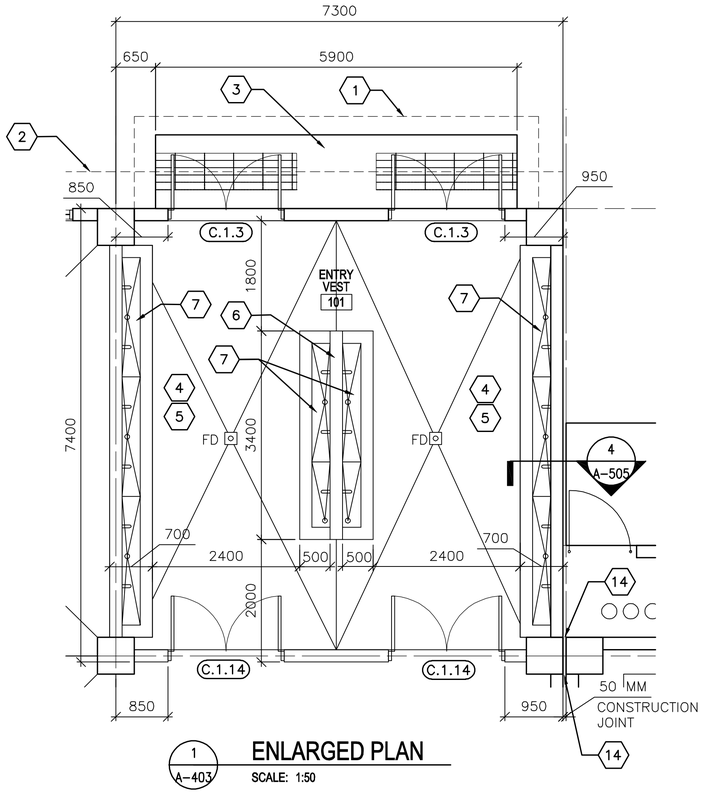


1 A-403 **ENLARGED PLAN**
SCALE: 1:50

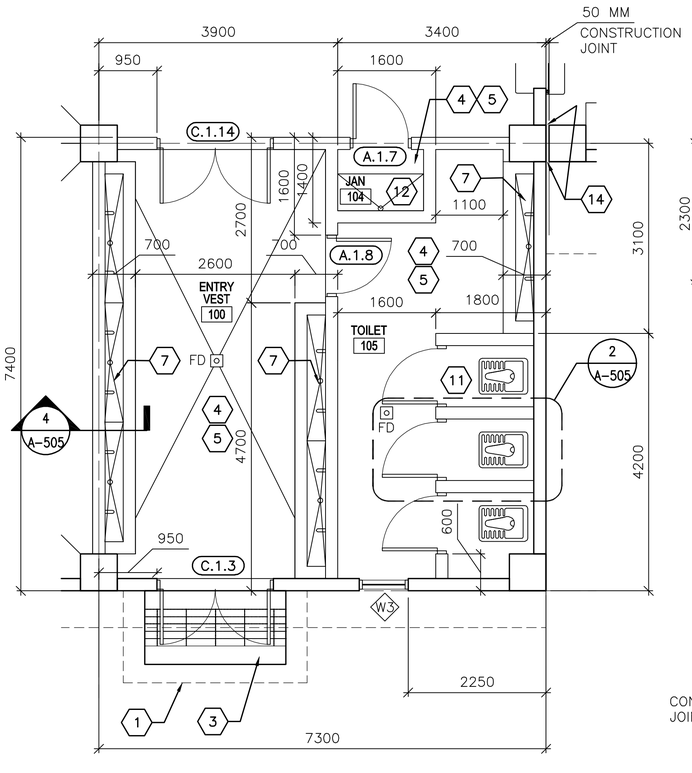


2 A-403 **ENLARGED PLAN**
SCALE: 1:50

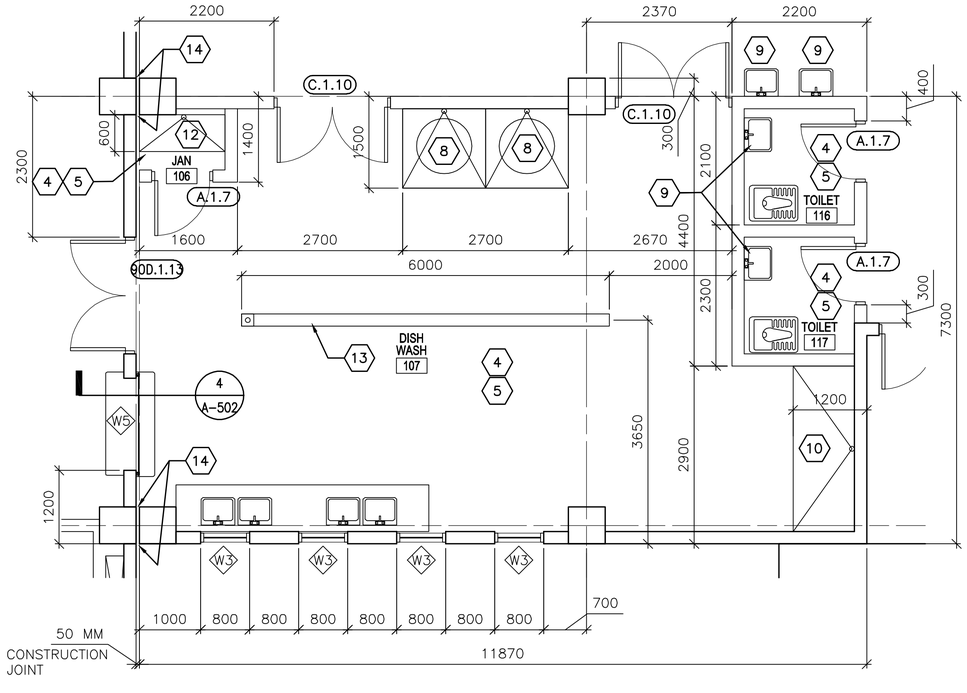


3 A-403 **ENLARGED PLAN**
SCALE: 1:50

LINEAR DIMENSIONS SHOWN ARE IN MILLIMETERS (MM), UNLESS OTHERWISE NOTED

0 1000 2000
SCALE: 1:50

## KEY NOTES: (X)

1. LINE OF METAL ENTRANCE CANOPY ABOVE.
2. LINE OF ROOF OVERHANG ABOVE.
3. CONCRETE STOOP WITH GRATE – SEE DETAIL 1/A–503.
4. WALL FINISH SHALL BE CERAMIC TILE TO 2000 MM WITH PAINTED PLASTER APPLIED TO STRUCTURE ABOVE.
5. FLOOR FINISH SHALL BE TERRAZZO TILE.
6. PARTIAL HEIGHT WALL –2000 MM ABOVE FINISH FLOOR.
7. LAVATORY – SEE DETAIL 4/A–505.
8. 1200 MM X 1200 MM RECESSED TROUGH – SEE DETAIL 6/A–505.
9. WALL MOUNTED LAVATORY – SEE DETAIL 2/A–506.
10. CART WASH.
11. TYPICAL TOILET STALL LAYOUT – SEE DETAIL 2/A–505.
12. 1400 MM X 600 MM RECESSED TROUGH – SEE DETAIL 6/A–505.
13. CONTINUOUS TRENCH DRAIN – SEE SHEET S–505.
14. ISOLATION JOINT COVER – SEE SHEET A–507.

## GENERAL NOTES:

A. DIMENSIONS ARE SHOWN TO OUTER EDGE OF EXTERIOR STRUCTURAL COLUMNS, STRUCTURAL COLUMN GRID, EDGE OF INTERIOR PARTITIONS, EDGE OF WINDOW OPENINGS, AND TO HINGE SIDE OF DOOR FRAME OPENINGS.

B. HINGE SIDE OF OPENINGS FOR DOORS AND FRAMES SHALL BE LOCATED 200 MM FROM THE ADJACENT WALL OR COLUMN, UNLESS NOTED OTHERWISE.

C. INTERIOR PARTITIONS SHALL BE 200 MM CMU. SEE STRUCTURAL DRAWINGS FOR LOCATION OF CONCRETE SHEAR WALLS.

D. COSMETIC REPAIR OF MINOR DEFECTS: REPAIR OR FILL MORTAR JOINTS AND MINOR DEFECTS, INCLUDING BUT NOT LIMITED TO SPALLS, IN ACCORDANCE WITH MANUFACTURER'S RECOMMENDATIONS AND PRIOR TO COATING APPLICATION. SURFACES TO BE PAINTED SHALL BE CLEAN AND FREE OF FOREIGN MATTER BEFORE APPLICATION OF PAINT. CLEANING SHALL BE SCHEDULED SO THAT DUST AND OTHER CONTAMINANTS WILL NOT FALL ON NEWLY PAINTED SURFACES.

E. CONCRETE, PLASTER AND MASONRY SURFACES SHALL BE ALLOWED TO CURE FOR AT LEAST 30 DAYS BEFORE PAINTING. CONCRETE SLABS–ON–GRADE SHALL BE ALLOWED TO CURE 90 DAYS BEFORE STAINING OR SEALING.

F. DO NOT USE PAINT MATERIALS CONTAINING LEAD CONTENT IN EXCESS OF 0.009 PERCENT OF THE WEIGHT OF THE TOTAL NONVOLATILE CONTENT OF THE PAINT OR THE WEIGHT OF THE DRIED PAINT FILM.

G. DO NOT USE ANY ASBESTOS CONTAINING MATERIALS (ACM) IN PROJECT. ACM IS DEFINED AS 1% OR MORE BY VOLUME.

H. DO NOT USE PAINT MATERIALS CONTAINING MERCURIAL FUNGICIDES.

I. FACTORY PRIMED METAL DOORS AND FRAMES SHALL RECEIVE TWO COATS OF PAINT.

J. FILL REMAINING SPACE AT PENETRATIONS IN FIRE–RATED FLOORS, PARTITIONS AND CEILINGS WITH APPROPRIATE FIRESTOPPING MATERIALS.

K. ALL CEILING FINISHES SHALL BE PAINTED PLASTER APPLIED TO STRUCTURE.

L. ALL WALL FINISHES SHALL BE PAINTED PLASTER APPLIED TO STRUCTURE, UNLESS NOTED OTHERWISE.

M. ALL FLOOR FINISHES SHALL BE EPOXY SEALED CONCRETE, UNLESS NOTED OTHERWISE.

N. PROVIDE TILE FINISHES AS INDICATED IN DETAILS

O. ALL TOILET STALL DOOR FRAMES AND HARDWARE SHALL BE F.2.12.

P. HEIGHT OF ALL TOILET PARTITIONS SHALL BE 2000 MM ABOVE FINISHED FLOOR.

## LEGEND:

| | |
|---|---|
| XXX | DOOR FRAME AND HARDWARE TYPE, SEE SHEET A–601 |
| A | WINDOW TYPE, SEE SHEET A–601 |
| X | KEY NOTE |

## ABBREVIATIONS:

| | |
|---|---|
| ELEC | ELECTRICAL |
| MECH | MECHANICAL |
| JAN | JANITOR |
| CLOS | CLOSET |
| COMM | COMMUNICATIONS |

APPROVED:

A/E DESIGNER OF RECORD

SEAL:

STATE OF SOUTH CAROLINA
KEVIN R. CHAFIN
N. Charleston, SC
6374
REGISTERED ARCHITECT

US ARMY CORPS OF ENGINEERS
AFGHANISTAN ENGINEER DISTRICT

| Mark | Description | Date | Appr. | Mark | Description | Date | Appr. |
|---|---|---|---|---|---|---|---|

U.S. ARMY CORPS OF ENGINEERS
AFGHANISTAN ENGINEER DISTRICT
APO AE 96338

Michael Baker Jr., Inc
A unit of Michael Baker Corporation
Airside Business Park
100 Airside Drive
Moon Township, PA 15108
www.mbakercorp.com

| | | | |
|---|---|---|---|
| Designed by: KRC | | Date: 2/23/10 | Rev: 0 |
| Dwn by: KJG | Ckd by: NLJ | Design file no. | |
| Reviewed by: LHM | | Drawing code: | |
| Submitted by: BAKER | | File name: ANADFACA-403EP<br>Plot date: 2/23/2010<br>Plot scale: x:X | |

AFGHAN NATIONAL ARMY
REGIONAL MILITARY TRAINING CENTER
STANDARD DESIGN

DINING FACILITY

ENLARGED PLANS

Sheet reference number:
A–403

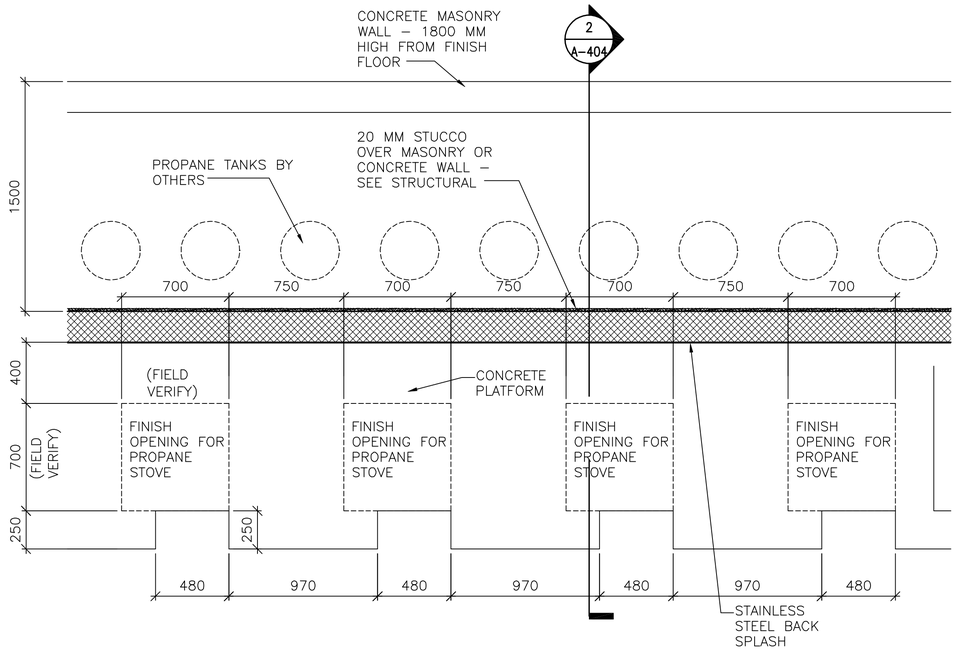


1 A-404 PARTIAL PROPANE STOVE ENCASEMENT PLAN

SCALE: 1:20

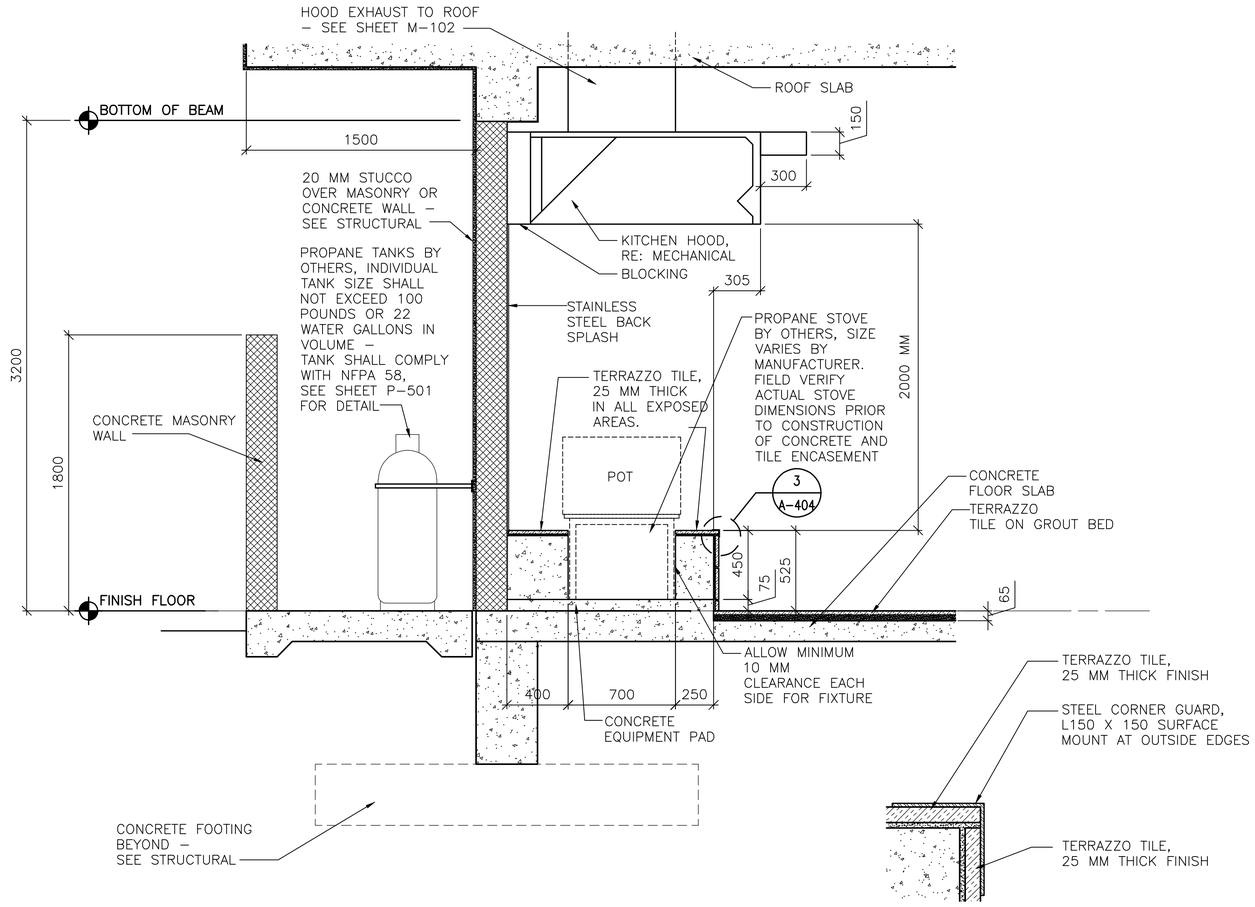


2 A-404 PROPANE STOVE ENCASEMENT SECTION

SCALE: 1:20

3 A-404 CORNER GUARD DETAIL

SCALE: 1:5

## KEY PLAN:

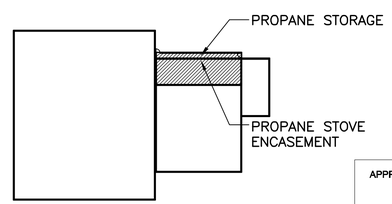


LINEAR DIMENSIONS SHOWN ARE IN MILLIMETERS (MM), UNLESS OTHERWISE NOTED

0 400 800

SCALE: 1:20

APPROVED:

A/E DESIGNER OF RECORD

SEAL:

STATE OF SOUTH CAROLINA
KEVIN R. CHAFIN
N. Charleston, SC
6374
REGISTERED ARCHITECT

US ARMY CORPS OF ENGINEERS
AFGHANISTAN ENGINEER DISTRICT

| Mark | Description | Date | Appr. | Mark | Description | Date | Appr. |
|---|---|---|---|---|---|---|---|

Designed by: KRC
Dwn by: KJG
Ckd by: NLJ
Reviewed by: LHM
Submitted by: BAKER
Date: 2/23/10
Rev: 0
Design file no.
Drawing code:
File name: ANADFACA-404PSP
Plot date: 2/23/2010
Plot scale: X:X

U.S. ARMY CORPS OF ENGINEERS
AFGHANISTAN ENGINEER DISTRICT
APO AE 96338

Michael Baker Jr., Inc
A unit of Michael Baker Corporation
Airside Business Park
100 Airside Drive
Moon Township, PA 15108
www.mbakercorp.com

AFGHAN NATIONAL ARMY
REGIONAL MILITARY TRAINING CENTER
STANDARD DESIGN

DINING FACILITY

PROPANE STOVE PLAN AND SECTION

Sheet reference number:
A-404

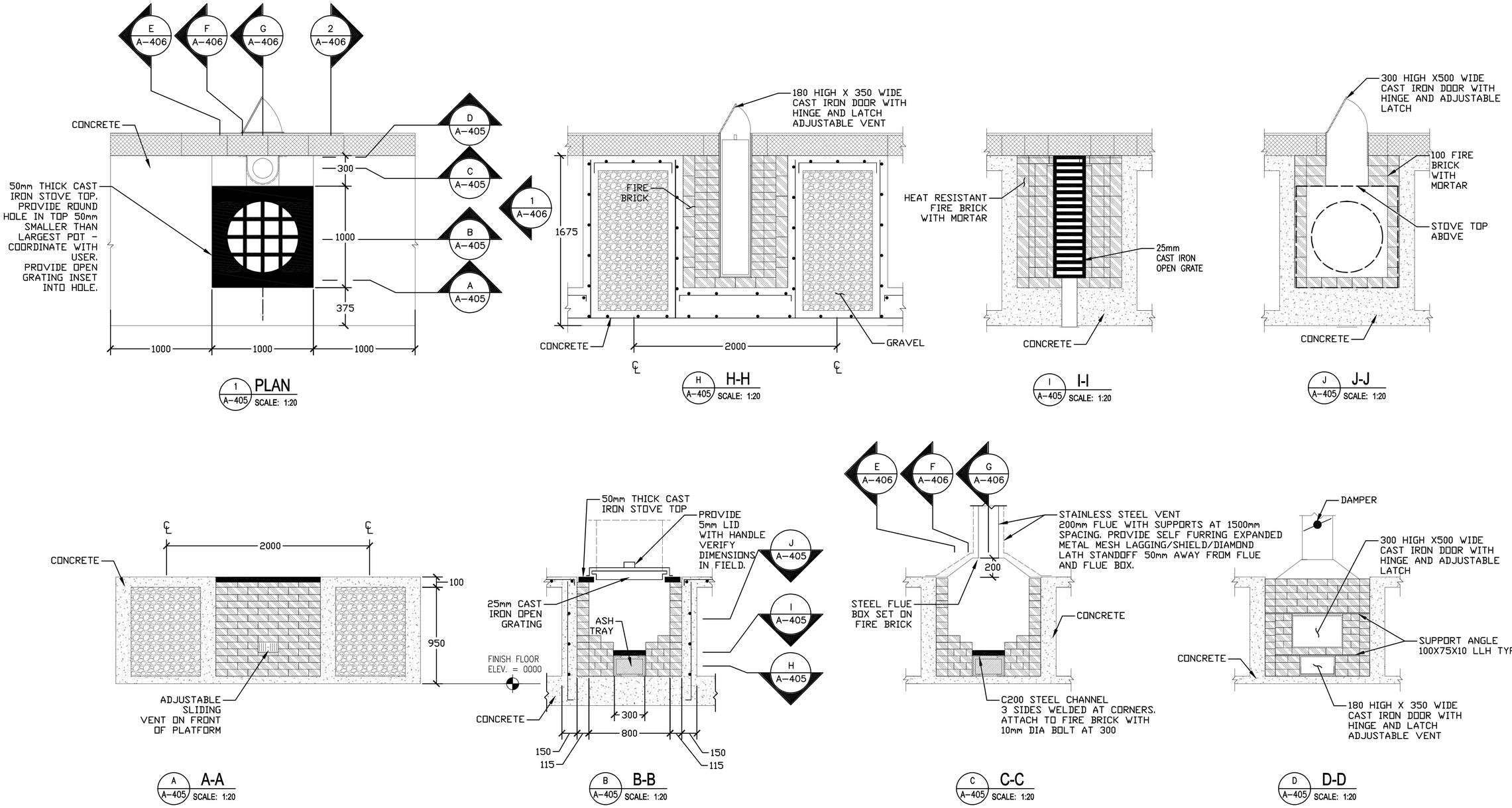


US ARMY CORPS OF ENGINEERS
AFGHANISTAN ENGINEER DISTRICT

| Mark | Description | Date | Appr. | Mark | Description | Date | Appr. |
|---|---|---|---|---|---|---|---|

Designed by: KRC
Dwn by: KJG
Ckd by: NLJ
Reviewed by: LHM
Submitted by: BAKER
Date: 2/23/10
Rev: 0
Design file no.
Drawing code:
File name: ANADFACA-405WBS
Plot date: 2/24/2010
Plot scale: X:X

U.S. ARMY CORPS OF ENGINEERS
AFGHANISTAN ENGINEER DISTRICT
APO AE 96338

Michael Baker Jr., Inc
A unit of Michael Baker Corporation
Airside Business Park
100 Airside Drive
Moon Township, PA 15108
www.mbakercorp.com

AFGHAN NATIONAL ARMY
REGIONAL MILITARY TRAINING CENTER
STANDARD DESIGN

DINING FACILITY

WOOD BURNING STOVE DETAILS

APPROVED:

A/E DESIGNER OF RECORD

SEAL:

STATE OF SOUTH CAROLINA
KEVIN R. CHAFIN
N. Charleston, SC
6374
REGISTERED ARCHITECT

Sheet reference number:
A-405

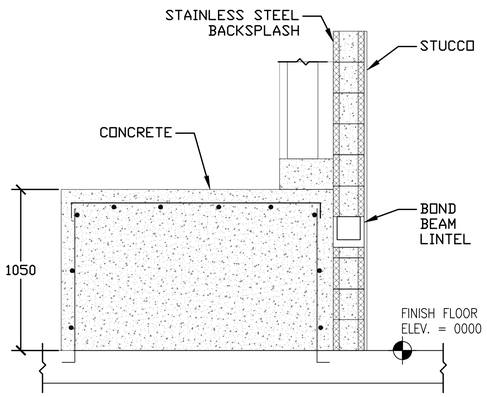


1 A-406 **ELEVATION**
SCALE: 1:20

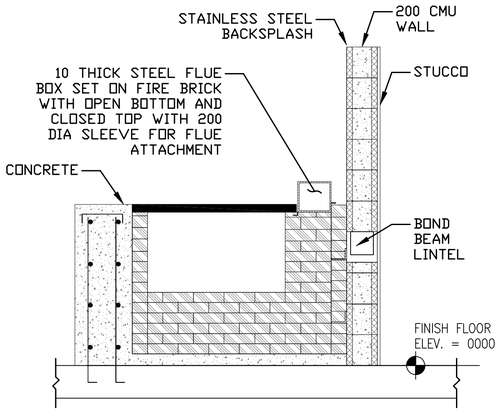


E A-406 **E-E**
SCALE: 1:20

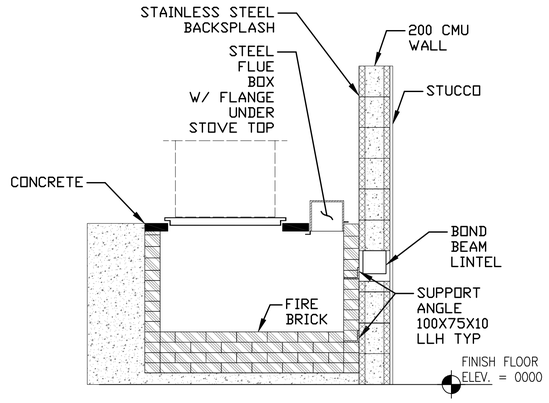


F A-406 **F-F**
SCALE: 1:20

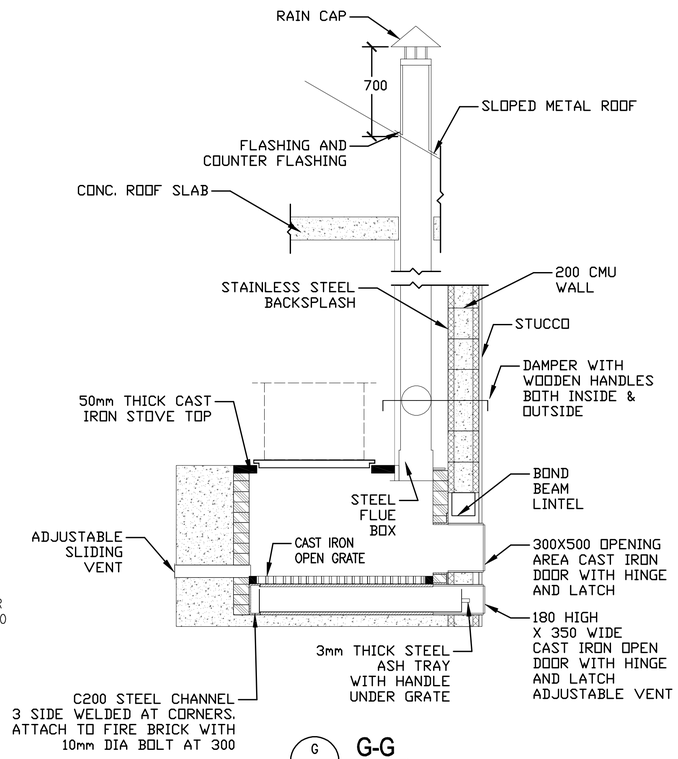


G A-406 **G-G**
SCALE: 1:20

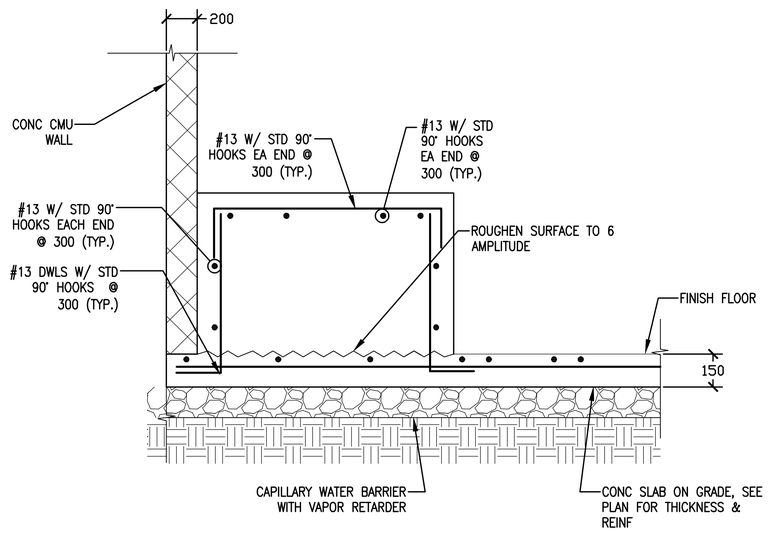


2 A-406 **DETAIL**
SCALE: NTS

0 400 800
SCALE: 1:20

APPROVED:

A/E DESIGNER OF RECORD

SEAL:

STATE OF SOUTH CAROLINA
KEVIN R. CHAFIN
N. Charleston, SC
6374
REGISTERED ARCHITECT

US ARMY CORPS OF ENGINEERS
AFGHANISTAN ENGINEER DISTRICT

| Mark | Description | Date | Appr. | Mark | Description | Date | Appr. |
|---|---|---|---|---|---|---|---|

Designed by: KRC
Dwn by: KJG
Ckd by: NLJ
Reviewed by: LHM
Submitted by: BAKER
Date: 2/23/10
Design file no.
Drawing code:
File name: ANASFACA406WBS
Plot date: 2/24/2010
Plot scale: XX
Rev: 0

U.S. ARMY CORPS OF ENGINEERS
AFGHANISTAN ENGINEER DISTRICT
APO AE 96338

*Michael Baker Jr., Inc.*
*A unit of Michael Baker Corporation*
Airside Business Park
100 Airside Drive
Moon Township, PA 15108
www.mbakercorp.com

AFGHAN NATIONAL ARMY
REGIONAL MILITARY TRAINING CENTER
STANDARD DESIGN

DINING FACILITY

WOOD BURNING STOVE
DETAILS

Sheet reference number:
A-406

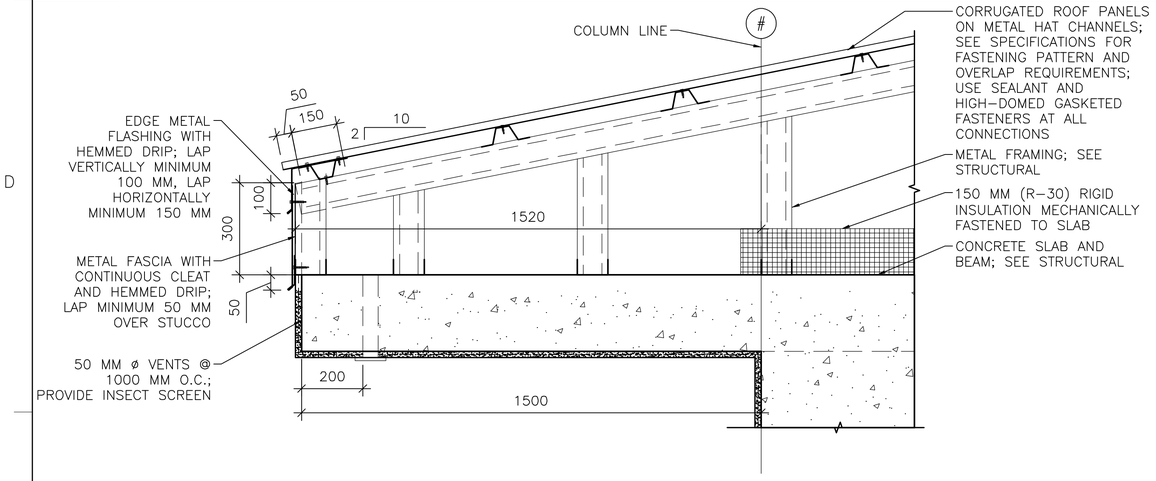


1 A-501 **EAVE DETAIL**
SCALE: 1:10

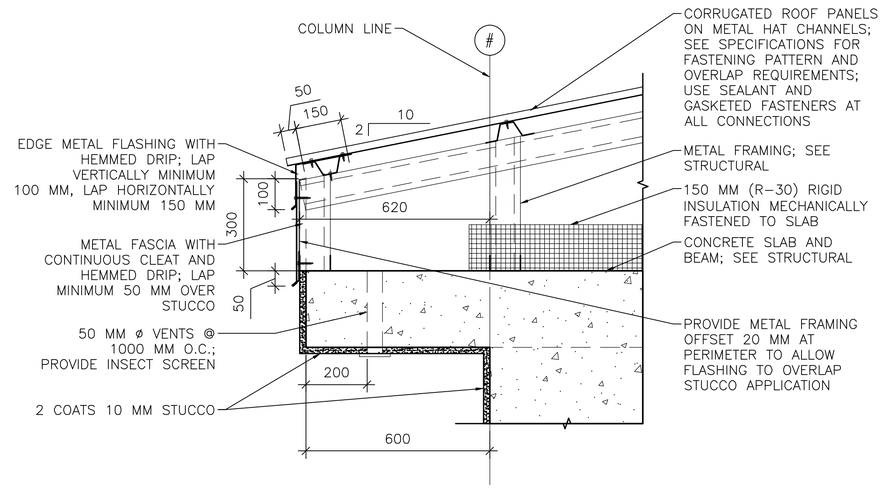


1A A-501 **EAVE DETAIL**
SCALE: 1:10

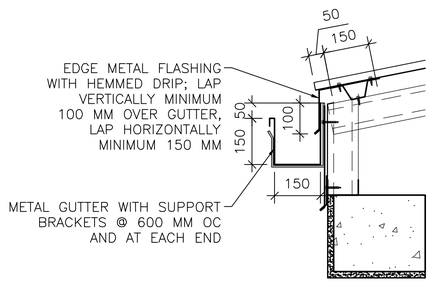


1B A-501 **GUTTER DETAIL**
SCALE: 1:10

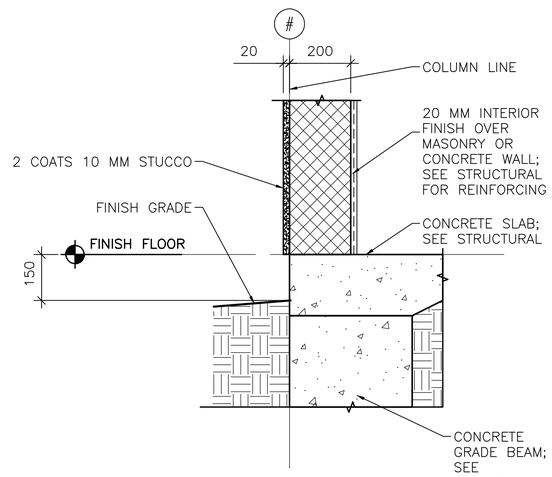


2 A-501 **STUCCO BASE DETAIL**
SCALE: 1:10

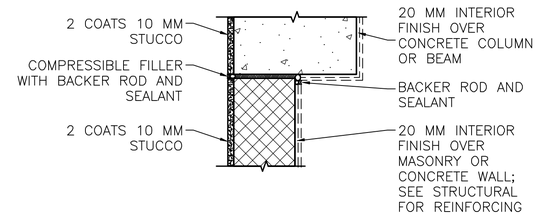


NOTE: DETAIL TYPICAL AT ALL WALL/COLUMN AND WALL/BEAM LOCATIONS, SEE ALTERNATE BRACING DETAIL BELOW 2B/A-501.

2A A-501 **STUCCO JOINT DETAIL**
SCALE: 1:10

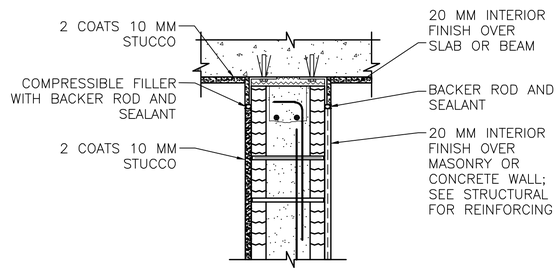


2B A-501 **ALTERNATE BRACING DETAIL**
SCALE: 1:10

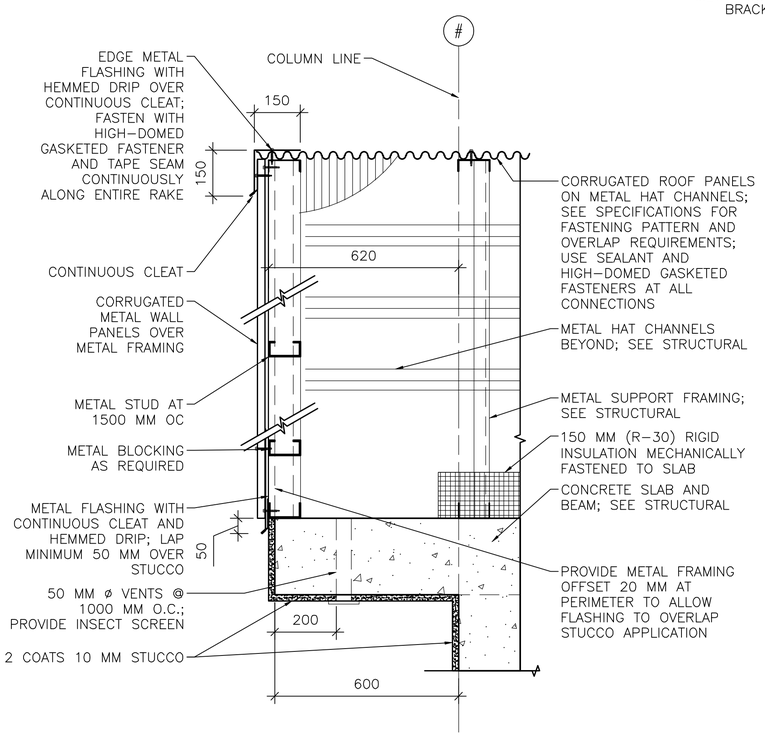


3 A-501 **RAKE/EAVE DETAIL**
SCALE: 1:10

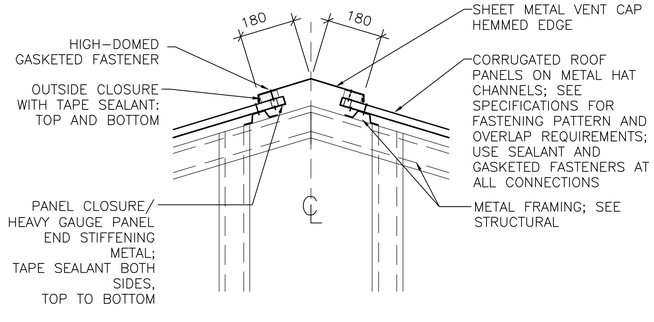


4 A-501 **RIDGE VENT DETAIL**
SCALE: 1:10

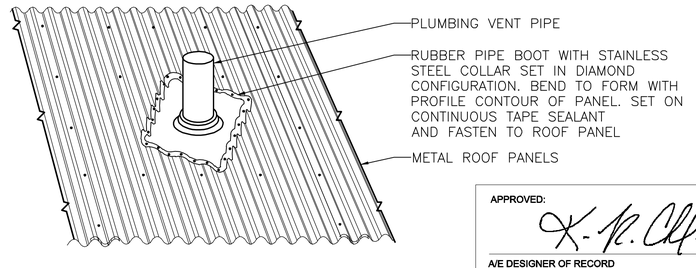


5 A-501 **PLUMBING VENT DETAIL**
SCALE: NTS

LINEAR DIMENSIONS SHOWN ARE IN MILLIMETERS (MM), UNLESS OTHERWISE NOTED

0 200 400
SCALE: 1:10

APPROVED:

A/E DESIGNER OF RECORD

SEAL:

STATE OF SOUTH CAROLINA
KEVIN R. CHAFIN
N. Charleston, SC
6374
REGISTERED ARCHITECT

US ARMY CORPS OF ENGINEERS
AFGHANISTAN ENGINEER DISTRICT

| Mark | Description | Date | Appr. | Mark | Description | Date | Appr. |
|---|---|---|---|---|---|---|---|
| | | | | | | | |

U.S. ARMY CORPS OF ENGINEERS
AFGHANISTAN ENGINEER DISTRICT
APO AE 96338

Michael Baker Jr., Inc.
A unit of Michael Baker Corporation
Airside Business Park
100 Airside Drive
Moon Township, PA 15108
www.mbakercorp.com

Designed by: KRC
Dwn by: KJG
Ckd by: NLJ
Reviewed by: LHM
Submitted by: BAKER
Date: 2/23/10
Design file no.
Rev: 0
Drawing code:
File name: ANAFGACA501DT
Plot date: 2/23/2010
Plot scale: X:X

AFGHAN NATIONAL ARMY
REGIONAL MILITARY TRAINING CENTER
STANDARD DESIGN

DINING FACILITY

EXTERIOR DETAILS

Sheet reference number:
A-501

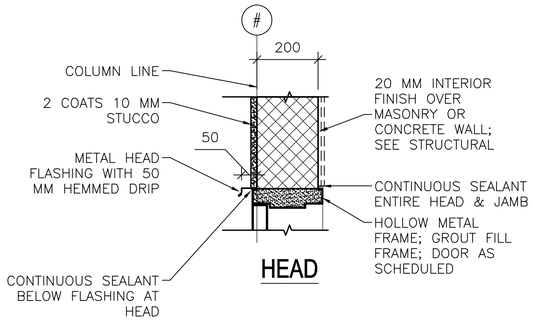


HEAD

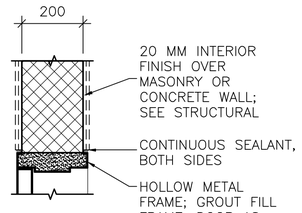


HEAD

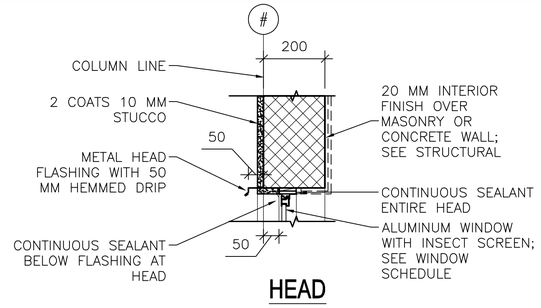


HEAD

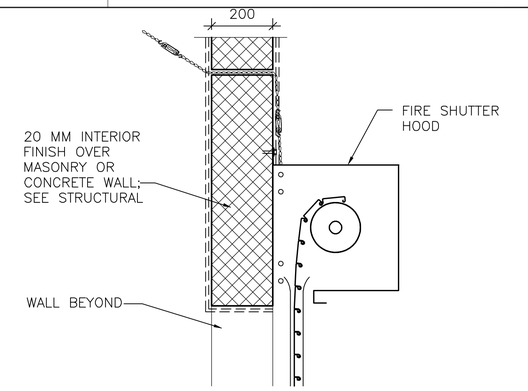


HEAD

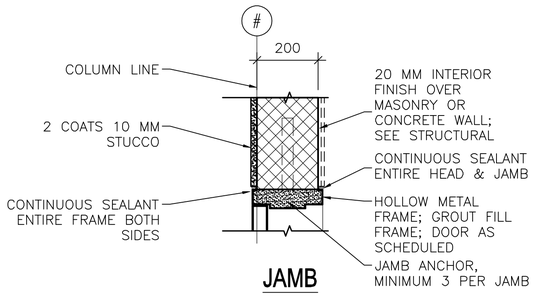


JAMB

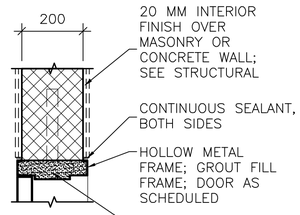


JAMB

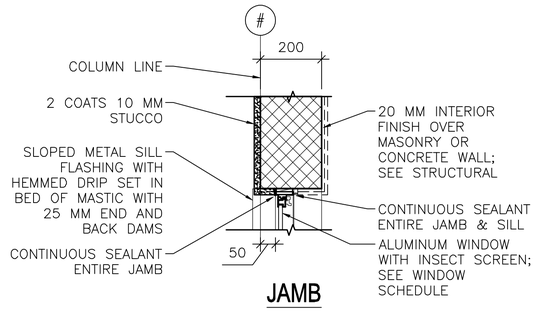


JAMB

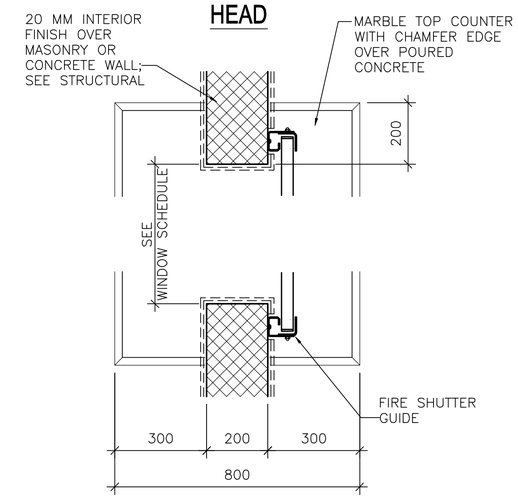


JAMB

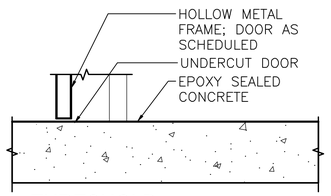


THRESHOLD

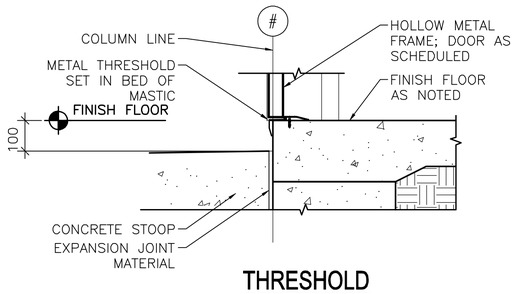


THRESHOLD

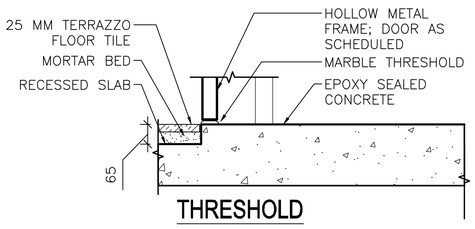


THRESHOLD

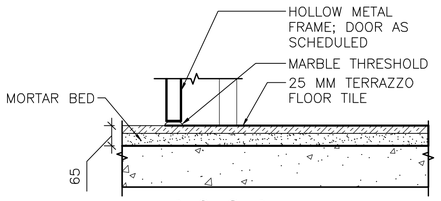


THRESHOLD

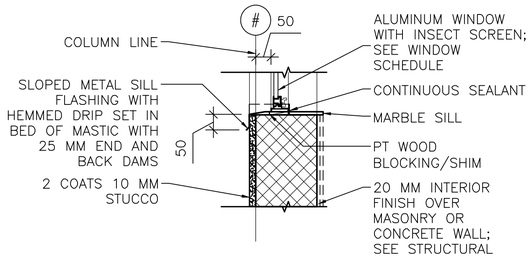


SILL

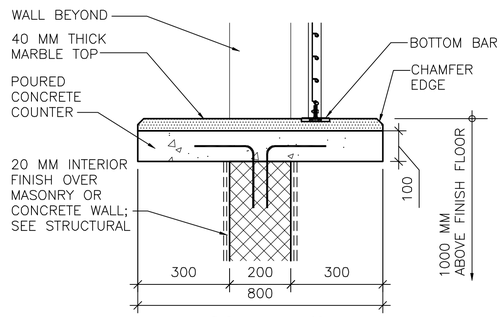


COUNTER/SILL

4 / A-502 **FIRE SHUTTER COUNTER**

SCALE: 1:10

1 / A-502 **EXTERIOR DOOR DETAILS**

SCALE: 1:10

2 / A-502 **INTERIOR DOOR DETAILS**

SCALE: 1:10

3 / A-502 **EXTERIOR WINDOW DETAILS**

SCALE: 1:10

LINEAR DIMENSIONS SHOWN ARE IN MILLIMETERS (MM), UNLESS OTHERWISE NOTED

0 200 400

SCALE: 1:10

APPROVED:

A/E DESIGNER OF RECORD

SEAL:

STATE OF SOUTH CAROLINA
KEVIN R. CHAFIN
N. Charleston, SC
6374
REGISTERED ARCHITECT

US ARMY CORPS OF ENGINEERS
AFGHANISTAN ENGINEER DISTRICT

| Mark | Description | Date | Appr. | Mark | Description | Date | Appr. |
|---|---|---|---|---|---|---|---|

Date: 2/23/10
Design file no.
Rev: 0
Drawing code:
File name: ANADFACA502HJS
Plot date: 2/23/2010
Plot scale: x:X

Designed by: KRC
Dwn by: KJG
Ckd by: NLJ
Reviewed by: LHM
Submitted by: BAKER

U.S. ARMY CORPS OF ENGINEERS
AFGHANISTAN ENGINEER DISTRICT
APO AE 96338

Michael Baker Jr., Inc
A unit of Michael Baker Corporation
Airside Business Park
100 Airside Drive
Moon Township, PA 15108
www.mbakercorp.com

AFGHAN NATIONAL ARMY
REGIONAL MILITARY TRAINING CENTER
STANDARD DESIGN

DINING FACILITY

HEAD, JAMB & SILL DETAILS

Sheet reference number:
A-502

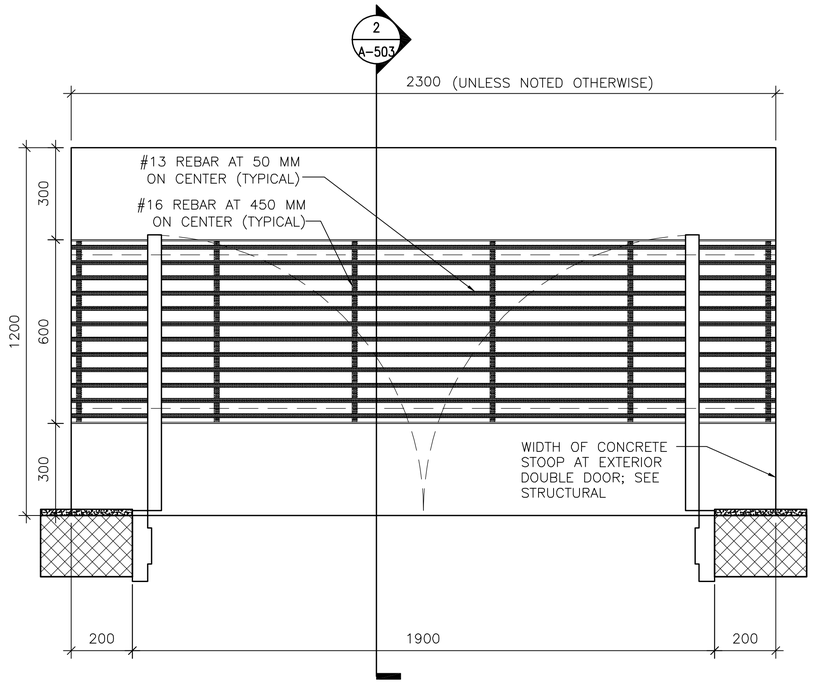


1 A-503 **DOOR STOOP PLAN (WITH GRATE)**

SCALE: 1:10

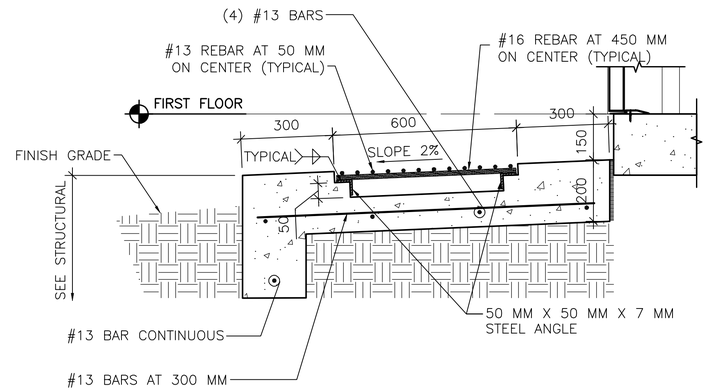


2 A-503 **DOOR STOOP DETAIL**

SCALE: 1:10

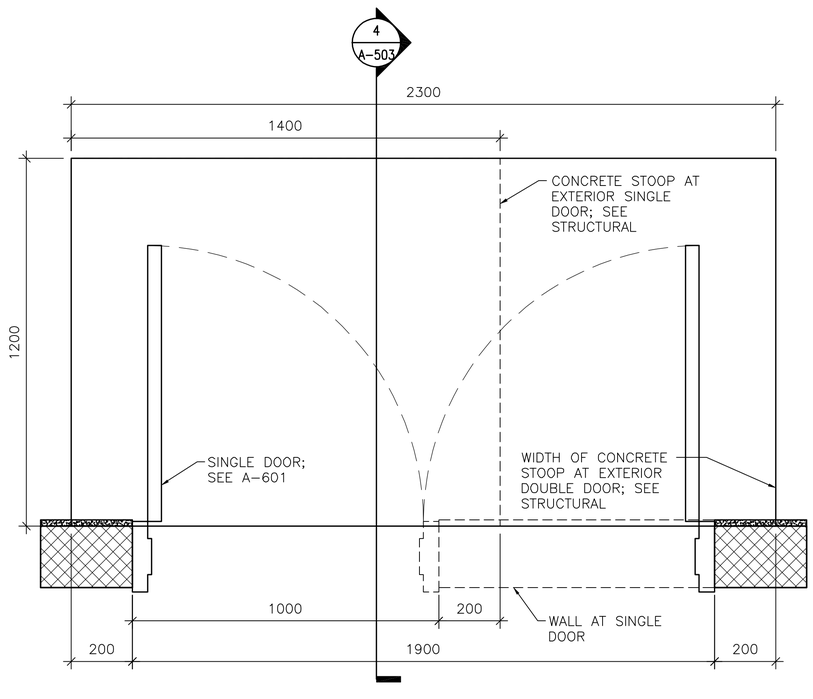


3 A-503 **DOOR STOOP PLAN (WITHOUT GRATE)**

SCALE: 1:10

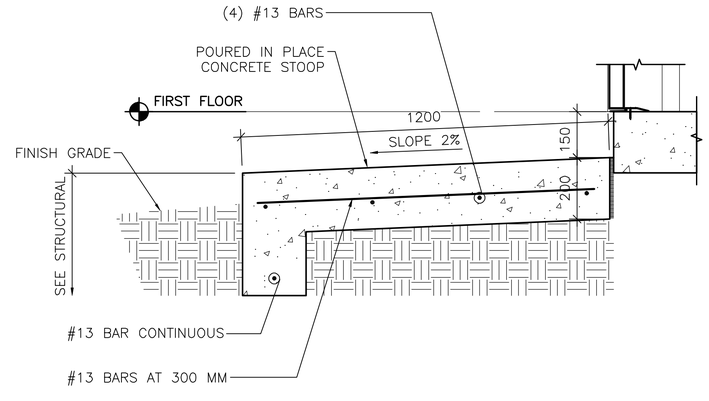


4 A-503 **DOOR STOOP DETAIL**

SCALE: 1:10

LINEAR DIMENSIONS SHOWN ARE IN MILLIMETERS (MM), UNLESS OTHERWISE NOTED

0 200 400
SCALE: 1:10

APPROVED:

A/E DESIGNER OF RECORD

SEAL:

STATE OF SOUTH CAROLINA
KEVIN R. CHAFIN
N. Charleston, SC
6374
REGISTERED ARCHITECT

US ARMY CORPS OF ENGINEERS
AFGHANISTAN ENGINEER DISTRICT

| Mark | Description | Date | Appr. | Mark | Description | Date | Appr. |
|---|---|---|---|---|---|---|---|

U.S. ARMY CORPS OF ENGINEERS
AFGHANISTAN ENGINEER DISTRICT
APO AE 96338

*Michael Baker Jr., Inc*
*A unit of Michael Baker Corporation*
Airside Business Park
100 Airside Drive
Moon Township, PA 15108
www.mbakercorp.com

| | | | |
|---|---|---|---|
| Designed by: KRC | | Date: 2/23/10 | Rev: 0 |
| Dwn by: KJG | Ckd by: NLJ | Design file no. | |
| | | Drawing code: | |
| Reviewed by: LHM | | File name: ANADFACA-503DT | |
| Submitted by: BAKER | | Plot date: 2/23/2010 | |
| | | Plot scale: x:X | |

AFGHAN NATIONAL ARMY
REGIONAL MILITARY TRAINING CENTER
STANDARD DESIGN

DINING FACILITY

STOOP DETAILS

Sheet reference number:
A-503

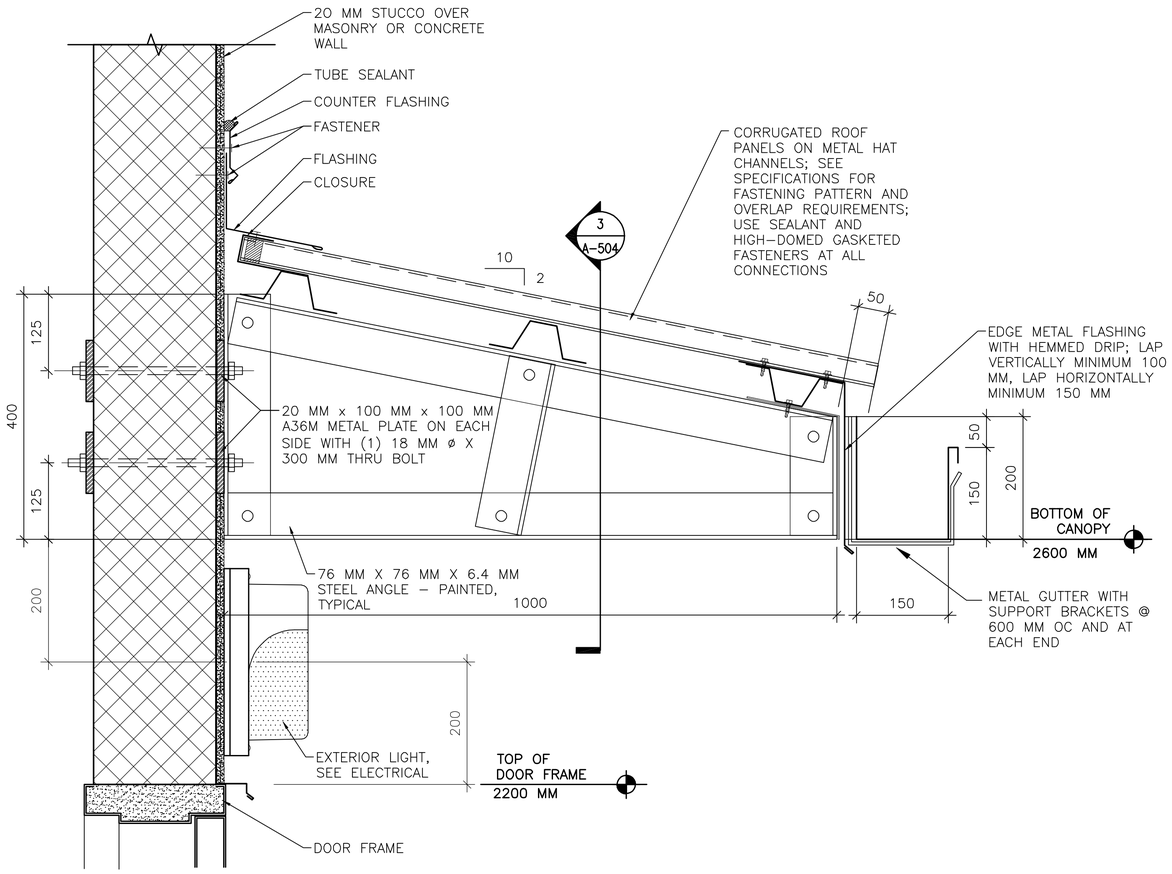


1 A-504 **CANOPY CONNECTION DETAILS**

SCALE: 1:5

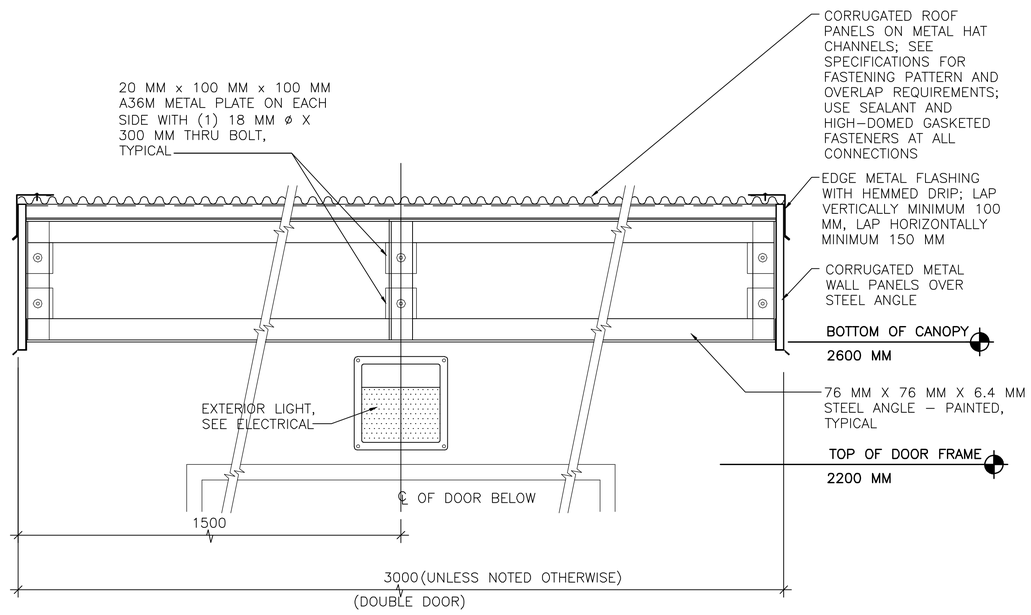


3 A-504 **CANOPY CONNECTION DETAILS**

SCALE: 1:10

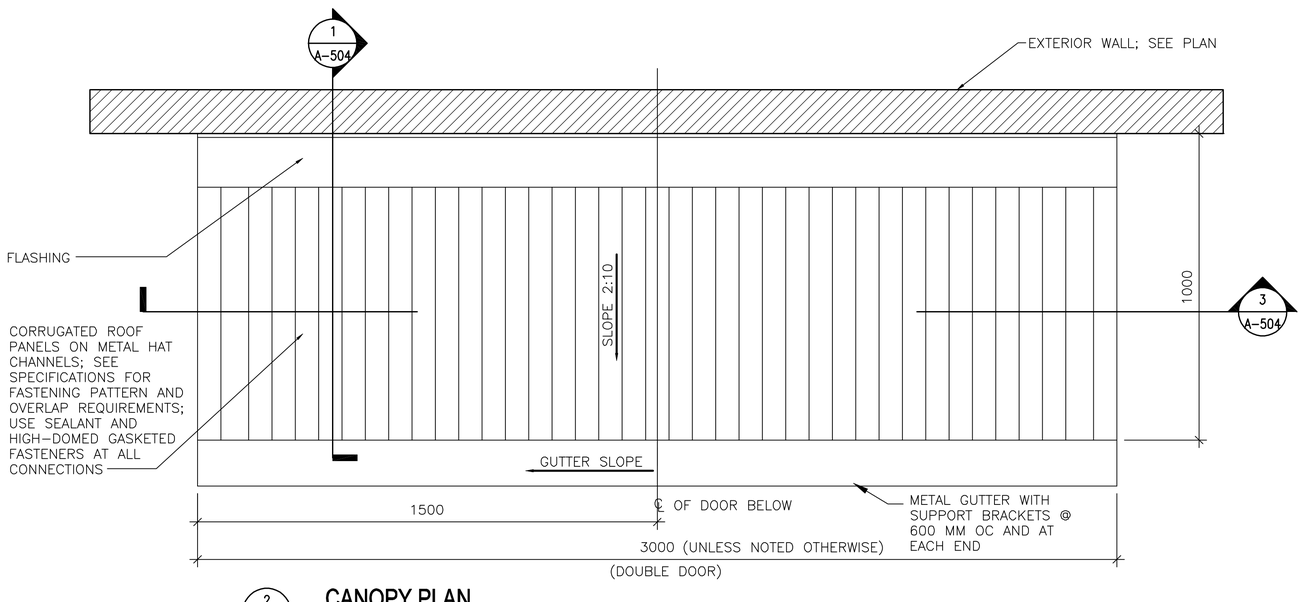


2 A-504 **CANOPY PLAN**

SCALE: 1:10

## SHEET NOTES:

1. SEE A-101 FOR FLOOR PLANS AND CANOPY LOCATIONS.

LINEAR DIMENSIONS SHOWN ARE IN MILLIMETERS (MM), UNLESS OTHERWISE NOTED

0 200 400
SCALE: 1:10

0 100 200
SCALE: 1:5

APPROVED:

A/E DESIGNER OF RECORD

SEAL:

STATE OF SOUTH CAROLINA
KEVIN R. CHAFIN
N. Charleston, SC
6374
REGISTERED ARCHITECT

US ARMY CORPS OF ENGINEERS
AFGHANISTAN ENGINEER DISTRICT

| Mark | Description | Date | Appr. | Mark | Description | Date | Appr. |
|---|---|---|---|---|---|---|---|

Date: 2/23/10
Rev: 0
Design file no.
Drawing code:
File name: ANADFACA-504DT
Plot date: 2/23/2010
Plot scale: x:X

Designed by: KRC
Dwn by: KJG
Ckd by: NLJ
Reviewed by: LHM
Submitted by: BAKER

U.S. ARMY CORPS OF ENGINEERS
AFGHANISTAN ENGINEER DISTRICT
APO AE 96338

Michael Baker Jr., Inc
A unit of Michael Baker Corporation
Airside Business Park
100 Airside Drive
Moon Township, PA 15108
www.mbakercorp.com

AFGHAN NATIONAL ARMY
REGIONAL MILITARY TRAINING CENTER
STANDARD DESIGN

DINING FACILITY

CANOPY DETAILS

Sheet reference number:
A-504

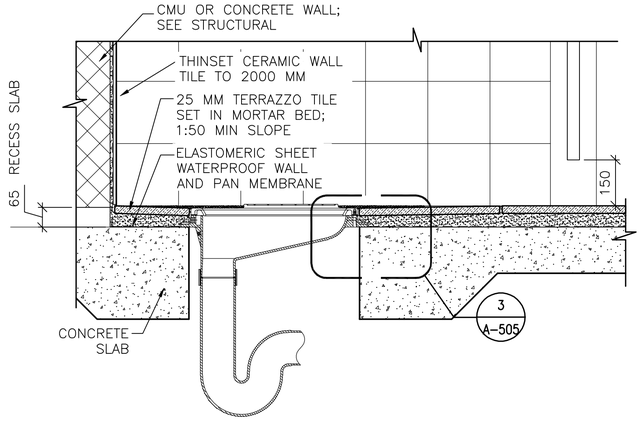


1 A-505 **LATRINE DETAIL**
SCALE: 1:10

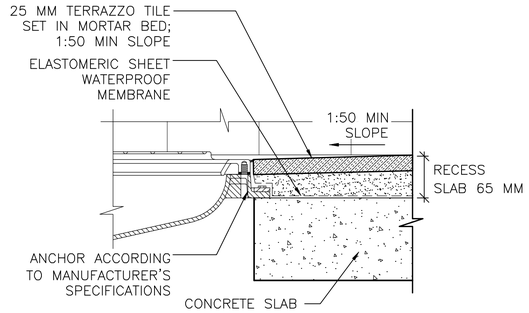


3 A-505 **MOUNTING DETAIL**
SCALE: 1:5

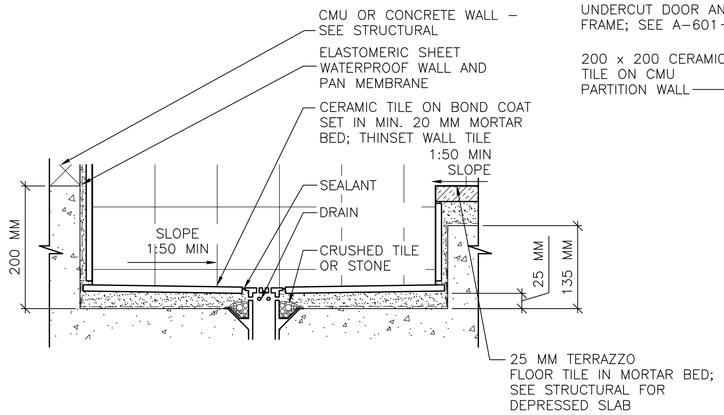


6 A-505 **RECESSED TROUGH**
SCALE: 1:5

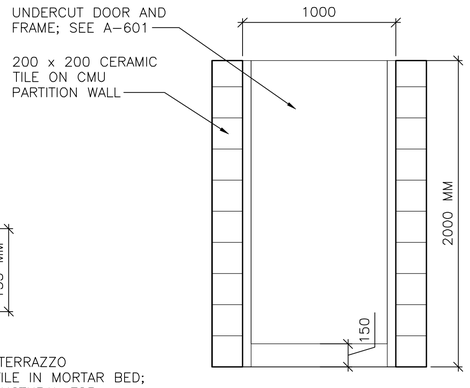


7 A-505 **TOILET PARTITION DOOR ELEVATION**
SCALE: 1:20

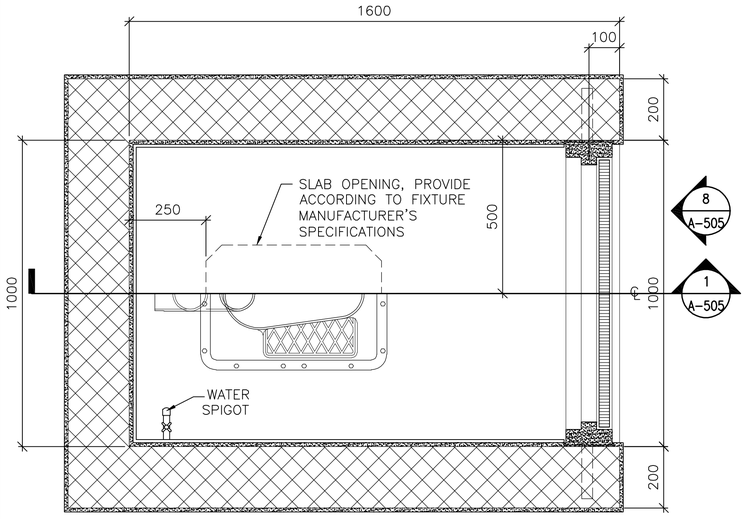


2 A-505 **TOILET DETAIL**
SCALE: 1:10

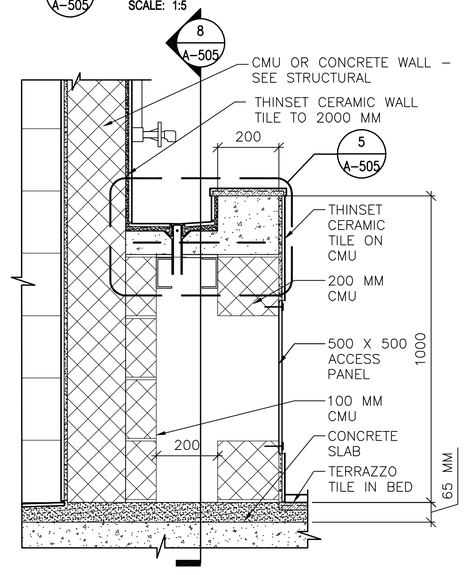


4 A-505 **LAVATORY SECTION**
SCALE: 1:10

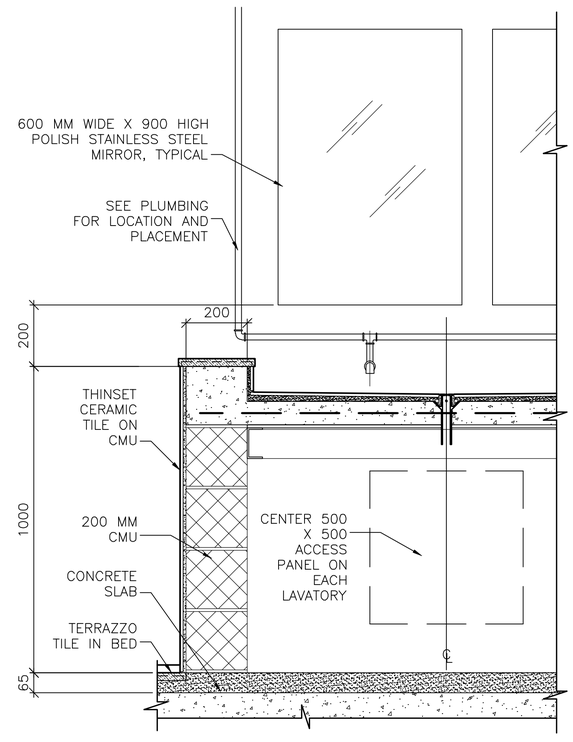


8 A-505 **LAVATORY SECTION**
SCALE: 1:10

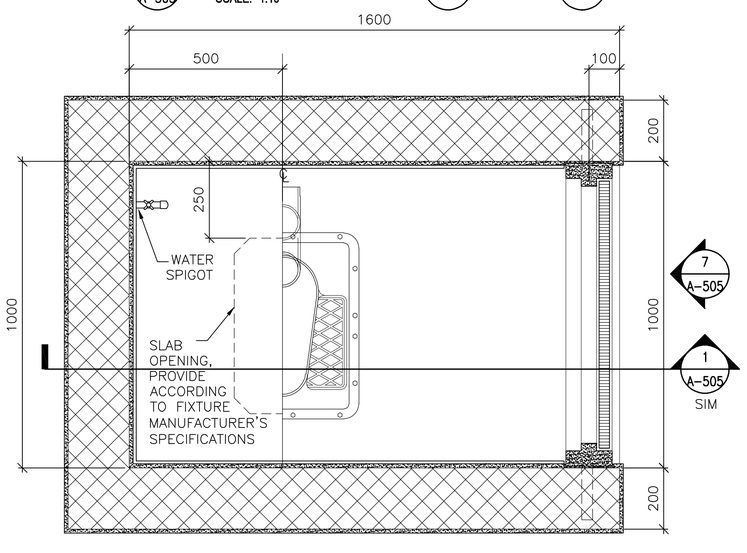


2A A-505 **TOILET DETAIL**
SCALE: 1:10

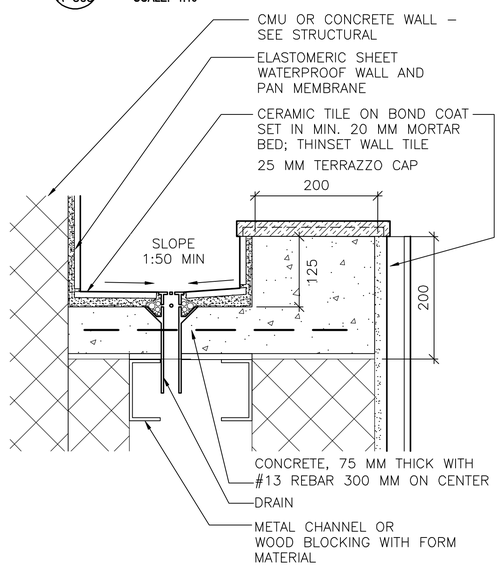


5 A-505 **LAVATORY DETAIL**
SCALE: 1:5

LINEAR DIMENSIONS SHOWN ARE IN MILLIMETERS (MM), UNLESS OTHERWISE NOTED

0 100 200
SCALE: 1:5

0 200 400
SCALE: 1:10

0 400 800
SCALE: 1:20

APPROVED:

A/E DESIGNER OF RECORD

SEAL:

STATE OF SOUTH CAROLINA
KEVIN R. CHAFIN
N. Charleston, SC
6374
REGISTERED ARCHITECT

US ARMY CORPS OF ENGINEERS
AFGHANISTAN ENGINEER DISTRICT

| Mark | Description | Date | Appr. | Mark | Description | Date | Appr. |
|---|---|---|---|---|---|---|---|

Date: 2/23/10
Rev: 0
Design file no.
Drawing code:
File name: ANADFACA-505DT
Plot date: 2/23/2010
Plot scale:

Designed by: KRC
Dwn by: KJG
Ckd by: NLJ
Reviewed by: LHM
Submitted by: BAKER

U.S. ARMY CORPS OF ENGINEERS
AFGHANISTAN ENGINEER DISTRICT
APO AE 96338

Michael Baker Jr., Inc
A unit of Michael Baker Corporation
Airside Business Park
100 Airside Drive
Moon Township, PA 15108
www.mbakercorp.com

AFGHAN NATIONAL ARMY
REGIONAL MILITARY TRAINING CENTER
STANDARD DESIGN

DINING FACILITY

TOILET & LAVATORY DETAILS

Sheet reference number:
A-505

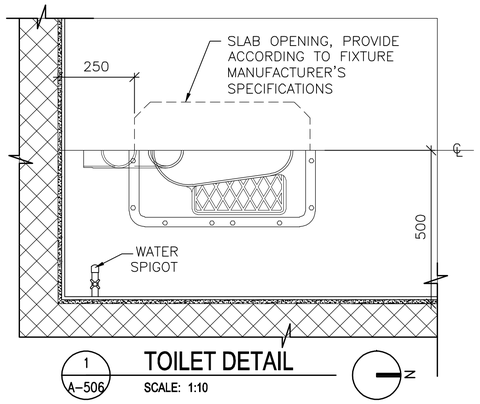


1 A-506 **TOILET DETAIL**
SCALE: 1:10

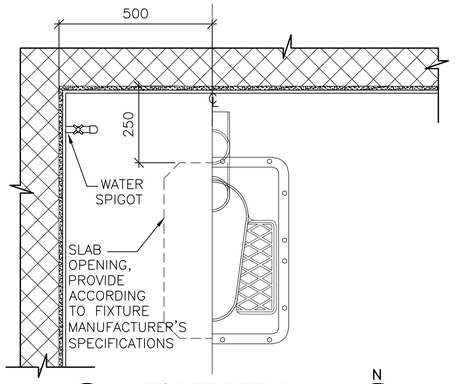


1A A-506 **TOILET DETAIL**
SCALE: 1:10

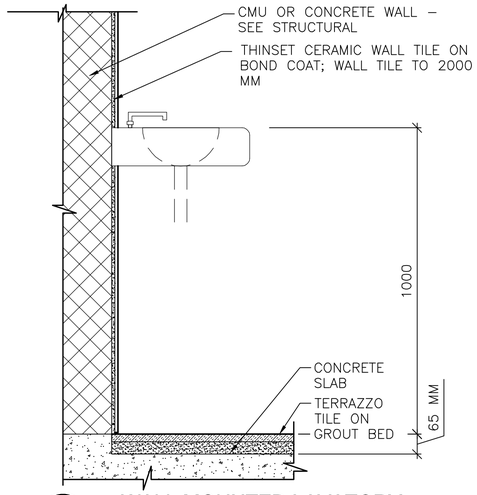


2 A-506 **WALL MOUNTED LAVATORY**
SCALE: 1:10

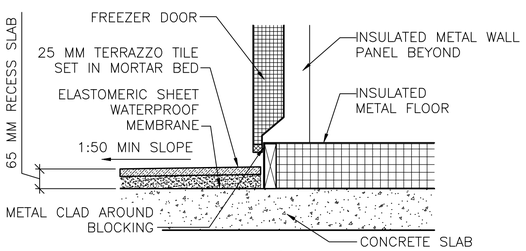


3 A-506 **FLOOR TRANSITION AT WALK-IN COOLER**
SCALE: 1:10

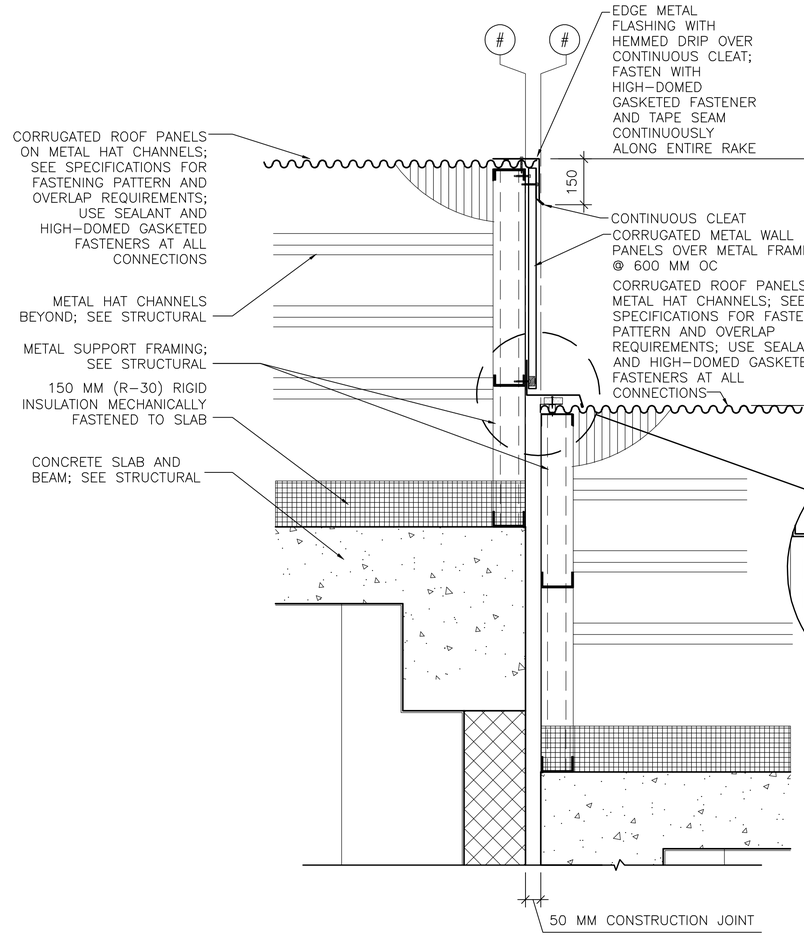


4 A-506 **ROOF EXPANSION JOINT DETAIL**
SCALE: 1:10

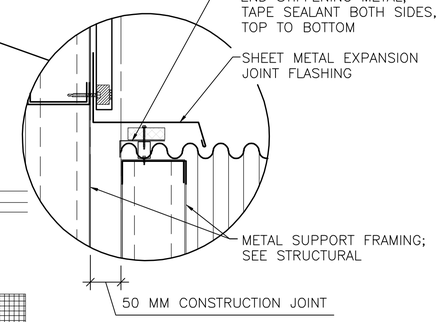


4A A-506 **DETAIL**
SCALE: 1:5

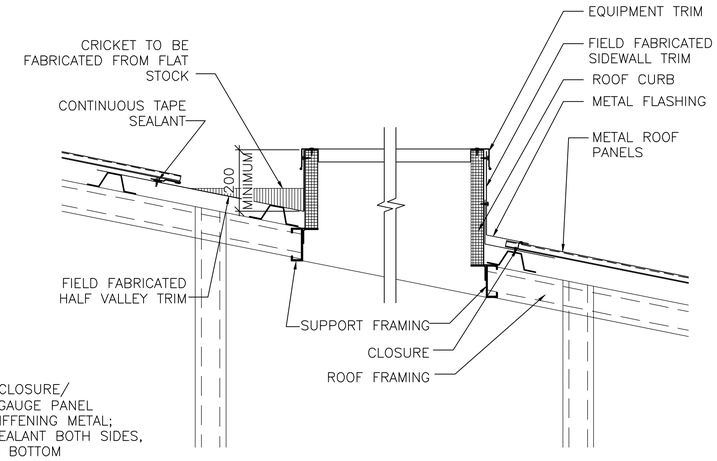


6 A-506 **ROOF CURB DETAIL**
SCALE: 1:10

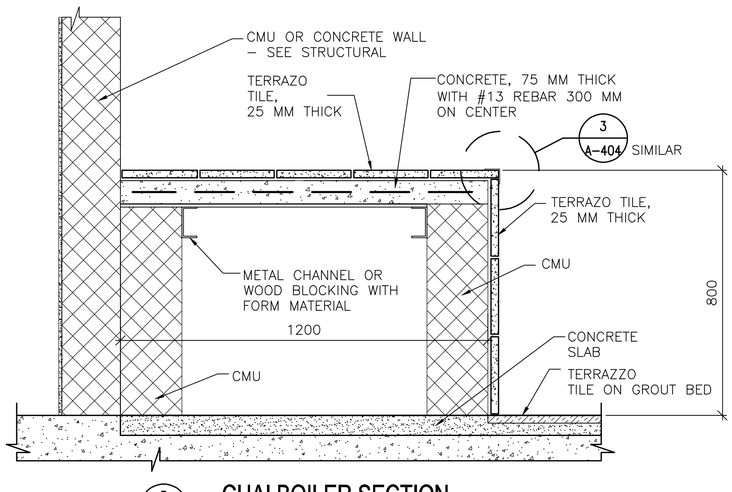


5 A-506 **CHAI BOILER SECTION**
SCALE: 1:10

LINEAR DIMENSIONS SHOWN ARE IN MILLIMETERS (MM), UNLESS OTHERWISE NOTED

0 200 400
SCALE: 1:10

APPROVED:
A/E DESIGNER OF RECORD
SEAL:
STATE OF SOUTH CAROLINA
KEVIN R. CHARN
N. Charleston, SC
6374
REGISTERED ARCHITECT

US ARMY CORPS OF ENGINEERS
AFGHANISTAN ENGINEER DISTRICT

| Mark | Description | Date | Appr. | Mark | Description | Date | Appr. |
|---|---|---|---|---|---|---|---|
| | | | | | | | |

U.S. ARMY CORPS OF ENGINEERS
AFGHANISTAN ENGINEER DISTRICT
APO AE 96338

Michael Baker Jr., Inc
A unit of Michael Baker Corporation
Airside Business Park
100 Airside Drive
Moon Township, PA 15108
www.mbakercorp.com

Designed by: KRC
Dwn by: KJG
Ckd by: NLJ
Reviewed by: LHM
Submitted by: BAKER
Date: 2/23/10
Rev: 0
Design file no.
Drawing code:
File name: ANAFACA-506DT
Plot date: 2/23/2010
Plot scale:

AFGHAN NATIONAL ARMY
REGIONAL MILITARY TRAINING CENTER
STANDARD DESIGN

DINING FACILITY

DETAILS

Sheet reference number:
A-506

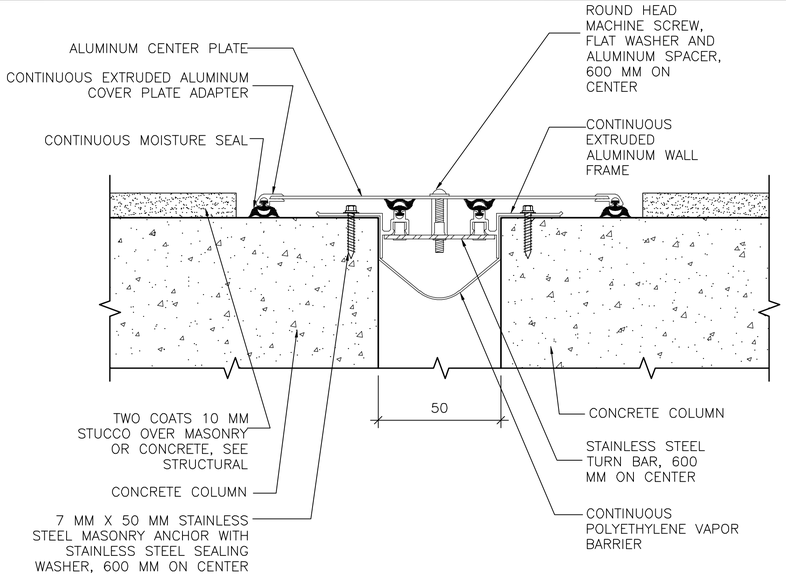


1 A-507 **EXTERIOR ISOLATION JOINT COVER**

SCALE: NTS

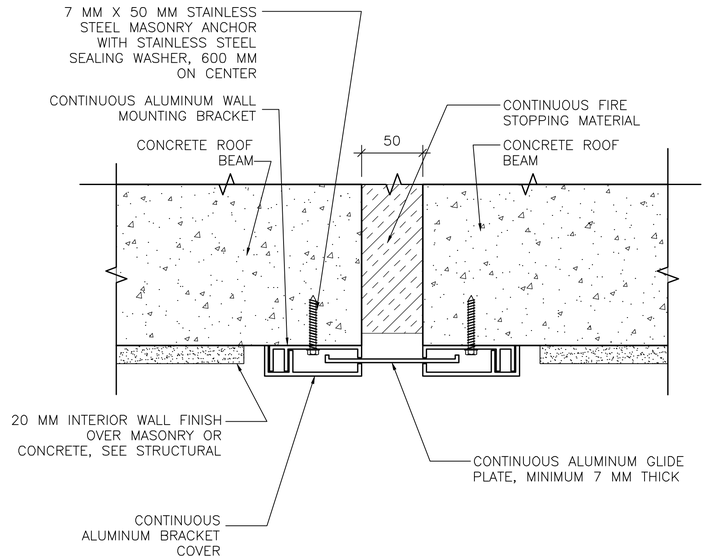


3 A-507 **CEILING ISOLATION JOINT COVER**

SCALE: NTS

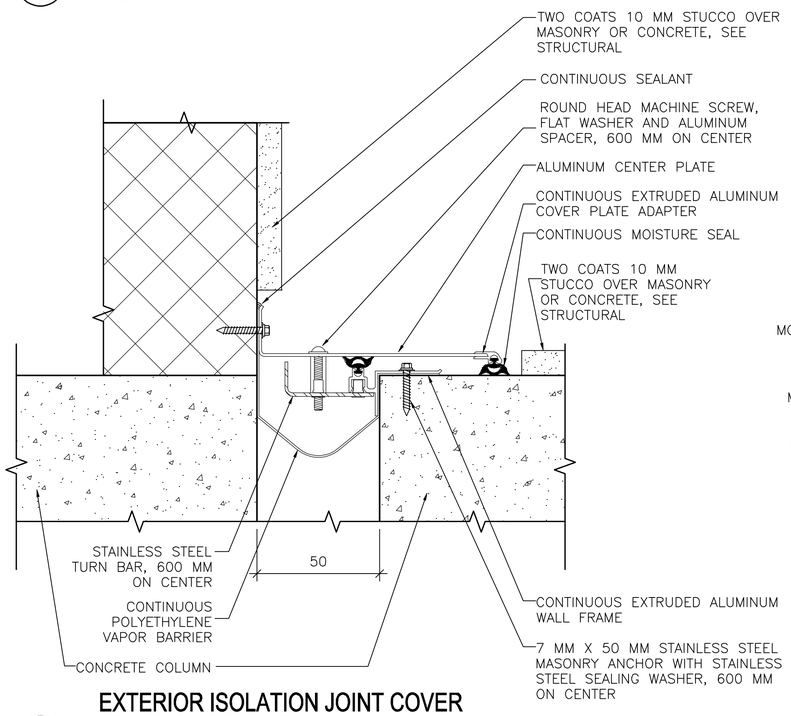


2 A-507 **EXTERIOR ISOLATION JOINT COVER AT INSIDE CORNER**

SCALE: NTS

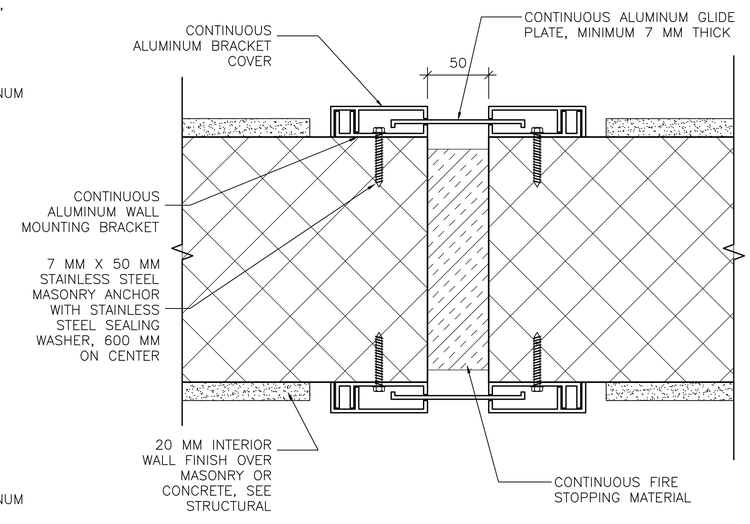


4 A-507 **INTERIOR ISOLATION JOINT COVER**

SCALE: NTS

LINEAR DIMENSIONS SHOWN ARE IN MILLIMETERS (MM), UNLESS OTHERWISE NOTED

APPROVED:

A/E DESIGNER OF RECORD

SEAL:

STATE OF SOUTH CAROLINA
KEVIN R. CHAFIN
N. Charleston, SC
6374
REGISTERED ARCHITECT

US ARMY CORPS OF ENGINEERS
AFGHANISTAN ENGINEER DISTRICT

| Mark | Description | Date | Appr. | Mark | Description | Date | Appr. |
|---|---|---|---|---|---|---|---|
| | | | | | | | |

U.S. ARMY CORPS OF ENGINEERS
AFGHANISTAN ENGINEER DISTRICT
APO AE 96338

*Michael Baker Jr., Inc*
*A unit of Michael Baker Corporation*
Airside Business Park
100 Airside Drive
Moon Township, PA 15108
www.mbakercorp.com

| | |
|---|---|
| Designed by: KRC | Date: 2/23/10 |
| Dwn by: KJG | Ckd by: NLJ |
| Reviewed by: LHM | Drawing code: |
| Submitted by: BAKER | File name: ANADFACA-507DT<br>Plot date: 2/23/2010<br>Plot scale: |

Rev: 0

AFGHAN NATIONAL ARMY
REGIONAL MILITARY TRAINING CENTER
STANDARD DESIGN

DINING FACILITY

ISOLATION JOINT DETAILS

Sheet reference number:
A-507

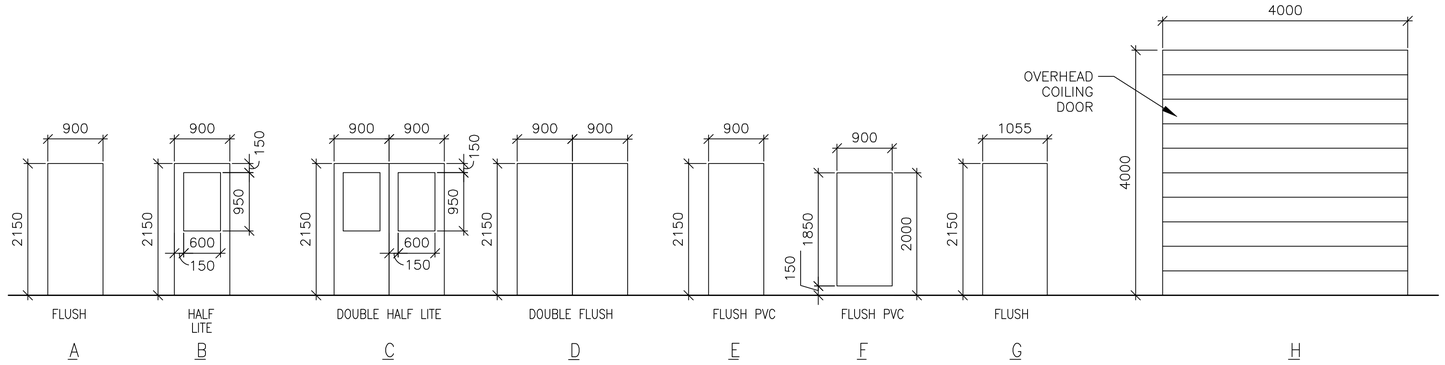


## 1 A-601 DOOR TYPES

SCALE: 1:50

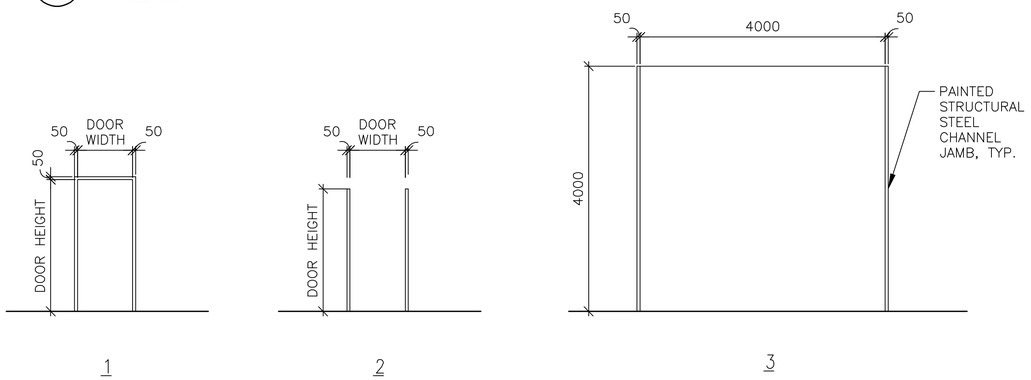


## 2 A-601 FRAME TYPES

SCALE: 1:50

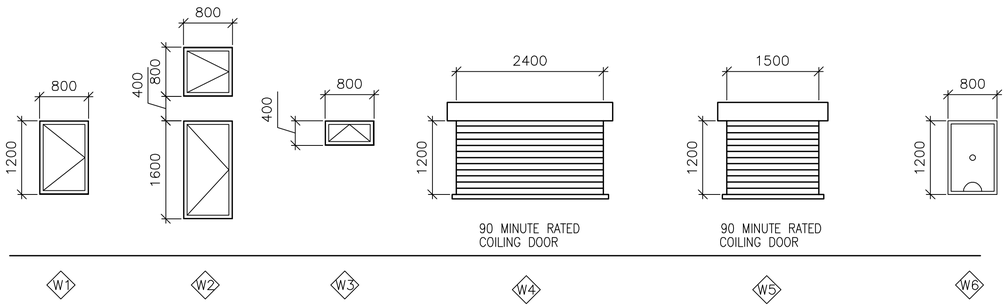


## 3 A-601 WINDOW TYPES

SCALE: 1:50

## 4 A-601 DOOR TAG

SCALE: NTS

## 5 A-601 RATED DOOR TAG

SCALE: NTS

## WINDOW TYPE NOTES:

1. ALL EXTERIOR WINDOWS SHALL BE ALUMINUM WITH INSECT SCREENS. WINDOWS SHALL BE COMMERCIAL GRADE.
2. ALL EXTERIOR WINDOWS SHALL BE OPERABLE.

## DOOR TAG NOTES:

1. THE DOOR TAG INDICATES THE DOOR TYPE, FRAME TYPE AND HARDWARE SET FOR EACH DOOR.
2. THE DOOR TAG FOR RATED DOORS INCLUDES THE RATING OF THE DOOR IN MINUTES.

## EXTERIOR DOOR HARDWARE TYPES:

HW-1
1-1/2 PR HINGES, A5112 114 X 114
1 EA RIM EXIT DEVICE, TYPE 1
1 EA CYLINDER. E09221A, GRADE 1
1 EA OVERHEAD CLOSER, C02061, LOW RESISTANCE
1 EA THRESHOLD, J32130
3 EA DOOR SILENCERS, L03011

HW-2
1-1/2 PR HINGES, A5112 114 X 114
1 EA LOCKSET, F13 ENTRY LOCK W/LEVER HANDLES, GRADE 1
1 EA OVERHEAD CLOSER, C02061, LOW RESISTANCE
1 EA THRESHOLD, J32130
3 EA DOOR SILENCERS, L03011

HW-3
3 PR HINGES, A5112 114 X 114
2 EA RIM EXIT DEVICE, TYPE 1
2 EA CYLINDER. GRADE 1
2 EA OVERHEAD CLOSER, C02061, LOW RESISTANCE
1 EA DOOR COORDINATOR, TYPE 21
1 EA ASTRAGAL
1 EA THRESHOLD, J32130
2 EA DOOR SILENCERS, L03011

HW-4
3 PR HINGES, A5112 114 X 114
1 EA LOCKSET W/LEVER HANDLES. GRADE 1, F13
1 EA OVERHEAD CLOSER, C02061, LOW RESISTANCE
2 EA MAGNETIC HOLDER PIN, ATTACHED TO DOOR LEAF
2 EA MAGNETIC HOLDER RECEIVER, ATTACHED TO STOOP
2 EA LEVER EXTENSION FLUSH BOLTS, L04081
1 EA ASTRAGAL
1 EA THRESHOLD, J32130
2 EA DOOR SILENCERS, L03011

## DOOR AND HARDWARE NOTES:

1. INTERIOR AND EXTERIOR METAL DOORS AND FRAME COLORS SHALL MATCH ADJACENT WALL COLORS AS SELECTED BY THE CONTRACTING OFFICER.
2. FRAMES, EXCEPT FIRE-RATED FRAMES, SHALL BE MOUNTED AND ADJUSTED IN ACCORDANCE WITH MANUFACTURER'S INSTRUCTIONS. FRAMES SHALL BE FASTENED WITH MINIMUM OF THREE ANCHORS PER JAMB AT EQUAL INTERVALS.
3. DIMENSIONS SHOWN ON DOOR TYPES DETAIL ARE BASED UPON MODULAR MASONRY (OR ROUGH OPENING), HEIGHT OF 2200 MM FOR STANDARD PERSONNEL DOORS. CONTRACTOR SHALL COORDINATE WITH DOOR SUPPLIER TO ENSURE THAT DIMENSIONS OF DOORS AND FRAMES PROVIDED ARE COMPATIBLE WITH DOOR OPENING DIMENSIONS.
4. HARDWARE SHALL BE HEAVY DUTY, COMMERCIAL GRADE, STAINLESS STEEL WITH A SATIN OR BRUSHED FINISH.
5. HARDWARE TYPES INCLUDE BUILDERS HARDWARE MANUFACTURERS ASSOCIATION (BMHA) NUMBER.
6. DOORS IN 2 HOUR RATED PARTITIONS SHALL BE 1.5 HOUR (90 MINUTE) RATED DOORS IN ACCORDANCE WITH NFPA 101, TABLE 8.3.4.2.
7. DOORS AT STAIR ENCLOSURES SHALL BE 1 HOUR (60 MINUTE) RATED AT 1 HOUR WALL IN ACCORDANCE WITH NFPA 101, TABLE 8.3.4.2.
8. DOORS IN 1 HOUR RATED WALLS SHALL BE 3/4 HOUR (45 MINUTE) RATED DOORS IN ACCORDANCE WITH NFPA 101, TABLE 8.3.4.2.
9. DOORS IN 1 HOUR RATED CORRIDOR WALLS SHALL BE 1/3 HOUR (20 MINUTE) IN ACCORDANCE WITH NFPA 101, TABLE 8.3.4.2.
10. PROVIDE DOOR STOPS TO PROTECT WALLS ON LOCATIONS WHERE DOOR SWING WILL STRIKE WALL.

THIS SHEET IS STANDARD AND IS INCLUSIVE OF ALL THE DOOR/ WINDOW/ HARDWARE TYPES FOR THE ENTIRE RMTC CONTRACT. NOT ALL DOOR/ WINDOW/ HARDWARE TYPES ARE USED FOR ANY PARTICULAR BUILDING DESIGN. CONTRACTOR SHALL REFER TO THE FLOOR PLAN FOR THE TYPES BEING USED.

## INTERIOR DOOR HARDWARE TYPES:

HW-5
1-1/2 PR HINGES, A8133 114 X 114
1 EA LOCKSET W/LEVER HANDLES, F08, GRADE 1
1 EA WALL STOP, L02101 OR L02161
3 EA DOOR SILENCERS, L03011

HW-6
1-1/2 PR HINGES, A8112 114 X 114
1 EA LOCKSET W/LEVER HANDLES, F08, GRADE 1
1 EA WALL STOP, L02101 OR L02161
1 EA OVERHEAD CLOSER, C02061, LOW RESISTANCE
3 EA DOOR SILENCERS, L03011

HW-7
1-1/2 PR HINGES, A8133
1 EA LOCKSET W/LEVER HANDLES, F13 GRADE 1
1 EA WALL STOP, L02101 OR L02161
2 EA MOP PLATE, J103
3 EA DOOR SILENCERS, L03011

HW-8
1-1/2 PR HINGES, A8112
1 EA LOCKSET W/LEVER HANDLES, F13 GRADE 1
1 EA WALL STOP, L02101 OR L02161
2 EA MOP PLATE, J103
1 EA OVERHEAD CLOSER, C02061, LOW RESISTANCE
3 EA DOOR SILENCERS, L03011

HW-9
1-1/2 PR HINGES, A5112 114 X 114
1 EA RIM EXIT DEVICE, TYPE 1
1 EA CYLINDER. E09221A, GRADE 1
1 EA OVERHEAD CLOSER, C02061, LOW RESISTANCE
3 EA DOOR SILENCERS, L03011

HW-10
3 PR HINGES, A5112 114 X 114
1 EA LOCKSET W/LEVER HANDLES. GRADE 1, F13
2 EA LEVER EXTENSION FLUSH BOLTS, L04081
1 EA ASTRAGAL
2 EA DOOR SILENCERS, L03011

HW-11
1-1/2 PR HINGES, A8112 114 X 114
1 EA LOCKSET W/LEVER HANDLES, F13, GRADE 1
1 EA WALL STOP, L02101 OR L02161
1 EA OVERHEAD CLOSER, C02061, LOW RESISTANCE
3 EA DOOR SILENCERS, L03011
1 EA ROBE HOOK

HW-12
1-1/2 PR HINGES, A8133
1 EA LATCHSET W/LEVER HANDLES, F76 GRADE 1
1 EA WALL STOP, L02101 OR L02161
2 EA MOP PLATE, J103
3 EA DOOR SILENCERS, L03011
1 EA ROBE HOOK

HW-13
3 PR HINGES, A5112 114 X 114
1 EA LOCKSET W/LEVER HANDLES. GRADE 1, F13
1 EA OVERHEAD CLOSER, C02061, LOW RESISTANCE
2 EA LEVER EXTENSION FLUSH BOLTS, L04081
1 EA ASTRAGAL
2 EA DOOR SILENCERS, L03011

HW-14
3 PR HINGES, A5112 114 X 114
2 EA RIM EXIT DEVICE, TYPE 1
2 EA CYLINDER. GRADE 1
2 EA OVERHEAD CLOSER, C02061, LOW RESISTANCE
1 EA DOOR COORDINATOR, TYPE 21
1 EA ASTRAGAL
2 EA DOOR SILENCERS, L03011

APPROVED:

A/E DESIGNER OF RECORD

SEAL:

STATE OF SOUTH CAROLINA
KEVIN R. CHAFIN
N. Charleston, SC
6374
REGISTERED ARCHITECT

US ARMY CORPS OF ENGINEERS
AFGHANISTAN ENGINEER DISTRICT

| Mark | Description | Date | Appr. | Mark | Description | Date | Appr. |
|---|---|---|---|---|---|---|---|

Date: 2/23/10 Rev: 0
Design file no.
Drawing code:
File name: ANADFACA801SCH
Plot date: 2/23/2010
Plot scale: x:X

Designed by: KRC
Dwn by: KJG
Ckd by: NLJ
Reviewed by: LHM
Submitted by:
BAKER

U.S. ARMY CORPS OF ENGINEERS
AFGHANISTAN ENGINEER DISTRICT
APO AE 96338

Michael Baker Jr., Inc.
A unit of Michael Baker Corporation
Airside Business Park
100 Airside Drive
Moon Township, PA 15108
www.mbakercorp.com

AFGHAN NATIONAL ARMY
REGIONAL MILITARY TRAINING CENTER
STANDARD DESIGN

DINING FACILITY

WINDOW AND DOOR SCHEDULES

Sheet reference number:
A-601

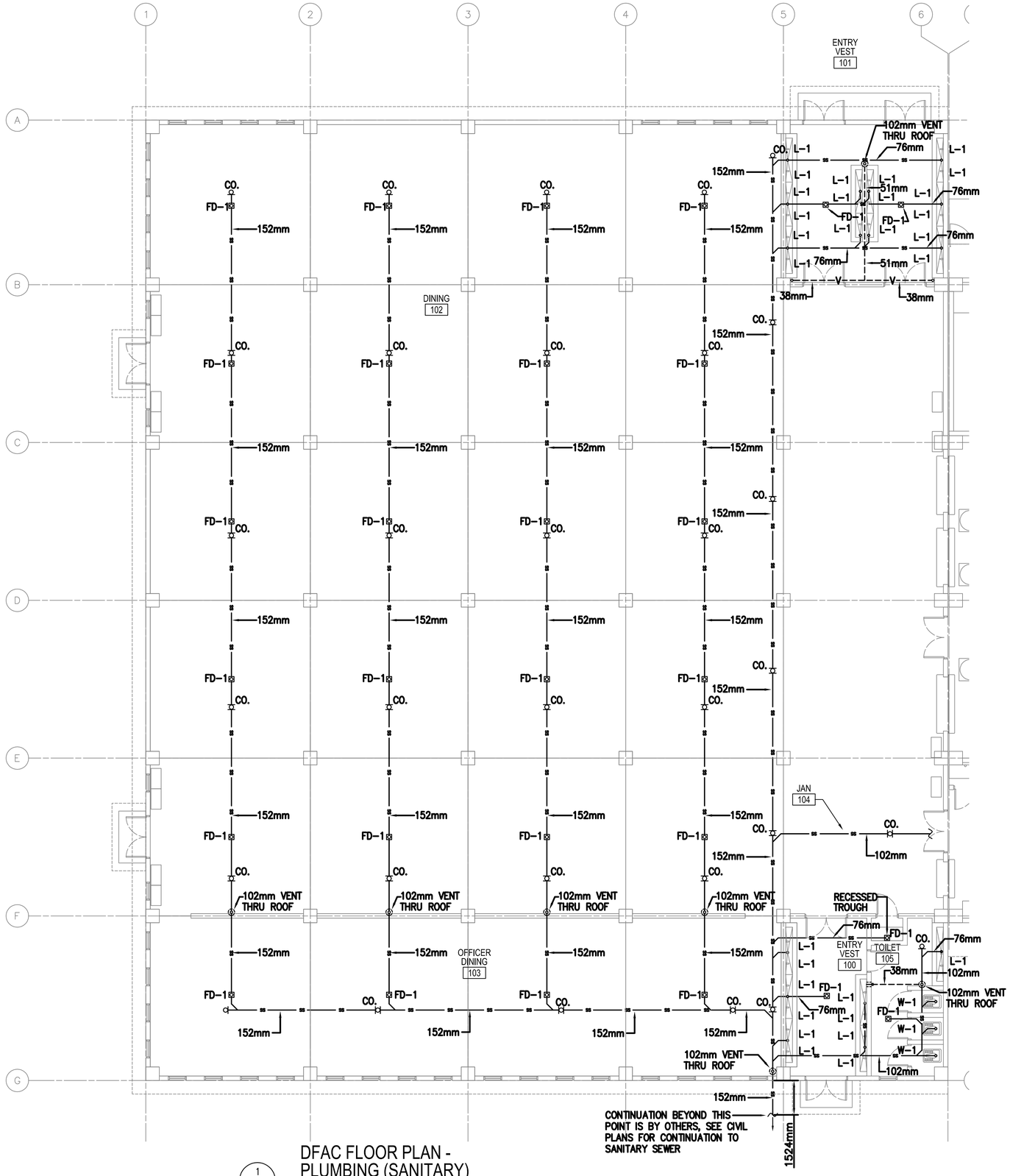


1 P101 DFAC FLOOR PLAN - PLUMBING (SANITARY)

SCALE: 1:100

## FLOOR PLAN NOTES:

1. DO NOT SCALE DRAWINGS – ALL DIMENSIONS AND CONDITIONS SHALL BE CHECKED AND VERIFIED BY THE CONTRACTOR AT THE SITE.
2. ALL WORK PERFORMED ON THIS BUILDING SHALL BE IN COMPLIANCE WITH ALL PERTINENT CODES, RULES, ORDINANCES AND REGULATIONS OF THE GOVERNING AUTHORITIES.
3. ALL WORK PERFORMED UNDER AND IN CONNECTION WITH THESE DRAWINGS AND SPECIFICATIONS SHALL BE IN STRICT COMPLIANCE WITH THE LATEST SAFETY AND HEALTH STANDARDS.
4. REPORT ANY DISCREPANCIES FOUND IN THE PLUMBING DRAWINGS AND/OR IN THE SPECIFICATIONS DURING THE BIDDING PROCESS FOR CLARIFICATION BY THE ENGINEER.
5. ALL EASTERN STYLE WATER CLOSETS IN THIS FACILITY ARE TO HAVE THE FIXTURE DESIGNATION OF W–1. EACH FIXTURE SHALL HAVE A 25mm (1 INCH) COLD WATER LINE EXTENDED TO IT AND THEN BE REDUCED TO 13mm (1/2 INCH) FOR A FINAL CONNECTION TO THE FLUSH TANK AND A 102mm (4) INCH SANITARY CONNECTION.
6. ALL TROUGH FIXTURES IN THIS FACILITY ARE TO HAVE THE FIXTURE DESIGNATION OF L–1. EACH FIXTURE SHALL HAVE A 13mm (1/2 INCH) COLD WATER, 13mm (1/2 INCH) HOT WATER CONNECTION AND A 76mm (3 INCH) SANITARY CONNECTION. SEE SHEET P501 FOR WATER PIPING LAYOUT DETAIL.
7. ALL ABLUTION FIXTURES IN THIS FACILITY ARE TO HAVE THE FIXTURE DESIGNATION OF ABL–1. EACH FIXTURE SHALL HAVE A 13mm (1/2 INCH) COLD WATER, 13mm (1/2 INCH) HOT WATER CONNECTION AND A 76mm (3 INCH) SANITARY CONNECTION. SEE SHEET P501 FOR WATER PIPING LAYOUT DETAIL.
8. REFER TO SHEET P501 & P502 FOR DETAILS AND SYMBOLS.
9. ALL WATER, SANITARY AND VENT LINES TO BE EXPOSED. RUN LINES TIGHT TO CEILING AND WALL.
10. SINK (S–1) IN THIS FACILITY IS TO BE SUPPLIED WITH A 13mm (1/2") COLD WATER, 13mm (1/2") HOT WATER AND A 76mm (3") SANITARY CONNECTION.
11. SINK (S–2) IN THIS FACILITY IS A 2–BOWL SINK. SINK SHALL BE SUPPLIED WITH A 13mm (1/2") COLD WATER, 13mm (1/2") HOT WATER, AND A 76mm (3") INDIRECT WASTE SYSTEM. (DIM. 2540mm X 807MM).
12. SINK (S–3) IN THIS FACILITY IS A 2–BOWL SINK. EACH SINK SHALL BE SUPPLIED WITH A 13mm (1/2") COLD WATER, 13mm (1/2") HOT WATER, AND A 76mm (3") GREASE WASTE LINE. (DIM. (2) AT 2540mm X 807mm).
13. DUE TO THE AMOUNT OF INFORMATION ON DRAWING, SEE DRAWING ISOMETRIC ON SHEET P901 FOR VENT PIPING.

## PLUMBING SYMBOLS

- SANITARY SEWER PIPING (BELOW GROUND)
- SANITARY SEWER PIPING (ABOVE GROUND)
- VENT PIPING (V)
- COLD WATER PIPING (CW)
- HOT WATER PIPING (HW)
- BALL VALVE
- BACKFLOW PREVENTER
- CLEANOUT (CO.) (OR)
- ROOF PENETRATION

## KEY PLAN:

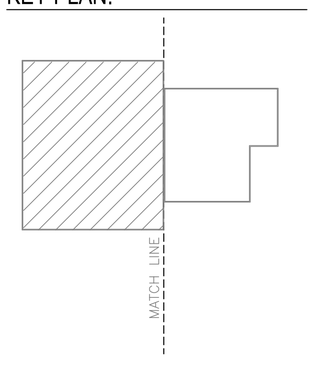


LINEAR DIMENSIONS SHOWN ARE IN MILLIMETERS (MM), UNLESS OTHERWISE NOTED

0 2000 4000
SCALE: 1:100

APPROVED:

A/E DESIGNER OF RECORD

SEAL:

COMMONWEALTH OF PENNSYLVANIA REGISTERED PROFESSIONAL ENGINEER MATTHEW R. SOTOSKY 046576-E

US ARMY CORPS OF ENGINEERS
AFGHANISTAN ENGINEER DISTRICT

| Mark | Description | Date | Appr. | Mark | Description | Date | Appr. |
|---|---|---|---|---|---|---|---|
| | | | | | | | |

Designed by: RMH
Dwn by: RMH
Ckd by: CJM
Reviewed by:
Submitted by: BAKER
Date: 02/23/10
Design file no.
Rev: 0
Drawing code:
File name: ANADFAICPL-1011XXX
Plot date: 02/26/2010
Plot scale: 1:100

U.S. ARMY CORPS OF ENGINEERS
AFGHANISTAN ENGINEER DISTRICT
APO AE 96338

Michael Baker Jr., Inc.
A unit of Michael Baker Corporation
Airside Business Park
100 Airside Drive
Moon Township, PA 15108
www.mbakercorp.com

AFGHAN NATIONAL ARMY
REGIONAL MILITARY TRAINING CENTER
STANDARD DESIGN

DINING FACILITY

DFAC FLOOR PLAN – PLUMBING (SANITARY)

Sheet reference number:
P–101

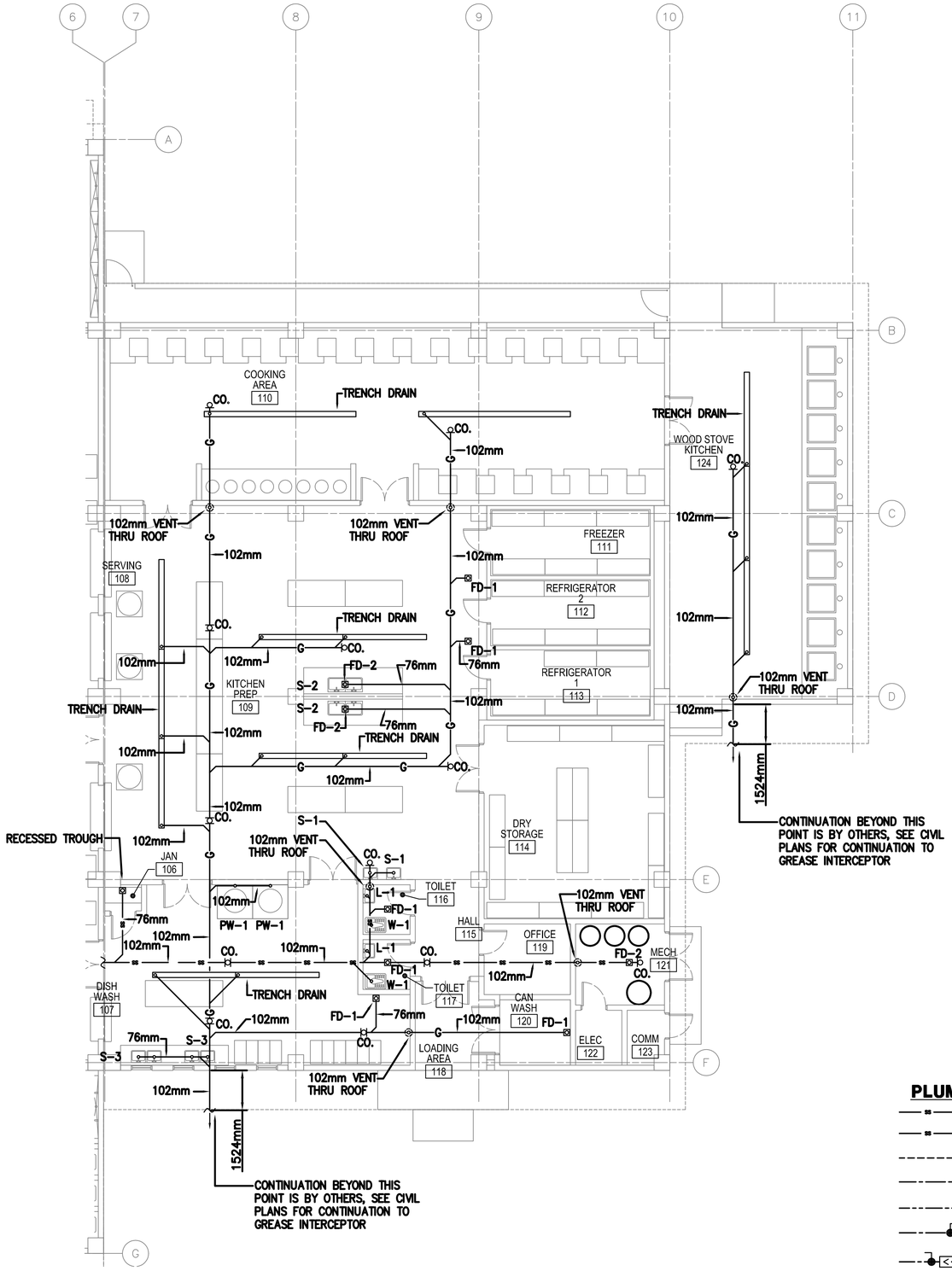


1 P102 DFAC FLOOR PLAN - PLUMBING (SANITARY)

SCALE: 1:100

## FLOOR PLAN NOTES:

1. DO NOT SCALE DRAWINGS – ALL DIMENSIONS AND CONDITIONS SHALL BE CHECKED AND VERIFIED BY THE CONTRACTOR AT THE SITE.
2. ALL WORK PERFORMED ON THIS BUILDING SHALL BE IN COMPLIANCE WITH ALL PERTINENT CODES, RULES, ORDINANCES AND REGULATIONS OF THE GOVERNING AUTHORITIES.
3. ALL WORK PERFORMED UNDER AND IN CONNECTION WITH THESE DRAWINGS AND SPECIFICATIONS SHALL BE IN STRICT COMPLIANCE WITH THE LATEST SAFETY AND HEALTH STANDARDS.
4. REPORT ANY DISCREPANCIES FOUND IN THE PLUMBING DRAWINGS AND/OR IN THE SPECIFICATIONS DURING THE BIDDING PROCESS FOR CLARIFICATION BY THE ENGINEER.
5. ALL EASTERN STYLE WATER CLOSETS IN THIS FACILITY ARE TO HAVE THE FIXTURE DESIGNATION OF W–1. EACH FIXTURE SHALL HAVE A 25mm (1 INCH) COLD WATER LINE EXTENDED TO IT AND THEN BE REDUCED TO 13mm (1/2 INCH) FOR A FINAL CONNECTION TO THE FLUSH TANK AND A 102mm (4) INCH SANITARY CONNECTION.
6. ALL TROUGH FIXTURES IN THIS FACILITY ARE TO HAVE THE FIXTURE DESIGNATION OF L–1. EACH FIXTURE SHALL HAVE A 13mm (1/2 INCH) COLD WATER, 13mm (1/2 INCH) HOT WATER CONNECTION AND A 76mm (3 INCH) SANITARY CONNECTION. SEE SHEET P501 FOR WATER PIPING LAYOUT DETAIL.
7. ALL ABLUTION FIXTURES IN THIS FACILITY ARE TO HAVE THE FIXTURE DESIGNATION OF ABL–1. EACH FIXTURE SHALL HAVE A 13mm (1/2 INCH) COLD WATER, 13mm (1/2 INCH) HOT WATER CONNECTION AND A 76mm (3 INCH) SANITARY CONNECTION. SEE SHEET P501 FOR WATER PIPING LAYOUT DETAIL.
8. REFER TO SHEET P501 & P502 FOR DETAILS AND SYMBOLS.
9. ALL WATER, SANITARY AND VENT LINES TO BE EXPOSED. RUN LINES TIGHT TO CEILING AND WALL.
10. SINK (S–1) IN THIS FACILITY IS TO BE SUPPLIED WITH A 13mm (1/2") COLD WATER, 13mm (1/2") HOT WATER AND A 76mm (3") SANITARY CONNECTION.
11. SINK (S–2) IN THIS FACILITY IS A 2–BOWL SINK. SINK SHALL BE SUPPLIED WITH A 13mm (1/2") COLD WATER, 13mm (1/2") HOT WATER, AND A 76mm (3") INDIRECT WASTE SYSTEM. (DIM. 2540mm X 807mm).
12. SINK (S–3) IN THIS FACILITY IS A 2–BOWL SINK. EACH SINK SHALL BE SUPPLIED WITH A 13mm (1/2") COLD WATER, 13mm (1/2") HOT WATER, AND A 76mm (3") GREASE WASTE LINE. (DIM. (2) AT 2540mm X 807mm).
13. DUE TO THE AMOUNT OF INFORMATION ON DRAWING, SEE DRAINAGE ISOMETRIC ON SHEET P901 FOR VENT PIPING.

## PLUMBING SYMBOLS

- SANITARY SEWER PIPING (BELOW GROUND)
- SANITARY SEWER PIPING (ABOVE GROUND)
- VENT PIPING (V)
- COLD WATER PIPING (CW)
- HOT WATER PIPING (HW)
- BALL VALVE
- BACKFLOW PREVENTER
- CLEANOUT (CO.) OR
- ROOF PENETRATION

## KEY PLAN:

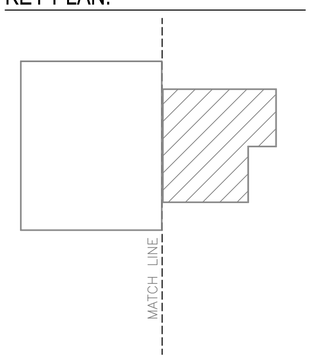


LINEAR DIMENSIONS SHOWN ARE IN MILLIMETERS (MM), UNLESS OTHERWISE NOTED

0 2000 4000
SCALE: 1:100

APPROVED:

A/E DESIGNER OF RECORD

SEAL:

COMMONWEALTH OF PENNSYLVANIA
REGISTERED PROFESSIONAL
MATTHEW R. SOTOSKY
ENGINEER
045570-E

US ARMY CORPS OF ENGINEERS
AFGHANISTAN ENGINEER DISTRICT

| Mark | Description | Date | Appr. | Mark | Description | Date | Appr. |
|---|---|---|---|---|---|---|---|
| | | | | | | | |

Rev: 0
Date: 02/23/10
Design file no.
Drawing code:
File name: ANADFACPL-1103XXX
Plot date: 02/26/2010
Plot scale: 1:100

Designed by: RMH
Dwn by: RMH
Ckd by: CJM
Reviewed by:
Submitted by: BAKER

U.S. ARMY CORPS OF ENGINEERS
AFGHANISTAN ENGINEER DISTRICT
APO AE 96338

Michael Baker Jr., Inc
A unit of Michael Baker Corporation
Airside Business Park
100 Airside Drive
Moon Township, PA 15108
www.mbakercorp.com

AFGHAN NATIONAL ARMY
REGIONAL MILITARY TRAINING CENTER
STANDARD DESIGN

DINING FACILITY
DFAC FLOOR PLAN – PLUMBING (SANITARY)

Sheet reference number:
P–102

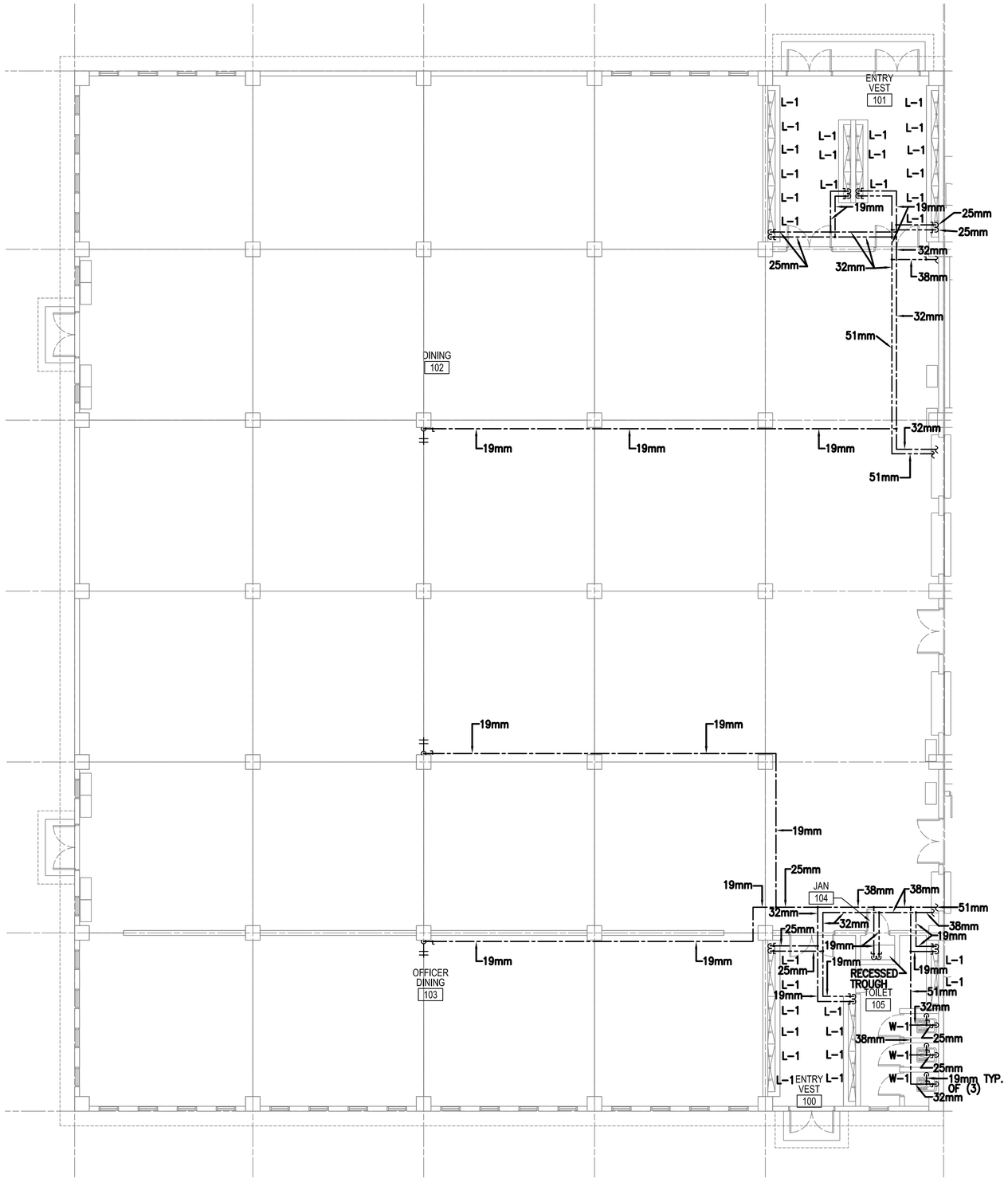


1
P103

DFAC FLOOR PLAN -
PLUMBING (HOT & COLD WATER)

SCALE: 1:100

## FLOOR PLAN NOTES:

1. DO NOT SCALE DRAWINGS – ALL DIMENSIONS AND CONDITIONS SHALL BE CHECKED AND VERIFIED BY THE CONTRACTOR AT THE SITE.
2. ALL WORK PERFORMED ON THIS BUILDING SHALL BE IN COMPLIANCE WITH ALL PERTINENT CODES, RULES, ORDINANCES AND REGULATIONS OF THE GOVERNING AUTHORITIES.
3. ALL WORK PERFORMED UNDER AND IN CONNECTION WITH THESE DRAWINGS AND SPECIFICATIONS SHALL BE IN STRICT COMPLIANCE WITH THE LATEST SAFETY AND HEALTH STANDARDS.
4. REPORT ANY DISCREPANCIES FOUND IN THE PLUMBING DRAWINGS AND/OR IN THE SPECIFICATIONS DURING THE BIDDING PROCESS FOR CLARIFICATION BY THE ENGINEER.
5. ALL EASTERN STYLE WATER CLOSETS IN THIS FACILITY ARE TO HAVE THE FIXTURE DESIGNATION OF W–1. EACH FIXTURE SHALL HAVE A 25mm (1 INCH) COLD WATER LINE EXTENDED TO IT AND THEN BE REDUCED TO 13mm (1/2 INCH) FOR A FINAL CONNECTION TO THE FLUSH TANK AND A 102mm (4) INCH SANITARY CONNECTION.
6. ALL TROUGH FIXTURES IN THIS FACILITY ARE TO HAVE THE FIXTURE DESIGNATION OF L–1. EACH FIXTURE SHALL HAVE A 13mm (1/2 INCH) COLD WATER, 13mm (1/2 INCH) HOT WATER CONNECTION AND A 76mm (3 INCH) SANITARY CONNECTION. SEE SHEET P501 FOR WATER PIPING LAYOUT DETAIL.
7. ALL ABLUTION FIXTURES IN THIS FACILITY ARE TO HAVE THE FIXTURE DESIGNATION OF ABL–1. EACH FIXTURE SHALL HAVE A 13mm (1/2 INCH) COLD WATER, 13mm (1/2 INCH) HOT WATER CONNECTION AND A 76mm (3 INCH) SANITARY CONNECTION. SEE SHEET P501 FOR WATER PIPING LAYOUT DETAIL.
8. REFER TO SHEET P501 & P502 FOR DETAILS AND SYMBOLS.
9. ALL WATER, SANITARY AND VENT LINES TO BE EXPOSED. RUN LINES TIGHT TO CEILING AND WALL.
10. SINK (S–1) IN THIS FACILITY IS TO BE SUPPLIED WITH A 13mm (1/2") COLD WATER, 13mm (1/2") HOT WATER AND A 76mm (3") SANITARY CONNECTION.
11. SINK (S–2) IN THIS FACILITY IS A 2–BOWL SINK. SINK SHALL BE SUPPLIED WITH A 13mm (1/2") COLD WATER, 13mm (1/2") HOT WATER, AND A 76mm (3") INDIRECT WASTE SYSTEM.
12. SINK (S–3) IN THIS FACILITY IS A 2–BOWL SINK. EACH SINK SHALL BE SUPPLIED WITH A 13mm (1/2") COLD WATER, 13mm (1/2") HOT WATER, AND A 76mm (3") GREASE WASTE LINE.

## PLUMBING SYMBOLS

- SANITARY SEWER PIPING (BELOW GROUND)
- SANITARY SEWER PIPING (ABOVE GROUND)
- VENT PIPING (V)
- COLD WATER PIPING (CW)
- HOT WATER PIPING (HW)
- BALL VALVE
- BACKFLOW PREVENTER
- OR CLEANOUT (CO.)
- ROOF PENETRATION

KEY PLAN:

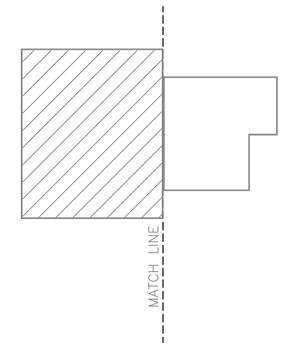


LINEAR DIMENSIONS SHOWN ARE IN MILLIMETERS (MM), UNLESS OTHERWISE NOTED

0 2000 4000
SCALE: 1:100

APPROVED:

A/E DESIGNER OF RECORD

SEAL:

COMMONWEALTH OF PENNSYLVANIA
REGISTERED PROFESSIONAL
MATTHEW R. SOTOSKY
ENGINEER
045576-E

US ARMY CORPS OF ENGINEERS
AFGHANISTAN ENGINEER DISTRICT

| Mark | Description | Date | Appr. | Mark | Description | Date | Appr. |
|---|---|---|---|---|---|---|---|

Designed by: RMH
Dwn by: RMH
Ckd by: CJM
Reviewed by:
Submitted by: BAKER
Date: 02/23/10
Rev: 0
Design file no.
Drawing code:
File name: ANADFACPL-103XXX
Plot date: 02/08/2010
Plot scale: 1:100

U.S. ARMY CORPS OF ENGINEERS
AFGHANISTAN ENGINEER DISTRICT
APO AE 96338

Michael Baker Jr., Inc
A unit of Michael Baker Corporation
Airside Business Park
100 Airside Drive
Moon Township PA 15108
www.mbakercorp.com

AFGHAN NATIONAL ARMY
REGIONAL MILITARY TRAINING CENTER
STANDARD DESIGN

DINING FACILITY
DFAC FLOOR PLAN –
PLUMBING (HOT & COLD WATER)

Sheet reference number:
P–103

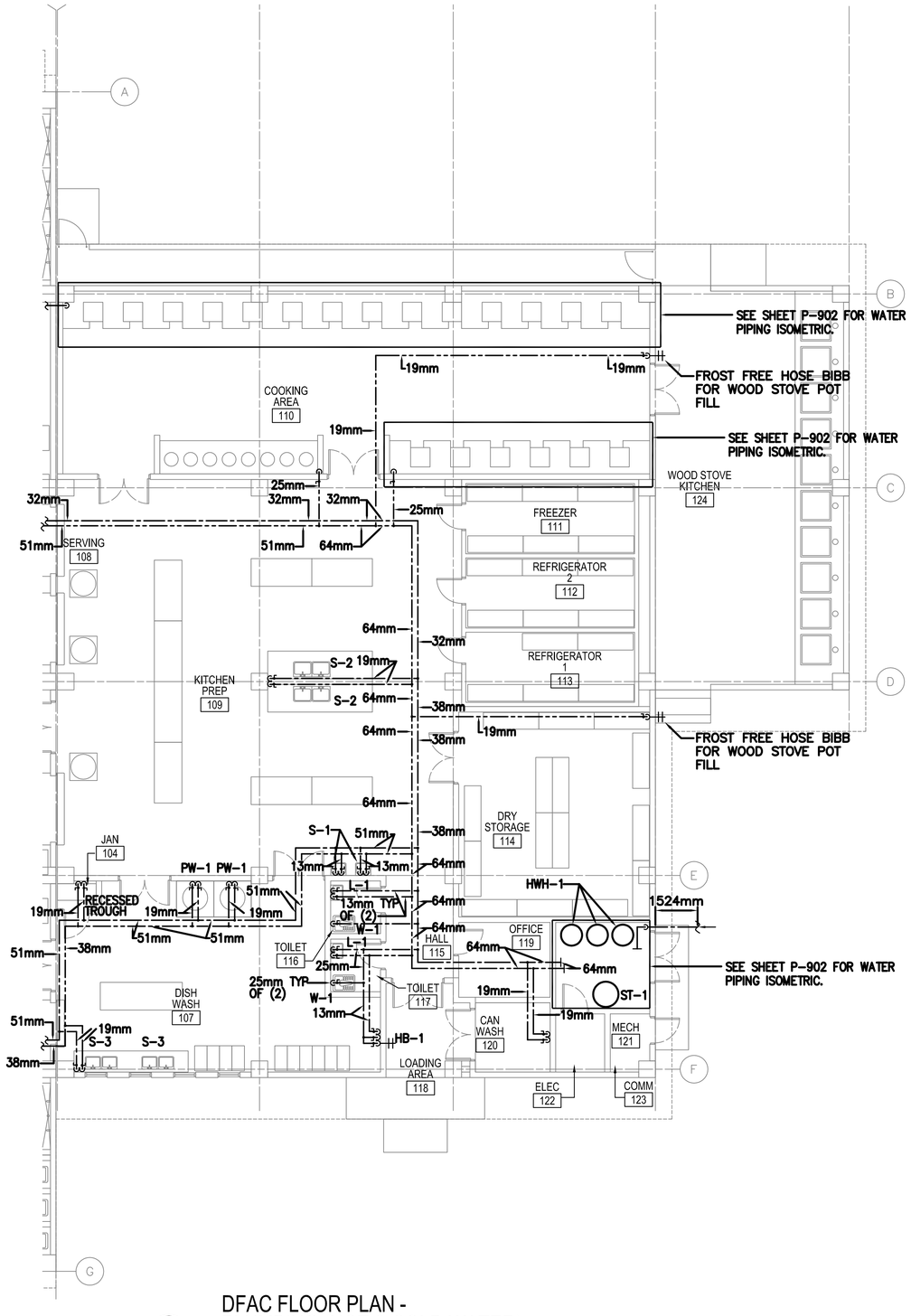


1 P104 DFAC FLOOR PLAN - PLUMBING (HOT & COLD WATER)

SCALE: 1:100

## FLOOR PLAN NOTES:

1. DO NOT SCALE DRAWINGS – ALL DIMENSIONS AND CONDITIONS SHALL BE CHECKED AND VERIFIED BY THE CONTRACTOR AT THE SITE.
2. ALL WORK PERFORMED ON THIS BUILDING SHALL BE IN COMPLIANCE WITH ALL PERTINENT CODES, RULES, ORDINANCES AND REGULATIONS OF THE GOVERNING AUTHORITIES.
3. ALL WORK PERFORMED UNDER AND IN CONNECTION WITH THESE DRAWINGS AND SPECIFICATIONS SHALL BE IN STRICT COMPLIANCE WITH THE LATEST SAFETY AND HEALTH STANDARDS.
4. REPORT ANY DISCREPANCIES FOUND IN THE PLUMBING DRAWINGS AND/OR IN THE SPECIFICATIONS DURING THE BIDDING PROCESS FOR CLARIFICATION BY THE ENGINEER.
5. ALL EASTERN STYLE WATER CLOSETS IN THIS FACILITY ARE TO HAVE THE FIXTURE DESIGNATION OF W–1. EACH FIXTURE SHALL HAVE A 25mm (1 INCH) COLD WATER LINE EXTENDED TO IT AND THEN BE REDUCED TO 13mm (1/2 INCH) FOR A FINAL CONNECTION TO THE FLUSH TANK AND A 102mm (4) INCH SANITARY CONNECTION.
6. ALL TROUGH FIXTURES IN THIS FACILITY ARE TO HAVE THE FIXTURE DESIGNATION OF L–1. EACH FIXTURE SHALL HAVE A 13mm (1/2 INCH) COLD WATER, 13mm (1/2 INCH) HOT WATER CONNECTION AND A 76mm (3 INCH) SANITARY CONNECTION. SEE SHEET P501 FOR WATER PIPING LAYOUT DETAIL.
7. ALL ABLUTION FIXTURES IN THIS FACILITY ARE TO HAVE THE FIXTURE DESIGNATION OF ABL–1. EACH FIXTURE SHALL HAVE A 13mm (1/2 INCH) COLD WATER, 13mm (1/2 INCH) HOT WATER CONNECTION AND A 76mm (3 INCH) SANITARY CONNECTION. SEE SHEET P501 FOR WATER PIPING LAYOUT DETAIL.
8. REFER TO SHEET P501 & P502 FOR DETAILS AND SYMBOLS.
9. ALL WATER, SANITARY AND VENT LINES TO BE EXPOSED. RUN LINES TIGHT TO CEILING AND WALL.
10. SINK (S–1) IN THIS FACILITY IS TO BE SUPPLIED WITH A 13mm (1/2") COLD WATER, 13mm (1/2") HOT WATER AND A 76mm (3") SANITARY CONNECTION.
11. SINK (S–2) IN THIS FACILITY IS A 2–BOWL SINK. SINK SHALL BE SUPPLIED WITH A 13mm (1/2") COLD WATER, 13mm (1/2") HOT WATER, AND A 76mm (3") INDIRECT WASTE SYSTEM.
12. SINK (S–3) IN THIS FACILITY IS A 2–BOWL SINK. EACH SINK SHALL BE SUPPLIED WITH A 13mm (1/2") COLD WATER, 13mm (1/2") HOT WATER, AND A 76mm (3") GREASE WASTE LINE.

## PLUMBING SYMBOLS

- SANITARY SEWER PIPING (BELOW GROUND)
- SANITARY SEWER PIPING (ABOVE GROUND)
- VENT PIPING (V)
- COLD WATER PIPING (CW)
- HOT WATER PIPING (HW)
- BALL VALVE
- BACKFLOW PREVENTER
- OR CLEANOUT (CO.)
- ROOF PENETRATION

## KEY PLAN:

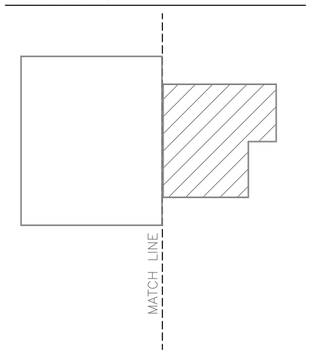


LINEAR DIMENSIONS SHOWN ARE IN MILLIMETERS (MM), UNLESS OTHERWISE NOTED

0 2000 4000
SCALE: 1:100

APPROVED:

A/E DESIGNER OF RECORD

SEAL:

COMMONWEALTH OF PENNSYLVANIA REGISTERED PROFESSIONAL MATTHEW R. SOTOSKY ENGINEER 045576-E

US ARMY CORPS OF ENGINEERS
AFGHANISTAN ENGINEER DISTRICT

| Mark | Description | Date | Appr. |
|---|---|---|---|
| | | | |

| Mark | Description | Date | Appr. |
|---|---|---|---|
| | | | |

Rev: 0
Date: 02/23/10
Design file no.
Drawing code:
File name: AN4DFACPL-104XXX
Plot date: 02/09/2010
Plot scale: 1:100

Designed by: RMH
Dwn by: RMH
Ckd by: CJM
Reviewed by:
Submitted by:
BAKER

U.S. ARMY CORPS OF ENGINEERS
AFGHANISTAN ENGINEER DISTRICT
APO AE 96338

Michael Baker Jr., Inc
A unit of Michael Baker Corporation
Airside Business Park
100 Airside Drive
Moon Township, PA 15108
www.mbakercorp.com

AFGHAN NATIONAL ARMY
REGIONAL MILITARY TRAINING CENTER
STANDARD DESIGN

DINING FACILITY
DFAC FLOOR PLAN – PLUMBING (HOT & COLD WATER)

Sheet reference number:
P–104

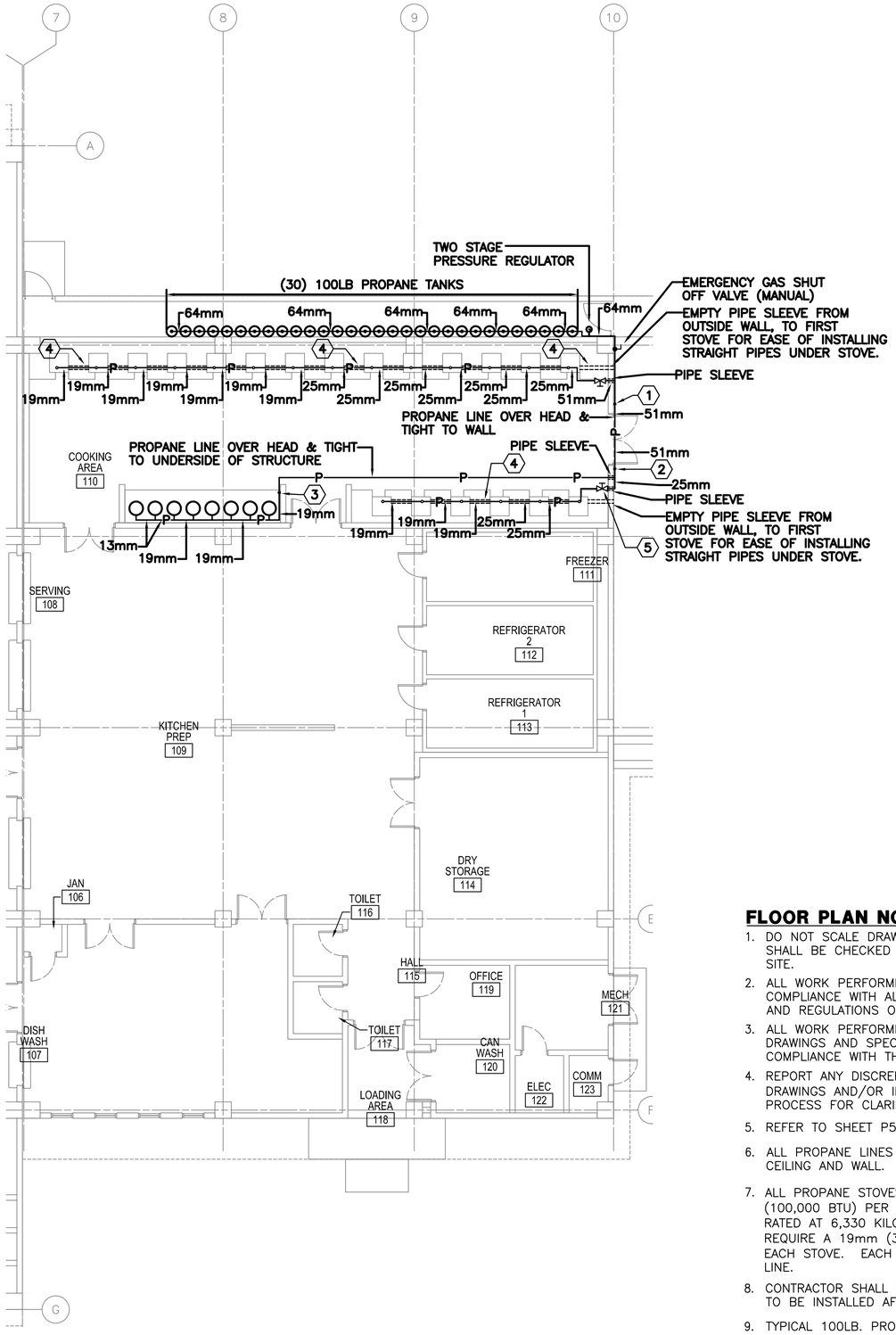


1 P105 DFAC FLOOR PLAN - PLUMBING (PROPANE)

SCALE: 1:100

## DFAC PROPANE CODED NOTES:

1. PROPANE LINE UP AND ABOVE DOOR STAYING TIGHT TO THE WALL.
2. PROPANE LINE DOWN FROM ABOVE DOOR STAYING TIGHT TO WALL. CONTINUE LINE INTO PROPANE STOVE STRUCTURE WITH OVERSIZED PIPE SLEEVE.
3. PROPANE LINE DOWN TIGHT TO WALL TO 152mm ABOVE COUNTER TOP, CONTINUE LINE TIGHT TO WALL TO PROVIDE PROPANE TO ALL TEA KETTLE WARMERS. VALVE IN VERTICAL NEAR COUNTERTOP.
4. MANIFOLD SLEEVED BEHIND STOVE LEGS IN CONCRETE. EXTEND BRANCH VALVE UNDER STOVE WITH FLEXIBLE CONNECTOR FROM VALVE TO STOVE.
5. SHUT OFF VALVE–INSTALL PIPING CLOSE TO CONCRETE PLATFORM TO PREVENT TRIPPING HAZARD.

## FLOOR PLAN NOTES:

1. DO NOT SCALE DRAWINGS – ALL DIMENSIONS AND CONDITIONS SHALL BE CHECKED AND VERIFIED BY THE CONTRACTOR AT THE SITE.
2. ALL WORK PERFORMED ON THIS BUILDING SHALL BE IN COMPLIANCE WITH ALL PERTINENT CODES, RULES, ORDINANCES AND REGULATIONS OF THE GOVERNING AUTHORITIES.
3. ALL WORK PERFORMED UNDER AND IN CONNECTION WITH THESE DRAWINGS AND SPECIFICATIONS SHALL BE IN STRICT COMPLIANCE WITH THE LATEST SAFETY AND HEALTH STANDARDS.
4. REPORT ANY DISCREPANCIES FOUND IN THE PLUMBING DRAWINGS AND/OR IN THE SPECIFICATIONS DURING THE BIDDING PROCESS FOR CLARIFICATION BY THE ENGINEER.
5. REFER TO SHEET P501, P502, & P503 FOR DETAILS AND SYMBOLS.
6. ALL PROPANE LINES TO BE EXPOSED. RUN LINES TIGHT TO CEILING AND WALL.
7. ALL PROPANE STOVES ARE RATED AT 105,506 KILOJOULES (100,000 BTU) PER HOUR, AND THE TEA KETTLE WARMERS ARE RATED AT 6,330 KILOJOULES (6,000 BTU). EACH STOVE WILL REQUIRE A 19mm (3/4") LINE WITH A SHUT OFF VALVE AT EACH STOVE. EACH TEA KETTLE WILL REQUIRE A 13mm (1/2") LINE.
8. CONTRACTOR SHALL PROVIDE A TWO STAGE PRESSURE REGULATOR TO BE INSTALLED AFTER FINAL PROPANE TANK IN THE MANIFOLD.
9. TYPICAL 100LB. PROPANE TANKS ARE 1168mm X 35mmø. VERIFY TANK SIZE IN FIELD.
10. SEAL ALL PIPE SLEEVE OPENINGS BETWEEN PROPANE PIPE AND PROPANE PIPE SLEEVE.

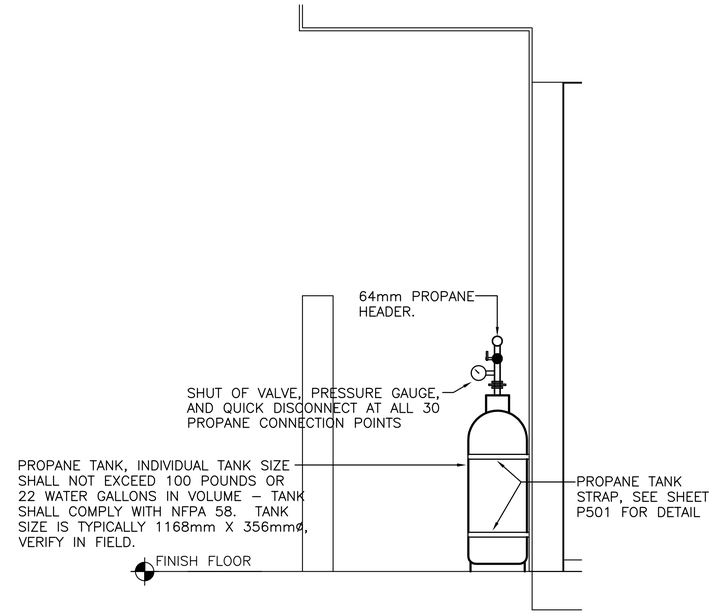


2 P105 PROPANE TANK MOUNTING AND LINE DETAIL

SCALE: N.T.S.

## KEY PLAN:

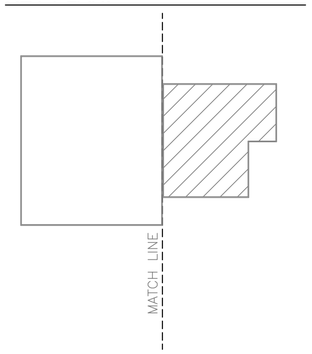


## PLUMBING SYMBOLS

| | |
|---|---|
| SS | SANITARY SEWER PIPING (BELOW GROUND) |
| SS | SANITARY SEWER PIPING (ABOVE GROUND) |
| | VENT PIPING (V) |
| | COLD WATER PIPING (CW) |
| | HOT WATER PIPING (HW) |
| P | PROPANE LINE |
| P | TWO STAGE PRESSURE GAUGE |
| | BALL VALVE |
| << | BACKFLOW PREVENTER |
| OR | CLEANOUT (CO.) |
| | ROOF PENETRATION |

LINEAR DIMENSIONS SHOWN ARE IN MILLIMETERS (MM), UNLESS OTHERWISE NOTED

0 2000 4000
SCALE: 1:100

APPROVED:

A/E DESIGNER OF RECORD

SEAL:

COMMONWEALTH OF PENNSYLVANIA REGISTERED PROFESSIONAL MATTHEW R. SOTOSKY ENGINEER 065576-E

US ARMY CORPS OF ENGINEERS
AFGHANISTAN ENGINEER DISTRICT

| Mark | Description | Date | Appr. | Mark | Description | Date | Appr. |
|---|---|---|---|---|---|---|---|
| | | | | | | | |

Designed by: RMH
Dwn by: RMH
Ckd by: CJM
Reviewed by:
Submitted by:
Date: 02/23/10
Rev: 0
Design file no.
Drawing code:
File name: AN4DFACPL-165XXX
Plot date: 02/09/2010
Plot scale: 1:100

U.S. ARMY CORPS OF ENGINEERS
AFGHANISTAN ENGINEER DISTRICT
APO AE 96338

Michael Baker Jr., Inc.
A unit of Michael Baker Corporation
Airside Business Park
100 Airside Drive
Moon Township, PA 15108
www.mbakercorp.com

BAKER

AFGHAN NATIONAL ARMY
REGIONAL MILITARY TRAINING CENTER
STANDARD DESIGN

DINING FACILITY
DFAC FLOOR PLAN – PLUMBING (PROPANE)

Sheet reference number:
P–105

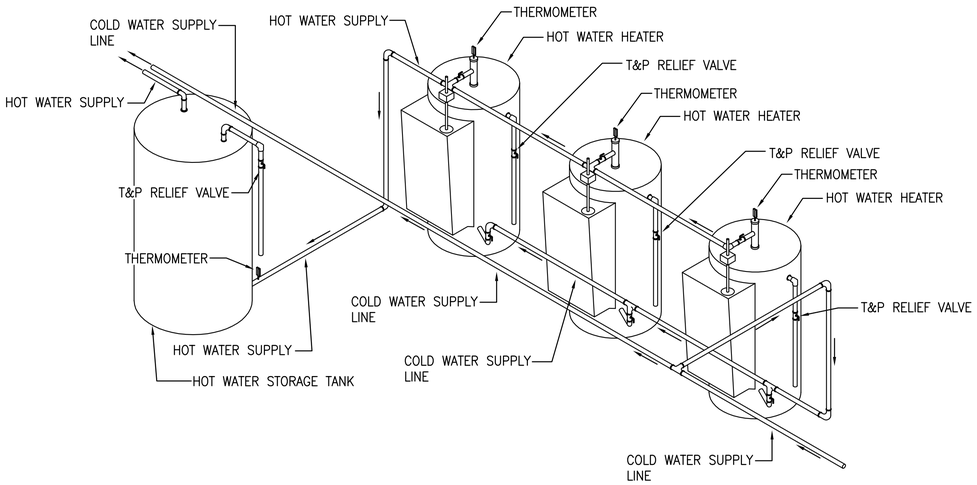


## HOT WATER HEATER AND STORAGE TANK SYSTEM DETAIL

SCALE: N.T.S.

## FIXTURE LIST

| TYPE | ITEM | SOIL & WASTE | VENT | COLD WATER | HOT WATER | REMARKS | REMARKS 2 |
|---|---|---|---|---|---|---|---|
| W–1 | EASTERN STYLE WATER CLOSET | 102mm | 51mm | 13mm | ------ | FLUSH TANK | LOW FLOW EFFICIENT TYPE |
| L–1 | TROUGH FIXTURE | 38mm | 38mm | 13mm | 13mm | FABRICATED IN FIELD | LOW FLOW EFFICIENT TYPE |
| PT–1 | POT FILL AT STOVE | -------- | -------- | 13mm | 13mm | WALL HUNG FIXTURE | POT FILL FAUCET |
| PW–1 | POT WASH | 38mm | 38mm | 13mm | 13mm | POT WASH | CAST IN PLACE |
| S–1 | WALL HUNG HAND SINK | 38mm | 38mm | 13mm | 13mm | 559mm x 635mm x 165mm STAINLESS STEEL | LOW FLOW EFFICIENT TYPE |
| S–2 | 2–COMPARTMENT SINK | INDIRECT WASTE | -------- | 13mm | 13mm | STAINLESS STEEL PREP SINK | LOW FLOW EFFICIENT TYPE |
| S–3 | 2–COMPARTMENT SINK | 38mm | 38mm | 13mm | 13mm | STAINLESS STEEL DISHWASHING SINK | LOW FLOW EFFICIENT TYPE |
| MB–1 | MOP BASIN | 76mm | 51mm | 19mm | 19mm | ------ | LOW FLOW EFFICIENT TYPE |
| HWH–1 | WATER HEATER | --- | --- | SEE DWG. | SEE DWG. | 454 LITER ELECTRIC WATER HEATER, 380/3ø, 24KW | ---------- |
| ST–1 | HOT WATER STORAGE TANK | --- | --- | SEE DWG. | SEE DWG. | 757 LITER HOT WATER STORAGE TANK | ---------- |
| FD–1 | FLOOR DRAIN | 76mm | --- | --- | --- | COORDINATE LOCATION WITH ARCHITECT | ---------- |

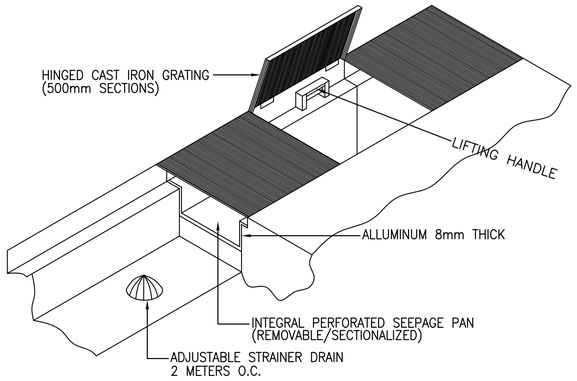


## FLOOR TRENCH DETAIL

SCALE: N.T.S.

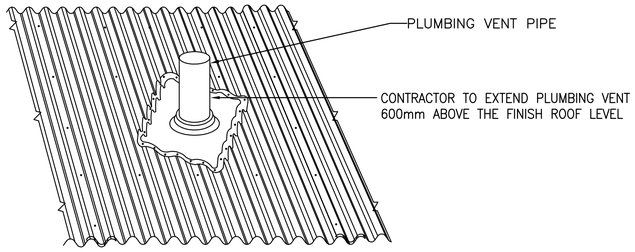


## PLUMBING VENT THRU ROOF DETAIL

SCALE: NTS

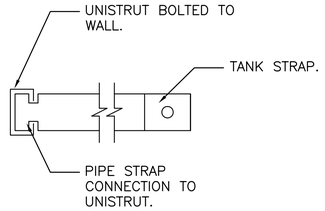


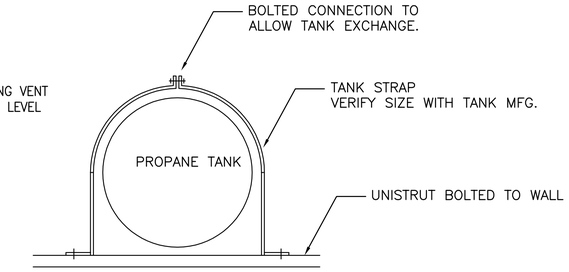


## PROPANE TANK SUPPORT DETAIL

SCALE: N.T.S.

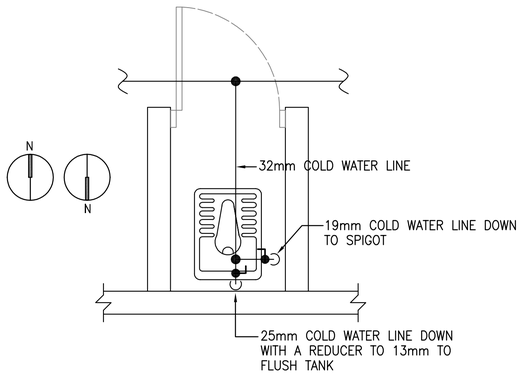


## TYPICAL EASTERN STYLE WATER CLOSET WITH SPIGOT WATER PIPING DETAIL

SCALE: N.T.S.

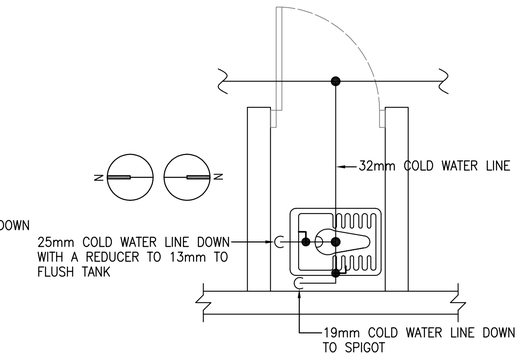


## TYPICAL EASTERN STYLE WATER CLOSET WITH SPIGOT WATER PIPING DETAIL

SCALE: N.T.S.

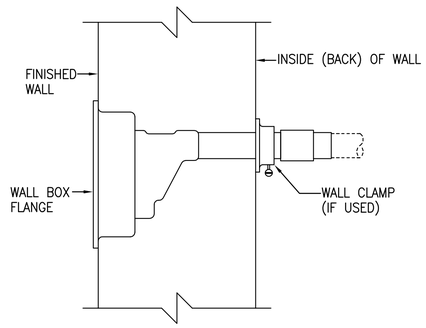


## TYPICAL FREEZEPROOF WALL HYDRANT DETAIL

SCALE: N.T.S.

GENERAL PLUMBING KITCHEN NOTES:

1. ALL ROUGH–INS AND FINAL PLUMBING CONNECTIONS SHALL BE PERFORMED IN STRICT ACCORDANCE WITH THE LATEST CODE REQUIREMENTS. CONTRACTOR SHALL BE RESPONSIBLE FOR VERIFICATION AND COMPLIANCE WITH ALL APPLICABLE CODE REQUIREMENTS.
2. CONTRACTOR SHALL BE RESPONSIBLE FOR PROVIDING AND INSTALLING ALL FAUCETS, VACUUM BREAKERS, CHECK VALVES, ETC. REQUIRED FOR ITEMS OF FOOD SERVICE EQUIPMENT THAT ARE NOT SUPPLIED AS PART OF THE EQUIPMENT, AND FOR PROVIDING FINAL CONNECTIONS TO SAME.
3. CONTRACTOR SHALL PROVIDE ALL FLOOR DRAINS, P–TRAPS, FLOOR SINKS, TRAPS, SHUT–OFF VALVES, PIPING, GAUGES, FITTINGS, AND ANY ADDITIONAL PIPING AND/OR FITTINGS REQUIRED FOR EQUIPMENT INSTALLATION.

APPROVED:

A/E DESIGNER OF RECORD

SEAL:

US ARMY CORPS OF ENGINEERS
AFGHANISTAN ENGINEER DISTRICT

| Mark | Description | Date | Appr. |
|---|---|---|---|
| | | | |

| Mark | Description | Date | Appr. |
|---|---|---|---|
| | | | |

Designed by: RMH
Dwn by: RMH
Ckd by: CJM
Reviewed by:
Submitted by:
Date: 02/23/10
Rev: 0
Design file no.
Drawing code:
File name: ANASFACPL-501XXX
Plot date: 02/05/2010
Plot scale: N.T.S.

U.S. ARMY CORPS OF ENGINEERS
AFGHANISTAN ENGINEER DISTRICT
APO AE 96338

Michael Baker Jr., Inc.
A unit of Michael Baker Corporation
Airside Business Park
100 Airside Drive
Moon Township, PA 15108
www.mbakercorp.com

BAKER

AFGHAN NATIONAL ARMY
REGIONAL MILITARY TRAINING CENTER
STANDARD DESIGN

DINING FACILITY
PLUMBING DETAILS

Sheet reference number:
P–501

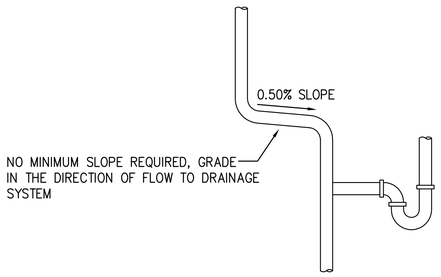


## TYPICAL VENT SLOPE DETAILS

SCALE: N.T.S.

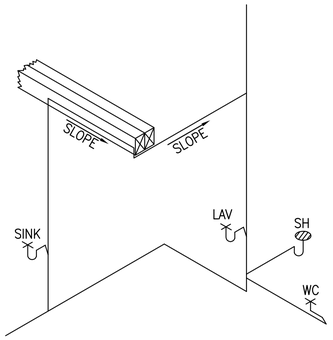


## TYPICAL VENT SLOPE DETAILS

SCALE: N.T.S.

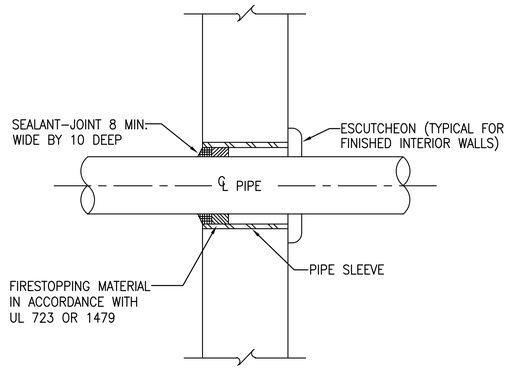


## TYPICAL WALL PENETRATION DETAIL

SCALE: N.T.S.

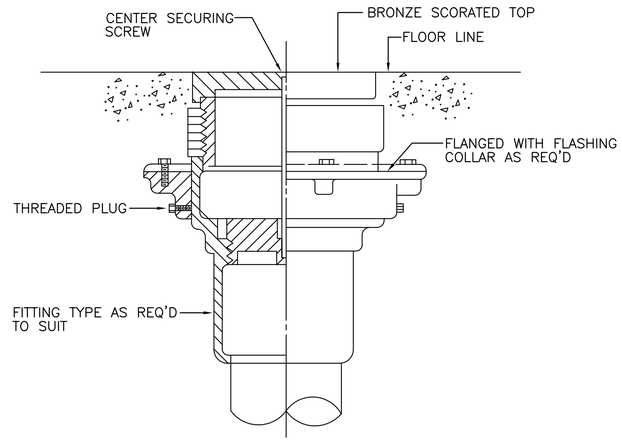


## TYPICAL FLOOR CLEANOUT DETAIL

SCALE: N.T.S.

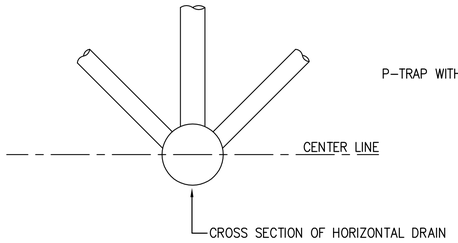


## ACCEPTABLE VENT CONNECTIONS TO HORIZONTAL DRAIN - DETAIL

SCALE: N.T.S.

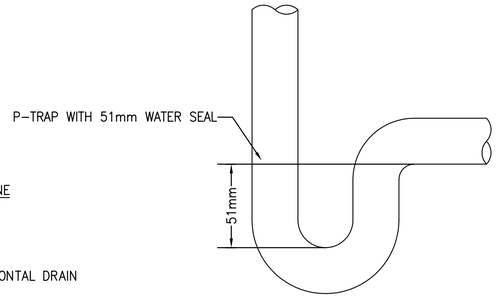


## P-TRAP WITH 51mm WATER SEAL DETAIL

SCALE: N.T.S.

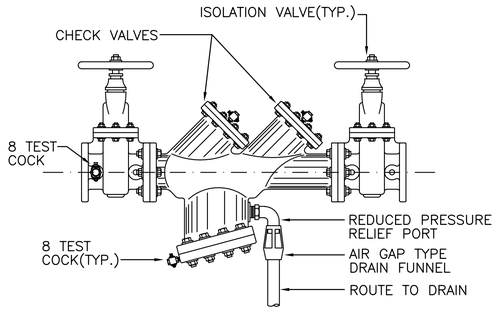


## TYPICAL BACKFLOW PREVENTER DETAIL

SCALE: N.T.S.

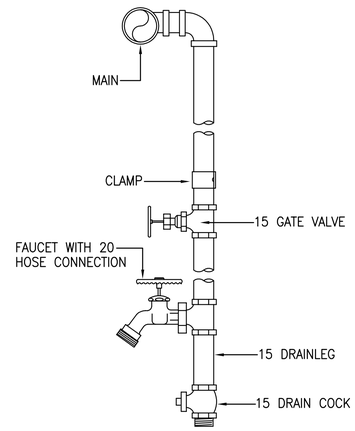


## TYPICAL WATER DROP DETAIL (SPIGOT)

SCALE: N.T.S.

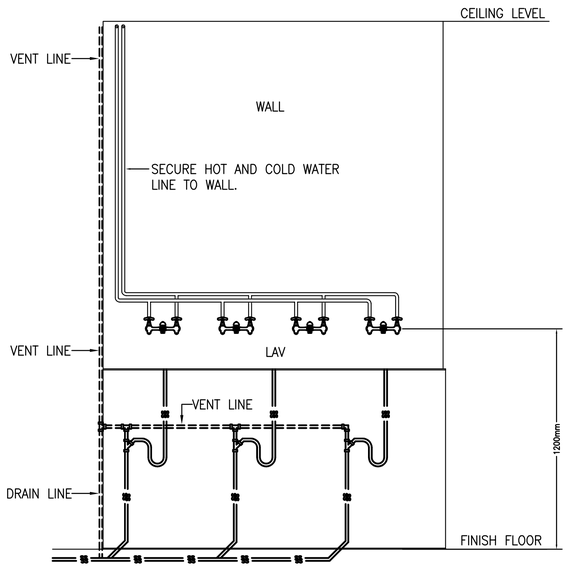


## LAVATORY ELEVATION PLAN - PLUMBING

SCALE: N.T.S.

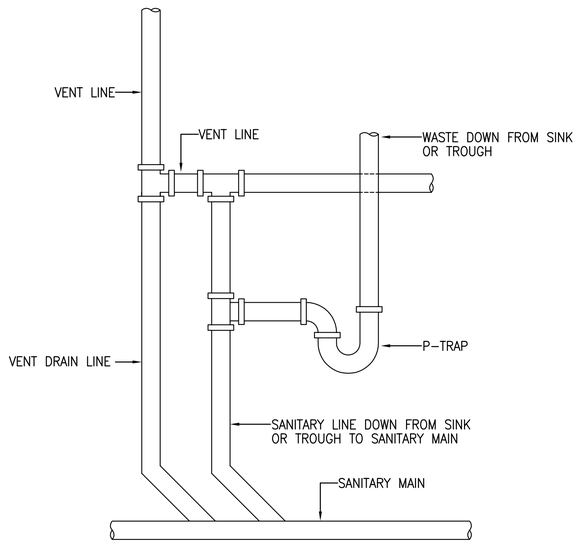


## TYPICAL LAVATORY/LAUNDRY VENT DETAIL

SCALE: N.T.S.

APPROVED:

A/E DESIGNER OF RECORD

SEAL:

COMMONWEALTH OF PENNSYLVANIA
REGISTERED PROFESSIONAL
MATTHEW R. SOTOSKY
ENGINEER
045576-E

US ARMY CORPS OF ENGINEERS
AFGHANISTAN ENGINEER DISTRICT

| Mark | Description | Date | Appr. | Mark | Description | Date | Appr. |
|---|---|---|---|---|---|---|---|

Rev: 0
Date: 02/23/10
Designed by: RMH
Dwn by: RMH
Ckd by: CJM
Reviewed by: MRS
Submitted by: BAKER
Design file no.
Drawing code:
File name: ANADFAICP_-502XXX
Plot date: 02/09/2010
Plot scale: N.T.S.

U.S. ARMY CORPS OF ENGINEERS
AFGHANISTAN ENGINEER DISTRICT
APO AE 96338

Michael Baker Jr., Inc.
A unit of Michael Baker Corporation
Airside Business Park
100 Airside Drive
Moon Township, PA 15108
www.mbakercorp.com

AFGHAN NATIONAL ARMY
REGIONAL MILITARY TRAINING CENTER
STANDARD DESIGN

DINING FACILITY

PLUMBING DETAILS & FIXTURE SCHEDULE

Sheet reference number:
P–502

## PLUMBING SYMBOLS

- SANITARY SEWER PIPING (BELOW GROUND)
- SANITARY SEWER PIPING (GREASE LINE)
- VENT PIPING (V)
- COLD WATER PIPING (CW)
- HOT WATER PIPING (HW)
- BALL VALVE
- BACKFLOW PREVENTER
- OR — CLEANOUT (CO.)
- ROOF PENETRATION

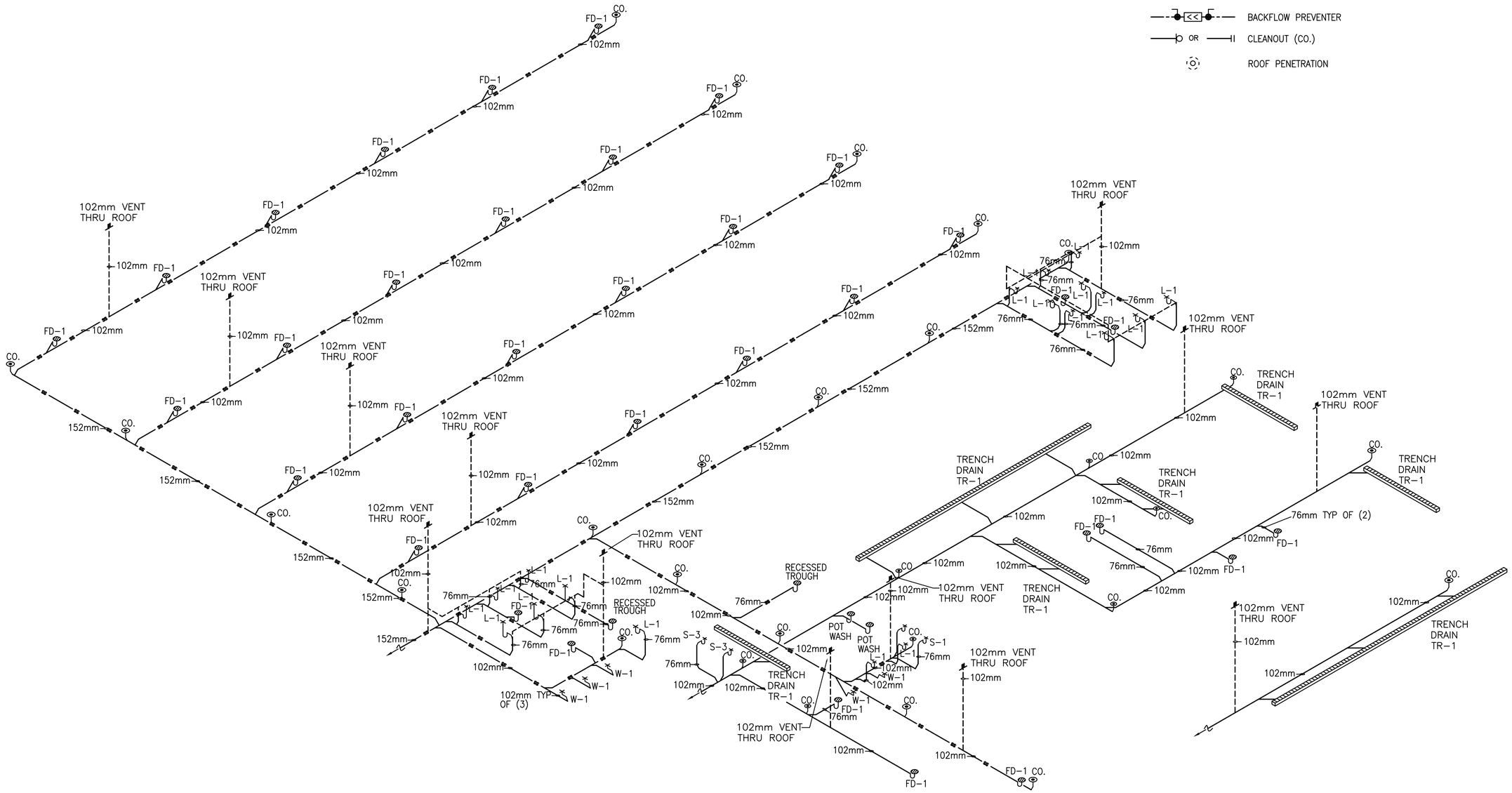


1 / P901 DFAC DRAINAGE ISOMETRIC

SCALE: N.T.S.

US ARMY CORPS OF ENGINEERS
AFGHANISTAN ENGINEER DISTRICT

| Mark | Description | Date | Appr. | Mark | Description | Date | Appr. |
|---|---|---|---|---|---|---|---|

Designed by: RMH
Dwn by: RMH
Ckd by: CJM
Reviewed by:
Submitted by: BAKER
Date: 02/23/10
Rev: 0
Design file no.
Drawing code:
File name: ANADFACPL-901XXX
Plot date: 02/08/2010
Plot scale: N.T.S.

U.S. ARMY CORPS OF ENGINEERS
AFGHANISTAN ENGINEER DISTRICT
APO AE 96338

Michael Baker Jr., Inc
A unit of Michael Baker Corporation
Airside Business Park
100 Airside Drive
Moon Township, PA 15108
www.mbakercorp.com

AFGHAN NATIONAL ARMY
REGIONAL MILITARY TRAINING CENTER
STANDARD DESIGN

DINING FACILITY
DFAC DRAINAGE ISOMETRIC

APPROVED:

A/E DESIGNER OF RECORD

SEAL:

COMMONWEALTH OF PENNSYLVANIA
REGISTERED PROFESSIONAL
MATTHEW R. SOTOSKY
ENGINEER
046576-E

Sheet reference number:
P-901

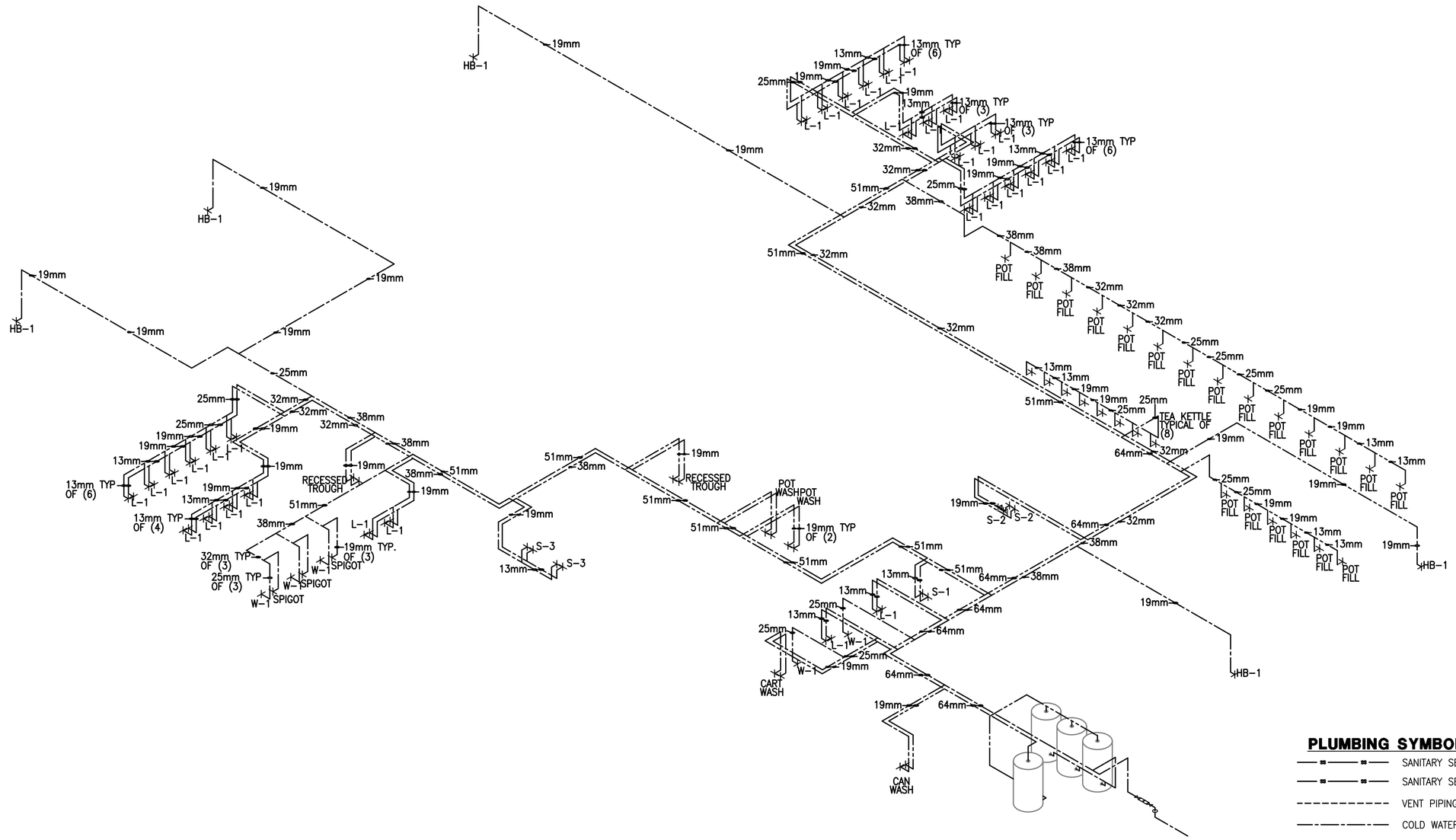


## PLUMBING SYMBOLS

- SANITARY SEWER PIPING (BELOW GROUND)
- SANITARY SEWER PIPING (ABOVE GROUND)
- VENT PIPING (V)
- COLD WATER PIPING (CW)
- HOT WATER PIPING (HW)
- BALL VALVE
- BACKFLOW PREVENTER
- OR CLEANOUT (CO.)
- ROOF PENETRATION

1 / P-902 DFAC WATER ISOMETRIC

SCALE: N.T.S.

APPROVED:

A/E DESIGNER OF RECORD

SEAL:

COMMONWEALTH OF PENNSYLVANIA
REGISTERED PROFESSIONAL
MATTHEW R. SOTOSKY
ENGINEER
045576-E

US ARMY CORPS OF ENGINEERS
AFGHANISTAN ENGINEER DISTRICT

| Mark | Description | Date | Appr. | Mark | Description | Date | Appr. |
|---|---|---|---|---|---|---|---|

Designed by: RMH
Dwn by: RMH
Ckd by: CJM
Reviewed by:
Submitted by: BAKER
Date: 02/23/10
Rev: 0
Design file no.
Drawing code:
File name: ANADFACPL-902XXX
Plot date: 02/08/2010
Plot scale: N.T.S.

U.S. ARMY CORPS OF ENGINEERS
AFGHANISTAN ENGINEER DISTRICT
APO AE 96338

Michael Baker Jr., Inc
A unit of Michael Baker Corporation
Airside Business Park
100 Airside Drive
Moon Township PA 15108
www.mbakercorp.com

AFGHAN NATIONAL ARMY
REGIONAL MILITARY TRAINING CENTER
STANDARD DESIGN

DINING FACILITY
DFAC WATER ISOMETRIC

Sheet reference number:
P-902

## PLUMBING SYMBOLS

| | |
|---|---|
| SS | SANITARY SEWER PIPING (BELOW GROUND) |
| SS | SANITARY SEWER PIPING (ABOVE GROUND) |
| | VENT PIPING (V) |
| | COLD WATER PIPING (CW) |
| | HOT WATER PIPING (HW) |
| P | PROPANE LINE |
| P | TWO STAGE PRESSURE GAUGE |
| | BALL VALVE |
| | BACKFLOW PREVENTER |
| OR | CLEANOUT (CO.) |
| | ROOF PENETRATION |

## ISOMETRIC NOTES:

1. SEAL ALL EXTERIOR PIPE SLEEVE OPENINGS BETWEEN PROPANE PIPE AND PROPANE PIPE SLEEVE.

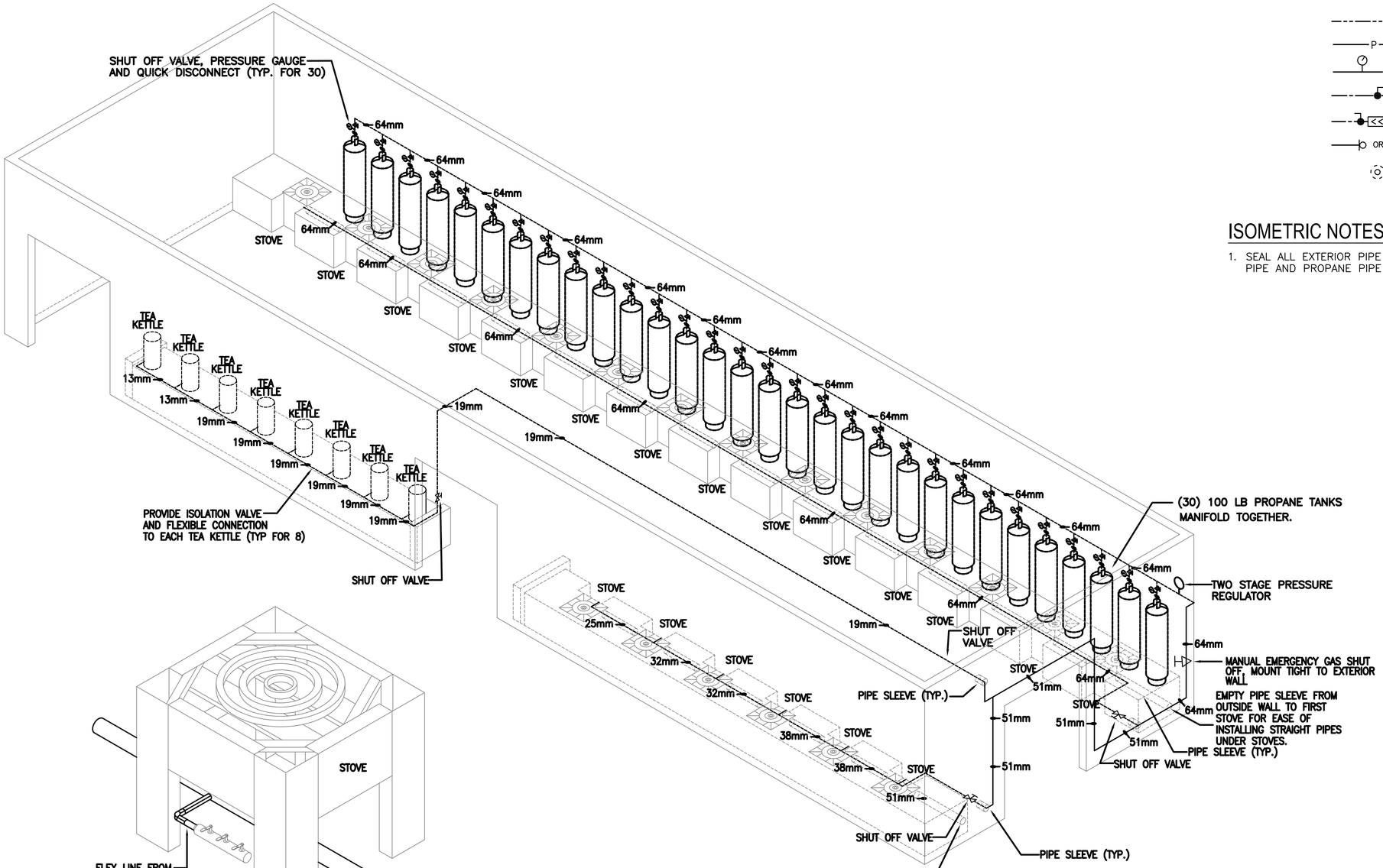


1 P903 DFAC PROPANE PIPING ISOMETRIC

SCALE: N.T.S.

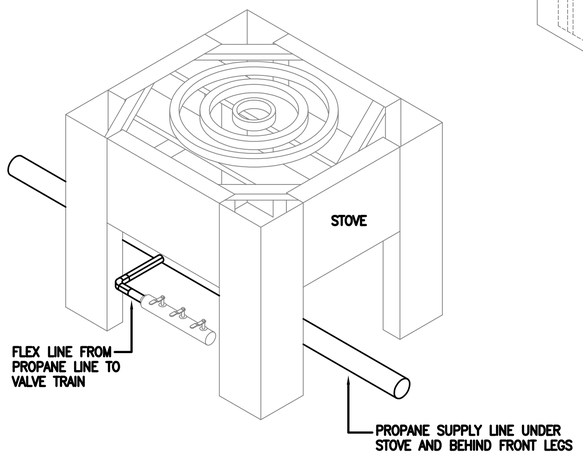


2 P903 PROPANE STOVE WITH FLEX CONNECTION

SCALE: N.T.S.

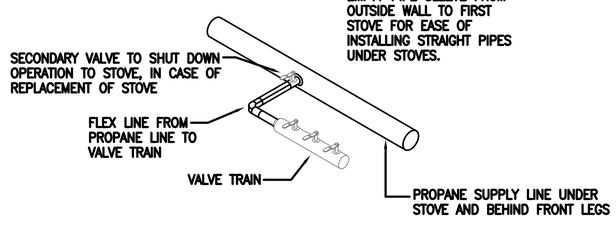


3 P903 VALVE TRAIN, PROPANE FLEX LINE AND PROPANE MAIN DETAIL

SCALE: N.T.S.

US ARMY CORPS OF ENGINEERS
AFGHANISTAN ENGINEER DISTRICT

| Mark | Description | Date | Appr. | Mark | Description | Date | Appr. |
|---|---|---|---|---|---|---|---|

Designed by: RMH
Dwn by: RMH
Ckd by: CJM
Reviewed by:
Submitted by: BAKER
Date: 02/23/10
Rev: 0
Design file no.
Drawing code:
File name: ANADFACPL-903XXX
Plot date: 02/08/2010
Plot scale: N.T.S.

U.S. ARMY CORPS OF ENGINEERS
AFGHANISTAN ENGINEER DISTRICT
APO AE 96338

Michael Baker Jr., Inc.
A unit of Michael Baker Corporation
Airside Business Park
100 Airside Drive
Moon Township, PA 15108
www.mbakercorp.com

AFGHAN NATIONAL ARMY
REGIONAL MILITARY TRAINING CENTER
STANDARD DESIGN

DINING FACILITY
DFAC PROPANE ISOMETRIC

APPROVED:

A/E DESIGNER OF RECORD

SEAL:

COMMONWEALTH OF PENNSYLVANIA
REGISTERED PROFESSIONAL
MATTHEW R. SOTOSKY
ENGINEER
045576-E

Sheet reference number:
P-903

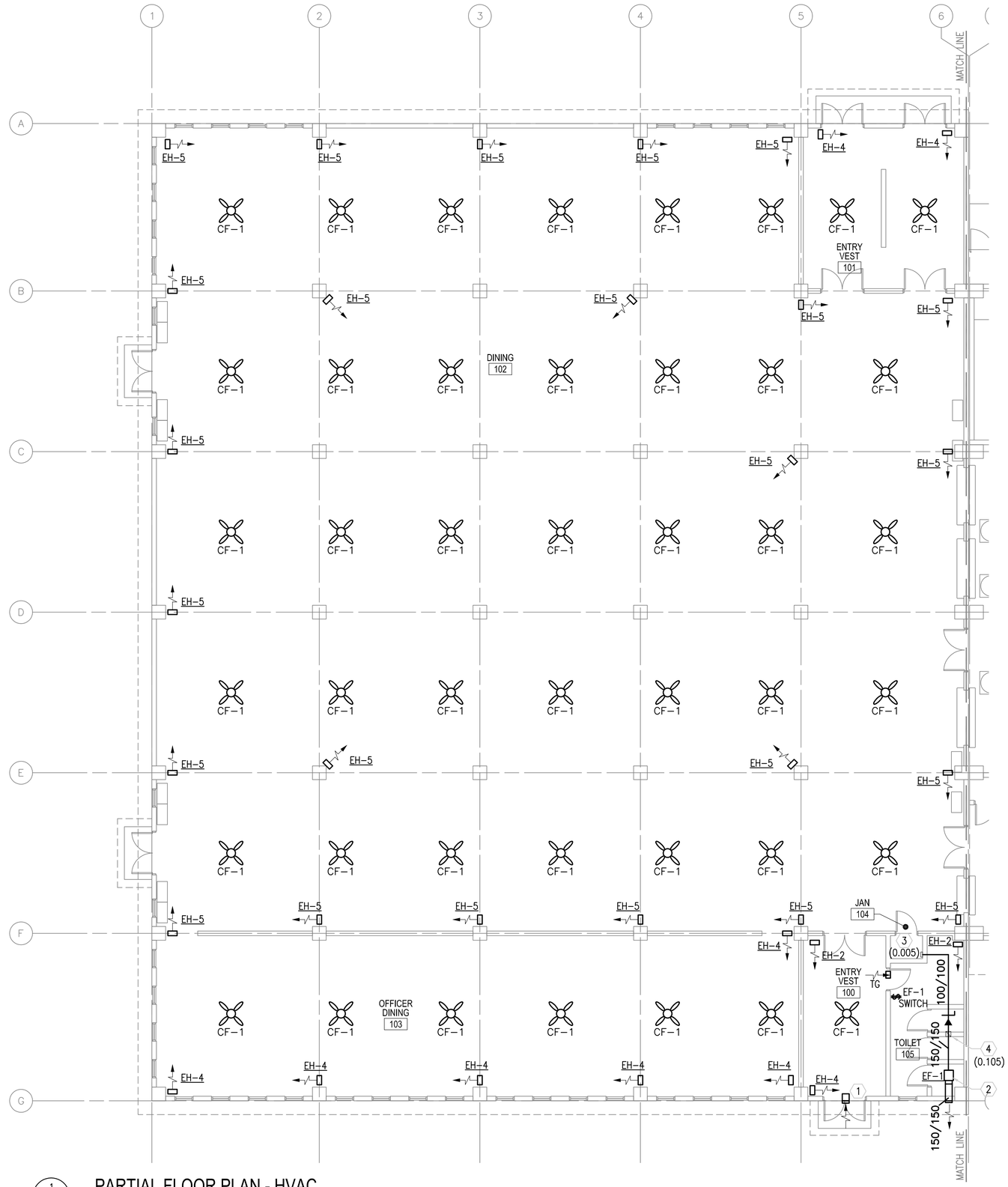


1 M-101 PARTIAL FLOOR PLAN - HVAC

SCALE: 1:100

## GENERAL NOTES:

1. DO NOT SCALE DRAWINGS – ALL DIMENSIONS AND CONDITIONS SHALL BE CHECKED AND VERIFIED BY THE CONTRACTOR AT THE SITE.
2. ALL WORK PERFORMED ON THIS BUILDING SHALL BE IN COMPLIANCE WITH ALL PERTINENT CODES, RULES, ORDINANCES AND REGULATIONS OF THE GOVERNING AUTHORITIES.
3. ALL WORK PERFORMED UNDER AND IN CONNECTION WITH THESE DRAWINGS AND SPECIFICATIONS SHALL BE IN STRICT COMPLIANCE WITH THE LATEST SAFETY AND HEALTH STANDARDS.

## SYMBOLS:

- (X) KEY NOTE
- (.050) AIR VOLUME IN CUBIC METERS PER SECOND (CMS)
- (T) THERMOSTAT WITH LOCKING COVER
- UC DOOR UNDERCUT
- TG TRANSFER GRILLE
- $ SINGLE POLE SWITCH – 20A RATED

## ABBREVIATIONS:

| | |
|---|---|
| AFF | ABOVE FINISH FLOOR |
| CF | CEILING FANS |
| CMS | CUBIC METERS PER SECOND |
| STATS | THERMOSTATS |

## KEY NOTE:

1. 610X400 (24X16) INTAKE LOUVER FOR MAKE UP AIR. PROVIDE WEATHER PROOF LOUVER WITH 50mm (2") WASHABLE FILTER AND SAND TRAP.
2. INLINE EXHAUST FAN DUCTED TO WALL CAP WITH LOW LEAKAGE GRAVITY BACK–DRAFT DAMPER. SECURE FAN TO STRUCTURE ABOVE.
3. 150x150 (6x6) ALUMINUM EXHAUST GRILLE WITH ADJUSTABLE OPPOSED BLADE DAMPERS. BALANCE TO CMS IN PARENTHESIS.
4. 250x150 (10x6) ALUMINUM EXHAUST GRILLE WITH ADJUSTABLE OPPOSED BLADE DAMPERS. BALANCE TO CMS IN PARENTHESIS.

## KEY PLAN:

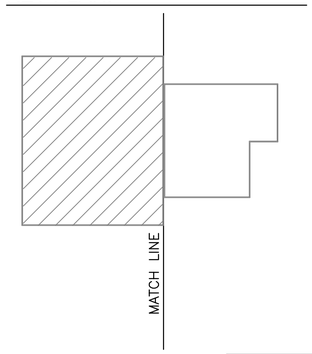


LINEAR DIMENSIONS SHOWN ARE IN MILLIMETERS (MM), UNLESS OTHERWISE NOTED

0 2000 4000
SCALE: 1:100

APPROVED:

A/E DESIGNER OF RECORD

SEAL:

COMMONWEALTH OF PENNSYLVANIA REGISTERED PROFESSIONAL MATTHEW R. SOTOSKY ENGINEER 046576-E

US ARMY CORPS OF ENGINEERS
AFGHANISTAN ENGINEER DISTRICT

| Mark | Description | Date | Appr. | Mark | Description | Date | Appr. |
|---|---|---|---|---|---|---|---|

Designed by: RML
Dwn by: JJN
Ckd by: CJM
Reviewed by: MRS
Submitted by: BAKER
Date: 02/23/10
Rev: 0
Design file no.
Drawing code:
File name: ANADFACMR-101XXX
Plot date: 02/26/2010
Plot scale: 1:100

U.S. ARMY CORPS OF ENGINEERS
AFGHANISTAN ENGINEER DISTRICT
APO AE 96338

Michael Baker Jr., Inc.
A unit of Michael Baker Corporation
Airside Business Park
100 Airside Drive
Moon Township, PA 15108
www.mbakercorp.com

AFGHAN NATIONAL ARMY
REGIONAL MILITARY TRAINING CENTER
STANDARD DESIGN

DINING FACILITY

PARTIAL HVAC FLOOR PLAN

Sheet reference number:
M–101

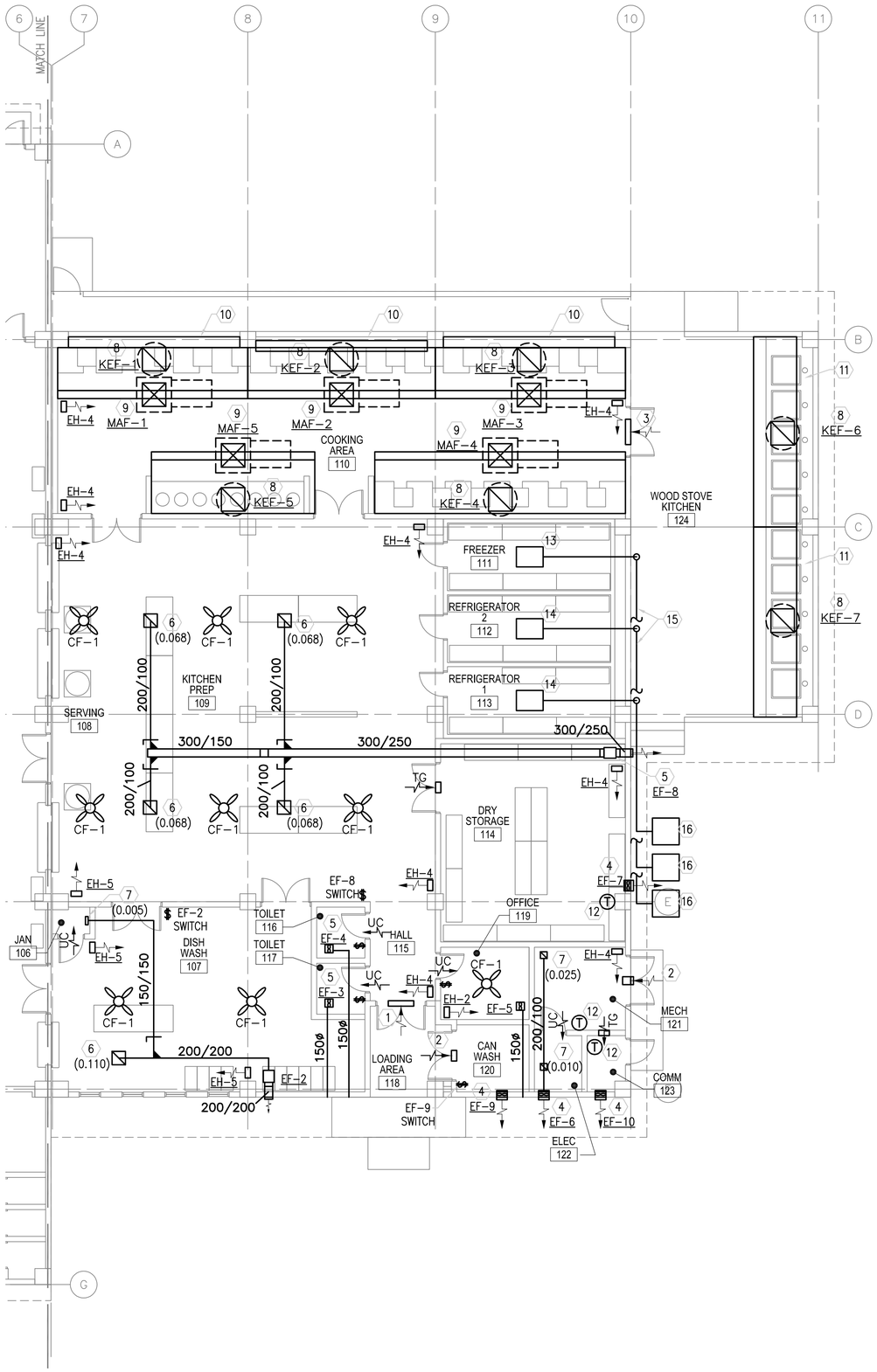


1 M-101 PARTIAL FLOOR PLAN - HVAC

SCALE: 1:100

## GENERAL NOTES:

1. DO NOT SCALE DRAWINGS – ALL DIMENSIONS AND CONDITIONS SHALL BE CHECKED AND VERIFIED BY THE CONTRACTOR AT THE SITE.
2. ALL WORK PERFORMED ON THIS BUILDING SHALL BE IN COMPLIANCE WITH ALL PERTINENT CODES, RULES, ORDINANCES AND REGULATIONS OF THE GOVERNING AUTHORITIES.
3. ALL WORK PERFORMED UNDER AND IN CONNECTION WITH THESE DRAWINGS AND SPECIFICATIONS SHALL BE IN STRICT COMPLIANCE WITH THE LATEST SAFETY AND HEALTH STANDARDS.

## SYMBOLS:

- (X) KEY NOTE
- (.050) AIR VOLUME IN CUBIC METERS PER SECOND (CMS)
- (T) THERMOSTAT WITH LOCKING COVER
- UC DOOR UNDERCUT
- TG TRANSFER GRILLE
- $ SINGLE POLE SWITCH – 20A RATED FOR EXHAUST FAN

## ABBREVIATIONS:

| | |
|---|---|
| AFF | ABOVE FINISH FLOOR |
| CF | CEILING FANS |
| CMS | CUBIC METERS PER SECOND |
| STATS | THERMOSTATS |

## KEY NOTE:

1. 810X610 (32X24) INTAKE LOUVER FOR MAKE UP AIR. PROVIDE WEATHER PROOF LOUVER W/0.05mm (2") WASHABLE FILTER AND SAND TRAP.
2. 400X200 (16X8) INTAKE LOUVER FOR MAKE UP AIR. PROVIDE WEATHER PROOF LOUVER W/0.05mm (2") WASHABLE FILTER AND SAND TRAP.
3. 1520x610 (60X24) INTAKE LOUVER FOR MAKE UP AIR. PROVIDE WEATHER PROOF LOUVER W/0.05mm (2") WASHABLE FILTER AND SAND TRAP.
4. WALL EXHAUST FAN WITH LOW SPRING OPERATED BACK–DRAFT DAMPER. SEE DETAIL ON SHEET M501.
5. INLINE EXHAUST FAN DUCTED TO WALL CAP WITH LOW LEAKAGE GRAVITY BACK–DRAFT DAMPER. SECURE FAN TO STRUCTURE ABOVE.
6. 250x150 (10x6) ALUMINUM EXHAUST GRILLE WITH ADJUSTABLE OPPOSED BLADE DAMPERS. BALANCE TO CMS IN PARENTHESIS.
7. 150x150 (6x6) ALUMINUM EXHAUST GRILLE WITH ADJUSTABLE OPPOSED BLADE DAMPERS. BALANCE TO CMS IN PARENTHESIS.
8. KITCHEN HOOD UP–BLAST EXHAUST FAN ON ROOF MOUNTED CURB. SEE DETAILS ON SHEET M502.
9. KITCHEN HOOD MAKE UP AIR FAN ON ROOF MOUNTED CURB. SEE DETAILS ON SHEET M502.
10. PROVIDE STAINLESS STEEL FILLER PANEL BEHIND HOOD IN BETWEEN COLUMNS.
11. HOLD HOOD OFF BACK WALL TO PROVIDE SPACE FOR FLUES TO PASS. PROVIDE HOOD BRACING BACK TO WALL IN BETWEEN FLUES.
12. THERMOSTAT MOUNTED AS HIGH AS POSSIBLE. INTERLOCK STAT WITH CORRESPONDING EXHAUST FAN, SET FAN TO ENERGIZE ON RISE IN TEMPERATURE ABOVE 25°C (77°F).
13. FREEZER EVAPORATOR UNIT
14. REFRIGERATOR EVAPORATOR UNIT
15. REFRIGERATION PIPING EXTENDED FROM EVAPORATOR TO CORRESPONDING CONDENSING UNIT. (TYPICAL)
16. REFRIGERATOR / FREEZER CONDENSING UNITS MOUNTED ON SLAB ON GRADE. REFER TO DETAIL "9" ON S–701.

## KEY PLAN:

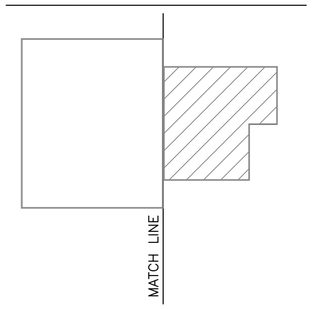


LINEAR DIMENSIONS SHOWN ARE IN MILLIMETERS (MM), UNLESS OTHERWISE NOTED

0 2000 4000
SCALE: 1:100

APPROVED:

A/E DESIGNER OF RECORD

SEAL:

US ARMY CORPS OF ENGINEERS
AFGHANISTAN ENGINEER DISTRICT

| Mark | Description | Date | Appr. | Mark | Description | Date | Appr. |
|---|---|---|---|---|---|---|---|
| | | | | | | | |

Date: 02/23/10
Rev: 0
Designed by: RML
Dwn by: JJN
Ckd by: CJM
Reviewed by: MRS
Submitted by: BAKER
Drawing code:
File name: ANADFACMH-102XXX
Plot date: 02/26/2010
Plot scale: 1:100

U.S. ARMY CORPS OF ENGINEERS
AFGHANISTAN ENGINEER DISTRICT
APO AE 96338

Michael Baker Jr., Inc
A unit of Michael Baker Corporation
Airside Business Park
100 Airside Drive
Moon Township, PA 15108
www.mbakercorp.com

AFGHAN NATIONAL ARMY
REGIONAL MILITARY TRAINING CENTER
STANDARD DESIGN

DINING FACILITY

PARTIAL HVAC FLOOR PLAN

Sheet reference number:
M–102

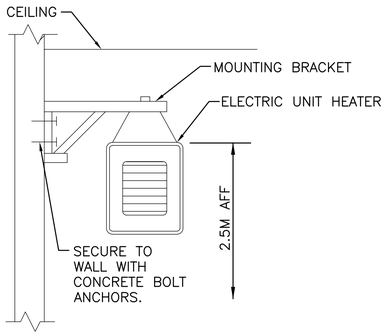


1 M-501 ELECTRIC UNIT HEATER MOUNTING DETAIL
N.T.S.

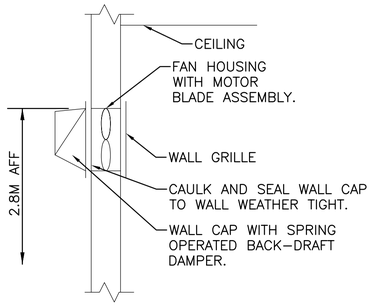


2 M-501 WALL EXHAUST FAN DETAIL
N.T.S.

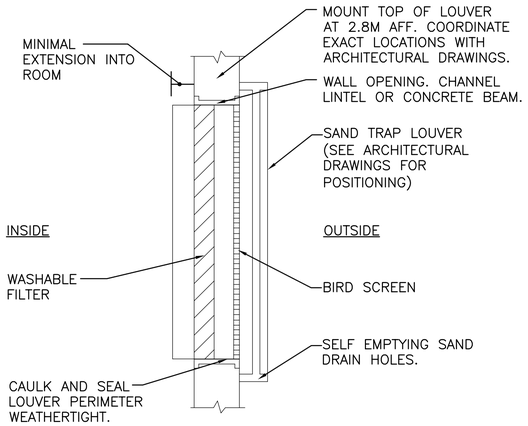


3 M-501 FILTERED SAND TRAP LOUVER
N.T.S.

## EXHAUST FAN SCHEDULE

| NO. | TYPE | FAN CMS | DRIVE | HP | SP mmH2O | ELECTRICAL DATA | SWITCH |
|---|---|---|---|---|---|---|---|
| EF-1 | INLINE | 0.110 | DIRECT | 1/12 | 13 | 220/1/50 | @ WALL |
| EF-2 | INLINE | 0.115 | DIRECT | 1/12 | 13 | 220/1/50 | @ WALL |
| EF-3 | INLINE | 0.035 | DIRECT | FRACT | 13 | 220/1/50 | @ WALL |
| EF-4 | INLINE | 0.035 | DIRECT | FRACT | 13 | 220/1/50 | @ WALL |
| EF-5 | INLINE | 0.035 | DIRECT | FRACT | 13 | 220/1/50 | @ WALL |
| EF-6 | INLINE | 0.035 | DIRECT | FRACT | 13 | 220/1/50 | W/ STAT |
| EF-7 | WALL | 0.035 | DIRECT | FRACT | 9.5 | 220/1/50 | W/ STAT |
| EF-8 | INLINE | 0.270 | DIRECT | 1/6 | 13 | 220/1/50 | @ WALL |
| EF-9 | WALL | 0.035 | DIRECT | FRACT | 9.5 | 220/1/50 | @ WALL |
| EF-10 | WALL | 0.035 | DIRECT | FRACT | 9.5 | 220/1/50 | W/ STAT |
| | | | | | | | |
| KEF-1 | UPBLAST | 4.400 | DIRECT | 3 | 25 | 220/1/50 | @ HOOD |
| KEF-2 | UPBLAST | 4.400 | DIRECT | 3 | 25 | 220/1/50 | @ HOOD |
| KEF-3 | UPBLAST | 4.400 | DIRECT | 3 | 25 | 220/1/50 | @ HOOD |
| KEF-4 | UPBLAST | 5.660 | DIRECT | 5 | 25 | 220/1/50 | @ HOOD |
| KEF-5 | UPBLAST | 3.800 | DIRECT | 3 | 25 | 220/1/50 | @ HOOD |
| KEF-6 | UPBLAST | 4.400 | DIRECT | 3 | 25 | 220/1/50 | @ HOOD |
| KEF-7 | UPBLAST | 4.400 | DIRECT | 3 | 25 | 220/1/50 | @ HOOD |

NOTE:
1. FANS SHALL BE CORROSION RESISTANT
2. WALL FANS SHALL HAVE SPRING OPERATED BACK-DRAFT DAMPER.

## MAKE-UP AIR FAN SCHEDULE

| NO. | TYPE | FAN CMS | DRIVE | HP | SP mmH2O | ELECTRICAL DATA | SWITCH |
|---|---|---|---|---|---|---|---|
| MAF-1 | ROOF | 4.200 | DIRECT | 5 | 19 | 220/1/50 | W/ KEF-1 |
| MAF-2 | ROOF | 4.200 | DIRECT | 5 | 19 | 220/1/50 | W/ KEF-2 |
| MAF-3 | ROOF | 4.200 | DIRECT | 5 | 19 | 220/1/50 | W/ KEF-3 |
| MAF-4 | ROOF | 5.400 | DIRECT | 7.5 | 19 | 220/1/50 | W/ KEF-4 |
| MAF-5 | ROOF | 3.600 | DIRECT | 5 | 19 | 220/1/50 | W/ KEF-5 |

NOTE:
1. FANS SHALL BE CORROSION RESISTANT

## ELECTRIC UNIT HEATER SCHEDULE

| NO. | CMS | KW | F.A.T. °C | ELECT. CHAR. | MOUNTING |
|---|---|---|---|---|---|
| EH-2 | .200 | 2.6 | 38 | 380/1/50 | WALL HUNG |
| EH-4 | .200 | 4 | 38 | 380/1/50 | WALL HUNG |
| EH-5 | .200 | 5 | 38 | 380/1/50 | WALL HUNG |

NOTES:
1. UNIT HEATERS SHALL BE MOUNTED 2.5M AFF.
2. UNIT HEATERS SHALL HAVE TAMPER PROOF INTEGRAL STATS.

## CEILING FAN

| NO. | BLADE SIZE mm | BLADE SIZE IN | VOLTAGE | SWITCH | REMARKS |
|---|---|---|---|---|---|
| CF-1 | 1320 | 52 | 220/1/50 | @ WALL | 3 SPEED REVERSIBLE MOTOR |

NOTES:
1. PROVIDE EXTENSION DOWN RODS, INSTALL FANS 2.5M AFF.
2. PROVIDE WITH OUT LIGHT FIXTURE.
3. PROVIDE WITH REMOTE MOUNTED ON-OFF SWITCH SHOWN ON ELECTRICAL DRAWINGS.

APPROVED:

A/E DESIGNER OF RECORD

SEAL:

COMMONWEALTH OF PENNSYLVANIA
REGISTERED PROFESSIONAL
MATTHEW R. SOTOSKY
ENGINEER
046576-E

US ARMY CORPS OF ENGINEERS
AFGHANISTAN ENGINEER DISTRICT

| Mark | Description | Date | Appr. |
|---|---|---|---|
| | | | |

| Mark | Description | Date | Appr. |
|---|---|---|---|
| | | | |

Date: 02/23/10 | Rev: 0
Designed by: RML | Dwn by: JJN | Ckd by: CJM
Reviewed by: MRS
Submitted by: BAKER
Drawing code:
File name: ANADFAGMH-501XXX
Plot date: 02/09/2010
Plot scale:

U.S. ARMY CORPS OF ENGINEERS
AFGHANISTAN ENGINEER DISTRICT
APO AE 96338

Michael Baker Jr., Inc.
A unit of Michael Baker Corporation
Airside Business Park
100 Airside Drive
Moon Township, PA 15108
www.mbakercorp.com

AFGHAN NATIONAL ARMY
REGIONAL MILITARY TRAINING CENTER
STANDARD DESIGN

DINING FACILITY

HVAC SCHEDULES AND DETAILS

Sheet reference number:
M-501

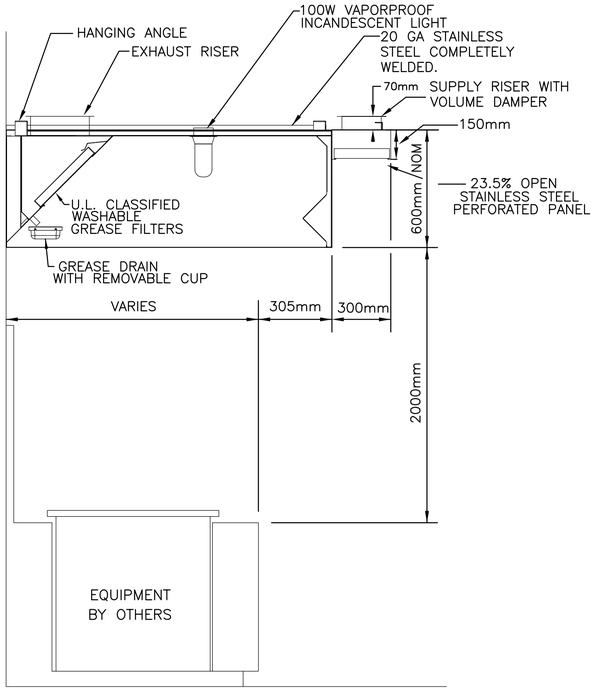


1 M-502 KITCHEN HOOD SECTION DETAIL
N.T.S.

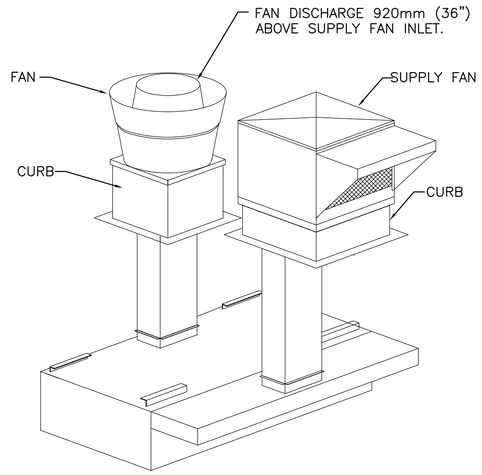


CORRECT INSTALLATION:
1. EXHAUST DUCT STRAIGHT UP
2. DO NOT USE FLEXIBLE SUPPLY DUCTWORK.
3. INSULATE EXHAUST DUCTS.

EXHAUST AND MAKE UP AIR
2 M-502 KITCHEN HOOD DUCT CONFIGURATION DETAIL
N.T.S.

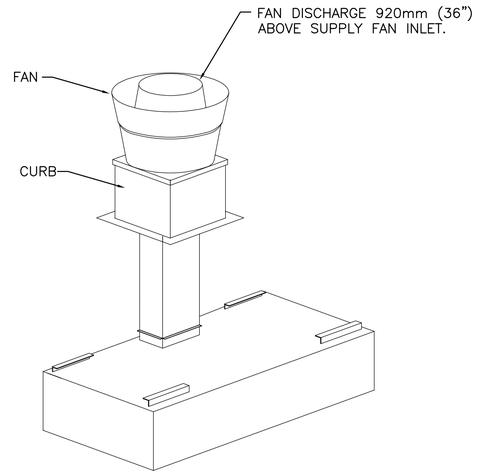


CORRECT INSTALLATION:
1. EXHAUST DUCT STRAIGHT UP
2. DO NOT USE FLEXIBLE SUPPLY DUCTWORK.
3. INSULATE EXHAUST DUCTS.

EXHAUST ONLY
5 M-502 KITCHEN HOOD DUCT CONFIGURATION DETAIL
N.T.S.

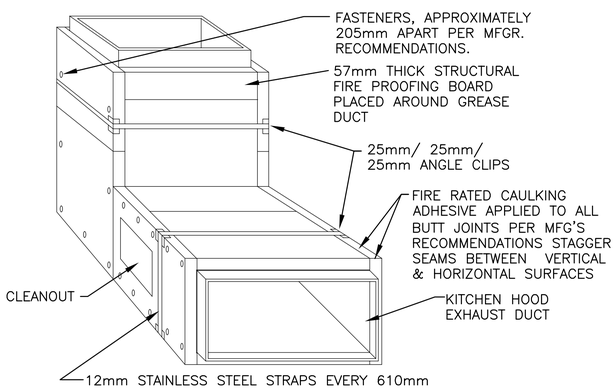


NOTES:
1. WHEN INSTALLING CLEANOUT DOOR COVER, USE REMOVABLE STAINLESS STEEL BANDS AT 305mm O.C. MAXIMUM ( 2 BANDS MINIMUM ).
2. DUCT SYSTEM SHALL BE SLOPED PER NFPA REGULATIONS.
3. DUCT HANGERS AND SUPPORTS FOR HORIZONTAL & VERTICAL RUNS SHALL BE DESIGNED TO PROVIDE ADEQUATE SUPPORT FOR THE DUCT AND ENCLOSURE ACCORDING TO REQUIREMENTS OF THE BUILDING & MECHANICAL CODES.
4. LABELS SHALL BE PROVIDED BY THE ENCLOSURE MANUFACTURER AND BE PLACED ADJACENT TO ALL CLEANOUT OPENINGS WHICH STATE THAT COVER MUST BE REPLACED USING REMOVABLE STAINLESS STEEL BANDS AT 305mm O.C. MAXIMUM (2 BANDS MINIMUM).
5. DUCT AND ENCLOSURE SHALL BE SUPPORTED BY HANGERS FROM BUILDING STRUCTURE. MAXIMUM DISTANCE BETWEEN SUPPORTS SHALL BE 1220mm.
6. PROVIDE 40mm GREASE DUCT INSULATION ON ALL KITCHEN EXHAUST DUCTS.

3 M-502 KITCHEN HOOD EXHAUST DUCT DETAIL
N.T.S.

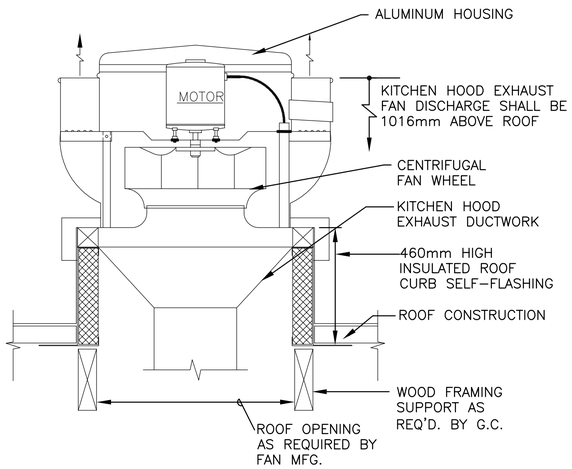


4 M-502 KITCHEN ROOF EXHAUST FAN DETAIL
N.T.S.

APPROVED:

A/E DESIGNER OF RECORD

SEAL:

COMMONWEALTH OF PENNSYLVANIA
REGISTERED PROFESSIONAL
MATTHEW R. SOTOSKY
ENGINEER
046576-E

US ARMY CORPS OF ENGINEERS
AFGHANISTAN ENGINEER DISTRICT

| Mark | Description | Date | Appr. | Mark | Description | Date | Appr. |
|---|---|---|---|---|---|---|---|

Rev: 0
Date: 02/23/10
Designed by: RML
Dwn by: JJN
Ckd by: CJM
Reviewed by: MRS
Submitted by: BAKER
Design file no.
Drawing code:
File name: ANADFAOMH-502XXX
Plot date: 02/08/2010
Plot scale:

U.S. ARMY CORPS OF ENGINEERS
AFGHANISTAN ENGINEER DISTRICT
APO AE 96338

Michael Baker Jr., Inc.
A unit of Michael Baker Corporation
Airside Business Park
100 Airside Drive
Moon Township, PA 15108
www.mbakercorp.com

AFGHAN NATIONAL ARMY
REGIONAL MILITARY TRAINING CENTER
STANDARD DESIGN

DINING FACILITY

KITCHEN EXHAUST HOOD DETAILS

Sheet reference number:
M-502

## POWER

- DISTRIBUTION PANELBOARD
- NEW PANELBOARD – SURFACE
- NEW PANELBOARD – RECESSED
- GENERATOR
- TRANSFORMER (DRAWN TO SIZE)
- JUNCTION BOX
- JUNCTION BOX – CEILING
- FUSIBLE SAFETY SWITCH
- MOTOR
- MOTOR STARTING SWITCH – 220V, 20A RATED UNLESS OTHERWISE NOTED
- ELECTRIC WATER HEATER
- CEILING FAN – REFER TO SPECIFICATION SECTION 26 20 00

## RECEPTACLES

- DUPLEX 20A TYPE CEE 7/7 "SCHUKO STYLE" UNSWITCHED RECEPTACLE
- GF DUPLEX 20A TYPE CEE 7/7 "SCHUKO STYLE" UNSWITCHED RECEPTACLES – 10mA GROUND FAULT INTERRUPTER TYPE
- WP DUPLEX 20A TYPE CEE 7/7 "SCHUKO STYLE" UNSWITCHED TYPE WITH WEATHERPROOF COVER – 10mA GROUND FAULT INTERRUPTER TYPE
- EXP DUPLEX 20A TYPE CEE 7/7 "SCHUKO STYLE" UNSWITCHED RECEPTACLES – EXPLOSION PROOF
- ★ INDICATES MOUNT DEVICE ABOVE COUNTERTOP OR AT 1070mm ABOVE FINISHED FLOOR WHERE NO COUNTER IS TO BE INSTALLED.

## LIGHTNING PROTECTION

- AIR TERMINAL 20mm O.D. X 450mm SOLID COPPER, NICKEL PLATED ON ADHESIVE BASE
- EQ EQUIPMENT AIR TERMINAL
- TEST WELL WITH GROUND ROD(S)
- GROUND ROD
- G GROUND PLATE
- MAIN GROUND CONDUCTER CONCEALED WITHIN CONSTRUCTION
- MAIN GROUND CONDUCTOR EXPOSED ON EXPOSED ON BUILDING EXTERIOR SURFACE
- GROUND CONDUCTOR CAD WELDED TO GROUND CABLE OR EQUIPMENT
- GROUND ROD TRIPOD, SPACED 3 METERS APART.
- LEVEL TO LEVEL CABLE

## LIGHTING

- LIGHTING FIXTURE – SEE FIXTURE SCHEDULE FOR MORE INFORMATION
- EMERGENCY LIGHTING FIXTURE – SEE FIXTURE SCHEDULE FOR MORE INFORMATION
- DOWNLIGHT
- LIGHTING FIXTURE ON NORMAL/EMERGENCY
- WALL MOUNTED LIGHT FIXTURE
- E EXIT SIGN – DIRECTIONAL ARROWS AS INDICATED ON DRAWINGS
- REMOTE HEAD FOR BATTERY PACK
- $ SINGLE POLE SWITCH – 20A RATED
- $3 3-WAY SWITCH – 20A RATED
- $4 4-WAY SWITCH – 20A RATED
- LC LIGHTING CONTACTOR
- POLE MOUNTED SITE LIGHTING FIXTURE– NUMBER OF FIXTURES PER POLE AS INDICATED ON DRAWINGS
- EXTERIOR DIRECTIONAL LIGHTING FIXTURE
- a SMALL CASE LETTERS REPRESENTS LAMP(S) / SWITCHES.

## TELECOMMUNICATIONS

- TELEPHONE OUTLET(S) @ 45cm AFF. U.N.O. WITH 20mm RACEWAY TERMINATED TO TELEDATA TERMINAL BOARD.
- DATA OUTLET(S) @ 45cm AFF. U.N.O. WITH 20mm RACEWAY TERMINATED TO TELEDATA TERMINAL BOARD.

## TELECOMMUNICATIONS (CONTINUED)

- COMBINATION TELEPHONE/DATA OUTLET(S) @ 45cm AFF. U.N.O. WITH 27mm RACEWAY TERMINATED TO TELEDATA TERMINAL BOARD.
- W WALL MTD. TELEPHONE OUTLET WITH 20mm RACEWAY TO TELEDATA TERMINAL BOARD.
- (x)T INDICATES NUMBER OF TELEPHONE OUTLET(S) AND ASSOCIATED CABLING
- (x)D INDICATES NUMBER OF DATA OUTLET(S) AND ASSOCIATED CABLING
- (x)TF INDICATES NUMBER OF TELEPHONE OUTLETS AND ASSOCIATED CABLING WITH 1 OUTLET AND CABLE DEDICATED FOR FAX

## SINGLE LINE SYMBOLS

- SWITCH
- BREAKER
- FUSE
- TRANSFORMER
- GROUND
- CONTACT (NORMALLY OPEN)
- CONTACT (NORMALLY CLOSED)
- TRANSFER SWITCH
- CURRENT TRANSFORMER
- INDICATES NEW ELECTRICAL EQUIPMENT
- C INDICATES NEW CONTROL WIRING AND CONDUIT
- EQUIPMENT OUTLINE

## MISCELLANEOUS

- BRANCH CIRCUIT WIRING, SURFACE MOUNTED ON WALLS
- BRANCH CIRCUIT WIRING – 6mm²
- BRANCH CIRCUIT WIRING – UNDER FLOOR
- HOME RUN BACK TO PANEL
- CONDUIT TURNED DOWN
- CONDUIT TURNED UP
- LV LOW VOLTAGE WIRING AND CONDUIT
- INDICATES CONTINUATION OF LINE

## FIRE ALARM

- FACP FIRE ALARM CONTROL PANEL WITH BATTERY BACKUP
- F FIRE ALARM PULL STATION

## FIRE ALARM (CONTINUED)

- F FIRE ALARM STROBE – WALL MOUNTED
- F FIRE ALARM AUDIBLE/STROBE – WALL MOUNTED
- F FIRE ALARM HORN/STROBE – WALL MOUNTED
- S SMOKE DETECTOR
- H HEAT DETECTOR CEILING MOUNTED
- D DUCT DETECTOR – PROVIDED BY EC, INSTALLED BY MC AND CONNECTED BY EC

## DENOTATIONS & ABBREVIATIONS

| | |
|---|---|
| AFF | ABOVE FINISHED FLOOR |
| C | CEILING MOUNTED |
| E | EMERGENCY |
| EC | ELECTRICAL CONTRACTOR |
| EPO | EMERGENCY POWER OFF |
| EXP | EXPLOSION PROOF |
| F | FIRE ALARM |
| FF | FLUSH FLOOR MOUNTED |
| FL | FLUORESCENT |
| FO | FIBER OPTIC |
| FSS | FUSED SAFETY SWITCH |
| GF | GROUND FAULT INTERRUPTER |
| GC | GENERAL CONTRACTOR |
| IG | ISOLATED GROUND |
| K | KEY |
| LV | LOW VOLTAGE |
| M | MOTOR |
| MC | MECHANICAL CONTRACTOR |
| NE | NORMAL/EMERGENCY |
| NFSS | NON-FUSED SAFETY SWITCH |
| PA | PAGING SYSTEM |
| PLC | PLUMBING CONTRACTOR |
| SL | SINGLE LINE |
| T | TELEPHONE |

## DENOTATIONS & ABBREVIATIONS (CONT.)

| | |
|---|---|
| TP | TAMPER PROOF |
| UE | UNDERGROUND ELECTRIC |
| W | WALL MOUNTED |
| WP | WEATHERPROOF WITH GROUND FAULT INTERRUPTION |
| WT | WATER TIGHT |

## GENERAL PROJECT NOTES:

G1. UNLESS OTHERWISE NOTED, PROVIDE ALL EQUIPMENT SHOWN ON THE PLANS. THE ELECTRICAL CONTRACTOR SHALL COORDINATE ALL SYMBOLS SHOWN ON THE PLANS WITH THE SYMBOL LIST. IT SHALL BE THE RESPONSIBILITY OF THE CONTRACTOR TO VERIFY THE INTENT OF ANY SYMBOL THAT IS SHOWN ON THE PLANS AND NOT INDICATED ON THE SYMBOL LIST WITH THE ENGINEER PRIOR TO BID.

G2. THE CONTRACTOR SHALL VERIFY THE LOCATION OF ALL UNDERGROUND UTILITIES WITHIN THE CONSTRUCTION AREA THREE (3) WORKING DAYS NOTICE BEFORE COMMENCING DIGGING. NOTIFY THE LOCAL AUTHORITY HAVING JURISDICTION AND WAIT THE REQUIRED TIME BEFORE COMMENCING TO DIG.

G3. THE CONTRACTOR SHALL COORDINATE CONDUIT RUNS, LIGHTING FIXTURES AND OTHER EQUIPMENT LOCATIONS WITH THE OTHER TRADE CONTRACTORS TO AVOID CONFLICTS.

G4. WHERE VOLTAGES AND FREQUENCIES ON THE DRAWINGS AND IN THE SPECIFICATIONS DIFFER FROM THE LOCAL ONES, ALL WORK SHALL BE PERFORMED USING THE LOCAL VOLTAGES AND FREQUENCIES.

G5. THE MINIMUM WIRE SIZE ON THE PROJECT SHALL BE 4mm². THE MINIMUM CONDUIT SIZE SHALL BE 20mm. THE MINIMUM BREAKER SIZE SHALL BE 20 AMPS.

G6. THE CONTRACTOR SHALL PUT A MAXIMUM OF 6 DUPLEX RECEPTACLES ON A 20A SINGLE POLE CIRCUIT.

G7. WHERE THE 1010 SCOPE REVIEW, 1015 TECHNICAL REVIEW, DRAWINGS, AND SPECIFICATIONS DIFFER FROM AMERICAN CODES OR STANDARDS, THE 1010, 1015, DRAWINGS, AND SPECIFICATIONS SHALL RULE.

G8. ALL CONDUIT AND DEVICES SHALL BE SURFACE MOUNTED UNLESS OTHERWISE INDICATED.

G9. CONTRACTOR SHALL COORDINATE ALL WORK WITH ALL OTHER TRADES TO ENSURE ALL WORK IS COMPLETED IN A PROFESSIONAL, WORKMAN-LIKE MANNER.

APPROVED:

A/E DESIGNER OF RECORD

SEAL:

COMMONWEALTH OF PENNSYLVANIA
REGISTERED PROFESSIONAL
JOSEPH R. GAUS
1/29/10
ENGINEER
PE-074251

US ARMY CORPS OF ENGINEERS
AFGHANISTAN ENGINEER DISTRICT

| Mark | Description | Date | Appr. | Mark | Description | Date | Appr. |
|---|---|---|---|---|---|---|---|

Rev: 0
Date: 2/23/10
Design file no.
Drawing code:
File name:
Plot date:
Plot scale:

Designed by: RAJ
Dwn by: BJB
Ckd by: JRG
Reviewed by: JRG
Submitted by: BAKER

U.S. ARMY CORPS OF ENGINEERS
AFGHANISTAN ENGINEER DISTRICT
APO AE 96338

Michael Baker Jr., Inc
A unit of Michael Baker Corporation
Airside Business Park
100 Airside Drive
Moon Township, PA 15108
www.mbakercorp.com

AFGHAN NATIONAL ARMY
REGIONAL MILITARY TRAINING CENTER
STANDARD DESIGN

DINING FACILITY (DFAC)

ELECTRICAL SYMBOLS & ABBREVIATIONS

Sheet reference number:
E-001

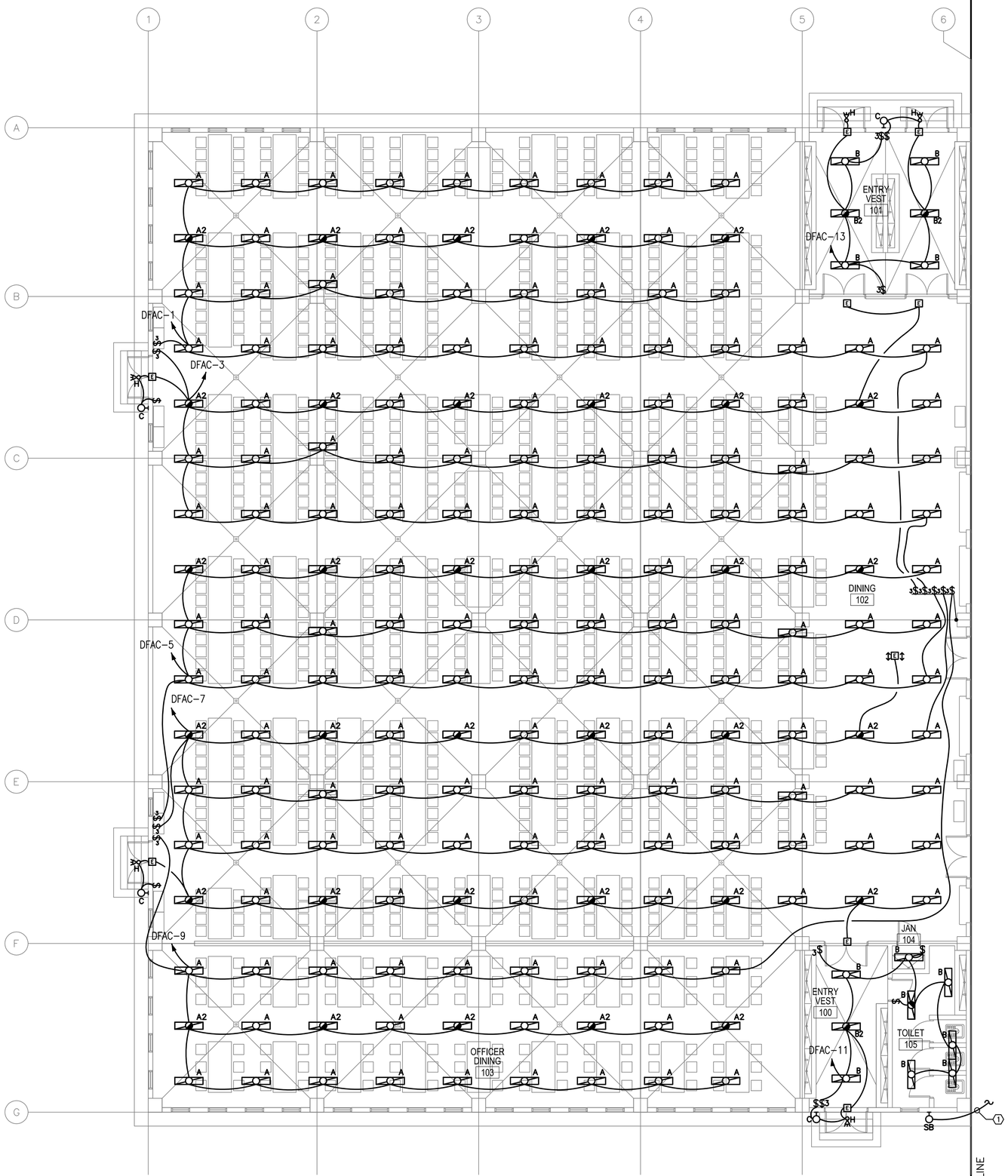


1
E-101

## DINING FACILITY- LIGHTING PLAN PART 'A'

SCALE: 1:100

## GENERAL NOTES:

1. REFER TO DRAWING #E-001 FOR THE ELECTRICAL SYMBOLS LIST.
2. EXIT SIGNS SHALL BE WIRED AHEAD OF ANY LOCAL SWITCHING ON CIRCUITS. SEE WIRING DIAGRAM DETAIL 8, DRAWING #E-501.
3. REFER TO DRAWING #E-601 FOR THE LIGHTING FIXTURE SCHEDULE.
4. REFER TO DRAWING #E-501 FOR THE POWER RISER.
5. REFER TO DRAWING #E-602 FOR PANEL SCHEDULES.
6. LIGHT FIXTURES INDICATED AS EMERGENCY SHALL BE PROVIDED WITH A BATTERY BACKUP BALLAST. SEE WIRING DIAGRAM DETAIL 7, DRAWING #E-501.
7. COORDINATE LIGHT FIXTURE LOCATIONS WITH CEILING FAN LOCATIONS PRIOR TO INSTALLATION. LIGHT FIXTURES SHALL HAVE PRIORITY OVER CEILING FANS.

## NUMBERED NOTES:

(1) TO FIXTURE ON DRAWING E-102.

## KEY PLAN:

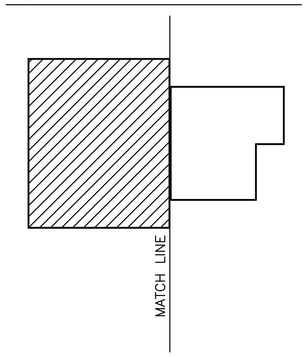


0 2000 4000
SCALE: 1:100

APPROVED:

A/E DESIGNER OF RECORD

SEAL:

COMMONWEALTH OF PENNSYLVANIA
REGISTERED PROFESSIONAL
JOSEPH R. GAUS
1/29/10
ENGINEER
PE-074251

US ARMY CORPS OF ENGINEERS
AFGHANISTAN ENGINEER DISTRICT

| Mark | Description | Date | Appr. | Mark | Description | Date | Appr. |
|---|---|---|---|---|---|---|---|
| | | | | | | | |

Designed by: RAJ
Dwn by: BJB
Ckd by: JRG
Reviewed by: JRG
Submitted by: BAKER
Date: 2/23/10
Design file no.
Rev: 0
Drawing code:
File name:
Plot date:
Plot scale:

U.S. ARMY CORPS OF ENGINEERS
AFGHANISTAN ENGINEER DISTRICT
APO AE 96338

Michael Baker Jr., Inc
A unit of Michael Baker Corporation
Airside Business Park
100 Airside Drive
Moon Township, PA 15108
www.mbakercorp.com

AFGHAN NATIONAL ARMY
REGIONAL MILITARY TRAINING CENTER
STANDARD DESIGN

DINING FACILITY (DFAC)
PARTIAL ELECTRICAL LIGHTING PLAN
PART 'A'

Sheet reference number:
E-101

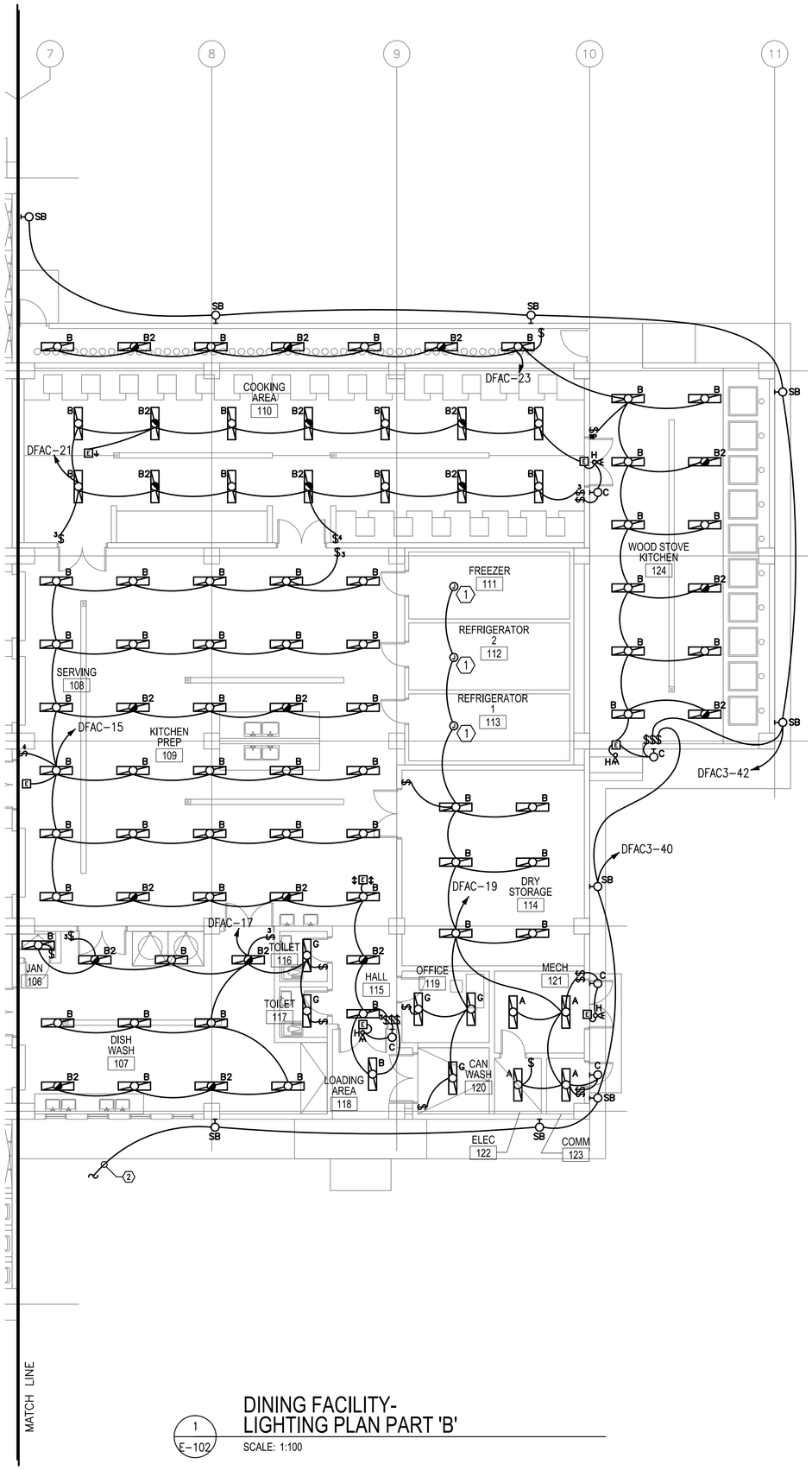


1
E-102

## DINING FACILITY-
## LIGHTING PLAN PART 'B'

SCALE: 1:100

## GENERAL NOTES:

1. REFER TO DRAWING #E-001 FOR THE ELECTRICAL SYMBOLS LIST.
2. EXIT SIGNS SHALL BE WIRED AHEAD OF ANY LOCAL SWITCHING ON CIRCUITS. SEE WIRING DIAGRAM DETAIL 8, ON DRAWING #E-501.
3. REFER TO DRAWING #E-601 FOR THE LIGHTING FIXTURE SCHEDULE.
4. REFER TO DRAWING #E-501 FOR THE POWER RISER.
5. REFER TO DRAWING #E-602 FOR PANEL SCHEDULES.
6. LIGHT FIXTURES INDICATED AS EMERGENCY SHALL BE PROVIDED WITH A BATTERY BACKUP BALLAST. SEE WIRING DIAGRAM DETAIL 7, ON DRAWING #E-501.

## NUMBERED NOTES:

(1) IT SHALL BE THE RESPONSIBILITY OF THE ELECTRICAL CONTRACTOR TO PROVIDE POWER TO THE LIGHTS IN THE PACKAGED REFRIGERATION AND FREEZER UNITS.

(2) TO FIXTURE ON DRAWING E-101.

## KEY PLAN:

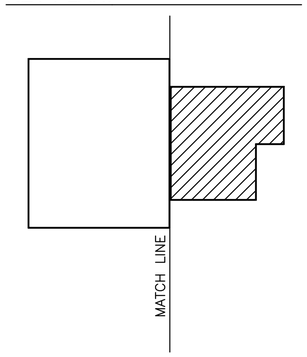


0 2000 4000
SCALE: 1:100

APPROVED:

A/E DESIGNER OF RECORD

SEAL:

COMMONWEALTH OF PENNSYLVANIA
REGISTERED PROFESSIONAL ENGINEER
JOSEPH R. GAUS
PE-074251

US ARMY CORPS OF ENGINEERS
AFGHANISTAN ENGINEER DISTRICT

| Mark | Description | Date | Appr. | Mark | Description | Date | Appr. |
|---|---|---|---|---|---|---|---|
| | | | | | | | |

Designed by: RAJ
Dwn by: BJB
Ckd by: JRG
Reviewed by: JRG
Submitted by: BAKER
Date: 2/23/10
Rev: 0
Design file no.
Drawing code:
File name:
Plot date:
Plot scale:

U.S. ARMY CORPS OF ENGINEERS
AFGHANISTAN ENGINEER DISTRICT
APO AE 96338

Michael Baker Jr., Inc.
A unit of Michael Baker Corporation
Airside Business Park
100 Airside Drive
Moon Township, PA 15108
www.mbakercorp.com

AFGHAN NATIONAL ARMY
REGIONAL MILITARY TRAINING CENTER
STANDARD DESIGN

DINING FACILITY (DFAC)
PARTIAL ELECTRICAL LIGHTING PLAN
PART 'B'

Sheet reference number:
E-102

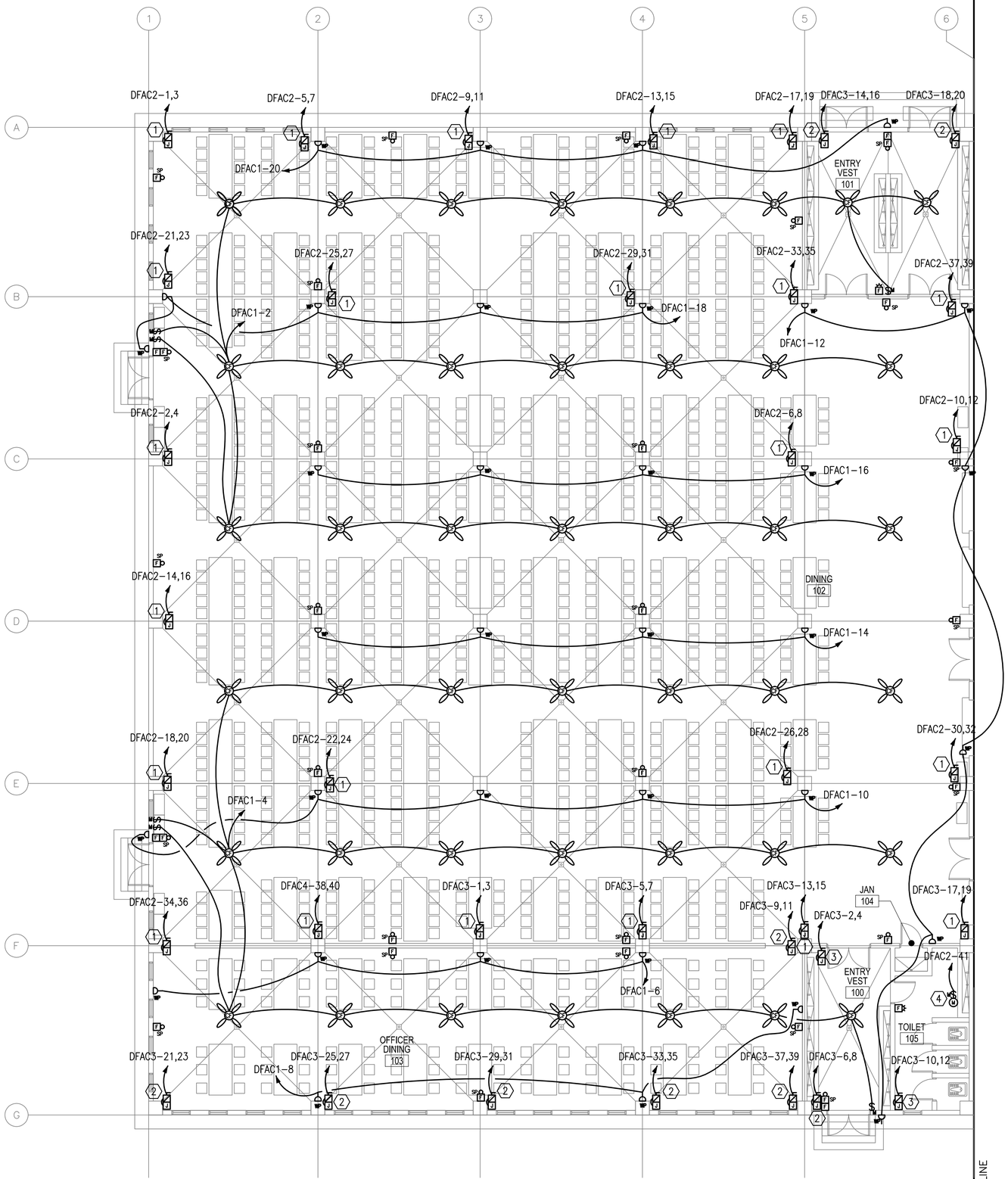


1
E-101

## DINING FACILITY-
## POWER AND SYSTEMS PLAN PART 'A'

SCALE: 1:100

## GENERAL NOTES:

1. REFER TO DRAWING #E-001 FOR THE ELECTRICAL SYMBOLS LIST.
2. REFER TO DRAWING #E-501 FOR THE POWER RISER.
3. REFER TO DRAWING #E-602 FOR PANEL SCHEDULES.
4. COORDINATE EXACT MOUNTING LOCATION OF DISCONNECTING MEANS FOR MECHANICAL AND PLUMBING EQUIPMENT IN THE FIELD.
5. FUSIBLE SAFETY SWITCHES THAT ARE NOT OTHERWISE IDENTIFIED SHALL BE 380V, 1P, 30A FUSED SAFETY SWITCHES WITH 20A FUSES.
6. CONTRACTOR SHALL COORDINATE FINAL LOCATIONS OF ALL MECHANICAL EQUIPMENT WITH MECHANICAL PLANS PER THIS PACKAGE.

## NUMBERED NOTES:

1. PROVIDE POWER CONNECTION TO ELECTRIC UNIT HEATER #5. SEE DRAWINGS #E-602 AND #M-101 FOR MORE INFORMATION.
2. PROVIDE POWER CONNECTION TO ELECTRIC UNIT HEATER #4. SEE DRAWINGS #E-602 AND #M-101 FOR MORE INFORMATION.
3. PROVIDE POWER CONNECTION TO ELECTRIC UNIT HEATER #2. SEE DRAWINGS #E-602 AND #M-101 FOR MORE INFORMATION.
4. PROVIDE POWER CONNECTION TO EXHAUST FAN #1. SEE DRAWINGS #E-602 AND #M-101 FOR MORE INFORMATION.

## KEY PLAN:

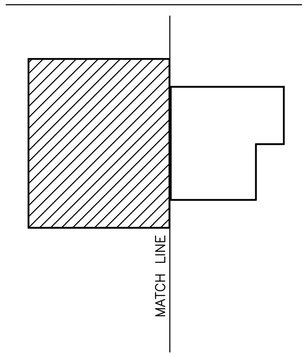


0 2000 4000
SCALE: 1:100

APPROVED:

A/E DESIGNER OF RECORD

SEAL:

COMMONWEALTH OF PENNSYLVANIA
REGISTERED PROFESSIONAL
JOSEPH R. GAUS
1/29/10
ENGINEER
PE-074251

US ARMY CORPS OF ENGINEERS
AFGHANISTAN ENGINEER DISTRICT

| Mark | Description | Date | Appr. | Mark | Description | Date | Appr. |
|---|---|---|---|---|---|---|---|
| | | | | | | | |

Rev: 0
Date: 2/23/10
Design file no.
Drawing code:
File name:
Plot date:
Plot scale:

Designed by: RAJ
Dwn by: BJB
Ckd by: JRG
Reviewed by: JRG
Submitted by: BAKER

U.S. ARMY CORPS OF ENGINEERS
AFGHANISTAN ENGINEER DISTRICT
APO AE 96338

Michael Baker Jr., Inc
A unit of Michael Baker Corporation
Airside Business Park
100 Airside Drive
Moon Township, PA 15108
www.mbakercorp.com

AFGHAN NATIONAL ARMY
REGIONAL MILITARY TRAINING CENTER
STANDARD DESIGN

DINING FACILITY (DFAC)
PARTIAL ELECTRICAL POWER AND SYSTEMS PLAN PART 'A'

Sheet reference number:
E-103

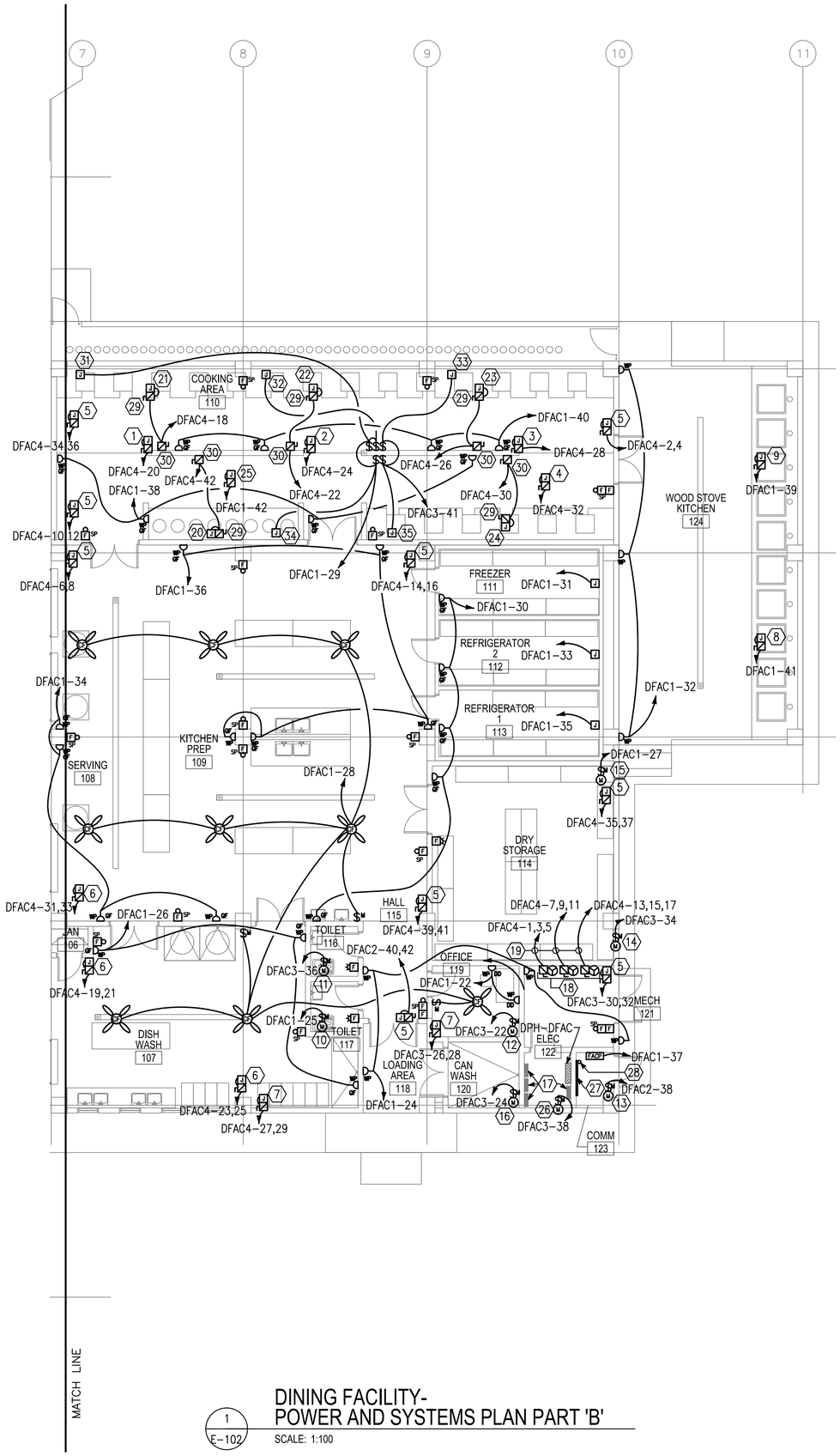


1
E-102

## DINING FACILITY- POWER AND SYSTEMS PLAN PART 'B'

SCALE: 1:100

## NUMBERED NOTES:

1. PROVIDE POWER CONNECTION TO MAKE-UP AIR UNIT #1. SEE DRAWINGS #E-602 AND #M-101 FOR MORE INFORMATION. PROVIDE 220V, 1ø, 30A MOTOR SNAP SWITCH.
2. PROVIDE POWER CONNECTION TO MAKE-UP AIR UNIT #2. SEE DRAWINGS #E-602 AND #M-101 FOR MORE INFORMATION. PROVIDE 220V, 1ø, 30A MOTOR SNAP SWITCH.
3. PROVIDE POWER CONNECTION TO MAKE-UP AIR UNIT #3. SEE DRAWINGS #E-602 AND #M-101 FOR MORE INFORMATION. PROVIDE 220V, 1ø, 30A MOTOR SNAP SWITCH.
4. PROVIDE POWER CONNECTION TO MAKE-UP AIR UNIT #4. SEE DRAWINGS #E-602 AND #M-101 FOR MORE INFORMATION. PROVIDE 220V, 1ø, 50A MOTOR SNAP SWITCH.
5. PROVIDE POWER CONNECTION TO ELECTRIC UNIT HEATER #4. SEE DRAWINGS #E-602 AND #M-101 FOR MORE INFORMATION.
6. PROVIDE POWER CONNECTION TO ELECTRIC UNIT HEATER #5. SEE DRAWINGS #E-602 AND #M-101 FOR MORE INFORMATION.
7. PROVIDE POWER CONNECTION TO ELECTRIC UNIT HEATER #2. SEE DRAWINGS #E-602 AND #M-101 FOR MORE INFORMATION.
8. PROVIDE POWER CONNECTION TO KITCHEN FAN #7. SEE DRAWINGS #E-602 AND #M-101 FOR MORE INFORMATION.
9. PROVIDE POWER CONNECTION TO KITCHEN FAN #6.. SEE DRAWINGS #E-602 AND #M-101 FOR MORE INFORMATION.
10. PROVIDE POWER CONNECTION TO EXHAUST FAN #3. SEE DRAWINGS #E-602 AND #M-101 FOR MORE INFORMATION.
11. PROVIDE POWER CONNECTION TO EXHAUST FAN #4. SEE DRAWINGS #E-602 AND #M-101 FOR MORE INFORMATION.
12. PROVIDE POWER CONNECTION TO EXHAUST FAN #5. SEE DRAWINGS #E-602 AND #M-101 FOR MORE INFORMATION.
13. PROVIDE POWER CONNECTION TO EXHAUST FAN #6. SEE DRAWINGS #E-602 AND #M-101 FOR MORE INFORMATION.
14. PROVIDE POWER CONNECTION TO EXHAUST FAN #7. SEE DRAWINGS #E-602 AND #M-101 FOR MORE INFORMATION.
15. PROVIDE POWER CONNECTION TO EXHAUST FAN #8. SEE DRAWINGS #E-602 AND #M-101 FOR MORE INFORMATION.
16. PROVIDE POWER CONNECTION TO EXHAUST FAN #9. SEE DRAWINGS #E-602 AND #M-101 FOR MORE INFORMATION.
17. PANEL DFAC1, DFAC2, DFAC3, & DFAC4
18. NEMA 3R, 380V, 3P, 60A FUSED DISCONNECT FUSED AT 60A. SEE PLUMBING DRAWINGS FOR EXACT LOCATION OF WATER HEATER.
19. SEE DRAWING #E-602 FOR WIRE AND CONDUIT SIZE.
20. PROVIDE POWER CONNECTION TO KITCHEN FAN #5. SEE DRAWINGS #E-602 AND #M-101 FOR MORE INFORMATION.

## NUMBERED NOTES (CONT):

21. PROVIDE POWER CONNECTION TO KITCHEN FAN #1. SEE DRAWINGS #E-602 AND #M-101 FOR MORE INFORMATION.
22. PROVIDE POWER CONNECTION TO KITCHEN FAN #2. SEE DRAWINGS #E-602 AND #M-101 FOR MORE INFORMATION.
23. PROVIDE POWER CONNECTION TO KITCHEN FAN #3. SEE DRAWINGS #E-602 AND #M-101 FOR MORE INFORMATION.
24. PROVIDE POWER CONNECTION TO KITCHEN FAN #4. SEE DRAWINGS #E-602 AND #M-101 FOR MORE INFORMATION. PROVIDE 220V, 1ø, 30A MOTOR SNAP SWITCH
25. PROVIDE POWER CONNECTION TO MAKE-UP AIR UNIT #5. SEE DRAWINGS #E-602 AND #M-101 FOR MORE INFORMATION. PROVIDE 220V, 1ø, 30A MOTOR SNAP SWITCH.
26. PROVIDE POWER CONNECTION TO EXHAUST FAN #10. SEE DRAWINGS #E-602 AND #M-101 FOR MORE INFORMATION.
27. PROVIDE A 1200mm X 2400mm SHEET OF PLYWOOD PAINTED WITH FIRE RESISTANT PAINT FOR FUTURE MOUNTING OF TELECOMMUNICATIONS EQUIPMENT.
28. PROVIDE CONDUIT STUB UP IN THE ROOM FOR INCOMING TELECOMMUNICATIONS SERVICES FROM THE CENTRAL COMMUNICATIONS SYSTEM IN THE GARRISON.
29. FUSIBLE SAFETY SWITCH TO BE MOUNTED ON EQUIPMENT LOCATED ON ROOF OF BUILDING
30. FUSIBLE SAFETY SWITCH TO BE MOUNTED INSIDE OF BUILDING TO CONTROL EQUIPMENT ON ROOF
31. JUNCTION BOX TO PROVIDE POWER TO LIGHTS IN EXHAUST HOOD OF KITCHEN FAN #1.
32. JUNCTION BOX TO PROVIDE POWER TO LIGHTS IN EXHAUST HOOD OF KITCHEN FAN #2.
33. JUNCTION BOX TO PROVIDE POWER TO LIGHTS IN EXHAUST HOOD OF KITCHEN FAN #3.
34. JUNCTION BOX TO PROVIDE POWER TO LIGHTS IN EXHAUST HOOD OF KITCHEN FAN #5.
35. JUNCTION BOX TO PROVIDE POWER TO LIGHTS IN EXHAUST HOOD OF KITCHEN FAN #4.

## GENERAL NOTES:

1. REFER TO DRAWING #E-001 FOR THE ELECTRICAL SYMBOLS LIST.
2. REFER TO DRAWING #E-501 FOR THE POWER RISER.
3. REFER TO DRAWING #E-602 FOR PANEL SCHEDULES.
4. COORDINATE EXACT MOUNTING LOCATION OF DISCONNECTING MEANS FOR MECHANICAL AND PLUMBING EQUIPMENT IN THE FIELD.
5. FUSIBLE SAFETY SWITCHES THAT ARE NOT OTHERWISE IDENTIFIED SHALL BE 380V, 1P, 30A FUSED SAFETY SWITCHES WITH 20A FUSES.
6. CONTRACTOR SHALL COORDINATE FINAL LOCATIONS OF ALL MECHANICAL EQUIPMENT WITH MECHANICAL PLANS PER THIS PACKAGE.

## KEY PLAN:

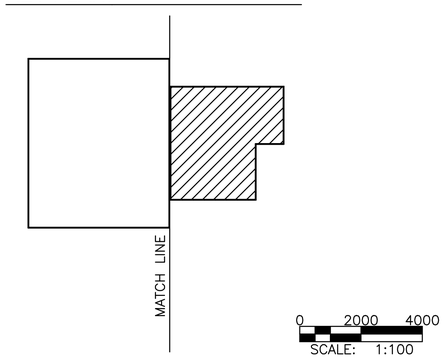


APPROVED:

A/E DESIGNER OF RECORD

SEAL:

COMMONWEALTH OF PENNSYLVANIA
REGISTERED PROFESSIONAL
JOSEPH R. GAUS
ENGINEER
PE-074251

US ARMY CORPS OF ENGINEERS
AFGHANISTAN ENGINEER DISTRICT

| Mark | Description | Date | Appr. | Mark | Description | Date | Appr. |
|---|---|---|---|---|---|---|---|
| | | | | | | | |

Rev: 0
Date: 2/23/10
Design file no.
Drawing code:
File name:
Plot date:
Plot scale:

Designed by: RAJ
Dwn by: BJB
Ckd by: JRG
Reviewed by: JRG
Submitted by:
BAKER

U.S. ARMY CORPS OF ENGINEERS
AFGHANISTAN ENGINEER DISTRICT
APO AE 96338

Michael Baker Jr., Inc.
A unit of Michael Baker Corporation
Airside Business Park
100 Airside Drive
Moon Township, PA 15108
www.mbakercorp.com

AFGHAN NATIONAL ARMY
REGIONAL MILITARY TRAINING CENTER
STANDARD DESIGN

DINING FACILITY (DFAC)
PARTIAL ELECTRICAL POWER AND SYSTEMS PLAN PART 'B'

Sheet reference number:
E-104

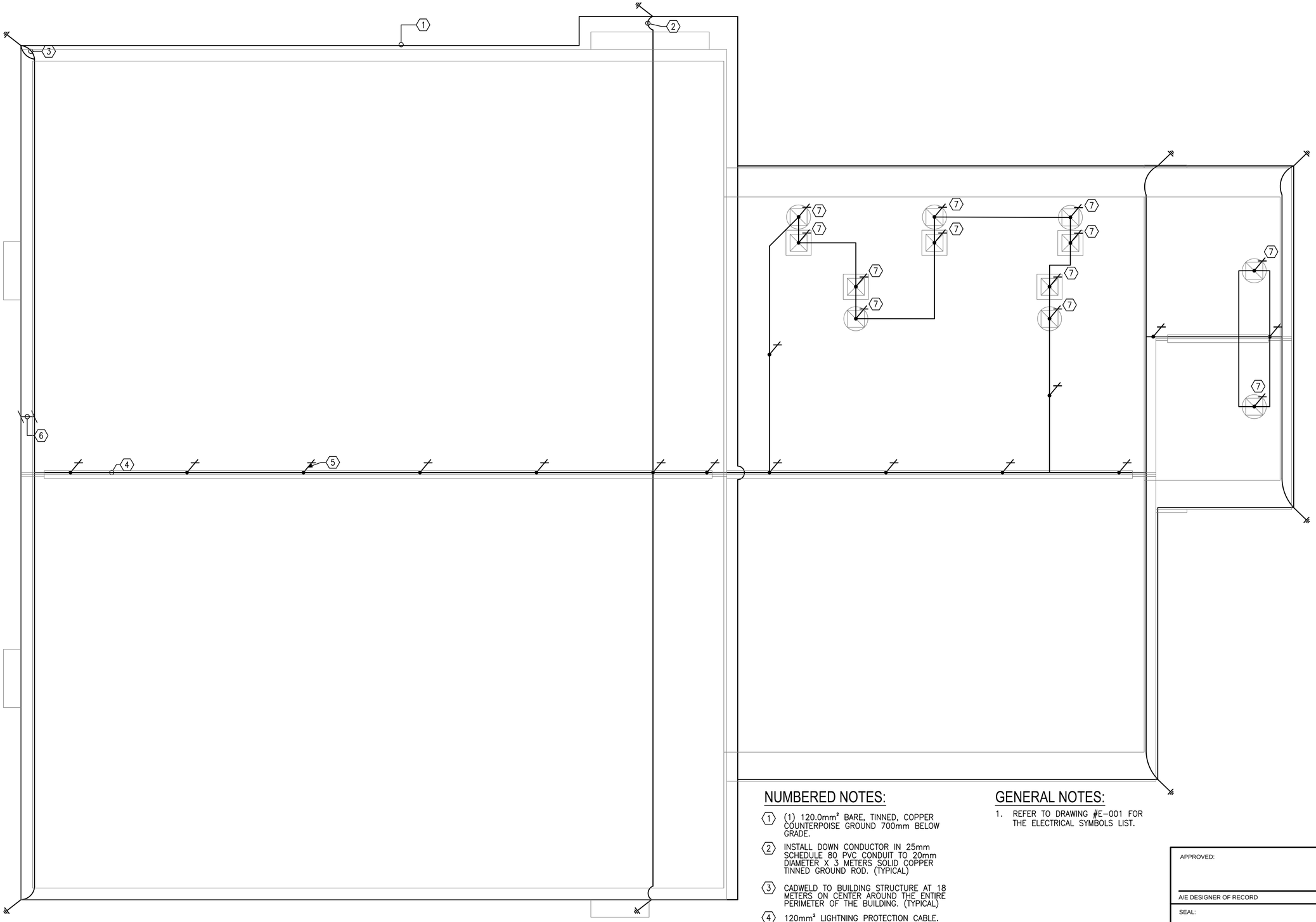


## DINING FACILITY- LIGHTNING PROTECTION PLAN

1 / E-105

SCALE: 1:100

## NUMBERED NOTES:

1. (1) 120.0mm² BARE, TINNED, COPPER COUNTERPOISE GROUND 700mm BELOW GRADE.
2. INSTALL DOWN CONDUCTOR IN 25mm SCHEDULE 80 PVC CONDUIT TO 20mm DIAMETER X 3 METERS SOLID COPPER TINNED GROUND ROD. (TYPICAL)
3. CADWELD TO BUILDING STRUCTURE AT 18 METERS ON CENTER AROUND THE ENTIRE PERIMETER OF THE BUILDING. (TYPICAL)
4. 120mm² LIGHTNING PROTECTION CABLE.
5. AIR TERMINAL. TERMINALS SHALL BE PLACED AT A MAXIMUM OF 6M ON CENTER PER NFPA 780 PARA. 4.8.2.1, AND WITHIN 0.6M OF RIDGE ENDS PER NFPA 780 PARA. 4.8 (TYPICAL)
6. 700mm MIN. (TYP) BETWEEN FOUNDATION AND GROUND LOOP.
7. AIR TERMINAL ON ROOFTOP FAN.

## GENERAL NOTES:

1. REFER TO DRAWING #E-001 FOR THE ELECTRICAL SYMBOLS LIST.

0 2000 4000

SCALE: 1:100

APPROVED:

A/E DESIGNER OF RECORD

SEAL:

COMMONWEALTH OF PENNSYLVANIA
REGISTERED PROFESSIONAL
JOSEPH R. GAUS
1/29/10
ENGINEER
PE-074251

US ARMY CORPS OF ENGINEERS
AFGHANISTAN ENGINEER DISTRICT

| Mark | Description | Date | Appr. | Mark | Description | Date | Appr. |
|---|---|---|---|---|---|---|---|
| | | | | | | | |

Date: 2/23/10
Rev: 0
Design file no.
Drawing code:
File name:
Plot date:
Plot scale:

Designed by: RAJ
Dwn by: BJB
Ckd by: JRG
Reviewed by: JRG
Submitted by: BAKER

U.S. ARMY CORPS OF ENGINEERS
AFGHANISTAN ENGINEER DISTRICT
APO AE 96338

*Michael Baker Jr., Inc*
*A unit of Michael Baker Corporation*
Airside Business Park
100 Airside Drive
Moon Township, PA 15108
www.mbakercorp.com

AFGHAN NATIONAL ARMY
REGIONAL MILITARY TRAINING CENTER
STANDARD DESIGN

DINING FACILITY (DFAC)
PARTIAL ELECTRICAL LIGHTNING PROTECTION PLAN PART 'A'

Sheet reference number:
E-105

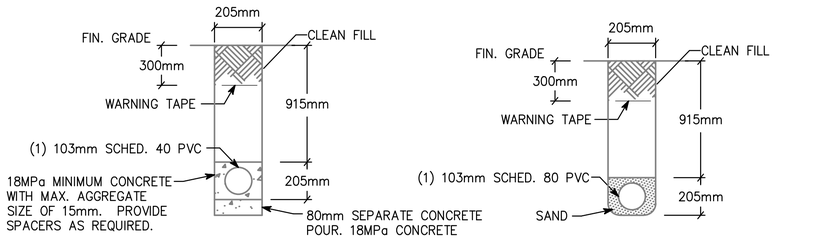


NOTE: PVC CONDUIT SHALL BE DIRECT BURIED SCHEDULE 80 FOR NO TRAFFIC AREAS AND CONCRETE-ENCASED SCHEDULE 40 FOR UNDER ROADWAYS OR TRAFFIC AREAS.

1 / E-501 TYPICAL DUCT BANK DETAILS FOR CONDUIT IN SAND OR CONCRETE

SCALE: N.T.S.

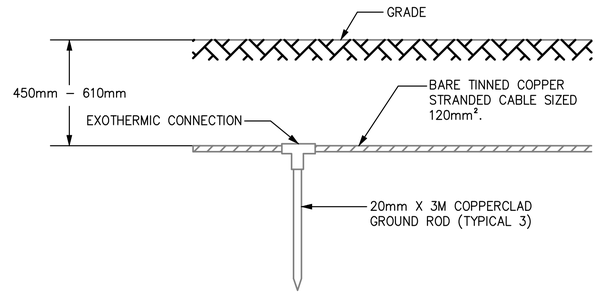


2 / E-501 GROUND TRIPOD SYSTEM DETAIL - ELEVATION

SCALE: N.T.S.

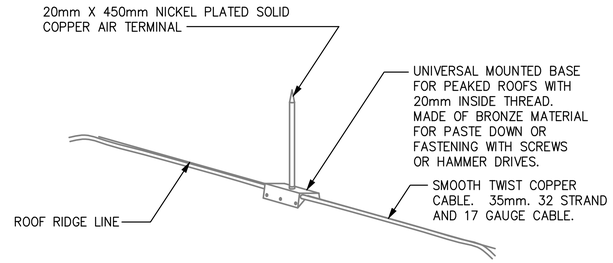


3 / E-501 LIGHTNING PROTECTION AIR TERMINAL DETAIL

SCALE: N.T.S.

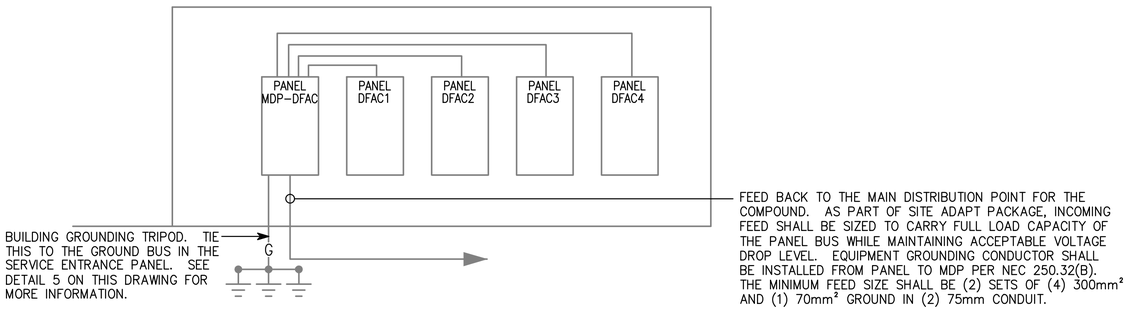


4 / E-501 (DFAC) DINING FACILITY RISER DIAGRAM

SCALE: N.T.S.

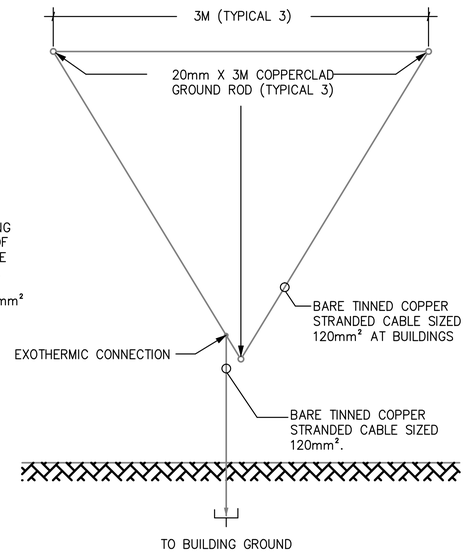


5 / E-501 GROUND TRIPOD SYSTEM DETAIL - PLAN

SCALE: N.T.S.

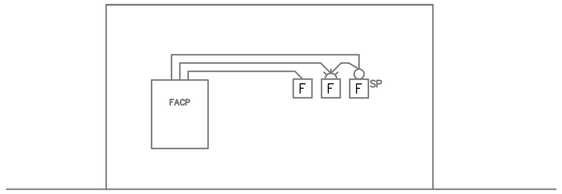


6 / E-501 TYPICAL ONE STORY FIRE ALARM RISER

SCALE: N.T.S.

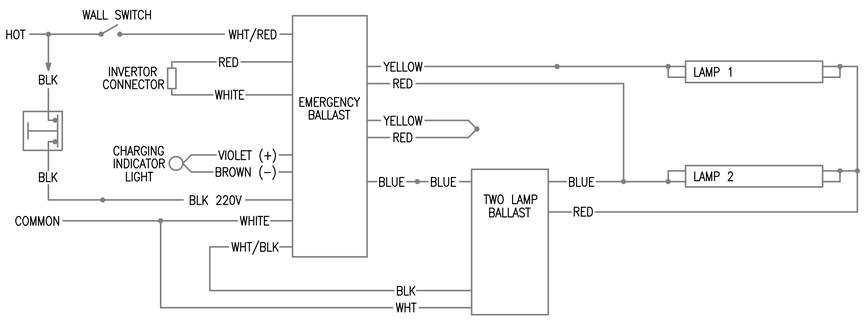


7 / E-501 EMERGENCY FIXTURE WIRING DIAGRAM

SCALE: N.T.S.

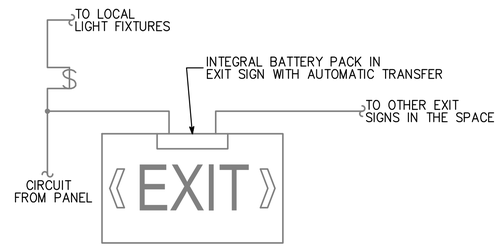


8 / E-501 EXIT SIGN WIRING DIAGRAM

SCALE: N.T.S.

APPROVED:

A/E DESIGNER OF RECORD

SEAL:

COMMONWEALTH OF PENNSYLVANIA
REGISTERED PROFESSIONAL ENGINEER
JOSEPH R. GAUS
PE-074251
1/29/10

US ARMY CORPS OF ENGINEERS
AFGHANISTAN ENGINEER DISTRICT

| Mark | Description | Date | Appr. | Mark | Description | Date | Appr. |
|---|---|---|---|---|---|---|---|

Designed by: RAJ
Dwn by: BJB
Ckd by: JRG
Reviewed by: JRG
Submitted by: BAKER
Date: 2/23/10
Rev: 0
Design file no.
Drawing code:
File name:
Plot date:
Plot scale:

U.S. ARMY CORPS OF ENGINEERS
AFGHANISTAN ENGINEER DISTRICT
APO AE 96338

Michael Baker Jr., Inc
A unit of Michael Baker Corporation
Airside Business Park
100 Airside Drive
Moon Township, PA 15108
www.mbakercorp.com

AFGHAN NATIONAL ARMY
REGIONAL MILITARY TRAINING CENTER
STANDARD DESIGN

DINING FACILITY (DFAC)
ELECTRICAL DETAILS

Sheet reference number:
E-501

| (A) LARGER OF THE TWO SIZES GIVEN IN THE TABLES BELOW | |
|---|---|
| GROUNDING ELECTRODE CONDUCTOR (BASED ON AIC RATING) | |
| AIC RATING OF SERVICE EQUIPMENT | NECESSARY GROUNDING ELECTRODE CONDUCTOR SIZE |
| 10K | (1) 35mm² |
| 14K | (1) 50mm² |
| 18K | (1) 70mm² |
| 22K | (1) 70mm² |
| 25K | (1) 70mm² |
| 30K | (1) 95mm² |
| 35K | (1) 120mm² |
| 42K | (1) 150mm² |
| 65K | (1) 185mm² |
| 100K | (1) 300mm² |
| 125K | (2) 185mm² |
| 200K | (2) 300mm² |
| GROUNDING ELECTRODE CONDUCTOR (BASED ON NEC TABLE 250.66) | |
| SIZE OF LARGEST UNGROUNDED SERVICE CONDUCTOR OR EQUIVALENT AREA FOR PARALLEL CONDUCTORS | NECESSARY GROUNDING ELECTRODE CONDUCTOR SIZE |
| 350 kcmil OR SMALLER | 35mm² |
| OVER 350 kcmil TO 600 kcmil | 70mm² |
| OVER 600 kcmil TO 1100 kcmil | 70mm² |
| OVER 1100 kcmil | 95mm² |
| NOTE: ALL SIZES ARE BASED ON COPPER CONDUCTORS. | |

| (B) EQUIPMENT GROUNDING CONDUCTOR | |
|---|---|
| RATING OR SETTING OF AUTOMATIC OVERCURRENT DEVICE IN CIRCUIT AHEAD OF EQUIPMENT, CONDUIT, ETC, NOT EXCEEDING (AMPERES) | NECESSARY EQUIPMENT GROUNDING CONDUCTOR SIZE |
| 15 | 2.5mm² |
| 20 | 4.0mm² |
| 30 | 6.0mm² |
| 40 | 6.0mm² |
| 60 | 6.0mm² |
| 100 | 10mm² |
| 200 | 16mm² |
| 300 | 25mm² |
| 400 | 25mm² |
| 500 | 35mm² |
| 600 | 50mm² |
| 800 | 70mm² |
| 1000 | 70mm² |
| 1200 | 95mm² |
| 1600 | 120mm² |
| 2000 | 150mm² |
| 2500 | 185mm² |
| 3000 | 240mm² |
| 4000 | 300mm² |
| 5000 | 400mm² |
| 6000 | 400mm² |
| NOTE: ALL SIZES ARE BASED ON COPPER CONDUCTORS. | |

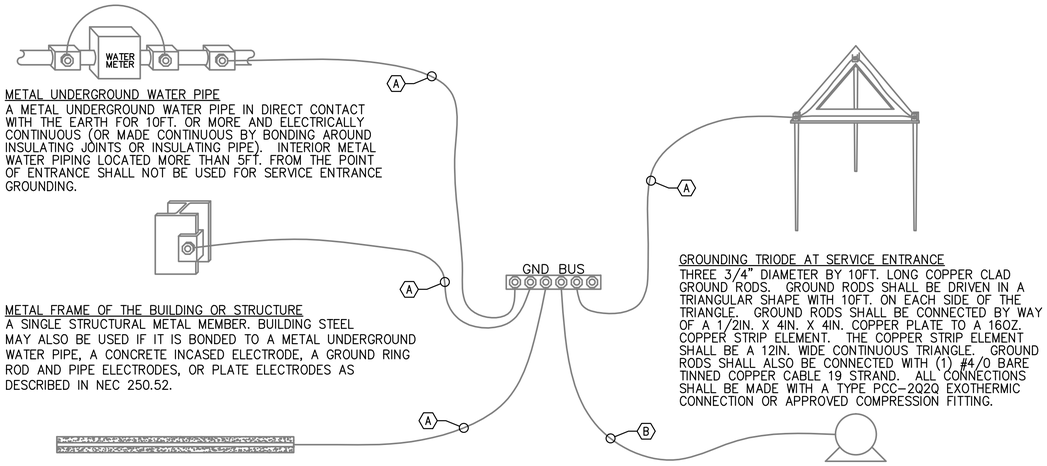


METAL UNDERGROUND WATER PIPE
A METAL UNDERGROUND WATER PIPE IN DIRECT CONTACT WITH THE EARTH FOR 10FT. OR MORE AND ELECTRICALLY CONTINUOUS (OR MADE CONTINUOUS BY BONDING AROUND INSULATING JOINTS OR INSULATING PIPE). INTERIOR METAL WATER PIPING LOCATED MORE THAN 5FT. FROM THE POINT OF ENTRANCE SHALL NOT BE USED FOR SERVICE ENTRANCE GROUNDING.

METAL FRAME OF THE BUILDING OR STRUCTURE
A SINGLE STRUCTURAL METAL MEMBER. BUILDING STEEL MAY ALSO BE USED IF IT IS BONDED TO A METAL UNDERGROUND WATER PIPE, A CONCRETE INCASED ELECTRODE, A GROUND RING ROD AND PIPE ELECTRODES, OR PLATE ELECTRODES AS DESCRIBED IN NEC 250.52.

CONCRETE ENCASED ELECTRODE
AN ELECTRODE ENCASED BY AT LEAST 2IN. OF CONCRETE , LOCATED WITHIN AND NEAR THE BOTTOM OF A CONCRETE FOUNDATION OR FOOTING THAT IS IN DIRECT CONTACT WITH THE EARTH, CONSISTING OF AT LEAST 20FT. OF ONE OR MORE BARE OR ZINC GALVANIZED OR OTHER ELECTRICALLY CONDUCTIVE COATED STEEL REINFORCING BARS OR RODS OF NOT LESS THAN 1/2" DIAMETER OR BARE COPPER CONDUCTOR NOT SMALLER THAN 4AWG.

GROUNDING TRIODE AT SERVICE ENTRANCE
THREE 3/4" DIAMETER BY 10FT. LONG COPPER CLAD GROUND RODS. GROUND RODS SHALL BE DRIVEN IN A TRIANGULAR SHAPE WITH 10FT. ON EACH SIDE OF THE TRIANGLE. GROUND RODS SHALL BE CONNECTED BY WAY OF A 1/2IN. X 4IN. X 4IN. COPPER PLATE TO A 16OZ. COPPER STRIP ELEMENT. THE COPPER STRIP ELEMENT SHALL BE A 12IN. WIDE CONTINUOUS TRIANGLE. GROUND RODS SHALL ALSO BE CONNECTED WITH (1) #4/0 BARE TINNED COPPER CABLE 19 STRAND. ALL CONNECTIONS SHALL BE MADE WITH A TYPE PCC-2Q2Q EXOTHERMIC CONNECTION OR APPROVED COMPRESSION FITTING.

LOAD OR DOWNSTREAM PANEL
ALL LOADS IN THE BUILDING SHALL HAVE AN EQUIPMENT GROUNDING CONDUCTOR PULLED TO THEM.

1
E-502

## SERVICE ENTRANCE GROUNDING DETAIL

SCALE: N.T.S.

APPROVED:

A/E DESIGNER OF RECORD

SEAL:

COMMONWEALTH OF PENNSYLVANIA
REGISTERED PROFESSIONAL
JOSEPH R. GAUS
ENGINEER
PE-074251
1/29/10

US ARMY CORPS OF ENGINEERS
AFGHANISTAN ENGINEER DISTRICT

| Mark | Description | Date | Appr. | Mark | Description | Date | Appr. |
|---|---|---|---|---|---|---|---|

Rev: 0
Date: 2/23/10
Design file no.
Drawing code:
File name:
Plot date:
Plot scale:

Designed by: RAJ
Dwn by: BJB
Ckd by: JRG
Reviewed by: JRG
Submitted by: BAKER

U.S. ARMY CORPS OF ENGINEERS
AFGHANISTAN ENGINEER DISTRICT
APO AE 96338

Michael Baker Jr., Inc.
A unit of Michael Baker Corporation
Airside Business Park
100 Airside Drive
Moon Township, PA 15108
www.mbakercorp.com

AFGHAN NATIONAL ARMY
REGIONAL MILITARY TRAINING CENTER
STANDARD DESIGN

DINING FACILITY (DFAC)
ELECTRICAL DETAILS

Sheet reference number:
E-502

FIXTURE MARK 'A'

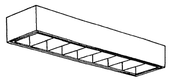

FIXTURE MARK 'B'

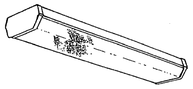

FIXTURE MARK 'C'

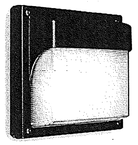

FIXTURE MARK 'G'

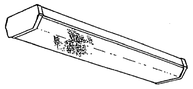

FIXTURE MARK 'H'

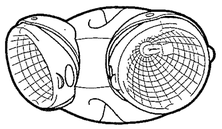

FIXTURE MARK 'SB'

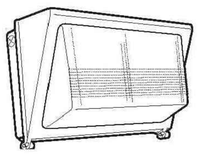

FIXTURE MARK 'E'

# LIGHT FIXTURE SCHEDULE

| FIXTURE MARK | STYLE NUMBER AND TYPE | NUMBER AND TYPE OF LAMPS | VOLTAGE | MOUNTING | NOTES |
|---|---|---|---|---|---|
| A | PARABOLIC SURFACE/PENDANT MOUNTED 300MM X 1200MM FLUORESCENT FIXTURE WITH ELECTRONIC BALLAST | (2) 32W 3500K | 220V – 1ø 50HZ | PENDANT MOUNTED FROM CEILINGS | FURNISHED WITH ELECTRONIC BALLAST. PARABOLIC LOUVER SHALL BE SPECULAR LENS IRADESCENCE TYPE. |
| A2 | SAME AS FIXTURE 'A' WITH EMERGENCY BALLAST | (2) 32W 3500K | 220V – 1ø 50HZ | PENDANT MOUNTED FROM CEILINGS | FURNISHED WITH ELECTRONIC BALLAST. PARABOLIC LOUVER SHALL BE SPECULAR LENS IRADESCENCE TYPE. EMERGENCY BALLAST SELF TEST. |
| B | WET LOCATION WRAP AROUND SURFACE/PENDANT MOUNTED FLUORESCENT FIXTURE WITH PRISMATIC ACRYLIC LENS AND ELECTRONIC BALLAST | (2) 32W 3500K | 220V – 1ø 50HZ | PENDANT MOUNTED FROM CEILINGS | FURNISHED WITH ELECTRONIC BALLAST, VIRGIN ACRYLIC WRAP AROUND LENS. |
| B2 | SAME AS FIXTURE 'B' WITH EMERGENCY BALLAST | (2) 32W 3500K | 220V – 1ø 50HZ | PENDANT MOUNTED FROM CEILINGS | FURNISHED WITH ELECTRONIC BALLAST, VIRGIN ACRYLIC WRAP AROUND LENS. EMERGENCY BALLAST WITH SELF TEST SWITCH. |
| C | INCANDESCENT ONE PIECE W/ APPROVED LENS STABILIZED HIGH IMPACT POLY CARBONATE. | (1) A19 – 100W INCANDESCENT | 220V – 1ø 50HZ | WALL MOUNTED ABOVE EXTERIOR DOORS | |
| G | WRAP AROUND SURFACE/PENDANT MOUNTED FLUORESCENT FIXTURE WITH PRISMATIC ACRYLIC LENS AND ELECTRONIC BALLAST | (2) 32W 3500K | 220V – 1ø 50HZ | PENDANT MOUNTED FROM CEILINGS | FURNISHED WITH ELECTRONIC BALLAST, VIRGIN ACRYLIC WRAP AROUND LENS. |
| G2 | SAME AS FIXTURE 'G' WITH EMERGENCY BALLAST | (2) 32W 3500K | 220V – 1ø 50HZ | PENDANT MOUNTED FROM CEILINGS | FURNISHED WITH ELECTRONIC BALLAST, VIRGIN ACRYLIC WRAP AROUND LENS. EMERGENCY BALLAST WITH SELF TEST SWITCH. |
| H | REMOTE HEAD EXTERIOR LIGHT HEAD POWERED FROM EXIT SIGN BATTERY– 12V DOUBLE HEAD CORROSION RESISTANT WITH UL34 WEATHERPROOF CONSTRUCTION | (2) 12W/12V HALOGEN LAMP | 12V – 1ø 50HZ | EXTERIOR WALL MOUNTED AT TOP OF DOOR HEIGHT | |
| SB | METAL HALIDE WALL MOUNTED EXTERIOR AREA LIGHT WITH PRISMATIC ACRYLIC LENS – CORROSION RESISTANT CONSTRUCTION | (1) 250W METAL HALIDE LAMP | 220V – 1ø 50HZ | EXTERIOR WALL MOUNTED 500mm BELOW ROOF | |
| E | UNIVERSAL MOUNT ENGINEER GRADE THERMOPLASTIC HOUSING EXIT SIGN WITH LED LAMPS, RED LETTERS 6" IN HEIGHT WITH ARROWS AS INDICATED, WITH 12V CADMIUM BATTERY WITH REMOTE HEAD CAPABILITY | LED LAMPS | 220V – 1ø 50HZ | UNIVERSAL MOUNTING | |

APPROVED:

A/E DESIGNER OF RECORD

SEAL:

COMMONWEALTH OF PENNSYLVANIA
REGISTERED PROFESSIONAL
JOSEPH R. GAUS
1/29/10
ENGINEER
PE-074251

US ARMY CORPS OF ENGINEERS
AFGHANISTAN ENGINEER DISTRICT

| Mark | Description | Date | Appr. |
|---|---|---|---|
| | | | |

| Mark | Description | Date | Appr. |
|---|---|---|---|
| | | | |

Designed by: RAJ
Dwn by: BJB
Ckd by: JRG
Reviewed by: JRG
Submitted by: BAKER
Date: 2/23/10
Rev: 0
Design file no.
Drawing code:
File name:
Plot date:
Plot scale:

U.S. ARMY CORPS OF ENGINEERS
AFGHANISTAN ENGINEER DISTRICT
APO AE 96338

Michael Baker Jr., Inc
A unit of Michael Baker Corporation
Airside Business Park
100 Airside Drive
Moon Township, PA 15108
www.mbakercorp.com

AFGHAN NATIONAL ARMY
REGIONAL MILITARY TRAINING CENTER
STANDARD DESIGN

DINING FACILITY (DFAC)

ELECTRICAL LIGHT FIXTURE SCHEDULE

Sheet reference number:
E–601

PANELBOARD MDP-DFAC SURFACE MOUNTED
AMP. MAIN LUGS (OR) 800 AMP. MAIN BREAKER W/ 800 AMP. TRIP
CIRCUIT BREAKER TYPE 380/220 VOLTS 3 PHASE 4 WIRE 50 HZ 800 AMP. BUS

| CKT. NO. | TRIP AMPS | NO. POLES | WIRE MM 2 | GND MM2 | CONDUIT MM | LOAD SERVED | LOAD-KVA A0 | LOAD-KVA B0 | LOAD-KVA C0 | LOAD-KVA A0 | LOAD-KVA B0 | LOAD-KVA C0 | LOAD SERVED | CONDUIT MM | GND MM2 | WIRE MM2 | NO. POLES | TRIP AMPS | CKT. NO. |
|---|---|---|---|---|---|---|---|---|---|---|---|---|---|---|---|---|---|---|---|
| 1 | | | | | | | 15.6 | | | 33.0 | | | | | | | | | 2 |
| 3 | 150 | 3 | 70.0 | 16.0 | 40 | DFAC1 | | 21.8 | | | 34.5 | | DFAC2 | 60 | 25.0 | 150.0 | 3 | 250 | 4 |
| 5 | | | | | | | | | 24.4 | | | 32.5 | | | | | | | 6 |
| 7 | | | | | | | 27.1 | | | 61.5 | | | | | | | | | 8 |
| 9 | 225 | 3 | 120.0 | 25.0 | 50 | DFAC3 | | 24.1 | | | 53.1 | | DFAC4 | (2) 50 | (2) 10.0 | (2) 95.0 | 3 | 400 | 10 |
| 11 | | | | | | | | | 23.8 | | | 55.9 | | | | | | | 12 |
| 13 | | | | | | | | | | | | | | | | | | | 14 |
| 15 | 100 | 3 | | | | SPARE | | | | | | | SPARE | | | | 3 | 100 | 16 |
| 17 | | | | | | | | | | | | | | | | | | | 18 |
| | | | | | | | 42.7 | 45.9 | 48.2 | 94.5 | 87.6 | 88.4 | | | | | | | |

TOTAL CONN. LOAD PER PHASE (KVA): A0 137.2 B0 133.5 C0 136.6

TOTAL CONN. LOAD 407.3 KVA. 70 % DEMAND = ESTIMATED DEMAND LOAD 285.11

* MAIN BREAKER SHALL BE 3P EARTH GROUND TYPE

PANELBOARD DFAC1 SURFACE MOUNTED
AMP. MAIN LUGS (OR) 150 AMP. MAIN BREAKER W/ 150 AMP. TRIP
CIRCUIT BREAKER TYPE 380/220 VOLTS 3 PHASE 4 WIRE 50 HZ 225 AMP. BUS

| CKT. NO. | TRIP AMPS | NO. POLES | WIRE MM 2 | GND MM2 | CONDUIT MM | LOAD SERVED | LOAD-KVA A0 | LOAD-KVA B0 | LOAD-KVA C0 | LOAD-KVA A0 | LOAD-KVA B0 | LOAD-KVA C0 | LOAD SERVED | CONDUIT MM | GND MM2 | WIRE MM2 | NO. POLES | TRIP AMPS | CKT. NO. |
|---|---|---|---|---|---|---|---|---|---|---|---|---|---|---|---|---|---|---|---|
| 1 | 20 | 1 | 4.0 | 4.0 | 20 | LIGHTING – RM 102 | 2.5 | | | 1.5 | | | CEILING FANS – RM 101, 102 | 20 | 4.0 | 4.0 | 1 | 20 | 2 |
| 3 | 20 | 1 | 4.0 | 4.0 | 20 | LIGHTING – RM 102 | | 2.5 | | | 2.5 | | CEILING FANS – RM 102, 103 | 20 | 4.0 | 4.0 | 1 | 20 | 4 |
| 5 | 20 | 1 | 4.0 | 4.0 | 20 | LIGHTING – RM 102 | | | 2.5 | | | 2.5 | RECEPTACLES – RM 103 | 20 | 4.0 | 4.0 | 1 | 20 | 6 |
| 7 | 20 | 1 | 4.0 | 4.0 | 20 | LIGHTING – RM 102 | 2.5 | | | 0.8 | | | RECEPTACLES – RM 103 | 20 | 4.0 | 4.0 | 1 | 20 | 8 |
| 9 | 20 | 1 | 4.0 | 4.0 | 20 | LIGHTING – RM 103 | | 2.5 | | | 0.6 | | RECEPTACLES – RM 102, EXTERIOR | 20 | 4.0 | 4.0 | 1 | 20 | 10 |
| 11 | 20 | 1 | 4.0 | 4.0 | 20 | LIGHTING – RM 100, 105 | | | 0.7 | | | 1.0 | RECEPTACLES – RM 102 | 20 | 4.0 | 4.0 | 1 | 20 | 12 |
| 13 | 20 | 1 | 4.0 | 4.0 | 20 | LIGHTING – RM 101 | 0.7 | | | 0.8 | | | RECEPTACLES – RM 102 | 20 | 4.0 | 4.0 | 1 | 20 | 14 |
| 15 | 20 | 1 | 4.0 | 4.0 | 20 | LIGHTING – 108, 109 | | 2.0 | | | 0.8 | | RECEPTACLES – RM 102 | 20 | 4.0 | 4.0 | 1 | 20 | 16 |
| 17 | 20 | 1 | 4.0 | 4.0 | 20 | LIGHTING – RM 108, 116, 117 | | | 1.6 | | | 0.8 | RECEPTACLES – RM 102, EXTERIOR | 20 | 4.0 | 4.0 | 1 | 20 | 18 |
| 19 | 20 | 1 | 4.0 | 4.0 | 20 | LIGHTING – RM 111–114, 119–123 | 2.0 | | | 0.8 | | | RECEPTACLES – RM 102 | 20 | 4.0 | 4.0 | 1 | 20 | 20 |
| 21 | 20 | 1 | 4.0 | 4.0 | 20 | LIGHTING – RM 110 | | 1.8 | | | 0.8 | | RECEPTACLES –RM 119 | 20 | 4.0 | 4.0 | 1 | 20 | 22 |
| 23 | 20 | 1 | 4.0 | 4.0 | 20 | LIGHTING – RM 124 | | | 1.2 | | | 0.8 | RECEPTACLES – RM 115, 121, EXT. | 20 | 4.0 | 4.0 | 1 | 20 | 24 |
| 25 | 20 | 1 | 4.0 | 4.0 | 20 | EXHAUST FAN #3 – RM 117 | 0.5 | | | 0.6 | | | RECEPTACLES – RM 107 | 20 | 4.0 | 4.0 | 1 | 20 | 26 |
| 27 | 20 | 1 | 4.0 | 4.0 | 20 | EXHAUST FAN #8 – RM 114 | | 0.5 | | | 1.5 | | CEILING FANS – RM 107, 109, 119 | 20 | 4.0 | 4.0 | 1 | 20 | 28 |
| 29 | 20 | 1 | 4.0 | 4.0 | 20 | EXHAUST HOOD LIGHTING | | | 3.2 | | | 1.2 | RECEPTACLES – 109,111,112,113 | 20 | 4.0 | 4.0 | 1 | 20 | 30 |
| 31 | 20 | 1 | 4.0 | 4.0 | 20 | FREEZER RM – 111 | 1.0 | | | 0.8 | | | RECEPTACLES – RM 124 | 20 | 4.0 | 4.0 | 1 | 20 | 32 |
| 33 | 20 | 1 | 4.0 | 4.0 | 20 | REFRIGERATOR 2 RM – 112 | | 1.0 | | | 0.8 | | RECEPTACLES – RM 108, 109 | 20 | 4.0 | 4.0 | 1 | 20 | 34 |
| 35 | 20 | 1 | 4.0 | 4.0 | 20 | REFRIGERATOR 1 RM – 113 | | | 1.0 | | | 0.8 | RECEPTACLES – RM 109 | 20 | 4.0 | 4.0 | 1 | 20 | 36 |
| 37 | 20 | 1 | 4.0 | 4.0 | 20 | FACP – RM 123 | 0.5 | | | 0.6 | | | RECEPTACLES – RM 110 | 20 | 4.0 | 4.0 | 1 | 20 | 38 |
| 39 | 30 | 1 | 6.0 | 6.0 | 20 | KITCHEN EXHAUST FAN #6 – RM 124 | | 3.9 | | | 0.6 | | RECEPTACLES – RM 110 | 20 | 4.0 | 4.0 | 1 | 20 | 40 |
| 41 | 30 | 1 | 6.0 | 6.0 | 20 | KITCHEN EXHAUST FAN #7 – RM 124 | | | 3.9 | | | 6.4 | MAKE UP AIR FAN #5 – RM 110 | 25 | 6.0 | 25.0 | 1 | 60 | 42 |
| | | | | | | | 9.7 | 14.2 | 14.1 | 5.9 | 7.6 | 13.5 | | | | | | | |

TOTAL CONN. LOAD PER PHASE (KVA): A0 15.6 B0 21.8 C0 27.6

TOTAL CONN. LOAD 65.0 KVA. 70 % DEMAND = ESTIMATED DEMAND LOAD 45.5

* MAIN BREAKER SHALL BE 3P EARTH GROUND TYPE

PANELBOARD DFAC3 SURFACE MOUNTED
AMP. MAIN LUGS (OR) 225 AMP. MAIN BREAKER W/ 225 AMP. TRIP
CIRCUIT BREAKER TYPE 380/220 VOLTS 3 PHASE 4 WIRE 50 HZ 225 AMP. BUS

| CKT. NO. | TRIP AMPS | NO. POLES | WIRE MM 2 | GND MM2 | CONDUIT MM | LOAD SERVED | LOAD-KVA A0 | LOAD-KVA B0 | LOAD-KVA C0 | LOAD-KVA A0 | LOAD-KVA B0 | LOAD-KVA C0 | LOAD SERVED | CONDUIT MM | GND MM2 | WIRE MM2 | NO. POLES | TRIP AMPS | CKT. NO. |
|---|---|---|---|---|---|---|---|---|---|---|---|---|---|---|---|---|---|---|---|
| 1 | 20 | 2 | 4.0 | 4.0 | 20 | ELECTRIC HEAT #5 – RM 102 | 2.5 | | | 1.3 | | | ELECTRIC HEAT #2 – RM 100 | 20 | 4 | 4 | 2 | 20 | 2 |
| 3 | | | | | | | | 2.5 | | | 1.3 | | | | | | | | 4 |
| 5 | 20 | 2 | 4.0 | 4.0 | 20 | ELECTRIC HEAT #5 – RM 102 | | | 2.5 | | | 2.0 | ELECTRIC HEAT #4 – RM 100 | 20 | 4 | 4 | 2 | 20 | 6 |
| 7 | | | | | | | 2.5 | | | 2.0 | | | | | | | | | 8 |
| 9 | 20 | 2 | 4.0 | 4.0 | 20 | ELECTRIC HEAT #5 – RM 102 | | 2.0 | | | 1.3 | | ELECTRIC HEAT #2 – RM 105 | 20 | 4 | 4 | 2 | 20 | 10 |
| 11 | | | | | | | | | 2.0 | | | 1.3 | | | | | | | 12 |
| 13 | 20 | 2 | 4.0 | 4.0 | 20 | ELECTRIC HEAT #5 – RM 102 | 2.5 | | | 2.0 | | | ELECTRIC HEAT #4 – RM 101 | 20 | 4 | 4 | 2 | 20 | 14 |
| 15 | | | | | | | | 2.5 | | | 2.0 | | | | | | | | 16 |
| 17 | 20 | 2 | 4.0 | 4.0 | 20 | ELECTRIC HEAT #5 – RM 102 | | | 2.5 | | | 2.0 | ELECTRIC HEAT #4 – RM 101 | 20 | 4 | 4 | 2 | 20 | 18 |
| 19 | | | | | | | 2.5 | | | 2.0 | | | | | | | | | 20 |
| 21 | 20 | 2 | 4.0 | 4.0 | 20 | ELECTRIC HEAT #4 – RM 103 | | 2.0 | | | 0.5 | | EXHAUST FAN #5 – RM 119 | 20 | 4 | 4 | 1 | 20 | 22 |
| 23 | | | | | | | | | 2.0 | | | 0.5 | EXHAUST FAN #9 – RM 120 | 20 | 4 | 4 | 1 | 20 | 24 |
| 25 | 20 | 2 | 4.0 | 4.0 | 20 | ELECTRIC HEAT #4 – RM 103 | 2.0 | | | 1.3 | | | ELECTRIC HEAT #2 – RM 119 | 20 | 4 | 4 | 2 | 20 | 26 |
| 27 | | | | | | | | 2.0 | | | 1.3 | | | | | | | | 28 |
| 29 | 20 | 2 | 4.0 | 4.0 | 20 | ELECTRIC HEAT #4 – RM 103 | | | 2.0 | | | 2.0 | ELECTRIC HEAT #4 – RM 121 | 20 | 4 | 4 | 2 | 20 | 30 |
| 31 | | | | | | | 2.0 | | | 2.0 | | | | | | | | | 32 |
| 33 | 20 | 2 | 4.0 | 4.0 | 20 | ELECTRIC HEAT #4 – RM 103 | | 2.0 | | | 0.5 | | EXHAUST FAN #7 – RM 114 | 20 | 4 | 4 | 1 | 20 | 34 |
| 35 | | | | | | | | | 2.0 | | | 0.5 | EXHAUST FAN #4 – RM 116 | 20 | 4 | 4 | 1 | 20 | 36 |
| 37 | 20 | 2 | 4.0 | 4.0 | 20 | ELECTRIC HEAT #4 – RM 103 | 2.0 | | | 0.5 | | | EXHAUST FAN #10 – RM 122 | 20 | 4 | 4 | 1 | 20 | 38 |
| 39 | | | | | | | | 2.0 | | | 2.0 | | EXTERIOR BUILDING LIGHTING | 20 | 4 | 4 | 1 | 20 | 40 |
| 41 | 20 | 1 | 4.0 | 4.0 | 20 | EXHAUST HOOD LIGHTING | | | 2.6 | | | 2.0 | EXTERIOR BUILDING LIGHTING | 20 | 4 | 4 | 1 | 20 | 42 |
| | | | | | | | 16.0 | 15.0 | 15.6 | 11.1 | 9.1 | 10.8 | | | | | | | |

TOTAL CONN. LOAD PER PHASE (KVA): A0 27.1 B0 24.1 C0 26.4

TOTAL CONN. LOAD 77.6 KVA. 70 % DEMAND = ESTIMATED DEMAND LOAD 54.3

* MAIN BREAKER SHALL BE 3P EARTH GROUND TYPE

PANELBOARD DFAC2 SURFACE MOUNTED
. AMP. MAIN LUGS (OR) 250 AMP. MAIN BREAKER W/ 250 AMP. TRIP
CIRCUIT BREAKER TYPE 380/220 VOLTS 3 PHASE 4 WIRE 50 HZ 400 AMP. BUS

| CKT. NO. | TRIP AMPS | NO. POLES | WIRE MM 2 | GND MM2 | CONDUIT MM | LOAD SERVED | LOAD-KVA A0 | LOAD-KVA B0 | LOAD-KVA C0 | LOAD-KVA A0 | LOAD-KVA B0 | LOAD-KVA C0 | LOAD SERVED | CONDUIT MM | GND MM2 | WIRE MM2 | NO. POLES | TRIP AMPS | CKT. NO. |
|---|---|---|---|---|---|---|---|---|---|---|---|---|---|---|---|---|---|---|---|
| 1 | 20 | 2 | 4.0 | 4.0 | 20 | ELECTRIC HEAT #5 – RM 102 | 2.5 | | | 2.5 | | | ELECTRIC HEAT #5 – RM 102 | 20 | 4.0 | 4.0 | 2 | 20 | 2 |
| 3 | | | | | | | | 2.5 | | | 2.5 | | | | | | | | 4 |
| 5 | 20 | 2 | 4.0 | 4.0 | 20 | ELECTRIC HEAT #5 – RM 102 | | | 2.5 | | | 2.5 | ELECTRIC HEAT #5 – RM 102 | 20 | 4.0 | 4.0 | 2 | 20 | 6 |
| 7 | | | | | | | 2.5 | | | 2.5 | | | | | | | | | 8 |
| 9 | 20 | 2 | 4.0 | 4.0 | 20 | ELECTRIC HEAT #5 – RM 102 | | 2.5 | | | 2.5 | | ELECTRIC HEAT #5 – RM 102 | 20 | 4.0 | 4.0 | 2 | 20 | 10 |
| 11 | | | | | | | | | 2.5 | | | 2.5 | | | | | | | 12 |
| 13 | 20 | 2 | 4.0 | 4.0 | 20 | ELECTRIC HEAT #5 – RM 102 | 2.5 | | | 2.5 | | | ELECTRIC HEAT #5 – RM 102 | 20 | 4.0 | 4.0 | 2 | 20 | 14 |
| 15 | | | | | | | | 2.5 | | | 2.5 | | | | | | | | 16 |
| 17 | 20 | 2 | 4.0 | 4.0 | 20 | ELECTRIC HEAT #5 – RM 102 | | | 2.5 | | | 2.5 | ELECTRIC HEAT #5 – RM 102 | 20 | 4.0 | 4.0 | 2 | 20 | 18 |
| 19 | | | | | | | 2.5 | | | 2.5 | | | | | | | | | 20 |
| 21 | 20 | 2 | 4.0 | 4.0 | 20 | ELECTRIC HEAT #5 – RM 102 | | 2.5 | | | 2.5 | | ELECTRIC HEAT #5 – RM 102 | 20 | 4.0 | 4.0 | 2 | 20 | 22 |
| 23 | | | | | | | | | 2.5 | | | 2.5 | | | | | | | 24 |
| 25 | 20 | 2 | 4.0 | 4.0 | 20 | ELECTRIC HEAT #5 – RM 102 | 2.5 | | | 2.5 | | | ELECTRIC HEAT #5 – RM 102 | 20 | 4.0 | 4.0 | 2 | 20 | 26 |
| 27 | | | | | | | | 2.5 | | | 2.5 | | | | | | | | 28 |
| 29 | 20 | 2 | 4.0 | 4.0 | 20 | ELECTRIC HEAT #5 – RM 102 | | | 2.5 | | | 2.5 | ELECTRIC HEAT #5 – RM 102 | 20 | 4.0 | 4.0 | 2 | 20 | 30 |
| 31 | | | | | | | 2.5 | | | 2.5 | | | | | | | | | 32 |
| 33 | 20 | 2 | 4.0 | 4.0 | 20 | ELECTRIC HEAT #5 – RM 102 | | 2.5 | | | 2.5 | | ELECTRIC HEAT #5 – RM 102 | 20 | 4.0 | 4.0 | 2 | 20 | 34 |
| 35 | | | | | | | | | 2.5 | | | 2.5 | | | | | | | 36 |
| 37 | 20 | 2 | 4.0 | 4.0 | 20 | ELECTRIC HEAT #5 – RM 102 | 2.5 | | | 0.5 | | | EXHAUST FAN #6 – RM 123 | 20 | 4.0 | 4.0 | 1 | 20 | 38 |
| 39 | | | | | | | | 2.5 | | | 2.0 | | ELECTRIC HEAT #4 – RM 115 | 20 | 4.0 | 4.0 | 2 | 20 | 40 |
| 41 | 20 | 1 | 4.0 | 4.0 | 20 | EXHAUST FAN #1 – RM 105 | | | 0.5 | | | 2.0 | | | | | | | 42 |
| | | | | | | | 17.5 | 17.5 | 15.5 | 16 | 17 | 17 | | | | | | | |

TOTAL CONN. LOAD PER PHASE (KVA): A0 33.5 B0 34.5 C0 32.5

TOTAL CONN. LOAD 100.5 KVA. 70 % DEMAND = ESTIMATED DEMAND LOAD 70.4

* MAIN BREAKER SHALL BE 3P EARTH GROUND TYPE

PANELBOARD DFAC4 SURFACE MOUNTED
AMP. MAIN LUGS (OR) 400 AMP. MAIN BREAKER W/ 400 AMP. TRIP
CIRCUIT BREAKER TYPE 380/220 VOLTS 3 PHASE 4 WIRE 50 HZ 400 AMP. BUS

| CKT. NO. | TRIP AMPS | NO. POLES | WIRE MM 2 | GND MM2 | CONDUIT MM | LOAD SERVED | LOAD-KVA A0 | LOAD-KVA B0 | LOAD-KVA C0 | LOAD-KVA A0 | LOAD-KVA B0 | LOAD-KVA C0 | LOAD SERVED | CONDUIT MM | GND MM2 | WIRE MM2 | NO. POLES | TRIP AMPS | CKT. NO. |
|---|---|---|---|---|---|---|---|---|---|---|---|---|---|---|---|---|---|---|---|
| 1 | | | | | | | 8.0 | | | 2.0 | | | | | | | | | 2 |
| 3 | 60 | 3 | 25.0 | 10 | 25 | WATER HEATER – RM 121 | | 8.0 | | | 2.0 | | ELECTRIC HEAT #4 – RM 110 | 20 | 4.0 | 4.0 | 2 | 20 | 4 |
| 5 | | | | | | | | | 8.0 | | | 2.0 | | | | | | | 6 |
| 7 | | | | | | | 8.0 | | | 2.0 | | | ELECTRIC HEAT #4 – RM 109 | 20 | 4.0 | 4.0 | 2 | 20 | 8 |
| 9 | 60 | 3 | 25.0 | 10 | 25 | WATER HEATER – RM 121 | | 8.0 | | | 2.0 | | | | | | | | 10 |
| 11 | | | | | | | | | 8.0 | | | 2.0 | ELECTRIC HEAT #4 – RM 110 | 20 | 4.0 | 4.0 | 2 | 20 | 12 |
| 13 | | | | | | | 8.0 | | | 2.0 | | | | | | | | | 14 |
| 15 | 60 | 3 | 25.0 | 10 | 25 | WATER HEATER – RM 121 | | 8.0 | | | 2.0 | | ELECTRIC HEAT #4 – RM 109 | 20 | 4.0 | 4.0 | 2 | 20 | 16 |
| 17 | | | | | | | | | 8.0 | | | 3.9 | KITCHEN EXHAUST FAN #1 – RM 110 | 20 | 6.0 | 6.0 | 1 | 30 | 18 |
| 19 | 20 | 2 | 4.0 | 4.0 | 20 | ELECTRIC HEAT #5 – RM 107 | 2.5 | | | 6.4 | | | MAKE UP AIR #1 – RM 110 | 25 | 6.0 | 25.0 | 1 | 60 | 20 |
| 21 | | | | | | | | 2.5 | | | 3.9 | | KITCHEN EXHAUST FAN #2 – RM 110 | 20 | 6.0 | 6.0 | 1 | 30 | 22 |
| 23 | 20 | 2 | 4.0 | 4.0 | 20 | ELECTRIC HEAT #5 – RM 107 | | | 2.5 | | | 6.4 | MAKE UP AIR #2 – RM 110 | 25 | 6.0 | 25.0 | 1 | 60 | 24 |
| 25 | | | | | | | 2.5 | | | 3.9 | | | KITCHEN EXHAUST FAN #3 – RM 110 | 20 | 6.0 | 6.0 | 1 | 30 | 26 |
| 27 | 20 | 2 | 4.0 | 4.0 | 20 | ELECTRIC HEAT #2 – RM 107 | | 1.3 | | | 6.4 | | MAKE UP AIR #3 – RM 110 | 25 | 6.0 | 25.0 | 1 | 60 | 28 |
| 29 | | | | | | | | | 1.3 | | | 6.5 | KITCHEN EXHAUST FAN #4 – RM 110 | 25 | 6.0 | 25.0 | 1 | 60 | 30 |
| 31 | 20 | 2 | 4.0 | 4.0 | 20 | ELECTRIC HEAT #5 – RM 109 | 2.5 | | | 9.2 | | | MAKE UP AIR #4 – RM 110 | 25 | 6.0 | 25.0 | 1 | 60 | 32 |
| 33 | | | | | | | | 2.5 | | | 2.0 | | ELECTRIC HEAT #4 – RM 110 | 20 | 4.0 | 4.0 | 2 | 20 | 34 |
| 35 | 20 | 2 | 4.0 | 4.0 | 20 | ELECTRIC HEAT #4 – RM 114 | | | 2.0 | | | 2.0 | | | | | | | 36 |
| 37 | | | | | | | 2.0 | | | 2.5 | | | | | | | | | 38 |
| 39 | 20 | 2 | 4.0 | 4.0 | 20 | ELECTRIC HEAT #4 – RM 115 | | 2.0 | | | 2.5 | | ELECTRIC HEAT #5 – RM 102 | 20 | 4.0 | 4.0 | 2 | 20 | 40 |
| 41 | | | | | | | | | 2.0 | | | 3.9 | KITCHEN EXHAUST FAN #5 – RM 110 | 20 | 6.0 | 6.0 | 1 | 30 | 42 |
| | | | | | | | 33.5 | 32.3 | 31.8 | 28 | 20.8 | 26.7 | | | | | | | |

TOTAL CONN. LOAD PER PHASE (KVA): A0 61.5 B0 53.1 C0 58.5

TOTAL CONN. LOAD 173.1 KVA. 70 % DEMAND = ESTIMATED DEMAND LOAD 121.2

* MAIN BREAKER SHALL BE 3P EARTH GROUND TYPE

APPROVED:

A/E DESIGNER OF RECORD

SEAL:

COMMONWEALTH OF PENNSYLVANIA
REGISTERED PROFESSIONAL
JOSEPH R. GAUS
1/29/10
ENGINEER
PE-074251

US ARMY CORPS OF ENGINEERS
AFGHANISTAN ENGINEER DISTRICT

| Mark | Description | Date | Appr. | Mark | Description | Date | Appr. |
|---|---|---|---|---|---|---|---|
| | | | | | | | |

Rev: 0
Date: 2/23/10
Drawing code: Design file no.
File name:
Plot date:
Plot scale:

Designed by: RAJ
Dwn by: BJB
Ckd by: JRG
Reviewed by: JRG
Submitted by: BAKER

U.S. ARMY CORPS OF ENGINEERS
AFGHANISTAN ENGINEER DISTRICT
APO AE 96338

Michael Baker Jr., Inc
A unit of Michael Baker Corporation
Airside Business Park
100 Airside Drive
Moon Township, PA 15108
www.mbakercorp.com

AFGHAN NATIONAL ARMY
REGIONAL MILITARY TRAINING CENTER
STANDARD DESIGN

DINING FACILITY (DFAC)
ELECTRICAL PANEL SCHEDULES

Sheet reference number:
E-602