AFGHAN NATIONAL ARMY

STANDARD BUILDING DESIGN

RMTC HEADQUARTERS BUILDING

100% FINAL DESIGN SUBMITTAL

SHEET INDEX

G–001 COVER SHEET

STRUCTURAL

S–001 GENERAL NOTES & DESIGN CRITERIA
S–101 FOUNDATION/SLAB PLAN
S–102 ROOF FRAMING PLAN
S–401 BUILDING SECTIONS
S–402 ENLARGED LATRINE SLAB PLAN
S–501 FOUNDATION SECTIONS
S–502 FRAMING SECTIONS
S–503 BEAM & COLUMN DETAILS
S–504 BEAM & COLUMN DETAILS
S–601 SCHEDULES
S–701 TYPICAL DETAILS
S–702 TYPICAL DETAILS

ARCHITECTURAL

A–001 LIFE SAFETY PLAN
A–101 FLOOR PLAN
A–102 ROOF PLAN
A–201 ELEVATIONS
A–301 BUILDING SECTIONS
A–401 WALL SECTIONS
A–402 ENLARGED PLAN
A–501 EXTERIOR DETAILS
A–502 HEAD, JAMB, & SILL DETAILS
A–503 STOOP DETAILS
A–504 TOILET, LAVATORY, & ABLUTION DETAILS
A–505 ISOLATION JOINT DETAILS
A–601 WINDOW & DOOR SCHEDULES

MECHANICAL

P–101 FLOOR PLAN–PLUMBING
P–501 PLUMBING DETAILS
P–502 PLUMBING DETAILS
P–901 PLUMBING ISOMETRICS

M–101 HVAC FLOOR PLAN & SCHEDULES & DETAILS
M–501 HVAC DETAILS

ELECTRICAL

E–001 ELECTRICAL SYMBOLS & ABBREVIATIONS
E–101 ELECTRICAL LIGHTING PLAN
E–102 ELECTRICAL POWER PLAN
E–103 ELECTRICAL MECHANICAL POWER PLAN
E–104 ELECTRICAL LIGHTNING PROTECTION PLAN
E–501 ELECTRICAL DETAILS
E–502 ELECTRICAL DETAILS
E–601 ELECTRICAL LIGHT FIXTURE SCHEDULE
E–602 ELECTRICAL PANEL SCHEDULES
E–603 ELECTRICAL PANEL SCHEDULES

US ARMY CORPS OF ENGINEERS
AFGHANISTAN ENGINEER DISTRICT

Mark	Description	Date	Appr.	Mark	Description	Date	Appr.

Date: 2/23/10 | Rev: 0
Design file no.
Drawing code:
File name: ANMHQS-001CS
Plot date: 2/23/2010
Plot scale: X:X

Designed by: KMP/MMY
Dwn by: RCG | Ckd by: CWW
Reviewed by: LHM
Submitted by: BAKER

U.S. ARMY CORPS OF ENGINEERS
AFGHANISTAN ENGINEER DISTRICT
APO AE 96338

Michael Baker Jr., Inc.
A unit of Michael Baker Corporation
Airside Business Park
100 Airside Drive
Moon Township, PA 15108
www.mbakercorp.com

AFGHAN NATIONAL ARMY
REGIONAL MILITARY TRAINING CENTER
STANDARD DESIGN

RMTC HEADQUARTERS BUILDING

COVER SHEET

Sheet reference number:
G–001

STRUCTURAL ABBREVIATIONS:

ACI	AMERICAN CONCRETE INSTITUTE
ADD'L	ADDITIONAL
AISC	AMERICAN INSTITUTE OF STEEL CONSTRUCTION
AISI	AMERICAN IRON AND STEEL INSTITUTE
ASTM	AMERICAN SOCIETY FOR TESTING AND MATERIALS
ARCH	ARCHITECTURAL
B	BOTTOM
BLDG	BUILDING
BOTT	BOTTOM
℄	CENTER LINE
CFMRF	COLD FORM METAL ROOF FRAME
CFMF	COLD FORM METAL FRAME
CFS	COLD FORMED STEEL
CIP	CAST-IN-PLACE
CIPL	CAST-IN-PLACE LINTEL
CJ	CONTROL JOINT
CLR	CLEAR
CMU	CONCRETE MASONRY UNIT
COEFF	COEFFICIENT
COL	COLUMN
CONC	CONCRETE
CONT	CONTINUOUS
COORD	COORDINATE
CRSI	CONCRETE REINFORCING STEEL INSTITUTE
CSJ	CONSTRUCTION JOINT
DIA	DIAMETER
DIAG	DIAGONAL
DIM	DIMENSION
DWG	DRAWING
DWL	DOWEL
EA	EACH
EF	EACH FACE
ELEC	ELECTRICAL
ELEV	ELEVATION
EMBED	EMBEDMENT
EQUIV	EQUIVALENT
ETC	ET CETERA
EW	EACH WAY
EXP	EXPANSION
EXT	EXTERIOR
FTG	FOOTING
GA	GAUGE
GB	GRADE BEAM
HORIZ	HORIZONTAL
h	HOUR
HRS	HOURS
IBC	INTERNATIONAL BUILDING CODE
INFO	INFORMATION
INT	INTERIOR
kg	KILOGRAM
km	KILOMETER
kN	KILONEWTON
kPa	KILOPASCAL
L#	ANGLE (# INDICATES SIZE)
LONG	LONGITUDINAL
LLV	LONG LEG VERTICAL
m	METER
MAX	MAXIMUM
MECH	MECHANICAL
MFG	MANUFACTURER
MID	MIDDLE
MIN	MINIMUM
MISC	MISCELLANEOUS
mm	MILLIMETER
MPa	MEGAPASCAL
MTL	METAL
MWFRS	MAIN WIND FORCE RESISTING SYSTEM
N	NEWTON
N	NORTH
N/A	NOT APPLICABLE
#	NUMBER SYMBOL FOR REBAR SIZE
NTS	NOT TO SCALE
OC	ON CENTER
OD	OUTSIDE DIAMETER
OPNG	OPENING
ℙ or PL	PLATE
PRE-ENG	PRE-ENGINEERED
REINF	REINFORCED
REQ'D	REQUIRED
RB	ROOF BEAM
SIM	SIMILAR
SPECS	SPECIFICATIONS
STD	STANDARD
STRUCT	STRUCTURAL
SW	SHEAR WALL
T	TOP
T/	TOP OF
T/ELEV	TOP ELEVATION
T/SLAB	TOP OF SLAB
T&B	TOP AND BOTTOM
THK	THICK
TYP	TYPICAL
UFC	UNIFIED FACILITIES CRITERIA
UON	UNLESS OTHERWISE NOTED
VERT	VERTICAL
W	WIDTH
W/	WITH

1.0 GENERAL NOTES:

1.1 THIS PROJECT HAS BEEN DESIGNED FOR THE WEIGHTS AND MATERIALS INDICATED ON THE SHEETS AND FOR THE LIVE LOADS INDICATED IN THE DESIGN DATA. IT IS THE CONTRACTOR'S RESPONSIBILITY TO DETERMINE ALLOWABLE CONSTRUCTION LOADS AND TO PROVIDE PROPER DESIGN AND CONSTRUCTION OF FALSEWORK, FORMWORK, STAGING, BRACING, SHEETING AND SHORING, ETC.

1.1 COORDINATE THESE SHEETS WITH THE ARCHITECTURAL, MECHANICAL, ELECTRICAL, PLUMBING, AND CIVIL SHEETS. ALL DIMENSIONS SHOWN ON THE SHEETS ARE MILLIMETERS UNLESS NOTED OTHERWISE.

1.2 THE CONTRACTOR SHALL VERIFY AND COORDINATE ALL FLOOR AND ROOF OPENING SIZES AND LOCATIONS, EQUIPMENT PAD SIZES AND LOCATIONS, ANCHOR BOLT LAYOUTS, ETC WITH EQUIPMENT SELECTED. THE CONTRACTOR SHALL MAKE ANY REQUIRED MODIFICATIONS AT NO ADDITIONAL COST.

1.3 THE CONTRACTOR SHALL REFER TO THE ARCHITECTURAL, MECHANICAL, ELECTRICAL AND PLUMBING SHEETS FOR SLEEVES, CURBS, INSERTS OR OPENINGS, ETC. NOT HEREIN INDICATED.

1.4 WORK NOT INCLUDED ON THE SHEETS BUT IMPLIED TO BE SIMILAR TO THAT SHOWN AT CORRESPONDING PLACES ELSEWHERE ON THE SHEETS SHALL BE REPEATED.

1.5 IN CASE OF CONFLICT BETWEEN THE NOTES, DETAILS AND SPECIFICATIONS THE MOST RIGID REQUIREMENTS SHALL GOVERN.

1.6 SEE ARCHITECTURAL SHEETS FOR LOCATIONS OF MASONRY AND NON-LOAD BEARING PARTITIONS. PROVIDE COMPRESSIBLE FIRESAFING AT TOP OF WALL AS REQUIRED BY ARCHITECTURAL SHEETS.

1.7 COORDINATE FINISHED FLOOR DATUM ELEVATION 0.0m WITH THE CIVIL SHEETS.

2.0 FOUNDATION NOTES

2.1 THE GEOTECHNICAL ANALYSIS FOR THIS PROJECT IS THE RESPONSIBILITY OF THE CONTRACTOR AWARDED THE WORK. AN ASSUMED ALLOWABLE SOIL BEARING VALUE OF 72 kPa HAS BEEN USED IN THE STRUCTURAL ANALYSIS OF THE BUILDING HEREIN AND SHALL BE CONFIRMED AND VERIFIED AS PART OF THE GEOTECHNICAL INVESTIGATION. VALUES WHICH DO NOT MEET THE REQUIREMENTS INDICATED ON THE BASIS OF DESIGN SHEET SHALL BE IMMEDIATELY BROUGHT TO THE ATTENTION OF THE CONTRACTING OFFICER FOR CONSIDERATION AND DETERMINATION ON THE NEXT APPROPRIATE COURSE OF ACTION.

2.2 SEE THE SPECIFICATION FOR ADDITIONAL REQUIREMENTS TO THOSE OUTLINED IN THE GEOTECHNICAL INVESTIGATION FOR EXCAVATION AND PREPARATION OF THE FOUNDATION AND THE SLAB ON GRADE SUBGRADE INCLUDING COMPACTION PROCEDURES.

2.3 EXCAVATIONS FOR FOOTINGS SHALL HAVE THE SIDES AND BOTTOMS TEMPORARILY LINED WITH 0.25mm POLYETHYLENE IF PLACEMENT OF CONCRETE DOES NOT OCCUR WITHIN 24 HRS OF THE EXCAVATION OF THE FOOTING.

2.4 FOUNDATION CONDITIONS NOTED DURING CONSTRUCTION WHICH DIFFER FROM THOSE DESCRIBED IN THE GEOTECHNICAL REPORT SHALL BE REPORTED TO THE GENERAL CONTRACTOR BEFORE FURTHER CONSTRUCTION IS ATTEMPTED. SEE PROJECT SPECIFICATIONS.

2.5 NO FOOTINGS OR SLABS SHALL BE POURED INTO OR AGAINST SUBGRADE CONTAINING FREE WATER, FROST, ICE OR LOOSE MATERIAL. FROST DEPTH ASSUMED TO BE 800mm.

2.6 ALL SLAB-ON-GRADE, TRENCH BOTTOMS AND OTHER ON-GRADE INTERIOR HORIZONTAL SURFACES SHALL BE PLACED OVER A 0.25mm POLYETHYLENE VAPOR RETARDER OVER A 100mm #57 STONE WATER CAPILLARY BARRIER PLACED ON SUBGRADE PROPERLY PREPARED IN ACCORDANCE WITH THE CONTRACT SPECIFICATIONS. (UON)

2.7 PRIOR TO START OF FOUNDATION OR SLAB-ON-GRADE CONSTRUCTION, EXISTING SUBGRADES SHALL BE COMPACTED TO MINIMUM OF 95% MAXIMUM DRY DENSITY OBTAINED THRU ASTM D 1557 MODIFIED PROCTOR TESTING.

2.8 SEE PLUMBING, ELECTRICAL & CIVIL SHEETS FOR REQUIRED UNDERSLAB UTILITIES.

2.9 SEE ARCHITECTURAL SHEETS FOR ALL WATERPROOFING DETAILS AND MATERIALS.

2.10 IF UNDERMINING OF FOOTINGS OCCURS, FILL VOIDS WITH 18 MPa CONCRETE. DO NOT ATTEMPT TO REPLACE AND RE-COMPACT SOIL.

3.0 CONCRETE

3.1 CONCRETE SHALL HAVE THE UNIT WEIGHT OF 2400 kg/m^3 AND A MINIMUM COMPRESSIVE STRENGTH (f'c) OF 28 MPa AT 28 DAYS. ALL CONCRETE SHALL HAVE A WATER-CEMENT RATIO OF 0.45. SEE SPECIFICATIONS FOR ADDITIONAL INFORMATION. ENTRAIN AIR TO PRODUCE TOTAL AIR CONTENT ACCORDING TO THE SPECIFICATIONS FOR CONCRETE EXPOSED TO FREEZING TEMPERATURES (EXTERIOR FOOTINGS, SLAB TURNDOWNS, EXTERIOR SLABS AND SLABS-ON-GRADE, EXTERIOR RETAINING WALLS, AND EXTERIOR GRADE BEAMS.)

3.2 NO CALCIUM CHLORIDE SHALL BE USED IN ANY CONCRETE.

3.3 MIXING, TRANSPORTING AND PLACING OF CONCRETE SHALL CONFORM TO ACI 301M-05.

3.4 ALL CONCRETE WORK SHALL CONFORM TO THE REQUIREMENTS OF THE AMERICAN CONCRETE INSTITUTE (ACI) 318M MANUAL (metric), "BUILDING CODE REQUIREMENTS FOR REINFORCED CONCRETE", AND REQUIREMENTS OUTLINED IN THE CONTRACT SPECIFICATIONS. WHEN THERE IS A CONFLICT BETWEEN ACI AND THE SPECIFICATIONS, THE MORE STRINGENT SHALL GOVERN.

3.5 CHAMFER ALL EXPOSED EXTERNAL CORNERS OF CONCRETE WITH 20mm x45 DEGREE CHAMFER UON.

3.6 CONCRETE REINFORCEMENT BARS SHALL CONFORM TO ASTM A615M-96a, GRADE 420 MPa, REINFORCING BARS SHALL NOT BE TACK WELDED, WELDED, HEATED OR CUT, UNLESS INDICATED ON THE CONTRACT DOCUMENTS. ALL LAP SPLICES SHALL BE CLASS "B" UON.

3.7 HORIZONTAL FOOTING AND HORIZONTAL WALL REINFORCEMENT SHALL BE CONTINUOUS AND SHALL HAVE 90 DEGREE BENDS AND EXTENSIONS, OR CORNER BARS OF EQUIVALENT SIZE LAPPED WITH A CLASS B TENSION SPLICE AT CORNERS AND INTERSECTIONS. TOP BAR CRITERIA SHALL APPLY IF 300mm OR MORE OF FRESH CONCRETE IS PLACED BELOW BAR.

3.8 SLABS-ON-GRADE SHALL HAVE CONSTRUCTION JOINTS OR CRACK CONTROL JOINTS AS SHOWN ON THE DRAWINGS. CONSTRUCTION JOINTS CAN BE USED AT CONTROL JOINT LOCATIONS AT CONTRACTORS OPTION. SEE SLAB PLANS & JOINT DETAILS FOR ADDITIONAL INFORMATION. FOR AREAS NOT SHOWN ON DWGS, THE MAXIMUM SPACING OF CONSTRUCTION/ CRACK CONTROL JOINTS SHALL BE 4800mm

3.9 ALL CONCRETE REINFORCEMENT SHALL BE DETAILED, FABRICATED, LABELED, SUPPORTED, AND SPACED IN FORMS AND SECURED IN PLACE IN ACCORDANCE WITH THE PROCEDURES AND REQUIREMENTS OUTLINED IN THE LATEST EDITION OF THE "BUILDING CODE REQUIREMENTS FOR REINFORCED CONCRETE", ACI 318M, AND THE "MANUAL OF STANDARD PRACTICE FOR DETAILING REINFORCED CONCRETE STRUCTURES", ACI 315M, LATEST EDITION. BASED ON IN COUNTRY REINFORCEMENT AVAILABILITY, IT IS THE CONTRACTOR'S OPTION TO ROUND DESIGNATED ODD NUMBERED REINFORCEMENT SIZES UP (1) ONE BAR SIZE.

3.10 ALL DOWELS SHALL MATCH SIZE AND NUMBER OF MAIN REINFORCING, UNLESS NOTED OTHERWISE ON THE SHEETS.

3.11 ADDITIONAL BARS SHALL BE PROVIDED AROUND ALL FLOOR AND WALL OPENINGS AS SHOWN ON THE SHEETS.

3.12 SEE ARCHITECTURAL SHEETS FOR TYPE AND LOCATION OF ALL FLOOR FINISHES.

3.13 THE CONTRACTOR SHALL COORDINATE ADDITIONAL WALL/SLAB OPENINGS NOT SHOWN ON STRUCTURAL SHEETS. SEE MECHANICAL, ELECTRICAL, PLUMBING AND CIVIL SHEETS.

3.14 UNLESS NOTED OTHERWISE, ALL CURBS SHALL BE REINFORCED WITH AT LEAST (1)-#13 CONTINUOUS AND #13 AT 300mm O.C. DOWELS TO STRUCTURE BELOW.

3.15 THE CONTRACTOR SHALL VERIFY ALL OPENINGS, PAD SIZES, AND ANCHOR BOLTS WITH EQUIPMENT SELECTED.

3.16 FOR ALL WALLS & PIERS, PROVIDE DOWELS INTO FOOTING AT EACH VERT REINF BAR, UON DOWEL SIZE SHALL BE SAME AS VERT REINF.

3.17 PROVIDE CONCRETE POUR STOPS OR FORMED AS REQUIRED FOR INSTALLATION OF ALL CONCRETE WORK.

3.18 PROVIDE ADDITIONAL (2)-#13 x 600mm REINFORCING BARS IN SLAB-ON GRADE AT ALL RE-ENTRANT CORNERS. PLACE BARS AT MID-DEPTH OF SLAB WITH A CLEARANCE OF 50mm FROM CORNER UON.

3.19 COLD-WEATHER PLACEMENT: COMPLY WITH ACI 306.1 AND AS FOLLOWS. PROTECT CONCRETE WORK FROM PHYSICAL DAMAGE OR REDUCED STRENGTH THAT COULD BE CAUSED BY FROST, FREEZING ACTIONS, OR LOW TEMPERATURES. SUBMIT A COLD WEATHER CONCRETING PLAN FOR APPROVAL.

3.20 PROVIDE BONDING COMPOUND PER ASTM C 1059-99: SPECIFICATION FOR LATEX AGENTS FOR BONDING FRESH CONCRETE (GROUT) TO HARDENED CONCRETE.

3.21 THE FORMED SURFACES FOR REINFORCED CONCRETE SHALL ACHIEVE A "CLASS A" FINISH WHEN RECEIVING PAINT OR A "CLASS B" FINISH WHEN RECEIVING PLASTER OR TILE AS PER SPECIFICATION SECTION 03 31 00 CAST-IN-PLACE STRUCTURAL CONCRETE.

3.22 AT INTERSECTING GRADE BEAMS AND SHEAR WALLS, PROVIDE CORNER BARS AT INTERSECTIONS WITH SAME QUANTITY, SIZE AND SPACING AS HORIZONTAL BARS WITH LEG LENGTH = 50db.

3.23 REFER TO S-800 SERIES REINFORCING BAR PLACEMENT DRAWINGS DEFINING LENGTHS, BENDS, AND SPACINGS FOR ALL STRUCTURAL CONCRETE. THE S-800 SERIES DRAWING ARE BASED ON THE S-400, S-500, S-600, AND S-700 SERIES DRAWING SCHEDULES, DETAILS, AND DIAGRAMS.

4.0 CONCRETE MASONRY

4.1 MASONRY CONSTRUCTION SHALL CONFORM TO SPECIFICATION FOR MASONRY STRUCTURES (ACI 530.1) UON.

4.2 STRENGTH OF MASONRY MATERIALS SHALL BE AS FOLLOWS:

a. CONCRETE MASONRY UNITS SHALL BE NORMAL WEIGHT, GRADE N, TYPE 1, CONFORMING TO ASTM C-90 AND HAVE A MINIMUM COMPRESSIVE STRENGTH OF 10.4 MPa ON THE NET AREA.
b. MORTAR SHALL CONFORM TO ASTM C-270 TYPE S.
c. GROUT FOR MASONRY SHALL BE NORMAL WEIGHT AND HAVE A MINIMUM COMPRESSIVE STRENGTH OF 14 MPa AT 28 DAYS. GROUT SHALL CONFORM TO ASTM C476M. GROUT LIFTS SHALL NOT EXCEED 1,400mm.
d. REINFORCED MASONRY SHALL HAVE A STRENGTH F'm = 10 MPa. (F'm IS THE COMPRESSIVE STRENGTH OF THE MASONRY AT 28 DAYS AS DETERMINED BY PRISM TESTS).

4.3 ALL VERTICAL REINFORCEMENT FOR CONCRETE MASONRY SHALL BE ASTM A615M-96a, GRADE 420 MPa. ALL SPLICES SHALL BE LAPPED 48 BAR DIAMETERS MINIMUM.

4.4 BOND BEAMS SHALL BE SPACED AT 1200mm OC VERTICALLY. BOND BEAM REINFORCING SHALL BE CONTINUOUS AND PROVIDED AT WALL INTERSECTIONS AND WALL CORNERS (REFERENCE CONCRETE MASONRY NOTE 4.11). ALL BOND BEAM REINFORCING SHALL BE CONTINUOUS AND HAVE STANDARD ACI HOOKS AT EACH END. PROVIDE STANDARD BAR SPLICES AS SPECIFIED. AS AN ALTERNATE TO CMU BOND BEAMS, IT IS THE CONTRACTOR'S OPTION TO PROVIDE 200mm x 200mm CONTINUOUS CAST-IN-PLACE CONCRETE BOND BEAMS WITH (2)-#16 IN LIEU OF CMU BOND BEAMS INDICATED ON THE DRAWINGS.

4.5 SEE TYPICAL DETAILS FOR MINIMUM REINFORCEMENT REQUIREMENTS FOR CMU WALLS. PROVIDE STANDARD BAR SPLICES AS SPECIFIED. ALL VERTICAL REINFORCEMENT EXTENDS FULL HEIGHT OF WALL.

4.6 CMU CELLS THAT REQUIRE VERTICAL REINFORCING BARS AS INDICATED ON THE CONTRACT DRAWINGS AND/OR SPECS SHALL HAVE REINF BARS PLACED IN CENTERS OF CMU CELLS AND CONTINUOUSLY GROUTED UON.

4.7 ALL CMU CELLS, OPEN CAVITIES, AND AIR SPACES OF ALL EXTERIOR WALLS SHALL BE GROUTED TO STOP FRAGMENTS FROM MORTAR BLAST.

4.8 CONTRACTOR SHALL COORDINATE LOCATION OF ALL OPENINGS SEE ARCH, MECH, ELEC, AND PLUMBING SHEETS FOR SIZE AND LOCATION OF OPENINGS.

4.9 MASONRY WALLS SHALL NOT BE BACK FILLED PRIOR TO THE MORTAR AND GROUT ATTAINING THEIR RESPECTIVE MAXIMUM DESIGN STRENGTHS PER SPECIFICATIONS.

4.10 PROVIDE GALVANIZED MORTAR/GROUT SCREEN W/ 3mm MESH WHERE CELLS BELOW ARE NOT GROUTED.

4.11 AT INTERSECTING BOND BEAMS, PROVIDE CORNER BAR FOR EACH HORIZONTAL BAR IN BOND BEAMS AT INTERSECTING WALLS. USE SAME SIZE AND SPACING AS HORIZONTAL BARS WITH LEG LENGTH = 50db.

4.12 THE ALTERNATE TOP OF CMU WALL BRACING DETAIL(S) SHOWN ON S-701 CAN BE UTILIZED AT THE CONTRACTOR'S OPTION IN PLACE OF THE "SLEEVED DOWEL" WALL CONNECTIONS DEPICTED ON S-400 AND S-500 SERIES DRAWINGS. IN ADDITION, ALTERNATE DETAIL(S) SHOW CAST-IN-PLACE WALL BOND BEAMS THAT CAN BE UTILIZED AT THE CONTRACTOR'S OPTION IN PLACE OF THE STANDARD CMU BOND BEAMS CONSTRUCTED OF CMU BLOCKS.

5.0 COLD-FORMED METAL FRAMING

5.1 ALL COLD-FORMED METAL FRAMING MEMBERS SHALL CONFORM TO ASTM A1003M, STRUCTURAL GRADE ST340 (MPa), WITH A GALVANIZED COATING OF Z275 OR BETTER IN ACCORDANCE WITH ASTM A653M.

5.2 ALL COLD-FORMED METAL FRAMING MEMBERS SHALL HAVE THE FOLLOWING MINIMUM PROPERTIES:

a. MINIMUM METAL THICKNESS:
TRACK = 1.37mm;
STUD/OTHER = 1.09mm
b. MINIMUM FLANGE WIDTH:
TRACK = 38mm;
STUD/OTHER = 35mm
c. MINIMUM MEMBER DEPTH:
ALL SECTIONS = 152.2mm
d. PURLIN (HAT CHANNEL)
DEPTHxWIDTH(FLAT TOP)xTHICK = 25mmx42mmx1.59mm

5.3 ALL CONNECTIONS SHALL BE MADE WITH CORROSION RESISTANT (ASTM A153M), SELF-DRILLING, SELF-TAPPING STEEL DRILL SCREWS IN ACCORDANCE WITH ASTM C1513. SCREWS SHALL HAVE A LOW PROFILE HEAD BENEATH ROOF DECK, AND STANDARD HEAD ALL OTHER LOCATIONS.

5.4 FABRICATE COLD FORMED METAL FRAMING AND ACCESSORIES PLUMB, SQUARE AND TRUE TO LINE, WITH CONNECTIONS SECURELY FASTENED ACCORDING TO AISI STANDARD FOR COLD FORMED STEEL FRAMING.

5.5 CUT FRAMING MEMBERS BY SAWING OR SHEATHING, DO NOT TORCH CUT.

5.6 INSTALL FRAMING MEMBERS IN ONE-PIECE LENGTHS UNLESS SPLICE CONNECTIONS ARE INDICATED FOR TRACK OR TENSION MEMBERS

5.7 INSTALL TEMPORARY BRACING AND SUPPORTS TO SECURE FRAMING DURING CONSTRUCTION. MAINTAIN BRACING AND SUPPORTS IN PLACE UNTIL THE STRUCTURE HAS BEEN COMPLETED WITH ALL CONNECTIONS AND PERMANENT BRACING SECURED.

6.0 STRUCTURAL DESIGN CRITERIA

6.1 ALL DESIGNS SHALL CONFORM TO THE PROVISIONS OF THE IBC 2006 AND UFC AS APPLICABLE.

6.2 DESIGN LOADS

6.2.1 DEAD LOADS (PER IBC 2006 & UFC 3-310-01)

MECH/ELEC/PLUMBING	0.20 kPa
MISCELLANEOUS	0.15 kPa
COLD-FORMED FRAMING	0.20 kPa
INSULATION	0.10 kPa
METAL ROOF PANEL	0.14 kPa
	0.79 kPa
FLOOR PARTITION ALLOWANCE	0.96 kPa

6.2.2 LIVE LOADS (PER IBC 2006 & UFC 3-310-01)

ROOF	1.00 kPa
CORRIDOR (2-STORY BLDG ONLY)	4.80 kPa
ALL OTHERS (2-STORY BLDG ONLY)	2.40 kPa
SLAB ON GRADE	4.80 kPa

6.2.3 SNOW LOADS (PER IBC 2006 & UFC 3-310-01)

GROUND SNOW LOAD (Pg)	1.2 kPa
SNOW IMPORTANCE FACTOR (I)	1.0
SNOW EXPOSURE FACTOR (Ce)	1.0
THERMAL FACTOR (Ct)	1.0

6.2.4 WIND LOADS (PER IBC 2006)

BASIC WIND SPEED	137 km/h
WIND IMPORTANCE FACTOR	1.0
WIND EXPOSURE CATEGORY	D
DIRECTIONALITY COEFFICIENT (Kd)	0.85
TOPOGRAPHIC FACTOR (Kzt)	1.0

6.2.5 SEISMIC LOADS (PER IBC 2006 & UFC 3-310-04)

OCCUPANCY USE CATEGORY	II
SEISMIC IMPORTANCE FACTOR (Ie)	1.0
SEISMIC SITE CLASS	D

S_s = 2.4 (FOR IRREGULAR PORTION OF BUILDING – COLUMN LINE 4 THRU 9)
S_s = 1.50 (REDUCED FROM 2.40 PER ASCE 7-05, 12.8.1.3 FOR A BUILDING WITHOUT IRREGULARITIES – COLUMN LINES 1 THRU 3)
S_1 = 1.20
S_{DS} = 1.60 (IRREGULAR BUILDING); 1.00 (REGULAR BUILDING)
S_{D1} = 1.20

SEISMIC DESIGN CATEGORY	E
SEISMIC RESISTING SYSTEM: –SPECIAL REINFORCED CONCRETE SHEAR WALL	
RESPONSE MODIFICATION FACTOR (R)	6
RESPONSE COEFFICIENT (Cs)	0.267
SEISMIC ANALYTICAL PROCEDURE =	EQUIV LATERAL FORCE
SEISMIC BASE SHEAR	
REGULAR PORTION OF BUILDING =	740 kN
IRREGULAR PORTION OF BUILDING =	2300 kN

APPROVED:

A/E DESIGNER OF RECORD

SEAL:

GEORGIA REGISTERED 1-29-10 No. 27141 PROFESSIONAL ENGINEER CHRISTOPHER W. WHITMORE

US ARMY CORPS OF ENGINEERS
AFGHANISTAN ENGINEER DISTRICT

Mark	Description	Date	Appr.	Mark	Description	Date	Appr.

Date: 2/23/10 | Rev: 0
Design file no.
Drawing code:
File name: ANMHQS-001GN
Plot date: 2/23/2010
Plot scale: X:X

Designed by: KMF/MMY
Dwn by: RCG | Ckd by: CWW
Reviewed by: LHM
Submitted by:
BAKER

U.S. ARMY CORPS OF ENGINEERS
AFGHANISTAN ENGINEER DISTRICT
APO AE 96338

Michael Baker Jr., Inc
A unit of Michael Baker Corporation
Airside Business Park
100 Airside Drive
Moon Township, PA 15108
www.mbakercorp.com

AFGHAN NATIONAL ARMY
REGIONAL MILITARY TRAINING CENTER
STANDARD DESIGN

RMTC HEADQUARTERS BUILDING

GENERAL NOTES & DESIGN CRITERIA

Sheet reference number:
S-001

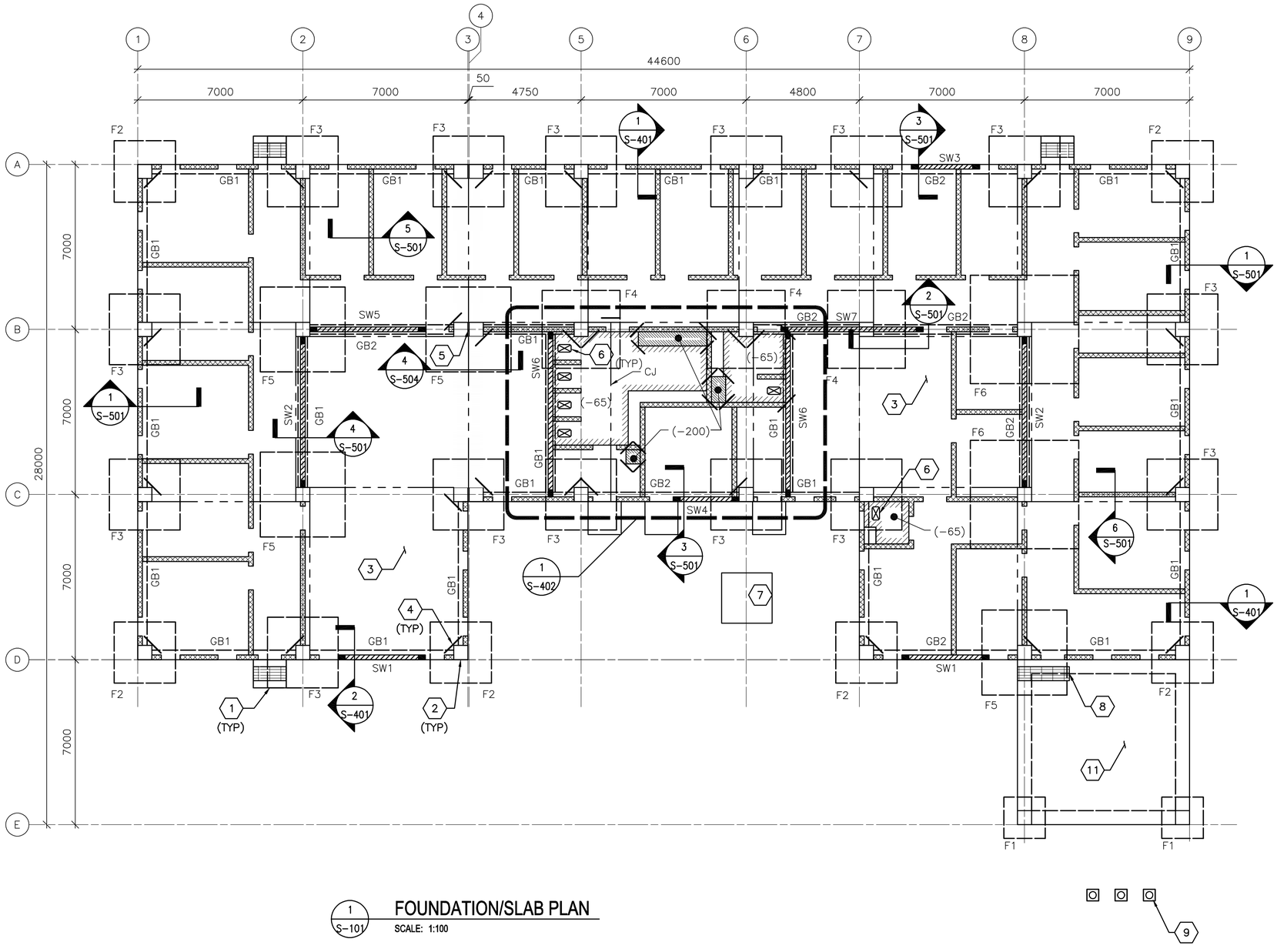

1 S-101 FOUNDATION/SLAB PLAN

SCALE: 1:100

FOUNDATION/SLAB PLAN NOTES:

1. REFER TO SHEET S-001 FOR STRUCTURAL NOTES AND DESIGN CRITERIA.
2. FINISH FIRST FLOOR ELEVATION SHALL BE (DATUM 0.00MM) ALL PLUS OR MINUS DIMENSIONS INDICATED ON PLAN OR REFERRED TO IN NOTES RELATE TO FINISH FIRST FLOOR ELEVATION.
3. SLAB-ON-GRADE IS 150 WITH #13 @ 300 OC EW LOCATED 38 FROM T/SLAB UON. WHERE NOTED, 300 SLAB-ON-GRADE SHALL BE REINFORCED W/ #13 @300 OC EW T&B.
4. TOP OF EXTERIOR FOOTINGS SHALL BE −950 UNLESS OTHERWISE INDICATED.
5. TOP OF INTERIOR FOOTINGS WITH GRADE BEAM ABOVE SHALL BE −950.
6. TOP OF INTERIOR FOOTING WITHOUT GRADE BEAM ABOVE SHALL BE −600
7. COLUMN FOOTINGS INDICATED BY F# ON PLAN. REFER TO COLUMN FOOTING SCHEDULE ON SHEET S-601.
8. REFER TO COLUMN SCHEDULE ON SHEET S-601.
9. GRADE BEAM INDICATED BY GB# ON PLAN, REFER TO BEAM SCHEDULE ON SHEET S-601.
10. SHEARWALL INDICATED BY SW# ON PLAN, REFER TO SHEARWALL SCHEDULE ON SHEET S-601.
11. SEE TYP EXTERIOR AND INTERIOR CMU WALL REINFORCING DETAILS ON SHEET S-701.
12. SEE MECHANICAL AND ELECTRICAL SHEETS FOR CONCRETE PAD LOCATIONS, SIZES, AND THICKNESS NOT SHOWN. SEE SHEET S-701 FOR DETAILS.
13. THICKENED SLAB UNDER CMU PERIMETER/PARTITION WALLS NOT SHOWN FOR CLARITY.

FOUNDATION/SLAB PLAN KEY NOTES: (X)

1. CONC PAD (ENTRANCE) – SEE ARCH DWGS FOR INFORMATION
2. REINF CONC COLUMN
3. REINF CONC SLAB-ON-GRADE
4. (2)-#13 @ RE-ENTRANT CORNERS – SEE S-701 FOR INFORMATION
5. 50 ISOLATION JOINT BETWEEN STRUCTURES LOCATED ABOVE FIRST FLOOR SLAB-ON-GRADE
6. SLAB OPENING – COORDINATE W/ARCH AND PLUB DWGS
7. EMERGENCY GENERATOR PAD – SEE SECTION 9 ON SHEET S-701
8. PROVIDE DEPRESSED SLAB AREA FOR BOOT SCRAPE GRATING – COORDINATE WITH ARCH DWGS. SLOPE BOTTOM OF DEPRESSED AREA TO DRAIN TO EXTERIOR OF SLAB.
9. (3) FLAGPOLES – SEE DETAIL ON SHEET S-702
10. NOT USED
11. SLAB-ON-GRADE W/ THICKENED EDGES. SEE SECTION 9 ON SHEET S-701

FOUNDATION/SLAB PLAN LEGEND:

- REINF CONC SHEAR WALL
- REINF CMU WALL
- CONTROL JOINT
- INDICATES DROP SLAB 65 BELOW FINISH FLOOR
- INDICATES DROP SLAB 200 BELOW FINISH FLOOR
- SLAB OPENING

0 2000 4000
SCALE: 1:100

UNLESS OTHERWISE NOTED, LINEAR DIMENSIONS SHOWN ON DRAWINGS ARE IN MILLIMETERS (mm)

APPROVED:

A/E DESIGNER OF RECORD

SEAL:

GEORGIA REGISTERED 1-27-10 No. 27141 PROFESSIONAL ENGINEER CHRISTOPHER W. WHITMORE

US ARMY CORPS OF ENGINEERS
AFGHANISTAN ENGINEER DISTRICT

Mark	Description	Date	Appr.	Mark	Description	Date	Appr.

U.S. ARMY CORPS OF ENGINEERS
AFGHANISTAN ENGINEER DISTRICT
APO AE 96338

Michael Baker Jr., Inc
A unit of Michael Baker Corporation
Airside Business Park
100 Airside Drive
Moon Township, PA 15108
www.mbakercorp.com

Designed by: KMP/MMY
Dwn by: RCG
Ckd by: CWW
Reviewed by: LHM
Submitted by: BAKER
Date: 2/23/10
Rev: 0
Design file no.
Drawing code:
File name: AANHQB-101FNP
Plot date: 2/23/2010
Plot scale: X:X

AFGHAN NATIONAL ARMY
REGIONAL MILITARY TRAINING CENTER
STANDARD DESIGN

RMTC HEADQUARTERS BUILDING

FOUNDATION/SLAB PLAN

Sheet reference number:
S-101

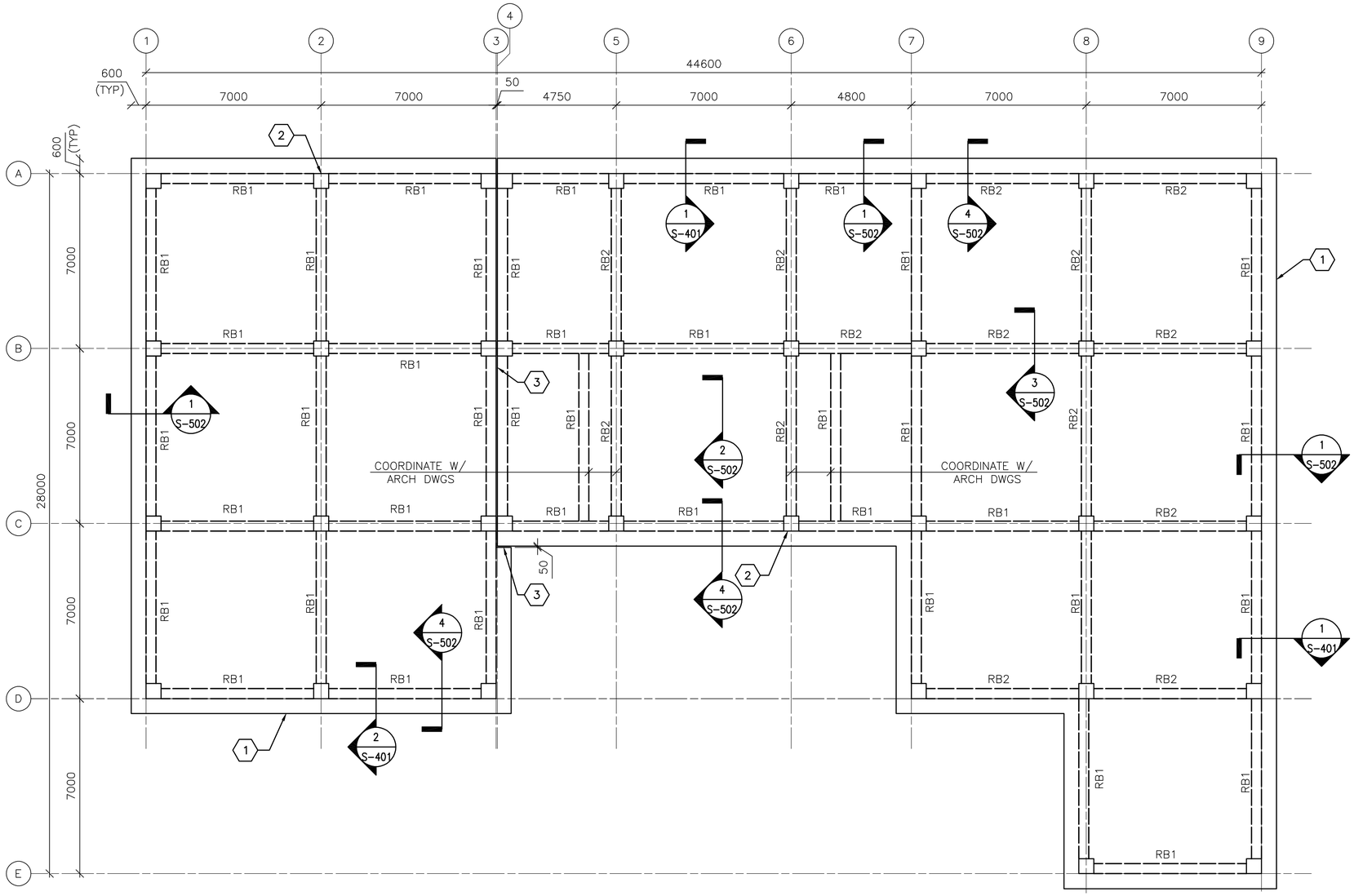

1 S-102 **ROOF FRAMING PLAN**

SCALE: 1:100

ROOF FRAMING PLAN NOTES:

1. REFER TO SHEETS S-001 FOR STRUCTURAL NOTES AND DESIGN CRITERIA.
2. TOP OF SLAB ELEVATION = 3600 UNLESS NOTED OTHERWISE.
3. ROOF SLAB IS 250 WITH #16 @ 300 OC EW T&B.
4. ROOF BEAM INDICATED BY RB# ON PLAN. REFER TO BEAM SCHEDULE ON SHEET S-601.
5. COORDINATE WITH ARCHITECTURAL SHEETS FOR COLD-FORMED STEEL OVERBUILD FRAMING ABOVE ROOF SLAB.
6. COLD-FORMED METAL OVERBUILD ROOF FRAMING NOT SHOWN FOR CLARITY. SEE OVERBUILD ROOF FRAMING DETAILS AND SECTIONS ON SHEET S-702.
7. CMU PARTITION WALLS (BELOW ROOF SLAB) NOT SHOWN FOR CLARITY.
8. OVERHANG AREAS OF ROOF SLAB CONTAIN ROOF VENT PENETRATIONS. REFERENCE ARCHITECTURAL DRAWINGS FOR INFORMATION.
9. DISCONTINUE ALL ROOF FRAMING AT BUILDING EXPANSION JOINT. REFER TO ARCHITECTURAL SHEETS FOR COLD-FORMED ROOF OVERBUILD FRAMING EXPANSION JOINT DETAIL.

ROOF FRAMING PLAN KEY NOTES: (X)

1. CONC ROOF SLAB (BELOW ROOF OVERBUILD)
2. REINF CONC COLUMN (BELOW CONC ROOF SLAB)
3. 50 ISOLATION JOINT BETWEEN STRUCTURES LOCATED ABOVE FIRST FLOOR SLAB-ON-GRADE

0 2000 4000
SCALE: 1:100

UNLESS OTHERWISE NOTED, LINEAR DIMENSIONS SHOWN ON DRAWINGS ARE IN MILLIMETERS (mm)

APPROVED:

A/E DESIGNER OF RECORD

SEAL:

GEORGIA REGISTERED 1-28-10 No. 27141 PROFESSIONAL ENGINEER CHRISTOPHER W. WHITMORE

US ARMY CORPS OF ENGINEERS
AFGHANISTAN ENGINEER DISTRICT

Mark	Description	Date	Appr.	Mark	Description	Date	Appr.

U.S. ARMY CORPS OF ENGINEERS
AFGHANISTAN ENGINEER DISTRICT
APO AE 96338

Michael Baker Jr., Inc
A unit of Michael Baker Corporation
Airside Business Park
100 Airside Drive
Moon Township, PA 15108
www.mbakercorp.com

Designed by: KMP/MMY
Dwn by: RCG
Ckd by: CWW
Reviewed by: LHM
Submitted by: BAKER
Date: 2/23/10
Design file no.
Drawing code:
File name: ANAHQS-102FRP
Plot date: 2/23/2010
Plot scale: X:X
Rev: 0

AFGHAN NATIONAL ARMY
REGIONAL MILITARY TRAINING CENTER
STANDARD DESIGN

RMTC HEADQUARTERS BUILDING

ROOF FRAMING PLAN

Sheet reference number:
S-102

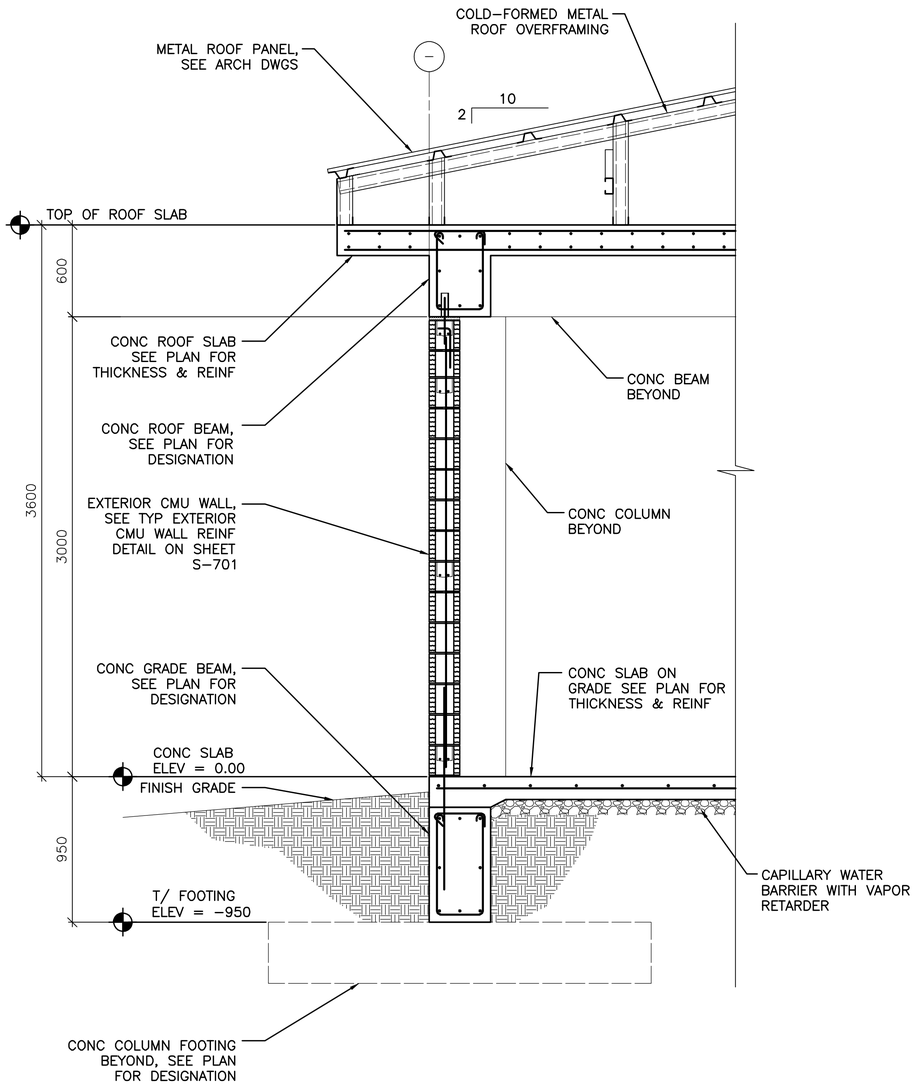

1 / 1
S-101 / S-102

TYPICAL WALL SECTION AT EXTERIOR MASONRY WALL

SCALE: 1:20

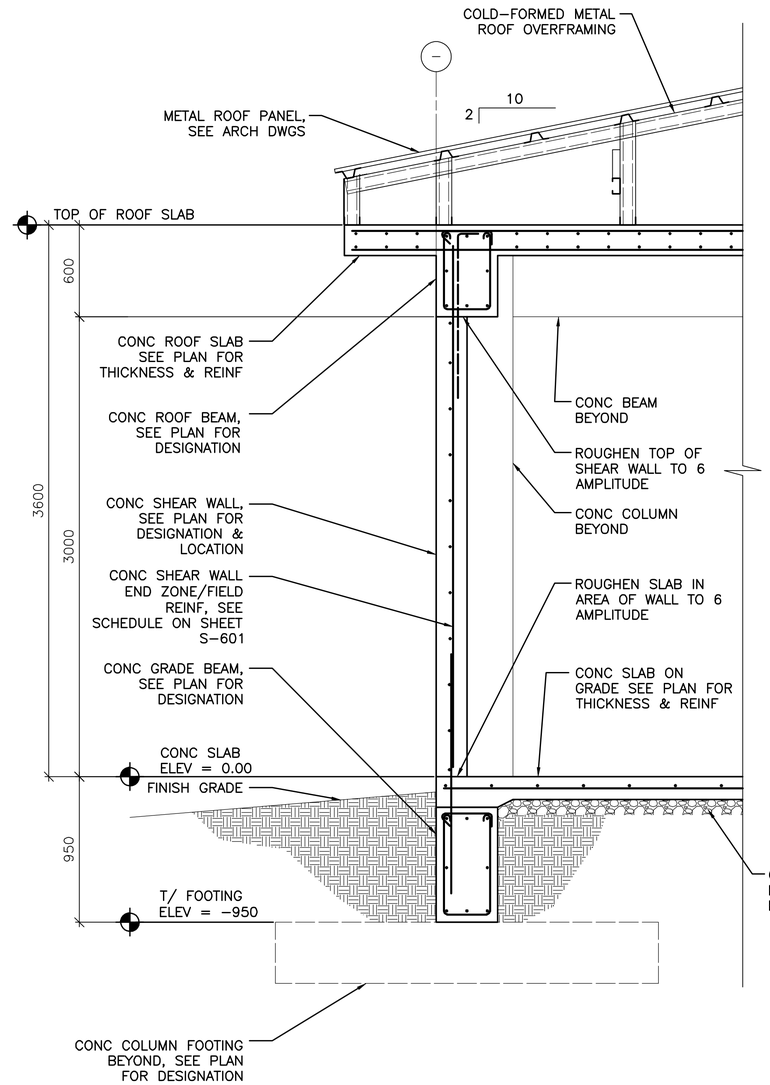

2 / 2
S-101 / S-102

TYPICAL WALL SECTION AT CONCRETE SHEAR WALL

SCALE: 1:20

0 400 800
SCALE: 1:20

UNLESS OTHERWISE NOTED, LINEAR DIMENSIONS SHOWN ON DRAWINGS ARE IN MILLIMETERS (mm)

APPROVED:

A/E DESIGNER OF RECORD

SEAL:

GEORGIA REGISTERED PROFESSIONAL ENGINEER No. 27141 CHRISTOPHER W. WHITMORE 1-29-10

US ARMY CORPS OF ENGINEERS
AFGHANISTAN ENGINEER DISTRICT

Mark	Description	Date	Appr.	Mark	Description	Date	Appr.

Date: 2/23/10
Rev: 0
Design file no.
Drawing code:
File name: AANHQS-01BS
Plot date: 2/23/2010
Plot scale: x:X

Designed by: KMP/MMY
Dwn by: RCG
Ckd by: CWW
Reviewed by: LHM
Submitted by: BAKER

U.S. ARMY CORPS OF ENGINEERS
AFGHANISTAN ENGINEER DISTRICT
APO AE 96338

Michael Baker Jr., Inc
A unit of Michael Baker Corporation
Airside Business Park
100 Airside Drive
Moon Township, PA 15108
www.mbakercorp.com

AFGHAN NATIONAL ARMY
REGIONAL MILITARY TRAINING CENTER
STANDARD DESIGN

RMTC HEADQUARTERS BUILDING

BUILDING SECTIONS

Sheet reference number:
S-401

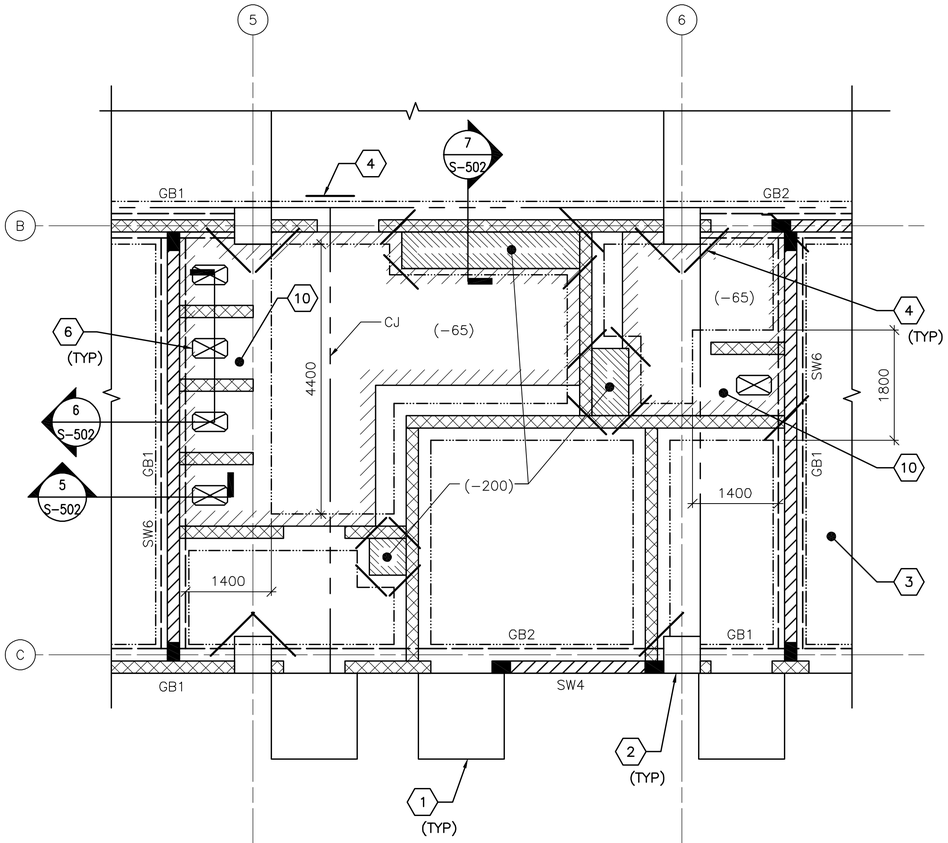

1 S-101 **ENLARGED LATRINE SLAB PLAN**

SCALE: 1:50

ENLARGED PLAN NOTES:

1. REFER TO SHEET S-001 FOR STRUCTURAL NOTES AND DESIGN CRITERIA.
2. FINISH FIRST FLOOR ELEVATION SHALL BE (DATUM 0.00MM) ALL PLUS OR MINUS DIMENSIONS INDICATED ON PLAN OR REFERRED TO IN NOTES RELATE TO FINISH FIRST FLOOR ELEVATION.
3. SLAB-ON-GRADE IS 150 WITH #13 @ 300 OC EW LOCATED 38 FROM T/SLAB UON. WHERE NOTED, 300 SLAB-ON-GRADE SHALL BE REINFORCED W/ #13 @300 OC EW T&B.
4. REFER TO FOUNDATION/SLAB PLAN ON SHEET S-101 FOR COLUMN DESIGNATION AND COLUMN SCHEDULE ON SHEET S-601.
5. REFER TO FOUNDATION/SLAB PLAN ON SHEET S-101 FOR SHEARWALL DESIGNATION AND SHEARWALL SCHEDULE ON SHEET S-601.
6. REFER TO FOUNDATION/SLAB PLAN ON SHEET S-101 FOR GRADE BEAM DESIGNATION AND GRADE BEAM SCHEDULE ON SHEET S-601.
7. SEE TYP EXTERIOR AND INTERIOR CMU WALL REINFORCING DETAILS ON SHEET S-701.

ENLARGED PLAN KEYNOTES: (X)

1. CONC PAD (ENTRANCE) - SEE ARCH DWGS FOR INFORMATION
2. REINF CONC COLUMN
3. REINF CONC SLAB-ON-GRADE. SEE SECTION 8 ON SHEET S-701.
4. (2)-#13 @ RE-ENTRANT CORNERS - SEE S-701 FOR INFORMATION
5. NOT USED
6. SLAB OPENING - COORDINATE W/ARCH AND PLUMBING DWGS.
7. NOT USED
8. NOT USED
9. NOT USED
10. 300 SLAB-ON-GRADE.
11. NOT USED

PLAN LEGEND:

- REINF CONC SHEAR WALL
- REINF CMU WALL
- CONTROL JOINT
- INDICATES DROP SLAB 65 BELOW FINISH FLOOR
- INDICATES DROP SLAB 200 BELOW FINISH FLOOR
- SLAB OPENING
- OUTLINE OF THICKENED SLAB AREAS
- GRADE BEAM

0 1000 2000
SCALE: 1:50

UNLESS OTHERWISE NOTED, LINEAR DIMENSIONS SHOWN ON DRAWINGS ARE IN MILLIMETERS (mm)

APPROVED:

A/E DESIGNER OF RECORD

SEAL:

GEORGIA REGISTERED 1-29-10 No. 27141 PROFESSIONAL ENGINEER CHRISTOPHER W. WHITMORE

US ARMY CORPS OF ENGINEERS
AFGHANISTAN ENGINEER DISTRICT

Mark	Description	Date	Appr.	Mark	Description	Date	Appr.

U.S. ARMY CORPS OF ENGINEERS
AFGHANISTAN ENGINEER DISTRICT
APO AE 96338

Michael Baker Jr., Inc
A unit of Michael Baker Corporation
Airside Business Park
100 Airside Drive
Moon Township, PA 15108
www.mbakercorp.com

Designed by: KMP/MMY
Dwn by: RCG
Ckd by: CWW
Reviewed by: LHM
Submitted by: BAKER
Date: 2/23/10
Rev: 0
Design file no.
Drawing code:
File name: ANAHQB-402EP
Plot date: 2/23/2010
Plot scale: x:X

AFGHAN NATIONAL ARMY
REGIONAL MILITARY TRAINING CENTER
STANDARD DESIGN

RMTC HEADQUARTERS BUILDING

ENLARGED LATRINE SLAB PLAN

Sheet reference number:
S-402

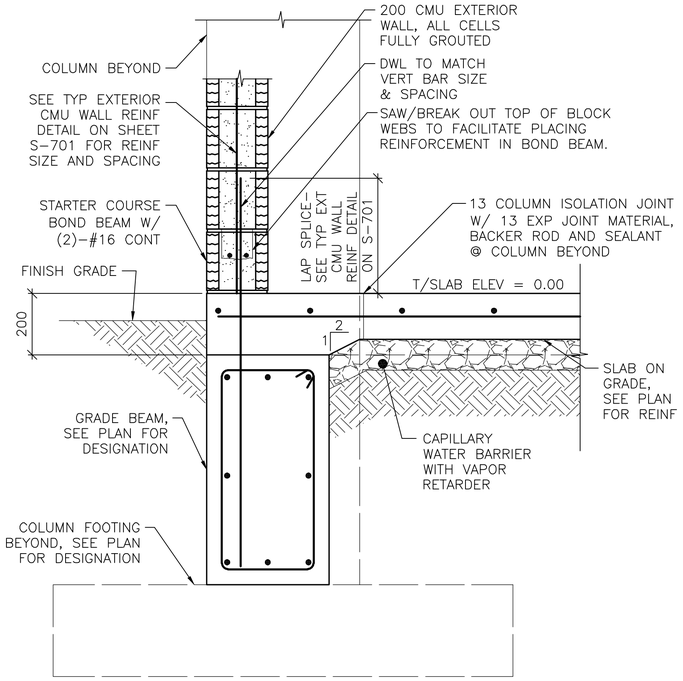

NOTE:
1. SECTION IS SIMILAR FOR INTERIOR CMU PARTITIONS OVER GRADE BEAMS SHOWING THICKENED 200 CONC SLAB AREA.

1 S-101 **SECTION**
SCALE: 1:10

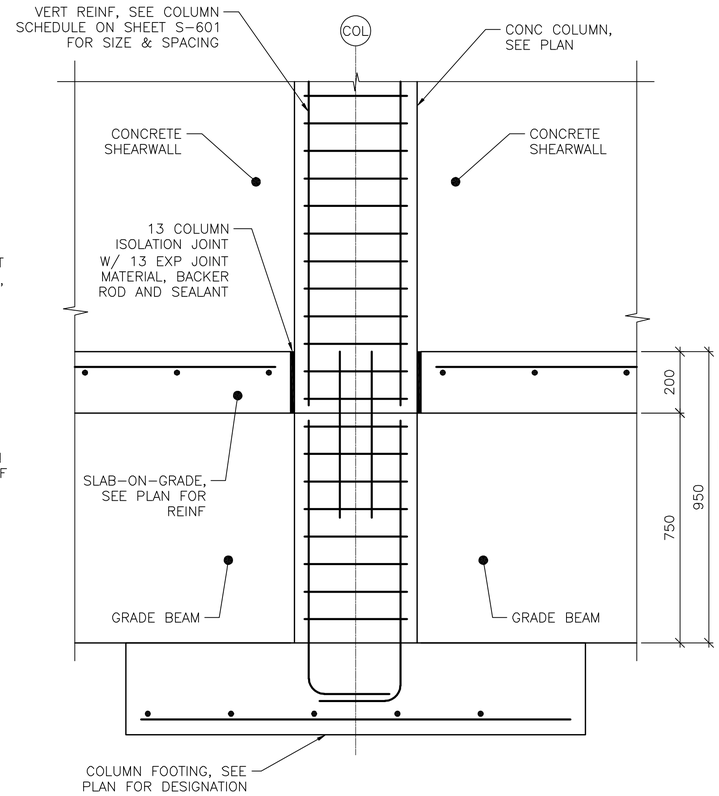

NOTE:
1. GRADE BEAM REINF NOT SHOWN FOR CLARITY

2 S-101 **SECTION**
SCALE: 1:10

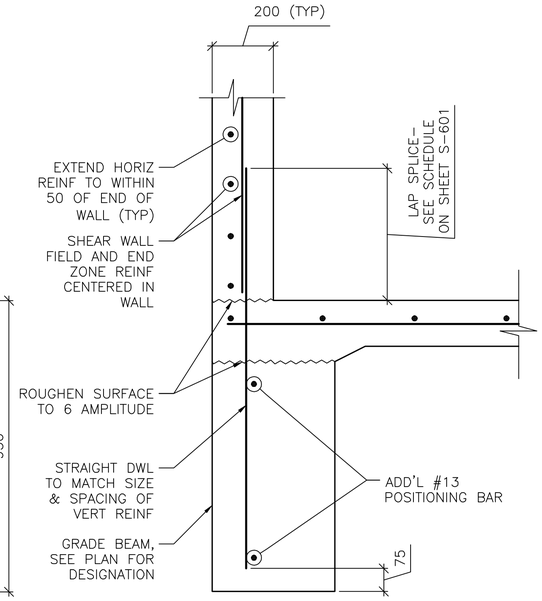

NOTES:
1. SECTION DEPICTS SHEAR WALL TERMINATION ONLY. GRADE BEAM REINFORCING NOT SHOWN FOR CLARITY
2. SEE SHEET S-601 AND SHEET S-702 FOR SCHEDULED FIELD AND END ZONE REINF.

3 S-101 **SECTION**
SCALE: 1:10

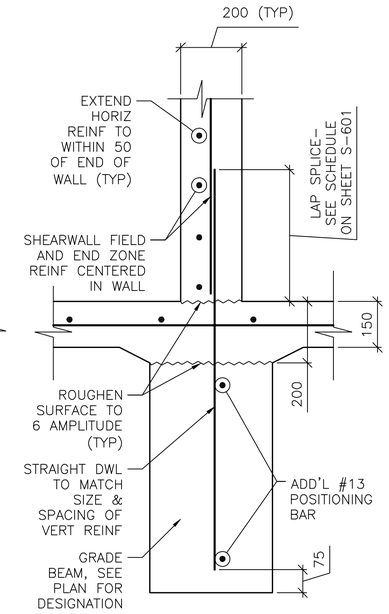

SECTION NOTES:
1. SECTION DEPICTS SHEAR WALL TERMINATION ONLY. GRADE BEAM REINFORCING NOT SHOWN FOR CLARITY
2. SEE SHEET S-601 AND SHEET S-702 FOR SCHEDULED FIELD AND END ZONE REINF.

4 S-101 **SECTION**
SCALE: 1:10

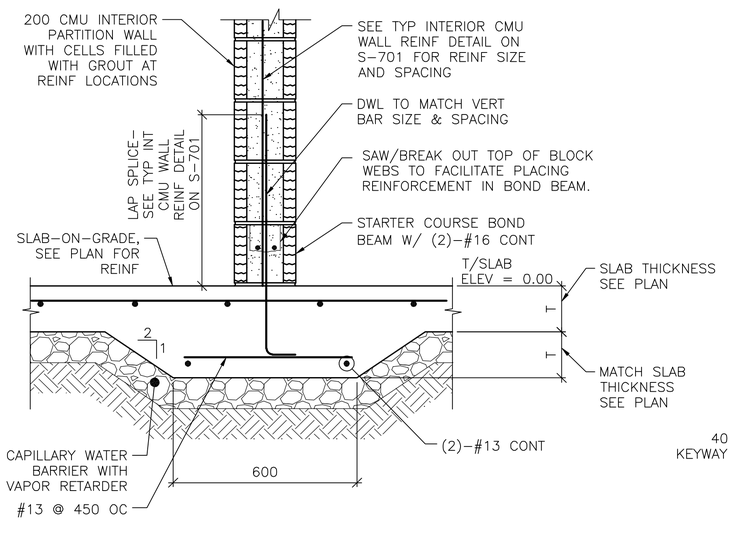

5 S-101 **SECTION**
SCALE: 1:10

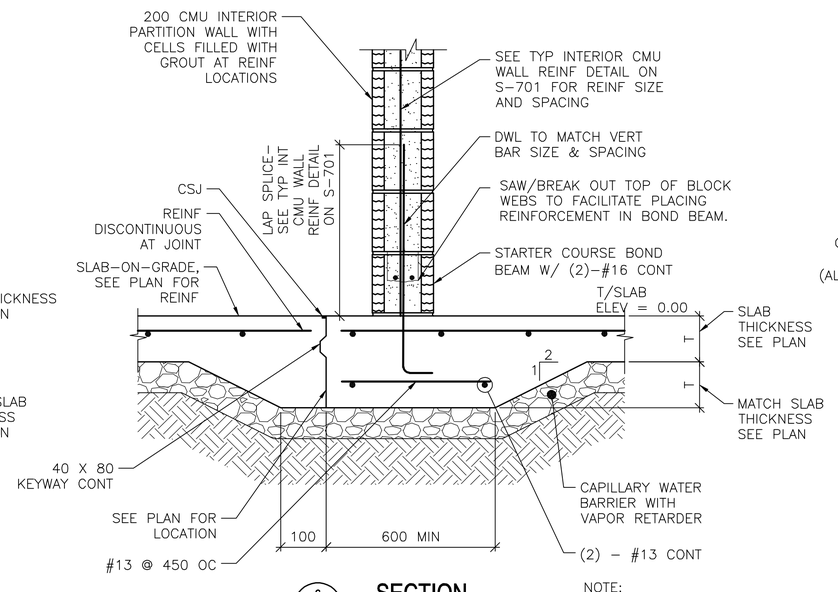

6 S-101 **SECTION**
SCALE: 1:10

NOTE:
1. DETAIL IS APPLICABLE AT CONTROL JOINTS RUNNING PARALLEL TO CMU WALLS AND WITHIN 300 OF FACE OF WALL.

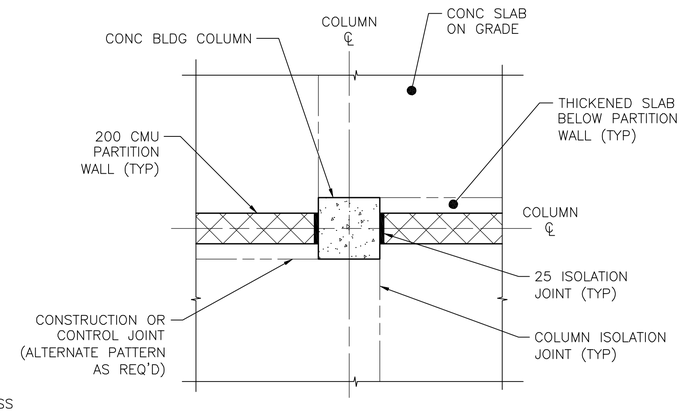

A S-501 **COLUMN ISOLATION JOINT DETAIL**
SCALE: NTS

0 200 400
SCALE: 1:10

UNLESS OTHERWISE NOTED, LINEAR DIMENSIONS SHOWN ON DRAWINGS ARE IN MILLIMETERS (mm)

APPROVED:

A/E DESIGNER OF RECORD

SEAL:

GEORGIA REGISTERED 1-27-10 No. 27141 PROFESSIONAL ENGINEER CHRISTOPHER W. WHITMORE

US ARMY CORPS OF ENGINEERS
AFGHANISTAN ENGINEER DISTRICT

Mark	Description	Date	Appr.	Mark	Description	Date	Appr.

Date: 2/23/10 | Rev: 0
Design file no.
Drawing code:
File name: ANAH08-501SC
Plot date: 2/23/2010
Plot scale: X:X

Designed by: KMP/MMY | Ckd by: CWW
Dwn by: RCG | Reviewed by: LHM
Submitted by: BAKER

U.S. ARMY CORPS OF ENGINEERS
AFGHANISTAN ENGINEER DISTRICT
APO AE 96338

Michael Baker Jr., Inc
A unit of Michael Baker Corporation
Airside Business Park
100 Airside Drive
Moon Township, PA 15108
www.mbakercorp.com

AFGHAN NATIONAL ARMY
REGIONAL MILITARY TRAINING CENTER
STANDARD DESIGN

RMTC HEADQUARTERS BUILDING

FOUNDATION SECTIONS

Sheet reference number:
S-501

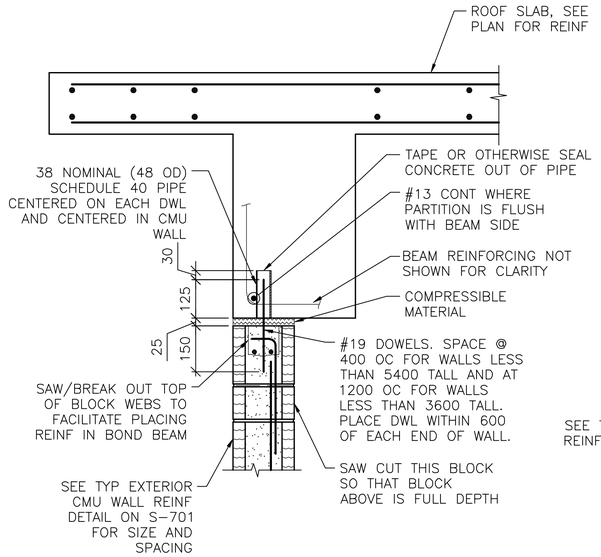

NOTES:
1. EXTEND DOWEL REINF TO 25 CLEAR FROM TOP OF CMU WALL.

1 S-102 **SECTION**
SCALE: 1:10

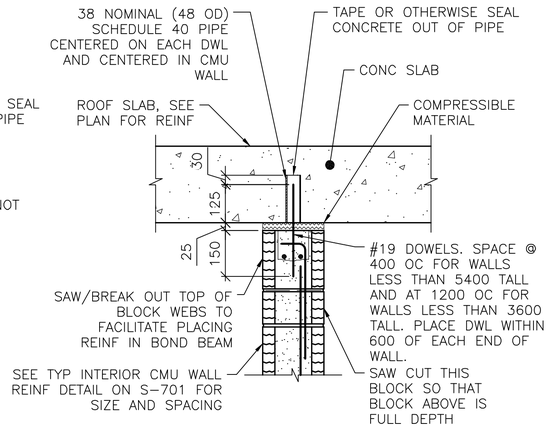

NOTES:
1. EXTEND DOWEL REINF TO 25 CLEAR FROM TOP OF CMU WALL.
2. SLAB REINF NOT SHOWN FOR CLARITY.

2 S-102 **SECTION**
SCALE: 1:10

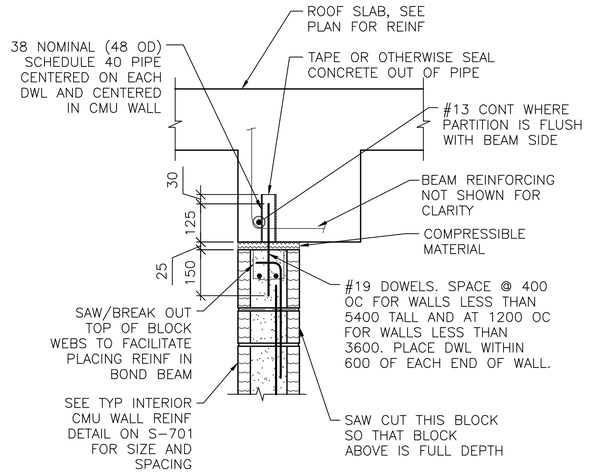

NOTES:
1. EXTEND DOWEL REINF TO 25 CLEAR FROM TOP OF CMU WALL.
2. PARTITION WALL MAY BE CENTERED UNDER THE BEAM OR FLUSH AS SHOWN. SEE PLAN FOR LOCATION.
3. SLAB REINF NOT SHOWN FOR CLARITY.

3 S-102 **SECTION**
SCALE: 1:10

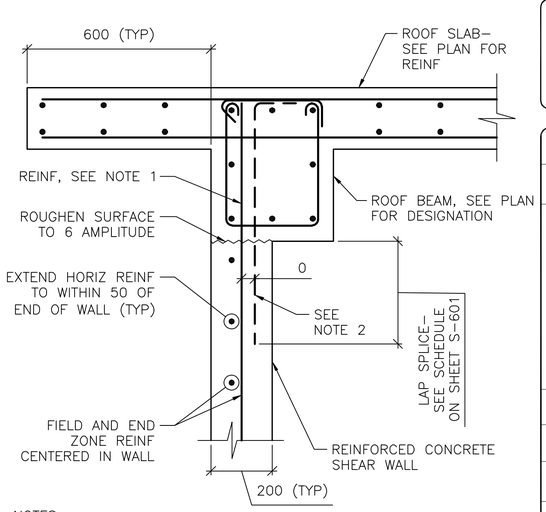

NOTES:
1. TERMINATE "FIELD" VERT REINF & END ZONE REINF @ 50 CLEAR FROM TOP OF ROOF SLAB.
2. WHERE END ZONE REINFORCING CANNOT BE DEVELOPED IN BEAM DEPTH, PROVIDE HOOKED DWLS SAME SIZE & SPACING. PROVIDE TENSION LAP BELOW ROOF BEAM.
3. SEE SHEET S-601 AND SHEET S-702 FOR SCHEDULED FIELD AND END ZONE REINF.

4 S-102 **SECTION**
SCALE: 1:10

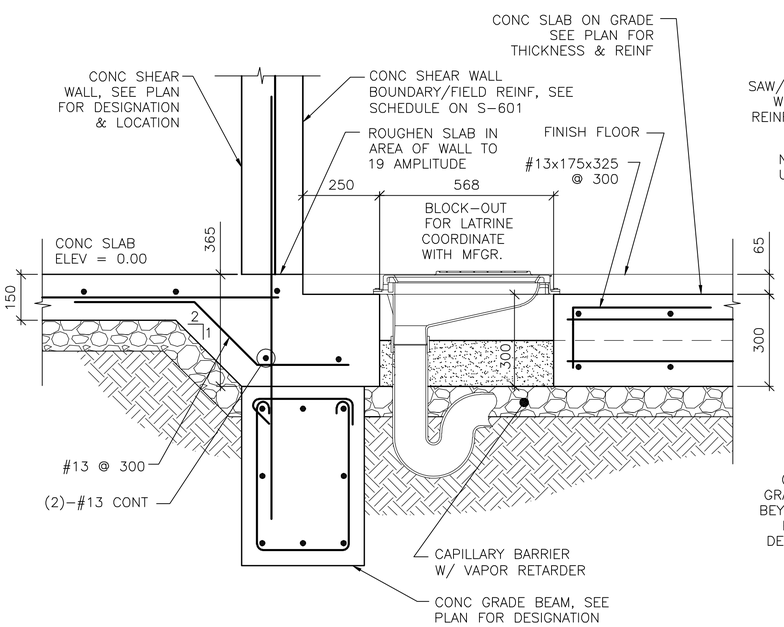

5 S-402 **SECTION**
SCALE: 1:10

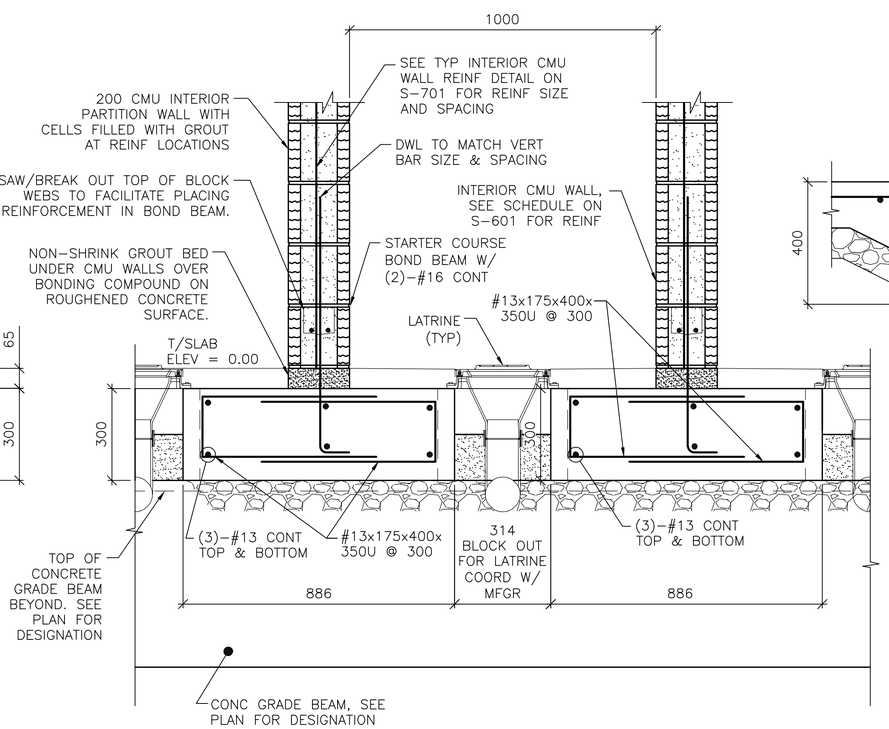

6 S-402 **SECTION**
SCALE: 1:10

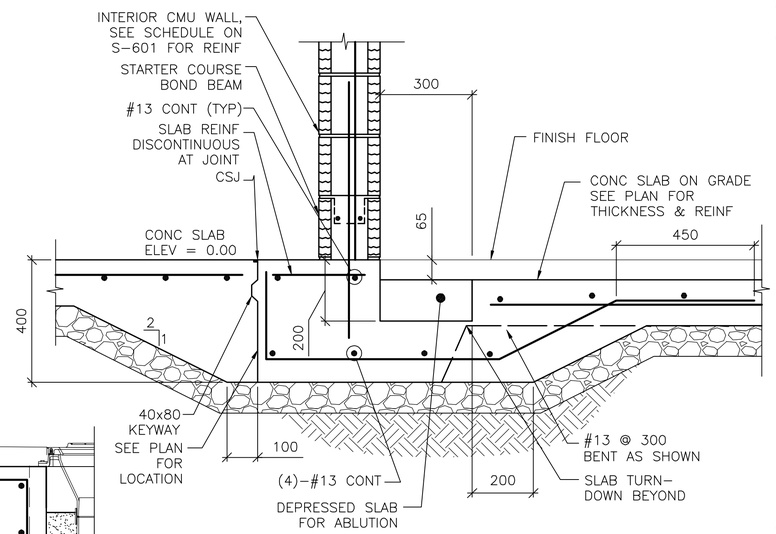

7 S-402 **SECTION**
SCALE: 1:10

0 200 400
SCALE: 1:10

UNLESS OTHERWISE NOTED, LINEAR DIMENSIONS SHOWN ON DRAWINGS ARE IN MILLIMETERS (mm)

APPROVED:

A/E DESIGNER OF RECORD

SEAL:

GEORGIA REGISTERED 1-28-10 No. 27141 PROFESSIONAL ENGINEER CHRISTOPHER W. WHITMORE

US ARMY CORPS OF ENGINEERS
AFGHANISTAN ENGINEER DISTRICT

Mark	Description	Date	Appr.	Mark	Description	Date	Appr.

Rev: 0
Date: 2/23/10
Design file no.
Drawing code:
File name: ANAHQB-502SC
Plot date: 2/23/2010
Plot scale: x:X

Designed by: KMP/MMY
Dwn by: RCG
Ckd by: CWW
Reviewed by: LHM
Submitted by: BAKER

U.S. ARMY CORPS OF ENGINEERS
AFGHANISTAN ENGINEER DISTRICT
APO AE 96338

Michael Baker Jr., Inc
A unit of Michael Baker Corporation
Airside Business Park
100 Airside Drive
Moon Township, PA 15108
www.mbakercorp.com

AFGHAN NATIONAL ARMY
REGIONAL MILITARY TRAINING CENTER
STANDARD DESIGN

RMTC HEADQUARTERS BUILDING

FRAMING SECTIONS

Sheet reference number:
S-502

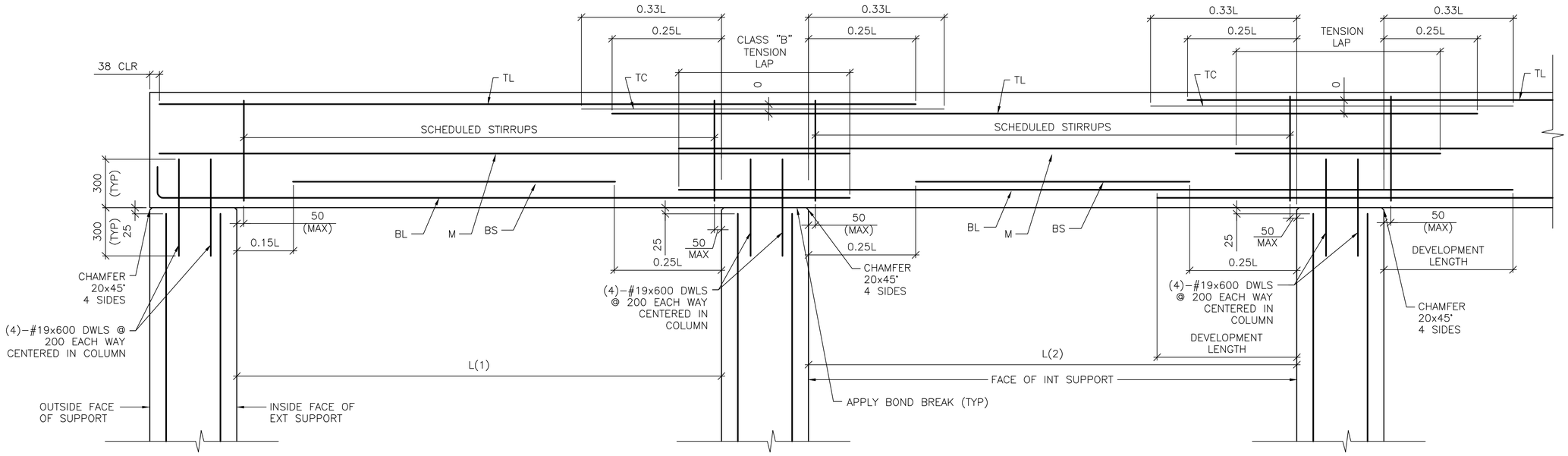

DETAIL NOTE:
1. WORK THIS DETAIL WITH BEAM SCHEDULE ON SHEET S-601.
2. L=GREATEST OF ADJACENT SPANS L(1) OR L(2)
3. ONLY COLUMN CORNER BARS ARE SHOWN

1 / S-503 ROOF BEAM REINFORCING DETAIL

SCALE: NTS

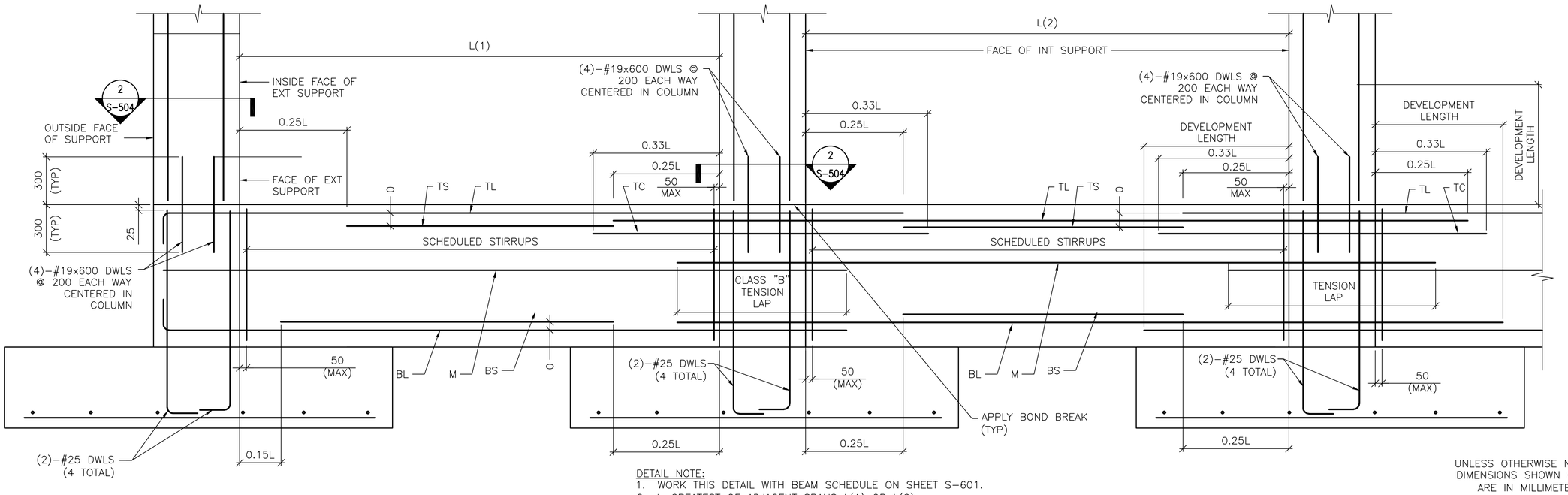

DETAIL NOTE:
1. WORK THIS DETAIL WITH BEAM SCHEDULE ON SHEET S-601.
2. L=GREATEST OF ADJACENT SPANS L(1) OR L(2)
3. ONLY COLUMN CORNER BARS ARE SHOWN.

2 / S-503 GRADE BEAM REINFORCING DETAIL

SCALE: NTS

UNLESS OTHERWISE NOTED, LINEAR DIMENSIONS SHOWN ON DRAWINGS ARE IN MILLIMETERS (mm)

APPROVED:

A/E DESIGNER OF RECORD

SEAL:

GEORGIA REGISTERED 1-27-10 No. 27141 PROFESSIONAL ENGINEER CHRISTOPHER W. WHITMORE

US ARMY CORPS OF ENGINEERS
AFGHANISTAN ENGINEER DISTRICT

Mark	Description	Date	Appr.	Mark	Description	Date	Appr.

Rev: 0
Date: 2/23/10
Designed by: KMP/MMY
Dwn by: RCG
Ckd by: CWW
Reviewed by: LHM
Submitted by: BAKER
Design file no.
Drawing code:
File name: ANAHQS-503DT
Plot date: 2/23/2010
Plot scale: X:X

U.S. ARMY CORPS OF ENGINEERS
AFGHANISTAN ENGINEER DISTRICT
APO AE 96338

Michael Baker Jr., Inc.
A unit of Michael Baker Corporation
Airside Business Park
100 Airside Drive
Moon Township, PA 15108
www.mbakercorp.com

AFGHAN NATIONAL ARMY
REGIONAL MILITARY TRAINING CENTER
STANDARD DESIGN

RMTC HEADQUARTERS BUILDING

BEAM & COLUMN DETAILS

Sheet reference number:
S-503

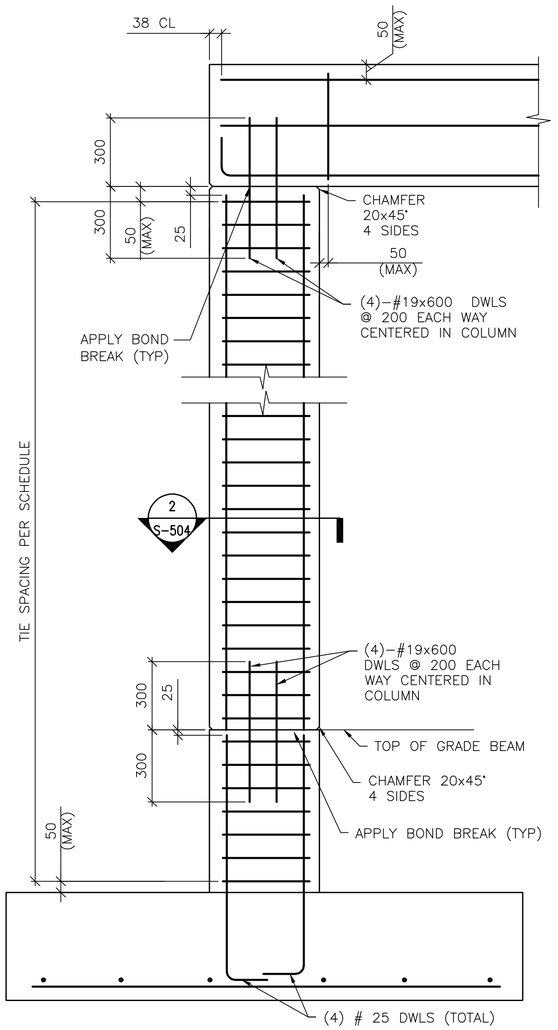

DETAIL NOTE:
1. ONLY COLUMN CORNER BARS ARE SHOWN

1 S-504 1-STORY COLUMN REINF DETAILS

SCALE: NTS

(WITH GRADE BEAM)

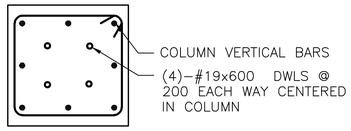

DETAIL NOTE:
1. INTERIOR TIES NOT SHOWN FOR CLARITY. REFER TO DETAIL A THIS SHEET FOR INTERIOR TIE CONFIGURATION.

2 S-503 2 S-504 SECTION

SCALE: NTS

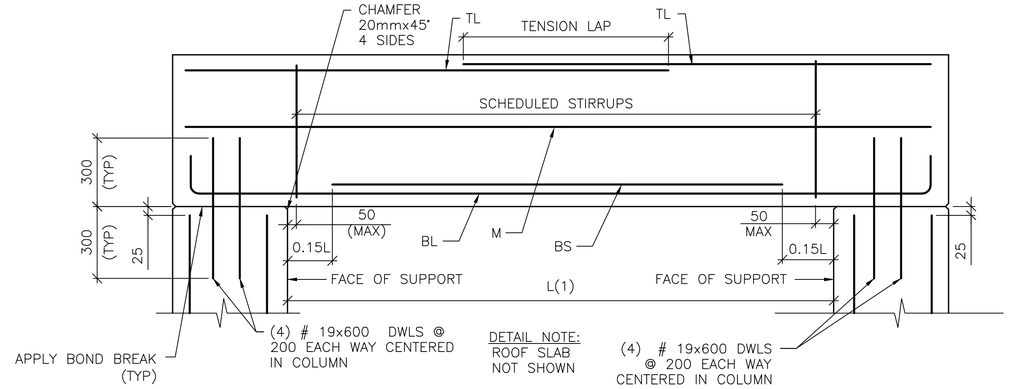

DETAIL NOTE:
ROOF SLAB NOT SHOWN

3 S-504 SINGLE SPAN ROOF BEAM REINFORCING DETAIL

SCALE: NTS

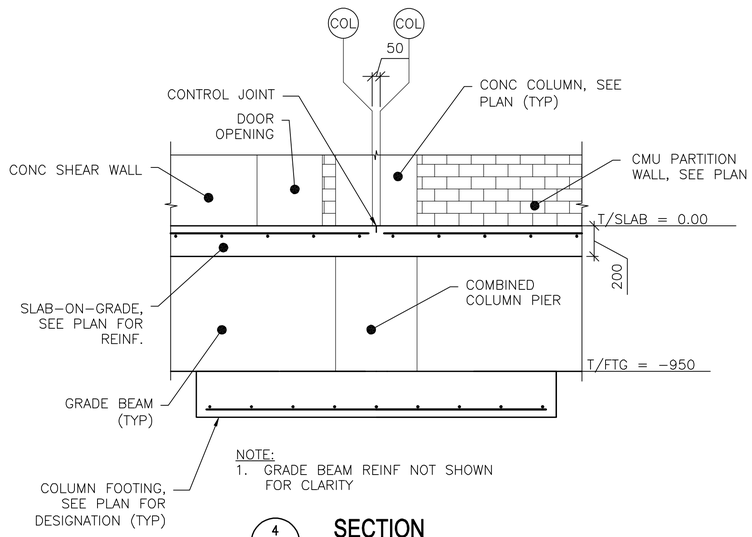

NOTE:
1. GRADE BEAM REINF NOT SHOWN FOR CLARITY

4 S-101 SECTION

SCALE: NTS

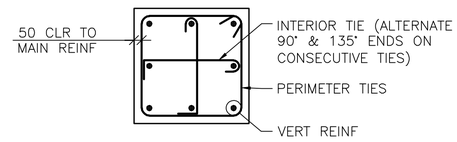

A S-504 8 BAR COLUMN

SCALE: NTS

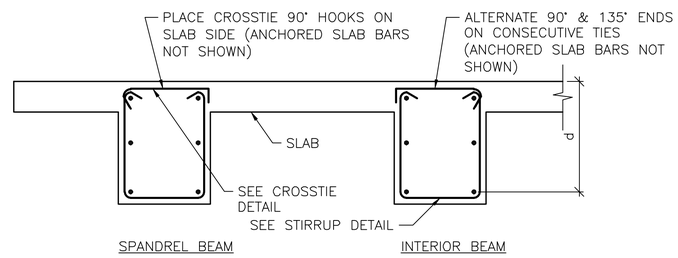

B S-504 BEAM REINFORCEMENT DETAILS

SCALE: NTS

UNLESS OTHERWISE NOTED, LINEAR DIMENSIONS SHOWN ARE IN MILLIMETERS (mm)

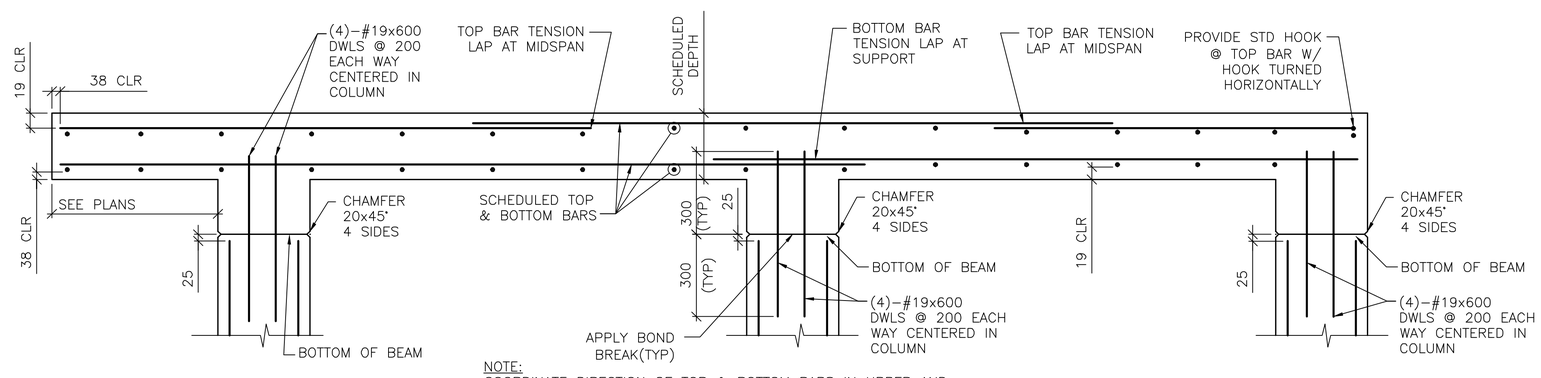

NOTE:
COORDINATE DIRECTION OF TOP & BOTTOM BARS IN UPPER AND LOWER MATS OF REINFORCING WITH BEAM TOP BAR DIRECTIONS

5 S-504 FRAMED SLAB REINFORCING DETAIL

SCALE: NTS

US ARMY CORPS OF ENGINEERS
AFGHANISTAN ENGINEER DISTRICT

Mark	Description	Date	Appr.	Mark	Description	Date	Appr.

Designed by: KMP/MMY
Dwn by: RCG
Ckd by: CWW
Reviewed by: LHM
Submitted by: BAKER
Date: 2/23/10
Rev: 0
Design file no.
Drawing code:
File name: ANAHQS-S04D1
Plot date: 2/23/2010
Plot scale: X:X

U.S. ARMY CORPS OF ENGINEERS
AFGHANISTAN ENGINEER DISTRICT
APO AE 96338

Michael Baker Jr., Inc.
A unit of Michael Baker Corporation
Airside Business Park
100 Airside Drive
Moon Township, PA 15108
www.mbakercorp.com

AFGHAN NATIONAL ARMY
REGIONAL MILITARY TRAINING CENTER
STANDARD DESIGN

RMTC HEADQUARTERS BUILDING

BEAM & COLUMN DETAILS

APPROVED:

A/E DESIGNER OF RECORD

SEAL:

GEORGIA REGISTERED 1-29-10 No. 27141 PROFESSIONAL ENGINEER CHRISTOPHER W. WHITMORE

Sheet reference number:
S–504

CONCRETE REINFORCEMENT TENSION DEVELOPMENT/LAP SPLICE SCHEDULE

f'c = 28 MPa	LAP CLASS	UNCOATED BARS			
		TOP BARS		OTHER BARS	
BAR SIZES		CASE 1	CASE 2	CASE 1	CASE 2
#10 TO #19	A	50 BAR DIA	74 BAR DIA	38 BAR DIA	57 BAR DIA
	B	64 BAR DIA	96 BAR DIA	50 BAR DIA	74 BAR DIA
#22 TO #57	A	62 BAR DIA	93 BAR DIA	48 BAR DIA	71 BAR DIA
	B	80 BAR DIA	121 BAR DIA	62 BAR DIA	93 BAR DIA

NOTES:
1. TABULATED TENSION DEVELOPMENT LENGTH VALUES ARE TAKEN FROM CRSI DESIGN HANDBOOK 2008 10TH ED.
2. TENSION DEVELOPMENT & TENSION LAP SPLICE LENGTHS ARE EXPRESSED AS MULTIPLES OF BAR DIAMETERS.
3. TABULATED VALUES ARE BASED ON MINIMUM YIELD STRENGTH OF REINFORCEMENT, fy, OF 420MPa.
4. CONCRETE IS NORMAL WEIGHT (2400Kg/m^3) AND 28 DAY COMPRESSIVE STRENGTH = 28MPa.
5. TABULATED VALUES FOR BEAMS & COLUMNS ARE BASED ON TRANSVERSE REINFORCEMENT AND CONCRETE COVER MEETING MINIMUM CODE REQUIREMENTS.
6. CASES 1 & 2, WHICH DEPEND ON THE TYPE OF STRUCTURAL MEMBER, CONCRETE COVER, AND CENTER-TO-CENTER SPACING OF THE BARS ARE DEFINED IN THE TABLE BELOW.
7. LAP SPLICE LENGTHS (MINIMUM 300mm) ARE MULTIPLES OF TENSION DEVELOPMENT LENGTHS: CLASS A = 1.0(TENSION DEVELOPMENT LENGTH) & CLASS B = 1.3(TENSION DEVELOPMENT LENGTH)
8. TOP BARS ARE HORIZONTAL REINFORCEMENT WITH MORE THAN 300mm OF CONCRETE CAST BELOW THE BARS.
9. IT SHALL BE PERMISSIBLE TO CALCULATE WALL AND SLAB REINFORCEMENT TENSION DEVELOPMENT/SPLICE LENGTHS IN ACCORDANCE WITH ACI 12.2.3 OR TABLE 5.3(b) OF CRSI 2008 IN LIEU OF VALUES TABULATED ABOVE.

BEAMS, COLUMNS	CASE 1	CONCRETE COVER AT LEAST 1 BAR DIA AND CENTER-TO-CENTER SPACING AT LEAST 2 BAR DIA
	CASE 2	CONCRETE COVER LESS THAN 1 BAR DIA OR CENTER-TO-CENTER SPACING LESS THAN 2 BAR DIA
ALL OTHERS	CASE 1	CONCRETE COVER AT LEAST 1 BAR DIA AND CENTER-TO-CENTER SPACING AT LEAST 3 BAR DIA
	CASE 2	CONCRETE COVER LESS THAN 1 BAR DIA OR CENTER-TO-CENTER SPACING LESS THAN 3 BAR DIA

CONCRETE COVER SCHEDULE

MINIMUM CONCRETE COVER PROTECTION FOR REINFORCEMENT BARS SHALL BE AS LISTED BELOW: (SEE ACI 318M-05, SECTION 7.7 FOR CONDITIONS NOT NOTED). DIMENSIONS FOR BAR PLACEMENT GIVEN IN SECTIONS AND DETAILS SHALL SUPERSEDE MINIMUM COVER REQUIREMENTS GIVEN HERE. DIMENSIONS ARE IN mm. PROVIDE STANDARD BAR CHAIRS AND SUPPORT BARS @1200mm MAXIMUM AS REQUIRED TO MAINTAIN CONCRETE PROTECTION SPECIFIED.

FOOTINGS (EARTH FORMED):		70
COLUMNS / PIERS (TO TIES)		40
GRADE BEAMS OR SLAB TURNED DOWN EDGES:		
TOP		40
BOTTOM (EARTH FORMED)		70
SIDES (EARTH FORMED)		70
SIDES (BOARD FORMED)	#16 BAR & SMALLER	40
	#19 THRU #36 BAR	50
ELEVATED BEAMS & SLABS:		
BEAM TIES & STIRRUPS (NOT EXPOSED TO WEATHER)		40
BEAM TIES & STIRRUPS (EXPOSED TO WEATHER)		50
FLOOR SLABS (NOT EXPOSED TO WEATHER)		20
FLOOR SLABS (EXPOSED TO WEATHER)		
#19 & LARGER		50
#13 & SMALLER		40
ROOF SLAB BARS		25
SLABS ON GRADE		
NOT EXPOSED TO WEATHER (FROM TOP)		20
EXPOSED TO WEATHER (FROM TOP)		40
UTILITY TUNNEL WALLS, RETAINING WALLS AND SHEAR WALLS. (NO SURFACES SHALL BE EARTH FORMED)		
EARTH SIDE AND FRONT SIDE (EXPOSED TO WEATHER)		
#16 BAR AND SMALLER		40
#19 THRU #36 BAR		50

COLUMN FOOTING SCHEDULE

MARK	FOOTING SIZE (mm)			FOOTING REINFORCING	REMARKS
	LENGTH	WIDTH	THICKNESS		
F1	1750	1750	300	(5)-#16 EW BOTT	-----
F2	2600	2600	300	(6)-#22 EW BOTT	-----
F3	3000	3000	300	(10)-#19 EW BOTT	-----
F4	3300	3300	300	(11)-#22 EW BOTT	-----
F5	3600	3600	300	(14)-#22 EW BOTT	-----
F6	4600	4600	400	(15)-#22 EW BOTT	-----

CONCRETE SHEAR WALL SCHEDULE

MARK	TYPE	WALL LENGTH (L) (mm)	WALL REINFORCEMENT		REMARKS
			END ZONE	FIELD	
SW1	A	3700	(3)-#16 @ 150mm OC	#13 @ 250mm OC	-----
SW2	C	6400	(8)-#16 @ 150mm OC	#13 @ 250mm OC	-----
SW3	A	2900	(8)-#16 @ 150mm OC	#13 @ 250mm OC	-----
SW4	B	2800	(9)-#16 @ 150mm OC	#13 @ 250mm OC	-----
SW5	B	4900	(6)-#19 @ 230mm OC	#13 @ 250mm OC	-----
SW6	A	7000	(6)-#19 @ 150mm OC	#13 @ 250mm OC	-----
SW7	D	6000	(7)-#19 @ 230mm OC	#13 @ 250mm OC	-----

NOTES:
1. WORK THIS SCHEDULE WITH SHEAR WALL DETAILS ON SHEETS S-702
2. SEE PLAN FOR LOCATION OF SHEAR WALL(S).
3. WALL "FIELD" REINFORCEMENT LISTED APPLIES TO VERTICAL & HORIZONTAL BARS.
4. WALL "FIELD" REINFORCEMENT SHOULD BE CENTERED IN WALL.
5. VERTICAL "FIELD" BARS MAY BE OMITTED IN LOCATION OF "END ZONE" REINFORCEMENT.

STANDARD HOOKS IN TENSION PER (ACI 318M-05)

HOOK DEVELOPMENT LENGTH (mm)	
BAR SIZE	f'c 28 MPa
#10	180
#13	250
#16	300
#19	380
#22	430
#25	480
#29	560
#32	610
#36	690

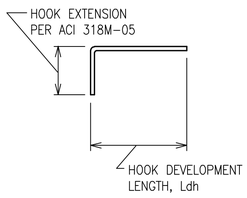

NOTES:
1. CONCRETE IS NORMAL WEIGHT CONCRETE.
2. BAR YIELD STRENGTH, fy = 420 MPa
3. SIDE COVER REQUIREMENTS OF ACI SECT. 12.5.3 ARE ASSUMED TO NOT BE MET.
4. TIE OR STIRRUP REQUIREMENTS OF ACI SECT. 12.5.3 ARE ASSUMED TO NOT BE MET.
5. REDUCTION FOR EXCESS REINFORCEMENT IS NOT TAKEN.
6. HOOK DEVELOPMENT LENGTH IS VALID FOR 180° HOOKS ALSO.

CMU OR CAST IN PLACE CONC LINTEL SCHEDULE (TYP)

OPENING TYPE OR SIZE, BEAM LOCATION OR TYPE	MAX SPAN (mm)	LINTEL DEPTH (mm)	REINFORCING BOTTOM
WALL OPENING	4000	600	(2)-#16 T&B
WALL OPENING	1900	400	(2)-#16 T&B
WALL OPENING	1000	400	(2)-#13 B

1. STRUCTURAL SHEETS DO NOT INDICATE ALL OPENINGS IN MASONRY WALLS. VERIFY NUMBER, SIZE AND LOCATION OF ALL OPENINGS IN MASONRY WALLS FROM ARCHITECTURAL SHEETS AND APPROVED PLUMBING, MECHANICAL, AND ELECTRICAL SHOP DRAWINGS.
2. PROVIDE 200mm BEARING EA END.
3. FOR HEAD DETAILS REFER TO ARCHITECTURAL SHEETS.
4. REINFORCING SHALL BE ASTM A615M, GRADE 420. GROUT FOR CMU LINTELS SHALL HAVE A MINIMUM COMPRESSIVE STRENGTH OF 14 MPa AT 28 DAYS.
5. CONTRACTOR SHALL SUBMIT FOR APPROVAL SHOP DRAWINGS AND SCHEDULES SHOWING SIZE, SPAN, REINFORCEMENT, DETAILS, LOCATIONS, ETC.

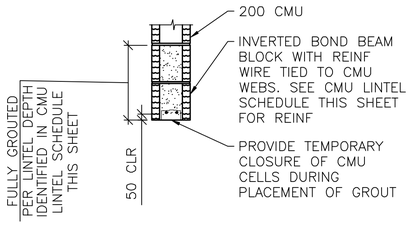

A
S-601

LINTEL DETAIL

SCALE: NTS

BEAM SCHEDULE

MARK	BEAM SIZE (mm)		BEAM REINFORCING						STIRRUPS			REMARKS
	DEPTH	WIDTH	BL	BS	TL	TS	TC	M	SIZE	TYPE	SPACING	-----
GRADE BEAM												
GB1	750/585	400	(2)-#22	(1)-#22	(3)-#19	---	---	#25 EF	#13	S3 + T9	d/2	LOWER TOP BETWEEN B4-B5, B4.6-C4.6, B6.3-C6.3, C7-D7
GB2	750/585	400	(2)-#25	(2)-#25	(2)-#22	---	---	---	#13	S3 + T9	d/2	LOWER TOP @ LATRINES BETWEEN B6-B7
ROOF BEAM												
RB1	600	400	(2)-#19	(1)-#19	(2)-#22	---	---	---	#13	S3 + T9	d/2	-----
RB2	600	400	(2)-#25	(1)-#25	(2)-#25	---	---	---	#13	S3 + T9	d/2	-----

NOTES:
1. WORK THIS SCHEDULE WITH BEAM REINFORCING DETAILS ON SHEETS S-503 AND S-504.
2. HOOKS SHOWN ON SECTIONS AND DETAILS SHALL BE 90° STD UON.
3. USE ONLY (1) TC AT BEAM COLUMN INTERSECTION WHERE REQ'D.

COLUMN SCHEDULE

COLUMN MARK / DESCRIPTION	TYP UON	---	---	---
TYPE	8-BAR	---	---	---
DIMENSIONS	600mm SQ.	---	---	---
VERTICAL REINFORCEMENT	(8)-#25	---	---	---
TIES	#13 @ d/2	---	---	---
TOP OF ROOF ELEVATION	3600mm	---	---	---
TOP OF GRADE BEAM ELEVATION	-200mm	---	---	---
TOP OF FOOTING ELEVATION	-950mm	---	---	---

NOTES:
1. WORK THIS SCHEDULE WITH COLUMN DETAILS ON SHEET S-504.
2. SEE FOOTING SCHEDULE THIS SHEET FOR FOOTING INFORMATION.
3. COLUMN TIES: INTERIOR TIES TO MATCH SIZE & SPACING OF PERIMETER TIES.
4. HOOKS SHOWN ON SECTIONS & DETAILS SHALL BE 90° STD UON.

UNLESS OTHERWISE NOTED, LINEAR DIMENSIONS SHOWN ON DRAWINGS ARE IN MILLIMETERS (mm)

APPROVED:

A/E DESIGNER OF RECORD

SEAL:

GEORGIA REGISTERED 1-29-10 No. 27141 PROFESSIONAL ENGINEER CHRISTOPHER W. WHITMORE

US ARMY CORPS OF ENGINEERS
AFGHANISTAN ENGINEER DISTRICT

Mark	Description	Date	Appr.	Mark	Description	Date	Appr.

Date: 2/23/10 | Rev: 0
Design file no.
Drawing code:
File name: ANMHDS6015CH
Plot date: 2/23/2010
Plot scale: X:X

Designed by: KMP/MMY
Dwn by: RCG | Ckd by: CWW
Reviewed by: LHM
Submitted by:
BAKER

U.S. ARMY CORPS OF ENGINEERS
AFGHANISTAN ENGINEER DISTRICT
APO AE 96338

Michael Baker Jr., Inc.
A unit of Michael Baker Corporation
Airside Business Park
100 Airside Drive
Moon Township, PA 15108
www.mbakercorp.com

AFGHAN NATIONAL ARMY
REGIONAL MILITARY TRAINING CENTER
STANDARD DESIGN

RMTC HEADQUARTERS BUILDING

SCHEDULES

Sheet reference number:
S-601

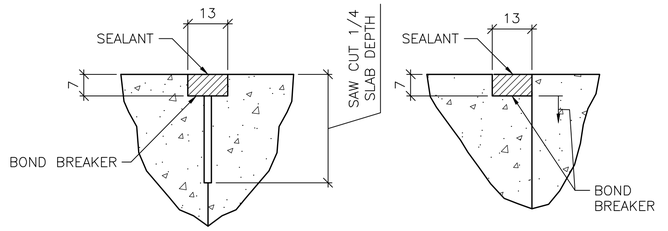

CONTROL JOINT DETAIL

CONSTRUCTION JOINT DETAIL

1 / S-701 TYPICAL CONCRETE SLAB JOINT FINISH DETAILS

SCALE: NTS

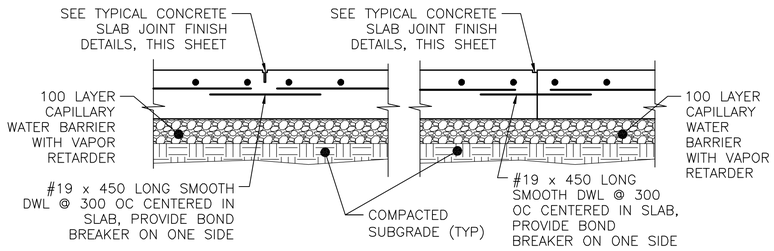

CONTROL JOINT DETAIL

CONSTRUCTION JOINT DETAIL

2 / S-701 TYPICAL SLAB ON GRADE JOINT DETAIL

SCALE: NTS

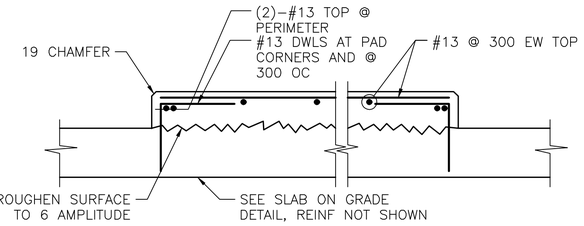

3 / S-701 INTERIOR EQUIPMENT PAD DETAIL

SCALE: NTS

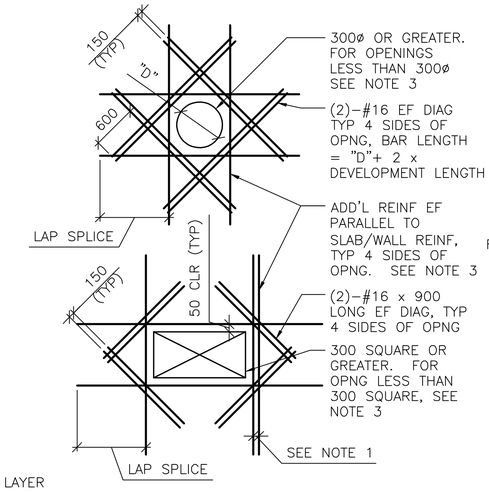

SHEAR WALL/SLAB OPENINGS

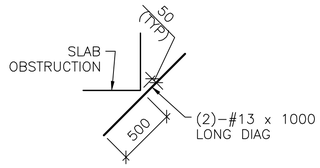

RE-ENTRANT CORNERS

DETAIL NOTES:
1. WHERE MORE THAN ONE ADDITIONAL BAR IS REQUIRED PARALLEL TO THE EXISTING SLAB/WALL REINFORCING THE ADDITIONAL REINFORCING BARS SHALL BE SPACED AT 100 ON CENTER.
2. ADDITIONAL REINFORCING PARALLEL TO THE SLAB/WALL REINFORCING SHALL BE #16 BARS THAT PROVIDE A STEEL AREA ON EACH SIDE OF THE OPENING EQUAL TO 1/2 THE AREA OF THE REINFORCING CUT BY THE OPENING.
3. FOR OPENINGS WITH SIDES OR DIAMETERS LESS THAN 300 SPREAD THE SLAB/WALL REINFORCING TO CLEAR THE OPENING.

4 / S-701 ADD'L CONCRETE REINFORCEMENT DETAILS

SCALE: NTS

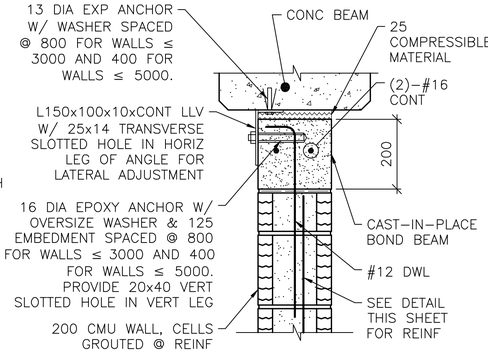

NOTE:
1. AT ANCHOR BOLTS, ADD AN ADDITIONAL 25 COMPRESSIBLE MATERIAL BELOW EXP ANCHOR HEAD.

INTERIOR BEAM

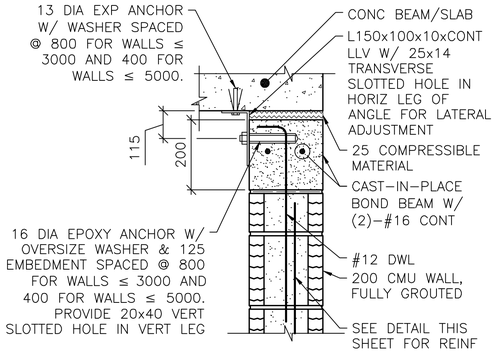

EXTERIOR WALL OR SLAB

NOTES:
1. THIS DETAIL IS AN ALTERNATE TOP OF WALL ANCHORAGE DETAIL TO BE USED AT THE CONTRACTOR'S OPTION IN LIEU OF DETAILS SHOWN ON S-400 & S-500 DRAWINGS.
2. CAST-IN-PLACE BOND BEAM SHOWN AT TOP OF WALL IS ALSO APPLICABLE FOR INTERMEDIATE AND STARTER COURSE BOND BEAMS WITHIN WALL.

5 / S-701 ALTERNATE TOP OF CMU WALL BRACING DETAILS

SCALE: NTS

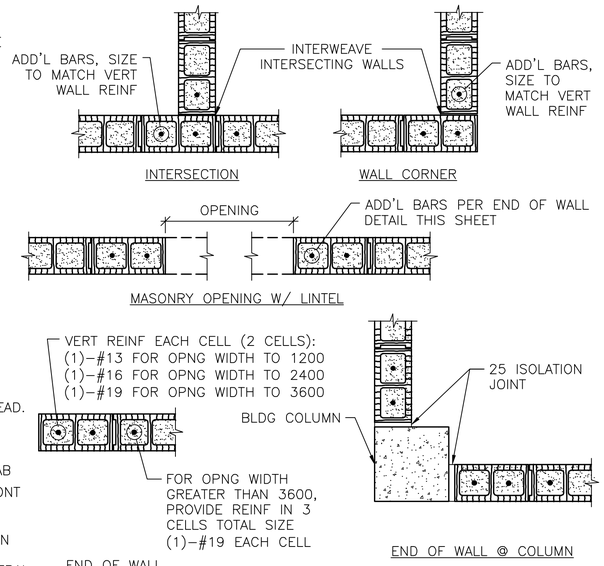

NOTES:
1. OPENING WIDTH SHALL NOT EXCEED 3600 FOR THIS TYPE OF JAMB.
2. ALL CELLS FULLY GROUTED AT EXTERIOR WALLS. AT INTERIOR WALLS, ONLY GROUT CELLS CONTAINING REINF.

6 / S-701 TYP CMU DETAILS

SCALE: NTS

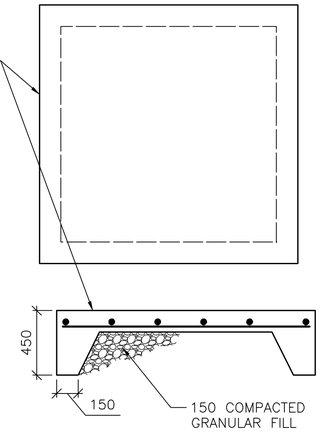

NOTE:
1. COORDINATE W/ ELECTRICAL CONTRACTOR FOR DIMENSIONS @ ELECTRICAL EQUIPMENT

9 / S-701 SLAB ON GRADE

SCALE: NTS

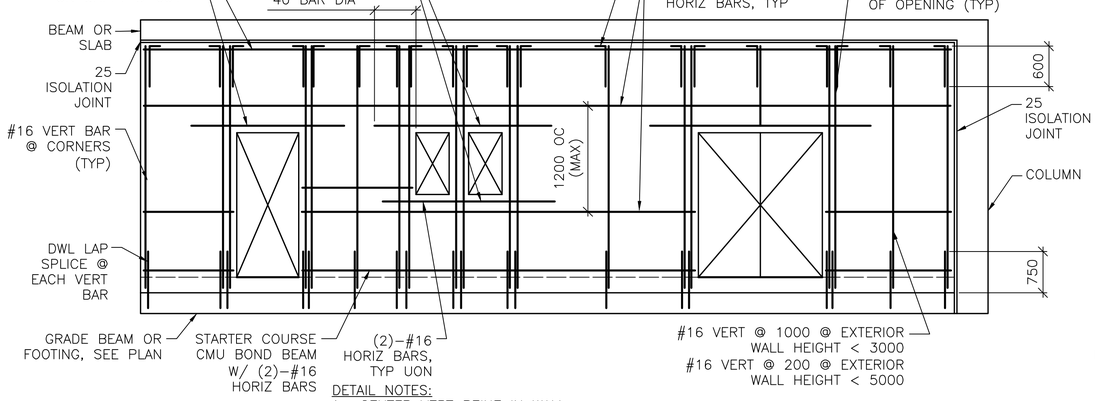

DETAIL NOTES:
1. CENTER VERT REINF IN WALL.
2. GROUT ALL CMU CELLS.
3. REFERENCE ARCH DWGS FOR JOINT INFORMATION
4. DOWELS BETWEEN TOP BOND BEAM AND BEAM/SLAB ABOVE (INCLUDING EMBEDDED PIPE SLEEVE) NOT SHOWN FOR CLARITY. SEE SPECIFIC S-500 SERIES DWGS FOR INFO.
5. FOR INFORMATION ON ALTERNATE CAST-IN-PLACE WALL BOND BEAMS, REFERENCE ALTERNATE TOP OF CMU WALL BRACING DETAILS THIS SHEET.

7 / S-701 TYP EXTERIOR CMU WALL REINF DETAIL

SCALE: NTS

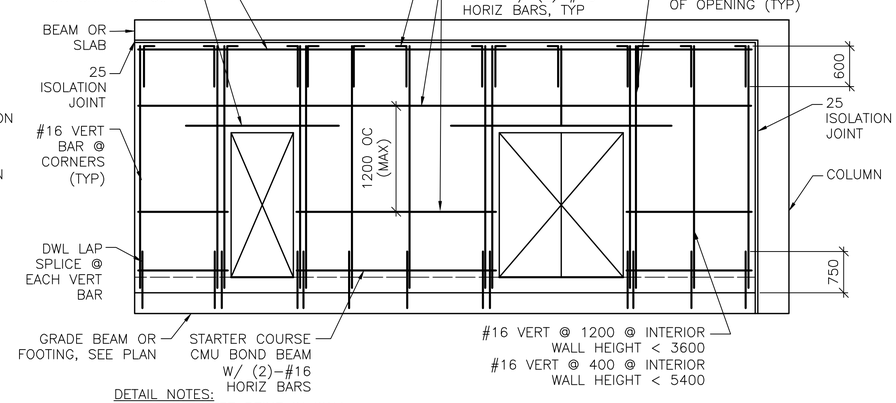

DETAIL NOTES:
1. CENTER VERT REINF IN WALL.
2. GROUT ALL CMU CELLS.
3. REFERENCE ARCH DWGS FOR JOINT INFORMATION
4. DOWELS BETWEEN TOP BOND BEAM AND BEAM/SLAB ABOVE (INCLUDING EMBEDDED PIPE SLEEVE) NOT SHOWN FOR CLARITY. SEE SPECIFIC S-500 SERIES DWGS FOR INFO.
5. FOR INFORMATION ON ALTERNATE CAST-IN-PLACE WALL BOND BEAMS, REFERENCE ALTERNATE TOP OF CMU WALL BRACING DETAILS THIS SHEET.

8 / S-701 TYP INTERIOR CMU WALL REINF DETAIL

SCALE: NTS

UNLESS OTHERWISE NOTED, LINEAR DIMENSIONS SHOWN ON DRAWINGS ARE IN MILLIMETERS (mm)

APPROVED:

A/E DESIGNER OF RECORD

SEAL:

GEORGIA REGISTERED 1-29-10 No. 27141 PROFESSIONAL ENGINEER CHRISTOPHER W. WHITMORE

US ARMY CORPS OF ENGINEERS
AFGHANISTAN ENGINEER DISTRICT

Mark	Description	Date	Appr.	Mark	Description	Date	Appr.

Date: 2/23/10 | Rev: 0
Design file no.
Drawing code:
File name: AANHQS7017DT
Plot date: 2/23/2010
Plot scale: X:X

Designed by: KMP/MMY
Dwn by: RCG | Ckd by: CWW
Reviewed by: LHM
Submitted by:
BAKER

U.S. ARMY CORPS OF ENGINEERS
AFGHANISTAN ENGINEER DISTRICT
APO AE 96338

Michael Baker Jr., Inc
A unit of Michael Baker Corporation
Airside Business Park
100 Airside Drive
Moon Township, PA 15108
www.mbakercorp.com

AFGHAN NATIONAL ARMY
REGIONAL MILITARY TRAINING CENTER
STANDARD DESIGN

RMTC HEADQUARTERS BUILDING

TYPICAL DETAILS

Sheet reference number:
S-701

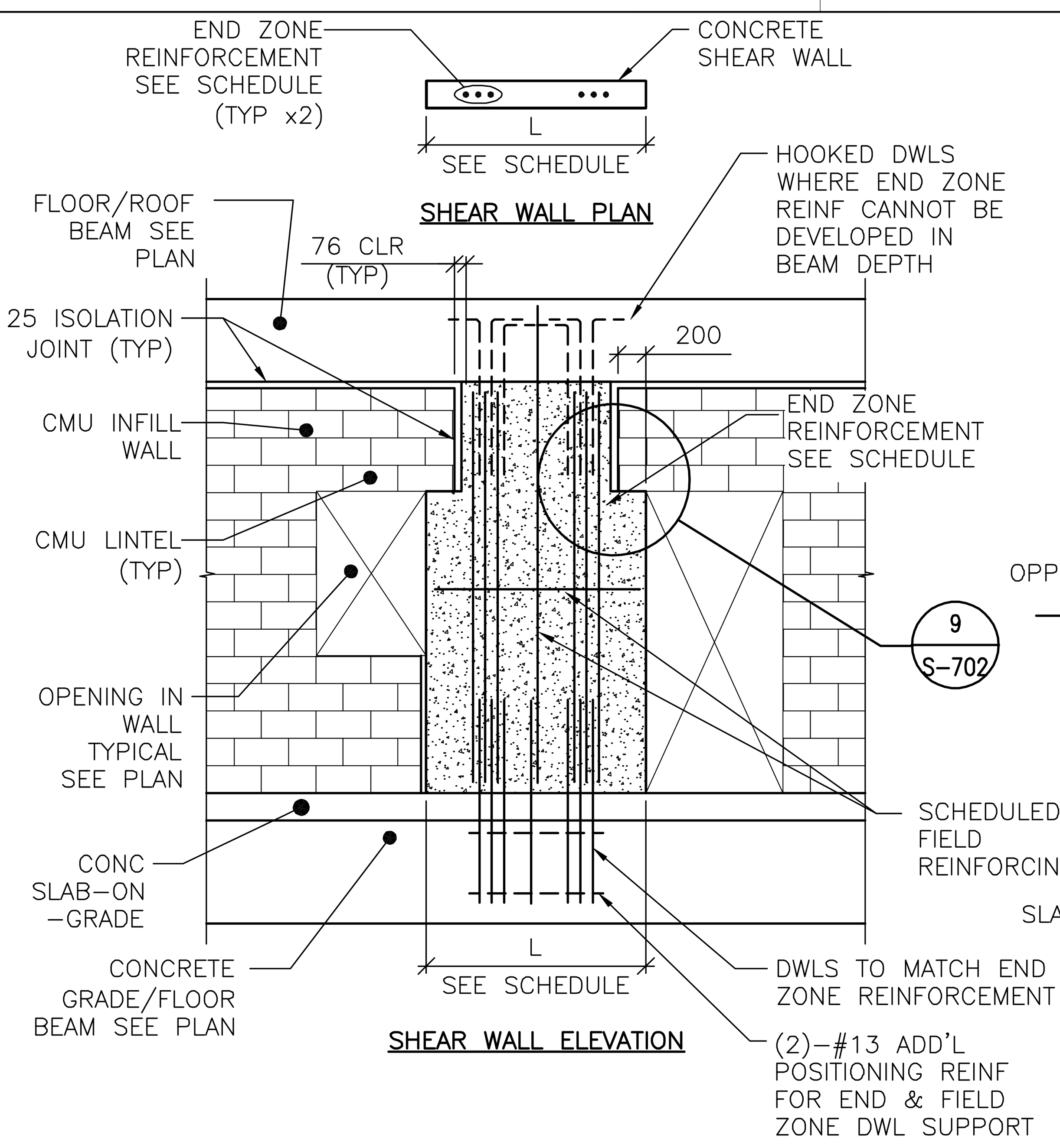

DETAIL NOTES:
1. FIELD REINFORCEMENT IN SHEAR WALL NOT SHOWN COMPLETELY FOR CLARITY.
2. FIELD REINFORCEMENT CENTERED IN WALL.
3. MINIMUM CONC CLEAR DISTANCE FOR END ZONE REINF = 76
4. SEE CONC SHEAR WALL SCHEDULE ON SHEET S-601
5. SEE ARCH DWGS FOR JOINT INFORMATION

1 / S-702 TYPE "A" SHEAR WALL DETAIL
SCALE: NTS

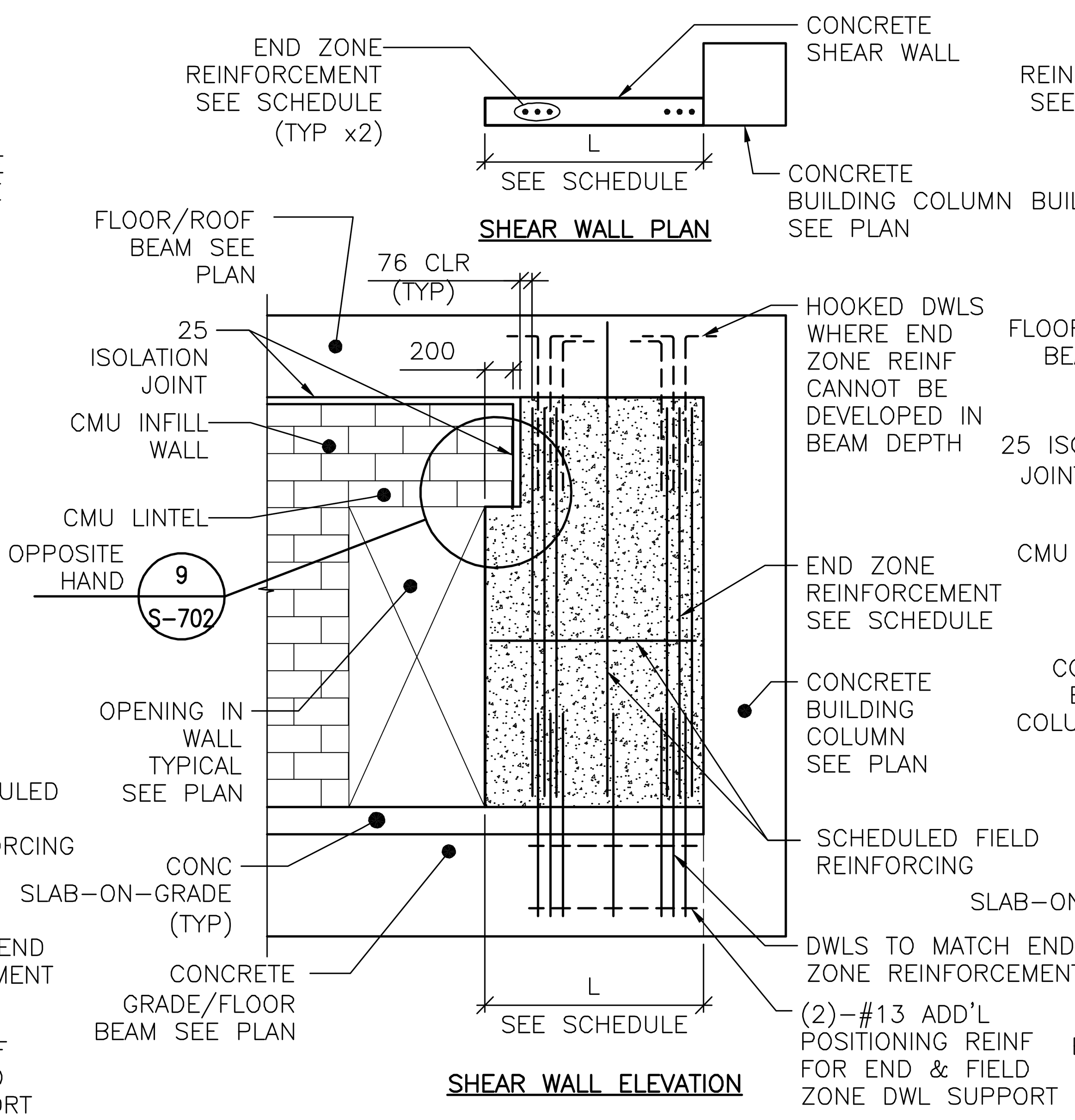

DETAIL NOTES:
1. FIELD REINFORCEMENT IN SHEAR WALL NOT SHOWN COMPLETELY FOR CLARITY.
2. FIELD REINFORCEMENT CENTERED IN WALL.
3. MINIMUM CONC CLEAR DISTANCE FOR END ZONE REINF = 76
4. SEE CONC SHEAR WALL SCHEDULE ON SHEET S-601
5. SEE ARCH DWGS FOR JOINT INFORMATION

2 / S-702 TYPE "B" SHEAR WALL DETAIL
SCALE: NTS

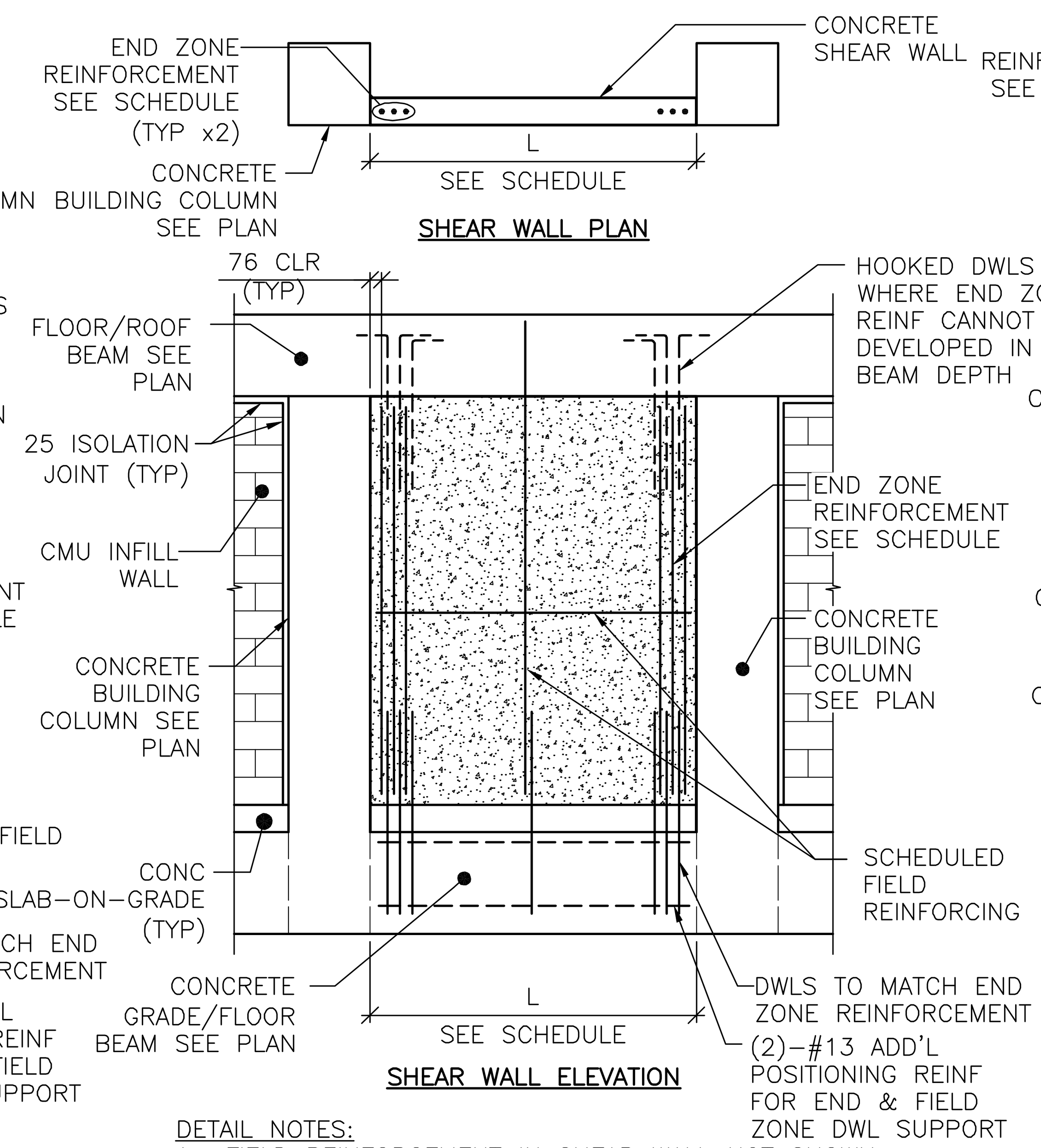

DETAIL NOTES:
1. FIELD REINFORCEMENT IN SHEAR WALL NOT SHOWN COMPLETELY FOR CLARITY.
2. FIELD REINFORCEMENT CENTERED IN WALL.
3. MINIMUM CONC CLEAR DISTANCE FOR END ZONE REINF = 76
4. SEE CONC SHEAR WALL SCHEDULE ON SHEET S-601
5. SEE ARCH DWGS FOR JOINT INFORMATION

3 / S-702 TYPE "C" SHEAR WALL DETAIL
SCALE: NTS

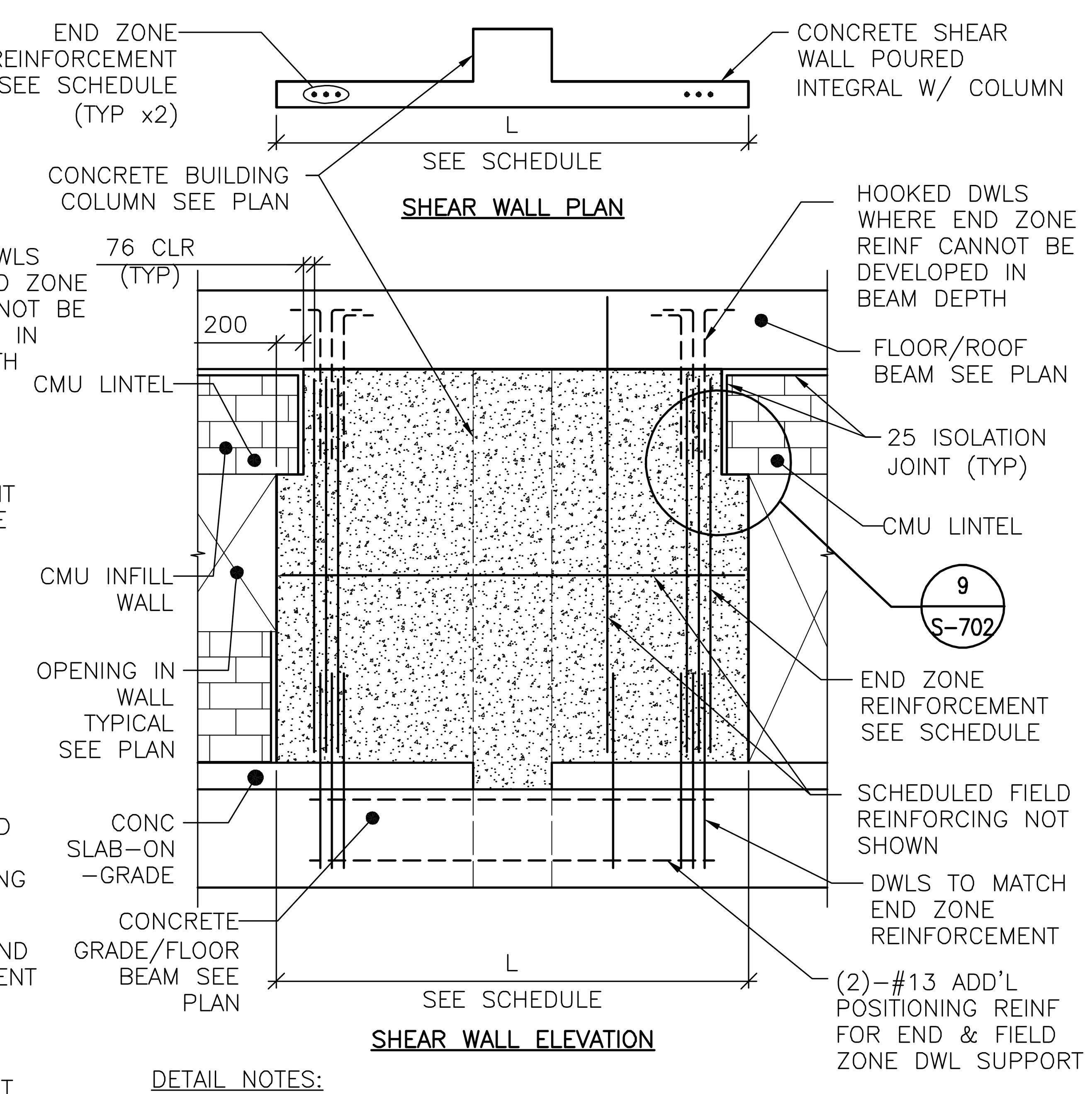

DETAIL NOTES:
1. FIELD REINFORCEMENT IN SHEAR WALL NOT SHOWN COMPLETELY FOR CLARITY.
2. FIELD REINFORCEMENT CENTERED IN WALL.
3. MINIMUM CONC CLEAR DISTANCE FOR END ZONE REINF = 76
4. SEE CONC SHEAR WALL SCHEDULE ON SHEET S-601
5. SEE ARCH DWGS FOR JOINT INFORMATION

4 / S-702 TYPE "D" SHEAR WALL DETAIL
SCALE: NTS

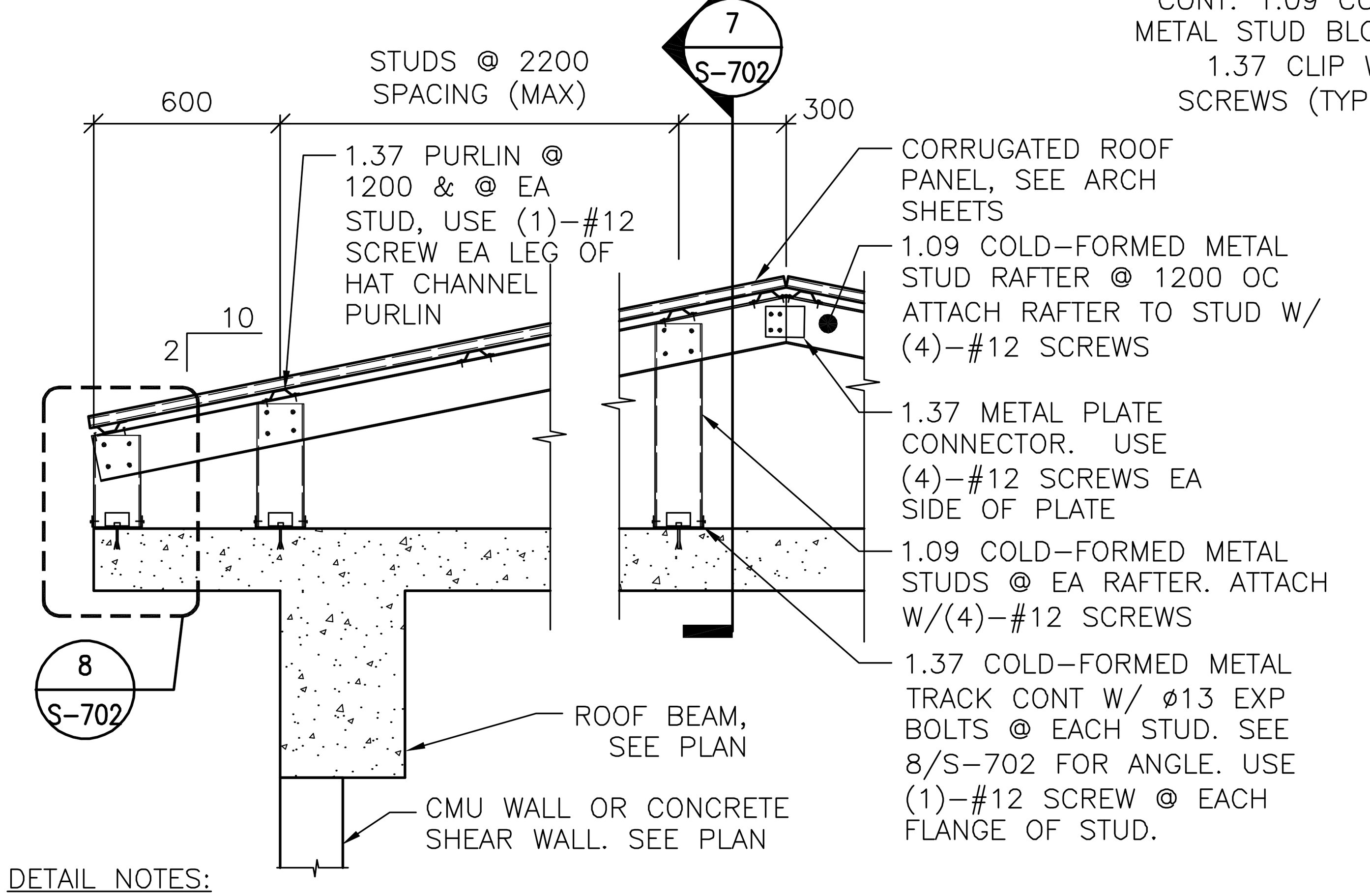

DETAIL NOTES:
1. ALL GABLE END VERTICAL STUDS SHALL BE ORIENTED 90° TO INTERIOR STUDS & SPACED @ 600 OC. GABLE END RAFTER SHALL BE 1.37 METAL TRACK SPANNING CONTINUOUSLY OVER GABLE END STUDS. INSET GIRTS AT GABLE END SHALL BE 1.09 COLD-FORMED METAL STUDS @ 1200 OC ATTACHED VIA 1.37 THICKNESS CLIP ANGLE W/ (2) #12 SCREWS EA LEG.
2. ALL INTERIOR, NON-GABLE END VERTICAL STUDS GREATER THAN 2400 IN LENGTH SHALL BE BACK-TO-BACK W/ #12 SCREWS @ 200 OC STAGGERED.

5 / S-702 TYPICAL OVERBUILT ROOF FRAMING DETAIL
SCALE: NTS

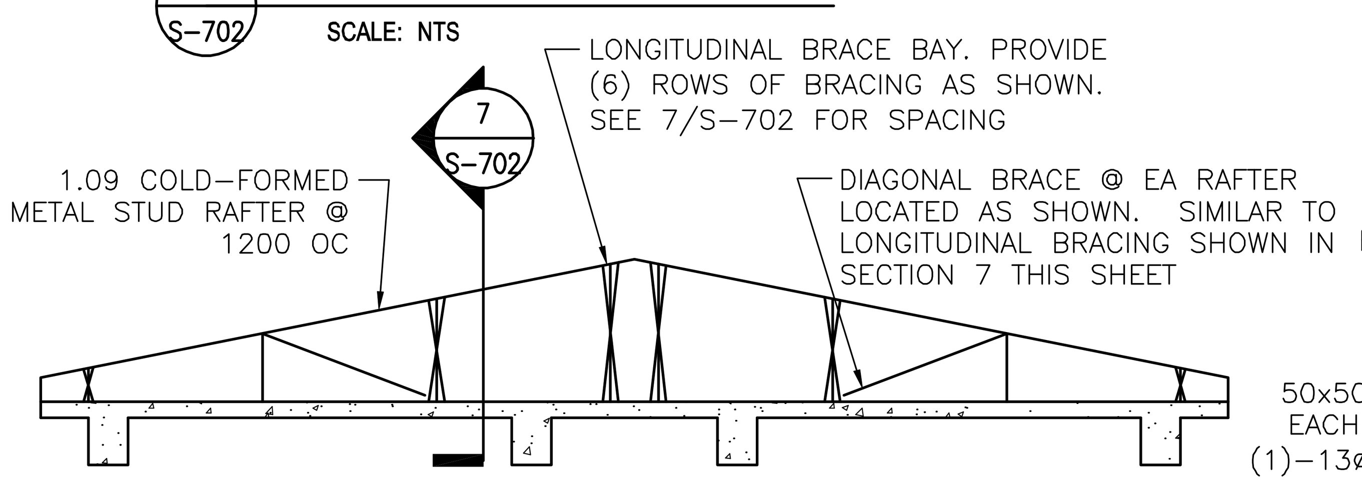

6 / S-702 TYPICAL ROOF BRACE LAYOUT
SCALE: NTS

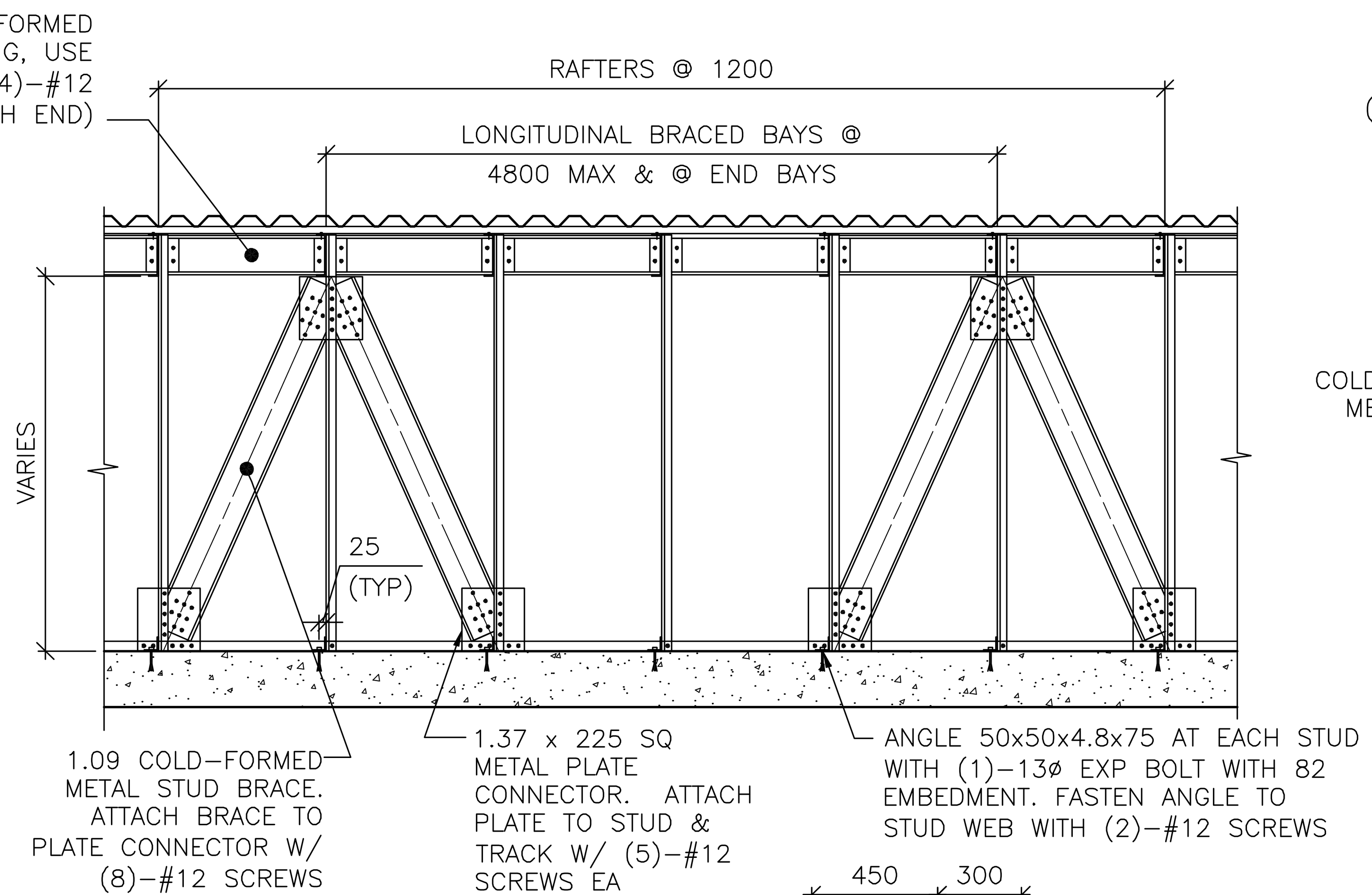

7 / S-702 SECTION
SCALE: NTS

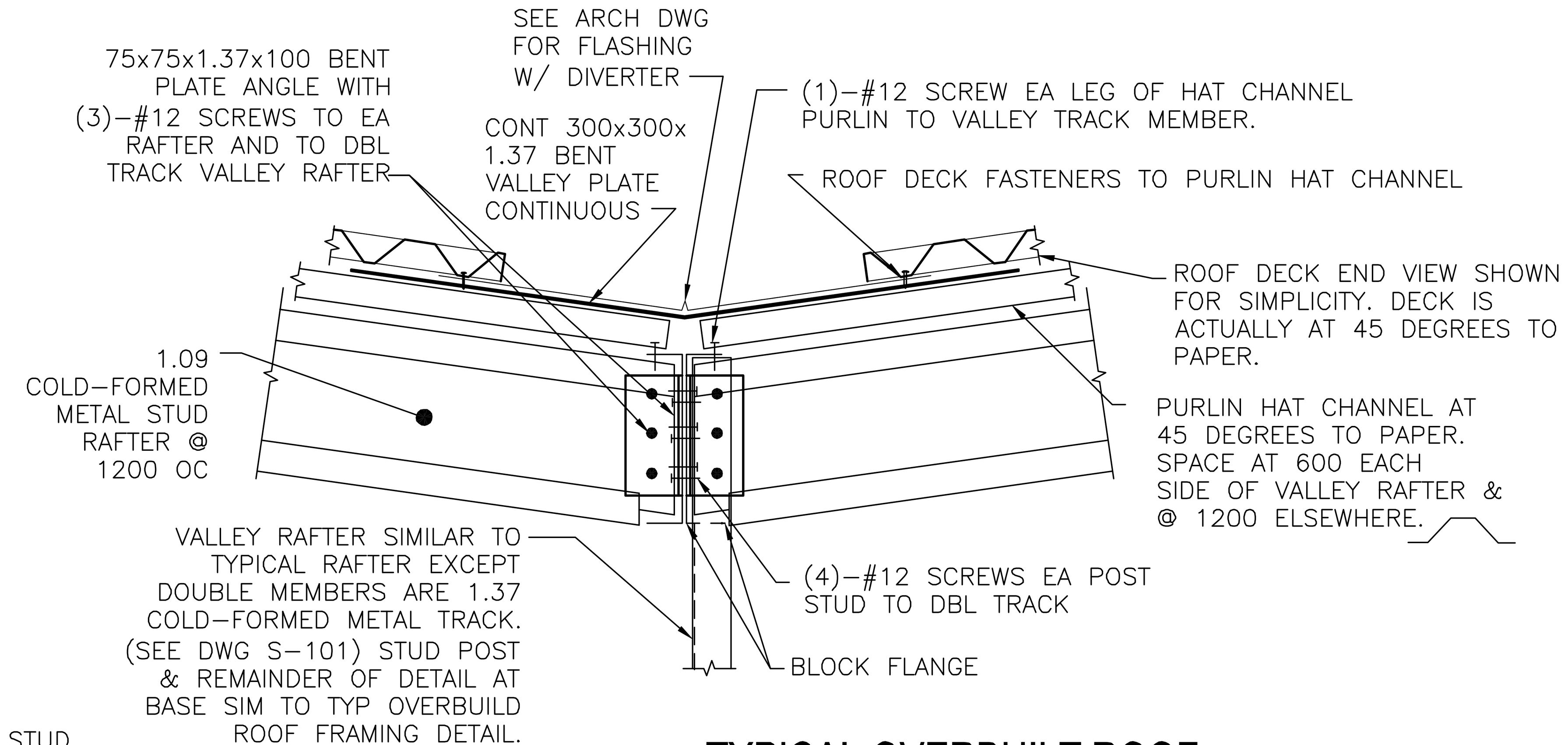

11 / S-702 TYPICAL OVERBUILT ROOF SECTION THROUGH VALLEY
SCALE: NTS

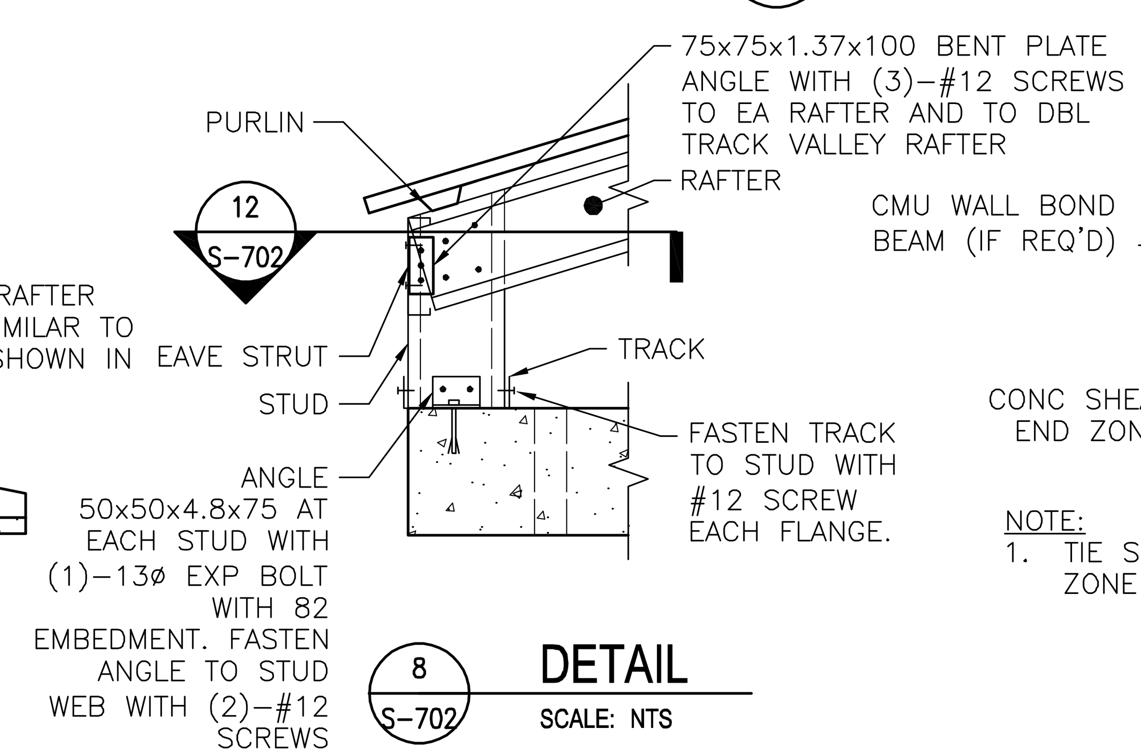

8 / S-702 DETAIL
SCALE: NTS

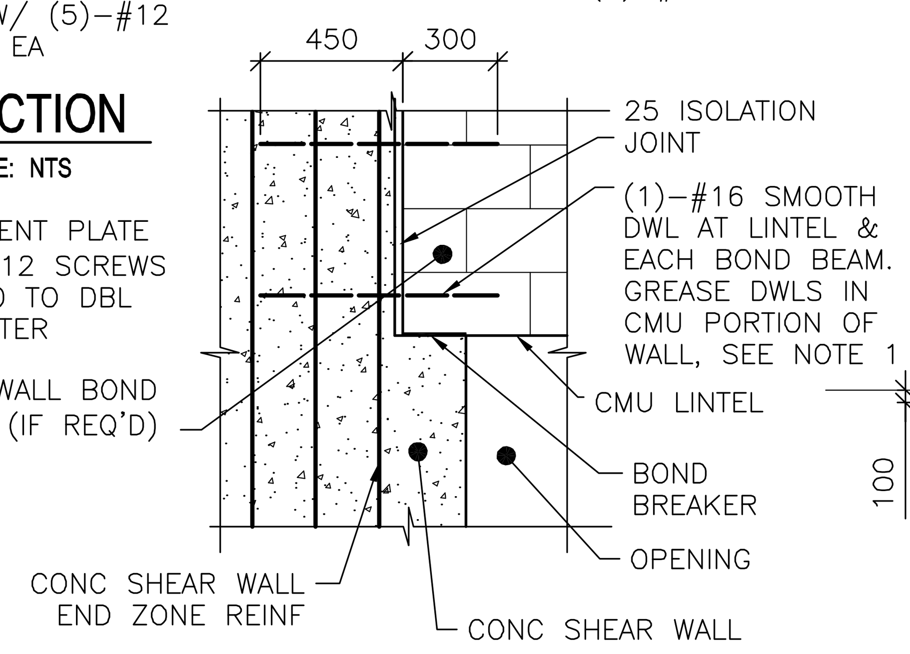

NOTE:
1. TIE SMOOTH DOWEL ROD TO SHEAR WALL END ZONE REINF FOR EACH BOND BEAM AND LINTEL.

9 / S-702 SECTION
SCALE: NTS

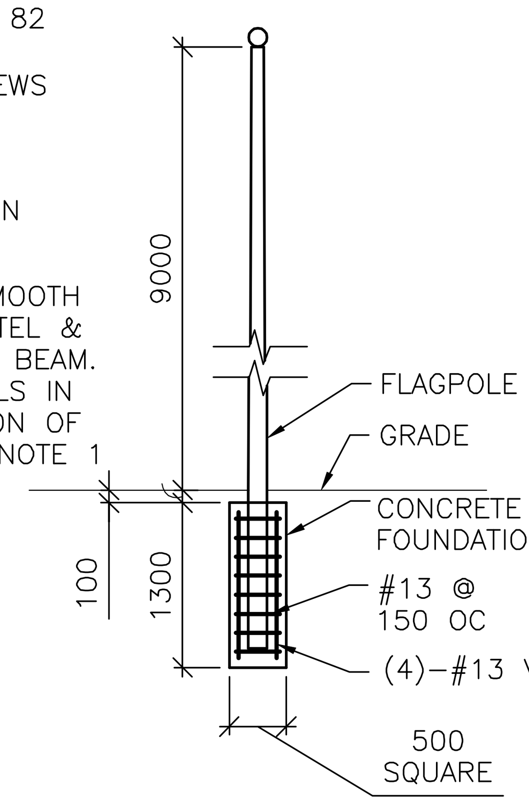

10 / S-702 DETAIL
SCALE: NTS

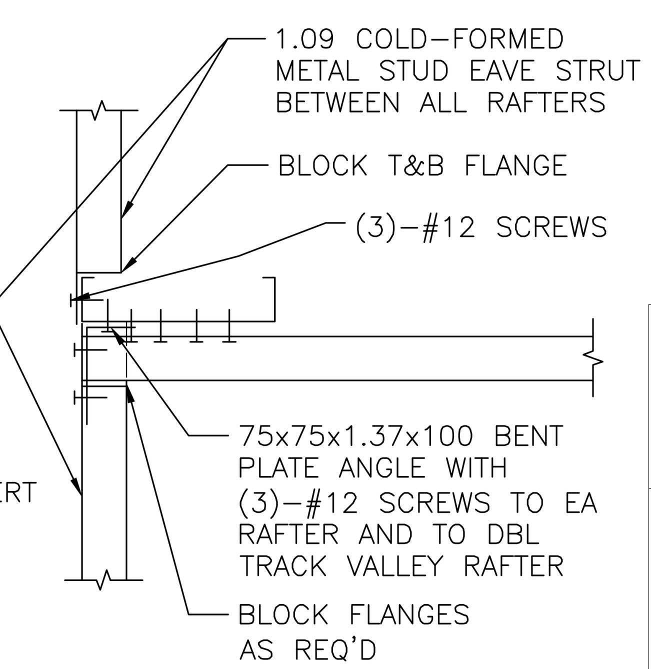

12 / S-702 SECTION
SCALE: NTS

UNLESS OTHERWISE NOTED, LINEAR DIMENSIONS SHOWN ARE IN MILLIMETERS (mm)

APPROVED:

A/E DESIGNER OF RECORD

SEAL:

GEORGIA REGISTERED 1-29-10 No. 27141 PROFESSIONAL ENGINEER CHRISTOPHER W. WHITMORE

US ARMY CORPS OF ENGINEERS
AFGHANISTAN ENGINEER DISTRICT

Mark	Description	Date	Appr.

Mark	Description	Date	Appr.

Designed by: KMP/MMY | Date: 2/23/10 | Rev: 0
Dwn by: RCG | Ckd by: CWW | Design file no.
Reviewed by: LHM | Drawing code:
Submitted by: BAKER | File name: ANAHQS-702TDT | Plot date: 2/23/2010 | Plot scale: X:X

U.S. ARMY CORPS OF ENGINEERS
AFGHANISTAN ENGINEER DISTRICT
APO AE 96338

Michael Baker Jr., Inc
A unit of Michael Baker Corporation
Airside Business Park
100 Airside Drive
Moon Township PA 15108
www.mbakercorp.com

AFGHAN NATIONAL ARMY
REGIONAL MILITARY TRAINING CENTER
STANDARD DESIGN

RMTC HEADQUARTERS BUILDING

TYPICAL DETAILS

Sheet reference number:
S-702

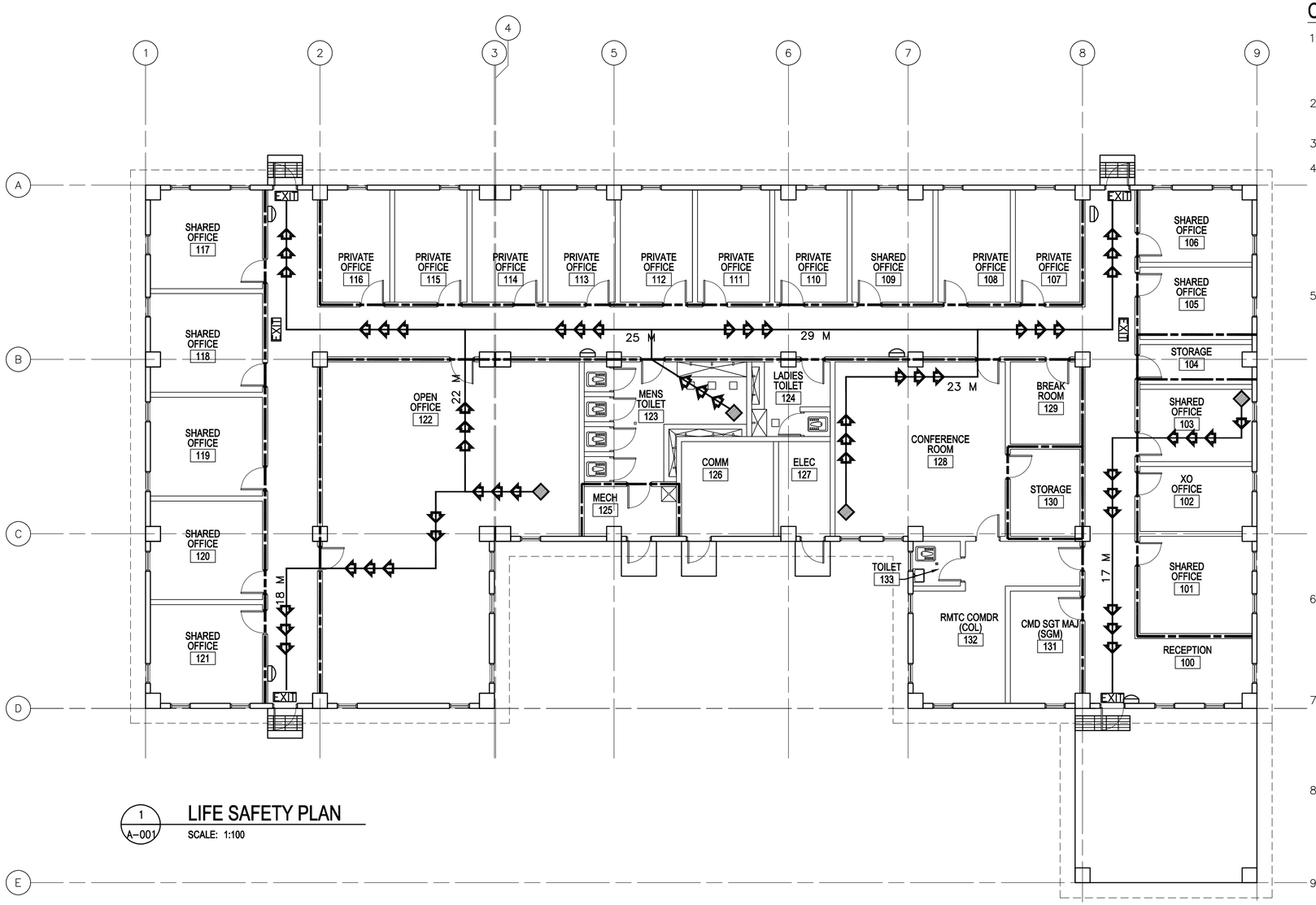

1 A-001 **LIFE SAFETY PLAN**

SCALE: 1:100

CODE ANALYSIS:

1. REFERENCES:
   2006 INTERNATIONAL BUILDING CODE (2006 IBC)
   2006 LIFE SAFETY CODE (2006 NFPA 101)

2. IBC OCCUPANCY CLASSIFICATION:
   GROUP B (BUSINESS NFPA 101 6.1.11 AND CHAPTER 38)

3. TYPE OF CONSTRUCTION (IBC): TYPE II–B (UNPROTECTED/NONSPRINKLERED)

4. IBC TABLE 503: ALLOWABLE HEIGHT AND BUILDING AREAS:
   GROUP B
   ALLOWABLE AREA: 2,137 SM
   ALLOWABLE HEIGHT: 3 STORIES (18 M)

   GROUP B
   PROPOSED AREA: 821 SM
   PROPOSED HEIGHT: 1 STORY (<16 M)

5. IBC TABLE 601 & 602: FIRE RESISTANCE RATING REQUIREMENTS FOR BUILDING ELEMENTS FOR TYPE II–B

BUILDING ELEMENT	RATING (HOUR)	REFERENCE
STRUCTURAL FRAME (COLUMNS, GIRDERS & TRUSSES)	0	TABLE 601
BEARING WALLS		
EXTERIOR	0	TABLE 601
INTERIOR	0	TABLE 601
NONBEARING WALLS & PARTITIONS		
INTERIOR	0	TABLE 601
FLOOR CONSTRUCTION	0	TABLE 601
ROOF CONSTRUCTION	0	TABLE 601
EXTERIOR WALL	0	TABLE 602

6. IBC TABLE 803.5 – INTERIOR WALL AND CEILING FINISH REQUIREMENTS FOR B OCCUPANCY/NONSPRINKLERED

GROUP	EXIT ENCLOSURES AND EXIT PASSAGEWAY	CORRIDORS	ROOMS AND ENCLOSED SPACES
B	A	B	C

7. NFPA 101 TABLE 7.3.1.2 – OCCUPANT LOAD
   BUSINESS = 9.3 SM/PERSON BUSINESS PROPOSED = 89 OCCUPANTS
   ASSEMBLY = 1.4 NSM/PERSON ASSEMBLY PROPOSED = 35 OCCUPANTS
   AS CONFERENCE ROOM WILL BE OCCUPIED BY PEOPLE WORKING IN THE BUILDING, THE TOTAL BUILDING OCCUPANCY IS NOT INCREASED.

8. NFPA 101 TABLE 7.3.3.1 – EGRESS CAPACITY
   BUSINESS = 5 MM PER OCCUPANT

   REQUIRED: 445 MM (89 OCCUPANTS x 5 MM PER OCCUPANT)
   PROPOSED EGRESS CAPACITY: 4500 MM: (3) 900 MM DOORS
   (1) 900 MM DOUBLE DOOR

9. NFPA 101 PARAGRAPH 38.2.6.2 – EXIT ACCESS TRAVEL DISTANCE (NONSPRINKLERED)
   REQUIRED: 60 METERS
   PROPOSED: 28 METERS

10. NFPA 101 PARAGRAPH 38.3.6.1(2) – CORRIDORS
    RATED CORRIDOR NOT REQUIRED WITHIN A SPACE OCCUPIED BY A SINGLE TENANT

11. NFPA 101 PARAGRAPH 38.2.3.2 – CORRIDOR WIDTH NOT LESS THAN 1120"
    PROVIDED: (1800) MM

12. NFPA 101 PARAGRAPH 38.2.5.2.1 – DEAD END CORRIDOR
    BUSINESS: PERMITTED: 6 METERS
    PROPOSED: NO DEAD END CORRIDOR

13. NFPA 101 PARAGRAPH 38.2.4.1 – NUMBER OF EXITS
    BUSINESS REQUIRED: 2 MINIMUM
    BUSINESS PROPOSED: 4 EXITS

14. NFPA 101 PARAGRAPH 38.3.2.1 & 8.7.1.1 (1) – PROTECTION FROM HAZARDS
    REQUIRED SEPARATION AT GENERAL STORAGE: 1 HOUR WALL AND 45 MINUTE DOOR
    PROVIDED: 1 HOUR WALL AND 45 MINUTE DOOR

LEGEND:

- DENOTES PATHS OF EXIT TRAVEL
- EXIT — DENOTES DOOR AS AN EMERGENCY EXIT
- DENOTES STARTING POINT FOR TRAVEL DISTANCE
- DENOTES FIRE EXTINGUISHER LOCATIONS
- (1) HOUR RATED WALL
- (2) HOUR RATED WALL
- (3) HOUR RATED WALL

LINEAR DIMENSIONS SHOWN ARE IN MILLIMETERS (MM), UNLESS OTHERWISE NOTED

0 2000 4000
SCALE: 1:100

APPROVED:

A/E DESIGNER OF RECORD

SEAL:

STATE OF SOUTH CAROLINA
KEVIN R. CHAFIN
N. Charleston, SC
6374
REGISTERED ARCHITECT

US ARMY CORPS OF ENGINEERS
AFGHANISTAN ENGINEER DISTRICT

Mark	Description	Date	Appr.	Mark	Description	Date	Appr.

Date: 2/23/10
Design file no.
Rev: 0
Drawing code:
File name: ANAHQA-001.SP
Plot date: 2/23/2010
Plot scale: x:X

Designed by: KRC
Dwn by: EBB
Ckd by: NLJ
Reviewed by: LHM
Submitted by: BAKER

U.S. ARMY CORPS OF ENGINEERS
AFGHANISTAN ENGINEER DISTRICT
APO AE 96338

Michael Baker Jr., Inc
A unit of Michael Baker Corporation
Airside Business Park
100 Airside Drive
Moon Township, PA 15108
www.mbakercorp.com

AFGHAN NATIONAL ARMY
REGIONAL MILITARY TRAINING CENTER
STANDARD DESIGN

RMTC HEADQUARTERS BUILDING

LIFE SAFETY PLAN

Sheet reference number:
A–001

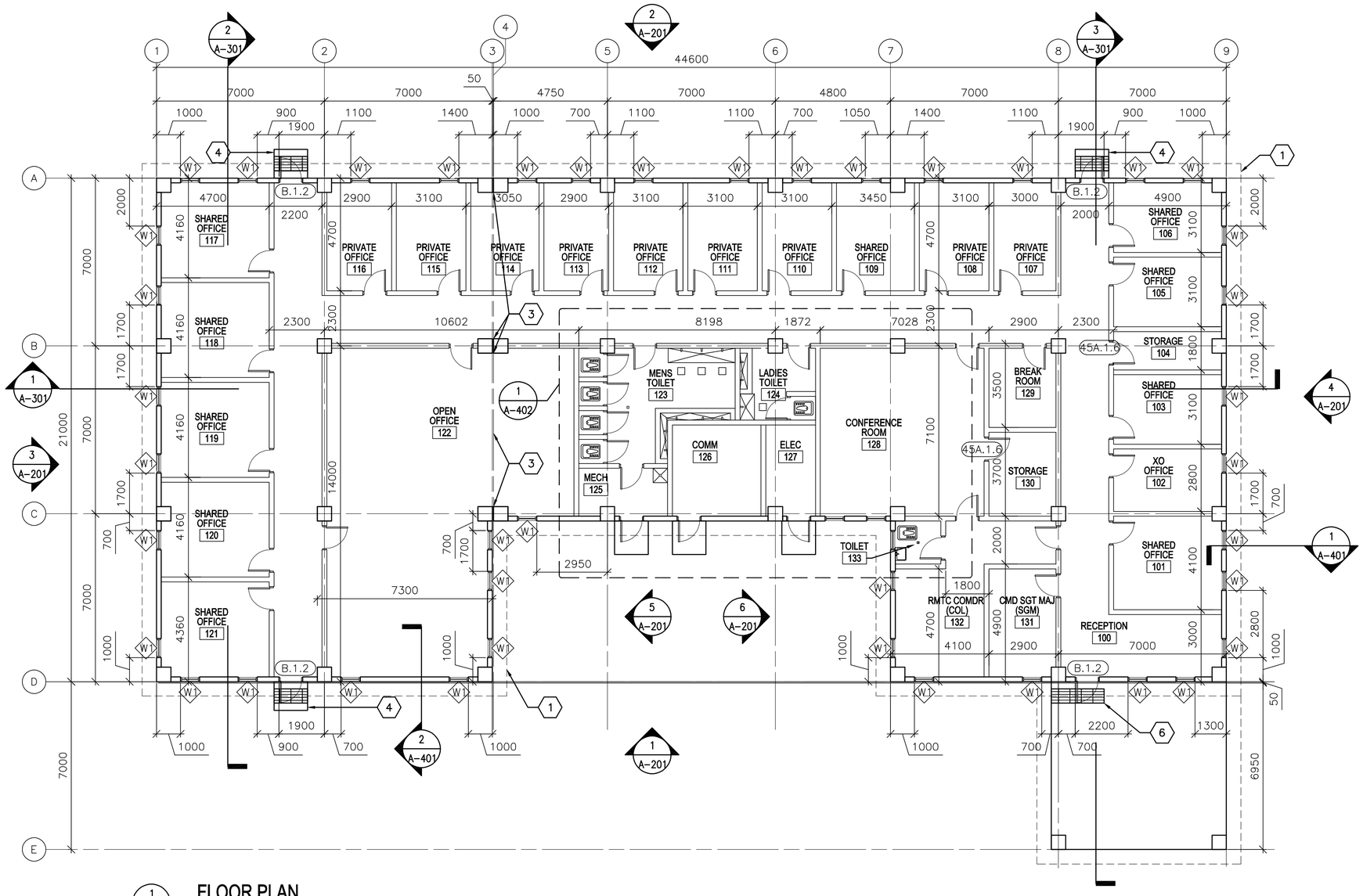

1 A-101 **FLOOR PLAN**

SCALE: 1:100

GENERAL NOTES:

A. DIMENSIONS ARE SHOWN TO OUTER EDGE OF EXTERIOR STRUCTURAL COLUMNS, STRUCTURAL COLUMN GRID, EDGE OF INTERIOR PARTITIONS, EDGE OF WINDOW OPENINGS, AND TO HINGED SIDE OF DOOR FRAME OPENINGS.

B. HINGE SIDE OF OPENINGS FOR DOORS AND FRAMES SHALL BE LOCATED 200 MM FROM THE ADJACENT WALL OR COLUMN, UNLESS NOTED OTHERWISE.

C. INTERIOR PARTITIONS SHALL BE 200 MM CMU. SEE STRUCTURAL DRAWINGS FOR LOCATION OF CONCRETE SHEAR WALLS.

D. COSMETIC REPAIR OF MINOR DEFECTS: REPAIR OR FILL MORTAR JOINTS AND MINOR DEFECTS, INCLUDING BUT NOT LIMITED TO SPALLS, IN ACCORDANCE WITH MANUFACTURER'S RECOMMENDATIONS AND PRIOR TO COATING APPLICATION. SURFACES TO BE PAINTED SHALL BE CLEAN AND FREE OF FOREIGN MATTER BEFORE APPLICATION OF PAINT. CLEANING SHALL BE SCHEDULED SO THAT DUST AND OTHER CONTAMINANTS WILL NOT FALL ON NEWLY PAINTED SURFACES.

E. PLASTER AND MASONRY SURFACES SHALL BE ALLOWED TO CURE FOR AT LEAST 30 DAYS BEFORE PAINTING. CONCRETE SLABS–ON–GRADE SHALL BE ALLOWED TO CURE 90 DAYS BEFORE STAINING OR SEALING.

F. DO NOT USE PAINT MATERIALS CONTAINING LEAD CONTENT IN EXCESS OF 0.009 PERCENT OF THE WEIGHT OF THE TOTAL NONVOLATILE CONTENT OF THE PAINT OR THE WEIGHT OF THE DRIED PAINT FILM.

G. DO NOT USE ANY ASBESTOS CONTAINING MATERIALS (ACM) IN PROJECT. ACM IS DEFINED AS 1% OR MORE BY VOLUME.

H. DO NOT USE PAINT MATERIALS CONTAINING MERCURIAL FUNGICIDES.

I. FACTORY PRIMED METAL DOORS AND FRAMES SHALL RECEIVE TWO COATS OF PAINT.

J. FILL REMAINING SPACE AT PENETRATIONS IN FIRE–RATED FLOORS, PARTITIONS AND CEILINGS WITH APPROPRIATE FIRESTOPPING MATERIALS.

K. ALL CEILING FINISHES SHALL BE PAINTED PLASTER APPLIED TO STRUCTURE.

L. ALL WALL FINISHES SHALL BE PAINTED PLASTER APPLIED TO STRUCTURE, UNLESS NOTED OTHERWISE.

M. ALL FLOOR FINISHES SHALL BE EPOXY SEALED CONCRETE, UNLESS NOTED OTHERWISE

N. PROVIDE TILE FINISHES AS INDICATED IN DETAILS.

O. ALL DOOR, FRAME AND HARDWARE TYPES SHALL BE 20A.1.6 UNLESS NOTED OTHERWISE.

P. TOILETS STALL DOOR, FRAME & HARDWARE TYPE SHALL BE F.2.12.

Q. PROVIDE POLISHED STAINLESS STEEL MIRROR 600 X 900 ABOVE LAVATORY FAUCET.

KEY NOTES:

1. LINE OF ROOF OVERHANG ABOVE.
2. CONCRETE STOOP – SEE DETAIL 3/A–503.
3. ISOLATION JOINT COVER– SEE SHEET A–505.
4. CONCRETE STOOP WITH GRATE – SEE DETAIL 1/A–503.
5. NOT USED.
6. GRATE – SEE SIMILAR DETAIL 1/A–503.

LEGEND:

(XXX) DOOR FRAME AND HARDWARE TYPE, SEE SHEET A–601

(A) WINDOW TYPE, SEE SHEET A–601

(X) KEY NOTE

ABBREVIATIONS:

COMM	COMMUNICATIONS
ELEC	ELECTRICAL
MECH	MECHANICAL
JAN	JANITOR
CLOS	CLOSET

LINEAR DIMENSIONS SHOWN ARE IN MILLIMETERS (MM), UNLESS OTHERWISE NOTED

0 2000 4000
SCALE: 1:100

APPROVED:

A/E DESIGNER OF RECORD

SEAL:

STATE OF SOUTH CAROLINA
KEVIN R. CHAFIN
N. Charleston, SC
6374
REGISTERED ARCHITECT

US ARMY CORPS OF ENGINEERS
AFGHANISTAN ENGINEER DISTRICT

Mark	Description	Date	Appr.	Mark	Description	Date	Appr.

Date: 2/23/10 | Rev: 0
Design file no.
Drawing code:
File name: ANAHQA-101FP
Plot date: 2/23/2010
Plot scale:

Designed by: KRC | Ckd by: NLJ
Dwn by: EBB | Reviewed by: LHM
Submitted by:
BAKER

U.S. ARMY CORPS OF ENGINEERS
AFGHANISTAN ENGINEER DISTRICT
APO AE 96338

Michael Baker Jr., Inc.
A unit of Michael Baker Corporation
Airside Business Park
100 Airside Drive
Moon Township, PA 15108
www.mbakercorp.com

AFGHAN NATIONAL ARMY
REGIONAL MILITARY TRAINING CENTER
STANDARD DESIGN

RMTC HEADQUARTERS BUILDING

FLOOR PLAN

Sheet reference number:
A–101

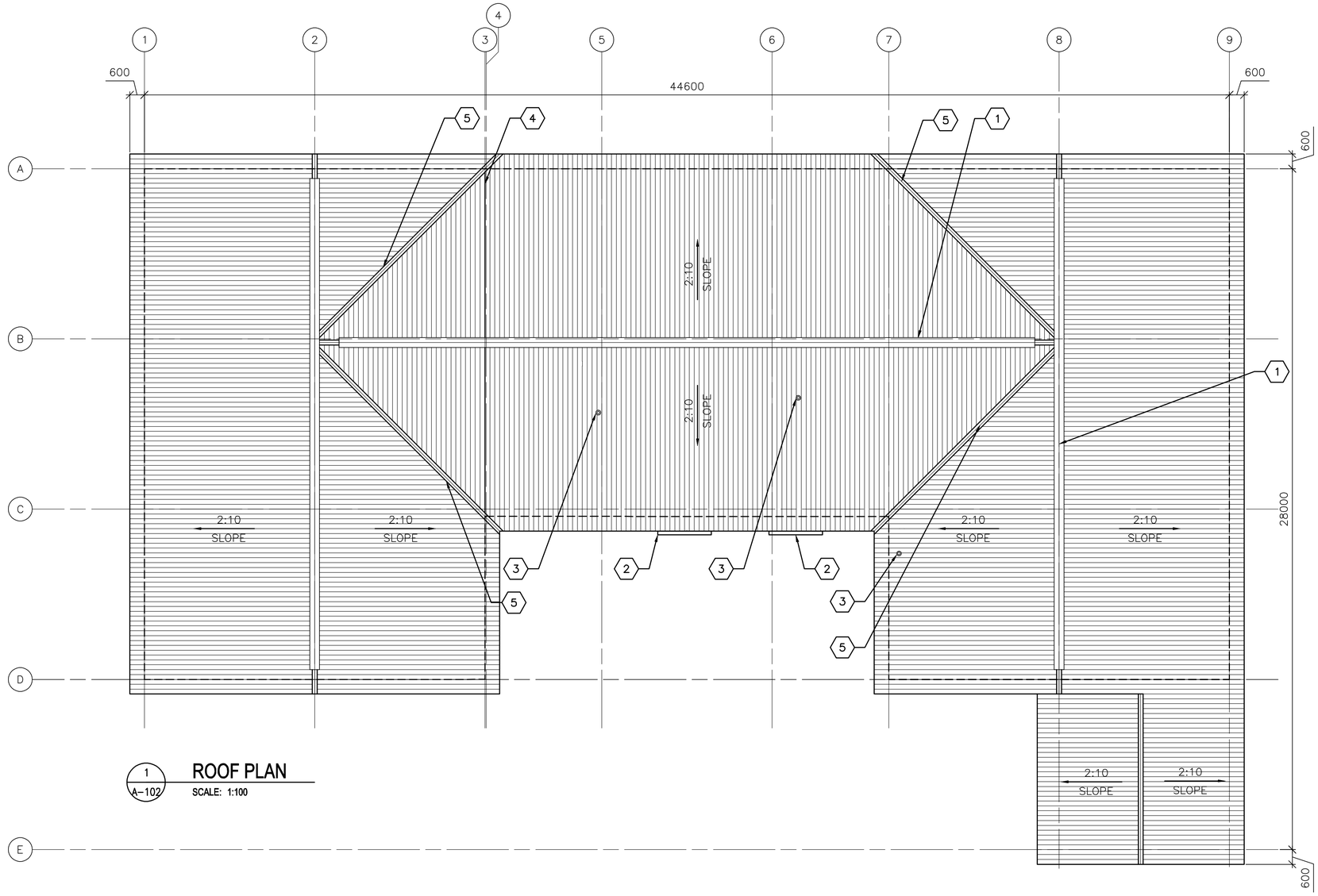

1 A–102 **ROOF PLAN**

SCALE: 1:100

GENERAL NOTES:

A. THE APPROXIMATE LOCATION OF ROOF DEVICES AND PENETRATIONS ARE SHOWN ON THE ROOF PLAN FOR INFORMATION ONLY. THE CONTRACTOR SHALL BE RESPONSIBLE FOR UNDERSTANDING THE ACTUAL LOCATION OF THESE AND ALL OTHER ITEMS PRIOR TO BEGINNING CONSTRUCTION. COORDINATE ALL ROOF PENETRATIONS WITH STRUCTURAL, MECHANICAL AND PLUMBING WORK.

B. PLUMBING VENT PENETRATIONS SHALL TERMINATE 300 MM MINIMUM ABOVE THE ROOF.

C. UNLESS OTHERWISE NOTED, NOTES, DETAILS OR FEATURES INDICATED FOR ONE CONDITION SHALL BE APPLICABLE FOR ALL ALIKE AND SIMILAR CONDITIONS.

D. STOCKPILING OF MATERIALS, EQUIPMENT AND ANY OTHER ITEMS ON THE ROOF IS PROHIBITED.

E. ROOFS SHALL BE CORRUGATED METAL ROOF PANELS ON COLD–FORMED METAL FRAMING ON CONCRETE SLAB.

KEY NOTES:

(X)

1. CONTINUOUS METAL RIDGE VENT – SEE DETAIL 4/A–501.
2. METAL GUTTER, CENTER ON DOOR, 1400 MM – SEE DETAIL 1A/A–501.
3. PLUMBING VENT – SEE DETAIL 5/A–501.
4. ROOF EXPANSION JOINT – SEE DETAIL 4A/A–501.
5. VALLEY – SEE DETAIL 6/A–501

LINEAR DIMENSIONS SHOWN ARE IN MILLIMETERS (MM), UNLESS OTHERWISE NOTED

0 2000 4000
SCALE: 1:100

APPROVED:

A/E DESIGNER OF RECORD

SEAL:

STATE OF SOUTH CAROLINA
KEVIN R. CHAFIN
N. Charleston, SC
6374
REGISTERED ARCHITECT

US ARMY CORPS OF ENGINEERS
AFGHANISTAN ENGINEER DISTRICT

Mark	Description	Date	Appr.	Mark	Description	Date	Appr.

Date: 2/23/10
Design file no.
Rev: 0
Drawing code:
File name: AANHQA-102RP
Plot date: 2/23/2010
Plot scale: x:X

Designed by: KRC
Dwn by: EBB
Ckd by: NLJ
Reviewed by: LHM
Submitted by: BAKER

U.S. ARMY CORPS OF ENGINEERS
AFGHANISTAN ENGINEER DISTRICT
APO AE 96338

Michael Baker Jr., Inc
A unit of Michael Baker Corporation
Airside Business Park
100 Airside Drive
Moon Township, PA 15108
www.mbakercorp.com

AFGHAN NATIONAL ARMY
REGIONAL MILITARY TRAINING CENTER
STANDARD DESIGN

RMTC HEADQUARTERS BUILDING

ROOF PLAN

Sheet reference number:
A–102

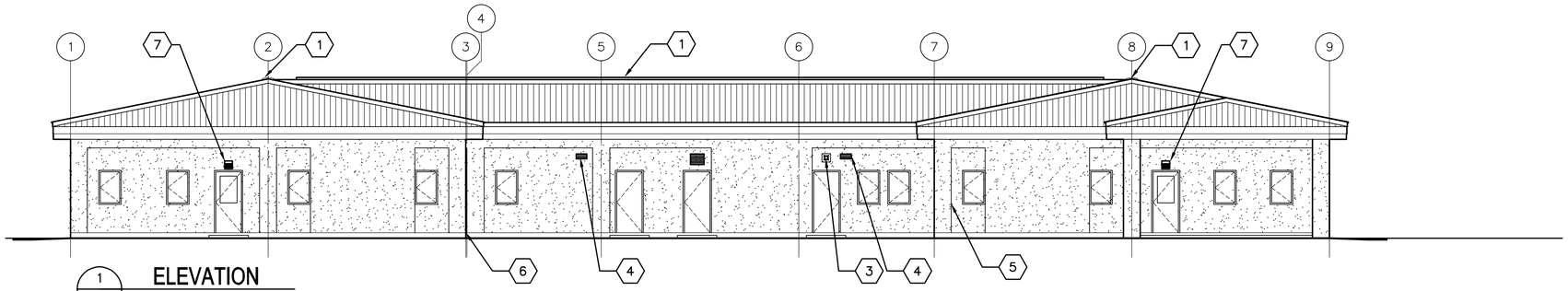

1 A-201 **ELEVATION**
SCALE: 1:100

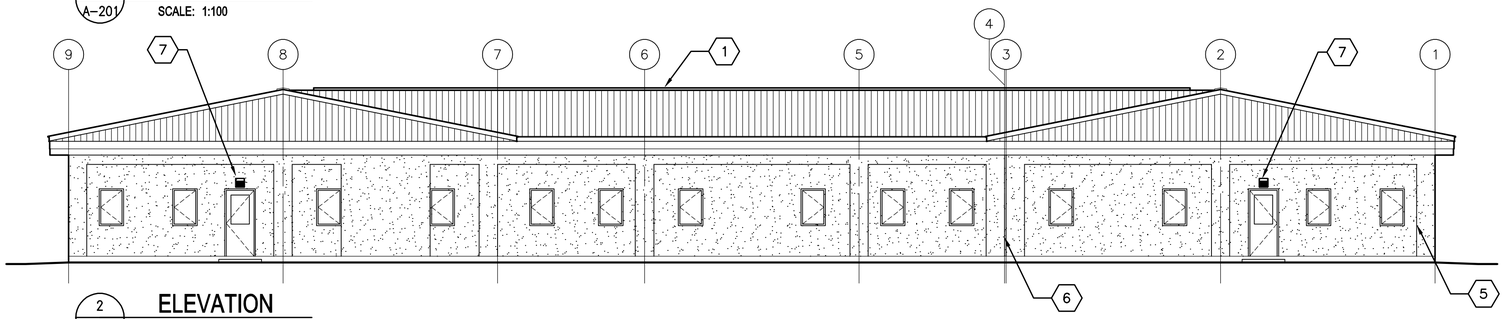

2 A-201 **ELEVATION**
SCALE: 1:100

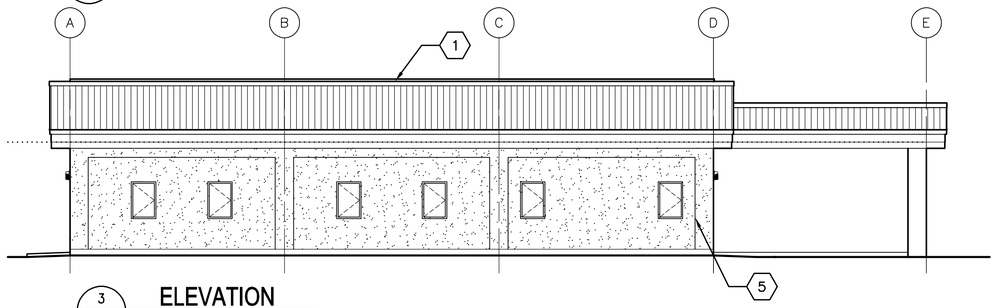

3 A-201 **ELEVATION**
SCALE: 1:100

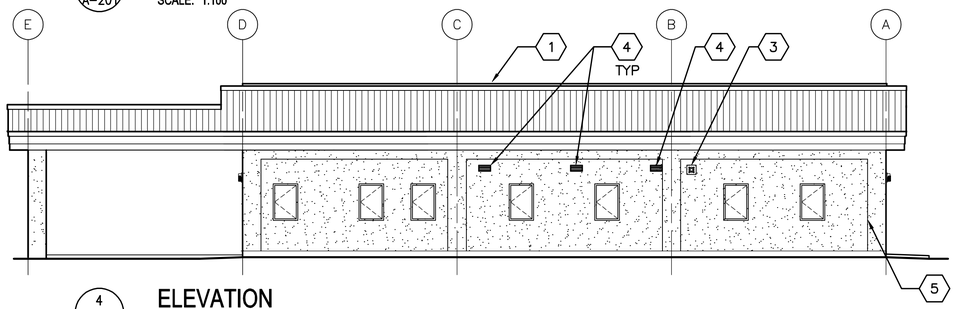

4 A-201 **ELEVATION**
SCALE: 1:100

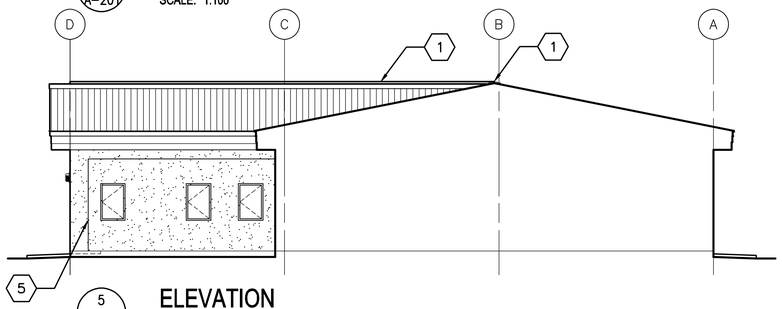

5 A-201 **ELEVATION**
SCALE: 1:100

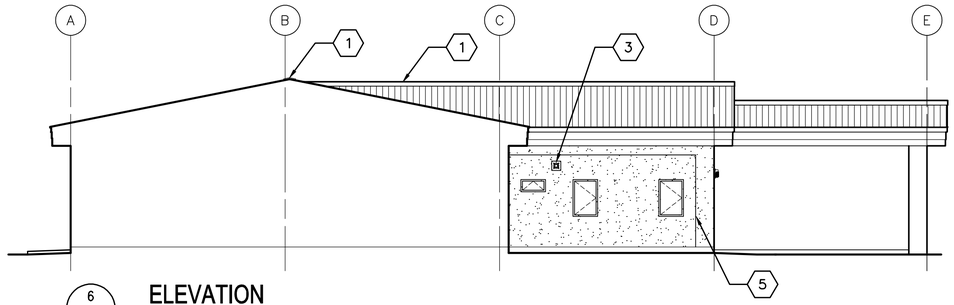

6 A-201 **ELEVATION**
SCALE: 1:100

GENERAL NOTES:

A. COORDINATE SIZE AND LOCATION OF OPENINGS FOR MECHANICAL ITEMS WITH MECHANICAL DRAWINGS.

B. PROVIDE STRUCTURAL LINTELS AS REQUIRED – SEE STRUCTURAL DRAWINGS

C. ALL EXTERIOR WALL FINISHES SHALL BE STUCCO OVER CMU AND CONCRETE SUBSTRATES. PROVIDE CONTROL JOINTS IN STUCCO WALL FINISH AS NOTED.

D. ROOF SHALL BE CORRUGATED METAL ROOF PANELS ON COLD-FORMED METAL FRAMING ON CONCRETE SLAB.

KEY NOTES:

1. CONTINUOUS METAL RIDGE VENT – SEE DETAIL 4/A-501.
2. LOUVER, LOCATE TOP OF WALL PENETRATION 2800 MM ABOVE FINISHED FLOOR – SEE MECHANICAL DRAWINGS.
3. EXHAUST FAN, LOCATE TOP OF WALL PENETRATION 2800 MM ABOVE FINISHED FLOOR – SEE MECHANICAL DRAWINGS.
4. WALL GRILL, LOCATE TOP OF WALL PENETRATION 2800 MM ABOVE FINISHED FLOOR – SEE MECHANICAL DRAWINGS.
5. STUCCO CONTROL JOINT – SEE DETAIL 2A/A-501.
6. EXPANSION JOINT COVER – SEE SHEET A-505.
7. EXTERIOR LIGHT FIXTURE – SEE ELECTRICAL.

LINEAR DIMENSIONS SHOWN ARE IN MILLIMETERS (MM), UNLESS OTHERWISE NOTED

0 2000 4000
SCALE: 1:100

APPROVED:

A/E DESIGNER OF RECORD

SEAL:

STATE OF SOUTH CAROLINA
KEVIN R. CHAFIN
N. Charleston, SC
6374
REGISTERED ARCHITECT

US ARMY CORPS OF ENGINEERS
AFGHANISTAN ENGINEER DISTRICT

Mark	Description	Date	Appr.	Mark	Description	Date	Appr.

U.S. ARMY CORPS OF ENGINEERS
AFGHANISTAN ENGINEER DISTRICT
APO AE 96338

Michael Baker Jr., Inc
A unit of Michael Baker Corporation
Airside Business Park
100 Airside Drive
Moon Township, PA 15108
www.mbakercorp.com

Designed by: KRC		Date: 2/23/10	Rev: 0
Dwn by: EBB	Ckd by: NLJ	Design file no.	
Reviewed by: LHM		Drawing code:	
Submitted by: BAKER		File name: ANAHQA-201ELV Plot date: 2/23/2010 Plot scale: X:X	

AFGHAN NATIONAL ARMY
REGIONAL MILITARY TRAINING CENTER
STANDARD DESIGN

RMTC HEADQUARTERS BUILDING

ELEVATIONS

Sheet reference number:
A-201

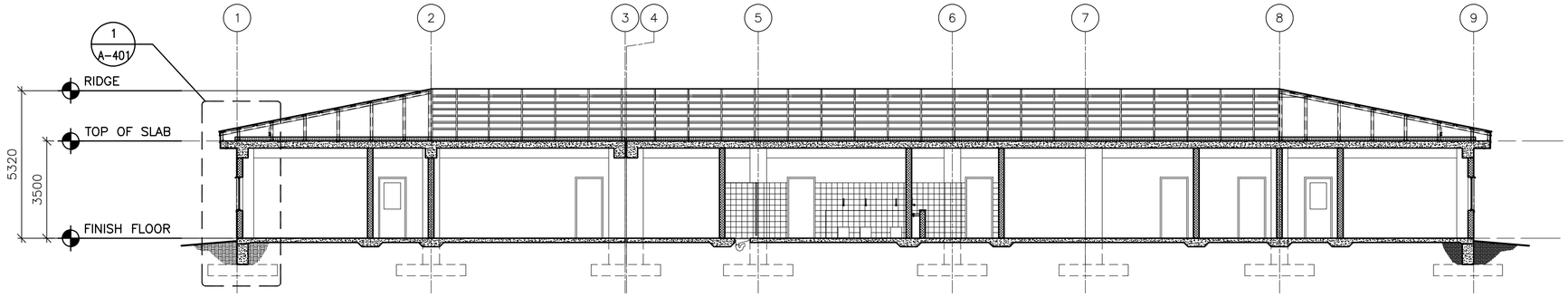

1 A-301 **BUILDING SECTION**
SCALE: 1:100

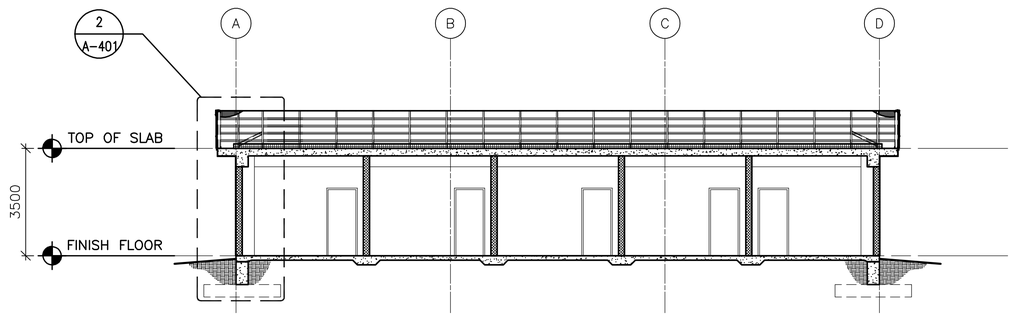

2 A-301 **BUILDING SECTION**
SCALE: 1:100

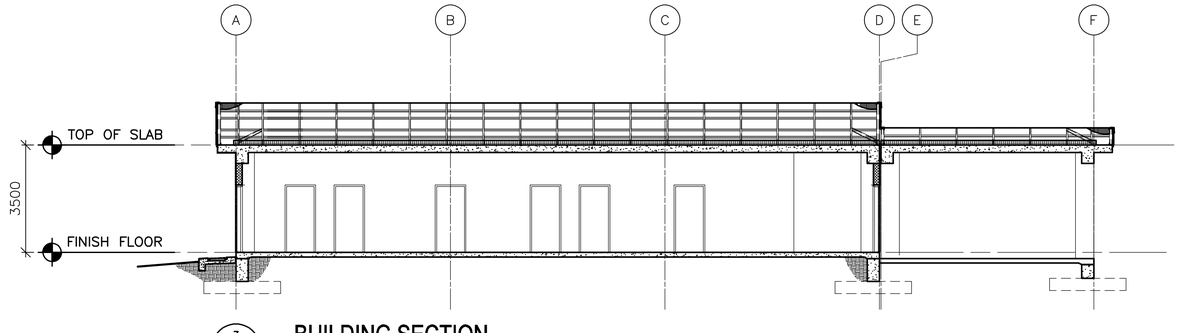

3 A-301 **BUILDING SECTION**
SCALE: 1:100

LINEAR DIMENSIONS SHOWN ARE IN MILLIMETERS (MM), UNLESS OTHERWISE NOTED

0 2000 4000
SCALE: 1:100

APPROVED:

A/E DESIGNER OF RECORD

SEAL:

STATE OF SOUTH CAROLINA
KEVIN R. CHAFIN
N. Charleston, SC
6374
REGISTERED ARCHITECT

US ARMY CORPS OF ENGINEERS
AFGHANISTAN ENGINEER DISTRICT

Mark	Description	Date	Appr.	Mark	Description	Date	Appr.

U.S. ARMY CORPS OF ENGINEERS
AFGHANISTAN ENGINEER DISTRICT
APO AE 96338

Michael Baker Jr., Inc
A unit of Michael Baker Corporation
Airside Business Park
100 Airside Drive
Moon Township, PA 15108
www.mbakercorp.com

Designed by: KRC	Date: 2/23/10
Dwn by: EBB	Ckd by: NLJ
Reviewed by: LHM	Rev: 0
Submitted by: BAKER	Design file no.
	Drawing code:
	File name: ANAHQA-301BS
	Plot date: 2/23/2010
	Plot scale: x:X

AFGHAN NATIONAL ARMY
REGIONAL MILITARY TRAINING CENTER
STANDARD DESIGN

RMTC HEADQUARTERS BUILDING

BUILDING SECTIONS

Sheet reference number:
A-301

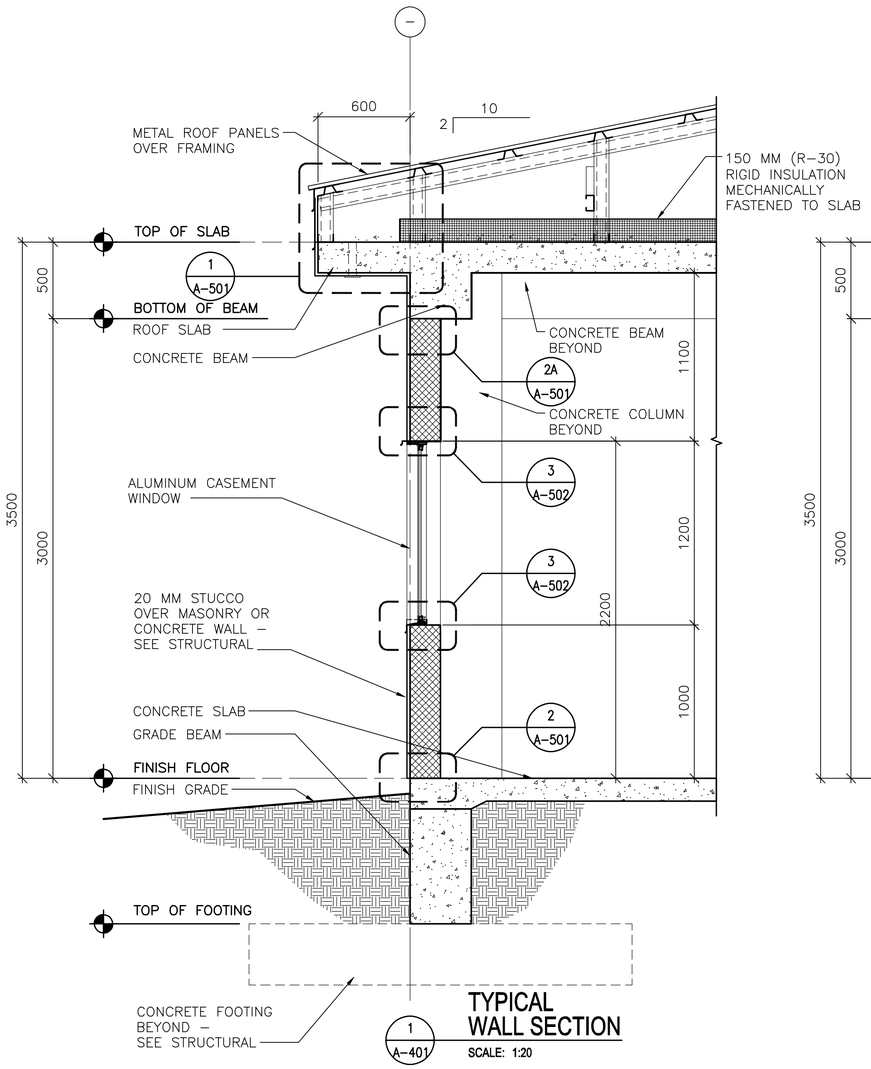

1 A-401 **TYPICAL WALL SECTION**

SCALE: 1:20

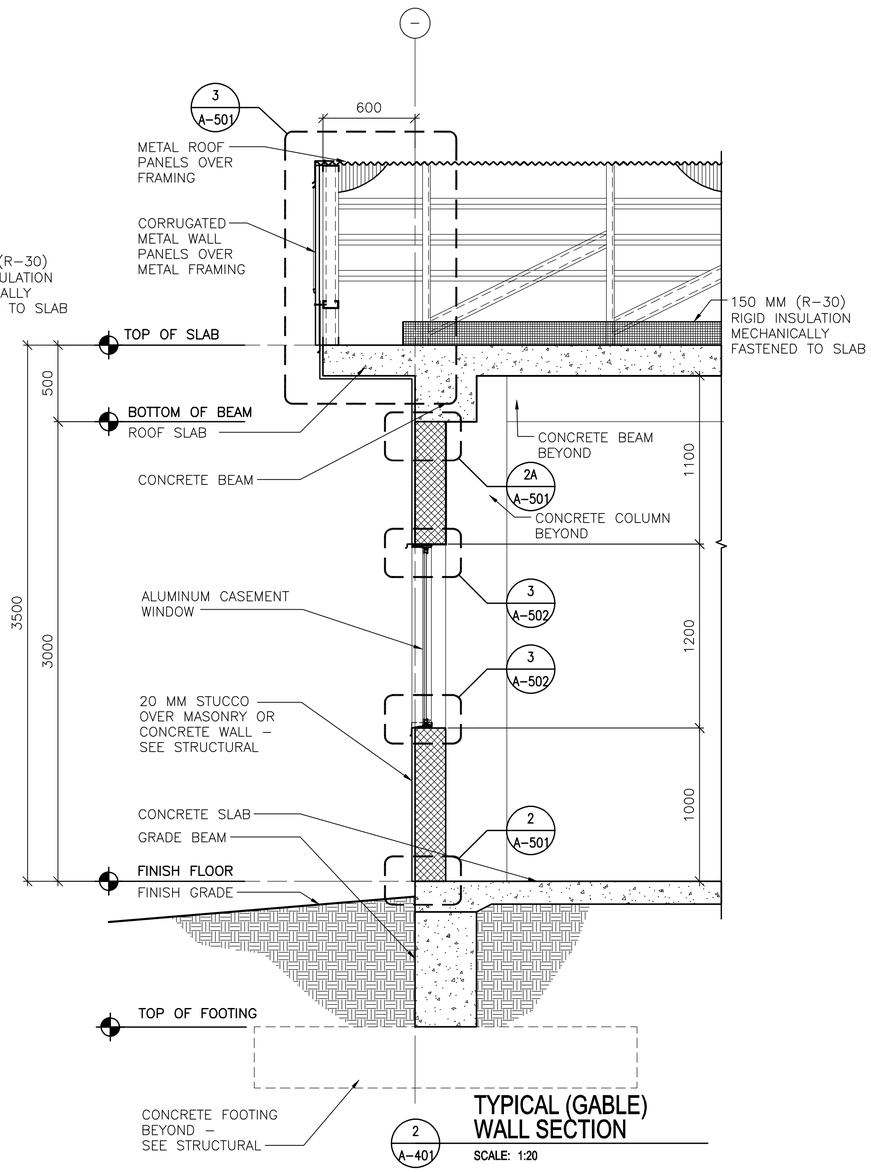

2 A-401 **TYPICAL (GABLE) WALL SECTION**

SCALE: 1:20

LINEAR DIMENSIONS SHOWN ARE IN MILLIMETERS (MM), UNLESS OTHERWISE NOTED

0 400 800

SCALE: 1:20

APPROVED:

A/E DESIGNER OF RECORD

SEAL:

STATE OF SOUTH CAROLINA
KEVIN R. CHAFIN
N. Charleston, SC
6374
REGISTERED ARCHITECT

US ARMY CORPS OF ENGINEERS
AFGHANISTAN ENGINEER DISTRICT

Mark	Description	Date	Appr.	Mark	Description	Date	Appr.

U.S. ARMY CORPS OF ENGINEERS
AFGHANISTAN ENGINEER DISTRICT
APO AE 96338

Michael Baker Jr., Inc
A unit of Michael Baker Corporation
Airside Business Park
100 Airside Drive
Moon Township, PA 15108
www.mbakercorp.com

Designed by: KRC
Dwn by: EBB
Ckd by: NLJ
Reviewed by: LHM
Submitted by: BAKER
Date: 2/23/10
Rev: 0
Design file no.
Drawing code:
File name: ANAHQA-401WS
Plot date: 2/23/2010
Plot scale: x:X

AFGHAN NATIONAL ARMY
REGIONAL MILITARY TRAINING CENTER
STANDARD DESIGN

RMTC HEADQUARTERS BUILDING

WALL SECTIONS

Sheet reference number:
A-401

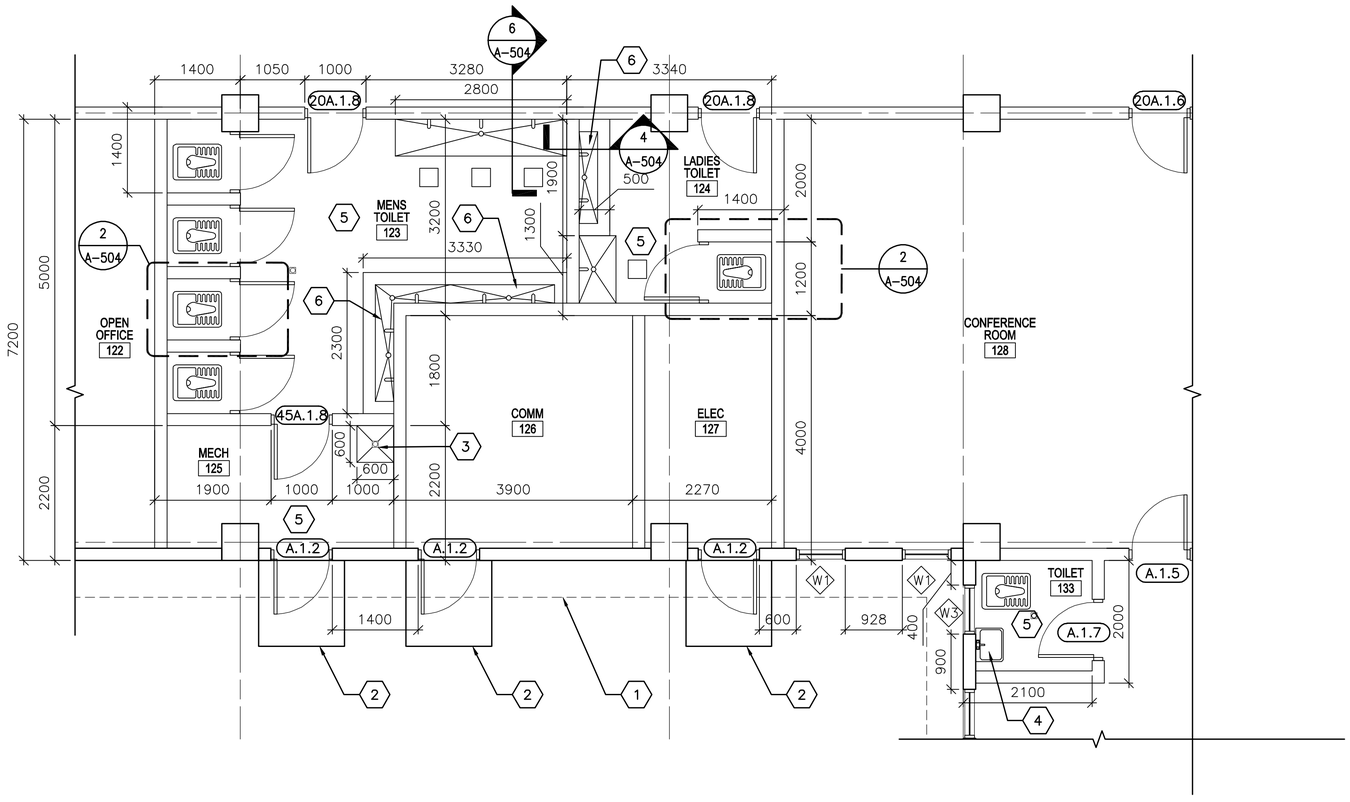

1 / A-402 ENLARGED PLAN

SCALE: 1:50

GENERAL NOTES:

A. DIMENSIONS ARE SHOWN TO OUTER EDGE OF EXTERIOR STRUCTURAL COLUMNS, STRUCTURAL COLUMN GRID, EDGE OF INTERIOR PARTITIONS, EDGE OF WINDOW OPENINGS, AND TO HINGE SIDE OF DOOR FRAME OPENINGS.

B. OPENINGS FOR DOORS AND FRAMES SHALL BE LOCATED 200 MM FROM THE ADJACENT WALL OR COLUMN, UNLESS NOTED OTHERWISE.

C. INTERIOR PARTITIONS SHALL BE 200 MM CMU. SEE STRUCTURAL DRAWINGS FOR LOCATION OF CONCRETE SHEAR WALLS.

D. COSMETIC REPAIR OF MINOR DEFECTS: REPAIR OR FILL MORTAR JOINTS AND MINOR DEFECTS, INCLUDING BUT NOT LIMITED TO SPALLS, IN ACCORDANCE WITH MANUFACTURER'S RECOMMENDATIONS AND PRIOR TO COATING APPLICATION. SURFACES TO BE PAINTED SHALL BE CLEAN AND FREE OF FOREIGN MATTER BEFORE APPLICATION OF PAINT. CLEANING SHALL BE SCHEDULED SO THAT DUST AND OTHER CONTAMINANTS WILL NOT FALL ON NEWLY PAINTED SURFACES.

E. CONCRETE, PLASTER AND MASONRY SURFACES SHALL BE ALLOWED TO CURE FOR AT LEAST 30 DAYS BEFORE PAINTING. CONCRETE SLABS-ON-GRADE SHALL BE ALLOWED TO CURE 90 DAYS BEFORE STAINING OR SEALING.

F. DO NOT USE PAINT MATERIALS CONTAINING LEAD CONTENT IN EXCESS OF 0.009 PERCENT OF THE WEIGHT OF THE TOTAL NONVOLATILE CONTENT OF THE PAINT OR THE WEIGHT OF THE DRIED PAINT FILM.

G. DO NOT USE ANY ASBESTOS CONTAINING MATERIALS (ACM) IN PROJECT. ACM IS DEFINED AS 1% OR MORE BY VOLUME.

H. DO NOT USE PAINT MATERIALS CONTAINING MERCURIAL FUNGICIDES.

I. FACTORY PRIMED METAL DOORS AND FRAMES SHALL RECEIVE TWO COATS OF PAINT.

J. FILL REMAINING SPACE AT PENETRATIONS IN FIRE-RATED FLOORS, PARTITIONS AND CEILINGS WITH APPROPRIATE FIRESTOPPING MATERIALS.

K. ALL CEILING FINISHES SHALL BE PAINTED PLASTER APPLIED TO STRUCTURE.

L. ALL WALL FINISHES SHALL BE PAINTED PLASTER APPLIED TO STRUCTURE, UNLESS NOTED OTHERWISE.

M. ALL FLOOR FINISHES SHALL BE EPOXY SEALED CONCRETE, UNLESS NOTED OTHERWISE

N. PROVIDE TILE FINISHES AS INDICATED IN DETAILS.

O. ALL DOOR, FRAME AND HARDWARE TYPES SHALL BE 20A.1.6 UNLESS NOTED OTHERWISE.

P. TOILETS STALL DOOR, FRAME & HARDWARE TYPE SHALL BE F.2.12.

Q. PROVIDE POLISHED STAINLESS STEEL MIRROR 600 X 900 ABOVE LAVATORY FAUCET.

KEY NOTES:

(X)

1. LINE OF ROOF OVERHANG ABOVE.
2. CONCRETE STOOP – SEE DETAIL 3/A-503.
3. RECESSED TROUGH – SEE DETAIL 7/A-504.
4. WALL MOUNTED LAVATORY – SEE DETAIL 10/A-504.
5. TERRAZZO FLOOR TILE AND CERAMIC WALL TILE TO 2000 MM ABOVE FINISHED FLOOR.
6. LAVATORY – SEE DETAIL 4/A-504.

LEGEND:

(XXX) DOOR FRAME AND HARDWARE TYPE, SEE SHEET A-601

(A) WINDOW TYPE, SEE SHEET A-601

(X) KEY NOTE

ABBREVIATIONS:

COMM	COMMUNICATIONS
ELEC	ELECTRICAL
MECH	MECHANICAL
JAN	JANITOR
CLOS	CLOSET

LINEAR DIMENSIONS SHOWN ARE IN MILLIMETERS (MM), UNLESS OTHERWISE NOTED

0 1000 2000
SCALE: 1:50

APPROVED:

A/E DESIGNER OF RECORD

SEAL:

STATE OF SOUTH CAROLINA
KEVIN R. CHAFIN
N. Charleston, SC
6374
REGISTERED ARCHITECT

US ARMY CORPS OF ENGINEERS
AFGHANISTAN ENGINEER DISTRICT

Mark	Description	Date	Appr.	Mark	Description	Date	Appr.

U.S. ARMY CORPS OF ENGINEERS
AFGHANISTAN ENGINEER DISTRICT
APO AE 96338

Michael Baker Jr., Inc
A unit of Michael Baker Corporation
Airside Business Park
100 Airside Drive
Moon Township, PA 15108
www.mbakercorp.com

Designed by: KRC	Date: 2/23/10
Dwn by: EBB	Ckd by: NLJ
Reviewed by: LHM	Drawing code:
Submitted by:	File name: ANAHQA-402EP
BAKER	Plot date: 2/23/2010
	Plot scale: x:X
	Rev: 0
	Design file no.

AFGHAN NATIONAL ARMY
REGIONAL MILITARY TRAINING CENTER
STANDARD DESIGN

RMTC HEADQUARTERS BUILDING

ENLARGED PLAN

Sheet reference number:
A-402

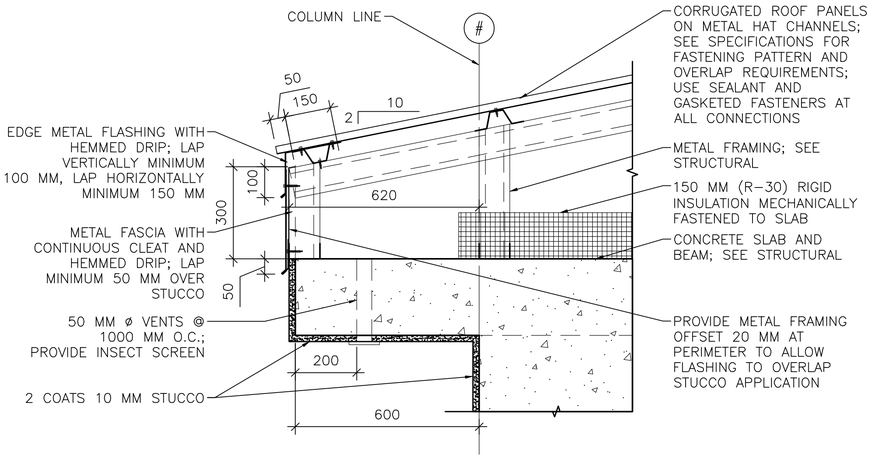

1 A-501 **EAVE DETAIL**
SCALE: 1:10

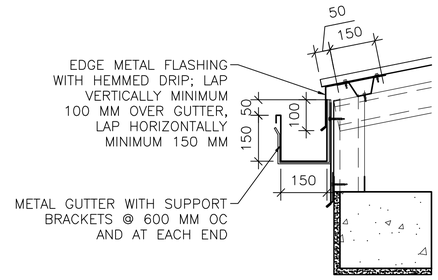

1A A-501 **GUTTER DETAIL**
SCALE: 1:10

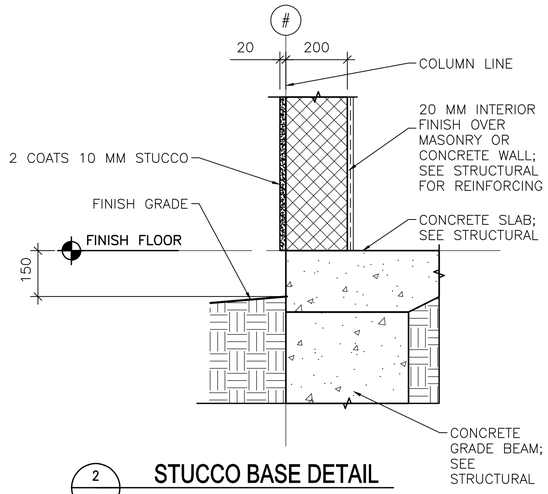

2 A-501 **STUCCO BASE DETAIL**
SCALE: 1:10

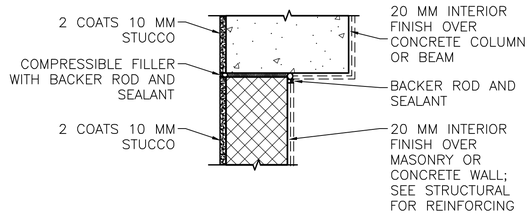

NOTE: DETAIL TYPICAL AT ALL WALL/COLUMN AND WALL/BEAM LOCATIONS, SEE ALTERNATE BRACING DETAIL BELOW 2B/A-501.

2A A-501 **STUCCO JOINT DETAIL**
SCALE: 1:10

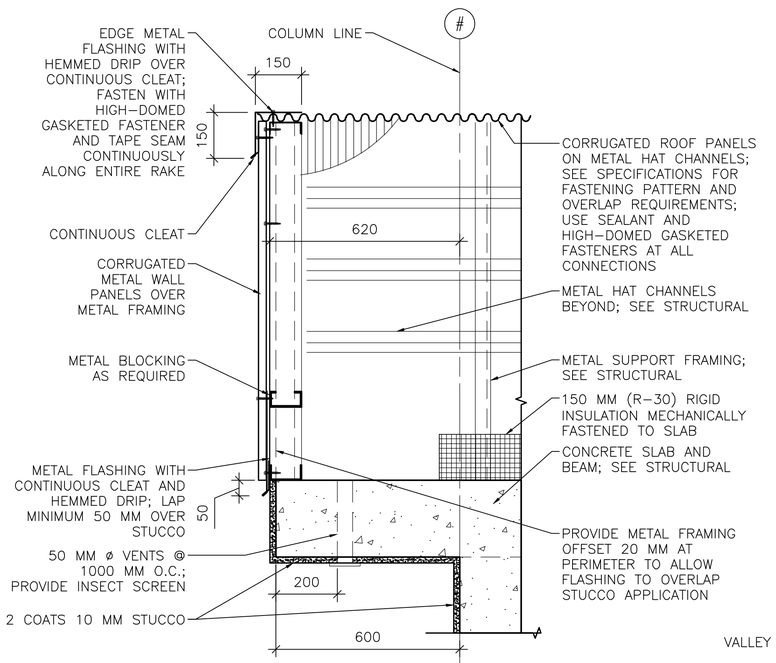

3 A-501 **RAKE/EAVE DETAIL**
SCALE: 1:10

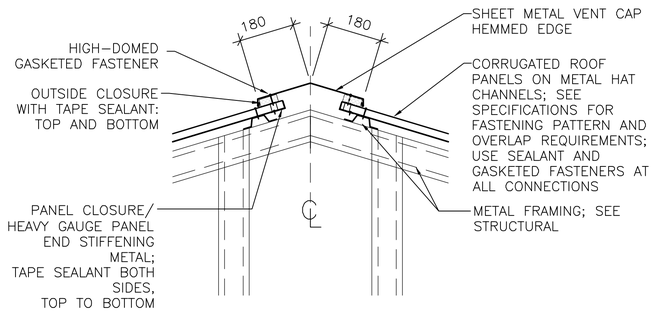

4 A-501 **RIDGE VENT DETAIL**
SCALE: 1:10

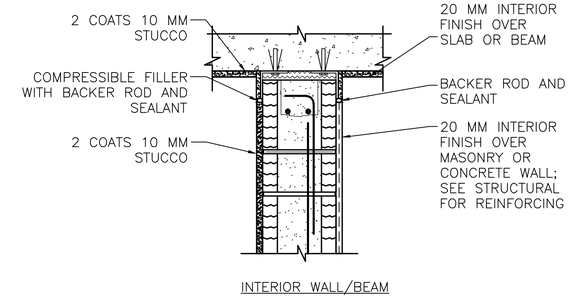

2B A-501 **ALTERNATE BRACING DETAIL**
SCALE: 1:10

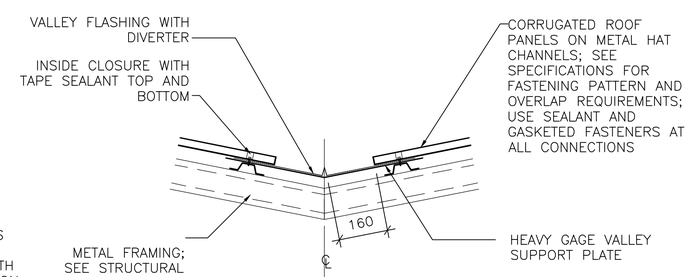

6 A-501 **VALLEY DETAIL**
SCALE: 1:10

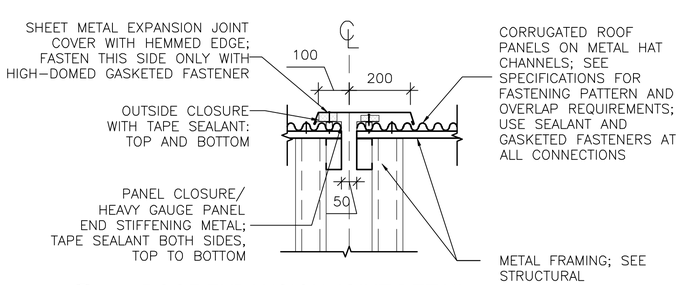

4A A-501 **ROOF EXPANSION JOINT DETAIL**
SCALE: 1:10

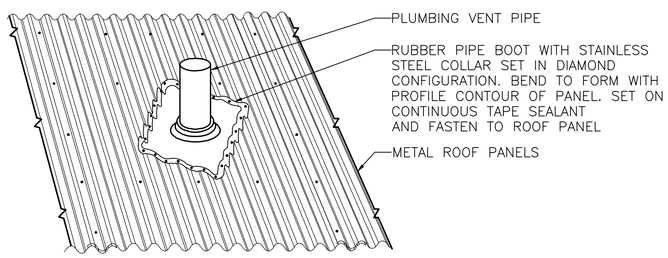

5 A-501 **PLUMBING VENT DETAIL**
SCALE: NTS

LINEAR DIMENSIONS SHOWN ARE IN MILLIMETERS (MM), UNLESS OTHERWISE NOTED

0 200 400
SCALE: 1:10

APPROVED:

A/E DESIGNER OF RECORD

SEAL:

STATE OF SOUTH CAROLINA
KEVIN R. CHAFIN
N. Charleston, SC
6374
REGISTERED ARCHITECT

US ARMY CORPS OF ENGINEERS
AFGHANISTAN ENGINEER DISTRICT

Mark	Description	Date	Appr.	Mark	Description	Date	Appr.

Designed by: KRC
Dwn by: EBB
Ckd by: NLJ
Reviewed by: LHM
Submitted by: BAKER
Date: 2/23/10
Design file no.
Rev: 0
Drawing code:
File name: ANAHQA-5010T
Plot date: 2/23/2010
Plot scale: x:X

U.S. ARMY CORPS OF ENGINEERS
AFGHANISTAN ENGINEER DISTRICT
APO AE 96338

Michael Baker Jr., Inc
A unit of Michael Baker Corporation
Airside Business Park
100 Airside Drive
Moon Township, PA 15108
www.mbakercorp.com

AFGHAN NATIONAL ARMY
REGIONAL MILITARY TRAINING CENTER
STANDARD DESIGN

RMTC HEADQUARTERS BUILDING

EXTERIOR DETAILS

Sheet reference number:
A-501

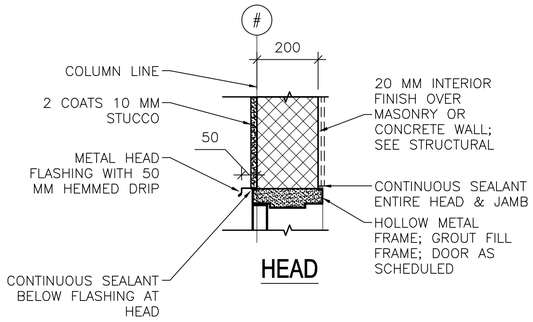

HEAD

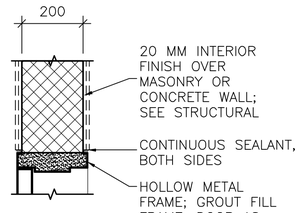

HEAD

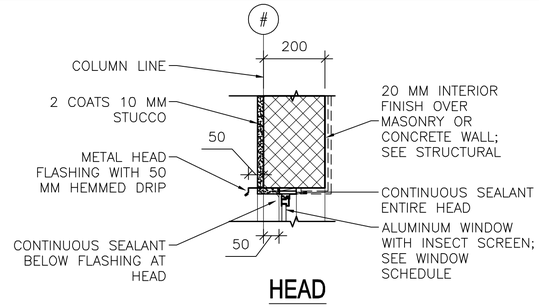

HEAD

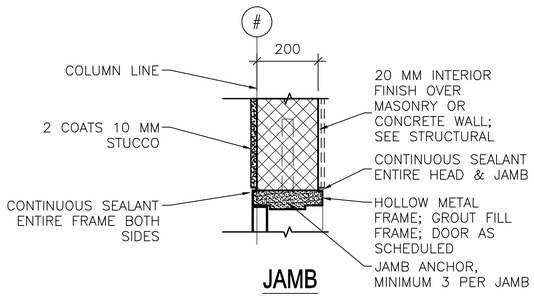

JAMB

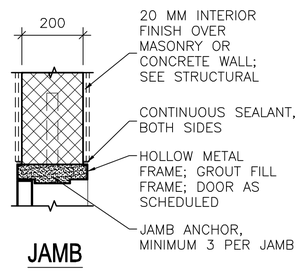

JAMB

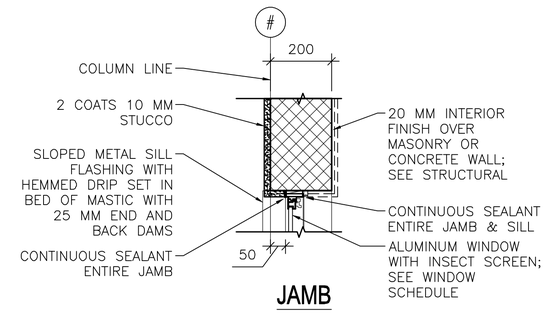

JAMB

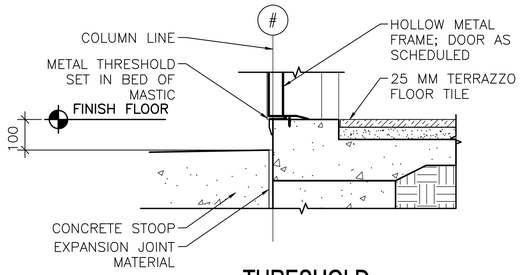

THRESHOLD

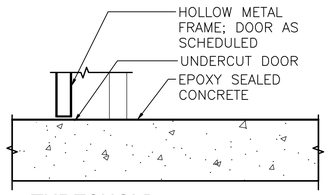

THRESHOLD

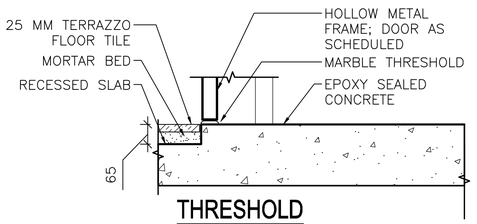

THRESHOLD

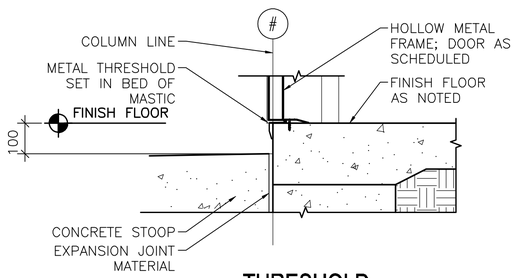

THRESHOLD

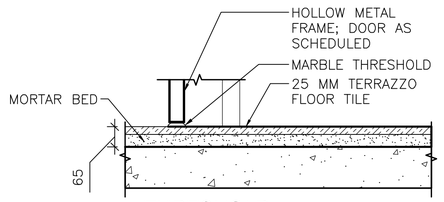

THRESHOLD

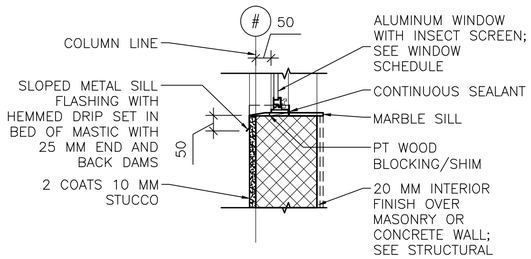

SILL

1 A–502 **EXTERIOR DOOR DETAILS**
SCALE: 1:10

2 A–502 **INTERIOR DOOR DETAILS**
SCALE: 1:10

3 A–502 **EXTERIOR WINDOW DETAILS**
SCALE: 1:10

LINEAR DIMENSIONS SHOWN ARE IN MILLIMETERS (MM), UNLESS OTHERWISE NOTED

0 200 400
SCALE: 1:10

APPROVED:

A/E DESIGNER OF RECORD

SEAL:

STATE OF SOUTH CAROLINA
KEVIN R. CHAFIN
N. Charleston, SC
6374
REGISTERED ARCHITECT

US ARMY CORPS OF ENGINEERS
AFGHANISTAN ENGINEER DISTRICT

Mark	Description	Date	Appr.	Mark	Description	Date	Appr.

Rev: 0
Date: 2/23/10
Design file no.
Drawing code:
File name: ANAHQA-502HS
Plot date: 2/23/2010
Plot scale: x:x

Designed by: KRC
Dwn by: EBB
Ckd by: NLJ
Reviewed by: LHM
Submitted by: BAKER

U.S. ARMY CORPS OF ENGINEERS
AFGHANISTAN ENGINEER DISTRICT
APO AE 96338

Michael Baker Jr., Inc
A unit of Michael Baker Corporation
Airside Business Park
100 Airside Drive
Moon Township, PA 15108
www.mbakercorp.com

AFGHAN NATIONAL ARMY
REGIONAL MILITARY TRAINING CENTER
STANDARD DESIGN

RMTC HEADQUARTERS BUILDING

HEAD, JAMB & SILL DETAILS

Sheet reference number:
A–502

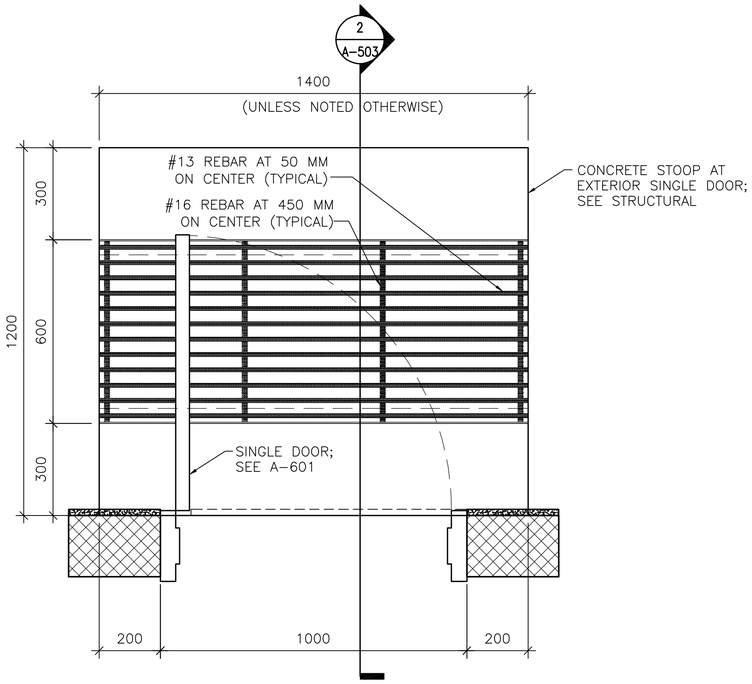

1 A-503 **DOOR STOOP PLAN (WITH GRATE)**

SCALE: 1:10

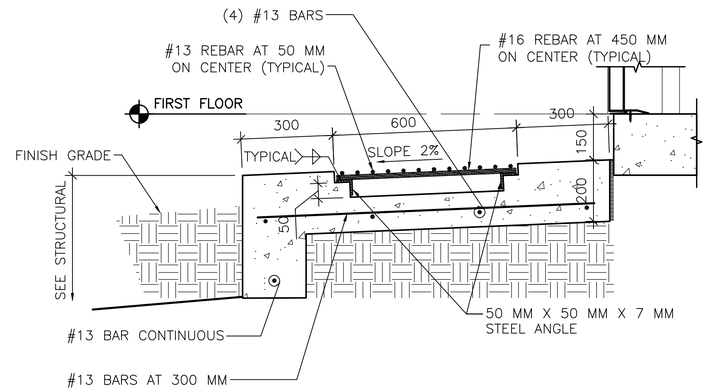

2 A-503 **DOOR STOOP DETAIL**

SCALE: 1:10

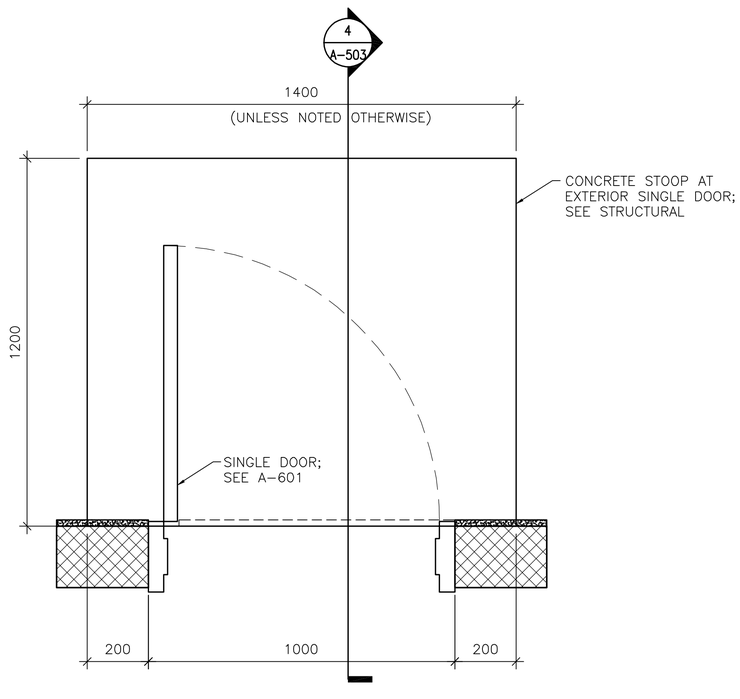

3 A-503 **DOOR STOOP PLAN (WITHOUT GRATE)**

SCALE: 1:10

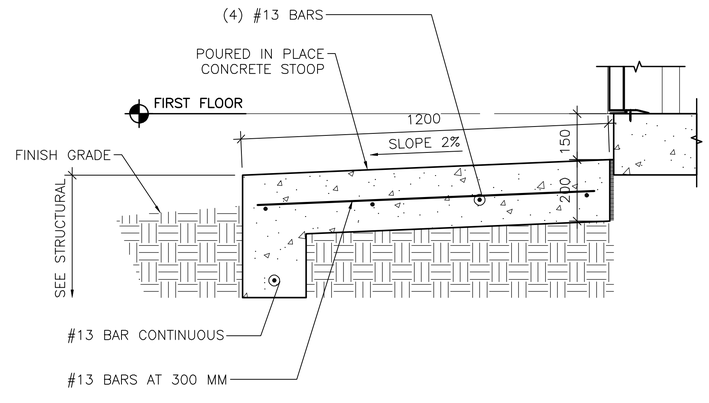

4 A-503 **DOOR STOOP DETAIL**

SCALE: 1:10

LINEAR DIMENSIONS SHOWN ARE IN MILLIMETERS (MM), UNLESS OTHERWISE NOTED

0 200 400
SCALE: 1:10

APPROVED:

A/E DESIGNER OF RECORD

SEAL:

STATE OF SOUTH CAROLINA
KEVIN R. CHAFIN
N. Charleston, SC
6374
REGISTERED ARCHITECT

US ARMY CORPS OF ENGINEERS
AFGHANISTAN ENGINEER DISTRICT

Mark	Description	Date	Appr.	Mark	Description	Date	Appr.

Designed by: KRC
Dwn by: EBB
Ckd by: NLJ
Reviewed by: LHM
Submitted by: BAKER
Date: 2/23/10
Rev: 0
Design file no.
Drawing code:
File name: ANAHQA-503DT
Plot date: 2/23/2010
Plot scale: x:X

U.S. ARMY CORPS OF ENGINEERS
AFGHANISTAN ENGINEER DISTRICT
APO AE 96338

Michael Baker Jr., Inc
A unit of Michael Baker Corporation
Airside Business Park
100 Airside Drive
Moon Township, PA 15108
www.mbakercorp.com

AFGHAN NATIONAL ARMY
REGIONAL MILITARY TRAINING CENTER
STANDARD DESIGN

RMTC HEADQUARTERS BUILDING

STOOP DETAILS

Sheet reference number:
A-503

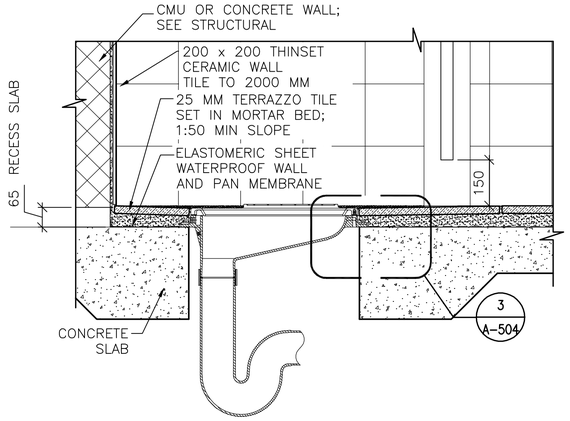

1 A-504 **LATRINE DETAIL**
SCALE: 1:10

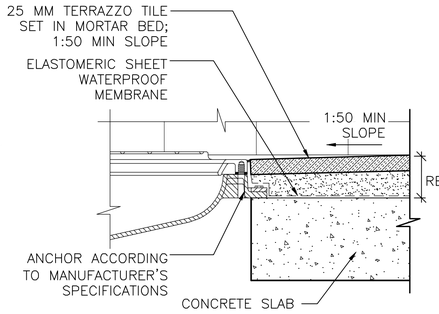

3 A-504 **MOUNTING DETAIL**
SCALE: 1:5

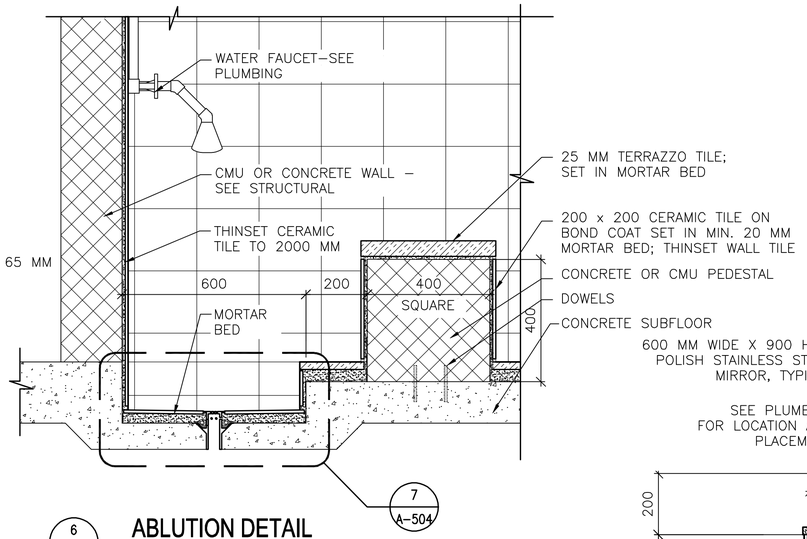

6 A-504 **ABLUTION DETAIL**
SCALE: 1:10

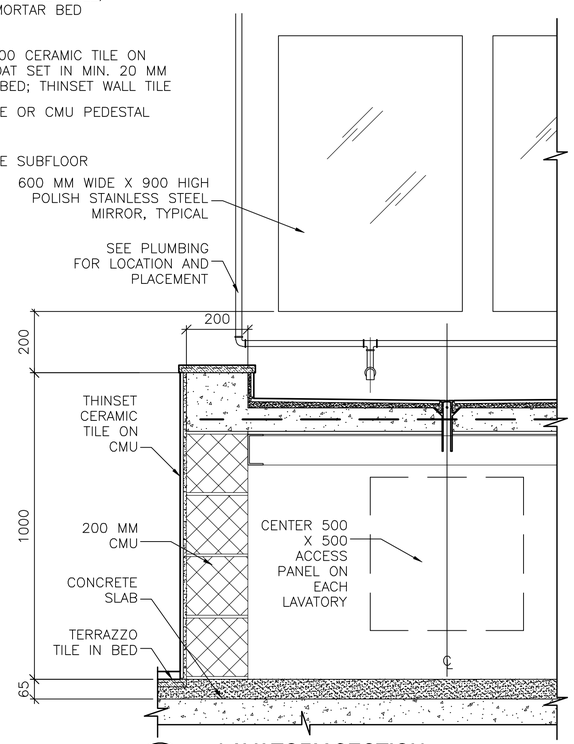

9 A-504 **LAVATORY SECTION**
SCALE: 1:10

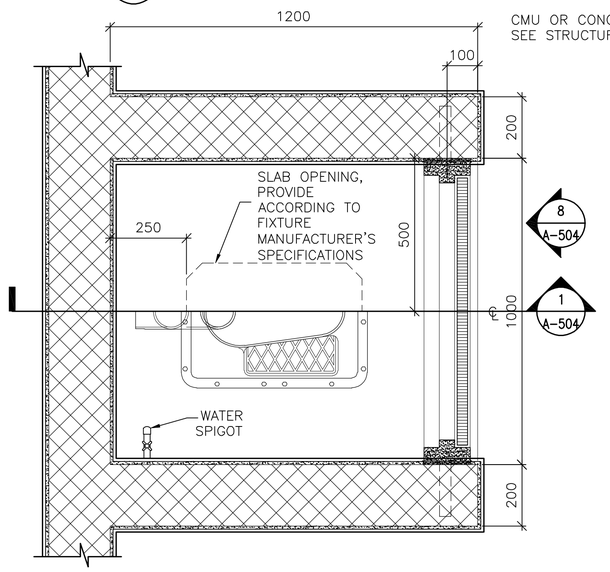

2 A-504 **TOILET DETAIL**
SCALE: 1:10

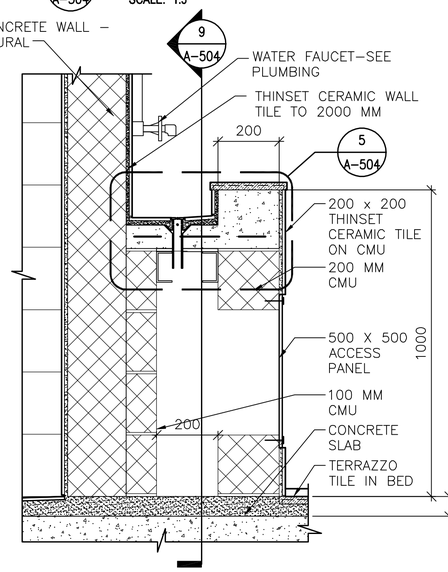

4 A-504 **LAVATORY SECTION**
SCALE: 1:10

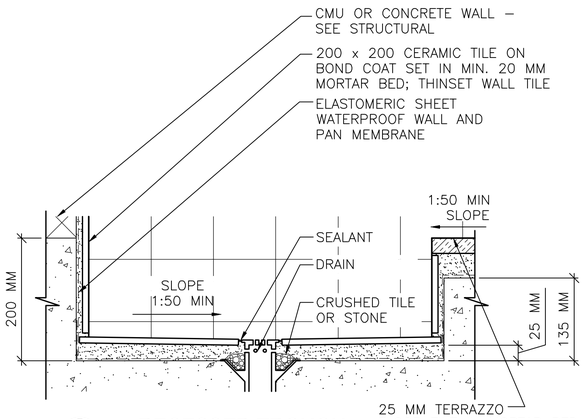

7 A-504 **RECESSED TROUGH**
SCALE: 1:5

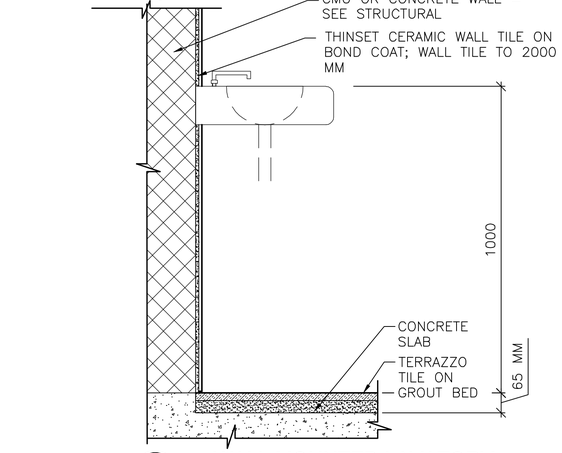

10 A-504 **WALL MOUNTED LAVATORY**
SCALE: 1:10

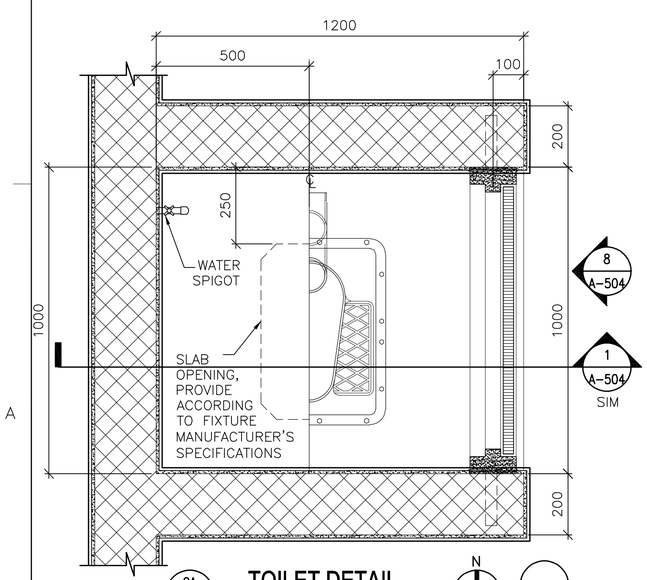

2A A-504 **TOILET DETAIL**
SCALE: 1:10

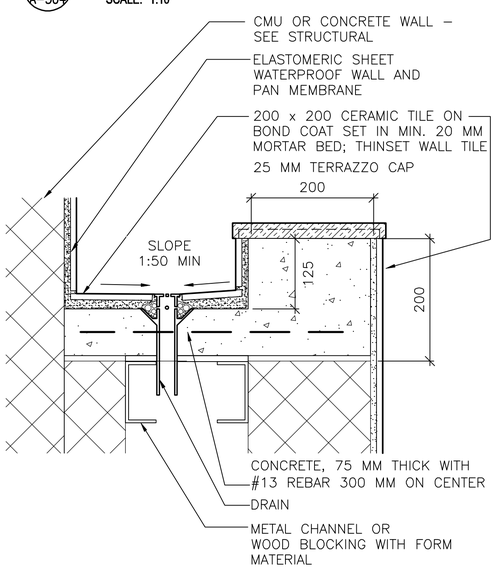

5 A-504 **LAVATORY DETAIL**
SCALE: 1:5

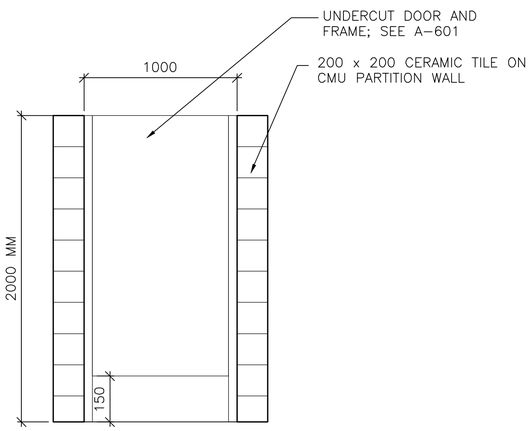

8 A-504 **TOILET PARTITION DOOR ELEVATION**
SCALE: 1:20

LINEAR DIMENSIONS SHOWN ARE IN MILLIMETERS (MM), UNLESS OTHERWISE NOTED

0 100 200 SCALE: 1:5
0 200 400 SCALE: 1:10
0 400 800 SCALE: 1:20

APPROVED:
A/E DESIGNER OF RECORD
SEAL:
STATE OF SOUTH CAROLINA
KEVIN R. CHAFIN
N. Charleston, SC
6374
REGISTERED ARCHITECT

US ARMY CORPS OF ENGINEERS
AFGHANISTAN ENGINEER DISTRICT

Mark	Description	Date	Appr.	Mark	Description	Date	Appr.

Date: 2/23/10
Design file no.
Rev: 0
Drawing code:
File name: ANAHQA-504DT
Plot date: 2/23/2010
Plot scale: x:X

Designed by: KRC
Dwn by: EBB
Ckd by: NLJ
Reviewed by: LHM
Submitted by:
BAKER

U.S. ARMY CORPS OF ENGINEERS
AFGHANISTAN ENGINEER DISTRICT
APO AE 96338

Michael Baker Jr., Inc
A unit of Michael Baker Corporation
Airside Business Park
100 Airside Drive
Moon Township, PA 15108
www.mbakercorp.com

AFGHAN NATIONAL ARMY
REGIONAL MILITARY TRAINING CENTER
STANDARD DESIGN

RMTC HEADQUARTERS BUILDING

TOILET, LAVATORY & ABLUTION DETAILS

Sheet reference number:
A-504

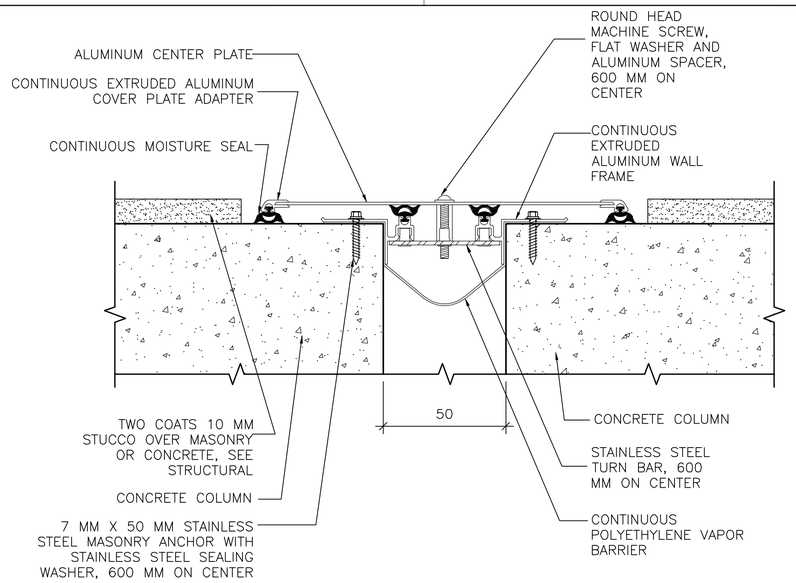

1 / A–506 **EXTERIOR ISOLATION JOINT COVER**

SCALE: NTS

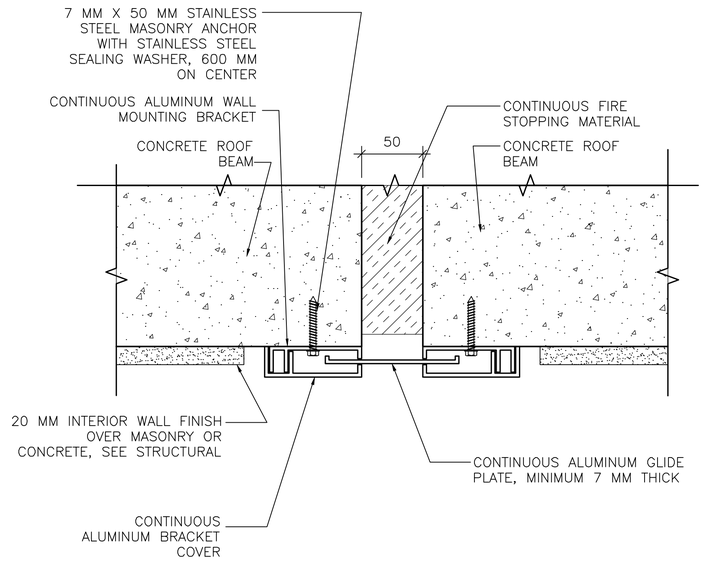

3 / A–506 **CEILING ISOLATION JOINT COVER**

SCALE: NTS

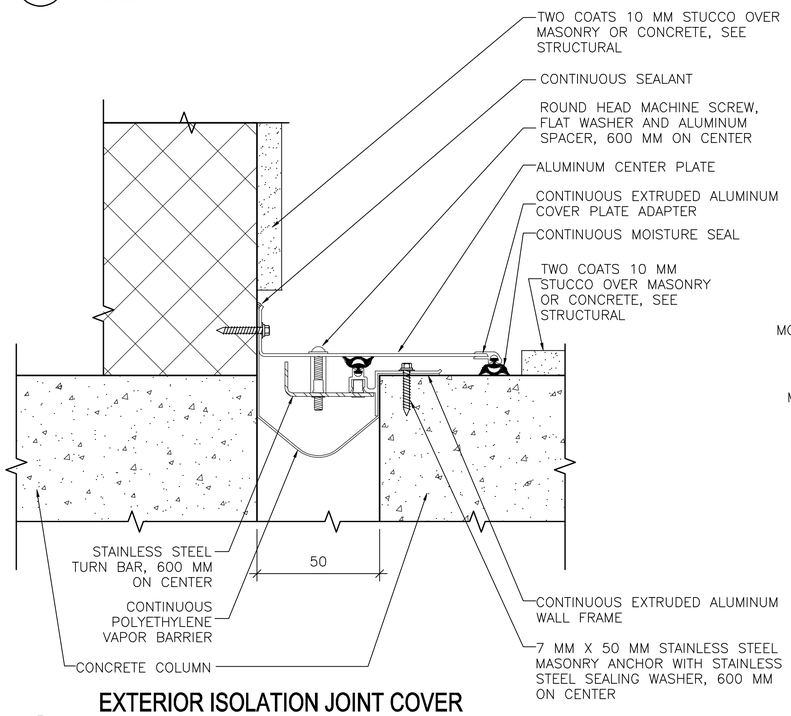

2 / A–506 **EXTERIOR ISOLATION JOINT COVER AT INSIDE CORNER**

SCALE: NTS

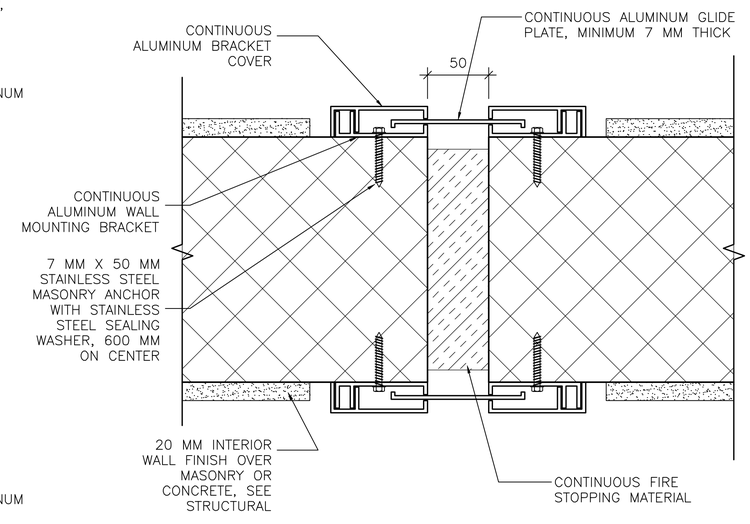

4 / A–506 **INTERIOR ISOLATION JOINT COVER**

SCALE: NTS

LINEAR DIMENSIONS SHOWN ARE IN MILLIMETERS (MM), UNLESS OTHERWISE NOTED

APPROVED:

A/E DESIGNER OF RECORD

SEAL:

STATE OF SOUTH CAROLINA
KEVIN R. CHAFIN
N. Charleston, SC
6374
REGISTERED ARCHITECT

US ARMY CORPS OF ENGINEERS
AFGHANISTAN ENGINEER DISTRICT

Mark	Description	Date	Appr.	Mark	Description	Date	Appr.

U.S. ARMY CORPS OF ENGINEERS
AFGHANISTAN ENGINEER DISTRICT
APO AE 96338

Michael Baker Jr., Inc
A unit of Michael Baker Corporation
Airside Business Park
100 Airside Drive
Moon Township, PA 15108
www.mbakercorp.com

Designed by: KRC		Date: 2/23/10	Rev: 0
Dwn by: EBB	Ckd by: NLJ	Design file no.	
Reviewed by: LHM		Drawing code:	
Submitted by: BAKER		File name: ANAHQA-5002ST Plot date: 2/23/2010 Plot scale: X:X	

AFGHAN NATIONAL ARMY
REGIONAL MILITARY TRAINING CENTER
STANDARD DESIGN

RMTC HEADQUARTERS BUILDING

ISOLATION JOINT DETAILS

Sheet reference number:
A–505

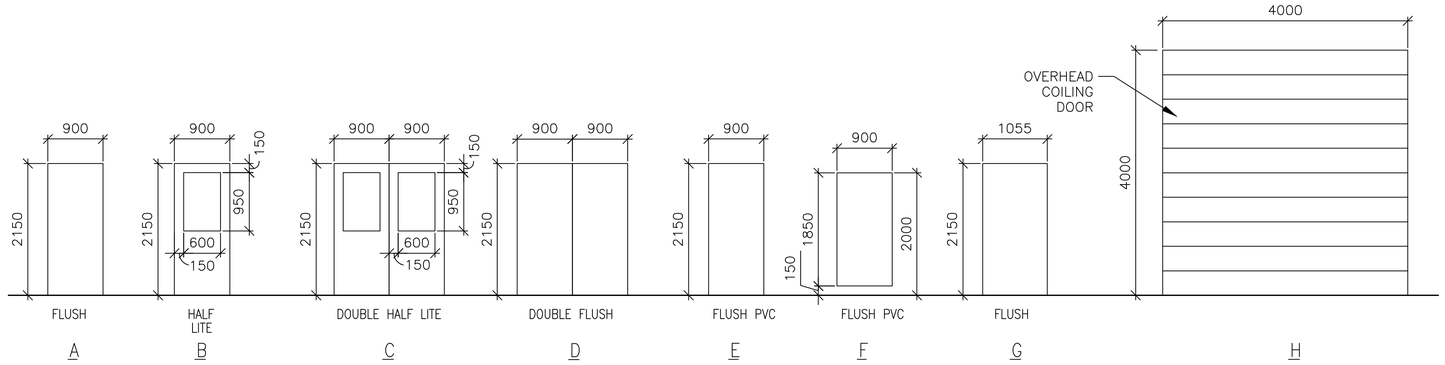

1 A-601 DOOR TYPES

SCALE: 1:50

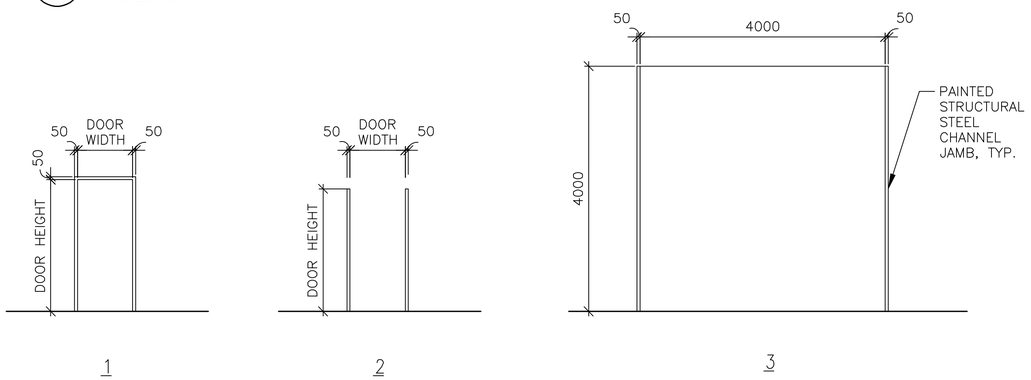

2 A-601 FRAME TYPES

SCALE: 1:50

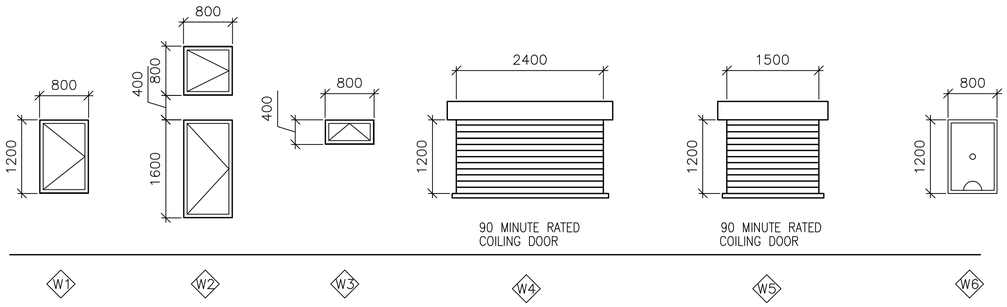

3 A-601 WINDOW TYPES

SCALE: 1:50

WINDOW TYPE NOTES:

1. ALL EXTERIOR WINDOWS SHALL BE ALUMINUM WITH INSECT SCREENS. WINDOWS SHALL BE COMMERCIAL GRADE.
2. ALL EXTERIOR WINDOWS SHALL BE OPERABLE.

4 A-601 DOOR TAG

SCALE: NTS

5 A-601 RATED DOOR TAG

SCALE: NTS

DOOR TAG NOTES:

1. THE DOOR TAG INDICATES THE DOOR TYPE, FRAME TYPE AND HARDWARE SET FOR EACH DOOR.
2. THE DOOR TAG FOR RATED DOORS INCLUDES THE RATING OF THE DOOR IN MINUTES.

EXTERIOR DOOR HARDWARE TYPES:

HW-1
1-1/2 PR HINGES, A5112 114 X 114
1 EA RIM EXIT DEVICE, TYPE 1
1 EA CYLINDER. E09221A, GRADE 1
1 EA OVERHEAD CLOSER, C02061, LOW RESISTANCE
1 EA THRESHOLD, J32130
3 EA DOOR SILENCERS, L03011

HW-2
1-1/2 PR HINGES, A5112 114 X 114
1 EA LOCKSET, F13 ENTRY LOCK W/LEVER HANDLES, GRADE 1
1 EA OVERHEAD CLOSER, C02061, LOW RESISTANCE
1 EA THRESHOLD, J32130
3 EA DOOR SILENCERS, L03011

HW-3
3 PR HINGES, A5112 114 X 114
2 EA RIM EXIT DEVICE, TYPE 1
2 EA CYLINDER. GRADE 1
2 EA OVERHEAD CLOSER, C02061, LOW RESISTANCE
1 EA DOOR COORDINATOR, TYPE 21
1 EA ASTRAGAL
1 EA THRESHOLD, J32130
2 EA DOOR SILENCERS, L03011

HW-4
3 PR HINGES, A5112 114 X 114
1 EA LOCKSET W/LEVER HANDLES. GRADE 1, F13
1 EA OVERHEAD CLOSER, C02061, LOW RESISTANCE
2 EA MAGNETIC HOLDER PIN, ATTACHED TO DOOR LEAF
2 EA MAGNETIC HOLDER RECEIVER, ATTACHED TO STOOP
2 EA LEVER EXTENSION FLUSH BOLTS, L04081
1 EA ASTRAGAL
1 EA THRESHOLD, J32130
2 EA DOOR SILENCERS, L03011

DOOR AND HARDWARE NOTES:

1. INTERIOR AND EXTERIOR METAL DOORS AND FRAME COLORS SHALL MATCH ADJACENT WALL COLORS AS SELECTED BY THE CONTRACTING OFFICER.
2. FRAMES, EXCEPT FIRE-RATED FRAMES, SHALL BE MOUNTED AND ADJUSTED IN ACCORDANCE WITH MANUFACTURER'S INSTRUCTIONS. FRAMES SHALL BE FASTENED WITH MINIMUM OF THREE ANCHORS PER JAMB AT EQUAL INTERVALS.
3. DIMENSIONS SHOWN ON DOOR TYPES DETAIL ARE BASED UPON MODULAR MASONRY (OR ROUGH OPENING), HEIGHT OF 2200 MM FOR STANDARD PERSONNEL DOORS. CONTRACTOR SHALL COORDINATE WITH DOOR SUPPLIER TO ENSURE THAT DIMENSIONS OF DOORS AND FRAMES PROVIDED ARE COMPATIBLE WITH DOOR OPENING DIMENSIONS.
4. HARDWARE SHALL BE HEAVY DUTY, COMMERCIAL GRADE, STAINLESS STEEL WITH A SATIN OR BRUSHED FINISH.
5. HARDWARE TYPES INCLUDE BUILDERS HARDWARE MANUFACTURERS ASSOCIATION (BMHA) NUMBER.
6. DOORS IN 2 HOUR RATED PARTITIONS SHALL BE 1.5 HOUR (90 MINUTE) RATED DOORS IN ACCORDANCE WITH NFPA 101, TABLE 8.3.4.2.
7. DOORS AT STAIR ENCLOSURES SHALL BE 1 HOUR (60 MINUTE) RATED AT 1 HOUR WALL IN ACCORDANCE WITH NFPA 101, TABLE 8.3.4.2.
8. DOORS IN 1 HOUR RATED WALLS SHALL BE 3/4 HOUR (45 MINUTE) RATED DOORS IN ACCORDANCE WITH NFPA 101, TABLE 8.3.4.2.
9. DOORS IN 1 HOUR RATED CORRIDOR WALLS SHALL BE 1/3 HOUR (20 MINUTE) IN ACCORDANCE WITH NFPA 101, TABLE 8.3.4.2.
10. PROVIDE DOOR STOPS TO PROTECT WALLS ON LOCATIONS WHERE DOOR SWING WILL STRIKE WALL.

THIS SHEET IS STANDARD AND IS INCLUSIVE OF ALL THE DOOR/ WINDOW/ HARDWARE TYPES FOR THE ENTIRE RMTC CONTRACT. NOT ALL DOOR/ WINDOW/ HARDWARE TYPES ARE USED FOR ANY PARTICULAR BUILDING DESIGN. CONTRACTOR SHALL REFER TO THE FLOOR PLAN FOR THE TYPES BEING USED.

INTERIOR DOOR HARDWARE TYPES:

HW-5
1-1/2 PR HINGES, A8133 114 X 114
1 EA LOCKSET W/LEVER HANDLES, F08, GRADE 1
1 EA WALL STOP, L02101 OR L02161
3 EA DOOR SILENCERS, L03011

HW-6
1-1/2 PR HINGES, A8112 114 X 114
1 EA LOCKSET W/LEVER HANDLES, F08, GRADE 1
1 EA WALL STOP, L02101 OR L02161
1 EA OVERHEAD CLOSER, C02061, LOW RESISTANCE
3 EA DOOR SILENCERS, L03011

HW-7
1-1/2 PR HINGES, A8133
1 EA LOCKSET W/LEVER HANDLES, F13 GRADE 1
1 EA WALL STOP, L02101 OR L02161
2 EA MOP PLATE, J103
3 EA DOOR SILENCERS, L03011

HW-8
1-1/2 PR HINGES, A8112
1 EA LOCKSET W/LEVER HANDLES, F13 GRADE 1
1 EA WALL STOP, L02101 OR L02161
2 EA MOP PLATE, J103
1 EA OVERHEAD CLOSER, C02061, LOW RESISTANCE
3 EA DOOR SILENCERS, L03011

HW-9
1-1/2 PR HINGES, A5112 114 X 114
1 EA RIM EXIT DEVICE, TYPE 1
1 EA CYLINDER. E09221A, GRADE 1
1 EA OVERHEAD CLOSER, C02061, LOW RESISTANCE
3 EA DOOR SILENCERS, L03011

HW-10
3 PR HINGES, A5112 114 X 114
1 EA LOCKSET W/LEVER HANDLES. GRADE 1, F13
2 EA LEVER EXTENSION FLUSH BOLTS, L04081
1 EA ASTRAGAL
2 EA DOOR SILENCERS, L03011

HW-11
1-1/2 PR HINGES, A8112 114 X 114
1 EA LOCKSET W/LEVER HANDLES, F13, GRADE 1
1 EA WALL STOP, L02101 OR L02161
1 EA OVERHEAD CLOSER, C02061, LOW RESISTANCE
3 EA DOOR SILENCERS, L03011
1 EA ROBE HOOK

HW-12
1-1/2 PR HINGES, A8133
1 EA LATCHSET W/LEVER HANDLES, F76 GRADE 1
1 EA WALL STOP, L02101 OR L02161
2 EA MOP PLATE, J103
3 EA DOOR SILENCERS, L03011
1 EA ROBE HOOK

HW-13
3 PR HINGES, A5112 114 X 114
1 EA LOCKSET W/LEVER HANDLES. GRADE 1, F13
1 EA OVERHEAD CLOSER, C02061, LOW RESISTANCE
2 EA LEVER EXTENSION FLUSH BOLTS, L04081
1 EA ASTRAGAL
2 EA DOOR SILENCERS, L03011

HW-14
3 PR HINGES, A5112 114 X 114
2 EA RIM EXIT DEVICE, TYPE 1
2 EA CYLINDER. GRADE 1
2 EA OVERHEAD CLOSER, C02061, LOW RESISTANCE
1 EA DOOR COORDINATOR, TYPE 21
1 EA ASTRAGAL
2 EA DOOR SILENCERS, L03011

APPROVED:

A/E DESIGNER OF RECORD

SEAL:

STATE OF SOUTH CAROLINA
KEVIN R. CHAFIN
N. Charleston, SC
6374
REGISTERED ARCHITECT

US ARMY CORPS OF ENGINEERS
AFGHANISTAN ENGINEER DISTRICT

Mark	Description	Date	Appr.	Mark	Description	Date	Appr.

Date: 2/23/10 Rev: 0
Design file no.
Drawing code:
File name: ANAHQA-601SCH
Plot date: 2/23/2010
Plot scale: X:X

Designed by: KRC
Dwn by: EBB
Ckd by: NLJ
Reviewed by: LHM
Submitted by:
BAKER

U.S. ARMY CORPS OF ENGINEERS
AFGHANISTAN ENGINEER DISTRICT
APO AE 96338

Michael Baker Jr., Inc.
A unit of Michael Baker Corporation
Airside Business Park
100 Airside Drive
Moon Township, PA 15108
www.mbakercorp.com

AFGHAN NATIONAL ARMY
REGIONAL MILITARY TRAINING CENTER
STANDARD DESIGN

RMTC HEADQUARTERS BUILDING

WINDOW AND DOOR SCHEDULES

Sheet reference number:
A-601

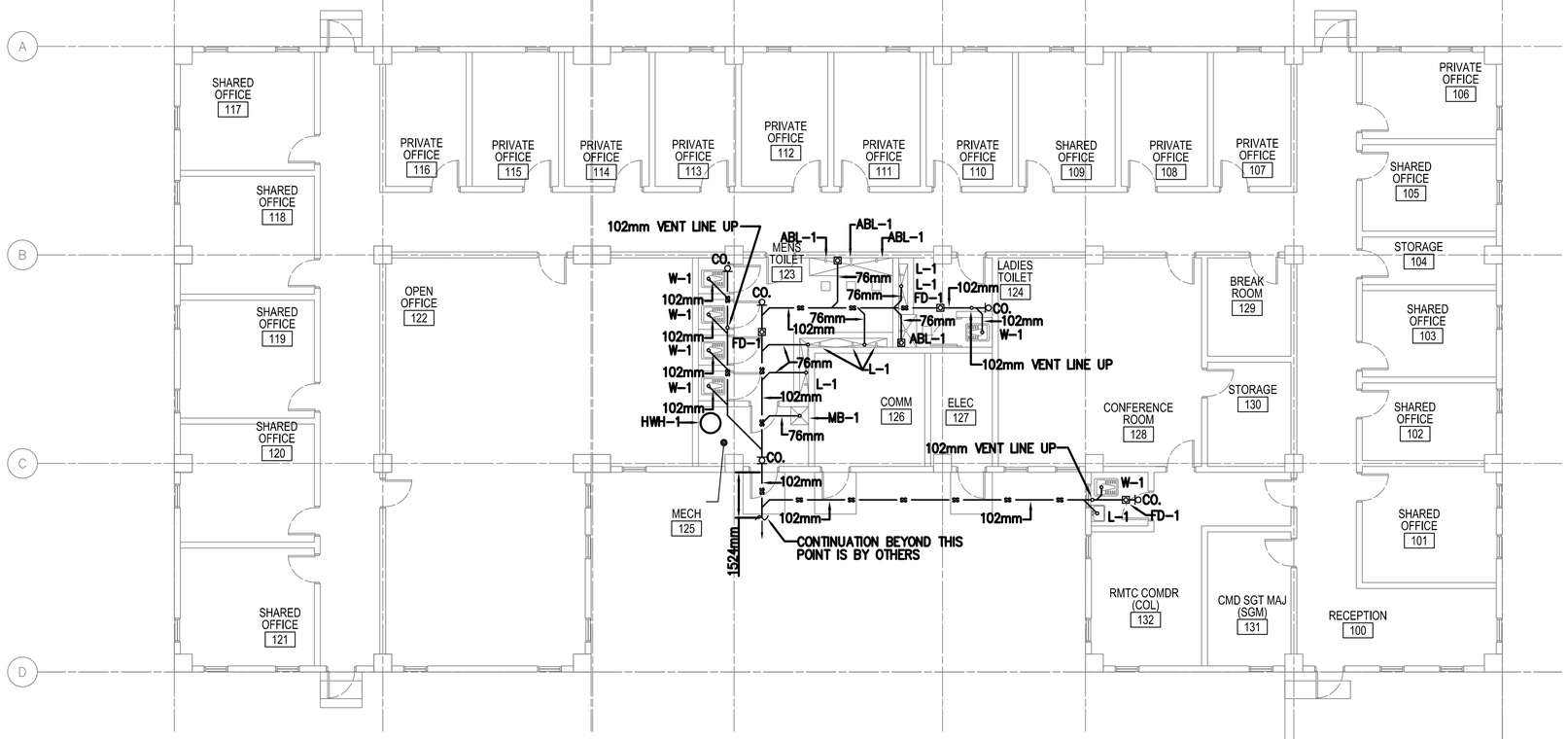

1 P-101 RMTC HEADQUARTERS FLOOR PLAN - PLUMBING (SANITARY)

SCALE: 1:100

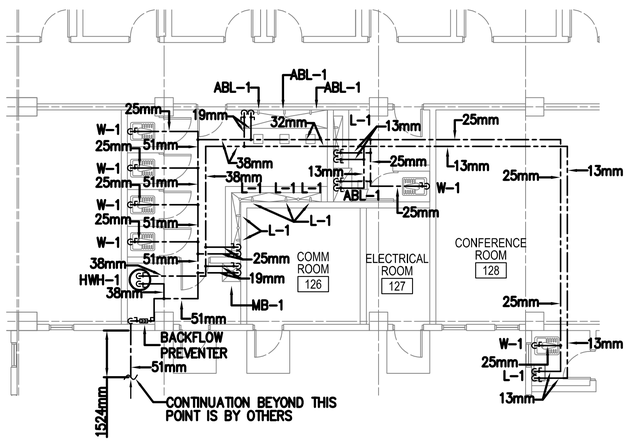

2 P-101 RMTC HEADQUARTERS FLOOR PLAN - PLUMBING (HOT AND COLD WATER)

SCALE: 1:100

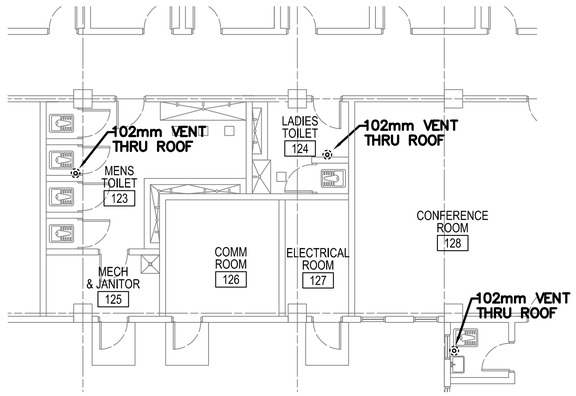

3 P-101 RMTC HEADQUARTERS FLOOR PLAN - PLUMBING (VENT PIPING)

SCALE: 1:100

FLOOR PLAN NOTES:

1. DO NOT SCALE DRAWINGS – ALL DIMENSIONS AND CONDITIONS SHALL BE CHECKED AND VERIFIED BY THE CONTRACTOR AT THE SITE.
2. ALL WORK PERFORMED ON THIS BUILDING SHALL BE IN COMPLIANCE WITH ALL PERTINENT CODES, RULES, ORDINANCES AND REGULATIONS OF THE GOVERNING AUTHORITIES.
3. ALL WORK PERFORMED UNDER AND IN CONNECTION WITH THESE DRAWINGS AND SPECIFICATIONS SHALL BE IN STRICT COMPLIANCE WITH THE LATEST SAFETY AND HEALTH STANDARDS.
4. REPORT ANY DISCREPANCIES FOUND IN THE PLUMBING DRAWINGS AND/OR IN THE SPECIFICATIONS DURING THE BIDDING PROCESS FOR CLARIFICATION BY THE ENGINEER.
5. ALL EASTERN STYLE WATER CLOSETS IN THIS FACILITY ARE TO HAVE THE FIXTURE DESIGNATION OF W-1. EACH FIXTURE SHALL HAVE A 25mm (1 INCH) COLD WATER LINE EXTENDED TO IT AND THEN BE REDUCED TO 13mm (1/2 INCH) FOR A FINAL CONNECTION TO THE FLUSH TANK AND A 102mm (4) INCH SANITARY CONNECTION.
6. ALL LAV FIXTURES IN THIS FACILITY ARE TO HAVE THE FIXTURE DESIGNATION OF L-1. EACH FIXTURE SHALL HAVE A 13mm (1/2 INCH) COLD WATER, 13mm (1/2 INCH) HOT WATER CONNECTION AND A 76mm (3 INCH) SANITARY CONNECTION.
7. ALL ABLUTION FIXTURES IN THIS FACILITY ARE TO HAVE THE FIXTURE DESIGNATION OF ABL-1. EACH FIXTURE SHALL HAVE A 13mm (1/2 INCH) COLD WATER, 13mm (1/2 INCH) HOT WATER CONNECTION AND A 76mm (3 INCH) SANITARY CONNECTION.
8. REFER TO SHEET P501 FOR DETAILS AND SYMBOLS.
9. ALL WATER, SANITARY AND VENT LINES TO BE EXPOSED. RUN LINES TIGHT TO CEILING AND WALL.

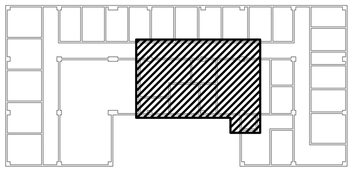

KEY PLAN:

PLUMBING SYMBOLS

—— SS ——	SANITARY SEWER PIPING (BELOW GROUND)
—— SS ——	SANITARY SEWER PIPING (ABOVE GROUND)
- - - - - -	VENT PIPING (V)
—·—·—	COLD WATER PIPING (CW)
—··—··—	HOT WATER PIPING (HW)
—•—	BALL VALVE
—•—<<—•—	BACKFLOW PREVENTER
—o OR —|	CLEANOUT (CO.)
(o)	ROOF PENETRATION

LINEAR DIMENSIONS SHOWN ARE IN MILLIMETERS (MM), UNLESS OTHERWISE NOTED

0 2000 4000
SCALE: 1:100

APPROVED:

A/E DESIGNER OF RECORD

SEAL:

COMMONWEALTH OF PENNSYLVANIA
REGISTERED PROFESSIONAL
MATTHEW R. SOTOSKY
ENGINEER
045576-E

US ARMY CORPS OF ENGINEERS
AFGHANISTAN ENGINEER DISTRICT

Mark	Description	Date	Appr.	Mark	Description	Date	Appr.

Date: 02/23/10
Rev: 0
Design file no.
Drawing code:
File name: ANAHQPL-101XXX
Plot date: 02/05/2010
Plot scale: 1:50

Designed by: RMH
Dwn by: RMH
Ckd by: CJM
Reviewed by:
Submitted by:

U.S. ARMY CORPS OF ENGINEERS
AFGHANISTAN ENGINEER DISTRICT
APO AE 96338

Michael Baker Jr., Inc
A unit of Michael Baker Corporation
Airside Business Park
100 Airside Drive
Moon Township, PA 15108
www.mbakercorp.com

BAKER

AFGHAN NATIONAL ARMY
REGIONAL MILITARY TRAINING CENTER
STANDARD DESIGN

RMTC HEADQUARTERS BUILDING
FLOOR PLAN PLUMBING

Sheet reference number:
P-101

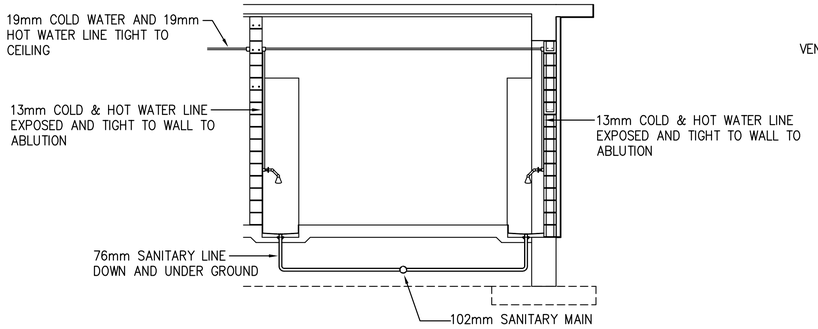

TYPICAL ABLUTION SANITARY & WATER INSTALLATION SCHEMATIC

SCALE: N.T.S.

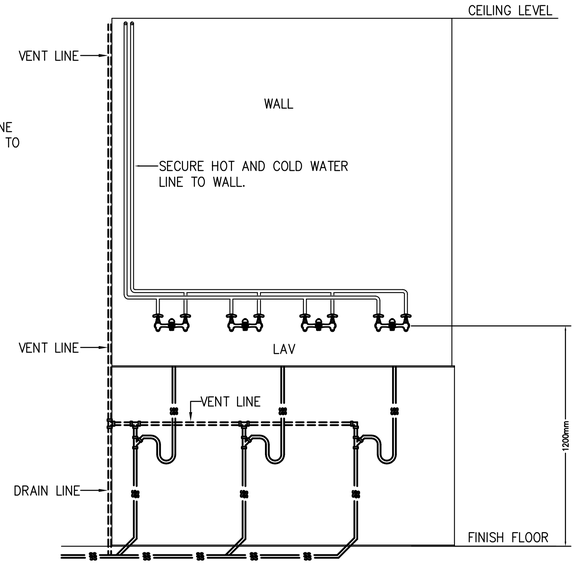

LAVATORY ELEVATION PLAN - PLUMBING

SCALE: N.T.S.

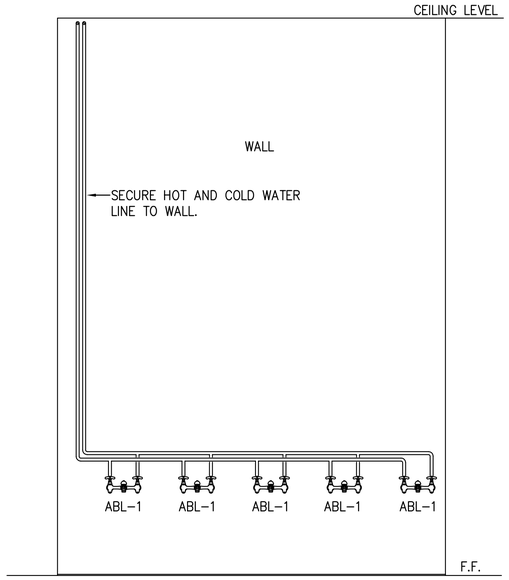

TYPICAL ABLUTION ELEVATION PLUMBING PLAN - WATER INSTALLATION SCHEMATIC

SCALE: N.T.S.

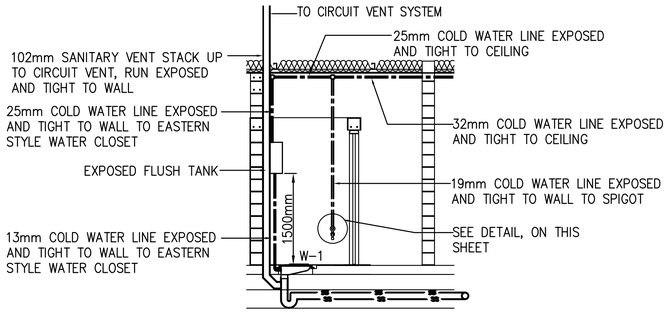

TYPICAL EASTERN STYLE WATER CLOSET SANITARY & WATER INSTALLATION SCHEMATIC

SCALE: N.T.S.

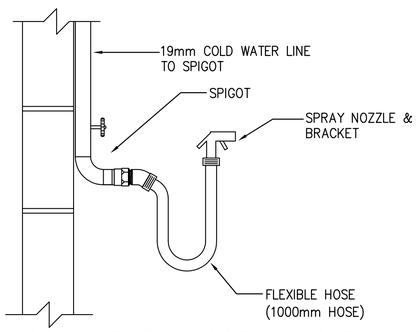

TYPICAL DETAIL - SPIGOT, FLEXIBLE HOSE, AND SPRAY NOZZLE

SCALE: N.T.S.

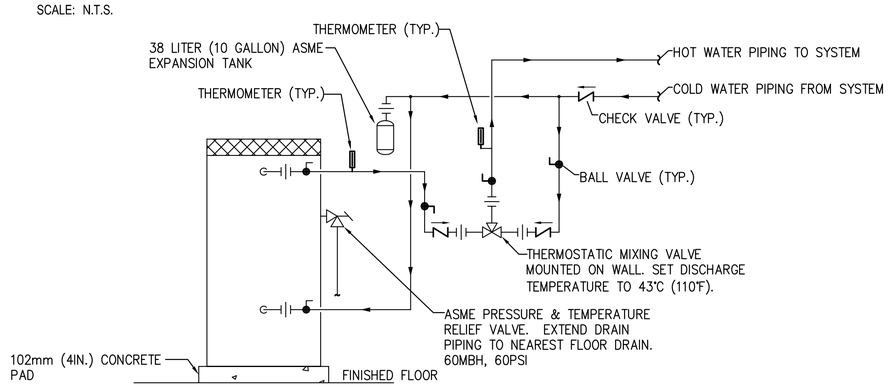

ELECTRIC WATER HEATER PIPING SCHEMATIC

SCALE: N.T.S.

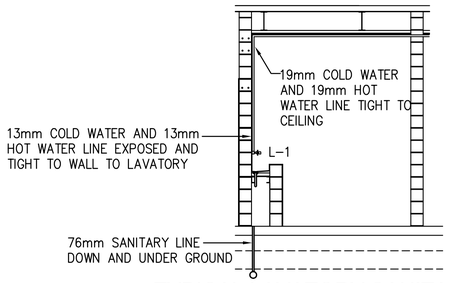

TYPICAL LAVATORY SANITARY & WATER INSTALLATION SCHEMATIC

SCALE: N.T.S.

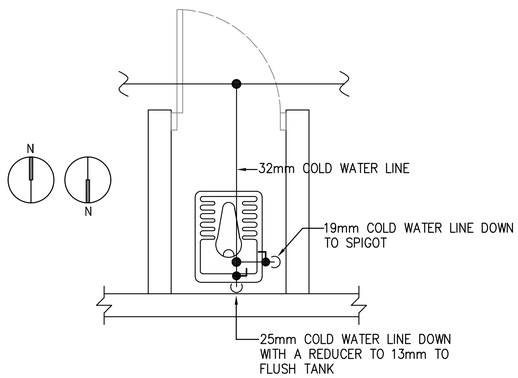

TYPICAL EASTERN STYLE WATER CLOSET WITH SPIGOT WATER PIPING DETAIL

SCALE: N.T.S.

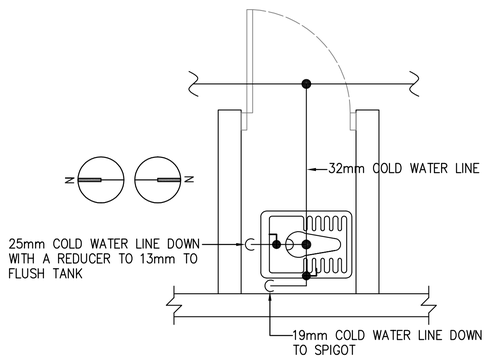

TYPICAL EASTERN STYLE WATER CLOSET WITH SPIGOT WATER PIPING DETAIL

SCALE: N.T.S.

US ARMY CORPS OF ENGINEERS
AFGHANISTAN ENGINEER DISTRICT

Mark	Description	Date	Appr.	Mark	Description	Date	Appr.

Rev: 0
Date: 02/23/10
Design file no.
Drawing code:
File name: ANAHQPL-501XXX
Plot date: 02/05/2010
Plot scale:1:100

Designed by: RMH
Dwn by: RMH
Ckd by: CJM
Reviewed by:
Submitted by: MRS

U.S. ARMY CORPS OF ENGINEERS
AFGHANISTAN ENGINEER DISTRICT
APO AE 96338

Michael Baker Jr., Inc
A unit of Michael Baker Corporation
Airside Business Park
100 Airside Drive
Moon Township, PA 15108
www.mbakercorp.com

AFGHAN NATIONAL ARMY
REGIONAL MILITARY TRAINING CENTER
STANDARD DESIGN

RMTC HEADQUARTERS BUILDING
PLUMBING DETAILS

APPROVED:

A/E DESIGNER OF RECORD

SEAL:

COMMONWEALTH OF PENNSYLVANIA
REGISTERED PROFESSIONAL
MATTHEW R. SOTOSKY
ENGINEER
045576-E

Sheet reference number:
P-501

FIXTURE LIST

TYPE	ITEM	SOIL & WASTE	VENT	COLD WATER	HOT WATER	REMARKS	REMARKS 2
W-1	EASTERN STYLE WATER CLOSET	102mm	51mm	25mm	------	FLUSH VALVE	LOW FLOW EFFICIENT TYPE
L-1	TROUGH FIXTURE	38mm	38mm	13mm	13mm	FABRICATED IN FIELD	LOW FLOW EFFICIENT TYPE
ABL-1	ABLUTION	FLOOR DRAIN	------	13mm	13mm	FABRICATED IN FIELD	----------
HWH-1	WATER HEATER	---	---	SEE DWG.	SEE DWG.	151 LITER ELECTRIC WATER HEATER, 380/3ø, 9KW	----------

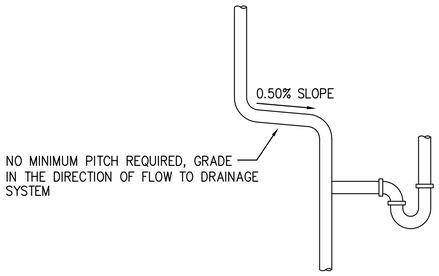

TYPICAL VENT GRADE DETAILS

SCALE: N.T.S.

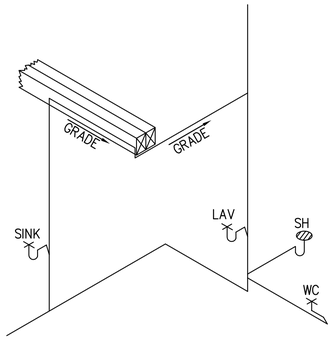

TYPICAL VENT GRADE DETAILS

SCALE: N.T.S.

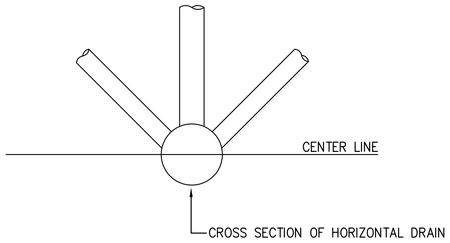

ACCEPTABLE VENT CONNECTIONS TO HORIZONTAL DRAIN - DETAIL

SCALE: N.T.S.

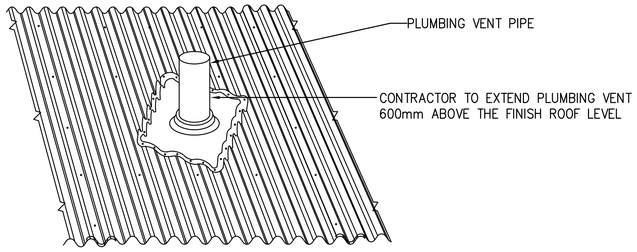

PLUMBING VENT THRU ROOF DETAIL

SCALE: NTS

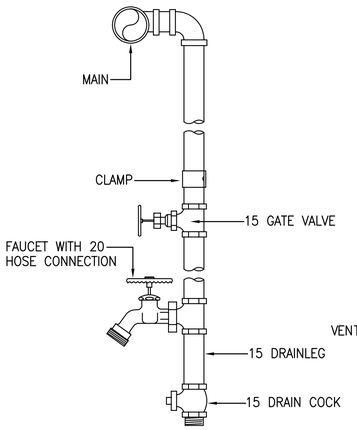

TYPICAL WATER DROP DETAIL

SCALE: N.T.S.

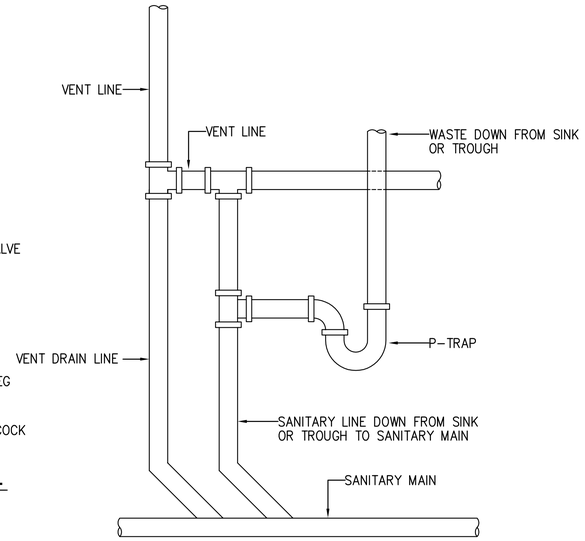

TYPICAL LAVATORY/LAUNDRY VENT DETAIL

SCALE: N.T.S.

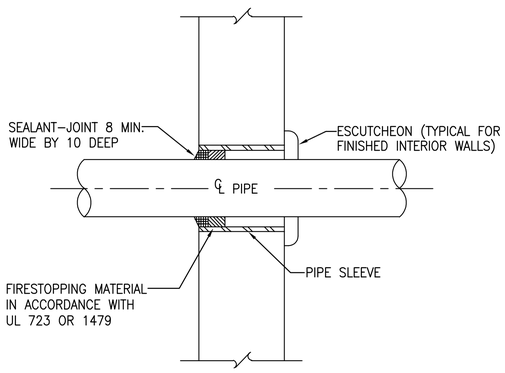

TYPICAL WALL PENETRATION DETAIL

SCALE: N.T.S.

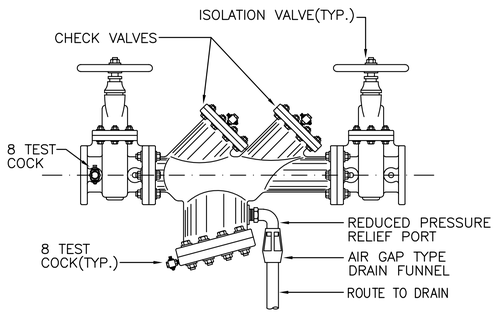

TYPICAL BACKFLOW PREVENTER DETAIL

SCALE: N.T.S.

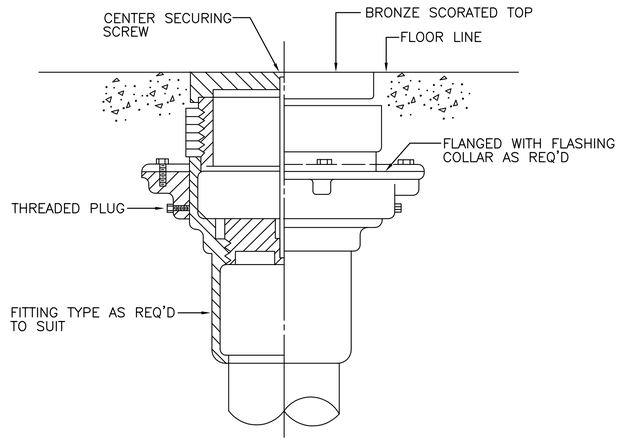

TYPICAL FLOOR CLEANOUT DETAIL

SCALE: N.T.S.

APPROVED:

A/E DESIGNER OF RECORD

SEAL:

COMMONWEALTH OF PENNSYLVANIA REGISTERED PROFESSIONAL MATTHEW R. SOTOSKY ENGINEER 046570-E

US ARMY CORPS OF ENGINEERS
AFGHANISTAN ENGINEER DISTRICT

Mark	Description	Date	Appr.	Mark	Description	Date	Appr.

Date: 02/23/10 | Rev: 0
Design file no.
Drawing code:
File name: ANAHQPL-502XXX
Plot date: 02/09/2010
Plot scale: 1:100

Designed by: RMH | Dwn by: RMH | Ckd by: CJM | Reviewed by: | Submitted by: MRS

U.S. ARMY CORPS OF ENGINEERS
AFGHANISTAN ENGINEER DISTRICT
APO AE 96338

Michael Baker Jr., Inc
A unit of Michael Baker Corporation
Airside Business Park
100 Airside Drive
Moon Township, PA 15108
www.mbakercorp.com

AFGHAN NATIONAL ARMY
REGIONAL MILITARY TRAINING CENTER
STANDARD DESIGN

RMTC HEADQUARTERS BUILDING

PLUMBING DETAILS

Sheet reference number:
P-502

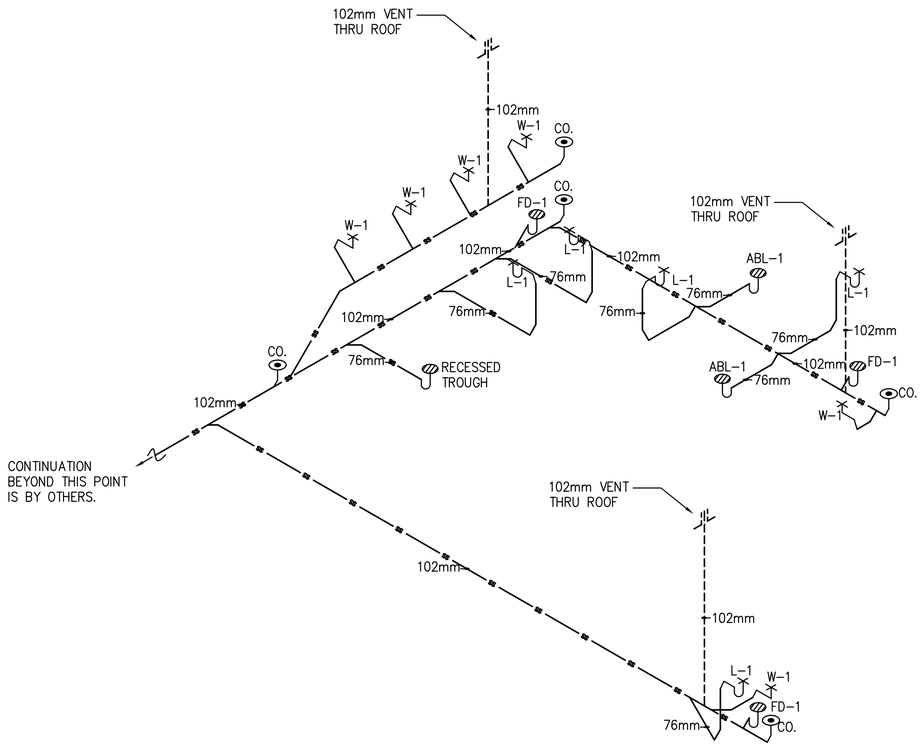

1 P-901 HEADQUARTERS DRAINAGE ISOMETRIC

SCALE: N.T.S.

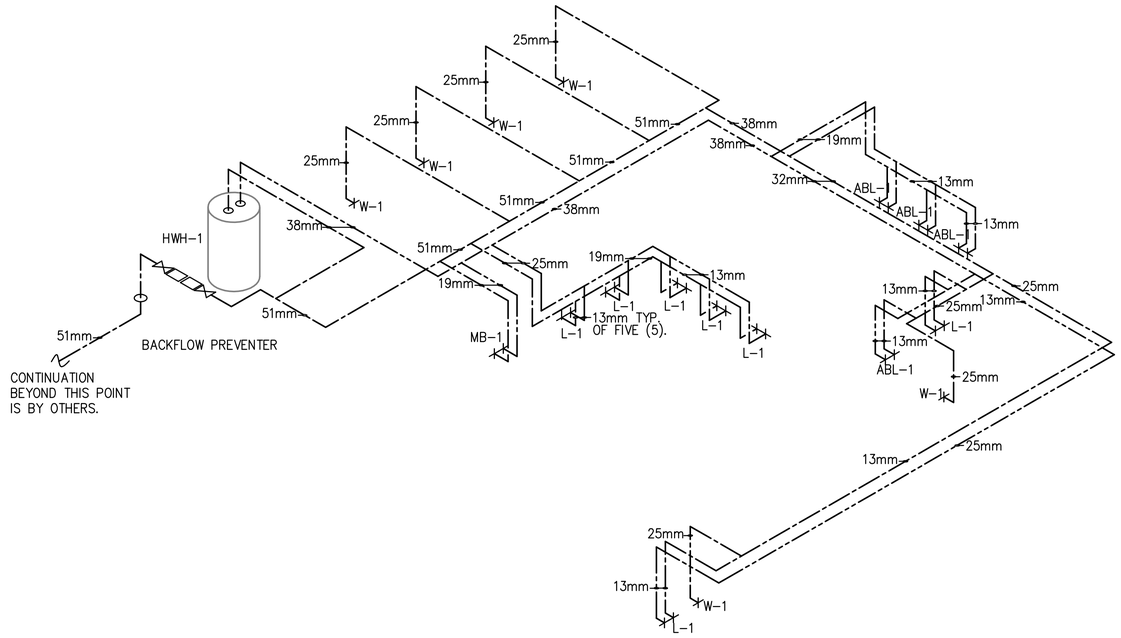

2 P-901 HEADQUARTERS HOT AND COLD WATER ISOMETRIC

SCALE: N.T.S.

GENERAL PLUMBING NOTES:

1. CONTRACTOR TO REFER TO ARCHITECTURAL DRAWINGS FOR DETAIL OF VENT THRU AND RESPONSIBILITY OF VENT THRU ROOF.

PLUMBING SYMBOLS

- SANITARY SEWER PIPING (BELOW GROUND)
- SANITARY SEWER PIPING (ABOVE GROUND)
- VENT PIPING (V)
- COLD WATER PIPING (CW)
- HOT WATER PIPING (HW)
- BALL VALVE
- BACKFLOW PREVENTER
- CLEANOUT (CO.) — OR
- ROOF PENETRATION

APPROVED:

A/E DESIGNER OF RECORD

SEAL:

COMMONWEALTH OF PENNSYLVANIA REGISTERED PROFESSIONAL ENGINEER MATTHEW R. SOTOSKY 046576-E

US ARMY CORPS OF ENGINEERS
AFGHANISTAN ENGINEER DISTRICT

Mark	Description	Date	Appr.	Mark	Description	Date	Appr.

Date: 02/23/10 | Rev: 0
Design file no.
Drawing code:
File name: ANAHQPL-901XXX
Plot date: 02/09/2010
Plot scale: N.T.S.

Designed by: RMH | Ckd by: CJM
Dwn by: RMH
Reviewed by:
Submitted by: BAKER

U.S. ARMY CORPS OF ENGINEERS
AFGHANISTAN ENGINEER DISTRICT
APO AE 96338

Michael Baker Jr., Inc.
A unit of Michael Baker Corporation
Airside Business Park
100 Airside Drive
Moon Township, PA 15108
www.mbakercorp.com

AFGHAN NATIONAL ARMY
REGIONAL MILITARY TRAINING CENTER
STANDARD DESIGN

RMTC HEADQUARTERS BUILDING
PLUMBING ISOMETRICS

Sheet reference number:
P-901

SPLIT SYSTEM HEAT PUMP UNIT SCHEDULE

INDOOR UNIT

	CMS	COOLING COIL DATA E.A.T. °C DB	WB	kW	EER	HEATING kW	ELECT. CHAR.	FLA AMP.	FUSE RATING	WEIGHT (kg)
HP-1	0.175	35	21	2.5	3.25	2.62	220/1/50	0.30	6	9
HP-2	0.213	35	21	4.95	2.81	4.30	220/1/50	0.30	6	16
HP-3	0.213	35	21	4.95	2.81	4.30	220/1/50	0.30	6	16
HP-4	0.175	35	21	2.5	3.25	2.62	220/1/50	0.30	6	9
HP-5	0.175	35	21	2.5	3.25	2.62	220/1/50	0.30	6	9

OUTDOOR UNIT

	ELECTRICAL CHAR.	STARTING CURRENT (AMP)	RUNNING CURRENT HEAT/COOL	FUSE RATING	SYSTEM POWER INPUT (kW) HEAT/COOL	WEIGHT (kg)
HP-1	220/1/50	4.2	4.2/3.7	16	0.801/0.616	25
HP-2	220/1/50	37.0	7.23/7.93	16	1.465/1.424	47
HP-3	220/1/50	37.0	7.23/7.93	16	1.465/1.424	47
HP-4	220/1/50	4.2	4.2/3.7	16	0.801/0.616	25
HP-5	220/1/50	4.2	4.2/3.7	16	0.801/0.616	25

ELECTRIC UNIT HEATER SCHEDULE

NO.	CMS	KW	FINAL AIR TEMP. °C	ELECT. CHAR.	MOUNTING
EH-2	0.200	2.6	38	380/1/50	WALL HUNG
EH-4	0.200	4	38	380/1/50	WALL HUNG
EH-5	0.200	5	38	380/1/50	WALL HUNG

NOTES:
1. UNIT HEATERS SHALL HAVE TAMPER PROOF INTEGRAL STATS.
2. COORDINATE LOCATION AND ORIENTATION IN FIELD.

EXHAUST FAN SCHEDULE

NO.	TYPE	FAN CMS	DRIVE	HP	SP mmH20	ELECTRICAL DATA	SWITCH
EF-1	WALL	0.140	DIRECT	FRACT	9.5	220/1/50	@ WALL
EF-2	INLINE	0.035	DIRECT	FRACT	13	220/1/50	@ WALL
EF-3	WALL	0.035	DIRECT	FRACT	9.5	220/1/50	W/ STAT
EF-4	WALL	0.035	DIRECT	FRACT	9.5	220/1/50	@ WALL
EF-5	INLINE	0.035	DIRECT	FRACT	13	220/1/50	W/ STAT
EF-6	INLINE	0.035	DIRECT	FRACT	13	220/1/50	@ WALL
EF-7	WALL	0.035	DIRECT	FRACT	9.5	220/1/50	W/ STAT

NOTE:
1. FANS SHALL HAVE SPRING OPERATED BACK DRAFT DAMPER.

CEILING FAN

NO.	BLADE SIZE mm	IN	VOLTAGE	SWITCH	REMARKS
CF-1	1320	52	220/1/50	@ WALL	3 SPEED REVERSIBLE MOTOR

NOTES:
1. INSTALL FANS 2.5M AFF.
2. PROVIDE WITH OUT LIGHT FIXTURE.
3. PROVIDE WITH REMOTE MOUNTED ON-OFF SWITCH SHOWN ON ELECTRICAL DRAWINGS.

GENERAL NOTES:

1. DO NOT SCALE DRAWINGS – ALL DIMENSIONS AND CONDITIONS SHALL BE CHECKED AND VERIFIED BY THE CONTRACTOR AT THE SITE.
2. ALL WORK PERFORMED ON THIS BUILDING SHALL BE IN COMPLIANCE WITH ALL PERTINENT CODES, RULES, ORDINANCES AND REGULATIONS OF THE GOVERNING AUTHORITIES.
3. ALL WORK PERFORMED UNDER AND IN CONNECTION WITH THESE DRAWINGS AND SPECIFICATIONS SHALL BE IN STRICT COMPLIANCE WITH THE LATEST SAFETY AND HEALTH STANDARDS.

SYMBOLS:

- (X) KEY NOTE
- (0.050) AIR VOLUME IN CUBIC METERS PER SECOND (CMS)
- ¬ VOLUME DAMPER
- (T) THERMOSTAT WITH LOCKING COVER
- UC DOOR UNDERCUT
- TG 200x400 (8X16) TRANSFER GRILLE
- $ SINGLE POLE SWITCH – 20A RATED

ABBREVIATIONS:

AFF	ABOVE FINISH FLOOR
CF	CEILING FANS
CMS	CUBIC METERS PER SECOND
EF	EXHAUST FAN
STATS	THERMOSTATS

KEY NOTE:

1. INLINE EXHAUST FAN DUCTED TO WALL CAP WITH LOW LEAKAGE GRAVITY BACK-DRAFT DAMPER. SECURE FAN TO STRUCTURE.
2. WALL EXHAUST FAN WITH LOW SPRING OPERATED BACK-DRAFT DAMPER. SEE DETAIL ON SHEET M501.
3. 200X400 (8X16) INTAKE LOUVER FOR MAKE UP AIR. PROVIDE WEATHER PROOF LOUVER WITH 50mm (2") WASHABLE FILTER AND SAND TRAP. SEE DETAIL ON SHEET M501. DUCT TO 200x400 (8x16) WALL LOUVER IN BREAK ROOM.
4. 150x150 (6x6) DUCT MOUNTED EXHAUST GRILLE WITH ADJUSTABLE OPPOSED BLADE DAMPERS. BALANCE EACH GRILLE TO CMS IN PARENTHESIS.
5. HEAT PUMP INDOOR UNIT MOUNTED FROM WALL. SEE DETAIL "1" ON SHEET M501.
6. HEAT PUMP OUTDOOR UNIT MOUNTED FROM WALL. SEE DETAIL 4 ON SHEET M501.
7. 500X400 (20X16) INTAKE LOUVER FOR MAKE UP AIR. PROVIDE WEATHER PROOF LOUVER With 50mm (2") WASHABLE FILTER AND SAND TRAP. SEE DETAIL ON SHEET M501. DUCT TO 200x400 (8x16) WALL LOUVER IN BREAK ROOM.
8. THERMOSTAT MOUNTED AS HIGH AS POSSIBLE. INTERLOCK STAT WITH CORRESPONDING EXHAUST FAN, SET FAN TO ENERGIZE ON RISE IN TEMPERATURE ABOVE 25°C (77°F).

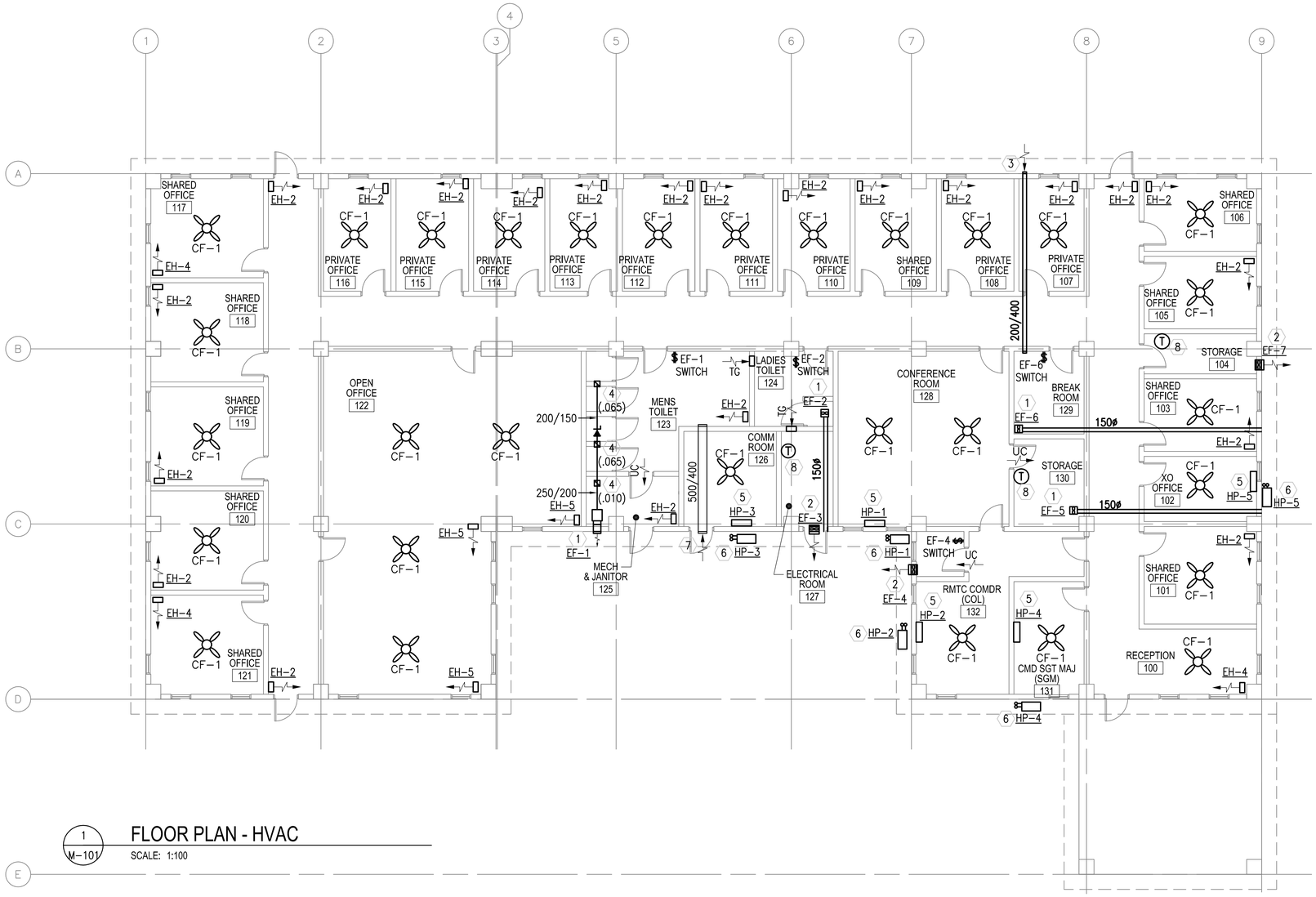

1 M-101 FLOOR PLAN - HVAC

SCALE: 1:100

LINEAR DIMENSIONS SHOWN ARE IN MILLIMETERS (MM), UNLESS OTHERWISE NOTED

0 2000 4000
SCALE: 1:100

APPROVED:

A/E DESIGNER OF RECORD

SEAL:

COMMONWEALTH OF PENNSYLVANIA REGISTERED PROFESSIONAL ENGINEER MATTHEW R. SOTOSKY 046576-E

US ARMY CORPS OF ENGINEERS
AFGHANISTAN ENGINEER DISTRICT

Mark	Description	Date	Appr.	Mark	Description	Date	Appr.

Rev: 0
Date: 02/23/10
Designed by: RML
Dwn by: JJN
Ckd by: CJM
Reviewed by: MRS
Submitted by: BAKER
Design file no.
Drawing code:
File name: ANAHQMA-101XXX
Plot date: 02/08/2010
Plot scale: 1:100

U.S. ARMY CORPS OF ENGINEERS
AFGHANISTAN ENGINEER DISTRICT
APO AE 96338

Michael Baker Jr., Inc
A unit of Michael Baker Corporation
Airside Business Park
100 Airside Drive
Moon Township, PA 15108
www.mbakercorp.com

AFGHAN NATIONAL ARMY
REGIONAL MILITARY TRAINING CENTER
STANDARD DESIGN

RMTC HEADQUARTERS BUILDING

HVAC FLOOR PLANS & SCHEDULES

Sheet reference number:
M-101

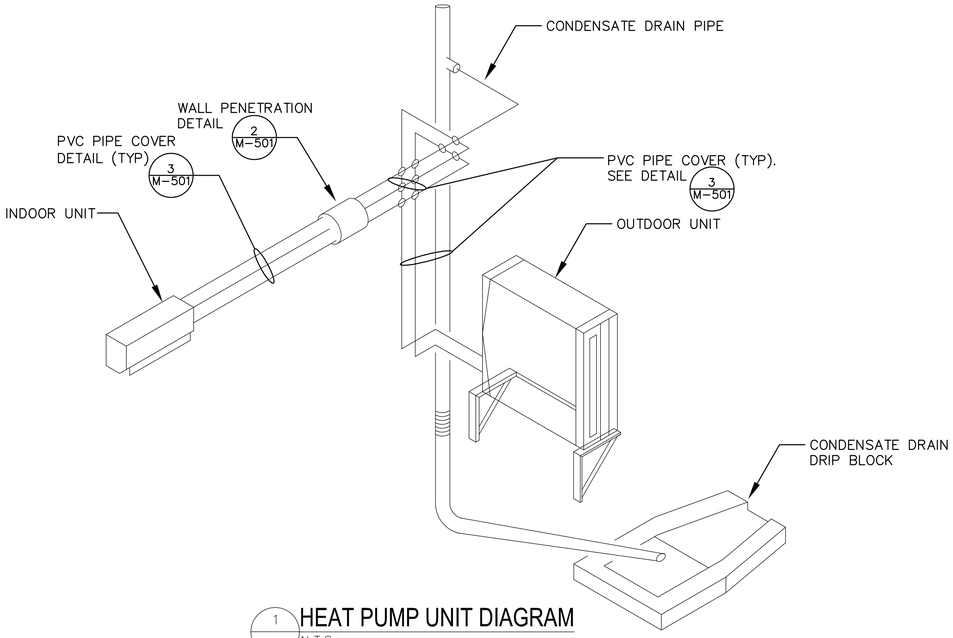

1 M-501 HEAT PUMP UNIT DIAGRAM
N.T.S.

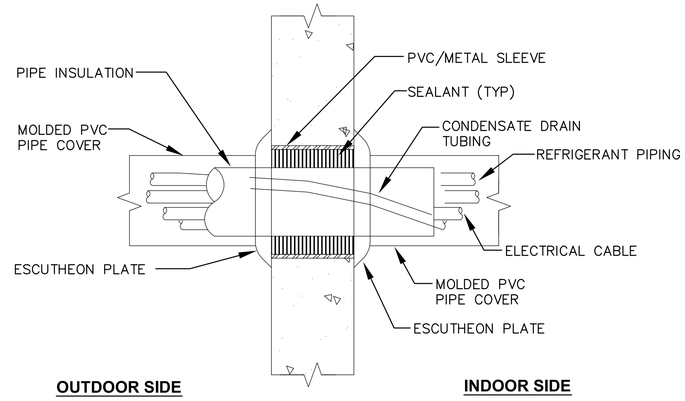

2 M-501 WALL PENETRATION DETAIL
N.T.S.

NOTE:
DRILL HOLE AT WALL SO THAT THE OUTER EDGE IS LOWER TO ALLOW CONDENSATE DRAIN WATER TO FLOW OUTWARD.

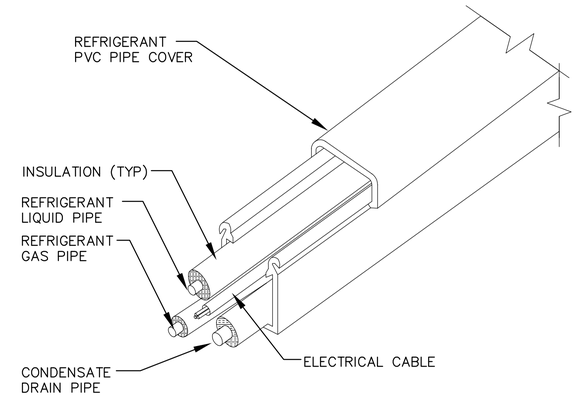

3 M-501 PVC PIPE COVER DETAIL
N.T.S.

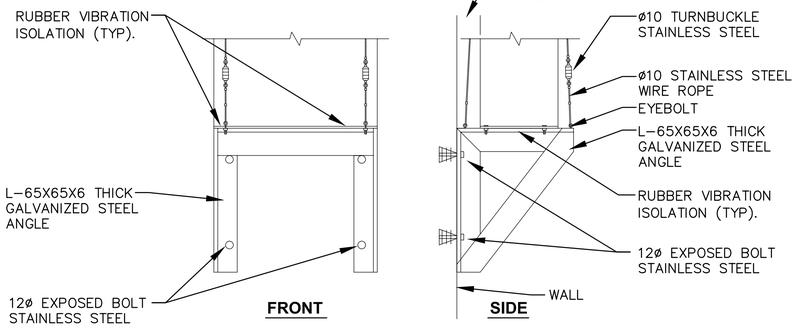

4 M-501 OUTDOOR UNIT SUPPORT
N.T.S.

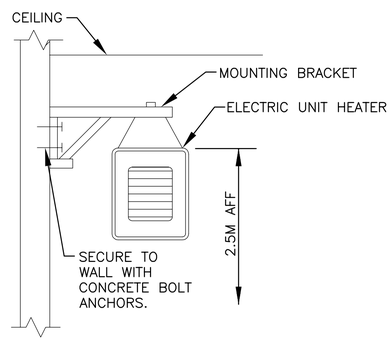

5 M-501 ELECTRIC UNIT HEATER MOUNTING DETAIL
N.T.S.

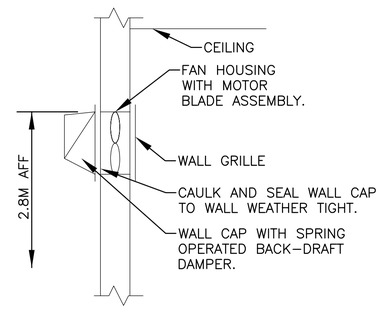

6 M-501 WALL EXHAUST FAN DETAIL
N.T.S.

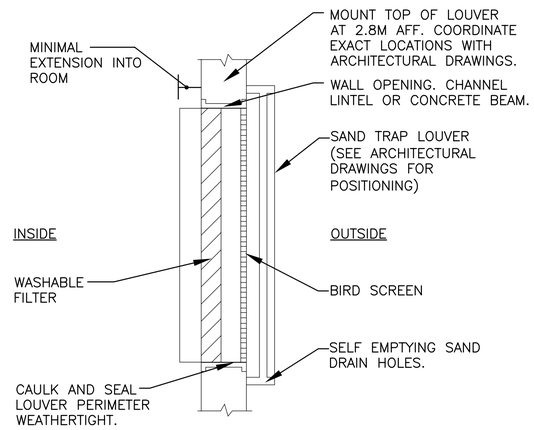

7 M-501 FILTERED SAND TRAP LOUVER
N.T.S.

US ARMY CORPS OF ENGINEERS
AFGHANISTAN ENGINEER DISTRICT

Mark	Description	Date	Appr.	Mark	Description	Date	Appr.

Rev: 0
Date: 02/23/10
Designed by: RML
Dwn by: JJN
Ckd by: CJM
Reviewed by: MRS
Submitted by: BAKER
Drawing code:
Design file no.
File name: ANAHQMH-501XXX
Plot date: 02/08/2010
Plot scale: 1:100

U.S. ARMY CORPS OF ENGINEERS
AFGHANISTAN ENGINEER DISTRICT
APO AE 96338

Michael Baker Jr., Inc
A unit of Michael Baker Corporation
Airside Business Park
100 Airside Drive
Moon Township, PA 15108
www.mbakercorp.com

AFGHAN NATIONAL ARMY
REGIONAL MILITARY TRAINING CENTER
STANDARD DESIGN

RMTC HEADQUARTERS BUILDING
HVAC DETAILS

APPROVED:

A/E DESIGNER OF RECORD

SEAL:

COMMONWEALTH OF PENNSYLVANIA
REGISTERED PROFESSIONAL
MATTHEW R. SOTOSKY
ENGINEER
046576-E

Sheet reference number:
M-501

POWER

- DISTRIBUTION PANELBOARD
- NEW PANELBOARD – SURFACE
- NEW PANELBOARD – RECESSED
- GENERATOR
- TRANSFORMER (DRAWN TO SIZE)
- JUNCTION BOX
- JUNCTION BOX – CEILING
- FUSIBLE SAFETY SWITCH
- MOTOR
- MOTOR STARTING SWITCH – 220V, 20A RATED UNLESS OTHERWISE NOTED
- ELECTRIC WATER HEATER
- CEILING FAN – REFER TO SPECIFICATION SECTION 26 20 00

RECEPTACLES

- DUPLEX 20A TYPE CEE 7/7 "SCHUKO STYLE" UNSWITCHED RECEPTACLE
- GF — DUPLEX 20A TYPE CEE 7/7 "SCHUKO STYLE" UNSWITCHED RECEPTACLES – 10mA GROUND FAULT INTERRUPTER TYPE
- WP — DUPLEX 20A TYPE CEE 7/7 "SCHUKO STYLE" UNSWITCHED TYPE WITH WEATHERPROOF COVER – 10mA GROUND FAULT INTERRUPTER TYPE
- EXP — DUPLEX 20A TYPE CEE 7/7 "SCHUKO STYLE" UNSWITCHED RECEPTACLES – EXPLOSION PROOF
- ★ INDICATES MOUNT DEVICE ABOVE COUNTERTOP OR AT 1070mm ABOVE FINISHED FLOOR WHERE NO COUNTER IS TO BE INSTALLED.

LIGHTNING PROTECTION

- AIR TERMINAL 20mm O.D. X 450mm SOLID COPPER, NICKEL PLATED ON ADHESIVE BASE
- EQ — EQUIPMENT AIR TERMINAL
- TEST WELL WITH GROUND ROD(S)
- GROUND ROD
- G — GROUND PLATE
- MAIN GROUND CONDUCTOR CONCEALED WITHIN CONSTRUCTION
- MAIN GROUND CONDUCTOR EXPOSED ON EXPOSED ON BUILDING EXTERIOR SURFACE
- GROUND CONDUCTOR CAD WELDED TO GROUND CABLE OR EQUIPMENT
- GROUND ROD TRIPOD, SPACED 3 METERS APART.
- LEVEL TO LEVEL CABLE

LIGHTING

- LIGHTING FIXTURE – SEE FIXTURE SCHEDULE FOR MORE INFORMATION
- EMERGENCY LIGHTING FIXTURE – SEE FIXTURE SCHEDULE FOR MORE INFORMATION
- DOWNLIGHT
- LIGHTING FIXTURE ON NORMAL/EMERGENCY
- WALL MOUNTED LIGHT FIXTURE
- E — EXIT SIGN – DIRECTIONAL ARROWS AS INDICATED ON DRAWINGS
- REMOTE HEAD FOR BATTERY PACK
- $ — SINGLE POLE SWITCH – 20A RATED
- $3 — 3-WAY SWITCH – 20A RATED
- $4 — 4-WAY SWITCH – 20A RATED
- LC — LIGHTING CONTACTOR
- POLE MOUNTED SITE LIGHTING FIXTURE– NUMBER OF FIXTURES PER POLE AS INDICATED ON DRAWINGS
- EXTERIOR DIRECTIONAL LIGHTING FIXTURE
- a — SMALL CASE LETTERS REPRESENTS LAMP(S) / SWITCHES.

TELECOMMUNICATIONS

- ▼ TELEPHONE OUTLET(S) @ 45cm AFF. U.N.O. WITH 20mm RACEWAY TERMINATED TO TELEDATA TERMINAL BOARD.
- ▽ DATA OUTLET(S) @ 45cm AFF. U.N.O. WITH 20mm RACEWAY TERMINATED TO TELEDATA TERMINAL BOARD.

TELECOMMUNICATIONS (CONTINUED)

- ▼ COMBINATION TELEPHONE/DATA OUTLET(S) @ 45cm AFF. U.N.O. WITH 27mm RACEWAY TERMINATED TO TELEDATA TERMINAL BOARD.
- W▼ WALL MTD. TELEPHONE OUTLET WITH 20mm RACEWAY TO TELEDATA TERMINAL BOARD.
- (x)T INDICATES NUMBER OF TELEPHONE OUTLET(S) AND ASSOCIATED CABLING
- (x)D INDICATES NUMBER OF DATA OUTLET(S) AND ASSOCIATED CABLING
- (x)TF INDICATES NUMBER OF TELEPHONE OUTLETS AND ASSOCIATED CABLING WITH 1 OUTLET AND CABLE DEDICATED FOR FAX

SINGLE LINE SYMBOLS

- SWITCH
- BREAKER
- FUSE
- TRANSFORMER
- GROUND
- CONTACT (NORMALLY OPEN)
- CONTACT (NORMALLY CLOSED)
- TRANSFER SWITCH
- CURRENT TRANSFORMER
- INDICATES NEW ELECTRICAL EQUIPMENT
- C — INDICATES NEW CONTROL WIRING AND CONDUIT
- EQUIPMENT OUTLINE

MISCELLANEOUS

- BRANCH CIRCUIT WIRING, SURFACE MOUNTED ON WALLS
- BRANCH CIRCUIT WIRING – 6mm²
- BRANCH CIRCUIT WIRING – UNDER FLOOR
- HOME RUN BACK TO PANEL
- CONDUIT TURNED DOWN
- CONDUIT TURNED UP
- LV — LOW VOLTAGE WIRING AND CONDUIT
- ~ INDICATES CONTINUATION OF LINE

FIRE ALARM

- FACP — FIRE ALARM CONTROL PANEL WITH BATTERY BACKUP
- F — FIRE ALARM PULL STATION

FIRE ALARM (CONTINUED)

- F — FIRE ALARM STROBE – WALL MOUNTED
- F — FIRE ALARM AUDIBLE/STROBE – WALL MOUNTED
- F — FIRE ALARM HORN/STROBE – WALL MOUNTED
- S — SMOKE DETECTOR
- H — HEAT DETECTOR CEILING MOUNTED
- D — DUCT DETECTOR – PROVIDED BY EC, INSTALLED BY MC AND CONNECTED BY EC

DENOTATIONS & ABBREVIATIONS

AFF	ABOVE FINISHED FLOOR
C	CEILING MOUNTED
E	EMERGENCY
EC	ELECTRICAL CONTRACTOR
EPO	EMERGENCY POWER OFF
EXP	EXPLOSION PROOF
F	FIRE ALARM
FF	FLUSH FLOOR MOUNTED
FL	FLUORESCENT
FO	FIBER OPTIC
FSS	FUSED SAFETY SWITCH
GF	GROUND FAULT INTERRUPTER
GC	GENERAL CONTRACTOR
IG	ISOLATED GROUND
K	KEY
LV	LOW VOLTAGE
M	MOTOR
MC	MECHANICAL CONTRACTOR
NE	NORMAL/EMERGENCY
NFSS	NON–FUSED SAFETY SWITCH
PA	PAGING SYSTEM
PLC	PLUMBING CONTRACTOR
SL	SINGLE LINE
T	TELEPHONE

DENOTATIONS & ABBREVIATIONS (CONT.)

TP	TAMPER PROOF
UE	UNDERGROUND ELECTRIC
W	WALL MOUNTED
WP	WEATHERPROOF WITH GROUND FAULT INTERRUPTION
WT	WATER TIGHT

GENERAL PROJECT NOTES:

G1. UNLESS OTHERWISE NOTED, PROVIDE ALL EQUIPMENT SHOWN ON THE PLANS. THE ELECTRICAL CONTRACTOR SHALL COORDINATE ALL SYMBOLS SHOWN ON THE PLANS WITH THE SYMBOL LIST. IT SHALL BE THE RESPONSIBILITY OF THE CONTRACTOR TO VERIFY THE INTENT OF ANY SYMBOL THAT IS SHOWN ON THE PLANS AND NOT INDICATED ON THE SYMBOL LIST WITH THE ENGINEER PRIOR TO BID.

G2. THE CONTRACTOR SHALL VERIFY THE LOCATION OF ALL UNDERGROUND UTILITIES WITHIN THE CONSTRUCTION AREA THREE (3) WORKING DAYS NOTICE BEFORE COMMENCING DIGGING. NOTIFY THE LOCAL AUTHORITY HAVING JURISDICTION AND WAIT THE REQUIRED TIME BEFORE COMMENCING TO DIG.

G3. THE CONTRACTOR SHALL COORDINATE CONDUIT RUNS, LIGHTING FIXTURES AND OTHER EQUIPMENT LOCATIONS WITH THE OTHER TRADE CONTRACTORS TO AVOID CONFLICTS.

G4. WHERE VOLTAGES AND FREQUENCIES ON THE DRAWINGS AND IN THE SPECIFICATIONS DIFFER FROM THE LOCAL ONES, ALL WORK SHALL BE PERFORMED USING THE LOCAL VOLTAGES AND FREQUENCIES.

G5. THE MINIMUM WIRE SIZE ON THE PROJECT SHALL BE 4mm². THE MINIMUM CONDUIT SIZE SHALL BE 20mm. THE MINIMUM BREAKER SIZE SHALL BE 20 AMPS.

G6. THE CONTRACTOR SHALL PUT A MAXIMUM OF 6 DUPLEX RECEPTACLES ON A 20A SINGLE POLE CIRCUIT.

G7. WHERE THE 1010 SCOPE REVIEW, 1015 TECHNICAL REVIEW, DRAWINGS, AND SPECIFICATIONS DIFFER FROM AMERICAN CODES OR STANDARDS, THE 1010, 1015, DRAWINGS, AND SPECIFICATIONS SHALL RULE.

G8. ALL CONDUIT AND DEVICES SHALL BE SURFACE MOUNTED UNLESS OTHERWISE INDICATED.

G9. CONTRACTOR SHALL COORDINATE ALL WORK WITH ALL OTHER TRADES TO ENSURE ALL WORK IS COMPLETED IN A PROFESSIONAL, WORKMAN–LIKE MANNER.

APPROVED:

A/E DESIGNER OF RECORD

SEAL:

COMMONWEALTH OF PENNSYLVANIA
REGISTERED PROFESSIONAL
JOSEPH R. GAUS
1/29/10
ENGINEER
PE-074251

US ARMY CORPS OF ENGINEERS
AFGHANISTAN ENGINEER DISTRICT

Mark	Description	Date	Appr.	Mark	Description	Date	Appr.

Rev: 0
Date: 2/23/10
Design file no.
Drawing code:
File name:
Plot date:
Plot scale:

Designed by: JRG
Dwn by: BJB
Ckd by: JRG
Reviewed by: JRG
Submitted by: BAKER

U.S. ARMY CORPS OF ENGINEERS
AFGHANISTAN ENGINEER DISTRICT
APO AE 96338

Michael Baker Jr., Inc
A unit of Michael Baker Corporation
Airside Business Park
100 Airside Drive
Moon Township, PA 15108
www.mbakercorp.com

AFGHAN NATIONAL ARMY
REGIONAL MILITARY TRAINING CENTER
STANDARD DESIGN

RMTC HEADQUARTERS BUILDING
ELECTRICAL SYMBOLS & ABBREVIATIONS

Sheet reference number:
E–001

GENERAL NOTES:

1. REFER TO DRAWING #E-001 FOR THE ELECTRICAL SYMBOLS LIST.
2. EXIT SIGNS SHALL BE WIRED AHEAD OF ANY LOCAL SWITCHING ON CIRCUITS. SEE WIRING DIAGRAM DETAIL 6, ON DRAWING #E-501.
3. REFER TO DRAWING #E-601 FOR THE LIGHTING FIXTURE SCHEDULE.
4. REFER TO DRAWING #E-501 FOR THE POWER RISER.
5. REFER TO DRAWING #E-602 FOR PANEL SCHEDULES.
6. LIGHT FIXTURES INDICATED AS EMERGENCY SHALL BE PROVIDED WITH A BATTERY BACKUP BALLAST. SEE WIRING DIAGRAM DETAIL 7, ON DRAWING #E-501.

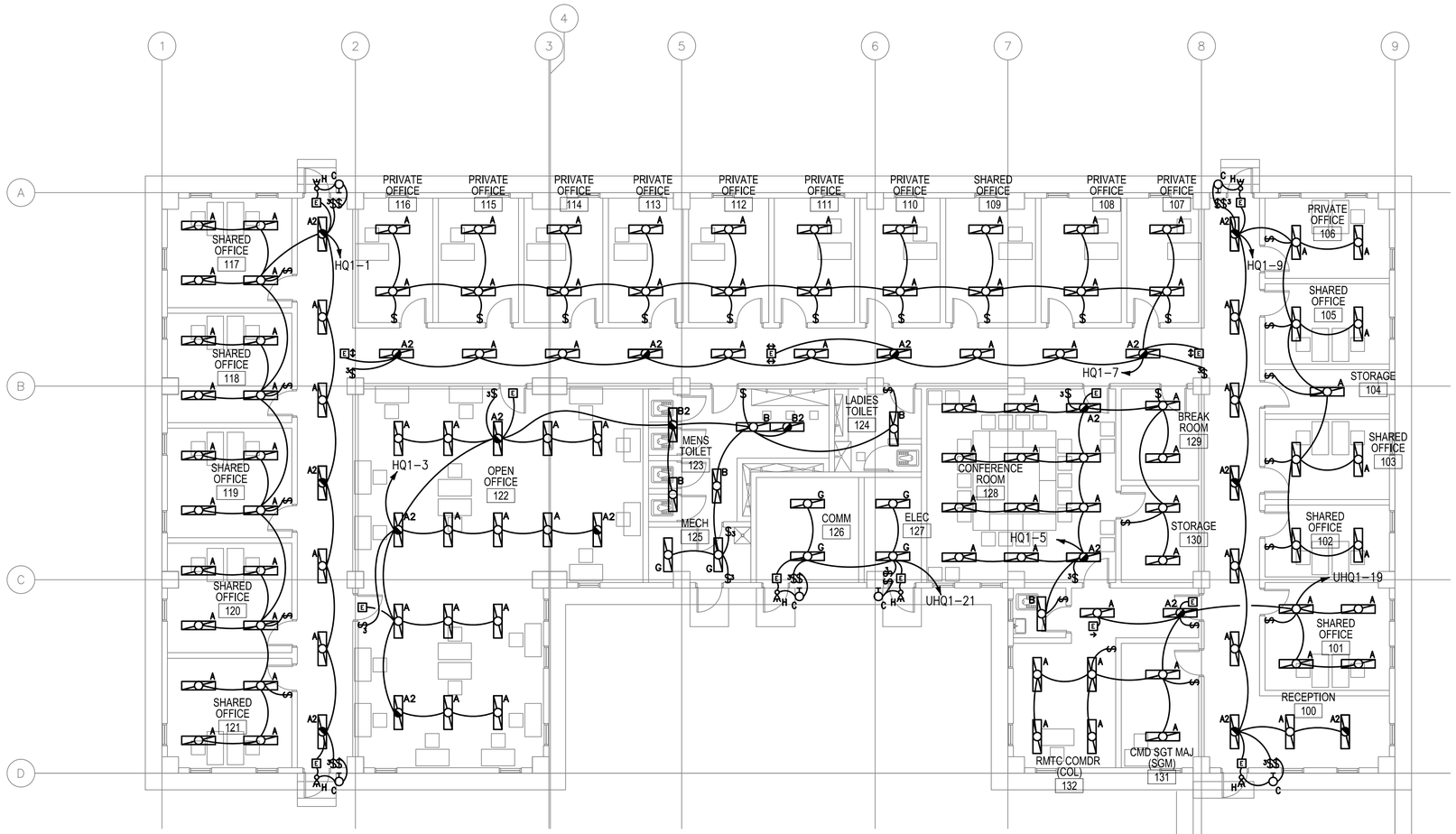

1
E-101

RMTC HEADQUARTERS BUILDING (HQ) FLOOR PLAN - LIGHTING

SCALE: 1:100

0 2000 4000
SCALE: 1:100

APPROVED:

A/E DESIGNER OF RECORD

SEAL:

COMMONWEALTH OF PENNSYLVANIA
REGISTERED PROFESSIONAL
JOSEPH R. GAUS
1/29/10
ENGINEER
PE-074251

US ARMY CORPS OF ENGINEERS
AFGHANISTAN ENGINEER DISTRICT

Mark	Description	Date	Appr.

Mark	Description	Date	Appr.

Rev: 0
Date: 2/23/10
Designed by: RAJ
Dwn by: BJB
Ckd by: JRG
Reviewed by: JRG
Submitted by: BAKER
Design file no.
Drawing code:
File name:
Plot date:
Plot scale:

U.S. ARMY CORPS OF ENGINEERS
AFGHANISTAN ENGINEER DISTRICT
APO AE 96338

Michael Baker Jr., Inc.
A unit of Michael Baker Corporation
Airside Business Park
100 Airside Drive
Moon Township, PA 15108
www.mbakercorp.com

AFGHAN NATIONAL ARMY
REGIONAL MILITARY TRAINING CENTER
STANDARD DESIGN

RMTC HEADQUARTERS BUILDING
ELECTRICAL LIGHTING PLAN

Sheet reference number:
E-101

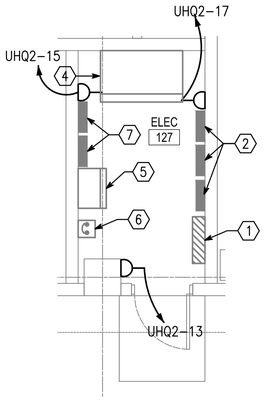

RMTC HEADQUARTERS BUILDING
FLOOR PLAN - ENLARGED ELECTRICAL CLOSET LAYOUT

2 / E-102

SCALE: 1:50

GENERAL NOTES:

1. REFER TO DRAWING #E-001 FOR THE ELECTRICAL SYMBOLS LIST.
2. REFER TO DRAWING #E-501 FOR THE POWER RISER.
3. REFER TO DRAWING #E-602 FOR PANEL SCHEDULES.
4. COORDINATE EXACT MOUNTING LOCATION OF DISCONNECTING MEANS FOR MECHANICAL AND PLUMBING EQUIPMENT IN THE FIELD.
5. FUSIBLE SAFETY SWITCHES THAT ARE NOT OTHERWISE IDENTIFIED SHALL BE 380V, 1P, 30A FUSED SAFETY SWITCHES WITH 20A FUSES.

NUMBERED NOTES:

1. PANEL MDP-HQ
2. PANEL HQ1, HQ2, HQ3
3. SEE ENLARGED PLAN THIS DRAWING FOR DEVICE LOCATIONS FOR THIS AREA.
4. 100kVA UPS SYSTEM: 220/380V, 3ø INPUT. ELECTRICAL CONTRACTOR SHALL BE RESPONSIBLE FOR DE-RATING THE UPS BASED ON SITE ALTITUDE AND AMBIENT TEMPERATURE CONDITIONS.
5. AUTOMATIC TRANSFER SWITCH: 300A/3P, 380V/3ø
6. SURFACE MOUNTED 220/380V, 3ø, 300A/3P ENCLOSED CIRCUIT BREAKER FOR INCOMING 300A ELECTRICAL SERVICE TO BUILDING.
7. PANELS UHQ1 & UHQ2
8. PROVIDE METALLIC RACEWAY POWER POLE TO SERVE WORKSTATIONS IN THIS LOCATION. RECEPTACLES SHALL BE AS INDICATED. RACEWAY SHALL BE DUAL CHANNEL AND SIZED TO CARRY THE DATA CABLING AND DROPS ON DRAWING #E-104 AS WELL AS THE POWER CABLING AND RECEPTACLES SHOWN ON THIS DRAWING.

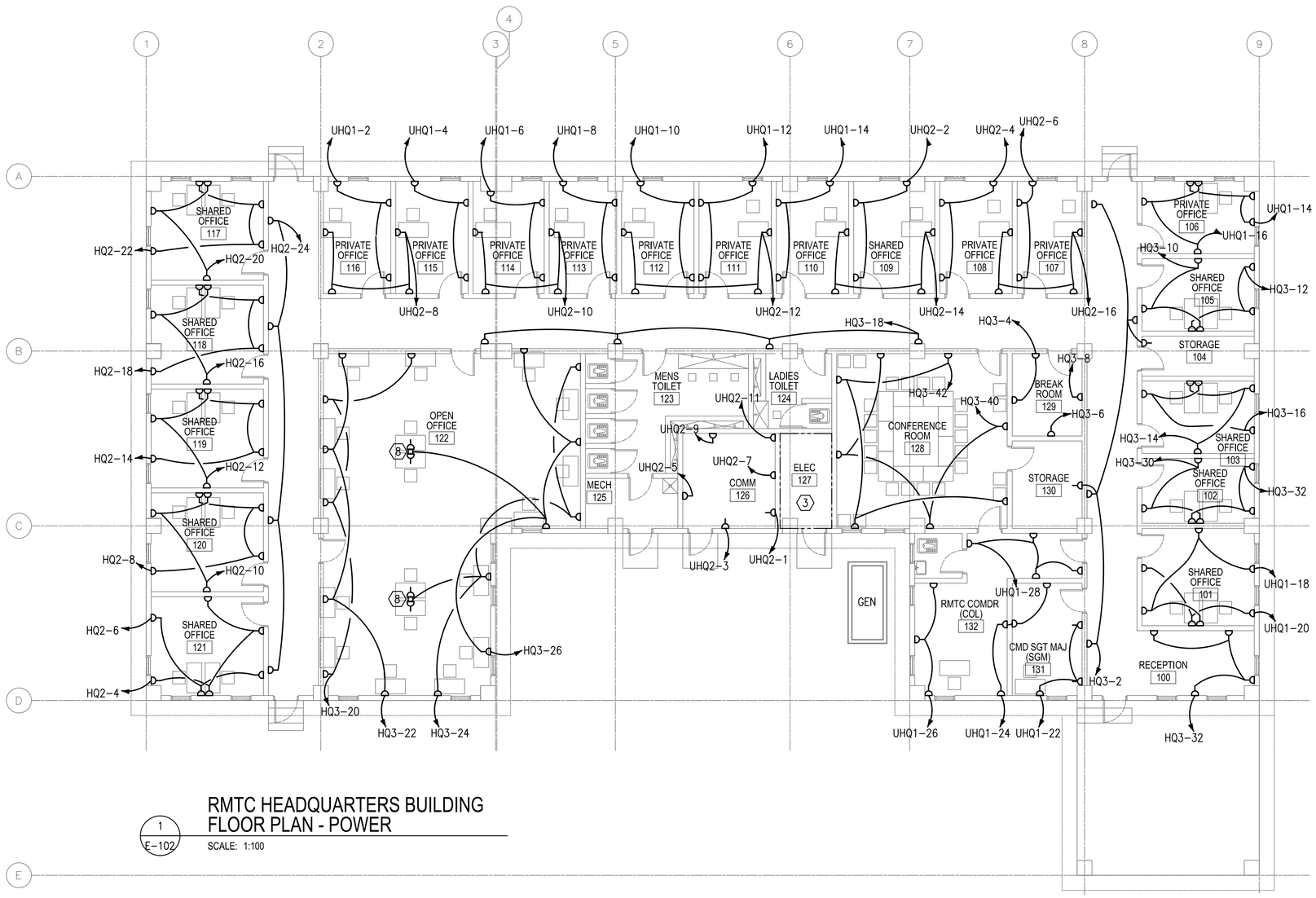

RMTC HEADQUARTERS BUILDING
FLOOR PLAN - POWER

1 / E-102

SCALE: 1:100

0 2000 4000
SCALE: 1:100

APPROVED:

A/E DESIGNER OF RECORD

SEAL:

COMMONWEALTH OF PENNSYLVANIA
REGISTERED PROFESSIONAL ENGINEER
JOSEPH R. GAUS
PE-074251

US ARMY CORPS OF ENGINEERS
AFGHANISTAN ENGINEER DISTRICT

Mark	Description	Date	Appr.

Mark	Description	Date	Appr.

U.S. ARMY CORPS OF ENGINEERS
AFGHANISTAN ENGINEER DISTRICT
APO AE 96338

Michael Baker Jr., Inc.
A unit of Michael Baker Corporation
Airside Business Park
100 Airside Drive
Moon Township, PA 15108
www.mbakercorp.com

Designed by: JRG
Dwn by: BJB
Ckd by: JRG
Reviewed by: JRG
Submitted by: BAKER
Date: 2/23/10
Rev: 0
Design file no.
Drawing code:
File name:
Plot date:
Plot scale:

AFGHAN NATIONAL ARMY
REGIONAL MILITARY TRAINING CENTER
STANDARD DESIGN

RMTC HEADQUARTERS BUILDING
ELECTRICAL POWER PLAN

Sheet reference number:
E-102

GENERAL NOTES:

1. REFER TO DRAWING #E–001 FOR THE ELECTRICAL SYMBOLS LIST.
2. REFER TO DRAWING #E–501 FOR THE POWER RISER.
3. REFER TO DRAWING #E–602 FOR PANEL SCHEDULES.
4. COORDINATE EXACT MOUNTING LOCATION OF DISCONNECTING MEANS FOR MECHANICAL AND PLUMBING EQUIPMENT IN THE FIELD.
5. FUSIBLE SAFETY SWITCHES THAT ARE NOT OTHERWISE IDENTIFIED SHALL BE 380V, 1P, 30A FUSED SAFETY SWITCHES WITH 20A FUSES.

NUMBERED NOTES:

1. SEE ENLARGED PLAN DRAWING #E–102 FOR DEVICE AND EQUIPMENT LOCATIONS THIS AREA.
2. PROVIDE POWER CONNECTION TO ELECTRIC UNIT HEATER #4. SEE DRAWINGS #E–602 AND #M–101 FOR MORE INFORMATION.
3. PROVIDE POWER CONNECTION TO ELECTRIC UNIT HEATER #2. SEE DRAWINGS #E–602 AND #M–101 FOR MORE INFORMATION.
4. PROVIDE POWER CONNECTION TO EXHAUST FAN #1. SEE DRAWINGS #E–602 AND #M–101 FOR MORE INFORMATION.
5. PROVIDE POWER CONNECTION TO EXHAUST FAN #2. SEE DRAWINGS #E–602 AND #M–101 FOR MORE INFORMATION.
6. CONCRETE EQUIPMENT PAD
7. PROVIDE POWER CONNECTION TO EXHAUST FAN #4. SEE DRAWINGS #E–602 AND #M–101 FOR MORE INFORMATION.
8. PROVIDE POWER CONNECTION TO EXHAUST FAN #5. SEE DRAWINGS #E–602 AND #M–101 FOR MORE INFORMATION.
9. PROVIDE POWER CONNECTION TO EXHAUST FAN #6. SEE DRAWINGS #E–602 AND #M–101 FOR MORE INFORMATION.
10. PROVIDE A 220/380V, 3ø, 50Hz, 150kW GENERATOR ON CONCRETE EQUIPMENT PAD IN A WEATHERPROOF HOUSING. PROVIDE (1) METER CLEARANCE AROUND ALL SIDES OF GEN–SET ENCLOSURE. ELECTRICAL CONTRACTOR SHALL BE RESPONSIBLE FOR DE–RATING THE GENERATOR AND UPS BASED ON SITE ALTITUDE AND AMBIENT TEMPERATURE CONDITIONS. PROVIDE A 50KW LOAD BANK INTEGRAL TO THE WEATHERPROOF GENERATOR ENCLOSURE. IN THE EVENT NORMAL POWER IS LOST TO THE BUILDING WHILE THE GENERATOR IS RUNNING A TEST USING THE LOAD BANK, THE GENERATOR SHALL AUTOMATICALLY END THE TEST AND TRANSFER POWER OVER TO THE BUILDING. THIS ENTIRE OPERATION SHALL TAKE LESS THAN 10 SECONDS.
11. PROVIDE EXTERIOR DOUBLE WALL TANK FOR GENERATOR TO PROVIDE 3 DAYS OF FUEL STORAGE.
12. NEMA 3R, 380V, 3P, 30A FUSED DISCONNECT FUSED AT 20A. SEE PLUMBING DRAWINGS FOR EXACT LOCATION OF WATER HEATER.
13. SEE DRAWING #E–602 FOR WIRE AND CONDUIT SIZE.
14. PROVIDE POWER CONNECTION TO ELECTRIC UNIT HEATER #5. SEE DRAWINGS #E–602 AND #M–101 FOR MORE INFORMATION.
15. PROVIDE POWER CONNECTION TO OUTDOOR UNIT OF SPLIT SYSTEM HEAT PUMP. SEE DRAWINGS #M–101 AND #E–602 FOR MORE INFORMATION.
16. THE DISCONNECTING MEANS FOR THIS PIECE OF EQUIPMENT SHALL BE IN A NEMA 3R ENCLOSURE.
17. PROVIDE POWER CONNECTION TO INDOOR UNIT OF SPLIT SYSTEM HEAT PUMP. SEE DRAWINGS #M–101 AND #E–602 FOR MORE INFORMATION.
18. PROVIDE POWER CONNECTION TO EXHAUST FAN #3. SEE DRAWINGS #E–602 AND #M–101 FOR MORE INFORMATION.
19. PROVIDE POWER CONNECTION TO EXHAUST FAN #7. SEE DRAWINGS #E–602 AND #M–101 FOR MORE INFORMATION.

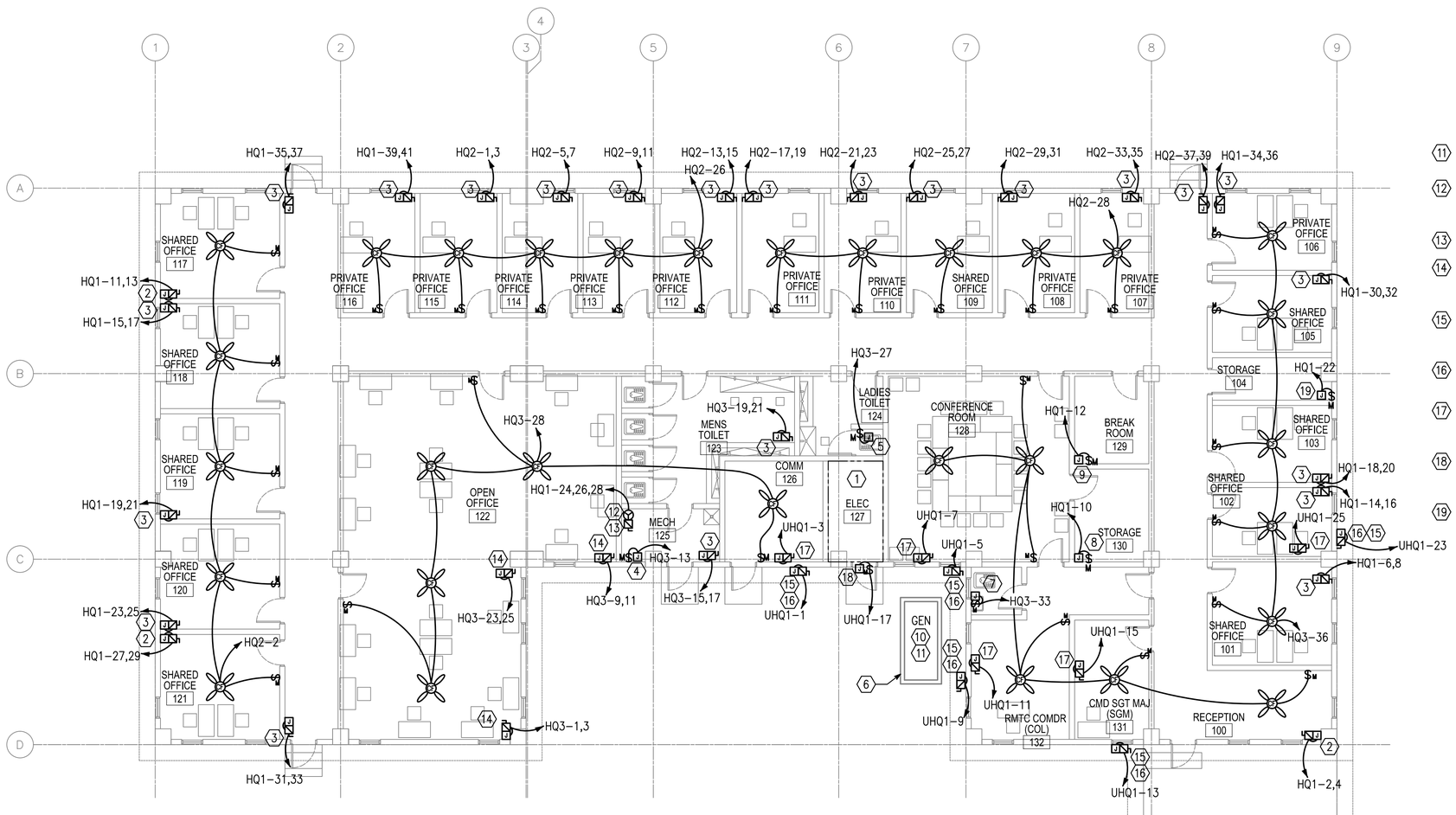

1
E–103

RMTC HEADQUARTERS BUILDING FLOOR PLAN - MECHANICAL POWER

SCALE: 1:100

0 2000 4000
SCALE: 1:100

APPROVED:

A/E DESIGNER OF RECORD

SEAL:

COMMONWEALTH OF PENNSYLVANIA
REGISTERED PROFESSIONAL
JOSEPH R. GAUS
1/29/10
ENGINEER
PE-074251

US ARMY CORPS OF ENGINEERS
AFGHANISTAN ENGINEER DISTRICT

Mark	Description	Date	Appr.	Mark	Description	Date	Appr.

Rev: 0
Date: 2/23/10
Design file no.
Drawing code:
File name:
Plot date:
Plot scale:

Designed by: JRG
Dwn by: BJB
Ckd by: JRG
Reviewed by: JRG
Submitted by: BAKER

U.S. ARMY CORPS OF ENGINEERS
AFGHANISTAN ENGINEER DISTRICT
APO AE 96338

Michael Baker Jr., Inc.
A unit of Michael Baker Corporation
Airside Business Park
100 Airside Drive
Moon Township, PA 15108
www.mbakercorp.com

AFGHAN NATIONAL ARMY
REGIONAL MILITARY TRAINING CENTER
STANDARD DESIGN

RMTC HEADQUARTERS BUILDING
ELECTRICAL MECHANICAL POWER PLAN

Sheet reference number:
E–103

GENERAL NOTES:

1. REFER TO DRAWING #E-001 FOR THE ELECTRICAL SYMBOLS LIST.
2. REFER TO DRAWING #E-501 FOR THE POWER RISER.
3. REFER TO DRAWING #E-602 FOR PANEL SCHEDULES.
4. COORDINATE EXACT MOUNTING LOCATION OF DISCONNECTING MEANS FOR MECHANICAL AND PLUMBING EQUIPMENT IN THE FIELD.
5. FUSIBLE SAFETY SWITCHES THAT ARE NOT OTHERWISE IDENTIFIED SHALL BE 380V, 1P, 30A FUSED SAFETY SWITCHES WITH 20A FUSES.

NUMBERED NOTES:

(1) SEE ENLARGED PLAN DRAWING #E-102 FOR DEVICE AND EQUIPMENT LOCATIONS THIS AREA.

(2) INSTALL (4) 50mm CONDUITS PASSING FROM THE COMMUNICATIONS ROOM TO THE ROOF OF THE BUILDING. THE ROOF PENETRATION SHALL HAVE A WEATHERPROOF BOX ON TOP AND SHALL BE FLASHED OR PATCHED AS NECESSARY TO PREVENT WATER LEAKAGE. THE (4) 50mm OR LARGER COMMUNICATION CONDUITS SHALL BE TYPICAL WITH THE FOLLOWING INSTALLATION CRITERIA: MANHOLE OR HAND-HOLE SYSTEMS SHALL HAVE NO MORE THAN 150 METERS BETWEEN ACCESS POINTS. PER NEC CODE, THERE SHALL NOT BE MORE THAN 3 BENDS PER RUN OF CONDUITS. THE RADIUS BENDS SHALL BE BETWEEN 609mm TO 914mm RADIUS BENDS.

(3) PROVIDE METALLIC RACEWAY POWER POLE TO SERVE WORKSTATIONS IN THIS LOCATION. DATA DROPS SHALL BE AS INDICATED. RACEWAY SHALL BE DUAL CHANNEL AND SIZED TO CARRY THE DATA CABLING AND DROPS ON THIS DRAWING AS WELL AS THE POWER CABLING AND RECEPTACLES SHOWN ON DRAWING #E-102.

(4) PROVIDE CONDUIT STUB UP IN THE ROOM FOR INCOMING TELECOMMUNICATIONS SERVICES FROM THE CENTRAL COMMUNICATIONS SYSTEM IN THE GARRISON.

(5) PROVIDE A 1200mm X 2400mm SHEET OF PLYWOOD PAINTED WITH FIRE RESISTANT PAINT FOR MOUNTING TELECOMMUNICATIONS EQUIPMENT.

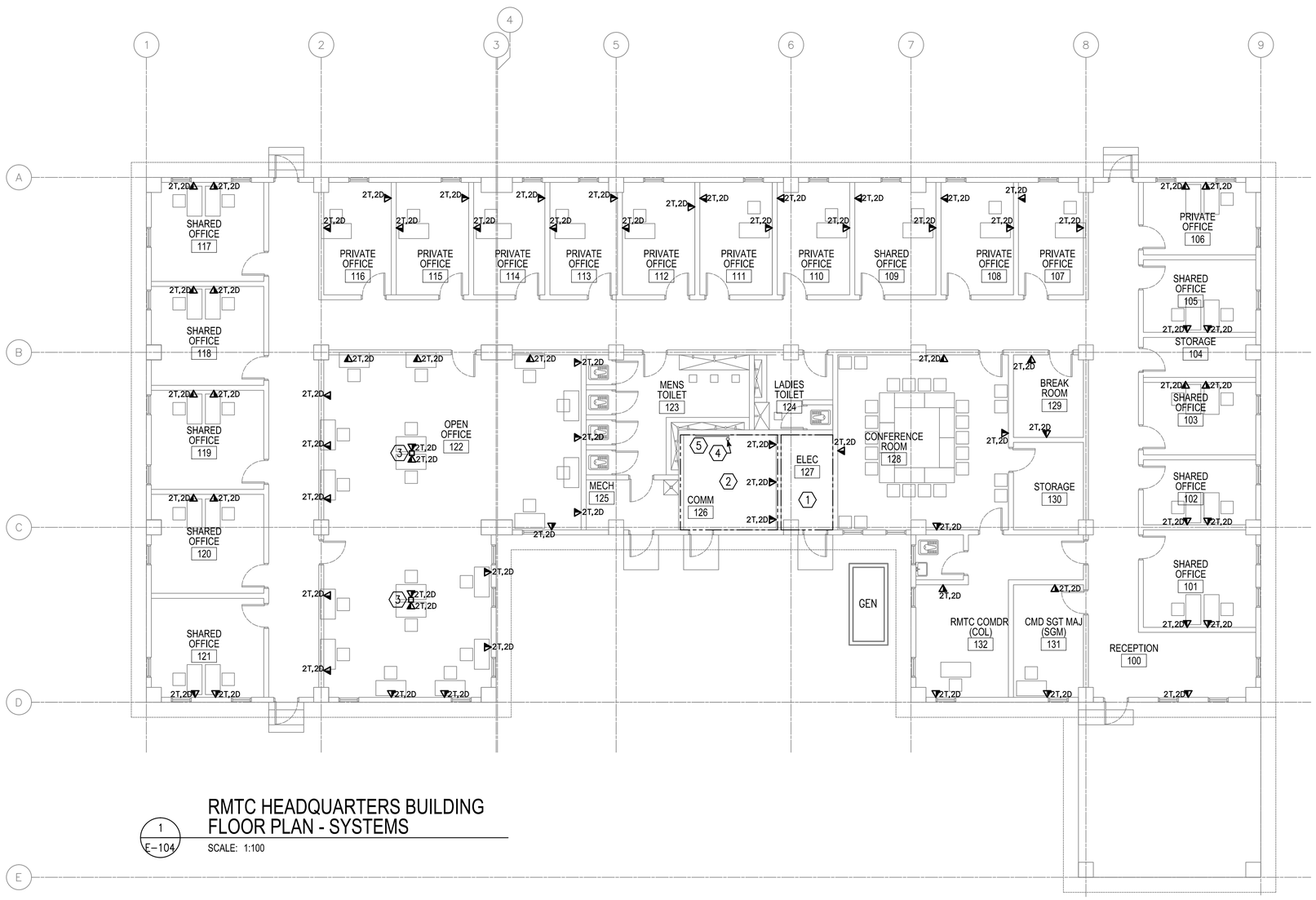

1 / E-104 RMTC HEADQUARTERS BUILDING FLOOR PLAN - SYSTEMS

SCALE: 1:100

0 2000 4000
SCALE: 1:100

APPROVED:

A/E DESIGNER OF RECORD

SEAL:

COMMONWEALTH OF PENNSYLVANIA REGISTERED PROFESSIONAL JOSEPH R. GAUS ENGINEER PE-074251

US ARMY CORPS OF ENGINEERS
AFGHANISTAN ENGINEER DISTRICT

Mark	Description	Date	Appr.	Mark	Description	Date	Appr.

Rev: 0
Date: 2/23/10
Design file no.
Drawing code:
File name:
Plot date:
Plot scale:

Designed by: JRG
Dwn by: BJB
Ckd by: JRG
Reviewed by: JRG
Submitted by: BAKER

U.S. ARMY CORPS OF ENGINEERS
AFGHANISTAN ENGINEER DISTRICT
APO AE 96338

Michael Baker Jr., Inc
A unit of Michael Baker Corporation
Airside Business Park
100 Airside Drive
Moon Township, PA 15108
www.mbakercorp.com

AFGHAN NATIONAL ARMY
REGIONAL MILITARY TRAINING CENTER
STANDARD DESIGN

RMTC HEADQUARTERS BUILDING
ELECTRICAL SYSTEMS PLAN

Sheet reference number:
E-104

GENERAL NOTES:

1. REFER TO DRAWING #E-001 FOR THE ELECTRICAL SYMBOLS LIST.

NUMBERED NOTES:

1. (1) 120.0mm² BARE, TINNED, COPPER COUNTERPOISE GROUND 700mm BELOW GRADE.
2. INSTALL DOWN CONDUCTOR IN 25mm SCHEDULE 80 PVC CONDUIT TO 20mm DIAMETER X 3 METERS SOLID COPPER TINNED GROUND ROD. (TYPICAL)
3. CADWELD TO BUILDING STRUCTURE AT 18 METERS ON CENTER AROUND THE ENTIRE PERIMETER OF THE BUILDING. (TYPICAL)
4. 120mm² LIGHTNING PROTECTION CABLE.
5. AIR TERMINAL. TERMINALS SHALL BE PLACED AT A MAXIMUM OF 6M ON CENTER PER NFPA 780 PARA. 4.8.2.1, AND WITHIN 0.6M OF RIDGE ENDS PER NFPA 780 PARA. 4.8 (TYPICAL)
6. 700mm MIN. (TYP) BETWEEN FOUNDATION AND GROUND LOOP.
7. GROUNDING GRID IS LESS THAN OR EQUAL TO 5 OHMS.

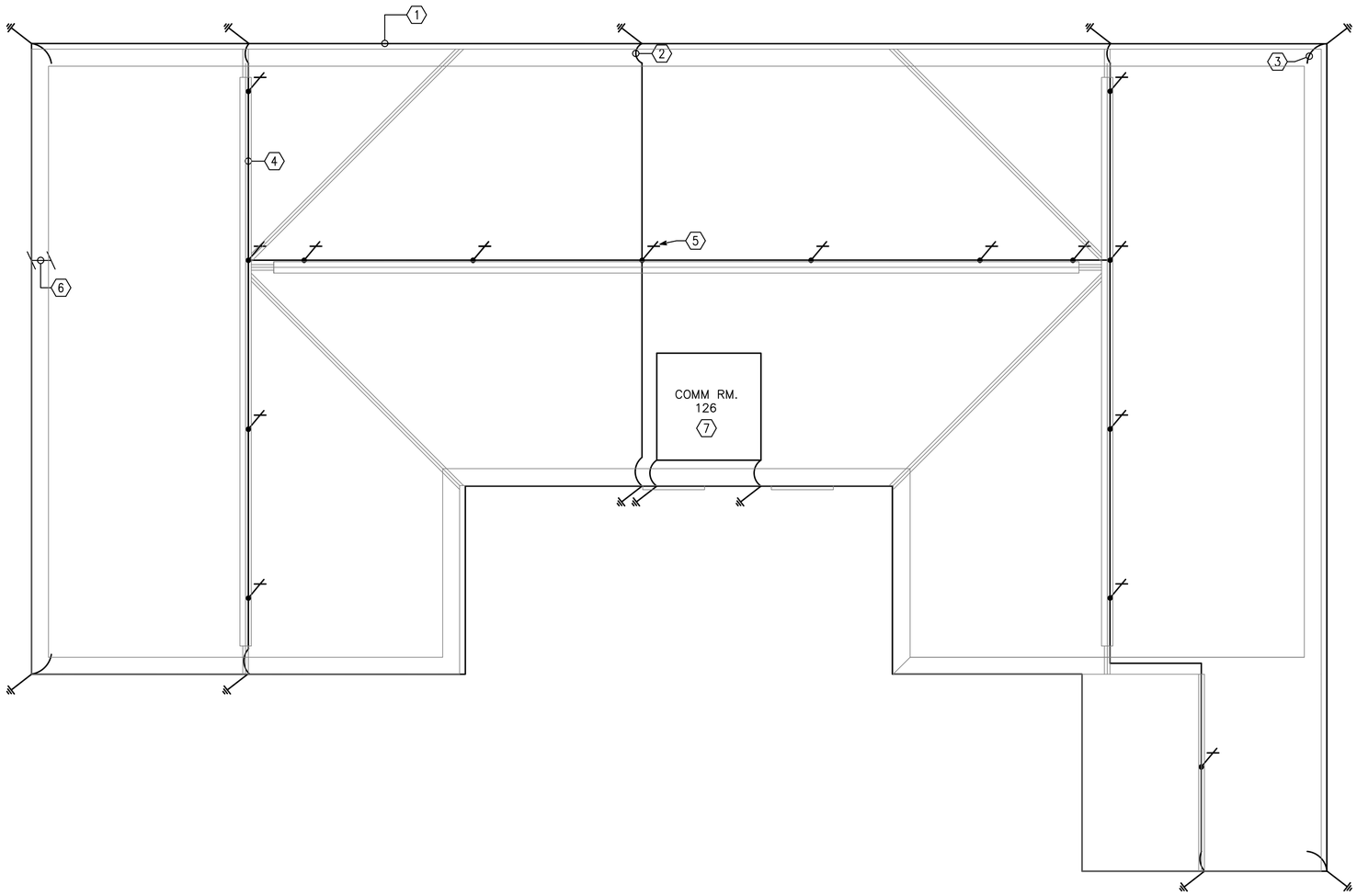

1 / E-105 RMTC HEADQUARTERS BUILDING (HQ) FLOOR PLAN - LIGHTNING PROTECTION

SCALE: 1:100

0 2000 4000
SCALE: 1:100

APPROVED:

A/E DESIGNER OF RECORD

SEAL:

COMMONWEALTH OF PENNSYLVANIA
REGISTERED PROFESSIONAL
JOSEPH R. GAUS
1/29/10
ENGINEER
PE-074251

US ARMY CORPS OF ENGINEERS
AFGHANISTAN ENGINEER DISTRICT

Mark	Description	Date	Appr.

Mark	Description	Date	Appr.

Designed by: RAJ
Dwn by: BJB
Ckd by: JRG
Reviewed by: JRG
Submitted by: BAKER
Date: 2/23/10
Rev: 0
Design file no.
Drawing code:
File name:
Plot date:
Plot scale:

U.S. ARMY CORPS OF ENGINEERS
AFGHANISTAN ENGINEER DISTRICT
APO AE 96338

Michael Baker Jr., Inc
A unit of Michael Baker Corporation
Airside Business Park
100 Airside Drive
Moon Township, PA 15108
www.mbakercorp.com

AFGHAN NATIONAL ARMY
REGIONAL MILITARY TRAINING CENTER
STANDARD DESIGN

RMTC HEADQUARTERS BUILDING
ELECTRICAL LIGHTNING PROTECTION PLAN

Sheet reference number:
E-105

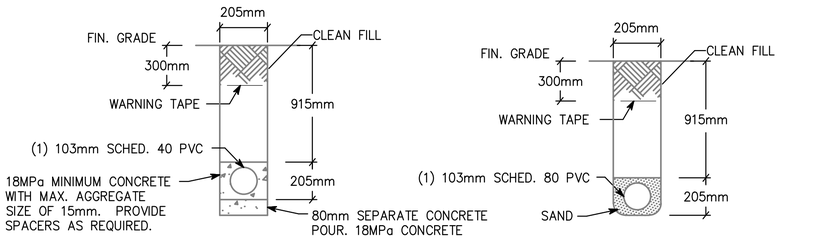

NOTE: PVC CONDUIT SHALL BE DIRECT BURIED SCHEDULE 80 FOR NO TRAFFIC AREAS AND CONCRETE-ENCASED SCHEDULE 40 FOR UNDER ROADWAYS OR TRAFFIC AREAS.

1 / E-501 TYPICAL DUCT BANK DETAILS FOR CONDUIT IN SAND OR CONCRETE

SCALE: N.T.S.

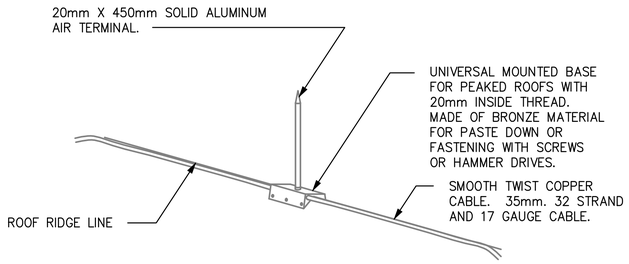

3 / E-501 LIGHTNING PROTECTION AIR TERMINAL DETAIL

SCALE: N.T.S.

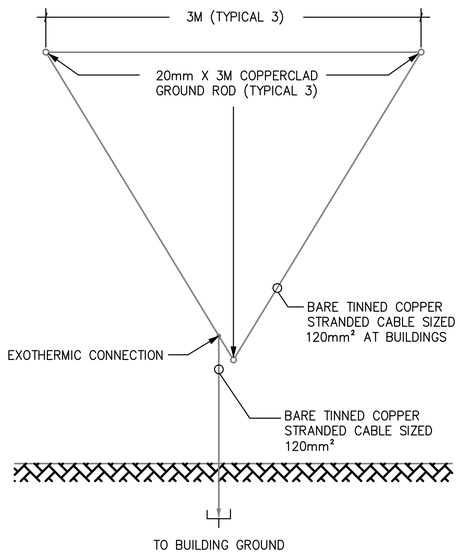

5 / E-501 GROUND TRIPOD SYSTEM DETAIL - PLAN

SCALE: N.T.S.

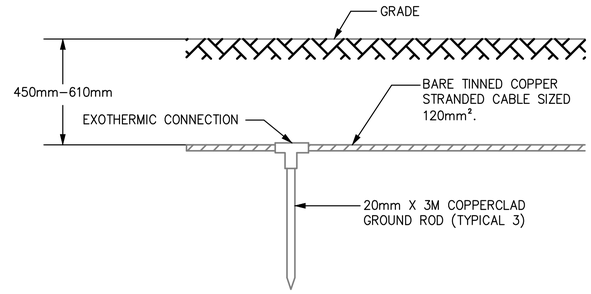

2 / E-501 GROUND TRIPOD SYSTEM DETAIL - ELEVATION

SCALE: N.T.S.

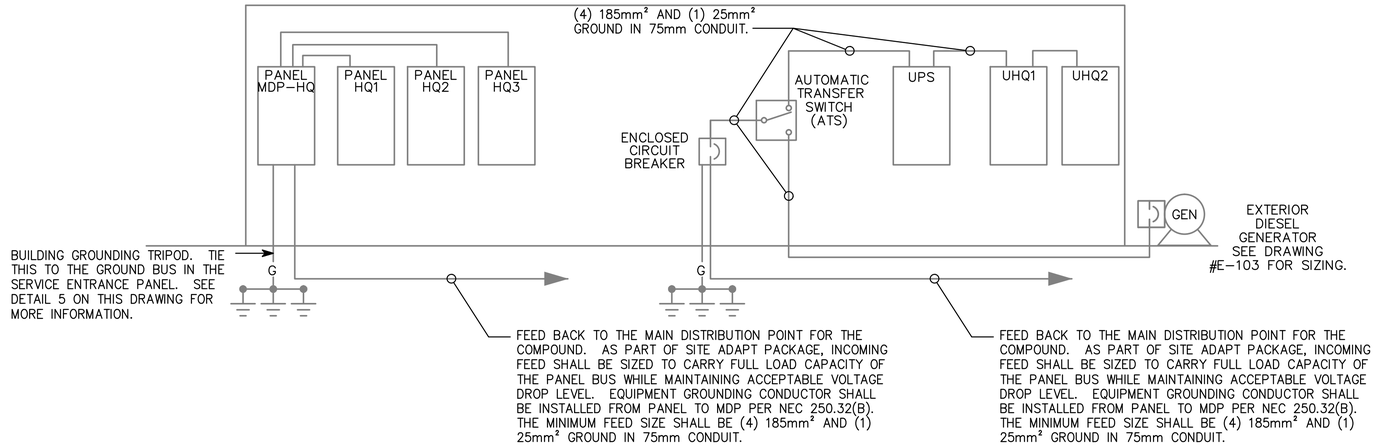

4 / E-501 HEADQUARTERS RISER DIAGRAM

SCALE: N.T.S.

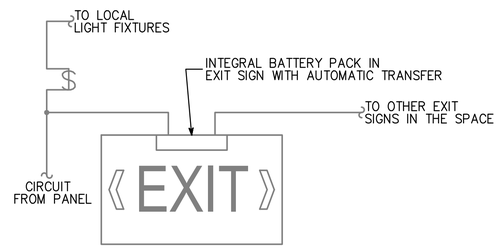

6 / E-501 EXIT SIGN WIRING DIAGRAM

SCALE: N.T.S.

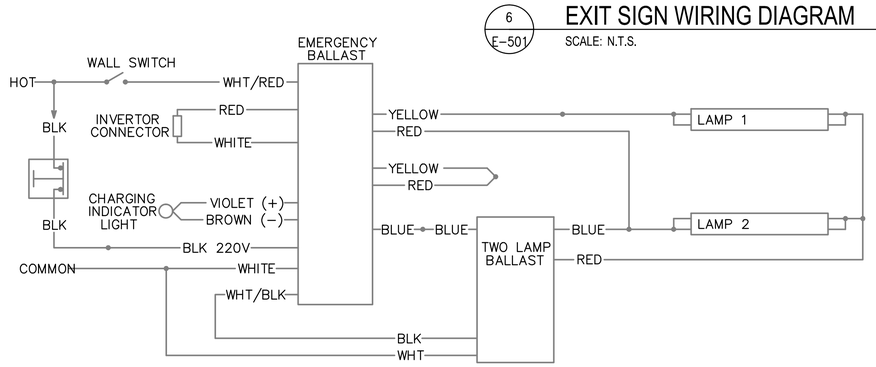

7 / E-501 EMERGENCY FIXTURE WIRING DIAGRAM

SCALE: N.T.S.

APPROVED:

A/E DESIGNER OF RECORD

SEAL:

COMMONWEALTH OF PENNSYLVANIA
REGISTERED PROFESSIONAL ENGINEER
JOSEPH R. GAUS
PE-074251

US ARMY CORPS OF ENGINEERS
AFGHANISTAN ENGINEER DISTRICT

Mark	Description	Date	Appr.	Mark	Description	Date	Appr.

Rev: 0
Date: 2/23/10
Design file no.
Drawing code:
File name:
Plot date:
Plot scale:

Designed by: RAJ
Dwn by: BJB
Ckd by: JRG
Reviewed by: JRG
Submitted by: BAKER

U.S. ARMY CORPS OF ENGINEERS
AFGHANISTAN ENGINEER DISTRICT
APO AE 96338

Michael Baker Jr., Inc.
A unit of Michael Baker Corporation
Airside Business Park
100 Airside Drive
Moon Township, PA 15108
www.mbakercorp.com

AFGHAN NATIONAL ARMY
REGIONAL MILITARY TRAINING CENTER
STANDARD DESIGN

RMTC HEADQUARTERS BUILDING
ELECTRICAL DETAILS

Sheet reference number:
E-501

(A) LARGER OF THE TWO SIZES GIVEN IN THE TABLES BELOW	
GROUNDING ELECTRODE CONDUCTOR (BASED ON AIC RATING)	
AIC RATING OF SERVICE EQUIPMENT	NECESSARY GROUNDING ELECTRODE CONDUCTOR SIZE
10K	(1) 35mm²
14K	(1) 50mm²
18K	(1) 70mm²
22K	(1) 70mm²
25K	(1) 70mm²
30K	(1) 95mm²
35K	(1) 120mm²
42K	(1) 150mm²
65K	(1) 185mm²
100K	(1) 300mm²
125K	(2) 185mm²
200K	(2) 300mm²
GROUNDING ELECTRODE CONDUCTOR (BASED ON NEC TABLE 250.66)	
SIZE OF LARGEST UNGROUNDED SERVICE CONDUCTOR OR EQUIVALENT AREA FOR PARALLEL CONDUCTORS	NECESSARY GROUNDING ELECTRODE CONDUCTOR SIZE
350 kcmil OR SMALLER	35mm²
OVER 350 kcmil TO 600 kcmil	70mm²
OVER 600 kcmil TO 1100 kcmil	70mm²
OVER 1100 kcmil	95mm²
NOTE: ALL SIZES ARE BASED ON COPPER CONDUCTORS.	

(B) EQUIPMENT GROUNDING CONDUCTOR	
RATING OR SETTING OF AUTOMATIC OVERCURRENT DEVICE IN CIRCUIT AHEAD OF EQUIPMENT, CONDUIT, ETC, NOT EXCEEDING (AMPERES)	NECESSARY EQUIPMENT GROUNDING CONDUCTOR SIZE
15	2.5mm²
20	4.0mm²
30	6.0mm²
40	6.0mm²
60	6.0mm²
100	10mm²
200	16mm²
300	25mm²
400	25mm²
500	35mm²
600	50mm²
800	70mm²
1000	70mm²
1200	95mm²
1600	120mm²
2000	150mm²
2500	185mm²
3000	240mm²
4000	300mm²
5000	400mm²
6000	400mm²
NOTE: ALL SIZES ARE BASED ON COPPER CONDUCTORS.	

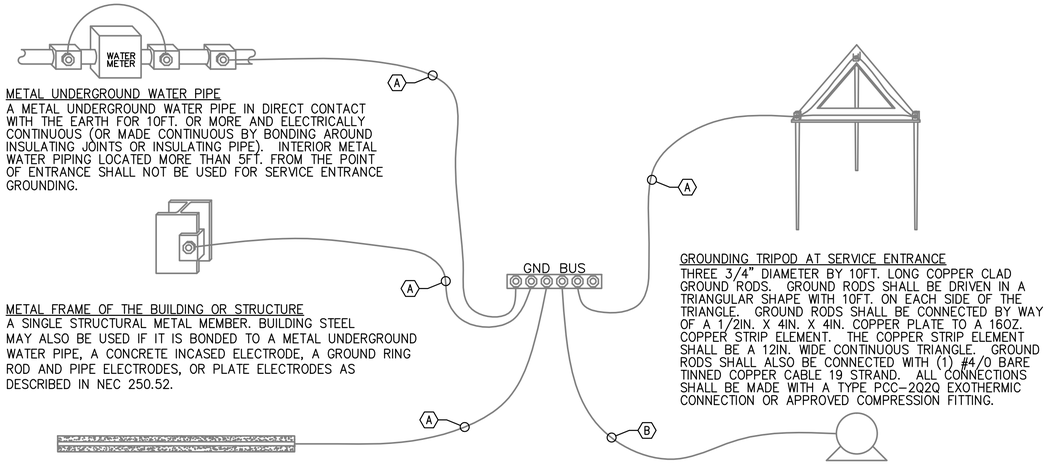

METAL UNDERGROUND WATER PIPE
A METAL UNDERGROUND WATER PIPE IN DIRECT CONTACT WITH THE EARTH FOR 10FT. OR MORE AND ELECTRICALLY CONTINUOUS (OR MADE CONTINUOUS BY BONDING AROUND INSULATING JOINTS OR INSULATING PIPE). INTERIOR METAL WATER PIPING LOCATED MORE THAN 5FT. FROM THE POINT OF ENTRANCE SHALL NOT BE USED FOR SERVICE ENTRANCE GROUNDING.

METAL FRAME OF THE BUILDING OR STRUCTURE
A SINGLE STRUCTURAL METAL MEMBER. BUILDING STEEL MAY ALSO BE USED IF IT IS BONDED TO A METAL UNDERGROUND WATER PIPE, A CONCRETE INCASED ELECTRODE, A GROUND RING ROD AND PIPE ELECTRODES, OR PLATE ELECTRODES AS DESCRIBED IN NEC 250.52.

CONCRETE ENCASED ELECTRODE
AN ELECTRODE ENCASED BY AT LEAST 2IN. OF CONCRETE , LOCATED WITHIN AND NEAR THE BOTTOM OF A CONCRETE FOUNDATION OR FOOTING THAT IS IN DIRECT CONTACT WITH THE EARTH, CONSISTING OF AT LEAST 20FT. OF ONE OR MORE BARE OR ZINC GALVANIZED OR OTHER ELECTRICALLY CONDUCTIVE COATED STEEL REINFORCING BARS OR RODS OF NOT LESS THAN 1/2" DIAMETER OR BARE COPPER CONDUCTOR NOT SMALLER THAN 4AWG.

GROUNDING TRIPOD AT SERVICE ENTRANCE
THREE 3/4" DIAMETER BY 10FT. LONG COPPER CLAD GROUND RODS. GROUND RODS SHALL BE DRIVEN IN A TRIANGULAR SHAPE WITH 10FT. ON EACH SIDE OF THE TRIANGLE. GROUND RODS SHALL BE CONNECTED BY WAY OF A 1/2IN. X 4IN. X 4IN. COPPER PLATE TO A 16OZ. COPPER STRIP ELEMENT. THE COPPER STRIP ELEMENT SHALL BE A 12IN. WIDE CONTINUOUS TRIANGLE. GROUND RODS SHALL ALSO BE CONNECTED WITH (1) #4/0 BARE TINNED COPPER CABLE 19 STRAND. ALL CONNECTIONS SHALL BE MADE WITH A TYPE PCC-2Q2Q EXOTHERMIC CONNECTION OR APPROVED COMPRESSION FITTING.

LOAD OR DOWNSTREAM PANEL
ALL LOADS IN THE BUILDING SHALL HAVE AN EQUIPMENT GROUNDING CONDUCTOR PULLED TO THEM.

1 / E-502 SERVICE ENTRANCE GROUNDING DETAIL
SCALE: N.T.S.

BOX #-OUTLET

NOTES:
1. CABLE MARKERS-PANDUIT SELF LAMINATING TYPE PSWM. INDICATE THUS. EXAMPLE.
"001-D1"
"001-D2"
"001-V1"
"015-TV"
IDENTIFY EACH CABLE SEGMENT AT EACH END.
2. LAMINATED NAMEPLATE-SIMILIAR TO ABOVE-SEE DETAIL.
3. SUBMIT LISTING OF NAMEPLATES FOR APPROVAL.

2 / E-502 CABLE MARKER DETAIL
SCALE: N.T.S.

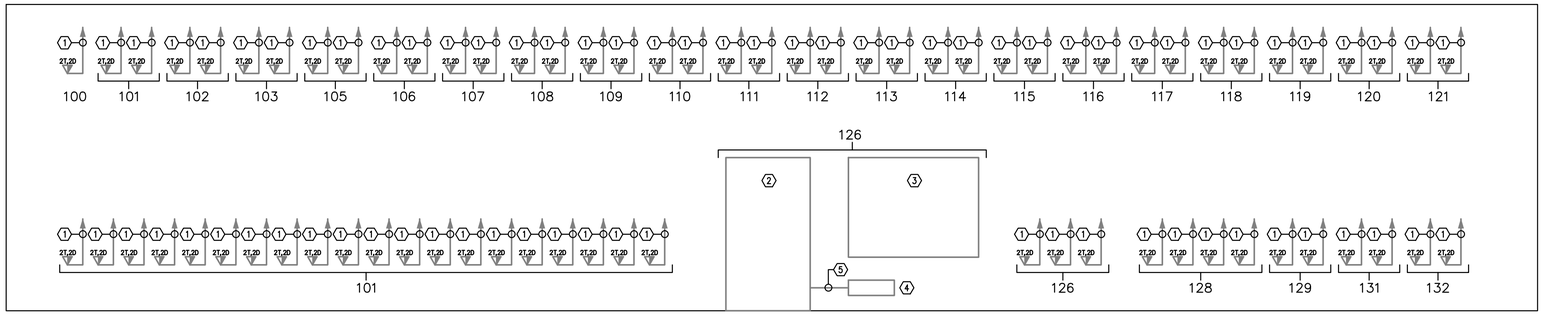

3 / E-502 COMMUNICATIONS RISER DIAGRAM
SCALE: N.T.S.

RISER NOTES:

1. (2) CAT6 CABLE TO TELEPHONE TERMINAL BOARD & (2) CAT6 CABLE TO DATA RACK.
2. DATA EQUIPMENT RACK. SEE DETAIL THIS SHEET.
3. TELEPHONE TERMINAL BOARD. SEE DETAIL THIS SHEET.
4. COMMUNICATIONS GROUND BAR.
5. #6 GROUND WIRE.

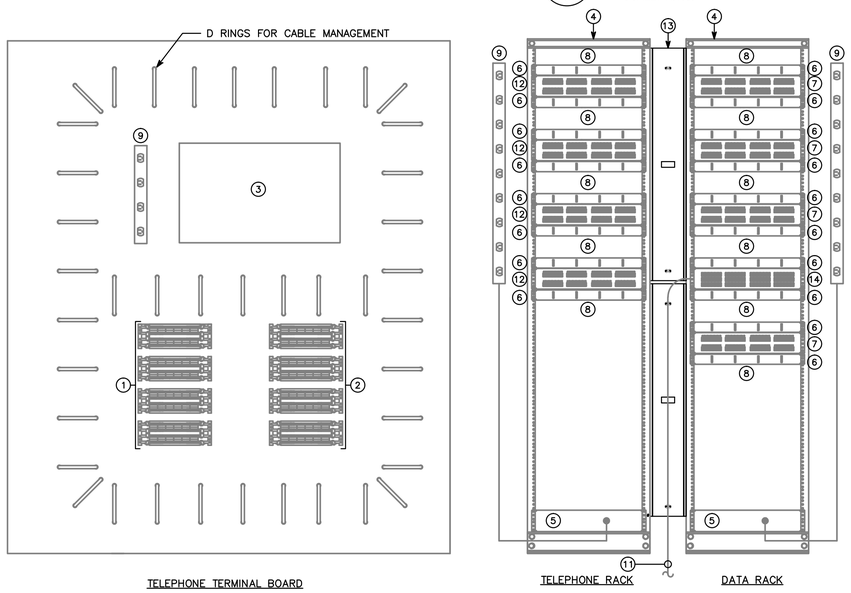

RACK DETAIL NUMBERED NOTES

1. (4) 100 PAIR CAT 3 110 BLOCK FOR TERMINATION OF CAT 3 HIGH PAIR COUNT CABLES FROM OTHER BUILDINGS.
2. (4) 100 PAIR CAT 3 110 BLOCKS FOR CROSS-CONNECTION OF CAT 3 TELEPHONE CABLES. PROVIDE CROSS-CONNECT CABLES TO DISTRIBUTION CABLE BLOCKS AND TO TELEPHONE SWITCH. CROSS-CONNECT EVERY INCOMING PAIR.
3. TELEPHONE ELECTRONICS BY OWNER.
4. 19" WIDE 84" HIGH FOUR POST FLOOR MOUNTED EQUIPMENT RACK. HOFFMAN #E4DR19FM51U OR EQUAL.
5. 2000VA RACKMOUNTED UPS. TRIPP-LITE #SU2200RTXL2UA.
6. HORIZONTAL WIRE MANAGEMENT (1RU). HOFFMAN #ECM19F1U WITH COVER.
7. CAT 6 48 PORT PATCH PANEL.
8. SPACE FOR OWNERS NETWORK ELECTRONICS.
9. 3' PLUG MOLDS WITH RECEPTACLES 4" OC.
10. (1) 100 PAIR CAT 3 110 BLOCK FOR TERMINATION OF DISTRIBUTION TELEPHONE PAIRS FROM THE DEMARK IN ROOM 1201.
11. OUTGOING FIBER OPTIC CABLE. EXTEND INNER DUCT INTO WIRE MANAGEMENT.
12. CAT 6 48 PORT PATCH PANEL FOR HORIZONTAL TELEPHONE CABLES THIS BUILDING.
13. VERTICAL CABLE MANAGEMENT. HOFFMAN #ECC3SF45UB WITH COVER.
14. 72 PORT FIBER OPTIC CABLE TERMINATION PANEL. TERMANATE ALL FIBER OPTIC CABLES IN PANEL WITH CONNECTORS. PROVIDE 10'-0" DUPLEX FIBER OPTIC PATCH CABLES FOR EVERY TERMINATED FIBER PAIR. COORDINATE CONNECTOR TYPES WITH THE OWNER.

4 / E-502 COMMUNICATION RACK AND TERMINAL BOARD DETAIL
SCALE: N.T.S.

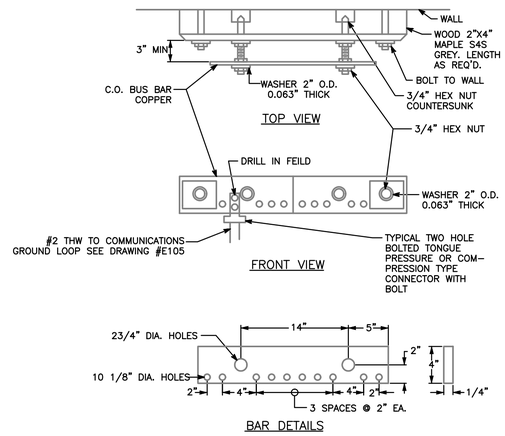

5 / E-502 COMMUNICATIONS GROUND BAR DETAIL
SCALE: N.T.S.

GENERAL COMMUNICATIONS NOTES:

1. GROUND ALL RACKS CABLE TRAYS AND PROTECTION MODULES PER NEC 250 AND EIA/TIA 607. SEE COMMUNICATIONS GROUNDING BAR DETAIL ABOVE.

APPROVED:

A/E DESIGNER OF RECORD

SEAL:

COMMONWEALTH OF PENNSYLVANIA
REGISTERED PROFESSIONAL
JOSEPH R. GAUS
1/29/10
ENGINEER
PE-074251

US ARMY CORPS OF ENGINEERS
AFGHANISTAN ENGINEER DISTRICT

Mark	Description	Date	Appr.	Mark	Description	Date	Appr.

Rev: 0
Date: 2/23/10
Design file no.
Drawing code:
File name:
Plot date:
Plot scale:

Designed by: RAJ
Dwn by: BJB
Ckd by: JRG
Reviewed by: JRG
Submitted by: BAKER

U.S. ARMY CORPS OF ENGINEERS
AFGHANISTAN ENGINEER DISTRICT
APO AE 96338

Michael Baker Jr., Inc
A unit of Michael Baker Corporation
Airside Business Park
100 Airside Drive
Moon Township, PA 15108
www.mbakercorp.com

AFGHAN NATIONAL ARMY
REGIONAL MILITARY TRAINING CENTER
STANDARD DESIGN

RMTC HEADQUARTERS BUILDING
ELECTRICAL DETAILS

Sheet reference number:
E-502

FIXTURE MARK 'A'

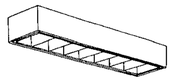

FIXTURE MARK 'B'

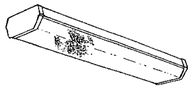

FIXTURE MARK 'C'

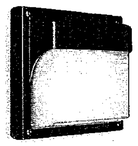

FIXTURE MARK 'G'

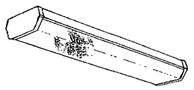

FIXTURE MARK 'H'

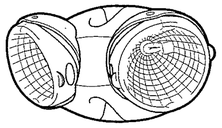

FIXTURE MARK 'E'

LIGHT FIXTURE SCHEDULE

FIXTURE MARK	STYLE NUMBER AND TYPE	NUMBER AND TYPE OF LAMPS	VOLTAGE	MOUNTING	NOTES
A	PARABOLIC SURFACE/PENDANT MOUNTED 300MM X 1200MM FLUORESCENT FIXTURE WITH ELECTRONIC BALLAST	(2) 32W 3500K	220V – 1ø 50HZ	SURFACE MOUNTED	FURNISHED WITH ELECTRONIC BALLAST. PARABOLIC LOUVER SHALL BE SPECULAR LENS IRIDESCENCE TYPE.
A2	SAME AS FIXTURE 'A' WITH EMERGENCY BALLAST	(2) 32W 3500K	220V – 1ø 50HZ	SURFACE MOUNTED	FURNISHED WITH ELECTRONIC BALLAST. PARABOLIC LOUVER SHALL BE SPECULAR LENS IRIDESCENCE TYPE. EMERGENCY BALLAST SELF TEST.
B	WET LOCATION WRAP AROUND SURFACE/PENDANT MOUNTED FLUORESCENT FIXTURE WITH PRISMATIC ACRYLIC LENS AND ELECTRONIC BALLAST	(2) 32W 3500K	220V – 1ø 50HZ	SURFACE MOUNTED	FURNISHED WITH ELECTRONIC BALLAST, VIRGIN ACRYLIC WRAP AROUND LENS.
B2	SAME AS FIXTURE 'B' WITH EMERGENCY BALLAST	(2) 32W 3500K	220V – 1ø 50HZ	SURFACE MOUNTED	FURNISHED WITH ELECTRONIC BALLAST, VIRGIN ACRYLIC WRAP AROUND LENS. EMERGENCY BALLAST WITH SELF TEST SWITCH.
C	INCANDESCENT ONE PIECE W/ APPROVED LENS STABILIZED HIGH IMPACT POLY CARBONATE.	(1) A19 – 100W INCANDESCENT	220V – 1ø 50HZ	WALL MOUNTED ABOVE EXTERIOR DOORS	
G	WRAP AROUND SURFACE/PENDANT MOUNTED FLUORESCENT FIXTURE WITH PRISMATIC ACRYLIC LENS AND ELECTRONIC BALLAST	(2) 32W 3500K	220V – 1ø 50HZ	SURFACE MOUNTED	FURNISHED WITH ELECTRONIC BALLAST, VIRGIN ACRYLIC WRAP AROUND LENS.
G2	SAME AS FIXTURE 'B' WITH EMERGENCY BALLAST	(2) 32W 3500K	220V – 1ø 50HZ	SURFACE MOUNTED	FURNISHED WITH ELECTRONIC BALLAST, VIRGIN ACRYLIC WRAP AROUND LENS. EMERGENCY BALLAST WITH SELF TEST SWITCH.
H	REMOTE HEAD EXTERIOR LIGHT HEAD POWERED FROM EXIT SIGN BATTERY– 12V DOUBLE HEAD CORROSION RESISTANT WITH UL34 WEATHERPROOF CONSTRUCTION	(2) 12W/12V HALOGEN LAMP	12V – 1ø 50HZ	EXTERIOR WALL MOUNTED AT TOP OF DOOR HEIGHT	
E	UNIVERSAL MOUNT ENGINEER GRADE THERMOPLASTIC HOUSING EXIT SIGN WITH LED LAMPS, RED LETTERS 6" IN HEIGHT WITH ARROWS AS INDICATED, WITH 12V CADMIUM BATTERY WITH REMOTE HEAD CAPABILITY	LED LAMPS	220V – 1ø 50HZ	UNIVERSAL MOUNTING	

APPROVED:

A/E DESIGNER OF RECORD

SEAL:

COMMONWEALTH OF PENNSYLVANIA
REGISTERED PROFESSIONAL
JOSEPH R. GAUS
1/29/10
ENGINEER
PE-074251

US ARMY CORPS OF ENGINEERS
AFGHANISTAN ENGINEER DISTRICT

Mark	Description	Date	Appr.

Mark	Description	Date	Appr.

Rev: 0

Date: 2/23/10

Design file no.

Drawing code:

File name:
Plot date:
Plot scale:

Designed by: JRG
Dwn by: BJB
Ckd by: JRG
Reviewed by: JRG
Submitted by: BAKER

U.S. ARMY CORPS OF ENGINEERS
AFGHANISTAN ENGINEER DISTRICT
APO AE 96338

Michael Baker Jr., Inc
A unit of Michael Baker Corporation
Airside Business Park
100 Airside Drive
Moon Township, PA 15108
www.mbakercorp.com

AFGHAN NATIONAL ARMY
REGIONAL MILITARY TRAINING CENTER
STANDARD DESIGN

RMTC HEADQUARTERS BUILDING
ELECTRICAL LIGHT FIXTURE SCHEDULE

Sheet reference number:
E–601

PANELBOARD HQ1 SURFACE MOUNTED
AMP. MAIN LUGS (OR) 150 AMP. MAIN BREAKER W/ 150 AMP. TRIP
CIRCUIT BREAKER TYPE 380/220 VOLTS 3 PHASE 4 WIRE 50 HZ 225 AMP. BUS

CKT. NO.	TRIP AMPS	NO. POLES	WIRE MM 2	GND MM2	CONDUIT MM	LOAD SERVED	LOAD-KVA A0	LOAD-KVA B0	LOAD-KVA C0	LOAD-KVA A0	LOAD-KVA B0	LOAD-KVA C0	LOAD SERVED	CONDUIT MM	GND MM2	WIRE MM2	NO. POLES	TRIP AMPS	CKT. NO.
1	20	1	4.0	4.0	20	LIGHTING – RM 117–121, ENTRY	1.8			2.0			ELECTRIC HEAT #4 – RM 100	20	4.0	4.0	2	20	2
3	20	1	4.0	4.0	20	LIGHTING – RM 122–125		1.8			2.0								4
5	20	1	4.0	4.0	20	LIGHTING – RM 128–130			1.6			1.3	ELECTRIC HEAT #2 – RM 101	20	4.0	4.0	2	20	6
7	20	1	4.0	4.0	20	LIGHTING – RM 107–116	2.0			1.3									8
9	20	1	4.0	4.0	20	LIGHTING – RM 100, 102–106		1.5			0.5		EXHAUST FAN #5 – RM 130	20	4.0	4.0	1	20	10
11	20	2	4.0	4.0	20	ELECTRIC HEAT #4 – RM 117			2.0			0.5	EXHAUST FAN #6 – RM 129	20	4.0	4.0	1	20	12
13							2.0			1.3			ELECTRIC HEAT #2 – RM 102	20	4.0	4.0	2	20	14
15	20	2	4.0	4.0	20	ELECTRIC HEAT #2 – RM 118		1.3			1.3								16
17									1.3			1.3	ELECTRIC HEAT #2 – RM 103	20	4.0	4.0	2	20	18
19	20	2	4.0	4.0	20	ELECTRIC HEAT #2 – RM 119	1.3			1.3									20
21								1.3			0.5		EXHAUST FAN #7 – RM 104	20	4.0	4.0	2	20	22
23	20	2	4.0	4.0	20	ELECTRIC HEAT #2 – RM 120			1.3			3.0	WATER HEATER – RM 125	20	4.0	4.0	3	20	24
25							1.3			3.0									26
27	20	2	4.0	4.0	20	ELECTRIC HEAT #2 – RM 121		2.0			3.0								28
29									2.0			1.3	ELECTRIC HEAT #2 – RM 105	20	4.0	4.0	2	20	30
31	20	2	4.0	4.0	20	ELECTRIC HEAT #2 – ENTRY	1.3			1.3									32
33								1.3			1.3		ELECTRIC HEAT #2 – RM 106	20	4.0	4.0	2	20	34
35	20	2	4.0	4.0	20	ELECTRIC HEAT #2 – ENTRY			1.3			1.3							36
37							1.3						SPARE				3	20	38
39	20	2	4.0	4.0	20	ELECTRIC HEAT #2 – RM 116		1.3											40
41									1.3										42
							11.0	10.5	10.8	10.2	8.6	8.7							

TOTAL CONN. LOAD PER PHASE (KVA): A0 21.2 B0 19.1 C0 19.5

TOTAL CONN. LOAD 59.8 KVA. 70 % DEMAND = ESTIMATED DEMAND LOAD 41.86

* MAIN BREAKER SHALL BE 3P EARTH GROUND TYPE

PANELBOARD HQ2 SURFACE MOUNTED
AMP. MAIN LUGS (OR) 100 AMP. MAIN BREAKER W/ 100 AMP. TRIP
CIRCUIT BREAKER TYPE 380/220 VOLTS 3 PHASE 4 WIRE 50 HZ 100 AMP. BUS

CKT. NO.	TRIP AMPS	NO. POLES	WIRE MM 2	GND MM2	CONDUIT MM	LOAD SERVED	LOAD-KVA A0	LOAD-KVA B0	LOAD-KVA C0	LOAD-KVA A0	LOAD-KVA B0	LOAD-KVA C0	LOAD SERVED	CONDUIT MM	GND MM2	WIRE MM2	NO. POLES	TRIP AMPS	CKT. NO.
1	20	2	4.0	4.0	20	ELECTRIC HEAT #2 – RM 115	1.3			1.0			CEILING FANS – RM 117–121	20	4.0	4.0	1	20	2
3								1.3			0.8		RECEPTACLES – RM 121	20	4.0	4.0	1	20	4
5	20	2	4.0	4.0	20	ELECTRIC HEAT #2 – RM 114			1.3			0.6	RECEPTACLES – RM 121	20	4.0	4.0	1	20	6
7							1.3			0.8			RECEPTACLES – RM 120	20	4.0	4.0	1	20	8
9	20	2	4.0	4.0	20	ELECTRIC HEAT #2 – RM 113		1.3			0.6		RECEPTACLES – RM 120	20	4.0	4.0	1	20	10
11									1.3			0.6	RECEPTACLES – RM 119	20	4.0	4.0	1	20	12
13	20	2	4.0	4.0	20	ELECTRIC HEAT #2 – RM 112	1.3			0.8			RECEPTACLES – RM 119	20	4.0	4.0	1	20	14
15								1.3			0.6		RECEPTACLES – RM 118	20	4.0	4.0	1	20	16
17	20	2	4.0	4.0	20	ELECTRIC HEAT #2 – RM 111			1.3			0.8	RECEPTACLES – RM 118	20	4.0	4.0	1	20	18
19							1.3			0.6			RECEPTACLES – RM 117	20	4.0	4.0	1	20	20
21	20	2	4.0	4.0	20	ELECTRIC HEAT #2 – RM 110		1.3			0.8		RECEPTACLES – RM 117	20	4.0	4.0	1	20	22
23									1.3			0.8	RECEPTS – CORRIDOR	20	4.0	4.0	1	20	24
25	20	2	4.0	4.0	20	ELECTRIC HEAT #2 – RM 109	1.3			1.0			CEILING FANS – RM 112–116	20	4.0	4.0	1	20	26
27								1.3			1.0		CEILING FANS – RM 107–111	20	4.0	4.0	1	20	28
29	20	2	4.0	4.0	20	ELECTRIC HEAT #2 – RM 108			1.3				SPARE				1	20	30
31							1.3						SPARE				1	20	32
33	20	2	4.0	4.0	20	ELECTRIC HEAT #2 – RM 107		1.3					SPARE				1	20	34
35									1.3				SPARE				1	20	36
37	20	2	4.0	4.0	20	ELECTRIC HEAT #2 – ENTRY	1.3						SPARE				1	20	38
39								1.3					SPARE				1	20	40
41	20	1				SPARE							SPARE				1	20	42
							9.1	9.1	7.8	4.2	3.8	2.8							

TOTAL CONN. LOAD PER PHASE (KVA): A0 13.3 B0 12.9 C0 10.6

TOTAL CONN. LOAD 36.8 KVA. 70 % DEMAND = ESTIMATED DEMAND LOAD 25.76

* MAIN BREAKER SHALL BE 3P EARTH GROUND TYPE

PANELBOARD HQ3 SURFACE MOUNTED
AMP. MAIN LUGS (OR) 100 AMP. MAIN BREAKER W/ 100 AMP. TRIP
CIRCUIT BREAKER TYPE 380/220 VOLTS 3 PHASE 4 WIRE 50 HZ 100 AMP. BUS

CKT. NO.	TRIP AMPS	NO. POLES	WIRE MM 2	GND MM2	CONDUIT MM	LOAD SERVED	LOAD-KVA A0	LOAD-KVA B0	LOAD-KVA C0	LOAD-KVA A0	LOAD-KVA B0	LOAD-KVA C0	LOAD SERVED	CONDUIT MM	GND MM2	WIRE MM2	NO. POLES	TRIP AMPS	CKT. NO.
1	20	2	4.0	4.0	20	ELECTRIC HEAT #5 – RM 122	2.5			1.2			RECEPTACLES – CORRIDOR	20	4.0	4.0	1	20	2
3								2.5			0.4		RECEPTACLES – RM 129	20	4.0	4.0	1	20	4
5	20	2				SPARE						1.0	RECEPTACLES – RM 129	20	4.0	4.0	1	20	6
7										1.0			RECEPTACLES – RM 129	20	4.0	4.0	1	20	8
9	20	2	4.0	4.0	20	ELECTRIC HEAT #5 – RM 122		2.5			0.6		RECEPTACLES – RM 105	20	4.0	4.0	1	20	10
11									2.5			0.8	RECEPTACLES – RM 105	20	4.0	4.0	1	20	12
13	20	1	4.0	4.0	20	EXHAUST FAN #1 – RM 125	0.5			0.6			RECEPTACLES – RM 103	20	4.0	4.0	1	20	14
15	20	2	4.0	4.0	20	ELECTRIC HEAT #2 – RM 125		1.3			0.6		RECEPTACLES – RM 103	20	4.0	4.0	1	20	16
17									1.3			0.8	RECEPTACLES – CORRIDOR	20	4.0	4.0	1	20	18
19	20	2	4.0	4.0	20	ELECTRIC HEAT #2 – RM 123	1.3			0.8			RECEPTACLES – RM 122	20	4.0	4.0	1	20	20
21								1.3			0.8		RECEPTACLES – RM 122	20	4.0	4.0	1	20	22
23	20	2	4.0	4.0	20	ELECTRIC HEAT #5 – RM 122			2.5			0.8	RECEPTACLES – RM 122	20	4.0	4.0	1	20	24
25							2.5			0.8			RECEPTACLES – RM 122	20	4.0	4.0	1	20	26
27	20	1	4.0	4.0	20	EXHAUST FAN #2 – RM 124		0.5			0.6		CEILING FANS – RM 122–126	20	4.0	4.0	1	20	28
29	20	1				SPARE						0.6	RECEPTACLES – RM 102	20	4.0	4.0	1	20	30
31	20	1				SPARE				0.6			RECEPTACLES – RM 102	20	4.0	4.0	1	20	32
33	20	1	4.0	4.0	20	EXHAUST FAN #4 – RM 132		0.5			0.8		RECEPTACLES – RM 100	20	4.0	4.0	1	20	34
35	20	1				SPARE						1.0	CEILING FANS – RM 101–106	20	4.0	4.0	1	20	36
37	20	1				SPARE							SPARE				1	20	38
39	20	1				SPARE					0.8		RECEPTACLES – RM 128	20	4.0	4.0	1	20	40
41	20	1				SPARE						0.8	RECEPTACLES – RM 128	20	4.0	4.0	1	20	42
							6.8	8.6	6.3	5.0	4.8	5.8							

TOTAL CONN. LOAD PER PHASE (KVA): A0 11.8 B0 13.4 C0 12.1

TOTAL CONN. LOAD 37.3 KVA. 70 % DEMAND = ESTIMATED DEMAND LOAD 26.11

* MAIN BREAKER SHALL BE 3P EARTH GROUND TYPE

PANELBOARD MDP–HQ SURFACE MOUNTED
AMP. MAIN LUGS (OR) 300 AMP. MAIN BREAKER W/ 300 AMP. TRIP
CIRCUIT BREAKER TYPE 380/220 VOLTS 3 PHASE 4 WIRE 50 HZ 300 AMP. BUS

CKT. NO.	TRIP AMPS	NO. POLES	WIRE MM 2	GND MM2	CONDUIT MM	LOAD SERVED	LOAD-KVA A0	LOAD-KVA B0	LOAD-KVA C0	LOAD-KVA A0	LOAD-KVA B0	LOAD-KVA C0	LOAD SERVED	CONDUIT MM	GND MM2	WIRE MM2	NO. POLES	TRIP AMPS	CKT. NO.
1							21.2			13.3									2
3	150	3	70.0	16.0	40	HQ1		19.1			12.9		HQ2	40	10.0	50.0	3	100	4
5									19.5			10.6							6
7							11.8												8
9	100	3	50.0	10.0	40	HQ3		13.4					SPARE				3	100	10
11									12.1										12
13																			14
15	225	3				SPARE							SPARE				3	100	16
17																			18
19																			20
21						SPACE							SPACE						22
23																			24
							33.0	32.5	31.6	13.3	12.9	10.6							

TOTAL CONN. LOAD PER PHASE (KVA): A0 46.3 B0 45.4 C0 42.2

TOTAL CONN. LOAD 133.9 KVA. 70 % DEMAND = ESTIMATED DEMAND LOAD 93.73

* MAIN BREAKER SHALL BE 3P EARTH GROUND TYPE

US ARMY CORPS OF ENGINEERS
AFGHANISTAN ENGINEER DISTRICT

Mark	Description	Date	Appr.

Mark	Description	Date	Appr.

Rev: 0
Date: 2/23/10
Design file no.
Drawing code:
File name:
Plot date:
Plot scale:

Designed by: JRG
Dwn by: BJB
Ckd by: JRG
Reviewed by: JRG
Submitted by: BAKER

U.S. ARMY CORPS OF ENGINEERS
AFGHANISTAN ENGINEER DISTRICT
APO AE 96338

Michael Baker Jr., Inc
A unit of Michael Baker Corporation
Airside Business Park
100 Airside Drive
Moon Township, Pa. 15108
www.mbakercorp.com

AFGHAN NATIONAL ARMY
REGIONAL MILITARY TRAINING CENTER
STANDARD DESIGN

RMTC HEADQUARTERS BUILDING
ELECTRICAL PANEL SCHEDULES

APPROVED:

A/E DESIGNER OF RECORD

SEAL:

COMMONWEALTH OF PENNSYLVANIA
REGISTERED PROFESSIONAL
JOSEPH R. GAUS
ENGINEER
PE-074251
12/21/10

Sheet reference number:
E–602

PANELBOARD UHQ1 SURFACE MOUNTED
AMP. MAIN LUGS (OR) 150 AMP. MAIN BREAKER W/ 150 AMP. TRIP
CIRCUIT BREAKER TYPE 380/220 VOLTS 3 PHASE 4 WIRE 50 HZ 225 AMP. BUS

CKT. NO.	TRIP AMPS	NO. POLES	WIRE MM 2	GND MM2	CONDUIT MM	LOAD SERVED	LOAD-KVA A0	LOAD-KVA B0	LOAD-KVA C0	LOAD-KVA A0	LOAD-KVA B0	LOAD-KVA C0	LOAD SERVED	CONDUIT MM	GND MM2	WIRE MM2	NO. POLES	TRIP AMPS	CKT. NO.
1	20	1	4.0	4.0	20	HEAT PUMP #3 – EXTERIOR	1.0			1.6			RECEPTACLES – RM 116	20	4.0	4.0	1	20	2
3	30	1	6.0	6.0	25	HEAT PUMP #3 – RM 126		3.4			0.6		RECEPTACLES – RM 115	20	4.0	4.0	1	20	4
5	20	1	4.0	4.0	20	HEAT PUMP #1 – EXTERIOR			1.0			0.6	RECEPTACLES – RM 114	20	4.0	4.0	1	20	6
7	20	1	4.0	4.0	20	HEAT PUMP #1 – RM 128	2.5			0.6			RECEPTACLES – RM 113	20	4.0	4.0	1	20	8
9	20	1	4.0	4.0	20	HEAT PUMP #2 – EXTERIOR		1.6			0.6		RECEPTACLES – RM 112	20	4.0	4.0	1	20	10
11	40	1	10.0	6.0	25	HEAT PUMP #2 – RM 132			5.0			0.6	RECEPTACLES – RM 111	20	4.0	4.0	1	20	12
13	20	1	4.0	4.0	20	HEAT PUMP #4 – EXTERIOR	1.0			0.6			RECEPTACLES – RM 106	20	4.0	4.0	1	20	14
15	20	1	4.0	4.0	20	HEAT PUMP #4 – RM 131		2.5			0.6		RECEPTACLES – RM 106	20	4.0	4.0	1	20	16
17	20	1	4.0	4.0	20	EXHUAST FAN #3 – RM 127			0.5			0.6	RECEPTACLES – RM 101	20	4.0	4.0	1	20	18
19	20	1	4.0	4.0	20	LIGHTING – RM 131, 132	0.5			0.6			RECEPTACLES – RM 101	20	4.0	4.0	1	20	20
21	20	1	4.0	4.0	20	LIGHTING – RM 126, 127		0.5			0.6		RECEPTACLES – RM 131	20	4.0	4.0	1	20	22
23	20	1	4.0	4.0	20	HEAT PUMP #5 – EXTERIOR			1.0			0.8	RECEPTACLES – RM 131	20	4.0	4.0	1	20	24
25	20	1	4.0	4.0	20	HEAT PUMP #5 – RM 102	2.5			0.6			RECEPTACLES – RM 132	20	4.0	4.0	1	20	26
27	20	1				SPARE					0.8		RECEPTACLES – RM 132	20	4.0	4.0	1	20	28
29	20	1				SPARE							SPARE				1	20	30
31	20	1				SPARE							SPARE				1	20	32
33	20	1				SPARE							SPARE				1	20	34
35	20	1				SPARE							SPARE				1	20	36
37	20	1				SPARE				5.0			UHQ2	40	6.0	16.0	3	50	38
39	20	1				SPARE					5.0								40
41	20	1				SPARE						4.4							42
							7.5	8.0	7.5	8.0	8.2	7.0	TOTAL CONN. LOAD PER PHASE (KVA): A0 15.5 B0 16.2 C0 14.5						

TOTAL CONN. LOAD 46.2 KVA. 70 % DEMAND = ESTIMATED DEMAND LOAD 32.34

* MAIN BREAKER SHALL BE 3P EARTH GROUND TYPE

PANELBOARD UHQ2 SURFACE MOUNTED
AMP. MAIN LUGS (OR) 50 AMP. MAIN BREAKER W/ 50 AMP. TRIP
CIRCUIT BREAKER TYPE 380/220 VOLTS 3 PHASE 4 WIRE 50 HZ 100 AMP. BUS

CKT. NO.	TRIP AMPS	NO. POLES	WIRE MM 2	GND MM2	CONDUIT MM	LOAD SERVED	LOAD-KVA A0	LOAD-KVA B0	LOAD-KVA C0	LOAD-KVA A0	LOAD-KVA B0	LOAD-KVA C0	LOAD SERVED	CONDUIT MM	GND MM2	WIRE MM2	NO. POLES	TRIP AMPS	CKT. NO.
1	20	1	4.0	4.0	20	RECEPTACLES – RM 126	1.0			0.6			RECEPTACLES – RM 109	20	4.0	4.0	1	20	2
3	20	1	4.0	4.0	20	RECEPTACLES – RM 126		1.0			0.6		RECEPTACLES – RM 108	20	4.0	4.0	1	20	4
5	20	1	4.0	4.0	20	RECEPTACLES – RM 126			1.0			0.6	RECEPTACLES – RM 107	20	4.0	4.0	1	20	6
7	20	1	4.0	4.0	20	RECEPTACLES – RM 126	1.0			0.8			RECEPTACLES – RM 115–116	20	4.0	4.0	1	20	8
9	20	1	4.0	4.0	20	RECEPTACLES – RM 126		1.0			0.8		RECEPTACLES – RM 113–114	20	4.0	4.0	1	20	10
11	20	1	4.0	4.0	20	RECEPTACLES – RM 126			1.0			0.8	RECEPTACLES – RM 111–112	20	4.0	4.0	1	20	12
13	20	1	4.0	4.0	20	RECEPTACLES – RM 127	1.0			0.6			RECEPTACLES – RM 109–110	20	4.0	4.0	1	20	14
15	20	1	4.0	4.0	20	RECEPTACLES – RM 127		1.0			0.6		RECEPTACLES – RM 107–108	20	4.0	4.0	1	20	16
17	20	1	4.0	4.0	20	RECEPTACLES – RM 127			1.0				SPARE				1	20	18
19	20	1				SPARE							SPARE				1	20	20
21	20	1				SPARE							SPARE				1	20	22
23	20	1				SPARE							SPARE				1	20	24
25	20	1				SPARE							SPARE				1	20	26
27	20	1				SPARE							SPARE				1	20	28
29	20	1				SPARE							SPARE				1	20	30
31	20	1				SPARE							SPARE				1	20	32
33	20	1				SPARE							SPARE				1	20	34
35	20	1				SPARE							SPARE				1	20	36
37	20	1				SPARE							SPARE				1	20	38
39	20	1				SPARE							SPARE				1	20	40
41	20	1				SPARE							SPARE				1	20	42
							3.0	3.0	3.0	2.0	2.0	1.4	TOTAL CONN. LOAD PER PHASE (KVA): A0 5.0 B0 5.0 C0 4.4						

TOTAL CONN. LOAD 14.4 KVA. 70 % DEMAND = ESTIMATED DEMAND LOAD 10.08

* MAIN BREAKER SHALL BE 3P EARTH GROUND TYPE

APPROVED:

A/E DESIGNER OF RECORD

SEAL:

COMMONWEALTH OF PENNSYLVANIA
REGISTERED PROFESSIONAL
JOSEPH R. GAUS
ENGINEER
PE-074251
1/29/10

US ARMY CORPS OF ENGINEERS
AFGHANISTAN ENGINEER DISTRICT

Mark	Description	Date	Appr.

Mark	Description	Date	Appr.

Rev: 0
Date: 2/23/10
Design file no.
Drawing code:
File name:
Plot date:
Plot scale:

Designed by: JRG
Dwn by: BJB
Ckd by: JRG
Reviewed by: JRG
Submitted by: BAKER

U.S. ARMY CORPS OF ENGINEERS
AFGHANISTAN ENGINEER DISTRICT
APO AE 96338

Michael Baker Jr., Inc.
A unit of Michael Baker Corporation
Airside Business Park
100 Airside Drive
Moon Township, PA 15108
www.mbakercorp.com

AFGHAN NATIONAL ARMY
REGIONAL MILITARY TRAINING CENTER
STANDARD DESIGN

RMTC HEADQUARTERS BUILDING
ELECTRICAL PANEL SCHEDULES

Sheet reference number:
E–603

AFGHAN NATIONAL ARMY

STANDARD BUILDING DESIGN

RMTC STORAGE

100% FINAL DESIGN SUBMITTAL

SHEET INDEX

G–001 COVER SHEET

STRUCTURAL

S–001 GENERAL NOTES & DESIGN CRITERIA
S–101 FOUNDATION/SLAB PLAN
S–102 ROOF FRAMING PLAN
S–401 BUILDING SECTIONS
S–402 ENLARGED ELEVATED SLAB PLAN
S–501 FOUNDATION SECTIONS
S–502 FRAMING SECTIONS
S–503 BEAM & COLUMN DETAILS
S–504 BEAM & COLUMN DETAILS
S–601 SCHEDULES
S–701 TYPICAL DETAILS
S–702 TYPICAL DETAILS

ARCHITECTURAL

A–001 LIFE SAFETY PLAN
A–101 FLOOR PLAN
A–102 ROOF PLAN
A–201 ELEVATIONS
A–301 BUILDING SECTIONS
A–401 WALL SECTIONS
A–501 EXTERIOR DETAILS
A–502 HEAD, JAMB, & SILL DETAILS
A–503 STOOP DETAILS
A–504 CANOPY DETAILS
A–601 WINDOW & DOOR SCHEDULES

MECHANICAL

M–101 HVAC FLOOR PLAN, SCHEDULES, & DETAILS

ELECTRICAL

E–001 ELECTRICAL SYMBOLS & ABBREVIATIONS
E–101 ELECTRICAL LIGHTING PLAN
E–102 ELECTRICAL POWER & SYSTEMS PLAN
E–103 ELECTRICAL LIGHTNING PROTECTION
E–501 ELECTRICAL DETAILS
E–502 ELECTRICAL DETAILS
E–601 ELECTRICAL LIGHT FIXTURE SCHEDULE
E–602 ELECTRICAL PANEL SCHEDULES

US ARMY CORPS OF ENGINEERS
AFGHANISTAN ENGINEER DISTRICT

Mark	Description	Date	Appr.	Mark	Description	Date	Appr.

U.S. ARMY CORPS OF ENGINEERS
AFGHANISTAN ENGINEER DISTRICT
APO AE 96338

Michael Baker Jr., Inc.
A unit of Michael Baker Corporation
Airside Business Park
100 Airside Drive
Moon Township, PA 15108
www.mbakercorp.com

Designed by: KMF/MMY
Dwn by: RCG
Ckd by: CWW
Reviewed by: LHM
Submitted by: BAKER
Date: 2/23/10
Rev: 0
Design file no.
Drawing code:
File name: ANASTORG.001CS
Plot date: 2/23/2010
Plot scale: X:X

AFGHAN NATIONAL ARMY
REGIONAL MILITARY TRAINING CENTER
STANDARD DESIGN

RMTC STORAGE

COVER SHEET

Sheet reference number:
G–001

STRUCTURAL ABBREVIATIONS:

ACI	AMERICAN CONCRETE INSTITUTE
ADD'L	ADDITIONAL
AISC	AMERICAN INSTITUTE OF STEEL CONSTRUCTION
AISI	AMERICAN IRON AND STEEL INSTITUTE
ASTM	AMERICAN SOCIETY FOR TESTING AND MATERIALS
ARCH	ARCHITECTURAL
B	BOTTOM
BLDG	BUILDING
BOTT	BOTTOM
℄	CENTER LINE
CFMRF	COLD FORM METAL ROOF FRAME
CFMF	COLD FORM METAL FRAME
CFS	COLD FORMED STEEL
CIP	CAST-IN-PLACE
CIPL	CAST-IN-PLACE LINTEL
CJ	CONTROL JOINT
CLR	CLEAR
CMU	CONCRETE MASONRY UNIT
COEFF	COEFFICIENT
COL	COLUMN
CONC	CONCRETE
CONT	CONTINUOUS
COORD	COORDINATE
CRSI	CONCRETE REINFORCING STEEL INSTITUTE
CSJ	CONSTRUCTION JOINT
DIA	DIAMETER
DIAG	DIAGONAL
DIM	DIMENSION
DWG	DRAWING
DWL	DOWEL
EA	EACH
EF	EACH FACE
ELEC	ELECTRICAL
ELEV	ELEVATION
EMBED	EMBEDMENT
EQUIV	EQUIVALENT
ETC	ET CETERA
EW	EACH WAY
EXP	EXPANSION
EXT	EXTERIOR
FTG	FOOTING
GA	GAUGE
GB	GRADE BEAM
HORIZ	HORIZONTAL
h	HOUR
HRS	HOURS
IBC	INTERNATIONAL BUILDING CODE
INFO	INFORMATION
INT	INTERIOR
kg	KILOGRAM
km	KILOMETER
kN	KILONEWTON
kPa	KILOPASCAL
L#	ANGLE (# INDICATES SIZE)
LONG	LONGITUDINAL
LLV	LONG LEG VERTICAL
m	METER
MAX	MAXIMUM
MECH	MECHANICAL
MFG	MANUFACTURER
MID	MIDDLE
MIN	MINIMUM
MISC	MISCELLANEOUS
mm	MILLIMETER
MPa	MEGAPASCAL
MTL	METAL
MWFRS	MAIN WIND FORCE RESISTING SYSTEM
N	NEWTON
N	NORTH
N/A	NOT APPLICABLE
#	NUMBER SYMBOL FOR REBAR SIZE
NTS	NOT TO SCALE
OC	ON CENTER
OD	OUTSIDE DIAMETER
OPNG	OPENING
ℙ or PL	PLATE
PRE-ENG	PRE-ENGINEERED
REINF	REINFORCED
REQ'D	REQUIRED
RB	ROOF BEAM
SIM	SIMILAR
SPECS	SPECIFICATIONS
STD	STANDARD
STRUCT	STRUCTURAL
SW	SHEAR WALL
T	TOP
T/	TOP OF
T/ELEV	TOP ELEVATION
T/SLAB	TOP OF SLAB
T&B	TOP AND BOTTOM
THK	THICK
TYP	TYPICAL
UFC	UNIFIED FACILITIES CRITERIA
UON	UNLESS OTHERWISE NOTED
VERT	VERTICAL
W	WIDTH
W/	WITH

1.0 GENERAL NOTES:

1.1 THIS PROJECT HAS BEEN DESIGNED FOR THE WEIGHTS AND MATERIALS INDICATED ON THE SHEETS AND FOR THE LIVE LOADS INDICATED IN THE DESIGN DATA. IT IS THE CONTRACTOR'S RESPONSIBILITY TO DETERMINE ALLOWABLE CONSTRUCTION LOADS AND TO PROVIDE PROPER DESIGN AND CONSTRUCTION OF FALSEWORK, FORMWORK, STAGING, BRACING, SHEETING AND SHORING, ETC.

1.1 COORDINATE THESE SHEETS WITH THE ARCHITECTURAL, MECHANICAL, ELECTRICAL, PLUMBING, AND CIVIL SHEETS. ALL DIMENSIONS SHOWN ON THE SHEETS ARE MILLIMETERS UNLESS NOTED OTHERWISE.

1.2 THE CONTRACTOR SHALL VERIFY AND COORDINATE ALL FLOOR AND ROOF OPENING SIZES AND LOCATIONS, EQUIPMENT PAD SIZES AND LOCATIONS, ANCHOR BOLT LAYOUTS, ETC WITH EQUIPMENT SELECTED. THE CONTRACTOR SHALL MAKE ANY REQUIRED MODIFICATIONS AT NO ADDITIONAL COST.

1.3 THE CONTRACTOR SHALL REFER TO THE ARCHITECTURAL, MECHANICAL, ELECTRICAL AND PLUMBING SHEETS FOR SLEEVES, CURBS, INSERTS OR OPENINGS, ETC. NOT HEREIN INDICATED.

1.4 WORK NOT INCLUDED ON THE SHEETS BUT IMPLIED TO BE SIMILAR TO THAT SHOWN AT CORRESPONDING PLACES ELSEWHERE ON THE SHEETS SHALL BE REPEATED.

1.5 IN CASE OF CONFLICT BETWEEN THE NOTES, DETAILS AND SPECIFICATIONS THE MOST RIGID REQUIREMENTS SHALL GOVERN.

1.6 SEE ARCHITECTURAL SHEETS FOR LOCATIONS OF MASONRY AND NON-LOAD BEARING PARTITIONS. PROVIDE COMPRESSIBLE FIRESAFING AT TOP OF WALL AS REQUIRED BY ARCHITECTURAL SHEETS.

1.7 COORDINATE FINISHED FLOOR DATUM ELEVATION 0.0m WITH THE CIVIL SHEETS.

2.0 FOUNDATION NOTES

2.1 THE GEOTECHNICAL ANALYSIS FOR THIS PROJECT IS THE RESPONSIBILITY OF THE CONTRACTOR AWARDED THE WORK. AN ASSUMED ALLOWABLE SOIL BEARING VALUE OF 72 kPa HAS BEEN USED IN THE STRUCTURAL ANALYSIS OF THE BUILDING HEREIN AND SHALL BE CONFIRMED AND VERIFIED AS PART OF THE GEOTECHNICAL INVESTIGATION. VALUES WHICH DO NOT MEET THE REQUIREMENTS INDICATED ON THE BASIS OF DESIGN SHEET SHALL BE IMMEDIATELY BROUGHT TO THE ATTENTION OF THE CONTRACTING OFFICER FOR CONSIDERATION AND DETERMINATION ON THE NEXT APPROPRIATE COURSE OF ACTION.

2.2 SEE THE SPECIFICATION FOR ADDITIONAL REQUIREMENTS TO THOSE OUTLINED IN THE GEOTECHNICAL INVESTIGATION FOR EXCAVATION AND PREPARATION OF THE FOUNDATION AND THE SLAB ON GRADE SUBGRADE INCLUDING COMPACTION PROCEDURES.

2.3 EXCAVATIONS FOR FOOTINGS SHALL HAVE THE SIDES AND BOTTOMS TEMPORARILY LINED WITH 0.25mm POLYETHYLENE IF PLACEMENT OF CONCRETE DOES NOT OCCUR WITHIN 24 HRS OF THE EXCAVATION OF THE FOOTING.

2.4 FOUNDATION CONDITIONS NOTED DURING CONSTRUCTION WHICH DIFFER FROM THOSE DESCRIBED IN THE GEOTECHNICAL REPORT SHALL BE REPORTED TO THE GENERAL CONTRACTOR BEFORE FURTHER CONSTRUCTION IS ATTEMPTED. SEE PROJECT SPECIFICATIONS.

2.5 NO FOOTINGS OR SLABS SHALL BE POURED INTO OR AGAINST SUBGRADE CONTAINING FREE WATER, FROST, ICE OR LOOSE MATERIAL. FROST DEPTH ASSUMED TO BE 800mm.

2.6 ALL SLAB-ON-GRADE, TRENCH BOTTOMS AND OTHER ON-GRADE INTERIOR HORIZONTAL SURFACES SHALL BE PLACED OVER A 0.25mm POLYETHYLENE VAPOR RETARDER OVER A 100mm #57 STONE WATER CAPILLARY BARRIER PLACED ON SUBGRADE PROPERLY PREPARED IN ACCORDANCE WITH THE CONTRACT SPECIFICATIONS. (UON)

2.7 PRIOR TO START OF FOUNDATION OR SLAB-ON-GRADE CONSTRUCTION, EXISTING SUBGRADES SHALL BE COMPACTED TO MINIMUM OF 95% MAXIMUM DRY DENSITY OBTAINED THRU ASTM D 1557 MODIFIED PROCTOR TESTING.

2.8 SEE PLUMBING, ELECTRICAL & CIVIL SHEETS FOR REQUIRED UNDERSLAB UTILITIES.

2.9 SEE ARCHITECTURAL SHEETS FOR ALL WATERPROOFING DETAILS AND MATERIALS.

2.10 IF UNDERMINING OF FOOTINGS OCCURS, FILL VOIDS WITH 18 MPa CONCRETE. DO NOT ATTEMPT TO REPLACE AND RE-COMPACT SOIL.

3.0 CONCRETE

3.1 CONCRETE SHALL HAVE THE UNIT WEIGHT OF 2400 kg/m^3 AND A MINIMUM COMPRESSIVE STRENGTH (f'c) OF 28 MPa AT 28 DAYS. ALL CONCRETE SHALL HAVE A WATER-CEMENT RATIO OF 0.45. SEE SPECIFICATIONS FOR ADDITIONAL INFORMATION. ENTRAIN AIR TO PRODUCE TOTAL AIR CONTENT ACCORDING TO THE SPECIFICATIONS FOR CONCRETE EXPOSED TO FREEZING TEMPERATURES (EXTERIOR FOOTINGS, SLAB TURNDOWNS, EXTERIOR SLABS AND SLABS-ON-GRADE, EXTERIOR RETAINING WALLS, AND EXTERIOR GRADE BEAMS.)

3.2 NO CALCIUM CHLORIDE SHALL BE USED IN ANY CONCRETE.

3.3 MIXING, TRANSPORTING AND PLACING OF CONCRETE SHALL CONFORM TO ACI 301M-05.

3.4 ALL CONCRETE WORK SHALL CONFORM TO THE REQUIREMENTS OF THE AMERICAN CONCRETE INSTITUTE (ACI) 318M MANUAL (metric), "BUILDING CODE REQUIREMENTS FOR REINFORCED CONCRETE", AND REQUIREMENTS OUTLINED IN THE CONTRACT SPECIFICATIONS. WHEN THERE IS A CONFLICT BETWEEN ACI AND THE SPECIFICATIONS, THE MORE STRINGENT SHALL GOVERN.

3.5 CHAMFER ALL EXPOSED EXTERNAL CORNERS OF CONCRETE WITH 20mm x45 DEGREE CHAMFER UON.

3.6 CONCRETE REINFORCEMENT BARS SHALL CONFORM TO ASTM A615M-96a, GRADE 420 MPa, REINFORCING BARS SHALL NOT BE TACK WELDED, WELDED, HEATED OR CUT, UNLESS INDICATED ON THE CONTRACT DOCUMENTS. ALL LAP SPLICES SHALL BE CLASS "B" UON.

3.7 HORIZONTAL FOOTING AND HORIZONTAL WALL REINFORCEMENT SHALL BE CONTINUOUS AND SHALL HAVE 90 DEGREE BENDS AND EXTENSIONS, OR CORNER BARS OF EQUIVALENT SIZE LAPPED WITH A CLASS B TENSION SPLICE AT CORNERS AND INTERSECTIONS. TOP BAR CRITERIA SHALL APPLY IF 300mm OR MORE OF FRESH CONCRETE IS PLACED BELOW BAR.

3.8 SLABS-ON-GRADE SHALL HAVE CONSTRUCTION JOINTS OR CRACK CONTROL JOINTS AS SHOWN ON THE DRAWINGS. CONSTRUCTION JOINTS CAN BE USED AT CONTROL JOINT LOCATIONS AT CONTRACTORS OPTION. SEE SLAB PLANS & JOINT DETAILS FOR ADDITIONAL INFORMATION. FOR AREAS NOT SHOWN ON DWGS, THE MAXIMUM SPACING OF CONSTRUCTION/ CRACK CONTROL JOINTS SHALL BE 4800mm

3.9 ALL CONCRETE REINFORCEMENT SHALL BE DETAILED, FABRICATED, LABELED, SUPPORTED, AND SPACED IN FORMS AND SECURED IN PLACE IN ACCORDANCE WITH THE PROCEDURES AND REQUIREMENTS OUTLINED IN THE LATEST EDITION OF THE "BUILDING CODE REQUIREMENTS FOR REINFORCED CONCRETE", ACI 318M, AND THE "MANUAL OF STANDARD PRACTICE FOR DETAILING REINFORCED CONCRETE STRUCTURES", ACI 315M, LATEST EDITION. BASED ON IN COUNTRY REINFORCEMENT AVAILABILITY, IT IS THE CONTRACTOR'S OPTION TO ROUND DESIGNATED ODD NUMBERED REINFORCEMENT SIZES UP (1) ONE BAR SIZE.

3.10 ALL DOWELS SHALL MATCH SIZE AND NUMBER OF MAIN REINFORCING, UNLESS NOTED OTHERWISE ON THE SHEETS.

3.11 ADDITIONAL BARS SHALL BE PROVIDED AROUND ALL FLOOR AND WALL OPENINGS AS SHOWN ON THE SHEETS.

3.12 SEE ARCHITECTURAL SHEETS FOR TYPE AND LOCATION OF ALL FLOOR FINISHES.

3.13 THE CONTRACTOR SHALL COORDINATE ADDITIONAL WALL/SLAB OPENINGS NOT SHOWN ON STRUCTURAL SHEETS. SEE MECHANICAL, ELECTRICAL, PLUMBING AND CIVIL SHEETS.

3.14 UNLESS NOTED OTHERWISE, ALL CURBS SHALL BE REINFORCED WITH AT LEAST (1)-#13 CONTINUOUS AND #13 AT 300mm O.C. DOWELS TO STRUCTURE BELOW.

3.15 THE CONTRACTOR SHALL VERIFY ALL OPENINGS, PAD SIZES, AND ANCHOR BOLTS WITH EQUIPMENT SELECTED.

3.16 FOR ALL WALLS & PIERS, PROVIDE DOWELS INTO FOOTING AT EACH VERT REINF BAR, UON DOWEL SIZE SHALL BE SAME AS VERT REINF.

3.17 PROVIDE CONCRETE POUR STOPS OR FORMED AS REQUIRED FOR INSTALLATION OF ALL CONCRETE WORK.

3.18 PROVIDE ADDITIONAL (2)-#13 x 600mm REINFORCING BARS IN SLAB-ON GRADE AT ALL RE-ENTRANT CORNERS. PLACE BARS AT MID-DEPTH OF SLAB WITH A CLEARANCE OF 50mm FROM CORNER UON.

3.19 COLD-WEATHER PLACEMENT: COMPLY WITH ACI 306.1 AND AS FOLLOWS. PROTECT CONCRETE WORK FROM PHYSICAL DAMAGE OR REDUCED STRENGTH THAT COULD BE CAUSED BY FROST, FREEZING ACTIONS, OR LOW TEMPERATURES. SUBMIT A COLD WEATHER CONCRETING PLAN FOR APPROVAL.

3.20 PROVIDE BONDING COMPOUND PER ASTM C 1059-99: SPECIFICATION FOR LATEX AGENTS FOR BONDING FRESH CONCRETE (GROUT) TO HARDENED CONCRETE.

3.21 THE FORMED SURFACES FOR REINFORCED CONCRETE SHALL ACHIEVE A "CLASS A" FINISH WHEN RECEIVING PAINT OR A "CLASS B" FINISH WHEN RECEIVING PLASTER OR TILE AS PER SPECIFICATION SECTION 03 31 00 CAST-IN-PLACE STRUCTURAL CONCRETE.

3.22 AT INTERSECTING GRADE BEAMS AND SHEAR WALLS, PROVIDE CORNER BARS AT INTERSECTIONS WITH SAME QUANTITY, SIZE AND SPACING AS HORIZONTAL BARS WITH LEG LENGTH = 50db.

3.23 REFER TO S-800 SERIES REINFORCING BAR PLACEMENT DRAWINGS DEFINING LENGTHS, BENDS, AND SPACINGS FOR ALL STRUCTURAL CONCRETE. THE S-800 SERIES DRAWING ARE BASED ON THE S-400, S-500, S-600, AND S-700 SERIES DRAWING SCHEDULES, DETAILS, AND DIAGRAMS.

4.0 CONCRETE MASONRY

4.1 MASONRY CONSTRUCTION SHALL CONFORM TO SPECIFICATION FOR MASONRY STRUCTURES (ACI 530.1) UON.

4.2 STRENGTH OF MASONRY MATERIALS SHALL BE AS FOLLOWS:

a. CONCRETE MASONRY UNITS SHALL BE NORMAL WEIGHT, GRADE N, TYPE 1, CONFORMING TO ASTM C-90 AND HAVE A MINIMUM COMPRESSIVE STRENGTH OF 10.4 MPa ON THE NET AREA.

b. MORTAR SHALL CONFORM TO ASTM C-270 TYPE S.

c. GROUT FOR MASONRY SHALL BE NORMAL WEIGHT AND HAVE A MINIMUM COMPRESSIVE STRENGTH OF 14 MPa AT 28 DAYS. GROUT SHALL CONFORM TO ASTM C476M. GROUT LIFTS SHALL NOT EXCEED 1,400mm.

d. REINFORCED MASONRY SHALL HAVE A STRENGTH F'm = 10 MPa. (F'm IS THE COMPRESSIVE STRENGTH OF THE MASONRY AT 28 DAYS AS DETERMINED BY PRISM TESTS).

4.3 ALL VERTICAL REINFORCEMENT FOR CONCRETE MASONRY SHALL BE ASTM A615M-96a, GRADE 420 MPa. ALL SPLICES SHALL BE LAPPED 48 BAR DIAMETERS MINIMUM.

4.4 BOND BEAMS SHALL BE SPACED AT 1200mm OC VERTICALLY. BOND BEAM REINFORCING SHALL BE CONTINUOUS AND PROVIDED AT WALL INTERSECTIONS AND WALL CORNERS (REFERENCE CONCRETE MASONRY NOTE 4.11). ALL BOND BEAM REINFORCING SHALL BE CONTINUOUS AND HAVE STANDARD ACI HOOKS AT EACH END. PROVIDE STANDARD BAR SPLICES AS SPECIFIED. AS AN ALTERNATE TO CMU BOND BEAMS, IT IS THE CONTRACTOR'S OPTION TO PROVIDE 200mm x 200mm CONTINUOUS CAST-IN-PLACE CONCRETE BOND BEAMS WITH (2)-#16 IN LIEU OF CMU BOND BEAMS INDICATED ON THE DRAWINGS.

4.5 SEE TYPICAL DETAILS FOR MINIMUM REINFORCEMENT REQUIREMENTS FOR CMU WALLS. PROVIDE STANDARD BAR SPLICES AS SPECIFIED. ALL VERTICAL REINFORCEMENT EXTENDS FULL HEIGHT OF WALL.

4.6 CMU CELLS THAT REQUIRE VERTICAL REINFORCING BARS AS INDICATED ON THE CONTRACT DRAWINGS AND/OR SPECS SHALL HAVE REINF BARS PLACED IN CENTERS OF CMU CELLS AND CONTINUOUSLY GROUTED UON.

4.7 ALL CMU CELLS, OPEN CAVITIES, AND AIR SPACES OF ALL EXTERIOR WALLS SHALL BE GROUTED TO STOP FRAGMENTS FROM MORTAR BLAST.

4.8 CONTRACTOR SHALL COORDINATE LOCATION OF ALL OPENINGS SEE ARCH, MECH, ELEC, AND PLUMBING SHEETS FOR SIZE AND LOCATION OF OPENINGS.

4.9 MASONRY WALLS SHALL NOT BE BACK FILLED PRIOR TO THE MORTAR AND GROUT ATTAINING THEIR RESPECTIVE MAXIMUM DESIGN STRENGTHS PER SPECIFICATIONS.

4.10 PROVIDE GALVANIZED MORTAR/GROUT SCREEN W/ 3mm MESH WHERE CELLS BELOW ARE NOT GROUTED.

4.11 AT INTERSECTING BOND BEAMS, PROVIDE CORNER BAR FOR EACH HORIZONTAL BAR IN BOND BEAMS AT INTERSECTING WALLS. USE SAME SIZE AND SPACING AS HORIZONTAL BARS WITH LEG LENGTH = 50db.

4.12 THE ALTERNATE CMU BRACE DETAILS SHOWN ON S-701 CAN BE UTILIZED AT THE CONTRACTOR'S OPTION IN PLACE OF THE "FLOATING PIN" WALL BRACE CONNECTIONS AT TOP OF CMU WALLS DEPICTED ON S-400 AND S-500 SERIES DRAWINGS THESE ALTERNATE DETAILS ALSO SHOW ALTERNATE CAST-IN-PLACE WALL BOND BEAMS THAT CAN BE UTILIZED AT THE CONTRACTOR'S OPTION IN PLACE OF THE STANDARD CMU BOND BEAMS CONSTRUCTED OF CMU BLOCKS.

5.0 COLD-FORMED METAL FRAMING

5.1 ALL COLD-FORMED METAL FRAMING MEMBERS SHALL CONFORM TO ASTM A1003M, STRUCTURAL GRADE ST340 (MPa), WITH A GALVANIZED COATING OF Z275 OR BETTER IN ACCORDANCE WITH ASTM A653M.

5.2 ALL COLD-FORMED METAL FRAMING MEMBERS SHALL HAVE THE FOLLOWING MINIMUM PROPERTIES:

a. MINIMUM METAL THICKNESS:
TRACK = 1.37mm;
STUD/OTHER = 1.09mm

b. MINIMUM FLANGE WIDTH:
TRACK = 38mm;
STUD/OTHER = 35mm

c. MINIMUM MEMBER DEPTH:
ALL SECTIONS = 152.2mm

d. PURLIN (HAT CHANNEL)
DEPTHxWIDTH(FLAT TOP)xTHICK = 25mmx42mmx1.59mm

5.3 ALL CONNECTIONS SHALL BE MADE WITH CORROSION RESISTANT (ASTM A153M), SELF-DRILLING, SELF-TAPPING STEEL DRILL SCREWS IN ACCORDANCE WITH ASTM C1513. SCREWS SHALL HAVE A LOW PROFILE HEAD BENEATH ROOF DECK, AND STANDARD HEAD ALL OTHER LOCATIONS.

5.4 FABRICATE COLD FORMED METAL FRAMING AND ACCESSORIES PLUMB, SQUARE AND TRUE TO LINE, WITH CONNECTIONS SECURELY FASTENED ACCORDING TO AISI STANDARD FOR COLD FORMED STEEL FRAMING.

5.5 CUT FRAMING MEMBERS BY SAWING OR SHEATHING, DO NOT TORCH CUT.

5.6 INSTALL FRAMING MEMBERS IN ONE-PIECE LENGTHS UNLESS SPLICE CONNECTIONS ARE INDICATED FOR TRACK OR TENSION MEMBERS

5.7 INSTALL TEMPORARY BRACING AND SUPPORTS TO SECURE FRAMING DURING CONSTRUCTION. MAINTAIN BRACING AND SUPPORTS IN PLACE UNTIL THE STRUCTURE HAS BEEN COMPLETED WITH ALL CONNECTIONS AND PERMANENT BRACING SECURED.

6.0 STRUCTURAL DESIGN CRITERIA

6.1 ALL DESIGNS SHALL CONFORM TO THE PROVISIONS OF THE IBC 2006 AND UFC AS APPLICABLE.

6.2 DESIGN LOADS

6.2.1 DEAD LOADS (PER IBC 2006 & UFC 3-310-01)

MECH/ELEC/PLUMBING	0.20 kPa
MISCELLANEOUS	0.15 kPa
COLD-FORMED FRAMING	0.20 kPa
INSULATION	0.10 kPa
METAL ROOF PANEL	0.14 kPa
	0.79 kPa
FLOOR PARTITION ALLOWANCE	0.96 kPa

6.2.2 LIVE LOADS (PER IBC 2006 & UFC 3-310-01)

ROOF	1.00 kPa
CORRIDOR (2-STORY BLDG ONLY)	4.80 kPa
ALL OTHERS (2-STORY BLDG ONLY)	2.40 kPa
SLAB ON GRADE	4.80 kPa

6.2.3 SNOW LOADS (PER IBC 2006 & UFC 3-310-01)

GROUND SNOW LOAD (Pg)	1.2 kPa
SNOW IMPORTANCE FACTOR (I)	1.0
SNOW EXPOSURE FACTOR (Ce)	1.0
THERMAL FACTOR (Ct)	1.0

6.2.4 WIND LOADS (PER IBC 2006)

BASIC WIND SPEED	137 km/h
WIND IMPORTANCE FACTOR	1.0
WIND EXPOSURE CATEGORY	D
DIRECTIONALITY COEFFICIENT (Kd)	0.85
TOPOGRAPHIC FACTOR (Kzt)	1.0

6.2.5 SEISMIC LOADS (PER IBC 2006 & UFC 3-310-04)

OCCUPANCY USE CATEGORY	II
SEISMIC IMPORTANCE FACTOR (Ie)	1.0
SEISMIC SITE CLASS	D

S_s = 1.50 (REDUCED FROM 2.40 PER ASCE 7-05, 12.8.1.3 FOR A BUILDING WITHOUT IRREGULARITIES)
S_1 = 1.20
S_{DS} = 1.00
S_{D1} = 1.20

SEISMIC DESIGN CATEGORY	E
SEISMIC RESISTING SYSTEM: -SPECIAL REINFORCED CONCRETE SHEAR WALL	
RESPONSE MODIFICATION FACTOR (R)	6
RESPONSE COEFFICIENT (Cs)	0.167
SEISMIC ANALYTICAL PROCEDURE =	EQUIV LATERAL FORCE
SEISMIC BASE SHEAR	1900 kN

APPROVED:

A/E DESIGNER OF RECORD

SEAL:

GEORGIA REGISTERED PROFESSIONAL ENGINEER No. 27141 CHRISTOPHER W. WHITMORE 1-27-10

US ARMY CORPS OF ENGINEERS
AFGHANISTAN ENGINEER DISTRICT

Mark	Description	Date	Appr.	Mark	Description	Date	Appr.

Date: 2/23/10 | Rev: 0
Design file no.
Drawing code:
File name: AMASTORS-001GN
Plot date: 2/23/2010
Plot scale: X:X

Designed by: KMF/MMY
Dwn by: RCG | Ckd by: CWW
Reviewed by: LHM
Submitted by:
BAKER

U.S. ARMY CORPS OF ENGINEERS
AFGHANISTAN ENGINEER DISTRICT
APO AE 96338

Michael Baker Jr., Inc
A unit of Michael Baker Corporation
Airside Business Park
100 Airside Drive
Moon Township, PA 15108
www.mbakercorp.com

AFGHAN NATIONAL ARMY
REGIONAL MILITARY TRAINING CENTER
STANDARD DESIGN

RMTC STORAGE

GENERAL NOTES & DESIGN CRITERIA

Sheet reference number:
S-001

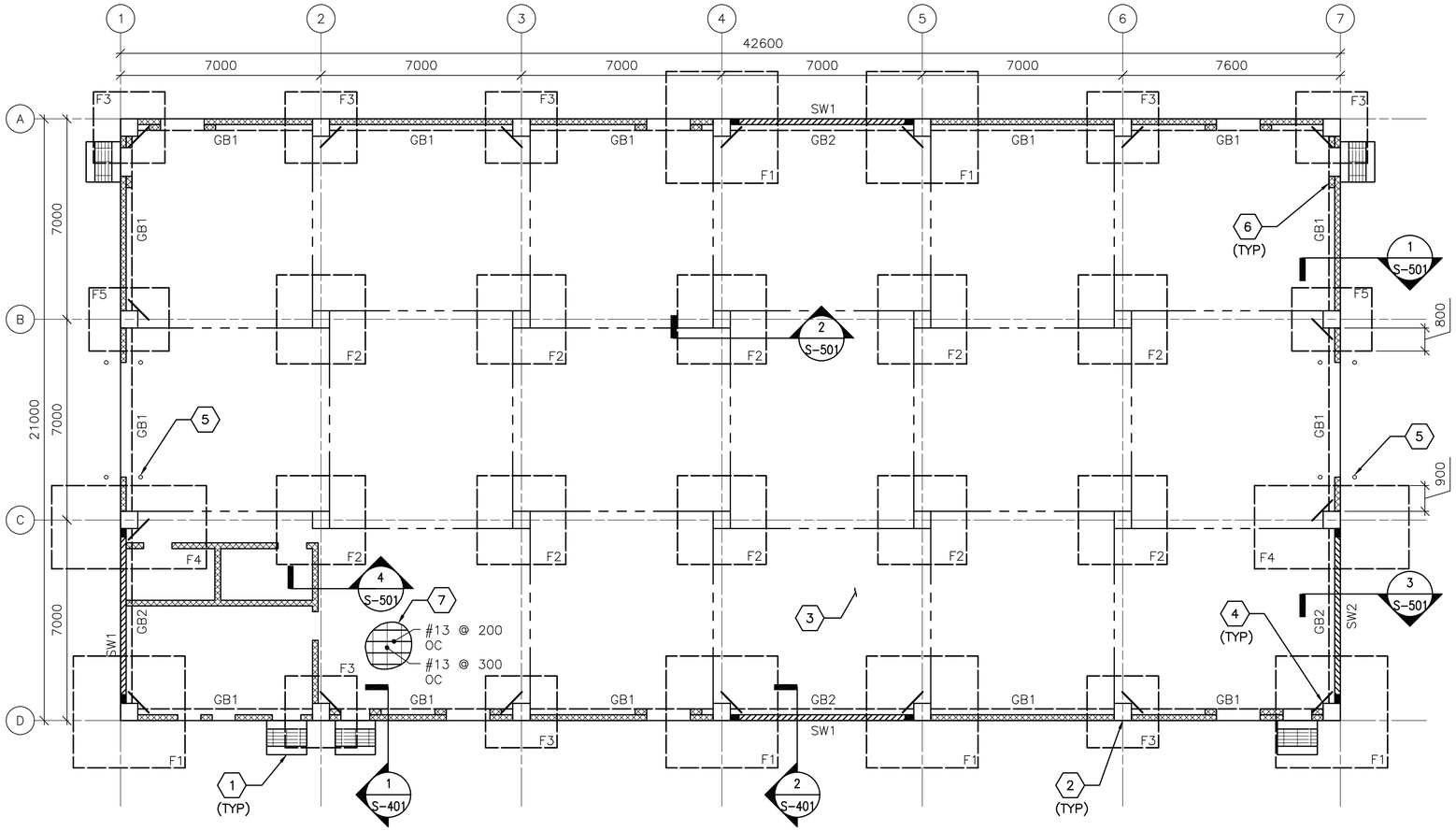

1 S-101 **FOUNDATION/SLAB PLAN**

SCALE: 1:100

FOUNDATION/SLAB PLAN NOTES:

1. REFER TO SHEET S-001 FOR STRUCTURAL NOTES AND DESIGN CRITERIA.
2. FINISH FIRST FLOOR ELEVATION SHALL BE (DATUM 0.00MM) ALL PLUS OR MINUS DIMENSIONS INDICATED ON PLAN OR REFERRED TO IN NOTES RELATE TO FINISH FIRST FLOOR ELEVATION.
3. SLAB-ON-GRADE IS 150 WITH #13 @ 300 OC EW LOCATED 38 FROM T/SLAB.
4. TOP OF EXTERIOR FOOTINGS SHALL BE -950 UNLESS OTHERWISE INDICATED.
5. TOP OF INTERIOR FOOTINGS WITHOUT GRADE BEAM ABOVE SHALL BE -600.
6. COLUMN FOOTINGS INDICATED THUS F# ON PLAN. REFER TO COLUMN FOOTING SCHEDULE ON SHEET S-601.
7. REFER TO COLUMN SCHEDULE ON SHEET S-601.
8. GRADE BEAM INDICATED THUS GB# ON PLAN, REFER TO BEAM SCHEDULE ON SHEET S-601.
9. SHEARWALL INDICATED THUS SW# ON PLAN, REFER TO SHEARWALL SCHEDULE ON SHEET S-601.
10. SEE TYP EXTERIOR AND INTERIOR CMU WALL REINF DETAILS ON SHEET S-701.
11. SEE MECHANICAL AND ELECTRICAL SHEETS FOR CONCRETE PAD LOCATIONS, SIZES, AND THICKNESS NOT SHOWN. SEE SHEET S-701 FOR DETAILS.
12. THICKENED SLAB UNDER CMU WALLS NOT SHOWN FOR CLARITY.

FOUNDATION/SLAB PLAN KEY NOTES: (X)

1. CONC PAD (ENTRANCE) - SEE ARCH DWGS FOR INFORMATION
2. REINF CONC COLUMN
3. REINF CONC SLAB-ON-GRADE
4. (2)-#13 @ RE-ENTRANT CORNERS - SEE S-701 FOR INFORMATION
5. BOLLARD - SEE SECTION 8/S-502
6. WALL STIFFENER EACH SIDE OF PEDESTRIAN DOOR AND LOUVER WHERE NO BOTTOM OF SLAB EXIST AT ELEVATION 3000.
7. SPACE #13 LONGITUDINAL SLAB REINF @ 200 OC BETWEEN COLUMN LINES 1 & 3 FROM C TO D

FOUNDATION/SLAB PLAN LEGEND:

REINF CONC SHEAR WALL

REINF CMU WALL

CONTROL JOINT

0 2000 4000
SCALE: 1:100

UNLESS OTHERWISE NOTED, LINEAR DIMENSIONS SHOWN ON DRAWINGS ARE IN MILLIMETERS (mm)

APPROVED:

A/E DESIGNER OF RECORD

SEAL:

GEORGIA REGISTERED 2-19-10 No. 27141 PROFESSIONAL ENGINEER CHRISTOPHER W. WHITMORE

US ARMY CORPS OF ENGINEERS
AFGHANISTAN ENGINEER DISTRICT

Mark	Description	Date	Appr.	Mark	Description	Date	Appr.

Designed by: KMP/MMY
Dwn by: RCG
Ckd by: CWW
Reviewed by: LHM
Submitted by: BAKER
Date: 2/23/10
Rev: 0
Design file no.
Drawing code:
File name: ANASTORS-101FNP
Plot date: 2/23/2010
Plot scale: x:X

U.S. ARMY CORPS OF ENGINEERS
AFGHANISTAN ENGINEER DISTRICT
APO AE 96338

Michael Baker Jr., Inc
A unit of Michael Baker Corporation
Airside Business Park
100 Airside Drive
Moon Township, PA 15108
www.mbakercorp.com

AFGHAN NATIONAL ARMY
REGIONAL MILITARY TRAINING CENTER
STANDARD DESIGN

RMTC STORAGE

FOUNDATION/SLAB PLAN

Sheet reference number:
S-101

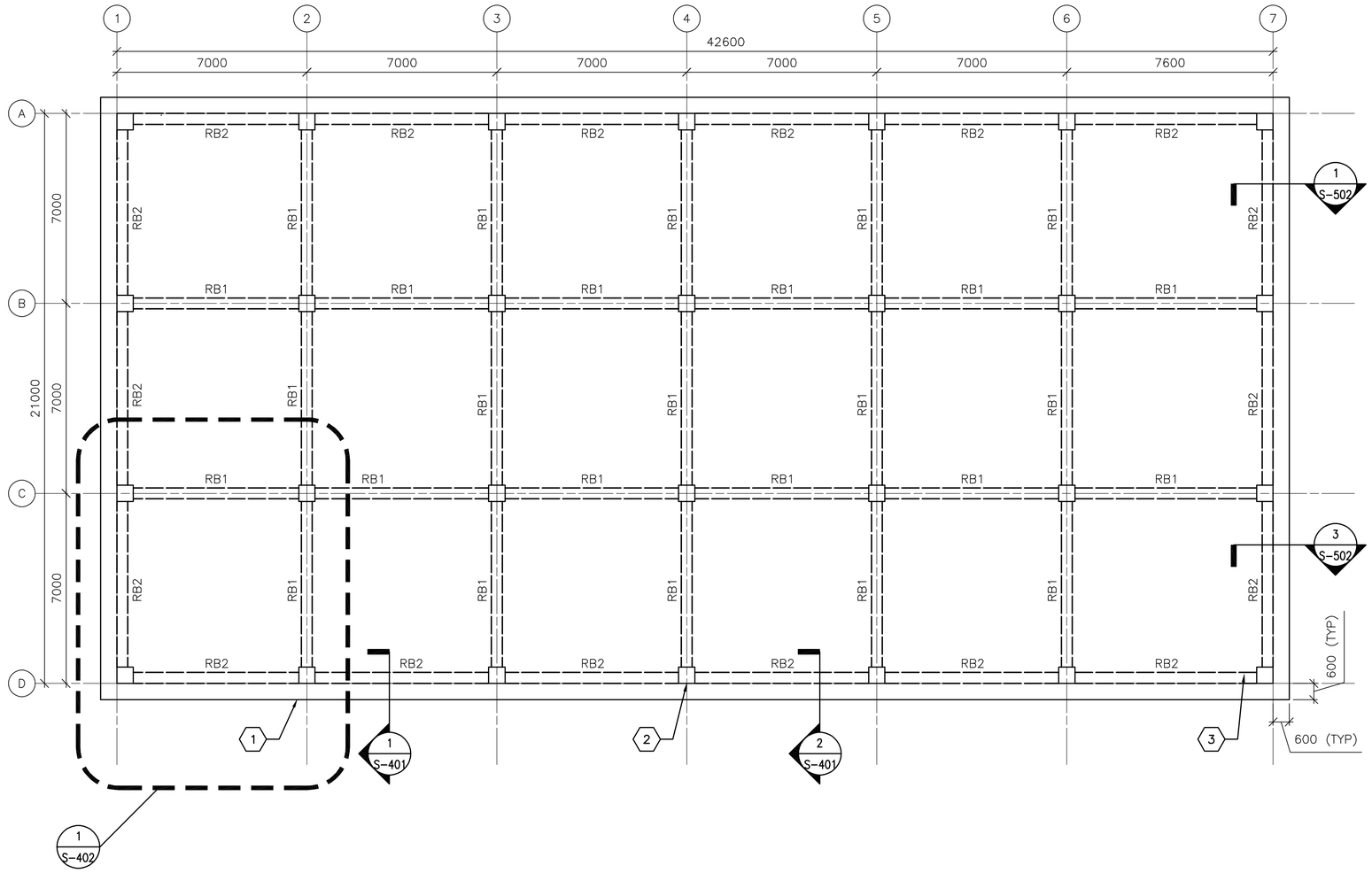

1 S-102 **ROOF FRAMING PLAN**

SCALE: 1:100

ROOF FRAMING PLAN NOTES:

1. REFER TO SHEETS S-001 FOR STRUCTURAL NOTES AND DESIGN CRITERIA.
2. TOP OF SLAB ELEVATION = 5600 UNLESS NOTED OTHERWISE.
3. ROOF SLAB IS 250 WITH #16 @ 300 OC EW T&B.
4. ROOF BEAM INDICATED BY RB# ON PLAN. REFER TO BEAM SCHEDULE ON SHEET S-601.
5. COORDINATE WITH ARCHITECTURAL SHEETS FOR COLD-FORMED STEEL OVERBUILD FRAMING ABOVE ROOF SLAB.
6. COLD-FORMED METAL OVERBUILD ROOF FRAMING NOT SHOWN FOR CLARITY. SEE OVERBUILD ROOF FRAMING DETAILS AND SECTIONS ON SHEET S-702.
7. CMU PARTITION WALLS (BELOW ROOF SLAB) NOT SHOWN FOR CLARITY.
8. OVERHANG AREAS OF ROOF SLAB CONTAIN ROOF VENT PENETRATIONS. REFERENCE ARCHITECTURAL DRAWINGS FOR INFORMATION.

ROOF FRAMING PLAN KEY NOTES: (X)

1. CONC ROOF SLAB (BELOW ROOF OVERBUILD)
2. REINF CONC COLUMN (BELOW CONC ROOF SLAB)

0 2000 4000
SCALE: 1:100

UNLESS OTHERWISE NOTED, LINEAR DIMENSIONS SHOWN ON DRAWINGS ARE IN MILLIMETERS (mm)

APPROVED:

A/E DESIGNER OF RECORD

SEAL:

GEORGIA REGISTERED 2-23-10 No. 27141 PROFESSIONAL ENGINEER CHRISTOPHER W. WHITMORE

US ARMY CORPS OF ENGINEERS
AFGHANISTAN ENGINEER DISTRICT

Mark	Description	Date	Appr.	Mark	Description	Date	Appr.

Designed by: KMP/MMY
Dwn by: RCG
Ckd by: CWW
Reviewed by: LHM
Submitted by: BAKER
Date: 2/23/10
Design file no.
Drawing code:
File name: AMASTORS-102FRP
Plot date: 2/23/2010
Plot scale: x:X
Rev: 0

U.S. ARMY CORPS OF ENGINEERS
AFGHANISTAN ENGINEER DISTRICT
APO AE 96338

Michael Baker Jr., Inc
A unit of Michael Baker Corporation
Airside Business Park
100 Airside Drive
Moon Township, PA 15108
www.mbakercorp.com

AFGHAN NATIONAL ARMY
REGIONAL MILITARY TRAINING CENTER
STANDARD DESIGN

RMTC STORAGE

ROOF FRAMING PLAN

Sheet reference number:
S-102

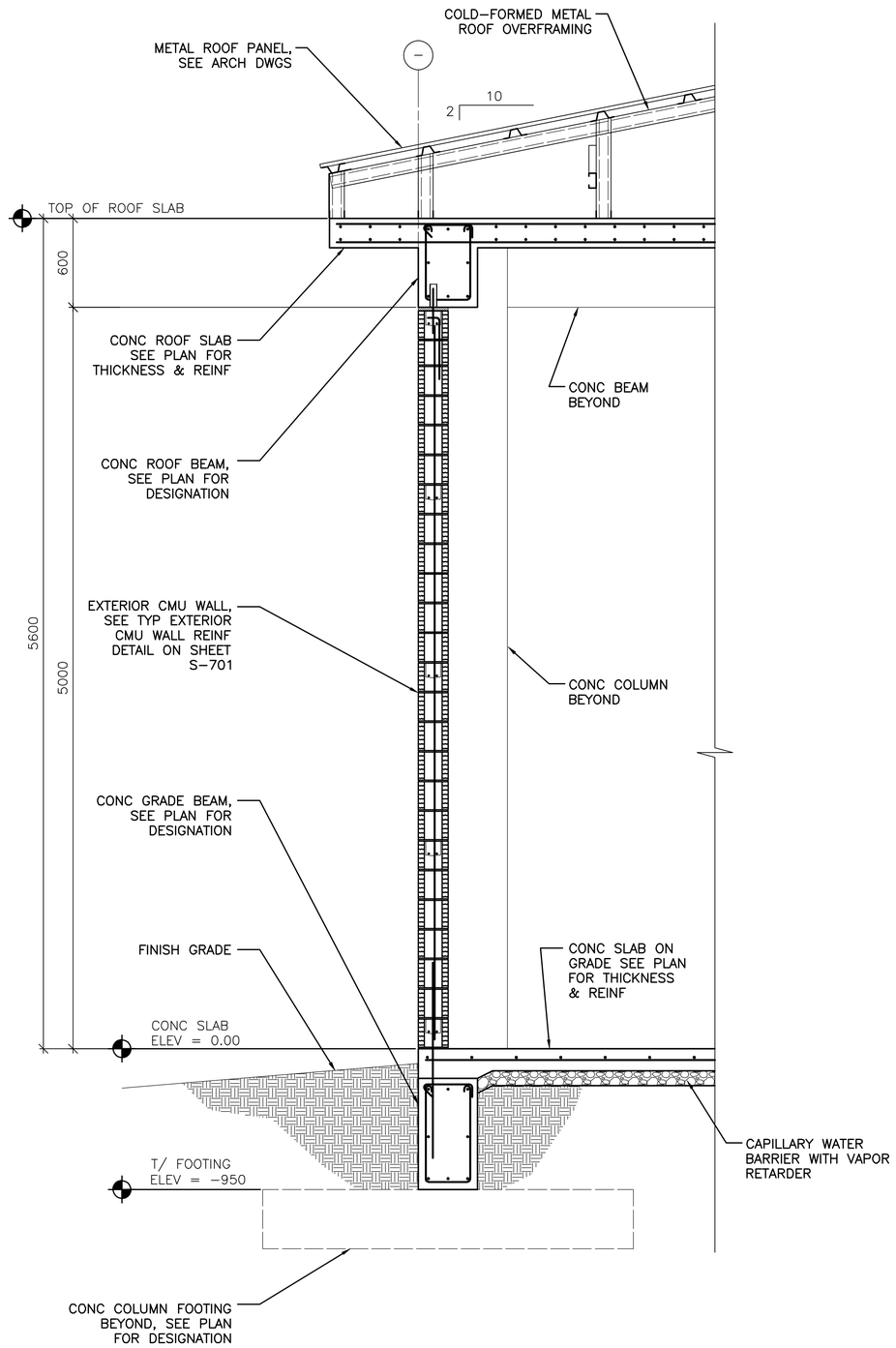

1 S-101 / 1 S-102

TYPICAL WALL SECTION AT EXTERIOR MASONRY WALL

SCALE: 1:20

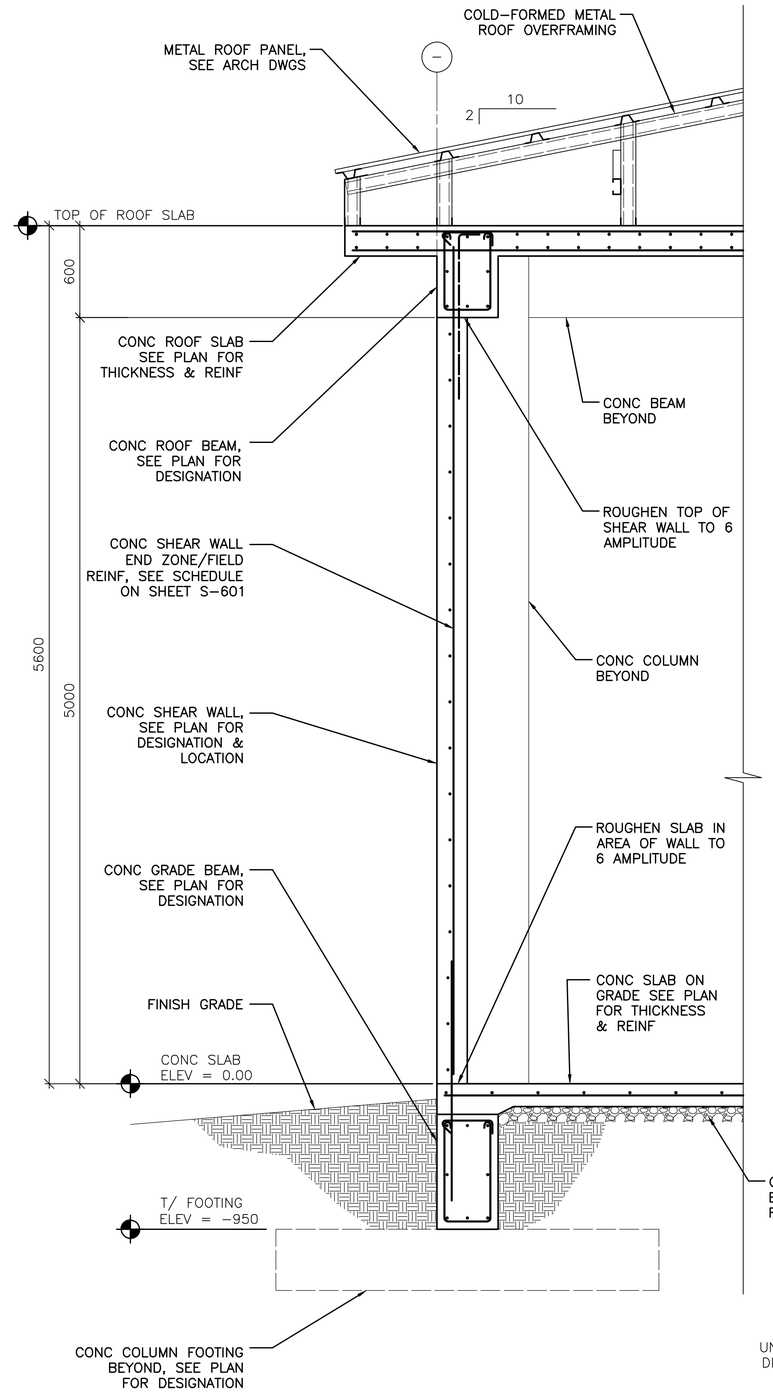

2 S-101 / 2 S-102

TYPICAL WALL SECTION AT CONCRETE SHEAR WALL

SCALE: 1:20

0 400 800
SCALE: 1:20

UNLESS OTHERWISE NOTED, LINEAR DIMENSIONS SHOWN ON DRAWINGS ARE IN MILLIMETERS (mm)

APPROVED:

A/E DESIGNER OF RECORD

SEAL:

GEORGIA REGISTERED 1-27-10 No. 27141 PROFESSIONAL ENGINEER CHRISTOPHER W. WHITMORE

US ARMY CORPS OF ENGINEERS
AFGHANISTAN ENGINEER DISTRICT

Mark	Description	Date	Appr.	Mark	Description	Date	Appr.

Date: 2/23/10
Design file no.
Rev: 0
Drawing code:
File name: ANASTORS-401BS
Plot date: 2/23/2010
Plot scale: X:X

Designed by: KMP/MMY
Dwn by: RCG
Ckd by: CWW
Reviewed by: LHM
Submitted by: BAKER

U.S. ARMY CORPS OF ENGINEERS
AFGHANISTAN ENGINEER DISTRICT
APO AE 96338

Michael Baker Jr., Inc.
A unit of Michael Baker Corporation
Airside Business Park
100 Airside Drive
Moon Township, PA 15108
www.mbakercorp.com

AFGHAN NATIONAL ARMY
REGIONAL MILITARY TRAINING CENTER
STANDARD DESIGN

RMTC STORAGE

BUILDING SECTIONS

Sheet reference number:
S-401

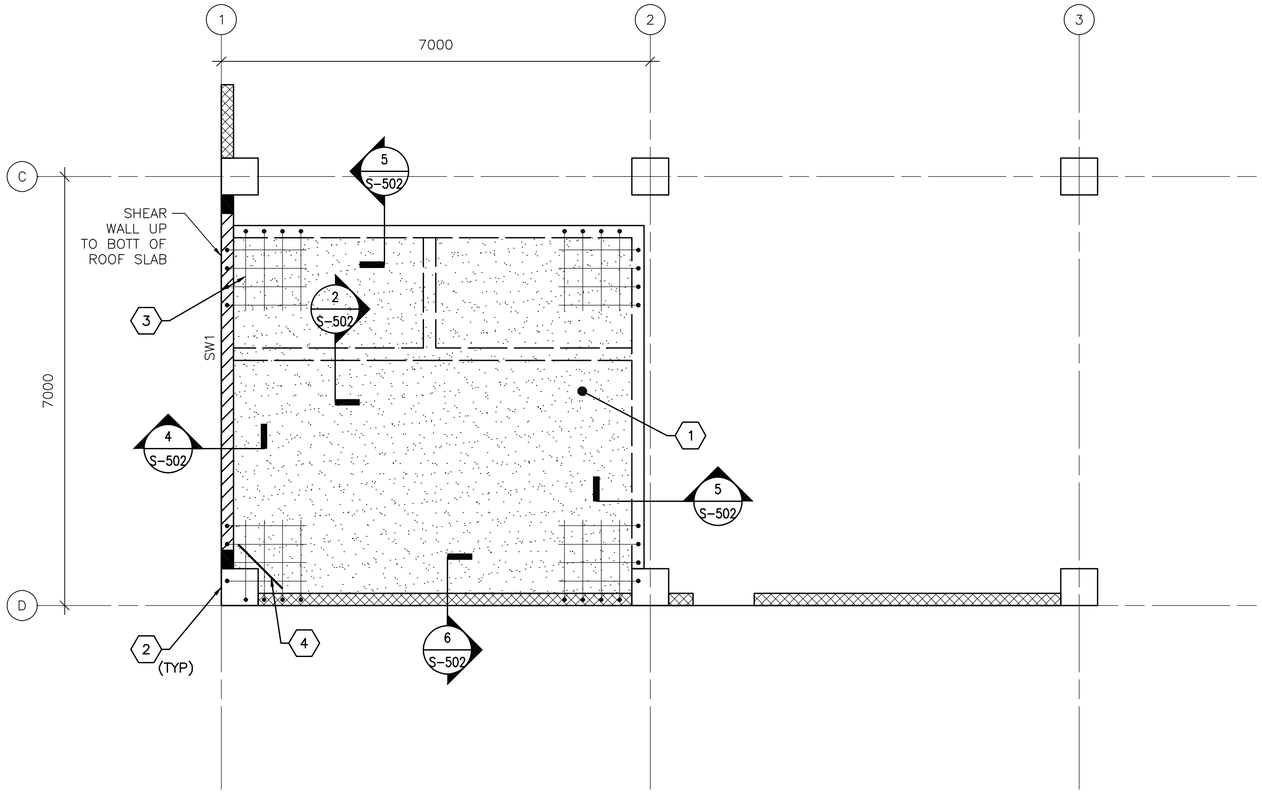

1 S-102 **ENLARGED ELEVATED SLAB PLAN @ ELEV 3250**

SCALE: 1:50

ROOF/ELEVATED SLAB FRAMING PLAN NOTES:

1. REFER TO SHEETS S-001 FOR STRUCTURAL NOTES AND DESIGN CRITERIA.
2. ELEVATED SLAB IS 250 W/ #13 @ 250 OC EW
3. TOP OF ELEVATED SLAB IS 3250.

ELEVATED SLAB PLAN LEGEND:

REINF CONC SHEAR WALL

REINF CMU WALL

ELEVATED SLAB FRAMING PLAN KEY NOTES: (X)

1. ELEVATED CONCRETE SLAB
2. REINF CONC COLUMN (ABOVE AND BELOW CONC SLAB)
3. ADD'L REINF @ CONCRETE SLAB CORNERS – SEE S-701 FOR INFORMATION
4. (2)-#13 @ RE-ENTRANT CORNERS – SEE S-701 FOR INFORMATION

0 1000 2000
SCALE: 1:50

UNLESS OTHERWISE NOTED, LINEAR DIMENSIONS SHOWN ON DRAWINGS ARE IN MILLIMETERS (mm)

APPROVED:

A/E DESIGNER OF RECORD

SEAL:

GEORGIA REGISTERED PROFESSIONAL ENGINEER No. 27141 CHRISTOPHER W. WHITMORE

US ARMY CORPS OF ENGINEERS
AFGHANISTAN ENGINEER DISTRICT

Mark	Description	Date	Appr.	Mark	Description	Date	Appr.

U.S. ARMY CORPS OF ENGINEERS
AFGHANISTAN ENGINEER DISTRICT
APO AE 96338

Michael Baker Jr., Inc
A unit of Michael Baker Corporation
Airside Business Park
100 Airside Drive
Moon Township, PA 15108
www.mbakercorp.com

Designed by: KMP/MMY
Dwn by: RCG
Ckd by: CWW
Reviewed by: LHM
Submitted by: BAKER
Date: 2/23/10
Design file no.
Drawing code:
File name: AMASTORS-4025P
Plot date: 2/23/2010
Plot scale: x:X
Rev: 0

AFGHAN NATIONAL ARMY
REGIONAL MILITARY TRAINING CENTER
STANDARD DESIGN

RMTC STORAGE

ENLARGED ELEVATED SLAB PLAN

Sheet reference number:
S-402

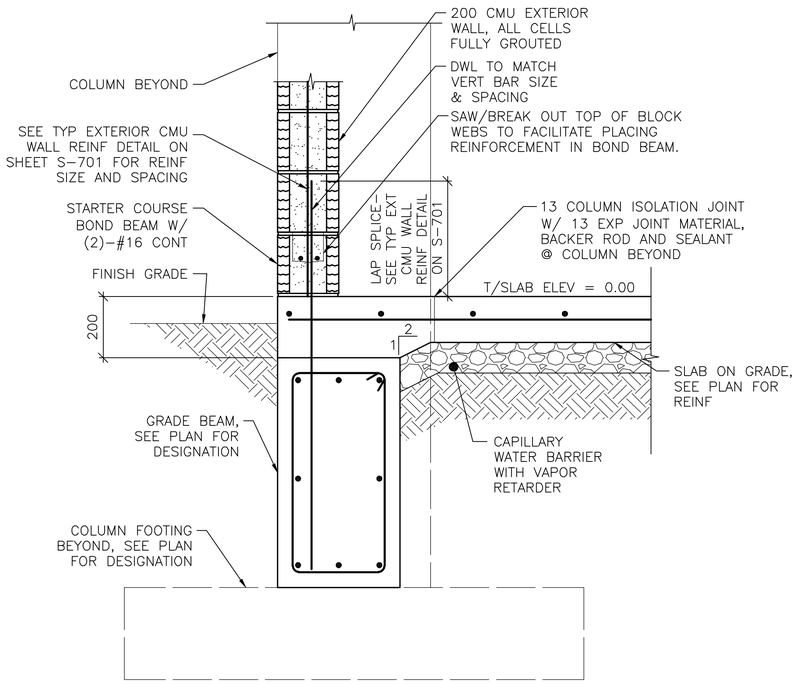

NOTE:
1. SECTION IS SIMILAR FOR INTERIOR CMU PARTITIONS OVER GRADE BEAMS SHOWING THICKENED 200 CONC SLAB AREA.

1 / S-101 **SECTION**
SCALE: 1:10

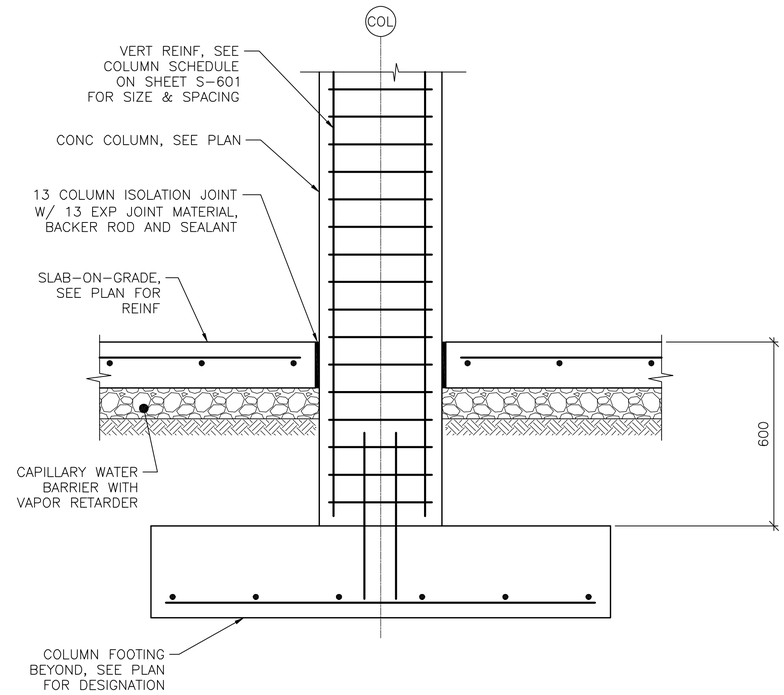

2 / S-101 **SECTION**
SCALE: 1:10

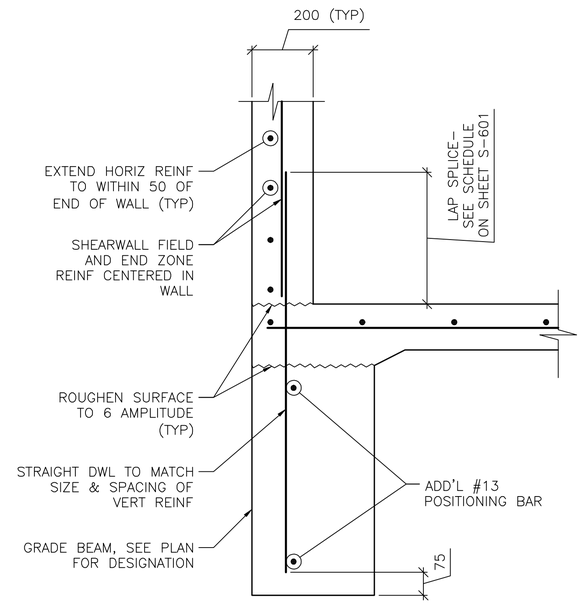

NOTE:
1. SECTION DEPICTS SHEAR WALL TERMINATION ONLY. GRADE BEAM REINFORCING NOT SHOWN FOR CLARITY
2. SEE SHEET S-601 AND SHEET S-702 FOR SCHEDULED FIELD AND END ZONE REINF.

3 / S-101 **SECTION**
SCALE: 1:10

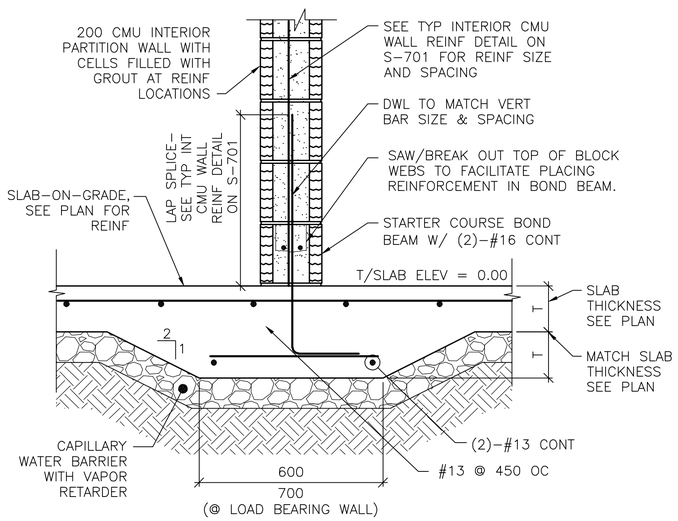

4 / S-101 **SECTION**
SCALE: 1:10

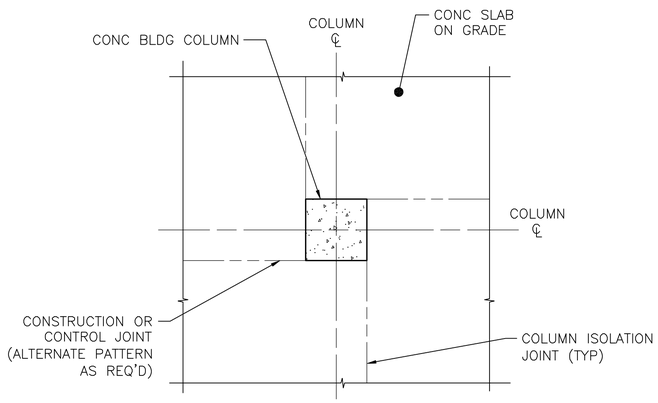

A / S-501 **COLUMN ISOLATION JOINT DETAIL**
SCALE: NTS

0 200 400
SCALE: 1:10

UNLESS OTHERWISE NOTED, LINEAR DIMENSIONS SHOWN ON DRAWINGS ARE IN MILLIMETERS (mm)

APPROVED:

A/E DESIGNER OF RECORD

SEAL:

GEORGIA REGISTERED PROFESSIONAL ENGINEER No. 27141 CHRISTOPHER W. WHITMORE 2-23-10

US ARMY CORPS OF ENGINEERS
AFGHANISTAN ENGINEER DISTRICT

Mark	Description	Date	Appr.	Mark	Description	Date	Appr.

Date: 2/23/10
Rev: 0
Design file no.
Drawing code:
File name: AMASTORS-501SC
Plot date: 2/23/2010
Plot scale: x:X

Designed by: KMP/MMY
Dwn by: RCG
Ckd by: CWW
Reviewed by: LHM
Submitted by: BAKER

U.S. ARMY CORPS OF ENGINEERS
AFGHANISTAN ENGINEER DISTRICT
APO AE 96338

Michael Baker Jr., Inc
A unit of Michael Baker Corporation
Airside Business Park
100 Airside Drive
Moon Township, PA 15108
www.mbakercorp.com

AFGHAN NATIONAL ARMY
REGIONAL MILITARY TRAINING CENTER
STANDARD DESIGN

RMTC STORAGE

FOUNDATION SECTIONS

Sheet reference number:
S-501

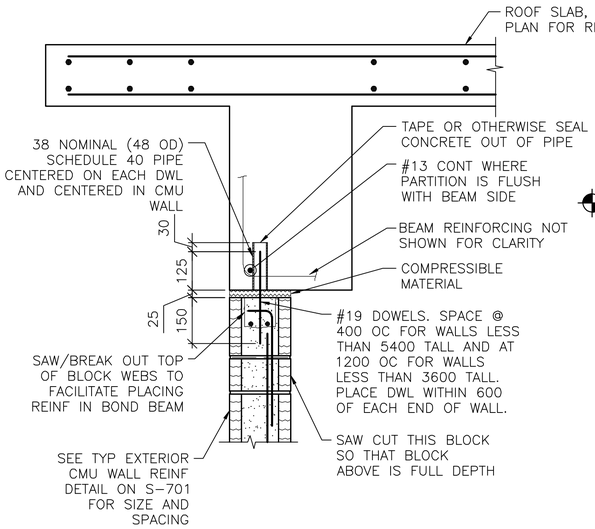

NOTES:
1. EXTEND DOWEL REINF TO 25 CLEAR FROM TOP OF CMU WALL.

1 S-102 **SECTION**
SCALE: 1:10

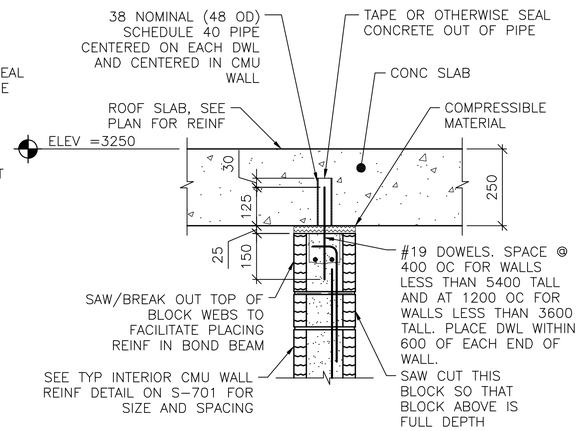

NOTES:
1. EXTEND DOWEL REINF TO 25 CLEAR FROM TOP OF CMU WALL.
2. SLAB REINF NOT SHOWN FOR CLARITY.

2 S-402 **SECTION**
SCALE: 1:10

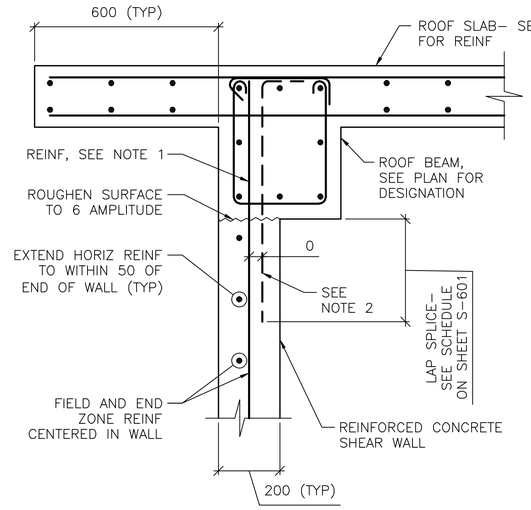

NOTES:
1. TERMINATE "FIELD" VERT REINF & END ZONE REINF @ 50 CLEAR FROM TOP OF ROOF SLAB.
2. WHERE END ZONE REINFORCING CANNOT BE DEVELOPED IN BEAM DEPTH, PROVIDE HOOKED DWLS SAME SIZE & SPACING. PROVIDE TENSION LAP BELOW ROOF BEAM.
3. SEE SHEET S-601 AND SHEET S-702 FOR SCHEDULED FIELD AND END ZONE REINF.

3 S-102 **SECTION**
SCALE: 1:10

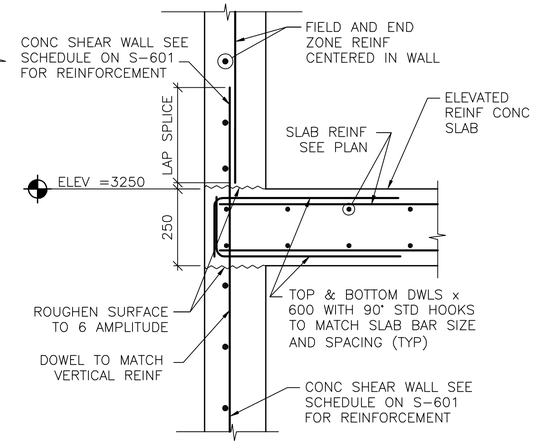

4 S-402 **SECTION**
SCALE: 1:10

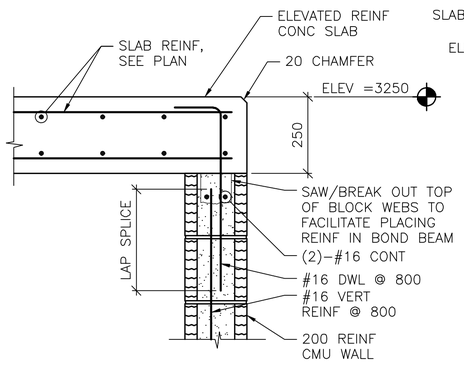

5 S-402 **SECTION**
SCALE: 1:10

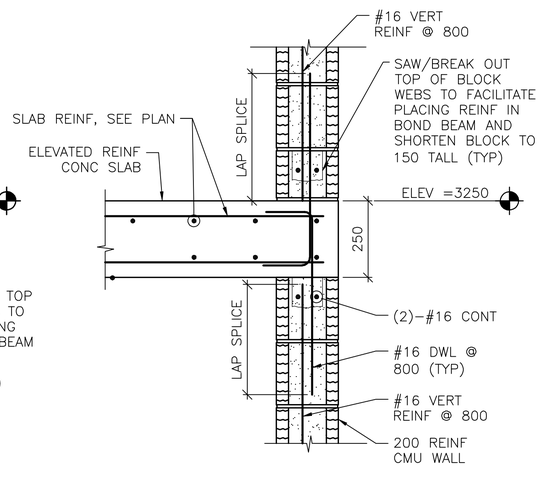

6 S-402 **SECTION**
SCALE: 1:10

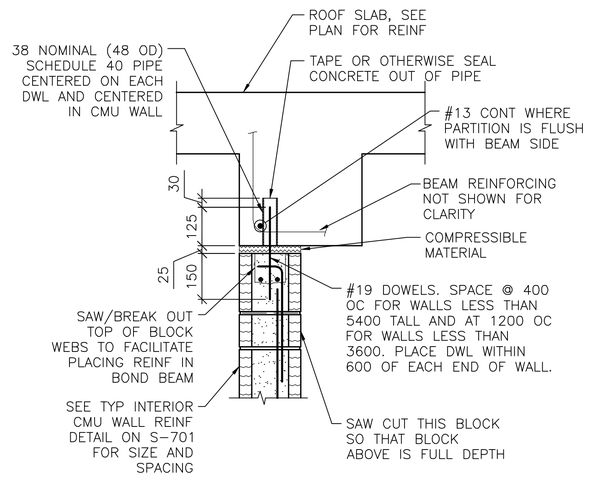

NOTES:
1. EXTEND DOWEL REINF TO 25 CLEAR FROM TOP OF CMU WALL.
2. PARTITION WALL MAY BE CENTERED UNDER THE BEAM OR FLUSH AS SHOWN. SEE PLAN FOR LOCATION.
3. SLAB REINF NOT SHOWN FOR CLARITY.

7 S-102 **SECTION**
SCALE: 1:10

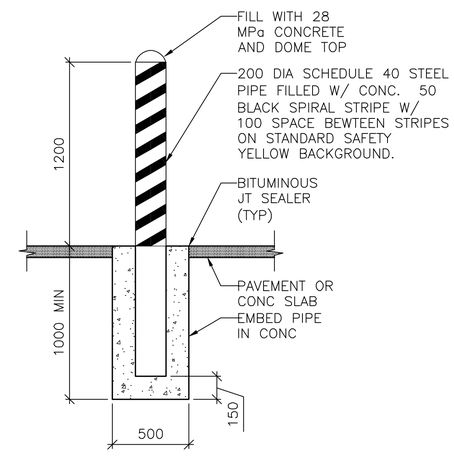

8 S-101 **SECTION AT BOLLARD**
SCALE: 1:20

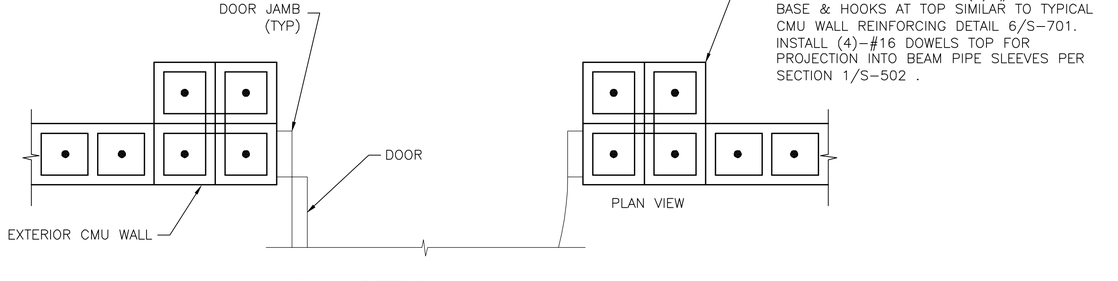

9 S-101 **DETAIL**
SCALE: 1:10

0 400 800
SCALE: 1:20

0 200 400
SCALE: 1:10

UNLESS OTHERWISE NOTED, LINEAR DIMENSIONS SHOWN ON DRAWINGS ARE IN MILLIMETERS (mm)

APPROVED:

A/E DESIGNER OF RECORD

SEAL:

GEORGIA REGISTERED 1-29-10 No. 27141 PROFESSIONAL ENGINEER CHRISTOPHER W. WHITMORE

US ARMY CORPS OF ENGINEERS
AFGHANISTAN ENGINEER DISTRICT

Mark	Description	Date	Appr.	Mark	Description	Date	Appr.

Rev: 0
Date: 2/23/10
Design file no.
Drawing code:
File name: ANASTORS-502SC
Plot date: 2/23/2010
Plot scale: X:X

Designed by: KMP/MMY
Dwn by: RCG
Ckd by: CWW
Reviewed by: LHM
Submitted by: BAKER

U.S. ARMY CORPS OF ENGINEERS
AFGHANISTAN ENGINEER DISTRICT
APO AE 96338

Michael Baker Jr., Inc.
A unit of Michael Baker Corporation
Airside Business Park
100 Airside Drive
Moon Township, PA 15108
www.mbakercorp.com

AFGHAN NATIONAL ARMY
REGIONAL MILITARY TRAINING CENTER
STANDARD DESIGN

RMTC STORAGE

FRAMING SECTIONS

Sheet reference number:
S-502

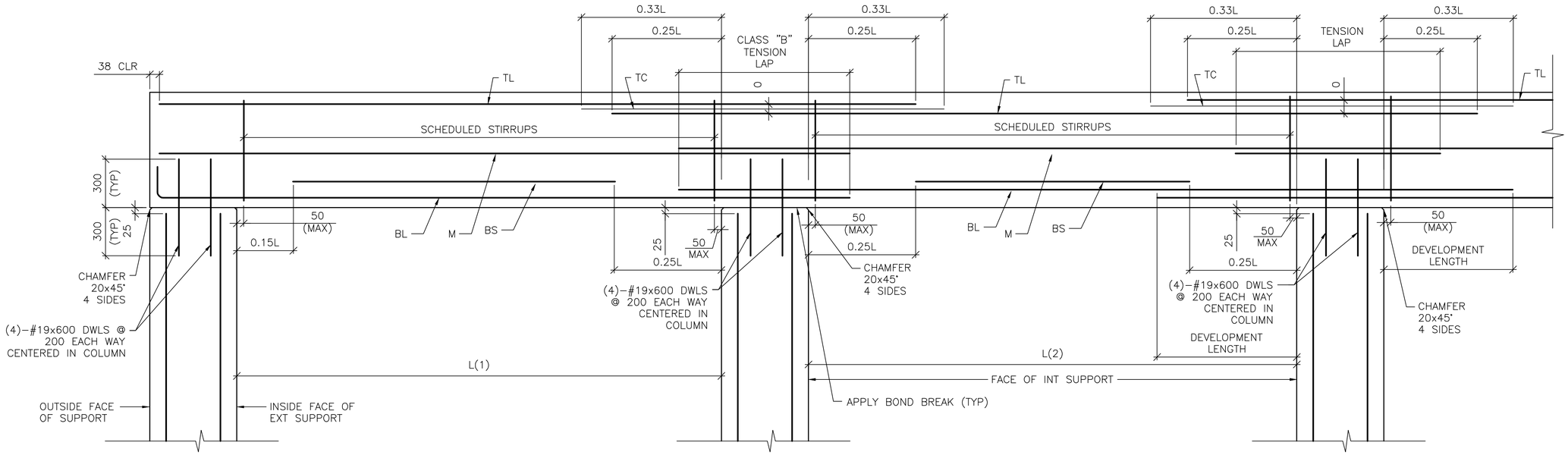

DETAIL NOTE:
1. WORK THIS DETAIL WITH BEAM SCHEDULE ON SHEET S-601.
2. L=GREATEST OF ADJACENT SPANS L(1) OR L(2)
3. ONLY COLUMN CORNER BARS ARE SHOWN

1 / S-503 ROOF BEAM REINFORCING DETAIL

SCALE: NTS

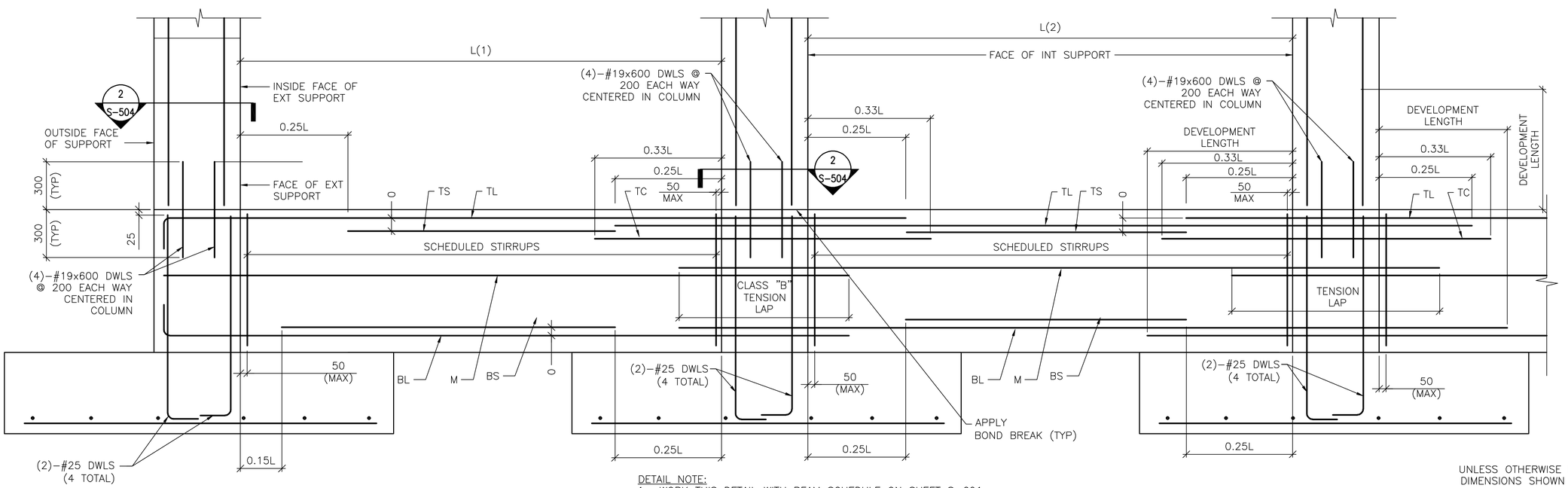

DETAIL NOTE:
1. WORK THIS DETAIL WITH BEAM SCHEDULE ON SHEET S-601.
2. L=GREATEST OF ADJACENT SPANS L(1) OR L(2)
3. ONLY COLUMN CORNER BARS ARE SHOWN.

2 / S-503 GRADE BEAM REINFORCING DETAIL

SCALE: NTS

UNLESS OTHERWISE NOTED, LINEAR DIMENSIONS SHOWN ON DRAWINGS ARE IN MILLIMETERS (mm)

APPROVED:

A/E DESIGNER OF RECORD

SEAL:

GEORGIA REGISTERED No. 27141 PROFESSIONAL ENGINEER CHRISTOPHER W. WHITMORE

US ARMY CORPS OF ENGINEERS
AFGHANISTAN ENGINEER DISTRICT

Mark	Description	Date	Appr.	Mark	Description	Date	Appr.

Rev: 0
Date: 2/23/10
Design file no.
Drawing code:
File name: AMASTORS-S503DT
Plot date: 2/23/2010
Plot scale: X:X

Designed by: KMP/MMY
Dwn by: RCG
Ckd by: CWW
Reviewed by: LHM
Submitted by: BAKER

U.S. ARMY CORPS OF ENGINEERS
AFGHANISTAN ENGINEER DISTRICT
APO AE 96338

Michael Baker Jr., Inc
A unit of Michael Baker Corporation
Airside Business Park
100 Airside Drive
Moon Township, PA 15108
www.mbakercorp.com

AFGHAN NATIONAL ARMY
REGIONAL MILITARY TRAINING CENTER
STANDARD DESIGN

RMTC STORAGE

BEAM & COLUMN DETAILS

Sheet reference number:
S-503

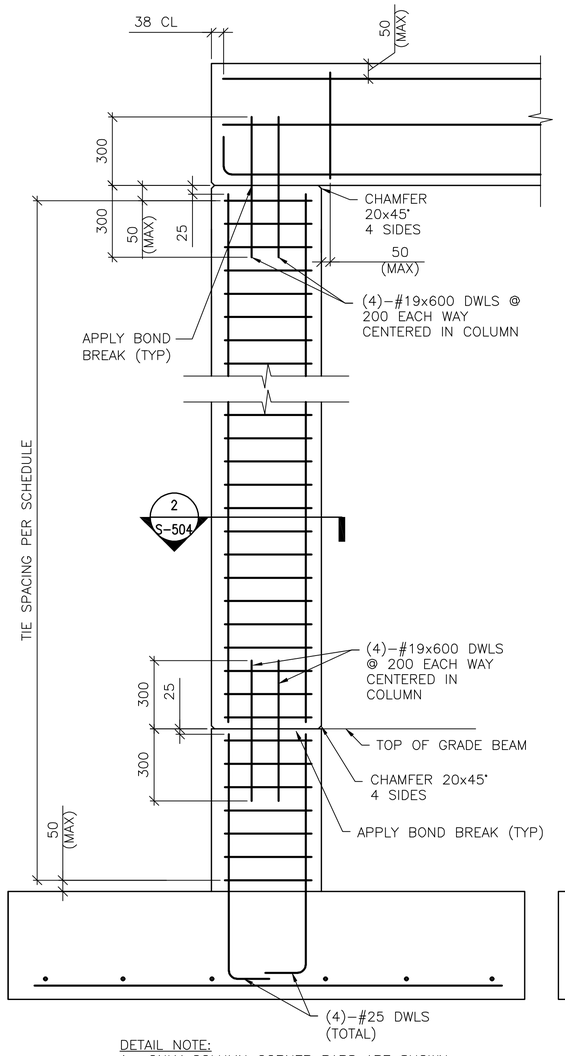

DETAIL NOTE:
1. ONLY COLUMN CORNER BARS ARE SHOWN

1 S-504 1-STORY COLUMN REINF DETAILS
SCALE: NTS
(WITH GRADE BEAM)

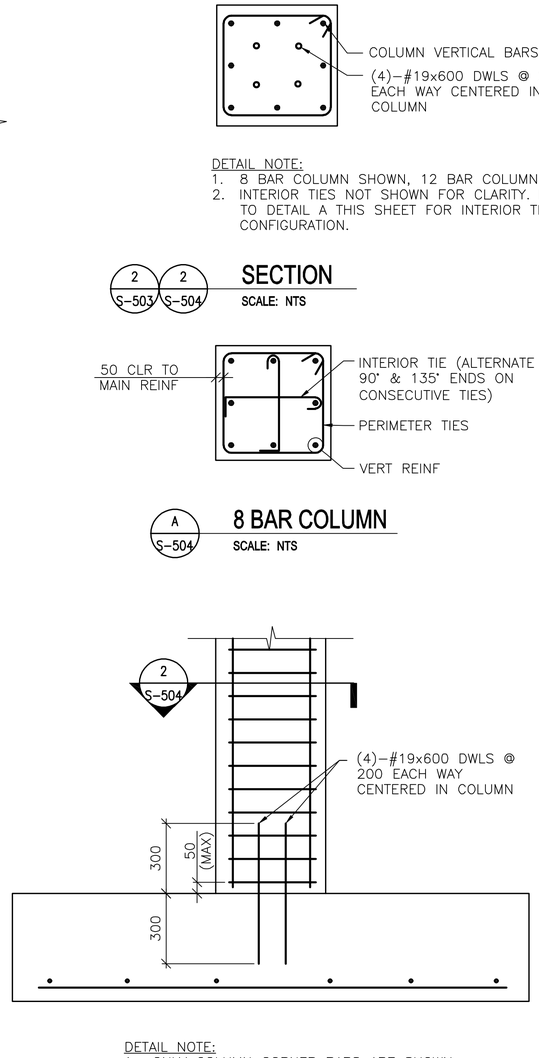

DETAIL NOTE:
1. ONLY COLUMN CORNER BARS ARE SHOWN

1 S-504 1-STORY COLUMN REINF DETAILS
SCALE: NTS
(WITHOUT GRADE BEAM)

DETAIL NOTE:
1. 8 BAR COLUMN SHOWN, 12 BAR COLUMN SIMILAR
2. INTERIOR TIES NOT SHOWN FOR CLARITY. REFER TO DETAIL A THIS SHEET FOR INTERIOR TIE CONFIGURATION.

2 S-503 2 S-504 SECTION
SCALE: NTS

A S-504 8 BAR COLUMN
SCALE: NTS

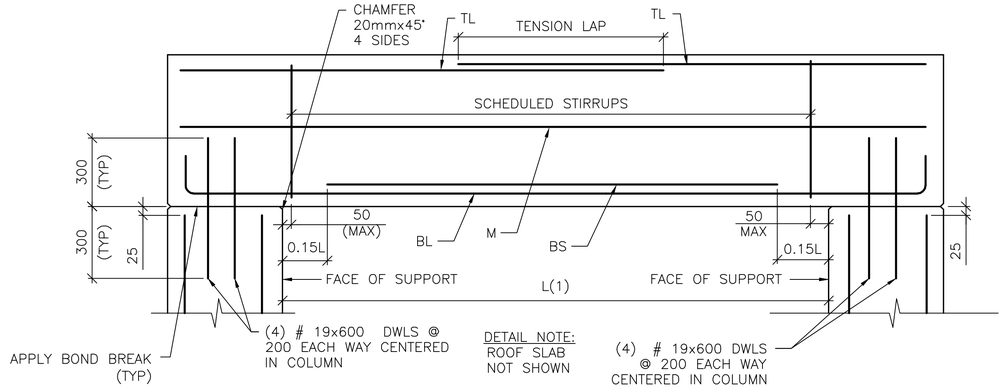

3 S-504 SINGLE SPAN ROOF BEAM REINFORCING DETAIL
SCALE: NTS

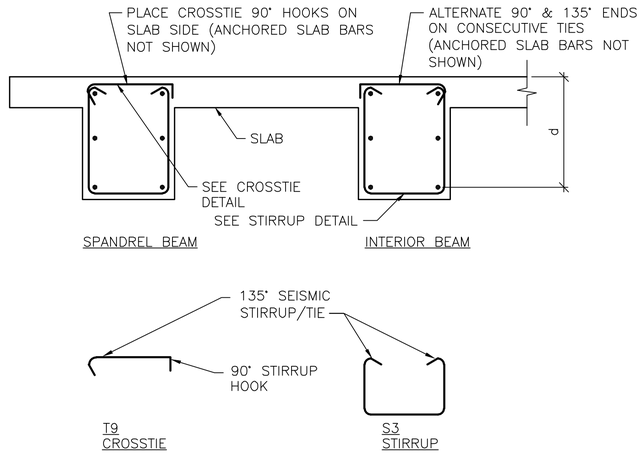

B S-504 BEAM REINFORCEMENT DETAILS
SCALE: NTS

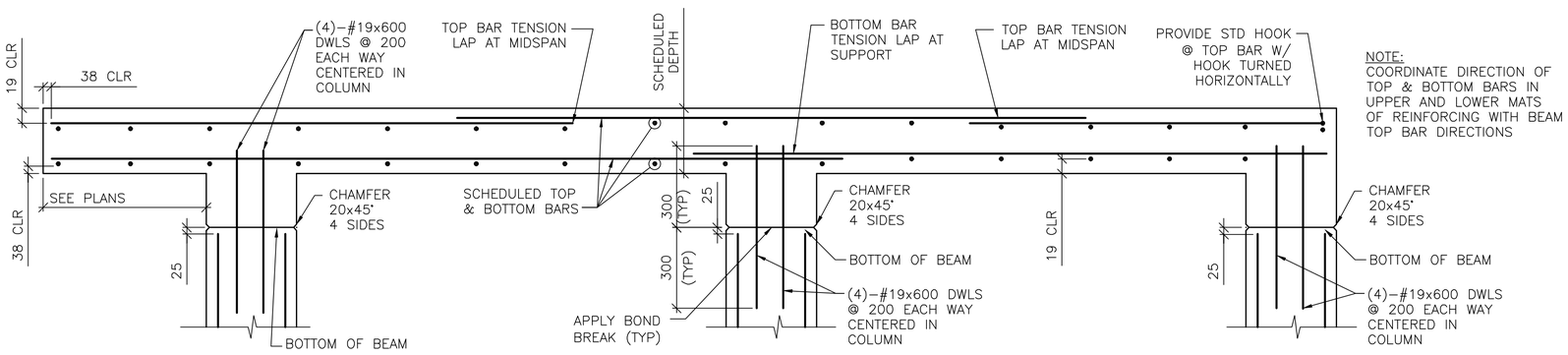

4 S-504 FRAMED SLAB REINFORCING DETAIL
SCALE: NTS

UNLESS OTHERWISE NOTED, LINEAR DIMENSIONS SHOWN ON DRAWINGS ARE IN MILLIMETERS (mm)

APPROVED:

A/E DESIGNER OF RECORD

SEAL:

GEORGIA REGISTERED 2-29-10 No. 27141 PROFESSIONAL ENGINEER CHRISTOPHER W. WHITMORE

US ARMY CORPS OF ENGINEERS
AFGHANISTAN ENGINEER DISTRICT

Mark	Description	Date	Appr.	Mark	Description	Date	Appr.

Designed by: KMP/MMY
Dwn by: RCG
Ckd by: CWW
Reviewed by: LHM
Submitted by: BAKER
Date: 2/23/10
Rev: 0
Design file no.
Drawing code:
File name: AMASTORS-S04DT
Plot date: 2/23/2010
Plot scale: X:X

U.S. ARMY CORPS OF ENGINEERS
AFGHANISTAN ENGINEER DISTRICT
APO AE 96338

Michael Baker Jr., Inc
A unit of Michael Baker Corporation
Airside Business Park
100 Airside Drive
Moon Township, PA 15108
www.mbakercorp.com

AFGHAN NATIONAL ARMY
REGIONAL MILITARY TRAINING CENTER
STANDARD DESIGN

RMTC STORAGE

BEAM & COLUMN DETAILS

Sheet reference number:
S-504

CONCRETE REINFORCEMENT TENSION DEVELOPMENT/LAP SPLICE SCHEDULE

f'c = 28 MPa	LAP CLASS	UNCOATED BARS			
		TOP BARS		OTHER BARS	
BAR SIZES		CASE 1	CASE 2	CASE 1	CASE 2
#10 TO #19	A	50 BAR DIA	74 BAR DIA	38 BAR DIA	57 BAR DIA
	B	64 BAR DIA	96 BAR DIA	50 BAR DIA	74 BAR DIA
#22 TO #57	A	62 BAR DIA	93 BAR DIA	48 BAR DIA	71 BAR DIA
	B	80 BAR DIA	121 BAR DIA	62 BAR DIA	93 BAR DIA

NOTES:
1. TABULATED TENSION DEVELOPMENT LENGTH VALUES ARE TAKEN FROM CRSI DESIGN HANDBOOK 2008 10TH ED.
2. TENSION DEVELOPMENT & TENSION LAP SPLICE LENGTHS ARE EXPRESSED AS MULTIPLES OF BAR DIAMETERS.
3. TABULATED VALUES ARE BASED ON MINIMUM YIELD STRENGTH OF REINFORCEMENT, fy, OF 420MPa.
4. CONCRETE IS NORMAL WEIGHT (2400Kg/m³) AND 28 DAY COMPRESSIVE STRENGTH = 28MPa.
5. TABULATED VALUES FOR BEAMS & COLUMNS ARE BASED ON TRANSVERSE REINFORCEMENT AND CONCRETE COVER MEETING MINIMUM CODE REQUIREMENTS.
6. CASES 1 & 2, WHICH DEPEND ON THE TYPE OF STRUCTURAL MEMBER, CONCRETE COVER, AND CENTER-TO-CENTER SPACING OF THE BARS ARE DEFINED IN THE TABLE BELOW.
7. LAP SPLICE LENGTHS (MINIMUM 300mm) ARE MULTIPLES OF TENSION DEVELOPMENT LENGTHS: CLASS A = 1.0(TENSION DEVELOPMENT LENGTH) & CLASS B = 1.3(TENSION DEVELOPMENT LENGTH)
8. TOP BARS ARE HORIZONTAL REINFORCEMENT WITH MORE THAN 300mm OF CONCRETE CAST BELOW THE BARS.
9. IT SHALL BE PERMISSIBLE TO CALCULATE WALL AND SLAB REINFORCEMENT TENSION DEVELOPMENT/SPLICE LENGTHS IN ACCORDANCE WITH ACI 12.2.3 OR TABLE 5.3(b) OF CRSI 2008 IN LIEU OF VALUES TABULATED ABOVE.

BEAMS, COLUMNS	CASE 1	CONCRETE COVER AT LEAST 1 BAR DIA AND CENTER-TO-CENTER SPACING AT LEAST 2 BAR DIA
	CASE 2	CONCRETE COVER LESS THAN 1 BAR DIA OR CENTER-TO-CENTER SPACING LESS THAN 2 BAR DIA
ALL OTHERS	CASE 1	CONCRETE COVER AT LEAST 1 BAR DIA AND CENTER-TO-CENTER SPACING AT LEAST 3 BAR DIA
	CASE 2	CONCRETE COVER LESS THAN 1 BAR DIA OR CENTER-TO-CENTER SPACING LESS THAN 3 BAR DIA

CONCRETE COVER SCHEDULE

MINIMUM CONCRETE COVER PROTECTION FOR REINFORCEMENT BARS SHALL BE AS LISTED BELOW: (SEE ACI 318M-05, SECTION 7.7 FOR CONDITIONS NOT NOTED). DIMENSIONS FOR BAR PLACEMENT GIVEN IN SECTIONS AND DETAILS SHALL SUPERSEDE MINIMUM COVER REQUIREMENTS GIVEN HERE. DIMENSIONS ARE IN mm. PROVIDE STANDARD BAR CHAIRS AND SUPPORT BARS @1200mm MAXIMUM AS REQUIRED TO MAINTAIN CONCRETE PROTECTION SPECIFIED.

FOOTINGS (EARTH FORMED):		70
COLUMNS / PIERS (TO TIES)		40
GRADE BEAMS OR SLAB TURNED DOWN EDGES:		
TOP		40
BOTTOM (EARTH FORMED)		70
SIDES (EARTH FORMED)		70
SIDES (BOARD FORMED)	#16 BAR & SMALLER	40
	#19 THRU #36 BAR	50
ELEVATED BEAMS & SLABS:		
BEAM TIES & STIRRUPS (NOT EXPOSED TO WEATHER)		40
BEAM TIES & STIRRUPS (EXPOSED TO WEATHER)		50
FLOOR SLABS (NOT EXPOSED TO WEATHER)		20
FLOOR SLABS (EXPOSED TO WEATHER)		
#19 & LARGER		50
#13 & SMALLER		40
ROOF SLAB BARS		25
SLABS ON GRADE		
NOT EXPOSED TO WEATHER (FROM TOP)		20
EXPOSED TO WEATHER (FROM TOP)		40
UTILITY TUNNEL WALLS, RETAINING WALLS AND SHEAR WALLS. (NO SURFACES SHALL BE EARTH FORMED)		
EARTH SIDE AND FRONT SIDE (EXPOSED TO WEATHER)		
#16 BAR AND SMALLER		40
#19 THRU #36 BAR		50

COLUMN FOOTING SCHEDULE

MARK	FOOTING SIZE (mm)			FOOTING REINFORCING	REMARKS
	LENGTH	WIDTH	THICKNESS		
F1	3900	3900	400	(9)-#25 EW BOTT	-----
F2	3100	3100	300	(8)-#22 EW BOTT	-----
F3	2500	2500	250	(6)-#19 EW BOTT	-----
F4	5400	2900	450	(12)-#22 SHORT BOTT (12)-#25 LONG BOTT	-----
F5	2800	2200	250	(7)-#16 SHORT BOTT (7)-#19 LONG BOTT	-----

CONCRETE SHEAR WALL SCHEDULE

MARK	TYPE	WALL LENGTH (L) (mm)	WALL REINFORCEMENT		REMARKS
			END ZONE	FIELD	
SW1	C	6400	(5)-#19 @ 225mm OC	#13 @ 300mm OC	-----
SW2	C	6100	(5)-#19 @ 225mm OC	#13 @ 300mm OC	-----

NOTES:
1. WORK THIS SCHEDULE WITH SHEAR WALL DETAILS ON SHEETS S-702
2. SEE PLAN FOR LOCATION OF SHEAR WALL(S).
3. VERTICAL "FIELD" BARS MAY BE OMITTED IN LOCATION OF "END ZONE" REINFORCEMENT.
4. WALL FIELD REINF LISTED APPLIES TO VERT & HORIZ BARS.
5. WALL FIELD REINFORCEMENT CENTERED IN WALL.

STANDARD HOOKS IN TENSION PER (ACI 318M-05)

HOOK DEVELOPMENT LENGTH (mm)	
BAR SIZE	f'c 28 MPa
#10	180
#13	250
#16	300
#19	380
#22	430
#25	480
#29	560
#32	610
#36	690

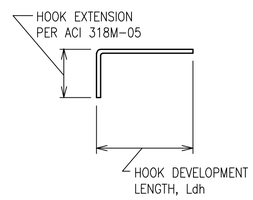

NOTES:
1. CONCRETE IS NORMAL WEIGHT CONCRETE.
2. BAR YIELD STRENGTH, fy = 420 MPa
3. SIDE COVER REQUIREMENTS OF ACI SECT. 12.5.3 ARE ASSUMED TO NOT BE MET.
4. TIE OR STIRRUP REQUIREMENTS OF ACI SECT. 12.5.3 ARE ASSUMED TO NOT BE MET.
5. REDUCTION FOR EXCESS REINFORCEMENT IS NOT TAKEN.
6. HOOK DEVELOPMENT LENGTH IS VALID FOR 180° HOOKS ALSO.

CMU OR CAST IN PLACE CONC LINTEL SCHEDULE (TYP)

OPENING TYPE OR SIZE, BEAM LOCATION OR TYPE	MAX SPAN (mm)	LINTEL DEPTH (mm)	REINFORCING BOTTOM
WALL OPENING	4000	600	(2)-#16 T&B
WALL OPENING	1900	400	(2)-#16 T&B
WALL OPENING	1000	400	(2)-#13 B

1. STRUCTURAL SHEETS DO NOT INDICATE ALL OPENINGS IN MASONRY WALLS. VERIFY NUMBER, SIZE AND LOCATION OF ALL OPENINGS IN MASONRY WALLS FROM ARCHITECTURAL SHEETS AND APPROVED PLUMBING, MECHANICAL, AND ELECTRICAL SHOP DRAWINGS.
2. PROVIDE 200mm BEARING EA END.
3. FOR HEAD DETAILS REFER TO ARCHITECTURAL SHEETS.
4. REINFORCING SHALL BE ASTM A615M, GRADE 420. GROUT FOR CMU LINTELS SHALL HAVE A MINIMUM COMPRESSIVE STRENGTH OF 14 MPa AT 28 DAYS.
5. CONTRACTOR SHALL SUBMIT FOR APPROVAL SHOP DRAWINGS AND SCHEDULES SHOWING SIZE, SPAN, REINFORCEMENT, DETAILS, LOCATIONS, ETC.

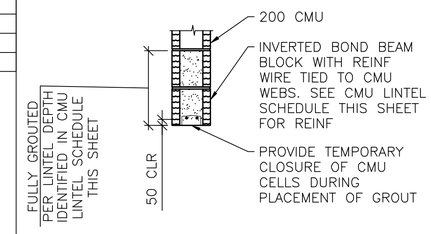

A S-601 **LINTEL DETAIL**
SCALE: NTS

BEAM SCHEDULE

MARK	BEAM SIZE (mm)		BEAM REINFORCING						STIRRUPS			REMARKS
	DEPTH	WIDTH	BL	BS	TL	TS	TC	M	SIZE	TYPE	SPACING	
GRADE BEAMS												
GB1	750	400	(2)-#22	(1)-#22	(2)-#19	---	---	---	#13	S3 +T9	d/2	---
GB2	750	400	(2)-#25	(2)-#25	(2)-#25	---	---	---	#13	S3 +T9	d/2	---
ROOF BEAMS												
RB1	600	400	(2)-#22	(1)-#22	(2)-#19	---	---	---	#13	S3+T9	d/2	---
RB2	600	400	(2)-#22	(1)-#22	(2)-#22	---	---	---	#13	S3+T9	d/2	

NOTES:
1. WORK THIS SCHEDULE WITH BEAM REINFORCING DETAILS ON SHEETS S-503 AND S-504.
2. HOOKS SHOWN ON SECTIONS AND DETAILS SHALL BE 90° STD UON.
3. USE ONLY (1) TC AT BEAM COLUMN INTERSECTION WHERE REQ'D.

COLUMN SCHEDULE

COLUMN MARK / DESCRIPTION	TYP UON	---	---	---
TYPE	8-BAR	---	---	---
DIMENSIONS	600mm SQ	---	---	---
VERTICAL REINFORCEMENT	(8)-#25	---	---	---
TIES	#13 @ d/2	---	---	---
TOP OF ROOF ELEVATION	5600mm	---	---	---
TOP OF GRADE BEAM ELEVATION	-200mm	---	---	---
TOP OF FOOTING ELEVATION	-950mm	---	---	---

NOTES:
1. WORK THIS SCHEDULE WITH COLUMN DETAILS ON SHEET S-504.
2. SEE FOOTING SCHEDULE ON THIS SHEET FOR FOOTING INFORMATION.
3. COLUMN TIES: INTERIOR TIES TO MATCH SIZE & SPACING OF PERIMETER TIES.
4. HOOKS SHOWN ON SECTIONS & DETAILS SHALL BE 90° STD UON.

UNLESS OTHERWISE NOTED, LINEAR DIMENSIONS SHOWN ON DRAWINGS ARE IN MILLIMETERS (mm)

APPROVED:

A/E DESIGNER OF RECORD

SEAL:

GEORGIA REGISTERED 1-27-10 No. 27141 PROFESSIONAL ENGINEER CHRISTOPHER W. WHITMORE

US ARMY CORPS OF ENGINEERS
AFGHANISTAN ENGINEER DISTRICT

Mark	Description	Date	Appr.	Mark	Description	Date	Appr.

Designed by: KMP/MMY
Dwn by: RCG
Ckd by: CWW
Reviewed by: LHM
Submitted by: BAKER
Date: 2/23/10
Rev: 0
Design file no.
Drawing code:
File name: AMASTOR-S01SCH
Plot date: 2/23/2010
Plot scale: X:X

U.S. ARMY CORPS OF ENGINEERS
AFGHANISTAN ENGINEER DISTRICT
APO AE 96338

Michael Baker Jr., Inc
A unit of Michael Baker Corporation
Airside Business Park
100 Airside Drive
Moon Township, PA 15108
www.mbakercorp.com

AFGHAN NATIONAL ARMY
REGIONAL MILITARY TRAINING CENTER
STANDARD DESIGN

RMTC STORAGE

SCHEDULES

Sheet reference number:
S-601

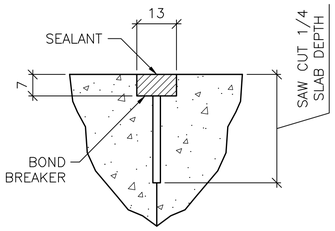

CONTROL JOINT DETAIL

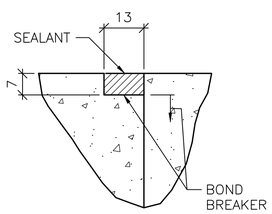

CONSTRUCTION JOINT DETAIL

1 / S-701 TYPICAL CONCRETE SLAB JOINT FINISH DETAILS

SCALE: NTS

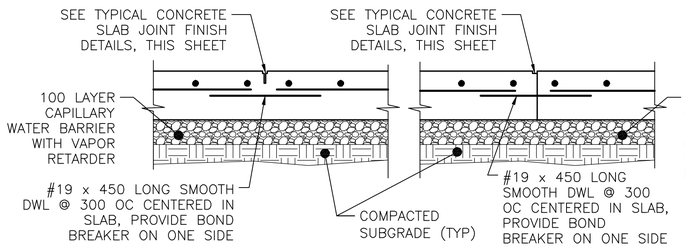

CONTROL JOINT DETAIL

CONSTRUCTION JOINT DETAIL

2 / S-701 TYPICAL SLAB ON GRADE JOINT DETAIL

SCALE: NTS

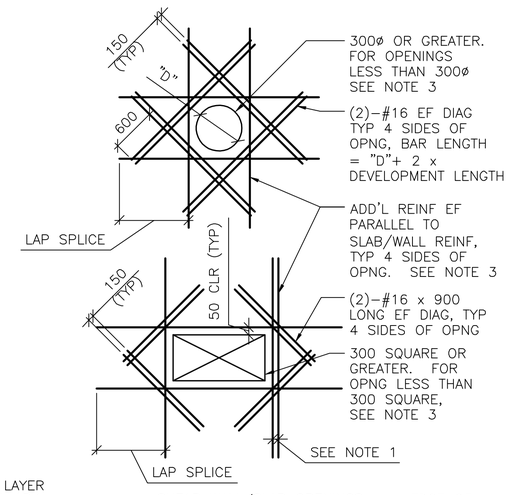

SHEAR WALL/SLAB OPENINGS

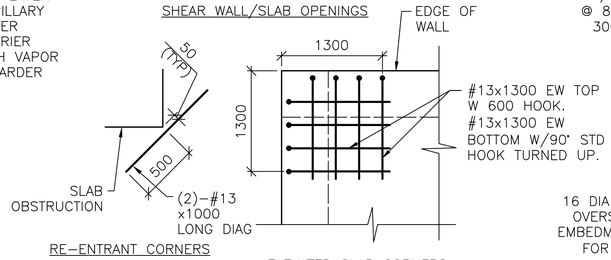

RE-ENTRANT CORNERS

ELEVATED SLAB CORNERS

DETAIL NOTES:

1. WHERE MORE THAN ONE ADDITIONAL BAR IS REQUIRED PARALLEL TO THE EXISTING SLAB/WALL REINFORCING THE ADDITIONAL REINFORCING BARS SHALL BE SPACED AT 100 ON CENTER.
2. ADDITIONAL REINFORCING PARALLEL TO THE SLAB/WALL REINFORCING SHALL BE #16 BARS THAT PROVIDE A STEEL AREA ON EACH SIDE OF THE OPENING EQUAL TO 1/2 THE AREA OF THE REINFORCING CUT BY THE OPENING.
3. FOR OPENINGS WITH SIDES OR DIAMETERS LESS THAN 300 SPREAD THE SLAB/WALL REINFORCING TO CLEAR THE OPENING.

4 / S-701 ADD'L CONCRETE REINFORCEMENT DETAILS

SCALE: NTS

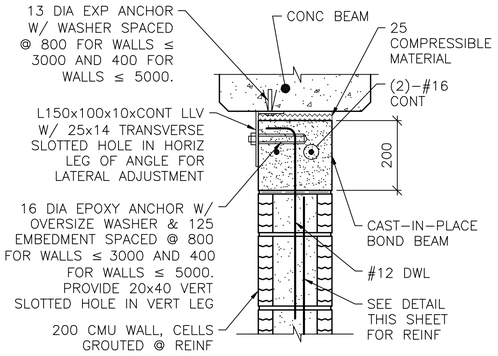

NOTE:

1. AT ANCHOR BOLTS, ADD AN ADDITIONAL 25 COMPRESSIBLE MATERIAL BELOW EXP ANCHOR HEAD.

INTERIOR BEAM

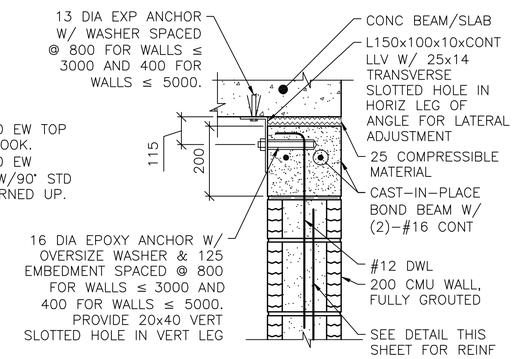

EXTERIOR WALL OR SLAB

NOTES:

1. THIS DETAIL IS AN ALTERNATE TOP OF WALL ANCHORAGE DETAIL TO BE USED AT THE CONTRACTOR'S OPTION IN LIEU OF DETAILS SHOWN ON S-400 & S-500 DRAWINGS.
2. CAST-IN-PLACE BOND BEAM SHOWN AT TOP OF WALL IS ALSO APPLICABLE FOR INTERMEDIATE AND STARTER COURSE BOND BEAMS WITHIN WALL.

5 / S-701 ALTERNATE TOP OF CMU WALL BRACING DETAILS

SCALE: NTS

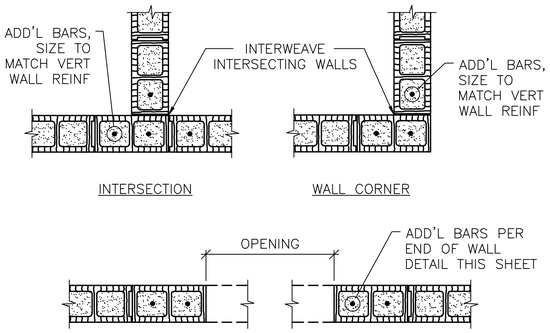

MASONRY OPENING W/ LINTEL

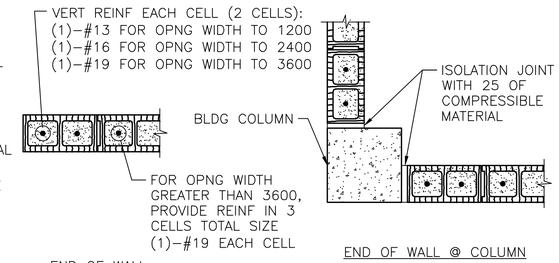

END OF WALL

END OF WALL @ COLUMN

NOTES:

1. OPENING WIDTH SHALL NOT EXCEED 3600 FOR THIS TYPE OF JAMB.
2. ALL CELLS FULLY GROUTED AT EXTERIOR WALLS. AT INTERIOR WALLS, ONLY GROUT CELLS CONTAINING REINF.

6 / S-701 TYP CMU DETAILS

SCALE: NTS

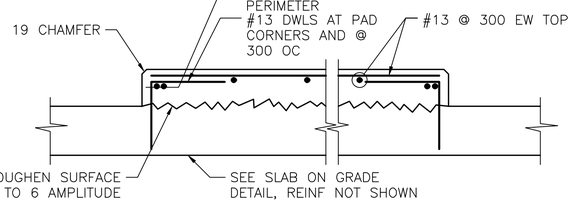

3 / S-701 INTERIOR EQUIPMENT PAD DETAIL

SCALE: NTS

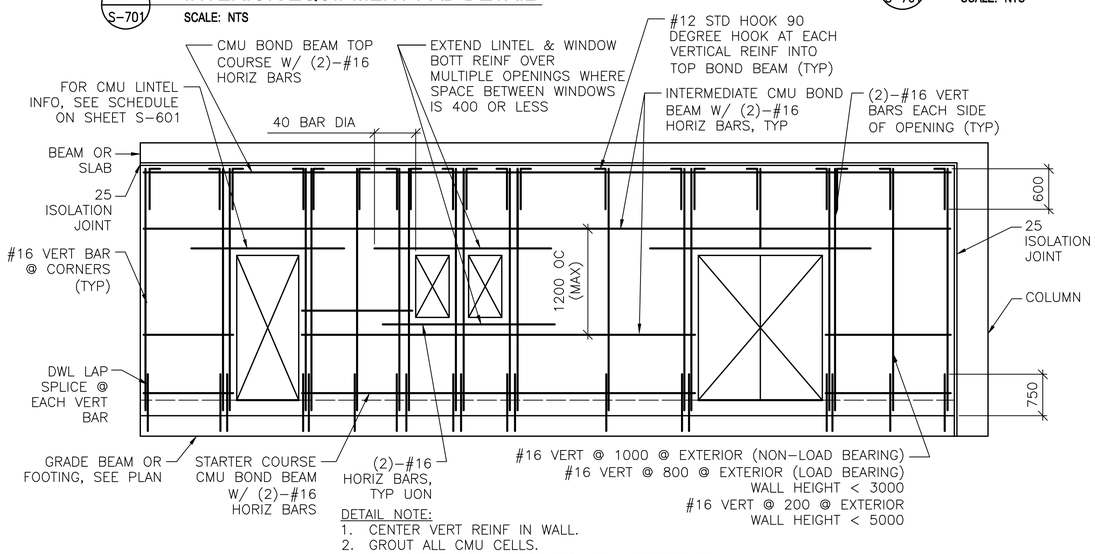

DETAIL NOTE:

1. CENTER VERT REINF IN WALL.
2. GROUT ALL CMU CELLS.
3. REFERENCE ARCH DWGS FOR JOINT INFORMATION
4. DOWELS BETWEEN TOP BOND BEAM AND BEAM/SLAB ABOVE (INCLUDING EMBEDDED PIPE SLEEVE) NOT SHOWN FOR CLARITY. SEE SPECIFIC S-500 SERIES DWGS FOR INFO.
5. FOR INFORMATION ON ALTERNATE CAST-IN-PLACE WALL BOND BEAMS, REFERENCE ALTERNATE TOP OF CMU WALL BRACING DETAILS THIS SHEET.

7 / S-701 TYP EXTERIOR CMU WALL REINF DETAIL

SCALE: NTS

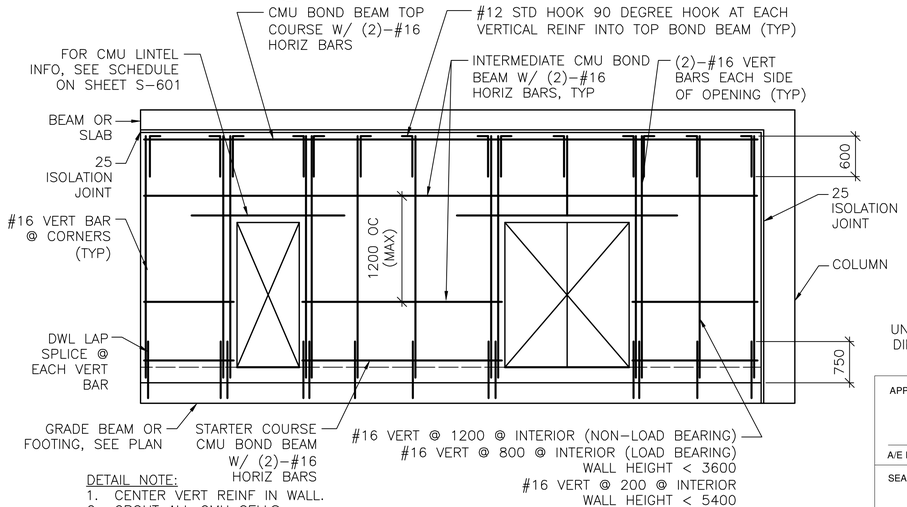

DETAIL NOTE:

1. CENTER VERT REINF IN WALL.
2. GROUT ALL CMU CELLS.
3. REFERENCE ARCH DWGS FOR JOINT INFORMATION
4. DOWELS BETWEEN TOP BOND BEAM AND BEAM/SLAB ABOVE (INCLUDING EMBEDDED PIPE SLEEVE) NOT SHOWN FOR CLARITY. SEE SPECIFIC S-500 SERIES DWGS FOR INFO.
5. FOR INFORMATION ON ALTERNATE CAST-IN-PLACE WALL BOND BEAMS, REFERENCE ALTERNATE TOP OF CMU WALL BRACING DETAILS THIS SHEET.

8 / S-701 TYP INTERIOR CMU WALL REINF DETAIL

SCALE: NTS

UNLESS OTHERWISE NOTED, LINEAR DIMENSIONS SHOWN ON DRAWINGS ARE IN MILLIMETERS (mm)

APPROVED:

A/E DESIGNER OF RECORD

SEAL:

GEORGIA REGISTERED No. 27141 PROFESSIONAL ENGINEER CHRISTOPHER W. WHITMORE 1-29-10

US ARMY CORPS OF ENGINEERS
AFGHANISTAN ENGINEER DISTRICT

Mark	Description	Date	Appr.	Mark	Description	Date	Appr.

Rev: 0
Date: 2/23/10
Design file no.
Drawing code:
File name: AMASTDRS-701TDT
Plot date: 2/23/2010
Plot scale: X:X

Designed by: KMP/MMY
Dwn by: RCG
Ckd by: CWW
Reviewed by: LHM
Submitted by: BAKER

U.S. ARMY CORPS OF ENGINEERS
AFGHANISTAN ENGINEER DISTRICT
APO AE 96338

Michael Baker Jr., Inc
A unit of Michael Baker Corporation
Airside Business Park
100 Airside Drive
Moon Township, PA 15108
www.mbakercorp.com

AFGHAN NATIONAL ARMY
REGIONAL MILITARY TRAINING CENTER
STANDARD DESIGN

RMTC STORAGE

TYPICAL DETAILS

Sheet reference number:
S-701

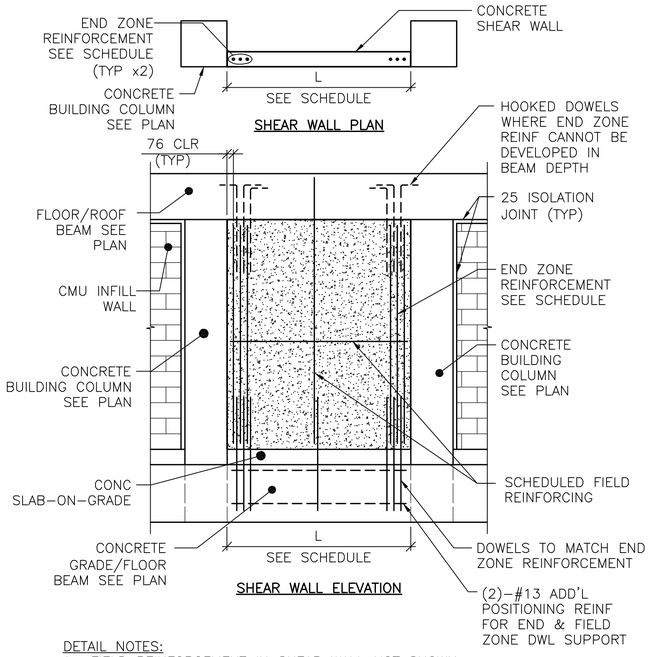

DETAIL NOTES:
1. FIELD REINFORCEMENT IN SHEAR WALL NOT SHOWN COMPLETELY FOR CLARITY.
2. FIELD REINFORCEMENT CENTERED IN WALL.
3. MINIMUM CONC CLEAR DISTANCE FOR END ZONE REINF = 76
4. SEE CONC SHEAR WALL SCHEDULE ON SHEET S-601
5. SEE ARCH DWGS FOR ISOLATION JOINT INFORMATION

1 S-702 TYPE "C" SHEAR WALL DETAIL

SCALE: NTS

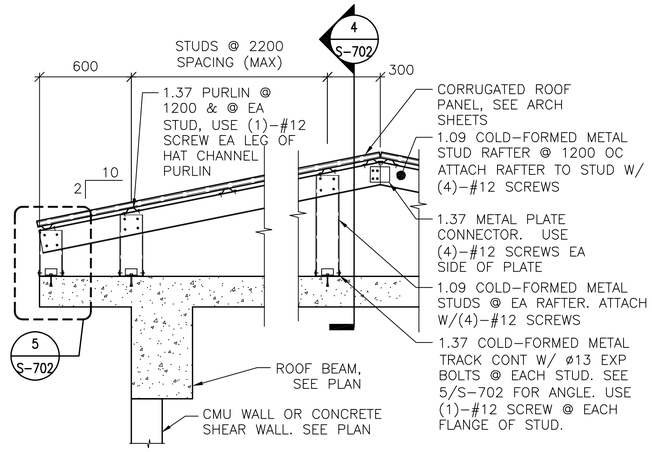

DETAIL NOTES:
1. ALL GABLE END VERTICAL STUDS SHALL BE ORIENTED 90° TO INTERIOR STUDS & SPACED @ 600 OC. GABLE END RAFTER SHALL BE 1.37 METAL TRACK SPANNING CONTINUOUSLY OVER GABLE END STUDS. INSET GIRTS AT GABLE END SHALL BE 1.09 COLD-FORMED METAL STUDS @ 1200 OC ATTACHED VIA 1.37 THICKNESS CLIP ANGLE W/ (2) #12 SCREWS EA LEG.
2. ALL INTERIOR, NON-GABLE END VERTICAL STUDS GREATER THAN 2400 IN LENGTH SHALL BE BACK-TO-BACK W/ #12 SCREWS @ 200 OC STAGGERED.

2 S-702 TYPICAL OVERBUILT ROOF FRAMING DETAIL

SCALE: NTS

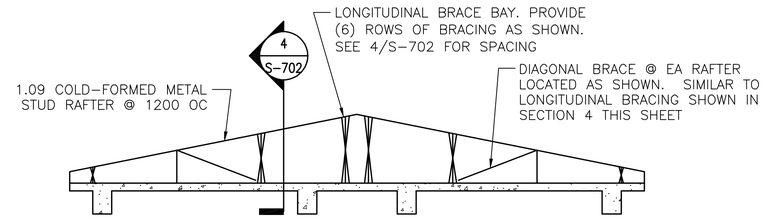

3 S-702 TYPICAL ROOF BRACE LAYOUT

SCALE: NTS

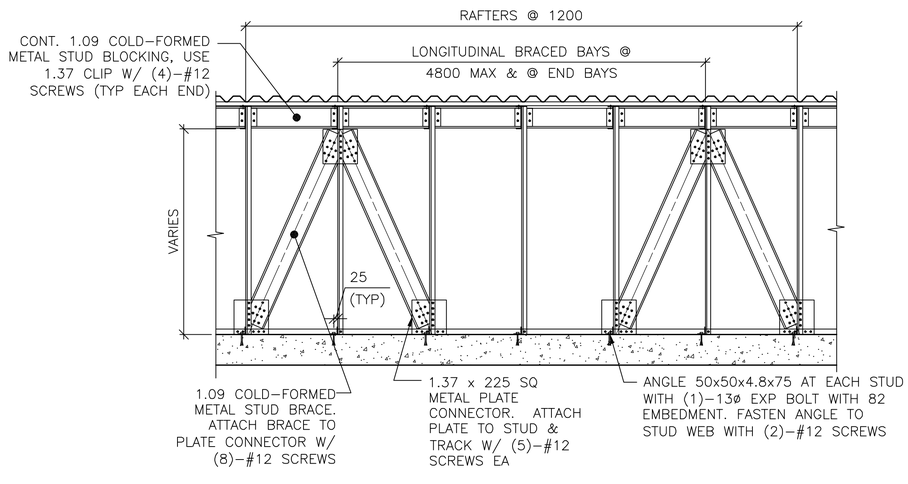

4 S-702 SECTION

SCALE: NTS

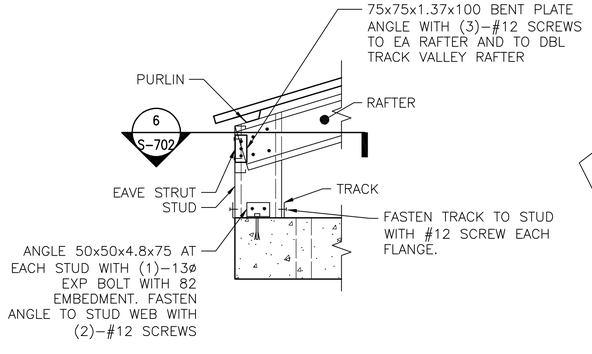

5 S-702 DETAIL

SCALE: NTS

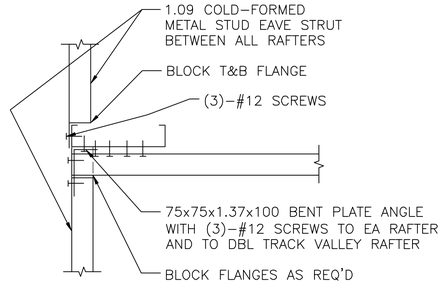

6 S-702 SECTION

SCALE: NTS

UNLESS OTHERWISE NOTED, LINEAR DIMENSIONS SHOWN ARE IN MILLIMETERS (mm)

APPROVED:

A/E DESIGNER OF RECORD

SEAL:

GEORGIA REGISTERED No. 27141 PROFESSIONAL ENGINEER CHRISTOPHER W. WHITMORE 2-23-10

US ARMY CORPS OF ENGINEERS
AFGHANISTAN ENGINEER DISTRICT

Mark	Description	Date	Appr.	Mark	Description	Date	Appr.

Designed by: KMP/MMY
Dwn by: RCG
Ckd by: CWW
Reviewed by: LHM
Submitted by: BAKER
Date: 2/23/10
Design file no.
Drawing code:
Rev: 0
File name: AMASTOR5-702TOT
Plot date: 2/23/2010
Plot scale: x:X

U.S. ARMY CORPS OF ENGINEERS
AFGHANISTAN ENGINEER DISTRICT
APO AE 96338

Michael Baker Jr., Inc.
A unit of Michael Baker Corporation
Airside Business Park
100 Airside Drive
Moon Township, PA 15108
www.mbakercorp.com

AFGHAN NATIONAL ARMY
REGIONAL MILITARY TRAINING CENTER
STANDARD DESIGN

RMTC STORAGE

TYPICAL DETAILS

Sheet reference number:
S-702

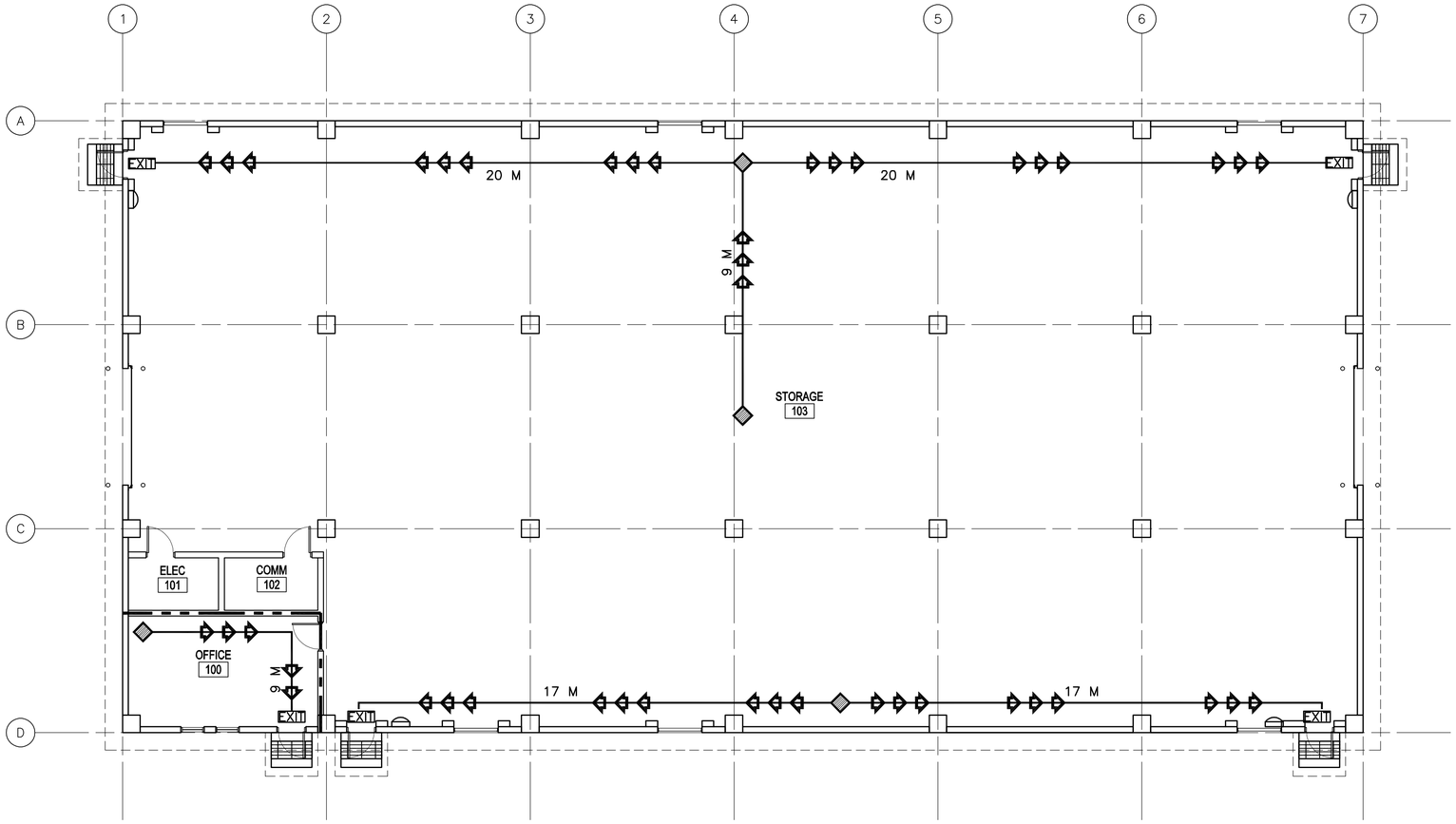

1 A-001 **LIFE SAFETY PLAN**

SCALE: 1:100

CODE ANALYSIS:

1. REFERENCES:
   2006 INTERNATIONAL BUILDING CODE (2006 IBC)
   2006 LIFE SAFETY CODE (2006 NFPA 101)

2. IBC OCCUPANCY CLASSIFICATION:
   GROUP S–1
   (STORAGE, ORDINARY HAZARD NFPA 101 6.1.13.1 & 6.2.2 AND CHAPTER 42)

3. TYPE OF CONSTRUCTION (IBC): TYPE II–B (UNPROTECTED/NONSPRINKLERED)

4. IBC TABLE 503: ALLOWABLE HEIGHT AND BUILDING AREAS:
   GROUP S–1
   ALLOWABLE AREA: 1625 SM
   ALLOWABLE HEIGHT: 2 STORIES (16 M)

   GROUP S–1
   PROPOSED AREA: 895 SM
   PROPOSED HEIGHT: 1 STORY (<16 M)

5. IBC TABLE 601 & 602: FIRE RESISTANCE RATING REQUIREMENTS FOR BUILDING ELEMENTS FOR TYPE II–B

BUILDING ELEMENT	RATING (HOUR)	REFERENCE
STRUCTURAL FRAME (COLUMNS, GIRDERS & TRUSSES)	0	TABLE 601
BEARING WALLS		
EXTERIOR	0	TABLE 601
INTERIOR	0	TABLE 601
NONBEARING WALLS & PARTITIONS		
INTERIOR	0	TABLE 601
FLOOR CONSTRUCTION	0	TABLE 601
ROOF CONSTRUCTION	0	TABLE 601
EXTERIOR WALL	0	TABLE 602

6. IBC TABLE 803.5 – INTERIOR WALL AND CEILING FINISH REQUIREMENTS FOR S–1 OCCUPANCY/NONSPRINKLERED

GROUP	EXIT ENCLOSURES AND EXIT PASSAGEWAY	CORRIDORS	ROOMS AND ENCLOSED SPACES
S	A	A	B

7. NFPA 101 TABLE 7.3.1.2 – OCCUPANT LOAD
   STORAGE = N/A
   NFPA 101 42.1.7: USE THE PROBABLE POPULATION: 5

8. NFPA 101 TABLE 7.3.3.1 – EGRESS CAPACITY
   STORAGE = 5 MM PER OCCUPANT

   REQUIRED: 25 MM (5 OCCUPANTS x 5 MM PER OCCUPANT)
   PROPOSED EGRESS CAPACITY: 4500 MM: (5) 900 MM DOORS

9. NFPA 101 PARAGRAPH 42.2.6 AND TABLE 42.2.6 – EXIT ACCESS TRAVEL DISTANCE
   REQUIRED: 61 METERS
   PROPOSED: 20 METERS

10. NFPA 101 PARAGRAPH 42.3.6 – CORRIDORS
    CORRIDORS ARE NOT REQUIRED AS DOORS EXIT DIRECTLY TO OUTSIDE

11. NFPA 101 PARAGRAPH 42.2.4.1 AND 7.4.1.1 – MINIMUM NUMBER OF EXITS
    REQUIRED: 1 MINIMUM
    PROPOSED: 4 EXIT

12. NFPA 101, TABLE 6.1.14.4.1 – REQUIRED SEPARATION OF OCCUPANCIES
    BUSINESS TO ORDINARY HAZARD STORAGE
    REQUIRED: 2 HOUR
    PROVIDED: 2 HOUR

13. NFPA 101, TABLE 8.3.4.2 –OPENING PROTECTIVE
    REQUIRED: 90 MINUTE DOOR IN 2 HOUR FIRE BARRIER
    PROVIDED: 90 MINUTE DOOR IN 2 HOUR FIRE BARRIER

LEGEND:

- DENOTES PATHS OF EXIT TRAVEL
- EXIT — DENOTES DOOR AS AN EMERGENCY EXIT
- DENOTES STARTING POINT FOR TRAVEL DISTANCE
- DENOTES FIRE EXTINGUISHER LOCATIONS
- (1) HOUR RATED WALL
- (2) HOUR RATED WALL
- (3) HOUR RATED WALL

LINEAR DIMENSIONS SHOWN ARE IN MILLIMETERS (MM), UNLESS OTHERWISE NOTED

0 2000 4000
SCALE: 1:100

APPROVED:

A/E DESIGNER OF RECORD

SEAL:

STATE OF SOUTH CAROLINA
KEVIN R. CHAFIN
N. Charleston, SC
6374
REGISTERED ARCHITECT

US ARMY CORPS OF ENGINEERS
AFGHANISTAN ENGINEER DISTRICT

Mark	Description	Date	Appr.	Mark	Description	Date	Appr.

Designed by: KRC
Dwn by: EBB
Ckd by: NLJ
Reviewed by: LHM
Submitted by: BAKER
Date: 2/23/10
Rev: 0
Design file no.
Drawing code:
File name: ANASTORA001.SP
Plot date: 2/23/2010
Plot scale: x:X

U.S. ARMY CORPS OF ENGINEERS
AFGHANISTAN ENGINEER DISTRICT
APO AE 96338

Michael Baker Jr., Inc
A unit of Michael Baker Corporation
Airside Business Park
100 Airside Drive
Moon Township, PA 15108
www.mbakercorp.com

AFGHAN NATIONAL ARMY
REGIONAL MILITARY TRAINING CENTER
STANDARD DESIGN

RMTC STORAGE

LIFE SAFETY PLAN

Sheet reference number:
A–001

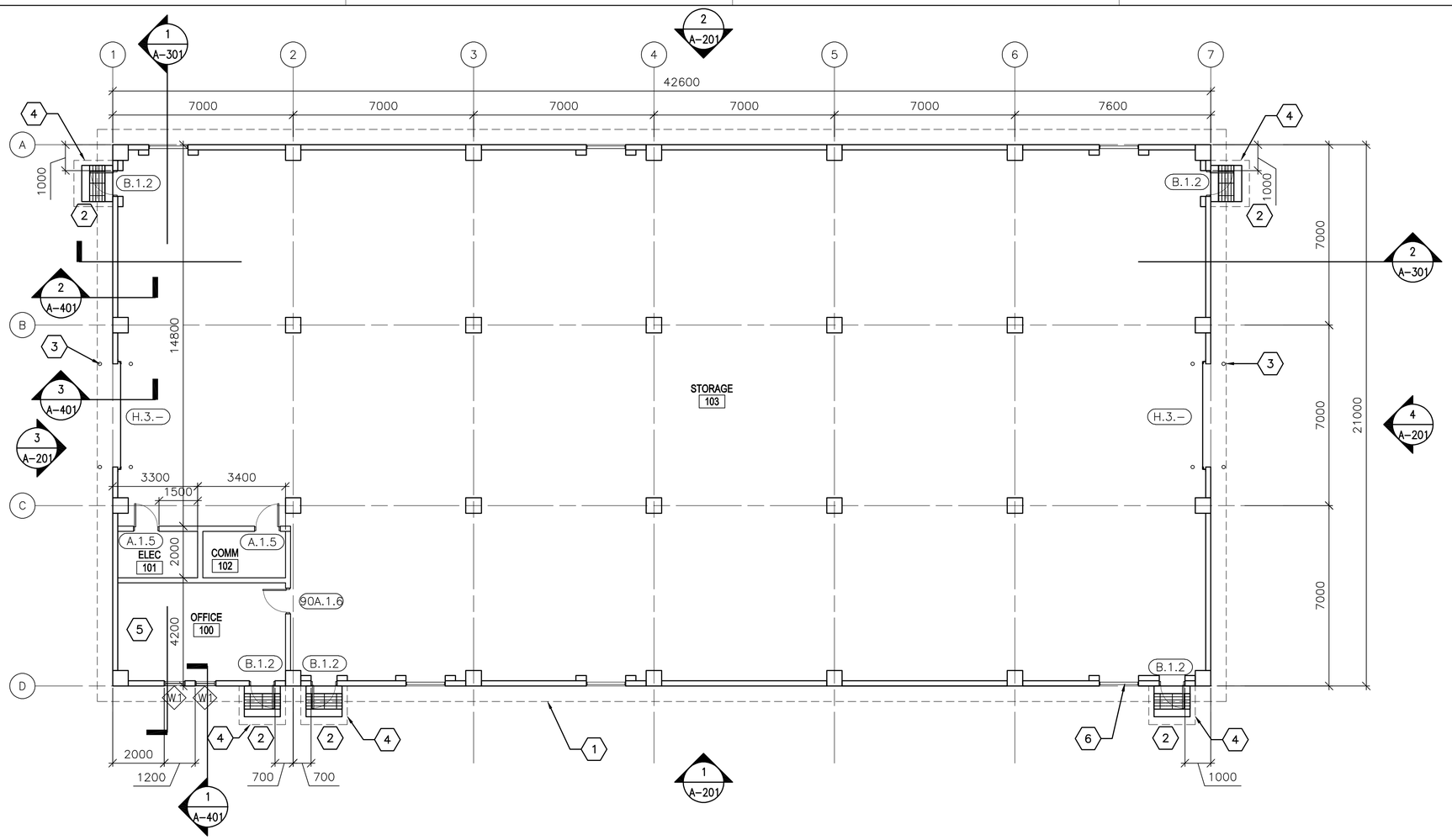

FLOOR PLAN

SCALE: 1:100

GENERAL NOTES:

A. DIMENSIONS ARE SHOWN TO OUTER EDGE OF EXTERIOR STRUCTURAL COLUMNS, STRUCTURAL COLUMN GRID, EDGE OF INTERIOR PARTITIONS, EDGE OF WINDOW OPENINGS, AND TO HINGE SIDE OF DOOR FRAME OPENINGS.

B. HINGE SIDE OF OPENINGS FOR DOORS AND FRAMES SHALL BE LOCATED 200 MM FROM THE ADJACENT WALL OR COLUMN, UNLESS NOTED OTHERWISE.

C. INTERIOR PARTITIONS SHALL BE 200 MM CMU. SEE STRUCTURAL DRAWINGS FOR LOCATION OF CONCRETE SHEAR WALLS.

D. COSMETIC REPAIR OF MINOR DEFECTS: REPAIR OR FILL MORTAR JOINTS AND MINOR DEFECTS, INCLUDING BUT NOT LIMITED TO SPALLS, IN ACCORDANCE WITH MANUFACTURER'S RECOMMENDATIONS AND PRIOR TO COATING APPLICATION. SURFACES TO BE PAINTED SHALL BE CLEAN AND FREE OF FOREIGN MATTER BEFORE APPLICATION OF PAINT. CLEANING SHALL BE SCHEDULED SO THAT DUST AND OTHER CONTAMINANTS WILL NOT FALL ON NEWLY PAINTED SURFACES.

E. CONCRETE, PLASTER AND MASONRY SURFACES SHALL BE ALLOWED TO CURE FOR AT LEAST 30 DAYS BEFORE PAINTING. CONCRETE SLABS–ON–GRADE SHALL BE ALLOWED TO CURE 90 DAYS BEFORE STAINING OR SEALING.

F. DO NOT USE PAINT MATERIALS CONTAINING LEAD CONTENT IN EXCESS OF 0.009 PERCENT OF THE WEIGHT OF THE TOTAL NONVOLATILE CONTENT OF THE PAINT OR THE WEIGHT OF THE DRIED PAINT FILM.

G. DO NOT USE ANY ASBESTOS CONTAINING MATERIALS (ACM) IN PROJECT. ACM IS DEFINED AS 1% OR MORE BY VOLUME.

H. DO NOT USE PAINT MATERIALS CONTAINING MERCURIAL FUNGICIDES.

I. FACTORY PRIMED METAL DOORS AND FRAMES SHALL RECEIVE TWO COATS OF PAINT.

J. FILL REMAINING SPACE AT PENETRATIONS IN FIRE–RATED FLOORS, PARTITIONS AND CEILINGS WITH APPROPRIATE FIRESTOPPING MATERIALS.

K. ALL CEILING FINISHES SHALL BE PAINTED STRUCTURE, UNLESS OTHERWISE NOTED.

L. ALL WALL FINISHES SHALL BE PAINTED STRUCTURE, UNLESS OTHERWISE NOTED.

M. ALL FLOOR FINISHES SHALL BE EPOXY SEALED CONCRETE.

KEY NOTES:

1. LINE OF ROOF OVERHANG ABOVE.
2. CONCRETE STOOP WITH GRATE – SEE DETAIL 1/A–503.
3. BOLLARD – SEE STRUCTURAL DRAWINGS FOR TYPICAL DETAIL
4. CANOPY – SEE DETAIL 2/A–504.
5. OFFICE WALLS & CEILING TO BE PAINTED PLASTER.
6. LOUVER – SEE SHEET M–101.

LEGEND:

XXX — DOOR FRAME AND HARDWARE TYPE, SEE SHEET A–601

A — WINDOW TYPE, SEE SHEET A–601

X — KEY NOTE

ABBREVIATIONS:

COMM	COMMUNICATIONS	JAN	JANITOR
ELEC	ELECTRICAL	CLOS	CLOSET
MECH	MECHANICAL		

APPROVED:

A/E DESIGNER OF RECORD

SEAL:

STATE OF SOUTH CAROLINA
KEVIN R. CHAFIN
N. Charleston, SC
6374
REGISTERED ARCHITECT

LINEAR DIMENSIONS SHOWN ARE IN MILLIMETERS (MM), UNLESS OTHERWISE NOTED

0 2000 4000
SCALE: 1:100

US ARMY CORPS OF ENGINEERS
AFGHANISTAN ENGINEER DISTRICT

Mark	Description	Date	Appr.	Mark	Description	Date	Appr.

Date: 2/23/10
Rev: 0
Design file no.
Drawing code:
File name: ANASTORA-101FP
Plot date: 2/23/2010
Plot scale: x:X

Designed by: KRC
Dwn by: EBB
Ckd by: NLJ
Reviewed by: LHM
Submitted by: BAKER

U.S. ARMY CORPS OF ENGINEERS
AFGHANISTAN ENGINEER DISTRICT
APO AE 96338

Michael Baker Jr., Inc
A unit of Michael Baker Corporation
Airside Business Park
100 Airside Drive
Moon Township, PA 15108
www.mbakercorp.com

AFGHAN NATIONAL ARMY
REGIONAL MILITARY TRAINING CENTER
STANDARD DESIGN

RMTC STORAGE

FLOOR PLAN

Sheet reference number:
A–101

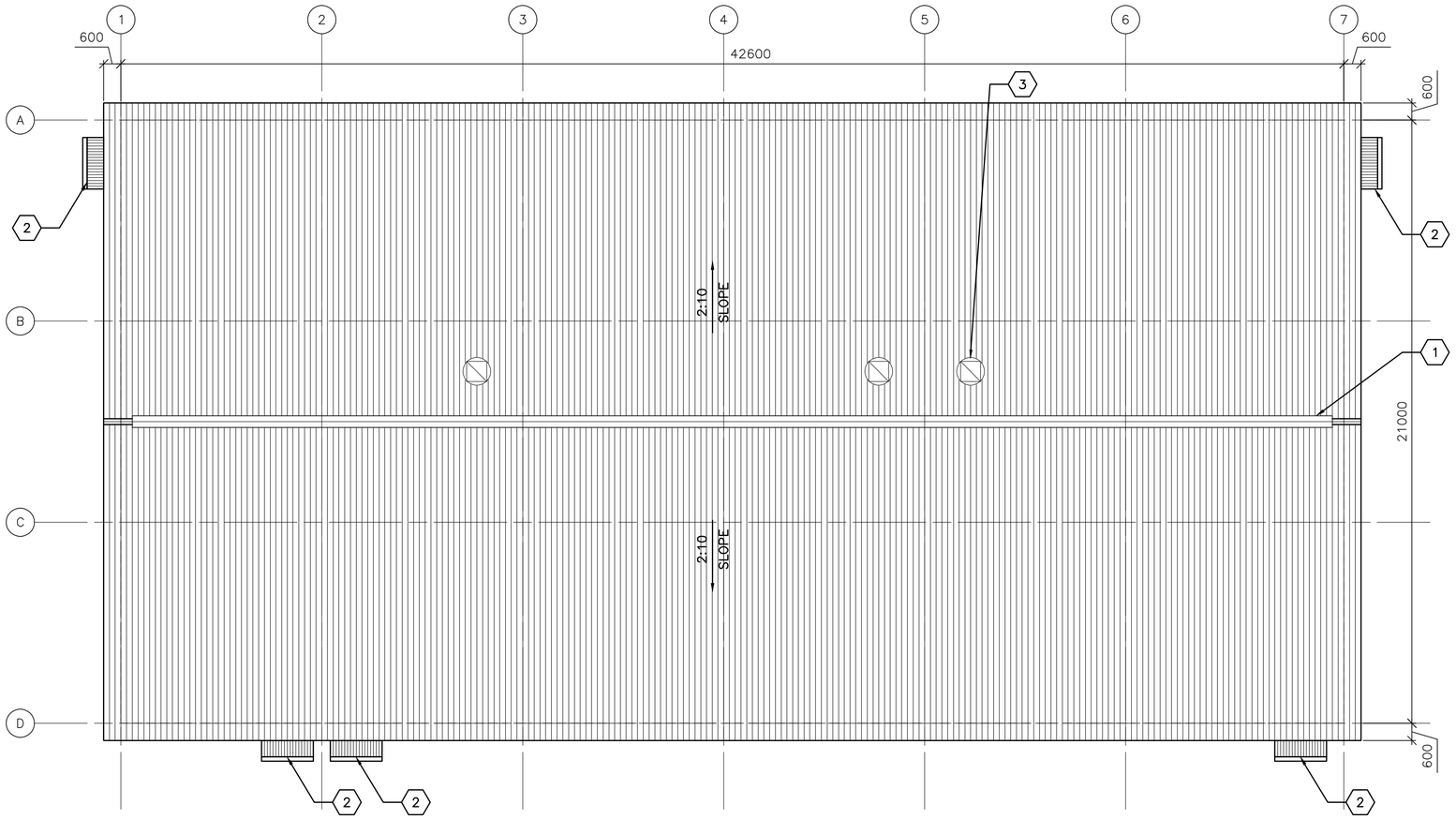

1 A-102 **ROOF PLAN**

SCALE: 1:100

GENERAL NOTES:

A. THE APPROXIMATE LOCATION OF ROOF DEVICES AND PENETRATIONS ARE SHOWN ON THE ROOF PLAN FOR INFORMATION ONLY. THE CONTRACTOR SHALL BE RESPONSIBLE FOR UNDERSTANDING THE ACTUAL LOCATION OF THESE AND ALL OTHER ITEMS PRIOR TO BEGINNING CONSTRUCTION. COORDINATE ALL ROOF PENETRATIONS WITH STRUCTURAL, MECHANICAL AND PLUMBING WORK.

B. UNLESS OTHERWISE NOTED, NOTES, DETAILS OR FEATURES INDICATED FOR ONE CONDITION SHALL BE APPLICABLE FOR ALL ALIKE AND SIMILAR CONDITIONS.

C. STOCKPILING OF MATERIALS, EQUIPMENT AND ANY OTHER ITEMS ON THE ROOF IS PROHIBITED.

D. ROOFS SHALL BE CORRUGATED METAL ROOF PANELS ON COLD-FORMED METAL FRAMING ON CONCRETE SLAB.

KEY NOTES:

1. CONTINUOUS METAL RIDGE VENT SEE DETAIL 4/A-501.
2. CANOPY – SEE DETAIL 2/A-504.
3. EXHAUST FAN – SEE SHEET M-101.

LINEAR DIMENSIONS SHOWN ARE IN MILLIMETERS (MM), UNLESS OTHERWISE NOTED

0 2000 4000
SCALE: 1:100

APPROVED:

A/E DESIGNER OF RECORD

SEAL:

STATE OF SOUTH CAROLINA
KEVIN R. CHAFIN
N. Charleston, SC
6374
REGISTERED ARCHITECT

US ARMY CORPS OF ENGINEERS
AFGHANISTAN ENGINEER DISTRICT

Mark	Description	Date	Appr.	Mark	Description	Date	Appr.

Designed by: KRC
Dwn by: EBB
Ckd by: NLJ
Reviewed by: LHM
Submitted by: BAKER
Date: 2/23/10
Rev: 0
Design file no.
Drawing code:
File name: ANASTORA-1025P
Plot date: 2/23/2010
Plot scale: x:X

U.S. ARMY CORPS OF ENGINEERS
AFGHANISTAN ENGINEER DISTRICT
APO AE 96338

Michael Baker Jr., Inc
A unit of Michael Baker Corporation
Airside Business Park
100 Airside Drive
Moon Township, PA 15108
www.mbakercorp.com

AFGHAN NATIONAL ARMY
REGIONAL MILITARY TRAINING CENTER
STANDARD DESIGN

RMTC STORAGE

ROOF PLAN

Sheet reference number:
A-102

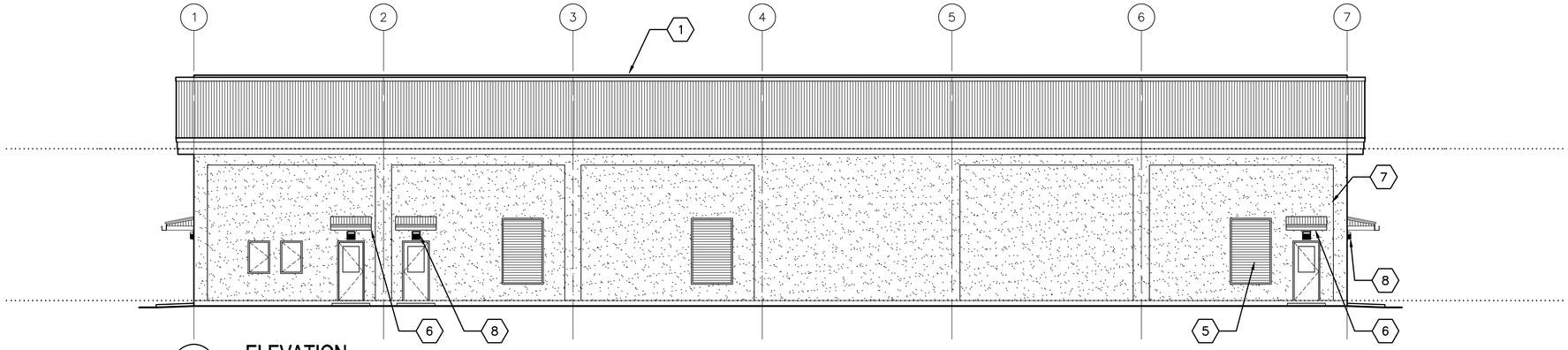

1 A-201 **ELEVATION**
SCALE: 1:100

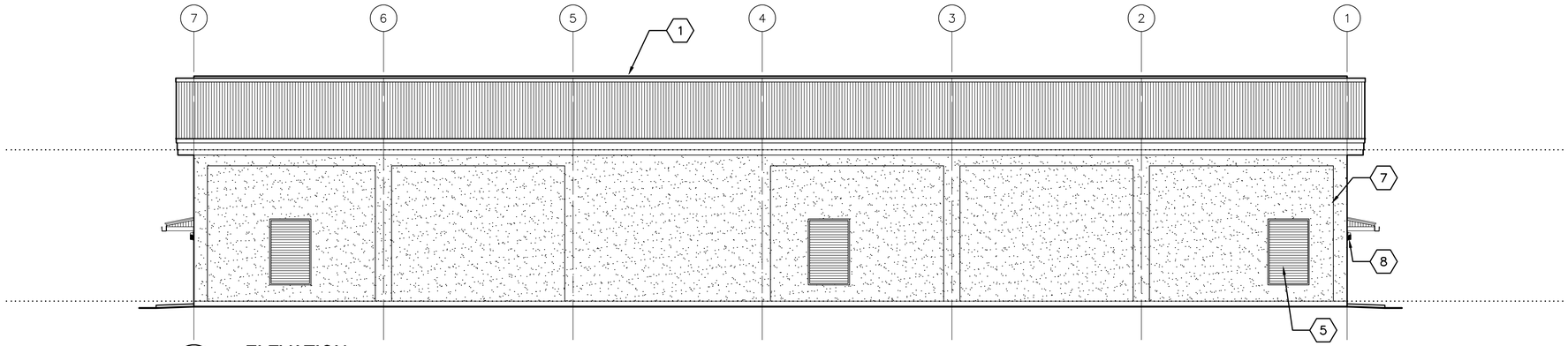

2 A-201 **ELEVATION**
SCALE: 1:100

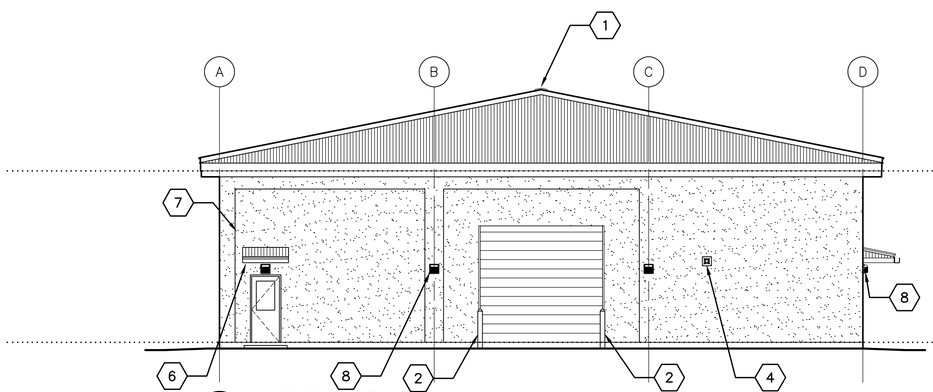

3 A-201 **ELEVATION**
SCALE: 1:100

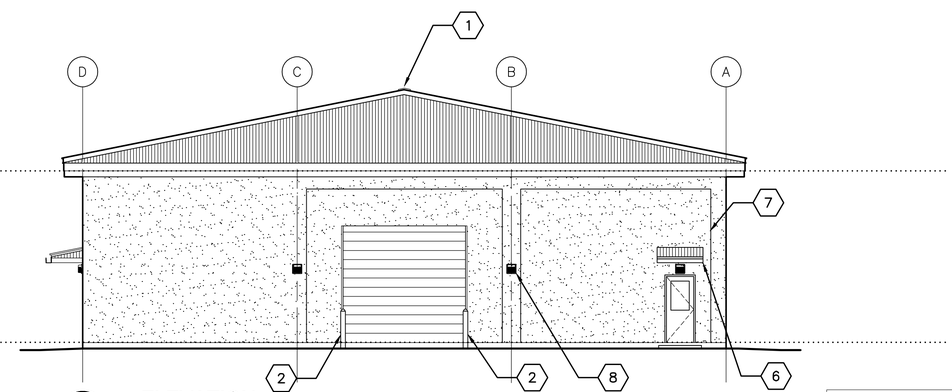

4 A-201 **ELEVATION**
SCALE: 1:100

GENERAL NOTES:

A. COORDINATE SIZE AND LOCATION OF OPENINGS FOR MECHANICAL ITEMS WITH MECHANICAL DRAWINGS.

B. PROVIDE STRUCTURAL LINTELS AS REQUIRED – SEE STRUCTURAL DRAWINGS

C. ALL EXTERIOR WALL FINISHES SHALL BE STUCCO OVER CMU AND CONCRETE SUBSTRATES. PROVIDE CONTROL JOINTS IN STUCCO WALL FINISH.

D. ROOF SHALL BE CORRUGATED METAL ROOF PANELS ON COLD–FORMED METAL FRAMING ON CONCRETE SLAB.

KEY NOTES:

1. CONTINUOUS METAL RIDGE VENT – SEE DETAIL 4/A–501.
2. BOLLARD – SEE STRUCTURAL DRAWINGS FOR TYPICAL DETAIL
3. NOT USED.
4. EXHAUST FAN, LOCATE TOP OF WALL PENETRATION 2800 MM ABOVE FINISHED FLOOR – SEE MECHANICAL DRAWINGS.
5. LOUVER – SEE SHEET M–101.
6. CANOPY – SEE DETAIL 1/A–504.
7. STUCCO CONTROL JOINT – SEE DETAIL 2A/A–501.
8. EXTERIOR LIGHT FIXTURE – SEE EXTERIOR

LINEAR DIMENSIONS SHOWN ARE IN MILLIMETERS (MM), UNLESS OTHERWISE NOTED

0 2000 4000
SCALE: 1:100

APPROVED:

A/E DESIGNER OF RECORD

SEAL:

STATE OF SOUTH CAROLINA
KEVIN R. CHAFIN
N. Charleston, SC
6374
REGISTERED ARCHITECT

US ARMY CORPS OF ENGINEERS
AFGHANISTAN ENGINEER DISTRICT

Mark	Description	Date	Appr.	Mark	Description	Date	Appr.

Designed by: KRC
Dwn by: EBB
Ckd by: NLJ
Reviewed by: LHM
Submitted by: BAKER
Date: 2/23/10
Rev: 0
Design file no.
Drawing code:
File name: ANASTORA-201ELV
Plot date: 2/23/2010
Plot scale: x:X

U.S. ARMY CORPS OF ENGINEERS
AFGHANISTAN ENGINEER DISTRICT
APO AE 96338

Michael Baker Jr., Inc
A unit of Michael Baker Corporation
Airside Business Park
100 Airside Drive
Moon Township, PA 15108
www.mbakercorp.com

AFGHAN NATIONAL ARMY
REGIONAL MILITARY TRAINING CENTER
STANDARD DESIGN

RMTC STORAGE

ELEVATIONS

Sheet reference number:
A–201

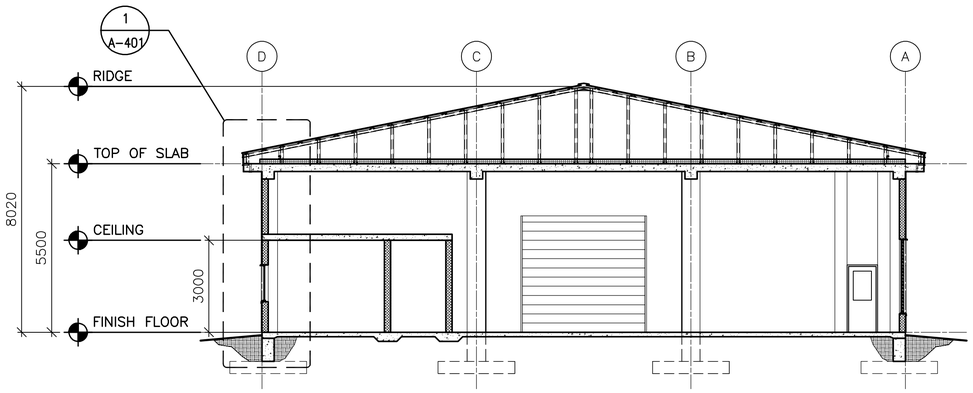

1 A-301 **BUILDING SECTION**
SCALE: 1:100

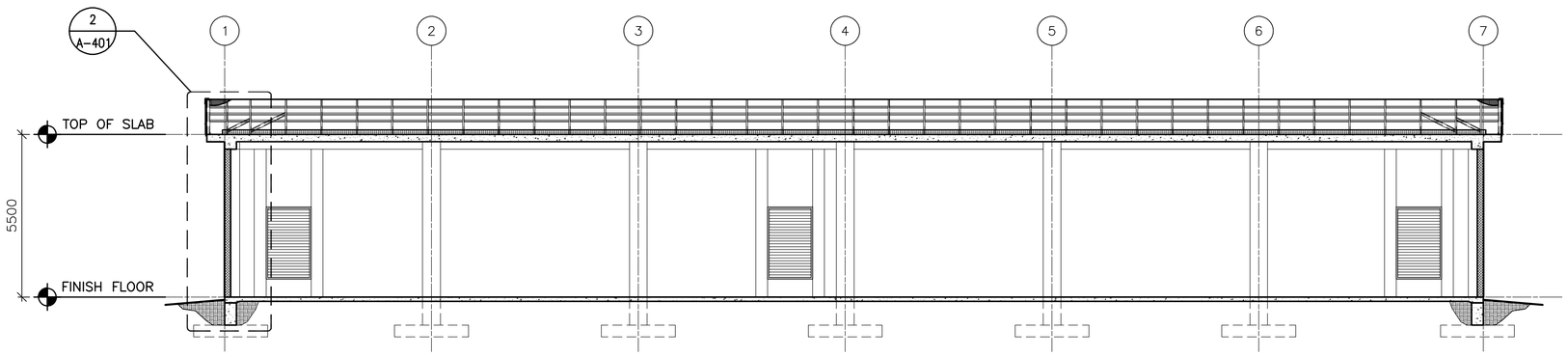

2 A-301 **BUILDING SECTION**
SCALE: 1:100

LINEAR DIMENSIONS SHOWN ARE IN MILLIMETERS (MM), UNLESS OTHERWISE NOTED

0 2000 4000
SCALE: 1:100

APPROVED:

A/E DESIGNER OF RECORD

SEAL:

STATE OF SOUTH CAROLINA
KEVIN R. CHAFIN
N. Charleston, SC
6374
REGISTERED ARCHITECT

US ARMY CORPS OF ENGINEERS
AFGHANISTAN ENGINEER DISTRICT

Mark	Description	Date	Appr.	Mark	Description	Date	Appr.

U.S. ARMY CORPS OF ENGINEERS
AFGHANISTAN ENGINEER DISTRICT
APO AE 96338

Michael Baker Jr., Inc.
A unit of Michael Baker Corporation
Airside Business Park
100 Airside Drive
Moon Township, PA 15108
www.mbakercorp.com

Designed by: KRC
Dwn by: EBB
Ckd by: NLJ
Reviewed by: LHM
Submitted by: BAKER
Date: 2/23/10
Rev: 0
Design file no.
Drawing code:
File name: ANASTORA-301BS
Plot date: 2/23/2010
Plot scale: x:X

AFGHAN NATIONAL ARMY
REGIONAL MILITARY TRAINING CENTER
STANDARD DESIGN

RMTC STORAGE

BUILDING SECTIONS

Sheet reference number:
A-301

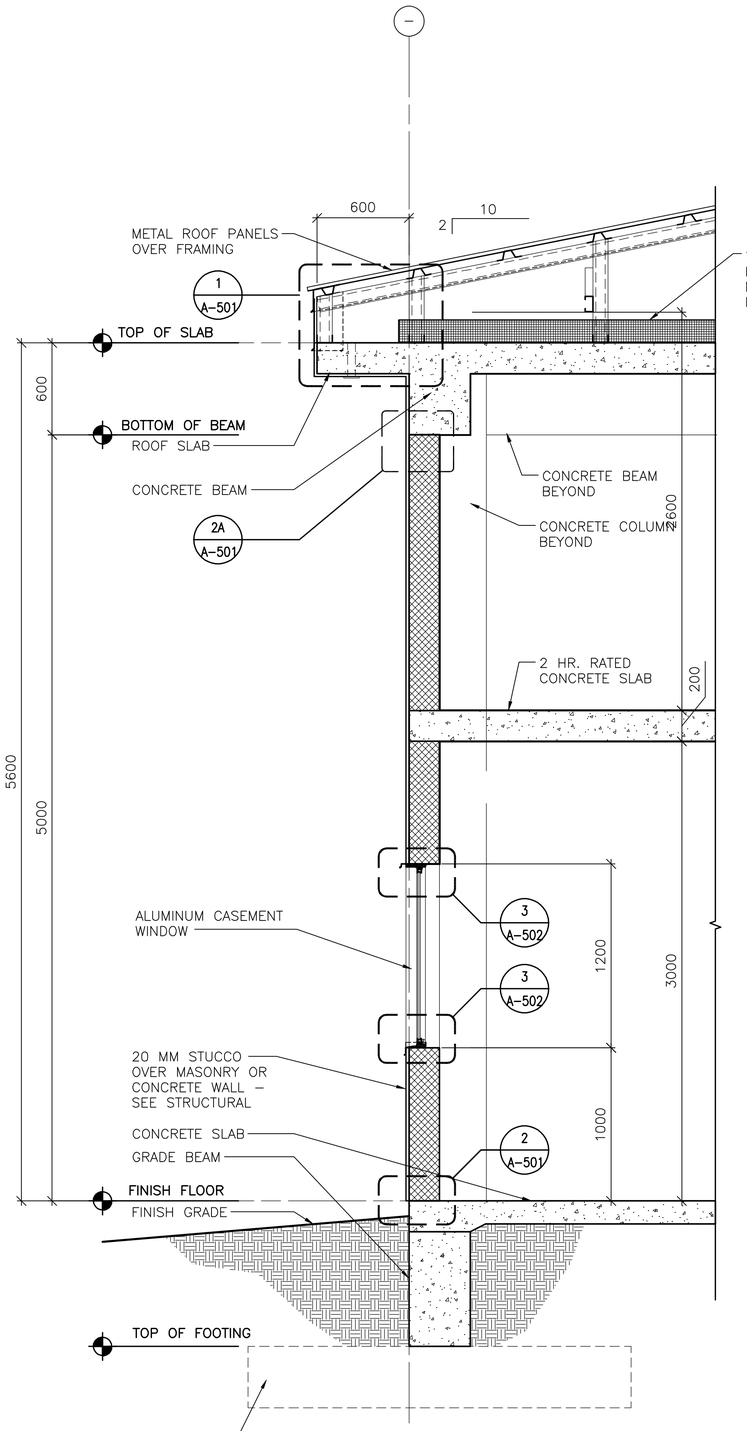

1 A-401 **TYPICAL WALL SECTION**
SCALE: 1:20

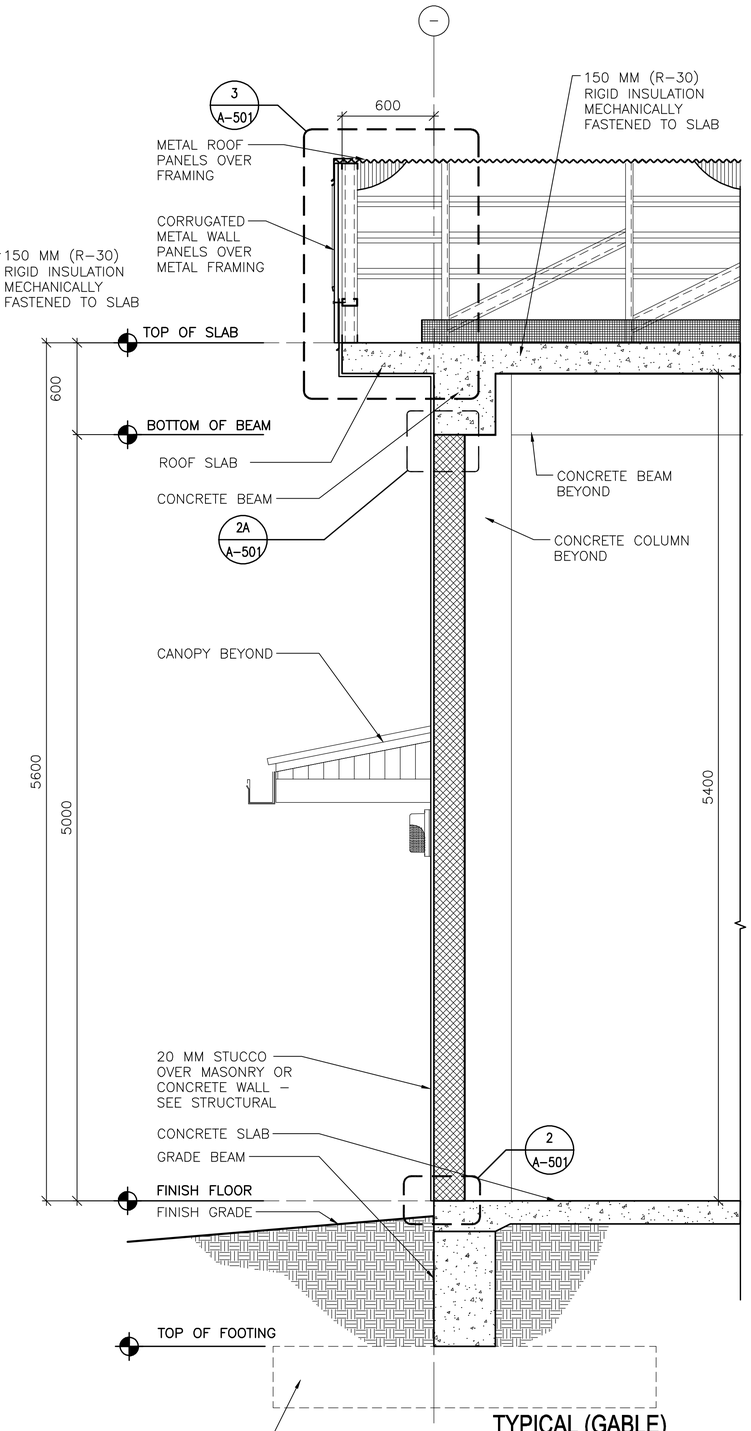

2 A-401 **TYPICAL (GABLE) WALL SECTION**
SCALE: 1:20

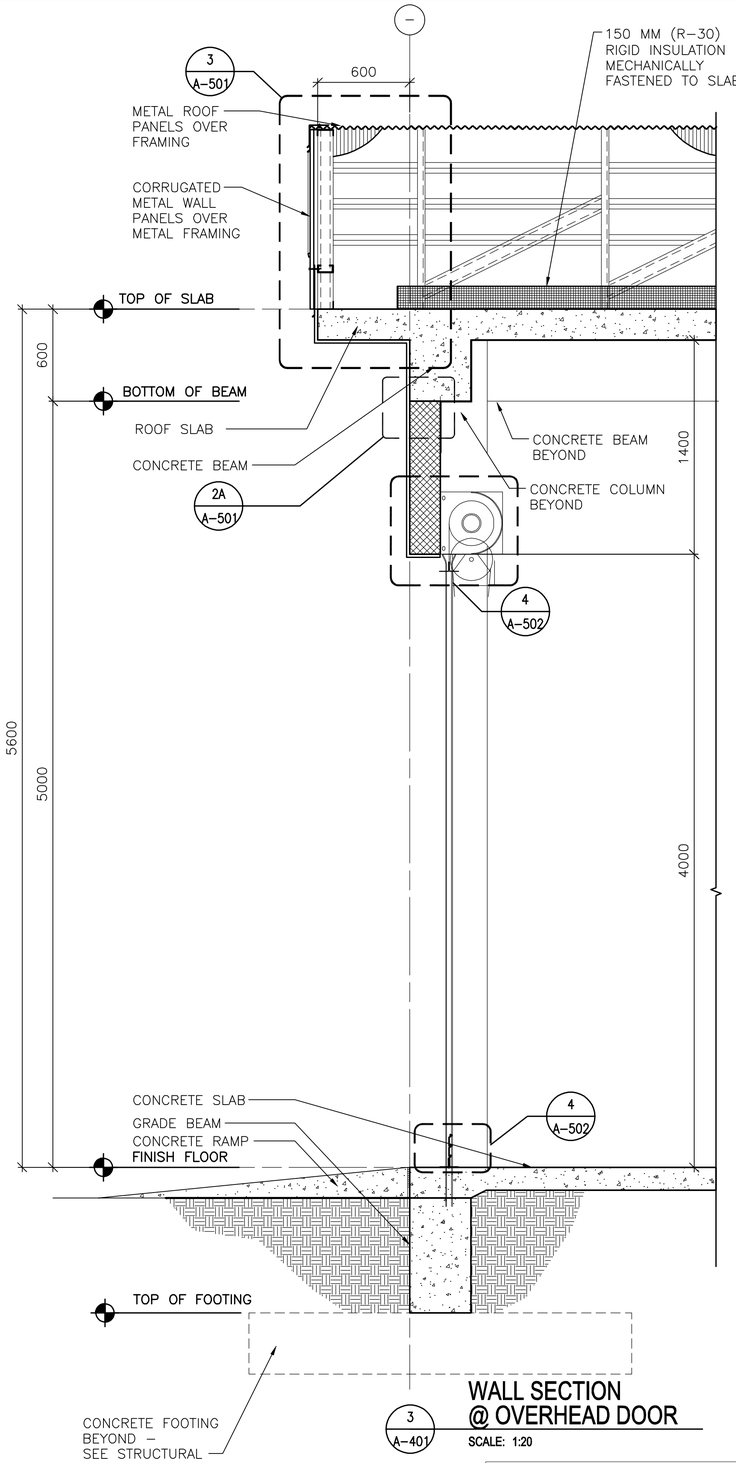

3 A-401 **WALL SECTION @ OVERHEAD DOOR**
SCALE: 1:20

LINEAR DIMENSIONS SHOWN ARE IN MILLIMETERS (MM), UNLESS OTHERWISE NOTED

0 400 800
SCALE: 1:20

APPROVED:

A/E DESIGNER OF RECORD

SEAL:

STATE OF SOUTH CAROLINA
KEVIN R. CHAFIN
N. Charleston, SC
6374
REGISTERED ARCHITECT

US ARMY CORPS OF ENGINEERS
AFGHANISTAN ENGINEER DISTRICT

Mark	Description	Date	Appr.	Mark	Description	Date	Appr.

U.S. ARMY CORPS OF ENGINEERS
AFGHANISTAN ENGINEER DISTRICT
APO AE 96338

Michael Baker Jr., Inc
A unit of Michael Baker Corporation
Airside Business Park
100 Airside Drive
Moon Township, PA 15108
www.mbakercorp.com

Designed by: KRC
Dwn by: EBB
Ckd by: NLJ
Reviewed by: LHM
Submitted by: BAKER
Date: 2/23/10
Rev: 0
Design file no.
Drawing code:
File name: ANASTORA-401WS
Plot date: 2/23/2010
Plot scale: X:X

AFGHAN NATIONAL ARMY
REGIONAL MILITARY TRAINING CENTER
STANDARD DESIGN

RMTC STORAGE

WALL SECTIONS

Sheet reference number:
A-401

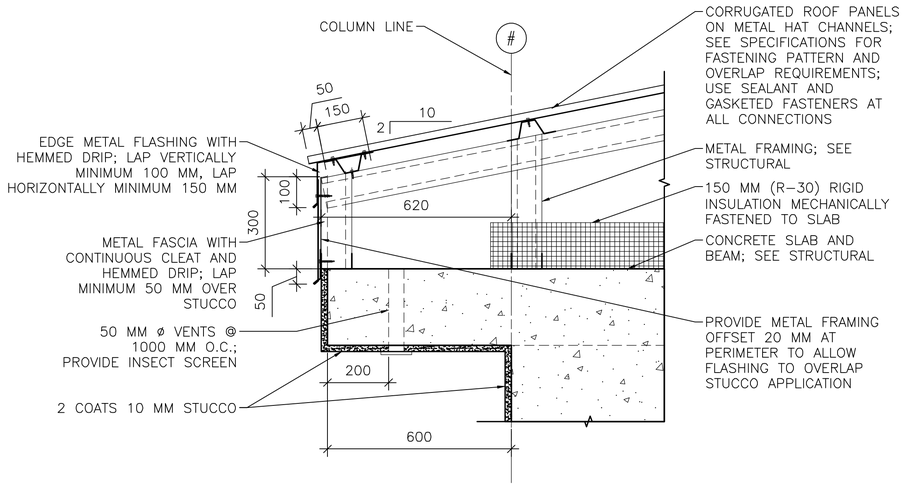

1 / A–501 **EAVE DETAIL**
SCALE: 1:10

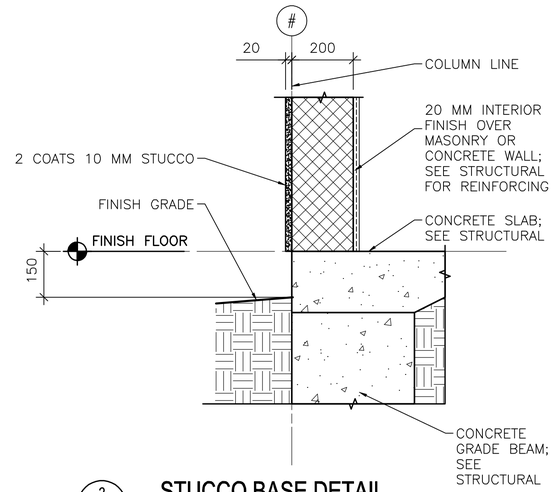

2 / A–501 **STUCCO BASE DETAIL**
SCALE: 1:10

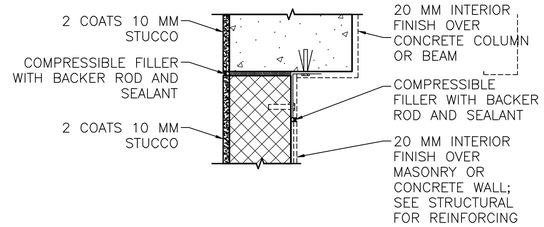

NOTE: DETAIL TYPICAL AT ALL WALL/COLUMN AND WALL/BEAM LOCATIONS, SEE ALTERNATE BRACING DETAIL BELOW 2B/A–501.

2A / A–501 **STUCCO JOINT DETAIL**
SCALE: 1:10

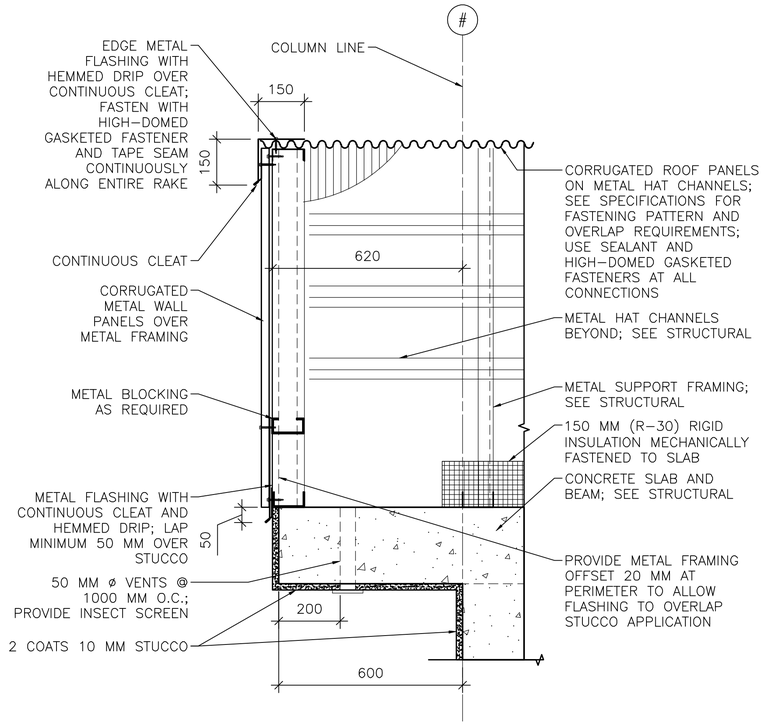

3 / A–501 **RAKE/EAVE DETAIL**
SCALE: 1:10

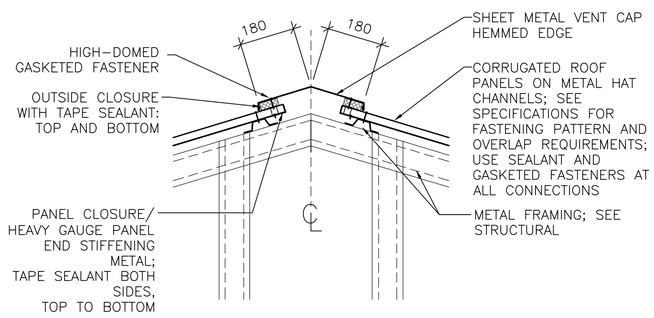

4 / A–501 **RIDGE VENT DETAIL**
SCALE: 1:10

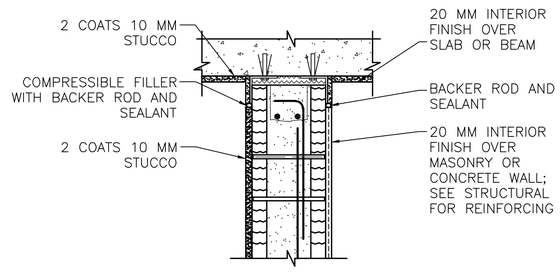

INTERIOR WALL/BEAM

2B / A–501 **ALTERNATE BRACING DETAIL**
SCALE: 1:10

LINEAR DIMENSIONS SHOWN ARE IN MILLIMETERS (MM), UNLESS OTHERWISE NOTED

0 200 400
SCALE: 1:10

APPROVED:

A/E DESIGNER OF RECORD

SEAL:

STATE OF SOUTH CAROLINA
KEVIN R. CHAFIN
N. Charleston, SC
8374
REGISTERED ARCHITECT

US ARMY CORPS OF ENGINEERS
AFGHANISTAN ENGINEER DISTRICT

Mark	Description	Date	Appr.	Mark	Description	Date	Appr.

Rev: 0
Date: 2/23/10
Design file no.
Drawing code:
File name: ANASTORA501DT
Plot date: 2/23/2010
Plot scale: x:X

Designed by: KRC
Dwn by: EBB
Ckd by: NLJ
Reviewed by: LHM
Submitted by:
BAKER

U.S. ARMY CORPS OF ENGINEERS
AFGHANISTAN ENGINEER DISTRICT
APO AE 96338

Michael Baker Jr., Inc.
A unit of Michael Baker Corporation
Airside Business Park
100 Airside Drive
Moon Township, PA 15108
www.mbakercorp.com

AFGHAN NATIONAL ARMY
REGIONAL MILITARY TRAINING CENTER
STANDARD DESIGN

RMTC STORAGE

EXTERIOR DETAILS

Sheet reference number:
A–501

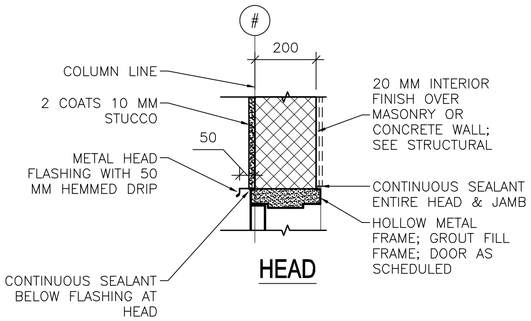

HEAD

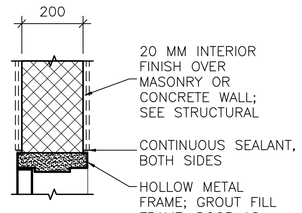

HEAD

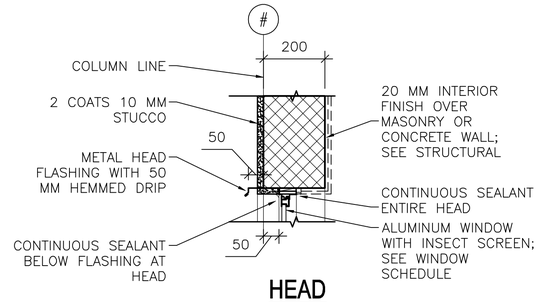

HEAD

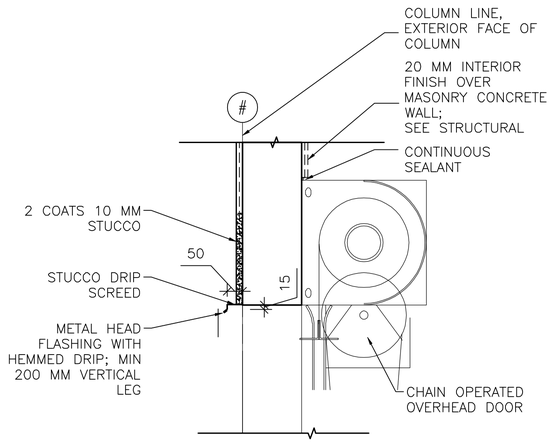

HEAD

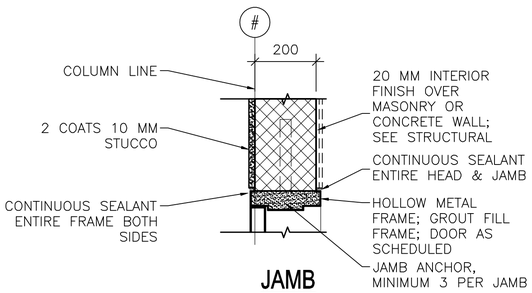

JAMB

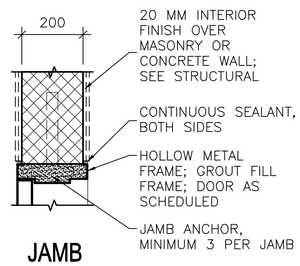

JAMB

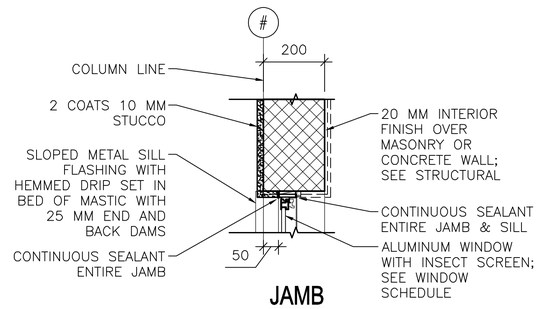

JAMB

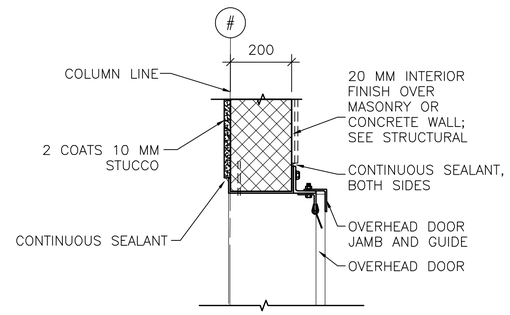

JAMB

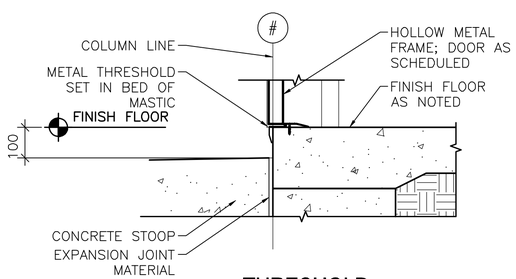

THRESHOLD

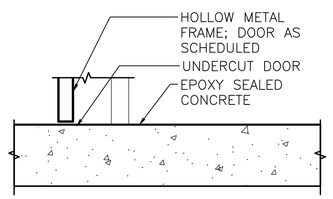

THRESHOLD

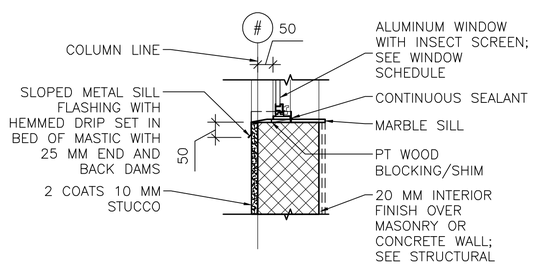

SILL

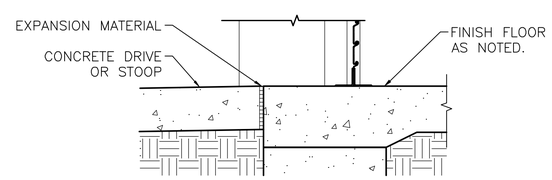

THRESHOLD

1 A-502 **EXTERIOR DOOR DETAILS**
SCALE: 1:10

2 A-502 **INTERIOR DOOR DETAILS**
SCALE: 1:10

3 A-502 **EXTERIOR WINDOW DETAILS**
SCALE: 1:10

4 A-502 **OVERHEAD DOOR DETAILS**
SCALE: 1:10

LINEAR DIMENSIONS SHOWN ARE IN MILLIMETERS (MM), UNLESS OTHERWISE NOTED

0 200 400
SCALE: 1:10

APPROVED:

A/E DESIGNER OF RECORD

SEAL:

STATE OF SOUTH CAROLINA
KEVIN R. CHAFIN
N. Charleston, SC
6374
REGISTERED ARCHITECT

US ARMY CORPS OF ENGINEERS
AFGHANISTAN ENGINEER DISTRICT

Mark	Description	Date	Appr.	Mark	Description	Date	Appr.

Designed by: KRC
Dwn by: EBB
Ckd by: NLJ
Reviewed by: LHM
Submitted by: BAKER
Date: 2/23/10
Rev: 0
Design file no.
Drawing code:
File name: ANASTORA-502HAS
Plot date: 2/23/2010
Plot scale: x:X

U.S. ARMY CORPS OF ENGINEERS
AFGHANISTAN ENGINEER DISTRICT
APO AE 96338

Michael Baker Jr., Inc
A unit of Michael Baker Corporation
Airside Business Park
100 Airside Drive
Moon Township, PA 15108
www.mbakercorp.com

AFGHAN NATIONAL ARMY
REGIONAL MILITARY TRAINING CENTER
STANDARD DESIGN

RMTC STORAGE

HEAD, JAMB & SILL DETAILS

Sheet reference number:
A-502

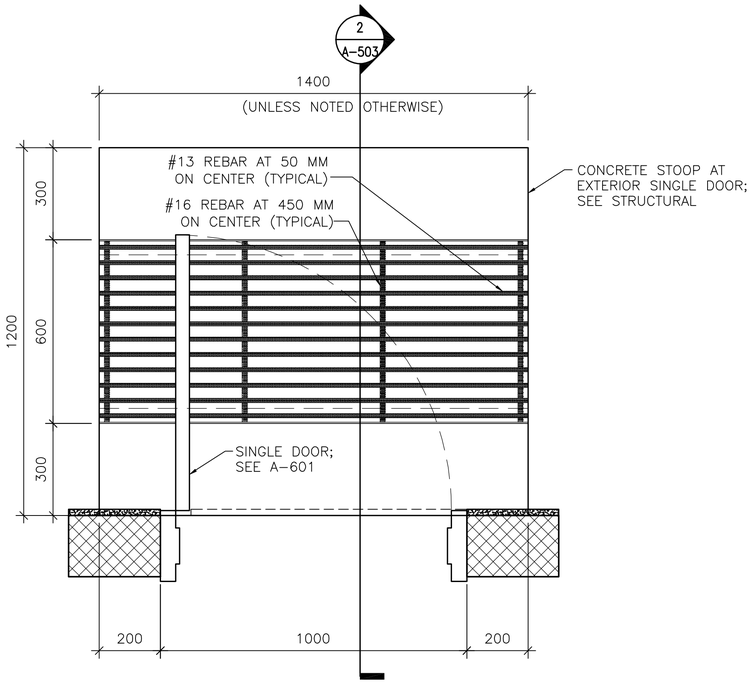

1 A-503 **DOOR STOOP PLAN (WITH GRATE)**

SCALE: 1:10

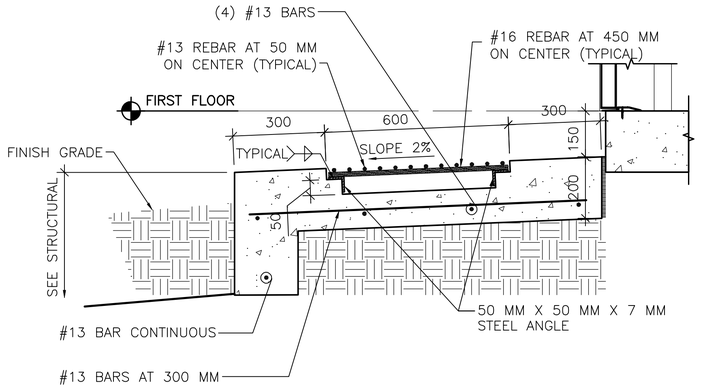

2 A-503 **DOOR STOOP DETAIL**

SCALE: 1:10

LINEAR DIMENSIONS SHOWN ARE IN MILLIMETERS (MM), UNLESS OTHERWISE NOTED

0 200 400
SCALE: 1:10

APPROVED:

A/E DESIGNER OF RECORD

SEAL:

STATE OF SOUTH CAROLINA
KEVIN R. CHAFIN
N. Charleston, SC
6374
REGISTERED ARCHITECT

US ARMY CORPS OF ENGINEERS
AFGHANISTAN ENGINEER DISTRICT

Mark	Description	Date	Appr.	Mark	Description	Date	Appr.

U.S. ARMY CORPS OF ENGINEERS
AFGHANISTAN ENGINEER DISTRICT
APO AE 96338

Michael Baker Jr., Inc.
A unit of Michael Baker Corporation
Airside Business Park
100 Airside Drive
Moon Township, PA 15108
www.mbakercorp.com

Designed by: KRC	Date: 2/23/10
Dwn by: EBB	Ckd by: NLJ
Reviewed by: LHM	Drawing code:
Submitted by: BAKER	File name: ANASTORA-503DT Plot date: 2/23/2010 Plot scale: x:X

Design file no.

Rev: 0

AFGHAN NATIONAL ARMY
REGIONAL MILITARY TRAINING CENTER
STANDARD DESIGN

RMTC STORAGE

STOOP DETAILS

Sheet reference number:
A-503

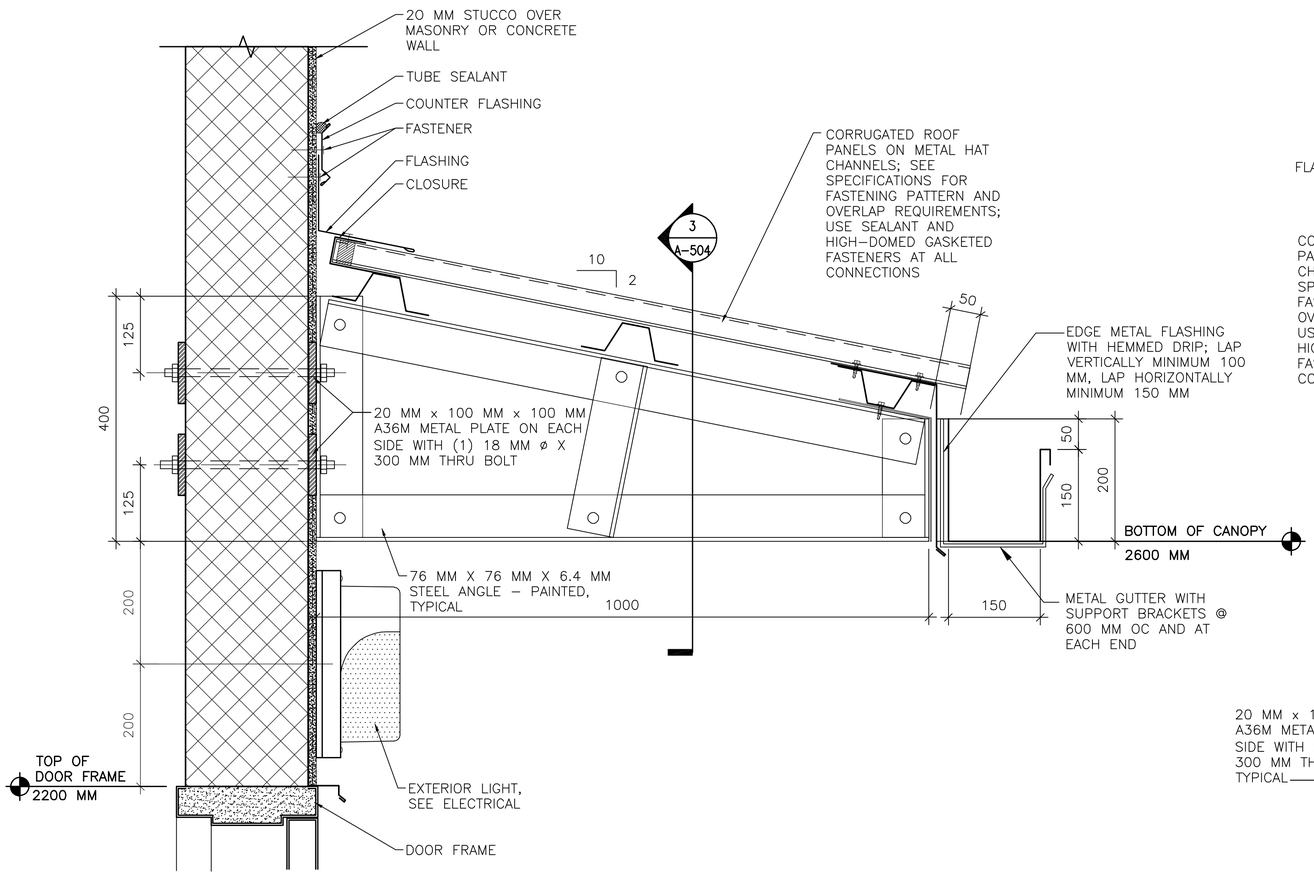

1 A-504 **CANOPY CONNECTION DETAILS**

SCALE: 1:5

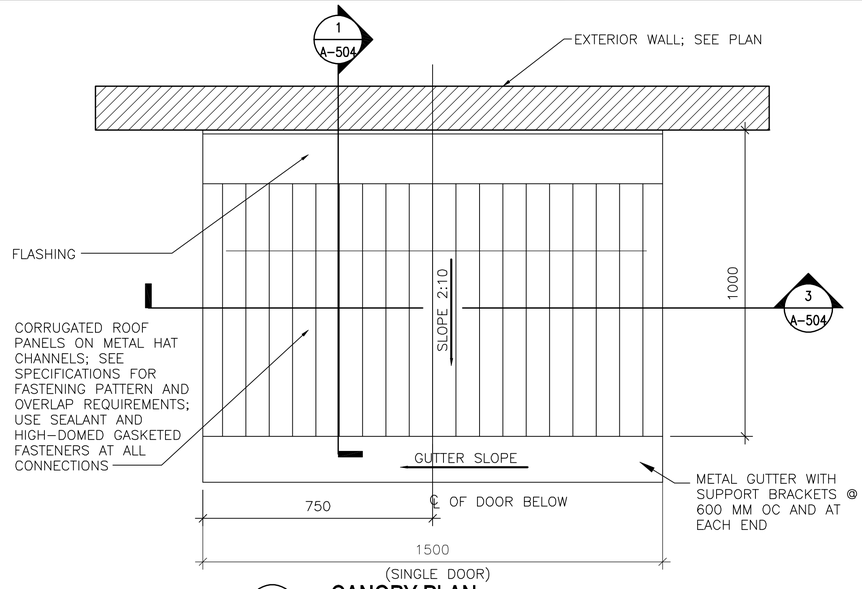

2 A-504 **CANOPY PLAN**

SCALE: 1:10

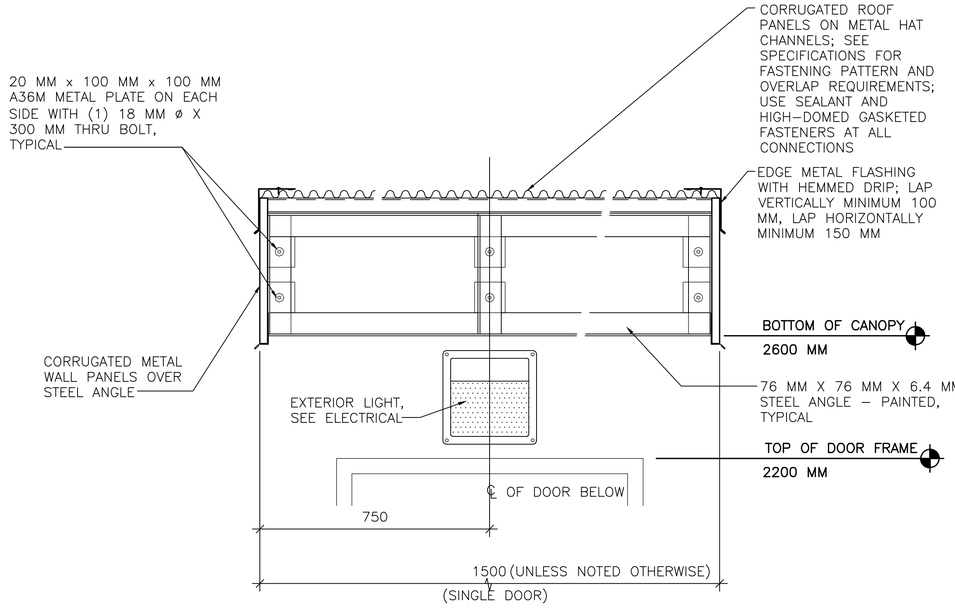

3 A-504 **CANOPY CONNECTION DETAILS**

SCALE: 1:10

SHEET NOTES:

1. SEE A-101 FOR FLOOR PLANS AND CANOPY LOCATIONS.

APPROVED:

A/E DESIGNER OF RECORD

SEAL:

STATE OF SOUTH CAROLINA
KEVIN R. CHARIN
N. Charleston, SC
6374
REGISTERED ARCHITECT

LINEAR DIMENSIONS SHOWN ARE IN MILLIMETERS (MM), UNLESS OTHERWISE NOTED

0 100 200
SCALE: 1:5

US ARMY CORPS OF ENGINEERS
AFGHANISTAN ENGINEER DISTRICT

Mark	Description	Date	Appr.	Mark	Description	Date	Appr.

Designed by: KRC
Dwn by: EB
Ckd by: NLJ
Reviewed by: LHM
Submitted by: BAKER
Date: 2/23/10
Rev: 0
Design file no.
Drawing code:
File name: ANASTGRA504DT
Plot date: 2/23/2010
Plot scale: x:X

U.S. ARMY CORPS OF ENGINEERS
AFGHANISTAN ENGINEER DISTRICT
APO AE 96338

Michael Baker Jr., Inc
A unit of Michael Baker Corporation
Airside Business Park
100 Airside Drive
Moon Township, PA 15108
www.mbakercorp.com

AFGHAN NATIONAL ARMY
REGIONAL MILITARY TRAINING CENTER
STANDARD DESIGN

RMTC STORAGE

CANOPY DETAILS

Sheet reference number:
A-504

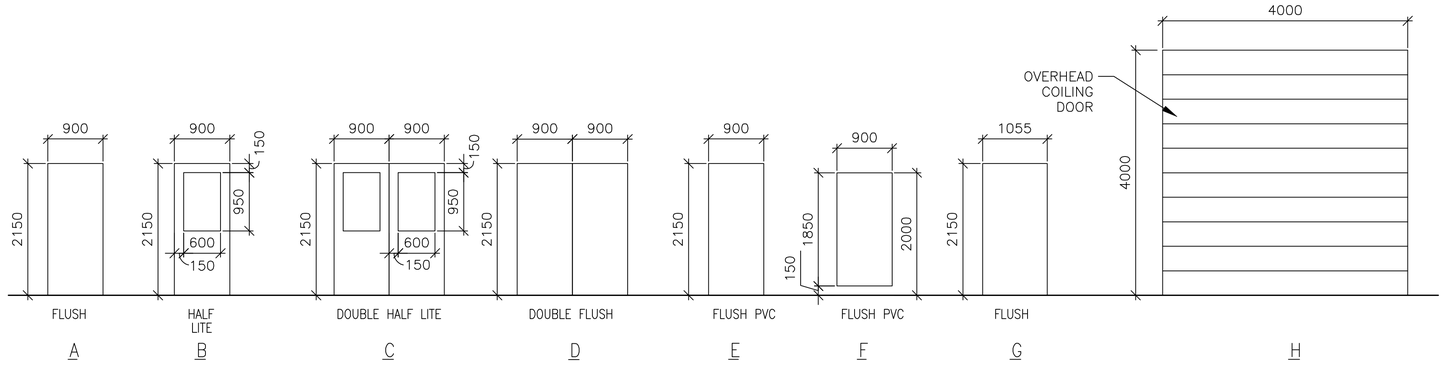

1 A-601 DOOR TYPES

SCALE: 1:50

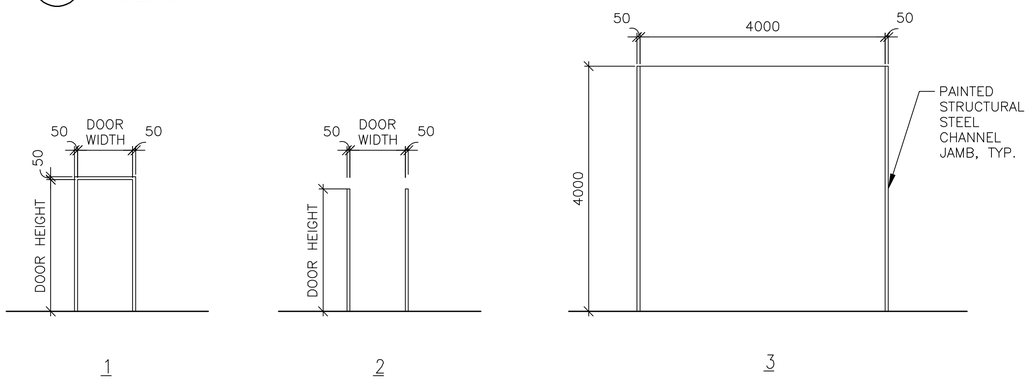

2 A-601 FRAME TYPES

SCALE: 1:50

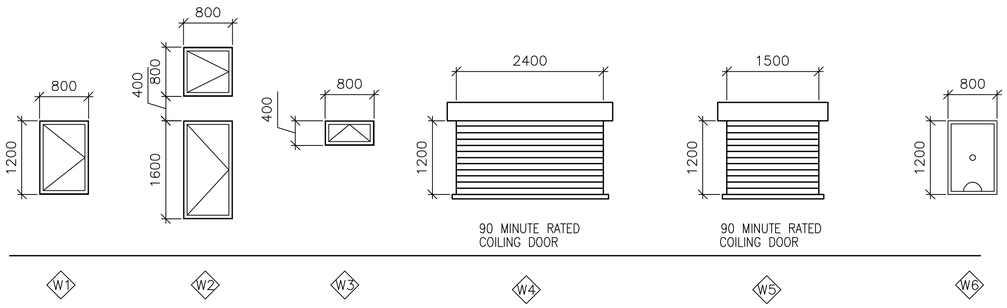

3 A-601 WINDOW TYPES

SCALE: 1:50

WINDOW TYPE NOTES:

1. ALL EXTERIOR WINDOWS SHALL BE ALUMINUM WITH INSECT SCREENS. WINDOWS SHALL BE COMMERCIAL GRADE.
2. ALL EXTERIOR WINDOWS SHALL BE OPERABLE.

4 A-601 DOOR TAG

SCALE: NTS

5 A-601 RATED DOOR TAG

SCALE: NTS

DOOR TAG NOTES:

1. THE DOOR TAG INDICATES THE DOOR TYPE, FRAME TYPE AND HARDWARE SET FOR EACH DOOR.
2. THE DOOR TAG FOR RATED DOORS INCLUDES THE RATING OF THE DOOR IN MINUTES.

EXTERIOR DOOR HARDWARE TYPES:

HW-1 1-1/2 PR HINGES, A5112 114 X 114
1 EA RIM EXIT DEVICE, TYPE 1
1 EA CYLINDER. E09221A, GRADE 1
1 EA OVERHEAD CLOSER, C02061, LOW RESISTANCE
1 EA THRESHOLD, J32130
3 EA DOOR SILENCERS, L03011

HW-2 1-1/2 PR HINGES, A5112 114 X 114
1 EA LOCKSET, F13 ENTRY LOCK W/LEVER HANDLES, GRADE 1
1 EA OVERHEAD CLOSER, C02061, LOW RESISTANCE
1 EA THRESHOLD, J32130
3 EA DOOR SILENCERS, L03011

HW-3 3 PR HINGES, A5112 114 X 114
2 EA RIM EXIT DEVICE, TYPE 1
2 EA CYLINDER. GRADE 1
2 EA OVERHEAD CLOSER, C02061, LOW RESISTANCE
1 EA DOOR COORDINATOR, TYPE 21
1 EA ASTRAGAL
1 EA THRESHOLD, J32130
2 EA DOOR SILENCERS, L03011

HW-4 3 PR HINGES, A5112 114 X 114
1 EA LOCKSET W/LEVER HANDLES. GRADE 1, F13
1 EA OVERHEAD CLOSER, C02061, LOW RESISTANCE
2 EA MAGNETIC HOLDER PIN, ATTACHED TO DOOR LEAF
2 EA MAGNETIC HOLDER RECEIVER, ATTACHED TO STOOP
2 EA LEVER EXTENSION FLUSH BOLTS, L04081
1 EA ASTRAGAL
1 EA THRESHOLD, J32130
2 EA DOOR SILENCERS, L03011

DOOR AND HARDWARE NOTES:

1. INTERIOR AND EXTERIOR METAL DOORS AND FRAME COLORS SHALL MATCH ADJACENT WALL COLORS AS SELECTED BY THE CONTRACTING OFFICER.
2. FRAMES, EXCEPT FIRE-RATED FRAMES, SHALL BE MOUNTED AND ADJUSTED IN ACCORDANCE WITH MANUFACTURER'S INSTRUCTIONS. FRAMES SHALL BE FASTENED WITH MINIMUM OF THREE ANCHORS PER JAMB AT EQUAL INTERVALS.
3. DIMENSIONS SHOWN ON DOOR TYPES DETAIL ARE BASED UPON MODULAR MASONRY (OR ROUGH OPENING), HEIGHT OF 2200 MM FOR STANDARD PERSONNEL DOORS. CONTRACTOR SHALL COORDINATE WITH DOOR SUPPLIER TO ENSURE THAT DIMENSIONS OF DOORS AND FRAMES PROVIDED ARE COMPATIBLE WITH DOOR OPENING DIMENSIONS.
4. HARDWARE SHALL BE HEAVY DUTY, COMMERCIAL GRADE, STAINLESS STEEL WITH A SATIN OR BRUSHED FINISH.
5. HARDWARE TYPES INCLUDE BUILDERS HARDWARE MANUFACTURERS ASSOCIATION (BMHA) NUMBER.
6. DOORS IN 2 HOUR RATED PARTITIONS SHALL BE 1.5 HOUR (90 MINUTE) RATED DOORS IN ACCORDANCE WITH NFPA 101, TABLE 8.3.4.2.
7. DOORS AT STAIR ENCLOSURES SHALL BE 1 HOUR (60 MINUTE) RATED AT 1 HOUR WALL IN ACCORDANCE WITH NFPA 101, TABLE 8.3.4.2.
8. DOORS IN 1 HOUR RATED WALLS SHALL BE 3/4 HOUR (45 MINUTE) RATED DOORS IN ACCORDANCE WITH NFPA 101, TABLE 8.3.4.2.
9. DOORS IN 1 HOUR RATED CORRIDOR WALLS SHALL BE 1/3 HOUR (20 MINUTE) IN ACCORDANCE WITH NFPA 101, TABLE 8.3.4.2.
10. PROVIDE DOOR STOPS TO PROTECT WALLS ON LOCATIONS WHERE DOOR SWING WILL STRIKE WALL.

THIS SHEET IS STANDARD AND IS INCLUSIVE OF ALL THE DOOR/ WINDOW/ HARDWARE TYPES FOR THE ENTIRE RMTC CONTRACT. NOT ALL DOOR/ WINDOW/ HARDWARE TYPES ARE USED FOR ANY PARTICULAR BUILDING DESIGN. CONTRACTOR SHALL REFER TO THE FLOOR PLAN FOR THE TYPES BEING USED.

INTERIOR DOOR HARDWARE TYPES:

HW-5 1-1/2 PR HINGES, A8133 114 X 114
1 EA LOCKSET W/LEVER HANDLES, F08, GRADE 1
1 EA WALL STOP, L02101 OR L02161
3 EA DOOR SILENCERS, L03011

HW-6 1-1/2 PR HINGES, A8112 114 X 114
1 EA LOCKSET W/LEVER HANDLES, F08, GRADE 1
1 EA WALL STOP, L02101 OR L02161
1 EA OVERHEAD CLOSER, C02061, LOW RESISTANCE
3 EA DOOR SILENCERS, L03011

HW-7 1-1/2 PR HINGES, A8133
1 EA LOCKSET W/LEVER HANDLES, F13 GRADE 1
1 EA WALL STOP, L02101 OR L02161
2 EA MOP PLATE, J103
3 EA DOOR SILENCERS, L03011

HW-8 1-1/2 PR HINGES, A8112
1 EA LOCKSET W/LEVER HANDLES, F13 GRADE 1
1 EA WALL STOP, L02101 OR L02161
2 EA MOP PLATE, J103
1 EA OVERHEAD CLOSER, C02061, LOW RESISTANCE
3 EA DOOR SILENCERS, L03011

HW-9 1-1/2 PR HINGES, A5112 114 X 114
1 EA RIM EXIT DEVICE, TYPE 1
1 EA CYLINDER. E09221A, GRADE 1
1 EA OVERHEAD CLOSER, C02061, LOW RESISTANCE
3 EA DOOR SILENCERS, L03011

HW-10 3 PR HINGES, A5112 114 X 114
1 EA LOCKSET W/LEVER HANDLES. GRADE 1, F13
2 EA LEVER EXTENSION FLUSH BOLTS, L04081
1 EA ASTRAGAL
2 EA DOOR SILENCERS, L03011

HW-11 1-1/2 PR HINGES, A8112 114 X 114
1 EA LOCKSET W/LEVER HANDLES, F13, GRADE 1
1 EA WALL STOP, L02101 OR L02161
1 EA OVERHEAD CLOSER, C02061, LOW RESISTANCE
3 EA DOOR SILENCERS, L03011
1 EA ROBE HOOK

HW-12 1-1/2 PR HINGES, A8133
1 EA LATCHSET W/LEVER HANDLES, F76 GRADE 1
1 EA WALL STOP, L02101 OR L02161
2 EA MOP PLATE, J103
3 EA DOOR SILENCERS, L03011
1 EA ROBE HOOK

HW-13 3 PR HINGES, A5112 114 X 114
1 EA LOCKSET W/LEVER HANDLES. GRADE 1, F13
1 EA OVERHEAD CLOSER, C02061, LOW RESISTANCE
2 EA LEVER EXTENSION FLUSH BOLTS, L04081
1 EA ASTRAGAL
2 EA DOOR SILENCERS, L03011

HW-14 3 PR HINGES, A5112 114 X 114
2 EA RIM EXIT DEVICE, TYPE 1
2 EA CYLINDER. GRADE 1
2 EA OVERHEAD CLOSER, C02061, LOW RESISTANCE
1 EA DOOR COORDINATOR, TYPE 21
1 EA ASTRAGAL
2 EA DOOR SILENCERS, L03011

APPROVED:

A/E DESIGNER OF RECORD

SEAL:

STATE OF SOUTH CAROLINA
KEVIN R. CHAFIN
N. Charleston, SC
6374
REGISTERED ARCHITECT

US ARMY CORPS OF ENGINEERS
AFGHANISTAN ENGINEER DISTRICT

Mark	Description	Date	Appr.	Mark	Description	Date	Appr.

Date: 2/23/10 Rev: 0
Design file no.
Drawing code:
File name: ANASTORA801SCH
Plot date: 2/23/2010
Plot scale: x:X

Designed by: KRC
Dwn by: EBB
Ckd by: NLJ
Reviewed by: LHM
Submitted by:
BAKER

U.S. ARMY CORPS OF ENGINEERS
AFGHANISTAN ENGINEER DISTRICT
APO AE 96338

Michael Baker Jr., Inc.
A unit of Michael Baker Corporation
Airside Business Park
100 Airside Drive
Moon Township, PA 15108
www.mbakercorp.com

AFGHAN NATIONAL ARMY
REGIONAL MILITARY TRAINING CENTER
STANDARD DESIGN

RMTC STORAGE

WINDOW AND DOOR SCHEDULES

Sheet reference number:
A-601

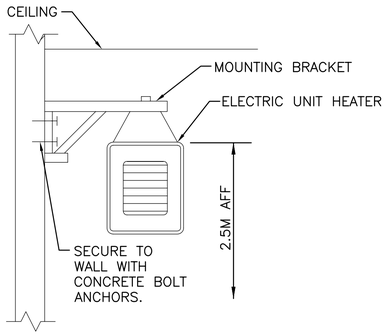

1 M-101 ELECTRIC UNIT HEATER MOUNTING DETAIL
N.T.S.

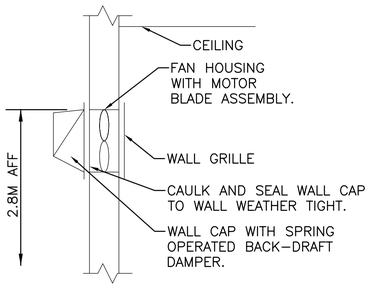

2 M-101 WALL EXHAUST FAN DETAIL
N.T.S.

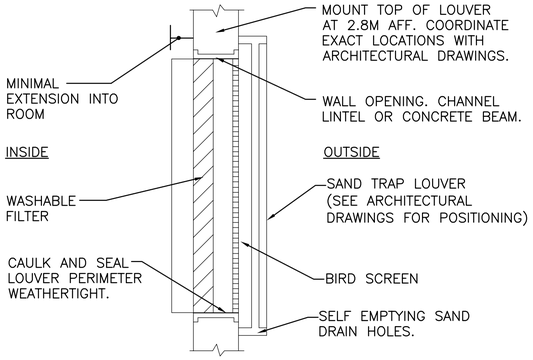

3 M-101 FILTERED SAND TRAP LOUVER
N.T.S.

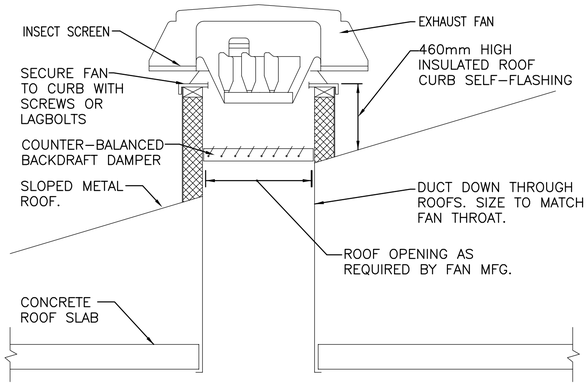

4 M-101 ROOF MOUNTED EXHAUST FAN
N.T.S.

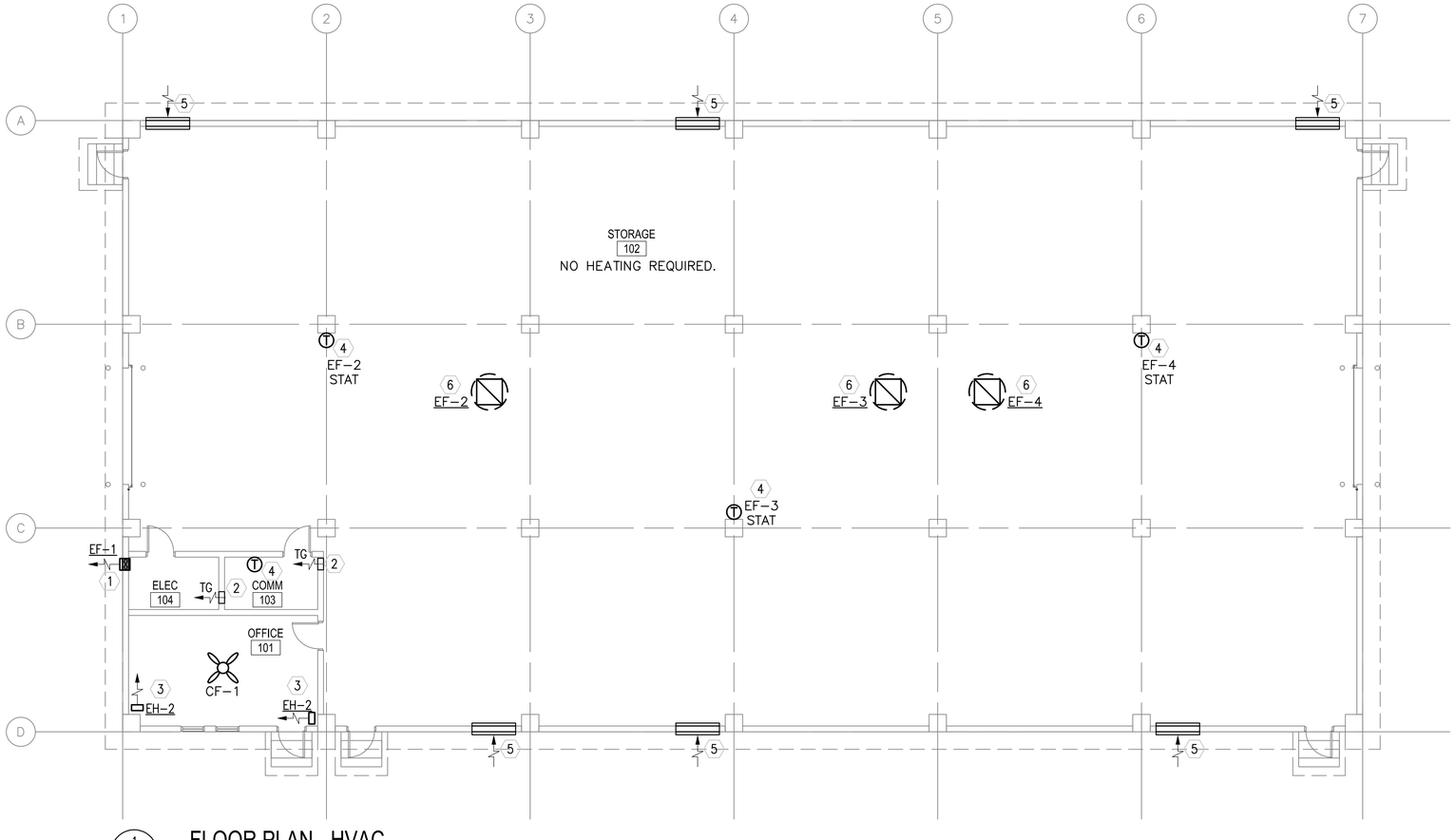

1 M-101 FLOOR PLAN - HVAC
SCALE: 1:100

GENERAL NOTES:

1. DO NOT SCALE DRAWINGS – ALL DIMENSIONS AND CONDITIONS SHALL BE CHECKED AND VERIFIED BY THE CONTRACTOR AT THE SITE.
2. ALL WORK PERFORMED ON THIS BUILDING SHALL BE IN COMPLIANCE WITH ALL PERTINENT CODES, RULES, ORDINANCES AND REGULATIONS OF THE GOVERNING AUTHORITIES.
3. ALL WORK PERFORMED UNDER AND IN CONNECTION WITH THESE DRAWINGS AND SPECIFICATIONS SHALL BE IN STRICT COMPLIANCE WITH THE LATEST SAFETY AND HEALTH STANDARDS.

SYMBOLS:

- (X) KEY NOTE
- (.050) AIR VOLUME IN CUBIC METERS PER SECOND (CMS)
- VOLUME DAMPER
- (T) THERMOSTAT WITH LOCKING COVER.
- UC DOOR UNDERCUT
- TG TRANSFER GRILLE

ABBREVIATIONS:

AFF	ABOVE FINISH FLOOR
CF	CEILING FANS
CMS	CUBIC METERS PER SECOND
STATS	THERMOSTATS

KEY NOTE:

1. WALL EXHAUST FAN WITH SPRING OPERATED BACK-DRAFT DAMPER.
2. 200x150 (8x6) TRANSFER GRILLE. MOUNT GRILLE 800mm BELOW CEILING. COORDINATE LOCATION IN FIELD WITH EC.
3. UNIT HEATER SECURED FROM WALL. SEE DETAIL THIS SHEET.
4. THERMOSTAT MOUNTED 2M (6.5') AFF, STAT SHALL BE INTERLOCKED WITH CORRESPONDING EXHAUST FAN, SET FAN TO ENERGIZE ON RISE IN TEMPERATURE ABOVE 35°C (95°F).
5. (2) 1.5x1.2 (60x48) INTAKE LOUVERS 1 STACKED ON TOP OF THE OTHER. SEE ARCHITECTURAL ELEVATIONS FOR EXACT LOCATIONS HOLD BOTTOM LOUVER 600mm AFF. PROVIDE WEATHER PROOF LOUVERS W/ 50mm (2") WASHABLE FILTER AND SAND TRAP. SEE DETAIL 3 THIS SHEET.
6. ROOF MOUNTED EXHAUST FAN ON FACTORY CURB. EXTEND DUCT DOWN THROUGH CONCRETE ROOF SLAB. DUCT SIZE SHALL MATCH FAN THROAT.

ELECTRIC UNIT HEATER SCHEDULE

NO.	CMS	KW	F.A.T. °C	ELECT. CHAR.	MOUNTING
EH-2	0.200	2.6	38	380/1/50	WALL HUNG

NOTES:
1. UNIT HEATERS SHALL HAVE TAMPER PROOF INTEGRAL STATS.
2. COORDINATE LOCATION AND ORIENTATION IN FIELD.

EXHAUST FAN SCHEDULE

NO.	TYPE	FAN CMS	DRIVE	HP	SP mmH20	ELECTRICAL DATA	SWITCH
EF-1	WALL	0.045	DIRECT	FRACT	13	220/1/50	W/ STAT
EF-2	ROOF	3.300	DIRECT	3	9.5	220/1/50	W/ STAT
EF-3	ROOF	3.300	DIRECT	3	9.5	220/1/50	W/ STAT
EF-4	ROOF	3.300	DIRECT	3	9.5	220/1/50	W/ STAT

NOTE:
1. FANS SHALL HAVE SPRING OPERATED BACK DRAFT DAMPER.

CEILING FAN

NO.	BLADE SIZE mm	BLADE SIZE IN	VOLTAGE	SWITCH	REMARKS
CF-1	1320	52	220/1/50	@ WALL	3 SPEED REVERSIBLE MOTOR

NOTES:
1. INSTALL FANS 2.5M AFF.
2. PROVIDE WITH OUT LIGHT FIXTURE.
3. PROVIDE WITH REMOTE MOUNTED ON-OFF SWITCH SHOWN ON ELECTRICAL DRAWINGS.

APPROVED:

A/E DESIGNER OF RECORD

SEAL:

COMMONWEALTH OF PENNSYLVANIA
REGISTERED PROFESSIONAL ENGINEER
MATTHEW R. SOTOSKY
065576-E

LINEAR DIMENSIONS SHOWN ARE IN MILLIMETERS (MM), UNLESS OTHERWISE NOTED

0 2000 4000
SCALE: 1:100

US ARMY CORPS OF ENGINEERS
AFGHANISTAN ENGINEER DISTRICT

Mark	Description	Date	Appr.	Mark	Description	Date	Appr.

Rev: 0
Date: 02/23/10
Designed by: RML
Dwn by: JUN
Ckd by: CJM
Reviewed by: MRS
Submitted by: BAKER
Drawing code:
Design file no.
File name: ANASTORMH-107XXX
Plot date: 02/08/2010
Plot scale: 1:100

U.S. ARMY CORPS OF ENGINEERS
AFGHANISTAN ENGINEER DISTRICT
APO AE 96338

Michael Baker Jr., Inc
A unit of Michael Baker Corporation
Airside Business Park
100 Airside Drive
Moon Township, PA 15108
www.mbakercorp.com

AFGHAN NATIONAL ARMY
REGIONAL MILITARY TRAINING CENTER
STANDARD DESIGN

RMTC STORAGE

HVAC – FLOOR PLAN, SCHEDULES AND DETAILS

Sheet reference number:
M-101

POWER

- DISTRIBUTION PANELBOARD
- NEW PANELBOARD – SURFACE
- NEW PANELBOARD – RECESSED
- GENERATOR
- TRANSFORMER (DRAWN TO SCALE)
- JUNCTION BOX
- JUNCTION BOX – CEILING
- FUSIBLE SAFETY SWITCH
- MOTOR
- MOTOR STARTING SWITCH – 220V, 20A RATED UNLESS OTHERWISE NOTED
- ELECTRIC WATER HEATER
- CEILING FAN – REFER TO SPECIFICATION SECTION 26 20 00

RECEPTACLES

- DUPLEX 20A TYPE CEE 7/7 "SCHUKO STYLE" UNSWITCHED RECEPTACLE
- GF DUPLEX 20A TYPE CEE 7/7 "SCHUKO STYLE" UNSWITCHED RECEPTACLES – 10mA GROUND FAULT INTERRUPTER TYPE
- WP DUPLEX 20A TYPE CEE 7/7 "SCHUKO STYLE" UNSWITCHED TYPE WITH WEATHERPROOF COVER – 10mA GROUND FAULT INTERRUPTER TYPE
- EXP DUPLEX 20A TYPE CEE 7/7 "SCHUKO STYLE" UNSWITCHED RECEPTACLES – EXPLOSION PROOF
- * INDICATES MOUNT DEVICE ABOVE COUNTERTOP OR AT 1070mm ABOVE FINISHED FLOOR WHERE NO COUNTER IS TO BE INSTALLED.

LIGHTNING PROTECTION

- AIR TERMINAL 20mm O.D. X 450mm SOLID COPPER, NICKEL PLATED ON ADHESIVE BASE
- EQ EQUIPMENT AIR TERMINAL
- TEST WELL WITH GROUND ROD(S)
- GROUND ROD
- G GROUND PLATE
- MAIN GROUND CONDUCTER CONCEALED WITHIN CONSTRUCTION
- MAIN GROUND CONDUCTOR EXPOSED ON EXPOSED ON BUILDING EXTERIOR SURFACE
- GROUND CONDUCTOR CAD WELDED TO GROUND CABLE OR EQUIPMENT
- GROUND ROD TRIPOD, SPACED 3 METERS APART.
- LEVEL TO LEVEL CABLE

LIGHTING

- LIGHTING FIXTURE – SEE FIXTURE SCHEDULE FOR MORE INFORMATION
- EMERGENCY LIGHTING FIXTURE – SEE FIXTURE SCHEDULE FOR MORE INFORMATION
- DOWNLIGHT
- LIGHTING FIXTURE ON NORMAL/EMERGENCY
- WALL MOUNTED LIGHT FIXTURE
- E EXIT SIGN – DIRECTIONAL ARROWS AS INDICATED ON DRAWINGS
- REMOTE HEAD FOR BATTERY PACK
- $ SINGLE POLE SWITCH – 20A RATED
- $3 3–WAY SWITCH – 20A RATED
- $4 4–WAY SWITCH – 20A RATED
- LC LIGHTING CONTACTOR
- POLE MOUNTED SITE LIGHTING FIXTURE– NUMBER OF FIXTURES PER POLE AS INDICATED ON DRAWINGS
- EXTERIOR DIRECTIONAL LIGHTING FIXTURE
- a SMALL CASE LETTERS REPRESENTS LAMP(S) / SWITCHES.

TELECOMMUNICATIONS

- TELEPHONE OUTLET(S) @ 45cm AFF. U.N.O. WITH 20mm RACEWAY TERMINATED TO TELEDATA TERMINAL BOARD.
- DATA OUTLET(S) @ 45cm AFF. U.N.O. WITH 20mm RACEWAY TERMINATED TO TELEDATA TERMINAL BOARD.

TELECOMMUNICATIONS (CONTINUED)

- COMBINATION TELEPHONE/DATA OUTLET(S) @ 45cm AFF. U.N.O. WITH 27mm RACEWAY TERMINATED TO TELEDATA TERMINAL AREA.
- W WALL MTD. TELEPHONE OUTLET WITH 20mm RACEWAY TO TELEDATA TERMINAL BOARD.
- (x)T INDICATES NUMBER OF TELEPHONE OUTLET(S) AND ASSOCIATED CABLING
- (x)D INDICATES NUMBER OF DATA OUTLET(S) AND ASSOCIATED CABLING
- (x)TF INDICATES NUMBER OF TELEPHONE OUTLETS AND ASSOCIATED CABLING WITH 1 OUTLET AND CABLE DEDICATED FOR FAX

SINGLE LINE SYMBOLS

- SWITCH
- BREAKER
- FUSE
- TRANSFORMER
- GROUND
- CONTACT (NORMALLY OPEN)
- CONTACT (NORMALLY CLOSED)
- TRANSFER SWITCH
- CURRENT TRANSFORMER
- INDICATES NEW ELECTRICAL EQUIPMENT
- C INDICATES NEW CONTROL WIRING AND CONDUIT
- EQUIPMENT OUTLINE

MISCELLANEOUS

- BRANCH CIRCUIT WIRING, SURFACE MOUNTED ON WALLS
- BRANCH CIRCUIT WIRING – 6mm²
- BRANCH CIRCUIT WIRING – UNDER FLOOR
- HOME RUN BACK TO PANEL
- CONDUIT TURNED DOWN
- CONDUIT TURNED UP
- LV LOW VOLTAGE WIRING AND CONDUIT
- INDICATES CONTINUATION OF LINE

FIRE ALARM

- FACP FIRE ALARM CONTROL PANEL WITH BATTERY BACKUP
- F FIRE ALARM PULL STATION

FIRE ALARM (CONTINUED)

- F FIRE ALARM STROBE – WALL MOUNTED
- F FIRE ALARM AUDIBLE/STROBE – WALL MOUNTED
- F FIRE ALARM HORN/STROBE – WALL MOUNTED
- S SMOKE DETECTOR
- H HEAT DETECTOR CEILING MOUNTED
- D DUCT DETECTOR – PROVIDED BY EC, INSTALLED BY MC AND CONNECTED BY EC

DENOTATIONS & ABBREVIATIONS

AFF	ABOVE FINISHED FLOOR
C	CEILING MOUNTED
E	EMERGENCY
EC	ELECTRICAL CONTRACTOR
EPO	EMERGENCY POWER OFF
EXP	EXPLOSION PROOF
F	FIRE ALARM
FF	FLUSH FLOOR MOUNTED
FL	FLUORESCENT
FO	FIBER OPTIC
FSS	FUSED SAFETY SWITCH
GF	GROUND FAULT INTERRUPTER
GC	GENERAL CONTRACTOR
IG	ISOLATED GROUND
K	KEY
LV	LOW VOLTAGE
M	MOTOR
MC	MECHANICAL CONTRACTOR
NE	NORMAL/EMERGENCY
NFSS	NON–FUSED SAFETY SWITCH
PA	PAGING SYSTEM
PLC	PLUMBING CONTRACTOR
SL	SINGLE LINE
T	TELEPHONE

DENOTATIONS & ABBREVIATIONS (CONT.)

TP	TAMPER PROOF
UE	UNDERGROUND ELECTRIC
W	WALL MOUNTED
WP	WEATHERPROOF WITH GROUND FAULT INTERRUPTION
WT	WATER TIGHT

GENERAL PROJECT NOTES:

G1. UNLESS OTHERWISE NOTED, PROVIDE ALL EQUIPMENT SHOWN ON THE PLANS. THE ELECTRICAL CONTRACTOR SHALL COORDINATE ALL SYMBOLS SHOWN ON THE PLANS WITH THE SYMBOL LIST. IT SHALL BE THE RESPONSIBILITY OF THE CONTRACTOR TO VERIFY THE INTENT OF ANY SYMBOL THAT IS SHOWN ON THE PLANS AND NOT INDICATED ON THE SYMBOL LIST WITH THE ENGINEER PRIOR TO BID.

G2. THE CONTRACTOR SHALL VERIFY THE LOCATION OF ALL UNDERGROUND UTILITIES WITHIN THE CONSTRUCTION AREA THREE (3) WORKING DAYS NOTICE BEFORE COMMENCING DIGGING. NOTIFY THE LOCAL AUTHORITY HAVING JURISDICTION AND WAIT THE REQUIRED TIME BEFORE COMMENCING TO DIG.

G3. THE CONTRACTOR SHALL COORDINATE CONDUIT RUNS, LIGHTING FIXTURES AND OTHER EQUIPMENT LOCATIONS WITH THE OTHER TRADE CONTRACTORS TO AVOID CONFLICTS.

G4. WHERE VOLTAGES AND FREQUENCIES ON THE DRAWINGS AND IN THE SPECIFICATIONS DIFFER FROM THE LOCAL ONES, ALL WORK SHALL BE PERFORMED USING THE LOCAL VOLTAGES AND FREQUENCIES.

G5. THE MINIMUM WIRE SIZE ON THE PROJECT SHALL BE 4mm². THE MINIMUM CONDUIT SIZE SHALL BE 20mm. THE MINIMUM BREAKER SIZE SHALL BE 20 AMPS.

G6. THE CONTRACTOR SHALL PUT A MAXIMUM OF 6 DUPLEX RECEPTACLES ON A 20A SINGLE POLE CIRCUIT.

G7. WHERE THE 1010 SCOPE REVIEW, 1015 TECHNICAL REVIEW, DRAWINGS, AND SPECIFICATIONS DIFFER FROM AMERICAN CODES OR STANDARDS, THE 1010, 1015, DRAWINGS, AND SPECIFICATIONS SHALL RULE.

G8. ALL CONDUIT AND DEVICES SHALL BE SURFACE MOUNTED UNLESS OTHERWISE INDICATED.

G9. CONTRACTOR SHALL COORDINATE ALL WORK WITH ALL OTHER TRADES TO ENSURE ALL WORK IS COMPLETED IN A PROFESSIONAL, WORKMAN–LIKE MANNER.

APPROVED:

A/E DESIGNER OF RECORD

SEAL:

COMMONWEALTH OF PENNSYLVANIA
REGISTERED PROFESSIONAL
JOSEPH R. GAUS
1/29/10
ENGINEER
PE-074251

US ARMY CORPS OF ENGINEERS
AFGHANISTAN ENGINEER DISTRICT

Mark	Description	Date	Appr.

Mark	Description	Date	Appr.

Rev: 0
Date: 2/23/10
Design file no.
Drawing code:
File name:
Plot date:
Plot scale:

Designed by: KJR
Dwn by: BJB
Ckd by: JRG
Reviewed by: JRG
Submitted by: BAKER

U.S. ARMY CORPS OF ENGINEERS
AFGHANISTAN ENGINEER DISTRICT
APO AE 96338

Michael Baker Jr., Inc
A unit of Michael Baker Corporation
Airside Business Park
100 Airside Drive
Moon Township, PA 15108
www.mbakercorp.com

AFGHAN NATIONAL ARMY
REGIONAL MILITARY TRAINING CENTER
STANDARD DESIGN

RMTC STORAGE
ELECTRICAL SYMBOLS & ABBREVIATIONS

Sheet reference number:
E–001

GENERAL NOTES:

1. REFER TO DRAWING #E-001 FOR THE ELECTRICAL SYMBOLS LIST.
2. EXIT SIGNS SHALL BE WIRED AHEAD OF ANY LOCAL SWITCHING ON CIRCUITS. SEE WIRING DIAGRAM DETAIL 8, ON DRAWING #E-501.
3. REFER TO DRAWING #E-601 FOR THE LIGHTING FIXTURE SCHEDULE.
4. REFER TO DRAWING #E-501 FOR THE POWER RISER.
5. REFER TO DRAWING #E-602 FOR PANEL SCHEDULES.
6. LIGHT FIXTURES INDICATED AS EMERGENCY SHALL BE PROVIDED WITH A BATTERY BACKUP BALLAST. WIRING DIAGRAM DETAIL 7, ON DRAWING #E-501.

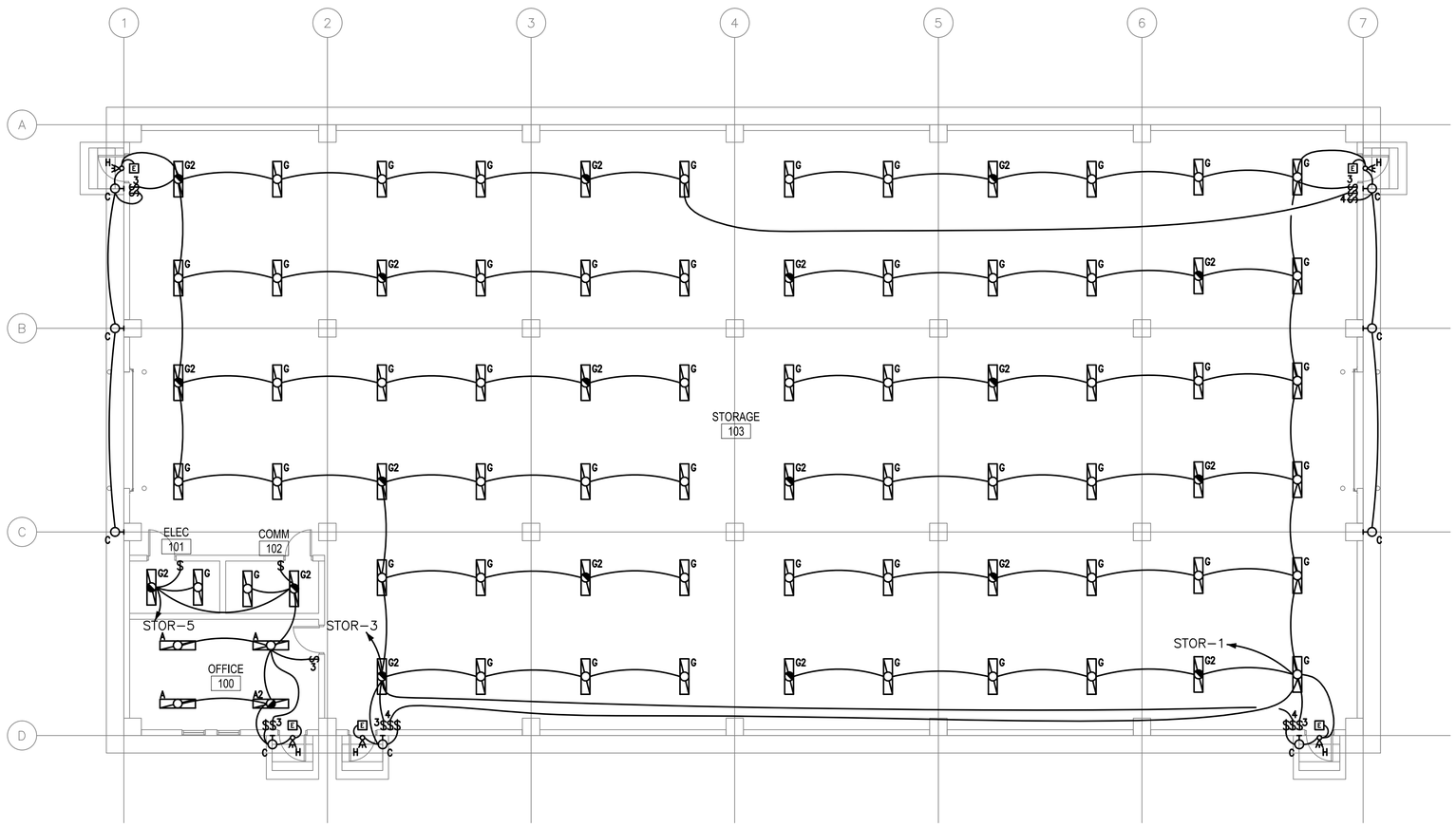

1
E-101

RMTC STORAGE
FLOOR PLAN - LIGHTING

SCALE: 1:100

0 2000 4000
SCALE: 1:100

APPROVED:

A/E DESIGNER OF RECORD

SEAL:

COMMONWEALTH OF PENNSYLVANIA
REGISTERED PROFESSIONAL
JOSEPH R. GAUS
ENGINEER
PE-074251

US ARMY CORPS OF ENGINEERS
AFGHANISTAN ENGINEER DISTRICT

Mark	Description	Date	Appr.

Mark	Description	Date	Appr.

Designed by: KJR
Dwn by: BJB
Ckd by: JRG
Reviewed by: JRG
Submitted by: BAKER
Date: 2/23/10
Rev: 0
Design file no.
Drawing code:
File name:
Plot date:
Plot scale:

U.S. ARMY CORPS OF ENGINEERS
AFGHANISTAN ENGINEER DISTRICT
APO AE 96338

Michael Baker Jr., Inc.
A unit of Michael Baker Corporation
Airside Business Park
100 Airside Drive
Moon Township, PA 15108
www.mbakercorp.com

AFGHAN NATIONAL ARMY
REGIONAL MILITARY TRAINING CENTER
STANDARD DESIGN

RMTC STORAGE
ELECTRICAL LIGHTING PLAN

Sheet reference number:
E-101

GENERAL NOTES:

1. REFER TO DRAWING #E-001 FOR THE ELECTRICAL SYMBOLS LIST.
2. REFER TO DRAWING #E-501 FOR THE POWER RISER.
3. REFER TO DRAWING #E-602 FOR PANEL SCHEDULES.
4. COORDINATE EXACT MOUNTING LOCATION OF DISCONNECTING MEANS FOR MECHANICAL AND PLUMBING EQUIPMENT IN THE FIELD.
5. FUSIBLE SAFETY SWITCHES THAT ARE NOT OTHERWISE IDENTIFIED SHALL BE 380V, 1P, 30A FUSED SAFETY SWITCHES WITH 20A FUSES.

NUMBERED NOTES:

1. PANEL STOR.
2. PROVIDE A 1200mm X 2400mm SHEET OF PLYWOOD PAINTED WITH FIRE RESISTANTPAINT FOR MOUNTING TELECOMMUNICATIONS EQUIPMENT.
3. PROVIDE CONDUIT STUB UP IN THE ROOM FOR INCOMING TELECOMMUNICATIONS SERVICES FROM THE CENTRAL COMMUNICATIONS SYSTEM IN THE GARRISON.
4. PROVIDE POWER CONNECTION TO EXHAUST FANS. SEE DRAWINGS #M-101 AND #E-602 FOR MORE INFORMATION.
5. PROVIDE POWER CONNECTION TO ELECTRIC UNIT HEATER #2. SEE DRAWINGS #M-101 AND #E-602 FOR MORE INFORMATION.
6. CONTRACTOR SHALL PROVIDE WEATHER PROOF RECEPTACLE AT 18" ABOVE FINISHED ROOF MOUNTED TO MECHANICAL EQUIPMENT HOUSING. RECEPTACLE SHALL BE WITHIN 7M OF ALL ROOFTOP EQUIPMENT.
7. PROVIDE 220V, 1P, 30A FUSED SAFETY SWITCH WITH 30A FUSES.

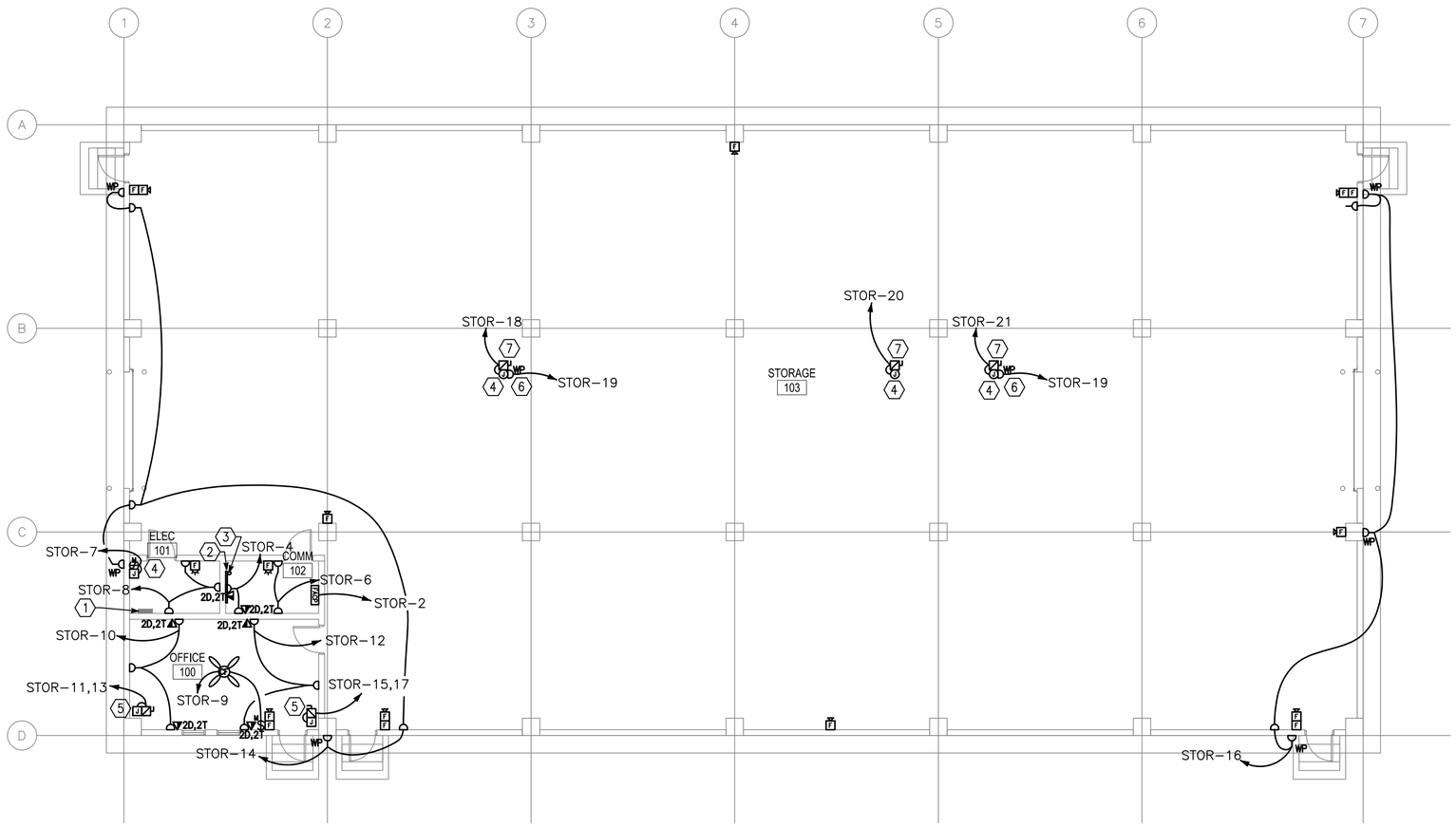

1
E-102

RMTC STORAGE
FLOOR PLAN - POWER & SYSTEMS

SCALE: 1:100

0 2000 4000
SCALE: 1:100

APPROVED:

A/E DESIGNER OF RECORD

SEAL:

COMMONWEALTH OF PENNSYLVANIA
REGISTERED PROFESSIONAL
JOSEPH R. GAUS
ENGINEER
PE-074251

US ARMY CORPS OF ENGINEERS
AFGHANISTAN ENGINEER DISTRICT

Mark	Description	Date	Appr.

Mark	Description	Date	Appr.

U.S. ARMY CORPS OF ENGINEERS
AFGHANISTAN ENGINEER DISTRICT
APO AE 96338

Michael Baker Jr., Inc.
A unit of Michael Baker Corporation
Airside Business Park
100 Airside Drive
Moon Township, PA 15108
www.mbakercorp.com

Designed by: KJR
Dwn by: BJB
Ckd by: JRG
Reviewed by: JRG
Submitted by: BAKER
Date: 2/23/10
Rev: 0
Design file no.
Drawing code:
File name:
Plot date:
Plot scale:

AFGHAN NATIONAL ARMY
REGIONAL MILITARY TRAINING CENTER
STANDARD DESIGN

RMTC STORAGE
ELECTRICAL POWER AND SYSTEMS PLAN

Sheet reference number:
E-102

GENERAL NOTES:

1. REFER TO DRAWING #E-001 FOR THE ELECTRICAL SYMBOLS LIST.

NUMBERED NOTES:

1. (1) 120.0mm² BARE, TINNED, COPPER COUNTERPOISE GROUND 700mm BELOW GRADE.
2. INSTALL DOWN CONDUCTOR IN 25mm SCHEDULE 80 PVC CONDUIT TO 20mm DIAMETER X 3 METERS SOLID COPPER TINNED GROUND ROD. (TYPICAL)
3. CADWELD TO BUILDING STRUCTURE AT 18 METERS ON CENTER AROUND THE ENTIRE PERIMETER OF THE BUILDING. (TYPICAL)
4. 120mm² LIGHTNING PROTECTION CABLE.
5. AIR TERMINAL. TERMINALS SHALL BE PLACED AT A MAXIMUM OF 6M ON CENTER PER NFPA 780 PARA. 7.8.2.1, AND WITHIN 0.6M OF RIDGE ENDS PER NFPA 780 PARA. 4.8 (TYPICAL)
6. 700mm MIN. (TYP) BETWEEN FOUNDATION AND GROUND LOOP.
7. AIR TERMINAL ON ROOFTOP FAN.

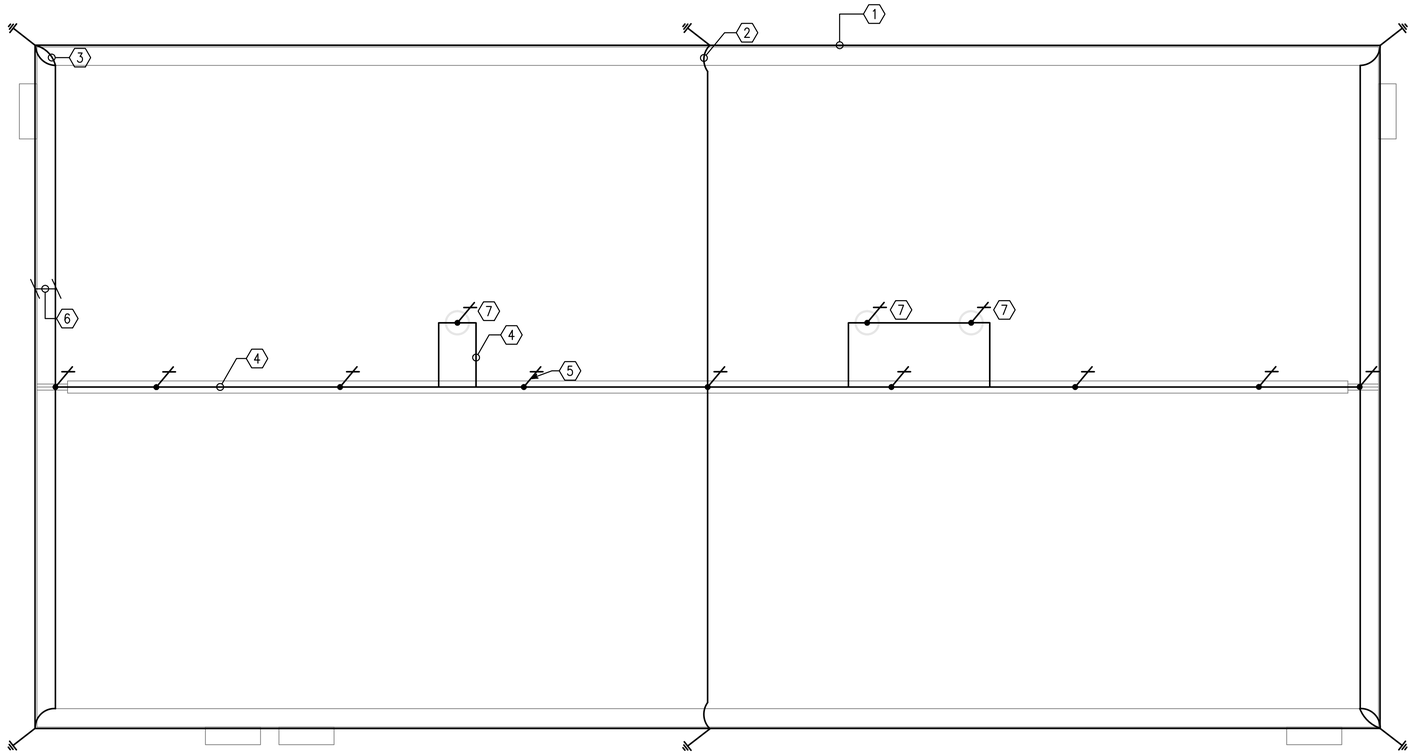

1
E-103

RMTC STORAGE
FLOOR PLAN - LIGHTNING PROTECTION
SCALE: 1:100

0 2000 4000
SCALE: 1:100

APPROVED:

A/E DESIGNER OF RECORD

SEAL:

COMMONWEALTH OF PENNSYLVANIA
REGISTERED PROFESSIONAL
JOSEPH R. GAUS
1/29/10
ENGINEER
PE-074251

US ARMY CORPS OF ENGINEERS
AFGHANISTAN ENGINEER DISTRICT

Mark	Description	Date	Appr.	Mark	Description	Date	Appr.

Designed by: KJR
Dwn by: BJB
Ckd by: JRG
Reviewed by: JRG
Submitted by: BAKER
Date: 2/23/10
Rev: 0
Design file no.
Drawing code:
File name:
Plot date:
Plot scale:

U.S. ARMY CORPS OF ENGINEERS
AFGHANISTAN ENGINEER DISTRICT
APO AE 96338

Michael Baker Jr., Inc
A unit of Michael Baker Corporation
Airside Business Park
100 Airside Drive
Moon Township, PA 15108
www.mbakercorp.com

AFGHAN NATIONAL ARMY
REGIONAL MILITARY TRAINING CENTER
STANDARD DESIGN

RMTC STORAGE
ELECTRICAL LIGHTNING PROTECTION PLAN

Sheet reference number:
E-103

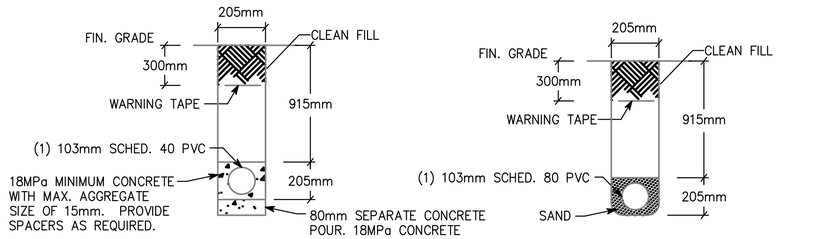

NOTE: PVC CONDUIT SHALL BE DIRECT BURIED SCHEDULE 80 FOR NO TRAFFIC AREAS AND CONCRETE-ENCASED SCHEDULE 40 FOR UNDER ROADWAYS OR TRAFFIC AREAS.

1 / E-501 TYPICAL DUCT BANK DETAILS FOR CONDUIT IN SAND OR CONCRETE

SCALE: N.T.S.

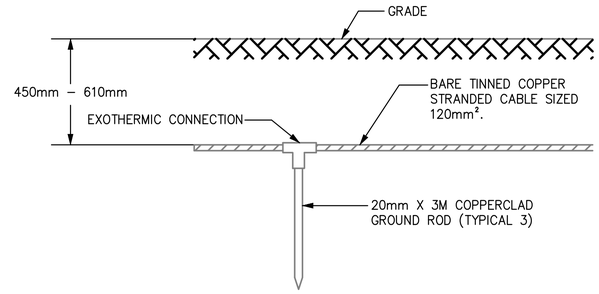

2 / E-501 GROUND TRIPOD SYSTEM DETAIL - ELEVATION

SCALE: N.T.S.

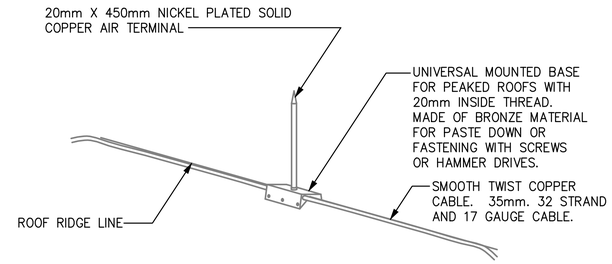

3 / E-501 LIGHTNING PROTECTION AIR TERMINAL DETAIL

SCALE: N.T.S.

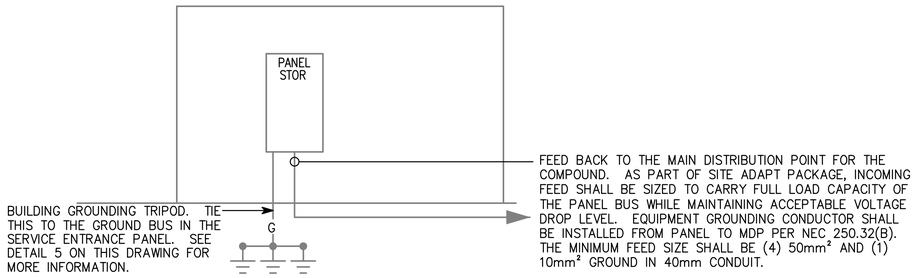

4 / E-501 STOR RISER DIAGRAM

SCALE: N.T.S.

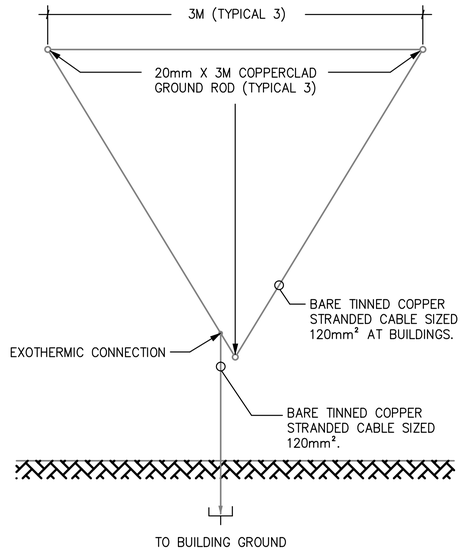

5 / E-501 GROUND TRIPOD SYSTEM DETAIL - PLAN

SCALE: N.T.S.

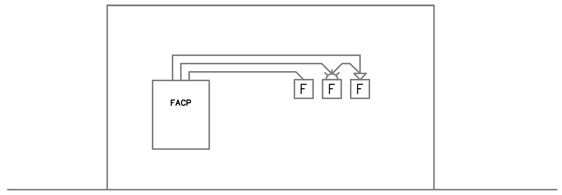

6 / E-501 TYPICAL ONE STORY FIRE ALARM RISER

SCALE: N.T.S.

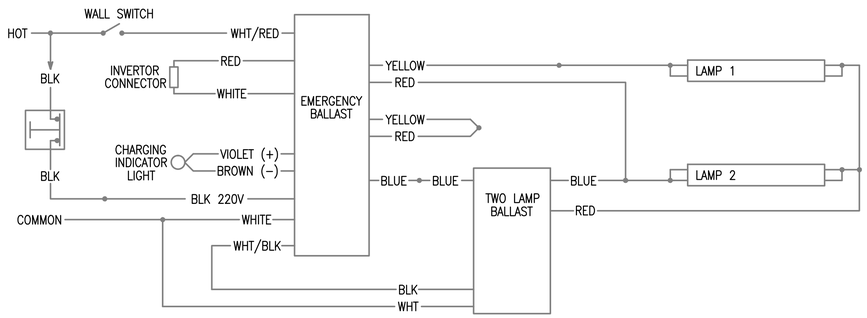

7 / E-501 EMERGENCY FIXTURE WIRING DIAGRAM

SCALE: N.T.S.

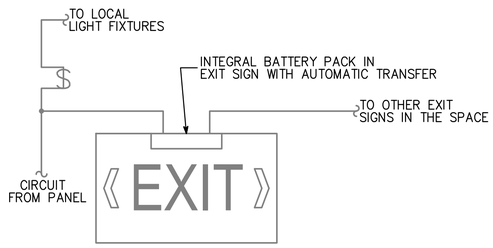

8 / E-501 EXIT SIGN WIRING DIAGRAM

SCALE: N.T.S.

APPROVED:

A/E DESIGNER OF RECORD

SEAL:

COMMONWEALTH OF PENNSYLVANIA
REGISTERED PROFESSIONAL
JOSEPH R. GAUS
ENGINEER
PE-074251

US ARMY CORPS OF ENGINEERS
AFGHANISTAN ENGINEER DISTRICT

Mark	Description	Date	Appr.	Mark	Description	Date	Appr.

Rev: 0
Date: 2/23/10
Design file no.
Drawing code:
File name:
Plot date:
Plot scale:

Designed by: KJR
Dwn by: BJB
Ckd by: JRG
Reviewed by: JRG
Submitted by: BAKER

U.S. ARMY CORPS OF ENGINEERS
AFGHANISTAN ENGINEER DISTRICT
APO AE 96338

Michael Baker Jr., Inc
A unit of Michael Baker Corporation
Airside Business Park
100 Airside Drive
Moon Township, PA 15108
www.mbakercorp.com

AFGHAN NATIONAL ARMY
REGIONAL MILITARY TRAINING CENTER
STANDARD DESIGN

RMTC STORAGE
ELECTRICAL DETAILS

Sheet reference number:
E-501

(A) LARGER OF THE TWO SIZES GIVEN IN THE TABLES BELOW	
GROUNDING ELECTRODE CONDUCTOR (BASED ON AIC RATING)	
AIC RATING OF SERVICE EQUIPMENT	NECESSARY GROUNDING ELECTRODE CONDUCTOR SIZE
10K	(1) 35mm²
14K	(1) 50mm²
18K	(1) 70mm²
22K	(1) 70mm²
25K	(1) 70mm²
30K	(1) 95mm²
35K	(1) 120mm²
42K	(1) 150mm²
65K	(1) 185mm²
100K	(1) 300mm²
125K	(2) 185mm²
200K	(2) 300mm²
GROUNDING ELECTRODE CONDUCTOR (BASED ON NEC TABLE 250.66)	
SIZE OF LARGEST UNGROUNDED SERVICE CONDUCTOR OR EQUIVALENT AREA FOR PARALLEL CONDUCTORS	NECESSARY GROUNDING ELECTRODE CONDUCTOR SIZE
350 kcmil OR SMALLER	35mm²
OVER 350 kcmil TO 600 kcmil	70mm²
OVER 600 kcmil TO 1100 kcmil	70mm²
OVER 1100 kcmil	95mm²
NOTE: ALL SIZES ARE BASED ON COPPER CONDUCTORS.	

(B) EQUIPMENT GROUNDING CONDUCTOR	
RATING OR SETTING OF AUTOMATIC OVERCURRENT DEVICE IN CIRCUIT AHEAD OF EQUIPMENT, CONDUIT, ETC, NOT EXCEEDING (AMPERES)	NECESSARY EQUIPMENT GROUNDING CONDUCTOR SIZE
15	2.5mm²
20	4.0mm²
30	6.0mm²
40	6.0mm²
60	6.0mm²
100	10mm²
200	16mm²
300	25mm²
400	25mm²
500	35mm²
600	50mm²
800	70mm²
1000	70mm²
1200	95mm²
1600	120mm²
2000	150mm²
2500	185mm²
3000	240mm²
4000	300mm²
5000	400mm²
6000	400mm²
NOTE: ALL SIZES ARE BASED ON COPPER CONDUCTORS.	

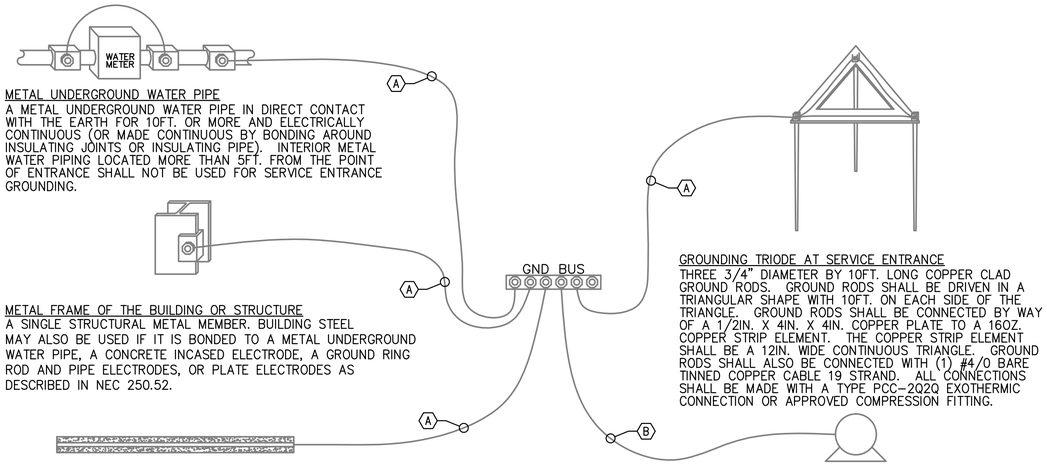

METAL UNDERGROUND WATER PIPE
A METAL UNDERGROUND WATER PIPE IN DIRECT CONTACT WITH THE EARTH FOR 10FT. OR MORE AND ELECTRICALLY CONTINUOUS (OR MADE CONTINUOUS BY BONDING AROUND INSULATING JOINTS OR INSULATING PIPE). INTERIOR METAL WATER PIPING LOCATED MORE THAN 5FT. FROM THE POINT OF ENTRANCE SHALL NOT BE USED FOR SERVICE ENTRANCE GROUNDING.

METAL FRAME OF THE BUILDING OR STRUCTURE
A SINGLE STRUCTURAL METAL MEMBER. BUILDING STEEL MAY ALSO BE USED IF IT IS BONDED TO A METAL UNDERGROUND WATER PIPE, A CONCRETE INCASED ELECTRODE, A GROUND RING ROD AND PIPE ELECTRODES, OR PLATE ELECTRODES AS DESCRIBED IN NEC 250.52.

CONCRETE ENCASED ELECTRODE
AN ELECTRODE ENCASED BY AT LEAST 2IN. OF CONCRETE , LOCATED WITHIN AND NEAR THE BOTTOM OF A CONCRETE FOUNDATION OR FOOTING THAT IS IN DIRECT CONTACT WITH THE EARTH, CONSISTING OF AT LEAST 20FT. OF ONE OR MORE BARE OR ZINC GALVANIZED OR OTHER ELECTRICALLY CONDUCTIVE COATED STEEL REINFORCING BARS OR RODS OF NOT LESS THAN 1/2" DIAMETER OR BARE COPPER CONDUCTOR NOT SMALLER THAN 4AWG.

GROUNDING TRIODE AT SERVICE ENTRANCE
THREE 3/4" DIAMETER BY 10FT. LONG COPPER CLAD GROUND RODS. GROUND RODS SHALL BE DRIVEN IN A TRIANGULAR SHAPE WITH 10FT. ON EACH SIDE OF THE TRIANGLE. GROUND RODS SHALL BE CONNECTED BY WAY OF A 1/2IN. X 4IN. X 4IN. COPPER PLATE TO A 16OZ. COPPER STRIP ELEMENT. THE COPPER STRIP ELEMENT SHALL BE A 12IN. WIDE CONTINUOUS TRIANGLE. GROUND RODS SHALL ALSO BE CONNECTED WITH (1) #4/0 BARE TINNED COPPER CABLE 19 STRAND. ALL CONNECTIONS SHALL BE MADE WITH A TYPE PCC-2Q2Q EXOTHERMIC CONNECTION OR APPROVED COMPRESSION FITTING.

LOAD OR DOWNSTREAM PANEL
ALL LOADS IN THE BUILDING SHALL HAVE AN EQUIPMENT GROUNDING CONDUCTOR PULLED TO THEM.

1
E-502

SERVICE ENTRANCE GROUNDING DETAIL

SCALE: N.T.S.

APPROVED:

A/E DESIGNER OF RECORD

SEAL:

COMMONWEALTH OF PENNSYLVANIA
REGISTERED PROFESSIONAL
JOSEPH R. GAUS
ENGINEER
PE-074251
1/29/10

US ARMY CORPS OF ENGINEERS
AFGHANISTAN ENGINEER DISTRICT

Mark	Description	Date	Appr.	Mark	Description	Date	Appr.

Rev: 0
Date: 2/23/10
Design file no.
Drawing code:
File name:
Plot date:
Plot scale:

Designed by: KJR
Dwn by: BJB
Ckd by: JRG
Reviewed by: JRG
Submitted by: BAKER

U.S. ARMY CORPS OF ENGINEERS
AFGHANISTAN ENGINEER DISTRICT
APO AE 96338

Michael Baker Jr., Inc.
A unit of Michael Baker Corporation
Airside Business Park
100 Airside Drive
Moon Township, PA 15108
www.mbakercorp.com

AFGHAN NATIONAL ARMY
REGIONAL MILITARY TRAINING CENTER
STANDARD DESIGN

RMTC STORAGE
ELECTRICAL DETAILS

Sheet reference number:
E-502

FIXTURE MARK 'A'

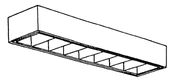

FIXTURE MARK 'C'

FIXTURE MARK 'G'

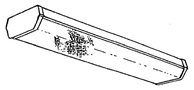

FIXTURE MARK 'H'

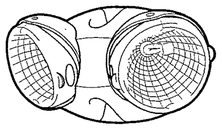

FIXTURE MARK 'E'

LIGHT FIXTURE SCHEDULE

FIXTURE MARK	STYLE NUMBER AND TYPE	NUMBER AND TYPE OF LAMPS	VOLTAGE	MOUNTING	NOTES
A	PARABOLIC SURFACE/PENDANT MOUNTED 300MM X 1200MM FLUORESCENT FIXTURE WITH ELECTRONIC BALLAST	(2) 32W 3500K	220V – 1ø 50HZ	SURFACE MOUNTED	FURNISHED WITH ELECTRONIC BALLAST. PARABOLIC LOUVER SHALL BE SPECULAR LENS IRADESCENCE TYPE.
A2	SAME AS FIXTURE 'A' WITH EMERGENCY BALLAST	(2) 32W 3500K	220V – 1ø 50HZ	SURFACE MOUNTED	FURNISHED WITH ELECTRONIC BALLAST. PARABOLIC LOUVER SHALL BE SPECULAR LENS IRADESCENCE TYPE. EMERGENCY BALLAST SELF TEST.
C	INCANDESCENT ONE PIECE W/ APPROVED LENS STABILIZED HIGH IMPACT POLY CARBONATE.	(1) A19 – 100W INCANDESCENT	220V – 1ø 50HZ	WALL MOUNTED ABOVE EXTERIOR DOORS	
G	WRAP AROUND SURFACE/PENDANT MOUNTED FLUORESCENT FIXTURE WITH PRISMATIC ACRYLIC LENS AND ELECTRONIC BALLAST	(2) 32W 3500K	220V – 1ø 50HZ	SURFACE MOUNTED	FURNISHED WITH ELECTRONIC BALLAST, VIRGIN ACRYLIC WRAP AROUND LENS.
G2	SAME AS FIXTURE 'G' WITH EMERGENCY BALLAST	(2) 32W 3500K	220V – 1ø 50HZ	SURFACE MOUNTED	FURNISHED WITH ELECTRONIC BALLAST, VIRGIN ACRYLIC WRAP AROUND LENS. EMERGENCY BALLAST WITH SELF TEST SWITCH.
H	REMOTE HEAD EXTERIOR LIGHT HEAD POWERED FROM EXIT SIGN BATTERY– 12V DOUBLE HEAD CORROSION RESISTANT WITH UL34 WEATHERPROOF CONSTRUCTION	(2) 12W/12V HALOGEN LAMP	12V – 1ø 50HZ	EXTERIOR WALL MOUNTED AT TOP OF DOOR HEIGHT	
E	UNIVERSAL MOUNT ENGINEER GRADE THERMOPLASTIC HOUSING EXIT SIGN WITH LED LAMPS, RED LETTERS 6" IN HEIGHT WITH ARROWS AS INDICATED, WITH 12V CADMIUM BATTERY WITH REMOTE HEAD CAPABILITY	LED LAMPS	220V – 1ø 50HZ	UNIVERSAL MOUNTING	

APPROVED:

A/E DESIGNER OF RECORD

SEAL:

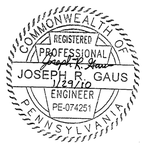

US ARMY CORPS OF ENGINEERS
AFGHANISTAN ENGINEER DISTRICT

Mark	Description	Date	Appr.	Mark	Description	Date	Appr.

U.S. ARMY CORPS OF ENGINEERS
AFGHANISTAN ENGINEER DISTRICT
APO AE 96338

Michael Baker Jr., Inc
A unit of Michael Baker Corporation
Airside Business Park
100 Airside Drive
Moon Township, PA 15108
www.mbakercorp.com

Designed by: KJR
Dwn by: BJB
Ckd by: JRG
Reviewed by: JRG
Submitted by: BAKER
Date: 2/23/10
Rev: 0
Design file no.
Drawing code:
File name:
Plot date:
Plot scale:

AFGHAN NATIONAL ARMY
REGIONAL MILITARY TRAINING CENTER
STANDARD DESIGN

RMTC STORAGE
ELECTRICAL LIGHTING FIXTURE SCHEDULE

Sheet reference number:
E–601

PANELBOARD STOR SURFACE MOUNTED

AMP. MAIN LUGS (OR) 100 AMP. MAIN BREAKER W/ 100 AMP. TRIP

CIRCUIT BREAKER TYPE 380/220 VOLTS 3 PHASE 4 WIRE 50 HZ 100 AMP. BUS

CKT. NO.	TRIP AMPS	NO. POLES	WIRE MM ²	GND MM ²	CONDUIT MM	LOAD SERVED	LOAD-KVA A0	LOAD-KVA B0	LOAD-KVA C0	LOAD-KVA A0	LOAD-KVA B0	LOAD-KVA C0	LOAD SERVED	CONDUIT MM	GND MM²	WIRE MM²	NO. POLES	TRIP AMPS	CKT. NO.
1	20	1	4.0	4.0	20	LIGHTING – RM 103	2.6			0.5			FACP – RM 102	20	4.0	4.0	1	20	2
3	20	1	4.0	4.0	20	LIGHTING – RM 103, EXTERIOR		2.3			0.6		RECEPTACLES – RM 102	20	4.0	4.0	1	20	4
5	20	1	4.0	4.0	20	LIGHTING – RM 100–102			0.7			0.4	RECEPTACLES – RM 102	20	4.0	4.0	1	20	6
7	20	1	4.0	4.0	20	EXHAUST FAN #1 – RM 101	0.5			0.6			RECEPTACLES – RM 101	20	4.0	4.0	1	20	8
9	20	1	4.0	4.0	20	CEILING FAN – RM 100		0.3			0.6		RECEPTACLES – RM 100	20	4.0	4.0	1	20	10
11	20	2	4.0	4.0	20	ELECTRIC HEAT #2 – RM 100			1.3			0.6	RECEPTACLES – RM 100	20	4.0	4.0	1	20	12
13							1.3			1.2			RECEPTACLES – 103, EXTERIOR	20	4.0	4.0	1	20	14
15	20	2	4.0	4.0	20	ELECTRIC HEAT #2 – RM 100		1.3			1.0		RECEPTACLES – 103, EXTERIOR	20	4.0	4.0	1	20	16
17									1.3			3.9	EXHAUST FAN #2 – RM 103	20	6.0	6.0	1	30	18
19	20	1	4.0	4.0	20	ROOFTOP RECEPTACLES	0.4			3.9			EXHAUST FAN #3 – RM 104	20	6.0	6.0	1	30	20
21	30	1	6.0	6.0	20	EXHAUST FAN #4 – RM 104		3.9					SPARE				1	20	22
23	20	1				SPARE							SPARE				1	20	24
							4.8	7.8	3.3	6.2	2.2	4.9							

TOTAL CONN. LOAD PER PHASE (KVA): A0 11.0 B0 10.0 C0 8.2

TOTAL CONN. LOAD 29.2 KVA. 70 % DEMAND = ESTIMATED DEMAND LOAD 20.44

* MAIN BREAKER SHALL BE 3P EARTH GROUND TYPE

APPROVED:

A/E DESIGNER OF RECORD

SEAL:

COMMONWEALTH OF PENNSYLVANIA
REGISTERED PROFESSIONAL
JOSEPH R. GAUS
ENGINEER
PE-074251
1/29/10

US ARMY CORPS OF ENGINEERS
AFGHANISTAN ENGINEER DISTRICT

Mark	Description	Date	Appr.

Mark	Description	Date	Appr.

Designed by: KJR
Dwn by: BJB
Ckd by: JRG
Reviewed by: JRG
Submitted by: BAKER
Date: 2/23/10
Rev: 0
Design file no.
Drawing code:
File name:
Plot date:
Plot scale:

U.S. ARMY CORPS OF ENGINEERS
AFGHANISTAN ENGINEER DISTRICT
APO AE 96338

Michael Baker Jr., Inc.
A unit of Michael Baker Corporation
Airside Business Park
100 Airside Drive
Moon Township, PA 15108
www.mbakercorp.com

AFGHAN NATIONAL ARMY
REGIONAL MILITARY TRAINING CENTER
STANDARD DESIGN

RMTC STORAGE
ELECTRICAL PANEL SCHEDULES

Sheet reference number:
E–602

AFGHAN NATIONAL ARMY

STANDARD BUILDING DESIGN

SENIOR BOQ BARRACKS

100% FINAL DESIGN SUBMITTAL

SHEET INDEX

G-001 COVER SHEET

STRUCTURAL

S-001 GENERAL NOTES & DESIGN CRITERIA
S-101 FOUNDATION/SLAB PLAN
S-102 ROOF FRAMING PLAN
S-401 BUILDING SECTIONS
S-402 ENLARGED LATRINE SLAB PLAN
S-501 FOUNDATION SECTIONS
S-502 FOUNDATION & FRAMING SECTIONS
S-503 BEAM & COLUMN DETAILS
S-504 BEAM & COLUMN DETAILS
S-505 MISCELLANEOUS SECTIONS
S-601 SCHEDULES
S-701 TYPICAL DETAILS
S-702 TYPICAL DETAILS

ARCHITECTURAL

A-001 LIFE SAFETY PLAN
A-101 FLOOR PLAN
A-102 ROOF PLAN
A-201 ELEVATIONS
A-301 BUILDING SECTIONS
A-401 WALL SECTIONS
A-402 ENLARGED PLAN
A-501 EXTERIOR DETAILS
A-502 HEAD, JAMB, & SILL DETAILS
A-503 STOOP DETAILS
A-504 TOILET, LAVATORY, & ABLUTION DETAILS
A-505 SHOWER DETAILS
A-506 ISOLATION JOINT DETAILS
A-601 WINDOW & DOOR SCHEDULES

MECHANICAL

P-101 FLOOR PLAN-PLUMBING
P-501 PLUMBING DETAILS
P-502 PLUMBING DETAILS
P-503 PLUMBING DETAILS
P-901 PLUMBING ISOMETRICS (DRAINAGE & WATER)

M-101 HVAC FLOOR PLAN, SCHEDULES, & DETAILS

ELECTRICAL

E-001 ELECTRICAL SYMBOLS & ABBREVIATIONS
E-101 ELECTRICAL LIGHTING PLAN
E-102 ELECTRICAL POWER & SYSTEMS PLAN
E-103 ELECTRICAL LIGHTNING PROTECTION
E-501 ELECTRICAL DETAILS
E-502 ELECTRICAL DETAILS
E-601 ELECTRICAL LIGHT FIXTURE SCHEDULE
E-602 ELECTRICAL PANEL SCHEDULES

US ARMY CORPS OF ENGINEERS
AFGHANISTAN ENGINEER DISTRICT

Mark	Description	Date	Appr.	Mark	Description	Date	Appr.

Designed by: KMP/MMY
Dwn by: RCG
Ckd by: CWW
Reviewed by: LHM
Submitted by: BAKER
Date: 2/23/10
Rev: 0
Design file no.
Drawing code:
File name: ANABOQSG-001CS
Plot date: 2/23/2010
Plot scale: X:X

U.S. ARMY CORPS OF ENGINEERS
AFGHANISTAN ENGINEER DISTRICT
APO AE 96338

Michael Baker Jr., Inc
A unit of Michael Baker Corporation
Airside Business Park
100 Airside Drive
Moon Township PA 15108
www.mbakercorp.com

AFGHAN NATIONAL ARMY
REGIONAL MILITARY TRAINING CENTER
STANDARD DESIGN

SENIOR BOQ BARRACKS

COVER SHEET

Sheet reference number:
G-001

STRUCTURAL ABBREVIATIONS:

ACI	AMERICAN CONCRETE INSTITUTE
ADD'L	ADDITIONAL
AISC	AMERICAN INSTITUTE OF STEEL CONSTRUCTION
AISI	AMERICAN IRON AND STEEL INSTITUTE
ASTM	AMERICAN SOCIETY FOR TESTING AND MATERIALS
ARCH	ARCHITECTURAL
B	BOTTOM
BLDG	BUILDING
BOTT	BOTTOM
℄	CENTER LINE
CFMRF	COLD FORM METAL ROOF FRAME
CFMF	COLD FORM METAL FRAME
CFS	COLD FORMED STEEL
CIP	CAST–IN–PLACE
CIPL	CAST–IN–PLACE LINTEL
CJ	CONTROL JOINT
CLR	CLEAR
CMU	CONCRETE MASONRY UNIT
COEFF	COEFFICIENT
COL	COLUMN
CONC	CONCRETE
CONT	CONTINUOUS
COORD	COORDINATE
CRSI	CONCRETE REINFORCING STEEL INSTITUTE
CSJ	CONSTRUCTION JOINT
DIA	DIAMETER
DIAG	DIAGONAL
DIM	DIMENSION
DWG	DRAWING
DWL	DOWEL
EA	EACH
EF	EACH FACE
ELEC	ELECTRICAL
ELEV	ELEVATION
EMBED	EMBEDMENT
EQUIV	EQUIVALENT
ETC	ET CETERA
EW	EACH WAY
EXP	EXPANSION
EXT	EXTERIOR
FTG	FOOTING
GA	GAUGE
GB	GRADE BEAM
HORIZ	HORIZONTAL
h	HOUR
HRS	HOURS
IBC	INTERNATIONAL BUILDING CODE
INFO	INFORMATION
INT	INTERIOR
kg	KILOGRAM
km	KILOMETER
kN	KILONEWTON
kPa	KILOPASCAL
L#	ANGLE (# INDICATES SIZE)
LONG	LONGITUDINAL
LLV	LONG LEG VERTICAL
m	METER
MAX	MAXIMUM
MECH	MECHANICAL
MFG	MANUFACTURER
MID	MIDDLE
MIN	MINIMUM
MISC	MISCELLANEOUS
mm	MILLIMETER
MPa	MEGAPASCAL
MTL	METAL
MWFRS	MAIN WIND FORCE RESISTING SYSTEM
N	NEWTON
N	NORTH
N/A	NOT APPLICABLE
#	NUMBER SYMBOL FOR REBAR SIZE
NTS	NOT TO SCALE
OC	ON CENTER
OPNG	OPENING
ℙ or PL	PLATE
PRE–ENG	PRE–ENGINEERED
RB	ROOF BEAM
REINF	REINFORCED
REQ'D	REQUIRED
SIM	SIMILAR
SPECS	SPECIFICATIONS
STD	STANDARD
STRUCT	STRUCTURAL
SW	SHEAR WALL
T	TOP
T/	TOP OF
T/ELEV	TOP ELEVATION
T/SLAB	TOP OF SLAB
T&B	TOP AND BOTTOM
THK	THICK
TYP	TYPICAL
UFC	UNIFIED FACILITIES CRITERIA
UON	UNLESS OTHERWISE NOTED
VERT	VERTICAL
W	WIDTH
W/	WITH

1.0 GENERAL NOTES:

1.1 THIS PROJECT HAS BEEN DESIGNED FOR THE WEIGHTS AND MATERIALS INDICATED ON THE SHEETS AND FOR THE LIVE LOADS INDICATED IN THE DESIGN DATA. IT IS THE CONTRACTOR'S RESPONSIBILITY TO DETERMINE ALLOWABLE CONSTRUCTION LOADS AND TO PROVIDE PROPER DESIGN AND CONSTRUCTION OF FALSEWORK, FORMWORK, STAGING, BRACING, SHEETING AND SHORING, ETC.

1.1 COORDINATE THESE SHEETS WITH THE ARCHITECTURAL, MECHANICAL, ELECTRICAL, PLUMBING, AND CIVIL SHEETS. ALL DIMENSIONS SHOWN ON THE SHEETS ARE MILLIMETERS UNLESS NOTED OTHERWISE.

1.2 THE CONTRACTOR SHALL VERIFY AND COORDINATE ALL FLOOR AND ROOF OPENING SIZES AND LOCATIONS, EQUIPMENT PAD SIZES AND LOCATIONS, ANCHOR BOLT LAYOUTS, ETC WITH EQUIPMENT SELECTED. THE CONTRACTOR SHALL MAKE ANY REQUIRED MODIFICATIONS AT NO ADDITIONAL COST.

1.3 THE CONTRACTOR SHALL REFER TO THE ARCHITECTURAL, MECHANICAL, ELECTRICAL AND PLUMBING SHEETS FOR SLEEVES, CURBS, INSERTS OR OPENINGS, ETC. NOT HEREIN INDICATED.

1.4 WORK NOT INCLUDED ON THE SHEETS BUT IMPLIED TO BE SIMILAR TO THAT SHOWN AT CORRESPONDING PLACES ELSEWHERE ON THE SHEETS SHALL BE REPEATED.

1.5 IN CASE OF CONFLICT BETWEEN THE NOTES, DETAILS AND SPECIFICATIONS THE MOST RIGID REQUIREMENTS SHALL GOVERN.

1.6 SEE ARCHITECTURAL SHEETS FOR LOCATIONS OF MASONRY AND NON–LOAD BEARING PARTITIONS. PROVIDE COMPRESSIBLE FIRESAFING AT TOP OF WALL AS REQUIRED BY ARCHITECTURAL SHEETS.

1.7 COORDINATE FINISHED FLOOR DATUM ELEVATION 0.0m WITH THE CIVIL SHEETS.

2.0 FOUNDATION NOTES

2.1 THE GEOTECHNICAL ANALYSIS FOR THIS PROJECT IS THE RESPONSIBILITY OF THE CONTRACTOR AWARDED THE WORK. AN ASSUMED ALLOWABLE SOIL BEARING VALUE OF 72 kPa HAS BEEN USED IN THE STRUCTURAL ANALYSIS OF THE BUILDING HEREIN AND SHALL BE CONFIRMED AND VERIFIED AS PART OF THE GEOTECHNICAL INVESTIGATION. VALUES WHICH DO NOT MEET THE REQUIREMENTS INDICATED ON THE BASIS OF DESIGN SHEET SHALL BE IMMEDIATELY BROUGHT TO THE ATTENTION OF THE CONTRACTING OFFICER FOR CONSIDERATION AND DETERMINATION ON THE NEXT APPROPRIATE COURSE OF ACTION.

2.2 SEE THE SPECIFICATION FOR ADDITIONAL REQUIREMENTS TO THOSE OUTLINED IN THE GEOTECHNICAL INVESTIGATION FOR EXCAVATION AND PREPARATION OF THE FOUNDATION AND THE SLAB ON GRADE SUBGRADE INCLUDING COMPACTION PROCEDURES.

2.3 EXCAVATIONS FOR FOOTINGS SHALL HAVE THE SIDES AND BOTTOMS TEMPORARILY LINED WITH 0.25mm POLYETHYLENE IF PLACEMENT OF CONCRETE DOES NOT OCCUR WITHIN 24 HRS OF THE EXCAVATION OF THE FOOTING.

2.4 FOUNDATION CONDITIONS NOTED DURING CONSTRUCTION WHICH DIFFER FROM THOSE DESCRIBED IN THE GEOTECHNICAL REPORT SHALL BE REPORTED TO THE GENERAL CONTRACTOR BEFORE FURTHER CONSTRUCTION IS ATTEMPTED. SEE PROJECT SPECIFICATIONS.

2.5 NO FOOTINGS OR SLABS SHALL BE POURED INTO OR AGAINST SUBGRADE CONTAINING FREE WATER, FROST, ICE OR LOOSE MATERIAL. FROST DEPTH ASSUMED TO BE 800mm.

2.6 ALL SLAB–ON–GRADE, TRENCH BOTTOMS AND OTHER ON–GRADE INTERIOR HORIZONTAL SURFACES SHALL BE PLACED OVER A 0.25mm POLYETHYLENE VAPOR RETARDER OVER A 100mm #57 STONE WATER CAPILLARY BARRIER PLACED ON SUBGRADE PROPERLY PREPARED IN ACCORDANCE WITH THE CONTRACT SPECIFICATIONS. (UON)

2.7 PRIOR TO START OF FOUNDATION OR SLAB–ON–GRADE CONSTRUCTION, EXISTING SUBGRADES SHALL BE COMPACTED TO MINIMUM OF 95% MAXIMUM DRY DENSITY OBTAINED THRU ASTM D 1557 MODIFIED PROCTOR TESTING.

2.8 SEE PLUMBING, ELECTRICAL & CIVIL SHEETS FOR REQUIRED UNDERSLAB UTILITIES.

2.9 SEE ARCHITECTURAL SHEETS FOR ALL WATERPROOFING DETAILS AND MATERIALS.

2.10 IF UNDERMINING OF FOOTINGS OCCURS, FILL VOIDS WITH 18 MPa CONCRETE. DO NOT ATTEMPT TO REPLACE AND RE–COMPACT SOIL.

3.0 CONCRETE

3.1 CONCRETE SHALL HAVE THE UNIT WEIGHT OF 2400 kg/m^3 AND A MINIMUM COMPRESSIVE STRENGTH (f'c) OF 28 MPa AT 28 DAYS. ALL CONCRETE SHALL HAVE A WATER–CEMENT RATIO OF 0.45. SEE SPECIFICATIONS FOR ADDITIONAL INFORMATION. ENTRAIN AIR TO PRODUCE TOTAL AIR CONTENT ACCORDING TO THE SPECIFICATIONS FOR CONCRETE EXPOSED TO FREEZING TEMPERATURES (EXTERIOR FOOTINGS, SLAB TURNDOWNS, EXTERIOR SLABS AND SLABS–ON–GRADE, EXTERIOR RETAINING WALLS, AND EXTERIOR GRADE BEAMS.)

3.2 NO CALCIUM CHLORIDE SHALL BE USED IN ANY CONCRETE.

3.3 MIXING, TRANSPORTING AND PLACING OF CONCRETE SHALL CONFORM TO ACI 301M–05.

3.4 ALL CONCRETE WORK SHALL CONFORM TO THE REQUIREMENTS OF THE AMERICAN CONCRETE INSTITUTE (ACI) 318M MANUAL (metric), "BUILDING CODE REQUIREMENTS FOR REINFORCED CONCRETE", AND REQUIREMENTS OUTLINED IN THE CONTRACT SPECIFICATIONS. WHEN THERE IS A CONFLICT BETWEEN ACI AND THE SPECIFICATIONS, THE MORE STRINGENT SHALL GOVERN.

3.5 CHAMFER ALL EXPOSED EXTERNAL CORNERS OF CONCRETE WITH 20mm x45 DEGREE CHAMFER UON.

3.6 CONCRETE REINFORCEMENT BARS SHALL CONFORM TO ASTM A615M–96a, GRADE 420 MPa, REINFORCING BARS SHALL NOT BE TACK WELDED, WELDED, HEATED OR CUT, UNLESS INDICATED ON THE CONTRACT DOCUMENTS. ALL LAP SPLICES SHALL BE CLASS "B" UON.

3.7 HORIZONTAL FOOTING AND HORIZONTAL WALL REINFORCEMENT SHALL BE CONTINUOUS AND SHALL HAVE 90 DEGREE BENDS AND EXTENSIONS, OR CORNER BARS OF EQUIVALENT SIZE LAPPED WITH A CLASS B TENSION SPLICE AT CORNERS AND INTERSECTIONS. TOP BAR CRITERIA SHALL APPLY IF 300mm OR MORE OF FRESH CONCRETE IS PLACED BELOW BAR.

3.8 SLABS–ON–GRADE SHALL HAVE CONSTRUCTION JOINTS OR CRACK CONTROL JOINTS AS SHOWN ON THE DRAWINGS. CONSTRUCTION JOINTS CAN BE USED AT CONTROL JOINT LOCATIONS AT CONTRACTORS OPTION. SEE SLAB PLANS & JOINT DETAILS FOR ADDITIONAL INFORMATION. FOR AREAS NOT SHOWN ON DWGS, THE MAXIMUM SPACING OF CONSTRUCTION/ CRACK CONTROL JOINTS SHALL BE 4800mm

3.9 ALL CONCRETE REINFORCEMENT SHALL BE DETAILED, FABRICATED, LABELED, SUPPORTED, AND SPACED IN FORMS AND SECURED IN PLACE IN ACCORDANCE WITH THE PROCEDURES AND REQUIREMENTS OUTLINED IN THE LATEST EDITION OF THE "BUILDING CODE REQUIREMENTS FOR REINFORCED CONCRETE", ACI 318M, AND THE "MANUAL OF STANDARD PRACTICE FOR DETAILING REINFORCED CONCRETE STRUCTURES", ACI 315M, LATEST EDITION. BASED ON IN COUNTRY REINFORCEMENT AVAILABILITY, IT IS THE CONTRACTOR'S OPTION TO ROUND DESIGNATED ODD NUMBERED REINFORCEMENT SIZES UP (1) ONE BAR SIZE.

3.10 ALL DOWELS SHALL MATCH SIZE AND NUMBER OF MAIN REINFORCING, UNLESS NOTED OTHERWISE ON THE SHEETS.

3.11 ADDITIONAL BARS SHALL BE PROVIDED AROUND ALL FLOOR AND WALL OPENINGS AS SHOWN ON THE SHEETS.

3.12 SEE ARCHITECTURAL SHEETS FOR TYPE AND LOCATION OF ALL FLOOR FINISHES.

3.13 THE CONTRACTOR SHALL COORDINATE ADDITIONAL WALL/SLAB OPENINGS NOT SHOWN ON STRUCTURAL SHEETS. SEE MECHANICAL, ELECTRICAL, PLUMBING AND CIVIL SHEETS.

3.14 UNLESS NOTED OTHERWISE, ALL CURBS SHALL BE REINFORCED WITH AT LEAST (1)–#13 CONTINUOUS AND #13 AT 300mm O.C. DOWELS TO STRUCTURE BELOW.

3.15 THE CONTRACTOR SHALL VERIFY ALL OPENINGS, PAD SIZES, AND ANCHOR BOLTS WITH EQUIPMENT SELECTED.

3.16 FOR ALL WALLS & PIERS, PROVIDE DOWELS INTO FOOTING AT EACH VERT REINF BAR, UON DOWEL SIZE SHALL BE SAME AS VERT REINF.

3.17 PROVIDE CONCRETE POUR STOPS OR FORMED AS REQUIRED FOR INSTALLATION OF ALL CONCRETE WORK.

3.18 PROVIDE ADDITIONAL (2)–#13 x 600mm REINFORCING BARS IN SLAB–ON GRADE AT ALL RE–ENTRANT CORNERS. PLACE BARS AT MID–DEPTH OF SLAB WITH A CLEARANCE OF 50mm FROM CORNER UON.

3.19 COLD–WEATHER PLACEMENT: COMPLY WITH ACI 306.1 AND AS FOLLOWS. PROTECT CONCRETE WORK FROM PHYSICAL DAMAGE OR REDUCED STRENGTH THAT COULD BE CAUSED BY FROST, FREEZING ACTIONS, OR LOW TEMPERATURES. SUBMIT A COLD WEATHER CONCRETING PLAN FOR APPROVAL.

3.20 PROVIDE BONDING COMPOUND PER ASTM C 1059–99: SPECIFICATION FOR LATEX AGENTS FOR BONDING FRESH CONCRETE (GROUT) TO HARDENED CONCRETE.

3.21 THE FORMED SURFACES FOR REINFORCED CONCRETE SHALL ACHIEVE A "CLASS A" FINISH WHEN RECEIVING PAINT OR A "CLASS B" FINISH WHEN RECEIVING PLASTER OR TILE AS PER SPECIFICATION SECTION 03 31 00 CAST–IN–PLACE STRUCTURAL CONCRETE.

3.22 AT INTERSECTING GRADE BEAMS AND SHEAR WALLS, PROVIDE CORNER BARS AT INTERSECTIONS WITH SAME QUANTITY, SIZE AND SPACING AS HORIZONTAL BARS WITH LEG LENGTH = 50db.

3.23 REFER TO S–800 SERIES REINFORCING BAR PLACEMENT DRAWINGS DEFINING LENGTHS, BENDS, AND SPACINGS FOR ALL STRUCTURAL CONCRETE. THE S–800 SERIES DRAWING ARE BASED ON THE S–400, S–500, S–600, AND S–700 SERIES DRAWING SCHEDULES, DETAILS, AND DIAGRAMS.

4.0 CONCRETE MASONRY

4.1 MASONRY CONSTRUCTION SHALL CONFORM TO SPECIFICATION FOR MASONRY STRUCTURES (ACI 530.1) UON.

4.2 STRENGTH OF MASONRY MATERIALS SHALL BE AS FOLLOWS:

a. CONCRETE MASONRY UNITS SHALL BE NORMAL WEIGHT, GRADE N, TYPE 1, CONFORMING TO ASTM C–90 AND HAVE A MINIMUM COMPRESSIVE STRENGTH OF 10.4 MPa ON THE NET AREA.

b. MORTAR SHALL CONFORM TO ASTM C–270 TYPE S.

c. GROUT FOR MASONRY SHALL BE NORMAL WEIGHT AND HAVE A MINIMUM COMPRESSIVE STRENGTH OF 14 MPa AT 28 DAYS. GROUT SHALL CONFORM TO ASTM C476M. GROUT LIFTS SHALL NOT EXCEED 1,400mm.

d. REINFORCED MASONRY SHALL HAVE A STRENGTH F'm = 10 MPa. (F'm IS THE COMPRESSIVE STRENGTH OF THE MASONRY AT 28 DAYS AS DETERMINED BY PRISM TESTS).

4.3 ALL VERTICAL REINFORCEMENT FOR CONCRETE MASONRY SHALL BE ASTM A615M–96a, GRADE 420 MPa. ALL SPLICES SHALL BE LAPPED 48 BAR DIAMETERS MINIMUM.

4.4 BOND BEAMS SHALL BE SPACED AT 1200mm OC VERTICALLY. BOND BEAM REINFORCING SHALL BE CONTINUOUS AND PROVIDED AT WALL INTERSECTIONS AND WALL CORNERS (REFERENCE CONCRETE MASONRY NOTE 4.11). ALL BOND BEAM REINFORCING SHALL BE CONTINUOUS AND HAVE STANDARD ACI HOOKS AT EACH END. PROVIDE STANDARD BAR SPLICES AS SPECIFIED. AS AN ALTERNATE TO CMU BOND BEAMS, IT IS THE CONTRACTOR'S OPTION TO PROVIDE 200mm x 200mm CONTINUOUS CAST–IN–PLACE CONCRETE BOND BEAMS WITH (2)–#16 IN LIEU OF CMU BOND BEAMS INDICATED ON THE DRAWINGS.

4.5 SEE TYPICAL DETAILS FOR MINIMUM REINFORCEMENT REQUIREMENTS FOR CMU WALLS. PROVIDE STANDARD BAR SPLICES AS SPECIFIED. ALL VERTICAL REINFORCEMENT EXTENDS FULL HEIGHT OF WALL.

4.6 CMU CELLS THAT REQUIRE VERTICAL REINFORCING BARS AS INDICATED ON THE CONTRACT DRAWINGS AND/OR SPECS SHALL HAVE REINF BARS PLACED IN CENTERS OF CMU CELLS AND CONTINUOUSLY GROUTED UON.

4.7 ALL CMU CELLS, OPEN CAVITIES, AND AIR SPACES OF ALL EXTERIOR WALLS SHALL BE GROUTED TO STOP FRAGMENTS FROM MORTAR BLAST.

4.8 CONTRACTOR SHALL COORDINATE LOCATION OF ALL OPENINGS SEE ARCH, MECH, ELEC, AND PLUMBING SHEETS FOR SIZE AND LOCATION OF OPENINGS.

4.9 MASONRY WALLS SHALL NOT BE BACK FILLED PRIOR TO THE MORTAR AND GROUT ATTAINING THEIR RESPECTIVE MAXIMUM DESIGN STRENGTHS PER SPECIFICATIONS.

4.10 PROVIDE GALVANIZED MORTAR/GROUT SCREEN W/ 3mm MESH WHERE CELLS BELOW ARE NOT GROUTED.

4.11 AT INTERSECTING BOND BEAMS, PROVIDE CORNER BAR FOR EACH HORIZONTAL BAR IN BOND BEAMS AT INTERSECTING WALLS. USE SAME SIZE AND SPACING AS HORIZONTAL BARS WITH LEG LENGTH = 50db.

4.12 THE ALTERNATE TOP OF CMU WALL BRACING DETAIL(S) SHOWN ON S–701 CAN BE UTILIZED AT THE CONTRACTOR'S OPTION IN PLACE OF THE "SLEEVED DOWEL" WALL CONNECTIONS DEPICTED ON S–400 AND S–500 SERIES DRAWINGS. IN ADDITION, ALTERNATE DETAIL(S) SHOW CAST–IN–PLACE WALL BOND BEAMS THAT CAN BE UTILIZED AT THE CONTRACTOR'S OPTION IN PLACE OF THE STANDARD CMU BOND BEAMS CONSTRUCTED OF CMU BLOCKS.

5.0 COLD–FORMED METAL FRAMING

5.1 ALL COLD–FORMED METAL FRAMING MEMBERS SHALL CONFORM TO ASTM A1003M, STRUCTURAL GRADE ST340 (MPa), WITH A GALVANIZED COATING OF Z275 OR BETTER IN ACCORDANCE WITH ASTM A653M.

5.2 ALL COLD–FORMED METAL FRAMING MEMBERS SHALL HAVE THE FOLLOWING MINIMUM PROPERTIES:

a. MINIMUM METAL THICKNESS:
TRACK = 1.37mm;
STUD/OTHER = 1.09mm

b. MINIMUM FLANGE WIDTH:
TRACK = 38mm;
STUD/OTHER = 35mm

c. MINIMUM MEMBER DEPTH:
ALL SECTIONS = 152.2mm

d. PURLIN (HAT CHANNEL)
DEPTHxWIDTH(FLAT TOP)xTHICK = 25mmx42mmx1.59mm

5.3 ALL CONNECTIONS SHALL BE MADE WITH CORROSION RESISTANT (ASTM A153M), SELF–DRILLING, SELF–TAPPING STEEL DRILL SCREWS IN ACCORDANCE WITH ASTM C1513. SCREWS SHALL HAVE A LOW PROFILE HEAD BENEATH ROOF DECK, AND STANDARD HEAD ALL OTHER LOCATIONS.

5.4 FABRICATE COLD FORMED METAL FRAMING AND ACCESSORIES PLUMB, SQUARE AND TRUE TO LINE, WITH CONNECTIONS SECURELY FASTENED ACCORDING TO AISI STANDARD FOR COLD FORMED STEEL FRAMING.

5.5 CUT FRAMING MEMBERS BY SAWING OR SHEATHING, DO NOT TORCH CUT.

5.6 INSTALL FRAMING MEMBERS IN ONE–PIECE LENGTHS UNLESS SPLICE CONNECTIONS ARE INDICATED FOR TRACK OR TENSION MEMBERS

5.7 INSTALL TEMPORARY BRACING AND SUPPORTS TO SECURE FRAMING DURING CONSTRUCTION. MAINTAIN BRACING AND SUPPORTS IN PLACE UNTIL THE STRUCTURE HAS BEEN COMPLETED WITH ALL CONNECTIONS AND PERMANENT BRACING SECURED.

6.0 STRUCTURAL DESIGN CRITERIA

6.1 ALL DESIGNS SHALL CONFORM TO THE PROVISIONS OF THE IBC 2006 AND UFC AS APPLICABLE.

6.2 DESIGN LOADS

6.2.1 DEAD LOADS (PER IBC 2006 & UFC 3–310–01)

MECH/ELEC/PLUMBING	0.20 kPa
MISCELLANEOUS	0.15 kPa
COLD–FORMED FRAMING	0.20 kPa
INSULATION	0.10 kPa
METAL ROOF PANEL	0.14 kPa
	0.79 kPa
FLOOR PARTITION ALLOWANCE	0.96 kPa

6.2.2 LIVE LOADS (PER IBC 2006 & UFC 3–310–01)

ROOF	1.00 kPa
CORRIDOR (2–STORY BLDG ONLY)	4.80 kPa
ALL OTHERS (2–STORY BLDG ONLY)	2.40 kPa
SLAB ON GRADE	4.80 kPa

6.2.3 SNOW LOADS (PER IBC 2006 & UFC 3–310–01)

GROUND SNOW LOAD (Pg)	1.2 kPa
SNOW IMPORTANCE FACTOR (I)	1.0
SNOW EXPOSURE FACTOR (Ce)	1.0
THERMAL FACTOR (Ct)	1.0

6.2.4 WIND LOADS (PER IBC 2006)

BASIC WIND SPEED	137 km/h
WIND IMPORTANCE FACTOR	1.0
WIND EXPOSURE CATEGORY	D
DIRECTIONALITY COEFFICIENT (Kd)	0.85
TOPOGRAPHIC FACTOR (Kzt)	1.0

6.2.5 SEISMIC LOADS (PER IBC 2006 & UFC 3–310–04)

OCCUPANCY USE CATEGORY	II
SEISMIC IMPORTANCE FACTOR (Ie)	1.0
SEISMIC SITE CLASS	D

S_s = 2.40 (FOR IRREGULAR PORTION OF BUILDING – COLUMN LINES 1–4)

S_s = 1.50 (REDUCED FROM 2.40 PER ASCE 7–05,12.81.3. FOR A BUILDING WITHOUT IRREGULARITIES – COLUMN LINES 5–9.)

S_1 = 1.20
S_{DS} = 1.00 WHEN S_s = 1.5
S_{DS} = 1.60 WHEN S_s = 2.4
S_{D1} = 1.20

SEISMIC DESIGN CATEGORY	E
SEISMIC RESISTING SYSTEM: –SPECIAL REINFORCED CONCRETE SHEAR WALL	
RESPONSE MODIFICATION FACTOR (R)	6
RESPONSE COEFFICIENT (Cs) – REGULAR PORTION	0.167
RESPONSE COEFFICIENT (Cs) – IRREGULAR PORTION	0.267
SEISMIC ANALYTICAL PROCEDURE =	EQUIV LATERAL FORCE

SEISMIC BASE SHEAR:
REGULAR PORTION = 820 kN
IRREGULAR PORTION = 1410 kN

APPROVED:

A/E DESIGNER OF RECORD

SEAL: GEORGIA REGISTERED 1-29-10 No. 27141 PROFESSIONAL ENGINEER CHRISTOPHER W. WHITMORE

US ARMY CORPS OF ENGINEERS
AFGHANISTAN ENGINEER DISTRICT

Mark	Description	Date	Appr.

Mark	Description	Date	Appr.

U.S. ARMY CORPS OF ENGINEERS
AFGHANISTAN ENGINEER DISTRICT
APO AE 96338

Michael Baker Jr., Inc
A unit of Michael Baker Corporation
Airside Business Park
100 Airside Drive
Moon Township PA 15108
www.mbakercorp.com

Designed by: KMP/MMY | Dwn by: RCG | Ckd by: CWW | Reviewed by: LHM | Submitted by: BAKER
Date: 2/23/10 | Rev: 0 | Design file no. | Drawing code: | File name: ANABOQSS-001GN | Plot date: 2/23/2010 | Plot scale: X:X

AFGHAN NATIONAL ARMY
REGIONAL MILITARY TRAINING CENTER
STANDARD DESIGN

SENIOR BOQ BARRACKS

GENERAL NOTES & DESIGN CRITERIA

Sheet reference number:
S–001

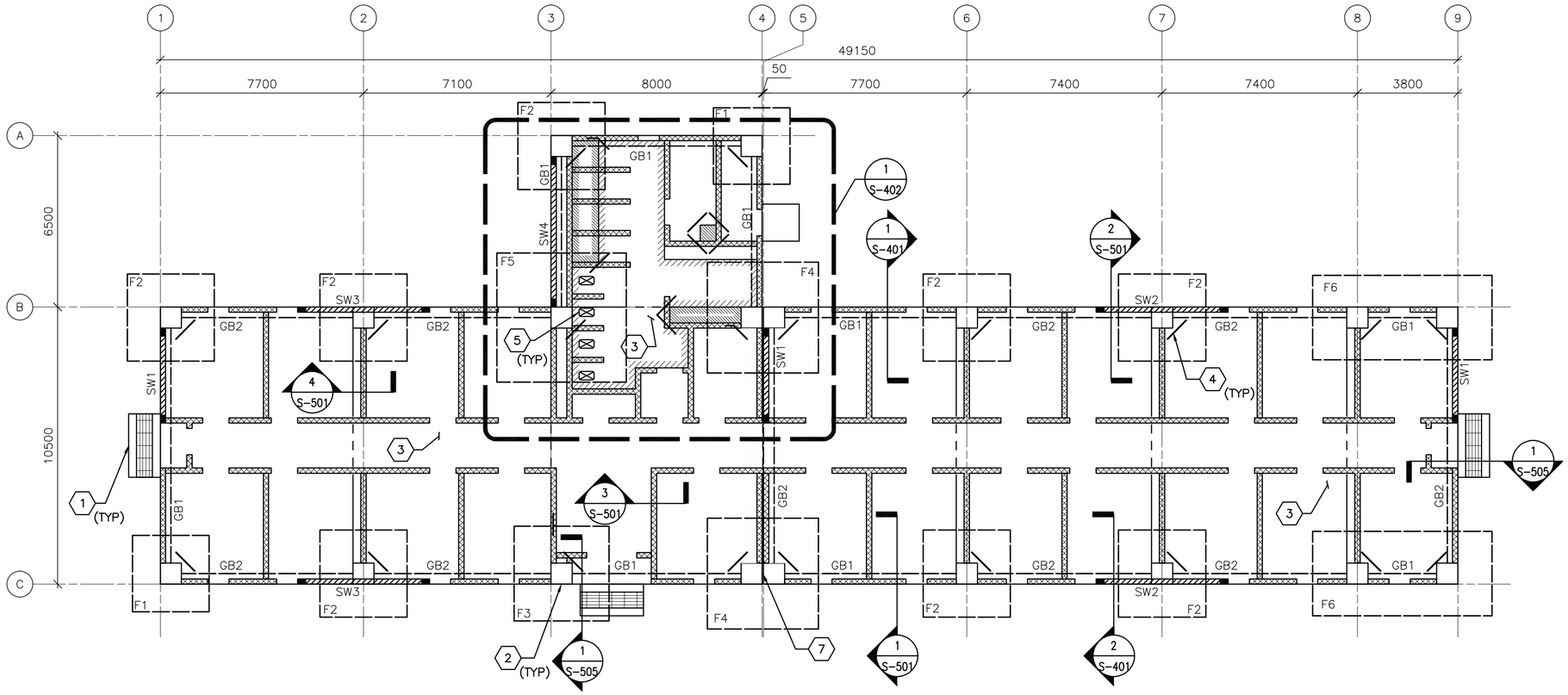

1 / S-101 FOUNDATION/SLAB PLAN

SCALE: 1:100

FOUNDATION/SLAB PLAN NOTES:

1. REFER TO SHEET S-001 FOR STRUCTURAL NOTES AND DESIGN CRITERIA.
2. FINISH FIRST FLOOR ELEVATION SHALL BE (DATUM 0.00) ALL PLUS OR MINUS DIMENSIONS INDICATED ON PLAN OR REFERRED TO IN NOTES RELATE TO FINISH FIRST FLOOR ELEVATION.
3. SLAB-ON-GRADE IS 150 WITH #13 @ 300 OC EW LOCATED 38 FROM T/SLAB OUN. WHERE NOTED, 300 SLAB-ON-GRADE SHALL BE REINFORCED W/ #13 @ 300 OC EW T&B
4. TOP OF EXTERIOR FOOTINGS SHALL BE -950 UNLESS OTHERWISE INDICATED.
5. COLUMN FOOTINGS INDICATED BY F# ON PLAN. REFER TO COLUMN FOOTING SCHEDULE ON SHEET S-601.
6. REFER TO COLUMN SCHEDULE ON SHEET S-601.
7. GRADE BEAM INDICATED BY GB# ON PLAN, REFER TO BEAM SCHEDULE ON SHEET S-601.
8. SHEARWALL INDICATED BY SW# ON PLAN, REFER TO SHEARWALL SCHEDULE ON SHEET S-601.
9. SEE TYP EXTERIOR & INTERIOR CMU WALL REINF DETAILS ON SHEET S-701.
10. SEE MECHANICAL AND ELECTRICAL SHEETS FOR CONCRETE PAD LOCATIONS, SIZES, AND THICKNESS NOT SHOWN. SEE SHEET S-701 FOR DETAILS.
11. THICKENED SLAB UNDER CMU PERIMETER/PARTITION WALLS NOT SHOWN FOR CLARITY.

FOUNDATION/SLAB PLAN KEY NOTES: (X)

1. CONC PAD (ENTRANCE) - SEE ARCH DWGS FOR INFORMATION
2. REINF CONC COLUMN
3. REINF CONC SLAB-ON-GRADE
4. (2)-#13 @ RE-ENTRANT CORNERS - SEE S-701 FOR INFORMATION
5. SLAB OPENING - COORD W/ ARCH AND PLUMBING DWGS
6. NOT USED
7. 50 ISOLATION JOINT BETWEEN STRUCTURES LOCATED ABOVE FIRST FLOOR SLAB-ON-GRADE

FOUNDATION/SLAB PLAN LEGEND:

- REINF CONC SHEAR WALL
- REINF CMU WALL
- CONTROL JOINT
- INDICATES DROP SLAB 65 BELOW FINISH FLOOR
- INDICATES DROP SLAB 200 BELOW FINISH FLOOR
- SLAB OPENING

0 2000 4000
SCALE: 1:100

UNLESS OTHERWISE NOTED, LINEAR DIMENSIONS SHOWN ON DRAWINGS ARE IN MILLIMETERS (mm)

APPROVED:

A/E DESIGNER OF RECORD

SEAL:

GEORGIA REGISTERED 1-29-10 No. 27141 PROFESSIONAL ENGINEER CHRISTOPHER W. WHITMORE

US ARMY CORPS OF ENGINEERS
AFGHANISTAN ENGINEER DISTRICT

Mark	Description	Date	Appr.	Mark	Description	Date	Appr.

Date: 2/23/10 | Rev: 0
Design file no.
Drawing code:
File name: AN4BOQSS-101FNP
Plot date: 2/23/2010
Plot scale: x:X

Designed by: KMP/MMY
Dwn by: RCG | Ckd by: CWW
Reviewed by: LHM
Submitted by:
BAKER

U.S. ARMY CORPS OF ENGINEERS
AFGHANISTAN ENGINEER DISTRICT
APO AE 96338

Michael Baker Jr., Inc.
A unit of Michael Baker Corporation
Airside Business Park
100 Airside Drive
Moon Township, PA 15108
www.mbakercorp.com

AFGHAN NATIONAL ARMY
REGIONAL MILITARY TRAINING CENTER
STANDARD DESIGN

SENIOR BOQ BARRACKS

FOUNDATION/SLAB PLAN

Sheet reference number:
S-101

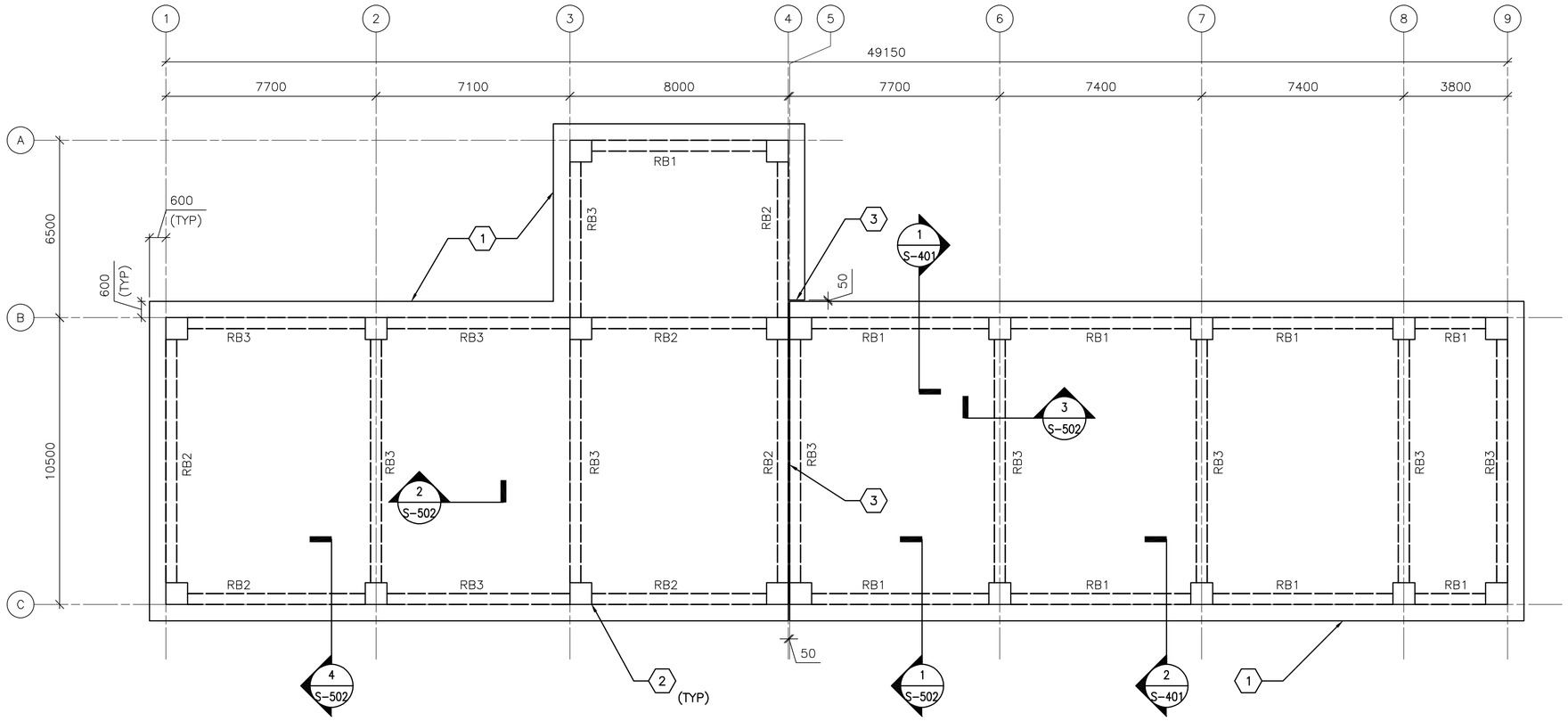

1 / S-102 **ROOF FRAMING PLAN**

SCALE: 1:100

ROOF FRAMING PLAN NOTES:

1. REFER TO SHEETS S-001 FOR STRUCTURAL NOTES AND DESIGN CRITERIA.
2. TOP OF SLAB ELEVATION = 3800 UNLESS NOTED OTHERWISE.
3. ROOF SLAB IS 300 WITH #19 @ 300 OC EW T&B.
4. ROOF BEAM INDICATED BY RB# ON PLAN. REFER TO BEAM SCHEDULE ON SHEET S-601
5. COORDINATE WITH ARCHITECTURAL SHEETS FOR COLD-FORMED STEEL OVERBUILD FRAMING ABOVE ROOF SLAB.
6. COLD-FORMED METAL OVERBUILD ROOF FRAMING NOT SHOWN FOR CLARITY. SEE OVERBUILD ROOF FRAMING DETAILS AND SECTIONS ON SHEET S-702.
7. CMU PARTITION WALLS (BELOW ROOF SLAB) NOT SHOWN FOR CLARITY.
8. OVERHANG AREAS OF ROOF SLAB CONTAIN ROOF VENT PENETRATIONS. REFERENCE ARCHITECTURAL DRAWINGS FOR INFORMATION.
9. DISCONTINUE ALL ROOF FRAMING AT BUILDING EXPANSION JOINT. REFER TO ARCHITECTURAL SHEETS FOR COLD-FORMED ROOF OVERBUILD FRAMING EXPANSION JOINT DETAIL.

ROOF FRAMING PLAN KEY NOTES: (X)

1. CONC ROOF SLAB (BELOW ROOF OVERBUILD)
2. REINF CONC COLUMN (BELOW CONC ROOF SLAB)
3. 50 ISOLATION JOINT BETWEEN STRUCTURES LOCATED ABOVE FIRST FLOOR SLAB-ON-GRADE

0 2000 4000
SCALE: 1:100

UNLESS OTHERWISE NOTED, LINEAR DIMENSIONS SHOWN ON DRAWINGS ARE IN MILLIMETERS (mm)

APPROVED:

A/E DESIGNER OF RECORD

SEAL:

GEORGIA REGISTERED 1-29-10 No. 27141 PROFESSIONAL ENGINEER CHRISTOPHER W. WHITMORE

US ARMY CORPS OF ENGINEERS
AFGHANISTAN ENGINEER DISTRICT

Mark	Description	Date	Appr.	Mark	Description	Date	Appr.

Date: 2/23/10 | Rev: 0
Design file no.
Drawing code:
File name: AN4BOQSS-102FRP
Plot date: 2/23/2010
Plot scale: X:X

Designed by: KMP/MMY
Dwn by: RCG | Ckd by: CWW
Reviewed by: LHM
Submitted by:
BAKER

U.S. ARMY CORPS OF ENGINEERS
AFGHANISTAN ENGINEER DISTRICT
APO AE 96338

Michael Baker Jr., Inc.
A unit of Michael Baker Corporation
Airside Business Park
100 Airside Drive
Moon Township, PA 15108
www.mbakercorp.com

AFGHAN NATIONAL ARMY
REGIONAL MILITARY TRAINING CENTER
STANDARD DESIGN

SENIOR BOQ BARRACKS

ROOF FRAMING PLAN

Sheet reference number:
S-102

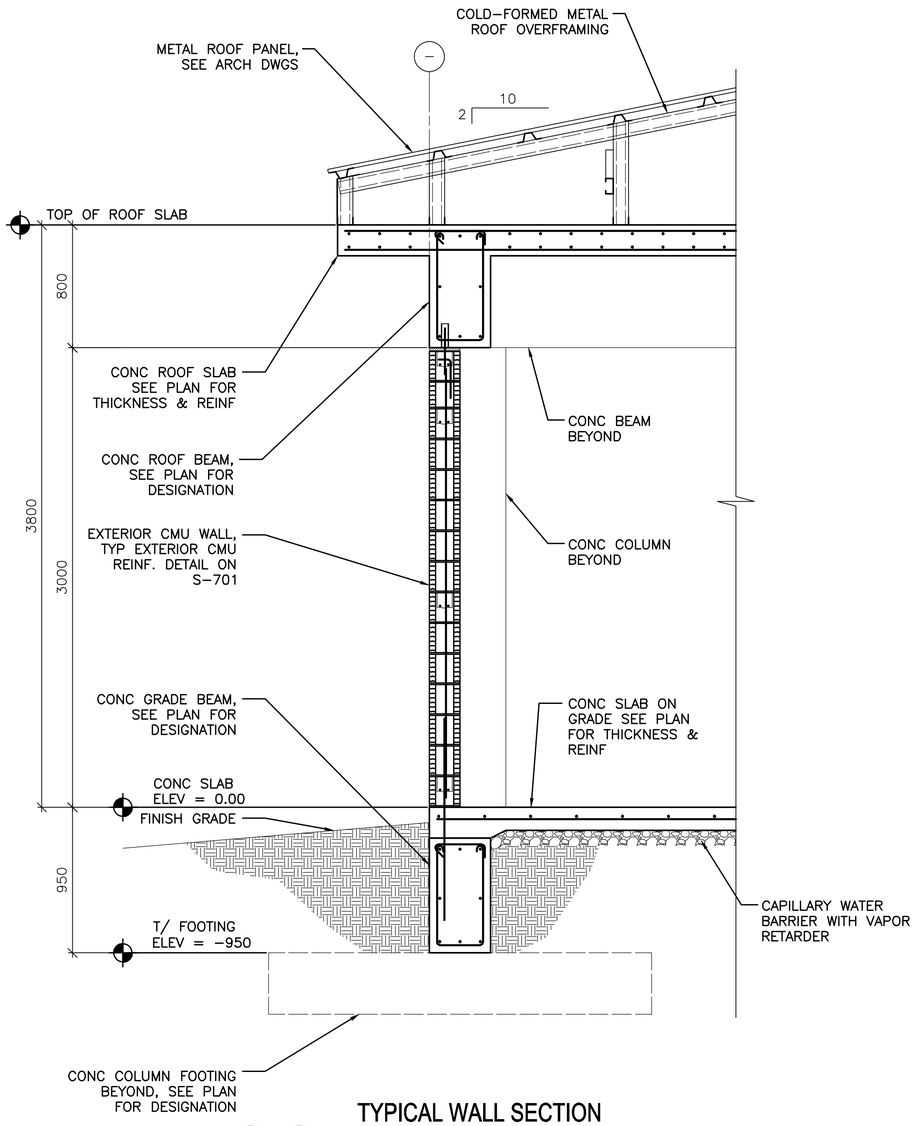

1 S-101 / 1 S-102

TYPICAL WALL SECTION AT EXTERIOR MASONRY WALL

SCALE: 1:20

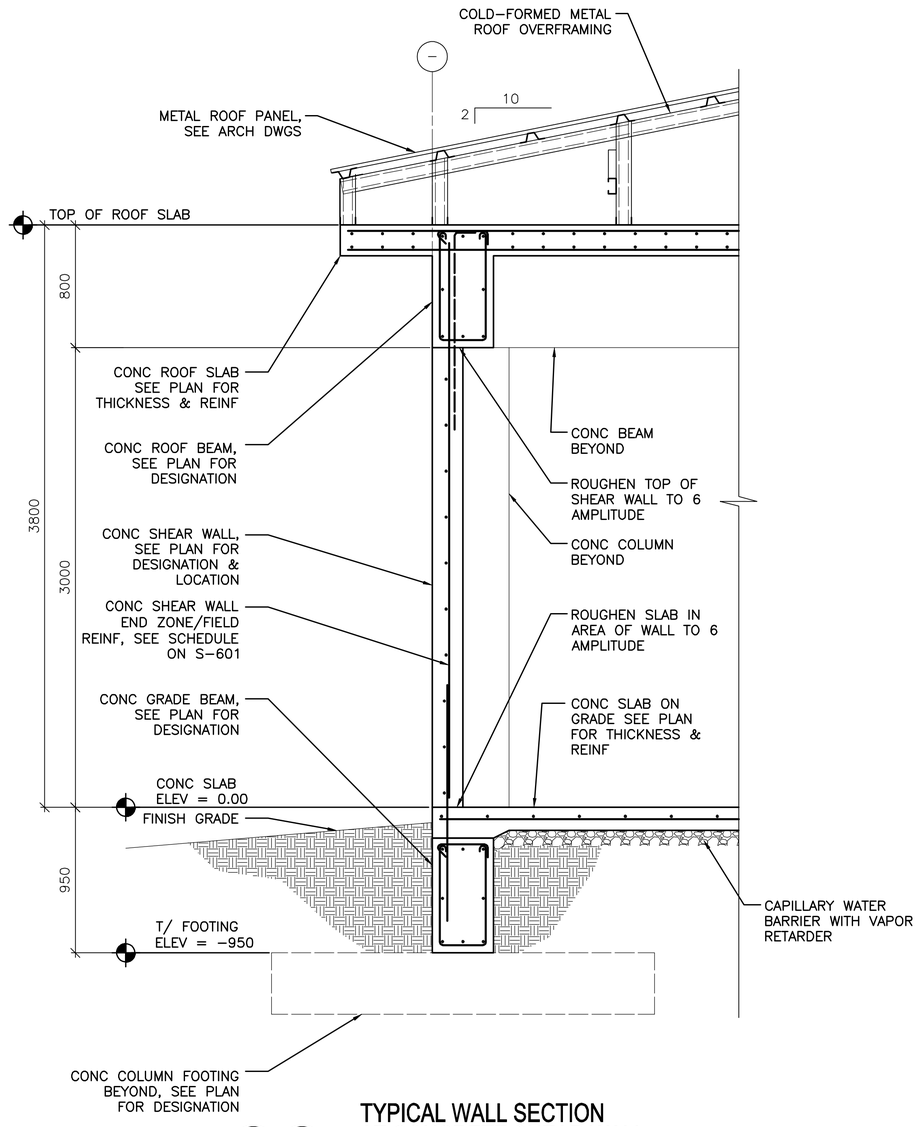

2 S-101 / 2 S-102

TYPICAL WALL SECTION AT CONCRETE SHEAR WALL

SCALE: 1:20

0 400 800
SCALE: 1:20

UNLESS OTHERWISE NOTED, LINEAR DIMENSIONS SHOWN ON DRAWINGS ARE IN MILLIMETERS (mm)

APPROVED:

A/E DESIGNER OF RECORD

SEAL:

GEORGIA REGISTERED 1-29-10 No. 27141 PROFESSIONAL ENGINEER CHRISTOPHER W. WHITMORE

US ARMY CORPS OF ENGINEERS
AFGHANISTAN ENGINEER DISTRICT

Mark	Description	Date	Appr.	Mark	Description	Date	Appr.

Date: 2/23/10 | Rev: 0
Design file no.
Drawing code:
File name: AN4BOQSS-40188
Plot date: 2/23/2010
Plot scale: X:X

Designed by: KMP/MMY
Dwn by: RCG | Ckd by: CWW
Reviewed by: LHM
Submitted by: BAKER

U.S. ARMY CORPS OF ENGINEERS
AFGHANISTAN ENGINEER DISTRICT
APO AE 96338

Michael Baker Jr., Inc
A unit of Michael Baker Corporation
Airside Business Park
100 Airside Drive
Moon Township, PA 15108
www.mbakercorp.com

AFGHAN NATIONAL ARMY
REGIONAL MILITARY TRAINING CENTER
STANDARD DESIGN

SENIOR BOQ BARRACKS

BUILDING SECTIONS

Sheet reference number:
S-401

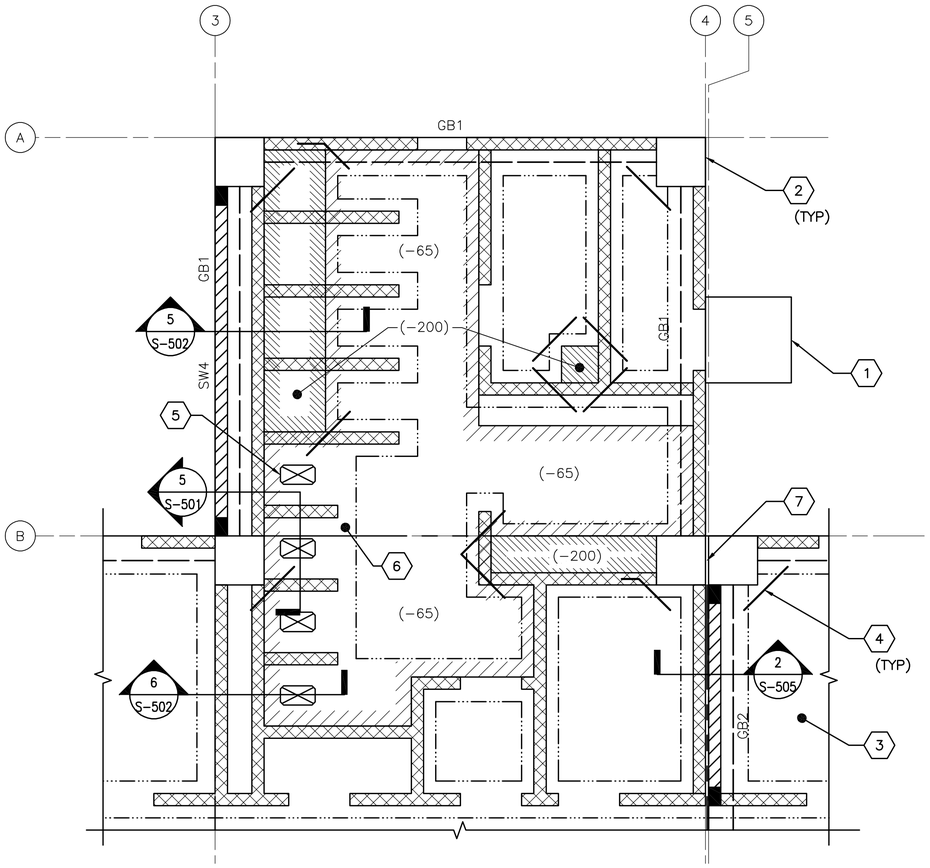

1 / S-101 **ENLARGED LATRINE SLAB PLAN**

SCALE: 1:50

ENLARGED PLAN NOTES:

1. REFER TO SHEET S-001 FOR STRUCTURAL NOTES AND DESIGN CRITERIA.
2. FINISH FIRST FLOOR ELEVATION SHALL BE (DATUM 0.00MM) ALL PLUS OR MINUS DIMENSIONS INDICATED ON PLAN OR REFERRED TO IN NOTES RELATE TO FINISH FIRST FLOOR ELEVATION.
3. SLAB-ON-GRADE IS 150 WITH #13 @ 300 OC EW LOCATED 38 FROM T/SLAB UON. WHERE NOTED, 300 SLAB-ON-GRADE SHALL BE REINFORCED W/ #13 @300 OC EW T&B.
4. REFER TO FOUNDATION/SLAB PLAN ON SHEET S-101 FOR COLUMN DESIGNATION AND COLUMN SCHEDULE ON SHEET S-601.
5. REFER TO FOUNDATION/SLAB PLAN ON SHEET S-101 FOR SHEARWALL DESIGNATION AND SHEARWALL SCHEDULE ON SHEET S-601.
6. REFER TO FOUNDATION/SLAB PLAN ON SHEET S-101 FOR GRADE BEAM DESIGNATION AND GRADE BEAM SCHEDULE ON SHEET S-601.
7. SEE TYP EXTERIOR AND INTERIOR CMU WALL REINFORCING DETAILS ON SHEET S-701.

ENLARGED PLAN KEYNOTES: (X)

1. CONC PAD (ENTRANCE) – SEE ARCH DWGS FOR INFORMATION
2. REINF CONC COLUMN
3. REINF CONC SLAB-ON-GRADE
4. (2)-#13 RE-ENTRANT CORNER BARS – SEE S-701 FOR INFORMATION
5. SLAB OPENING – COORDINATE W/ ARCH AND PLUMBING DWGS.
6. 300 SLAB-ON-GRADE
7. 50 ISOLATION JOINT BETWEEN STRUCTURES LOCATED ABOVE FIRST FLOOR SLAB-ON-GRADE

PLAN LEGEND:

- REINF CONC SHEAR WALL
- REINF CMU WALL
- CONTROL JOINT
- INDICATES DROP SLAB 65 BELOW FINISH FLOOR
- INDICATES DROP SLAB 200 BELOW FINISH FLOOR
- SLAB OPENING
- OUTLINE OF THICKENED SLAB AREAS
- GRADE BEAM

0 1000 2000
SCALE: 1:50

UNLESS OTHERWISE NOTED, LINEAR DIMENSIONS SHOWN ON DRAWINGS ARE IN MILLIMETERS (mm)

APPROVED:

A/E DESIGNER OF RECORD

SEAL:

GEORGIA REGISTERED 1-29-10 No. 27141 PROFESSIONAL ENGINEER CHRISTOPHER W. WHITMORE

US ARMY CORPS OF ENGINEERS
AFGHANISTAN ENGINEER DISTRICT

Mark	Description	Date	Appr.	Mark	Description	Date	Appr.

Designed by: KMP/MMY
Dwn by: RCG
Ckd by: CWW
Reviewed by: LHM
Submitted by: BAKER
Date: 2/23/10
Rev: 0
Design file no.
Drawing code:
File name: AN4BOQSS-402EP
Plot date: 2/23/2010
Plot scale: x:X

U.S. ARMY CORPS OF ENGINEERS
AFGHANISTAN ENGINEER DISTRICT
APO AE 96338

Michael Baker Jr., Inc.
A unit of Michael Baker Corporation
Airside Business Park
100 Airside Drive
Moon Township, PA 15108
www.mbakercorp.com

AFGHAN NATIONAL ARMY
REGIONAL MILITARY TRAINING CENTER
STANDARD DESIGN

SENIOR BOQ BARRACKS

ENLARGED LATRINE SLAB PLAN

Sheet reference number:
S-402

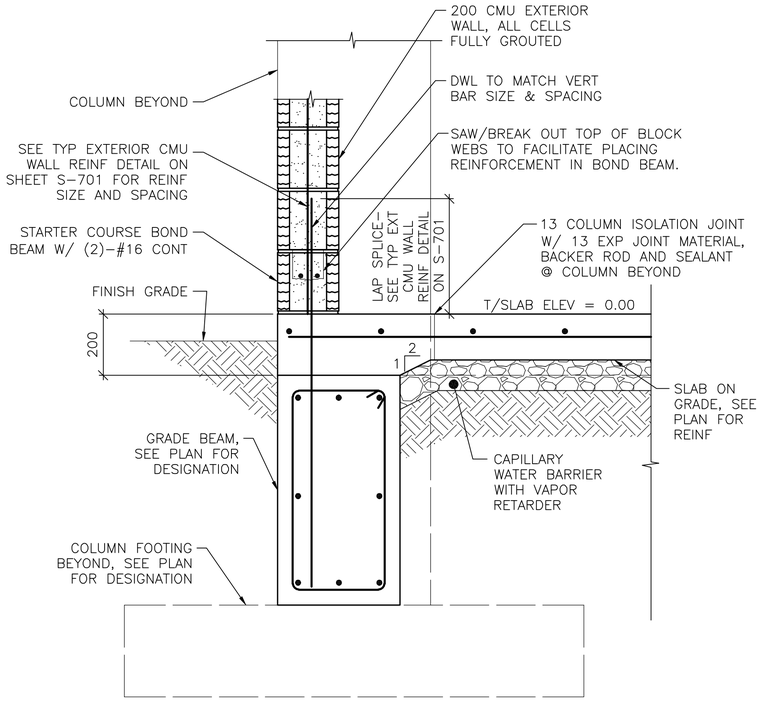

NOTE:
1. SECTION IS SIMILAR FOR INTERIOR CMU PARTITIONS OVER GRADE BEAMS SHOWING THICKENED 200 CONC SLAB AREA.

1 S-101 **SECTION**
SCALE: 1:10

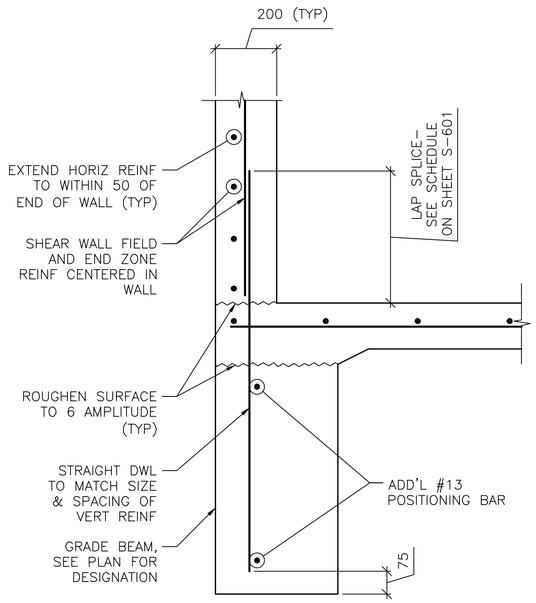

NOTE:
1. SECTION DEPICTS SHEAR WALL TERMINATION ONLY. GRADE BEAM REINFORCING NOT SHOWN FOR CLARITY.
2. SEE SHEET S-601 AND SHEET S-702 FOR SCHEDULED FIELD AND END ZONE REINF.

2 S-101 **SECTION**
SCALE: 1:10

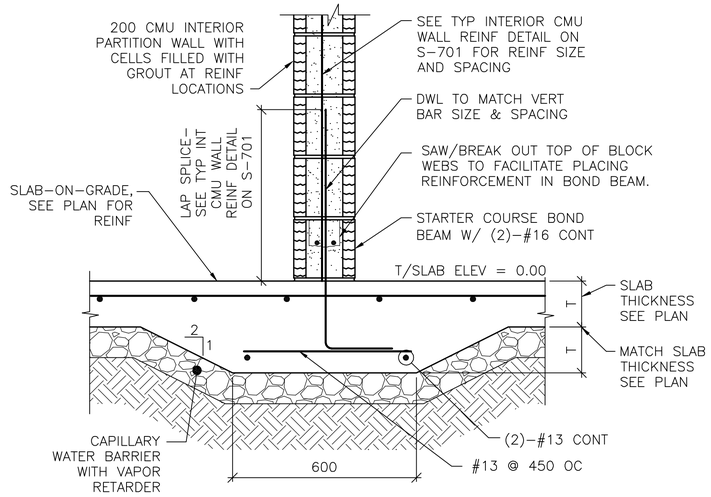

3 S-101 **SECTION**
SCALE: 1:10

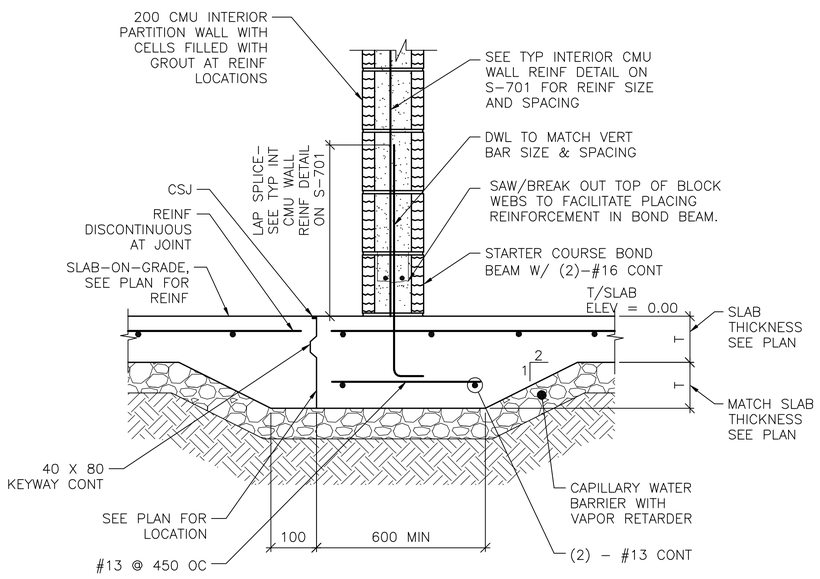

NOTE:
1. DETAIL IS APPLICABLE AT CONTROL JOINTS RUNNING PARALLEL TO CMU WALLS AND WITHIN 300 OF FACE OF WALL.

4 S-101 **SECTION**
SCALE: 1:10

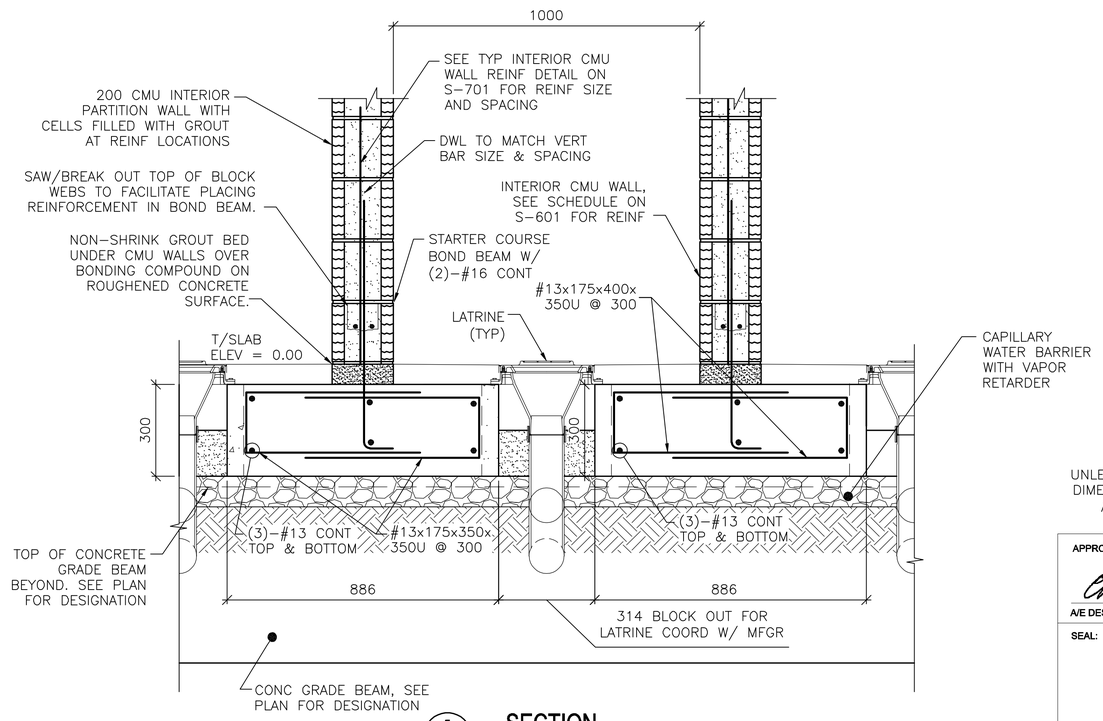

5 S-402 **SECTION**
SCALE: 1:10

0 200 400
SCALE: 1:10

UNLESS OTHERWISE NOTED, LINEAR DIMENSIONS SHOWN ON DRAWINGS ARE IN MILLIMETERS (mm)

APPROVED:

A/E DESIGNER OF RECORD

SEAL:

GEORGIA REGISTERED 1-29-10 No. 27141 PROFESSIONAL ENGINEER CHRISTOPHER W. WHITMORE

US ARMY CORPS OF ENGINEERS
AFGHANISTAN ENGINEER DISTRICT

Mark	Description	Date	Appr.	Mark	Description	Date	Appr.

Date: 2/23/10 Rev: 0
Design file no.
Drawing code:
File name: AN4BOQS5-501SC
Plot date: 2/23/2010
Plot scale: x:X

Designed by: KMF/MMY
Dwn by: RCG
Ckd by: CWW
Reviewed by: LHM
Submitted by:
BAKER

U.S. ARMY CORPS OF ENGINEERS
AFGHANISTAN ENGINEER DISTRICT
APO AE 96338

Michael Baker Jr., Inc.
A unit of Michael Baker Corporation
Airside Business Park
100 Airside Drive
Moon Township, PA 15108
www.mbakercorp.com

AFGHAN NATIONAL ARMY
REGIONAL MILITARY TRAINING CENTER
STANDARD DESIGN

SENIOR BOQ BARRACKS

FOUNDATION SECTIONS

Sheet reference number:
S-501

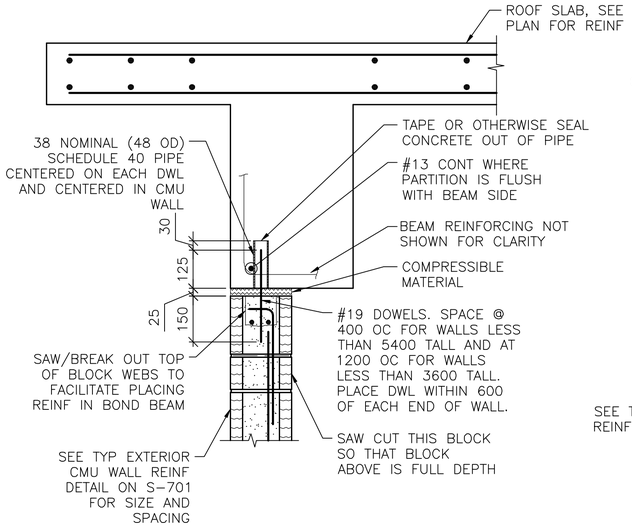

NOTES:
1. EXTEND DOWEL REINF TO 25 CLEAR FROM TOP OF CMU WALL.

1 S-102 **SECTION**
SCALE: 1:10

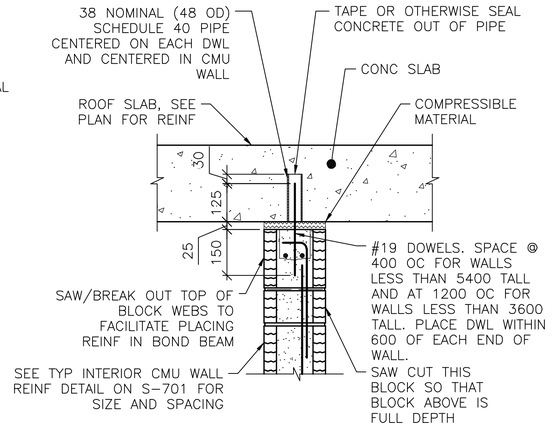

NOTES:
1. EXTEND DOWEL REINF TO 25 CLEAR FROM TOP OF CMU WALL.
2. SLAB REINF NOT SHOWN FOR CLARITY.

2 S-102 **SECTION**
SCALE: 1:10

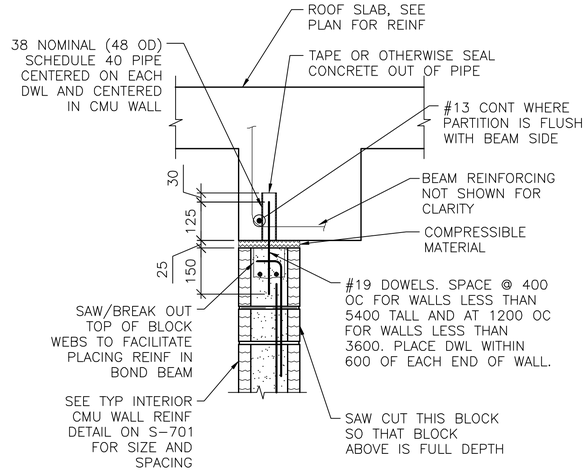

NOTES:
1. EXTEND DOWEL REINF TO 25 CLEAR FROM TOP OF CMU WALL.
2. PARTITION WALL MAY BE CENTERED UNDER THE BEAM OR FLUSH AS SHOWN. SEE PLAN FOR LOCATION.
3. SLAB REINF NOT SHOWN FOR CLARTIY.

3 S-102 **SECTION**
SCALE: 1:10

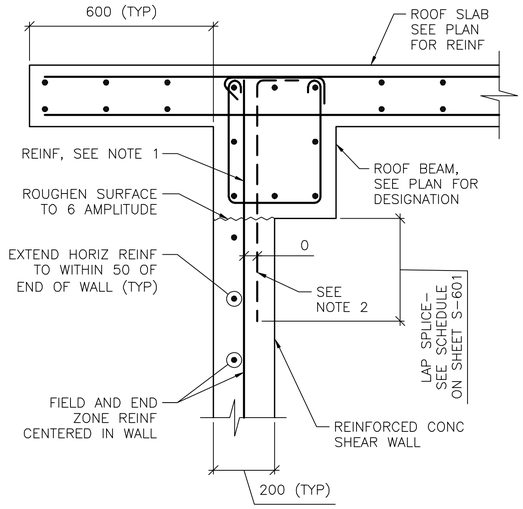

NOTES:
1. TERMINATE "FIELD" VERT REINF & END ZONE REINF @ 50 CLEAR FROM TOP OF ROOF SLAB.
2. WHERE END ZONE REINFORCING CANNOT BE DEVELOPED IN BEAM DEPTH, PROVIDE HOOKED DWLS SAME SIZE & SPACING. PROVIDE TENSION LAP BELOW ROOF BEAM.
3. SEE SHEET S-601 AND SHEET S-702 FOR SCHEDULED FIELD AND END ZONE REINF.

4 S-102 **SECTION**
SCALE: 1:10

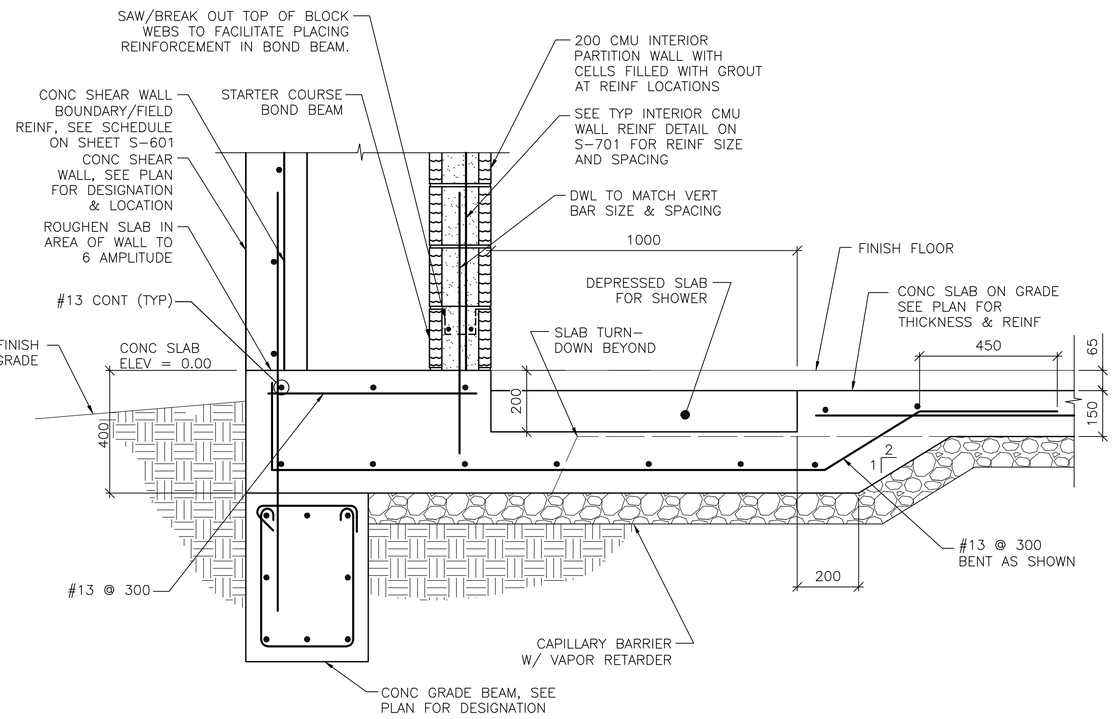

5 S-402 **SECTION**
SCALE: 1:10

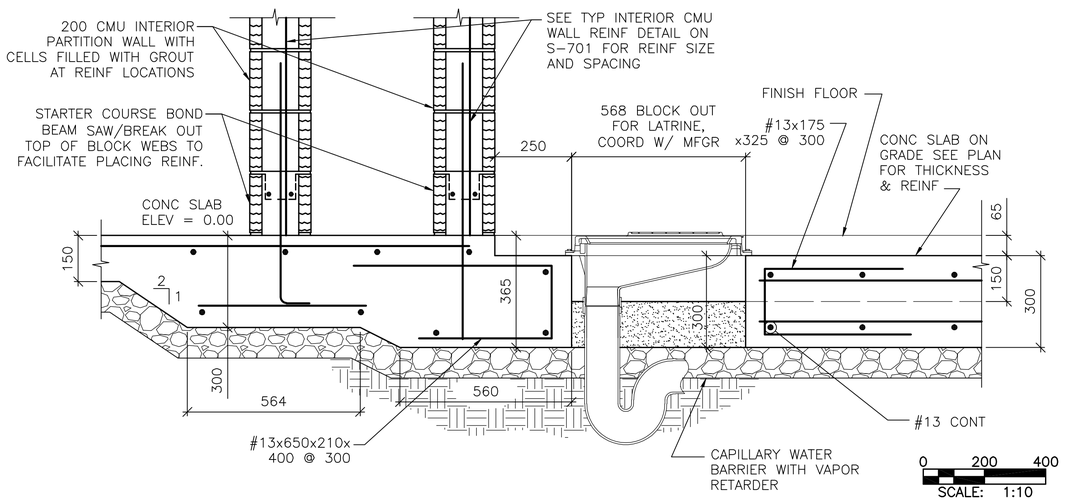

6 S-402 **SECTION**
SCALE: 1:10

0 200 400
SCALE: 1:10

UNLESS OTHERWISE NOTED, LINEAR DIMENSIONS SHOWN ON DRAWINGS ARE IN MILLIMETERS (mm)

APPROVED:

A/E DESIGNER OF RECORD

SEAL:

GEORGIA REGISTERED 1-29-10 No. 27141 PROFESSIONAL ENGINEER CHRISTOPHER W. WHITMORE

US ARMY CORPS OF ENGINEERS
AFGHANISTAN ENGINEER DISTRICT

Mark	Description	Date	Appr.	Mark	Description	Date	Appr.

Date: 2/23/10 | Rev: 0
Design file no.
Drawing code:
File name: AN4BOQSS-502SC
Plot date: 2/23/2010
Plot scale: X:X

Designed by: KMF/MMY
Dwn by: RCG | Ckd by: CWW
Reviewed by: LHM
Submitted by:
BAKER

U.S. ARMY CORPS OF ENGINEERS
AFGHANISTAN ENGINEER DISTRICT
APO AE 96338

Michael Baker Jr., Inc.
A unit of Michael Baker Corporation
Airside Business Park
100 Airside Drive
Moon Township, PA 15108
www.mbakercorp.com

AFGHAN NATIONAL ARMY
REGIONAL MILITARY TRAINING CENTER
STANDARD DESIGN

SENIOR BOQ BARRACKS

FOUNDATION & FRAMING SECTIONS

Sheet reference number:
S-502

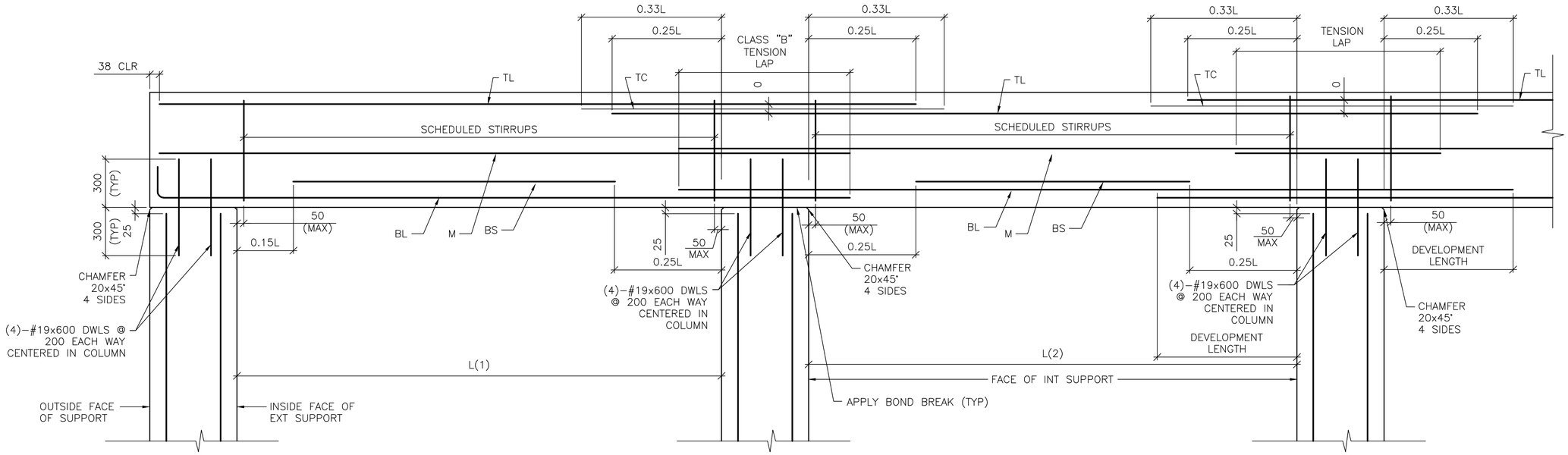

DETAIL NOTE:
1. WORK THIS DETAIL WITH BEAM SCHEDULE ON SHEET S-601.
2. L=GREATEST OF ADJACENT SPANS L(1) OR L(2)
3. ONLY COLUMN CORNER BARS ARE SHOWN

1 S-503 **ROOF BEAM REINFORCING DETAIL**

SCALE: NTS

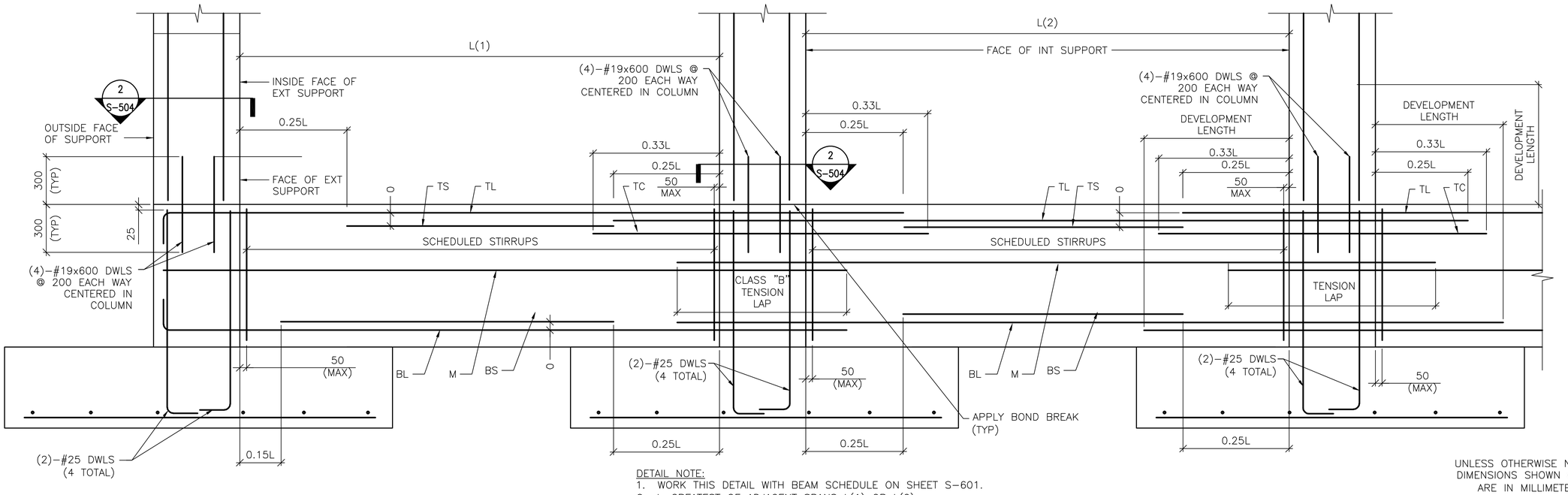

DETAIL NOTE:
1. WORK THIS DETAIL WITH BEAM SCHEDULE ON SHEET S-601.
2. L=GREATEST OF ADJACENT SPANS L(1) OR L(2)
3. ONLY COLUMN CORNER BARS ARE SHOWN.

2 S-503 **GRADE BEAM REINFORCING DETAIL**

SCALE: NTS

UNLESS OTHERWISE NOTED, LINEAR DIMENSIONS SHOWN ON DRAWINGS ARE IN MILLIMETERS (mm)

APPROVED:

A/E DESIGNER OF RECORD

SEAL:

GEORGIA REGISTERED No. 27141 PROFESSIONAL ENGINEER CHRISTOPHER W. WHITMORE

US ARMY CORPS OF ENGINEERS
AFGHANISTAN ENGINEER DISTRICT

Mark	Description	Date	Appr.	Mark	Description	Date	Appr.

Designed by: KMP/MMY
Dwn by: RCG
Ckd by: CWW
Reviewed by: LHM
Submitted by: BAKER
Date: 2/23/10
Rev: 0
Design file no.
Drawing code:
File name: ANABOQSS-503DT
Plot date: 2/23/2010
Plot scale: X:X

U.S. ARMY CORPS OF ENGINEERS
AFGHANISTAN ENGINEER DISTRICT
APO AE 96338

Michael Baker Jr., Inc
A unit of Michael Baker Corporation
Airside Business Park
100 Airside Drive
Moon Township PA 15108
www.mbakercorp.com

AFGHAN NATIONAL ARMY
REGIONAL MILITARY TRAINING CENTER
STANDARD DESIGN

SENIOR BOQ BARRACKS

BEAM & COLUMN DETAILS

Sheet reference number:
S-503

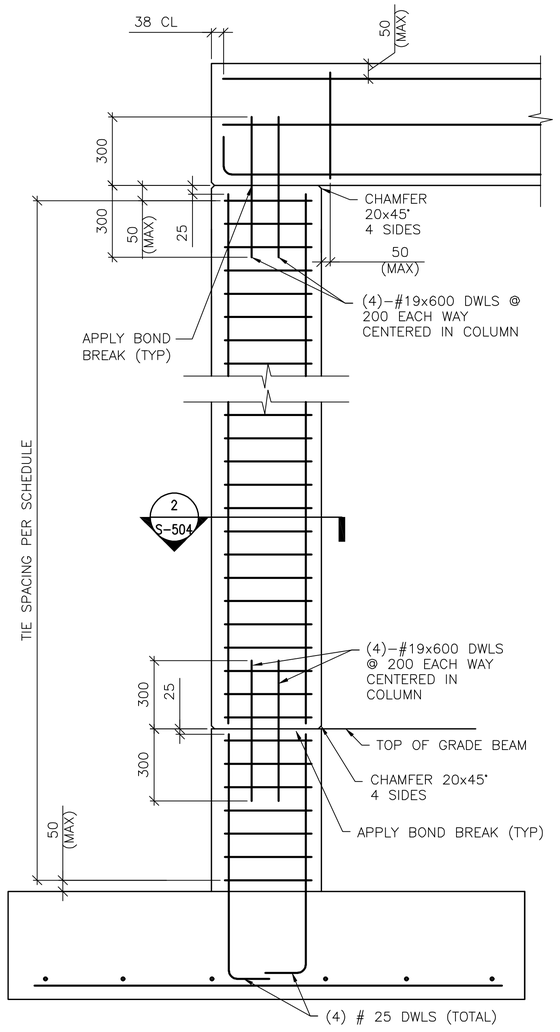

DETAIL NOTE:
1. ONLY COLUMN CORNER BARS ARE SHOWN

1 / S-504 1-STORY COLUMN REINF DETAILS

SCALE: NTS

(WITH GRADE BEAM)

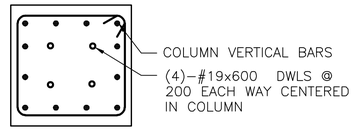

DETAIL NOTE:
1. INTERIOR TIES NOT SHOWN FOR CLARITY. REFER TO DETAIL A THIS SHEET FOR INTERIOR TIE CONFIGURATION.

2 / S-503 2 / S-504 SECTION

SCALE: NTS

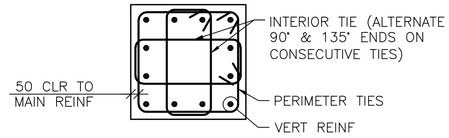

A / S-504 12 BAR COLUMN

SCALE: NTS

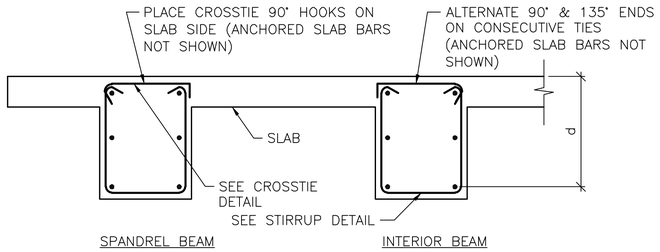

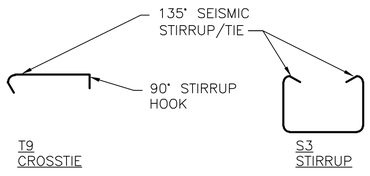

B / S-504 BEAM REINFORCEMENT DETAILS

SCALE: NTS

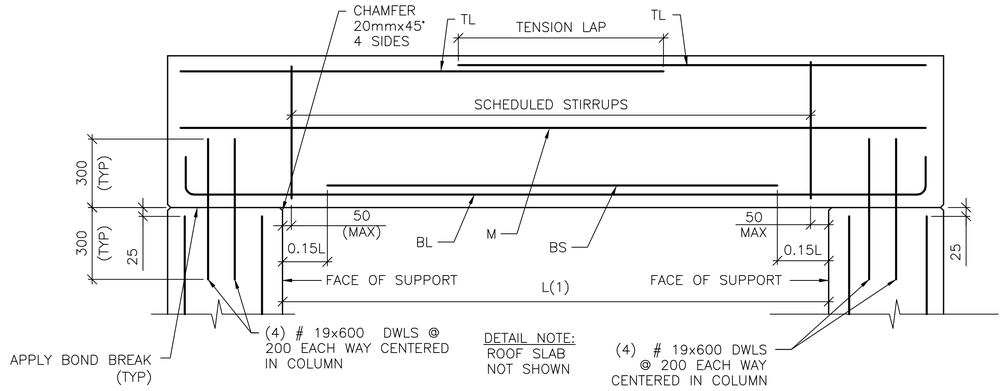

3 / S-504 SINGLE SPAN ROOF BEAM REINFORCING DETAIL

SCALE: NTS

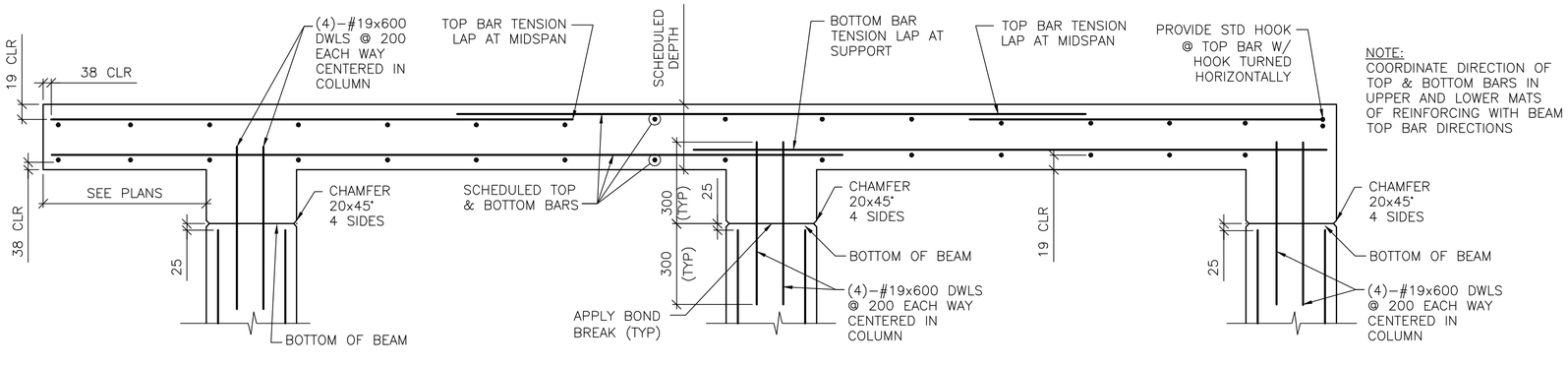

4 / S-504 FRAMED SLAB REINFORCING DETAIL

SCALE: NTS

UNLESS OTHERWISE NOTED, LINEAR DIMENSIONS SHOWN ON DRAWINGS ARE IN MILLIMETERS (mm)

APPROVED:

A/E DESIGNER OF RECORD

SEAL:

GEORGIA REGISTERED No. 27141 PROFESSIONAL ENGINEER CHRISTOPHER W. WHITMORE

US ARMY CORPS OF ENGINEERS
AFGHANISTAN ENGINEER DISTRICT

Mark	Description	Date	Appr.	Mark	Description	Date	Appr.

U.S. ARMY CORPS OF ENGINEERS
AFGHANISTAN ENGINEER DISTRICT
APO AE 96338

Michael Baker Jr., Inc.
A unit of Michael Baker Corporation
Airside Business Park
100 Airside Drive
Moon Township, PA 15108
www.mbakercorp.com

Designed by: KMP/MMY
Dwn by: RCG
Ckd by: CWW
Reviewed by: LHM
Submitted by:
BAKER

Date: 2/23/10
Design file no.
Drawing code:
File name: AN8BOQSS_S04DT
Plot date: 2/23/2010
Plot scale: X:X
Rev: 0

AFGHAN NATIONAL ARMY
REGIONAL MILITARY TRAINING CENTER
STANDARD DESIGN

SENIOR BOQ BARRACKS

BEAM & COLUMN DETAILS

Sheet reference number:
S-504

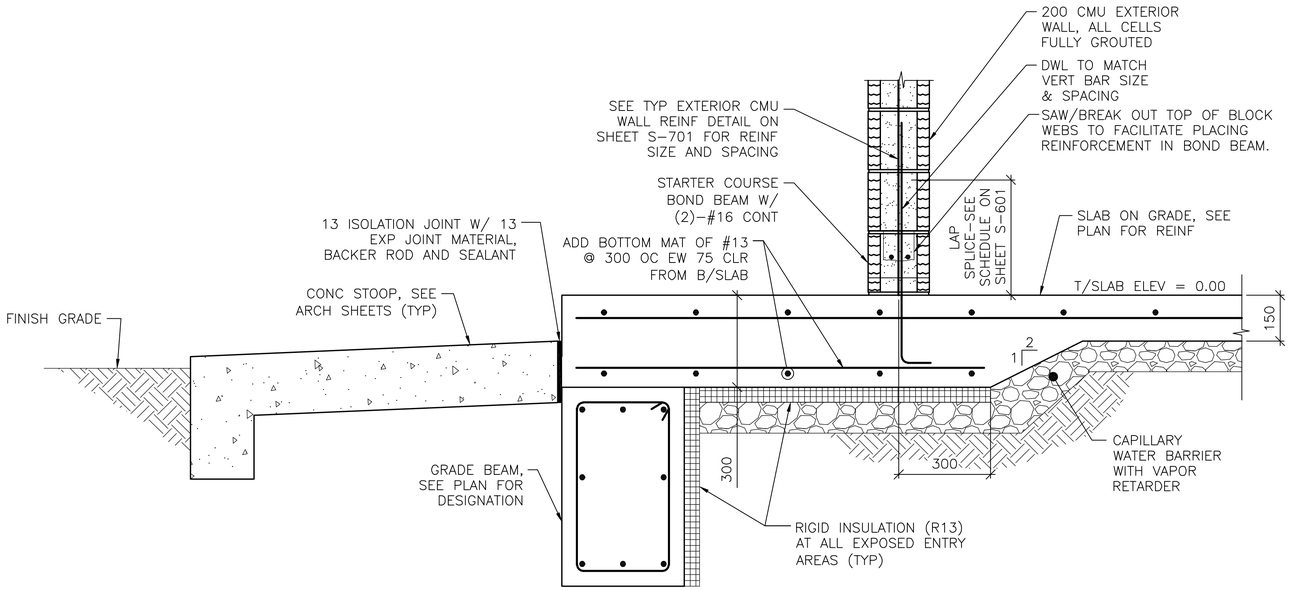

1 S-101 **SECTION**
SCALE: 1:10

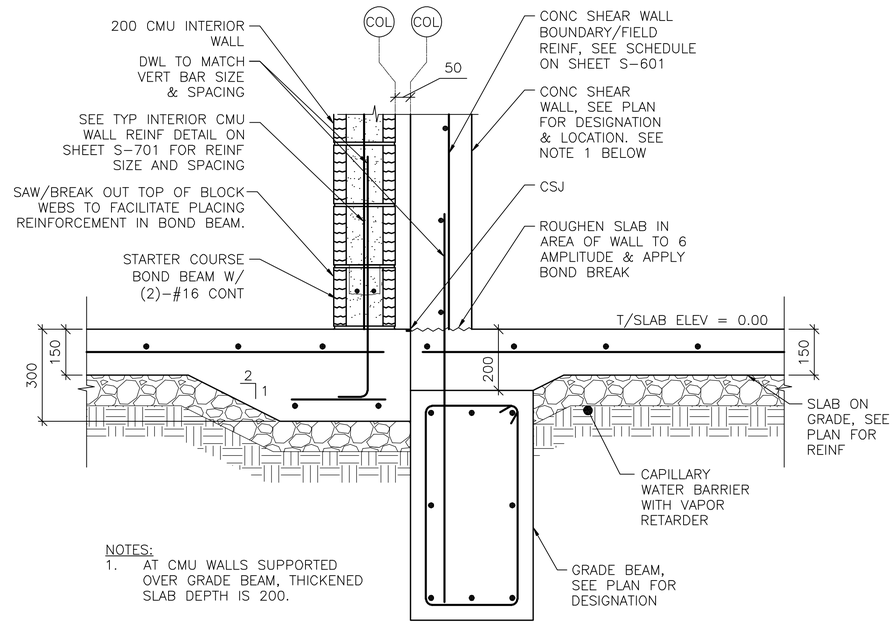

NOTES:
1. AT CMU WALLS SUPPORTED OVER GRADE BEAM, THICKENED SLAB DEPTH IS 200.

2 S-101 **SECTION**
SCALE: 1:10

0 200 400
SCALE: 1:10

UNLESS OTHERWISE NOTED, LINEAR DIMENSIONS SHOWN ON DRAWINGS ARE IN MILLIMETERS (mm)

APPROVED:

A/E DESIGNER OF RECORD

SEAL:

GEORGIA REGISTERED 2-22-10 No. 27141 PROFESSIONAL ENGINEER CHRISTOPHER W. WHITMORE

US ARMY CORPS OF ENGINEERS
AFGHANISTAN ENGINEER DISTRICT

Mark	Description	Date	Appr.	Mark	Description	Date	Appr.

U.S. ARMY CORPS OF ENGINEERS
AFGHANISTAN ENGINEER DISTRICT
APO AE 96338

Michael Baker Jr., Inc.
A unit of Michael Baker Corporation
Airside Business Park
100 Airside Drive
Moon Township, PA 15108
www.mbakercorp.com

Designed by: KMF/MMY
Dwn by: RCG
Ckd by: CWW
Reviewed by: LHM
Submitted by: BAKER
Date: 2/23/10
Rev: 0
Design file no.
Drawing code:
File name: AN4BOQSS-505SC
Plot date: 2/23/2010
Plot scale: x:X

AFGHAN NATIONAL ARMY
REGIONAL MILITARY TRAINING CENTER
STANDARD DESIGN

SENIOR BOQ BARRACKS

MISCELLANEOUS SECTIONS

Sheet reference number:
S-505

CONCRETE REINFORCEMENT TENSION DEVELOPMENT/LAP SPLICE SCHEDULE

f'c = 28 MPa	LAP CLASS	UNCOATED BARS			
		TOP BARS		OTHER BARS	
BAR SIZES		CASE 1	CASE 2	CASE 1	CASE 2
#10 TO #19	A	50 BAR DIA	74 BAR DIA	38 BAR DIA	57 BAR DIA
	B	64 BAR DIA	96 BAR DIA	50 BAR DIA	74 BAR DIA
#22 TO #57	A	62 BAR DIA	93 BAR DIA	48 BAR DIA	71 BAR DIA
	B	80 BAR DIA	121 BAR DIA	62 BAR DIA	93 BAR DIA

NOTES:
1. TABULATED TENSION DEVELOPMENT LENGTH VALUES ARE TAKEN FROM CRSI DESIGN HANDBOOK 2008 10TH ED.
2. TENSION DEVELOPMENT & TENSION LAP SPLICE LENGTHS ARE EXPRESSED AS MULTIPLES OF BAR DIAMETERS.
3. TABULATED VALUES ARE BASED ON MINIMUM YIELD STRENGTH OF REINFORCEMENT, fy, OF 420MPa.
4. CONCRETE IS NORMAL WEIGHT (2400Kg/m³) AND 28 DAY COMPRESSIVE STRENGTH = 28MPa.
5. TABULATED VALUES FOR BEAMS & COLUMNS ARE BASED ON TRANSVERSE REINFORCEMENT AND CONCRETE COVER MEETING MINIMUM CODE REQUIREMENTS.
6. CASES 1 & 2, WHICH DEPEND ON THE TYPE OF STRUCTURAL MEMBER, CONCRETE COVER, AND CENTER-TO-CENTER SPACING OF THE BARS ARE DEFINED IN THE TABLE BELOW.
7. LAP SPLICE LENGTHS (MINIMUM 300mm) ARE MULTIPLES OF TENSION DEVELOPMENT LENGTHS: CLASS A = 1.0(TENSION DEVELOPMENT LENGTH) & CLASS B = 1.3(TENSION DEVELOPMENT LENGTH)
8. TOP BARS ARE HORIZONTAL REINFORCEMENT WITH MORE THAN 300mm OF CONCRETE CAST BELOW THE BARS.
9. IT SHALL BE PERMISSIBLE TO CALCULATE WALL AND SLAB REINFORCEMENT TENSION DEVELOPMENT/SPLICE LENGTHS IN ACCORDANCE WITH ACI 12.2.3 OR TABLE 5.3(b) OF CRSI 2008 IN LIEU OF VALUES TABULATED ABOVE.

BEAMS, COLUMNS	CASE 1	CONCRETE COVER AT LEAST 1 BAR DIA AND CENTER-TO-CENTER SPACING AT LEAST 2 BAR DIA
	CASE 2	CONCRETE COVER LESS THAN 1 BAR DIA OR CENTER-TO-CENTER SPACING LESS THAN 2 BAR DIA
ALL OTHERS	CASE 1	CONCRETE COVER AT LEAST 1 BAR DIA AND CENTER-TO-CENTER SPACING AT LEAST 3 BAR DIA
	CASE 2	CONCRETE COVER LESS THAN 1 BAR DIA OR CENTER-TO-CENTER SPACING LESS THAN 3 BAR DIA

CONCRETE COVER SCHEDULE

MINIMUM CONCRETE COVER PROTECTION FOR REINFORCEMENT BARS SHALL BE AS LISTED BELOW: (SEE ACI 318M-05, SECTION 7.7 FOR CONDITIONS NOT NOTED). DIMENSIONS FOR BAR PLACEMENT GIVEN IN SECTIONS AND DETAILS SHALL SUPERSEDE MINIMUM COVER REQUIREMENTS GIVEN HERE. DIMENSIONS ARE IN mm. PROVIDE STANDARD BAR CHAIRS AND SUPPORT BARS @1200mm MAXIMUM AS REQUIRED TO MAINTAIN CONCRETE PROTECTION SPECIFIED.

FOOTINGS (EARTH FORMED):		70
COLUMNS / PIERS (TO TIES)		40
GRADE BEAMS OR SLAB TURNED DOWN EDGES:		
TOP		40
BOTTOM (EARTH FORMED)		70
SIDES (EARTH FORMED)		70
SIDES (BOARD FORMED)	#16 BAR & SMALLER	40
	#19 THRU #36 BAR	50
ELEVATED BEAMS & SLABS:		
BEAM TIES & STIRRUPS (NOT EXPOSED TO WEATHER)		40
BEAM TIES & STIRRUPS (EXPOSED TO WEATHER)		50
FLOOR SLABS (NOT EXPOSED TO WEATHER)		20
FLOOR SLABS (EXPOSED TO WEATHER)		
#19 & LARGER		50
#13 & SMALLER		40
ROOF SLAB BARS		25
SLABS ON GRADE		
NOT EXPOSED TO WEATHER (FROM TOP)		20
EXPOSED TO WEATHER (FROM TOP)		40
UTILITY TUNNEL WALLS, RETAINING WALLS AND SHEAR WALLS. (NO SURFACES SHALL BE EARTH FORMED)		
EARTH SIDE AND FRONT SIDE (EXPOSED TO WEATHER)		
#16 BAR AND SMALLER		40
#19 THRU #36 BAR		50

COLUMN FOOTING SCHEDULE

MARK	FOOTING SIZE (mm)			FOOTING REINFORCING	REMARKS
	LENGTH	WIDTH	THICKNESS		
F1	2900	2900	300	(9)-#19 EW BOTT	-----
F2	3300	3300	300	(11)-#22 EW BOTT	-----
F3	3600	3600	300	(12)-#22 EW BOTT	-----
F4	4200	4200	350	(14)-#25 EW BOTT	-----
F5	4900	4900	450	(17)-#25 EW BOTT	-----
F6	6800	3200	300	(23)-#22 SHORT BOTT (11)-#19 LONG BOTT	-----

CONCRETE SHEAR WALL SCHEDULE

MARK	TYPE	WALL LENGTH (L) (mm)	WALL REINFORCEMENT		REMARKS
			END ZONE	FIELD	
SW1	B	3600	(8)-#16 @ 150mm OC	#13 @ 300mm OC	-----
SW2	D	5000	(4)-#16 @ 150mm OC	#13 @ 300mm OC	-----
SW3	D	5000	(12)-#16 @ 150mm OC	#13 @ 300mm OC	-----
SW4	C	5700	(13)-#16 @ 150mm OC	#13 @ 300mm OC	-----

NOTES:
1. WORK THIS SCHEDULE WITH SHEAR WALL DETAILS ON SHEETS S-702
2. SEE PLAN FOR LOCATION OF SHEAR WALL(S).
3. VERTICAL "FIELD" BARS MAY BE OMITTED IN LOCATION OF "END ZONE" REINFORCEMENT.
4. WALL FIELD REINF LISTED APPLIES TO VERT & HORIZ BARS.
5. WALL FIELD REINFORCEMENT CENTERED IN WALL.

STANDARD HOOKS IN TENSION PER (ACI 318M-05)

HOOK DEVELOPMENT LENGTH (mm)	
BAR SIZE	f'c 28 MPa
#10	180
#13	250
#16	300
#19	380
#22	430
#25	480
#29	560
#32	610
#36	690

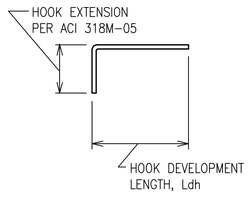

NOTES:
1. CONCRETE IS NORMAL WEIGHT CONCRETE.
2. BAR YIELD STRENGTH, fy = 420 MPa
3. SIDE COVER REQUIREMENTS OF ACI SECT. 12.5.3 ARE ASSUMED TO NOT BE MET.
4. TIE OR STIRRUP REQUIREMENTS OF ACI SECT. 12.5.3 ARE ASSUMED TO NOT BE MET.
5. REDUCTION FOR EXCESS REINFORCEMENT IS NOT TAKEN.
6. HOOK DEVELOPMENT LENGTH IS VALID FOR 180° HOOKS ALSO.

CMU OR CAST IN PLACE CONC LINTEL SCHEDULE (TYP)

OPENING TYPE OR SIZE, BEAM LOCATION OR TYPE	MAX SPAN (mm)	LINTEL DEPTH (mm)	REINFORCING BOTTOM
WALL OPENING	4000	600	(2)-#16 T&B
WALL OPENING	1900	400	(2)-#16 T&B
WALL OPENING	1000	400	(2)-#13 B

1. STRUCTURAL SHEETS DO NOT INDICATE ALL OPENINGS IN MASONRY WALLS. VERIFY NUMBER, SIZE AND LOCATION OF ALL OPENINGS IN MASONRY WALLS FROM ARCHITECTURAL SHEETS AND APPROVED PLUMBING, MECHANICAL, AND ELECTRICAL SHOP DRAWINGS.
2. PROVIDE 200mm BEARING EA END.
3. FOR HEAD DETAILS REFER TO ARCHITECTURAL SHEETS.
4. REINFORCING SHALL BE ASTM A615M, GRADE 420. GROUT FOR CMU LINTELS SHALL HAVE A MINIMUM COMPRESSIVE STRENGTH OF 14MPa AT 28 DAYS.
5. CONTRACTOR SHALL SUBMIT FOR APPROVAL SHOP DRAWINGS AND SCHEDULES SHOWING SIZE, SPAN, REINFORCEMENT, DETAILS, LOCATIONS, ETC.

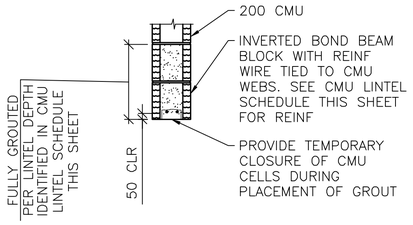

A
S-601

LINTEL DETAIL
SCALE: NTS

BEAM SCHEDULE

MARK	BEAM SIZE (mm)		BEAM REINFORCING						STIRRUPS			REMARKS
	DEPTH	WIDTH	BL	BS	T	TS	TC	M	SIZE	TYPE	SPACING	
GRADE BEAMS												
GB1	750/550 /735	400	(2)-#16	---	(2)-#16	---	---	---	#13	S3 + T9	d/2	LOWER TOP TO 735 BETWEEN A4-B4; TO 550 BETWEEN A3-A4 & A3-B3
GB2	750	400	(2)-#25	(1)-#25	(2)-#25	(1)-#25	---	---	#13	S3 + T9	d/2	-----
ROOF BEAMS												
RB1	800	400	(2)-#22	(1)-#22	(2)-#19	---	---	---	#13	S3 + T9	d/2	-----
RB2	800	400	(2)-#25	(1)-#25	(2)-#22	---	---	---	#13	S3 + T9	d/2	
RB3	800	400	(3)-#29	(2)-#29	(2)-#25	---	---	---	#13	S3 + T9	d/2	

NOTES:
1. WORK THIS SCHEDULE WITH BEAM REINFORCING DETAILS ON SHEETS S-503 AND S-504.
2. HOOKS SHOWN ON SECTIONS AND DETAILS SHALL BE 90° STD UON.
3. USE ONLY (1) TS AT BEAM COLUMN INTERSECTION WHERE REQ'D.

COLUMN SCHEDULE

DESCRIPTION \ COLUMN MARK	TYP UON	---	---	---
TYPE	12-BAR	---	---	---
DIMENSION	800mm SQ.	---	---	---
VERTICAL REINFORCEMENT	(12)-#29	---	---	---
TIES	#13 @ d/2	---	---	---
TOP OF ROOF ELEVATION	3800mm	---	---	---
TOP OF GRADE BEAM ELEVATION	-200mm	---	---	---
TOP OF FOOTING ELEVATION	-950mm	---	---	---

NOTES:
1. WORK THIS SCHEDULE WITH COLUMN DETAILS ON SHEET S-504.
2. SEE FOOTING SCHEDULE ON THIS SHEET FOR FOOTING INFORMATION.
3. COLUMN TIES: INTERIOR TIES TO MATCH SIZE & SPACING OF PERIMETER TIES.
4. HOOKS SHOWN ON SECTIONS & DETAILS SHALL BE 90° STD UON.

UNLESS OTHERWISE NOTED, LINEAR DIMENSIONS SHOWN ARE IN MILLIMETERS (mm)

APPROVED:

A/E DESIGNER OF RECORD

SEAL:

US ARMY CORPS OF ENGINEERS
AFGHANISTAN ENGINEER DISTRICT

Mark	Description	Date	Appr.	Mark	Description	Date	Appr.

Rev: 0
Date: 2/23/10
Design file no.
Drawing code:
Designed by: KMP/MMY
Dwn by: RCG
Ckd by: CWW
Reviewed by: LHM
Submitted by:
BAKER
File name: AN8K0GS5.6015CH
Plot date: 2/23/2010
Plot scale: X.X

U.S. ARMY CORPS OF ENGINEERS
AFGHANISTAN ENGINEER DISTRICT
APO AE 96338

Michael Baker Jr., Inc
A unit of Michael Baker Corporation
Airside Business Park
100 Airside Drive
Moon Township, PA 15108
www.mbakercorp.com

AFGHAN NATIONAL ARMY
REGIONAL MILITARY TRAINING CENTER
STANDARD DESIGN

SENIOR BOQ BARRACKS

SCHEDULES

Sheet reference number:
S-601

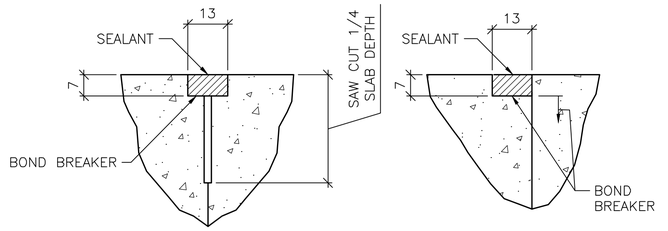

TYPICAL CONCRETE SLAB JOINT FINISH DETAILS

1 / S-701 SCALE: NTS

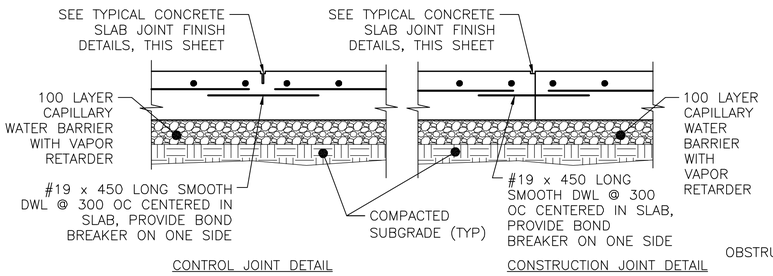

TYPICAL SLAB ON GRADE JOINT DETAIL

2 / S-701 SCALE: NTS

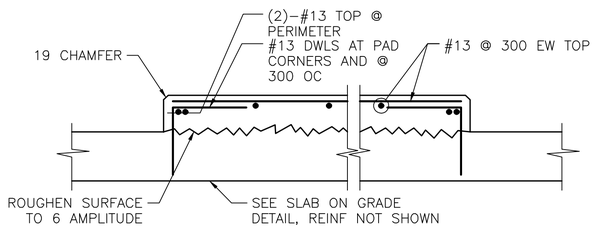

INTERIOR EQUIPMENT PAD DETAIL

3 / S-701 SCALE: NTS

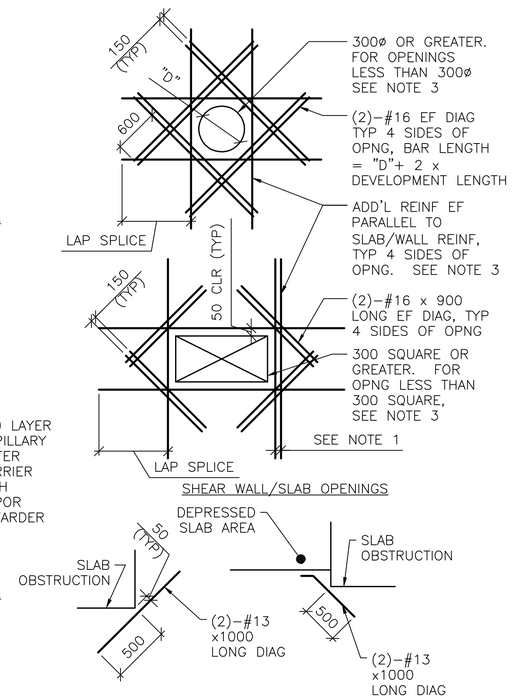

DETAIL NOTES:

1. WHERE MORE THAN ONE ADDITIONAL BAR IS REQUIRED PARALLEL TO THE EXISTING SLAB/WALL REINFORCING THE ADDITIONAL REINFORCING BARS SHALL BE SPACED AT 100 ON CENTER.
2. ADDITIONAL REINFORCING PARALLEL TO THE SLAB/WALL REINFORCING SHALL BE #16 BARS THAT PROVIDE A STEEL AREA ON EACH SIDE OF THE OPENING EQUAL TO 1/2 THE AREA OF THE REINFORCING CUT BY THE OPENING.
3. FOR OPENINGS WITH SIDES OR DIAMETERS LESS THAN 300 SPREAD THE SLAB/WALL REINFORCING TO CLEAR THE OPENING.

ADD'L CONCRETE REINFORCEMENT DETAILS

4 / S-701 SCALE: NTS

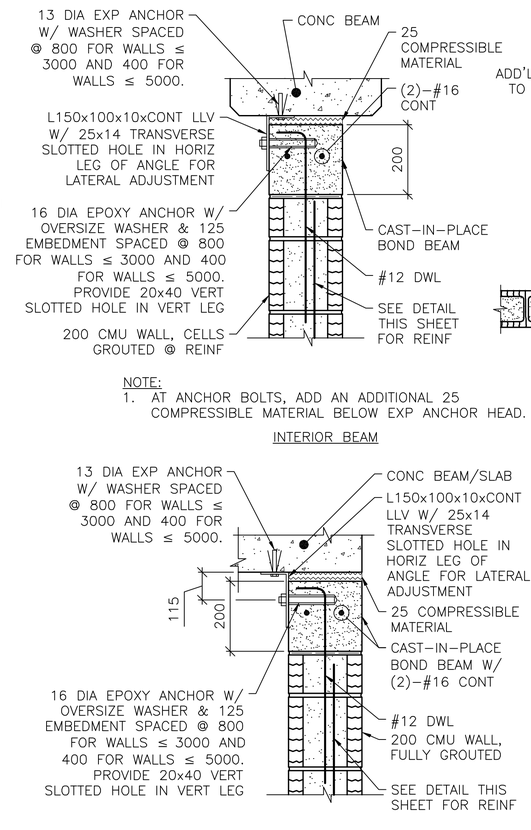

NOTE:

1. AT ANCHOR BOLTS, ADD AN ADDITIONAL 25 COMPRESSIBLE MATERIAL BELOW EXP ANCHOR HEAD.

NOTES:

1. THIS DETAIL IS AN ALTERNATE TOP OF WALL ANCHORAGE DETAIL TO BE USED AT THE CONTRACTOR'S OPTION IN LIEU OF DETAILS SHOWN ON S-400 & S-500 DRAWINGS.
2. CAST-IN-PLACE BOND BEAM SHOWN AT TOP OF WALL IS ALSO APPLICABLE FOR INTERMEDIATE AND STARTER COURSE BOND BEAMS WITHIN WALL.

ALTERNATE TOP OF CMU WALL BRACING DETAILS

5 / S-701 SCALE: NTS

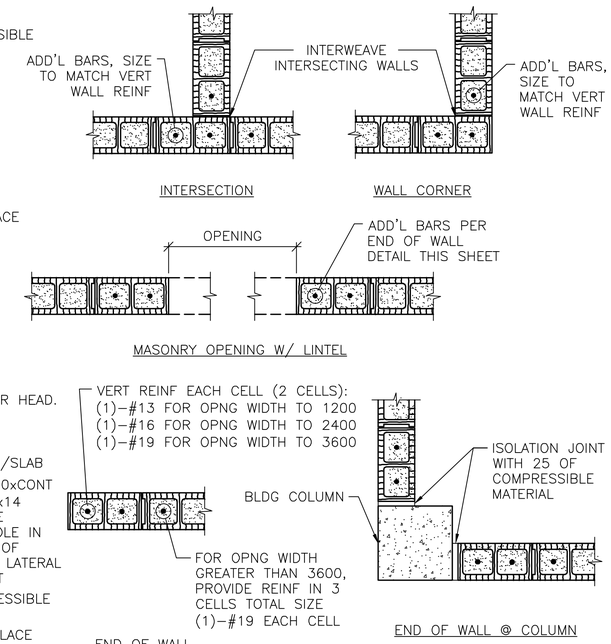

NOTES:

1. OPENING WIDTH SHALL NOT EXCEED 3600 FOR THIS TYPE OF JAMB.
2. ALL CELLS FULLY GROUTED AT EXTERIOR WALLS. AT INTERIOR WALLS, ONLY GROUT CELLS CONTAINING REINF.

TYP CMU DETAILS

6 / S-701 SCALE: NTS

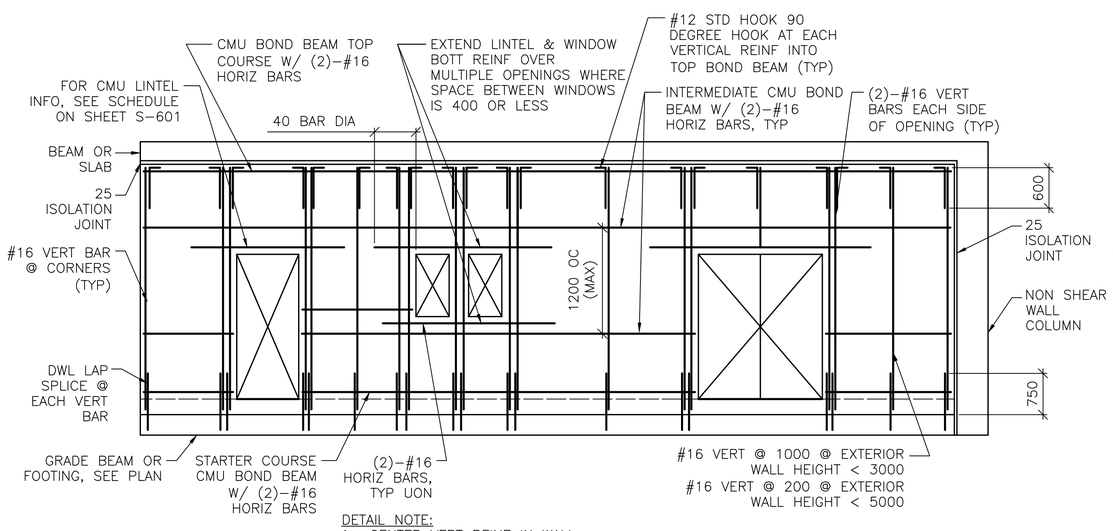

DETAIL NOTE:

1. CENTER VERT REINF IN WALL.
2. GROUT ALL CMU CELLS.
3. REFERENCE ARCH DWGS FOR JOINT INFORMATION
4. DOWELS BETWEEN TOP BOND BEAM AND BEAM/SLAB ABOVE (INCLUDING EMBEDDED PIPE SLEEVE) NOT SHOWN FOR CLARITY. SEE SPECIFIC S-500 SERIES DWGS FOR INFO.
5. FOR INFORMATION ON ALTERNATE CAST-IN-PLACE WALL BOND BEAMS, REFERENCE ALTERNATE TOP OF CMU WALL BRACING DETAILS THIS SHEET.

TYP EXTERIOR CMU WALL REINF DETAIL

7 / S-701 SCALE: NTS

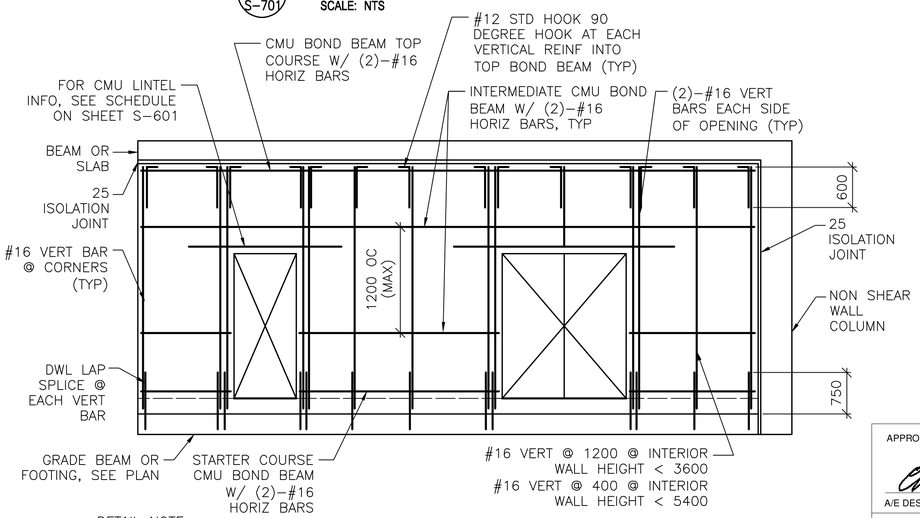

DETAIL NOTE:

1. CENTER VERT REINF IN WALL.
2. GROUT ALL CMU CELLS.
3. REFERENCE ARCH DWGS FOR JOINT INFORMATION
4. DOWELS BETWEEN TOP BOND BEAM AND BEAM/SLAB ABOVE (INCLUDING EMBEDDED PIPE SLEEVE) NOT SHOWN FOR CLARITY. SEE SPECIFIC S-500 SERIES DWGS FOR INFO.
5. FOR INFORMATION ON ALTERNATE CAST-IN-PLACE WALL BOND BEAMS, REFERENCE ALTERNATE TOP OF CMU WALL BRACING DETAILS THIS SHEET.

TYP INTERIOR CMU WALL REINF DETAIL

8 / S-701 SCALE: NTS

UNLESS OTHERWISE NOTED, LINEAR DIMENSIONS SHOWN ARE IN MILLIMETERS (mm)

APPROVED:

A/E DESIGNER OF RECORD

SEAL:

GEORGIA REGISTERED 1-29-10 No. 27141 PROFESSIONAL ENGINEER CHRISTOPHER W. WHITMORE

US ARMY CORPS OF ENGINEERS
AFGHANISTAN ENGINEER DISTRICT

Mark	Description	Date	Appr.	Mark	Description	Date	Appr.

Rev: 0
Date: 2/23/10
Design file no.
Drawing code:
File name: AMABCOSS.701TDT
Plot date: 2/23/2010
Plot scale: X:X

Designed by: KMP/MMY
Dwn by: RCG
Ckd by: CWW
Reviewed by: LHM
Submitted by: BAKER

U.S. ARMY CORPS OF ENGINEERS
AFGHANISTAN ENGINEER DISTRICT
APO AE 96338

Michael Baker Jr., Inc
A unit of Michael Baker Corporation
Airside Business Park
100 Airside Drive
Moon Township, PA 15108
www.mbakercorp.com

AFGHAN NATIONAL ARMY
REGIONAL MILITARY TRAINING CENTER
STANDARD DESIGN

SENIOR BOQ BARRACKS

TYPICAL DETAILS

Sheet reference number:
S-701

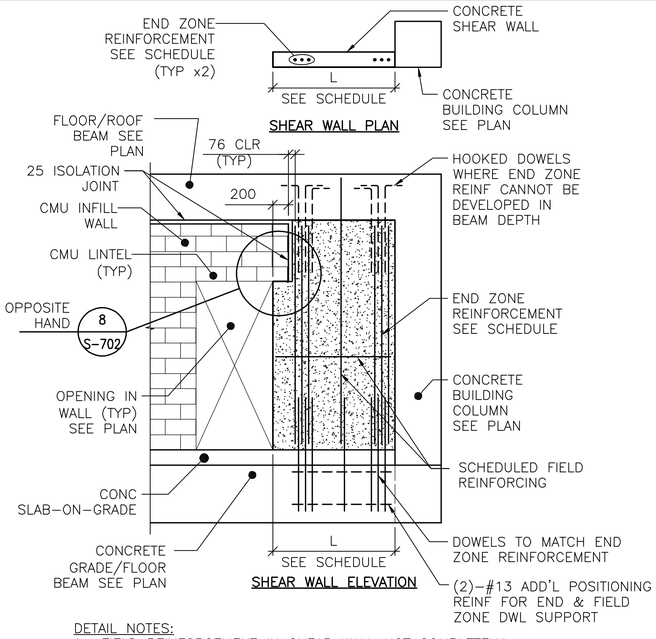

DETAIL NOTES:
1. FIELD REINFORCEMENT IN SHEAR WALL NOT COMPLETELY SHOWN FOR CLARITY.
2. FIELD REINFORCEMENT CENTERED IN WALL.
3. MINIMUM CONC CLEAR DISTANCE FOR END ZONE REINF = 76
4. SEE CONC SHEAR WALL SCHEDULE ON SHEET S-601
5. SEE ARCH DWGS FOR ISOLATION JOINT INFORMATION

1 S-702 TYPE "B" SHEAR WALL DETAIL

SCALE: NTS

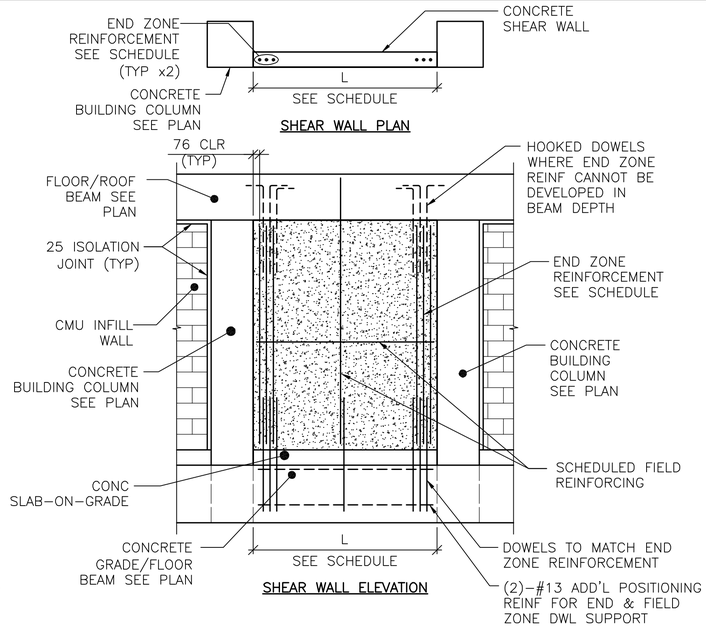

DETAIL NOTES:
1. FIELD REINFORCEMENT IN SHEAR WALL NOT COMPLETELY SHOWN FOR CLARITY.
2. FIELD REINFORCEMENT CENTERED IN WALL.
3. MINIMUM CONC CLEAR DISTANCE FOR END ZONE REINF = 76
4. SEE CONC SHEAR WALL SCHEDULE ON SHEET S-601
5. SEE ARCH DWGS FOR ISOLATION JOINT INFORMATION

2 S-702 TYPE "C" SHEAR WALL DETAIL

SCALE: NTS

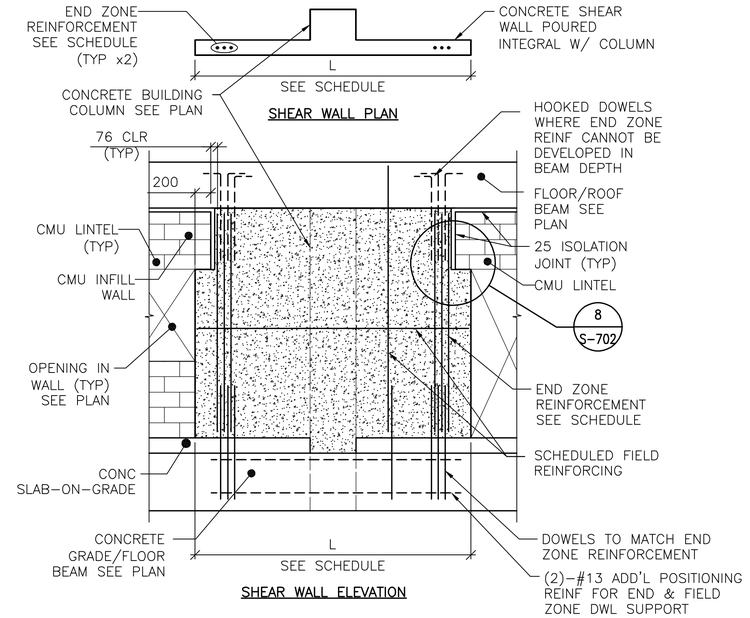

DETAIL NOTES:
1. FIELD REINFORCEMENT IN SHEAR WALL NOT COMPLETELY SHOWN FOR CLARITY.
2. FIELD REINFORCEMENT CENTERED IN WALL.
3. MINIMUM CONC CLEAR DISTANCE FOR END ZONE REINF = 76
4. SEE CONC SHEAR WALL SCHEDULE ON SHEET S-601
5. SEE ARCH DWGS FOR ISOLATION JOINT INFORMATION

3 S-702 TYPE "D" SHEAR WALL DETAIL

SCALE: NTS

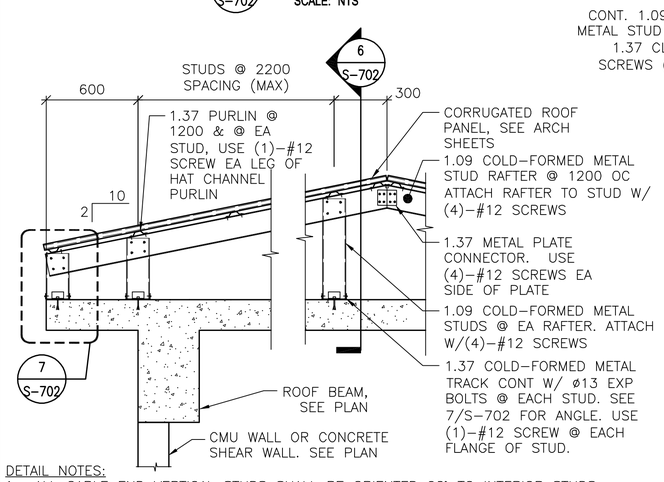

DETAIL NOTES:
1. ALL GABLE END VERTICAL STUDS SHALL BE ORIENTED 90° TO INTERIOR STUDS & SPACED @ 600 OC. GABLE END RAFTER SHALL BE 1.37 METAL TRACK SPANNING CONTINUOUSLY OVER GABLE END STUDS. INSET GIRTS AT GABLE END SHALL BE 1.09 COLD-FORMED METAL STUDS @ 1200 OC ATTACHED VIA 1.37 THICKNESS CLIP ANGLE W/ (2) #12 SCREWS EA LEG.
2. ALL INTERIOR, NON-GABLE END VERTICAL STUDS GREATER THAN 2400 IN LENGTH SHALL BE BACK-TO-BACK W/ #12 SCREWS @ 200 OC STAGGERED.

4 S-702 TYPICAL OVERBUILT ROOF FRAMING DETAIL

SCALE: NTS

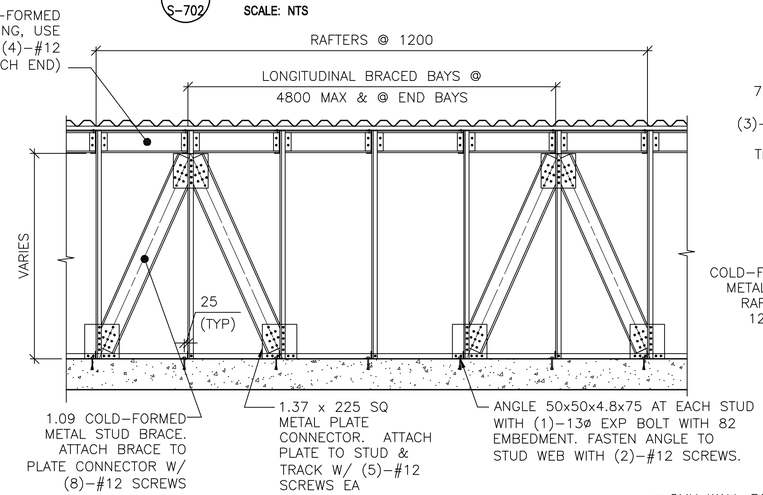

6 S-702 SECTION

SCALE: NTS

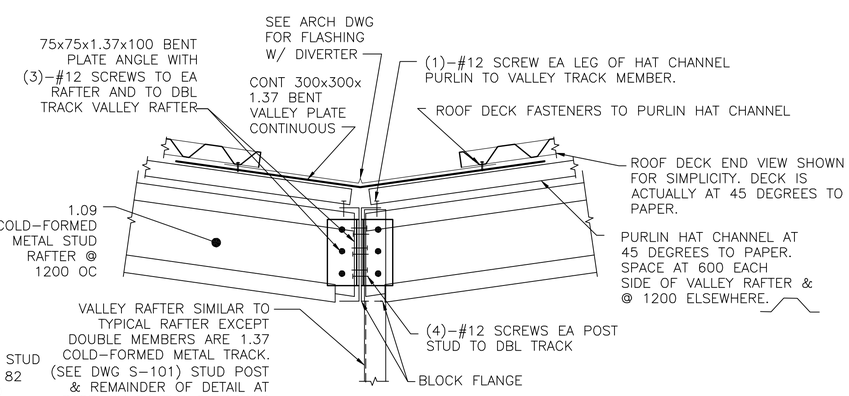

9 S-702 TYPICAL OVERBUILT ROOF SECTION THROUGH VALLEY

SCALE: NTS

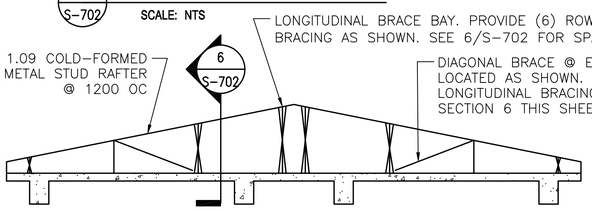

5 S-702 TYPICAL ROOF BRACE LAYOUT

SCALE: NTS

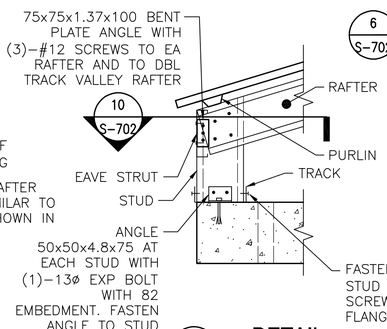

7 S-702 DETAIL

SCALE: NTS

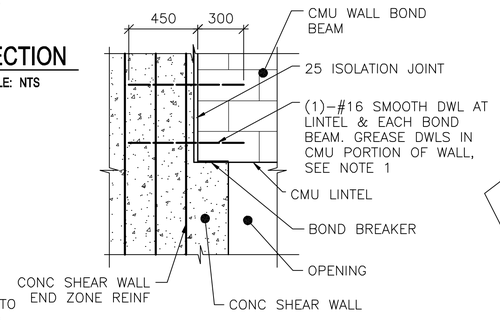

NOTE:
1. TIE SMOOTH DOWEL ROD TO SHEAR WALL END ZONE REINF FOR EACH BOND BEAM AND LINTEL.

8 S-702 SECTION

SCALE: NTS

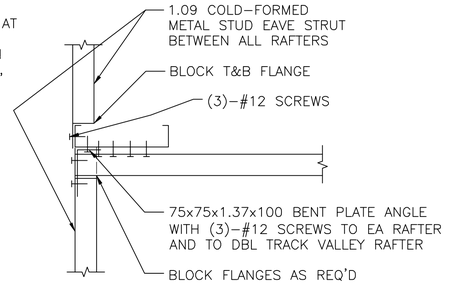

10 S-702 SECTION

SCALE: NTS

UNLESS OTHERWISE NOTED, LINEAR DIMENSIONS SHOWN ARE IN MILLIMETERS (mm)

APPROVED:

A/E DESIGNER OF RECORD

SEAL:

GEORGIA REGISTERED 1-29-10 No. 27141 PROFESSIONAL ENGINEER CHRISTOPHER W. WHITMORE

US ARMY CORPS OF ENGINEERS
AFGHANISTAN ENGINEER DISTRICT

Mark	Description	Date	Appr.	Mark	Description	Date	Appr.

Date: 2/23/10 | Rev: 0
Design file no.
Drawing code:
File name: ANA8OD8S-TOTTOT
Plot date: 2/23/2010
Plot scale: X:X

Designed by: KMP/MMY
Dwn by: RCG | Ckd by: CWW
Reviewed by: LHM
Submitted by: BAKER

U.S. ARMY CORPS OF ENGINEERS
AFGHANISTAN ENGINEER DISTRICT
APO AE 96338

Michael Baker Jr., Inc
A unit of Michael Baker Corporation
Airside Business Park
100 Airside Drive
Moon Township, PA 15108
www.mbakercorp.com

AFGHAN NATIONAL ARMY
REGIONAL MILITARY TRAINING CENTER
STANDARD DESIGN

SENIOR BOQ BARRACKS

TYPICAL DETAILS

Sheet reference number:
S-702

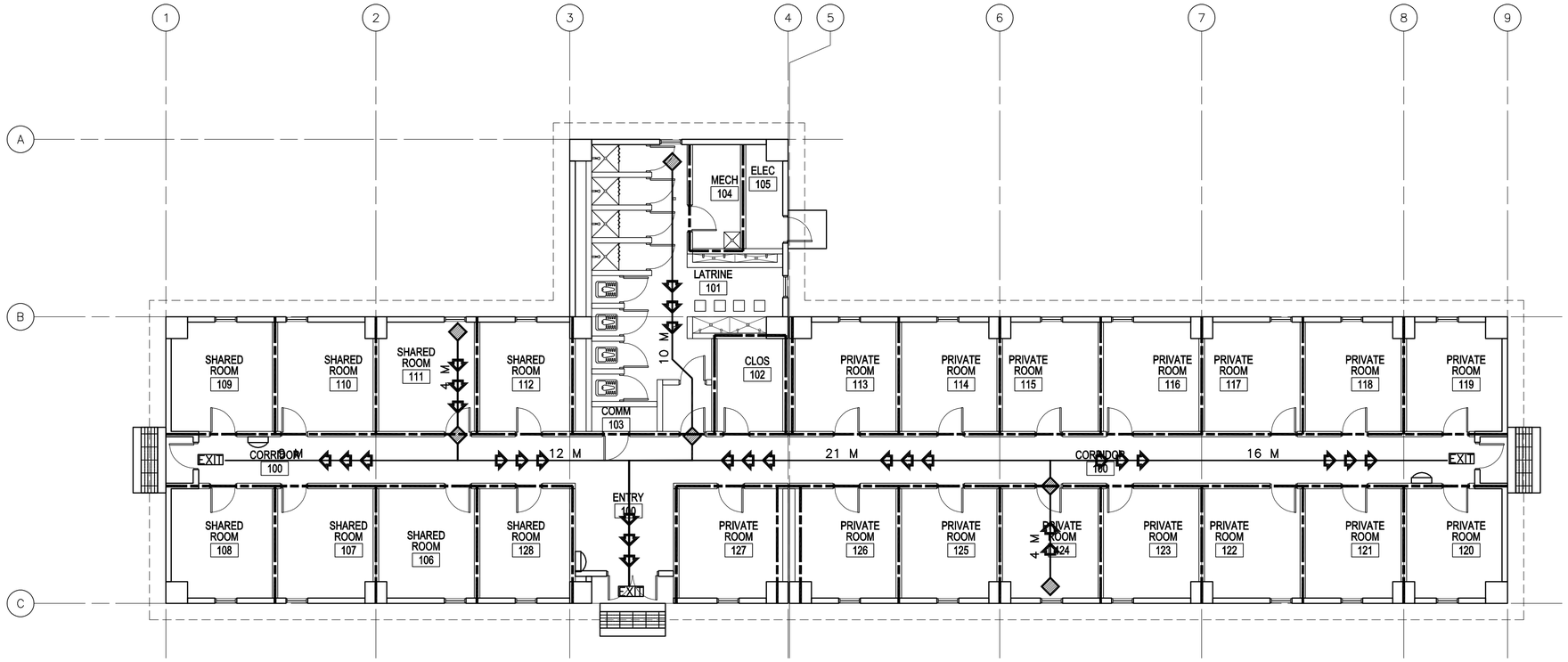

LEGEND:

- DENOTES PATHS OF EXIT TRAVEL
- EXIT — DENOTES DOOR AS AN EMERGENCY EXIT
- DENOTES STARTING POINT FOR TRAVEL DISTANCE
- DENOTES FIRE EXTINGUISHER LOCATIONS
- (1) HOUR RATED WALL
- (2) HOUR RATED WALL
- (3) HOUR RATED WALL

1 / A-001 **LIFE SAFETY PLAN**
SCALE: 1:100

CODE ANALYSIS:

1. REFERENCES:
2006 INTERNATIONAL BUILDING CODE (2006 IBC)
2006 LIFE SAFETY CODE (2006 NFPA 101)

2. IBC OCCUPANCY CLASSIFICATION:
GROUP R–2 (NEW HOTELS AND DORMITORIES NFPA 101 6.1.8 AND CHAPTER 28)

3. TYPE OF CONSTRUCTION (IBC): TYPE II–B (UNPROTECTED/NONSPRINKLERED)

4. IBC TABLE 503: ALLOWABLE HEIGHT AND BUILDING AREAS:
GROUP R–2
ALLOWABLE AREA: 1486 SM
ALLOWABLE HEIGHT: 4 STORIES (16 M)

GROUP R–2
PROPOSED AREA: 569 SM
PROPOSED HEIGHT: 1 STORY (<16 M)

5. IBC TABLE 601 & 602: FIRE RESISTANCE RATING REQUIREMENTS FOR BUILDING ELEMENTS FOR TYPE II–B

BUILDING ELEMENT	RATING (HOUR)	REFERENCE
STRUCTURAL FRAME (COLUMNS, GIRDERS & TRUSSES)	0	TABLE 601
BEARING WALLS		
EXTERIOR	0	TABLE 601
INTERIOR	0	TABLE 601
NONBEARING WALLS & PARTITIONS		
INTERIOR	0	TABLE 601
FLOOR CONSTRUCTION	0	TABLE 601
ROOF CONSTRUCTION	0	TABLE 601
EXTERIOR WALL	0	TABLE 602

6. IBC TABLE 803.5 – INTERIOR WALL AND CEILING FINISH REQUIREMENTS FOR R–2 OCCUPANCY/NONSPRINKLERED

GROUP	EXIT ENCLOSURES AND EXIT PASSAGEWAY	CORRIDORS	ROOMS AND ENCLOSED SPACES
R–2	B	B	C

7. NFPA 101 TABLE 7.3.1.2 – OCCUPANT LOAD
HOTELS AND DORMITORIES = 18.6 SM/PERSON
CALCULATED = 31 OCCUPANTS
ACTUAL = 31 OCCUPANTS

8. NFPA 101 TABLE 7.3.3.1 – EGRESS CAPACITY
HOTELS AND DORMITORIES = 5 MM PER OCCUPANT

MINIMUM REQUIRED: 155 MM (31 OCCUPANTS x 5 MM PER OCCUPANT)
PROPOSED EGRESS CAPACITY: 3600 MM: (4) 900 MM DOORS

9. NFPA 101 PARAGRAPH 28.2.6 – EXIT ACCESS TRAVEL DISTANCE
MAXIMUM ALLOWED WITHIN ROOM OR SUITE TO CORRIDOR: 23 METERS
MAXIMUM ALLOWED CORRIDOR DOOR OF ANY ROOM OR SUITE TO NEAREST EXIT: 30 METERS

PROPOSED WITHIN ROOM OR SUITE TO CORRIDOR: 4 METERS
PROPOSED CORRIDOR DOOR OF ANY ROOM OR SUITE TO NEAREST EXIT: 21 METERS

10. NFPA 101 PARAGRAPH 28.3.6.1.2 – CORRIDOR FIRE–RESISTANCE RATING (HOUR)
REQUIRED: WALLS NOT LESS THAN ONE HOUR FIRE RESISTANCE RATING
PROPOSED: 1 HOUR RATING

11. NFPA 101 PARAGRAPH 28.3.6.2 & TABLE 8.3.4.2 – DOORS INTO EXIT ACCESS CORRIDORS
REQUIRED MINIMUM: 20 MINUTE FIRE PROTECTION RATING
PROPOSED: 20 MINUTE DOORS

12. NFPA 101 PARAGRAPH 28.2.3.3 – CORRIDOR WIDTH
REQUIRED: SUFFICIENT FOR OCCUPANT LOAD, BUT NOT LESS THAN 1120 MM
CALCULATED WIDTH REQUIRED PER OCCUPANT LOAD: 155 MM (31 OCCUPANTS X 5 MM)
PROVIDED: 1700 MM

13. NFPA 101 PARAGRAPH 28.2.5.3 – COMMON PATH OF TRAVEL
MAXIMUM ALLOWED: 10.7 METERS
PROVIDED: 0 M

14. NFPA 101 PARAGRAPH 28.2.5.5 – DEAD END CORRIDORS
PERMITTED: 10.7 METERS
PROPOSED: NO DEAD END CORRIDORS

15. NFPA 101 PARAGRAPH 28.2.4.1 AND 7.4.1.1 – MINIMUM NUMBER OF EXITS
REQUIRED: 2 MINIMUM
PROPOSED: 3 EXITS

16. NFPA 101 PARAGRAPH 28.2.1.2 & 24.2 – SECONDARY MEANS OF ESCAPE
ONE OF THE FOLLOWING REQUIRED:
1)DOOR, SIMILAR TO PRIMARY, BUT REMOTE FROM PRIMARY
2) OPERABLE WINDOW, 0.53 SM, NOT LESS THAN 510 MM WIDE, 610 MM HIGH, NOT MORE THAN 1120 MM AFF, WITHIN 6100 MM OF GRADE
PROVIDED: OPERABLE WINDOWS, 0.93 SM EACH PER SLEEPING ROOM

17. NFPA 101 PARAGRAPH 24.2.2.4 – TWO PRIMARY MEANS OF ESCAPE
AREA WITH DWELLING UNIT EXCEEDS 185 SM PER STORY
ALLOWED AREA PER STORY WITHIN DWELLING UNIT: 185 SM
PROVIDED AREA WITHIN DWELLING UNIT: 14 SM
REQUIRED PRIMARY EXITS: 1
PROVIDED PRIMARY EXITS: 1

18. NFPA 101 PARAGRAPH 28.3.7.1 – SUBDIVISION OF BUILDING SPACES – NONSPRINKLERED
REQUIRED: EACH GUEST ROOM OR DORMITORY ROOM SHALL BE SEPARATED FROM OTHER GUEST OR DORMITORY ROOMS BY FIRE BARRIERS HAVING FIRE RESISTANCE RATED OF NOT LESS THAN 1 HOUR
PROVIDED: 1 HOUR SEPARATION

19. HAZARDOUS AREA PROTECTION TABLE 28.3.2.2.2
STORAGE ROOMS: 1 HOUR SEPARATION REQUIRED

20. NFPA 101 A.3.3.53 DORMITORY: ROOMS WITHIN DORMITORIES INTENDED FOR THE USE OF INDIVIDUALS FOR COMBINED LIVING AND SLEEPING PURPOSES ARE GUEST ROOMS OR GUEST SUITES. EXAMPLES OF DORMITORIES ARE COLLEGE DORMITORIES, FRATERNITY AND SORORITY HOUSES AND MILITARY BARRACKS.

21. NFPA 101 28.3.5.2 EXTINGUISHMENT REQUIREMENTS: AUTOMATIC SPRINKLER PROTECTION REQUIRED UNLESS SLEEPING ROOMS HAVE DOORS DIRECTLY TO OUTSIDE.
DUE TO AUSTERE DESIGN CRITERIA, THE GOVERNMENT HAS A FIRE PROTECTION WAIVER FOR THIS REQUIREMENT.

LINEAR DIMENSIONS SHOWN ARE IN MILLIMETERS (MM), UNLESS OTHERWISE NOTED

0 2000 4000
SCALE: 1:100

APPROVED:
A/E DESIGNER OF RECORD
SEAL:
STATE OF SOUTH CAROLINA
KEVIN R. CHAFIN
N. Charleston, SC
6374
REGISTERED ARCHITECT

US ARMY CORPS OF ENGINEERS
AFGHANISTAN ENGINEER DISTRICT

Mark	Description	Date	Appr.	Mark	Description	Date	Appr.

Date: 2/23/10
Rev: 0
Design file no.
Drawing code:
File name: ANABOQSA-001LSP
Plot date: 2/23/2010
Plot scale: x:X

Designed by: KRC
Dwn by: EBB
Ckd by: NLJ
Reviewed by: LHM
Submitted by: BAKER

U.S. ARMY CORPS OF ENGINEERS
AFGHANISTAN ENGINEER DISTRICT
APO AE 96338

Michael Baker Jr., Inc
A unit of Michael Baker Corporation
Airside Business Park
100 Airside Drive
Moon Township, PA 15108
www.mbakercorp.com

AFGHAN NATIONAL ARMY
REGIONAL MILITARY TRAINING CENTER
STANDARD DESIGN

SENIOR BOQ BARRACKS

LIFE SAFETY PLAN

Sheet reference number:
A–001

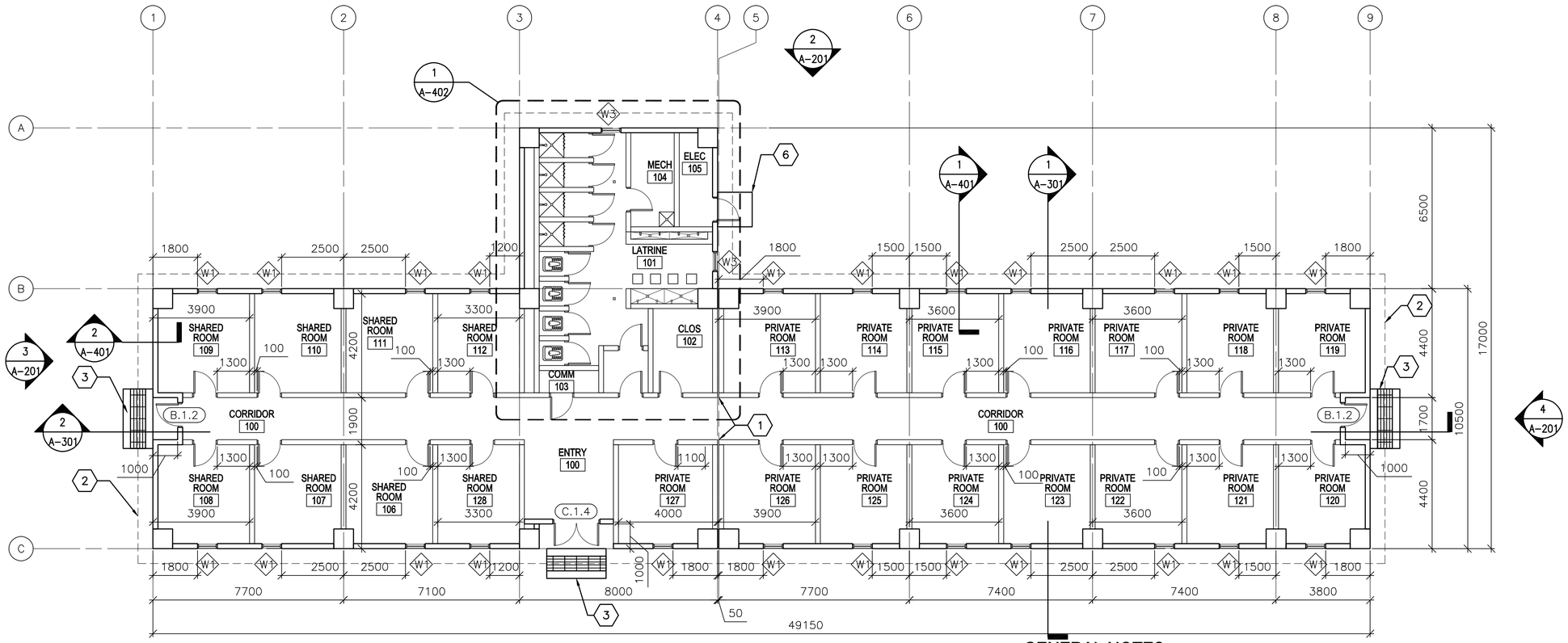

1 A-101 **FLOOR PLAN**

SCALE: 1:100

GENERAL NOTES:

A. DIMENSIONS ARE SHOWN TO OUTER EDGE OF EXTERIOR STRUCTURAL COLUMNS, STRUCTURAL COLUMN GRID, EDGE OF INTERIOR PARTITIONS, EDGE OF WINDOW OPENINGS, AND TO HINGED SIDE OF DOOR FRAME OPENINGS.

B. OPENINGS FOR DOORS AND FRAMES SHALL BE LOCATED 200 MM FROM THE ADJACENT WALL OR COLUMN, UNLESS NOTED OTHERWISE.

C. INTERIOR PARTITIONS SHALL BE 200 MM CMU, UNLESS NOTED OTHERWISE.

D. COSMETIC REPAIR OF MINOR DEFECTS: REPAIR OR FILL MORTAR JOINTS AND MINOR DEFECTS, INCLUDING BUT NOT LIMITED TO SPALLS, IN ACCORDANCE WITH MANUFACTURER'S RECOMMENDATIONS AND PRIOR TO COATING APPLICATION. SURFACES TO BE PAINTED SHALL BE CLEAN AND FREE OF FOREIGN MATTER BEFORE APPLICATION OF PAINT. CLEANING SHALL BE SCHEDULED SO THAT DUST AND OTHER CONTAMINANTS WILL NOT FALL ON NEWLY PAINTED SURFACES.

E. CONCRETE, PLASTER AND MASONRY SURFACES SHALL BE ALLOWED TO CURE FOR AT LEAST 30 DAYS BEFORE PAINTING. CONCRETE SLABS-ON-GRADE SHALL BE ALLOWED TO CURE 90 DAYS BEFORE STAINING OR SEALING.

F. DO NOT USE PAINT MATERIALS CONTAINING LEAD CONTENT IN EXCESS OF 0.009 PERCENT OF THE WEIGHT OF THE TOTAL NONVOLATILE CONTENT OF THE PAINT OR THE WEIGHT OF THE DRIED PAINT FILM.

G. DO NOT USE ANY ASBESTOS CONTAINING MATERIALS (ACM) IN PROJECT. ACM IS DEFINED AS 1% OR MORE BY VOLUME.

H. DO NOT USE PAINT MATERIALS CONTAINING MERCURIAL FUNGICIDES.

I. FACTORY PRIMED METAL DOORS AND FRAMES SHALL RECEIVE TWO COATS OF PAINT.

J. FILL REMAINING SPACE AT PENETRATIONS IN FIRE-RATED FLOORS, PARTITIONS AND CEILINGS WITH APPROPRIATE FIRESTOPPING MATERIALS.

K. ALL CEILING FINISHES SHALL BE PAINTED PLASTER APPLIED TO STRUCTURE.

L. ALL WALL FINISHES SHALL BE PAINTED PLASTER APPLIED TO STRUCTURE, UNLESS OTHERWISE NOTED.

M. ALL FLOOR FINISHES SHALL BE EPOXY SEALED CONCRETE, UNLESS NOTED OTHERWISE.

N. PROVIDE TILE FINISHES AS INDICATED IN DETAILS AND KEY NOTES.

O. ALL DOOR, FRAME AND HARDWARE TYPES SHALL BE 20A.1.11 UNLESS NOTED OTHERWISE

P. ALL TOILET STALL DOORS SHALL BE F.2.12

Q. SHOWER STALL DOOR, FRAME AND HARDWARE TYPE SHALL BE E.1.12.

R. PROVIDE POLISHED STAINLESS STEEL MIRROR 600 X 900 ABOVE EVERY LAVATORY FAUCET.

KEY NOTES:

1. ISOLATION JOINT COVER- SEE SHEET A-506.
2. LINE OF ROOF OVERHANG ABOVE.
3. CONCRETE STOOP WITH GRATE – SEE DETAIL 1/A-503.
4. NOT USED.
5. NOT USED.
6. CONCRETE STOOP – SEE DETAIL 3/A-503.

LEGEND:

XXX — DOOR FRAME AND HARDWARE TYPE, SEE SHEET A-601

A — WINDOW TYPE, SEE SHEET A-601

X — KEY NOTE

ABBREVIATIONS:

COMM	COMMUNICATIONS
ELEC	ELECTRICAL
MECH	MECHANICAL
JAN	JANITOR
CLOS	CLOSET

LINEAR DIMENSIONS SHOWN ARE IN MILLIMETERS (MM), UNLESS OTHERWISE NOTED

0 2000 4000
SCALE: 1:100

APPROVED:

A/E DESIGNER OF RECORD

SEAL:

STATE OF SOUTH CAROLINA
KEVIN R. CHAFIN
N. Charleston, SC
6374
REGISTERED ARCHITECT

US ARMY CORPS OF ENGINEERS
AFGHANISTAN ENGINEER DISTRICT

Mark	Description	Date	Appr.	Mark	Description	Date	Appr.

Designed by: KRC
Dwn by: EBB
Ckd by: NLJ
Reviewed by: LHM
Submitted by: BAKER
Date: 2/23/10
Rev: 0
Design file no.
Drawing code:
File name: AN4BOQSA-101FP
Plot date: 2/23/2010
Plot scale: X:X

U.S. ARMY CORPS OF ENGINEERS
AFGHANISTAN ENGINEER DISTRICT
APO AE 96338

Michael Baker Jr., Inc
A unit of Michael Baker Corporation
Airside Business Park
100 Airside Drive
Moon Township, PA 15108
www.mbakercorp.com

AFGHAN NATIONAL ARMY
REGIONAL MILITARY TRAINING CENTER
STANDARD DESIGN

SENIOR BOQ BARRACKS

FLOOR PLAN

Sheet reference number:
A-101

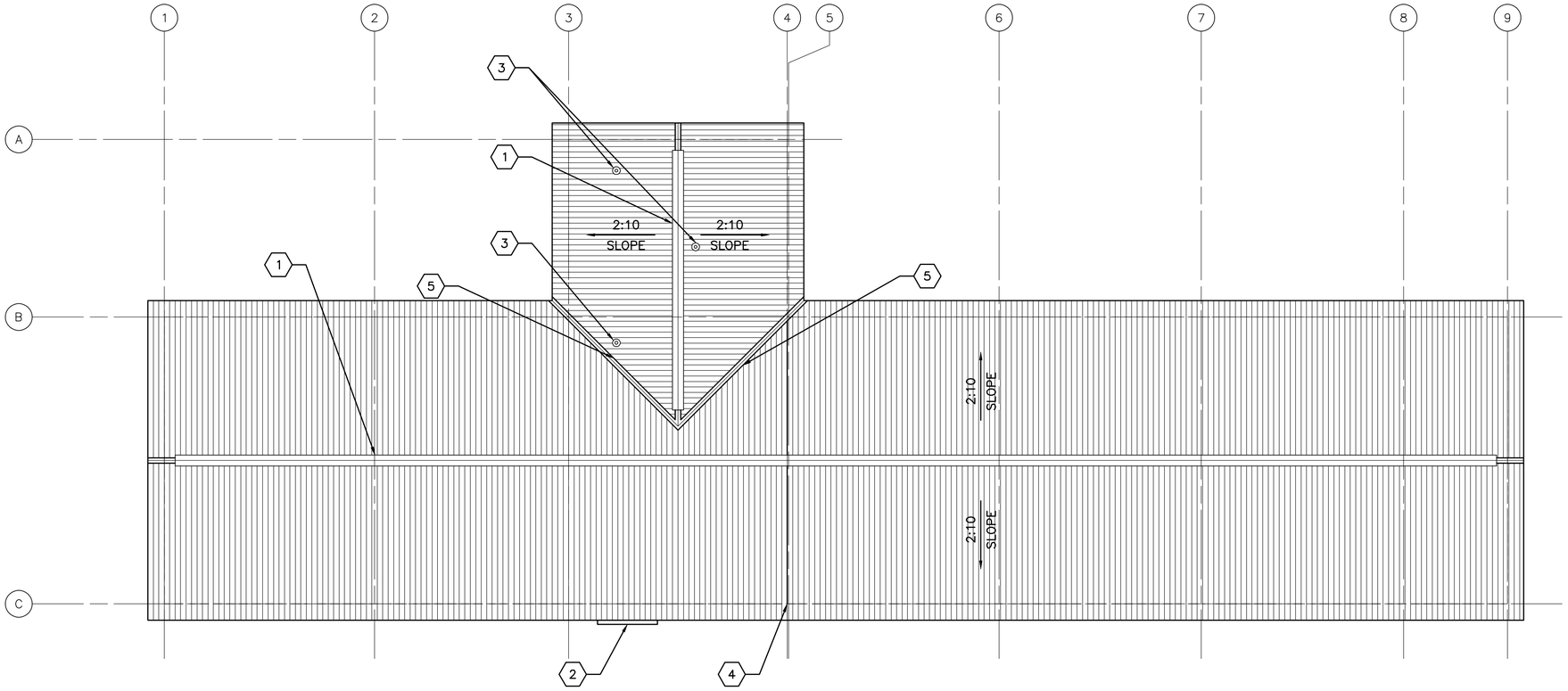

1 / A-102 **ROOF PLAN**

SCALE: 1:100

GENERAL NOTES:

A. THE APPROXIMATE LOCATION OF ROOF DEVICES AND PENETRATIONS ARE SHOWN ON THE ROOF PLAN FOR INFORMATION ONLY. THE CONTRACTOR SHALL BE RESPONSIBLE FOR UNDERSTANDING THE ACTUAL LOCATION OF THESE AND ALL OTHER ITEMS PRIOR TO BEGINNING CONSTRUCTION. COORDINATE ALL ROOF PENETRATIONS WITH STRUCTURAL, MECHANICAL AND PLUMBING WORK.

B. PLUMBING VENT PENETRATIONS SHALL TERMINATE 300 MM MINIMUM ABOVE THE ROOF.

C. UNLESS OTHERWISE NOTED, NOTES, DETAILS OR FEATURES INDICATED FOR ONE CONDITION SHALL BE APPLICABLE FOR ALL ALIKE AND SIMILAR CONDITIONS.

D. STOCKPILING OF MATERIALS, EQUIPMENT AND ANY OTHER ITEMS ON THE ROOF IS PROHIBITED.

E. ROOFS SHALL BE CORRUGATED METAL ROOF PANELS ON COLD-FORMED METAL FRAMING ON CONCRETE SLAB.

KEY NOTES: (X)

1. CONTINUOUS METAL RIDGE VENT SEE DETAIL 4/A-501.
2. METAL GUTTER, CENTER ON DOOR, 2300 MM – SEE DETAIL 1A/A-501.
3. PLUMBING VENT – SEE DETAIL 5/A-501.
4. ROOF EXPANSION JOINT – SEE DETAIL 4A/A-501.
5. VALLEY – SEE DETAIL 6/A-501

LINEAR DIMENSIONS SHOWN ARE IN MILLIMETERS (MM), UNLESS OTHERWISE NOTED

0 2000 4000
SCALE: 1:100

APPROVED:

A/E DESIGNER OF RECORD

SEAL:

STATE OF SOUTH CAROLINA
KEVIN R. CHAFIN
N. Charleston, SC
6374
REGISTERED ARCHITECT

US ARMY CORPS OF ENGINEERS
AFGHANISTAN ENGINEER DISTRICT

Mark	Description	Date	Appr.	Mark	Description	Date	Appr.

U.S. ARMY CORPS OF ENGINEERS
AFGHANISTAN ENGINEER DISTRICT
APO AE 96338

Michael Baker Jr., Inc
A unit of Michael Baker Corporation
Airside Business Park
100 Airside Drive
Moon Township, PA 15108
www.mbakercorp.com

Designed by: KRC
Dwn by: EBB
Ckd by: NLJ
Reviewed by: LHM
Submitted by: BAKER
Date: 2/23/10
Rev: 0
Design file no.
Drawing code:
File name: ANABOQSA-100RP
Plot date: 2/23/2010
Plot scale: x:X

AFGHAN NATIONAL ARMY
REGIONAL MILITARY TRAINING CENTER
STANDARD DESIGN

SENIOR BOQ BARRACKS

ROOF PLAN

Sheet reference number:
A-102

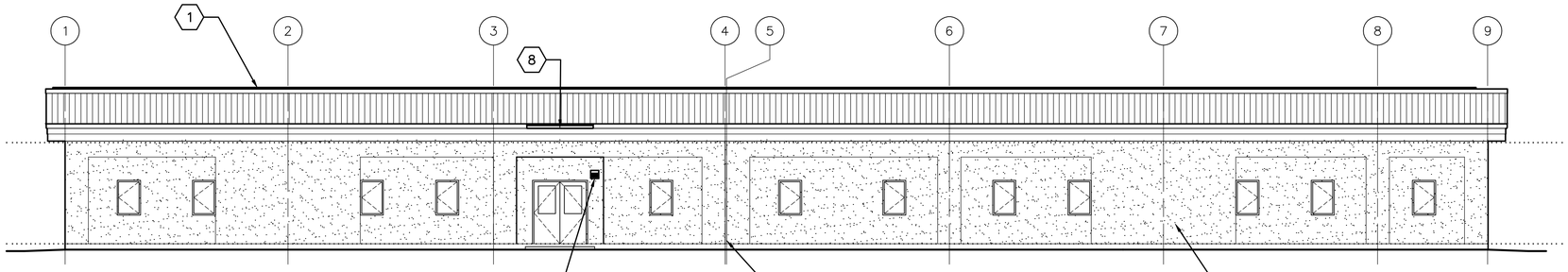

1 A-201 **ELEVATION**
SCALE: 1:100

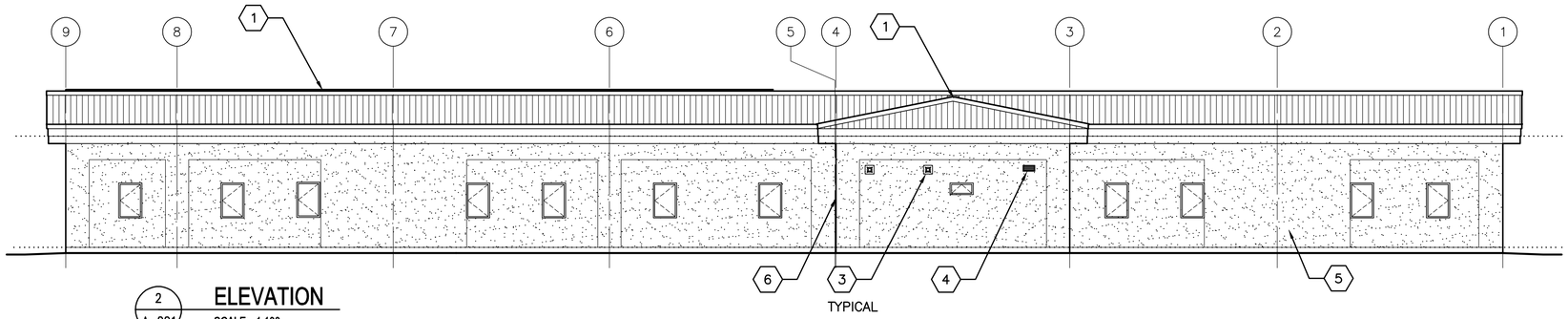

2 A-201 **ELEVATION**
SCALE: 1:100

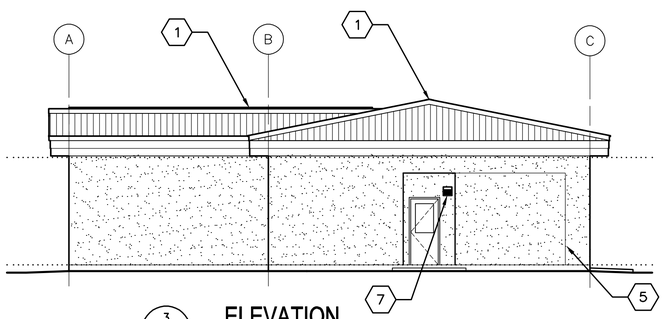

3 A-201 **ELEVATION**
SCALE: 1:100

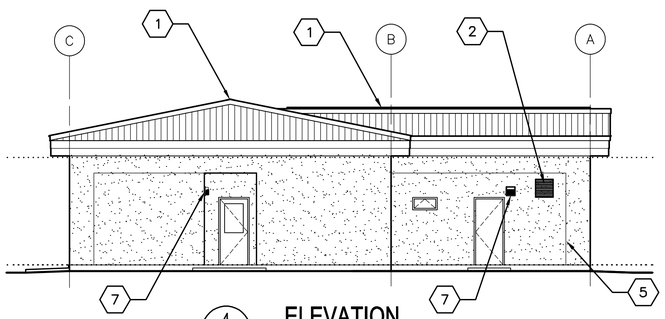

4 A-201 **ELEVATION**
SCALE: 1:100

GENERAL NOTES:

A. COORDINATE SIZE AND LOCATION OF OPENINGS FOR MECHANICAL ITEMS WITH MECHANICAL DRAWINGS.

B. PROVIDE STRUCTURAL LINTELS AS REQUIRED – SEE STRUCTURAL DRAWINGS

C. ALL EXTERIOR WALL FINISHES SHALL BE STUCCO OVER CMU AND CONCRETE SUBSTRATES. PROVIDE CONTROL JOINTS IN STUCCO WALL FINISH AS NOTED.

D. ROOF SHALL BE CORRUGATED METAL ROOF PANELS ON COLD-FORMED METAL FRAMING ON CONCRETE SLAB.

KEY NOTES:

1. CONTINUOUS METAL RIDGE VENT – SEE DETAIL 4/A-501.
2. LOUVER, LOCATE TOP OF WALL PENETRATION 2800 MM ABOVE FINISHED FLOOR – SEE MECHANICAL DRAWINGS.
3. EXHAUST FAN, LOCATE TOP OF WALL PENETRATION 2800 MM ABOVE FINISHED FLOOR – SEE MECHANICAL DRAWINGS.
4. EXHAUST FAN WITH WALL GRILL, LOCATE TOP OF WALL PENETRATION 2800 MM ABOVE FINISHED FLOOR – SEE MECHANICAL DRAWINGS.
5. STUCCO CONTROL JOINT – SEE DETAIL 2A/A-501.
6. EXPANSION JOINT COVER – SEE SHEET A-506.
7. EXTERIOR LIGHT FIXTURE – SEE ELECTRICAL.
8. METAL GUTTER, CENTER ON DOOR, 2300 MM – SEE DETAIL 1A/A-501

LINEAR DIMENSIONS SHOWN ARE IN MILLIMETERS (MM), UNLESS OTHERWISE NOTED

0 2000 4000
SCALE: 1:100

APPROVED:

A/E DESIGNER OF RECORD

SEAL:

STATE OF SOUTH CAROLINA
KEVIN R. CHAFIN
N. Charleston, SC
6374
REGISTERED ARCHITECT

US ARMY CORPS OF ENGINEERS
AFGHANISTAN ENGINEER DISTRICT

Mark	Description	Date	Appr.	Mark	Description	Date	Appr.

U.S. ARMY CORPS OF ENGINEERS
AFGHANISTAN ENGINEER DISTRICT
APO AE 96338

Michael Baker Jr., Inc
A unit of Michael Baker Corporation
Airside Business Park
100 Airside Drive
Moon Township, PA 15108
www.mbakercorp.com

Designed by: KRC	Date: 2/23/10
Dwn by: EBB	Ckd by: NLJ
Reviewed by: LHM	Drawing code:
Submitted by: BAKER	File name: ANABOQSA-201ELV
	Plot date: 2/23/2010
	Plot scale: x:X
	Design file no.
	Rev: 0

AFGHAN NATIONAL ARMY
REGIONAL MILITARY TRAINING CENTER
STANDARD DESIGN

SENIOR BOQ BARRACKS

ELEVATIONS

Sheet reference number:
A-201

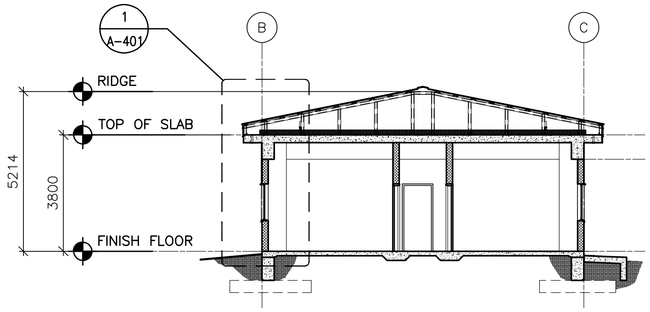

1 A-301 **SECTION**
SCALE: 1:100

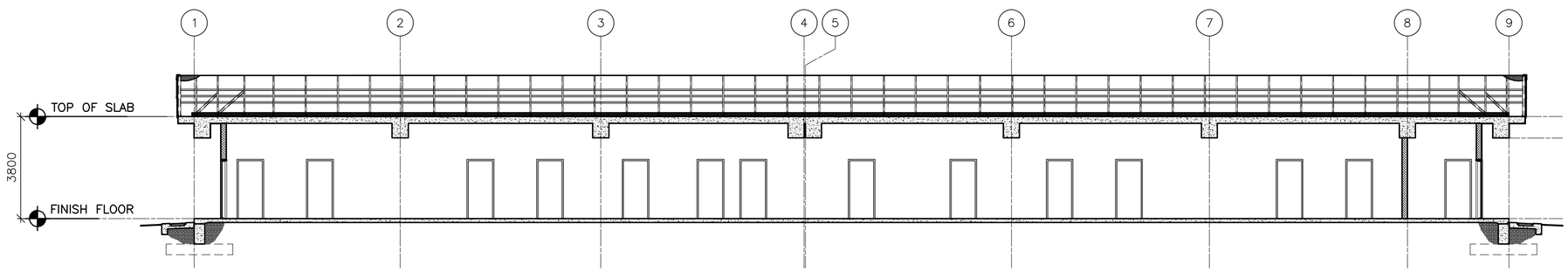

2 A-301 **SECTION**
SCALE: 1:100

LINEAR DIMENSIONS SHOWN ARE IN MILLIMETERS (MM), UNLESS OTHERWISE NOTED

0 2000 4000
SCALE: 1:100

APPROVED:

A/E DESIGNER OF RECORD

SEAL:

STATE OF SOUTH CAROLINA
KEVIN R. CHAFIN
N. Charleston, SC
6374
REGISTERED ARCHITECT

US ARMY CORPS OF ENGINEERS
AFGHANISTAN ENGINEER DISTRICT

Mark	Description	Date	Appr.	Mark	Description	Date	Appr.

U.S. ARMY CORPS OF ENGINEERS
AFGHANISTAN ENGINEER DISTRICT
APO AE 96338

Michael Baker Jr., Inc
A unit of Michael Baker Corporation
Airside Business Park
100 Airside Drive
Moon Township PA 15108
www.mbakercorp.com

Designed by: KRC
Dwn by: EBB
Ckd by: NLJ
Reviewed by: LHM
Submitted by: BAKER
Date: 2/23/10
Rev: 0
Design file no.
Drawing code:
File name: ANABOQSa-301BS
Plot date: 2/23/2010
Plot scale: X:X

AFGHAN NATIONAL ARMY
REGIONAL MILITARY TRAINING CENTER
STANDARD DESIGN

SENIOR BOQ BARRACKS

BUILDING SECTIONS

Sheet reference number:
A-301

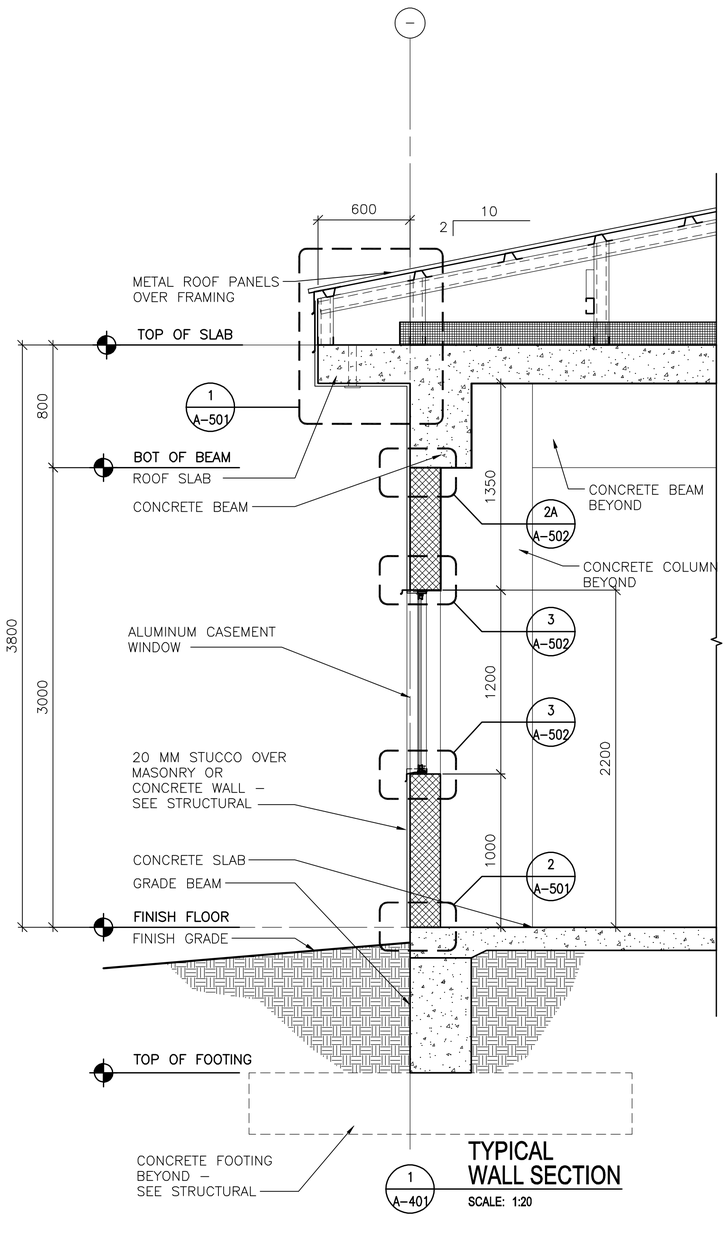

1 A-401 **TYPICAL WALL SECTION**

SCALE: 1:20

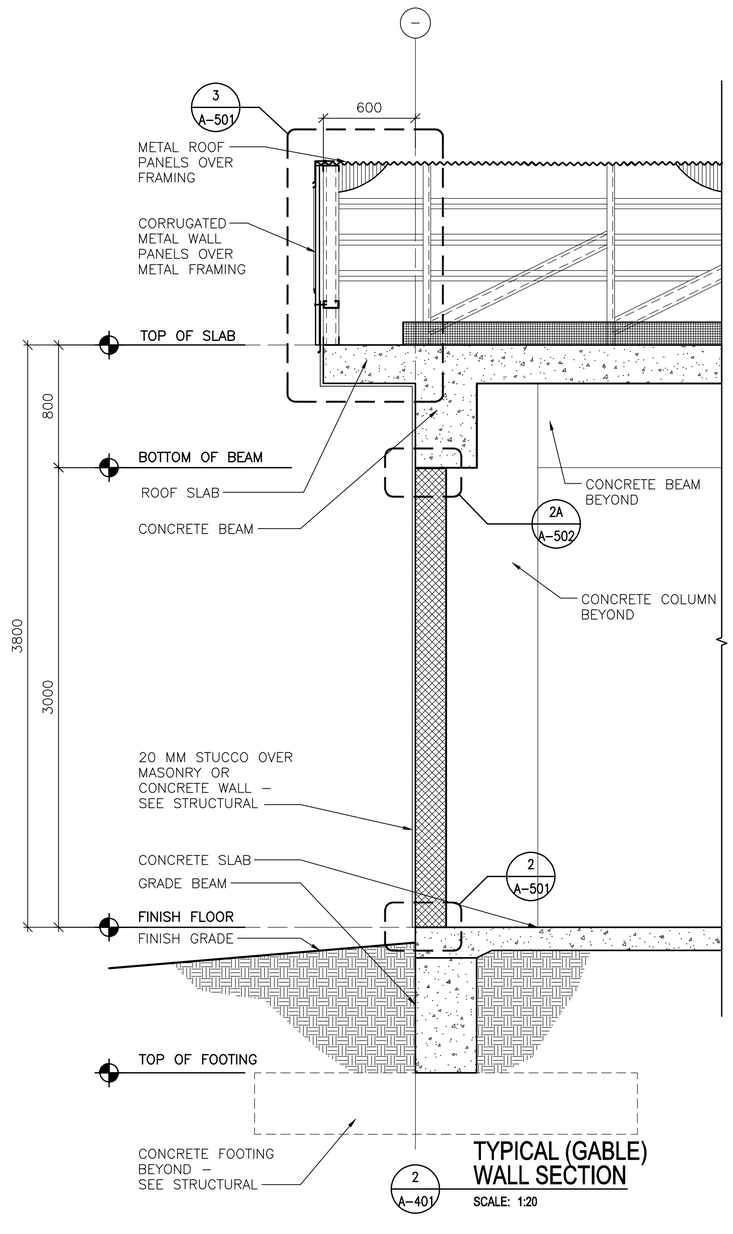

2 A-401 **TYPICAL (GABLE) WALL SECTION**

SCALE: 1:20

0 400 800
SCALE: 1:20

LINEAR DIMENSIONS SHOWN ARE IN MILLIMETERS (MM), UNLESS OTHERWISE NOTED

APPROVED:

A/E DESIGNER OF RECORD

SEAL:

STATE OF SOUTH CAROLINA
KEVIN R. CHAFIN
N. Charleston, SC
6374
REGISTERED ARCHITECT

US ARMY CORPS OF ENGINEERS
AFGHANISTAN ENGINEER DISTRICT

Mark	Description	Date	Appr.	Mark	Description	Date	Appr.

Rev: 0
Date: 2/23/10
Design file no.
Drawing code:
File name: AN4BOQSA-401WS
Plot date: 2/23/2010
Plot scale: x:X

Designed by: KRC
Dwn by: EBB
Ckd by: NLJ
Reviewed by: LHM
Submitted by: BAKER

U.S. ARMY CORPS OF ENGINEERS
AFGHANISTAN ENGINEER DISTRICT
APO AE 96338

Michael Baker Jr., Inc
A unit of Michael Baker Corporation
Airside Business Park
100 Airside Drive
Moon Township, PA 15108
www.mbakercorp.com

AFGHAN NATIONAL ARMY
REGIONAL MILITARY TRAINING CENTER
STANDARD DESIGN

SENIOR BOQ BARRACKS

WALL SECTIONS

Sheet reference number:
A-401

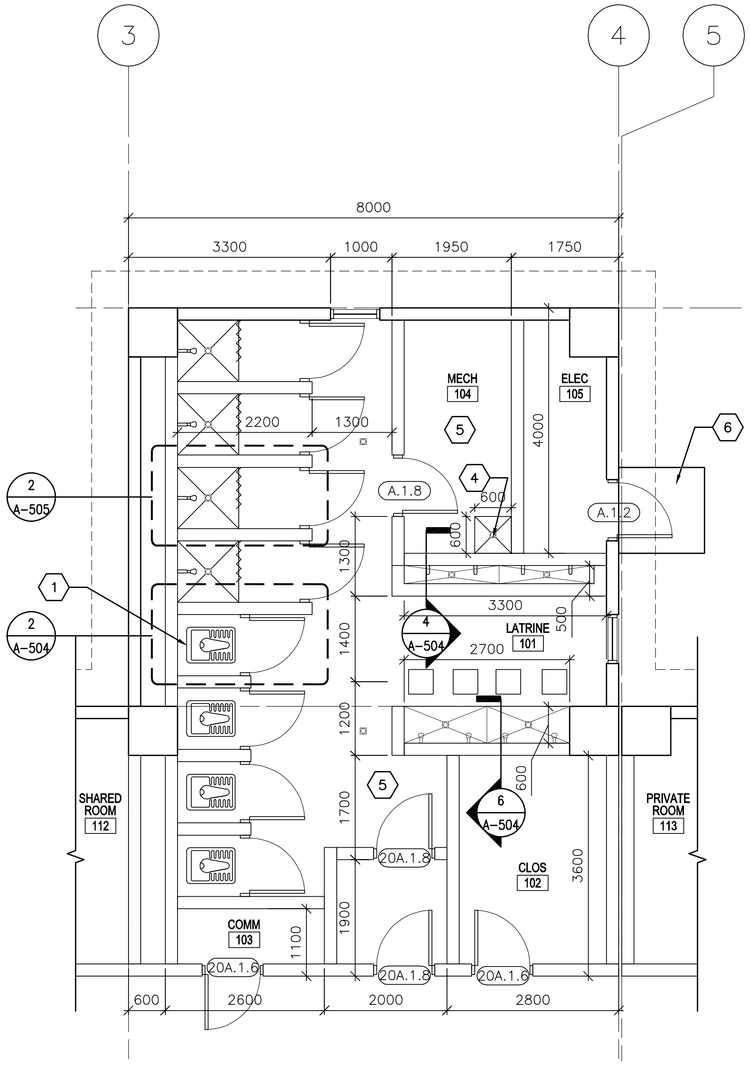

1 / A-402 ENLARGED PLAN

SCALE: 1:50

GENERAL NOTES:

A. DIMENSIONS ARE SHOWN TO OUTER EDGE OF EXTERIOR STRUCTURAL COLUMNS, STRUCTURAL COLUMN GRID, EDGE OF INTERIOR PARTITIONS, EDGE OF WINDOW OPENINGS, AND TO HINGE SIDE OF DOOR FRAME OPENINGS.

B. OPENINGS FOR DOORS AND FRAMES SHALL BE LOCATED 200 MM FROM THE ADJACENT WALL OR COLUMN, UNLESS NOTED OTHERWISE.

C. INTERIOR PARTITIONS SHALL BE 200 MM CMU, UNLESS NOTED OTHERWISE.

D. COSMETIC REPAIR OF MINOR DEFECTS: REPAIR OR FILL MORTAR JOINTS AND MINOR DEFECTS, INCLUDING BUT NOT LIMITED TO SPALLS, IN ACCORDANCE WITH MANUFACTURER'S RECOMMENDATIONS AND PRIOR TO COATING APPLICATION. SURFACES TO BE PAINTED SHALL BE CLEAN AND FREE OF FOREIGN MATTER BEFORE APPLICATION OF PAINT. CLEANING SHALL BE SCHEDULED SO THAT DUST AND OTHER CONTAMINANTS WILL NOT FALL ON NEWLY PAINTED SURFACES.

E. CONCRETE, PLASTER, AND MASONRY SURFACES SHALL BE ALLOWED TO CURE FOR AT LEAST 30 DAYS BEFORE PAINTING. CONCRETE SLABS-ON-GRADE SHALL BE ALLOWED TO CURE 90 DAYS BEFORE STAINING OR SEALING.

F. DO NOT USE PAINT MATERIALS CONTAINING LEAD CONTENT IN EXCESS OF 0.009 PERCENT OF THE WEIGHT OF THE TOTAL NONVOLATILE CONTENT OF THE PAINT OR THE WEIGHT OF THE DRIED PAINT FILM.

G. DO NOT USE ANY ASBESTOS CONTAINING MATERIALS (ACM) IN PROJECT. ACM IS DEFINED AS 1% OR MORE BY VOLUME.

H. DO NOT USE PAINT MATERIALS CONTAINING MERCURIAL FUNGICIDES.

I. FACTORY PRIMED METAL DOORS AND FRAMES SHALL RECEIVE TWO COATS OF PAINT.

J. FILL REMAINING SPACE AT PENETRATIONS IN FIRE-RATED FLOORS, PARTITIONS AND CEILINGS WITH APPROPRIATE FIRESTOPPING MATERIALS.

K. ALL CEILING FINISHES SHALL BE PAINTED PLASTER APPLIED TO STRUCTURE.

L. ALL WALL FINISHES SHALL BE PAINTED PLASTER APPLIED TO STRUCTURE, UNLESS OTHERWISE NOTED.

M. ALL FLOOR FINISHES SHALL BE EPOXY SEALED CONCRETE, UNLESS NOTED OTHERWISE.

N. PROVIDE TILE FINISHES AS INDICATED IN DETAILS AND KEY NOTES.

O. ALL DOOR, FRAME AND HARDWARE TYPES SHALL BE 20A.1.11 UNLESS NOTED OTHERWISE

P. ALL TOILET STALL DOORS SHALL BE F.2.12

Q. SHOWER STALL DOOR, FRAME AND HARDWARE TYPE SHALL BE E.1.12.

R. PROVIDE POLISHED STAINLESS MIRROR 600 X 900 ABOVE EVERY LAVATORY FAUCET

KEY NOTES:

(X)

1. TYPICAL TOILET STALL LAYOUT – SEE DETAIL 2/A-504.
2. NOT USED.
3. NOT USED.
4. RECESSED TROUGH – SEE DETAIL 7/A-504.
5. TERRAZZO FLOOR TILE AND CERAMIC WALL TILE TO 2000 MM ABOVE FINISHED FLOOR UNLESS OTHERWISE NOTED.
6. CONCRETE STOOP – SEE DETAIL 3/A-503.

LEGEND:

(XXX) DOOR FRAME AND HARDWARE TYPE, SEE SHEET A-601

(A) WINDOW TYPE, SEE SHEET A-601

(X) KEY NOTE

ABBREVIATIONS:

COMM	COMMUNICATIONS
ELEC	ELECTRICAL
MECH	MECHANICAL
JAN	JANITOR
CLOS	CLOSET

LINEAR DIMENSIONS SHOWN ARE IN MILLIMETERS (MM), UNLESS OTHERWISE NOTED

0 1000 2000
SCALE: 1:50

APPROVED:

A/E DESIGNER OF RECORD

SEAL:

STATE OF SOUTH CAROLINA
KEVIN R. CHAFIN
N. Charleston, SC
6374
REGISTERED ARCHITECT

US ARMY CORPS OF ENGINEERS
AFGHANISTAN ENGINEER DISTRICT

Mark	Description	Date	Appr.	Mark	Description	Date	Appr.

Date: 2/23/10
Design file no.
Rev: 0
Drawing code:
File name: AN4BOQSA-402EP
Plot date: 2/23/2010
Plot scale: x:X

Designed by: KRC
Dwn by: EBB
Ckd by: NLJ
Reviewed by: LHM
Submitted by:
BAKER

U.S. ARMY CORPS OF ENGINEERS
AFGHANISTAN ENGINEER DISTRICT
APO AE 96338

Michael Baker Jr., Inc
A unit of Michael Baker Corporation
Airside Business Park
100 Airside Drive
Moon Township, PA 15108
www.mbakercorp.com

AFGHAN NATIONAL ARMY
REGIONAL MILITARY TRAINING CENTER
STANDARD DESIGN

SENIOR BOQ BARRACKS

ENLARGED PLAN

Sheet reference number:
A-402

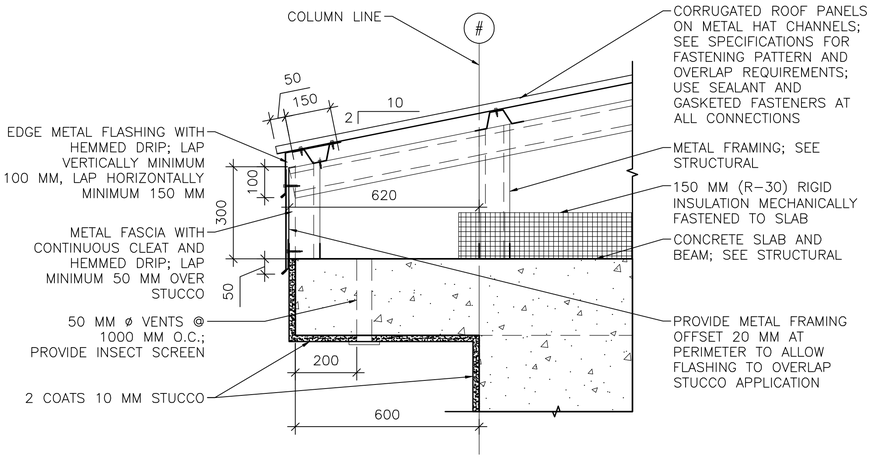

1 / A-501 EAVE DETAIL

SCALE: 1:10

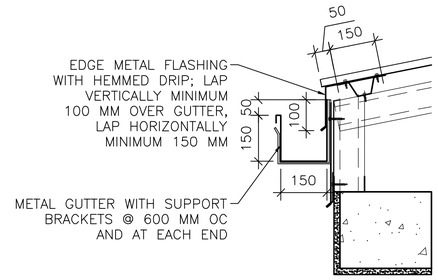

1A / A-501 GUTTER DETAIL

SCALE: 1:10

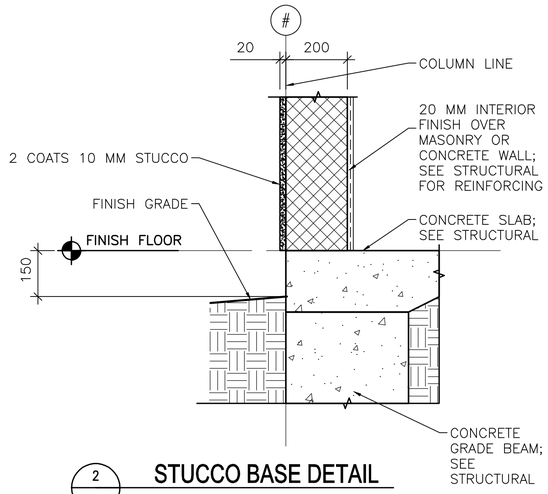

2 / A-501 STUCCO BASE DETAIL

SCALE: 1:10

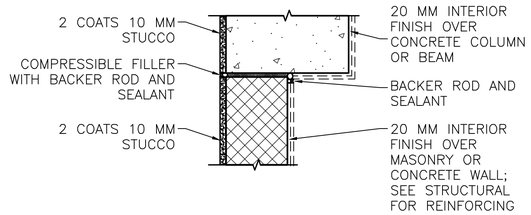

NOTE: DETAIL TYPICAL AT ALL WALL/COLUMN AND WALL/BEAM LOCATIONS, SEE ALTERNATE BRACING DETAIL BELOW 2B/A-501.

2A / A-501 STUCCO JOINT DETAIL

SCALE: 1:10

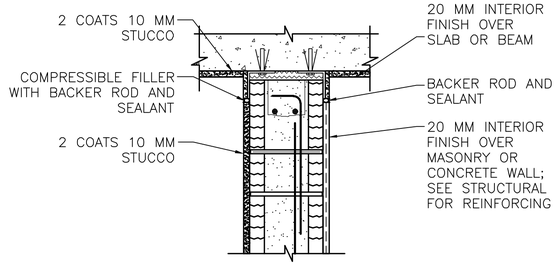

INTERIOR WALL/BEAM

2B / A-501 ALTERNATE BRACING DETAIL

SCALE: 1:10

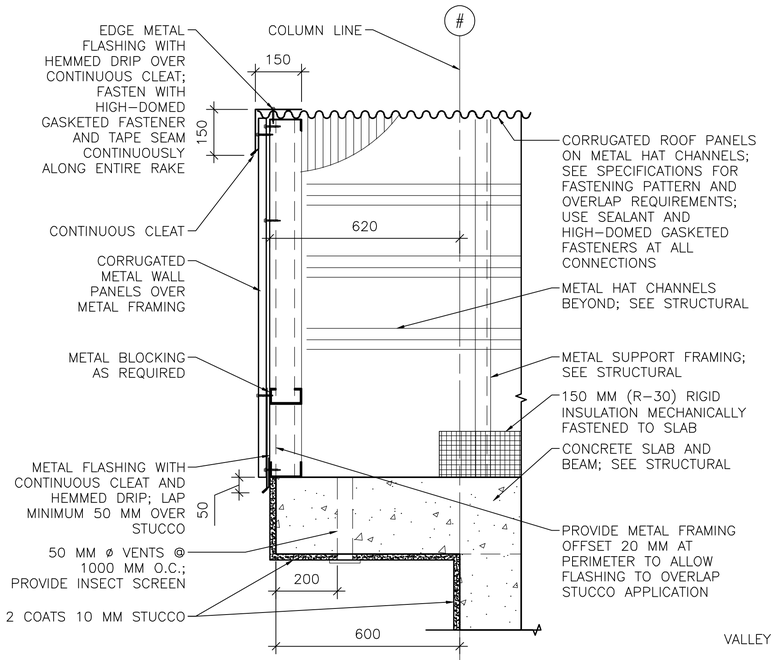

3 / A-501 RAKE/EAVE DETAIL

SCALE: 1:10

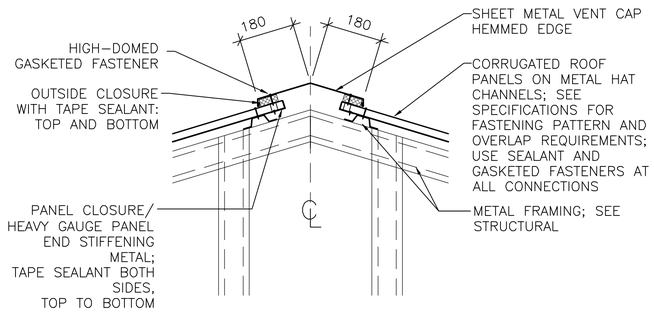

4 / A-501 RIDGE VENT DETAIL

SCALE: 1:10

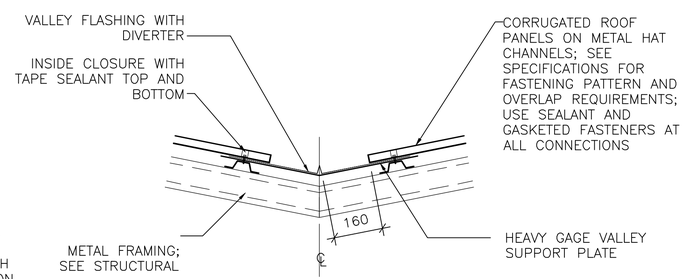

6 / A-501 VALLEY DETAIL

SCALE: 1:10

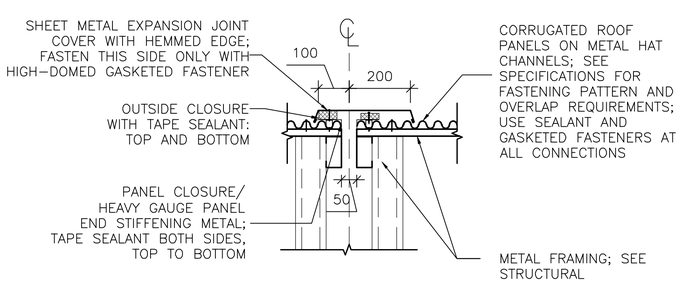

4A / A-501 ROOF EXPANSION JOINT DETAIL

SCALE: 1:10

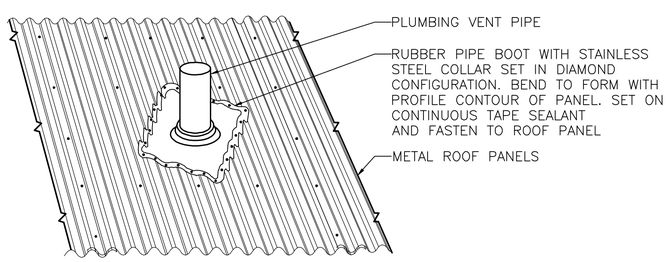

5 / A-501 PLUMBING VENT DETAIL

SCALE: NTS

LINEAR DIMENSIONS SHOWN ARE IN MILLIMETERS (MM), UNLESS OTHERWISE NOTED

0 200 400
SCALE: 1:10

APPROVED:

A/E DESIGNER OF RECORD

SEAL:

STATE OF SOUTH CAROLINA
KEVIN R. CHAFIN
N. Charleston, SC
6374
REGISTERED ARCHITECT

US ARMY CORPS OF ENGINEERS
AFGHANISTAN ENGINEER DISTRICT

Mark	Description	Date	Appr.	Mark	Description	Date	Appr.

Designed by: KRC
Dwn by: EBB
Ckd by: NLJ
Reviewed by: LHM
Submitted by: BAKER
Date: 2/23/10
Design file no.
Rev: 0
Drawing code:
File name: AN4BOQSA-5010T
Plot date: 2/23/2010
Plot scale: x:X

U.S. ARMY CORPS OF ENGINEERS
AFGHANISTAN ENGINEER DISTRICT
APO AE 96338

Michael Baker Jr., Inc
A unit of Michael Baker Corporation
Airside Business Park
100 Airside Drive
Moon Township, PA 15108
www.mbakercorp.com

AFGHAN NATIONAL ARMY
REGIONAL MILITARY TRAINING CENTER
STANDARD DESIGN

SENIOR BOQ BARRACKS

EXTERIOR DETAILS

Sheet reference number:
A-501

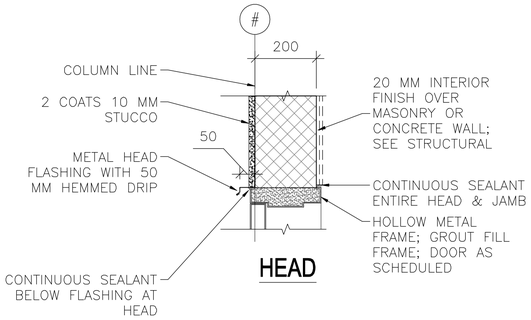

HEAD

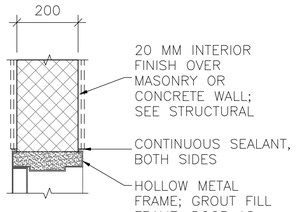

HEAD

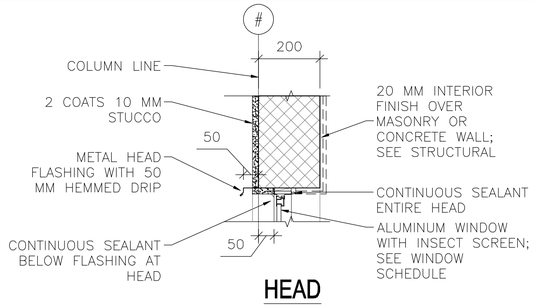

HEAD

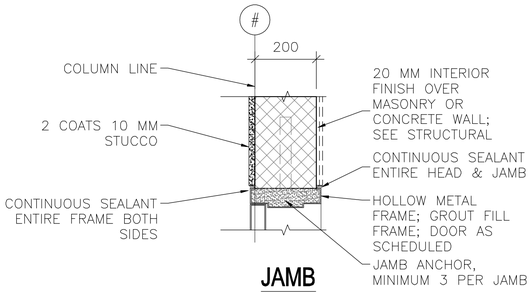

JAMB

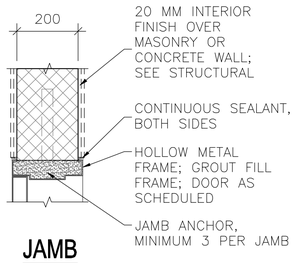

JAMB

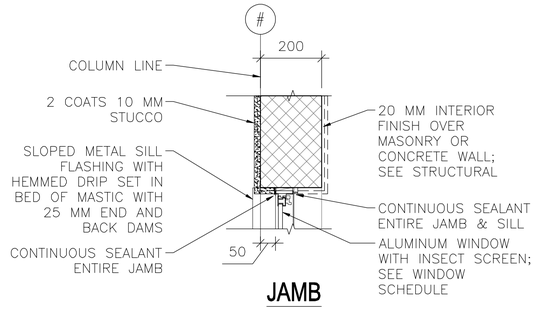

JAMB

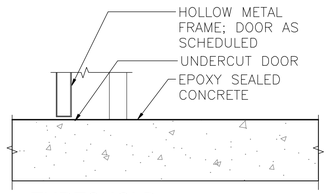

THRESHOLD

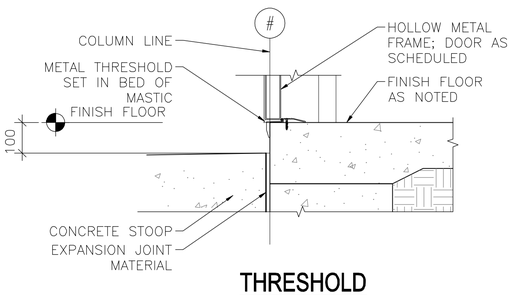

THRESHOLD

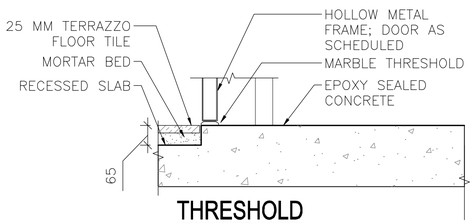

THRESHOLD

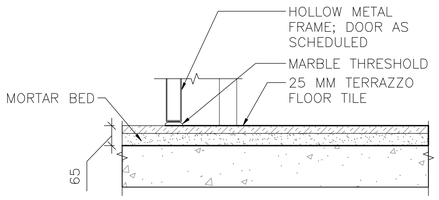

THRESHOLD

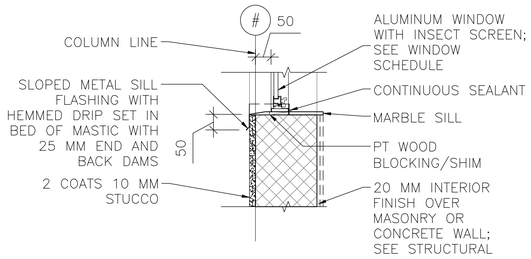

SILL

1 A-502 **EXTERIOR DOOR DETAILS**
SCALE: 1:10

2 A-502 **INTERIOR DOOR DETAILS**
SCALE: 1:10

3 A-502 **EXTERIOR WINDOW DETAILS**
SCALE: 1:10

LINEAR DIMENSIONS SHOWN ARE IN MILLIMETERS (MM), UNLESS OTHERWISE NOTED

0 200 400
SCALE: 1:10

APPROVED:

A/E DESIGNER OF RECORD

SEAL:

STATE OF SOUTH CAROLINA
KEVIN R. CHAFIN
N. Charleston, SC
6374
REGISTERED ARCHITECT

US ARMY CORPS OF ENGINEERS
AFGHANISTAN ENGINEER DISTRICT

Mark	Description	Date	Appr.	Mark	Description	Date	Appr.

Rev: 0
Date: 2/23/10
Design file no.
Drawing code:
File name: AN4BOQSA-502HLS
Plot date: 2/23/2010
Plot scale: X:X

Designed by: KRC
Dwn by: EBB
Ckd by: NLJ
Reviewed by: LHM
Submitted by: BAKER

U.S. ARMY CORPS OF ENGINEERS
AFGHANISTAN ENGINEER DISTRICT
APO AE 96338

Michael Baker Jr., Inc
A unit of Michael Baker Corporation
Airside Business Park
100 Airside Drive
Moon Township, PA 15108
www.mbakercorp.com

AFGHAN NATIONAL ARMY
REGIONAL MILITARY TRAINING CENTER
STANDARD DESIGN

SENIOR BOQ BARRACKS

HEAD, JAMB & SILL DETAILS

Sheet reference number:
A-502

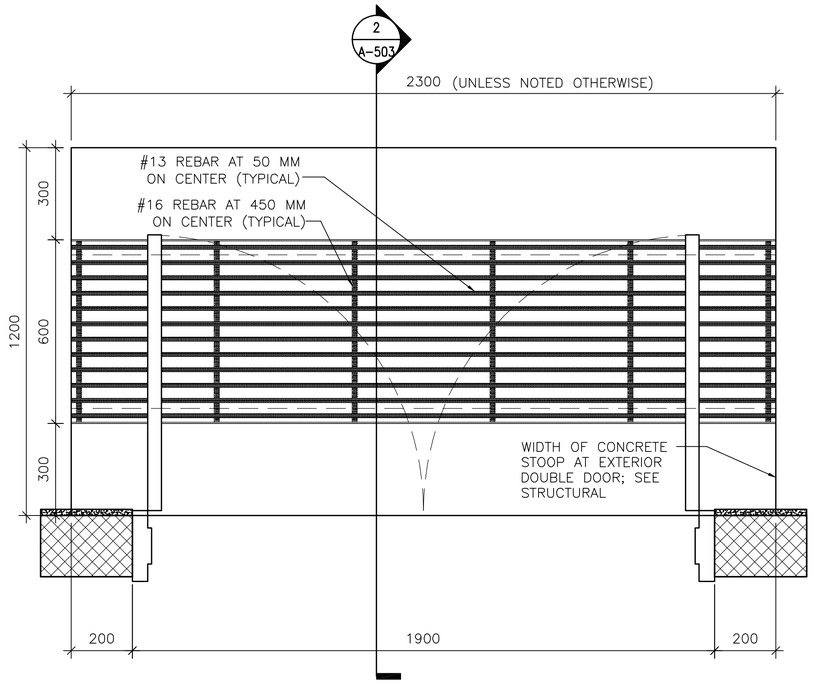

1 A-503 **DOOR STOOP PLAN (WITH GRATE)**

SCALE: 1:10

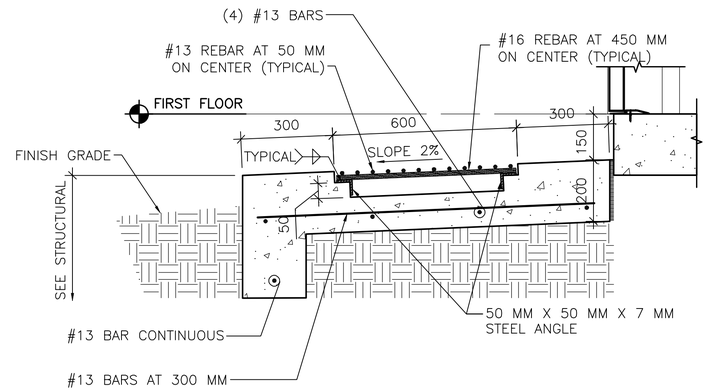

2 A-503 **DOOR STOOP DETAIL**

SCALE: 1:10

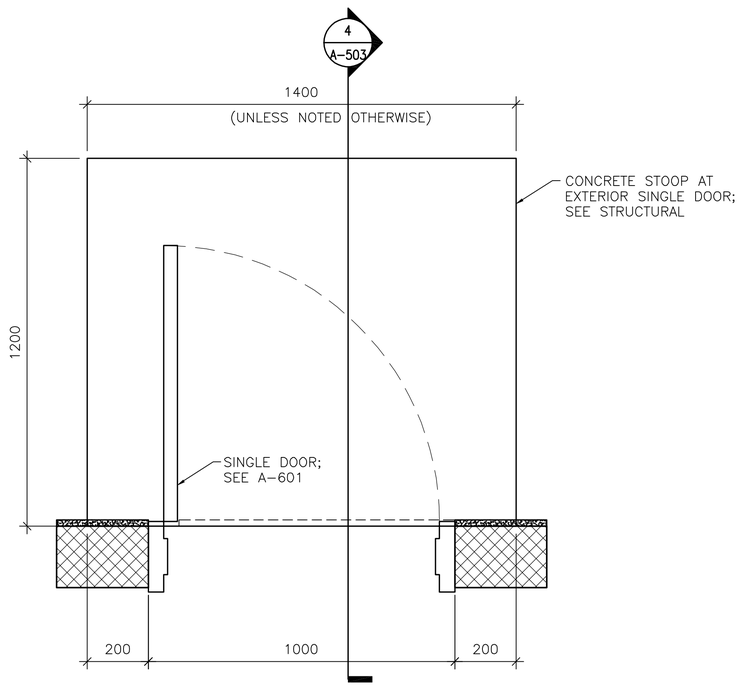

3 A-503 **DOOR STOOP PLAN (WITHOUT GRATE)**

SCALE: 1:10

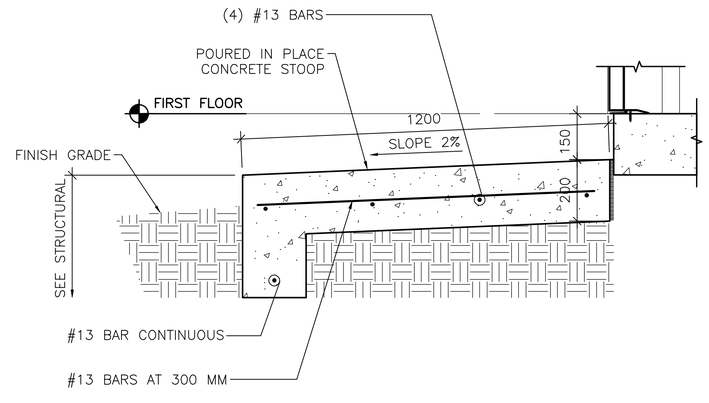

4 A-503 **DOOR STOOP DETAIL**

SCALE: 1:10

LINEAR DIMENSIONS SHOWN ARE IN MILLIMETERS (MM), UNLESS OTHERWISE NOTED

0 200 400
SCALE: 1:10

APPROVED:

A/E DESIGNER OF RECORD

SEAL:

STATE OF SOUTH CAROLINA
KEVIN R. CHAFIN
N. Charleston, SC
8374
REGISTERED ARCHITECT

US ARMY CORPS OF ENGINEERS
AFGHANISTAN ENGINEER DISTRICT

Mark	Description	Date	Appr.	Mark	Description	Date	Appr.

Date: 2/23/10
Rev: 0
Design file no.
Drawing code:
File name: ANABOQSA-503DT
Plot date: 2/23/2010
Plot scale: X:X

Designed by: KRC
Dwn by: EBB
Ckd by: NLJ
Reviewed by: LHM
Submitted by: BAKER

U.S. ARMY CORPS OF ENGINEERS
AFGHANISTAN ENGINEER DISTRICT
APO AE 96338

Michael Baker Jr., Inc
A unit of Michael Baker Corporation
Airside Business Park
100 Airside Drive
Moon Township, PA 15108
www.mbakercorp.com

AFGHAN NATIONAL ARMY
REGIONAL MILITARY TRAINING CENTER
STANDARD DESIGN

SENIOR BOQ BARRACKS

STOOP DETAILS

Sheet reference number:
A-503

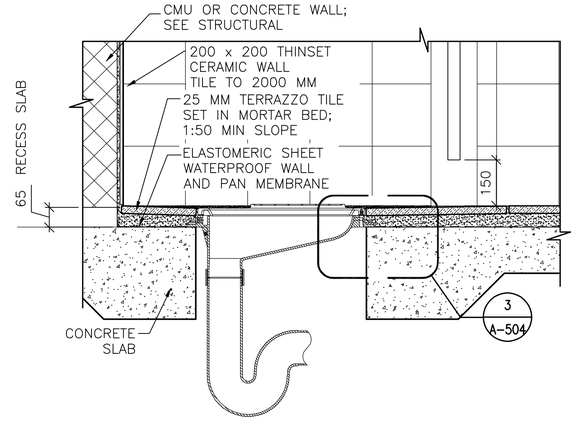

1 A-504 **LATRINE DETAIL**
SCALE: 1:10

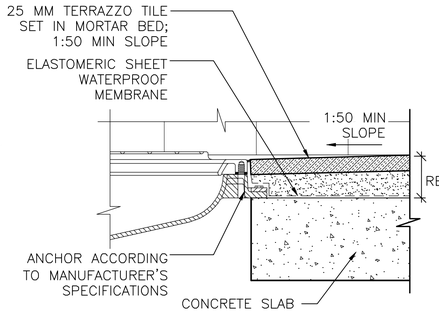

3 A-504 **MOUNTING DETAIL**
SCALE: 1:5

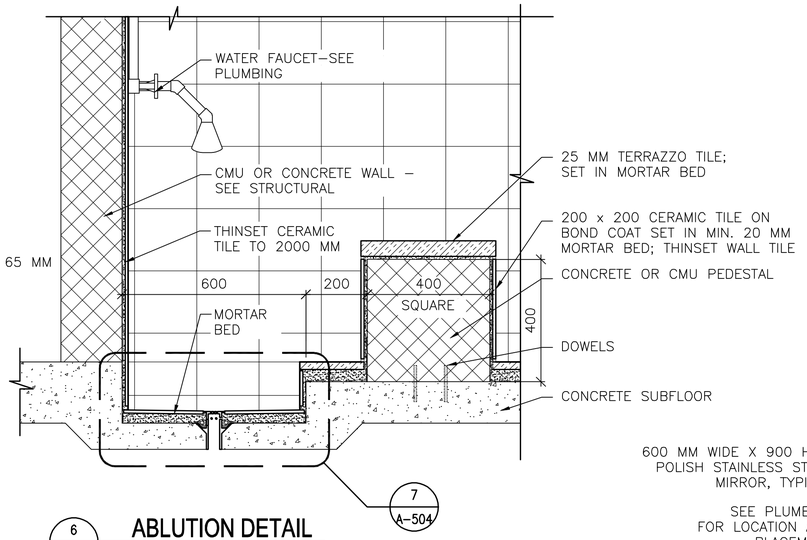

6 A-504 **ABLUTION DETAIL**
SCALE: 1:10

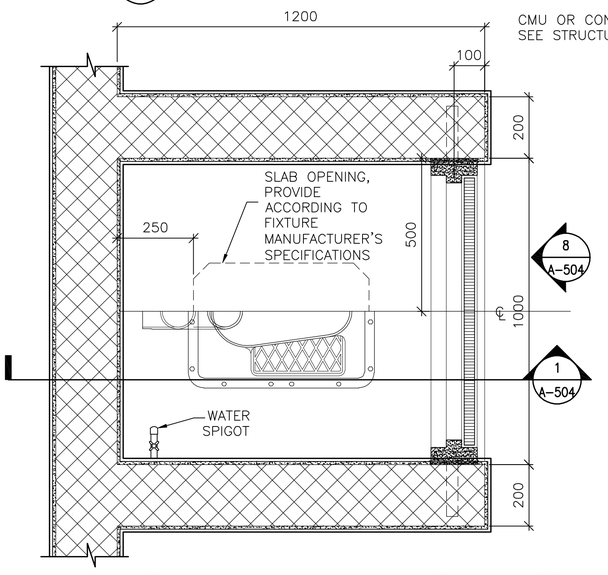

2 A-504 **TOILET DETAIL**
SCALE: 1:10

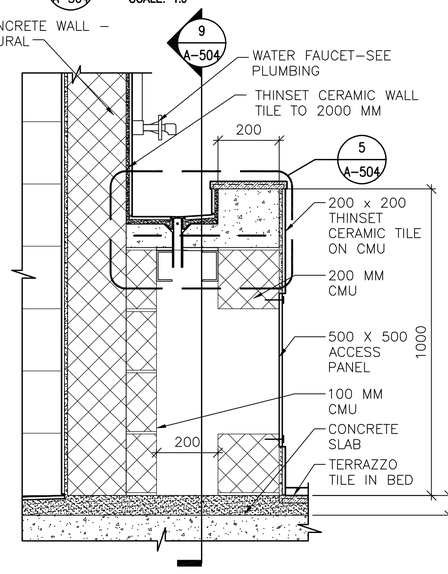

4 A-504 **LAVATORY SECTION**
SCALE: 1:10

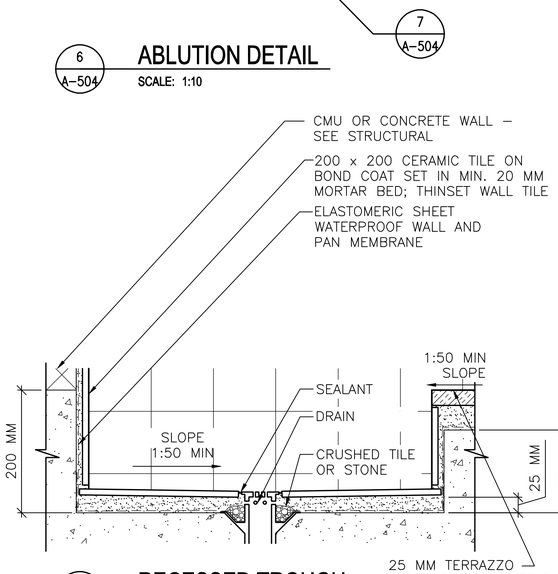

7 A-504 **RECESSED TROUGH**
SCALE: 1:5

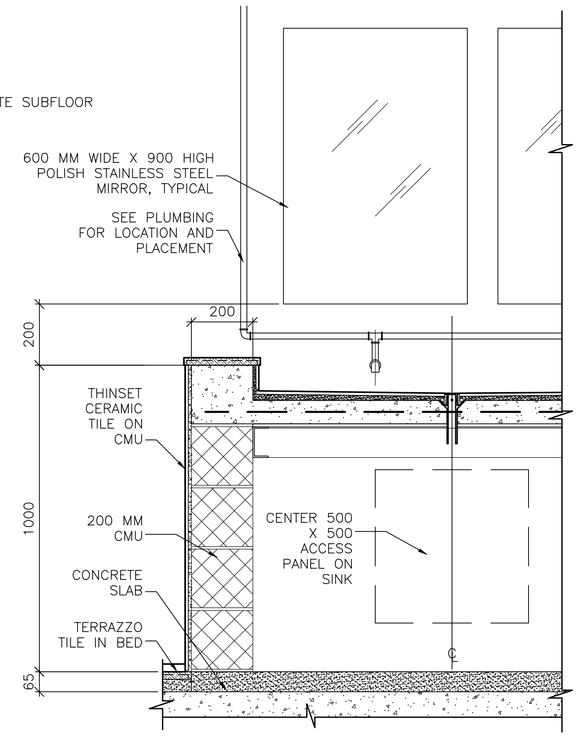

9 A-504 **LAVATORY SECTION**
SCALE: 1:10

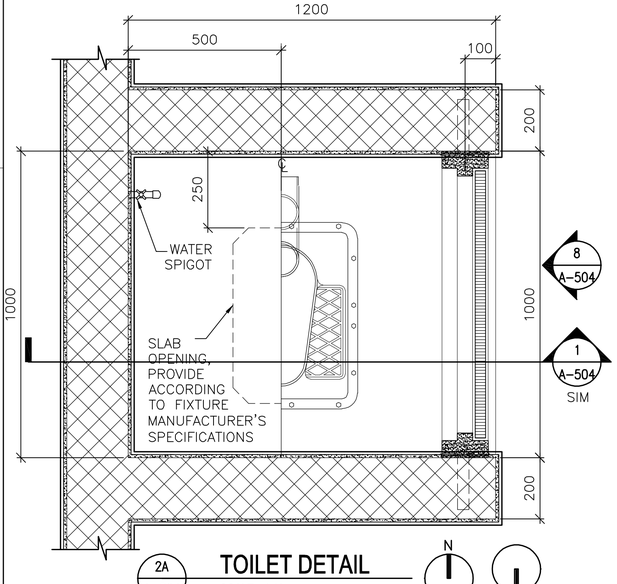

2A A-504 **TOILET DETAIL**
SCALE: 1:10

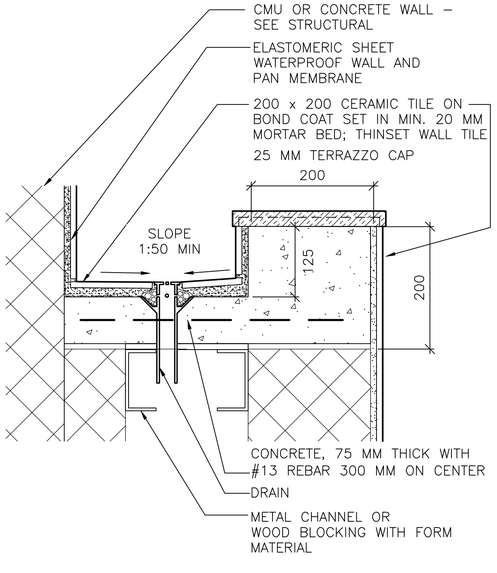

5 A-504 **LAVATORY DETAIL**
SCALE: 1:5

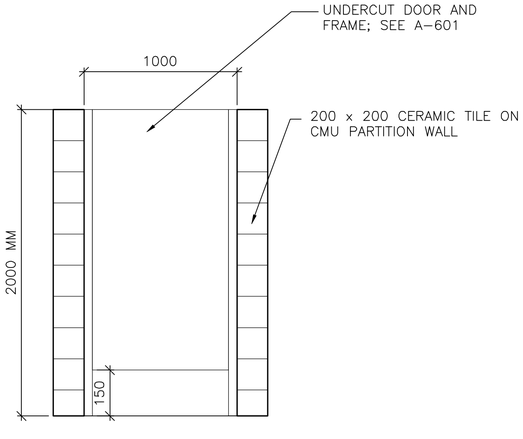

8 A-504 **TOILET PARTITION DOOR ELEVATION**
SCALE: 1:20

LINEAR DIMENSIONS SHOWN ARE IN MILLIMETERS (MM), UNLESS OTHERWISE NOTED

0 100 200
SCALE: 1:5

0 200 400
SCALE: 1:10

0 400 800
SCALE: 1:20

APPROVED:

A/E DESIGNER OF RECORD

SEAL:

STATE OF SOUTH CAROLINA
KEVIN R. CHAFIN
N. Charleston, SC
6374
REGISTERED ARCHITECT

US ARMY CORPS OF ENGINEERS
AFGHANISTAN ENGINEER DISTRICT

Mark	Description	Date	Appr.	Mark	Description	Date	Appr.

Date: 2/23/10
Rev: 0
Design file no.
Drawing code:
File name: AN4BOQSA-504DT
Plot date: 2/23/2010
Plot scale: X:X

Designed by: KRC
Dwn by: EBB
Ckd by: NLJ
Reviewed by: LHM
Submitted by: BAKER

U.S. ARMY CORPS OF ENGINEERS
AFGHANISTAN ENGINEER DISTRICT
APO AE 96338

Michael Baker Jr., Inc
A unit of Michael Baker Corporation
Airside Business Park
100 Airside Drive
Moon Township, PA 15108
www.mbakercorp.com

AFGHAN NATIONAL ARMY
REGIONAL MILITARY TRAINING CENTER
STANDARD DESIGN

SENIOR BOQ BARRACKS

TOILET, LAVATORY & ABLUTION DETAILS

Sheet reference number:
A-504

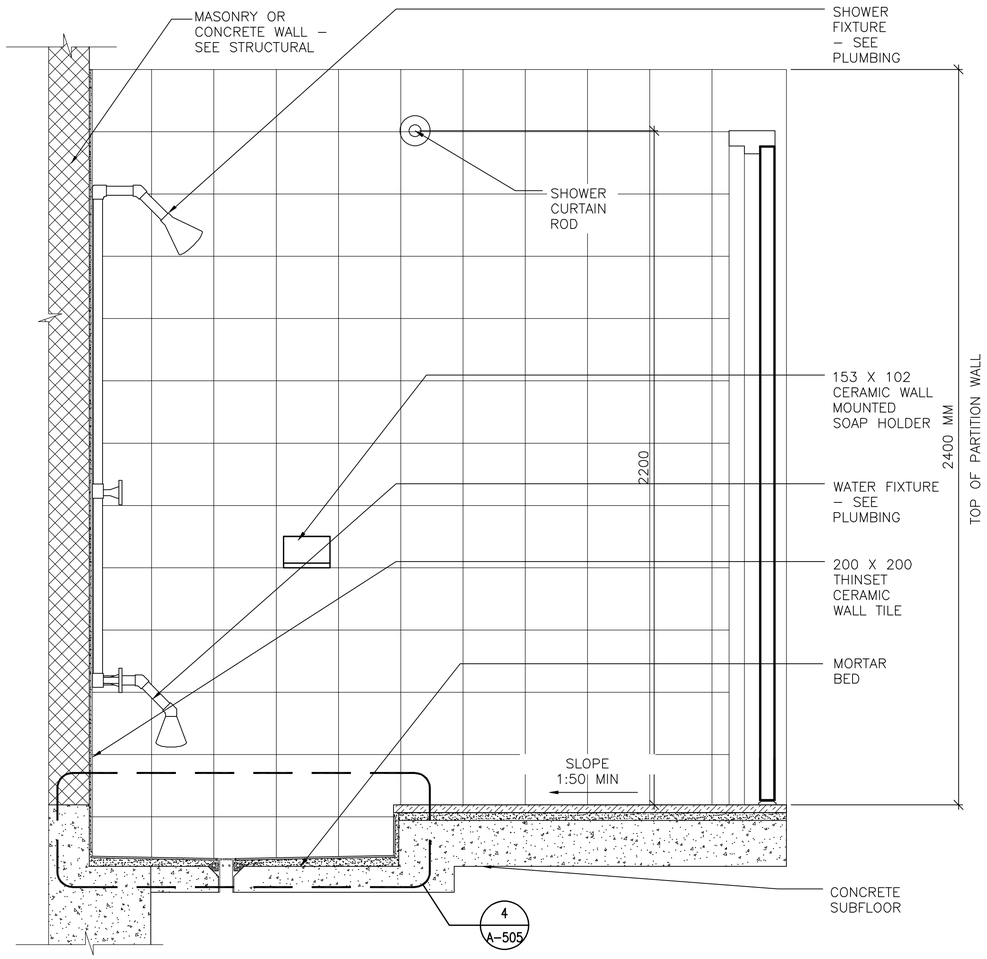

1 A-505 SHOWER DETAIL

SCALE: 1:10

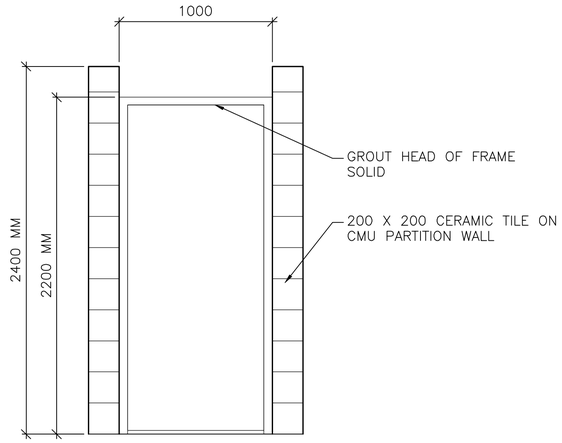

3 A-505 SHOWER PARTITION DOOR ELEVATION

SCALE: 1:20

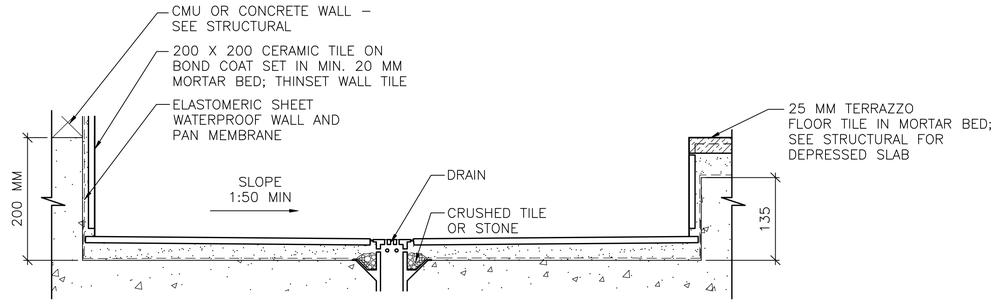

4 A-505 SHOWER RECESS

SCALE: 1:5

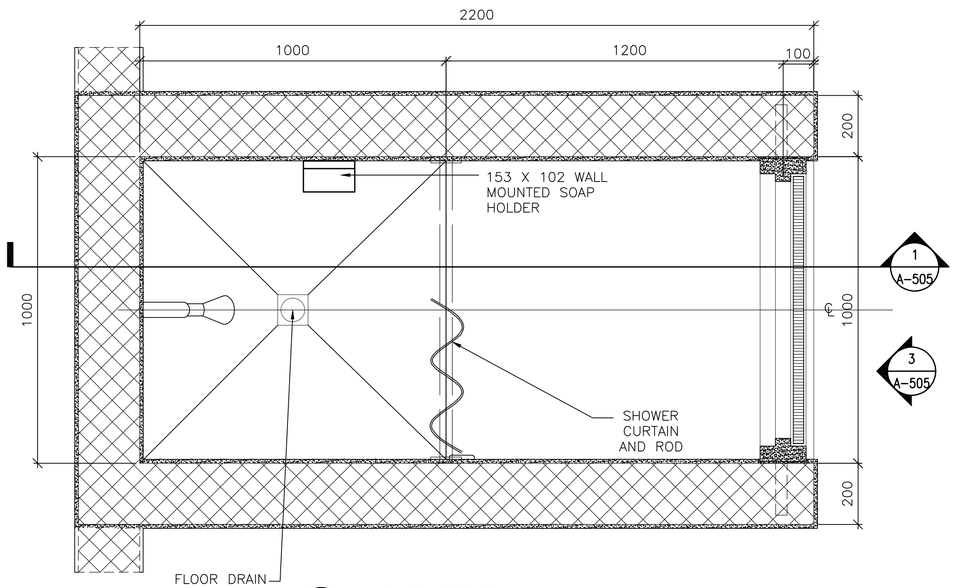

2 A-505 SHOWER PLAN

SCALE: 1:10

LINEAR DIMENSIONS SHOWN ARE IN MILLIMETERS (MM), UNLESS OTHERWISE NOTED

0 100 200 SCALE: 1:5

0 200 400 SCALE: 1:10

0 400 800 SCALE: 1:20

APPROVED:

A/E DESIGNER OF RECORD

SEAL:

STATE OF SOUTH CAROLINA
KEVIN R. CHAFIN
N. Charleston, SC
6374
REGISTERED ARCHITECT

US ARMY CORPS OF ENGINEERS
AFGHANISTAN ENGINEER DISTRICT

Mark	Description	Date	Appr.	Mark	Description	Date	Appr.

U.S. ARMY CORPS OF ENGINEERS
AFGHANISTAN ENGINEER DISTRICT
APO AE 96338

Michael Baker Jr., Inc
A unit of Michael Baker Corporation
Airside Business Park
100 Airside Drive
Moon Township, PA 15108
www.mbakercorp.com

Designed by: KRC
Dwn by: EBB
Ckd by: NLJ
Reviewed by: LHM
Submitted by: BAKER
Date: 2/23/10
Design file no.
Drawing code:
File name: ANABOQSA-5050T
Plot date: 2/23/2010
Plot scale: x:X
Rev: 0

AFGHAN NATIONAL ARMY
REGIONAL MILITARY TRAINING CENTER
STANDARD DESIGN

SENIOR BOQ BARRACKS

SHOWER DETAILS

Sheet reference number:
A-505

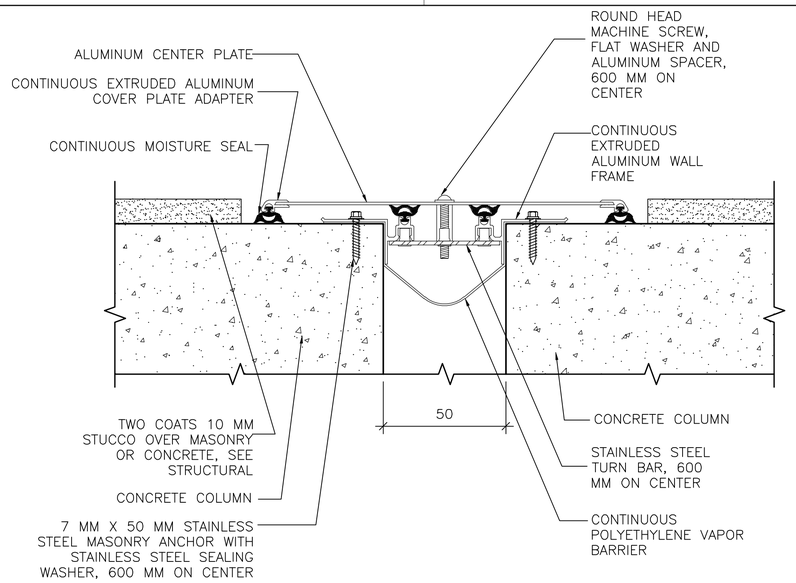

1 / A-506 **EXTERIOR ISOLATION JOINT COVER**

SCALE: NTS

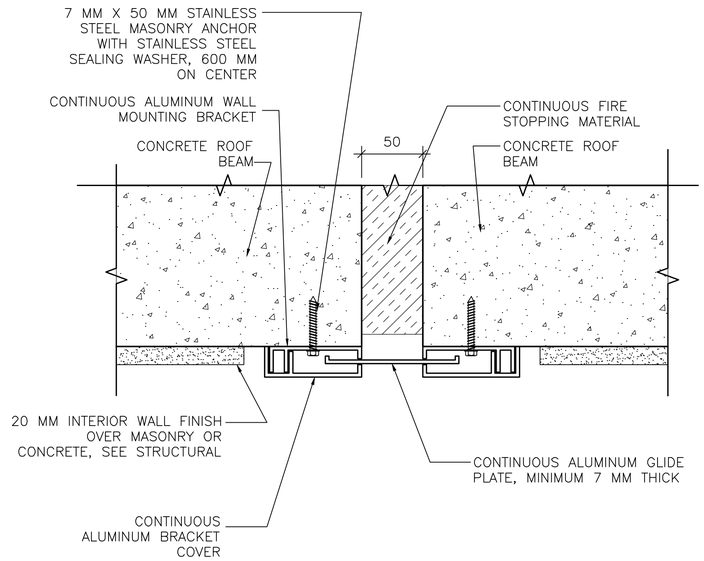

3 / A-506 **CEILING ISOLATION JOINT COVER**

SCALE: NTS

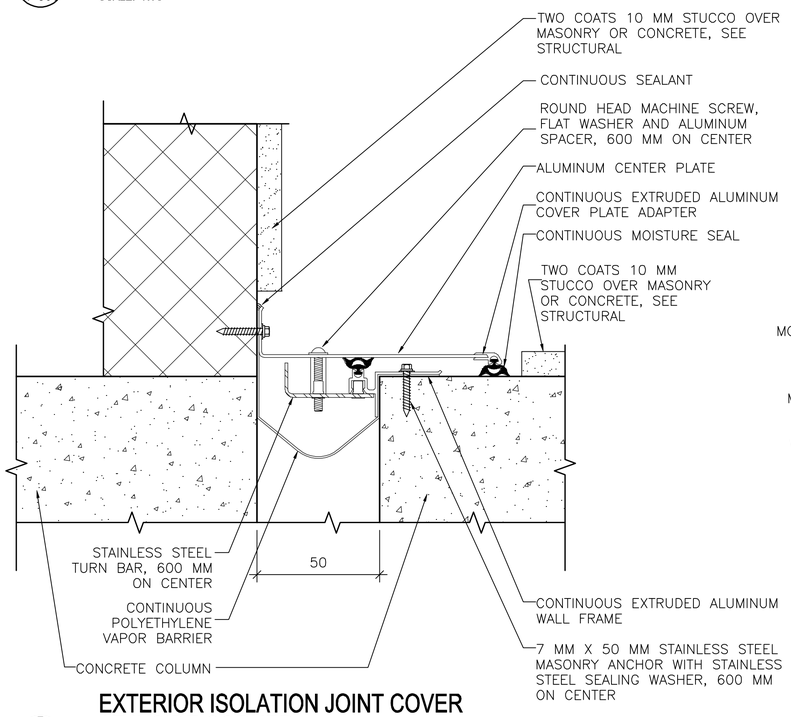

2 / A-506 **EXTERIOR ISOLATION JOINT COVER AT INSIDE CORNER**

SCALE: NTS

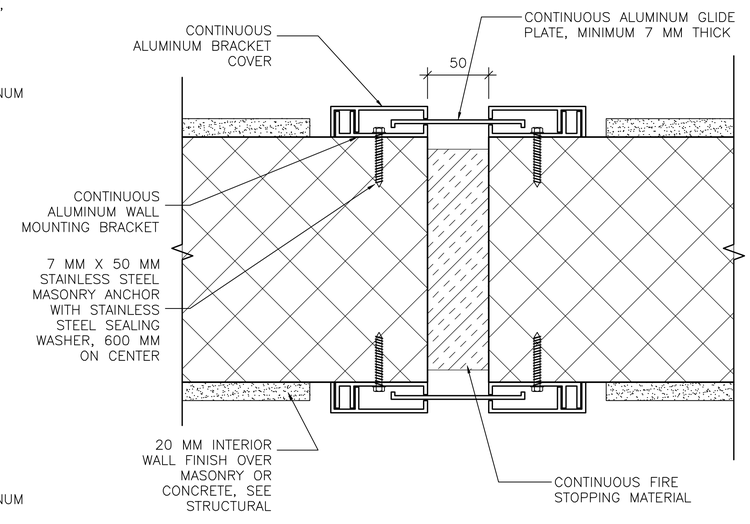

4 / A-506 **INTERIOR ISOLATION JOINT COVER**

SCALE: NTS

LINEAR DIMENSIONS SHOWN ARE IN MILLIMETERS (MM), UNLESS OTHERWISE NOTED

APPROVED:

A/E DESIGNER OF RECORD

SEAL:

STATE OF SOUTH CAROLINA
KEVIN R. CHAFIN
N. Charleston, SC
6374
REGISTERED ARCHITECT

US ARMY CORPS OF ENGINEERS
AFGHANISTAN ENGINEER DISTRICT

Mark	Description	Date	Appr.	Mark	Description	Date	Appr.

U.S. ARMY CORPS OF ENGINEERS
AFGHANISTAN ENGINEER DISTRICT
APO AE 96338

Michael Baker Jr., Inc
A unit of Michael Baker Corporation
Airside Business Park
100 Airside Drive
Moon Township, PA 15108
www.mbakercorp.com

Designed by: KRC		Date: 2/23/10	Rev: 0
Dwn by: KJG	Ckd by: NLJ	Design file no.	
Reviewed by: LHM		Drawing code:	
Submitted by: BAKER		File name: ANABOQSA-506DT Plot date: 2/23/2010 Plot scale: X:X	

AFGHAN NATIONAL ARMY
REGIONAL MILITARY TRAINING CENTER
STANDARD DESIGN

SENIOR BOQ BARRACKS

ISOLATION JOINT DETAILS

Sheet reference number:
A-506

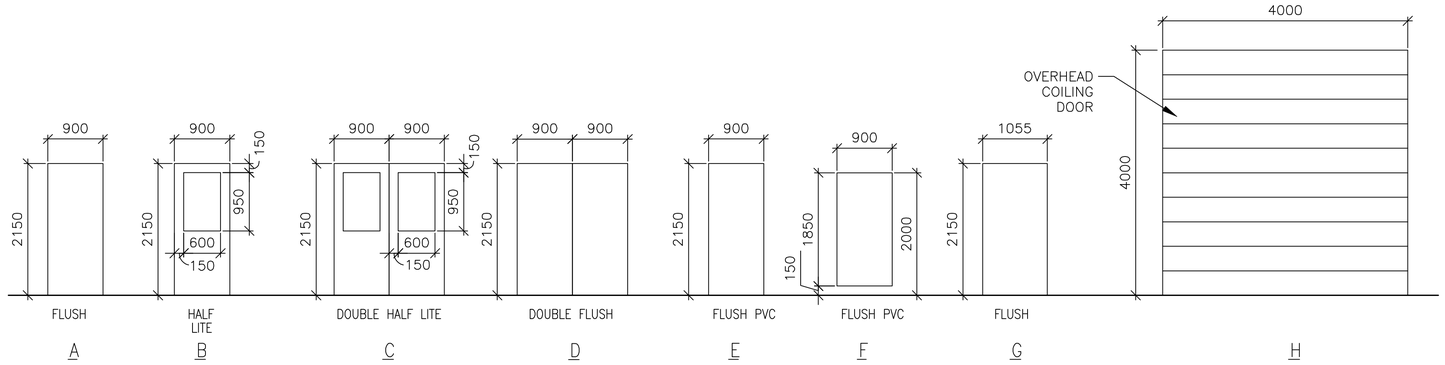

1 A-601 DOOR TYPES

SCALE: 1:50

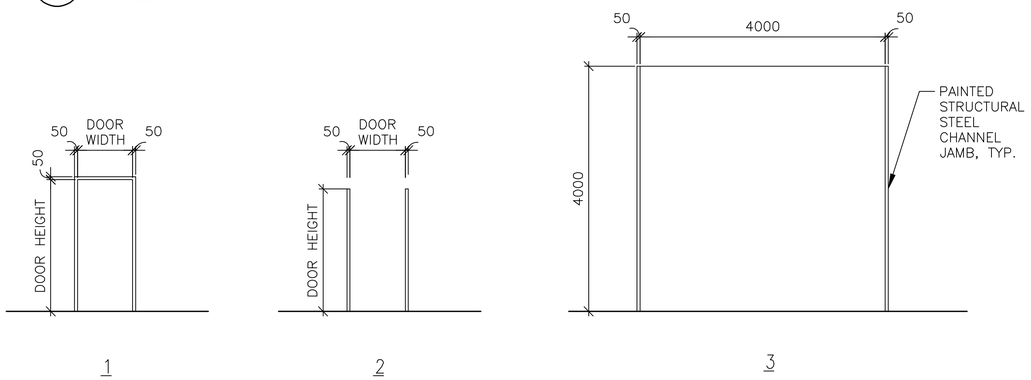

2 A-601 FRAME TYPES

SCALE: 1:50

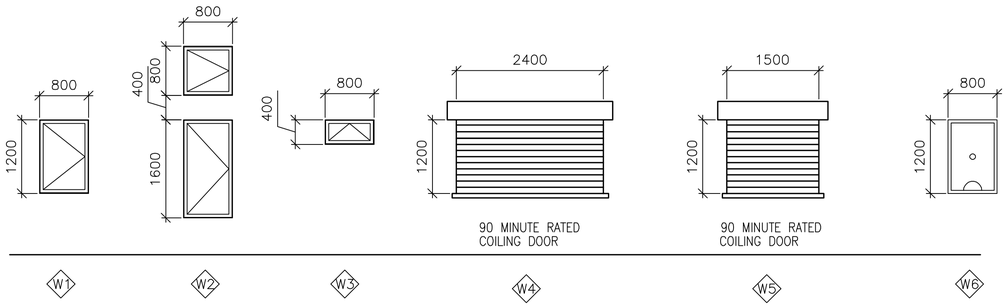

3 A-601 WINDOW TYPES

SCALE: 1:50

WINDOW TYPE NOTES:

1. ALL EXTERIOR WINDOWS SHALL BE ALUMINUM WITH INSECT SCREENS. WINDOWS SHALL BE COMMERCIAL GRADE.
2. ALL EXTERIOR WINDOWS SHALL BE OPERABLE.

4 A-601 DOOR TAG

SCALE: NTS

5 A-601 RATED DOOR TAG

SCALE: NTS

DOOR TAG NOTES:

1. THE DOOR TAG INDICATES THE DOOR TYPE, FRAME TYPE AND HARDWARE SET FOR EACH DOOR.
2. THE DOOR TAG FOR RATED DOORS INCLUDES THE RATING OF THE DOOR IN MINUTES.

EXTERIOR DOOR HARDWARE TYPES:

HW-1 1-1/2 PR HINGES, A5112 114 X 114
1 EA RIM EXIT DEVICE, TYPE 1
1 EA CYLINDER. E09221A, GRADE 1
1 EA OVERHEAD CLOSER, C02061, LOW RESISTANCE
1 EA THRESHOLD, J32130
3 EA DOOR SILENCERS, L03011

HW-2 1-1/2 PR HINGES, A5112 114 X 114
1 EA LOCKSET, F13 ENTRY LOCK W/LEVER HANDLES, GRADE 1
1 EA OVERHEAD CLOSER, C02061, LOW RESISTANCE
1 EA THRESHOLD, J32130
3 EA DOOR SILENCERS, L03011

HW-3 3 PR HINGES, A5112 114 X 114
2 EA RIM EXIT DEVICE, TYPE 1
2 EA CYLINDER. GRADE 1
2 EA OVERHEAD CLOSER, C02061, LOW RESISTANCE
1 EA DOOR COORDINATOR, TYPE 21
1 EA ASTRAGAL
1 EA THRESHOLD, J32130
2 EA DOOR SILENCERS, L03011

HW-4 3 PR HINGES, A5112 114 X 114
1 EA LOCKSET W/LEVER HANDLES. GRADE 1, F13
1 EA OVERHEAD CLOSER, C02061, LOW RESISTANCE
2 EA MAGNETIC HOLDER PIN, ATTACHED TO DOOR LEAF
2 EA MAGNETIC HOLDER RECEIVER, ATTACHED TO STOOP
2 EA LEVER EXTENSION FLUSH BOLTS, L04081
1 EA ASTRAGAL
1 EA THRESHOLD, J32130
2 EA DOOR SILENCERS, L03011

DOOR AND HARDWARE NOTES:

1. INTERIOR AND EXTERIOR METAL DOORS AND FRAME COLORS SHALL MATCH ADJACENT WALL COLORS AS SELECTED BY THE CONTRACTING OFFICER.
2. FRAMES, EXCEPT FIRE-RATED FRAMES, SHALL BE MOUNTED AND ADJUSTED IN ACCORDANCE WITH MANUFACTURER'S INSTRUCTIONS. FRAMES SHALL BE FASTENED WITH MINIMUM OF THREE ANCHORS PER JAMB AT EQUAL INTERVALS.
3. DIMENSIONS SHOWN ON DOOR TYPES DETAIL ARE BASED UPON MODULAR MASONRY (OR ROUGH OPENING), HEIGHT OF 2200 MM FOR STANDARD PERSONNEL DOORS. CONTRACTOR SHALL COORDINATE WITH DOOR SUPPLIER TO ENSURE THAT DIMENSIONS OF DOORS AND FRAMES PROVIDED ARE COMPATIBLE WITH DOOR OPENING DIMENSIONS.
4. HARDWARE SHALL BE HEAVY DUTY, COMMERCIAL GRADE, STAINLESS STEEL WITH A SATIN OR BRUSHED FINISH.
5. HARDWARE TYPES INCLUDE BUILDERS HARDWARE MANUFACTURERS ASSOCIATION (BMHA) NUMBER.
6. DOORS IN 2 HOUR RATED PARTITIONS SHALL BE 1.5 HOUR (90 MINUTE) RATED DOORS IN ACCORDANCE WITH NFPA 101, TABLE 8.3.4.2.
7. DOORS AT STAIR ENCLOSURES SHALL BE 1 HOUR (60 MINUTE) RATED AT 1 HOUR WALL IN ACCORDANCE WITH NFPA 101, TABLE 8.3.4.2.
8. DOORS IN 1 HOUR RATED WALLS SHALL BE 3/4 HOUR (45 MINUTE) RATED DOORS IN ACCORDANCE WITH NFPA 101, TABLE 8.3.4.2.
9. DOORS IN 1 HOUR RATED CORRIDOR WALLS SHALL BE 1/3 HOUR (20 MINUTE) IN ACCORDANCE WITH NFPA 101, TABLE 8.3.4.2.
10. PROVIDE DOOR STOPS TO PROTECT WALLS ON LOCATIONS WHERE DOOR SWING WILL STRIKE WALL.

THIS SHEET IS STANDARD AND IS INCLUSIVE OF ALL THE DOOR/ WINDOW/ HARDWARE TYPES FOR THE ENTIRE RMTC CONTRACT. NOT ALL DOOR/ WINDOW/ HARDWARE TYPES ARE USED FOR ANY PARTICULAR BUILDING DESIGN. CONTRACTOR SHALL REFER TO THE FLOOR PLAN FOR THE TYPES BEING USED.

INTERIOR DOOR HARDWARE TYPES:

HW-5 1-1/2 PR HINGES, A8133 114 X 114
1 EA LOCKSET W/LEVER HANDLES, F08, GRADE 1
1 EA WALL STOP, L02101 OR L02161
3 EA DOOR SILENCERS, L03011

HW-6 1-1/2 PR HINGES, A8112 114 X 114
1 EA LOCKSET W/LEVER HANDLES, F08, GRADE 1
1 EA WALL STOP, L02101 OR L02161
1 EA OVERHEAD CLOSER, C02061, LOW RESISTANCE
3 EA DOOR SILENCERS, L03011

HW-7 1-1/2 PR HINGES, A8133
1 EA LOCKSET W/LEVER HANDLES, F13 GRADE 1
1 EA WALL STOP, L02101 OR L02161
2 EA MOP PLATE, J103
3 EA DOOR SILENCERS, L03011

HW-8 1-1/2 PR HINGES, A8112
1 EA LOCKSET W/LEVER HANDLES, F13 GRADE 1
1 EA WALL STOP, L02101 OR L02161
2 EA MOP PLATE, J103
1 EA OVERHEAD CLOSER, C02061, LOW RESISTANCE
3 EA DOOR SILENCERS, L03011

HW-9 1-1/2 PR HINGES, A5112 114 X 114
1 EA RIM EXIT DEVICE, TYPE 1
1 EA CYLINDER. E09221A, GRADE 1
1 EA OVERHEAD CLOSER, C02061, LOW RESISTANCE
3 EA DOOR SILENCERS, L03011

HW-10 3 PR HINGES, A5112 114 X 114
1 EA LOCKSET W/LEVER HANDLES. GRADE 1, F13
2 EA LEVER EXTENSION FLUSH BOLTS, L04081
1 EA ASTRAGAL
2 EA DOOR SILENCERS, L03011

HW-11 1-1/2 PR HINGES, A8112 114 X 114
1 EA LOCKSET W/LEVER HANDLES, F13, GRADE 1
1 EA WALL STOP, L02101 OR L02161
1 EA OVERHEAD CLOSER, C02061, LOW RESISTANCE
3 EA DOOR SILENCERS, L03011
1 EA ROBE HOOK

HW-12 1-1/2 PR HINGES, A8133
1 EA LATCHSET W/LEVER HANDLES, F76 GRADE 1
1 EA WALL STOP, L02101 OR L02161
2 EA MOP PLATE, J103
3 EA DOOR SILENCERS, L03011
1 EA ROBE HOOK

HW-13 3 PR HINGES, A5112 114 X 114
1 EA LOCKSET W/LEVER HANDLES. GRADE 1, F13
1 EA OVERHEAD CLOSER, C02061, LOW RESISTANCE
2 EA LEVER EXTENSION FLUSH BOLTS, L04081
1 EA ASTRAGAL
2 EA DOOR SILENCERS, L03011

HW-14 3 PR HINGES, A5112 114 X 114
2 EA RIM EXIT DEVICE, TYPE 1
2 EA CYLINDER. GRADE 1
2 EA OVERHEAD CLOSER, C02061, LOW RESISTANCE
1 EA DOOR COORDINATOR, TYPE 21
1 EA ASTRAGAL
2 EA DOOR SILENCERS, L03011

APPROVED:

A/E DESIGNER OF RECORD

SEAL:

STATE OF SOUTH CAROLINA
KEVIN R. CHAFIN
N. Charleston, SC
6374
REGISTERED ARCHITECT

US ARMY CORPS OF ENGINEERS
AFGHANISTAN ENGINEER DISTRICT

Mark	Description	Date	Appr.	Mark	Description	Date	Appr.

Date: 2/23/10 Rev: 0
Design file no.
Drawing code:
File name: AN4BOQSA-001SCH
Plot date: 2/23/2010
Plot scale: X:X

Designed by: KRC
Dwn by: EBB
Ckd by: NLJ
Reviewed by: LHM
Submitted by:
BAKER

U.S. ARMY CORPS OF ENGINEERS
AFGHANISTAN ENGINEER DISTRICT
APO AE 96338

Michael Baker Jr., Inc.
A unit of Michael Baker Corporation
Airside Business Park
100 Airside Drive
Moon Township, PA 15108
www.mbakercorp.com

AFGHAN NATIONAL ARMY
REGIONAL MILITARY TRAINING CENTER
STANDARD DESIGN

SENIOR BOQ BARRACKS

WINDOW AND DOOR SCHEDULES

Sheet reference number:
A-601

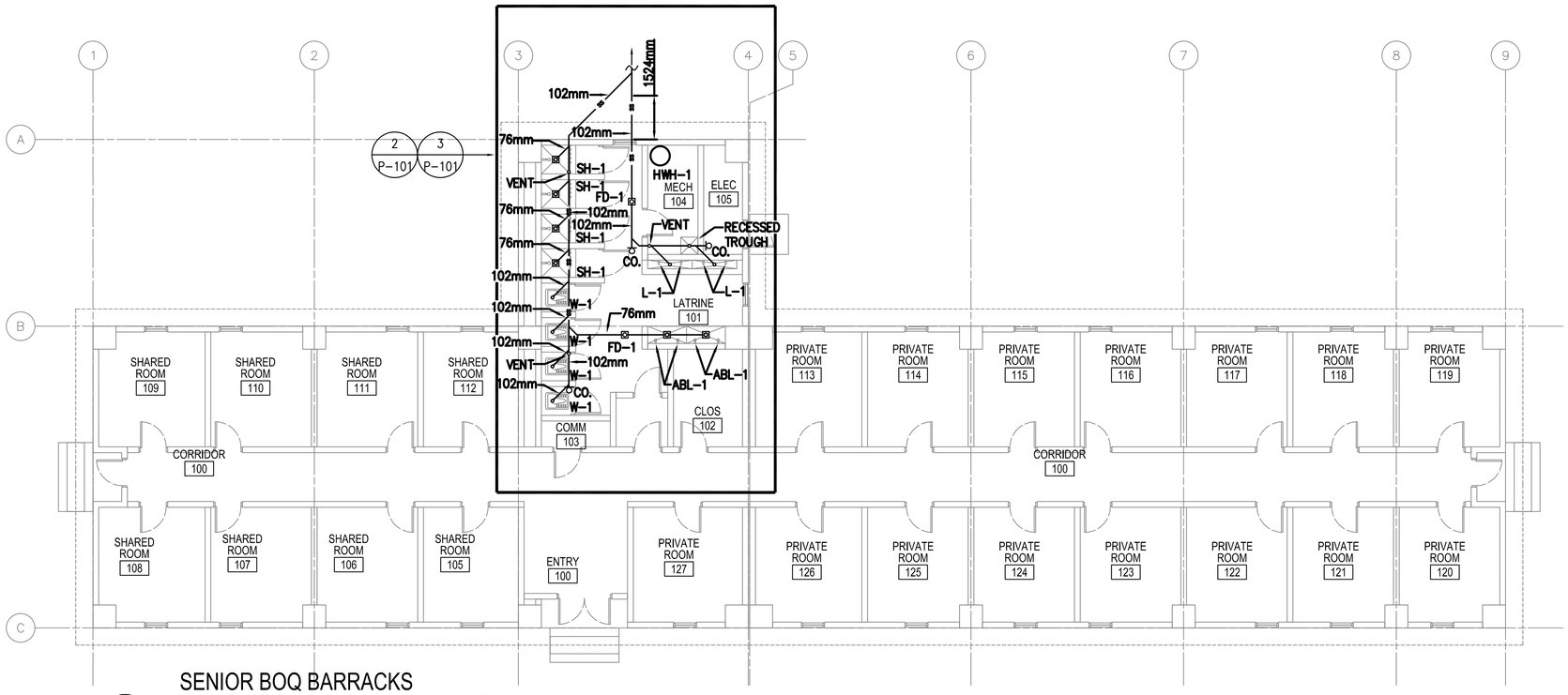

1 P-101

SENIOR BOQ BARRACKS FLOOR PLAN - PLUMBING (SANITARY)

SCALE: 1:100

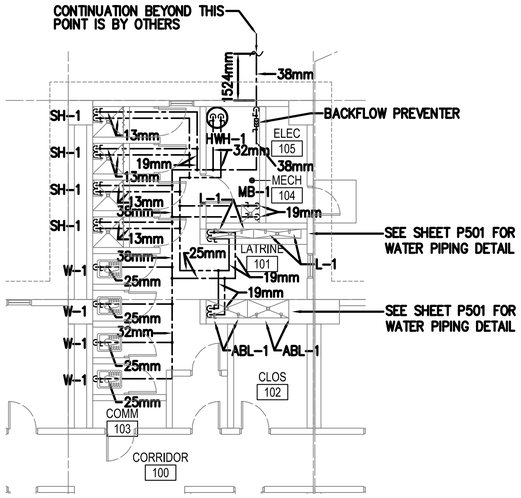

2 P-101

PARTIAL SENIOR BOQ BARRACKS FLOOR PLAN - PLUMBING (HOT AND COLD WATER)

SCALE: 1:100

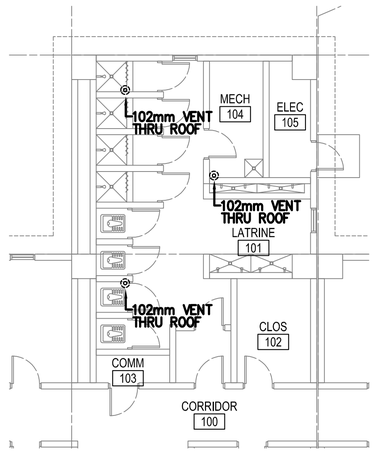

3 P-101

PARTIAL SENIOR BOQ BARRACKS FLOOR PLAN - PLUMBING (VENT PIPING)

SCALE: 1:100

PLUMBING SYMBOLS

- SANITARY SEWER PIPING (BELOW GROUND)
- SANITARY SEWER PIPING (ABOVE GROUND)
- VENT PIPING (V)
- COLD WATER PIPING (CW)
- HOT WATER PIPING (HW)
- BALL VALVE
- BACKFLOW PREVENTER
- CLEANOUT (CO.)
- ROOF PENETRATION

FLOOR PLAN NOTES:

1. DO NOT SCALE DRAWINGS – ALL DIMENSIONS AND CONDITIONS SHALL BE CHECKED AND VERIFIED BY THE CONTRACTOR AT THE SITE.
2. ALL WORK PERFORMED ON THIS BUILDING SHALL BE IN COMPLIANCE WITH ALL PERTINENT CODES, RULES, ORDINANCES AND REGULATIONS OF THE GOVERNING AUTHORITIES.
3. ALL WORK PERFORMED UNDER AND IN CONNECTION WITH THESE DRAWINGS AND SPECIFICATIONS SHALL BE IN STRICT COMPLIANCE WITH THE LATEST SAFETY AND HEALTH STANDARDS.
4. REPORT ANY DISCREPANCIES FOUND IN THE PLUMBING DRAWINGS AND/OR IN THE SPECIFICATIONS DURING THE BIDDING PROCESS FOR CLARIFICATION BY THE ENGINEER.
5. ALL EASTERN STYLE WATER CLOSETS IN THIS FACILITY ARE TO HAVE THE FIXTURE DESIGNATION OF W-1. EACH FIXTURE SHALL HAVE A 25mm (1 INCH) COLD WATER LINE EXTENDED TO IT AND THEN BE REDUCED TO 13mm (1/2 INCH) FOR A FINAL CONNECTION TO THE FLUSH TANK AND A 102mm (4) INCH SANITARY CONNECTION.
6. ALL LAV FIXTURES IN THIS FACILITY ARE TO HAVE THE FIXTURE DESIGNATION OF L-1. EACH FIXTURE SHALL HAVE A 13mm (1/2 INCH) COLD WATER, 13mm (1/2 INCH) HOT WATER CONNECTION AND A 76mm (3 INCH) SANITARY CONNECTION.
7. ALL ABLUTION FIXTURES IN THIS FACILITY ARE TO HAVE THE FIXTURE DESIGNATION OF ABL-1. EACH FIXTURE SHALL HAVE A 13mm (1/2 INCH) COLD WATER, 13mm (1/2 INCH) HOT WATER CONNECTION AND A 76mm (3 INCH) SANITARY CONNECTION.
8. REFER TO SHEET P501, P502, AND P503 FOR DETAILS AND SYMBOLS.
9. ALL WATER, SANITARY AND VENT LINES TO BE EXPOSED. RUN LINES TIGHT TO CEILING AND WALL.

LINEAR DIMENSIONS SHOWN ARE IN MILLIMETERS (MM), UNLESS OTHERWISE NOTED

0 2000 4000
SCALE: 1:100

APPROVED:

A/E DESIGNER OF RECORD

SEAL:

COMMONWEALTH OF PENNSYLVANIA REGISTERED PROFESSIONAL MATTHEW R. SOTOSKY ENGINEER 045576-E

US ARMY CORPS OF ENGINEERS
AFGHANISTAN ENGINEER DISTRICT

Mark	Description	Date	Appr.	Mark	Description	Date	Appr.

Rev: 0
Date: 02/23/10
Design file no.
Drawing code:
File name: ANABIOOSPL-101XXX
Plot date: 02/09/2010
Plot scale: 1:50

Designed by: RMH
Dwn by: RMH
Ckd by: CJM
Reviewed by:
Submitted by: BAKER

U.S. ARMY CORPS OF ENGINEERS
AFGHANISTAN ENGINEER DISTRICT
APO AE 96338

Michael Baker Jr., Inc.
A unit of Michael Baker Corporation
Airside Business Park
100 Airside Drive
Moon Township, PA 15108
www.mbakercorp.com

AFGHAN NATIONAL ARMY
REGIONAL MILITARY TRAINING CENTER
STANDARD DESIGN

SENIOR BOQ BARRACKS
FLOOR PLAN – PLUMBING

Sheet reference number:
P-101

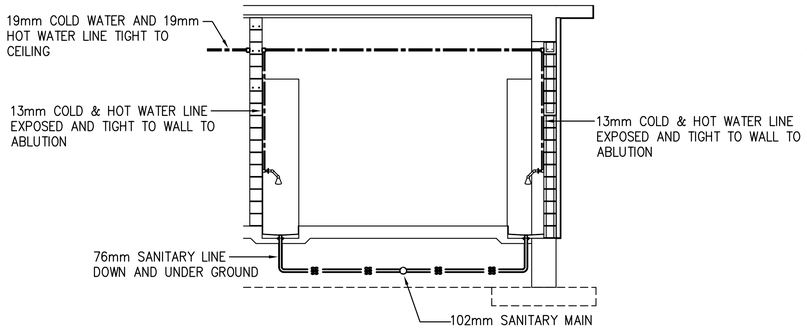

TYPICAL ABLUTION SANITARY & WATER INSTALLATION SCHEMATIC

SCALE: N.T.S.

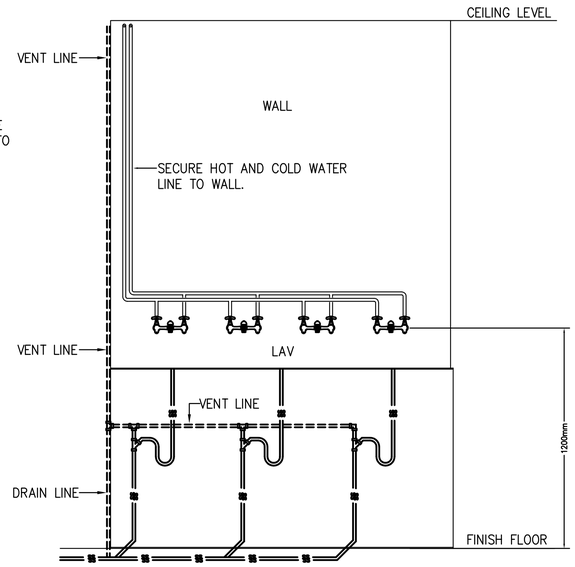

LAVATORY ELEVATION PLAN - PLUMBING

SCALE: N.T.S.

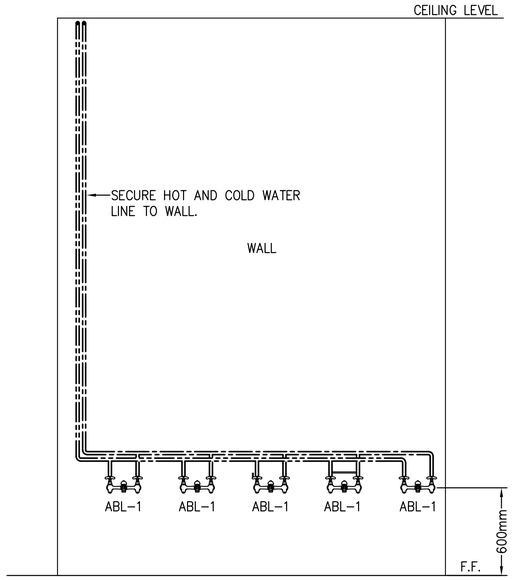

TYPICAL ABLUTION ELEVATION PLUMBING PLAN - WATER INSTALLATION SCHEMATIC

SCALE: N.T.S.

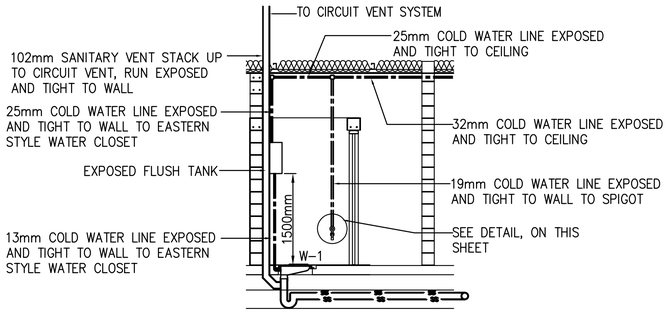

TYPICAL EASTERN STYLE WATER CLOSET SANITARY & WATER INSTALLATION SCHEMATIC

SCALE: N.T.S.

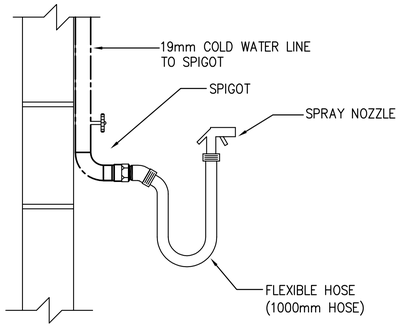

TYPICAL DETAIL - SPIGOT, FLEXIBLE HOSE, AND SPRAY NOZZLE

SCALE: N.T.S.

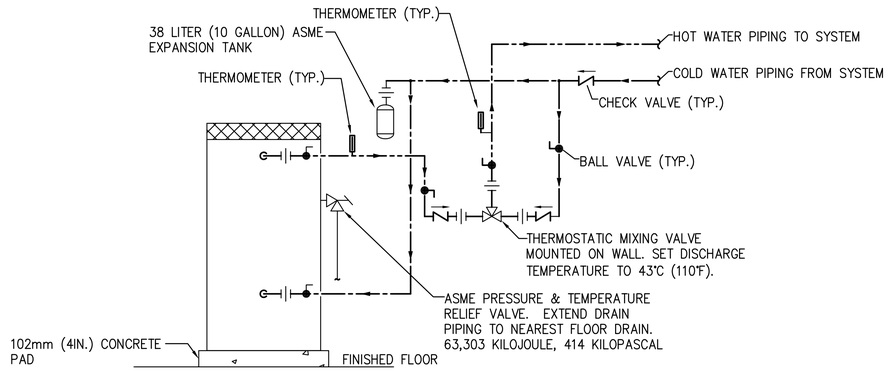

ELECTRIC WATER HEATER PIPING SCHEMATIC

SCALE: N.T.S.

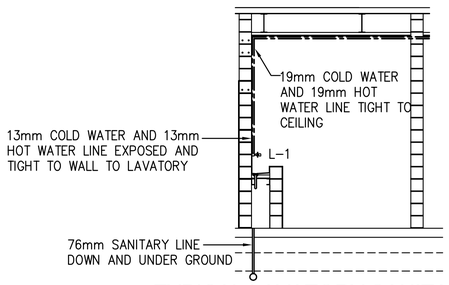

TYPICAL LAVATORY SANITARY & WATER INSTALLATION SCHEMATIC

SCALE: N.T.S.

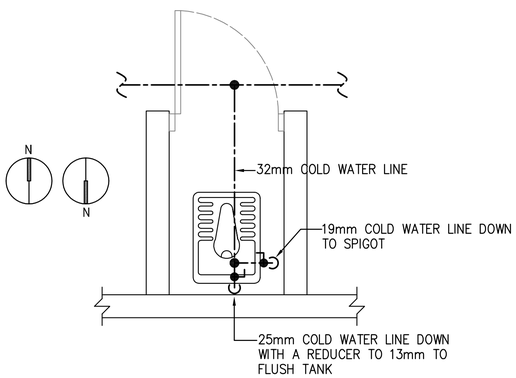

TYPICAL EASTERN STYLE WATER CLOSET WITH SPIGOT WATER PIPING DETAIL

SCALE: N.T.S.

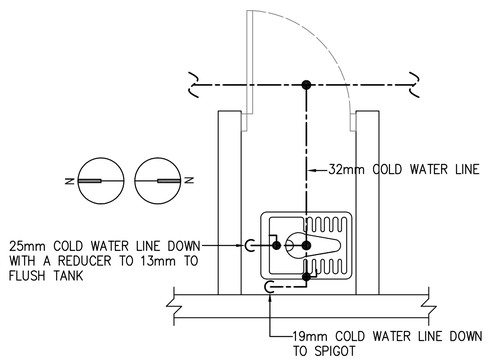

TYPICAL EASTERN STYLE WATER CLOSET WITH SPIGOT WATER PIPING DETAIL

SCALE: N.T.S.

GENERAL PLUMBING NOTES:

1. ALL SANITARY PIPING SHALL BE BELOW FLOOR, AND ALL WATER, AND VENT PIPING SHALL BE TIGHT TO CEILING, UNLESS OTHERWISE NOTED.

2. PLUMBING CONTRACTOR SHALL COORDINATE PLUMBING WORK WITH THE WORK OF ALL OTHER TRADES. VERIFY THE LOCATIONS OF ALL UTILITIES AT THE SITE PRIOR TO THE START OF ANY PLUMBING WORK.

3. COORDINATE ALL ACCESS PANEL LOCATIONS WITH THE ARCHITECT AND GENERAL CONTRACTOR.

4. ALL SANITARY PIPING BELOW SLAB SHALL BE A MINIMUM OF 51mm, UNLESS OTHERWISE NOTED OR AS REQUIRED BY THE LOCAL AUTHORITY HAVING JURISDICTION.

5. ALL SANITARY BRANCH LINES SHALL BE SLOPED AT 6mm PER 305mm, AND ALL MAIN LINES SHALL BE SLOPED AT 3mm PER 305mm, UNLESS OTHERWISE NOTED OR AS REQUIRED BY THE LOCAL AUTHORITY HAVING JURISDICTION.

6. THE CONTRACTOR SHALL BE RESPONSIBLE FOR COORDINATION WITH ALL UTILITY AUTHORITIES FOR INSTALLATION REQUIREMENTS, REGULATIONS, FEES, PERMITS, AND APPROVALS BEFORE THE START OF CONSTRUCTION.

7. THE CONTRACTOR SHALL ROUGH-IN AND CONNECT ALL EQUIPMENT REQUIRING WATER, WASTE, AND/OR VENT WHETHER OR NOT FURNISHED UNDER THIS CONTRACT. THE CONTRACTOR SHALL ALSO FURNISH AND INSTALL ALL NECESSARY PIPE, FITTINGS, VALVES, TRAPS, ETC., REQUIRED FOR A COMPLETE INSTALLATION, LEAVING SAME READY FOR SERVICE.

APPROVED:

A/E DESIGNER OF RECORD

SEAL:

COMMONWEALTH OF PENNSYLVANIA REGISTERED PROFESSIONAL ENGINEER MATTHEW R. SOTOSKY 065576-E

US ARMY CORPS OF ENGINEERS
AFGHANISTAN ENGINEER DISTRICT

Mark	Description	Date	Appr.	Mark	Description	Date	Appr.

Date: 02/23/10 | Rev: 0
Designed by: RMH | Dwn by: RMH | Ckd by: CJM
Design file no.
Drawing code:
Reviewed by:
Submitted by: MRS
File name: ANABIOOSPI-561XXX
Plot date: 02/09/2010
Plot scale: 1:100

U.S. ARMY CORPS OF ENGINEERS
AFGHANISTAN ENGINEER DISTRICT
APO AE 96338

Michael Baker Jr., Inc.
A unit of Michael Baker Corporation
Airside Business Park
100 Airside Drive
Moon Township, PA 15108
www.mbakercorp.com

AFGHAN NATIONAL ARMY
REGIONAL MILITARY TRAINING CENTER
STANDARD DESIGN

SENIOR BOQ BARRACKS
PLUMBING DETAILS

Sheet reference number:
P-501

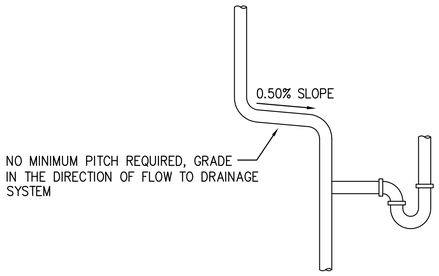

TYPICAL VENT GRADE DETAILS

SCALE: N.T.S.

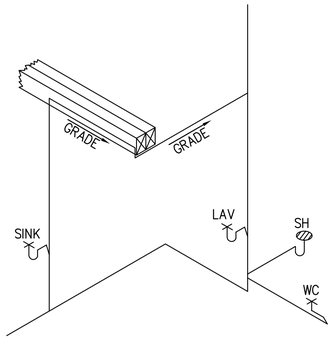

TYPICAL VENT GRADE DETAILS

SCALE: N.T.S.

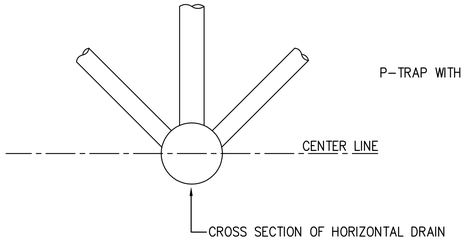

ACCEPTABLE VENT CONNECTIONS TO HORIZONTAL DRAIN - DETAIL

SCALE: N.T.S.

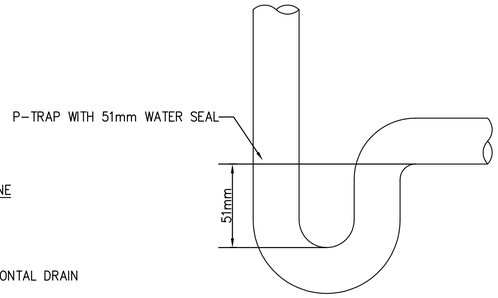

P-TRAP WITH 51mm WATER SEAL DETAIL

SCALE: N.T.S.

GENERAL PLUMBING NOTES:

1. ALL SANITARY PIPING SHALL BE BELOW FLOOR, AND ALL WATER, AND VENT PIPING SHALL BE TIGHT TO CEILING, UNLESS OTHERWISE NOTED.

2. PLUMBING CONTRACTOR SHALL COORDINATE PLUMBING WORK WITH THE WORK OF ALL OTHER TRADES. VERIFY THE LOCATIONS OF ALL UTILITIES AT THE SITE PRIOR TO THE START OF ANY PLUMBING WORK.

3. ALL SANITARY PIPING BELOW SLAB SHALL BE A MINIMUM OF 51mm, UNLESS OTHERWISE NOTED OR AS REQUIRED BY THE LOCAL AUTHORITY HAVING JURISDICTION.

4. ALL SANITARY BRANCH LINES SHALL BE SLOPED AT 6mm PER 305mm, AND ALL MAIN LINES SHALL BE SLOPED AT 3mm PER 305mm, UNLESS OTHERWISE NOTED OR AS REQUIRED BY THE LOCAL AUTHORITY HAVING JURISDICTION.

5. THE CONTRACTOR SHALL BE RESPONSIBLE FOR COORDINATION WITH ALL UTILITY AUTHORITIES FOR INSTALLATION REQUIREMENTS, REGULATIONS, FEES, PERMITS, AND APPROVALS BEFORE THE START OF CONSTRUCTION.

6. THE CONTRACTOR SHALL ROUGH-IN AND CONNECT ALL EQUIPMENT REQUIRING WATER, WASTE, AND/OR VENT WHETHER OR NOT FURNISHED UNDER THIS CONTRACT. THE CONTRACTOR SHALL ALSO FURNISH AND INSTALL ALL NECESSARY PIPE, FITTINGS, VALVES, TRAPS, ETC., REQUIRED FOR A COMPLETE INSTALLATION, LEAVING SAME READY FOR SERVICE.

FIXTURE LIST

TYPE	ITEM	SOIL & WASTE	VENT	COLD WATER	HOT WATER	REMARKS	REMARKS 2
W-1	EASTERN STYLE WATER CLOSET	102mm	51mm	13mm	------	FLUSH TANK	LOW FLOW EFFICIENT TYPE
L-1	TROUGH FIXTURE	38mm	38mm	13mm	13mm	FABRICATED IN FIELD	LOW FLOW EFFICIENT TYPE
ABL-1	ABLUTION	FLOOR DRAIN	------	13mm	13mm	FABRICATED IN FIELD	----------
HWH-1	WATER HEATER	---	---	SEE DWG.	SEE DWG.	151 LITER ELECTRIC WATER HEATER, 380/3ø, 9KW	----------
SH-1	SHOWER	76mm	---	13mm	13mm	DRAIN AND SHOWER CONTROLS	----------

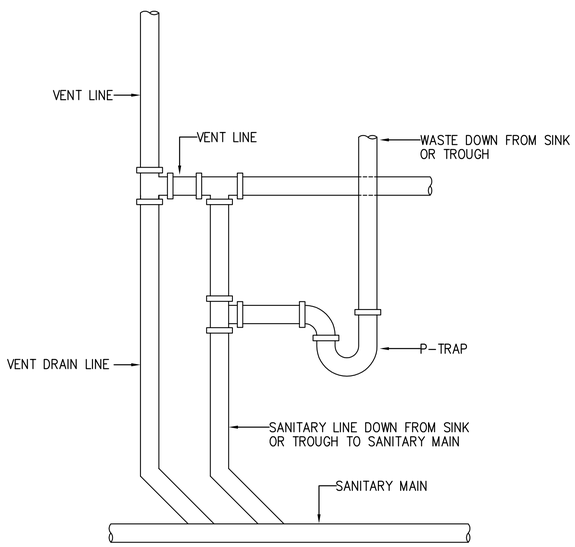

TYPICAL LAVATORY/LAUNDRY VENT DETAIL

SCALE: N.T.S.

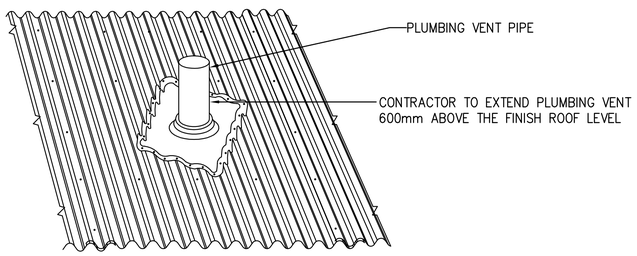

PLUMBING VENT THRU ROOF DETAIL

SCALE: NTS

APPROVED:

A/E DESIGNER OF RECORD

SEAL:

COMMONWEALTH OF PENNSYLVANIA
REGISTERED PROFESSIONAL
MATTHEW R. SOTOSKY
ENGINEER
046576-E

US ARMY CORPS OF ENGINEERS
AFGHANISTAN ENGINEER DISTRICT

Mark	Description	Date	Appr.	Mark	Description	Date	Appr.

Rev: 0
Date: 02/23/10
Design file no.
Drawing code:
File name: ANA8OOSPI-502XXX
Plot date: 02/09/2010
Plot scale: 1:100

Designed by: RMH
Dwn by: RMH
Ckd by: CJM
Reviewed by:
Submitted by: MRS

U.S. ARMY CORPS OF ENGINEERS
AFGHANISTAN ENGINEER DISTRICT
APO AE 96338

Michael Baker Jr., Inc.
A unit of Michael Baker Corporation
Airside Business Park
100 Airside Drive
Moon Township, PA 15108
www.mbakercorp.com

AFGHAN NATIONAL ARMY
REGIONAL MILITARY TRAINING CENTER
STANDARD DESIGN

SENIOR BOQ BARRACKS
PLUMBING DETAILS

Sheet reference number:
P-502

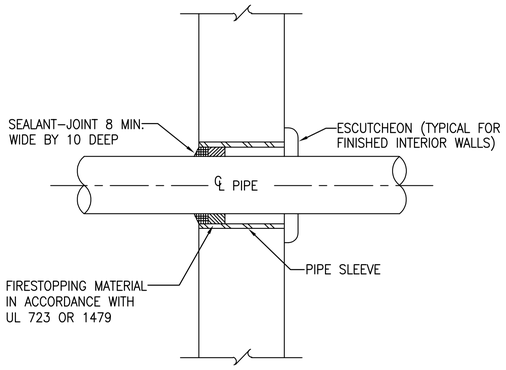

TYPICAL WALL PENETRATION DETAIL

SCALE: N.T.S.

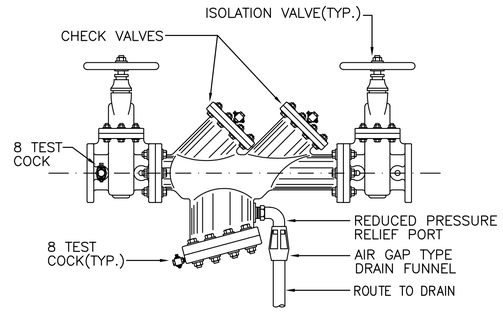

TYPICAL BACKFLOW PREVENTER DETAIL

SCALE: N.T.S.

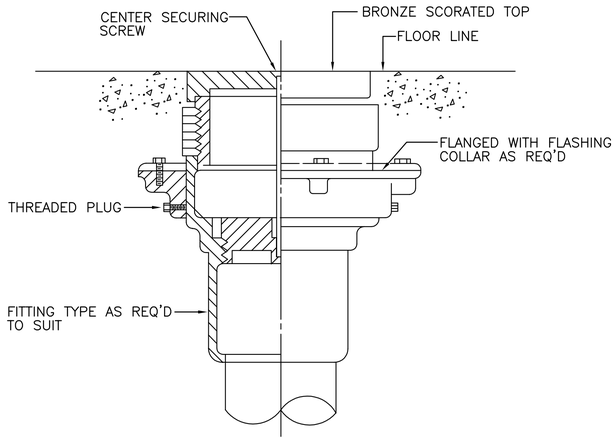

TYPICAL FLOOR CLEANOUT DETAIL

SCALE: N.T.S.

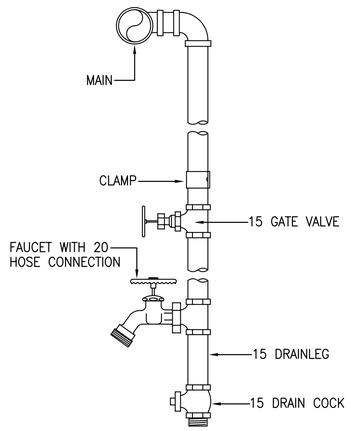

TYPICAL WATER DROP DETAIL

SCALE: N.T.S.

US ARMY CORPS OF ENGINEERS
AFGHANISTAN ENGINEER DISTRICT

Mark	Description	Date	Appr.	Mark	Description	Date	Appr.

Designed by: RMH
Dwn by: RMH
Ckd by: CJM
Reviewed by:
Submitted by: MRS
Date: 02/23/10
Rev: 0
Design file no.
Drawing code:
File name: ANABOOSPL-503XXX
Plot date: 02/08/2010
Plot scale:1:100

U.S. ARMY CORPS OF ENGINEERS
AFGHANISTAN ENGINEER DISTRICT
APO AE 96338

Michael Baker Jr., Inc
A unit of Michael Baker Corporation
Airside Business Park
100 Airside Drive
Moon Township PA 15108
www.mbakercorp.com

AFGHAN NATIONAL ARMY
REGIONAL MILITARY TRAINING CENTER
STANDARD DESIGN

SENIOR BOQ BARRACKS
PLUMBING DETAILS

APPROVED:

A/E DESIGNER OF RECORD

SEAL:

COMMONWEALTH OF PENNSYLVANIA
REGISTERED PROFESSIONAL
MATTHEW R. SOTOSKY
ENGINEER
046576-E

Sheet reference number:
P–503

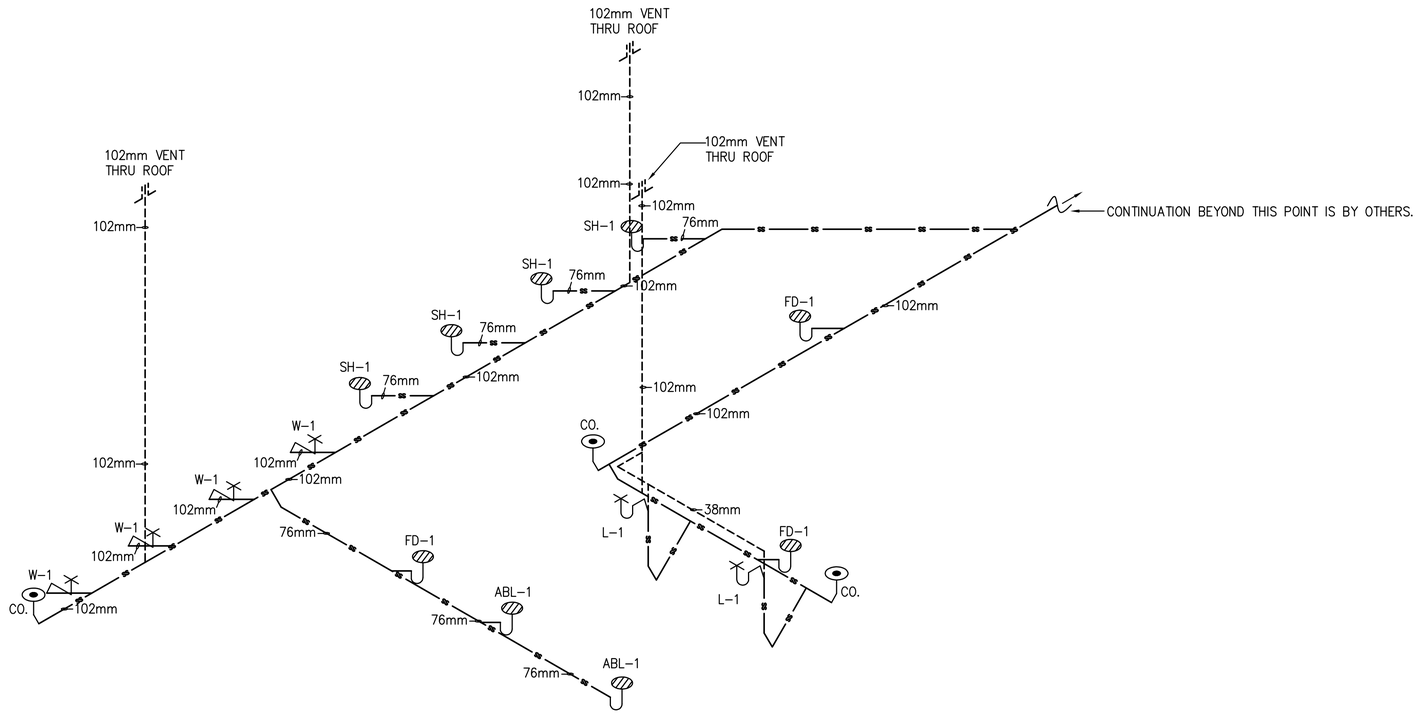

1 P-901 BOQS DRAINAGE ISOMETRIC

SCALE: N.T.S.

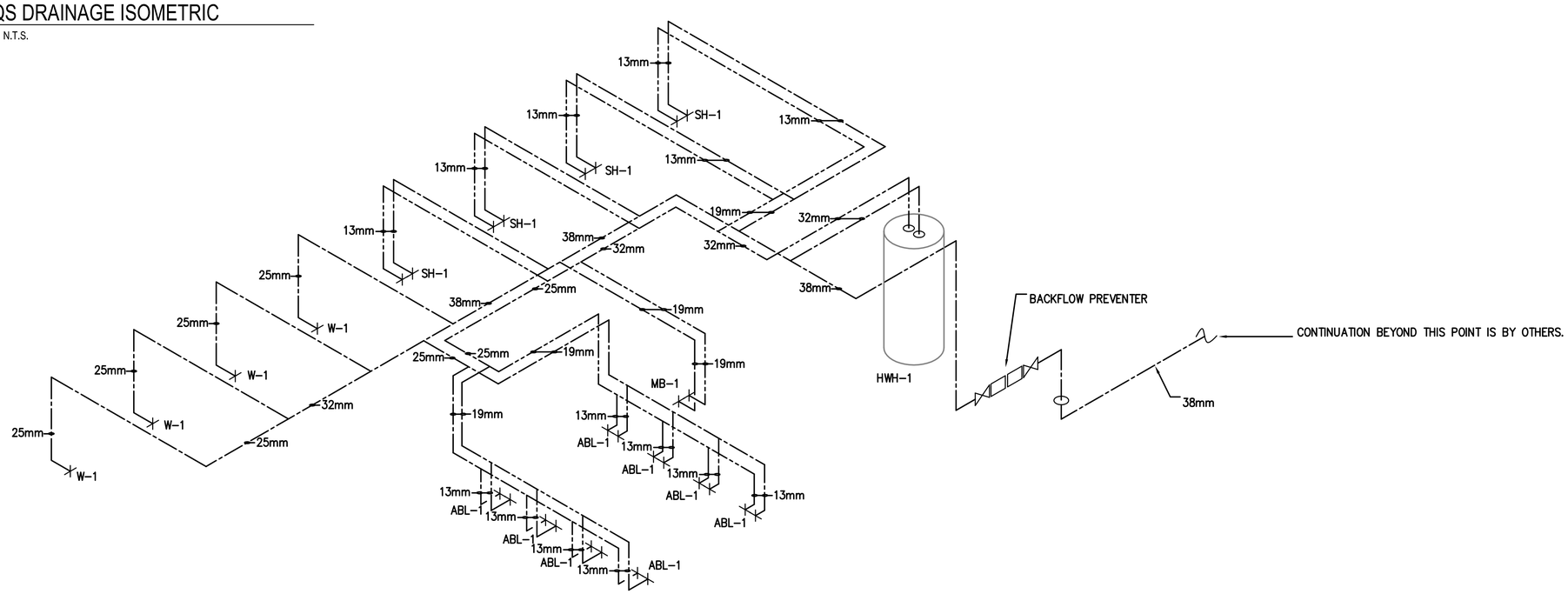

2 P-901 BOQS HOT AND COLD WATER ISOMETRIC

SCALE: N.T.S.

PLUMBING SYMBOLS

- SANITARY SEWER PIPING (BELOW GROUND)
- SANITARY SEWER PIPING (ABOVE GROUND)
- VENT PIPING (V)
- COLD WATER PIPING (CW)
- HOT WATER PIPING (HW)
- BALL VALVE
- BACKFLOW PREVENTER
- OR CLEANOUT (CO.)
- ROOF PENETRATION

US ARMY CORPS OF ENGINEERS
AFGHANISTAN ENGINEER DISTRICT

Mark	Description	Date	Appr.	Mark	Description	Date	Appr.

Designed by: RMH
Dwn by: RMH
Ckd by: CJM
Reviewed by:
Submitted by: BAKER
Date: 02/23/10
Rev: 0
Design file no.
Drawing code:
File name: ANABOQSPL-901XXX
Plot date: 02/08/2010
Plot scale: N.T.S.

U.S. ARMY CORPS OF ENGINEERS
AFGHANISTAN ENGINEER DISTRICT
APO AE 96338

Michael Baker Jr., Inc
A unit of Michael Baker Corporation
Airside Business Park
100 Airside Drive
Moon Township, PA 15108
www.mbakercorp.com

AFGHAN NATIONAL ARMY
REGIONAL MILITARY TRAINING CENTER
STANDARD DESIGN

SENIOR BOQ BARRACKS
PLUMBING ISOMETRICS

APPROVED:

A/E DESIGNER OF RECORD

SEAL:

COMMONWEALTH OF PENNSYLVANIA
REGISTERED PROFESSIONAL
MATTHEW R. SOTOSKY
ENGINEER
045576-E

Sheet reference number:
P-901

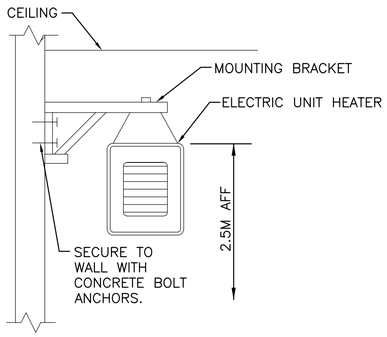

2 M-101 ELECTRIC UNIT HEATER MOUNTING DETAIL
N.T.S.

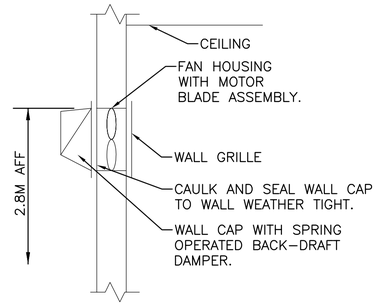

3 M-101 WALL EXHAUST FAN DETAIL
N.T.S.

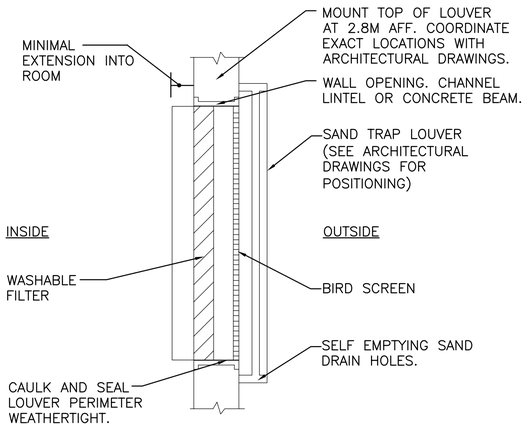

4 M-101 FILTERED SAND TRAP LOUVER
N.T.S.

EXHAUST FAN SCHEDULE

NO.	TYPE	FAN CMS	DRIVE	HP	SP mmH20	ELECTRICAL DATA	SWITCH
EF-1	WALL	0.330	DIRECT	1/6	13	220/1/50	@ WALL
EF-2	WALL	0.035	DIRECT	FRACT	13	220/1/50	@ WALL
EF-3	WALL	0.035	DIRECT	FRACT	13	220/1/50	W/ STAT

NOTES:
1. FANS SHALL HAVE LOW LEAKAGE GRAVITY LOUVER.

MAKE UP AIR HEATERS

NO.	BLOWER CMS	FUSE	KW	MIN. TEMP RISE °C	SP mmH20	ELECTRICAL DATA	CONTROL
MUA-1	0.284	60	10	20	13	220/1/50	REMOTE

NOTES:
1. PROVIDE REMOTE MOUNTED THERMOSTAT WITH LOCKING COVER.
2. INTERLOCK BLOWER OPERATION WITH EXHAUST FANS EF-1 & STAT.
3. PROVIDE AIR SENSING SWITCH FOR HEATING OPERATION.

ELECTRIC UNIT HEATER SCHEDULE

NO.	CMS	KW	F.A.T. °C	ELECT. CHAR.	MOUNTING
EH-2	0.200	2.6	38	380/1/50	WALL HUNG

NOTES:
1. UNIT HEATERS SHALL HAVE TAMPER PROOF INTEGRAL STATS.
2. FINAL ELECTRICAL CONNECTIONS BY EC.

CEILING FAN

NO.	BLADE SIZE mm	BLADE SIZE IN	VOLTAGE	SWITCH	REMARKS
CF-1	1320	52	220/1/50	@ WALL	3 SPEED REVERSIBLE MOTOR

NOTES:
1. INSTALL FANS 2.5M AFF.
2. PROVIDE WITH OUT LIGHT FIXTURE.
3. PROVIDE WITH REMOTE MOUNTED ON-OFF SWITCH SHOWN ON ELECTRICAL DRAWINGS.

GENERAL NOTES:

1. DO NOT SCALE DRAWINGS – ALL DIMENSIONS AND CONDITIONS SHALL BE CHECKED AND VERIFIED BY THE CONTRACTOR AT THE SITE.
2. ALL WORK PERFORMED ON THIS BUILDING SHALL BE IN COMPLIANCE WITH ALL PERTINENT CODES, RULES, ORDINANCES AND REGULATIONS OF THE GOVERNING AUTHORITIES.
3. ALL WORK PERFORMED UNDER AND IN CONNECTION WITH THESE DRAWINGS AND SPECIFICATIONS SHALL BE IN STRICT COMPLIANCE WITH THE LATEST SAFETY AND HEALTH STANDARDS.

SYMBOLS:

- (X) KEY NOTE
- (0.050) AIR VOLUME IN CUBIC METERS PER SECOND (CMS)
- UC DOOR UNDERCUT
- TG 200x400 (8x16) TRANSFER GRILLE
- $ SINGLE POLE SWITCH – 20A RATED

ABBREVIATIONS:

AFF	ABOVE FINISH FLOOR
CF	CEILING FANS
CMS	CUBIC METERS PER SECOND
EC	ELECTRICAL CONTRACTOR
STATS	THERMOSTATS

KEY NOTE:

1. INLINE EXHAUST FAN DUCTED TO WALL CAP WITH LOW LEAKAGE GRAVITY BACK-DRAFT DAMPER. SECURE FAN TO STRUCTURE ABOVE AND INTERLOCK WITH MAKE UP AIR HEATER.
2. ELECTRIC MAKE UP AIR HEATER SECURED TO STRUCTURE ABOVE. BLOWER SHALL BE SET TO ENERGIZE WITH EXHAUST FAN EF-1 & STAT, HEAT SHALL BE CONTROLLED BY STAT.
3. WALL EXHAUST FAN WITH LOW SPRING OPERATED BACK-DRAFT DAMPER. SEE DETAIL 3 THIS SHEET.
4. 600X600 (24X24) INTAKE LOUVER FOR MAKE UP AIR UNIT. PROVIDE WEATHER PROOF LOUVER WITH 50mm (2") WASHABLE FILTER AND SAND TRAP.
5. 200x150 (8x6) ALUMINUM DUCT MOUNTED SUPPLY GRILLE WITH ADJUSTABLE OPPOSED BLADE DAMPERS. BALANCE EACH GRILLE TO 0.070 CMS.
6. 150x150 (6x6) ALUMINUM DUCT MOUNTED EXHAUST GRILLE WITH ADJUSTABLE OPPOSED BLADE DAMPERS. BALANCE EACH GRILLE TO 0.075 CMS.
7. 150x150 (6x6) ALUMINUM WALL MOUNTED EXHAUST GRILLE WITH ADJUSTABLE OPPOSED BLADE DAMPERS. BALANCE GRILLE TO 0.030 CMS.
8. THERMOSTAT MOUNTED AS HIGH AS POSSIBLE. INTERLOCK STAT WITH CORRESPONDING EXHAUST FAN, SET FAN TO ENERGIZE ON RISE IN TEMPERATURE ABOVE 25°C (77°F).

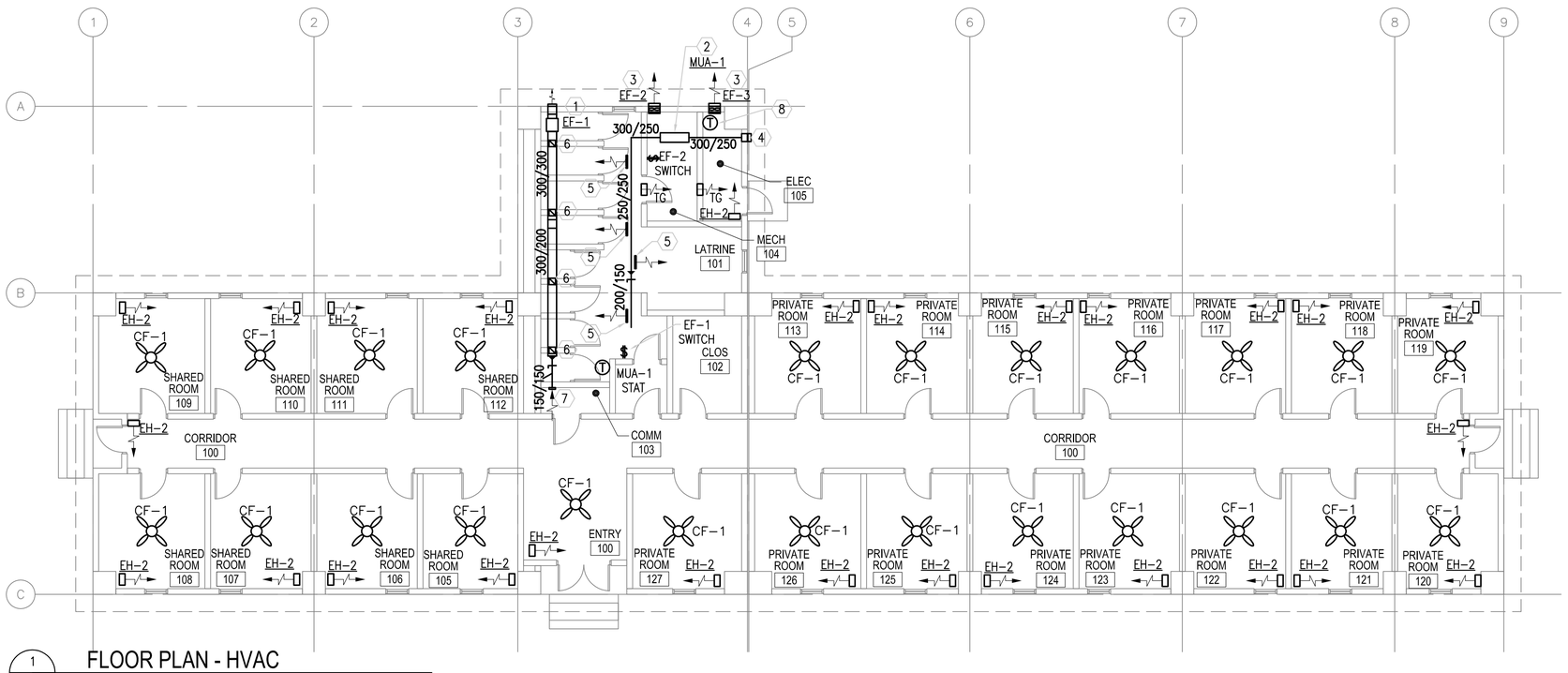

1 M-101 FLOOR PLAN - HVAC
SCALE: 1:100

LINEAR DIMENSIONS SHOWN ARE IN MILLIMETERS (MM), UNLESS OTHERWISE NOTED

0 2000 4000
SCALE: 1:100

APPROVED:

A/E DESIGNER OF RECORD

SEAL:

COMMONWEALTH OF PENNSYLVANIA
REGISTERED PROFESSIONAL
MATTHEW R. SOTOSKY
ENGINEER
065576-E

US ARMY CORPS OF ENGINEERS
AFGHANISTAN ENGINEER DISTRICT

Mark	Description	Date	Appr.

Mark	Description	Date	Appr.

Rev: 0
Date: 02/23/10
Design file no.
Drawing code:
File name: ANABIOOSBMI-101XXX
Plot date: 02/09/2010
Plot scale: 1:100

Designed by: RML
Dwn by: JJN
Ckd by: CJM
Reviewed by: MRS
Submitted by: BAKER

U.S. ARMY CORPS OF ENGINEERS
AFGHANISTAN ENGINEER DISTRICT
APO AE 96338

Michael Baker Jr., Inc
A unit of Michael Baker Corporation
Airside Business Park
100 Airside Drive
Moon Township, PA 15108
www.mbakercorp.com

AFGHAN NATIONAL ARMY
REGIONAL MILITARY TRAINING CENTER
STANDARD DESIGN

SENIOR BOQ BARRACKS
HVAC – FLOOR PLAN, SCHEDULES AND DETAILS

Sheet reference number:
M-101

POWER

- DISTRIBUTION PANELBOARD
- NEW PANELBOARD – SURFACE
- NEW PANELBOARD – RECESSED
- GENERATOR
- TRANSFORMER (DRAWN TO SIZE)
- JUNCTION BOX
- JUNCTION BOX – CEILING
- FUSIBLE SAFETY SWITCH
- MOTOR
- MOTOR STARTING SWITCH – 220V, 20A RATED UNLESS OTHERWISE NOTED
- ELECTRIC WATER HEATER
- CEILING FAN – REFER TO SPECIFICATION SECTION 26 20 00

RECEPTACLES

- DUPLEX 20A TYPE CEE 7/7 "SCHUKO STYLE" UNSWITCHED RECEPTACLE
- GF DUPLEX 20A TYPE CEE 7/7 "SCHUKO STYLE" UNSWITCHED RECEPTACLES – 10mA GROUND FAULT INTERRUPTER TYPE
- WP DUPLEX 20A TYPE CEE 7/7 "SCHUKO STYLE" UNSWITCHED TYPE WITH WEATHERPROOF COVER – 10mA GROUND FAULT INTERRUPTER TYPE
- EXP DUPLEX 20A TYPE CEE 7/7 "SCHUKO STYLE" UNSWITCHED RECEPTACLES – EXPLOSION PROOF
- * INDICATES MOUNT DEVICE ABOVE COUNTERTOP OR AT 1070mm ABOVE FINISHED FLOOR WHERE NO COUNTER IS TO BE INSTALLED.

LIGHTNING PROTECTION

- AIR TERMINAL 20mm O.D. X 450mm SOLID COPPER, NICKEL PLATED ON ADHESIVE BASE
- EQ EQUIPMENT AIR TERMINAL
- TEST WELL WITH GROUND ROD(S)
- GROUND ROD
- G GROUND PLATE
- MAIN GROUND CONDUCTER CONCEALED WITHIN CONSTRUCTION
- MAIN GROUND CONDUCTOR EXPOSED ON EXPOSED ON BUILDING EXTERIOR SURFACE
- GROUND CONDUCTOR CAD WELDED TO GROUND CABLE OR EQUIPMENT
- GROUND ROD TRIPOD, SPACED 3 METERS APART.
- LEVEL TO LEVEL CABLE

LIGHTING

- LIGHTING FIXTURE – SEE FIXTURE SCHEDULE FOR MORE INFORMATION
- EMERGENCY LIGHTING FIXTURE – SEE FIXTURE SCHEDULE FOR MORE INFORMATION
- DOWNLIGHT
- LIGHTING FIXTURE ON NORMAL/EMERGENCY
- WALL MOUNTED LIGHT FIXTURE
- E EXIT SIGN – DIRECTIONAL ARROWS AS INDICATED ON DRAWINGS
- REMOTE HEAD FOR BATTERY PACK
- $ SINGLE POLE SWITCH – 20A RATED
- $3 3–WAY SWITCH – 20A RATED
- $4 4–WAY SWITCH – 20A RATED
- LC LIGHTING CONTACTOR
- POLE MOUNTED SITE LIGHTING FIXTURE– NUMBER OF FIXTURES PER POLE AS INDICATED ON DRAWINGS
- EXTERIOR DIRECTIONAL LIGHTING FIXTURE
- a SMALL CASE LETTERS REPRESENTS LAMP(S) / SWITCHES.

TELECOMMUNICATIONS

- TELEPHONE OUTLET(S) @ 45cm AFF. U.N.O. WITH 20mm RACEWAY TERMINATED TO TELEDATA TERMINAL BOARD.
- DATA OUTLET(S) @ 45cm AFF. U.N.O. WITH 20mm RACEWAY TERMINATED TO TELEDATA TERMINAL BOARD.

TELECOMMUNICATIONS (CONTINUED)

- COMBINATION TELEPHONE/DATA OUTLET(S) @ 45cm AFF. U.N.O. WITH 27mm RACEWAY TERMINATED TO TELEDATA TERMINAL BOARD.
- W WALL MTD. TELEPHONE OUTLET WITH 20mm RACEWAY TO TELEDATA TERMINAL BOARD.
- (x)T INDICATES NUMBER OF TELEPHONE OUTLET(S) AND ASSOCIATED CABLING
- (x)D INDICATES NUMBER OF DATA OUTLET(S) AND ASSOCIATED CABLING
- (x)TF INDICATES NUMBER OF TELEPHONE OUTLETS AND ASSOCIATED CABLING WITH 1 OUTLET AND CABLE DEDICATED FOR FAX

SINGLE LINE SYMBOLS

- SWITCH
- BREAKER
- FUSE
- TRANSFORMER
- GROUND
- CONTACT (NORMALLY OPEN)
- CONTACT (NORMALLY CLOSED)
- TRANSFER SWITCH
- CURRENT TRANSFORMER
- INDICATES NEW ELECTRICAL EQUIPMENT
- C INDICATES NEW CONTROL WIRING AND CONDUIT
- EQUIPMENT OUTLINE

MISCELLANEOUS

- BRANCH CIRCUIT WIRING, SURFACE MOUNTED ON WALLS
- BRANCH CIRCUIT WIRING – 6mm²
- BRANCH CIRCUIT WIRING – UNDER FLOOR
- HOME RUN BACK TO PANEL
- CONDUIT TURNED DOWN
- CONDUIT TURNED UP
- LV LOW VOLTAGE WIRING AND CONDUIT
- INDICATES CONTINUATION OF LINE

FIRE ALARM

- FACP FIRE ALARM CONTROL PANEL WITH BATTERY BACKUP
- F FIRE ALARM PULL STATION

FIRE ALARM (CONTINUED)

- F FIRE ALARM STROBE – WALL MOUNTED
- F FIRE ALARM AUDIBLE/STROBE – WALL MOUNTED
- F FIRE ALARM HORN/STROBE – WALL MOUNTED
- S SMOKE DETECTOR
- H HEAT DETECTOR CEILING MOUNTED
- D DUCT DETECTOR – PROVIDED BY EC, INSTALLED BY MC AND CONNECTED BY EC

DENOTATIONS & ABBREVIATIONS

AFF	ABOVE FINISHED FLOOR
C	CEILING MOUNTED
E	EMERGENCY
EC	ELECTRICAL CONTRACTOR
EPO	EMERGENCY POWER OFF
EXP	EXPLOSION PROOF
F	FIRE ALARM
FF	FLUSH FLOOR MOUNTED
FL	FLUORESCENT
FO	FIBER OPTIC
FSS	FUSED SAFETY SWITCH
GF	GROUND FAULT INTERRUPTER
GC	GENERAL CONTRACTOR
IG	ISOLATED GROUND
K	KEY
LV	LOW VOLTAGE
M	MOTOR
MC	MECHANICAL CONTRACTOR
NE	NORMAL/EMERGENCY
NFSS	NON–FUSED SAFETY SWITCH
PA	PAGING SYSTEM
PLC	PLUMBING CONTRACTOR
SL	SINGLE LINE
T	TELEPHONE

DENOTATIONS & ABBREVIATIONS (CONT.)

TP	TAMPER PROOF
UE	UNDERGROUND ELECTRIC
W	WALL MOUNTED
WP	WEATHERPROOF WITH GROUND FAULT INTERRUPTION
WT	WATER TIGHT

GENERAL PROJECT NOTES:

G1. UNLESS OTHERWISE NOTED, PROVIDE ALL EQUIPMENT SHOWN ON THE PLANS. THE ELECTRICAL CONTRACTOR SHALL COORDINATE ALL SYMBOLS SHOWN ON THE PLANS WITH THE SYMBOL LIST. IT SHALL BE THE RESPONSIBILITY OF THE CONTRACTOR TO VERIFY THE INTENT OF ANY SYMBOL THAT IS SHOWN ON THE PLANS AND NOT INDICATED ON THE SYMBOL LIST WITH THE ENGINEER PRIOR TO BID.

G2. THE CONTRACTOR SHALL VERIFY THE LOCATION OF ALL UNDERGROUND UTILITIES WITHIN THE CONSTRUCTION AREA THREE (3) WORKING DAYS NOTICE BEFORE COMMENCING DIGGING. NOTIFY THE LOCAL AUTHORITY HAVING JURISDICTION AND WAIT THE REQUIRED TIME BEFORE COMMENCING TO DIG.

G3. THE CONTRACTOR SHALL COORDINATE CONDUIT RUNS, LIGHTING FIXTURES AND OTHER EQUIPMENT LOCATIONS WITH THE OTHER TRADE CONTRACTORS TO AVOID CONFLICTS.

G4. WHERE VOLTAGES AND FREQUENCIES ON THE DRAWINGS AND IN THE SPECIFICATIONS DIFFER FROM THE LOCAL ONES, ALL WORK SHALL BE PERFORMED USING THE LOCAL VOLTAGES AND FREQUENCIES.

G5. THE MINIMUM WIRE SIZE ON THE PROJECT SHALL BE 4mm². THE MINIMUM CONDUIT SIZE SHALL BE 20mm. THE MINIMUM BREAKER SIZE SHALL BE 20 AMPS.

G6. THE CONTRACTOR SHALL PUT A MAXIMUM OF 6 DUPLEX RECEPTACLES ON A 20A SINGLE POLE CIRCUIT.

G7. WHERE THE 1010 SCOPE REVIEW, 1015 TECHNICAL REVIEW, DRAWINGS, AND SPECIFICATIONS DIFFER FROM AMERICAN CODES OR STANDARDS, THE 1010, 1015, DRAWINGS, AND SPECIFICATIONS SHALL RULE.

G8. ALL CONDUIT AND DEVICES SHALL BE SURFACE MOUNTED UNLESS OTHERWISE INDICATED.

G9. CONTRACTOR SHALL COORDINATE ALL WORK WITH ALL OTHER TRADES TO ENSURE ALL WORK IS COMPLETED IN A PROFESSIONAL, WORKMAN–LIKE MANNER.

APPROVED:

A/E DESIGNER OF RECORD

SEAL:

COMMONWEALTH OF PENNSYLVANIA
REGISTERED PROFESSIONAL
JOSEPH R. GAUS
1/29/10
ENGINEER
PE-074251

US ARMY CORPS OF ENGINEERS
AFGHANISTAN ENGINEER DISTRICT

Mark	Description	Date	Appr.	Mark	Description	Date	Appr.

Rev: 0
Date: 2/23/10
Designed by: RAJ
Dwn by: BJB
Ckd by: JRG
Reviewed by: JRG
Submitted by: BAKER
Design file no.
Drawing code:
File name:
Plot date:
Plot scale:

U.S. ARMY CORPS OF ENGINEERS
AFGHANISTAN ENGINEER DISTRICT
APO AE 96338

Michael Baker Jr., Inc
A unit of Michael Baker Corporation
Airside Business Park
100 Airside Drive
Moon Township, PA 15108
www.mbakercorp.com

AFGHAN NATIONAL ARMY
REGIONAL MILITARY TRAINING CENTER
STANDARD DESIGN

SENIOR BOQ BARRACKS
ELECTRICAL SYMBOLS & ABBREVIATIONS

Sheet reference number:
E–001

GENERAL NOTES:

1. REFER TO DRAWING #E-001 FOR THE ELECTRICAL SYMBOLS LIST.
2. EXIT SIGNS SHALL BE WIRED AHEAD OF ANY LOCAL SWITCHING ON CIRCUITS. SEE WIRING DIAGRAM DETAIL 8, DRAWING #E-501.
3. REFER TO DRAWING #E-400 FOR THE LIGHTING FIXTURE SCHEDULE.
4. REFER TO DRAWING #E-500 FOR THE POWER RISER.
5. REFER TO DRAWING #E-600 FOR PANEL SCHEDULES.
6. LIGHT FIXTURES INDICATED AS EMERGENCY SHALL BE PROVIDED WITH A BATTERY BACKUP BALLAST. SEE WIRING DIAGRAM DETAIL 7, DRAWING #E-501.

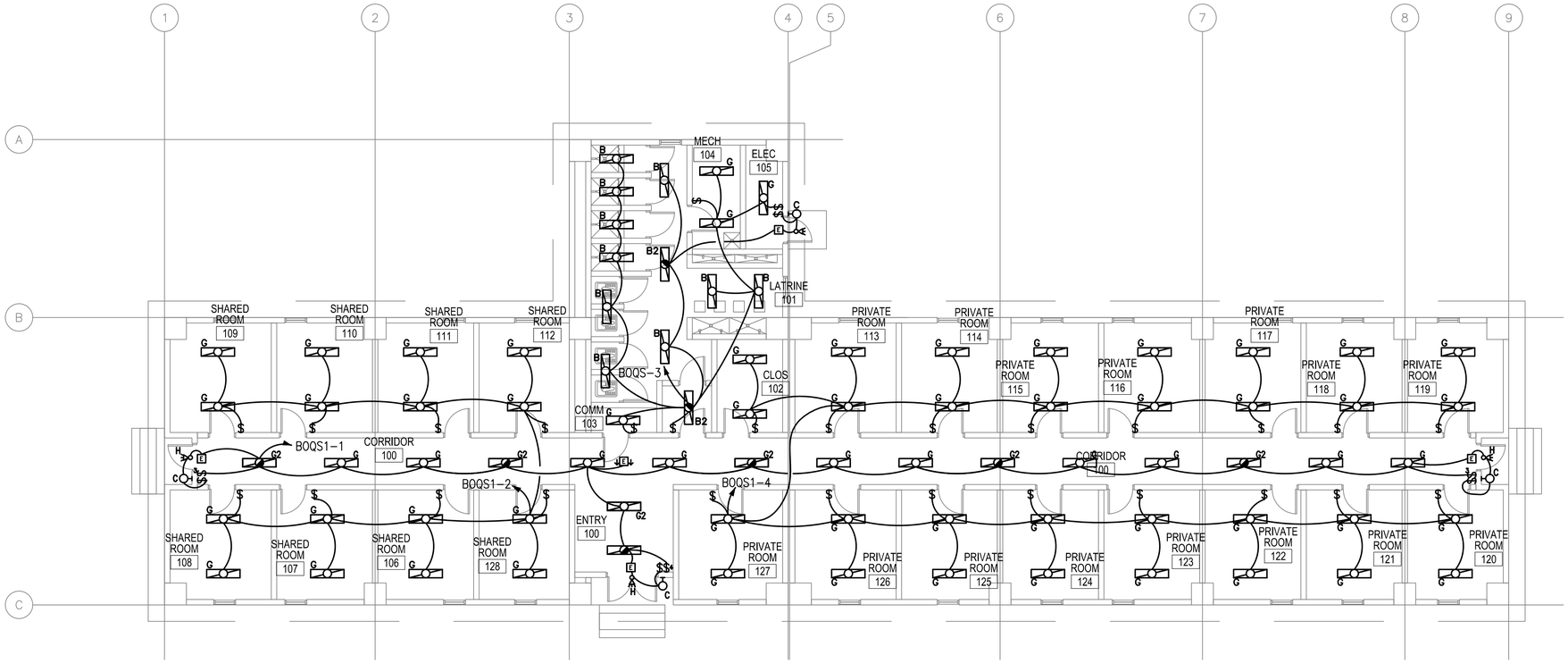

1
E-101

SENIOR BOQ BARRACKS-LIGHTING PLAN

SCALE: 1:100

0 2000 4000
SCALE: 1:100

APPROVED:

A/E DESIGNER OF RECORD

SEAL:

COMMONWEALTH OF PENNSYLVANIA
REGISTERED PROFESSIONAL ENGINEER
JOSEPH R. GAUS
PE-074251

US ARMY CORPS OF ENGINEERS
AFGHANISTAN ENGINEER DISTRICT

Mark	Description	Date	Appr.

Mark	Description	Date	Appr.

Rev: 0
Date: 2/23/10
Designed by: RAJ
Dwn by: BJB
Ckd by: JRG
Reviewed by: JRG
Submitted by: BAKER
Design file no.
Drawing code:
File name:
Plot date:
Plot scale:

U.S. ARMY CORPS OF ENGINEERS
AFGHANISTAN ENGINEER DISTRICT
APO AE 96338

Michael Baker Jr., Inc.
A unit of Michael Baker Corporation
Airside Business Park
100 Airside Drive
Moon Township, PA 15108
www.mbakercorp.com

AFGHAN NATIONAL ARMY
REGIONAL MILITARY TRAINING CENTER
STANDARD DESIGN

SENIOR BOQ BARRACKS
ELECTRICAL LIGHTING PLAN

Sheet reference number:
E-101

GENERAL NOTES:

1. REFER TO DRAWING #E-001 FOR THE ELECTRICAL SYMBOLS LIST.
2. REFER TO DRAWING #E-501 FOR THE POWER RISER.
3. REFER TO DRAWING #E-602 FOR PANEL SCHEDULES.
4. COORDINATE EXACT MOUNTING LOCATION OF DISCONNECTING MEANS FOR MECHANICAL AND PLUMBING EQUIPMENT IN THE FIELD.
5. FUSIBLE SAFETY SWITCHES THAT ARE NOT OTHERWISE IDENTIFIED SHALL BE 380V, 1P, 30A FUSED SAFETY SWITCHES WITH 20A FUSES.

NUMBERED NOTES:

1. PROVIDE POWER CONNECTION TO MAKE-UP AIR UNIT #1. SEE DRAWINGS #E-602 AND #M-101 FOR MORE INFORMATION.
2. SEE DRAWING #E-602 FOR WIRE AND CONDUIT SIZE.
3. PROVIDE POWER CONNECTION TO ELECTRIC UNIT HEATER #2. SEE DRAWINGS #E-602 AND #M-101 FOR MORE INFORMATION.
4. PROVIDE POWER CONNECTION TO EXHAUST FAN #1. SEE DRAWINGS #E-602 AND #M-101 FOR MORE INFORMATION.
5. PROVIDE POWER CONNECTION TO EXHAUST FAN #2. SEE DRAWINGS #E-602 AND #M-101 FOR MORE INFORMATION.
6. PROVIDE POWER CONNECTION TO EXHAUST FAN #3. SEE DRAWINGS #E-602 AND #M-101 FOR MORE INFORMATION.
7. PANEL BOQS1, BOQS2 AND BOQS3.
8. NEMA 3R, 380V, 3P, 30A FUSED DISCONNECT FUSED AT 30A. SEE PLUMBING DRAWINGS FOR EXACT LOCATION OF WATER HEATER.
9. PROVIDE A 1,200mm X 2,400mm PIECE OF PLYWOOD PAINTED WITH FIRE RESISTANT PAINT FOR MOUNTING TELECOMMUNICATIONS EQUIPMENT.
10. PROVIDE CONDUIT STUB UP IN THE ROOM FOR INCOMMING TELECOMMUNICATIONS SERVICES FROM THE CENTRAL COMMUNICATIONS SYSTEM IN THE GARRISON.
11. PROVIDE 220V, 1ø, 60A MOTOR SNAP SWITCH IN NEMA 3R ENCLOSURE.

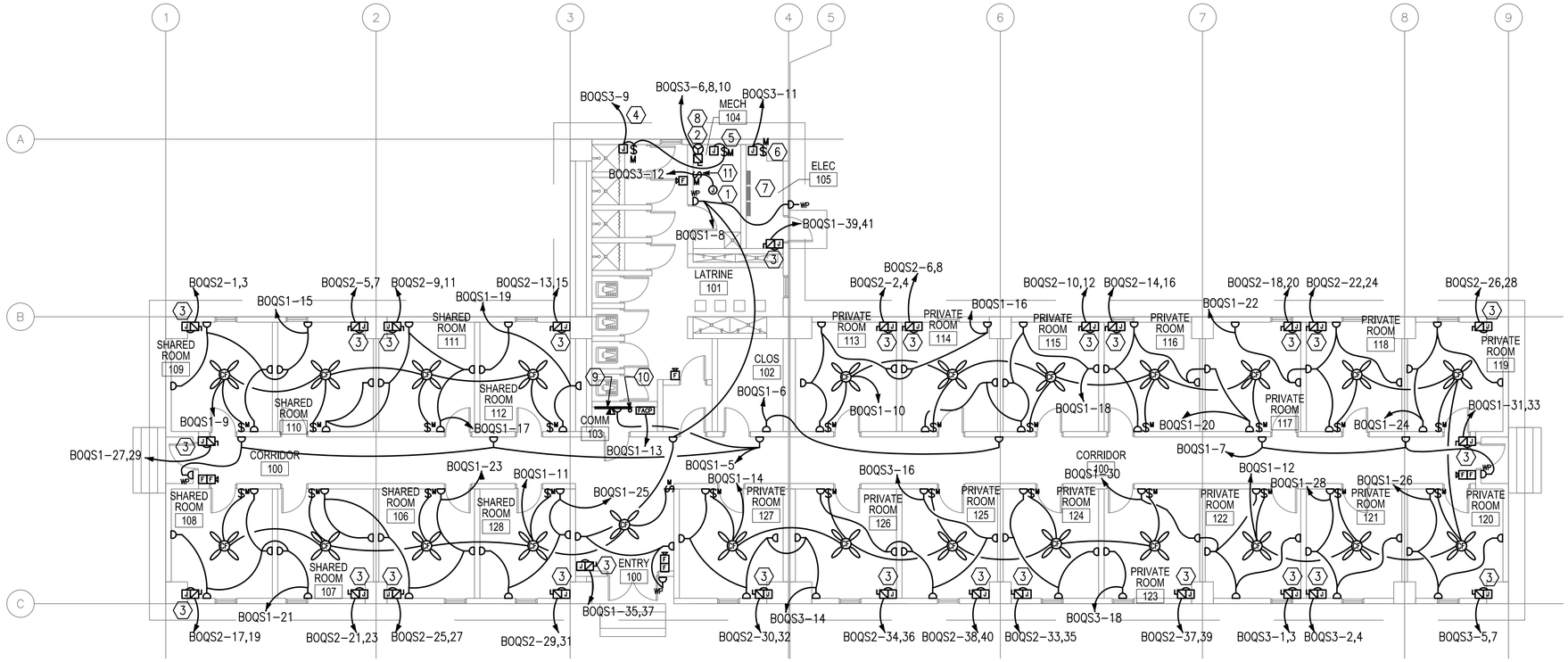

1 / E-102 SENIOR BOQ BARRACKS- POWER AND SYSTEMS PLAN

SCALE: 1:100

0 2000 4000
SCALE: 1:100

APPROVED:

A/E DESIGNER OF RECORD

SEAL:

COMMONWEALTH OF PENNSYLVANIA
REGISTERED PROFESSIONAL ENGINEER
JOSEPH R. GAUS
PE-074251
1/29/10

US ARMY CORPS OF ENGINEERS
AFGHANISTAN ENGINEER DISTRICT

Mark	Description	Date	Appr.

Mark	Description	Date	Appr.

Rev: 0
Date: 2/23/10
Designed by: RAJ
Dwn by: BJB
Ckd by: JRG
Reviewed by: JRG
Submitted by: BAKER
Drawing code:
Design file no.
File name:
Plot date:
Plot scale:

U.S. ARMY CORPS OF ENGINEERS
AFGHANISTAN ENGINEER DISTRICT
APO AE 96338

Michael Baker Jr., Inc.
A unit of Michael Baker Corporation
Airside Business Park
100 Airside Drive
Moon Township, PA 15108
www.mbakercorp.com

AFGHAN NATIONAL ARMY
REGIONAL MILITARY TRAINING CENTER
STANDARD DESIGN

SENIOR BOQ BARRACKS
ELECTRICAL POWER AND SYSTEMS PLAN

Sheet reference number:
E-102

GENERAL NOTES:

1. REFER TO DRAWING #E-001 FOR THE ELECTRICAL SYMBOLS LIST.

NUMBERED NOTES:

1. (1) 120.0mm² BARE, TINNED, COPPER COUNTERPOISE GROUND 700mm BELOW GRADE.
2. INSTALL DOWN CONDUCTOR IN 25mm SCHEDULE 80 PVC CONDUIT TO 20mm DIAMETER X 3 METERS SOLID COPPER TINNED GROUND ROD. (TYPICAL)
3. CADWELD TO BUILDING STRUCTURE AT 18 METERS ON CENTER AROUND THE ENTIRE PERIMETER OF THE BUILDING. (TYPICAL)
4. 120mm² LIGHTNING PROTECTION CABLE.
5. AIR TERMINAL. TERMINALS SHALL BE PLACED AT A MAXIMUM OF 6M ON CENTER PER NFPA 780 PARA. 4.8.2.1, AND WITHIN 0.6M OF RIDGE ENDS PER NFPA 780 PARA. 4.8 (TYPICAL)
6. 700mm MIN. (TYP) BETWEEN FOUNDATION AND GROUND LOOP.

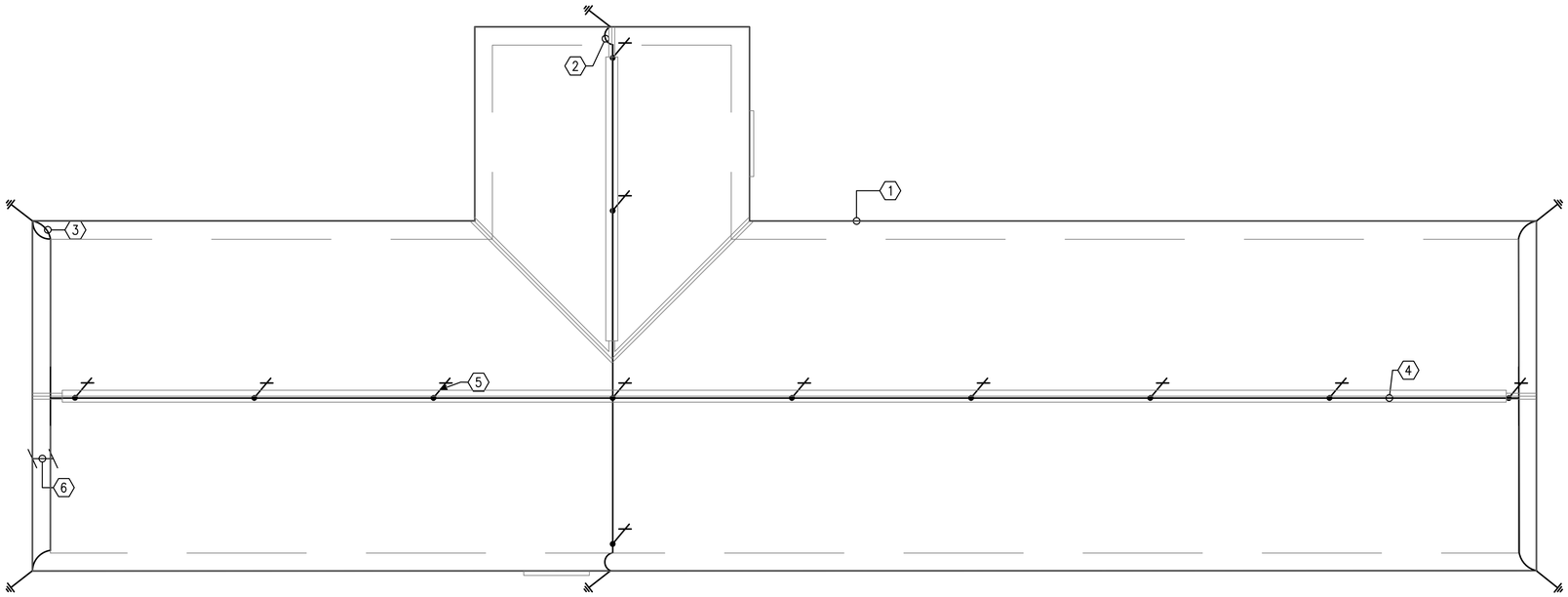

1 / E-103 SENIOR BOQ BARRACKS-LIGHTNING PROTECTION

SCALE: 1:100

0 2000 4000
SCALE: 1:100

APPROVED:

A/E DESIGNER OF RECORD

SEAL:

COMMONWEALTH OF PENNSYLVANIA
REGISTERED PROFESSIONAL
JOSEPH R. GAUS
ENGINEER
PE-074251
2/23/10

US ARMY CORPS OF ENGINEERS
AFGHANISTAN ENGINEER DISTRICT

Mark	Description	Date	Appr.

Mark	Description	Date	Appr.

Designed by: RAJ
Dwn by: BJB
Ckd by: JRG
Reviewed by: JRG
Submitted by: BAKER
Date: 2/23/10
Rev: 0
Design file no.
Drawing code:
File name:
Plot date:
Plot scale:

U.S. ARMY CORPS OF ENGINEERS
AFGHANISTAN ENGINEER DISTRICT
APO AE 96338

Michael Baker Jr., Inc.
A unit of Michael Baker Corporation
Airside Business Park
100 Airside Drive
Moon Township, PA 15108
www.mbakercorp.com

AFGHAN NATIONAL ARMY
REGIONAL MILITARY TRAINING CENTER
STANDARD DESIGN

SENIOR BOQ BARRACKS
ELECTRICAL LIGHTNING PROTECTION PLAN

Sheet reference number:
E-103

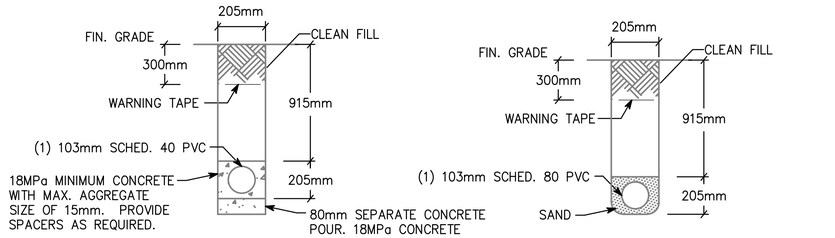

NOTE: PVC CONDUIT SHALL BE DIRECT BURIED SCHEDULE 80 FOR NO TRAFFIC AREAS AND CONCRETE-ENCASED SCHEDULE 40 FOR UNDER ROADWAYS OR TRAFFIC AREAS.

1 E-501 TYPICAL DUCT BANK DETAILS FOR CONDUIT IN SAND OR CONCRETE

SCALE: N.T.S.

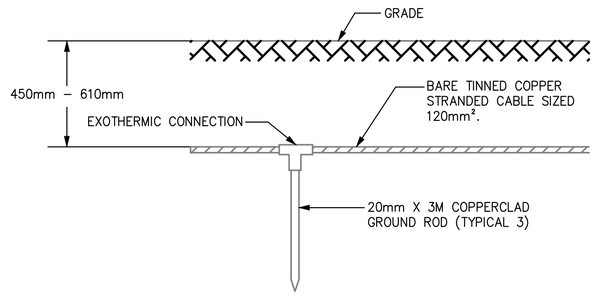

2 E-501 GROUND TRIPOD SYSTEM DETAIL - ELEVATION

SCALE: N.T.S.

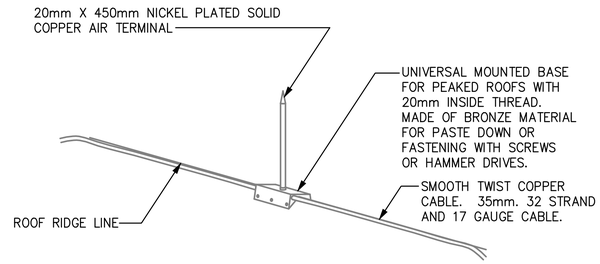

3 E-501 LIGHTNING PROTECTION AIR TERMINAL DETAIL

SCALE: N.T.S.

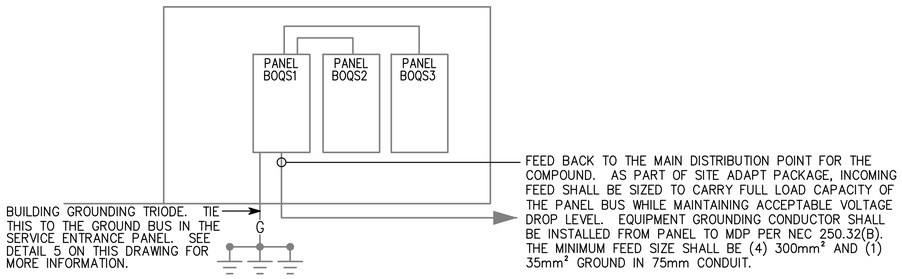

4 E-501 BOQS RISER DIAGRAM

SCALE: N.T.S.

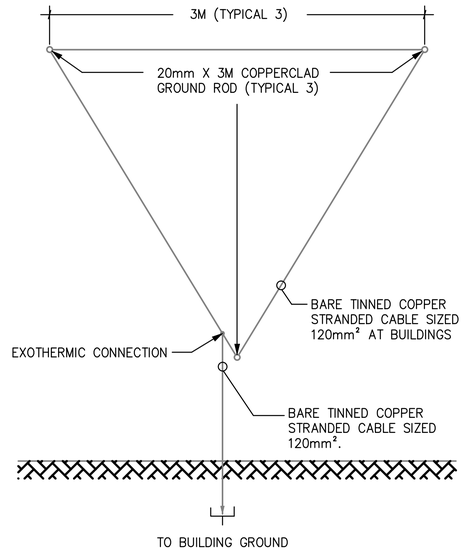

5 E-501 GROUND TRIPOD SYSTEM DETAIL - PLAN

SCALE: N.T.S.

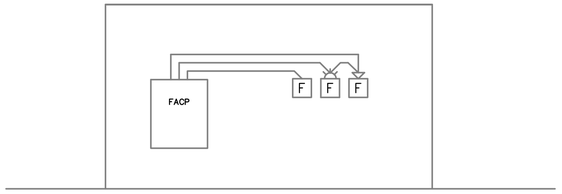

6 E-501 TYPICAL ONE STORY FIRE ALARM RISER

SCALE: N.T.S.

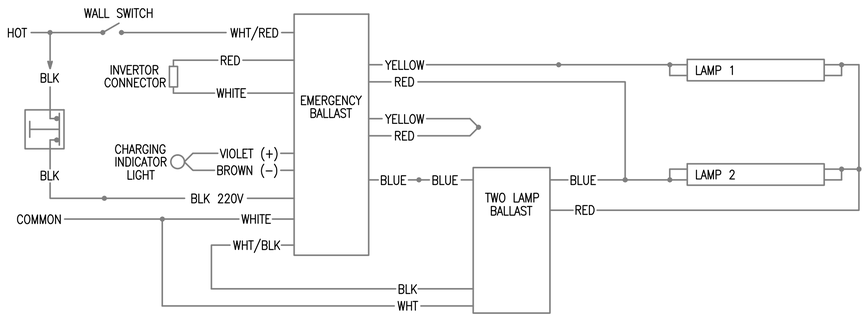

7 E-501 EMERGENCY FIXTURE WIRING DIAGRAM

SCALE: N.T.S.

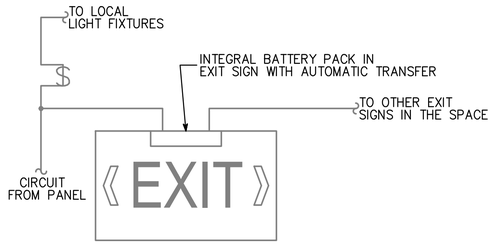

8 E-501 EXIT SIGN WIRING DIAGRAM

SCALE: N.T.S.

APPROVED:

A/E DESIGNER OF RECORD

SEAL:

COMMONWEALTH OF PENNSYLVANIA
REGISTERED PROFESSIONAL ENGINEER
JOSEPH R. GAUS
PE-074251

US ARMY CORPS OF ENGINEERS
AFGHANISTAN ENGINEER DISTRICT

Mark	Description	Date	Appr.	Mark	Description	Date	Appr.

Rev: 0
Date: 2/23/10
Design file no.
Drawing code:
File name:
Plot date:
Plot scale:

Designed by: RAJ
Dwn by: BJB
Ckd by: JRG
Reviewed by: JRG
Submitted by: BAKER

U.S. ARMY CORPS OF ENGINEERS
AFGHANISTAN ENGINEER DISTRICT
APO AE 96338

Michael Baker Jr., Inc.
A unit of Michael Baker Corporation
Airside Business Park
100 Airside Drive
Moon Township, PA 15108
www.mbakercorp.com

AFGHAN NATIONAL ARMY
REGIONAL MILITARY TRAINING CENTER
STANDARD DESIGN

SENIOR BOQ BARRACKS
ELECTRICAL DETAILS

Sheet reference number:
E-501

(A) LARGER OF THE TWO SIZES GIVEN IN THE TABLES BELOW	
GROUNDING ELECTRODE CONDUCTOR (BASED ON AIC RATING)	
AIC RATING OF SERVICE EQUIPMENT	NECESSARY GROUNDING ELECTRODE CONDUCTOR SIZE
10K	(1) 35mm²
14K	(1) 50mm²
18K	(1) 70mm²
22K	(1) 70mm²
25K	(1) 70mm²
30K	(1) 95mm²
35K	(1) 120mm²
42K	(1) 150mm²
65K	(1) 185mm²
100K	(1) 300mm²
125K	(2) 185mm²
200K	(2) 300mm²
GROUNDING ELECTRODE CONDUCTOR (BASED ON NEC TABLE 250.66)	
SIZE OF LARGEST UNGROUNDED SERVICE CONDUCTOR OR EQUIVALENT AREA FOR PARALLEL CONDUCTORS	NECESSARY GROUNDING ELECTRODE CONDUCTOR SIZE
350 kcmil OR SMALLER	35mm²
OVER 350 kcmil TO 600 kcmil	70mm²
OVER 600 kcmil TO 1100 kcmil	70mm²
OVER 1100 kcmil	95mm²
NOTE: ALL SIZES ARE BASED ON COPPER CONDUCTORS.	

(B) EQUIPMENT GROUNDING CONDUCTOR	
RATING OR SETTING OF AUTOMATIC OVERCURRENT DEVICE IN CIRCUIT AHEAD OF EQUIPMENT, CONDUIT, ETC, NOT EXCEEDING (AMPERES)	NECESSARY EQUIPMENT GROUNDING CONDUCTOR SIZE
15	2.5mm²
20	4.0mm²
30	6.0mm²
40	6.0mm²
60	6.0mm²
100	10mm²
200	16mm²
300	25mm²
400	25mm²
500	35mm²
600	50mm²
800	70mm²
1000	70mm²
1200	95mm²
1600	120mm²
2000	150mm²
2500	185mm²
3000	240mm²
4000	300mm²
5000	400mm²
6000	400mm²
NOTE: ALL SIZES ARE BASED ON COPPER CONDUCTORS.	

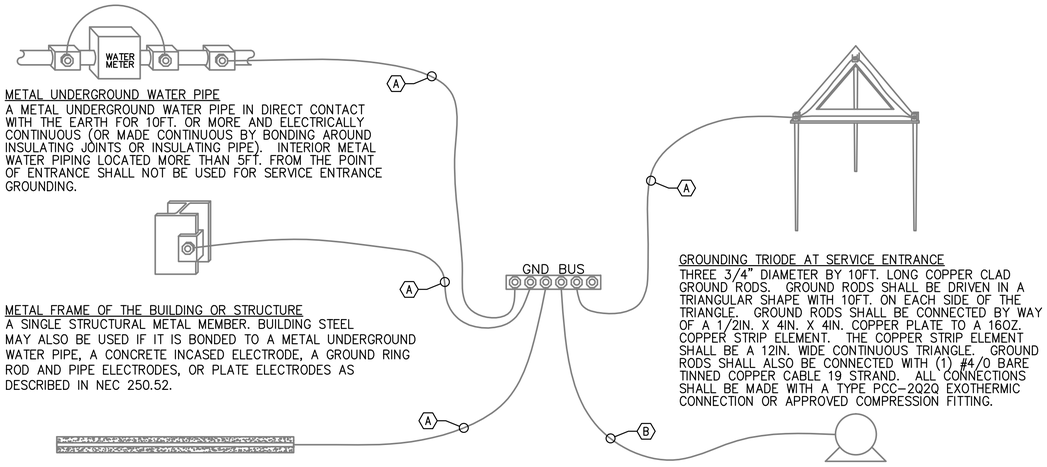

METAL UNDERGROUND WATER PIPE
A METAL UNDERGROUND WATER PIPE IN DIRECT CONTACT WITH THE EARTH FOR 10FT. OR MORE AND ELECTRICALLY CONTINUOUS (OR MADE CONTINUOUS BY BONDING AROUND INSULATING JOINTS OR INSULATING PIPE). INTERIOR METAL WATER PIPING LOCATED MORE THAN 5FT. FROM THE POINT OF ENTRANCE SHALL NOT BE USED FOR SERVICE ENTRANCE GROUNDING.

METAL FRAME OF THE BUILDING OR STRUCTURE
A SINGLE STRUCTURAL METAL MEMBER. BUILDING STEEL MAY ALSO BE USED IF IT IS BONDED TO A METAL UNDERGROUND WATER PIPE, A CONCRETE INCASED ELECTRODE, A GROUND RING ROD AND PIPE ELECTRODES, OR PLATE ELECTRODES AS DESCRIBED IN NEC 250.52.

CONCRETE ENCASED ELECTRODE
AN ELECTRODE ENCASED BY AT LEAST 2IN. OF CONCRETE , LOCATED WITHIN AND NEAR THE BOTTOM OF A CONCRETE FOUNDATION OR FOOTING THAT IS IN DIRECT CONTACT WITH THE EARTH, CONSISTING OF AT LEAST 20FT. OF ONE OR MORE BARE OR ZINC GALVANIZED OR OTHER ELECTRICALLY CONDUCTIVE COATED STEEL REINFORCING BARS OR RODS OF NOT LESS THAN 1/2" DIAMETER OR BARE COPPER CONDUCTOR NOT SMALLER THAN 4AWG.

GROUNDING TRIODE AT SERVICE ENTRANCE
THREE 3/4" DIAMETER BY 10FT. LONG COPPER CLAD GROUND RODS. GROUND RODS SHALL BE DRIVEN IN A TRIANGULAR SHAPE WITH 10FT. ON EACH SIDE OF THE TRIANGLE. GROUND RODS SHALL BE CONNECTED BY WAY OF A 1/2IN. X 4IN. X 4IN. COPPER PLATE TO A 16OZ. COPPER STRIP ELEMENT. THE COPPER STRIP ELEMENT SHALL BE A 12IN. WIDE CONTINUOUS TRIANGLE. GROUND RODS SHALL ALSO BE CONNECTED WITH (1) #4/0 BARE TINNED COPPER CABLE 19 STRAND. ALL CONNECTIONS SHALL BE MADE WITH A TYPE PCC-2Q2Q EXOTHERMIC CONNECTION OR APPROVED COMPRESSION FITTING.

LOAD OR DOWNSTREAM PANEL
ALL LOADS IN THE BUILDING SHALL HAVE AN EQUIPMENT GROUNDING CONDUCTOR PULLED TO THEM.

1
E-502

SERVICE ENTRANCE GROUNDING DETAIL

SCALE: N.T.S.

APPROVED:

A/E DESIGNER OF RECORD

SEAL:

COMMONWEALTH OF PENNSYLVANIA
REGISTERED PROFESSIONAL
JOSEPH R. GAUS
ENGINEER
PE-074251
1/29/10

US ARMY CORPS OF ENGINEERS
AFGHANISTAN ENGINEER DISTRICT

Mark	Description	Date	Appr.	Mark	Description	Date	Appr.

Designed by: RAJ
Dwn by: BJB
Ckd by: JRG
Reviewed by: JRG
Submitted by: BAKER
Date: 2/23/10
Rev: 0
Design file no.
Drawing code:
File name:
Plot date:
Plot scale:

U.S. ARMY CORPS OF ENGINEERS
AFGHANISTAN ENGINEER DISTRICT
APO AE 96338

Michael Baker Jr., Inc.
A unit of Michael Baker Corporation
Airside Business Park
100 Airside Drive
Moon Township, PA 15108
www.mbakercorp.com

AFGHAN NATIONAL ARMY
REGIONAL MILITARY TRAINING CENTER
STANDARD DESIGN

SENIOR BOQ BARRACKS
ELECTRICAL DETAILS

Sheet reference number:
E-502

FIXTURE MARK 'B'

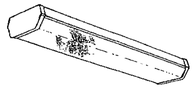

FIXTURE MARK 'C'

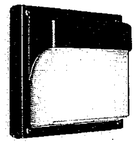

FIXTURE MARK 'G'

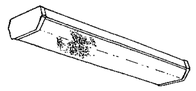

FIXTURE MARK 'H'

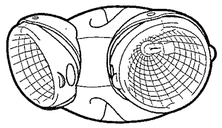

FIXTURE MARK 'E'

LIGHT FIXTURE SCHEDULE

FIXTURE MARK	STYLE NUMBER AND TYPE	NUMBER AND TYPE OF LAMPS	VOLTAGE	MOUNTING	NOTES
B	WET LOCATION WRAP AROUND SURFACE/PENDANT MOUNTED FLUORESCENT FIXTURE WITH PRISMATIC ACRYLIC LENS AND ELECTRONIC BALLAST	(2) 32W 3500K	220V – 1ø 50HZ	SURFACE MOUNTED	FURNISHED WITH ELECTRONIC BALLAST, VIRGIN ACRYLIC WRAP AROUND LENS.
B2	SAME AS FIXTURE 'B' WITH EMERGENCY BALLAST	(2) 32W 3500K	220V – 1ø 50HZ	SURFACE MOUNTED	FURNISHED WITH ELECTRONIC BALLAST, VIRGIN ACRYLIC WRAP AROUND LENS. EMERGENCY BALLAST WITH SELF TEST SWITCH.
C	INCANDESCENT ONE PIECE W/ APPROVED LENS STABILIZED HIGH IMPACT POLY CARBONATE.	(1) A19 – 100W INCANDESCENT	220V – 1ø 50HZ	WALL MOUNTED ABOVE EXTERIOR DOORS	
G	WRAP AROUND SURFACE/PENDANT MOUNTED FLUORESCENT FIXTURE WITH PRISMATIC ACRYLIC LENS AND ELECTRONIC BALLAST	(2) 32W 3500K	220V – 1ø 50HZ	SURFACE MOUNTED	FURNISHED WITH ELECTRONIC BALLAST, VIRGIN ACRYLIC WRAP AROUND LENS.
G2	SAME AS FIXTURE 'G' WITH EMERGENCY BALLAST	(2) 32W 3500K	220V – 1ø 50HZ	SURFACE MOUNTED	FURNISHED WITH ELECTRONIC BALLAST, VIRGIN ACRYLIC WRAP AROUND LENS. EMERGENCY BALLAST WITH SELF TEST SWITCH.
H	REMOTE HEAD EXTERIOR LIGHT HEAD POWERED FROM EXIT SIGN BATTERY– 12V DOUBLE HEAD CORROSION RESISTANT WITH UL34 WEATHERPROOF CONSTRUCTION	(2) 12W/12V HALOGEN LAMP	12V – 1ø 50HZ	EXTERIOR WALL MOUNTED AT TOP OF DOOR HEIGHT	
E	UNIVERSAL MOUNT ENGINEER GRADE THERMOPLASTIC HOUSING EXIT SIGN WITH LED LAMPS, RED LETTERS 6" IN HEIGHT WITH ARROWS AS INDICATED, WITH 12V CADMIUM BATTERY WITH REMOTE HEAD CAPABILITY	LED LAMPS	220V – 1ø 50HZ	UNIVERSAL MOUNTING	

APPROVED:

A/E DESIGNER OF RECORD

SEAL:

US ARMY CORPS OF ENGINEERS
AFGHANISTAN ENGINEER DISTRICT

Mark	Description	Date	Appr.

Mark	Description	Date	Appr.

U.S. ARMY CORPS OF ENGINEERS
AFGHANISTAN ENGINEER DISTRICT
APO AE 96338

Michael Baker Jr., Inc
A unit of Michael Baker Corporation
Airside Business Park
100 Airside Drive
Moon Township, PA 15108
www.mbakercorp.com

Designed by: RAJ		Date: 2/23/10	Rev: 0
Dwn by: BJB	Ckd by: JRG	Design file no.	
Reviewed by: JRG		Drawing code:	
Submitted by: BAKER		File name: Plot date: Plot scale:	

AFGHAN NATIONAL ARMY
REGIONAL MILITARY TRAINING CENTER
STANDARD DESIGN

SENIOR BOQ BARRACKS
ELECTRICAL LIGHT FIXTURE SCHEDULE

Sheet reference number:
E–601

PANELBOARD BOQS1 SURFACE MOUNTED
225 AMP. MAIN LUGS (OR) 400 AMP. MAIN BREAKER W/ 400 AMP. TRIP
CIRCUIT BREAKER TYPE 380/220 VOLTS 3 PHASE 4 WIRE 50 HZ 400 AMP. BUS

CKT. NO.	TRIP AMPS	NO. POLES	WIRE MM 2	GND MM2	CONDUIT MM	LOAD SERVED	LOAD-KVA A0	LOAD-KVA B0	LOAD-KVA C0	LOAD-KVA A0	LOAD-KVA B0	LOAD-KVA C0	LOAD SERVED	CONDUIT MM	GND MM2	WIRE MM2	NO. POLES	TRIP AMPS	CKT. NO.
1	20	1	4.0	4.0	20	LIGHTING – RM 100	1.4			1.1			LIGHTING – RM 105–112	20	4.0	4.0	1	20	2
3	20	1	4.0	4.0	20	LIGHTING – RM 101, 104, 105		1.1			2.1		LIGHTING – RM 113–126	20	4.0	4.0	1	20	4
5	20	1	4.0	4.0	20	RECEPTACLES – RM 100			1.2			0.8	RECEPTACLES – RM 100	20	4.0	4.0	1	20	6
7	20	1	4.0	4.0	20	RECEPTACLES – RM 100	0.8			1.2			RECEPTACLES – RM 100,104,EXT	20	4.0	4.0	1	20	8
9	20	1	4.0	4.0	20	CEILING FANS – RM 109–111		1.2			1.5		CEILING FANS – RM 113–117	20	4.0	4.0	1	20	10
11	20	1	4.0	4.0	20	CEILING FANS – RM 105–108			1.2			1.5	CEILING FANS – RM 117–122	20	4.0	4.0	1	20	12
13	20	1	4.0	4.0	20	FACP – RM 103	0.5			1.5			CEILING FANS – RM 123–127	20	4.0	4.0	1	20	14
15	20	1	4.0	4.0	20	RECEPTACLES – RM 109, 110		1.2			1.2		RECEPTACLES – RM 113, 114	20	4.0	4.0	1	20	16
17	20	1	4.0	4.0	20	RECEPTACLES – RM 110, 111			1.2			1.2	RECEPTACLES – RM 115, 116	20	4.0	4.0	1	20	18
19	20	1	4.0	4.0	20	RECEPTACLES – RM 112	0.8			1.2			RECEPTACLES – RM 116, 117	20	4.0	4.0	1	20	20
21	20	1	4.0	4.0	20	RECEPTACLES – RM 107, 108		1.2			1.2		RECEPTACLES – RM 117, 118	20	4.0	4.0	1	20	22
23	20	1	4.0	4.0	20	RECEPTACLES – RM 106, 107			1.2			0.8	RECEPTACLES – RM 118, 119	20	4.0	4.0	1	20	24
25	20	1	4.0	4.0	20	RECEPTACLES – RM 105	0.8			0.8			RECEPTACLES – RM 120	20	4.0	4.0	1	20	26
27	20	2	4.0	4.0	20	ELECTRIC HEAT #2 – RM 100		1.3			0.8		RECEPTACLES – RM 121	20	4.0	4.0	1	20	28
29									1.3			1.2	RECEPTACLES – RM 122, 123	20	4.0	4.0	1	20	30
31	20	2	4.0	4.0	20	ELECTRIC HEAT #2 – RM 100	1.3			10.1			PANEL BOQS3	40	10.0	50.0	3	100	32
33								1.3			9.8								34
35	20	2	4.0	4.0	20	ELECTRIC HEAT #2 – RM 100			1.3			18.0							36
37							1.3			18.2			PANEL BOQS2	40	16.0	70.0	3	150	38
39	20	2	4.0	4.0	20	ELECTRIC HEAT #2 – RM 105		1.3			18.2								40
41									1.3			15.6							42
							6.9	8.6	8.7	34.1	34.8	39.1							

TOTAL CONN. LOAD PER PHASE (KVA): A0 41.0 B0 43.4 C0 47.8

TOTAL CONN. LOAD 132.2 KVA. 70 % DEMAND = ESTIMATED DEMAND LOAD 92.5

* MAIN BREAKER SHALL BE 3P EARTH GROUND TYPE

PANELBOARD BOQS2 SURFACE MOUNTED
225 AMP. MAIN LUGS (OR) 150 AMP. MAIN BREAKER W/ 150 AMP. TRIP
CIRCUIT BREAKER TYPE 380/220 VOLTS 3 PHASE 4 WIRE 50 HZ 225 AMP. BUS

CKT. NO.	TRIP AMPS	NO. POLES	WIRE MM 2	GND MM2	CONDUIT MM	LOAD SERVED	LOAD-KVA A0	LOAD-KVA B0	LOAD-KVA C0	LOAD-KVA A0	LOAD-KVA B0	LOAD-KVA C0	LOAD SERVED	CONDUIT MM	GND MM2	WIRE MM2	NO. POLES	TRIP AMPS	CKT. NO.
1	20	2	4.0	4.0	20	ELECTRIC HEAT #2 – RM 109	1.3			1.3			ELECTRIC HEAT #2 – RM 113	20	4.0	4.0	2	20	2
3								1.3			1.3								4
5	20	2	4.0	4.0	20	ELECTRIC HEAT #2 – RM 110			1.3			1.3	ELECTRIC HEAT #2 – RM 114	20	4.0	4.0	2	20	6
7							1.3			1.3									8
9	20	2	4.0	4.0	20	ELECTRIC HEAT #2 – RM 111		1.3			1.3		ELECTRIC HEAT #2 – RM 115	20	4.0	4.0	2	20	10
11									1.3			1.3							12
13	20	2	4.0	4.0	20	ELECTRIC HEAT #2 – RM 112	1.3			1.3			ELECTRIC HEAT #2 – RM 116	20	4.0	4.0	2	20	14
15								1.3			1.3								16
17	20	2	4.0	4.0	20	ELECTRIC HEAT #2 – RM 108			1.3			1.3	ELECTRIC HEAT #2 – RM 117	20	4.0	4.0	2	20	18
19							1.3			1.3									20
21	20	2	4.0	4.0	20	ELECTRIC HEAT #2 – RM 107		1.3			1.3		ELECTRIC HEAT #2 – RM 118	20	4.0	4.0	2	20	22
23									1.3			1.3							24
25	20	2	4.0	4.0	20	ELECTRIC HEAT #2 – RM 106	1.3			1.3			ELECTRIC HEAT #2 – RM 119	20	4.0	4.0	2	20	26
27								1.3			1.3								28
29	20	2	4.0	4.0	20	ELECTRIC HEAT #2 – RM 105			1.3			1.3	ELECTRIC HEAT #2 – RM 127	20	4.0	4.0	2	20	30
31							1.3			1.3									32
33	20	2	4.0	4.0	20	ELECTRIC HEAT #2 – RM 124		1.3			1.3		ELECTRIC HEAT #2 – RM 126	20	4.0	4.0	2	20	34
35									1.3			1.3							36
37	20	2	4.0	4.0	20	ELECTRIC HEAT #2 – RM 123	1.3			1.3			ELECTRIC HEAT #2 – RM 125	20	4.0	4.0	2	20	38
39								1.3			1.3								40
41	20	1				SPARE							SPARE				1	20	42
							9.1	9.1	7.8	9.1	9.1	7.8							

TOTAL CONN. LOAD PER PHASE (KVA): A0 18.2 B0 18.2 C0 15.6

TOTAL CONN. LOAD 52.0 KVA. 70 % DEMAND = ESTIMATED DEMAND LOAD 36.4

* MAIN BREAKER SHALL BE 3P EARTH GROUND TYPE

PANELBOARD BOQS3 SURFACE MOUNTED
225 AMP. MAIN LUGS (OR) 100 AMP. MAIN BREAKER W/ 100 AMP. TRIP
CIRCUIT BREAKER TYPE 380/220 VOLTS 3 PHASE 4 WIRE 50 HZ 100 AMP. BUS

CKT. NO.	TRIP AMPS	NO. POLES	WIRE MM 2	GND MM2	CONDUIT MM	LOAD SERVED	LOAD-KVA A0	LOAD-KVA B0	LOAD-KVA C0	LOAD-KVA A0	LOAD-KVA B0	LOAD-KVA C0	LOAD SERVED	CONDUIT MM	GND MM2	WIRE MM2	NO. POLES	TRIP AMPS	CKT. NO.
1	20	2	4.0	4.0	20	ELECTRIC HEAT #2 – RM 122	1.3			1.3			ELECTRIC HEAT #2 – 121	20	4.0	4.0	2	20	2
3								1.3			1.3								4
5	20	2	4.0	4.0	20	ELECTRIC HEAT #2 – RM 120			1.3			5.0	WATER HEATER – RM 104	20	6.0	6.0	3	30	6
7							1.3			5.0									8
9	20	1	4.0	4.0	20	EXHAUST FANS #1, #2 – RM 101		1.0			5.0								10
11	20	1	4.0	4.0	20	EXHAUST FAN #3 – RM 104			0.5			10.0	MAKE UP AIR #1 – RM 104	25	6.0	25.0	1	60	12
13	20	1				SPARE				1.2			RECEPTACLES – RM 126, 127	20	4.0	4.0	1	20	14
15	20	1				SPARE					1.2		RECEPTACLES – RM 125, 126	20	4.0	4.0	1	20	16
17	20	1				SPARE						1.2	RECEPTACLES – RM 124, 125	20	4.0	4.0	1	20	18
19	20	1				SPARE							SPARE				1	20	20
21	20	1				SPARE							SPARE				1	20	22
23	20	1				SPARE							SPARE				1	20	24
25	20	1				SPARE							SPARE				1	20	26
27	20	1				SPARE							SPARE				1	20	28
29	20	1				SPARE							SPARE				1	20	30
31	20	1				SPARE							SPARE				1	20	32
33	20	1				SPARE							SPARE				1	20	34
35	20	1				SPARE							SPARE				1	20	36
37	20	1				SPARE							SPARE				1	20	38
39	20	1				SPARE							SPARE				1	20	40
41	20	1				SPARE							SPARE				1	20	42
							2.6	2.3	1.8	7.5	7.5	16.2							

TOTAL CONN. LOAD PER PHASE (KVA): A0 10.1 B0 9.8 C0 18.0

TOTAL CONN. LOAD 37.9 KVA. 70 % DEMAND = ESTIMATED DEMAND LOAD 26.53

* MAIN BREAKER SHALL BE 3P EARTH GROUND TYPE

APPROVED:

A/E DESIGNER OF RECORD

SEAL:

COMMONWEALTH OF PENNSYLVANIA
REGISTERED PROFESSIONAL ENGINEER
JOSEPH R. GAUS
PE-074251
1/29/10

US ARMY CORPS OF ENGINEERS
AFGHANISTAN ENGINEER DISTRICT

Mark	Description	Date	Appr.

Mark	Description	Date	Appr.

Rev: 0
Date: 2/23/10
Design file no.
Drawing code:
File name:
Plot date:
Plot scale:

Designed by: RAJ
Dwn by: BJB
Ckd by: JRG
Reviewed by: JRG
Submitted by: BAKER

U.S. ARMY CORPS OF ENGINEERS
AFGHANISTAN ENGINEER DISTRICT
APO AE 96338

Michael Baker Jr., Inc
A unit of Michael Baker Corporation
Airside Business Park
100 Airside Drive
Moon Township, PA 15108
www.mbakercorp.com

AFGHAN NATIONAL ARMY
REGIONAL MILITARY TRAINING CENTER
STANDARD DESIGN

SENIOR BOQ BARRACKS
ELECTRICAL PANEL SCHEDULES

Sheet reference number:
E–602

AFGHAN NATIONAL ARMY

STANDARD BUILDING DESIGN

SMALL ARMS STORAGE

100% FINAL DESIGN SUBMITTAL

SHEET INDEX

G–001 COVER SHEET

STRUCTURAL

S–001 GENERAL NOTES & DESIGN CRITERIA
S–101 FOUNDATION/SLAB & ROOF FRAMING PLAN
S–401 BUILDING SECTIONS
S–501 FOUNDATION & FRAMING SECTIONS
S–502 BEAM & COLUMN DETAILS
S–503 BEAM & COLUMN DETAILS
S–601 SCHEDULES
S–701 TYPICAL DETAILS
S–702 TYPICAL DETAILS

ARCHITECTURAL

A–001 LIFE SAFETY PLAN
A–101 FLOOR PLAN
A–102 ROOF PLAN
A–201 ELEVATIONS
A–301 BUILDING SECTIONS
A–401 WALL SECTIONS
A–501 EXTERIOR DETAILS
A–502 HEAD, JAMB, & SILL DETAILS
A–503 STOOP DETAILS
A–601 WINDOW & DOOR SCHEDULES

MECHANICAL

M–101 HVAC FLOOR PLAN, SCHEDULES, & DETAILS

ELECTRICAL

E–001 ELECTRICAL SYMBOLS & ABBREVIATIONS
E–101 ELECTRICAL LIGHTING PLAN
E–102 ELECTRICAL POWER & SYSTEMS PLAN
E–103 ELECTRICAL LIGHTNING PROTECTION
E–501 ELECTRICAL DETAILS
E–502 ELECTRICAL DETAILS
E–601 ELECTRICAL LIGHT FIXTURE SCHEDULE
E–602 ELECTRICAL PANEL SCHEDULES

US ARMY CORPS OF ENGINEERS
AFGHANISTAN ENGINEER DISTRICT

Mark	Description	Date	Appr.	Mark	Description	Date	Appr.

U.S. ARMY CORPS OF ENGINEERS
AFGHANISTAN ENGINEER DISTRICT
APO AE 96338

Michael Baker Jr., Inc.
A unit of Michael Baker Corporation
Airside Business Park
100 Airside Drive
Moon Township, PA 15108
www.mbakercorp.com

Designed by: KMF/MMY
Dwn by: RCG
Ckd by: CWW
Reviewed by: LHM
Submitted by: BAKER
Date: 2/23/10
Rev: 0
Design file no.
Drawing code:
File name: ANASASTG-G01CS
Plot date: 2/23/2010
Plot scale: X:X

AFGHAN NATIONAL ARMY
REGIONAL MILITARY TRAINING CENTER
STANDARD DESIGN

SMALL ARMS STORAGE

COVER SHEET

Sheet reference number:
G–001

1 2 3 4 5

STRUCTURAL ABBREVIATIONS:

ACI	AMERICAN CONCRETE INSTITUTE
ADD'L	ADDITIONAL
AISC	AMERICAN INSTITUTE OF STEEL CONSTRUCTION
AISI	AMERICAN IRON AND STEEL INSTITUTE
ASTM	AMERICAN SOCIETY FOR TESTING AND MATERIALS
ARCH	ARCHITECTURAL
B	BOTTOM
BLDG	BUILDING
BOTT	BOTTOM
℄	CENTER LINE
CFMRF	COLD FORM METAL ROOF FRAME
CFMF	COLD FORM METAL FRAME
CFS	COLD FORMED STEEL
CIP	CAST–IN–PLACE
CIPL	CAST–IN–PLACE LINTEL
CJ	CONTROL JOINT
CLR	CLEAR
CMU	CONCRETE MASONRY UNIT
COEFF	COEFFICIENT
COL	COLUMN
CONC	CONCRETE
CONT	CONTINUOUS
COORD	COORDINATE
CRSI	CONCRETE REINFORCING STEEL INSTITUTE
CSJ	CONSTRUCTION JOINT
DIA	DIAMETER
DIAG	DIAGONAL
DIM	DIMENSION
DWG	DRAWING
DWL	DOWEL
EA	EACH
EF	EACH FACE
ELEC	ELECTRICAL
ELEV	ELEVATION
EMBED	EMBEDMENT
EQUIV	EQUIVALENT
ETC	ET CETERA
EW	EACH WAY
EXP	EXPANSION
EXT	EXTERIOR
FTG	FOOTING
GA	GAUGE
GB	GRADE BEAM
HORIZ	HORIZONTAL
h	HOUR
HRS	HOURS
IBC	INTERNATIONAL BUILDING CODE
INFO	INFORMATION
INT	INTERIOR
kg	KILOGRAM
km	KILOMETER
kN	KILONEWTON
kPa	KILOPASCAL
L#	ANGLE (# INDICATES SIZE)
LONG	LONGITUDINAL
LLV	LONG LEG VERTICAL
m	METER
MAX	MAXIMUM
MECH	MECHANICAL
MFG	MANUFACTURER
MID	MIDDLE
MIN	MINIMUM
MISC	MISCELLANEOUS
mm	MILLIMETER
MPa	MEGAPASCAL
MTL	METAL
MWFRS	MAIN WIND FORCE RESISTING SYSTEM
N	NEWTON
N	NORTH
N/A	NOT APPLICABLE
#	NUMBER SYMBOL FOR REBAR SIZE
NTS	NOT TO SCALE
OC	ON CENTER
OPNG	OPENING
ℙ or PL	PLATE
PRE–ENG	PRE–ENGINEERED
RB	ROOF BEAM
REINF	REINFORCED
REQ'D	REQUIRED
SIM	SIMILAR
SPECS	SPECIFICATIONS
STD	STANDARD
STRUCT	STRUCTURAL
SW	SHEAR WALL
T	TOP
T/	TOP OF
T/ELEV	TOP ELEVATION
T/SLAB	TOP OF SLAB
T&B	TOP AND BOTTOM
THK	THICK
TYP	TYPICAL
UFC	UNIFIED FACILITIES CRITERIA
UON	UNLESS OTHERWISE NOTED
VERT	VERTICAL
W	WIDTH
W/	WITH

1.0 GENERAL NOTES:

1.1 THIS PROJECT HAS BEEN DESIGNED FOR THE WEIGHTS AND MATERIALS INDICATED ON THE SHEETS AND FOR THE LIVE LOADS INDICATED IN THE DESIGN DATA. IT IS THE CONTRACTOR'S RESPONSIBILITY TO DETERMINE ALLOWABLE CONSTRUCTION LOADS AND TO PROVIDE PROPER DESIGN AND CONSTRUCTION OF FALSEWORK, FORMWORK, STAGING, BRACING, SHEETING AND SHORING, ETC.

1.1 COORDINATE THESE SHEETS WITH THE ARCHITECTURAL, MECHANICAL, ELECTRICAL, PLUMBING, AND CIVIL SHEETS. ALL DIMENSIONS SHOWN ON THE SHEETS ARE MILLIMETERS UNLESS NOTED OTHERWISE.

1.2 THE CONTRACTOR SHALL VERIFY AND COORDINATE ALL FLOOR AND ROOF OPENING SIZES AND LOCATIONS, EQUIPMENT PAD SIZES AND LOCATIONS, ANCHOR BOLT LAYOUTS, ETC WITH EQUIPMENT SELECTED. THE CONTRACTOR SHALL MAKE ANY REQUIRED MODIFICATIONS AT NO ADDITIONAL COST.

1.3 THE CONTRACTOR SHALL REFER TO THE ARCHITECTURAL, MECHANICAL, ELECTRICAL AND PLUMBING SHEETS FOR SLEEVES, CURBS, INSERTS OR OPENINGS, ETC. NOT HEREIN INDICATED.

1.4 WORK NOT INCLUDED ON THE SHEETS BUT IMPLIED TO BE SIMILAR TO THAT SHOWN AT CORRESPONDING PLACES ELSEWHERE ON THE SHEETS SHALL BE REPEATED.

1.5 IN CASE OF CONFLICT BETWEEN THE NOTES, DETAILS AND SPECIFICATIONS THE MOST RIGID REQUIREMENTS SHALL GOVERN.

1.6 SEE ARCHITECTURAL SHEETS FOR LOCATIONS OF MASONRY AND NON–LOAD BEARING PARTITIONS. PROVIDE COMPRESSIBLE FIRESAFING AT TOP OF WALL AS REQUIRED BY ARCHITECTURAL SHEETS.

1.7 COORDINATE FINISHED FLOOR DATUM ELEVATION 0.0m WITH THE CIVIL SHEETS.

2.0 FOUNDATION NOTES

2.1 THE GEOTECHNICAL ANALYSIS FOR THIS PROJECT IS THE RESPONSIBILITY OF THE CONTRACTOR AWARDED THE WORK. AN ASSUMED ALLOWABLE SOIL BEARING VALUE OF 72 kPa HAS BEEN USED IN THE STRUCTURAL ANALYSIS OF THE BUILDING HEREIN AND SHALL BE CONFIRMED AND VERIFIED AS PART OF THE GEOTECHNICAL INVESTIGATION. VALUES WHICH DO NOT MEET THE REQUIREMENTS INDICATED ON THE BASIS OF DESIGN SHEET SHALL BE IMMEDIATELY BROUGHT TO THE ATTENTION OF THE CONTRACTING OFFICER FOR CONSIDERATION AND DETERMINATION ON THE NEXT APPROPRIATE COURSE OF ACTION.

2.2 SEE THE SPECIFICATION FOR ADDITIONAL REQUIREMENTS TO THOSE OUTLINED IN THE GEOTECHNICAL INVESTIGATION FOR EXCAVATION AND PREPARATION OF THE FOUNDATION AND THE SLAB ON GRADE SUBGRADE INCLUDING COMPACTION PROCEDURES.

2.3 EXCAVATIONS FOR FOOTINGS SHALL HAVE THE SIDES AND BOTTOMS TEMPORARILY LINED WITH 0.25mm POLYETHYLENE IF PLACEMENT OF CONCRETE DOES NOT OCCUR WITHIN 24 HRS OF THE EXCAVATION OF THE FOOTING.

2.4 FOUNDATION CONDITIONS NOTED DURING CONSTRUCTION WHICH DIFFER FROM THOSE DESCRIBED IN THE GEOTECHNICAL REPORT SHALL BE REPORTED TO THE GENERAL CONTRACTOR BEFORE FURTHER CONSTRUCTION IS ATTEMPTED. SEE PROJECT SPECIFICATIONS.

2.5 NO FOOTINGS OR SLABS SHALL BE POURED INTO OR AGAINST SUBGRADE CONTAINING FREE WATER, FROST, ICE OR LOOSE MATERIAL. FROST DEPTH ASSUMED TO BE 800mm.

2.6 ALL SLAB–ON–GRADE, TRENCH BOTTOMS AND OTHER ON–GRADE INTERIOR HORIZONTAL SURFACES SHALL BE PLACED OVER A 0.25mm POLYETHYLENE VAPOR RETARDER OVER A 100mm #57 STONE WATER CAPILLARY BARRIER PLACED ON SUBGRADE PROPERLY PREPARED IN ACCORDANCE WITH THE CONTRACT SPECIFICATIONS. (UON)

2.7 PRIOR TO START OF FOUNDATION OR SLAB–ON–GRADE CONSTRUCTION, EXISTING SUBGRADES SHALL BE COMPACTED TO MINIMUM OF 95% MAXIMUM DRY DENSITY OBTAINED THRU ASTM D 1557 MODIFIED PROCTOR TESTING.

2.8 SEE PLUMBING, ELECTRICAL & CIVIL SHEETS FOR REQUIRED UNDERSLAB UTILITIES.

2.9 SEE ARCHITECTURAL SHEETS FOR ALL WATERPROOFING DETAILS AND MATERIALS.

2.10 IF UNDERMINING OF FOOTINGS OCCURS, FILL VOIDS WITH 18 MPa CONCRETE. DO NOT ATTEMPT TO REPLACE AND RE–COMPACT SOIL.

3.0 CONCRETE

3.1 CONCRETE SHALL HAVE THE UNIT WEIGHT OF 2400 kg/m^3 AND A MINIMUM COMPRESSIVE STRENGTH (f'c) OF 28 MPa AT 28 DAYS. ALL CONCRETE SHALL HAVE A WATER–CEMENT RATIO OF 0.45. SEE SPECIFICATIONS FOR ADDITIONAL INFORMATION. ENTRAIN AIR TO PRODUCE TOTAL AIR CONTENT ACCORDING TO THE SPECIFICATIONS FOR CONCRETE EXPOSED TO FREEZING TEMPERATURES (EXTERIOR FOOTINGS, SLAB TURNDOWNS, EXTERIOR SLABS AND SLABS–ON–GRADE, EXTERIOR RETAINING WALLS, AND EXTERIOR GRADE BEAMS.)

3.2 NO CALCIUM CHLORIDE SHALL BE USED IN ANY CONCRETE.

3.3 MIXING, TRANSPORTING AND PLACING OF CONCRETE SHALL CONFORM TO ACI 301M–05.

3.4 ALL CONCRETE WORK SHALL CONFORM TO THE REQUIREMENTS OF THE AMERICAN CONCRETE INSTITUTE (ACI) 318M MANUAL (metric), "BUILDING CODE REQUIREMENTS FOR REINFORCED CONCRETE", AND REQUIREMENTS OUTLINED IN THE CONTRACT SPECIFICATIONS. WHEN THERE IS A CONFLICT BETWEEN ACI AND THE SPECIFICATIONS, THE MORE STRINGENT SHALL GOVERN.

3.5 CHAMFER ALL EXPOSED EXTERNAL CORNERS OF CONCRETE WITH 20mm x45 DEGREE CHAMFER UON.

3.6 CONCRETE REINFORCEMENT BARS SHALL CONFORM TO ASTM A615M–96a, GRADE 420 MPa, REINFORCING BARS SHALL NOT BE TACK WELDED, WELDED, HEATED OR CUT, UNLESS INDICATED ON THE CONTRACT DOCUMENTS. ALL LAP SPLICES SHALL BE CLASS "B" UON.

3.7 HORIZONTAL FOOTING AND HORIZONTAL WALL REINFORCEMENT SHALL BE CONTINUOUS AND SHALL HAVE 90 DEGREE BENDS AND EXTENSIONS, OR CORNER BARS OF EQUIVALENT SIZE LAPPED WITH A CLASS B TENSION SPLICE AT CORNERS AND INTERSECTIONS. TOP BAR CRITERIA SHALL APPLY IF 300mm OR MORE OF FRESH CONCRETE IS PLACED BELOW BAR.

3.8 SLABS–ON–GRADE SHALL HAVE CONSTRUCTION JOINTS OR CRACK CONTROL JOINTS AS SHOWN ON THE DRAWINGS. CONSTRUCTION JOINTS CAN BE USED AT CONTROL JOINT LOCATIONS AT CONTRACTORS OPTION. SEE SLAB PLANS & JOINT DETAILS FOR ADDITIONAL INFORMATION. FOR AREAS NOT SHOWN ON DWGS, THE MAXIMUM SPACING OF CONSTRUCTION/ CRACK CONTROL JOINTS SHALL BE 4800mm

3.9 ALL CONCRETE REINFORCEMENT SHALL BE DETAILED, FABRICATED, LABELED, SUPPORTED, AND SPACED IN FORMS AND SECURED IN PLACE IN ACCORDANCE WITH THE PROCEDURES AND REQUIREMENTS OUTLINED IN THE LATEST EDITION OF THE "BUILDING CODE REQUIREMENTS FOR REINFORCED CONCRETE", ACI 318M, AND THE "MANUAL OF STANDARD PRACTICE FOR DETAILING REINFORCED CONCRETE STRUCTURES", ACI 315M, LATEST EDITION. BASED ON IN COUNTRY REINFORCEMENT AVAILABILITY, IT IS THE CONTRACTOR'S OPTION TO ROUND DESIGNATED ODD NUMBERED REINFORCEMENT SIZES UP (1) ONE BAR SIZE.

3.10 ALL DOWELS SHALL MATCH SIZE AND NUMBER OF MAIN REINFORCING, UNLESS NOTED OTHERWISE ON THE SHEETS.

3.11 ADDITIONAL BARS SHALL BE PROVIDED AROUND ALL FLOOR AND WALL OPENINGS AS SHOWN ON THE SHEETS.

3.12 SEE ARCHITECTURAL SHEETS FOR TYPE AND LOCATION OF ALL FLOOR FINISHES.

3.13 THE CONTRACTOR SHALL COORDINATE ADDITIONAL WALL/SLAB OPENINGS NOT SHOWN ON STRUCTURAL SHEETS. SEE MECHANICAL, ELECTRICAL, PLUMBING AND CIVIL SHEETS.

3.14 UNLESS NOTED OTHERWISE, ALL CURBS SHALL BE REINFORCED WITH AT LEAST (1)–#13 CONTINUOUS AND #13 AT 300mm O.C. DOWELS TO STRUCTURE BELOW.

3.15 THE CONTRACTOR SHALL VERIFY ALL OPENINGS, PAD SIZES, AND ANCHOR BOLTS WITH EQUIPMENT SELECTED.

3.16 FOR ALL WALLS & PIERS, PROVIDE DOWELS INTO FOOTING AT EACH VERT REINF BAR, UON DOWEL SIZE SHALL BE SAME AS VERT REINF.

3.17 PROVIDE CONCRETE POUR STOPS OR FORMED AS REQUIRED FOR INSTALLATION OF ALL CONCRETE WORK.

3.18 PROVIDE ADDITIONAL (2)–#13 x 600mm REINFORCING BARS IN SLAB–ON GRADE AT ALL RE–ENTRANT CORNERS. PLACE BARS AT MID–DEPTH OF SLAB WITH A CLEARANCE OF 50mm FROM CORNER UON.

3.19 COLD–WEATHER PLACEMENT: COMPLY WITH ACI 306.1 AND AS FOLLOWS. PROTECT CONCRETE WORK FROM PHYSICAL DAMAGE OR REDUCED STRENGTH THAT COULD BE CAUSED BY FROST, FREEZING ACTIONS, OR LOW TEMPERATURES. SUBMIT A COLD WEATHER CONCRETING PLAN FOR APPROVAL.

3.20 PROVIDE BONDING COMPOUND PER ASTM C 1059–99: SPECIFICATION FOR LATEX AGENTS FOR BONDING FRESH CONCRETE (GROUT) TO HARDENED CONCRETE.

3.21 THE FORMED SURFACES FOR REINFORCED CONCRETE SHALL ACHIEVE A "CLASS A" FINISH WHEN RECEIVING PAINT OR A "CLASS B" FINISH WHEN RECEIVING PLASTER OR TILE AS PER SPECIFICATION SECTION 03 31 00 CAST–IN–PLACE STRUCTURAL CONCRETE.

3.22 AT INTERSECTING GRADE BEAMS AND SHEAR WALLS, PROVIDE CORNER BARS AT INTERSECTIONS WITH SAME QUANTITY, SIZE AND SPACING AS HORIZONTAL BARS WITH LEG LENGTH = 50db.

3.23 REFER TO S–800 SERIES REINFORCING BAR PLACEMENT DRAWINGS DEFINING LENGTHS, BENDS, AND SPACINGS FOR ALL STRUCTURAL CONCRETE. THE S–800 SERIES DRAWING ARE BASED ON THE S–400, S–500, S–600, AND S–700 SERIES DRAWING SCHEDULES, DETAILS, AND DIAGRAMS.

4.0 CONCRETE MASONRY

4.1 MASONRY CONSTRUCTION SHALL CONFORM TO SPECIFICATION FOR MASONRY STRUCTURES (ACI 530.1) UON.

4.2 STRENGTH OF MASONRY MATERIALS SHALL BE AS FOLLOWS:

a. CONCRETE MASONRY UNITS SHALL BE NORMAL WEIGHT, GRADE N, TYPE 1, CONFORMING TO ASTM C–90 AND HAVE A MINIMUM COMPRESSIVE STRENGTH OF 10.4 MPa ON THE NET AREA.

b. MORTAR SHALL CONFORM TO ASTM C–270 TYPE S.

c. GROUT FOR MASONRY SHALL BE NORMAL WEIGHT AND HAVE A MINIMUM COMPRESSIVE STRENGTH OF 14 MPa AT 28 DAYS. GROUT SHALL CONFORM TO ASTM C476M. GROUT LIFTS SHALL NOT EXCEED 1,400mm.

d. REINFORCED MASONRY SHALL HAVE A STRENGTH F'm = 10 MPa. (F'm IS THE COMPRESSIVE STRENGTH OF THE MASONRY AT 28 DAYS AS DETERMINED BY PRISM TESTS).

4.3 ALL VERTICAL REINFORCEMENT FOR CONCRETE MASONRY SHALL BE ASTM A615M–96a, GRADE 420 MPa. ALL SPLICES SHALL BE LAPPED 48 BAR DIAMETERS MINIMUM.

4.4 BOND BEAMS SHALL BE SPACED AT 1200mm OC VERTICALLY. BOND BEAM REINFORCING SHALL BE CONTINUOUS AND PROVIDED AT WALL INTERSECTIONS AND WALL CORNERS (REFERENCE CONCRETE MASONRY NOTE 4.11). ALL BOND BEAM REINFORCING SHALL BE CONTINUOUS AND HAVE STANDARD ACI HOOKS AT EACH END. PROVIDE STANDARD BAR SPLICES AS SPECIFIED. AS AN ALTERNATE TO CMU BOND BEAMS, IT IS THE CONTRACTOR'S OPTION TO PROVIDE 200mm x 200mm CONTINUOUS CAST–IN–PLACE CONCRETE BOND BEAMS WITH (2)–#16 IN LIEU OF CMU BOND BEAMS INDICATED ON THE DRAWINGS.

4.5 SEE TYPICAL DETAILS FOR MINIMUM REINFORCEMENT REQUIREMENTS FOR CMU WALLS. PROVIDE STANDARD BAR SPLICES AS SPECIFIED. ALL VERTICAL REINFORCEMENT EXTENDS FULL HEIGHT OF WALL.

4.6 CMU CELLS THAT REQUIRE VERTICAL REINFORCING BARS AS INDICATED ON THE CONTRACT DRAWINGS AND/OR SPECS SHALL HAVE REINF BARS PLACED IN CENTERS OF CMU CELLS AND CONTINUOUSLY GROUTED UON.

4.7 ALL CMU CELLS, OPEN CAVITIES, AND AIR SPACES OF ALL EXTERIOR WALLS SHALL BE GROUTED TO STOP FRAGMENTS FROM MORTAR BLAST.

4.8 CONTRACTOR SHALL COORDINATE LOCATION OF ALL OPENINGS SEE ARCH, MECH, ELEC, AND PLUMBING SHEETS FOR SIZE AND LOCATION OF OPENINGS.

4.9 MASONRY WALLS SHALL NOT BE BACK FILLED PRIOR TO THE MORTAR AND GROUT ATTAINING THEIR RESPECTIVE MAXIMUM DESIGN STRENGTHS PER SPECIFICATIONS.

4.10 PROVIDE GALVANIZED MORTAR/GROUT SCREEN W/ 3mm MESH WHERE CELLS BELOW ARE NOT GROUTED.

4.11 AT INTERSECTING BOND BEAMS, PROVIDE CORNER BAR FOR EACH HORIZONTAL BAR IN BOND BEAMS AT INTERSECTING WALLS. USE SAME SIZE AND SPACING AS HORIZONTAL BARS WITH LEG LENGTH = 50db.

4.12 THE ALTERNATE CMU BRACE DETAILS SHOWN ON S–701 CAN BE UTILIZED AT THE CONTRACTOR'S OPTION IN PLACE OF THE "FLOATING PIN" WALL BRACE CONNECTIONS AT TOP OF CMU WALLS DEPICTED ON S–400 AND S–500 SERIES DRAWINGS THESE ALTERNATE DETAILS ALSO SHOW ALTERNATE CAST–IN–PLACE WALL BOND BEAMS THAT CAN BE UTILIZED AT THE CONTRACTOR'S OPTION IN PLACE OF THE STANDARD CMU BOND BEAMS CONSTRUCTED OF CMU BLOCKS.

5.0 COLD–FORMED METAL FRAMING

5.1 ALL COLD–FORMED METAL FRAMING MEMBERS SHALL CONFORM TO ASTM A1003M, STRUCTURAL GRADE ST340 (MPa), WITH A GALVANIZED COATING OF Z275 OR BETTER IN ACCORDANCE WITH ASTM A653M.

5.2 ALL COLD–FORMED METAL FRAMING MEMBERS SHALL HAVE THE FOLLOWING MINIMUM PROPERTIES:

a. MINIMUM METAL THICKNESS:
TRACK = 1.37mm;
STUD/OTHER = 1.09mm

b. MINIMUM FLANGE WIDTH:
TRACK = 38mm;
STUD/OTHER = 35mm

c. MINIMUM MEMBER DEPTH:
ALL SECTIONS = 152.2mm

d. PURLIN (HAT CHANNEL)
DEPTHxWIDTH(FLAT TOP)xTHICK = 25mmx42mmx1.59mm

5.3 ALL CONNECTIONS SHALL BE MADE WITH CORROSION RESISTANT (ASTM A153M), SELF–DRILLING, SELF–TAPPING STEEL DRILL SCREWS IN ACCORDANCE WITH ASTM C1513. SCREWS SHALL HAVE A LOW PROFILE HEAD BENEATH ROOF DECK, AND STANDARD HEAD ALL OTHER LOCATIONS.

5.4 FABRICATE COLD FORMED METAL FRAMING AND ACCESSORIES PLUMB, SQUARE AND TRUE TO LINE, WITH CONNECTIONS SECURELY FASTENED ACCORDING TO AISI STANDARD FOR COLD FORMED STEEL FRAMING.

5.5 CUT FRAMING MEMBERS BY SAWING OR SHEATHING, DO NOT TORCH CUT.

5.6 INSTALL FRAMING MEMBERS IN ONE–PIECE LENGTHS UNLESS SPLICE CONNECTIONS ARE INDICATED FOR TRACK OR TENSION MEMBERS

5.7 INSTALL TEMPORARY BRACING AND SUPPORTS TO SECURE FRAMING DURING CONSTRUCTION. MAINTAIN BRACING AND SUPPORTS IN PLACE UNTIL THE STRUCTURE HAS BEEN COMPLETED WITH ALL CONNECTIONS AND PERMANENT BRACING SECURED.

6.0 STRUCTURAL DESIGN CRITERIA

6.1 ALL DESIGNS SHALL CONFORM TO THE PROVISIONS OF THE IBC 2006 AND UFC AS APPLICABLE.

6.2 DESIGN LOADS

6.2.1 DEAD LOADS (PER IBC 2006 & UFC 3–310–01)

MECH/ELEC/PLUMBING	0.20 kPa
MISCELLANEOUS	0.15 kPa
COLD–FORMED FRAMING	0.20 kPa
INSULATION	0.10 kPa
METAL ROOF PANEL	0.14 kPa
	0.79 kPa
FLOOR PARTITION ALLOWANCE	0.96 kPa

6.2.2 LIVE LOADS (PER IBC 2006 & UFC 3–310–01)

ROOF	1.00 kPa
CORRIDOR (2–STORY BLDG ONLY)	4.80 kPa
ALL OTHERS (2–STORY BLDG ONLY)	2.40 kPa
SLAB ON GRADE	4.80 kPa

6.2.3 SNOW LOADS (PER IBC 2006 & UFC 3–310–01)

GROUND SNOW LOAD (Pg)	1.2 kPa
SNOW IMPORTANCE FACTOR (I)	1.0
SNOW EXPOSURE FACTOR (Ce)	1.0
THERMAL FACTOR (Ct)	1.0

6.2.4 WIND LOADS (PER IBC 2006)

BASIC WIND SPEED	137 km/h
WIND IMPORTANCE FACTOR	1.0
WIND EXPOSURE CATEGORY	D
DIRECTIONALITY COEFFICIENT (Kd)	0.85
TOPOGRAPHIC FACTOR (Kzt)	1.0

6.2.5 SEISMIC LOADS (PER IBC 2006 & UFC 3–310–04)

OCCUPANCY USE CATEGORY II
SEISMIC IMPORTANCE FACTOR (Ie) 1.0
SEISMIC SITE CLASS D
S_s = 1.5 (REDUCED FROM 2.4 PER ASCE 7–05, 12.8.1.3 FOR A BUILDING WITHOUT IRREGULARITIES)
$S_1 = 1.20$
$S_{DS} = 1.0$
$S_{D1} = 1.20$
SEISMIC DESIGN CATEGORY E
SEISMIC RESISTING SYSTEM:
–SPECIAL REINFORCED CONCRETE SHEAR WALL
RESPONSE MODIFICATION FACTOR (R) 6
RESPONSE COEFFICIENT (Cs) 0.167
SEISMIC ANALYTICAL PROCEDURE = EQUIV LATERAL FORCE
SEISMIC BASE SHEAR 290 kN

APPROVED:
A/E DESIGNER OF RECORD
SEAL:
GEORGIA REGISTERED 1-29-10 No. 27141 PROFESSIONAL ENGINEER CHRISTOPHER W. WHITMORE

US ARMY CORPS OF ENGINEERS
AFGHANISTAN ENGINEER DISTRICT

Mark | Date | Appr. | Description

Designed by: KMP/MMY
Dwn by: RCG
Ckd by: CWW
Reviewed by: LHM
Submitted by: BAKER
Date: 2/23/10
Rev: 0
Design file no.
Drawing code:
File name: ANASASTS-001GN
Plot date: 2/23/2010
Plot scale: X:X

U.S. ARMY CORPS OF ENGINEERS
AFGHANISTAN ENGINEER DISTRICT
APO AE 96338

Michael Baker Jr., Inc
A unit of Michael Baker Corporation
Airside Business Park
100 Airside Drive
Moon Township PA 15108
www.mbakercorp.com

AFGHAN NATIONAL ARMY
REGIONAL MILITARY TRAINING CENTER
STANDARD DESIGN

SMALL ARMS STORAGE

GENERAL NOTES & DESIGN CRITERIA

Sheet reference number:
S–001

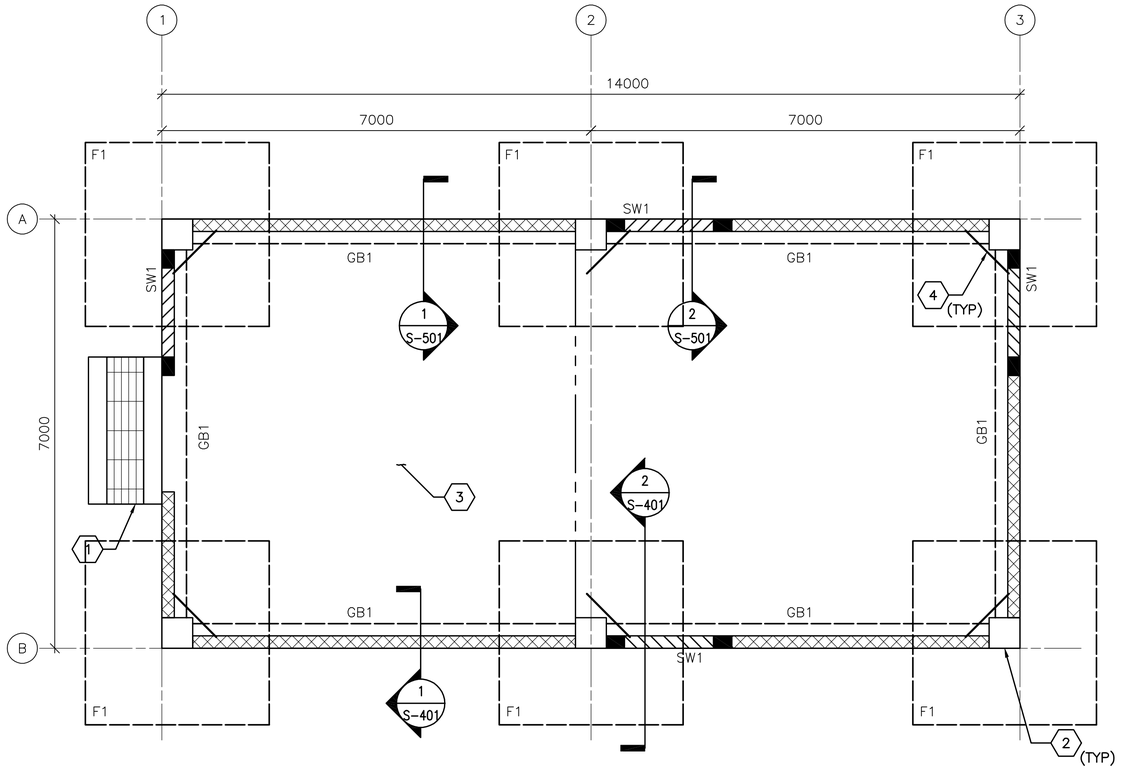

1 S-101 **FOUNDATION/SLAB PLAN**
SCALE: 1:50

FOUNDATION/SLAB PLAN NOTES:

1. REFER TO SHEET S-001 FOR STRUCTURAL NOTES AND DESIGN CRITERIA.
2. FINISH FIRST FLOOR ELEVATION SHALL BE (DATUM 0.00) ALL PLUS OR MINUS DIMENSIONS INDICATED ON PLAN OR REFERRED TO IN NOTES RELATE TO FINISH FLOOR ELEVATION.
3. SLAB-ON-GRADE IS 150 WITH #13 @ 300 OC EW LOCATED 38 FROM T/SLAB.
4. TOP OF EXTERIOR FOOTINGS SHALL BE -950 UNLESS OTHERWISE INDICATED.
5. COLUMN FOOTINGS INDICATED BY F# ON PLAN. REFER TO COLUMN FOOTING SCHEDULE ON SHEET S-601.
6. REFER TO COLUMN SCHEDULE ON SHEET S-601.
7. GRADE BEAM INDICATED BY GB# ON PLAN, REFER TO BEAM SCHEDULE ON SHEET S-601.
8. SHEARWALL INDICATED BY SW# ON PLAN, REFER TO SHEARWALL SCHEDULE ON SHEET S-601.
9. SEE TYP EXTERIOR CMU WALL DETAIL ON SHEET S-701.
10. SEE MECHANICAL AND ELECTRICAL SHEETS FOR CONCRETE PAD LOCATIONS, SIZES, AND THICKNESS NOT SHOWN. SEE SHEET S-701 FOR DETAILS.
11. THICKENED SLAB UNDER PERIMETER CMU WALLS NOT SHOWN FOR CLARITY.

FOUNDATION/SLAB PLAN KEY NOTES: (X)

1. CONC PAD (ENTRANCE)- SEE ARCH DWGS FOR INFORMATION
2. REINF CONC COLUMN
3. REINF CONC SLAB-ON-GRADE
4. (2)-#13 RE-ENTRANT CORNER BARS - SEE S-701 FOR INFORMATION

FOUNDATION/SLAB PLAN LEGEND:

REINF CONC SHEAR WALL

REINF CMU WALL

CONTROL JOINT

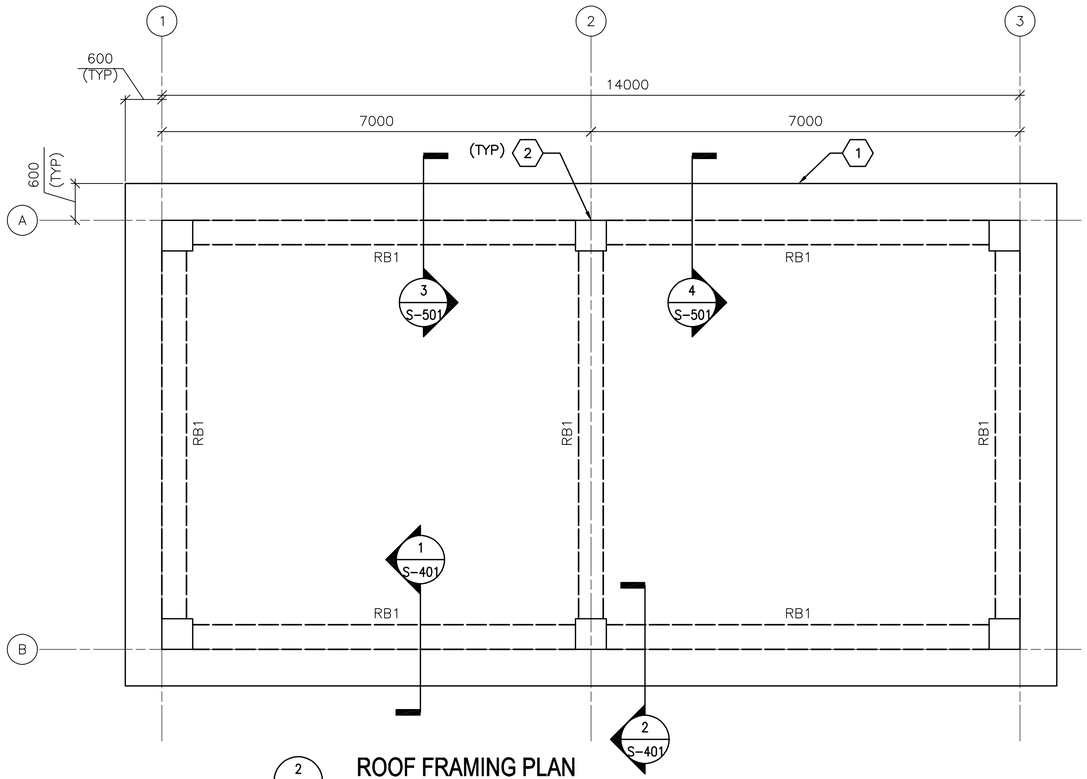

2 S-101 **ROOF FRAMING PLAN**
SCALE: 1:50

ROOF FRAMING PLAN NOTES:

1. REFER TO SHEETS S-001 FOR STRUCTURAL NOTES AND BASIS OF DESIGN.
2. TOP OF SLAB ELEVATION = 3500 UNLESS NOTED OTHERWISE.
3. ROOF SLAB IS 250 WITH #16 @ 300 OC EW T&B.
4. ROOF BEAM INDICATED BY RB# ON PLAN. REFER TO BEAM SCHEDULE ON SHEET S-601.
5. COORDINATE WITH ARCHITECTURAL SHEETS FOR COLD-FORMED STEEL OVERBUILD FRAMING ABOVE ROOF SLAB.
6. COLD-FORMED METAL OVERBUILD ROOF FRAMING NOT SHOWN FOR CLARITY. SEE OVERBUILD ROOF FRAMING DETAILS AND SECTIONS ON SHEET S-702.
7. OVERHANG AREAS OF ROOF SLAB CONTAIN ROOF VENT PENETRATIONS. REFERENCE ARCHITECTURAL DRAWINGS FOR INFORMATION.

ROOF FRAMING PLAN KEY NOTES: (X)

1. CONC ROOF SLAB (BELOW ROOF OVERBUILD)
2. REINF CONC COLUMN (BELOW CONC ROOF SLAB)

0 1000 2000
SCALE: 1:50

UNLESS OTHERWISE NOTED, LINEAR DIMENSIONS SHOWN ON DRAWINGS ARE IN MILLIMETERS (mm)

APPROVED:

A/E DESIGNER OF RECORD

SEAL:

GEORGIA REGISTERED PROFESSIONAL ENGINEER No. 27141 CHRISTOPHER W. WHITMORE

US ARMY CORPS OF ENGINEERS
AFGHANISTAN ENGINEER DISTRICT

Mark	Description	Date	Appr.	Mark	Description	Date	Appr.

Date: 2/23/10 | Rev: 0
Design file no.
Drawing code:
File name: ANASASTS-101FFP
Plot date: 2/23/2010
Plot scale: x:X

Designed by: KMF/MMY
Dwn by: RCG | Ckd by: CWW
Reviewed by: LHM
Submitted by: BAKER

U.S. ARMY CORPS OF ENGINEERS
AFGHANISTAN ENGINEER DISTRICT
APO AE 96338

Michael Baker Jr., Inc.
A unit of Michael Baker Corporation
Airside Business Park
100 Airside Drive
Moon Township, PA 15108
www.mbakercorp.com

AFGHAN NATIONAL ARMY
REGIONAL MILITARY TRAINING CENTER
STANDARD DESIGN

SMALL ARMS STORAGE

FOUNDATION/SLAB & ROOF FRAMING PLAN

Sheet reference number:
S-101

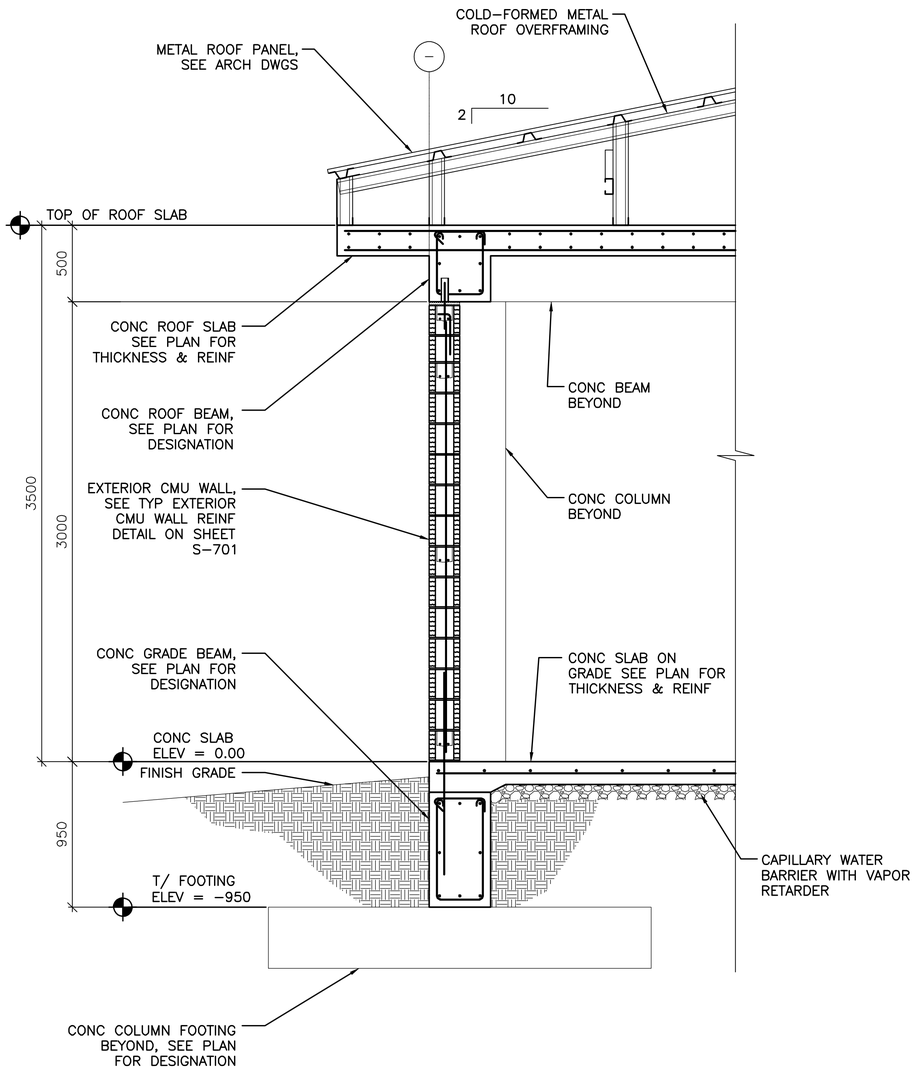

1 S-101 TYPICAL WALL SECTION AT EXTERIOR MASONRY WALL

SCALE: 1:20

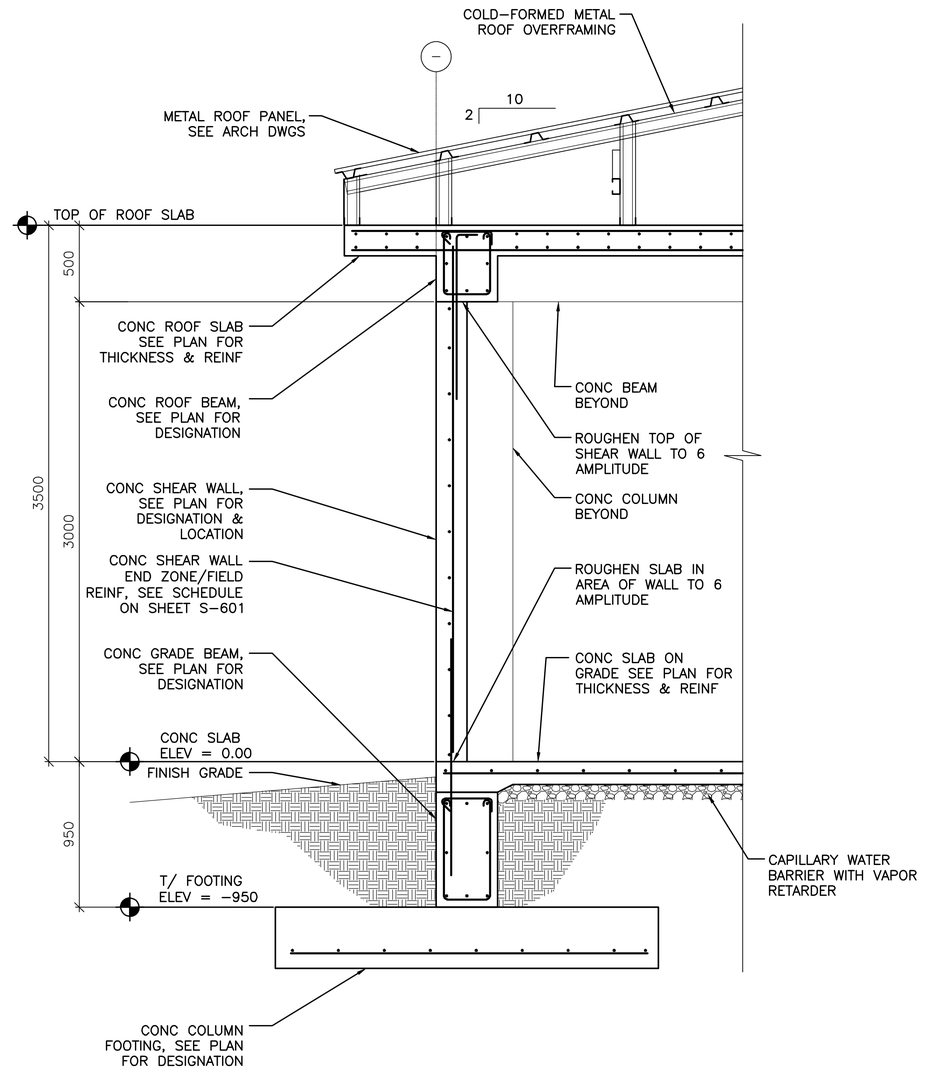

2 S-101 TYPICAL WALL SECTION AT CONCRETE SHEAR WALL

SCALE: 1:20

0 400 800

SCALE: 1:20

UNLESS OTHERWISE NOTED, LINEAR DIMENSIONS SHOWN ON DRAWINGS ARE IN MILLIMETERS (mm)

APPROVED:

A/E DESIGNER OF RECORD

SEAL:

GEORGIA REGISTERED 1-29-10 No. 27141 PROFESSIONAL ENGINEER CHRISTOPHER W. WHITMORE

US ARMY CORPS OF ENGINEERS
AFGHANISTAN ENGINEER DISTRICT

Mark	Description	Date	Appr.	Mark	Description	Date	Appr.

Designed by: KMP/MMY
Dwn by: RCG
Ckd by: CWW
Reviewed by: LHM
Submitted by: BAKER
Date: 2/23/10
Rev: 0
Design file no.
Drawing code:
File name: ANASASTS-401BS
Plot date: 2/23/2010
Plot scale: X:X

U.S. ARMY CORPS OF ENGINEERS
AFGHANISTAN ENGINEER DISTRICT
APO AE 96338

Michael Baker Jr., Inc
A unit of Michael Baker Corporation
Airside Business Park
100 Airside Drive
Moon Township PA 15108
www.mbakercorp.com

AFGHAN NATIONAL ARMY
REGIONAL MILITARY TRAINING CENTER
STANDARD DESIGN

SMALL ARMS STORAGE

BUILDING SECTIONS

Sheet reference number:
S-401

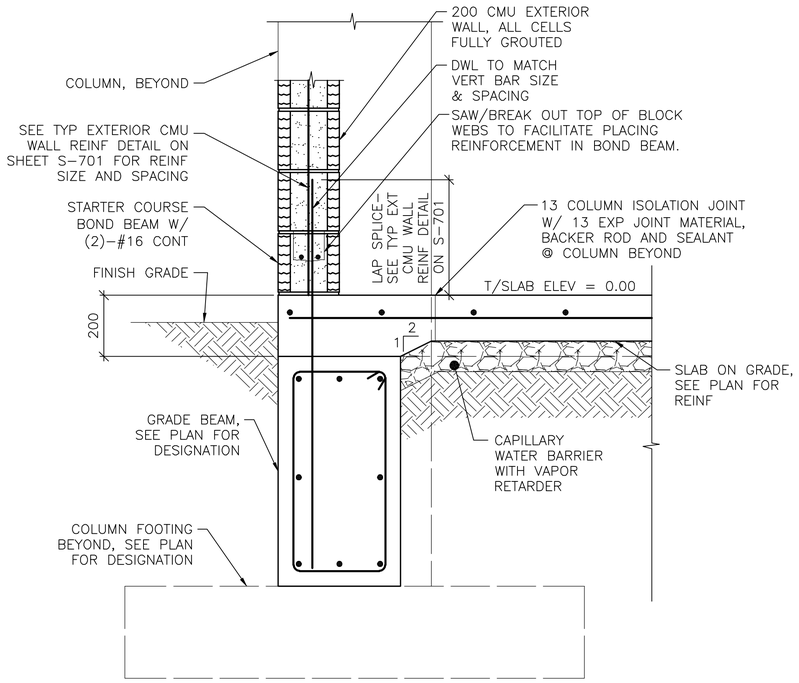

NOTE:
1. SECTION IS SIMILAR FOR INTERIOR CMU PARTITIONS OVER GRADE BEAMS SHOWING THICKENED 200 CONC SLAB AREA.

1 / S-101 **SECTION**
SCALE: 1:10

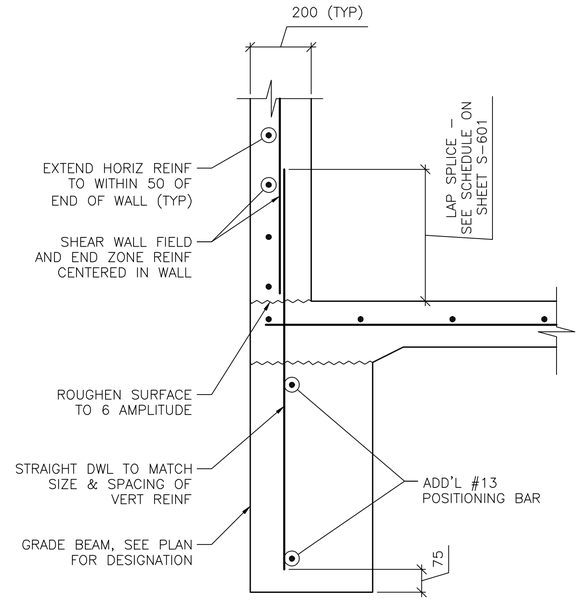

NOTES:
1. SECTION DEPICTS SHEAR WALL TERMINATION ONLY. GRADE BEAM REINFORCING NOT SHOWN FOR CLARITY.
2. SEE SHEET S-601 AND SHEET S-702 FOR SCHEDULED FIELD AND END ZONE REINF.

2 / S-101 **SECTION**
SCALE: 1:10

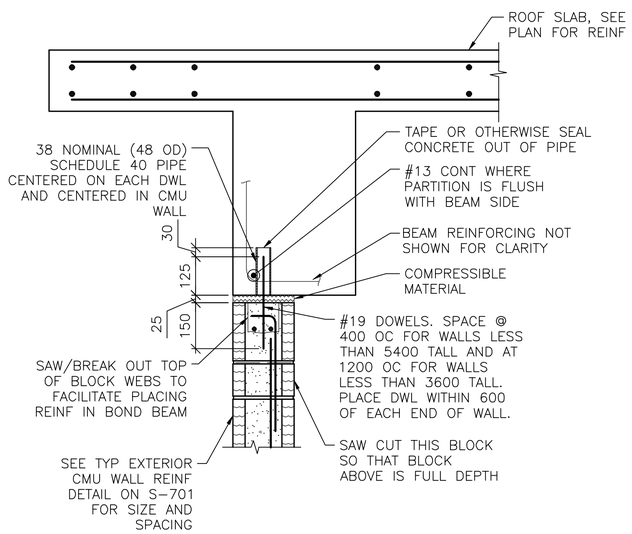

NOTES:
1. EXTEND DOWEL REINF TO 25 CLEAR FROM TOP OF CMU WALL.

3 / S-101 **SECTION**
SCALE: 1:10

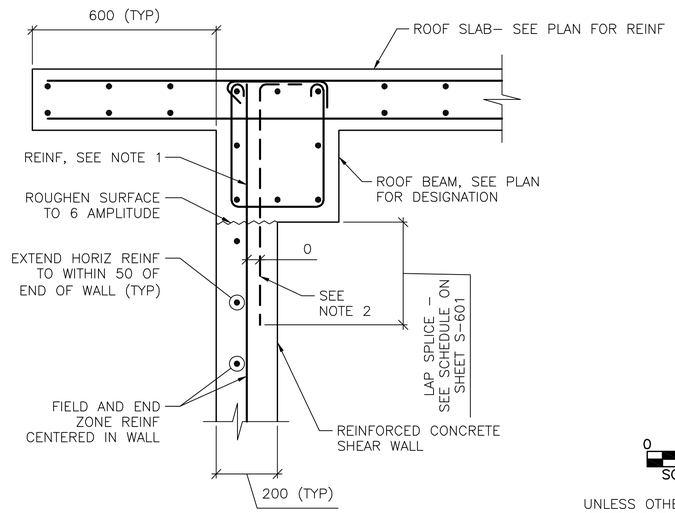

NOTES:
1. TERMINATE "FIELD" VERT REINF & END ZONE REINF @ 50 CLEAR FROM TOP OF ROOF SLAB.
2. WHERE END ZONE REINFORCING CANNOT BE DEVELOPED IN BEAM DEPTH, PROVIDE HOOKED DWLS SAME SIZE & SPACING. PROVIDE TENSION LAP BELOW ROOF BEAM.
3. SEE SHEET S-601 AND SHEET S-702 FOR SCHEDULED FIELD AND END ZONE REINF.

4 / S-101 **SECTION**
SCALE: 1:10

0 200 400
SCALE: 1:10

UNLESS OTHERWISE NOTED, LINEAR DIMENSIONS SHOWN ON DRAWINGS ARE IN MILLIMETERS (mm)

APPROVED:

A/E DESIGNER OF RECORD

SEAL:

GEORGIA REGISTERED PROFESSIONAL ENGINEER No. 27141 CHRISTOPHER W. WHITMORE 2-23-10

US ARMY CORPS OF ENGINEERS
AFGHANISTAN ENGINEER DISTRICT

Mark	Description	Date	Appr.	Mark	Description	Date	Appr.

Date: 2/23/10 | Rev: 0
Design file no.
Drawing code:
File name: AANSASTS-S01SC
Plot date: 2/23/2010
Plot scale: x:X

Designed by: KMF/MMY
Dwn by: RCG | Ckd by: CWW
Reviewed by: LHM
Submitted by:
BAKER

U.S. ARMY CORPS OF ENGINEERS
AFGHANISTAN ENGINEER DISTRICT
APO AE 96338

Michael Baker Jr., Inc.
A unit of Michael Baker Corporation
Airside Business Park
100 Airside Drive
Moon Township, PA 15108
www.mbakercorp.com

AFGHAN NATIONAL ARMY
REGIONAL MILITARY TRAINING CENTER
STANDARD DESIGN

SMALL ARMS STORAGE

FOUNDATION & FRAMING SECTIONS

Sheet reference number:
S-501

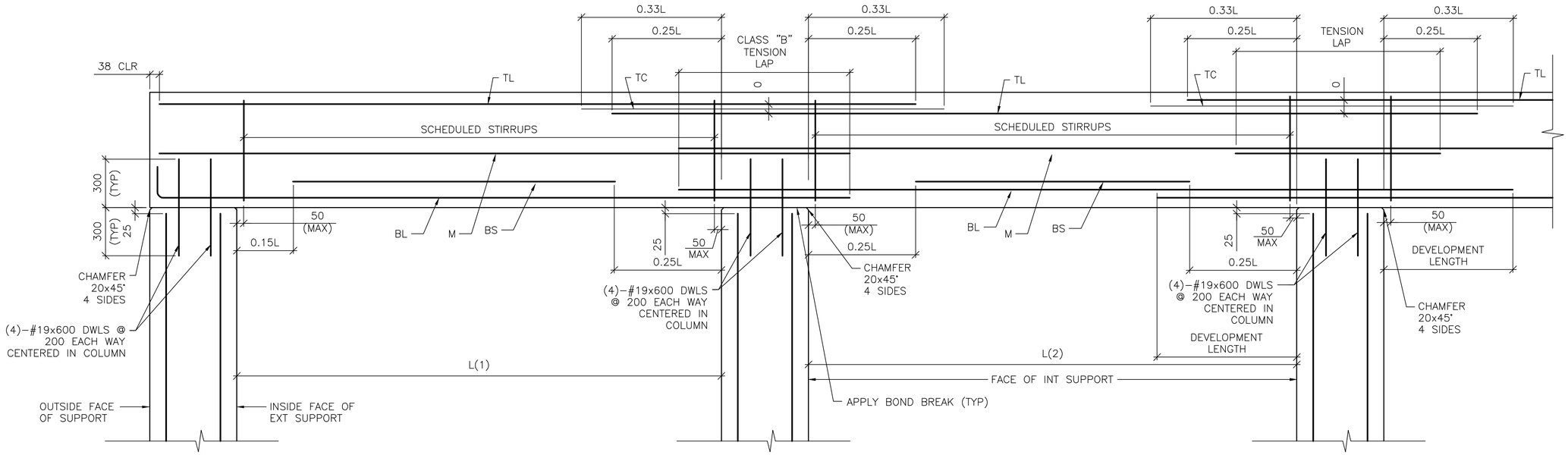

DETAIL NOTE:
1. WORK THIS DETAIL WITH BEAM SCHEDULE ON SHEET S-601.
2. L=GREATEST OF ADJACENT SPANS L(1) OR L(2)
3. ONLY COLUMN CORNER BARS ARE SHOWN

1 / S-502 ROOF BEAM REINFORCING DETAIL

SCALE: NTS

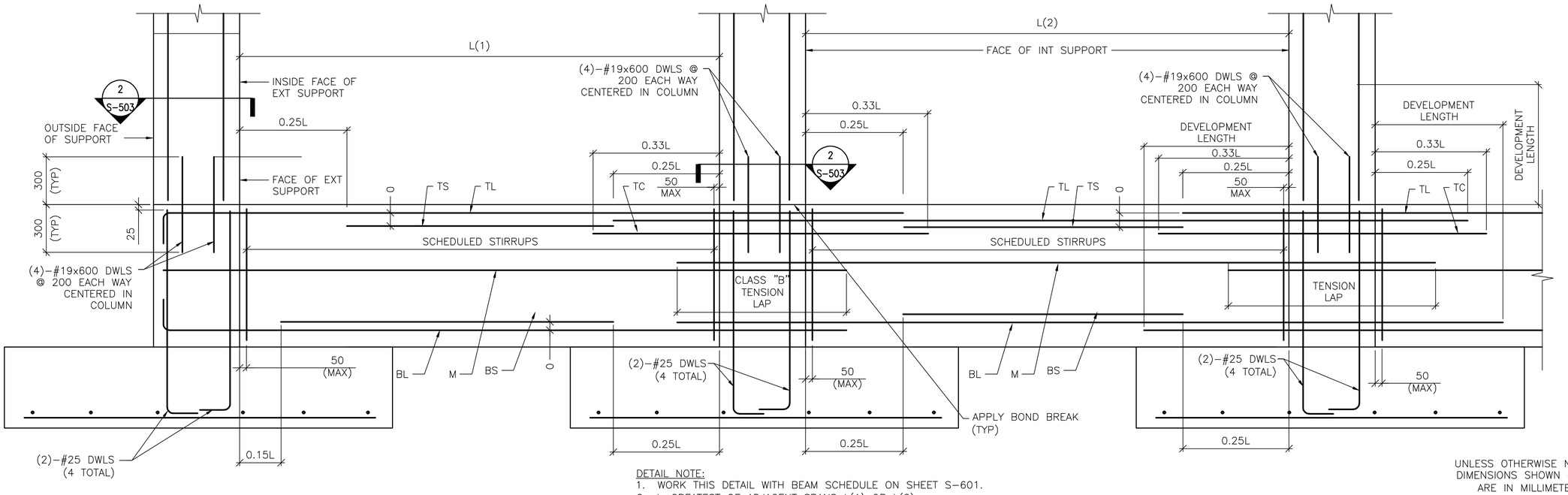

DETAIL NOTE:
1. WORK THIS DETAIL WITH BEAM SCHEDULE ON SHEET S-601.
2. L=GREATEST OF ADJACENT SPANS L(1) OR L(2)
3. ONLY COLUMN CORNER BARS ARE SHOWN.

2 / S-502 GRADE BEAM REINFORCING DETAIL

SCALE: NTS

UNLESS OTHERWISE NOTED, LINEAR DIMENSIONS SHOWN ON DRAWINGS ARE IN MILLIMETERS (mm)

APPROVED:

A/E DESIGNER OF RECORD

SEAL:

GEORGIA REGISTERED 1-27-10 No. 27141 PROFESSIONAL ENGINEER CHRISTOPHER W. WHITMORE

US ARMY CORPS OF ENGINEERS
AFGHANISTAN ENGINEER DISTRICT

Mark	Description	Date	Appr.	Mark	Description	Date	Appr.

Rev: 0
Date: 2/23/10
Designed by: KMP/MMY
Dwn by: RCG
Ckd by: CWW
Reviewed by: LHM
Submitted by: BAKER
Design file no.
Drawing code:
File name: ANASASTS-S502DT
Plot date: 2/23/2010
Plot scale: X:X

U.S. ARMY CORPS OF ENGINEERS
AFGHANISTAN ENGINEER DISTRICT
APO AE 96338

Michael Baker Jr., Inc.
A unit of Michael Baker Corporation
Airside Business Park
100 Airside Drive
Moon Township, PA 15108
www.mbakercorp.com

AFGHAN NATIONAL ARMY
REGIONAL MILITARY TRAINING CENTER
STANDARD DESIGN

SMALL ARMS STORAGE

BEAM & COLUMN DETAILS

Sheet reference number:
S-502

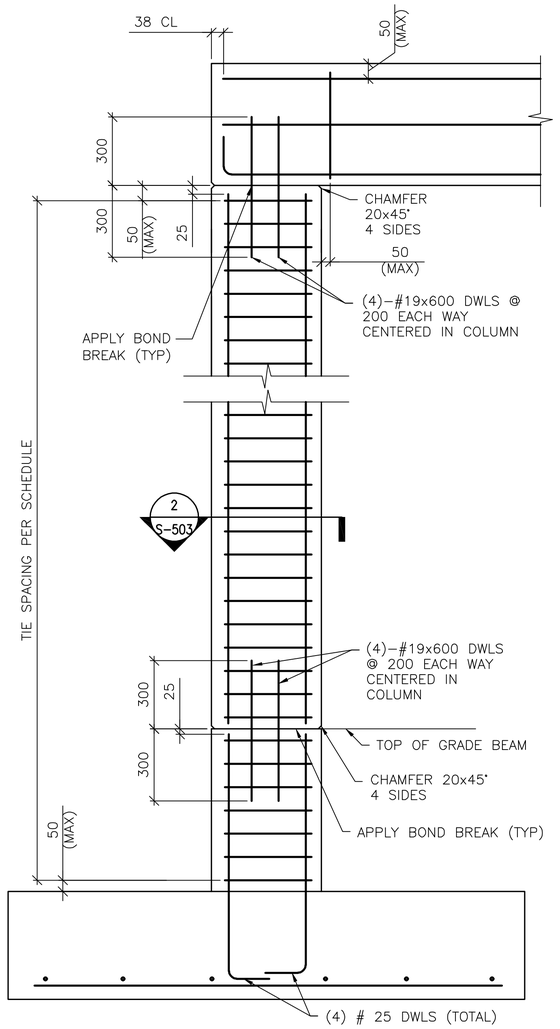

DETAIL NOTE:
1. ONLY COLUMN CORNER BARS ARE SHOWN

1-STORY COLUMN REINF DETAILS

1 / S-503 SCALE: NTS

(WITH GRADE BEAM)

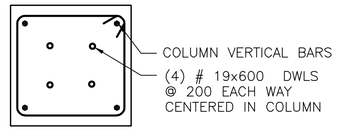

SECTION

2 / S-502 2 / S-503 SCALE: NTS

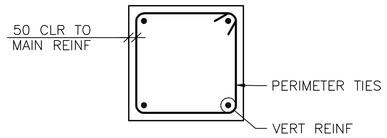

4 BAR COLUMN

A / S-503 SCALE: NTS

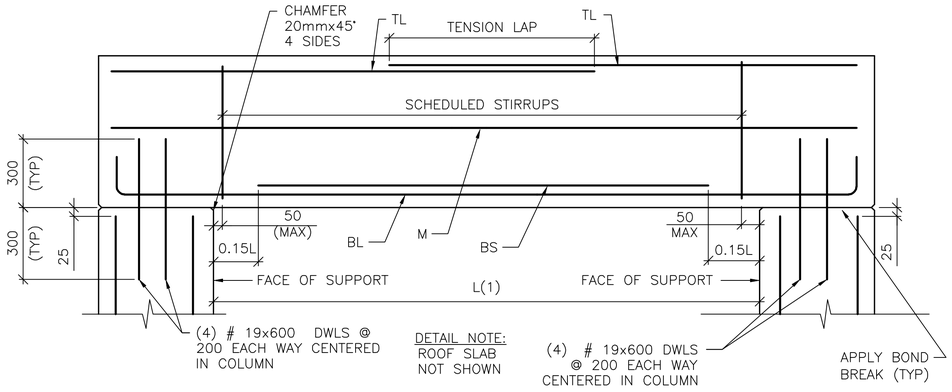

SINGLE SPAN ROOF BEAM REINFORCING DETAIL

3 / S-503 SCALE: NTS

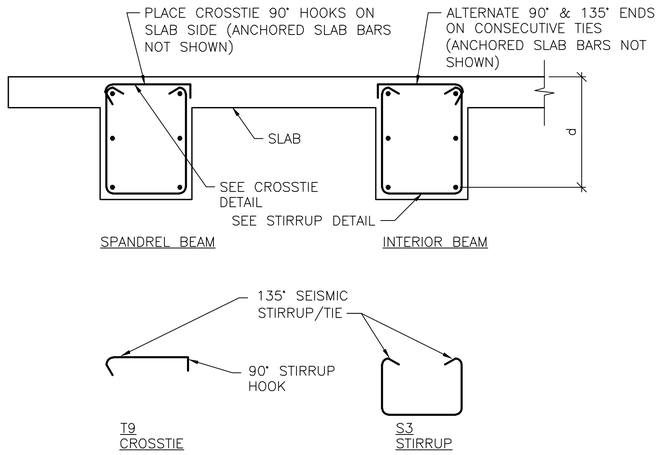

BEAM REINFORCEMENT DETAILS

B / S-503 SCALE: NTS

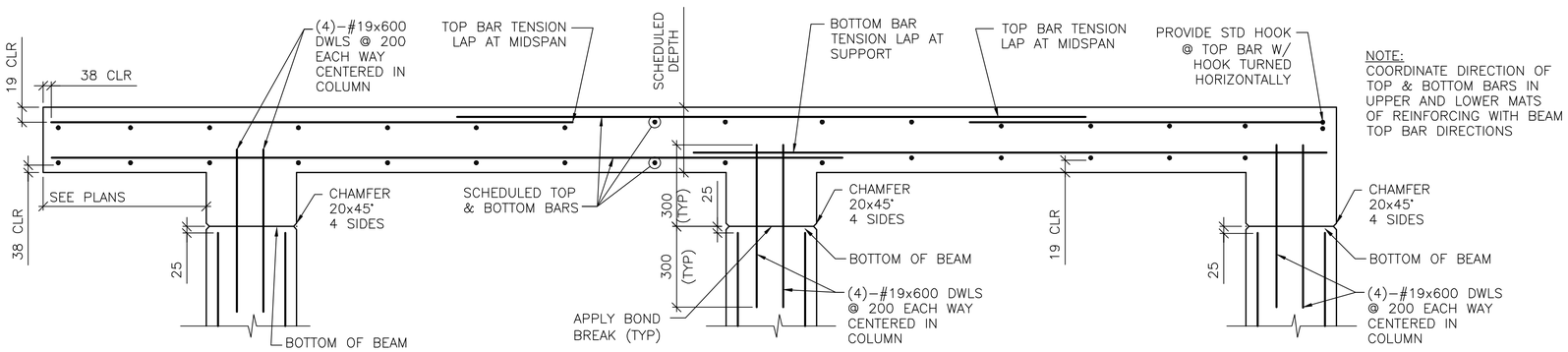

FRAMED SLAB REINFORCING DETAIL

4 / S-503 SCALE: NTS

UNLESS OTHERWISE NOTED, LINEAR DIMENSIONS SHOWN ON DRAWINGS ARE IN MILLIMETERS (mm)

APPROVED:

A/E DESIGNER OF RECORD

SEAL:

GEORGIA REGISTERED 1-27-10 No. 27141 PROFESSIONAL ENGINEER CHRISTOPHER W. WHITMORE

US ARMY CORPS OF ENGINEERS
AFGHANISTAN ENGINEER DISTRICT

Mark	Description	Date	Appr.	Mark	Description	Date	Appr.

Date: 2/23/10 Rev: 0
Design file no.
Drawing code:
File name: AAMSASTS-503DT
Plot date: 2/23/2010
Plot scale: X:X

Designed by: KMP/MMY
Dwn by: RCG
Ckd by: CWW
Reviewed by: LHM
Submitted by: BAKER

U.S. ARMY CORPS OF ENGINEERS
AFGHANISTAN ENGINEER DISTRICT
APO AE 96338

Michael Baker Jr., Inc
A unit of Michael Baker Corporation
Airside Business Park
100 Airside Drive
Moon Township, PA 15108
www.mbakercorp.com

AFGHAN NATIONAL ARMY
REGIONAL MILITARY TRAINING CENTER
STANDARD DESIGN

SMALL ARMS STORAGE

BEAM & COLUMN DETAILS

Sheet reference number:
S-503

CONCRETE REINFORCEMENT TENSION DEVELOPMENT/LAP SPLICE SCHEDULE

f'c = 28 MPa	LAP CLASS	UNCOATED BARS			
		TOP BARS		OTHER BARS	
BAR SIZES		CASE 1	CASE 2	CASE 1	CASE 2
#10 TO #19	A	50 BAR DIA	74 BAR DIA	38 BAR DIA	57 BAR DIA
	B	64 BAR DIA	96 BAR DIA	50 BAR DIA	74 BAR DIA
#22 TO #57	A	62 BAR DIA	93 BAR DIA	48 BAR DIA	71 BAR DIA
	B	80 BAR DIA	121 BAR DIA	62 BAR DIA	93 BAR DIA

NOTES:
1. TABULATED TENSION DEVELOPMENT LENGTH VALUES ARE TAKEN FROM CRSI DESIGN HANDBOOK 2008 10TH ED.
2. TENSION DEVELOPMENT & TENSION LAP SPLICE LENGTHS ARE EXPRESSED AS MULTIPLES OF BAR DIAMETERS.
3. TABULATED VALUES ARE BASED ON MINIMUM YIELD STRENGTH OF REINFORCEMENT, fy, OF 420MPa.
4. CONCRETE IS NORMAL WEIGHT (2400Kg/m³) AND 28 DAY COMPRESSIVE STRENGTH = 28MPa.
5. TABULATED VALUES FOR BEAMS & COLUMNS ARE BASED ON TRANSVERSE REINFORCEMENT AND CONCRETE COVER MEETING MINIMUM CODE REQUIREMENTS.
6. CASES 1 & 2, WHICH DEPEND ON THE TYPE OF STRUCTURAL MEMBER, CONCRETE COVER, AND CENTER-TO-CENTER SPACING OF THE BARS ARE DEFINED IN THE TABLE BELOW.
7. LAP SPLICE LENGTHS (MINIMUM 300mm) ARE MULTIPLES OF TENSION DEVELOPMENT LENGTHS: CLASS A = 1.0(TENSION DEVELOPMENT LENGTH) & CLASS B = 1.3(TENSION DEVELOPMENT LENGTH)
8. TOP BARS ARE HORIZONTAL REINFORCEMENT WITH MORE THAN 300mm OF CONCRETE CAST BELOW THE BARS.
9. IT SHALL BE PERMISSIBLE TO CALCULATE WALL AND SLAB REINFORCEMENT TENSION DEVELOPMENT/SPLICE LENGTHS IN ACCORDANCE WITH ACI 12.2.3 OR TABLE 5.3(b) OF CRSI 2008 IN LIEU OF VALUES TABULATED ABOVE.

BEAMS, COLUMNS	CASE 1	CONCRETE COVER AT LEAST 1 BAR DIA AND CENTER-TO-CENTER SPACING AT LEAST 2 BAR DIA
	CASE 2	CONCRETE COVER LESS THAN 1 BAR DIA OR CENTER-TO-CENTER SPACING LESS THAN 2 BAR DIA
ALL OTHERS	CASE 1	CONCRETE COVER AT LEAST 1 BAR DIA AND CENTER-TO-CENTER SPACING AT LEAST 3 BAR DIA
	CASE 2	CONCRETE COVER LESS THAN 1 BAR DIA OR CENTER-TO-CENTER SPACING LESS THAN 3 BAR DIA

CONCRETE COVER SCHEDULE

MINIMUM CONCRETE COVER PROTECTION FOR REINFORCEMENT BARS SHALL BE AS LISTED BELOW: (SEE ACI 318M-05, SECTION 7.7 FOR CONDITIONS NOT NOTED). DIMENSIONS FOR BAR PLACEMENT GIVEN IN SECTIONS AND DETAILS SHALL SUPERSEDE MINIMUM COVER REQUIREMENTS GIVEN HERE. DIMENSIONS ARE IN mm. PROVIDE STANDARD BAR CHAIRS AND SUPPORT BARS @1200mm MAXIMUM AS REQUIRED TO MAINTAIN CONCRETE PROTECTION SPECIFIED.

FOOTINGS (EARTH FORMED):		70
COLUMNS / PIERS (TO TIES)		40
GRADE BEAMS OR SLAB TURNED DOWN EDGES:		
TOP		40
BOTTOM (EARTH FORMED)		70
SIDES (EARTH FORMED)		70
SIDES (BOARD FORMED)	#16 BAR & SMALLER	40
	#19 THRU #36 BAR	50
ELEVATED BEAMS & SLABS:		
BEAM TIES & STIRRUPS (NOT EXPOSED TO WEATHER)		40
BEAM TIES & STIRRUPS (EXPOSED TO WEATHER)		50
FLOOR SLABS (NOT EXPOSED TO WEATHER)		20
FLOOR SLABS (EXPOSED TO WEATHER)		
#19 & LARGER		50
#13 & SMALLER		40
ROOF SLAB BARS		25
SLABS ON GRADE		
NOT EXPOSED TO WEATHER (FROM TOP)		20
EXPOSED TO WEATHER (FROM TOP)		40
UTILITY TUNNEL WALLS, RETAINING WALLS AND SHEAR WALLS. (NO SURFACES SHALL BE EARTH FORMED)		
EARTH SIDE AND FRONT SIDE (EXPOSED TO WEATHER)		
#16 BAR AND SMALLER		40
#19 THRU #36 BAR		50

COLUMN FOOTING SCHEDULE

MARK	FOOTING SIZE (mm)			FOOTING REINFORCING	REMARKS
	LENGTH	WIDTH	THICKNESS		
F1	3000	3000	350	(8)-#19 EW BOTT	-----

CONCRETE SHEAR WALL SCHEDULE

MARK	TYPE	WALL LENGTH (L) (mm)	WALL REINFORCEMENT		REMARKS
			END ZONE	FIELD	
SW1	B	2050	(4)-#16 @ 150mm OC	#13 @ 300mm OC	-----

NOTES:
1. WORK THIS SCHEDULE WITH SHEAR WALL DETAILS ON SHEETS S-702
2. SEE PLAN FOR LOCATION OF SHEAR WALL(S).
3. WALL "FIELD" REINFORCEMENT LISTED APPLIES TO VERTICAL & HORIZONTAL BARS.
4. WALL "FIELD" REINFORCEMENT SHOULD BE CENTERED IN WALL.
5. VERTICAL "FIELD" BARS MAY BE OMITTED IN LOCATION OF "END ZONE" REINFORCEMENT.

STANDARD HOOKS IN TENSION PER (ACI 318M-05)

HOOK DEVELOPMENT LENGTH (mm)	
BAR SIZE	f'c 28 MPa
#10	180
#13	250
#16	300
#19	380
#22	430
#25	480
#29	560
#32	610
#36	690

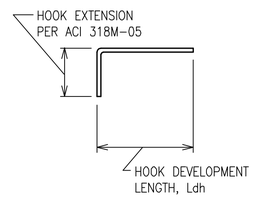

NOTES:
1. CONCRETE IS NORMAL WEIGHT CONCRETE.
2. BAR YIELD STRENGTH, fy = 420 MPa
3. SIDE COVER REQUIREMENTS OF ACI SECT. 12.5.3 ARE ASSUMED TO NOT BE MET.
4. TIE OR STIRRUP REQUIREMENTS OF ACI SECT. 12.5.3 ARE ASSUMED TO NOT BE MET.
5. REDUCTION FOR EXCESS REINFORCEMENT IS NOT TAKEN.
6. HOOK DEVELOPMENT LENGTH IS VALID FOR 180° HOOKS ALSO.

CMU OR CAST IN PLACE CONC LINTEL SCHEDULE (TYP)

OPENING TYPE OR SIZE, BEAM LOCATION OR TYPE	MAX SPAN (mm)	LINTEL DEPTH (mm)	REINFORCING BOTTOM
WALL OPENING	4000	600	(2)-#16 T&B
WALL OPENING	1900	400	(2)-#16 T&B
WALL OPENING	1000	400	(2)-#13 B

1. STRUCTURAL SHEETS DO NOT INDICATE ALL OPENINGS IN MASONRY WALLS. VERIFY NUMBER, SIZE AND LOCATION OF ALL OPENINGS IN MASONRY WALLS FROM ARCHITECTURAL SHEETS AND APPROVED PLUMBING, MECHANICAL, AND ELECTRICAL SHOP DRAWINGS.
2. PROVIDE 200mm BEARING EA END.
3. FOR HEAD DETAILS REFER TO ARCHITECTURAL SHEETS.
4. REINFORCING SHALL BE ASTM A615M, GRADE 420. GROUT FOR CMU LINTELS SHALL HAVE A MINIMUM COMPRESSIVE STRENGTH OF 14 MPa AT 28 DAYS.
5. CONTRACTOR SHALL SUBMIT FOR APPROVAL SHOP DRAWINGS AND SCHEDULES SHOWING SIZE, SPAN, REINFORCEMENT, DETAILS, LOCATIONS, ETC.

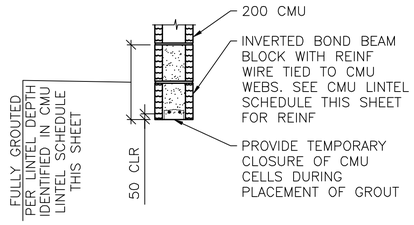

A / S-601 **LINTEL DETAIL**
SCALE: NTS

BEAM SCHEDULE

MARK	BEAM SIZE (mm)		BEAM REINFORCING						STIRRUPS			REMARKS
	DEPTH	WIDTH	BL	BS	TL	TS	TC	M	SIZE	TYPE	SPACING	-----
GRADE BEAMS												
GB1	750	400	(2)-#29	(1)-#29	(2)-#25	---	---	---	#13	S3 + T9	d/2	-----
ROOF BEAMS												
RB1	500	400	(2)-#22	(1)-#22	(2)-#25	---	---	---	#13	S3 + T9	d/2	OMIT "M" BARS IN INTERIOR BEAMS

NOTES:
1. WORK THIS SCHEDULE WITH BEAM REINFORCING DETAILS ON SHEETS S-503.
2. HOOKS SHOWN ON SECTIONS AND DETAILS SHALL BE 90° STD UON.
3. USE ONLY (1) TC AT BEAM COLUMN INTERSECTION WHERE REQ'D.

COLUMN SCHEDULE

COLUMN MARK / DESCRIPTION	TYP UON	---	---	---
TYPE	4-BAR	---	---	---
DIMENSIONS	500mm SQ	---	---	---
VERTICAL REINFORCEMENT	(4)-#29	---	---	---
TIES	#13 @ d/2	---	---	---
TOP OF ROOF ELEVATION	3500mm	---	---	---
TOP OF GRADE BEAM ELEVATION	-200mm	---	---	---
TOP OF FOOTING ELEVATION	-950mm	---	---	---

NOTES:
1. WORK THIS SCHEDULE WITH COLUMN DETAILS ON SHEET S-503.
2. SEE FOOTING SCHEDULE THIS SHEET FOR FOOTING INFORMATION.
3. COLUMN TIES: INTERIOR TIES TO MATCH SIZE & SPACING OF PERIMETER TIES.
4. HOOKS SHOWN ON SECTIONS & DETAILS SHALL BE 90° STD UON.

UNLESS OTHERWISE NOTED, LINEAR DIMENSIONS SHOWN ARE IN MILLIMETERS (mm)

APPROVED:

A/E DESIGNER OF RECORD

SEAL:

GEORGIA REGISTERED 1-29-10 No. 27141 PROFESSIONAL ENGINEER CHRISTOPHER W. WHITMORE

US ARMY CORPS OF ENGINEERS
AFGHANISTAN ENGINEER DISTRICT

Mark	Description	Date	Appr.	Mark	Description	Date	Appr.

Date: 2/23/10 | Rev: 0
Design file no.
Drawing code:
File name: AMASATS-601SCH
Plot date: 2/23/2010
Plot scale: X:X

Designed by: KMP/MMY | Ckd by: CWW
Dwn by: RCG | Reviewed by: LHM
Submitted by: BAKER

U.S. ARMY CORPS OF ENGINEERS
AFGHANISTAN ENGINEER DISTRICT
APO AE 96338

Michael Baker Jr., Inc
A unit of Michael Baker Corporation
Airside Business Park
100 Airside Drive
Moon Township, PA 15108
www.mbakercorp.com

AFGHAN NATIONAL ARMY
REGIONAL MILITARY TRAINING CENTER
STANDARD DESIGN

SMALL ARMS STORAGE

SCHEDULES

Sheet reference number:
S-601

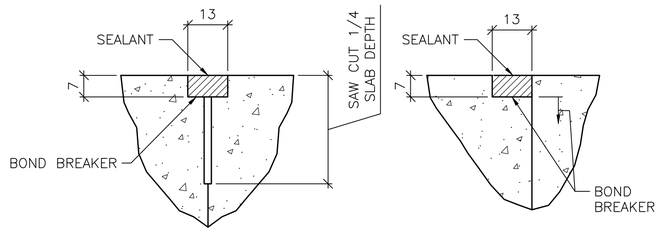

CONTROL JOINT DETAIL

CONSTRUCTION JOINT DETAIL

TYPICAL CONCRETE SLAB JOINT FINISH DETAILS

1 / S-701

SCALE: NTS

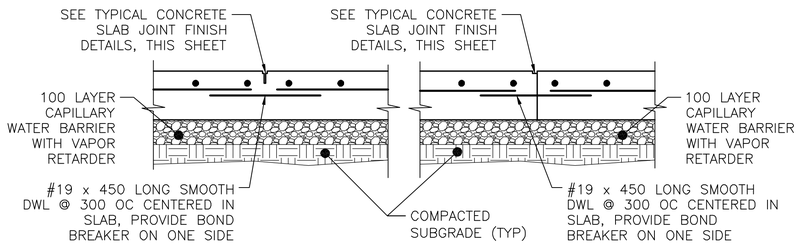

CONTROL JOINT DETAIL

CONSTRUCTION JOINT DETAIL

TYPICAL SLAB ON GRADE JOINT DETAIL

2 / S-701

SCALE: NTS

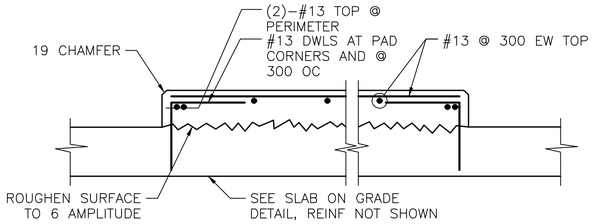

INTERIOR EQUIPMENT PAD DETAIL

3 / S-701

SCALE: NTS

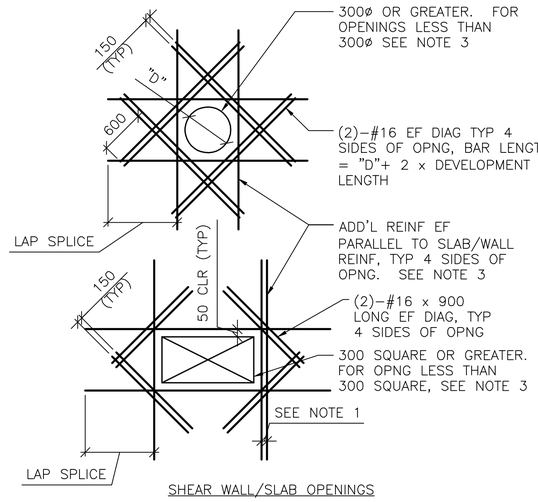

SHEAR WALL/SLAB OPENINGS

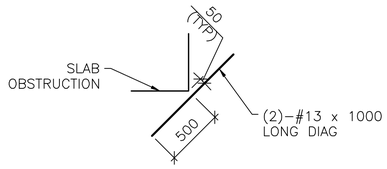

RE-ENTRANT CORNERS

DETAIL NOTES:

1. WHERE MORE THAN ONE ADDITIONAL BAR IS REQUIRED PARALLEL TO THE EXISTING SLAB/WALL REINFORCING THE ADDITIONAL REINFORCING BARS SHALL BE SPACED AT 100 ON CENTER.
2. ADDITIONAL REINFORCING PARALLEL TO THE SLAB/WALL REINFORCING SHALL BE #16 BARS THAT PROVIDE A STEEL AREA ON EACH SIDE OF THE OPENING EQUAL TO 1/2 THE AREA OF THE REINFORCING CUT BY THE OPENING.
3. FOR OPENINGS WITH SIDES OR DIAMETERS LESS THAN 300 SPREAD THE SLAB/WALL REINFORCING TO CLEAR THE OPENING.

ADD'L CONCRETE REINFORCEMENT DETAILS

4 / S-701

SCALE: NTS

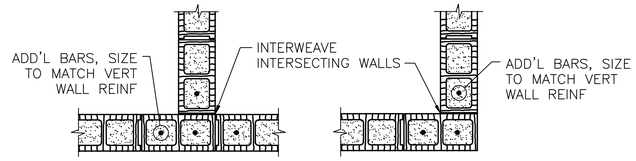

INTERSECTION

WALL CORNER

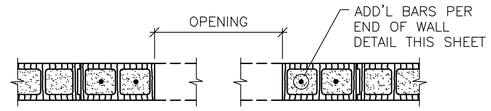

MASONRY OPENING W/ LINTEL

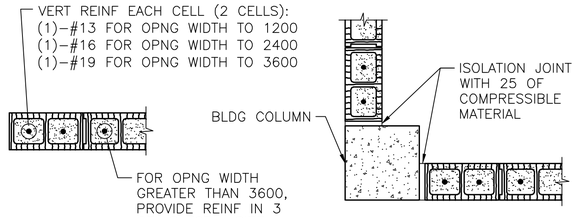

END OF WALL

END OF WALL @ COLUMN

NOTES:

1. OPENING WIDTH SHALL NOT EXCEED 3600 FOR THIS TYPE OF JAMB.
2. ALL CELLS FULLY GROUTED AT EXTERIOR WALLS. AT INTERIOR WALLS, ONLY GROUT CELLS CONTAINING REINF.

TYP CMU DETAILS

5 / S-701

SCALE: NTS

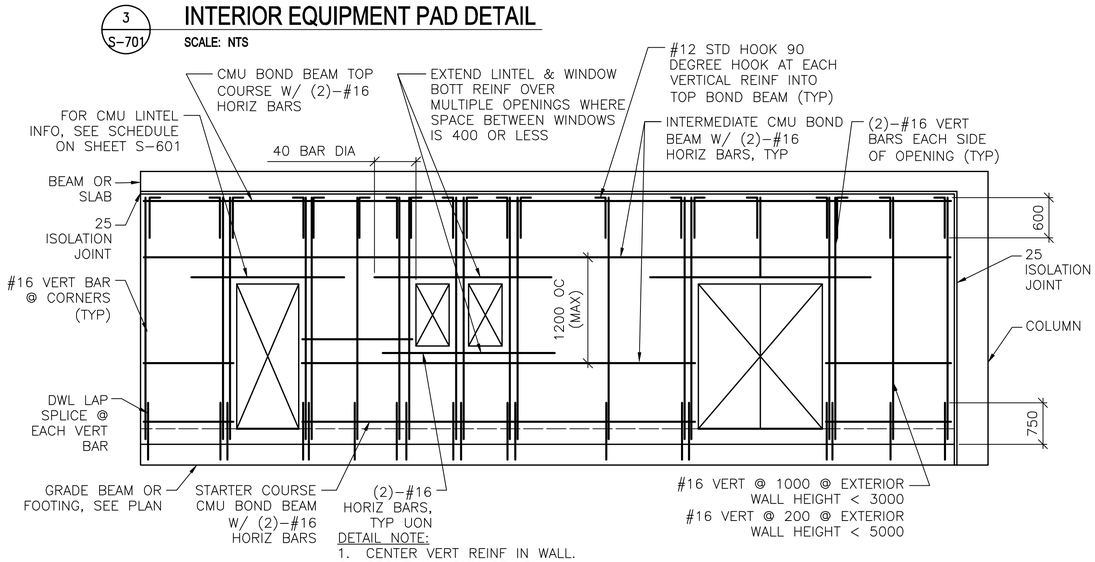

DETAIL NOTE:

1. CENTER VERT REINF IN WALL.
2. GROUT ALL CMU CELLS.
3. REFERENCE ARCH DWGS FOR JOINT INFORMATION
4. DOWELS BETWEEN TOP BOND BEAM AND BEAM/SLAB ABOVE (INCLUDING EMBEDDED PIPE SLEEVE) NOT SHOWN FOR CLARITY. SEE SPECIFIC S-500 SERIES DWGS FOR INFO.
5. FOR INFORMATION ON ALTERNATE CAST-IN-PLACE WALL BOND BEAMS, REFERENCE ALTERNATE TOP OF CMU WALL BRACING DETAILS THIS SHEET.

TYP EXTERIOR CMU WALL REINF DETAIL

6 / S-701

SCALE: NTS

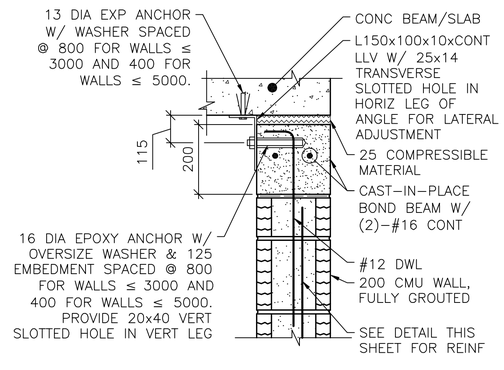

EXTERIOR WALL OR SLAB

NOTES:

1. THIS DETAIL IS AN ALTERNATE TOP OF WALL ANCHORAGE DETAIL TO BE USED AT THE CONTRACTOR'S OPTION IN LIEU OF DETAILS SHOWN ON S-400 & S-500 DRAWINGS.
2. CAST-IN-PLACE BOND BEAM SHOWN AT TOP OF WALL IS ALSO APPLICABLE FOR INTERMEDIATE AND STARTER COURSE BOND BEAMS WITHIN WALL.

ALTERNATE TOP OF CMU WALL BRACING DETAILS

7 / S-701

SCALE: NTS

UNLESS OTHERWISE NOTED, LINEAR DIMENSIONS SHOWN ARE IN MILLIMETERS (mm)

APPROVED:

A/E DESIGNER OF RECORD

SEAL:

US ARMY CORPS OF ENGINEERS
AFGHANISTAN ENGINEER DISTRICT

Mark	Description	Date	Appr.	Mark	Description	Date	Appr.

Designed by: KMP/MMY
Dwn by: RCG
Ckd by: CWW
Reviewed by: LHM
Submitted by: BAKER
Date: 2/23/10
Design file no.
Rev: 0
Drawing code:
File name: AM5A575-701T0T
Plot date: 2/23/2010
Plot scale: X:X

U.S. ARMY CORPS OF ENGINEERS
AFGHANISTAN ENGINEER DISTRICT
APO AE 96338

Michael Baker Jr., Inc
A unit of Michael Baker Corporation
Airside Business Park
100 Airside Drive
Moon Township, PA 15108
www.mbakercorp.com

AFGHAN NATIONAL ARMY
REGIONAL MILITARY TRAINING CENTER
STANDARD DESIGN

SMALL ARMS STORAGE

TYPICAL DETAILS

Sheet reference number:
S-701

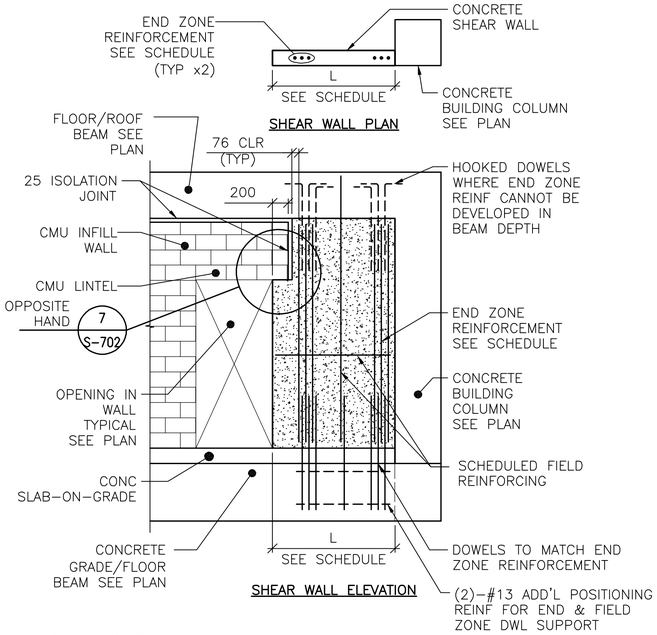

DETAIL NOTES:
1. FIELD REINFORCEMENT IN SHEAR WALL NOT COMPLETELY SHOWN FOR CLARITY.
2. FIELD REINFORCEMENT CENTERED IN WALL.
3. MINIMUM CONC CLEAR DISTANCE FOR END ZONE REINF = 76
4. SEE CONC SHEAR WALL SCHEDULE ON SHEET S-601
5. SEE ARCH DWGS FOR ISOLATION JOINT INFORMATION

1 S-702 TYPE "B" SHEAR WALL DETAIL

SCALE: NTS

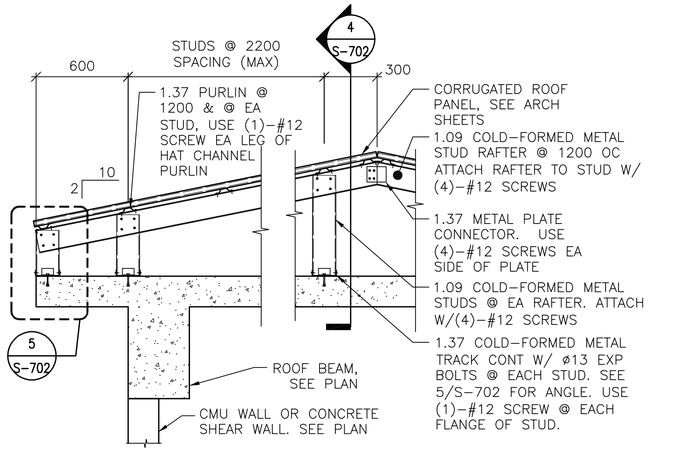

DETAIL NOTES:
1. ALL GABLE END VERTICAL STUDS SHALL BE ORIENTED 90° TO INTERIOR STUDS & SPACED @ 600 OC. GABLE END RAFTER SHALL BE 1.37 METAL TRACK SPANNING CONTINUOUSLY OVER GABLE END STUDS. INSET GIRTS AT GABLE END SHALL BE 1.09 COLD-FORMED METAL STUDS @ 1200 OC ATTACHED VIA 1.37 THICKNESS CLIP ANGLE W/ (2) #12 SCREWS EA LEG.
2. ALL INTERIOR, NON-GABLE END VERTICAL STUDS GREATER THAN 2400 IN LENGTH SHALL BE BACK-TO-BACK W/ #12 SCREWS @ 200 OC STAGGERED.

2 S-702 TYPICAL OVERBUILT ROOF FRAMING DETAIL

SCALE: NTS

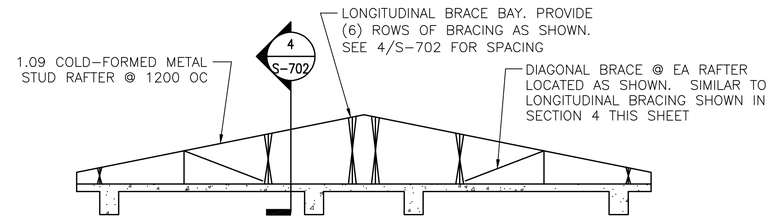

3 S-702 TYPICAL ROOF BRACE LAYOUT

SCALE: NTS

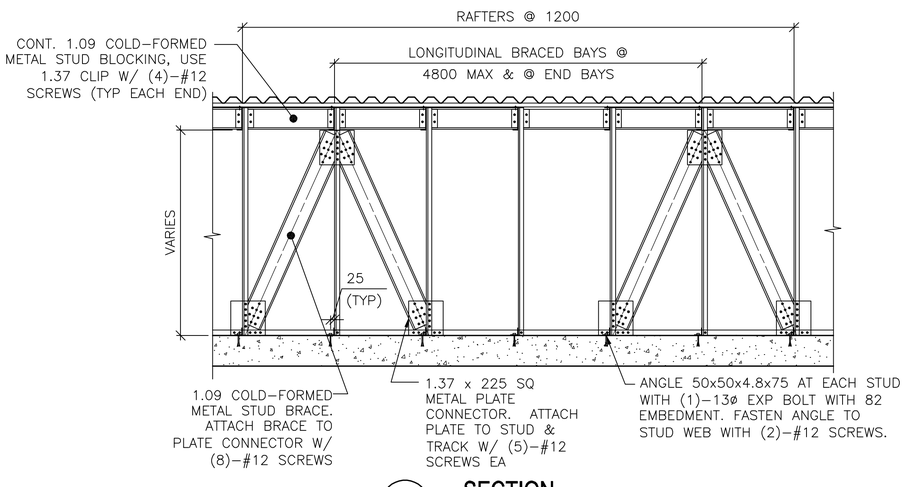

4 S-702 SECTION

SCALE: NTS

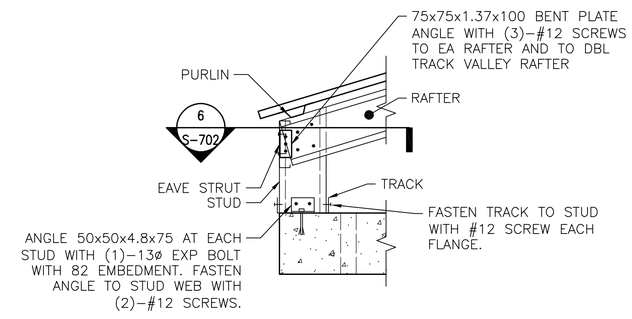

5 S-702 DETAIL

SCALE: NTS

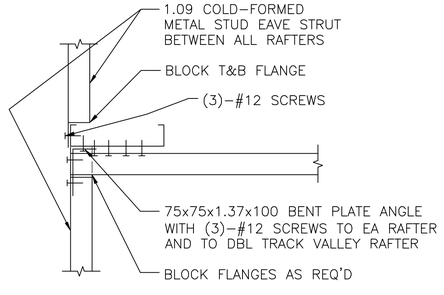

6 S-702 SECTION

SCALE: NTS

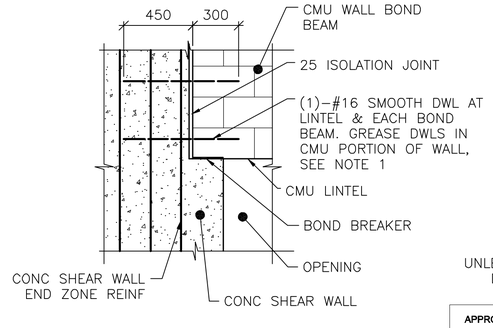

NOTE:
1. TIE SMOOTH DOWEL ROD TO SHEAR WALL END ZONE REINF FOR EACH BOND BEAM AND LINTEL.

7 S-702 SECTION

SCALE: NTS

UNLESS OTHERWISE NOTED, LINEAR DIMENSIONS SHOWN ARE IN MILLIMETERS (mm)

APPROVED:

A/E DESIGNER OF RECORD

SEAL:

GEORGIA REGISTERED 1-29-10 No. 27141 PROFESSIONAL ENGINEER CHRISTOPHER W. WHITMORE

US ARMY CORPS OF ENGINEERS
AFGHANISTAN ENGINEER DISTRICT

Mark	Description	Date	Appr.	Mark	Description	Date	Appr.

U.S. ARMY CORPS OF ENGINEERS
AFGHANISTAN ENGINEER DISTRICT
APO AE 96338

Michael Baker Jr., Inc
A unit of Michael Baker Corporation
Airside Business Park
100 Airside Drive
Moon Township, PA 15108
www.mbakercorp.com

Designed by: KMP/MMY
Dwn by: RCG
Ckd by: CWW
Reviewed by: LHM
Submitted by: BAKER
Date: 2/23/10
Design file no.
Drawing code:
Rev: 0
File name: ANASASTS-702TDT
Plot date: 2/23/2010
Plot scale: x:X

AFGHAN NATIONAL ARMY
REGIONAL MILITARY TRAINING CENTER
STANDARD DESIGN

SMALL ARMS STORAGE

TYPICAL DETAILS

Sheet reference number:
S-702

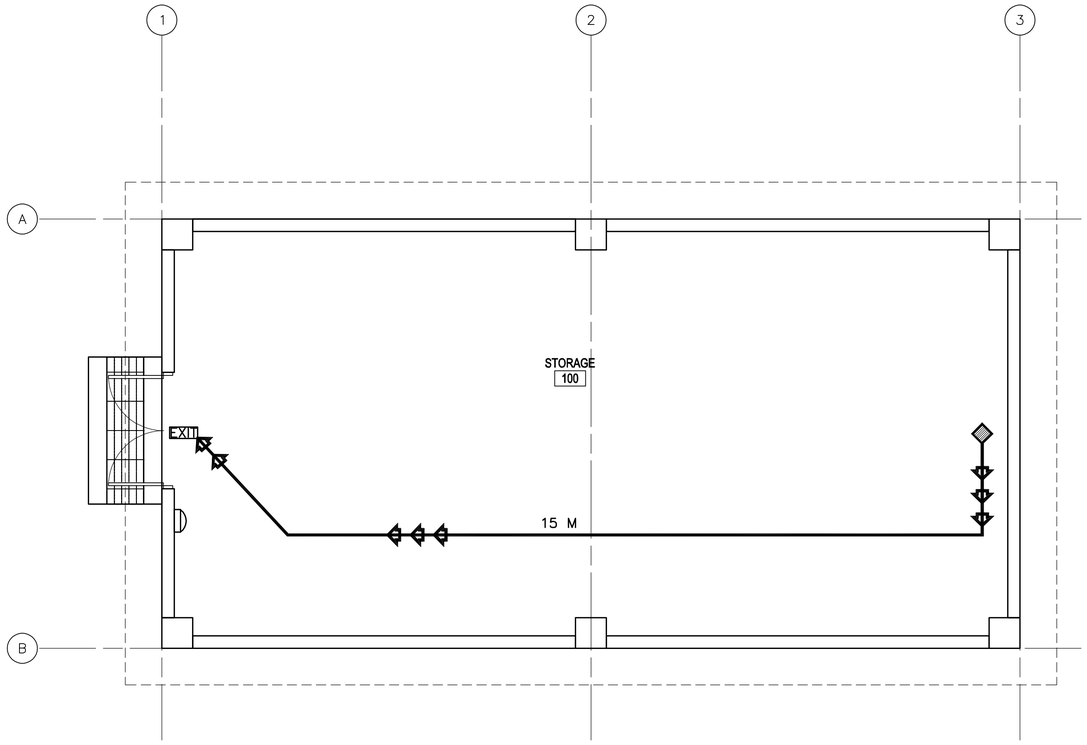

1
A-001

LIFE SAFETY PLAN

SCALE: 1:50

CODE ANALYSIS:

1. REFERENCES:
   2006 INTERNATIONAL BUILDING CODE (2006 IBC)
   2006 LIFE SAFETY CODE (2006 NFPA 101)

2. IBC OCCUPANCY CLASSIFICATION:
   GROUP H–3
   (STORAGE, ORDINARY HAZARD NFPA 101 6.1.13.1 & 6.2.2 AND CHAPTER 42)

3. TYPE OF CONSTRUCTION (IBC): TYPE II–B (UNPROTECTED/NONSPRINKLERED)

4. IBC TABLE 503: ALLOWABLE HEIGHT AND BUILDING AREAS:
   GROUP H–3
   ALLOWABLE AREA: 1300 SM
   ALLOWABLE HEIGHT: 2 STORIES (16 M)

   GROUP H–3
   PROPOSED AREA: 98 SM
   PROPOSED HEIGHT: 1 STORY (<16 M)

5. IBC TABLE 601 & 602: FIRE RESISTANCE RATING REQUIREMENTS FOR BUILDING ELEMENTS FOR TYPE II–B

BUILDING ELEMENT	RATING (HOUR)	REFERENCE
STRUCTURAL FRAME (COLUMNS, GIRDERS & TRUSSES)	0	TABLE 601
BEARING WALLS		
EXTERIOR	0	TABLE 601
INTERIOR	0	TABLE 601
NONBEARING WALLS & PARTITIONS		
INTERIOR	0	TABLE 601
FLOOR CONSTRUCTION	0	TABLE 601
ROOF CONSTRUCTION	0	TABLE 601
EXTERIOR WALL	0	TABLE 602

6. IBC TABLE 803.5 – INTERIOR WALL AND CEILING FINISH REQUIREMENTS FOR H–3 OCCUPANCY/NONSPRINKLERED

GROUP	EXIT ENCLOSURES AND EXIT PASSAGEWAY	CORRIDORS	ROOMS AND ENCLOSED SPACES
H	A	A	B

7. NFPA 101 TABLE 7.3.1.2 – OCCUPANT LOAD
   STORAGE = N/A
   NFPA 101 42.1.7: USE THE PROBABLE POPULATION: 5

8. NFPA 101 TABLE 7.3.3.1 – EGRESS CAPACITY
   STORAGE = 5 MM PER OCCUPANT

   REQUIRED: 25 MM (5 OCCUPANTS x 5 MM PER OCCUPANT)
   PROPOSED EGRESS CAPACITY: 1800 MM: (1) 900 MM DOUBLE DOORS

9. NFPA 101 PARAGRAPH 42.2.6 AND TABLE 42.2.6 – EXIT ACCESS TRAVEL DISTANCE
   REQUIRED: 61 METERS
   PROPOSED: 15 METERS

10. NFPA 101 PARAGRAPH 42.3.6 – CORRIDORS
    CORRIDORS ARE NOT REQUIRED AS DOORS EXIT DIRECTLY TO OUTSIDE

11. NFPA 101 PARAGRAPH 42.2.4.1(2) AND 7.4.1.1 – MINIMUM NUMBER OF EXITS
    REQUIRED: 1 MINIMUM
    PROPOSED: 1 EXIT

LEGEND:

- DENOTES PATHS OF EXIT TRAVEL
- EXIT — DENOTES DOOR AS AN EMERGENCY EXIT
- DENOTES STARTING POINT FOR TRAVEL DISTANCE
- DENOTES FIRE EXTINGUISHER LOCATIONS
- (1) HOUR RATED WALL
- (2) HOUR RATED WALL
- (3) HOUR RATED WALL

LINEAR DIMENSIONS SHOWN ARE IN MILLIMETERS (MM), UNLESS OTHERWISE NOTED

0 1000 2000
SCALE: 1:50

APPROVED:

A/E DESIGNER OF RECORD

SEAL:

STATE OF SOUTH CAROLINA
KEVIN R. CHAFIN
N. Charleston, SC
6374
REGISTERED ARCHITECT

US ARMY CORPS OF ENGINEERS
AFGHANISTAN ENGINEER DISTRICT

Mark	Description	Date	Appr.	Mark	Description	Date	Appr.

Date: 2/23/10
Rev: 0
Design file no.
Drawing code:
File name: ANASATA-001LSP
Plot date: 2/23/2010
Plot scale: x:X

Designed by: KRC
Dwn by: EBB
Ckd by: NLJ
Reviewed by: LHM
Submitted by: BAKER

U.S. ARMY CORPS OF ENGINEERS
AFGHANISTAN ENGINEER DISTRICT
APO AE 96338

Michael Baker Jr., Inc.
A unit of Michael Baker Corporation
Airside Business Park
100 Airside Drive
Moon Township, PA 15108
www.mbakercorp.com

AFGHAN NATIONAL ARMY
REGIONAL MILITARY TRAINING CENTER
STANDARD DESIGN

SMALL ARMS STORAGE

LIFE SAFETY PLAN

Sheet reference number:
A–001

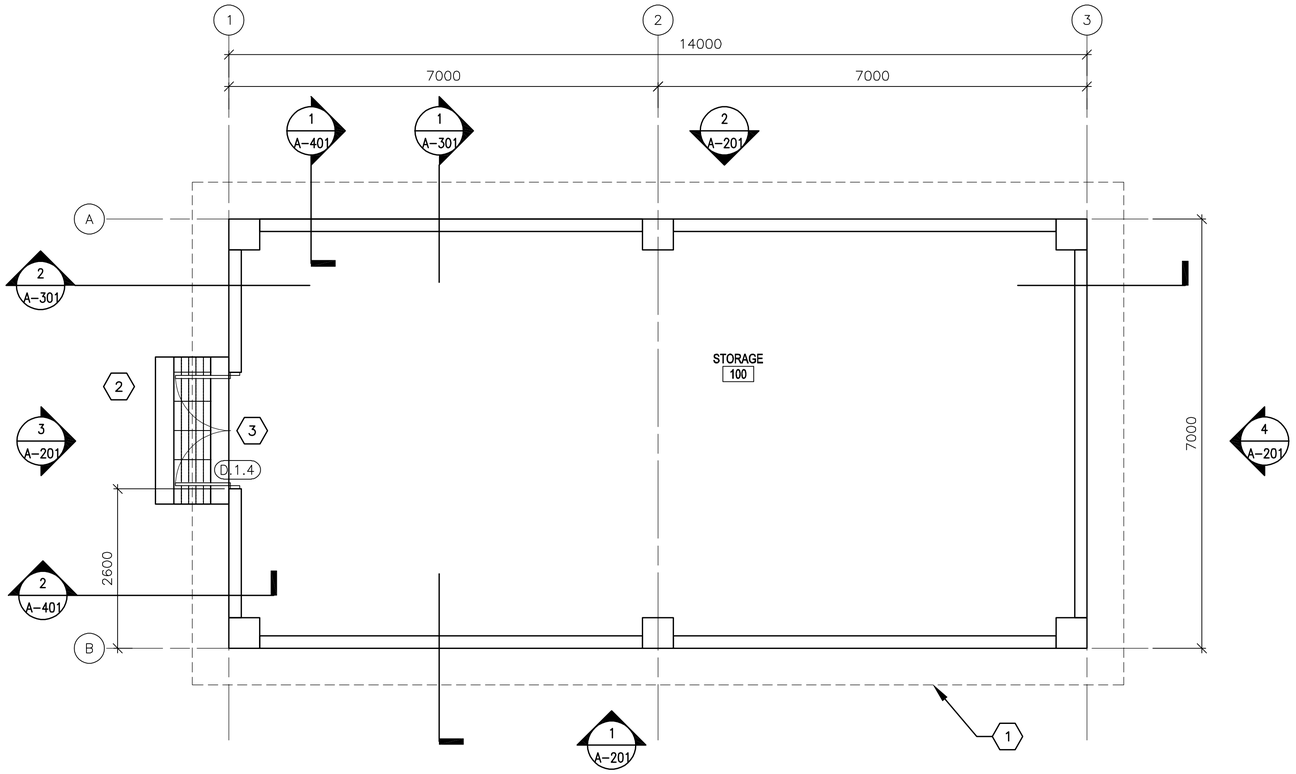

1 A-101 **FLOOR PLAN**

SCALE: 1:50

GENERAL NOTES:

A. DIMENSIONS ARE SHOWN TO OUTER EDGE OF EXTERIOR STRUCTURAL COLUMNS, STRUCTURAL COLUMN GRID, EDGE OF INTERIOR PARTITIONS, EDGE OF WINDOW OPENINGS, AND TO HINGE SIDE OF DOOR FRAME OPENINGS.

B. HINGE SIDE OF OPENINGS FOR DOORS AND FRAMES SHALL BE LOCATED 200 MM FROM THE ADJACENT WALL OR COLUMN, UNLESS NOTED OTHERWISE.

C. INTERIOR PARTITIONS SHALL BE 200 MM CMU. SEE STRUCTURAL DRAWINGS FOR LOCATION OF CONCRETE SHEAR WALLS.

D. COSMETIC REPAIR OF MINOR DEFECTS: REPAIR OR FILL MORTAR JOINTS AND MINOR DEFECTS, INCLUDING BUT NOT LIMITED TO SPALLS, IN ACCORDANCE WITH MANUFACTURER'S RECOMMENDATIONS AND PRIOR TO COATING APPLICATION. SURFACES TO BE PAINTED SHALL BE CLEAN AND FREE OF FOREIGN MATTER BEFORE APPLICATION OF PAINT. CLEANING SHALL BE SCHEDULED SO THAT DUST AND OTHER CONTAMINANTS WILL NOT FALL ON NEWLY PAINTED SURFACES.

E. CONCRETE, PLASTER AND MASONRY SURFACES SHALL BE ALLOWED TO CURE FOR AT LEAST 30 DAYS BEFORE PAINTING. CONCRETE SLABS-ON-GRADE SHALL BE ALLOWED TO CURE 90 DAYS BEFORE STAINING OR SEALING.

F. DO NOT USE PAINT MATERIALS CONTAINING LEAD CONTENT IN EXCESS OF 0.009 PERCENT OF THE WEIGHT OF THE TOTAL NONVOLATILE CONTENT OF THE PAINT OR THE WEIGHT OF THE DRIED PAINT FILM.

G. DO NOT USE ANY ASBESTOS CONTAINING MATERIALS (ACM) IN PROJECT. ACM IS DEFINED AS 1% OR MORE BY VOLUME.

H. DO NOT USE PAINT MATERIALS CONTAINING MERCURIAL FUNGICIDES.

I. FACTORY PRIMED METAL DOORS AND FRAMES SHALL RECEIVE TWO COATS OF PAINT.

J. FILL REMAINING SPACE AT PENETRATIONS IN FIRE-RATED FLOORS, PARTITIONS AND CEILINGS WITH APPROPRIATE FIRESTOPPING MATERIALS.

K. ALL CEILING FINISHES SHALL BE PAINTED STRUCTURE.

L. ALL WALL FINISHES SHALL BE PAINTED.

M. ALL FLOOR FINISHES SHALL BE GRAY EPOXY SEALED CONCRETE, UNLESS NOTED OTHERWISE.

KEY NOTES: (X)

1. LINE OF ROOF OVERHANG ABOVE.
2. CONCRETE STOOP WITH GRATE – SEE DETAIL 1/A-503.
3. DOOR SHALL BE MAXIMUM DUTY.

LEGEND:

(XXX) DOOR FRAME AND HARDWARE TYPE, SEE SHEET A-601

(A) WINDOW TYPE, SEE SHEET A-601

(X) KEY NOTE

ABBREVIATIONS:

ELEC	ELECTRICAL
MECH	MECHANICAL
JAN	JANITOR
CLOS	CLOSET
COMM	COMMUNICATIONS

LINEAR DIMENSIONS SHOWN ARE IN MILLIMETERS (MM), UNLESS OTHERWISE NOTED

0 1000 2000
SCALE: 1:50

APPROVED:

A/E DESIGNER OF RECORD

SEAL:

STATE OF SOUTH CAROLINA
KEVIN R. CHAFIN
N. Charleston, SC
6374
REGISTERED ARCHITECT

US ARMY CORPS OF ENGINEERS
AFGHANISTAN ENGINEER DISTRICT

Mark	Description	Date	Appr.	Mark	Description	Date	Appr.

Date: 2/23/10 Rev: 0
Design file no.
Drawing code:
File name: ANASATA-101FP
Plot date: 2/23/2010
Plot scale: x:X

Designed by: KRC
Dwn by: EBB
Ckd by: NLJ
Reviewed by: LHM
Submitted by: BAKER

U.S. ARMY CORPS OF ENGINEERS
AFGHANISTAN ENGINEER DISTRICT
APO AE 96338

Michael Baker Jr., Inc.
A unit of Michael Baker Corporation
Airside Business Park
100 Airside Drive
Moon Township, PA 15108
www.mbakercorp.com

AFGHAN NATIONAL ARMY
REGIONAL MILITARY TRAINING CENTER
STANDARD DESIGN

SMALL ARMS STORAGE

FLOOR PLAN

Sheet reference number:
A-101

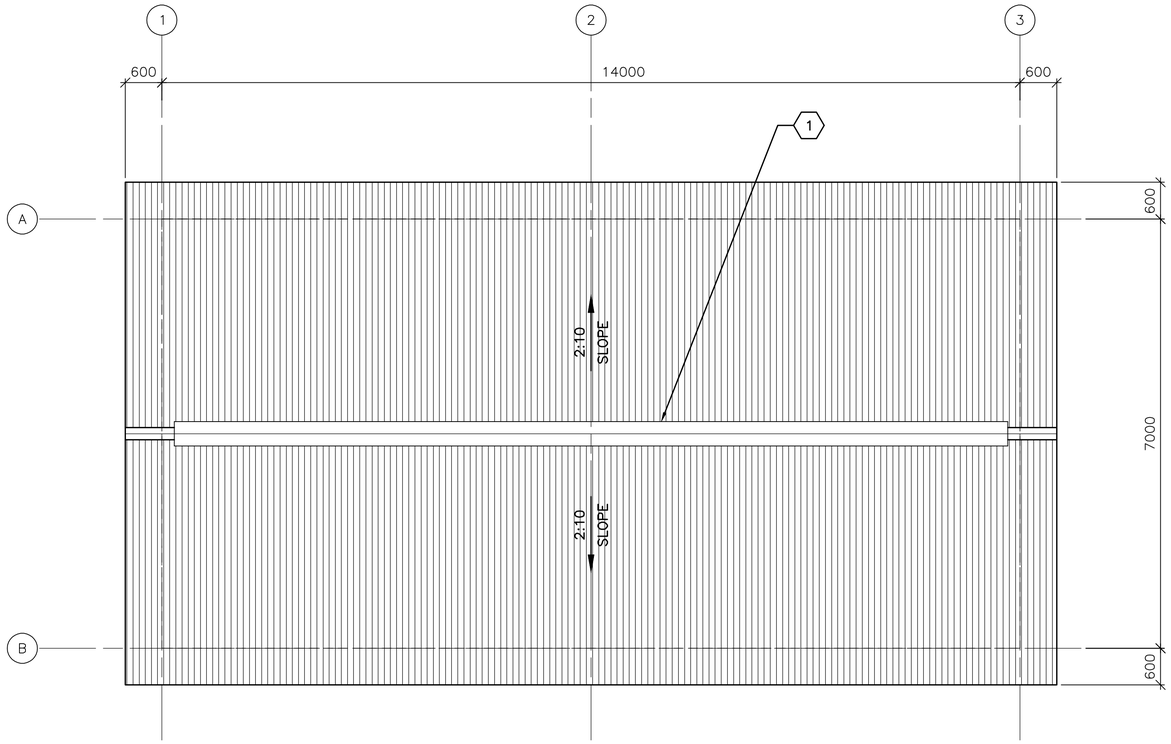

1 / A-102 **ROOF PLAN**

SCALE: 1:50

GENERAL NOTES:

A. THE APPROXIMATE LOCATION OF ROOF DEVICES AND PENETRATIONS ARE SHOWN ON THE ROOF PLAN FOR INFORMATION ONLY. THE CONTRACTOR SHALL BE RESPONSIBLE FOR UNDERSTANDING THE ACTUAL LOCATION OF THESE AND ALL OTHER ITEMS PRIOR TO BEGINNING CONSTRUCTION. COORDINATE ALL ROOF PENETRATIONS WITH STRUCTURAL, MECHANICAL AND PLUMBING WORK.

B. UNLESS OTHERWISE NOTED, NOTES, DETAILS OR FEATURES INDICATED FOR ONE CONDITION SHALL BE APPLICABLE FOR ALL ALIKE AND SIMILAR CONDITIONS.

C. STOCKPILING OF MATERIALS, EQUIPMENT AND ANY OTHER ITEMS ON THE ROOF IS PROHIBITED.

D. ROOFS SHALL BE CORRUGATED METAL ROOF PANELS ON COLD-FORMED METAL FRAMING ON CONCRETE SLAB.

KEY NOTES:

(X)

1. CONTINUOUS METAL RIDGE VENT SEE DETAIL 4/A-501.

LINEAR DIMENSIONS SHOWN ARE IN MILLIMETERS (MM), UNLESS OTHERWISE NOTED

0 1000 2000
SCALE: 1:50

APPROVED:

A/E DESIGNER OF RECORD

SEAL:

STATE OF SOUTH CAROLINA
KEVIN R. CHAFIN
N. Charleston, SC
6374
REGISTERED ARCHITECT

US ARMY CORPS OF ENGINEERS
AFGHANISTAN ENGINEER DISTRICT

Mark	Description	Date	Appr.	Mark	Description	Date	Appr.

Designed by: KRC
Dwn by: EBB
Ckd by: NLJ
Reviewed by: LHM
Submitted by: BAKER
Date: 2/23/10
Rev: 0
Design file no.
Drawing code:
File name: ANASATA-1025P
Plot date: 2/23/2010
Plot scale: x:X

U.S. ARMY CORPS OF ENGINEERS
AFGHANISTAN ENGINEER DISTRICT
APO AE 96338

Michael Baker Jr., Inc
A unit of Michael Baker Corporation
Airside Business Park
100 Airside Drive
Moon Township, PA 15108
www.mbakercorp.com

AFGHAN NATIONAL ARMY
REGIONAL MILITARY TRAINING CENTER
STANDARD DESIGN

SMALL ARMS STORAGE

ROOF PLAN

Sheet reference number:
A-102

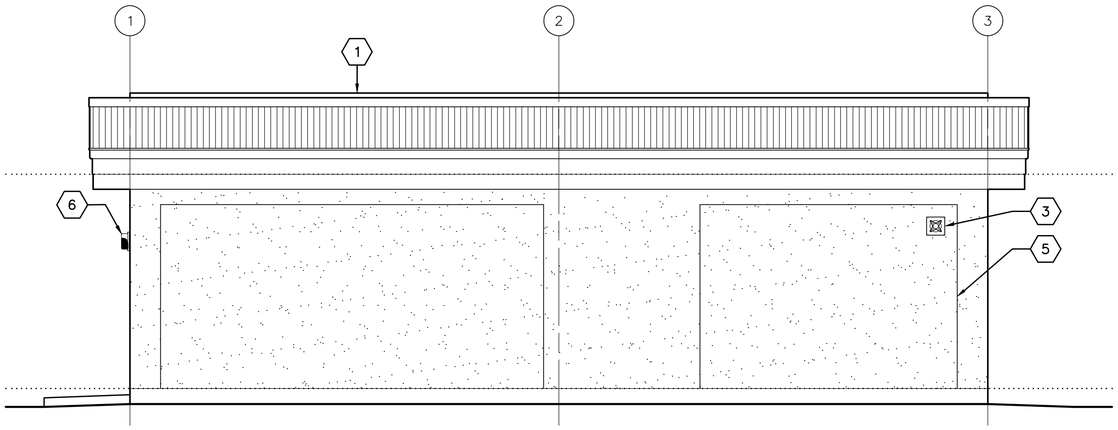

1 A-201 **ELEVATION**
SCALE: 1:50

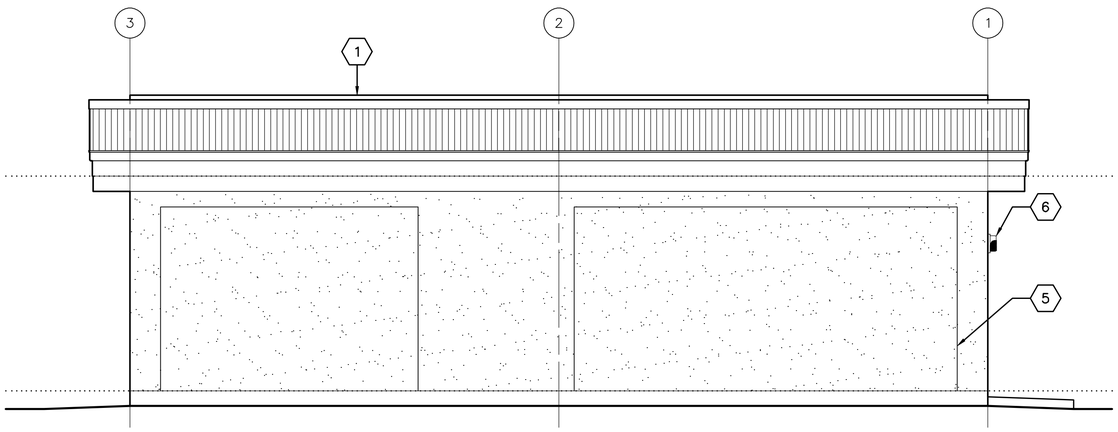

2 A-201 **ELEVATION**
SCALE: 1:50

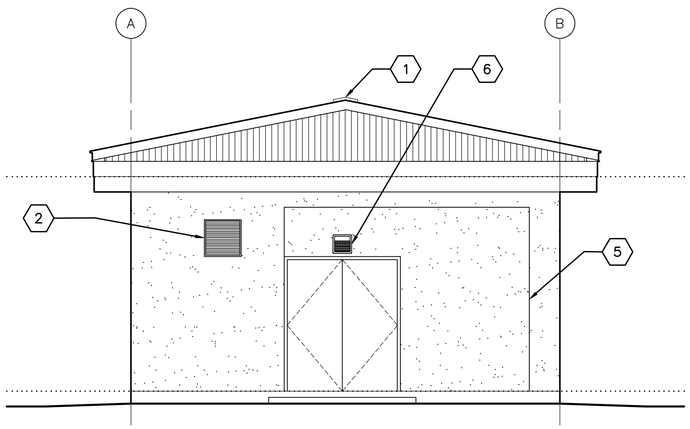

3 A-201 **ELEVATION**
SCALE: 1:50

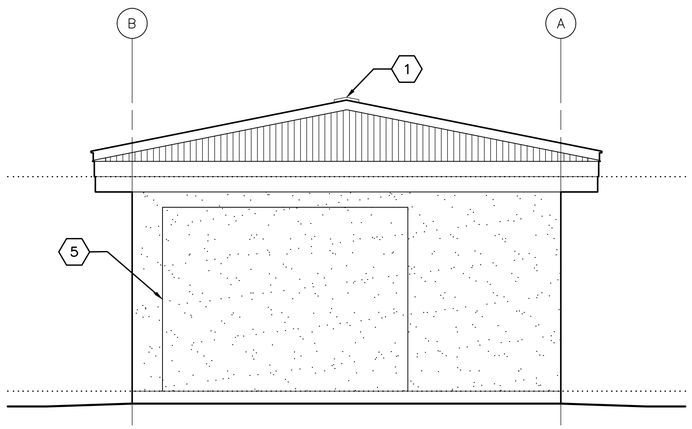

4 A-201 **ELEVATION**
SCALE: 1:50

GENERAL NOTES:

A. COORDINATE SIZE AND LOCATION OF OPENINGS FOR MECHANICAL ITEMS WITH MECHANICAL DRAWINGS.

B. PROVIDE STRUCTURAL LINTELS AS REQUIRED – SEE STRUCTURAL DRAWINGS

C. ALL EXTERIOR WALL FINISHES SHALL BE STUCCO OVER CMU AND CONCRETE SUBSTRATES. PROVIDE CONTROL JOINTS IN STUCCO WALL FINISH AS NOTED.

D. ROOF SHALL BE CORRUGATED METAL ROOF PANELS ON COLD–FORMED METAL FRAMING ON CONCRETE SLAB.

KEY NOTES:

X

1. CONTINUOUS METAL RIDGE VENT – SEE DETAIL 4/A–501.
2. LOUVER, LOCATE TOP OF WALL PENETRATION 2800 MM ABOVE FINISHED FLOOR – SEE MECHANICAL DRAWINGS.
3. EXHAUST FAN, LOCATE TOP OF WALL PENETRATION 2800 MM ABOVE FINISHED FLOOR – SEE MECHANICAL DRAWINGS.
4. NOT USED
5. STUCCO CONTROL JOINT – SEE DETAIL 2A/A–501.
6. EXTERIOR LIGHT FIXTURE – SEE ELECTRICAL.

LINEAR DIMENSIONS SHOWN ARE IN MILLIMETERS (MM), UNLESS OTHERWISE NOTED

0 1000 2000
SCALE: 1:50

APPROVED:

A/E DESIGNER OF RECORD

SEAL:

STATE OF SOUTH CAROLINA
KEVIN R. CHAFIN
N. Charleston, SC
6374
REGISTERED ARCHITECT

US ARMY CORPS OF ENGINEERS
AFGHANISTAN ENGINEER DISTRICT

Mark	Description	Date	Appr.	Mark	Description	Date	Appr.

U.S. ARMY CORPS OF ENGINEERS
AFGHANISTAN ENGINEER DISTRICT
APO AE 96338

Michael Baker Jr., Inc
A unit of Michael Baker Corporation
Airside Business Park
100 Airside Drive
Moon Township, PA 15108
www.mbakercorp.com

Designed by: KRC
Dwn by: EBB
Ckd by: NLJ
Reviewed by: LHM
Submitted by: BAKER

Date: 2/23/10
Design file no.
Drawing code:
File name: ANASATA-A201ELV
Plot date: 2/23/2010
Plot scale: x:x
Rev: 0

AFGHAN NATIONAL ARMY
REGIONAL MILITARY TRAINING CENTER
STANDARD DESIGN

SMALL ARMS STORAGE

ELEVATIONS

Sheet reference number:
A–201

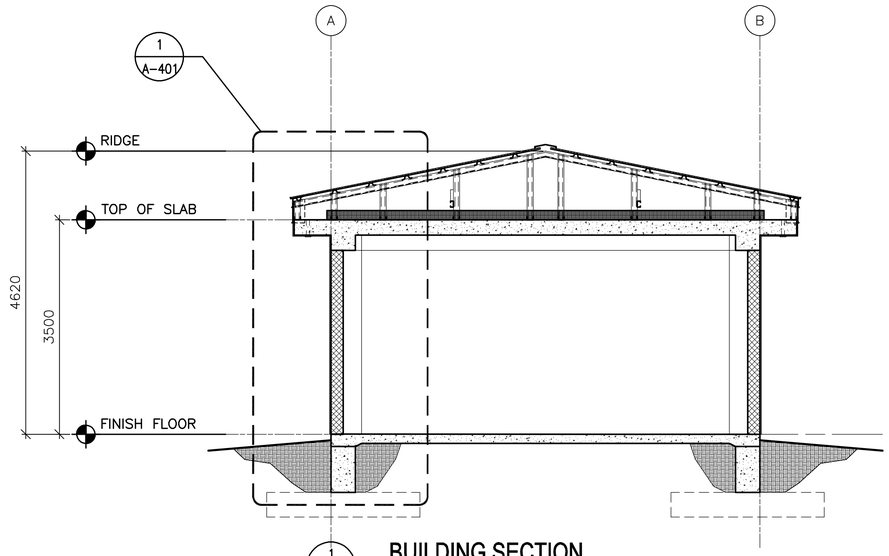

1 A-301 **BUILDING SECTION**
SCALE: 1:50

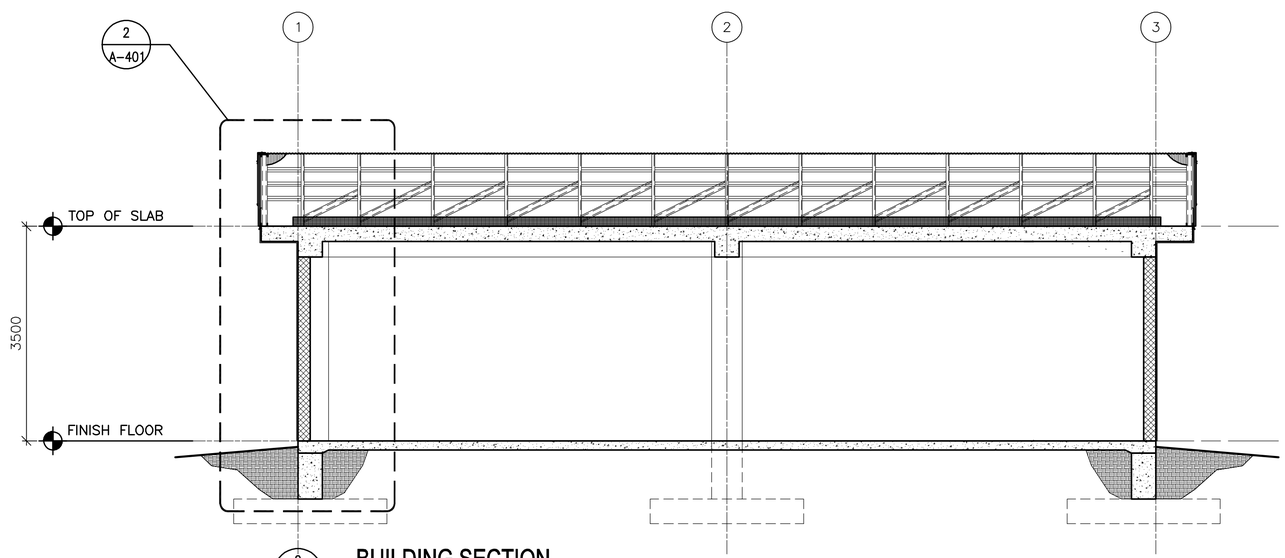

2 A-301 **BUILDING SECTION**
SCALE: 1:50

LINEAR DIMENSIONS SHOWN ARE IN MILLIMETERS (MM), UNLESS OTHERWISE NOTED

0 1000 2000
SCALE: 1:50

APPROVED:

A/E DESIGNER OF RECORD

SEAL:

STATE OF SOUTH CAROLINA
KEVIN R. CHAFIN
N. Charleston, SC
6374
REGISTERED ARCHITECT

US ARMY CORPS OF ENGINEERS
AFGHANISTAN ENGINEER DISTRICT

Mark	Description	Date	Appr.	Mark	Description	Date	Appr.

U.S. ARMY CORPS OF ENGINEERS
AFGHANISTAN ENGINEER DISTRICT
APO AE 96338

Michael Baker Jr., Inc
A unit of Michael Baker Corporation
Airside Business Park
100 Airside Drive
Moon Township, PA 15108
www.mbakercorp.com

Designed by: KRC		Date: 2/23/10	Rev: 0
Dwn by: EBB	Ckd by: NLJ	Design file no.	
Reviewed by: LHM		Drawing code: XXXXXXX	
Submitted by: BAKER		File name: ANASATA-301BS Plot date: 2/23/2010 Plot scale: x:X	

AFGHAN NATIONAL ARMY
REGIONAL MILITARY TRAINING CENTER
STANDARD DESIGN

SMALL ARMS STORAGE

BUILDING SECTIONS

Sheet reference number:
A-301

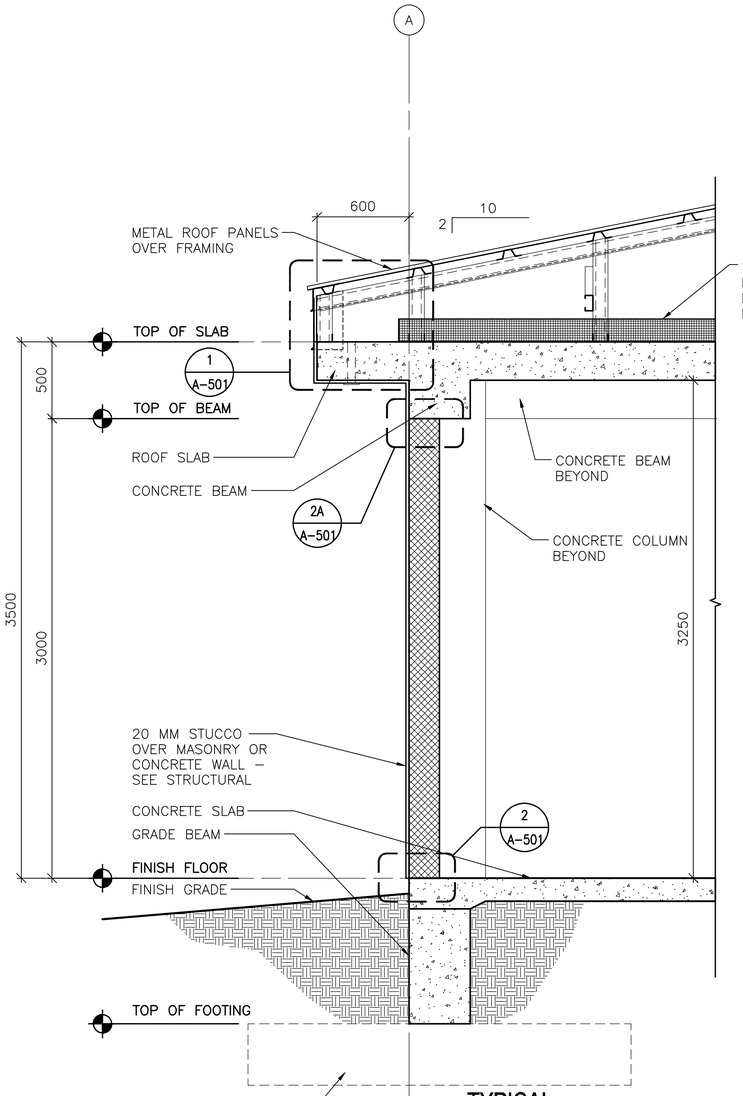

TYPICAL WALL SECTION

SCALE: 1:20

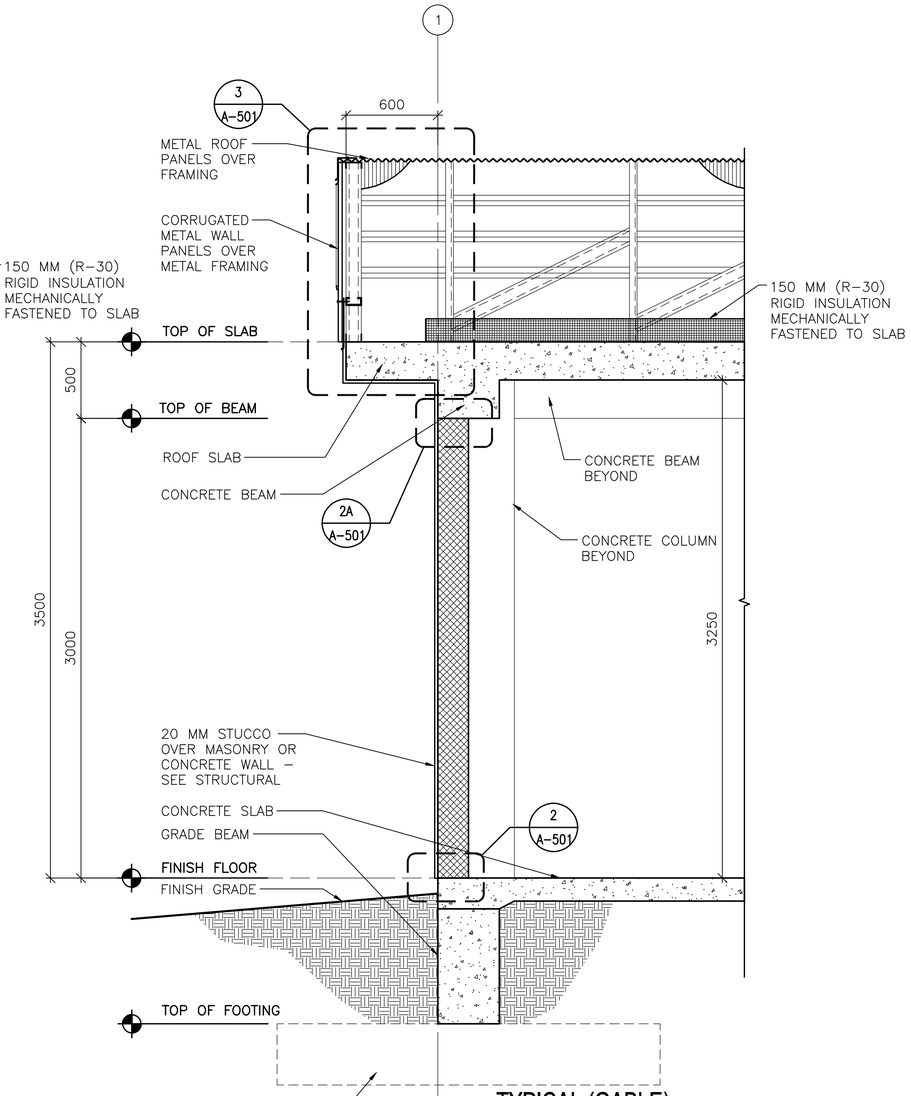

TYPICAL (GABLE) WALL SECTION

SCALE: 1:20

LINEAR DIMENSIONS SHOWN ARE IN MILLIMETERS (MM), UNLESS OTHERWISE NOTED

0 400 800
SCALE: 1:20

APPROVED:

A/E DESIGNER OF RECORD

SEAL:

STATE OF SOUTH CAROLINA
KEVIN R. CHAFIN
N. Charleston, SC
6374
REGISTERED ARCHITECT

US ARMY CORPS OF ENGINEERS
AFGHANISTAN ENGINEER DISTRICT

Mark	Description	Date	Appr.	Mark	Description	Date	Appr.

Designed by: KRC
Dwn by: EBB
Ckd by: NLJ
Reviewed by: LHM
Submitted by: BAKER
Date: 2/23/10
Rev: 0
Design file no.
Drawing code:
File name: ANASATS-A01WS
Plot date: 2/23/2010
Plot scale:

U.S. ARMY CORPS OF ENGINEERS
AFGHANISTAN ENGINEER DISTRICT
APO AE 96338

Michael Baker Jr., Inc
A unit of Michael Baker Corporation
Airside Business Park
100 Airside Drive
Moon Township, PA 15108
www.mbakercorp.com

AFGHAN NATIONAL ARMY
REGIONAL MILITARY TRAINING CENTER
STANDARD DESIGN

SMALL ARMS STORAGE

WALL SECTIONS

Sheet reference number:
A-401

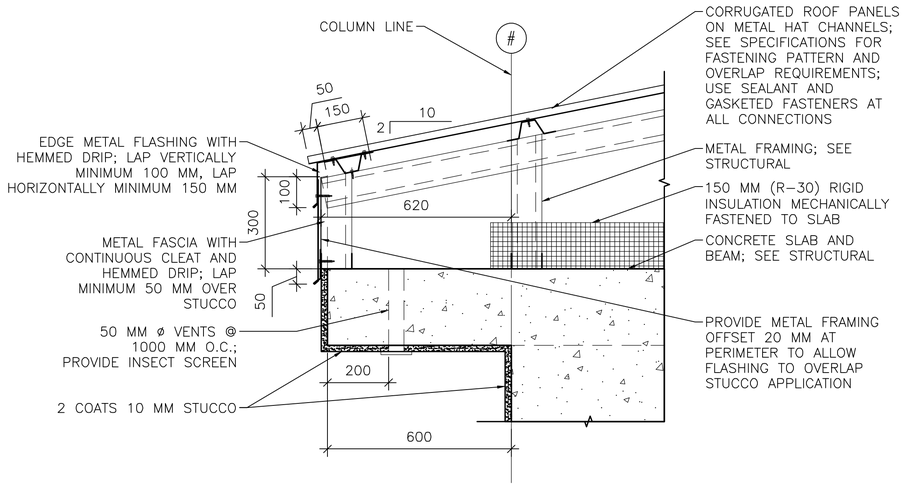

1 / A–501 **EAVE DETAIL**
SCALE: 1:10

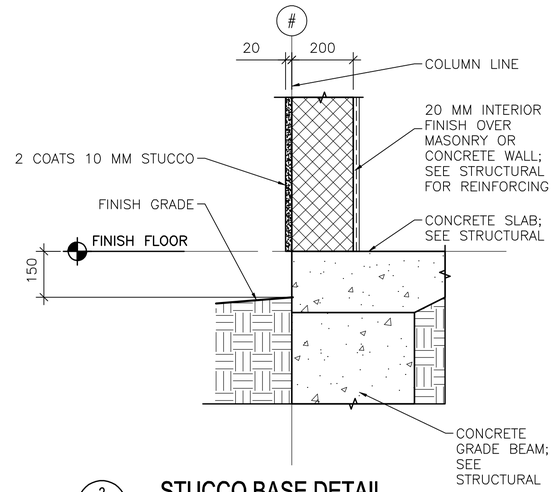

2 / A–501 **STUCCO BASE DETAIL**
SCALE: 1:10

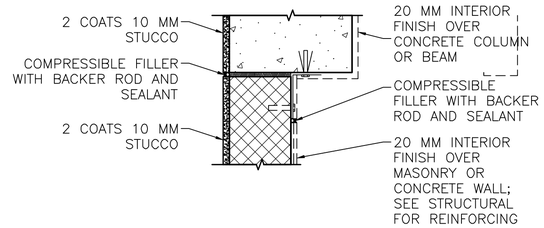

NOTE: DETAIL TYPICAL AT ALL WALL/COLUMN AND WALL/BEAM LOCATIONS, SEE ALTERNATE BRACING DETAIL BELOW 2B/A–501.

2A / A–501 **STUCCO JOINT DETAIL**
SCALE: 1:10

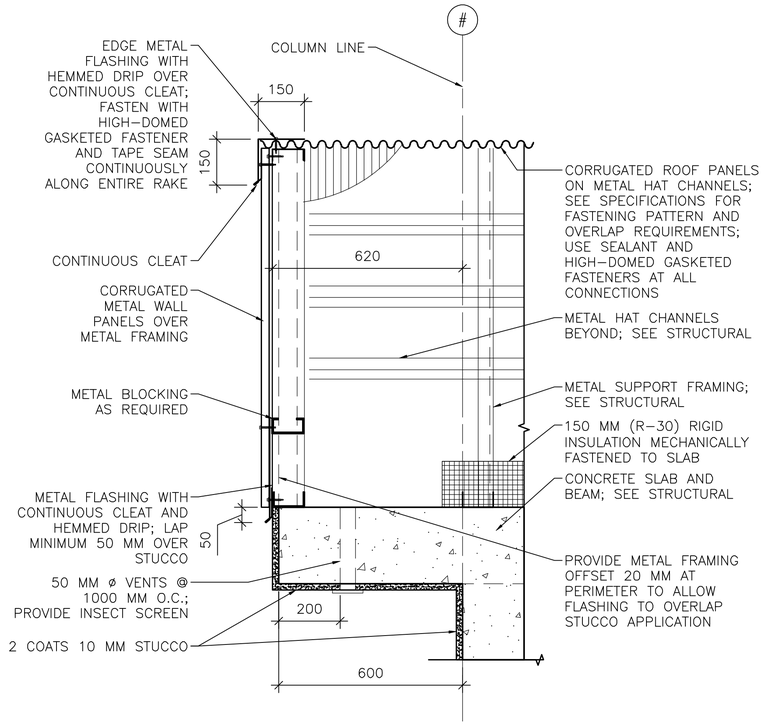

3 / A–501 **RAKE/EAVE DETAIL**
SCALE: 1:10

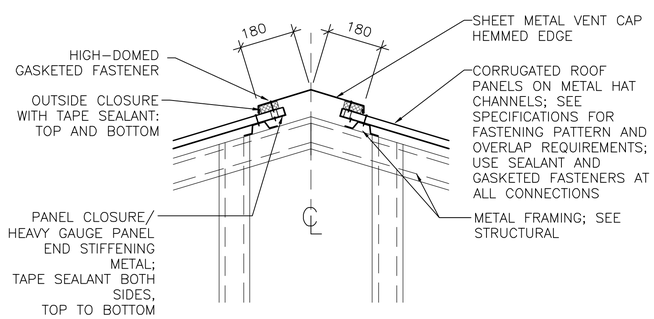

4 / A–501 **RIDGE VENT DETAIL**
SCALE: 1:10

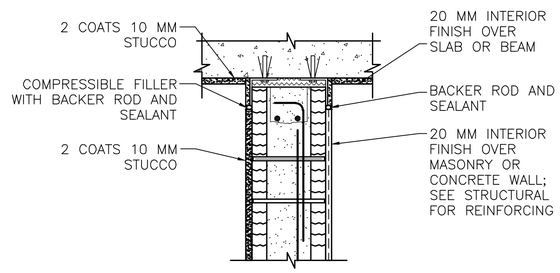

INTERIOR WALL/BEAM

2B / A–501 **ALTERNATE BRACING DETAIL**
SCALE: 1:10

LINEAR DIMENSIONS SHOWN ARE IN MILLIMETERS (MM), UNLESS OTHERWISE NOTED

0 200 400
SCALE: 1:10

APPROVED:

A/E DESIGNER OF RECORD

SEAL:

STATE OF SOUTH CAROLINA
KEVIN R. CHAFIN
N. Charleston, SC
6374
REGISTERED ARCHITECT

US ARMY CORPS OF ENGINEERS
AFGHANISTAN ENGINEER DISTRICT

Mark	Description	Date	Appr.	Mark	Description	Date	Appr.

U.S. ARMY CORPS OF ENGINEERS
AFGHANISTAN ENGINEER DISTRICT
APO AE 96338

Michael Baker Jr., Inc.
A unit of Michael Baker Corporation
Airside Business Park
100 Airside Drive
Moon Township, PA 15108
www.mbakercorp.com

Designed by: KRC
Dwn by: EBB
Ckd by: NLJ
Reviewed by: LHM
Submitted by:
BAKER

Date: 2/23/10
Design file no.
Drawing code:
File name: ANASATA-501DT
Plot date: 2/23/2010
Plot scale: x:X
Rev: 0

AFGHAN NATIONAL ARMY
REGIONAL MILITARY TRAINING CENTER
STANDARD DESIGN

SMALL ARMS STORAGE

EXTERIOR DETAILS

Sheet reference number:
A–501

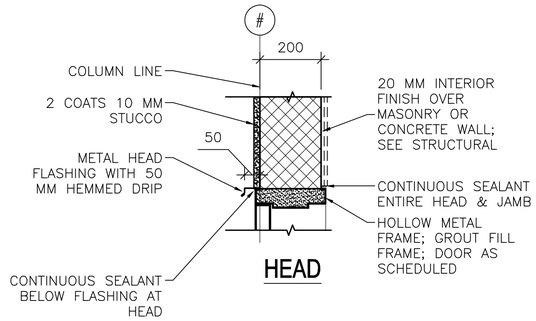

HEAD

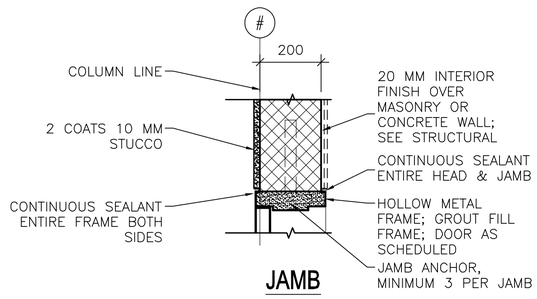

JAMB

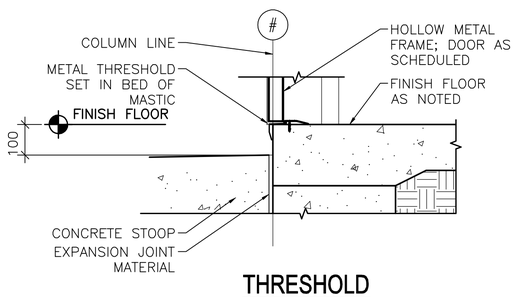

THRESHOLD

1 / A–502 **EXTERIOR DOOR DETAILS**

SCALE: 1:10

LINEAR DIMENSIONS SHOWN ARE IN MILLIMETERS (MM), UNLESS OTHERWISE NOTED

0 200 400

SCALE: 1:10

APPROVED:

A/E DESIGNER OF RECORD

SEAL:

STATE OF SOUTH CAROLINA
KEVIN R. CHAFIN
N. Charleston, SC
6374
REGISTERED ARCHITECT

US ARMY CORPS OF ENGINEERS
AFGHANISTAN ENGINEER DISTRICT

Mark	Description	Date	Appr.	Mark	Description	Date	Appr.

Designed by: KRC
Dwn by: EBB
Ckd by: NLJ
Reviewed by: LHM
Submitted by: BAKER
Date: 2/23/10
Rev: 0
Design file no.
Drawing code:
File name: ANASATA-502H-US
Plot date: 2/23/2010
Plot scale: x:X

U.S. ARMY CORPS OF ENGINEERS
AFGHANISTAN ENGINEER DISTRICT
APO AE 96338

Michael Baker Jr., Inc
A unit of Michael Baker Corporation
Airside Business Park
100 Airside Drive
Moon Township, PA 15108
www.mbakercorp.com

AFGHAN NATIONAL ARMY
REGIONAL MILITARY TRAINING CENTER
STANDARD DESIGN

SMALL ARMS STORAGE

HEAD, JAMB & SILL DETAILS

Sheet reference number:
A–502

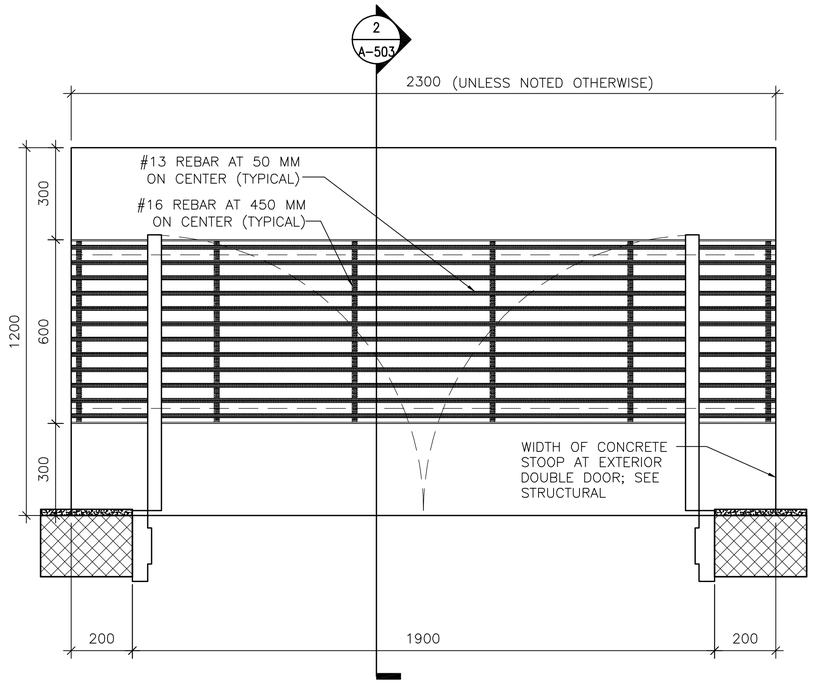

1 A-503 **DOOR STOOP PLAN (WITH GRATE)**

SCALE: 1:10

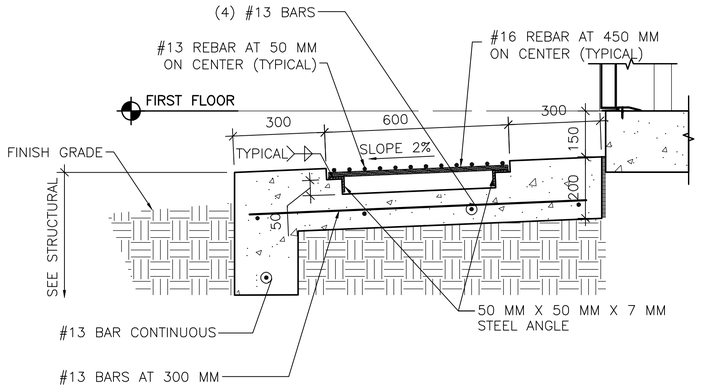

2 A-503 **DOOR STOOP DETAIL**

SCALE: 1:10

LINEAR DIMENSIONS SHOWN ARE IN MILLIMETERS (MM), UNLESS OTHERWISE NOTED

0 200 400
SCALE: 1:10

APPROVED:

A/E DESIGNER OF RECORD

SEAL:

STATE OF SOUTH CAROLINA
KEVIN R. CHAFIN
N. Charleston, SC
6374
REGISTERED ARCHITECT

US ARMY CORPS OF ENGINEERS
AFGHANISTAN ENGINEER DISTRICT

Mark	Description	Date	Appr.	Mark	Description	Date	Appr.

Date: 2/23/10
Rev: 0
Design file no.
Drawing code:
File name: ANASATA-503DT
Plot date: 2/23/2010
Plot scale: x:X

Designed by: KRC
Dwn by: EBB
Ckd by: NLJ
Reviewed by: LHM
Submitted by: BAKER

U.S. ARMY CORPS OF ENGINEERS
AFGHANISTAN ENGINEER DISTRICT
APO AE 96338

Michael Baker Jr., Inc.
A unit of Michael Baker Corporation
Airside Business Park
100 Airside Drive
Moon Township, PA 15108
www.mbakercorp.com

AFGHAN NATIONAL ARMY
REGIONAL MILITARY TRAINING CENTER
STANDARD DESIGN

SMALL ARMS STORAGE

STOOP DETAILS

Sheet reference number:
A-503

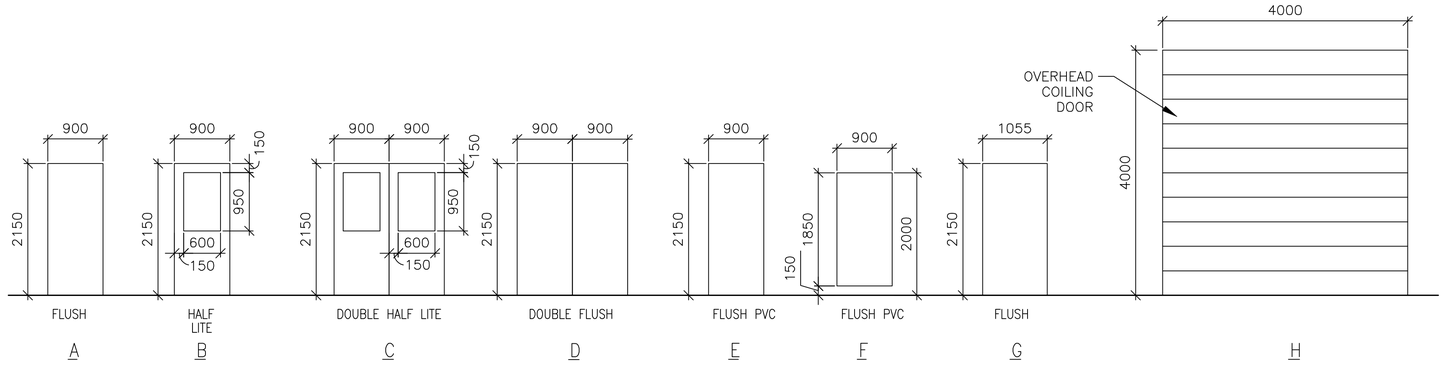

1 A-601 **DOOR TYPES**
SCALE: 1:50

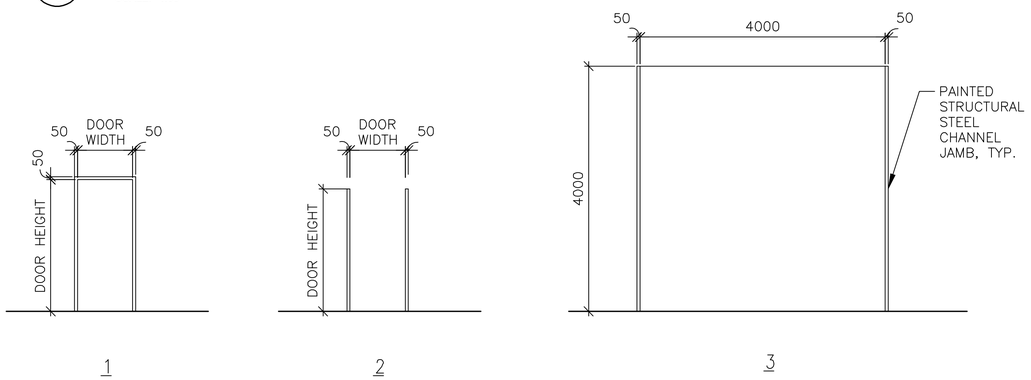

2 A-601 **FRAME TYPES**
SCALE: 1:50

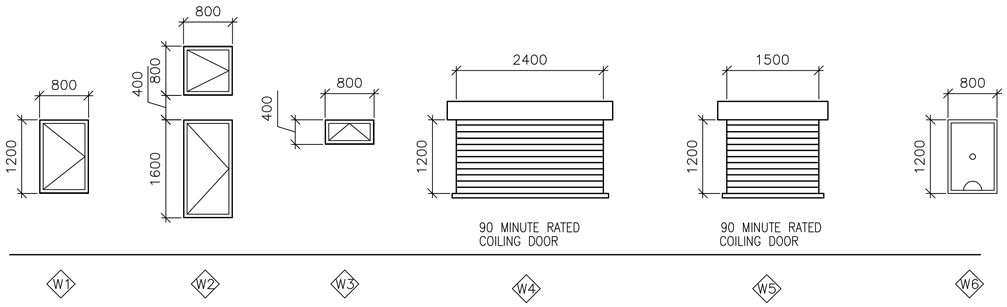

3 A-601 **WINDOW TYPES**
SCALE: 1:50

WINDOW TYPE NOTES:

1. ALL EXTERIOR WINDOWS SHALL BE ALUMINUM WITH INSECT SCREENS. WINDOWS SHALL BE COMMERCIAL GRADE.
2. ALL EXTERIOR WINDOWS SHALL BE OPERABLE.

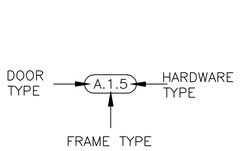

4 A-601 **DOOR TAG**
SCALE: NTS

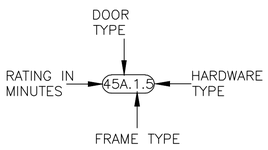

5 A-601 **RATED DOOR TAG**
SCALE: NTS

DOOR TAG NOTES:

1. THE DOOR TAG INDICATES THE DOOR TYPE, FRAME TYPE AND HARDWARE SET FOR EACH DOOR.
2. THE DOOR TAG FOR RATED DOORS INCLUDES THE RATING OF THE DOOR IN MINUTES.

EXTERIOR DOOR HARDWARE TYPES:

HW-1
1-1/2 PR HINGES, A5112 114 X 114
1 EA RIM EXIT DEVICE, TYPE 1
1 EA CYLINDER. E09221A, GRADE 1
1 EA OVERHEAD CLOSER, C02061, LOW RESISTANCE
1 EA THRESHOLD, J32130
3 EA DOOR SILENCERS, L03011

HW-2
1-1/2 PR HINGES, A5112 114 X 114
1 EA LOCKSET, F13 ENTRY LOCK W/LEVER HANDLES, GRADE 1
1 EA OVERHEAD CLOSER, C02061, LOW RESISTANCE
1 EA THRESHOLD, J32130
3 EA DOOR SILENCERS, L03011

HW-3
3 PR HINGES, A5112 114 X 114
2 EA RIM EXIT DEVICE, TYPE 1
2 EA CYLINDER. GRADE 1
2 EA OVERHEAD CLOSER, C02061, LOW RESISTANCE
1 EA DOOR COORDINATOR, TYPE 21
1 EA ASTRAGAL
1 EA THRESHOLD, J32130
2 EA DOOR SILENCERS, L03011

HW-4
3 PR HINGES, A5112 114 X 114
1 EA LOCKSET W/LEVER HANDLES. GRADE 1, F13
1 EA OVERHEAD CLOSER, C02061, LOW RESISTANCE
2 EA MAGNETIC HOLDER PIN, ATTACHED TO DOOR LEAF
2 EA MAGNETIC HOLDER RECEIVER, ATTACHED TO STOOP
2 EA LEVER EXTENSION FLUSH BOLTS, L04081
1 EA ASTRAGAL
1 EA THRESHOLD, J32130
2 EA DOOR SILENCERS, L03011

DOOR AND HARDWARE NOTES:

1. INTERIOR AND EXTERIOR METAL DOORS AND FRAME COLORS SHALL MATCH ADJACENT WALL COLORS AS SELECTED BY THE CONTRACTING OFFICER.
2. FRAMES, EXCEPT FIRE-RATED FRAMES, SHALL BE MOUNTED AND ADJUSTED IN ACCORDANCE WITH MANUFACTURER'S INSTRUCTIONS. FRAMES SHALL BE FASTENED WITH MINIMUM OF THREE ANCHORS PER JAMB AT EQUAL INTERVALS.
3. DIMENSIONS SHOWN ON DOOR TYPES DETAIL ARE BASED UPON MODULAR MASONRY (OR ROUGH OPENING), HEIGHT OF 2200 MM FOR STANDARD PERSONNEL DOORS. CONTRACTOR SHALL COORDINATE WITH DOOR SUPPLIER TO ENSURE THAT DIMENSIONS OF DOORS AND FRAMES PROVIDED ARE COMPATIBLE WITH DOOR OPENING DIMENSIONS.
4. HARDWARE SHALL BE HEAVY DUTY, COMMERCIAL GRADE, STAINLESS STEEL WITH A SATIN OR BRUSHED FINISH.
5. HARDWARE TYPES INCLUDE BUILDERS HARDWARE MANUFACTURERS ASSOCIATION (BMHA) NUMBER.
6. DOORS IN 2 HOUR RATED PARTITIONS SHALL BE 1.5 HOUR (90 MINUTE) RATED DOORS IN ACCORDANCE WITH NFPA 101, TABLE 8.3.4.2.
7. DOORS AT STAIR ENCLOSURES SHALL BE 1 HOUR (60 MINUTE) RATED AT 1 HOUR WALL IN ACCORDANCE WITH NFPA 101, TABLE 8.3.4.2.
8. DOORS IN 1 HOUR RATED WALLS SHALL BE 3/4 HOUR (45 MINUTE) RATED DOORS IN ACCORDANCE WITH NFPA 101, TABLE 8.3.4.2.
9. DOORS IN 1 HOUR RATED CORRIDOR WALLS SHALL BE 1/3 HOUR (20 MINUTE) IN ACCORDANCE WITH NFPA 101, TABLE 8.3.4.2.
10. PROVIDE DOOR STOPS TO PROTECT WALLS ON LOCATIONS WHERE DOOR SWING WILL STRIKE WALL.

THIS SHEET IS STANDARD AND IS INCLUSIVE OF ALL THE DOOR/ WINDOW/ HARDWARE TYPES FOR THE ENTIRE RMTC CONTRACT. NOT ALL DOOR/ WINDOW/ HARDWARE TYPES ARE USED FOR ANY PARTICULAR BUILDING DESIGN. CONTRACTOR SHALL REFER TO THE FLOOR PLAN FOR THE TYPES BEING USED.

INTERIOR DOOR HARDWARE TYPES:

HW-5
1-1/2 PR HINGES, A8133 114 X 114
1 EA LOCKSET W/LEVER HANDLES, F08, GRADE 1
1 EA WALL STOP, L02101 OR L02161
3 EA DOOR SILENCERS, L03011

HW-6
1-1/2 PR HINGES, A8112 114 X 114
1 EA LOCKSET W/LEVER HANDLES, F08, GRADE 1
1 EA WALL STOP, L02101 OR L02161
1 EA OVERHEAD CLOSER, C02061, LOW RESISTANCE
3 EA DOOR SILENCERS, L03011

HW-7
1-1/2 PR HINGES, A8133
1 EA LOCKSET W/LEVER HANDLES, F13 GRADE 1
1 EA WALL STOP, L02101 OR L02161
2 EA MOP PLATE, J103
3 EA DOOR SILENCERS, L03011

HW-8
1-1/2 PR HINGES, A8112
1 EA LOCKSET W/LEVER HANDLES, F13 GRADE 1
1 EA WALL STOP, L02101 OR L02161
2 EA MOP PLATE, J103
1 EA OVERHEAD CLOSER, C02061, LOW RESISTANCE
3 EA DOOR SILENCERS, L03011

HW-9
1-1/2 PR HINGES, A5112 114 X 114
1 EA RIM EXIT DEVICE, TYPE 1
1 EA CYLINDER. E09221A, GRADE 1
1 EA OVERHEAD CLOSER, C02061, LOW RESISTANCE
3 EA DOOR SILENCERS, L03011

HW-10
3 PR HINGES, A5112 114 X 114
1 EA LOCKSET W/LEVER HANDLES. GRADE 1, F13
2 EA LEVER EXTENSION FLUSH BOLTS, L04081
1 EA ASTRAGAL
2 EA DOOR SILENCERS, L03011

HW-11
1-1/2 PR HINGES, A8112 114 X 114
1 EA LOCKSET W/LEVER HANDLES, F13, GRADE 1
1 EA WALL STOP, L02101 OR L02161
1 EA OVERHEAD CLOSER, C02061, LOW RESISTANCE
3 EA DOOR SILENCERS, L03011
1 EA ROBE HOOK

HW-12
1-1/2 PR HINGES, A8133
1 EA LATCHSET W/LEVER HANDLES, F76 GRADE 1
1 EA WALL STOP, L02101 OR L02161
2 EA MOP PLATE, J103
3 EA DOOR SILENCERS, L03011
1 EA ROBE HOOK

HW-13
3 PR HINGES, A5112 114 X 114
1 EA LOCKSET W/LEVER HANDLES. GRADE 1, F13
1 EA OVERHEAD CLOSER, C02061, LOW RESISTANCE
2 EA LEVER EXTENSION FLUSH BOLTS, L04081
1 EA ASTRAGAL
2 EA DOOR SILENCERS, L03011

HW-14
3 PR HINGES, A5112 114 X 114
2 EA RIM EXIT DEVICE, TYPE 1
2 EA CYLINDER. GRADE 1
2 EA OVERHEAD CLOSER, C02061, LOW RESISTANCE
1 EA DOOR COORDINATOR, TYPE 21
1 EA ASTRAGAL
2 EA DOOR SILENCERS, L03011

APPROVED:
A/E DESIGNER OF RECORD
SEAL:
STATE OF SOUTH CAROLINA
KEVIN R. CHAFIN
N. Charleston, SC
6374
REGISTERED ARCHITECT

US ARMY CORPS OF ENGINEERS
AFGHANISTAN ENGINEER DISTRICT

Mark	Description	Date	Appr.	Mark	Description	Date	Appr.

Date: 2/23/10 Rev: 0
Design file no.
Drawing code:
File name: ANASATS-A01SCH
Plot date: 2/23/2010
Plot scale: X:X

Designed by: KRC
Dwn by: EBB
Ckd by: NLJ
Reviewed by:
Submitted by:

U.S. ARMY CORPS OF ENGINEERS
AFGHANISTAN ENGINEER DISTRICT
APO AE 96338

Michael Baker Jr., Inc.
A unit of Michael Baker Corporation
Airside Business Park
100 Airside Drive
Moon Township, PA 15108
www.mbakercorp.com

AFGHAN NATIONAL ARMY
REGIONAL MILITARY TRAINING CENTER
STANDARD DESIGN

SMALL ARMS STORAGE

WINDOW AND DOOR SCHEDULES

Sheet reference number:
A-601

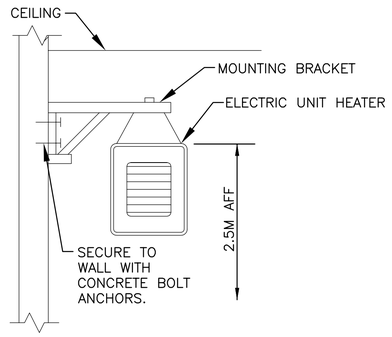

1 M-101 ELECTRIC UNIT HEATER MOUNTING DETAIL
N.T.S.

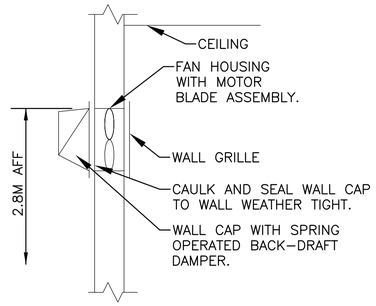

2 M-101 WALL EXHAUST FAN DETAIL
N.T.S.

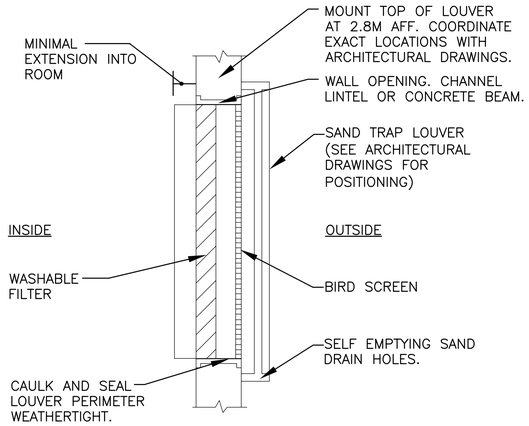

3 M-101 FILTERED SAND TRAP LOUVER
N.T.S.

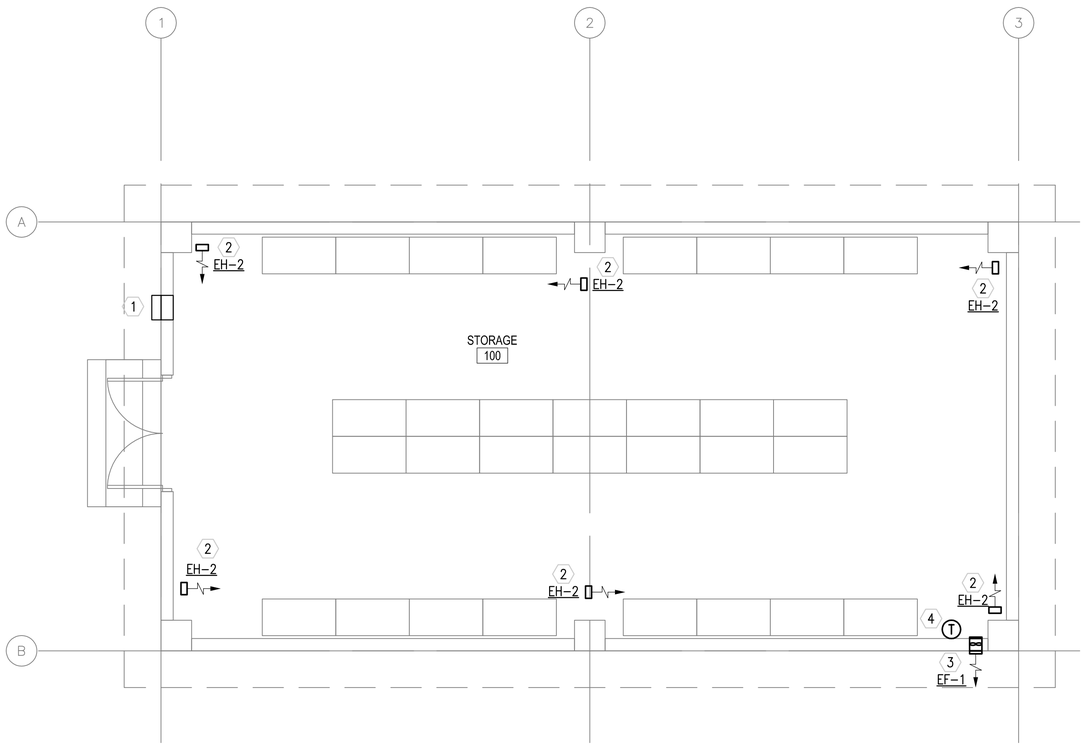

1 M-101 FLOOR PLAN - HVAC
SCALE: 1:50

GENERAL NOTES:

1. DO NOT SCALE DRAWINGS – ALL DIMENSIONS AND CONDITIONS SHALL BE CHECKED AND VERIFIED BY THE CONTRACTOR AT THE SITE.
2. ALL WORK PERFORMED ON THIS BUILDING SHALL BE IN COMPLIANCE WITH ALL PERTINENT CODES, RULES, ORDINANCES AND REGULATIONS OF THE GOVERNING AUTHORITIES.
3. ALL WORK PERFORMED UNDER AND IN CONNECTION WITH THESE DRAWINGS AND SPECIFICATIONS SHALL BE IN STRICT COMPLIANCE WITH THE LATEST SAFETY AND HEALTH STANDARDS.
4. ALL EQUIPMENT, WITHIN THIS BUILDING SHALL BE NONINCENDIVE OR HERMETICALLY SEALED OR SHALL BE PROVIDED WITH A NONINCENDIVE OR HERMETICALLY SEALED ENCLOSURE PER NEC ARTICLE 500.7. ALL WORK IN THIS BUILDING SHALL BE IN ACCORDANCE WITH NEC ARTICLE 502. NONINCENDIVE OR HERMETICALLY SEALED EQUIPMENT SHALL BE USED FOR ALL FIXTURES AND DEVICES. PROVIDE CONDUIT SEALS WHERE REQUIRED. ALL WIRING SHALL BE IN ACCORDANCE WITH NEC ARTICLE 502. FOR CLASS II LOCATIONS. INSTALLATION SHALL BE IN ACCORDANCE WITH DEPARTMENT OF DEFENSE DESIGN DOCUMENT 6055.9-STD.

SYMBOLS:

(X) KEY NOTE

TG 200x400 (8x16) TRANSFER GRILLE

ABBREVIATIONS:

AFF	ABOVE FINISH FLOOR
CF	CEILING FANS
CMS	CUBIC METERS PER SECOND
STATS	THERMOSTATS

KEY NOTE:

1. 610x610 (24x24) INTAKE LOUVER. PROVIDE WEATHER PROOF LOUVER WITH 50mm (2") WASHABLE FILTER AND SAND TRAP. SEE DETAIL 4 THIS SHEET.
2. EXPLOSION PROOF ELECTRIC UNIT HEATER SECURED TO WALL. SEE DETAIL 2 THIS SHEET.
3. WALL EXHAUST FAN WITH LOW SPRING OPERATED BACK-DRAFT DAMPER. SEE DETAIL 3 THIS SHEET.
4. THERMOSTAT MOUNTED AS HIGH AS POSSIBLE. INTERLOCK STAT WITH CORRESPONDING EXHAUST FAN, SET FAN TO ENERGIZE ON RISE IN TEMPERATURE ABOVE 25°C (77°F).

EXHAUST FAN SCHEDULE

NO.	TYPE	FAN CMS	DRIVE	HP	SP mmH20	ELECTRICAL DATA	SWITCH
EF-1	WALL	0.330	DIRECT	FRACT	13	220/1/50	W/ STAT

NOTES:
1. FANS SHALL HAVE SPRING OPERATED BACK-DRAFT DAMPER.
2. SEE GENERAL NOTE #4.

ELECTRIC UNIT HEATER SCHEDULE

NO.	CMS	KW	F.A.T. °C	ELECT. CHAR.	MOUNTING
EH-2	0.200	2.6	38	380/1/50	WALL HUNG

NOTES:
1. COORDINATE LOCATION AND ORIENTATION IN FIELD.
2. UNIT HEATERS SHALL HAVE TAMPER PROOF INTEGRAL STATS.
3. SEE GENERAL NOTE #4.

LINEAR DIMENSIONS SHOWN ARE IN MILLIMETERS (MM), UNLESS OTHERWISE NOTED

0 1000 2000
SCALE: 1:50

APPROVED:

A/E DESIGNER OF RECORD

SEAL:

COMMONWEALTH OF PENNSYLVANIA
REGISTERED PROFESSIONAL
MATTHEW R. SOTOSKY
ENGINEER
046576-E

US ARMY CORPS OF ENGINEERS
AFGHANISTAN ENGINEER DISTRICT

Mark	Description	Date	Appr.	Mark	Description	Date	Appr.

Rev: 0
Date: 02/23/10
Design file no.
Drawing code:
File name: ANASASTMH-101XXX
Plot date: 02/09/2010
Plot scale: 1:50

Designed by: RML
Dwn by: JJN
Ckd by: CJM
Reviewed by: MRS
Submitted by: BAKER

U.S. ARMY CORPS OF ENGINEERS
AFGHANISTAN ENGINEER DISTRICT
APO AE 96338

Michael Baker Jr., Inc
A unit of Michael Baker Corporation
Airside Business Park
100 Airside Drive
Moon Township, PA 15108
www.mbakercorp.com

AFGHAN NATIONAL ARMY
REGIONAL MILITARY TRAINING CENTER
STANDARD DESIGN

SMALL ARMS STORAGE
HVAC – FLOOR PLAN, SCHEDULES AND DETAILS

Sheet reference number:
M-101

POWER

- DISTRIBUTION PANELBOARD
- NEW PANELBOARD – SURFACE
- NEW PANELBOARD – RECESSED
- GENERATOR
- TRANSFORMER (DRAWN TO SIZE)
- JUNCTION BOX
- JUNCTION BOX – CEILING
- FUSIBLE SAFETY SWITCH
- MOTOR
- MOTOR STARTING SWITCH – 220V, 20A RATED UNLESS OTHERWISE NOTED
- ELECTRIC WATER HEATER
- CEILING FAN – REFER TO SPECIFICATION SECTION 26 20 00

RECEPTACLES

- DUPLEX 20A TYPE CEE 7/7 "SCHUKO STYLE" UNSWITCHED RECEPTACLE
- GF — DUPLEX 20A TYPE CEE 7/7 "SCHUKO STYLE" UNSWITCHED RECEPTACLES – 10mA GROUND FAULT INTERRUPTER TYPE
- WP — DUPLEX 20A TYPE CEE 7/7 "SCHUKO STYLE" UNSWITCHED TYPE WITH WEATHERPROOF COVER – 10mA GROUND FAULT INTERRUPTER TYPE
- EXP — DUPLEX 20A TYPE CEE 7/7 "SCHUKO STYLE" UNSWITCHED RECEPTACLES – EXPLOSION PROOF
- * — INDICATES MOUNT DEVICE ABOVE COUNTERTOP OR AT 1070mm ABOVE FINISHED FLOOR WHERE NO COUNTER IS TO BE INSTALLED.

LIGHTNING PROTECTION

- AIR TERMINAL 20mm O.D. X 450mm SOLID COPPER, NICKEL PLATED ON ADHESIVE BASE
- EQ — EQUIPMENT AIR TERMINAL
- TEST WELL WITH GROUND ROD(S)
- GROUND ROD
- G — GROUND PLATE
- MAIN GROUND CONDUCTOR CONCEALED WITHIN CONSTRUCTION
- MAIN GROUND CONDUCTOR EXPOSED ON EXPOSED ON BUILDING EXTERIOR SURFACE
- GROUND CONDUCTOR CAD WELDED TO GROUND CABLE OR EQUIPMENT
- GROUND ROD TRIPOD, SPACED 3 METERS APART.
- LEVEL TO LEVEL CABLE

LIGHTING

- LIGHTING FIXTURE – SEE FIXTURE SCHEDULE FOR MORE INFORMATION
- EMERGENCY LIGHTING FIXTURE – SEE FIXTURE SCHEDULE FOR MORE INFORMATION
- DOWNLIGHT
- LIGHTING FIXTURE ON NORMAL/EMERGENCY
- WALL MOUNTED LIGHT FIXTURE
- E — EXIT SIGN – DIRECTIONAL ARROWS AS INDICATED ON DRAWINGS
- REMOTE HEAD FOR BATTERY PACK
- $ — SINGLE POLE SWITCH – 20A RATED
- $3 — 3-WAY SWITCH – 20A RATED
- $4 — 4-WAY SWITCH – 20A RATED
- LC — LIGHTING CONTACTOR
- POLE MOUNTED SITE LIGHTING FIXTURE– NUMBER OF FIXTURES PER POLE AS INDICATED ON DRAWINGS
- EXTERIOR DIRECTIONAL LIGHTING FIXTURE
- a — SMALL CASE LETTERS REPRESENTS LAMP(S) / SWITCHES.

TELECOMMUNICATIONS

- TELEPHONE OUTLET(S) @ 45cm AFF. U.N.O. WITH 20mm RACEWAY TERMINATED TO TELEDATA TERMINAL BOARD.
- DATA OUTLET(S) @ 45cm AFF. U.N.O. WITH 20mm RACEWAY TERMINATED TO TELEDATA TERMINAL BOARD.

TELECOMMUNICATIONS (CONTINUED)

- COMBINATION TELEPHONE/DATA OUTLET(S) @ 45cm AFF. U.N.O. WITH 27mm RACEWAY TERMINATED TO TELEDATA TERMINAL BOARD.
- W — WALL MTD. TELEPHONE OUTLET WITH 20mm RACEWAY TO TELEDATA TERMINAL BOARD.
- (x)T — INDICATES NUMBER OF TELEPHONE OUTLET(S) AND ASSOCIATED CABLING
- (x)D — INDICATES NUMBER OF DATA OUTLET(S) AND ASSOCIATED CABLING
- (x)TF — INDICATES NUMBER OF TELEPHONE OUTLETS AND ASSOCIATED CABLING WITH 1 OUTLET AND CABLE DEDICATED FOR FAX

SINGLE LINE SYMBOLS

- SWITCH
- BREAKER
- FUSE
- TRANSFORMER
- GROUND
- CONTACT (NORMALLY OPEN)
- CONTACT (NORMALLY CLOSED)
- TRANSFER SWITCH
- CURRENT TRANSFORMER
- INDICATES NEW ELECTRICAL EQUIPMENT
- C — INDICATES NEW CONTROL WIRING AND CONDUIT
- EQUIPMENT OUTLINE

MISCELLANEOUS

- BRANCH CIRCUIT WIRING, SURFACE MOUNTED ON WALLS
- BRANCH CIRCUIT WIRING – 6mm²
- BRANCH CIRCUIT WIRING – UNDER FLOOR
- HOME RUN BACK TO PANEL
- CONDUIT TURNED DOWN
- CONDUIT TURNED UP
- LV — LOW VOLTAGE WIRING AND CONDUIT
- INDICATES CONTINUATION OF LINE

FIRE ALARM

- FACP — FIRE ALARM CONTROL PANEL WITH BATTERY BACKUP
- F — FIRE ALARM PULL STATION

FIRE ALARM (CONTINUED)

- F — FIRE ALARM STROBE – WALL MOUNTED
- F — FIRE ALARM AUDIBLE/STROBE – WALL MOUNTED
- F — FIRE ALARM HORN/STROBE – WALL MOUNTED
- S — SMOKE DETECTOR
- H — HEAT DETECTOR CEILING MOUNTED
- D — DUCT DETECTOR – PROVIDED BY EC, INSTALLED BY MC AND CONNECTED BY EC

DENOTATIONS & ABBREVIATIONS

AFF	ABOVE FINISHED FLOOR
C	CEILING MOUNTED
E	EMERGENCY
EC	ELECTRICAL CONTRACTOR
EPO	EMERGENCY POWER OFF
EXP	EXPLOSION PROOF
F	FIRE ALARM
FF	FLUSH FLOOR MOUNTED
FL	FLUORESCENT
FO	FIBER OPTIC
FSS	FUSED SAFETY SWITCH
GF	GROUND FAULT INTERRUPTER
GC	GENERAL CONTRACTOR
IG	ISOLATED GROUND
K	KEY
LV	LOW VOLTAGE
M	MOTOR
MC	MECHANICAL CONTRACTOR
NE	NORMAL/EMERGENCY
NFSS	NON-FUSED SAFETY SWITCH
PA	PAGING SYSTEM
PLC	PLUMBING CONTRACTOR
SL	SINGLE LINE
T	TELEPHONE

DENOTATIONS & ABBREVIATIONS (CONT.)

TP	TAMPER PROOF
UE	UNDERGROUND ELECTRIC
W	WALL MOUNTED
WP	WEATHERPROOF WITH GROUND FAULT INTERRUPTION
WT	WATER TIGHT

GENERAL PROJECT NOTES:

G1. UNLESS OTHERWISE NOTED, PROVIDE ALL EQUIPMENT SHOWN ON THE PLANS. THE ELECTRICAL CONTRACTOR SHALL COORDINATE ALL SYMBOLS SHOWN ON THE PLANS WITH THE SYMBOL LIST. IT SHALL BE THE RESPONSIBILITY OF THE CONTRACTOR TO VERIFY THE INTENT OF ANY SYMBOL THAT IS SHOWN ON THE PLANS AND NOT INDICATED ON THE SYMBOL LIST WITH THE ENGINEER PRIOR TO BID.

G2. THE CONTRACTOR SHALL VERIFY THE LOCATION OF ALL UNDERGROUND UTILITIES WITHIN THE CONSTRUCTION AREA THREE (3) WORKING DAYS NOTICE BEFORE COMMENCING DIGGING. NOTIFY THE LOCAL AUTHORITY HAVING JURISDICTION AND WAIT THE REQUIRED TIME BEFORE COMMENCING TO DIG.

G3. THE CONTRACTOR SHALL COORDINATE CONDUIT RUNS, LIGHTING FIXTURES AND OTHER EQUIPMENT LOCATIONS WITH THE OTHER TRADE CONTRACTORS TO AVOID CONFLICTS.

G4. WHERE VOLTAGES AND FREQUENCIES ON THE DRAWINGS AND IN THE SPECIFICATIONS DIFFER FROM THE LOCAL ONES, ALL WORK SHALL BE PERFORMED USING THE LOCAL VOLTAGES AND FREQUENCIES.

G5. THE MINIMUM WIRE SIZE ON THE PROJECT SHALL BE 4mm². THE MINIMUM CONDUIT SIZE SHALL BE 20mm. THE MINIMUM BREAKER SIZE SHALL BE 20 AMPS.

G6. THE CONTRACTOR SHALL PUT A MAXIMUM OF 6 DUPLEX RECEPTACLES ON A 20A SINGLE POLE CIRCUIT.

G7. WHERE THE 1010 SCOPE REVIEW, 1015 TECHNICAL REVIEW, DRAWINGS, AND SPECIFICATIONS DIFFER FROM AMERICAN CODES OR STANDARDS, THE 1010, 1015, DRAWINGS, AND SPECIFICATIONS SHALL RULE.

G8. ALL CONDUIT AND DEVICES SHALL BE SURFACE MOUNTED UNLESS OTHERWISE INDICATED.

G9. CONTRACTOR SHALL COORDINATE ALL WORK WITH ALL OTHER TRADES TO ENSURE ALL WORK IS COMPLETED IN A PROFESSIONAL, WORKMAN-LIKE MANNER.

APPROVED:

A/E DESIGNER OF RECORD

SEAL:

COMMONWEALTH OF PENNSYLVANIA
REGISTERED PROFESSIONAL
JOSEPH R. GAUS
1/29/10
ENGINEER
PE-074251

US ARMY CORPS OF ENGINEERS
AFGHANISTAN ENGINEER DISTRICT

Mark	Description	Date	Appr.

Mark	Description	Date	Appr.

Rev: 0
Date: 2/23/10
Designed by: KJR
Dwn by: BJB
Ckd by: JRG
Reviewed by: JRG
Submitted by: BAKER
Design file no.
Drawing code:
File name:
Plot date:
Plot scale:

U.S. ARMY CORPS OF ENGINEERS
AFGHANISTAN ENGINEER DISTRICT
APO AE 96338

Michael Baker Jr., Inc
A unit of Michael Baker Corporation
Airside Business Park
100 Airside Drive
Moon Township, PA 15108
www.mbakercorp.com

AFGHAN NATIONAL ARMY
REGIONAL MILITARY TRAINING CENTER
STANDARD DESIGN

SMALL ARMS STORAGE

ELECTRICAL SYMBOLS & ABBREVIATIONS

Sheet reference number:
E-001

GENERAL NOTES:

1. REFER TO DRAWING #E-001 FOR THE ELECTRICAL SYMBOLS LIST.
2. EXIT SIGNS SHALL BE WIRED AHEAD OF ANY LOCAL SWITCHING ON CIRCUITS. SEE WIRING DIAGRAM DETAIL 6, DRAWING #E-501.
3. REFER TO DRAWING #E-602 FOR THE LIGHTING FIXTURE SCHEDULE.
4. REFER TO DRAWING #E-601 FOR PANEL SCHEDULES.
5. LIGHT FIXTURES INDICATED AS EMERGENCY SHALL BE PROVIDED WITH A BATTERY BACKUP BALLAST. SEE WIRING DIAGRAM DETAIL 7, DRAWING #E-501.
6. ALL PANELS, DEVICES, EQUIPMENT, ETC. SHALL BE NONINCENDIVE OR HERMETICALLY SEALED OR SHALL BE PROVIDED WITH A NONINCENDIVE OR HERMETICALLY SEALED ENCLOSURE PER NEC ARTICLE 500.7. ALL WORK IN THIS BUILDING SHALL BE IN ACCORDANCE WITH NEC ARTICLE 502. NONINCENDIVE OR HERMETICALLY SEALED EQUIPMENT SHALL BE USED FOR ALL FIXTURES AND DEVICES. PROVIDE CONDUIT SEALS WHERE REQUIRED. ALL WIRING SHALL BE IN ACCORDANCE WITH NEC ARTICLE 502. FOR CLASS II LOCATIONS. INSTALLATION SHALL BE IN ACCORDANCE WITH DEPARTMENT OF DEFENSE DESIGN DOCUMENT 6055.9-STD.

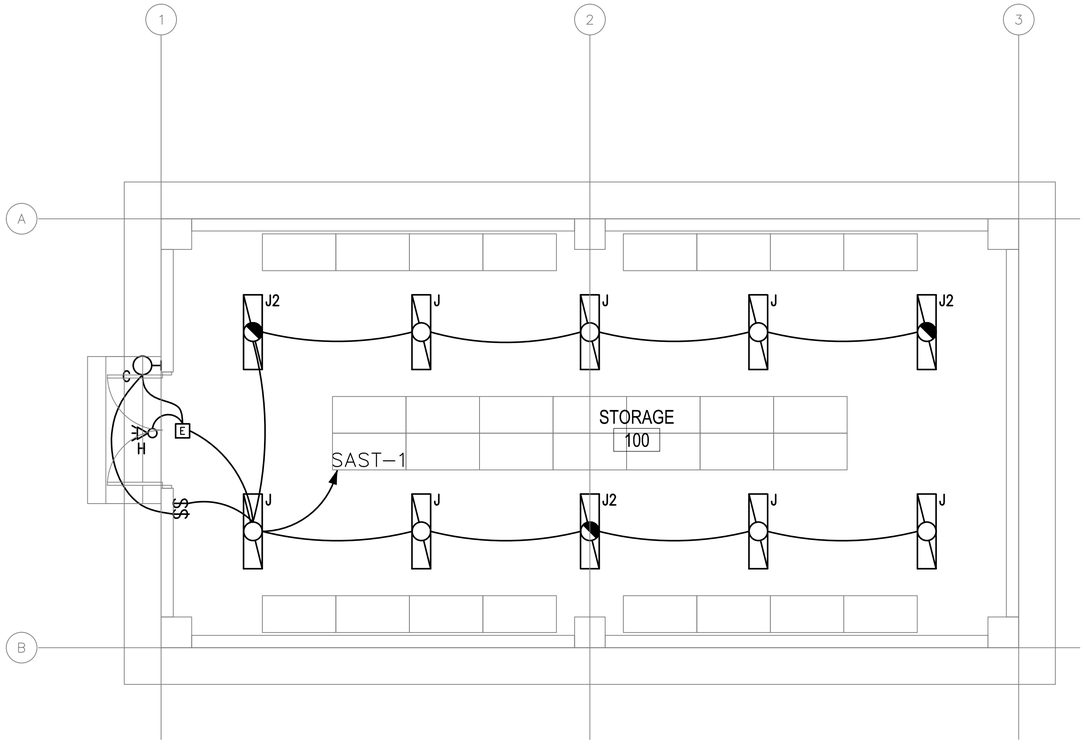

1
E-101

SMALL ARMS STORAGE
FLOOR PLAN - LIGHTING

SCALE: 1:50

0 1000 2000
SCALE: 1:50

APPROVED:

A/E DESIGNER OF RECORD

SEAL:

COMMONWEALTH OF PENNSYLVANIA
REGISTERED PROFESSIONAL
JOSEPH R. GAUS
ENGINEER
PE-074251
1/29/10

US ARMY CORPS OF ENGINEERS
AFGHANISTAN ENGINEER DISTRICT

Mark	Description	Date	Appr.	Mark	Description	Date	Appr.

Designed by: KJR
Dwn by: BJB
Ckd by: JRG
Reviewed by: JRG
Submitted by: BAKER
Date: 2/23/10
Rev: 0
Design file no.
Drawing code:
File name:
Plot date:
Plot scale:

U.S. ARMY CORPS OF ENGINEERS
AFGHANISTAN ENGINEER DISTRICT
APO AE 96338

Michael Baker Jr., Inc.
A unit of Michael Baker Corporation
Airside Business Park
100 Airside Drive
Moon Township, PA 15108
www.mbakercorp.com

AFGHAN NATIONAL ARMY
REGIONAL MILITARY TRAINING CENTER
STANDARD DESIGN

SMALL ARMS STORAGE
ELECTRICAL LIGHTING PLAN

Sheet reference number:
E-101

GENERAL NOTES:

1. REFER TO DRAWING #E-001 FOR THE ELECTRICAL SYMBOLS LIST. REFER TO
2. DRAWING #E-501 FOR THE POWER RISER.
3. REFER TO DRAWING #E-601 FOR PANEL SCHEDULES.
4. COORDINATE EXACT MOUNTING LOCATION OF DISCONNECTING MEANS FOR MECHANICAL AND PLUMBING EQUIPMENT IN THE FIELD.
5. FUSIBLE SAFETY SWITCHES THAT ARE NOT OTHERWISE IDENTIFIED SHALL BE 380V, 1P, 30A FUSED SAFETY SWITCHES WITH 20A FUSES.
6. ALL PANELS, DEVICES, EQUIPMENT, ETC. SHALL BE NONINCENDIVE OR HERMETICALLY SEALED OR SHALL BE PROVIDED WITH A NONINCENDIVE OR HERMETICALLY SEALED ENCLOSURE PER NEC ARTICLE 500.7. ALL WORK IN THIS BUILDING SHALL BE IN ACCORDANCE WITH NEC ARTICLE 502. NONINCENDIVE OR HERMETICALLY SEALED EQUIPMENT SHALL BE USED FOR ALL FIXTURES AND DEVICES. PROVIDE CONDUIT SEALS WHERE REQUIRED. ALL WIRING SHALL BE IN ACCORDANCE WITH NEC ARTICLE 502. FOR CLASS II LOCATIONS. INSTALLATION SHALL BE IN ACCORDANCE WITH DEPARTMENT OF DEFENSE DESIGN DOCUMENT 6055.9-STD.

NUMBERED NOTES:

1. PANEL SAST WITH NEMA 3R LOCKABLE, WEATHERPROOF HOUSING.
2. PROVIDE POWER CONNECTION TO ELECTRIC UNIT HEATER #2. SEE DRAWINGS #M-101 AND #E-602 FOR MORE INFORMATION.
3. PROVIDE POWER CONNECTION TO EXHAUST FANS. SEE DRAWINGS #M-101 AND #E-602 FOR MORE INFORMATION.

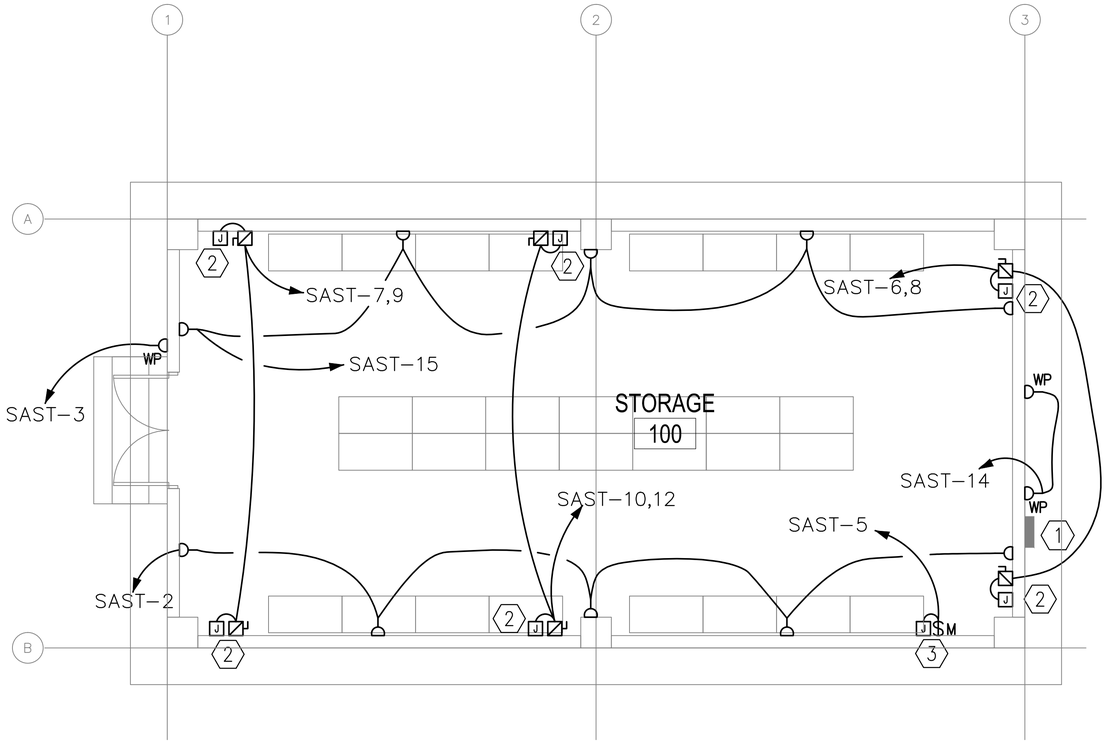

1 / E-102 SMALL ARMS STORAGE FLOOR PLAN - POWER AND SYSTEMS

SCALE: 1:50

0 1000 2000
SCALE: 1:50

APPROVED:

A/E DESIGNER OF RECORD

SEAL:

COMMONWEALTH OF PENNSYLVANIA
REGISTERED PROFESSIONAL ENGINEER
JOSEPH R. GAUS
PE-074251
1/29/10

US ARMY CORPS OF ENGINEERS
AFGHANISTAN ENGINEER DISTRICT

Mark	Description	Date	Appr.	Mark	Description	Date	Appr.

Designed by: KJR
Dwn by: BJB
Ckd by: JRG
Reviewed by: JRG
Submitted by: BAKER
Date: 2/23/10
Rev: 0
Design file no.
Drawing code:
File name:
Plot date:
Plot scale:

U.S. ARMY CORPS OF ENGINEERS
AFGHANISTAN ENGINEER DISTRICT
APO AE 96338

Michael Baker Jr., Inc.
A unit of Michael Baker Corporation
Airside Business Park
100 Airside Drive
Moon Township, PA 15108
www.mbakercorp.com

AFGHAN NATIONAL ARMY
REGIONAL MILITARY TRAINING CENTER
STANDARD DESIGN

SMALL ARMS STORAGE
ELECTRICAL POWER AND SYSTEMS PLAN

Sheet reference number:
E-102

GENERAL NOTES:

1. REFER TO DRAWING #E-001 FOR THE ELECTRICAL SYMBOLS LIST.

NUMBERED NOTES:

1. (1) 120.0mm² BARE, TINNED, COPPER COUNTERPOISE GROUND 700mm BELOW GRADE.
2. INSTALL DOWN CONDUCTOR IN 25mm SCHEDULE 80 PVC CONDUIT TO 20mm DIAMETER X 3 METERS SOLID COPPER TINNED GROUND ROD. (TYPICAL)
3. CADWELD TO BUILDING STRUCTURE AT 18 METERS ON CENTER AROUND THE ENTIRE PERIMETER OF THE BUILDING. (TYPICAL)
4. 120mm² LIGHTNING PROTECTION CABLE.
5. AIR TERMINAL. TERMINALS SHALL BE PLACED AT A MAXIMUM OF 6M ON CENTER PER NFPA 780 PARA. 4.8.2.1 AND WITHIN 0.6M OF RIDGE ENDS PER NFPA 780 PARA. 4.8 (TYPICAL)

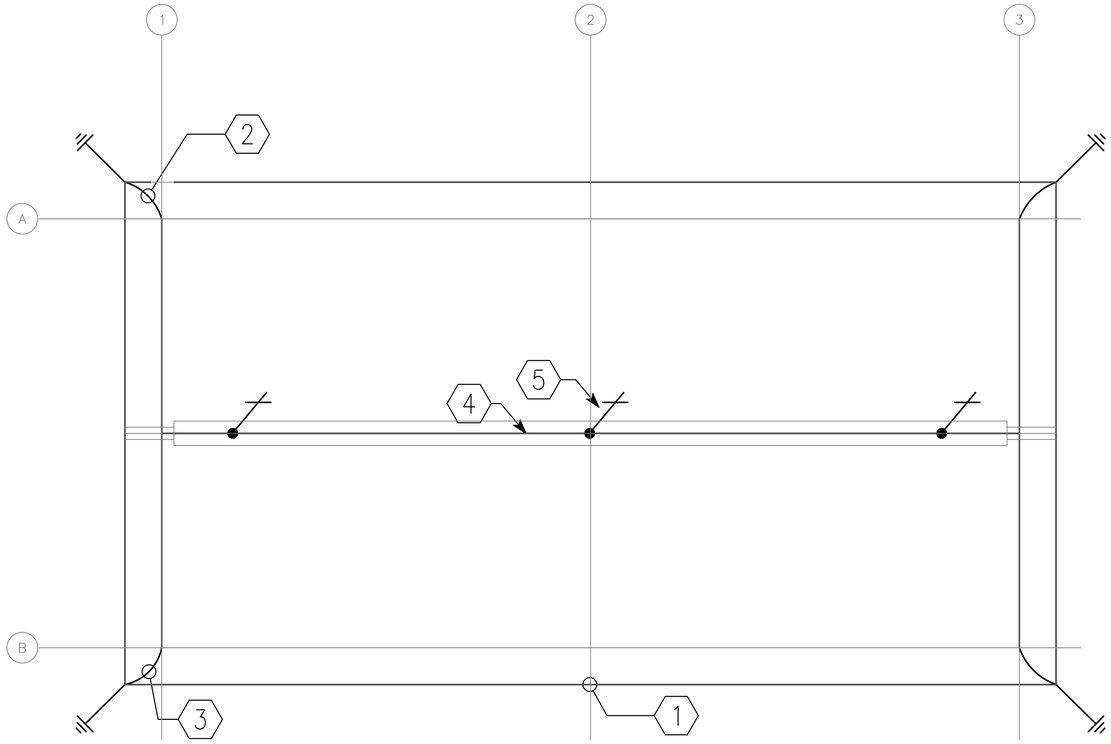

1 / E-103 SMALL ARMS STORAGE (SAST) FLOOR PLAN - LIGHTNING PROTECTION

SCALE: 1:50

0 1000 2000
SCALE: 1:50

APPROVED:

A/E DESIGNER OF RECORD

SEAL:

COMMONWEALTH OF PENNSYLVANIA
REGISTERED PROFESSIONAL
JOSEPH R. GAUS
1/29/10
ENGINEER
PE-074251

US ARMY CORPS OF ENGINEERS
AFGHANISTAN ENGINEER DISTRICT

Mark	Description	Date	Appr.

Mark	Description	Date	Appr.

U.S. ARMY CORPS OF ENGINEERS
AFGHANISTAN ENGINEER DISTRICT
APO AE 96338

Michael Baker Jr., Inc
A unit of Michael Baker Corporation
Airside Business Park
100 Airside Drive
Moon Township, PA 15108
www.mbakercorp.com

Designed by: KJR
Dwn by: BJB
Ckd by: JRG
Reviewed by: JRG
Submitted by: BAKER
Date: 2/23/10
Design file no.
Drawing code:
File name:
Plot date:
Plot scale:
Rev: 0

AFGHAN NATIONAL ARMY
REGIONAL MILITARY TRAINING CENTER
STANDARD DESIGN

SMALL ARMS STORAGE

ELECTRICAL LIGHTNING PROTECTION PLAN

Sheet reference number:
E-103

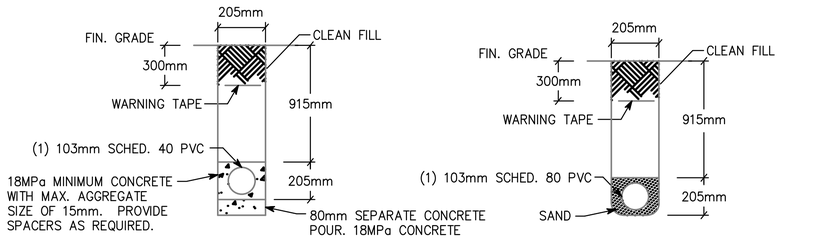

NOTE: PVC CONDUIT SHALL BE DIRECT BURIED SCHEDULE 80 FOR NO TRAFFIC AREAS AND CONCRETE-ENCASED SCHEDULE 40 FOR UNDER ROADWAYS OR TRAFFIC AREAS.

1 / E-501 TYPICAL DUCT BANK DETAILS FOR CONDUIT IN SAND OR CONCRETE

SCALE: N.T.S.

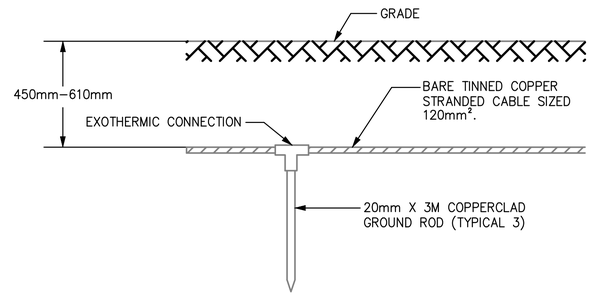

2 / E-501 GROUND TRIPOD SYSTEM DETAIL - ELEVATION

SCALE: N.T.S.

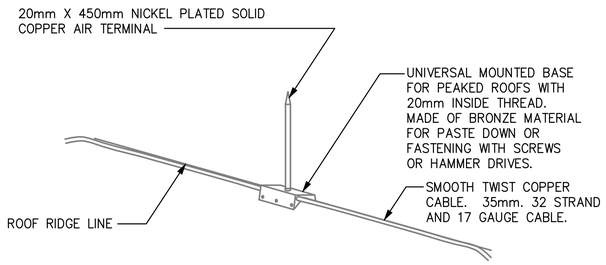

3 / E-501 LIGHTNING PROTECTION AIR TERMINAL DETAIL

SCALE: N.T.S.

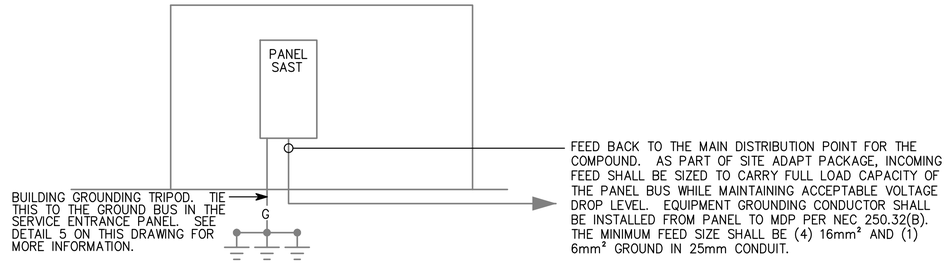

4 / E-501 SAST RISER DIAGRAM

SCALE: N.T.S.

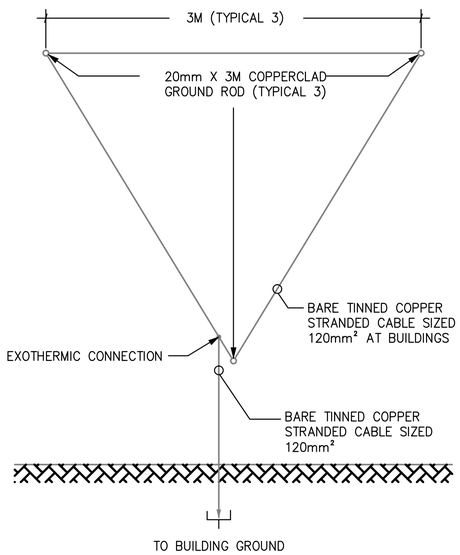

5 / E-501 GROUND TRIPOD SYSTEM DETAIL - PLAN

SCALE: N.T.S.

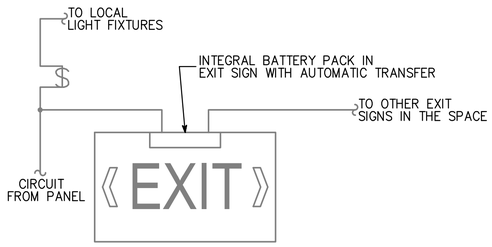

6 / E-501 EXIT SIGN WIRING DIAGRAM

SCALE: N.T.S.

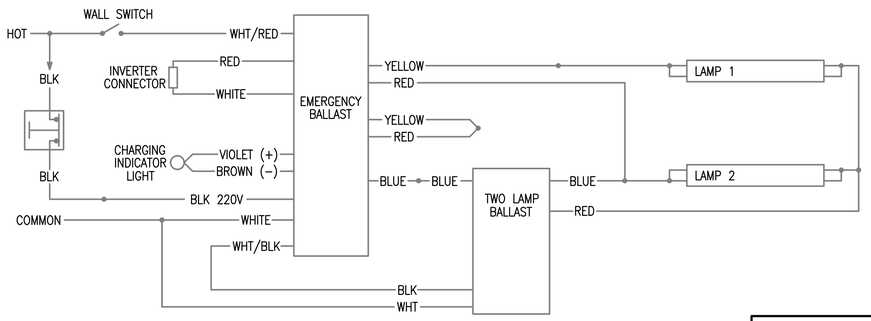

7 / E-501 EMERGENCY FIXTURE WIRING DIAGRAM

SCALE: N.T.S.

APPROVED:

A/E DESIGNER OF RECORD

SEAL:

COMMONWEALTH OF PENNSYLVANIA
REGISTERED PROFESSIONAL ENGINEER
JOSEPH R. GAUS
PE-074251

US ARMY CORPS OF ENGINEERS
AFGHANISTAN ENGINEER DISTRICT

Mark	Description	Date	Appr.	Mark	Description	Date	Appr.

Designed by: KJR
Dwn by: BJB
Ckd by: JRG
Reviewed by: JRG
Submitted by: BAKER
Date: 2/23/10
Rev: 0
Design file no.
Drawing code:
File name:
Plot date:
Plot scale:

U.S. ARMY CORPS OF ENGINEERS
AFGHANISTAN ENGINEER DISTRICT
APO AE 96338

Michael Baker Jr., Inc.
A unit of Michael Baker Corporation
Airside Business Park
100 Airside Drive
Moon Township, PA 15108
www.mbakercorp.com

AFGHAN NATIONAL ARMY
REGIONAL MILITARY TRAINING CENTER
STANDARD DESIGN

SMALL ARMS STORAGE

ELECTRICAL DETAILS

Sheet reference number:
E-501

(A) LARGER OF THE TWO SIZES GIVEN IN THE TABLES BELOW	
GROUNDING ELECTRODE CONDUCTOR (BASED ON AIC RATING)	
AIC RATING OF SERVICE EQUIPMENT	NECESSARY GROUNDING ELECTRODE CONDUCTOR SIZE
10K	(1) 35mm²
14K	(1) 50mm²
18K	(1) 70mm²
22K	(1) 70mm²
25K	(1) 70mm²
30K	(1) 95mm²
35K	(1) 120mm²
42K	(1) 150mm²
65K	(1) 185mm²
100K	(1) 300mm²
125K	(2) 185mm²
200K	(2) 300mm²
GROUNDING ELECTRODE CONDUCTOR (BASED ON NEC TABLE 250.66)	
SIZE OF LARGEST UNGROUNDED SERVICE CONDUCTOR OR EQUIVALENT AREA FOR PARALLEL CONDUCTORS	NECESSARY GROUNDING ELECTRODE CONDUCTOR SIZE
350 kcmil OR SMALLER	35mm²
OVER 350 kcmil TO 600 kcmil	70mm²
OVER 600 kcmil TO 1100 kcmil	70mm²
OVER 1100 kcmil	95mm²
NOTE: ALL SIZES ARE BASED ON COPPER CONDUCTORS.	

(B) EQUIPMENT GROUNDING CONDUCTOR	
RATING OR SETTING OF AUTOMATIC OVERCURRENT DEVICE IN CIRCUIT AHEAD OF EQUIPMENT, CONDUIT, ETC, NOT EXCEEDING (AMPERES)	NECESSARY EQUIPMENT GROUNDING CONDUCTOR SIZE
15	2.5mm²
20	4.0mm²
30	6.0mm²
40	6.0mm²
60	6.0mm²
100	10mm²
200	16mm²
300	25mm²
400	25mm²
500	35mm²
600	50mm²
800	70mm²
1000	70mm²
1200	95mm²
1600	120mm²
2000	150mm²
2500	185mm²
3000	240mm²
4000	300mm²
5000	400mm²
6000	400mm²
NOTE: ALL SIZES ARE BASED ON COPPER CONDUCTORS.	

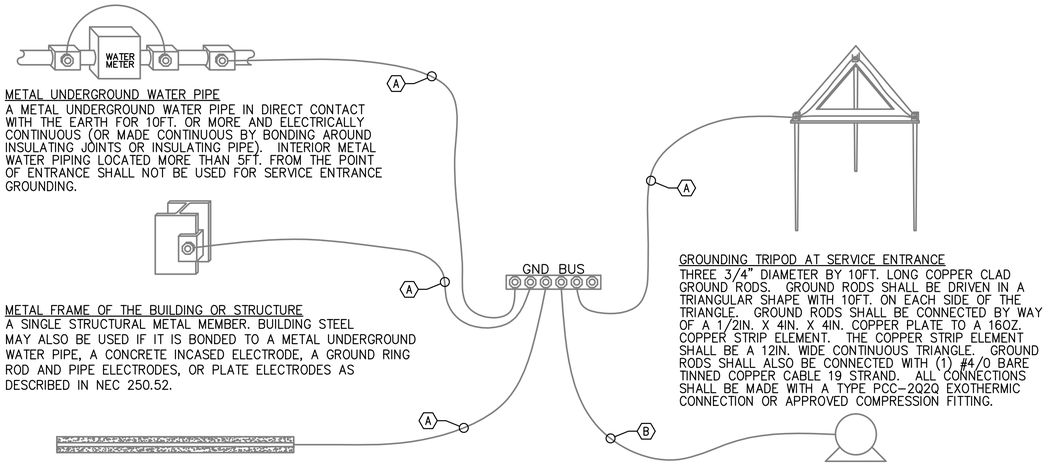

METAL UNDERGROUND WATER PIPE
A METAL UNDERGROUND WATER PIPE IN DIRECT CONTACT WITH THE EARTH FOR 10FT. OR MORE AND ELECTRICALLY CONTINUOUS (OR MADE CONTINUOUS BY BONDING AROUND INSULATING JOINTS OR INSULATING PIPE). INTERIOR METAL WATER PIPING LOCATED MORE THAN 5FT. FROM THE POINT OF ENTRANCE SHALL NOT BE USED FOR SERVICE ENTRANCE GROUNDING.

METAL FRAME OF THE BUILDING OR STRUCTURE
A SINGLE STRUCTURAL METAL MEMBER. BUILDING STEEL MAY ALSO BE USED IF IT IS BONDED TO A METAL UNDERGROUND WATER PIPE, A CONCRETE INCASED ELECTRODE, A GROUND RING ROD AND PIPE ELECTRODES, OR PLATE ELECTRODES AS DESCRIBED IN NEC 250.52.

CONCRETE ENCASED ELECTRODE
AN ELECTRODE ENCASED BY AT LEAST 2IN. OF CONCRETE , LOCATED WITHIN AND NEAR THE BOTTOM OF A CONCRETE FOUNDATION OR FOOTING THAT IS IN DIRECT CONTACT WITH THE EARTH, CONSISTING OF AT LEAST 20FT. OF ONE OR MORE BARE OR ZINC GALVANIZED OR OTHER ELECTRICALLY CONDUCTIVE COATED STEEL REINFORCING BARS OR RODS OF NOT LESS THAN 1/2" DIAMETER OR BARE COPPER CONDUCTOR NOT SMALLER THAN 4AWG.

GROUNDING TRIPOD AT SERVICE ENTRANCE
THREE 3/4" DIAMETER BY 10FT. LONG COPPER CLAD GROUND RODS. GROUND RODS SHALL BE DRIVEN IN A TRIANGULAR SHAPE WITH 10FT. ON EACH SIDE OF THE TRIANGLE. GROUND RODS SHALL BE CONNECTED BY WAY OF A 1/2IN. X 4IN. X 4IN. COPPER PLATE TO A 16OZ. COPPER STRIP ELEMENT. THE COPPER STRIP ELEMENT SHALL BE A 12IN. WIDE CONTINUOUS TRIANGLE. GROUND RODS SHALL ALSO BE CONNECTED WITH (1) #4/0 BARE TINNED COPPER CABLE 19 STRAND. ALL CONNECTIONS SHALL BE MADE WITH A TYPE PCC-2Q2Q EXOTHERMIC CONNECTION OR APPROVED COMPRESSION FITTING.

LOAD OR DOWNSTREAM PANEL
ALL LOADS IN THE BUILDING SHALL HAVE AN EQUIPMENT GROUNDING CONDUCTOR PULLED TO THEM.

1
E-502

SERVICE ENTRANCE GROUNDING DETAIL

SCALE: N.T.S.

APPROVED:

A/E DESIGNER OF RECORD

SEAL:

COMMONWEALTH OF PENNSYLVANIA
REGISTERED PROFESSIONAL
JOSEPH R. GAUS
ENGINEER
PE-074251
1/29/10

US ARMY CORPS OF ENGINEERS
AFGHANISTAN ENGINEER DISTRICT

Mark	Description	Date	Appr.	Mark	Description	Date	Appr.

Rev: 0
Date: 2/23/10
Design file no.
Drawing code:
File name:
Plot date:
Plot scale:

Designed by: KJR
Dwn by: BJB
Ckd by: JRG
Reviewed by: JRG
Submitted by: BAKER

U.S. ARMY CORPS OF ENGINEERS
AFGHANISTAN ENGINEER DISTRICT
APO AE 96338

Michael Baker Jr., Inc.
A unit of Michael Baker Corporation
Airside Business Park
100 Airside Drive
Moon Township, PA 15108
www.mbakercorp.com

AFGHAN NATIONAL ARMY
REGIONAL MILITARY TRAINING CENTER
STANDARD DESIGN

SMALL ARMS STORAGE

ELECTRICAL DETAILS

Sheet reference number:
E-502

FIXTURE MARK 'C'

FIXTURE MARK 'H'

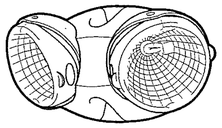

FIXTURE MARK 'E'

FIXTURE MARK 'J'

LIGHT FIXTURE SCHEDULE

FIXTURE MARK	STYLE NUMBER AND TYPE	NUMBER AND TYPE OF LAMPS	VOLTAGE	MOUNTING	NOTES
C	INCANDESCENT ONE PIECE W/ APPROVED LENS STABILIZED HIGH IMPACT POLY CARBONATE.	(1) A19 – 100W INCANDESCENT	220V – 1ø 50HZ	WALL MOUNTED ABOVE EXTERIOR DOORS	
H	REMOTE HEAD EXTERIOR LIGHT HEAD POWERED FROM EXIT SIGN BATTERY– 12V DOUBLE HEAD CORROSION RESISTANT WITH UL34 WEATHERPROOF CONSTRUCTION	(2) 12W/12V HALOGEN LAMP	12V – 1ø 50HZ	EXTERIOR WALL MOUNTED AT TOP OF DOOR HEIGHT	
J	EXPLOSION–PROOF (2) LAMP FIXTURE PROVIDED WITH LAMPS. COPPER FREE, ALUMINUM HOUSING, TEMPERED BOROSILICATE GLASS, AND BIAX LAMPS WITH WIRE GUARD	(2) 40W 3500K BIAX FLUORESCENT LAMPS	220V – 1ø 50HZ	SURFACE MOUNTED	FURNISHED WITH LAMPS AND WIRE GUARD
J2	SAME AS FIXTURE 'A' WITH EMERGENCY BALLAST	(2) 40W 3500K BIAX FLUORESCENT LAMPS	220V – 1ø 50HZ	SURFACE MOUNTED	FURNISHED WITH LAMPS, WIRE GUARD, EMERGENCY BALLAST WITH SELF TEST SWITCH
E	UNIVERSAL MOUNT NONINCENDIVE GRADE THERMOPLASTIC HOUSING EXIT SIGN WITH LED LAMPS, RED LETTERS 6" IN HEIGHT WITH ARROWS AS INDICATED, WITH 12V CADMIUM BATTERY WITH REMOTE HEAD CAPABILITY	LED LAMPS	220V – 1ø 50HZ	UNIVERSAL MOUNTING	EXIT SIGN SHALL BE NONINCENDIVE TYPE EXIT SIGN.

APPROVED:

A/E DESIGNER OF RECORD

SEAL:

COMMONWEALTH OF PENNSYLVANIA
REGISTERED PROFESSIONAL
JOSEPH R. GAUS
ENGINEER
PE-074251
1/29/10

US ARMY CORPS OF ENGINEERS
AFGHANISTAN ENGINEER DISTRICT

Mark	Description	Date	Appr.

Mark	Description	Date	Appr.

Designed by: KJR
Dwn by: BJB
Ckd by: JRG
Reviewed by: JRG
Submitted by: BAKER
Date: 2/23/10
Rev: 0
Design file no.
Drawing code:
File name:
Plot date:
Plot scale:

U.S. ARMY CORPS OF ENGINEERS
AFGHANISTAN ENGINEER DISTRICT
APO AE 96338

Michael Baker Jr., Inc.
A unit of Michael Baker Corporation
Airside Business Park
100 Airside Drive
Moon Township, PA 15108
www.mbakercorp.com

AFGHAN NATIONAL ARMY
REGIONAL MILITARY TRAINING CENTER
STANDARD DESIGN

SMALL ARMS STORAGE

ELECTRICAL LIGHT FIXTURE SCHEDULE

Sheet reference number:
E–601

PANELBOARD SAST SURFACE MOUNTED

AMP. MAIN LUGS (OR) 50 AMP. MAIN BREAKER W/ 50 AMP. TRIP

CIRCUIT BREAKER TYPE 380/220 VOLTS 3 PHASE 4 WIRE 50 HZ 100 AMP. BUS

CKT. NO.	TRIP AMPS	NO. POLES	WIRE MM 2	GND MM 2	CONDUIT MM	LOAD SERVED	LOAD-KVA A0	LOAD-KVA B0	LOAD-KVA C0	LOAD-KVA A0	LOAD-KVA B0	LOAD-KVA C0	LOAD SERVED	CONDUIT MM	GND MM 2	WIRE MM 2	NO. POLES	TRIP AMPS	CKT. NO.
1	20	1	4.0	4.0	20	LIGHTING – RM 100	0.6			1.0			RECEPTACLES – RM 100	20	4.0	4.0	1	20	2
3	20	1	4.0	4.0	20	RECEPTACLES – EXTERIOR		0.2					SPARE				1	20	4
5	20	1	4.0	4.0	20	EXHUAST FAN #1 – RM 100			0.5			2.6	ELECTRIC HEAT #2 – RM 100	20	4.0	4.0	2	20	6
7	20	2	4.0	4.0	20	ELECTRIC HEAT #2 – RM 100	2.6			2.6									8
9								2.6			2.6		ELECTRIC HEAT #2 – RM 100	20	4.0	4.0	2	20	10
11	20	2				SPARE						2.6							12
13										0.4			RECEPTACLES – EXTERIOR	20	4.0	4.0	1	20	14
15	20	1	4.0	4.0	20	RECEPTACLES – EXTERIOR		1.0					SPARE				1	20	16
17	20	1				SPARE							SPARE				1	20	18
							3.2	3.8	0.5	4.0	2.6	5.2							

TOTAL CONN. LOAD PER PHASE (KVA): A0 7.2 B0 6.4 C0 5.7

TOTAL CONN. LOAD 19.3 KVA. 70 % DEMAND = ESTIMATED DEMAND LOAD 13.51

* MAIN BREAKER SHALL BE 3P EARTH GROUND TYPE

APPROVED:

A/E DESIGNER OF RECORD

SEAL:

COMMONWEALTH OF PENNSYLVANIA
REGISTERED PROFESSIONAL
JOSEPH R. GAUS
ENGINEER
PE-074251
1/29/10

US ARMY CORPS OF ENGINEERS
AFGHANISTAN ENGINEER DISTRICT

Mark	Description	Date	Appr.

Mark	Description	Date	Appr.

Designed by: KJR
Dwn by: BJB
Ckd by: JRG
Reviewed by: JRG
Submitted by: BAKER
Date: 2/23/10
Rev: 0
Design file no.
Drawing code:
File name:
Plot date:
Plot scale:

U.S. ARMY CORPS OF ENGINEERS
AFGHANISTAN ENGINEER DISTRICT
APO AE 96338

Michael Baker Jr., Inc.
A unit of Michael Baker Corporation
Airside Business Park
100 Airside Drive
Moon Township, PA 15108
www.mbakercorp.com

AFGHAN NATIONAL ARMY
REGIONAL MILITARY TRAINING CENTER
STANDARD DESIGN

SMALL ARMS STORAGE

ELECTRICAL PANEL SCHDULES

Sheet reference number:
E-602

AFGHAN NATIONAL ARMY

STANDARD BUILDING DESIGN

LATRINE BUILDING
SMALL

100% FINAL DESIGN SUBMITTAL

SHEET INDEX

G-001 COVER SHEET

STRUCTURAL

S-001 GENERAL NOTES & DESIGN CRITERIA
S-101 FOUNDATION/SLAB & ROOF FRAMING PLANS
S-401 BUILDING SECTIONS
S-501 FOUNDATION SECTIONS
S-502 FRAMING SECTIONS
S-503 BEAM AND COLUMN DETAILS
S-504 BEAM AND COLUMN DETAILS
S-601 SCHEDULES
S-701 TYPICAL DETAILS
S-702 TYPICAL DETAILS

ARCHITECTURAL

A-001 LIFE SAFETY PLAN
A-101 FLOOR PLAN
A-102 ROOF PLAN
A-201 ELEVATIONS
A-301 BUILDING SECTIONS
A-401 WALL SECTIONS
A-501 EXTERIOR DETAILS
A-502 HEAD, JAMB, & SILL DETAILS
A-503 STOOP DETAILS
A-504 TOILET, LAVATORY & ABLUTION DETAILS
A-601 WINDOW & DOOR SCHEDULES

MECHANICAL

P-101 FLOOR PLAN-PLUMBING
P-501 PLUMBING DETAILS
P-502 PLUMBING DETAILS
P-503 PLUMBING DETAILS
P-901 PLUMBING ISOMETRICS
P-902 PLUMBING ISOMETRICS

M-101 HVAC FLOOR PLAN, SCHEDULES, & DETAILS

ELECTRICAL

E-001 ELECTRICAL SYMBOLS & ABBREVIATIONS
E-101 ELECTRICAL LIGHTING PLAN
E-102 ELECTRICAL POWER & SYSTEMS PLAN
E-501 ELECTRICAL DETAILS
E-502 ELECTRICAL DETAILS
E-601 ELECTRICAL LIGHT FIXTURE SCHEDULE
E-602 ELECTRICAL PANEL SCHEDULES

US ARMY CORPS OF ENGINEERS
AFGHANISTAN ENGINEER DISTRICT

Mark	Description	Date	Appr.	Mark	Description	Date	Appr.

Designed by: KMP/MMY
Dwn by: RCG
Ckd by: CWW
Reviewed by: LHM
Submitted by: BAKER
Date: 2/23/10
Rev: 0
Design file no.
Drawing code:
File name: ANALATSG-001CS
Plot date: 2/23/2010
Plot scale: X:X

U.S. ARMY ENGINEER DISTRICT, AFGHANISTAN
CORPS OF ENGINEERS
APO AE 96338

Michael Baker Jr., Inc
A unit of Michael Baker Corporation
Airside Business Park
100 Airside Drive
Moon Township PA 15108
www.mbakercorp.com

AFGHAN NATIONAL ARMY
REGIONAL MILITARY TRAINING CENTER
STANDARD DESIGN

LATRINE BUILDING
SMALL

COVER SHEET

Sheet reference number:
G-001

STRUCTURAL ABBREVIATIONS:

ACI	AMERICAN CONCRETE INSTITUTE
ADD'L	ADDITIONAL
AISC	AMERICAN INSTITUTE OF STEEL CONSTRUCTION
AISI	AMERICAN IRON AND STEEL INSTITUTE
ASTM	AMERICAN SOCIETY FOR TESTING AND MATERIALS
ARCH	ARCHITECTURAL
B	BOTTOM
BLDG	BUILDING
BOTT	BOTTOM
℄	CENTER LINE
CFMRF	COLD FORM METAL ROOF FRAME
CFMF	COLD FORM METAL FRAME
CFS	COLD FORMED STEEL
CIP	CAST-IN-PLACE
CIPL	CAST-IN-PLACE LINTEL
CJ	CONTROL JOINT
CLR	CLEAR
CMU	CONCRETE MASONRY UNIT
COEFF	COEFFICIENT
COL	COLUMN
CONC	CONCRETE
CONT	CONTINUOUS
COORD	COORDINATE
CSJ	CONSTRUCTION JOINT
CRSI	CONCRETE REINFORCING STEEL INSTITUTE
DIA	DIAMETER
DIAG	DIAGONAL
DIM	DIMENSION
DWG	DRAWING
DWL	DOWEL
EA	EACH
EF	EACH FACE
ELEC	ELECTRICAL
ELEV	ELEVATION
EMBED	EMBEDMENT
EQUIV	EQUIVALENT
ETC	ET CETERA
EW	EACH WAY
EXP	EXPANSION
EXT	EXTERIOR
FTG	FOOTING
GA	GAUGE
GB	GRADE BEAM
HORIZ	HORIZONTAL
h	HOUR
HRS	HOURS
IBC	INTERNATIONAL BUILDING CODE
INFO	INFORMATION
INT	INTERIOR
kg	KILOGRAM
km	KILOMETER
kN	KILONEWTON
kPa	KILOPASCAL
L#	ANGLE (# INDICATES SIZE)
LONG	LONGITUDINAL
LLV	LONG LEG VERTICAL
m	METER
MAX	MAXIMUM
MECH	MECHANICAL
MFG	MANUFACTURER
MID	MIDDLE
MIN	MINIMUM
MISC	MISCELLANEOUS
mm	MILLIMETER
MPa	MEGAPASCAL
MTL	METAL
MWFRS	MAIN WIND FORCE RESISTING SYSTEM
N	NEWTON
N	NORTH
N/A	NOT APPLICABLE
#	NUMBER SYMBOL FOR REBAR SIZE
NTS	NOT TO SCALE
OC	ON CENTER
OD	OUTSIDE DIAMETER
OPNG	OPENING
ℙ or PL	PLATE
PRE-ENG	PRE-ENGINEERED
REINF	REINFORCED
REQ'D	REQUIRED
RB	ROOF BEAM
SIM	SIMILAR
SPECS	SPECIFICATIONS
STD	STANDARD
STRUCT	STRUCTURAL
SW	SHEAR WALL
T	TOP
T/	TOP OF
T/ELEV	TOP ELEVATION
T/SLAB	TOP OF SLAB
T&B	TOP AND BOTTOM
THK	THICK
TYP	TYPICAL
UFC	UNIFIED FACILITIES CRITERIA
UON	UNLESS OTHERWISE NOTED
VERT	VERTICAL
W	WIDTH
W/	WITH

1.0 GENERAL NOTES:

1.1 THIS PROJECT HAS BEEN DESIGNED FOR THE WEIGHTS AND MATERIALS INDICATED ON THE SHEETS AND FOR THE LIVE LOADS INDICATED IN THE DESIGN DATA. IT IS THE CONTRACTOR'S RESPONSIBILITY TO DETERMINE ALLOWABLE CONSTRUCTION LOADS AND TO PROVIDE PROPER DESIGN AND CONSTRUCTION OF FALSEWORK, FORMWORK, STAGING, BRACING, SHEETING AND SHORING, ETC.

1.1 COORDINATE THESE SHEETS WITH THE ARCHITECTURAL, MECHANICAL, ELECTRICAL, PLUMBING, AND CIVIL SHEETS. ALL DIMENSIONS SHOWN ON THE SHEETS ARE MILLIMETERS UNLESS NOTED OTHERWISE.

1.2 THE CONTRACTOR SHALL VERIFY AND COORDINATE ALL FLOOR AND ROOF OPENING SIZES AND LOCATIONS, EQUIPMENT PAD SIZES AND LOCATIONS, ANCHOR BOLT LAYOUTS, ETC WITH EQUIPMENT SELECTED. THE CONTRACTOR SHALL MAKE ANY REQUIRED MODIFICATIONS AT NO ADDITIONAL COST.

1.3 THE CONTRACTOR SHALL REFER TO THE ARCHITECTURAL, MECHANICAL, ELECTRICAL AND PLUMBING SHEETS FOR SLEEVES, CURBS, INSERTS OR OPENINGS, ETC. NOT HEREIN INDICATED.

1.4 WORK NOT INCLUDED ON THE SHEETS BUT IMPLIED TO BE SIMILAR TO THAT SHOWN AT CORRESPONDING PLACES ELSEWHERE ON THE SHEETS SHALL BE REPEATED.

1.5 IN CASE OF CONFLICT BETWEEN THE NOTES, DETAILS AND SPECIFICATIONS THE MOST RIGID REQUIREMENTS SHALL GOVERN.

1.6 SEE ARCHITECTURAL SHEETS FOR LOCATIONS OF MASONRY AND NON-LOAD BEARING PARTITIONS. PROVIDE COMPRESSIBLE FIRESAFING AT TOP OF WALL AS REQUIRED BY ARCHITECTURAL SHEETS.

1.7 COORDINATE FINISHED FLOOR DATUM ELEVATION 0.0m WITH THE CIVIL SHEETS.

2.0 FOUNDATION NOTES

2.1 THE GEOTECHNICAL ANALYSIS FOR THIS PROJECT IS THE RESPONSIBILITY OF THE CONTRACTOR AWARDED THE WORK. AN ASSUMED ALLOWABLE SOIL BEARING VALUE OF 72 kPa HAS BEEN USED IN THE STRUCTURAL ANALYSIS OF THE BUILDING HEREIN AND SHALL BE CONFIRMED AND VERIFIED AS PART OF THE GEOTECHNICAL INVESTIGATION. VALUES WHICH DO NOT MEET THE REQUIREMENTS INDICATED ON THE BASIS OF DESIGN SHEET SHALL BE IMMEDIATELY BROUGHT TO THE ATTENTION OF THE CONTRACTING OFFICER FOR CONSIDERATION AND DETERMINATION ON THE NEXT APPROPRIATE COURSE OF ACTION.

2.2 SEE THE SPECIFICATION FOR ADDITIONAL REQUIREMENTS TO THOSE OUTLINED IN THE GEOTECHNICAL INVESTIGATION FOR EXCAVATION AND PREPARATION OF THE FOUNDATION AND THE SLAB ON GRADE SUBGRADE INCLUDING COMPACTION PROCEDURES.

2.3 EXCAVATIONS FOR FOOTINGS SHALL HAVE THE SIDES AND BOTTOMS TEMPORARILY LINED WITH 0.25mm POLYETHYLENE IF PLACEMENT OF CONCRETE DOES NOT OCCUR WITHIN 24 HRS OF THE EXCAVATION OF THE FOOTING.

2.4 FOUNDATION CONDITIONS NOTED DURING CONSTRUCTION WHICH DIFFER FROM THOSE DESCRIBED IN THE GEOTECHNICAL REPORT SHALL BE REPORTED TO THE GENERAL CONTRACTOR BEFORE FURTHER CONSTRUCTION IS ATTEMPTED. SEE PROJECT SPECIFICATIONS.

2.5 NO FOOTINGS OR SLABS SHALL BE POURED INTO OR AGAINST SUBGRADE CONTAINING FREE WATER, FROST, ICE OR LOOSE MATERIAL. FROST DEPTH ASSUMED TO BE 800mm.

2.6 ALL SLAB-ON-GRADE, TRENCH BOTTOMS AND OTHER ON-GRADE INTERIOR HORIZONTAL SURFACES SHALL BE PLACED OVER A 0.25mm POLYETHYLENE VAPOR RETARDER OVER A 100mm #57 STONE WATER CAPILLARY BARRIER PLACED ON SUBGRADE PROPERLY PREPARED IN ACCORDANCE WITH THE CONTRACT SPECIFICATIONS. (UON)

2.7 PRIOR TO START OF FOUNDATION OR SLAB-ON-GRADE CONSTRUCTION, EXISTING SUBGRADES SHALL BE COMPACTED TO MINIMUM OF 95% MAXIMUM DRY DENSITY OBTAINED THRU ASTM D 1557 MODIFIED PROCTOR TESTING.

2.8 SEE PLUMBING, ELECTRICAL & CIVIL SHEETS FOR REQUIRED UNDERSLAB UTILITIES.

2.9 SEE ARCHITECTURAL SHEETS FOR ALL WATERPROOFING DETAILS AND MATERIALS.

2.10 IF UNDERMINING OF FOOTINGS OCCURS, FILL VOIDS WITH 18 MPa CONCRETE. DO NOT ATTEMPT TO REPLACE AND RE-COMPACT SOIL.

3.0 CONCRETE

3.1 CONCRETE SHALL HAVE THE UNIT WEIGHT OF 2400 kg/m^3 AND A MINIMUM COMPRESSIVE STRENGTH (f'c) OF 28 MPa AT 28 DAYS. ALL CONCRETE SHALL HAVE A WATER-CEMENT RATIO OF 0.45. SEE SPECIFICATIONS FOR ADDITIONAL INFORMATION. ENTRAIN AIR TO PRODUCE TOTAL AIR CONTENT ACCORDING TO THE SPECIFICATIONS FOR CONCRETE EXPOSED TO FREEZING TEMPERATURES (EXTERIOR FOOTINGS, SLAB TURNDOWNS, EXTERIOR SLABS AND SLABS-ON-GRADE, EXTERIOR RETAINING WALLS, AND EXTERIOR GRADE BEAMS.)

3.2 NO CALCIUM CHLORIDE SHALL BE USED IN ANY CONCRETE.

3.3 MIXING, TRANSPORTING AND PLACING OF CONCRETE SHALL CONFORM TO ACI 301M-05.

3.4 ALL CONCRETE WORK SHALL CONFORM TO THE REQUIREMENTS OF THE AMERICAN CONCRETE INSTITUTE (ACI) 318M MANUAL (metric), "BUILDING CODE REQUIREMENTS FOR REINFORCED CONCRETE", AND REQUIREMENTS OUTLINED IN THE CONTRACT SPECIFICATIONS. WHEN THERE IS A CONFLICT BETWEEN ACI AND THE SPECIFICATIONS, THE MORE STRINGENT SHALL GOVERN.

3.5 CHAMFER ALL EXPOSED EXTERNAL CORNERS OF CONCRETE WITH 20mm x45 DEGREE CHAMFER UON.

3.6 CONCRETE REINFORCEMENT BARS SHALL CONFORM TO ASTM A615M-96a, GRADE 420 MPa, REINFORCING BARS SHALL NOT BE TACK WELDED, WELDED, HEATED OR CUT, UNLESS INDICATED ON THE CONTRACT DOCUMENTS. ALL LAP SPLICES SHALL BE CLASS "B" UON.

3.7 HORIZONTAL FOOTING AND HORIZONTAL WALL REINFORCEMENT SHALL BE CONTINUOUS AND SHALL HAVE 90 DEGREE BENDS AND EXTENSIONS, OR CORNER BARS OF EQUIVALENT SIZE LAPPED WITH A CLASS B TENSION SPLICE AT CORNERS AND INTERSECTIONS. TOP BAR CRITERIA SHALL APPLY IF 300mm OR MORE OF FRESH CONCRETE IS PLACED BELOW BAR.

3.8 SLABS-ON-GRADE SHALL HAVE CONSTRUCTION JOINTS OR CRACK CONTROL JOINTS AS SHOWN ON THE DRAWINGS. CONSTRUCTION JOINTS CAN BE USED AT CONTROL JOINT LOCATIONS AT CONTRACTORS OPTION. SEE SLAB PLANS & JOINT DETAILS FOR ADDITIONAL INFORMATION. FOR AREAS NOT SHOWN ON DWGS, THE MAXIMUM SPACING OF CONSTRUCTION/ CRACK CONTROL JOINTS SHALL BE 4800mm

3.9 ALL CONCRETE REINFORCEMENT SHALL BE DETAILED, FABRICATED, LABELED, SUPPORTED, AND SPACED IN FORMS AND SECURED IN PLACE IN ACCORDANCE WITH THE PROCEDURES AND REQUIREMENTS OUTLINED IN THE LATEST EDITION OF THE "BUILDING CODE REQUIREMENTS FOR REINFORCED CONCRETE", ACI 318M, AND THE "MANUAL OF STANDARD PRACTICE FOR DETAILING REINFORCED CONCRETE STRUCTURES", ACI 315M, LATEST EDITION. BASED ON IN COUNTRY REINFORCEMENT AVAILABILITY, IT IS THE CONTRACTOR'S OPTION TO ROUND DESIGNATED ODD NUMBERED REINFORCEMENT SIZES UP (1) ONE BAR SIZE.

3.10 ALL DOWELS SHALL MATCH SIZE AND NUMBER OF MAIN REINFORCING, UNLESS NOTED OTHERWISE ON THE SHEETS.

3.11 ADDITIONAL BARS SHALL BE PROVIDED AROUND ALL FLOOR AND WALL OPENINGS AS SHOWN ON THE SHEETS.

3.12 SEE ARCHITECTURAL SHEETS FOR TYPE AND LOCATION OF ALL FLOOR FINISHES.

3.13 THE CONTRACTOR SHALL COORDINATE ADDITIONAL WALL/SLAB OPENINGS NOT SHOWN ON STRUCTURAL SHEETS. SEE MECHANICAL, ELECTRICAL, PLUMBING AND CIVIL SHEETS.

3.14 UNLESS NOTED OTHERWISE, ALL CURBS SHALL BE REINFORCED WITH AT LEAST (1)-#13 CONTINUOUS AND #13 AT 300mm O.C. DOWELS TO STRUCTURE BELOW.

3.15 THE CONTRACTOR SHALL VERIFY ALL OPENINGS, PAD SIZES, AND ANCHOR BOLTS WITH EQUIPMENT SELECTED.

3.16 FOR ALL WALLS & PIERS, PROVIDE DOWELS INTO FOOTING AT EACH VERT REINF BAR, UON DOWEL SIZE SHALL BE SAME AS VERT REINF.

3.17 PROVIDE CONCRETE POUR STOPS OR FORMED AS REQUIRED FOR INSTALLATION OF ALL CONCRETE WORK.

3.18 PROVIDE ADDITIONAL (2)-#13 x 600mm REINFORCING BARS IN SLAB-ON GRADE AT ALL RE-ENTRANT CORNERS. PLACE BARS AT MID-DEPTH OF SLAB WITH A CLEARANCE OF 50mm FROM CORNER UON.

3.19 COLD-WEATHER PLACEMENT: COMPLY WITH ACI 306.1 AND AS FOLLOWS. PROTECT CONCRETE WORK FROM PHYSICAL DAMAGE OR REDUCED STRENGTH THAT COULD BE CAUSED BY FROST, FREEZING ACTIONS, OR LOW TEMPERATURES. SUBMIT A COLD WEATHER CONCRETING PLAN FOR APPROVAL.

3.20 PROVIDE BONDING COMPOUND PER ASTM C 1059-99: SPECIFICATION FOR LATEX AGENTS FOR BONDING FRESH CONCRETE (GROUT) TO HARDENED CONCRETE.

3.21 THE FORMED SURFACES FOR REINFORCED CONCRETE SHALL ACHIEVE A "CLASS A" FINISH WHEN RECEIVING PAINT OR A "CLASS B" FINISH WHEN RECEIVING PLASTER OR TILE AS PER SPECIFICATION SECTION 03 31 00 CAST-IN-PLACE STRUCTURAL CONCRETE.

3.22 AT INTERSECTING GRADE BEAMS AND SHEAR WALLS, PROVIDE CORNER BARS AT INTERSECTIONS WITH SAME QUANTITY, SIZE AND SPACING AS HORIZONTAL BARS WITH LEG LENGTH = 50db.

3.23 REFER TO S-800 SERIES REINFORCING BAR PLACEMENT DRAWINGS DEFINING LENGTHS, BENDS, AND SPACINGS FOR ALL STRUCTURAL CONCRETE. THE S-800 SERIES DRAWING ARE BASED ON THE S-400, S-500, S-600, AND S-700 SERIES DRAWING SCHEDULES, DETAILS, AND DIAGRAMS.

4.0 CONCRETE MASONRY

4.1 MASONRY CONSTRUCTION SHALL CONFORM TO SPECIFICATION FOR MASONRY STRUCTURES (ACI 530.1) UON.

4.2 STRENGTH OF MASONRY MATERIALS SHALL BE AS FOLLOWS:

a. CONCRETE MASONRY UNITS SHALL BE NORMAL WEIGHT, GRADE N, TYPE 1, CONFORMING TO ASTM C-90 AND HAVE A MINIMUM COMPRESSIVE STRENGTH OF 10.4 MPa ON THE NET AREA.

b. MORTAR SHALL CONFORM TO ASTM C-270 TYPE S.

c. GROUT FOR MASONRY SHALL BE NORMAL WEIGHT AND HAVE A MINIMUM COMPRESSIVE STRENGTH OF 14 MPa AT 28 DAYS. GROUT SHALL CONFORM TO ASTM C476M. GROUT LIFTS SHALL NOT EXCEED 1,400mm.

d. REINFORCED MASONRY SHALL HAVE A STRENGTH F'm = 10 MPa. (F'm IS THE COMPRESSIVE STRENGTH OF THE MASONRY AT 28 DAYS AS DETERMINED BY PRISM TESTS).

4.3 ALL VERTICAL REINFORCEMENT FOR CONCRETE MASONRY SHALL BE ASTM A615M-96a, GRADE 420 MPa. ALL SPLICES SHALL BE LAPPED 48 BAR DIAMETERS MINIMUM.

4.4 BOND BEAMS SHALL BE SPACED AT 1200mm OC VERTICALLY. BOND BEAM REINFORCING SHALL BE CONTINUOUS AND PROVIDED AT WALL INTERSECTIONS AND WALL CORNERS (REFERENCE CONCRETE MASONRY NOTE 4.11). ALL BOND BEAM REINFORCING SHALL BE CONTINUOUS AND HAVE STANDARD ACI HOOKS AT EACH END. PROVIDE STANDARD BAR SPLICES AS SPECIFIED. AS AN ALTERNATE TO CMU BOND BEAMS, IT IS THE CONTRACTOR'S OPTION TO PROVIDE 200mm x 200mm CONTINUOUS CAST-IN-PLACE CONCRETE BOND BEAMS WITH (2)-#16 IN LIEU OF CMU BOND BEAMS INDICATED ON THE DRAWINGS.

4.5 SEE TYPICAL DETAILS FOR MINIMUM REINFORCEMENT REQUIREMENTS FOR CMU WALLS. PROVIDE STANDARD BAR SPLICES AS SPECIFIED. ALL VERTICAL REINFORCEMENT EXTENDS FULL HEIGHT OF WALL.

4.6 CMU CELLS THAT REQUIRE VERTICAL REINFORCING BARS AS INDICATED ON THE CONTRACT DRAWINGS AND/OR SPECS SHALL HAVE REINF BARS PLACED IN CENTERS OF CMU CELLS AND CONTINUOUSLY GROUTED UON.

4.7 ALL CMU CELLS, OPEN CAVITIES, AND AIR SPACES OF ALL EXTERIOR WALLS SHALL BE GROUTED TO STOP FRAGMENTS FROM MORTAR BLAST.

4.8 CONTRACTOR SHALL COORDINATE LOCATION OF ALL OPENINGS SEE ARCH, MECH, ELEC, AND PLUMBING SHEETS FOR SIZE AND LOCATION OF OPENINGS.

4.9 MASONRY WALLS SHALL NOT BE BACK FILLED PRIOR TO THE MORTAR AND GROUT ATTAINING THEIR RESPECTIVE MAXIMUM DESIGN STRENGTHS PER SPECIFICATIONS.

4.10 PROVIDE GALVANIZED MORTAR/GROUT SCREEN W/ 3mm MESH WHERE CELLS BELOW ARE NOT GROUTED.

4.11 AT INTERSECTING BOND BEAMS, PROVIDE CORNER BAR FOR EACH HORIZONTAL BAR IN BOND BEAMS AT INTERSECTING WALLS. USE SAME SIZE AND SPACING AS HORIZONTAL BARS WITH LEG LENGTH = 50db.

4.12 THE ALTERNATE CMU BRACE DETAILS SHOWN ON S-701 CAN BE UTILIZED AT THE CONTRACTOR'S OPTION IN PLACE OF THE "FLOATING PIN" WALL BRACE CONNECTIONS AT TOP OF CMU WALLS DEPICTED ON S-400 AND S-500 SERIES DRAWINGS THESE ALTERNATE DETAILS ALSO SHOW ALTERNATE CAST-IN-PLACE WALL BOND BEAMS THAT CAN BE UTILIZED AT THE CONTRACTOR'S OPTION IN PLACE OF THE STANDARD CMU BOND BEAMS CONSTRUCTED OF CMU BLOCKS.

5.0 COLD-FORMED METAL FRAMING

5.1 ALL COLD-FORMED METAL FRAMING MEMBERS SHALL CONFORM TO ASTM A1003M, STRUCTURAL GRADE ST340 (MPa), WITH A GALVANIZED COATING OF Z275 OR BETTER IN ACCORDANCE WITH ASTM A653M.

5.2 ALL COLD-FORMED METAL FRAMING MEMBERS SHALL HAVE THE FOLLOWING MINIMUM PROPERTIES:

a. MINIMUM METAL THICKNESS:
TRACK = 1.37mm;
STUD/OTHER = 1.09mm

b. MINIMUM FLANGE WIDTH:
TRACK = 38mm;
STUD/OTHER = 35mm

c. MINIMUM MEMBER DEPTH:
ALL SECTIONS = 152.2mm

d. PURLIN (HAT CHANNEL)
DEPTHxWIDTH(FLAT TOP)xTHICK = 25mmx42mmx1.59mm

5.3 ALL CONNECTIONS SHALL BE MADE WITH CORROSION RESISTANT (ASTM A153M), SELF-DRILLING, SELF-TAPPING STEEL DRILL SCREWS IN ACCORDANCE WITH ASTM C1513. SCREWS SHALL HAVE A LOW PROFILE HEAD BENEATH ROOF DECK, AND STANDARD HEAD ALL OTHER LOCATIONS.

5.4 FABRICATE COLD FORMED METAL FRAMING AND ACCESSORIES PLUMB, SQUARE AND TRUE TO LINE, WITH CONNECTIONS SECURELY FASTENED ACCORDING TO AISI STANDARD FOR COLD FORMED STEEL FRAMING.

5.5 CUT FRAMING MEMBERS BY SAWING OR SHEATHING, DO NOT TORCH CUT.

5.6 INSTALL FRAMING MEMBERS IN ONE-PIECE LENGTHS UNLESS SPLICE CONNECTIONS ARE INDICATED FOR TRACK OR TENSION MEMBERS

5.7 INSTALL TEMPORARY BRACING AND SUPPORTS TO SECURE FRAMING DURING CONSTRUCTION. MAINTAIN BRACING AND SUPPORTS IN PLACE UNTIL THE STRUCTURE HAS BEEN COMPLETED WITH ALL CONNECTIONS AND PERMANENT BRACING SECURED.

6.0 STRUCTURAL DESIGN CRITERIA

6.1 ALL DESIGNS SHALL CONFORM TO THE PROVISIONS OF THE IBC 2006 AND UFC AS APPLICABLE.

6.2 DESIGN LOADS

6.2.1 DEAD LOADS (PER IBC 2006 & UFC 3-310-01)

MECH/ELEC/PLUMBING	0.20 kPa
MISCELLANEOUS	0.15 kPa
COLD-FORMED FRAMING	0.20 kPa
INSULATION	0.10 kPa
METAL ROOF PANEL	0.14 kPa
	0.79 kPa
FLOOR PARTITION ALLOWANCE	0.96 kPa

6.2.2 LIVE LOADS (PER IBC 2006 & UFC 3-310-01)

ROOF	1.00 kPa
CORRIDOR (2-STORY BLDG ONLY)	4.80 kPa
ALL OTHERS (2-STORY BLDG ONLY)	2.40 kPa
SLAB ON GRADE	4.80 kPa

6.2.3 SNOW LOADS (PER IBC 2006 & UFC 3-310-01)

GROUND SNOW LOAD (Pg)	1.2 kPa
SNOW IMPORTANCE FACTOR (I)	1.0
SNOW EXPOSURE FACTOR (Ce)	1.0
THERMAL FACTOR (Ct)	1.0

6.2.4 WIND LOADS (PER IBC 2006)

BASIC WIND SPEED	137 km/h
WIND IMPORTANCE FACTOR	1.0
WIND EXPOSURE CATEGORY	D
DIRECTIONALITY COEFFICIENT (Kd)	0.85
TOPOGRAPHIC FACTOR (Kzt)	1.0

6.2.5 SEISMIC LOADS (PER IBC 2006 & UFC 3-310-04)

OCCUPANCY USE CATEGORY	II
SEISMIC IMPORTANCE FACTOR (Ie)	1.0
SEISMIC SITE CLASS	D

S_s = 1.50 (REDUCED FROM 2.40 PER ASCE 7-05, 12.8.1.3 FOR A BUILDING WITHOUT IRREGULARITIES)
S_1 = 1.20
S_{DS} = 1.00
S_{D1} = 1.20

SEISMIC DESIGN CATEGORY	E
SEISMIC RESISTING SYSTEM: -SPECIAL REINFORCED CONCRETE SHEAR WALL	
RESPONSE MODIFICATION FACTOR (R)	6
RESPONSE COEFFICIENT (Cs)	0.167
SEISMIC ANALYTICAL PROCEDURE =	EQUIV LATERAL FORCE
SEISMIC BASE SHEAR	363 kN

APPROVED:

A/E DESIGNER OF RECORD

SEAL:

GEORGIA REGISTERED 1-29-10 No. 27141 PROFESSIONAL ENGINEER CHRISTOPHER W. WHITMORE

US ARMY CORPS OF ENGINEERS
AFGHANISTAN ENGINEER DISTRICT

Mark	Description	Date	Appr.	Mark	Description	Date	Appr.

Date: 2/23/10 | Rev: 0
Design file no.
Drawing code:
File name: AMLATSS-001GN
Plot date: 2/23/2010
Plot scale: X:X

Designed by: KMP/MMY
Dwn by: RCG | Ckd by: CWW
Reviewed by: LHM
Submitted by:
BAKER

U.S. ARMY ENGINEER DISTRICT, AFGHANISTAN
CORPS OF ENGINEERS
APO AE 96338

Michael Baker Jr., Inc.
A unit of Michael Baker Corporation
Airside Business Park
100 Airside Drive
Moon Township, PA 15108
www.mbakercorp.com

AFGHAN NATIONAL ARMY
REGIONAL MILITARY TRAINING CENTER
STANDARD DESIGN

LATRINE BUILDING
SMALL

GENERAL NOTES & DESIGN CRITERIA

Sheet reference number:
S-001

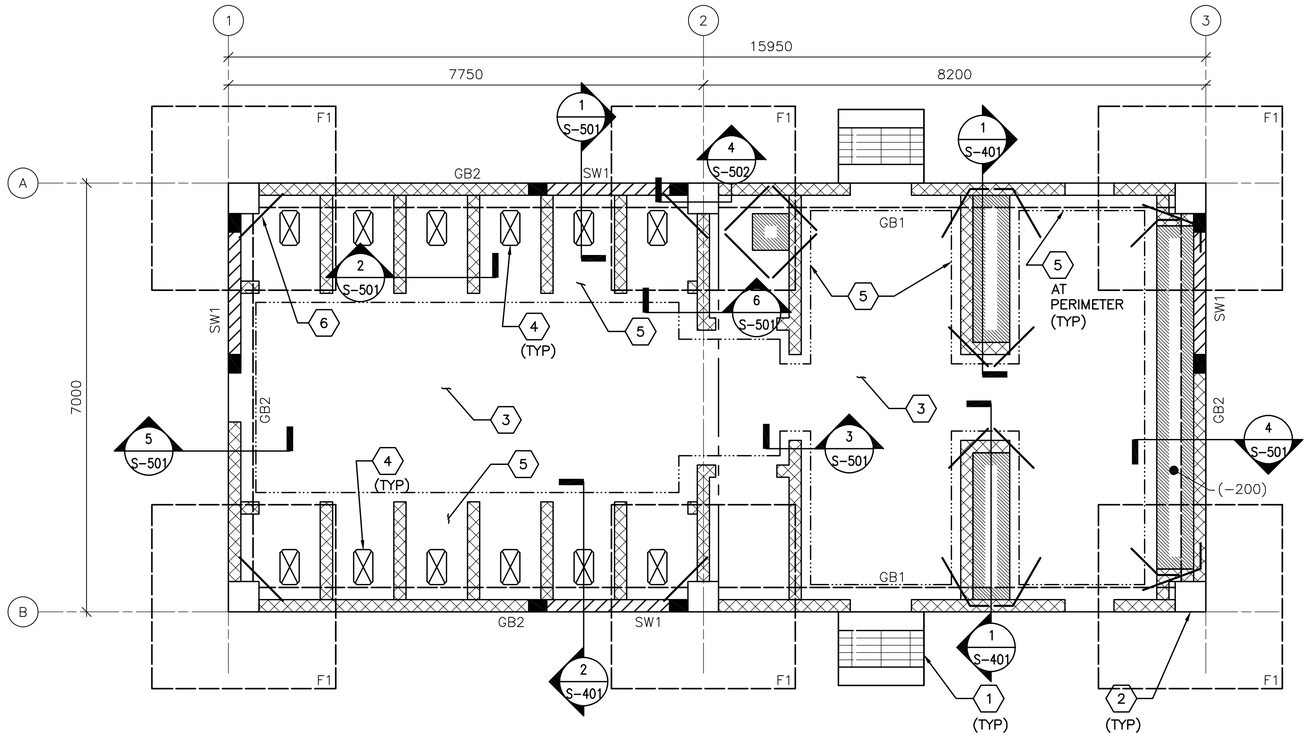

1 S-101 FOUNDATION/SLAB PLAN
SCALE: 1:50

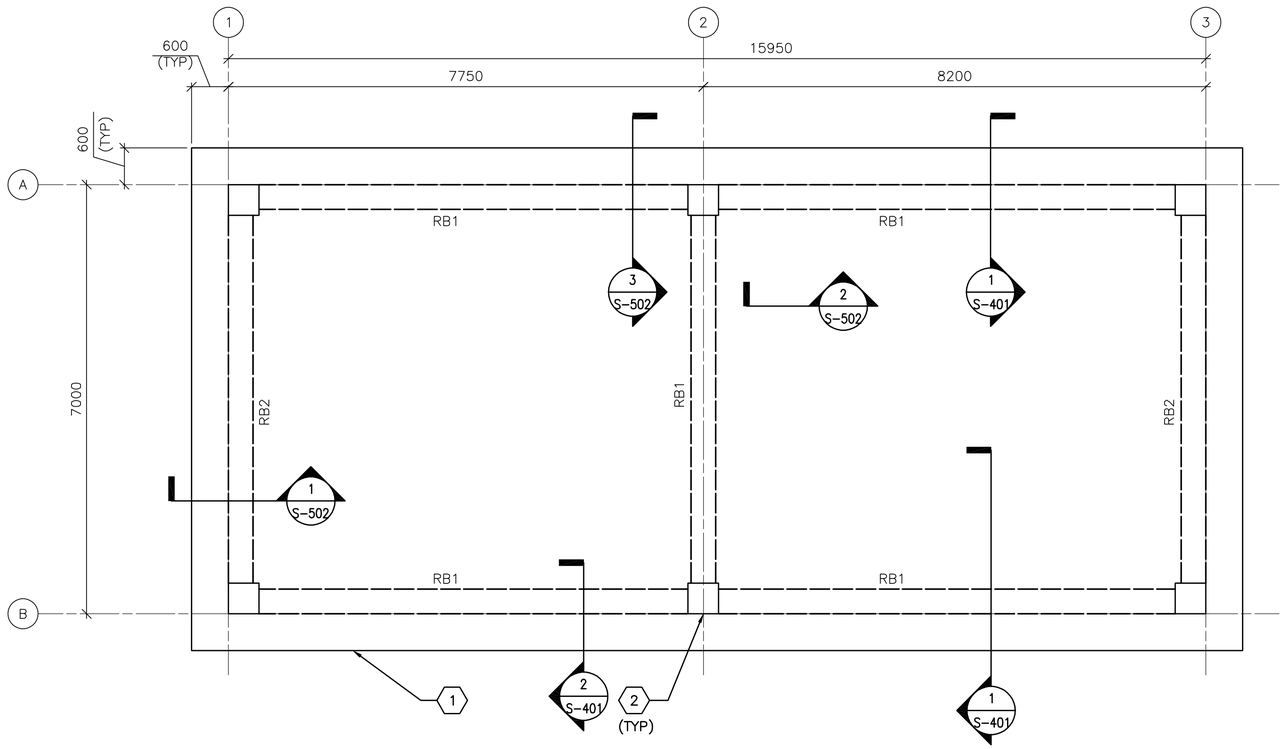

2 S-101 ROOF FRAMING PLAN
SCALE: 1:50

FOUNDATION/SLAB PLAN NOTES:

1. REFER TO SHEET S-001 FOR STRUCTURAL NOTES AND DESIGN CRITERIA.
2. FINISH FIRST FLOOR ELEVATION SHALL BE (DATUM 0.00) ALL PLUS OR MINUS DIMENSIONS INDICATED ON PLAN OR REFERRED TO IN NOTES RELATE TO FINISH FIRST FLOOR ELEVATION.
3. SLAB-ON-GRADE IS 150 WITH #13 @ 300 OC EW LOCATED 38 FROM T/SLAB UON. WHERE NOTED, 300 SLAB ON GRADE SHALL BE REINF W/ #13 @ 300 OC EW T&B. DEPRESS ALL SLABS 65 EXCEPT WHERE INDICATED.
4. TOP OF EXTERIOR FOOTINGS SHALL BE -950 UNLESS OTHERWISE INDICATED.
5. COLUMN FOOTINGS INDICATED BY F# ON PLAN. REFER TO COLUMN FOOTING SCHEDULE ON SHEET S-601.
6. REFER TO COLUMN SCHEDULE ON SHEET S-601.
7. GRADE BEAM INDICATED BY GB# ON PLAN, REFER TO BEAM SCHEDULE ON SHEET S-601.
8. SHEARWALL INDICATED BY SW# ON PLAN, REFER TO SHEARWALL SCHEDULE ON SHEET S-601.
9. SEE TYP EXTERIOR AND INTERIOR CMU WALL REINF DETAILS ON SHEET S-701.
10. SEE MECHANICAL AND ELECTRICAL SHEETS FOR CONCRETE PAD LOCATIONS, SIZES, AND THICKNESS NOT SHOWN. SEE SHEET S-701 FOR DETAILS.

FOUNDATION/SLAB PLAN KEY NOTES: (X)

1. CONC PAD (ENTRANCE)-SEE ARCH DWGS FOR INFORMATION
2. REINF CONC COLUMN
3. REINF CONC SLAB-ON-GRADE
4. SLAB OPENING - COORDINATE W/ ARCH AND PLUMBING DWGS
5. 300 SLAB-ON-GRADE
6. (2)-#13 @ RE-ENTRANT CORNERS - SEE S-701 FOR INFORMATION

FOUNDATION/SLAB PLAN LEGEND:

- REINF CONC SHEAR WALL
- REINF CMU WALL
- CONTROL JOINT
- INDICATES DROP SLAB 200 BELOW FINISH FLOOR
- TRANSITION BETWEEN 150 AND 300 THICK SLAB AREAS
- SLAB OPENING. SEE SHEET S-701 FOR ADDITIONAL SLAB REINF AT OPENING

ROOF FRAMING PLAN NOTES:

1. REFER TO SHEETS S-001 FOR STRUCTURAL NOTES AND DESIGN CRITERIA.
2. TOP OF SLAB ELEVATION = 3500 UNLESS NOTED OTHERWISE.
3. ROOF SLAB IS 250 WITH #19 @ 300 OC EW T&B.
4. ROOF BEAM INDICATED BY RB# ON PLAN. REFER TO BEAM SCHEDULE ON SHEET S-601.
5. COORDINATE WITH ARCHITECTURAL SHEETS FOR COLD-FORMED STEEL OVERBUILT FRAMING ABOVE ROOF SLAB.
6. COLD-FORMED METAL OVERBUILD ROOF FRAMING NOT SHOWN FOR CLARITY. SEE OVERBUILD ROOF FRAMING DETAILS AND SECTIONS ON SHEET S-702.
7. CMU PARTITION WALLS (BELOW ROOF SLAB) NOT SHOWN FOR CLARITY.
8. OVERHANG AREAS OF ROOF SLAB CONTAIN ROOF VENT PENETRATIONS. REFERENCE ARCHITECTURAL DRAWINGS FOR INFORMATION.

ROOF FRAMING PLAN KEY NOTES: (X)

1. CONC ROOF SLAB (BELOW ROOF OVERBUILD)
2. REINF CONC COLUMN (BELOW CONC ROOF SLAB)

0 1000 2000
SCALE: 1:50

UNLESS OTHERWISE NOTED, LINEAR DIMENSIONS SHOWN ON DRAWINGS ARE IN MILLIMETERS (mm)

APPROVED:

A/E DESIGNER OF RECORD

SEAL:

GEORGIA REGISTERED PROFESSIONAL ENGINEER No. 27141 CHRISTOPHER W. WHITMORE 2-23-10

US ARMY CORPS OF ENGINEERS
AFGHANISTAN ENGINEER DISTRICT

Mark	Description	Date	Appr.	Mark	Description	Date	Appr.

Date: 2/23/10 | Rev: 0
Design file no.
Drawing code:
File name: AN4ATSS-101FFP
Plot date: 2/23/2010
Plot scale: x:X

Designed by: KMF/MMY
Dwn by: RCG | Ckd by: CWW
Reviewed by: LHM
Submitted by:

U.S. ARMY ENGINEER DISTRICT, AFGHANISTAN
CORPS OF ENGINEERS
APO AE 96338

Michael Baker Jr., Inc.
A unit of Michael Baker Corporation
Airside Business Park
100 Airside Drive
Moon Township, PA 15108
www.mbakercorp.com

BAKER

AFGHAN NATIONAL ARMY
REGIONAL MILITARY TRAINING CENTER
STANDARD DESIGN

LATRINE BUILDING
SMALL

FOUNDATION/SLAB & ROOF FRAMING PLANS

Sheet reference number:
S-101

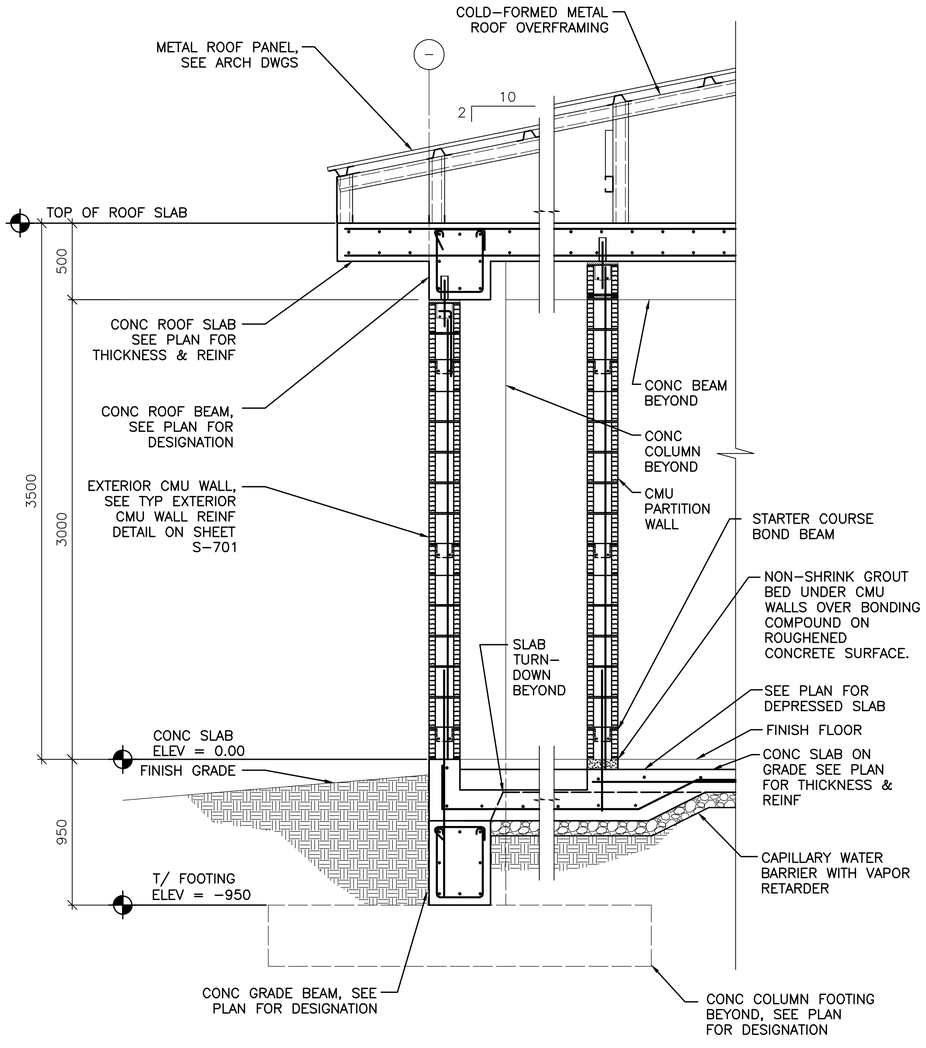

1 S-101 TYPICAL WALL SECTION AT EXTERIOR MASONRY WALL

SCALE: 1:20

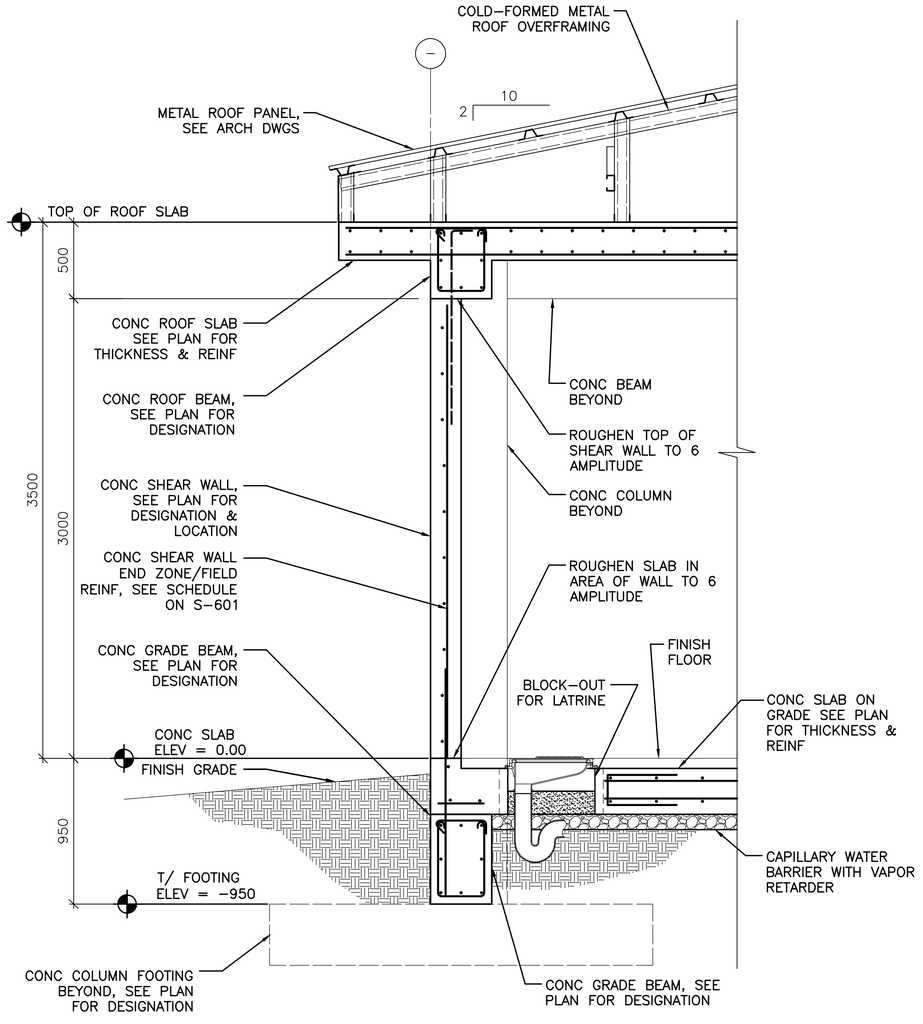

2 S-101 TYPICAL WALL SECTION AT CONCRETE SHEAR WALL

SCALE: 1:20

0 400 800

SCALE: 1:20

UNLESS OTHERWISE NOTED, LINEAR DIMENSIONS SHOWN ON DRAWINGS ARE IN MILLIMETERS (mm)

APPROVED:

A/E DESIGNER OF RECORD

SEAL:

GEORGIA REGISTERED 1-29-10 No. 27141 PROFESSIONAL ENGINEER CHRISTOPHER W. WHITMORE

US ARMY CORPS OF ENGINEERS
AFGHANISTAN ENGINEER DISTRICT

Mark	Description	Date	Appr.	Mark	Description	Date	Appr.

Designed by: KMP/MMY
Dwn by: RCG
Ckd by: CWW
Reviewed by: LHM
Submitted by: BAKER
Date: 2/23/10
Rev: 0
Design file no.
Drawing code:
File name: ANALATSS-401BS
Plot date: 2/23/2010
Plot scale: X:X

U.S. ARMY ENGINEER DISTRICT, AFGHANISTAN
CORPS OF ENGINEERS
APO AE 96338

Michael Baker Jr., Inc
A unit of Michael Baker Corporation
Airside Business Park
100 Airside Drive
Moon Township PA 15108
www.mbakercorp.com

AFGHAN NATIONAL ARMY
REGIONAL MILITARY TRAINING CENTER
STANDARD DESIGN

LATRINE BUILDING
SMALL

BUILDING SECTIONS

Sheet reference number:
S-401

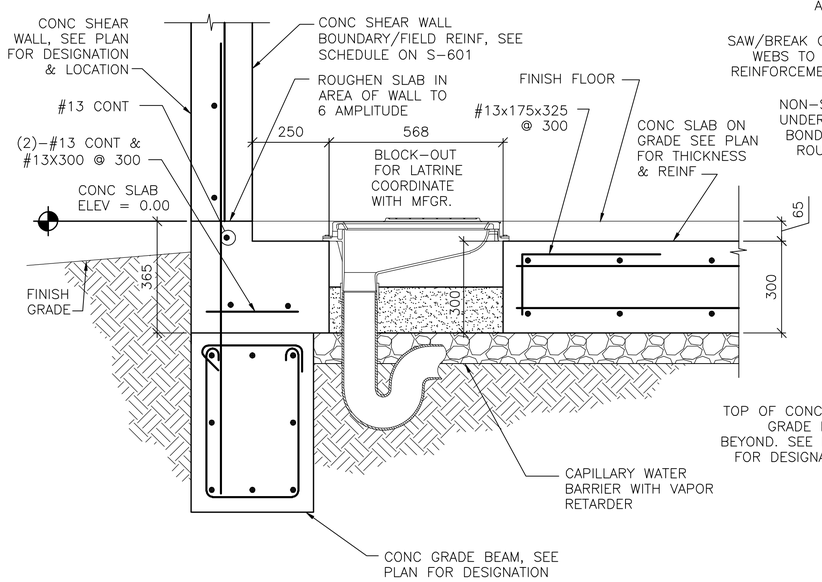

1 S-101 **SECTION**
SCALE: 1:10

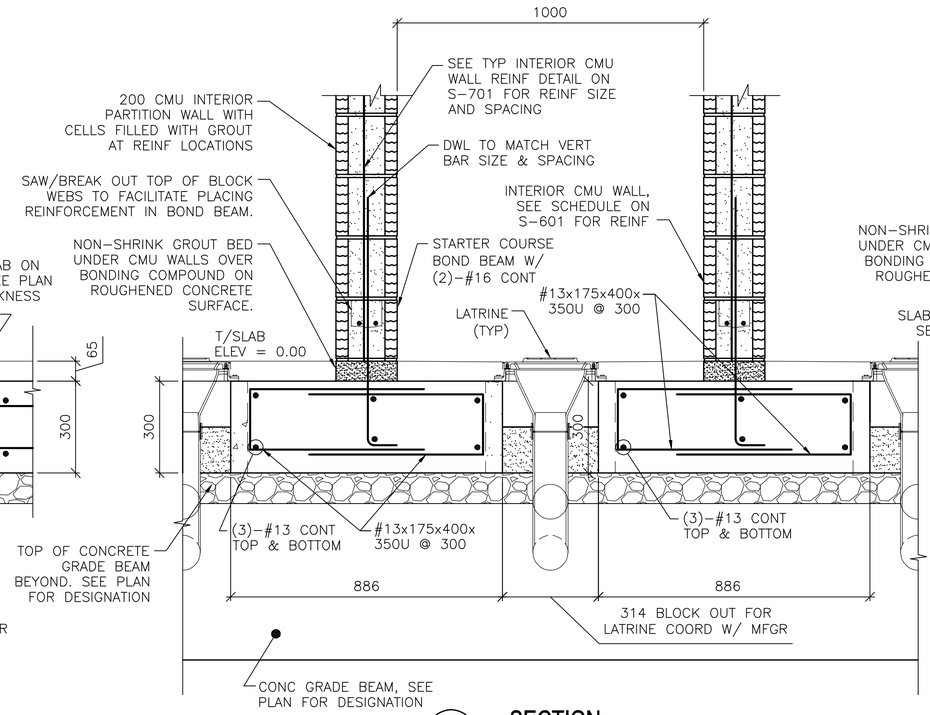

2 S-101 **SECTION**
SCALE: 1:10

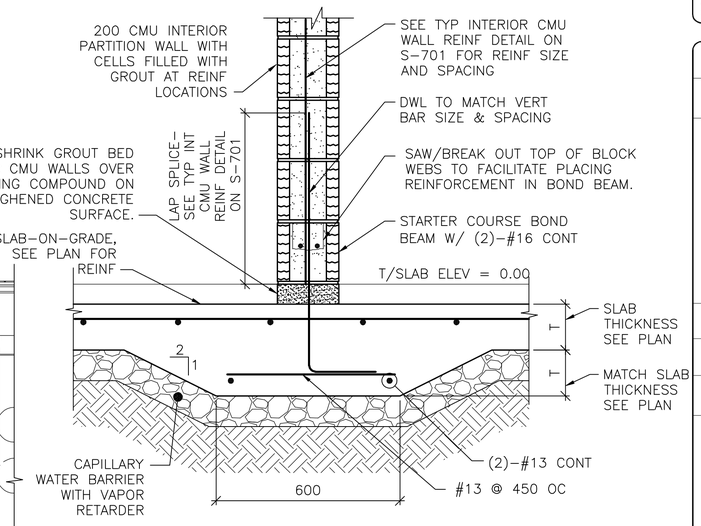

3 S-101 **SECTION**
SCALE: 1:10

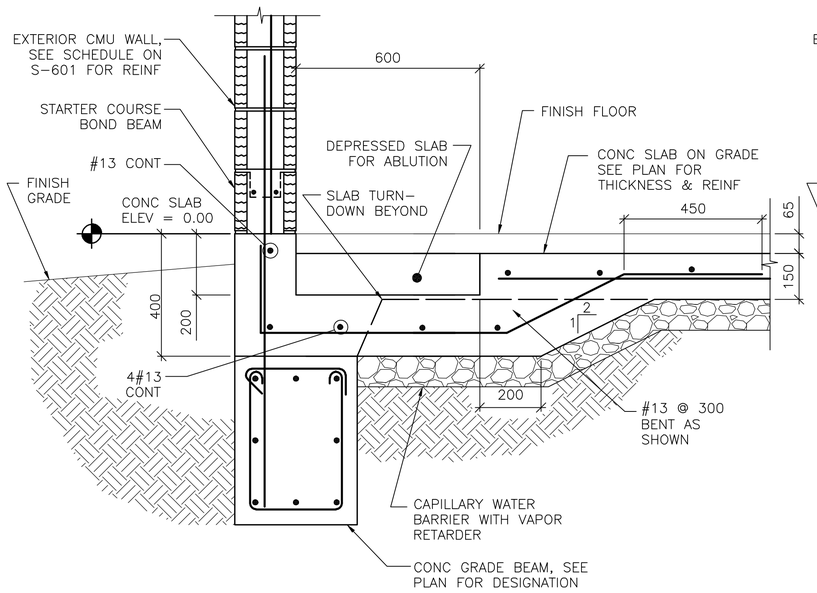

4 S-101 **SECTION**
SCALE: 1:10

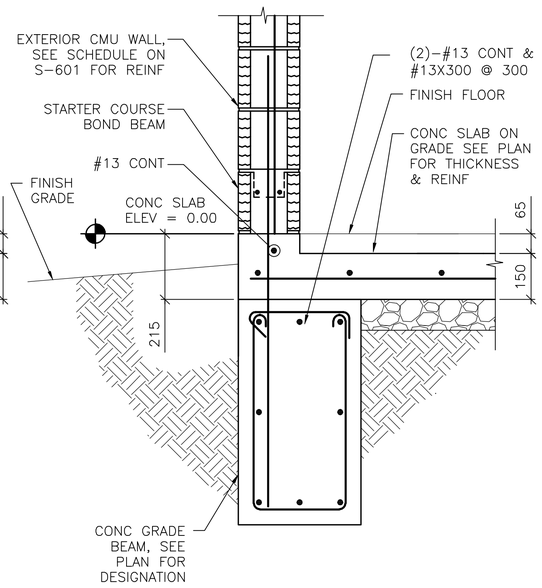

5 S-101 **SECTION**
SCALE: 1:10

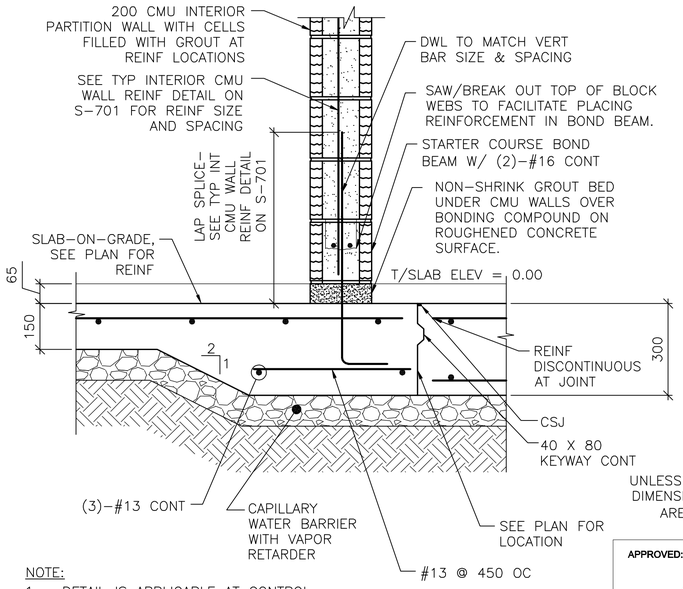

6 S-101 **SECTION**
SCALE: 1:10

NOTE:
1. DETAIL IS APPLICABLE AT CONTROL JOINTS RUNNING PARALLEL TO CMU WALLS AND WITHIN 300 OF FACE OF WALL.

0 200 400
SCALE: 1:10

UNLESS OTHERWISE NOTED, LINEAR DIMENSIONS SHOWN ON DRAWINGS ARE IN MILLIMETERS (mm)

APPROVED:

A/E DESIGNER OF RECORD

SEAL:

GEORGIA REGISTERED 1-29-10 No. 27141 PROFESSIONAL ENGINEER CHRISTOPHER W. WHITMORE

US ARMY CORPS OF ENGINEERS
AFGHANISTAN ENGINEER DISTRICT

Mark	Description	Date	Appr.	Mark	Description	Date	Appr.

U.S. ARMY ENGINEER DISTRICT, AFGHANISTAN
CORPS OF ENGINEERS
APO AE 96338

Michael Baker Jr., Inc.
A unit of Michael Baker Corporation
Airside Business Park
100 Airside Drive
Moon Township, PA 15108
www.mbakercorp.com

Designed by: KMP/MMY
Dwn by: RCG
Ckd by: CWW
Reviewed by: LHM
Submitted by: BAKER
Date: 2/23/10
Rev: 0
Design file no.
Drawing code:
File name: AMAATS5-S01SC
Plot date: 2/23/2010
Plot scale: x:X

AFGHAN NATIONAL ARMY
REGIONAL MILITARY TRAINING CENTER
STANDARD DESIGN

LATRINE BUILDING
SMALL

FOUNDATION SECTIONS

Sheet reference number:
S-501

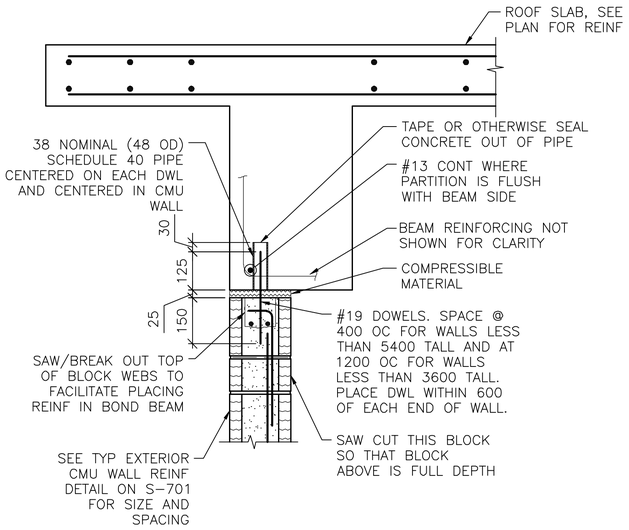

NOTES:
1. EXTEND DOWEL REINF TO 25 CLEAR FROM TOP OF CMU WALL.

1 S-101 **SECTION**
SCALE: 1:10

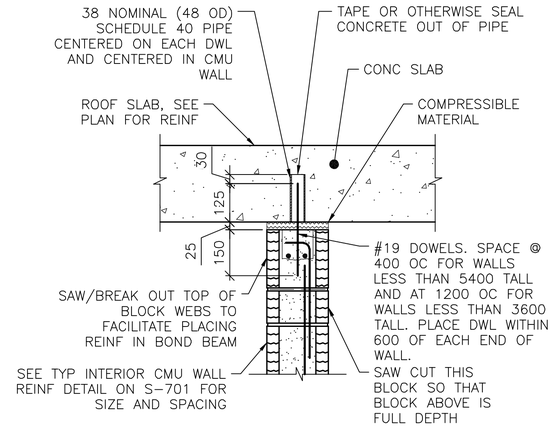

NOTES:
1. EXTEND DOWEL REINF TO 25 CLEAR FROM TOP OF CMU WALL.
2. SLAB REINF NOT SHOWN FOR CLARITY.

2 S-101 **SECTION**
SCALE: 1:10

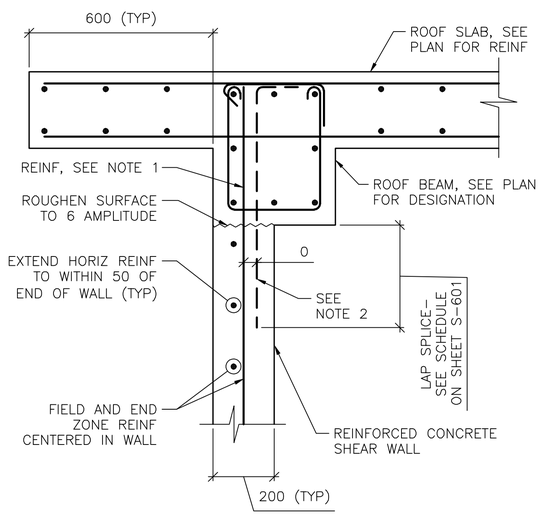

NOTES:
1. TERMINATE "FIELD" VERT REINF & END ZONE REINF @ 50 CLEAR FROM TOP OF ROOF SLAB.
2. WHERE END ZONE REINFORCING CANNOT BE DEVELOPED IN BEAM DEPTH, PROVIDE HOOKED DWLS SAME SIZE & SPACING. PROVIDE TENSION LAP BELOW ROOF BEAM.
3. SEE SHEET S-601 AND SHEET S-702 FOR SCHEDULED FIELD AND END ZONE REINF.

3 S-101 **SECTION**
SCALE: 1:10

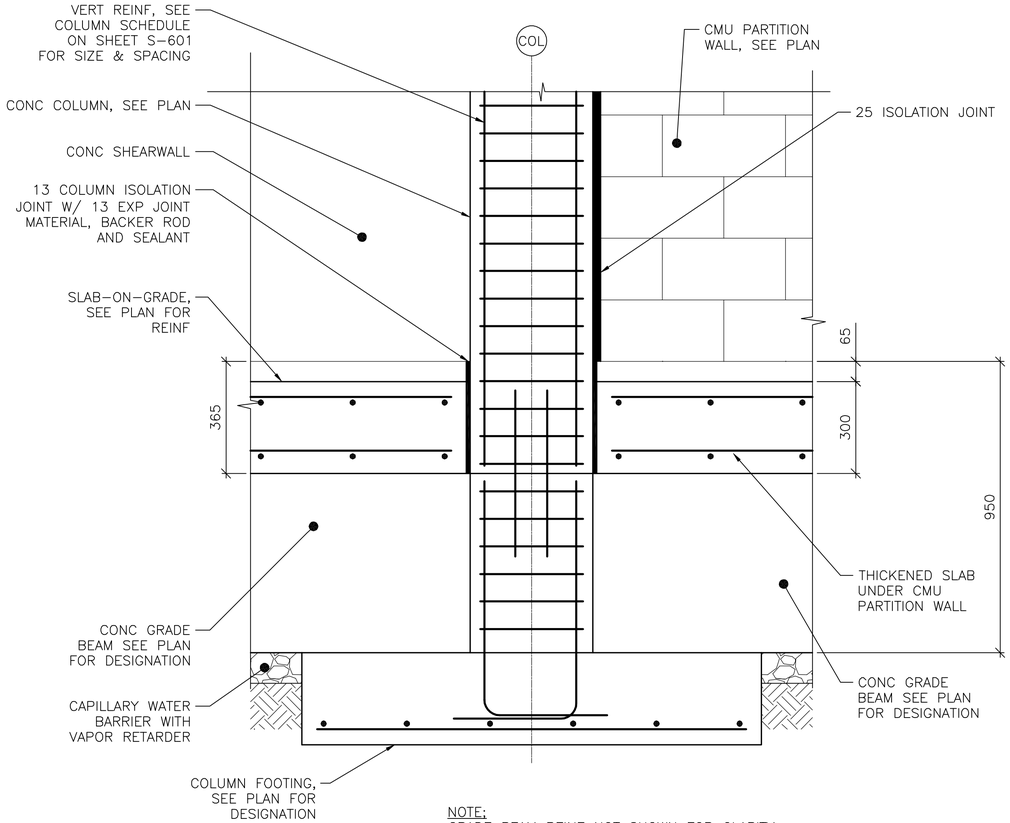

NOTE:
GRADE BEAM REINF NOT SHOWN FOR CLARITY.

4 S-101 **SECTION**
SCALE: 1:10

0 200 400
SCALE: 1:10

UNLESS OTHERWISE NOTED, LINEAR DIMENSIONS SHOWN ON DRAWINGS ARE IN MILLIMETERS (mm)

APPROVED:

A/E DESIGNER OF RECORD

SEAL:

GEORGIA REGISTERED 2-23-10 No. 27141 PROFESSIONAL ENGINEER CHRISTOPHER W. WHITMORE

US ARMY CORPS OF ENGINEERS
AFGHANISTAN ENGINEER DISTRICT

Mark	Description	Date	Appr.	Mark	Description	Date	Appr.

U.S. ARMY ENGINEER DISTRICT, AFGHANISTAN
CORPS OF ENGINEERS
APO AE 96338

Michael Baker Jr., Inc
A unit of Michael Baker Corporation
Airside Business Park
100 Airside Drive
Moon Township, PA 15108
www.mbakercorp.com

Designed by: KMP/MMY
Dwn by: RCG
Ckd by: CWW
Reviewed by: LHM
Submitted by: BAKER
Date: 2/23/10
Design file no.
Drawing code:
File name: ANALATS5-S02SC
Plot date: 2/23/2010
Plot scale: X:X
Rev: 0

AFGHAN NATIONAL ARMY
REGIONAL MILITARY TRAINING CENTER
STANDARD DESIGN

LATRINE BUILDING
SMALL

FRAMING SECTIONS

Sheet reference number:
S-502

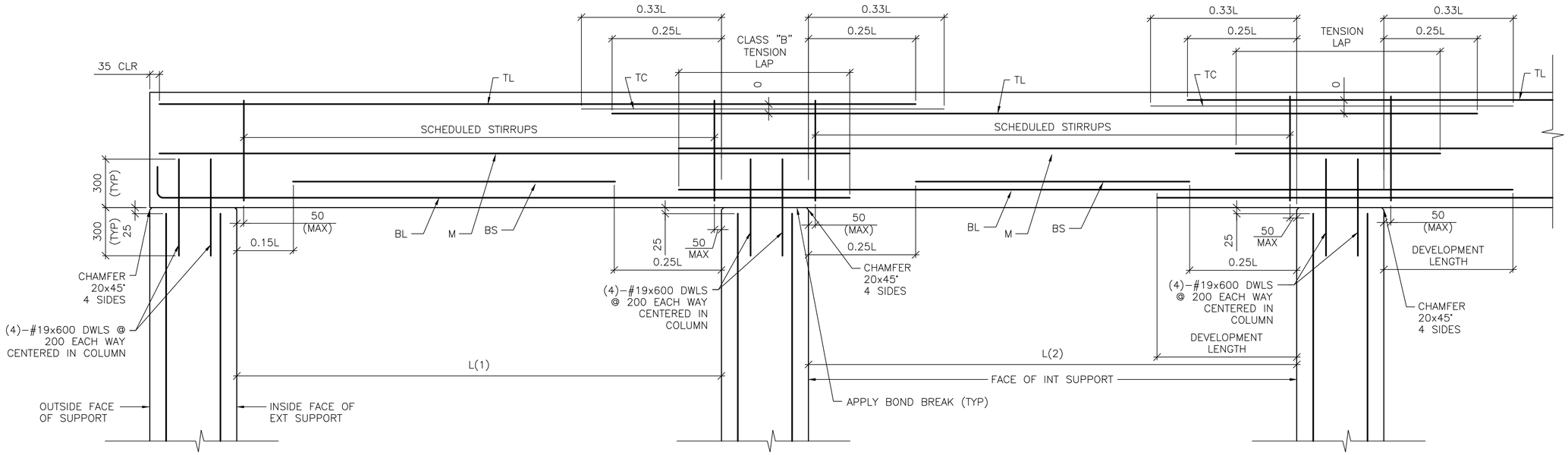

DETAIL NOTE:
1. WORK THIS DETAIL WITH BEAM SCHEDULE ON SHEET S-601.
2. L=GREATEST OF ADJACENT SPANS L(1) OR L(2)
3. ONLY COLUMN CORNER BARS ARE SHOWN

1 / S-503 ROOF BEAM REINFORCING DETAIL

SCALE: NTS

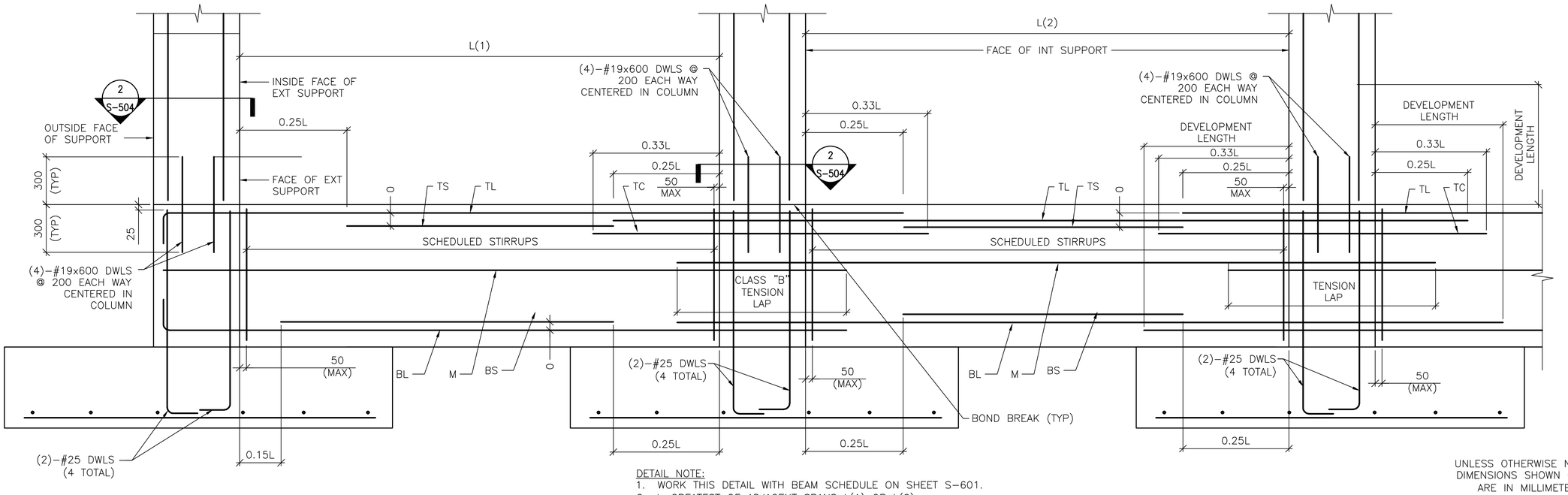

DETAIL NOTE:
1. WORK THIS DETAIL WITH BEAM SCHEDULE ON SHEET S-601.
2. L=GREATEST OF ADJACENT SPANS L(1) OR L(2)
3. ONLY COLUMN CORNER BARS ARE SHOWN.

2 / S-503 GRADE BEAM REINFORCING DETAIL

SCALE: NTS

UNLESS OTHERWISE NOTED, LINEAR DIMENSIONS SHOWN ON DRAWINGS ARE IN MILLIMETERS (mm)

APPROVED:

A/E DESIGNER OF RECORD

SEAL:

GEORGIA REGISTERED 2-23-10 No. 27141 PROFESSIONAL ENGINEER CHRISTOPHER W. WHITMORE

US ARMY CORPS OF ENGINEERS
AFGHANISTAN ENGINEER DISTRICT

Mark	Description	Date	Appr.	Mark	Description	Date	Appr.

Rev: 0
Date: 2/23/10
Design file no.
Drawing code:
File name: ANALATSS-S0307
Plot date: 2/23/2010
Plot scale: X:X

Designed by: KMP/MMY
Dwn by: RCG
Ckd by: CWW
Reviewed by: LHM
Submitted by: BAKER

U.S. ARMY ENGINEER DISTRICT, AFGHANISTAN
CORPS OF ENGINEERS
APO AE 96338

Michael Baker Jr., Inc.
A unit of Michael Baker Corporation
Airside Business Park
100 Airside Drive
Moon Township, PA 15108
www.mbakercorp.com

AFGHAN NATIONAL ARMY
REGIONAL MILITARY TRAINING CENTER
STANDARD DESIGN

LATRINE BUILDING
SMALL

BEAM & COLUMN DETAILS

Sheet reference number:
S-503

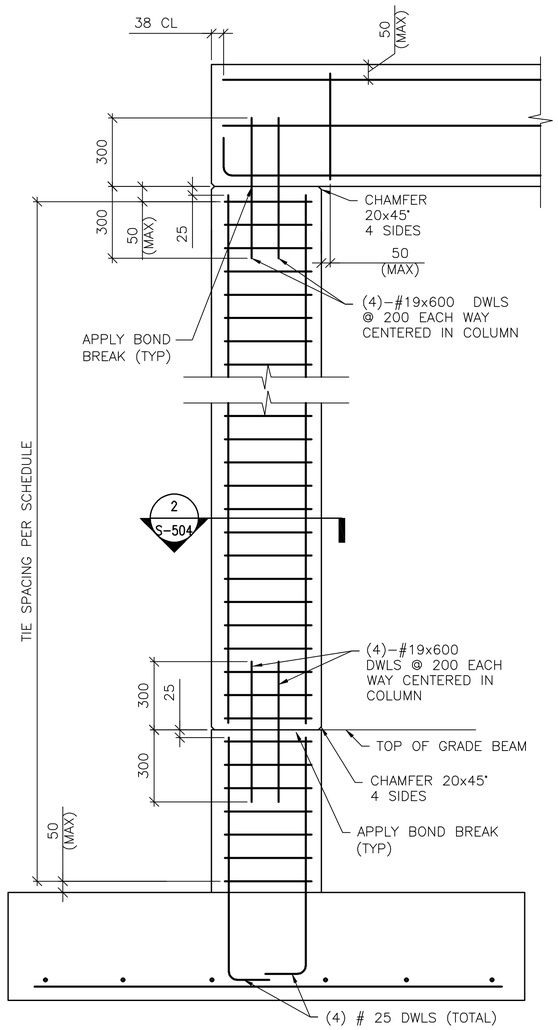

DETAIL NOTE:
1. ONLY COLUMN CORNER BARS ARE SHOWN

1-STORY COLUMN REINF DETAILS

1 / S-504 — SCALE: NTS

(WITH GRADE BEAM)

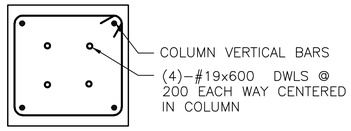

SECTION

2 / S-503 — 2 / S-504 — SCALE: NTS

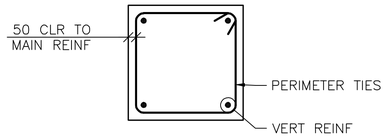

4 BAR COLUMN

A / S-504 — SCALE: NTS

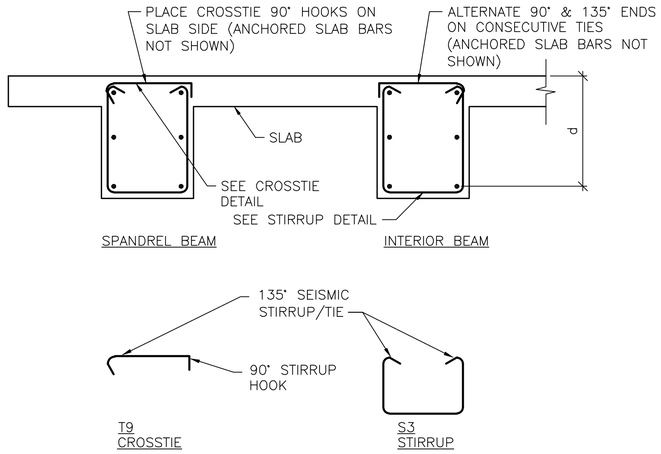

BEAM REINFORCEMENT DETAILS

B / S-504 — SCALE: NTS

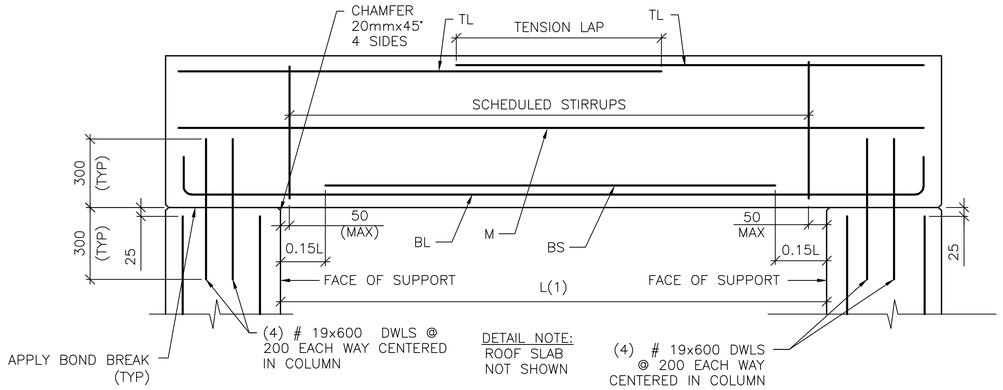

SINGLE SPAN ROOF BEAM REINFORCING DETAIL

3 / S-504 — SCALE: NTS

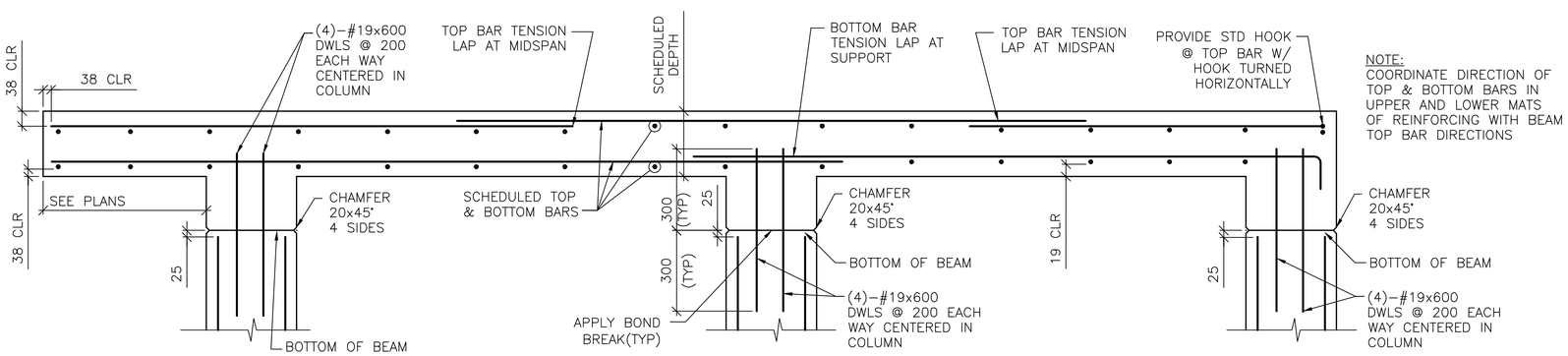

FRAMED SLAB REINFORCING DETAIL

4 / S-504 — SCALE: NTS

UNLESS OTHERWISE NOTED, LINEAR DIMENSIONS SHOWN ARE IN MILLIMETERS (mm)

APPROVED:

A/E DESIGNER OF RECORD

SEAL:

GEORGIA REGISTERED 1-29-10 No. 27141 PROFESSIONAL ENGINEER CHRISTOPHER W. WHITMORE

US ARMY CORPS OF ENGINEERS
AFGHANISTAN ENGINEER DISTRICT

Mark	Description	Date	Appr.	Mark	Description	Date	Appr.

U.S. ARMY ENGINEER DISTRICT, AFGHANISTAN
CORPS OF ENGINEERS
APO AE 96338

Michael Baker Jr., Inc.
A unit of Michael Baker Corporation
Airside Business Park
100 Airside Drive
Moon Township, PA 15108
www.mbakercorp.com

Designed by: KMP/MMY
Dwn by: RCG
Ckd by: CWW
Reviewed by: LHM
Submitted by: BAKER
Date: 2/23/10
Design file no.
Drawing code:
File name: AMMA1SS-S04DT
Plot date: 2/23/2010
Plot scale: X:X
Rev: 0

AFGHAN NATIONAL ARMY
REGIONAL MILITARY TRAINING CENTER
STANDARD DESIGN

LATRINE BUILDING
SMALL

BEAM & COLUMN DETAILS

Sheet reference number:
S-504

CONCRETE REINFORCEMENT TENSION DEVELOPMENT/LAP SPLICE SCHEDULE

f'c = 28 MPa	LAP CLASS	UNCOATED BARS			
		TOP BARS		OTHER BARS	
BAR SIZES		CASE 1	CASE 2	CASE 1	CASE 2
#10 TO #19	A	50 BAR DIA	74 BAR DIA	38 BAR DIA	57 BAR DIA
	B	64 BAR DIA	96 BAR DIA	50 BAR DIA	74 BAR DIA
#22 TO #57	A	62 BAR DIA	93 BAR DIA	48 BAR DIA	71 BAR DIA
	B	80 BAR DIA	121 BAR DIA	62 BAR DIA	93 BAR DIA

NOTES:
1. TABULATED TENSION DEVELOPMENT LENGTH VALUES ARE TAKEN FROM CRSI DESIGN HANDBOOK 2008 10TH ED.
2. TENSION DEVELOPMENT & TENSION LAP SPLICE LENGTHS ARE EXPRESSED AS MULTIPLES OF BAR DIAMETERS.
3. TABULATED VALUES ARE BASED ON MINIMUM YIELD STRENGTH OF REINFORCEMENT, fy, OF 420MPa.
4. CONCRETE IS NORMAL WEIGHT (2400Kg/m³) AND 28 DAY COMPRESSIVE STRENGTH = 28MPa.
5. TABULATED VALUES FOR BEAMS & COLUMNS ARE BASED ON TRANSVERSE REINFORCEMENT AND CONCRETE COVER MEETING MINIMUM CODE REQUIREMENTS.
6. CASES 1 & 2, WHICH DEPEND ON THE TYPE OF STRUCTURAL MEMBER, CONCRETE COVER, AND CENTER-TO-CENTER SPACING OF THE BARS ARE DEFINED IN THE TABLE BELOW.
7. LAP SPLICE LENGTHS (MINIMUM 300mm) ARE MULTIPLES OF TENSION DEVELOPMENT LENGTHS: CLASS A = 1.0(TENSION DEVELOPMENT LENGTH) & CLASS B = 1.3(TENSION DEVELOPMENT LENGTH)
8. TOP BARS ARE HORIZONTAL REINFORCEMENT WITH MORE THAN 300mm OF CONCRETE CAST BELOW THE BARS.
9. IT SHALL BE PERMISSIBLE TO CALCULATE WALL AND SLAB REINFORCEMENT TENSION DEVELOPMENT/SPLICE LENGTHS IN ACCORDANCE WITH ACI 12.2.3 OR TABLE 5.3(b) OF CRSI 2008 IN LIEU OF VALUES TABULATED ABOVE.

BEAMS, COLUMNS	CASE 1	CONCRETE COVER AT LEAST 1 BAR DIA AND CENTER-TO-CENTER SPACING AT LEAST 2 BAR DIA
	CASE 2	CONCRETE COVER LESS THAN 1 BAR DIA OR CENTER-TO-CENTER SPACING LESS THAN 2 BAR DIA
ALL OTHERS	CASE 1	CONCRETE COVER AT LEAST 1 BAR DIA AND CENTER-TO-CENTER SPACING AT LEAST 3 BAR DIA
	CASE 2	CONCRETE COVER LESS THAN 1 BAR DIA OR CENTER-TO-CENTER SPACING LESS THAN 3 BAR DIA

CONCRETE COVER SCHEDULE

MINIMUM CONCRETE COVER PROTECTION FOR REINFORCEMENT BARS SHALL BE AS LISTED BELOW: (SEE ACI 318M-05, SECTION 7.7 FOR CONDITIONS NOT NOTED). DIMENSIONS FOR BAR PLACEMENT GIVEN IN SECTIONS AND DETAILS SHALL SUPERSEDE MINIMUM COVER REQUIREMENTS GIVEN HERE. DIMENSIONS ARE IN mm. PROVIDE STANDARD BAR CHAIRS AND SUPPORT BARS @1200mm MAXIMUM AS REQUIRED TO MAINTAIN CONCRETE PROTECTION SPECIFIED.

FOOTINGS (EARTH FORMED):		70
COLUMNS / PIERS (TO TIES)		40
GRADE BEAMS OR SLAB TURNED DOWN EDGES:		
TOP		40
BOTTOM (EARTH FORMED)		70
SIDES (EARTH FORMED)		70
SIDES (BOARD FORMED)	#16 BAR & SMALLER	40
	#19 THRU #36 BAR	50
ELEVATED BEAMS & SLABS:		
BEAM TIES & STIRRUPS (NOT EXPOSED TO WEATHER)		40
BEAM TIES & STIRRUPS (EXPOSED TO WEATHER)		50
FLOOR SLABS (NOT EXPOSED TO WEATHER)		20
FLOOR SLABS (EXPOSED TO WEATHER)		
#19 & LARGER		50
#13 & SMALLER		40
ROOF SLAB BARS		25
SLABS ON GRADE		
NOT EXPOSED TO WEATHER (FROM TOP)		20
EXPOSED TO WEATHER (FROM TOP)		40
UTILITY TUNNEL WALLS, RETAINING WALLS AND SHEAR WALLS. (NO SURFACES SHALL BE EARTH FORMED)		
EARTH SIDE AND FRONT SIDE (EXPOSED TO WEATHER)		
#16 BAR AND SMALLER		40
#19 THRU #36 BAR		50

COLUMN FOOTING SCHEDULE

MARK	FOOTING SIZE (mm)			FOOTING REINFORCING	REMARKS
	LENGTH	WIDTH	THICKNESS		
F1	3000	3000	300	(9)-#19 EW BOTT	-----

CONCRETE SHEAR WALL SCHEDULE

MARK	TYPE	WALL LENGTH (L) (mm)	WALL REINFORCEMENT		REMARKS
			END ZONE	FIELD	
SW1	B	2600	(4)-#16 @ 150mm OC	#13 @ 300mm OC	-----

NOTES:
1. WORK THIS SCHEDULE WITH SHEAR WALL DETAILS ON SHEETS S-702
2. SEE PLAN FOR LOCATION OF SHEAR WALL(S).
3. VERTICAL "FIELD" BARS MAY BE OMITTED IN LOCATION OF "END ZONE" REINFORCEMENT.
4. WALL FIELD REINF LISTED APPLIES TO VERT & HORIZ BARS.
5. WALL FIELD REINFORCEMENT CENTERED IN WALL.

STANDARD HOOKS IN TENSION PER (ACI 318M-05)

HOOK DEVELOPMENT LENGTH (mm)

BAR SIZE	f'c 28 MPa
#10	180
#13	250
#16	300
#19	380
#22	430
#25	480
#29	560
#32	610
#36	690

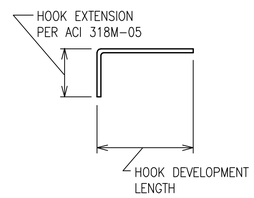

NOTES:
1. CONCRETE IS NORMAL WEIGHT CONCRETE.
2. BAR YIELD STRENGTH, fy = 420 MPa
3. SIDE COVER REQUIREMENTS OF ACI SECT. 12.5.3 ARE ASSUMED TO NOT BE MET.
4. TIE OR STIRRUP REQUIREMENTS OF ACI SECT. 12.5.3 ARE ASSUMED TO NOT BE MET.
5. REDUCTION FOR EXCESS REINFORCEMENT IS NOT TAKEN.
6. HOOK DEVELOPMENT LENGTH IS VALID FOR 180° HOOKS ALSO.

BEAM SCHEDULE

MARK	BEAM SIZE (mm)		BEAM REINFORCING						STIRRUPS			REMARKS
	DEPTH	WIDTH	BL	BS	TL	TS	TC	M	SIZE	TYPE	SPACING	
GRADE BEAMS												
GB1	735/550	400	(2)-#25	(1)-#25	(2)-#19	---	---	#22 EF	#13	S3+T9	d/2	LOWER TOP TO 550 BETWEEN A2-A3 & B2-B3
GB2	735/585 /550	400	(2)-#29	(2)-#29	(2)-#19	---	---	#22 EF	#13	S3+T9	d/2	LOWER TOP TO 585 BETWEEN A1-A2 & B1-B2; TO 550 BETWEEN A3-B3
ROOF BEAMS												
RB1	500	400	(2)-#25	(1)-#25	(2)-#25	---	---	---	#13	S3+T9	d/2	-----
RB2	500	400	(2)-#29	(1)-#29	(2)-#25	---	---	---	#13	S3+T9	d/2	-----

NOTES:
1. WORK THIS SCHEDULE WITH BEAM REINFORCING DETAILS ON SHEETS S-503 AND S-504.
2. HOOKS SHOWN ON SECTIONS AND DETAILS SHALL BE 90° STD UON.
3. USE ONLY (1) TC AT BEAM COLUMN INTERSECTION WHERE REQ'D.

COLUMN SCHEDULE

COLUMN MARK / DESCRIPTION	TYP UON	---	---	---
TYPE	4-BAR	---	---	---
DIMENSIONS	500mm SQ	---	---	---
VERTICAL REINFORCEMENT	(4)-#29	---	---	---
TIES	#13 @ d/2	---	---	---
TOP OF ROOF ELEVATION	3500mm	---	---	---
TOP OF GRADE BEAM ELEVATION	-200mm	---	---	---
TOP OF FOOTING ELEVATION	-950mm	---	---	---

NOTES:
1. WORK THIS SCHEDULE WITH COLUMN DETAILS ON SHEET S-504.
2. SEE FOOTING SCHEDULE THIS SHEET FOR FOOTING INFORMATION
3. COLUMN TIES: INTERIOR TIES TO MATCH SIZE & SPACING OF PERIMETER TIES.
4. HOOKS SHOWN ON SECTIONS & DETAILS SHALL BE 90° STD UON

CMU OR CAST IN PLACE CONC LINTEL SCHEDULE (TYP)

OPENING TYPE OR SIZE, BEAM LOCATION OR TYPE	MAX SPAN (mm)	LINTEL DEPTH (mm)	REINFORCING BOTTOM
WALL OPENING	4000	600	(2)-#16 T&B
WALL OPENING	1900	400	(2)-#16 T&B
WALL OPENING	1000	400	(2)-#13 B

1. STRUCTURAL SHEETS DO NOT INDICATE ALL OPENINGS IN MASONRY WALLS. VERIFY NUMBER, SIZE AND LOCATION OF ALL OPENINGS IN MASONRY WALLS FROM ARCHITECTURAL SHEETS AND APPROVED PLUMBING, MECHANICAL, AND ELECTRICAL SHOP DRAWINGS.
2. PROVIDE 200mm BEARING EA END.
3. FOR HEAD DETAILS REFER TO ARCHITECTURAL SHEETS.
4. REINFORCING SHALL BE ASTM A615M, GRADE 420. GROUT FOR CMU LINTELS SHALL HAVE A MINIMUM COMPRESSIVE STRENGTH OF 14 MPa AT 28 DAYS.
5. CONTRACTOR SHALL SUBMIT FOR APPROVAL SHOP DRAWINGS AND SCHEDULES SHOWING SIZE, SPAN, REINFORCEMENT, DETAILS, LOCATIONS, ETC.

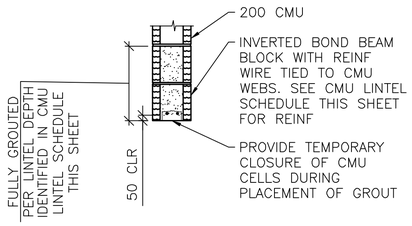

A / S-601 **LINTEL DETAIL**
SCALE: NTS

UNLESS OTHERWISE NOTED, LINEAR DIMENSIONS SHOWN ON DRAWINGS ARE IN MILLIMETERS (mm)

APPROVED:

A/E DESIGNER OF RECORD

SEAL:

GEORGIA REGISTERED PROFESSIONAL ENGINEER No. 27141 1-27-10 CHRISTOPHER W. WHITMORE

US ARMY CORPS OF ENGINEERS
AFGHANISTAN ENGINEER DISTRICT

Mark	Description	Date	Appr.	Mark	Description	Date	Appr.

U.S. ARMY ENGINEER DISTRICT, AFGHANISTAN
CORPS OF ENGINEERS
APO AE 96338

Michael Baker Jr., Inc
A unit of Michael Baker Corporation
Airside Business Park
100 Airside Drive
Moon Township, PA 15108
www.mbakercorp.com

Designed by: KMP/MMY
Dwn by: RCG
Ckd by: CWW
Reviewed by: LMH
Submitted by:
BAKER

Date: 2/23/10
Design file no.
Rev: 0
Drawing code:
File name: ANMA1TSS-601SCH
Plot date: 2/23/2010
Plot scale: X:X

AFGHAN NATIONAL ARMY
REGIONAL MILITARY TRAINING CENTER
STANDARD DESIGN

LATRINE BUILDING
SMALL

SCHEDULES

Sheet reference number:
S-601

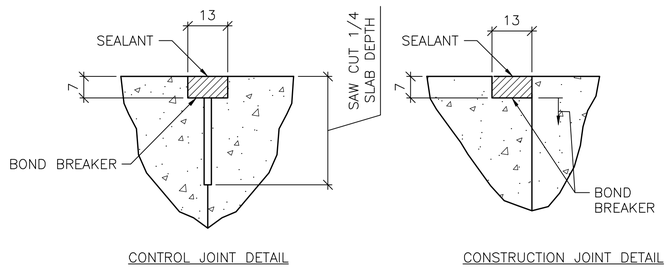

TYPICAL CONCRETE SLAB JOINT FINISH DETAILS

1 / S-701 SCALE: NTS

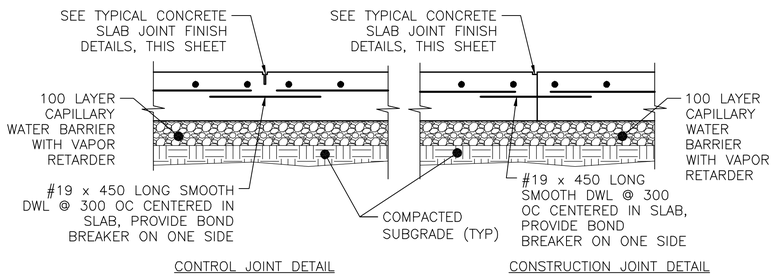

TYPICAL SLAB ON GRADE JOINT DETAIL

2 / S-701 SCALE: NTS

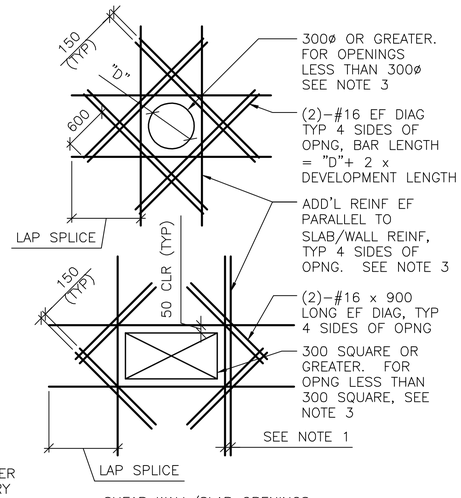

DETAIL NOTES:
1. WHERE MORE THAN ONE ADDITIONAL BAR IS REQUIRED PARALLEL TO THE EXISTING SLAB/WALL REINFORCING THE ADDITIONAL REINFORCING BARS SHALL BE SPACED AT 100 ON CENTER.
2. ADDITIONAL REINFORCING PARALLEL TO THE SLAB/WALL REINFORCING SHALL BE #16 BARS THAT PROVIDE A STEEL AREA ON EACH SIDE OF THE OPENING EQUAL TO 1/2 THE AREA OF THE REINFORCING CUT BY THE OPENING.
3. FOR OPENINGS WITH SIDES OR DIAMETERS LESS THAN 300 SPREAD THE SLAB/WALL REINFORCING TO CLEAR THE OPENING.

ADD'L CONCRETE REINFORCEMENT DETAILS

4 / S-701 SCALE: NTS

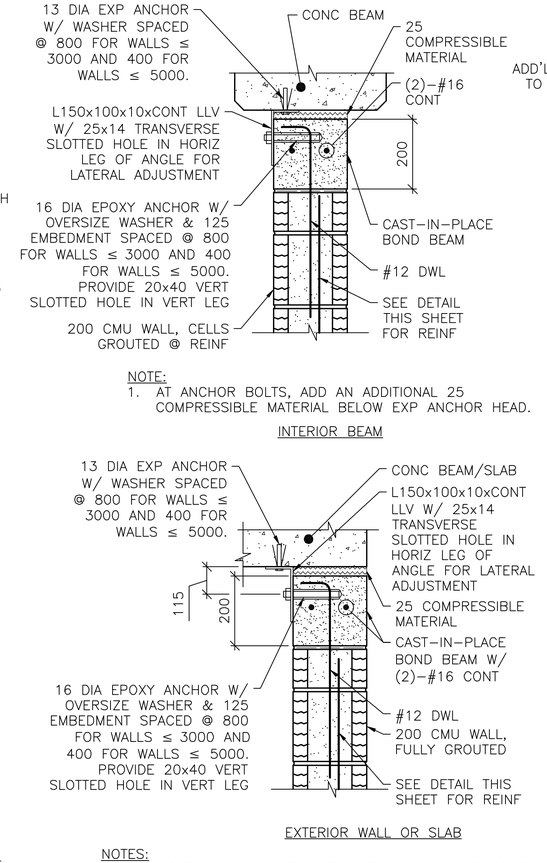

NOTE:
1. AT ANCHOR BOLTS, ADD AN ADDITIONAL 25 COMPRESSIBLE MATERIAL BELOW EXP ANCHOR HEAD.

NOTES:
1. THIS DETAIL IS AN ALTERNATE TOP OF WALL ANCHORAGE DETAIL TO BE USED AT THE CONTRACTOR'S OPTION IN LIEU OF DETAILS SHOWN ON S-400 & S-500 DRAWINGS.
2. CAST-IN-PLACE BOND BEAM SHOWN AT TOP OF WALL IS ALSO APPLICABLE FOR INTERMEDIATE AND STARTER COURSE BOND BEAMS WITHIN WALL.

ALTERNATE TOP OF CMU WALL BRACING DETAILS

5 / S-701 SCALE: NTS

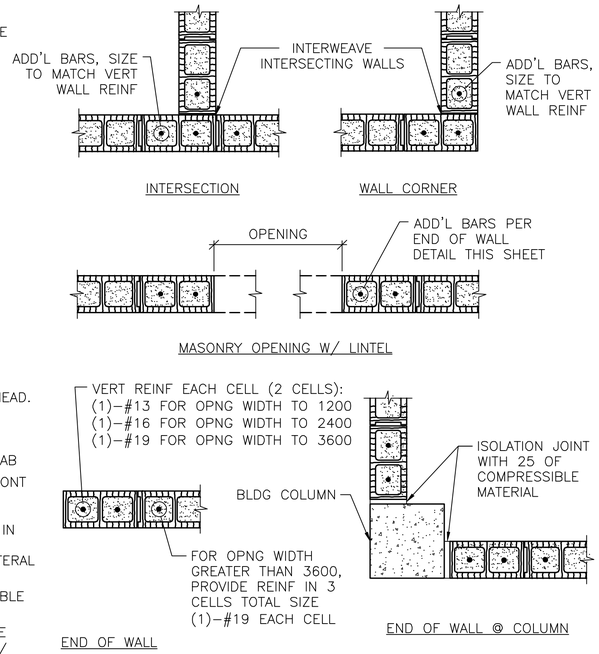

NOTES:
1. OPENING WIDTH SHALL NOT EXCEED 3600 FOR THIS TYPE OF JAMB.
2. ALL CELLS FULLY GROUTED AT EXTERIOR WALLS. AT INTERIOR WALLS, ONLY GROUT CELLS CONTAINING REINF.

TYP CMU DETAILS

6 / S-701 SCALE: NTS

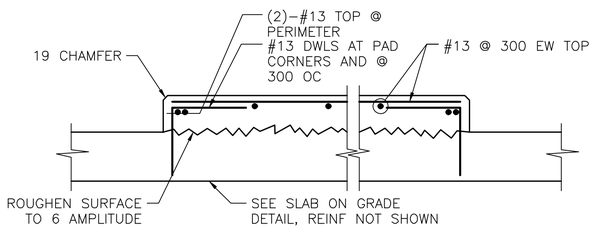

INTERIOR EQUIPMENT PAD DETAIL

3 / S-701 SCALE: NTS

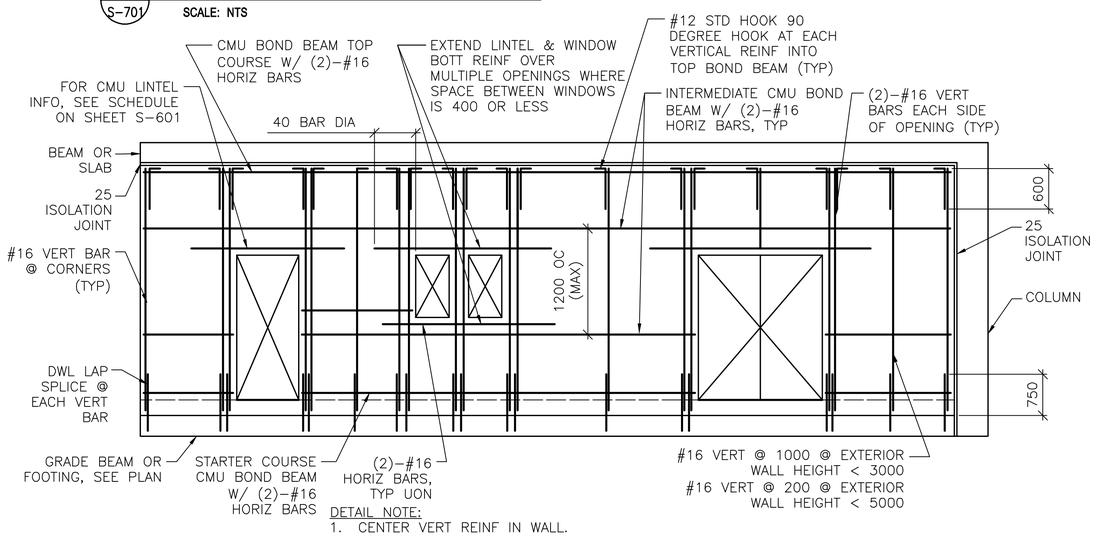

DETAIL NOTE:
1. CENTER VERT REINF IN WALL.
2. GROUT ALL CMU CELLS.
3. REFERENCE ARCH DWGS FOR JOINT INFORMATION
4. DOWELS BETWEEN TOP BOND BEAM AND BEAM/SLAB ABOVE (INCLUDING EMBEDDED PIPE SLEEVE) NOT SHOWN FOR CLARITY. SEE SPECIFIC S-500 SERIES DWGS FOR INFO.
5. FOR INFORMATION ON ALTERNATE CAST-IN-PLACE WALL BOND BEAMS, REFERENCE ALTERNATE TOP OF CMU WALL BRACING DETAILS THIS SHEET.

TYP EXTERIOR CMU WALL REINF DETAIL

7 / S-701 SCALE: NTS

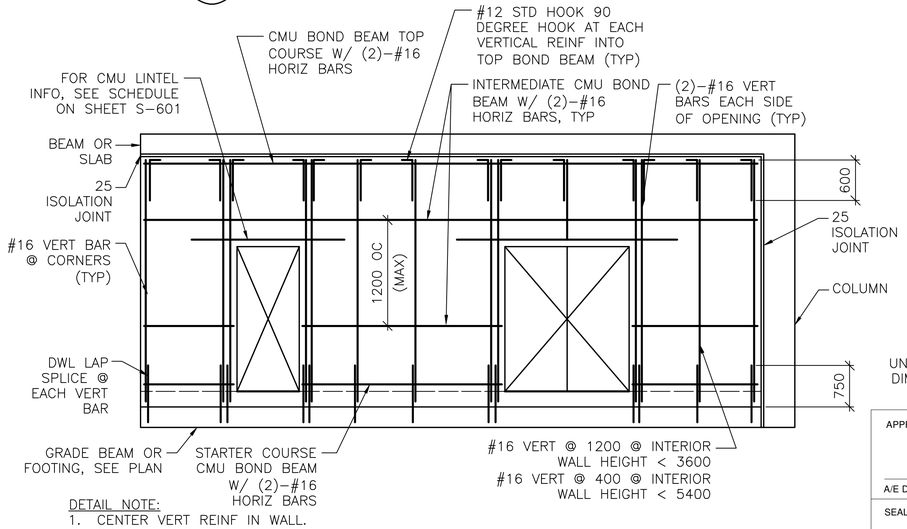

DETAIL NOTE:
1. CENTER VERT REINF IN WALL.
2. GROUT ALL CMU CELLS.
3. REFERENCE ARCH DWGS FOR JOINT INFORMATION
4. DOWELS BETWEEN TOP BOND BEAM AND BEAM/SLAB ABOVE (INCLUDING EMBEDDED PIPE SLEEVE) NOT SHOWN FOR CLARITY. SEE SPECIFIC S-500 SERIES DWGS FOR INFO.
5. FOR INFORMATION ON ALTERNATE CAST-IN-PLACE WALL BOND BEAMS, REFERENCE ALTERNATE TOP OF CMU WALL BRACING DETAILS THIS SHEET.

TYP INTERIOR CMU WALL REINF DETAIL

8 / S-701 SCALE: NTS

UNLESS OTHERWISE NOTED, LINEAR DIMENSIONS SHOWN ON DRAWINGS ARE IN MILLIMETERS (mm)

APPROVED:

A/E DESIGNER OF RECORD

SEAL:

GEORGIA REGISTERED 1-29-10 No. 27141 PROFESSIONAL ENGINEER CHRISTOPHER W. WHILMORE

US ARMY CORPS OF ENGINEERS
AFGHANISTAN ENGINEER DISTRICT

Mark	Description	Date	Appr.	Mark	Description	Date	Appr.

Rev: 0
Date: 2/23/10
Design file no.
Drawing code:
File name: ANALATSS-701TDT
Plot date: 2/23/2010
Plot scale: X/X

Designed by: KMP/MMY
Dwn by: RCG
Ckd by: CWW
Reviewed by: LHM
Submitted by:

U.S. ARMY ENGINEER DISTRICT, AFGHANISTAN
CORPS OF ENGINEERS
APO AE 96338

Michael Baker Jr., Inc.
A unit of Michael Baker Corporation
Airside Business Park
100 Airside Drive
Moon Township, PA 15108
www.mbakercorp.com

BAKER

AFGHAN NATIONAL ARMY
REGIONAL MILITARY TRAINING CENTER
STANDARD DESIGN

LATRINE BUILDING
SMALL

TYPICAL DETAILS

Sheet reference number:
S-701

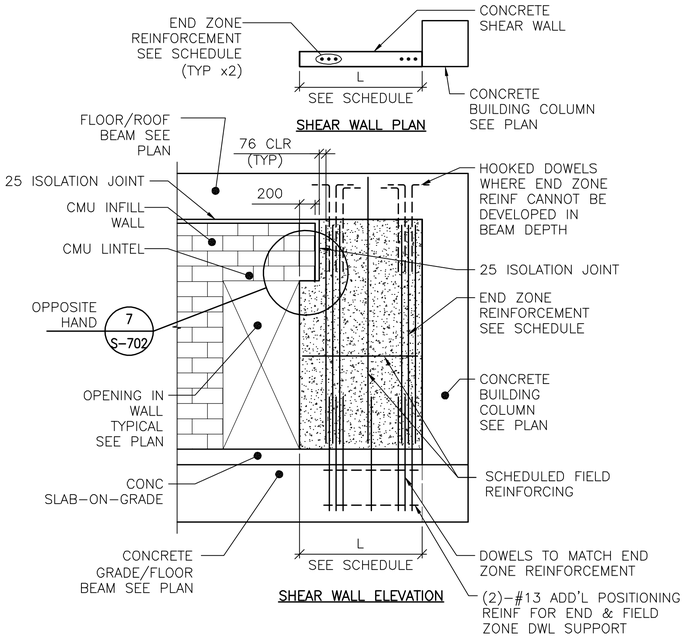

DETAIL NOTES:
1. FIELD REINFORCEMENT IN SHEAR WALL NOT SHOWN COMPLETELY FOR CLARITY.
2. FIELD REINFORCEMENT CENTERED IN WALL.
3. MINIMUM CONC CLEAR DISTANCE FOR END ZONE REINF = 76
4. SEE CONC SHEAR WALL SCHEDULE ON SHEET S-601
5. SEE ARCH DWGS FOR JOINT INFORMATION

1 S-702 TYPE "B" SHEAR WALL DETAIL

SCALE: NTS

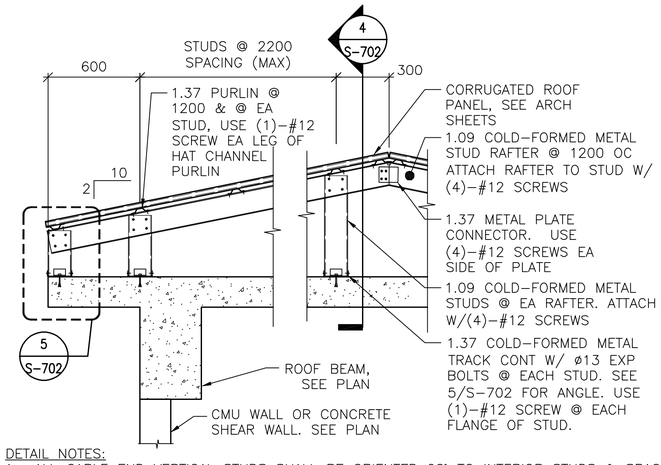

DETAIL NOTES:
1. ALL GABLE END VERTICAL STUDS SHALL BE ORIENTED 90° TO INTERIOR STUDS & SPACED @ 600 OC. GABLE END RAFTER SHALL BE 1.37 METAL TRACK SPANNING CONTINUOUSLY OVER GABLE END STUDS. INSET GIRTS AT GABLE END SHALL BE 1.09 COLD-FORMED METAL STUDS @ 1200 OC ATTACHED VIA 1.37 THICKNESS CLIP ANGLE W/ (2) #12 SCREWS EA LEG.
2. ALL INTERIOR, NON-GABLE END VERTICAL STUDS GREATER THAN 2400 IN LENGTH SHALL BE BACK-TO-BACK W/ #12 SCREWS @ 200 OC STAGGERED.

2 S-702 TYPICAL OVERBUILT ROOF FRAMING DETAIL

SCALE: NTS

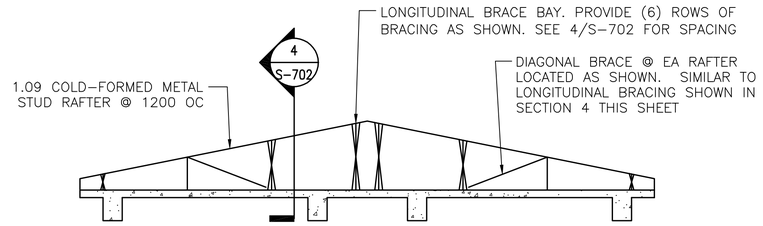

3 S-702 TYPICAL ROOF BRACE LAYOUT

SCALE: NTS

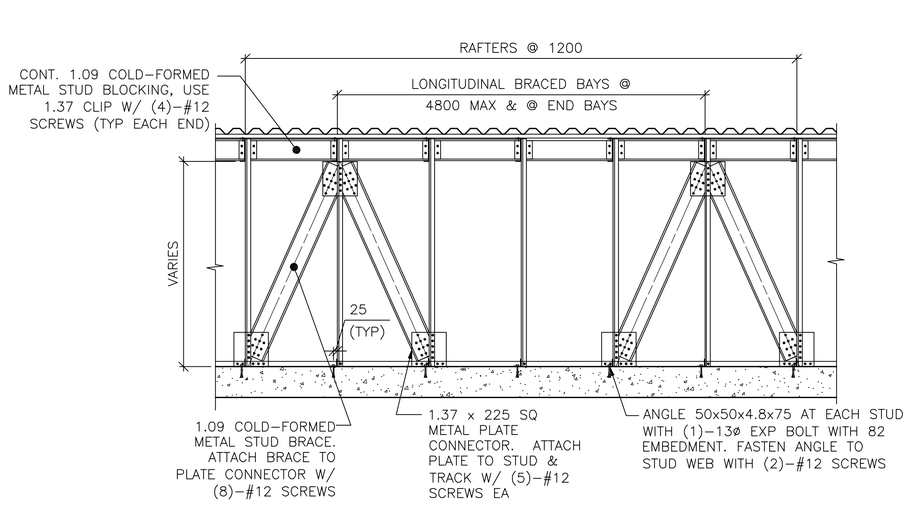

4 S-702 SECTION

SCALE: NTS

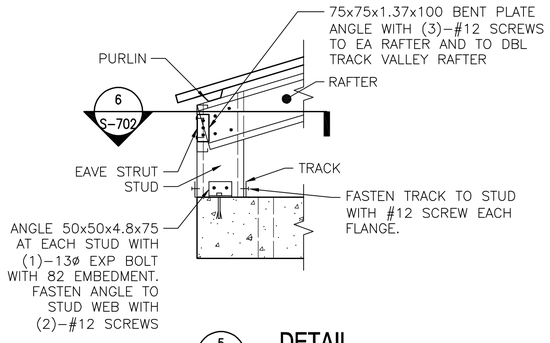

5 S-702 DETAIL

SCALE: NTS

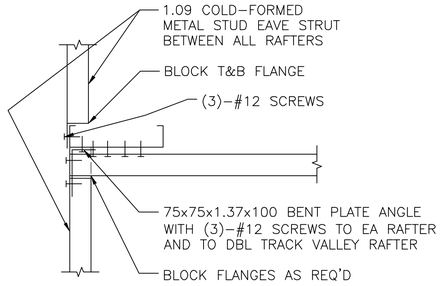

6 S-702 SECTION

SCALE: NTS

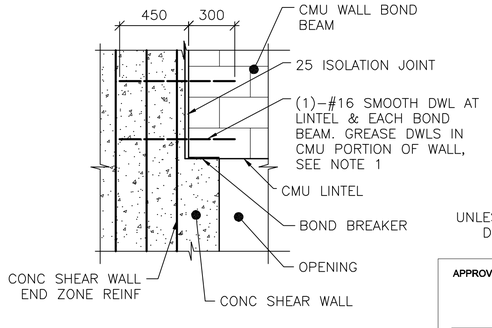

NOTE:
1. TIE SMOOTH DOWEL ROD TO SHEAR WALL END ZONE REINF FOR EACH BOND BEAM AND LINTEL.

7 S-702 SECTION

SCALE: NTS

UNLESS OTHERWISE NOTED, LINEAR DIMENSIONS SHOWN ARE IN MILLIMETERS (mm)

APPROVED:

A/E DESIGNER OF RECORD

SEAL:

GEORGIA REGISTERED 1-27-10 No. 27141 PROFESSIONAL ENGINEER CHRISTOPHER W. WHITMORE

US ARMY CORPS OF ENGINEERS
AFGHANISTAN ENGINEER DISTRICT

Mark	Description	Date	Appr.	Mark	Description	Date	Appr.

Date: 2/23/10 | Rev: 0
Design file no.
Drawing code:
File name: AANLATSS-702TDT
Plot date: 2/23/2010
Plot scale: x:X

Designed by: KMP/MMY
Dwn by: RCG | Ckd by: CWW
Reviewed by: LHM
Submitted by:
BAKER

U.S. ARMY ENGINEER DISTRICT, AFGHANISTAN
CORPS OF ENGINEERS
APO AE 96338

Michael Baker Jr., Inc.
A unit of Michael Baker Corporation
Airside Business Park
100 Airside Drive
Moon Township, PA 15108
www.mbakercorp.com

AFGHAN NATIONAL ARMY
REGIONAL MILITARY TRAINING CENTER
STANDARD DESIGN

LATRINE BUILDING
SMALL

TYPICAL DETAILS

Sheet reference number:
S-702

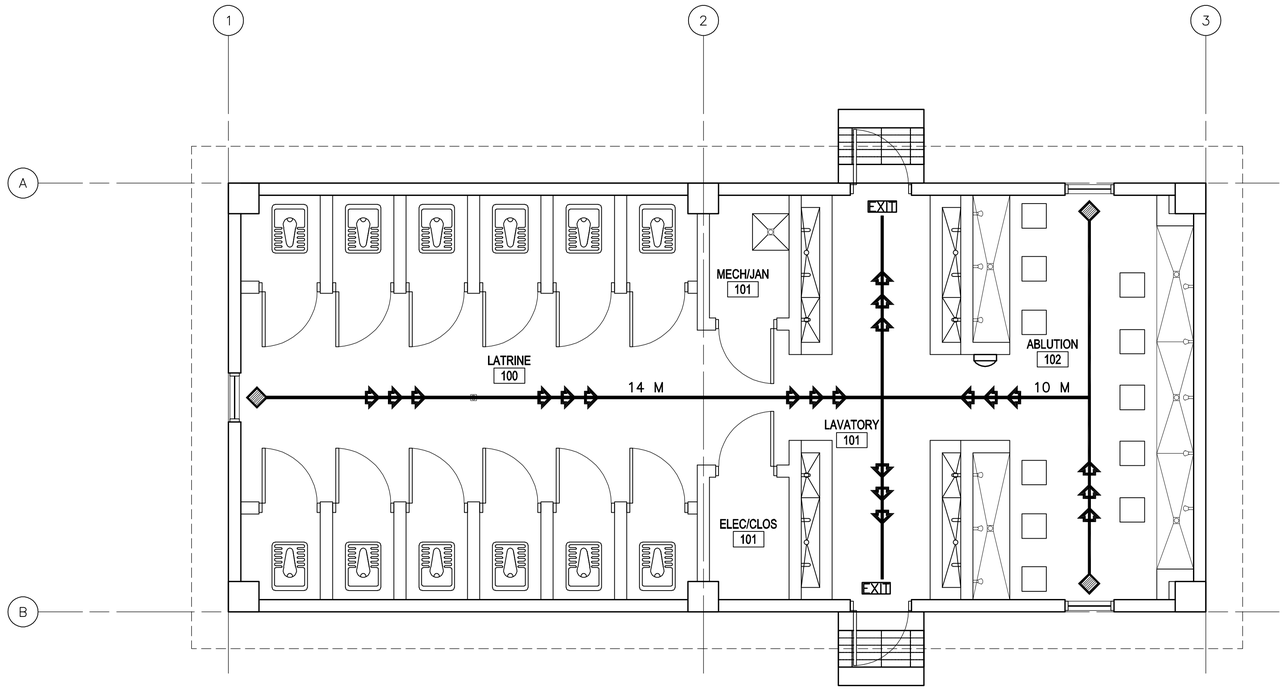

1
A-001

LIFE SAFETY PLAN

SCALE: 1:50

CODE ANALYSIS:

1. REFERENCES:
   2006 INTERNATIONAL BUILDING CODE (2006 IBC)
   2006 LIFE SAFETY CODE (2006 NFPA 101)

2. IBC OCCUPANCY CLASSIFICATION:
   GROUP U UTILITY AND MISCELLANEOUS (ASSEMBLY ≤300 NFPA 101 6.1.2 AND CHAPTER 12)

3. TYPE OF CONSTRUCTION (IBC): TYPE II–B (UNPROTECTED/NONSPRINKLERED)

4. IBC TABLE 503: ALLOWABLE HEIGHT AND BUILDING AREAS:
   GROUP U
   ALLOWABLE AREA: 789 SM
   ALLOWABLE HEIGHT: 2 STORIES (<16 M)

   GROUP U
   PROPOSED AREA: 112 SM
   PROPOSED HEIGHT: 1 STORY (<16 M)

5. IBC TABLE 601 & 602: FIRE RESISTANCE RATING REQUIREMENTS FOR BUILDING ELEMENTS FOR TYPE II–B

BUILDING ELEMENT	RATING (HOUR)	REFERENCE
STRUCTURAL FRAME (COLUMNS, GIRDERS & TRUSSES)	0	TABLE 601
BEARING WALLS		
EXTERIOR	0	TABLE 601
INTERIOR	0	TABLE 601
NONBEARING WALLS & PARTITIONS		
INTERIOR	0	TABLE 601
FLOOR CONSTRUCTION	0	TABLE 601
ROOF CONSTRUCTION	0	TABLE 601
EXTERIOR WALL	0	TABLE 602

6. IBC TABLE 803.5 – INTERIOR WALL AND CEILING FINISH REQUIREMENTS FOR U OCCUPANCY/NONSPRINKLERED

GROUP	EXIT ENCLOSURES AND EXIT PASSAGEWAY	CORRIDORS	ROOMS AND ENCLOSED SPACES
U	NO RESTRICTIONS	NO RESTRICTIONS	NO RESTRICTIONS

7. NFPA 101 TABLE 7.3.1.2 – OCCUPANT LOAD
   ASSEMBLY ≤ 300 = 1.4 NET SM/PERSON CALCULATED = 80 OCCUPANTS
   ACTUAL = 35 OCCUPANTS

8. NFPA 101 TABLE 7.3.3.1 – EGRESS CAPACITY
   ASSEMBLY = 5 MM PER OCCUPANT

   REQUIRED: 400 MM (80 OCCUPANTS x 5 MM PER OCCUPANT)
   PROPOSED EGRESS CAPACITY: 1800 MM: (2) 900 MM DOORS

9. NFPA 101 PARAGRAPH 12.2.6 – EXIT ACCESS TRAVEL DISTANCE
   REQUIRED: 60 METERS
   PROPOSED: 14 METERS

10. NFPA 101 PARAGRAPH 12.3.6 (1) – CORRIDOR FIRE–RESISTANCE RATING (HOUR)
    CORRIDORS ARE NOT REQUIRED AS DOORS EXIT DIRECTLY TO OUTSIDE

11. NFPA 101 PARAGRAPH 12.2.4.1 AND 7.4.1.1 – MINIMUM NUMBER OF EXITS
    REQUIRED: 2 MINIMUM
    PROPOSED: 2 EXITS

12. NFPA 101 PARAGRAPH 12.3.2.1.2 – PROTECTION FROM HAZARDS
    SEPARATION AT STORAGE NOT REQUIRED. STORAGE ROOMS WILL NOT CONTAIN QUANTITIES OR MATERIALS DEEMED HAZARDOUS.

    INCIDENTAL USE AREAS: IBC TABLES 508.2
    1 HOUR SEPARATION FOR STORAGE ROOMS OVER 9.3 SM
    STORAGE AREAS ARE 3 SM EACH, SO SEPARATION IS NOT REQUIRED

LEGEND:

- DENOTES PATHS OF EXIT TRAVEL
- EXIT — DENOTES DOOR AS AN EMERGENCY EXIT
- DENOTES STARTING POINT FOR TRAVEL DISTANCE
- DENOTES FIRE EXTINGUISHER LOCATIONS

LINEAR DIMENSIONS SHOWN ARE IN MILLIMETERS (MM), UNLESS OTHERWISE NOTED

0 1000 2000
SCALE: 1:50

APPROVED:

A/E DESIGNER OF RECORD

SEAL:

STATE OF SOUTH CAROLINA
KEVIN R. CHAFIN
N. Charleston, SC
6374
REGISTERED ARCHITECT

US ARMY CORPS OF ENGINEERS
AFGHANISTAN ENGINEER DISTRICT

Mark	Description	Date	Appr.	Mark	Description	Date	Appr.

Date: 2/23/10
Design file no.
Rev: 0
Drawing code:
File name: ANAATSA-001LSP
Plot date: 2/23/2010
Plot scale: x:X

Designed by: KRC
Dwn by: EBB
Ckd by: NLJ
Reviewed by: LHM
Submitted by: BAKER

U.S. ARMY ENGINEER DISTRICT, AFGHANISTAN
CORPS OF ENGINEERS
APO AE 96338

Michael Baker Jr., Inc.
A unit of Michael Baker Corporation
Airside Business Park
100 Airside Drive
Moon Township, PA 15108
www.mbakercorp.com

AFGHAN NATIONAL ARMY
REGIONAL MILITARY TRAINING CENTER
STANDARD DESIGN

LATRINE BUILDING
SMALL

LIFE SAFETY PLAN

Sheet reference number:
A–001

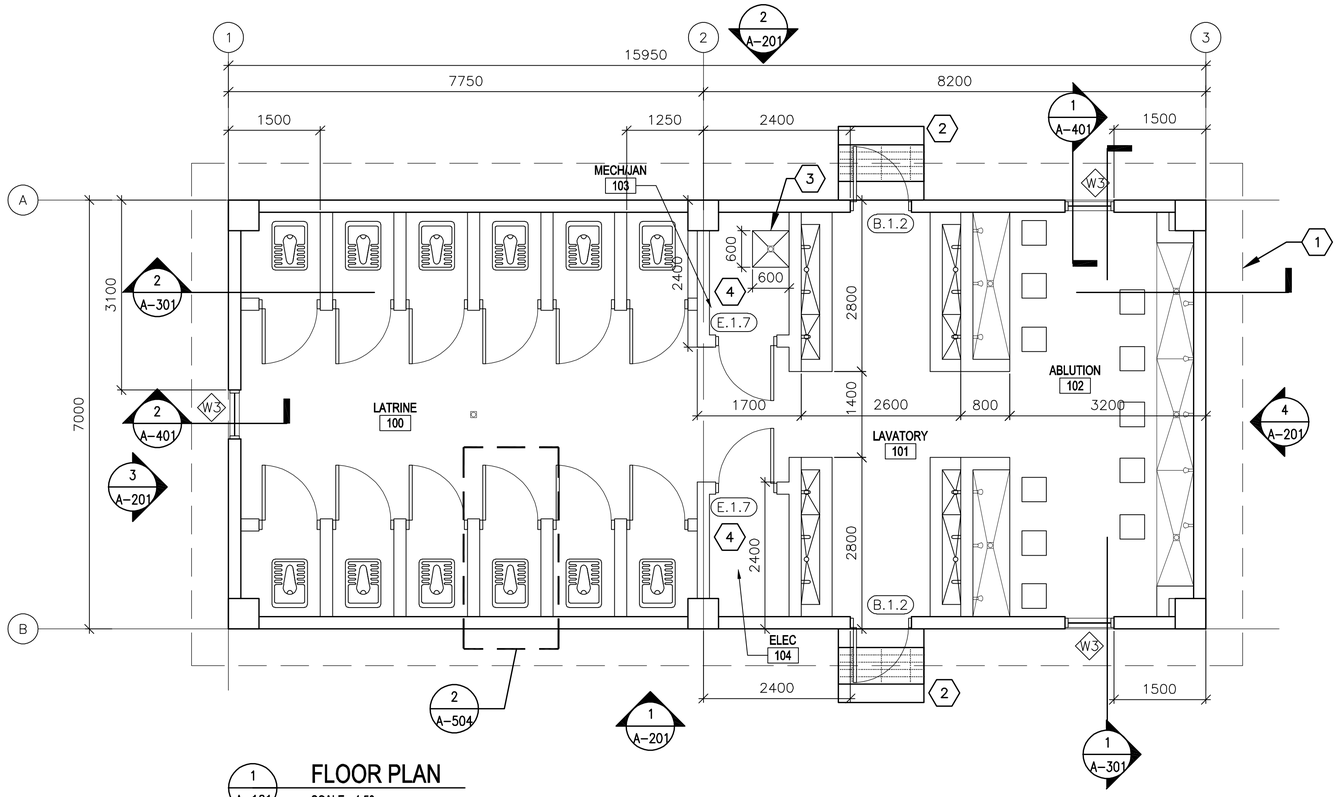

1 A-101 **FLOOR PLAN**

SCALE: 1:50

GENERAL NOTES:

A. DIMENSIONS ARE SHOWN TO OUTER EDGE OF EXTERIOR STRUCTURAL COLUMNS, STRUCTURAL COLUMN GRID, EDGE OF INTERIOR PARTITIONS, EDGE OF WINDOW OPENINGS, AND TO HINGED SIDE OF DOOR FRAME OPENINGS.

B. OPENINGS FOR DOORS AND FRAMES SHALL BE LOCATED 200 MM FROM THE ADJACENT WALL OR COLUMN, UNLESS NOTED OTHERWISE.

C. INTERIOR PARTITIONS SHALL BE 200 MM CMU. SEE STRUCTURAL DRAWINGS FOR LOCATION OF CONCRETE SHEAR WALLS.

D. COSMETIC REPAIR OF MINOR DEFECTS: REPAIR OR FILL MORTAR JOINTS AND MINOR DEFECTS, INCLUDING BUT NOT LIMITED TO SPALLS, IN ACCORDANCE WITH MANUFACTURER'S RECOMMENDATIONS AND PRIOR TO COATING APPLICATION. SURFACES TO BE PAINTED OR PLASTERED SHALL BE CLEAN AND FREE OF FOREIGN MATTER BEFORE APPLICATION OF PAINT. CLEANING SHALL BE SCHEDULED SO THAT DUST AND OTHER CONTAMINANTS WILL NOT FALL ON NEWLY PAINTED SURFACES.

E. CONCRETE, PLASTER AND MASONRY SURFACES SHALL BE ALLOWED TO CURE FOR AT LEAST 30 DAYS BEFORE PAINTING OR TILING. CONCRETE SLABS-ON-GRADE SHALL BE ALLOWED TO CURE 90 DAYS BEFORE STAINING OR SEALING.

F. DO NOT USE PAINT MATERIALS CONTAINING LEAD CONTENT IN EXCESS OF 0.009 PERCENT OF THE WEIGHT OF THE TOTAL NONVOLATILE CONTENT OF THE PAINT OR THE WEIGHT OF THE DRIED PAINT FILM.

G. DO NOT USE ANY ASBESTOS CONTAINING MATERIALS (ACM) IN PROJECT. ACM IS DEFINED AS 1% OR MORE BY VOLUME.

H. DO NOT USE PAINT MATERIALS CONTAINING MERCURIAL FUNGICIDES.

I. FACTORY PRIMED METAL DOORS AND FRAMES SHALL RECEIVE TWO COATS OF PAINT.

J. FILL REMAINING SPACE AT PENETRATIONS IN FIRE-RATED FLOORS, PARTITIONS AND CEILINGS WITH APPROPRIATE FIRESTOPPING MATERIALS.

K. ALL CEILING FINISHES SHALL BE PAINTED PLASTER APPLIED TO STRUCTURE.

L. ALL WALL FINISHES SHALL BE CERAMIC TILE TO 2000 MM WITH PAINTED PLASTER APPLIED TO STRUCTURE ABOVE, UNLESS NOTED OTHERWISE.

M. ALL FLOOR FINISHES SHALL BE TERRAZZO TILE.

N. PROVIDE TILE FINISHES AS INDICATED IN DETAILS.

O. ALL TOILET STALL DOORS, FRAMES & HARDWARE TYPE SHALL BE F.2.12

P. HEIGHT OF ALL TOILET PARTITIONS SHALL BE 2000 MM ABOVE FINISHED FLOOR.

Q. PROVIDE POLISHED STAINLESS STEEL MIRROR 600 X 900 ABOVE EVERY LAVATORY FAUCET.

KEY NOTES: (X)

1. LINE OF ROOF OVERHANG ABOVE.
2. CONCRETE STOOP WITH GRATE – SEE DETAIL 1/A-503.
3. RECESSED TROUGH – SEE DETAIL 7/A-504.
4. WALL FINISH: PAINTED PLASTER APPLIED TO STRUCTURE.

LEGEND:

(XXX) DOOR FRAME AND HARDWARE TYPE, SEE SHEET A-601

(A) WINDOW TYPE, SEE SHEET A-601

(X) KEY NOTE

ABBREVIATIONS:

COMM	COMMUNICATIONS
ELEC	ELECTRICAL
MECH	MECHANICAL
JAN	JANITOR
CLOS	CLOSET

LINEAR DIMENSIONS SHOWN ARE IN MILLIMETERS (MM), UNLESS OTHERWISE NOTED

0 1000 2000
SCALE: 1:50

APPROVED:

A/E DESIGNER OF RECORD

SEAL:

STATE OF SOUTH CAROLINA
KEVIN R. CHAFIN
N. Charleston, SC
6374
REGISTERED ARCHITECT

US ARMY CORPS OF ENGINEERS
AFGHANISTAN ENGINEER DISTRICT

Mark	Description	Date	Appr.	Mark	Description	Date	Appr.

Date: 2/23/10 Rev: 0
Design file no.
Drawing code:
File name: ANAATSA-101FP
Plot date: 2/23/2010
Plot scale: x:X

Designed by: KRC
Dwn by: EBB
Ckd by: NLJ
Reviewed by: LHM
Submitted by: BAKER

U.S. ARMY ENGINEER DISTRICT, AFGHANISTAN
CORPS OF ENGINEERS
APO AE 96338

Michael Baker Jr., Inc.
A unit of Michael Baker Corporation
Airside Business Park
100 Airside Drive
Moon Township, PA 15108
www.mbakercorp.com

AFGHAN NATIONAL ARMY
REGIONAL MILITARY TRAINING CENTER
STANDARD DESIGN

LATRINE BUILDING
SMALL

FLOOR PLAN

Sheet reference number:
A-101

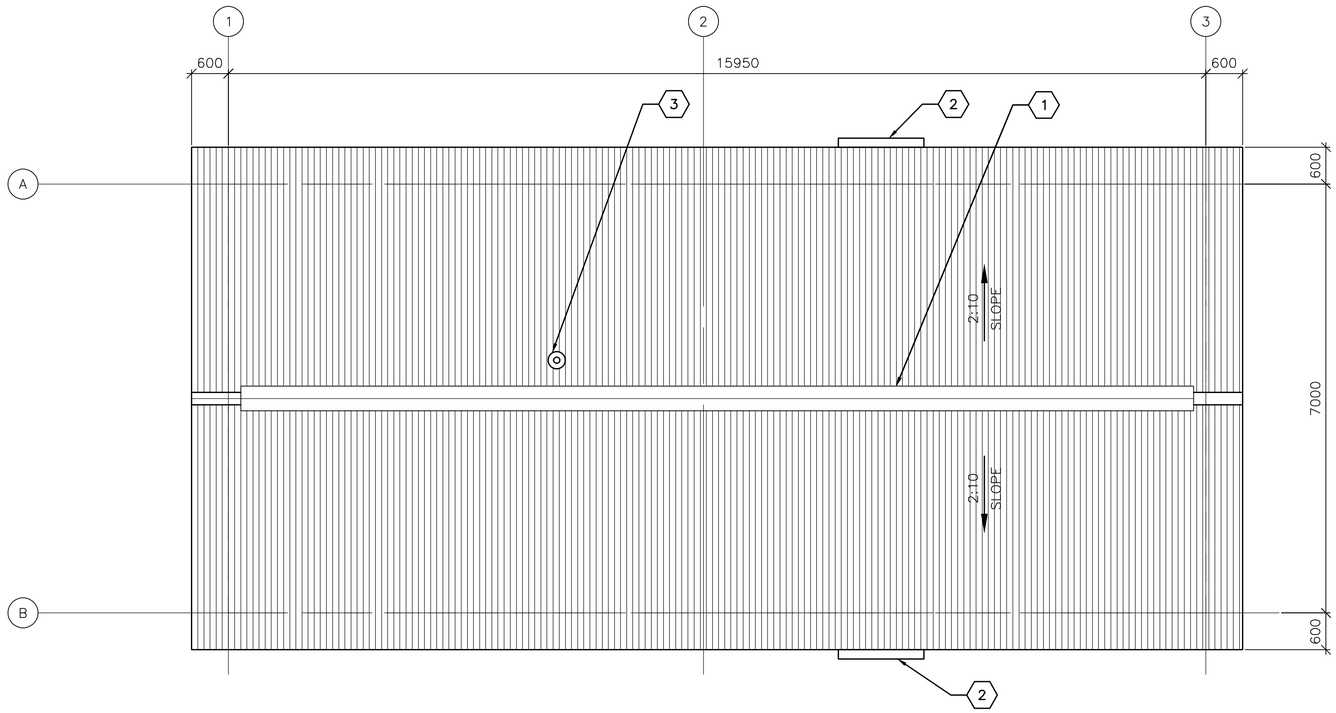

1 / A-102 **ROOF PLAN**

SCALE: 1:50

GENERAL NOTES:

A. THE APPROXIMATE LOCATION OF ROOF DEVICES AND PENETRATIONS ARE SHOWN ON THE ROOF PLAN FOR INFORMATION ONLY. THE CONTRACTOR SHALL BE RESPONSIBLE FOR UNDERSTANDING THE ACTUAL LOCATION OF THESE AND ALL OTHER ITEMS PRIOR TO BEGINNING CONSTRUCTION. COORDINATE ALL ROOF PENETRATIONS WITH STRUCTURAL, MECHANICAL AND PLUMBING WORK.

B. PLUMBING VENT PENETRATIONS SHALL TERMINATE 300 MM MINIMUM ABOVE THE ROOF.

C. UNLESS OTHERWISE NOTED, NOTES, DETAILS OR FEATURES INDICATED FOR ONE CONDITION SHALL BE APPLICABLE FOR ALL ALIKE AND SIMILAR CONDITIONS.

D. STOCKPILING OF MATERIALS, EQUIPMENT AND ANY OTHER ITEMS ON THE ROOF IS PROHIBITED.

E. ROOFS SHALL BE CORRUGATED METAL ROOF PANELS ON COLD-FORMED METAL FRAMING ON CONCRETE SLAB.

KEY NOTES:

1. CONTINUOUS METAL RIDGE VENT SEE DETAIL 4/A-501.
2. METAL GUTTER, CENTER ON DOOR, 1400 MM – SEE DETAIL 1A/A-501.
3. PLUMBING VENT – SEE DETAIL 5/A-501.

LINEAR DIMENSIONS SHOWN ARE IN MILLIMETERS (MM), UNLESS OTHERWISE NOTED

0 1000 2000
SCALE: 1:50

APPROVED:

A/E DESIGNER OF RECORD

SEAL:

STATE OF SOUTH CAROLINA
KEVIN R. CHARIN
N. Charleston, SC
6374
REGISTERED ARCHITECT

US ARMY CORPS OF ENGINEERS
AFGHANISTAN ENGINEER DISTRICT

Mark	Description	Date	Appr.	Mark	Description	Date	Appr.

U.S. ARMY ENGINEER DISTRICT, AFGHANISTAN
CORPS OF ENGINEERS
APO AE 96338

Michael Baker Jr., Inc
A unit of Michael Baker Corporation
Airside Business Park
100 Airside Drive
Moon Township, PA 15108
www.mbakercorp.com

Designed by: KRC
Dwn by: EBB
Ckd by: NLJ
Reviewed by: LHM
Submitted by: BAKER

Date: 2/23/10
Rev: 0
Design file no.
Drawing code:
File name: ANAATSA-1026P
Plot date: 2/23/2010
Plot scale: x:X

AFGHAN NATIONAL ARMY
REGIONAL MILITARY TRAINING CENTER
STANDARD DESIGN

LATRINE BUILDING
SMALL

ROOF PLAN

Sheet reference number:
A-102

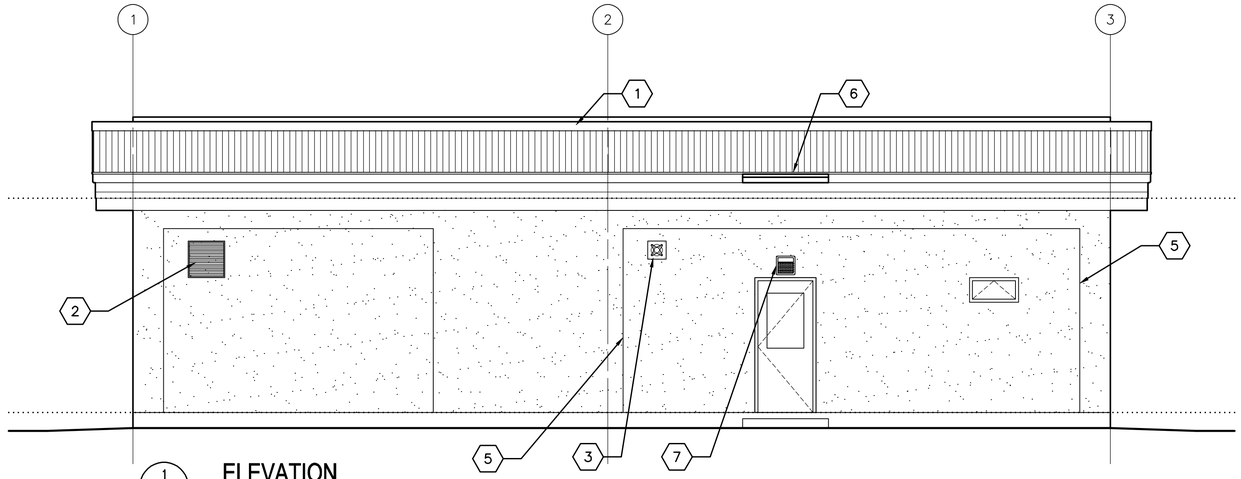

1 A-201 **ELEVATION**
SCALE: 1:50

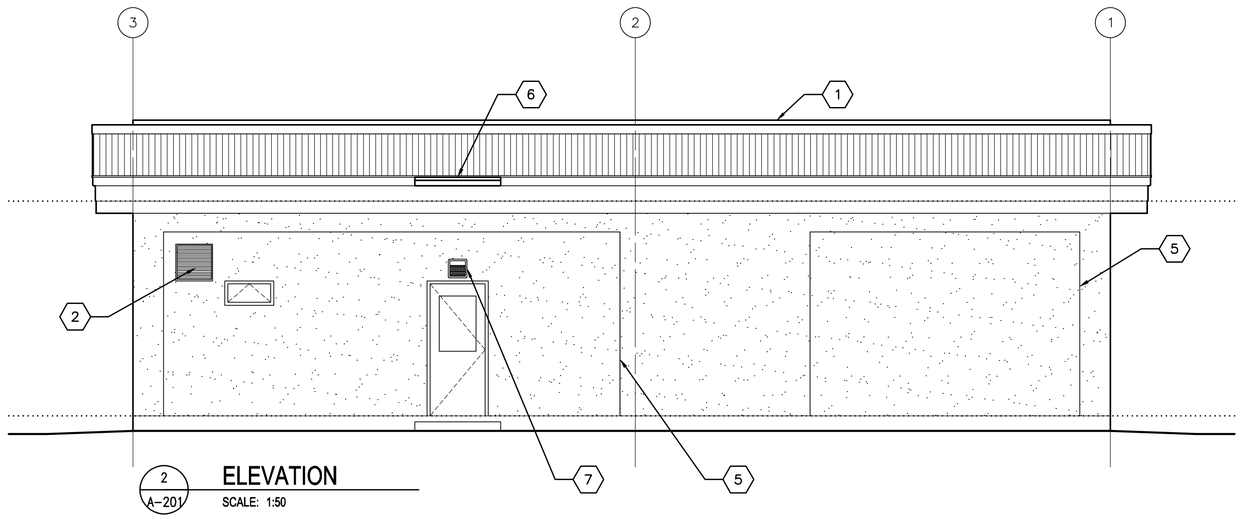

2 A-201 **ELEVATION**
SCALE: 1:50

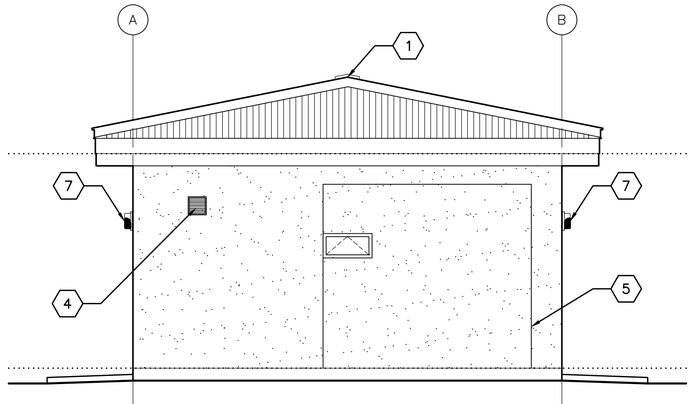

3 A-201 **ELEVATION**
SCALE: 1:50

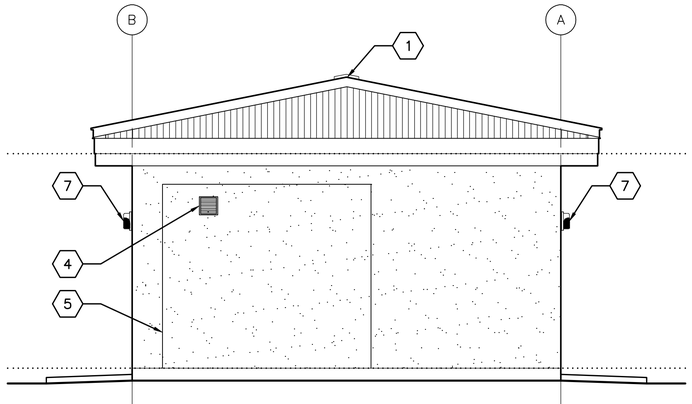

4 A-201 **ELEVATION**
SCALE: 1:50

GENERAL NOTES:

A. COORDINATE SIZE AND LOCATION OF OPENINGS FOR MECHANICAL ITEMS WITH MECHANICAL DRAWINGS.

B. PROVIDE STRUCTURAL LINTELS AS REQUIRED – SEE STRUCTURAL DRAWINGS

C. ALL EXTERIOR WALL FINISHES SHALL BE STUCCO OVER CMU AND CONCRETE SUBSTRATES. PROVIDE CONTROL JOINTS IN STUCCO WALL FINISH AS NOTED.

D. ROOF SHALL BE CORRUGATED METAL ROOF PANELS ON COLD–FORMED METAL FRAMING ON CONCRETE SLAB.

KEY NOTES: (X)

1. CONTINUOUS METAL RIDGE VENT – SEE DETAIL 4/A–501.
2. LOUVER, LOCATE TOP OF WALL PENETRATION 2800 MM ABOVE FINISHED FLOOR – SEE MECHANICAL DRAWINGS.
3. EXHAUST FAN, LOCATE TOP OF WALL PENETRATION 2800 MM ABOVE FINISHED FLOOR – SEE MECHANICAL DRAWINGS.
4. WALL GRILL, LOCATE TOP OF WALL PENETRATION 2800 MM ABOVE FINISHED FLOOR – SEE MECHANICAL DRAWINGS.
5. STUCCO CONTROL JOINT – SEE DETAIL 2A/A–501.
6. METAL GUTTER, CENTER ON DOOR, 1400 MM – SEE DETAIL 1A/A501.
7. EXTERIOR LIGHT FIXTURE – SEE ELECTRICAL.

LINEAR DIMENSIONS SHOWN ARE IN MILLIMETERS (MM), UNLESS OTHERWISE NOTED

0 1000 2000
SCALE: 1:50

APPROVED:

A/E DESIGNER OF RECORD

SEAL:

STATE OF SOUTH CAROLINA
KEVIN R. CHAFIN
N. Charleston, SC
6374
REGISTERED ARCHITECT

US ARMY CORPS OF ENGINEERS
AFGHANISTAN ENGINEER DISTRICT

Mark	Description	Date	Appr.	Mark	Description	Date	Appr.

Rev: 0
Date: 2/23/10
Design file no.
Drawing code:
File name: ANALATSA-201ELV
Plot date: 2/23/2010
Plot scale: X:X

Designed by: KRC
Dwn by: EBB
Ckd by: NLJ
Reviewed by: LHM
Submitted by: BAKER

U.S. ARMY ENGINEER DISTRICT, AFGHANISTAN
CORPS OF ENGINEERS
APO AE 96338

Michael Baker Jr., Inc
A unit of Michael Baker Corporation
Airside Business Park
100 Airside Drive
Moon Township, PA 15108
www.mbakercorp.com

AFGHAN NATIONAL ARMY
REGIONAL MILITARY TRAINING CENTER
STANDARD DESIGN

LATRINE BUILDING
SMALL

ELEVATIONS

Sheet reference number:
A–201

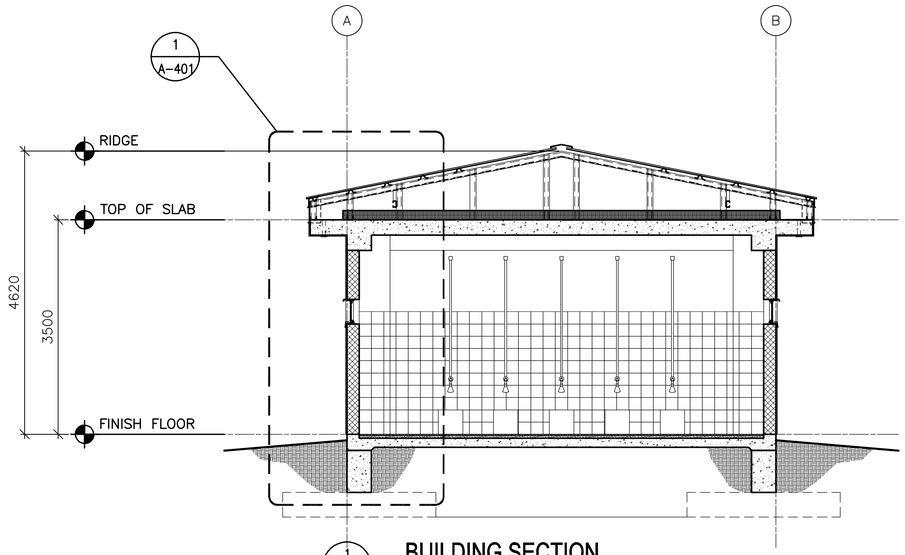

1 A-301 **BUILDING SECTION**
SCALE: 1:50

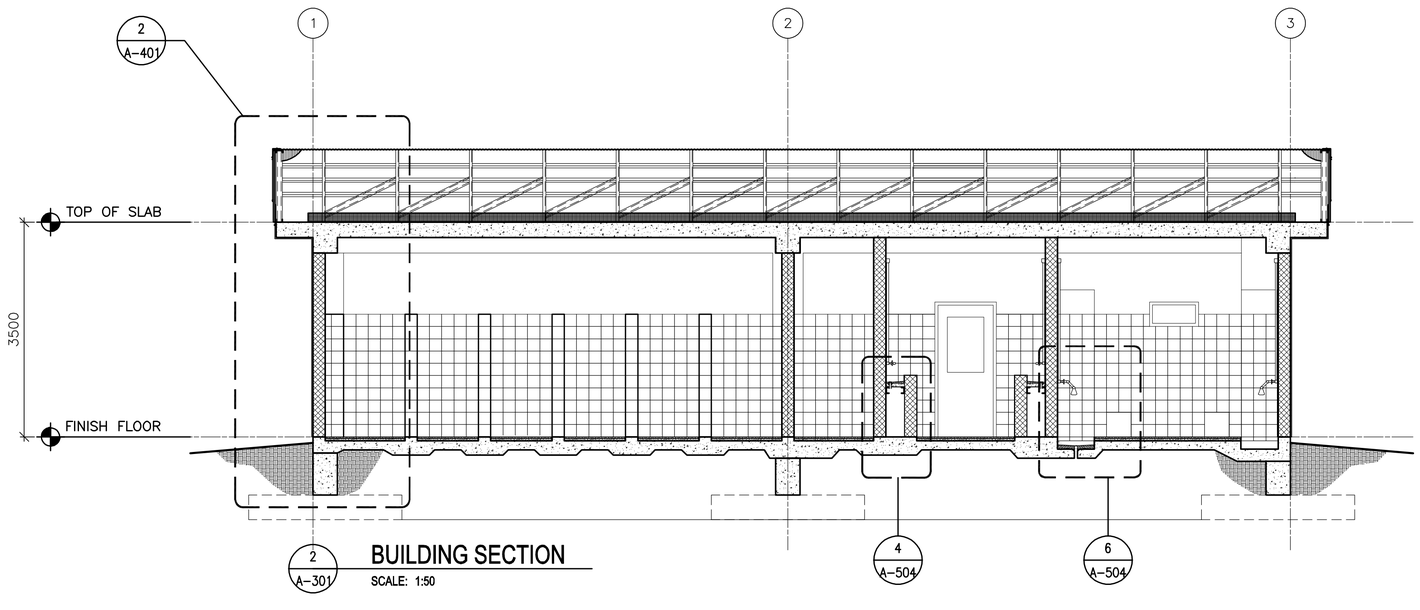

2 A-301 **BUILDING SECTION**
SCALE: 1:50

LINEAR DIMENSIONS SHOWN ARE IN MILLIMETERS (MM), UNLESS OTHERWISE NOTED

0 1000 2000
SCALE: 1:50

APPROVED:

A/E DESIGNER OF RECORD

SEAL:

STATE OF SOUTH CAROLINA
KEVIN R. CHAFIN
N. Charleston, SC
6374
REGISTERED ARCHITECT

US ARMY CORPS OF ENGINEERS
AFGHANISTAN ENGINEER DISTRICT

Mark	Description	Date	Appr.	Mark	Description	Date	Appr.

U.S. ARMY ENGINEER DISTRICT, AFGHANISTAN
CORPS OF ENGINEERS
APO AE 96338

Michael Baker Jr., Inc
A unit of Michael Baker Corporation
Airside Business Park
100 Airside Drive
Moon Township, PA 15108
www.mbakercorp.com

Designed by: KRC
Dwn by: EBB
Ckd by: NLJ
Reviewed by: LHM
Submitted by: BAKER
Date: 2/23/10
Rev: 0
Design file no.
Drawing code:
File name: ANALATSA-301BS
Plot date: 2/23/2010
Plot scale: x:X

AFGHAN NATIONAL ARMY
REGIONAL MILITARY TRAINING CENTER
STANDARD DESIGN

LATRINE BUILDING
SMALL

BUILDING SECTIONS

Sheet reference number:
A-301

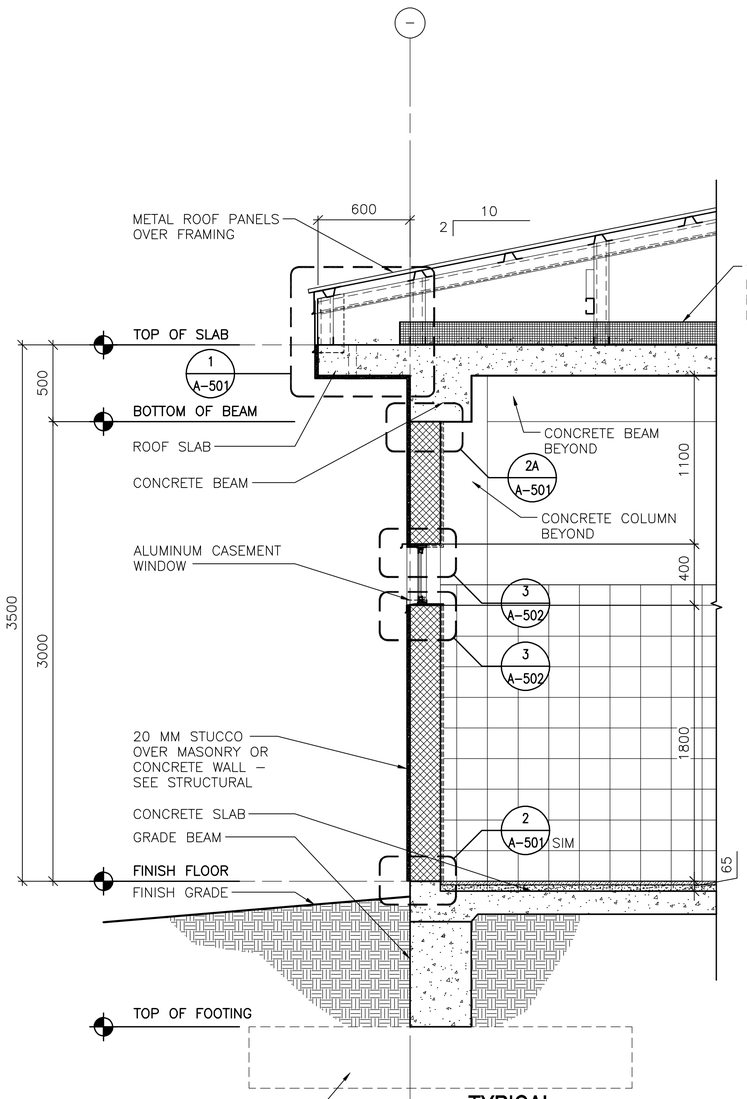

1 A-401 **TYPICAL WALL SECTION**
SCALE: 1:20

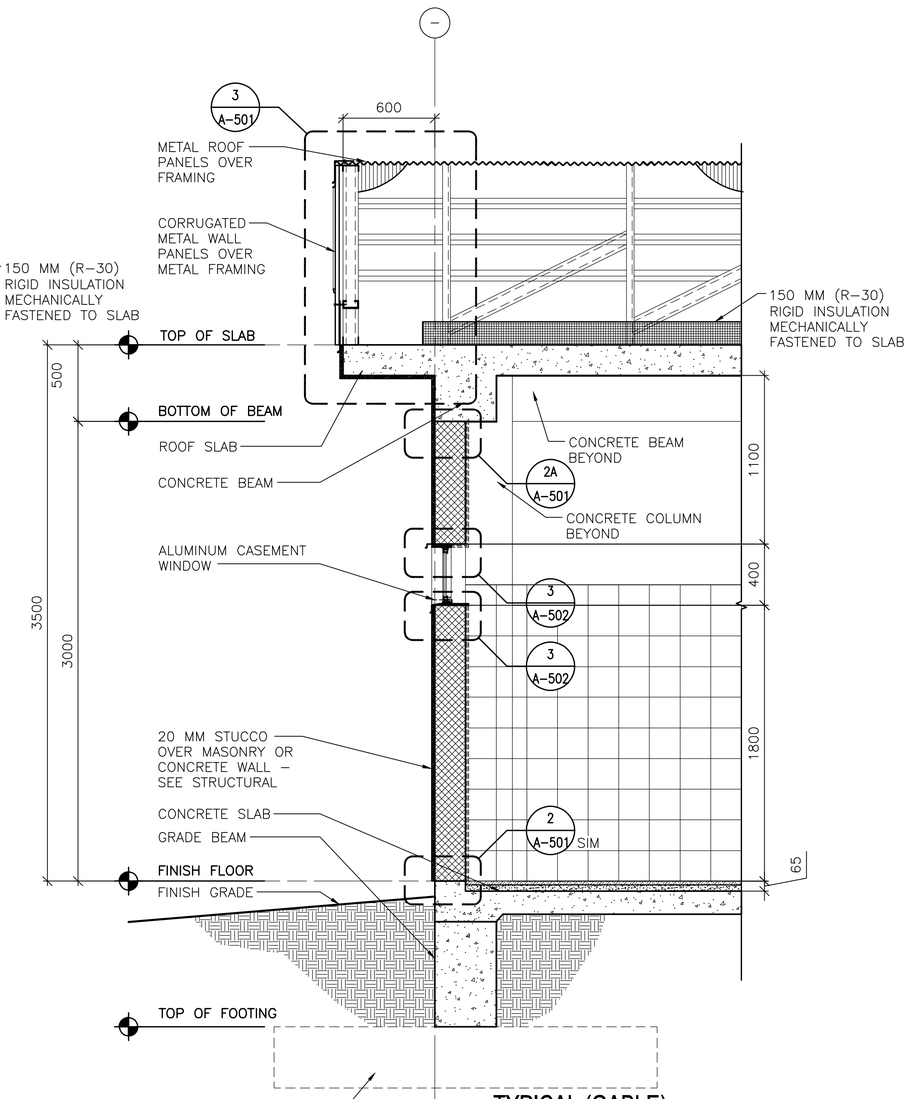

2 A-401 **TYPICAL (GABLE) WALL SECTION**
SCALE: 1:20

LINEAR DIMENSIONS SHOWN ARE IN MILLIMETERS (MM), UNLESS OTHERWISE NOTED

0 400 800
SCALE: 1:20

APPROVED:

A/E DESIGNER OF RECORD

SEAL:

STATE OF SOUTH CAROLINA
KEVIN R. CHAFIN
N. Charleston, SC
6374
REGISTERED ARCHITECT

US ARMY CORPS OF ENGINEERS
AFGHANISTAN ENGINEER DISTRICT

Mark	Description	Date	Appr.	Mark	Description	Date	Appr.

Date: 2/23/10
Rev: 0
Design file no.
Drawing code:
File name: ANALATSA-A011WS
Plot date: 2/23/2010
Plot scale: x:X

Designed by: KRC
Dwn by: EBB
Ckd by: NLJ
Reviewed by: LHM
Submitted by: BAKER

U.S. ARMY ENGINEER DISTRICT, AFGHANISTAN
CORPS OF ENGINEERS
APO AE 96338

Michael Baker Jr., Inc
A unit of Michael Baker Corporation
Airside Business Park
100 Airside Drive
Moon Township, PA 15108
www.mbakercorp.com

AFGHAN NATIONAL ARMY
REGIONAL MILITARY TRAINING CENTER
STANDARD DESIGN

LATRINE BUILDING
SMALL

WALL SECTIONS

Sheet reference number:
A-401

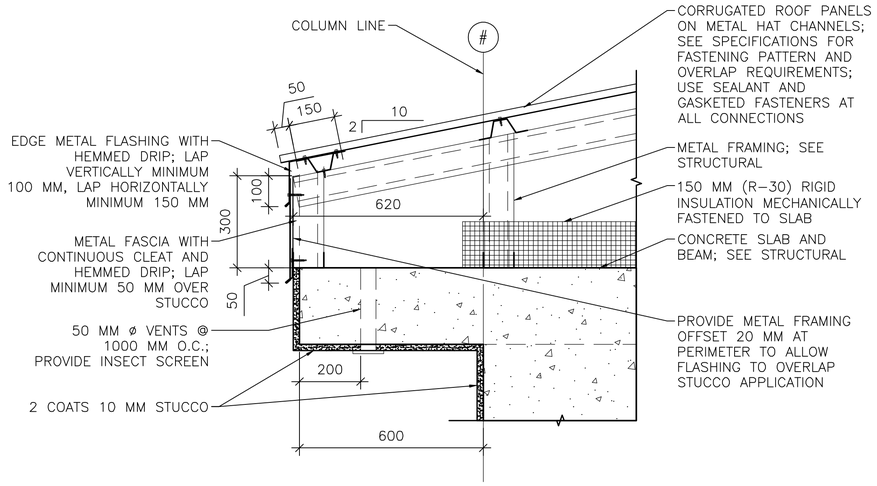

1 A–501 **EAVE DETAIL**
SCALE: 1:10

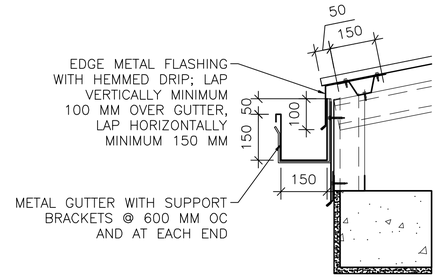

1A A–501 **GUTTER DETAIL**
SCALE: 1:10

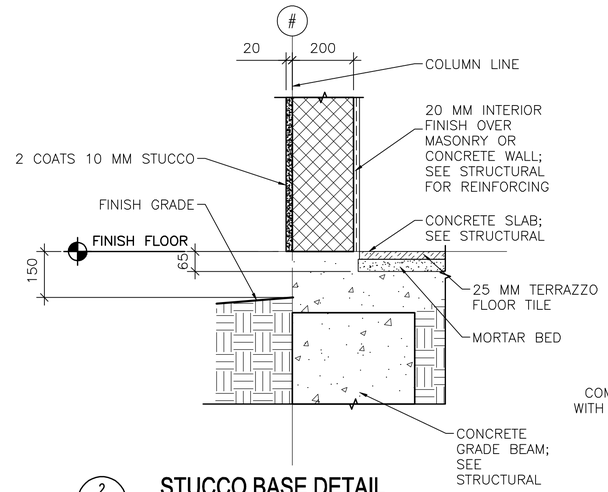

2 A–501 **STUCCO BASE DETAIL**
SCALE: 1:10

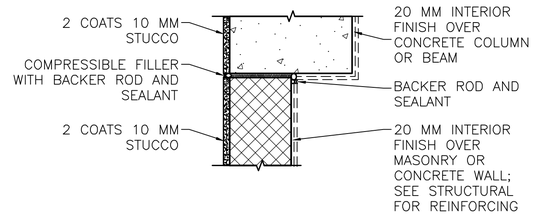

NOTE: DETAIL TYPICAL AT ALL WALL/COLUMN AND WALL/BEAM LOCATIONS, ALTERNATE BRACING DETAIL BELOW 2B/A–501.

2A A–501 **STUCCO JOINT DETAIL**
SCALE: 1:10

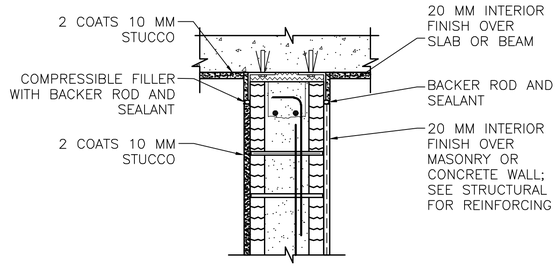

INTERIOR WALL/BEAM

2B A–501 **ALTERNATE BRACING DETAIL**
SCALE: 1:10

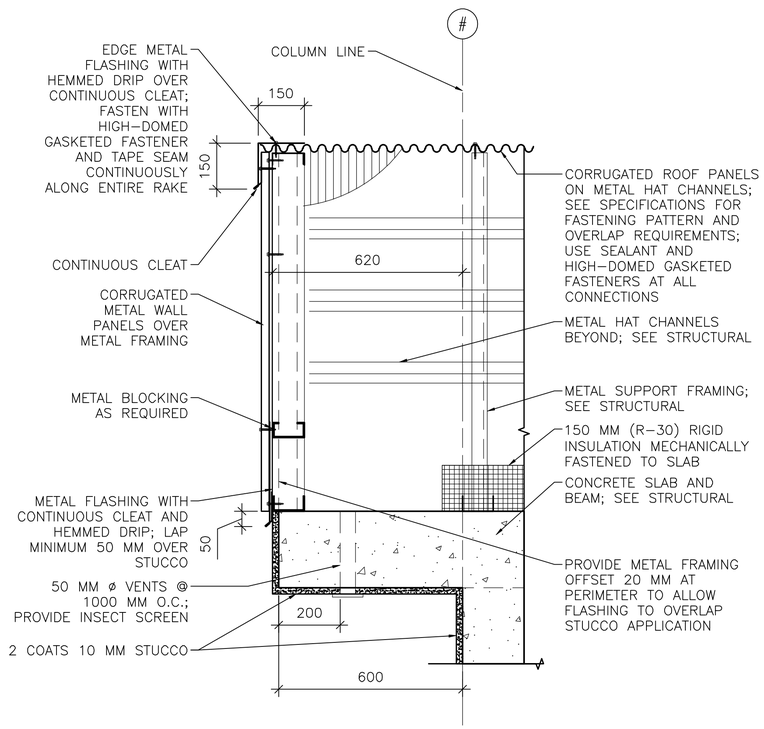

3 A–501 **RAKE/EAVE DETAIL**
SCALE: 1:10

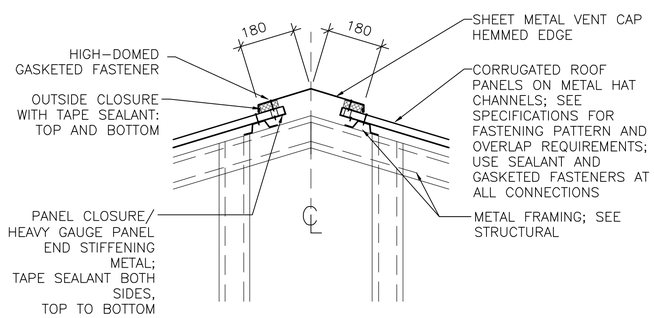

4 A–501 **RIDGE VENT DETAIL**
SCALE: 1:10

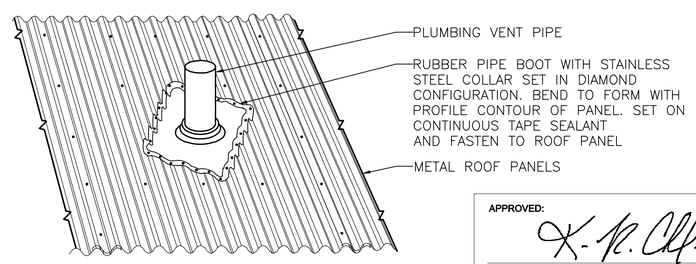

5 A–501 **PLUMBING VENT DETAIL**
SCALE: NTS

LINEAR DIMENSIONS SHOWN ARE IN MILLIMETERS (MM), UNLESS OTHERWISE NOTED

0 200 400
SCALE: 1:10

APPROVED:

A/E DESIGNER OF RECORD

SEAL:

STATE OF SOUTH CAROLINA
KEVIN R. CHAFIN
N. Charleston, SC
6374
REGISTERED ARCHITECT

US ARMY CORPS OF ENGINEERS
AFGHANISTAN ENGINEER DISTRICT

Mark	Description	Date	Appr.	Mark	Description	Date	Appr.

Date: 2/23/10 | Rev: 0
Design file no.
Drawing code:
File name: ANAATSA-501DT
Plot date: 2/23/2010
Plot scale: x:X

Designed by: KRC | Dwn by: EBB | Ckd by: NLJ
Reviewed by: LHM | Submitted by: BAKER

U.S. ARMY ENGINEER DISTRICT, AFGHANISTAN
CORPS OF ENGINEERS
APO AE 96338

Michael Baker Jr., Inc
A unit of Michael Baker Corporation
Airside Business Park
100 Airside Drive
Moon Township, PA 15108
www.mbakercorp.com

AFGHAN NATIONAL ARMY
REGIONAL MILITARY TRAINING CENTER
STANDARD DESIGN

LATRINE BUILDING
SMALL

EXTERIOR DETAILS

Sheet reference number:
A–501

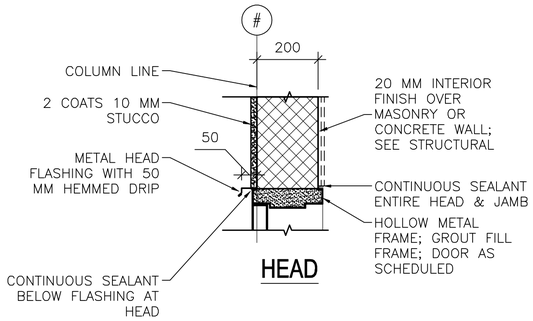

HEAD

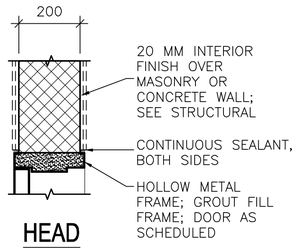

HEAD

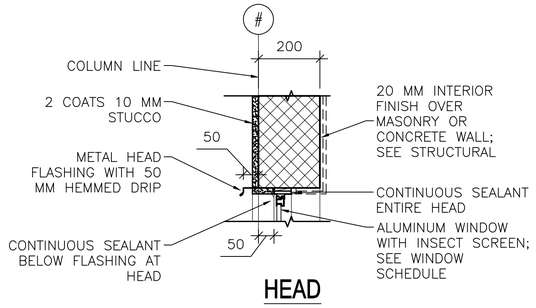

HEAD

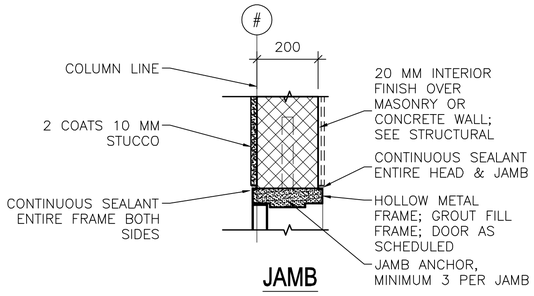

JAMB

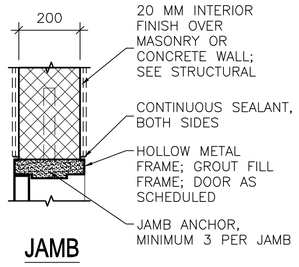

JAMB

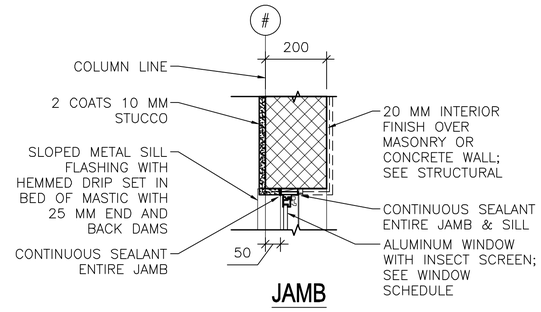

JAMB

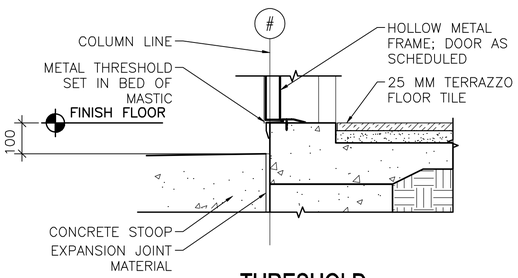

THRESHOLD

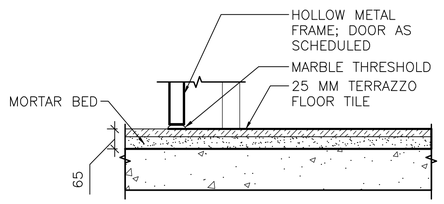

THRESHOLD

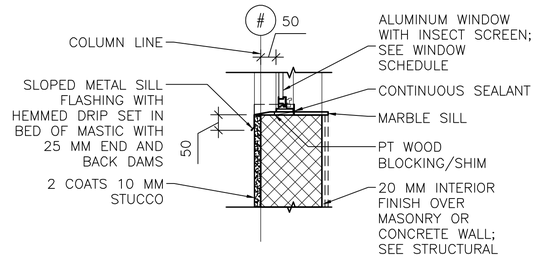

SILL

1 A-502 **EXTERIOR DOOR DETAILS**
SCALE: 1:10

2 A-502 **INTERIOR DOOR DETAILS**
SCALE: 1:10

3 A-502 **EXTERIOR WINDOW DETAILS**
SCALE: 1:10

LINEAR DIMENSIONS SHOWN ARE IN MILLIMETERS (MM), UNLESS OTHERWISE NOTED

0 200 400
SCALE: 1:10

APPROVED:

A/E DESIGNER OF RECORD

SEAL:

STATE OF SOUTH CAROLINA
KEVIN R. CHAFIN
N. Charleston, SC
6374
REGISTERED ARCHITECT

US ARMY CORPS OF ENGINEERS
AFGHANISTAN ENGINEER DISTRICT

Mark	Description	Date	Appr.	Mark	Description	Date	Appr.

Date: 2/23/10 | Rev: 0
Design file no.
Drawing code:
File name: ANAATSA-502HJS
Plot date: 2/23/2010
Plot scale: x:X

Designed by: KRC | Ckd by: NLJ
Dwn by: EBB | Reviewed by: LHM
Submitted by: BAKER

U.S. ARMY ENGINEER DISTRICT, AFGHANISTAN
CORPS OF ENGINEERS
APO AE 96338

Michael Baker Jr., Inc.
A unit of Michael Baker Corporation
Airside Business Park
100 Airside Drive
Moon Township, PA 15108
www.mbakercorp.com

AFGHAN NATIONAL ARMY
REGIONAL MILITARY TRAINING CENTER
STANDARD DESIGN

LATRINE BUILDING
SMALL

HEAD, JAMB & SILL
DETAILS

Sheet reference number:
A-502

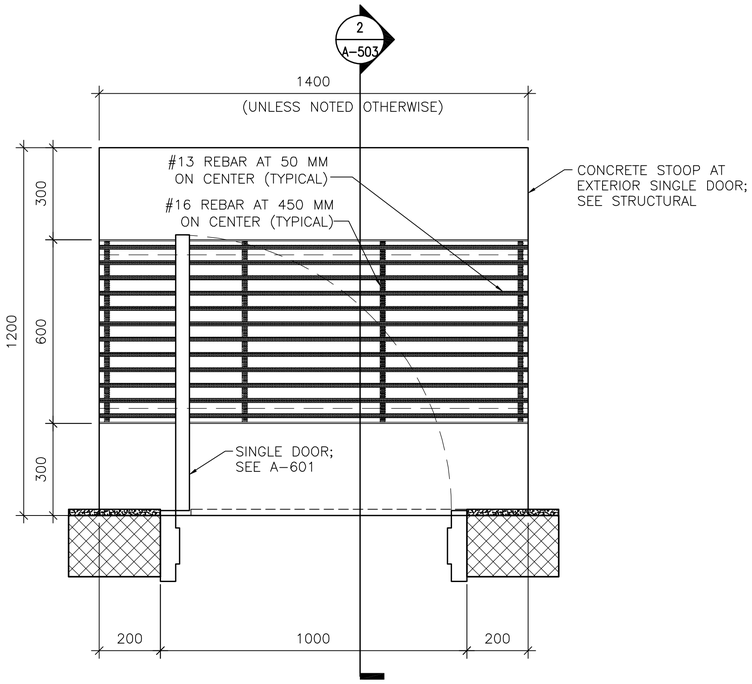

1 A-503 **DOOR STOOP PLAN (WITH GRATE)**

SCALE: 1:10

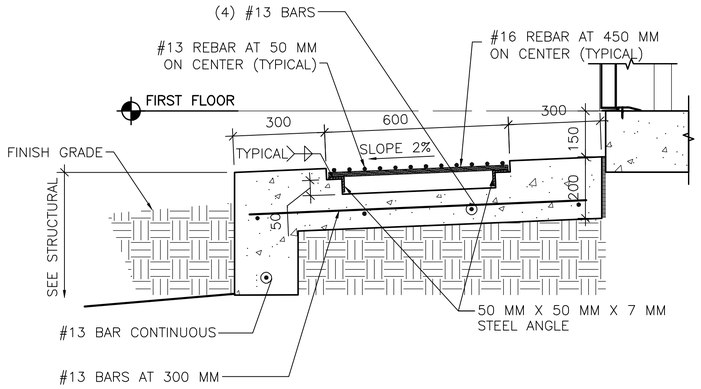

2 A-503 **DOOR STOOP DETAIL**

SCALE: 1:10

LINEAR DIMENSIONS SHOWN ARE IN MILLIMETERS (MM), UNLESS OTHERWISE NOTED

0 200 400
SCALE: 1:10

APPROVED:

A/E DESIGNER OF RECORD

SEAL:

STATE OF SOUTH CAROLINA
KEVIN R. CHAFIN
N. Charleston, SC
6374
REGISTERED ARCHITECT

US ARMY CORPS OF ENGINEERS
AFGHANISTAN ENGINEER DISTRICT

Mark	Description	Date	Appr.	Mark	Description	Date	Appr.

U.S. ARMY ENGINEER DISTRICT, AFGHANISTAN
CORPS OF ENGINEERS
APO AE 96338

Michael Baker Jr., Inc.
A unit of Michael Baker Corporation
Airside Business Park
100 Airside Drive
Moon Township, PA 15108
www.mbakercorp.com

Designed by: KRC	Date: 2/23/10
Dwn by: EBB	Ckd by: NLJ
Reviewed by: LHM	Design file no.
Submitted by: BAKER	Drawing code:
File name: ANALATSA-503DT	Rev: 0
Plot date: 2/23/2010	
Plot scale: x:X	

AFGHAN NATIONAL ARMY
REGIONAL MILITARY TRAINING CENTER
STANDARD DESIGN

LATRINE BUILDING
SMALL

STOOP
DETAILS

Sheet reference number:
A-503

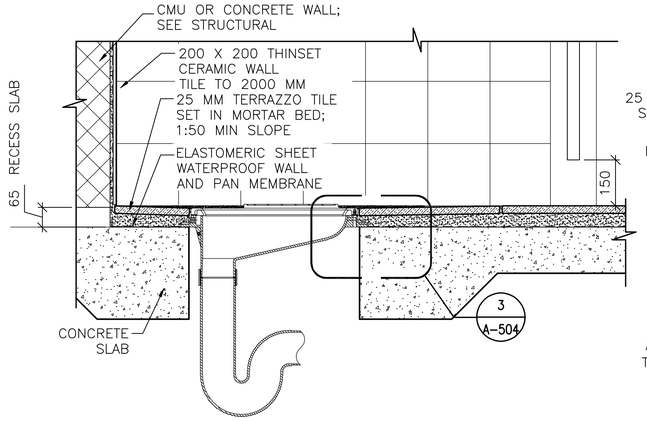

1 A-504 **LATRINE DETAIL**
SCALE: 1:10

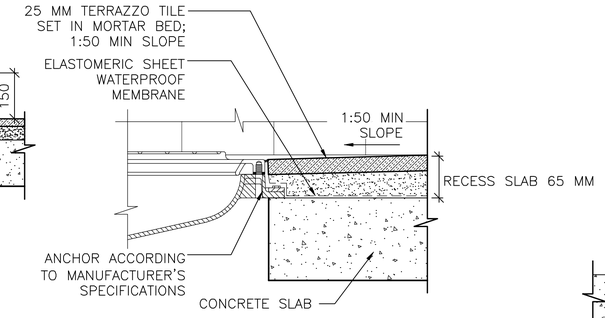

3 A-504 **MOUNTING DETAIL**
SCALE: 1:5

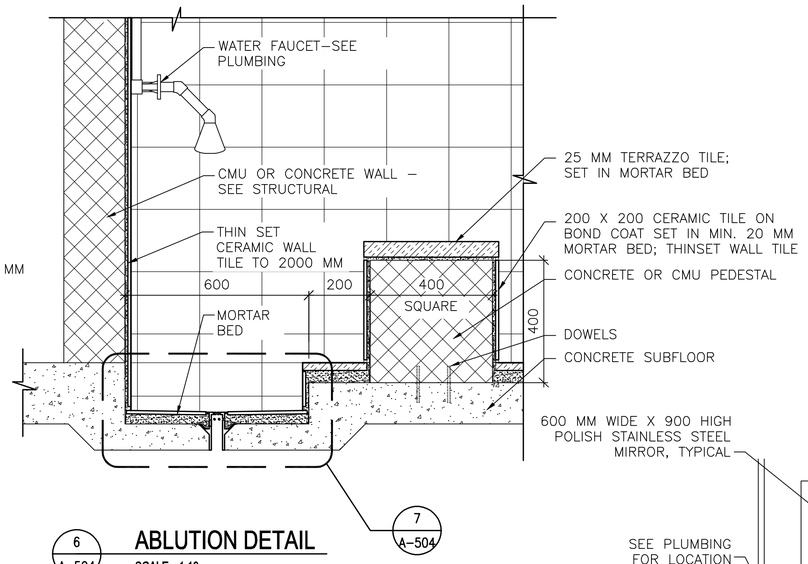

6 A-504 **ABLUTION DETAIL**
SCALE: 1:10

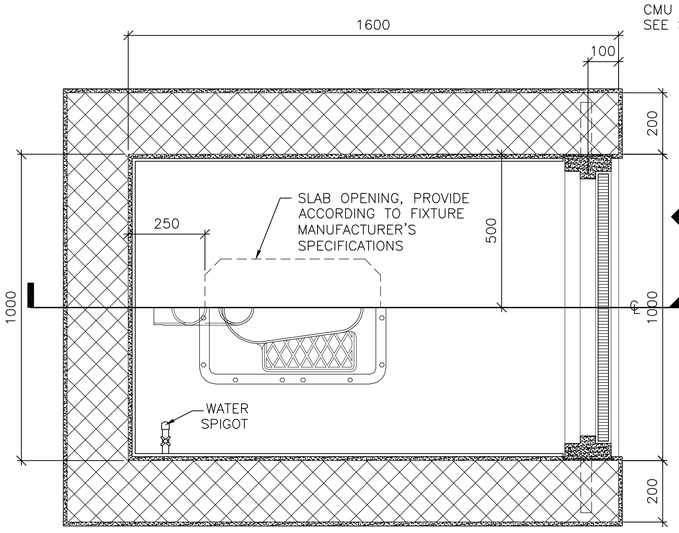

2 A-504 **TOILET DETAIL**
SCALE: 1:10

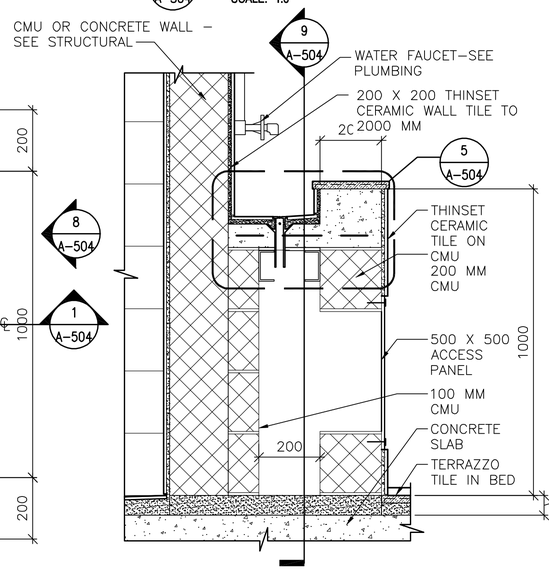

4 A-504 **LAVATORY SECTION**
SCALE: 1:10

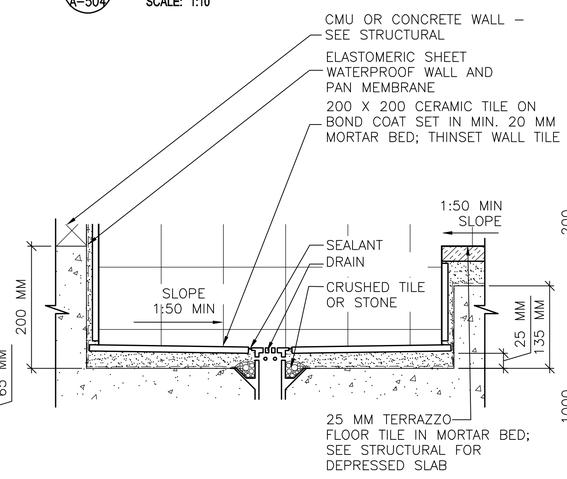

7 A-504 **RECESSED TROUGH**
SCALE: 1:5

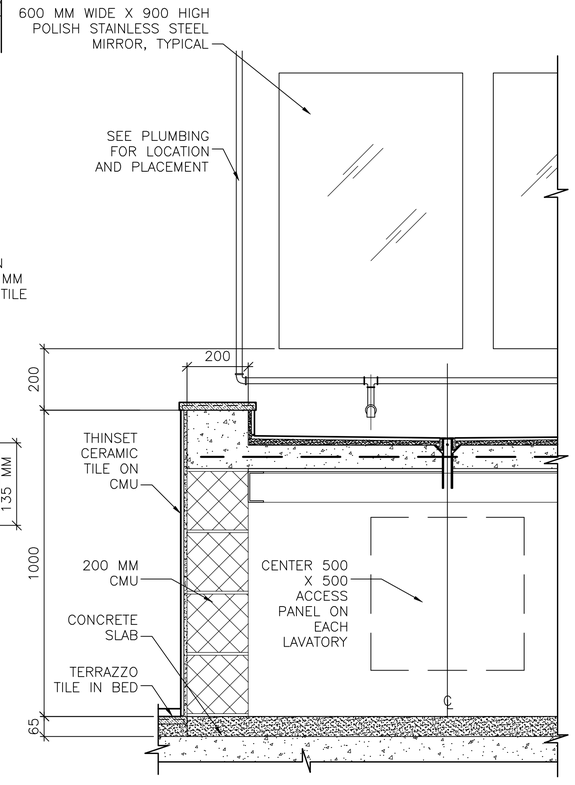

9 A-504 **LAVATORY SECTION**
SCALE: 1:10

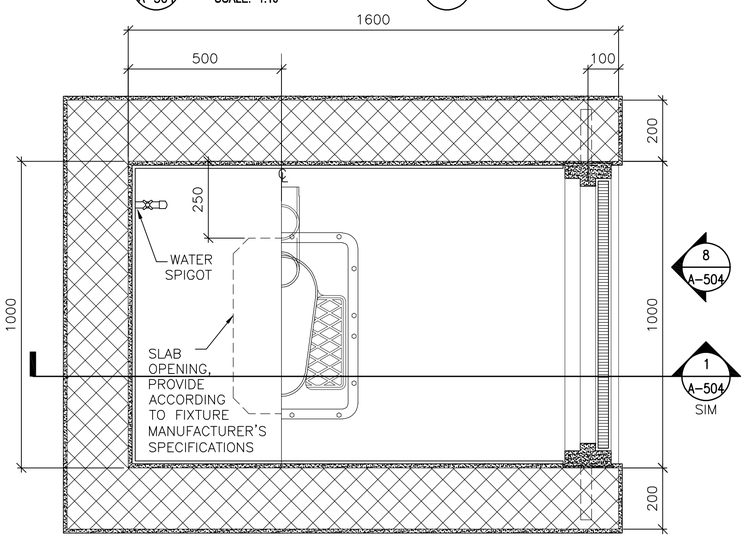

2A A-504 **TOILET DETAIL**
SCALE: 1:10

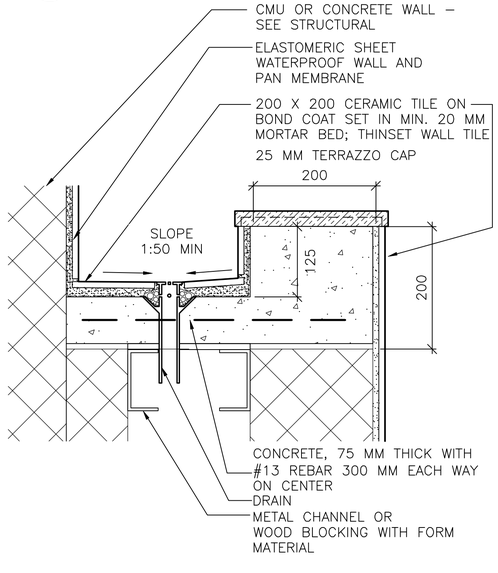

5 A-504 **LAVATORY DETAIL**
SCALE: 1:5

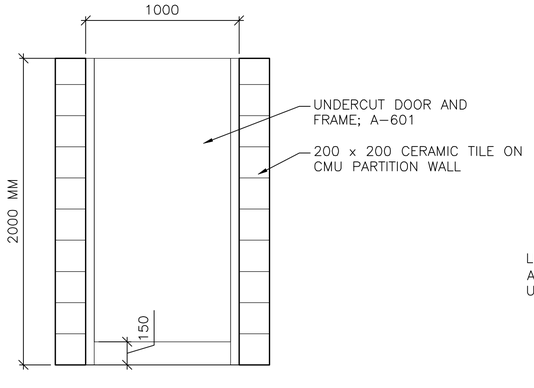

8 A-504 **TOILET PARTITION DOOR ELEVATION**
SCALE: 1:20

LINEAR DIMENSIONS SHOWN ARE IN MILLIMETERS (MM), UNLESS OTHERWISE NOTED

0 100 200 SCALE: 1:5
0 200 400 SCALE: 1:10
0 400 800 SCALE: 1:20

APPROVED:
A/E DESIGNER OF RECORD
SEAL:
STATE OF SOUTH CAROLINA
KEVIN R. CHAFIN
N. Charleston, SC
6374
REGISTERED ARCHITECT

US ARMY CORPS OF ENGINEERS
AFGHANISTAN ENGINEER DISTRICT

Mark	Description	Date	Appr.	Mark	Description	Date	Appr.

Rev: 0
Date: 2/23/10
Design file no.
Drawing code:
File name: AANLATSA-504DT
Plot date: 2/23/2010
Plot scale: X:X

Designed by: KRC
Dwn by: EBB
Ckd by: NLJ
Reviewed by: LHM
Submitted by:
BAKER

U.S. ARMY ENGINEER DISTRICT, AFGHANISTAN
CORPS OF ENGINEERS
APO AE 96338

Michael Baker Jr., Inc
A unit of Michael Baker Corporation
Airside Business Park
100 Airside Drive
Moon Township, PA 15108
www.mbakercorp.com

AFGHAN NATIONAL ARMY
REGIONAL MILITARY TRAINING CENTER
STANDARD DESIGN

LATRINE BUILDING
SMALL

TOILET, LAVATORY & ABLUTION DETAILS

Sheet reference number:
A–504

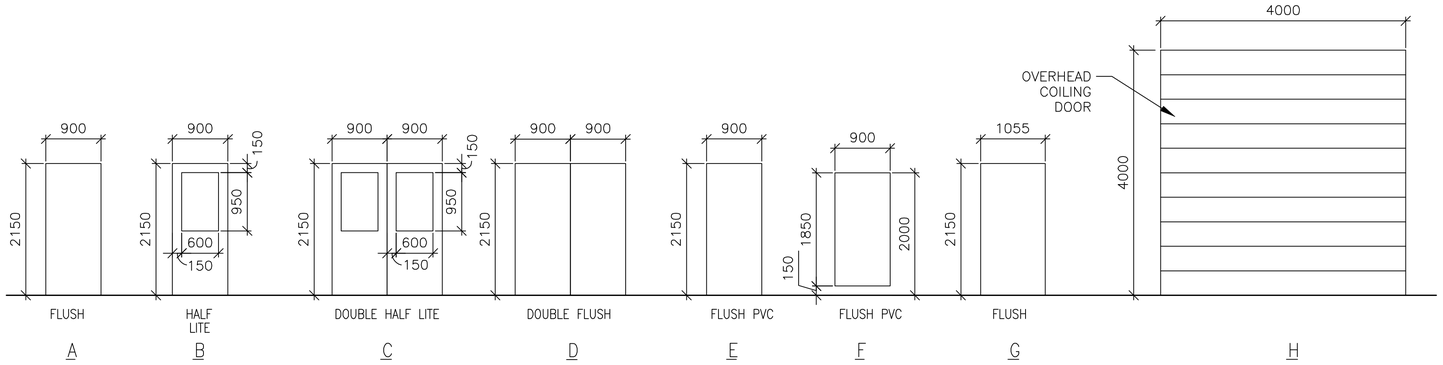

1 A-601 DOOR TYPES

SCALE: 1:50

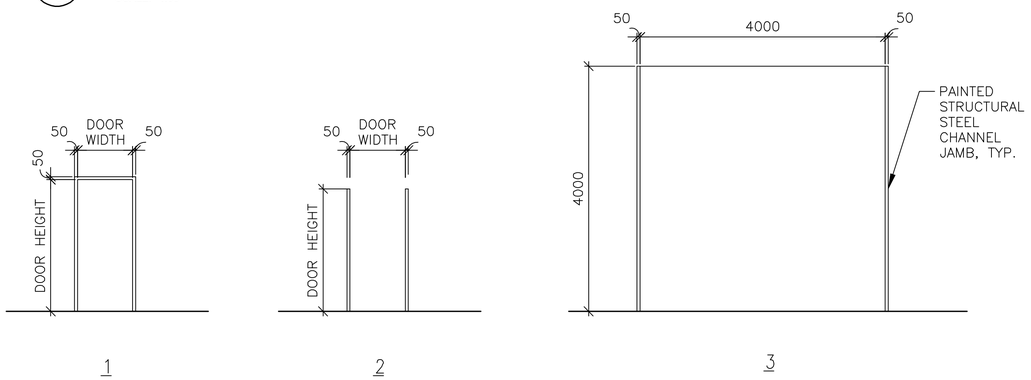

2 A-601 FRAME TYPES

SCALE: 1:50

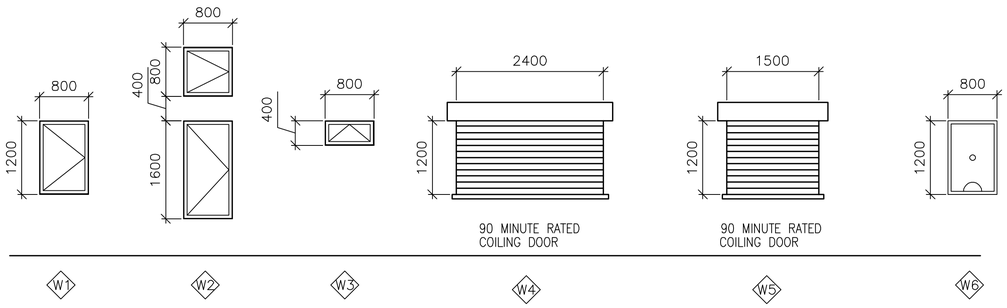

3 A-601 WINDOW TYPES

SCALE: 1:50

WINDOW TYPE NOTES:

1. ALL EXTERIOR WINDOWS SHALL BE ALUMINUM WITH INSECT SCREENS. WINDOWS SHALL BE COMMERCIAL GRADE.
2. ALL EXTERIOR WINDOWS SHALL BE OPERABLE.

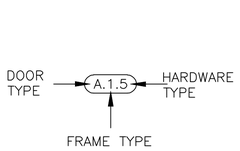

4 A-601 DOOR TAG

SCALE: NTS

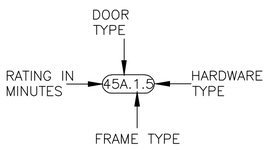

5 A-601 RATED DOOR TAG

SCALE: NTS

DOOR TAG NOTES:

1. THE DOOR TAG INDICATES THE DOOR TYPE, FRAME TYPE AND HARDWARE SET FOR EACH DOOR.
2. THE DOOR TAG FOR RATED DOORS INCLUDES THE RATING OF THE DOOR IN MINUTES.

EXTERIOR DOOR HARDWARE TYPES:

HW-1
1-1/2 PR HINGES, A5112 114 X 114
1 EA RIM EXIT DEVICE, TYPE 1
1 EA CYLINDER. E09221A, GRADE 1
1 EA OVERHEAD CLOSER, C02061, LOW RESISTANCE
1 EA THRESHOLD, J32130
3 EA DOOR SILENCERS, L03011

HW-2
1-1/2 PR HINGES, A5112 114 X 114
1 EA LOCKSET, F13 ENTRY LOCK W/LEVER HANDLES, GRADE 1
1 EA OVERHEAD CLOSER, C02061, LOW RESISTANCE
1 EA THRESHOLD, J32130
3 EA DOOR SILENCERS, L03011

HW-3
3 PR HINGES, A5112 114 X 114
2 EA RIM EXIT DEVICE, TYPE 1
2 EA CYLINDER. GRADE 1
2 EA OVERHEAD CLOSER, C02061, LOW RESISTANCE
1 EA DOOR COORDINATOR, TYPE 21
1 EA ASTRAGAL
1 EA THRESHOLD, J32130
2 EA DOOR SILENCERS, L03011

HW-4
3 PR HINGES, A5112 114 X 114
1 EA LOCKSET W/LEVER HANDLES. GRADE 1, F13
1 EA OVERHEAD CLOSER, C02061, LOW RESISTANCE
2 EA MAGNETIC HOLDER PIN, ATTACHED TO DOOR LEAF
2 EA MAGNETIC HOLDER RECEIVER, ATTACHED TO STOOP
2 EA LEVER EXTENSION FLUSH BOLTS, L04081
1 EA ASTRAGAL
1 EA THRESHOLD, J32130
2 EA DOOR SILENCERS, L03011

DOOR AND HARDWARE NOTES:

1. INTERIOR AND EXTERIOR METAL DOORS AND FRAME COLORS SHALL MATCH ADJACENT WALL COLORS AS SELECTED BY THE CONTRACTING OFFICER.
2. FRAMES, EXCEPT FIRE-RATED FRAMES, SHALL BE MOUNTED AND ADJUSTED IN ACCORDANCE WITH MANUFACTURER'S INSTRUCTIONS. FRAMES SHALL BE FASTENED WITH MINIMUM OF THREE ANCHORS PER JAMB AT EQUAL INTERVALS.
3. DIMENSIONS SHOWN ON DOOR TYPES DETAIL ARE BASED UPON MODULAR MASONRY (OR ROUGH OPENING), HEIGHT OF 2200 MM FOR STANDARD PERSONNEL DOORS. CONTRACTOR SHALL COORDINATE WITH DOOR SUPPLIER TO ENSURE THAT DIMENSIONS OF DOORS AND FRAMES PROVIDED ARE COMPATIBLE WITH DOOR OPENING DIMENSIONS.
4. HARDWARE SHALL BE HEAVY DUTY, COMMERCIAL GRADE, STAINLESS STEEL WITH A SATIN OR BRUSHED FINISH.
5. HARDWARE TYPES INCLUDE BUILDERS HARDWARE MANUFACTURERS ASSOCIATION (BMHA) NUMBER.
6. DOORS IN 2 HOUR RATED PARTITIONS SHALL BE 1.5 HOUR (90 MINUTE) RATED DOORS IN ACCORDANCE WITH NFPA 101, TABLE 8.3.4.2.
7. DOORS AT STAIR ENCLOSURES SHALL BE 1 HOUR (60 MINUTE) RATED AT 1 HOUR WALL IN ACCORDANCE WITH NFPA 101, TABLE 8.3.4.2.
8. DOORS IN 1 HOUR RATED WALLS SHALL BE 3/4 HOUR (45 MINUTE) RATED DOORS IN ACCORDANCE WITH NFPA 101, TABLE 8.3.4.2.
9. DOORS IN 1 HOUR RATED CORRIDOR WALLS SHALL BE 1/3 HOUR (20 MINUTE) IN ACCORDANCE WITH NFPA 101, TABLE 8.3.4.2.
10. PROVIDE DOOR STOPS TO PROTECT WALLS ON LOCATIONS WHERE DOOR SWING WILL STRIKE WALL.

THIS SHEET IS STANDARD AND IS INCLUSIVE OF ALL THE DOOR/ WINDOW/ HARDWARE TYPES FOR THE ENTIRE RMTC CONTRACT. NOT ALL DOOR/ WINDOW/ HARDWARE TYPES ARE USED FOR ANY PARTICULAR BUILDING DESIGN. CONTRACTOR SHALL REFER TO THE FLOOR PLAN FOR THE TYPES BEING USED.

INTERIOR DOOR HARDWARE TYPES:

HW-5
1-1/2 PR HINGES, A8133 114 X 114
1 EA LOCKSET W/LEVER HANDLES, F08, GRADE 1
1 EA WALL STOP, L02101 OR L02161
3 EA DOOR SILENCERS, L03011

HW-6
1-1/2 PR HINGES, A8112 114 X 114
1 EA LOCKSET W/LEVER HANDLES, F08, GRADE 1
1 EA WALL STOP, L02101 OR L02161
1 EA OVERHEAD CLOSER, C02061, LOW RESISTANCE
3 EA DOOR SILENCERS, L03011

HW-7
1-1/2 PR HINGES, A8133
1 EA LOCKSET W/LEVER HANDLES, F13 GRADE 1
1 EA WALL STOP, L02101 OR L02161
2 EA MOP PLATE, J103
3 EA DOOR SILENCERS, L03011

HW-8
1-1/2 PR HINGES, A8112
1 EA LOCKSET W/LEVER HANDLES, F13 GRADE 1
1 EA WALL STOP, L02101 OR L02161
2 EA MOP PLATE, J103
1 EA OVERHEAD CLOSER, C02061, LOW RESISTANCE
3 EA DOOR SILENCERS, L03011

HW-9
1-1/2 PR HINGES, A5112 114 X 114
1 EA RIM EXIT DEVICE, TYPE 1
1 EA CYLINDER. E09221A, GRADE 1
1 EA OVERHEAD CLOSER, C02061, LOW RESISTANCE
3 EA DOOR SILENCERS, L03011

HW-10
3 PR HINGES, A5112 114 X 114
1 EA LOCKSET W/LEVER HANDLES. GRADE 1, F13
2 EA LEVER EXTENSION FLUSH BOLTS, L04081
1 EA ASTRAGAL
2 EA DOOR SILENCERS, L03011

HW-11
1-1/2 PR HINGES, A8112 114 X 114
1 EA LOCKSET W/LEVER HANDLES, F13, GRADE 1
1 EA WALL STOP, L02101 OR L02161
1 EA OVERHEAD CLOSER, C02061, LOW RESISTANCE
3 EA DOOR SILENCERS, L03011
1 EA ROBE HOOK

HW-12
1-1/2 PR HINGES, A8133
1 EA LATCHSET W/LEVER HANDLES, F76 GRADE 1
1 EA WALL STOP, L02101 OR L02161
2 EA MOP PLATE, J103
3 EA DOOR SILENCERS, L03011
1 EA ROBE HOOK

HW-13
3 PR HINGES, A5112 114 X 114
1 EA LOCKSET W/LEVER HANDLES. GRADE 1, F13
1 EA OVERHEAD CLOSER, C02061, LOW RESISTANCE
2 EA LEVER EXTENSION FLUSH BOLTS, L04081
1 EA ASTRAGAL
2 EA DOOR SILENCERS, L03011

HW-14
3 PR HINGES, A5112 114 X 114
2 EA RIM EXIT DEVICE, TYPE 1
2 EA CYLINDER. GRADE 1
2 EA OVERHEAD CLOSER, C02061, LOW RESISTANCE
1 EA DOOR COORDINATOR, TYPE 21
1 EA ASTRAGAL
2 EA DOOR SILENCERS, L03011

APPROVED:

A/E DESIGNER OF RECORD

SEAL:

STATE OF SOUTH CAROLINA
KEVIN R. CHAFIN
N. Charleston, SC
6374
REGISTERED ARCHITECT

US ARMY CORPS OF ENGINEERS
AFGHANISTAN ENGINEER DISTRICT

U.S. ARMY ENGINEER DISTRICT, AFGHANISTAN
CORPS OF ENGINEERS
APO AE 96338

Michael Baker Jr., Inc.
A unit of Michael Baker Corporation
Airside Business Park
100 Airside Drive
Moon Township, PA 15108
www.mbakercorp.com

Mark	Description	Date	Appr.	Mark	Description	Date	Appr.

Designed by: KRC
Dwn by: EBB
Ckd by: NLJ
Reviewed by: LHM
Submitted by: BAKER
Date: 2/23/10
Rev: 0
Design file no.
Drawing code:
File name: ANALATSA-SD1SCH
Plot date: 2/23/2010
Plot scale: X:X

AFGHAN NATIONAL ARMY
REGIONAL MILITARY TRAINING CENTER
STANDARD DESIGN

LATRINE BUILDING
SMALL

WINDOW AND DOOR SCHEDULES

Sheet reference number:
A-601

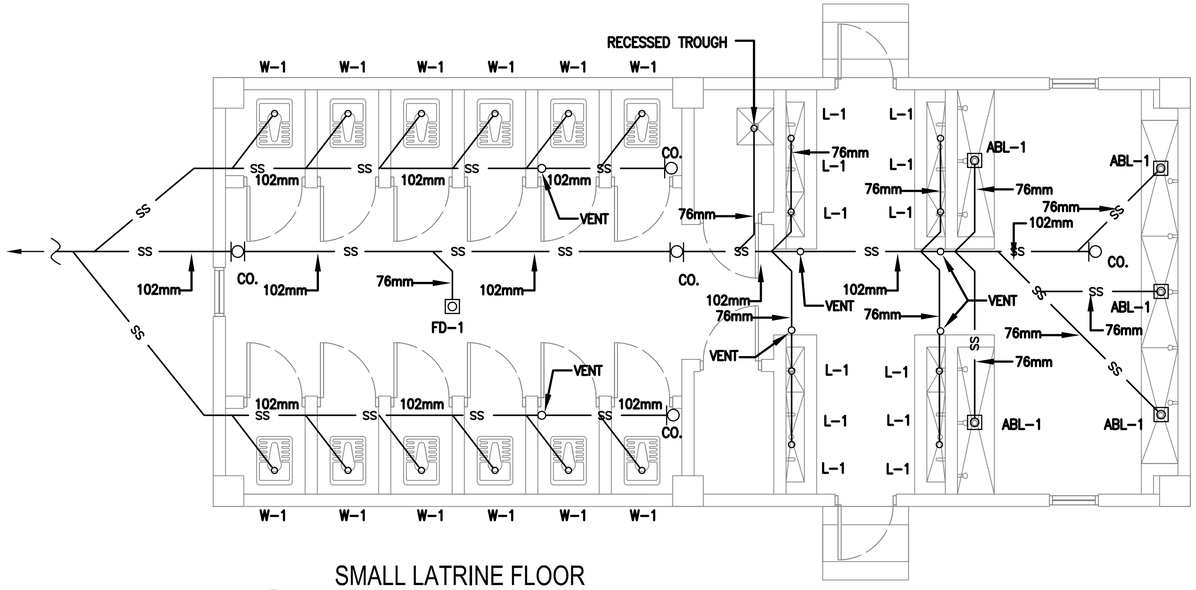

1
P-101

SMALL LATRINE FLOOR PLAN - PLUMBING (SANITARY)

SCALE: 1:50

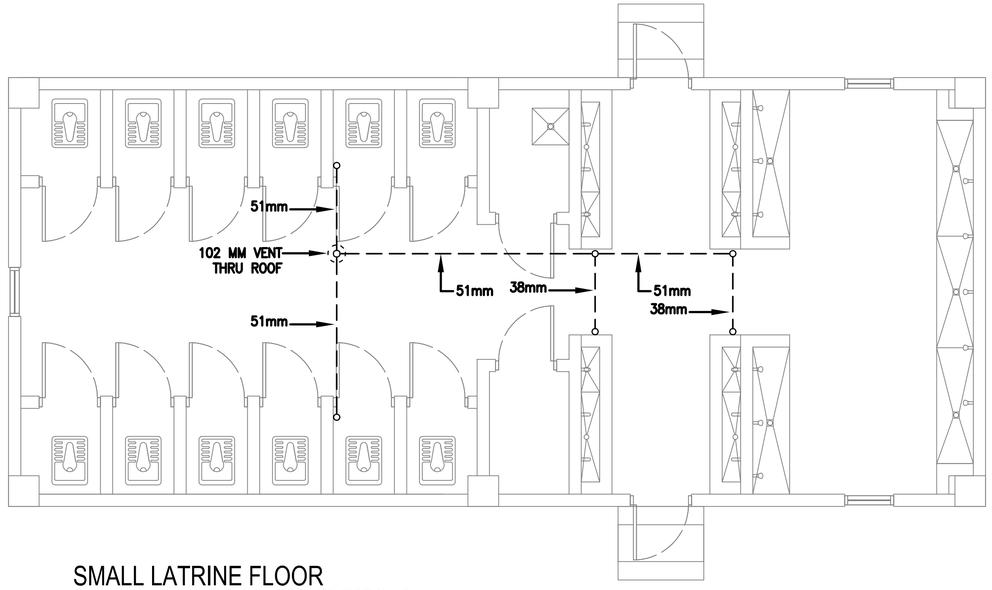

2
P-101

SMALL LATRINE FLOOR PLAN - PLUMBING (VENT PIPING)

SCALE: 1:50

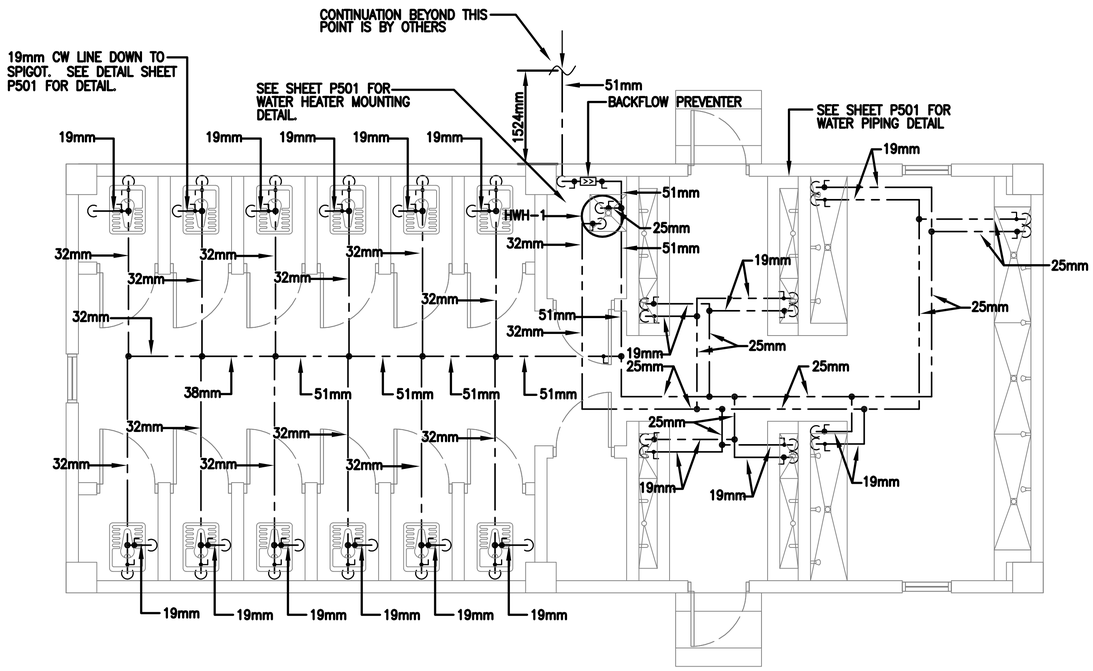

3
P-101

SMALL LATRINE FLOOR PLAN - PLUMBING (HOT & COLD WATER)

SCALE: 1:50

FLOOR PLAN NOTES:

1. DO NOT SCALE DRAWINGS – ALL DIMENSIONS AND CONDITIONS SHALL BE CHECKED AND VERIFIED BY THE CONTRACTOR AT THE SITE.
2. ALL WORK PERFORMED ON THIS BUILDING SHALL BE IN COMPLIANCE WITH ALL PERTINENT CODES, RULES, ORDINANCES AND REGULATIONS OF THE GOVERNING AUTHORITIES.
3. ALL WORK PERFORMED UNDER AND IN CONNECTION WITH THESE DRAWINGS AND SPECIFICATIONS SHALL BE IN STRICT COMPLIANCE WITH THE LATEST SAFETY AND HEALTH STANDARDS.
4. REPORT ANY DISCREPANCIES FOUND IN THE PLUMBING DRAWINGS AND/OR IN THE SPECIFICATIONS DURING THE BIDDING PROCESS FOR CLARIFICATION BY THE ENGINEER.
5. ALL EASTERN STYLE WATER CLOSETS IN THIS FACILITY ARE TO HAVE THE FIXTURE DESIGNATION OF W-1. EACH FIXTURE SHALL HAVE A 25mm (1 INCH) COLD WATER LINE EXTENDED TO IT AND THEN BE REDUCED TO 13mm (1/2 INCH) FOR A FINAL CONNECTION TO THE FLUSH TANK AND A 102mm (4) INCH SANITARY CONNECTION.
6. ALL TROUGH FIXTURES IN THIS FACILITY ARE TO HAVE THE FIXTURE DESIGNATION OF L-1. EACH FIXTURE SHALL HAVE A 13mm (1/2 INCH) COLD WATER, 13mm (1/2 INCH) HOT WATER CONNECTION AND A 76mm (3 INCH) SANITARY CONNECTION.
7. ALL ABLUTION FIXTURES IN THIS FACILITY ARE TO HAVE THE FIXTURE DESIGNATION OF ABL-1. EACH FIXTURE SHALL HAVE A 13mm (1/2 INCH) COLD WATER, 13mm (1/2 INCH) HOT WATER CONNECTION AND A 76mm (3 INCH) SANITARY CONNECTION.
8. REFER TO SHEET P501 & P502 FOR DETAILS AND SYMBOLS.
9. ALL WATER, SANITARY AND VENT LINES TO BE EXPOSED. RUN LINES TIGHT TO CEILING AND WALL.
10. CONTRACTOR TO COORDINATE ALL WORK WITH MECHANICAL AND ELECTRICAL DRAWINGS.
11. L-1 DESIGNATION REPRESENTS THE NUMBER OF FAUCETS FOR THE TROUGH FIXTURE.
12. CONTRACTOR TO COORDINATE WATER PIPING MOUNTING LOCATION WITH BOTH MECHANICAL & ELECTRICAL DRAWINGS.

PLUMBING SYMBOLS

- SS — SANITARY SEWER PIPING (BELOW GROUND)
- SS — SANITARY SEWER PIPING (ABOVE GROUND)
- VENT PIPING (V)
- COLD WATER PIPING (CW)
- HOT WATER PIPING (HW)
- BALL VALVE
- BACKFLOW PREVENTER
- OR — CLEANOUT (CO.)
- ROOF PENETRATION

LINEAR DIMENSIONS SHOWN ARE IN MILLIMETERS (MM), UNLESS OTHERWISE NOTED

0 1000 2000
SCALE: 1:50

APPROVED:

A/E DESIGNER OF RECORD

SEAL:

COMMONWEALTH OF PENNSYLVANIA
REGISTERED PROFESSIONAL
MATTHEW R. SOTOSKY
ENGINEER
046576-E

US ARMY CORPS OF ENGINEERS
AFGHANISTAN ENGINEER DISTRICT

Mark	Description	Date	Appr.	Mark	Description	Date	Appr.

Rev: 0
Date: 02/23/10
Design file no.
Drawing code:
File name: ANNATBR-1101XXX
Plot date: 02/09/2010
Plot scale: 1:50

Designed by: RMH
Dwn by: RMH
Ckd by: CJM
Reviewed by: MRS
Submitted by: BAKER

U.S. ARMY ENGINEER DISTRICT, AFGHANISTAN
CORPS OF ENGINEERS
APO AE 96338

Michael Baker Jr., Inc.
A unit of Michael Baker Corporation
Airside Business Park
100 Airside Drive
Moon Township, PA 15108
www.mbakercorp.com

AFGHAN NATIONAL ARMY
REGIONAL MILITARY TRAINING CENTER
STANDARD DESIGN

LATRINE BUILDING
SMALL

FLOOR PLAN PLUMBING

Sheet reference number:
P-101

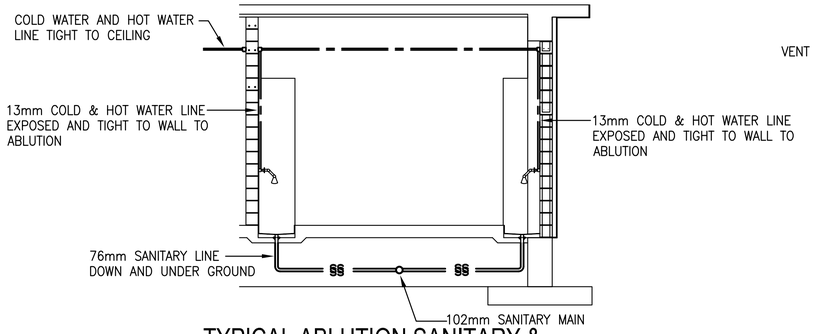

TYPICAL ABLUTION SANITARY & WATER INSTALLATION SCHEMATIC

SCALE: N.T.S.

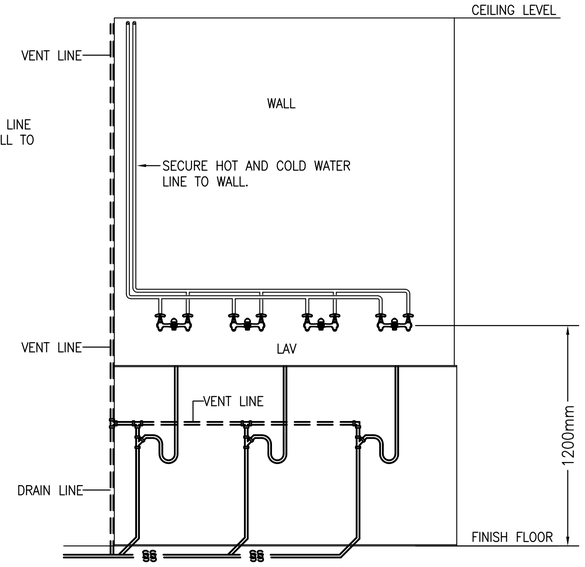

LAVATORY ELEVATION PLAN - PLUMBING

SCALE: N.T.S.

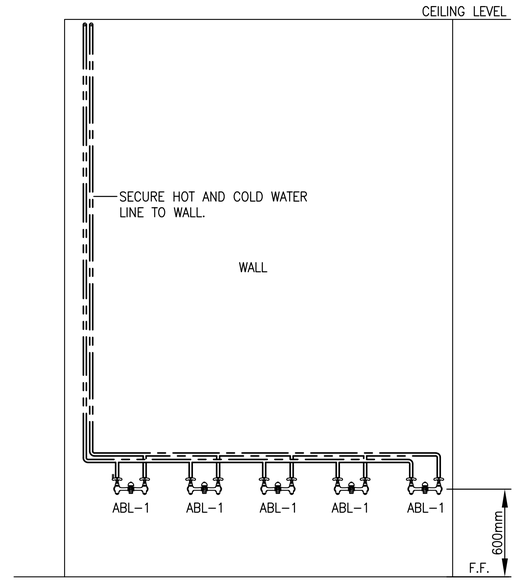

TYPICAL ABLUTION ELEVATION PLUMBING PLAN - WATER INSTALLATION SCHEMATIC

SCALE: N.T.S.

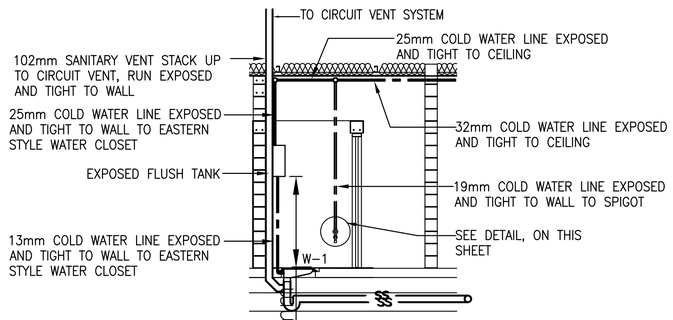

TYPICAL EASTERN STYLE WATER CLOSET SANITARY & WATER INSTALLATION SCHEMATIC

SCALE: N.T.S.

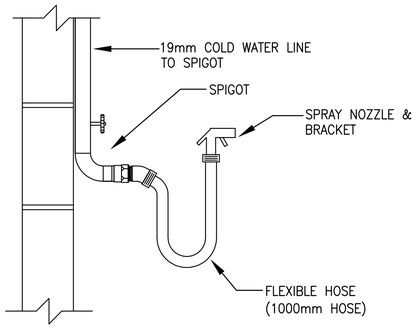

TYPICAL DETAIL - SPIGOT, FLEXIBLE HOSE, AND SPRAY NOZZLE

SCALE: N.T.S.

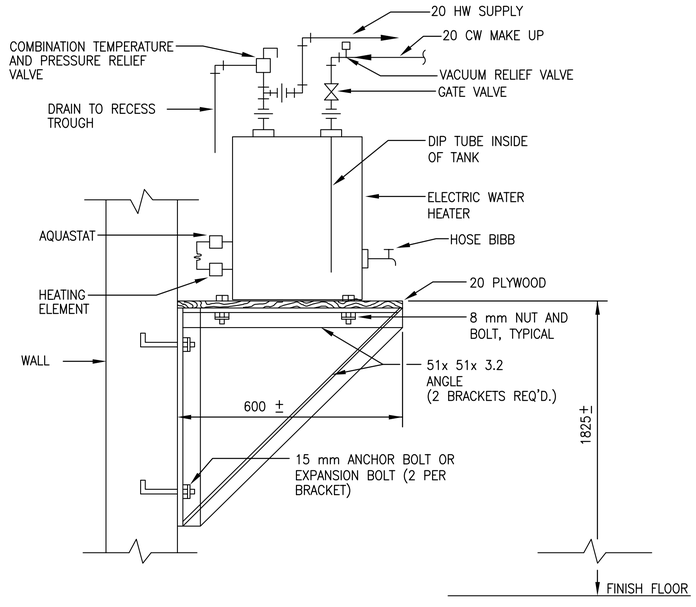

WALL MOUNTED ELECTRIC WATER HEATER DETAIL

SCALE: N.T.S.

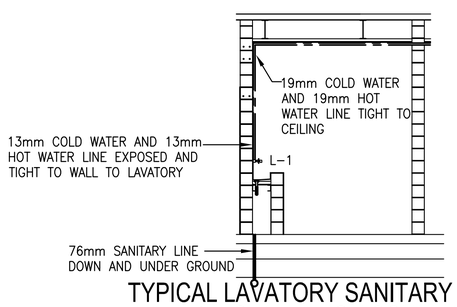

TYPICAL LAVATORY SANITARY & WATER INSTALLATION SCHEMATIC

SCALE: N.T.S.

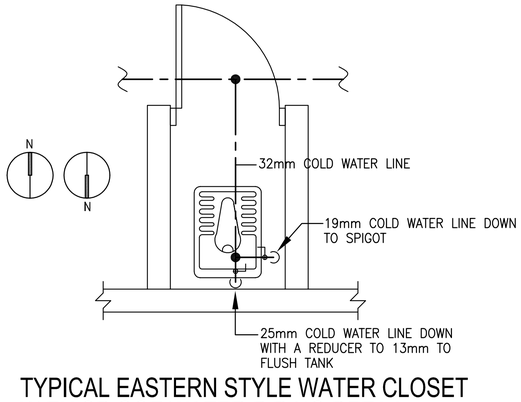

TYPICAL EASTERN STYLE WATER CLOSET WITH SPIGOT WATER PIPING DETAIL

SCALE: N.T.S.

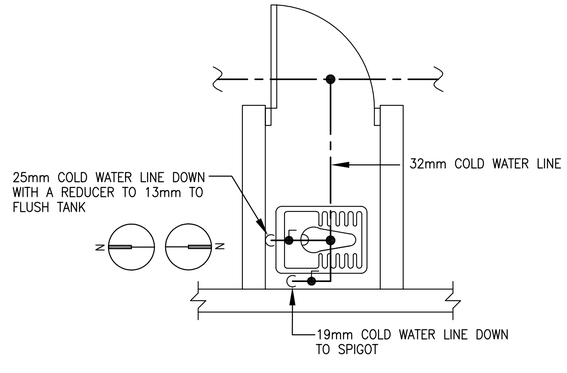

TYPICAL EASTERN STYLE WATER CLOSET WITH SPIGOT WATER PIPING DETAIL

SCALE: N.T.S.

US ARMY CORPS OF ENGINEERS
AFGHANISTAN ENGINEER DISTRICT

Mark	Description	Date	Appr.	Mark	Description	Date	Appr.

Date: 02/23/10 | Rev: 0
Designed by: RMH | Dwn by: RMH | Ckd by: CJM
Reviewed by: MRS | Submitted by: BAKER
Design file no.
Drawing code:
File name: ANNA1ABR-5910XX1
Plot date: 02/09/2010
Plot scale: N.T.S.

U.S. ARMY ENGINEER DISTRICT, AFGHANISTAN
CORPS OF ENGINEERS
APO AE 96338

Michael Baker Jr., Inc
A unit of Michael Baker Corporation
Airside Business Park
100 Airside Drive
Moon Township, PA 15108
www.mbakercorp.com

AFGHAN NATIONAL ARMY
REGIONAL MILITARY TRAINING CENTER
STANDARD DESIGN

LATRINE BUILDING
SMALL

PLUMBING DETAILS

APPROVED:

A/E DESIGNER OF RECORD

SEAL:

COMMONWEALTH OF PENNSYLVANIA
REGISTERED PROFESSIONAL
MATTHEW R. SOTOSKY
ENGINEER
045578-E

Sheet reference number:
P-501

FIXTURE LIST

TYPE	ITEM	SOIL & WASTE	VENT	COLD WATER	HOT WATER	REMARKS	REMARKS 2
W–1	EASTERN STYLE WATER CLOSET	102mm	51mm	13mm	------	FLUSH TANK	LOW FLOW EFFICIENT TYPE
L–1	TROUGH FIXTURE	38mm	38mm	13mm	13mm	FABRICATED IN FIELD	LOW FLOW EFFICIENT TYPE
ABL–1	ABLUTION	FLOOR DRAIN	------	13mm	13mm	FABRICATED IN FIELD	----------
HWH–1	WATER HEATER	---	---	SEE DWG.	SEE DWG.	151 LITER ELECTRIC WATER HEATER, 380/3ø, 9KW	----------

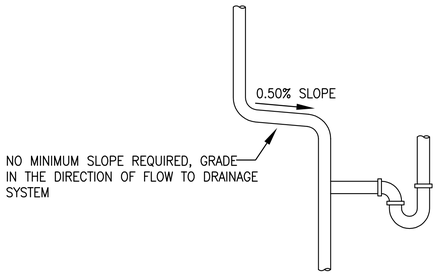

TYPICAL VENT SLOPE DETAIL

SCALE: N.T.S.

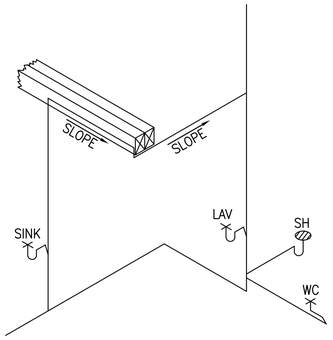

TYPICAL VENT SLOPE DETAIL

SCALE: N.T.S.

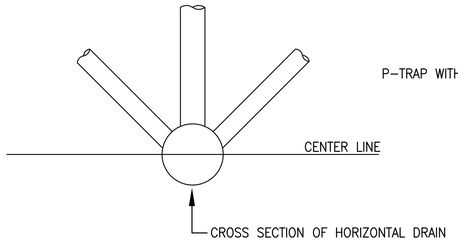

ACCEPTABLE VENT CONNECTIONS TO HORIZONTAL DRAIN - DETAIL

SCALE: N.T.S.

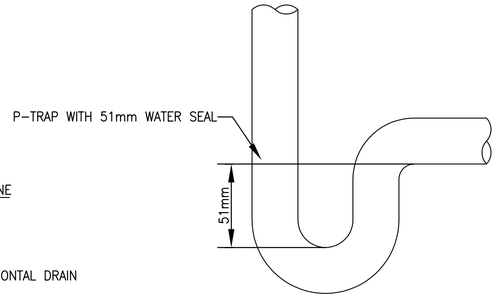

P-TRAP WITH 51mm WATER SEAL DETAIL

SCALE: N.T.S.

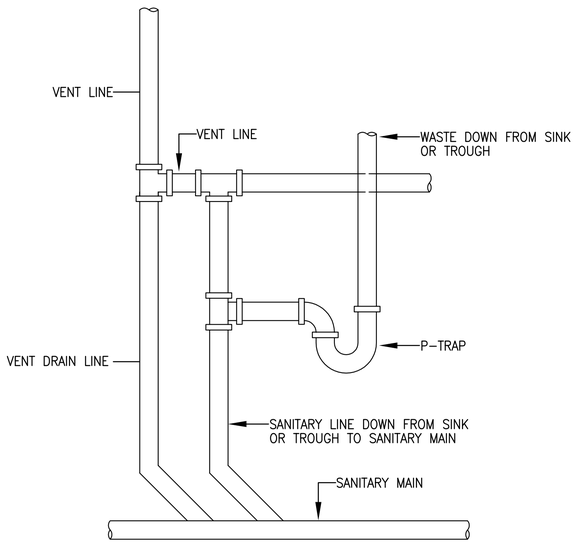

TYPICAL LAVATORY/LAUNDRY VENT DETAIL

SCALE: N.T.S.

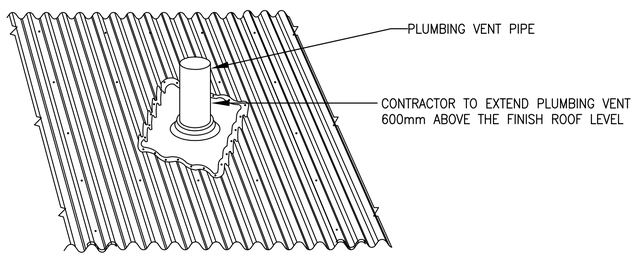

PLUMBING VENT THRU ROOF DETAIL

SCALE: NTS

APPROVED:

A/E DESIGNER OF RECORD

SEAL:

COMMONWEALTH OF PENNSYLVANIA
REGISTERED PROFESSIONAL
MATTHEW R. SOTOSKY
ENGINEER
045576-E

US ARMY CORPS OF ENGINEERS
AFGHANISTAN ENGINEER DISTRICT

Mark	Description	Date	Appr.	Mark	Description	Date	Appr.

Designed by: RMH
Dwn by: RMH
Ckd by: CJM
Reviewed by: MRS
Submitted by: BAKER
Date: 02/23/10
Rev: 0
Design file no.
Drawing code:
File name: ANNATBR-S502XXX
Plot date: 02/09/2010
Plot scale: N.T.S.

U.S. ARMY ENGINEER DISTRICT, AFGHANISTAN
CORPS OF ENGINEERS
APO AE 96338

Michael Baker Jr., Inc
A unit of Michael Baker Corporation
Airside Business Park
100 Airside Drive
Moon Township, PA 15108
www.mbakercorp.com

AFGHAN NATIONAL ARMY
REGIONAL MILITARY TRAINING CENTER
STANDARD DESIGN

LATRINE BUILDING
SMALL

PLUMBING DETAILS & FIXTURE SCHEDULE

Sheet reference number:
P–502

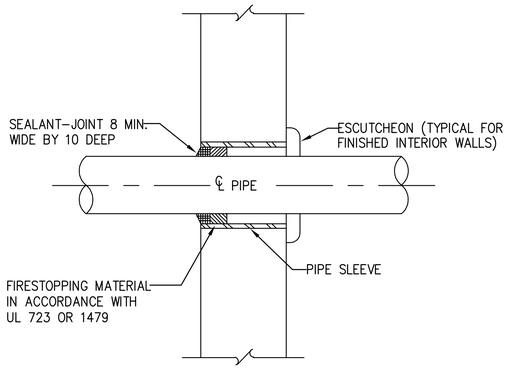

TYPICAL WALL PENETRATION DETAIL

SCALE: N.T.S.

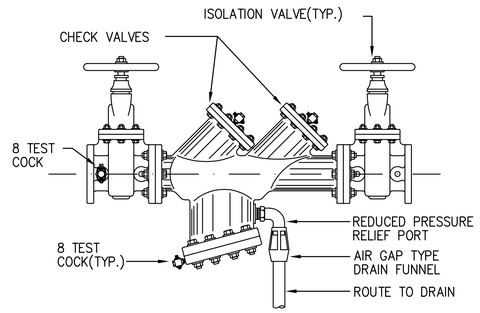

TYPICAL BACKFLOW PREVENTER DETAIL

SCALE: N.T.S.

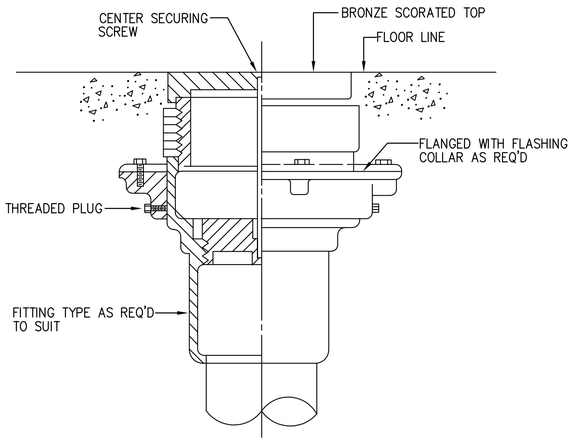

TYPICAL FLOOR CLEANOUT DETAIL

SCALE: N.T.S.

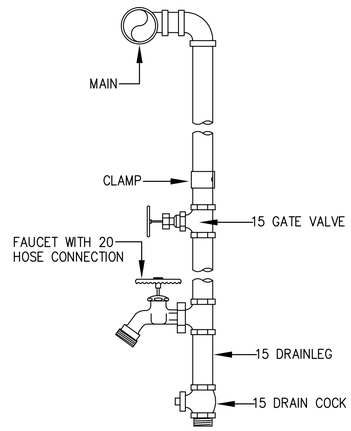

TYPICAL WATER DROP DETAIL

SCALE: N.T.S.

US ARMY CORPS OF ENGINEERS
AFGHANISTAN ENGINEER DISTRICT

Mark	Description	Date	Appr.	Mark	Description	Date	Appr.

Designed by: RMH
Dwn by: RMH
Ckd by: CJM
Reviewed by: MRS
Submitted by: BAKER
Date: 02/23/10
Rev: 0
Design file no.
Drawing code:
File name: ANALATSPL-503XXX
Plot date: 02/08/2010
Plot scale:N.T.S.

U.S. ARMY ENGINEER DISTRICT, AFGHANISTAN
CORPS OF ENGINEERS
APO AE 96338

Michael Baker Jr., Inc
A unit of Michael Baker Corporation
Airside Business Park
100 Airside Drive
Moon Township PA 15108
www.mbakercorp.com

AFGHAN NATIONAL ARMY
REGIONAL MILITARY TRAINING CENTER
STANDARD DESIGN

LATRINE BUILDING
SMALL

PLUMBING DETAILS

APPROVED:

A/E DESIGNER OF RECORD

SEAL:

COMMONWEALTH OF PENNSYLVANIA
REGISTERED PROFESSIONAL
MATTHEW R. SOTOSKY
ENGINEER
045576-E

Sheet reference number:
P–503

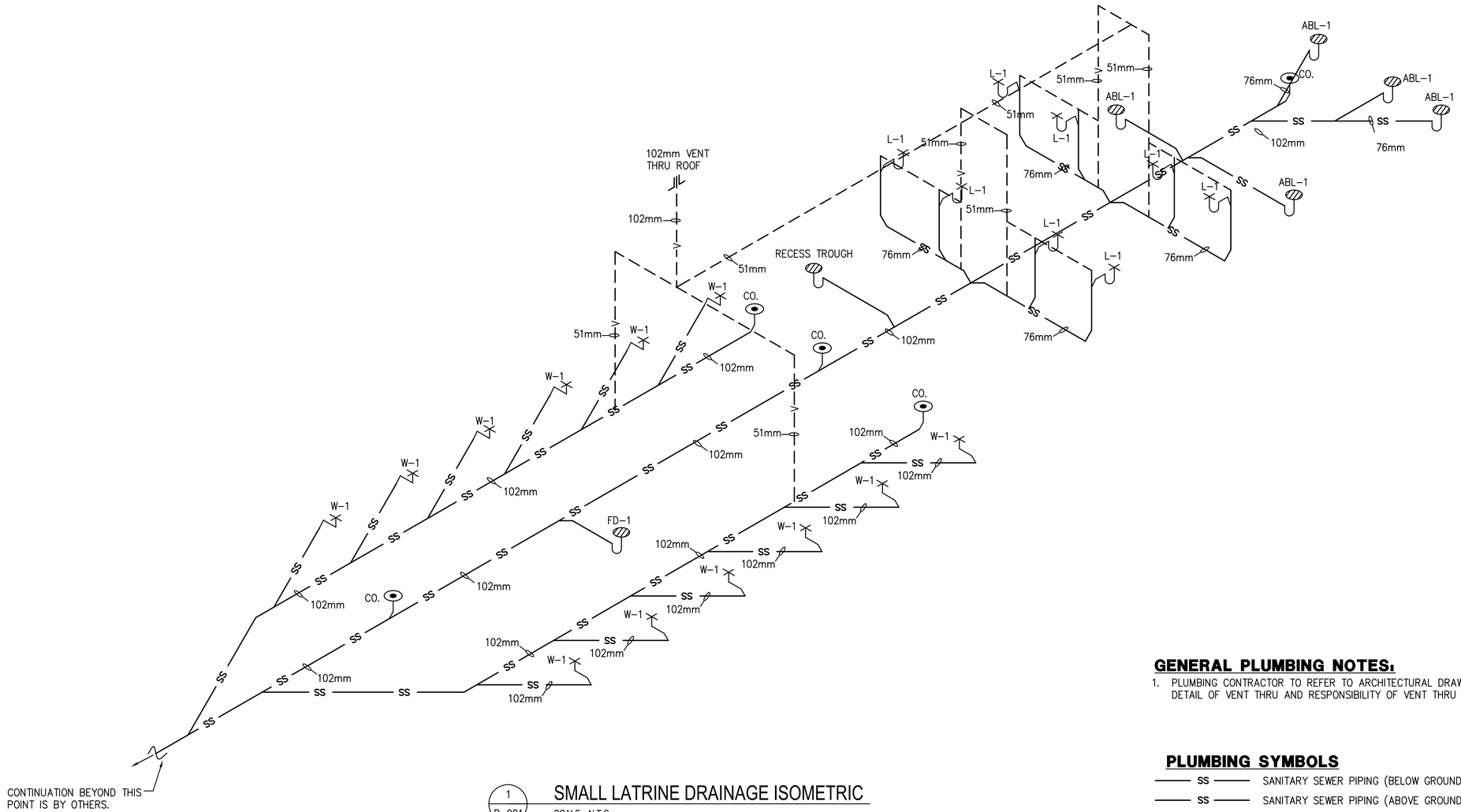

1 P-901 SMALL LATRINE DRAINAGE ISOMETRIC

SCALE: N.T.S.

GENERAL PLUMBING NOTES:

1. PLUMBING CONTRACTOR TO REFER TO ARCHITECTURAL DRAWINGS FOR DETAIL OF VENT THRU AND RESPONSIBILITY OF VENT THRU ROOF.

PLUMBING SYMBOLS

- SS — SANITARY SEWER PIPING (BELOW GROUND)
- SS — SANITARY SEWER PIPING (ABOVE GROUND)
- VENT PIPING (V)
- COLD WATER PIPING (CW)
- HOT WATER PIPING (HW)
- BALL VALVE
- BACKFLOW PREVENTER
- OR — CLEANOUT (CO.)
- ROOF PENETRATION

APPROVED:

A/E DESIGNER OF RECORD

SEAL:

COMMONWEALTH OF PENNSYLVANIA
REGISTERED PROFESSIONAL
MATTHEW R. SOTOSKY
ENGINEER
046576-E

US ARMY CORPS OF ENGINEERS
AFGHANISTAN ENGINEER DISTRICT

Mark	Description	Date	Appr.	Mark	Description	Date	Appr.

U.S. ARMY ENGINEER DISTRICT, AFGHANISTAN
CORPS OF ENGINEERS
APO AE 96338

Michael Baker Jr., Inc
A unit of Michael Baker Corporation
Airside Business Park
100 Airside Drive
Moon Township, PA 15108
www.mbakercorp.com

Designed by: RMH
Dwn by: RMH
Ckd by: CJM
Reviewed by: MRS
Submitted by: BAKER
Date: 02/23/10
Rev: 0
Design file no.
Drawing code:
File name: ANALATSPL-901XXX
Plot date: 02/08/2010
Plot scale: N.T.S.

AFGHAN NATIONAL ARMY
REGIONAL MILITARY TRAINING CENTER
STANDARD DESIGN

LATRINE BUILDING
SMALL

PLUMBING ISOMETRICS

Sheet reference number:
P-901

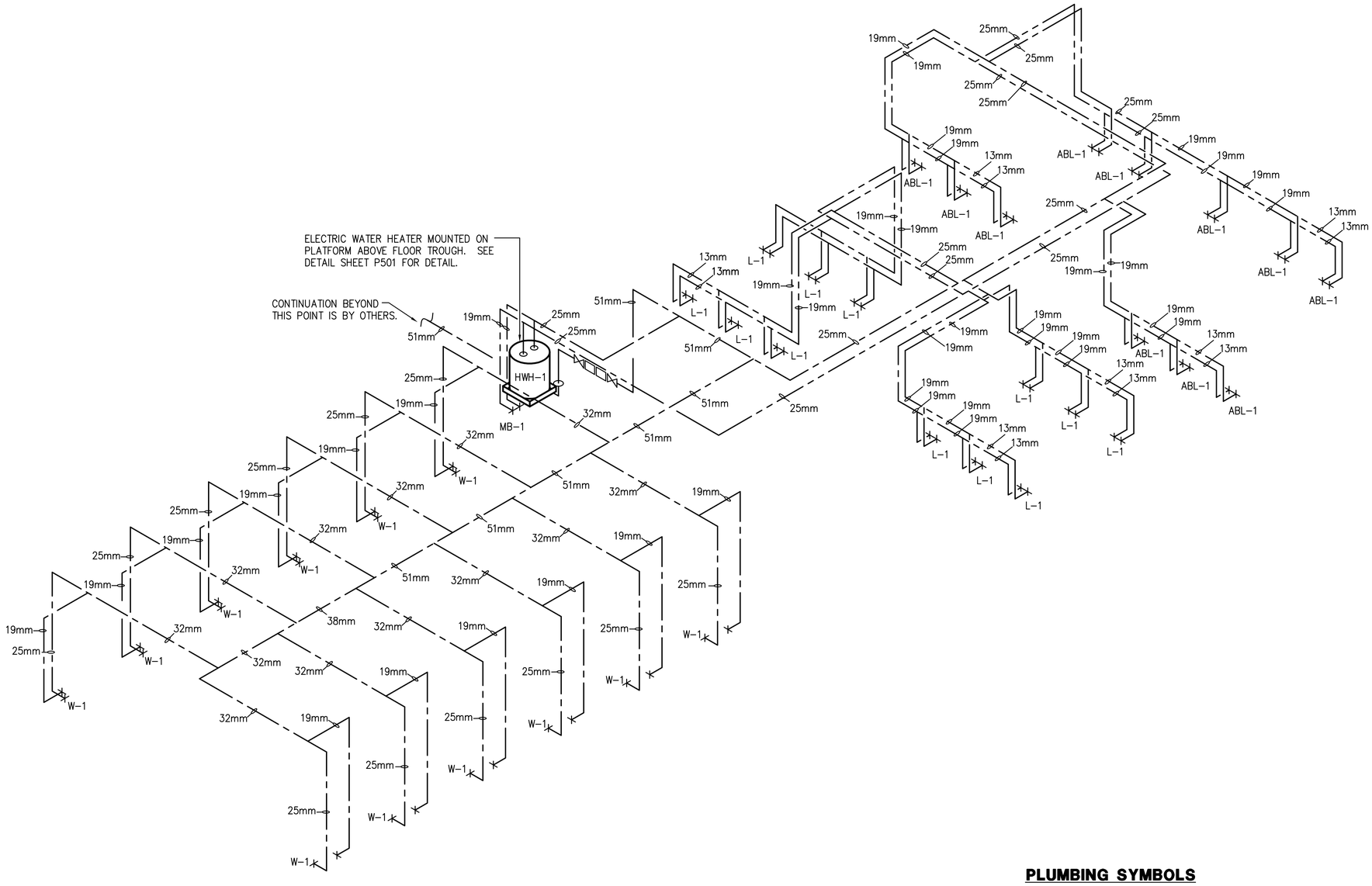

1
P-902

SMALL LATRINE HOT AND COLD WATER ISOMETRIC

SCALE: N.T.S.

PLUMBING SYMBOLS

—— SS ——	SANITARY SEWER PIPING (BELOW GROUND)
—— SS ——	SANITARY SEWER PIPING (ABOVE GROUND)
— — — — —	VENT PIPING (V)
—— - ——	COLD WATER PIPING (CW)
— — — —	HOT WATER PIPING (HW)
—— ● ——	BALL VALVE
—— << ——	BACKFLOW PREVENTER
—— OR ——	CLEANOUT (CO.)
(O)	ROOF PENETRATION

APPROVED:

A/E DESIGNER OF RECORD

SEAL:

COMMONWEALTH OF PENNSYLVANIA
REGISTERED PROFESSIONAL
MATTHEW R. SOTOSKY
ENGINEER
045578-E

US ARMY CORPS OF ENGINEERS
AFGHANISTAN ENGINEER DISTRICT

Mark	Description	Date	Appr.

Mark	Description	Date	Appr.

Date: 02/23/10
Rev: 0
Design file no.
Drawing code:
File name: ANNATRPL-P902XXX
Plot date: 02/26/2010
Plot scale: N.T.S.

Designed by: RMH
Dwn by: RMH
Ckd by: CJM
Reviewed by: MRS
Submitted by: BAKER

U.S. ARMY ENGINEER DISTRICT, AFGHANISTAN
CORPS OF ENGINEERS
APO AE 96338

Michael Baker Jr., Inc
A unit of Michael Baker Corporation
Airside Business Park
100 Airside Drive
Moon Township, PA 15108
www.mbakercorp.com

AFGHAN NATIONAL ARMY
REGIONAL MILITARY TRAINING CENTER
STANDARD DESIGN

LATRINE BUILDING
SMALL

PLUMBING ISOMETRICS

Sheet reference number:
P-902

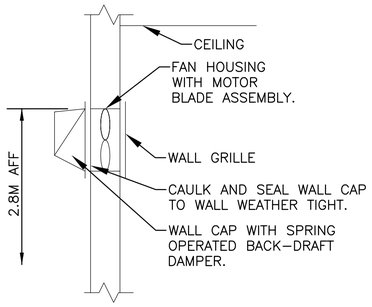

2 / M-101 WALL EXHAUST FAN DETAIL
N.T.S.

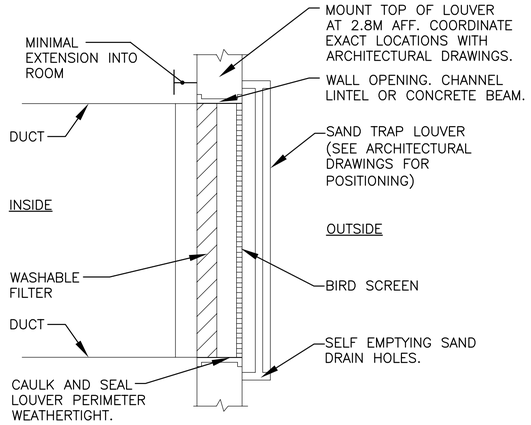

3 / M-101 FILTERED SAND TRAP LOUVER
N.T.S.

EXHAUST FAN SCHEDULE

NO.	TYPE	FAN CMS	DRIVE	HP	SP mmH20	ELECTRICAL DATA	SWITCH
EF-1	INLINE	0.250	DIRECT	1/8	13	220/1/50	@ WALL
EF-2	INLINE	0.250	DIRECT	1/8	13	220/1/50	@ WALL
EF-3	WALL	0.035	DIRECT	FRACT	9.5	220/1/50	W/ STAT

NOTE:
1. FANS SHALL BE CORROSION RESISTANT.
2. FANS SHALL HAVE SPRING OPERATED BACK DRAFT DAMPER.

MAKE UP AIR HEATERS

NO.	BLOWER CMS	FUSE	KW	MIN. TEMP RISE °C	SP mmH20	ELECTRICAL DATA	CONTROL
MUA-1	0.284	60	10	20	13	220/1/50	REMOTE
MUA-2	0.142	30	5	20	13	220/1/50	REMOTE

NOTES:
1. PROVIDE REMOTE MOUNTED THERMOSTAT WITH LOCKING COVER.
2. INTERLOCK MUA-1 BLOWER OPERATION WITH EF-1 AND THERMOSTAT.
3. INTERLOCK MUA-2 BLOWER OPERATION WITH EF-2 AND THERMOSTAT.
4. BLOWER SHALL BE SET TO ENERGIZE WITH EXHAUST FAN(S) AND OR THERMOSTAT(S), HEAT SHALL BE CONTROLLED BY THERMOSTAT. PROVIDE AIR SENSING SWITCH FOR HEATING OPERATION.

GENERAL NOTES:

1. DO NOT SCALE DRAWINGS – ALL DIMENSIONS AND CONDITIONS SHALL BE CHECKED AND VERIFIED BY THE CONTRACTOR AT THE SITE.
2. ALL WORK PERFORMED ON THIS BUILDING SHALL BE IN COMPLIANCE WITH ALL PERTINENT CODES, RULES, ORDINANCES AND REGULATIONS OF THE GOVERNING AUTHORITIES.
3. ALL WORK PERFORMED UNDER AND IN CONNECTION WITH THESE DRAWINGS AND SPECIFICATIONS SHALL BE IN STRICT COMPLIANCE WITH THE LATEST SAFETY AND HEALTH STANDARDS.

SYMBOLS:

- (X) KEY NOTE
- (0.050) AIR VOLUME IN CUBIC METERS PER SECOND (CMS)
- ¬ VOLUME DAMPER
- (T) THERMOSTAT WITH LOCKING COVER
- UC DOOR UNDERCUT
- TG TRANSFER GRILLE

ABBREVIATIONS:

AFF	ABOVE FINISH FLOOR
CF	CEILING FANS
CMS	CUBIC METERS PER SECOND
STATS	THERMOSTATS

KEY NOTE:

1. INLINE EXHAUST FAN DUCTED TO WALL CAP WITH LOW LEAKAGE GRAVITY BACK-DRAFT DAMPER. SECURE FAN TO STRUCTURE ABOVE AND INTERLOCK WITH MAKE UP AIR HEATER.
2. ELECTRIC MAKE UP AIR HEATER SECURED TO STRUCTURE ABOVE. BLOWER SHALL BE SET TO ENERGIZE WITH CORRESPONDING EXHAUST FAN AND OR THE THERMOSTAT, HEAT SHALL BE CONTROLLED BY THERMOSTAT. COORDINATE DUCT AND LIGHT LOCATIONS WITH OTHER TRADES.
3. WALL EXHAUST FAN WITH LOW SPRING OPERATED BACK-DRAFT DAMPER. SEE DETAIL 2 THIS SHEET.
4. 600X600 (24X24) INTAKE LOUVER WITH BACK-DRAFT DAMPER FOR MAKE UP AIR UNIT. PROVIDE WEATHER PROOF LOUVER WITH 50mm (2") WASHABLE FILTER AND SAND TRAP. SEE DETAIL 3 THIS SHEET.
5. 200x150 (8x6) ALUMINUM DUCT MOUNTED SUPPLY GRILLE WITH ADJUSTABLE OPPOSED BLADE DAMPERS. BALANCE TO CMS IN PARENTHESIS.
6. 150x150 (6x6) ALUMINUM DUCT MOUNTED EXHAUST GRILLE WITH ADJUSTABLE OPPOSED BLADE DAMPERS. BALANCE TO CMS IN PARENTHESIS.
7. THERMOSTAT MOUNTED AS HIGH AS POSSIBLE. INTERLOCK STAT WITH CORRESPONDING EXHAUST FAN, SET FAN TO ENERGIZE ON RISE IN TEMPERATURE ABOVE 25°C (77°F).

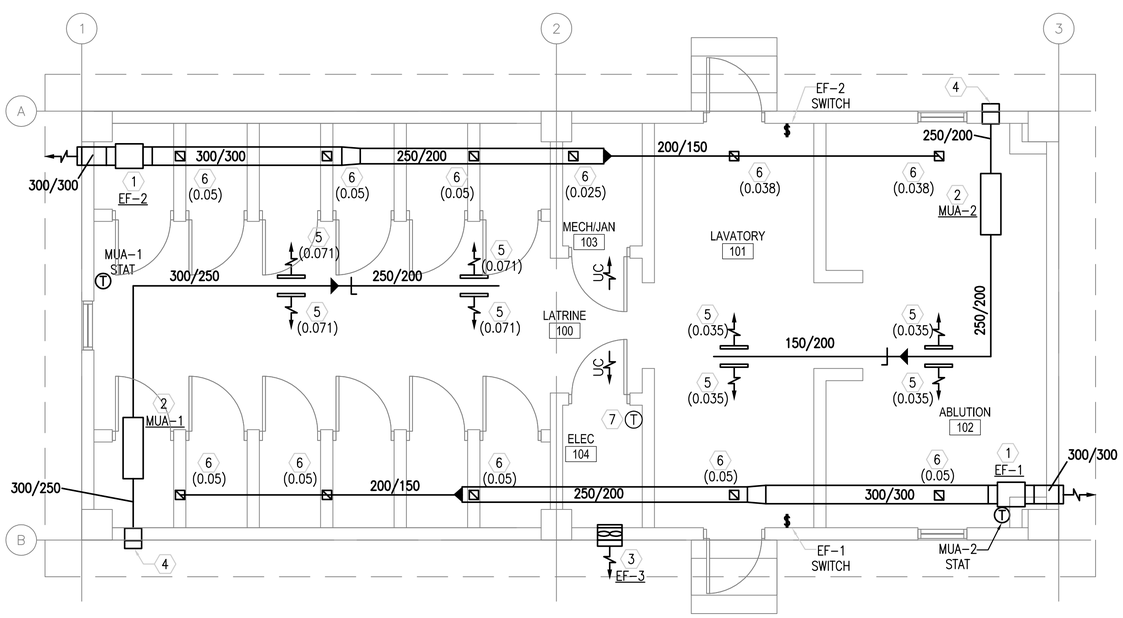

1 / M-101 FLOOR PLAN - HVAC
SCALE: 1:50

LINEAR DIMENSIONS SHOWN ARE IN MILLIMETERS (MM), UNLESS OTHERWISE NOTED

0 1000 2000
SCALE: 1:50

APPROVED:

A/E DESIGNER OF RECORD

SEAL:

COMMONWEALTH OF PENNSYLVANIA REGISTERED PROFESSIONAL MATTHEW R. SOTOSKY ENGINEER 045578-E

US ARMY CORPS OF ENGINEERS
AFGHANISTAN ENGINEER DISTRICT

Mark	Description	Date	Appr.	Mark	Description	Date	Appr.

Designed by: RML
Dwn by: JJN
Ckd by: CJM
Reviewed by: MRS
Submitted by: BAKER
Date: 02/23/10
Rev: 0
Design file no.
Drawing code:
File name: ANMATBMH-101XXX
Plot date: 02/08/2010
Plot scale: 1:50

U.S. ARMY ENGINEER DISTRICT, AFGHANISTAN
CORPS OF ENGINEERS
APO AE 96338

Michael Baker Jr., Inc
A unit of Michael Baker Corporation
Airside Business Park
100 Airside Drive
Moon Township, PA 15108
www.mbakercorp.com

AFGHAN NATIONAL ARMY
REGIONAL MILITARY TRAINING CENTER
STANDARD DESIGN

LATRINE BUILDING
SMALL

HVAC PLANS, SCHEDULES AND DETAILS

Sheet reference number:
M-101

POWER

- DISTRIBUTION PANELBOARD
- NEW PANELBOARD – SURFACE
- NEW PANELBOARD – RECESSED
- GENERATOR
- TRANSFORMER (DRAWN TO SIZE)
- JUNCTION BOX
- JUNCTION BOX – CEILING
- FUSIBLE SAFETY SWITCH
- MOTOR
- ^{M} MOTOR STARTING SWITCH – 220V, 20A RATED UNLESS OTHERWISE NOTED
- ELECTRIC WATER HEATER
- CF CEILING FAN – REFER TO SPECIFICATION SECTION 26 20 00

RECEPTACLES

- DUPLEX 20A TYPE CEE 7/7 "SCHUKO STYLE" UNSWITCHED RECEPTACLE
- GF DUPLEX 20A TYPE CEE 7/7 "SCHUKO STYLE" UNSWITCHED RECEPTACLES – 10mA GROUND FAULT INTERRUPTER TYPE
- WP DUPLEX 20A TYPE CEE 7/7 "SCHUKO STYLE" UNSWITCHED TYPE WITH WEATHERPROOF COVER – 10mA GROUND FAULT INTERRUPTER TYPE
- EXP DUPLEX 20A TYPE CEE 7/7 "SCHUKO STYLE" UNSWITCHED RECEPTACLES – EXPLOSION PROOF
- * INDICATES MOUNT DEVICE ABOVE COUNTERTOP OR AT 1070mm ABOVE FINISHED FLOOR WHERE NO COUNTER IS TO BE INSTALLED.

LIGHTING

- LIGHTING FIXTURE – SEE FIXTURE SCHEDULE FOR MORE INFORMATION
- EMERGENCY LIGHTING FIXTURE – SEE FIXTURE SCHEDULE FOR MORE INFORMATION
- DOWNLIGHT
- LIGHTING FIXTURE ON NORMAL/EMERGENCY
- WALL MOUNTED LIGHT FIXTURE
- E EXIT SIGN – DIRECTIONAL ARROWS AS INDICATED ON DRAWINGS
- REMOTE HEAD FOR BATTERY PACK
- $ SINGLE POLE SWITCH – 20A RATED
- $^{3} 3–WAY SWITCH – 20A RATED
- $^{4} 4–WAY SWITCH – 20A RATED
- LC LIGHTING CONTACTOR
- POLE MOUNTED SITE LIGHTING FIXTURE– NUMBER OF FIXTURES PER POLE AS INDICATED ON DRAWINGS
- EXTERIOR DIRECTIONAL LIGHTING FIXTURE
- a SMALL CASE LETTERS REPRESENTS LAMP(S) / SWITCHES.

TELECOMMUNICATIONS

- TELEPHONE OUTLET(S) @ 45cm AFF. U.N.O. WITH 20mm RACEWAY TERMINATED TO TELEDATA TERMINAL BOARD.
- DATA OUTLET(S) @ 45cm AFF. U.N.O. WITH 20mm RACEWAY TERMINATED TO TELEDATA TERMINAL BOARD.

TELECOMMUNICATIONS (CONTINUED)

- COMBINATION TELEPHONE/DATA OUTLET(S) @ 45cm AFF. U.N.O. WITH 27mm RACEWAY TERMINATED TO TELEDATA TERMINAL BOARD.
- W WALL MTD. TELEPHONE OUTLET WITH 20mm RACEWAY TO TELEDATA TERMINAL BOARD.
- (x)T INDICATES NUMBER OF TELEPHONE OUTLET(S) AND ASSOCIATED CABLING
- (x)D INDICATES NUMBER OF DATA OUTLET(S) AND ASSOCIATED CABLING
- (x)TF INDICATES NUMBER OF TELEPHONE OUTLETS AND ASSOCIATED CABLING WITH 1 OUTLET AND CABLE DEDICATED FOR FAX

SINGLE LINE SYMBOLS

- SWITCH
- BREAKER
- FUSE
- TRANSFORMER
- GROUND
- CONTACT (NORMALLY OPEN)
- CONTACT (NORMALLY CLOSED)
- TRANSFER SWITCH
- CURRENT TRANSFORMER
- INDICATES NEW ELECTRICAL EQUIPMENT
- C INDICATES NEW CONTROL WIRING AND CONDUIT
- EQUIPMENT OUTLINE

MISCELLANEOUS

- BRANCH CIRCUIT WIRING, SURFACE MOUNTED ON WALLS
- BRANCH CIRCUIT WIRING – 6mm²
- BRANCH CIRCUIT WIRING – UNDER FLOOR
- HOME RUN BACK TO PANEL
- CONDUIT TURNED DOWN
- CONDUIT TURNED UP
- LV LOW VOLTAGE WIRING AND CONDUIT
- ~ INDICATES CONTINUATION OF LINE

FIRE ALARM

- FACP FIRE ALARM CONTROL PANEL WITH BATTERY BACKUP
- F FIRE ALARM PULL STATION

FIRE ALARM (CONTINUED)

- F FIRE ALARM STROBE – WALL MOUNTED
- F FIRE ALARM AUDIBLE/STROBE – WALL MOUNTED
- F FIRE ALARM HORN/STROBE – WALL MOUNTED
- S SMOKE DETECTOR
- H HEAT DETECTOR CEILING MOUNTED
- D DUCT DETECTOR – PROVIDED BY EC, INSTALLED BY MC AND CONNECTED BY EC

DENOTATIONS & ABBREVIATIONS

AFF	ABOVE FINISHED FLOOR
C	CEILING MOUNTED
E	EMERGENCY
EC	ELECTRICAL CONTRACTOR
EPO	EMERGENCY POWER OFF
EXP	EXPLOSION PROOF
F	FIRE ALARM
FF	FLUSH FLOOR MOUNTED
FL	FLUORESCENT
FO	FIBER OPTIC
FSS	FUSED SAFETY SWITCH
GF	GROUND FAULT INTERRUPTER
GC	GENERAL CONTRACTOR
IG	ISOLATED GROUND
K	KEY
LV	LOW VOLTAGE
M	MOTOR
MC	MECHANICAL CONTRACTOR
NE	NORMAL/EMERGENCY
NFSS	NON–FUSED SAFETY SWITCH
PA	PAGING SYSTEM
PLC	PLUMBING CONTRACTOR
SL	SINGLE LINE
T	TELEPHONE

DENOTATIONS & ABBREVIATIONS (CONT.)

TP	TAMPER PROOF
UE	UNDERGROUND ELECTRIC
W	WALL MOUNTED
WP	WEATHERPROOF WITH GROUND FAULT INTERRUPTION
WT	WATER TIGHT

GENERAL PROJECT NOTES:

G1. UNLESS OTHERWISE NOTED, PROVIDE ALL EQUIPMENT SHOWN ON THE PLANS. THE ELECTRICAL CONTRACTOR SHALL COORDINATE ALL SYMBOLS SHOWN ON THE PLANS WITH THE SYMBOL LIST. IT SHALL BE THE RESPONSIBILITY OF THE CONTRACTOR TO VERIFY THE INTENT OF ANY SYMBOL THAT IS SHOWN ON THE PLANS AND NOT INDICATED ON THE SYMBOL LIST WITH THE ENGINEER PRIOR TO BID.

G2. THE CONTRACTOR SHALL VERIFY THE LOCATION OF ALL UNDERGROUND UTILITIES WITHIN THE CONSTRUCTION AREA THREE (3) WORKING DAYS NOTICE BEFORE COMMENCING DIGGING. NOTIFY THE LOCAL AUTHORITY HAVING JURISDICTION AND WAIT THE REQUIRED TIME BEFORE COMMENCING TO DIG.

G3. THE CONTRACTOR SHALL COORDINATE CONDUIT RUNS, LIGHTING FIXTURES AND OTHER EQUIPMENT LOCATIONS WITH THE OTHER TRADE CONTRACTORS TO AVOID CONFLICTS.

G4. WHERE VOLTAGES AND FREQUENCIES ON THE DRAWINGS AND IN THE SPECIFICATIONS DIFFER FROM THE LOCAL ONES, ALL WORK SHALL BE PERFORMED USING THE LOCAL VOLTAGES AND FREQUENCIES.

G5. THE MINIMUM WIRE SIZE ON THE PROJECT SHALL BE 4mm². THE MINIMUM CONDUIT SIZE SHALL BE 20mm. THE MINIMUM BREAKER SIZE SHALL BE 20 AMPS.

G6. THE CONTRACTOR SHALL PUT A MAXIMUM OF 6 DUPLEX RECEPTACLES ON A 20A SINGLE POLE CIRCUIT.

G7. WHERE THE 1010 SCOPE REVIEW, 1015 TECHNICAL REVIEW, DRAWINGS, AND SPECIFICATIONS DIFFER FROM AMERICAN CODES OR STANDARDS, THE 1010, 1015, DRAWINGS, AND SPECIFICATIONS SHALL RULE.

G8. ALL CONDUIT AND DEVICES SHALL BE SURFACE MOUNTED UNLESS OTHERWISE INDICATED.

G9. CONTRACTOR SHALL COORDINATE ALL WORK WITH ALL OTHER TRADES TO ENSURE ALL WORK IS COMPLETED IN A PROFESSIONAL, WORKMAN–LIKE MANNER.

APPROVED:

A/E DESIGNER OF RECORD

SEAL:

COMMONWEALTH OF PENNSYLVANIA
REGISTERED PROFESSIONAL
JOSEPH R. GAUS
1/29/10
ENGINEER
PE-074251

US ARMY CORPS OF ENGINEERS
AFGHANISTAN ENGINEER DISTRICT

Mark	Description	Date	Appr.

Mark	Description	Date	Appr.

Rev: 0

Date: 2/23/10
Design file no.
Drawing code:
File name:
Plot date:
Plot scale:

Designed by: RAJ
Dwn by: BJB
Ckd by: JRG
Reviewed by: JRG
Submitted by: BAKER

U.S. ARMY ENGINEER DISTRICT, AFGHANISTAN
CORPS OF ENGINEERS
APO AE 96338

Michael Baker Jr., Inc
A unit of Michael Baker Corporation
Airside Business Park
100 Airside Drive
Moon Township, PA 15108
www.mbakercorp.com

AFGHAN NATIONAL ARMY
REGIONAL MILITARY TRAINING CENTER
STANDARD DESIGN

LATRINE BUILDING
SMALL

ELECTRICAL SYMBOLS & ABBREVIATIONS

Sheet reference number:
E–001

GENERAL NOTES:

1. REFER TO DRAWING #E-001 FOR THE ELECTRICAL SYMBOLS LIST.
2. EXIT SIGNS SHALL BE WIRED AHEAD OF ANY LOCAL SWITCHING ON CIRCUITS. SEE WIRING DIAGRAM DETAIL 6, ON DRAWING #E-501.
3. REFER TO DRAWING #E-601 FOR THE LIGHTING FIXTURE SCHEDULE.
4. REFER TO DRAWING #E-501 FOR THE POWER RISER.
5. REFER TO DRAWING #E-602 FOR PANEL SCHEDULES.
6. LIGHT FIXTURES INDICATED AS EMERGENCY SHALL BE PROVIDED WITH A BATTERY BACKUP BALLAST. SEE WIRING DIAGRAM DETAIL 5, ON DRAWING #E-501.
7. COORDINATE THE LOCATIONS OF LIGHT FIXTURES WITH THE LOCATION OF DUCTWORK PRIOR TO INSTALLATION.

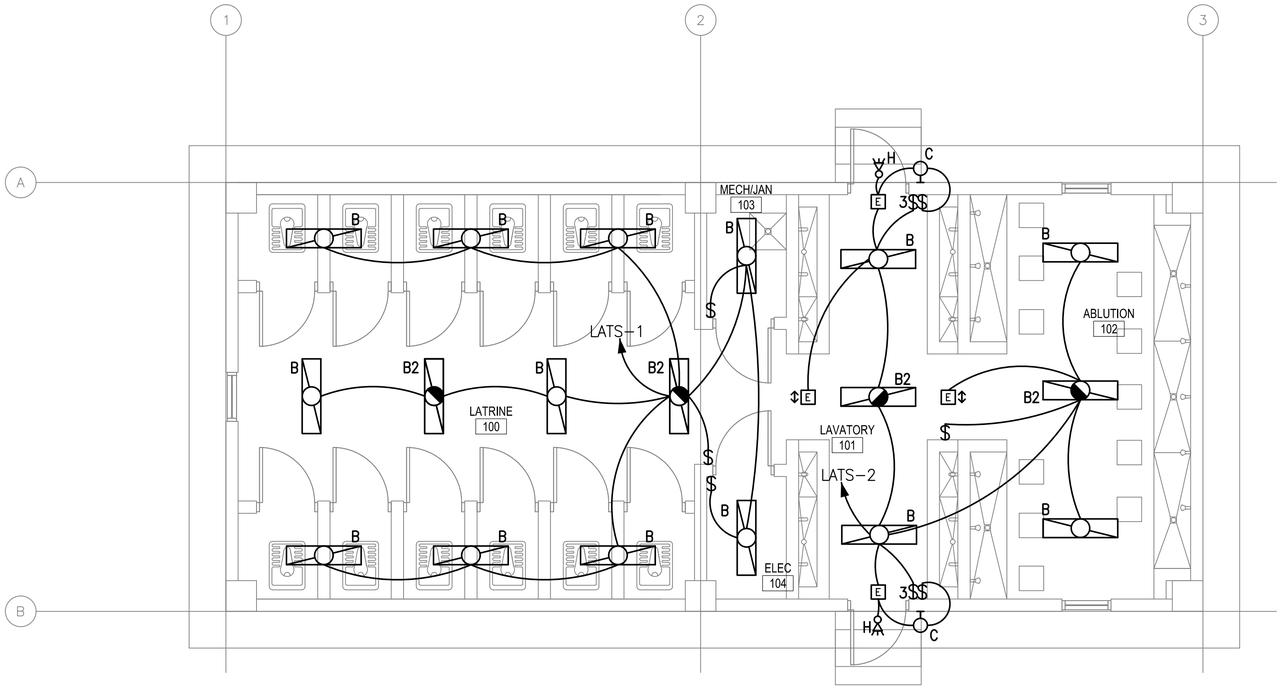

1
E-101

SMALL LATRINE FLOOR PLAN - LIGHTING

SCALE: 1:50

0 1000 2000
SCALE: 1:50

APPROVED:

A/E DESIGNER OF RECORD

SEAL:

COMMONWEALTH OF PENNSYLVANIA
REGISTERED PROFESSIONAL
JOSEPH R. GAUS
ENGINEER
PE-074251

US ARMY CORPS OF ENGINEERS
AFGHANISTAN ENGINEER DISTRICT

Mark	Description	Date	Appr.

Mark	Description	Date	Appr.

Designed by: RAJ
Dwn by: BJB
Ckd by: JRG
Reviewed by: JRG
Submitted by: BAKER
Date: 2/23/10
Rev: 0
Design file no.
Drawing code:
File name:
Plot date:
Plot scale:

U.S. ARMY ENGINEER DISTRICT, AFGHANISTAN
CORPS OF ENGINEERS
APO AE 96338

Michael Baker Jr., Inc
A unit of Michael Baker Corporation
Airside Business Park
100 Airside Drive
Moon Township, PA 15108
www.mbakercorp.com

AFGHAN NATIONAL ARMY
REGIONAL MILITARY TRAINING CENTER
STANDARD DESIGN

LATRINE BUILDING
SMALL
ELECTRICAL LIGHTING PLAN

Sheet reference number:
E-101

GENERAL NOTES:

1. REFER TO DRAWING #E-001 FOR THE ELECTRICAL SYMBOLS LIST.
2. REFER TO DRAWING #E-501 FOR THE POWER RISER.
3. REFER TO DRAWING #E-602 FOR PANEL SCHEDULES.
4. COORDINATE EXACT MOUNTING LOCATION OF DISCONNECTING MEANS FOR MECHANICAL AND PLUMBING EQUIPMENT IN THE FIELD.
5. FUSIBLE SAFETY SWITCHES THAT ARE NOT OTHERWISE IDENTIFIED SHALL BE 380V, 1P, 30A FUSED SAFETY SWITCHES WITH 20A FUSES.

NUMBERED NOTES:

1. PANEL LATS.
2. NEMA 3R, 380V, 3P, 30A FUSED DISCONNECT FUSED AT 30A. SEE PLUMBING DRAWINGS FOR EXACT LOCATION OF WATER HEATER.
3. SEE DRAWING #E-602 FOR WIRE AND CONDUIT SIZE.
4. PROVIDE POWER CONNECTION TO EXHAUST FANS. SEE DRAWINGS #M-101 AND #E-602 FOR MORE INFORMATION.
5. NEMA 3R, 220V, 1P, 30A FUSED DISCONNECT FUSED AT 30A. SEE MECHANICAL DRAWINGS FOR EXACT LOCATION OF MUA-2.
6. PROVIDE POWER CONNECTION TO MAKE UP AIR UNIT #1. SEE DRAWINGS #M-101 AND #E-602 FOR MORE INFORMATION.
7. PROVIDE POWER CONNECTION TO MAKE UP AIR UNIT #2. SEE DRAWINGS #M-101 AND #E-602 FOR MORE INFORMATION.
8. THE DISCONNECTING MEANS FOR THIS PIECE OF EQUIPMENT SHALL BE IN A NEMA 3R ENCLOSURE.
9. NEMA 3R, 220V, 1P, 60A FUSED DISCONNECT FUSED AT 60A. SEE MECHANICAL DRAWINGS FOR EXACT LOCATION OF MUA-1.

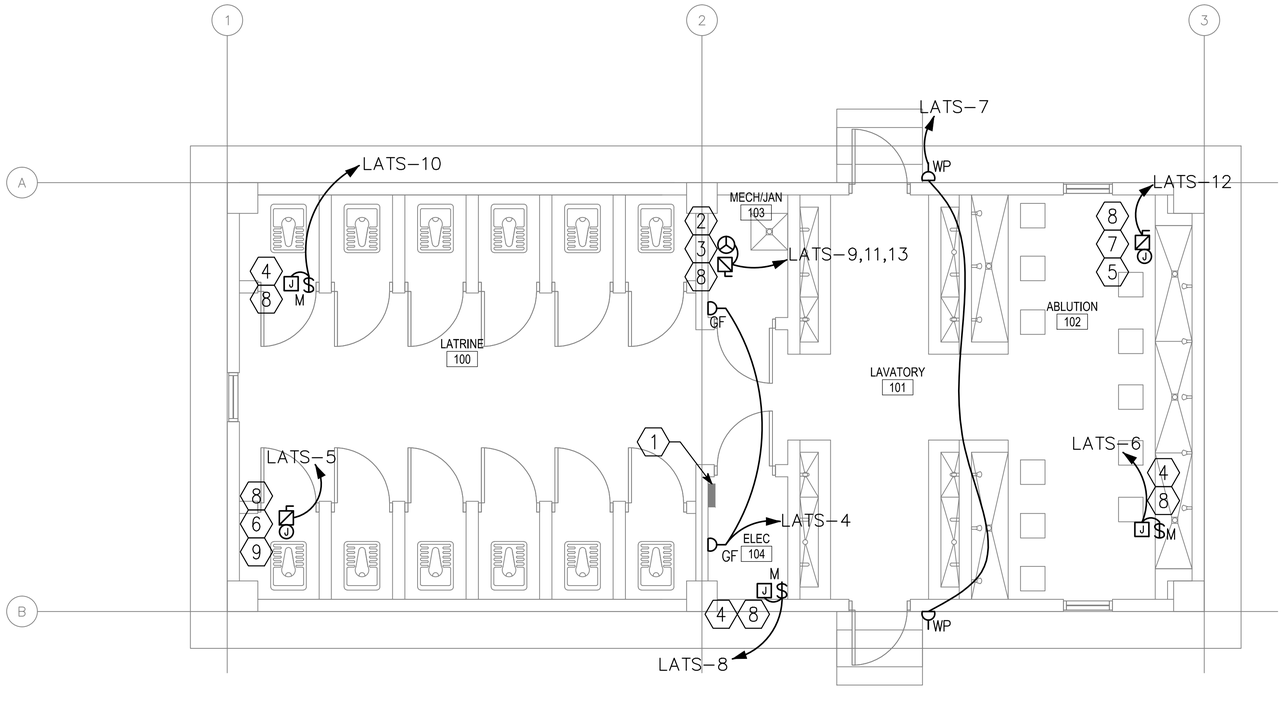

1 / E-102 SMALL LATRINE FLOOR PLAN - POWER & SYSTEMS

SCALE: 1:50

0 1000 2000
SCALE: 1:50

APPROVED:

A/E DESIGNER OF RECORD

SEAL:

COMMONWEALTH OF PENNSYLVANIA
REGISTERED PROFESSIONAL
JOSEPH R. GAUS
1/29/10
ENGINEER
PE-074251

US ARMY CORPS OF ENGINEERS
AFGHANISTAN ENGINEER DISTRICT

Mark	Description	Date	Appr.

Mark	Description	Date	Appr.

Rev: 0
Date: 2/23/10
Design file no.
Drawing code:
File name:
Plot date:
Plot scale:

Designed by: RAJ
Dwn by: BJB
Ckd by: JRG
Reviewed by: JRG
Submitted by: BAKER

U.S. ARMY ENGINEER DISTRICT, AFGHANISTAN
CORPS OF ENGINEERS
APO AE 96338

Michael Baker Jr., Inc
A unit of Michael Baker Corporation
Airside Business Park
100 Airside Drive
Moon Township, PA 15108
www.mbakercorp.com

AFGHAN NATIONAL ARMY
REGIONAL MILITARY TRAINING CENTER
STANDARD DESIGN

LATRINE BUILDING
SMALL
ELECTRICAL POWER AND SYSTEMS PLAN

Sheet reference number:
E-102

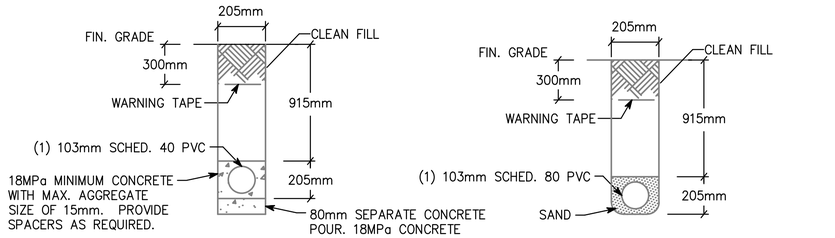

NOTE: PVC CONDUIT SHALL BE DIRECT BURIED SCHEDULE 80 FOR NO TRAFFIC AREAS AND CONCRETE-ENCASED SCHEDULE 40 FOR UNDER ROADWAYS OR TRAFFIC AREAS.

1 / E-501 TYPICAL DUCT BANK DETAILS FOR CONDUIT IN SAND OR CONCRETE

SCALE: N.T.S.

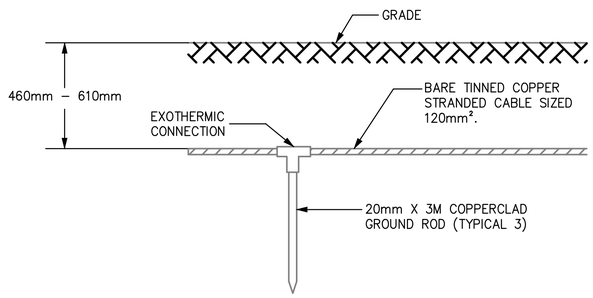

3 / E-501 GROUND TRIPOD SYSTEM DETAIL - ELEVATION

SCALE: N.T.S.

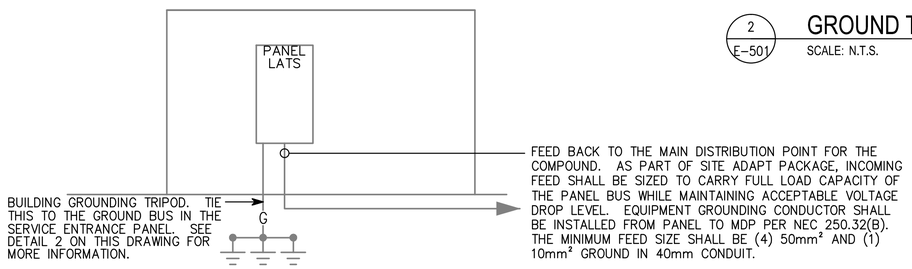

4 / E-501 LATS RISER DIAGRAM

SCALE: N.T.S.

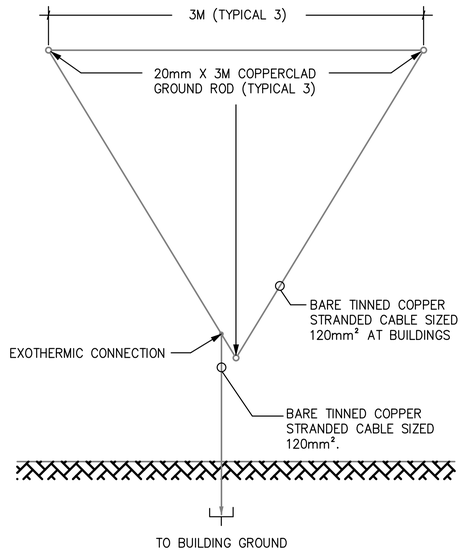

2 / E-501 GROUND TRIPOD SYSTEM DETAIL - PLAN

SCALE: N.T.S.

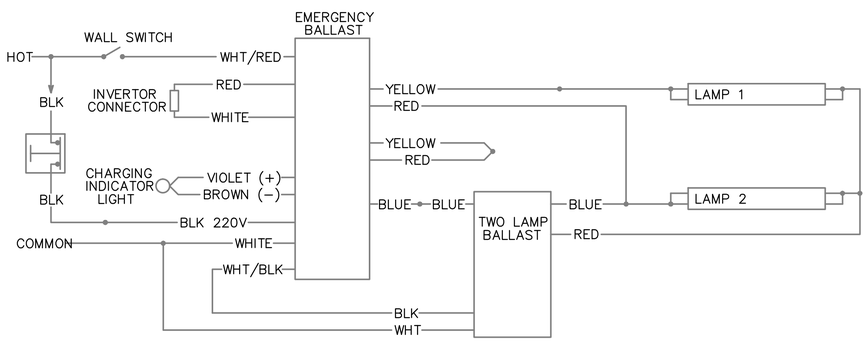

6 / E-501 EMERGENCY FIXTURE WIRING DIAGRAM

SCALE: N.T.S.

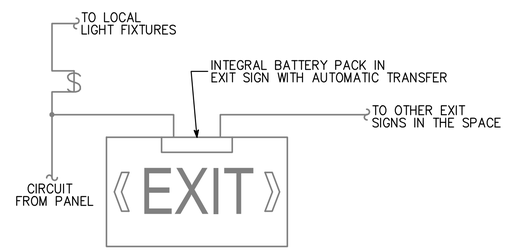

6 / E-501 EXIT SIGN WIRING DIAGRAM

SCALE: N.T.S.

APPROVED:

A/E DESIGNER OF RECORD

SEAL:

COMMONWEALTH OF PENNSYLVANIA
REGISTERED PROFESSIONAL
JOSEPH R. GAUS
ENGINEER
PE-074251

US ARMY CORPS OF ENGINEERS
AFGHANISTAN ENGINEER DISTRICT

Mark	Description	Date	Appr.	Mark	Description	Date	Appr.

Designed by: RAJ
Dwn by: BJB
Ckd by: JRG
Reviewed by: JRG
Submitted by: BAKER
Date: 2/23/10
Rev: 0
Design file no.
Drawing code:
File name:
Plot date:
Plot scale:

U.S. ARMY ENGINEER DISTRICT, AFGHANISTAN
CORPS OF ENGINEERS
APO AE 96338

Michael Baker Jr., Inc
A unit of Michael Baker Corporation
Airside Business Park
100 Airside Drive
Moon Township, PA 15108
www.mbakercorp.com

AFGHAN NATIONAL ARMY
REGIONAL MILITARY TRAINING CENTER
STANDARD DESIGN

LATRINE BUILDING
SMALL
ELECTRICAL DETAILS

Sheet reference number:
E-501

(A) LARGER OF THE TWO SIZES GIVEN IN THE TABLES BELOW	
GROUNDING ELECTRODE CONDUCTOR (BASED ON AIC RATING)	
AIC RATING OF SERVICE EQUIPMENT	NECESSARY GROUNDING ELECTRODE CONDUCTOR SIZE
10K	(1) 35mm²
14K	(1) 50mm²
18K	(1) 70mm²
22K	(1) 70mm²
25K	(1) 70mm²
30K	(1) 95mm²
35K	(1) 120mm²
42K	(1) 150mm²
65K	(1) 185mm²
100K	(1) 300mm²
125K	(2) 185mm²
200K	(2) 300mm²
GROUNDING ELECTRODE CONDUCTOR (BASED ON NEC TABLE 250.66)	
SIZE OF LARGEST UNGROUNDED SERVICE CONDUCTOR OR EQUIVALENT AREA FOR PARALLEL CONDUCTORS	NECESSARY GROUNDING ELECTRODE CONDUCTOR SIZE
350 kcmil OR SMALLER	35mm²
OVER 350 kcmil TO 600 kcmil	70mm²
OVER 600 kcmil TO 1100 kcmil	70mm²
OVER 1100 kcmil	95mm²
NOTE: ALL SIZES ARE BASED ON COPPER CONDUCTORS.	

(B) EQUIPMENT GROUNDING CONDUCTOR	
RATING OR SETTING OF AUTOMATIC OVERCURRENT DEVICE IN CIRCUIT AHEAD OF EQUIPMENT, CONDUIT, ETC, NOT EXCEEDING (AMPERES)	NECESSARY EQUIPMENT GROUNDING CONDUCTOR SIZE
15	2.5mm²
20	4.0mm²
30	6.0mm²
40	6.0mm²
60	6.0mm²
100	10mm²
200	16mm²
300	25mm²
400	25mm²
500	35mm²
600	50mm²
800	70mm²
1000	70mm²
1200	95mm²
1600	120mm²
2000	150mm²
2500	185mm²
3000	240mm²
4000	300mm²
5000	400mm²
6000	400mm²
NOTE: ALL SIZES ARE BASED ON COPPER CONDUCTORS.	

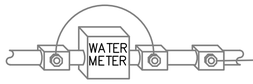

METAL UNDERGROUND WATER PIPE
A METAL UNDERGROUND WATER PIPE IN DIRECT CONTACT WITH THE EARTH FOR 10FT. OR MORE AND ELECTRICALLY CONTINUOUS (OR MADE CONTINUOUS BY BONDING AROUND INSULATING JOINTS OR INSULATING PIPE). INTERIOR METAL WATER PIPING LOCATED MORE THAN 5FT. FROM THE POINT OF ENTRANCE SHALL NOT BE USED FOR SERVICE ENTRANCE GROUNDING.

METAL FRAME OF THE BUILDING OR STRUCTURE
A SINGLE STRUCTURAL METAL MEMBER. BUILDING STEEL MAY ALSO BE USED IF IT IS BONDED TO A METAL UNDERGROUND WATER PIPE, A CONCRETE INCASED ELECTRODE, A GROUND RING ROD AND PIPE ELECTRODES, OR PLATE ELECTRODES AS DESCRIBED IN NEC 250.52.

CONCRETE ENCASED ELECTRODE
AN ELECTRODE ENCASED BY AT LEAST 2IN. OF CONCRETE , LOCATED WITHIN AND NEAR THE BOTTOM OF A CONCRETE FOUNDATION OR FOOTING THAT IS IN DIRECT CONTACT WITH THE EARTH, CONSISTING OF AT LEAST 20FT. OF ONE OR MORE BARE OR ZINC GALVANIZED OR OTHER ELECTRICALLY CONDUCTIVE COATED STEEL REINFORCING BARS OR RODS OF NOT LESS THAN 1/2" DIAMETER OR BARE COPPER CONDUCTOR NOT SMALLER THAN 4AWG.

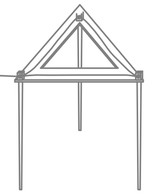

GROUNDING TRIPOD AT SERVICE ENTRANCE
THREE 3/4" DIAMETER BY 10FT. LONG COPPER CLAD GROUND RODS. GROUND RODS SHALL BE DRIVEN IN A TRIANGULAR SHAPE WITH 10FT. ON EACH SIDE OF THE TRIANGLE. GROUND RODS SHALL BE CONNECTED BY WAY OF A 1/2IN. X 4IN. X 4IN. COPPER PLATE TO A 16OZ. COPPER STRIP ELEMENT. THE COPPER STRIP ELEMENT SHALL BE A 12IN. WIDE CONTINUOUS TRIANGLE. GROUND RODS SHALL ALSO BE CONNECTED WITH (1) #4/0 BARE TINNED COPPER CABLE 19 STRAND. ALL CONNECTIONS SHALL BE MADE WITH A TYPE PCC-2Q2Q EXOTHERMIC CONNECTION OR APPROVED COMPRESSION FITTING.

LOAD OR DOWNSTREAM PANEL
ALL LOADS IN THE BUILDING SHALL HAVE AN EQUIPMENT GROUNDING CONDUCTOR PULLED TO THEM.

1
E-502

SERVICE ENTRANCE GROUNDING DETAIL

SCALE: N.T.S.

APPROVED:

A/E DESIGNER OF RECORD

SEAL:

COMMONWEALTH OF PENNSYLVANIA
REGISTERED PROFESSIONAL
JOSEPH R. GAUS
ENGINEER
PE-074251
1/29/10

US ARMY CORPS OF ENGINEERS
AFGHANISTAN ENGINEER DISTRICT

Mark	Description	Date	Appr.	Mark	Description	Date	Appr.

Rev: 0
Date: 2/23/10
Design file no.
Drawing code:
File name:
Plot date:
Plot scale:

Designed by: RAJ
Dwn by: BJB
Ckd by: JRG
Reviewed by: JRG
Submitted by: BAKER

U.S. ARMY ENGINEER DISTRICT, AFGHANISTAN
CORPS OF ENGINEERS
APO AE 96338

Michael Baker Jr., Inc.
A unit of Michael Baker Corporation
Airside Business Park
100 Airside Drive
Moon Township, PA 15108
www.mbakercorp.com

AFGHAN NATIONAL ARMY
REGIONAL MILITARY TRAINING CENTER
STANDARD DESIGN

LATRINE BUILDING
SMALL
ELECTRICAL DETAILS

Sheet reference number:
E-502

FIXTURE MARK 'B' & 'B2'

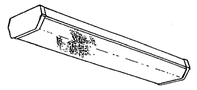

FIXTURE MARK 'C'

FIXTURE MARK 'H'

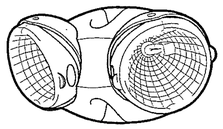

FIXTURE MARK E

LIGHTING FIXTURE SCHEDULE

FIXTURE MARK	STYLE NUMBER AND TYPE	NUMBER AND TYPE OF LAMPS	VOLTAGE	MOUNTING	NOTES
B	WET LOCATION WRAP AROUND SURFACE MOUNTED FLUORESCENT FIXTURE WITH PRISMATIC ACRYLIC LENS AND ELECTRONIC BALLAST	(2) 32W 3500K	220V – 1ø 50HZ	SURFACE MOUNTED	FURNISHED WITH ELECTRONIC BALLAST, VIRGIN ACRYLIC WRAP AROUND LENS.
B2	SAME AS FIXTURE 'B' WITH EMERGENCY BALLAST	(2) 32W 3500K	220V – 1ø 50HZ	SURFACE MOUNTED	FURNISHED WITH ELECTRONIC BALLAST, VIRGIN ACRYLIC WRAP AROUND LENS. EMERGENCY BALLAST WITH SELF TEST SWITCH.
C	INCANDESCENT ONE PIECE W/ APPROVED LENS STABILIZED HIGH IMPACT POLY CARBONATE.	(1) A19 – 100W INCANDESCENT	220V – 1ø 50HZ	WALL MOUNTED ABOVE EXTERIOR DOORS	
H	REMOTE HEAD EXTERIOR LIGHT HEAD POWERED FROM EXIT SIGN BATTERY– 12V DOUBLE HEAD CORROSION RESISTANT WITH UL34 WEATHERPROOF CONSTRUCTION	(2) 12W/12V HALOGEN LAMP	12V – 1ø 50HZ	EXTERIOR WALL MOUNTED AT TOP OF DOOR HEIGHT	
E	UNIVERSAL MOUNT ENGINEER GRADE THERMOPLASTIC HOUSING EXIT SIGN WITH LED LAMPS, RED LETTERS 155mm IN HEIGHT WITH ARROWS AS INDICATED, WITH 12V CADMIUM BATTERY WITH REMOTE HEAD CAPABILITY	LED LAMPS	220V – 1ø 50HZ	UNIVERSAL MOUNTING	

APPROVED:

A/E DESIGNER OF RECORD

SEAL:

COMMONWEALTH OF PENNSYLVANIA
REGISTERED PROFESSIONAL
JOSEPH R. GAUS
ENGINEER
PE-074251
1/29/10

US ARMY CORPS OF ENGINEERS
AFGHANISTAN ENGINEER DISTRICT

Mark	Description	Date	Appr.	Mark	Description	Date	Appr.

Rev: 0
Date: 2/23/10
Design file no.
Drawing code:
File name:
Plot date:
Plot scale:

Designed by: RAJ
Dwn by: BJB
Ckd by: JRG
Reviewed by: JRG
Submitted by: BAKER

U.S. ARMY ENGINEER DISTRICT, AFGHANISTAN
CORPS OF ENGINEERS
APO AE 96338

Michael Baker Jr., Inc.
A unit of Michael Baker Corporation
Airside Business Park
100 Airside Drive
Moon Township, PA 15108
www.mbakercorp.com

AFGHAN NATIONAL ARMY
REGIONAL MILITARY TRAINING CENTER
STANDARD DESIGN

LATRINE BUILDING
SMALL

ELECTRICAL LIGHTING FIXTURE SCHEDULE

Sheet reference number:
E–601

PANELBOARD LATS SURFACE MOUNTED
_____ AMP. MAIN LUGS (OR) 100 AMP. MAIN BREAKER W/ 100 AMP. TRIP
CIRCUIT BREAKER TYPE 380/220 VOLTS 3 PHASE 4 WIRE 50 HZ 100 AMP. BUS

CKT. NO.	TRIP AMPS	NO. POLES	WIRE MM 2	GND MM2	CONDUIT MM	LOAD SERVED	LOAD-KVA A0	LOAD-KVA B0	LOAD-KVA C0	LOAD-KVA A0	LOAD-KVA B0	LOAD-KVA C0	LOAD SERVED	CONDUIT MM	GND MM2	WIRE MM2	NO. POLES	TRIP AMPS	CKT. NO.
1	20	1	4.0	4.0	20	LIGHTING – RM 100, 103, 104	0.9			0.5			LIGHTING – RM 101, 102	20	4.0	4.0	1	20	2
3	20	1				SPARE					0.4		RECEPTACLES – RM 103, 104	20	4.0	4.0	1	20	4
5	60	1	25.0	6.0	25	MAKE UP AIR #1 – RM 100			10.0			0.5	EXHAUST FAN #1 – RM 102	20	4.0	4.0	1	20	6
7	20	1	4.0	4.0	20	EXTERIOR RECEPT	0.4			0.5			EXHAUST FAN #3 – RM 101	20	4.0	4.0	1	20	8
9	30	3	6.0	6.0	20	WATER HEATER – RM 103		3.0			0.5		EXHAUST FAN #2 – RM 100	20	4.0	4.0	1	20	10
11									3.0			5.0	MAKE UP AIR #2 – RM 102	20	6.0	6.0	1	30	12
13							3.0						SPARE				1	20	14
15	20	1				SPARE							SPARE				1	20	16
17	20	1				SPARE							SPARE				1	20	18
19	20	1				SPARE							SPARE				1	20	20
21	20	1				SPARE							SPARE				1	20	22
23	20	1				SPARE							SPARE				1	20	24
25	20	1				SPARE							SPARE				1	20	26
27	20	1				SPARE							SPARE				1	20	28
29	20	1				SPARE							SPARE				1	20	30
							4.3	3.0	13.0	1.0	0.9	5.5							

TOTAL CONN. LOAD PER PHASE (KVA): A0 5.3 B0 3.9 C0 18.5

TOTAL CONN. LOAD 27.7 KVA. 70 % DEMAND = ESTIMATED DEMAND LOAD 19.39

* MAIN BREAKER SHALL BE 3P EARTH GROUND TYPE

US ARMY CORPS OF ENGINEERS
AFGHANISTAN ENGINEER DISTRICT

Mark	Description	Date	Appr.	Mark	Description	Date	Appr.

Designed by: RAJ
Dwn by: BJB
Ckd by: JRG
Reviewed by: JRG
Submitted by: BAKER
Date: 2/23/10
Rev: 0
Design file no.
Drawing code:
File name:
Plot date:
Plot scale:

U.S. ARMY ENGINEER DISTRICT, AFGHANISTAN
CORPS OF ENGINEERS
APO AE 96338

Michael Baker Jr., Inc.
A unit of Michael Baker Corporation
Airside Business Park
100 Airside Drive
Moon Township, PA 15108
www.mbakercorp.com

AFGHAN NATIONAL ARMY
REGIONAL MILITARY TRAINING CENTER
STANDARD DESIGN

LATRINE BUILDING
SMALL

ELECTRICAL PANEL SCHEDULES

APPROVED:

A/E DESIGNER OF RECORD

SEAL:

COMMONWEALTH OF PENNSYLVANIA
REGISTERED PROFESSIONAL
JOSEPH R. GAUS
ENGINEER
PE-074251
2/23/10

Sheet reference number:
E–602

AFGHAN NATIONAL ARMY

STANDARD BUILDING DESIGN

STORAGE AREA

100% FINAL DESIGN SUBMITTAL

SHEET INDEX

G–001 COVER SHEET

CIVIL

C–101 SITE PLAN
C–501 3000 mm FENCING DETAILS
C–502 FENCING DETAILS

ELECTRICAL

ES–101 ELECTRICAL SITE LIGHTING PLAN
ES–601 ELECTRICAL SITE LIGHT FIXTURE SCHEDULE

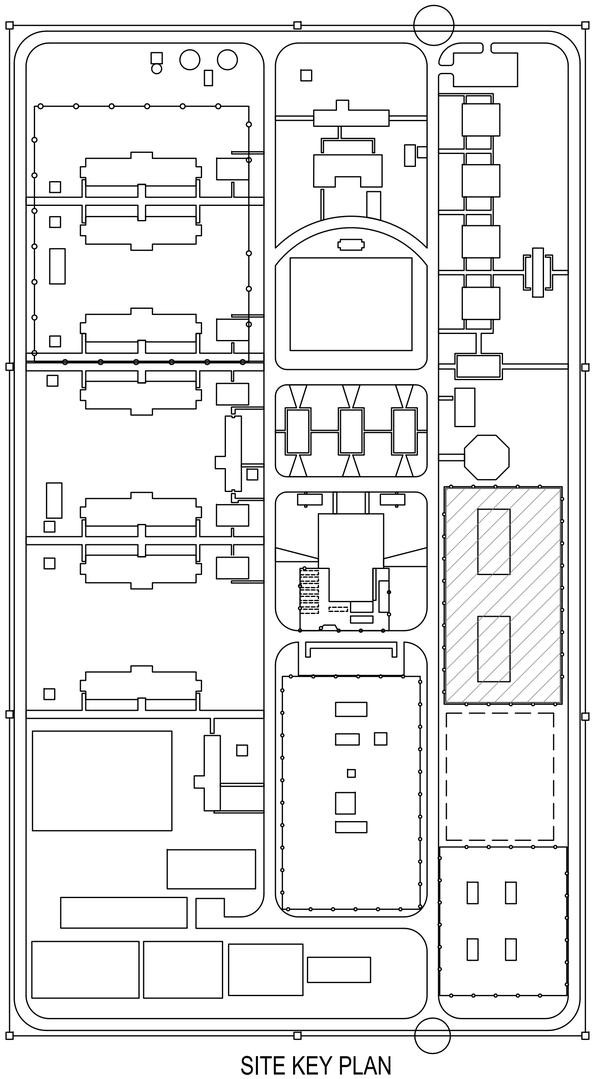

SITE KEY PLAN
NTS

US ARMY CORPS OF ENGINEERS
AFGHANISTAN ENGINEER DISTRICT

Mark	Description	Date	Appr.	Mark	Description	Date	Appr.

U.S. ARMY ENGINEER DISTRICT, AFGHANISTAN
CORPS OF ENGINEERS
APO AE 96338

Michael Baker Jr., Inc
A unit of Michael Baker Corporation
Airside Business Park
100 Airside Drive
Moon Township, PA 15108
www.mbakercorp.com

Designed by:
Dwn by: JDS
Ckd by: JDS
Reviewed by: LHM
Submitted by: BAKER
Date: 2/23/2010
Rev: 0
Design file no. G–001
Drawing code:
File name: ANASTOR-G-001XXX
Plot date: 2/23/2010
Plot scale: 1:1

AFGHAN NATIONAL ARMY
REGIONAL MILITARY TRAINING CENTER
STANDARD DESIGN

STORAGE AREA

COVER SHEET

Sheet reference number:
G–001

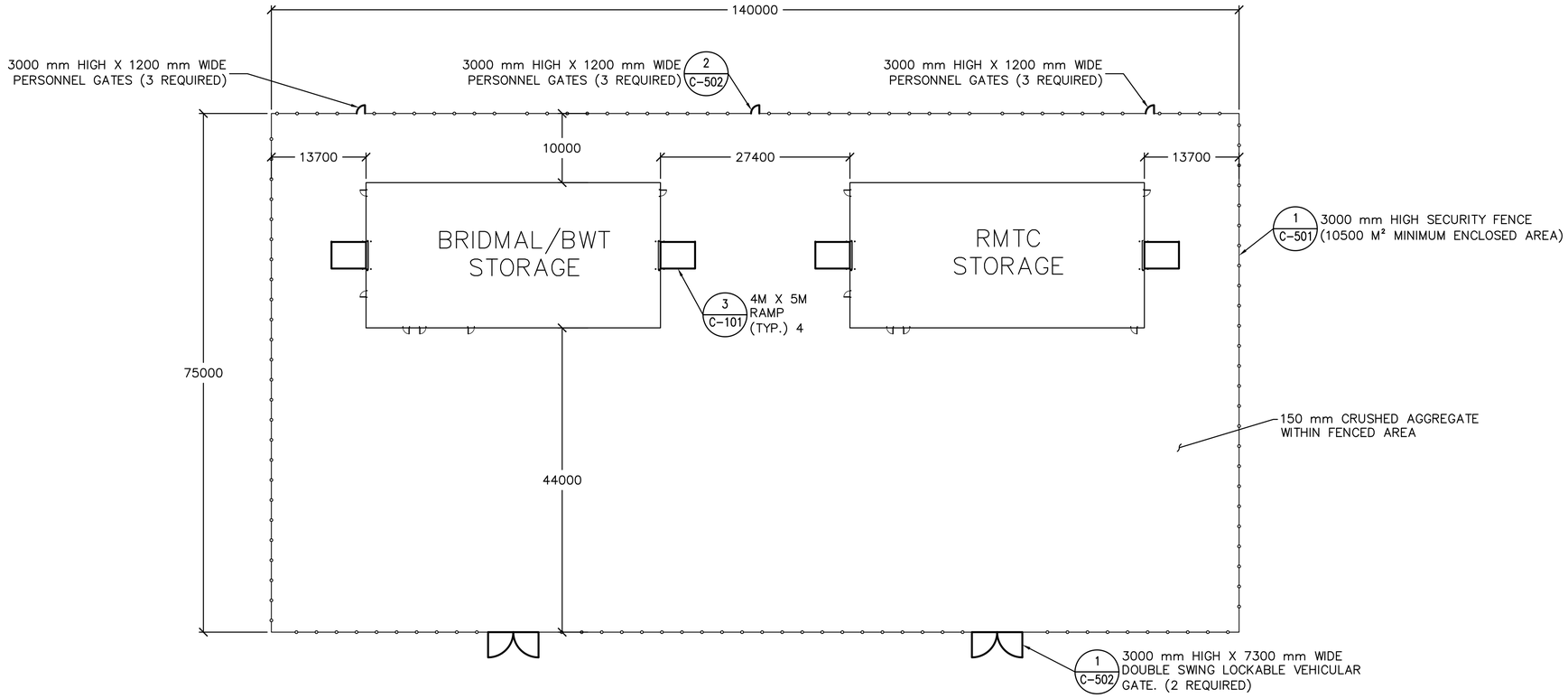

1 C-101 STORAGE COMPOUND RMTC & BRIDMAL/BWT BUILDINGS
SCALE: 1:400

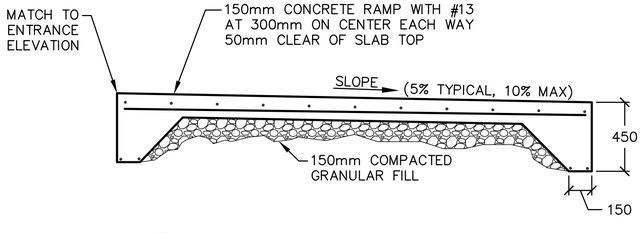

3 C-101 CONCRETE ENTRANCE RAMP DETAIL
SCALE: NTS

0 4000 8000 16000
SCALE: 1: 400

APPROVED:

A/E DESIGNER OF RECORD

SEAL:

COMMONWEALTH OF PENNSYLVANIA
REGISTERED PROFESSIONAL
GREGORY P. HYNES
ENGINEER
044310-E

US ARMY CORPS OF ENGINEERS
AFGHANISTAN ENGINEER DISTRICT

Mark	Description	Date	Appr.

Mark	Description	Date	Appr.

Date: 2/23/2010 Rev: 0
Design file no. C-101
Drawing code:
File name: ANASTOR-C-101XXX
Plot date: 2/23/2010
Plot scale: 1:400

Designed by: GPH
Dwn by: JDS
Ckd by: JMB
Reviewed by: LHM
Submitted by:
BAKER

U.S. ARMY ENGINEER DISTRICT, AFGHANISTAN
CORPS OF ENGINEERS
APO AE 96338

Michael Baker Jr., Inc.
A unit of Michael Baker Corporation
Airside Business Park
100 Airside Drive
Moon Township, PA 15108
www.mbakercorp.com

AFGHAN NATIONAL ARMY
REGIONAL MILITARY TRAINING CENTER
STANDARD DESIGN

STORAGE AREA
SITE PLAN

Sheet reference number:
C-101

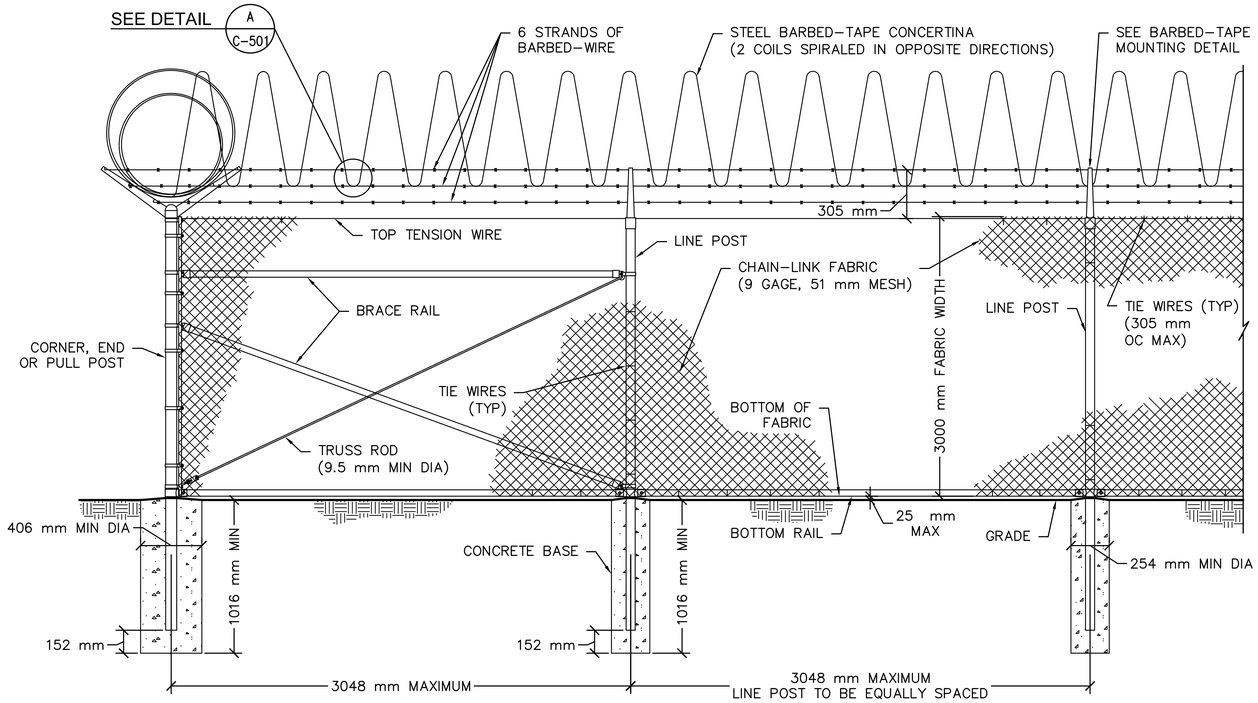

1 C-501 3000 mm CHAIN-LINK SECURITY FENCE DETAIL
SCALE: NTS

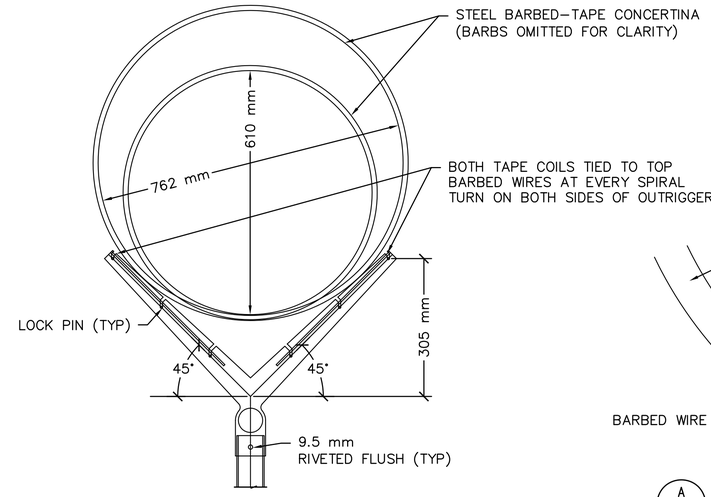

BARBED-TAPE MOUNTING DETAIL
NO SCALE

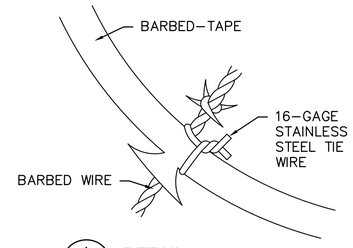

A C-501 DETAIL
NO SCALE

STEEL POST SCHEDULE	
USE AND SECTION	MINIMUM OUTSIDE DIMENSIONS (NOMINAL) FABRIC WIDTH 2440 mm AND OVER
CORNER, END & PULL POSTS	
TUBULAR – ROUND	102 mm O.D.
LINE POSTS	
TUBULAR – ROUND	73 mm O.D.
BOTTOM & BRACE RAILS	
TUBULAR – ROUND	42 mm O.D.
TUBULAR – SQUARE	38 mm SQ.
H–SECTION	41 mm x 38 mm
C–SECTION (ROLL–FORMED)	41 mm x 32 mm

NOTES:

1. WIRE TIES, RAILS, POSTS, AND BRACES SHALL BE CONSTRUCTED ON THE SECURE SIDE OF THE FENCE ALIGNMENT. CHAIN–LINK FABRIC SHALL BE PLACED ON THE SIDE OPPOSITE THE SECURE AREA.
2. ONLY 9–GAGE GALVANIZED STEEL TIE WIRES SHALL BE USED FOR FASTENING THE FENCE FABRIC TO FENCE POSTS AND RAILS. 16–GAGE, STAINLESS STEEL TIE WIRES SHALL BE USED FOR FASTENING FENCE FABRIC TO TENSION WIRES. HOG RINGS SHALL NOT BE ALLOWED ON SENSORED FENCES.
3. BOTTOM RAIL SHALL BE ATTACHED TO DOUBLE RAIL ENDS USING 9.5 mm CARRIAGE BOLTS AS SHOWN. ADDITIONAL HOLES SHALL BE DRILLED THROUGH THE BOTTOM RAIL ENDS TO INSURE THAT CARRIAGE BOLTS PASS THROUGH THE BOTTOM RAIL AS SHOWN.

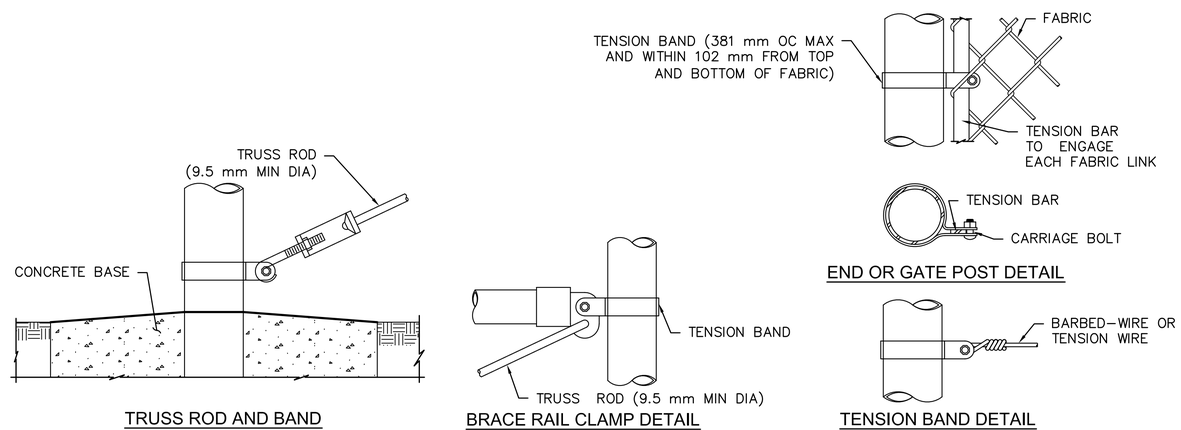

TRUSS ROD AND BAND
BRACE RAIL CLAMP DETAIL
END OR GATE POST DETAIL
TENSION BAND DETAIL

FASTENING DETAILS
NO SCALE

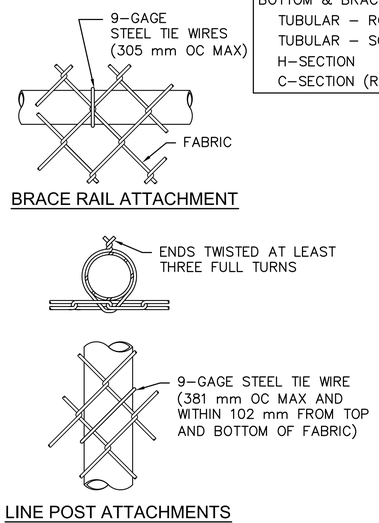

BRACE RAIL ATTACHMENT
LINE POST ATTACHMENTS

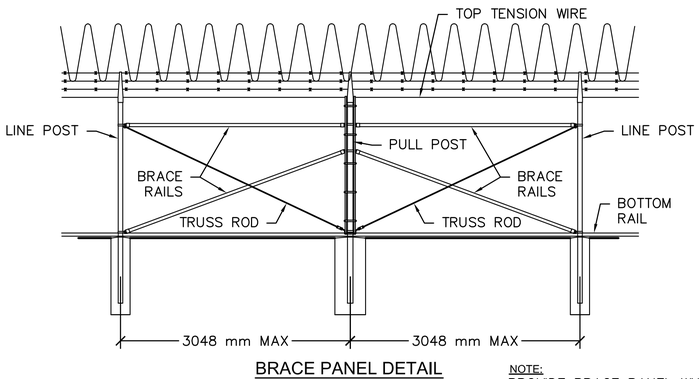

BRACE PANEL DETAIL
NO SCALE

NOTE:
PROVIDE BRACE PANEL WHENEVER STRAIGHT RUNS EXCEED 152 METERS.

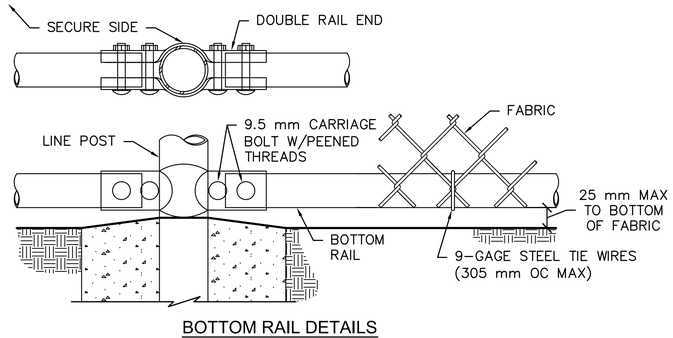

BOTTOM RAIL DETAILS
NO SCALE

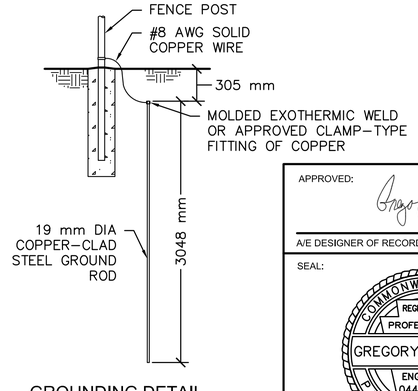

GROUNDING DETAIL
NO SCALE

APPROVED:
A/E DESIGNER OF RECORD
SEAL:
COMMONWEALTH OF PENNSYLVANIA
REGISTERED PROFESSIONAL
GREGORY P. HYNES
ENGINEER 044310–E

US ARMY CORPS OF ENGINEERS
AFGHANISTAN ENGINEER DISTRICT

Mark	Description	Date	Appr.	Mark	Description	Date	Appr.

Dates: 2/23/2010 Rev: 0
Design file no. C–501
Drawing code:
File name: ANASTOR-C-501XXX
Plot date: 2/23/2010
Plot scale:1:1

Designed by: GPH
Dwn by: JDS
Ckd by: JMB
Reviewed by: LHM
Submitted by:
BAKER

U.S. ARMY ENGINEER DISTRICT, AFGHANISTAN
CORPS OF ENGINEERS
APO AE 96338

Michael Baker Jr., Inc.
A unit of Michael Baker Corporation
Airside Business Park
100 Airside Drive
Moon Township, PA 15108
www.mbakercorp.com

AFGHAN NATIONAL ARMY
REGIONAL MILITARY TRAINING CENTER
STANDARD DESIGN

STORAGE AREA

3000 mm FENCING DETAILS

Sheet reference number:
C–501

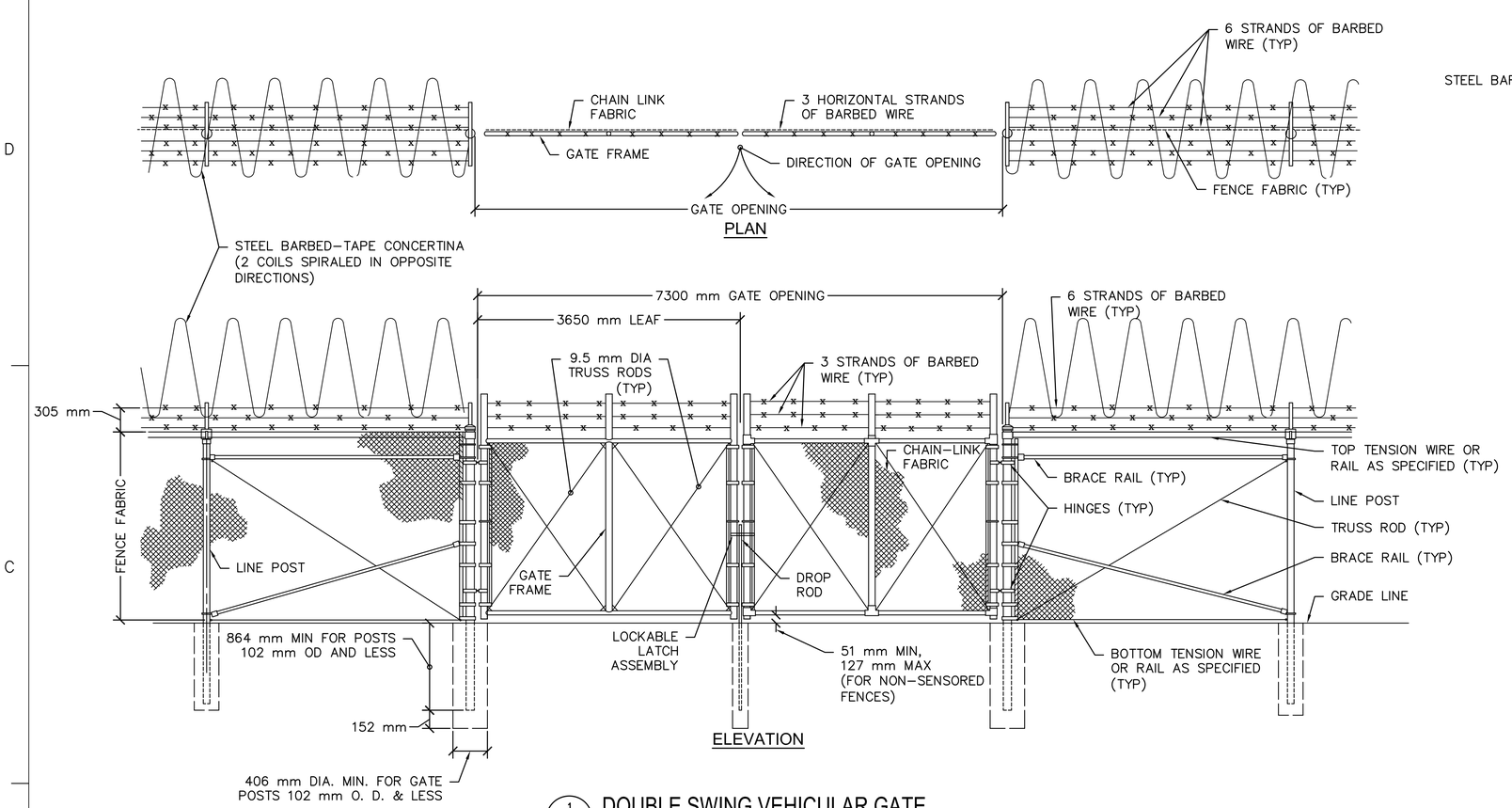

1 C–502 DOUBLE SWING VEHICULAR GATE
SCALE: NTS

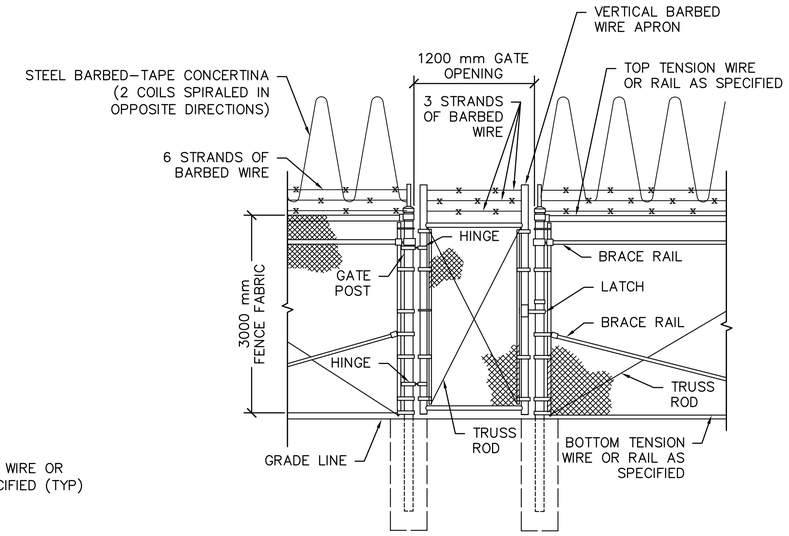

2 C–502 PERSONNEL GATE
NO SCALE

NOTES:

1. FOR NON–SENSORED FENCES, DETAILS SHOWN ARE TO CLARIFY REQUIREMENTS AND ARE NOT INTENDED TO LIMIT OTHER TYPE OF FENCE SECTIONS AND METHODS OF INSTALLATION THAT COMPLY WITH THE SPECIFICATIONS.
2. SWING GATES SHALL BE CONSTRUCTED WITH DROP RODS, PADLOCKS, LATCH ASSEMBLY AND GATE KEEPERS EXCEPT AS NOTED.
3. ALL GATE FRAMES SHALL MEET THE MINIMUM REQUIREMENTS OF ASTM F900 48 mm NOMINAL (ROUND) OR 51 mm NOMINAL (SQUARE). GATE FRAMES SHALL BE OF WELDED CONSTRUCTION OR SHALL BE ASSEMBLED USING HEAVY FITTINGS. AT CONTRACTOR'S OPTION A WELDED HORIZONTAL BRACE MAY BE USED IN LIEU OF TRUSS RODS TO BRACE ALL–WELDED GATE FRAMES. THE CONTRACTOR SHALL BE RESPONSIBLE FOR THE PROPER RIGID CONSTRUCTION OF ALL GATES SUPPLIED.

GATE POST SCHEDULE	
GATE LEAF WIDTH (NOMINAL)	OUTSIDE DIMENSION (NOMINAL)
1830 mm OR LESS	73 mm OD 64 mm SQ
GREATER THAN 1830 mm TO 3660 mm	102 mm OD

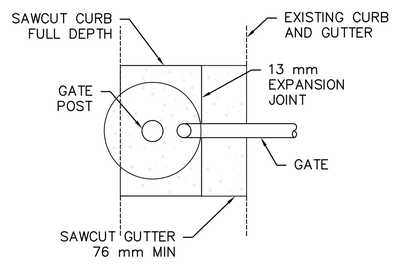

PLAN

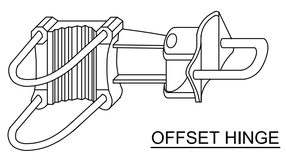

OFFSET HINGE

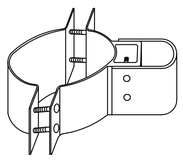

STANDARD HINGE

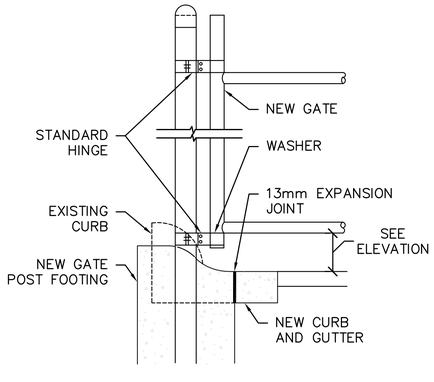

GATE POST SECTION AT CURB AND GUTTER
NO SCALE

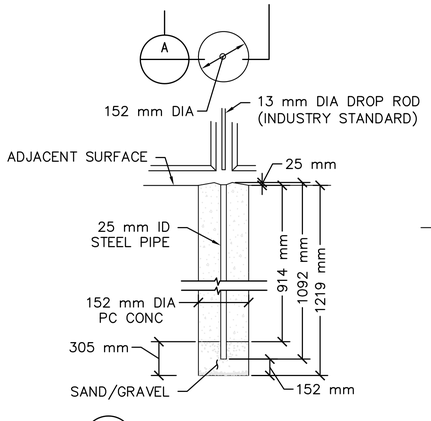

A DROP ROD FOUNDATION

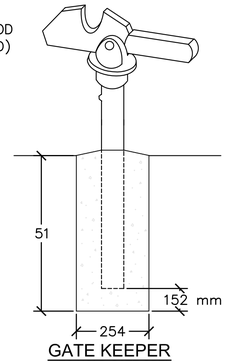

GATE KEEPER
(TO HOLD GATE OPEN)

SWING GATE DETAILS
NO SCALE

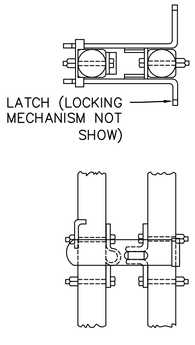

LOCKABLE LATCH ASSEMBLY

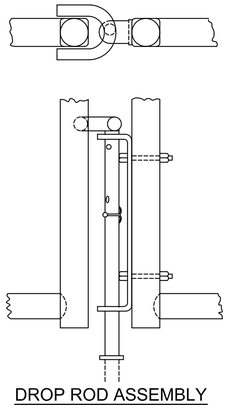

DROP ROD ASSEMBLY

APPROVED:

A/E DESIGNER OF RECORD

SEAL:

COMMONWEALTH OF PENNSYLVANIA
REGISTERED PROFESSIONAL
GREGORY P. HYNES
ENGINEER
044310–E

US ARMY CORPS OF ENGINEERS
AFGHANISTAN ENGINEER DISTRICT

Mark	Description	Date	Appr.	Mark	Description	Date	Appr.

Date: 2/23/2010 | Rev: 0
Design file no. C–502
Drawing code:
File name: ANASTOR-C-502XXX
Plot date: 2/23/2010
Plot scale: 1:1

Designed by: GPH | Ckd by: JMB
Dwn by: JDS | Reviewed by: LHM
Submitted by: BAKER

U.S. ARMY ENGINEER DISTRICT, AFGHANISTAN
CORPS OF ENGINEERS
APO AE 96338

Michael Baker Jr., Inc.
A unit of Michael Baker Corporation
Airside Business Park
100 Airside Drive
Moon Township, PA 15108
www.mbakercorp.com

AFGHAN NATIONAL ARMY
REGIONAL MILITARY TRAINING CENTER
STANDARD DESIGN

STORAGE AREA

FENCING DETAILS

Sheet reference number:
C–502

NUMBERED NOTES:

1. 2 – 25mm & 1 – 6mm IN 25mm CONDUIT TO 20A/1P CIRCUIT BREAKER IN SITE DISTRIBUTION PANEL. SITE ADAPT CONTRACTOR SHALL ADJUST CONDUCTOR SIZE AND SOURCE PANEL BASED ON SITE CONFIGURATION.
2. 2 – 16mm & 1 – 6mm IN 20mm CONDUIT TO 20A/1P CIRCUIT BREAKER IN SITE DISTRIBUTION PANEL. SITE ADAPT CONTRACTOR SHALL ADJUST CONDUCTOR SIZE AND SOURCE PANEL BASED ON SITE CONFIGURATION.
3. 30A/1P NEMA 3R FUSED DISCONNECT SWITCH FUSED AT 20A.

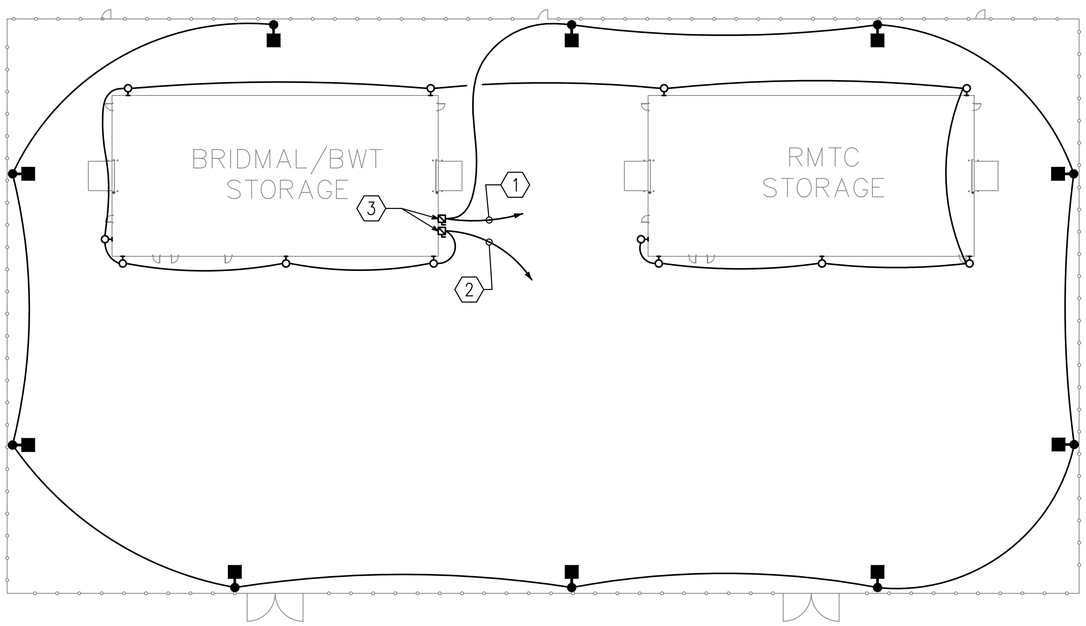

0 4000 8000 16000
SCALE: 1: 400

APPROVED:

A/E DESIGNER OF RECORD

SEAL:

COMMONWEALTH OF PENNSYLVANIA
REGISTERED PROFESSIONAL
JOSEPH R. GAUS
ENGINEER
PE-074251

US ARMY CORPS OF ENGINEERS
AFGHANISTAN ENGINEER DISTRICT

Mark	Description	Date	Appr.

Mark	Description	Date	Appr.

U.S. ARMY ENGINEER DISTRICT, AFGHANISTAN
CORPS OF ENGINEERS
APO AE 96338

Michael Baker Jr., Inc
A unit of Michael Baker Corporation
Airside Business Park
100 Airside Drive
Moon Township, PA 15108
www.mbakercorp.com

Designed by: KJR	Date: 2/23/10
Dwn by: BJB	Ckd by: KJR
Reviewed by: JRG	Drawing code:
Submitted by: BAKER	File name: Plot date: Plot scale: 1:400

Rev. 00

AFGHAN NATIONAL ARMY
REGIONAL MILITARY TRAINING CENTER
STANDARD DESIGN

STORAGE AREA

ELECTRICAL SITE LIGHTING PLAN

Sheet reference number:
ES–101

FIXTURE MARK 'SB'

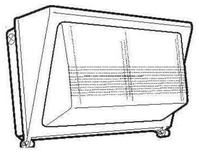

FIXTURE MARK 'SP'

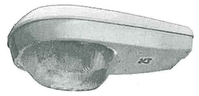

LIGHT FIXTURE SCHEDULE

FIXTURE MARK	STYLE NUMBER AND TYPE	NUMBER AND TYPE OF LAMPS	VOLTAGE	MOUNTING	NOTES
SB	METAL HALIDE WALL MOUNTED EXTERIOR AREA LIGHT WITH PRISMATIC ACRYLIC LENS – CORROSION RESISTANT CONSTRUCTION	(1) 250W METAL HALIDE LAMP	220V – 1ø 50HZ	EXTERIOR WALL MOUNTED 500mm BELOW ROOF	
SP	LIGHT POLE MOUNTED COBRA HEAD STYLE METAL HALIDE FIXTURE WITH WOOD POLE ARM AND MOUNTING BRACKET	(1) 250W METAL HALIDE LAMP	220V – 1ø 50HZ	POLE MOUNTED ON WOODEN POLE 7.7 METERS ABOVE GRADE	

APPROVED:

A/E DESIGNER OF RECORD

SEAL:

COMMONWEALTH OF PENNSYLVANIA
REGISTERED PROFESSIONAL
JOSEPH R. GAUS
ENGINEER
PE-074251
1/29/10

US ARMY CORPS OF ENGINEERS
AFGHANISTAN ENGINEER DISTRICT

Mark	Description	Date	Appr.	Mark	Description	Date	Appr.

U.S. ARMY ENGINEER DISTRICT, AFGHANISTAN
CORPS OF ENGINEERS
APO AE 96338

Michael Baker Jr., Inc
A unit of Michael Baker Corporation
Airside Business Park
100 Airside Drive
Moon Township, PA 15108
www.mbakercorp.com

Designed by: KJR
Dwn by: BJB
Ckd by: KJR
Reviewed by: JRG
Submitted by: BAKER
Date: 2/23/10
Rev. 0.0
Design file no.
Drawing code:
File name:
Plot date:
Plot scale: NTS

AFGHAN NATIONAL ARMY
REGIONAL MILITARY TRAINING CENTER
STANDARD DESIGN

STORAGE AREA

ELECTRICAL SITE LIGHT FIXTURE SCHEDULE

Sheet reference number:
ES–601

AFGHAN NATIONAL ARMY

STANDARD BUILDING DESIGN

SUPPORT STAFF BARRACKS

100% FINAL DESIGN SUBMITTAL

SHEET INDEX

G-001 COVER SHEET

STRUCTURAL

S-001 GENERAL NOTES & DESIGN CRITERIA
S-101 FOUNDATION/SLAB PLAN
S-102 ROOF FRAMING PLAN
S-401 BUILDING SECTIONS
S-402 ENLARGED LATRINE SLAB PLAN
S-501 FOUNDATION SECTIONS
S-502 FOUNDATION & FRAMING SECTIONS
S-503 BEAM & COLUMN DETAILS
S-504 BEAM & COLUMN DETAILS
S-505 MISCELLANEOUS SECTIONS
S-601 SCHEDULES
S-701 TYPICAL DETAILS
S-702 TYPICAL DETAILS

ARCHITECTURAL

A-001 LIFE SAFETY PLAN
A-101 FLOOR PLAN
A-102 ROOF PLAN
A-201 ELEVATIONS
A-301 BUILDING SECTIONS
A-401 WALL SECTIONS
A-402 ENLARGED PLAN
A-501 EXTERIOR DETAILS
A-502 HEAD, JAMB, & SILL DETAILS
A-503 STOOP DETAILS
A-504 TOILET, LAVATORY, & ABLUTION DETAILS
A-505 SHOWER DETAILS
A-506 ISOLATION JOINT DETAILS
A-601 WINDOW & DOOR SCHEDULES

MECHANICAL

P-101 FLOOR PLAN-PLUMBING
P-501 PLUMBING DETAILS
P-502 PLUMBING DETAILS
P-503 PLUMBING DETAILS
P-901 PLUMBING ISOMETRICS

M-101 HVAC FLOOR PLAN SCHEDULES & DETAILS

ELECTRICAL

E-001 ELECTRICAL SYMBOLS & ABBREVIATIONS
E-101 ELECTRICAL LIGHTING PLAN
E-102 ELECTRICAL POWER & SYSTEMS PLAN
E-103 ELECTRICAL LIGHTNING PROTECTION
E-501 ELECTRICAL DETAILS
E-502 ELECTRICAL DETAILS
E-601 ELECTRICAL LIGHT FIXTURE SCHEDULE
E-602 ELECTRICAL PANEL SCHEDULES

US ARMY CORPS OF ENGINEERS
AFGHANISTAN ENGINEER DISTRICT

Mark	Description	Date	Appr.	Mark	Description	Date	Appr.

Designed by: KMP/MMY
Dwn by: RCG
Ckd by: CWW
Reviewed by: LHM
Submitted by: BAKER
Date: 2/23/10
Rev: 0
Design file no.
Drawing code:
File name: ANABSSBG001CS
Plot date: 2/23/2010
Plot scale: X:X

U.S. ARMY CORPS OF ENGINEERS
AFGHANISTAN ENGINEER DISTRICT
APO AE 96338

Michael Baker Jr., Inc
A unit of Michael Baker Corporation
Airside Business Park
100 Airside Drive
Moon Township PA 15108
www.mbakercorp.com

AFGHAN NATIONAL ARMY
REGIONAL MILITARY TRAINING CENTER
STANDARD DESIGN

SUPPORT STAFF BARRACKS

COVER SHEET

Sheet reference number:
G-001

STRUCTURAL ABBREVIATIONS:

ACI	AMERICAN CONCRETE INSTITUTE
ADD'L	ADDITIONAL
AISC	AMERICAN INSTITUTE OF STEEL CONSTRUCTION
AISI	AMERICAN IRON AND STEEL INSTITUTE
ASTM	AMERICAN SOCIETY FOR TESTING AND MATERIALS
ARCH	ARCHITECTURAL
B	BOTTOM
BLDG	BUILDING
BOTT	BOTTOM
℄	CENTER LINE
CFMRF	COLD FORM METAL ROOF FRAME
CFMF	COLD FORM METAL FRAME
CFS	COLD FORMED STEEL
CIP	CAST–IN–PLACE
CIPL	CAST–IN–PLACE LINTEL
CJ	CONTROL JOINT
CLR	CLEAR
CMU	CONCRETE MASONRY UNIT
COEFF	COEFFICIENT
COL	COLUMN
CONC	CONCRETE
CONT	CONTINUOUS
COORD	COORDINATE
CRSI	CONCRETE REINFORCING STEEL INSTITUTE
CSJ	CONSTRUCTION JOINT
DIA	DIAMETER
DIAG	DIAGONAL
DIM	DIMENSION
DWG	DRAWING
DWL	DOWEL
EA	EACH
EF	EACH FACE
ELEC	ELECTRICAL
ELEV	ELEVATION
EMBED	EMBEDMENT
EQUIV	EQUIVALENT
ETC	ET CETERA
EW	EACH WAY
EXP	EXPANSION
EXT	EXTERIOR
FTG	FOOTING
GA	GAUGE
GB	GRADE BEAM
HORIZ	HORIZONTAL
h	HOUR
HRS	HOURS
IBC	INTERNATIONAL BUILDING CODE
ID	INSIDE DIAMETER
INFO	INFORMATION
INT	INTERIOR
kg	KILOGRAM
km	KILOMETER
kN	KILONEWTON
kPa	KILOPASCAL
L#	ANGLE (# INDICATES SIZE)
LONG	LONGITUDINAL
LLV	LONG LEG VERTICAL
m	METER
MAX	MAXIMUM
MECH	MECHANICAL
MFG	MANUFACTURER
MID	MIDDLE
MIN	MINIMUM
MISC	MISCELLANEOUS
mm	MILLIMETER
MPa	MEGAPASCAL
MTL	METAL
MWFRS	MAIN WIND FORCE RESISTING SYSTEM
N	NEWTON
N	NORTH
N/A	NOT APPLICABLE
#	NUMBER SYMBOL FOR REBAR SIZE
NTS	NOT TO SCALE
OC	ON CENTER
OD	OUTSIDE DIAMETER
OPNG	OPENING
℄ or PL	PLATE
PRE–ENG	PRE–ENGINEERED
RB	ROOF BEAM
REINF	REINFORCED
REQ'D	REQUIRED
SIM	SIMILAR
SPECS	SPECIFICATIONS
STD	STANDARD
STRUCT	STRUCTURAL
SW	SHEAR WALL
T	TOP
T/	TOP OF
T/ELEV	TOP ELEVATION
T/SLAB	TOP OF SLAB
T&B	TOP AND BOTTOM
THK	THICK
TYP	TYPICAL
UFC	UNIFIED FACILITIES CRITERIA
UON	UNLESS OTHERWISE NOTED
VERT	VERTICAL
W	WIDTH
W/	WITH

1.0 GENERAL NOTES:

1.1 THIS PROJECT HAS BEEN DESIGNED FOR THE WEIGHTS AND MATERIALS INDICATED ON THE SHEETS AND FOR THE LIVE LOADS INDICATED IN THE DESIGN DATA. IT IS THE CONTRACTOR'S RESPONSIBILITY TO DETERMINE ALLOWABLE CONSTRUCTION LOADS AND TO PROVIDE PROPER DESIGN AND CONSTRUCTION OF FALSEWORK, FORMWORK, STAGING, BRACING, SHEETING AND SHORING, ETC.

1.1 COORDINATE THESE SHEETS WITH THE ARCHITECTURAL, MECHANICAL, ELECTRICAL, PLUMBING, AND CIVIL SHEETS. ALL DIMENSIONS SHOWN ON THE SHEETS ARE MILLIMETERS UNLESS NOTED OTHERWISE.

1.2 THE CONTRACTOR SHALL VERIFY AND COORDINATE ALL FLOOR AND ROOF OPENING SIZES AND LOCATIONS, EQUIPMENT PAD SIZES AND LOCATIONS, ANCHOR BOLT LAYOUTS, ETC WITH EQUIPMENT SELECTED. THE CONTRACTOR SHALL MAKE ANY REQUIRED MODIFICATIONS AT NO ADDITIONAL COST.

1.3 THE CONTRACTOR SHALL REFER TO THE ARCHITECTURAL, MECHANICAL, ELECTRICAL AND PLUMBING SHEETS FOR SLEEVES, CURBS, INSERTS OR OPENINGS, ETC. NOT HEREIN INDICATED.

1.4 WORK NOT INCLUDED ON THE SHEETS BUT IMPLIED TO BE SIMILAR TO THAT SHOWN AT CORRESPONDING PLACES ELSEWHERE ON THE SHEETS SHALL BE REPEATED.

1.5 IN CASE OF CONFLICT BETWEEN THE NOTES, DETAILS AND SPECIFICATIONS THE MOST RIGID REQUIREMENTS SHALL GOVERN.

1.6 SEE ARCHITECTURAL SHEETS FOR LOCATIONS OF MASONRY AND NON–LOAD BEARING PARTITIONS. PROVIDE COMPRESSIBLE FIRESAFING AT TOP OF WALL AS REQUIRED BY ARCHITECTURAL SHEETS.

1.7 COORDINATE FINISHED FLOOR DATUM ELEVATION 0.0m WITH THE CIVIL SHEETS.

2.0 FOUNDATION NOTES

2.1 THE GEOTECHNICAL ANALYSIS FOR THIS PROJECT IS THE RESPONSIBILITY OF THE CONTRACTOR AWARDED THE WORK. AN ASSUMED ALLOWABLE SOIL BEARING VALUE OF 72 kPa HAS BEEN USED IN THE STRUCTURAL ANALYSIS OF THE BUILDING HEREIN AND SHALL BE CONFIRMED AND VERIFIED AS PART OF THE GEOTECHNICAL INVESTIGATION. VALUES WHICH DO NOT MEET THE REQUIREMENTS INDICATED ON THE BASIS OF DESIGN SHEET SHALL BE IMMEDIATELY BROUGHT TO THE ATTENTION OF THE CONTRACTING OFFICER FOR CONSIDERATION AND DETERMINATION ON THE NEXT APPROPRIATE COURSE OF ACTION.

2.2 SEE THE SPECIFICATION FOR ADDITIONAL REQUIREMENTS TO THOSE OUTLINED IN THE GEOTECHNICAL INVESTIGATION FOR EXCAVATION AND PREPARATION OF THE FOUNDATION AND THE SLAB ON GRADE SUBGRADE INCLUDING COMPACTION PROCEDURES.

2.3 EXCAVATIONS FOR FOOTINGS SHALL HAVE THE SIDES AND BOTTOMS TEMPORARILY LINED WITH 0.25mm POLYETHYLENE IF PLACEMENT OF CONCRETE DOES NOT OCCUR WITHIN 24 HRS OF THE EXCAVATION OF THE FOOTING.

2.4 FOUNDATION CONDITIONS NOTED DURING CONSTRUCTION WHICH DIFFER FROM THOSE DESCRIBED IN THE GEOTECHNICAL REPORT SHALL BE REPORTED TO THE GENERAL CONTRACTOR BEFORE FURTHER CONSTRUCTION IS ATTEMPTED. SEE PROJECT SPECIFICATIONS.

2.5 NO FOOTINGS OR SLABS SHALL BE POURED INTO OR AGAINST SUBGRADE CONTAINING FREE WATER, FROST, ICE OR LOOSE MATERIAL. FROST DEPTH ASSUMED TO BE 800mm.

2.6 ALL SLAB–ON–GRADE, TRENCH BOTTOMS AND OTHER ON–GRADE INTERIOR HORIZONTAL SURFACES SHALL BE PLACED OVER A 0.25mm POLYETHYLENE VAPOR RETARDER OVER A 100mm #57 STONE WATER CAPILLARY BARRIER PLACED ON SUBGRADE PROPERLY PREPARED IN ACCORDANCE WITH THE CONTRACT SPECIFICATIONS. (UON)

2.7 PRIOR TO START OF FOUNDATION OR SLAB–ON–GRADE CONSTRUCTION, EXISTING SUBGRADES SHALL BE COMPACTED TO MINIMUM OF 95% MAXIMUM DRY DENSITY OBTAINED THRU ASTM D 1557 MODIFIED PROCTOR TESTING.

2.8 SEE PLUMBING, ELECTRICAL & CIVIL SHEETS FOR REQUIRED UNDERSLAB UTILITIES.

2.9 SEE ARCHITECTURAL SHEETS FOR ALL WATERPROOFING DETAILS AND MATERIALS.

2.10 IF UNDERMINING OF FOOTINGS OCCURS, FILL VOIDS WITH 18 MPa CONCRETE. DO NOT ATTEMPT TO REPLACE AND RE–COMPACT SOIL.

3.0 CONCRETE

3.1 CONCRETE SHALL HAVE THE UNIT WEIGHT OF 2400 kg/m^3 AND A MINIMUM COMPRESSIVE STRENGTH (f'c) OF 28 MPa AT 28 DAYS. ALL CONCRETE SHALL HAVE A WATER–CEMENT RATIO OF 0.45. SEE SPECIFICATIONS FOR ADDITIONAL INFORMATION. ENTRAIN AIR TO PRODUCE TOTAL AIR CONTENT ACCORDING TO THE SPECIFICATIONS FOR CONCRETE EXPOSED TO FREEZING TEMPERATURES (EXTERIOR FOOTINGS, SLAB TURNDOWNS, EXTERIOR SLABS AND SLABS–ON–GRADE, EXTERIOR RETAINING WALLS, AND EXTERIOR GRADE BEAMS.)

3.2 NO CALCIUM CHLORIDE SHALL BE USED IN ANY CONCRETE.

3.3 MIXING, TRANSPORTING AND PLACING OF CONCRETE SHALL CONFORM TO ACI 301M–05.

3.4 ALL CONCRETE WORK SHALL CONFORM TO THE REQUIREMENTS OF THE AMERICAN CONCRETE INSTITUTE (ACI) 318M MANUAL (metric), "BUILDING CODE REQUIREMENTS FOR REINFORCED CONCRETE", AND REQUIREMENTS OUTLINED IN THE CONTRACT SPECIFICATIONS. WHEN THERE IS A CONFLICT BETWEEN ACI AND THE SPECIFICATIONS, THE MORE STRINGENT SHALL GOVERN.

3.5 CHAMFER ALL EXPOSED EXTERNAL CORNERS OF CONCRETE WITH 20mm x45 DEGREE CHAMFER UON.

3.6 CONCRETE REINFORCEMENT BARS SHALL CONFORM TO ASTM A615M–96a, GRADE 420 MPa, REINFORCING BARS SHALL NOT BE TACK WELDED, WELDED, HEATED OR CUT, UNLESS INDICATED ON THE CONTRACT DOCUMENTS. ALL LAP SPLICES SHALL BE CLASS "B" UON.

3.7 HORIZONTAL FOOTING AND HORIZONTAL WALL REINFORCEMENT SHALL BE CONTINUOUS AND SHALL HAVE 90 DEGREE BENDS AND EXTENSIONS, OR CORNER BARS OF EQUIVALENT SIZE LAPPED WITH A CLASS B TENSION SPLICE AT CORNERS AND INTERSECTIONS. TOP BAR CRITERIA SHALL APPLY IF 300mm OR MORE OF FRESH CONCRETE IS PLACED BELOW BAR.

3.8 SLABS–ON–GRADE SHALL HAVE CONSTRUCTION JOINTS OR CRACK CONTROL JOINTS AS SHOWN ON THE DRAWINGS. CONSTRUCTION JOINTS CAN BE USED AT CONTROL JOINT LOCATIONS AT CONTRACTORS OPTION. SEE SLAB PLANS & JOINT DETAILS FOR ADDITIONAL INFORMATION. FOR AREAS NOT SHOWN ON DWGS, THE MAXIMUM SPACING OF CONSTRUCTION/ CRACK CONTROL JOINTS SHALL BE 4800mm

3.9 ALL CONCRETE REINFORCEMENT SHALL BE DETAILED, FABRICATED, LABELED, SUPPORTED, AND SPACED IN FORMS AND SECURED IN PLACE IN ACCORDANCE WITH THE PROCEDURES AND REQUIREMENTS OUTLINED IN THE LATEST EDITION OF THE "BUILDING CODE REQUIREMENTS FOR REINFORCED CONCRETE", ACI 318M, AND THE "MANUAL OF STANDARD PRACTICE FOR DETAILING REINFORCED CONCRETE STRUCTURES", ACI 315M, LATEST EDITION. BASED ON IN COUNTRY REINFORCEMENT AVAILABILITY, IT IS THE CONTRACTOR'S OPTION TO ROUND DESIGNATED ODD NUMBERED REINFORCEMENT SIZES UP (1) ONE BAR SIZE.

3.10 ALL DOWELS SHALL MATCH SIZE AND NUMBER OF MAIN REINFORCING, UNLESS NOTED OTHERWISE ON THE SHEETS.

3.11 ADDITIONAL BARS SHALL BE PROVIDED AROUND ALL FLOOR AND WALL OPENINGS AS SHOWN ON THE SHEETS.

3.12 SEE ARCHITECTURAL SHEETS FOR TYPE AND LOCATION OF ALL FLOOR FINISHES.

3.13 THE CONTRACTOR SHALL COORDINATE ADDITIONAL WALL/SLAB OPENINGS NOT SHOWN ON STRUCTURAL SHEETS. SEE MECHANICAL, ELECTRICAL, PLUMBING AND CIVIL SHEETS.

3.14 UNLESS NOTED OTHERWISE, ALL CURBS SHALL BE REINFORCED WITH AT LEAST (1)–#13 CONTINUOUS AND #13 AT 300mm O.C. DOWELS TO STRUCTURE BELOW.

3.15 THE CONTRACTOR SHALL VERIFY ALL OPENINGS, PAD SIZES, AND ANCHOR BOLTS WITH EQUIPMENT SELECTED.

3.16 FOR ALL WALLS & PIERS, PROVIDE DOWELS INTO FOOTING AT EACH VERT REINF BAR, UON DOWEL SIZE SHALL BE SAME AS VERT REINF.

3.17 PROVIDE CONCRETE POUR STOPS OR FORMED AS REQUIRED FOR INSTALLATION OF ALL CONCRETE WORK.

3.18 PROVIDE ADDITIONAL (2)–#13 x 600mm REINFORCING BARS IN SLAB–ON GRADE AT ALL RE–ENTRANT CORNERS. PLACE BARS AT MID–DEPTH OF SLAB WITH A CLEARANCE OF 50mm FROM CORNER UON.

3.19 COLD–WEATHER PLACEMENT: COMPLY WITH ACI 306.1 AND AS FOLLOWS. PROTECT CONCRETE WORK FROM PHYSICAL DAMAGE OR REDUCED STRENGTH THAT COULD BE CAUSED BY FROST, FREEZING ACTIONS, OR LOW TEMPERATURES. SUBMIT A COLD WEATHER CONCRETING PLAN FOR APPROVAL.

3.20 PROVIDE BONDING COMPOUND PER ASTM C 1059–99: SPECIFICATION FOR LATEX AGENTS FOR BONDING FRESH CONCRETE (GROUT) TO HARDENED CONCRETE.

3.21 THE FORMED SURFACES FOR REINFORCED CONCRETE SHALL ACHIEVE A "CLASS A" FINISH WHEN RECEIVING PAINT OR A "CLASS B" FINISH WHEN RECEIVING PLASTER OR TILE AS PER SPECIFICATION SECTION 03 31 00 CAST–IN–PLACE STRUCTURAL CONCRETE.

3.22 AT INTERSECTING GRADE BEAMS AND SHEAR WALLS, PROVIDE CORNER BARS AT INTERSECTIONS WITH SAME QUANTITY, SIZE AND SPACING AS HORIZONTAL BARS WITH LEG LENGTH = 50db.

3.23 REFER TO S–800 SERIES REINFORCING BAR PLACEMENT DRAWINGS DEFINING LENGTHS, BENDS, AND SPACINGS FOR ALL STRUCTURAL CONCRETE. THE S–800 SERIES DRAWING ARE BASED ON THE S–400, S–500, S–600, AND S–700 SERIES DRAWING SCHEDULES, DETAILS, AND DIAGRAMS.

4.0 CONCRETE MASONRY

4.1 MASONRY CONSTRUCTION SHALL CONFORM TO SPECIFICATION FOR MASONRY STRUCTURES (ACI 530.1) UON.

4.2 STRENGTH OF MASONRY MATERIALS SHALL BE AS FOLLOWS:

a. CONCRETE MASONRY UNITS SHALL BE NORMAL WEIGHT, GRADE N, TYPE 1, CONFORMING TO ASTM C–90 AND HAVE A MINIMUM COMPRESSIVE STRENGTH OF 10.4 MPa ON THE NET AREA.

b. MORTAR SHALL CONFORM TO ASTM C–270 TYPE S.

c. GROUT FOR MASONRY SHALL BE NORMAL WEIGHT AND HAVE A MINIMUM COMPRESSIVE STRENGTH OF 14 MPa AT 28 DAYS. GROUT SHALL CONFORM TO ASTM C476M. GROUT LIFTS SHALL NOT EXCEED 1,400mm.

d. REINFORCED MASONRY SHALL HAVE A STRENGTH F'm = 10 MPa. (F'm IS THE COMPRESSIVE STRENGTH OF THE MASONRY AT 28 DAYS AS DETERMINED BY PRISM TESTS).

4.3 ALL VERTICAL REINFORCEMENT FOR CONCRETE MASONRY SHALL BE ASTM A615M–96a, GRADE 420 MPa. ALL SPLICES SHALL BE LAPPED 48 BAR DIAMETERS MINIMUM.

4.4 BOND BEAMS SHALL BE SPACED AT 1200mm OC VERTICALLY. BOND BEAM REINFORCING SHALL BE CONTINUOUS AND PROVIDED AT WALL INTERSECTIONS AND WALL CORNERS (REFERENCE CONCRETE MASONRY NOTE 4.11). ALL BOND BEAM REINFORCING SHALL BE CONTINUOUS AND HAVE STANDARD ACI HOOKS AT EACH END. PROVIDE STANDARD BAR SPLICES AS SPECIFIED. AS AN ALTERNATE TO CMU BOND BEAMS, IT IS THE CONTRACTOR'S OPTION TO PROVIDE 200mm x 200mm CONTINUOUS CAST–IN–PLACE CONCRETE BOND BEAMS WITH (2)–#16 IN LIEU OF CMU BOND BEAMS INDICATED ON THE DRAWINGS.

4.5 SEE TYPICAL DETAILS FOR MINIMUM REINFORCEMENT REQUIREMENTS FOR CMU WALLS. PROVIDE STANDARD BAR SPLICES AS SPECIFIED. ALL VERTICAL REINFORCEMENT EXTENDS FULL HEIGHT OF WALL.

4.6 CMU CELLS THAT REQUIRE VERTICAL REINFORCING BARS AS INDICATED ON THE CONTRACT DRAWINGS AND/OR SPECS SHALL HAVE REINF BARS PLACED IN CENTERS OF CMU CELLS AND CONTINUOUSLY GROUTED UON.

4.7 ALL CMU CELLS, OPEN CAVITIES, AND AIR SPACES OF ALL EXTERIOR WALLS SHALL BE GROUTED TO STOP FRAGMENTS FROM MORTAR BLAST.

4.8 CONTRACTOR SHALL COORDINATE LOCATION OF ALL OPENINGS SEE ARCH, MECH, ELEC, AND PLUMBING SHEETS FOR SIZE AND LOCATION OF OPENINGS.

4.9 MASONRY WALLS SHALL NOT BE BACK FILLED PRIOR TO THE MORTAR AND GROUT ATTAINING THEIR RESPECTIVE MAXIMUM DESIGN STRENGTHS PER SPECIFICATIONS.

4.10 PROVIDE GALVANIZED MORTAR/GROUT SCREEN W/ 3mm MESH WHERE CELLS BELOW ARE NOT GROUTED.

4.11 AT INTERSECTING BOND BEAMS, PROVIDE CORNER BAR FOR EACH HORIZONTAL BAR IN BOND BEAMS AT INTERSECTING WALLS. USE SAME SIZE AND SPACING AS HORIZONTAL BARS WITH LEG LENGTH = 50db.

4.12 THE ALTERNATE TOP OF CMU WALL BRACING DETAIL(S) SHOWN ON S–701 CAN BE UTILIZED AT THE CONTRACTOR'S OPTION IN PLACE OF THE "SLEEVED DOWEL" WALL CONNECTIONS DEPICTED ON S–400 AND S–500 SERIES DRAWINGS. IN ADDITION, ALTERNATE DETAIL(S) SHOW CAST–IN–PLACE WALL BOND BEAMS THAT CAN BE UTILIZED AT THE CONTRACTOR'S OPTION IN PLACE OF THE STANDARD CMU BOND BEAMS CONSTRUCTED OF CMU BLOCKS.

5.0 COLD–FORMED METAL FRAMING

5.1 ALL COLD–FORMED METAL FRAMING MEMBERS SHALL CONFORM TO ASTM A1003M, STRUCTURAL GRADE ST340 (MPa), WITH A GALVANIZED COATING OF Z275 OR BETTER IN ACCORDANCE WITH ASTM A653M.

5.2 ALL COLD–FORMED METAL FRAMING MEMBERS SHALL HAVE THE FOLLOWING MINIMUM PROPERTIES:

a. MINIMUM METAL THICKNESS:
TRACK = 1.37mm;
STUD/OTHER = 1.09mm

b. MINIMUM FLANGE WIDTH:
TRACK = 38mm;
STUD/OTHER = 35mm

c. MINIMUM MEMBER DEPTH:
ALL SECTIONS = 152.2mm

d. PURLIN (HAT CHANNEL)
DEPTHxWIDTH(FLAT TOP)xTHICK = 25mmx42mmx1.59mm

5.3 ALL CONNECTIONS SHALL BE MADE WITH CORROSION RESISTANT (ASTM A153M), SELF–DRILLING, SELF–TAPPING STEEL DRILL SCREWS IN ACCORDANCE WITH ASTM C1513. SCREWS SHALL HAVE A LOW PROFILE HEAD BENEATH ROOF DECK, AND STANDARD HEAD ALL OTHER LOCATIONS.

5.4 FABRICATE COLD FORMED METAL FRAMING AND ACCESSORIES PLUMB, SQUARE AND TRUE TO LINE, WITH CONNECTIONS SECURELY FASTENED ACCORDING TO AISI STANDARD FOR COLD FORMED STEEL FRAMING.

5.5 CUT FRAMING MEMBERS BY SAWING OR SHEATHING, DO NOT TORCH CUT.

5.6 INSTALL FRAMING MEMBERS IN ONE–PIECE LENGTHS UNLESS SPLICE CONNECTIONS ARE INDICATED FOR TRACK OR TENSION MEMBERS

5.7 INSTALL TEMPORARY BRACING AND SUPPORTS TO SECURE FRAMING DURING CONSTRUCTION. MAINTAIN BRACING AND SUPPORTS IN PLACE UNTIL THE STRUCTURE HAS BEEN COMPLETED WITH ALL CONNECTIONS AND PERMANENT BRACING SECURED.

6.0 STRUCTURAL DESIGN CRITERIA

6.1 ALL DESIGNS SHALL CONFORM TO THE PROVISIONS OF THE IBC 2006 AND UFC AS APPLICABLE.

6.2 DESIGN LOADS

6.2.1 DEAD LOADS (PER IBC 2006 & UFC 3–310–01)

MECH/ELEC/PLUMBING	0.20 kPa
MISCELLANEOUS	0.15 kPa
COLD–FORMED FRAMING	0.20 kPa
INSULATION	0.10 kPa
METAL ROOF PANEL	0.14 kPa
	0.79 kPa
FLOOR PARTITION ALLOWANCE	0.96 kPa

6.2.2 LIVE LOADS (PER IBC 2006 & UFC 3–310–01)

ROOF	1.00 kPa
CORRIDOR (2–STORY BLDG ONLY)	4.80 kPa
ALL OTHERS (2–STORY BLDG ONLY)	2.40 kPa
SLAB ON GRADE	4.80 kPa

6.2.3 SNOW LOADS (PER IBC 2006 & UFC 3–310–01)

GROUND SNOW LOAD (Pg)	1.2 kPa
SNOW IMPORTANCE FACTOR (I)	1.0
SNOW EXPOSURE FACTOR (Ce)	1.0
THERMAL FACTOR (Ct)	1.0

6.2.4 WIND LOADS (PER IBC 2006)

BASIC WIND SPEED	137 km/h
WIND IMPORTANCE FACTOR	1.0
WIND EXPOSURE CATEGORY	D
DIRECTIONALITY COEFFICIENT (Kd)	0.85
TOPOGRAPHIC FACTOR (Kzt)	1.0

6.2.5 SEISMIC LOADS (PER IBC 2006 & UFC 3–310–04)

OCCUPANCY USE CATEGORY	II
SEISMIC IMPORTANCE FACTOR (Ie)	1.0
SEISMIC SITE CLASS	D

S_s = 2.40 (FOR IRREGULAR PORTION OF BUILDING – COLUMN LINES 1–4)

S_s = 1.50 (REDUCED FROM 2.40 PER ASCE 7–05,12.81.3. FOR A BUILDING WITHOUT IRREGULARITIES – COLUMN LINES 5–9.)

S_1 = 1.20
S_{DS} = 1.00 WHEN S_s = 1.5
S_{DS} = 1.60 WHEN S_s = 2.4
S_{D1} = 1.20

SEISMIC DESIGN CATEGORY	E
SEISMIC RESISTING SYSTEM: –SPECIAL REINFORCED CONCRETE SHEAR WALL	
RESPONSE MODIFICATION FACTOR (R)	6
RESPONSE COEFFICIENT (Cs) – REGULAR PORTION	0.167
RESPONSE COEFFICIENT (Cs) – IRREGULAR PORTION	0.267
SEISMIC ANALYTICAL PROCEDURE =	EQUIV LATERAL FORCE

SEISMIC BASE SHEAR:
REGULAR PORTION = 765 kN
IRREGULAR PORTION = 1310 kN

APPROVED:

A/E DESIGNER OF RECORD

SEAL:

GEORGIA REGISTERED 1-29-10 No. 27141 PROFESSIONAL ENGINEER CHRISTOPHER W. WHITMORE

US ARMY CORPS OF ENGINEERS
AFGHANISTAN ENGINEER DISTRICT

Mark	Description	Date	Appr.

Designed by: KMP/MMY
Dwn by: RCG | Ckd by: CWW
Reviewed by: LHM
Submitted by: BAKER
Date: 2/23/10 | Rev: 0
Design file no.
Drawing code:
File name: ANABSSBS-001GN
Plot date: 2/23/2010
Plot scale: X:X

U.S. ARMY CORPS OF ENGINEERS
AFGHANISTAN ENGINEER DISTRICT
APO AE 96338

Michael Baker Jr., Inc
A unit of Michael Baker Corporation
Airside Business Park
100 Airside Drive
Moon Township PA 15108
www.mbakercorp.com

AFGHAN NATIONAL ARMY
REGIONAL MILITARY TRAINING CENTER
STANDARD DESIGN

SUPPORT STAFF BARRACKS

GENERAL NOTES & DESIGN CRITERIA

Sheet reference number:
S–001

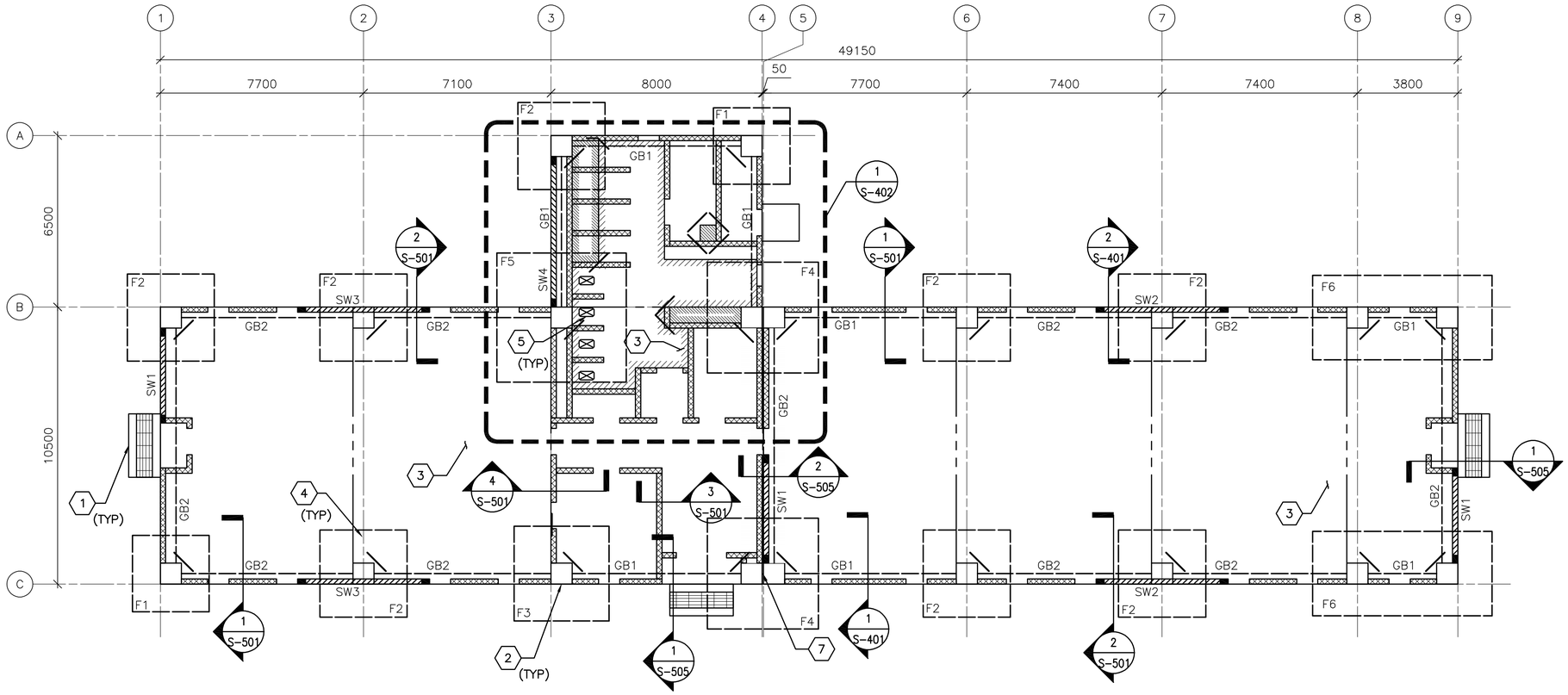

1 S-101 FOUNDATION/SLAB PLAN
SCALE: 1:100

FOUNDATION/SLAB PLAN NOTES:

1. REFER TO SHEET S-001 FOR STRUCTURAL NOTES AND DESIGN CRITERIA.
2. FINISH FIRST FLOOR ELEVATION SHALL BE (DATUM 0.00) ALL PLUS OR MINUS DIMENSIONS INDICATED ON PLAN OR REFERRED TO IN NOTES RELATE TO FINISH FIRST FLOOR ELEVATION.
3. SLAB-ON-GRADE IS 150 WITH #13 @ 300 OC EW LOCATED 38 FROM T/SLAB. UON. WHERE NOTED, 300 SLAB-ON-GRADE SHALL BE REINFORCED W/ #13@300 OC EW T&B.
4. TOP OF EXTERIOR FOOTINGS SHALL BE -950 UNLESS OTHERWISE INDICATED
5. COLUMN FOOTINGS INDICATED BY F# ON PLAN. REFER TO COLUMN FOOTING SCHEDULE ON SHEET S-601.
6. REFER TO COLUMN SCHEDULE ON SHEET S-601.
7. GRADE BEAM INDICATED BY GB# ON PLAN, REFER TO BEAM SCHEDULE ON SHEET S-601.
8. SHEARWALL INDICATED BY SW# ON PLAN, REFER TO SHEARWALL SCHEDULE ON SHEET S-601.
9. SEE TYPICAL EXTERIOR AND INTERIOR CMU WALL REINF DETAILS ON SHEET S-701.
10. SEE MECHANICAL AND ELECTRICAL SHEETS FOR CONCRETE PAD LOCATIONS, SIZES, AND THICKNESS NOT SHOWN. SEE SHEET S-701 FOR DETAILS.
11. THICKENED SLAB UNDER CMU PERIMETER/PARTITION WALLS NOT SHOWN FOR CLARITY.

FOUNDATION/SLAB PLAN KEY NOTES: (X)

1. CONC PAD (ENTRANCE) – SEE ARCH DWGS FOR INFORMATION
2. REINF CONC COLUMN
3. REINF CONC SLAB-ON-GRADE
4. (2)-#13 @ RE-ENTRANT CORNERS – SEE S-701 FOR INFORMATION
5. SLAB OPENING – COORD W/ ARCH AND PLUMBING DWGS
6. NOT USED
7. 50 ISOLATION JOINT BETWEEN STRUCTURES LOCATED ABOVE FIRST FLOOR SLAB-ON-GRADE

FOUNDATION/SLAB PLAN LEGEND:

- REINF CONC SHEAR WALL
- REINF CMU WALL
- CONTROL JOINT
- INDICATES DROP SLAB 65 BELOW FINISH FLOOR
- INDICATES DROP SLAB 200 BELOW FINISH FLOOR
- SLAB OPENING

0 2000 4000
SCALE: 1:100

UNLESS OTHERWISE NOTED, LINEAR DIMENSIONS SHOWN ON DRAWINGS ARE IN MILLIMETERS (mm)

APPROVED:

A/E DESIGNER OF RECORD

SEAL:

GEORGIA REGISTERED 1-29-10 No. 27141 PROFESSIONAL ENGINEER CHRISTOPHER W. WHITMORE

US ARMY CORPS OF ENGINEERS
AFGHANISTAN ENGINEER DISTRICT

Mark	Description	Date	Appr.	Mark	Description	Date	Appr.

Designed by: KMP/MMY
Dwn by: RCG
Ckd by: CWW
Reviewed by: LHM
Submitted by: BAKER
Date: 2/23/10
Rev: 0
Design file no.
Drawing code:
File name: ANABSSBS-101FNP
Plot date: 2/23/2010
Plot scale: X:X

U.S. ARMY CORPS OF ENGINEERS
AFGHANISTAN ENGINEER DISTRICT
APO AE 96338

Michael Baker Jr., Inc
A unit of Michael Baker Corporation
Airside Business Park
100 Airside Drive
Moon Township PA 15108
www.mbakercorp.com

AFGHAN NATIONAL ARMY
REGIONAL MILITARY TRAINING CENTER
STANDARD DESIGN

SUPPORT STAFF BARRACKS

FOUNDATION/SLAB PLAN

Sheet reference number:
S-101

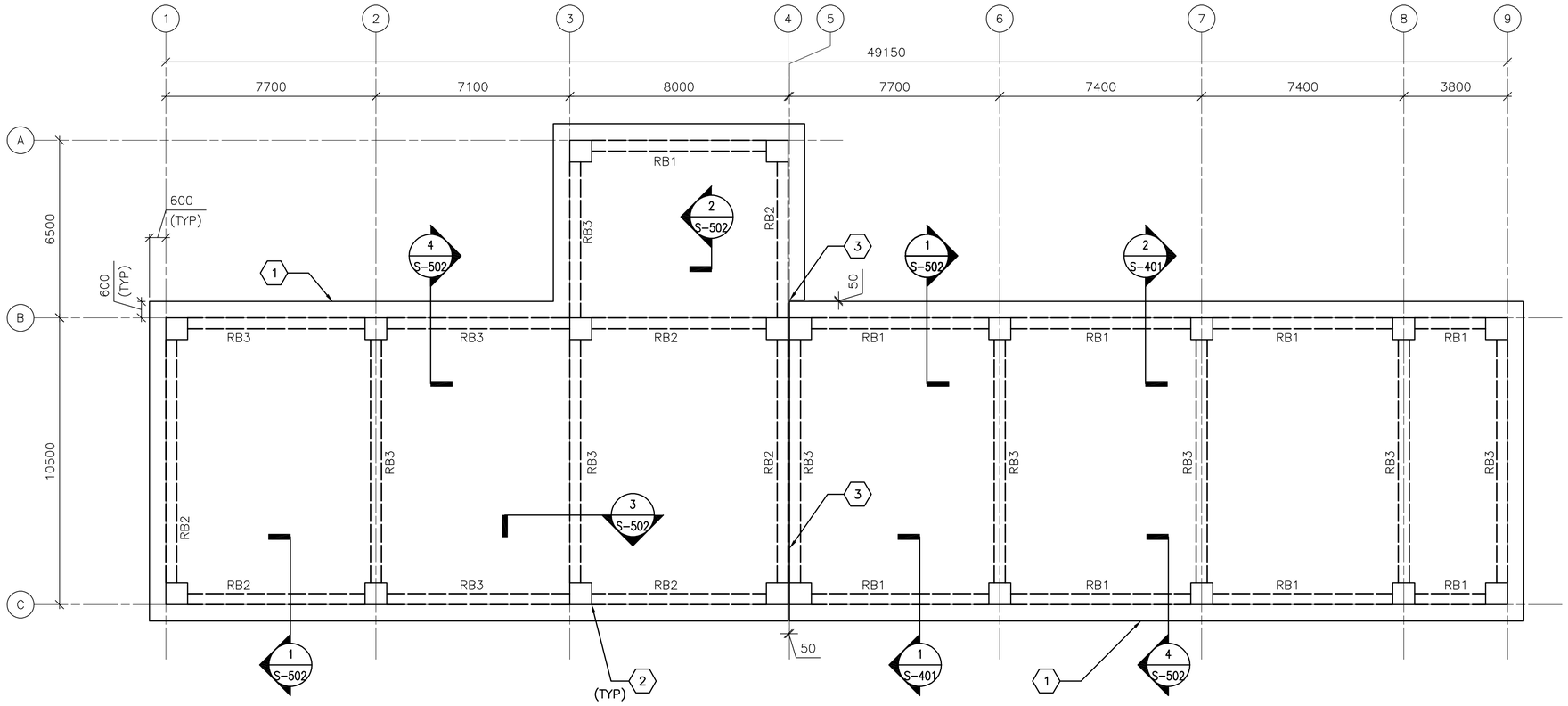

1 S-102 ROOF FRAMING PLAN
SCALE: 1:100

ROOF FRAMING PLAN NOTES:

1. REFER TO SHEETS S-001 FOR STRUCTURAL NOTES AND DESIGN CRITERIA.
2. TOP OF SLAB ELEVATION = 3800 UNLESS NOTED OTHERWISE.
3. ROOF SLAB IS 300 WITH #19 @ 300 OC EW T&B.
4. ROOF BEAM INDICATED BY RB# ON PLAN. REFER TO BEAM SCHEDULE ON SHEET S-601.
5. COORDINATE WITH ARCHITECTURAL SHEETS FOR COLD-FORMED STEEL OVERBUILD FRAMING ABOVE ROOF SLAB.
6. COLD-FORMED METAL OVERBUILD ROOF FRAMING NOT SHOWN FOR CLARITY. SEE OVERBUILD ROOF FRAMING DETAILS AND SECTIONS ON SHEET S-702.
7. CMU PARTITION WALL (BELOW ROOF SLAB) NOT SHOWN FOR CLARITY.
8. DISCONTINUE ALL ROOF FRAMING AT BUILDING EXPANSION JOINT. REFER TO ARCHITECTURAL SHEETS FOR COLD-FORMED ROOF OVERBUILD FRAMING EXPANSION JOINT DETAIL.
9. OVERHANG AREAS OF ROOF SLAB CONTAIN ROOF VENT PENETRATIONS. REFERENCE ARCHITECTURAL DRAWINGS FOR INFORMATION.

ROOF FRAMING PLAN KEY NOTES: (X)

1. CONC ROOF SLAB (BELOW ROOF OVERBUILD)
2. REINF CONC COLUMN (BELOW CONC ROOF SLAB)
3. 50 ISOLATION JOINT BETWEEN STRUCTURES LOCATED ABOVE FIRST FLOOR SLAB-ON-GRADE

0 2000 4000
SCALE: 1:100

UNLESS OTHERWISE NOTED, LINEAR DIMENSIONS SHOWN ON DRAWINGS ARE IN MILLIMETERS (mm)

APPROVED:

A/E DESIGNER OF RECORD

SEAL:

GEORGIA REGISTERED 1-29-10 No. 27141 PROFESSIONAL ENGINEER CHRISTOPHER W. WHITMORE

US ARMY CORPS OF ENGINEERS
AFGHANISTAN ENGINEER DISTRICT

Mark	Description	Date	Appr.	Mark	Description	Date	Appr.

Designed by: KMP/MMY
Dwn by: RCG
Ckd by: CWW
Reviewed by: LHM
Submitted by: BAKER
Date: 2/23/10
Rev: 0
Design file no.
Drawing code:
File name: ANABSSBS-102FRP
Plot date: 2/23/2010
Plot scale: X:X

U.S. ARMY CORPS OF ENGINEERS
AFGHANISTAN ENGINEER DISTRICT
APO AE 96338

Michael Baker Jr., Inc.
A unit of Michael Baker Corporation
Airside Business Park
100 Airside Drive
Moon Township PA 15108
www.mbakercorp.com

AFGHAN NATIONAL ARMY
REGIONAL MILITARY TRAINING CENTER
STANDARD DESIGN

SUPPORT STAFF BARRACKS

ROOF FRAMING PLAN

Sheet reference number:
S-102

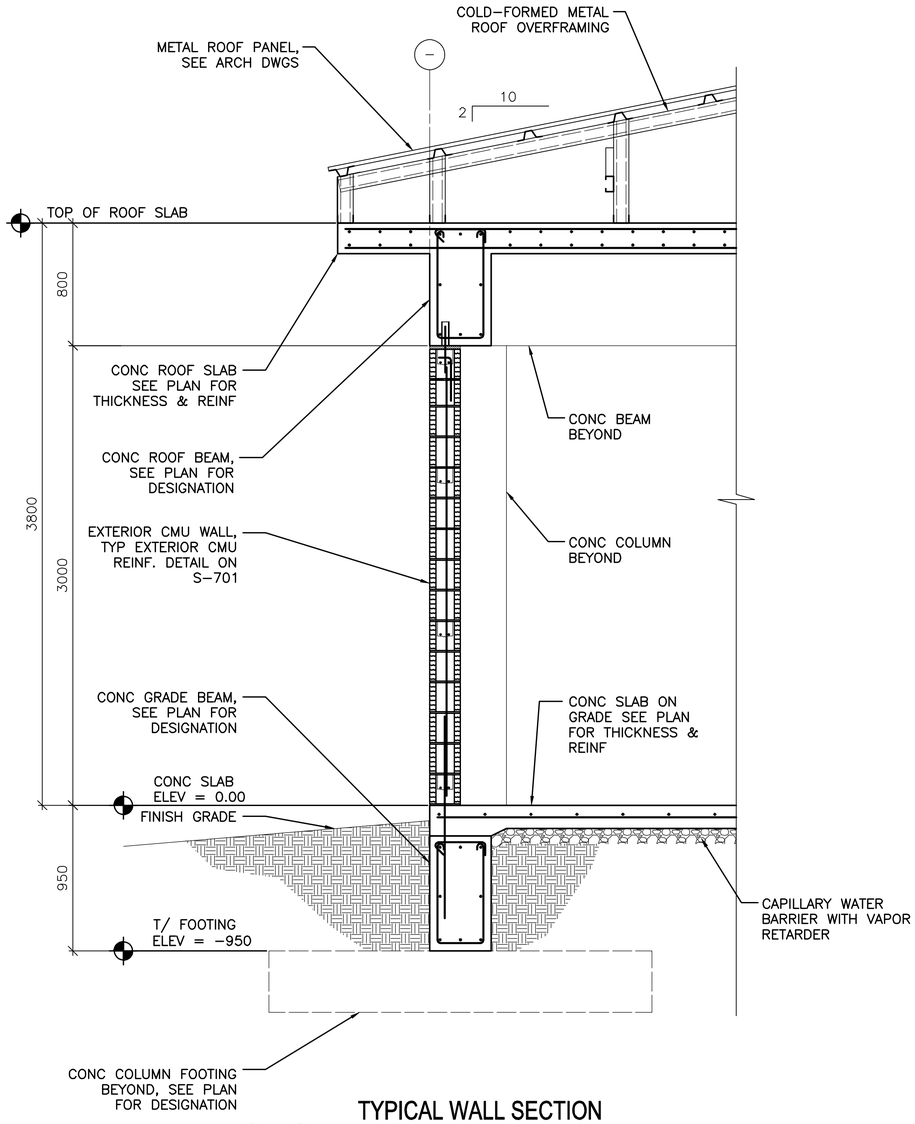

1 S-101 / 1 S-102

TYPICAL WALL SECTION AT EXTERIOR MASONRY WALL

SCALE: 1:20

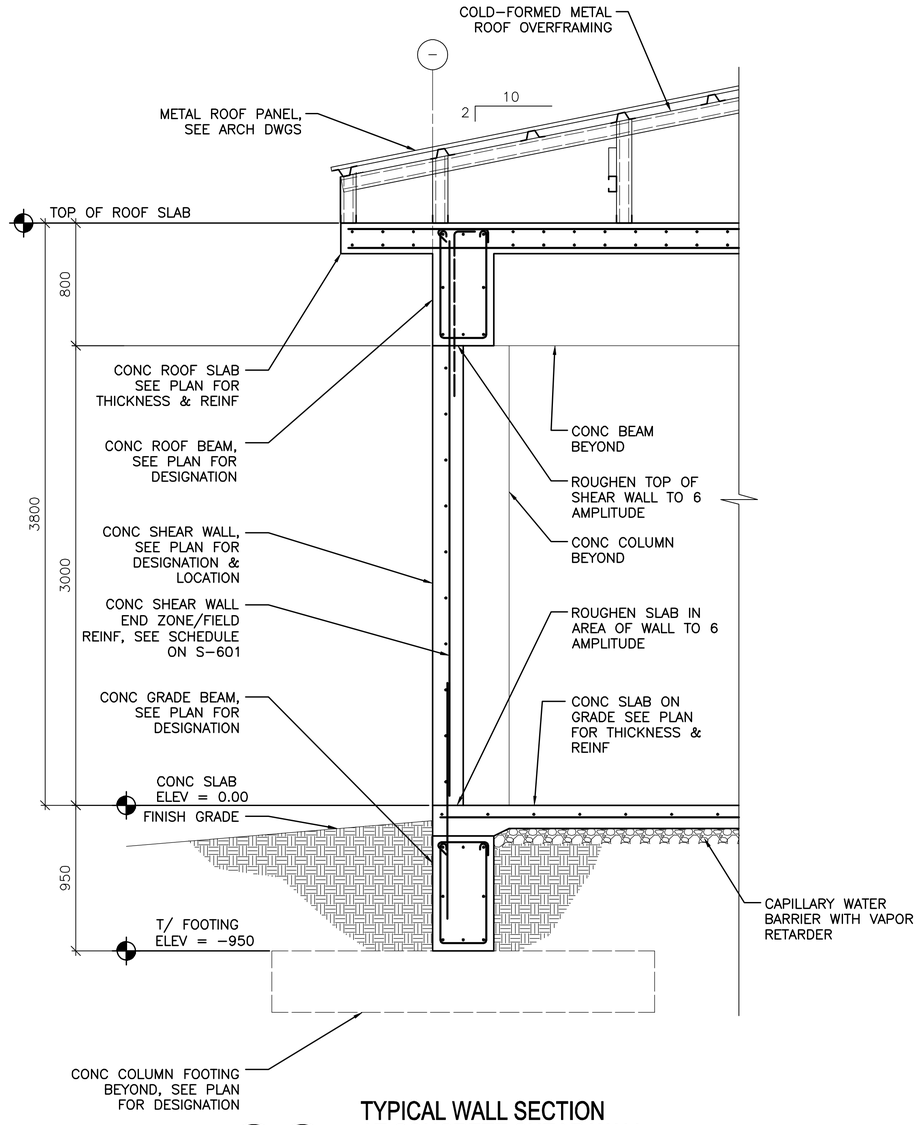

2 S-101 / 2 S-102

TYPICAL WALL SECTION AT CONCRETE SHEAR WALL

SCALE: 1:20

0 400 800
SCALE: 1:20

UNLESS OTHERWISE NOTED, LINEAR DIMENSIONS SHOWN ON DRAWINGS ARE IN MILLIMETERS (mm)

APPROVED:

A/E DESIGNER OF RECORD

SEAL:

GEORGIA REGISTERED 1-29-10 No. 27141 PROFESSIONAL ENGINEER CHRISTOPHER W. WHITMORE

US ARMY CORPS OF ENGINEERS
AFGHANISTAN ENGINEER DISTRICT

Mark	Description	Date	Appr.	Mark	Description	Date	Appr.

Date: 2/23/10
Design file no.
Rev: 0
Drawing code:
File name: AN4SSBS-401BS
Plot date: 2/23/2010
Plot scale: x:X

Designed by: KMP/MMY
Dwn by: RCG
Ckd by: CWW
Reviewed by: LHM
Submitted by:
BAKER

U.S. ARMY CORPS OF ENGINEERS
AFGHANISTAN ENGINEER DISTRICT
APO AE 96338

Michael Baker Jr., Inc.
A unit of Michael Baker Corporation
Airside Business Park
100 Airside Drive
Moon Township, PA 15108
www.mbakercorp.com

AFGHAN NATIONAL ARMY
REGIONAL MILITARY TRAINING CENTER
STANDARD DESIGN

SUPPORT STAFF BARRACKS

BUILDING SECTIONS

Sheet reference number:
S-401

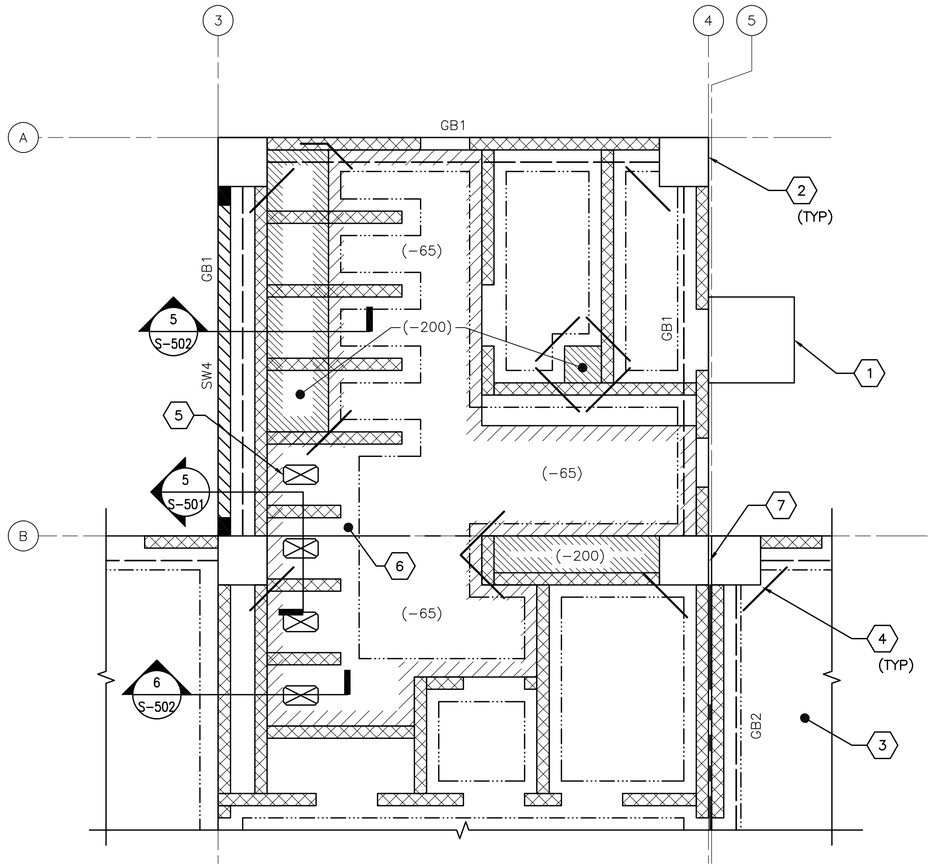

1
S-101

ENLARGED LATRINE SLAB PLAN

SCALE: 1:50

ENLARGED PLAN NOTES:

1. REFER TO SHEET S-001 FOR STRUCTURAL NOTES AND DESIGN CRITERIA.
2. FINISH FIRST FLOOR ELEVATION SHALL BE (DATUM 0.00MM) ALL PLUS OR MINUS DIMENSIONS INDICATED ON PLAN OR REFERRED TO IN NOTES RELATE TO FINISH FIRST FLOOR ELEVATION.
3. SLAB-ON-GRADE IS 150 WITH #13 @ 300 OC EW LOCATED 38 FROM T/SLAB UON. WHERE NOTED, 300 SLAB-ON-GRADE SHALL BE REINFORCED W/ #13 @300 OC EW T&B.
4. REFER TO FOUNDATION/SLAB PLAN ON SHEET S-101 FOR COLUMN DESIGNATION AND COLUMN SCHEDULE ON SHEET S-601.
5. REFER TO FOUNDATION/SLAB PLAN ON SHEET S-101 FOR SHEARWALL DESIGNATION AND SHEARWALL SCHEDULE ON SHEET S-601.
6. REFER TO FOUNDATION/SLAB PLAN ON SHEET S-101 FOR GRADE BEAM DESIGNATION AND GRADE BEAM SCHEDULE ON SHEET S-601.
7. SEE TYP EXTERIOR AND INTERIOR CMU WALL REINFORCING DETAILS ON SHEET S-701.

ENLARGED PLAN KEYNOTES: (X)

1. CONC PAD (ENTRANCE) - SEE ARCH DWGS FOR INFORMATION
2. REINF CONC COLUMN
3. REINF CONC SLAB-ON-GRADE
4. (2)-#13 RE-ENTRANT CORNER BARS - SEE S-701 FOR INFORMATION
5. SLAB OPENING - COORDINATE W/ ARCH AND PLUMB DWGS.
6. 300 SLAB-ON-GRADE
7. 50 ISOLATION JOINT BETWEEN STRUCTURES LOCATED ABOVE FIRST FLOOR SLAB-ON-GRADE

PLAN LEGEND:

- REINF CONC SHEAR WALL
- REINF CMU WALL
- CONTROL JOINT
- INDICATES DROP SLAB 65 BELOW FINISH FLOOR
- INDICATES DROP SLAB 200 BELOW FINISH FLOOR
- SLAB OPENING
- OUTLINE OF THICKENED SLAB AREAS
- GRADE BEAM

0 1000 2000
SCALE: 1:50

UNLESS OTHERWISE NOTED, LINEAR DIMENSIONS SHOWN ON DRAWINGS ARE IN MILLIMETERS (mm)

APPROVED:

A/E DESIGNER OF RECORD

SEAL:

GEORGIA REGISTERED 2-23-10 No. 27141 PROFESSIONAL ENGINEER CHRISTOPHER W. WHITMORE

US ARMY CORPS OF ENGINEERS
AFGHANISTAN ENGINEER DISTRICT

Mark	Description	Date	Appr.	Mark	Description	Date	Appr.

U.S. ARMY CORPS OF ENGINEERS
AFGHANISTAN ENGINEER DISTRICT
APO AE 96338

Michael Baker Jr., Inc
A unit of Michael Baker Corporation
Airside Business Park
100 Airside Drive
Moon Township, PA 15108
www.mbakercorp.com

Designed by: KMP/MMY
Dwn by: RCG
Ckd by: CWW
Reviewed by: LHM
Submitted by: BAKER
Date: 2/23/10
Rev: 0
Design file no.
Drawing code:
File name: AN4SSBS-402EP
Plot date: 2/23/2010
Plot scale: x:X

AFGHAN NATIONAL ARMY
REGIONAL MILITARY TRAINING CENTER
STANDARD DESIGN

SUPPORT STAFF BARRACKS

ENLARGED LATRINE SLAB PLAN

Sheet reference number:
S-402

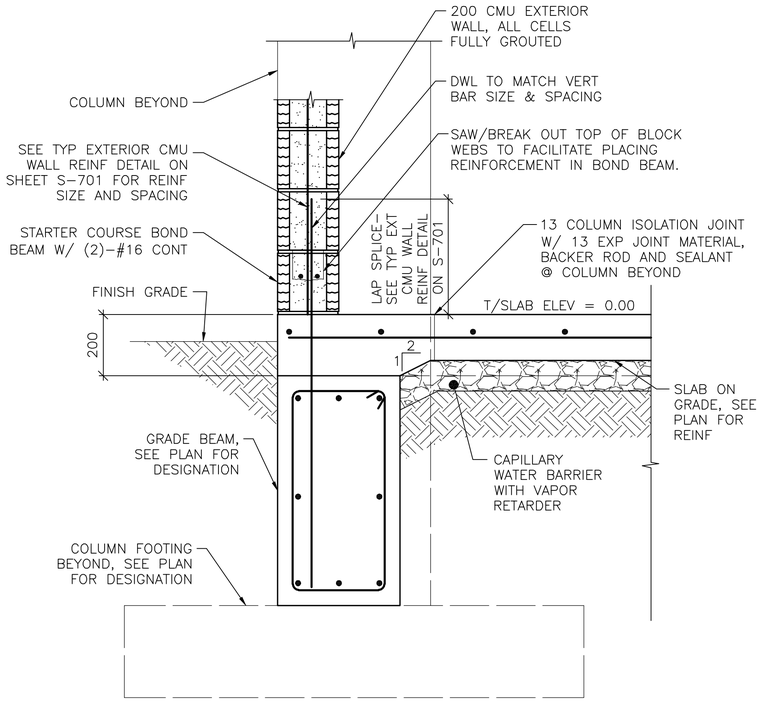

NOTE:
1. SECTION IS SIMILAR FOR INTERIOR CMU PARTITIONS OVER GRADE BEAMS SHOWING THICKENED 200 CONC SLAB AREA.

1 S-101 **SECTION**
SCALE: 1:10

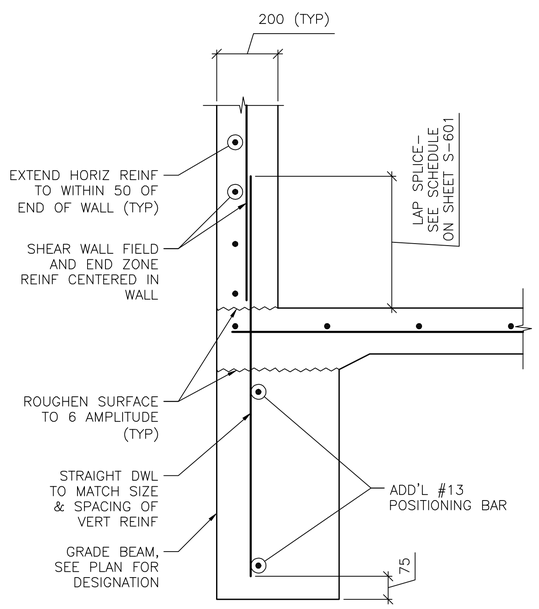

NOTE:
1. SECTION DEPICTS SHEAR WALL TERMINATION ONLY. GRADE BEAM REINFORCING NOT SHOWN FOR CLARITY
2. SEE SHEET S-601 AND SHEET S-702 FOR SCHEDULED FIELD AND END ZONE REINF.

2 S-101 **SECTION**
SCALE: 1:10

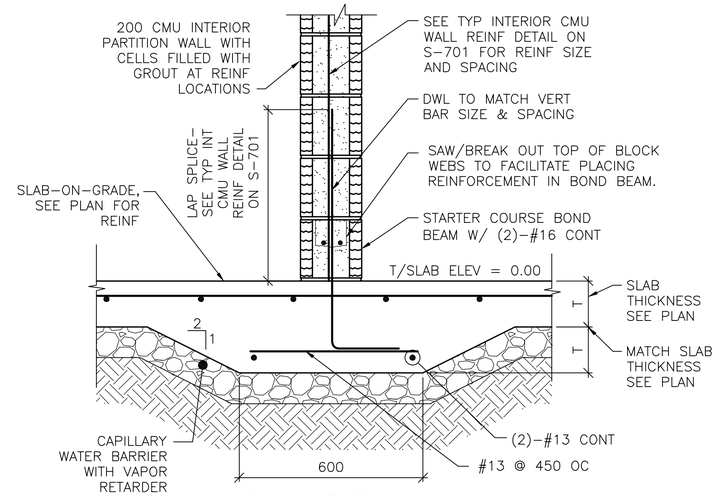

3 S-101 **SECTION**
SCALE: 1:10

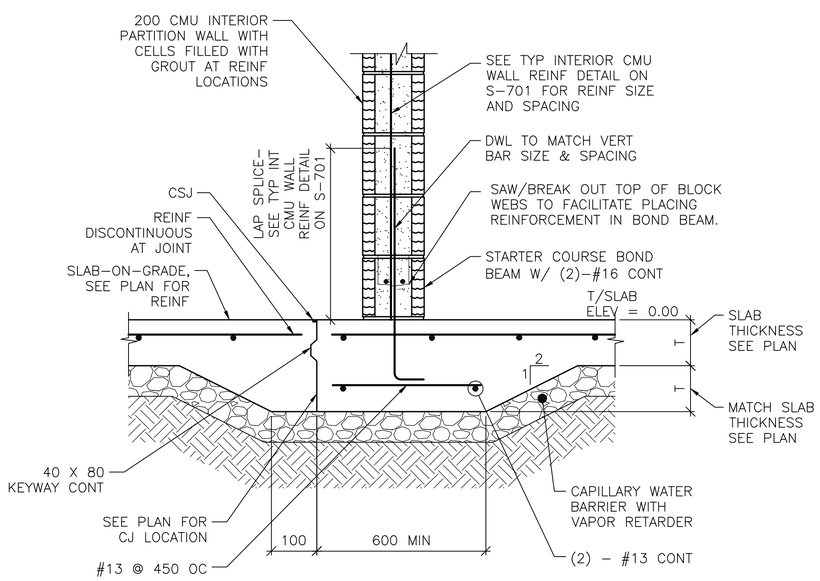

4 S-101 **SECTION**
SCALE: 1:10

NOTE:
1. DETAIL IS APPLICABLE AT CONTROL JOINTS RUNNING PARALLEL TO CMU WALLS AND WITHIN 300 OF FACE OF WALL.

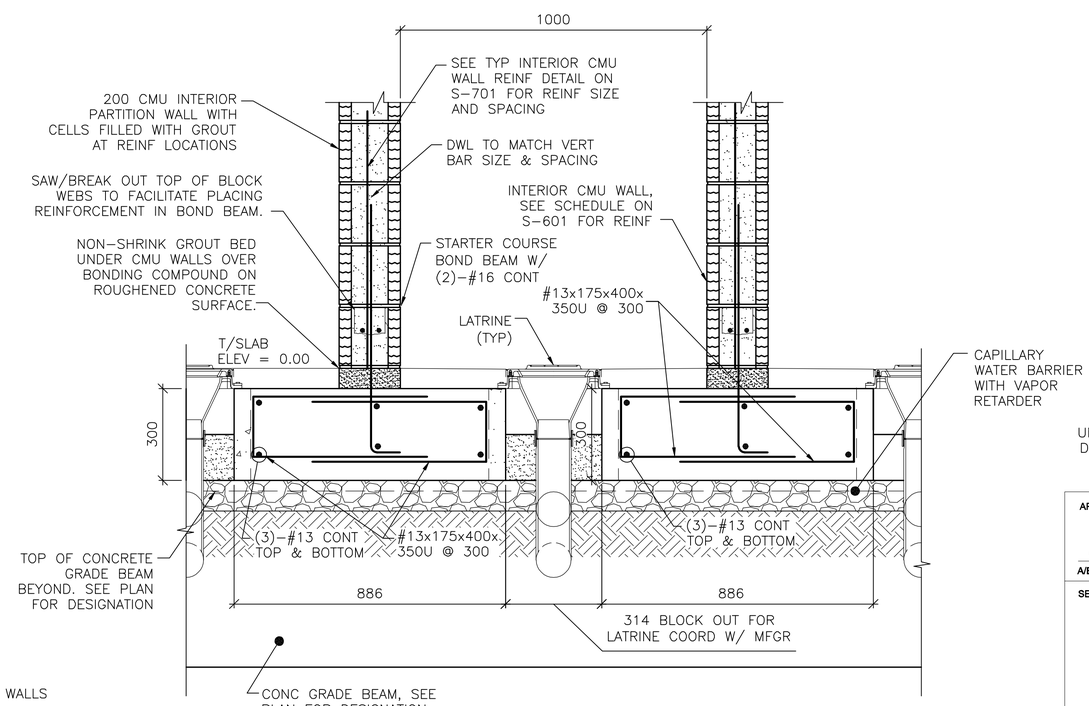

5 S-402 **SECTION**
SCALE: 1:10

0 200 400
SCALE: 1:10

UNLESS OTHERWISE NOTED, LINEAR DIMENSIONS SHOWN ON DRAWINGS ARE IN MILLIMETERS (mm)

APPROVED:

A/E DESIGNER OF RECORD

SEAL:

GEORGIA REGISTERED 1-29-10 No. 27141 PROFESSIONAL ENGINEER CHRISTOPHER W. WHITMORE

US ARMY CORPS OF ENGINEERS
AFGHANISTAN ENGINEER DISTRICT

Mark	Description	Date	Appr.	Mark	Description	Date	Appr.

U.S. ARMY CORPS OF ENGINEERS
AFGHANISTAN ENGINEER DISTRICT
APO AE 96338

Michael Baker Jr., Inc
A unit of Michael Baker Corporation
Airside Business Park
100 Airside Drive
Moon Township, PA 15108
www.mbakercorp.com

Designed by: KMP/MMY
Dwn by: RCG
Ckd by: CWW
Reviewed by: LHM
Submitted by: BAKER
Date: 2/23/10
Design file no.
Rev: 0
Drawing code:
File name: AN6S8S8-501SC
Plot date: 2/23/2010
Plot scale: x:X

AFGHAN NATIONAL ARMY
REGIONAL MILITARY TRAINING CENTER
STANDARD DESIGN

SUPPORT STAFF BARRACKS

FOUNDATION SECTIONS

Sheet reference number:
S-501

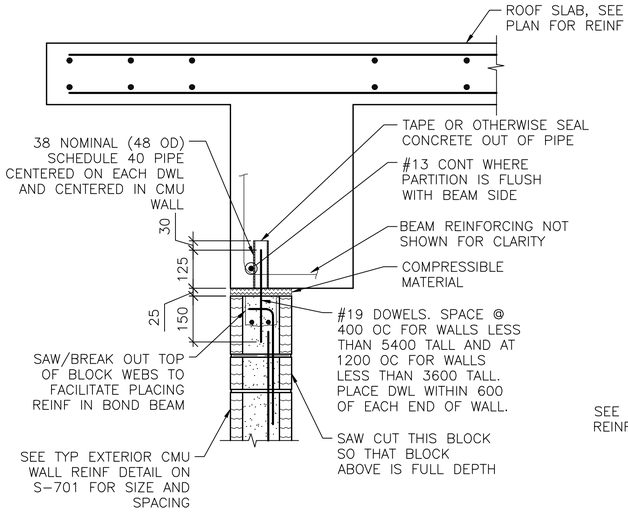

NOTES:
1. EXTEND DOWEL REINF TO 25 CLEAR FROM TOP OF CMU WALL.

1 S-102 **SECTION**
SCALE: 1:10

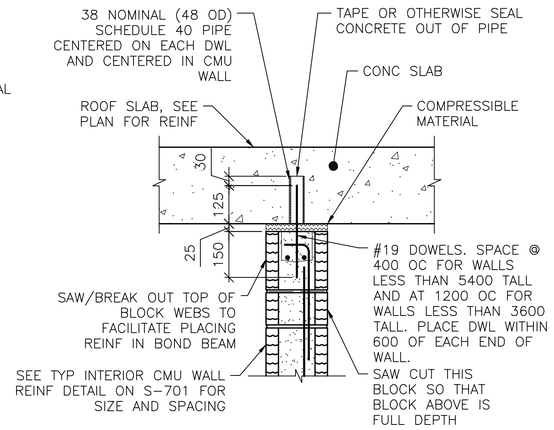

NOTES:
1. EXTEND DOWEL REINF TO 25 CLEAR FROM TOP OF CMU WALL.
2. SLAB REINF NOT SHOWN FOR CLARITY.

2 S-102 **SECTION**
SCALE: 1:10

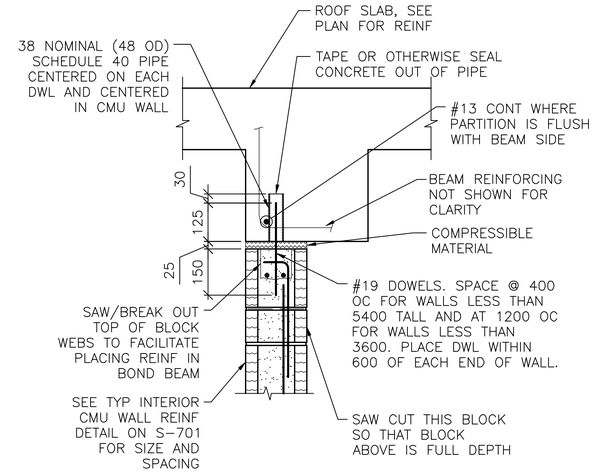

NOTES:
1. EXTEND DOWEL REINF TO 25 CLEAR FROM TOP OF CMU WALL.
2. PARTITION WALL MAY BE CENTERED UNDER THE BEAM OR FLUSH AS SHOWN. SEE PLAN FOR LOCATION.
3. SLAB REINF NOT SHOWN FOR CLARITY.

3 S-102 **SECTION**
SCALE: 1:10

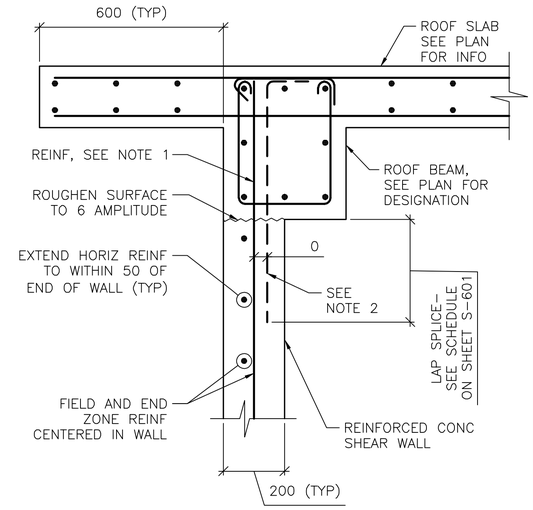

NOTES:
1. TERMINATE "FIELD" VERT REINF & END ZONE REINF @ 50 CLEAR FROM TOP OF ROOF SLAB.
2. WHERE END ZONE REINFORCING CANNOT BE DEVELOPED IN BEAM DEPTH, PROVIDE HOOKED DWLS SAME SIZE & SPACING. PROVIDE TENSION LAP BELOW ROOF BEAM.
3. SEE SHEET S-601 AND SHEET S-702 FOR SCHEDULED FIELD AND END ZONE REINF.

4 S-102 **SECTION**
SCALE: 1:10

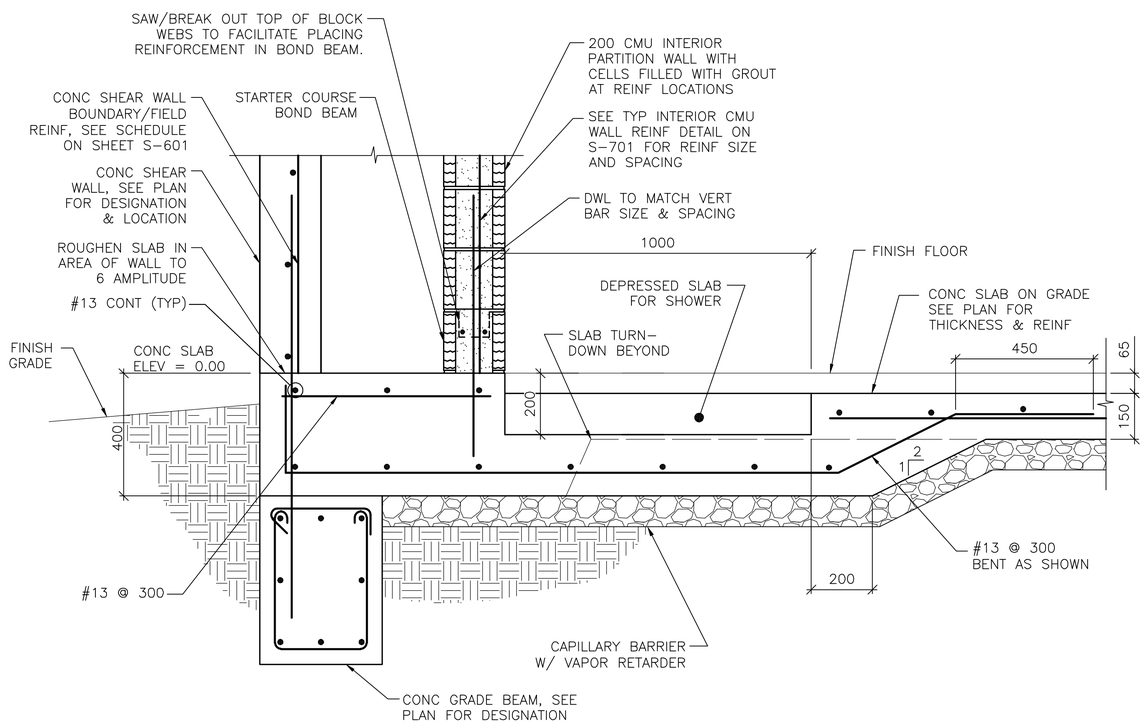

5 S-402 **SECTION**
SCALE: 1:10

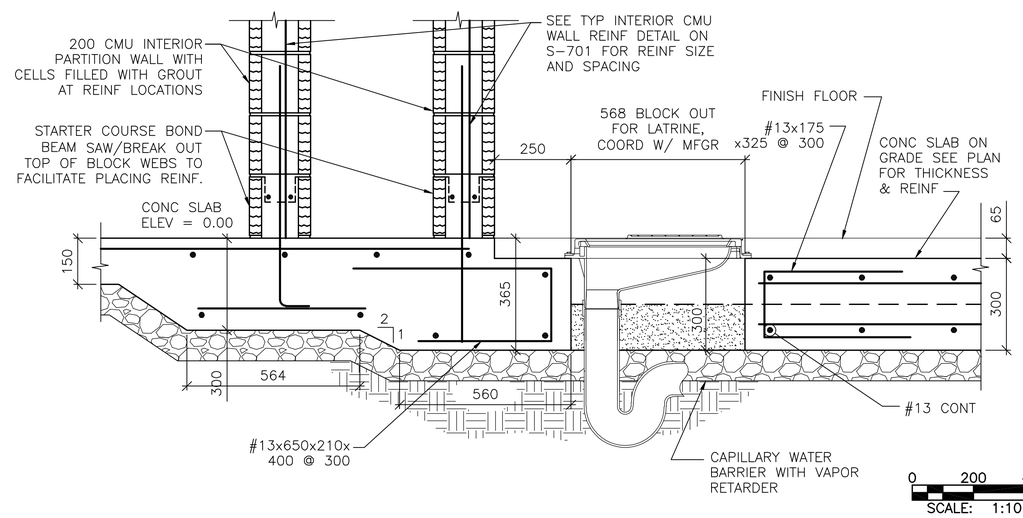

6 S-402 **SECTION**
SCALE: 1:10

0 200 400
SCALE: 1:10

UNLESS OTHERWISE NOTED, LINEAR DIMENSIONS SHOWN ON DRAWINGS ARE IN MILLIMETERS (mM)

APPROVED:

A/E DESIGNER OF RECORD

SEAL:

GEORGIA REGISTERED 1-27-10 No. 27141 PROFESSIONAL ENGINEER CHRISTOPHER W. WHITMORE

US ARMY CORPS OF ENGINEERS
AFGHANISTAN ENGINEER DISTRICT

Mark	Description	Date	Appr.	Mark	Description	Date	Appr.

Rev: 0
Date: 2/23/10
Designed by: KMP/MMY
Dwn by: RCG
Ckd by: CWW
Reviewed by: LHM
Submitted by: BAKER
Design file no.
Drawing code:
File name: ANABS8S8-S025C
Plot date: 2/23/2010
Plot scale: X:X

U.S. ARMY CORPS OF ENGINEERS
AFGHANISTAN ENGINEER DISTRICT
APO AE 96338

Michael Baker Jr., Inc.
A unit of Michael Baker Corporation
Airside Business Park
100 Airside Drive
Moon Township, PA 15108
www.mbakercorp.com

AFGHAN NATIONAL ARMY
REGIONAL MILITARY TRAINING CENTER
STANDARD DESIGN

SUPPORT STAFF BARRACKS

FOUNDATION & FRAMING SECTIONS

Sheet reference number:
S-502

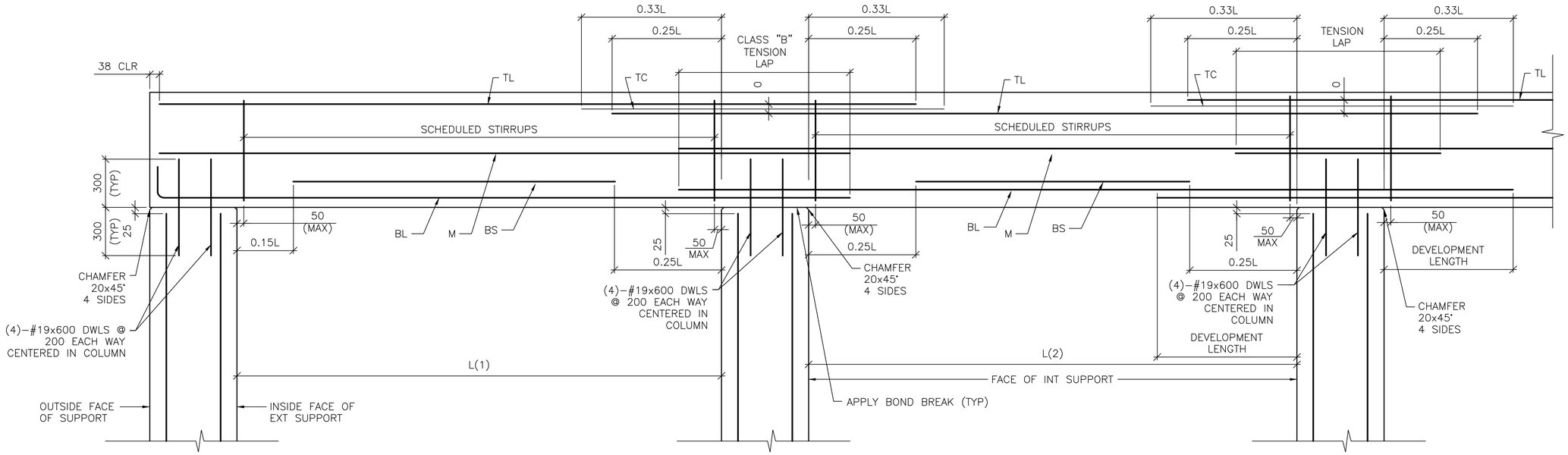

DETAIL NOTE:
1. WORK THIS DETAIL WITH BEAM SCHEDULE ON SHEET S-601.
2. L=GREATEST OF ADJACENT SPANS L(1) OR L(2)
3. ONLY COLUMN CORNER BARS ARE SHOWN

1 / S-503 ROOF BEAM REINFORCING DETAIL

SCALE: NTS

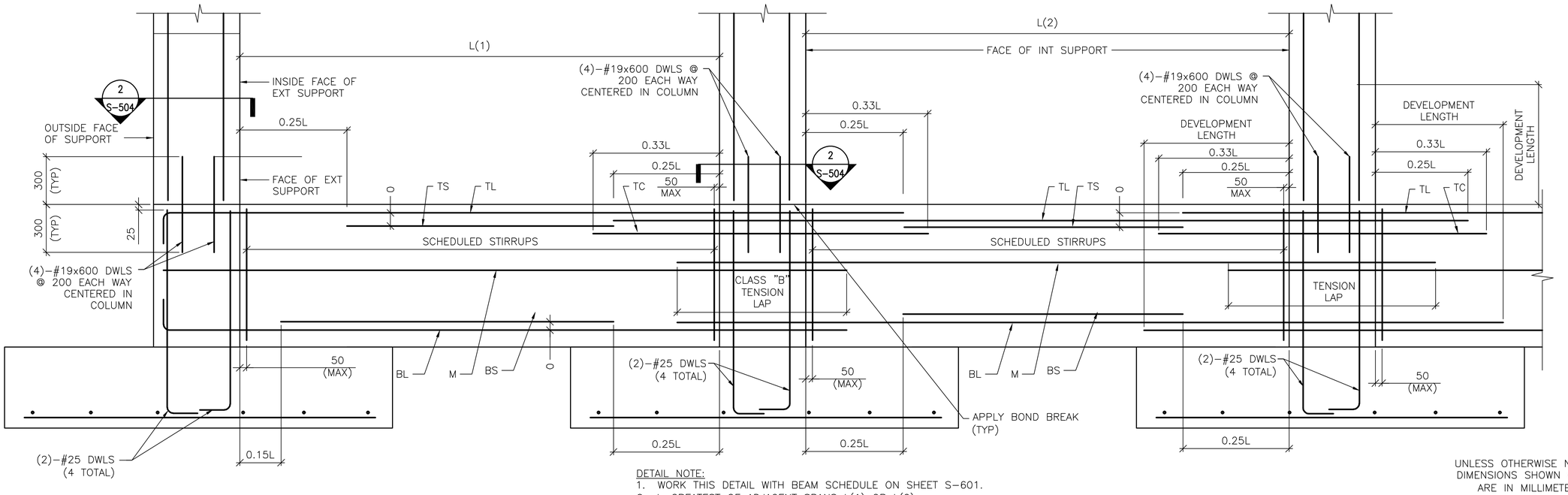

DETAIL NOTE:
1. WORK THIS DETAIL WITH BEAM SCHEDULE ON SHEET S-601.
2. L=GREATEST OF ADJACENT SPANS L(1) OR L(2)
3. ONLY COLUMN CORNER BARS ARE SHOWN.

2 / S-503 GRADE BEAM REINFORCING DETAIL

SCALE: NTS

UNLESS OTHERWISE NOTED, LINEAR DIMENSIONS SHOWN ON DRAWINGS ARE IN MILLIMETERS (mm)

APPROVED:

A/E DESIGNER OF RECORD

SEAL:

GEORGIA REGISTERED PROFESSIONAL ENGINEER No. 27141 CHRISTOPHER W. WHITMORE

US ARMY CORPS OF ENGINEERS
AFGHANISTAN ENGINEER DISTRICT

Mark	Description	Date	Appr.	Mark	Description	Date	Appr.

Rev: 0
Date: 2/23/10
Design file no.
Drawing code:
File name: ANABSSBS-S503T
Plot date: 2/23/2010
Plot scale: X:X

Designed by: KMP/MMY
Dwn by: RCG
Ckd by: CWW
Reviewed by: LHM
Submitted by:

U.S. ARMY CORPS OF ENGINEERS
AFGHANISTAN ENGINEER DISTRICT
APO AE 96338

Michael Baker Jr., Inc.
A unit of Michael Baker Corporation
Airside Business Park
100 Airside Drive
Moon Township, PA 15108
www.mbakercorp.com

BAKER

AFGHAN NATIONAL ARMY
REGIONAL MILITARY TRAINING CENTER
STANDARD DESIGN

SUPPORT STAFF BARRACKS

BEAM & COLUMN DETAILS

Sheet reference number:
S-503

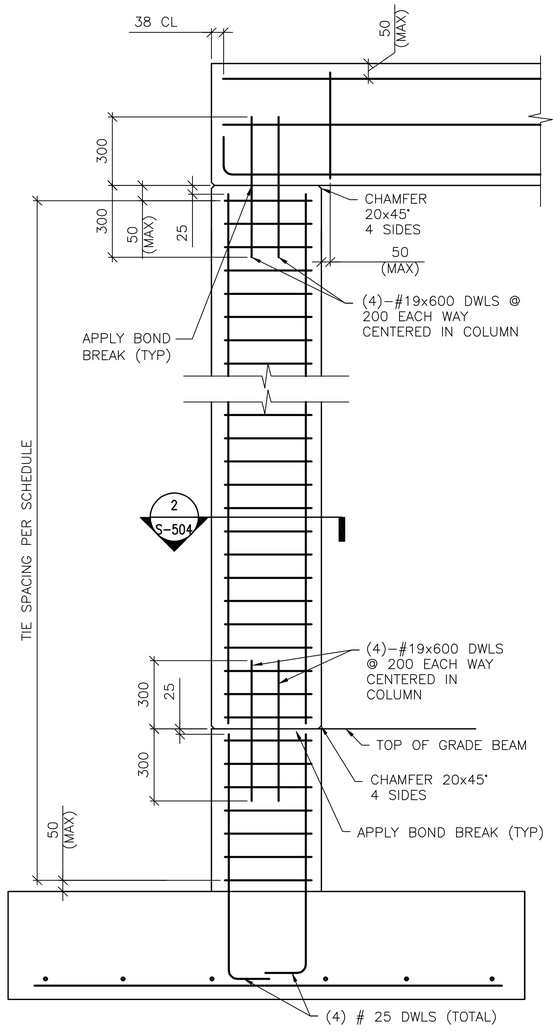

DETAIL NOTE:
1. ONLY COLUMN CORNER BARS ARE SHOWN

1 / S-504 1-STORY COLUMN REINF DETAILS

SCALE: NTS

(WITH GRADE BEAM)

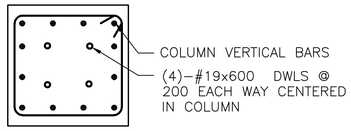

DETAIL NOTE:
1. INTERIOR TIES NOT SHOWN FOR CLARITY. REFER TO DETAIL A THIS SHEET FOR INTERIOR TIE CONFIGURATION.

2 / S-503 2 / S-504 SECTION

SCALE: NTS

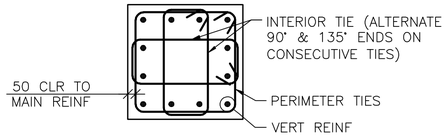

A / S-504 12 BAR COLUMN

SCALE: NTS

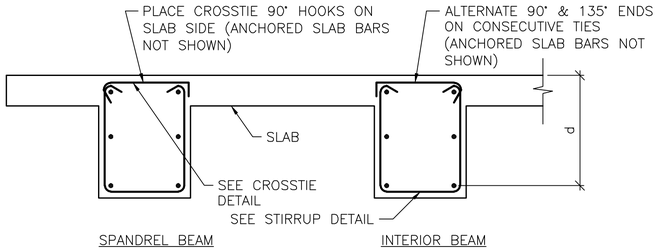

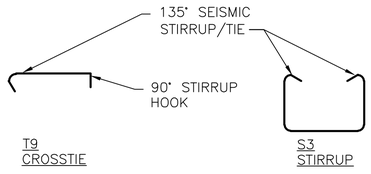

B / S-504 BEAM REINFORCEMENT DETAILS

SCALE: NTS

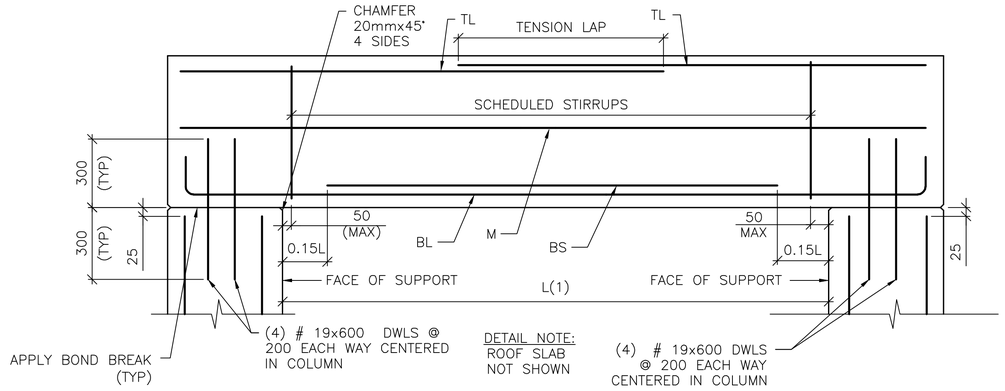

3 / S-504 SINGLE SPAN ROOF BEAM REINFORCING DETAIL

SCALE: NTS

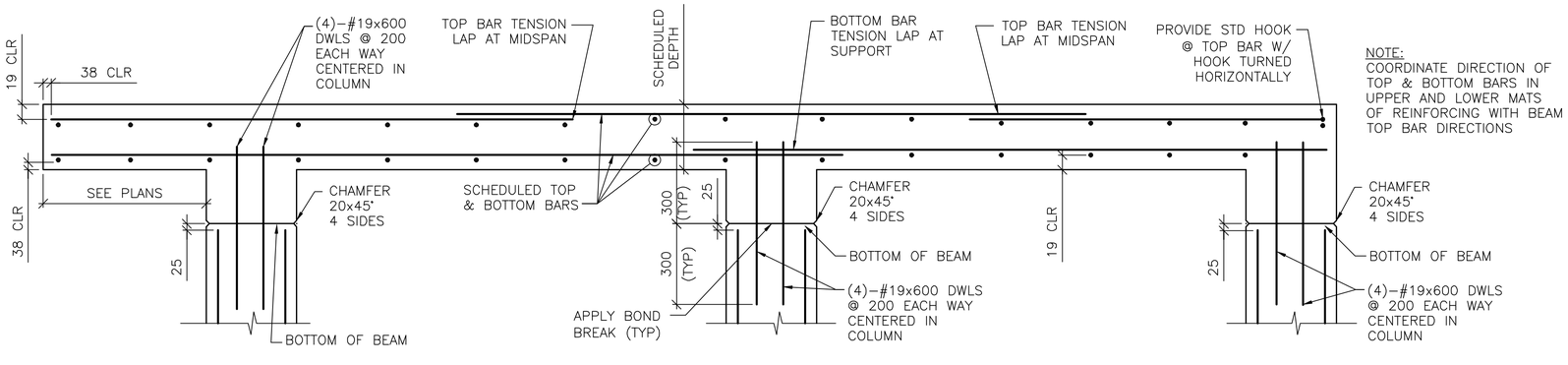

4 / S-504 FRAMED SLAB REINFORCING DETAIL

SCALE: NTS

UNLESS OTHERWISE NOTED, LINEAR DIMENSIONS SHOWN ON DRAWINGS ARE IN MILLIMETERS (mm)

APPROVED:

A/E DESIGNER OF RECORD

SEAL:

US ARMY CORPS OF ENGINEERS
AFGHANISTAN ENGINEER DISTRICT

Mark	Description	Date	Appr.	Mark	Description	Date	Appr.

Date: 2/23/10
Rev: 0
Design file no.
Drawing code:
File name: AN8SSBS-S04DT
Plot date: 2/23/2010
Plot scale: X:X

Designed by: KMP/MMY
Dwn by: RCG
Ckd by: CWW
Reviewed by: LHM
Submitted by:
BAKER

U.S. ARMY CORPS OF ENGINEERS
AFGHANISTAN ENGINEER DISTRICT
APO AE 96338

Michael Baker Jr., Inc.
A unit of Michael Baker Corporation
Airside Business Park
100 Airside Drive
Moon Township, PA 15108
www.mbakercorp.com

AFGHAN NATIONAL ARMY
REGIONAL MILITARY TRAINING CENTER
STANDARD DESIGN

SUPPORT STAFF BARRACKS

BEAM & COLUMN DETAILS

Sheet reference number:
S-504

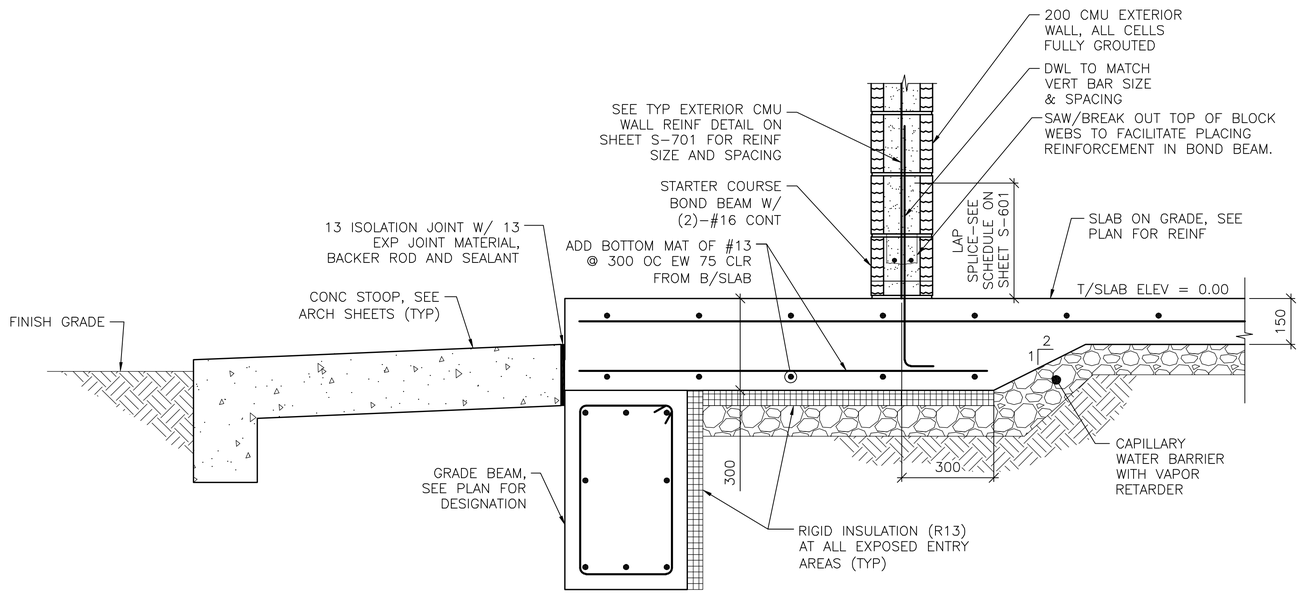

1 S-101 **SECTION**
SCALE: 1:10

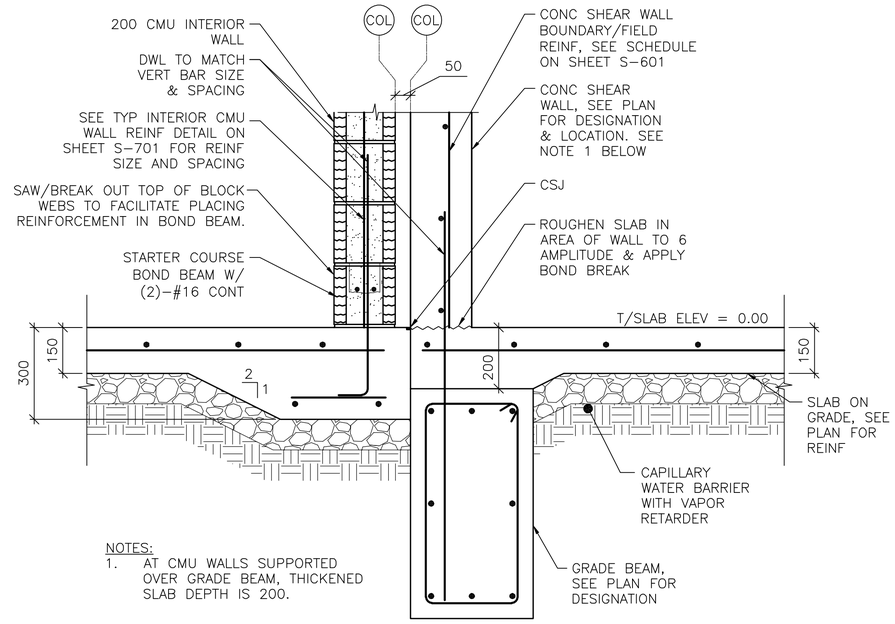

NOTES:
1. AT CMU WALLS SUPPORTED OVER GRADE BEAM, THICKENED SLAB DEPTH IS 200.

2 S-101 **SECTION**
SCALE: 1:10

0 200 400
SCALE: 1:10

UNLESS OTHERWISE NOTED, LINEAR DIMENSIONS SHOWN ON DRAWINGS ARE IN MILLIMETERS (mm)

APPROVED:

A/E DESIGNER OF RECORD

SEAL:

GEORGIA REGISTERED 1-29-10 No. 27141 PROFESSIONAL ENGINEER CHRISTOPHER W. WHITMORE

US ARMY CORPS OF ENGINEERS
AFGHANISTAN ENGINEER DISTRICT

Mark	Description	Date	Appr.	Mark	Description	Date	Appr.

Designed by: KMP/MMY
Dwn by: RCG
Ckd by: CWW
Reviewed by: LHM
Submitted by: BAKER
Date: 2/23/10
Rev: 0
Design file no.
Drawing code:
File name: ANABSSBS-505SC
Plot date: 2/23/2010
Plot scale: X:X

U.S. ARMY CORPS OF ENGINEERS
AFGHANISTAN ENGINEER DISTRICT
APO AE 96338

Michael Baker Jr., Inc
A unit of Michael Baker Corporation
Airside Business Park
100 Airside Drive
Moon Township PA 15108
www.mbakercorp.com

AFGHAN NATIONAL ARMY
REGIONAL MILITARY TRAINING CENTER
STANDARD DESIGN

SUPPORT STAFF BARRACKS

MISCELLANEOUS SECTIONS

Sheet reference number:
S-505

CONCRETE REINFORCEMENT TENSION DEVELOPMENT/LAP SPLICE SCHEDULE

f'c = 28 MPa	LAP CLASS	UNCOATED BARS			
		TOP BARS		OTHER BARS	
BAR SIZES		CASE 1	CASE 2	CASE 1	CASE 2
#10 TO #19	A	50 BAR DIA	74 BAR DIA	38 BAR DIA	57 BAR DIA
	B	64 BAR DIA	96 BAR DIA	50 BAR DIA	74 BAR DIA
#22 TO #57	A	62 BAR DIA	93 BAR DIA	48 BAR DIA	71 BAR DIA
	B	80 BAR DIA	121 BAR DIA	62 BAR DIA	93 BAR DIA

NOTES:
1. TABULATED TENSION DEVELOPMENT LENGTH VALUES ARE TAKEN FROM CRSI DESIGN HANDBOOK 2008 10TH ED.
2. TENSION DEVELOPMENT & TENSION LAP SPLICE LENGTHS ARE EXPRESSED AS MULTIPLES OF BAR DIAMETERS.
3. TABULATED VALUES ARE BASED ON MINIMUM YIELD STRENGTH OF REINFORCEMENT, fy, OF 420MPa.
4. CONCRETE IS NORMAL WEIGHT (2400Kg/m³) AND 28 DAY COMPRESSIVE STRENGTH = 28MPa.
5. TABULATED VALUES FOR BEAMS & COLUMNS ARE BASED ON TRANSVERSE REINFORCEMENT AND CONCRETE COVER MEETING MINIMUM CODE REQUIREMENTS.
6. CASES 1 & 2, WHICH DEPEND ON THE TYPE OF STRUCTURAL MEMBER, CONCRETE COVER, AND CENTER-TO-CENTER SPACING OF THE BARS ARE DEFINED IN THE TABLE BELOW.
7. LAP SPLICE LENGTHS (MINIMUM 300mm) ARE MULTIPLES OF TENSION DEVELOPMENT LENGTHS: CLASS A = 1.0(TENSION DEVELOPMENT LENGTH) & CLASS B = 1.3(TENSION DEVELOPMENT LENGTH)
8. TOP BARS ARE HORIZONTAL REINFORCEMENT WITH MORE THAN 300mm OF CONCRETE CAST BELOW THE BARS.
9. IT SHALL BE PERMISSIBLE TO CALCULATE WALL AND SLAB REINFORCEMENT TENSION DEVELOPMENT/SPLICE LENGTHS IN ACCORDANCE WITH ACI 12.2.3 OR TABLE 5.3(b) OF CRSI 2008 IN LIEU OF VALUES TABULATED ABOVE.

BEAMS, COLUMNS	CASE 1	CONCRETE COVER AT LEAST 1 BAR DIA AND CENTER-TO-CENTER SPACING AT LEAST 2 BAR DIA
	CASE 2	CONCRETE COVER LESS THAN 1 BAR DIA OR CENTER-TO-CENTER SPACING LESS THAN 2 BAR DIA
ALL OTHERS	CASE 1	CONCRETE COVER AT LEAST 1 BAR DIA AND CENTER-TO-CENTER SPACING AT LEAST 3 BAR DIA
	CASE 2	CONCRETE COVER LESS THAN 1 BAR DIA OR CENTER-TO-CENTER SPACING LESS THAN 3 BAR DIA

CONCRETE COVER SCHEDULE

MINIMUM CONCRETE COVER PROTECTION FOR REINFORCEMENT BARS SHALL BE AS LISTED BELOW: (SEE ACI 318M-05, SECTION 7.7 FOR CONDITIONS NOT NOTED). DIMENSIONS FOR BAR PLACEMENT GIVEN IN SECTIONS AND DETAILS SHALL SUPERSEDE MINIMUM COVER REQUIREMENTS GIVEN HERE. DIMENSIONS ARE IN mm. PROVIDE STANDARD BAR CHAIRS AND SUPPORT BARS @1200mm MAXIMUM AS REQUIRED TO MAINTAIN CONCRETE PROTECTION SPECIFIED.

FOOTINGS (EARTH FORMED):		70
COLUMNS / PIERS (TO TIES)		40
GRADE BEAMS OR SLAB TURNED DOWN EDGES:		
TOP		40
BOTTOM (EARTH FORMED)		70
SIDES (EARTH FORMED)		70
SIDES (BOARD FORMED)	#16 BAR & SMALLER	40
	#19 THRU #36 BAR	50
ELEVATED BEAMS & SLABS:		
BEAM TIES & STIRRUPS (NOT EXPOSED TO WEATHER)		40
BEAM TIES & STIRRUPS (EXPOSED TO WEATHER)		50
FLOOR SLABS (NOT EXPOSED TO WEATHER)		20
FLOOR SLABS (EXPOSED TO WEATHER)		
#19 & LARGER		50
#13 & SMALLER		40
ROOF SLAB BARS		25
SLABS ON GRADE		
NOT EXPOSED TO WEATHER (FROM TOP)		20
EXPOSED TO WEATHER (FROM TOP)		40
UTILITY TUNNEL WALLS, RETAINING WALLS AND SHEAR WALLS. (NO SURFACES SHALL BE EARTH FORMED)		
EARTH SIDE AND FRONT SIDE (EXPOSED TO WEATHER)		
#16 BAR AND SMALLER		40
#19 THRU #36 BAR		50

COLUMN FOOTING SCHEDULE

MARK	FOOTING SIZE (mm)			FOOTING REINFORCING	REMARKS
	LENGTH	WIDTH	THICKNESS		
F1	2900	2900	300	(9)-#19 EW BOTT	-----
F2	3300	3300	300	(11)-#22 EW BOTT	-----
F3	3600	3600	300	(12)-#22 EW BOTT	-----
F4	4200	4200	350	(14)-#25 EW BOTT	-----
F5	4900	4900	450	(17)-#25 EW BOTT	-----
F6	6800	3200	300	(23)-#22 SHORT BOTT (11)-#19 LONG BOTT	-----

CONCRETE SHEAR WALL SCHEDULE

MARK	TYPE	WALL LENGTH (L) (mm)	WALL REINFORCEMENT		REMARKS
			END ZONE	FIELD	
SW1	B	3600	(8)-#16 @ 150mm OC	#13 @ 300mm OC	-----
SW2	D	5000	(4)-#16 @ 150mm OC	#13 @ 300mm OC	-----
SW3	D	5000	(12)-#16 @ 150mm OC	#13 @ 300mm OC	-----
SW4	C	5700	(13)-#16 @ 150mm OC	#13 @ 300mm OC	-----

NOTES:
1. WORK THIS SCHEDULE WITH SHEAR WALL DETAILS ON SHEETS S-702
2. SEE PLAN FOR LOCATION OF SHEAR WALL(S).
3. VERTICAL "FIELD" BARS MAY BE OMITTED IN LOCATION OF "END ZONE" REINFORCEMENT.
4. WALL FIELD REINFORCEMENT LISTED APPLIES TO VERTICAL & HORIZONTAL BARS.
5. WALL FIELD REINFORCEMENT SHOULD BE CENTERED IN WALL.

STANDARD HOOKS IN TENSION PER (ACI 318M-05)

HOOK DEVELOPMENT LENGTH (mm)	
BAR SIZE	f'c 28 MPa
#10	180
#13	250
#16	300
#19	380
#22	430
#25	480
#29	560
#32	610
#36	690

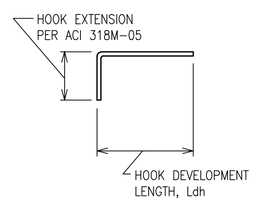

NOTES:
1. CONCRETE IS NORMAL WEIGHT CONCRETE.
2. BAR YIELD STRENGTH, fy = 420 MPa
3. SIDE COVER REQUIREMENTS OF ACI SECT. 12.5.3 ARE ASSUMED TO NOT BE MET.
4. TIE OR STIRRUP REQUIREMENTS OF ACI SECT. 12.5.3 ARE ASSUMED TO NOT BE MET.
5. REDUCTION FOR EXCESS REINFORCEMENT IS NOT TAKEN.
6. HOOK DEVELOPMENT LENGTH IS VALID FOR 180° HOOKS ALSO.

CMU OR CAST IN PLACE CONC LINTEL SCHEDULE (TYP)

OPENING TYPE OR SIZE, BEAM LOCATION OR TYPE	MAX SPAN (mm)	LINTEL DEPTH (mm)	REINFORCING BOTTOM
WALL OPENING	4000	600	(2)-#16 T&B
WALL OPENING	1900	400	(2)-#16 T&B
WALL OPENING	1000	400	(2)-#13 B

1. STRUCTURAL SHEETS DO NOT INDICATE ALL OPENINGS IN MASONRY WALLS. VERIFY NUMBER, SIZE AND LOCATION OF ALL OPENINGS IN MASONRY WALLS FROM ARCHITECTURAL SHEETS AND APPROVED PLUMBING, MECHANICAL, AND ELECTRICAL SHOP DRAWINGS.
2. PROVIDE 200mm BEARING EA END.
3. FOR HEAD DETAILS REFER TO ARCHITECTURAL SHEETS.
4. REINFORCING SHALL BE ASTM A615M, GRADE 420. GROUT FOR CMU LINTELS SHALL HAVE A MINIMUM COMPRESSIVE STRENGTH OF 14MPa AT 28 DAYS.
5. CONTRACTOR SHALL SUBMIT FOR APPROVAL SHOP DRAWINGS AND SCHEDULES SHOWING SIZE, SPAN, REINFORCEMENT, DETAILS, LOCATIONS, ETC.

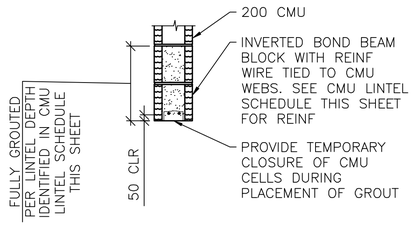

A S-601 **LINTEL DETAILS**
SCALE: NTS

BEAM SCHEDULE

MARK	BEAM SIZE (mm)		BEAM REINFORCING						STIRRUPS			REMARKS
	DEPTH	WIDTH	BL	BS	T	TS	TC	M	SIZE	TYPE	SPACING	-----
GRADE BEAMS												
GB1	750/550 /735	400	(2)-#16	---	(2)-#16	---	---	---	#13	S3 + T9	d/2	LOWER TOP TO 735 BETWEEN A4-B4; TO 550 BETWEEN A3-A4 & A3-B3
GB2	750	400	(2)-#25	(1)-#25	(2)-#25	(1)-#25	---	---	#13	S3 + T9	d/2	-----
ROOF BEAMS												
RB1	800	400	(2)-#22	(1)-#22	(2)-#19	---	---	---	#13	S3 + T9	d/2	-----
RB2	800	400	(2)-#25	(1)-#25	(2)-#22	---	---	---	#13	S3 + T9	d/2	
RB3	800	400	(3)-#29	(2)-#29	(2)-#25	---	---	---	#13	S3 + T9	d/2	

NOTES:
1. WORK THIS SCHEDULE WITH BEAM REINFORCING DETAILS ON SHEETS S-503 AND S-504.
2. HOOKS SHOWN ON SECTIONS AND DETAILS SHALL BE 90° STD UON.
3. USE ONLY (1) TS AT BEAM COLUMN INTERSECTION WHERE REQ'D.

COLUMN SCHEDULE

DESCRIPTION \ COLUMN MARK	TYP UON	---	---	---
TYPE	12-BAR	---	---	---
DIMENSION	800mm SQ.	---	---	---
VERTICAL REINFORCEMENT	(12)-#29	---	---	---
TIES	#13 @ d/2	---	---	---
TOP OF ROOF ELEVATION	3800mm	---	---	---
TOP OF GRADE BEAM ELEVATION	-200mm	---	---	---
TOP OF FOOTING ELEVATION	-950mm	---	---	---

NOTES:
1. WORK THIS SCHEDULE WITH COLUMN DETAILS ON SHEET S-504.
2. SEE FOOTING SCHEDULE ON THIS SHEET FOR FOOTING INFORMATION.
3. COLUMN TIES: INTERIOR TIES TO MATCH SIZE & SPACING OF PERIMETER TIES.
4. HOOKS SHOWN ON SECTIONS & DETAILS SHALL BE 90° STD UON.

UNLESS OTHERWISE NOTED, LINEAR DIMENSIONS SHOWN ARE IN MILLIMETERS (mm)

APPROVED:

A/E DESIGNER OF RECORD

SEAL:

US ARMY CORPS OF ENGINEERS
AFGHANISTAN ENGINEER DISTRICT

Mark	Description	Date	Appr.	Mark	Description	Date	Appr.

Date: 2/23/10 | Rev: 0
Design file no.
Drawing code:
File name: AN8SBSB-E015CH
Plot date: 2/23/2010
Plot scale: X:X

Designed by: KMP/MMY | Ckd by: CWW
Dwn by: RCG
Reviewed by: LHM
Submitted by:
BAKER

U.S. ARMY CORPS OF ENGINEERS
AFGHANISTAN ENGINEER DISTRICT
APO AE 96338

Michael Baker Jr., Inc
A unit of Michael Baker Corporation
Airside Business Park
100 Airside Drive
Moon Township, PA 15108
www.mbakercorp.com

AFGHAN NATIONAL ARMY
REGIONAL MILITARY TRAINING CENTER
STANDARD DESIGN

SUPPORT STAFF BARRACKS

SCHEDULES

Sheet reference number:
S-601

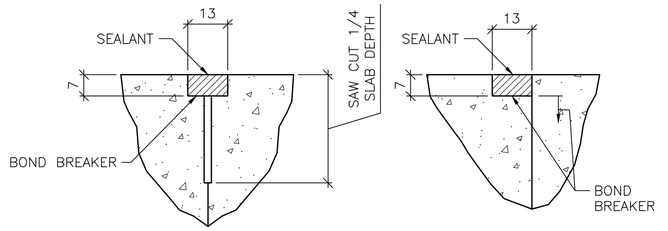

1 S-701 TYPICAL CONCRETE SLAB JOINT FINISH DETAILS

SCALE: NTS

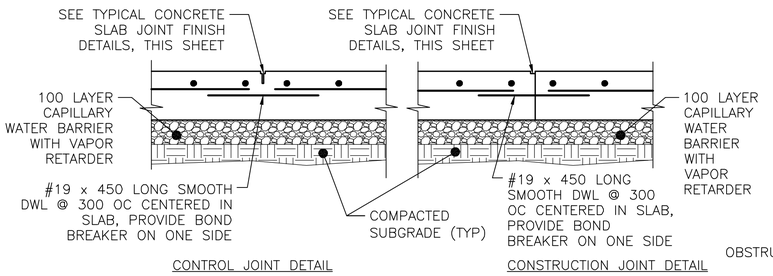

2 S-701 TYPICAL SLAB ON GRADE JOINT DETAIL

SCALE: NTS

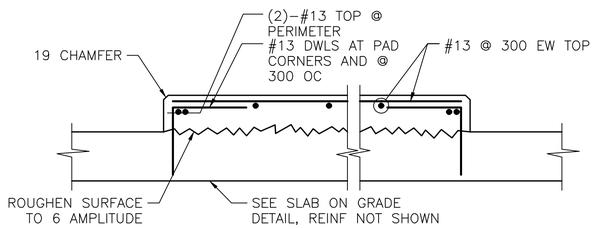

3 S-701 INTERIOR EQUIPMENT PAD DETAIL

SCALE: NTS

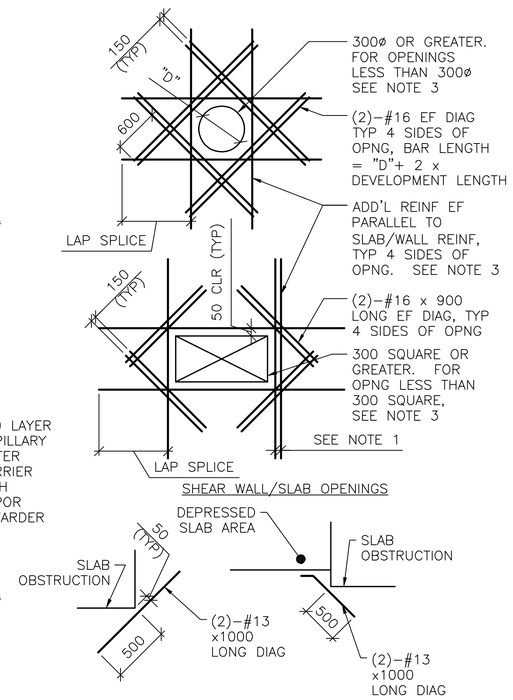

DETAIL NOTES:

1. WHERE MORE THAN ONE ADDITIONAL BAR IS REQUIRED PARALLEL TO THE EXISTING SLAB/WALL REINFORCING THE ADDITIONAL REINFORCING BARS SHALL BE SPACED AT 100 ON CENTER.
2. ADDITIONAL REINFORCING PARALLEL TO THE SLAB/WALL REINFORCING SHALL BE #16 BARS THAT PROVIDE A STEEL AREA ON EACH SIDE OF THE OPENING EQUAL TO 1/2 THE AREA OF THE REINFORCING CUT BY THE OPENING.
3. FOR OPENINGS WITH SIDES OR DIAMETERS LESS THAN 300 SPREAD THE SLAB/WALL REINFORCING TO CLEAR THE OPENING.

4 S-701 ADD'L CONCRETE REINFORCEMENT DETAILS

SCALE: NTS

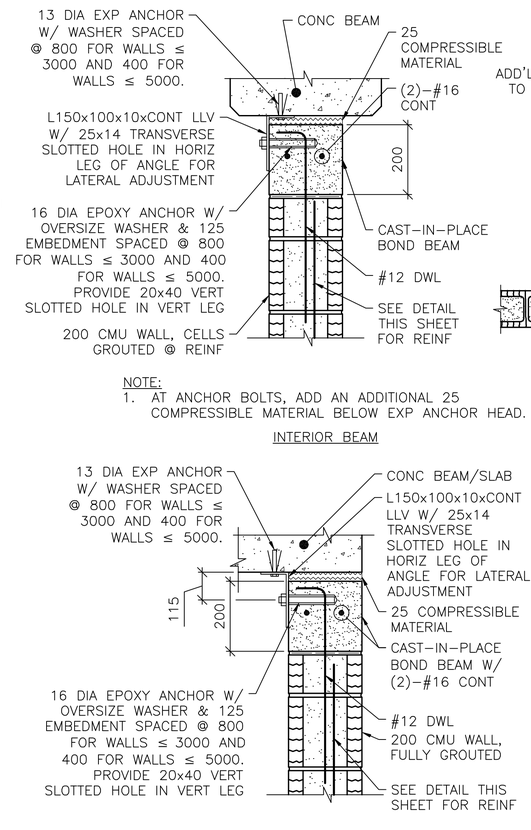

NOTE:

1. AT ANCHOR BOLTS, ADD AN ADDITIONAL 25 COMPRESSIBLE MATERIAL BELOW EXP ANCHOR HEAD.

NOTES:

1. THIS DETAIL IS AN ALTERNATE TOP OF WALL ANCHORAGE DETAIL TO BE USED AT THE CONTRACTOR'S OPTION IN LIEU OF DETAILS SHOWN ON S-400 & S-500 DRAWINGS.
2. CAST-IN-PLACE BOND BEAM SHOWN AT TOP OF WALL IS ALSO APPLICABLE FOR INTERMEDIATE AND STARTER COURSE BOND BEAMS WITHIN WALL.

5 S-701 ALTERNATE TOP OF CMU WALL BRACING DETAILS

SCALE: NTS

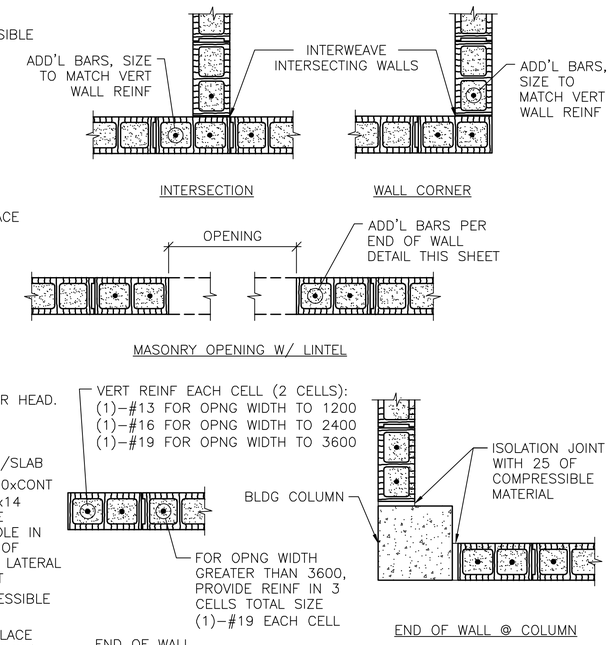

NOTES:

1. OPENING WIDTH SHALL NOT EXCEED 3600 FOR THIS TYPE OF JAMB.
2. ALL CELLS FULLY GROUTED AT EXTERIOR WALLS. AT INTERIOR WALLS, ONLY GROUT CELLS CONTAINING REINF.

6 S-701 TYP CMU DETAILS

SCALE: NTS

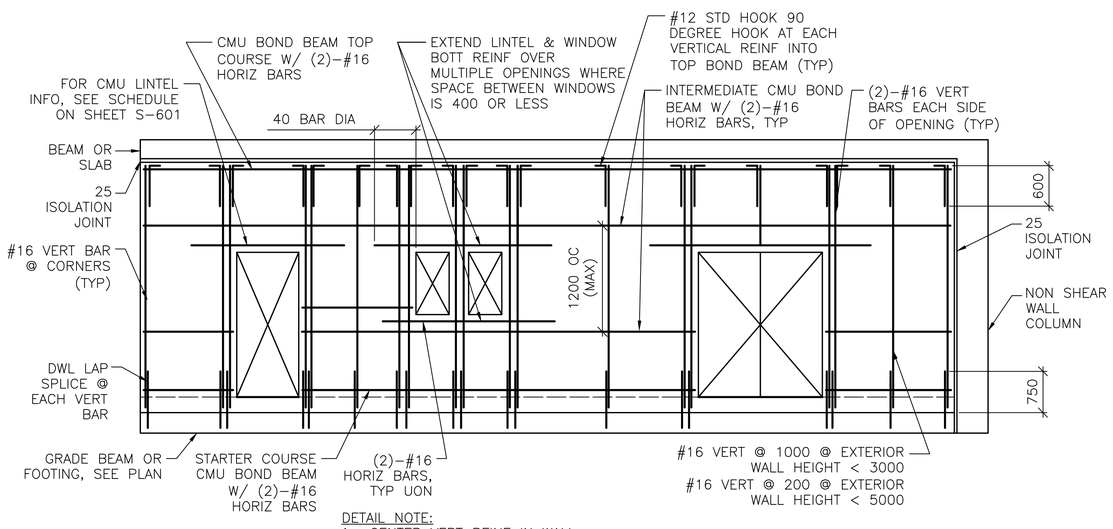

DETAIL NOTE:

1. CENTER VERT REINF IN WALL.
2. GROUT ALL CMU CELLS.
3. REFERENCE ARCH DWGS FOR JOINT INFORMATION
4. DOWELS BETWEEN TOP BOND BEAM AND BEAM/SLAB ABOVE (INCLUDING EMBEDDED PIPE SLEEVE) NOT SHOWN FOR CLARITY. SEE SPECIFIC S-500 SERIES DWGS FOR INFO.
5. FOR INFORMATION ON ALTERNATE CAST-IN-PLACE WALL BOND BEAMS, REFERENCE ALTERNATE TOP OF CMU WALL BRACING DETAILS THIS SHEET.

7 S-701 TYP EXTERIOR CMU WALL REINF DETAIL

SCALE: NTS

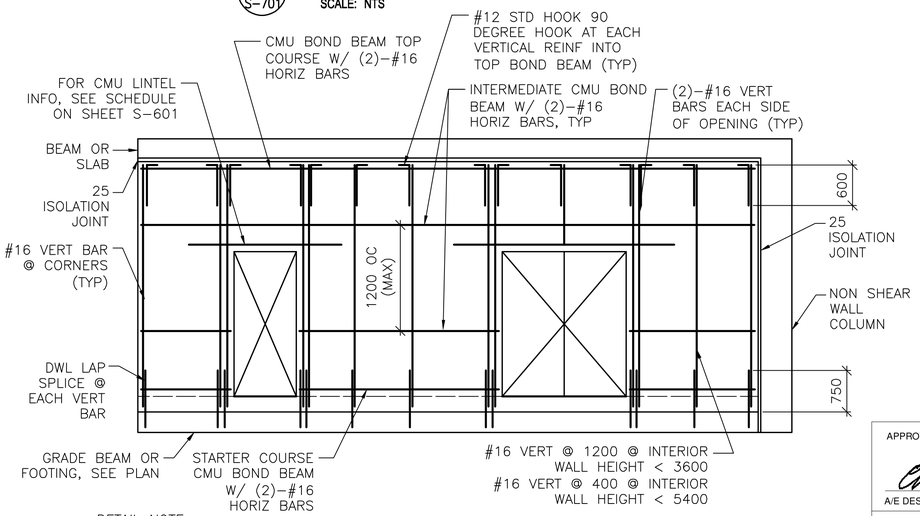

DETAIL NOTE:

1. CENTER VERT REINF IN WALL.
2. GROUT ALL CMU CELLS.
3. REFERENCE ARCH DWGS FOR JOINT INFORMATION
4. DOWELS BETWEEN TOP BOND BEAM AND BEAM/SLAB ABOVE (INCLUDING EMBEDDED PIPE SLEEVE) NOT SHOWN FOR CLARITY. SEE SPECIFIC S-500 SERIES DWGS FOR INFO.
5. FOR INFORMATION ON ALTERNATE CAST-IN-PLACE WALL BOND BEAMS, REFERENCE ALTERNATE TOP OF CMU WALL BRACING DETAILS THIS SHEET.

8 S-701 TYP INTERIOR CMU WALL REINF DETAIL

SCALE: NTS

UNLESS OTHERWISE NOTED, LINEAR DIMENSIONS SHOWN ARE IN MILLIMETERS (mm)

APPROVED:

A/E DESIGNER OF RECORD

SEAL:

GEORGIA REGISTERED 1-29-10 No. 27141 PROFESSIONAL ENGINEER CHRISTOPHER W. WHITMORE

US ARMY CORPS OF ENGINEERS
AFGHANISTAN ENGINEER DISTRICT

Mark	Description	Date	Appr.	Mark	Description	Date	Appr.

Rev: 0
Date: 2/23/10
Design file no.
Drawing code:
File name: AA4BSS8S-701TDT
Plot date: 2/23/2010
Plot scale: X/X

Designed by: KMP/MMY
Dwn by: RCG
Ckd by: CWW
Reviewed by: LHM
Submitted by:
BAKER

U.S. ARMY CORPS OF ENGINEERS
AFGHANISTAN ENGINEER DISTRICT
APO AE 96338

Michael Baker Jr., Inc
A unit of Michael Baker Corporation
Airside Business Park
100 Airside Drive
Moon Township, PA 15108
www.mbakercorp.com

AFGHAN NATIONAL ARMY
REGIONAL MILITARY TRAINING CENTER
STANDARD DESIGN

SUPPORT STAFF BARRACKS

TYPICAL DETAILS

Sheet reference number:
S-701

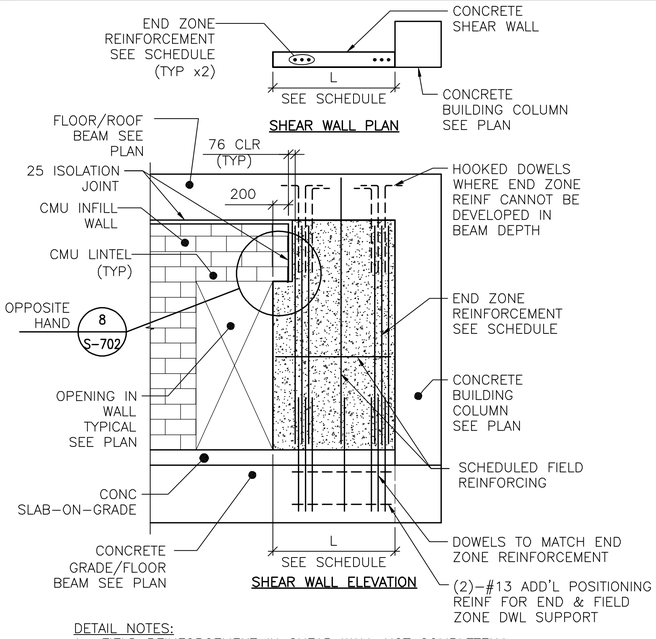

DETAIL NOTES:
1. FIELD REINFORCEMENT IN SHEAR WALL NOT COMPLETELY SHOWN FOR CLARITY.
2. FIELD REINFORCEMENT CENTERED IN WALL.
3. MINIMUM CONC CLEAR DISTANCE FOR END ZONE REINF = 76
4. SEE CONC SHEAR WALL SCHEDULE ON SHEET S-601
5. SEE ARCH DWGS FOR ISOLATION JOINT INFORMATION

TYPE "B" SHEAR WALL DETAIL

1 / S-702 — SCALE: NTS

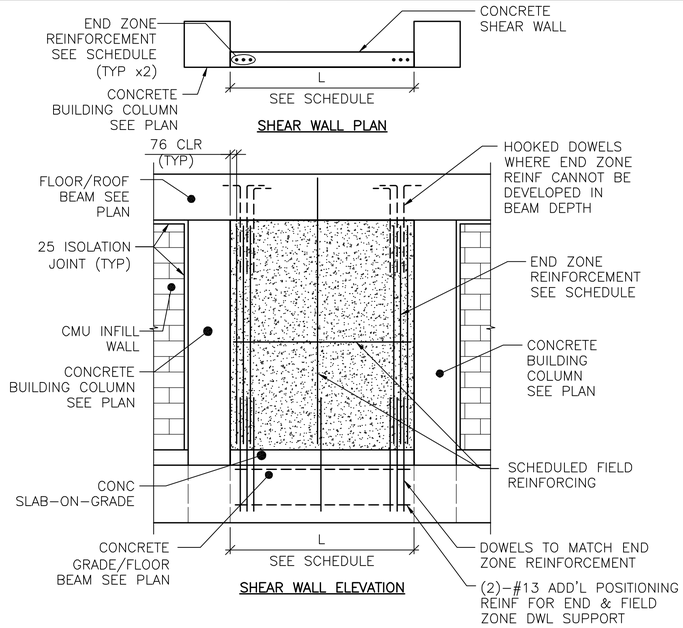

DETAIL NOTES:
1. FIELD REINFORCEMENT IN SHEAR WALL NOT COMPLETELY SHOWN FOR CLARITY.
2. FIELD REINFORCEMENT CENTERED IN WALL.
3. MINIMUM CONC CLEAR DISTANCE FOR END ZONE REINF = 76
4. SEE CONC SHEAR WALL SCHEDULE ON SHEET S-601
5. SEE ARCH DWGS FOR ISOLATION JOINT INFORMATION

TYPE "C" SHEAR WALL DETAIL

2 / S-702 — SCALE: NTS

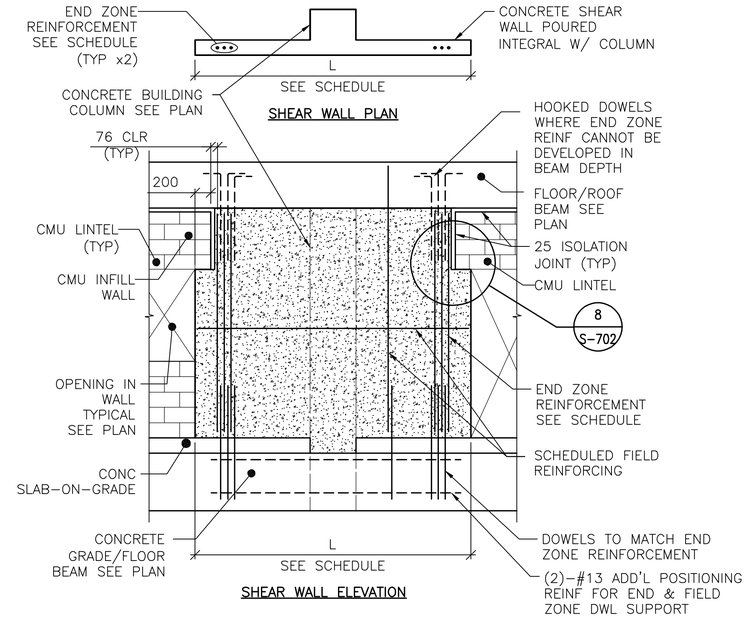

DETAIL NOTES:
1. FIELD REINFORCEMENT IN SHEAR WALL NOT COMPLETELY SHOWN FOR CLARITY.
2. FIELD REINFORCEMENT CENTERED IN WALL.
3. MINIMUM CONC CLEAR DISTANCE FOR END ZONE REINF = 76
4. SEE CONC SHEAR WALL SCHEDULE ON SHEET S-601
5. SEE ARCH DWGS FOR ISOLATION JOINT INFORMATION

TYPE "D" SHEAR WALL DETAIL

3 / S-702 — SCALE: NTS

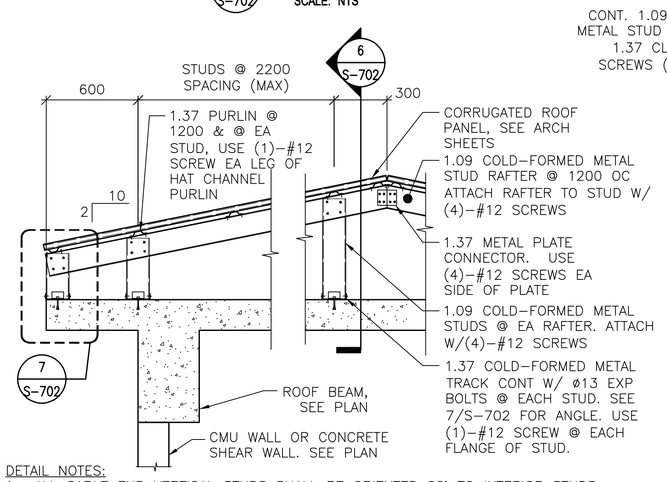

DETAIL NOTES:
1. ALL GABLE END VERTICAL STUDS SHALL BE ORIENTED 90° TO INTERIOR STUDS & SPACED @ 600 OC. GABLE END RAFTER SHALL BE 1.37 METAL TRACK SPANNING CONTINUOUSLY OVER GABLE END STUDS. INSET GIRTS AT GABLE END SHALL BE 1.09 COLD-FORMED METAL STUDS @ 1200 OC ATTACHED VIA 1.37 THICKNESS CLIP ANGLE W/ (2) #12 SCREWS EA LEG.
2. ALL INTERIOR, NON-GABLE END VERTICAL STUDS GREATER THAN 2400 IN LENGTH SHALL BE BACK-TO-BACK W/ #12 SCREWS @ 200 OC STAGGERED.

TYPICAL OVERBUILT ROOF FRAMING DETAIL

4 / S-702 — SCALE: NTS

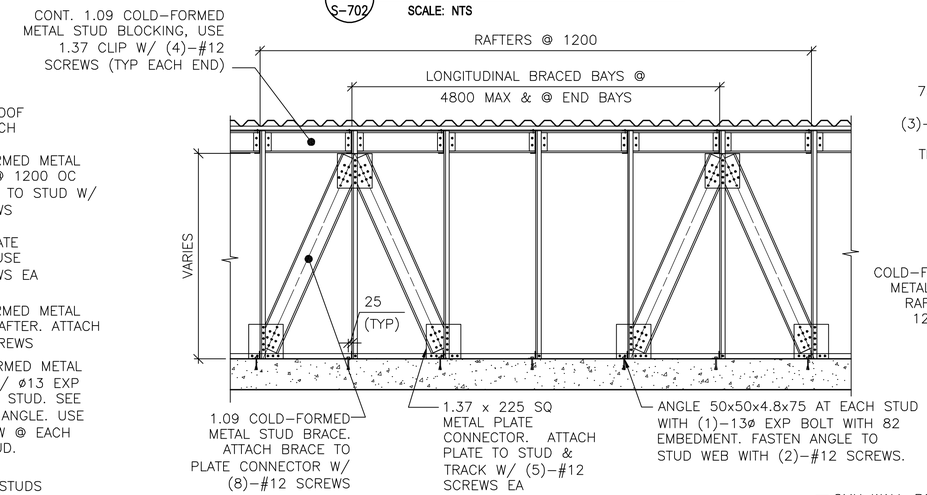

SECTION

6 / S-702 — SCALE: NTS

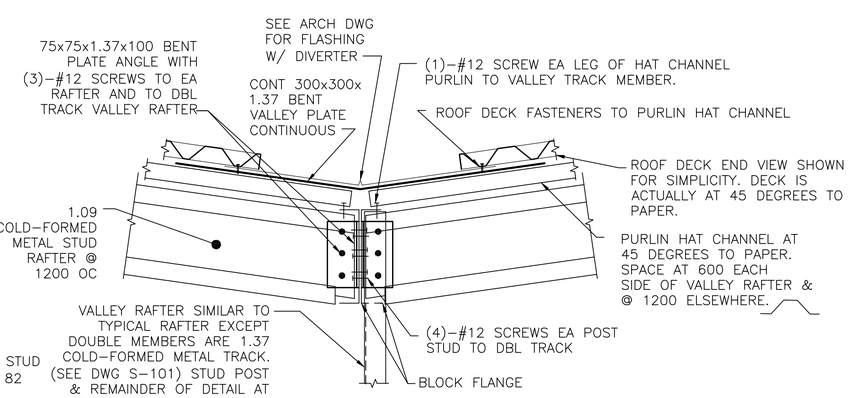

TYPICAL OVERBUILT ROOF SECTION THROUGH VALLEY

9 / S-702 — SCALE: NTS

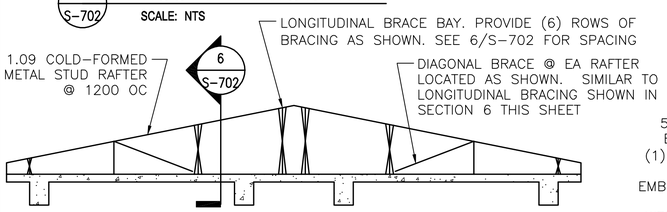

TYPICAL ROOF BRACE LAYOUT

5 / S-702 — SCALE: NTS

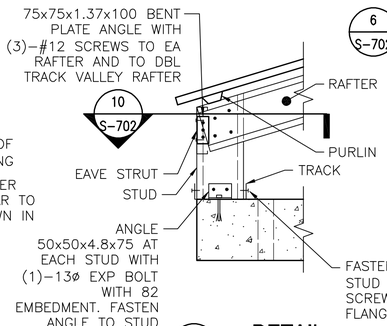

DETAIL

7 / S-702 — SCALE: NTS

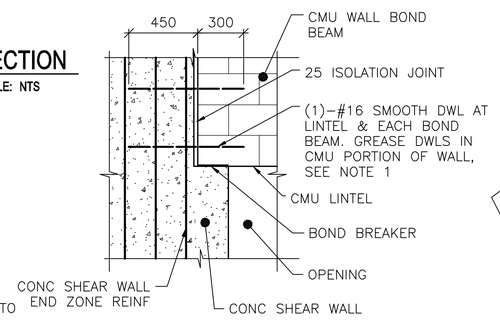

NOTE:
1. TIE SMOOTH DOWEL ROD TO SHEAR WALL END ZONE REINF FOR EACH BOND BEAM AND LINTEL.

SECTION

8 / S-702 — SCALE: NTS

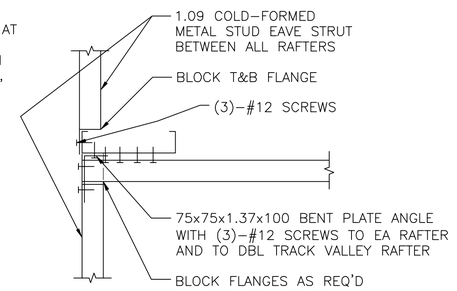

SECTION

10 / S-702 — SCALE: NTS

UNLESS OTHERWISE NOTED, LINEAR DIMENSIONS SHOWN ARE IN MILLIMETERS (mm)

APPROVED:

A/E DESIGNER OF RECORD

SEAL:

GEORGIA REGISTERED 1-29-10 No. 27141 PROFESSIONAL ENGINEER CHRISTOPHER W. WHITMORE

US ARMY CORPS OF ENGINEERS
AFGHANISTAN ENGINEER DISTRICT

Mark	Description	Date	Appr.	Mark	Description	Date	Appr.

Date: 2/23/10 | Rev: 0
Design file no.
Drawing code:
File name: AN4SS8S-702TDT
Plot date: 2/23/2010
Plot scale: X:X

Designed by: KMP/MMY
Dwn by: RCG | Ckd by: CWW
Reviewed by: LHM
Submitted by: BAKER

U.S. ARMY CORPS OF ENGINEERS
AFGHANISTAN ENGINEER DISTRICT
APO AE 96338

Michael Baker Jr., Inc
A unit of Michael Baker Corporation
Airside Business Park
100 Airside Drive
Moon Township, PA 15108
www.mbakercorp.com

AFGHAN NATIONAL ARMY
REGIONAL MILITARY TRAINING CENTER
STANDARD DESIGN

SUPPORT STAFF BARRACKS

TYPICAL DETAILS

Sheet reference number: S-702

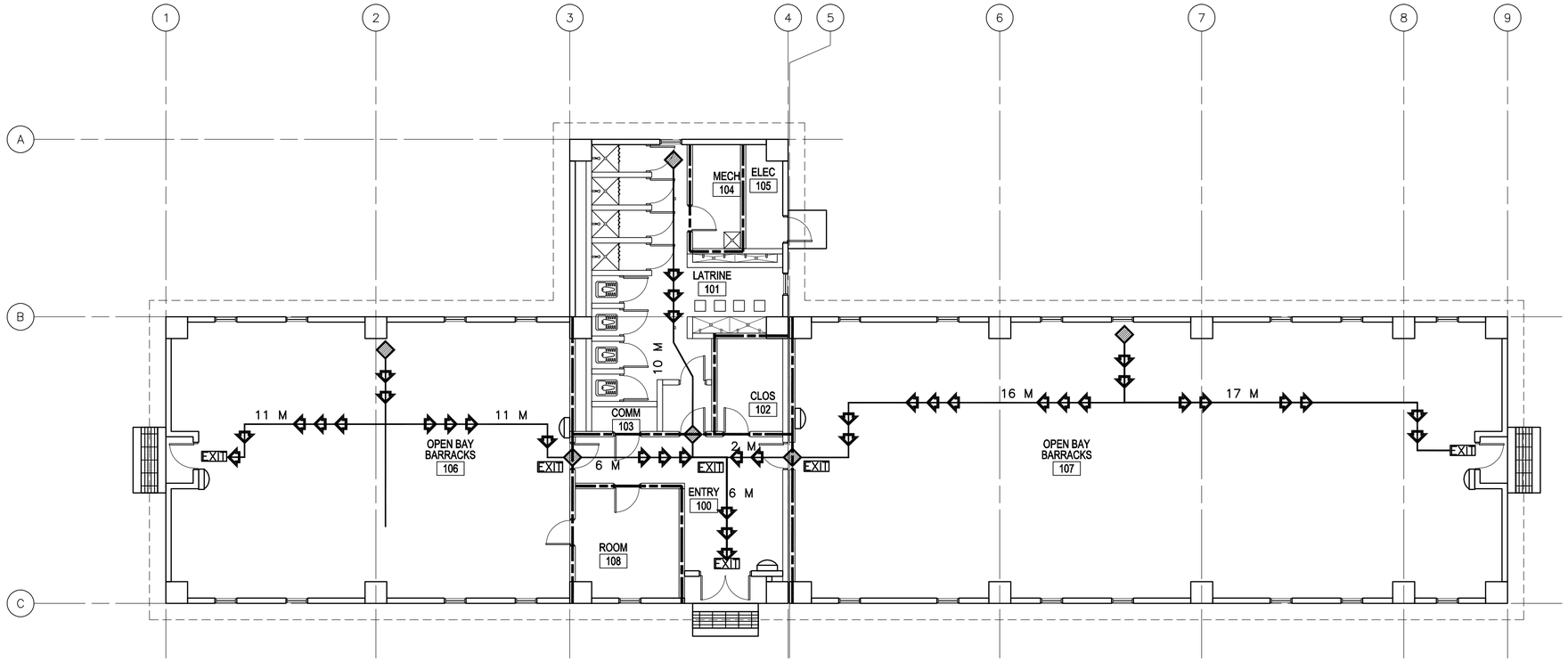

LEGEND:

- DENOTES PATHS OF EXIT TRAVEL
- DENOTES DOOR AS AN EMERGENCY EXIT
- DENOTES STARTING POINT FOR TRAVEL DISTANCE
- DENOTES FIRE EXTINGUISHER LOCATIONS
- (1) HOUR RATED WALL
- (2) HOUR RATED WALL
- (3) HOUR RATED WALL

1 / A-001 **LIFE SAFETY PLAN**

SCALE: 1:100

CODE ANALYSIS:

1. REFERENCES:
   2006 INTERNATIONAL BUILDING CODE (2006 IBC)
   2006 LIFE SAFETY CODE (2006 NFPA 101)

2. IBC OCCUPANCY CLASSIFICATION:
   GROUP R–2 (NEW HOTELS AND DORMITORIES NFPA 101 6.1.8 AND CHAPTER 28)

3. TYPE OF CONSTRUCTION (IBC): TYPE II–B (UNPROTECTED/NONSPRINKLERED)

4. IBC TABLE 503: ALLOWABLE HEIGHT AND BUILDING AREAS:
   GROUP R–2
   ALLOWABLE AREA: 1486 SM
   ALLOWABLE HEIGHT: 4 STORIES (16 M)

   GROUP R–2
   PROPOSED AREA: 569 SM
   PROPOSED HEIGHT: 1 STORY (<16 M)

5. IBC TABLE 601 & 602: FIRE RESISTANCE RATING REQUIREMENTS FOR BUILDING ELEMENTS FOR TYPE II–B

BUILDING ELEMENT	RATING (HOUR)	REFERENCE
STRUCTURAL FRAME (COLUMNS, GIRDERS & TRUSSES)	0	TABLE 601
BEARING WALLS		
EXTERIOR	0	TABLE 601
INTERIOR	0	TABLE 601
NONBEARING WALLS & PARTITIONS		
INTERIOR	0	TABLE 601
FLOOR CONSTRUCTION	0	TABLE 601
ROOF CONSTRUCTION	0	TABLE 601
EXTERIOR WALL	0	TABLE 602

6. IBC TABLE 803.5 – INTERIOR WALL AND CEILING FINISH REQUIREMENTS FOR R–2 OCCUPANCY/NONSPRINKLERED

GROUP	EXIT ENCLOSURES AND EXIT PASSAGEWAY	CORRIDORS	ROOMS AND ENCLOSED SPACES
R–2	B	B	C

7. NFPA 101 TABLE 7.3.1.2 – OCCUPANT LOAD
   HOTELS AND DORMITORIES = 18.6 SM/PERSON CALCULATED = 30 OCCUPANTS
   ACTUAL = 45 OCCUPANTS

8. NFPA 101 TABLE 7.3.3.1 – EGRESS CAPACITY
   HOTELS AND DORMITORIES = 5 MM PER OCCUPANT

   MINIMUM REQUIRED: 225 MM (45 OCCUPANTS x 5 MM PER OCCUPANT)
   PROPOSED EGRESS CAPACITY: 3600 MM: (4) 900 MM DOORS

9. NFPA 101 PARAGRAPH 28.2.6 – EXIT ACCESS TRAVEL DISTANCE
   MAXIMUM ALLOWED WITHIN ROOM OR SUITE TO CORRIDOR: 23 METERS
   MAXIMUM ALLOWED CORRIDOR DOOR OF ANY ROOM OR SUITE TO NEAREST EXIT: 30 METERS

   PROPOSED WITHIN ROOM OR SUITE TO CORRIDOR: 17 METERS
   PROPOSED CORRIDOR DOOR OF ANY ROOM OR SUITE TO NEAREST EXIT: 11 METERS

10. NFPA 101 PARAGRAPH 28.3.6.1.2 – CORRIDOR FIRE–RESISTANCE RATING (HOUR)
    REQUIRED: WALLS NOT LESS THAN ONE HOUR FIRE RESISTANCE RATING
    PROPOSED: 1 HOUR RATED WALLS

11. NFPA 101 PARAGRAPH 28.3.6.2 & TABLE 8.3.4.2 – DOORS INTO EXIT ACCESS CORRIDORS
    REQUIRED MINIMUM: 20 MINUTE FIRE PROTECTION RATING
    PROPOSED: 20 MINUTE DOORS

12. NFPA 101 PARAGRAPH 28.2.3.3 – CORRIDOR WIDTH
    REQUIRED: SUFFICIENT FOR OCCUPANT LOAD, BUT NOT LESS THAN 1120 MM
    CALCULATED WIDTH REQUIRED PER OCCUPANT LOAD: 225 (45 OCCUPANTS X 5 MM)
    PROVIDED: 1700 MM

13. NFPA 101 PARAGRAPH 28.2.5.3 – COMMON PATH OF TRAVEL
    MAXIMUM ALLOWED: 10.7 METERS
    PROVIDED: 0 METERS

14. NFPA 101 PARAGRAPH 28.2.5.5 – DEAD END CORRIDORS
    PERMITTED: 10.7 METERS
    PROPOSED: NO DEAD END CORRIDORS

15. NFPA 101 PARAGRAPH 28.2.4.1 AND 7.4.1.1 – MINIMUM NUMBER OF EXITS
    REQUIRED: 2 MINIMUM
    PROPOSED: 3 EXITS

16. NFPA 101 PARAGRAPH 28.2.1.2 & 24.2 – SECONDARY MEANS OF ESCAPE
    ONE OF THE FOLLOWING REQUIRED:
    1)DOOR, SIMILAR TO PRIMARY, BUT REMOTE FROM PRIMARY
    2) OPERABLE WINDOW, 0.53 SM, NOT LESS THAN 510 MM WIDE, 610 MM HIGH, NOT MORE THAN 1120 MM AFF, WITHIN 6100 MM OF GRADE
    PROVIDED: OPERABLE WINDOWS, 0.93 SM EACH, MULTIPLE PER ROOM

17. NFPA 101 PARAGRAPH 24.2.2.4 – TWO PRIMARY MEANS OF ESCAPE
    AREA WITH DWELLING UNIT EXCEEDS 185 SM PER STORY
    ALLOWED AREA PER STORY WITHIN DWELLING UNIT: 185 SM
    PROVIDED AREA WITHIN DWELLING UNIT: (253) SM ROOM 106
    REQUIRED PRIMARY EXITS: 2
    PROVIDED PRIMARY EXITS: 2

18. NFPA 101 PARAGRAPH 28.3.7.1 – SUBDIVISION OF BUILDING SPACES – NONSPRINKLERED
    REQUIRED: EACH GUEST ROOM OR DORMITORY ROOM SHALL BE SEPARATED FROM OTHER GUEST OR DORMITORY ROOMS BY FIRE BARRIERS HAVING FIRE RESISTANCE RATING OF NOT LESS THAN 1 HOUR
    PROVIDED: 1 HOUR SEPARATION

19. HAZARDOUS AREA PROTECTION TABLE 28.3.2.2.2
    STORAGE ROOMS: 1 HOUR SEPARATION REQUIRED

20. NFPA 101 A.3.3.53 DORMITORY: ROOMS WITHIN DORMITORIES INTENDED FOR THE USE OF INDIVIDUALS FOR COMBINED LIVING AND SLEEPING PURPOSES ARE GUEST ROOMS OR GUEST SUITES. EXAMPLES OF DORMITORIES ARE COLLEGE DORMITORIES, FRATERNITY AND SORORITY HOUSES AND MILITARY BARRACKS.

21. NFPA 101 28.3.5.2 EXTINGUISHMENT REQUIREMENTS: AUTOMATIC SPRINKLER PROTECTION REQUIRED UNLESS SLEEPING ROOMS HAVE DOORS DIRECTLY TO OUTSIDE.
    DUE TO AUSTERE DESIGN CRITERIA, THE GOVERNMENT HAS A FIRE PROTECTION WAIVER FOR THIS REQUIREMENT.

LINEAR DIMENSIONS SHOWN ARE IN MILLIMETERS (MM), UNLESS OTHERWISE NOTED

0 2000 4000
SCALE: 1:100

APPROVED:

A/E DESIGNER OF RECORD

SEAL:

STATE OF SOUTH CAROLINA
KEVIN R. CHAFIN
N. Charleston, SC
6374
REGISTERED ARCHITECT

US ARMY CORPS OF ENGINEERS
AFGHANISTAN ENGINEER DISTRICT

Mark	Description	Date	Appr.	Mark	Description	Date	Appr.

Date: 2/23/10 Rev: 0
Design file no.
Drawing code:
File name: ANASSSA-A001.SP
Plot date: 2/23/2010
Plot scale:

Designed by: KRC
Dwn by: KJG
Ckd by: NLJ
Reviewed by: LHM
Submitted by:
BAKER

U.S. ARMY CORPS OF ENGINEERS
AFGHANISTAN ENGINEER DISTRICT
APO AE 96338

Michael Baker Jr., Inc.
A unit of Michael Baker Corporation
Airside Business Park
100 Airside Drive
Moon Township, PA 15108
www.mbakercorp.com

AFGHAN NATIONAL ARMY
REGIONAL MILITARY TRAINING CENTER
STANDARD DESIGN

SUPPORT STAFF BARRACKS

LIFE SAFETY PLAN

Sheet reference number:
A–001

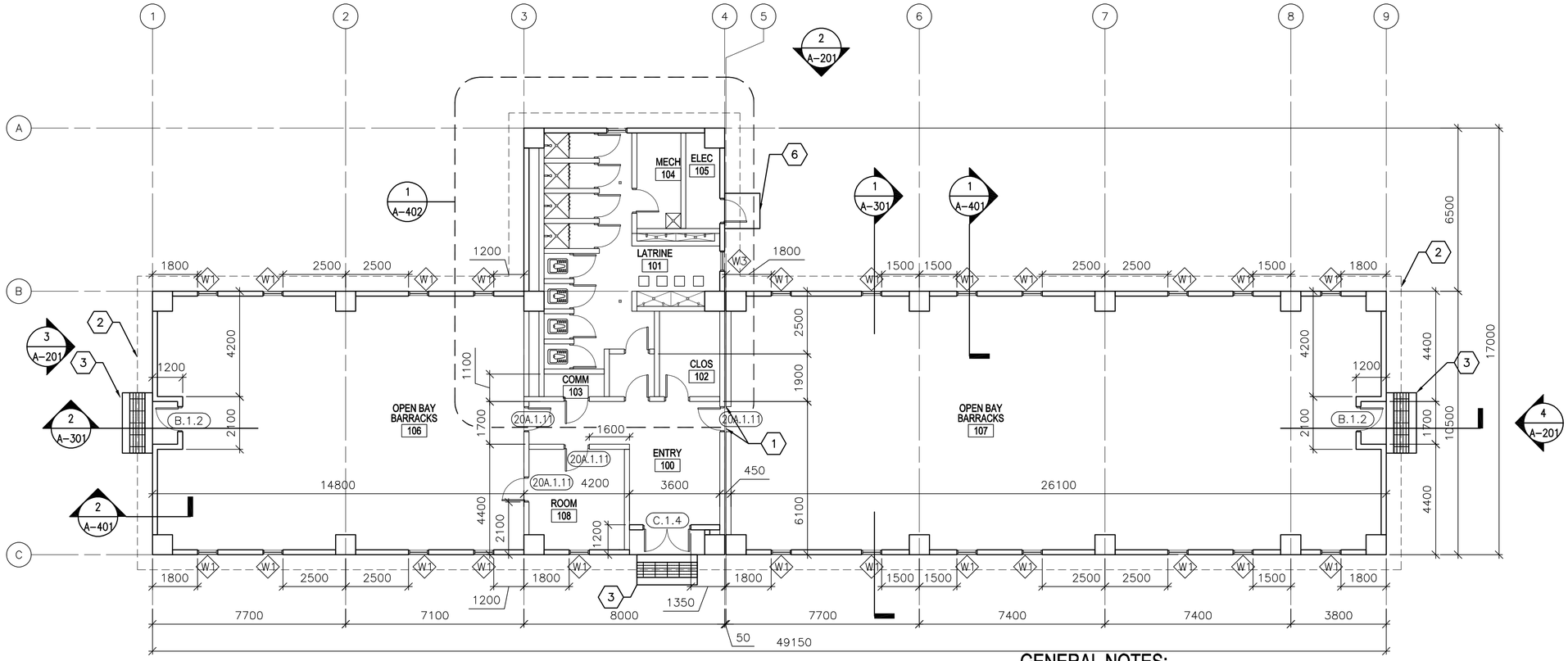

FLOOR PLAN

1 / A-101

SCALE: 1:100

1 / A-201

GENERAL NOTES:

A. DIMENSIONS ARE SHOWN TO OUTER EDGE OF EXTERIOR STRUCTURAL COLUMNS, STRUCTURAL COLUMN GRID, EDGE OF INTERIOR PARTITIONS, EDGE OF WINDOW OPENINGS, AND TO HINGE SIDE OF DOOR FRAME OPENINGS.

B. HINGE SIDE OF OPENINGS FOR DOORS AND FRAMES SHALL BE LOCATED 200 MM FROM THE ADJACENT WALL OR COLUMN, UNLESS NOTED OTHERWISE.

C. INTERIOR PARTITIONS SHALL BE 200 MM CMU, UNLESS NOTED OTHERWISE.

D. COSMETIC REPAIR OF MINOR DEFECTS: REPAIR OR FILL MORTAR JOINTS AND MINOR DEFECTS, INCLUDING BUT NOT LIMITED TO SPALLS, IN ACCORDANCE WITH MANUFACTURER'S RECOMMENDATIONS AND PRIOR TO COATING APPLICATION. SURFACES TO BE PAINTED SHALL BE CLEAN AND FREE OF FOREIGN MATTER BEFORE APPLICATION OF PAINT. CLEANING SHALL BE SCHEDULED SO THAT DUST AND OTHER CONTAMINANTS WILL NOT FALL ON NEWLY PAINTED SURFACES.

E. CONCRETE, PLASTER AND MASONRY SURFACES SHALL BE ALLOWED TO CURE FOR AT LEAST 30 DAYS BEFORE PAINTING. CONCRETE SLABS-ON-GRADE SHALL BE ALLOWED TO CURE 90 DAYS BEFORE STAINING OR SEALING.

F. DO NOT USE PAINT MATERIALS CONTAINING LEAD CONTENT IN EXCESS OF 0.009 PERCENT OF THE WEIGHT OF THE TOTAL NONVOLATILE CONTENT OF THE PAINT OR THE WEIGHT OF THE DRIED PAINT FILM.

G. DO NOT USE ANY ASBESTOS CONTAINING MATERIALS (ACM) IN PROJECT. ACM IS DEFINED AS 1% OR MORE BY VOLUME.

H. DO NOT USE PAINT MATERIALS CONTAINING MERCURIAL FUNGICIDES.

I. FACTORY PRIMED METAL DOORS AND FRAMES SHALL RECEIVE TWO COATS OF PAINT.

J. FILL REMAINING SPACE AT PENETRATIONS IN FIRE-RATED FLOORS, PARTITIONS AND CEILINGS WITH APPROPRIATE FIRESTOPPING MATERIALS.

K. ALL CEILING FINISHES SHALL BE PAINTED PLASTER APPLIED TO STRUCTURE.

L. ALL WALL FINISHES SHALL BE PAINTED PLASTER APPLIED TO STRUCTURE UNLESS OTHERWISE NOTED.

M. ALL FLOOR FINISHES SHALL BE SEALED CONCRETE, UNLESS NOTED OTHERWISE.

N. PROVIDE TILE FINISHES AS INDICATED IN DETAILS AND KEY NOTES.

O. HEIGHT OF ALL TOILET AND SHOWER PARTITIONS SHALL BE 2400 MM ABOVE FINISHED FLOOR.

P. ALL TOILET STALL DOORS SHALL BE F.2.12

Q. SHOWER STALL DOOR, FRAME, AND HARDWARE TYPE SHALL BE E.1.12.

R. PROVIDE POLISHED STAINLESS STEEL MIRROR 600 X 900 ABOVE EVERY LAVATORY FAUCET.

KEY NOTES:

1. ISOLATION JOINT COVER – SEE SHEET A-506.
2. LINE OF ROOF OVERHANG ABOVE.
3. CONCRETE STOOP WITH GRATE – SEE DETAIL 1/A-503.
4. NOT USED.
5. NOT USED.
6. CONCRETE STOOP – SEE DETAIL 3/A-503.

LEGEND:

XXX — DOOR FRAME AND HARDWARE TYPE, SEE SHEET A-601

A — WINDOW TYPE, SEE SHEET A-601

X — KEY NOTE

ABBREVIATIONS:

ELEC	ELECTRICAL
MECH	MECHANICAL
JAN	JANITOR
CLOS	CLOSET
COMM	COMMUNICATIONS

LINEAR DIMENSIONS SHOWN ARE IN MILLIMETERS (MM), UNLESS OTHERWISE NOTED

0 2000 4000
SCALE: 1:100

APPROVED:

A/E DESIGNER OF RECORD

SEAL:

STATE OF SOUTH CAROLINA
KEVIN R. CHAFIN
N. Charleston, SC
6374
REGISTERED ARCHITECT

US ARMY CORPS OF ENGINEERS
AFGHANISTAN ENGINEER DISTRICT

Mark	Description	Date	Appr.	Mark	Description	Date	Appr.

Rev: 0
Date: 2/23/10
Design file no.
Drawing code:
File name: AN4SSSA-101FP
Plot date: 2/23/2010
Plot scale: x:X

Designed by: KRC
Dwn by: KJG
Ckd by: NLJ
Reviewed by: LHM
Submitted by: BAKER

U.S. ARMY CORPS OF ENGINEERS
AFGHANISTAN ENGINEER DISTRICT
APO AE 96338

Michael Baker Jr., Inc
A unit of Michael Baker Corporation
Airside Business Park
100 Airside Drive
Moon Township, PA 15108
www.mbakercorp.com

AFGHAN NATIONAL ARMY
REGIONAL MILITARY TRAINING CENTER
STANDARD DESIGN

SUPPORT STAFF BARRACKS

FLOOR PLAN

Sheet reference number:
A-101

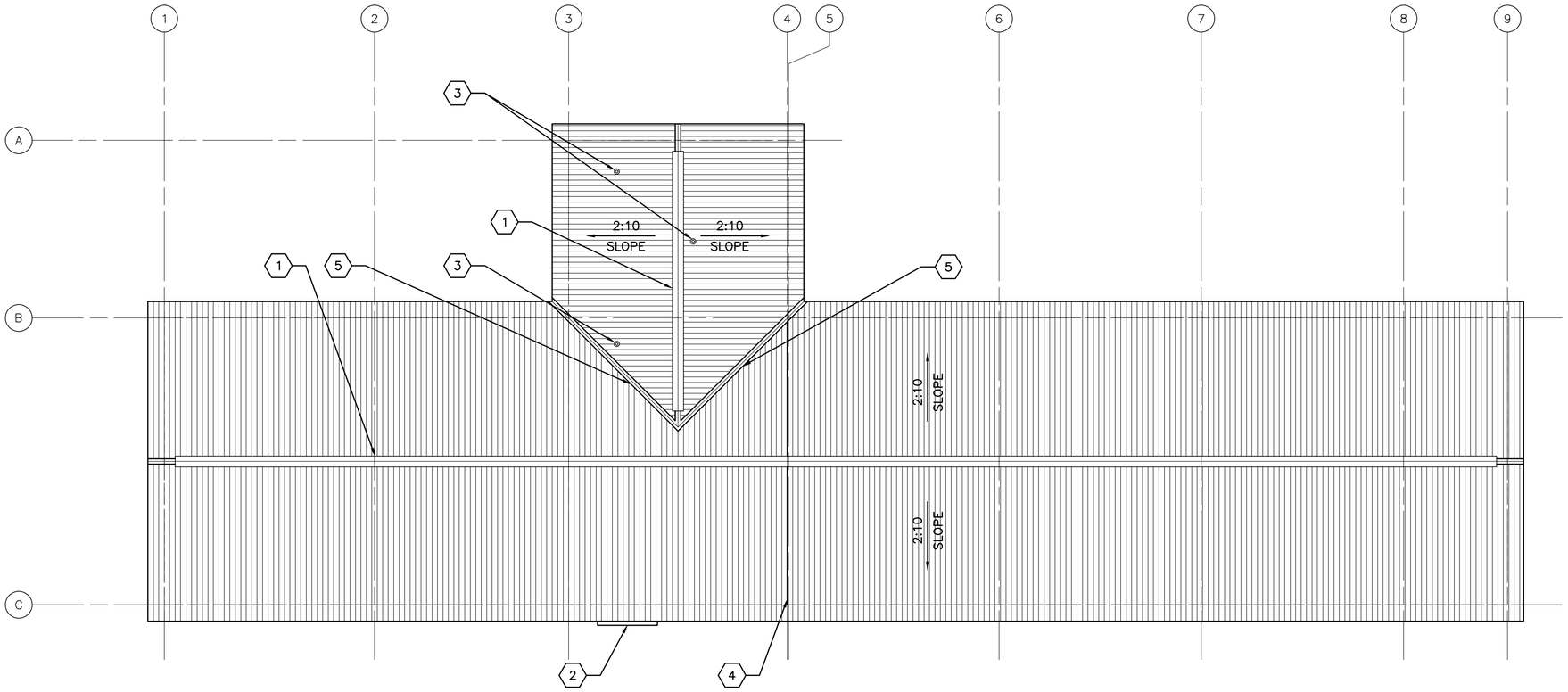

1 A-102 **ROOF PLAN**
SCALE: 1:100

GENERAL NOTES:

A. THE APPROXIMATE LOCATION OF ROOF DEVICES AND PENETRATIONS ARE SHOWN ON THE ROOF PLAN FOR INFORMATION ONLY. THE CONTRACTOR SHALL BE RESPONSIBLE FOR UNDERSTANDING THE ACTUAL LOCATION OF THESE AND ALL OTHER ITEMS PRIOR TO BEGINNING CONSTRUCTION. COORDINATE ALL ROOF PENETRATIONS WITH STRUCTURAL, MECHANICAL AND PLUMBING WORK.

B. PLUMBING VENT PENETRATIONS SHALL TERMINATE 300 MM MINIMUM ABOVE THE ROOF.

C. UNLESS OTHERWISE NOTED, NOTES, DETAILS OR FEATURES INDICATED FOR ONE CONDITION SHALL BE APPLICABLE FOR ALL ALIKE AND SIMILAR CONDITIONS.

D. STOCKPILING OF MATERIALS, EQUIPMENT AND ANY OTHER ITEMS ON THE ROOF IS PROHIBITED.

E. ROOFS SHALL BE CORRUGATED METAL ROOF PANELS ON COLD-FORMED METAL FRAMING ON CONCRETE SLAB.

KEY NOTES: (X)

1. CONTINUOUS METAL RIDGE VENT – SEE DETAIL 4/A-501.
2. METAL GUTTER, CENTER ON DOOR, 2300 MM – SEE DETAIL 1A/A-501.
3. PLUMBING VENT – SEE DETAIL 5/A-501.
4. ROOF EXPANSION JOINT – SEE DETAIL 4A/A501.
5. VALLEY – SEE DETAIL 6/A-501.

LINEAR DIMENSIONS SHOWN ARE IN MILLIMETERS (MM), UNLESS OTHERWISE NOTED

APPROVED:

A/E DESIGNER OF RECORD

SEAL:

STATE OF SOUTH CAROLINA
KEVIN R. CHAFIN
N. Charleston, SC
6374
REGISTERED ARCHITECT

0 2000 4000
SCALE: 1:100

US ARMY CORPS OF ENGINEERS
AFGHANISTAN ENGINEER DISTRICT

Mark	Description	Date	Appr.	Mark	Description	Date	Appr.

Designed by: KRC
Dwn by: KJG
Ckd by: NLJ
Reviewed by: LHM
Submitted by: BAKER
Date: 2/23/10
Rev: 0
Design file no.
Drawing code:
File name: ANABSSBA-102RP
Plot date: 2/23/2010
Plot scale: X:X

U.S. ARMY CORPS OF ENGINEERS
AFGHANISTAN ENGINEER DISTRICT
APO AE 96338

Michael Baker Jr., Inc
A unit of Michael Baker Corporation
Airside Business Park
100 Airside Drive
Moon Township, PA 15108
www.mbakercorp.com

AFGHAN NATIONAL ARMY
REGIONAL MILITARY TRAINING CENTER
STANDARD DESIGN

SUPPORT STAFF BARRACKS

ROOF PLAN

Sheet reference number:
A-102

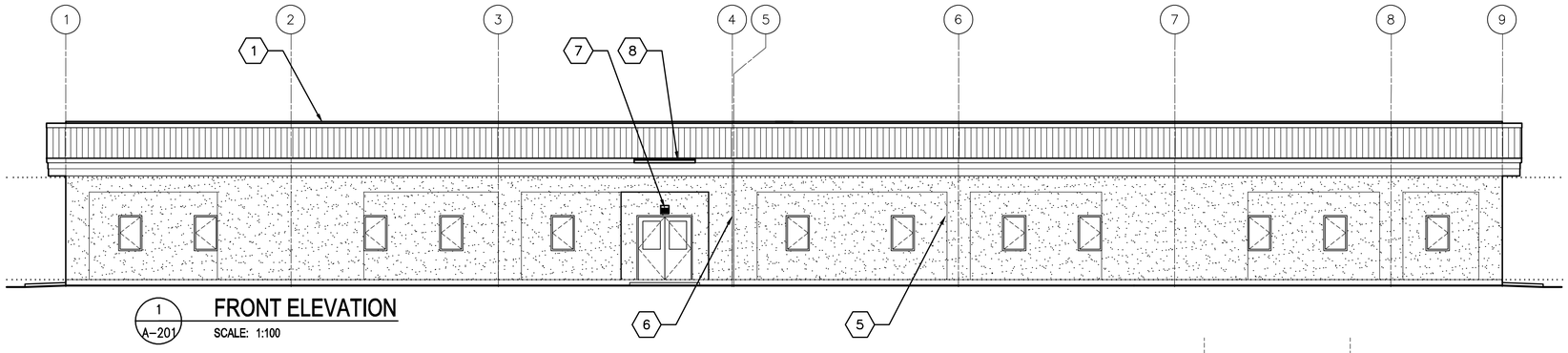

1 A-201 FRONT ELEVATION
SCALE: 1:100

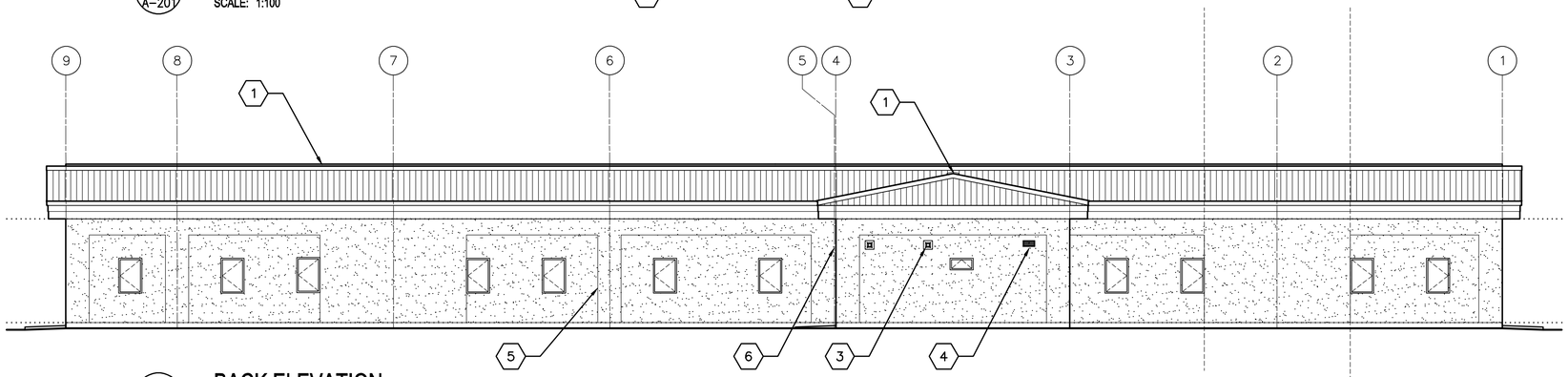

2 A-201 BACK ELEVATION
SCALE: 1:100

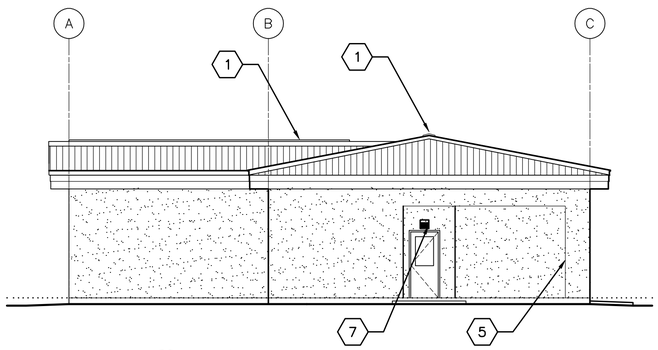

3 A-201 SIDE ELEVATION
SCALE: 1:100

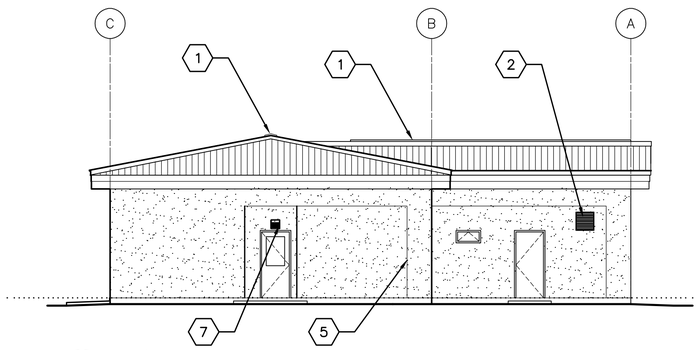

4 A-201 SIDE ELEVATION
SCALE: 1:100

GENERAL NOTES:

A. COORDINATE SIZE AND LOCATION OF OPENINGS FOR MECHANICAL ITEMS WITH MECHANICAL DRAWINGS.

B. PROVIDE STRUCTURAL LINTELS AS REQUIRED – SEE STRUCTURAL DRAWINGS

C. ALL EXTERIOR WALL FINISHES SHALL BE STUCCO OVER CMU AND CONCRETE SUBSTRATES. PROVIDE CONTROL JOINTS IN STUCCO WALL FINISH AS NOTED.

D. ROOF SHALL BE CORRUGATED METAL ROOF PANELS ON COLD-FORMED METAL FRAMING ON CONCRETE SLAB.

KEY NOTES: (X)

1. CONTINUOUS METAL RIDGE VENT – SEE DETAIL 4/A-501.
2. LOUVER, LOCATE TOP OF WALL PENETRATION 2800 MM ABOVE FINISHED FLOOR – SEE MECHANICAL DRAWINGS.
3. EXHAUST FAN, LOCATE TOP OF WALL PENETRATION 2800 MM ABOVE FINISHED FLOOR – SEE MECHANICAL DRAWINGS.
4. EXHAUST FAN WITH WALL GRILL, LOCATE TOP OF WALL PENETRATION 2800 MM ABOVE FINISHED FLOOR – SEE MECHANICAL DRAWINGS.
5. STUCCO CONTROL JOINT – SEE DETAIL 2A/A-501.
6. EXPANSION JOINT COVER – SEE SHEET 1/A-506.
7. EXTERIOR LIGHT FIXTURE – SEE ELECTRICAL.
8. METAL GUTTER, CENTER ON DOOR, 2300 MM – SEE DETAIL 1A/ A-501

LINEAR DIMENSIONS SHOWN ARE IN MILLIMETERS (MM), UNLESS OTHERWISE NOTED

APPROVED:

A/E DESIGNER OF RECORD

SEAL:

STATE OF SOUTH CAROLINA
KEVIN R. CHAFIN
N. Charleston, SC
6374
REGISTERED ARCHITECT

0 2000 4000
SCALE: 1:100

US ARMY CORPS OF ENGINEERS
AFGHANISTAN ENGINEER DISTRICT

Mark	Description	Date	Appr.	Mark	Description	Date	Appr.

Designed by: KRC
Dwn by: KJG
Ckd by: NLJ
Reviewed by: LHM
Submitted by: BAKER
Date: 2/23/10
Design file no.
Drawing code:
File name: ANABSSBA-201ELV
Plot date: 2/23/2010
Plot scale: X:X
Rev: 0

U.S. ARMY CORPS OF ENGINEERS
AFGHANISTAN ENGINEER DISTRICT
APO AE 96338

Michael Baker Jr., Inc
A unit of Michael Baker Corporation
Airside Business Park
100 Airside Drive
Moon Township PA 15108
www.mbakercorp.com

AFGHAN NATIONAL ARMY
REGIONAL MILITARY TRAINING CENTER
STANDARD DESIGN

SUPPORT STAFF BARRACKS

ELEVATIONS

Sheet reference number:
A-201

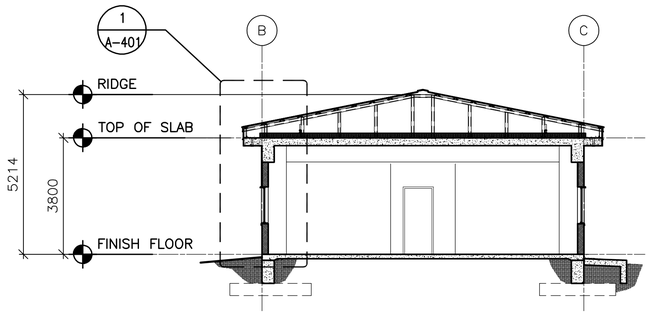

1 / A-301 **SECTION**
SCALE: 1:100

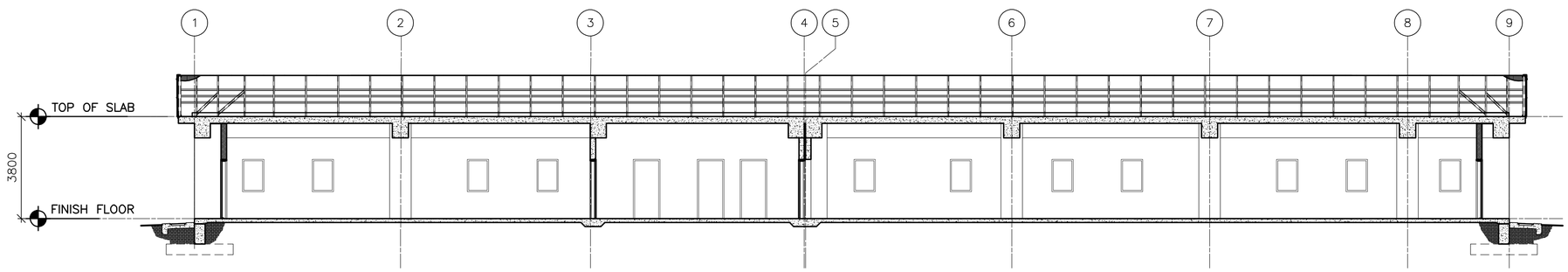

2 / A-301 **SECTION**
SCALE: 1:100

LINEAR DIMENSIONS SHOWN ARE IN MILLIMETERS (MM), UNLESS OTHERWISE NOTED

0 2000 4000
SCALE: 1:100

APPROVED:

A/E DESIGNER OF RECORD

SEAL:

STATE OF SOUTH CAROLINA
KEVIN R. CHAFIN
N. Charleston, SC
6374
REGISTERED ARCHITECT

US ARMY CORPS OF ENGINEERS
AFGHANISTAN ENGINEER DISTRICT

Mark	Description	Date	Appr.	Mark	Description	Date	Appr.

U.S. ARMY CORPS OF ENGINEERS
AFGHANISTAN ENGINEER DISTRICT
APO AE 96338

Michael Baker Jr., Inc.
A unit of Michael Baker Corporation
Airside Business Park
100 Airside Drive
Moon Township, PA 15108
www.mbakercorp.com

Designed by: KRC
Dwn by: KJG
Ckd by: NLJ
Reviewed by: LHM
Submitted by: BAKER
Date: 2/23/10
Rev: 0
Design file no.
Drawing code:
File name: ANA6SSBA-301BS
Plot date: 2/23/2010
Plot scale:

AFGHAN NATIONAL ARMY
REGIONAL MILITARY TRAINING CENTER
STANDARD DESIGN

SUPPORT STAFF BARRACKS

BUILDING SECTIONS

Sheet reference number:
A-301

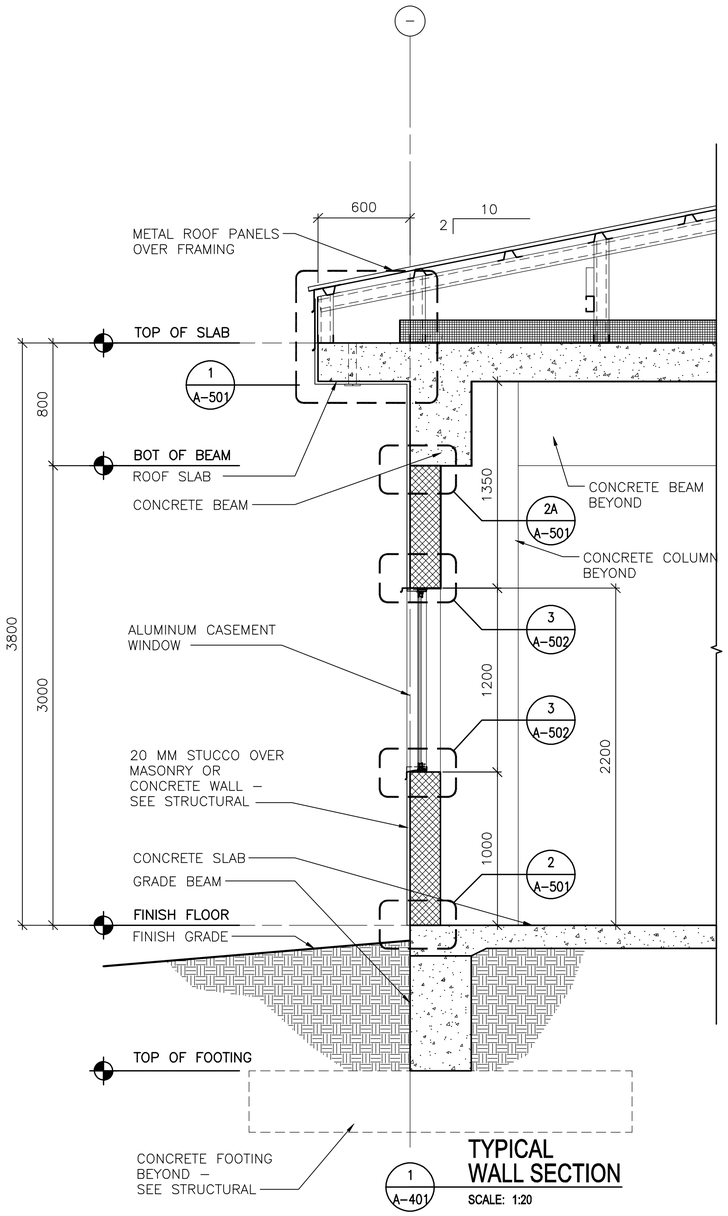

1 A-401 **TYPICAL WALL SECTION**
SCALE: 1:20

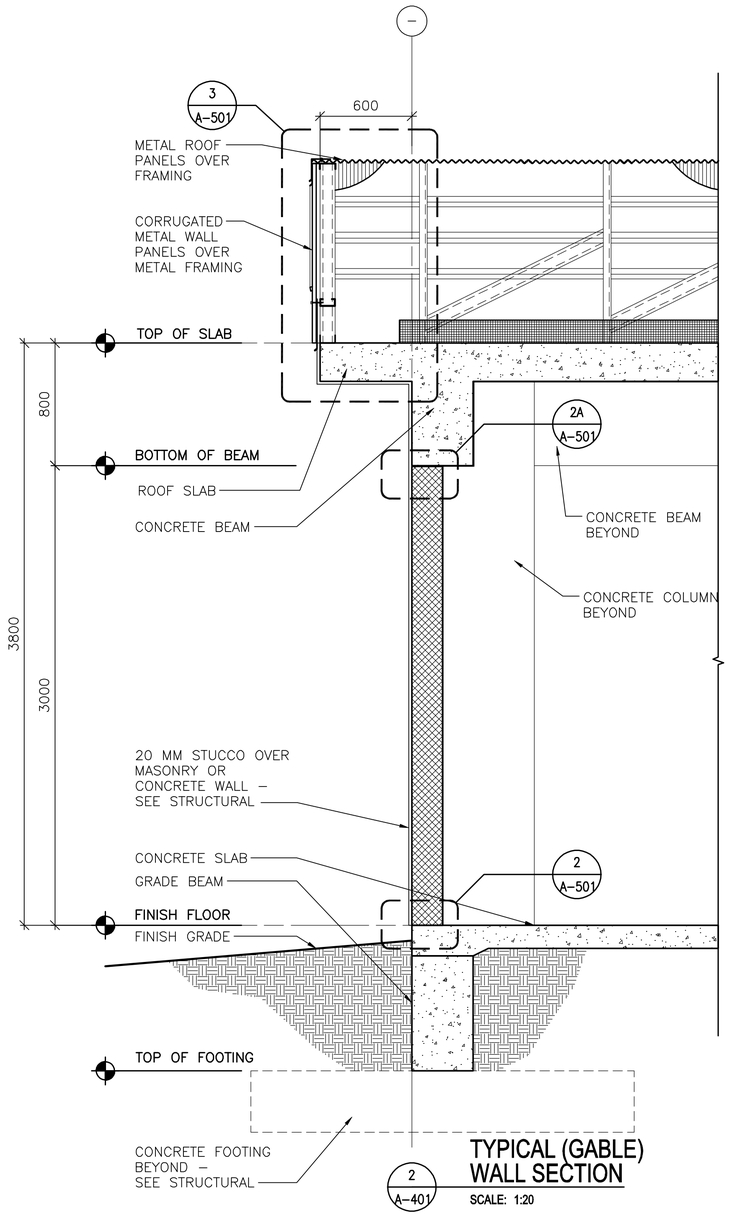

2 A-401 **TYPICAL (GABLE) WALL SECTION**
SCALE: 1:20

0 400 800
SCALE: 1:20

LINEAR DIMENSIONS SHOWN ARE IN MILLIMETERS (MM), UNLESS OTHERWISE NOTED

APPROVED:

A/E DESIGNER OF RECORD

SEAL:

STATE OF SOUTH CAROLINA
KEVIN R. CHAFIN
N. Charleston, SC
6374
REGISTERED ARCHITECT

US ARMY CORPS OF ENGINEERS
AFGHANISTAN ENGINEER DISTRICT

Mark	Description	Date	Appr.	Mark	Description	Date	Appr.

Designed by: KRC
Dwn by: KJG
Ckd by: NLJ
Reviewed by: LHM
Submitted by: BAKER
Date: 2/23/10
Rev: 0
Design file no.
Drawing code:
File name: ANABSSBA-401WS
Plot date: 2/23/2010
Plot scale: X:X

U.S. ARMY CORPS OF ENGINEERS
AFGHANISTAN ENGINEER DISTRICT
APO AE 96338

Michael Baker Jr., Inc
A unit of Michael Baker Corporation
Airside Business Park
100 Airside Drive
Moon Township PA 15108
www.mbakercorp.com

AFGHAN NATIONAL ARMY
REGIONAL MILITARY TRAINING CENTER
STANDARD DESIGN

SUPPORT STAFF BARRACKS

WALL SECTIONS

Sheet reference number:
A-401

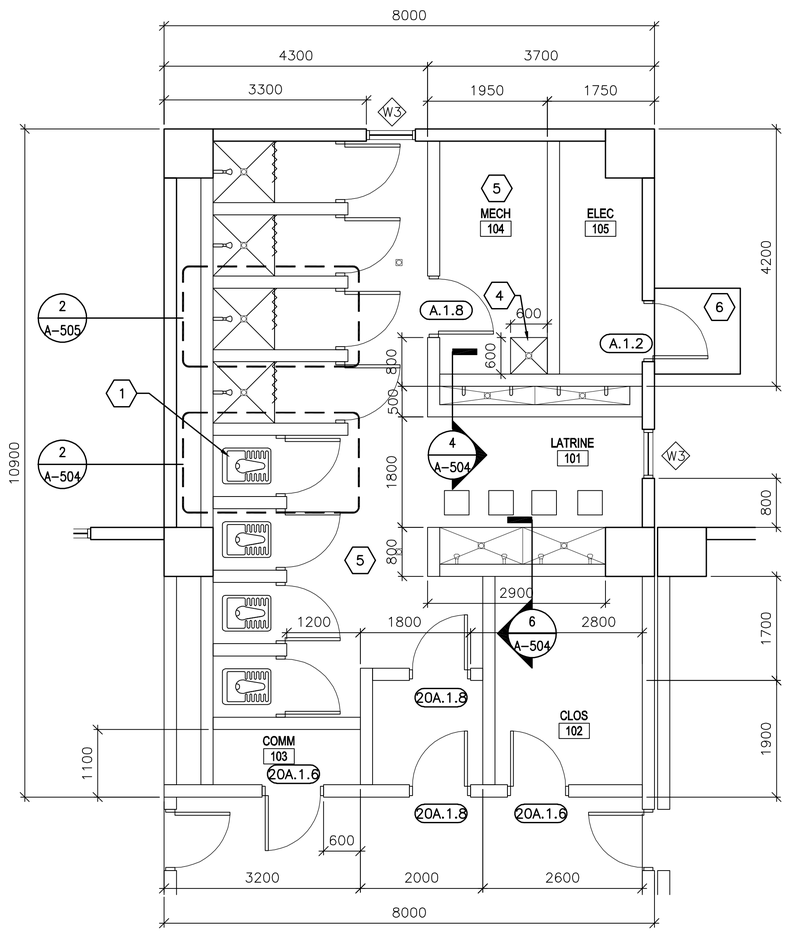

1 A-402 **ENLARGED PLAN**

SCALE: 1:50

GENERAL NOTES:

A. DIMENSIONS ARE SHOWN TO OUTER EDGE OF EXTERIOR STRUCTURAL COLUMNS, STRUCTURAL COLUMN GRID, EDGE OF INTERIOR PARTITIONS, EDGE OF WINDOW OPENINGS, AND TO HINGE SIDE OF DOOR FRAME OPENINGS.

B. HINGE SIDE OF OPENINGS FOR DOORS AND FRAMES SHALL BE LOCATED 200 MM FROM THE ADJACENT WALL OR COLUMN, UNLESS NOTED OTHERWISE.

C. INTERIOR PARTITIONS SHALL BE 200 MM CMU, UNLESS NOTED OTHERWISE.

D. COSMETIC REPAIR OF MINOR DEFECTS: REPAIR OR FILL MORTAR JOINTS AND MINOR DEFECTS, INCLUDING BUT NOT LIMITED TO SPALLS, IN ACCORDANCE WITH MANUFACTURER'S RECOMMENDATIONS AND PRIOR TO COATING APPLICATION. SURFACES TO BE PAINTED SHALL BE CLEAN AND FREE OF FOREIGN MATTER BEFORE APPLICATION OF PAINT. CLEANING SHALL BE SCHEDULED SO THAT DUST AND OTHER CONTAMINANTS WILL NOT FALL ON NEWLY PAINTED SURFACES.

E. CONCRETE, PLASTER AND MASONRY SURFACES SHALL BE ALLOWED TO CURE FOR AT LEAST 30 DAYS BEFORE PAINTING. CONCRETE SLABS-ON-GRADE SHALL BE ALLOWED TO CURE 90 DAYS BEFORE STAINING OR SEALING.

F. DO NOT USE PAINT MATERIALS CONTAINING LEAD CONTENT IN EXCESS OF 0.009 PERCENT OF THE WEIGHT OF THE TOTAL NONVOLATILE CONTENT OF THE PAINT OR THE WEIGHT OF THE DRIED PAINT FILM.

G. DO NOT USE ANY ASBESTOS CONTAINING MATERIALS (ACM) IN PROJECT. ACM IS DEFINED AS 1% OR MORE BY VOLUME.

H. DO NOT USE PAINT MATERIALS CONTAINING MERCURIAL FUNGICIDES.

I. FACTORY PRIMED METAL DOORS AND FRAMES SHALL RECEIVE TWO COATS OF PAINT.

J. FILL REMAINING SPACE AT PENETRATIONS IN FIRE-RATED FLOORS, PARTITIONS AND CEILINGS WITH APPROPRIATE FIRESTOPPING MATERIALS.

K. ALL CEILING FINISHES SHALL BE PAINTED PLASTER APPLIED TO STRUCTURE.

L. ALL WALL FINISHES SHALL BE PAINTED PLASTER APPLIED TO STRUCTURE UNLESS OTHERWISE NOTED.

M. ALL FLOOR FINISHES SHALL BE SEALED CONCRETE, UNLESS NOTED OTHERWISE.

N. PROVIDE TILE FINISHES AS INDICATED IN DETAILS AND KEY NOTES.

O. HEIGHT OF ALL TOILET AND SHOWER PARTITIONS SHALL BE 2400 MM ABOVE FINISHED FLOOR.

P. ALL TOILET STALL DOORS SHALL BE F.2.12

Q. SHOWER STALL DOOR, FRAME, AND HARDWARE TYPE SHALL BE E.1.12.

R. PROVIDE POLISHED STAINLESS STEEL MIRROR 600 X 900 ABOVE EVERY LAVATORY FAUCET.

KEY NOTES: (X)

1. TYPICAL TOILET STALL LAYOUT – SEE DETAIL 2/A-504.
2. NOT USED
3. NOT USED
4. RECESSED TROUGH – SEE DETAIL 7/A-505.
5. TERRAZZO FLOOR TILE AND CERAMIC WALL TILE TO 2000 MM ABOVE FINISHED FLOOR UNLESS OTHERWISE NOTED.
6. CONCRETE STOOP – SEE DETAIL 2/A-503.

LEGEND:

(XXX) DOOR FRAME AND HARDWARE TYPE, SEE SHEET A-601

(A) WINDOW TYPE, SEE SHEET A-601

(X) KEY NOTE

ABBREVIATIONS:

ELEC	ELECTRICAL
MECH	MECHANICAL
JAN	JANITOR
CLOS	CLOSET
COMM	COMMUNICATIONS

LINEAR DIMENSIONS SHOWN ARE IN MILLIMETERS (MM), UNLESS OTHERWISE NOTED

0 1000 2000
SCALE: 1:50

APPROVED:

A/E DESIGNER OF RECORD

SEAL:

STATE OF SOUTH CAROLINA
KEVIN R. CHAFIN
N. Charleston, SC
6374
REGISTERED ARCHITECT

US ARMY CORPS OF ENGINEERS
AFGHANISTAN ENGINEER DISTRICT

Mark	Description	Date	Appr.	Mark	Description	Date	Appr.

Rev: 0
Date: 2/23/10
Design file no.
Drawing code:
File name: ANASSSA-402EP
Plot date: 2/23/2010
Plot scale: x:X

Designed by: KRC
Dwn by: KJG
Ckd by: NLJ
Reviewed by: LHM
Submitted by:
BAKER

U.S. ARMY CORPS OF ENGINEERS
AFGHANISTAN ENGINEER DISTRICT
APO AE 96338

Michael Baker Jr., Inc
A unit of Michael Baker Corporation
Airside Business Park
100 Airside Drive
Moon Township, PA 15108
www.mbakercorp.com

AFGHAN NATIONAL ARMY
REGIONAL MILITARY TRAINING CENTER
STANDARD DESIGN

SUPPORT STAFF BARRACKS

ENLARGED PLAN

Sheet reference number:
A-402

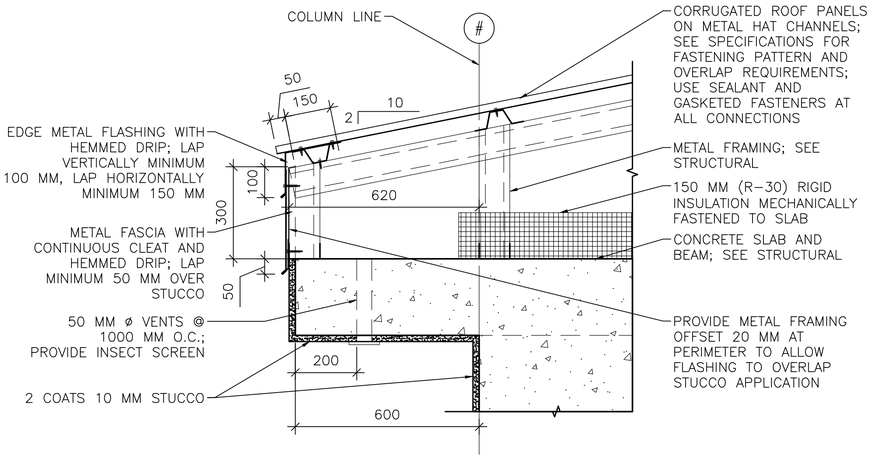

1 A-501 **EAVE DETAIL**
SCALE: 1:10

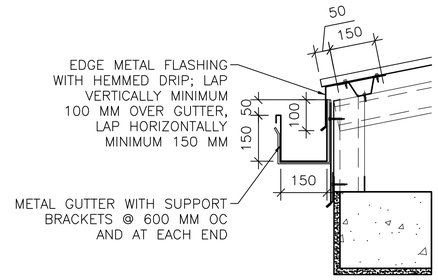

1A A-501 **GUTTER DETAIL**
SCALE: 1:10

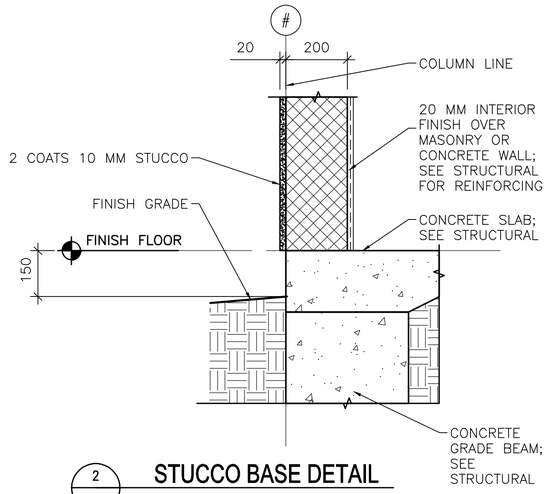

2 A-501 **STUCCO BASE DETAIL**
SCALE: 1:10

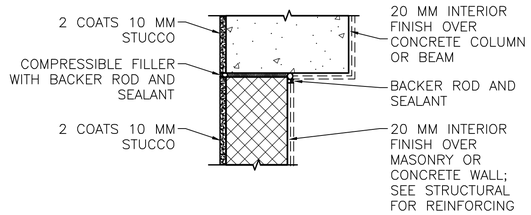

NOTE: DETAIL TYPICAL AT ALL WALL/COLUMN AND WALL/BEAM LOCATIONS, SEE ALTERNATE BRACING DETAIL BELOW 2B/A-501.

2A A-501 **STUCCO JOINT DETAIL**
SCALE: 1:10

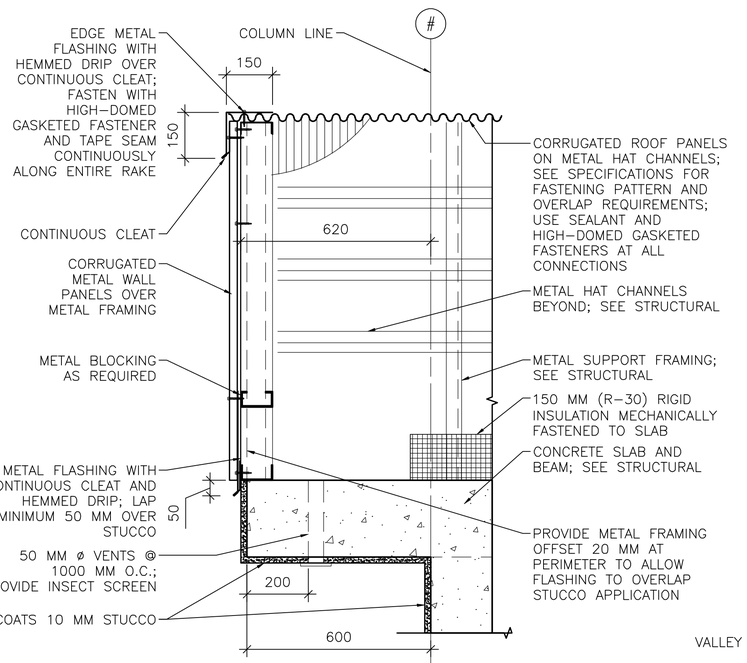

3 A-501 **RAKE/EAVE DETAIL**
SCALE: 1:10

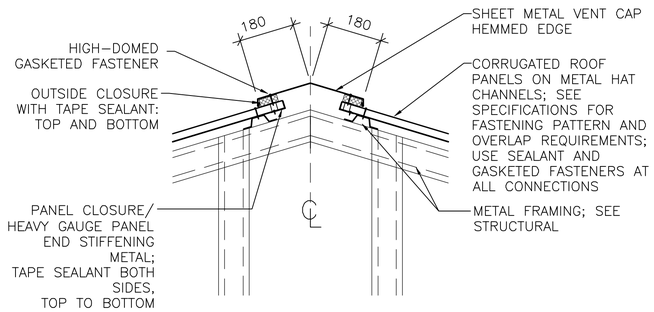

4 A-501 **RIDGE VENT DETAIL**
SCALE: 1:10

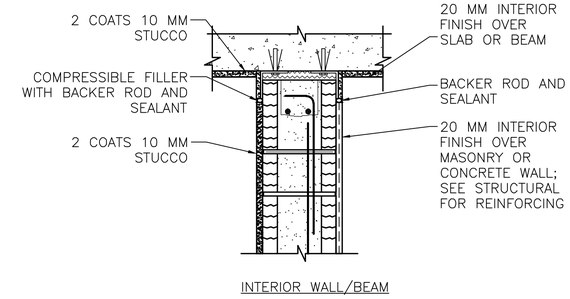

2B A-501 **ALTERNATE BRACING DETAIL**
SCALE: 1:10

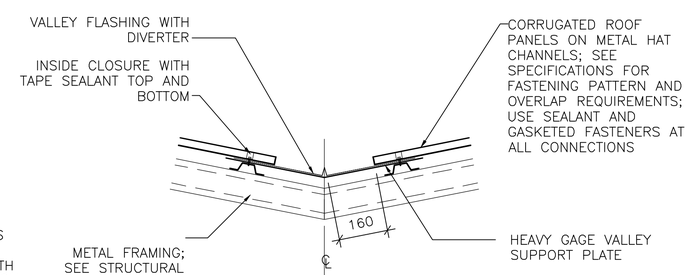

6 A-501 **VALLEY DETAIL**
SCALE: 1:10

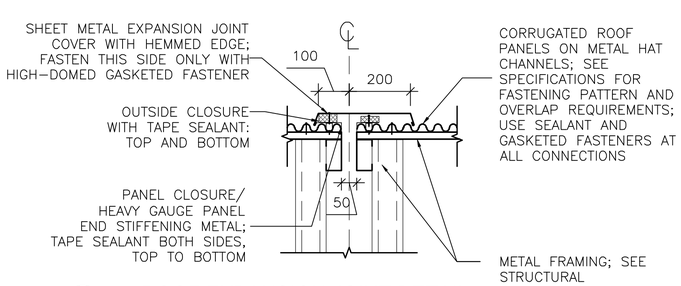

4A A-501 **ROOF EXPANSION JOINT DETAIL**
SCALE: 1:10

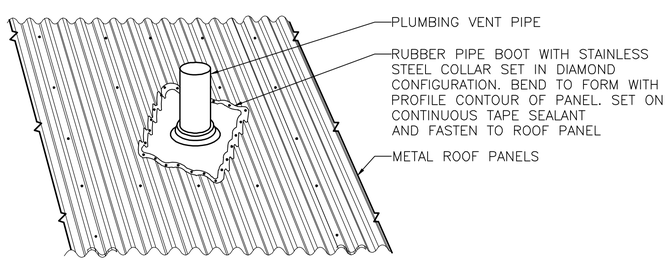

5 A-501 **PLUMBING VENT DETAIL**
SCALE: NTS

LINEAR DIMENSIONS SHOWN ARE IN MILLIMETERS (MM), UNLESS OTHERWISE NOTED

0 200 400
SCALE: 1:10

APPROVED:

A/E DESIGNER OF RECORD

SEAL:

STATE OF SOUTH CAROLINA
KEVIN R. CHARN
N. Charleston, SC
6374
REGISTERED ARCHITECT

US ARMY CORPS OF ENGINEERS
AFGHANISTAN ENGINEER DISTRICT

Mark	Description	Date	Appr.	Mark	Description	Date	Appr.

Designed by: KRC
Dwn by: KJG
Ckd by: NLJ
Reviewed by: LHM
Submitted by: BAKER
Date: 2/23/10
Design file no.
Rev: 0
Drawing code:
File name: AN4SSSA-501DT
Plot date: 2/23/2010
Plot scale: x:X

U.S. ARMY CORPS OF ENGINEERS
AFGHANISTAN ENGINEER DISTRICT
APO AE 96338

Michael Baker Jr., Inc
A unit of Michael Baker Corporation
Airside Business Park
100 Airside Drive
Moon Township, PA 15108
www.mbakercorp.com

AFGHAN NATIONAL ARMY
REGIONAL MILITARY TRAINING CENTER
STANDARD DESIGN

SUPPORT STAFF BARRACKS

EXTERIOR DETAILS

Sheet reference number:
A-501

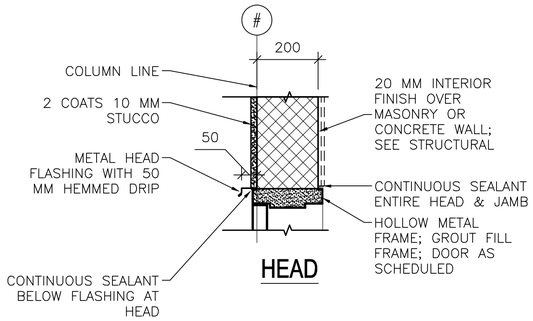

HEAD

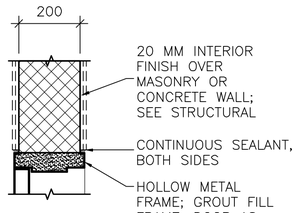

HEAD

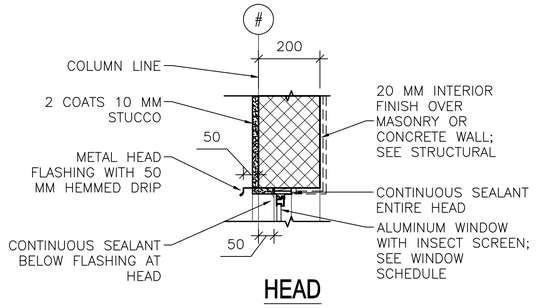

HEAD

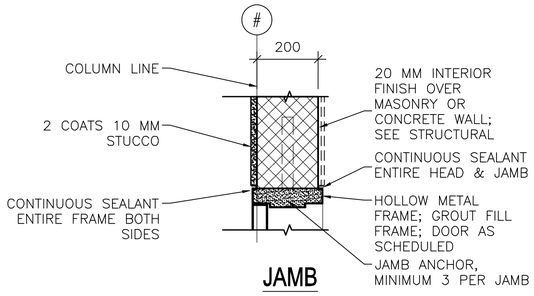

JAMB

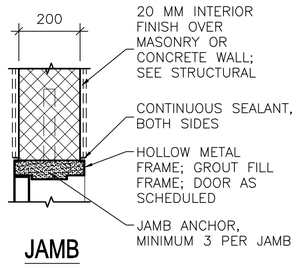

JAMB

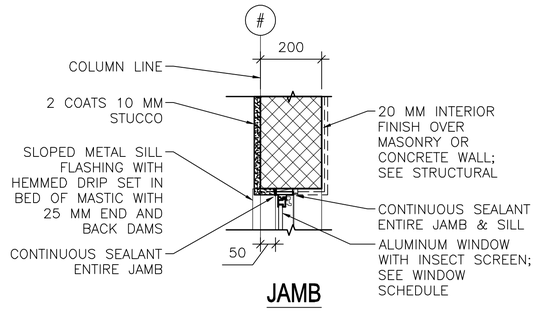

JAMB

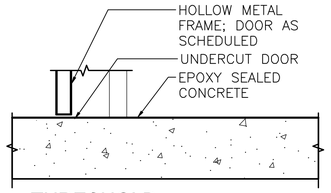

THRESHOLD

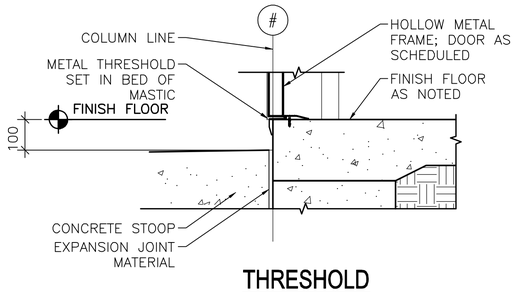

THRESHOLD

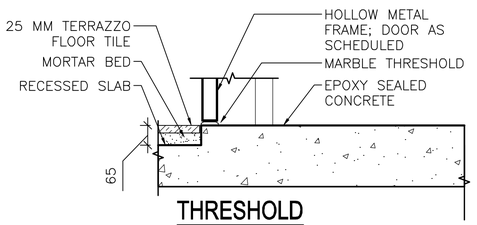

THRESHOLD

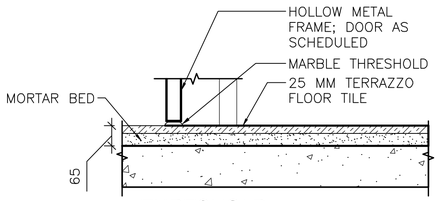

THRESHOLD

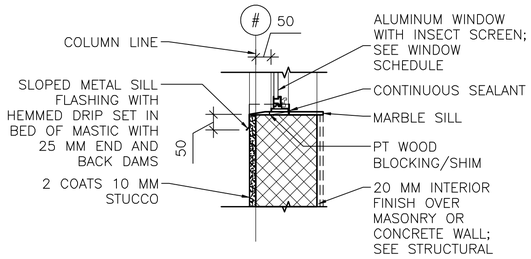

SILL

1 A–502 **EXTERIOR DOOR DETAILS**
SCALE: 1:10

2 A–502 **INTERIOR DOOR DETAILS**
SCALE: 1:10

3 A–502 **EXTERIOR WINDOW DETAILS**
SCALE: 1:10

LINEAR DIMENSIONS SHOWN ARE IN MILLIMETERS (MM), UNLESS OTHERWISE NOTED

0 200 400
SCALE: 1:10

APPROVED:

A/E DESIGNER OF RECORD

SEAL:

STATE OF SOUTH CAROLINA
KEVIN R. CHARIN
N. Charleston, SC
6374
REGISTERED ARCHITECT

US ARMY CORPS OF ENGINEERS
AFGHANISTAN ENGINEER DISTRICT

Mark	Description	Date	Appr.	Mark	Description	Date	Appr.

Date: 2/23/10
Rev: 0
Design file no.
Drawing code:
File name: ANA6SSSA-502H-U3
Plot date: 2/23/2010
Plot scale: x:X

Designed by: KRC
Dwn by: KJG
Ckd by: NLJ
Reviewed by: LHM
Submitted by: BAKER

U.S. ARMY CORPS OF ENGINEERS
AFGHANISTAN ENGINEER DISTRICT
APO AE 96338

Michael Baker Jr., Inc
A unit of Michael Baker Corporation
Airside Business Park
100 Airside Drive
Moon Township, PA 15108
www.mbakercorp.com

AFGHAN NATIONAL ARMY
REGIONAL MILITARY TRAINING CENTER
STANDARD DESIGN

SUPPORT STAFF BARRACKS

HEAD, JAMB & SILL DETAILS

Sheet reference number:
A–502

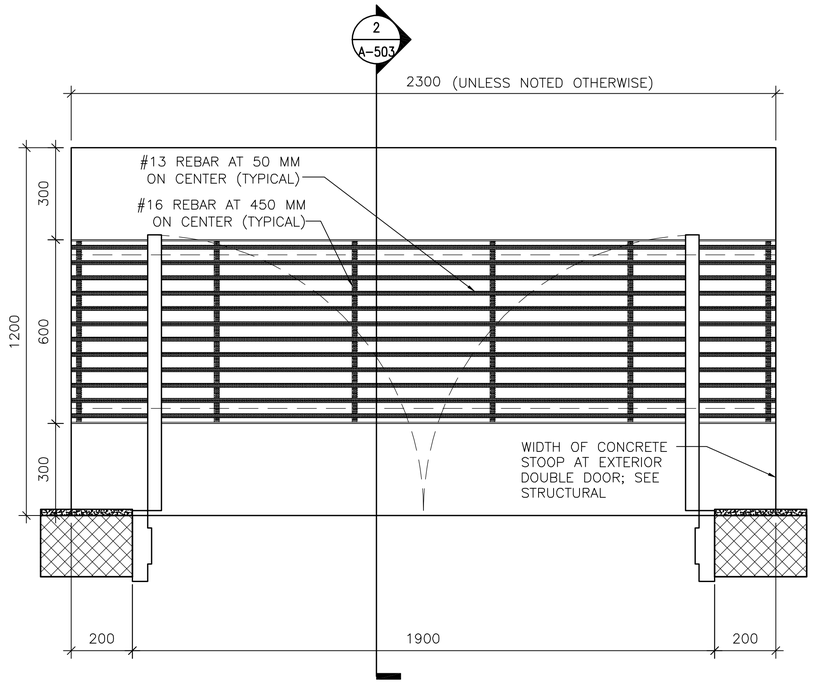

1 A-503 **DOOR STOOP PLAN (WITH GRATE)**

SCALE: 1:10

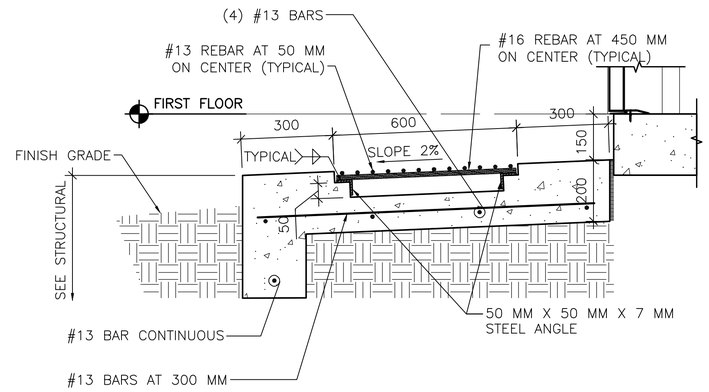

2 A-503 **DOOR STOOP DETAIL**

SCALE: 1:10

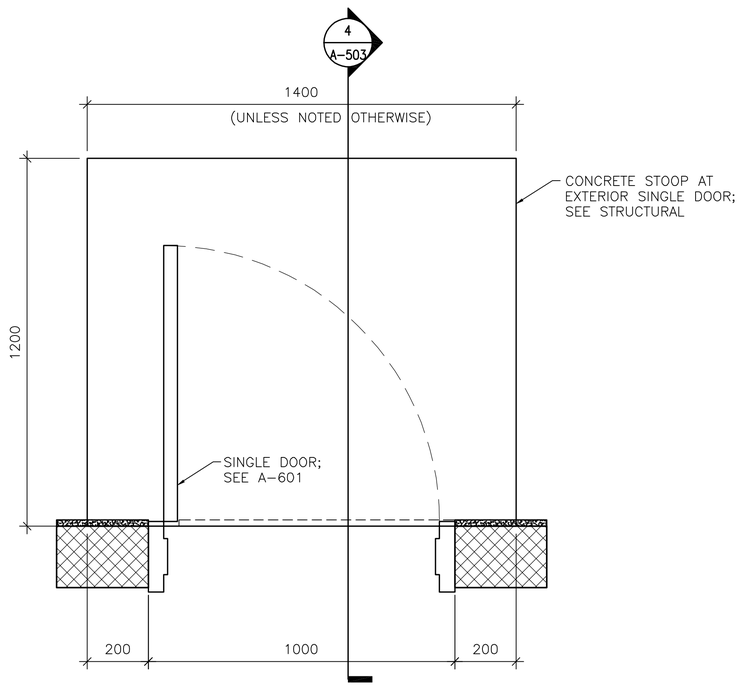

3 A-503 **DOOR STOOP PLAN (WITHOUT GRATE)**

SCALE: 1:10

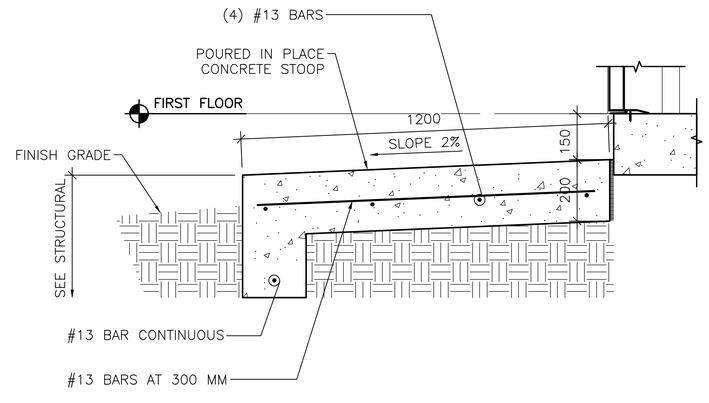

4 A-503 **DOOR STOOP DETAIL**

SCALE: 1:10

LINEAR DIMENSIONS SHOWN ARE IN MILLIMETERS (MM), UNLESS OTHERWISE NOTED

0 200 400
SCALE: 1:10

APPROVED:

A/E DESIGNER OF RECORD

SEAL:

STATE OF SOUTH CAROLINA
KEVIN R. CHAFIN
N. Charleston, SC
6374
REGISTERED ARCHITECT

US ARMY CORPS OF ENGINEERS
AFGHANISTAN ENGINEER DISTRICT

Mark	Description	Date	Appr.	Mark	Description	Date	Appr.

Designed by: KRC
Dwn by: KJG
Ckd by: NLJ
Reviewed by: LHM
Submitted by: BAKER
Date: 2/23/10
Rev: 0
Design file no.
Drawing code:
File name: ANABSSBA-503DT
Plot date: 2/23/2010
Plot scale: x:X

U.S. ARMY CORPS OF ENGINEERS
AFGHANISTAN ENGINEER DISTRICT
APO AE 96338

Michael Baker Jr., Inc
A unit of Michael Baker Corporation
Airside Business Park
100 Airside Drive
Moon Township, PA 15108
www.mbakercorp.com

AFGHAN NATIONAL ARMY
REGIONAL MILITARY TRAINING CENTER
STANDARD DESIGN

SUPPORT STAFF BARRACKS

STOOP DETAILS

Sheet reference number:
A-503

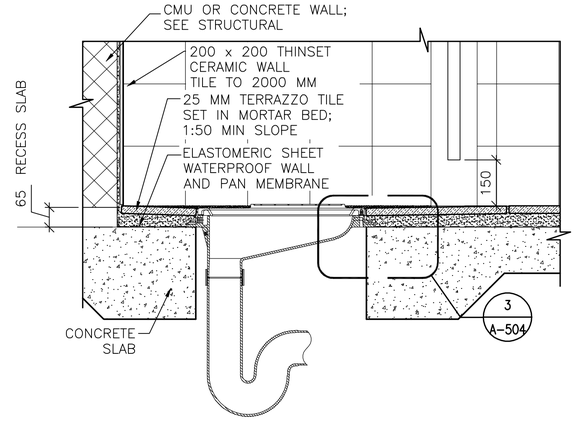

1 A-504 **LATRINE DETAIL**
SCALE: 1:10

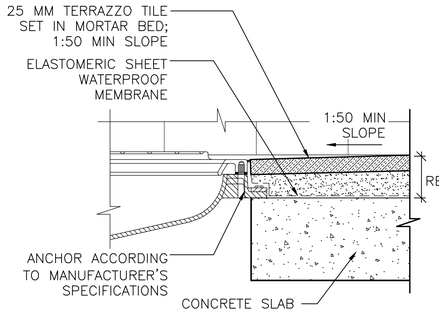

3 A-504 **MOUNTING DETAIL**
SCALE: 1:5

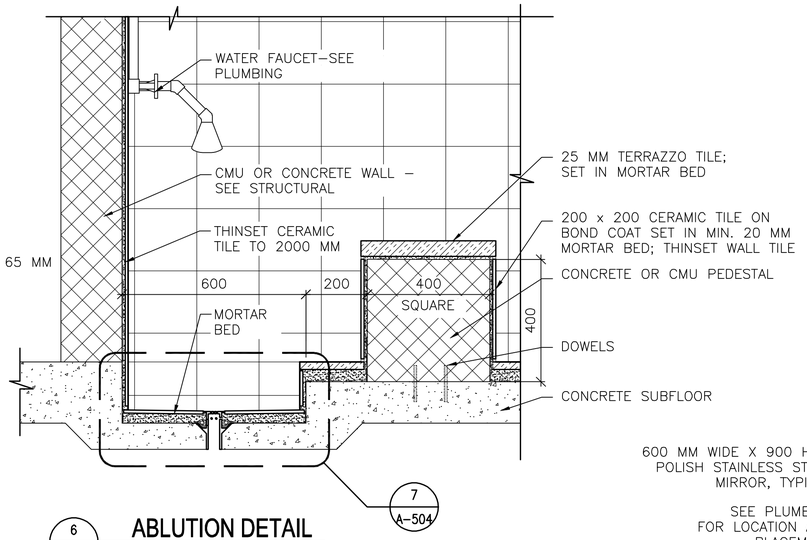

6 A-504 **ABLUTION DETAIL**
SCALE: 1:10

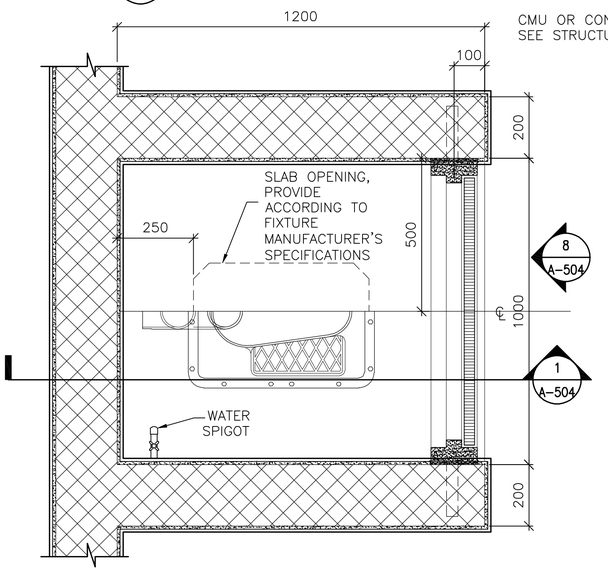

2 A-504 **TOILET DETAIL**
SCALE: 1:10

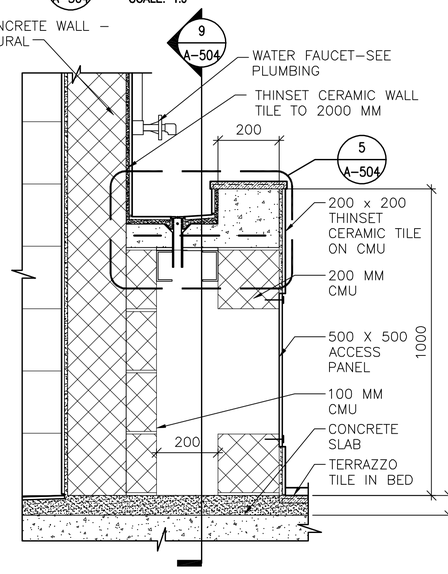

4 A-504 **LAVATORY SECTION**
SCALE: 1:10

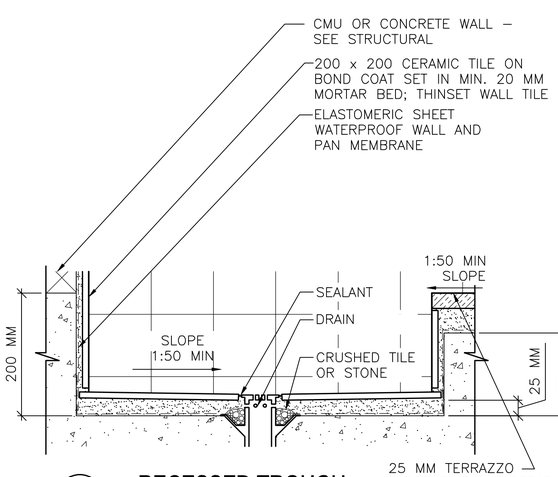

7 A-504 **RECESSED TROUGH**
SCALE: 1:5

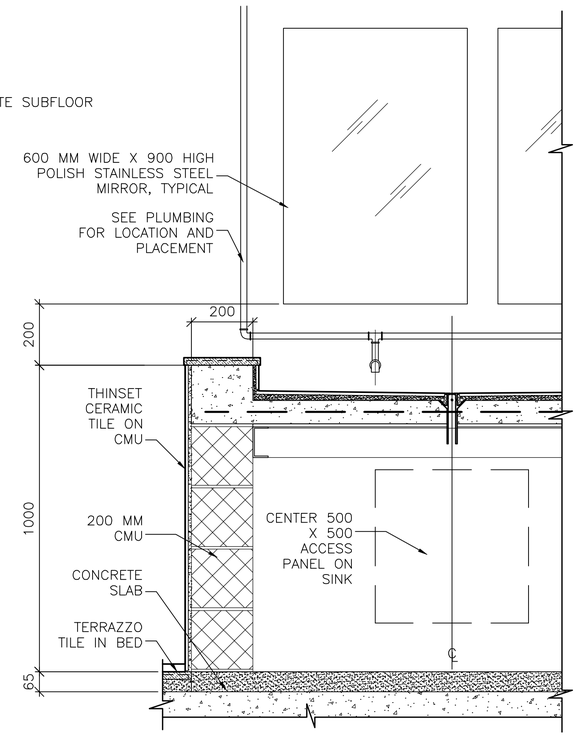

9 A-504 **LAVATORY SECTION**
SCALE: 1:10

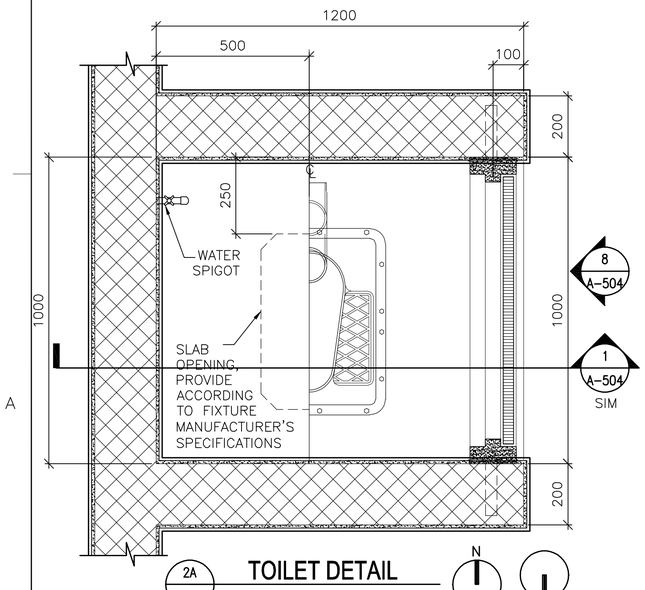

2A A-504 **TOILET DETAIL**
SCALE: 1:10

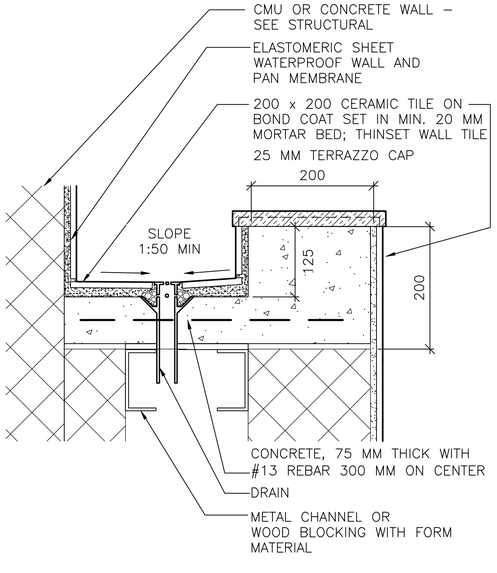

5 A-504 **LAVATORY DETAIL**
SCALE: 1:5

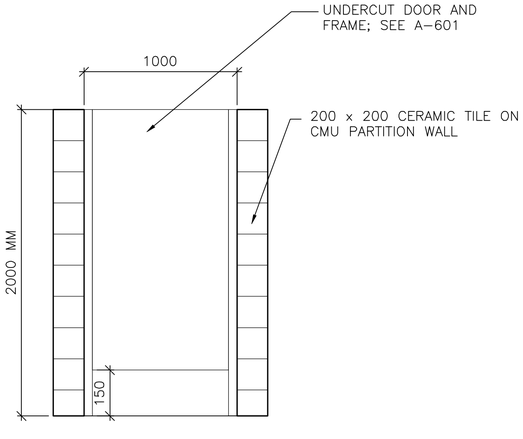

8 A-504 **TOILET PARTITION DOOR ELEVATION**
SCALE: 1:20

LINEAR DIMENSIONS SHOWN ARE IN MILLIMETERS (MM), UNLESS OTHERWISE NOTED

0 100 200
SCALE: 1:5

0 200 400
SCALE: 1:10

0 400 800
SCALE: 1:20

APPROVED:

A/E DESIGNER OF RECORD

SEAL:

STATE OF SOUTH CAROLINA
KEVIN R. CHARIN
N. Charleston, SC
6374
REGISTERED ARCHITECT

US ARMY CORPS OF ENGINEERS
AFGHANISTAN ENGINEER DISTRICT

Mark	Description	Date	Appr.	Mark	Description	Date	Appr.

Date: 2/23/10
Rev: 0
Design file no.
Drawing code:
File name: AN4SSSA-504DT
Plot date: 2/23/2010
Plot scale: X:X

Designed by: KRC
Dwn by: KJG
Ckd by: NLJ
Reviewed by: LHM
Submitted by: BAKER

U.S. ARMY CORPS OF ENGINEERS
AFGHANISTAN ENGINEER DISTRICT
APO AE 96338

Michael Baker Jr., Inc
A unit of Michael Baker Corporation
Airside Business Park
100 Airside Drive
Moon Township, PA 15108
www.mbakercorp.com

AFGHAN NATIONAL ARMY
REGIONAL MILITARY TRAINING CENTER
STANDARD DESIGN

SUPPORT STAFF BARRACKS

TOILET, LAVATORY & ABLUTION DETAILS

Sheet reference number:
A–504

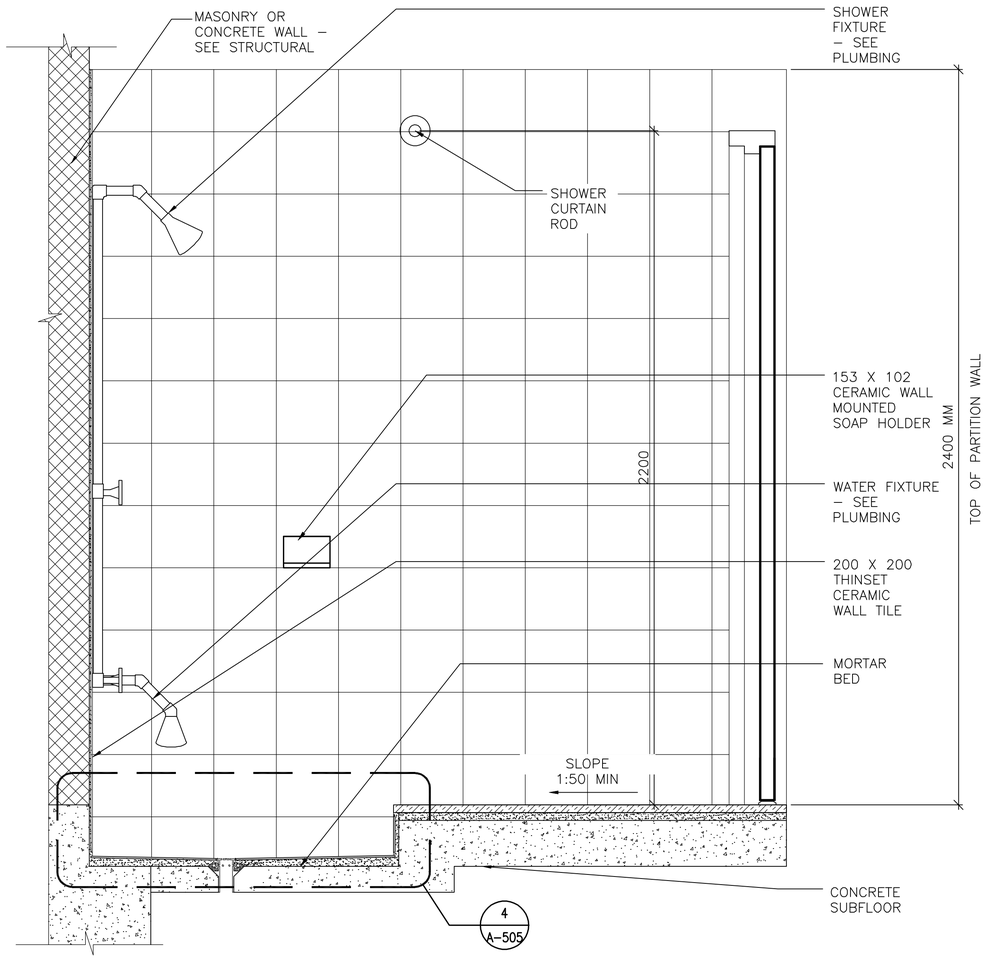

1 A-505 **SHOWER DETAIL**
SCALE: 1:10

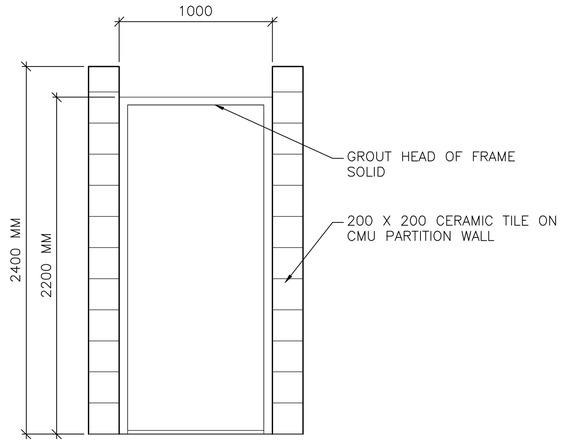

3 A-505 **SHOWER PARTITION DOOR ELEVATION**
SCALE: 1:20

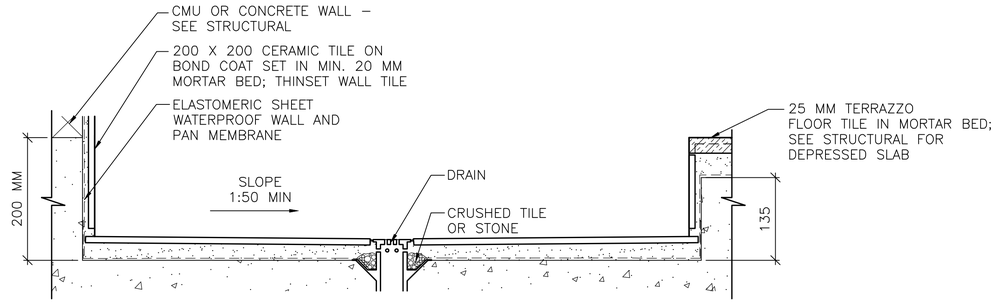

4 A-505 **SHOWER RECESS**
SCALE: 1:5

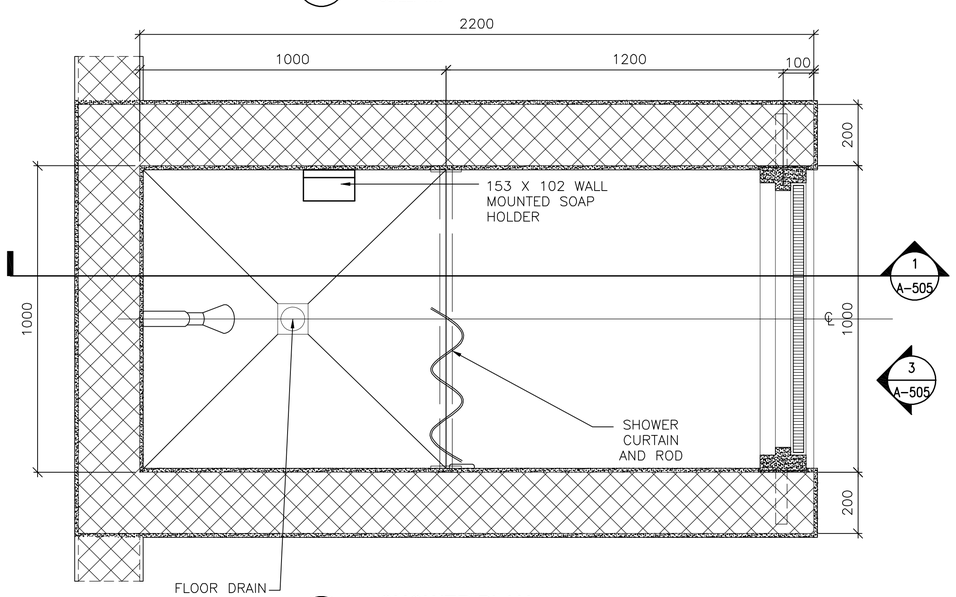

2 A-505 **SHOWER PLAN**
SCALE: 1:10

0 100 200
SCALE: 1:5

0 200 400
SCALE: 1:10

0 400 800
SCALE: 1:20

LINEAR DIMENSIONS SHOWN ARE IN MILLIMETERS (MM), UNLESS OTHERWISE NOTED

APPROVED:

A/E DESIGNER OF RECORD

SEAL:

STATE OF SOUTH CAROLINA
KEVIN R. CHAFIN
N. Charleston, SC
6374
REGISTERED ARCHITECT

US ARMY CORPS OF ENGINEERS
AFGHANISTAN ENGINEER DISTRICT

Mark	Description	Date	Appr.	Mark	Description	Date	Appr.

Designed by: KRC
Dwn by: KJG
Ckd by: NLJ
Reviewed by: LHM
Submitted by: BAKER
Date: 2/23/10
Rev: 0
Design file no.
Drawing code:
File name: ANABSSBA-505DT
Plot date: 2/23/2010
Plot scale: X:X

U.S. ARMY CORPS OF ENGINEERS
AFGHANISTAN ENGINEER DISTRICT
APO AE 96338

Michael Baker Jr., Inc
A unit of Michael Baker Corporation
Airside Business Park
100 Airside Drive
Moon Township, PA 15108
www.mbakercorp.com

AFGHAN NATIONAL ARMY
REGIONAL MILITARY TRAINING CENTER
STANDARD DESIGN

SUPPORT STAFF BARRACKS

SHOWER DETAILS

Sheet reference number:
A-505

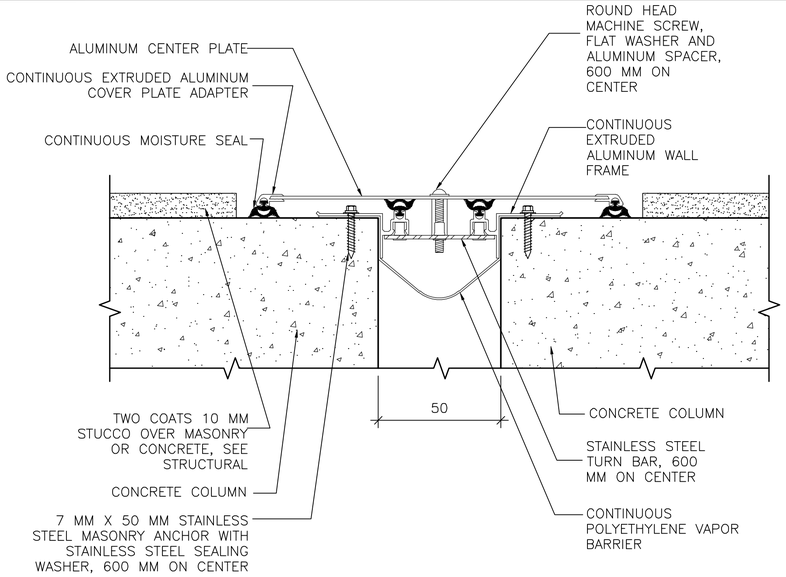

1 A-506 **EXTERIOR ISOLATION JOINT COVER**

SCALE: NTS

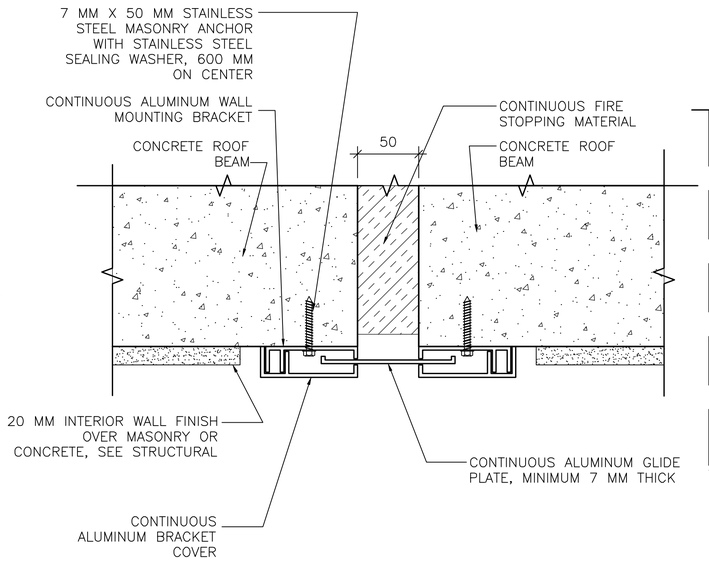

3 A-506 **CEILING ISOLATION JOINT COVER**

SCALE: NTS

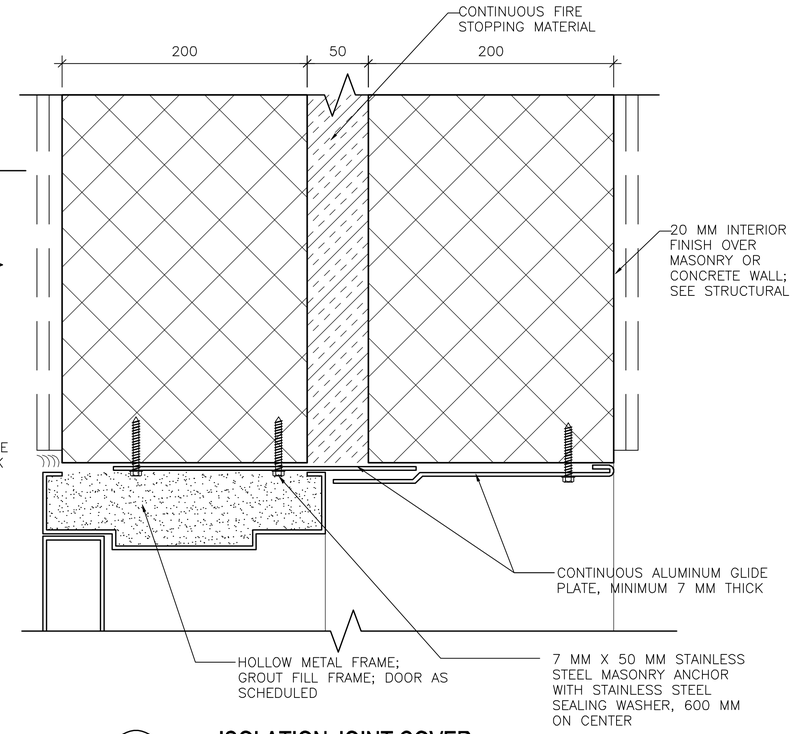

5 A-506 **ISOLATION JOINT COVER**

SCALE: NTS

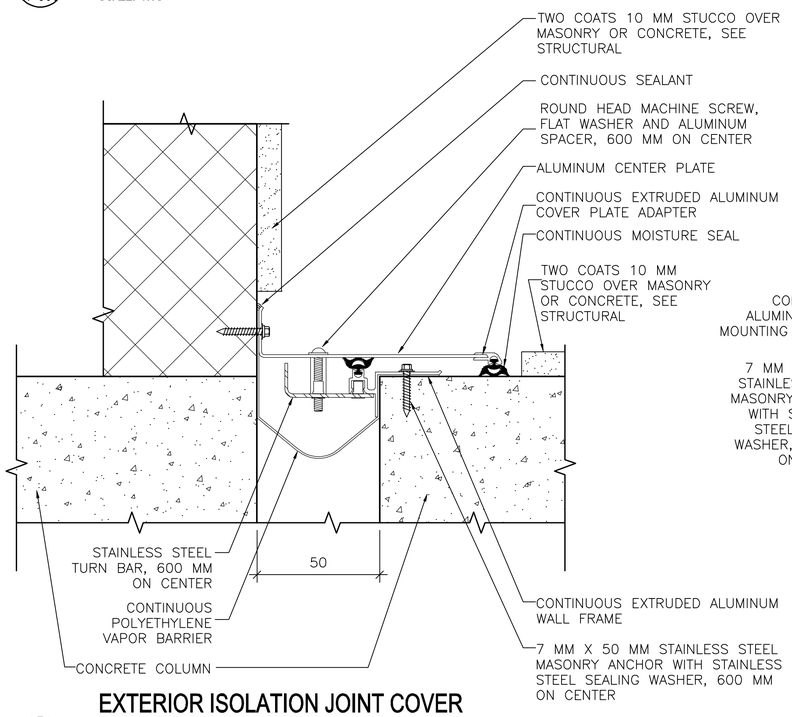

EXTERIOR ISOLATION JOINT COVER AT INSIDE CORNER

2 A-506

SCALE: NTS

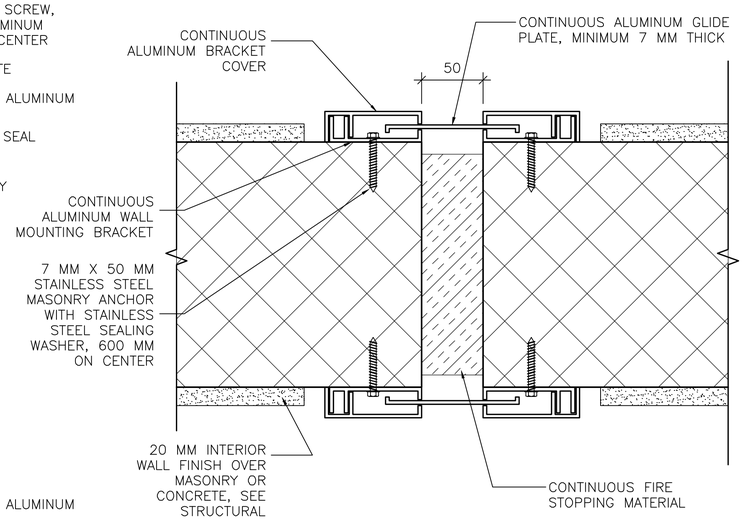

INTERIOR ISOLATION JOINT COVER

4 A-506

SCALE: NTS

LINEAR DIMENSIONS SHOWN ARE IN MILLIMETERS (MM), UNLESS OTHERWISE NOTED

APPROVED:

A/E DESIGNER OF RECORD

SEAL:

STATE OF SOUTH CAROLINA
KEVIN R. CHAFIN
N. Charleston, SC
6374
REGISTERED ARCHITECT

US ARMY CORPS OF ENGINEERS
AFGHANISTAN ENGINEER DISTRICT

Mark	Description	Date	Appr.	Mark	Description	Date	Appr.

U.S. ARMY CORPS OF ENGINEERS
AFGHANISTAN ENGINEER DISTRICT
APO AE 96338

Michael Baker Jr., Inc
A unit of Michael Baker Corporation
Airside Business Park
100 Airside Drive
Moon Township, PA 15108
www.mbakercorp.com

Designed by: KRC		Date: 2/23/10	Rev: 0
Dwn by: KJG	Ckd by: NLJ	Design file no.	
Reviewed by: LHM		Drawing code:	
Submitted by: BAKER		File name: ANA8S8A-506DT Plot date: 2/23/2010 Plot scale: X:X	

AFGHAN NATIONAL ARMY
REGIONAL MILITARY TRAINING CENTER
STANDARD DESIGN

SUPPORT STAFF BARRACKS

ISOLATION JOINT DETAILS

Sheet reference number:
A-506

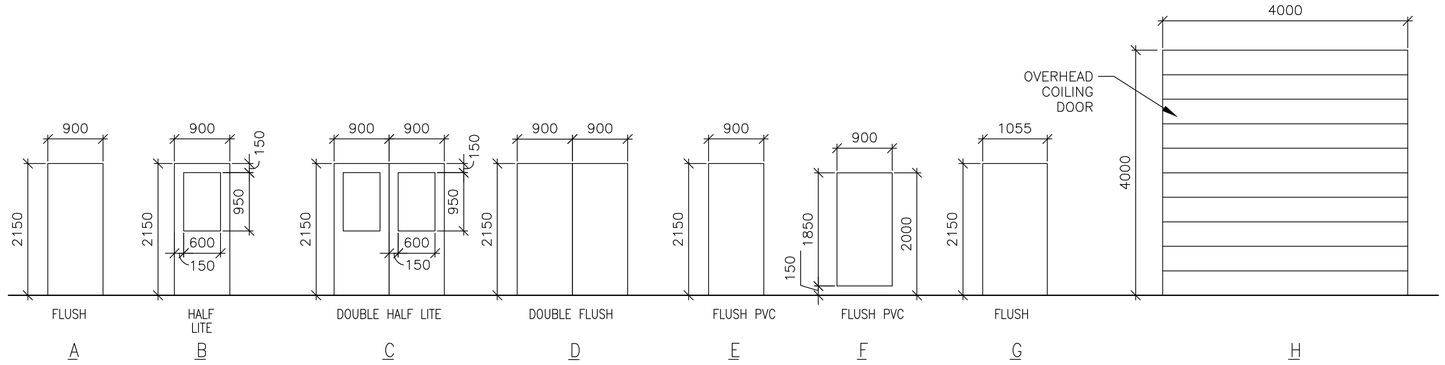

1 A-601 DOOR TYPES

SCALE: 1:50

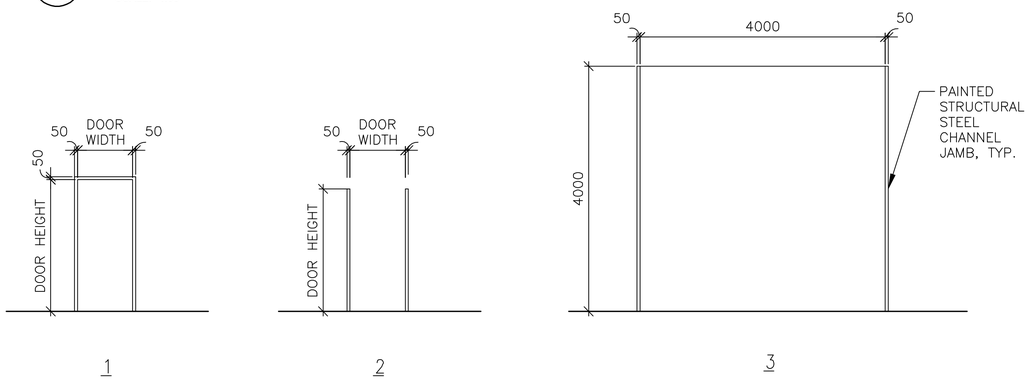

2 A-601 FRAME TYPES

SCALE: 1:50

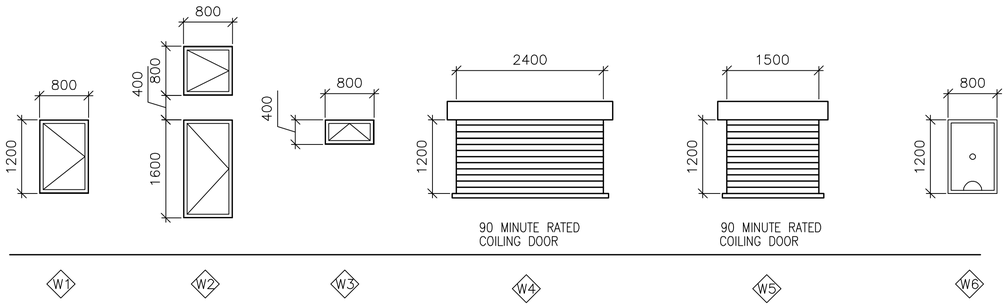

3 A-601 WINDOW TYPES

SCALE: 1:50

4 A-601 DOOR TAG

SCALE: NTS

5 A-601 RATED DOOR TAG

SCALE: NTS

WINDOW TYPE NOTES:

1. ALL EXTERIOR WINDOWS SHALL BE ALUMINUM WITH INSECT SCREENS. WINDOWS SHALL BE COMMERCIAL GRADE.
2. ALL EXTERIOR WINDOWS SHALL BE OPERABLE.

DOOR TAG NOTES:

1. THE DOOR TAG INDICATES THE DOOR TYPE, FRAME TYPE AND HARDWARE SET FOR EACH DOOR.
2. THE DOOR TAG FOR RATED DOORS INCLUDES THE RATING OF THE DOOR IN MINUTES.

EXTERIOR DOOR HARDWARE TYPES:

HW-1
1-1/2 PR HINGES, A5112 114 X 114
1 EA RIM EXIT DEVICE, TYPE 1
1 EA CYLINDER. E09221A, GRADE 1
1 EA OVERHEAD CLOSER, C02061, LOW RESISTANCE
1 EA THRESHOLD, J32130
3 EA DOOR SILENCERS, L03011

HW-2
1-1/2 PR HINGES, A5112 114 X 114
1 EA LOCKSET, F13 ENTRY LOCK W/LEVER HANDLES, GRADE 1
1 EA OVERHEAD CLOSER, C02061, LOW RESISTANCE
1 EA THRESHOLD, J32130
3 EA DOOR SILENCERS, L03011

HW-3
3 PR HINGES, A5112 114 X 114
2 EA RIM EXIT DEVICE, TYPE 1
2 EA CYLINDER. GRADE 1
2 EA OVERHEAD CLOSER, C02061, LOW RESISTANCE
1 EA DOOR COORDINATOR, TYPE 21
1 EA ASTRAGAL
1 EA THRESHOLD, J32130
2 EA DOOR SILENCERS, L03011

HW-4
3 PR HINGES, A5112 114 X 114
1 EA LOCKSET W/LEVER HANDLES. GRADE 1, F13
1 EA OVERHEAD CLOSER, C02061, LOW RESISTANCE
2 EA MAGNETIC HOLDER PIN, ATTACHED TO DOOR LEAF
2 EA MAGNETIC HOLDER RECEIVER, ATTACHED TO STOOP
2 EA LEVER EXTENSION FLUSH BOLTS, L04081
1 EA ASTRAGAL
1 EA THRESHOLD, J32130
2 EA DOOR SILENCERS, L03011

DOOR AND HARDWARE NOTES:

1. INTERIOR AND EXTERIOR METAL DOORS AND FRAME COLORS SHALL MATCH ADJACENT WALL COLORS AS SELECTED BY THE CONTRACTING OFFICER.
2. FRAMES, EXCEPT FIRE-RATED FRAMES, SHALL BE MOUNTED AND ADJUSTED IN ACCORDANCE WITH MANUFACTURER'S INSTRUCTIONS. FRAMES SHALL BE FASTENED WITH MINIMUM OF THREE ANCHORS PER JAMB AT EQUAL INTERVALS.
3. DIMENSIONS SHOWN ON DOOR TYPES DETAIL ARE BASED UPON MODULAR MASONRY (OR ROUGH OPENING), HEIGHT OF 2200 MM FOR STANDARD PERSONNEL DOORS. CONTRACTOR SHALL COORDINATE WITH DOOR SUPPLIER TO ENSURE THAT DIMENSIONS OF DOORS AND FRAMES PROVIDED ARE COMPATIBLE WITH DOOR OPENING DIMENSIONS.
4. HARDWARE SHALL BE HEAVY DUTY, COMMERCIAL GRADE, STAINLESS STEEL WITH A SATIN OR BRUSHED FINISH.
5. HARDWARE TYPES INCLUDE BUILDERS HARDWARE MANUFACTURERS ASSOCIATION (BMHA) NUMBER.
6. DOORS IN 2 HOUR RATED PARTITIONS SHALL BE 1.5 HOUR (90 MINUTE) RATED DOORS IN ACCORDANCE WITH NFPA 101, TABLE 8.3.4.2.
7. DOORS AT STAIR ENCLOSURES SHALL BE 1 HOUR (60 MINUTE) RATED AT 1 HOUR WALL IN ACCORDANCE WITH NFPA 101, TABLE 8.3.4.2.
8. DOORS IN 1 HOUR RATED WALLS SHALL BE 3/4 HOUR (45 MINUTE) RATED DOORS IN ACCORDANCE WITH NFPA 101, TABLE 8.3.4.2.
9. DOORS IN 1 HOUR RATED CORRIDOR WALLS SHALL BE 1/3 HOUR (20 MINUTE) IN ACCORDANCE WITH NFPA 101, TABLE 8.3.4.2.
10. PROVIDE DOOR STOPS TO PROTECT WALLS ON LOCATIONS WHERE DOOR SWING WILL STRIKE WALL.

THIS SHEET IS STANDARD AND IS INCLUSIVE OF ALL THE DOOR/ WINDOW/ HARDWARE TYPES FOR THE ENTIRE RMTC CONTRACT. NOT ALL DOOR/ WINDOW/ HARDWARE TYPES ARE USED FOR ANY PARTICULAR BUILDING DESIGN. CONTRACTOR SHALL REFER TO THE FLOOR PLAN FOR THE TYPES BEING USED.

INTERIOR DOOR HARDWARE TYPES:

HW-5
1-1/2 PR HINGES, A8133 114 X 114
1 EA LOCKSET W/LEVER HANDLES, F08, GRADE 1
1 EA WALL STOP, L02101 OR L02161
3 EA DOOR SILENCERS, L03011

HW-6
1-1/2 PR HINGES, A8112 114 X 114
1 EA LOCKSET W/LEVER HANDLES, F08, GRADE 1
1 EA WALL STOP, L02101 OR L02161
1 EA OVERHEAD CLOSER, C02061, LOW RESISTANCE
3 EA DOOR SILENCERS, L03011

HW-7
1-1/2 PR HINGES, A8133
1 EA LOCKSET W/LEVER HANDLES, F13 GRADE 1
1 EA WALL STOP, L02101 OR L02161
2 EA MOP PLATE, J103
3 EA DOOR SILENCERS, L03011

HW-8
1-1/2 PR HINGES, A8112
1 EA LOCKSET W/LEVER HANDLES, F13 GRADE 1
1 EA WALL STOP, L02101 OR L02161
2 EA MOP PLATE, J103
1 EA OVERHEAD CLOSER, C02061, LOW RESISTANCE
3 EA DOOR SILENCERS, L03011

HW-9
1-1/2 PR HINGES, A5112 114 X 114
1 EA RIM EXIT DEVICE, TYPE 1
1 EA CYLINDER. E09221A, GRADE 1
1 EA OVERHEAD CLOSER, C02061, LOW RESISTANCE
3 EA DOOR SILENCERS, L03011

HW-10
3 PR HINGES, A5112 114 X 114
1 EA LOCKSET W/LEVER HANDLES. GRADE 1, F13
2 EA LEVER EXTENSION FLUSH BOLTS, L04081
1 EA ASTRAGAL
2 EA DOOR SILENCERS, L03011

HW-11
1-1/2 PR HINGES, A8112 114 X 114
1 EA LOCKSET W/LEVER HANDLES, F13, GRADE 1
1 EA WALL STOP, L02101 OR L02161
1 EA OVERHEAD CLOSER, C02061, LOW RESISTANCE
3 EA DOOR SILENCERS, L03011
1 EA ROBE HOOK

HW-12
1-1/2 PR HINGES, A8133
1 EA LATCHSET W/LEVER HANDLES, F76 GRADE 1
1 EA WALL STOP, L02101 OR L02161
2 EA MOP PLATE, J103
3 EA DOOR SILENCERS, L03011
1 EA ROBE HOOK

HW-13
3 PR HINGES, A5112 114 X 114
1 EA LOCKSET W/LEVER HANDLES. GRADE 1, F13
1 EA OVERHEAD CLOSER, C02061, LOW RESISTANCE
2 EA LEVER EXTENSION FLUSH BOLTS, L04081
1 EA ASTRAGAL
2 EA DOOR SILENCERS, L03011

HW-14
3 PR HINGES, A5112 114 X 114
2 EA RIM EXIT DEVICE, TYPE 1
2 EA CYLINDER. GRADE 1
2 EA OVERHEAD CLOSER, C02061, LOW RESISTANCE
1 EA DOOR COORDINATOR, TYPE 21
1 EA ASTRAGAL
2 EA DOOR SILENCERS, L03011

APPROVED:

A/E DESIGNER OF RECORD

SEAL:

STATE OF SOUTH CAROLINA
KEVIN R. CHAFIN
N. Charleston, SC
6374
REGISTERED ARCHITECT

US ARMY CORPS OF ENGINEERS
AFGHANISTAN ENGINEER DISTRICT

Mark	Description	Date	Appr.	Mark	Description	Date	Appr.

Date: 2/23/10 Rev: 0
Design file no.
Drawing code:
File name: ANASSSSA-001SCH
Plot date: 2/23/2010
Plot scale: X:X

Designed by: KRC
Dwn by: KJG
Ckd by: NLJ
Reviewed by: LHM
Submitted by:
BAKER

U.S. ARMY CORPS OF ENGINEERS
AFGHANISTAN ENGINEER DISTRICT
APO AE 96338

Michael Baker Jr., Inc.
A unit of Michael Baker Corporation
Airside Business Park
100 Airside Drive
Moon Township, PA 15108
www.mbakercorp.com

AFGHAN NATIONAL ARMY
REGIONAL MILITARY TRAINING CENTER
STANDARD DESIGN

SUPPORT STAFF BARRACKS

WINDOW AND DOOR SCHEDULES

Sheet reference number:
A-601

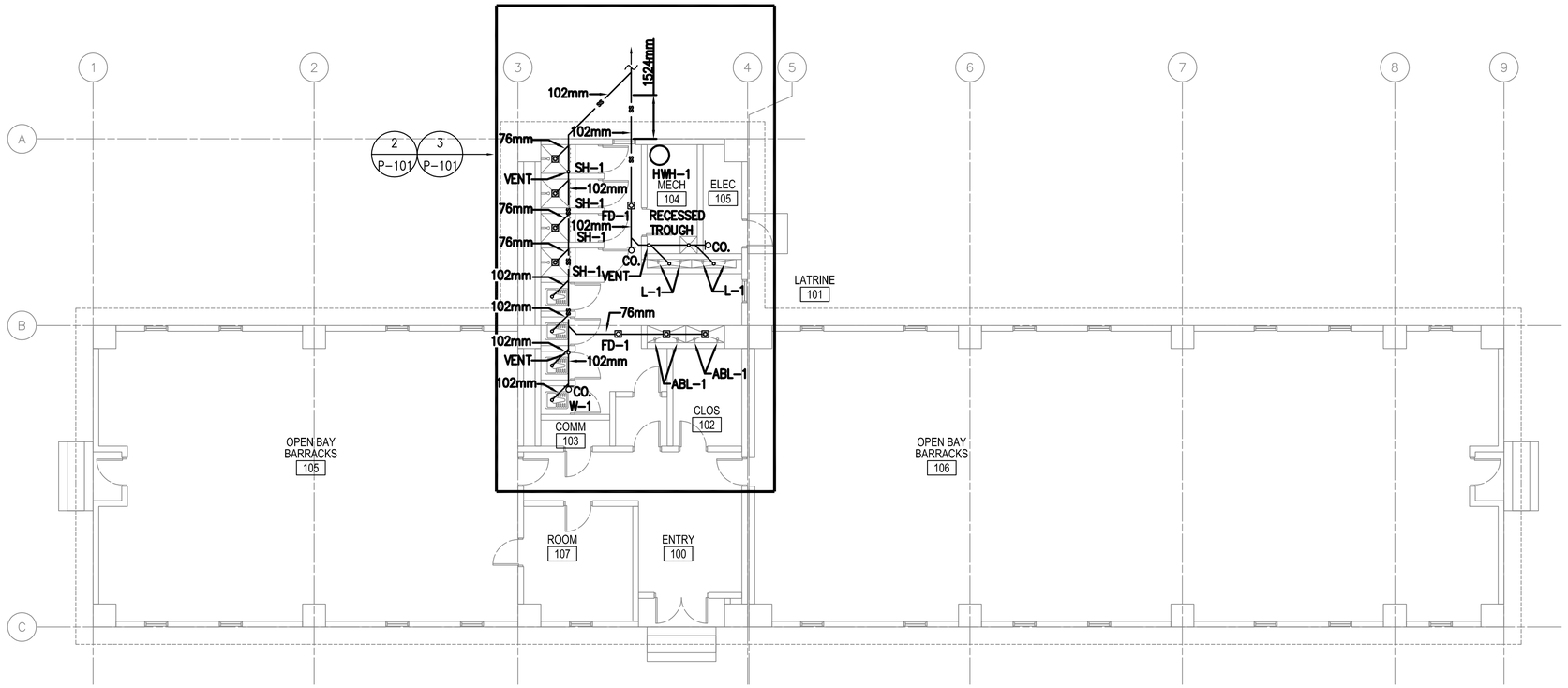

1
P-101

SUPPORT BARRACKS
FLOOR PLAN - PLUMBING (SANITARY)

SCALE: 1:50

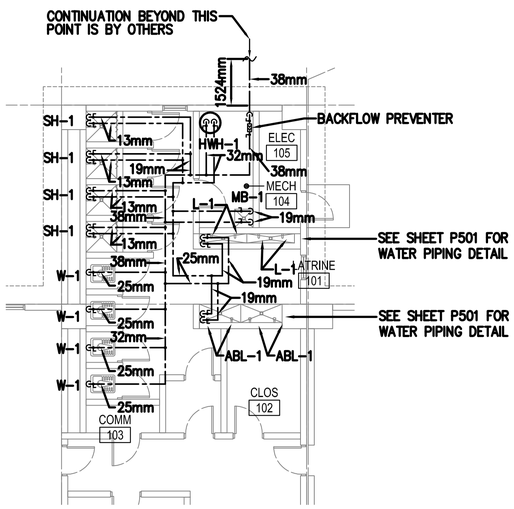

2
P-101

PARTIAL SUPPORT BARRACKS
FLOOR PLAN - PLUMBING (HOT AND COLD WATER)

SCALE: 1:50

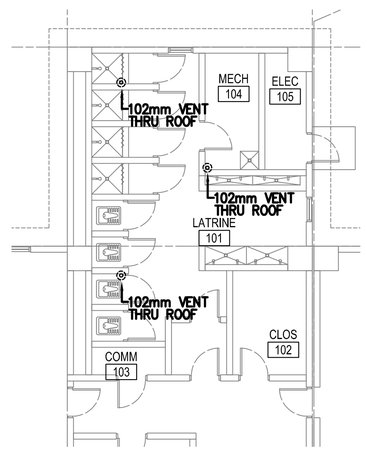

3
P-101

PARTIAL SUPPORT BARRACKS
FLOOR PLAN - PLUMBING (VENT PIPING)

SCALE: 1:50

FLOOR PLAN NOTES:

1. DO NOT SCALE DRAWINGS – ALL DIMENSIONS AND CONDITIONS SHALL BE CHECKED AND VERIFIED BY THE CONTRACTOR AT THE SITE.
2. ALL WORK PERFORMED ON THIS BUILDING SHALL BE IN COMPLIANCE WITH ALL PERTINENT CODES, RULES, ORDINANCES AND REGULATIONS OF THE GOVERNING AUTHORITIES.
3. ALL WORK PERFORMED UNDER AND IN CONNECTION WITH THESE DRAWINGS AND SPECIFICATIONS SHALL BE IN STRICT COMPLIANCE WITH THE LATEST SAFETY AND HEALTH STANDARDS.
4. REPORT ANY DISCREPANCIES FOUND IN THE PLUMBING DRAWINGS AND/OR IN THE SPECIFICATIONS DURING THE BIDDING PROCESS FOR CLARIFICATION BY THE ENGINEER.
5. ALL EASTERN STYLE WATER CLOSETS IN THIS FACILITY ARE TO HAVE THE FIXTURE DESIGNATION OF W-1. EACH FIXTURE SHALL HAVE A 25mm (1 INCH) COLD WATER LINE EXTENDED TO IT AND THEN BE REDUCED TO 13mm (1/2 INCH) FOR A FINAL CONNECTION TO THE FLUSH TANK AND A 102mm (4) INCH SANITARY CONNECTION.
6. ALL LAV FIXTURES IN THIS FACILITY ARE TO HAVE THE FIXTURE DESIGNATION OF L-1. EACH FIXTURE SHALL HAVE A 13mm (1/2 INCH) COLD WATER, 13mm (1/2 INCH) HOT WATER CONNECTION AND A 76mm (3 INCH) SANITARY CONNECTION.
7. ALL ABLUTION FIXTURES IN THIS FACILITY ARE TO HAVE THE FIXTURE DESIGNATION OF ABL-1. EACH FIXTURE SHALL HAVE A 13mm (1/2 INCH) COLD WATER, 13mm (1/2 INCH) HOT WATER CONNECTION AND A 76mm (3 INCH) SANITARY CONNECTION.
8. REFER TO SHEET P501, P502, AND P503 FOR DETAILS AND SYMBOLS.
9. ALL WATER, SANITARY AND VENT LINES TO BE EXPOSED. RUN LINES TIGHT TO CEILING AND WALL.

PLUMBING SYMBOLS

- SANITARY SEWER PIPING (BELOW GROUND)
- SANITARY SEWER PIPING (ABOVE GROUND)
- VENT PIPING (V)
- COLD WATER PIPING (CW)
- HOT WATER PIPING (HW)
- BALL VALVE
- BACKFLOW PREVENTER
- OR — CLEANOUT (CO.)
- ROOF PENETRATION

LINEAR DIMENSIONS SHOWN ARE IN MILLIMETERS (MM), UNLESS OTHERWISE NOTED

0 2000 4000
SCALE: 1:100

APPROVED:

A/E DESIGNER OF RECORD

SEAL:

COMMONWEALTH OF PENNSYLVANIA
REGISTERED PROFESSIONAL ENGINEER
MATTHEW R. SOTOSKY
046576-E

US ARMY CORPS OF ENGINEERS
AFGHANISTAN ENGINEER DISTRICT

Mark	Description	Date	Appr.

Mark	Description	Date	Appr.

Designed by: RMH
Dwn by: RMH
Ckd by: CJM
Reviewed by:
Submitted by:
Date: 02/23/10
Rev: 0
Design file no.
Drawing code:
File name: AN4BSSBPL-101XXX
Plot date: 02/26/2010
Plot scale: 1:50

U.S. ARMY CORPS OF ENGINEERS
AFGHANISTAN ENGINEER DISTRICT
APO AE 96338

Michael Baker Jr., Inc
A unit of Michael Baker Corporation
Airside Business Park
100 Airside Drive
Moon Township, PA 15108
www.mbakercorp.com

BAKER

AFGHAN NATIONAL ARMY
REGIONAL MILITARY TRAINING CENTER
STANDARD DESIGN

SUPPORT STAFF BARRACKS
FLOOR PLAN – PLUMBING

Sheet reference number:
P-101

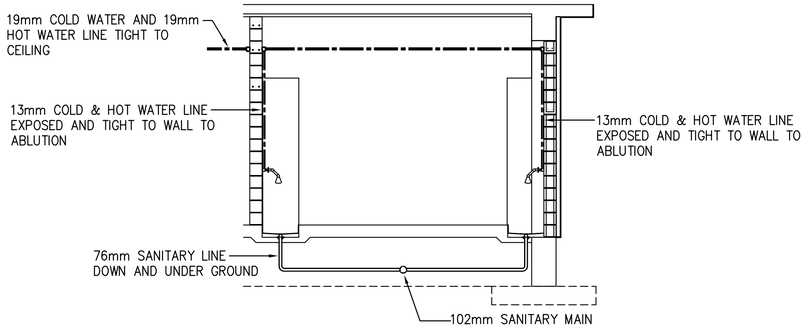

TYPICAL ABLUTION SANITARY & WATER INSTALLATION SCHEMATIC

SCALE: N.T.S.

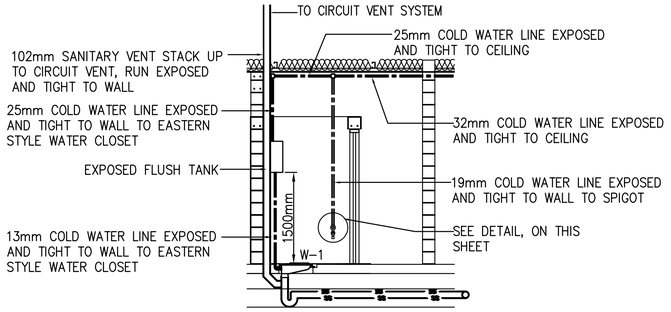

TYPICAL EASTERN STYLE WATER CLOSET SANITARY & WATER INSTALLATION SCHEMATIC

SCALE: N.T.S.

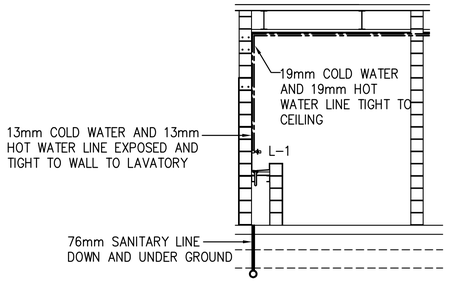

TYPICAL LAVATORY SANITARY & WATER INSTALLATION SCHEMATIC

SCALE: N.T.S.

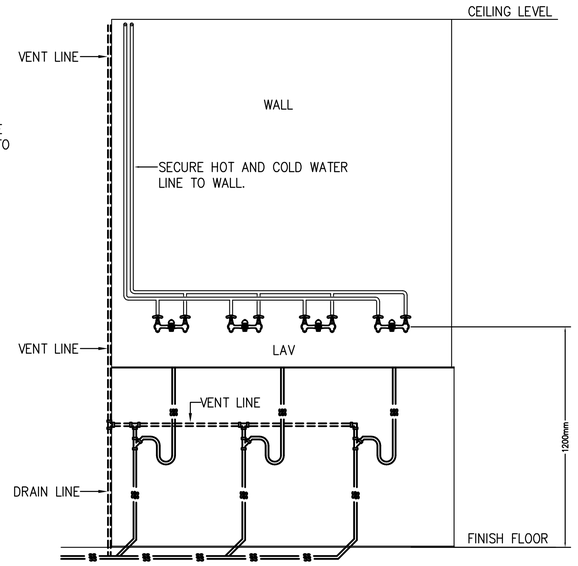

LAVATORY ELEVATION PLAN - PLUMBING

SCALE: N.T.S.

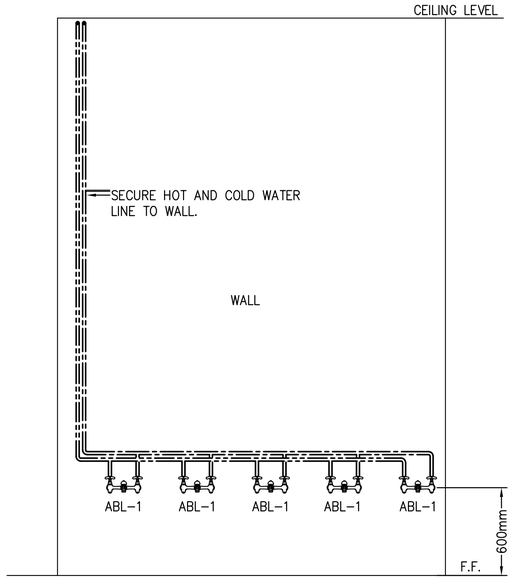

TYPICAL ABLUTION ELEVATION PLUMBING PLAN - WATER INSTALLATION SCHEMATIC

SCALE: N.T.S.

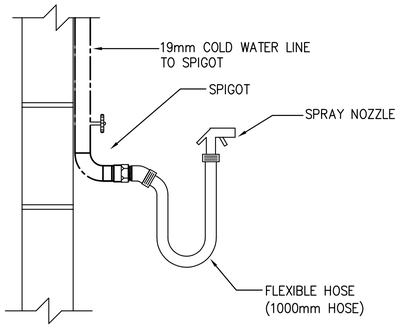

TYPICAL DETAIL - SPIGOT, FLEXIBLE HOSE, AND SPRAY NOZZLE

SCALE: N.T.S.

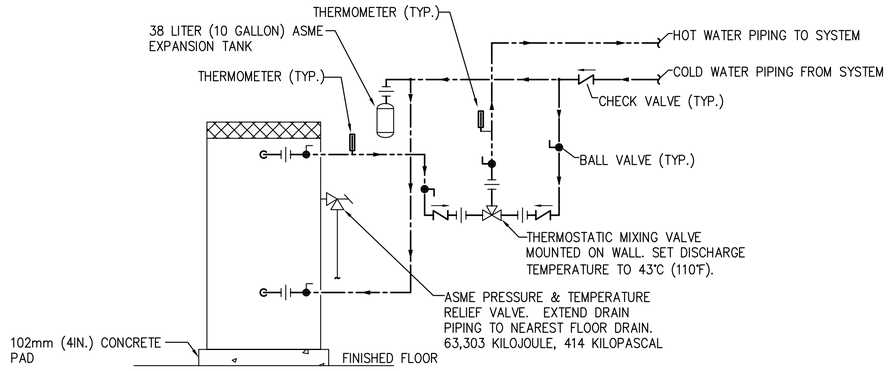

ELECTRIC WATER HEATER PIPING SCHEMATIC

SCALE: N.T.S.

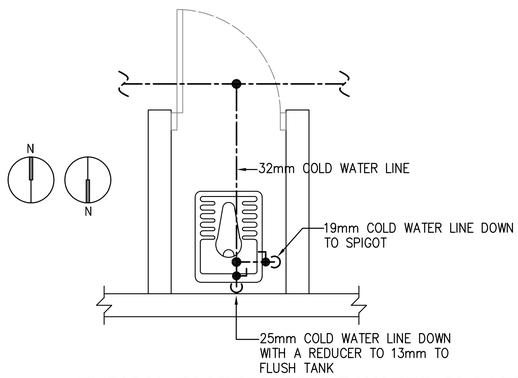

TYPICAL EASTERN STYLE WATER CLOSET WITH SPIGOT WATER PIPING DETAIL

SCALE: N.T.S.

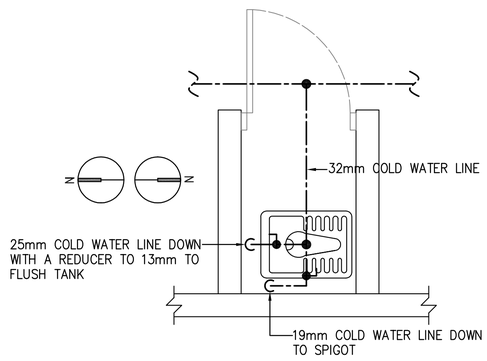

TYPICAL EASTERN STYLE WATER CLOSET WITH SPIGOT WATER PIPING DETAIL

SCALE: N.T.S.

GENERAL PLUMBING NOTES:

1. ALL SANITARY PIPING SHALL BE BELOW FLOOR, AND ALL WATER, AND VENT PIPING SHALL BE TIGHT TO CEILING, UNLESS OTHERWISE NOTED.

2. PLUMBING CONTRACTOR SHALL COORDINATE PLUMBING WORK WITH THE WORK OF ALL OTHER TRADES. VERIFY THE LOCATIONS OF ALL UTILITIES AT THE SITE PRIOR TO THE START OF ANY PLUMBING WORK.

3. COORDINATE ALL ACCESS PANEL LOCATIONS WITH THE ARCHITECT AND GENERAL CONTRACTOR.

4. ALL SANITARY PIPING BELOW SLAB SHALL BE A MINIMUM OF 51mm, UNLESS OTHERWISE NOTED OR AS REQUIRED BY THE LOCAL AUTHORITY HAVING JURISDICTION.

5. ALL SANITARY BRANCH LINES SHALL BE SLOPED AT 6mm PER 305mm, AND ALL MAIN LINES SHALL BE SLOPED AT 3mm PER 305mm, UNLESS OTHERWISE NOTED OR AS REQUIRED BY THE LOCAL AUTHORITY HAVING JURISDICTION.

6. THE CONTRACTOR IS RESPONSIBLE FOR COORDINATION WITH ALL UTILITY AUTHORITIES FOR INSTALLATION REQUIREMENTS, REGULATIONS, FEES, PERMITS, AND APPROVALS BEFORE THE START OF CONSTRUCTION.

7. THE CONTRACTOR SHALL ROUGH-IN AND CONNECT ALL EQUIPMENT REQUIRING WATER, WASTE, AND/OR VENT WHETHER OR NOT FURNISHED UNDER THIS CONTRACT. THE CONTRACTOR SHALL ALSO FURNISH AND INSTALL ALL NECESSARY PIPE, FITTINGS, VALVES, TRAPS, ETC., REQUIRED FOR A COMPLETE INSTALLATION, LEAVING SAME READY FOR SERVICE.

APPROVED:

A/E DESIGNER OF RECORD

SEAL:

COMMONWEALTH OF PENNSYLVANIA
REGISTERED PROFESSIONAL
MATTHEW R. SOTOSKY
ENGINEER
045576-E

US ARMY CORPS OF ENGINEERS
AFGHANISTAN ENGINEER DISTRICT

Mark	Description	Date	Appr.	Mark	Description	Date	Appr.

Rev: 0
Date: 02/23/10
Design file no.
Drawing code:
File name: ANABSSBPI_501XXX
Plot date: 02/09/2010
Plot scale:1:100

Designed by: RMH
Dwn by: RMH
Ckd by: CJM
Reviewed by:
Submitted by: MRS

U.S. ARMY CORPS OF ENGINEERS
AFGHANISTAN ENGINEER DISTRICT
APO AE 96338

Michael Baker Jr., Inc
A unit of Michael Baker Corporation
Airside Business Park
100 Airside Drive
Moon Township, PA 15108
www.mbakercorp.com

AFGHAN NATIONAL ARMY
REGIONAL MILITARY TRAINING CENTER
STANDARD DESIGN

SUPPORT STAFF BARRACKS
PLUMBING DETAILS

Sheet reference number:
P-501

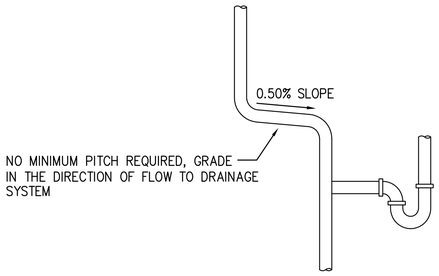

TYPICAL VENT SLOPE DETAILS

SCALE: N.T.S.

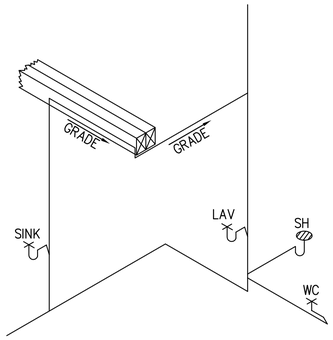

TYPICAL VENT SLOPE DETAILS

SCALE: N.T.S.

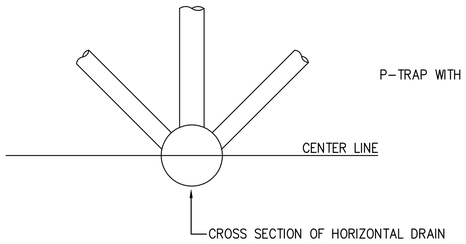

ACCEPTABLE VENT CONNECTIONS TO HORIZONTAL DRAIN - DETAIL

SCALE: N.T.S.

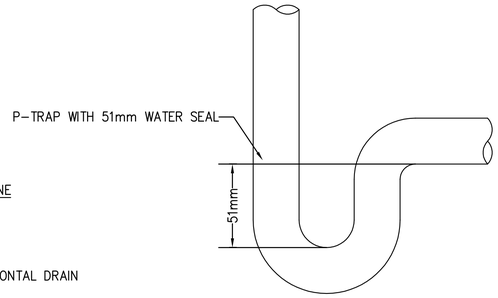

P-TRAP WITH 51mm WATER SEAL DETAIL

SCALE: N.T.S.

GENERAL PLUMBING NOTES:

1. ALL SANITARY PIPING SHALL BE BELOW FLOOR, AND ALL WATER, AND VENT PIPING SHALL BE TIGHT TO CEILING, UNLESS OTHERWISE NOTED.

2. PLUMBING CONTRACTOR SHALL COORDINATE PLUMBING WORK WITH THE WORK OF ALL OTHER TRADES. VERIFY THE LOCATIONS OF ALL UTILITIES AT THE SITE PRIOR TO THE START OF ANY PLUMBING WORK.

3. ALL SANITARY PIPING BELOW SLAB SHALL BE A MINIMUM OF 51mm, UNLESS OTHERWISE NOTED OR AS REQUIRED BY THE LOCAL AUTHORITY HAVING JURISDICTION.

4. ALL SANITARY BRANCH LINES SHALL BE SLOPED AT 6mm PER 305mm, AND ALL MAIN LINES SHALL BE SLOPED AT 3mm PER 305mm, UNLESS OTHERWISE NOTED OR AS REQUIRED BY THE LOCAL AUTHORITY HAVING JURISDICTION.

5. THE CONTRACTOR SHALL BE RESPONSIBLE FOR COORDINATION WITH ALL UTILITY AUTHORITIES FOR INSTALLATION REQUIREMENT, REGULATIONS, FEES, PERMITS, AND APPROVALS BEFORE THE START OF CONSTRUCTION.

6. THE CONTRACTOR SHALL ROUGH-IN AND CONNECT ALL EQUIPMENT REQUIRING WATER, WASTE, AND/OR VENT WHETHER OR NOT FURNISHED UNDER THIS CONTRACT. THE CONTRACTOR SHALL ALSO FURNISH AND INSTALL ALL NECESSARY PIPE, FITTINGS, VALVES, TRAPS, ETC., REQUIRED FOR A COMPLETE INSTALLATION, LEAVING SAME READY FOR SERVICE.

FIXTURE LIST

TYPE	ITEM	SOIL & WASTE	VENT	COLD WATER	HOT WATER	REMARKS	REMARKS 2
W-1	EASTERN STYLE WATER CLOSET	102mm	51mm	13mm	------	FLUSH TANK	LOW FLOW EFFICIENT TYPE
L-1	TROUGH FIXTURE	38mm	38mm	13mm	13mm	FABRICATED IN FIELD	LOW FLOW EFFICIENT TYPE
ABL-1	ABLUTION	FLOOR DRAIN	------	13mm	13mm	FABRICATED IN FIELD	----------
HWH-1	WATER HEATER	---	---	SEE DWG.	SEE DWG.	151 LITER ELECTRIC WATER HEATER, 380/3ø, 9KW	----------
SH-1	SHOWER	76mm	---	13mm	13mm	DRAIN AND SHOWER CONTROLS	----------

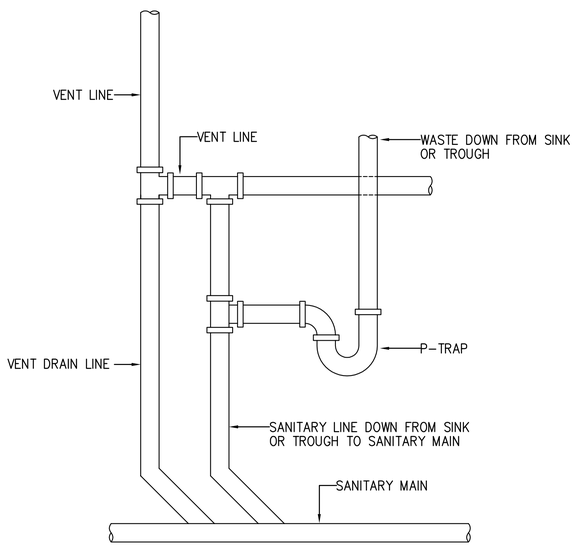

TYPICAL LAVATORY/LAUNDRY VENT DETAIL

SCALE: N.T.S.

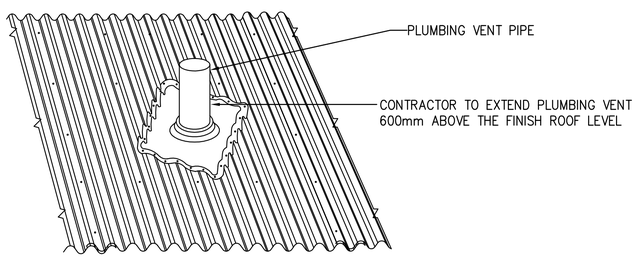

PLUMBING VENT THRU ROOF DETAIL

SCALE: NTS

APPROVED:

A/E DESIGNER OF RECORD

SEAL:

COMMONWEALTH OF PENNSYLVANIA
REGISTERED PROFESSIONAL ENGINEER
MATTHEW R. SOTOSKY
046576-E

US ARMY CORPS OF ENGINEERS
AFGHANISTAN ENGINEER DISTRICT

Mark	Description	Date	Appr.	Mark	Description	Date	Appr.

Rev: 0
Date: 02/23/10
Design file no.
Drawing code:
File name: ANABSSBPI_-502XXX
Plot date: 02/05/2010
Plot scale: 1:100

Designed by: RMH
Dwn by: RMH
Ckd by: CJM
Reviewed by:
Submitted by: MRS

U.S. ARMY CORPS OF ENGINEERS
AFGHANISTAN ENGINEER DISTRICT
APO AE 96338

Michael Baker Jr., Inc.
A unit of Michael Baker Corporation
Airside Business Park
100 Airside Drive
Moon Township, PA 15108
www.mbakercorp.com

AFGHAN NATIONAL ARMY
REGIONAL MILITARY TRAINING CENTER
STANDARD DESIGN

SUPPORT STAFF BARRACKS
PLUMBING DETAILS

Sheet reference number:
P-502

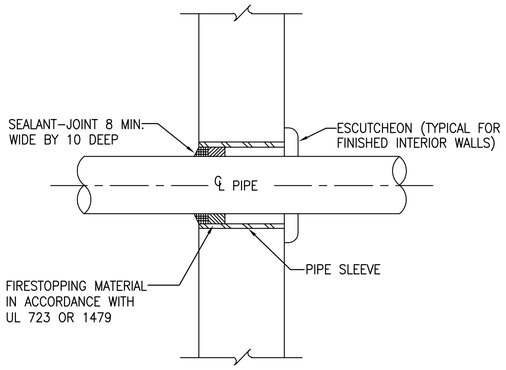

TYPICAL WALL PENETRATION DETAIL

SCALE: N.T.S.

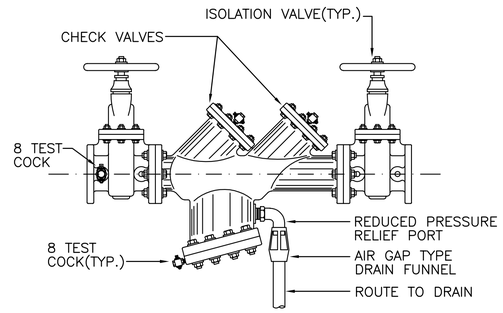

TYPICAL BACKFLOW PREVENTER DETAIL

SCALE: N.T.S.

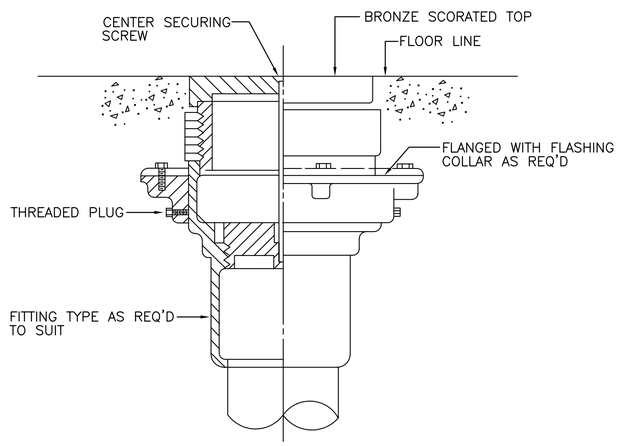

TYPICAL FLOOR CLEANOUT DETAIL

SCALE: N.T.S.

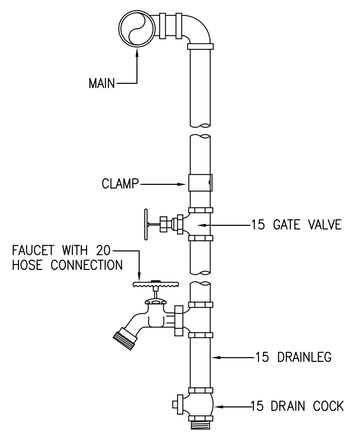

TYPICAL WATER DROP DETAIL

SCALE: N.T.S.

PLUMBING SYMBOLS

- SANITARY SEWER PIPING (BELOW GROUND)
- SANITARY SEWER PIPING (ABOVE GROUND)
- VENT PIPING (V)
- COLD WATER PIPING (CW)
- HOT WATER PIPING (HW)
- BALL VALVE
- BACKFLOW PREVENTER
- CLEANOUT (CO.) (OR)
- ROOF PENETRATION

APPROVED:

A/E DESIGNER OF RECORD

SEAL:

COMMONWEALTH OF PENNSYLVANIA REGISTERED PROFESSIONAL MATTHEW R. SOTOSKY ENGINEER 045576-E

US ARMY CORPS OF ENGINEERS
AFGHANISTAN ENGINEER DISTRICT

Mark	Description	Date	Appr.	Mark	Description	Date	Appr.

Rev: 0
Date: 02/23/10
Design file no.
Drawing code:
File name: ANABSSBPI_-503XXX
Plot date: 02/09/2010
Plot scale:1:100

Designed by: RMH
Dwn by: RMH
Ckd by: CJM
Reviewed by:
Submitted by: MRS

U.S. ARMY CORPS OF ENGINEERS
AFGHANISTAN ENGINEER DISTRICT
APO AE 96338

Michael Baker Jr., Inc.
A unit of Michael Baker Corporation
Airside Business Park
100 Airside Drive
Moon Township, PA 15108
www.mbakercorp.com

AFGHAN NATIONAL ARMY
REGIONAL MILITARY TRAINING CENTER
STANDARD DESIGN

SUPPORT STAFF BARRACKS
PLUMBING DETAILS

Sheet reference number:
P–503

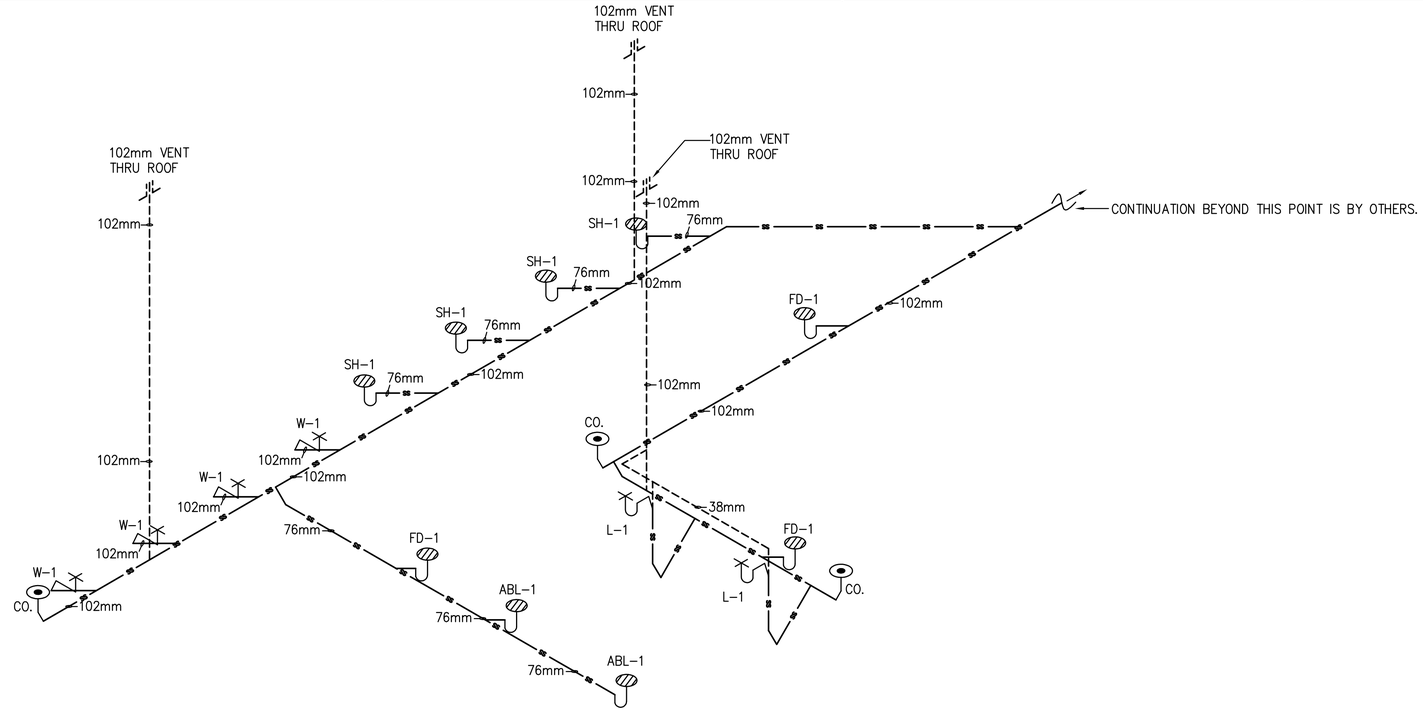

1 P-901 BSSB DRAINAGE ISOMETRIC

SCALE: N.T.S.

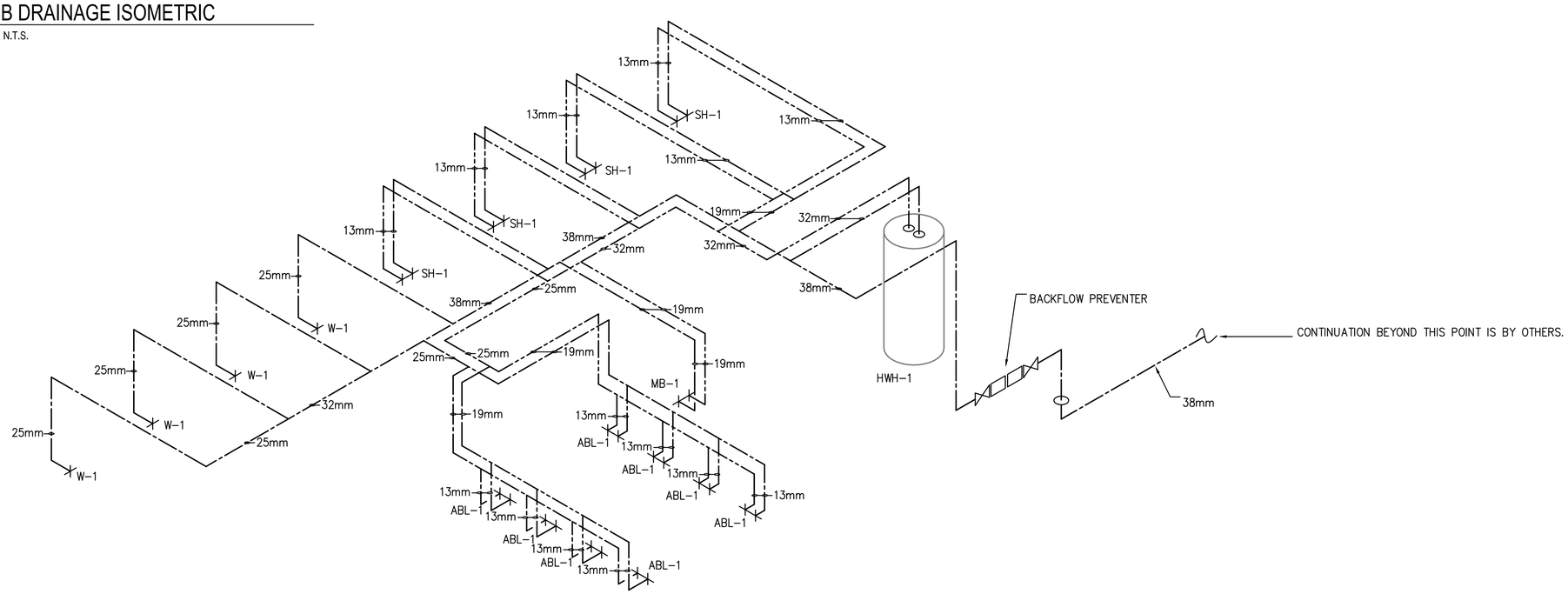

2 P-901 BSSB HOT AND COLD WATER ISOMETRIC

SCALE: N.T.S.

PLUMBING SYMBOLS

- SANITARY SEWER PIPING (BELOW GROUND)
- SANITARY SEWER PIPING (ABOVE GROUND)
- VENT PIPING (V)
- COLD WATER PIPING (CW)
- HOT WATER PIPING (HW)
- BALL VALVE
- BACKFLOW PREVENTER
- CLEANOUT (CO.) — OR
- ROOF PENETRATION

US ARMY CORPS OF ENGINEERS
AFGHANISTAN ENGINEER DISTRICT

Mark	Description	Date	Appr.	Mark	Description	Date	Appr.

Rev: 0
Date: 02/23/10
Design file no.
Drawing code:
File name: AN4BSSBPI_p901XXX
Plot date: 02/08/2010
Plot scale: N.T.S.

Designed by: RMH
Dwn by: RMH
Ckd by: CJM
Reviewed by:
Submitted by: BAKER

U.S. ARMY CORPS OF ENGINEERS
AFGHANISTAN ENGINEER DISTRICT
APO AE 96338

Michael Baker Jr., Inc.
A unit of Michael Baker Corporation
Airside Business Park
100 Airside Drive
Moon Township, PA 15108
www.mbakercorp.com

AFGHAN NATIONAL ARMY
REGIONAL MILITARY TRAINING CENTER
STANDARD DESIGN

SUPPORT STAFF BARRACKS
PLUMBING ISOMETRICS

APPROVED:

A/E DESIGNER OF RECORD

SEAL:

COMMONWEALTH OF PENNSYLVANIA
REGISTERED PROFESSIONAL
MATTHEW R. SOTOSKY
ENGINEER
046576-E

Sheet reference number:
P-901

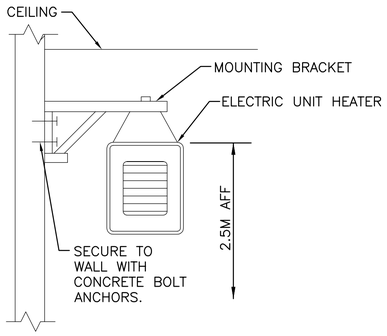

2 M-101 ELECTRIC UNIT HEATER MOUNTING DETAIL
N.T.S.

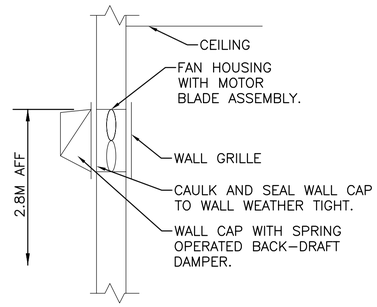

3 M-101 WALL EXHAUST FAN DETAIL
N.T.S.

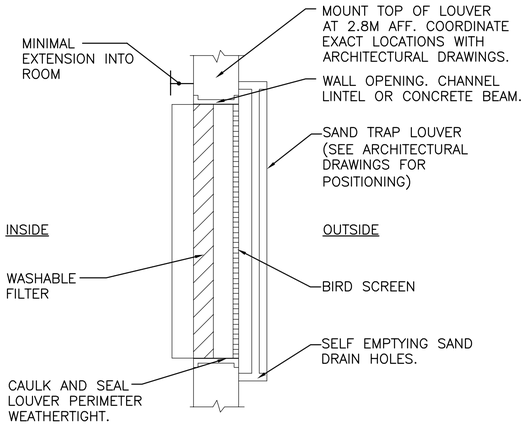

4 M-101 FILTERED SAND TRAP LOUVER
N.T.S.

KEY NOTE:

1. INLINE EXHAUST FAN DUCTED TO WALL CAP WITH LOW LEAKAGE GRAVITY BACK-DRAFT DAMPER. SECURE FAN TO STRUCTURE ABOVE AND INTERLOCK WITH MAKE UP AIR HEATER.
2. ELECTRIC MAKE UP AIR HEATER SECURED TO STRUCTURE ABOVE. BLOWER SHALL BE SET TO ENERGIZE WITH EXHAUST FAN EF-1 & STAT, HEAT SHALL BE CONTROLLED BY STAT.
3. WALL EXHAUST FAN WITH LOW SPRING OPERATED BACK-DRAFT DAMPER. SEE DETAIL 3 THIS SHEET.
4. 600X600 (24X24) INTAKE LOUVER FOR MAKE UP AIR UNIT. PROVIDE WEATHER PROOF LOUVER WITH 50mm (2") WASHABLE FILTER AND SAND TRAP.
5. 200x150 (8x6) ALUMINUM DUCT MOUNTED SUPPLY GRILLE WITH ADJUSTABLE OPPOSED BLADE DAMPERS. BALANCE EACH GRILLE TO 0.070 CMS.
6. 150x150 (6x6) ALUMINUM DUCT MOUNTED EXHAUST GRILLE WITH ADJUSTABLE OPPOSED BLADE DAMPERS. BALANCE EACH GRILLE TO 0.075 CMS.
7. 150x150 (6x6) ALUMINUM WALL MOUNTED EXHAUST GRILLE WITH ADJUSTABLE OPPOSED BLADE DAMPERS. BALANCE GRILLE TO 0.030 CMS.
8. THERMOSTAT MOUNTED AS HIGH AS POSSIBLE. INTERLOCK STAT WITH CORRESPONDING EXHAUST FAN, SET FAN TO ENERGIZE ON RISE IN TEMPERATURE ABOVE 25°C (77°F).

GENERAL NOTES:

1. DO NOT SCALE DRAWINGS – ALL DIMENSIONS AND CONDITIONS SHALL BE CHECKED AND VERIFIED BY THE CONTRACTOR AT THE SITE.
2. ALL WORK PERFORMED ON THIS BUILDING SHALL BE IN COMPLIANCE WITH ALL PERTINENT CODES, RULES, ORDINANCES AND REGULATIONS OF THE GOVERNING AUTHORITIES.
3. ALL WORK PERFORMED UNDER AND IN CONNECTION WITH THESE DRAWINGS AND SPECIFICATIONS SHALL BE IN STRICT COMPLIANCE WITH THE LATEST SAFETY AND HEALTH STANDARDS.

SYMBOLS:

- (X) KEY NOTE
- (0.050) AIR VOLUME IN CUBIC METERS PER SECOND (CMS)
- UC DOOR UNDERCUT
- TG 200x400 (8x16) TRANSFER GRILLE
- $ SINGLE POLE SWITCH – 20A RATED

ABBREVIATIONS:

AFF	ABOVE FINISH FLOOR
CF	CEILING FANS
CMS	CUBIC METERS PER SECOND
STATS	THERMOSTATS

EXHAUST FAN SCHEDULE

NO.	TYPE	FAN CMS	DRIVE	HP	SP mmH20	ELECTRICAL DATA	SWITCH
EF-1	WALL	0.330	DIRECT	1/6	13	220/1/50	@ WALL
EF-2	WALL	0.035	DIRECT	FRACT	9.5	220/1/50	@ WALL
EF-3	WALL	0.035	DIRECT	FRACT	9.5	220/1/50	W/ STAT

NOTES:
1. FANS SHALL HAVE LOW LEAKAGE GRAVITY LOUVER.

MAKE UP AIR HEATERS

NO.	BLOWER CMS	FUSE	KW	MIN. TEMP RISE °C	SP mmH20	ELECTRICAL DATA	CONTROL
MUA-1	0.280	60	10	20	13	220/1/50	REMOTE

NOTES:
1. PROVIDE REMOTE MOUNTED THERMOSTAT WITH LOCKING COVER.
2. INTERLOCK BLOWER OPERATION WITH EXHAUST FANS EF-1 & THERMOSTAT.
3. PROVIDE AIR SENSING SWITCH FOR HEATING OPERATION.

ELECTRIC UNIT HEATER SCHEDULE

NO.	CMS	KW	F.A.T. °C	ELECT. CHAR.	MOUNTING
EH-2	0.200	2.6	38	380/1/50	WALL HUNG
EH-4	0.200	4	38	380/1/50	WALL HUNG

NOTES:
1. UNIT HEATERS SHALL HAVE TAMPER PROOF INTEGRAL STATS.
2. COORDINATE LOCATION AND ORIENTATION IN FIELD.

CEILING FAN

NO.	BLADE SIZE mm	BLADE SIZE IN	VOLTAGE	SWITCH	REMARKS
CF-1	1320	52	220/1/50	@ WALL	3 SPEED REVERSIBLE MOTOR

NOTES:
1 INSTALL FANS 2.5M AFF.
2. PROVIDE WITH OUT LIGHT FIXTURE.
3. PROVIDE WITH REMOTE MOUNTED ON-OFF SWITCH SHOWN ON ELECTRICAL DRAWINGS.

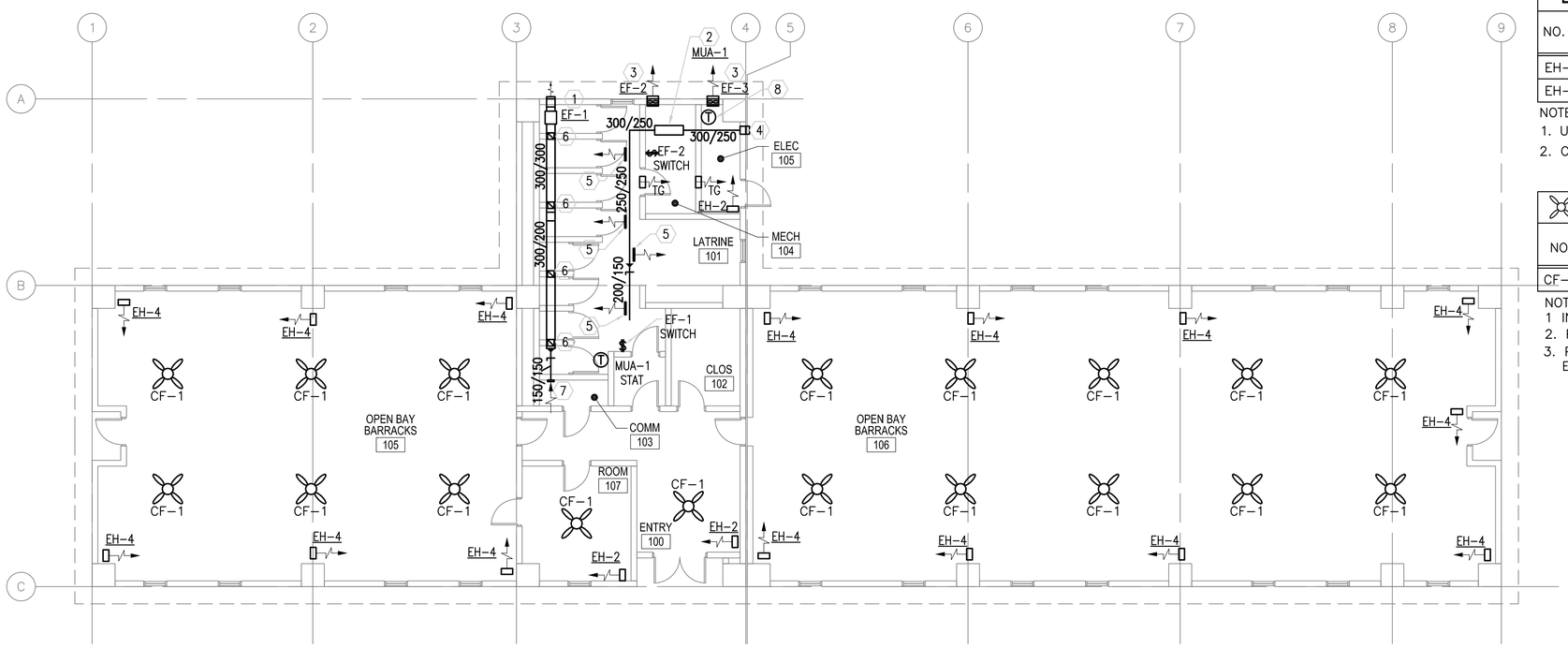

1 M-101 FLOOR PLAN - HVAC
SCALE: 1:100

LINEAR DIMENSIONS SHOWN ARE IN MILLIMETERS (MM), UNLESS OTHERWISE NOTED

0 2000 4000
SCALE: 1:100

APPROVED:

A/E DESIGNER OF RECORD

SEAL:

COMMONWEALTH OF PENNSYLVANIA
REGISTERED PROFESSIONAL
MATTHEW R. SOTOSKY
ENGINEER
045576-E

US ARMY CORPS OF ENGINEERS
AFGHANISTAN ENGINEER DISTRICT

Mark	Description	Date	Appr.	Mark	Description	Date	Appr.

Date: 02/23/10 | Rev: 0
Design file no.
Drawing code:
File name: ANASSBMH-101XXX
Plot date: 02/09/2010
Plot scale: 1:100

Designed by: RML | Ckd by: CJM
Dwn by: JJN | Reviewed by: MRS
Submitted by: BAKER

U.S. ARMY CORPS OF ENGINEERS
AFGHANISTAN ENGINEER DISTRICT
APO AE 96338

Michael Baker Jr., Inc
A unit of Michael Baker Corporation
Airside Business Park
100 Airside Drive
Moon Township, PA 15108
www.mbakercorp.com

AFGHAN NATIONAL ARMY
REGIONAL MILITARY TRAINING CENTER
STANDARD DESIGN

SUPPORT STAFF BARRACKS
HVAC – FLOOR PLAN,
SCHEDULES AND DETAILS

Sheet reference number:
M-101

POWER

- DISTRIBUTION PANELBOARD
- NEW PANELBOARD – SURFACE
- NEW PANELBOARD – RECESSED
- GENERATOR
- TRANSFORMER (DRAWN TO SCALE)
- JUNCTION BOX
- JUNCTION BOX – CEILING
- FUSIBLE SAFETY SWITCH
- MOTOR
- MOTOR STARTING SWITCH – 220V, 20A RATED UNLESS OTHERWISE STATED
- ELECTRIC WATER HEATER
- CEILING FAN – REFER TO SPECIFICATION SECTION 26 20 00

RECEPTACLES

- DUPLEX 20A TYPE CEE 7/7 "SCHUKO STYLE" UNSWITCHED RECEPTACLE
- GF DUPLEX 20A TYPE CEE 7/7 "SCHUKO STYLE" UNSWITCHED RECEPTACLES – 10mA GROUND FAULT INTERRUPTER TYPE
- WP DUPLEX 20A TYPE CEE 7/7 "SCHUKO STYLE" UNSWITCHED TYPE WITH WEATHERPROOF COVER – 10mA GROUND FAULT INTERRUPTER TYPE
- EXP DUPLEX 20A TYPE CEE 7/7 "SCHUKO STYLE" UNSWITCHED RECEPTACLES – EXPLOSION PROOF
- * INDICATES MOUNT DEVICE ABOVE COUNTERTOP OR AT 1070mm ABOVE FINISHED FLOOR WHERE NO COUNTER IS TO BE INSTALLED.

LIGHTNING PROTECTION

- AIR TERMINAL 20mm O.D. X 450mm SOLID COPPER, NICKEL PLATED ON ADHESIVE BASE
- EQ EQUIPMENT AIR TERMINAL
- TEST WELL WITH GROUND ROD(S)
- GROUND ROD
- G GROUND PLATE
- MAIN GROUND CONDUCTER CONCEALED WITHIN CONSTRUCTION
- MAIN GROUND CONDUCTOR EXPOSED ON EXPOSED ON BUILDING EXTERIOR SURFACE
- GROUND CONDUCTOR CAD WELDED TO GROUND CABLE OR EQUIPMENT
- GROUND ROD TRIPOD, SPACED 3 METERS APART.
- LEVEL TO LEVEL CABLE

LIGHTING

- LIGHTING FIXTURE – SEE FIXTURE SCHEDULE FOR MORE INFORMATION
- EMERGENCY LIGHTING FIXTURE – SEE FIXTURE SCHEDULE FOR MORE INFORMATION
- DOWNLIGHT
- LIGHTING FIXTURE ON NORMAL/EMERGENCY
- WALL MOUNTED LIGHT FIXTURE
- E EXIT SIGN – DIRECTIONAL ARROWS AS INDICATED ON DRAWINGS
- REMOTE HEAD FOR BATTERY PACK
- $ SINGLE POLE SWITCH – 20A RATED
- $3 3–WAY SWITCH – 20A RATED
- $4 4–WAY SWITCH – 20A RATED
- LC LIGHTING CONTACTOR
- POLE MOUNTED SITE LIGHTING FIXTURE– NUMBER OF FIXTURES PER POLE AS INDICATED ON DRAWINGS
- EXTERIOR DIRECTIONAL LIGHTING FIXTURE
- a SMALL CASE LETTERS REPRESENTS LAMP(S) / SWITCHES.

TELECOMMUNICATIONS

- TELEPHONE OUTLET(S) @ 45cm AFF. U.N.O. WITH 20mm RACEWAY TERMINATED TO TELEDATA TERMINAL BOARD.
- DATA OUTLET(S) @ 45cm AFF. U.N.O. WITH 20mm RACEWAY TERMINATED TO TELEDATA TERMINAL BOARD.

TELECOMMUNICATIONS (CONTINUED)

- COMBINATION TELEPHONE/DATA OUTLET(S) @ 45cm AFF. U.N.O. WITH 27mm RACEWAY TERMINATED TO TELEDATA TERMINAL BOARD.
- W WALL MTD. TELEPHONE OUTLET WITH 20mm RACEWAY TO TELEDATA TERMINAL BOARD.
- (x)T INDICATES NUMBER OF TELEPHONE OUTLET(S) AND ASSOCIATED CABLING
- (x)D INDICATES NUMBER OF DATA OUTLET(S) AND ASSOCIATED CABLING
- (x)TF INDICATES NUMBER OF TELEPHONE OUTLETS AND ASSOCIATED CABLING WITH 1 OUTLET AND CABLE DEDICATED FOR FAX

SINGLE LINE SYMBOLS

- SWITCH
- BREAKER
- FUSE
- TRANSFORMER
- GROUND
- CONTACT (NORMALLY OPEN)
- CONTACT (NORMALLY CLOSED)
- TRANSFER SWITCH
- CURRENT TRANSFORMER
- INDICATES NEW ELECTRICAL EQUIPMENT
- C INDICATES NEW CONTROL WIRING AND CONDUIT
- EQUIPMENT OUTLINE

MISCELLANEOUS

- BRANCH CIRCUIT WIRING, SURFACE MOUNTED ON WALLS
- BRANCH CIRCUIT WIRING – 6mm²
- BRANCH CIRCUIT WIRING – UNDER FLOOR
- HOME RUN BACK TO PANEL
- CONDUIT TURNED DOWN
- CONDUIT TURNED UP
- LV LOW VOLTAGE WIRING AND CONDUIT
- INDICATES CONTINUATION OF LINE

FIRE ALARM

- FACP FIRE ALARM CONTROL PANEL WITH BATTERY BACKUP
- F FIRE ALARM PULL STATION

FIRE ALARM (CONTINUED)

- F FIRE ALARM STROBE – WALL MOUNTED
- F FIRE ALARM AUDIBLE/STROBE – WALL MOUNTED
- F FIRE ALARM HORN/STROBE – WALL MOUNTED
- S SMOKE DETECTOR
- H HEAT DETECTOR CEILING MOUNTED
- D DUCT DETECTOR – PROVIDED BY EC, INSTALLED BY MC AND CONNECTED BY EC

DENOTATIONS & ABBREVIATIONS

AFF	ABOVE FINISHED FLOOR
C	CEILING MOUNTED
E	EMERGENCY
EC	ELECTRICAL CONTRACTOR
EPO	EMERGENCY POWER OFF
EXP	EXPLOSION PROOF
F	FIRE ALARM
FF	FLUSH FLOOR MOUNTED
FL	FLUORESCENT
FO	FIBER OPTIC
FSS	FUSED SAFETY SWITCH
GF	GROUND FAULT INTERRUPTER
GC	GENERAL CONTRACTOR
IG	ISOLATED GROUND
K	KEY
LV	LOW VOLTAGE
M	MOTOR
MC	MECHANICAL CONTRACTOR
NE	NORMAL/EMERGENCY
NFSS	NON–FUSED SAFETY SWITCH
PA	PAGING SYSTEM
PLC	PLUMBING CONTRACTOR
SL	SINGLE LINE
T	TELEPHONE

DENOTATIONS & ABBREVIATIONS (CONT.)

TP	TAMPER PROOF
UE	UNDERGROUND ELECTRIC
W	WALL MOUNTED
WP	WEATHERPROOF WITH GROUND FAULT INTERRUPTION
WT	WATER TIGHT

GENERAL PROJECT NOTES:

G1. UNLESS OTHERWISE NOTED, PROVIDE ALL EQUIPMENT SHOWN ON THE PLANS. THE ELECTRICAL CONTRACTOR SHALL COORDINATE ALL SYMBOLS SHOWN ON THE PLANS WITH THE SYMBOL LIST. IT SHALL BE THE RESPONSIBILITY OF THE CONTRACTOR TO VERIFY THE INTENT OF ANY SYMBOL THAT IS SHOWN ON THE PLANS AND NOT INDICATED ON THE SYMBOL LIST WITH THE ENGINEER PRIOR TO BID.

G2. THE CONTRACTOR SHALL VERIFY THE LOCATION OF ALL UNDERGROUND UTILITIES WITHIN THE CONSTRUCTION AREA THREE (3) WORKING DAYS NOTICE BEFORE COMMENCING DIGGING. NOTIFY THE LOCAL AUTHORITY HAVING JURISDICTION AND WAIT THE REQUIRED TIME BEFORE COMMENCING TO DIG.

G3. THE CONTRACTOR SHALL COORDINATE CONDUIT RUNS, LIGHTING FIXTURES AND OTHER EQUIPMENT LOCATIONS WITH THE OTHER TRADE CONTRACTORS TO AVOID CONFLICTS.

G4. WHERE VOLTAGES AND FREQUENCIES ON THE DRAWINGS AND IN THE SPECIFICATIONS DIFFER FROM THE LOCAL ONES, ALL WORK SHALL BE PERFORMED USING THE LOCAL VOLTAGES AND FREQUENCIES.

G5. THE MINIMUM WIRE SIZE ON THE PROJECT SHALL BE 4mm². THE MINIMUM CONDUIT SIZE SHALL BE 20mm. THE MINIMUM BREAKER SIZE SHALL BE 20 AMPS.

G6. THE CONTRACTOR SHALL PUT A MAXIMUM OF 6 DUPLEX RECEPTACLES ON A 20A SINGLE POLE CIRCUIT.

G7. WHERE THE 1010 SCOPE REVIEW, 1015 TECHNICAL REVIEW, DRAWINGS, AND SPECIFICATIONS DIFFER FROM AMERICAN CODES OR STANDARDS, THE 1010, 1015, DRAWINGS, AND SPECIFICATIONS SHALL RULE.

G8. ALL CONDUIT AND DEVICES SHALL BE SURFACE MOUNTED UNLESS OTHERWISE INDICATED.

G9. CONTRACTOR SHALL COORDINATE ALL WORK WITH ALL OTHER TRADES TO ENSURE ALL WORK IS COMPLETED IN A PROFESSIONAL, WORKMAN–LIKE MANNER.

APPROVED:

A/E DESIGNER OF RECORD

SEAL:

COMMONWEALTH OF PENNSYLVANIA
REGISTERED PROFESSIONAL
JOSEPH R. GAUS
1/29/10
ENGINEER
PE-074251

US ARMY CORPS OF ENGINEERS
AFGHANISTAN ENGINEER DISTRICT

Mark	Description	Date	Appr.	Mark	Description	Date	Appr.

Rev: 0
Date: 2/23/10
Design file no.
Drawing code:
File name:
Plot date:
Plot scale:

Designed by: RAJ
Dwn by: BJB
Ckd by: JRG
Reviewed by: JRG
Submitted by: BAKER

U.S. ARMY CORPS OF ENGINEERS
AFGHANISTAN ENGINEER DISTRICT
APO AE 96338

Michael Baker Jr., Inc
A unit of Michael Baker Corporation
Airside Business Park
100 Airside Drive
Moon Township, PA 15108
www.mbakercorp.com

AFGHAN NATIONAL ARMY
REGIONAL MILITARY TRAINING CENTER
STANDARD DESIGN

SUPPORT STAFF BARRACKS

ELECTRICAL SYMBOLS & ABBREVIATIONS

Sheet reference number:
E–001

GENERAL NOTES:

1. REFER TO DRAWING #E-001 FOR THE ELECTRICAL SYMBOLS LIST.
2. EXIT SIGNS SHALL BE WIRED AHEAD OF ANY LOCAL SWITCHING ON CIRCUITS. SEE WIRING DIAGRAM DETAIL 7, ON DRAWING #E-501.
3. REFER TO DRAWING #E-601 FOR THE LIGHTING FIXTURE SCHEDULE.
4. REFER TO DRAWING #E-501 FOR THE POWER RISER.
5. REFER TO DRAWING #E-602 FOR PANEL SCHEDULES.
6. LIGHT FIXTURES INDICATED AS EMERGENCY SHALL BE PROVIDED WITH A BATTERY BACKUP BALLAST. SEE WIRING DIAGRAM DETAIL 8, ON DRAWING #E-501.

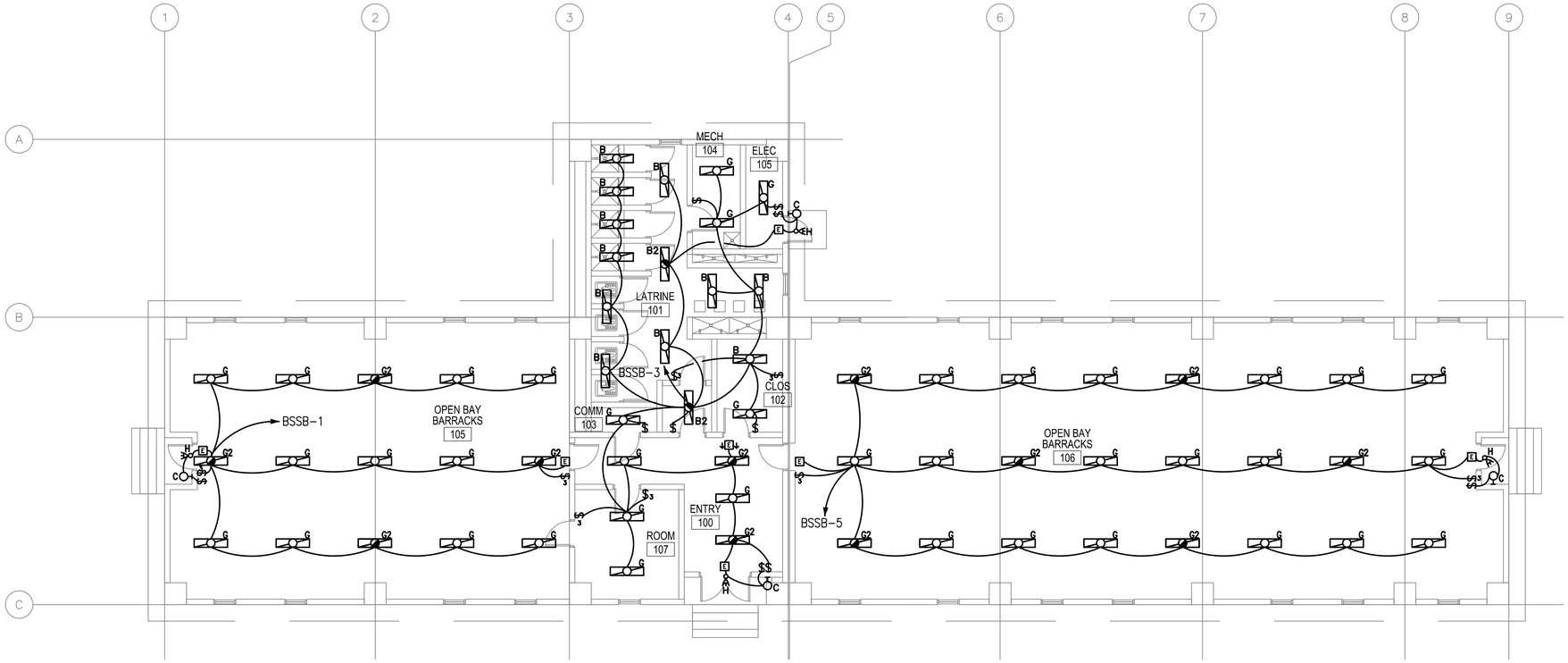

1
E-101

SUPPORT STAFF BARRACKS FLOOR PLAN - LIGHTING

SCALE: 1:100

0 2000 4000
SCALE: 1:100

APPROVED:

A/E DESIGNER OF RECORD

SEAL:

COMMONWEALTH OF PENNSYLVANIA
REGISTERED PROFESSIONAL
JOSEPH R. GAUS
ENGINEER
PE-074251
1/29/10

US ARMY CORPS OF ENGINEERS
AFGHANISTAN ENGINEER DISTRICT

Mark	Description	Date	Appr.

Mark	Description	Date	Appr.

Rev: 0
Date: 2/23/10
Designed by: RAJ
Dwn by: BJB
Ckd by: JRG
Reviewed by: JRG
Submitted by: BAKER
Design file no.
Drawing code:
File name:
Plot date:
Plot scale:

U.S. ARMY CORPS OF ENGINEERS
AFGHANISTAN ENGINEER DISTRICT
APO AE 96338

Michael Baker Jr., Inc.
A unit of Michael Baker Corporation
Airside Business Park
100 Airside Drive
Moon Township, PA 15108
www.mbakercorp.com

AFGHAN NATIONAL ARMY
REGIONAL MILITARY TRAINING CENTER
STANDARD DESIGN

SUPPORT STAFF BARRACKS

ELECTRICAL LIGHTING PLAN

Sheet reference number:
E-101

GENERAL NOTES:

1. REFER TO DRAWING #E-001 FOR THE ELECTRICAL SYMBOLS LIST.
2. REFER TO DRAWING #E-501 FOR THE POWER RISER.
3. REFER TO DRAWING #E-602 FOR PANEL SCHEDULES.
4. COORDINATE EXACT MOUNTING LOCATION OF DISCONNECTING MEANS FOR MECHANICAL AND PLUMBING EQUIPMENT IN THE FIELD.
5. FUSIBLE SAFETY SWITCHES THAT ARE NOT OTHERWISE IDENTIFIED SHALL BE 380V, 1P, 30A FUSED SAFETY SWITCHES WITH 20A FUSES.

NUMBERED NOTES:

1. PROVIDE POWER CONNECTION TO MAKE-UP AIR UNIT #1. SEE DRAWINGS #E-602 AND #M-101 FOR MORE INFORMATION.
2. PROVIDE POWER CONNECTION TO ELECTRIC UNIT HEATER #4. SEE DRAWINGS #E-602 AND #M-101 FOR MORE INFORMATION.
3. PROVIDE POWER CONNECTION TO ELECTRIC UNIT HEATER #2. SEE DRAWINGS #E-602 AND #M-101 FOR MORE INFORMATION.
4. PROVIDE POWER CONNECTION TO EXHAUST FAN #1. SEE DRAWINGS #E-602 AND #M-101 FOR MORE INFORMATION.
5. PROVIDE POWER CONNECTION TO EXHAUST FAN #2. SEE DRAWINGS #E-602 AND #M-101 FOR MORE INFORMATION.
6. PROVIDE POWER CONNECTION TO EXHAUST FAN #3. SEE DRAWINGS #E-602 AND #M-101 FOR MORE INFORMATION.
7. PANEL BSSB1 & BSSB2
8. NEMA 3R, 380V, 3P, 30A FUSED DISCONNECT FUSED AT 30A. SEE PLUMBING DRAWINGS FOR EXACT LOCATION OF WATER HEATER.
9. SEE DRAWING #E-602 FOR WIRE AND CONDUIT SIZE.
10. PROVIDE A 1200mm X 2400mm SHEET OF PLYWOOD PAINTED WITH FIRE RESISTANT PAINT FOR MOUNTING TELECOMMUNICATIONS EQUIPMENT.
11. PROVIDE CONDUIT STUB UP IN THE ROOM FOR INCOMING TELECOMMUNICATIONS SERVICES FROM THE CENTRAL COMMUNICATIONS SYSTEM IN THE GARRISON.
12. PROVIDE 220V, 1ø, 60A MOTOR SNAP SWITCH IN NEMA 3R ENCLOSURE.

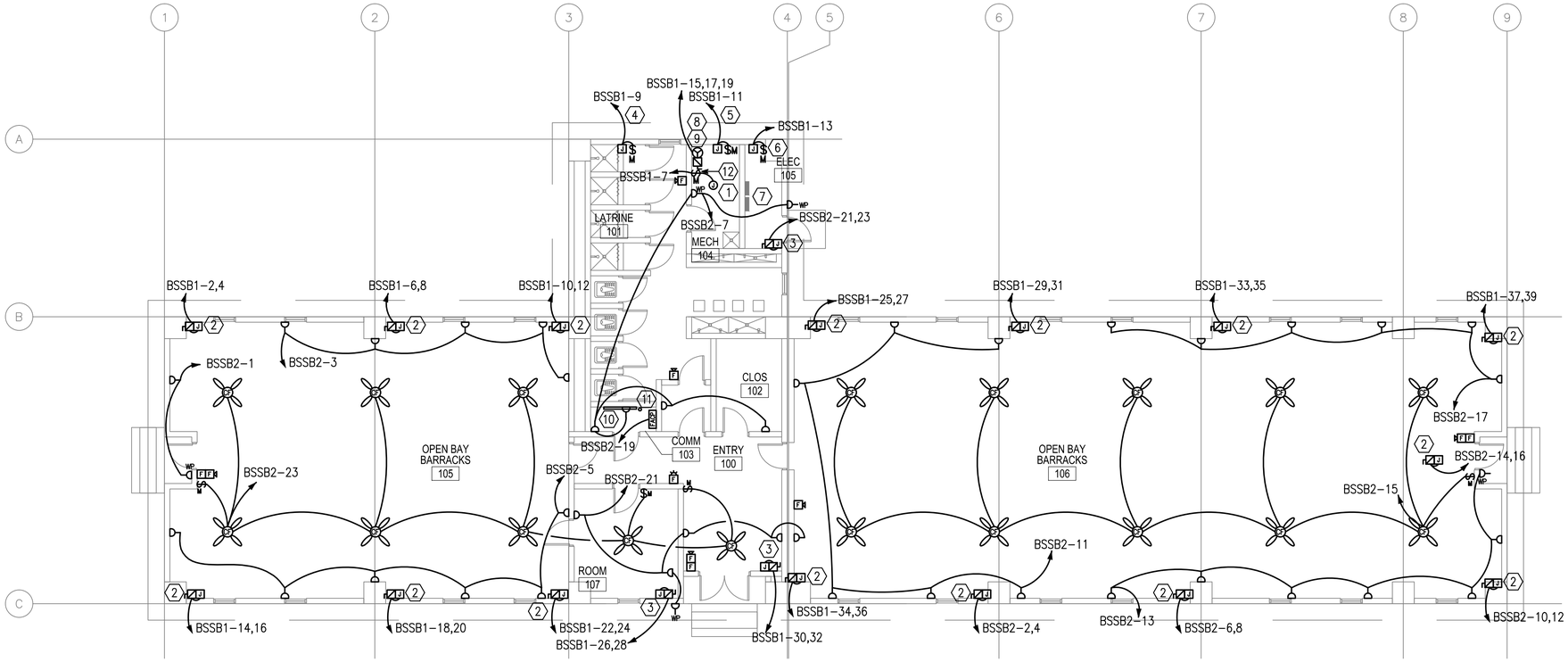

1
E-102

SUPPORT STAFF BARRACKS FLOOR PLAN - POWER & SYSTEMS

SCALE: 1:100

0 2000 4000
SCALE: 1:100

APPROVED:

A/E DESIGNER OF RECORD

SEAL:

COMMONWEALTH OF PENNSYLVANIA
REGISTERED PROFESSIONAL
JOSEPH R. GAUS
ENGINEER
PE-074251

US ARMY CORPS OF ENGINEERS
AFGHANISTAN ENGINEER DISTRICT

Mark	Description	Date	Appr.	Mark	Description	Date	Appr.

Designed by: RAJ
Dwn by: BJB
Ckd by: JRG
Reviewed by: JRG
Submitted by: BAKER
Date: 2/23/10
Rev: 0
Design file no.
Drawing code:
File name:
Plot date:
Plot scale:

U.S. ARMY CORPS OF ENGINEERS
AFGHANISTAN ENGINEER DISTRICT
APO AE 96338

Michael Baker Jr., Inc.
A unit of Michael Baker Corporation
Airside Business Park
100 Airside Drive
Moon Township, PA 15108
www.mbakercorp.com

AFGHAN NATIONAL ARMY
REGIONAL MILITARY TRAINING CENTER
STANDARD DESIGN

SUPPORT STAFF BARRACKS
ELECTRICAL POWER & SYSTEMS PLAN

Sheet reference number:
E-102

GENERAL NOTES:

1. REFER TO DRAWING #E-001 FOR THE ELECTRICAL SYMBOLS LIST.
2. REFER TO DRAWING #E-501 FOR THE POWER RISER.
3. REFER TO DRAWING #E-602 FOR PANEL SCHEDULES.

NUMBERED NOTES:

1. (1) 120.0mm² BARE, TINNED, COPPER COUNTERPOISE GROUND 700mm BELOW GRADE.
2. INSTALL DOWN CONDUCTOR IN 25mm SCHEDULE 80 PVC CONDUIT TO 20mm DIAMETER X 3 METERS SOLID COPPER TINNED GROUND ROD. (TYPICAL)
3. CADWELD TO BUILDING STRUCTURE AT 18 METERS ON CENTER AROUND THE ENTIRE PERIMETER OF THE BUILDING. (TYPICAL)
4. 120mm² LIGHTNING PROTECTION CABLE.
5. AIR TERMINAL. TERMINALS SHALL BE PLACED AT A MAXIMUM OF 6M ON CENTER PER NFPA 780 PARA. 4.8.2.1, AND WITHIN 0.6M OF RIDGE ENDS PER NFPA 780 PARA. 4.8 (TYPICAL)
6. 700mm MIN. (TYP) BETWEEN FOUNDATION AND GROUND LOOP.

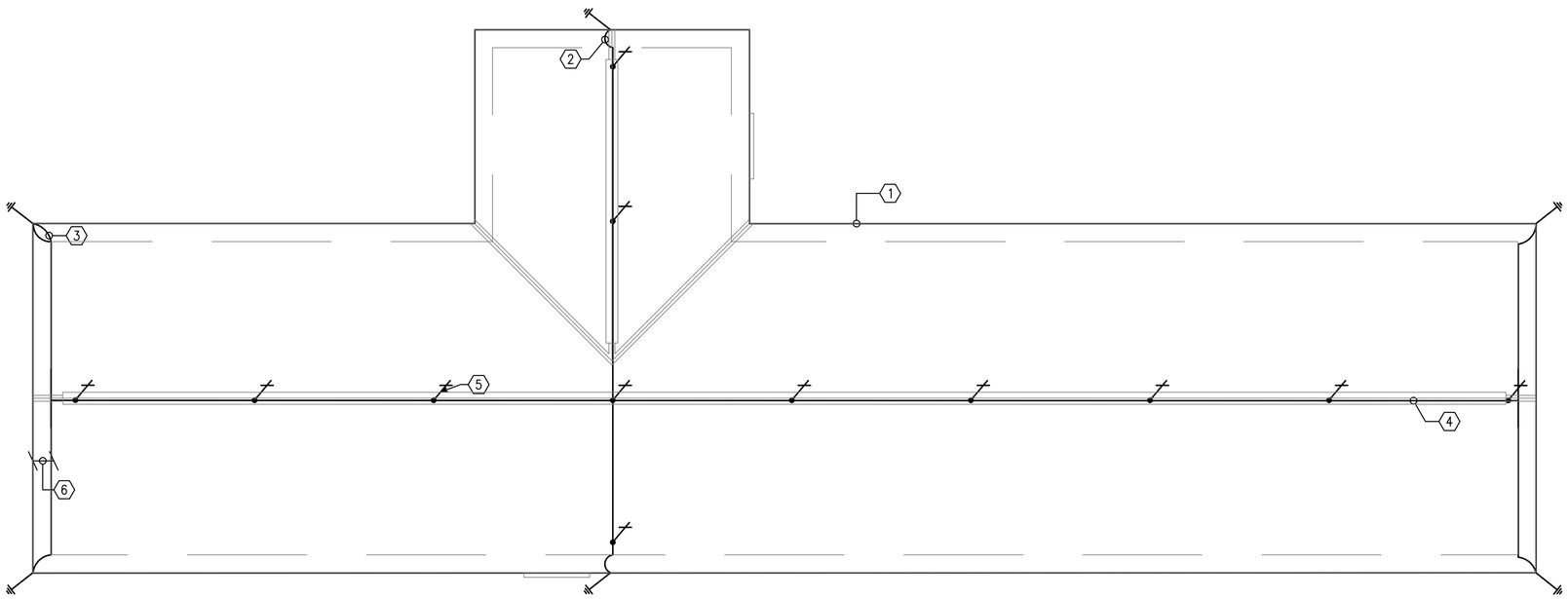

1 / E-103 SUPPORT STAFF BARRACKS FLOOR PLAN - LIGHTNING PROTECTION

SCALE: 1:100

0 2000 4000
SCALE: 1:100

APPROVED:

A/E DESIGNER OF RECORD

SEAL:

COMMONWEALTH OF PENNSYLVANIA
REGISTERED PROFESSIONAL
JOSEPH R. GAUS
ENGINEER
PE-074251

US ARMY CORPS OF ENGINEERS
AFGHANISTAN ENGINEER DISTRICT

Mark	Description	Date	Appr.	Mark	Description	Date	Appr.

Rev: 0
Date: 2/23/10
Design file no.
Drawing code:
File name:
Plot date:
Plot scale:

Designed by: RAJ
Dwn by: BJB
Ckd by: JRG
Reviewed by: JRG
Submitted by: BAKER

U.S. ARMY CORPS OF ENGINEERS
AFGHANISTAN ENGINEER DISTRICT
APO AE 96338

Michael Baker Jr., Inc.
A unit of Michael Baker Corporation
Airside Business Park
100 Airside Drive
Moon Township, PA 15108
www.mbakercorp.com

AFGHAN NATIONAL ARMY
REGIONAL MILITARY TRAINING CENTER
STANDARD DESIGN

SUPPORT STAFF BARRACKS

ELECTRICAL LIGHTNING PROTECTION PLAN

Sheet reference number:
E-103

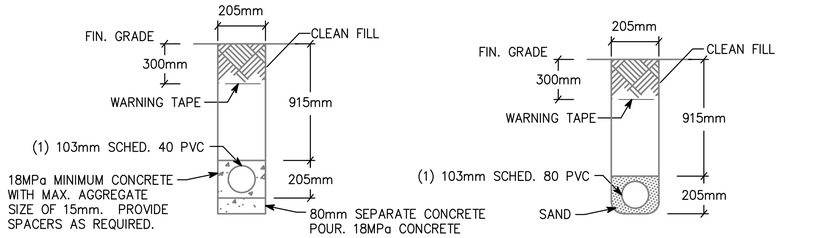

NOTE: PVC CONDUIT SHALL BE DIRECT BURIED SCHEDULE 80 FOR NO TRAFFIC AREAS AND CONCRETE-ENCASED SCHEDULE 40 FOR UNDER ROADWAYS OR TRAFFIC AREAS.

1 / E-501 TYPICAL DUCT BANK DETAILS FOR CONDUIT IN SAND OR CONCRETE

SCALE: N.T.S.

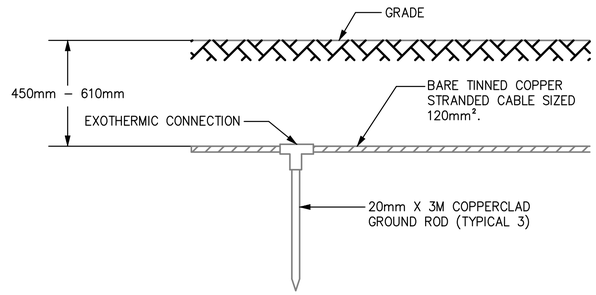

2 / E-501 GROUND TRIPOD SYSTEM DETAIL - ELEVATION

SCALE: N.T.S.

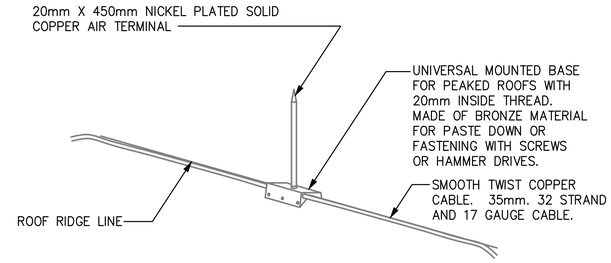

3 / E-501 LIGHTNING PROTECTION AIR TERMINAL DETAIL

SCALE: N.T.S.

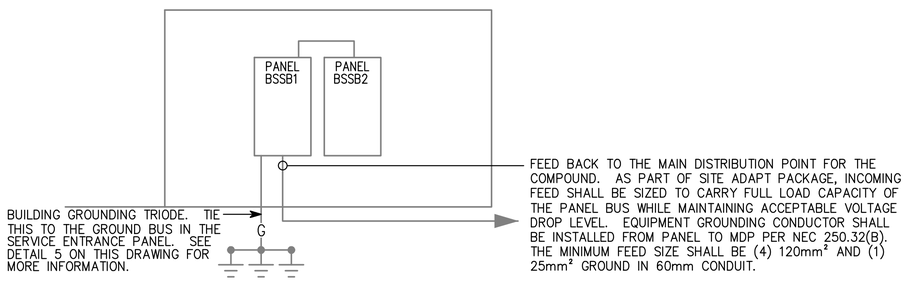

4 / E-501 BSSB RISER DIAGRAM

SCALE: N.T.S.

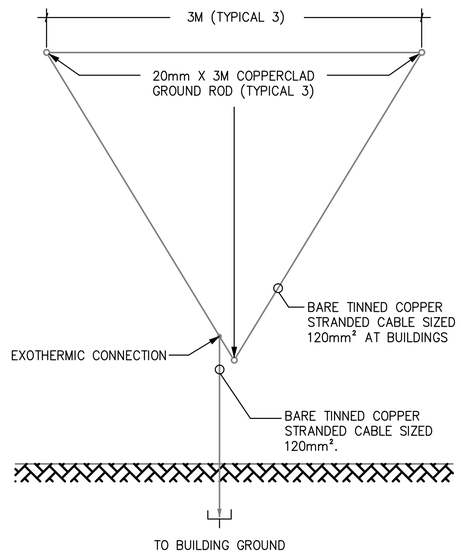

5 / E-501 GROUND TRIPOD SYSTEM DETAIL - PLAN

SCALE: N.T.S.

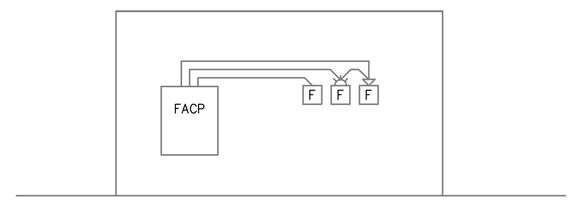

6 / E-501 TYPICAL ONE STORY FIRE ALARM RISER

SCALE: N.T.S.

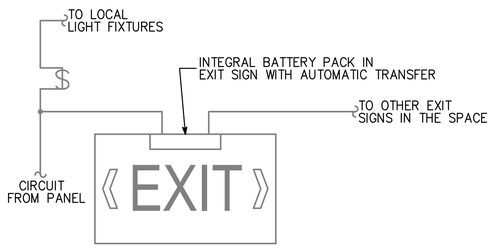

7 / E-501 EXIT SIGN WIRING DIAGRAM

SCALE: N.T.S.

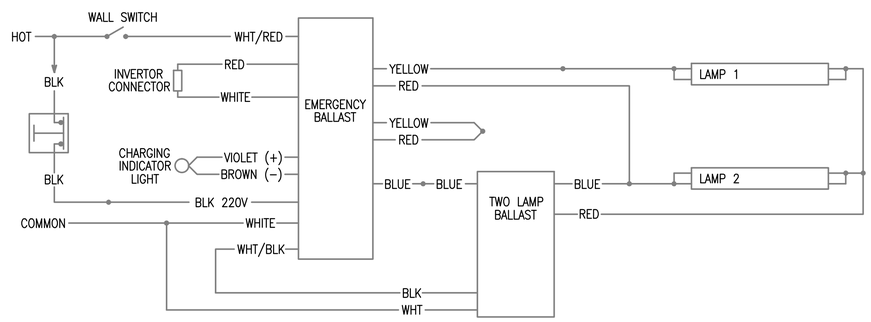

8 / E-501 EMERGENCY FIXTURE WIRING DIAGRAM

SCALE: N.T.S.

APPROVED:

A/E DESIGNER OF RECORD

SEAL:

COMMONWEALTH OF PENNSYLVANIA
REGISTERED PROFESSIONAL
JOSEPH R. GAUS
1/29/10
ENGINEER
PE-074251

US ARMY CORPS OF ENGINEERS
AFGHANISTAN ENGINEER DISTRICT

Mark	Description	Date	Appr.	Mark	Description	Date	Appr.

Rev: 0
Date: 2/23/10
Design file no.
Drawing code:
File name:
Plot date:
Plot scale:

Designed by: RAJ
Dwn by: BJB
Ckd by: JRG
Reviewed by: JRG
Submitted by: BAKER

U.S. ARMY CORPS OF ENGINEERS
AFGHANISTAN ENGINEER DISTRICT
APO AE 96338

Michael Baker Jr., Inc
A unit of Michael Baker Corporation
Airside Business Park
100 Airside Drive
Moon Township, PA 15108
www.mbakercorp.com

AFGHAN NATIONAL ARMY
REGIONAL MILITARY TRAINING CENTER
STANDARD DESIGN

SUPPORT STAFF BARRACKS

ELECTRICAL DETAILS

Sheet reference number:
E-501

(A) LARGER OF THE TWO SIZES GIVEN IN THE TABLES BELOW	
GROUNDING ELECTRODE CONDUCTOR (BASED ON AIC RATING)	
AIC RATING OF SERVICE EQUIPMENT	NECESSARY GROUNDING ELECTRODE CONDUCTOR SIZE
10K	(1) 35mm²
14K	(1) 50mm²
18K	(1) 70mm²
22K	(1) 70mm²
25K	(1) 70mm²
30K	(1) 95mm²
35K	(1) 120mm²
42K	(1) 150mm²
65K	(1) 185mm²
100K	(1) 300mm²
125K	(2) 185mm²
200K	(2) 300mm²
GROUNDING ELECTRODE CONDUCTOR (BASED ON NEC TABLE 250.66)	
SIZE OF LARGEST UNGROUNDED SERVICE CONDUCTOR OR EQUIVALENT AREA FOR PARALLEL CONDUCTORS	NECESSARY GROUNDING ELECTRODE CONDUCTOR SIZE
350 kcmil OR SMALLER	35mm²
OVER 350 kcmil TO 600 kcmil	70mm²
OVER 600 kcmil TO 1100 kcmil	70mm²
OVER 1100 kcmil	95mm²
NOTE: ALL SIZES ARE BASED ON COPPER CONDUCTORS.	

(B) EQUIPMENT GROUNDING CONDUCTOR	
RATING OR SETTING OF AUTOMATIC OVERCURRENT DEVICE IN CIRCUIT AHEAD OF EQUIPMENT, CONDUIT, ETC, NOT EXCEEDING (AMPERES)	NECESSARY EQUIPMENT GROUNDING CONDUCTOR SIZE
15	2.5mm²
20	4.0mm²
30	6.0mm²
40	6.0mm²
60	6.0mm²
100	10mm²
200	16mm²
300	25mm²
400	25mm²
500	35mm²
600	50mm²
800	70mm²
1000	70mm²
1200	95mm²
1600	120mm²
2000	150mm²
2500	185mm²
3000	240mm²
4000	300mm²
5000	400mm²
6000	400mm²
NOTE: ALL SIZES ARE BASED ON COPPER CONDUCTORS.	

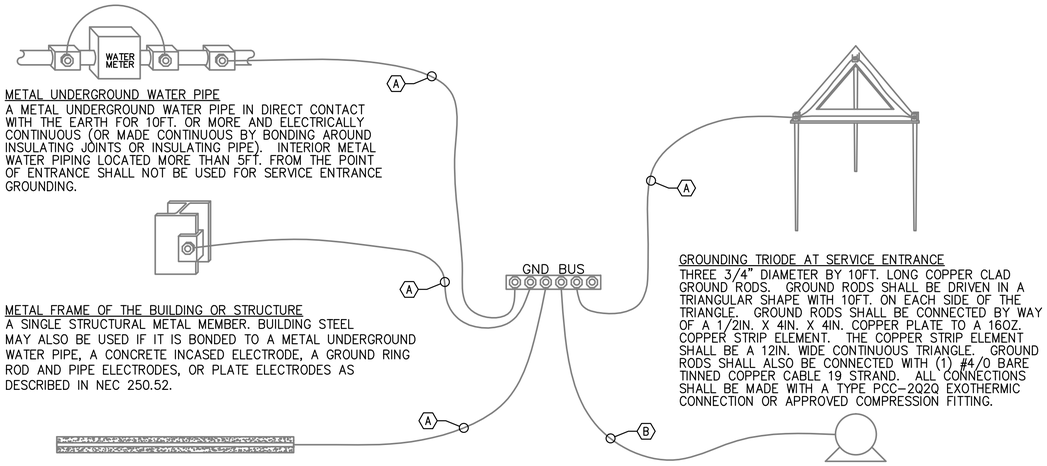

METAL UNDERGROUND WATER PIPE
A METAL UNDERGROUND WATER PIPE IN DIRECT CONTACT WITH THE EARTH FOR 10FT. OR MORE AND ELECTRICALLY CONTINUOUS (OR MADE CONTINUOUS BY BONDING AROUND INSULATING JOINTS OR INSULATING PIPE). INTERIOR METAL WATER PIPING LOCATED MORE THAN 5FT. FROM THE POINT OF ENTRANCE SHALL NOT BE USED FOR SERVICE ENTRANCE GROUNDING.

METAL FRAME OF THE BUILDING OR STRUCTURE
A SINGLE STRUCTURAL METAL MEMBER. BUILDING STEEL MAY ALSO BE USED IF IT IS BONDED TO A METAL UNDERGROUND WATER PIPE, A CONCRETE INCASED ELECTRODE, A GROUND RING ROD AND PIPE ELECTRODES, OR PLATE ELECTRODES AS DESCRIBED IN NEC 250.52.

CONCRETE ENCASED ELECTRODE
AN ELECTRODE ENCASED BY AT LEAST 2IN. OF CONCRETE , LOCATED WITHIN AND NEAR THE BOTTOM OF A CONCRETE FOUNDATION OR FOOTING THAT IS IN DIRECT CONTACT WITH THE EARTH, CONSISTING OF AT LEAST 20FT. OF ONE OR MORE BARE OR ZINC GALVANIZED OR OTHER ELECTRICALLY CONDUCTIVE COATED STEEL REINFORCING BARS OR RODS OF NOT LESS THAN 1/2" DIAMETER OR BARE COPPER CONDUCTOR NOT SMALLER THAN 4AWG.

GROUNDING TRIODE AT SERVICE ENTRANCE
THREE 3/4" DIAMETER BY 10FT. LONG COPPER CLAD GROUND RODS. GROUND RODS SHALL BE DRIVEN IN A TRIANGULAR SHAPE WITH 10FT. ON EACH SIDE OF THE TRIANGLE. GROUND RODS SHALL BE CONNECTED BY WAY OF A 1/2IN. X 4IN. X 4IN. COPPER PLATE TO A 16OZ. COPPER STRIP ELEMENT. THE COPPER STRIP ELEMENT SHALL BE A 12IN. WIDE CONTINUOUS TRIANGLE. GROUND RODS SHALL ALSO BE CONNECTED WITH (1) #4/0 BARE TINNED COPPER CABLE 19 STRAND. ALL CONNECTIONS SHALL BE MADE WITH A TYPE PCC-2Q2Q EXOTHERMIC CONNECTION OR APPROVED COMPRESSION FITTING.

LOAD OR DOWNSTREAM PANEL
ALL LOADS IN THE BUILDING SHALL HAVE AN EQUIPMENT GROUNDING CONDUCTOR PULLED TO THEM.

1
E-502

SERVICE ENTRANCE GROUNDING DETAIL

SCALE: N.T.S.

APPROVED:

A/E DESIGNER OF RECORD

SEAL:

COMMONWEALTH OF PENNSYLVANIA
REGISTERED PROFESSIONAL
JOSEPH R. GAUS
ENGINEER
PE-074251

US ARMY CORPS OF ENGINEERS
AFGHANISTAN ENGINEER DISTRICT

Mark	Description	Date	Appr.	Mark	Description	Date	Appr.

Designed by: RAJ
Dwn by: BJB
Ckd by: JRG
Reviewed by: JRG
Submitted by: BAKER
Date: 2/23/10
Rev: 0
Design file no.
Drawing code:
File name:
Plot date:
Plot scale:

U.S. ARMY CORPS OF ENGINEERS
AFGHANISTAN ENGINEER DISTRICT
APO AE 96338

Michael Baker Jr., Inc.
A unit of Michael Baker Corporation
Airside Business Park
100 Airside Drive
Moon Township, PA 15108
www.mbakercorp.com

AFGHAN NATIONAL ARMY
REGIONAL MILITARY TRAINING CENTER
STANDARD DESIGN

SUPPORT STAFF BARRACKS

ELECTRICAL DETAILS

Sheet reference number:
E-502

FIXTURE MARK 'B'

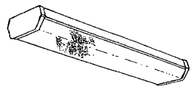

FIXTURE MARK 'C'

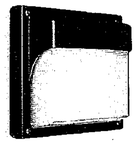

FIXTURE MARK 'G'

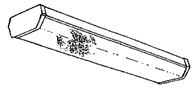

FIXTURE MARK 'H'

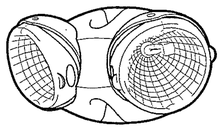

FIXTURE MARK 'E'

LIGHT FIXTURE SCHEDULE

FIXTURE MARK	STYLE NUMBER AND TYPE	NUMBER AND TYPE OF LAMPS	VOLTAGE	MOUNTING	NOTES
B	WET LOCATION WRAP AROUND SURFACE/PENDANT MOUNTED FLUORESCENT FIXTURE WITH PRISMATIC ACRYLIC LENS AND ELECTRONIC BALLAST	(2) 32W 3500K	220V – 1ø 50HZ	SURFACE MOUNTED	FURNISHED WITH ELECTRONIC BALLAST, VIRGIN ACRYLIC WRAP AROUND LENS.
B2	SAME AS FIXTURE 'B' WITH EMERGENCY BALLAST	(2) 32W 3500K	220V – 1ø 50HZ	SURFACE MOUNTED	FURNISHED WITH ELECTRONIC BALLAST, VIRGIN ACRYLIC WRAP AROUND LENS. EMERGENCY BALLAST WITH SELF TEST SWITCH.
C	INCANDESCENT ONE PIECE W/ APPROVED LENS STABILIZED HIGH IMPACT POLY CARBONATE.	(1) A19 – 100W INCANDESCENT	220V – 1ø 50HZ	WALL MOUNTED ABOVE EXTERIOR DOORS	
G	WRAP AROUND SURFACE/PENDANT MOUNTED FLUORESCENT FIXTURE WITH PRISMATIC ACRYLIC LENS AND ELECTRONIC BALLAST	(2) 32W 3500K	220V – 1ø 50HZ	SURFACE MOUNTED	FURNISHED WITH ELECTRONIC BALLAST, VIRGIN ACRYLIC WRAP AROUND LENS.
G2	SAME AS FIXTURE 'G' WITH EMERGENCY BALLAST	(2) 32W 3500K	220V – 1ø 50HZ	SURFACE MOUNTED	FURNISHED WITH ELECTRONIC BALLAST, VIRGIN ACRYLIC WRAP AROUND LENS. EMERGENCY BALLAST WITH SELF TEST SWITCH.
H	REMOTE HEAD EXTERIOR LIGHT HEAD POWERED FROM EXIT SIGN BATTERY– 12V DOUBLE HEAD CORROSION RESISTANT WITH UL34 WEATHERPROOF CONSTRUCTION	(2) 12W/12V HALOGEN LAMP	12V – 1ø 50HZ	EXTERIOR WALL MOUNTED AT TOP OF DOOR HEIGHT	
E	UNIVERSAL MOUNT ENGINEER GRADE THERMOPLASTIC HOUSING EXIT SIGN WITH LED LAMPS, RED LETTERS 6" IN HEIGHT WITH ARROWS AS INDICATED, WITH 12V CADMIUM BATTERY WITH REMOTE HEAD CAPABILITY	LED LAMPS	220V – 1ø 50HZ	UNIVERSAL MOUNTING	

APPROVED:

A/E DESIGNER OF RECORD

SEAL:

US ARMY CORPS OF ENGINEERS
AFGHANISTAN ENGINEER DISTRICT

Mark	Description	Date	Appr.

Mark	Description	Date	Appr.

U.S. ARMY CORPS OF ENGINEERS
AFGHANISTAN ENGINEER DISTRICT
APO AE 96338

Michael Baker Jr., Inc.
A unit of Michael Baker Corporation
Airside Business Park
100 Airside Drive
Moon Township, PA 15108
www.mbakercorp.com

Designed by: RAJ
Dwn by: BJB
Ckd by: JRG
Reviewed by: JRG
Submitted by: BAKER
Date: 2/23/10
Rev: 0
Design file no.
Drawing code:
File name:
Plot date:
Plot scale:

AFGHAN NATIONAL ARMY
REGIONAL MILITARY TRAINING CENTER
STANDARD DESIGN

SUPPORT STAFF BARRACKS
ELECTRICAL LIGHT FIXTURE SCHEDULE

Sheet reference number:
E–601

PANELBOARD BSSB1 SURFACE MOUNTED
225 AMP. MAIN LUGS (OR) 225 AMP. MAIN BREAKER W/ 225 AMP. TRIP
CIRCUIT BREAKER TYPE 380/220 VOLTS 3 PHASE 4 WIRE 50 HZ 225 AMP. BUS

CKT. NO.	TRIP AMPS	NO. POLES	WIRE MM 2	GND MM2	CONDUIT MM	LOAD SERVED	LOAD-KVA A0	LOAD-KVA B0	LOAD-KVA C0	LOAD-KVA A0	LOAD-KVA B0	LOAD-KVA C0	LOAD SERVED	CONDUIT MM	GND MM2	WIRE MM2	NO. POLES	TRIP AMPS	CKT. NO.
1	20	1	4.0	4.0	20	LIGHTING – RM 106	1.0			2.0			ELECTRIC HEAT #4 – RM 106	20	4.0	4.0	2	20	2
3	20	1	4.0	4.0	20	LIGHTING – RM 100–105, 108		1.3			2.0								4
5	20	1	4.0	4.0	20	LIGHTING – OPEN RM 107			1.6			2.0	ELECTRIC HEAT #4 – RM 106	20	4.0	4.0	2	20	6
7	60	1	25.0	6.0	25	MAKE UP AIR #1 – RM 104	10.0			2.0									8
9	20	1	4.0	4.0	20	EXHAUST FAN #1 – RM 101		0.5			2.0		ELECTRIC HEAT #4 – RM 106	20	4.0	4.0	2	20	10
11	20	1	4.0	4.0	20	EXHAUST FAN #2 – RM 104			0.5			2.0							12
13	20	1	4.0	4.0	20	EXHAUST FAN #3 – RM 105	0.5			2.0			ELECTRIC HEAT #4 – RM 106	20	4.0	4.0	2	20	14
15	30	3	6.0	6.0	20	WATER HEATER – RM 104		5.0			2.0								16
17									5.0			2.0	ELECTRIC HEAT #4 – RM 106	20	4.0	4.0	2	20	18
19							5.0			2.0									20
21	20	2	4.0	4.0	20	ELECTRIC HEAT #2 – RM 105		1.3			2.0		ELECTRIC HEAT #4 – RM 106	20	4.0	4.0	2	20	22
23									1.3			2.0							24
25	20	2	4.0	4.0	20	ELECTRIC HEAT #4 – RM 107	2.0			1.3			ELECTRIC HEAT #2 – RM 108	20	4.0	4.0	2	20	26
27								2.0			1.3								28
29	20	2	4.0	4.0	20	ELECTRIC HEAT #4 – RM 107			2.0			1.3	ELECTRIC HEAT #2 – RM 100	20	4.0	4.0	2	20	30
31							2.0			1.3									32
33	20	2	4.0	4.0	20	ELECTRIC HEAT #4 – RM 107		2.0			2.0		ELECTRIC HEAT #4 – RM 107	20	4.0	4.0	2	20	34
35									2.0			2.0							36
37	20	2	4.0	4.0	20	ELECTRIC HEAT #4 – RM 107	2.0			9.3			PANEL BSSB2	40	16.0	50.0	3	100	38
39								2.0			9.3								40
41	20	1				SPARE						9.1							42
							22.5	14.1	12.4	19.9	20.6	20.4							

TOTAL CONN. LOAD PER PHASE (KVA): A0 42.4 B0 34.7 C0 32.8

TOTAL CONN. LOAD 109.0 KVA. 70 % DEMAND = ESTIMATED DEMAND LOAD 76.3

* MAIN BREAKER SHALL BE 3P EARTH GROUND TYPE

PANELBOARD BSSB2 SURFACE MOUNTED
225 AMP. MAIN LUGS (OR) 100 AMP. MAIN BREAKER W/ 100 AMP. TRIP
CIRCUIT BREAKER TYPE 380/220 VOLTS 3 PHASE 4 WIRE 50 HZ 100 AMP. BUS

CKT. NO.	TRIP AMPS	NO. POLES	WIRE MM 2	GND MM2	CONDUIT MM	LOAD SERVED	LOAD-KVA A0	LOAD-KVA B0	LOAD-KVA C0	LOAD-KVA A0	LOAD-KVA B0	LOAD-KVA C0	LOAD SERVED	CONDUIT MM	GND MM2	WIRE MM2	NO. POLES	TRIP AMPS	CKT. NO.
1	20	1	4.0	4.0	20	RECEPTACLES – RM 106	0.4			2.0			ELECTRIC HEAT #4 – RM 107	20	4.0	4.0	2	20	2
3	20	1	4.0	4.0	20	RECEPTACLES – RM 106		1.2			2.0								4
5	20	1	4.0	4.0	20	RECEPTACLES – RM 106			1.2			2.0	ELECTRIC HEAT #4 – RM 107	20	4.0	4.0	2	20	6
7	20	1	4.0	4.0	20	RECEPTACLES – RM 101–103, EXT.	1.2			2.0									8
9	20	1				SPARE					2.0		ELECTRIC HEAT #4 – RM 107	20	4.0	4.0	2	20	10
11	20	1	4.0	4.0	20	RECEPTACLES – RM 107			1.2			2.0							12
13	20	1	4.0	4.0	20	RECEPTACLES – RM 107	1.2			2.0			ELECTRIC HEAT #4 – RM 107	20	4.0	4.0	2	20	14
15	20	1	4.0	4.0	20	RECEPTACLES – RM 107		1.5			2.0								16
17	20	1	4.0	4.0	20	RECEPTACLES – RM 107			1.2				SPARE				1	20	18
19	20	1	4.0	4.0	20	FACP – RM 103	0.5						SPARE				1	20	20
21	20	1	4.0	4.0	20	RECEPTACLES – RM 100,107,108		0.6					SPARE				1	20	22
23	20	1	4.0	4.0	20	CEILING FAN – RM 100,106,107			1.5				SPARE				1	20	24
25	20	1				SPARE							SPARE				1	20	26
27	20	1				SPARE							SPARE				1	20	28
29	20	1				SPARE							SPARE				1	20	30
31	20	1				SPARE							SPARE				1	20	32
33	20	1				SPARE							SPARE				1	20	34
35	20	1				SPARE							SPARE				1	20	36
37	20	1				SPARE							SPARE				1	20	38
39	20	1				SPARE							SPARE				1	20	40
41	20	1				SPARE							SPARE				1	20	42
							3.3	3.3	5.1	6.0	6.0	4.0							

TOTAL CONN. LOAD PER PHASE (KVA): A0 9.3 B0 9.3 C0 9.1

TOTAL CONN. LOAD 27.7 KVA. 70 % DEMAND = ESTIMATED DEMAND LOAD 19.39

* MAIN BREAKER SHALL BE 3P EARTH GROUND TYPE

APPROVED:

A/E DESIGNER OF RECORD

SEAL:

COMMONWEALTH OF PENNSYLVANIA
REGISTERED PROFESSIONAL
JOSEPH R. GAUS
ENGINEER
PE-074251
1/29/10

US ARMY CORPS OF ENGINEERS
AFGHANISTAN ENGINEER DISTRICT

Mark	Description	Date	Appr.

Mark	Description	Date	Appr.

Designed by: RAJ
Dwn by: BJB
Ckd by: JRG
Reviewed by: JRG
Submitted by: BAKER
Date: 2/23/10
Rev: 0
Design file no.
Drawing code:
File name:
Plot date:
Plot scale:

U.S. ARMY CORPS OF ENGINEERS
AFGHANISTAN ENGINEER DISTRICT
APO AE 96338

Michael Baker Jr., Inc.
A unit of Michael Baker Corporation
Airside Business Park
100 Airside Drive
Moon Township, PA 15108
www.mbakercorp.com

AFGHAN NATIONAL ARMY
REGIONAL MILITARY TRAINING CENTER
STANDARD DESIGN

SUPPORT STAFF BARRACKS

ELECTRICAL PANEL SCHEDULES

Sheet reference number:
E–602