20 METER WATER TOWER

U.S. Army Corps
OF Engineers
AFGHANISTAN ENGINEER DISTRICT
AFGHANISTAN, APO AE, 09356

17 DECEMBER 2009

ENGINEERING AND CONSTRUCTION DIVISION
US ARMY ENGINEER DISTRICT, AFGHANISTAN
APO AE, 09356

20 METER WATER TOWER

APPENDIX A

AFGHANISTAN

SECTION/DETAIL CROSS REFERENCING CONVENTIONS

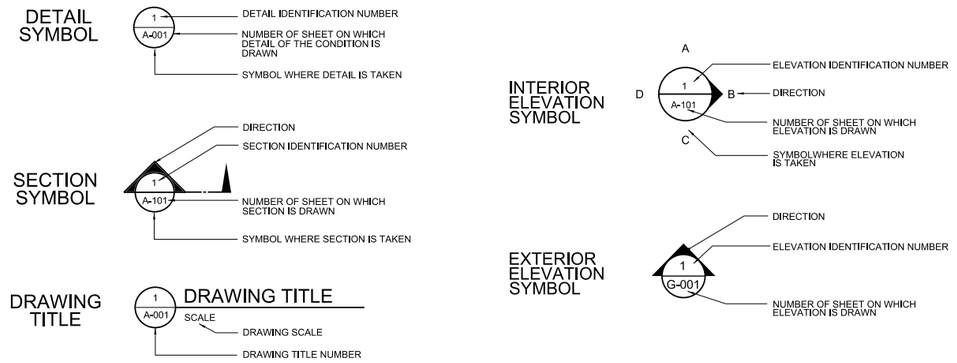

SCHEDULE OF DRAWINGS

SHEET NO	DWG CODE	SHEET REFERENCE NO	DESCRIPTION	REV STATUS
			GENERAL	
			COVER SHEET	
1		G-001	TITLE SHEET & SCHEDULE OF DRAWINGS	
			STRUCTURAL	
2		S-01	GENERAL NOTES	
3		S-02	FOUNDATION PLAN	
4		S-03	PLATFORM AND CATWALK FRAMING PLAN	
5		S-04	ELEVATIONS	
6		S-05	FOUNDATION SECTIONS	
7		S-06	FOUNDATION STEEL FRAMING SECTIONS	
8		S-07	SECTIONS AND DETAILS	
9		S-08	SECTIONS AND DETAILS	
10		S-09	SECTIONS AND DETAILS	
11		S-10	MEMBER DETAILS	
12		S-11	MEMBER DETAILS	
13		S-12	MEMBER DETAILS	
14		S-13	MEMBER DETAILS	
15		S-14	MEMBER DETAILS	
16		S-15	MEMBER DETAILS	
17		S-16	MEMBER DETAILS	
18		S-17	MEMBER DETAILS	
19		S-18	MEMBER DETAILS	
20		S-19	MEMBER DETAILS	
21		S-20	MEMBER DETAILS	
			PLUMBING	
22		P-01	NOT USED	
23		P-02	NOT USED	
24		P-03	NOT USED	
25		P-04	ELEVATION AND DETAIL	
			ELECTRICAL	
26		E-01	LIGHTNING PROTECTION DETAILS	

PROJECT COORDINATION

U.S. ARMY ENGINEER DISTRICT, AFGHANISTAN

PROJECT MANAGER _____ DATE _____

CHIEF, DESIGN BRANCH _____ DATE _____

THIS PROJECT WAS DESIGNED BY AFGHANASTAN ENGINEER DISTRICT OF THE U.S ARMY CORPS OF ENGINEERS. THE INITIALS OR SIGNATURES AND REGISTRATION DESIGNATIONS OF INDIVIDUALS APPEAR ON THESE DOCUMENTS WITHIN THE SCOPE OF THEIR EMPLOYMENT AS REQUIRED BY ER 1110-1-8152.

US ARMY CORPS OF ENGINEERS
AFGHANISTAN ENGINEER DISTRICT

SYMBOL	DESCRIPTION	DATE	APPR.

DESIGNED BY: DWN BY: CKD BY:
REVIEWED BY: SUBMITTED BY:

DATE: 17 DEC 2009
DESIGN FILE NO.
DRAWING CODE: G-TSJDGN
FILE NAME:
PLOT SCALE: _____
PLOT DATE: XX-XX-XX
REV: ___

U.S. ARMY ENGINEER DISTRICT, AFGHANISTAN
CORPS OF ENGINEERS
APO AE 96338

ENGINEERING AND CONSTRUCTION DIVISION

AFGHANISTAN ENGINEER DISTRICT
20 METER WATER TOWER

TITLE SHEET
SCHEDULE OF DRAWINGS

SHEET REFERENCE NUMBER:
G-001
SHEET 1 OF 26

GENERAL:

1. CONTRACTOR SHALL VERIFY ALL DIMENSIONS AND CONDITIONS AFFECTING THE WORK AT JOBSITE.

2. ALL STRUCTURAL WORK AND MATERIALS SHALL CONFORM TO THE REQUIREMENTS OF THE PROJECT.

3. FOR LOCATION AND DIMENSIONS OF GROOVES, REGLETS, SLEEVES, OPENINGS, AND EMBEDDED OR ATTACHED ITEMS, REFER TO ELECTRICAL, AND PIPING DRAWINGS.

CODES:

1. ALL PARTS SHALL BE FURNISHED AND ERECTED ACCORDING TO THE LATEST VERSION OF THE APPLICABLE CODES OF THE FOLLOWING:

AMERICAN CONCRETE INSTITUTE	(ACI)
AMERICAN INSTITUTE OF STEEL CONSTRUCTION	(AISC)
AMERICAN IRON AND STEEL INSTITUTE	(AISI)
AMERICAN WATER WORKS ASSOCIATION	(AWWA)

2. ALL PARTS SHALL BE FURNISHED AND ERECTED ACCORDING TO THE APPLICABLE CODES OF THE FOLLOWING:

MINIMUM DESIGN LOADS FOR BUILDINGS AND OTHER STRUCTURES	(ASCE 7-05)
INTERNATIONAL BUILDING CODE	(IBC-2006)
BUILDING CODE REQUIREMENTS FOR STRUCTURAL CONCRETE	(ACI 318-08)
SPECIFICATIONS FOR STRUCTURAL STEEL BUILDINGS	(AISC 13TH EDITION)

DESIGN LOADS:

1. ROOF LOADING

A. LIVE LOAD 195 KG/SQ METER (40 PSF)
B. SNOW LOAD 75 KG/SQ METER (15 PSF)
C. COLLATERAL LOAD 50 KG/SQ METER (10 PSF)

2. WIND LOADING

A. BASIC WIND SPEED 135 KM/HR (85 MPH)
B. EXPOSURE CATEGORY "B"
C. IMPORTANCE FACTOR, Iw = 1.00
D. BUILDING CATEGORY "II"

3. SEISMIC LOADING:

A. Ss = 1.28g
B. S1 = 0.51g
C. SEISMIC USE GROUP "I"
D. SITE CLASSIFICATION "D"
E. IMPORTANCE FACTOR I = 1.0

BASIC SEISMIC FORCE RESISTING SYSTEM:

CROSS-BRACED COLUMN-SUPPORTED ELEVATED TANK
DESIGN BASE SHEAR: 0.284W

ANALYSIS PROCEDURE: EQUIVALENT LATERAL FORCE METHOD

4. THE WATER TOWER IS DESIGNED TO SUPPORT A 26,500 LITER (7,000 GALLON) WATER TANK, UNIFORMLY LOADING THE PLATFORM IN A BALANCED CONFIGURATION. SEE SHEET S-3 FOR TANK LIMITS.

600 0 600mm
SCALE: 1 = 30

UNLESS NOTED OTHERWISE, LINEAR DIMENSIONS ARE IN MILLIMETERS.

FOUNDATIONS:

1. ALL FOOTINGS SHALL BEAR ON SOIL CAPABLE OF SUSTAINING THE LOADS. GEOTECHNICAL INVESTIGATIONS TO VERIFY THIS REQUIREMENT ARE CONTAINED IN THE AED DESIGN GUIDE – GEOTECHNICAL INVESTIGATIONS (LATEST VERSION). ALL REQUIREMENTS OF THIS PUBLICATION SHALL BE FOLLOWED, WITH EMPHASIS ON PARAGRAPH 2.2, DEPTH, LOCATION, SPACINT OF EXPLORATION.

2. FOUNDATION DESIGNED FOR A MAXIMUM BEARING CAPACITY OF 7323 KG/SQ. METER (1500 PSF).

3. ELEVATIONS SHOWN ON PLANS FOR TOP OF FOOTINGS ARE MINIMUM DEPTH. BOTTOM OF FOOTING SHALL BE A MINIMUM 800mm BELOW GRADE. DIFFERENT OR UNUSUAL CONDITIONS SHALL BE REPORTED TO THE CONTRACTING OFFICER.

4. ALL FOOTING REINFORCEMENT SHALL BE SECURELY SUPPORTED ABOVE GROUND. SUPPORT REINFORCEMENT WITH CONCRETE BRICK OR WITH ADEQUATE NUMBER AND SIZE OF REBAR CHAIRS.

5. ALL FOUNDATION FORMWORK SHALL BE ADEQUATELY PREPARED FOR CONCRETE PLACEMENT; SUFFICIENTLY BRACED; PROPER ELEVATIONS AND ALIGNMENT; NO STANDING WATER OR DEBRIS; ETC.

CONCRETE:

1. STRUCTURAL CONCRETE FOR THE BUILDING STRUCTURE SHALL HAVE THE FOLLOWING PROPERTIES:

ALL CONCRETE
UNLESS NOTED OTHERWISE: f'c = 280 KG/SQ. CM (4,000 PSI) AT 28 DAYS WITH MAXIMUM WATER/CEMENT RATIO OF 0.45. MIX DESIGN SHALL BE APPROVED BY COR PRIOR TO PLACEMENT.

2. ALL REINFORCING STEEL SHALL BE DEFORMED BARS CONFORMING TO ASTM A615 GRADE 60 UNLESS NOTED OTHERWISE.

3. MINIMUM PROTECTIVE COVER OF REINFORCEMENT (SEE DETAILS) SHALL BE AS FOLLOWS:

FOOTINGS, 75mm CLEAR BOTTOM AND SIDES, 40mm CLEAR TOP.
CONCRETE PIERS, 40mm CLEAR TO TIES.

4. MINIMUM CONCRETE SPLICES AND HOOKS FOR REINFORCING STEEL SHALL CONFORM TO ACI 318, CURRENT EDITION.

5. CONCRETE WORK SHALL BE COORDINATED WITH DRAINS, UNDERGROUND UTILITIES, MECHANICAL, ELECTRICAL, AND ARCHITECTURAL PLANS. CONCRETE SHALL NOT BE CAST UNTIL THESE ITEMS HAVE BEEN INSTALLED AND ACCEPTED.

6. CONCRETE OPERATIONS SHALL BE APPROVED BY COR PRIOR TO CONCRETE PLACEMENT. PLAN SHALL BE IN WRITING AND INCLUDE THE FOLLOWING:

a. PORTLAND CEMENT CONCRETE (PCC) PLACEMENT.

b. EMBEDDED METALS PLAN SHALL DESCRIBE HOW REINFORCEMENT AND TOWER LEG ANCHORAGE PLATES WILL BE INSTALLED. SPECIFIC DISCUSSION OF ANCHORAGE PLATES SHALL INCLUDE HOW THESE CRITICAL COMPONENTS WILL BE ACCURATELY LOCATED AND SECURED FOR TRUE PLAN, ELEVATION AND VERTICAL POSITION, WITH NO ROTATION, PRIOR TO, DURING AND AFTER CONCRETING OPERATIONS. THE FOUR CORNERS SHALL BE LAID OUT TO BE DIMENSIONALLY SQUARE AS PER DRAWINGS.

c. PLAN SHALL ADDRESS CONCRETE DELIVERY (BATCHING EQUIPMENT, CAPACITY AND LOCATION); CONCRETE PLACEMENT OPERATIONS INTO THE FORMWORK; NUMBER AND USE OF VIBRATORS; FIELD AND LABORATORY TESTING REQUIRED; HOT OR COLD WEATHER PLACEMENT REQUIREMENTS; MANPOWER REQUIRED; AND OTHER PROCEDURES TO BE FOLLOWED TO COMPLETE SUCCESSFUL CONCRETING OPERATIONS. SUFFICIENT CONCRETE DELIVERY SHALL BE SHOWN TO ELIMINATE THE POTENTIAL FOR CONCRETE DEFECTS IN THE FINAL PRODUCT, INCLUDING COLD JOINTS, VOIDS, SEGREGATION OF AGGREGATE, AND EXCESSIVE REWORK LEADING TO STRENGTH REDUCTION.

STRUCTURAL STEEL:

1. STRUCTURAL STEEL SHALL BE FABRICATED AND ERECTED IN ACCORDANCE WITH THE AMERICAN INSTITUTE OF STEEL CONSTRUCTION, "SPECIFICATION FOR STRUCTURAL STEEL BUILDINGS", 2005 (AISC MANUAL, 13TH EDITION).

2. STEEL SHALL CONFORM TO THE FOLLOWING REQUIREMENTS UNLESS NOTED OTHERWISE:

MISCELLANEOUS PLATES AND ANGLES – ASTM A36 250MPa (Fy = 36 KSI)
"W" SHAPES – ASTM A36 250MPa (Fy = 36 KSI)

3. NO STRUCTURAL STEEL SHALL BE FABRICATED OR ERECTED UNTIL SHOP DRAWINGS HAVE BEEN APPROVED.

4. NO HOLES OTHER THAN THOSE SPECIFICALLY DETAILED SHALL BE ALLOWED THROUGH STRUCTURAL STEEL MEMBERS. FIELD CUTTING OF STEEL SHALL NOT BE PERMITTED WITHOUT APPROVAL OF THE CONTRACTING OFFICER.

5. THE CONTRACTOR SHALL VERIFY ALL SHOP DRAWING DIMENSIONS WITH THE STRUCTURAL PLANS AND DETAILS, AND WITH DIMENSIONS OF COLUMN LAYOUT.

6. BOLTED CONNECTIONS: BOLTS SHALL CONFORM TO ASTM A307, 20MM DIAMETER MINIMUM UNLESS NOTED OTHERWISE AND HOT-DIP GALVANIZED; NUTS SHALL CONFORM TO ASTM A563 HOT DIP GALVANIZED; WASHERS SHALL NOT BE USED.

7. BOLTS SHALL BE TIGHTENED TO ADEQUATELY DEVELOP BOLT TENSION.

FABRICATION NOTES

1. THE CONTRACTOR SHALL SUBMIT A SEPARATE, SPECIFIC ERECTION AND SAFETY PLAN ADDRESSING ALL FACETS OF TOWER CONSTRUCTION.

2. THIS SET OF DRAWINGS WAS DEVELOPED AS A SOLUTION TO MEET AED REQUIREMENTS FOR THE CONSTRUCTION OF WATER TOWERS THAT MEET U.S. STANDARDS FOR DESIGN, TO INCLUDE SEISMIC CRITERIA, USING MATERIALS AND CONSTRUCTION METHODS THAT REDUCE OR ELIMINATE THE NEED FOR LARGE CRANES THAT MAY NOT BE ABLE TO ACCESS PROJECT SITES, AND ENABLE EASE OF CONSTRUCTION QUALITY CONTROL. WATER TOWER HAS BEEN DESIGNED TO SUPPORT A PRE-FABRICATED WATER TANK.

3. ALL ANGLES, BEAMS AND PLATES ARE TO BE FABRICATED IN A SHOP WHERE THE STRICTEST TOLERANCES FOR FABRICATION (MEMBER LENGTHS, LOCATION AND SIZE OF BOLT HOLES) CAN BE MAINTAINED. THESE COMPONENTS WOULD THEN BE TRANSPORTED TO PROJECT SITES AND ERECTED WITHOUT THE USE OF HEAVY EQUIPMENT AS THE MAXIMUM WEIGHT PER PIECE IS UNDER 90 KG. THIS DESIGN SHALL NOT BE MODIFIED, IN EITHER THE FABRICATION SHOP OR AT THE PROJECT SITE. UNDER NO CONDITIONS SHALL BOLT HOLES BE MODIFIED OR ADDED AT THE PROJECT SITE AS A RESULT OF INACCURATE CONSTRUCTION PRACTICES. CONTRACTOR SHALL ASSEMBLE PLATFORM IN SHOP, POSITION STEEL CHECKER PLATE SECTIONS IN FINAL LOCATION, AND DRILL HOLES IN PLATE TO ALIGH WITH FLANGES OF STRUCTURAL MEMBERS (SEE FUTHER NOTES ON S-3). LIMITED FIELD DRILLING OF HOLES FOR WATER TANK ERECTION MAY BE REQUIRED AND WILL BE SUBMITTED FOR APPROVAL.

4. IF THE CONTRACTOR CANNOT OBTAIN THE REQUIRED ANGLE, BEAM, OR PLATES, ANY MODIFICATIONS OR SUBSTITUTIONS WILL REQUIRE A SUBMISSION OF COMPLETE ALTERNATE FABRICATION DRAWINGS FOR REVIEW AND APPROVAL, AND ONLY INCREASES IN MEMBER SIZE WILL BE CONSIDERED.

5. WELDING WILL ABSOLUTELY NOT BE ALLOWED ON THIS TOWER.

6. FABRICATION SHALL BE DONE IN A SHOP WITH TOLERANCES PER AISC MANUAL OF STEEL CONSTRUCTION AND ALL ADDITIONAL CODES REFERENCED THERE IN. CONTRACTOR SHALL ESTABLISH A SYSTEM OF MARKING MEMBERS TO FACILITATE ASSEMBLY IN THE FIELD.

7. STEEL FINISH REQUIREMENTS SHALL INCLUDE REMOVAL OF ALL SCALE AND RUST PRIOR TO APPLICATION OF A BASE COAT PRIMER ON ALL METAL SURFACES. THIS WILL BE FOLLOWED BY TWO FINISH COATS OF EPOXY ENAMEL PAINT. IF AVAILABLE, HOT-DIP GALVANIZING OF TOWER ELEMENTS IS ACCEPTABLE, BUT GALVANIZED BOLTS AND NUTS MUST THEN BE PROVIDED, AND CARE MUST BE TAKEN TO PREVENT DAMAGING THE SURFACE FINISH.

8. TO AID IN MEANS OF CONSTRUCTION, THE 2L100x100 HANDRAIL PIECE HAS BEEN DESIGNED FOR A LOAD OF 250KG AT MIDSPAN. THE CONTRACTOR MAY USE THIS PIECE IN A PULLEY MECHANISM TO RAISE THE PLATFORM FRAMING TO THE REQUIRED ELEVATION. THE CONTRACTOR ASSUMES ALL RESPONSIBILITY FOR MEANS OF CONSTRUCTION AND SHALL NOT HOLD THE GOVERNMENT LIABLE.

9. FIT-UP FOR DIMENSIONAL CHECK SHALL BE MADE BY THE CONTRACTOR.

WATER TANK

1. WATER TOWER HAS BEEN DESIGNED TO ACCEPT A PRE-FABRICATED WATER TANK. ONLY METAL TANKS SHALL BE PERMITTED. FULL DETAILS OF THE PROPOSED TANK SHALL BE SUBMITTED FOR APPROVAL.

2. A PARTIAL LIST OF WTER TANK SUPPLIERS:

http://www.alibaba.com/product-free/100696118/Panel Water tank.html

http://www.alibaba.com/product/my100479764-100277497-0/prodductdetail.html

http://www.modutank.com/

http://www.binasteel.com.my/stainless-steel-tank.html

http://www.sunnik.com.my/products01.htm

http://www.watertank.com/products.asp#eltank

3. CONTRACTOR SHALL COORDINATE WATER TANK CONNECTIONS WITH SHOP FABRICATOR.

US Army Corps of Engineers
Mobile District

Symbol	No.	Description Revisions	Date	Approved

Date: 17 DECEMBER 2009
Contract No:
CADD CODE: MDTG17
Solicitation Number:
FILENAME:
Designed By:
Drawn By:
Checked By:
Reviewed By:
SIZE: 559x864mm

U.S. ARMY ENGINEER DISTRICT
CORPS OF ENGINEERS
MOBILE, ALABAMA

AFGHANISTAN ENGINEER DISTRICT
20 METER WATER TOWER

GENERAL NOTES

SHEET IDENTIFICATION
S-1

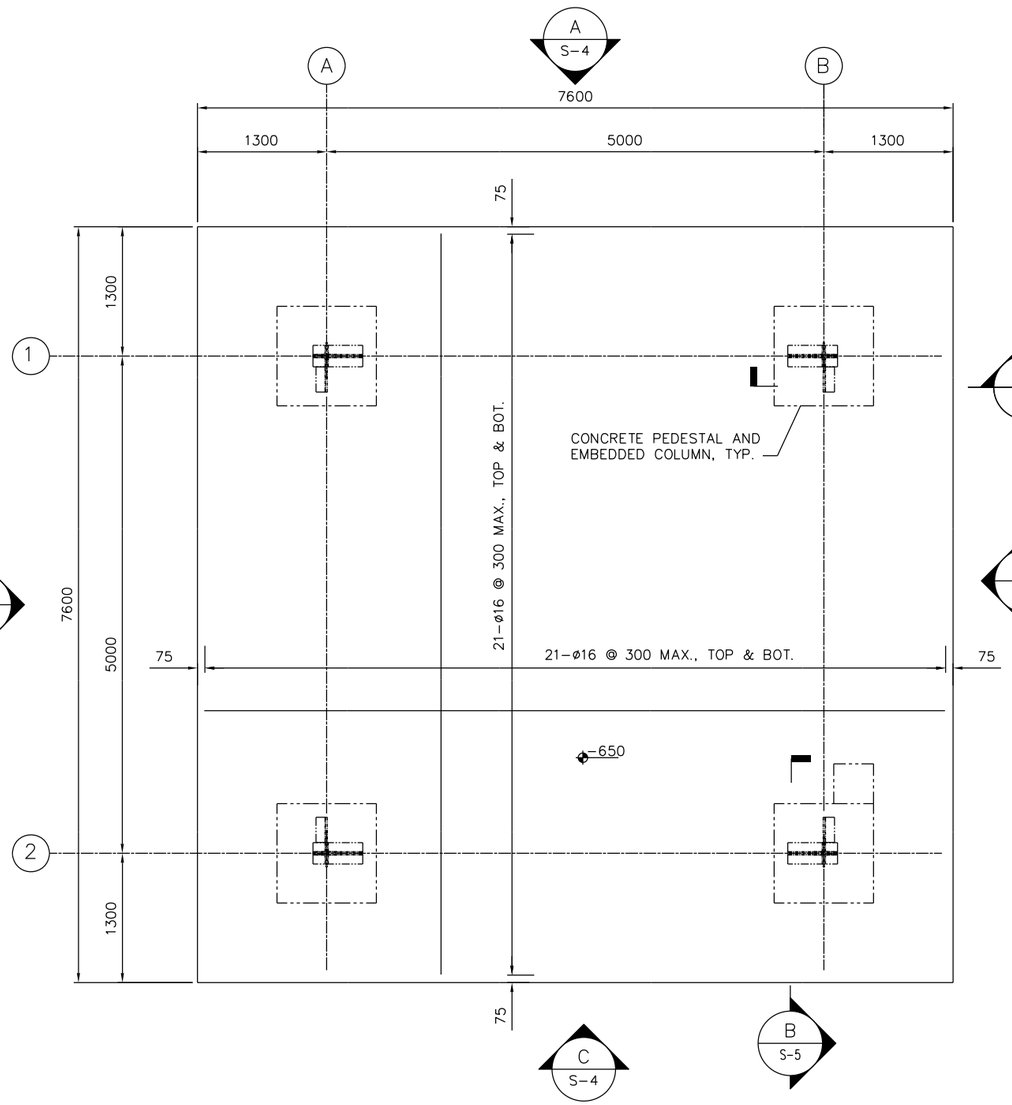

FOUNDATION PLAN
AT ELEVATION -650mm

1:30

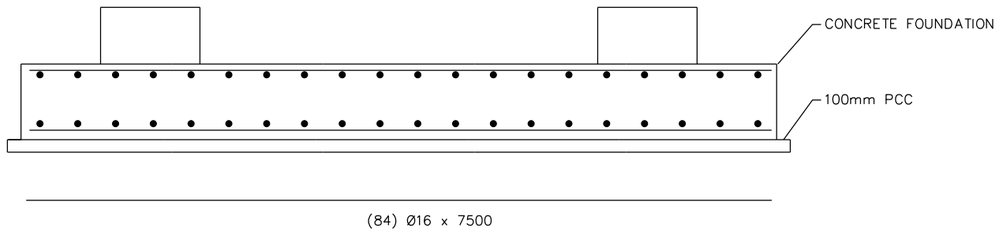

REBAR DETAIL

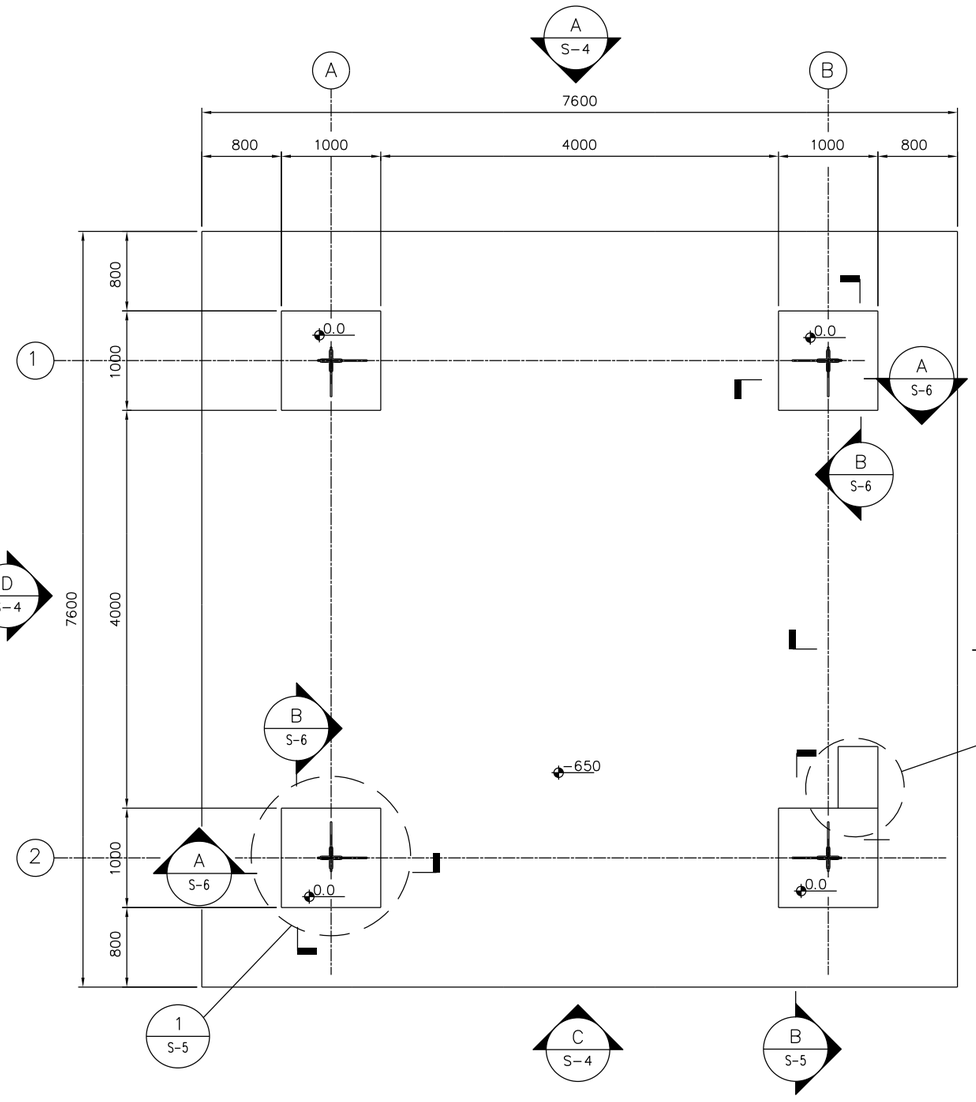

FOUNDATION PLAN
AT ELEVATION 0.0mm

1:30

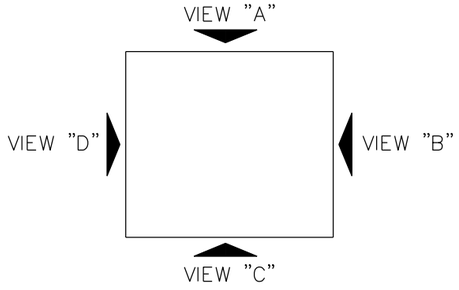

NOTES:

1. TOWER WAS DESIGNED FOR A 535mm BACKFILL OVER THE FOUNDATION SLAB. THE PEDESTALS SHALL BE A MAXIMUM OF 115mm ABOVE GRADE.

600 0 600mm
SCALE: 1 = 30

UNLESS NOTED OTHERWISE, LINEAR DIMENSIONS ARE IN MILLIMETERS.

US Army Corps of Engineers ®
Mobile District

Symbol	No.	Description	Revisions	Date	Approved

Designed By:		Date: 17 DECEMBER 2009	
Drawn By:		Contract No:	
Checked By:		CADD CODE: MVDTG17	
Reviewed By:		Solicitation Number:	
SIZE: 559x864mm		FILENAME:	

U.S. ARMY ENGINEER DISTRICT
CORPS OF ENGINEERS
MOBILE, ALABAMA

AFGHANISTAN ENGINEER DISTRICT
20 METER WATER TOWER

FOUNDATION PLAN

SHEET IDENTIFICATION

S-2

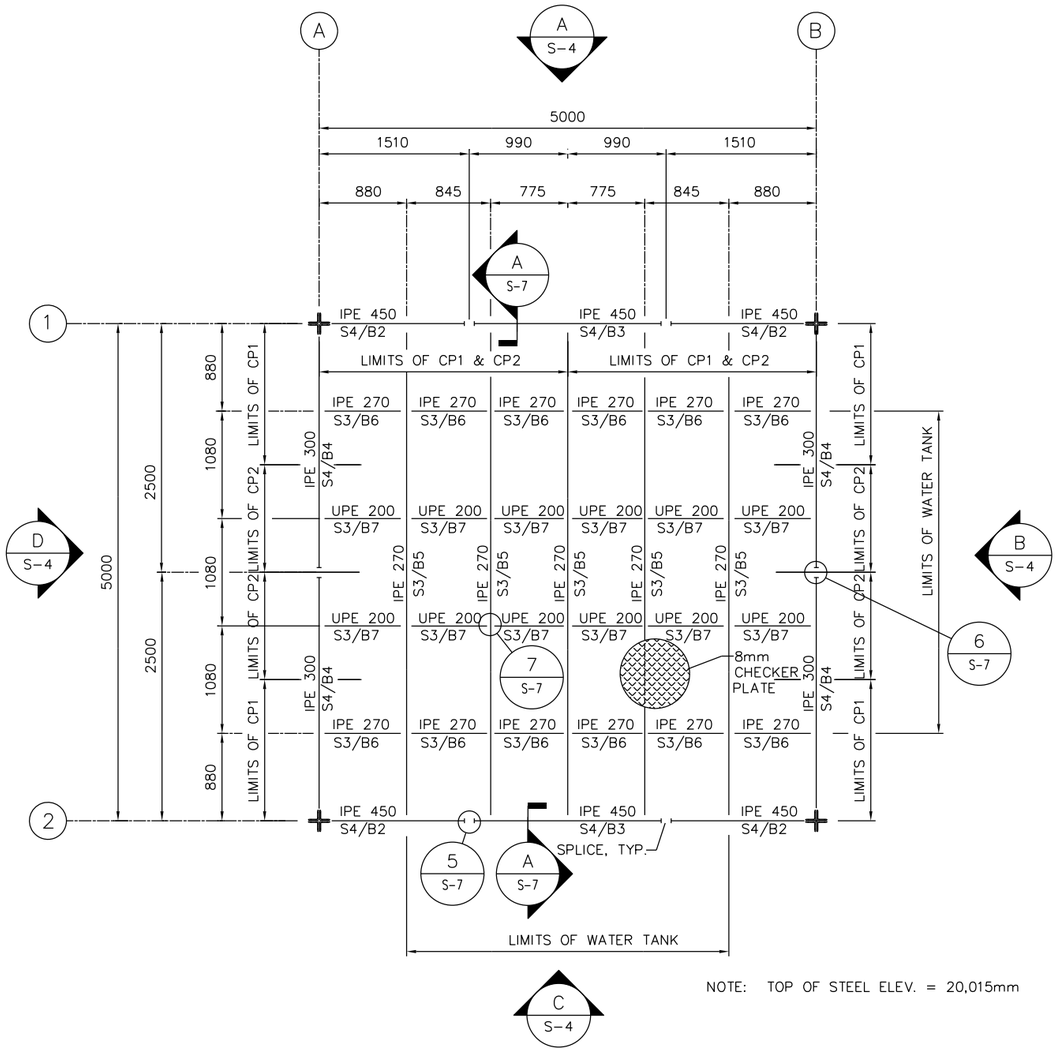

NOTE: TOP OF STEEL ELEV. = 20,015mm

PLATFORM FRAMING PLAN

1:30

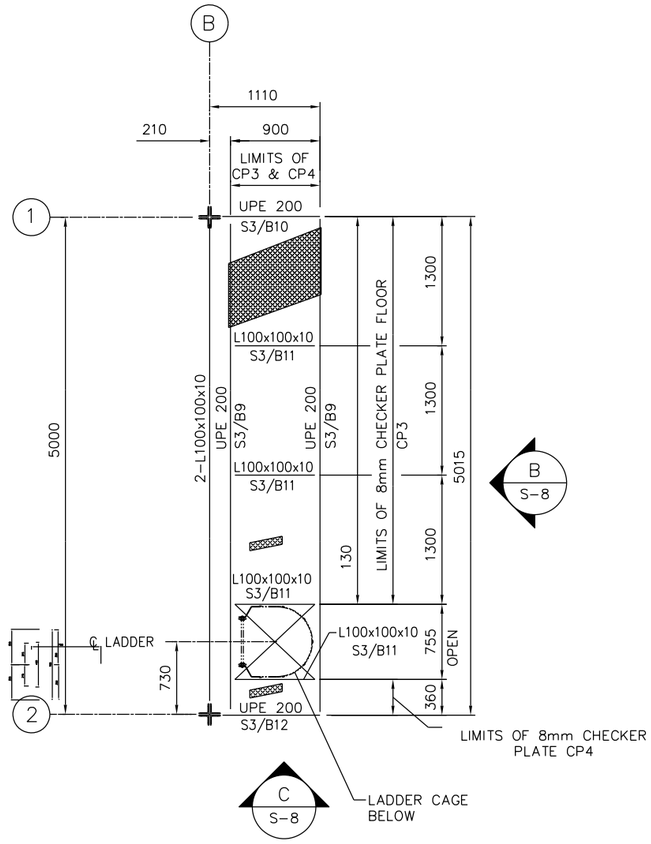

NOTE: TOP OF PLATFORM STEEL ELEV. = 9790mm

STAIR LANDING FRAMING PLAN

1:30

CHECKER PLATE NOTES:

PLATFORM

1. PLATFORM CHECKER PLATE SHALL BE INSTALLED IN SIX (6) SEPARATE PIECES; FOUR (4) EACH CP1'S AND TWO (2) EACH CP2'S.

2. PLATES WILL BE ATTACHED WITH 12mm ø BOLTS TO THE SUPPORTING MEMBERS AT A MAXIMUM SPACING IF 700mm AROUND PERIMETER BEAMS AND WALKWAY AREA. COORDINATE BOLT LOCATION AND INTERFERENCE WITH WATER TANK ON BOLTS UNDER THE WATER TANK.

3. CUT OUT PLATES AROUND BEAM SPLICE PLATES WHERE NECESSARY.

LANDING

4. LANDING CHECKER PLATE SHALL BE INSTALLED IN TWO (2) SEPARATE PIECES; ONE (1) EACH CP3 AND ONE (1) EACH CP4.

5. PLATES WILL BE ATTACHED WITH 12mm ø BOLTS TO THE SUPPORTING MEMBERS AT A MAXIMUM SPACING IF 700mm AROUND PERIMETER BEAMS.

CHECKER PLATE DIMENSIONS:

CP1 – 2470mm x 1390mm
CP2 – 2470mm x 1080mm
CP3 – 3885mm x 895mm
CP4 – 355mm x 895mm

LEGEND:

CPX – 8mm CHECKER PLATE NUMBER
SX/XX – MEMBER MARK NUMBER

NOTES:

1. PLAN DIMENSIONS ON IPE SHAPES ARE MEASURED TO THE CENTERLINE MEMBERS. PLAN DIMENSIONS ON UPE AND L SHAPES ARE MEASURED TO THE OUTSIDE OF THE VERTICAL FACE OF THE WEB OR LEG.

600 0 600mm
SCALE: 1 = 30

UNLESS NOTED OTHERWISE, LINEAR DIMENSIONS ARE IN MILLIMETERS.

US Army Corps of Engineers ®
Mobile District

Symbol	No.	Description	Date	Approved
		Revisions		

Date: 17 DECEMBER 2009
Contract No:
CADD CODE: MOTOTG17
Solicitation Number:
FILENAME:
Designed By:
Drawn By:
Checked By:
Reviewed By:
SIZE: 559x864mm

U.S. ARMY ENGINEER DISTRICT
CORPS OF ENGINEERS
MOBILE, ALABAMA

AFGHANISTAN ENGINEER DISTRICT
20 METER WATER TOWER

PLANFORM & CATWALK FRAMING PLAN

SHEET IDENTIFICATION

S-3

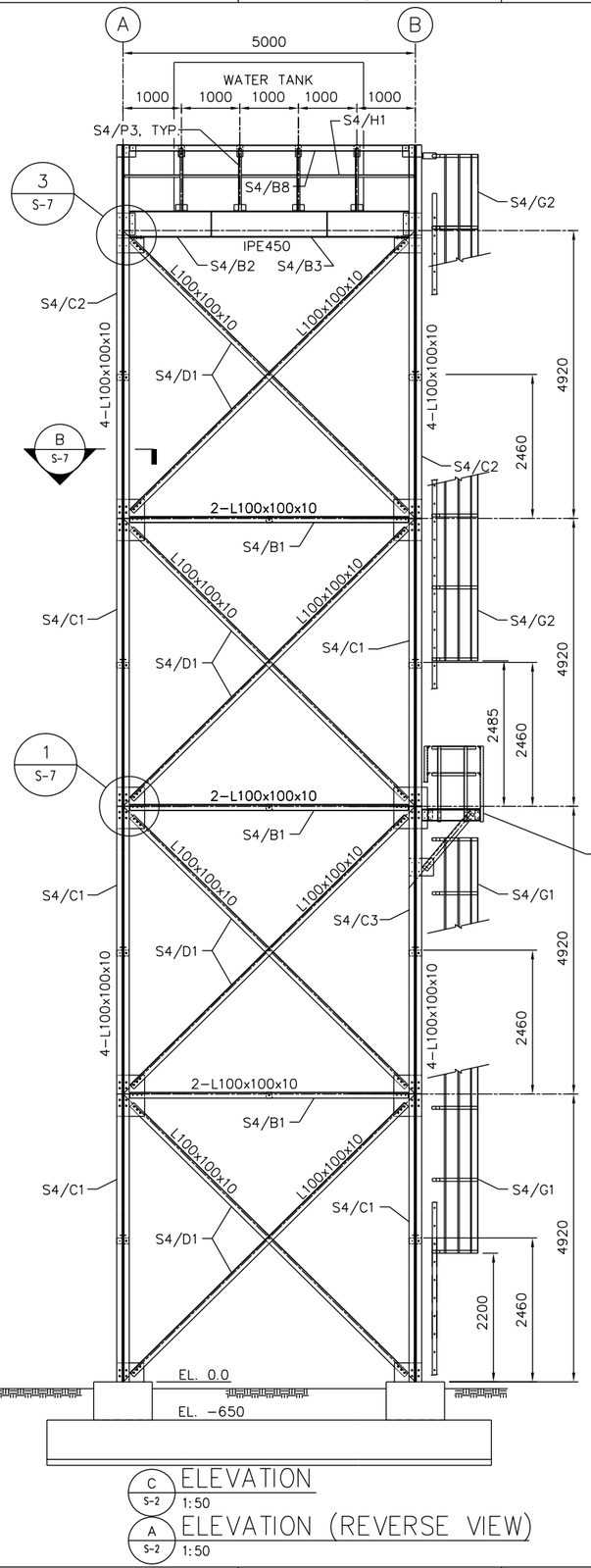

C S-2 ELEVATION
1:50

A S-2 ELEVATION (REVERSE VIEW)
1:50

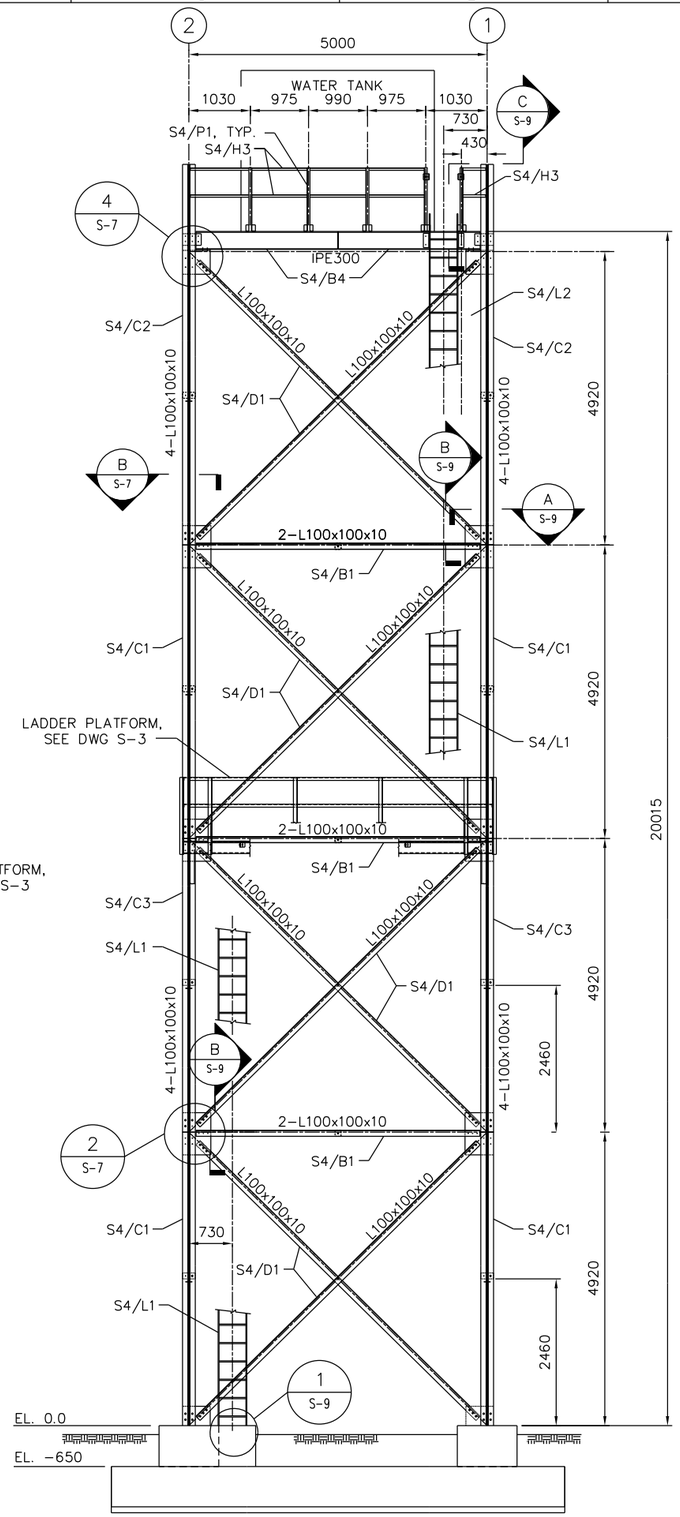

B S-2 ELEVATION
1:50

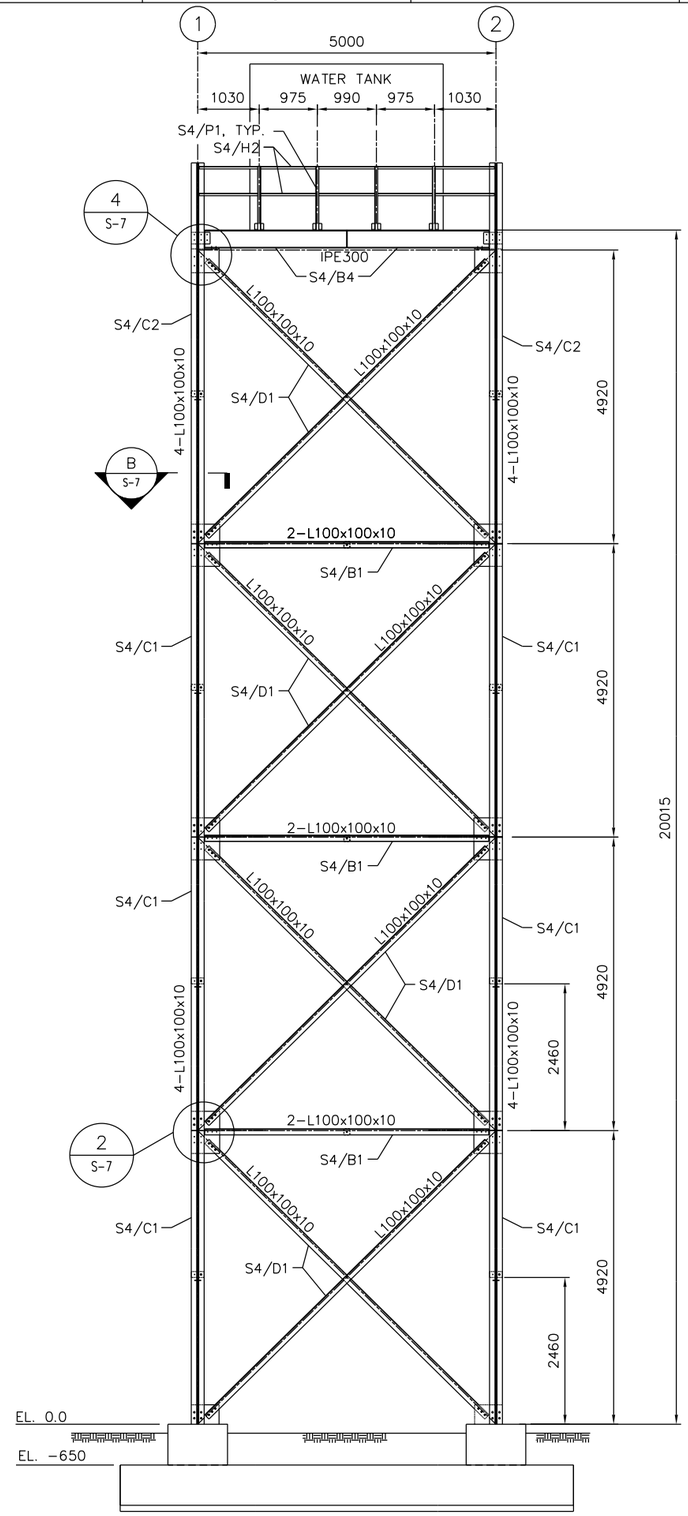

D S-2 ELEVATION
1:50

1000 0 1000mm
SCALE: 1 = 50

UNLESS NOTED OTHERWISE, LINEAR DIMENSIONS ARE IN MILLIMETERS.

US Army Corps of Engineers ®
Mobile District

Symbol	No.	Description	Date	Approved
		Revisions		

Designed By:	Date: 17 DECEMBER 2009
Drawn By:	Contract No:
Checked By:	CADD CODE: M01DTG17
Reviewed By:	Specification Number:
SIZE: 559x864mm	FILENAME:

U.S. ARMY ENGINEER DISTRICT
CORPS OF ENGINEERS
MOBILE, ALABAMA

AFGHANISTAN ENGINEER DISTRICT
20 METER WATER TOWER

ELEVATIONS

SHEET IDENTIFICATION
S-4

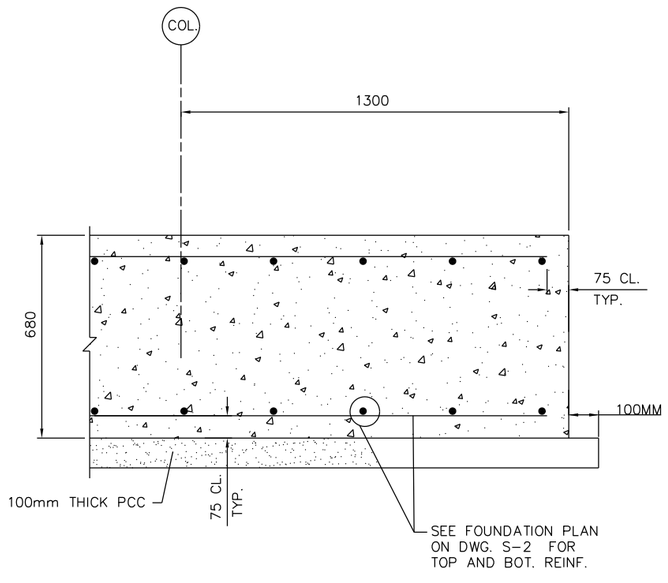

SECTION A
1:10 S-2

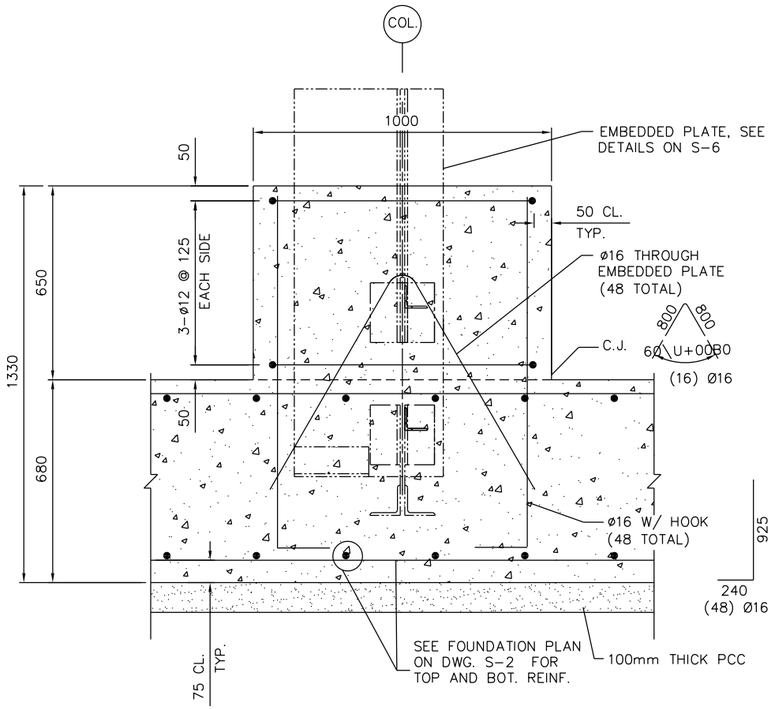

SECTION B
1:10 S-2 S-5

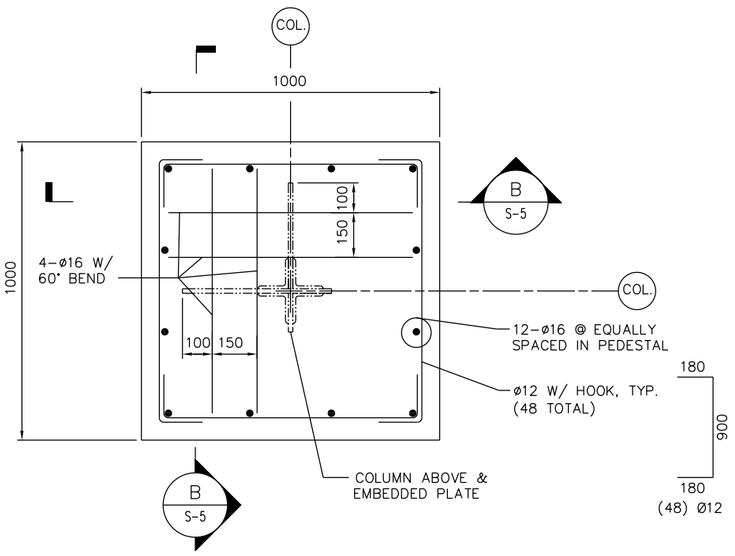

DETAIL 1
1:10 S-2

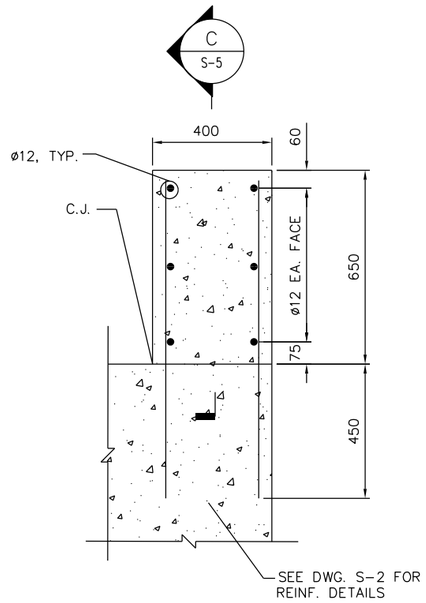

DETAIL 2
1:10 S-2

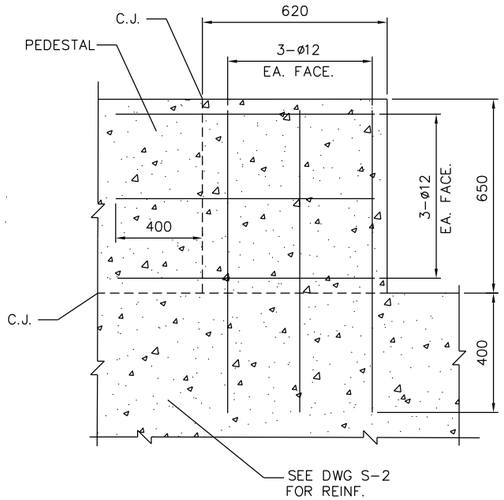

SECTION C
1:10 S-5

200 0 200mm
SCALE: 1 = 10

NOTE: SEPARATE CONCRETE PLACEMENT. SEE DETAIL 1 ON DRAWING S-9 FOR ANCHOR BOLT REQUIREMENTS.

UNLESS NOTED OTHERWISE, LINEAR DIMENSIONS ARE IN MILLIMETERS.

US Army Corps of Engineers ®
Mobile District

Symbol	No.	Description	Date	Approved
		Revisions		

Designed By:		Date: 17 DECEMBER 2009	
Drawn By:		Contract No:	
Checked By:		CADD CODE: MIL01G17	
Reviewed By:		Solicitation Number:	
SIZE: 559x864mm		FILENAME:	

U.S. ARMY ENGINEER DISTRICT
CORPS OF ENGINEERS
MOBILE, ALABAMA

AFGHANISTAN ENGINEER DISTRICT
20 METER WATER TOWER

FOUNDATION SECTIONS

SHEET IDENTIFICATION
S-5

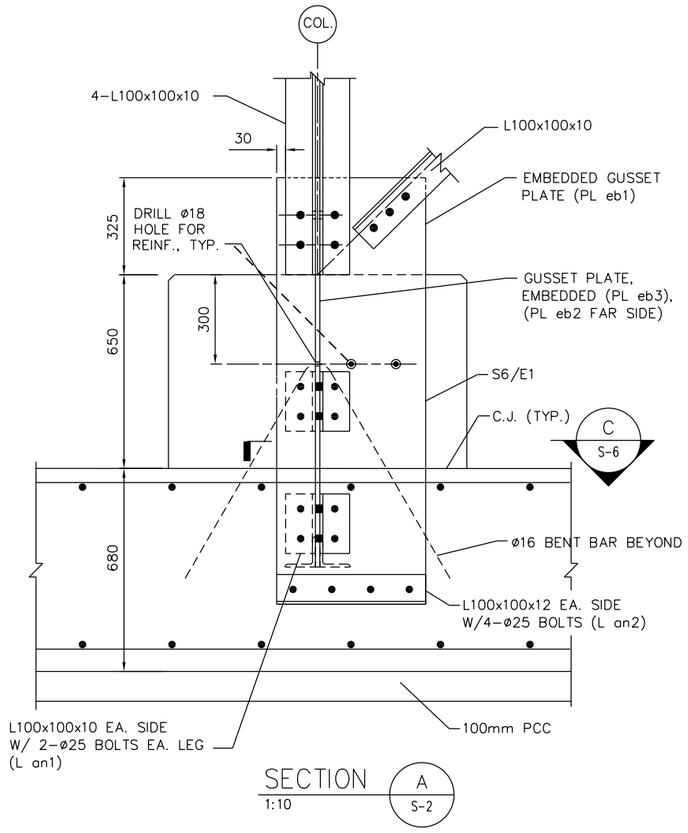

SECTION A
1:10 S-2

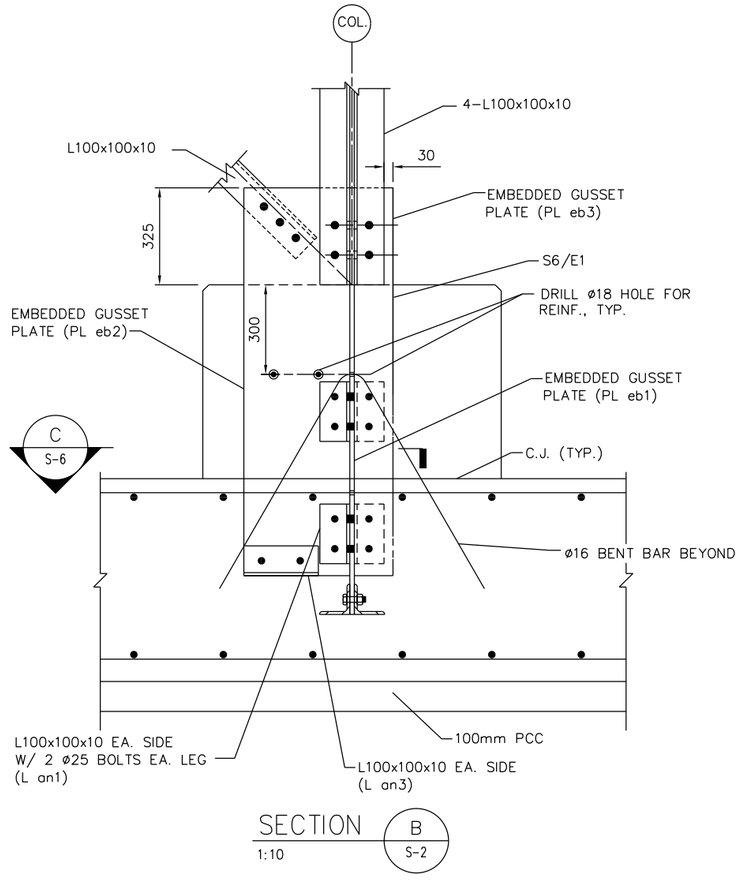

SECTION B
1:10 S-2

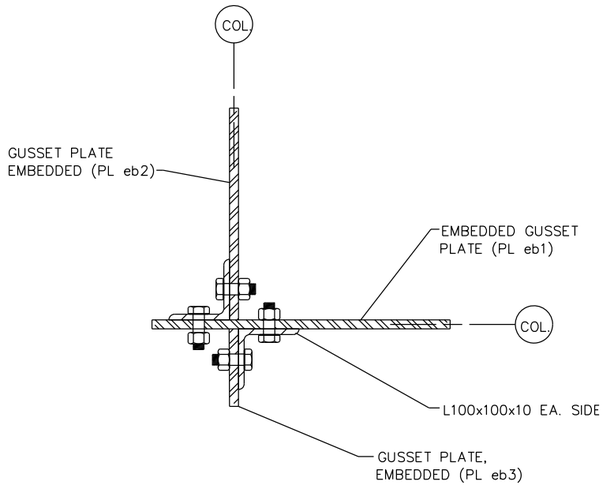

SECTION C
1:5 S-6

US Army Corps of Engineers ®
Mobile District

Symbol	No.	Description	Date	Approved
		Revisions		

Date: 17 DECEMBER 2009	
Contract No:	
CADD CODE: MD10TG17	
Specification Number:	
FILENAME:	
Designed By:	
Drawn By:	
Checked By:	
Reviewed By:	
SIZE: 559x864mm	E

U.S. ARMY ENGINEER DISTRICT
CORPS OF ENGINEERS
MOBILE, ALABAMA

AFGHANISTAN ENGINEER DISTRICT
20 METER WATER TOWER

FOUNDATION STEEL FRAMING SECTIONS

SHEET IDENTIFICATION

S–6

UNLESS NOTED OTHERWISE, LINEAR DIMENSIONS ARE IN MILLIMETERS.

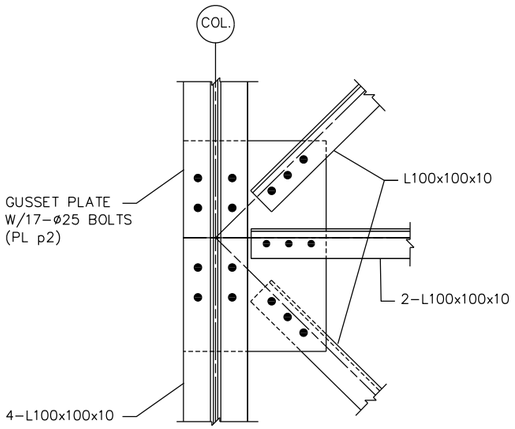

DETAIL 1 / S-4
1:10

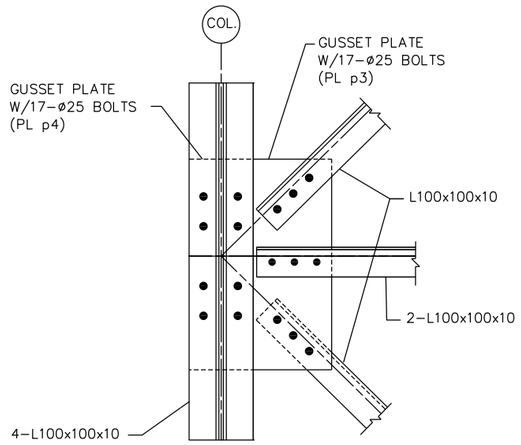

DETAIL 2 / S-4
1:10

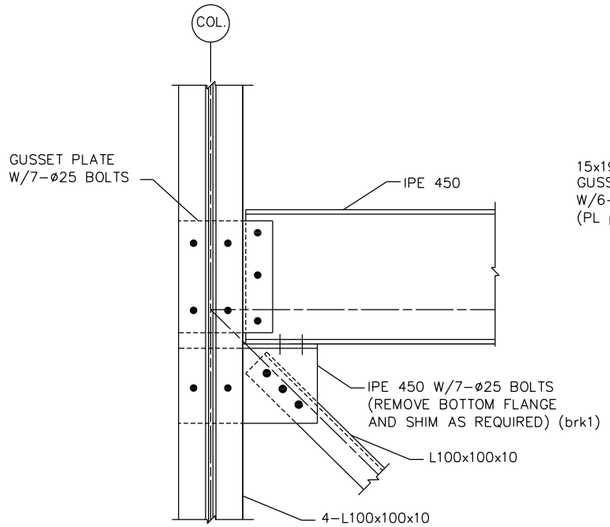

DETAIL 3 / S-4
1:10

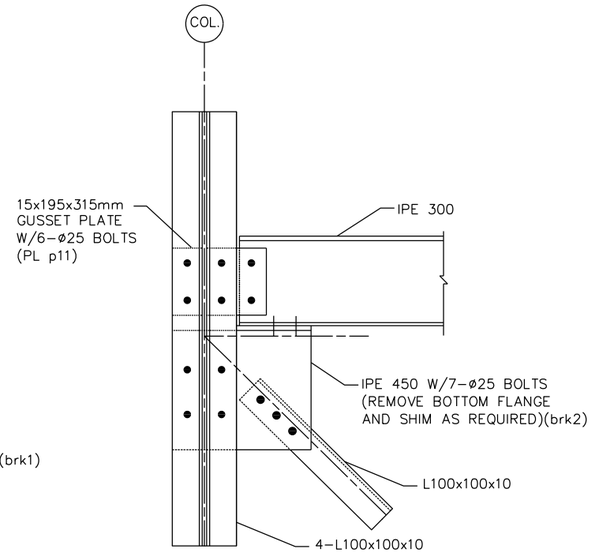

DETAIL 4 / S-4
1:10

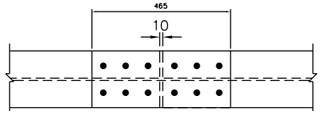

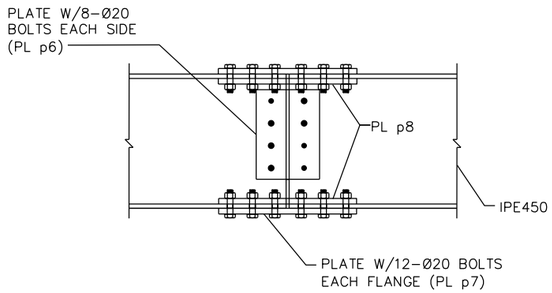

DETAIL 5 / S-3
1:10

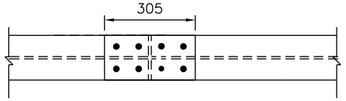

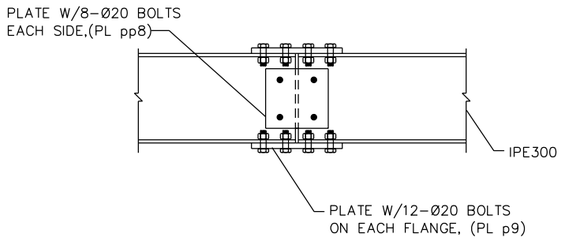

DETAIL 6 / S-3
1:10

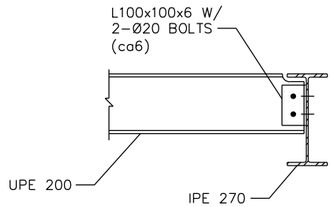

DETAIL 7 / S-3
1:10

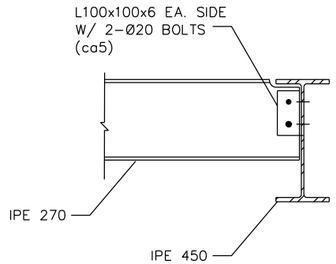

SECTION A / S-3
1:10

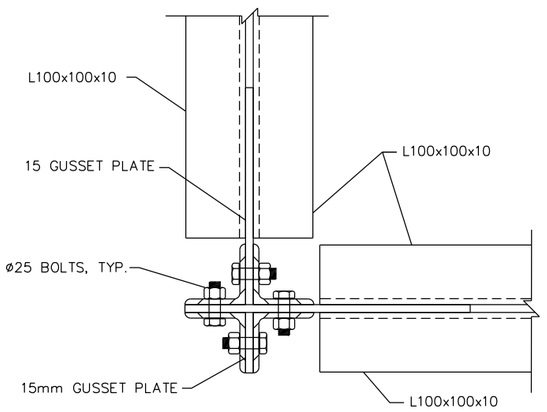

SECTION B / S-4
1:5

1000 0 1000mm
SCALE: 1 = 50

UNLESS NOTED OTHERWISE, LINEAR
DIMENSIONS ARE IN MILLIMETERS.

US Army Corps of Engineers ®
Mobile District

Symbol	No.	Description	Date	Approved
		Revisions		

Designed By:	Date: 17 DECEMBER 2009
Drawn By:	Contract No:
Checked By:	CADD CODE: MMD TCT 7
Reviewed By:	Solicitation Number:
SIZE: 559x864mm	FILENAME:

U.S. ARMY ENGINEER DISTRICT
CORPS OF ENGINEERS
MOBILE, ALABAMA

AFGHANISTAN ENGINEER DISTRICT
20 METER WATER TOWER

SECTIONS & DETAILS

SHEET IDENTIFICATION

S-7

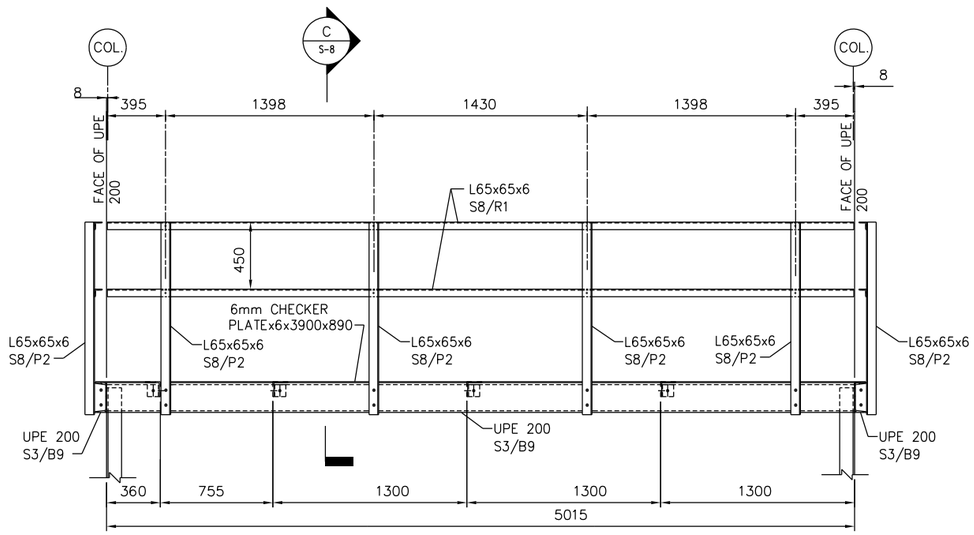

PLATFORM ELEVATION A S-3

1:20

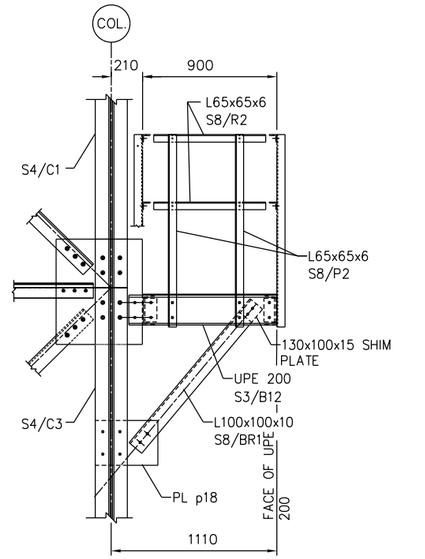

PLATFORM ELEVATION B S-3

1:20

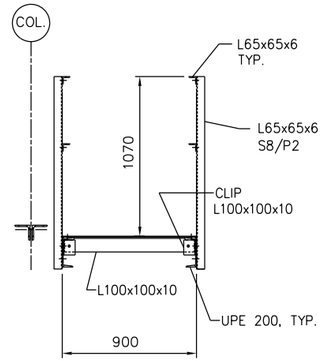

SECTION C S-8

1:20

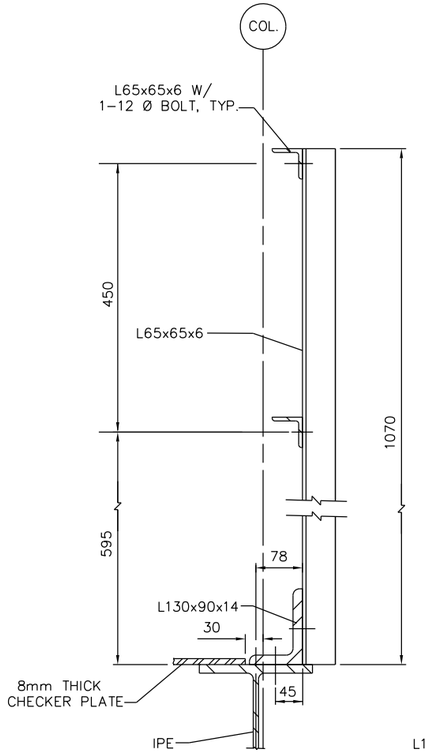

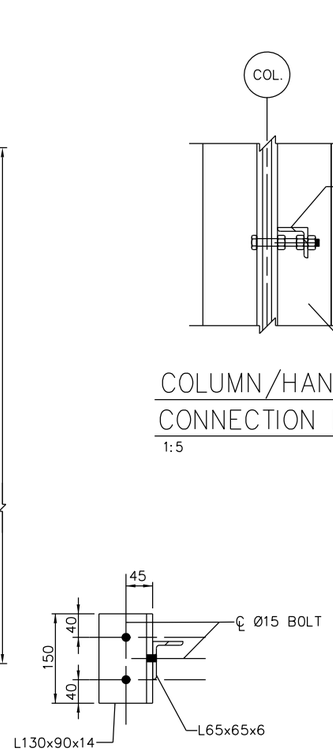

PLATFORM HANDRAIL DETAIL

1:5

COLUMN/HANDRAIL CONNECTION DETAIL

1:5

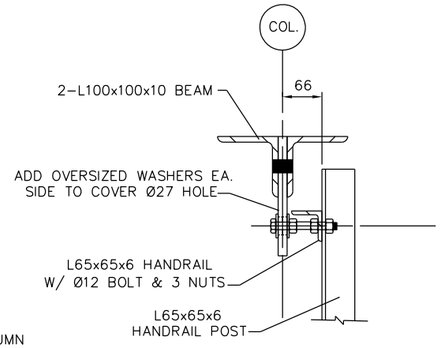

BEAM/HANDRAIL CONNECTION DETAIL

1:5

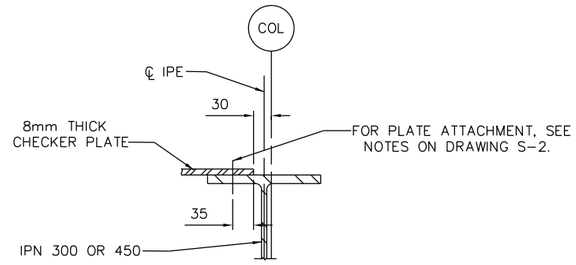

CHECKER PLATE ATTACHMENT DETAIL

1:5

100 0 100mm

SCALE: 1 = 5

UNLESS NOTED OTHERWISE, LINEAR DIMENSIONS ARE IN MILLIMETERS.

US Army Corps of Engineers ®
Mobile District

Symbol	No.	Description	Date	Approved
		Revisions		

Designed By:	Date: 17 DECEMBER 2009
Drawn By:	Contract No:
Checked By:	CADD CODE: MOTDG17
Reviewed By:	Solicitation Number:
SIZE: 559x864mm	FILENAME:

U.S. ARMY ENGINEER DISTRICT
CORPS OF ENGINEERS
MOBILE, ALABAMA

AFGHANISTAN ENGINEER DISTRICT
20 METER WATER TOWER

SECTIONS & DETAILS

SHEET IDENTIFICATION

S-8

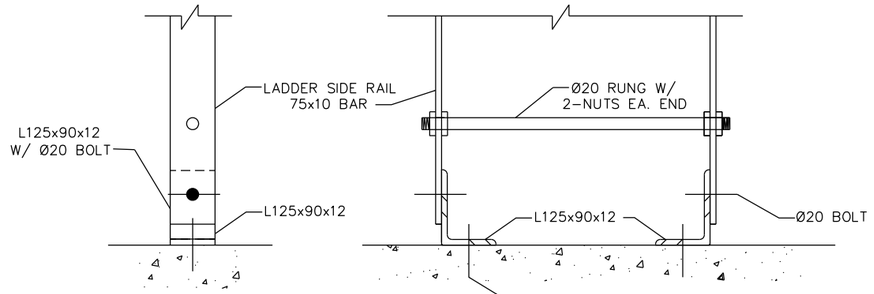

DETAIL 1 / S-4
1:5

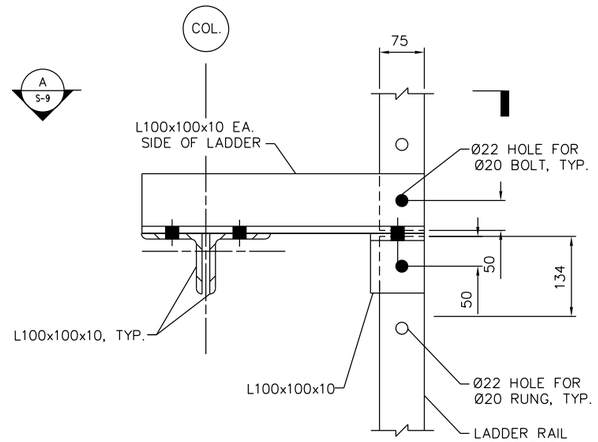

SECTION B / S-4
1:5

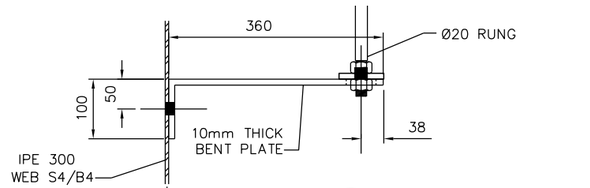

SECTION D / S-9
1:5

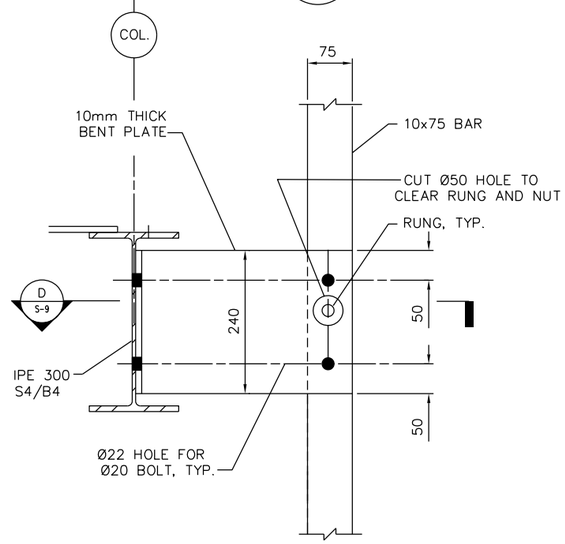

SECTION C / S-4
1:5

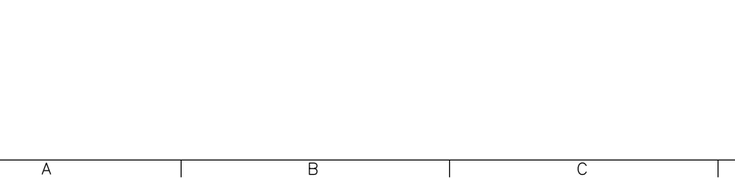

SECTION A / S-4 S-9
1:5

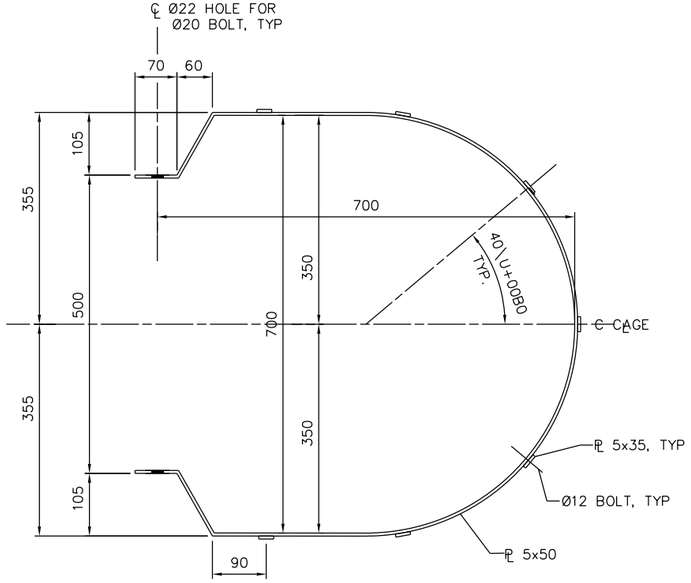

LADDER CAGE DETAIL
1:5

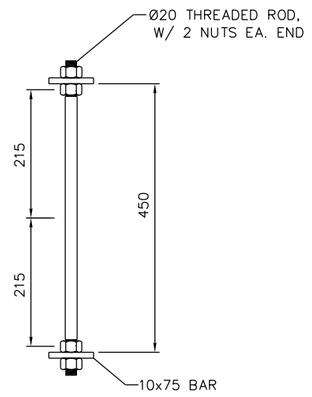

LADDER RUNG & SIDE RAIL
1:5

100 0 100mm
SCALE: 1 = 5

UNLESS NOTED OTHERWISE, LINEAR DIMENSIONS ARE IN MILLIMETERS.

US Army Corps of Engineers ®
Mobile District

Symbol	No.	Description	Date	Approved
		Revisions		

Designed By:
Drawn By:
Checked By:
Reviewed By:
Date: 17 DECEMBER 2009
Contract No:
CADD CODE: MDTDTG17
Solicitation Number:
FILENAME:
SIZE: 559x864mm

U.S. ARMY ENGINEER DISTRICT
CORPS OF ENGINEERS
MOBILE, ALABAMA

AFGHANISTAN ENGINEER DISTRICT
20 METER WATER TOWER

SECTIONS & DETAILS

SHEET IDENTIFICATION
S-9

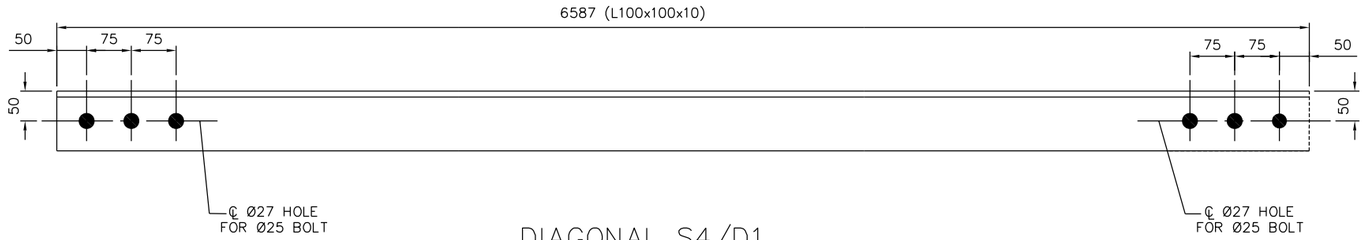

DIAGONAL S4/D1

MAKE: 32

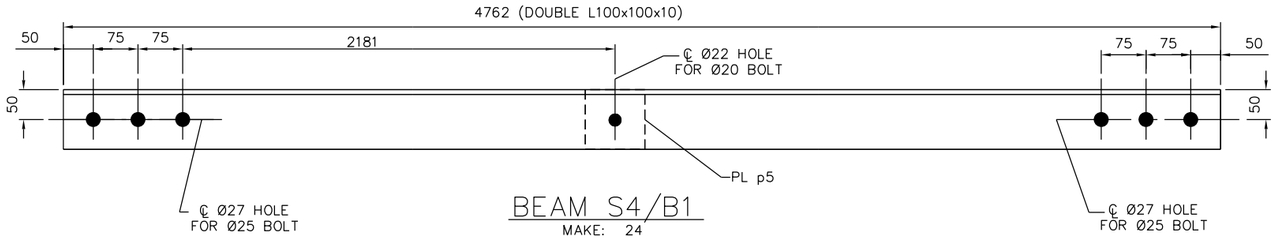

BEAM S4/B1

MAKE: 24

24-ø20 A307 BOLTS

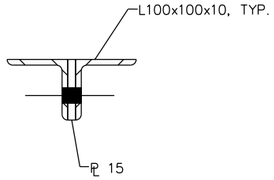

SHIP	MARK	NO. PCS	DESCRIPTION	LENGTH (mm)	FAB. MARK	NOTES
32	S4/D1		L100x100x10	6587		
24	S4/B1		2L100x100x10	4762		
		12	℄ 15x100	100	PL p5	
4	S4/B2		IPE 450	1388		
		4	℄ 10x215	300	PL p6	
		8	℄ 20x190	465	PL p7	
		16	℄ 20x80	465	PL p8	
		8	L100x100x10	200	ca5	
2	S4/B3		IPE 450	1970		
		12	L100x100x10	200	ca5	

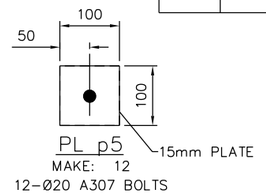

PL p5

MAKE: 12

12-ø20 A307 BOLTS

15mm PLATE

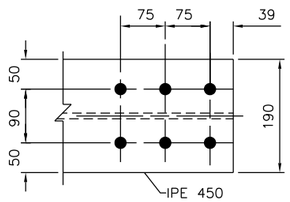

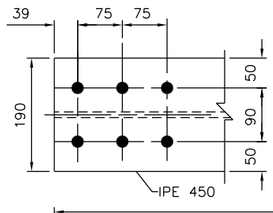

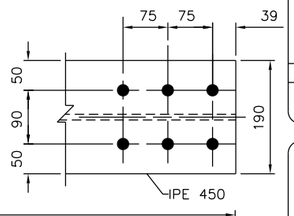

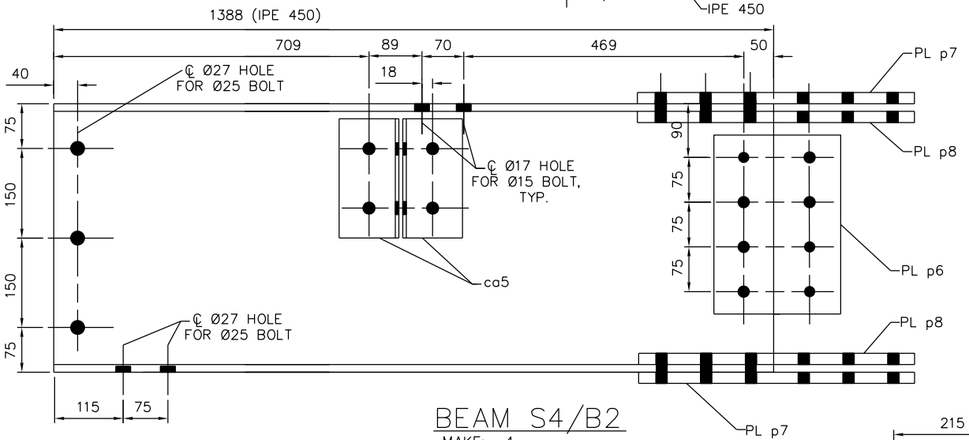

BEAM S4/B2

MAKE: 4

12-ø25 A307 BOLTS

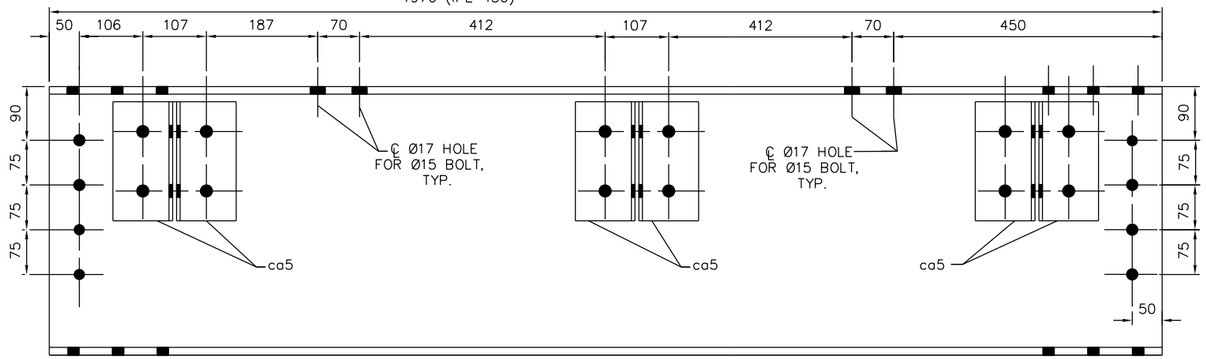

BEAM S4/B3

MAKE: 2

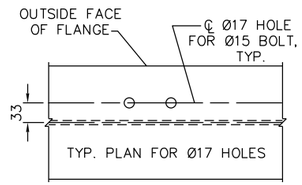

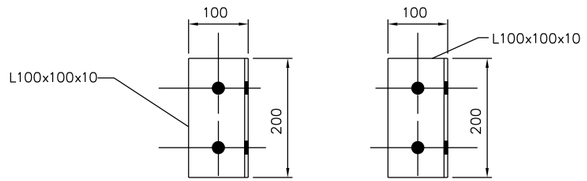

ca5

MAKE: 20

40-ø25 A307 BOLTS

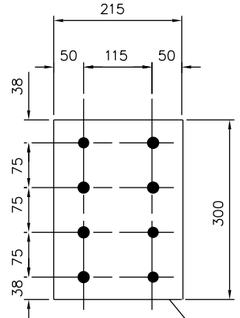

PL p6

MAKE: 8

32-ø20 A307 BOLTS

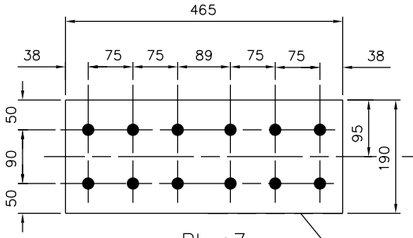

PL p7

MAKE: 8

96-ø20 A307 BOLTS

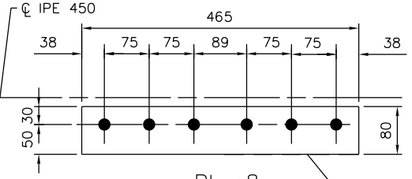

PL p8

MAKE: 16

UNLESS NOTED OTHERWISE, LINEAR DIMENSIONS ARE IN MILLIMETERS.

US Army Corps of Engineers
Mobile District

Symbol	No.	Description Revisions	Date	Approved

Designed By:
Drawn By:
Checked By:
Reviewed By:
Date: 17 DECEMBER 2009
Contract No:
CADD CODE: MDDTG17
Solicitation Number:
SIZE: 559x864mm
FILENAME:

U.S. ARMY ENGINEER DISTRICT
CORPS OF ENGINEERS
MOBILE, ALABAMA

AFGHANISTAN ENGINEER DISTRICT
20 METER WATER TOWER

MEMBER DETAILS

SHEET IDENTIFICATION

S-10

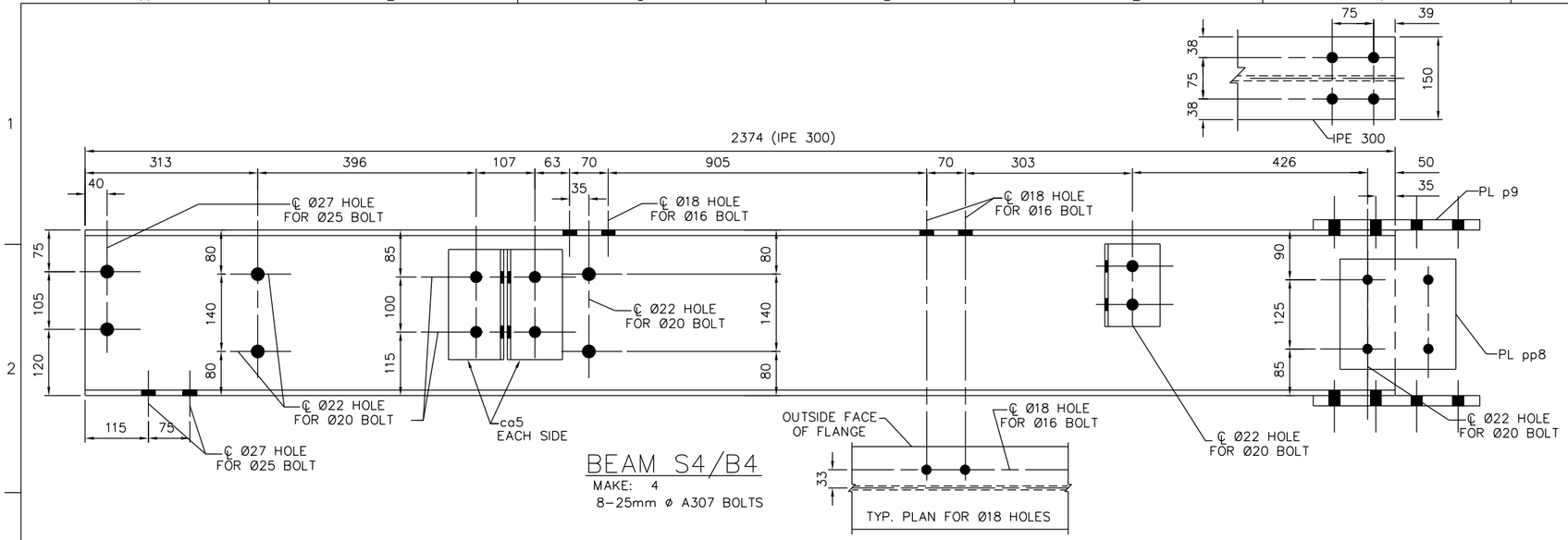

BEAM S4/B4

MAKE: 4
8-25mm ø A307 BOLTS

PL pp8

MAKE: 4
16-ø20 A307 BOLTS

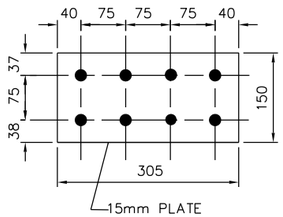

PL p9

MAKE: 4
24-ø20 A307 BOLTS

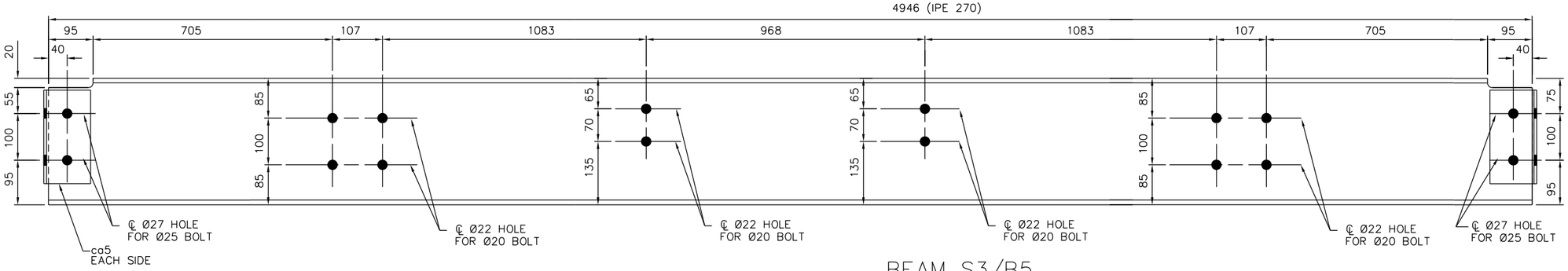

BEAM S3/B5

MAKE: 5
80-ø25 A307 BOLTS

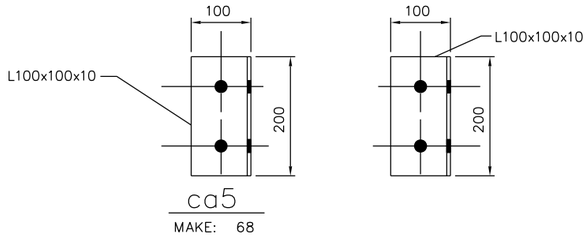

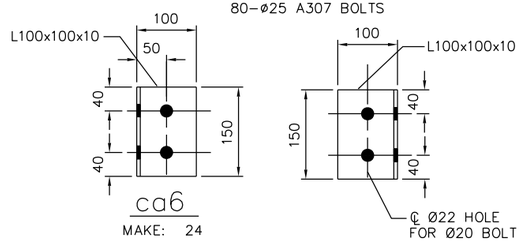

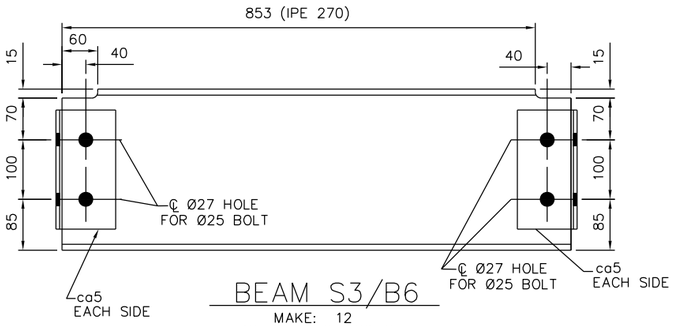

BEAM S3/B6

MAKE: 12
48-ø25 A307 BOLTS

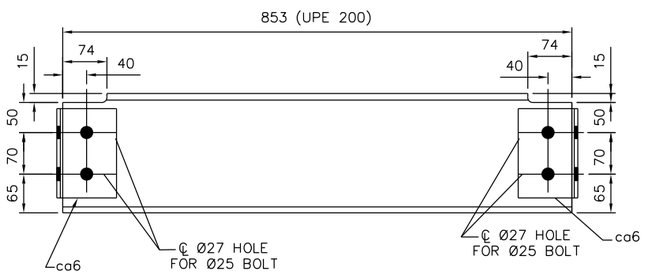

BEAM S3/B7

MAKE: 12
48-ø25 A307 BOLTS

SHIP	MARK	NO. PCS	DESCRIPTION	LENGTH (mm)	FAB. MARK	NOTES
4	S4/B4		IPE 300	2367		
		4	PL 210x10	200	PL pp8	
		4	PL 150x15	305	PL p9	
5	S3/B5		IPE 270	4947		
		20	L100x100x10	200	ca5	
12	S3/B6		IPE 270	853		
		48	L100x100x10	200	ca5	
12	S3/B7		UPE 200	853		
		24	L100x100x10	150	ca6	

UNLESS NOTED OTHERWISE, LINEAR DIMENSIONS ARE IN MILLIMETERS.

US Army Corps of Engineers ®
Mobile District

Symbol	No.	Description	Date	Approved
		Revisions		

Date: 17 DECEMBER 2009
Contract No:
CADD CODE: MDOTGT7
Specification Number:
FILENAME:
Designed By:
Drawn By:
Checked By:
Reviewed By:
SIZE: 559x864mm

U.S. ARMY ENGINEER DISTRICT
CORPS OF ENGINEERS
MOBILE, ALABAMA

AFGHANISTAN ENGINEER DISTRICT
20 METER WATER TOWER

MEMBER DETAILS

SHEET IDENTIFICATION
S-11

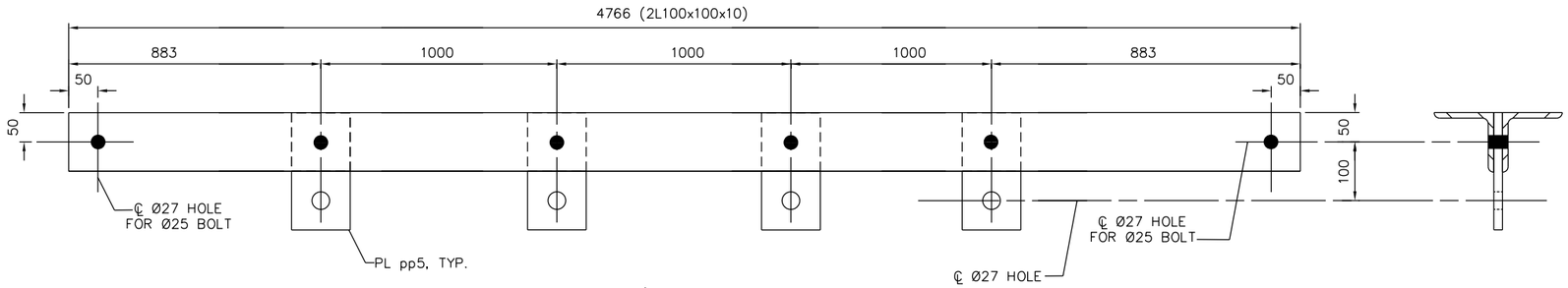

BEAM S4/B8

MAKE: 2
4-ø25 A307 BOLTS

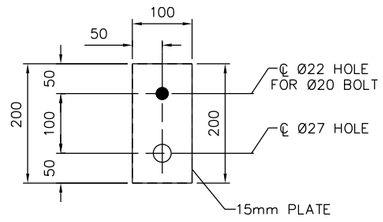

PL pp5

MAKE: 8
8-ø20 A307 BOLTS

SHIP	MARK	NO. PCS	DESCRIPTION	LENGTH (mm)	FAB. MARK	NOTES
4	S4/B8		2L100x100x10	4766		
		4	PL 15x100	200	PL pp5	

UNLESS NOTED OTHERWISE, LINEAR DIMENSIONS ARE IN MILLIMETERS.

US Army Corps of Engineers ®
Mobile District

Symbol	No.	Description	Date	Approved
		Revisions		

Date: 17 DECEMBER 2009
Contract No:
CADD CODE: MD10GT17
Solicitation Number:
FILENAME:

Designed By:
Drawn By:
Checked By:
Reviewed By:
SIZE: 559x864mm

U.S. ARMY ENGINEER DISTRICT
CORPS OF ENGINEERS
MOBILE, ALABAMA

AFGHANISTAN ENGINEER DISTRICT
20 METER WATER TOWER

MEMBER DETAILS

SHEET IDENTIFICATION

S-12

SHIP	MARK	NO. PCS	DESCRIPTION	LENGTH (mm)	FAB. MARK	WEIGHT	NOTES
10	S4/C1		4-L100x100x10	4920			
		40	L100x100x10	4920	L am1		
		20	PL 100x15	215	PL p1		
		10	PL 480x15	705	PL p2		
		10	PL 100x15	705	PL p3		
		10	PL 365x15	705	PL p4		
		4	PL 100X15	515	PL pp1		
		4	PL 100X15	515	PL pp2		

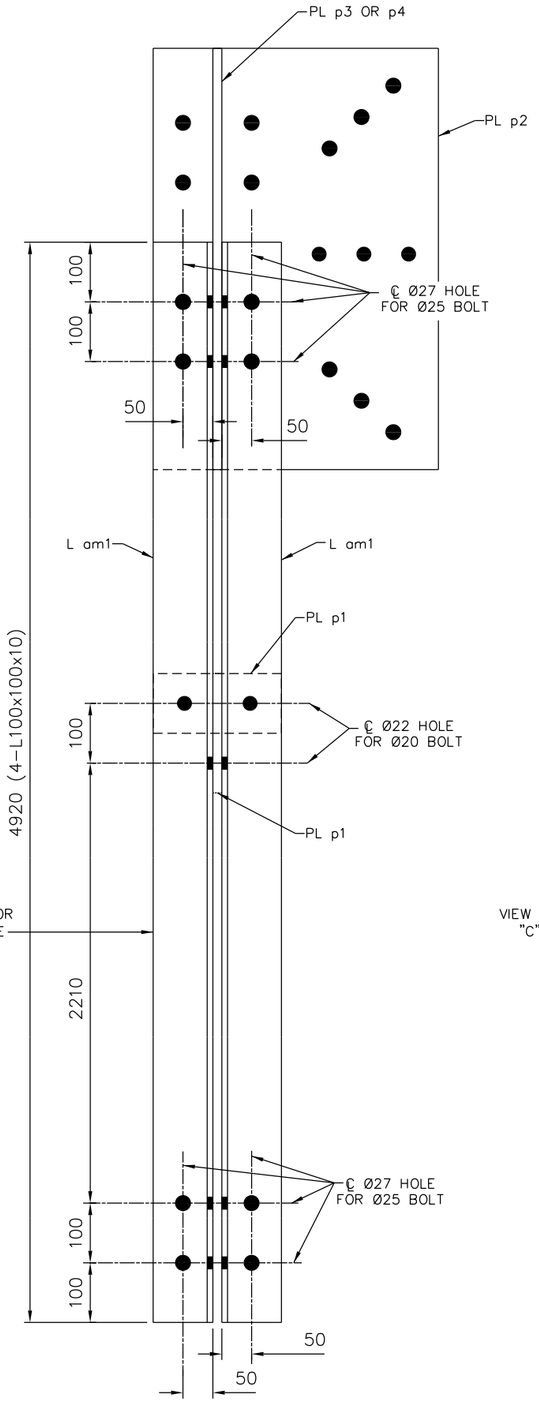

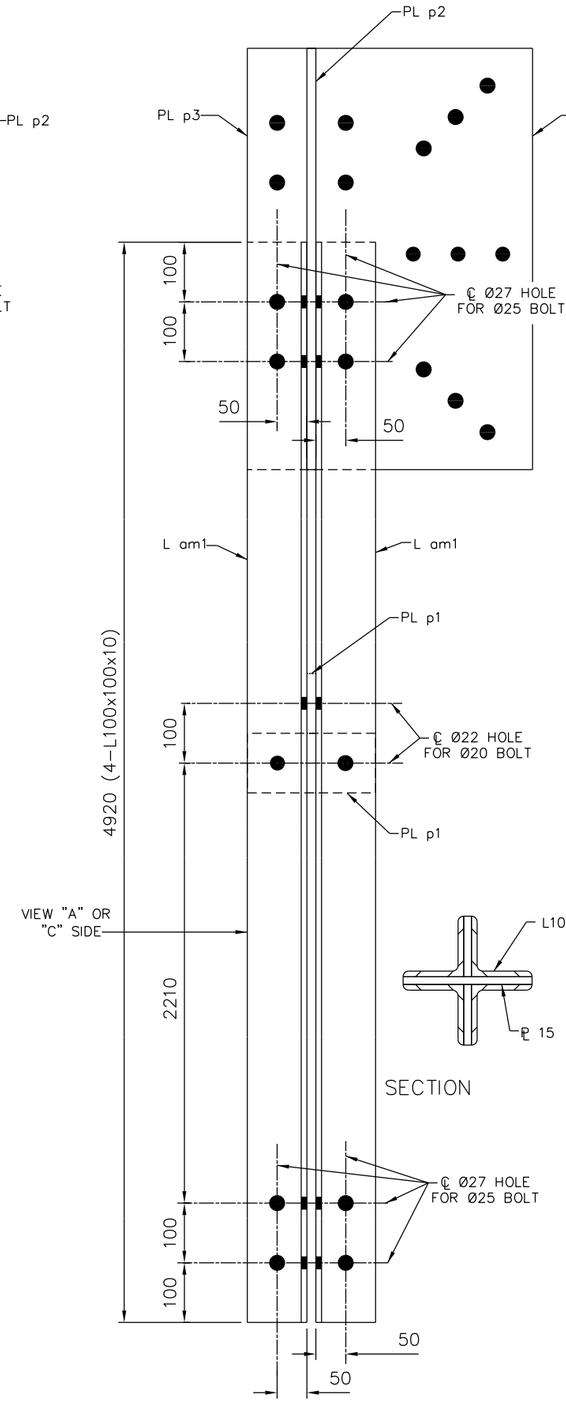

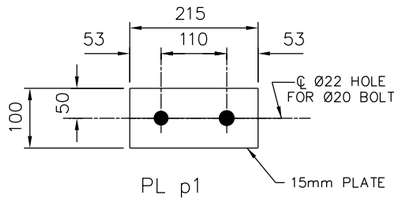

PL p1
MAKE: 20
40-ø20 A307 BOLTS

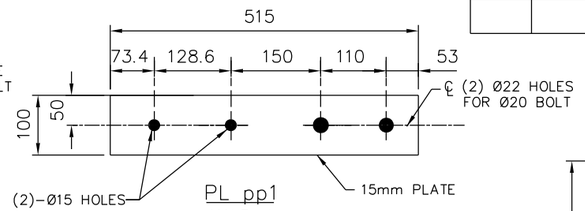

PL pp1
MAKE: 4
16-ø20 A307 BOLTS

NOTE: PLUMBING PIPE SUPPORT (PL pp1) MAY BE INTERCHANGED WITH PL p1 TO ATTACH PLUMBING.

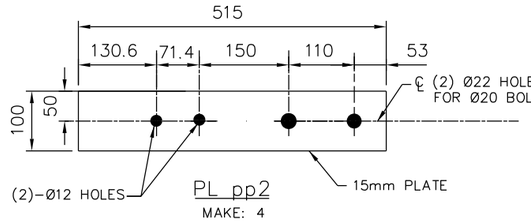

PL pp2
MAKE: 4
16-ø20 A307 BOLTS

NOTE: PLUMBING PIPE SUPPORT (PL pp2) MAY BE INTERCHANGED WITH PL p1 TO ATTACH PLUMBING.

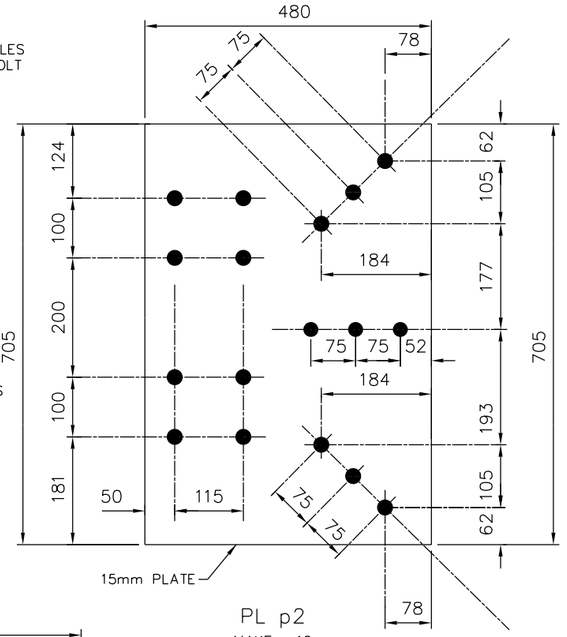

PL p2
MAKE: 10
170-ø25 A307 BOLTS

SECTION

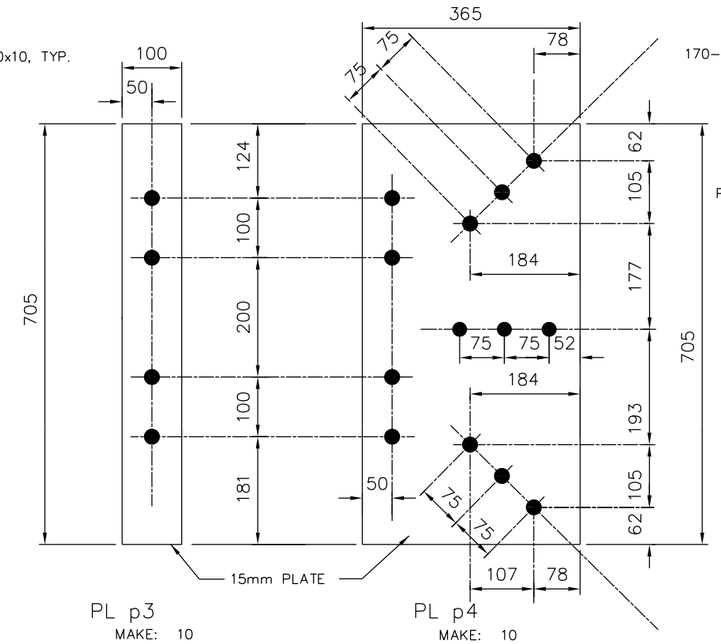

PL p3
MAKE: 10
40-ø25 A307 BOLTS

PL p4
MAKE: 10
130-ø25 A307 BOLTS

NOTE: BOLT HOLES IN PL p2, p3, & p4 ARE Ø27

COLUMN S4/C1
MAKE: 10

UNLESS NOTED OTHERWISE, LINEAR DIMENSIONS ARE IN MILLIMETERS.

US Army Corps of Engineers ®
Mobile District

Symbol	No.	Description Revisions	Date	Approved

Date: 17 DECEMBER 2009
Contract No:
Designed By:
Drawn By:
Checked By:
Reviewed By:
CADD CODE: MD1DTG17
Specification Number:
FILENAME:
SIZE: 559x864mm

U.S. ARMY ENGINEER DISTRICT
CORPS OF ENGINEERS
MOBILE, ALABAMA

AFGHANISTAN ENGINEER DISTRICT
20 METER WATER TOWER

MEMBER DETAILS

SHEET IDENTIFICATION
S-13

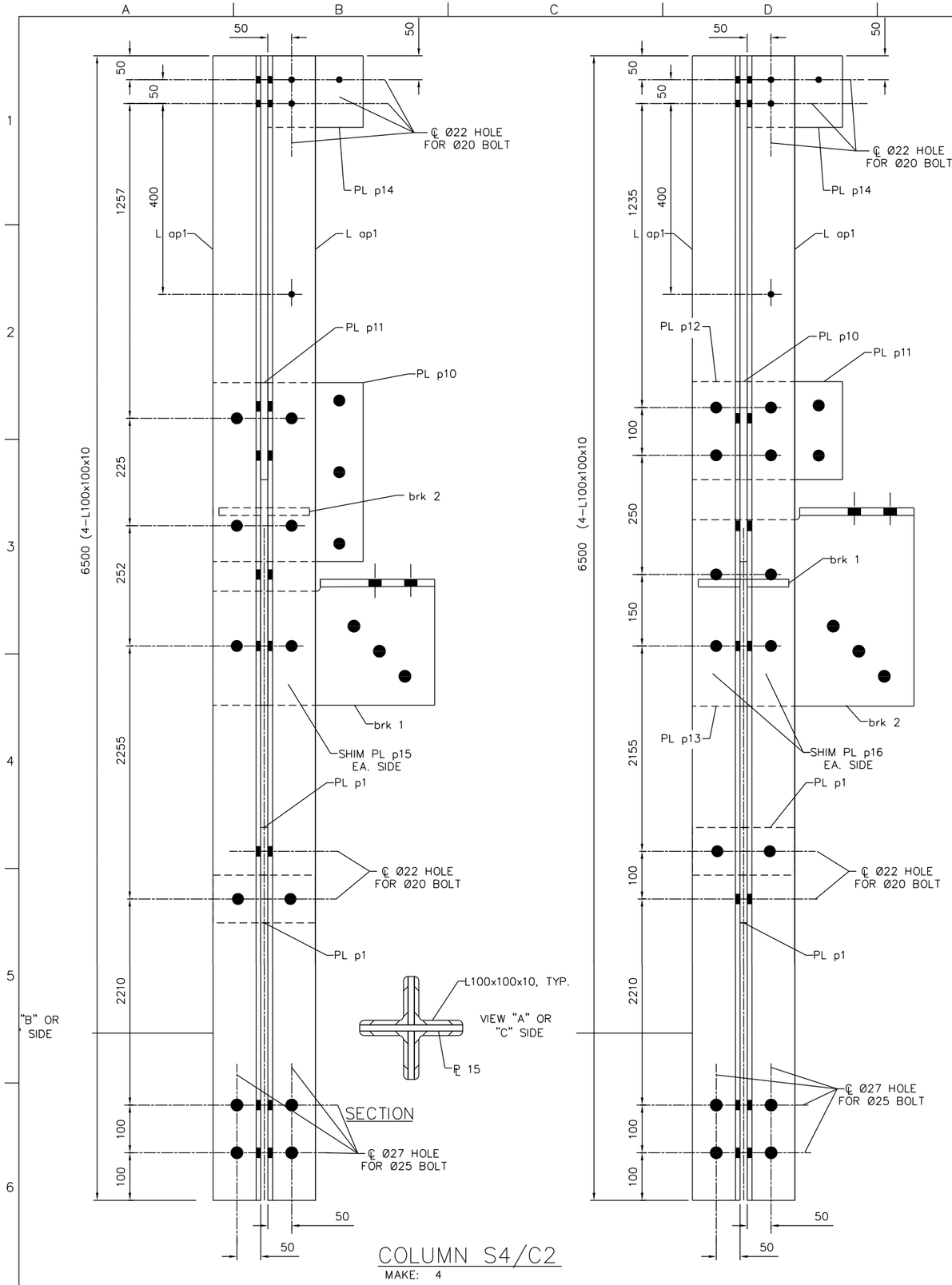

COLUMN S4/C2
MAKE: 4

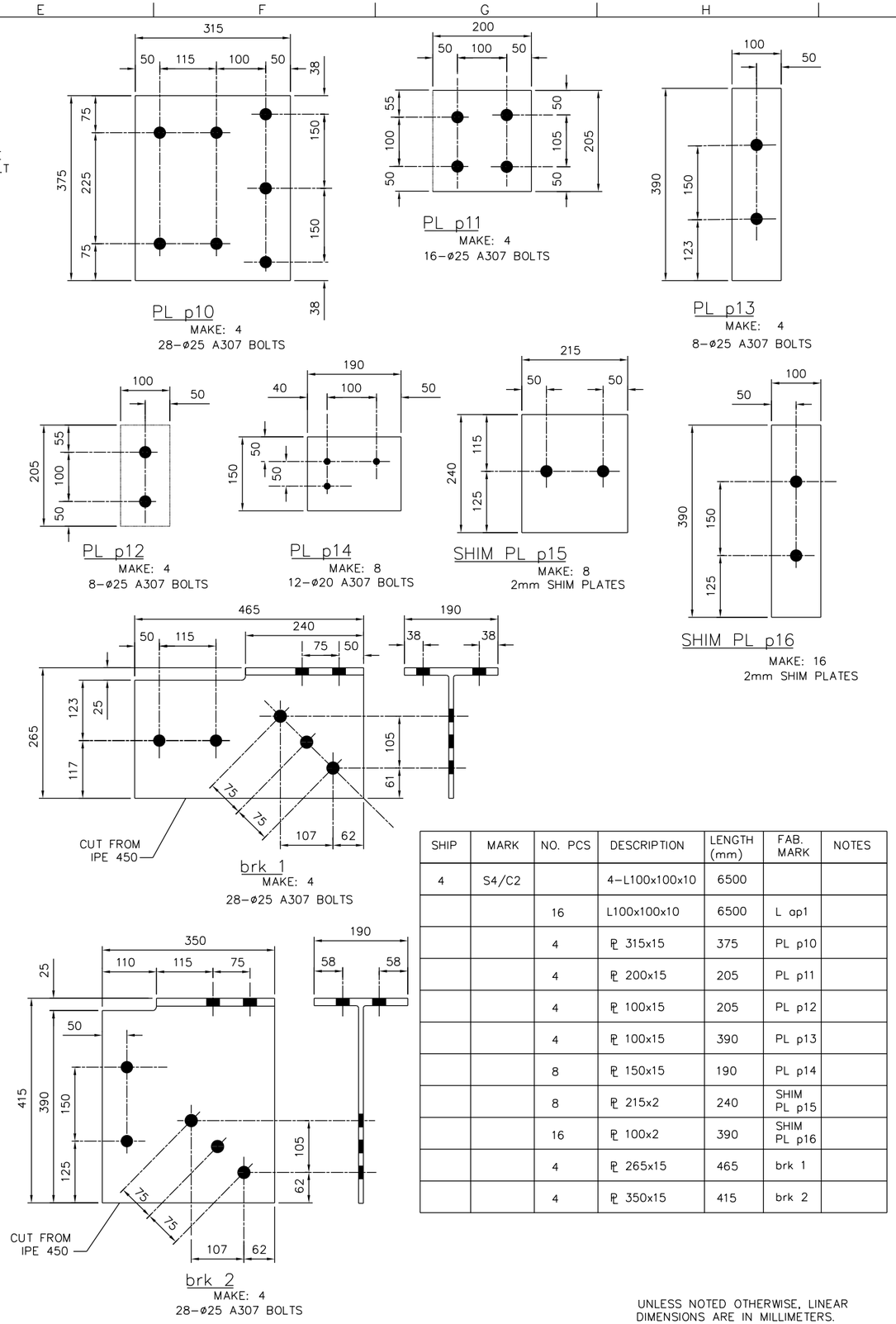

SHIP	MARK	NO. PCS	DESCRIPTION	LENGTH (mm)	FAB. MARK	NOTES
4	S4/C2		4-L100x100x10	6500		
		16	L100x100x10	6500	L ap1	
		4	PL 315x15	375	PL p10	
		4	PL 200x15	205	PL p11	
		4	PL 100x15	205	PL p12	
		4	PL 100x15	390	PL p13	
		8	PL 150x15	190	PL p14	
		8	PL 215x2	240	SHIM PL p15	
		16	PL 100x2	390	SHIM PL p16	
		4	PL 265x15	465	brk 1	
		4	PL 350x15	415	brk 2	

UNLESS NOTED OTHERWISE, LINEAR DIMENSIONS ARE IN MILLIMETERS.

US Army Corps of Engineers ® Mobile District

Symbol | No. | Description | Date | Approved
Revisions

Designed By: | Date: 17 DECEMBER 2009
Drawn By: | Contract No:
Checked By: | CADD CODE: M010TG17
Reviewed By: | Solicitation Number: -
SIZE: 559x864mm | FILENAME:

U.S. ARMY ENGINEER DISTRICT CORPS OF ENGINEERS MOBILE, ALABAMA

AFGHANISTAN ENGINEER DISTRICT 20 METER WATER TOWER

MEMBER DETAILS

SHEET IDENTIFICATION
S-14

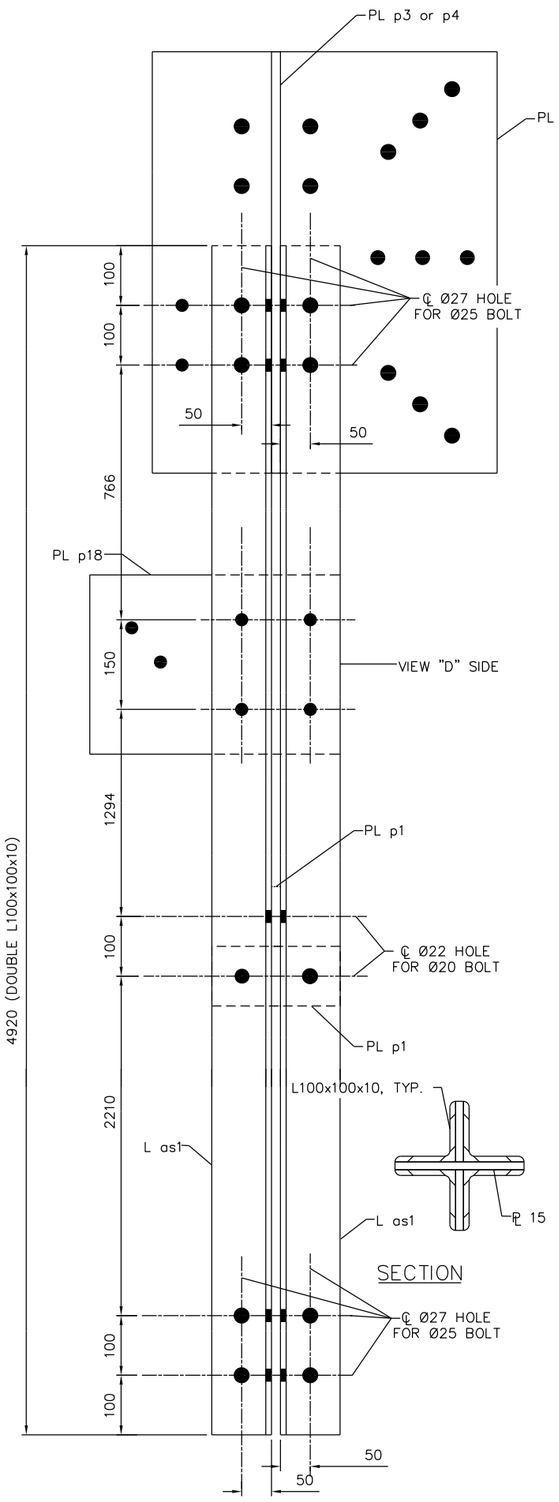

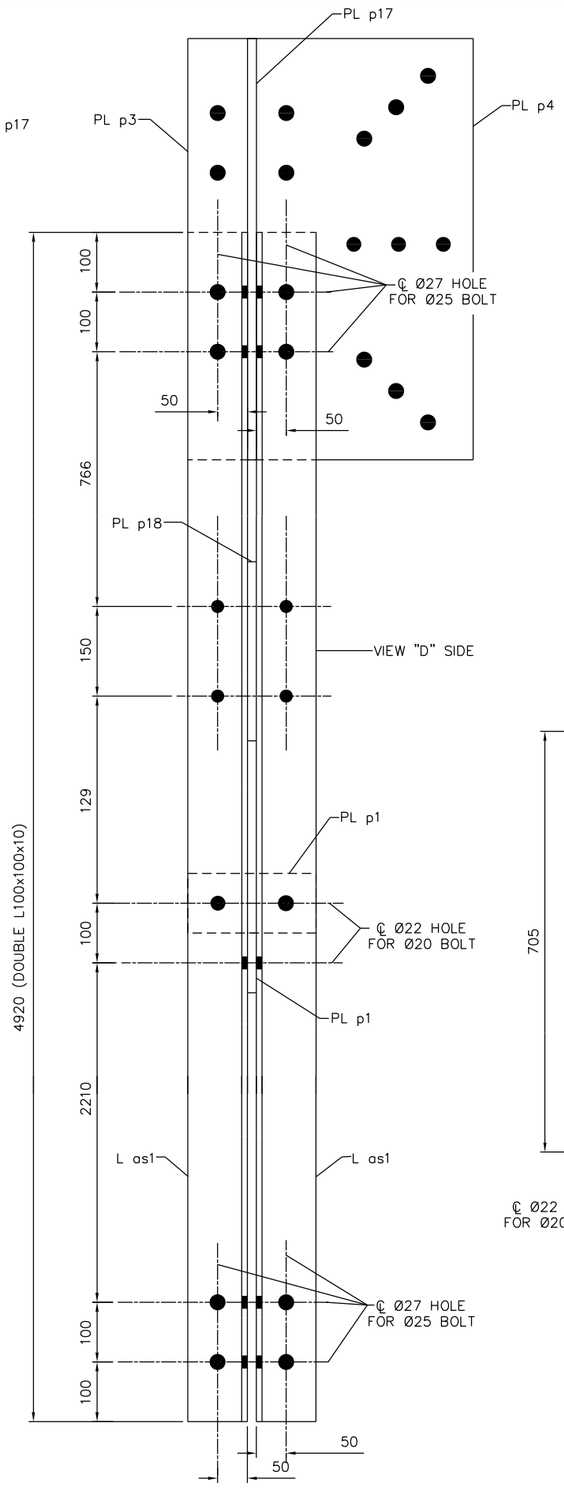

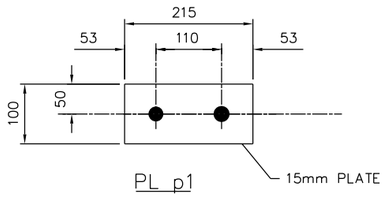

PL p1
MAKE: 4
64–ø20 A307 BOLTS

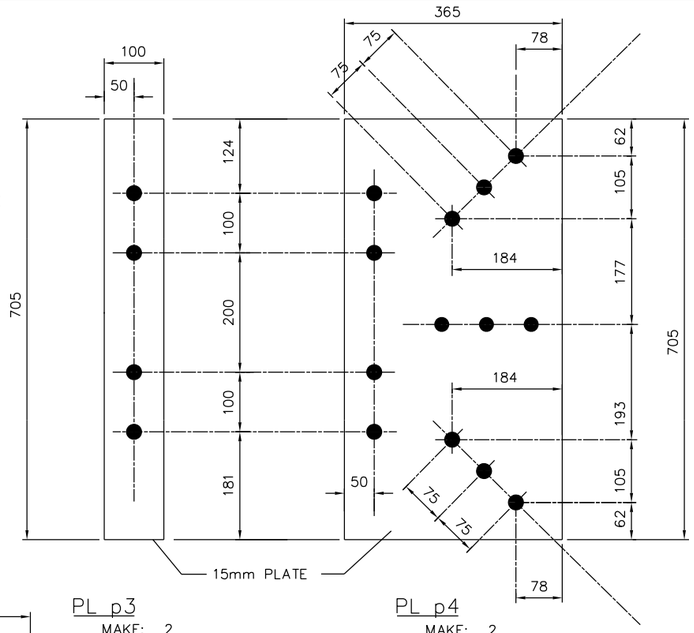

PL p3
MAKE: 2
8–ø25 A307 BOLTS

PL p4
MAKE: 2
26–ø25 A307 BOLTS

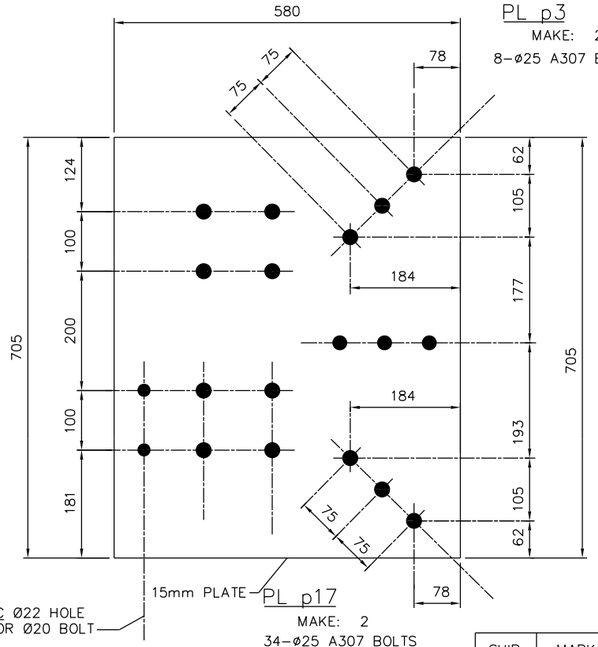

PL p17
MAKE: 2
34–ø25 A307 BOLTS
4–ø20 A307 BOLTS

TE: HOLES IN PL p3, p4,
, & p18 ARE Ø27 UNLESS
SHOWN OTHERWISE.

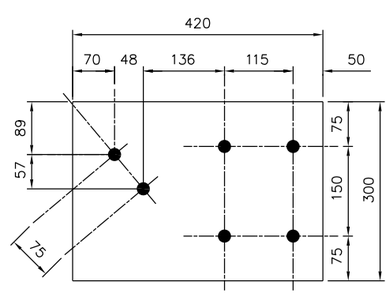

PL p18
MAKE: 2
12–ø25 A307 BOLTS

SHIP	MARK	NO. PCS	DESCRIPTION	LENGTH (mm)	FAB. MARK	WEIGHT	NOTES
2	S4/C3		4–L100x100x10	4920			
		8	4–L100x100x10	4920	L as1		
		4	℄ 100x15	215	PL p1		
		2	℄ 100x15	705	PL p3		
		2	℄ 100x15	705	PL p4		
		2	℄ 580x15	705	PL p17		
		2	℄ 300x15	420	PL p18		

UNLESS NOTED OTHERWISE, LINEAR
DIMENSIONS ARE IN MILLIMETERS.

COLUMN S4/C3
MAKE: 2

US Army Corps of Engineers ®
Mobile District

Symbol	No.	Description Revisions	Date	Approved

Designed By:
Drawn By:
Checked By:
Reviewed By:
Date: 17 DECEMBER 2009
Contract No:
CADD CODE: MD1CT17
Solicitation Number:
SIZE: 559x864mm
FILENAME:

U.S. ARMY ENGINEER DISTRICT
CORPS OF ENGINEERS
MOBILE, ALABAMA

AFGHANISTAN ENGINEER DISTRICT
20 METER WATER TOWER

MEMBER DETAILS

SHEET IDENTIFICATION
S–15

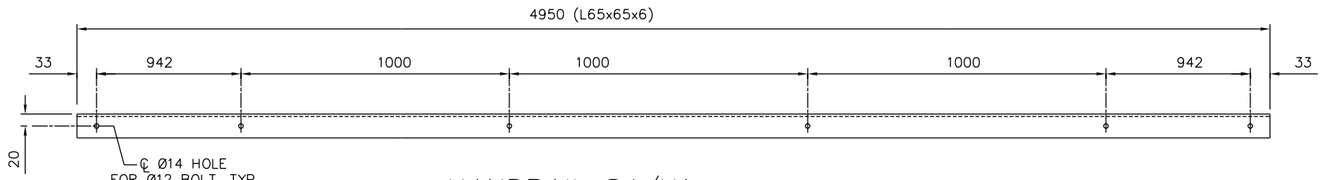

HANDRAIL S4/H1

MAKE: 2
24–Ø12 A307 BOLTS

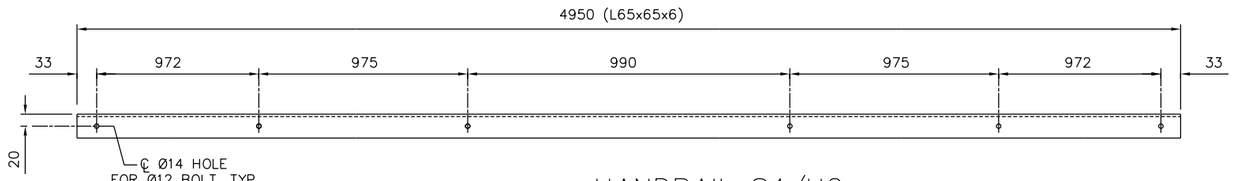

HANDRAIL S4/H2

MAKE: 2
20–Ø12 A307 BOLTS

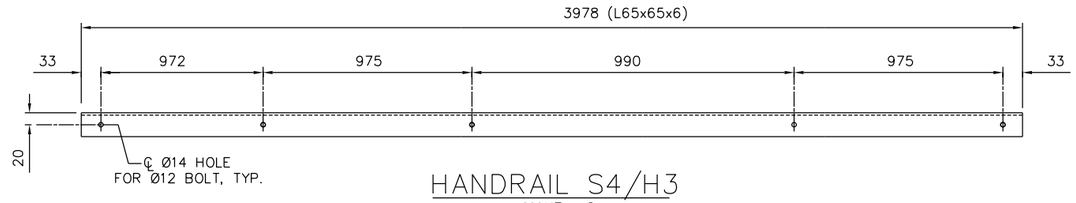

HANDRAIL S4/H3

MAKE: 2
10–Ø12 A307 BOLTS

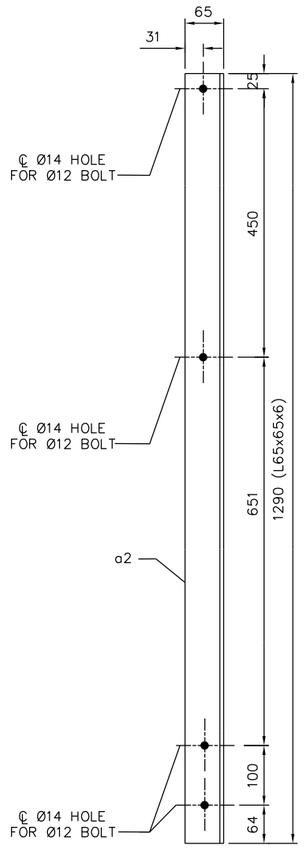

HANDRAIL POST S8/P2

MAKE: 12
48–12 ø A307 BOLTS

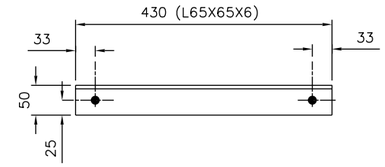

HANDRAIL S4/H4

MAKE: 2
4–Ø12 A307 BOLTS

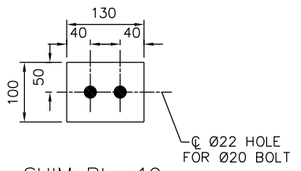

SHIM PL p19

MAKE: 2
15mm SHIM PLATES

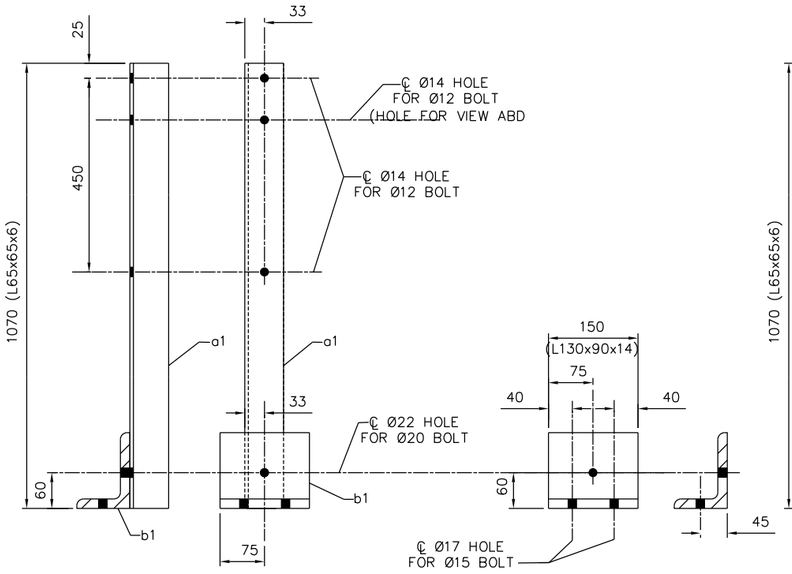

b1

8–Ø20 A307 BOLTS

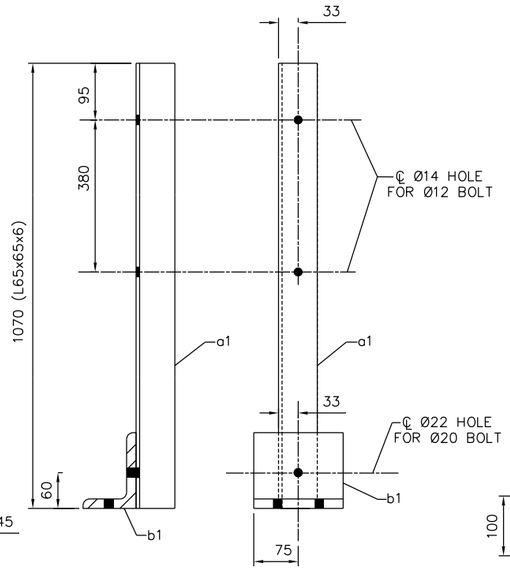

HANDRAIL POST S4/P1

MAKE: 9
28–Ø12 A307 BOLTS
42–Ø15 A307 BOLTS

HANDRAIL POST S4/P3

MAKE: 8
28–Ø12 A307 BOLTS
42–Ø15 A307 BOLTS

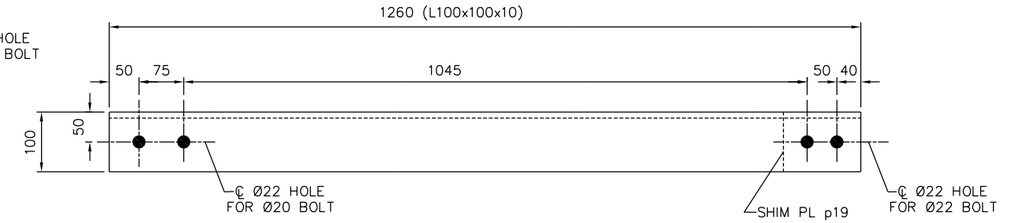

BEAM S8/BR1

MAKE: 2
4–Ø15 A307 BOLTS

SHIP	MARK	NO. PCS	DESCRIPTION	LENGTH (mm)	FAB. MARK	NOTES
2	S4/H1		L65x65x6	4950		
2	S4/H2		L65x65x6	4950		
2	S4/H3		L65x65x6	3978		
2	S4/H4		L65x65x6	3978		
14	S4/P1					
			L65x65x6	1070		
		14	L130x90x14	150	b1	
12	S4/P2		HANDRAIL POST	1290		
		14	L65x65x6	1290	a2	
2	S8/BR1		L100x100x10	1260		
		2	PL 100x15	130	PL p19	

UNLESS NOTED OTHERWISE, LINEAR DIMENSIONS ARE IN MILLIMETERS.

US Army Corps of Engineers ®
Mobile District

Symbol	No.	Description Revisions	Date	Approved

Date: 17 DECEMBER 2009
Contract No:
Designed By:
Drawn By:
CADD CODE: MD10TG17
Solicitation Number:
Checked By:
Reviewed By:
FILENAME:
SIZE: 559x864mm

U.S. ARMY ENGINEER DISTRICT
CORPS OF ENGINEERS
MOBILE, ALABAMA

AFGHANISTAN ENGINEER DISTRICT
20 METER WATER TOWER

MEMBER DETAILS

SHEET IDENTIFICATION
S–16

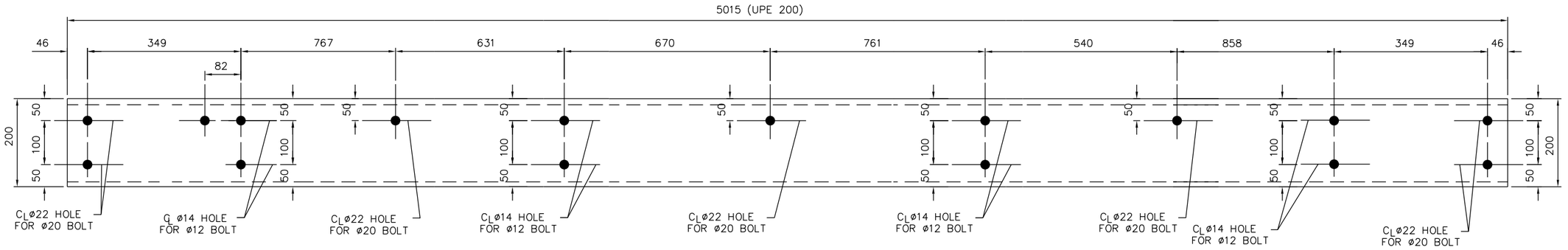

BEAM S3/B9

MAKE: 2

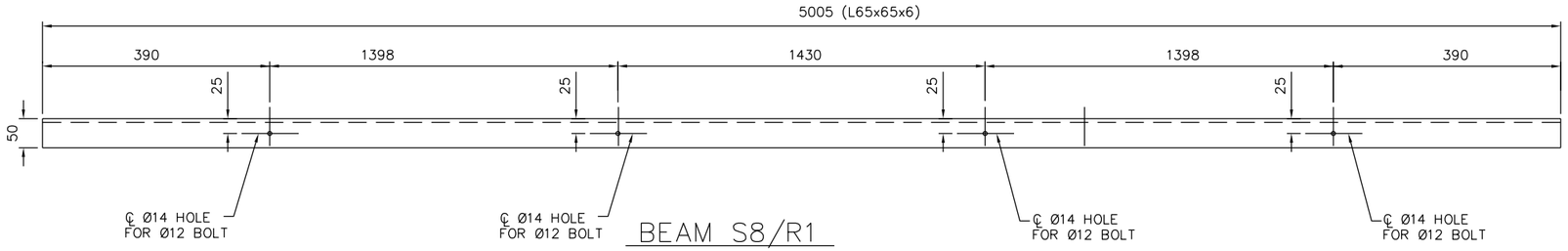

BEAM S8/R1

MAKE: 2

SHIP	MARK	NO. PCS	DESCRIPTION	LENGTH (mm)	FAB. MARK	NOTES
2	S3/B9		UPE 200	5015		
2	S8/R1		L65x65x6	5005		
2	S8/R2		L65x65x6	750		
1	S3/B10		UPE 200	992		
		1	L100x100x10	160	ca1	
4	S3/B11		L100x100x10	870		
		8	L100x100x10	100	ca2	
1	S3/B12		UPE 200	992		
		1	L100x100x10	100	ca1	

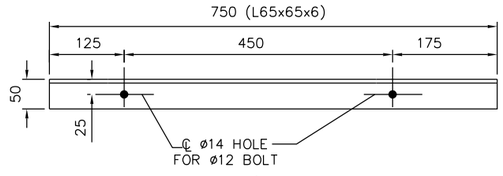

BEAM S8/R2

MAKE: 2

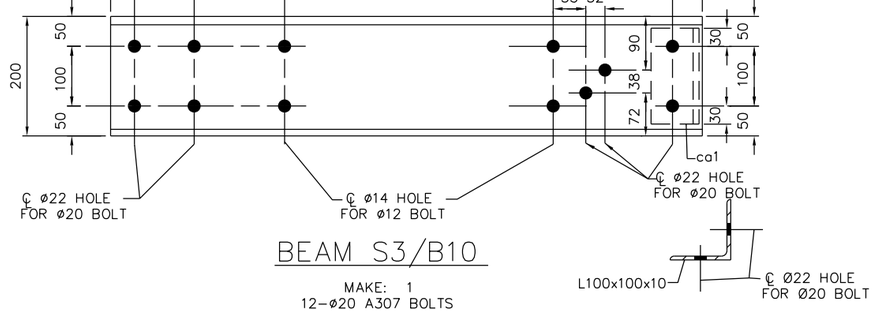

BEAM S3/B10

MAKE: 1
12–ø20 A307 BOLTS

MAKE: 2

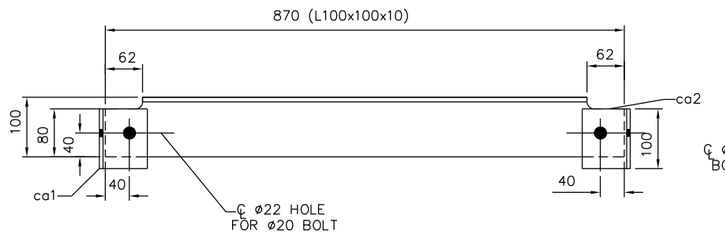

BEAM S3/B11

MAKE: 4
16–ø20 A307 BOLTS

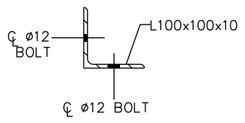

MAKE: 8

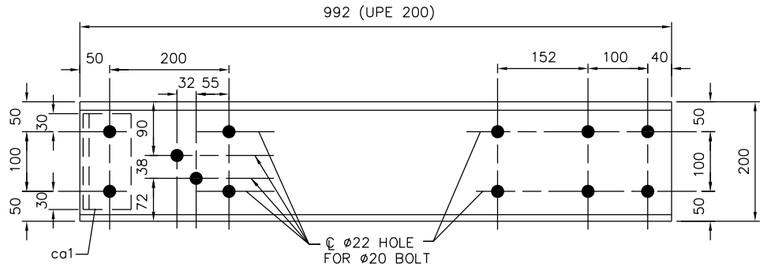

BEAM S3/B12

MAKE: 1
12–ø20 A307 BOLTS

UNLESS NOTED OTHERWISE, LINEAR DIMENSIONS ARE IN MILLIMETERS.

100 0 100mm
SCALE: 1 = 5

US Army Corps of Engineers ®
Mobile District

Symbol	No.	Description	Date	Approved
		Revisions		

Date: 17 DECEMBER 2009
Contract No:
CADD CODE: MOTOT17
Solicitation Number:
FILENAME:
Designed By:
Drawn By:
Checked By:
Reviewed By:
SIZE: 559x864mm

U.S. ARMY ENGINEER DISTRICT
CORPS OF ENGINEERS
MOBILE, ALABAMA

AFGHANISTAN ENGINEER DISTRICT
20 METER WATER TOWER

SECTIONS & DETAILS

SHEET IDENTIFICATION

S–17

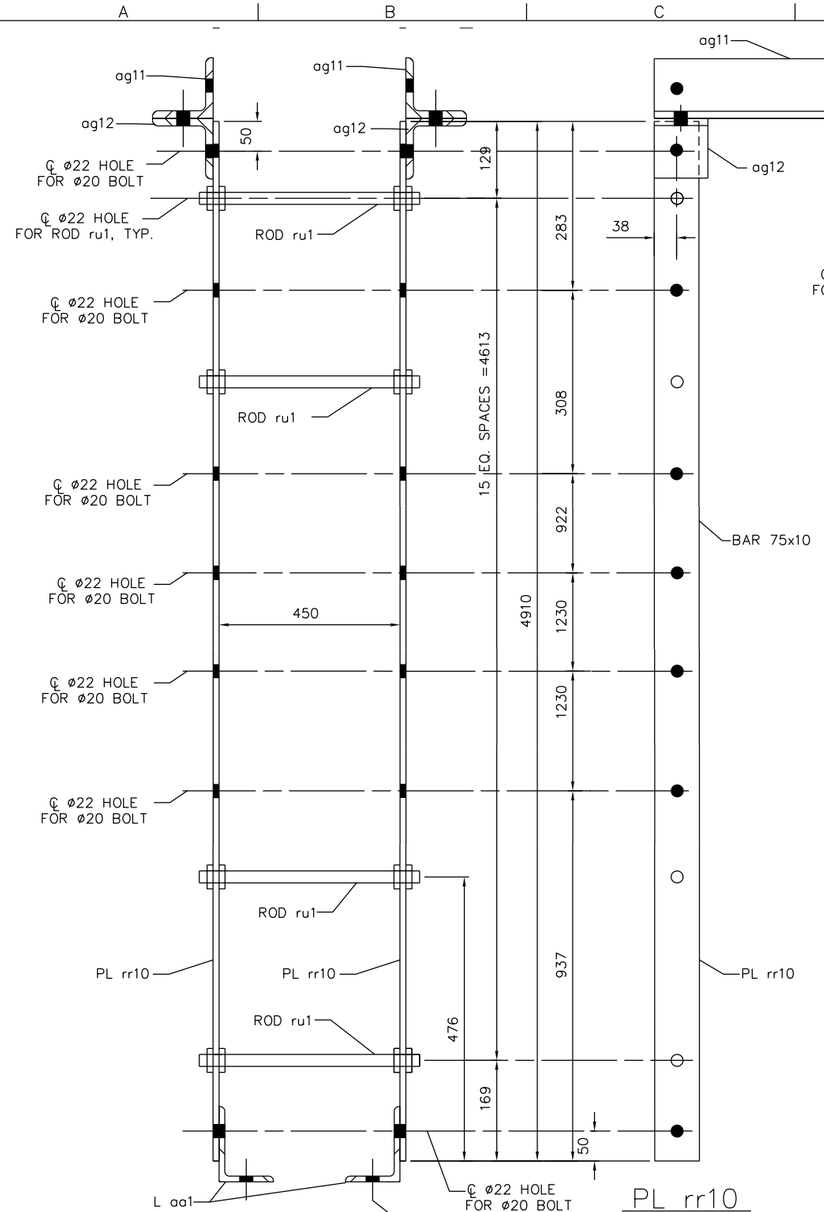

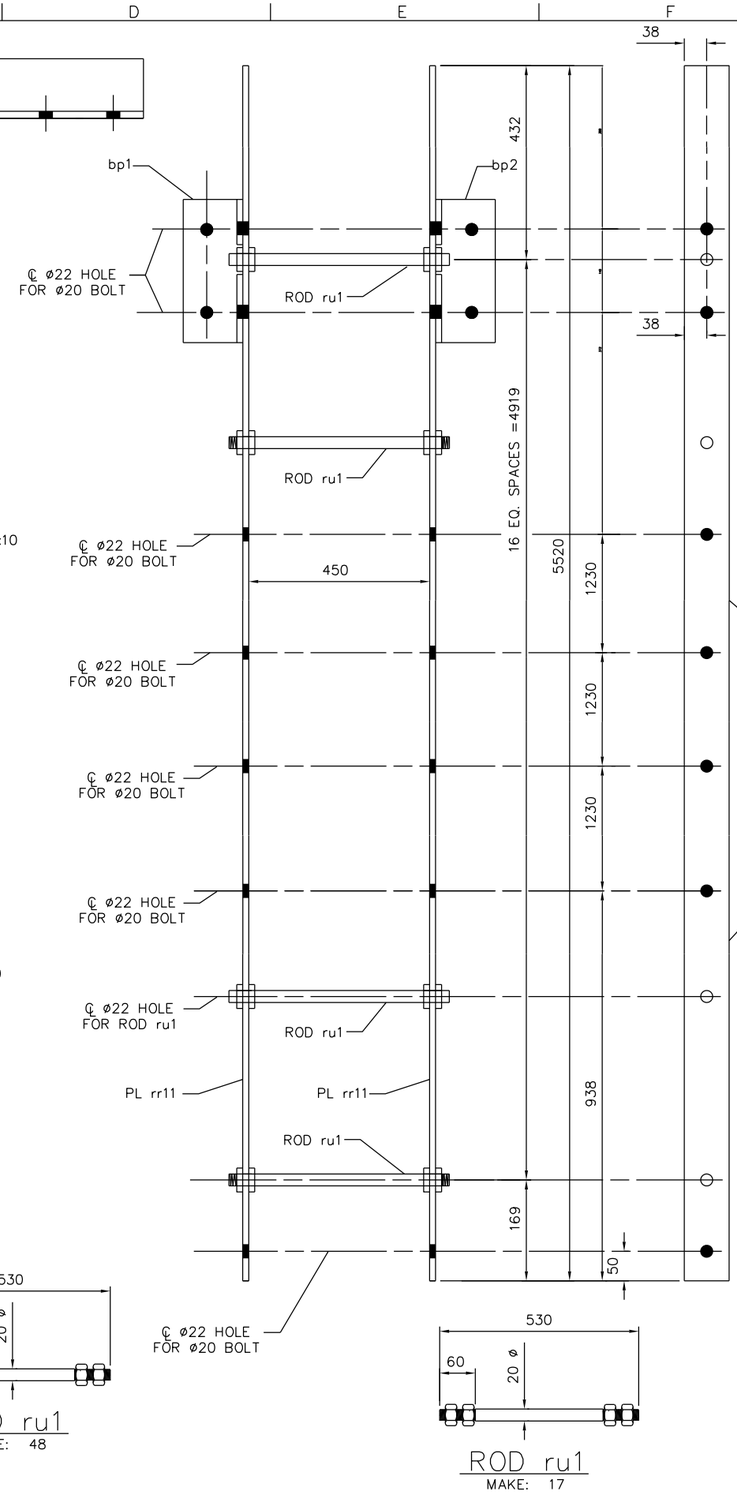

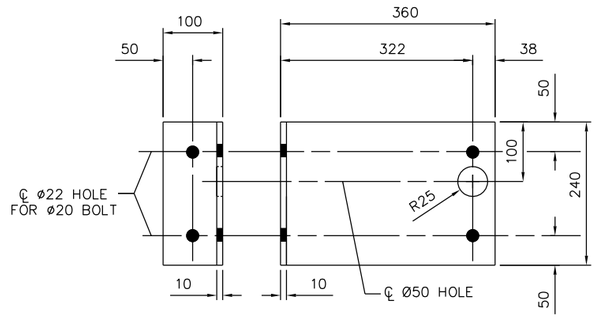

bp1
MAKE: 1

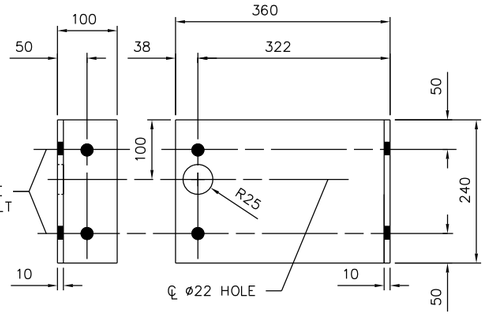

bp2
MAKE: 1

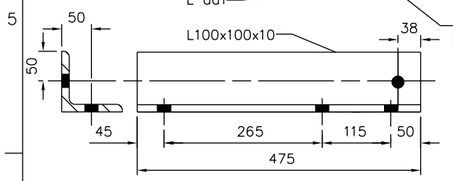

ag11
MAKE: 6

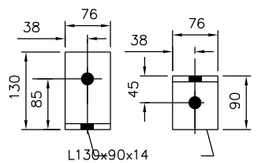

aa1
MAKE: 2

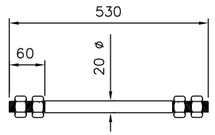

ROD ru1
MAKE: 48

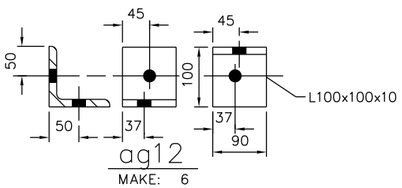

ag12
MAKE: 6

LADDER S4/L1
MAKE: 3
54-ø20 A307 BOLTS
2-ø20 A307 ANCHOR BOLTS

ROD ru1
MAKE: 17

LADDER S4/L2
MAKE: 1

SHIP	MARK	NO. PCS	DESCRIPTION	LENGTH (mm)	FAB. MARK	WEIGHT	NOTES
3	S4/L1		LADDER	4910			
		6	PL 10x75	4910	PL rr10		
		48	ø20	530	ROD ru1		
		2	L130x90x14	75	aa1		
		6	L100x100x10	475	ag11		
		6	L100x100x10	76	ag12		
1	S4/L2		LADDER	4910			
		2	PL 10x75	5920	PL rr11		
		17	ø20	530	ROD ru1		
		1	PL 10x460	240	bp1		
		1	PL 10x460	240	bp2		

UNLESS NOTED OTHERWISE, LINEAR DIMENSIONS ARE IN MILLIMETERS.

US Army Corps of Engineers ®
Mobile District

Symbol	No.	Description	Date	Approved
		Revisions		

Date: 17 DECEMBER 2009
Contract No:
CADD CODE: MD10GT17
Specification Number:
FILENAME:
Designed By:
Drawn By:
Checked By:
Reviewed By:
SIZE: 559x864mm

U.S. ARMY ENGINEER DISTRICT
CORPS OF ENGINEERS
MOBILE, ALABAMA

AFGHANISTAN ENGINEER DISTRICT
20 METER WATER TOWER

SECTIONS & DETAILS

SHEET IDENTIFICATION
S-18

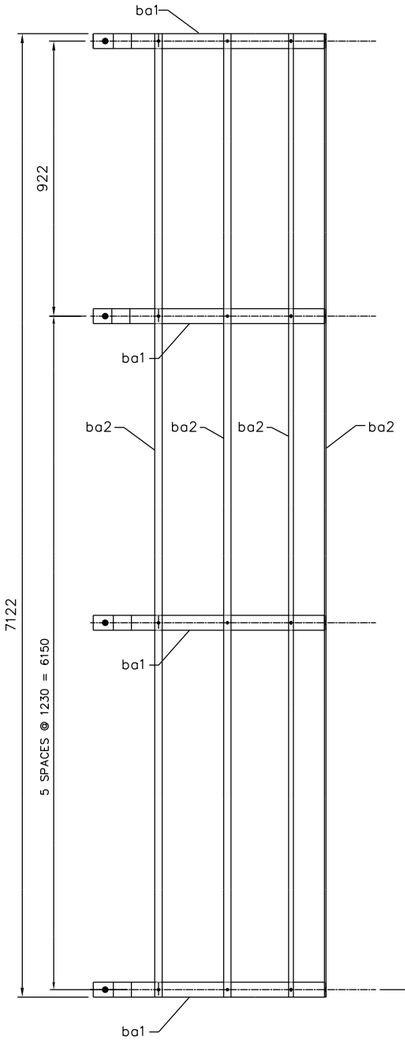

LADDER CAGE S4/G1
MAKE: 1

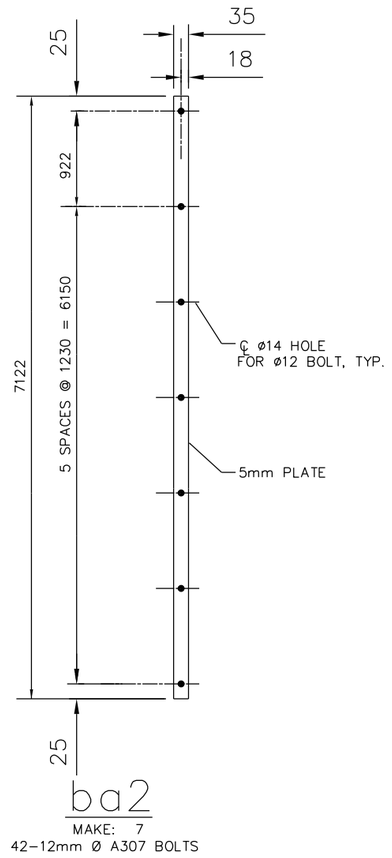

ba2
MAKE: 7
42–12mm Ø A307 BOLTS

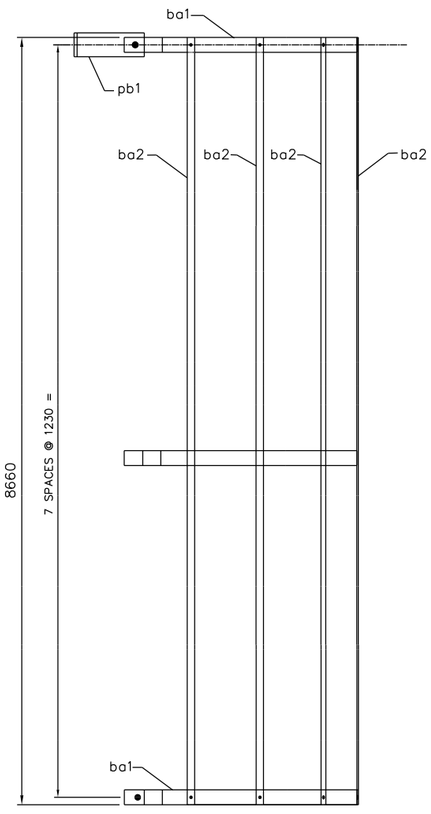

LADDER CAGE S4/G2
MAKE: 1

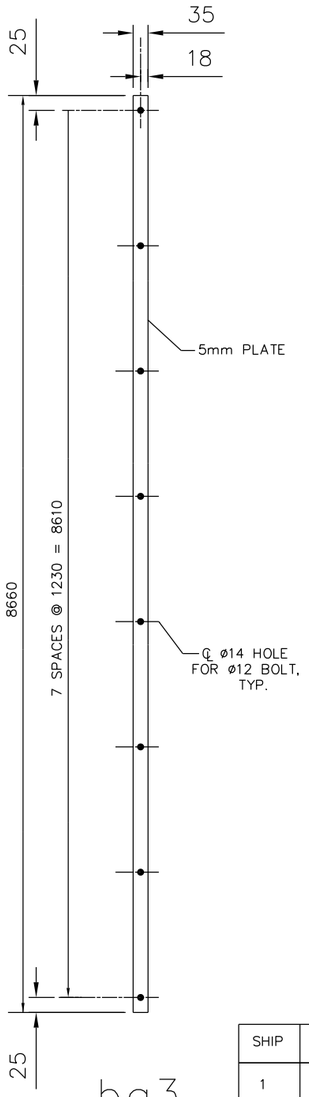

ba3
MAKE: 7

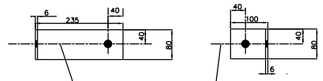

pb1
MAKE: 2

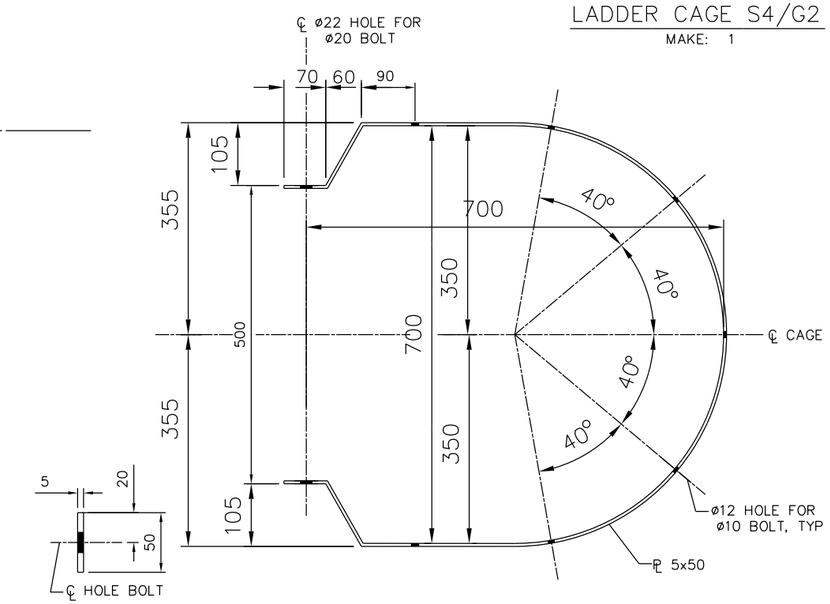

ba1
MAKE: 15

SHIP	MARK	NO. PCS	DESCRIPTION	LENGTH (mm)	FAB. MARK	WEIGHT	NOTES
1	S4/G1		LADDER CAGE	7150			
		6	PL 5x50	1990	ba1		
		7	PL 5x35	7122	ba2		
1	S4/G2		LADDER CAGE	8660			
		8	PL 5x50	1990	ba1		
		7	PL 5x35	8660	ba2		
		2	PL 6x80	335	pb1		

UNLESS NOTED OTHERWISE, LINEAR DIMENSIONS ARE IN MILLIMETERS.

US Army Corps of Engineers ®
Mobile District

Symbol	No.	Description	Date	Approved
		Revisions		

Date: 17 DECEMBER 2009
Contract No:
Designed By:
Drawn By:
CADD CODE: M01DTG17
Specification Number:
Checked By:
FILENAME:
Reviewed By:
SIZE: 559x864mm

U.S. ARMY ENGINEER DISTRICT
CORPS OF ENGINEERS
MOBILE, ALABAMA

AFGHANISTAN ENGINEER DISTRICT
20 METER WATER TOWER

MEMBER DETAILS

SHEET IDENTIFICATION
S–19

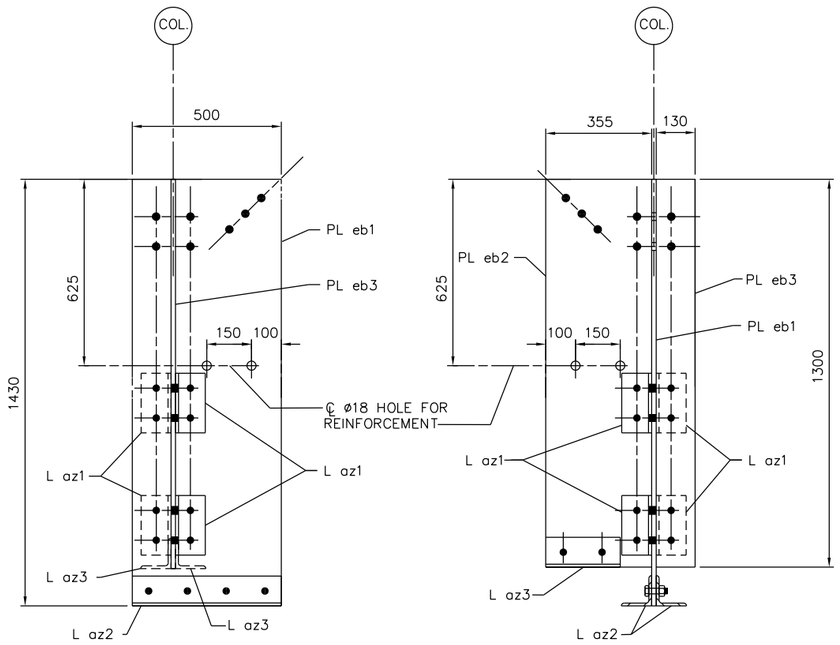

EMBEDDED ANCHOR PLATE S6/E1

MAKE: 4

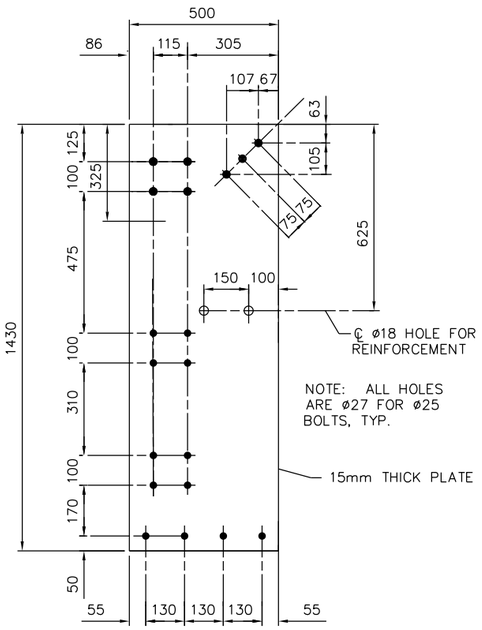

PL eb1

MAKE: 4
76–ø25 A307 BOLTS

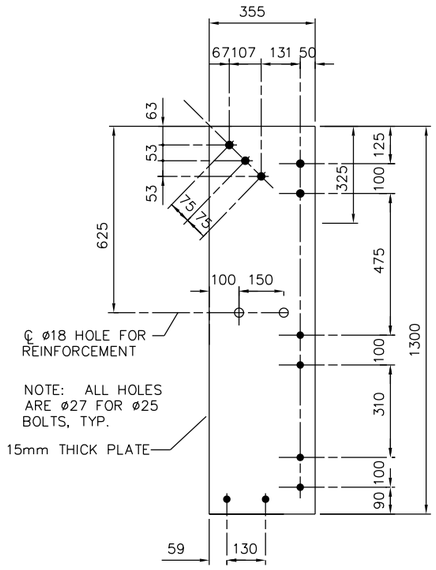

PL eb2

MAKE: 4
44–ø25 A307 BOLTS

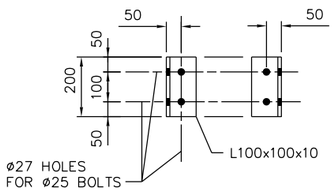

L az1

MAKE: 16

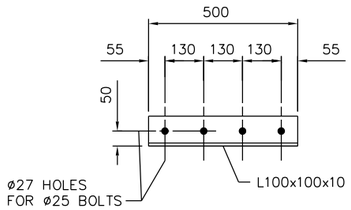

L az2

MAKE: 8

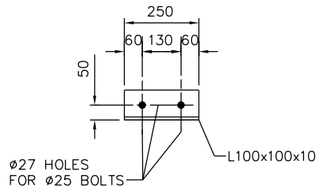

L az3

MAKE: 8

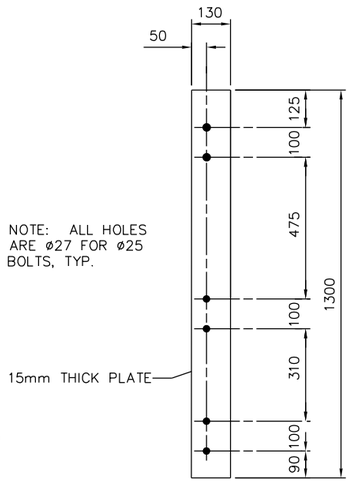

PL eb3

MAKE: 4
24–ø25 A307 BOLTS

SHIP	MARK	NO. PCS	DESCRIPTION	LENGTH (mm)	FAB. MARK	WEIGHT	NOTES
4	S6/E1		EMBEDDED ANCHOR PLATE	1430			
		4	PL 15x500	1430	PL eb1		
		4	PL 15x355	1300	PL eb2		
		4	PL 15x130	1300	PL eb3		
		16	L100x100x10	200	L az1		
		8	L100x100x10	500	L az2		
		8	L100x100x10	250	L az3		

UNLESS NOTED OTHERWISE, LINEAR DIMENSIONS ARE IN MILLIMETERS.

US Army Corps of Engineers ®
Mobile District

Symbol	No.	Description Revisions	Date	Approved

Date: 17 DECEMBER 2009
Contract No:
CADD CODE: MD10GT17
Solicitation Number:
FILENAME:
Designed By:
Drawn By:
Checked By:
Reviewed By:
SIZE: 559x864mm

U.S. ARMY ENGINEER DISTRICT
CORPS OF ENGINEERS
MOBILE, ALABAMA

AFGHANISTAN ENGINEER DISTRICT
20 METER WATER TOWER

MEMBER DETAILS

SHEET IDENTIFICATION

S-20

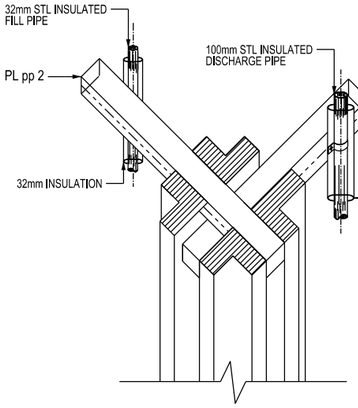

CONNECTION OF WATER PIPE DETAIL:
SCALE: NTS

NOTE: SEE STRUCTURAL SHEET S-13 FOR PLUMBING SUPPORT PLATES

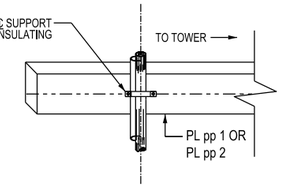

CONNECTION PIPE SUPPORT DETAIL:
SCALE: NTS

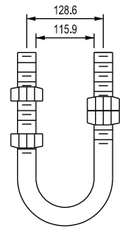

THREAD SIZE-12mm
THREAD LENGTH-76.2mm
TANGENT-114.3mm
TOP OF PIPE TO TOP OF THREAD-57.1
WT.-42.6kg

PIPE CLAMP DETAILS: NOMINAL 100mm
SCALE: NTS

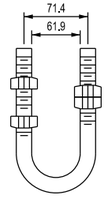

THREAD SIZE-10mm
THREAD LENGTH-63.5mm
TANGENT-82.5mm
TOP OF PIPE TO TOP OF THREAD-52.4
WT.-14.0kg

PIPE CLAMP DETAILS: NOMINAL 50mm
SCALE: NTS

PLUMBING NOTES:

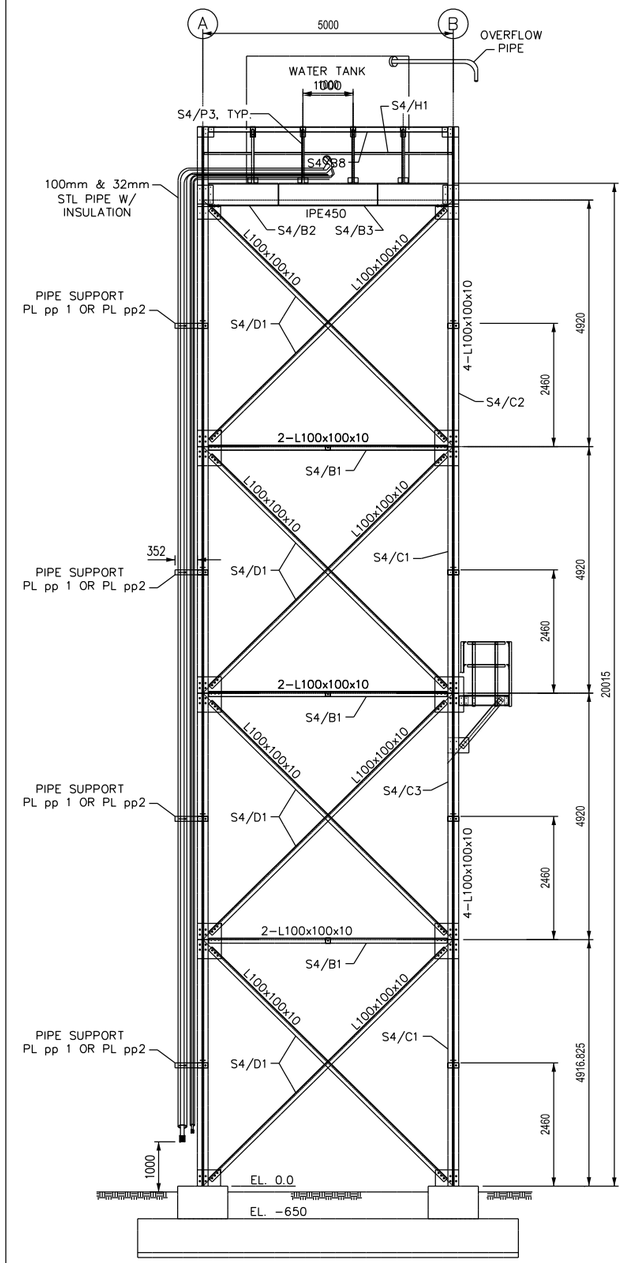

PIPING ELEVATION
1:50

US ARMY CORPS OF ENGINEERS
AFGHANISTAN ENGINEER DISTRICT

SYMBOL	DESCRIPTION	DATE	APPR.

DESIGNED BY:
DRN BY:
CKD BY:
REVIEWED BY:
SUBMITTED BY:
DATE: 17 DEC 2009
DESIGN FILE NO.:
DRAWING CODE:
FILE NAME:
PLOT SCALE:
PLOT DATE: xx-xx-xx
REV: —

U.S. ARMY ENGINEER DISTRICT, AFGHANISTAN
CORPS OF ENGINEERS
APO AE 96338

ENGINEERING AND CONSTRUCTION DIVISION

20 METER WATER TANK
AFGHANISTAN

PIPING ELEVATION

SHEET REFERENCE NUMBER:
P-04

A1 Size 594mm x 841mm

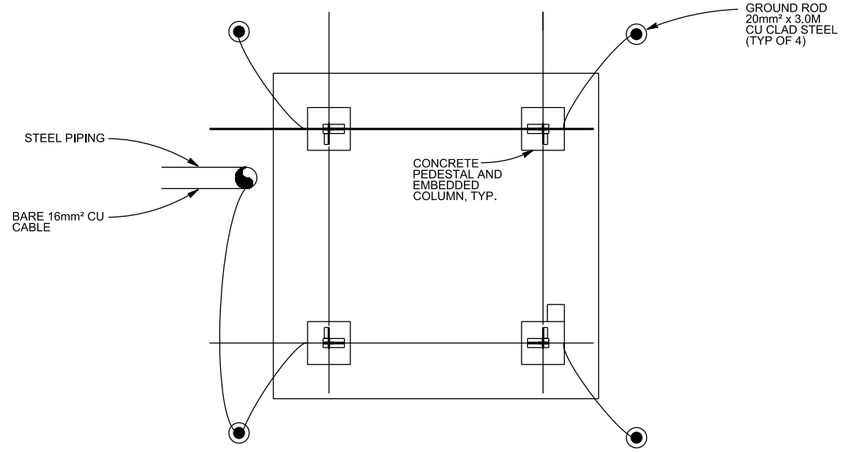

01 GROUNDING ELECTRODE PLAN
N.T.S.

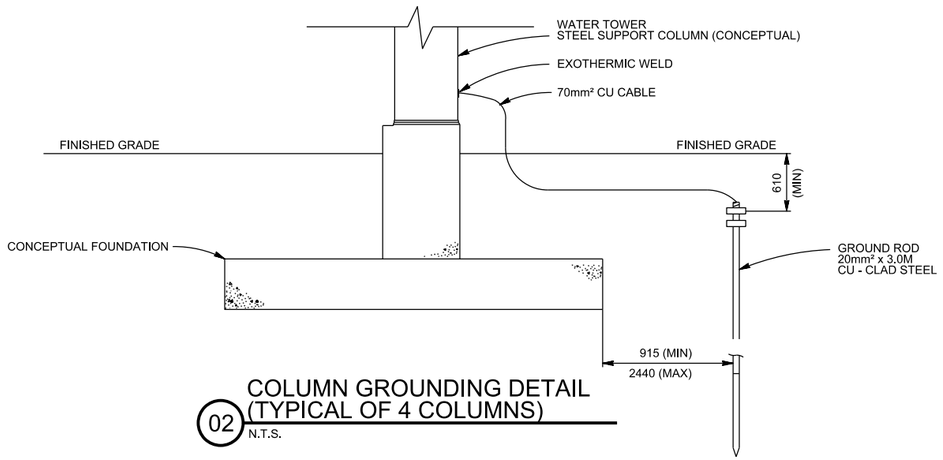

02 COLUMN GROUNDING DETAIL
(TYPICAL OF 4 COLUMNS)
N.T.S.

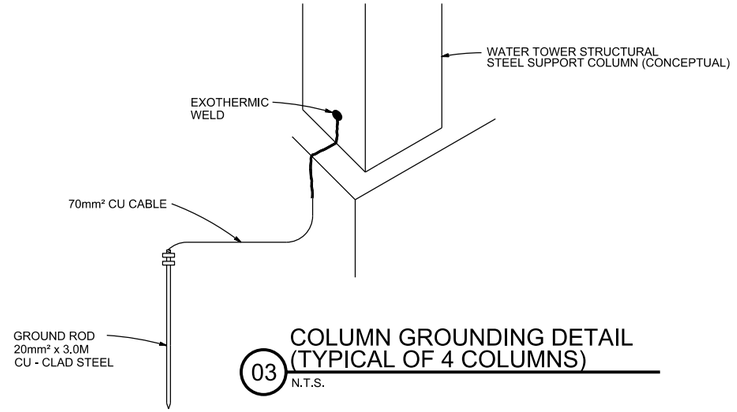

03 COLUMN GROUNDING DETAIL
(TYPICAL OF 4 COLUMNS)
N.T.S.

LIGHTING PROTECTION PLANS AND DETAILS
N.T.S.

NOTES:
1. CONTRACTOR SHALL MAKE ALL METALLIC ELEMENTS OF WATER TOWER TANK AND SUPPORT STRUCTURE ELECTRICALLY CONTINUOUS BY BOLTING REINFORCEMENT STEEL SHALL BE MADE ELECTRICALLY CONTINUOUS BY METALLIC WIRE TIES.
2. BOND EACH METALLIC UNDERGROUND PIPE TO AT LEAST ONE GROUND ROD WITH 16mm² CU CABLE.
3. EACH COLUMN SHALL BE BONDED TO A 20mm² x 3.0M CU CLAD STEEL GROUND ROD VIA A BARE 70mm² CU CABLE. CABLE SHALL BE EXOTHERMIC ALLY WELDED TO COLUMN 150mm ABOVE CONCRETE FOUNDATION.

US ARMY CORPS
OF ENGINEERS
AFGHANISTAN
ENGINEER DISTRICT

SYMBOL	DESCRIPTION	DATE	APPR.	SYMBOL	DESCRIPTION	DATE	APPR.

REV: —
DATE: 17 DEC 2009
DESIGN FILE NO.:
DRAWING CODE:
FILE NAME:
PLOT SCALE: ——
PLOT DATE: xx-xxx-xx

DESIGNED BY:
DWN BY:
CADD BY:
REVIEWED BY:
SUBMITTED BY:

U.S. ARMY ENGINEER DISTRICT, AFGHANISTAN
CORPS OF ENGINEERS
APO AE 96338

ENGINEERING AND
CONSTRUCTION DIVISION

20 METER WATER TANK
AFGHANISTAN

LIGHTING PROTECTION
DETAILS

SHEET
REFERENCE
NUMBER:
E-01

A1 Size 594mm x 841mm