# AFGHAN NATIONAL POLICE

## STANDARD BUILDING DESIGNS

### BARRACK BUILDING TYPE 3 (384 GSM)

SHEET INDEX


G1 COVER SHEET

S1 GENERAL NOTES & DESIGN CRITERIA
S2 DESIGN CRITERIA & SCHEDULES
S3 SCHEDULES
S4 FOUNDATION PLAN
S5 ROOF FRAMING PLAN
S6 FOUNDATION SECTIONS & DETAILS
S7 SECTIONS & DETAILS
S8 TYPICAL DETAILS

A1 FLOOR PLAN
A2 ROOF PLAN AND DETAILS
A3 EXTERIOR ELEVATIONS
A4 BUILDING & WALL SECTIONS
A5 DOOR, WINDOW & FINISH TYPES & DETAILS
A6 LATRINE AND SHOWER DETAILS
A7 SECTION DETAILS

P1 PLAN - PLUMBING AND DRAINAGE ISOMETRIC
P2 TYPICAL BUILDING PLUMBING SCHEMATICS & PLUMBING DETAILS

M1 PLAN - HVAC

E0 ELECTRICAL SYMBOLS AND ABBREVIATIONS
E1 LIGHTING PLAN
E2 POWER AND SYSTEMS PLAN
E3 DETAILS
E4 LIGHT FIXTURE SCHEDULE
E5 PANEL SCHEDULES AND RISER DIAGRAM


US Army Corps of Engineers
Afghanistan Engineer District

| SYMBOL | DESCRIPTION | DATE | APR |
|---|---|---|---|

DESIGNED BY: JDS
DATE: 09-30-09
DWN BY: JDS
SUBMITTED BY: BAKER
CHK BY: JDS
FILE NO.: ANPSDG-001XXX


Michael Baker Jr., Inc
A unit of Michael Baker Corporation
Airside Business Park
100 Airside Drive
Moon Township, PA 15108
www.mbakercorp.com


AFGHAN NATIONAL POLICE
STANDARD DESIGN
BARRACK BUILDING (384 GSM)
WOOD FIRED HEAT OPTION
COVER SHEET

SHEET REFERENCE NUMBER:
G1

100% SUBMISSION

STRUCTURAL ABBREVIATIONS:

| | |
|---|---|
| ACI | AMERICAN CONCRETE INSTITUTE |
| AISC | AMERICAN INSTITUTE OF STEEL CONSTRUCTION |
| ASTM | AMERICAN SOCIETY FOR TESTING AND MATERIALS |
| ARCH | ARCHITECTURAL |
| B | BOTTOM |
| BLDG | BUILDING |
| BOTT | BOTTOM |
| ℄ | CENTER LINE |
| CFMRF | COLD FORM METAL ROOF FRAME |
| CFMF | COLD FORM METAL FRAME |
| CFS | COLD FORMED STEEL |
| CIP | CAST-IN-PLACE |
| CIPL | CAST-IN-PLACE LINTEL |
| CJ | CONTROL JOINT |
| CLR | CLEAR |
| CMU | CONCRETE MASONRY UNIT |
| COEFF | COEFFICIENT |
| COL | COLUMN |
| CONC | CONCRETE |
| CONT | CONTINUOUS |
| COORD | COORDINATE |
| CSJ | CONSTRUCTION JOINT |
| CTJ | CONTROL JOINT |
| DIA | DIAMETER |
| DIAG | DIAGONAL |
| DIM | DIMENSION |
| DWG | DRAWING |
| DWL | DOWEL |
| EA | EACH |
| EF | EACH FACE |
| ELEC | ELECTRICAL |
| ELEV | ELEVATION |
| EMBED | EMBEDMENT |
| EQUIV | EQUIVALENT |
| ETC | ET CETERA |
| EW | EACH WAY |
| EXP | EXPANSION |
| EXT | EXTERIOR |
| FTG | FOOTING |
| GA | GAUGE |
| HORIZ | HORIZONTAL |
| HRS | HOURS |
| IBC | INTERNATIONAL BUILDING CODE |
| INFO | INFORMATION |
| INT | INTERIOR |
| Kg | KILOGRAM |
| Km | KILOMETER |
| kPa | KILOPASCAL |
| L# | ANGLE (# INDICATES SIZE) |
| LONG | LONGITUDINAL |
| LLV | LONG LEG VERTICAL |
| M | METER |
| MAX | MAXIMUM |
| MBM | METAL BUILDING MANUFACTURER |
| MECH | MECHANICAL |
| MFG | MANUFACTURER |
| MID | MIDDLE |
| MIN | MINIMUM |
| MISC | MISCELLANEOUS |
| MM | MILLIMETER |
| MPa | MEGAPASCAL |
| MTL | METAL |
| MWFRS | MAIN WIND FORCE RESISTING SYSTEM |
| N | NEWTON |
| N | NORTH |
| N/A | NOT APPLICABLE |
| # | NUMBER SYMBOL FOR REBAR SIZE |
| NTS | NOT TO SCALE |
| O.C. | ON CENTER |
| OPNG | OPENING |
| ℙ or PL | PLATE |
| PRE-ENG | PRE-ENGINEERED |
| REINF | REINFORCED |
| REQ'D | REQUIRED |
| SIM | SIMILAR |
| SPECS | SPECIFICATIONS |
| STD | STANDARD |
| STRUCT | STRUCTURAL |
| SW | SHEAR WALL |
| T | TOP |
| T/ | TOP OF |
| T/ELEV | TOP ELEVATION |
| T&B | TOP AND BOTTOM |
| THK | THICK |
| TYP | TYPICAL |
| UFC | UNIFIED FACILITIES CRITERIA |
| UON | UNLESS OTHERWISE NOTED |
| VERT | VERTICAL |
| W | WIDTH |
| W/ | WITH |

# GENERAL NOTES

1.0 THIS PROJECT HAS BEEN DESIGNED FOR THE WEIGHTS AND MATERIALS INDICATED ON THE SHEETS AND FOR THE LIVE LOADS INDICATED IN THE DESIGN DATA. IT IS THE CONTRACTOR'S RESPONSIBILITY TO DETERMINE ALLOWABLE CONSTRUCTION LOADS AND TO PROVIDE PROPER DESIGN AND CONSTRUCTION OF FALSEWORK, FORMWORK, STAGING, BRACING, SHEETING AND SHORING, ETC.

1.1 COORDINATE THESE SHEETS WITH THE ARCHITECTURAL, MECHANICAL, ELECTRICAL, PLUMBING, AND CIVIL SHEETS. ALL DIMENSIONS SHOWN ON THE SHEETS ARE MILLIMETERS UNLESS NOTED OTHERWISE.

1.2 THE CONTRACTOR SHALL VERIFY AND COORDINATE ALL FLOOR AND ROOF OPENING SIZES AND LOCATIONS, EQUIPMENT PAD SIZES AND LOCATIONS, ANCHOR BOLT LAYOUTS, ETC WITH EQUIPMENT SELECTED. THE CONTRACTOR SHALL MAKE ANY REQUIRED MODIFICATIONS AT NO ADDITIONAL COST.

1.3 THE CONTRACTOR SHALL REFER TO THE ARCHITECTURAL, MECHANICAL, ELECTRICAL AND PLUMBING SHEETS FOR SLEEVES, CURBS, INSERTS OR OPENINGS, ETC. NOT HEREIN INDICATED.

1.4 SLAB OPENINGS SMALLER THAN 250mm DIA TO BE CORE DRILLED IN FIELD UON. SEE MECHANICAL, ELECTRICAL AND PLUMBING SHEETS FOR LOCATIONS OF THESE OPENINGS.

1.5 WORK NOT INCLUDED ON THE SHEETS BUT IMPLIED TO BE SIMILAR TO THAT SHOWN AT CORRESPONDING PLACES ELSEWHERE ON THE SHEETS SHALL BE REPEATED.

1.6 IN CASE OF CONFLICT BETWEEN THE NOTES, DETAILS AND SPECIFICATIONS THE MOST RIGID REQUIREMENTS SHALL GOVERN.

1.7 SEE ARCHITECTURAL SHEETS FOR LOCATIONS OF MASONRY AND DRYWALL NON-LOAD BEARING PARTITIONS. PROVIDE COMPRESSIBLE FIRESAFING AT TOP OF WALL AS REQUIRED BY ARCHITECTURAL SHEETS.

1.8 COORDINATE FINISHED FLOOR DATUM ELEVATION 0.0m WITH THE CIVIL SHEETS.

2.0 FOUNDATION NOTES

2.1 THE GEOTECHNICAL ANALYSIS FOR THIS PROJECT IS THE RESPONSIBILITY OF THE CONTRACTOR AWARDED THE WORK. DESIGN VALUES USED IN THE STRUCTURAL ANALYSIS OF THE BUILDINGS HEREIN INDICATED HAVE BEEN ASSUMED AND SHALL BE CONFIRMED AND VERIFIED AS PART OF THE GEOTECHNICAL INVESTIGATION. VALUES WHICH DO NOT MEET THE REQUIREMENTS INDICATED ON THE BASIS OF DESIGN SHEET SHALL BE IMMEDIATELY BROUGHT TO THE ATTENTION OF THE CONTRACTING OFFICER FOR CONSIDERATION AND DETERMINATION ON THE NEXT APPROPRIATE COURSE OF ACTION.

2.2 SEE THE SPECIFICATION FOR ADDITIONAL REQUIREMENTS TO THOSE OUTLINED IN THE GEOTECHNICAL INVESTIGATION FOR EXCAVATION AND PREPARATION OF THE FOUNDATION AND THE SLAB ON GRADE SUBGRADE INCLUDING COMPACTION PROCEDURES.

2.3 EXCAVATIONS FOR FOOTINGS SHALL HAVE THE SIDES AND BOTTOMS TEMPORARILY LINED WITH 0.25mm POLYETHYLENE IF PLACEMENT OF CONCRETE DOES NOT OCCUR WITHIN 24 HRS OF THE EXCAVATION OF THE FOOTING.

2.4 FOUNDATION CONDITIONS NOTED DURING CONSTRUCTION WHICH DIFFER FROM THOSE DESCRIBED IN THE GEOTECHNICAL REPORT SHALL BE REPORTED TO THE GENERAL CONTRACTOR BEFORE FURTHER CONSTRUCTION IS ATTEMPTED. SEE PROJECT SPECIFICATIONS.

2.5 NO FOOTINGS OR SLABS SHALL BE POURED INTO OR AGAINST SUBGRADE CONTAINING FREE WATER, FROST, ICE OR LOOSE MATERIAL. FROST DEPTH ASSUMED TO BE 800MM

2.6 ALL SLAB-ON-GRADE, TRENCH BOTTOMS AND OTHER ON-GRADE INTERIOR HORIZONTAL SURFACES SHALL BE PLACED OVER A 0.25mm VAPOR RETARDER OVER A 100mm #57 STONE WATER BARRIER PLACED ON SUBGRADE PROPERLY PREPARED IN ACCORDANCE WITH THE CONTRACT SPECIFICATIONS. (UON)

2.7 SEE PLUMBING, ELECTRICAL & CIVIL SHEETS FOR REQUIRED UNDERSLAB UTILITIES.

2.8 SEE ARCHITECTURAL SHEETS FOR ALL WATERPROOFING DETAILS AND MATERIALS.

2.9 IF UNDERMINING OF FOOTINGS OCCURS, FILL VOIDS WITH 15MPa CONCRETE. DO NOT ATTEMPT TO REPLACE AND RECOMPACT SOIL.

3.0 CONCRETE

3.1 CONCRETE SHALL HAVE THE UNIT WEIGHT AND THE MINIMUM COMPRESSIVE STRENGTHS (f'c) AT 28 DAYS AS SHOWN IN THE CONCRETE MATERIALS SCHEDULE ON SHEET S3. SEE SPECIFICATIONS FOR ADDITIONAL INFORMATION. ENTRAIN AIR TO PRODUCE TOTAL AIR CONTENT ACCORDING TO THE SPECIFICATIONS FOR CONCRETE EXPOSED TO FREEZING TEMPERATURES (EXTERIOR FOOTINGS, SLAB TURNDOWNS, EXTERIOR SLABS AND SLABS-ON-GRADE, EXTERIOR RETAINING WALLS, AND EXTERIOR GRADE BEAMS.)

3.2 NO CALCIUM CHLORIDE SHALL BE USED IN ANY CONCRETE.

3.3 MIXING, TRANSPORTING AND PLACING OF CONCRETE SHALL CONFORM TO ACI 301M-05.

3.4 ALL CONCRETE WORK SHALL CONFORM TO THE REQUIREMENTS OF THE AMERICAN CONCRETE INSTITUTE (ACI) 318M MANUAL (metric), "BUILDING CODE REQUIREMENTS FOR REINFORCED CONCRETE", AND REQUIREMENTS OUTLINED IN THE CONTRACT SPECIFICATIONS. WHEN THERE IS A CONFLICT BETWEEN ACI AND THE SPECIFICATIONS, THE MORE STRINGENT SHALL GOVERN.

3.5 CHAMFER ALL EXPOSED EXTERNAL CORNERS OF CONCRETE WITH 20mm x45 DEGREE CHAMFER UON.

3.6 CONCRETE REINFORCEMENT BARS SHALL CONFORM TO ASTM A615M-96a, GRADE 420 MPa, REINFORCING BARS SHALL NOT BE TACK WELDED, WELDED, HEATED OR CUT, UNLESS INDICATED ON THE CONTRACT DOCUMENTS. ALL LAP SPLICES SHALL BE CLASS "B" UON.

3.7 HORIZONTAL FOOTING AND HORIZONTAL WALL REINFORCEMENT SHALL BE CONTINUOUS AND SHALL HAVE 90 DEGREE BENDS AND EXTENSIONS, OR CORNER BARS OF EQUIVALENT SIZE LAPPED WITH A CLASS B TENSION SPLICE AT CORNERS AND INTERSECTIONS. TOP BAR CRITERIA SHALL APPLY IF 300mm OR MORE OF FRESH CONCRETE IS PLACED BELOW BAR.

3.8 SLABS-ON-GRADE SHALL HAVE CONSTRUCTION JOINTS OR CRACK CONTROL JOINTS AS SHOWN ON THE DRAWINGS. CONSTRUCTION JOINTS CAN BE USED AT CONTROL JOINT LOCATIONS AT CONTRACTORS OPTION. SEE SLAB PLANS & JOINT DETAILS FOR ADDITIONAL INFORMATION. FOR AREAS NOT SHOWN ON DWGS, THE MAXIMUM SPACING OF CONSTRUCTION/ CRACK CONTROL JOINTS SHALL BE 4800mm

3.9 SEE SPECIFICATIONS FOR ALL WATERPROOFING/DAMPPROOFING REQUIREMENT.

3.10 ALL CONCRETE REINFORCEMENT SHALL BE DETAILED, FABRICATED, LABELED, SUPPORTED, AND SPACED IN FORMS AND SECURED IN PLACE IN ACCORDANCE WITH THE PROCEDURES AND REQUIREMENTS OUTLINED IN THE LATEST EDITION OF THE "BUILDING CODE REQUIREMENTS FOR REINFORCED CONCRETE", ACI 318M, AND THE "MANUAL OF STANDARD PRACTICE FOR DETAILING REINFORCED CONCRETE STRUCTURES", ACI 315M, LATEST EDITION.

3.11 SHOP DRAWINGS SHOWING REINFORCING DETAILS, INCLUDING STEEL SIZES, SPACING AND PLACEMENT, SHALL BE SUBMITTED FOR REVIEW PRIOR TO FABRICATION.

3.12 ALL DOWELS SHALL MATCH SIZE AND NUMBER OF MAIN REINFORCING, UNLESS NOTED OTHERWISE ON THE SHEETS.

3.13 ADDITIONAL BARS SHALL BE PROVIDED AROUND ALL FLOOR AND WALL OPENINGS AS SHOWN ON THE SHEETS.

3.14 SEE ARCHITECTURAL SHEETS FOR TYPE AND LOCATION OF ALL FLOOR FINISHES.

3.15 THE CONTRACTOR SHALL COORDINATE ADDITIONAL WALL/SLAB OPENINGS NOT SHOWN ON STRUCTURAL SHEETS. SEE MECHANICAL, ELECTRICAL, PLUMBING AND CIVIL SHEETS.

3.16 UNLESS NOTED OTHERWISE, ALL CURBS SHALL BE REINFORCED WITH AT LEAST (1)-#13 CONTINUOUS AND #13 AT 300mm O.C. DOWELS TO STRUCTURE BELOW.

3.17 THE SUB-CONTRACTOR SHALL VERIFY ALL OPENINGS, PAD SIZES, AND ANCHOR BOLTS WITH EQUIPMENT SELECTED.

3.18 FOR ALL WALLS & PIERS, PROVIDE DOWELS INTO FOOTING AT EACH VERT REINF BAR, UON DOWEL SIZE SHALL BE SAME AS VERT REINF.

3.19 ALL DEFORMED BAR ANCHORS SHALL BE TRS NELSON DIVISION OR EQUAL 15mm DIA (UON) CONFORMING TO ASTM A-496M WITH A MINIMUM TENSILE STRENGTH OF 550 MPa. INSTALL ANCHORS IN ACCORDANCE WITH MANUFACTURERS RECOMMENDATIONS BY AUTOMATIC END WELDING AS INDICATED ON THE DRAWINGS. NO UNAUTHORIZED OR FIELD WELDING SHALL BE MADE WITHOUT AUTHORIZATION FROM THE MANUFACTURER.

3.20 ALL REINFORCING INDICATED TO BE WELDED SHALL BE IN ACCORDANCE WITH ASTM A706M. "LOW ALLOY STEEL DEFORMED BARS FOR CONCRETE REINFORCEMENT". ANY INSTALLATIONS USING MANUFACTURER'S EQUIPMENT SHALL BE PER MANUFACTURER'S RECOMMENDATIONS.

3.21 PROVIDE CONCRETE POUR STOPS OR FORMED AS REQUIRED FOR INSTALLATION OF ALL CONCRETE WORK.

3.22 PROVIDE ADDITIONAL (2)-#13 x 600mm REINFORCING BARS IN SLAB-ON GRADE AT ALL RE-ENTRANT CORNERS. PLACE BARS AT MID-DEPTH OF SLAB WITH A CLEARANCE OF 50mm FROM CORNER UON.

4.0 CONCRETE MASONRY

4.1 MASONRY CONSTRUCTION AND MATERIALS SHALL CONFORM TO ALL REQUIREMENTS OF THESE CONTRACT DOCUMENTS AND THE PROJECT SPECIFICATIONS.

4.2 THE SPECIFIED ULTIMATE COMPRESSIVE STRENGTH OF CONCRETE MASONRY (f'm) ON THE NET AREA IS A MINIMUM OF 10.4 MPa.

4.3 PROVIDE TWO #16 BARS CONTINUOUS IN ALL MASONRY LINTELS UON ON THE SHEETS. BOND BEAM REINFORCING SHALL BE CONTINUOUS AND SPACED AT A MAXIMUM OF 1200mm OC VERTICALLY. ALL BOND BEAMS SHALL BE A MINIMUM OF 200mm IN DEPTH WITH REINFORCING BEING CONTINUOUS AND HAVING STANDARD ACI HOOKS AT EACH END. PROVIDE STANDARD BAR SPLICES AS SPECIFIED.

4.4 FOR WALL REINFORCING SEE "MIN CMU WALL REINFORCING" DETAILS ON SHEET S8. PROVIDE STANDARD BAR SPLICES AS SPECIFIED. ALL VERTICAL REINFORCEMENT EXTENDS FULL HEIGHT OF WALL.

4.5 CMU CELLS THAT REQUIRE VERTICAL REINFORCING BARS AS INDICATED ON THE CONTRACT DRAWINGS AND/OR SPECS SHALL HAVE REINF BARS PLACED IN CENTERS OF CMU CELLS AND CONTINUOUSLY GROUTED UON.

4.6 PROVIDE LADDER TYPE JOINT REINFORCEMENT AT 200mm EXTERIOR, & 400mm INTERIOR ON CENTER MAXIMUM, UON MINIMUM ROD SIZE USED SHALL BE 9 GA. DEFORMED WIRE AND CONFORM TO ASTM A82M, UON.

4.7 PROVIDE CONTROL JOINTS AS INDICATED ON THE ARCHITECTURAL SHEETS.

4.8 GROUT FOR MASONRY SHALL BE NORMAL WEIGHT AND HAVE A MINIMUM COMPRESSIVE STRENGTH OF 25 MPa AT 28 DAYS. GROUT SHALL CONFORM TO ASTM C476M. GROUT LIFTS SHALL NOT EXCEED 1400mm.

4.9 USE MORTAR TYPE S CONFORMING TO ASTM C270M, SEE SPECIFICATIONS.

4.10 CONCRETE MASONRY UNITS SHALL BE NORMAL WEIGHT AND CONFORM TO ASTM C90M.

4.11 ALL CMU CELLS, OPEN CAVITIES, AND AIR SPACES SHALL BE GROUTED TO STOP FRAGMENTS FROM MORTAR BLAST

4.12 BOND BEAM REINFORCING SHALL BE DISCONTINUOUS AT CONTROL JOINTS (UON). MAXIMUM CONTROL JOINT SPACING SHALL BE AS INDICATED ON THE ARCHITECTURAL SHEETS.

4.13 CONTRACTOR SHALL COORDINATE LOCATION OF ALL OPENINGS SEE ARCH, MECH, ELEC, AND PLUMBING SHEETS FOR SIZE AND LOCATION OF OPENINGS.

4.14 MASONRY WALLS SHALL NOT BE BACK FILLED PRIOR TO THE MORTAR AND GROUT ATTAINING THEIR RESPECTIVE MAXIMUM DESIGN STRENGTHS PER SPECIFICATIONS.

5.0 CFMRF – COLD FORM METAL ROOF FRAMING SYSTEM

5.1 CFMF SHALL BE DESIGNED BY CFMF MANUFACTURER'S ENGINEER FOR ALL LOADING PER CODE AND AS INDICATED ON THE SHEETS.

5.2 FOR WIND LOADS, SEE THE DESIGN CRITERIA ON SHEET S2.

5.3 SUBMIT VENDOR'S PUBLISHED LITERATURE, TEST DATA AND INSTALLATION INSTRUCTIONS FOR METAL STUD ASSEMBLY AND ACCESSORIES INCLUDING OTHER DATA AS MAY BE REQUIRED TO CERTIFY COMPLIANCE WITH PERFORMANCE REQUIREMENTS SPECIFIED HEREIN.

5.4 SHOP DRAWINGS AND DESIGN ANALYSIS SHALL BE STAMPED AND APPROVED BY A LICENSED PROFESSIONAL ENGINEER.

5.5 CONNECTIONS AND GAUGE SIZES ARE MINIMUM AND SHALL BE INCREASED AS NECESSARY TO PROVIDE A STRUCTURALLY ADEQUATE SYSTEM. KICKERS MAY BE ADDED TO REDUCE THE STUD HEIGHTS WHERE ACCEPTABLE AND COORDINATED WITH THE ARCHITECTURAL DRAWINGS.

5.6 CRMRF SHALL HAVE THE FOLLOWING MINIMUM PROPERTIES:

STUD/RAFTER/EAVE STRUT/BRACE/BLOCKING:
Fy = 344 MPa
GAUGE = 18
DEPTH = 152.3 mm
WIDTH = 34.8 mm
MOMENT OF INERTIA, Ix = $847 \times 10^3$ $mm^4$
SECTION MODULUS, Sx = $11.2 \times 10^3$ $mm^3$

TRACK:
Fy = 344 MPa
GAUGE = 16
DEPTH = 152.3 mm
WIDTH = 38 mm
MOMENT OF INERTIA, Ix = $1083 \times 10^3$ $mm^4$
SECTION MODULUS, Sx = $13.8 \times 10^3$ $mm^3$

PURLIN/SUBGIRT:
Fy = 393 MPa
GAUGE = 16
MOMENT OF INERTIA (TOP COMPRESSION), Ixt = $23.7 \times 10^3$ $mm^4$
MOMENT OF INERTIA (BOTT COMPRESSION), Ixb = $22.7 \times 10^3$ $mm^4$
SECTION MODULUS (TOP COMPRESSION), Sxt = $1.8 \times 10^3$ $mm^3$
SECTION MODULUS (BOTT COMPRESSION), Sxb = $1.7 \times 10^3$ $mm^3$

# STRUCTURAL DESIGN CRITERIA

ALL DESIGNS SHALL CONFORM TO THE PROVISIONS OF THE IBC 2006 AS APPLICABLE

1.0 DESIGN LOADS

1.1 DEAD LOADS

1.1.1 ROOF DEAD LOADS – CONCRETE FRAMING

| | MAXIMUM GRAVITY LOAD |
|---|---|
| CONC FLAT SLAB | 4.80 KPa |
| MECH/ELEC/PLUMBING | 0.15 KPa |
| MISC | 0.05 KPa |
| | 5.00 KPa |

1.1.2 ROOF DEAD LOADS – CONVENTIONAL LIGHT FRAMING

| | MAXIMUM GRAVITY LOAD | MINIMUM GRAVITY LOAD |
|---|---|---|
| LIGHT GAUGE FRAMING | 0.20 KPa | 0.15 KPa |
| INSULATION | 0.10 KPa | 0.05 KPa |
| METAL ROOFING | 0.14 KPa | 0.05 KPa |
| | 0.44 KPa | 0.25 KPa |

1.1.3 FLOOR PARTITION ALLOWANCE

0.96 KPa

1.2 LIVE LOADS (PER IBC 2006)

1.2.1 ROOF LIVE LOADS: ALL BUILDINGS

GREATER OF 1.0 KPa MINIMUM OR SNOW LOAD

1.2.2 ELEVATED FLOOR UNIFORM LIVE LOADS

| | |
|---|---|
| CORRIDOR | 4.80 KPa |
| ALL OTHER | 2.40 KPa |

1.2.3 SLAB-ON-GRADE LIVE LOADS

| | |
|---|---|
| ALL BUILDINGS | 4.80 KPa |

1.3 SNOW LOADS (PER IBC 2006)

1.3.1 DESIGN PARAMETERS

| | |
|---|---|
| GROUND SNOW LOAD (per UFC 3-310-01) | 1.0 KPa |
| SNOW IMPORTANCE FACTOR | 1.0 |
| SNOW EXPOSURE FACTOR | 1.0 |

1.4 SEISMIC LOADS (PER IBC 2006 & UFC 3-310-04)

1.4.1 SEISMIC PARAMETERS – CAST-IN-PLACE CONCRETE STRUCTURES

| | |
|---|---|
| SEISMIC OCCUPANCY CATEGORY | II |
| SEISMIC IMPORTANCE FACTOR (I) | 1.0 |
| SEISMIC SITE CLASS | D |
| Ss | 1.28 |
| S1 | 0.51 |
| Sds | 0.853 |
| Sd1 | 0.51 |
| SEISMIC DESIGN CATEGORY | D |
| SEISMIC RESISTING SYSTEM | SPECIAL REINFORCED MASONRY SHEAR WALLS |
| RESPONSE MODIFICATION FACTOR (R) | 5.0 |
| RESPONSE COEFFICIENT (Cs) | 0.17 |
| SEISMIC ANALYTICAL PROCEDURE | EQUIV LATERAL FORCE |
| SEISMIC BASE SHEAR | 804 kN |

US Army Corps of Engineers
Afghanistan Engineer District

| SYMBOL | DESCRIPTION | DATE | APR |
|---|---|---|---|

DATE: 09-30-09
SUBMITTED BY: BAKER
FILE NO.: ANPSDS-001XXX
DESIGNED BY: MMY
DWN BY: RCG
CHK BY: CWW

Michael Baker Jr., Inc.
A unit of Michael Baker Corporation
Airside Business Park
100 Airside Drive
Moon Township, PA 15108
www.mbakercorp.com

AFGHAN NATIONAL POLICE
STANDARD DESIGN
BARRACK BUILDING (384 GSM)
WOOD FIRED HEAT OPTION

GENERAL NOTES & DESIGN CRITERIA

SHEET REFERENCE NUMBER:
S1

100% SUBMISSION

## STRUCTURAL DESIGN CRITERIA (CONT)

ALL DESIGNS SHALL CONFORM TO THE PROVISIONS OF THE IBC 2006 AS APPLICABLE

### 1.5 WIND LOADS (PER IBC 2006)

#### 1.5.1 DESIGN PARAMETERS

| | |
|---|---|
| BASIC WIND SPEED | 137 Km/h |
| WIND IMPORTANCE FACTOR | 1.0 |
| WIND EXPOSURE CATEGORY | D |
| DIRECTIONALITY COEFFICIENT (Kd) | 0.85 |
| TOPOGRAPHIC FACTOR (Kzt) | 1.0 |

#### 1.5.2 DESIGN WIND PRESSURE – MAIN WINDFORCE RESISTING SYSTEM

| LOCATION | CORNER ZONE WIDTH "a" | MEAN ROOF HEIGHT (h) | WINDWARD WALL (@ MEAN ROOF HEIGHT) | LEEWARD WALL (@ MEAN ROOF HEIGHT) | ROOF |
|---|---|---|---|---|---|
| FIELD ZONE | N/A | 4920 mm | 680 N/m $^2$ | –480 N/m $^2$ | –470 N/m $^2$ |
| CORNER ZONE | 1440mm | 4920 mm | 800 N/m$^2$ | –418 N/m$^2$ | –750 N/m $^2$ |

a = 10% OF LEAST HORIZONTAL DIMENSION OR 0.4h, WHICHEVER IS SMALLER, BUT NOT LESS THAN EITHER 4% OF LEAST HORIZONTAL DIMENSION OR 0.9M.
h = MEAN ROOF HEIGHT, IN METERS, EXCEPT THAT EAVE HEIGHT SHALL BE USED FOR ANGLE GREATER THAN 10°.

#### 1.5.3 DESIGN WIND PRESSURE – WALL COMPONENTS AND CLADDING

EXTERIOR WALL SYSTEMS & THEIR ATTACHMENTS TO THE PRIMARY STRUCTURE SHALL BE DESIGNED FOR THE PRESSURES SHOWN IN THE DIAGRAM BELOW:

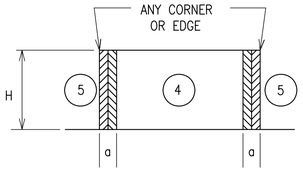


| LOCATION | WINDWARD PRESSURE N/m$^2$ (inward) | | LEEWARD PRESSURE N/m$^2$ (outward) | | a |
|---|---|---|---|---|---|
| | 4 | 5 | 4 | 5 | |
| MAIN BUILDING | | | | | (mm) |
| AREA = 1 m $^2$ | 788 | 788 | –850 | –1050 | 1440 |
| AREA = 2 m $^2$ | 748 | 748 | –815 | –967 | 1440 |
| AREA = 5 m $^2$ | 700 | 700 | –765 | –880 | 1440 |
| AREA = 10 m $^2$ | 648 | 648 | –715 | –750 | 1440 |

NOTES:
1. DESIGN WIND PRESSURES ABOVE REPRESENT THE NET PRESSURE (SUM OF INTERNAL AND EXTERNAL PRESSURE) APPLIED NORMAL TO ALL SURFACES.
2. LINEAR INTERPOLATION BETWEEN VALUES OF TRIBUTARY AREA IS PERMISSIBLE.
3. PLUS AND MINUS SIGNS SIGNIFY PRESSURE TOWARD AND AWAY FROM THE EXTERIOR SURFACE, RESPECTIVELY.

### 1.5 WIND LOADS (CONT)

#### 1.5.4 DESIGN WIND PRESSURE – ROOF COMPONENTS AND CLADDING

ROOF COMPONENTS & THEIR ATTACHMENTS SHALL BE DESIGNED FOR THE PRESSURES SHOWN IN THE ADJACENT DIAGRAM & TABLE BELOW:

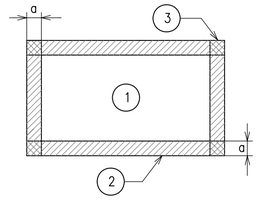


ROOF MEAN HEIGHT

| LOCATION | GROSS UPLIFT PRESSURE N/m $^2$ (upward) | | | a |
|---|---|---|---|---|
| | 1 | 2 | 3 | |
| MAIN BUILDING | | | | (mm) |
| AREA = 1 m $^2$ | –787 | –931 | –1738 | 1440 |
| AREA = 2 m $^2$ | –787 | –931 | –1738 | 1440 |
| AREA = 5 m $^2$ | –787 | –931 | –1738 | 1440 |
| AREA = 10 m $^2$ | –787 | –931 | –1738 | 1440 |

NOTES:
1. DESIGN WIND PRESSURES ABOVE REPRESENT THE NET PRESSURE (SUM OF INTERNAL AND EXTERNAL PRESSURE) APPLIED NORMAL TO ALL SURFACES.
2. LINEAR INTERPOLATION BETWEEN VALUES OF TRIBUTARY AREA IS PERMISSIBLE.
3. PLUS AND MINUS SIGNS SIGNIFY PRESSURE TOWARD AND AWAY FROM THE EXTERIOR SURFACE, RESPECTIVELY.

### 2.0 FOUNDATION DESIGN CRITERIA (TO BE CONFIRMED BY THE CONTRACTOR)

THE GEOTECHNICAL ANALYSIS FOR THIS PROJECT IS THE RESPONSIBILITY OF THE CONTRACTOR AWARDED THE WORK. DESIGN VALUES USED IN THE STRUCTURAL ANALYSIS OF THE BUILDINGS HEREIN INDICATED HAVE BEEN ASSUMED AND SHALL BE CONFIRMED AND VERIFIED AS PART OF THE GEOTECHNICAL INVESTIGATION. VALUES WHICH DO NOT MEET THE REQUIREMENTS INDICATED BELOW SHALL BE IMMEDIATELY BROUGHT TO THE ATTENTION OF THE CONTRACTING OFFICER FOR CONSIDERATION AND DETERMINATION ON THE NEXT APPROPRIATE COURSE OF ACTION.

#### 2.1.1 SOIL DESIGN PARAMETERS

| | |
|---|---|
| NET ALLOWABLE SOIL BEARING CAPACITY | 96.0 KPa |
| UNIT WEIGHT OF SOIL (moist) | 1800 Kg/m $^3$ |
| COEFF ACTIVE EARTH PRESSURE (Kpa) | 0.30 |
| COEFF PASSIVE EARTH PRESSURE (Kpp) | 3.33 |
| COEFF AT–REST EARTH PRESSURE (Kpr) | .55 |
| COEFF OF SOIL FRICTION | .35 |
| SUBGRADE MODULUS | 4120 g/cm$^3$ |
| MINIMUM BEARING DEPTH BELOW GRADE | 800mm |
| SEISMIC SITE CLASS (based on in–situ soil) | D |

## CONCRETE BEAM SCHEDULE

| GRADE BEAM | | | | | | |
|---|---|---|---|---|---|---|
| MARK | SIZE (BxH) | REINFORCING TOP | BOTTOM | STIRRUPS | MIDBAR | REMARKS |
| GB1 | 400x750 | (3)–#22 | (3)–#22 | #13 @ 200 | (1) #22 EF | TOP BAR LAP AT CENTER BOT BAR LAP PAST COL |
| **ROOF BEAM** | | | | | | |
| MARK | SIZE (BxH) | REINFORCING TOP | BOTTOM | STIRRUPS | MIDBAR | REMARKS |
| RB1 | 400x600 | (2)–#19 | (2)–#19 | #13 @ 250 | N/A | TOP BAR LAP AT CENTER BOT BAR LAP PAST COL |

NOTE:
1. DIMENSIONS NOTED ARE MILLIMETERS (mm) UON.

## CONCRETE COLUMN SCHEDULE

| MARK | SIZE (LxW) | REINFORCING VERT BARS | TIES |
|---|---|---|---|
| C1 | 400x400 | (8)–#25 | #13 @ 100 (CORE OF EXT & CORNER COLUMNS)<br>#13 @ 150 (CORE OF INTERIOR COLUMNS)<br>#13 @ 200 (OTHER) |

NOTE:
1. DIMENSIONS NOTED ARE MILLIMETERS (mm) UON.
2. SECOND STORY COLUMNS ARE SAME AS FIRST STORY COLUMNS.
3. CORE INDICATES THE AREA OF COLUMN & BEAM INTERSECTION
4. TIE INDICATES PERIMETER & CROSS TIE COMBINED

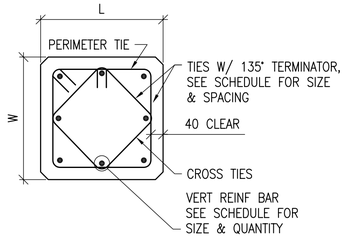


1 / S2 S2 **COLUMN DETAIL**
SCALE: 1:10

## SPREAD FOOTING SCHEDULE

| MARK | FOOTING SIZE (mm) LENGTH | WIDTH | THICKNESS | FOOTING REINFORCING | REMARKS |
|---|---|---|---|---|---|
| F1 | 4200 | 2400 | 300 | (5) #22 LONG BOTT<br>(6) #22 SHORT BOTT | ----- |
| F2 | 6100 | 2100 | 350 | (6) #25 LONG BOTT<br>(8) #25 SHORT BOTT | ----- |
| F3 | 2600 | 2000 | 300 | (5) #22 LONG BOTT<br>(4) #22 SHORT BOTT | ----- |

NOTES:
1. DIMENSIONS NOTED ARE MILLIMETERS (mm) UON.

UNLESS OTHERWISE NOTED, LINEAR DIMENSIONS SHOWN ARE IN MILLIMETERS (MM)

0 200 400 800
SCALE: 1: 10

US Army Corps of Engineers
Afghanistan Engineer District

| SYMBOL | DESCRIPTION | DATE | APR |
|---|---|---|---|

DESIGNED BY: MMY | DATE: 09–30–09
DWN BY: RCG | SUBMITTED BY: BAKER
CHK BY: CWW | FILE NO.: ANPSDS–002XXX


Michael Baker Jr., Inc
A unit of Michael Baker Corporation
Airside Business Park
100 Airside Drive
Moon Township, PA 15108
www.mbakercorp.com


AFGHAN NATIONAL POLICE
STANDARD DESIGN
BARRACK BUILDING (384 GSM)
WOOD FIRED HEAT OPTION

DESIGN CRITERIA & SCHEDULES

SHEET REFERENCE NUMBER:
S2

100% SUBMISSION

# MINIMUM LAP SPLICES OF REINFORCING BARS IN TENSION (PER ACI 318M–05)

f'c = 28 MPa CONCRETE

| BAR SIZE \ CENTER TO CENTER BAR SPACING | TOP BARS (mm) LESS THAN 4db | TOP BARS (mm) 4db OR MORE | OTHER BARS (mm) LESS THAN 4db | OTHER BARS (mm) 4db OR MORE | 4db |
|---|---|---|---|---|---|
| #10 | 460 | 460 | 410 | 410 | 40 |
| #13 | 660 | 610 | 510 | 480 | 50 |
| #16 | 1020 | 760 | 790 | 580 | 60 |
| #19 | 1450 | 910 | 1120 | 710 | 80 |
| #22 | 1960 | 1090 | 1500 | 840 | 90 |
| #25 | 2590 | 1450 | 1980 | 1120 | 100 |
| #29 | 3280 | 1830 | 2510 | 1420 | 110 |
| #32 | 4140 | 2340 | 3200 | 1780 | 130 |
| #36 | 5080 | 2840 | 3910 | 2180 | 140 |

NOTES:

1. LAP SPLICES ABOVE ARE IN MILLIMETERS UON.
2. YIELD STRENGTH OF REINFORCEMENT, fy, IS 420MPa (LAP SPLICE LENGTH IS IN MILLIMETERS).
3. CONCRETE IS NORMAL WEIGHT (2400Kg/m$^3$).
4. TOP BAR INDICATES HORIZONTAL REINFORCEMENT WHICH IS PLACED ABOVE 300mm OR MORE OF FRESH CONCRETE.
5. SEE COLUMN SCHEDULE FOR COLUMN AND SHEAR WALL VERTICAL LAP SPLICE.
6. STRAIGHT DEVELOPMENT LENGTH OF AN UNLAPPED BAR IS EQUAL TO VALUE FROM TABLE DIVIDED BY 1.3.
7. CATEGORY FOR BARS SPACED LESS THAN 4d, OR ON CENTER CORRESPONDS TO CATEGORY 1 IN THE CRSI HANDBOOK WHEREAS FOR BARS SPACED 4d, OR MORE ON CENTER CORRESPOND TO CRSI CATEGORY 5.

# CONCRETE COVER SCHEDULE

MINIMUM CONCRETE COVER PROTECTION FOR REINFORCEMENT BARS SHALL BE AS FOLLOWS: (SEE ACI 318M–05, SECTION 7.7 FOR CONDITIONS NOT NOTED). DIMENSIONS FOR BAR PLACEMENT GIVEN IN SECTIONS AND DETAILS SHALL SUPERSEDE MINIMUM COVER REQUIREMENTS GIVEN HERE. DIMENSIONS ARE IN mm.

| | | |
|---|---|---|
| FOOTINGS (EARTH FORMED) | | 70 |
| COLUMNS / PIERS (TO TIES) | | 40 |
| GRADE BEAMS OR SLAB TURNED DOWN EDGES: | | |
| TOP | | 40 |
| BOTTOM (EARTH FORMED) | | 70 |
| SIDES (EARTH FORMED) | | 70 |
| SIDES (BOARD FORMED) | #16 BAR & SMALLER | 40 |
| | #19 THRU #36 BAR | 50 |
| ELEVATED BEAMS & SLABS: | | |
| BEAM TIES & STIRRUPS (NOT EXPOSED TO WEATHER) | | 40 |
| BEAM TIES & STIRRUPS (EXPOSED TO WEATHER) | | 50 |
| FLOOR SLABS (NOT EXPOSED TO WEATHER) | | 20 |
| FLOOR SLABS (EXPOSED TO WEATHER) | | |
| #19 & LARGER | | 50 |
| #13 & SMALLER | | 40 |
| ROOF SLAB BARS | | 25 |
| SLABS–ON–GRADE (NO EXPOSURE TO WEATHER) FROM TOP | | 20 |
| SLABS–ON–GRADE (EXPOSURE TO WEATHER) FROM TOP | | 40 |
| UTILITY TUNNEL WALLS, RETAINING WALLS AND SHEAR WALLS, (NO SURFACES SHALL BE EARTH FORMED) EARTH SIDE AND FRONT SIDE (EXPOSED TO WEATHER): | | |
| #16 BAR AND SMALLER | | 40 |
| #19 THRU #36 BAR | | 50 |

PROVIDE STANDARD BAR CHAIRS AND SPACERS AS REQUIRED TO MAINTAIN CONCRETE PROTECTION SPECIFIED.

# MASONRY CONCRETE LINTEL SCHEDULE

| OPENING TYPE OR SIZE, BEAM LOCATION OR TYPE | MAX SPAN (mm) | BEAM DEPTH (mm) | MAIN REINFORCING TOP | MAIN REINFORCING BOTTOM | MAIN REINFORCING OTHER | SHEAR REINF STIRRUPS |
|---|---|---|---|---|---|---|
| EXT WINDOW OR DOOR | 900 | 400 | (2)–#13 | (2)–#13 | | ---- |
| EXT WALL OPENING, 1–STORY BLDG | 1800 | 400 | (2)–#13 | (2)–#13 | | ---- |
| EXT WALL OPENING, 1–STORY BLDG | 900 | 200 | | (2)–#13 | | ---- |
| INT WALL OPENING, NON–BEARING | 2400 | 400 | | (2)–#13 | | ---- |
| INT WALL OPENING, NON–BEARING | 1800 | 400 | | (2)–#13 | | ---- |
| INT WALL OPENING, NON–BEARING | 900 | 200 | | (2)–#13 | | ---- |

1. STRUCTURAL DRAWINGS DO NOT INDICATE ALL OPENINGS IN MASONRY WALLS. VERIFY NUMBER, SIZE AND LOCATION OF ALL OPENINGS IN MASONRY WALLS FROM ARCHITECTURAL SHEETS AND APPROVED PLUMBING, MECHANICAL, AND ELECTRICAL SHOP DRAWINGS.
2. PROVIDE 200mm BEARING EA END FOR 200mm DEEP MASONRY LINTEL. PROVIDE 400mm BEARING EA END FOR 400mm DEEP MASONRY LINTEL.
3. FOR HEAD DETAILS REFER TO ARCHITECTURAL SHEETS.
4. REINFORCING SHALL BE ASTM A615M, GRADE 420. CONCRETE FOR CAST–IN–PLACE BEAMS SHALL HAVE A MINIMUM COMPRESSIVE STRENGTH OF 28 MPa AT 28 DAYS.
5. CONTRACTOR SHALL SUBMIT FOR APPROVAL SHOP DRAWINGS AND SCHEDULES SHOWING SIZE, DETAILS, LOCATIONS, ETC FOR ALL CAST–IN–PLACE BEAMS IN CMU WALLS.

# TYPICAL CMU WALL REINFORCING SCHEDULE

| WALL TYPE OR LOCATION | WALL THICKNESS (mm) | CONT. VERT. REINF. (CENTERED IN CMU, UON) | CONT. CAST IN PLACE LINTEL (CIP BB) DEPTH (mm) | REINF (BOTT UON) | MAX CIPL VERT SPACING (mm) | REMARKS |
|---|---|---|---|---|---|---|
| ALL PERIMETER/EXTERIOR WALLS (UON) | 200 | 1–#16 @ 800 | 200 | 2–#16 | 1200 | ----- |
| NON–LOAD BEARING INTERIOR WALLS WITH TOP AND BOTT. SUPPORTS | 200 | 1–#13 @ 1200 | 200 | 2–#16 | 1200 | ----- |

NOTES:

1. REINFORCING SIZES AND SPACING GIVEN IN SECTIONS AND DETAILS SHALL SUPERSEDE THE ABOVE SCHEDULE REQUIREMENTS.
2. PROVIDE CONTINUOUS CAST IN PLACE CONCRETE BOND BEAM AT ALL WALL LATERAL SUPPORT LOCATIONS.
3. REINFORCING INDICATED SHALL BE CONTINUOUS FOR FULL EXTENT OF SPLICE FOLLOWING THE REQUIREMENTS OF THE LAP SPLICE TABLE SHOWN ON THIS SHEET.
4. WALLS HAVE BEEN DESIGNATED AS VERTICALLY SPANNING UON AND THEREFORE MUST BE TEMPORARILY SUPPORTED DURING CONSTRUCTION UNTIL THE SUPPORTING DIAPHRAGMS (FLOOR AND ROOF SYSTEMS) HAVE BEEN COMPLETELY INSTALLED. SHORING IS THE RESPONSIBILITY OF THE CONTRACTOR.
5. ALL CMU WALLS SHALL BE FULLY GROUTED IN LIFTS NOT EXCEEDING THOSE BY CODE (UON)
6. SEE TYPICAL CMU WALL DETAILS ON SHEET S8.

# CONCRETE MATERIALS SCHEDULE

| STRUCTURAL ELEMENT | f'c CONCRETE COMPRESSIVE STRENGTH @ 28 DAYS (MPa) |
|---|---|
| SLAB–ON–GRADE/TURN–DOWN SLABS | 28 |
| ROOF AND FLOOR SLABS | 28 |
| ALL FOOTINGS (UON) | 28 |
| MISC. CURBS, WALLS AND PADS UON | 28 |
| CAST–IN–PLACE LINTEL | 28 |
| CONCRETE FRAMING – BEAMS AND COLUMNS | 28 |

NOTES:

1. ALL CONCRETE SHALL BE NORMAL WEIGHT CONCRETE. (2400 Kg/m$^3$ UON)
2. ALL CONCRETE SHALL HAVE A MAX WATER–CEMENT RATIO OF 0.45.

# STANDARD HOOKS IN TENSION PER (ACI 318M–05)

| HOOK DEVELOPMENT LENGTH Ldh (mm) | |
|---|---|
| BAR SIZE | f'c 28 MPa |
| #10 | 180 |
| #13 | 250 |
| #16 | 300 |
| #19 | 380 |
| #22 | 430 |
| #25 | 480 |
| #29 | 560 |
| #32 | 610 |
| #36 | 690 |

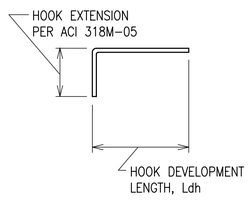


NOTES:

1. CONCRETE IS NORMAL WEIGHT CONCRETE.
2. BAR YIELD STRENGTH, fy = 420 MPa
3. SIDE COVER REQUIREMENTS OF ACI SECT. 12.5.3 ARE ASSUMED TO NOT BE MET.
4. TIE OR STIRRUP REQUIREMENTS OF ACI SECT. 12.5.3 ARE ASSUMED TO NOT BE MET.
5. REDUCTION FOR EXCESS REINFORCEMENT IS NOT TAKEN.
6. HOOK DEVELOPMENT LENGTH IS VALID FOR 180° HOOKS ALSO.

# MASONRY REINFORCING MINIMUM LAP SPLICES

| BAR SIZE | BASIC LAP SPLICE Ld FOR CMU REINFORCING (mm) |
|---|---|
| #10 | 450 |
| #13 | 600 |
| #16 | 750 |
| #19 | 900 |
| #22 | 1050 |
| #25 | 1200 |

# MAXIMUM CMU WALL UNSUPPORTED HEIGHT OR LENGTH

| | WALL THICKNESS (mm) | EXTERIOR WALL NON–LOAD BEARING (mm) | INTERIOR NON–LOAD BEARING WALL (mm) |
|---|---|---|---|
| MAX HEIGHT OR LENGTH BETWEEN SUPPORTS | 200 | 4800 | 7200 |

NOTE: CMU WALL MAXIMUM LATERAL SUPPORT SPACING GIVEN IN SECTIONS AND DETAILS SHALL SUPERSEDE THE ABOVE SCHEDULE REQUIREMENTS.


US Army Corps of Engineers
Afghanistan Engineer District


| SYMBOL | DESCRIPTION | DATE | APR |
|---|---|---|---|

DATE: 09–30–09
SUBMITTED BY: BAKER
FILE NO.: ANPSDS–003XXX
DESIGNED BY: MMY
DWN BY: RCG
CHK BY: CWW


Michael Baker Jr., Inc
A unit of Michael Baker Corporation
Airside Business Park
100 Airside Drive
Moon Township, PA 15108
www.mbakercorp.com


AFGHAN NATIONAL POLICE
STANDARD DESIGN
BARRACK BUILDING (384 GSM)
WOOD FIRED HEAT OPTION

SCHEDULES

SHEET REFERENCE NUMBER:
S3

100% SUBMISSION

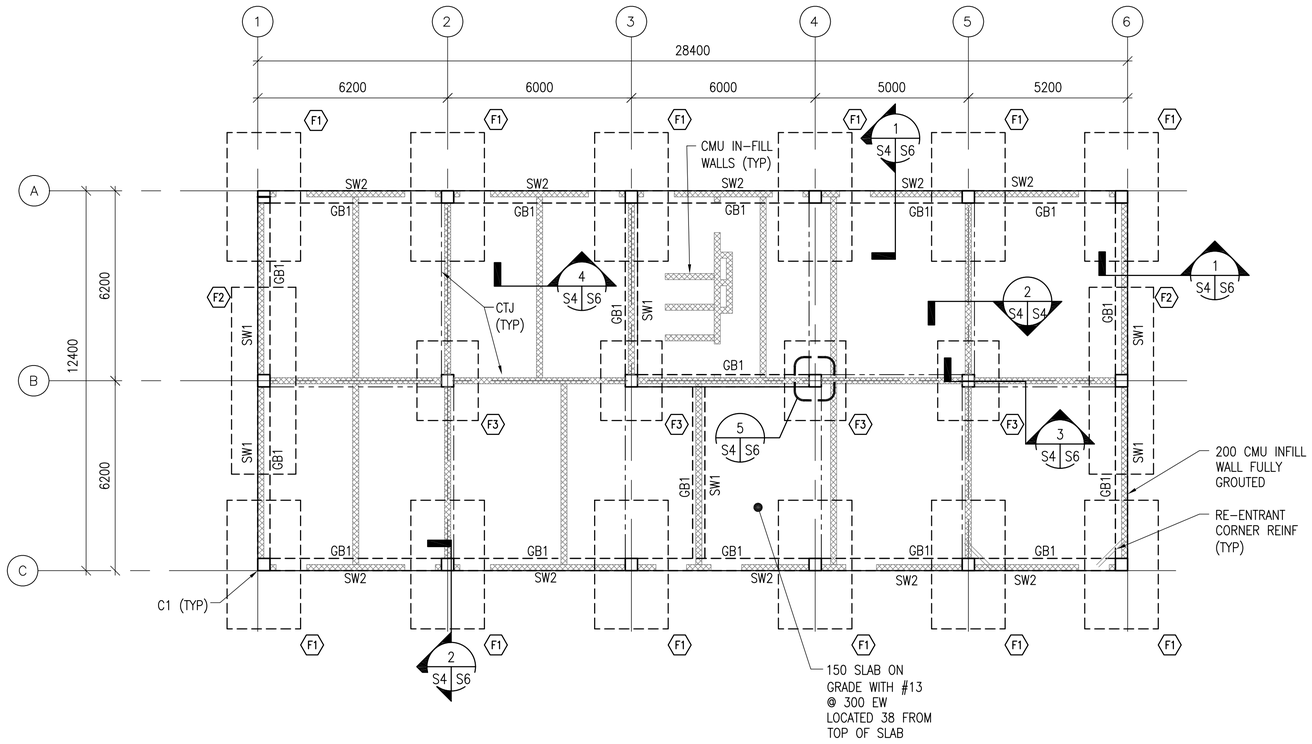


## FOUNDATION PLAN

SCALE: 1:100

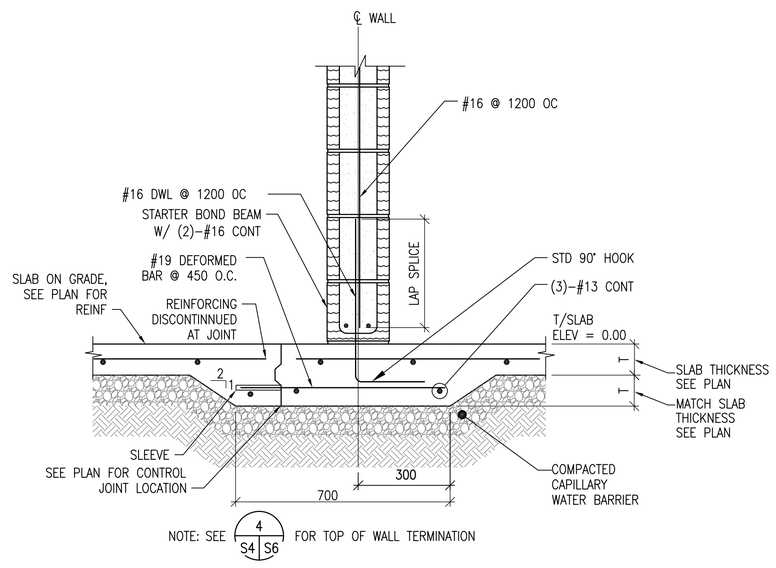


## SECTION

SCALE: 1:10

## PLAN NOTES:

1. FINISH FIRST FLOOR ELEVATION SHALL BE (DATUM 0.0). ALL PLUS OR MINUS DIMENSIONS INDICATED ON PLAN OR REFERRED TO IN NOTES RELATE TO FINISH FIRST FLOOR ELEVATION.
2. TOP OF EXTERIOR FOOTINGS SHALL BE −950 UNLESS OTHERWISE INDICATED.
3. TOP OF INTERIOR FOOTING SHALL BE −600 UNLESS OTHERWISE INDICATED.
4. SPREAD FOOTINGS INDICATED BY F# ON PLAN. REFER TO SPREAD FOOTING SCHEDULE ON SHEET S2.
5. COLUMNS INDICATED THUS C# ON PLAN. REFER TO COLUMN SCHEDULE ON SHEET S2.
6. REFER TO SHEETS S1 TO S3 FOR STRUCTURAL NOTES AND BASIS OF DESIGN.
7. CTJ & CSJ INDICATES SLAB CONTROL OR CONSTRUCTION JOINTS. RESPECTIVELY, REFER TO SHEET S8 FOR DETAILS.
8. SEE CMU WALL REINFORCING SCHEDULE ON SHEET S3.
9. REFER TO ARCHITECTURAL SHEETS FOR MASONRY PARTITION TYPES.
10. SEE MECHANICAL AND ELECTRICAL SHEETS FOR CONCRETE PAD LOCATIONS, SIZES, AND THICKNESS NOT SHOWN. SEE SHEET S8 FOR DETAILS.
11. THICKENED SLAB UNDER CMU WALLS NOT SHOWN FOR CLARITY

UNLESS OTHERWISE NOTED, LINEAR DIMENSIONS SHOWN ARE IN MILLIMETERS (MM)

0 2000 4000 8000

SCALE: 1: 100

US Army Corps of Engineers

Afghanistan Engineer District

| SYMBOL | DESCRIPTION | DATE | APR |
|---|---|---|---|

DESIGNED BY: MMY
DATE: 09-30-09
DWN BY: RCG
SUBMITTED BY: BAKER
CHK BY: CWW
FILE NO.: ANPSDS-104XXX

Michael Baker Jr., Inc.
A unit of Michael Baker Corporation
Airside Business Park
100 Airside Drive
Moon Township, PA 15108
www.mbakercorp.com

AFGHAN NATIONAL POLICE
STANDARD DESIGN
BARRACK BUILDING (384 GSM)
WOOD FIRED HEAT OPTION

FOUNDATION PLAN

SHEET REFERENCE NUMBER:

S4

100% SUBMISSION

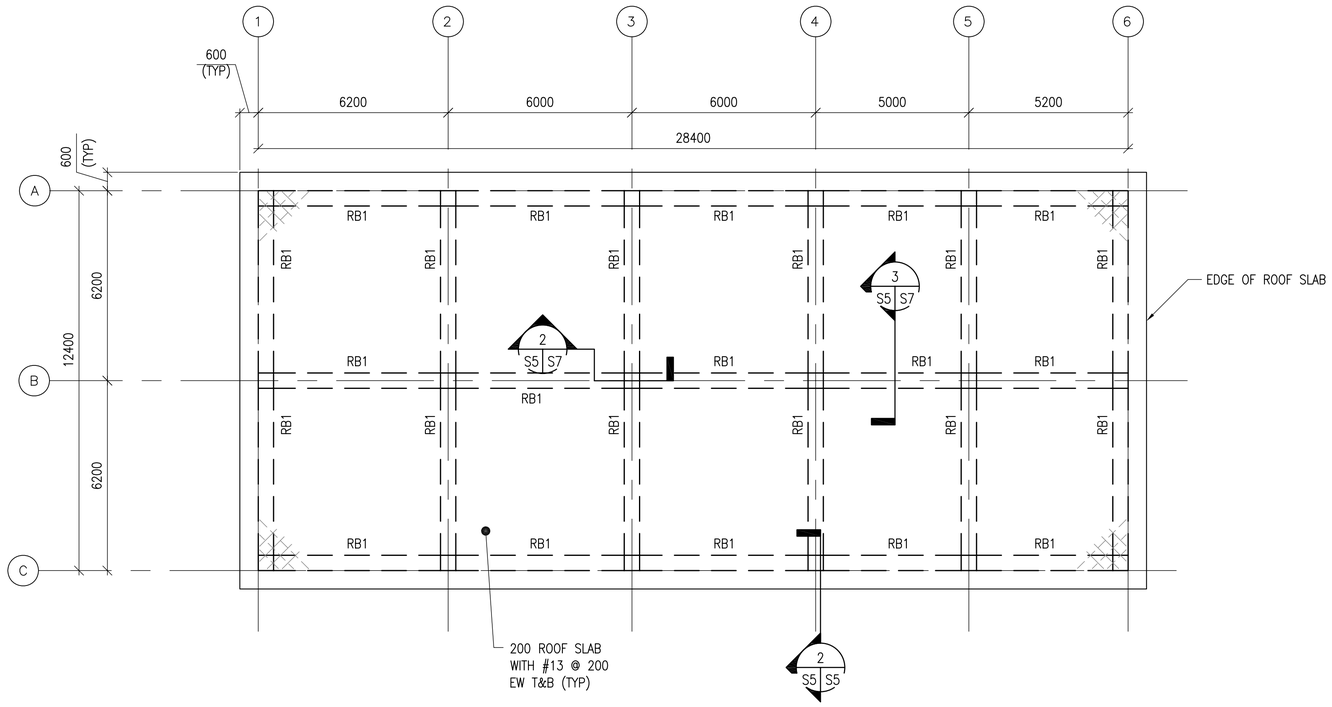


## 1 S5 S5 ROOF FRAMING PLAN

SCALE: 1:100

N

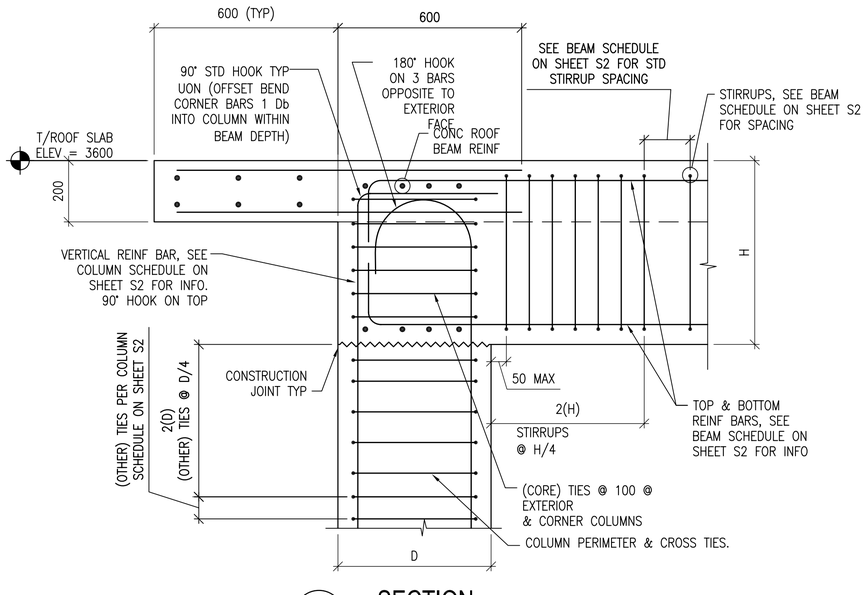


## 2 S5 S5 SECTION

SCALE: 1:10

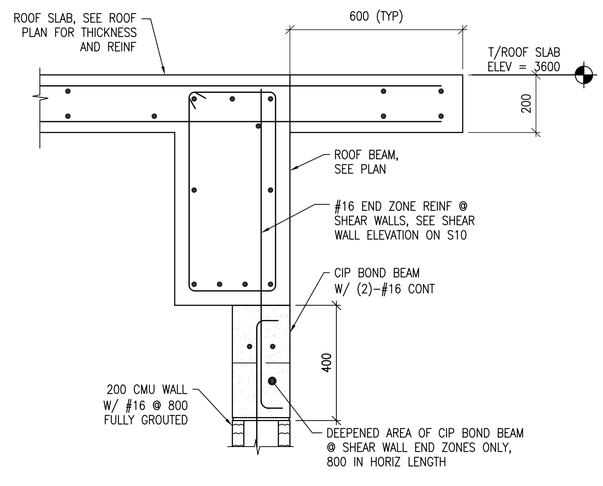


## 4 S8 S5 TYP SHEAR WALL END ZONE SECTION

SCALE: 1:10

## PLAN NOTES:

1. TOP OF SLAB ELEVATION = 3600 UNLESS NOTED OTHERWISE
2. RB# DENOTES ROOF BEAM TYPE. SEE BEAM SCHEDULE ON SHEET S2.
3. REFER TO SHEETS S1 TO S3 FOR STRUCTURAL NOTES AND BASIS OF DESIGN.
4. COORDINATE W/ ARCHITECTURAL SHEETS FOR COLD-FORMED STEEL OVERBUILT FRAMING ABOVE ROOF SLAB.
5. COLD-FORMED METAL OVERBUILT ROOF FRAMING NOT SHOWN FOR CLARITY. SEE OVERBUILT ROOF FRAMING DETAILS AND SECTIONS ON SHEET S7.

UNLESS OTHERWISE NOTED, LINEAR DIMENSIONS SHOWN ARE IN MILLIMETERS (MM)

0 200 400 800
SCALE: 1: 10

0 2000 4000 8000
SCALE: 1: 100

US Army Corps of Engineers
Afghanistan Engineer District

| SYMBOL | DESCRIPTION | DATE | APR |
|---|---|---|---|

DESIGNED BY: MMY
DATE: 09-30-09
DWN BY: RCG
SUBMITTED BY: BAKER
CHK BY: CWW
FILE NO.: ANPSDS-105XXX

Michael Baker Jr., Inc.
A unit of Michael Baker Corporation
Airside Business Park
100 Airside Drive
Moon Township, PA 15108
www.mbakercorp.com

AFGHAN NATIONAL POLICE
STANDARD DESIGN
BARRACK BUILDING (384 GSM)
WOOD FIRED HEAT OPTION

ROOF FRAMING PLAN

SHEET REFERENCE NUMBER:
S5

100% SUBMISSION

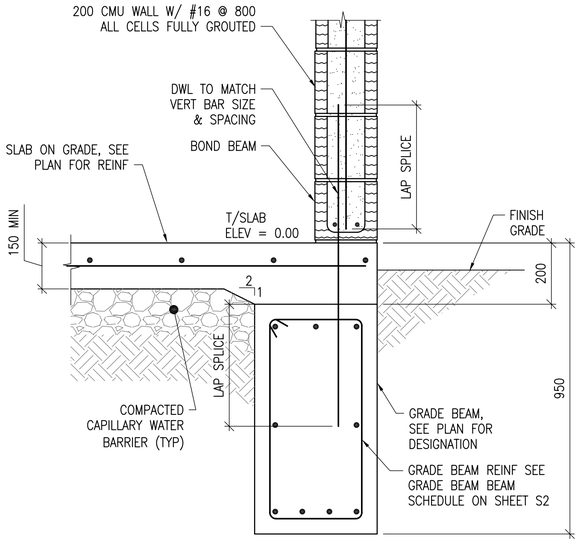


1 S4 S6 SECTION
SCALE: 1:10

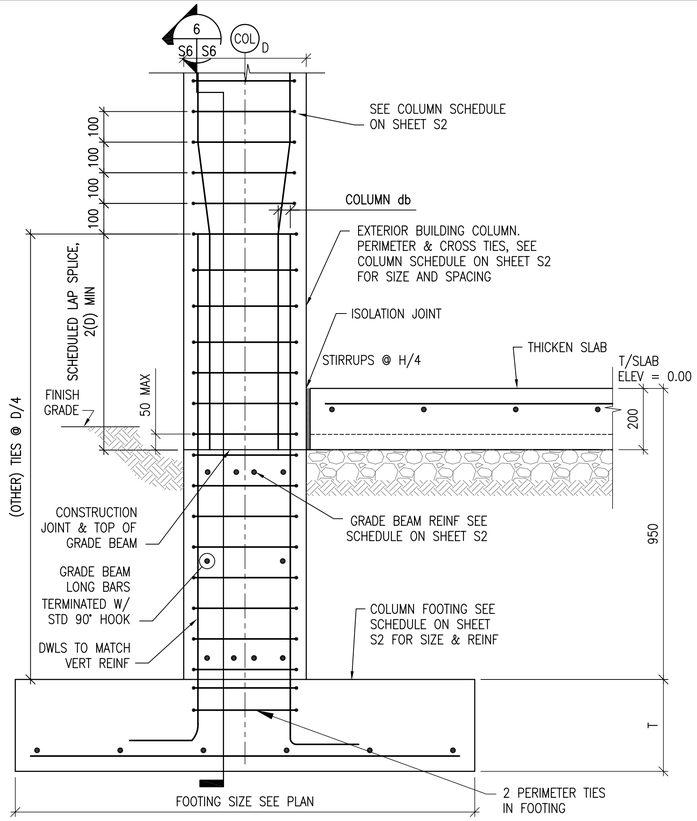


2 S4 S6 SECTION
SCALE: 1:10

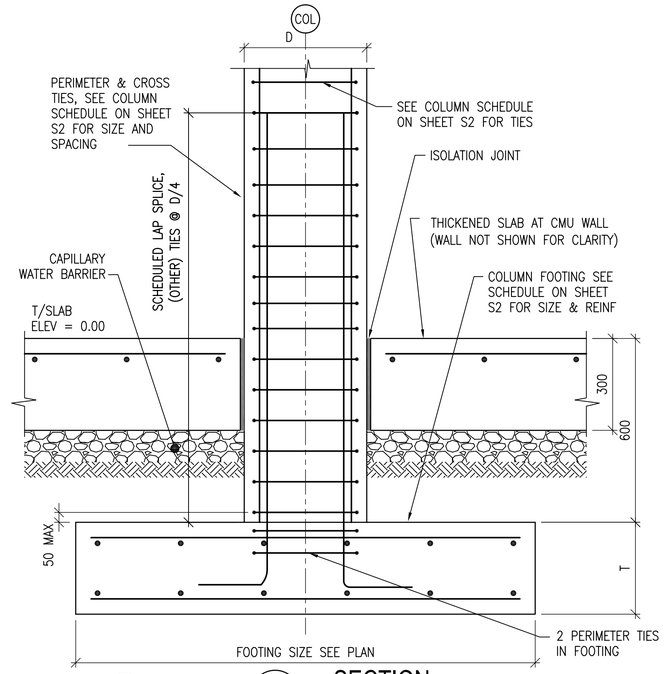


3 S4 S6 SECTION
SCALE: 1:10

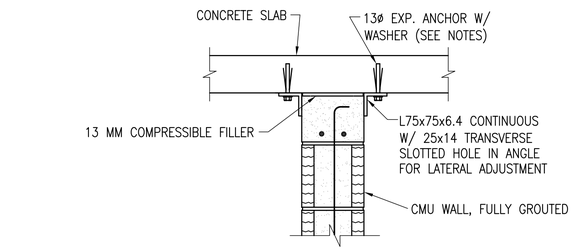


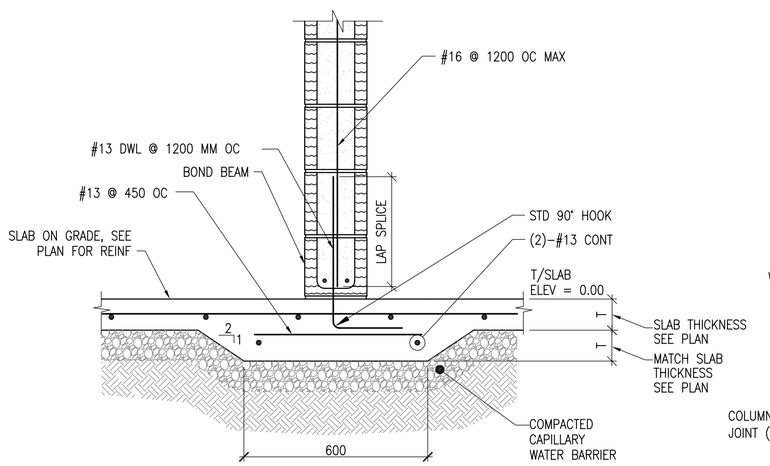


NOTES:
1. SEE SHEETS S3 AND S8 FOR ADDITIONAL CMU WALL REINF. REQUIREMENTS
2. EMBED EXPANSION ANCHOR 82 MINIMUM INTO SOLID CONCRETE.
3. INSTALL 13 MM ISOLATION JOINT VERTICALLY AT WALL ENDS THAT ARE ADJACENT TO CONCRETE COLUMNS.
4. USE STEEL WASHER BETWEEN ANCHOR HEAD AND ANGLE. NOMINAL WASHER INSIDE AND OUTSIDE DIAMETER TO BE 14 & 35 RESPECTIVELY.

4 S4 S6 SECTION
SCALE: 1:10

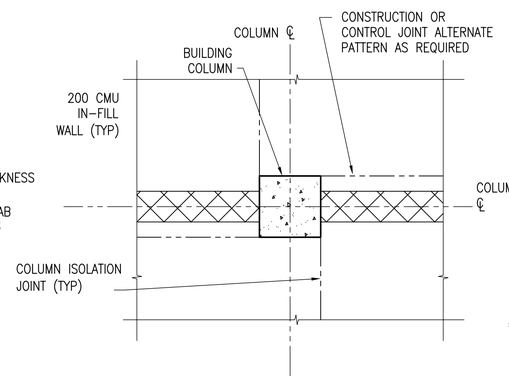


5 S4 S6 TYPICAL ISOLATION JOINT DETAIL
SCALE: 1:20

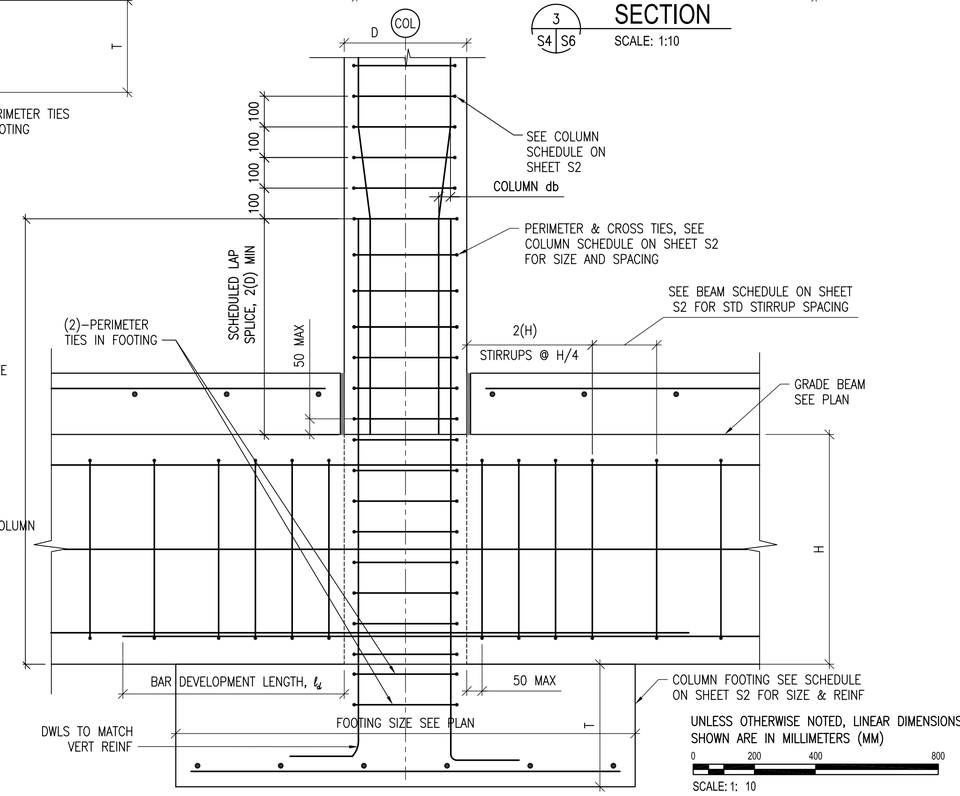


6 S6 S6 SECTION
SCALE: 1:10

UNLESS OTHERWISE NOTED, LINEAR DIMENSIONS SHOWN ARE IN MILLIMETERS (MM)

0 200 400 800
SCALE: 1: 10

0 400 800 1600
SCALE: 1: 20

US Army Corps of Engineers
Afghanistan Engineer District

| SYMBOL | DESCRIPTION | DATE | APR |
|---|---|---|---|

DESIGNED BY: MMY
DATE: 09-30-09
DWN BY: RCG
SUBMITTED BY: BAKER
CHK BY: CWW
FILE NO.: ANPSDS-306XXX

Michael Baker Jr., Inc.
A unit of Michael Baker Corporation
Airside Business Park
100 Airside Drive
Moon Township, PA 15108
www.mbakercorp.com

AFGHAN NATIONAL POLICE
STANDARD DESIGN
BARRACK BUILDING (384 GSM)
WOOD FIRED HEAT OPTION

FOUNDATION SECTIONS & DETAILS

SHEET REFERENCE NUMBER:
S6

100% SUBMISSION

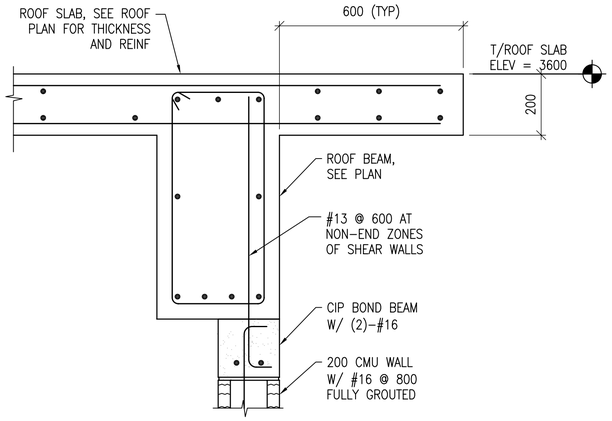


NOTES:
1. REFERENCE THIS SHEETS FOR OVERFRAMING ABOVE ROOF SLAB.

1 S8 S7 SECTION
SCALE: 1:10

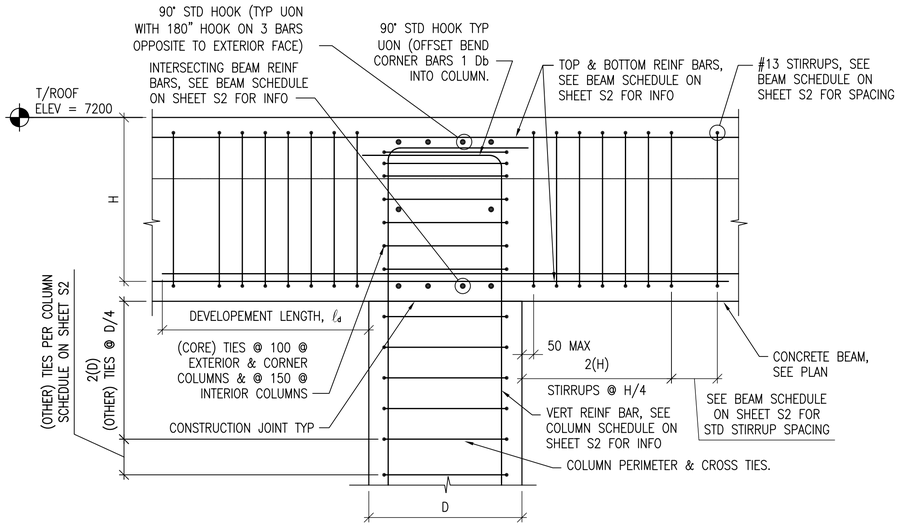


2 S5 S7 SECTION
SCALE: 1:10

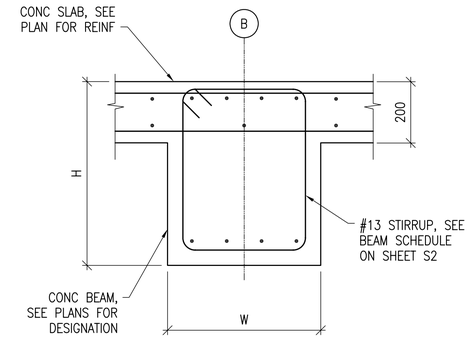


3 S5 S7 SECTION
SCALE: 1:10

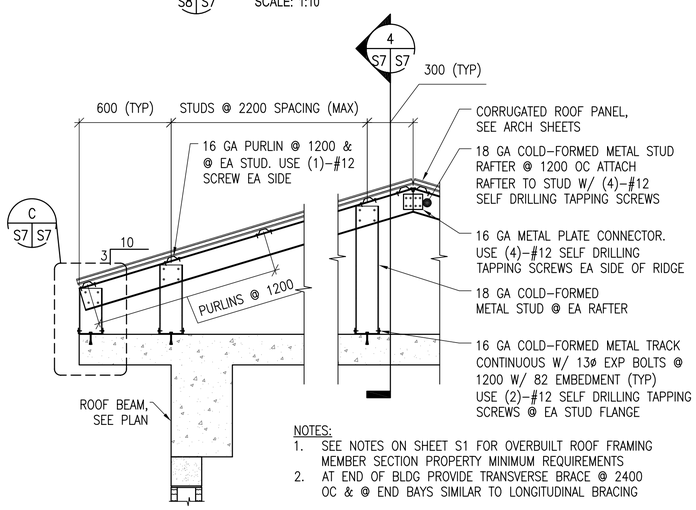


NOTES:
1. SEE NOTES ON SHEET S1 FOR OVERBUILT ROOF FRAMING MEMBER SECTION PROPERTY MINIMUM REQUIREMENTS
2. AT END OF BLDG PROVIDE TRANSVERSE BRACE @ 2400 OC & @ END BAYS SIMILAR TO LONGITUDINAL BRACING

A S7 S7 TYPICAL OVERBUILT ROOF FRAMING DETAIL
SCALE: 1:20

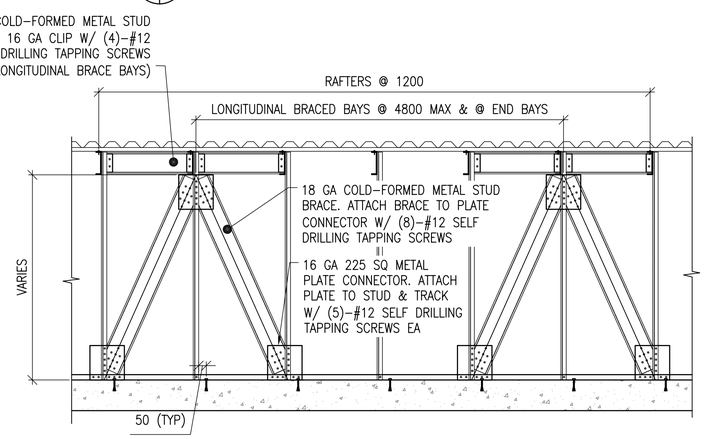


4 S7 S7 SECTION
SCALE: NTS

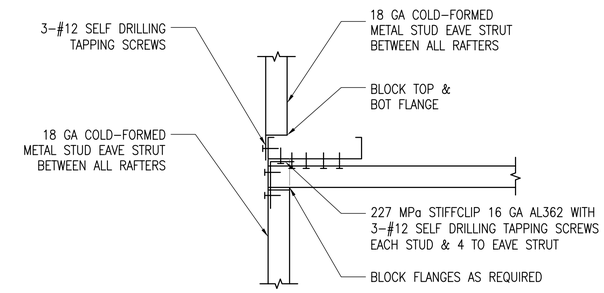


5 S7 S7 SECTION
SCALE: 1:5

DETAIL NOTE:
AT END OF BLDG PROVIDE TRANSVERSE BRACE @ 2400 OC & @ END BAYS SIMILAR TO LONGITUDINAL BRACING

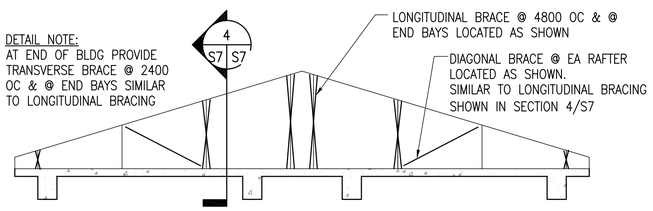


B S7 S7 TYPICAL ROOF BRACE LAYOUT DETAIL
SCALE: NTS

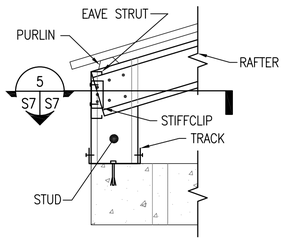


C S7 S7 DETAIL
SCALE: 1:10

DOUBLE LEDGE MEMBERS ARE 18 GA COLD-FORMED METAL TRACK.
FY = 344 MPa
DEPTH = 88.9mm
WIDTH = 34.8mm
MOMENT OF INERTIA, Ix = 236x103 mm4
SECTION MODULUS, SX = 5.3x103 mm3

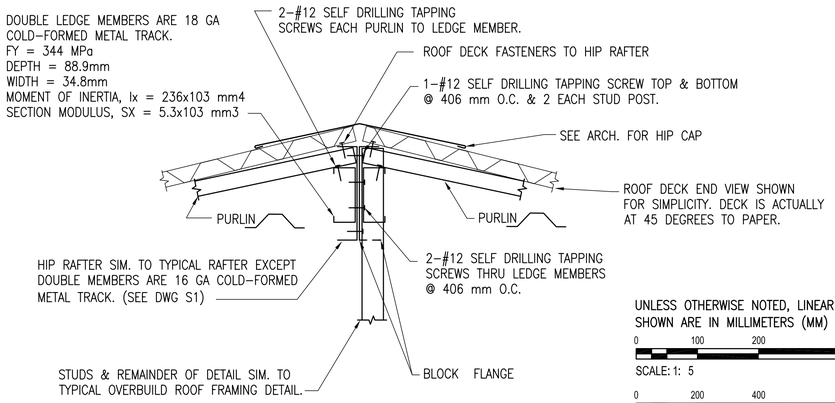


TYPICAL HIP FRAMING DETAIL
SCALE: 1:5

UNLESS OTHERWISE NOTED, LINEAR DIMENSIONS SHOWN ARE IN MILLIMETERS (MM)

0 100 200 400
SCALE: 1: 5

0 200 400 800
SCALE: 1: 10

0 400 800 1600
SCALE: 1: 20

US Army Corps of Engineers
Afghanistan Engineer District

| SYMBOL | DESCRIPTION | DATE | APR |
|---|---|---|---|

DESIGNED BY: MMY
DATE: 09-30-09
DWN BY: RCG
SUBMITTED BY: BAKER
CHK BY: CWW
FILE NO.: ANPSDS-307XXX


Michael Baker Jr., Inc.
A unit of Michael Baker Corporation
Airside Business Park
100 Airside Drive
Moon Township, PA 15108
www.mbakercorp.com


AFGHAN NATIONAL POLICE
STANDARD DESIGN
BARRACK BUILDING (384 GSM)
WOOD FIRED HEAT OPTION

SECTIONS & DETAILS

SHEET REFERENCE NUMBER:
S7

100% SUBMISSION

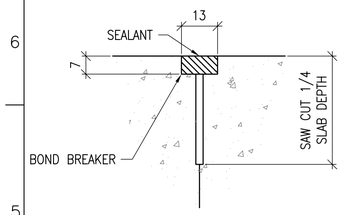


CONTROL JOINT DETAIL

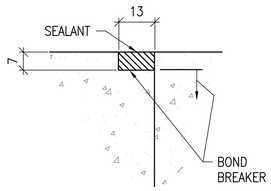


CONSTRUCTION JOINT DETAIL

## TYPICAL CONCRETE SLAB JOINT FINISH DETAIL

1 / S8 SCALE: NTS

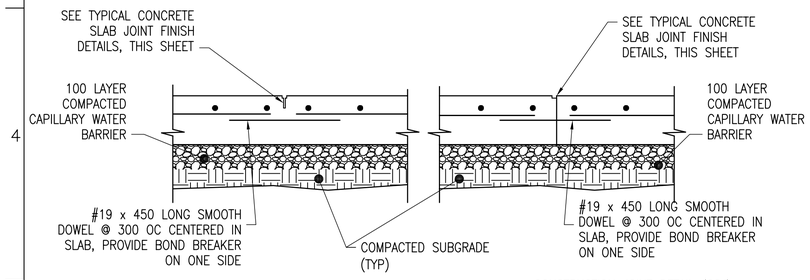


CONTROL JOINT DETAIL (CTJ)

CONSTRUCTION JOINT DETAIL (CSJ)

## TYPICAL SLAB ON GRADE JOINT DETAILS

2 / S8 SCALE: NTS

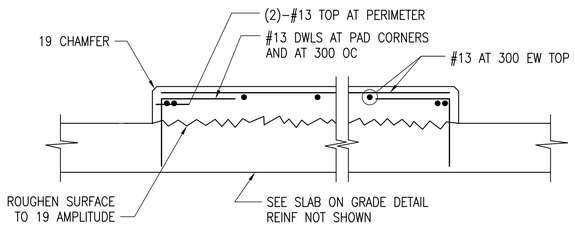


## INTERIOR EQUIPMENT PAD DETAIL

3 / S8 SCALE: NTS

DETAIL NOTE:
1. COORDINATE EQUIPMENT PAD SIZE AND LOCATIONS W/ ELECTRICAL/MECHANICAL DRAWINGS AND EQUIPMENT MANUFACTURER.

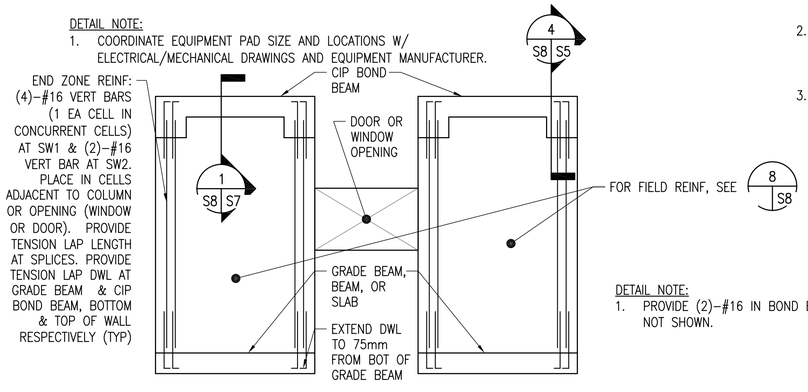


DETAIL NOTE:
1. PROVIDE (2)–#16 IN BOND BEAMS AT 1200 OC, NOT SHOWN.

## SPECIAL REINFORCED MASONRY SHEAR WALL ELEVATION

4 / S8 SCALE: NTS

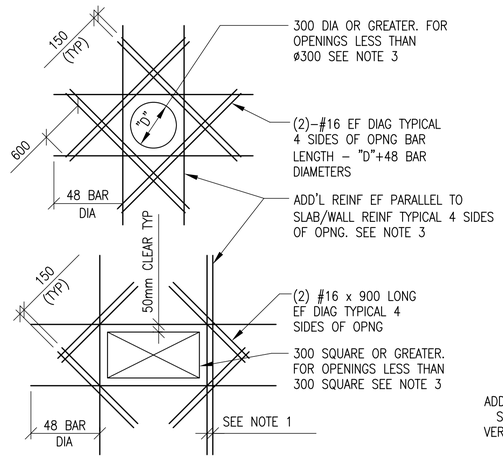


SLAB OPENINGS

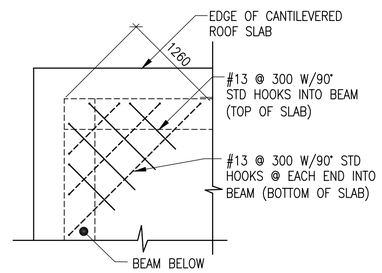


ELEVATED SLAB EXTERIOR CORNERS

## ADD'L REINFORCEMENT DETAILS

5 / S8 SCALE: NTS

DETAIL NOTES:
1. WHERE MORE THAN ONE ADDITIONAL BAR IS REQUIRED PARALLEL TO THE EXISTING SLAB/WALL REINF THE ADDITIONAL REINF BARS SHALL BE SPACED AT 100 ON CENTER.
2. ADDITIONAL REINF PARALLEL TO THE SLAB/WALL REINF SHALL BE #16 BARS THAT PROVIDE A STEEL AREA ON EACH SIDE OF THE OPENING EQUAL YO 1/2 THE AREA OF THE REINF CUT BY THE OPENING.
3. FOR OPENINGS WITH SIDES OR DIAMETERS LESS THAN 300 SPREAD THE SLAB/WALL REINF TO CLEAR THE OPENING.

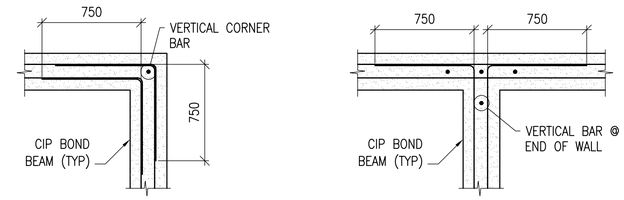


BOND BEAM CORNER

BOND BEAM INTERSECTION

## CIP BOND BEAM DETAILS

6 / S8 SCALE: NTS

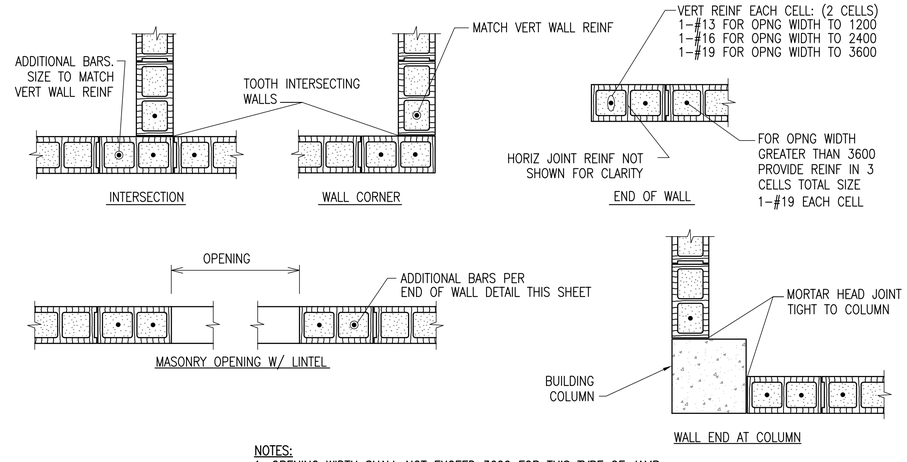


INTERSECTION

WALL CORNER

END OF WALL

MASONRY OPENING W/ LINTEL

WALL END AT COLUMN

NOTES:
1. OPENING WIDTH SHALL NOT EXCEED 3600 FOR THIS TYPE OF JAMB
2. ALL CELLS FULLY GROUTED

## TYPICAL CMU DETAILS

7 / S8 SCALE: NTS

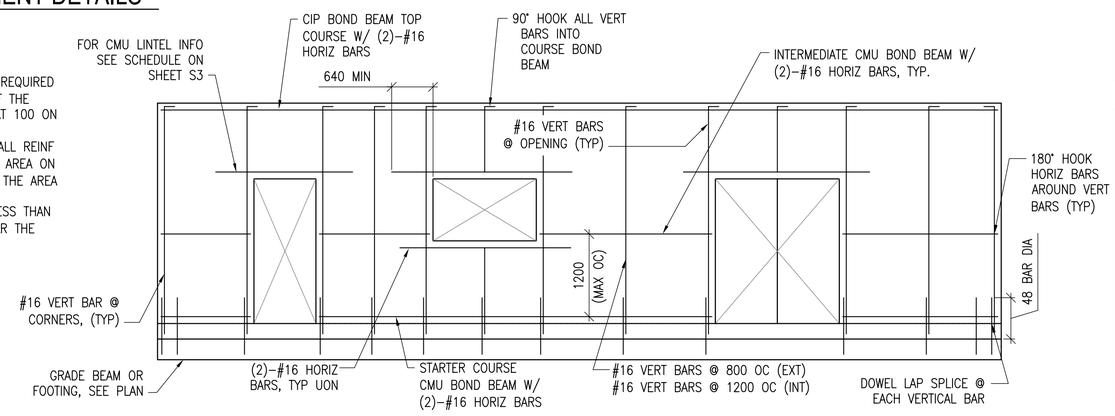


## MIN CMU WALL REINFORCING

8 / S8 SCALE: NTS

LINTEL NOTES:
CMU LINTEL REINFORCEMENT AS PER SCHEDULE ON SHEET S3

UNLESS OTHERWISE NOTED, LINEAR DIMENSIONS SHOWN ARE IN MILLIMETERS (MM)

US Army Corps of Engineers
Afghanistan Engineer District

| SYMBOL | DESCRIPTION | DATE | APR |
|---|---|---|---|

DESIGNED BY: MMY
DWN BY: RCG
CHK BY: CWW
DATE: 09-30-09
SUBMITTED BY: BAKER
FILE NO.: ANPSDS-508XXX

Michael Baker Jr., Inc
A unit of Michael Baker Corporation
Airside Business Park
100 Airside Drive
Moon Township, PA 15108
www.mbakercorp.com

AFGHAN NATIONAL POLICE
STANDARD DESIGN
BARRACK BUILDING (384 GSM)
WOOD FIRED HEAT OPTION

TYPICAL DETAILS

SHEET REFERENCE NUMBER:
S8

100% SUBMISSION

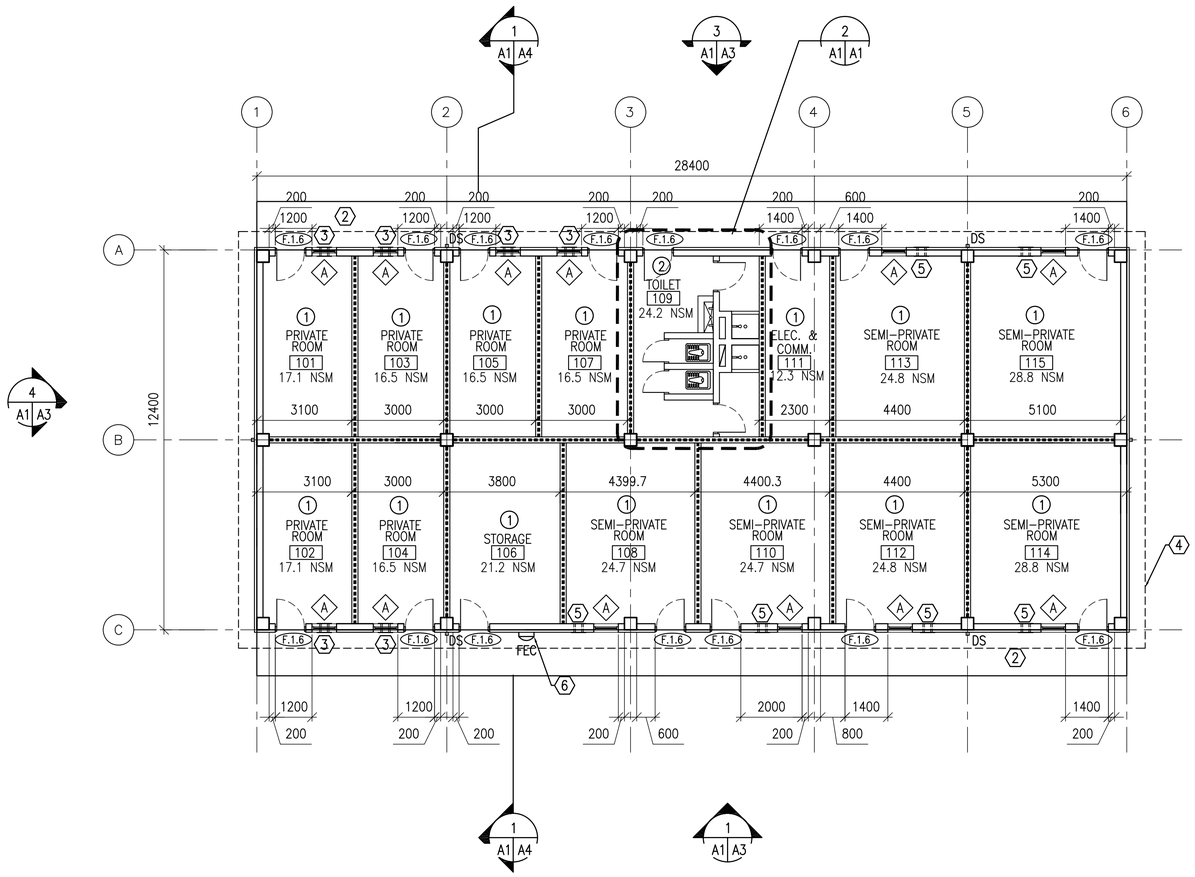


## FLOOR PLAN

SCALE: 1:100
384.0 GSM

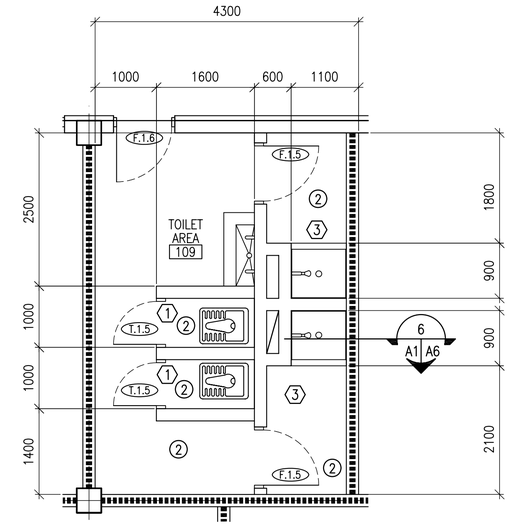


## ENLARGED TOILET PLAN

SCALE: 1:50

## GENERAL NOTES:

A. INTERIOR PARTITIONS SHALL BE 200 MM CMU UNLESS NOTED OTHERWISE

B. OPENINGS FOR DOORS SHALL BE LOCATED 200 MM FROM THE ADJACENT WALL UNLESS NOTED OTHERWISE

C. SURFACES TO BE PAINTED SHALL BE CLEAN AND FREE OF FOREIGN MATTER BEFORE APPLICATION OF PAINT. CLEANING SHALL BE SCHEDULED SO THAT DUST AND OTHER CONTAMINANTS WILL NOT FALL ON WET, NEWLY PAINTED SURFACES.

D. CONCRETE AND INTERIOR MASONRY SURFACES GROUTED SOLID SHALL BE ALLOWED TO DRY AT LEAST 30 DAYS BEFORE PAINTING EXCEPT CONCRETE SLAB ON GRADE WHICH SHALL BE ALLOWED TO CURE 90 DAYS BEFORE PAINTING.

E. PAINTS CONTAINING LEAD IN EXCESS OF 0.06 PERCENT BY WEIGHT OF THE TOTAL NONVOLATILE CONTENT SHALL NOT BE USED.

F. MERCURIAL FUNGICIDES SHALL NOT BE USED IN OIL–BASE PAINT.

G. REMOVE LOOSE DIRT AND CLEAN SURFACES BEFORE PAINTING. APPLY PAINT TO INTERIOR STRUCTURAL RIGID FRAMINGS AND CEILINGS AND TEST FOR ADHESION. PRIMER COAT FOR MASONRY. INITIAL FIRST COAT WITH AN ACRYLIC LATEX PAINT FOR EXTERIOR SURFACES AND A SECOND COAT WITH A WATER REPELLENT ACRYLIC LATEX PAINT.

H. METAL DOORS AND FRAMES SHALL RECEIVE A PRIMER COAT PLUS TWO COATS OF PAINT.

I. DIMENSIONS ARE TO STRUCTURAL COLUMN GRID, EDGE OF WINDOW OPENINGS, AND TO HINGE SIDE OF DOOR OPENINGS.

J. PROVIDE 1 HOUR FIRE RATED PARTITIONS IN ACCORDANCE WITH NFPA 101, 28.3.7.1. FILL ANULAR SPACE AT ANY AND ALL FLOOR, WALL OR CEILING PENETRATIONS WITH APPOPRIATE FIRE STOPPING MATERIALS.

## ROOM FINISHES: (X)

1. WALLS: PAINTED PLASTER,
   FLOOR: SEALED CONCRETE
   CEILING: PAINTED PLASTER APPLIED TO STRUCTURE
2. WALLS: 2400 MM HIGH CERAMIC TILE WAINSCOT, PAINTED PLASTER ABOVE WAINSCOT
   FLOOR: CERAMIC TILE
   CEILING: PAINTED PLASTER

## KEY NOTES: (X)

1. TYPICAL TOLIET STALL LAYOUT – RE: DETAIL 2/A6
2. CONCRETE SIDEWALK RE: DETAIL 2/A7 AND 3/A7
3. TWO–PIECE WALL THIMBLE AND TRIM PLATE MOUNTED IN WALL ABOVE WINDOW.
4. LINE OF ROOF OVERHANG ABOVE
5. TWO–PIECE WALL THIMBLE AND TRIM PLATE FOR OPTIONAL WOOD BURNING STOVE CHIMNEY PIPE. STOVE AND PIPE BY OTHERS.
6. PROVIDE FEC IN ACCORDANCE WITH NFPA 101, 28.3.5.8.

## LEGEND:

- (A) DOOR TYPE, SEE SHEET A6
- (A) WINDOW TYPE, SEE SHEET A6
- (X) KEY NOTE
- FEC FIRE EXTINGUISHER CABINET
- 1–HOUR RATED PARTITION
- (1) ROOM FINISH TYPE DESIGNATION

UNLESS OTHERWISE NOTED, LINEAR DIMENSIONS SHOWN ARE IN MILLIMETERS (MM)

0 1000 2000 4000
SCALE: 1: 50

0 2000 4000 8000
SCALE: 1: 100

US Army Corps of Engineers
Afghanistan Engineer District

| SYMBOL | DESCRIPTION | DATE | APR |
|---|---|---|---|

DESIGNED BY: DLB
DATE: 09–30–09
DWN BY: AAR
SUBMITTED BY: BAKER
CHK BY: KRC
FILE NO.: ANPSDA–101XXX

Michael Baker Jr., Inc
A unit of Michael Baker Corporation
Airside Business Park
100 Airside Drive
Moon Township, PA 15108
www.mbakercorp.com

AFGHAN NATIONAL POLICE
STANDARD DESIGN
BARRACK BUILDING (384 GSM)
WOOD FIRED HEAT OPTION

FLOOR PLAN

SHEET REFERENCE NUMBER:
A1

100% SUBMISSION

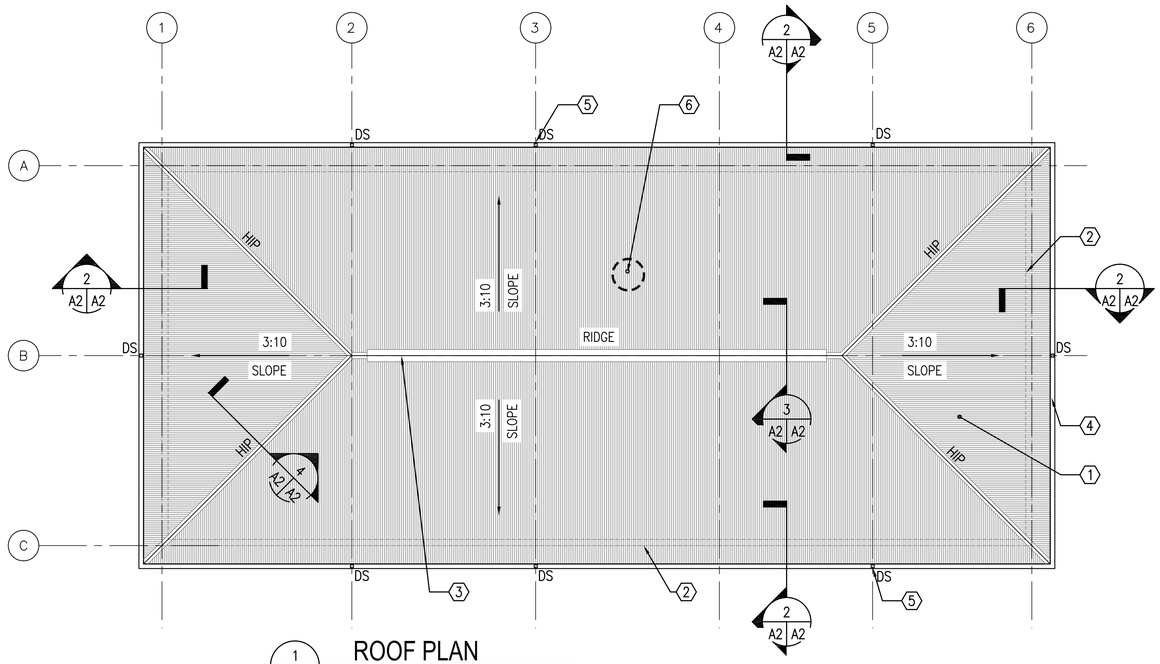


## ROOF PLAN

1 A2 A2 SCALE: 1:100

## KEY NOTES: (X)

1. CORRUGATED METAL ROOF PANELS ON COLD–FORMED METAL FRAMING
2. LINE OF BUILDING WALL BELOW
3. CONTINUOUS RIDGE VENT
4. METAL GUTTER
5. METAL DOWNSPOUT WITH SPLASHBLOCK
6. PLUMBING VENT– RE: DETAIL 5/A2

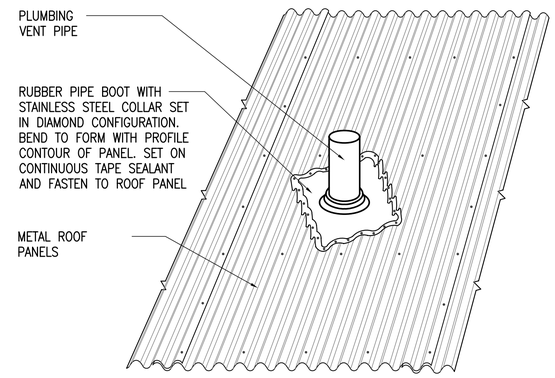


## VENT THRU ROOF DETAIL

5 A2 A2 SCALE: 1:10

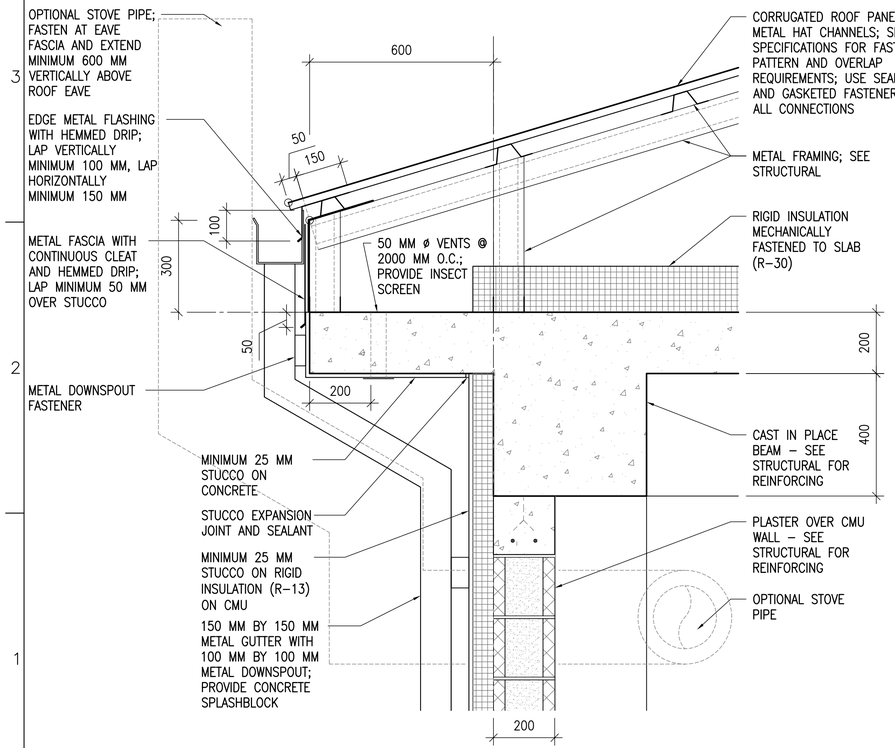


## EAVE DETAIL

2 A2 A2 SCALE: 1:10

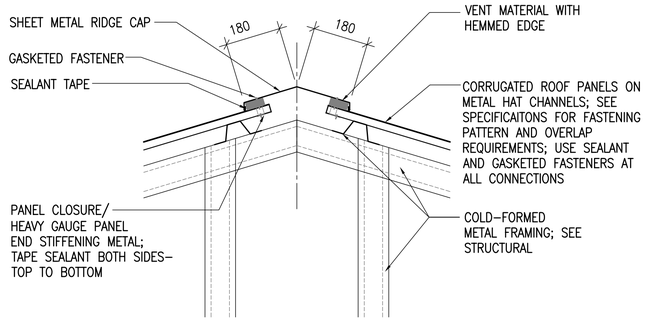


## RIDGE VENT DETAIL

3 A2 A2 SCALE: 1:10

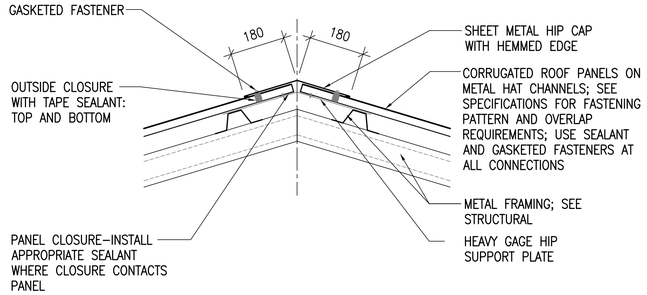


## HIP DETAIL

4 A2 A2 SCALE: 1:10

UNLESS OTHERWISE NOTED, LINEAR DIMENSIONS SHOWN ARE IN MILLIMETERS (MM)

0 200 400 800
SCALE: 1: 10

0 2000 4000 8000
SCALE: 1: 100

US Army Corps of Engineers
Afghanistan Engineer District

| SYMBOL | DESCRIPTION | DATE | APR |
|---|---|---|---|

| | |
|---|---|
| DESIGNED BY: DLB | DATE: 09–30–09 |
| DWN BY: AAR | SUBMITTED BY: BAKER |
| CHK BY: KRC | FILE NO.: ANPSDA–102XXX |


Michael Baker Jr., Inc
A unit of Michael Baker Corporation
Airside Business Park
100 Airside Drive
Moon Township, PA 15108
www.mbakercorp.com


AFGHAN NATIONAL POLICE
STANDARD DESIGN
BARRACK BUILDING (384 GSM)
WOOD FIRED HEAT OPTION

ROOF PLAN AND DETAILS

SHEET REFERENCE NUMBER:
A2

100% SUBMISSION

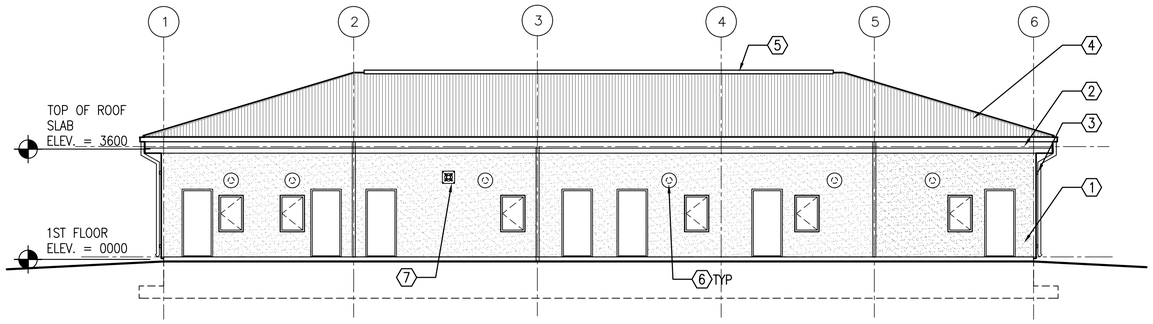


1 / A1 A3 EAST ELEVATION
SCALE: 1:100

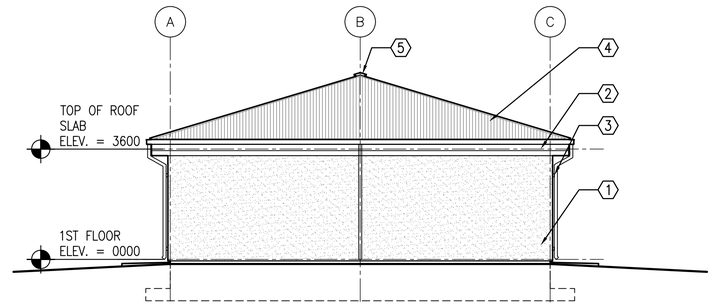


2 / A1 A3 NORTH ELEVATION
SCALE: 1:100

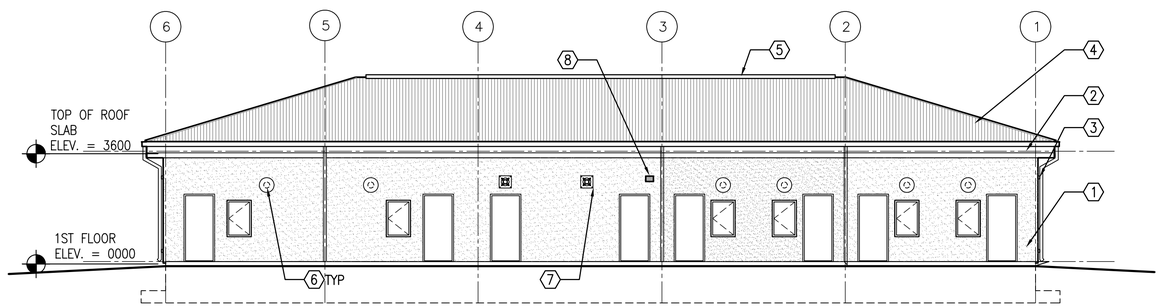


3 / A1 A3 WEST ELEVATION
SCALE: 1:100

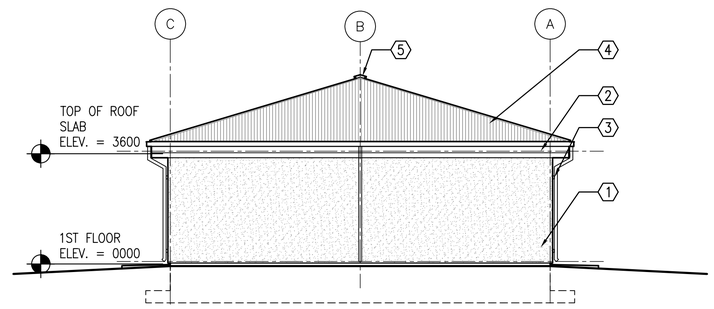


4 / A1 A3 SOUTH ELEVATION
SCALE: 1:100

## KEY NOTES:

1. STUCCO AND RIGID INSULATION SYSTEM OVER CMU AND CONCRETE.
2. METAL GUTTER
3. METAL DOWNSPOUT WITH SPLASH BLOCK
4. CORRUGATED METAL ROOF PANELS ON COLD–FORMED METAL FRAMING.
5. CONTINUOUS RIDGE VENT
6. TWO–PIECE WALL THIMBLE AND TRIM PLATE FOR OPTIONAL WOOD BURNING STOVE CHIMNEY PIPE. STOVE AND PIPE BY OTHERS.
7. EXHAUST FAN – RE: MECH
8. LOUVER – RE: MECH

## GENERAL NOTES:

1. COORDINATE SIZE AND LOCATION OF OPENINGS FOR MECHANICAL ITEMS WITH MECHANICAL DRAWINGS.
2. PROVIDE STRUCTURAL LINTELS AS REQUIRED – RE: STRUCT

UNLESS OTHERWISE NOTED, LINEAR DIMENSIONS SHOWN ARE IN MILLIMETERS (MM)

0 2000 4000 8000

SCALE: 1: 100

US Army Corps of Engineers
Afghanistan Engineer District

| SYMBOL | DESCRIPTION | DATE | APR |
|---|---|---|---|

DESIGNED BY: DLB
DATE: 09–30–09
DWN BY: AAR
SUBMITTED BY: BAKER
CHK BY: KRC
FILE NO.: ANPSDA–203XXX

Michael Baker Jr., Inc
A unit of Michael Baker Corporation
Airside Business Park
100 Airside Drive
Moon Township, PA 15108
www.mbakercorp.com

AFGHAN NATIONAL POLICE
STANDARD DESIGN
BARRACK BUILDING (384 GSM)
WOOD FIRED HEAT OPTION

EXTERIOR ELEVATIONS

SHEET REFERENCE NUMBER:
A3

100% SUBMISSION

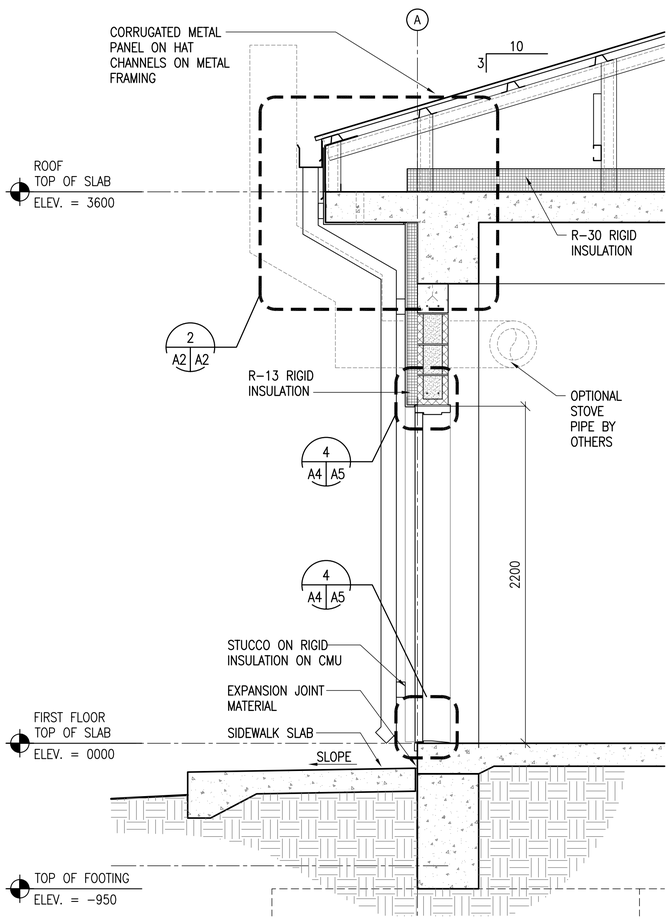


2 A4 A4 WALL SECTION
SCALE: 1:20

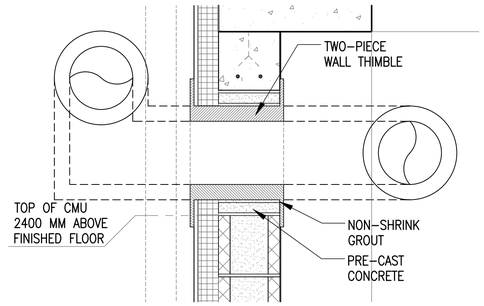


3 A4 A4 THIMBLE DETAIL, TYPICAL
SCALE: 1:10

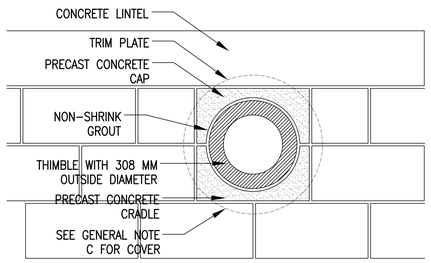


4 A4 A4 THIMBLE DETAIL, TYPICAL
SCALE: 1:10

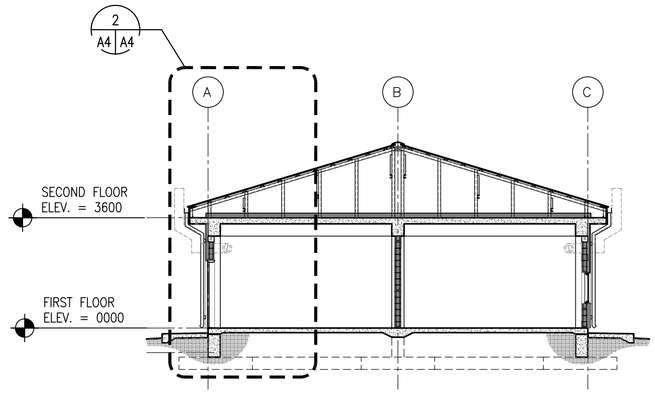


1 A1 A4 BUILDING SECTION
SCALE: 1:100

## GENERAL NOTES:

A. COORDINATE SIZE AND LOCATION OF OPENINGS FOR MECHANICAL ITEMS WITH MECHANICAL DRAWINGS.
B. PROVIDE STRUCTURAL LINTELS AS REQUIRED – RE: STRUCT
C. PROVIDE 480 MM SQUARE, 1.5 THICK GALVANIZED SHEET METAL COVER WITH 13 MM HEMMED EDGE FOR WALL THIMBLE UNTIL STOVE PIPE IS PROVIDED. INSTALL COVER ON EXTERIOR FACE OF THIMBLE TRIM PLATE. COVER SHALL BE SET IN SILICONE SEALANT AND FASTENED WITH 4 STAINLESS STEEL SCREWS. ALIGN FASTENER OPENINGS SO ADDITIONAL FASTENER PENETRATIONS ARE NOT CREATED IN EXTERIOR FINISH.

## KEY NOTES: (X)

1. STUCCO AND RIGID INSULATION SYSTEM OVER CMU AND CONCRETE.
2. CORRUGATED METAL ROOF PANELS ON COLD-FORMED METAL FRAMING.

UNLESS OTHERWISE NOTED, LINEAR DIMENSIONS SHOWN ARE IN MILLIMETERS (MM)

0 400 800 1600
SCALE: 1: 20

0 2000 4000 8000
SCALE: 1: 100

US Army Corps of Engineers
Afghanistan Engineer District

| SYMBOL | DESCRIPTION | DATE | APR |
|---|---|---|---|

DESIGNED BY: DLB
DATE: 09-30-09
DWN BY: AAR
SUBMITTED BY: BAKER
CHK BY: KRC
FILE NO.: ANPSDA-304XXX

Michael Baker Jr., Inc
A unit of Michael Baker Corporation
Airside Business Park
100 Airside Drive
Moon Township, PA 15108
www.mbakercorp.com

AFGHAN NATIONAL POLICE
STANDARD DESIGN
BARRACK BUILDING (384 GSM)
WOOD FIRED HEAT OPTION

BUILDING & WALL SECTIONS

SHEET REFERENCE NUMBER:
A4

100% SUBMISSION

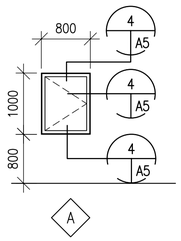


1 A5 A5 WINDOW TYPES
SCALE: 1:50

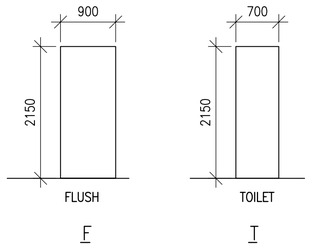


2 A5 A5 DOOR TYPES
SCALE: 1:50

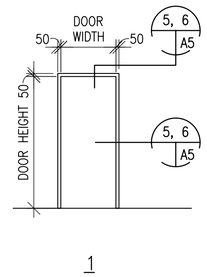


3 A5 A5 FRAME TYPES
SCALE: 1:50

## WINDOW TYPES NOTES:

1. ALL EXTERIOR WINDOWS SHALL BE WOOD WITH INSECT SCREENS. WINDOWS SHALL BE COMMERCIAL GRADE.
2. GLAZING SHALL BE ACRYLIC SHEET.

## DOOR TYPES NOTES:

1. INTERIOR AND EXTERIOR METAL DOORS AND FRAME COLORS SHALL MATCH ADJACENT WALL COLORS AS SELECTED BY THE CONTRACTING OFFICER.
2. HARDWARE SHALL BE HEAVY DUTY, COMMERCIAL GRADE, STAINLESS STEEL WITH A MATTE FINISH.
3. FRAMES, EXCEPT FIRE-RATED FRAMES, SHALL BE MOUNTED AND ADJUSTED IN ACCORDANCE WITH MANUFACTURER'S INSTRUCTIONS. FRAMES SHALL BE FASTENED WITH MINIMUM OF THREE FASTENING POINTS PER SIDE AT REGULAR INTERVALS.
4. DIMENSIONS SHOWN ON DOOR SCHEDULE ARE BASED UPON MODULAR MASONRY (OR ROUGH OPENING), HEIGHT OF 2200mm FOR STANDARD PERSONNEL DOORS. CONTRACTOR SHALL COORDINATE WITH DOOR SUPPLIER TO ENSURE THAT DIMENSIONS OF DOORS AND FRAMES PROVIDED ARE COMPATIBLE WITH DOOR OPENING DIMENSIONS.

## DOOR HARDWARE TYPES:

HW-1 1-1/2 PR HINGES
1 EA EXIT DEVICE, SURFACE MOUNTED F08
1 EA CYLINDER. GRADE 1
1 EA DOOR CLOSER, C02061,LOW RESISTANCE
1 EA THRESHOLD J32130

HW-5 1-1/2 PR HINGES, A8112
1 EA LOCKSET W/LEVERS. GRADE 1
1 EA DOOR STOP, L02101 OR L02161
2 EA MOP PLATE, J103

HW-6 1-1/2 PR HINGES
1 EA LOCKSET,F93 ENTRY LOCK W/LEVERS. GRADE
1 EA DOOR CLOSER, C02061,LOW RESISTANCE
1 EA THRESHOLD J32130

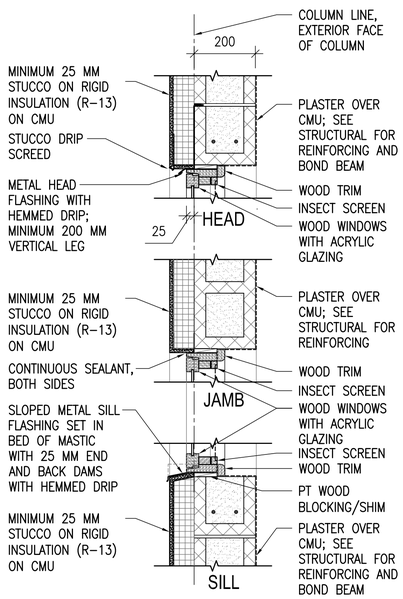


4 A5 A5 WINDOW DETAILS
SCALE: 1:10

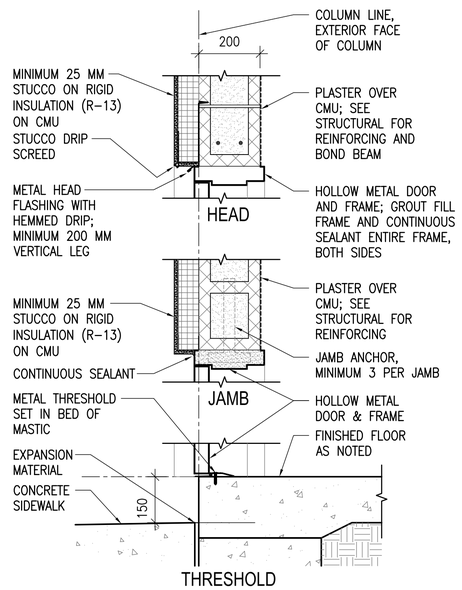


5 A5 A5 EXTERIOR DOOR DETAILS
SCALE: 1:10

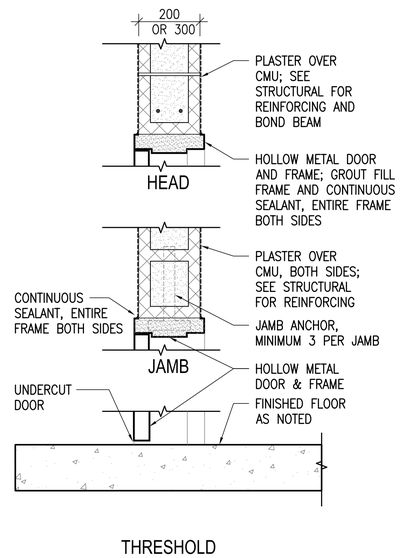


6 A5 A5 INTERIOR DOOR DETAILS
SCALE: 1:10

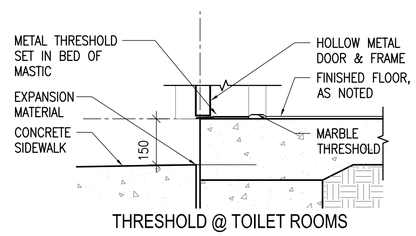


7 A5 A5 EXTERIOR THRESHOLD DETAILS
SCALE: 1:10

UNLESS OTHERWISE NOTED, LINEAR DIMENSIONS SHOWN ARE IN MILLIMETERS (MM)

0 200 400 800
SCALE: 1: 10

0 1000 2000 4000
SCALE: 1: 50

US Army Corps of Engineers
Afghanistan Engineer District

| SYMBOL | DESCRIPTION | DATE | APR |
|---|---|---|---|

DESIGNED BY: DLB
DWN BY: AAR
CHK BY: KRC
DATE: 09-30-09
SUBMITTED BY: BAKER
FILE NO.: ANPSDA-505XXX

Michael Baker Jr, Inc
A unit of Michael Baker Corporation
Airside Business Park
1500 Airside Drive
Moon Township, PA 15108
www.mbakercorp.com

AFGHAN NATIONAL POLICE
STANDARD DESIGN
BARRACK BUILDING (384 GSM)
WOOD FIRED HEAT OPTION

DOOR, WINDOW & FINISH TYPES & DETAILS

SHEET REFERENCE NUMBER:
A5

100% SUBMISSION

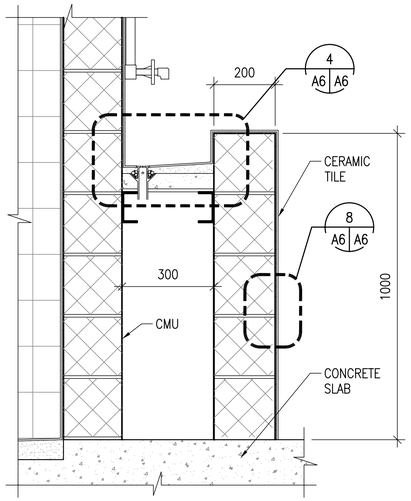


1 A1 A6 **LAVATORY SECTION**

SCALE: 1:10

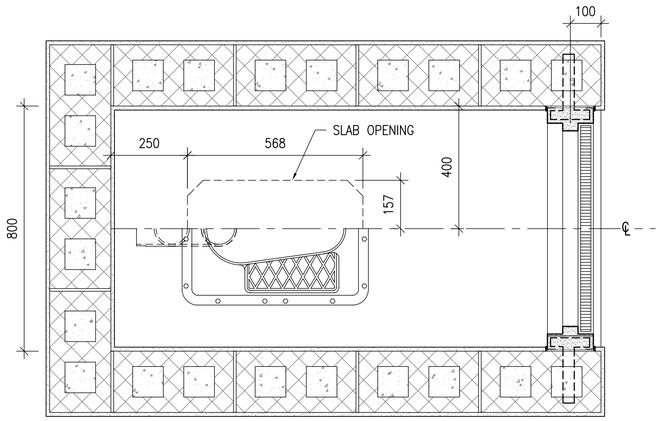


2 A1 A6 **TYPICAL TOILET STALL DETAIL**

SCALE: 1:10

ZURN Z1290 EASTERN STYLE WATER CLOSET

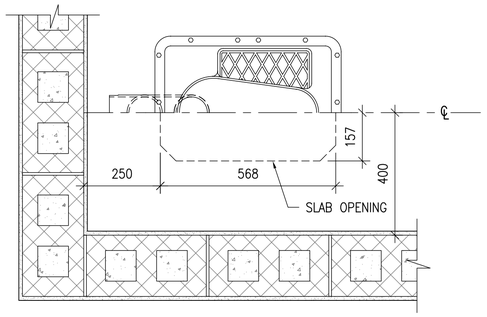


3 A1 A6 **TYPICAL TOILET DETAIL**

SCALE: 1:10

ZURN Z1290 EASTERN STYLE WATER CLOSET

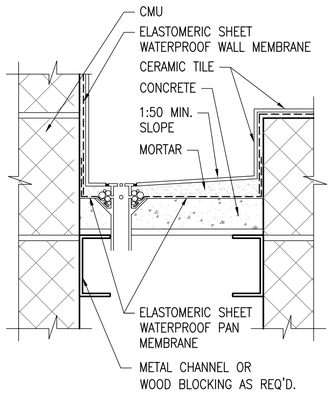


4 A6 A6 **LAVATORY DETAIL**

SCALE: NTS

NOTE: WALL MEMBRANE LAPS OVER PAN MEMBRANE

TCA METHOD: B417

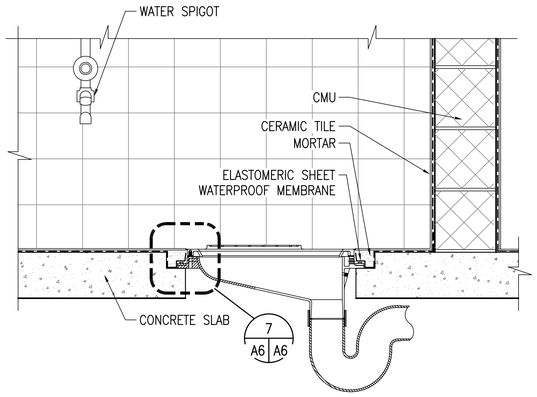


5 A1 A6 **THIN SET LATRINE**

SCALE: 1:10

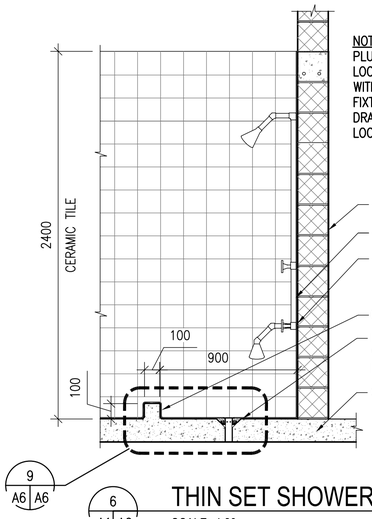


**NOTES:**
PLUMBING CONTROL LOCATIONS NEED TO ALIGN WITH ORIENTATION OF OTHER FIXTURES. SEE PLUMBING DRAWINGS FOR CORRECT LOCATION OF CONTROLS.

6 A1 A6 **THIN SET SHOWER**

SCALE: 1:20

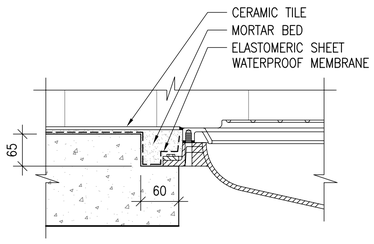


7 A6 A6 **MOUNTING DETAIL**

SCALE: NTS

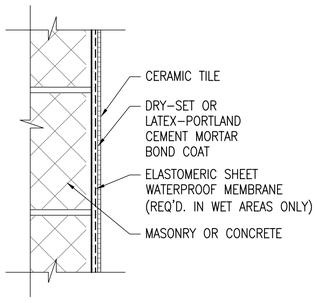


8 A6 A6 **WALL DETAIL**

SCALE: NTS

TCA METHOD: W222

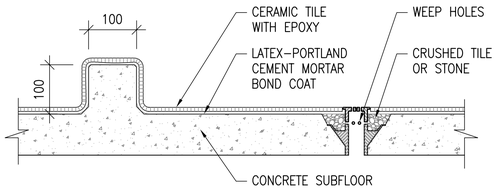


9 A6 A6 **THIN SET CURB**

SCALE: NTS

TCA METHOD: F115

UNLESS OTHERWISE NOTED, LINEAR DIMENSIONS SHOWN ARE IN MILLIMETERS (MM)

0 200 400 800

SCALE: 1: 10

0 400 800 1600

SCALE: 1: 20

US Army Corps of Engineers

Afghanistan Engineer District

| SYMBOL | DESCRIPTION | DATE | APR |
|---|---|---|---|
| | | | |

DESIGNED BY: DLB | DATE: 09-30-09

DWN BY: AAR | SUBMITTED BY: BAKER

CHK BY: KRC | FILE NO.: ANPSDA-506XXX


Michael Baker Jr., Inc
A unit of Michael Baker Corporation
Airside Business Park
100 Airside Drive
Moon Township, PA 15108
www.mbakercorp.com


AFGHAN NATIONAL POLICE
STANDARD DESIGN
BARRACK BUILDING (384 GSM)
WOOD FIRED HEAT OPTION

LATRINE AND SHOWER DETAILS

SHEET REFERENCE NUMBER:

A6

100% SUBMISSION

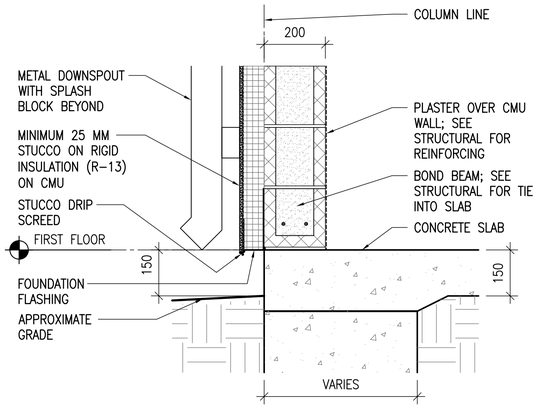


1 / A7 A7 STUCCO BASE DETAIL

SCALE: 1:10

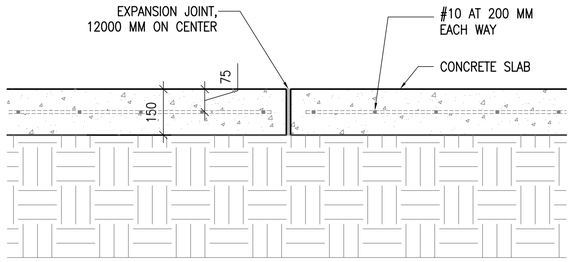


2 / A1 A7 SIDEWALK EXPANSION JOINT DETAIL

SCALE: 1:10

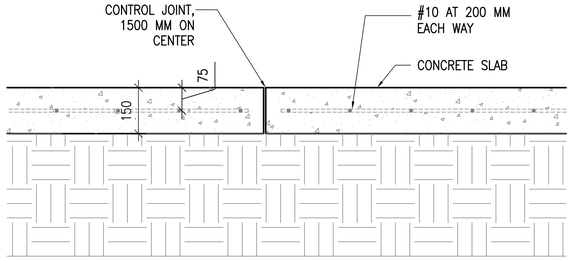


3 / A1 A7 SIDEWALK CONTROL JOINT DETAIL

SCALE: 1:10

UNLESS OTHERWISE NOTED, LINEAR DIMENSIONS SHOWN ARE IN MILLIMETERS (MM)

0 1000 2000 4000

SCALE: 1: 50

US Army Corps of Engineers

Afghanistan Engineer District

| SYMBOL | DESCRIPTION | DATE | APR |
|---|---|---|---|

DESIGNED BY: DLB
DATE: 09-30-09
DWN BY: AAR
SUBMITTED BY: BAKER
CHK BY: KRC
FILE NO.: ANPSDA-507XXX


Michael Baker Jr., Inc
A unit of Michael Baker Corporation
Airside Business Park
100 Airside Drive
Moon Township, PA 15108
www.mbakercorp.com


AFGHAN NATIONAL POLICE
STANDARD DESIGN
BARRACK BUILDING (384 GSM)
WOOD FIRED HEAT OPTION

SECTION DETAILS

SHEET REFERENCE NUMBER:

A7

100% SUBMISSION

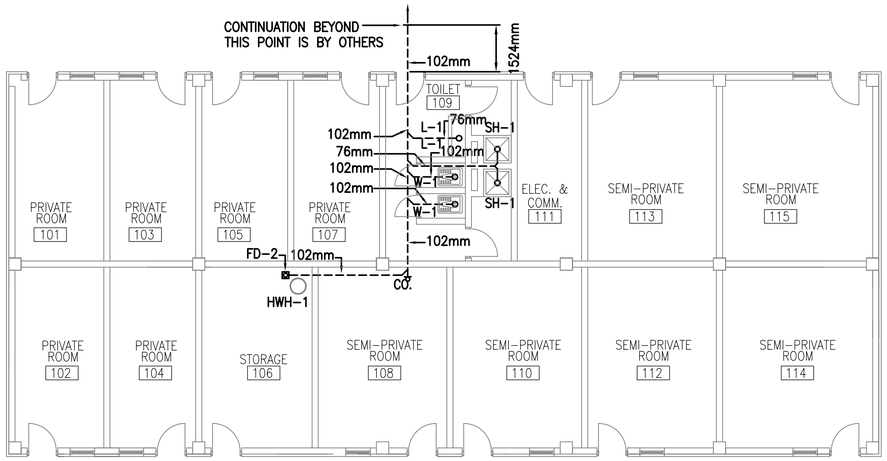


1 P1 P1 SENIOR AND HIGH BARRACKS PLAN - PLUMBING (SANITARY)

SCALE: 1:100

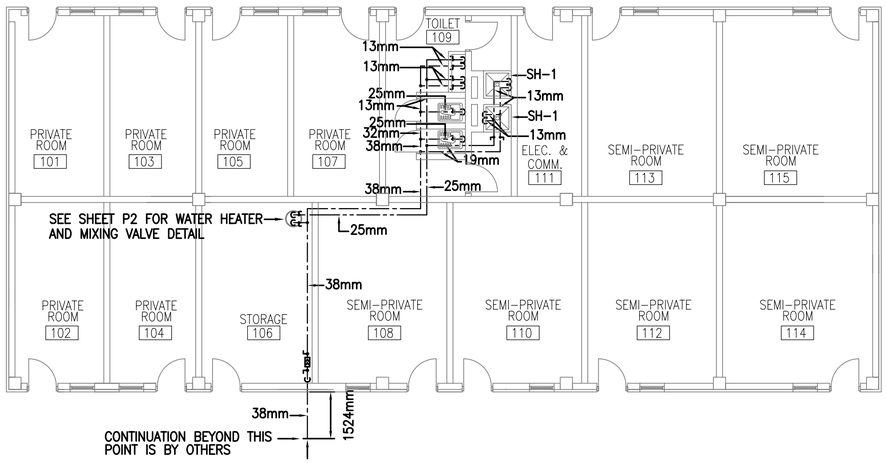


2 P1 P1 SENIOR AND HIGH BARRACKS PLAN - PLUMBING (WATER)

SCALE: 1:100

## FLOOR PLAN NOTES:

1. DO NOT SCALE DRAWINGS – ALL DIMENSIONS AND CONDITIONS SHALL BE CHECKED AND VERIFIED BY THE CONTRACTOR AT THE SITE.
2. ALL WORK PERFORMED ON THIS BUILDING SHALL BE IN COMPLIANCE WITH ALL PERTINENT CODES, RULES, ORDINANCES AND REGULATIONS OF THE GOVERNING AUTHORITIES.
3. ALL WORK PERFORMED UNDER AND IN CONNECTION WITH THESE DRAWINGS AND SPECIFICATIONS SHALL BE IN STRICT COMPLIANCE WITH THE LATEST SAFETY AND HEALTH STANDARDS.
4. REPORT ANY DISCREPANCIES FOUND IN THE PLUMBING DRAWINGS AND/OR IN THE SPECIFICATIONS DURING THE BIDDING PROCESS FOR CLARIFICATION BY THE ENGINEER.
5. ALL EASTERN STYLE WATER CLOSETS IN THIS FACILITY ARE TO HAVE THE FIXTURE DESIGNATION OF W–1. EACH FIXTURE SHALL HAVE A (1) INCH (25mm) COLD WATER CONNECTION AND A (4) INCH (102mm) SANITARY CONNECTION.
6. ALL TROUGH FIXTURES IN THIS FACILITY ARE TO HAVE THE FIXTURE DESIGNATION OF L–1. EACH FIXTURE SHALL HAVE A (1/2 INCH)/(13mm) COLD WATER, (1/2 INCH)/(13mm) HOT WATER CONNECTION AND A (3 INCH)/(76mm) SANITARY CONNECTION.
7. ALL SHOWER FIXTURES IN THIS FACILITY ARE TO HAVE THE FIXTURE DESIGNATION OF SH–1. EACH FIXTURE SHALL HAVE A (1/2 INCH)/(13mm) COLD WATER, (1/2 INCH)/(13mm) HOT WATER CONNECTION AND A (3 INCH)/(76mm) SANITARY CONNECTION TO A FLOOR DRAIN.
9. PLUMBING CONTRACTOR TO PROVIDE WATER HAMMER ARRESTORS AT ALL WATER CLOSETS.
10. PLUMBING CONTRACTOR TO PROVIDE TRAP PRIMERS AND 1/2" (13mm) COLD WATER LINES FOR ALL FLOOR DRAINS. COLD WATER LINES TO BE UNDER THE FLOOR FROM TRAP PRIMERS TO TRAPS ON FLOOR DRAINS.
11. REFER TO SHEET P2 FOR DETAILS AND SYMBOLS.
12. ALL WATER, SANITARY AND VENT LINES TO BE EXPOSED. RUN LINES TIGHT TO CEILING AND WALL.
13. ALL FIXTURES TO BE "LOW FLOW EFFICIENT FIXTURES".

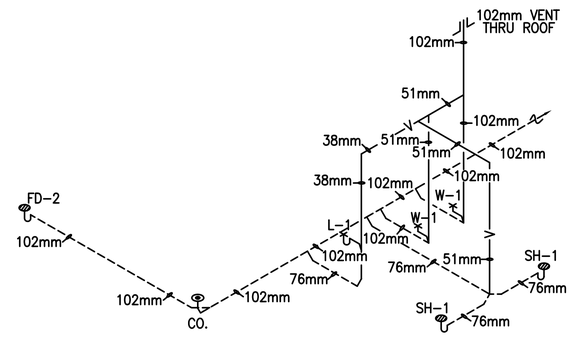


3 P1 P1 BARRACKS DRAINAGE ISOMETRIC

SCALE: N.T.S.

## LEGEND

COLD WATER

HOT WATER

SANITARY ABOVE GROUND

SANITARY UNDER GROUND

VENT LINE

1 0 1 2 3 4 5 6 7 8 9

1:100

US Army Corps of Engineers

Afghanistan Engineer District

| SYMBOL | DESCRIPTION | DATE | APR |
|---|---|---|---|

DESIGNED BY: RMH
DWN BY: RMH
CHK BY: CJM III
DATE: 09–30–09
SUBMITTED BY: BAKER
FILE NO.: ANPSDP–101XXX

Michael Baker Jr., Inc
A unit of Michael Baker Corporation
Airside Business Park
100 Airside Drive
Moon Township, PA 15108
www.mbakercorp.com

AFGHAN NATIONAL POLICE
STANDARD DESIGN
BARRACK BUILDING (384 GSM)
WOOD FIRED HEAT OPTION
PLAN - PLUMBING
AND DRAINAGE ISOMETRIC

SHEET REFERENCE NUMBER:
P1

100% SUBMISSION

## FIXTURE LIST

| TYPE | ITEM | SOIL & WASTE | VENT | COLD WATER | HOT WATER | REMARKS | REMARKS 2 |
|---|---|---|---|---|---|---|---|
| W-1 | EASTERN STYLE WATER CLOSET | 102mm | 51mm | 25mm | ------ | FLUSH VALVE | LOW FLOW EFFICIENT TYPE |
| L-1 | TROUGH FIXTURE | 38mm | 38mm | 13mm | 13mm | FABRICATED IN FIELD | LOW FLOW EFFICIENT TYPE |
| SH-1 | SHOWER | FLOOR DRAIN | ------ | 13mm | 13mm | PRIVATE SHOWER | LOW FLOW EFFICIENT TYPE |
| HWH-1 | WATER HEATER | --- | --- | SEE DWG. | SEE DWG. | 151 LITER ELECTRIC WATER HEATER, 380/3ø, 24KW | ---------- |

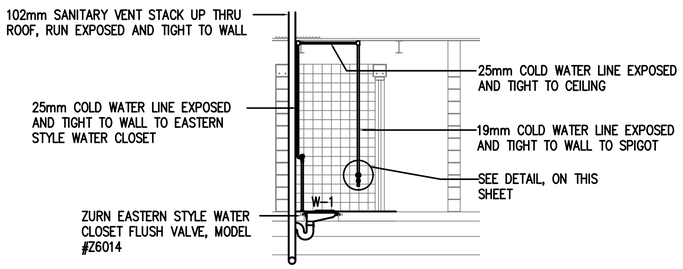


TYPICAL EASTERN STYLE WATER CLOSET
SANITARY & WATER INSTALLATION SCHEMATIC
NO SCALE

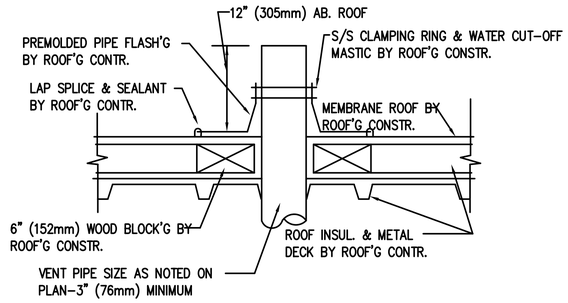


TYPICAL DETAIL – VENT THRU ROOF
NO SCALE

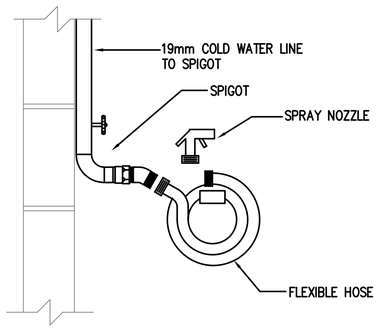


TYPICAL DETAIL – SPIGOT, FLEXIBLE HOSE, AND SPRAY NOZZLE
NO SCALE

## PLUMBING LEGEND

- SANITARY SEWER PIPING (BELOW GROUND)
- SANITARY SEWER PIPING (ABOVE GROUND)
- VENT PIPING (V)
- COLD WATER PIPING (CW)
- HOT WATER PIPING (HW)
- 140° HOT WATER PIPING (HW)
- BALL VALVE
- UNION
- WATER HAMMER ARRESTOR (WHA)
- BACKFLOW PREVENTER
- OR — CLEANOUT (CO.)
- THERMOMETER
- FLOOR DRAIN
- ROOF PENETRATION

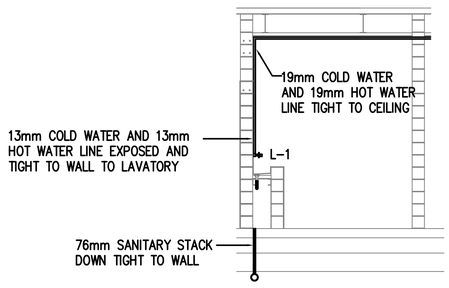


TYPICAL LAVATORY SANITARY & WATER
INSTALLATION SCHEMATIC
NO SCALE

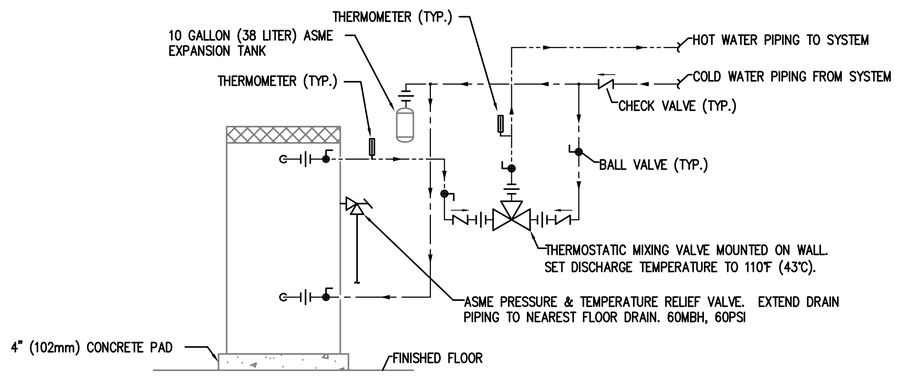


ELECTRIC WATER HEATER PIPING SCHEMATIC
NO SCALE

GENERAL PLUMBING NOTES:

1. ALL SANITARY PIPING SHALL BE BELOW FLOOR, AND ALL WATER, AND VENT PIPING SHALL BE TIGHT TO CEILING, UNLESS OTHERWISE NOTED.

2. PLUMBING CONTRACTOR SHALL COORDINATE PLUMBING WORK WITH THE WORK OF ALL OTHER TRADES. VERIFY THE LOCATIONS OF ALL UTILITES AT THE SITE PRIOR TO THE START OF ANY PLUMBING WORK.

3. COORDINATE ALL ACCESS PANEL LOCATIONS WITH THE ARCHITECT AND GENERAL CONTRACTOR.

4. ALL SANITARY PIPING BELOW SLAB SHALL BE A MINIMUM OF 51mm, UNLESS OTHERWISE NOTED OR AS REQUIRED BY THE LOCAL AUTHORITY HAVING JURISDICTION.

5. ALL SANITARY BRANCH LINES SHALL BE SLOPED AT 6mm PER 305mm, AND ALL MAIN LINES SHALL BE SLOPED AT 3mm PER 305mm, UNLESS OTHERWISE NOTED OR AS REQUIRED BY THE LOCAL AUTHORITY HAVING JURISDICTION.

6. THE PLUMBING CONTRACTOR SHALL BE RESPONSIBLE FOR COORDINATION WITH ALL UTILITY AUTHORITIES FOR INSTALLATION REQUIRMENTS, REGULATIONS, FEES, PERMITS, AND APPROVALS BEFORE THE START OF CONSTRUCTION.

7. THE PLUMBING CONTRACTOR SHALL ROUGH-IN AND CONNECT ALL EQUIPMENT REQUIRING WATER, WASTE, AND/OR VENT WHETHER OR NOT FURNISHED UNDER THIS CONTRACT. THE PLUMBING CONTRACTOR SHALL ALSO FURNISH AND INSTALL ALL NECESSARY PIPE, FITTINGS, VALVES, TRAPS, ETC., REQUIRED FOR A COMPLETE INSTALLATION, LEAVING SAME READY FOR SERVICE.

US Army Corps of Engineers
Afghanistan Engineer District

| SYMBOL | DESCRIPTION | DATE | APR |
|---|---|---|---|

DESIGNED BY: RMH
DWN BY: RMH
CHK BY: CJM III
DATE: 09-30-09
SUBMITTED BY: BAKER
FILE NO.: ANPSDP-502XXX


Michael Baker Jr., Inc
A unit of Michael Baker Corporation
Airside Business Park
100 Airside Drive
Moon Township, PA 15108
www.mbakercorp.com


AFGHAN NATIONAL POLICE
STANDARD DESIGN
BARRACK BUILDING (384 GSM)
WOOD FIRED HEAT OPTION
TYPICAL BUILDING PLUMBING SCHEMATICS & PLUMBING DETAILS

SHEET REFERENCE NUMBER:
P2

100% SUBMISSION

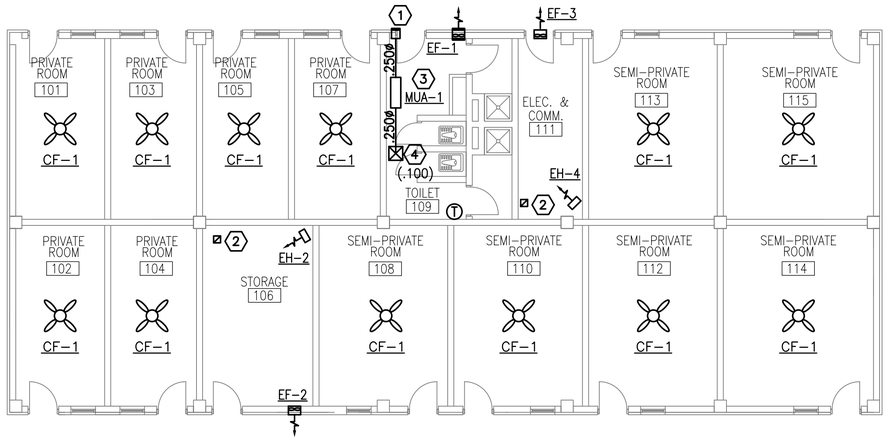


1 M1 M1 PLAN - HVAC

SCALE: 1:100

## EXHAUST FAN SCHEDULE

| NO. | TYPE | FAN CMS | DRIVE | HP | SP mmH20 | ELECT. CHAR. | SWITCH |
|---|---|---|---|---|---|---|---|
| EF-1 | WALL | 0.100 | DIRECT | FRACT | 13 | 220/1/50 | @ WALL |
| EF-2 | WALL | 0.050 | DIRECT | FRACT | 13 | 220/1/50 | @ WALL |
| EF-3 | WALL | 0.050 | DIRECT | FRACT | 13 | 220/1/50 | @ WALL |

NOTES:
1. WALL MOUNTED EXHAUST FAN MOUNT AT 600mm BELOW CEILING.

## ELECTRIC UNIT HEATER SCHEDULE

| NO. | CMS | KW | F.A.T. °C | ELECT. CHAR. | MOUNTING |
|---|---|---|---|---|---|
| EH-2 | .200 | 2.6 | 38 | 370/1/50 | WALL HUNG |
| EH-4 | .200 | 4 | 38 | 370/1/50 | WALL HUNG |

NOTES:
1. UNIT HEATERS SHALL BE MOUNTED AS HIGH AS POSSIBLE.
2. UNIT HEATERS SHALL HAVE TAMPER PROOF INTEGRAL STATS.

## MAKE UP AIR HEATERS

| NO. | BLOWER CMS | FUSE | KW | MIN. TEMP RISE °C | SP mmH20 | ELECT. CHAR. | CONTROL |
|---|---|---|---|---|---|---|---|
| MUA-1 | 0.100 | 30 | 5 | 20 | 13 | 220/1/50 | REMOTE |

NOTES:
1. PROVIDE REMOTE MOUNTED THERMOSTAT WITH LOCKING COVER.
2. INTERLOCK BLOWER OPERATION WITH EXHAUST FANS.
3. BLOWER SHALL BE SET TO ENERGIZE WITH EXHAUST FAN(S), HEAT SHALL BE CONTROLLED BY THERMOSTAT. PROVIDE AIR SENSING SWITCH FOR HEATING OPERATION.

## CEILING FAN

| NO. | BLADE SIZE mm | BLADE SIZE IN | VOLTAGE | SWITCH |
|---|---|---|---|---|
| CF-1 | 1320 | 52 | 220/1/50 | @ WALL |

NOTES:
1. FINAL ELECTRICAL CONNECTIONS BY EC.

## GENERAL NOTES:

1. DO NOT SCALE DRAWINGS – ALL DIMENSIONS AND CONDITIONS SHALL BE CHECKED AND VERIFIED BY THE CONTRACTOR AT THE SITE.
2. ALL WORK PERFORMED ON THIS BUILDING SHALL BE IN COMPLIANCE WITH ALL PERTINENT CODES, RULES, ORDINANCES AND REGULATIONS OF THE GOVERNING AUTHORITIES.
3. ALL WORK PERFORMED UNDER AND IN CONNECTION WITH THESE DRAWINGS AND SPECIFICATIONS SHALL BE IN STRICT COMPLIANCE WITH THE LATEST SAFETY AND HEALTH STANDARDS.

## SYMBOLS:

(X) KEY NOTE

(.050) AIR VOLUME IN CUBIC METERS PER SECOND (CMS)

FD FIRE DAMPER

## NUMBERED NOTE:

(1) 200X200 (8X8) LOW LEAKAGE GRAVITY WALL LOUVER FOR SUPPLY AIR. PROVIDE WEATHERPROOF LOUVER W/ 2" WASH DOWN FILTER AND SAND TRAP.

(2) 150X150 (6X6) TRANSFER GRILLE UP INTO ATTIC SPACE WITH FIRE DAMPER AT CEILING.

(3) ELECTRIC MAKE UP AIR HEATER SECURED TO STRUCTURE ABOVE. ALL FINAL ELECTRICAL CONNECTIONS SHALL BE BY THE EC.

(4) 150x150 (6x6) SUPPLY DIFFUSER CEILING WITH THREE WAY BLOW, BALANCE TO CMS IN PARENTHESIS.

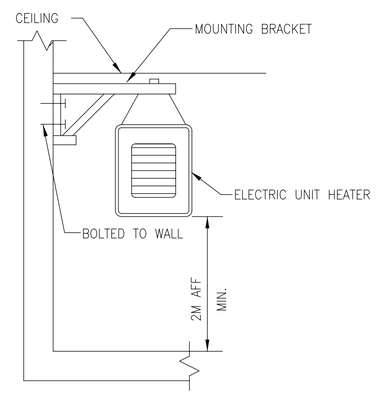


ELECTRIC UNIT HEATER MOUNTING

N.T.S.

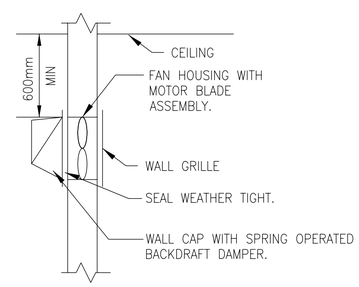


WALL MOUNTED EXHAUST FAN DETAIL

N.T.S.

US Army Corps of Engineers
Afghanistan Engineer District

| SYMBOL | DESCRIPTION | DATE | APR |
|---|---|---|---|

DESIGNED BY: RML
DATE: 09-30-09
DWN BY: JJN
SUBMITTED BY: BAKER
CHK BY: CJM III
FILE NO.: ANPSDM-101XXX

Michael Baker Jr., Inc
A unit of Michael Baker Corporation
Airside Business Park
100 Airside Drive
Moon Township, PA 15108
www.mbakercorp.com

AFGHAN NATIONAL POLICE
STANDARD DESIGN
BARRACK BUILDING (384 GSM)
WOOD FIRED HEAT OPTION

PLAN - HVAC

SHEET REFERENCE NUMBER:
M1

100% SUBMISSION

## POWER

- DISTRIBUTION PANELBOARD
- NEW PANELBOARD – SURFACE
- NEW PANELBOARD – RECESSED
- EXISTING PANELBOARD
- GENERATOR
- TVSS — TRANSIENT VOLTAGE SURGE SURPRESSOR
- TRANSFORMER (DRAWN TO SIZE)
- PS — POWER SUPPLY
- CP — CONTROL PANEL
- TC — TIME CLOCK
- TIM — ASTRONOMICAL TIME CLOCK– "SEE SPEC."
- R — RELAY WITH RATING AND NUMBER OF POLES AS NOTED ON DRAWINGS– "SEE SPEC."
- J — JUNCTION BOX
- J — JUNCTION BOX – CEILING
- PB — PULL BOX
- BD — BUS DUCT HORIZONTAL
- BUS DUCT VERTICAL
- EMERGENCY POWER OFF PUSH BUTTON
- NON–FUSIBLE SAFETY SWITCH
- FUSIBLE SAFETY SWITCH
- M — MOTOR
- $M — MOTOR STARTING SWITCH – 20A RATED
- $K — KEY SWITCH – 20A RATED
- FC — FAN COIL – FURNISHED BY MECHANICAL CONTRACTOR, ELECTRICAL CONTRACTOR SHALL INSTALL AND PROVIDE POWER CONNECTION
- UH — UNIT HEATER – FURNISHED BY MECHANICAL CONTRACTOR, ELECTRICAL CONTRACTOR SHALL INSTALL AND PROVIDE POWER CONNECTION
- D — JUNCTION BOX FOR CONNECTION TO GARBAGE DISPOSAL
- CF — LIGHT/HEATER/FAN – FURNISHED BY MECHANICAL CONTRACTOR, ELECTRICAL CONTRACTOR SHALL INSTALL AND PROVIDE POWER CONNECTION
- ELECTRIC WATER HEATER
- EPO — WEATHERPROOF / EXPLOSION PROOF EMERGENCY POWER OFF PUSH–BUTTON TO BE INTERCONNECTED WITH GENERATOR SHUT DOWN CONTROL
- CF — CEILING FAN – REFER TO SPECIFICATION SECTION 26 20 00

## RECEPTACLES

- DUPLEX 20A BRITISH STANDARD UNSWITCHED SOCKETS
- GF — DUPLEX 20A BRITISH STANDARD UNSWITCHED SOCKETS – 10mA GROUND FAULT INTERRUPTER TYPE
- WP — DUPLEX 20A BRITISH STANDARD UNSWITCHED SOCKETS – 10mA GROUND FAULT INTERRUPTER TYPE WITH WEATHERPROOF COVER
- EXP — DUPLEX 20A BRITISH STANDARD UNSWITCHED SOCKETS – EXPLOSION PROOF
- * — INDICATES MOUNT DEVICE ABOVE COUNTER TOP

## LIGHTNING PROTECTION

- AIR TERMINAL 20mm O.D. X 4m SOLID COPPER, NICKEL PLATED ON ADHESIVE BASE.
- EQ — EQUIPMENT AIR TERMINAL
- TEST WELL WITH GROUND ROD(S)
- GROUND ROD
- G — GROUND PLATE
- G — MAIN GROUND CONDUCTER CONCEALED WITHIN CONSTRUCTION
- G — MAIN GROUND CONDUCTOR EXPOSED ON EXPOSED ON BUILDING EXTERIOR SURFACE
- G — GROUND CONDUCTOR CAD WELDED TO GROUND CABLE OR EQUIPMENT
- G — GROUND CONDUCTOR CAD WELDED TO BUILDING STEEL COLUMN
- GROUND ROD TRIPOD, SPACED 10 FEET APART.
- LEVEL TO LEVEL CABLE

## LIGHTING

- LIGHTING FIXTURE – SEE FIXTURE SCHEDULE FOR MORE INFORMATION
- LIGHTING FIXTURE – SEE FIXTURE SCHEDULE FOR MORE INFORMATION
- DOWNLIGHT
- LIGHTING FIXTURE ON NORMAL/EMERGENCY
- WALL MOUNTED LIGHT FIXTURE
- E — EXIT SIGN – DIRECTIONAL ARROWS AS INDICATED ON DRAWINGS
- B — BATTERY PACK WITH HEADS AS INDICATED ON DRAWINGS
- REMOTE HEAD FOR BATTERY PACK
- $ — SINGLE POLE SWITCH – 20A RATED
- $3 — 3–WAY SWITCH – 20A RATED
- $4 — 4–WAY SWITCH – 20A RATED
- PC — PHOTOCELL VOLTAGE TO MATCH CIRCUITRY
- LC — LIGHTING CONTACTOR
- POLE MOUNTED SITE LIGHTING FIXTURE– NUMBER OF FIXTURES PER POLE AS INDICATED ON DRAWINGS
- EXTERIOR DIRECTIONAL LIGHTING FIXTURE
- a — SMALL CASE LETTERS REPRESENTS LAMP(S) / SWITCHES. WHEN USED WITH AN OCCUPANCY SENSOR THIS INDICATES SENSOR WITH MANUAL OVERRIDE SWITCH

## TELECOMMUNICATIONS

- TELEPHONE OUTLET(S) @ 18" AFF. U.N.O. WITH 3/4" RACEWAY TERMINATED ABOVE NEAREST ACCESSIBLE CEILING OR TO TELEPHONE TERMINAL BOARD IF NO ACCESSIBLE CEILING AVAILABLE. SEE TELE/DATA RISER DIAGRAM FOR OUTLET AND CABLE DESCRIPTION
- DATA OUTLET(S) @ 18" AFF. U.N.O. WITH 3/4" RACEWAY TERMINATED ABOVE NEAREST ACCESSIBLE CEILING OR TO DATA EQUIPMENT RACK IF NO ACCESSIBLE CEILING AVAILABLE. SEE TELE/DATA RISER DIAGRAM FOR OUTLET AND CABLE DESCRIPTION

## TELECOMMUNICATIONS (CONTINUED)

- COMBINATION TELEPHONE/DATA OUTLET(S) @ 18" AFF. U.N.O. WITH 1" RACEWAY TERMINATED ABOVE NEAREST ACCESSIBLE CEILING OR TO TELE/DATA TERMINAL AREA IF NO ACCESSIBLE CEILING AVAILABLE. SEE TELE/DATA RISER DIAGRAM FOR OUTLET AND CABLE DESCRIPTION
- W — WALL MTD. TELEPHONE OUTLET WITH 3/4" RACEWAY TERMINATED ABOVE NEAREST ACCESSIBLE CEILING OR TO TELEPHONE TERMINAL BOARD IF NO ACCESSIBLE CEILING AVAILABLE. SEE TELE/DATA RISER DIAGRAM FOR OUTLET AND CABLE DESCRIPTION
- (x)T — INDICATES NUMBER OF TELEPHONE OUTLET(S) AND ASSOCIATED CABLING
- (x)D — INDICATES NUMBER OF DATA OUTLET(S) AND ASSOCIATED CABLING
- (x)TF — INDICATES NUMBER OF TELEPHONE OUTLETS AND ASSOCIATED CABLING WITH 1 OUTLET AND CABLE DEDICATED FOR FAX

## SINGLE LINE SYMBOLS

- SWITCH
- BREAKER
- FUSE
- TRANSFORMER
- CAPACITOR
- GROUND
- CONTACT (NORMALLY OPEN)
- CONTACT (NORMALLY CLOSED)
- AUTOMATIC TRANSFER SWITCH
- MANUAL DOUBLE THROW SWITCH
- CURRENT TRANSFORMER
- INDICATES NEW ELECTRICAL EQUIPMENT
- C — INDICATES NEW CONTROL WIRING AND CONDUIT
- EQUIPMENT OUTLINE

## MISCELLANEOUS

- BRANCH CIRCUIT WIRING CONCEALED ABOVE CEILINGS, SURFACE MOUNTED ON WALLS
- BRANCH CIRCUIT WIRING – #10 AWG
- BRANCH CIRCUIT WIRING – UNDER FLOOR
- HOME RUN BACK TO PANEL
- CONDUIT TURNED DOWN
- CONDUIT TURNED UP
- LV — LOW VOLTAGE WIRING AND CONDUIT
- CT–X — CABLE TRAY ("X" DENOTES WIDTH)
- INDICATES CONTINUATION OF LINE

## FIRE ALARM

- FACP — FIRE ALARM CONTROL PANEL WITH BATTERY BACKUP
- F — FIRE ALARM PULL STATION

## FIRE ALARM (CONTINUED)

- F — FIRE ALARM STROBE – WALL MOUNTED
- F — FIRE ALARM AUDIBLE/STROBE – WM
- F — FIRE ALARM HORN/STROBE – WM
- S — SMOKE DETECTOR
- H — HEAT DETECTOR CEILING MOUNTED
- D — DUCT DETECTOR – PROVIDED BY EC, INSTALLED BY MC AND CONNECTED BY EC

## DENOTATIONS & ABBREVIATIONS

| | |
|---|---|
| AFF | ABOVE FINISHED FLOOR |
| C | CEILING MOUNTED |
| E | EMERGENCY |
| EC | ELECTRICAL CONTRACTOR |
| EPO | EMERGENCY POWER OFF |
| EXP | EXPLOSION PROOF |
| F | FIRE ALARM |
| FF | FLUSH FLOOR MOUNTED |
| FL | FLUORESCENT |
| FO | FIBER OPTIC |
| FSS | FUSED SAFETY SWITCH |
| G | GROUND FAULT INTERRUPTER |
| GC | GENERAL CONTRACTOR |
| HOA | HAND–OFF AUTO |
| I | INFRARED |
| ICD | INCANDESCENT |
| IG | ISOLATED GROUND |
| K | KEY |
| LV | LOW VOLTAGE |
| M | MOTOR |
| MC | MECHANICAL CONTRACTOR |
| NE | NORMAL/EMERGENCY |
| NFSS | NON–FUSED SAFETY SWITCH |
| PA | PAGING SYSTEM |
| PLC | PLUMBING CONTRACTOR |
| REL | RELOCATE |
| RED | RELOCATED |
| SL | SINGLE LINE |
| SS | SURGE SUPPRESSION |
| T | TELEPHONE |
| TL | TWIST LOCK |

## DENOTATIONS & ABBREVIATIONS (CONT.)

| | |
|---|---|
| TP | TAMPER PROOF |
| UE | UNDERGROUND ELECTRIC |
| UF | UNDERGROUND FIBER |
| UT | UNDERGROUND TELEPHONE |
| W | WALL MOUNTED |
| WG | WIRE GUARD |
| WP | WEATHERPROOF |
| WPG | WEATHERPROOF/GROUND FAULT INTERRUPTER |
| WT | WATER TIGHT |

## GENERAL PROJECT NOTES:

G1. UNLESS OTHERWISE NOTED, PROVIDE ALL EQUIPMENT SHOWN ON THE PLANS. THE ELECTRICAL CONTRACTOR SHALL COORDINATE ALL SYMBOLS SHOWN ON THE PLANS WITH THE SYMBOL LIST. IT SHALL BE THE RESPONSIBILITY OF THE CONTRACTOR TO VERIFY THE INTENT OF ANY SYMBOL THAT IS SHOWN ON THE PLANS AND NOT INDICATED ON THE SYMBOL LIST WITH THE ENGINEER PRIOR TO BID.

G2. COORDINATE THE FINAL LOCATIONS OF ALL LIGHT FIXTURES WITH THE ARCHITECT'S REFLECTED CEILING PLANS. REPORT ANY DISCREPANCIES TO THE ARCHITECT PRIOR TO INSTALLATION.

G3. THE CONTRACTOR SHALL VERIFY THE LOCATION OF ALL UNDERGROUND UTILITIES WITHIN THE CONSTRUCTION AREA THREE (3) WORKING DAYS NOTICE BEFORE COMMENCE DIGGING. NOTIFY THE LOCAL OR STATE AUTHORITY HAVING JURISDICTION AND WAIT THE REQUIRED TIME BEFORE COMMENCING TO DIG.

G4. THE CONTRACTOR SHALL COORDINATE CONDUIT RUNS, CABLE TRAY, LIGHTING FIXTURES AND OTHER EQUIPMENT LOCATIONS WITH THE OTHER TRADE CONTRACTORS TO AVOID CONFLICTS.

G5. WHERE VOLTAGES AND FREQUENCIES ON THE DRAWINGS AND IN THE SPECIFICATIONS DIFFER FROM THE LOCAL ONES, ALL WORK SHALL BE PERFORMED USING THE LOCAL VOLTAGES AND FREQUENCIES.

G6. THE MINIMUM WIRE SIZE ON THE PROJECT SHALL BE 4mm2. THE MINIMUM CONDUIT SIZE SHALL BE 20mm. THE MINIMUM BREAKER SIZE SHALL BE 20 AMPS.

G7. THE CONTRACTOR SHALL PUT A MAXIMUM OF 6 DUPLEX SOCKETS ON A 20A SINGLE POLE CIRCUIT.

G8. WHERE THE 1010 SCOPE REVIEW, 1015 TECHNICAL REVIEW, DRAWINGS, AND SPECIFICATIONS DIFFER FROM AMERICAN CODES OR STANDARDS THE 1010, 1015, DRAWINGS, AND SPECIFICATIONS SHALL RULE.

G9. WORK FOR THE AMMUNITION SUPPLY POINT SHALL BE DONE IN ACCORDANCE WITH DEPARTMENT OF DEFENSE STANDARD DOD 6055.9–STD.

G10. ALL CONDUIT AND DEVICES SHALL BE SURFACE MOUNTED UNLESS OTHERWISE INDICATED.

US Army Corps of Engineers
Afghanistan Engineer District

| SYMBOL | DESCRIPTION | DATE | APR |
|---|---|---|---|

DESIGNED BY: JRG
DWN BY: JRG
CHK BY: JRG
DATE: 09–30–09
SUBMITTED BY: BAKER
FILE NO.: ANPSDE–000XXX

Michael Baker Jr., Inc.
A unit of Michael Baker Corporation
Airside Business Park
100 Airside Drive
Moon Township, PA 15108
www.mbakercorp.com

AFGHAN NATIONAL POLICE
STANDARD DESIGN
BARRACK BUILDING (384 GSM)
WOOD FIRED HEAT OPTION

ELECTRICAL SYMBOLS AND ABBREVIATIONS

SHEET REFERENCE NUMBER:
E0

100% SUBMISSION

## GENERAL NOTES:

1. REFER TO DRAWING #E0 FOR THE ELECTRICAL SYMBOLS LIST.
2. EXIT SIGNS SHALL BE WIRED AHEAD OF ANY LOCAL SWITCHING ON CIRCUITS.
3. REFER TO DRAWING #E4 FOR THE LIGHTING FIXTURE SCHEDULE.
4. REFER TO DRAWING #E3 FOR THE POWER RISER.
5. REFER TO DRAWING #E5 FOR PANEL SCHEDULES.
6. LIGHT FIXTURES INDICATED AS EMERGENCY SHALL BE PROVIDED WITH A BATTERY BACKUP BALLAST.

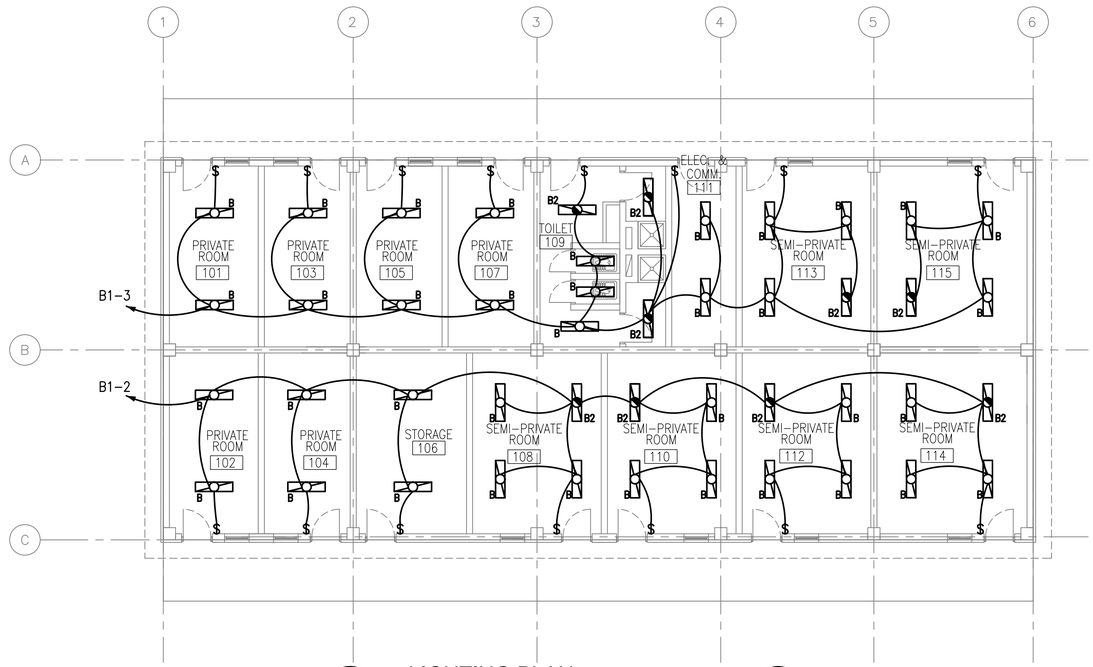


1 E1 E1 LIGHTING PLAN
SCALE: 1:100

N

US Army Corps of Engineers
Afghanistan Engineer District

| SYMBOL | DESCRIPTION | DATE | APR |
|---|---|---|---|

DESIGNED BY: JRG
DWN BY: JRG
CHK BY: JRG
DATE: 09-30-09
SUBMITTED BY: BAKER
FILE NO.: ANPSDE-101XXX


Michael Baker Jr., Inc
A unit of Michael Baker Corporation
Airside Business Park
100 Airside Drive
Moon Township, PA 15108
www.mbakercorp.com


AFGHAN NATIONAL POLICE
STANDARD DESIGN
BARRACK BUILDING (384 GSM)
WOOD FIRED HEAT OPTION

LIGHTING PLAN

SHEET REFERENCE NUMBER:
E1

100% SUBMISSION

## GENERAL NOTES:

1. REFER TO DRAWING #E0 FOR THE ELECTRICAL SYMBOLS LIST.
2. REFER TO DRAWING #E3 FOR THE POWER RISER.
3. REFER TO DRAWING #E5 FOR PANEL SCHEDULES.
4. COORDINATE EXACT MOUNTING LOCATION OF DISCONNECTING MEANS FOR MECHANICAL AND PLUMBING EQUIPMENT IN THE FIELD.
5. FUSIBLE SAFETY SWITCHES THAT ARE NOT OTHERWISE IDENTIFIED SHALL BE 380V, 1P, 30A FUSED SAFETY SWITCHES WITH 20A FUSES.

## NUMBERED NOTE:

1. PANEL B1.
2. NEMA 3R, 380V, 3P, 60A FUSED DISCONNECT, FUSED AT 60A.
3. TELECOMMUNICATIONS CONDUIT STUB–UP
4. SEE PANEL SCHEDULE ON DRAWING #E5 FOR WIRE AND CONDUIT INFORMATION.
5. PROVIDE POWER CONNECTION TO EXHAUST FANS. SEE DRAWINGS #M1 AND #E6 FOR MORE DETAILS.
6. PROVIDE POWER CONNECTION TO ELECTRIC UNIT HEATER #2. SEE DRAWINGS #M1 AND #E6 FOR MORE INFORMATION.
7. PROVIDE POWER CONNECTION TO ELECTRIC UNIT HEATER #4. SEE DRAWINGS #M1 AND #E6 FOR MORE INFORMATION.
8. PROVIDE POWER CONNECTION TO MAKEUP AIR UNIT #1. SEE DRAWINGS #M1 AND #E6 FOR MORE INFORMATION.

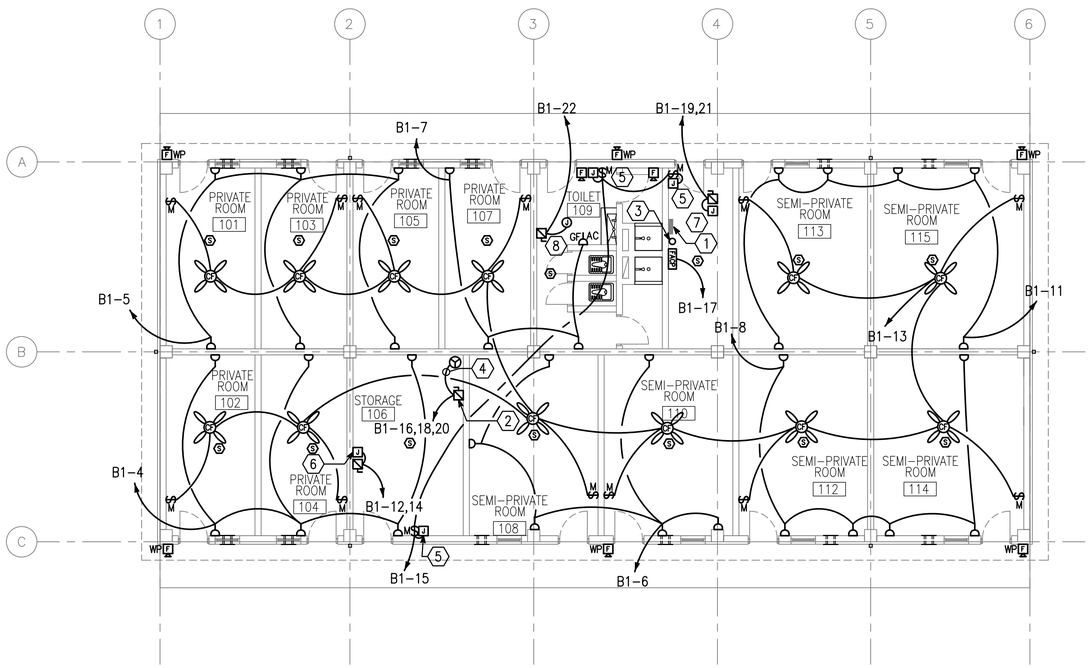


1 E2 E2 POWER AND SYSTEMS PLAN

SCALE: 1:100

N

US Army Corps of Engineers

Afghanistan Engineer District

| SYMBOL | DESCRIPTION | DATE | APR |
|---|---|---|---|

DESIGNED BY: JRG
DWN BY: JRG
CHK BY: JRG
DATE: 09–30–09
SUBMITTED BY: BAKER
FILE NO.: ANPSDE–102XXX


Michael Baker Jr., Inc
A unit of Michael Baker Corporation
Airside Business Park
100 Airside Drive
Moon Township, PA 15108
www.mbakercorp.com


AFGHAN NATIONAL POLICE
STANDARD DESIGN
BARRACK BUILDING (384 GSM)
WOOD FIRED HEAT OPTION

POWER AND SYSTEMS PLAN

SHEET REFERENCE NUMBER:

E2

100% SUBMISSION

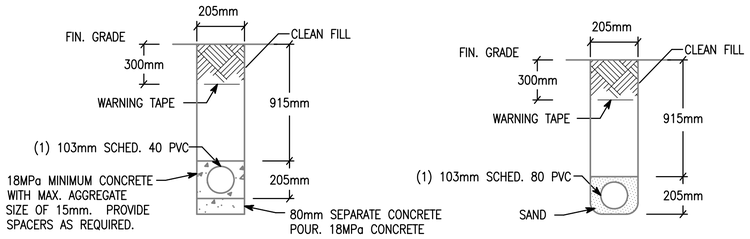


NOTE: PVC CONDUIT SHALL BE DIRECT BURIED SCHEDULE 80 FOR NO TRAFFIC AREAS AND CONCRETE-ENCASED SCHEDULE 40 FOR UNDER ROADWAYS OR TRAFFIC AREAS.

1 E3 E3 TYPICAL DUCT BANK DETAILS FOR CONDUIT IN SAND OR CONCRETE

SCALE: N.T.S.

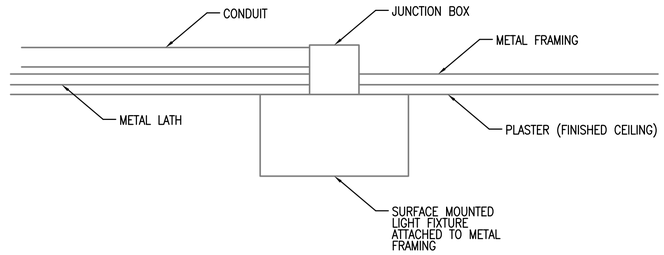


2 E3 E3 TYPICAL DETAIL FOR SURFACE MOUNTED LIGHT FIXTURES

SCALE: N.T.S.

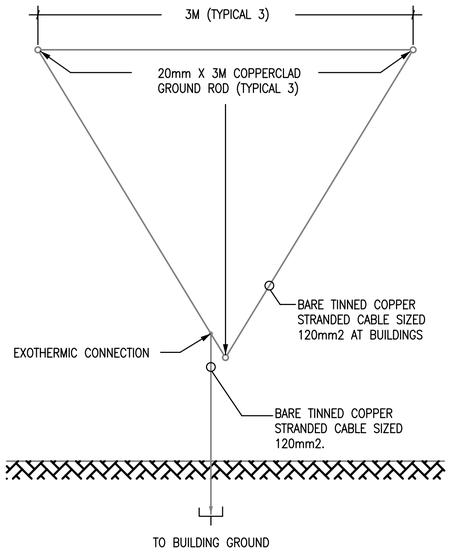


3 E3 E3 GROUND TRIPOD SYSTEM DETAIL - PLAN

SCALE: N.T.S.

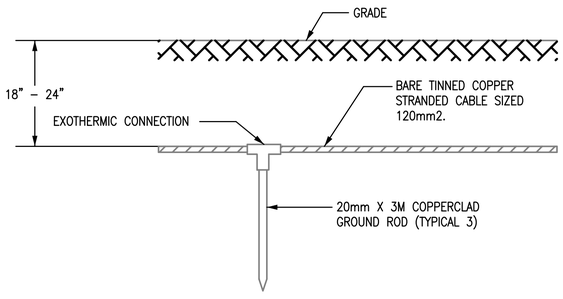


4 E3 E3 GROUND TRIPOD SYSTEM DETAIL - ELEVATION

SCALE: N.T.S.

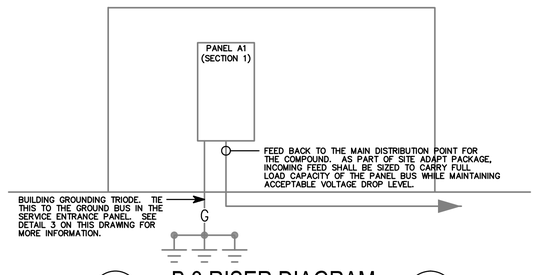


5 E3 E3 B.3 RISER DIAGRAM

SCALE: N.T.S.

US Army Corps of Engineers

Afghanistan Engineer District

| SYMBOL | DESCRIPTION | DATE | APR |
|---|---|---|---|

DESIGNED BY: JRG
DATE: 09-30-09
DWN BY: JRG
SUBMITTED BY: BAKER
CHK BY: JRG
FILE NO.: ANPSDE-503XXX

Michael Baker Jr., Inc.
A unit of Michael Baker Corporation
Airside Business Park
100 Airside Drive
Moon Township, PA 15108
www.mbakercorp.com

AFGHAN NATIONAL POLICE
STANDARD DESIGN
BARRACK BUILDING (384 GSM)
WOOD FIRED HEAT OPTION

DETAILS

SHEET REFERENCE NUMBER:

E3

100% SUBMISSION

FIXTURE MARK 'B'

WET LOCATION WRAP AROUND SURFACE/PENDANT MOUNTED FLUORESCENT FIXTURE WITH PRISMATIC ACRYLIC LENS AND ELECTRONIC BALLAST.

FIXTURE MARK 'B2':
SAME FIXTURE AS 'B' WITH EMERGENCY BALLAST.

# LIGHTING FIXTURE SCHEDULE

| FIXTURE MARK | STYLE NUMBER AND TYPE | NUMBER AND TYPE OF LAMPS | VOLTAGE | MOUNTING | NOTES |
|---|---|---|---|---|---|
| B | WET LOCATION WRAP AROUND SURFACE/PENDANT MOUNTED FLUORESCENT FIXTURE WITH PRISMATIC ACRYLIC LENS AND ELECTRONIC BALLAST | (2) 32W 3500K | 220V – 1ø 50HZ | PENDANT MOUNTED FROM SLOPED CEILINGS | FURNISHED WITH ELECTRONIC BALLAST, VIRGIN ACRYLIC WRAP AROUND LENS. |
| B2 | SAME AS FIXTURE 'B' WITH EMERGENCY BALLAST | (2) 32W 3500K | 220V – 1ø 50HZ | PENDANT MOUNTED FROM SLOPED CEILINGS | FURNISHED WITH ELECTRONIC BALLAST, VIRGIN ACRYLIC WRAP AROUND LENS. EMERGENCY BALLAST WITH SELF TEST SWITCH. |
| | | | | | |

US Army Corps of Engineers

Afghanistan Engineer District

| SYMBOL | DESCRIPTION | DATE | APR |
|---|---|---|---|

DESIGNED BY: JRG
DWN BY: JRG
CHK BY: JRG
DATE: 09-30-09
SUBMITTED BY: BAKER
FILE NO.: ANPSDE-604XXX

Michael Baker Jr., Inc
A unit of Michael Baker Corporation
Airside Business Park
100 Airside Drive
Moon Township, PA 15108
www.mbakercorp.com

AFGHAN NATIONAL POLICE
STANDARD DESIGN
BARRACK BUILDING (384 GSM)
WOOD FIRED HEAT OPTION

LIGHT FIXTURE SCHEDULE

SHEET REFERENCE NUMBER:
E4

100% SUBMISSION

PANELBOARD B1 SURFACE MOUNTED _____ ASYM. A.I.C. MIN.

_____ AMP. MAIN LUGS (OR) 100 AMP. MAIN BREAKER W/ 100 AMP. TRIP

CIRCUIT BREAKER TYPE 380/220 VOLTS 3 PHASE 4 WIRE 50 HZ 100 AMP. BUS

| CKT. NO. | TRIP AMPS | NO. POLES | WIRE MM 2 | GND MM² | CONDUIT MM | LOAD SERVED | LOAD-V.A. AØ | LOAD-V.A. BØ | LOAD-V.A. CØ | LOAD-V.A. AØ | LOAD-V.A. BØ | LOAD-V.A. CØ | LOAD SERVED | CONDUIT MM | GND MM² | WIRE MM² | NO. POLES | TRIP AMPS | CKT. NO. |
|---|---|---|---|---|---|---|---|---|---|---|---|---|---|---|---|---|---|---|---|
| 1 | 20 | 1 | 4.0 | 4.0 | 20 | SPARE | | | | 1.4 | | | LIGHTING - 102-114 (EVEN) | 20 | 4.0 | 4.0 | 1 | 20 | 2 |
| 3 | 20 | 1 | 4.0 | 4.0 | 20 | LIGHTING - 101-115 (ODD) | | 1.6 | | | 1.2 | | RECEPTACLES - 102, 104, 106 | 20 | 4.0 | 4.0 | 1 | 20 | 4 |
| 5 | 20 | 1 | 4.0 | 4.0 | 20 | RECEPTACLES - 101, 103, 105 | | | 1.2 | | | 1.2 | RECEPTACLES - 108, 110 | 20 | 4.0 | 4.0 | 1 | 20 | 6 |
| 7 | 20 | 1 | 4.0 | 4.0 | 20 | RECEPTACLES - 107, 109 | 0.8 | | | 1.2 | | | RECEPTACLES - 112, 114 | 20 | 4.0 | 4.0 | 1 | 20 | 8 |
| 9 | 20 | 1 | 4.0 | 4.0 | 20 | RECEPTACLES - 111 | | 1.2 | | | 0.8 | | RECEPTACLES - EXTERIOR | 20 | 4.0 | 4.0 | 1 | 20 | 10 |
| 11 | 20 | 1 | 4.0 | 4.0 | 20 | RECEPTACLES - 113, 115 | | | 1.2 | | | 2.6 | ELECTRIC HEAT - 106, 109 | 20 | 4.0 | 4.0 | 2 | 20 | 12 |
| 13 | 20 | 1 | 4.0 | 4.0 | 20 | CEILING FANS | 1.2 | | | 2.6 | | | | | | | | | 14 |
| 15 | 20 | 1 | 4.0 | 4.0 | 20 | EXHAUST FANS - 106, 109, 111 | | 0.8 | | | 8.0 | | WATER HEATER - 106 | 32 | 6.0 | 25.0 | 3 | 60 | 16 |
| 17 | 20 | 1 | 4.0 | 4.0 | 20 | F.A.C.P. | | | 0.5 | | | 8.0 | | | | | | | 18 |
| 19 | 20 | 2 | 4.0 | 4.0 | 20 | ELECTRIC HEAT - 111 | 2.0 | | | 8.0 | | | | | | | | | 20 |
| 21 | | | | | | | | 2.0 | | | 5.0 | | MUA-1 | 20 | 6.0 | 10.0 | 1 | 40 | 22 |
| 23 | 20 | 1 | | | | SPARE | | | | | | | SPARE | | | | | | 24 |
| 25 | 20 | 1 | | | | SPARE | | | | | | | SPARE | | | | | | 26 |
| 27 | 20 | 1 | | | | SPARE | | | | | | | SPARE | | | | | | 28 |
| 29 | 20 | 1 | | | | SPARE | | | | | | | SPARE | | | | | | 30 |
| 31 | 20 | 1 | | | | SPARE | | | | | | | SPARE | | | | | | 32 |
| 33 | 20 | 1 | | | | SPARE | | | | | | | SPARE | | | | | | 34 |
| 35 | 20 | 1 | | | | SPARE | | | | | | | SPARE | | | | | | 36 |
| 37 | 20 | 1 | | | | SPARE | | | | | | | SPARE | | | | | | 38 |
| 39 | 20 | 1 | | | | SPARE | | | | | | | SPARE | | | | | | 40 |
| 41 | 20 | 1 | | | | SPARE | | | | | | | SPARE | | | | | | 42 |
| | | | | | | | 4.0 | 5.3 | 2.9 | 13.2 | 15.0 | 11.8 | | | | | | | |

TOTAL CONN. LOAD PER PHASE (KVA): AØ 17.2 BØ 20.3 CØ 14.7

TOTAL CONN. LOAD 52.2 KVA. 70 % DEMAND = ESTIMATED DEMAND LOAD 36.6 SUPPLIED FROM MAIN SWITCHGEAR DISTRIBUTION

• MAIN BREAKER SHALL BE 3P EARTH GROUND TYPE

•• PROVIDE PANEL WITH FEED-THROUGH LUGS

US Army Corps of Engineers

Afghanistan Engineer District

| SYMBOL | DESCRIPTION | DATE | APR |
|---|---|---|---|

DESIGNED BY: JRG | DATE: 09-30-09

DWN BY: JRG | SUBMITTED BY: BAKER

CHK BY: JRG | FILE NO.: ANPSDE-605XXX

Michael Baker Jr., Inc
A unit of Michael Baker Corporation
Airside Business Park
100 Airside Drive
Moon Township, PA 15108
www.mbakercorp.com

AFGHAN NATIONAL POLICE
STANDARD DESIGN
BARRACK BUILDING (384 GSM)
WOOD FIRED HEAT OPTION

PANEL SCHEDULES AND RISER DIAGRAM

SHEET REFERENCE NUMBER:

E5

100% SUBMISSION