AFGHAN NATIONAL POLICE

STANDARD BUILDING DESIGNS

SITE DETAILS

SHEET INDEX

G1 COVER SHEET

C1 CIVIL DETAILS
C2 CIVIL DETAILS
C3 CIVIL DETAILS
C4 CIVIL DETAILS

US Army Corps of Engineers

Afghanistan Engineer District

SYMBOL	DESCRIPTION	DATE	APR

DESIGNED BY: JDS
DWN BY: JDS
CHK BY: JDS
DATE: 09-30-09
SUBMITTED BY: BAKER
FILE NO.: ANPSDG-BS-TTLE

AFGHAN NATIONAL POLICE
STANDARD DESIGN
SITE DETAILS

COVER SHEET

SHEET REFERENCE NUMBER:

G1

100% SUBMISSION

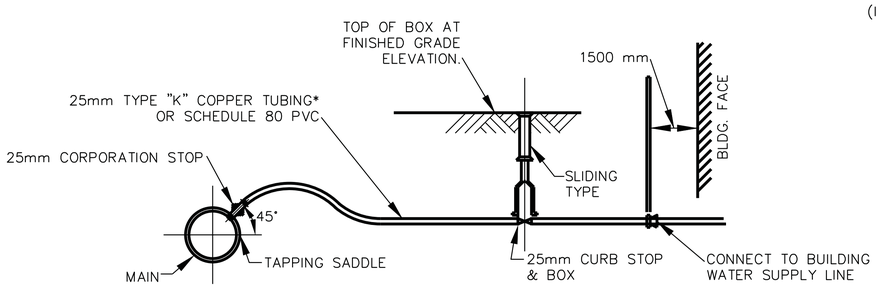

*DETAIL TYPICAL FOR 20mm THRU 50mm CONNECTIONS, SIZE OF COPORATION STOP, TUBING AND CURB STOP SHALL BE SIZED ACCORDINGLY. BLOWOFF VALVES LOCATED AT DEAD ENDS OF WATER MAINS SHALL CONSIST OF 50mm CONNECTION WITH TAP NEAR END OF PIPE, DISCHARGE TO SURFACE DRAINAGE. AND ANTI FREEZING PROVISIONS WHERE APPLICABLE.

WATER SERVICE CONNECTION DETAIL

N.T.S.

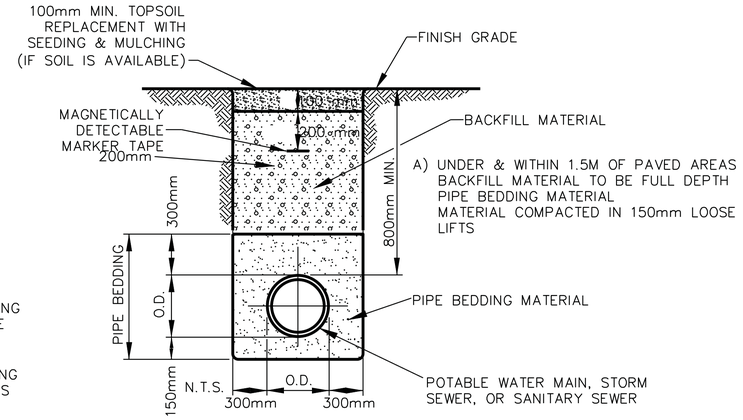

TYPICAL TRENCH DETAIL

N.T.S.

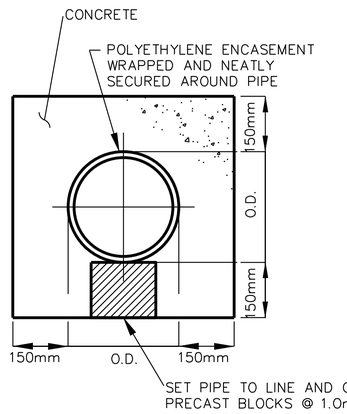

NOTE: REQUIRED FOR ROAD CROSSINGS WITH LESS THAN 1.2m COVER OR WHERE SANITARY AND WATER MAIN SEPARATION CANNOT BE MET.

PIPE CONCRETE ENCASEMENT DETAIL

N.T.S.

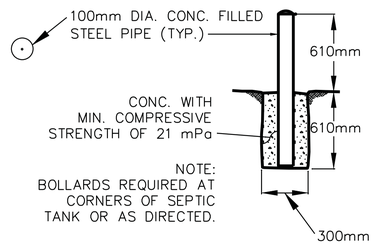

TYPICAL BOLLARDS

N.T.S.

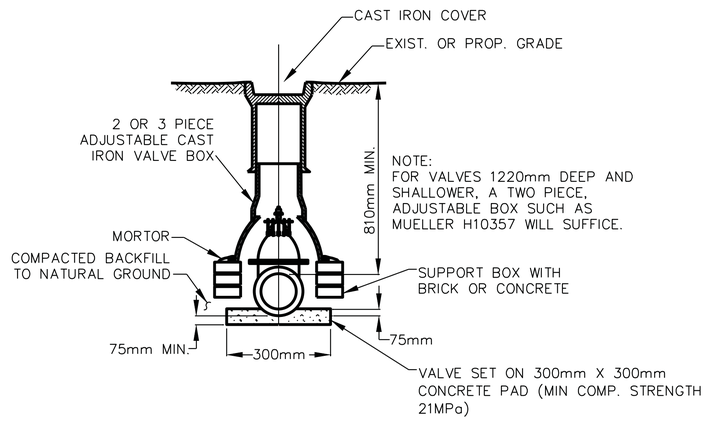

VALVE BOX INSTALLATION

N.T.S.

US Army Corps of Engineers
Afghanistan Engineer District

SYMBOL	DESCRIPTION	DATE	APR

DESIGNED BY: BAKER
DWN BY: JDS
CHK BY: GPH
DATE: 09-30-09
SUBMITTED BY: BAKER
FILE NO.: ANPSDG-BS-TTLE

AFGHAN NATIONAL POLICE
STANDARD DESIGN
SITE DETAILS
CIVIL DETAILS

SHEET REFERENCE NUMBER:
C1

100% SUBMISSION

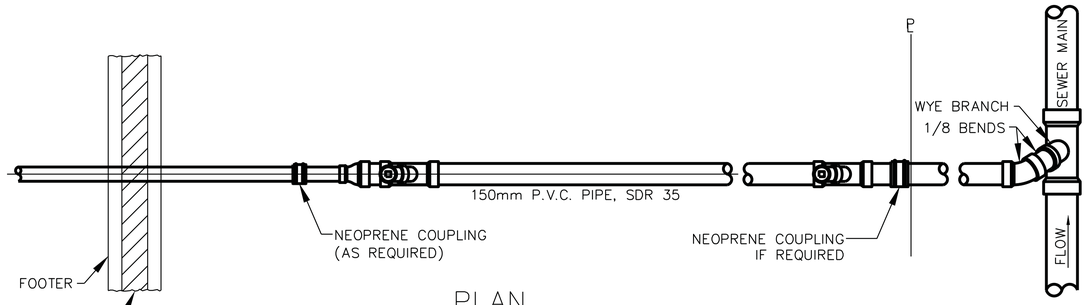

PLAN

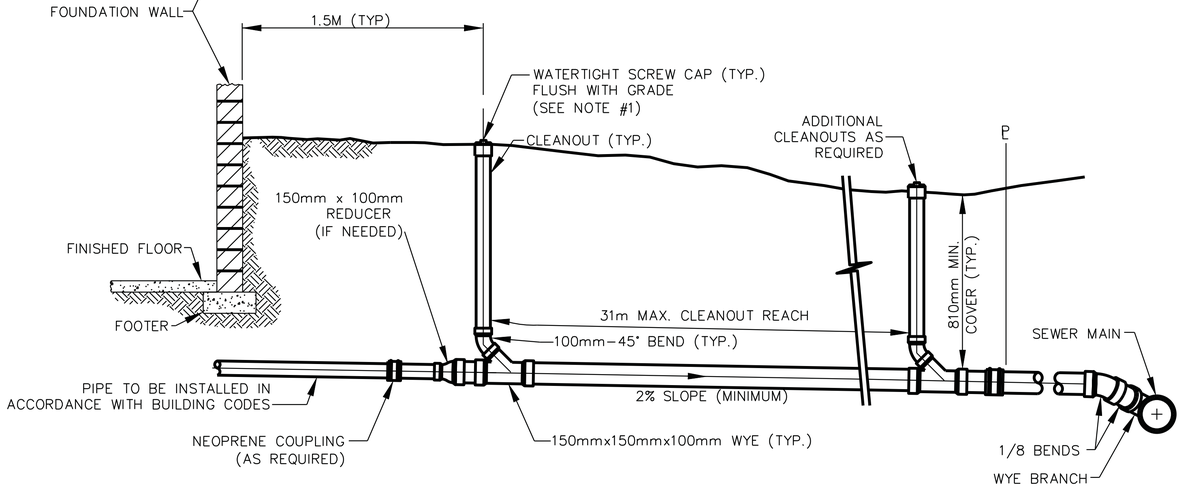

PROFILE

NOTES:

1. PLUGS AND CLEANOUT RISERS SHALL BE PVC IF LOCATED OUTSIDE OF PAVED AREAS, AND SHALL BE CAST IRON IF LOCATED WITHIN PAVED AREAS.
2. A TEE MUST BE PROVIDED FOR AIR TESTING OF THE LATERAL.
3. NO STORM WATER PIPING MAY BE CONNECTED TO THE LATERAL.

SANITARY SEWER – BUILDING SERVICE LATERAL

N.T.S.

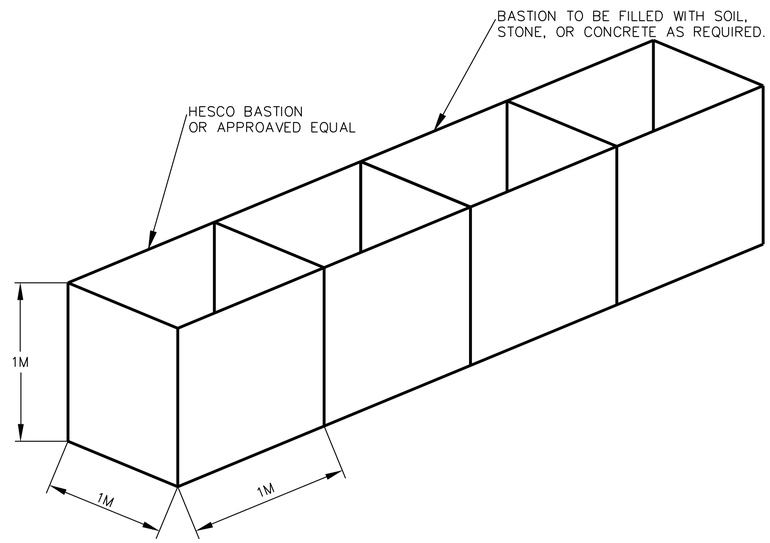

PASSIVE BARRIER

N.T.S.

US Army Corps of Engineers

Afghanistan Engineer District

SYMBOL	DESCRIPTION	DATE	APR

DESIGNED BY: BAKER
DWN BY: JDS
CHK BY: GPH
DATE: 09-30-09
SUBMITTED BY: BAKER
FILE NO.: ANPSDG-BS-TTLE

AFGHAN NATIONAL POLICE
STANDARD DESIGN
SITE DETAILS

CIVIL DETAILS

SHEET REFERENCE NUMBER:

C2

100% SUBMISSION

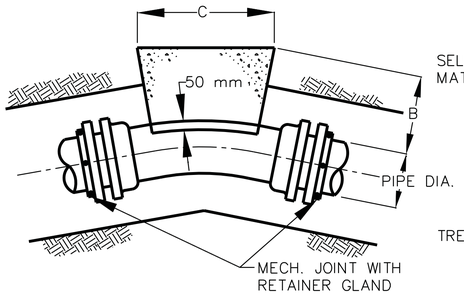

PLAN

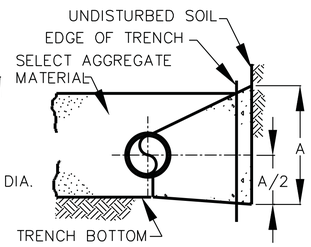

SECTION

	PIPE DIAMETER			
	100&150	200	250	300
A	510	560	610	660
B	300	300	355	380
C	300	400	480	530

WRAP FITTINGS & JOINT WITH TAR PAPER PRIOR TO POURING CONCRETE

CONCRETE ANCHORS FOR HORIZONTAL 22-1/2° & 11-1/4° BENDS

N.T.S.

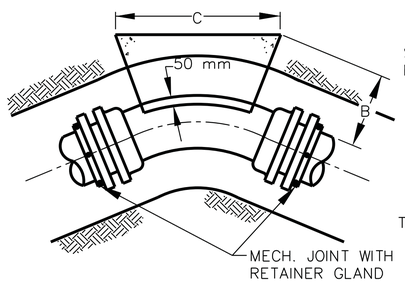

PLAN

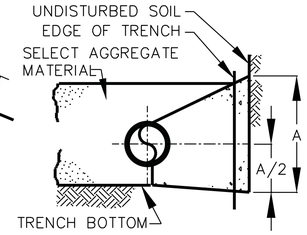

SECTION

	PIPE DIAMETER			
	100&150	200	250	300
A	460	530	610	710
B	300	300	355	380
C	380	510	640	710

WRAP FITTINGS & JOINT WITH TAR PAPER PRIOR TO POURING CONCRETE

CONCRETE ANCHORS FOR HORIZONTAL 45° BENDS

N.T.S.

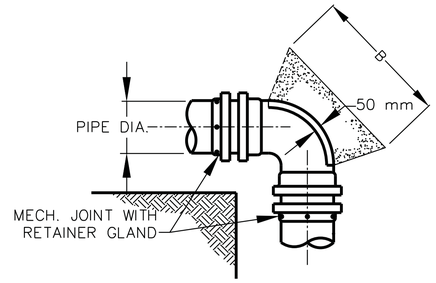

PLAN

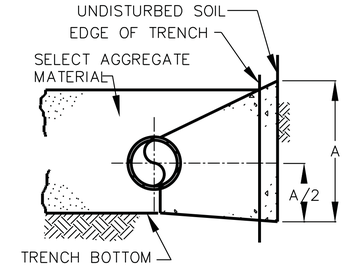

SECTION

	PIPE DIAMETER			
	100&150	200	250	300
A	460	610	710	920
B	610	710	710	920

WRAP FITTINGS & JOINT WITH TAR PAPER PRIOR TO POURING CONCRETE

CONCRETE ANCHORS FOR HORIZONTAL 90° BENDS

N.T.S.

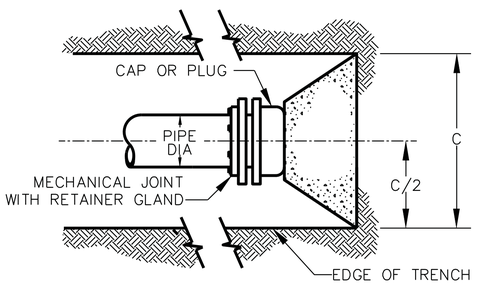

PLAN

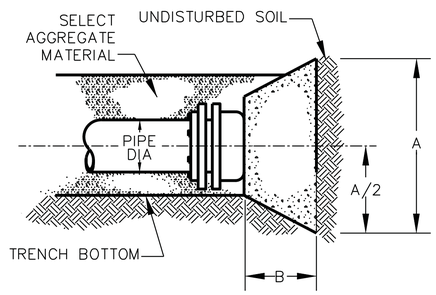

ELEVATION

	PIPE DIAMETER			
	100&150	200	250	300
A	460	610	760	760
B	300	380	460	460
C	460	610	1000	1000

WRAP FITTINGS & JOINT WITH TAR PAPER PRIOR TO POURING CONCRETE

CONCRETE ANCHORS FOR DEAD ENDS

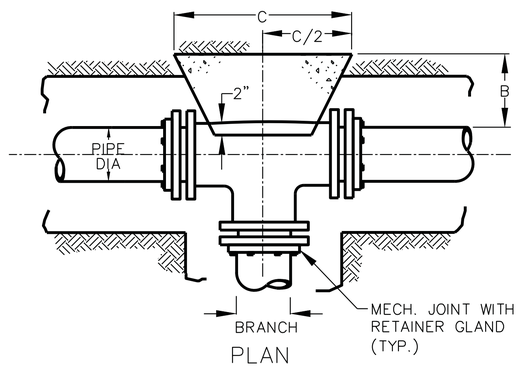

PLAN

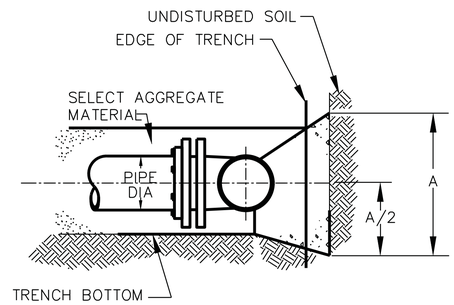

ELEVATION

	PIPE DIAMETER			
	100&150	200	250	300
A	460	610	760	920
B	300	380	380	380
C	460	610	760	920

WRAP FITTINGS & JOINT WITH TAR PAPER PRIOR TO POURING CONCRETE

D = APPROX. VOLUME OF CONC. IN C.Y.

CONCRETE ANCHORS FOR TEES

N.T.S.

NOTES:
1. ALL UNITS IN MILLIMETERS UNLESS OTHERWISE SPECIFIED.
2. THRUST BLOCK SIZES SHOWN ARE BASED ON 1034 KPa WATER PRESSURE AND 120 KPA UNDISTURBED SOIL BEARING.

US Army Corps of Engineers
Afghanistan Engineer District

SYMBOL	DESCRIPTION	DATE	APR

DESIGNED BY: BAKER
DWN BY: JDS
CHK BY: GPH
DATE: 09-30-09
SUBMITTED BY: BAKER
FILE NO.: ANPSDG-BS-TTLE

AFGHAN NATIONAL POLICE
STANDARD DESIGN
SITE DETAILS
CIVIL DETAILS

SHEET REFERENCE NUMBER:
C3

100% SUBMISSION

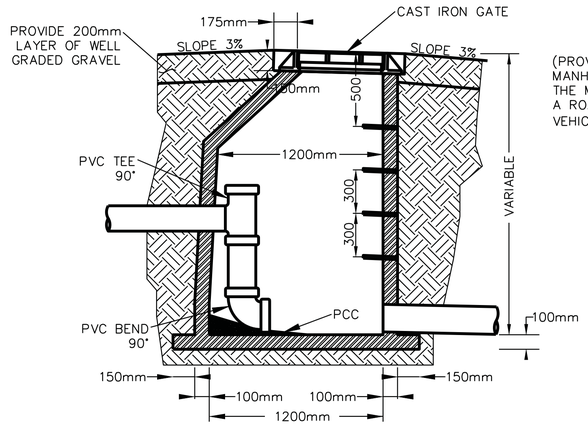

(PROVIDE A VEHICLE RATED MANHOLE COVER WHENEVER THE MANHOLE IS PLACED IN A ROADWAY OR SUBJECT TO VEHICULAR TRAFFIC.)

SEWER DROP MANHOLE
N.T.S.

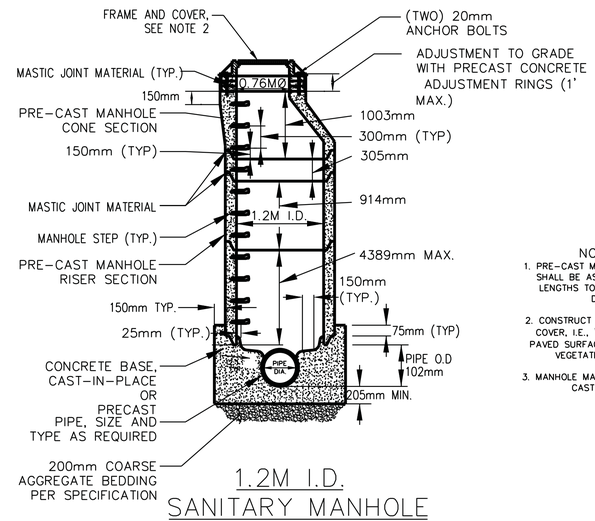

NOTES:
1. PRE-CAST MANHOLE SECTIONS SHALL BE ASTM C-478. VARY LENGTHS TO OBTAIN DESIRED DEPTH.
2. CONSTRUCT TOP OF MANHOLE COVER, I.E., "T/C" FLUSH WITH PAVED SURFACES AND 6" ABOVE VEGETATED SURFACES.
3. MANHOLE MAY BE PRECAST OR CAST IN PLACE

1.2M I.D. SANITARY MANHOLE
NTS

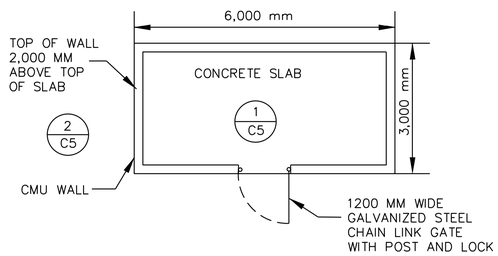

NOTES: 1) THE CMU WALLS SHALL RECEIVE STUCCO ON BOTH SIDES AND TOP.
2) PROPANE STORAGE AREA TO BE LOCATED NO LESS THAN 6.1 METERS FROM ANY STRUCTURE.

PROPANE STORAGE
N.T.S.

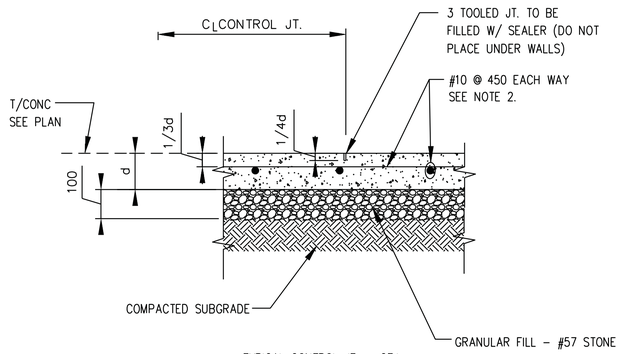

TYPICAL CONTROL JT. = CTJ

NOTE:
1. d = SLAB THICKNESS (SEE PLAN)
2. STOP 2/3 OF BARS 25MM BACK FROM EA. SIDE OF JOINT.
3. TOOL SLAB JOINTS AS SOON AS CONCRETE WILL SUPPORT EQUIPMENT AND NOT MORE THAN (4) HOURS AFTER PLACEMENT.

1 / C5 C5 **SECTION**
SCALE: NTS
CONTROL JOINT DETAIL

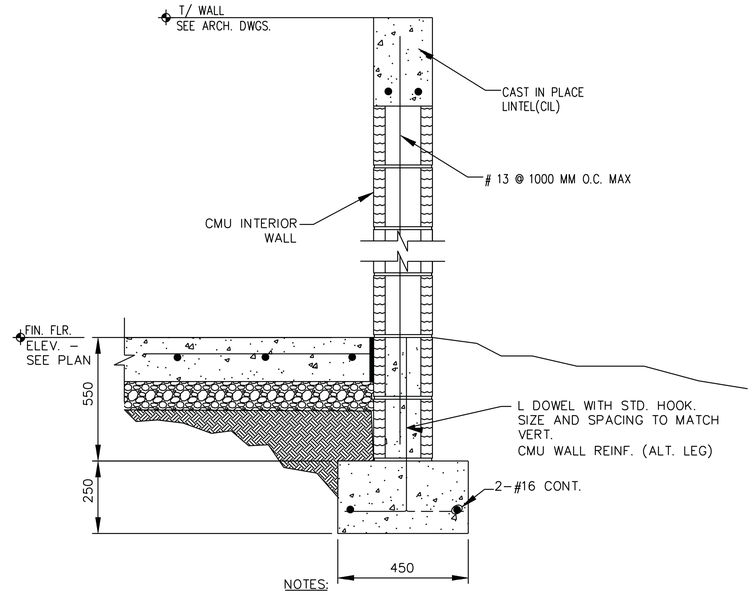

NOTES:
1. VERT. CMU WALL REINF. NOT SHOWN FOR CLARITY.
2. REQUIRED AT INTERIOR CMU WALL LENGTHS THAT EXCEED 3600mm BETWEEN OPPOSING CMU WALLS THAT ARE TIED.

2 / C5 C5 **SECTION**
SCALE: NTS

US Army Corps of Engineers
Afghanistan Engineer District

SYMBOL	DESCRIPTION	DATE	APR

DESIGNED BY: BAKER
DWN BY: JDS
CHK BY: GPH
DATE: 09-30-09
SUBMITTED BY: BAKER
FILE NO.: ANPSDG-BS-TTLE

AFGHAN NATIONAL POLICE
STANDARD DESIGN
SITE DETAILS
CIVIL DETAILS

SHEET REFERENCE NUMBER:
C4

100% SUBMISSION