# AFGHAN NATIONAL POLICE

## STANDARD BUILDING DESIGNS

### SITE DETAILS

SHEET INDEX


G1 COVER SHEET

C1 CIVIL DETAILS
C2 CIVIL DETAILS
C3 CIVIL DETAILS
C4 CIVIL DETAILS
C5 CIVIL DETAILS


US Army Corps of Engineers

Afghanistan Engineer District

| SYMBOL | DESCRIPTION | DATE | APR |
|---|---|---|---|

DESIGNED BY: JDS
DATE: 09-30-09
DWN BY: JDS
SUBMITTED BY: BAKER
CHK BY: JDS
FILE NO.: ANPSDG-BS-TTLE

AFGHAN NATIONAL POLICE
STANDARD DESIGN
SITE DETAILS

**COVER SHEET**

SHEET REFERENCE NUMBER:

**G1**

**100% SUBMISSION**

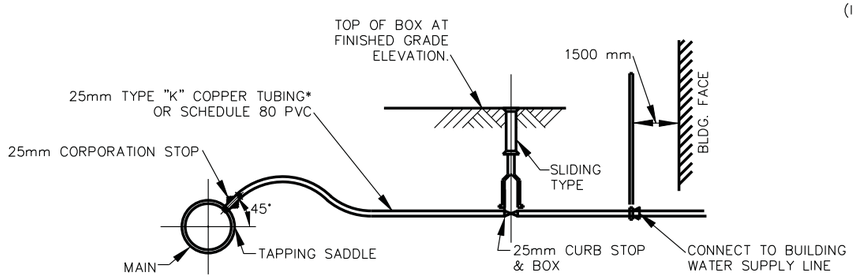


*DETAIL TYPICAL FOR 20mm THRU 50mm CONNECTIONS, SIZE OF COPORATION STOP, TUBING AND CURB STOP SHALL BE SIZED ACCORDINGLY. BLOWOFF VALVES LOCATED AT DEAD ENDS OF WATER MAINS SHALL CONSIST OF 50mm CONNECTION WITH TAP NEAR END OF PIPE, DISCHARGE TO SURFACE DRAINAGE. AND ANTI FREEZING PROVISIONS WHERE APPLICABLE.

## WATER SERVICE CONNECTION DETAIL

N.T.S.

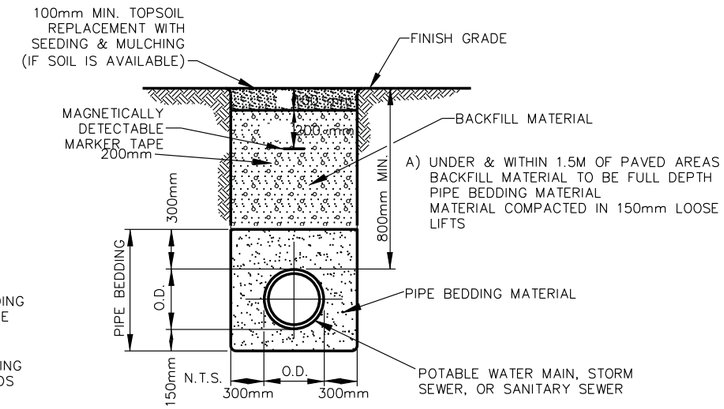


## TYPICAL TRENCH DETAIL

N.T.S.

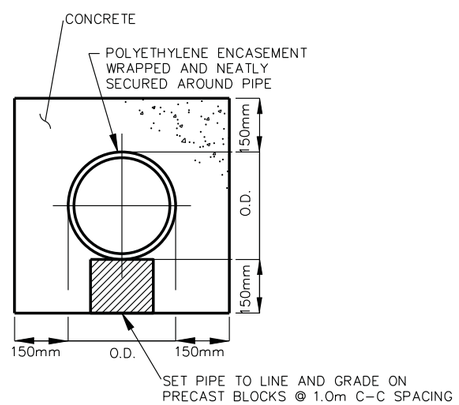


NOTE: REQUIRED FOR ROAD CROSSINGS WITH LESS THAN 1.2m COVER OR WHERE SANITARY AND WATER MAIN SEPARATION CANNOT BE MET.

## PIPE CONCRETE ENCASEMENT DETAIL

N.T.S.

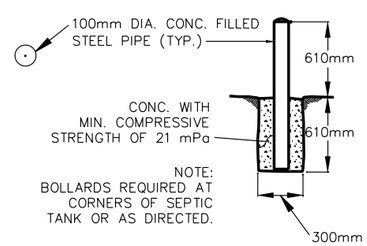


## TYPICAL BOLLARDS

N.T.S.

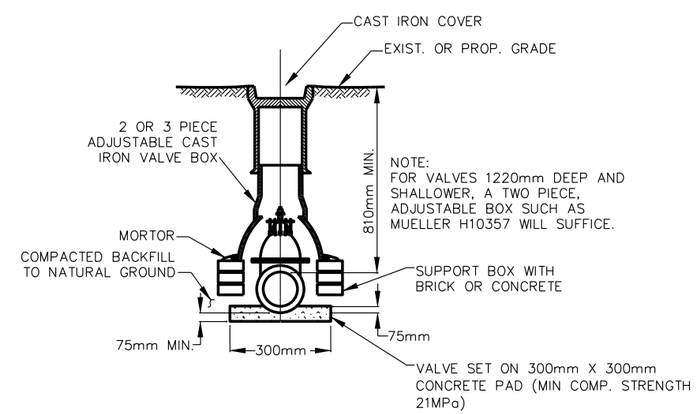


## VALVE BOX INSTALLATION

N.T.S.

US Army Corps of Engineers

Afghanistan Engineer District

| SYMBOL | DESCRIPTION | DATE | APR |
|---|---|---|---|

DESIGNED BY: BAKER
DATE: 09-30-09
DWN BY: JDS
SUBMITTED BY: BAKER
CHK BY: GPH
FILE NO.: ANPSDG-BS-TTLE

AFGHAN NATIONAL POLICE
STANDARD DESIGN
SITE DETAILS

**CIVIL DETAILS**

SHEET REFERENCE NUMBER:

**C1**

**100% SUBMISSION**

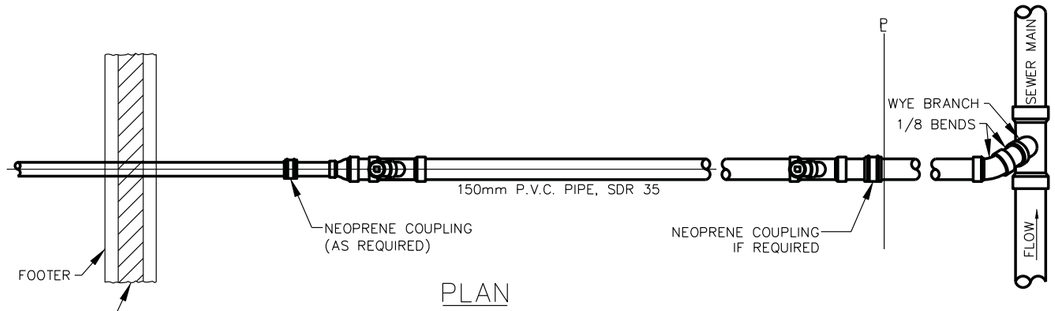


PLAN

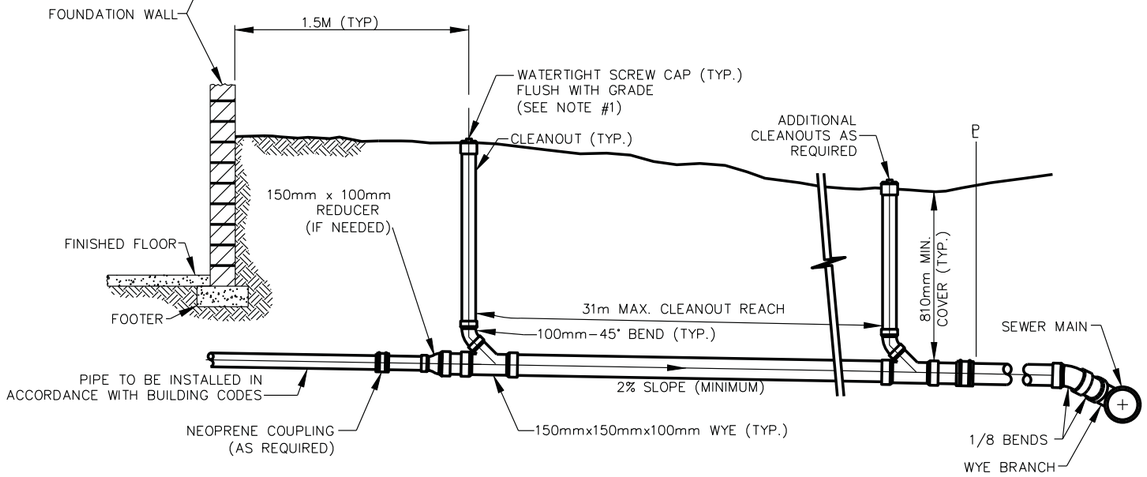


PROFILE

NOTES:

1. PLUGS AND CLEANOUT RISERS SHALL BE PVC IF LOCATED OUTSIDE OF PAVED AREAS, AND SHALL BE CAST IRON IF LOCATED WITHIN PAVED AREAS.
2. A TEE MUST BE PROVIDED FOR AIR TESTING OF THE LATERAL.
3. NO STORM WATER PIPING MAY BE CONNECTED TO THE LATERAL.

## SANITARY SEWER – BUILDING SERVICE LATERAL

N.T.S.

US Army Corps of Engineers

Afghanistan Engineer District

| SYMBOL | DESCRIPTION | DATE | APR |
|---|---|---|---|

| | | |
|---|---|---|
| DESIGNED BY: BAKER | DATE: 09-30-09 | |
| DWN BY: JDS | SUBMITTED BY: BAKER | |
| CHK BY: GPH | FILE NO.: ANPSDG-BS-TTLE | |

AFGHAN NATIONAL POLICE
STANDARD DESIGN
SITE DETAILS

**CIVIL DETAILS**

SHEET REFERENCE NUMBER:

**C2**

**100% SUBMISSION**

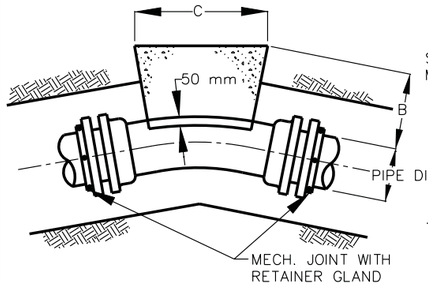


PLAN

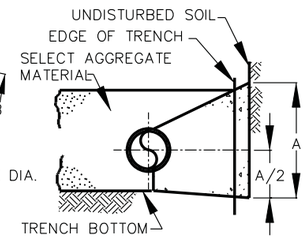


SECTION

| | PIPE DIAMETER | | | |
|---|---|---|---|---|
| | 100&150 | 200 | 250 | 300 |
| A | 510 | 560 | 610 | 660 |
| B | 300 | 300 | 355 | 380 |
| C | 300 | 400 | 480 | 530 |

WRAP FITTINGS & JOINT WITH TAR PAPER PRIOR TO POURING CONCRETE

## CONCRETE ANCHORS FOR HORIZONTAL 22-1/2° & 11-1/4° BENDS

N.T.S.

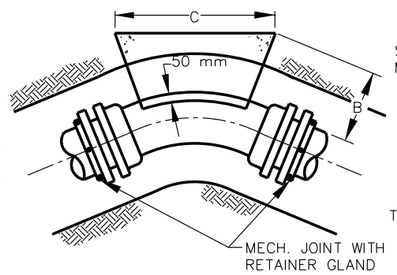


PLAN

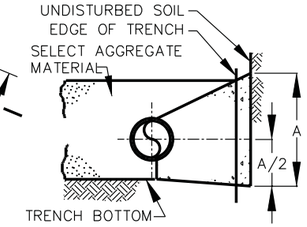


SECTION

| | PIPE DIAMETER | | | |
|---|---|---|---|---|
| | 100&150 | 200 | 250 | 300 |
| A | 460 | 530 | 610 | 710 |
| B | 300 | 300 | 355 | 380 |
| C | 380 | 510 | 640 | 710 |

WRAP FITTINGS & JOINT WITH TAR PAPER PRIOR TO POURING CONCRETE

## CONCRETE ANCHORS FOR HORIZONTAL 45° BENDS

N.T.S.

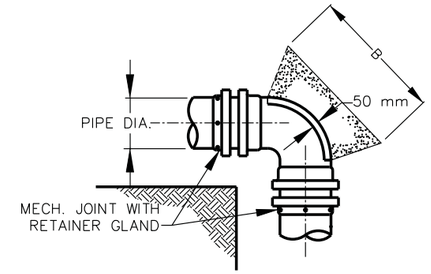


PLAN

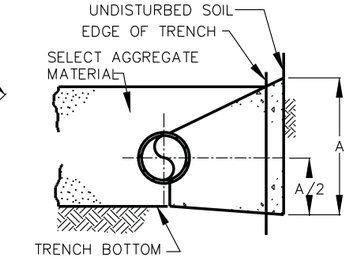


SECTION

| | PIPE DIAMETER | | | |
|---|---|---|---|---|
| | 100&150 | 200 | 250 | 300 |
| A | 460 | 610 | 710 | 920 |
| B | 610 | 710 | 710 | 920 |

WRAP FITTINGS & JOINT WITH TAR PAPER PRIOR TO POURING CONCRETE

## CONCRETE ANCHORS FOR HORIZONTAL 90° BENDS

N.T.S.

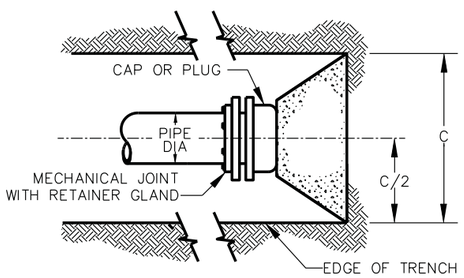


PLAN

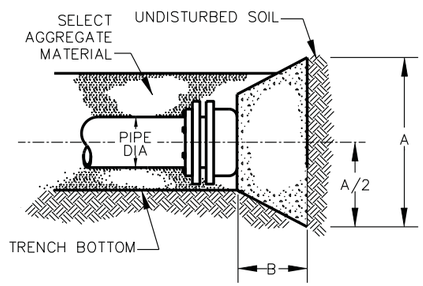


ELEVATION

| | PIPE DIAMETER | | | |
|---|---|---|---|---|
| | 100&150 | 200 | 250 | 300 |
| A | 460 | 610 | 760 | 760 |
| B | 300 | 380 | 460 | 460 |
| C | 460 | 610 | 1000 | 1000 |

WRAP FITTINGS & JOINT WITH TAR PAPER PRIOR TO POURING CONCRETE

## CONCRETE ANCHORS FOR DEAD ENDS

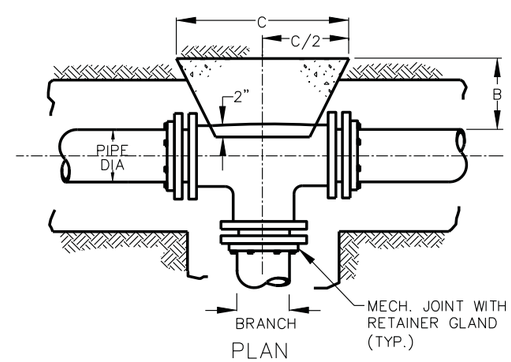


PLAN

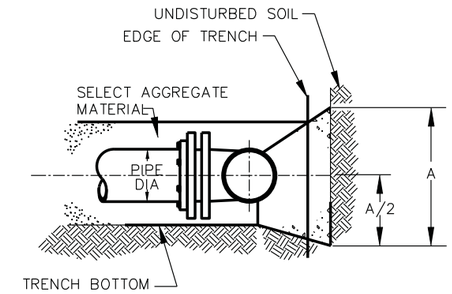


ELEVATION

| | PIPE DIAMETER | | | |
|---|---|---|---|---|
| | 100&150 | 200 | 250 | 300 |
| A | 460 | 610 | 760 | 920 |
| B | 300 | 380 | 380 | 380 |
| C | 460 | 610 | 760 | 920 |

WRAP FITTINGS & JOINT WITH TAR PAPER PRIOR TO POURING CONCRETE

D = APPROX. VOLUME OF CONC. IN C.Y.

## CONCRETE ANCHORS FOR TEES

N.T.S.

NOTES:
1. ALL UNITS IN MILLIMETERS UNLESS OTHERWISE SPECIFIED.
2. THRUST BLOCK SIZES SHOWN ARE BASED ON 1034 KPa WATER PRESSURE AND 120 KPA UNDISTURBED SOIL BEARING.

US Army Corps of Engineers
Afghanistan Engineer District

| SYMBOL | DESCRIPTION | DATE | APR |
|---|---|---|---|

DESIGNED BY: BAKER
DATE: 09-30-09
DWN BY: JDS
SUBMITTED BY: BAKER
CHK BY: GPH
FILE NO.: ANPSDG-BS-TTLE

AFGHAN NATIONAL POLICE
STANDARD DESIGN
SITE DETAILS
**CIVIL DETAILS**

SHEET REFERENCE NUMBER:
**C3**

**100% SUBMISSION**

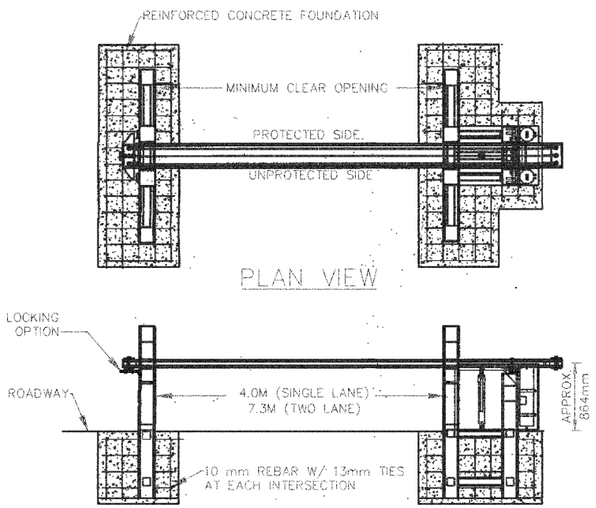


FRONT VIEW
MANUAL BEAM BARRIER
N.T.S.

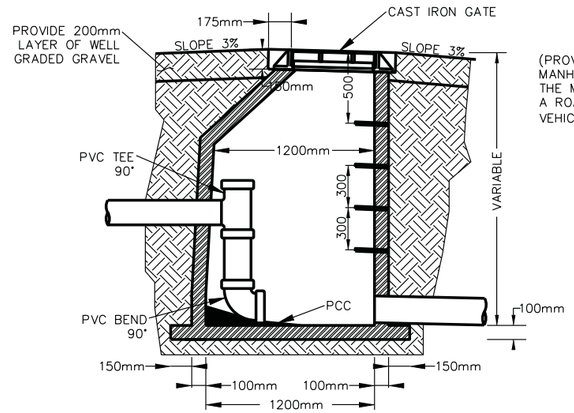


(PROVIDE A VEHICLE RATED MANHOLE COVER WHENEVER THE MANHOLE IS PLACED IN A ROADWAY OR SUBJECT TO VEHICULAR TRAFFIC.)

SEWER DROP MANHOLE
N.T.S.

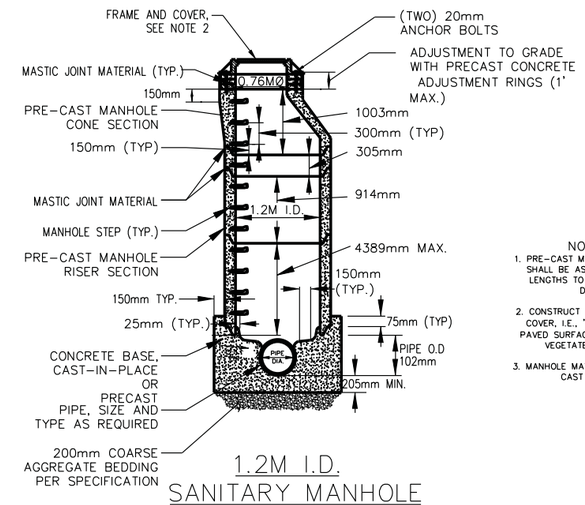


1.2M I.D.
SANITARY MANHOLE
NTS

NOTES:
1. PRE-CAST MANHOLE SECTIONS SHALL BE ASTM C-478. VARY LENGTHS TO OBTAIN DESIRED DEPTH.
2. CONSTRUCT TOP OF MANHOLE COVER, I.E., "T/C" FLUSH WITH PAVED SURFACES AND 6" ABOVE VEGETATED SURFACES.
3. MANHOLE MAY BE PRECAST OR CAST IN PLACE

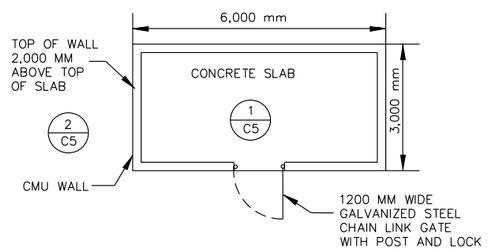


NOTES: 1) THE CMU WALLS SHALL RECEIVE STUCCO ON BOTH SIDES AND TOP.
2) PROPANE STORAGE AREA TO BE LOCATED NO LESS THAN 6.1 METERS FROM ANY STRUCTURE.

PROPANE STORAGE
N.T.S.

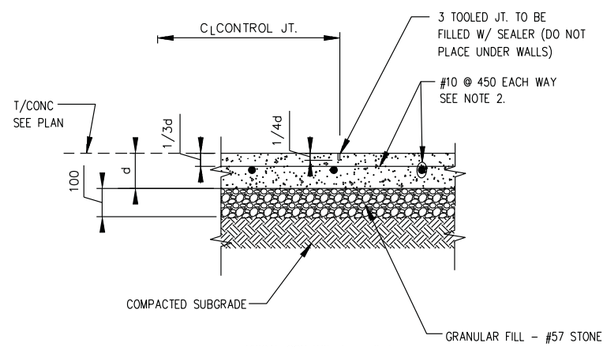


TYPICAL CONTROL JT. = CTJ

NOTE:
1. d = SLAB THICKNESS (SEE PLAN)
2. STOP 2/3 OF BARS 25MM BACK FROM EA. SIDE OF JOINT.
3. TOOL SLAB JOINTS AS SOON AS CONCRETE WILL SUPPORT EQUIPMENT AND NOT MORE THAN (4) HOURS AFTER PLACEMENT.

1 / C5 C5 **SECTION**
**SCALE: NTS**
**CONTROL JOINT DETAIL**

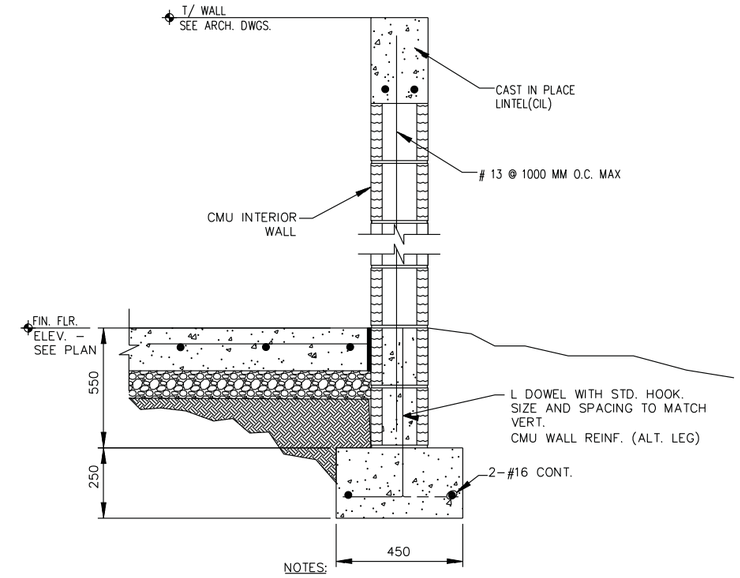


NOTES:
1. VERT. CMU WALL REINF. NOT SHOWN FOR CLARITY.
2. REQUIRED AT INTERIOR CMU WALL LENGTHS THAT EXCEED 3600mm BETWEEN OPPOSING CMU WALLS THAT ARE TIED.

2 / C5 C5 **SECTION**
**SCALE: NTS**

US Army Corps of Engineers
Afghanistan Engineer District

| SYMBOL | DESCRIPTION | DATE | APR |
|---|---|---|---|

DESIGNED BY: BAKER
DATE: 09-30-09
DWN BY: JDS
SUBMITTED BY: BAKER
CHK BY: GPH
FILE NO.: ANPSDG-BS-TTLE

AFGHAN NATIONAL POLICE
STANDARD DESIGN
SITE DETAILS
**CIVIL DETAILS**

SHEET REFERENCE NUMBER:
**C4**

**100% SUBMISSION**

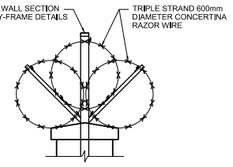


1A OPTIONAL CONCERTINA
SCALE: 1:25

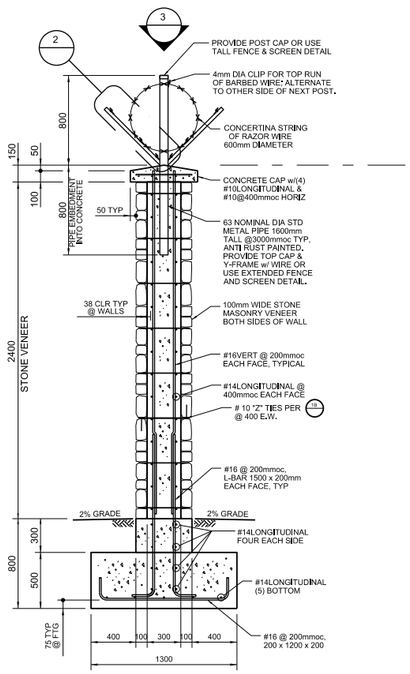


NOTE: IF PROPER GROUTING AND CONSTRUCTION TECHNIQUES ARE USED THE STONE VENEER FACES MAY BE USED TO FORM THE 300 CONCRETE WALL

1 STONE VENEER WALL SECTION
SCALE: 1:25

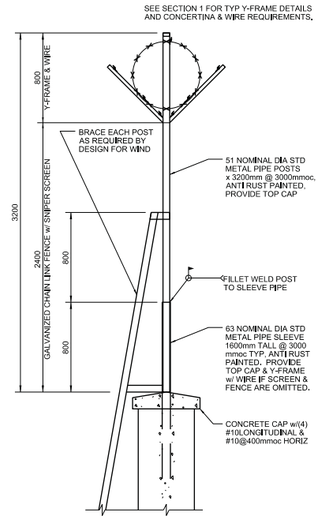


1B OPTIONAL SNIPER SCREEN
SCALE: 1:25

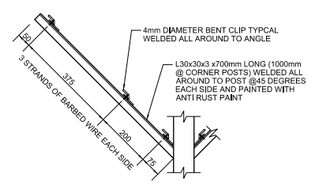


2 Y-FRAME ENLARGED DETAIL
SCALE: 1:10

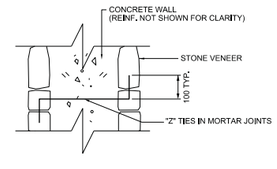


1B PLAN "Z"-TIES
SCALE: N.T.S.

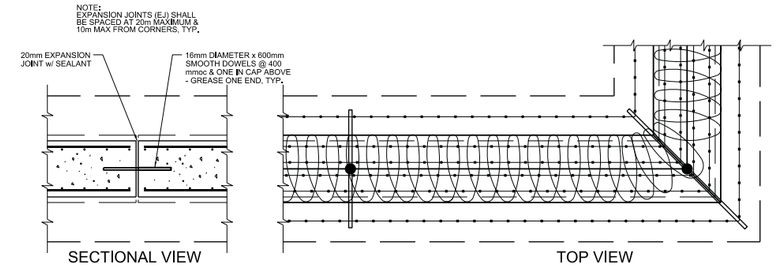


3 EXPANSION JOINT DETAIL AND WALL CORNER PLAN
SCALE: 1:25

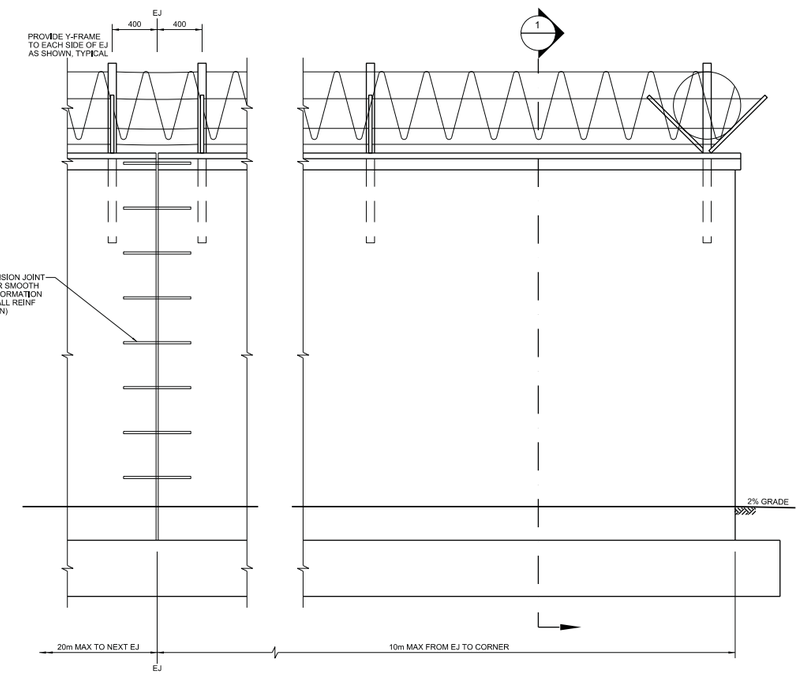


4 WALL ELEVATION SHOWING EXPANSION JOINT & CORNER
SCALE: 1:25

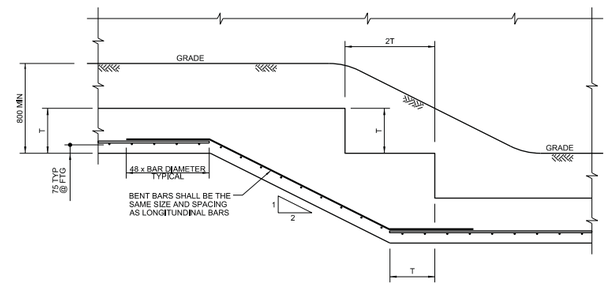


5 STEP FOOTING DETAIL AS REQUIRED FOR GRADE CHANGES
NO SCALE

US ARMY CORPS OF ENGINEERS AFGHANISTAN ENGINEER DISTRICT

| SYMBOL | DESCRIPTION | DATE | APPR. | SYMBOL | DESCRIPTION | DATE | APPR. |
|---|---|---|---|---|---|---|---|

DESIGNED BY: DATE: XX-XX-XX REV. ___
DWN BY: CAD BY: DESIGN FILE NO.
REVIEWED BY: DRAWING CODE:
SUBMITTED BY: FILE NAME: PLOT SCALE: PLOT DATE: XX-XX-XX

U.S. ARMY ENGINEER DISTRICT, AFGHANISTAN
CORPS OF ENGINEERS
APO AE 96338

ENGINEERING AND CONSTRUCTION DIVISION

PERIMETER WALL STANDARDS
AFGHANISTAN
2.4 METER - WALLS

SHEET REFERENCE NUMBER:
C5