NOTE

1- ALL DIMENSIONS ARE IN MM UNLESS OTHERWISE SPECIFIED.
2- ALL LEVELS ARE IN METER (M) UNLESS OTHERWISE SPECIFIED
3- ALL WALLS ARE 200MM CONCRETE MASONRY UNIT(CMU)
4- EXTERIOR WALLS TO BE COLORED STUCCO
5-ALL ROOF ARE 24G GALVANIZED SHEETS
6-FOR DOORS SCHEDULE SEE DWG# (5800-A-01,02)
7-FOR WINDOWS SCHEDULE SEE DWG# (5800-A-03)
8-IN WET AREAS MOISTURE RESISTENCE GYPSUM BOARD SHOULD BE USED
9-FOR AIR HOOD SEE DWG# (CO-S-15)

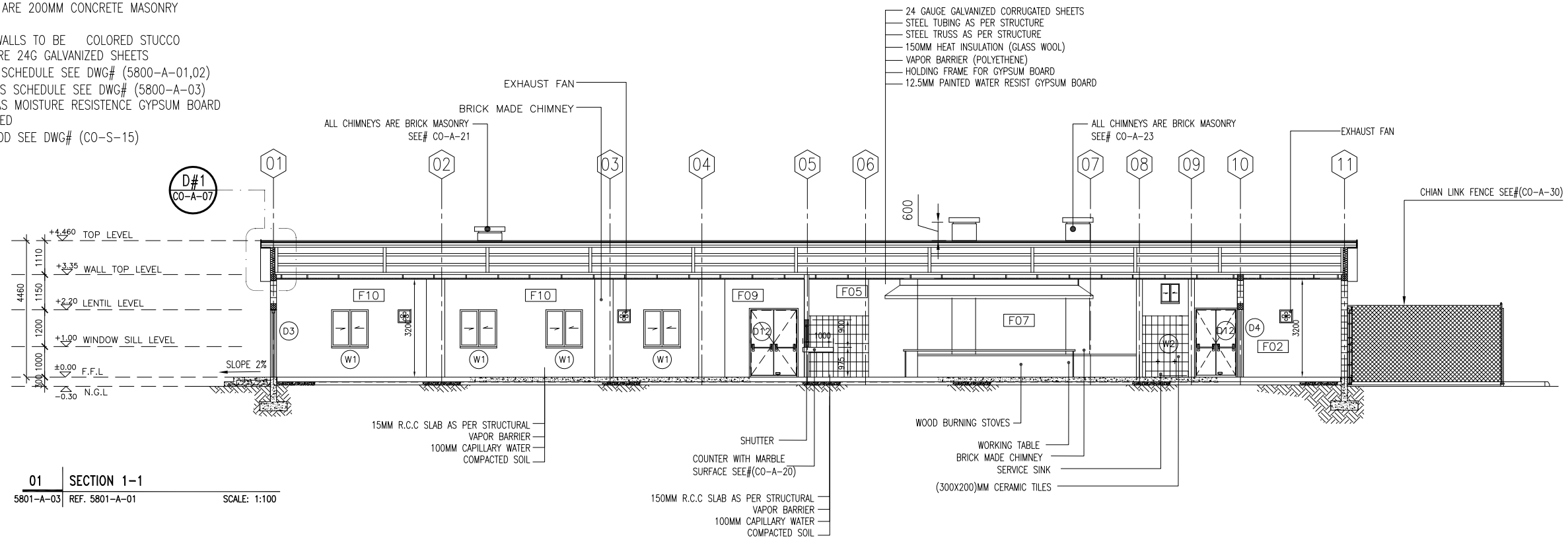

01 SECTION 1-1
5801-A-03 REF. 5801-A-01 SCALE: 1:100

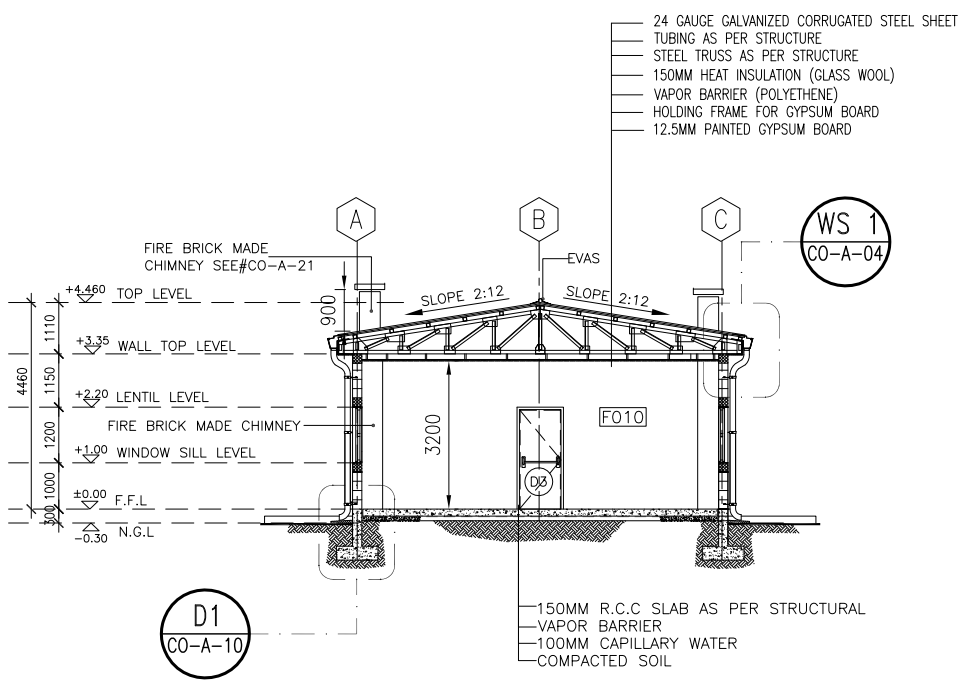

02 SECTION 2-2
5801-A-03 REF. 5801-A-01 SCALE: 1:100

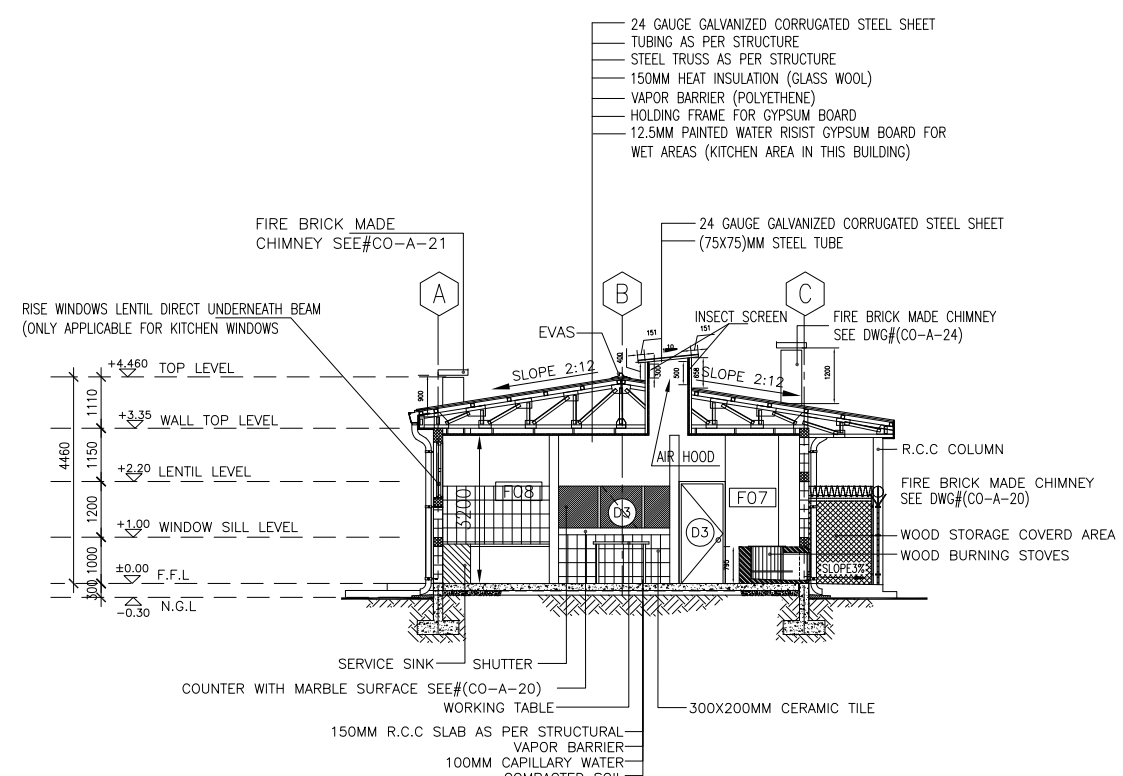

03 SECTION 3-3
5801-A-03 REF. 5801-A-01 SCALE: 1:100

1 0 1 2 3 4 5 6 7 8 9
1:75

US ARMY CORPS OF ENGINEERS AFGHANISTAN ENGINEER DISTRICT

Symbol	Description	Date	Description	DATE	Appr.

Designed BY: | Drawn BY: | Contract Date:
Reviewed by: | Draw Code: | FILE NAME:
Submitted by: | Plot Date: | Plot Scale:
Solicitation No: | Contract No:

DEPARTMENT OF THE ARMY
U.S ARMY CORPS OF ENGEERS
AFGHANISTAN ENGINEERS SOUTH
KANDAHAR, AFGHANISTAN
Contractor:
Designer :

DINING FACILITY BUILDING#(5801)
SECTION

SHEET REFERENCE NUMBER:
5801-A-03
58 OF 529

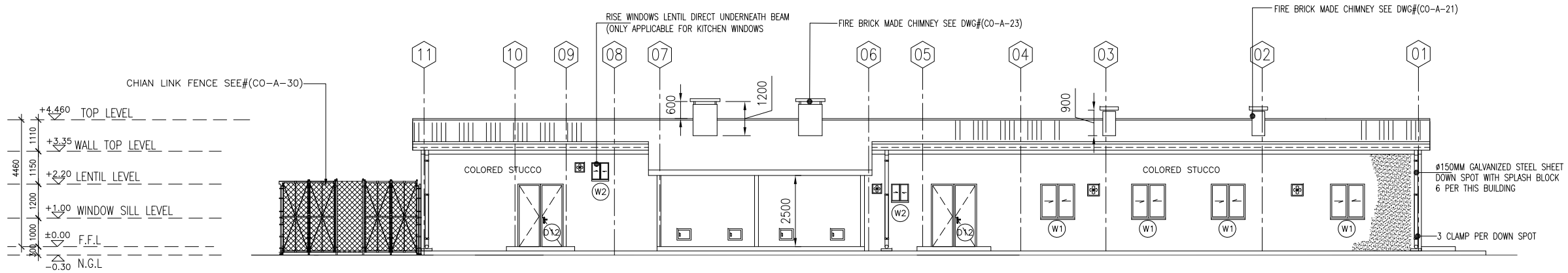

01 ELEVATION-A
5801-A-04 REF. SCALE: 1:100

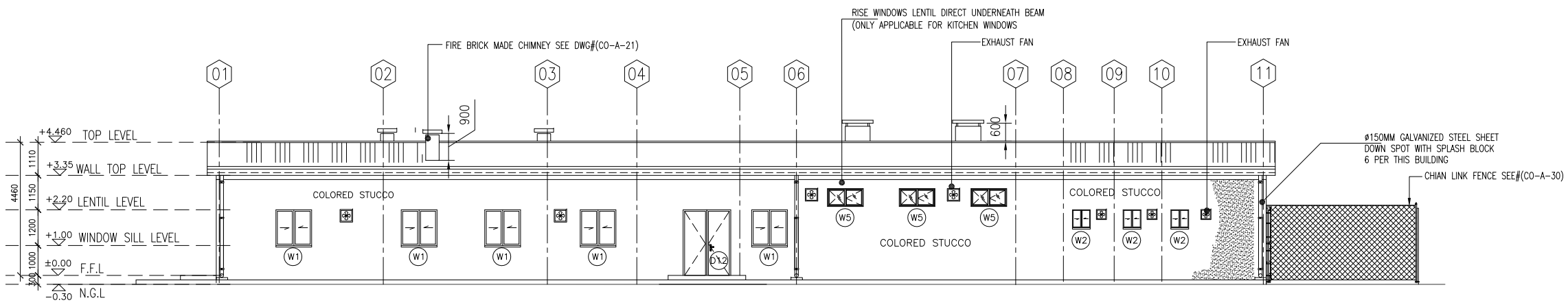

02 ELEVATION-C
5801-A-04 REF. SCALE: 1:100

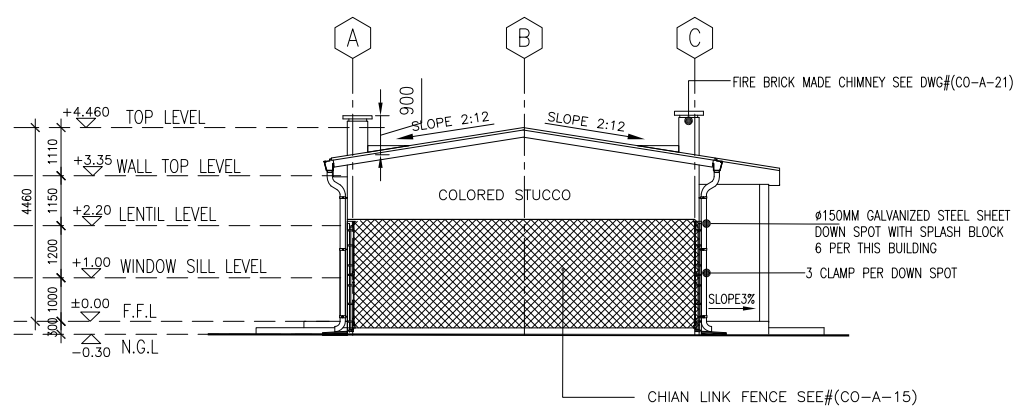

03 ELEVATION-B
5801-A-04 REF. SCALE: 1:100

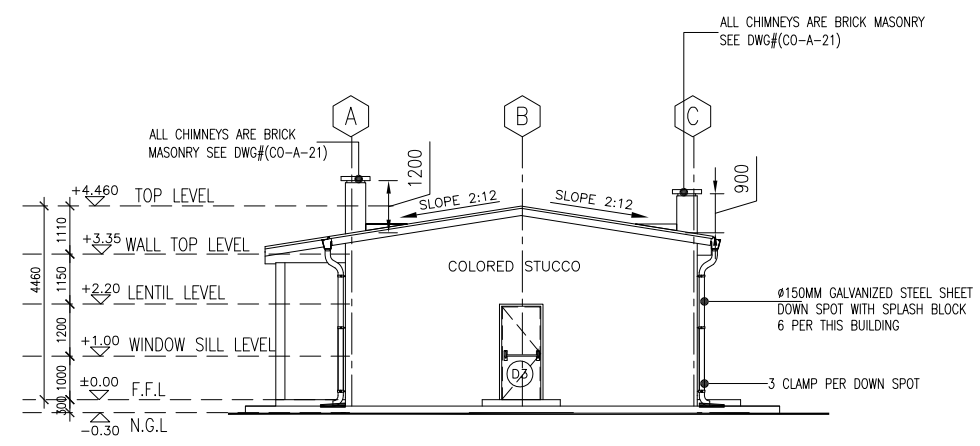

04 ELEVATION-D
5801-A-04 REF. SCALE: 1:100

1 0 1 2 3 4 5 6 7 8 9
1:100

US ARMY CORPS OF ENGINEERS
AFGHANISTAN ENGINEER DISTRICT

Symbol	Description	Date	Description	DATE	Appr.

Designed BY: | Drawn BY: | Contract Date:
Reviewed by: | Draw Code: | FILE NAME:
Submitted by: | Plot Date:
Plot Scale:
Solicitation No: | Contract No:
Contractor:
Designer :

DEPARTMENT OF THE ARMY
U.S ARMY CORPS OF ENGIEERS
AFGHANISTAN ENGINEERS SOUTH
KANDAHAR, AFGHANISTAN

DINING FACILITY BUILDING#(5801)
ELEVATIONS

SHEET REFERENCE NUMBER:
5801-A-04
59 OF 529

LEGEND:

1- ONE HOUR FIRE RATED WALL UP TO DECK LEVEL.
2- COMMON PATH OF TRAVEL
3- ISOLATED & ONE HOUR FIRE RATED (CERTIFIED BY MANUFACTURE) EXIT DOOR LOCATION
4- FAIRE EXTINGUISHER
5- EXIT SIGN
6-ONE HOUR FIRE RATED DOOR LOCATION (CERTIFIED BY MANUFACTURE)
7 -90 MINUTE FIRE RATED SHUTTER (CERTIFIED BY MANUFACTURE)
8 -2 HOURS FIRE RATED WALL BETWEEN THE KITCHEN AND DINNING HALL

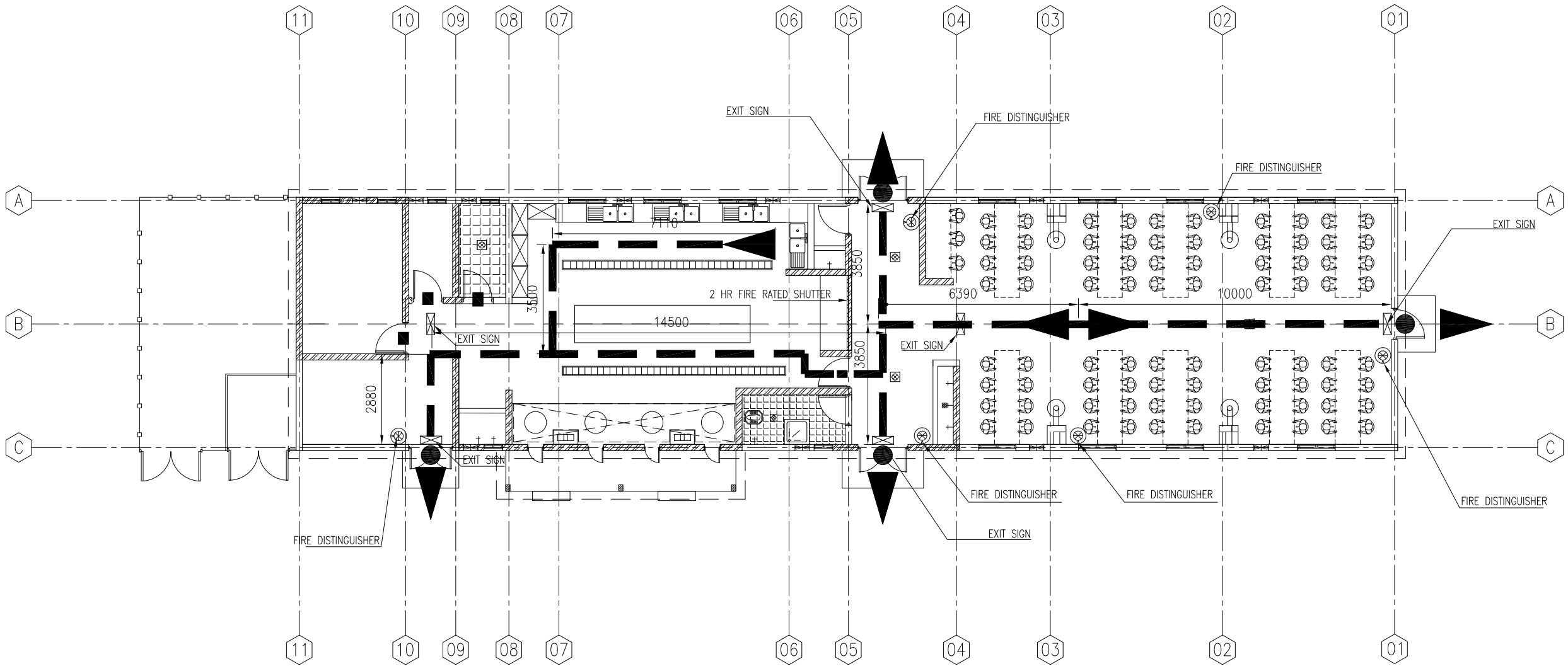

01 LIFE SAFTY PLAN
5801-A-05 REF. SCALE: 1:100

Notes

1- ALL DIMENSIONS ARE IN MM UNLESS OTHERWISE SPECIFIED.
2- ALL LEVELS ARE IN METER (M) UNLESS OTHERWISE SPECIFIED
3- ALL WALLS ARE 200MM CMU
4- EXTERIOR WALLS TO BE COLORED STUCCO
5-FOR ALL ROOFS STEEL TRUSS AND CORRUGATED IRON SHEET GAGE 24 CONSIDERED

1 0 1 2 3 4 5 6 7 8 9
1:100

US ARMY CORPS OF ENGINEERS AFGHANISTAN ENGINEER DISTRICT

Symbol	Description	Date	Description	DATE	Appr.

DEPARTMENT OF THE ARMY
U.S ARMY CORPS OF ENGEERS
AFGHANISTAN ENGINEERS SOUTH
KANDAHAR, AFGHANISTAN

Designed BY: | Drawn BY: | Contract Date:
Reviewed by: | Draw Code: | FILE NAME:
Submitted by: | Plot Date: | Plot Scale:
Solicitation No: | Contract No:
Contractor:
Designer :

DINING FACILITY BUILDING#(5801)
LIFE SAFTY PLAN

SHEET REFERENCE NUMBER:
5801-A-05
60 OF 529

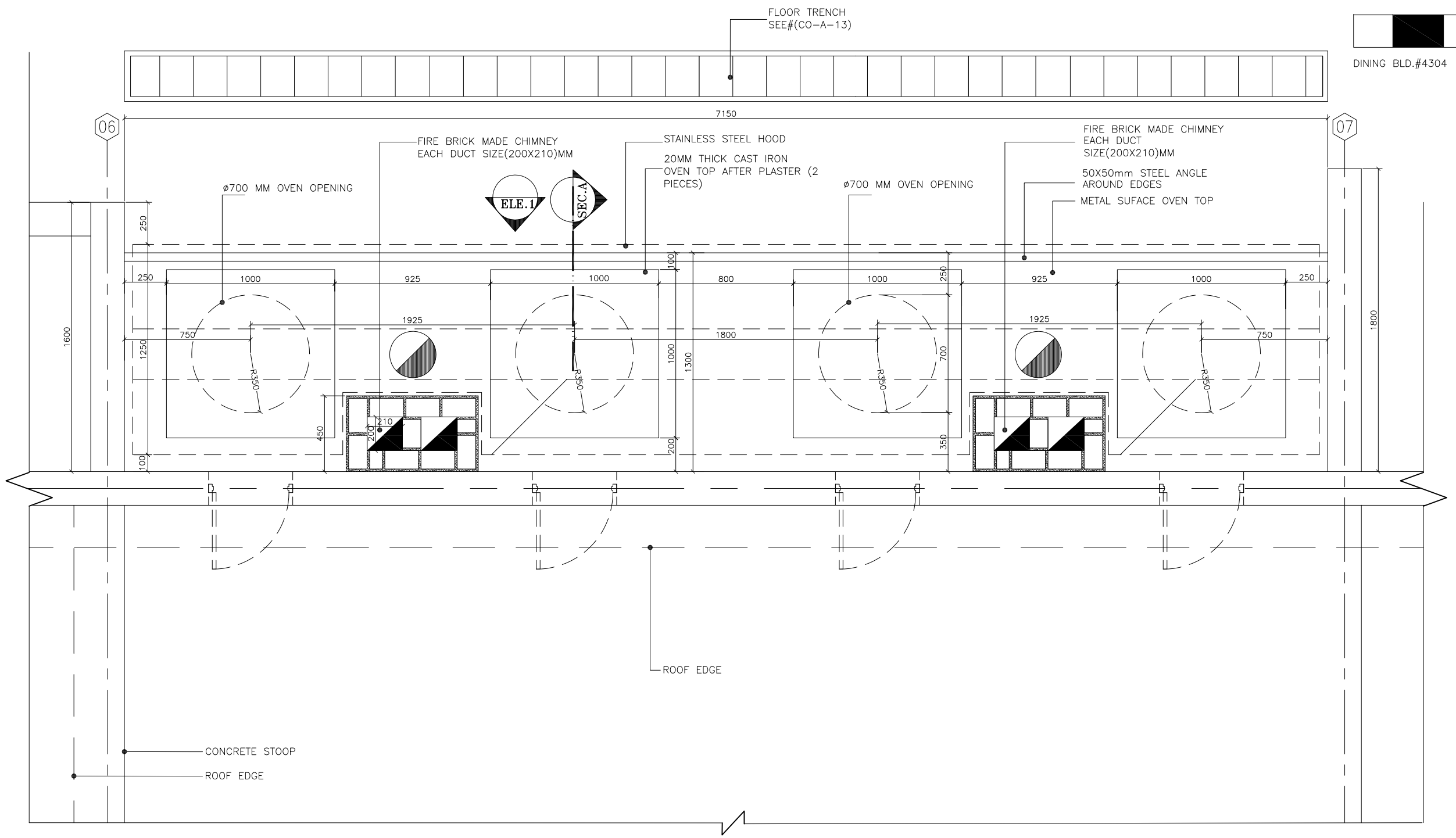

01 OVEN PLAN

5801-A-06 REF. 5801-A-01 SCALE: 1:15

US ARMY CORPS
OF ENGINEERS
AFGHANISTAN
ENGINEER DISTRICT

Symbol	Description	Date	Description	DATE	Appr.

DEPARTMENT OF THE ARMY
U.S ARMY CORPS OF ENGEERS
AFGHANISTAN ENGINEERS SOUTH
KANDAHAR, AFGHANISTAN

Designed BY: | Drawn BY: | Contract Date:
Reviewed by: | Draw Code: | FILE NAME:
Submitted by: | Plot Date:
Plot Scale:
Solicitation No: | Contract No:
Contractor:
Designer :

DINING FACILITY BUILDING#(5801)
OVEN ENLARGE PLAN

SHEET REFERENCE NUMBER:
5801-A-06
61 OF 529

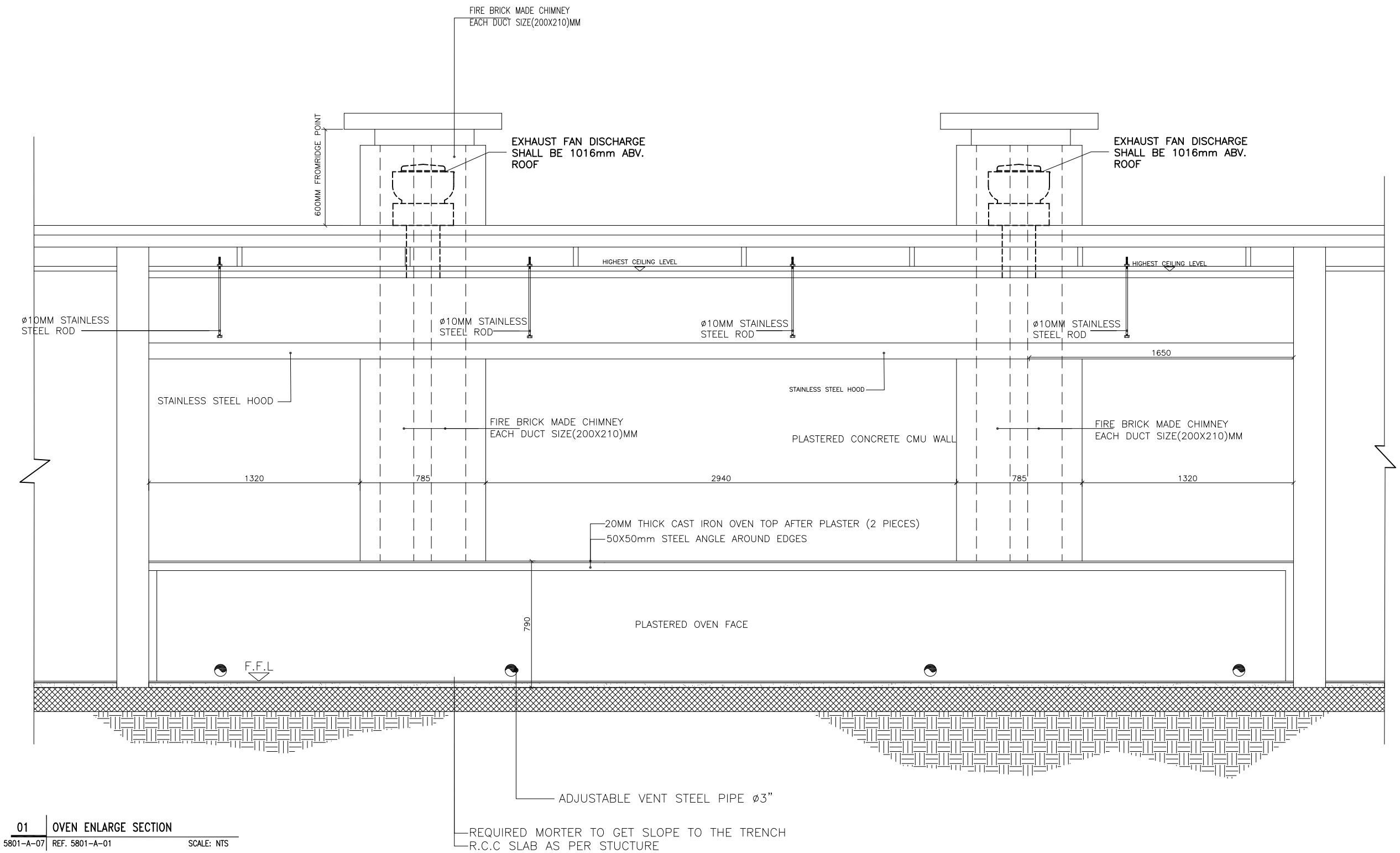

01 | OVEN ENLARGE SECTION

5801-A-07 | REF. 5801-A-01 SCALE: NTS

US ARMY CORPS
OF ENGINEERS
AFGHANISTAN
ENGINEER DISTRICT

Symbol	Description	Date	Description	DATE	Appr.

Designed BY: | Drawn BY: | Contract Date:
Reviewed by: | Draw Code: | FILE NAME:
Submitted by: | Plot Date: | Plot Scale:
Solicitation No: | Contract No:

DEPARTMENT OF THE ARMY
U.S ARMY CORPS OF ENGIEERS
AFGHANISTAN ENGINEERS SOUTH
KANDAHAR, AFGHANISTAN

Contractor:

Designer :

DINING FACILITY BUILDING#(4304)
OVEN ENLARGE SECTION

SHEET
REFERENCE
NUMBER:
5801-A-07
62 OF 529

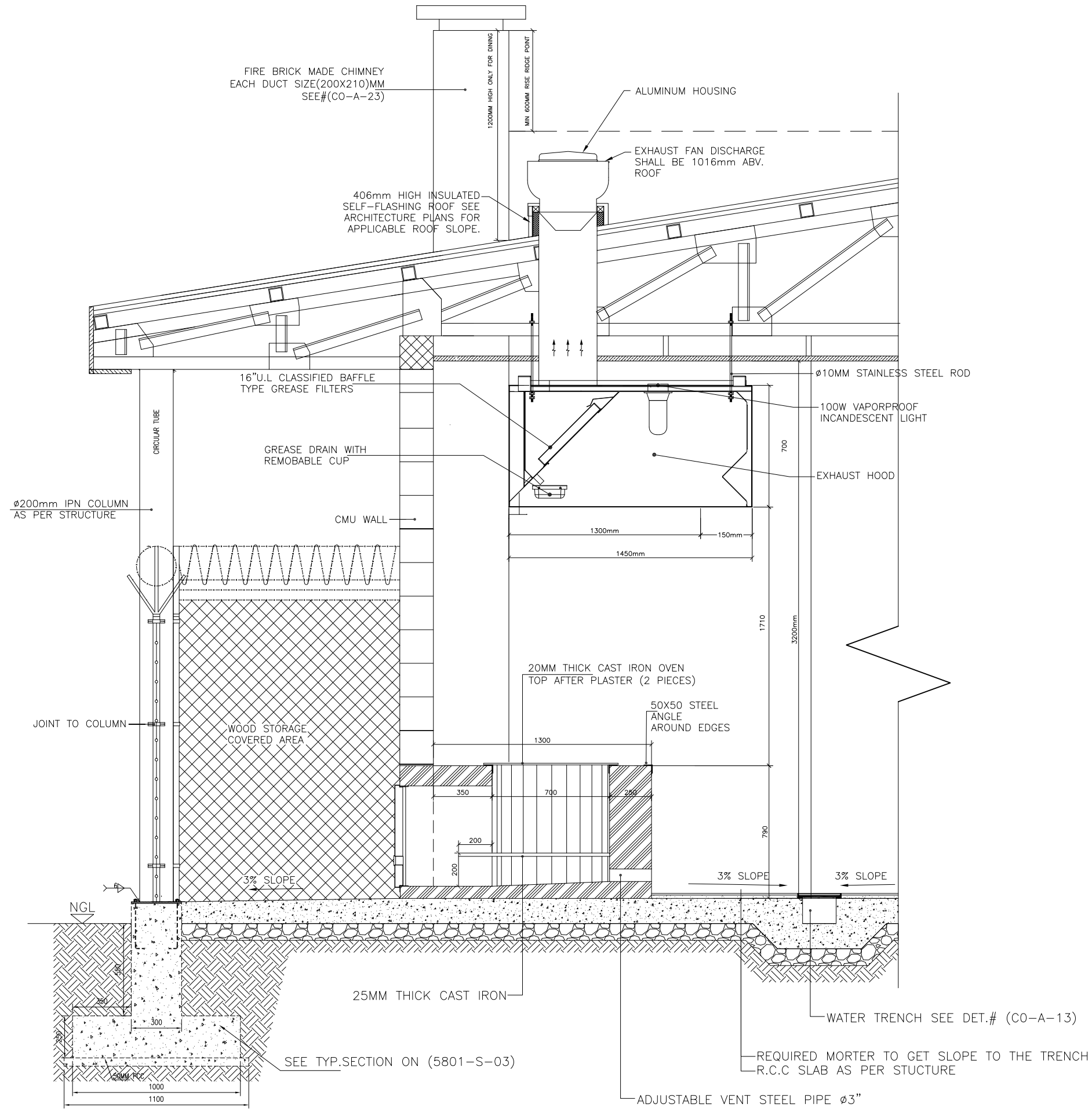

01 OVEN ENLARGE SECTION

5801-A-08 REF. SCALE: NTS

US ARMY CORPS OF ENGINEERS
AFGHANISTAN ENGINEER DISTRICT

Symbol	Description	Date	Description	DATE	Appr.

Designed BY: | Drawn BY: | Contract Date:
Reviewed by: | Draw Code: | FILE NAME:
Submitted by: | Plot Date:
Plot Scale:
Solicitation No: | Contract No:

DEPARTMENT OF THE ARMY
U.S ARMY CORPS OF ENGEERS
AFGHANISTAN ENGINEERS SOUTH
KANDAHAR, AFGHANISTAN

Contractor:

Designer :

DINING FACILITY BUILDING#(5801)
OVEN ENLARGE SECTION

SHEET REFERENCE NUMBER:
5801-A-08
63 OF 529

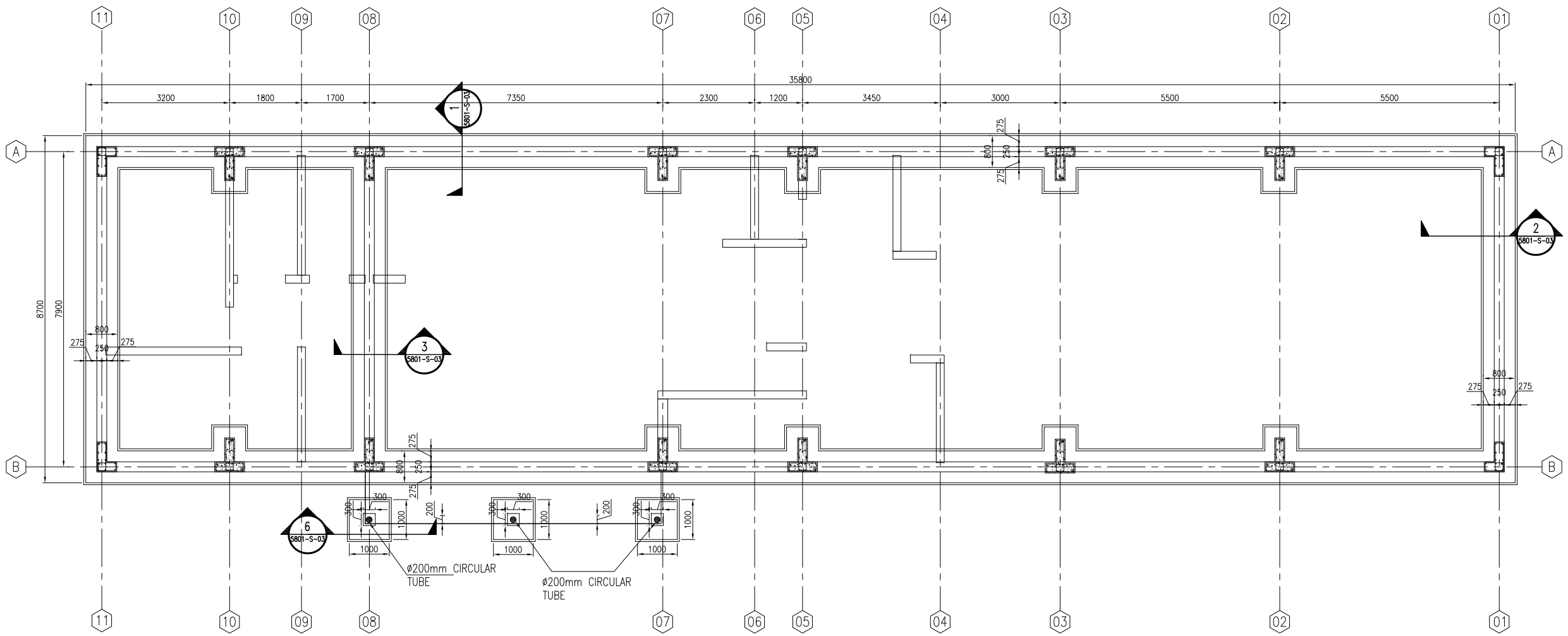

01 FOUNDATION PLAN

5801-S-01 REF. SCALE: 1:100

Notes

1- ALL DIMENSIONS ARE IN MM UNLESS OTHERWISE SPECIFIED.
2- FOUNDATION DESIGN IS ASSUMED ON BEARING CAPACITY OF 14.22 PSI (1Kg/cm²).
3-FOUNDATION SHALL BE FOUNDED ON 95% MINIMUM DENSITY OF COMPACTED MATERIAL.
4-THE STEEL GRADE SHALL BE Fy=60 KSI(Fy=4220Kg/cm²)
5-FOR CAST-IN-PLACE STRUCTURAL CONCRETE,MINIMUM 28 DAYS, CYLINDER STRENGTH f'c=4000 PSI(f'c=280Kg/cm²).

US ARMY CORPS OF ENGINEERS
AFGHANISTAN ENGINEER DISTRICT

Symbol	Description	Date	Description	DATE	Appr.

Designed BY: | Drawn BY: | Contract Date:
Reviewed by: | Draw Code: | FILE NAME:
Submitted by: | Plot Date: | Plot Scale:
Solicitation No: | Contract No:

DEPARTMENT OF THE ARMY
U.S ARMY CORPS OF ENGIEERS
AFGHANISTAN ENGINEERS SOUTH
KANDAHAR, AFGHANISTAN

Contractor:
Designer :

DINING FACILITY BUILDING#5801
FOUNDATION PLAN

SHEET REFERENCE NUMBER:
5801-S-01
182 OF 529

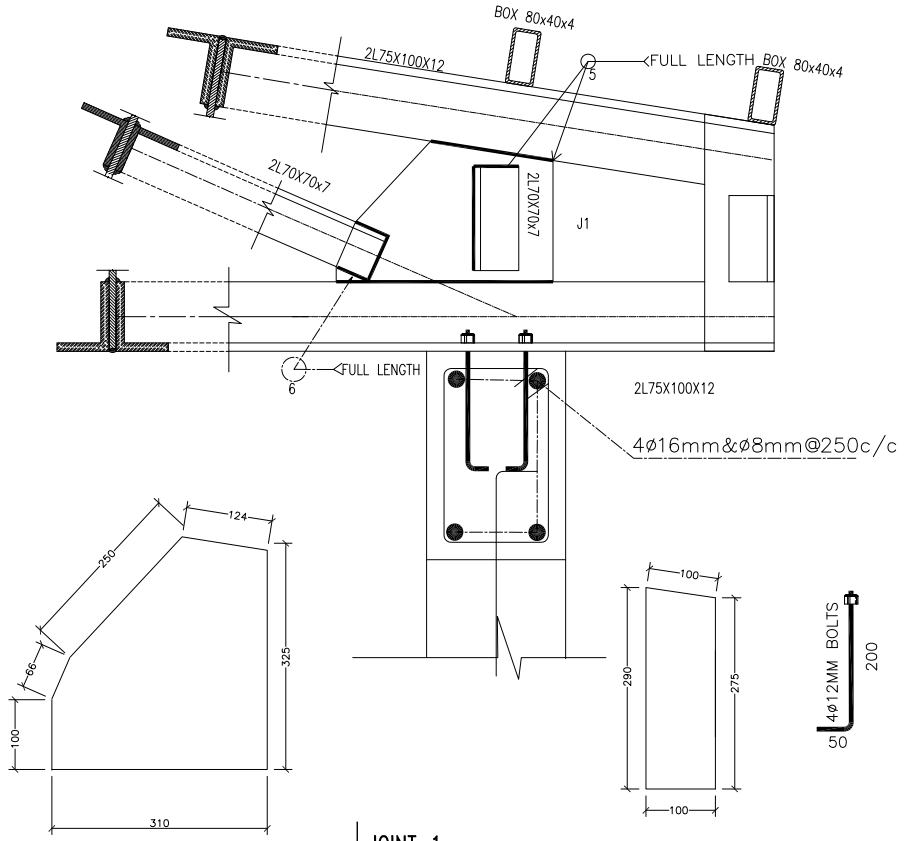

JOINT-1
5801-S-10 REF. 5801-S-09 SCALE: 1:10

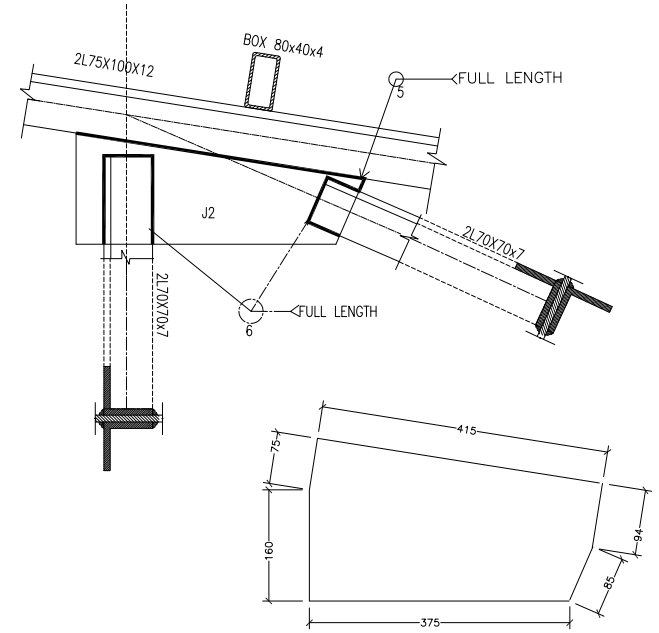

JOINT-2
5801-S-10 REF. 5801-S-09 SCALE: 1:10

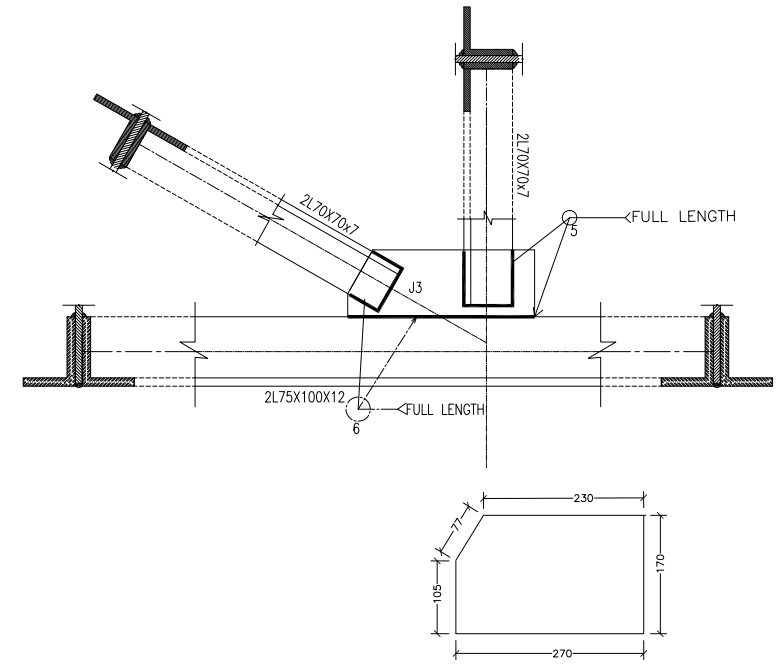

JOINT-3
5801-S-10 REF. 5801-S-09 SCALE: 1:10

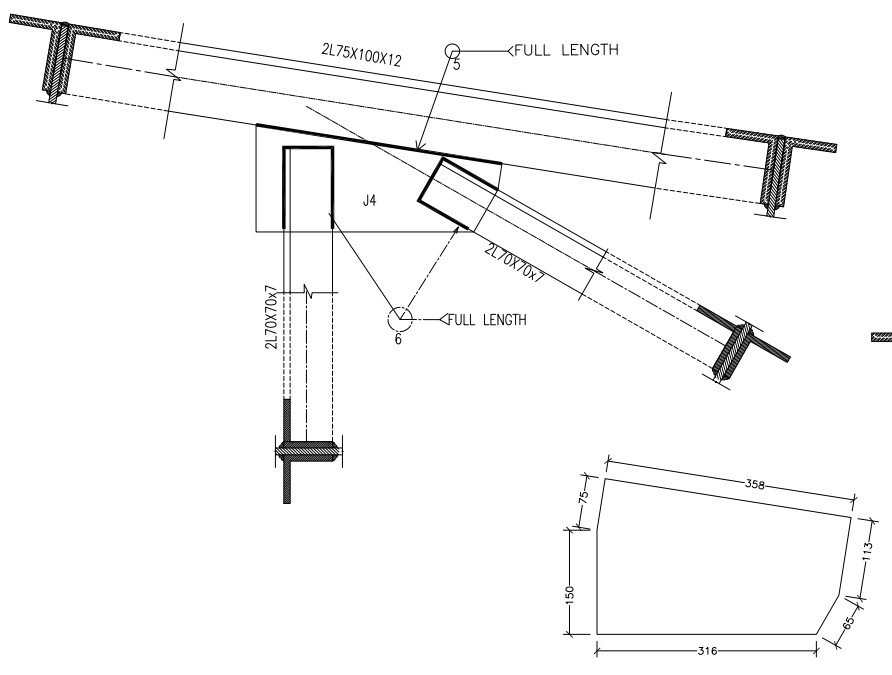

JOINT-4
5801-S-10 REF. 5801-S-09 SCALE: 1:10

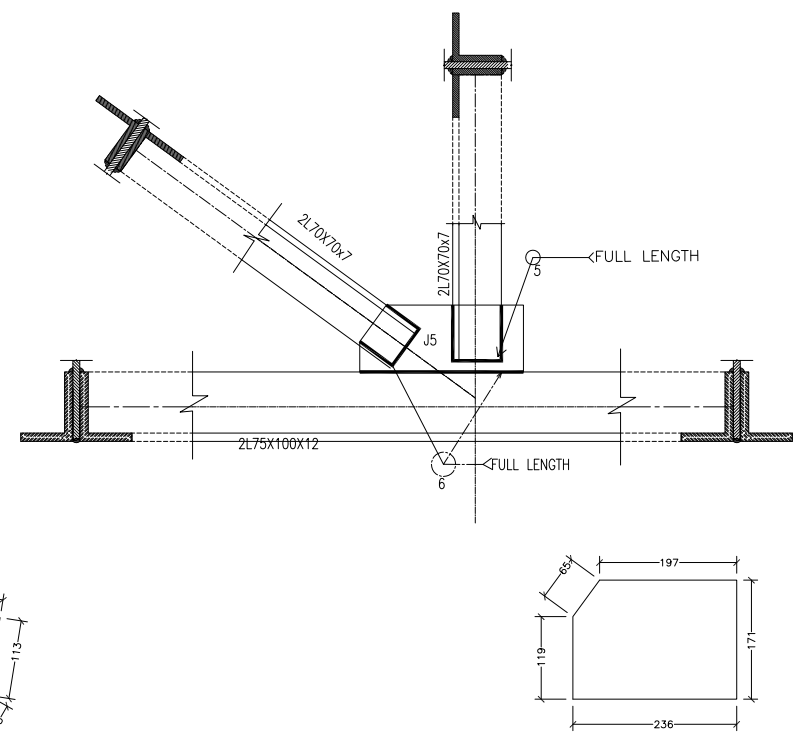

0 JOINT-5
5801-S-10 REF. 5801-S-09 SCALE: 1:10

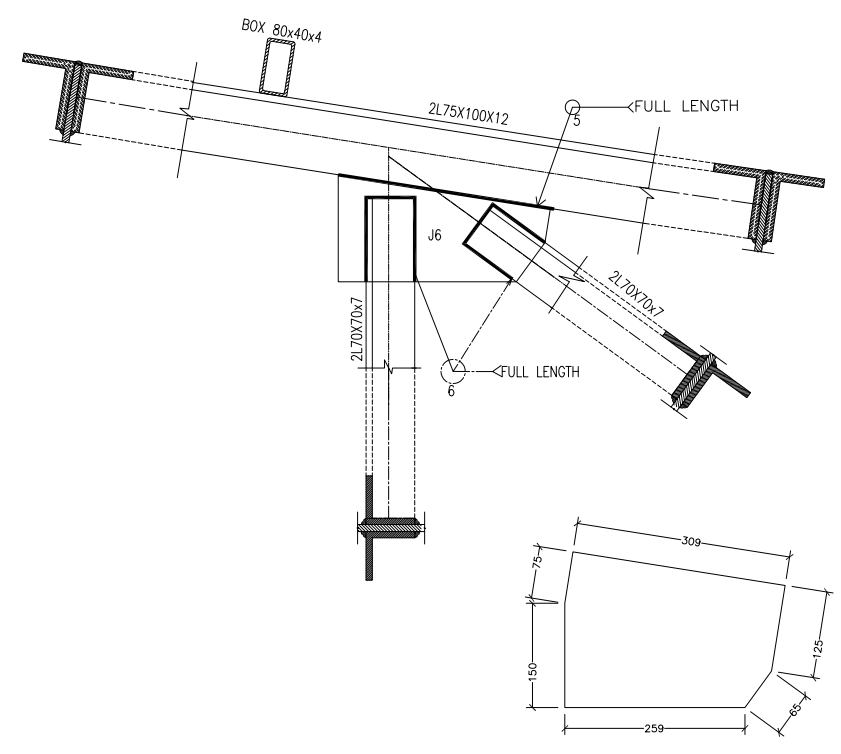

JOINT-6
5801-S-10 REF. 5801-S-09 SCALE: 1:10

NOTES
MINIMUM WELD SIZE 6mm
AND MINIMUM WELD LENGTH 50mm

US ARMY CORPS OF ENGINEERS
AFGHANISTAN ENGINEER DISTRICT

Symbol	Description	Date	Description	DATE	Appr.

Designed By: | Drawn By: | Contract Date:
Reviewed by: | Draw Code: | FILE NAME:
Submitted by: | Plot Date:
Plot Scale:
Solicitation No: | Contract No:

DEPARTMENT OF THE ARMY
U.S ARMY CORPS OF ENGEERS
AFGHANISTAN ENGINEERS SOUTH
KANDAHAR, AFGHANISTAN
Contractor:
Designer :

DINING FACILITY BUILDING#5801
TRUSS DETAILS

SHEET REFERENCE NUMBER:
5801-S-10
191 OF 529

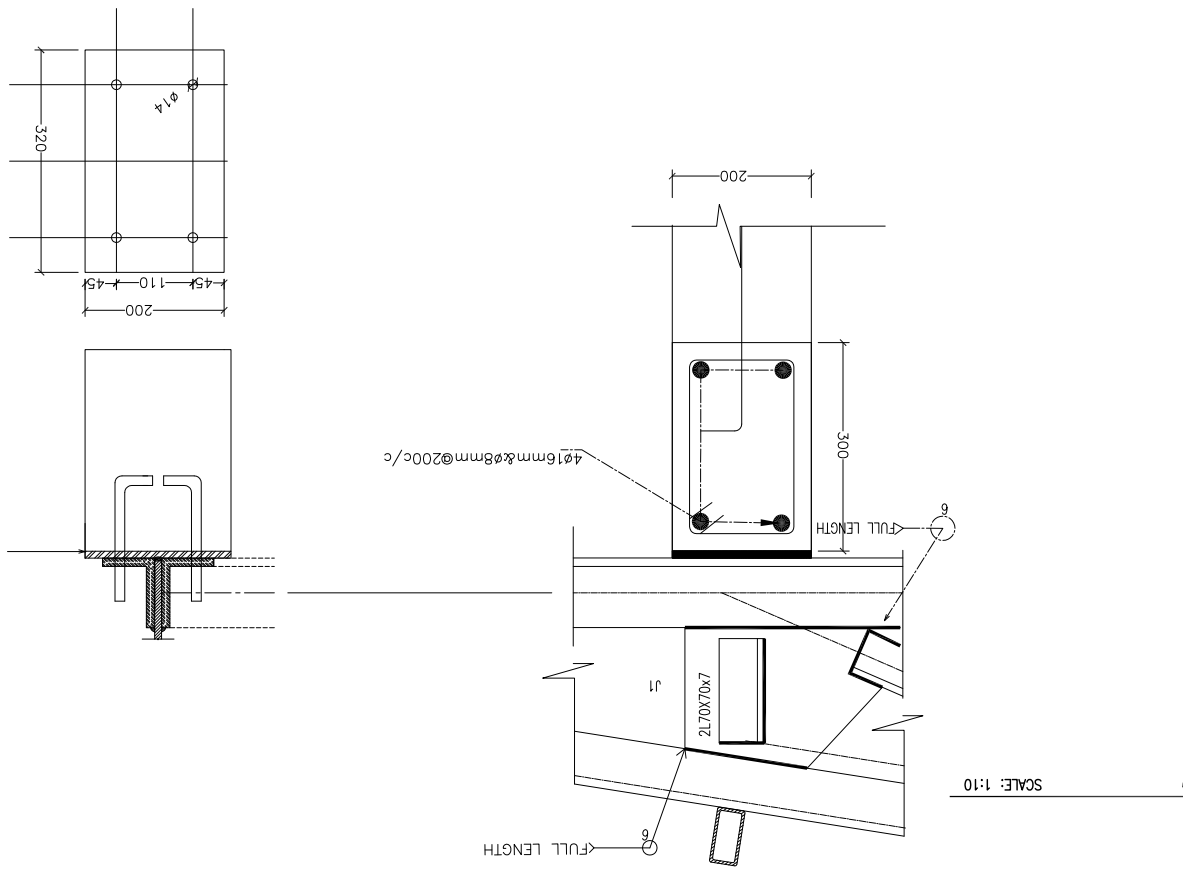

5801-S-11 | REF. 5801-S-09 | SCALE: 1:10

DETAIL OF TRUSS WITH RING BEAM

NOTES

MINIMUM WELD SIZE 6mm AND MINIMUM WELD LENGTH 50mm

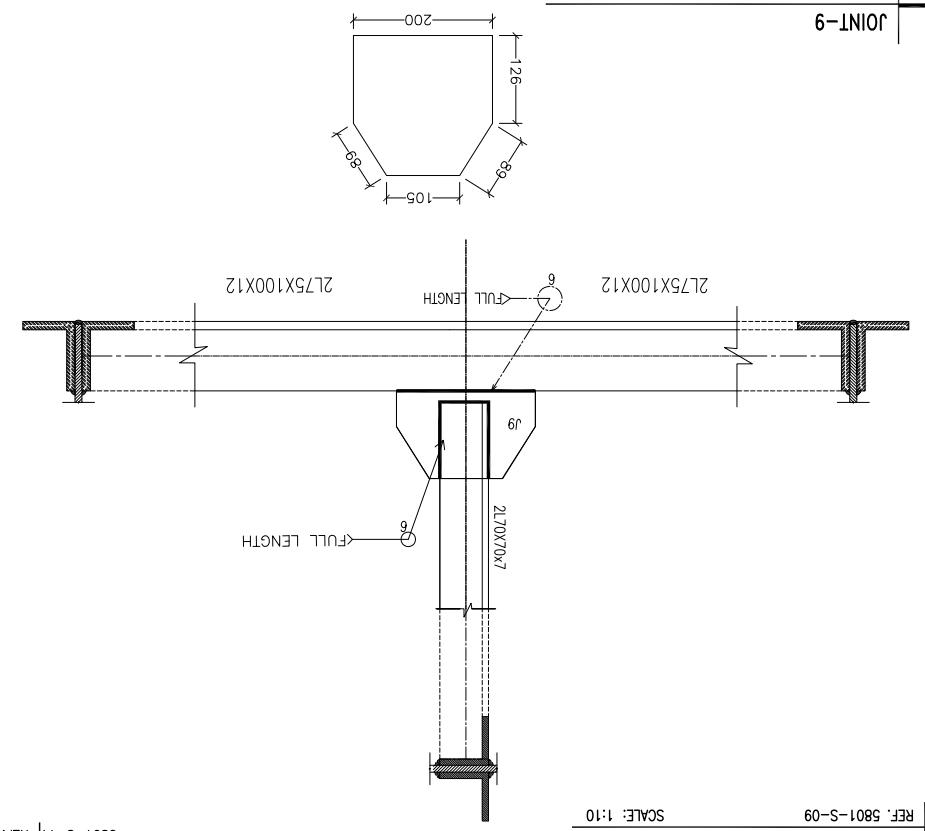

5801-S-11 | REF. 5801-S-09 | SCALE: 1:10

JOINT-9

5801-S-11 | REF. 5801-S-09 | SCALE: 1:10

JOINT-7

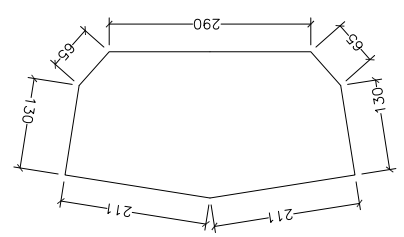

5801-S-11 | REF. 5801-S-09 | SCALE: 1:10

JOINT-8

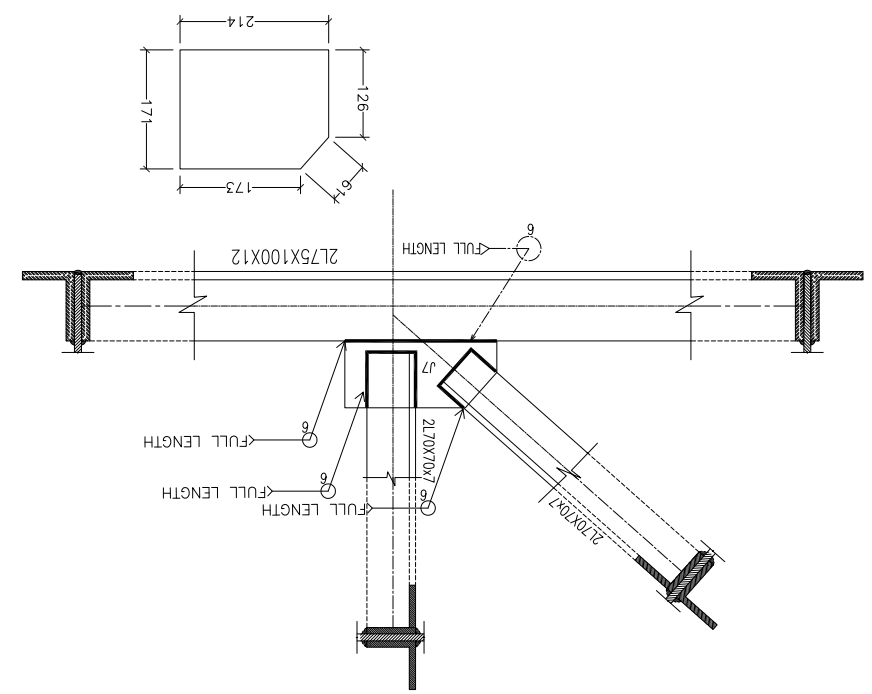

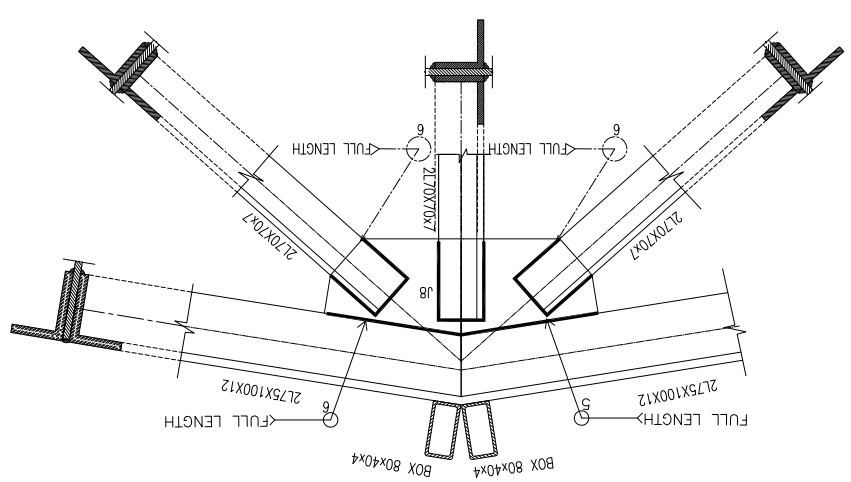

SHEET REFERENCE NUMBER: 5801-S-11

192 OF 529

DINING FACILITY BUILDING#5801
TRUSS DETAIL

DEPARTMENT OF THE ARMY
U.S ARMY CORPS OF ENGEERS
AFGHANISTAN ENGINEERS SOUTH
KANDAHAR, AFGHANISTAN

Contractor:
Designer :

Designed BY: | Drawn BY: | Contract Date:
Reviewed by: | Draw Code: | FILE NAME:
Submitted by: | Plot Date:
Solicitation No: | Plot Scale:
Contract No:

Symbol	Description	Date	Description	DATE	Appr.

US ARMY CORPS OF ENGINEERS AFGHANISTAN ENGINEER DISTRICT

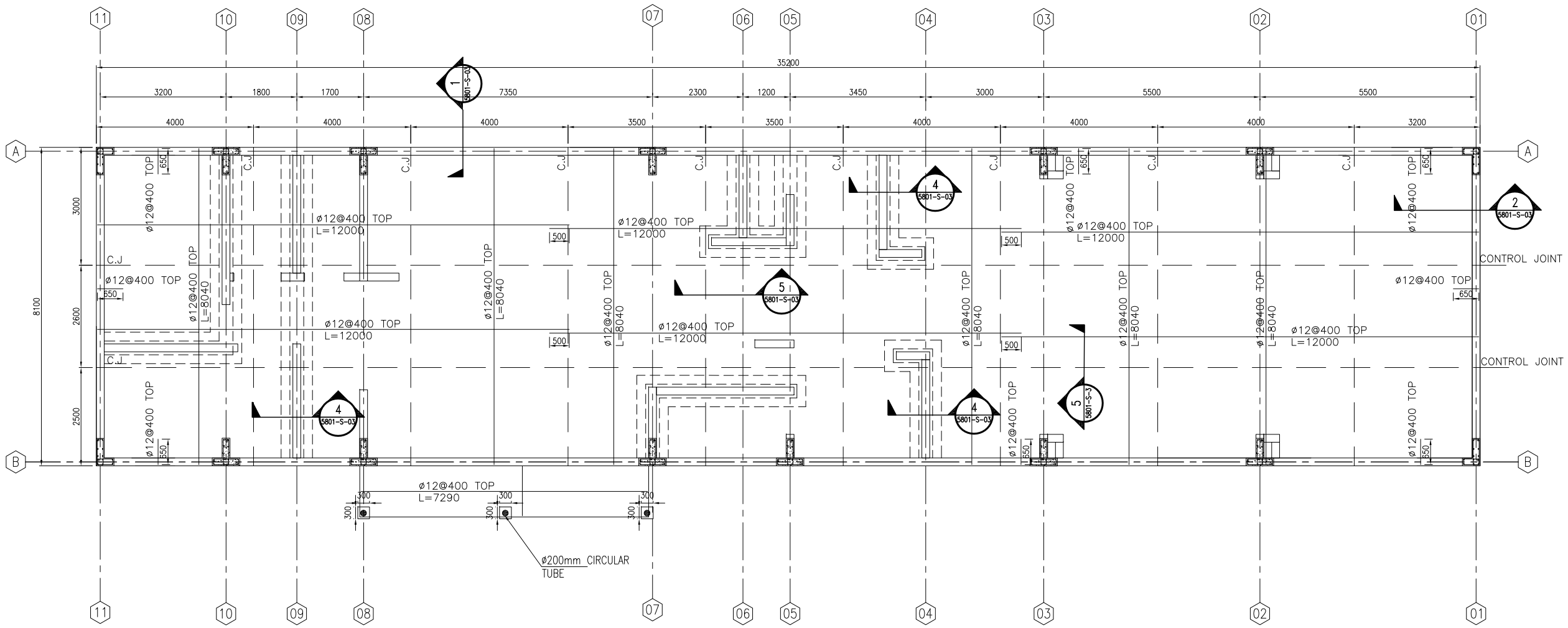

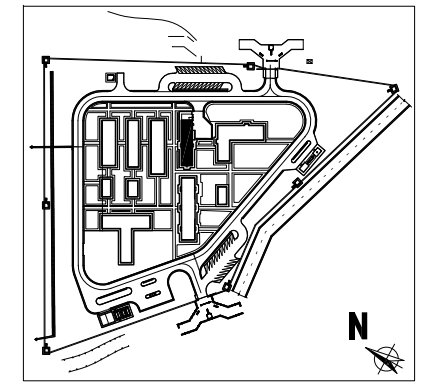

KEY PLAN

US ARMY CORPS OF ENGINEERS
AFGHANISTAN ENGINEER DISTRICT

Symbol	Description	Date	Description	DATE	Appr.

Designed BY: | Drawn BY: | Contract Date:
Reviewed by: | Draw Code: | FILE NAME:
Submitted by: | Plot Date: | Plot Scale:
Solicitation No: | Contract No:

DEPARTMENT OF THE ARMY
U.S ARMY CORPS OF ENGIEERS
AFGHANISTAN ENGINEERS SOUTH
KANDAHAR, AFGHANISTAN

Contractor:

Designer :

DINING FACILITY BUILDING#5801
SLAB REINFORCEMENT PLAN

SHEET REFERENCE NUMBER:
5801-S-02
183 OF 529

01 SLAB REINFORCEMENT PLAN
5801-S-02 REF. SCALE: 1:100

Notes

1- ALL DIMENSIONS ARE IN MM UNLESS OTHERWISE SPECIFIED.
2-THE STEEL GRADE SHALL BE Fy=60 KSI(Fy=4220Kg/cm²)
3-FOR CAST-IN-PLACE STRUCTURAL CONCRETE,MINIMUM 28 DAYS, CYLINDER STRENGTH f'c=4000 PSI(f'c=280Kg/cm²).

LEGEND:
1- C.J CONTROL JOINT
2- CSJ CONSTRACTION JOINT AS PER SITE CONDITION

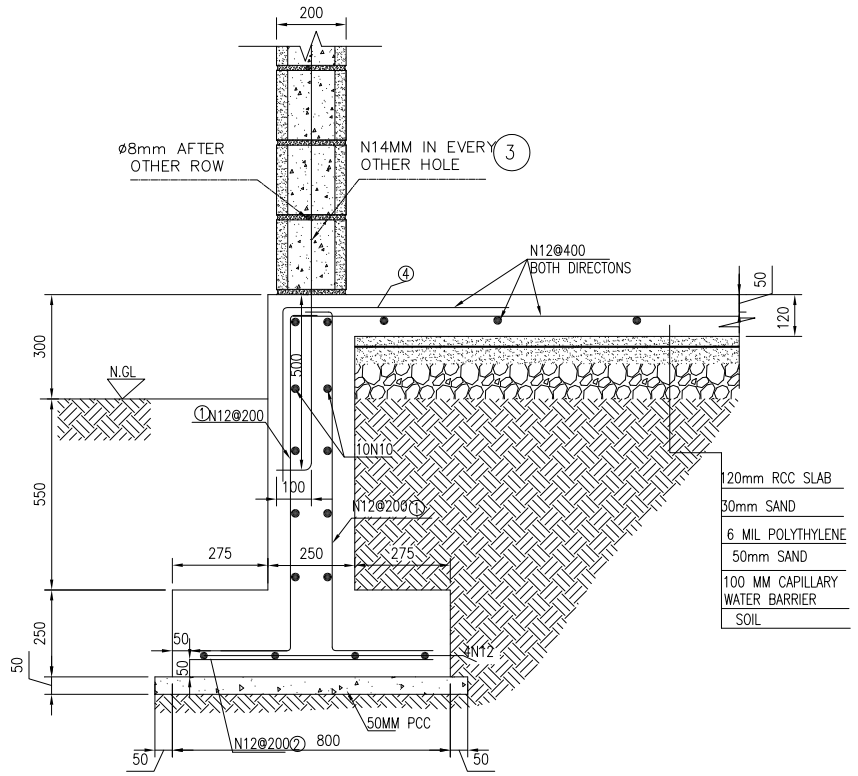

01 TYPICAL SECTION_1

5801-S-03 REF. 5801-S-01&02 SCALE: 1:20

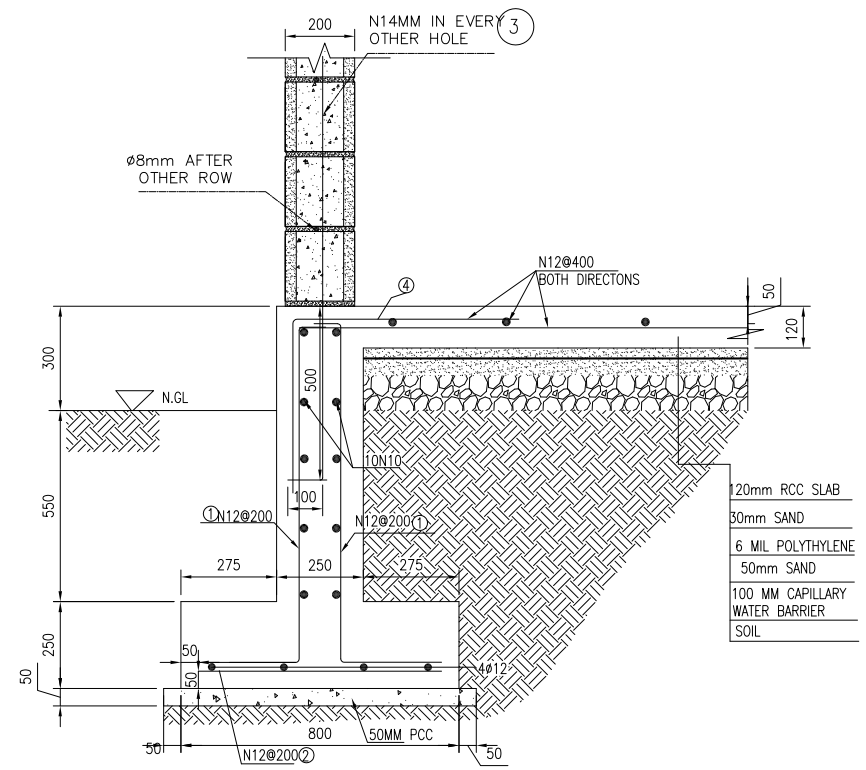

02 TYPICAL SECTION_2

5801-S-03 REF. 5801-S-01&02 SCALE: 1:20

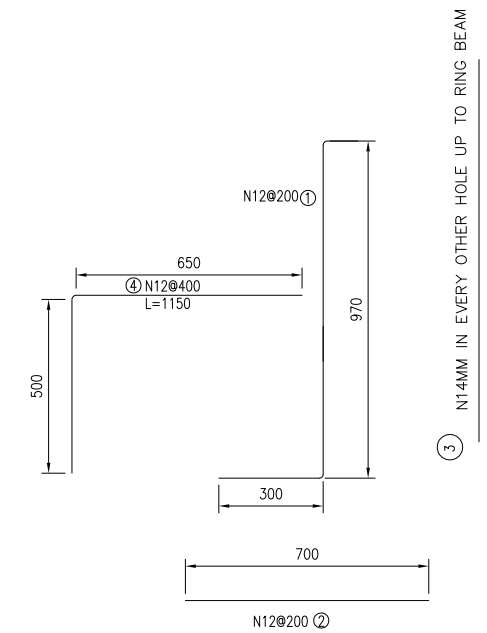

REINFORCEMENT DETAIL FOR SECTION 1&2

5801-S-03 REF. 5801-S-03 SCALE: 1:20

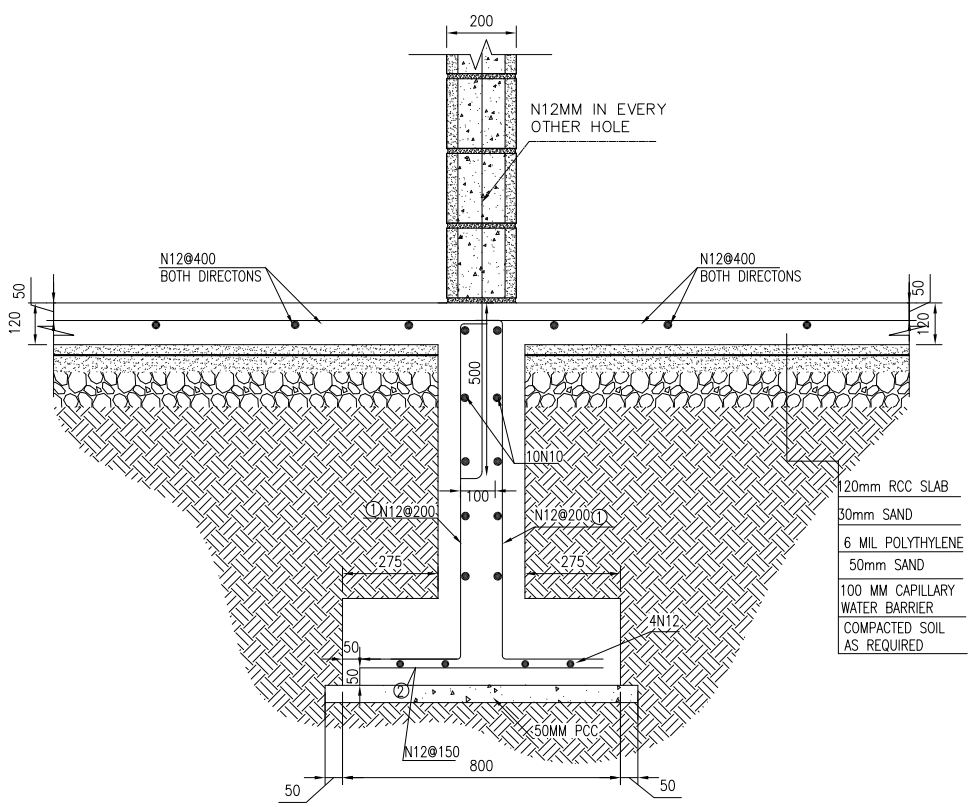

03 TYPICAL SECTION_3

5801-S-03 REF. 5801-S-01 SCALE: 1:20

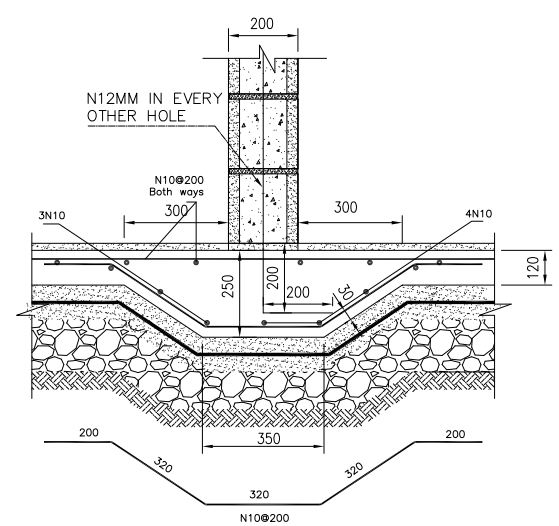

04 TYPICAL SECTION FOR INTERNAL WALLS

5801-S-03 REF. 5801-S-02 SCALE: 1:20

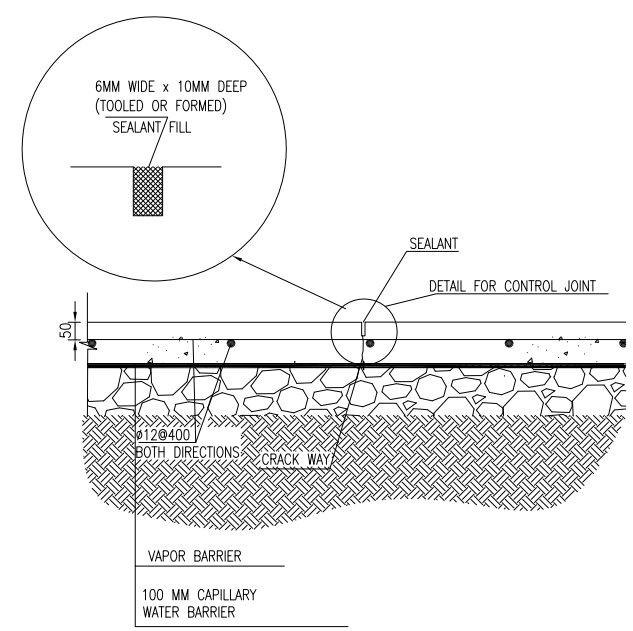

05 SLAB ON GRADE CONTROL JOINT

5801-S-03 REF. 5801-S-02 SCALE: 1:20

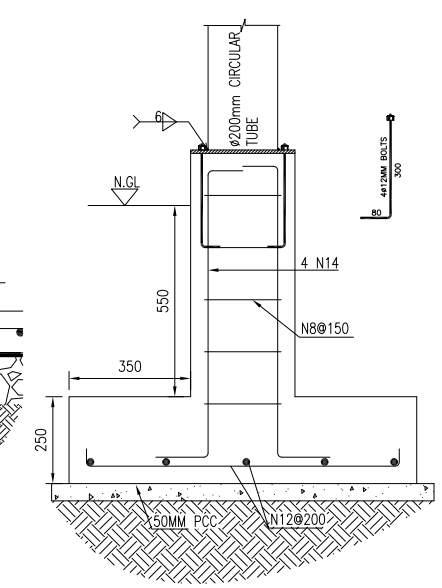

06 TYPICAL SECTION_6

5801-S-03 REF. 5801-S-01 SCALE: 1:20

US ARMY CORPS OF ENGINEERS
AFGHANISTAN ENGINEER DISTRICT

Symbol	Description	Date	Description	DATE	Appr.

Designed BY: | Drawn BY: | Contract Date:
Reviewed by: | Draw Code: | FILE NAME:
Submitted by: | Plot Date:
Plot Scale:
Solicitation No: | Contract No:

DEPARTMENT OF THE ARMY
U.S ARMY CORPS OF ENGIEERS
AFGHANISTAN ENGINEERS SOUTH
KANDAHAR, AFGHANISTAN

Contractor:
Designer :

DINING FACILITY BUILDING#5801
SECTIONS

SHEET REFERENCE NUMBER:
5801-S-03
184 OF 529

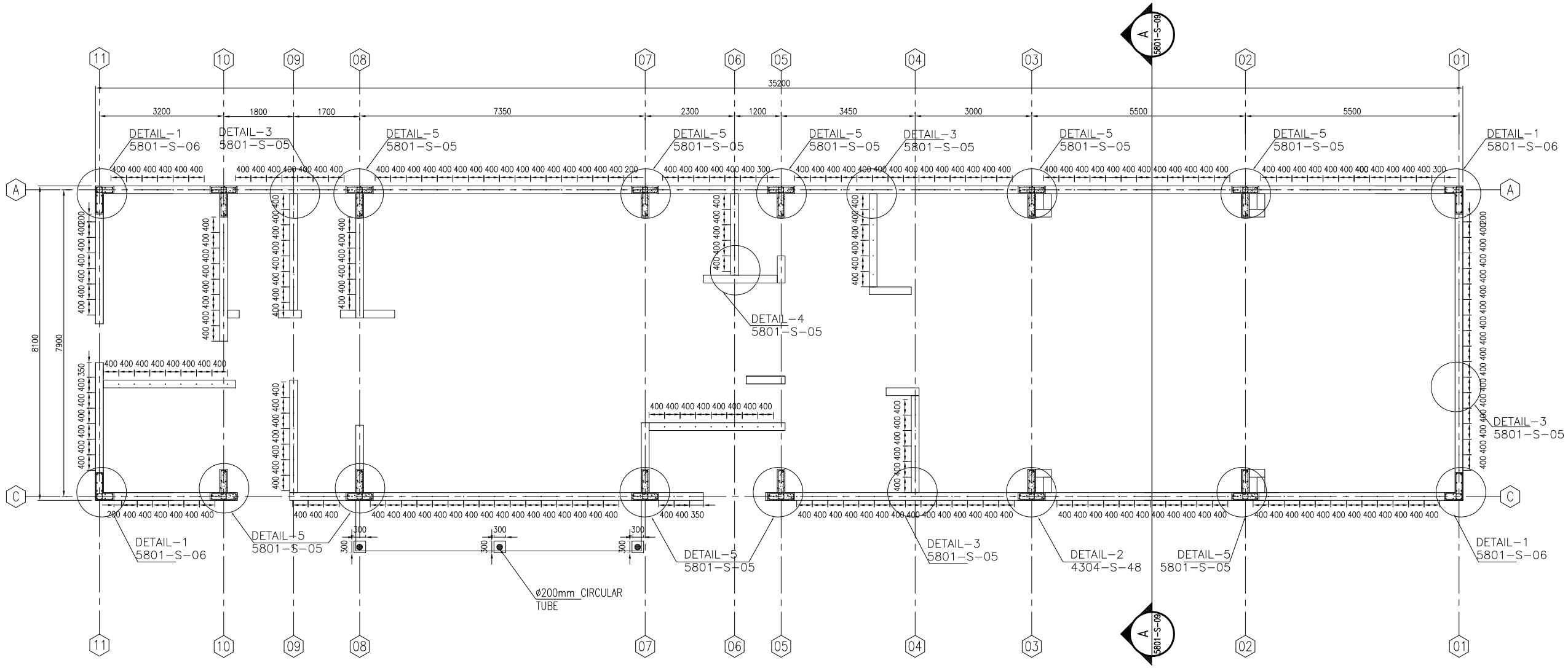

1 COLUMN&STARTER BARS PLAN

5801-S-04 REF. SCALE: 1:120

Notes

1- ALL DIMENSIONS ARE IN MM UNLESS OTHERWISE SPECIFIED.

2-THE STEEL GRADE SHALL BE Fy=60 KSI (Fy=4220Kg/cm²)

3-FOR CAST-IN-PLACE STRUCTURAL CONCRETE,MINIMUM 28 DAYS, CYLINDER STRENGTH f'c=4000 PSI (f'c=280Kg/cm²).

US ARMY CORPS OF ENGINEERS AFGHANISTAN ENGINEER DISTRICT

Symbol	Description	Date	Description	DATE	Appr.

Designed BY: Drawn BY: Contract Date:

Reviewed by: Draw Code: FILE NAME:

Submitted by: Plot Date: Plot Scale:

Solicitation No: Contract No:

DEPARTMENT OF THE ARMY
U.S ARMY CORPS OF ENGIEERS
AFGHANISTAN ENGINEERS SOUTH
KANDAHAR, AFGHANISTAN

Contractor:

Designer :

DINING FACILITY BUILDING#5801
COLUMN&STARTER BARS PLAN

SHEET REFERENCE NUMBER:
5801-S-04

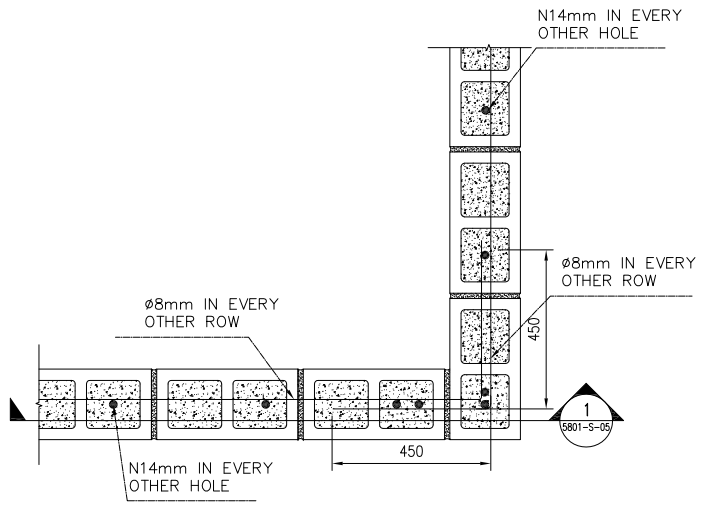

01 DETAIL OF EXTERIOR WALL IN CORNER
5801-S-05 REF. 5801-S-04 SCALE: 1:20

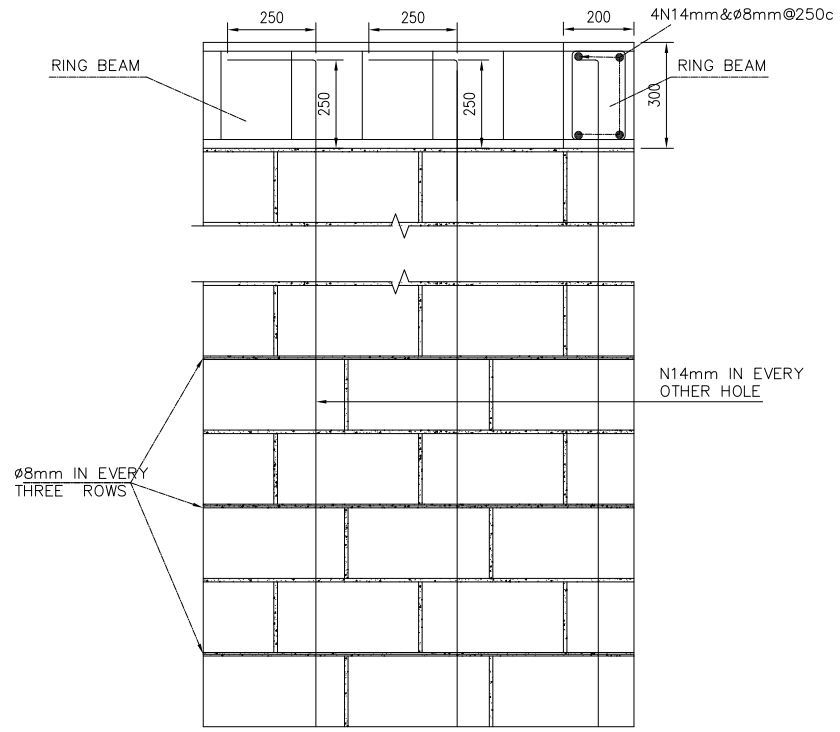

02 SECTION-1
5801-S-05 REF. 5801-S-05 SCALE: 1:20

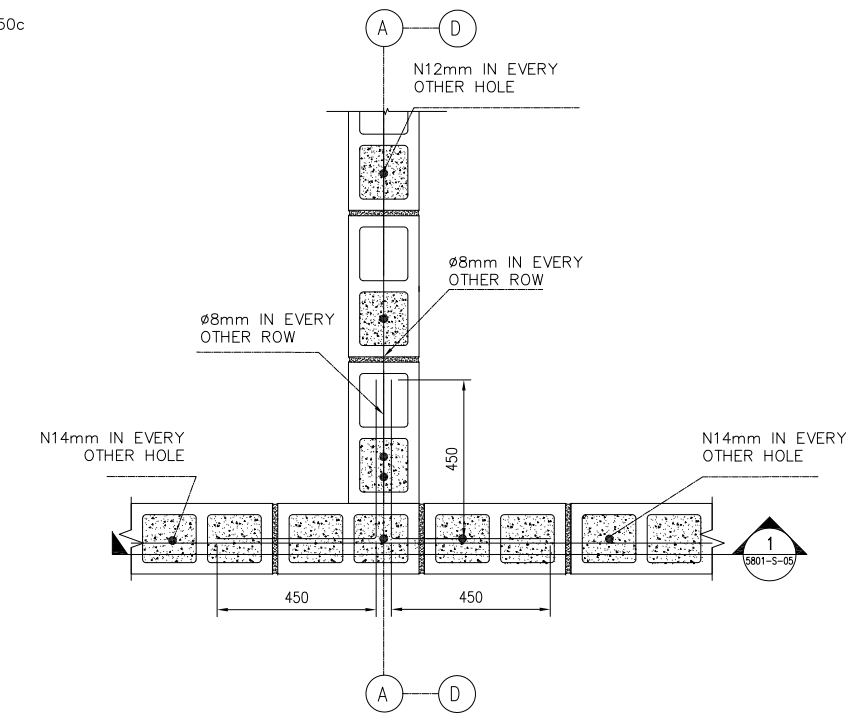

03 DETAIL OF EXTERIOR WALL IN MIDDLE
5801-S-05 REF. 5801-S-04 SCALE: 1:20

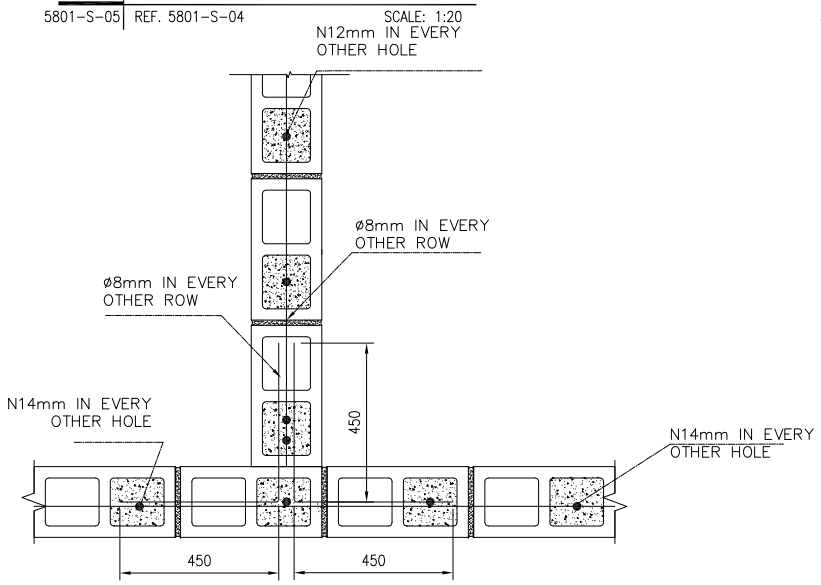

04 DETAIL OF INTERIOR WALL IN MIDDLE
5801-S-05 REF. 5801-S-04 SCALE: 1:20

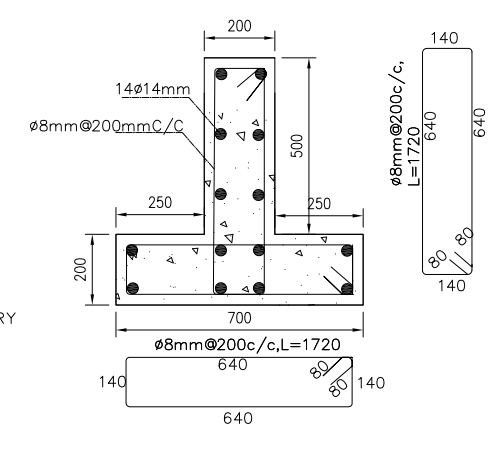

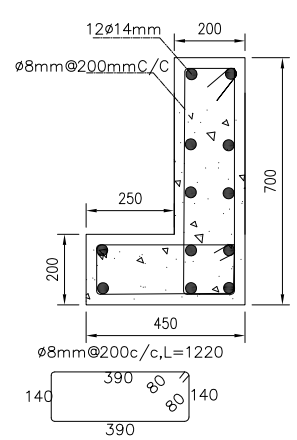

05 COLUMN DETAILS
5801-S-05 REF. 5801-S-04 SCALE: 1:20

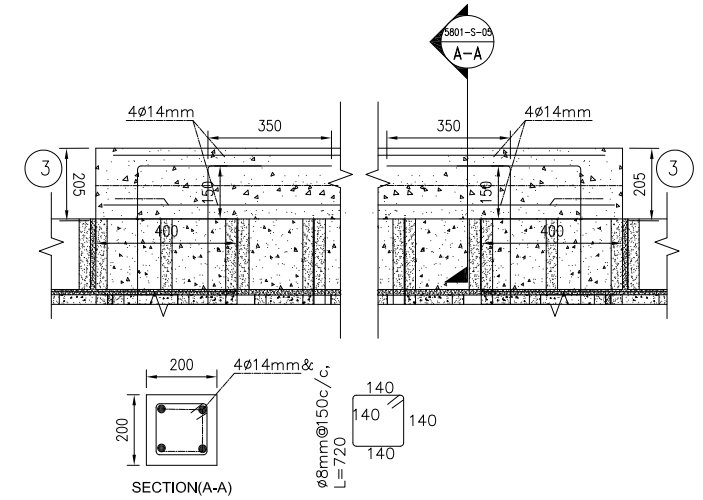

06 DETAIL FOR ALL LENTAL
5801-S-05 REF. 5801-S-04 SCALE: 1:20

NOTES

1- USE ø14MM @ 400 FOR EXTERIOR CMU WALLS AND ø12 @400 FOR INTERIOR CMU WALLS,UNLESS OTHERWISE NOTED.
2- ø 8 MM EVERY OTHER ROWS FOR HORIZONTAL REINFORCEMENT
3- ALL CELLS OF EXTIRIOR CMU WALLS SHALL BE FULLY GROUTED:
4- USE FULL CONTACT LAP SPLICES FOR REINFORCING STEEL IN CMU WALLS 48 DIAMETER OF BAR UNLESS OTHERWISE NOTED :

US ARMY CORPS OF ENGINEERS AFGHANISTAN ENGINEER DISTRICT

Symbol	Description	Date	Description	DATE	Appr.

DEPARTMENT OF THE ARMY
U.S ARMY CORPS OF ENGIEERS
AFGHANISTAN ENGINEERS SOUTH
KANDAHAR, AFGHANISTAN

Designed BY: Drawn BY: Contract Date:
Reviewed by: Draw Code: FILE NAME:
Submitted by: Plot Date:
Plot Scale:
Solicitation No: Contract No:
Contractor:
Designer :

DINING FACILITY BUILDING#5801
SECTIONS&DETAIL

SHEET REFERENCE NUMBER:
5801-S-05
186 OF 529

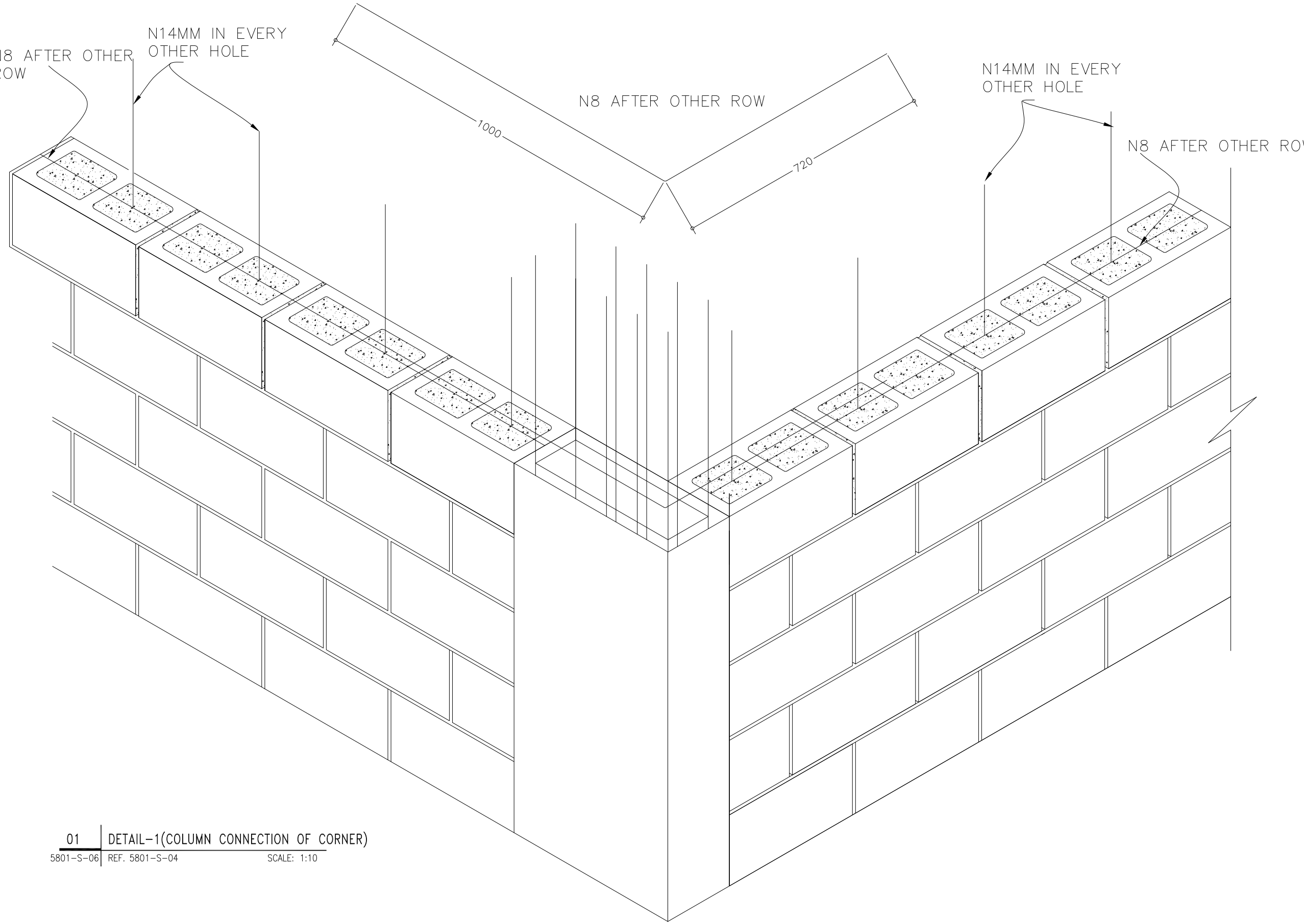

01 DETAIL-1(COLUMN CONNECTION OF CORNER)

5801-S-06 REF. 5801-S-04 SCALE: 1:10

US ARMY CORPS OF ENGINEERS AFGHANISTAN ENGINEER DISTRICT

Symbol	Description	Date	Description	DATE	Appr.

DEPARTMENT OF THE ARMY
U.S ARMY CORPS OF ENGIEERS
AFGHANISTAN ENGINEERS SOUTH
KANDAHAR, AFGHANISTAN

Designed BY: Drawn BY: Contract Date:
Reviewed by: Draw Code: FILE NAME:
Submitted by: Plot Date:
Plot Scale:
Contractor: Solicitation No: Contract No:
Designer :

DINING FACILITY BUILDING#5801
DETAIL-1(COLUMN CONNECTION OF CORNER)

SHEET REFERENCE NUMBER:
5801-S-06
187 OF 529

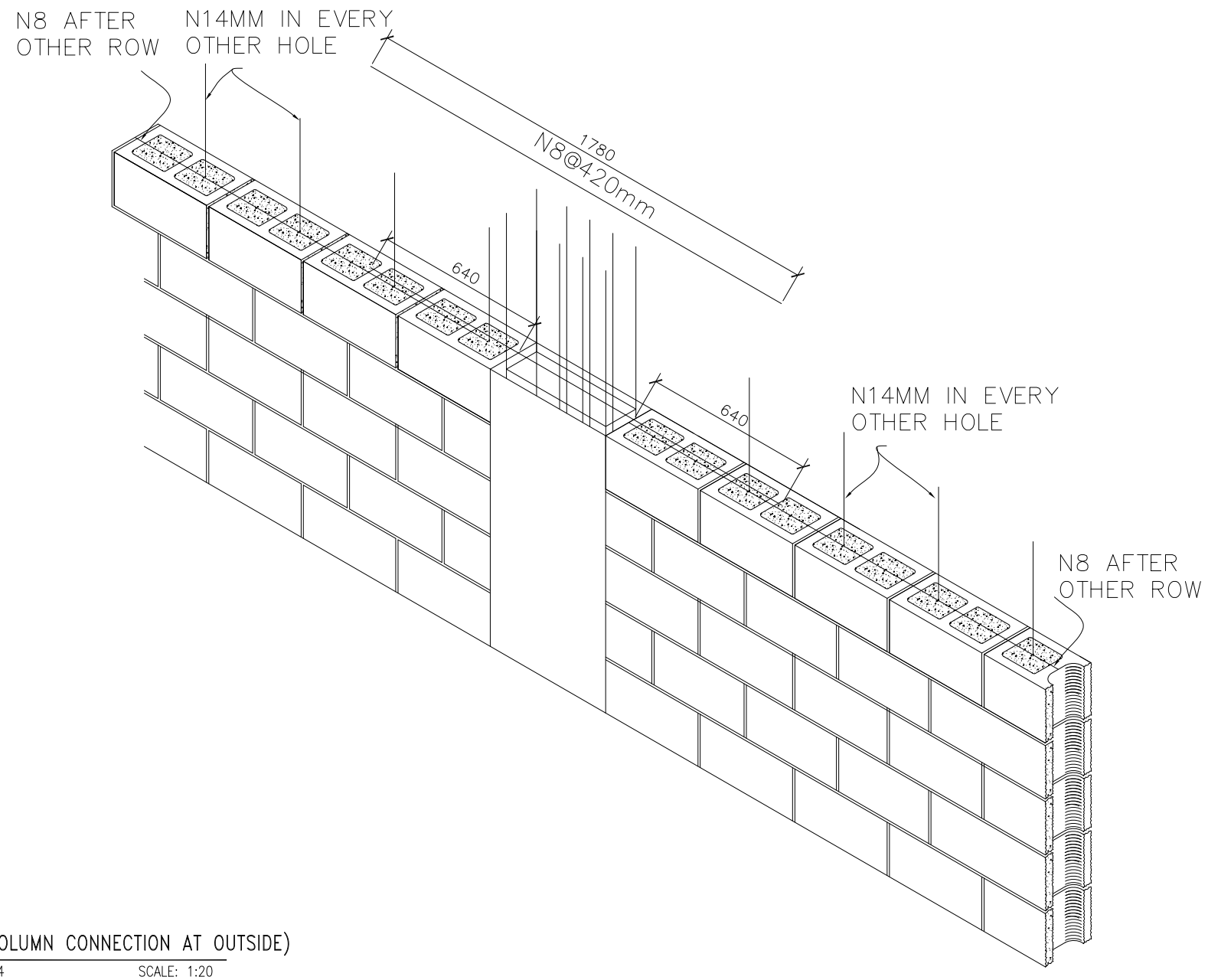

01 DETAIL-2(COLUMN CONNECTION AT OUTSIDE)

5801-S-07 REF. 5801-S-04 SCALE: 1:20

US ARMY CORPS
OF ENGINEERS
AFGHANISTAN
ENGINEER DISTRICT

Symbol	Description	Date	Description	DATE	Appr.

DEPARTMENT OF THE ARMY
U.S ARMY CORPS OF ENGIEERS
AFGHANISTAN ENGINEERS SOUTH
KANDAHAR, AFGHANISTAN

Designed BY: Drawn BY: Contract Date:
Reviewed by: Draw Code: FILE NAME:
Submitted by: Plot Date:
Plot Scale:
Solicitation No: Contract No:
Contractor:
Designer :

DINING FACILITY BUILDING#5801
DETAIL-2(COLUMN CONNECTION AT OUTSIDE)

SHEET
REFERENCE
NUMBER:
5801-S-07
188 OF 529

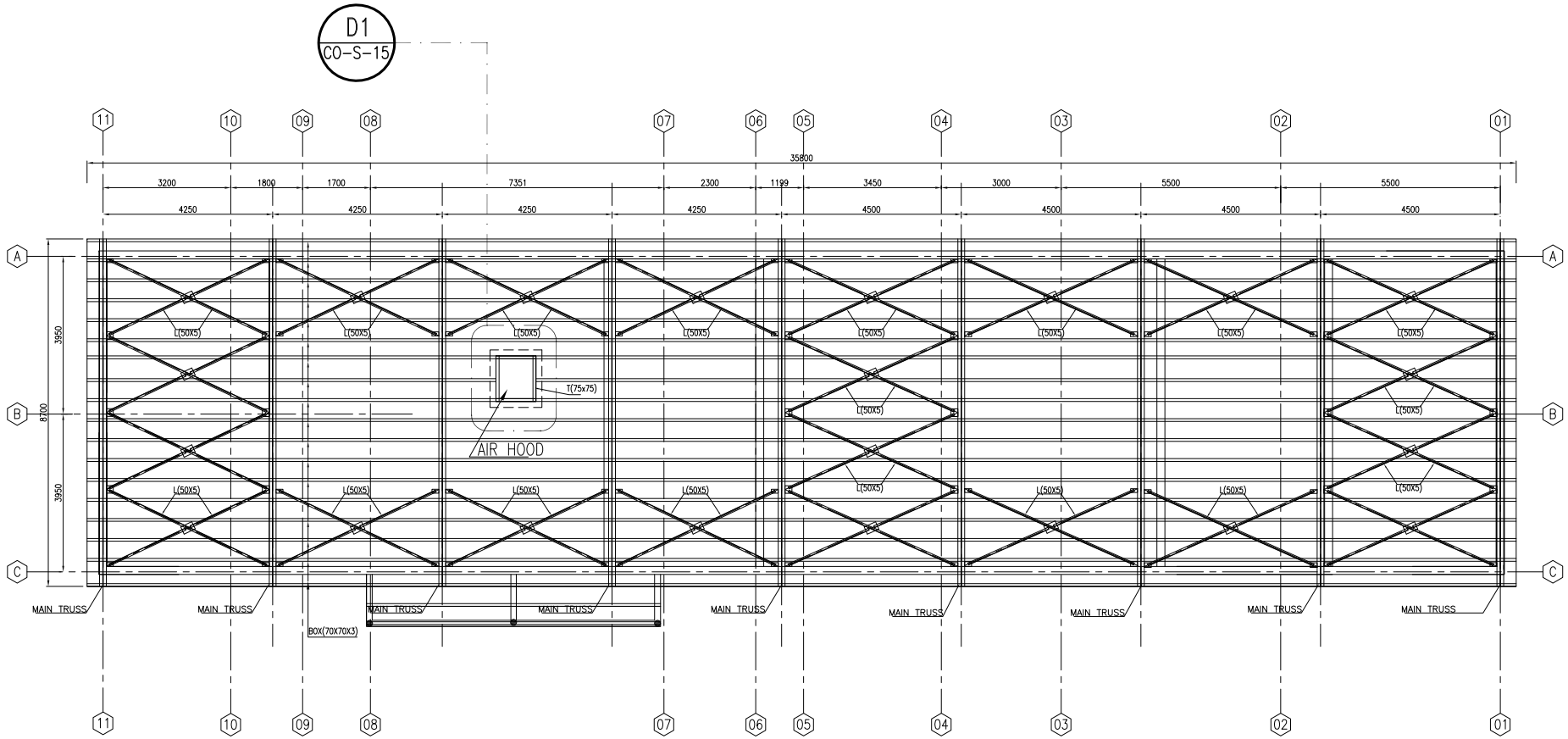

01 ROOF PLAN

5801-S-08 REF. SCALE: 1:100

Notes

1- ALL DIMENSIONS ARE IN MM UNLESS OTHERWISE SPECIFIED.
2-THE STEEL GRADE SHALL BE Fy=60 KSI(Fy=4220Kg/cm²)
3-FOR CAST-IN-PLACE STRUCTURAL CONCRETE,MINIMUM 28 DAYS, CYLINDER STRENGTH f'c=4000 PSI(f'c=280Kg/cm²).

US ARMY CORPS OF ENGINEERS AFGHANISTAN ENGINEER DISTRICT

Symbol	Description	Date	Description	DATE	Appr.

DEPARTMENT OF THE ARMY
U.S ARMY CORPS OF ENGEERS
AFGHANISTAN ENGINEERS SOUTH
KANDAHAR, AFGHANISTAN

Designed BY: | Drawn BY: | Contract Dates:
Reviewed by: | Draw Code: | FILE NAME:
Submitted by: | Plot Date:
Plot Scale:
Solicitation No: | Contract No:
Contractor:
Designer :

DINING FACILITY BUILDING#5801
ROOF PLAN

SHEET REFERENCE NUMBER:
5801-S-08
189 OF 529

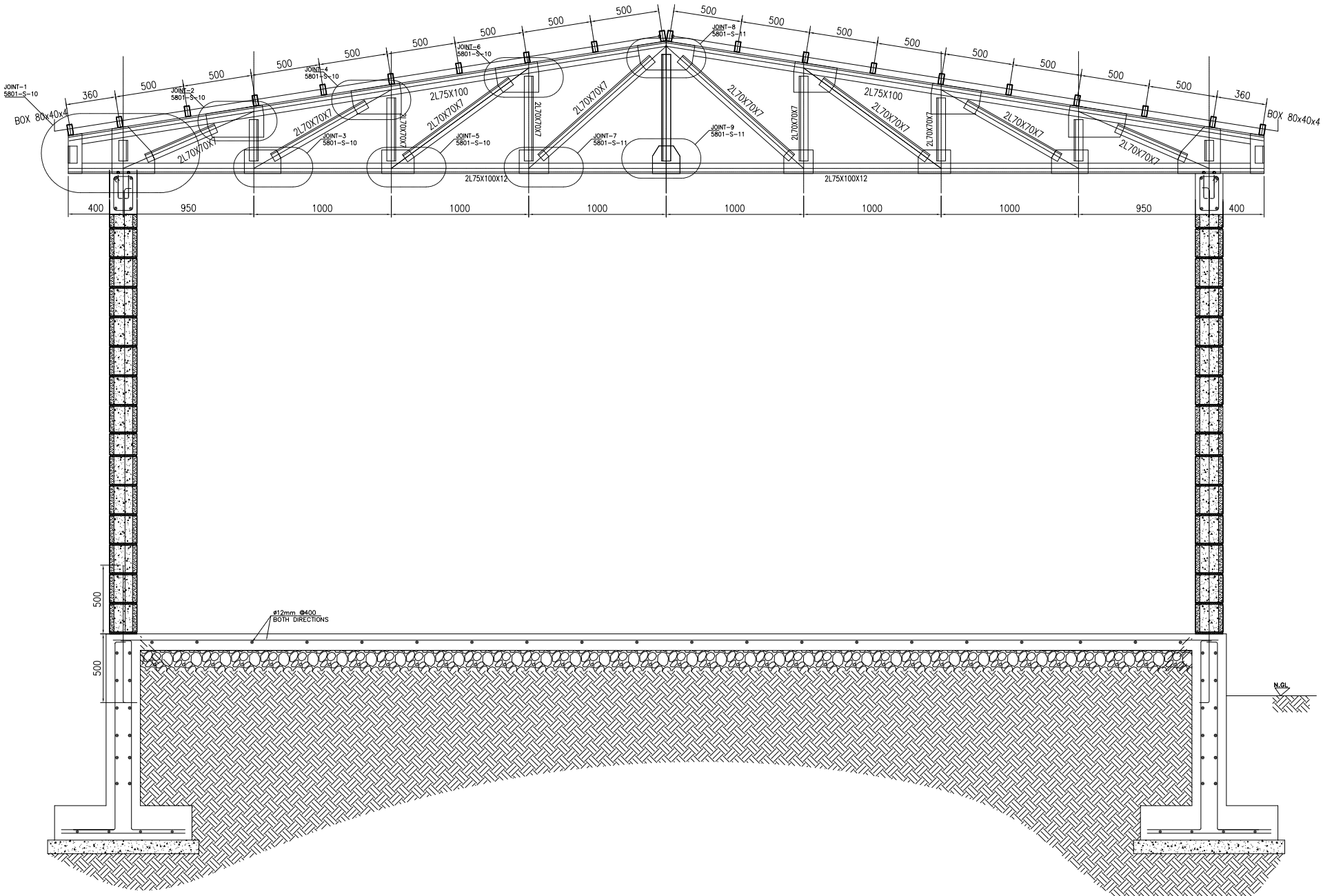

01 SECTION (A-A)

5801-S-09 REF. 5801-S-04 SCALE: 1:25

US ARMY CORPS OF ENGINEERS AFGHANISTAN ENGINEER DISTRICT

Symbol	Description	Date	Description	DATE	Appr.

DEPARTMENT OF THE ARMY
U.S ARMY CORPS OF ENGEERS
AFGHANISTAN ENGINEERS SOUTH
KANDAHAR, AFGHANISTAN

Designed BY: | Drawn BY: | Contract Dates:
Reviewed by: | Draw Code: | FILE NAME:
Submitted by: | Plot Date:
Plot Scale:
Solicitation No: | Contract No:
Contractor:
Designer :

DINING FACILITY BUILDING#5801
SECTION A-A

SHEET REFERENCE NUMBER:
5801-S-09
190 OF 529

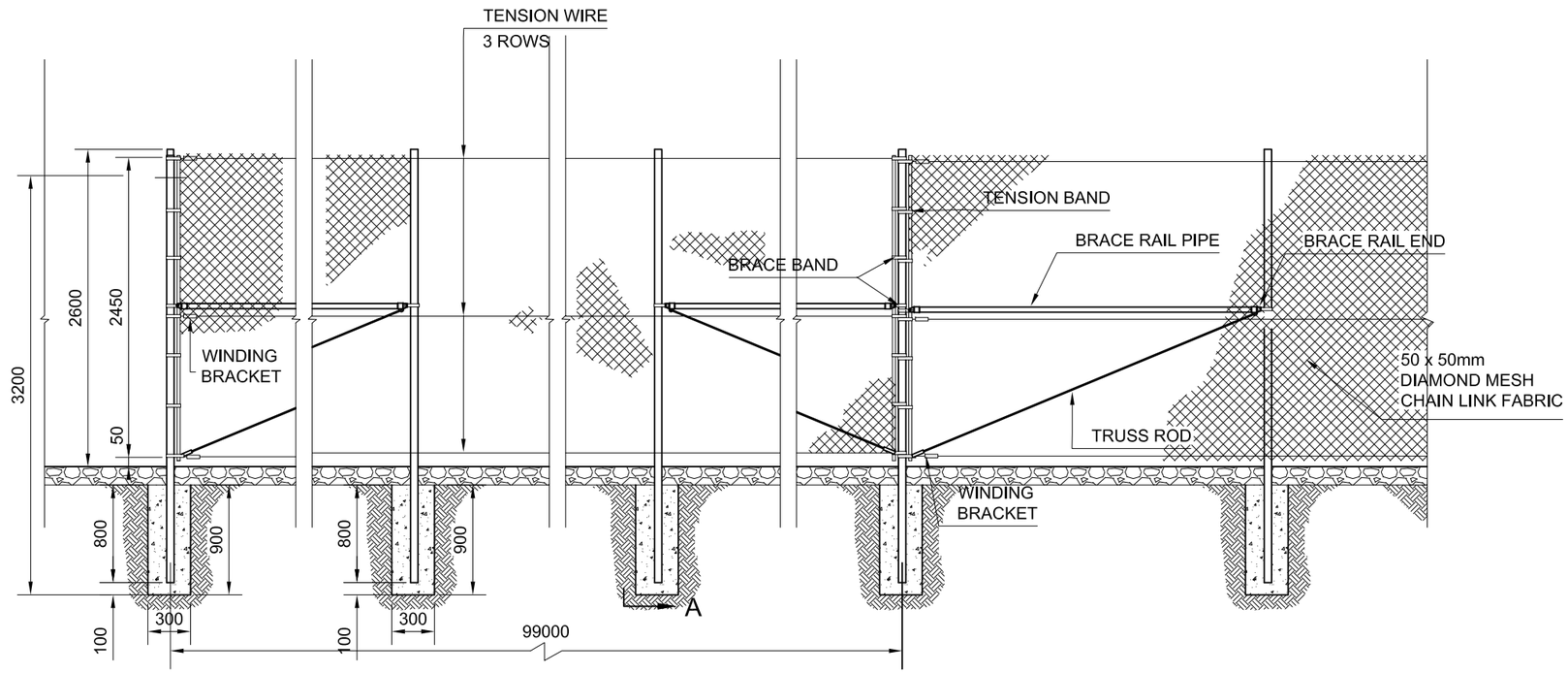

NOTES

LINE POST	60.3mm O.D. x 3.91mm WALL THICK
PULL / END / CORNER POST	73.0mm O.D. x 5.16mm WALL THICK
BRACE RAIL PIPE	42.2mm O.D. x 3.56mm WALL THICK
FABRIC	3.0mm DIA GALVANISED WIRE
TENSION WIRE	3.76mm DIA GALVANISED WIRE

1) FABRIC :- "CLICLINK" GALVANISED CHAIN LINK FABRIC,
50 x 50mm DIAMOND MESH, 3.0mm DIA GALVANISED WIRE,
FABRIC HEIGHT 2.45 M, BARBED SELVAGE.

2) TENSION WIRE :- "CLICLINK" 3.76mm DIA GALVANISED WIRE.

3) FITTINGS :- GALVANISED.

4) PIPES :- GALVANISED, CONFORMS TO ASTM A 53 SCH 40.

5) LINE POST SPACING @ EVERY 3.0 M.

6) ALL DIMENSIONS ARE IN mm U.N.O.

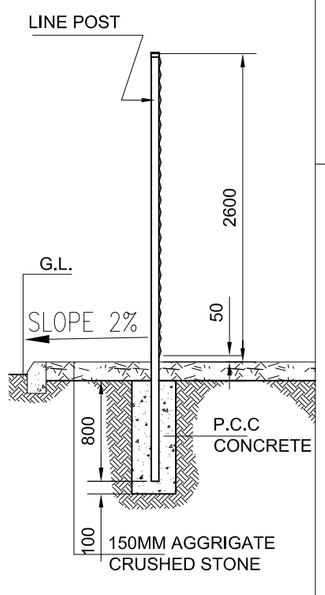

VIEW A-A

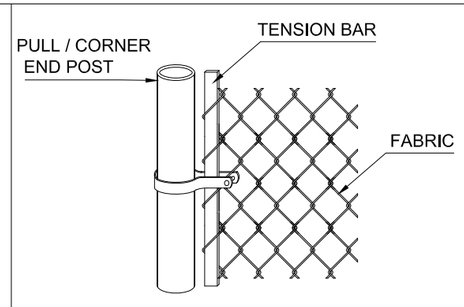

TENSION BAR CONNECTION

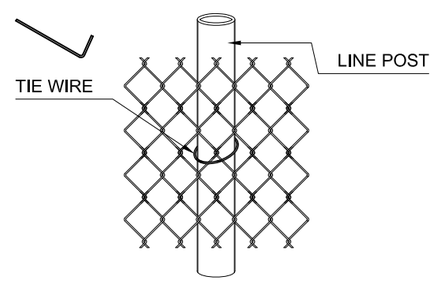

FIXING OF THE TIE WIRE ON LINE POST / BRACE RAIL PIPE

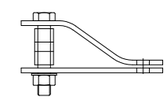

WINDING BRACKET

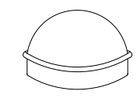

POST CAP

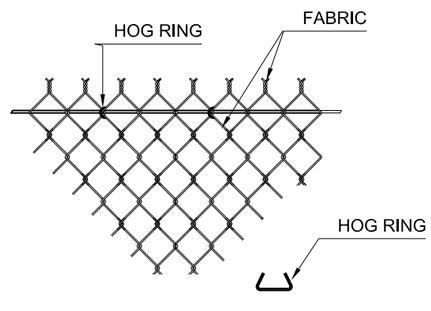

TYING FABRIC TO TENSION WIRE

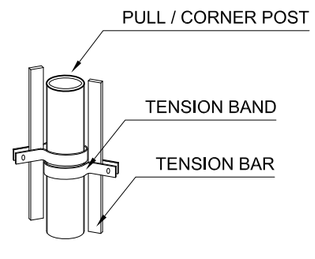

PULL / CORNER POST CONNECTION

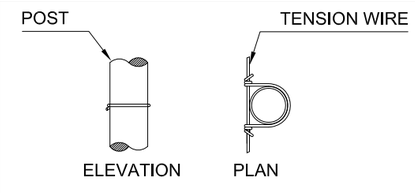

TYING TENSION WIRE

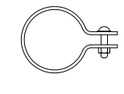

BRACE BAND

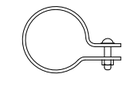

TENSION BAND

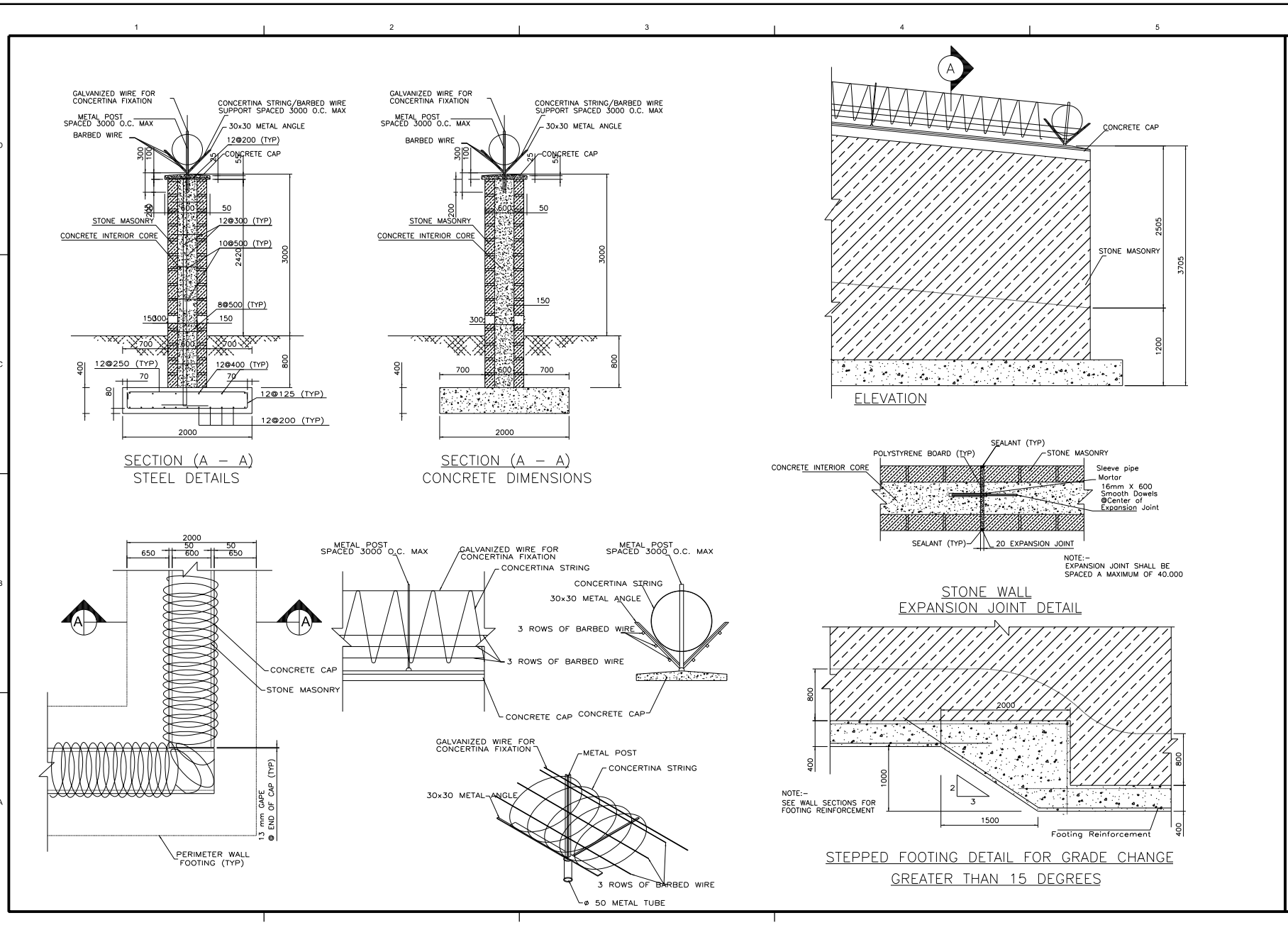

US Army Corps of Engineers®
AFGHANISTAN ENGINEER DISTRICT SOUTH

MARK	DESCRIPTION	DATE	APPR

MARK	DESCRIPTION	DATE	APPR

U.S. ARMY CORPS OF ENGINEERS
AFGHANISTAN ENGINEER DISTRICT SOUTH

DESIGNED BY: BRIAN JOHNSON PE
DWN BY: BRJ
CKD BY: BRJ
SUBMITTED BY: BRIAN JOHNSON PE
PLOT SCALE: NTS
PLOT DATE: 03 NOV 2010
SIZE: 11"X17"
FILE NAME:
DATE: 03 NOV 2010
SOLICITATION NO.:
CONTRACT NO.:
H-ek-mmmr

PERIMETER WALL DETAIL

SHEET IDENTIFICATION
CD-05

Details.dgn 6/26/2011 3:30:49 PM

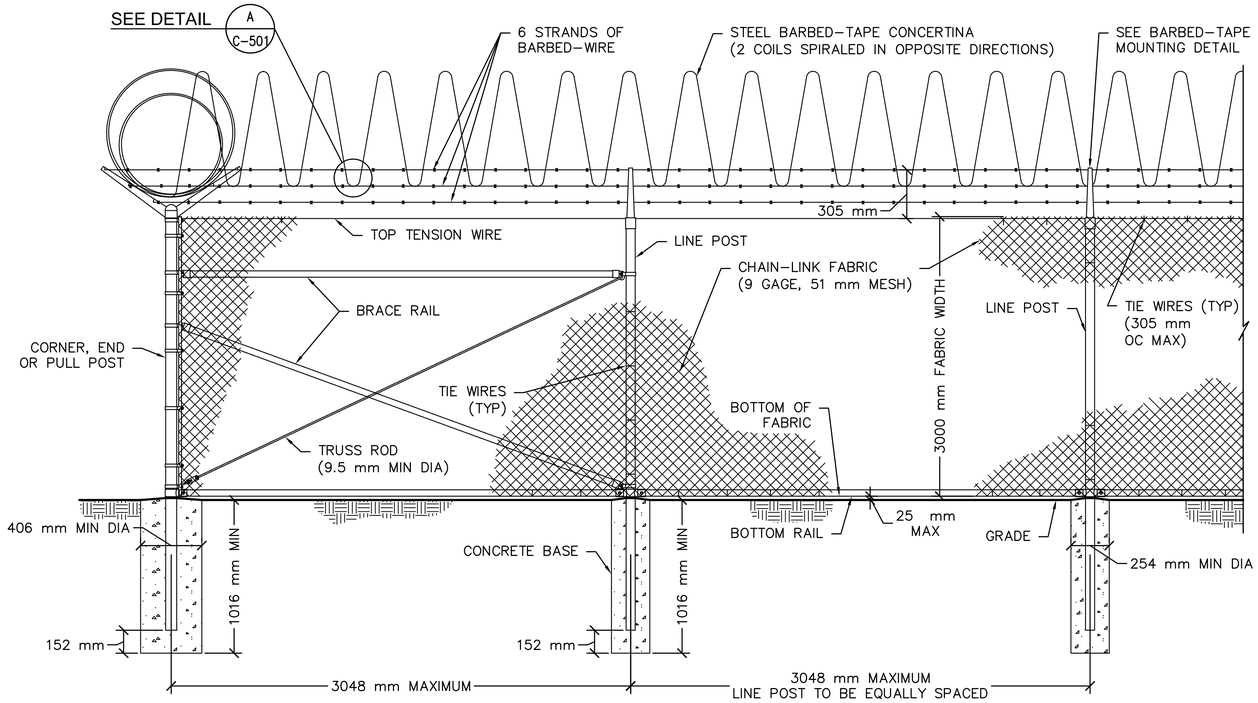

1 C-501 3000 mm CHAIN-LINK SECURITY FENCE DETAIL
SCALE: NTS

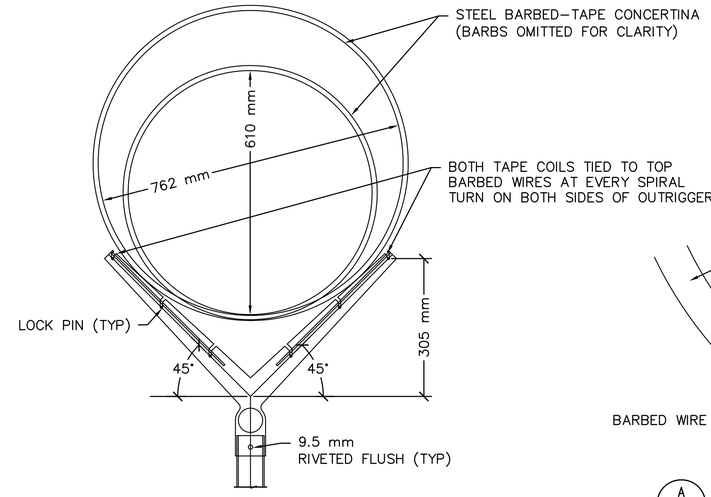

BARBED-TAPE MOUNTING DETAIL
NO SCALE

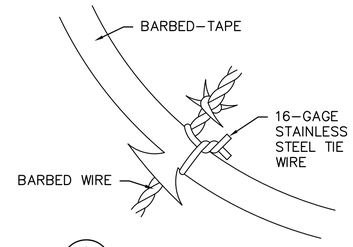

A C-501 DETAIL
NO SCALE

STEEL POST SCHEDULE	
USE AND SECTION	MINIMUM OUTSIDE DIMENSIONS (NOMINAL) FABRIC WIDTH 2440 mm AND OVER
CORNER, END & PULL POSTS	
TUBULAR – ROUND	102 mm O.D.
LINE POSTS	
TUBULAR – ROUND	73 mm O.D.
BOTTOM & BRACE RAILS	
TUBULAR – ROUND	42 mm O.D.
TUBULAR – SQUARE	38 mm SQ.
H–SECTION	41 mm x 38 mm
C–SECTION (ROLL–FORMED)	41 mm x 32 mm

NOTES:

1. WIRE TIES, RAILS, POSTS, AND BRACES SHALL BE CONSTRUCTED ON THE SECURE SIDE OF THE FENCE ALIGNMENT. CHAIN–LINK FABRIC SHALL BE PLACED ON THE SIDE OPPOSITE THE SECURE AREA.
2. ONLY 9–GAGE GALVANIZED STEEL TIE WIRES SHALL BE USED FOR FASTENING THE FENCE FABRIC TO FENCE POSTS AND RAILS. 16–GAGE, STAINLESS STEEL TIE WIRES SHALL BE USED FOR FASTENING FENCE FABRIC TO TENSION WIRES. HOG RINGS SHALL NOT BE ALLOWED ON SENSORED FENCES.
3. BOTTOM RAIL SHALL BE ATTACHED TO DOUBLE RAIL ENDS USING 9.5 mm CARRIAGE BOLTS AS SHOWN. ADDITIONAL HOLES SHALL BE DRILLED THROUGH THE BOTTOM RAIL ENDS TO INSURE THAT CARRIAGE BOLTS PASS THROUGH THE BOTTOM RAIL AS SHOWN.

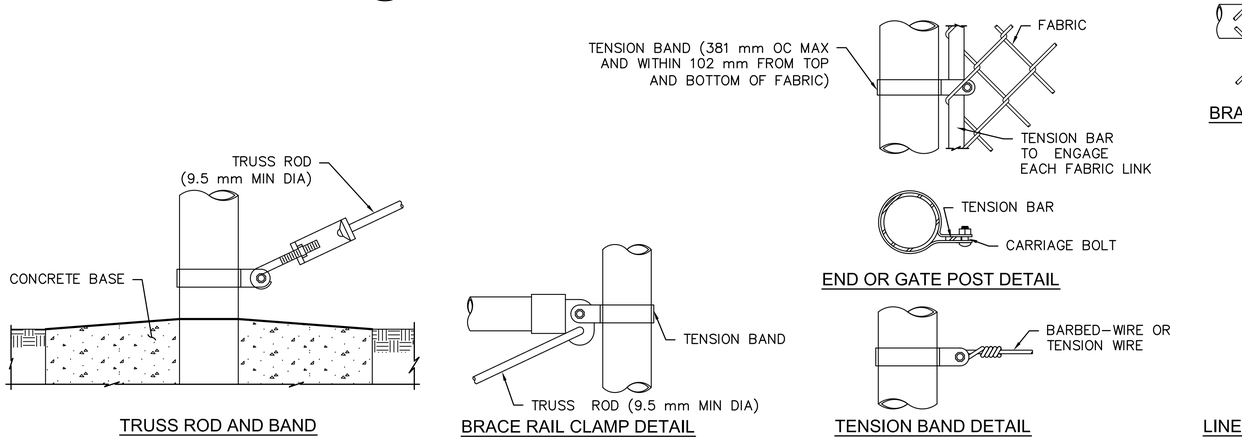

TRUSS ROD AND BAND
BRACE RAIL CLAMP DETAIL
END OR GATE POST DETAIL
TENSION BAND DETAIL

FASTENING DETAILS
NO SCALE

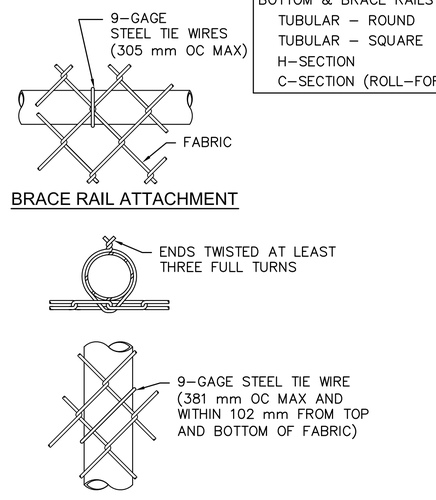

BRACE RAIL ATTACHMENT
LINE POST ATTACHMENTS

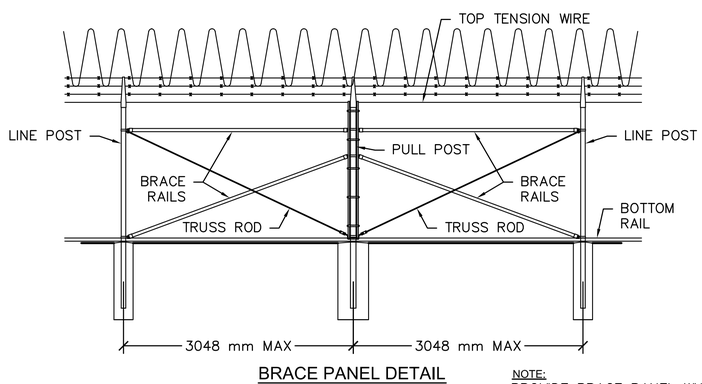

BRACE PANEL DETAIL
NO SCALE

NOTE:
PROVIDE BRACE PANEL WHENEVER STRAIGHT RUNS EXCEED 152 METERS.

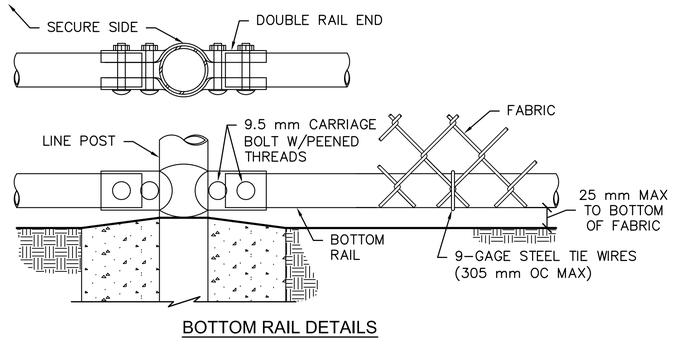

BOTTOM RAIL DETAILS
NO SCALE

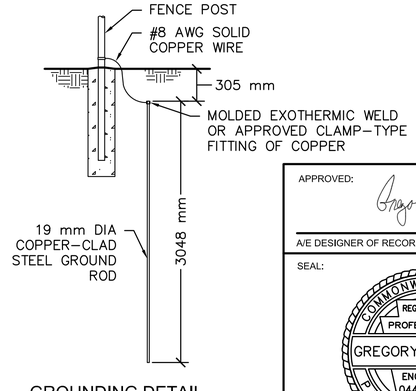

GROUNDING DETAIL
NO SCALE

APPROVED:
A/E DESIGNER OF RECORD
SEAL:
COMMONWEALTH OF PENNSYLVANIA
REGISTERED PROFESSIONAL
GREGORY P. HYNES
ENGINEER 044310–E

US ARMY CORPS OF ENGINEERS
AFGHANISTAN ENGINEER DISTRICT

Mark	Description	Date	Appr.	Mark	Description	Date	Appr.

Date: 2/23/2010 Rev: 0
Design file no. C–501
Drawing code:
File name: ANAMOTR-C-501XXX
Plot date: 2/23/2010
Plot scale: 1:1

Designed by: GPH
Dwn by: JDS
Ckd by: JMB
Reviewed by: LHM
Submitted by:
BAKER

U.S. ARMY ENGINEER DISTRICT, AFGHANISTAN
CORPS OF ENGINEERS
APO AE 96338

Michael Baker Jr., Inc.
A unit of Michael Baker Corporation
Airside Business Park
100 Airside Drive
Moon Township, PA 15108
www.mbakercorp.com

AFGHAN NATIONAL ARMY
XXXX MINISTRY OF XXXXXXXXXXXXXXXXXXXXXXXX
STANDARD DESIGN

XXXXXXXXXX
3000 mm FENCING DETAILS

Sheet reference number:
XXXXXX

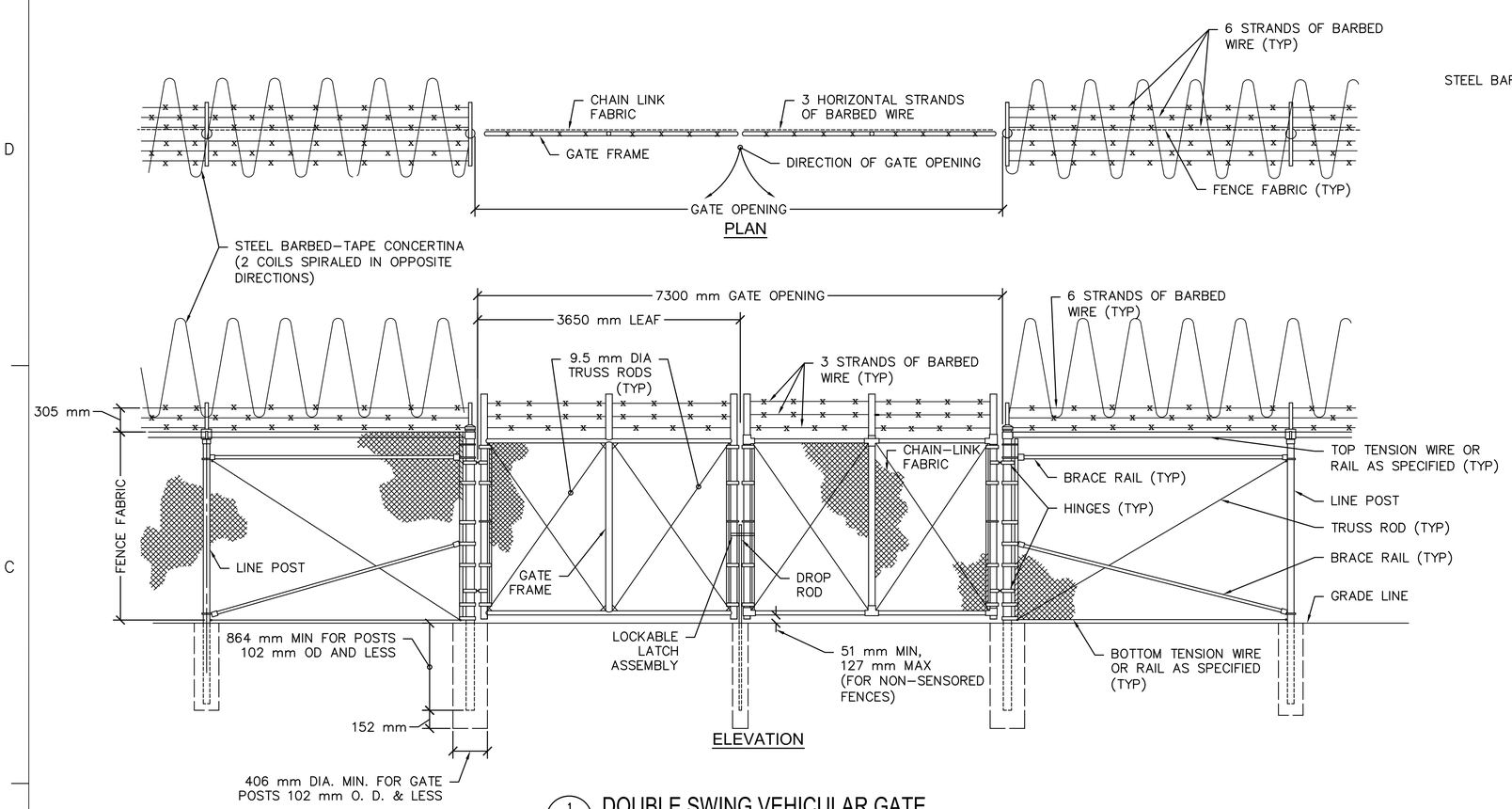

1 C–502 DOUBLE SWING VEHICULAR GATE
SCALE: NTS

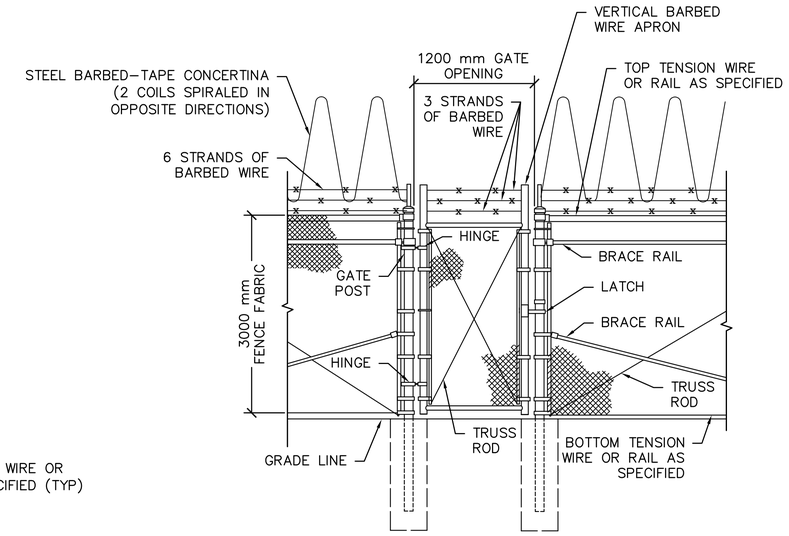

2 C–502 PERSONNEL GATE
NO SCALE

NOTES:

1. FOR NON–SENSORED FENCES, DETAILS SHOWN ARE TO CLARIFY REQUIREMENTS AND ARE NOT INTENDED TO LIMIT OTHER TYPE OF FENCE SECTIONS AND METHODS OF INSTALLATION THAT COMPLY WITH THE SPECIFICATIONS.
2. SWING GATES SHALL BE CONSTRUCTED WITH DROP RODS, PADLOCKS, LATCH ASSEMBLY AND GATE KEEPERS EXCEPT AS NOTED.
3. ALL GATE FRAMES SHALL MEET THE MINIMUM REQUIREMENTS OF ASTM F900 48 mm NOMINAL (ROUND) OR 51 mm NOMINAL (SQUARE). GATE FRAMES SHALL BE OF WELDED CONSTRUCTION OR SHALL BE ASSEMBLED USING HEAVY FITTINGS. AT CONTRACTOR'S OPTION A WELDED HORIZONTAL BRACE MAY BE USED IN LIEU OF TRUSS RODS TO BRACE ALL–WELDED GATE FRAMES. THE CONTRACTOR SHALL BE RESPONSIBLE FOR THE PROPER RIGID CONSTRUCTION OF ALL GATES SUPPLIED.

GATE POST SCHEDULE	
GATE LEAF WIDTH (NOMINAL)	OUTSIDE DIMENSION (NOMINAL)
1830 mm OR LESS	73 mm OD 64 mm SQ
GREATER THAN 1830 mm TO 3660 mm	102 mm OD

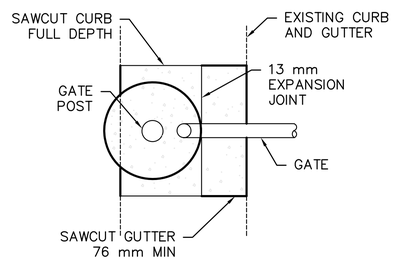

PLAN

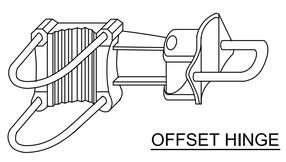

OFFSET HINGE

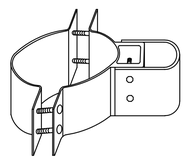

STANDARD HINGE

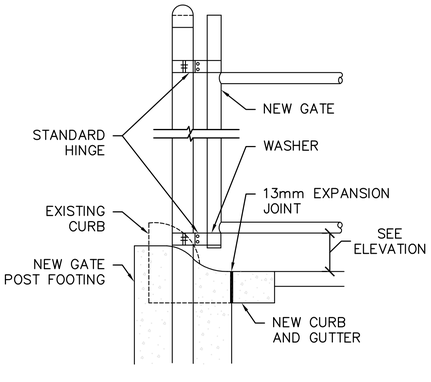

GATE POST SECTION AT CURB AND GUTTER
NO SCALE

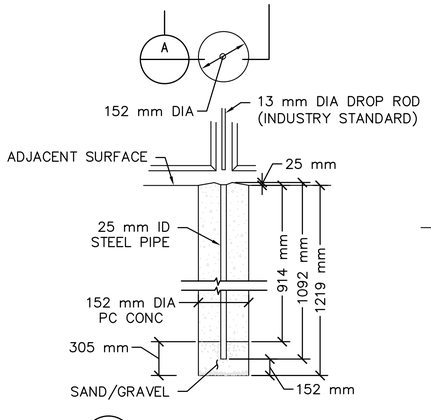

A DROP ROD FOUNDATION

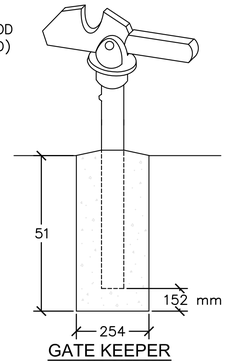

GATE KEEPER
(TO HOLD GATE OPEN)

SWING GATE DETAILS
NO SCALE

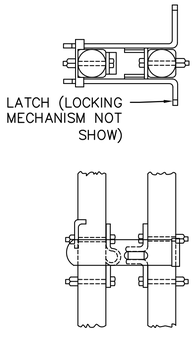

LOCKABLE LATCH ASSEMBLY

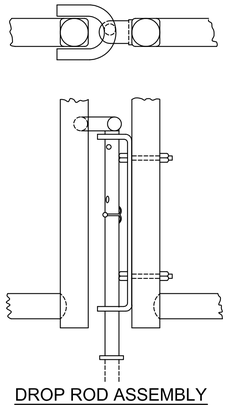

DROP ROD ASSEMBLY

APPROVED:

A/E DESIGNER OF RECORD

SEAL:

COMMONWEALTH OF PENNSYLVANIA
REGISTERED PROFESSIONAL
GREGORY P. HYNES
ENGINEER 044310–E

US ARMY CORPS OF ENGINEERS
AFGHANISTAN ENGINEER DISTRICT

Mark	Description	Date	Appr.	Mark	Description	Date	Appr.

Date: 2/23/2010 Rev: 0
Design file no. C–502
Drawing code:
File name: ANAM3TR-C-502XXX
Plot date: 2/23/2010
Plot scale: 1:1

Designed by: GPH
Dwn by: JDS
Ckd by: JMB
Reviewed by: LHM
Submitted by:
BAKER

U.S. ARMY ENGINEER DISTRICT, AFGHANISTAN
CORPS OF ENGINEERS
APO AE 96338

Michael Baker Jr., Inc.
A unit of Michael Baker Corporation
Airside Business Park
100 Airside Drive
Moon Township, PA 15108
www.mbakercorp.com

AFGHAN NATIONAL ARMY
XXXXX MILITARY TRAINING XXXX
STANDARD DESIGN

XXXXXXXXXX

FENCING DETAILS

Sheet reference number:
C–502

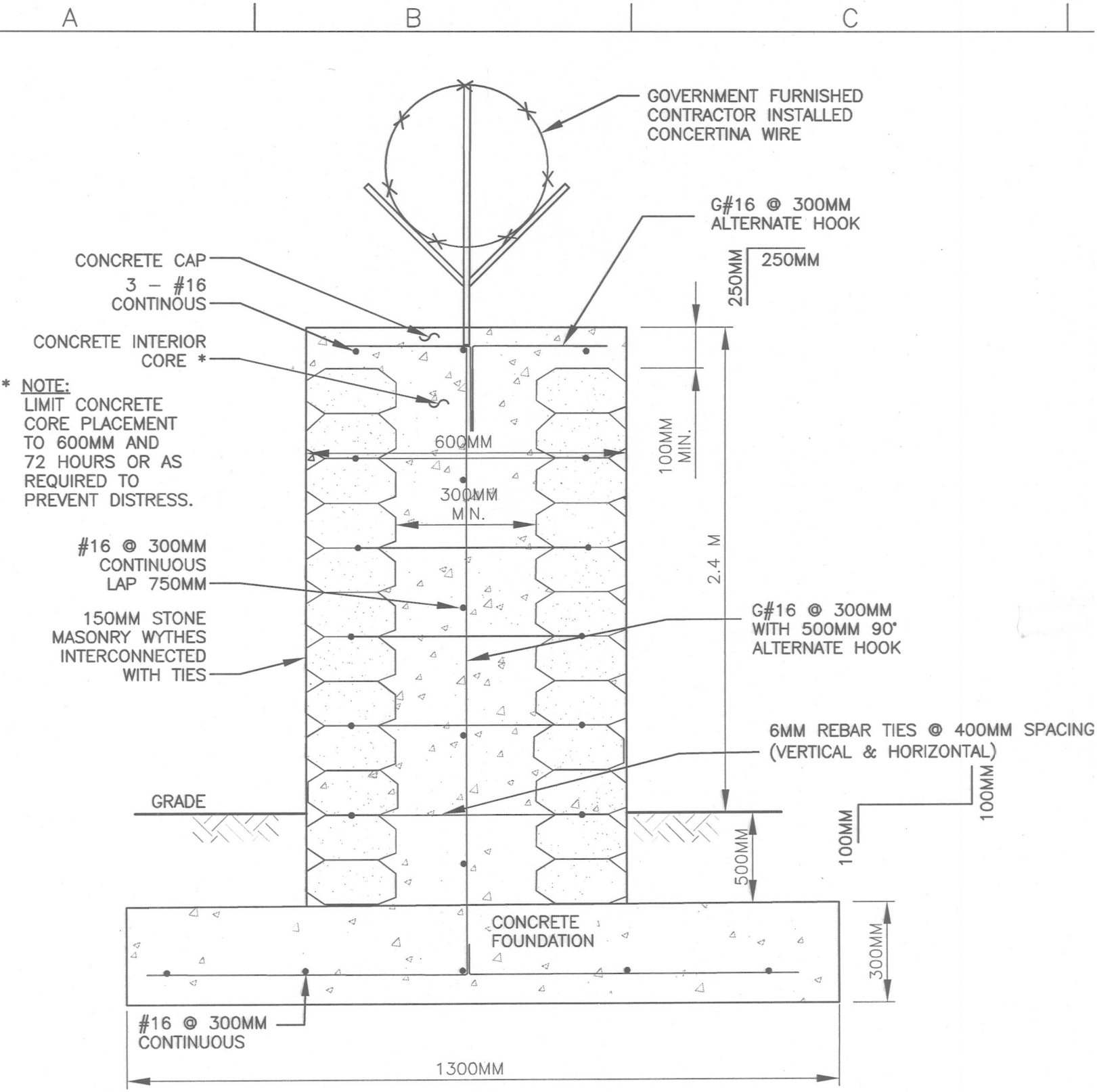

SECTION A

NOT TO SCALE

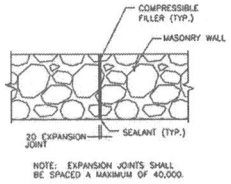

STONE WALL
EXPANSION JOINT DETAIL
NOT TO SCALE

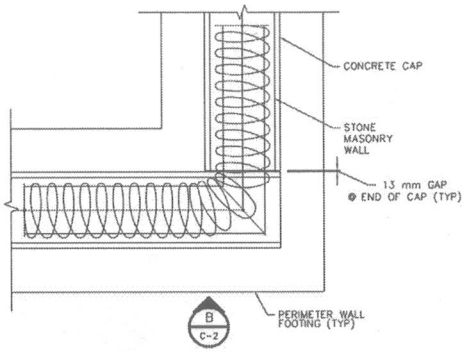

PERIMETER – STONE WALL CORNER – PLAN
(END CONDITION SIMILAR)
NOT TO SCALE

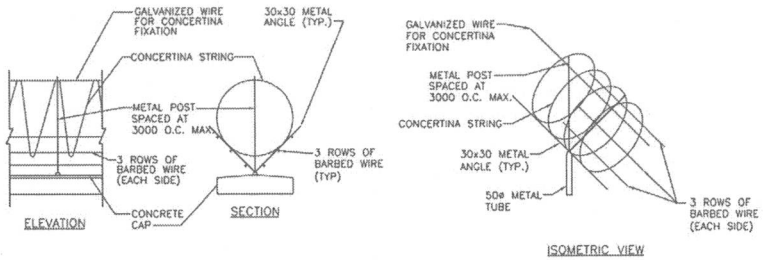

CONCERTINA STRING & BARBED WIRE DETAILS
NOT TO SCALE

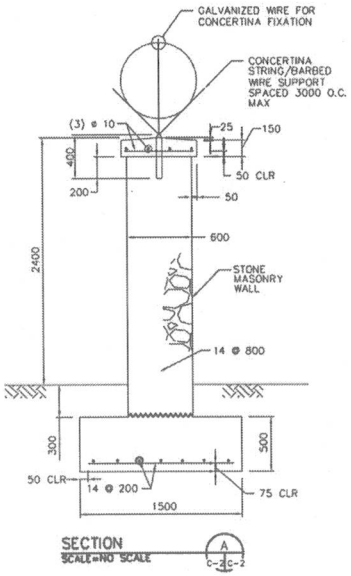

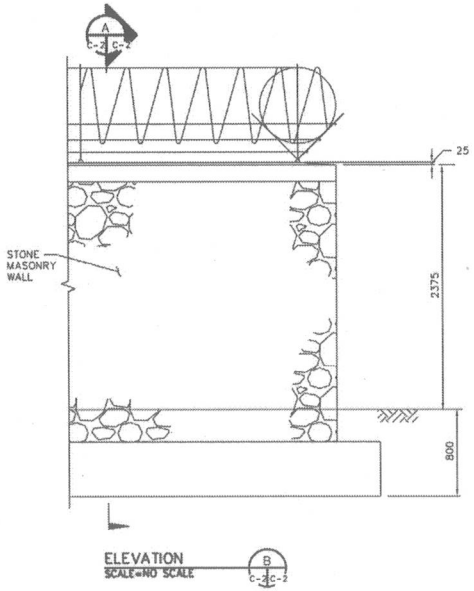

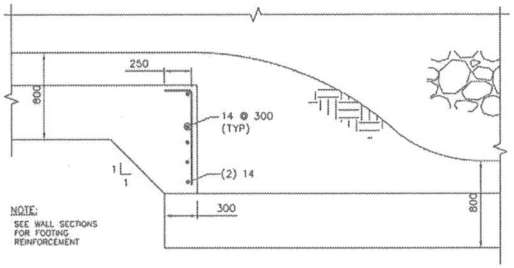

STEPPED FOOTING DETAIL FOR
GRADE CHANGE GREATER THAN 15 DEGREES
NOT TO SCALE

US ARMY CORPS OF ENGINEERS AFGHANISTAN ENGINEER DISTRICT

REVISION	DESCRIPTION	DATE	APPR

DESIGNED BY: | DATE: | REVIEW: | DRAWN BY: | CHK BY: | DESIGN FILE NO. | REVIEWED BY: | DRAWING TOOL: | SUBMITTED BY: | FILE NAME: | PLOT SCALE: | PLOT DATE:

U.S. ARMY ENGINEER DISTRICT, AFGHANISTAN
CORPS OF ENGINEERS
APO AE 09302

ENGINEERING AND CONSTRUCTION DIVISION

AFGHANISTAN NATIONAL POLICE (ANP) DISTRICT HEADQUARTERS
TYPE OF WORK: 1 STORY 4-12
VARIOUS LOCATIONS, AFGHANISTAN
SITE DESIGN

DETAILS

SHEET REFERENCE NUMBER:
C-2

A1 Size 594mm x 841mm

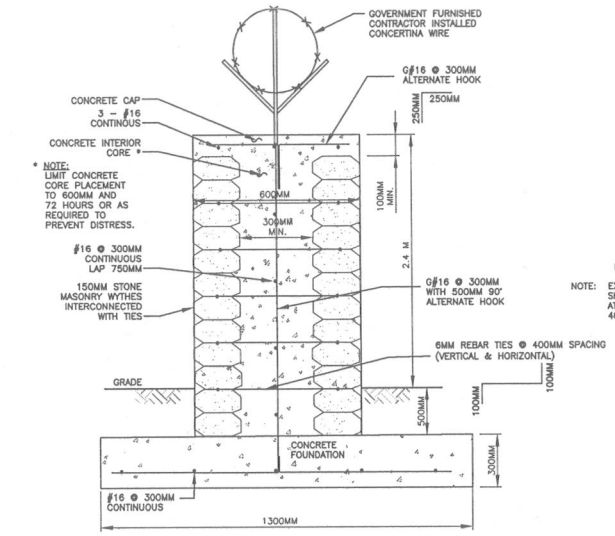

SECTION A
NOT TO SCALE

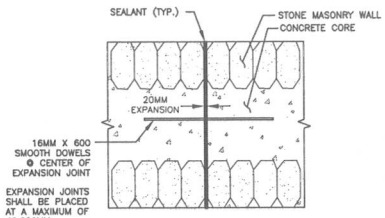

STONE WALL
EXPANSION JOINT DETAIL
NOT TO SCALE

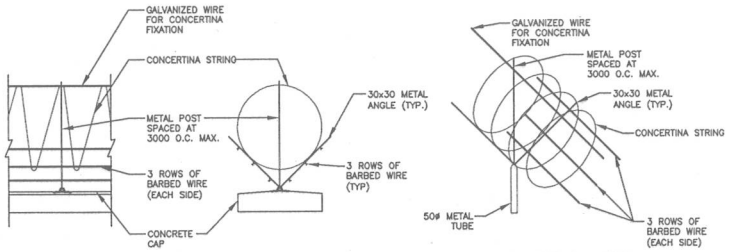

ELEVATION SECTION ISOMETRIC VIEW

CONCERTINA STRING & BARBED WIRE
DETAILS
NOT TO SCALE

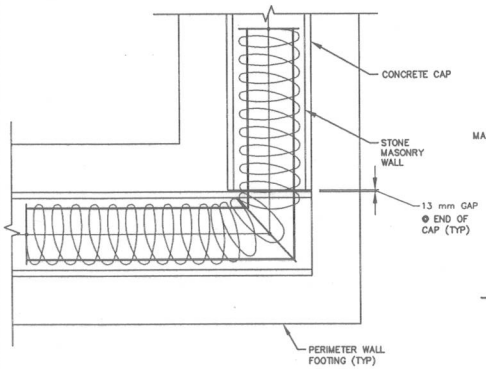

PERIMETER – STONE WALL CORNER – PLAN
(END CONDITION SIMILAR)
NOT TO SCALE

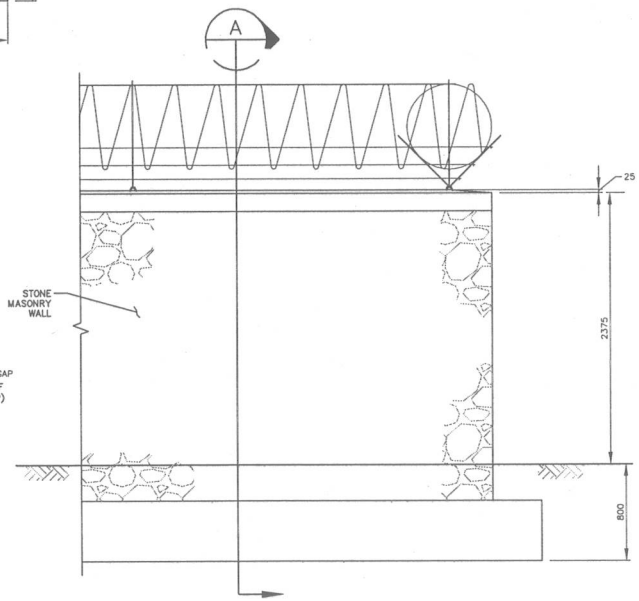

ELEVATION B
NOT TO SCALE

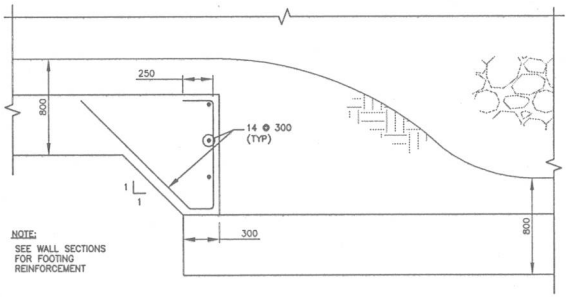

STEPPED FOOTING DETAIL FOR
GRADE CHANGE GREATER THAN 15 DEGREES
NOT TO SCALE

US Army Corps of Engineers
Afghanistan Engineer District

SYMBOL	DESCRIPTION	DATE	APP

DESIGNED BY: BAKER	DATE: 09-30-09
DWN BY: JDS	SUBMITTED BY: BAKER
CHK BY: GPH	FILE NO.: ANPSDC-507XXX

Michael Baker Jr., Inc.
A unit of Michael Baker Corporation
Airside Business Park
100 Airport Drive
Moon Township PA 15108
www.mbakercorp.com

AFGHAN NATIONAL POLICE
STANDARD DESIGN
SITE DETAILS
CIVIL DETAILS

SHEET REFERENCE NUMBER:
C7

100% SUBMISSION

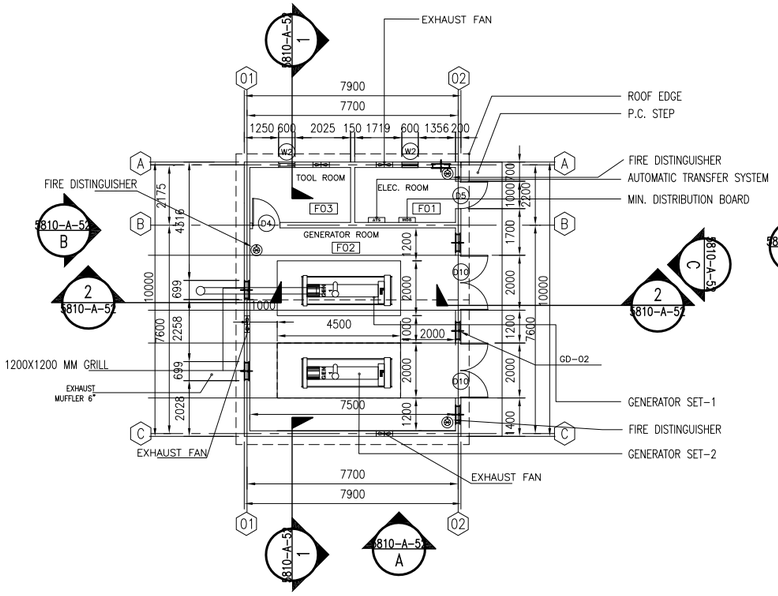

01 FIRST FLOOR PLAN

5810-A-52 REF. SCALE: 1:100

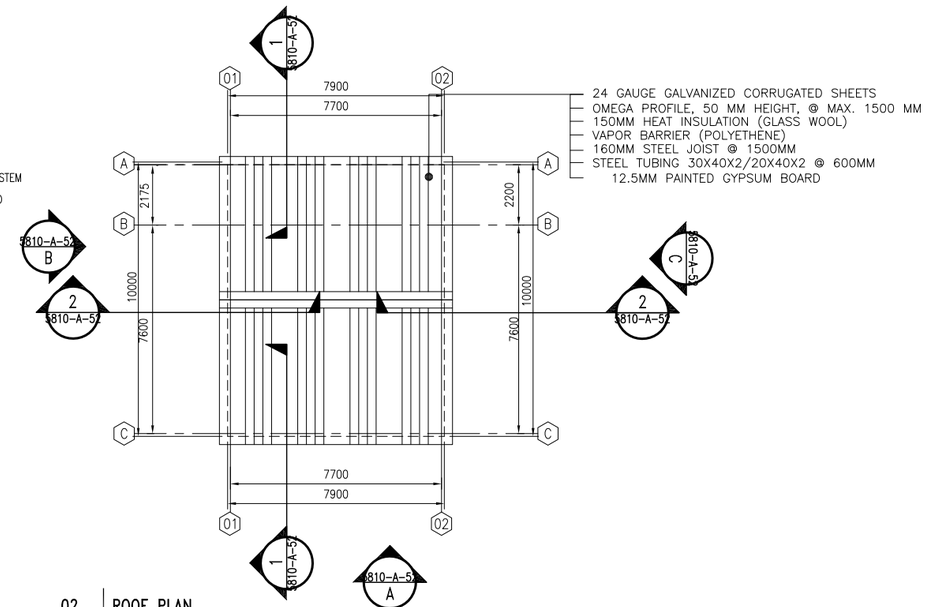

02 ROOF PLAN

5810-A-52 REF. SCALE: 1:100

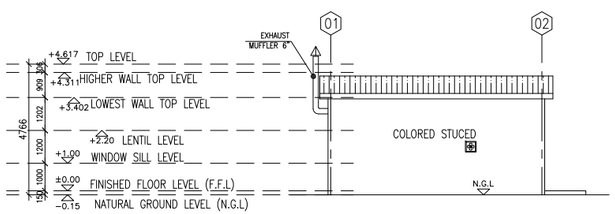

03 ELEVATION A

5810-A-52 REF. SCALE: 1:100

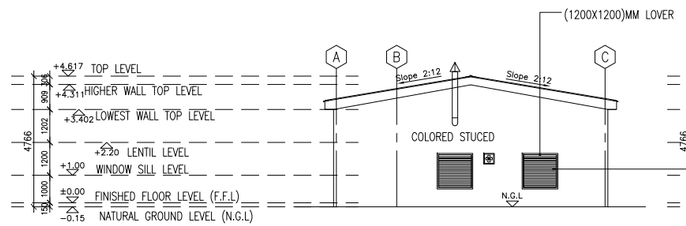

04 ELEVATION B

5810-A-52 REF. SCALE: 1:100

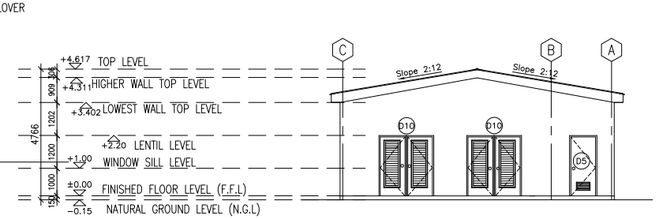

05 ELEVATION C

5810-A-52 REF. SCALE: 1:100

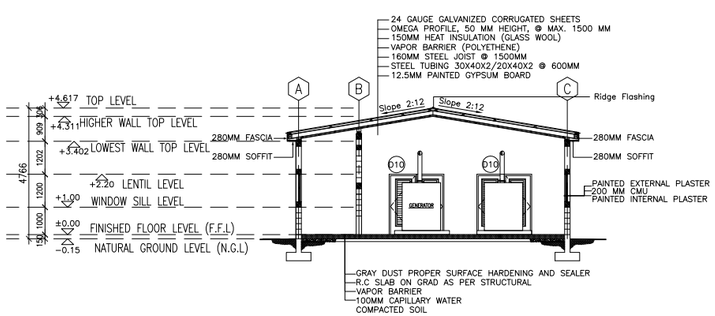

06 SECTION 1 : 1

5810-A-52 REF. SCALE: 1:100

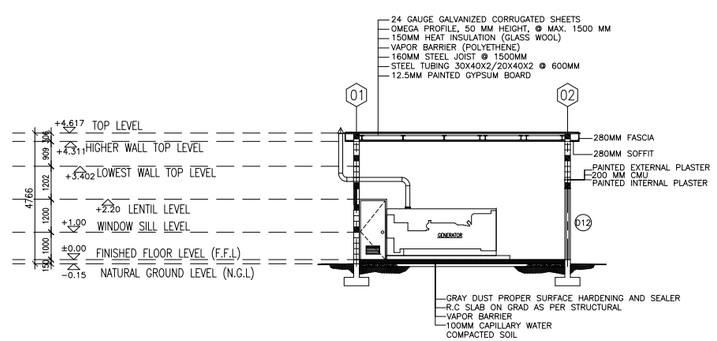

07 SECTION 2 : 2

5810-A-52 REF. SCALE: 1:100

Finishing Schedule Legend

Floor

F1	GRAY DUST PROPER SURFACE HARDENING AND SEALER
F2	300mmX300mm Terrazzo with water proofing membrane beneath sloping mortar bed

Wall

W1	White Painted Plaster
W2	150mmX150mm glazed ceramic tiles up to 2000mm above F.F.L.
W3	PAINTED WITH 1 HOUR FIRE RATED PAINT (JOTUN)

Ceiling

C1	White Painted GYPSUM BOARD
C2	1/2 HOUR FIRE RATED GYPSUM BOARD

Finishing Schedule

Room	Usage	Floor	Wall	Ceiling
F01	ELEC. ROOM	F2	W3	C2
F02	GENERATOR ROOM	F1	W1	C1
F03	MECHANICAL ROOM	F2	W1	C1

Notes

1- ALL DIMENSIONS ARE IN MM UNLESS OTHERWISE SPECIFIED.
2- ALL LEVELS ARE IN METER (M) UNLESS OTHERWISE SPECIFIED
3- ALL WALL ARE 200 mm CMU WITH 25mm PAINTED CEMENT PLASTER BOTH SIDE.
4- EXTERIOR WALLS TO BE PAINTED WITH COLORED STUCCO
5-ALL ROOFS ARE 24 GAUGE GALVANIZED CORRUGATED SHEETS

1:50

US ARMY CORPS OF ENGINEERS AFGHANISTAN ENGINEER DISTRICT

Symbol	Description	Date	Description	DATE	Appr.

Designed BY: | Drawn BY: | Contract Date:
Reviewed by: | Draw Code: | FILE NAME:
Submitted by: | Plot Date: | Plot Scale:
Solicitation No: | Contract No:

DEPARTMENT OF THE ARMY
U.S ARMY CORPS OF ENGIEERS
AFGHANISTAN ENGINEERS SOUTH
KANDAHAR, AFGHANISTAN

Contractor:
Designer :

GENERATOR ROOM BUILDING#(5810)
PLAN, SEC,& ELEVATIONS

SHEET REFERENCE NUMBER:
5810-A-52
107 OF 529

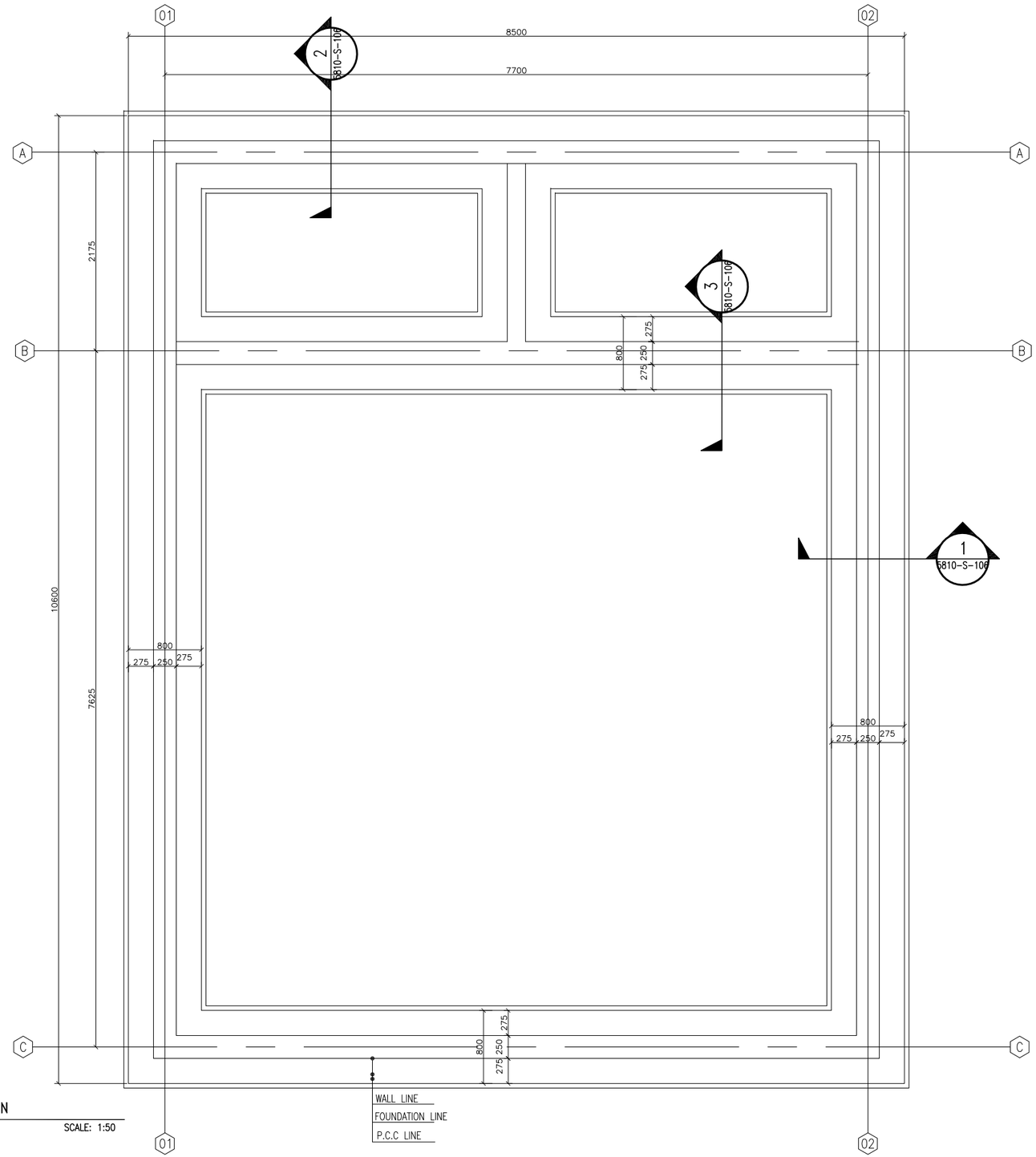

01 FOUNDATION PLAN

5810-S-104 REF. SCALE: 1:50

Notes

1- ALL DIMENSIONS ARE IN MM UNLESS OTHERWISE SPECIFIED.
2- FOUNDATION DESIGN IS ASSUMED ON BEARING CAPACITY OF 14.22 PSI (1Kg/cm²).
3-FOUNDATION SHALL BE FOUNDED ON 95% MAXIMUM DENSITY OF COMPACTED MATERIAL.
4-THE STEEL GRADE SHALL BE Fy=60 KSI (Fy=4220Kg/cm²).
5-FOR CAST-IN-PLACE STRUCTURAL CONCRETE,MINIMUM 28 DAYS, CYLINDER STRENGTH f'c=4000 PSI (f'c=280Kg/cm²).

US ARMY CORPS OF ENGINEERS
AFGHANISTAN ENGINEER DISTRICT

Symbol	Description	Date	Description	DATE	Appr.

Designed BY: | Drawn BY: | Contract Date:
Reviewed by: | Draw Code: | FILE NAME:
Submitted by: | Plot Date: | Plot Scale:
Solicitation No: | Contract No:

DEPARTMENT OF THE ARMY
U.S ARMY CORPS OF ENGIEERS
AFGHANISTAN ENGINEERS SOUTH
KANDAHAR, AFGHANISTAN

Contractor:
Designer :

GENRATOR ROOM (5810)
FOUNDATION PLAN

SHEET REFERENCE NUMBER:
5810-S-104
286 OF 529

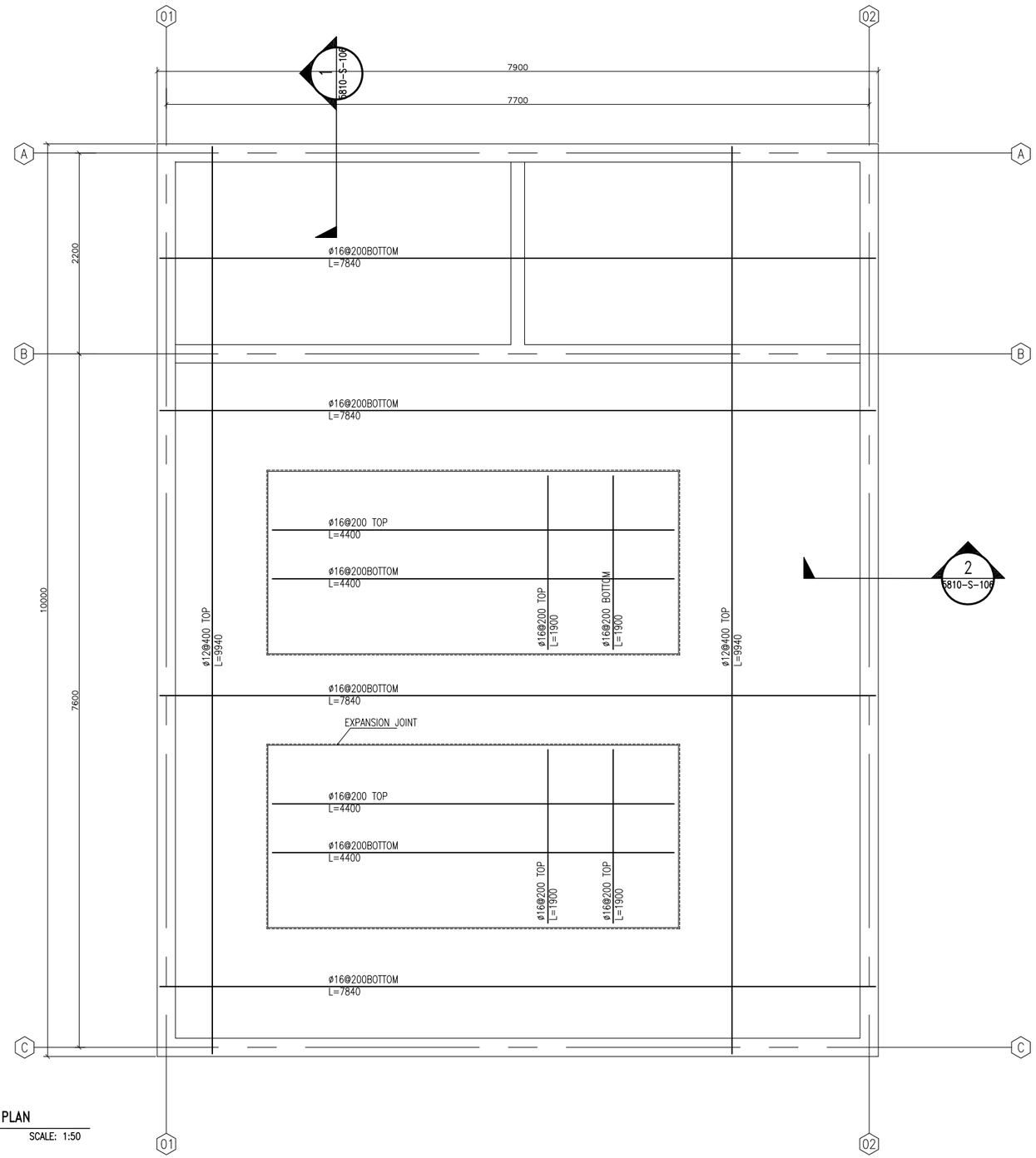

01 SLAB REINFORCEMENT PLAN

5810-S-105 REF. SCALE: 1:50

Notes

1- ALL DIMENSIONS ARE IN MM UNLESS OTHERWISE SPECIFIED.
2-THE STEEL GRADE SHALL BE Fy=60 KSI(4220 Kg/cm²).
3-FOR CAST-IN-PLACE STRUCTURAL CONCRETE,MINIMUM 28 DAYS, CYLINDER STRENGTH F'C=4000 PSI(F'C=280KG/CM²).

US ARMY CORPS OF ENGINEERS
AFGHANISTAN ENGINEER DISTRICT

Symbol	Description	Date	Description	DATE	Appr.

Designed BY: | Drawn BY: | Contract Date:
Reviewed by: | Draw Code: | FILE NAME:
Submitted by: | Plot Date: | Plot Scale:
Solicitation No: | Contract No:

DEPARTMENT OF THE ARMY
U.S ARMY CORPS OF ENGIEERS
AFGHANISTAN ENGINEERS SOUTH
KANDAHAR, AFGHANISTAN

Contractor:
Designer :

GENRATOR ROOM (5810)
SLAB REINFORCEMENT PLAN

SHEET REFERENCE NUMBER:
5810-S-105
286 OF 529

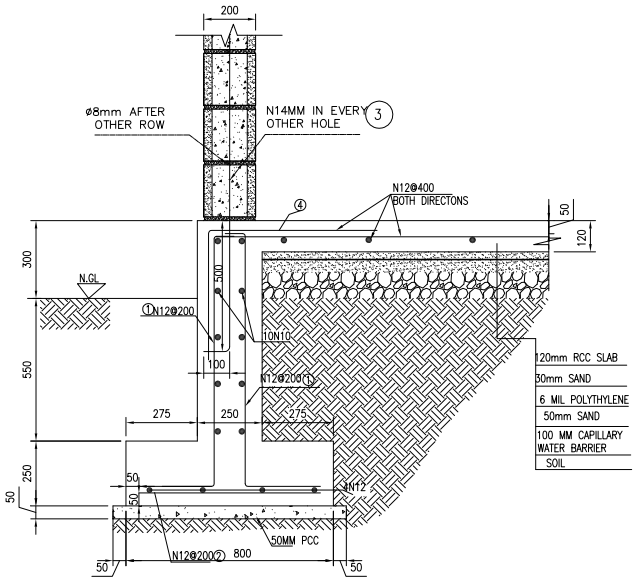

01 TYPICAL SECTION_1

5810-S-106 | REF. 5810-S-104&105 | SCALE: 1:20

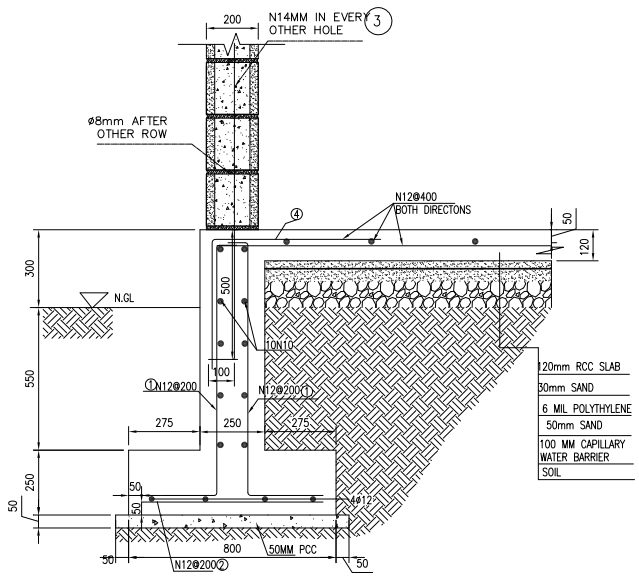

02 TYPICAL SECTION_2

5810-S-106 | REF. 5810-S-104&105 | SCALE: 1:20

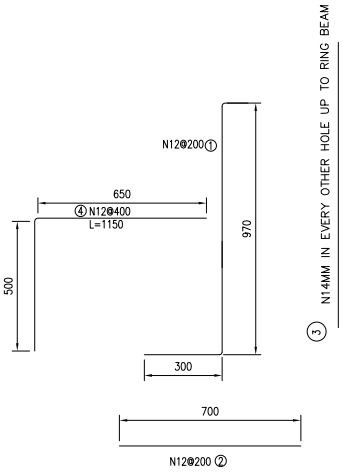

03 REINFORCEMENT DETAIL FOR SECTION 1&2

5810-S-106 | REF. 5810-S-106 | SCALE: 1:20

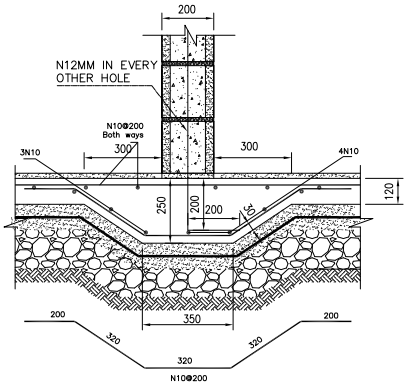

04 TYPICAL SECTION FOR INTERNAL WALLS

5810-S-106 | REF. 5810-S-105 | SCALE: 1:20

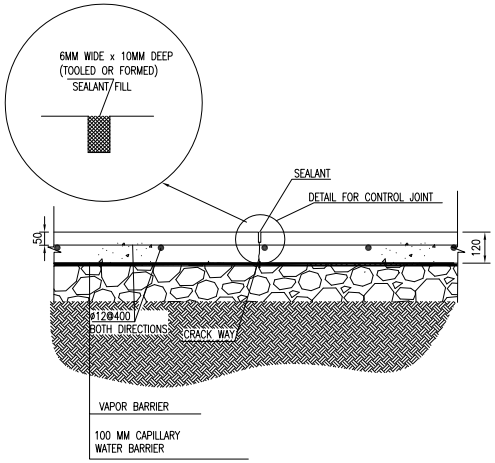

05 SLAB ON GRADE CONTROL JOINT

5810-S-106 | REF. 5810-S-105 | SCALE: 1:20

Notes

1- ALL DIMENSIONS ARE IN MM UNLESS OTHERWISE SPECIFIED.
2- FOUNDATION DESIGN IS ASSUMED ON BEARING CAPACITY OF 14.22 PSI (1Kg/cm²).
3-FOUNDATION SHALL BE FOUNDED ON 95% MINIMUM DENSITY OF COMPACTED MATERIAL.
4-THE STEEL GRADE SHALL BE Fy=60 KSI(Fy=4220Kg/cm²)
5-FOR CAST-IN-PLACE STRUCTURAL CONCRETE,MINIMUM 28 DAYS, CYLINDER STRENGTH f'c=4000 PSI(f'c=280Kg/cm²).

US ARMY CORPS OF ENGINEERS AFGHANISTAN ENGINEER DISTRICT

Symbol	Description	Date	Description	DATE	Appr.

Designed BY: | Drawn BY: | Contract Date:
Reviewed by: | Draw Code: | FILE NAME:
Submitted by: | Plot Date:
Plot Scale:
Solicitation No: | Contract No:

DEPARTMENT OF THE ARMY
U.S ARMY CORPS OF ENGIEERS
AFGHANISTAN ENGINEERS SOUTH
KANDAHAR, AFGHANISTAN

Contractor:
Designer :

GENRATOR ROOM (5810)
SECTIONS

SHEET REFERENCE NUMBER:
5810-S-106
287 OF 529

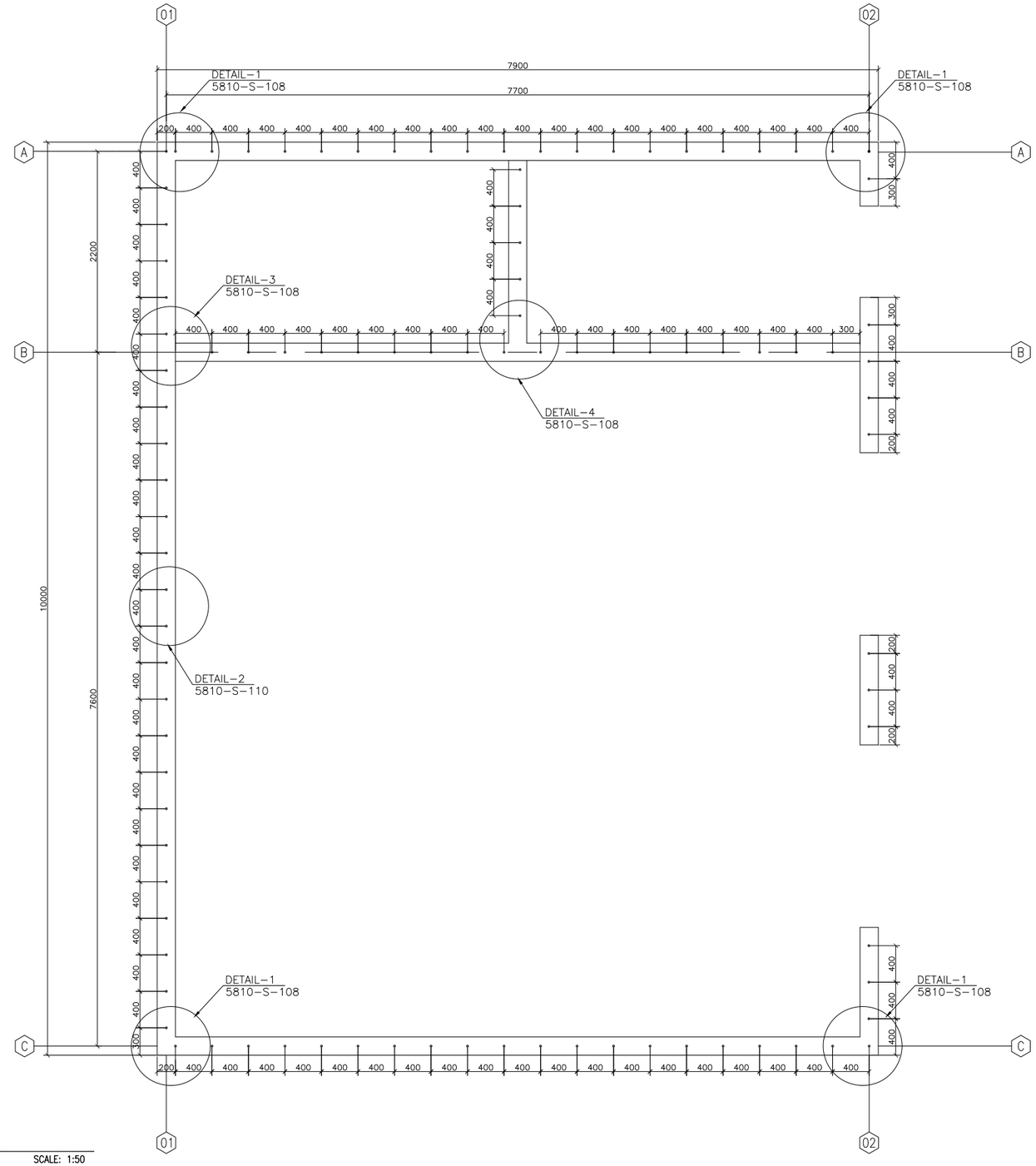

01 STARTER BARS PLAN

5810-S-107 REF. SCALE: 1:50

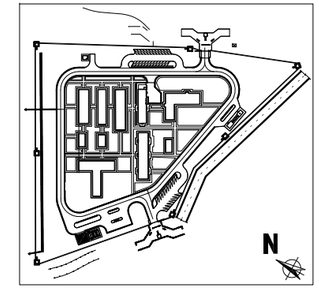

KEY PLAN

US ARMY CORPS OF ENGINEERS AFGHANISTAN ENGINEER DISTRICT

Symbol	Description	Date	Description	DATE	Appr.

Designed BY: | Drawn BY: | Contract Date:

Reviewed by: | Draw Code: | FILE NAME:

Submitted by: | Plot Date: | Plot Scale:

Solicitation No: | Contract No:

DEPARTMENT OF THE ARMY
U.S ARMY CORPS OF ENGIEERS
AFGHANISTAN ENGINEERS SOUTH
KANDAHAR, AFGHANISTAN

Contractor:

Designer :

GENRATOR ROOM (5810)
STARTER BARS PLAN

Notes

1- ALL DIMENSIONS ARE IN MM UNLESS OTHERWISE SPECIFIED.
2-THE STEEL GRADE SHALL BE Fy=60 KSI (Fy=4220Kg/cm²).
3-FOR CAST-IN-PLACE STRUCTURAL CONCRETE,MINIMUM 28 DAYS, CYLINDER STRENGTH f'c=4000 PSI (f'c=280Kg/cm²).

SHEET REFERENCE NUMBER:
5810-S-107
288 OF 529