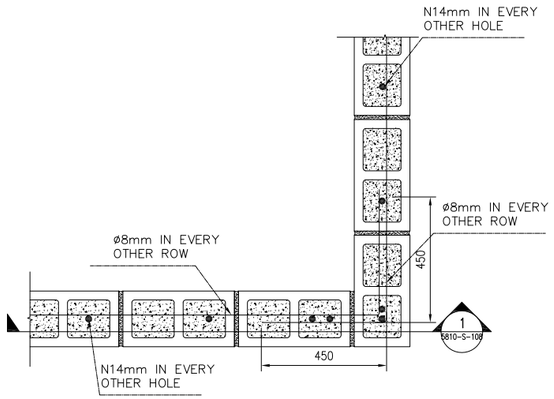

01 DETAIL OF EXTERIOR WALL IN CORNER

5810-S-108 REF. 5810-S-107 SCALE: 1:20

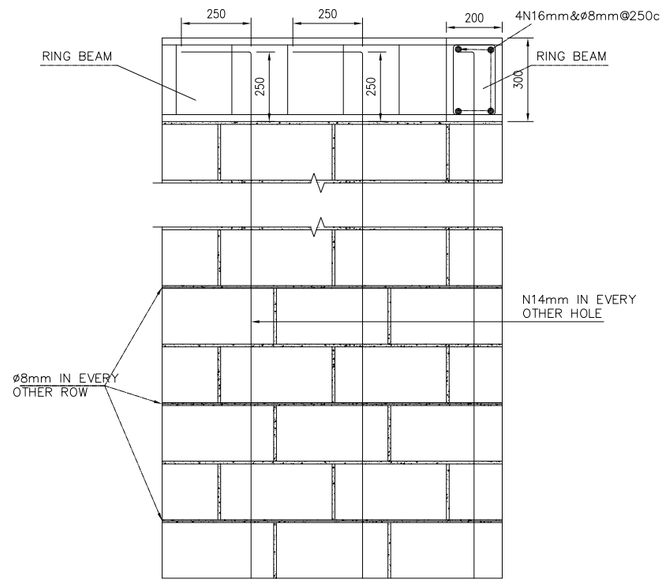

02 SECTION-1

5810-S-108 REF. 5810-S-108 SCALE: 1:20

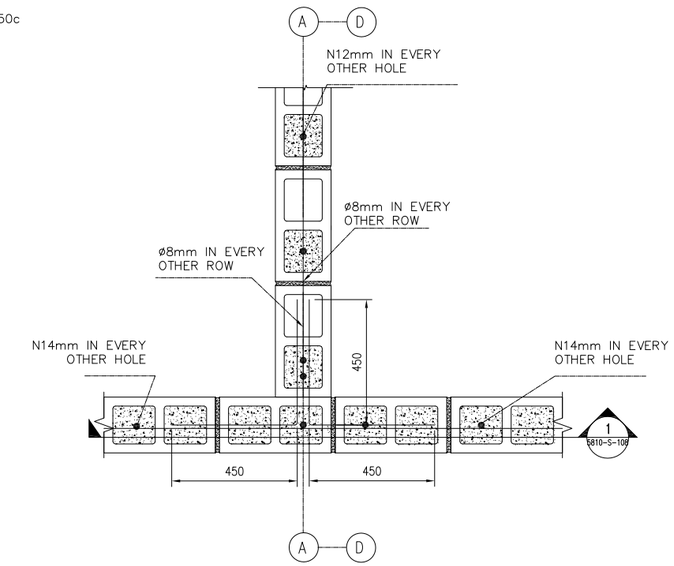

03 DETAIL OF EXTERIOR WALL IN MIDDLE

5810-S-108 REF. 5810-S-107 SCALE: 1:20

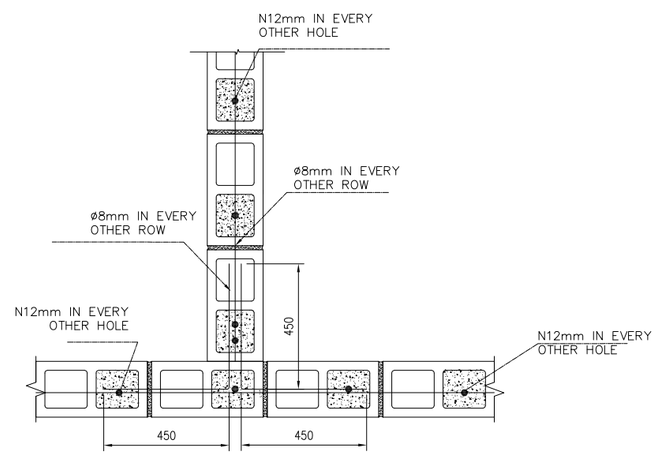

04 DETAIL OF INTERIOR WALL IN MIDDLE

5810-S-108 REF. 5810-S-107 SCALE: 1:20

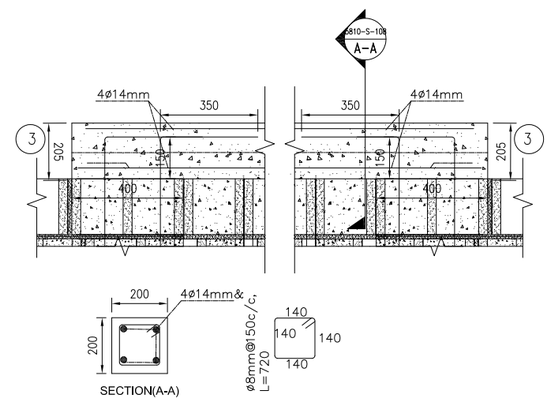

05 DETAIL FOR ALL LENTAL

5810-S-108 REF. SCALE: 1:20

NOTES

1- USE ø14MM @ 400 FOR EXTERIOR CMU WALLS AND ø12 @400 FOR INTERIOR CMU WALLS,UNLESS OTHERWISE NOTED.

2- ø 8 MM EVERY OTHER ROWS FOR HORIZONTAL REINFORCEMENT

3- ALL CELLS OF EXTIRIOR CMU WALLS SHALL BE FULLY GROUTED:

4- USE FULL CONTACT LAP SPLICES FOR REINFORCING STEEL IN CMU WALLS 48 DIAMETER OF BAR UNLESS OTHERWISE NOTED :

US ARMY CORPS OF ENGINEERS AFGHANISTAN ENGINEER DISTRICT

Symbol	Description	Date	Description	DATE	Appr.

DEPARTMENT OF THE ARMY
U.S ARMY CORPS OF ENGIEERS
AFGHANISTAN ENGINEERS SOUTH
KANDAHAR, AFGHANISTAN

Designed BY: | Drawn BY: | Contract Date:
Reviewed by: | Draw Code: | FILE NAME:
Submitted by: | Plot Date: | Plot Scale:
Solicitation No: | Contract No:
Contractor:
Designer :

GENRATOR ROOM (5810)
SECTION & DETAIL

SHEET REFERENCE NUMBER:
5810-S-108
289 OF 529

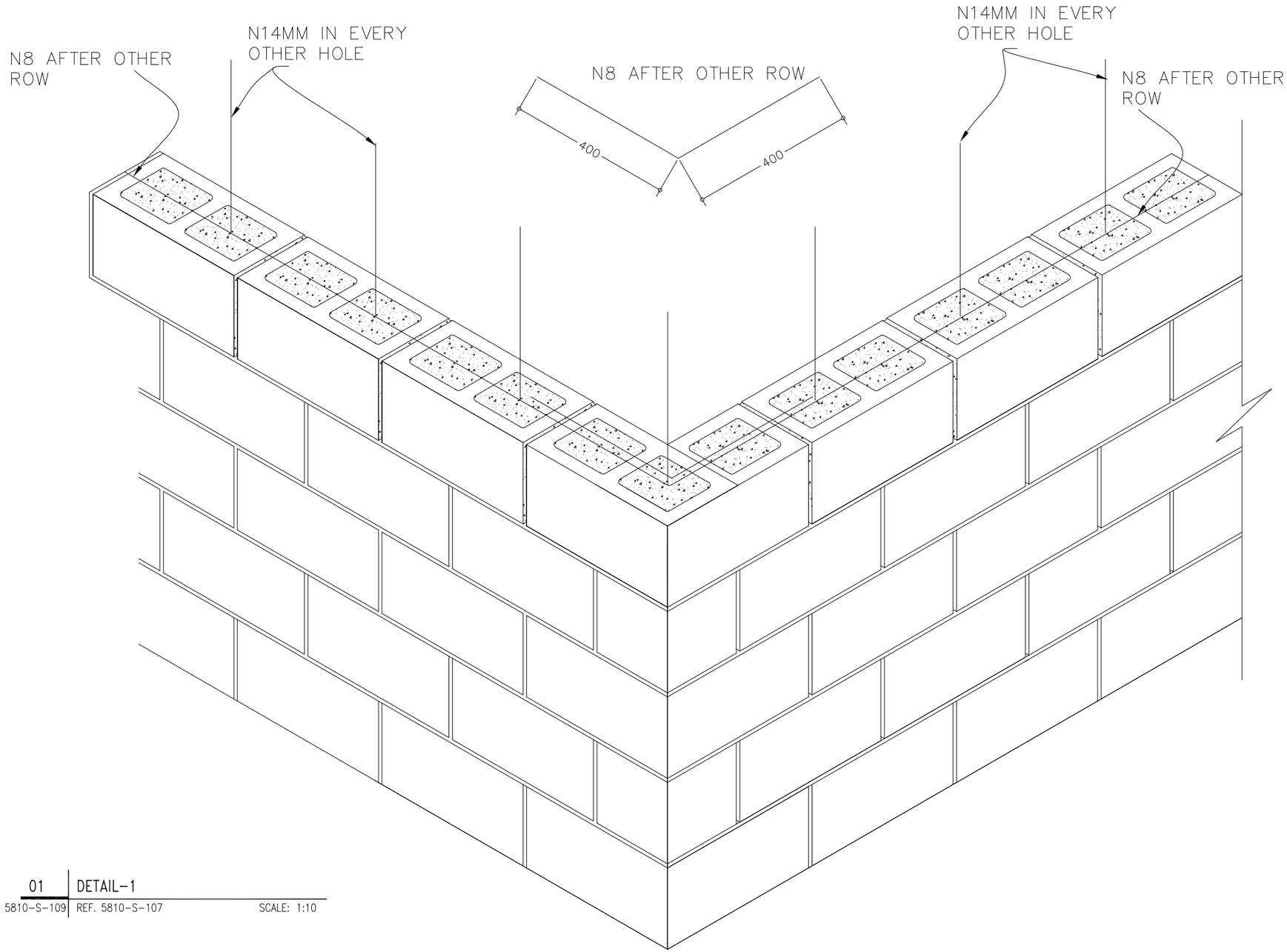

01 DETAIL-1

5810-S-109 REF. 5810-S-107 SCALE: 1:10

US ARMY CORPS OF ENGINEERS AFGHANISTAN ENGINEER DISTRICT

Symbol	Description	Date	Description	DATE	Appr.

DEPARTMENT OF THE ARMY
U.S ARMY CORPS OF ENGIERS
AFGHANISTAN ENGINEERS SOUTH
KANDAHAR, AFGHANISTAN

Designed BY: Drawn BY: Contract Date:
Reviewed by: Draw Code: FILE NAME:
Submitted by: Plot Date: Plot Scale:
Solicitation No: Contract No:
Contractor:
Designer :

GENRATOR ROOM (5810)
DETAIL-1

SHEET REFERENCE NUMBER:
5810-S-109
290 OF 529

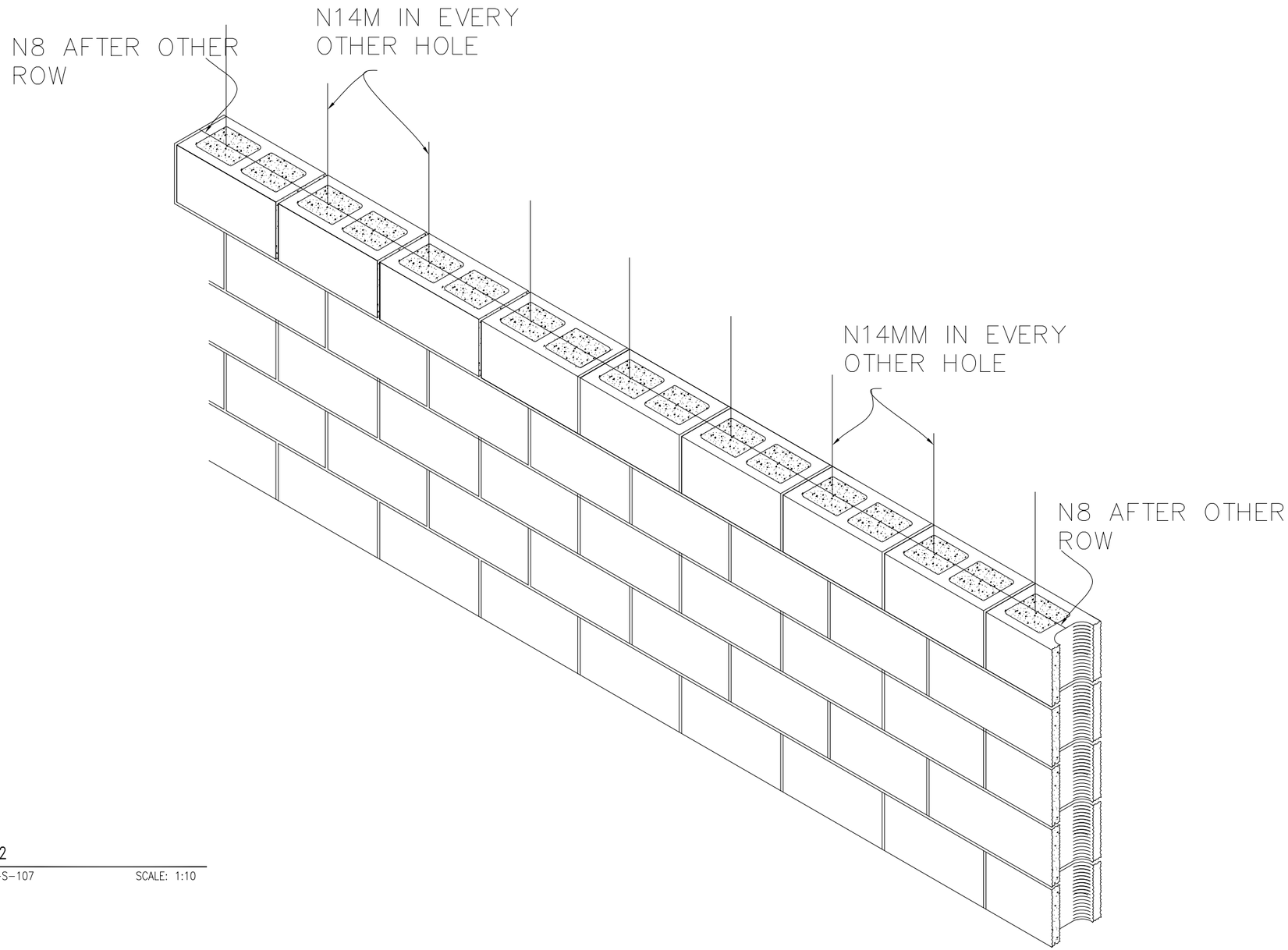

01 DETAIL-2

5810-S-110 REF. 5810-S-107 SCALE: 1:10

US ARMY CORPS OF ENGINEERS
AFGHANISTAN ENGINEER DISTRICT

Symbol	Description	Date	Description	DATE	Appr.

Designed BY: | Drawn BY: | Contract Date:
Reviewed by: | Draw Code: | FILE NAME:
Submitted by: | Plot Date: | Plot Scale:
Solicitation No: | Contract No:

DEPARTMENT OF THE ARMY
U.S ARMY CORPS OF ENGIEERS
AFGHANISTAN ENGINEERS SOUTH
KANDAHAR, AFGHANISTAN

Contractor:
Designer :

GENRATOR ROOM (5810)
DETAIL-2

SHEET REFERENCE NUMBER:
5810-S-110
291 OF 529

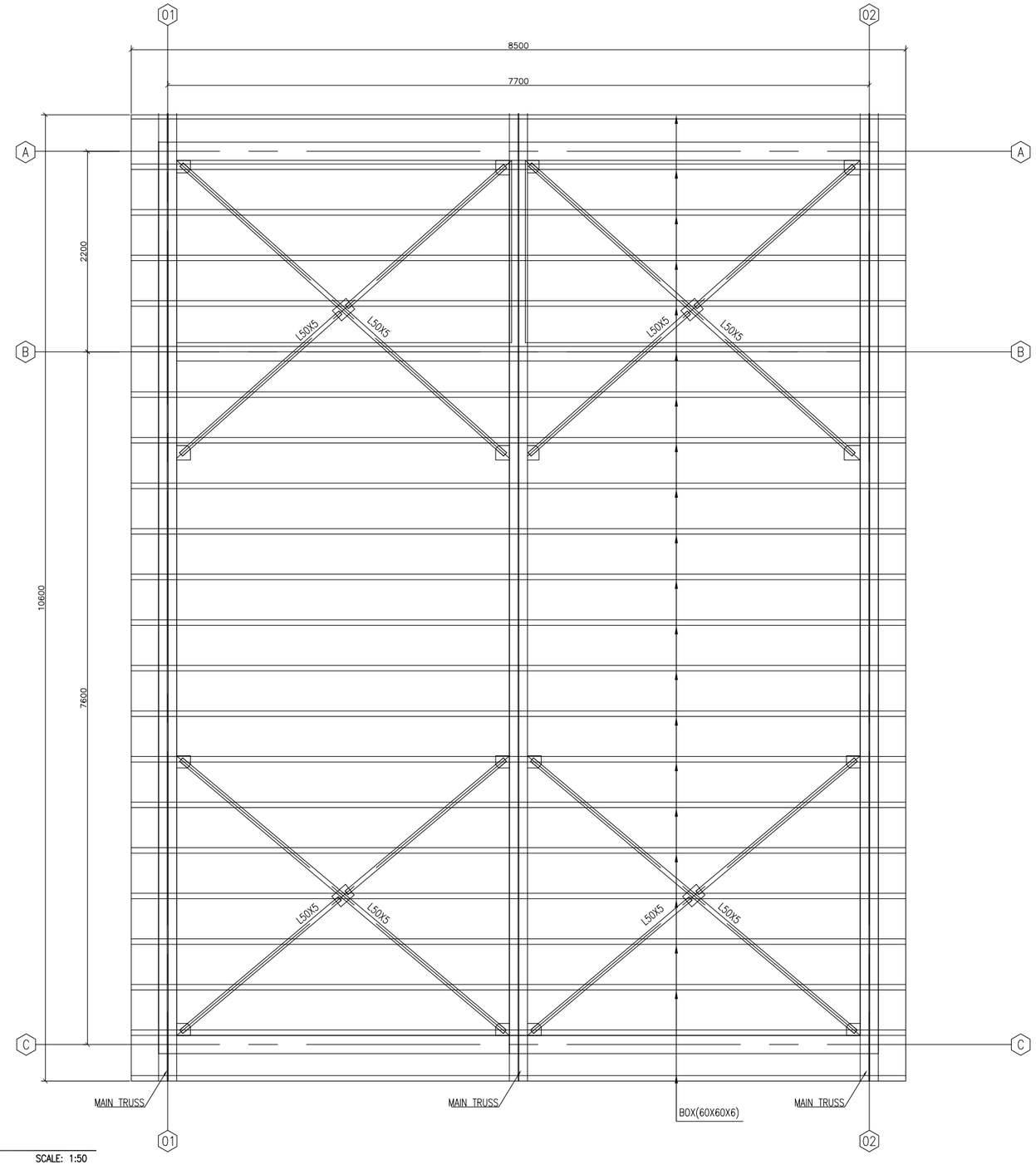

01 ROOF PLAN

5810-S-111 REF. SCALE: 1:50

Notes

1- ALL DIMENSIONS ARE IN MM UNLESS OTHERWISE SPECIFIED.
2-THE STEEL GRADE SHALL BE Fy=60 KSI(4220 Kg/cm²).
3-FOR CAST-IN-PLACE STRUCTURAL CONCRETE,MINIMUM 28 DAYS, CYLINDER STRENGTH F'C=4000 PSI(F'C=280KG/CM²).

US ARMY CORPS OF ENGINEERS
AFGHANISTAN ENGINEER DISTRICT

Symbol	Description	Date	Description	DATE	Appr.

Designed BY: | Drawn BY: | Contract Date:
Reviewed by: | Draw Code: | FILE NAME:
Submitted by: | Plot Date: | Plot Scale:
Solicitation No: | Contract No:

DEPARTMENT OF THE ARMY
U.S ARMY CORPS OF ENGEERS
AFGHANISTAN ENGINEERS SOUTH
KANDAHAR, AFGHANISTAN

Contractor:
Designer :

GENRATOR ROOM (5810)
ROOF PLAN

SHEET REFERENCE NUMBER:
5810-S-111
292 OF 529

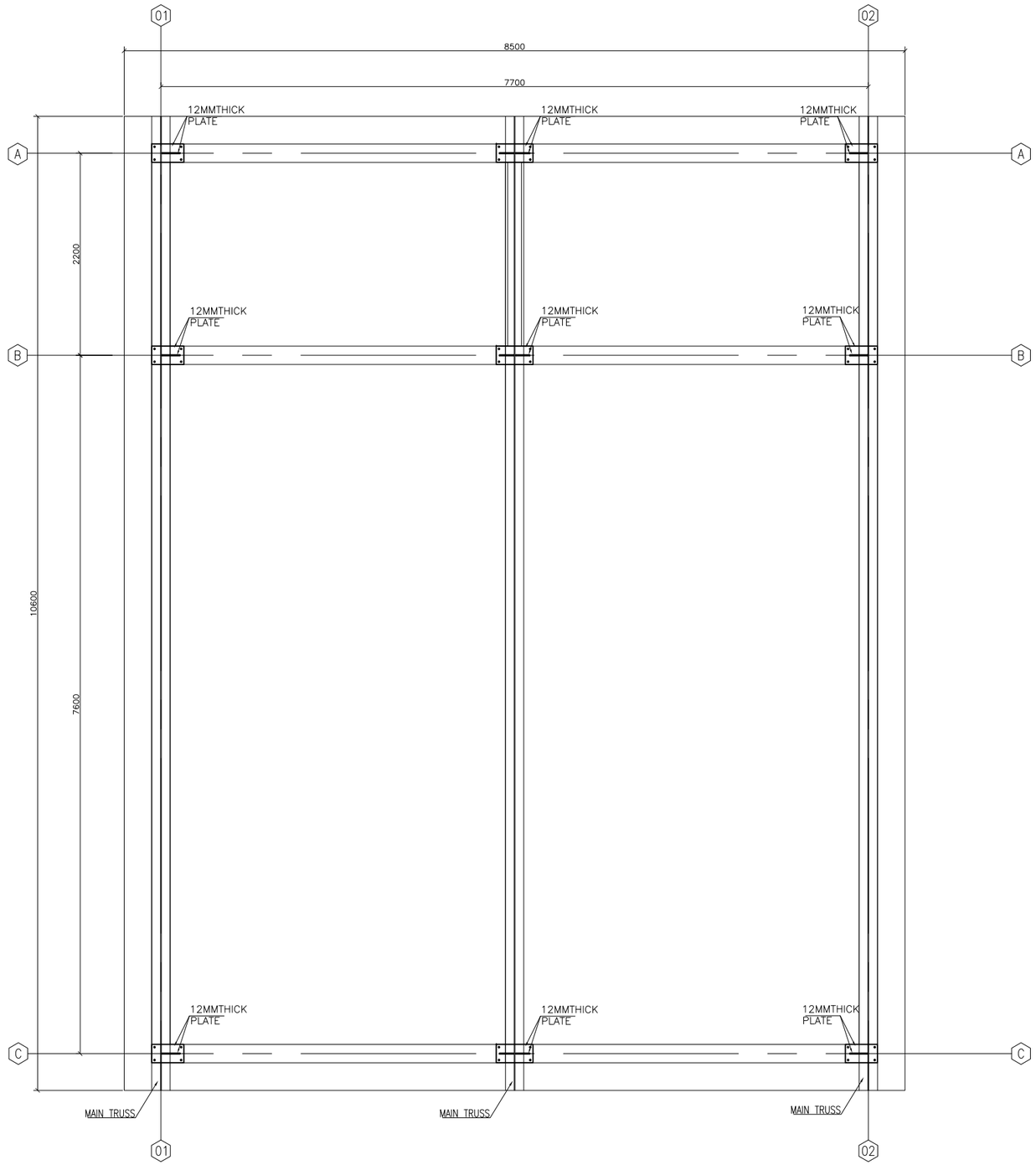

01 TRUSS&BEAM PLAN

5810-S-112 REF. SCALE: 1:50

Notes

1- ALL DIMENSIONS ARE IN MM UNLESS OTHERWISE SPECIFIED.
2-THE STEEL GRADE SHALL BE Fy=60 KSI(4220 Kg/cm²).
3-FOR CAST-IN-PLACE STRUCTURAL CONCRETE,MINIMUM 28 DAYS, CYLINDER STRENGTH F'C=4000 PSI(F'C=280KG/CM²).

US ARMY CORPS OF ENGINEERS AFGHANISTAN ENGINEER DISTRICT

Symbol	Description	Date	Description	DATE	Appr.

Designed BY: | Contract Date:
Drawn BY: | FILE NAME:
Reviewed by: | Draw Code:
Submitted by: | Plot Date: | Plot Scale:
Solicitation No: | Contract No:

DEPARTMENT OF THE ARMY
U.S ARMY CORPS OF ENGIEERS
AFGHANISTAN ENGINEERS SOUTH
KANDAHAR, AFGHANISTAN

Contractor:

Designer :

GENRATOR ROOM (5810)
TRUSS&BEAM PLAN

SHEET REFERENCE NUMBER:
5810-S-112
293 OF 529

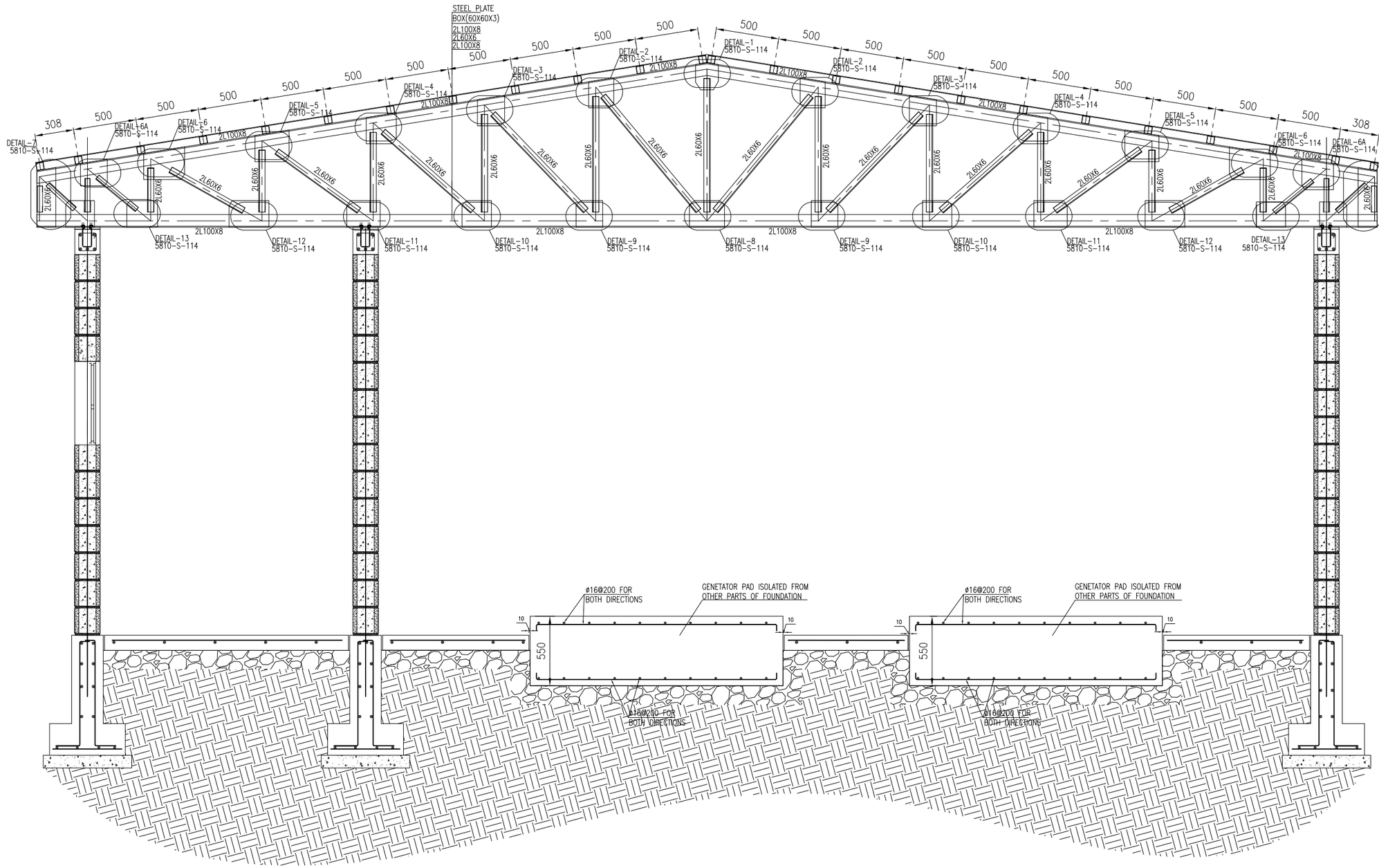

Notes

1- ALL DIMENSIONS ARE IN MM UNLESS OTHERWISE SPECIFIED.
2-THE STEEL GRADE SHALL BE Fy=60 KSI(Fy=4220Kg/cm²)
3-FOR CAST-IN-PLACE STRUCTURAL CONCRETE,MINIMUM 28 DAYS, CYLINDER STRENGTH f'c=4000 PSI(f'c=280Kg/cm²).

01 SECTION A-A
5810-S-113 REF. 5810-S-107 SCALE: 1:30

US ARMY CORPS OF ENGINEERS
AFGHANISTAN ENGINEER DISTRICT

Symbol	Description	Date	Description	DATE	Appr.

Designed By: | Drawn By: | Contract Date:
Reviewed by: | Draw Code: | FILE NAME:
Submitted by: | Plot Date:
Plot Scale:
Solicitation No: | Contract No:

DEPARTMENT OF THE ARMY
U.S ARMY CORPS OF ENGEERS
AFGHANISTAN ENGINEERS SOUTH
KANDAHAR, AFGHANISTAN
Contractor:
Designer :

GENRATOR ROOM (5810)
SECTION A-A

SHEET REFERENCE NUMBER:
5810-S-113
294 OF 529

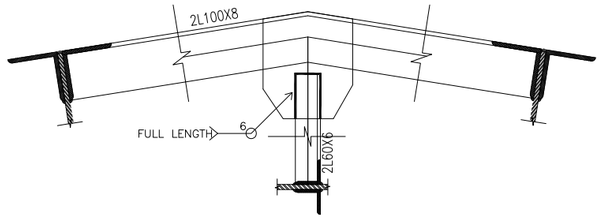

01 DETAIL-1
5810-S-114 REF. 5810-S-113 SCALE: 1:10

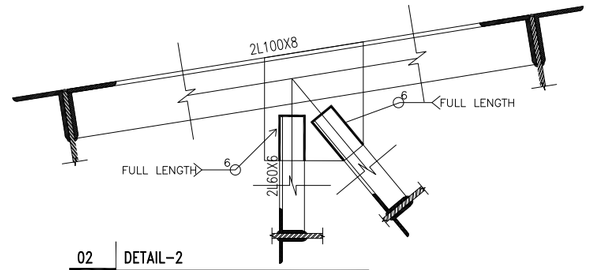

02 DETAIL-2
5810-S-114 REF. 5810-S-113 SCALE: 1:10

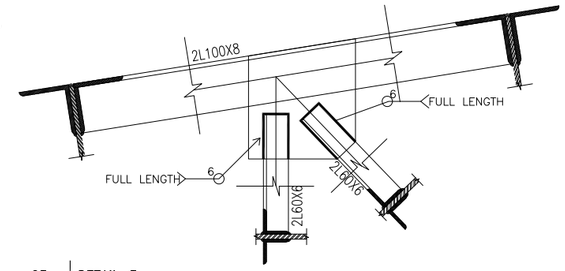

03 DETAIL-3
5810-S-114 REF. 5810-S-113 SCALE: 1:10

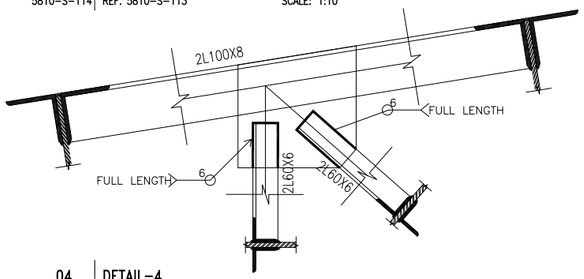

04 DETAIL-4
5810-S-114 REF. 5810-S-113 SCALE: 1:10

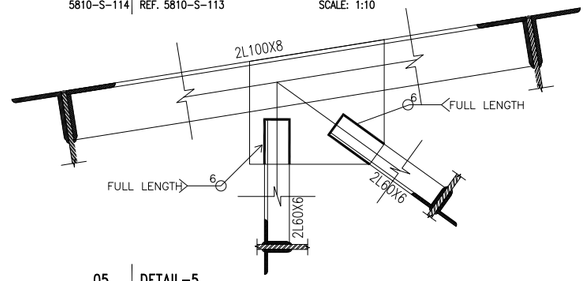

05 DETAIL-5
5810-S-114 REF. 5810-S-113 SCALE: 1:10

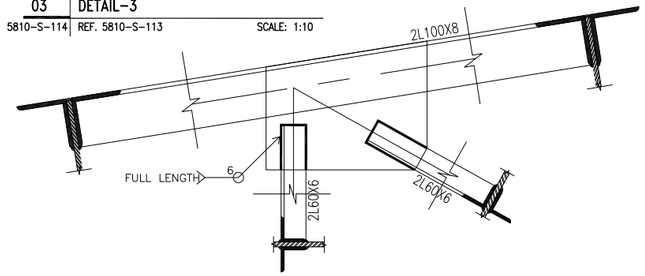

06 DETAIL-6
5810-S-114 REF. 5810-S-113 SCALE: 1:10

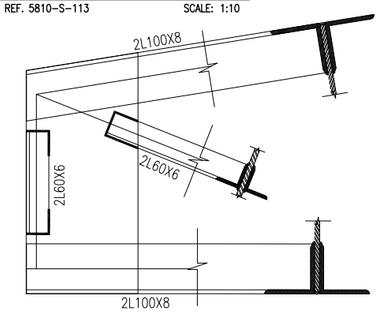

07 DETAIL-7
5810-S-114 REF. 5810-S-113 SCALE: 1:10

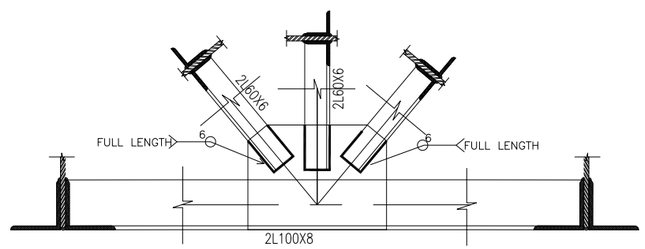

08 DETAIL-8
5810-S-114 REF. 5810-S-113 SCALE: 1:10

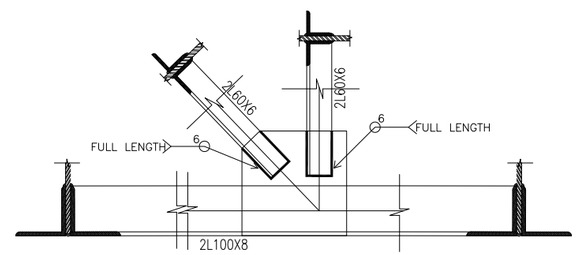

09 DETAIL-09
5810-S-114 REF. 5810-S-113 SCALE: 1:10

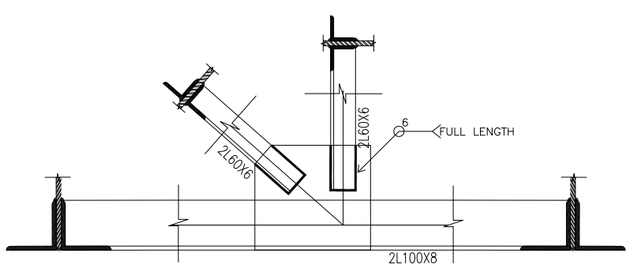

10 DETAIL-10
5810-S-114 REF. 5810-S-113 SCALE: 1:10

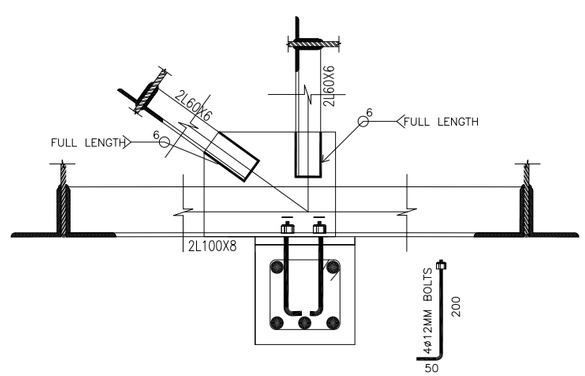

11 DETAIL-11
5810-S-114 REF. 5810-S-113 SCALE: 1:10

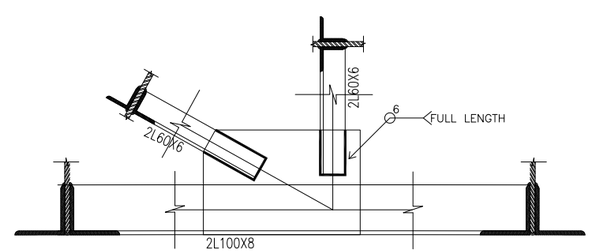

12 DETAIL-12
5810-S-114 REF. 5810-S-113 SCALE: 1:10

NOTES
MINIMUM WELD SIZE 6mm
AND MINIMUM WELD LENGTH 60mm

US ARMY CORPS OF ENGINEERS
AFGHANISTAN ENGINEER DISTRICT

Symbol	Description	Date	Description	DATE	Appr.

Designed BY: | Drawn BY: | Contract Date:
Reviewed by: | Draw Code: | FILE NAME:
Submitted by: | Plot Date: | Plot Scale:
Solicitation No: | Contract No:

DEPARTMENT OF THE ARMY
U.S ARMY CORPS OF ENGEERS
AFGHANISTAN ENGINEERS SOUTH
KANDAHAR, AFGHANISTAN
Contractor:
Designer :

GENRATOR ROOM (5810)
TRUSS DETAILS

SHEET REFERENCE NUMBER:
5810-S-114
295 OF 529

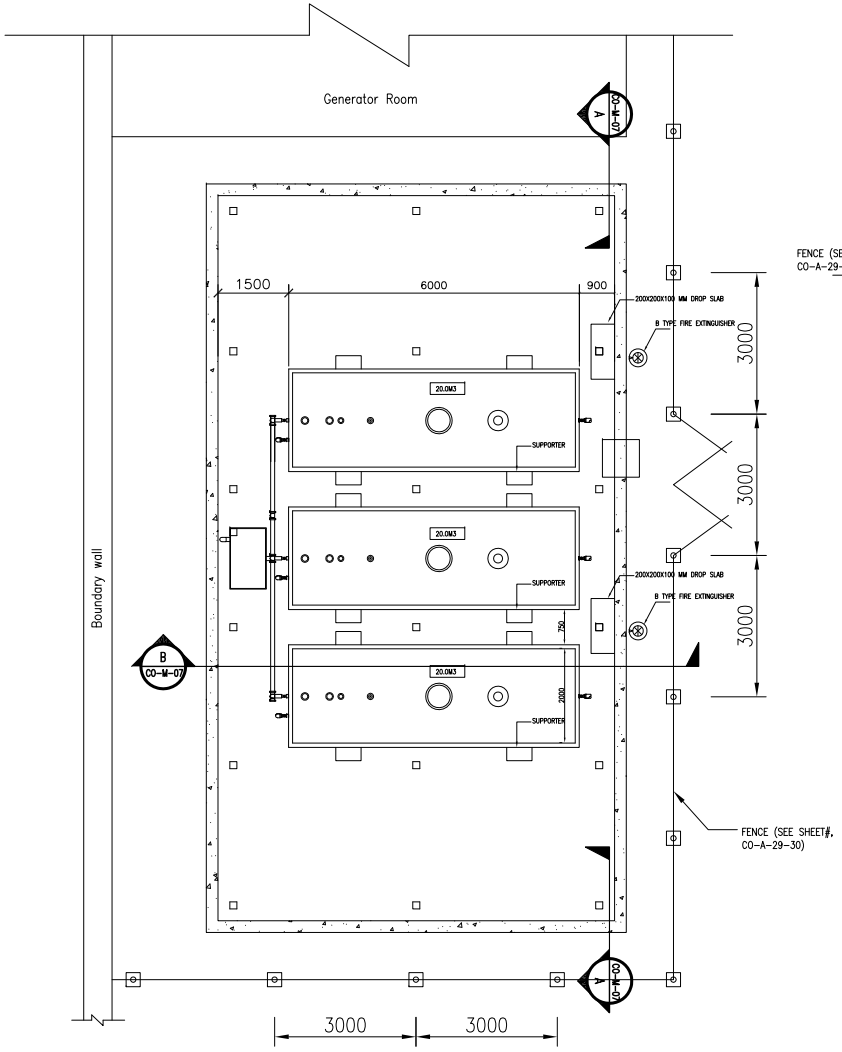

01 | PLAN
CO-M-07 | REF. SCALE: NTS

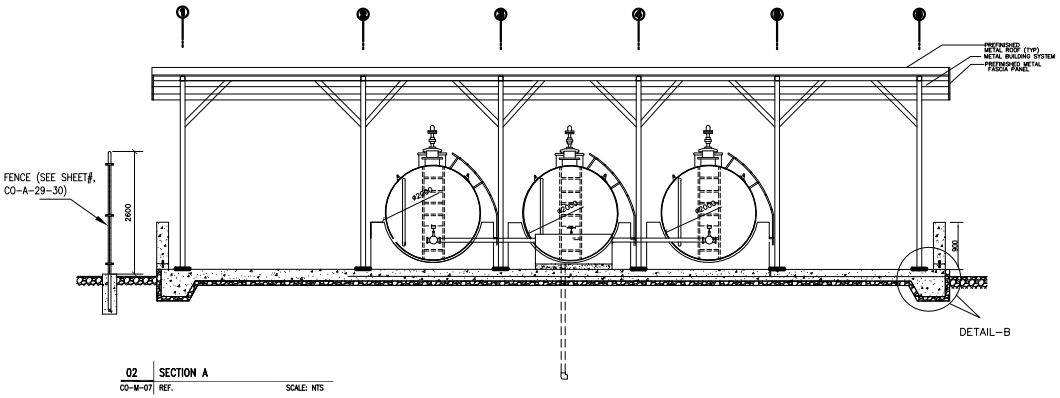

02 | SECTION A
CO-M-07 | REF. SCALE: NTS

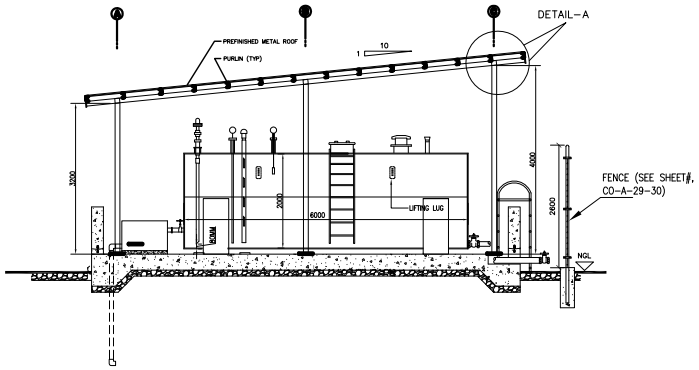

03 | SECTION B
CO-M-07 | REF. SCALE: NTS

US ARMY CORPS OF ENGINEERS
AFGHANISTAN ENGINEER DISTRICT

Symbol	Description	Date	Description	DATE	Appr.

DEPARTMENT OF THE ARMY
U.S ARMY CORPS OF ENGINEERS
AFGHANISTAN ENGINEERS SOUTH
KANDAHAR, AFGHANISTAN

Designed BY: | Drawn BY: | Contract Date:
Reviewed by: | Draw Code: | FILE NAME:
Submitted by: | Plot Date:
Plot Scale:
Solicitation No: | Contract No:
Contractor:
Designer :

FUEL STORAGE TANK PLAN & SECTION

SHEET REFERENCE NUMBER:
CO-A-51
170 OF 529

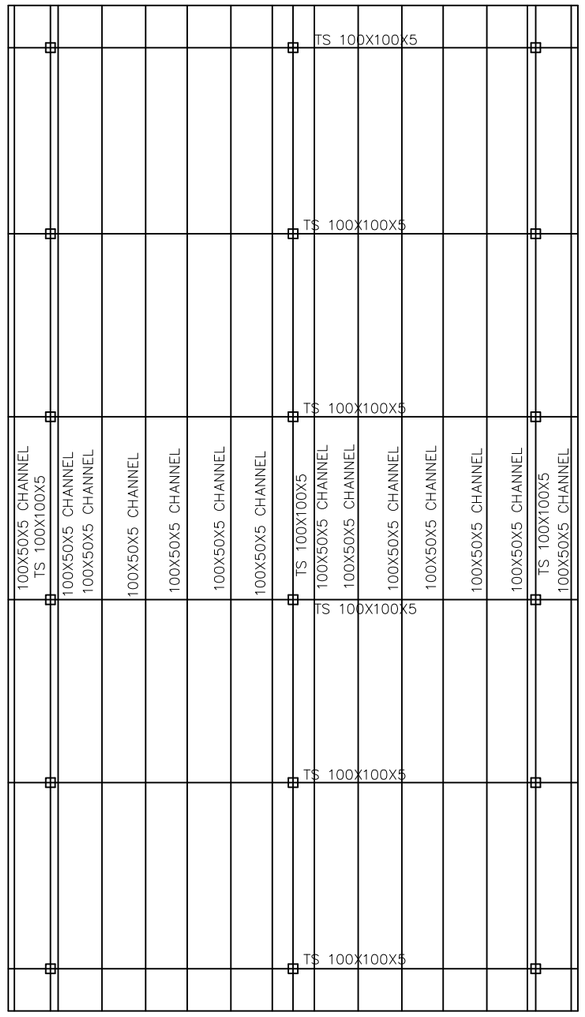

01 ROOF PLAN
CO-A-52 REF. SCALE: NTS

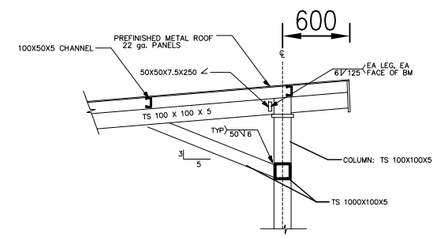

DETAIL-A

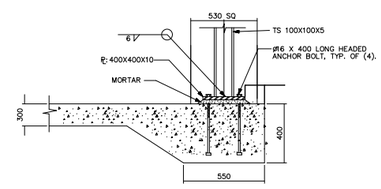

DETAIL-B

02 DETAILS
CO-A-52 REF. SCALE: NTS

US ARMY CORPS
OF ENGINEERS
AFGHANISTAN
ENGINEER DISTRICT

Symbol	Description	Date	Description	DATE	Appr.

DEPARTMENT OF THE ARMY
U.S ARMY CORPS OF ENGEERS
AFGHANISTAN ENGINEERS SOUTH
KANDAHAR, AFGHANISTAN

Designed BY: | Drawn BY: | Contract Date:
Reviewed by: | Draw Code: | FILE NAME:
Submitted by: | Plot Date:
Plot Scale:
Solicitation No: | Contract No:
Contractor:
Designer :

FUEL STORAGE ROOF PLAN & DETAILS

SHEET
REFERENCE
NUMBER:
CO-A-52
171 OF 529

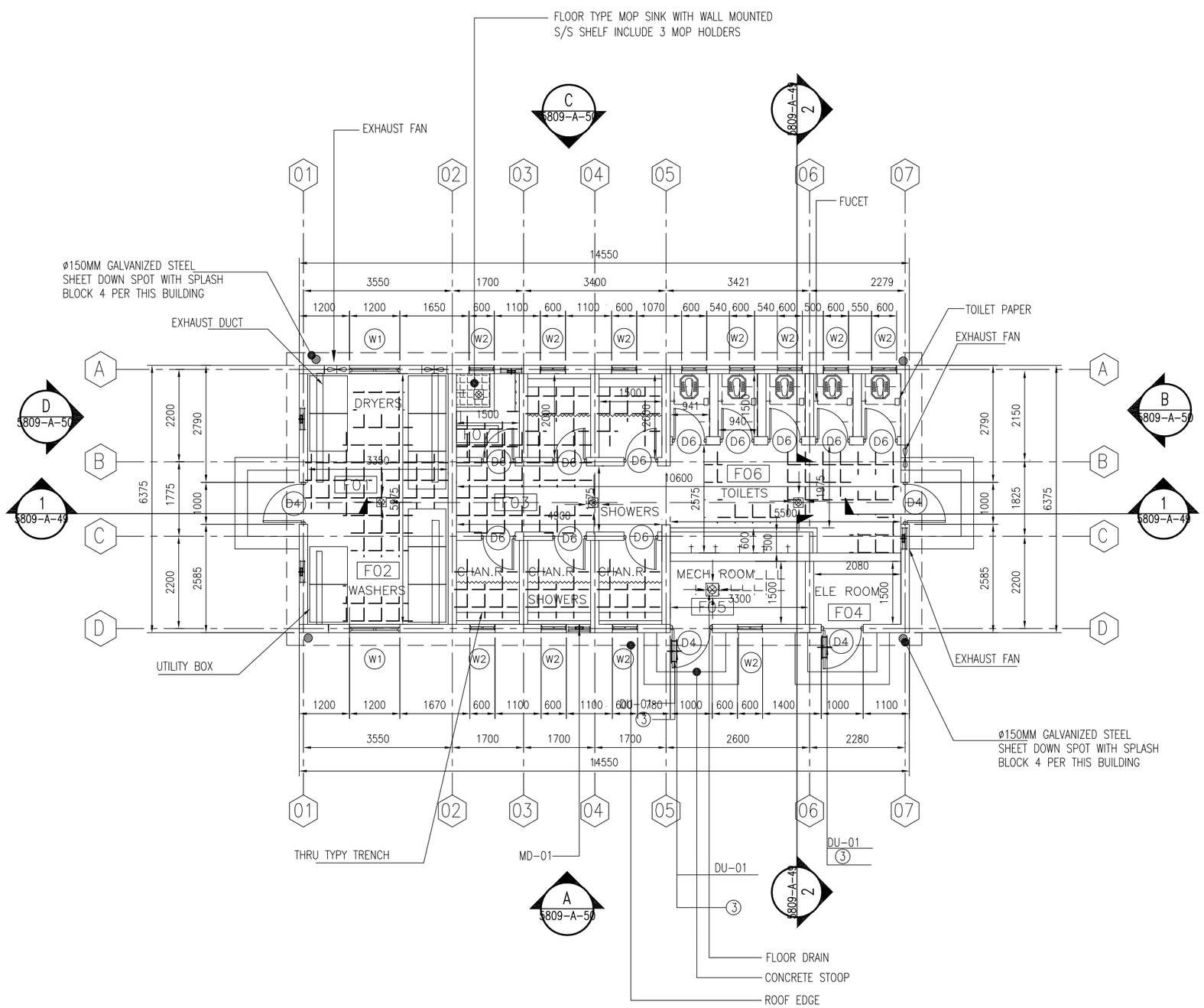

01 FIRST FLOOR PLAN

5809-A-47 REF. SCALE: 1:50

US ARMY CORPS OF ENGINEERS AFGHANISTAN ENGINEER DISTRICT

Symbol	Description	Date	Description	DATE	Appr.

VERIFY

1 0 1 2 3 4 5 6 7 8 9
1:50

NOTE

1- ALL DIMENSIONS ARE IN MM UNLESS OTHERWISE SPECIFIED.
2- ALL LEVELS ARE IN METER (M) UNLESS OTHERWISE SPECIFIED
3- ALL WALLS ARE 200MM CONCRETE MASONRY UNIT(CMU)
4- EXTERIOR WALLS TO BE COLORED STUCCO
5-ALL ROOF ARE 24G GALVANIZED SHEETS
6-12.5MM MOISTURE RESESTANT GYPSUM BOARD
7- ALL SLOPES TOWARD FLOOR DAINS ARE 3%

Finishing Schedule Legend

Floor

F1	GRAY DUST PROPER SURFACE HARDENING AND SEALER
F2	300mmX300mm Terrazzo with water proofing membrane beneath sloping mortar bed

Wall

W1	White Painted Plaster
W2	150mmX150mm glazed ceramic tiles up to 2000mm above F.F.L.
W3	PAINTED WITH 1 HOUR FIRE RATED PAINT (JOTUN)

Ceiling

C1	White Painted GYPSUM BOARD
C2	1/2 HOUR FIRE RATED GYPSUM BOARD

Finishing Schedule

Room	Usage	Floor	Wall	Ceiling
F01	SHOWERS	F2	W2	C1
F02	WASHERS	F2	W2	C1
F03	DRYERS	F2	W2	C1
F04	ELECTRICAL ROOM	F1	W3	C2
F05	MECHANICAL ROOM	F2	W3	C2
F06	TOILETS	F2	W2	C1
F07	MOP SINK	F2	W2	C1

Designed BY: Drawn BY: Contract Date:
Reviewed by: Draw Code: FILE NAME:
Submitted by: Plot Date:
Plot Scale:
Solicitation No: Contract No:
Contractor:
Designer :

DEPARTMENT OF THE ARMY
U.S ARMY CORPS OF ENGIEERS
AFGHANISTAN ENGINEERS SOUTH
KANDAHAR, AFGHANISTAN

LATRINE BUILDING(5809)
FIRST FLOOR PLAN

SHEET REFERENCE NUMBER:
5809-A-47
102 OF 529

NOTE

1- ALL DIMENSIONS ARE IN MM UNLESS OTHERWISE SPECIFIED.
2- ALL LEVELS ARE IN METER (M) UNLESS OTHERWISE SPECIFIED
3- ALL WALLS ARE 200MM CONCRETE MASONRY UNIT(CMU)
4- EXTERIOR WALLS TO BE COLORED STUCCO
5- ALL ROOF ARE 24G GALVANIZED SHEETS
6- FOR EACH 100-120 M2 ONE DOWNSPOUT SHOULD BE CONSIDERD
7- ALL SLOPES TOWARD FLOOR DAINS ARE 3%

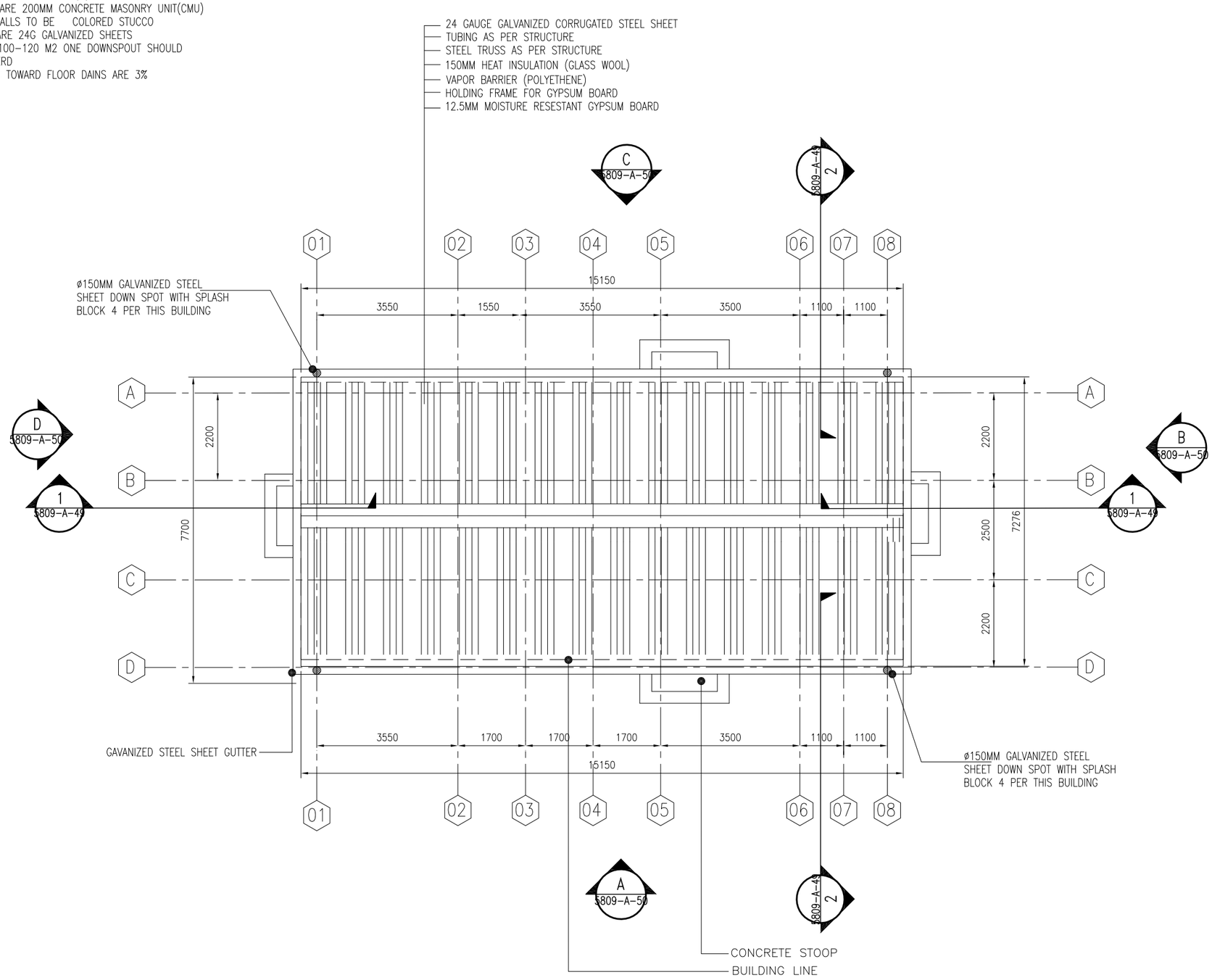

01 ROOF PLAN
5809-A-48 REF. 5809-A-47 SCALE: 1:50

US ARMY CORPS OF ENGINEERS AFGHANISTAN ENGINEER DISTRICT

Symbol	Description	Date	Description	DATE	Appr.

DEPARTMENT OF THE ARMY
U.S ARMY CORPS OF ENGIEERS
AFGHANISTAN ENGINEERS SOUTH
KANDAHAR, AFGHANISTAN

Designed BY: Drawn BY: Contract Date:
Reviewed by: Draw Code: FILE NAME:
Submitted by: Plot Date: Plot Scale:
Solicitation No: Contract No:
Contractor:
Designer :

LATRINE BUILDING(5809)
ROOF PLAN

SHEET REFERENCE NUMBER:
5809-A-48
103 OF 529

1:50

NOTE

1- ALL DIMENSIONS ARE IN MM UNLESS OTHERWISE SPECIFIED.
2- ALL LEVELS ARE IN METER (M) UNLESS OTHERWISE SPECIFIED
3- ALL WALLS ARE 200MM CONCRETE MASONRY UNIT(CMU)
4- EXTERIOR WALLS TO BE COLORED STUCCO
5-ALL ROOF ARE 24G GALVANIZED SHEETS

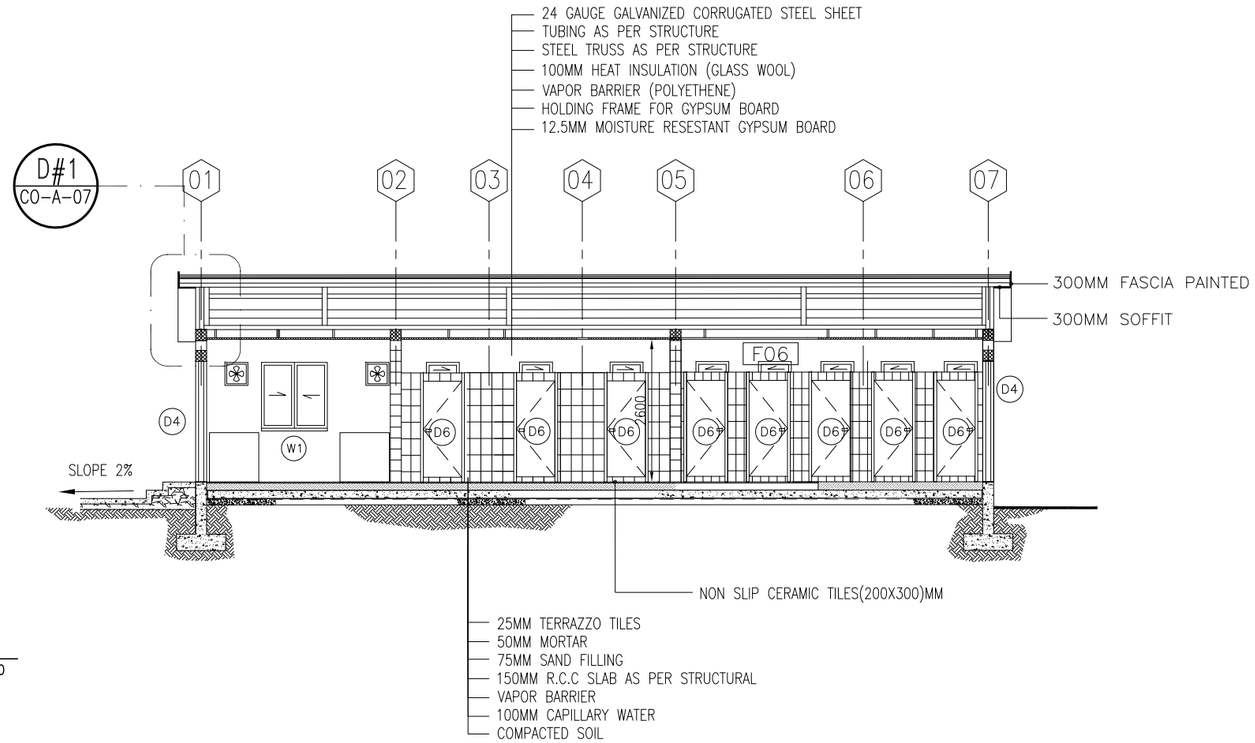

01 | SECTION 1-1
5809-A-49 | REF. 5809-A-47 SCALE: 1:50

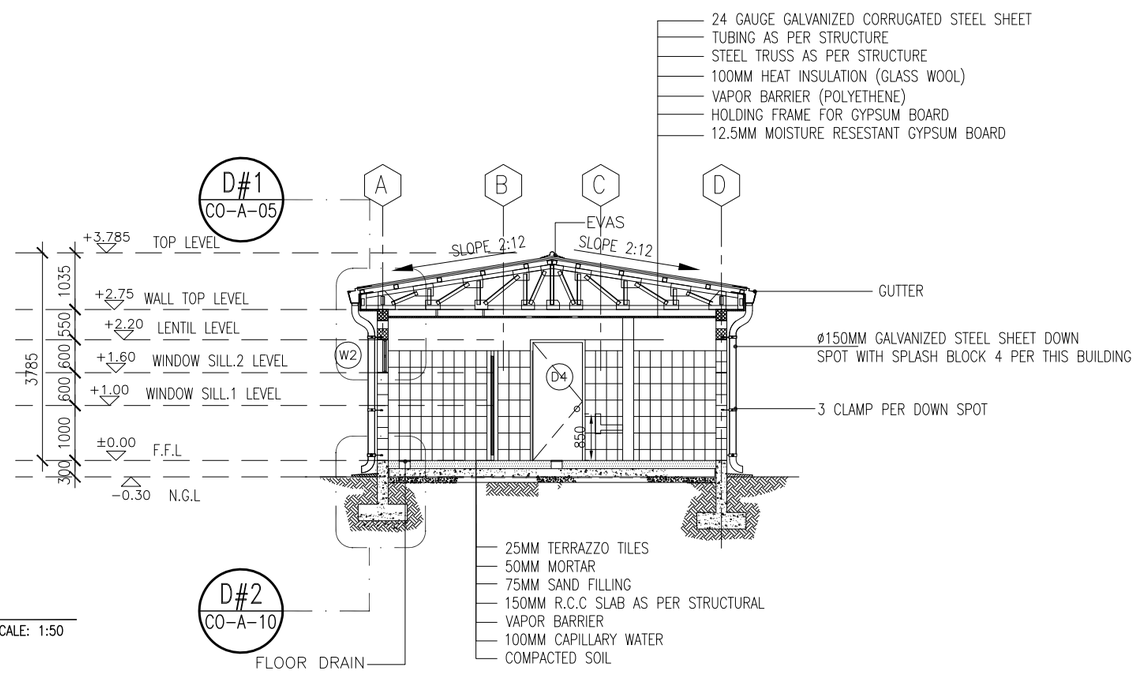

02 | SECTION 2-2
5809-A-49 | REF. 5809-A-47 SCALE: 1:50

1 0 1 2 3 4 5 6 7 8 9
1:50

US ARMY CORPS OF ENGINEERS AFGHANISTAN ENGINEER DISTRICT

Symbol	Description	Date	Description	DATE	Appr.

Designed BY: | Drawn BY: | Contract Date:
Reviewed by: | Draw Code: | FILE NAME:
Submitted by: | Plot Date: | Plot Scale:
Solicitation No: | Contract No::

DEPARTMENT OF THE ARMY
U.S ARMY CORPS OF ENGIEERS
AFGHANISTAN ENGINEERS SOUTH
KANDAHAR, AFGHANISTAN
Contractor:
Designer :

LATRINE BUILDING(5809)
SECTIONS

SHEET REFERENCE NUMBER:
5809-A-49
104 OF 529

NOTE

1- ALL DIMENSIONS ARE IN MM UNLESS OTHERWISE SPECIFIED.
2- ALL LEVELS ARE IN METER (M) UNLESS OTHERWISE SPECIFIED
3- ALL WALLS ARE 200MM CONCRETE MASONRY UNIT(CMU)
4- EXTERIOR WALLS TO BE COLORED STUCCO
5-ALL ROOF ARE 24G GALVANIZED SHEETS

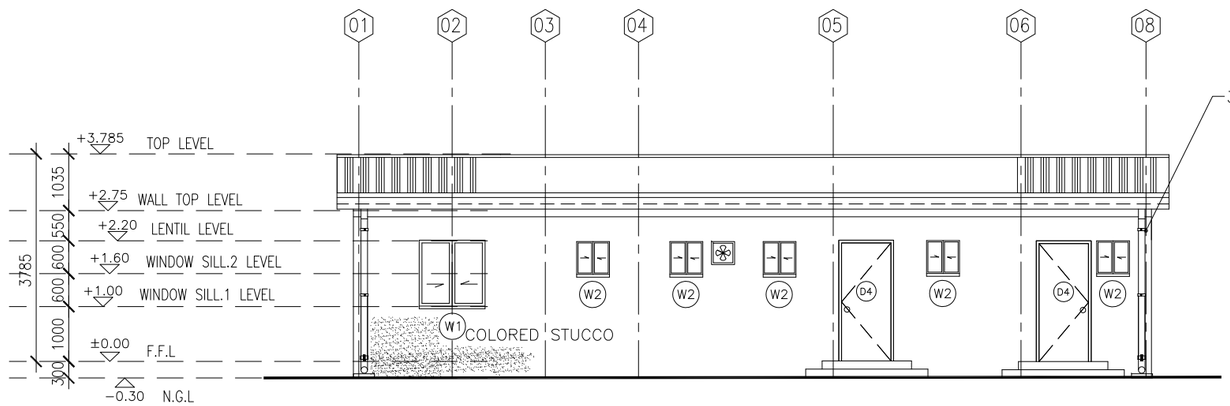

01 ELEVATION-A
5809-A-50 REF. SCALE: 1:50

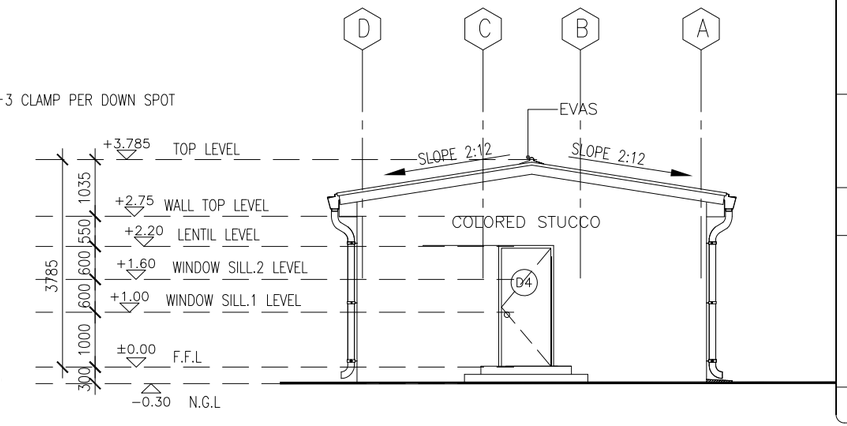

01 ELEVATION-B
5809-A-50 REF. SCALE: 1:50

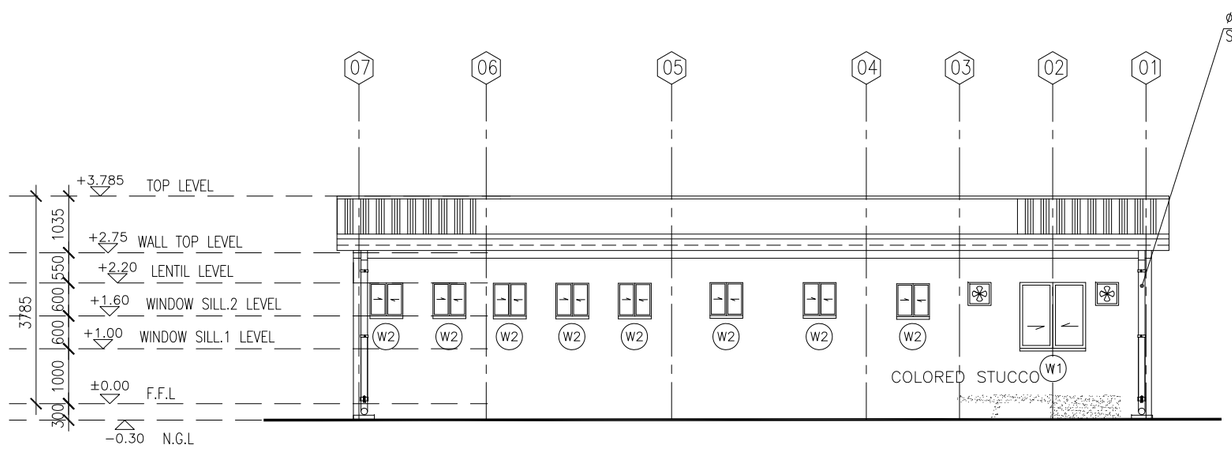

01 ELEVATION-C
5809-A-50 REF. SCALE: 1:50

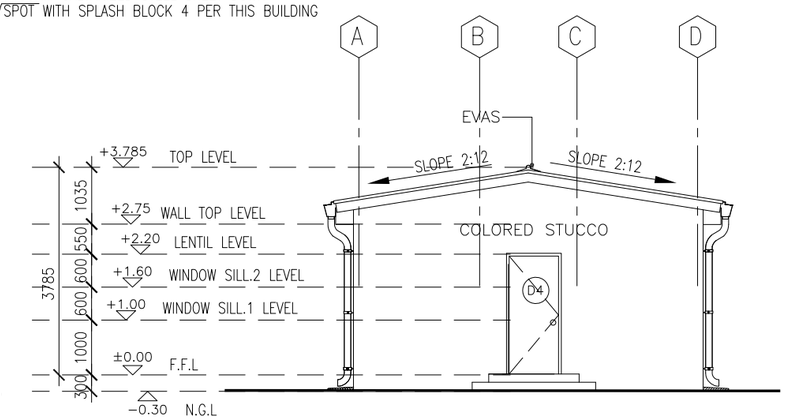

01 ELEVATION-D
5809-A-50 REF. SCALE: 1:50

1 0 1 2 3 4 5 6 7 8 9
1:50

US ARMY CORPS OF ENGINEERS AFGHANISTAN ENGINEER DISTRICT

Symbol	Description	Date	Description	DATE	Appr.

Designed BY: | Drawn BY: | Contract Date:
Reviewed by: | Draw Code: | FILE NAME:
Submitted by: | Plot Date: | Plot Scale:
Solicitation No: | Contract No::

DEPARTMENT OF THE ARMY
U.S ARMY CORPS OF ENGIEERS
AFGHANISTAN ENGINEERS SOUTH
KANDAHAR, AFGHANISTAN
Contractor:
Designer :

LATRINE BUILDING(5809)
ELEVATIONS

SHEET REFERENCE NUMBER:
5809-A-50
105 OF 529

LEGEND:

1- ONE HOUR FIRE RATED WALL UP TO DECK LEVEL.
2- COMMON PATH OF TRAVEL
3- ISOLATED EXIT DOOR LOCATION
4- FAIRE EXTINGUISHER
5- EXIT SIGN
6-FIRE RATED DOOR

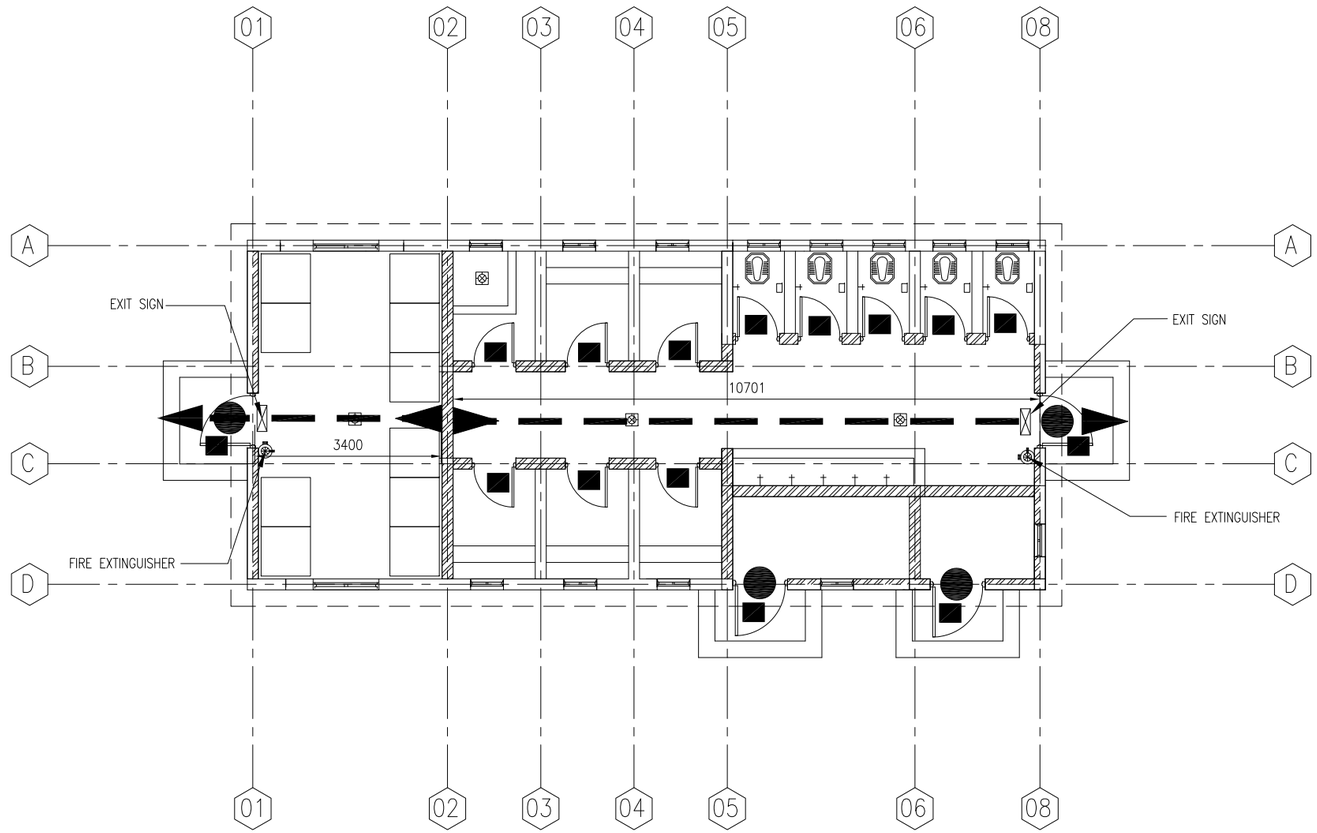

NOTE

1- ALL DIMENSIONS ARE IN MM UNLESS OTHERWISE SPECIFIED.
2- ALL LEVELS ARE IN METER (M) UNLESS OTHERWISE SPECIFIED
3- ALL WALLS ARE 200MM CONCRETE MASONRY UNIT(CMU)
4- EXTERIOR WALLS TO BE COLORED STUCCO
5-ALL ROOF ARE 24G GALVANIZED SHEETS

01 LIFE SAFTY PLAN

5809-A-51 REF. 5809-A-47 SCALE: 1:50

1 0 1 2 3 4 5 6 7 8 9
1:50

US ARMY CORPS OF ENGINEERS AFGHANISTAN ENGINEER DISTRICT

Symbol	Description	Date	Description	DATE	Appr.

Designed BY: Drawn BY: Contract Date:
Reviewed by: Draw Code: FILE NAME:
Submitted by: Plot Date: Plot Scale:
Solicitation No: Contract No:

DEPARTMENT OF THE ARMY
U.S ARMY CORPS OF ENGIEERS
AFGHANISTAN ENGINEERS SOUTH
KANDAHAR, AFGHANISTAN
Contractor:
Designer :

LATRINE BUILDING(5809)
LIFE SAFTY PLAN

SHEET REFERENCE NUMBER:
5809-A-51
106 OF 529

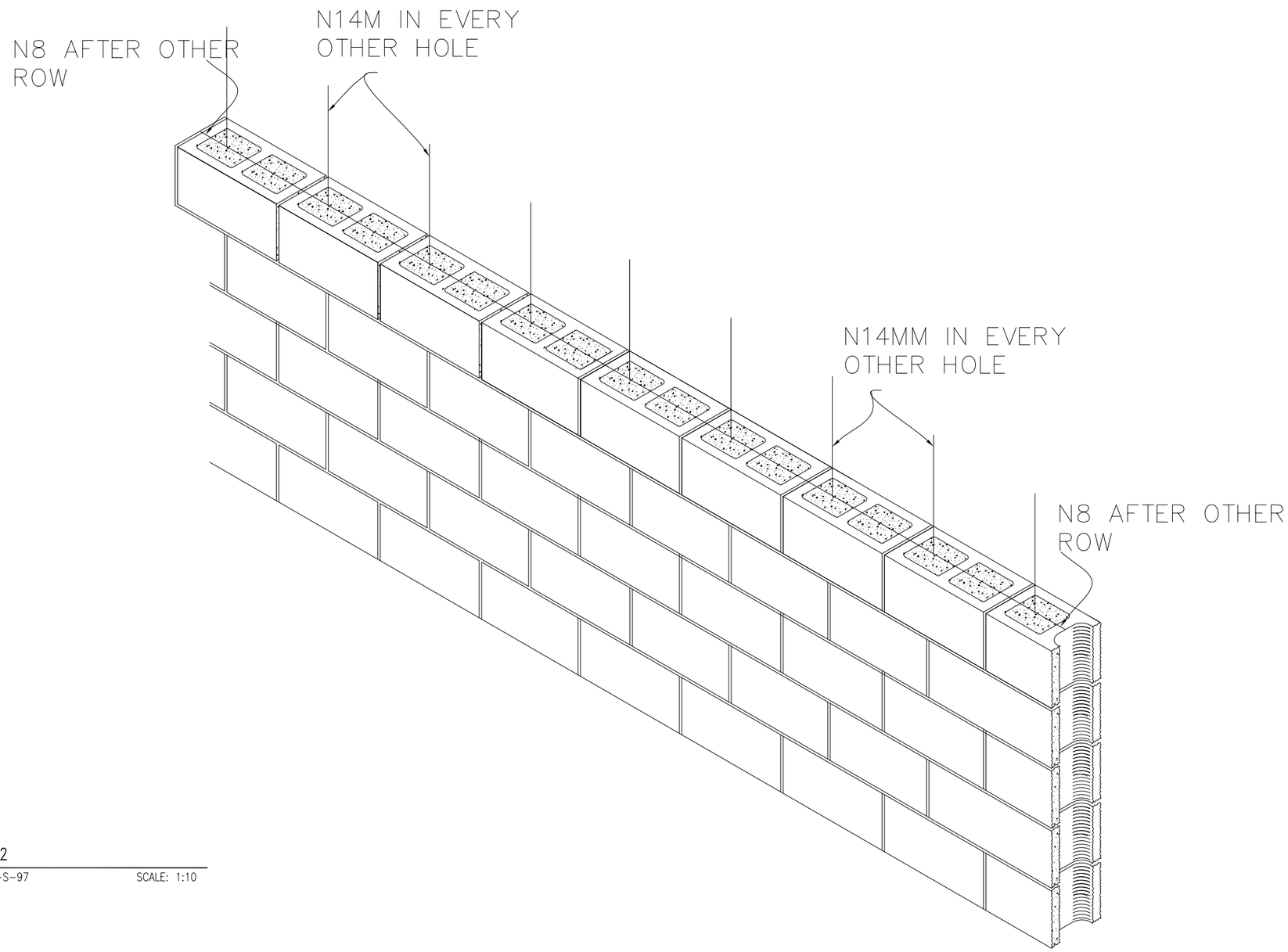

01 DETAIL-2

5809-S-100 REF. 5809-S-97 SCALE: 1:10

US ARMY CORPS OF ENGINEERS AFGHANISTAN ENGINEER DISTRICT

Symbol	Description	Date	Description	DATE	Appr.

Designed BY: Drawn BY: Contract Date:

Reviewed by: Draw Code: FILE NAME:

Submitted by: Plot Date:

Plot Scale:

Solicitation No: Contract No:

DEPARTMENT OF THE ARMY
U.S ARMY CORPS OF ENGIEERS
AFGHANISTAN ENGINEERS SOUTH
KANDAHAR, AFGHANISTAN

Contractor:

Designer :

FEMALE BARRACK (5808)
DETAIL-2

SHEET REFERENCE NUMBER:

5809-S-100

281 OF 529

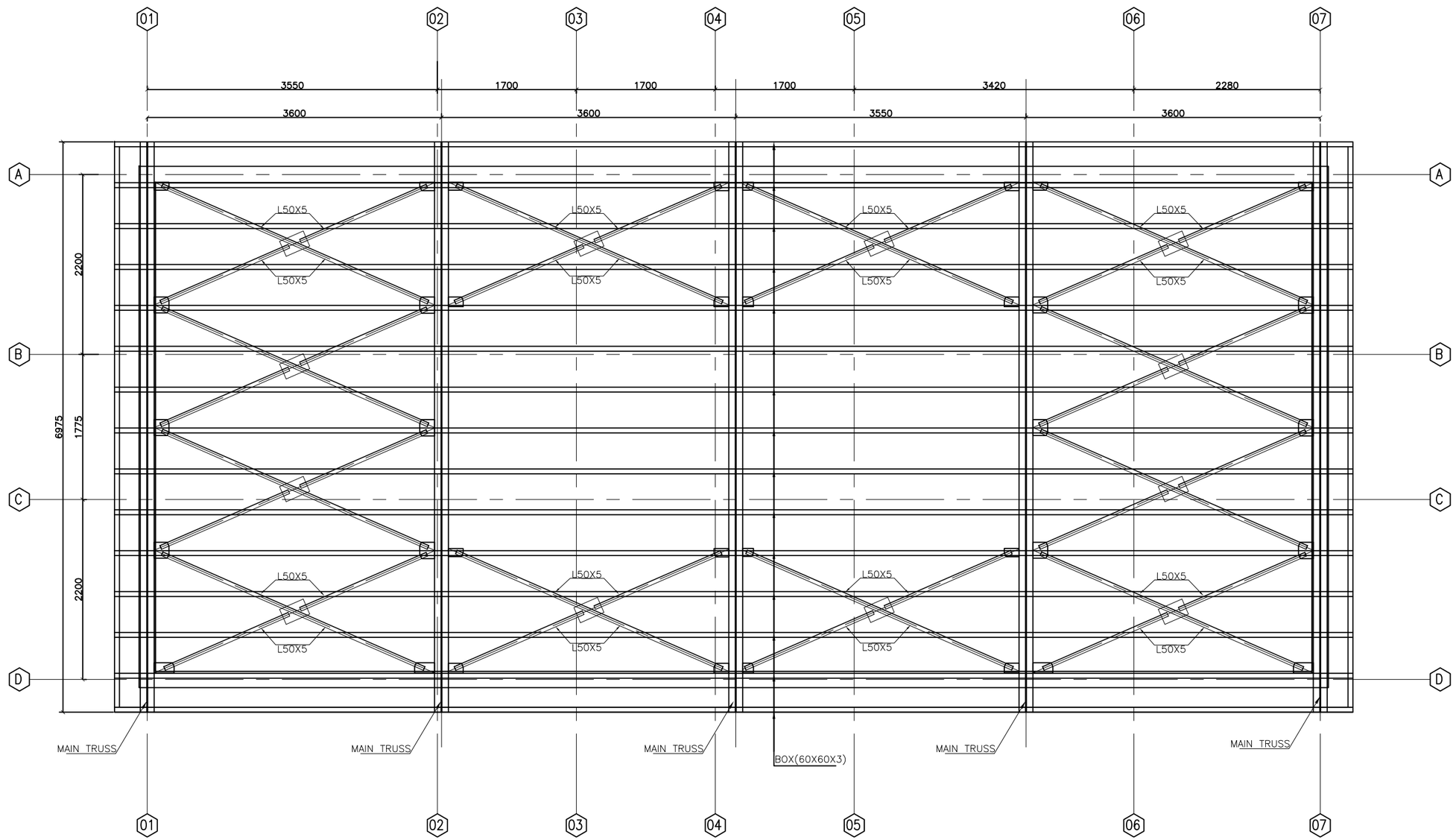

01 ROOF PLAN

5809-S-101 REF. SCALE: 1:50

Notes

1- ALL DIMENSIONS ARE IN MM UNLESS OTHERWISE SPECIFIED.
2-THE STEEL GRADE SHALL BE Fy=60 KSI(Fy=4220Kg/cm²)
3-FOR CAST-IN-PLACE STRUCTURAL CONCRETE,MINIMUM 28 DAYS, CYLINDER STRENGTH f'c=4000 PSI(f'c=280Kg/cm²).

US ARMY CORPS OF ENGINEERS AFGHANISTAN ENGINEER DISTRICT

Symbol	Description	Date	Description	DATE	Appr.

Designed BY: | Drawn BY: | Contract Date:
Reviewed by: | Draw Code: | FILE NAME:
Submitted by: | Plot Date: | Plot Scale:
Solicitation No: | Contract No:

DEPARTMENT OF THE ARMY
U.S ARMY CORPS OF ENGIEERS
AFGHANISTAN ENGINEERS SOUTH
KANDAHAR, AFGHANISTAN

Contractor:
Designer :

LATRINE BUILDING(5809)
ROOF PLAN

SHEET REFERENCE NUMBER:
5809-S-101
282 OF 529

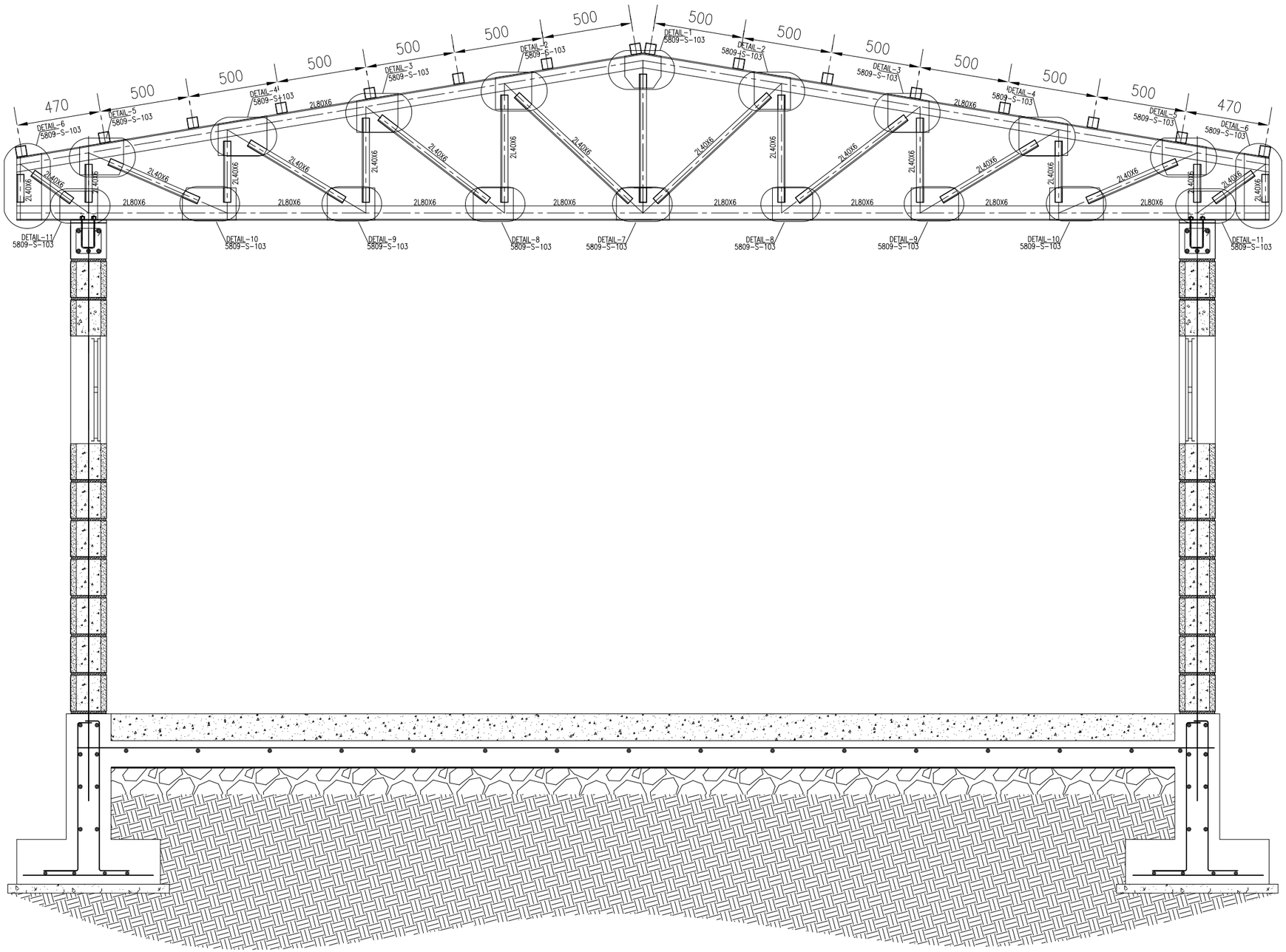

01 SECTION A-A

5809-S-102 REF. 5809-S-97 SCALE: 1:25

US ARMY CORPS OF ENGINEERS
AFGHANISTAN ENGINEER DISTRICT

Symbol	Description	Date	Description	DATE	Appr.

DEPARTMENT OF THE ARMY
U.S ARMY CORPS OF ENGIEERS
AFGHANISTAN ENGINEERS SOUTH
KANDAHAR, AFGHANISTAN

Designed BY: Drawn BY: Contract Date:
Reviewed by: Draw Code: FILE NAME:
Submitted by: Plot Date: Plot Scale:
Solicitation No: Contract No:
Contractor:
Designer :

LATRINE BUILDING(5809)
SECTION A-A

SHEET REFERENCE NUMBER:
5809-S-102
283 OF 529

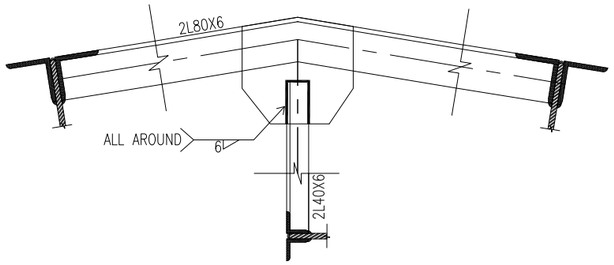

01 DETAIL-1
5809-S-103 REF. 5809-S-102 SCALE: 1:10

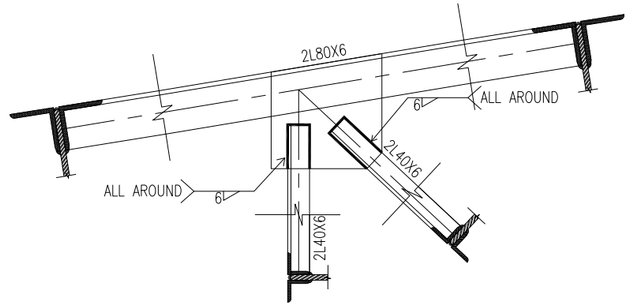

02 DETAIL-2
5809-S-103 REF. 5809-S-102 SCALE: 1:10

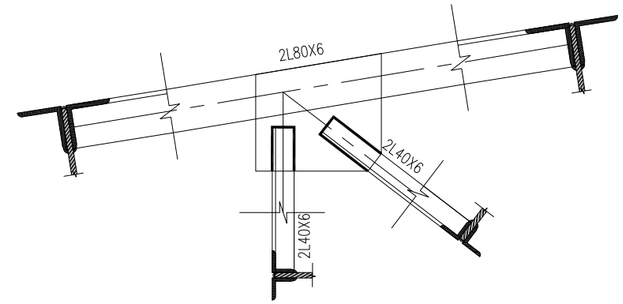

03 DETAIL-3
5809-S-103 REF. 5809-S-102 SCALE: 1:10

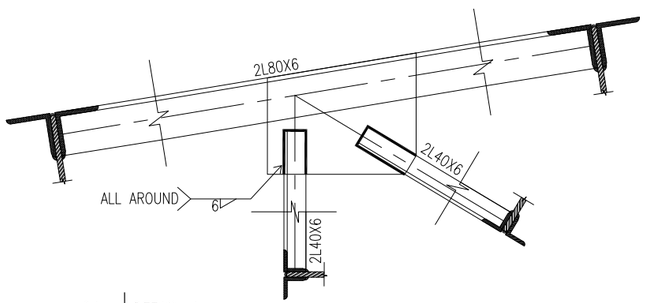

04 DETAIL-4
5809-S-103 REF. 5809-S-102 SCALE: 1:10

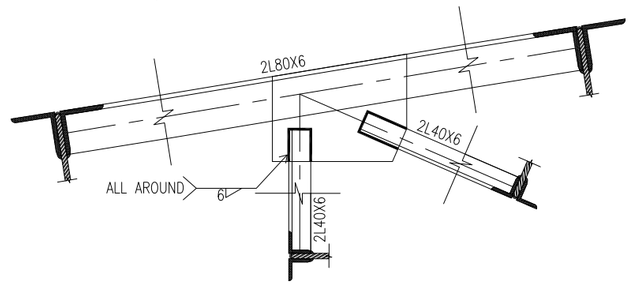

05 DETAIL-5
5809-S-103 REF. 5809-S-102 SCALE: 1:10

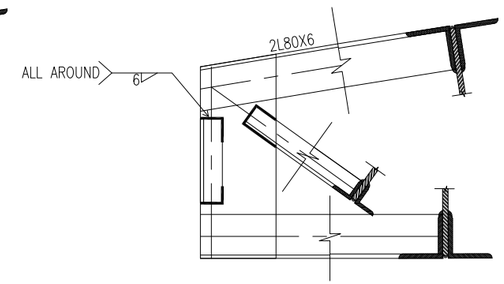

06 DETAIL-6
5809-S-103 REF. 5809-S-102 SCALE: 1:10

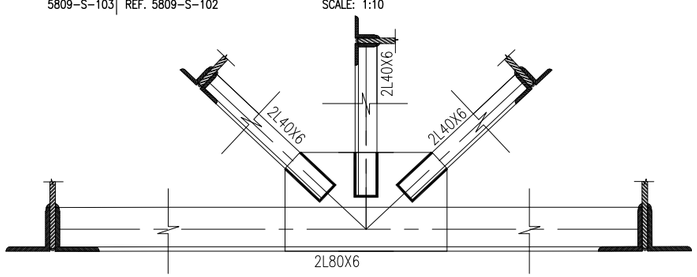

07 DETAIL-7
5809-S-103 REF. 5809-S-102 SCALE: 1:10

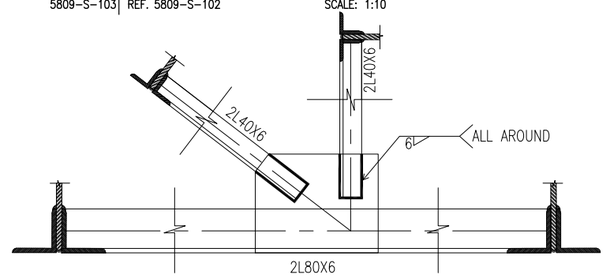

08 DETAIL-8
5809-S-103 REF. 5809-S-102 SCALE: 1:10

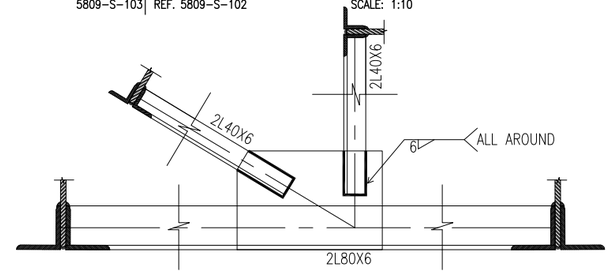

09 DETAIL-9
5809-S-103 REF. 5809-S-102 SCALE: 1:10

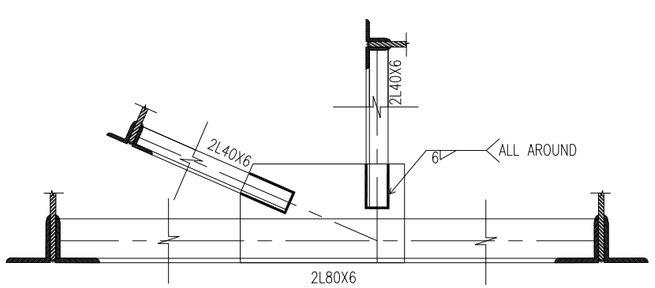

10 DETAIL-10
5809-S-103 REF. 5809-S-102 SCALE: 1:10

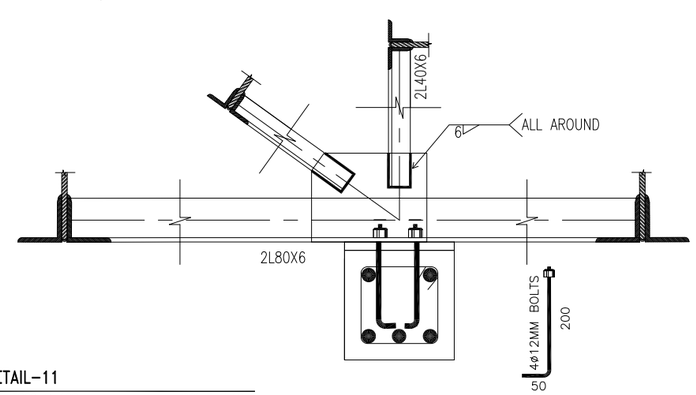

11 DETAIL-11
5809-S-103 REF. 5809-S-102 SCALE: 1:10

NOTES
MINIMUM WELD SIZE 6mm
AND MINIMUM WELD LENGTH 60mm

US ARMY CORPS OF ENGINEERS
AFGHANISTAN ENGINEER DISTRICT

Symbol	Description	Date	Description	DATE	Appr.

DEPARTMENT OF THE ARMY
U.S ARMY CORPS OF ENGEERS
AFGHANISTAN ENGINEERS SOUTH
KANDAHAR, AFGHANISTAN

Designed BY: Drawn BY: Contract Date:
Reviewed by: Draw Code: FILE NAME:
Submitted by: Plot Date: Plot Scale:
Solicitation No: Contract No:
Contractor:
Designer :

LATRINE BUILDING(5809)
TRUSS DETAIL

SHEET REFERENCE NUMBER:
5809-S-103
284 OF 529

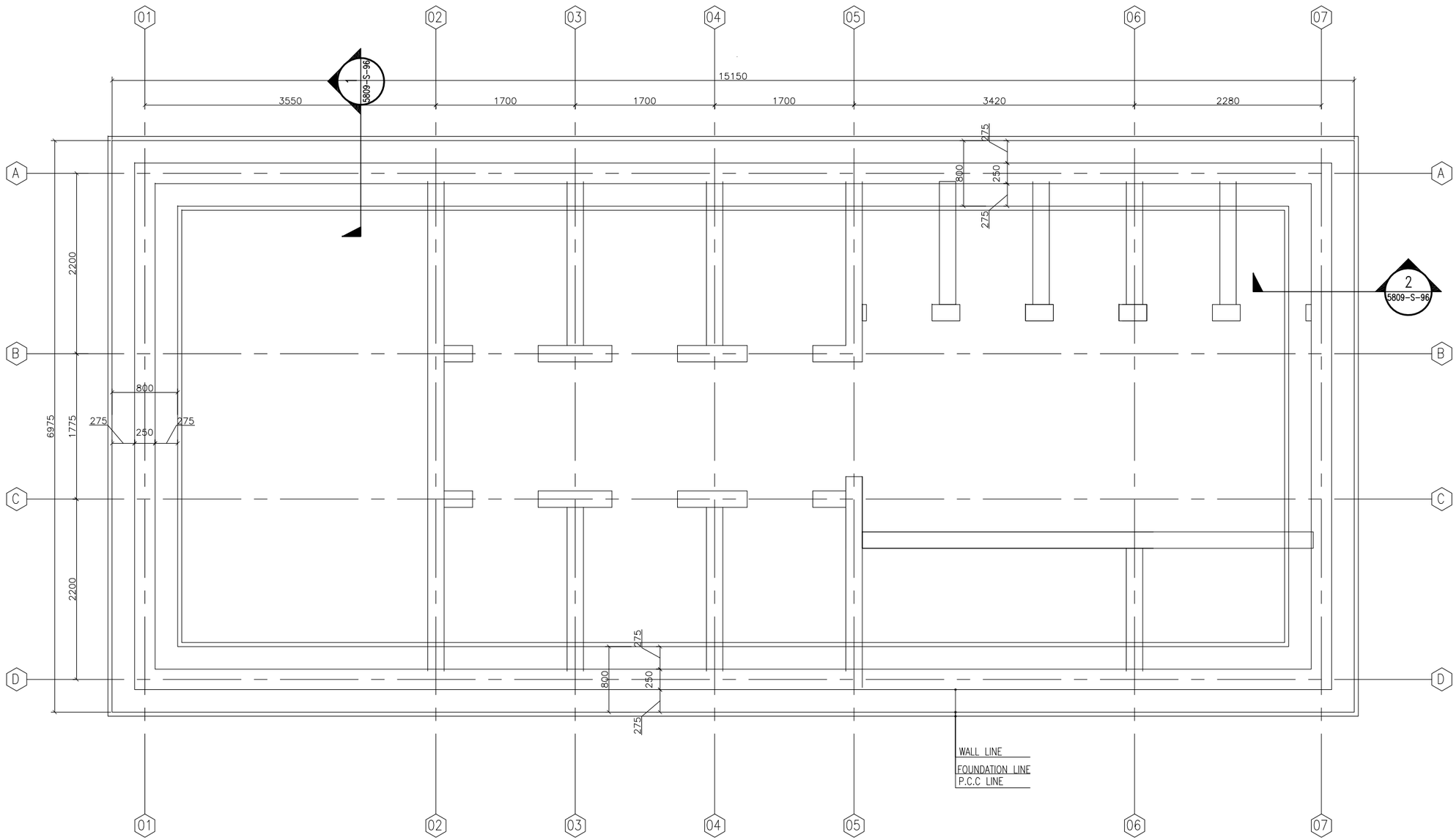

01 FOUNDATION PLAN

5809-S-94 REF. SCALE: 1:50

Notes

1- ALL DIMENSIONS ARE IN MM UNLESS OTHERWISE SPECIFIED.
2-THE STEEL GRADE SHALL BE Fy=60 KSI(Fy=4220Kg/cm²)
3-FOR CAST-IN-PLACE STRUCTURAL CONCRETE,MINIMUM 28 DAYS, CYLINDER STRENGTH f'c=4000 PSI(f'c=280Kg/cm²).

US ARMY CORPS OF ENGINEERS
AFGHANISTAN ENGINEER DISTRICT

Symbol	Description	Date	Description	DATE	Appr.

DEPARTMENT OF THE ARMY
U.S ARMY CORPS OF ENGIEERS
AFGHANISTAN ENGINEERS SOUTH
KANDAHAR, AFGHANISTAN

Designed BY: Drawn BY: Contract Date:
Reviewed by: Draw Code: FILE NAME:
Submitted by: Plot Date: Plot Scale:
Solicitation No: Contract No:
Contractor:
Designer :

LATRINE BUILDING(5809)
FOUNDATION PLAN

SHEET REFERENCE NUMBER:
5809-S-94
275 OF 529

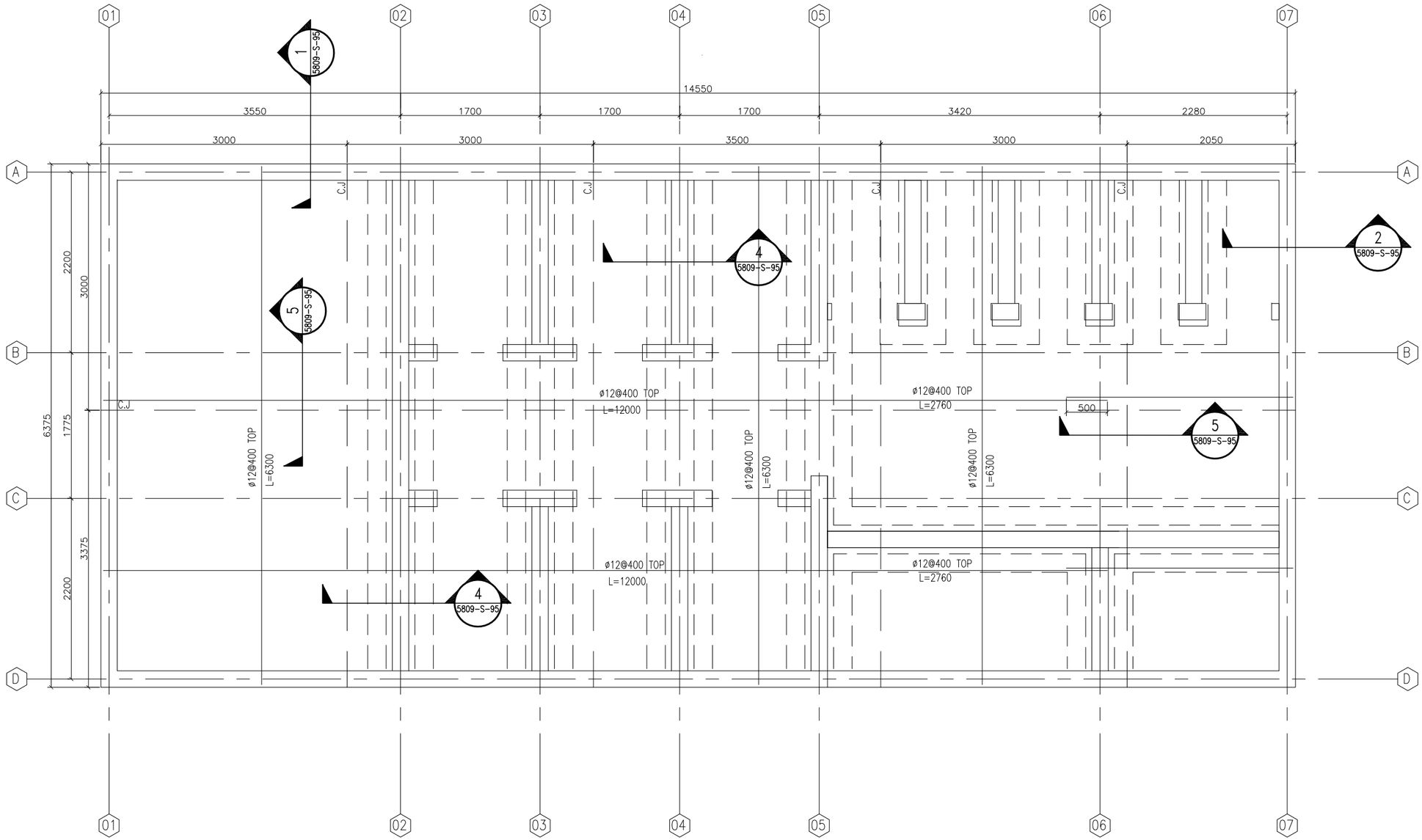

01 SLAB ON GRADE REINFORCEMENT PLAN

5809-S-95 REF. SCALE: 1:50

Notes

1- ALL DIMENSIONS ARE IN MM UNLESS OTHERWISE SPECIFIED.
2-THE STEEL GRADE SHALL BE Fy=60 KSI(Fy=4220Kg/cm²)
3-FOR CAST-IN-PLACE STRUCTURAL CONCRETE,MINIMUM 28 DAYS, CYLINDER STRENGTH f'c=4000 PSI(f'c=280Kg/cm²).

US ARMY CORPS OF ENGINEERS AFGHANISTAN ENGINEER DISTRICT

Symbol	Description	Date	Description	DATE	Appr.

Designed BY: Drawn BY: Contract Date:
Reviewed by: Draw Code: FILE NAME:
Submitted by: Plot Date: Plot Scale:
Solicitation No: Contract No:

DEPARTMENT OF THE ARMY
U.S ARMY CORPS OF ENGIEERS
AFGHANISTAN ENGINEERS SOUTH
KANDAHAR, AFGHANISTAN

Contractor:
Designer :

LATRINE BUILDING(5809)
SLAB ON GRADE REINFORCEMENT PLAN

SHEET REFERENCE NUMBER:
5809-S-95
276 OF 529

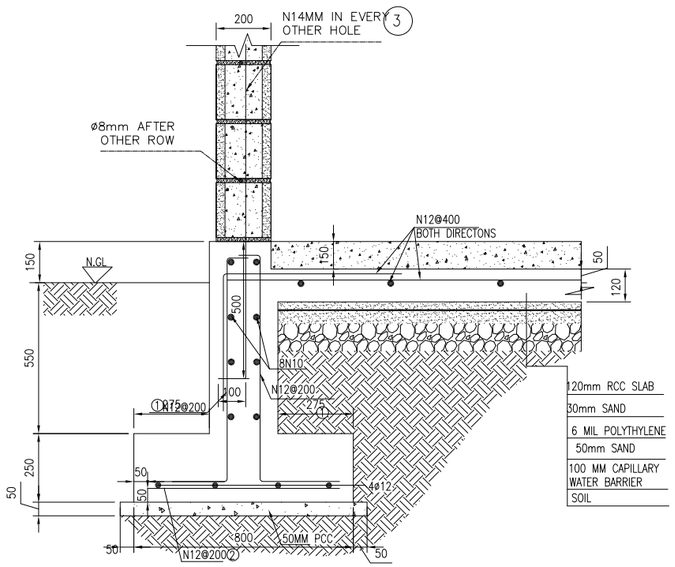

01 TYPICAL SECTION_1

5809-S-96 | REF. 5809-S-94&95 | SCALE: 1:20

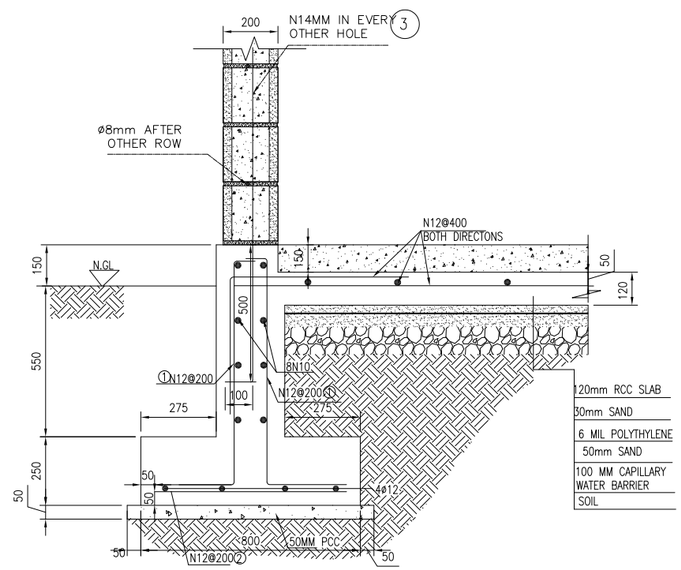

02 TYPICAL SECTION_2

5809-S-96 | REF. 5809-S-94&95 | SCALE: 1:20

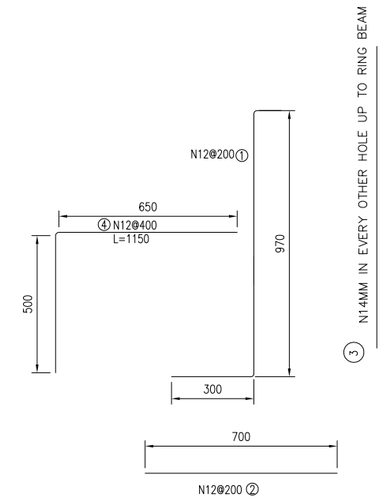

03 REINFORCEMENT DETAIL FOR SECTION 1&2

5809-S-96 | REF. 5809-S-96 | SCALE: 1:20

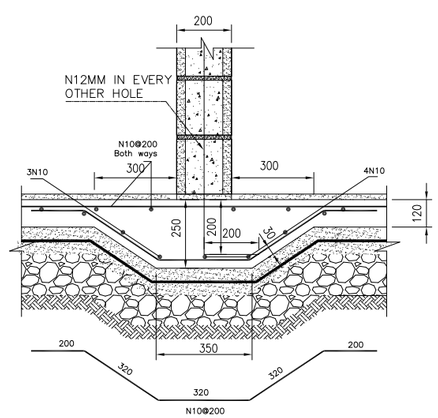

04 TYPICAL SECTION FOR INTERNAL WALLS

5809-S-96 | REF. 5809-S-95 | SCALE: 1:20

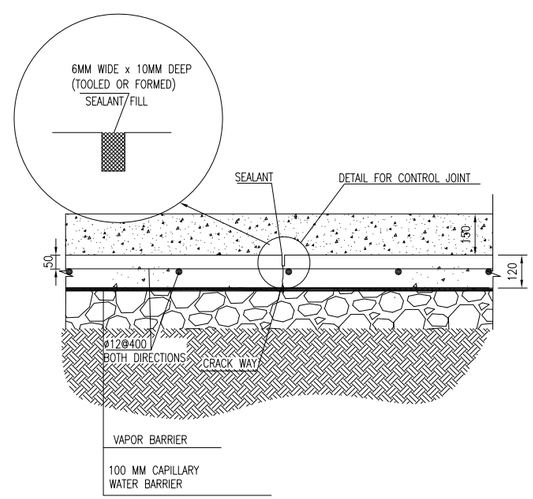

05 SLAB ON GRADE CONTROL JOINT

5809-S-96 | REF. 5809-S-95 | SCALE: 1:20

US ARMY CORPS OF ENGINEERS AFGHANISTAN ENGINEER DISTRICT

Symbol	Description	Date	Description	DATE	Appr.

Designed BY: | Drawn BY: | Contract Date:
Reviewed by: | Draw Code: | FILE NAME:
Submitted by: | Plot Date: | Plot Scale:
Solicitation No: | Contract No:

DEPARTMENT OF THE ARMY
U.S ARMY CORPS OF ENGIEERS
AFGHANISTAN ENGINEERS SOUTH
KANDAHAR, AFGHANISTAN

Contractor:
Designer :

LATRINE BUILDING(5809)
SECTIONS

SHEET REFERENCE NUMBER:
5809-S-96
277 OF 529

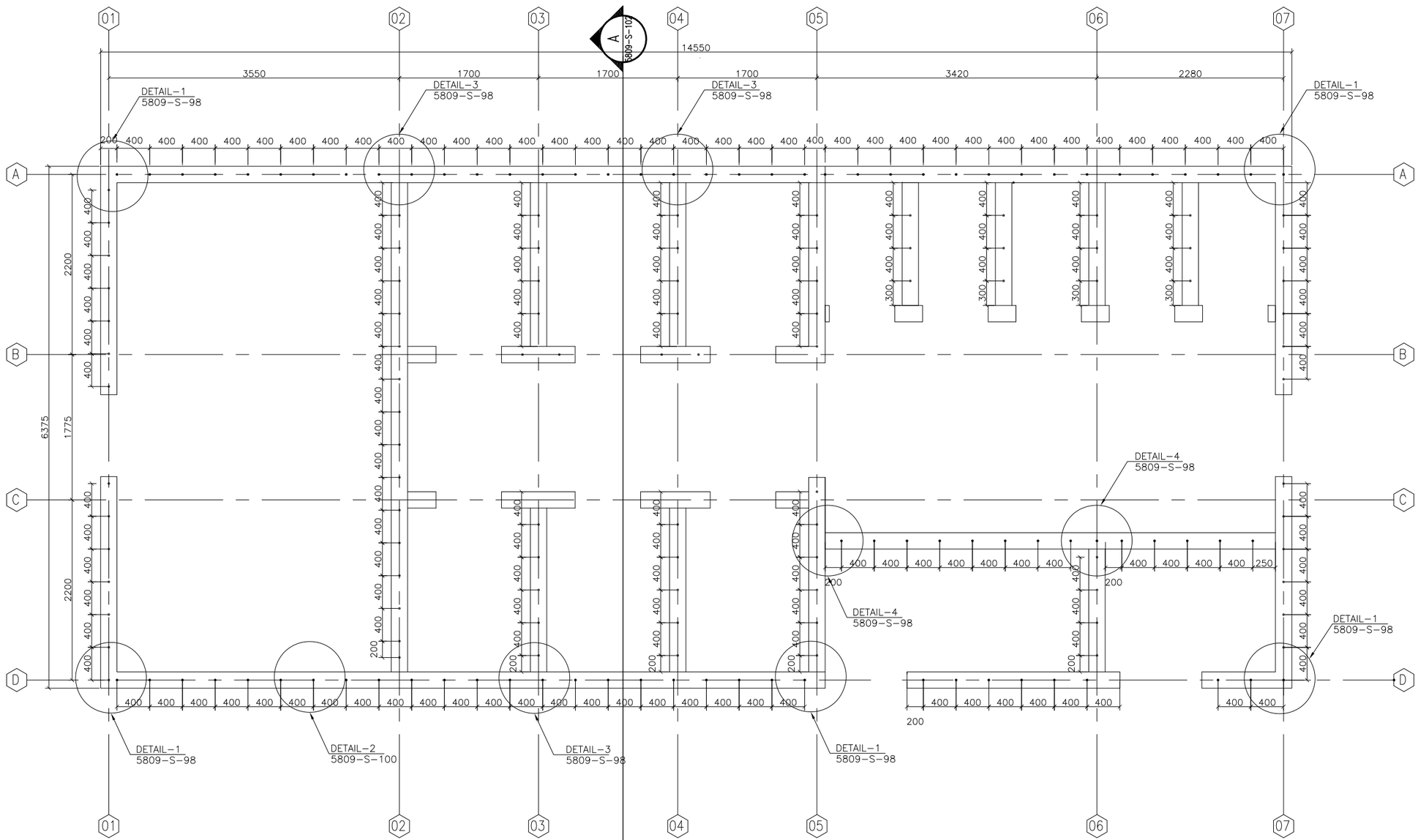

01 STARTER BARS PLAN

5809-S-97 REF. SCALE: 1:50

Notes

1- ALL DIMENSIONS ARE IN MM UNLESS OTHERWISE SPECIFIED.
2-THE STEEL GRADE SHALL BE Fy=60 KSI(Fy=4220Kg/cm²)
3-FOR CAST-IN-PLACE STRUCTURAL CONCRETE,MINIMUM 28 DAYS, CYLINDER STRENGTH f'c=4000 PSI(f'c=280Kg/cm²).

US ARMY CORPS OF ENGINEERS
AFGHANISTAN ENGINEER DISTRICT

Symbol	Description	Date	Description	DATE	Appr.

Designed BY: | Drawn BY: | Contract Date:
Reviewed by: | Draw Code: | FILE NAME:
Submitted by: | Plot Date: | Plot Scale:
Solicitation No: | Contract No::

DEPARTMENT OF THE ARMY
U.S ARMY CORPS OF ENGIEERS
AFGHANISTAN ENGINEERS SOUTH
KANDAHAR, AFGHANISTAN

Contractor:
Designer :

LATRINE BUILDING(5809)
STARTER BARS PLAN

SHEET REFERENCE NUMBER:
5809-S-97
278 OF 529

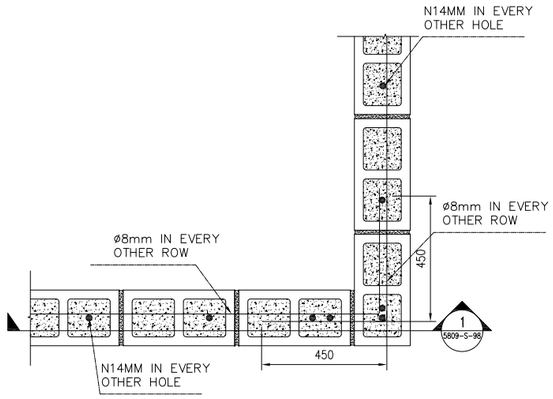

01 DETAIL OF EXTERIOR WALL IN CORNER

5809-S-98 REF. 5809-S-97 SCALE: 1:20

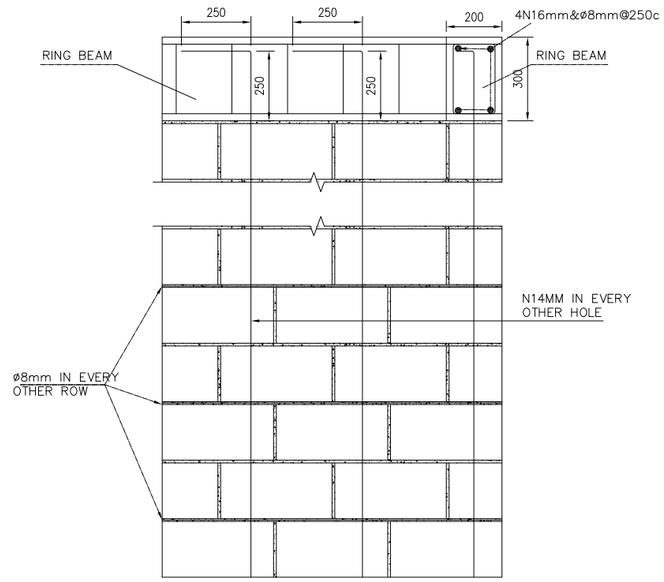

02 SECTION-1

5809-S-98 REF. 5809-S-98 SCALE: 1:20

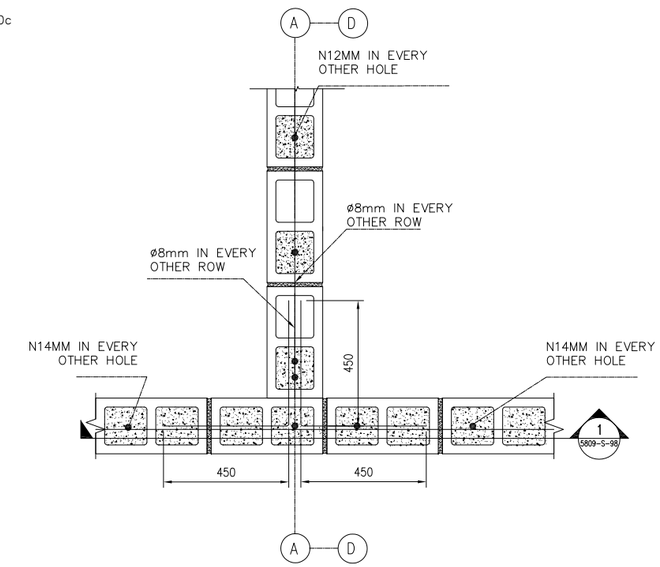

03 DETAIL OF EXTERIOR WALL IN MIDDLE

5809-S-98 REF. 5809-S-97 SCALE: 1:20

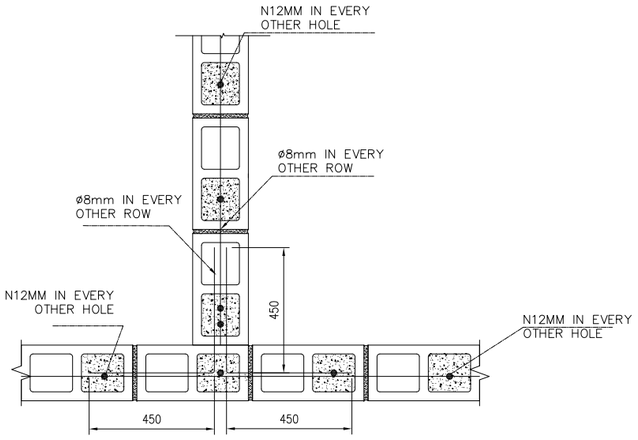

04 DETAIL OF INTERIOR WALL IN MIDDLE

5809-S-98 REF. 5809-S-97 SCALE: 1:20

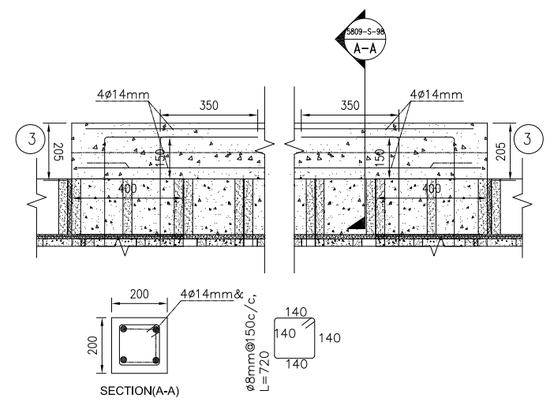

05 DETAIL FOR ALL LENTAL

5809-S-98 REF. SCALE: 1:20

NOTES

1- USE ø14MM @ 400 FOR EXTERIOR CMU WALLS AND ø12 @400 FOR INTERIOR CMU WALLS,UNLESS OTHERWISE NOTED.
2- ø 8 MM EVERY OTHER ROWS FOR HORIZONTAL REINFORCEMENT
3- ALL CELLS OF EXTIRIOR CMU WALLS SHALL BE FULLY GROUTED:
4- USE FULL CONTACT LAP SPLICES FOR REINFORCING STEEL IN CMU WALLS 48 DIAMETER OF BAR UNLESS OTHERWISE NOTED :

US ARMY CORPS OF ENGINEERS AFGHANISTAN ENGINEER DISTRICT

Symbol	Description	Date	Description	DATE	Appr.

Designed BY: | Drawn BY: | Contract Date:
Reviewed by: | Draw Code: | FILE NAME:
Submitted by: | Plot Date: | Plot Scale:
Solicitation No: | Contract No:

DEPARTMENT OF THE ARMY
U.S ARMY CORPS OF ENGEERS
AFGHANISTAN ENGINEERS SOUTH
KANDAHAR, AFGHANISTAN
Contractor:
Designer :

LATRINE BUILDING(5809)
SECTION&DETAIL

SHEET REFERENCE NUMBER:
5809-S-98
279 OF 529

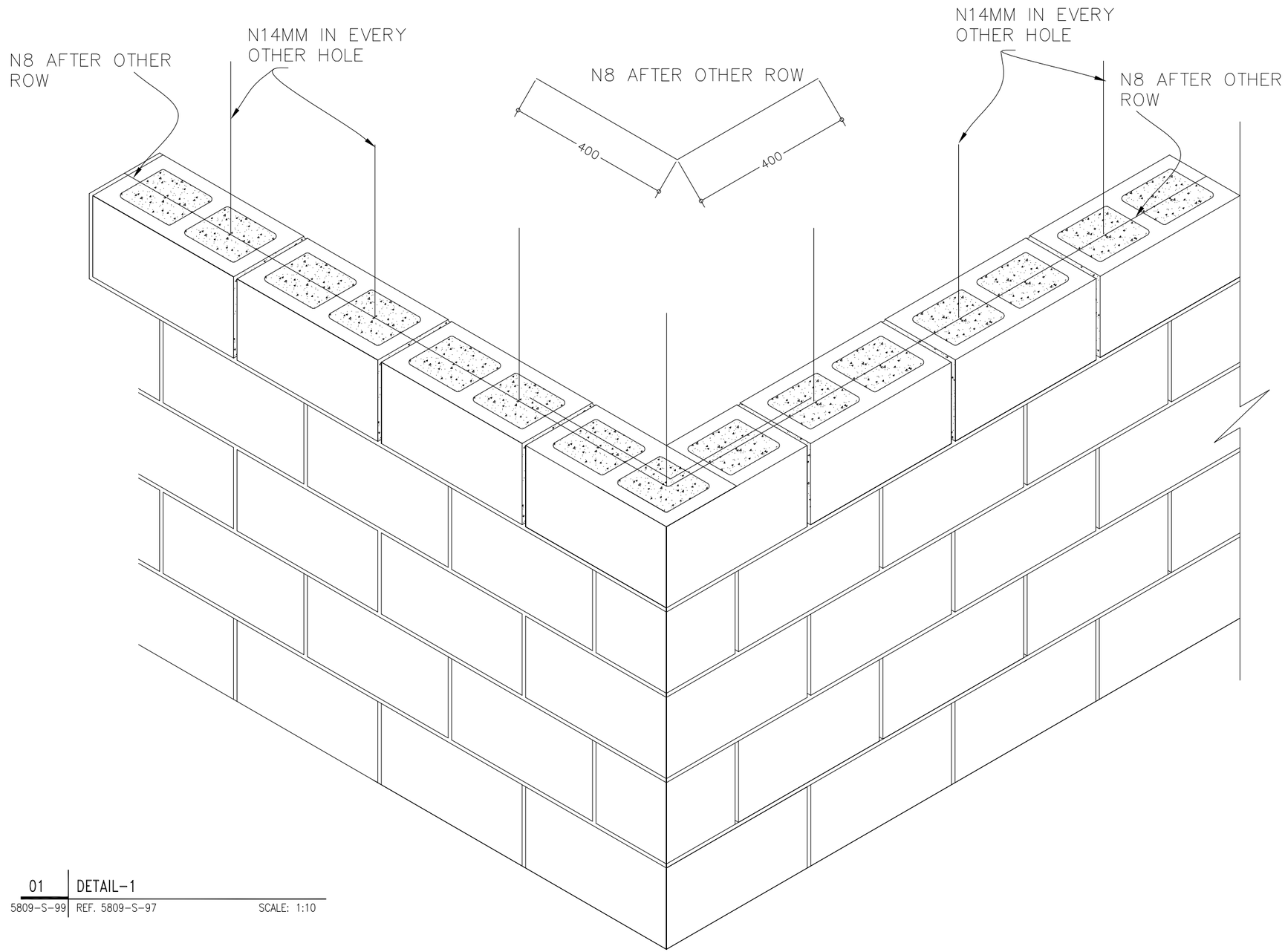

01 DETAIL-1

5809-S-99 REF. 5809-S-97 SCALE: 1:10

US ARMY CORPS OF ENGINEERS AFGHANISTAN ENGINEER DISTRICT

Symbol	Description	Date	Description	DATE	Appr.

DEPARTMENT OF THE ARMY
U.S ARMY CORPS OF ENGIEERS
AFGHANISTAN ENGINEERS SOUTH
KANDAHAR, AFGHANISTAN

Designed BY: Drawn BY: Contract Date:
Reviewed by: Draw Code: FILE NAME:
Submitted by: Plot Date: Plot Scale:
Solicitation No: Contract No:
Contractor:
Designer :

LATRINE BUILDING(5809)
DETAIL-1

SHEET REFERENCE NUMBER:
5809-S-99
280 OF 529

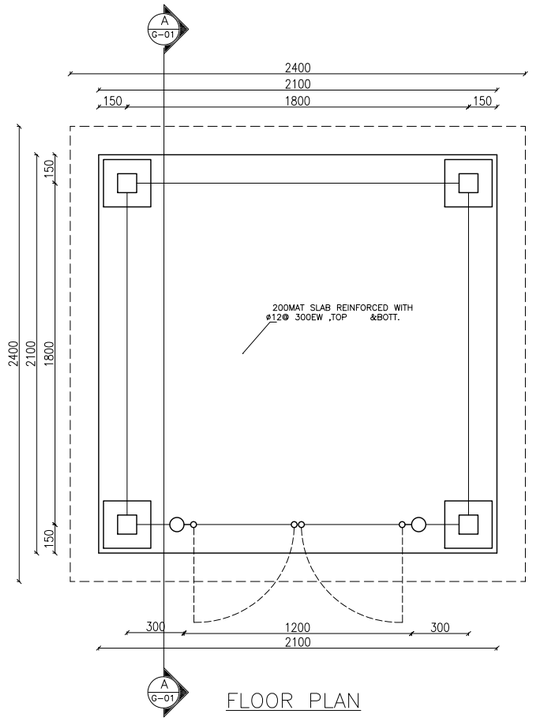

FLOOR PLAN

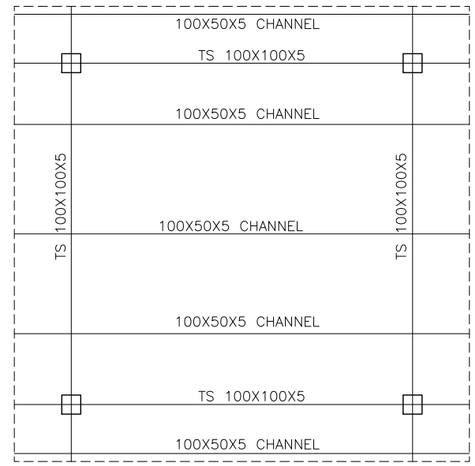

ROOF PLAN

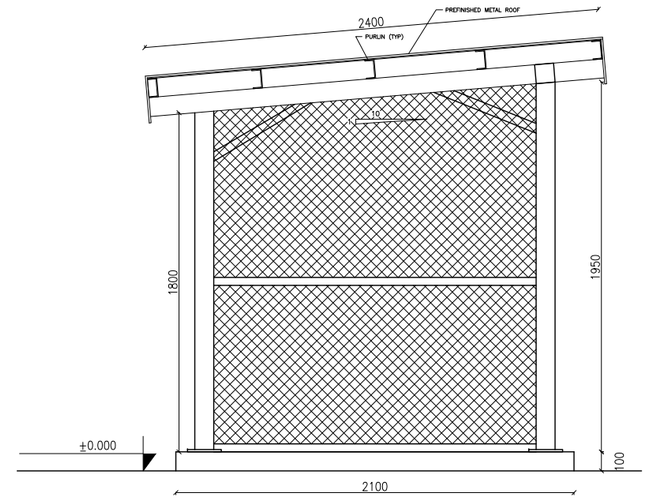

ELEVATION

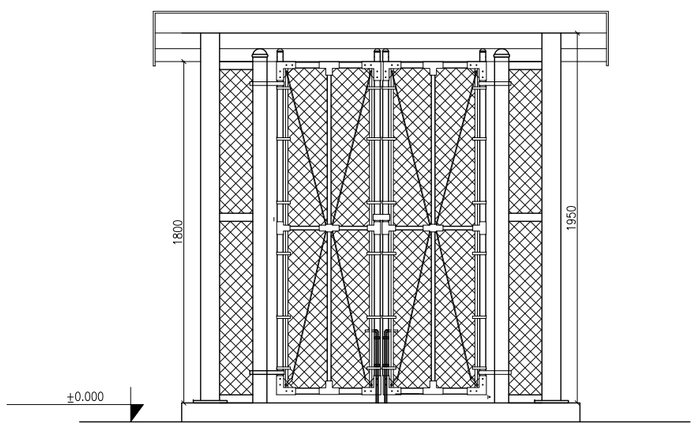

ELEVATION

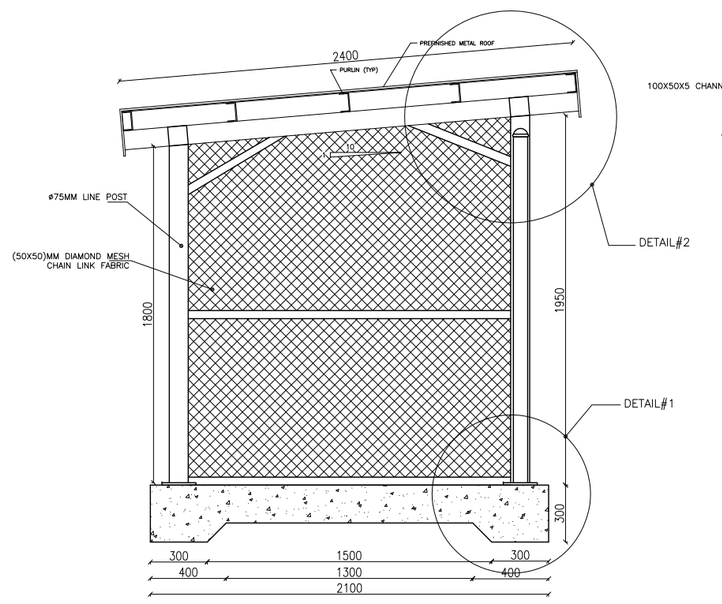

SECTION A–A

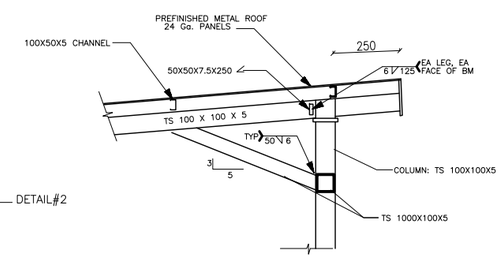

DETAIL#2

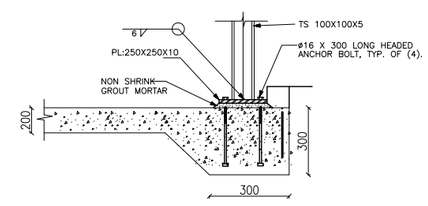

DETAIL #1

NOTE:
1. FOR FENCE DETAILS SEE SHEET NO (CO–A–29–30).
2, FOR STRUCTURAL SEE SHEET NO (CO–S–11)

UNLESS OTHERWISE NOTED LINEAR DIMENSIONS SHOWN IN MILLIMETRS

US ARMY CORPS OF ENGINEERS
AFGHANISTAN ENGINEER DISTRICT

Symbol	Description	Date	Appr. Symbol	Description	DATE	Appr.

Designed BY: | Drawn BY: | Contract Date:
Reviewed by: | Draw Code: | FILE NAME:
Submitted by: | Plot Date:
Plot Scale:
Solicitation No: | Contract No:

DEPARTMENT OF THE ARMY
U.S ARMY CORPS OF ENGIEERS
AFGHANISTAN ENGINEERS DISTRICT
KABUL, AFGHANISTAN

Contractor:
Designer:

TRASH POINT
PLAN , ELEVATION , SECTION & DETAILS

SHEET REFERENCE NUMBER:
CO–A–56
175 OF 529

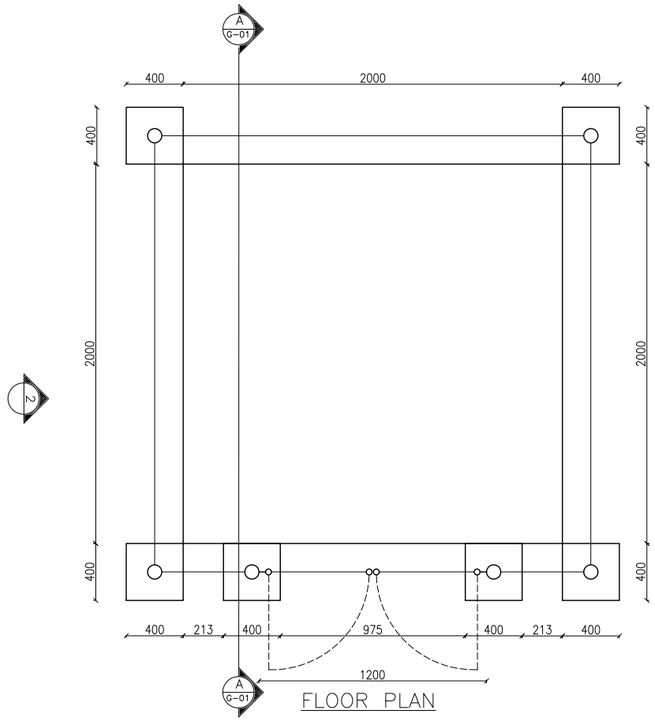

FLOOR PLAN

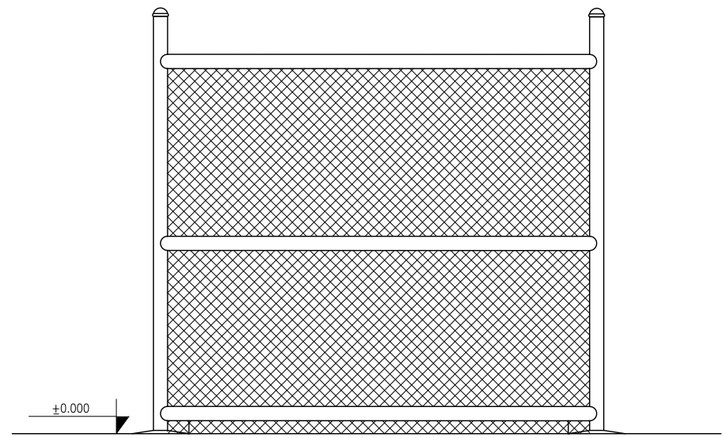

ELEVATION 2

NOTE:
FOR FENCE DETAILS SEE SHEET NO (CO-A-29-30).

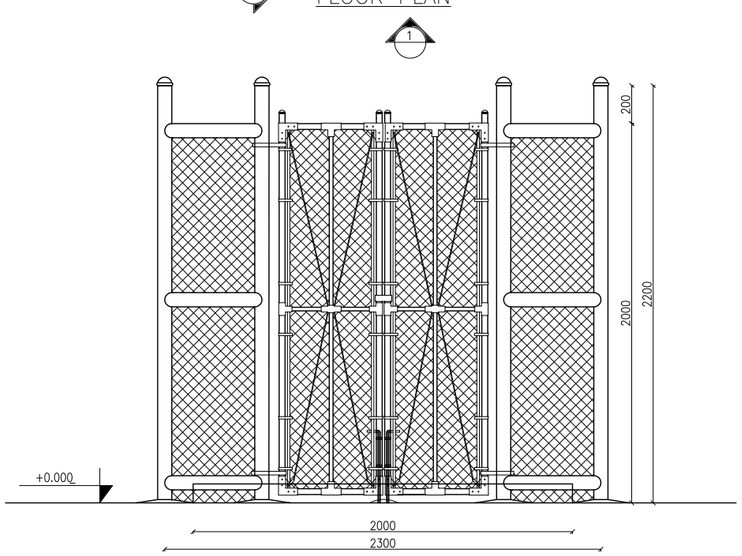

ELEVATION 1

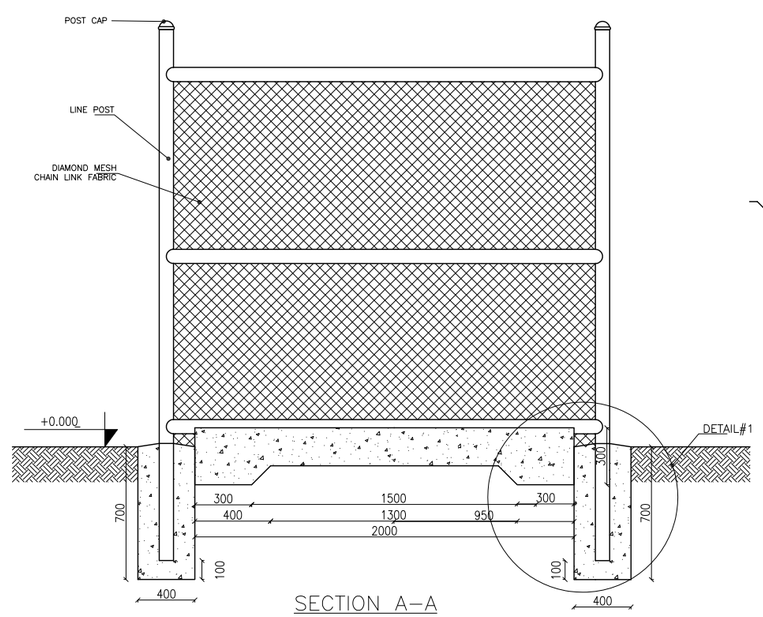

SECTION A-A

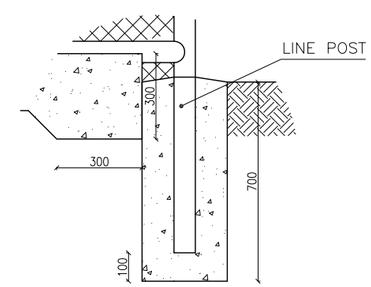

DETAIL#1

UNLESS OTHERWISE NOTED LINEAR DIMENSIONS SHOWN IN MILLIMETRS

US ARMY CORPS
OF ENGINEERS
AFGHANISTAN
ENGINEER DISTRICT

Symbol	Description	Date	Appr. Symbol	Description	DATE	Appr.

Designed BY: | Drawn BY: | Contract Date:
Reviewed by: | Draw Code: | FILE NAME:
Submitted by: | Plot Date:
Plot Scale:
Contractor: | Solicitation No: | Contract No:
Designer:

MEDICAL WASTE INCINERATOR
PLAN , ELEVATION , SECTION & DETAILS

SHEET REFERENCE NUMBER:
CO-A-57
176 OF 529

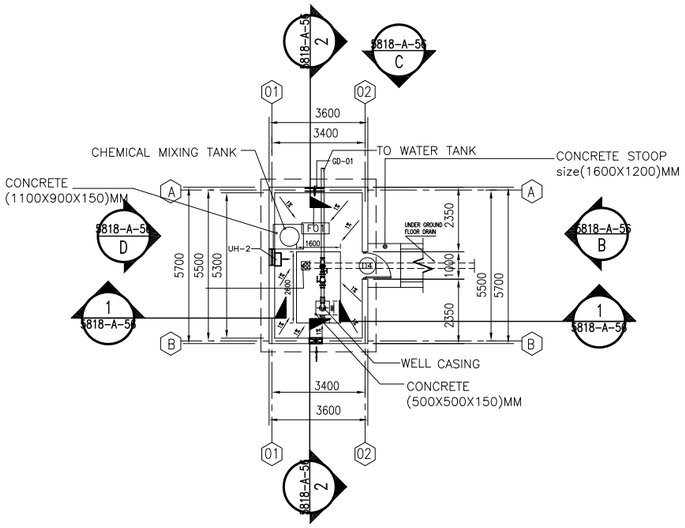

01 FLOOR PLAN

5818-A-56 | REF. | SCALE: 1:100

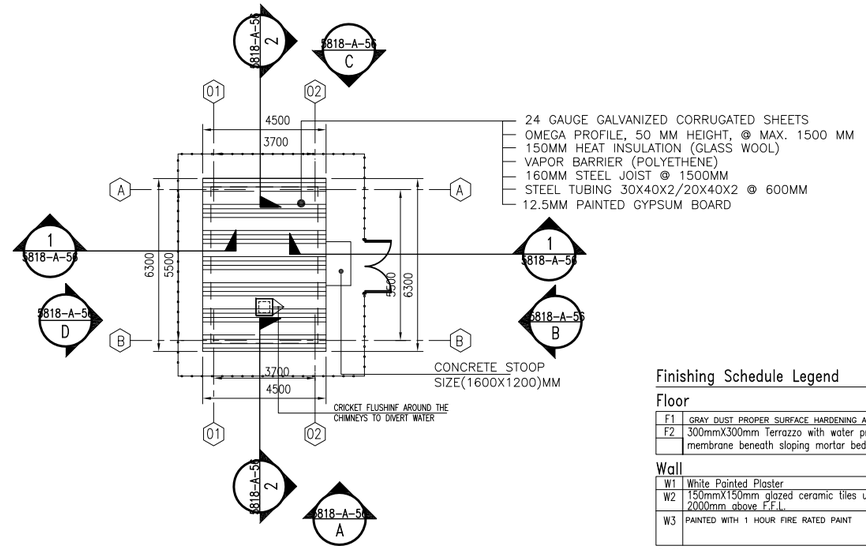

02 ROOF PLAN

5818-A-56 | REF. | SCALE: 1:100

Finishing Schedule Legend

Floor

F1	GRAY DUST PROPER SURFACE HARDENING AND SEALER
F2	300mmX300mm Terrazzo with water proofing membrane beneath sloping mortar bed

Wall

W1	White Painted Plaster
W2	150mmX150mm glazed ceramic tiles up to 2000mm above F.F.L.
W3	PAINTED WITH 1 HOUR FIRE RATED PAINT (JOTUN)

Ceiling

C1	White Painted GYPSUM BOARD
C2	1/2 HOUR FIRE RATED GYPSUM BOARD

Finishing Schedule

Room	Usage	Floor	Wall	Ceiling
F01	BOOSTER ROOM	F1	W1	C1

Notes

1- ALL DIMENSIONS ARE IN MM UNLESS OTHERWISE SPECIFIED.
2- ALL LEVELS ARE IN METER (M) UNLESS OTHERWISE SPECIFIED
3- ALL WALL ARE 200 mm CMU WITH 25mm PAINTED CEMENT PLASTER BOTH SIDE.
4- EXTERIOR WALLS TO BE PAINTED WITH COLORED STUCCO INSULATION.
5-ALL ROOFS ARE 24 GAUGE GALVANIZED CORRUGATED SHEETS

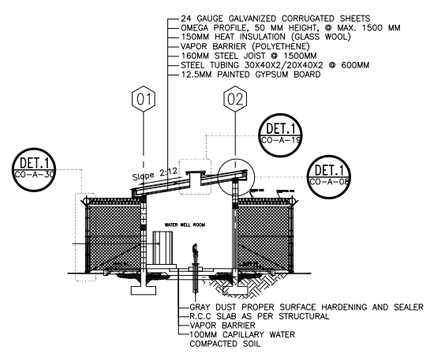

03 SECTION – 1:1

5818-A-56 | REF. 5818-A-56 | SCALE: 1:100

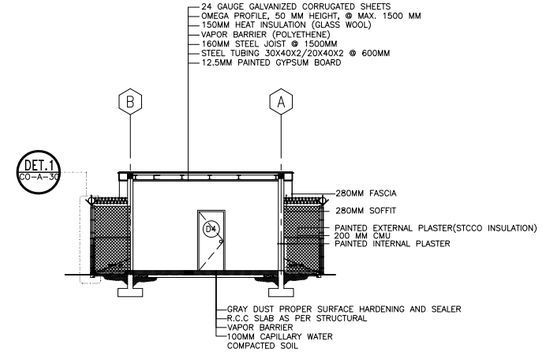

04 SECTION – 2:2

5818-A-56 | REF. 5818-A-56 | SCALE: 1:100

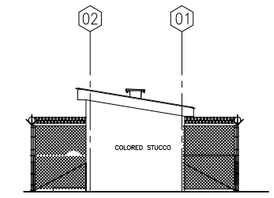

05 ELEVATION A

5818-A-56 | REF. 5818-A-56 | SCALE: 1:100

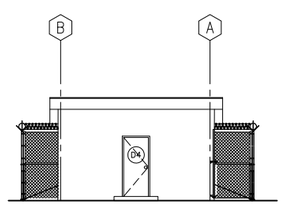

06 ELEVATION B

5818-A-56 | REF. 5818-A-56 | SCALE: 1:100

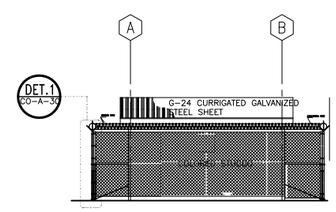

07 ELEVATION C

5818-A-56 | REF. 5818-A-56 | SCALE: 1:100

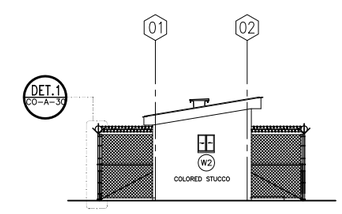

08 ELEVATION D

5818-A-56 | REF. 5818-A-56 | SCALE: 1:100

1 0 1 2 3 4 5 6 7 8 9
1:50

US ARMY CORPS OF ENGINEERS AFGHANISTAN ENGINEER DISTRICT

Symbol	Description	Date	Description	DATE	Appr.

Designed BY: | Drawn BY: | Contract Date:
Reviewed by: | Draw Code: | FILE NAME:
Submitted by: | Plot Date:
Plot Scale:
Solicitation No: | Contract No:

DEPARTMENT OF THE ARMY
U.S ARMY CORPS OF ENGEERS
AFGHANISTAN ENGINEERS SOUTH
KANDAHAR, AFGHANISTAN

Contractor:
Designer :

WELL HOUSE BUILDING#(5818)
PLANS, SECTIONS,& ELEVATIONS

SHEET REFERENCE NUMBER:
5811-A-56
111 OF 529

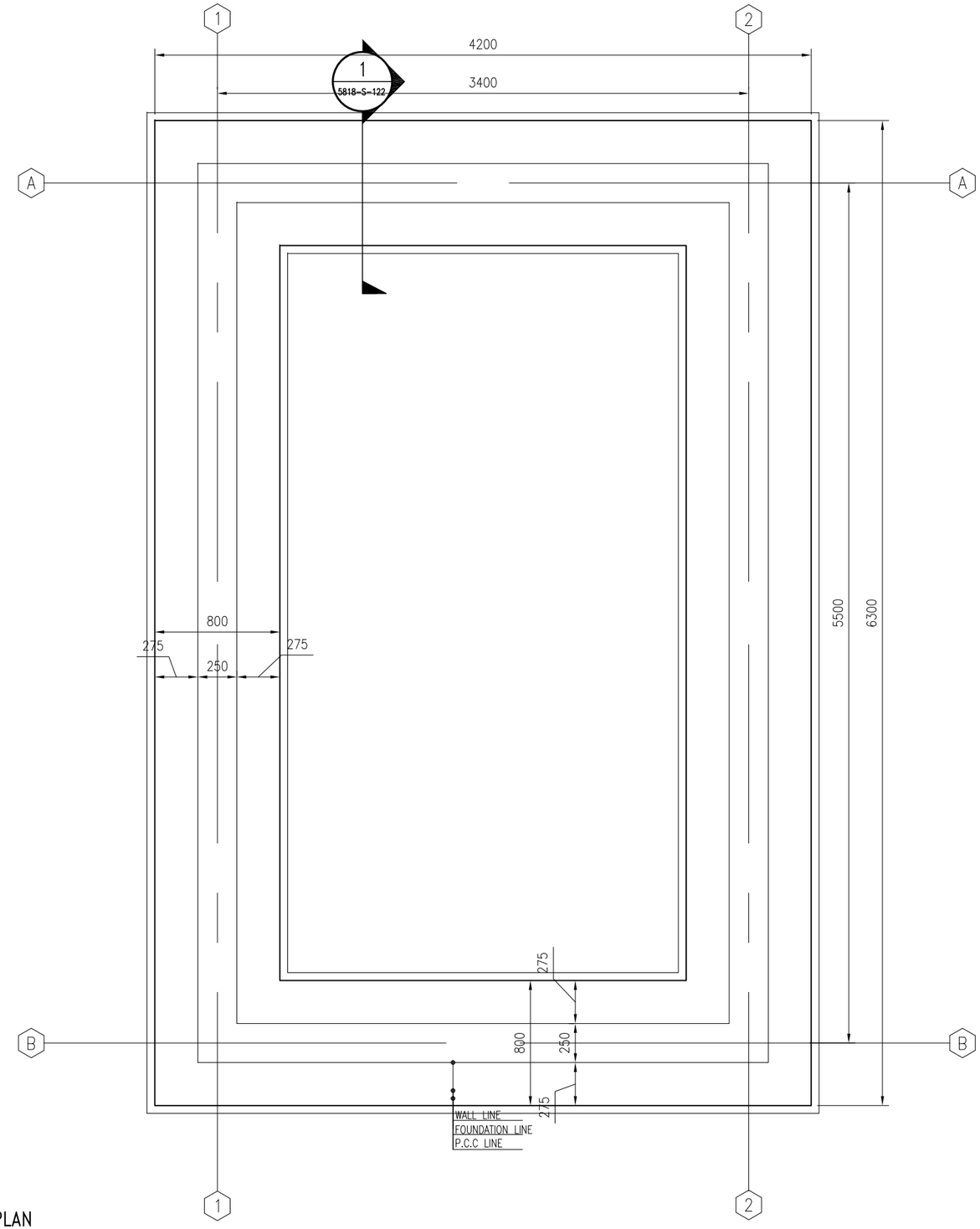

01 FOUNDATION PLAN

5818-S-121 REF. SCALE: 1:30

Notes

1- ALL DIMENSIONS ARE IN MM UNLESS OTHERWISE SPECIFIED.
2- FOUNDATION DESIGN IS ASSUMED ON BEARING CAPACITY OF 14.22 PSI (1Kg/cm²).
3-FOUNDATION SHALL BE FOUNDED ON 95% MINIMUM DENSITY OF COMPACTED MATERIAL.
4-THE STEEL GRADE SHALL BE Fy=60 KSI(4220 Kg/cm²).
5-FOR CAST-IN-PLACE STRUCTURAL CONCRETE,MINIMUM 28 DAYS, CYLINDER STRENGTH f'c=4000PSI (280Kg/cm²).

US ARMY CORPS OF ENGINEERS
AFGHANISTAN ENGINEER DISTRICT

Symbol	Description	Date	Description	DATE	Appr.

DEPARTMENT OF THE ARMY
U.S ARMY CORPS OF ENGIEERS
AFGHANISTAN ENGINEERS SOUTH
KANDAHAR, AFGHANISTAN

Designed BY: | Drawn BY: | Contract Date:
Reviewed by: | Draw Code: | FILE NAME:
Submitted by: | Plot Date: | Plot Scale:
Solicitation No: | Contract No:
Contractor:
Designer :

WATER WELL(5818)
FOUNDATION PLAN

SHEET REFERENCE NUMBER:
5818-S-121
302 OF 529

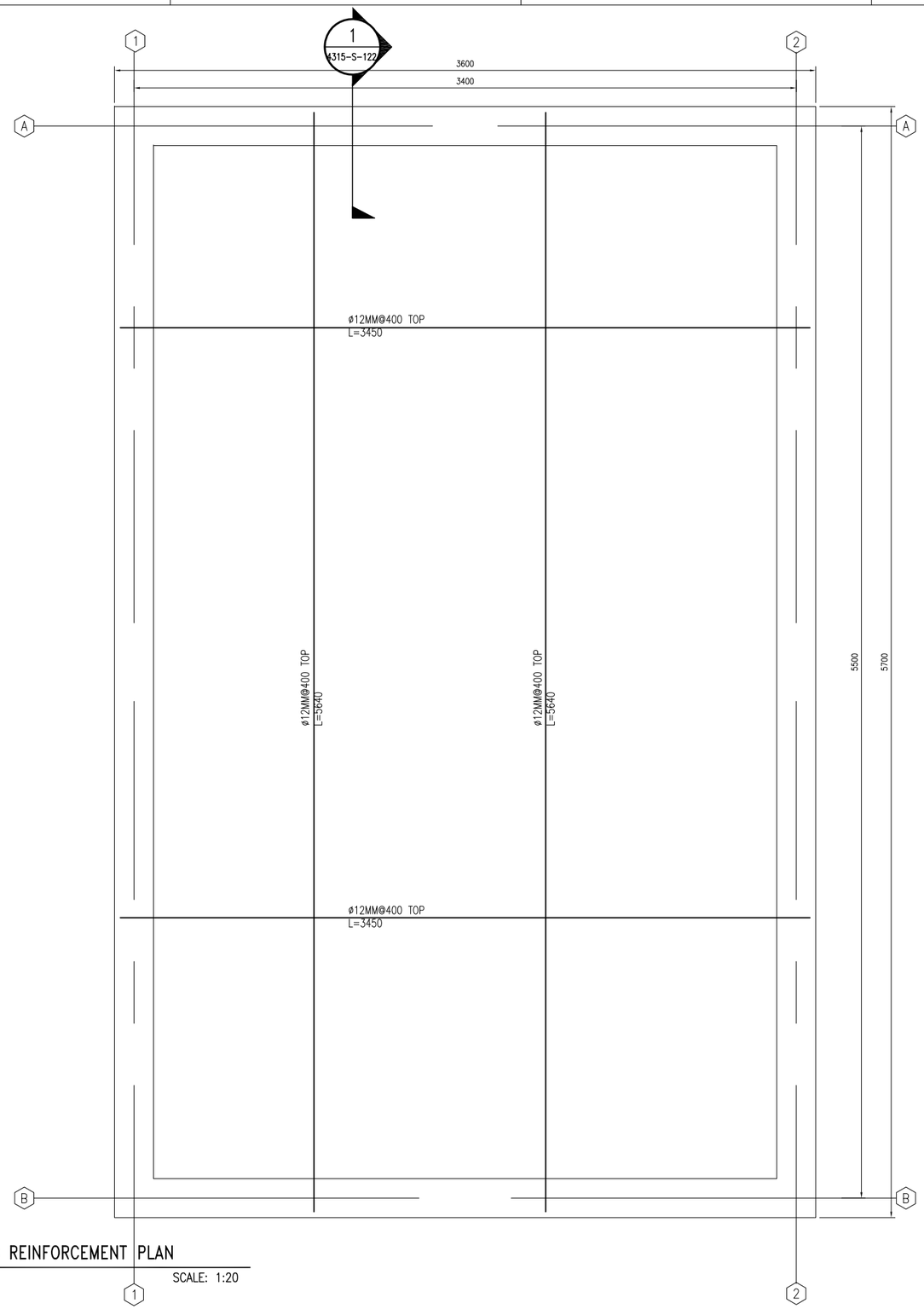

01 SLAB REINFORCEMENT PLAN

5820-S-122 REF. SCALE: 1:20

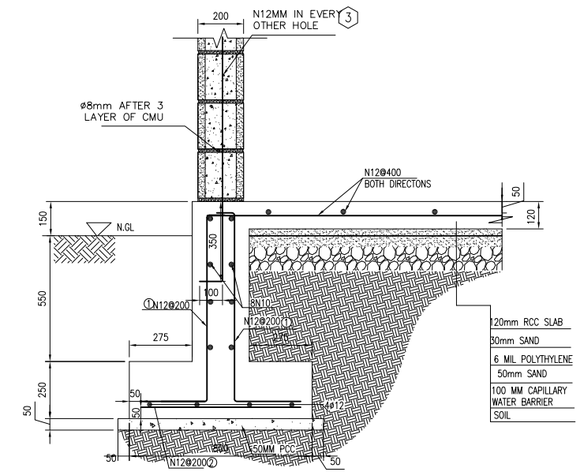

01 SECTION-1

5820-S-122 REF. 5820-S-122 SCALE: 1:20

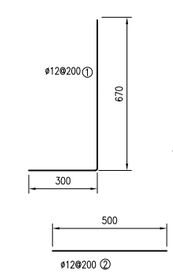

ø12 mm IN EVERY OTHER HOLE UP TO RING BEAM

Notes

1- ALL DIMENSIONS ARE IN MM UNLESS OTHERWISE SPECIFIED.
2-THE STEEL GRADE SHALL BE Fy=60 KSI(4220 Kg/cm²).
3-FOR CAST-IN-PLACE STRUCTURAL CONCRETE,MINIMUM 28 DAYS, CYLINDER STRENGTH f'c=4000PSI (280Kg/cm²).

US ARMY CORPS OF ENGINEERS AFGHANISTAN ENGINEER DISTRICT

Symbol	Description	Date	Description	DATE	Appr.

DEPARTMENT OF THE ARMY
U.S ARMY CORPS OF ENGEERS
AFGHANISTAN ENGINEERS SOUTH
KANDAHAR, AFGHANISTAN

Designed BY: Drawn BY: Contract Date:
Reviewed by: Draw Code: FILE NAME:
Submitted by: Plot Date:
Plot Scale:
Solicitation No: Contract No:
Contractor:
Designer :

WATER WELL(5818)
SLAB REINFORCEMENT PLAN&SECTION

SHEET REFERENCE NUMBER:
5818-S-122
303 OF 529