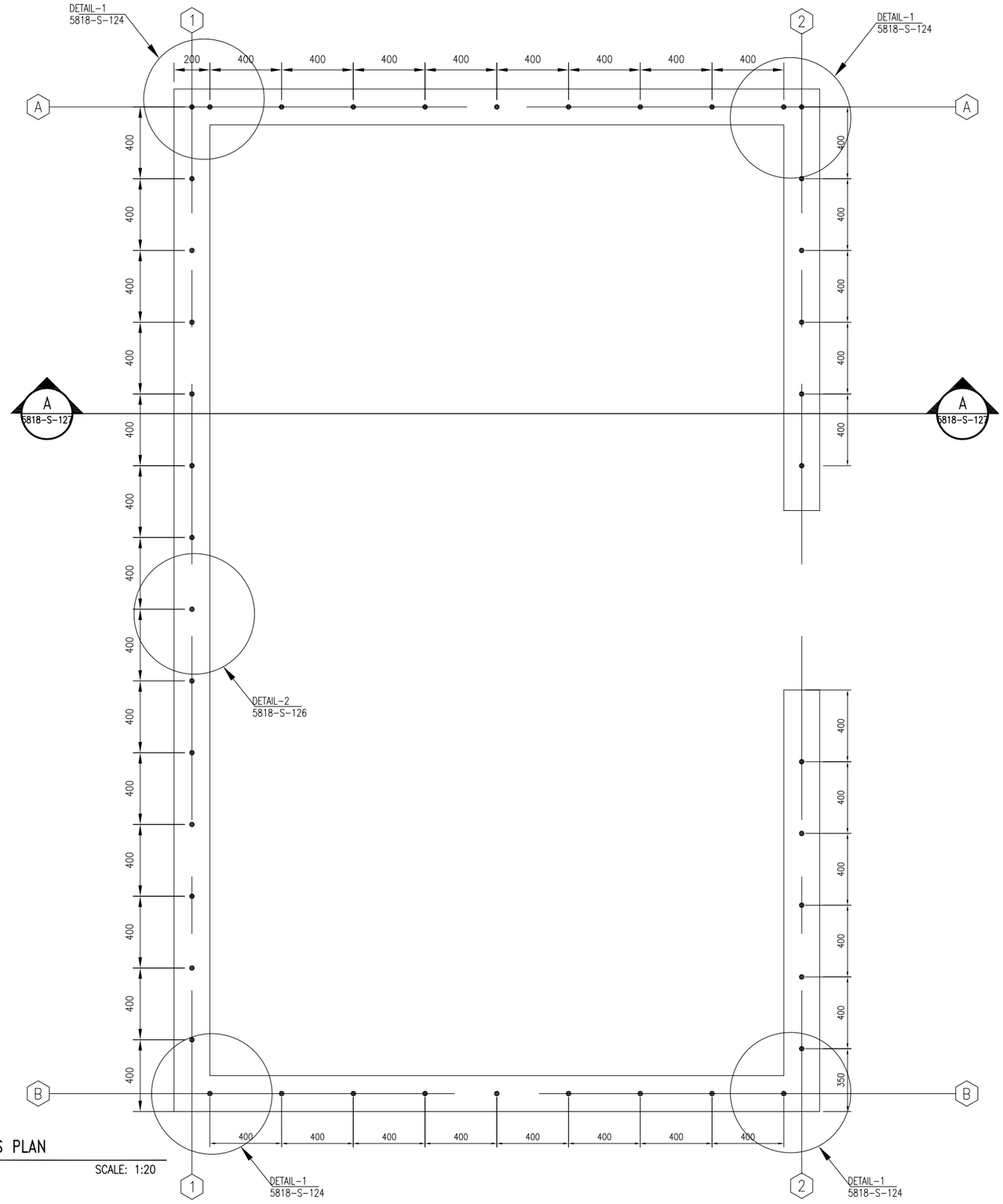

01 STARTER BARS PLAN

4315-S-123 REF. SCALE: 1:20

Notes

1- ALL DIMENSIONS ARE IN MM UNLESS OTHERWISE SPECIFIED.
2-THE STEEL GRADE SHALL BE Fy=60 KSI(4220 Kg/cm²).
3-FOR CAST-IN-PLACE STRUCTURAL CONCRETE,MINIMUM 28 DAYS, CYLINDER STRENGTH f'c=4000PSI (280Kg/cm²).

US ARMY CORPS OF ENGINEERS AFGHANISTAN ENGINEER DISTRICT

Symbol	Description	Date	Description	DATE	Appr.

Designed BY: | Drawn BY: | Contract Date:
Reviewed by: | Draw Code: | FILE NAME:
Submitted by: | Plot Date: | Plot Scale:
Solicitation No: | Contract No:

DEPARTMENT OF THE ARMY
U.S ARMY CORPS OF ENGIEERS
AFGHANISTAN ENGINEERS SOUTH
KANDAHAR, AFGHANISTAN

Contractor:
Designer :

WATER WELL(5818)
STARTER BARS PLAN

SHEET REFERENCE NUMBER:
5818-S-123
304 OF 529

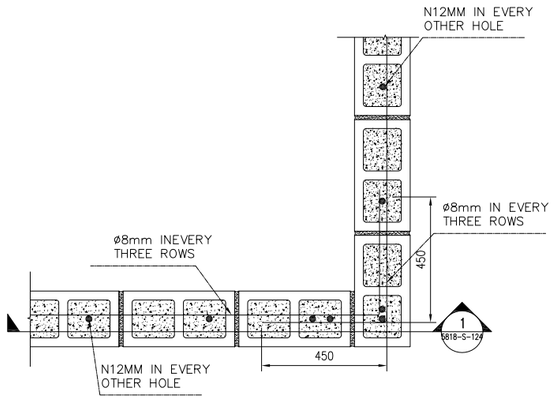

01 DETAIL OF EXTERIOR WALL IN CORNER

5818-S-124 REF. 5818-S-123 SCALE: 1:20

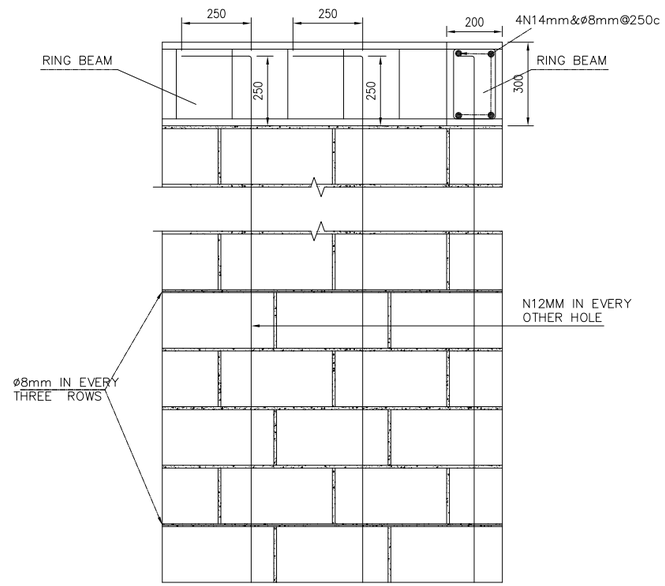

02 SECTION-1

5818-S-124 REF. 5818-S-124 SCALE: 1:20

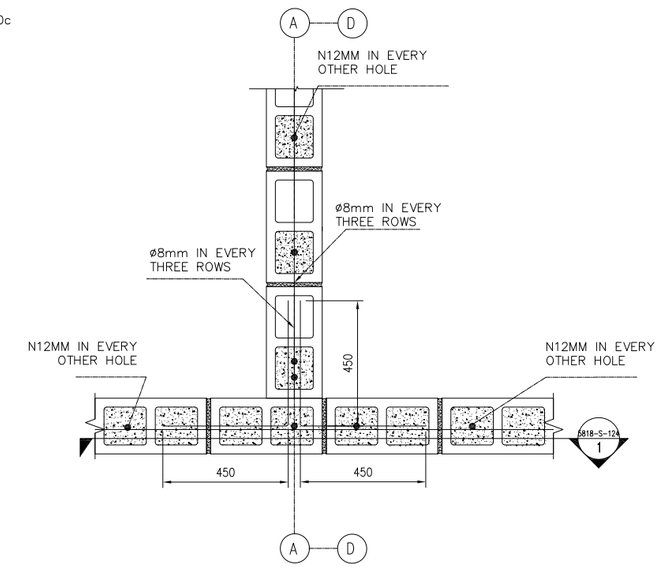

03 DETAIL OF EXTERIOR WALL IN MIDDLE

5818-S-124 REF. 5818-S-123 SCALE: 1:20

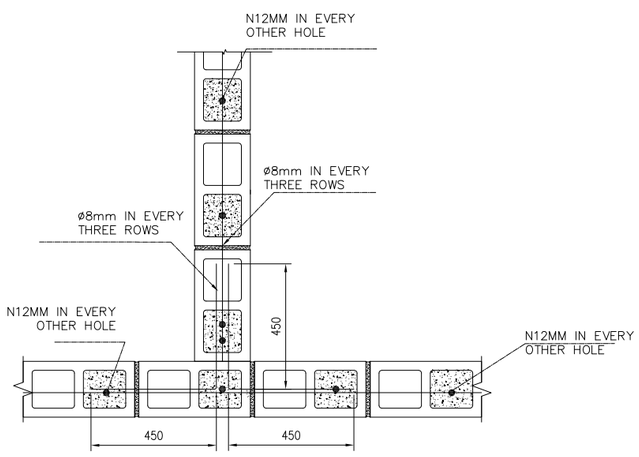

04 DETAIL OF INTERIOR WALL IN MIDDLE

5818-S-124 REF. 5818-S-123 SCALE: 1:20

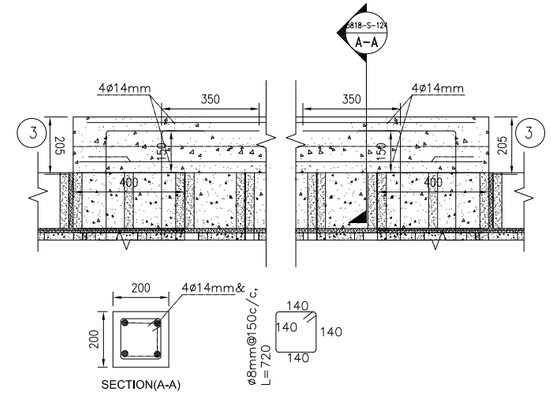

05 DETAIL FOR ALL LENTAL

5818-S-124 REF. SCALE: 1:20

US ARMY CORPS
OF ENGINEERS
AFGHANISTAN
ENGINEER DISTRICT

Symbol	Description	Date	Description	DATE	Appr.

Designed BY: Drawn BY: Contract Date:

Reviewed by: Draw Code: FILE NAME:

Submitted by: Plot Date:

Plot Scale:

Solicitation No: Contract No:

DEPARTMENT OF THE ARMY
U.S ARMY CORPS OF ENGEERS
AFGHANISTAN ENGINEERS SOUTH
KANDAHAR, AFGHANISTAN

Contractor:

Designer :

WATER WELL(5818)
SECTION & DETAIL

SHEET
REFERENCE
NUMBER:

5818-S-124

305 OF 529

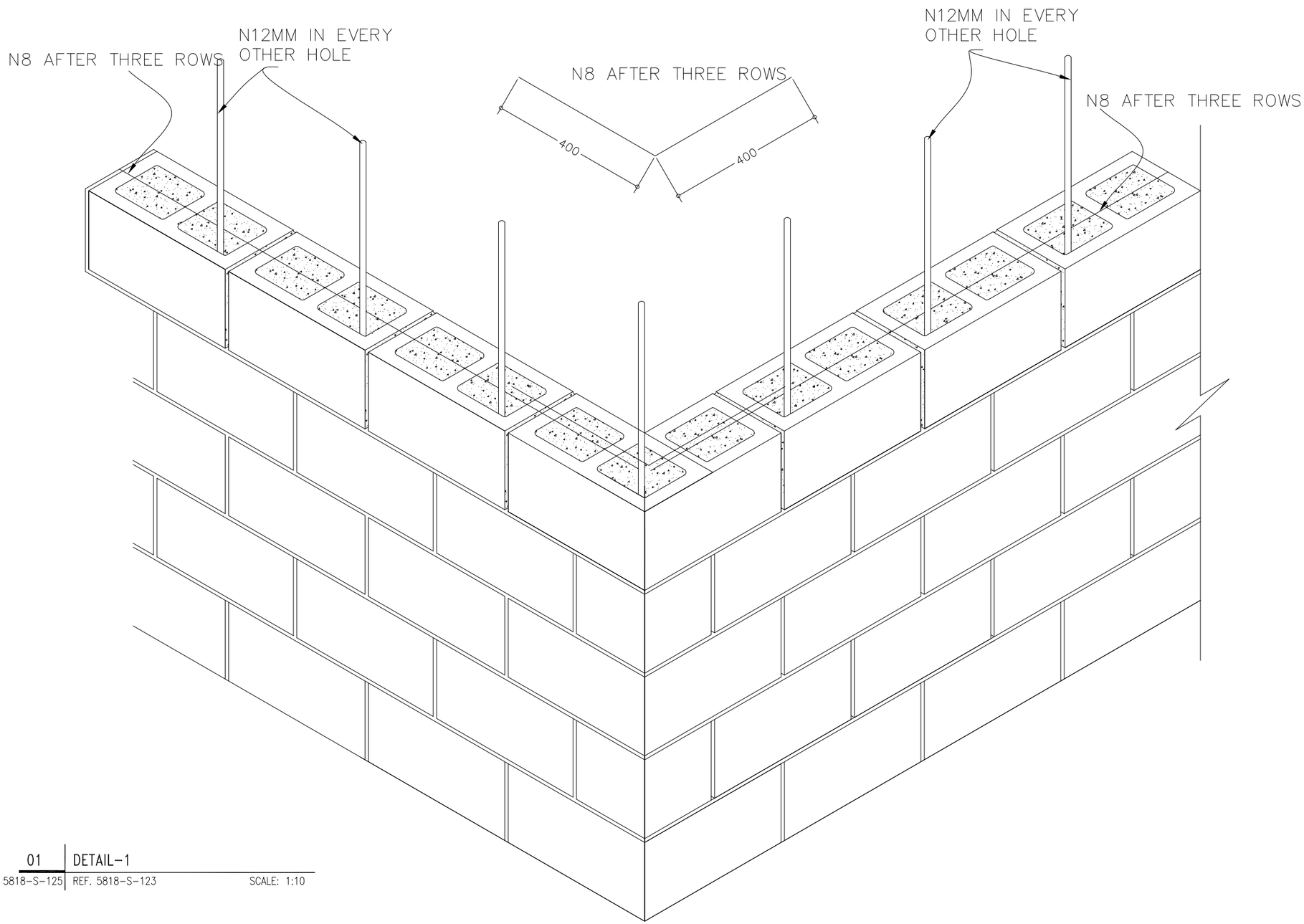

01 | DETAIL-1

5818-S-125 | REF. 5818-S-123 SCALE: 1:10

US ARMY CORPS OF ENGINEERS
AFGHANISTAN ENGINEER DISTRICT

Symbol	Description	Date	Description	DATE	Appr.

DEPARTMENT OF THE ARMY
U.S ARMY CORPS OF ENGIERS
AFGHANISTAN ENGINEERS SOUTH
KANDAHAR, AFGHANISTAN

Designed BY: | Drawn BY: | Contract Date:
Reviewed by: | Draw Code: | FILE NAME:
Submitted by: | Plot Date: | Plot Scale:
Solicitation No: | Contract No:
Contractor:
Designer :

WATER WELL(5818)
DETAIL-1

SHEET REFERENCE NUMBER:
5818-S-125
306 OF 529

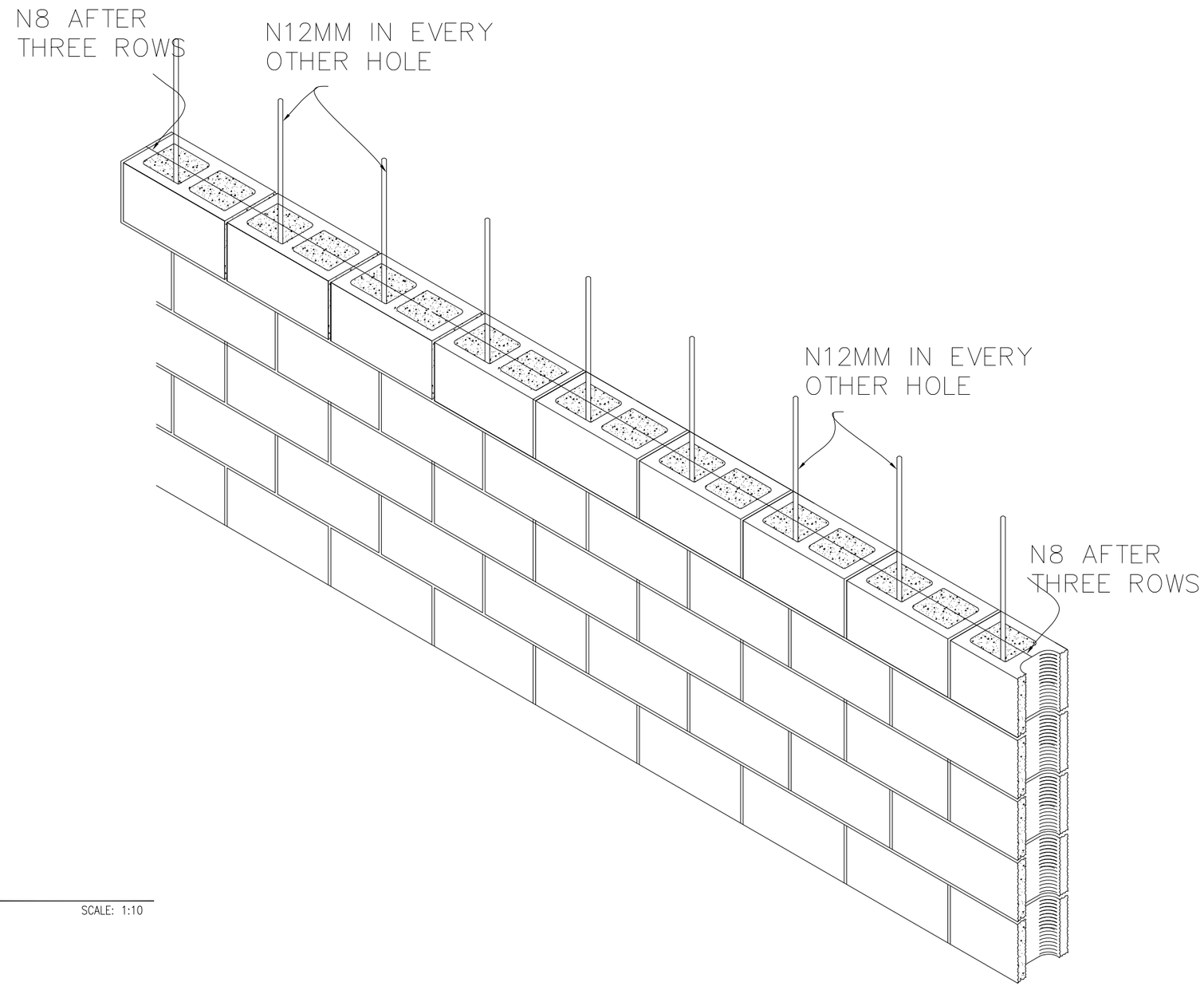

01 DETAIL-2

5818-S-126 REF. 5818-S-123 SCALE: 1:10

US ARMY CORPS
OF ENGINEERS
AFGHANISTAN
ENGINEER DISTRICT

Symbol	Description	Date	Description	DATE	Appr.

DEPARTMENT OF THE ARMY
U.S ARMY CORPS OF ENGIEERS
AFGHANISTAN ENGINEERS SOUTH
KANDAHAR, AFGHANISTAN

Designed BY: Drawn BY: Contract Date:

Reviewed by: Draw Code: FILE NAME:

Submitted by: Plot Date:

Plot Scale:

Contractor:

Solicitation No: Contract No:

Designer :

WATER WELL(5818)
DETAIL-2

SHEET
REFERENCE
NUMBER:

5818-S-126
307 OF 529

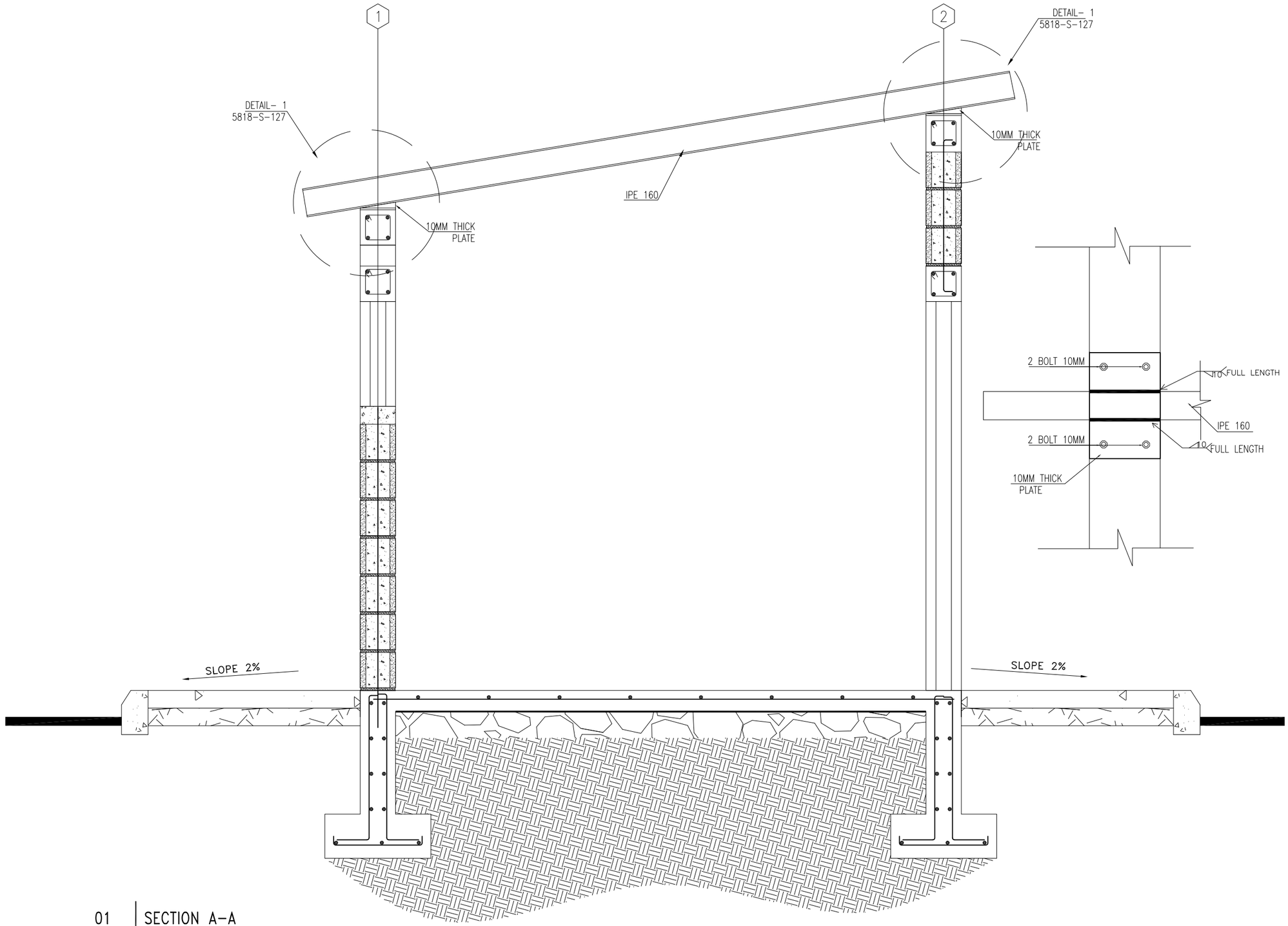

01 SECTION A-A

5818-S-127 REF. 5818-S-123 SCALE: 1:20

US ARMY CORPS OF ENGINEERS
AFGHANISTAN ENGINEER DISTRICT

Symbol	Description	Date	Description	DATE	Appr.

Designed BY: | Contract Date:
Drawn BY: | FILE NAME:
Reviewed by: | Draw Code:
Submitted by: | Plot Date:
Solicitation No: | Plot Scale:
Contract No:

DEPARTMENT OF THE ARMY
U.S ARMY CORPS OF ENGEERS
AFGHANISTAN ENGINEERS SOUTH
KANDAHAR, AFGHANISTAN

Contractor:

Designer :

WATER WELL(5818)
SECTION A-A

SHEET REFERENCE NUMBER:
5818-S-127
308 OF 529

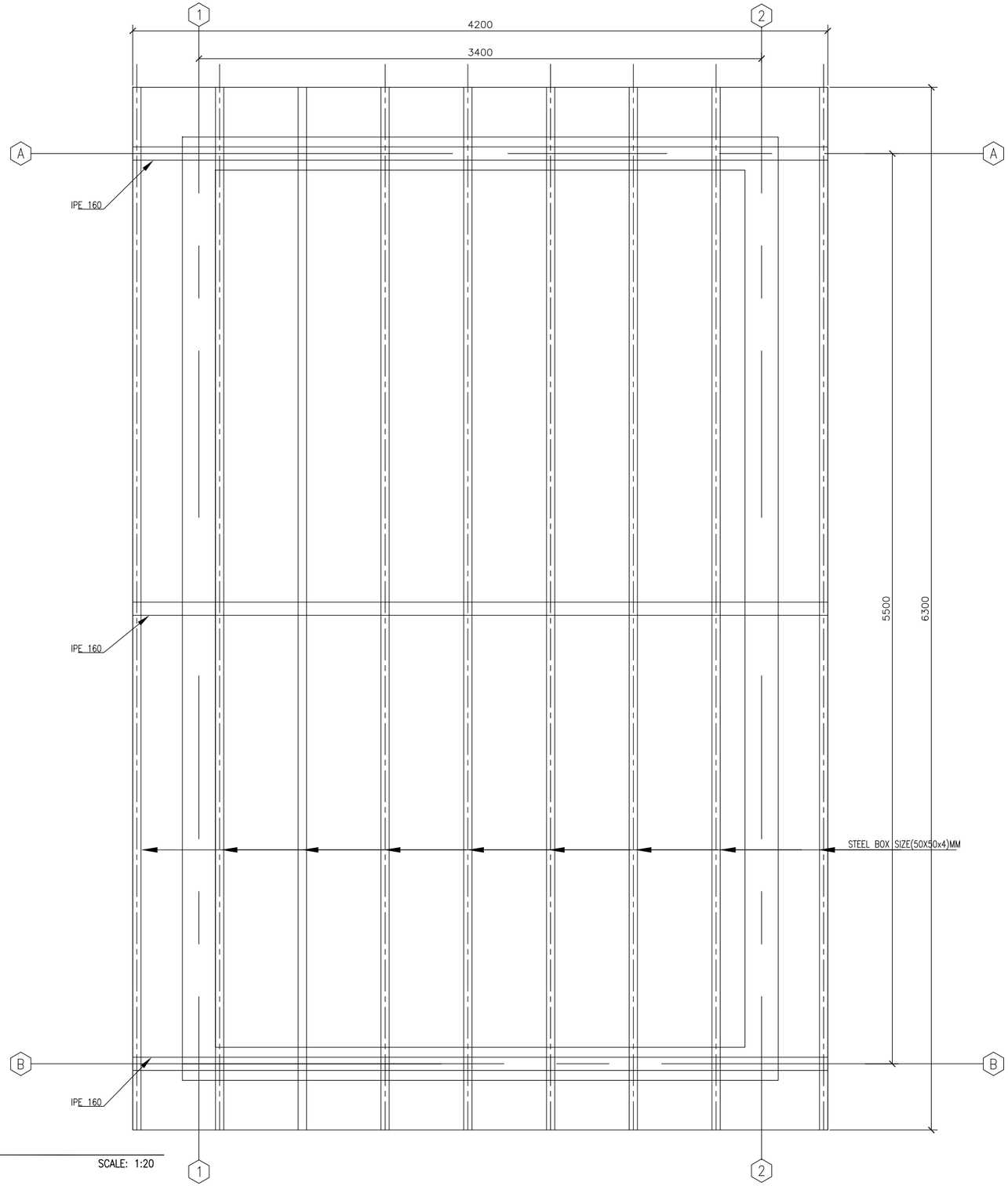

01 ROOF PLAN

5818-S-128 REF. SCALE: 1:20

US ARMY CORPS OF ENGINEERS
AFGHANISTAN ENGINEER DISTRICT

Symbol	Description	Date	Description	DATE	Appr.

DEPARTMENT OF THE ARMY
U.S ARMY CORPS OF ENGIEERS
AFGHANISTAN ENGINEERS SOUTH
KANDAHAR, AFGHANISTAN

Designed BY: | Drawn BY: | Contract Date:
Reviewed by: | Draw Code: | FILE NAME:
Submitted by: | Plot Date:
Plot Scale:
Solicitation No: | Contract No:
Contractor:
Designer :

WATER WELL(5818)
ROOF PLAN

SHEET REFERENCE NUMBER:
5818-S-128
309 OF 529

AFGHAN NATIONAL POLICE

STANDARD BUILDING DESIGNS

WELL HOUSE

SHEET INDEX

G1 COVER SHEET

S1 GENERAL NOTES
S2 DESIGN CRITERIA & SCHEDULES
S3 FOUNDATION & ROOF FRAMING PLANS
S4 SECTIONS AND DETAILS
S5 TYPICAL DETAILS

A1 FLOOR AND ROOF PLANS AND DETAILS
A2 EXTERIOR ELEVATIONS
A3 DOOR & WINDOW & FINISH TYPES & DETAILS

P1 PLUMBING SCHEMATIC AND DETAILS

M1 HVAC PLAN

E0 ELECTRICAL SYMBOLS AND ABBREVIATIONS
E1 LIGHTING AND POWER PLAN
E2 DETAILS
E3 LIGHT FIXTURE SCHEDULE
E4 PANEL SCHEDULES AND RISER DIAGRAM

US Army Corps of Engineers
Afghanistan Engineer District

SYMBOL	DESCRIPTION	DATE	APR

DESIGNED BY: JDS
DWN BY: JDS
CHK BY: JDS
DATE: 09-30-09
SUBMITTED BY: BAKER
FILE NO.: ANPSDG-001XXX

Michael Baker Jr., Inc
A unit of Michael Baker Corporation
Airside Business Park
100 Airside Drive
Moon Township, PA 15108
www.mbakercorp.com

AFGHAN NATIONAL POLICE
STANDARD DESIGN
WELL HOUSE

COVER SHEET

SHEET REFERENCE NUMBER:
G1

100% SUBMISSION

STRUCTURAL ABBREVIATIONS:

ACI	AMERICAN CONCRETE INSTITUTE
AISC	AMERICAN INSTITUTE OF STEEL CONSTRUCTION
ALT	ALTERNATE
ASTM	AMERICAN SOCIETY FOR TESTING AND MATERIALS
AWS	AMERICAN WELDING SOCIETY
ARCH	ARCHITECTURAL
B	BOTTOM
BLDG	BUILDING
BOTT	BOTTOM
℄	CENTER LINE
CFMF	COLD FORM METAL FRAME
CFS	COLD FORMED STEEL
CIP	CAST IN PLACE
CIPL	CAST-IN-PLACE LINTEL
CJ	CONTROL JOINT
CLR	CLEAR
CMU	CONCRETE MASONRY UNIT
COEFF	COEFFICIENT
COL	COLUMN
CONC	CONCRETE
CONT	CONTINUOUS
COORD	COORDINATE
CSJ	CONSTRUCTION JOINT
CTJ	CONTROL JOINT
DIA	DIAMETER
DIAG	DIAGONAL
DIM	DIMENSION
DWG	DRAWING
DWL	DOWEL
EA	EACH
ELEC	ELECTRICAL
ELEV	ELEVATION
EMBED	EMBEDMENT
EQUIV	EQUIVALENT
ETC	ET CETERA
EW	EACH WAY
EXT	EXTERIOR
FTG	FOOTING
GA	GAUGE
HORIZ	HORIZONTAL
HRS	HOURS
IBC	INTERNATIONAL BUILDING CODE
INT	INTERIOR
Kg	KILOGRAM
KIP	KIPS (1 KIP = 1,000 POUNDS)
kN	KILONEWTON
kPa	KILOPASCAL
L#	ANGLE (# INDICATES SIZE)
LLV	LONG LEG VERTICAL
M	METER
MAX	MAXIMUM
MBM	METAL BUILDING MANUFACTURER
MECH	MECHANICAL
MFG	MANUFACTURER
MID	MIDDLE
MIN	MINIMUM
MISC	MISCELLANEOUS
MM	MILLIMETER
MPa	MEGAPASCAL
MTL	METAL
MWFRS	MAIN WIND FORCE RESISTING SYSTEM
N	NEWTON
N	NORTH
N/A	NOT APPLICABLE
#	NUMBER SYMBOL FOR REBAR SIZE
NTS	NOT TO SCALE
OC	ON CENTER
OPNG	OPENING
ℙ or PL	PLATE
PRE-ENG	PRE-ENGINEERED
REINF	REINFORCED
REQ'D	REQUIRED
SIM	SIMILAR
SPECS	SPECIFICATIONS
STD	STANDARD
STRUCT	STRUCTURAL
SW	SHEAR WALL
T	TOP
T/	TOP OF
T/ELEV	TOP ELEVATION
T&B	TOP AND BOTTOM
THK	THICK
TM	TRADE MARK
TYP	TYPICAL
UON	UNLESS OTHERWISE NOTED
VERT	VERTICAL
W	WIDTH
W/	WITH

GENERAL NOTES

1.0 THIS PROJECT HAS BEEN DESIGNED FOR THE WEIGHTS AND MATERIALS INDICATED ON THE SHEETS AND FOR THE LIVE LOADS INDICATED IN THE DESIGN DATA. IT IS THE CONTRACTOR'S RESPONSIBILITY TO DETERMINE ALLOWABLE CONSTRUCTION LOADS AND TO PROVIDE PROPER DESIGN AND CONSTRUCTION OF FALSEWORK, FORMWORK, STAGING, BRACING, SHEETING AND SHORING, ETC.

1.1 COORDINATE THESE SHEETS WITH THE ARCHITECTURAL, MECHANICAL, ELECTRICAL, PLUMBING, AND CIVIL SHEETS. ALL DIMENSIONS SHOWN ON THE SHEETS ARE MILLIMETERS UNLESS NOTED OTHERWISE.

1.2 THE CONTRACTOR SHALL VERIFY AND COORDINATE ALL FLOOR AND ROOF OPENING SIZES AND LOCATIONS, EQUIPMENT PAD SIZES AND LOCATIONS, ANCHOR BOLT LAYOUTS, ETC WITH EQUIPMENT SELECTED. THE CONTRACTOR SHALL MAKE ANY REQUIRED MODIFICATIONS AT NO ADDITIONAL COST.

1.3 THE CONTRACTOR SHALL REFER TO THE ARCHITECTURAL, MECHANICAL, ELECTRICAL AND PLUMBING SHEETS FOR SLEEVES, CURBS, INSERTS OR OPENINGS, ETC. NOT HEREIN INDICATED.

1.4 SLAB OPENINGS SMALLER THAN 250mm DIA TO BE CORE DRILLED IN FIELD UON. SEE MECHANICAL, ELECTRICAL AND PLUMBING SHEETS FOR LOCATIONS OF THESE OPENINGS.

1.5 WORK NOT INCLUDED ON THE SHEETS BUT IMPLIED TO BE SIMILAR TO THAT SHOWN AT CORRESPONDING PLACES ELSEWHERE ON THE SHEETS SHALL BE REPEATED.

1.6 IN CASE OF CONFLICT BETWEEN THE NOTES, DETAILS AND SPECIFICATIONS THE MOST RIGID REQUIREMENTS SHALL GOVERN.

1.7 SEE ARCHITECTURAL SHEETS FOR LOCATIONS OF MASONRY AND DRYWALL NON-LOAD BEARING PARTITIONS. PROVIDE COMPRESSIBLE FIRESAFING AT TOP OF WALL AS REQUIRED BY ARCHITECTURAL SHEETS.

1.8 COORDINATE FINISHED FLOOR DATUM ELEVATION 0.0m WITH THE CIVIL SHEETS.

2.0 FOUNDATION NOTES

2.1 THE GEOTECHNICAL ANALYSIS FOR THIS PROJECT IS THE RESPONSIBILITY OF THE CONTRACTOR AWARDED THE WORK. DESIGN VALUES USED IN THE STRUCTURAL ANALYSIS OF THE BUILDINGS HEREIN INDICATED HAVE BEEN ASSUMED AND SHALL BE CONFIRMED AND VERIFIED AS PART OF THE GEOTECHNICAL INVESTIGATION. VALUES WHICH DO NOT MEET THE REQUIREMENTS INDICATED ON SHEET S2 SHALL BE IMMEDIATELY BROUGHT TO THE ATTENTION OF THE CONTRACTING OFFICER FOR CONSIDERATION AND DETERMINATION ON THE NEXT APPROPRIATE COURSE OF ACTION.

2.2 SEE THE SPECIFICATION FOR ADDITIONAL REQUIREMENTS TO THOSE OUTLINED IN THE GEOTECHNICAL INVESTIGATION FOR EXCAVATION AND PREPARATION OF THE FOUNDATION AND THE SLAB ON GRADE SUBGRADE INCLUDING COMPACTION PROCEDURES.

2.3 EXCAVATIONS FOR FOOTINGS SHALL HAVE THE SIDES AND BOTTOMS TEMPORARILY LINED WITH 0.25mm POLYETHYLENE IF PLACEMENT OF CONCRETE DOES NOT OCCUR WITHIN 24 HRS OF THE EXCAVATION OF THE FOOTING.

2.4 FOUNDATION CONDITIONS NOTED DURING CONSTRUCTION WHICH DIFFER FROM THOSE DESCRIBED IN THE GEOTECHNICAL REPORT SHALL BE REPORTED TO THE GENERAL CONTRACTOR BEFORE FURTHER CONSTRUCTION IS ATTEMPTED. SEE PROJECT SPECIFICATIONS.

2.5 NO FOOTINGS OR SLABS SHALL BE POURED INTO OR AGAINST SUBGRADE CONTAINING FREE WATER, FROST, ICE OR LOOSE MATERIAL. FROST DEPTH ASSUMED TO BE 800MM

2.6 ALL SLAB-ON-GRADE, TRENCH BOTTOMS AND OTHER ON-GRADE INTERIOR HORIZONTAL SURFACES SHALL BE PLACED OVER A 0.25mm VAPOR RETARDER OVER A 100mm #57 STONE WATER BARRIER PLACED ON SUBGRADE PROPERLY PREPARED IN ACCORDANCE WITH THE CONTRACT SPECIFICATIONS. (UON)

2.7 SEE PLUMBING, ELECTRICAL & CIVIL SHEETS FOR REQUIRED UNDERSLAB UTILITIES.

2.8 SEE ARCHITECTURAL SHEETS FOR ALL WATERPROOFING DETAILS AND MATERIALS.

2.9 IF UNDERMINING OF FOOTINGS OCCURS, FILL VOIDS WITH 15MPa CONCRETE. DO NOT ATTEMPT TO REPLACE AND RECOMPACT SOIL.

3.0 CONCRETE

3.1 CONCRETE SHALL HAVE THE UNIT WEIGHT AND THE MINIMUM COMPRESSIVE STRENGTHS (f'c) AT 28 DAYS AS SHOWN IN THE CONCRETE MATERIALS SCHEDULE ON THIS SHEET. SEE SPECIFICATIONS FOR ADDITIONAL INFORMATION. ENTRAIN AIR TO PRODUCE TOTAL AIR CONTENT ACCORDING TO THE SPECIFICATIONS FOR CONCRETE EXPOSED TO FREEZING TEMPERATURES (EXTERIOR FOOTINGS, SLAB TURNDOWNS, EXTERIOR SLABS AND SLABS-ON-GRADE, EXTERIOR RETAINING WALLS, AND EXTERIOR GRADE BEAMS.)

3.2 GROUT FOR BASE PLATES SHALL BE NON-SHRINKABLE GROUT AND SHALL HAVE A MINIMUM SPECIFIED COMPRESSIVE STRENGTH AT 28 DAYS OF 35MPa, UNLESS NOTED OTHERWISE.

3.3 NO CALCIUM CHLORIDE SHALL BE USED IN ANY CONCRETE.

3.4 MIXING, TRANSPORTING AND PLACING OF CONCRETE SHALL CONFORM TO ACI 301M-05.

3.5 ALL CONCRETE WORK SHALL CONFORM TO THE REQUIREMENTS OF THE AMERICAN CONCRETE INSTITUTE (ACI) 318M MANUAL (metric), "BUILDING CODE REQUIREMENTS FOR REINFORCED CONCRETE", AND REQUIREMENTS OUTLINED IN THE CONTRACT SPECIFICATIONS. WHEN THERE IS A CONFLICT BETWEEN ACI AND THE SPECIFICATIONS, THE MORE STRINGENT SHALL GOVERN.

3.6 CHAMFER ALL EXPOSED EXTERNAL CORNERS OF CONCRETE WITH 20mm x45 DEGREE CHAMFER UON.

3.7 CONCRETE REINFORCEMENT BARS SHALL CONFORM TO ASTM A615M, GRADE 420, REINFORCING BARS SHALL NOT BE TACK WELDED, WELDED, HEATED OR CUT, UNLESS INDICATED ON THE CONTRACT DOCUMENTS. ALL LAP SPLICES SHALL BE CLASS "B" UON.

3.8 HORIZONTAL FOOTING AND HORIZONTAL WALL REINFORCEMENT SHALL BE CONTINUOUS AND SHALL HAVE 90 DEGREE BENDS AND EXTENSIONS, OR CORNER BARS OF EQUIVALENT SIZE LAPPED WITH A CLASS B TENSION SPLICE AT CORNERS AND INTERSECTIONS. TOP BAR CRITERIA SHALL APPLY IF 300mm OR MORE OF FRESH CONCRETE IS PLACED BELOW BAR.

3.9 SLABS-ON-GRADE SHALL HAVE CONSTRUCTION JOINTS OR CRACK CONTROL JOINTS AS SHOWN ON THE SHEETS. CONSTRUCTION JOINTS CAN BE USED AT CONTROL JOINT LOCATIONS AT CONTRACTORS OPTION. SEE SLAB PLANS & JOINT DETAILS FOR ADDITIONAL INFORMATION. FOR AREAS NOT SHOWN ON THE SHEETS, THE MAXIMUM SPACING OF CONSTRUCTION/ CRACK CONTROL JOINTS SHALL BE 4800 mm.

3.10 SEE SPECIFICATIONS FOR ALL WATERPROOFING/DAMPPROOFING REQUIREMENT.

3.11 ALL CONCRETE REINFORCEMENT SHALL BE DETAILED, FABRICATED, LABELED, SUPPORTED, AND SPACED IN FORMS AND SECURED IN PLACE IN ACCORDANCE WITH THE PROCEDURES AND REQUIREMENTS OUTLINED IN THE LATEST EDITION OF THE "BUILDING CODE REQUIREMENTS FOR REINFORCED CONCRETE", ACI 318M, AND THE "MANUAL OF STANDARD PRACTICE FOR DETAILING REINFORCED CONCRETE STRUCTURES", ACI 315M, LATEST EDITION.

3.12 SHOP DRAWINGS SHOWING REINFORCING DETAILS, INCLUDING STEEL SIZES, SPACING AND PLACEMENT, SHALL BE SUBMITTED FOR REVIEW PRIOR TO FABRICATION.

3.13 ALL DOWELS SHALL MATCH SIZE AND NUMBER OF MAIN REINFORCING, UNLESS NOTED OTHERWISE ON THE SHEETS.

3.14 ADDITIONAL BARS SHALL BE PROVIDED AROUND ALL FLOOR AND WALL OPENINGS AS SHOWN ON THE SHEETS.

3.15 SEE ARCHITECTURAL SHEETS FOR TYPE AND LOCATION OF ALL FLOOR FINISHES.

3.16 THE CONTRACTOR SHALL COORDINATE ADDITIONAL WALL/SLAB OPENINGS NOT SHOWN ON STRUCTURAL SHEETS. SEE MECHANICAL, ELECTRICAL, PLUMBING AND CIVIL SHEETS.

3.17 THE SUB-CONTRACTOR SHALL VERIFY ALL OPENINGS, PAD SIZES, AND ANCHOR BOLTS WITH EQUIPMENT SELECTED.

3.18 FOR ALL WALLS & PIERS, PROVIDE DOWELS INTO FOOTING AT EACH VERT REINF BAR, UON DOWEL SIZE SHALL BE SAME AS VERT REINF.

3.19 ALL REINFORCING INDICATED TO BE WELDED SHALL BE IN ACCORDANCE WITH ASTM A706M. "LOW ALLOY STEEL DEFORMED BARS FOR CONCRETE REINFORCEMENT". ANY INSTALLATIONS USING MANUFACTURER'S EQUIPMENT SHALL BE PER MANUFACTURER'S RECOMMENDATIONS.

3.20 PROVIDE CONCRETE POUR STOPS OR FORMED AS REQUIRED FOR INSTALLATION OF ALL CONCRETE WORK.

3.21 PROVIDE ADDITIONAL (2)-#13 x 600mm REINFORCING BARS IN SLAB-ON GRADE AT ALL RE-ENTRANT CORNERS. PLACE BARS AT MID-DEPTH OF SLAB WITH A CLEARANCE OF 50mm FROM CORNER UON.

4.0 CONCRETE MASONRY

4.1 MASONRY CONSTRUCTION AND MATERIALS SHALL CONFORM TO ALL REQUIREMENTS OF THESE CONTRACT DOCUMENTS AND THE PROJECT SPECIFICATIONS.

4.2 THE SPECIFIED ULTIMATE COMPRESSIVE STRENGTH OF CONCRETE MASONRY (f'm) ON THE NET AREA IS A MINIMUM OF 10.4 MPa.

4.3 PROVIDE TWO #16 BARS CONTINUOUS IN ALL CMU AND CAST-IN-PLACE BOND BEAMS UON ON THE SHEETS. BOND BEAMS SHALL BE CONTINUOUS AND SPACED AT A MAXIMUM OF 1200mm OC VERTICALLY. PROVIDE BOND BEAM STARTER COURSE AT BOTTOM OR FIRST COURSE ON ALL MASONRY WALLS AND PARTITIONS. ALL BOND BEAMS SHALL BE A MINIMUM OF 200mm IN DEPTH WITH REINFORCING BEING CONTINUOUS AND HAVING STANDARD ACI 180° HOOKS AT EACH END. PROVIDE STANDARD BAR SPLICES AS SPECIFIED.

4.4 FOR WALL REINFORCING, SEE DETAIL 7 ON SHEET S5

4.5 CMU CELLS THAT REQUIRE VERTICAL REINFORCING BARS AS INDICATED ON THE CONTRACT DRAWINGS AND/OR SPECS SHALL HAVE REINF BARS PLACED IN CENTERS OF CMU CELLS AND CONTINUOUSLY GROUTED UON.

4.6 PROVIDE LADDER TYPE JOINT REINFORCEMENT AT (200mm EXTERIOR & 400mm INTERIOR) ON CENTER MAXIMUM UON MINIMUM ROD SIZE USED SHALL BE 9 GA. DEFORMED WIRE AND CONFORM TO ASTM A82M, UON.

4.7 PROVIDE CONTROL JOINTS AS INDICATED ON THE ARCHITECTURAL SHEETS.

4.8 GROUT FOR MASONRY SHALL BE NORMAL WEIGHT AND HAVE A MINIMUM COMPRESSIVE STRENGTH OF 25 MPa AT 28 DAYS. GROUT SHALL CONFORM TO ASTM C476M. GROUT LIFTS SHALL NOT EXCEED 1400mm.

4.9 USE MORTAR TYPE S CONFORMING TO ASTM C270M, SEE SPECIFICATIONS.

4.10 CONCRETE MASONRY UNITS SHALL BE NORMAL WEIGHT AND CONFORM TO ASTM C90M.

4.11 ALL CMU CELLS, OPEN CAVITIES, AND AIR SPACES SHALL BE GROUTED TO STOP FRAGMENTS FROM MORTAR BLAST

4.12 BOND BEAM REINFORCING SHALL BE DISCONTINUOUS AT CONTROL JOINTS (UON). MAXIMUM CONTROL JOINT SPACING SHALL BE AS INDICATED ON THE ARCHITECTURAL SHEETS.

4.13 CONTRACTOR SHALL COORDINATE LOCATION OF ALL OPENINGS SEE ARCH, MECH, ELEC, AND PLUMBING SHEETS. FOR SIZE AND LOCATION OF OPENINGS.

4.14 MASONRY WALLS SHALL NOT BE BACK FILLED PRIOR TO THE MORTAR AND GROUT ATTAINING THEIR RESPECTIVE MAXIMUM DESIGN STRENGTHS PER SPECIFICATIONS.

5.0 CFMRF - COLD FORM METAL ROOF FRAMING SYSTEM

5.1 CFMF SHALL BE DESIGNED BY CFMF MANUFACTURER'S ENGINEER FOR ALL LOADING PER CODE AND AS INDICATED ON THE SHEETS.

5.2 FOR WIND LOADS, SEE THE DESIGN CRITERIA ON SHEET S2.

5.3 SUBMIT VENDOR'S PUBLISHED LITERATURE, TEST DATA AND INSTALLATION INSTRUCTIONS FOR METAL STUD ASSEMBLY AND ACCESSORIES INCLUDING OTHER DATA AS MAY BE REQUIRED TO CERTIFY COMPLIANCE WITH PERFORMANCE REQUIREMENTS SPECIFIED HEREIN.

5.4 SHOP DRAWINGS AND DESIGN ANALYSIS SHALL BE STAMPED AND APPROVED BY A LICENSED PROFESSIONAL ENGINEER.

5.5 CONNECTIONS AND GAUGE SIZES ARE MINIMUM AND SHALL BE INCREASED AS NECESSARY TO PROVIDE A STRUCTURALLY ADEQUATE SYSTEM. KICKERS MAY BE ADDED TO REDUCE THE STUD HEIGHTS WHERE ACCEPTABLE AND COORDINATED WITH THE ARCHITECTURAL DRAWINGS.

5.6 CRMRF SHALL HAVE THE FOLLOWING MINIMUM PROPERTIES:

STUD/RAFTER/EAVE STRUT:
Fy = 344 MPa
GAUGE = 18
DEPTH = 152.3 mm
WIDTH = 34.8 mm
MOMENT OF INERTIA, Ix = 847×10^3 mm^4
SECTION MODULUS, Sx = 11.2×10^3 mm^3

TRACK:
Fy = 344 MPa
GAUGE = 16
DEPTH = 152.3 mm
WIDTH = 38 mm
MOMENT OF INERTIA, Ix = 1083×10^3 mm^4
SECTION MODULUS, Sx = 13.8×10^3 mm^3

PURLIN:
Fy = 393 MPa
GAUGE = 16
MOMENT OF INTERTIA (TOP COMPRESSION), Ixt = 23.7×10^3 mm^4
MOMENT OF INTERTIA (BOTT COMPRESSION), Ixb = 22.7×10^3 mm^4
SECTION MODULUS (TOP COMPRESSION), Sxt = 1.8×10^3 mm^3
SECTION MODULUS (BOTT COMPRESSION), Sxb = 1.7×10^3 mm^3

CONCRETE MATERIALS SCHEDULE

STRUCTURAL ELEMENT	f'c CONCRETE COMPRESSIVE STRENGTH @ 28 DAYS (MPa)
SLAB-ON-GRADE/TURN-DOWN SLABS	28
ROOF AND FLOOR SLABS	28
ALL FOOTINGS (UON)	28
MISC. CURBS, WALLS AND PADS UON	28
CAST-IN-PLACE LINTEL	28

NOTES:
1. ALL CONCRETE SHALL BE NORMAL WEIGHT CONCRETE. (2400 Kg/m^3 UON)
2. ALL CONCRETE SHALL HAVE A WATER-CEMENT RATIO OF 0.45.

MASONRY REINFORCING MINIMUM LAP SPLICES

BAR SIZE	BASIC LAP SPLICE Ld FOR CMU REINFORCING(mm)
#10	450
#13	600
#16	750

MINIMUM LAP SPLICES OF REINFORCING BARS IN TENSION (PER ACI 318M-05)

f'c = 28 MPa CONCRETE

BAR SIZE \ CENTER TO CENTER BAR SPACING	(---TOP BARS--) LESS THAN 4db	(---TOP BARS--) 4db OR MORE	(--OTHER BARS--) LESS THAN 4db	(--OTHER BARS--) 4db OR MORE	4db
#10	460	460	410	410	40
#13	660	610	510	480	50
#16	1020	760	790	580	60

NOTES:
1. LAP SPLICES ABOVE ARE IN MILLIMETERS UON.
2. YIELD STRENGTH OF REINFORCEMENT, fy, IS 420MPa (LAP SPLICE LENGTH IS IN MILLIMETERS).
3. CONCRETE IS NORMAL WEIGHT (2400Kg/m^3).
4. TOP BAR INDICATES HORIZONTAL REINFORCEMENT WHICH IS PLACED ABOVE 300mm OR MORE OF FRESH CONCRETE.
5. SEE COLUMN SCHEDULE FOR COLUMN AND SHEAR WALL VERTICAL LAP SPLICE.
6. STRAIGHT DEVELOPMENT LENGTH OF AN UNLAPPED BAR IS EQUAL TO VALUE FROM TABLE DIVIDED BY 1.3.
7. CATEGORY FOR BARS SPACED LESS THAN 4d, OR ON CENTER CORRESPONDS TO CATEGORY 1 IN THE CRSI HANDBOOK WHEREAS FOR BARS SPACED 4d, OR MORE ON CENTER CORRESPOND TO CRSI CATEGORY 5.

STANDARD HOOKS IN TENSION PER (ACI 318M-05)

HOOK DEVELOPMENT LENGTH Ldh (mm)	
BAR SIZE	f'c 28 MPa
#10	180
#13	250
#16	300
#19	380
#22	430
#25	480
#29	560
#32	610
#36	690

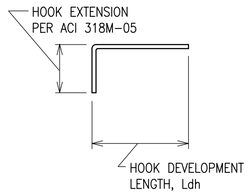

NOTES:
1. CONCRETE IS NORMAL WEIGHT CONCRETE.
2. BAR YIELD STRENGTH, fy = 420 MPa
3. SIDE COVER REQUIREMENTS OF ACI SECT. 12.5.3 ARE ASSUMED TO NOT BE MET.
4. TIE OR STIRRUP REQUIREMENTS OF ACI SECT. 12.5.3 ARE ASSUMED TO NOT BE MET.
5. REDUCTION FOR EXCESS REINFORCEMENT IS NOT TAKEN.
6. HOOK DEVELOPMENT LENGTH IS VALID FOR 180° HOOKS ALSO.

US Army Corps of Engineers
Afghanistan Engineer District

SYMBOL	DESCRIPTION	DATE	APR

DESIGNED BY: GDH
DATE: 09-30-09
DWN BY: MDB
SUBMITTED BY: BAKER
CHK BY: CWW
FILE NO.: ANPSDS-001XXX

Michael Baker Jr., Inc
A unit of Michael Baker Corporation
Airside Business Park
100 Airside Drive
Moon Township, PA 15108
www.mbakercorp.com

AFGHAN NATIONAL POLICE
STANDARD DESIGN
WELL HOUSE
GENERAL NOTES

SHEET REFERENCE NUMBER:
S1

100% SUBMISSION

STRUCTURAL DESIGN CRITERIA

ALL DESIGNS SHALL CONFORM TO THE PROVISIONS OF THE IBC 2006 AS APPLICABLE

1.0 DESIGN LOADS

1.1 DEAD LOADS

1.1.1 ROOF DEAD LOADS – CONVENTIONAL FRAMING

	MAXIMUM GRAVITY LOAD	MINIMUM GRAVITY LOAD
LIGHT GAUGE FRAMING	0.20 KPa	0.15 KPa
METAL ROOFING	0.14 KPa	0.05 KPa
INSULATION	0.10 KPa	0.05 KPa
MISC	0.05 KPa	0.00 KPa
	0.49 KPa	0.25 KPa

1.1.2 ROOF DEAD LOADS – CONCRETE FRAMING

	MAXIMUM GRAVITY LOAD
CONC FLAT SLAB	4.80 KPa
MECH/ELEC/PLUMBING	0.15 KPa
MISC	0.05 KPa
	5.00 KPa

1.2 LIVE LOADS (PER IBC 2006)

1.2.1 ROOF LIVE LOADS: ALL BUILDINGS

GREATER OF 1.0 KPa MINIMUM OR SNOW LOAD

1.2.2 SLAB-ON-GRADE LIVE LOADS

ALL BUILDINGS 4.80 KPa

1.3 SNOW LOADS (PER IBC 2006)

1.3.1 DESIGN PARAMETERS

GROUND SNOW LOAD (per UFC 3-310-01)	PER LOCAL CONDITION
SNOW IMPORTANCE FACTOR	1.0 KPa
SNOW EXPOSURE FACTOR	1.0 KPa

1.4 SEISMIC LOADS (PER IBC 2006 & UFC 3-310-04)

1.4.1 SEISMIC PARAMETERS – LOAD BEARING MASONRY

SEISMIC OCCUPANCY CATEGORY	II
SEISMIC IMPORTANCE FACTOR (I)	1.0
SEISMIC SITE CLASS	D
Ss	1.280
S_1	0.510
Sds	0.853
Sd1	0.510
SEISMIC DESIGN CATEGORY	D
SEISMIC RESISTING SYSTEM	BEARING WALL SYSTEM SPECIAL REINF MASONRY SHEAR WALLS
RESPONSE MODIFICATION FACTOR (R)	5.0
RESPONSE CEFFICIENT (Cs)	0.17
SEISMIC ANALYTICAL PROCEDURE	EQUIV LATERAL FORCE
SEISMIC BASE SHEAR	49 kN

1.6 WIND LOADS (PER IBC 2006)

1.6.1 DESIGN PARAMETERS

BASIC WIND SPEED	137 Km/h
WIND IMPORTANCE FACTOR	1.0
WIND EXPOSURE CATEGORY	D
DIRECTIONALITY COEFFICIENT (Kd)	0.85
TOPOGRAPHIC FACTOR (Kzt)	1.0

1.6.2 DESIGN WIND PRESSURE – MAIN WINDFORCE RESISTING SYSTEM

LOCATION	CORNER ZONE WIDTH "a"	MEAN ROOF HEIGHT (h)	WINDWARD WALL (@ MEAN ROOF HEIGHT)	LEEWARD WALL (@ MEAN ROOF HEIGHT)	ROOF
FIELD ZONE	N/A	3890mm	582 N/m^2	−463 N/m^2	−803 N/m^2
CORNER ZONE	900mm	3890mm	883 N/m^2	−689 N/m^2	−1244 N/m^2

a = 10% OF LEAST HORIZONTAL DIMENSION OR 0.4h, WHICHEVER IS SMALLER, BUT NOT LESS THAN EITHER 4% OF LEAST HORIZONTAL DIMENSION OR 0.9M.
h = MEAN ROOF HIEGHT, IN METERS, EXCEPT THAT EAVE HIEGHT SHALL BE USED FOR ANGLE GREATER THAN 10°.

1.6.3 DESIGN WIND PRESSURE – WALL COMPONENTS AND CLADDING

EXTERIOR WALL SYSTEMS & THEIR ATTACHMENTS TO THE PRIMARY STRUCTURE SHALL BE DESIGNED FOR THE PRESSURES SHOWN IN THE DIAGRAM BELOW:

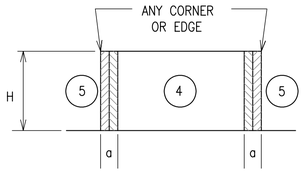

LOCATION	WINDWARD PRESSURE N/m^2 (inward)		LEEWARD PRESSURE N/m^2 (outward)		a
	4	5	4	5	
MAIN BUILDING					(mm)
AREA = 1 m^2	627	627	−986	−1216	900
AREA = 2 m^2	589	589	−948	−1134.8	900
AREA = 5 m^2	565	565	−910	−1086.9	900
AREA = 10 m^2	565	565	−910	−1086.9	900

NOTES:
1. DESIGN WIND PRESSURES ABOVE REPRESENT THE NET PRESSURE (SUM OF INTERNAL AND EXTERNAL PRESSURE) APPLIED NORMAL TO ALL SURFACES.
2. LINEAR INTERPOLATION BETWEEN VALUES OF TRIBUTARY AREA IS PERMISSIBLE.
3. PLUS AND MINUS SIGNS SIGNIFY PRESSURE TOWARD AND AWAY FROM THE EXTERIOR SURFACE, RESPECTIVELY.

1.6.4 DESIGN WIND PRESSURE – ROOF COMPONENTS AND CLADDING

ROOF COMPONENTS & THEIR ATTACHMENTS SHALL BE DESIGNED FOR THE PRESSURES SHOWN IN THE ADJACENT DIAGRAM & TABLE BELOW:

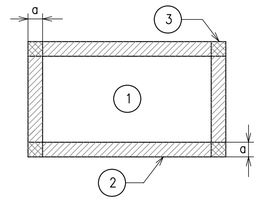

ROOF MEAN HEIGHT

1.6 WIND LOADS (CON'T)

LOCATION	GROSS UPLIFT PRESSURE N/m^2 (upward)			a
	1	2	3	
MAIN BUILDING				(mm)
AREA = 1 m^2	−838	−1460	−1460	900
AREA = 2 m^2	−838	−1460	−1460	900
AREA = 5 m^2	−838	−1460	−1460	900
AREA = 10 m^2	−838	−1460	−1460	900

NOTES:
1. DESIGN WIND PRESSURES ABOVE REPRESENT THE NET PRESSURE (SUM OF INTERNAL AND EXTERNAL PRESSURE) APPLIED NORMAL TO ALL SURFACES.
2. LINEAR INTERPOLATION BETWEEN VALUES OF TRIBUTARY AREA IS PERMISSIBLE.
3. PLUS AND MINUS SIGNS SIGNIFY PRESSURE TOWARD AND AWAY FROM THE EXTERIOR SURFACE, RESPECTIVELY.

2.0 FOUNDATION DESIGN CRITERIA (TO BE CONFIRMED BY THE CONTRACTOR)

THE GEOTECHNICAL ANALYSIS FOR THIS PROJECT IS THE RESPONSIBILITY OF THE CONTRACTOR AWARDED THE WORK. DESIGN VALUES USED IN THE STRUCTURAL ANALYSIS OF THE BUILDINGS HEREIN INDICATED HAVE BEEN ASSUMED AND SHALL BE CONFIRMED AND VERIFIED AS PART OF THE GEOTECHNICAL INVESTIGATION. VALUES WHICH DO NOT MEET THE REQUIREMENTS INDICATED BELOW SHALL BE IMMEDIATELY BROUGHT TO THE ATTENTION OF THE CONTRACTING OFFICER FOR CONSIDERATION AND DETERMINATION ON THE NEXT APPROPRIATE COURSE OF ACTION.

2.1.1 SOIL DESIGN PARAMETERS

NET ALLOWABLE SOIL BEARING CAPACITY	96.0 KPa
UNIT WEIGHT OF SOIL (moist)	1800 Kg/m^3
COEFF ACTIVE EARTH PRESSURE (Kpa)	0.30
COEFF PASSIVE EARTH PRESSURE (Kpp)	3.33
COEFF AT-REST EARTH PRESSURE (Kpr)	.55
COEFF OF SOIL FRICTION	.35
SUBGRADE MODULUS	4120 g/m^3
MINIMUM BEARING DEPTH BELOW GRADE	800mm
SEISMIC SITE CLASS (based on in-situ soil)	D

MASONRY CONCRETE LINTEL SCHEDULE

OPENING TYPE OR SIZE, BEAM LOCATION OR TYPE	MAX SPAN (mm)	BEAM DEPTH (mm)	MAIN REINFORCING			SHEAR REINF STIRRUPS
			TOP	BOTTOM	OTHER	
EXT WINDOW OR DOOR	900	400	(2)-#13	(2)-#13		----
INT WALL OPENING, NON-BEARING	1800	400		(2)-#13		----
INT WALL OPENING, NON-BEARING	900	200		(2)-#13		----

1. STRUCTURAL DRAWINGS DO NOT INDICATE ALL OPENINGS IN MASONRY WALLS. VERIFY NUMBER, SIZE AND LOCATION OF ALL OPENINGS IN MASONRY WALLS FROM ARCHITECTURAL SHEETS AND APPROVED PLUMBING, MECHANICAL, AND ELECTRICAL SHOP DRAWINGS.
2. PROVIDE 200mm BEARING EA END FOR 200mm DEEP CMU LINTEL PROVIDE 400mm BEARING EA END FOR 400mm DEEP CIPL.
3. FOR HEAD DETAILS REFER TO ARCHITECTURAL SHEETS.
4. REINFORCING SHALL BE ASTM A615M, GRADE 400. CONCRETE FOR CAST-IN-PLACE BEAMS SHALL HAVE A MINIMUM COMPRESSIVE STRENGTH OF 28 MPa AT 28 DAYS.
5. CONTRACTOR SHALL SUBMIT FOR APPROVAL SHOP DRAWINGS AND SCHEDULES SHOWING SIZE, DETAILS, LOCATIONS, ETC FOR ALL CAST-IN-PLACE BEAMS IN CMU WALLS.

CONCRETE COVER SCHEDULE

MINIMUM CONCRETE COVER PROTECTION FOR REINFORCEMENT BARS SHALL BE AS FOLLOWS: (SEE ACI 318M-05, SECTION 7.7 FOR CONDITIONS NOT NOTED). DIMENSIONS FOR BAR PLACEMENT GIVEN IN SECTIONS AND DETAILS SHALL SUPERSEDE MINIMUM COVER REQUIREMENTS GIVEN HERE. DIMENSIONS ARE IN mm.

FOOTINGS (EARTH FORMED)		70
COLUMNS / PIERS (TO TIES)		40
GRADE BEAMS OR SLAB TURNED DOWN EDGES:		
TOP		40
BOTTOM (EARTH FORMED)		70
SIDES (EARTH FORMED)		70
SIDES (BOARD FORMED)	#16 BAR & SMALLER	40
	#19 THRU #36 BAR	50
ELEVATED BEAMS & SLABS:		
BEAM TIES & STIRRUPS (NOT EXPOSED TO WEATHER)		40
BEAM TIES & STIRRUPS (EXPOSED TO WEATHER)		50
FLOOR SLABS (NOT EXPOSED TO WEATHER)		20
FLOOR SLABS (EXPOSED TO WEATHER)		
#19 & LARGER		50
#13 & SMALLER		40
ROOF SLAB BARS		25
SLABS-ON-GRADE (NO EXPOSURE TO WEATHER) FROM TOP		20
SLABS-ON-GRADE (EXPOSURE TO WEATHER) FROM TOP		40
UTILITY TUNNEL WALLS, RETAINING WALLS AND SHEAR WALLS, (NO SURFACES SHALL BE EARTH FORMED) EARTH SIDE AND FRONT SIDE (EXPOSED TO WEATHER):		
#16 BAR AND SMALLER		40
#19 THRU #36 BAR		50

PROVIDE STANDARD BAR CHAIRS AND SPACERS AS REQUIRED TO MAINTAIN CONCRETE PROTECTION SPECIFIED.

US Army Corps of Engineers
Afghanistan Engineer District

SYMBOL	DESCRIPTION	DATE	APR

DESIGNED BY: GDH
DWN BY: MDB
CHK BY: CWW
DATE: 09-30-09
SUBMITTED BY: BAKER
FILE NO.: ANPSDS-002XXX

Michael Baker Jr., Inc
A unit of Michael Baker Corporation
Airside Business Park
100 Airside Drive
Moon Township, PA 15108
www.mbakercorp.com

AFGHAN NATIONAL POLICE
STANDARD DESIGN
WELL HOUSE

DESGIN CRITERIA & SCHEDULES

SHEET REFERENCE NUMBER:
S2

100% SUBMISSION

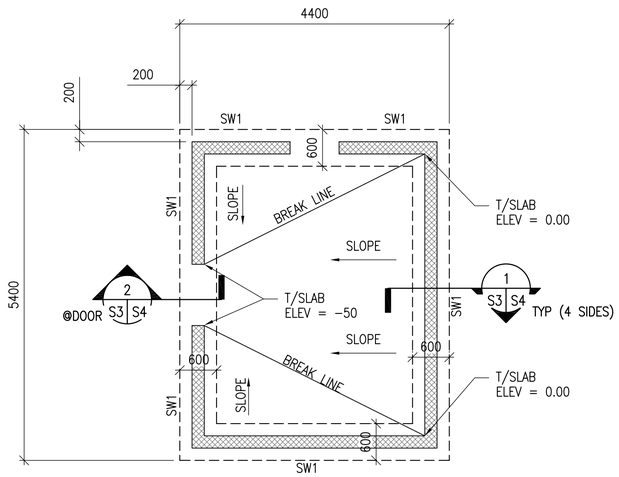

1 S3 S3 **WELL HOUSE FOUNDATION PLAN**

SCALE: 1:50

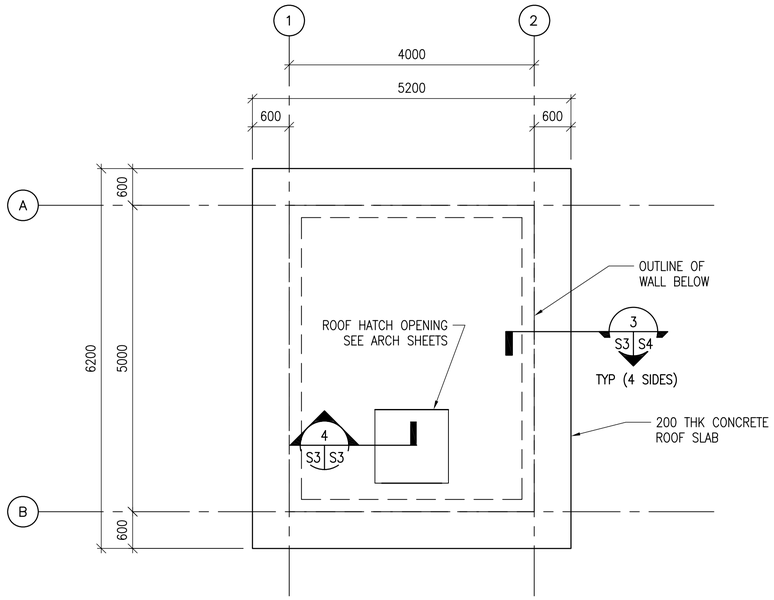

2 S3 S3 **WELL HOUSE ROOF FRAMING PLAN**

SCALE: 1:50

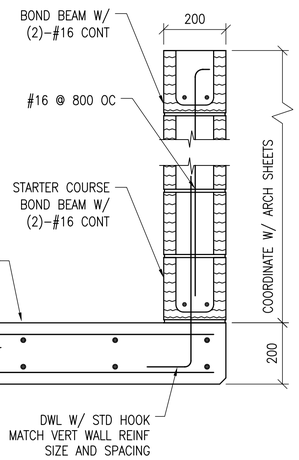

4 S3 S3 **SECTION**

SCALE: 1:10

NOTES:

1. FINISH FIRST FLOOR ELEVATION SHALL BE (DATUM 0.0) ALL PLUS OR MINUS DIMENSIONS INDICATED ON PLAN OR REFERRED TO IN NOTES RELATE TO FINISH FIRST FLOOR ELEVATION.
2. TOP OF EXTERIOR FOOTINGS SHALL BE -600 UNLESS OTHERWISE INDICATED.
3. UNLESS OTHERWISE INDICATED, FLOORS SHALL BE 150 THICK CONCRETE SLAB-ON-GRADE W/ 13 DIA REBAR @ 450 OC E.W. (38 CLR. TOP)
4. REFER TO SHEET S1 AND S2 FOR STRUCTURAL NOTES, ABBREVIATIONS AND SYMBOLS.
5. REFER TO ARCHITECTURAL SHEETS FOR MASONRY PARTITION TYPES AND SHEET S5 REINFORCEMENT.
6. SEE MECHANICAL AND ELECTRICAL SHEETS FOR CONCRETE PAD LOCATIONS, SIZES, AND THICKNESS NOT SHOWN. SEE SHEET S5 FOR DETAILS.
7. ⟶ INDICATES SLOPE IN SLAB ON GRADE. COORDINATE LOCATION AND ELEVATION WITH ARCHITECTURAL AND PLUMBING SHEETS (TYP).
8. COORD W/ ARCHITECTURAL SHEETS FOR COLD-FORMED STEEL OVERBUILT FRAMING ABOVE ROOF SLAB.
9. COLD-FORMED METAL OVERBUILT ROOF FRAMING NOT SHOWN FOR CLARITY. SEE OVERBUILT ROOF FRAMING DETAILS AND SECTIONS ON SHEET S4.

UNLESS OTHERWISE NOTED, LINEAR DIMENSIONS SHOWN ARE IN MILLIMETERS (MM)

0 200 400 800

SCALE: 1: 10

0 1000 2000 4000

SCALE: 1: 50

US Army Corps of Engineers

Afghanistan Engineer District

SYMBOL	DESCRIPTION	DATE	APR

DESIGNED BY: GDH	DATE: 09-30-09
DWN BY: MDB	SUBMITTED BY: BAKER
CHK BY: CWW	FILE NO.: ANPSDS-103XXX

Michael Baker Jr., Inc
A unit of Michael Baker Corporation
Airside Business Park
100 Airside Drive
Moon Township, PA 15108
www.mbakercorp.com

AFGHAN NATIONAL POLICE
STANDARD DESIGN
WELL HOUSE

FOUNDATION & ROOF FRAMING PLANS

SHEET REFERENCE NUMBER:

S3

100% SUBMISSION

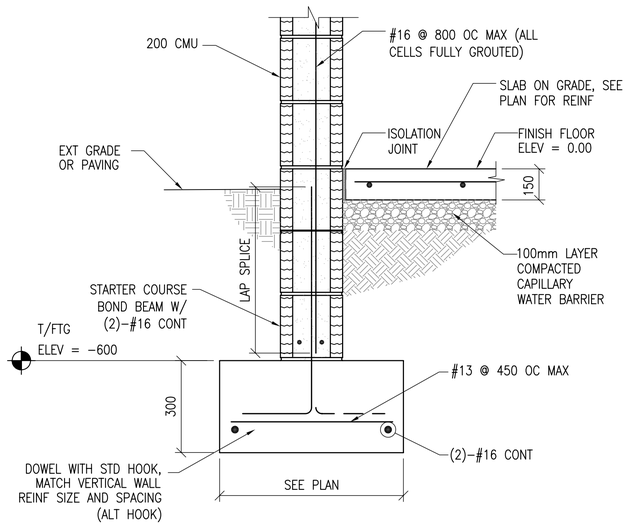

1 S3 S4 SECTION
SCALE: 1:10

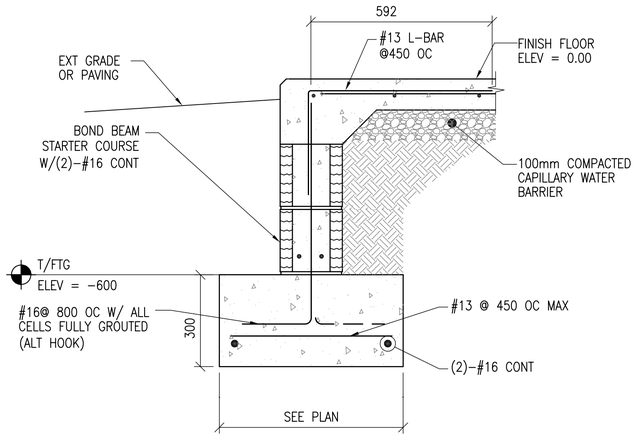

2 S3 S4 SECTION
SCALE: 1:10

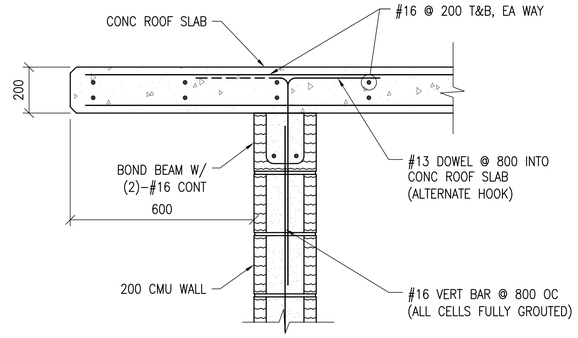

3 S3 S4 SECTION
SCALE: 1:10

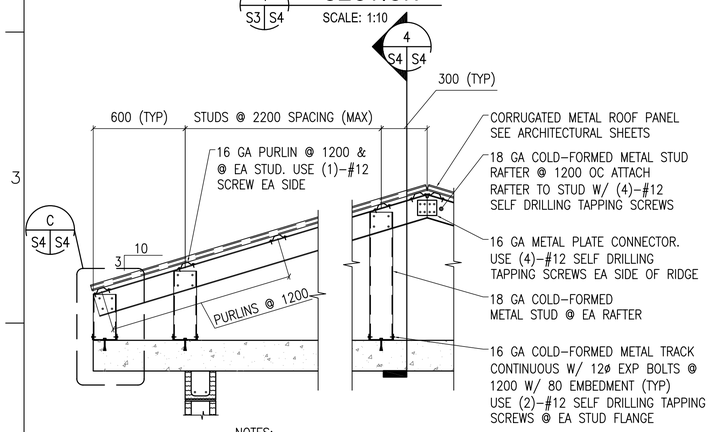

NOTES:
1. SEE NOTES ON SHEET S1 FOR OVERBUILT ROOF FRAMING MEMBER SECTION PROPERTY MINIMUM REQUIREMENTS
2. AT END OF BLDG PROVIDE TRANSVERSE BRACE @ 2400 OC SIMILAR TO LONGITUDINAL BRACING

A S4 S4 TYPICAL OVERBUILT ROOF FRAMING DETAIL
SCALE: 1:20

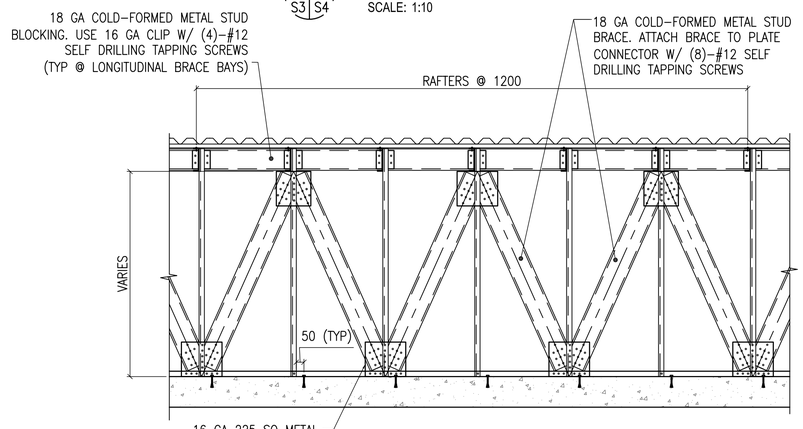

4 S4 S4 SECTION
SCALE: NTS

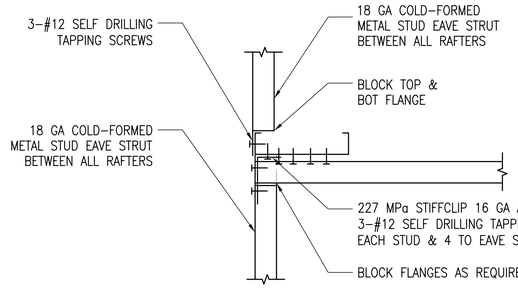

5 S4 S4 SECTION
SCALE: 1:5

DETAIL NOTE:
PROVIDE TRANSVERSE BRACE @ 2400 OC & @ END BAYS SIMILAR TO LONGITUDINAL BRACING

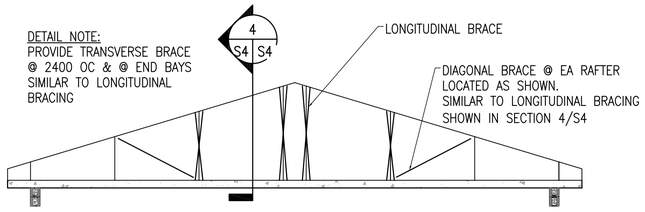

B S4 S4 TYPICAL ROOF BRACE LAYOUT DETAIL
SCALE: NTS

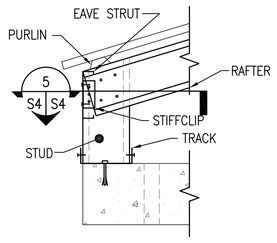

C S4 S4 DETAIL
SCALE: 1:10

DOUBLE LEDGE MEMBERS ARE 18 GA COLD-FORMED METAL STUD.
FY = 344 MPa
DEPTH = 88.9mm
WIDTH = 34.8mm
MOMENT OF INERTIA, Ix = 236x103 mm4
SECTION MODULUS, SX = 5.3x103 mm3

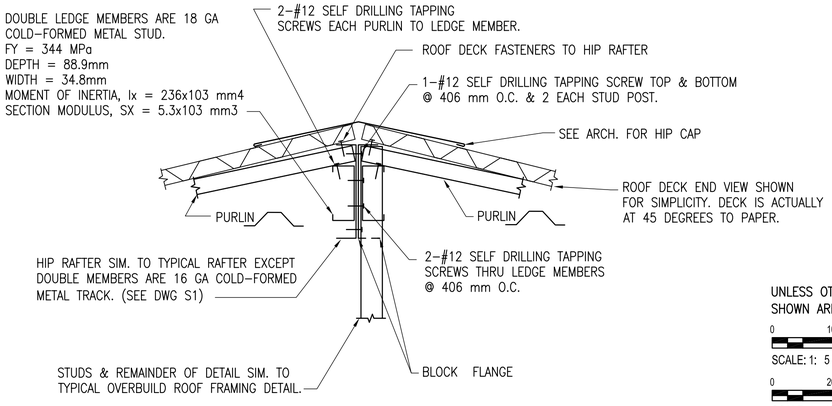

TYPICAL HIP FRAMING DETAIL
SCALE: 1:5

UNLESS OTHERWISE NOTED, LINEAR DIMENSIONS SHOWN ARE IN MILLIMETERS (MM)

0 100 200 400
SCALE: 1: 5

0 200 400 800
SCALE: 1: 10

0 400 800 1600
SCALE: 1: 20

US Army Corps of Engineers
Afghanistan Engineer District

SYMBOL	DESCRIPTION	DATE	APR

DESIGNED BY: GDH
DATE: 09-30-09
DWN BY: MDB
SUBMITTED BY: BAKER
CHK BY: CWW
FILE NO.: ANPSDS-304XXX

Michael Baker Jr., Inc
A unit of Michael Baker Corporation
Airside Business Park
100 Airside Drive
Moon Township, PA 15108
www.mbakercorp.com

AFGHAN NATIONAL POLICE
STANDARD DESIGN
WELL HOUSE

SECTIONS AND DETAILS

SHEET REFERENCE NUMBER:
S4

100% SUBMISSION

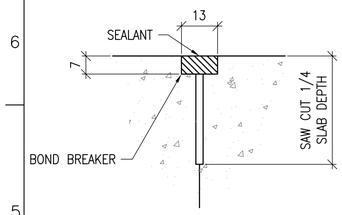

CONTROL JOINT DETAIL

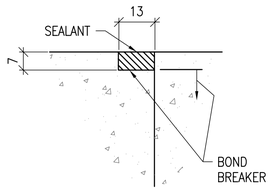

CONSTRUCTION JOINT DETAIL

TYPICAL CONCRETE SLAB JOINT FINISH DETAIL

1 / S5

SCALE: NTS

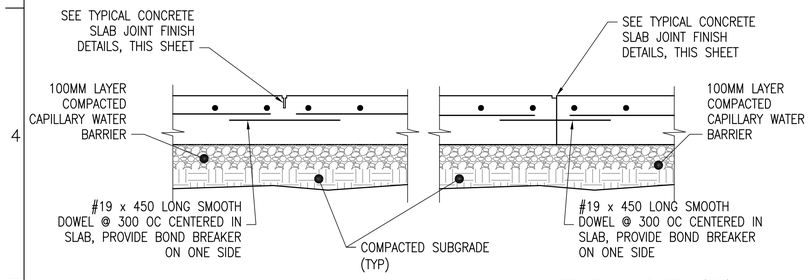

CONTROL JOINT DETAIL (CTJ)

CONSTRUCTION JOINT DETAIL (CSJ)

TYPICAL SLAB ON GRADE JOINT DETAILS

2 / S5

SCALE: NTS

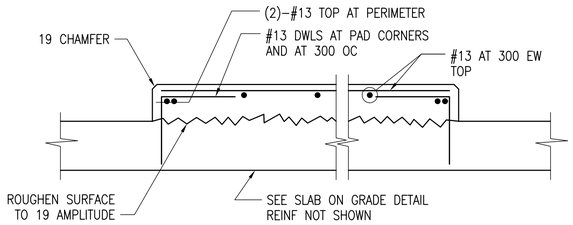

DETAIL NOTE:
1. COORDINATE EQUIPMENT PAD SIZE AND LOCATIONS W/ ELECTRICAL/MECHANICAL SHEETS AND EQUIPMENT MANUFACTURER.

INTERIOR EQUIPMENT PAD DETAIL

3 / S5

SCALE: NTS

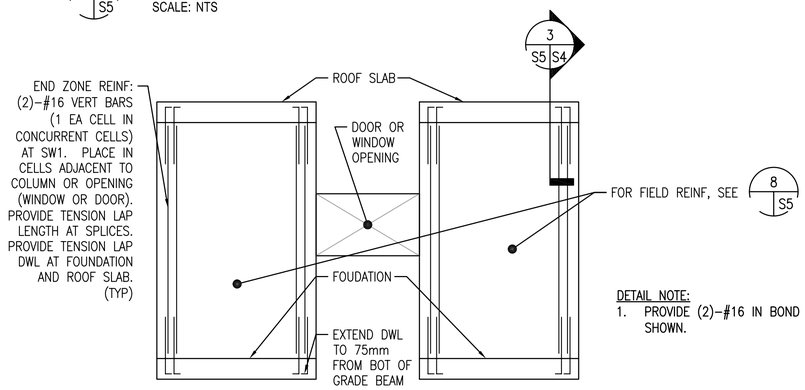

DETAIL NOTE:
1. PROVIDE (2)-#16 IN BOND BEAMS AT 1200 OC, NOT SHOWN.

SPECIAL REINFORCED MASONRY SHEAR WALL ELEVATION

4 / S5

SCALE: NTS

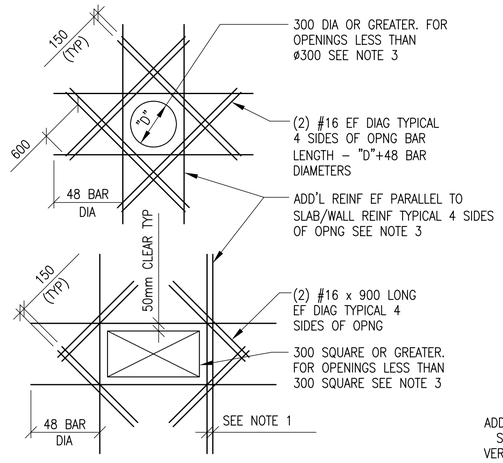

SLAB OPENINGS

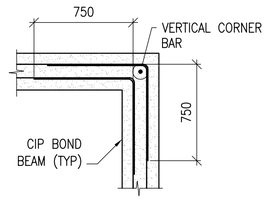

BOND BEAM CORNER

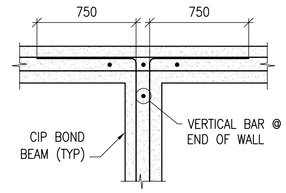

BOND BEAM INTERSECTION

CIP BOND BEAM DETAILS

5 / S5

SCALE: NTS

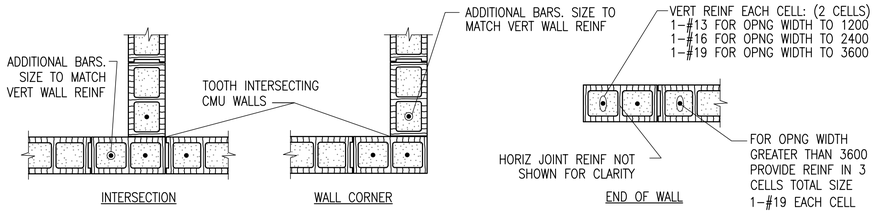

INTERSECTION

WALL CORNER

END OF WALL

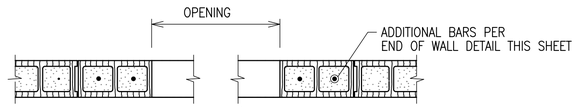

MASONRY OPENING W/ LINTEL

NOTES:
1. OPNG WIDTH SHALL NOT EXCEED 3600 FOR THIS TYPE OF JAMB
2. ALL CELLS FULLY GROUTED

TYPICAL CMU DETAILS

6 / S5

SCALE: NTS

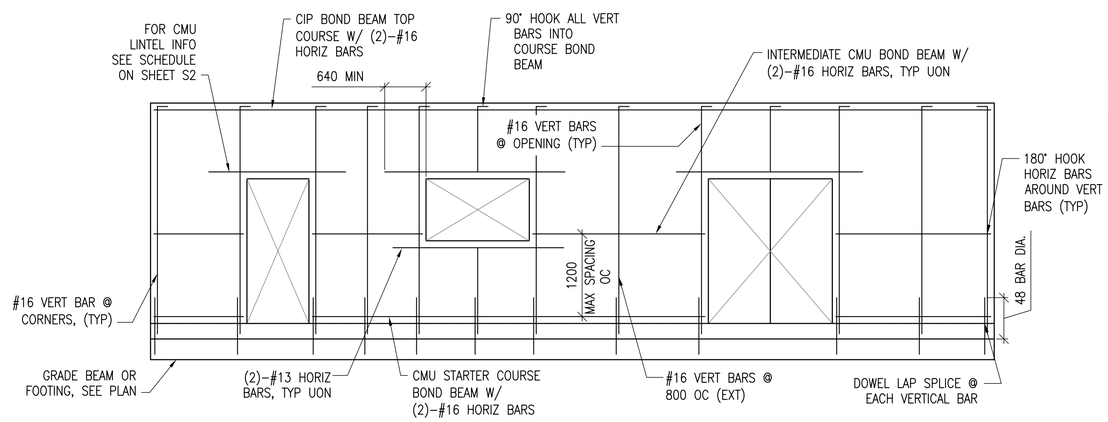

MIN CMU WALL REINFORCING

7 / S5

SCALE: NTS

UNLESS OTHERWISE NOTED, LINEAR DIMENSIONS SHOWN ARE IN MILLIMETERS (MM)

US Army Corps of Engineers
Afghanistan Engineer District

SYMBOL	DESCRIPTION	DATE	APR

DESIGNED BY: GDH
DWN BY: RCG
CHK BY: CWW
DATE: 09-30-09
SUBMITTED BY: BAKER
FILE NO.: ANPSDS-505XXX

Michael Baker Jr., Inc
A unit of Michael Baker Corporation
Airside Business Park
100 Airside Drive
Moon Township, PA 15108
www.mbakercorp.com

AFGHAN NATIONAL POLICE
STANDARD DESIGN
WELL HOUSE

TYPICAL DETAILS

SHEET REFERENCE NUMBER:
S5

100% SUBMISSION

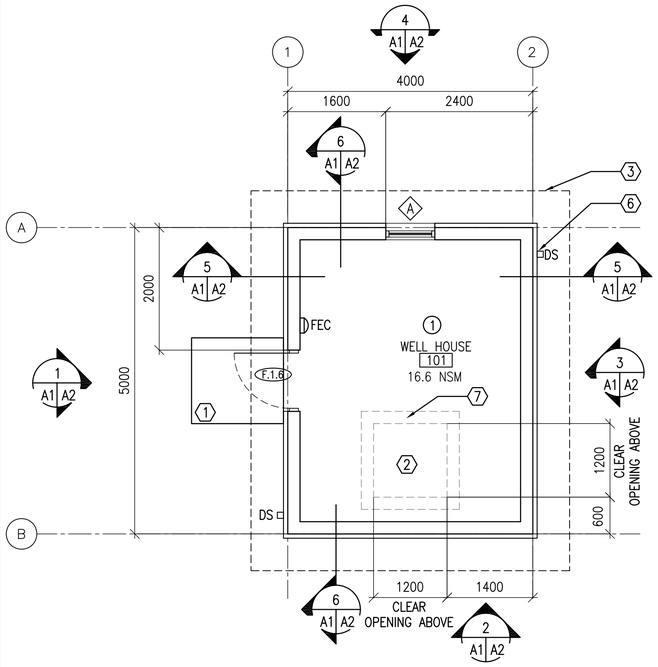

FLOOR PLAN

1 | A1 | A1 — SCALE: 1:50

20.0 GSM

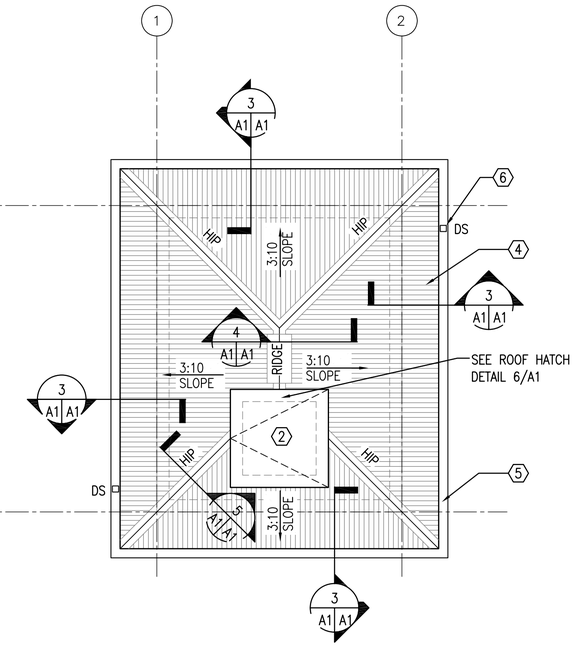

ROOF PLAN

2 | A1 | A1 — SCALE: 1:50

GENERAL NOTES:

A. OPENINGS FOR DOORS SHALL BE LOCATED 200 FROM THE ADJACENT WALL UNLESS NOTED OTHERWISE

B. SURFACES TO BE PAINTED SHALL BE CLEAN AND FREE OF FOREIGN MATTER BEFORE APPLICATION OF PAINT. CLEANING SHALL BE SCHEDULED SO THAT DUST AND OTHER CONTAMINANTS WILL NOT FALL ON WET, NEWLY PAINTED SURFACES.

C. CONCRETE AND INTERIOR MASONRY SURFACES GROUTED SOLID SHALL BE ALLOWED TO DRY AT LEAST 30 DAYS BEFORE PAINTING EXCEPT CONCRETE SLAB ON GRADE WHICH SHALL BE ALLOWED TO CURE 90 DAYS BEFORE PAINTING.

D. PAINTS CONTAINING LEAD IN EXCESS OF 0.06 PERCENT BY WEIGHT OF THE TOTAL NONVOLATILE CONTENT SHALL NOT BE USED.

E. MERCURIAL FUNGICIDES SHALL NOT BE USED IN OIL–BASE PAINT.

F. REMOVE LOOSE DIRT AND CLEAN SURFACES BEFORE PAINTING. APPLY PAINT TO INTERIOR STRUCTURAL RIGID FRAMINGS AND CEILINGS AND TEST FOR ADHESION. PRIMER COAT FOR MASONRY. INITIAL FIRST COAT WITH AN ACRYLIC LATEX PAINT FOR EXTERIOR SURFACES AND A SECOND COAT WITH A WATER REPELLENT ACRYLIC LATEX PAINT.

G. METAL DOORS AND FRAMES SHALL RECEIVE A PRIMER COAT PLUS TWO COATS OF PAINT.

H. DIMENSIONS ARE TO STRUCTURAL COLUMN GRID, EDGE OF WINDOW OPENINGS, AND TO HINGE SIDE OF DOOR OPENINGS.

KEY NOTES: (X)

1. CONCRETE STOOP – RE: DETAIL 7/A3
2. ROOF HATCH ABOVE, CENTER ON WELL PUMP
3. LINE OF ROOF OVERHANG ABOVE.
4. CORRUGATED METAL ROOF PANEL ON COLD–FORMED METAL FRAMING
5. METAL GUTTER.
6. METAL DOWNSPOUT WITH SPLASH BLOCK.
7. 200 MM CMU WITH EXTERIOR STUCCO

ROOM FINISHES: (X)

1. WALLS: PAINTED PLASTER,
   FLOOR: SEALED CONCRETE
   CEILING: PAINTED PLASTER APPLIED TO STRUCTURE

LEGEND:

- (F.1.4) DOOR TYPE, SEE SHEET A3
- (A) WINDOW TYPE, SEE SHEET A3
- (X) KEY NOTE
- FEC FIRE EXTINGUISHER CABINET
- (1) ROOM FINISH DESIGNATION

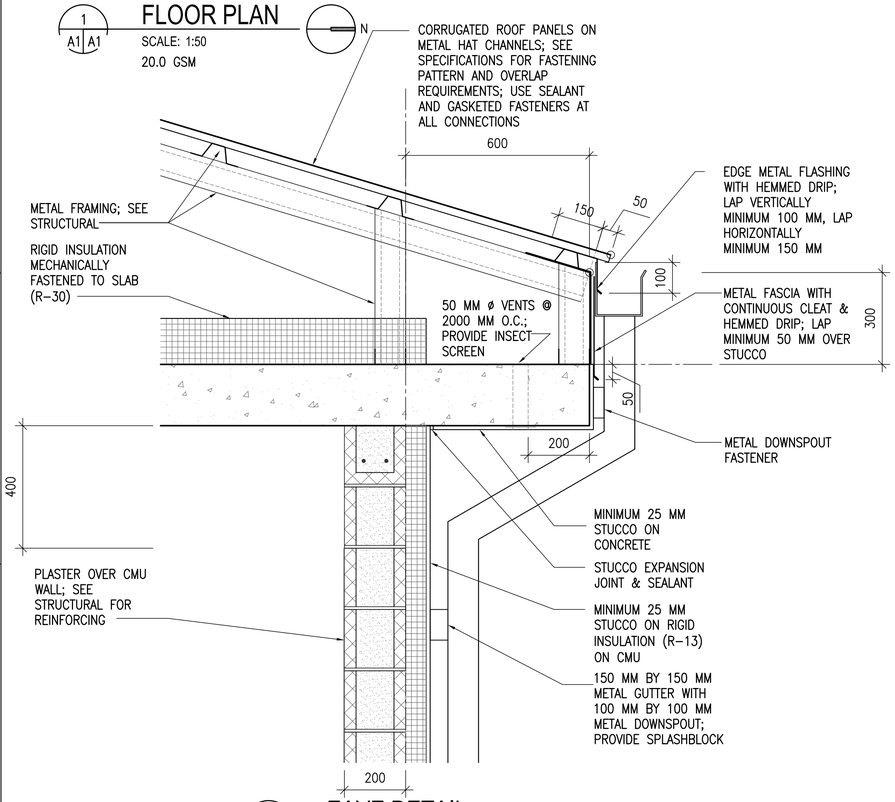

EAVE DETAIL

3 | A1 | A1 — SCALE: 1:10

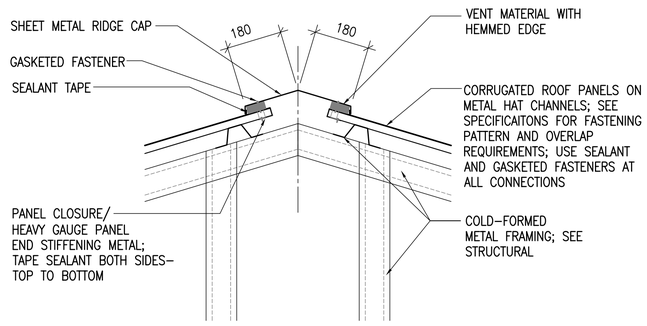

RIDGE VENT DETAIL

4 | A1 | A1 — SCALE: 1:10

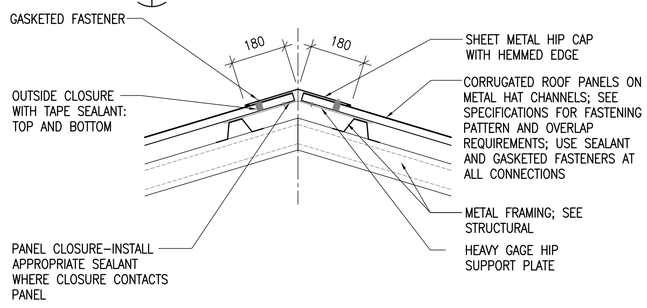

HIP DETAIL

5 | A1 | A1 — SCALE: 1:10

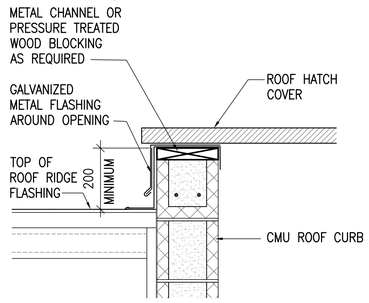

ROOF HATCH TO BE CENTERED ON WELL PUMP – SEE P1

ROOF HATCH

6 | A1 | A1 — SCALE: 1:10

UNLESS OTHERWISE NOTED, LINEAR DIMENSIONS SHOWN ARE IN MILLIMETERS (MM)

0 200 400 800 — SCALE: 1: 10

0 1000 2000 4000 — SCALE: 1: 50

US Army Corps of Engineers
Afghanistan Engineer District

SYMBOL	DESCRIPTION	DATE	APR

DESIGNED BY: PFF | DATE: 09–30–09
DWN BY: ECN | SUBMITTED BY: BAKER
CHK BY: NLJ | FILE NO.: ANPSDA–101XXX

Michael Baker Jr., Inc
A unit of Michael Baker Corporation
Airside Business Park
100 Airside Drive
Moon Township, PA 15108
www.mbakercorp.com

AFGHAN NATIONAL POLICE
STANDARD DESIGN
WELL HOUSE

FLOOR AND ROOF PLANS AND DETAILS

SHEET REFERENCE NUMBER:
A1

100% SUBMISSION

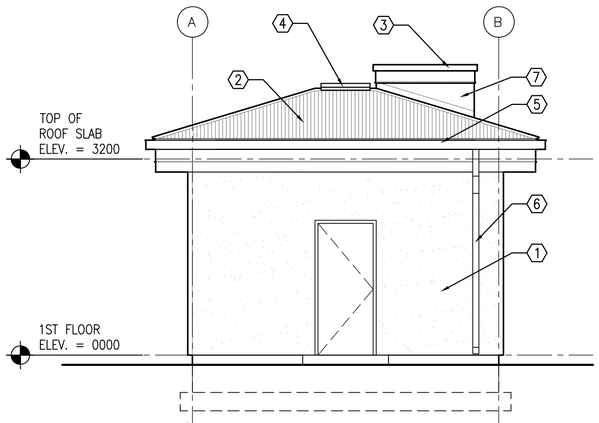

1 A1 A2 SOUTH ELEVATION
SCALE: 1:50

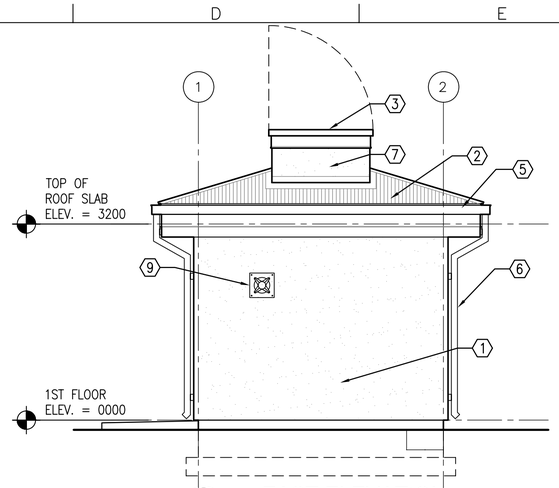

2 A1 A2 EAST ELEVATION
SCALE: 1:50

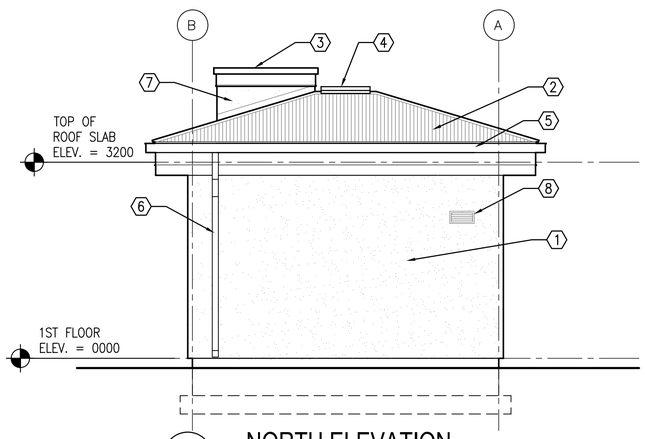

3 A1 A2 NORTH ELEVATION
SCALE: 1:50

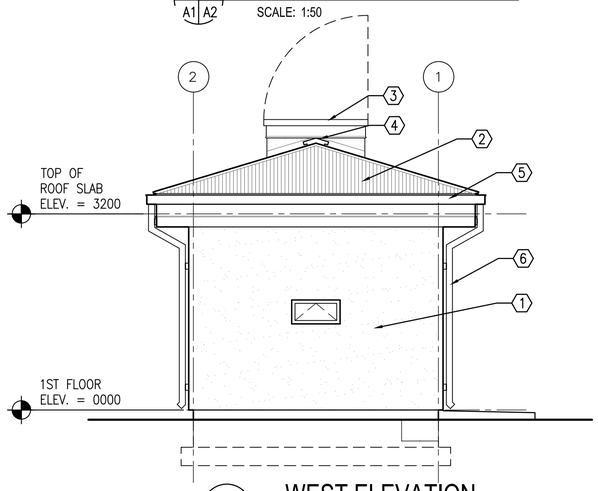

4 A1 A2 WEST ELEVATION
SCALE: 1:50

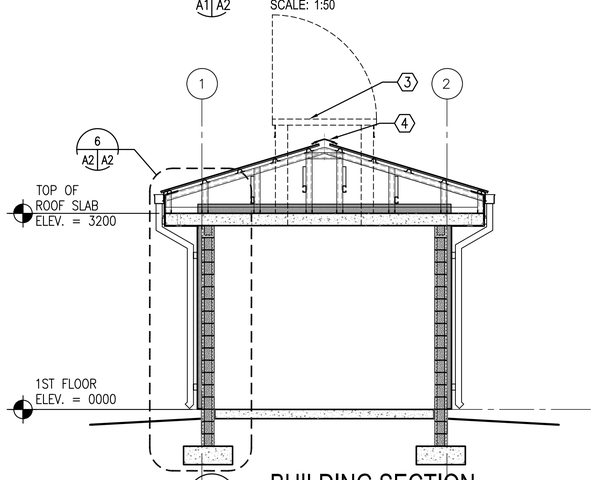

5 A1 A2 BUILDING SECTION
SCALE: 1:50

KEY NOTES:

1. STUCCO AND RIGID INSULATION SYSTEM ON CMU
2. CORRUGATED METAL ROOF PANELS ON COLD-FORMED METAL FRAMING
3. ROOF HATCH WITH CURB. CENTER ON WELL PUMP – RE: CIVIL
4. RIDGE VENT
5. METAL GUTTER
6. METAL DOWNSPOUT WITH SPLASH BLOCK
7. STUCCO ON CMU
8. LOUVER – RE: MECHANICAL
9. EXHAUST FAN – RE: MECHANICAL

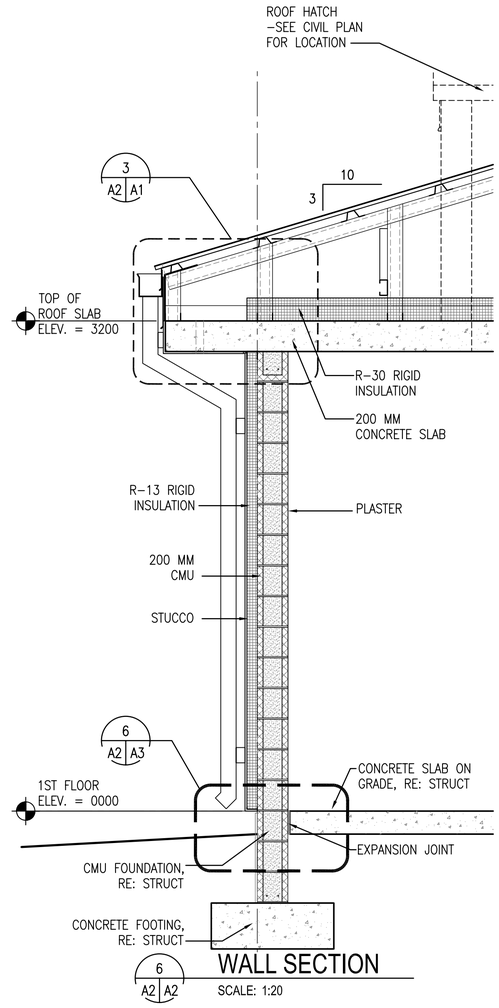

6 A2 A2 WALL SECTION
SCALE: 1:20

UNLESS OTHERWISE NOTED, LINEAR DIMENSIONS SHOWN ARE IN MILLIMETERS (MM)

0 400 800 1600
SCALE: 1: 20

0 1000 2000 4000
SCALE: 1: 50

US Army Corps of Engineers
Afghanistan Engineer District

SYMBOL	DESCRIPTION	DATE	APR

DESIGNED BY: PFF
DATE: 09-30-09
DWN BY: ECN
SUBMITTED BY: BAKER
CHK BY: NLJ
FILE NO.: ANPSDA-202XXX

Michael Baker Jr, Inc
A unit of Michael Baker Corporation
Airside Business Park
100 Airside Drive
Moon Township, PA 15108
www.mbakercorp.com

AFGHAN NATIONAL POLICE
STANDARD DESIGN
WELL HOUSE

EXTERIOR ELEVATIONS

SHEET REFERENCE NUMBER:
A2

100% SUBMISSION

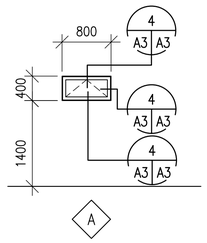

1 A3 A3 WINDOW TYPES
SCALE: 1:50

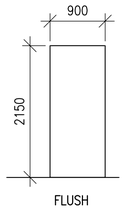

2 A3 A3 DOOR TYPES
SCALE: 1:50

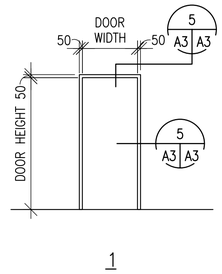

3 A3 A3 FRAME TYPES
SCALE: 1:50

WINDOW TYPES NOTES:

1. ALL EXTERIOR WINDOWS SHALL BE WOOD WITH INSECT SCREENS. WINDOWS SHALL BE COMMERCIAL GRADE.
2. GLAZING SHALL BE ACRYLIC SHEET.

DOOR TYPES NOTES:

1. INTERIOR AND EXTERIOR METAL DOORS AND FRAME COLORS SHALL MATCH ADJACENT WALL COLORS AS SELECTED BY THE CONTRACTING OFFICER.
2. HARDWARE SHALL BE HEAVY DUTY, COMMERCIAL GRADE, STAINLESS STEEL WITH A MATTE FINISH.
3. FRAMES, EXCEPT FIRE-RATED FRAMES, SHALL BE MOUNTED AND ADJUSTED IN ACCORDANCE WITH MANUFACTURER'S INSTRUCTIONS. FRAMES SHALL BE FASTENED WITH MINIMUM OF THREE FASTENING POINTS PER SIDE AT REGULAR INTERVALS.
4. DIMENSIONS SHOWN ON DOOR SCHEDULE ARE BASED UPON MODULAR MASONRY (OR ROUGH OPENING), HEIGHT OF 2200mm FOR STANDARD PERSONNEL DOORS. CONTRACTOR SHALL COORDINATE WITH DOOR SUPPLIER TO ENSURE THAT DIMENSIONS OF DOORS AND FRAMES PROVIDED ARE COMPATIBLE WITH DOOR OPENING DIMENSIONS.

HARDWARE TYPES:

HW-6 1-1/2 PR HINGES
1 EA LOCKSET,F04 ENTRY LOCK W/LEVERS. GRADE 1
1 EA DOOR CLOSER, C02061,LOW RESISTANCE
1 EA THRESHOLD J32130

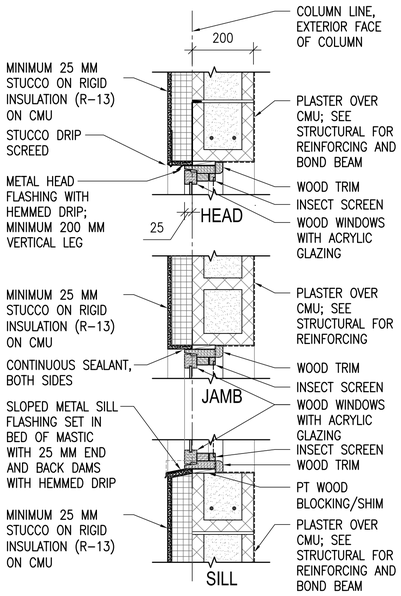

4 A3 A3 WINDOW DETAILS
SCALE: 1:10

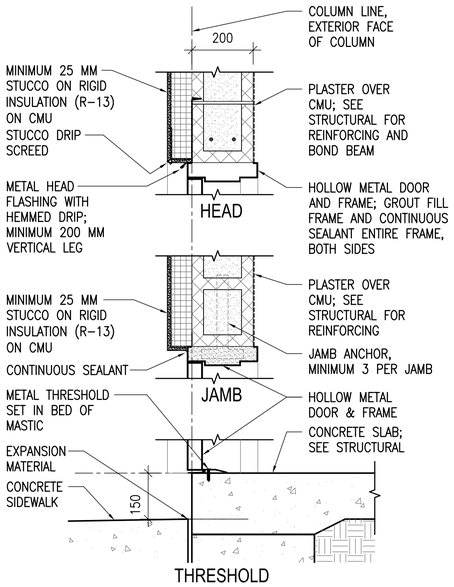

5 A3 A3 EXTERIOR DOOR DETAILS
SCALE: 1:10

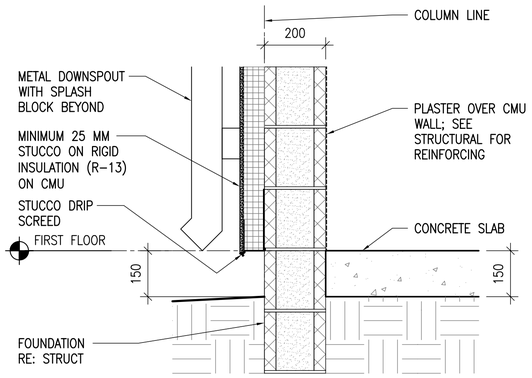

6 A3 A3 STUCCO BASE DETAIL
SCALE: 1:10

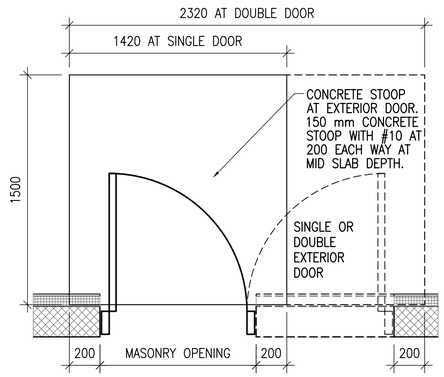

7 A3 A3 CONCRETE STOOP PLAN DETAIL
SCALE: 1:20

UNLESS OTHERWISE NOTED, LINEAR DIMENSIONS SHOWN ARE IN MILLIMETERS (MM)

0 200 400 800
SCALE: 1: 10

0 1000 2000 4000
SCALE: 1: 50

US Army Corps of Engineers
Afghanistan Engineer District

SYMBOL	DESCRIPTION	DATE	APR

DESIGNED BY: PFF
DATE: 09-30-09
DWN BY: ECN
SUBMITTED BY: BAKER
CHK BY: NLJ
FILE NO.: ANPSDA-303XXX

Michael Baker Jr., Inc
A unit of Michael Baker Corporation
Airside Business Park
100 Airside Drive
Moon Township, PA 15108
www.mbakercorp.com

AFGHAN NATIONAL POLICE
STANDARD DESIGN
WELL HOUSE

DOOR, WINDOW & FINISH TYPES & DETAILS

SHEET REFERENCE NUMBER:
A3

100% SUBMISSION

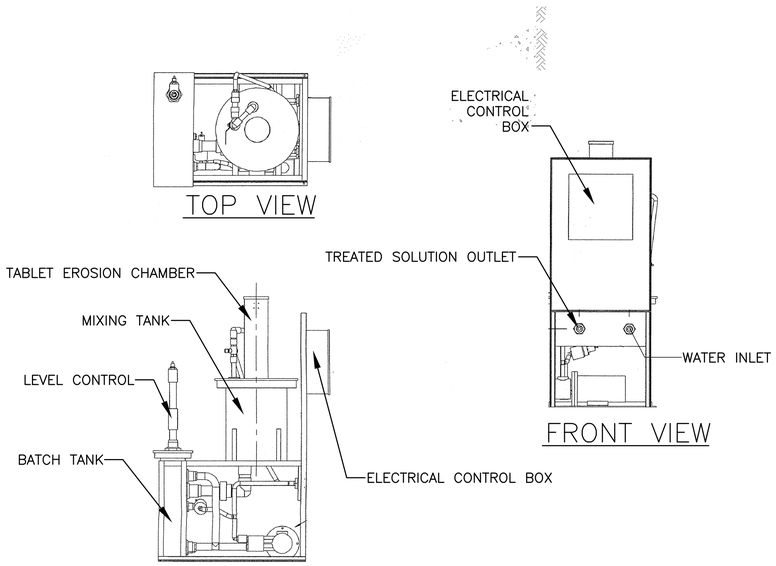

CHLORINE FEED SYSTEM
(Calcium Hypochorite Tablet Feeder)
N.T.S.

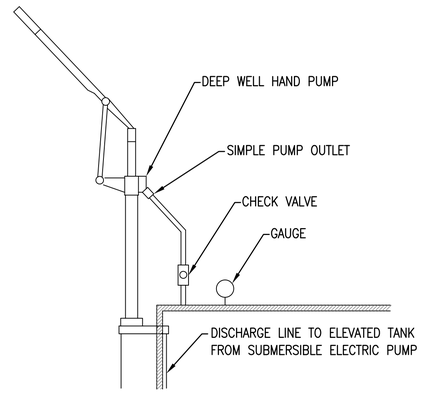

HAND PUMP
INSTALLATION DETAIL
N.T.S.

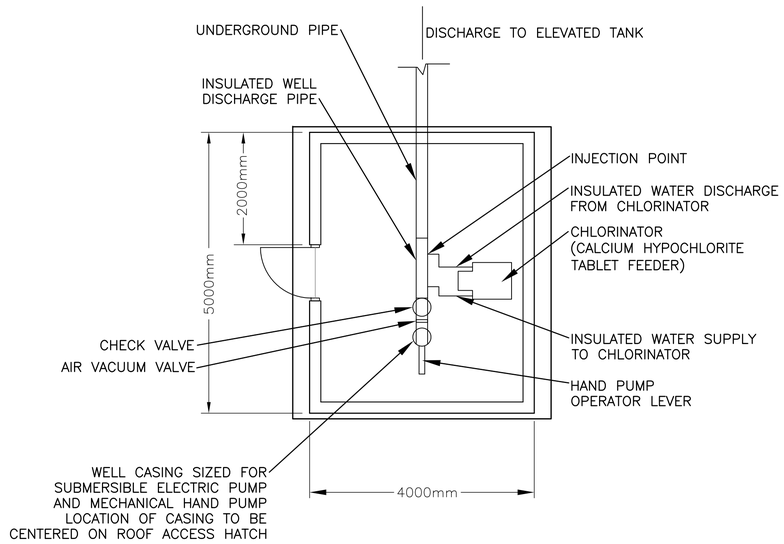

WELL HOUSE
PLUMBING SCHEMATIC
N.T.S.

US Army Corps of Engineers
Afghanistan Engineer District

SYMBOL	DESCRIPTION	DATE	APR

DESIGNED BY: BAKER
DATE: 09-30-09
DWN BY: BAKER
SUBMITTED BY: BAKER
CHK BY: GPH
FILE NO.: ANPSDP-501XXX

Michael Baker Jr., Inc
A unit of Michael Baker Corporation
Airside Business Park
100 Airside Drive
Moon Township, PA 15108
www.mbakercorp.com

AFGHAN NATIONAL POLICE
STANDARD DESIGN
WELL HOUSE

PLUMBING SCHEMATIC AND DETAILS

SHEET REFERENCE NUMBER:
P1

100% SUBMISSION

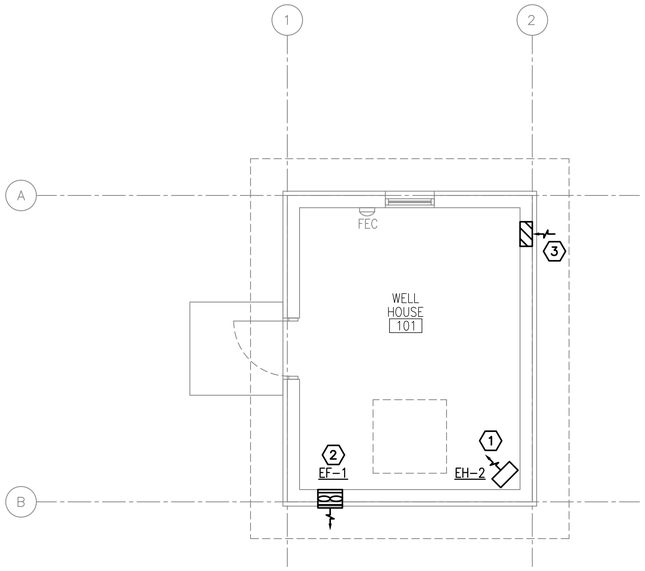

1 M1 M1 HVAC PLAN

SCALE: 1:50

N

GENERAL NOTES:

1. DO NOT SCALE DRAWINGS – ALL DIMENSIONS AND CONDITIONS SHALL BE CHECKED AND VERIFIED BY THE CONTRACTOR AT THE SITE.
2. ALL WORK PERFORMED ON THIS BUILDING SHALL BE IN COMPLIANCE WITH ALL PERTINENT CODES, RULES, ORDINANCES AND REGULATIONS OF THE GOVERNING AUTHORITIES.
3. ALL WORK PERFORMED UNDER AND IN CONNECTION WITH THESE DRAWINGS AND SPECIFICATIONS SHALL BE IN STRICT COMPLIANCE WITH THE LATEST SAFETY AND HEALTH STANDARDS.

NUMBERED NOTE:

(1) CORROSION RESISTANT ELECTRIC UNIT HEATER SUSPENDED FROM STRUCTURE ABOVE.

(2) CORROSION RESISTANT WALL MOUNTED EXHAUST FAN.

(3) 200x400 (8x16) LOW LEAKAGE GRAVITY WALL LOUVER FOR INTAKE. PROVIDE WEATHER PROOF LOUVER W/0.05mm (2") WASH DOWN FILTER AND SAND TRAP.

ELECTRIC UNIT HEATER SCHEDULE

NO.	CMS	KW	F.A.T. °C	ELECT. CHAR.	MOUNTING
EH–2	.200	2.6	33	370/1/50	CEILING

NOTES:
1. HEATERS SHALL BE CORROSION RESISTANT

EXHAUST FAN SCHEDULE

NO.	TYPE	FAN CMS	DRIVE	HP	SP mmH20	ELECT. CHAR.	SWITCH
EF–1	WALL	0.100	DIRECT	FRACT	13	220/1/50	@ WALL

NOTES:
1. WALL MOUNTED EXHAUST FAN MOUNT AT 600mm BELOW CEILING.
2. FANS SHALL HAVE LOW LEAKAGE GRAVITY LOUVER AND SECURITY GRILLE.
3. FANS SHALL BE EXPLOSION PROOF.

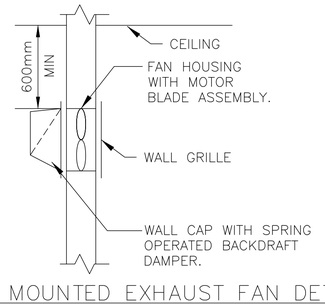

WALL MOUNTED EXHAUST FAN DETAIL

N.T.S.

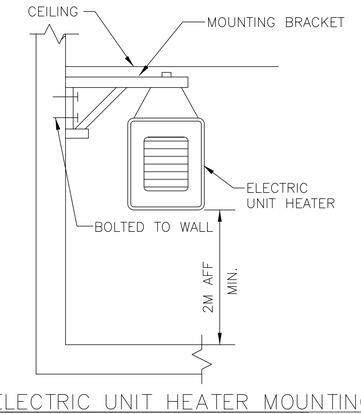

ELECTRIC UNIT HEATER MOUNTING

N.T.S.

US Army Corps of Engineers

Afghanistan Engineer District

SYMBOL	DESCRIPTION	DATE	APR.

DESIGNED BY: RML
DATE: 09-30-09
DWN BY: JJN
SUBMITTED BY: BAKER
CHK BY: CJM
FILE NO.: ANPSDM-101XXX

Michael Baker Jr., Inc
A unit of Michael Baker Corporation
Airside Business Park
100 Airside Drive
Moon Township, PA 15108
www.mbakercorp.com

AFGHAN NATIONAL POLICE
STANDARD DESIGN
WELL HOUSE

HVAC PLAN

SHEET REFERENCE NUMBER:

M1

100% SUBMISSION

POWER

- DISTRIBUTION PANELBOARD
- NEW PANELBOARD – SURFACE
- NEW PANELBOARD – RECESSED
- EXISTING PANELBOARD
- GENERATOR
- TVSS — TRANSIENT VOLTAGE SURGE SURPRESSOR
- TRANSFORMER (DRAWN TO SIZE)
- PS — POWER SUPPLY
- CP — CONTROL PANEL
- TC — TIME CLOCK
- TIM — ASTRONOMICAL TIME CLOCK– "SEE SPEC."
- R — RELAY WITH RATING AND NUMBER OF POLES AS NOTED ON DRAWINGS– "SEE SPEC."
- J — JUNCTION BOX
- J — JUNCTION BOX – CEILING
- PB — PULL BOX
- BD — BUS DUCT HORIZONTAL
- BUS DUCT VERTICAL
- EMERGENCY POWER OFF PUSH BUTTON
- NON–FUSIBLE SAFETY SWITCH
- FUSIBLE SAFETY SWITCH
- M — MOTOR
- $M — MOTOR STARTING SWITCH – 20A RATED
- $K — KEY SWITCH – 20A RATED
- FC — FAN COIL – FURNISHED BY MECHANICAL CONTRACTOR, ELECTRICAL CONTRACTOR SHALL INSTALL AND PROVIDE POWER CONNECTION
- UH — UNIT HEATER – FURNISHED BY MECHANICAL CONTRACTOR, ELECTRICAL CONTRACTOR SHALL INSTALL AND PROVIDE POWER CONNECTION
- D — JUNCTION BOX FOR CONNECTION TO GARBAGE DISPOSAL
- CF — LIGHT/HEATER/FAN – FURNISHED BY MECHANICAL CONTRACTOR, ELECTRICAL CONTRACTOR SHALL INSTALL AND PROVIDE POWER CONNECTION
- ELECTRIC WATER HEATER
- EPO — WEATHERPROOF / EXPLOSION PROOF EMERGENCY POWER OFF PUSH–BUTTON TO BE INTERCONNECTED WITH GENERATOR SHUT DOWN CONTROL
- CF — CEILING FAN – REFER TO SPECIFICATION SECTION 26 20 00

RECEPTACLES

- DUPLEX 20A BRITISH STANDARD UNSWITCHED SOCKETS
- GF — DUPLEX 20A BRITISH STANDARD UNSWITCHED SOCKETS – 10mA GROUND FAULT INTERRUPTER TYPE
- WP — DUPLEX 20A BRITISH STANDARD UNSWITCHED SOCKETS – 10mA GROUND FAULT INTERRUPTER TYPE WITH WEATHERPROOF COVER
- EXP — DUPLEX 20A BRITISH STANDARD UNSWITCHED SOCKETS – EXPLOSION PROOF
- * — INDICATES MOUNT DEVICE ABOVE COUNTER TOP

LIGHTNING PROTECTION

- AIR TERMINAL 200mm O.D. X 4m SOLID COPPER, NICKEL PLATED ON ADHESIVE BASE.
- EQ — EQUIPMENT AIR TERMINAL
- TEST WELL WITH GROUND ROD(S)
- GROUND ROD
- G — GROUND PLATE
- G — MAIN GROUND CONDUCTER CONCEALED WITHIN CONSTRUCTION
- G — MAIN GROUND CONDUCTOR EXPOSED ON EXPOSED ON BUILDING EXTERIOR SURFACE
- G — GROUND CONDUCTOR CAD WELDED TO GROUND CABLE OR EQUIPMENT
- G — GROUND CONDUCTOR CAD WELDED TO BUILDING STEEL COLUMN
- GROUND ROD TRIPOD, SPACED 10 FEET APART.
- LEVEL TO LEVEL CABLE

LIGHTING

- LIGHTING FIXTURE – SEE FIXTURE SCHEDULE FOR MORE INFORMATION
- LIGHTING FIXTURE – SEE FIXTURE SCHEDULE FOR MORE INFORMATION
- DOWNLIGHT
- LIGHTING FIXTURE ON NORMAL/EMERGENCY
- WALL MOUNTED LIGHT FIXTURE
- E — EXIT SIGN – DIRECTIONAL ARROWS AS INDICATED ON DRAWINGS
- B — BATTERY PACK WITH HEADS AS INDICATED ON DRAWINGS
- REMOTE HEAD FOR BATTERY PACK
- $ — SINGLE POLE SWITCH – 20A RATED
- $3 — 3–WAY SWITCH – 20A RATED
- $4 — 4–WAY SWITCH – 20A RATED
- PC — PHOTOCELL VOLTAGE TO MATCH CIRCUITRY
- LC — LIGHTING CONTACTOR
- POLE MOUNTED SITE LIGHTING FIXTURE– NUMBER OF FIXTURES PER POLE AS INDICATED ON DRAWINGS
- EXTERIOR DIRECTIONAL LIGHTING FIXTURE
- a — SMALL CASE LETTERS REPRESENTS LAMP(S) / SWITCHES. WHEN USED WITH AN OCCUPANCY SENSOR THIS INDICATES SENSOR WITH MANUAL OVERRIDE SWITCH

TELECOMMUNICATIONS

- TELEPHONE OUTLET(S) @ 18" AFF. U.N.O. WITH 3/4" RACEWAY TERMINATED ABOVE NEAREST ACCESSIBLE CEILING OR TO TELEPHONE TERMINAL BOARD IF NO ACCESSIBLE CEILING AVAILABLE. SEE TELE/DATA RISER DIAGRAM FOR OUTLET AND CABLE DESCRIPTION
- DATA OUTLET(S) @ 18" AFF. U.N.O. WITH 3/4" RACEWAY TERMINATED ABOVE NEAREST ACCESSIBLE CEILING OR TO DATA EQUIPMENT RACK IF NO ACCESSIBLE CEILING AVAILABLE. SEE TELE/DATA RISER DIAGRAM FOR OUTLET AND CABLE DESCRIPTION

TELECOMMUNICATIONS (CONTINUED)

- COMBINATION TELEPHONE/DATA OUTLET(S) @ 18" AFF. U.N.O. WITH 1" RACEWAY TERMINATED ABOVE NEAREST ACCESSIBLE CEILING OR TO TELE/DATA TERMINAL AREA IF NO ACCESSIBLE CEILING AVAILABLE. SEE TELE/DATA RISER DIAGRAM FOR OUTLET AND CABLE DESCRIPTION
- W — WALL MTD. TELEPHONE OUTLET WITH 3/4" RACEWAY TERMINATED ABOVE NEAREST ACCESSIBLE CEILING OR TO TELEPHONE TERMINAL BOARD IF NO ACCESSIBLE CEILING AVAILABLE. SEE TELE/DATA RISER DIAGRAM FOR OUTLET AND CABLE DESCRIPTION
- (x)T — INDICATES NUMBER OF TELEPHONE OUTLET(S) AND ASSOCIATED CABLING
- (x)D — INDICATES NUMBER OF DATA OUTLET(S) AND ASSOCIATED CABLING
- (x)TF — INDICATES NUMBER OF TELEPHONE OUTLETS AND ASSOCIATED CABLING WITH 1 OUTLET AND CABLE DEDICATED FOR FAX

SINGLE LINE SYMBOLS

- SWITCH
- BREAKER
- FUSE
- TRANSFORMER
- CAPACITOR
- GROUND
- CONTACT (NORMALLY OPEN)
- CONTACT (NORMALLY CLOSED)
- AUTOMATIC TRANSFER SWITCH
- MANUAL DOUBLE THROW SWITCH
- CURRENT TRANSFORMER
- INDICATES NEW ELECTRICAL EQUIPMENT
- C — INDICATES NEW CONTROL WIRING AND CONDUIT
- EQUIPMENT OUTLINE

MISCELLANEOUS

- BRANCH CIRCUIT WIRING CONCEALED ABOVE CEILINGS, SURFACE MOUNTED ON WALLS
- BRANCH CIRCUIT WIRING – #10 AWG
- BRANCH CIRCUIT WIRING – UNDER FLOOR
- HOME RUN BACK TO PANEL
- CONDUIT TURNED DOWN
- CONDUIT TURNED UP
- LV — LOW VOLTAGE WIRING AND CONDUIT
- CT–X — CABLE TRAY ("X" DENOTES WIDTH)
- INDICATES CONTINUATION OF LINE

FIRE ALARM

- FACP — FIRE ALARM CONTROL PANEL WITH BATTERY BACKUP
- F — FIRE ALARM PULL STATION

FIRE ALARM (CONTINUED)

- F — FIRE ALARM STROBE – WALL MOUNTED
- F — FIRE ALARM AUDIBLE/STROBE – WM
- F — FIRE ALARM HORN/STROBE – WM
- S — SMOKE DETECTOR
- H — HEAT DETECTOR CEILING MOUNTED
- D — DUCT DETECTOR – PROVIDED BY EC, INSTALLED BY MC AND CONNECTED BY EC

DENOTATIONS & ABBREVIATIONS

AFF	ABOVE FINISHED FLOOR
C	CEILING MOUNTED
E	EMERGENCY
EC	ELECTRICAL CONTRACTOR
EPO	EMERGENCY POWER OFF
EXP	EXPLOSION PROOF
F	FIRE ALARM
FF	FLUSH FLOOR MOUNTED
FL	FLUORESCENT
FO	FIBER OPTIC
FSS	FUSED SAFETY SWITCH
G	GROUND FAULT INTERRUPTER
GC	GENERAL CONTRACTOR
HOA	HAND–OFF AUTO
I	INFRARED
ICD	INCANDESCENT
IG	ISOLATED GROUND
K	KEY
LV	LOW VOLTAGE
M	MOTOR
MC	MECHANICAL CONTRACTOR
NE	NORMAL/EMERGENCY
NFSS	NON–FUSED SAFETY SWITCH
PA	PAGING SYSTEM
PLC	PLUMBING CONTRACTOR
REL	RELOCATE
RED	RELOCATED
SL	SINGLE LINE
SS	SURGE SUPPRESSION
T	TELEPHONE
TL	TWIST LOCK

DENOTATIONS & ABBREVIATIONS (CONT.)

TP	TAMPER PROOF
UE	UNDERGROUND ELECTRIC
UF	UNDERGROUND FIBER
UT	UNDERGROUND TELEPHONE
W	WALL MOUNTED
WG	WIRE GUARD
WP	WEATHERPROOF
WPG	WEATHERPROOF/GROUND FAULT INTERRUPTER
WT	WATER TIGHT

GENERAL PROJECT NOTES:

G1. UNLESS OTHERWISE NOTED, PROVIDE ALL EQUIPMENT SHOWN ON THE PLANS. THE ELECTRICAL CONTRACTOR SHALL COORDINATE ALL SYMBOLS SHOWN ON THE PLANS WITH THE SYMBOL LIST. IT SHALL BE THE RESPONSIBILITY OF THE CONTRACTOR TO VERIFY THE INTENT OF ANY SYMBOL THAT IS SHOWN ON THE PLANS AND NOT INDICATED ON THE SYMBOL LIST WITH THE ENGINEER PRIOR TO BID.

G2. COORDINATE THE FINAL LOCATIONS OF ALL LIGHT FIXTURES WITH THE ARCHITECT'S REFLECTED CEILING PLANS. REPORT ANY DISCREPANCIES TO THE ARCHITECT PRIOR TO INSTALLATION.

G3. THE CONTRACTOR SHALL VERIFY THE LOCATION OF ALL UNDERGROUND UTILITIES WITHIN THE CONSTRUCTION AREA THREE (3) WORKING DAYS NOTICE BEFORE COMMENCE DIGGING. NOTIFY THE LOCAL OR STATE AUTHORITY HAVING JURISDICTION AND WAIT THE REQUIRED TIME BEFORE COMMENCING TO DIG.

G4. THE CONTRACTOR SHALL COORDINATE CONDUIT RUNS, CABLE TRAY, LIGHTING FIXTURES AND OTHER EQUIPMENT LOCATIONS WITH THE OTHER TRADE CONTRACTORS TO AVOID CONFLICTS.

G5. WHERE VOLTAGES AND FREQUENCIES ON THE DRAWINGS AND IN THE SPECIFICATIONS DIFFER FROM THE LOCAL ONES, ALL WORK SHALL BE PERFORMED USING THE LOCAL VOLTAGES AND FREQUENCIES.

G6. THE MINIMUM WIRE SIZE ON THE PROJECT SHALL BE 4mm2. THE MINIMUM CONDUIT SIZE SHALL BE 20mm. THE MINIMUM BREAKER SIZE SHALL BE 20 AMPS.

G7. THE CONTRACTOR SHALL PUT A MAXIMUM OF 6 DUPLEX SOCKETS ON A 20A SINGLE POLE CIRCUIT.

G8. WHERE THE 1010 SCOPE REVIEW, 1015 TECHNICAL REVIEW, DRAWINGS, AND SPECIFICATIONS DIFFER FROM AMERICAN CODES OR STANDARDS THE 1010, 1015, DRAWINGS, AND SPECIFICATIONS SHALL RULE.

G9. WORK FOR THE AMMUNITION SUPPLY POINT SHALL BE DONE IN ACCORDANCE WITH DEPARTMENT OF DEFENSE STANDARD DOD 6055.9–STD.

G10. ALL CONDUIT AND DEVICES SHALL BE SURFACE MOUNTED UNLESS OTHERWISE INDICATED.

US Army Corps of Engineers
Afghanistan Engineer District

SYMBOL	DESCRIPTION	DATE	APR

DESIGNED BY: JRG
DATE: 09-30-09
DWN BY: JRG
SUBMITTED BY: BAKER
CHK BY: JRG
FILE NO.: ANPSDE-000XXX

Michael Baker Jr., Inc
A unit of Michael Baker Corporation
Airside Business Park
100 Airside Drive
Moon Township, PA 15108
www.mbakercorp.com

AFGHAN NATIONAL POLICE
STANDARD DESIGN
WELL HOUSE

ELECTRICAL SYMBOLS AND ABBREVIATIONS

SHEET REFERENCE NUMBER:
E0

100% SUBMISSION

GENERAL NOTES:

1. REFER TO DRAWING #E0 FOR THE ELECTRICAL SYMBOLS LIST.
2. EXIT SIGNS SHALL BE WIRED AHEAD OF ANY LOCAL SWITCHING ON CIRCUITS.
3. REFER TO DRAWING #E3 FOR THE LIGHTING FIXTURE SCHEDULE.
4. REFER TO DRAWING #E2 FOR THE POWER RISER.
5. REFER TO DRAWING #E4 FOR PANEL SCHEDULES.
6. LIGHT FIXTURES INDICATED AS EMERGENCY SHALL BE PROVIDED WITH A BATTERY BACKUP BALLAST.

NUMBERED NOTE:

1. REFER TO RISER DIAGRAM FOR FEEDER SIZE.
2. WELL WATER PUMP.
3. PANEL P1
4. 3 4mm + 1 4mm GND. IN 20mm C.
5. PROVIDE POWER CONNECTION TO ELECTRIC UNIT HEATER #2. SEE DRAWINGS #E5 AND #M1 FOR MORE INFORMATION.
6. PROVIDE POWER CONNECTION TO EXHAUST FAN. SEE DRAWINGS #E5 AND #M1 FOR MORE INFORMATION.
7. PROVIDE POWER CONNECTION TO CHLORINATION UNIT. COORDINATE FINAL LOCATION IN THE FIELD.

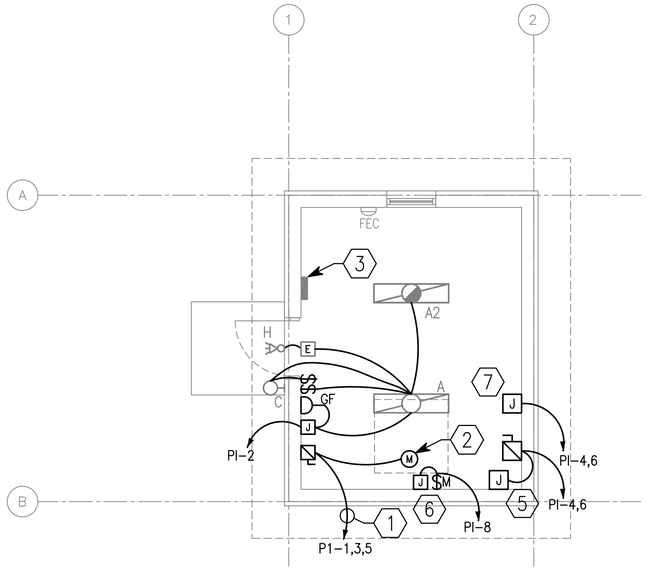

1 / E1 E1 LIGHTING AND POWER PLAN

SCALE: 1:50

N

UNLESS OTHERWISE NOTED, LINEAR DIMENSIONS SHOWN ARE IN MILLIMETERS (MM)

1 0 1 2 3 4

1:50

US Army Corps of Engineers

Afghanistan Engineer District

SYMBOL	DESCRIPTION	DATE	APR

DESIGNED BY: JRG	DATE: 09-30-09
DWN BY: JRG	SUBMITTED BY: BAKER
CHK BY: JRG	FILE NO.: ANPSDE-101XXX

Michael Baker Jr., Inc.
A unit of Michael Baker Corporation
Airside Business Park
100 Airside Drive
Moon Township, PA 15108
www.mbakercorp.com

AFGHAN NATIONAL POLICE
STANDARD DESIGN
WELL HOUSE

LIGHTING AND POWER PLAN

SHEET REFERENCE NUMBER:

E1

100% SUBMISSION

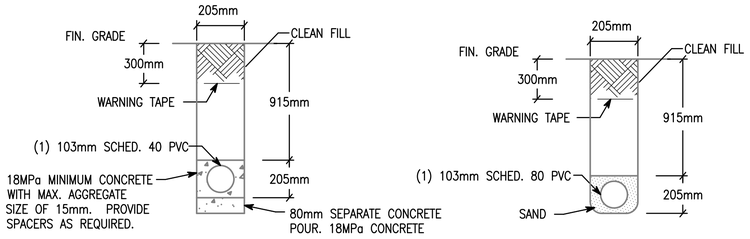

NOTE: PVC CONDUIT SHALL BE DIRECT BURIED SCHEDULE 80 FOR NO TRAFFIC AREAS AND CONCRETE-ENCASED SCHEDULE 40 FOR UNDER ROADWAYS OR TRAFFIC AREAS.

1 E2 | E2 TYPICAL DUCT BANK DETAILS FOR CONDUIT IN SAND OR CONCRETE

SCALE: N.T.S.

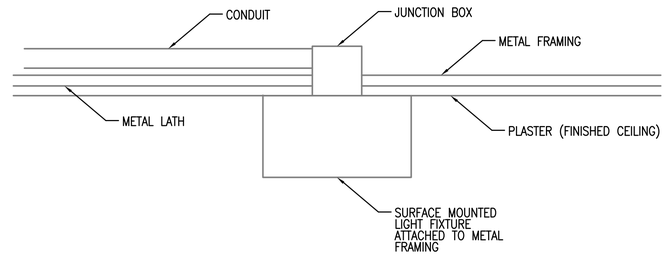

2 E2 | E2 TYPICAL DETAIL FOR SURFACE MOUNTED LIGHT FIXTURES

SCALE: N.T.S.

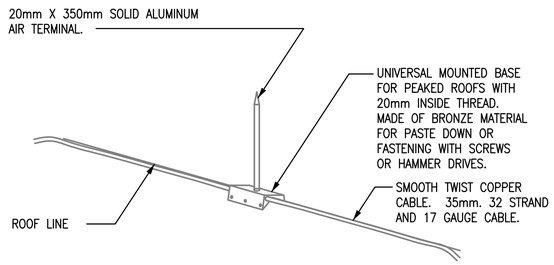

3 E2 | E2 LIGHTNING PROTECTION AIR TERMINAL DETAIL

SCALE: N.T.S.

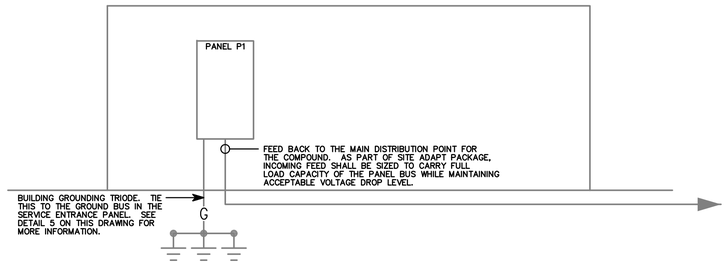

4 E2 | E2 WELLHOUSE RISER DIAGRAM

SCALE: N.T.S.

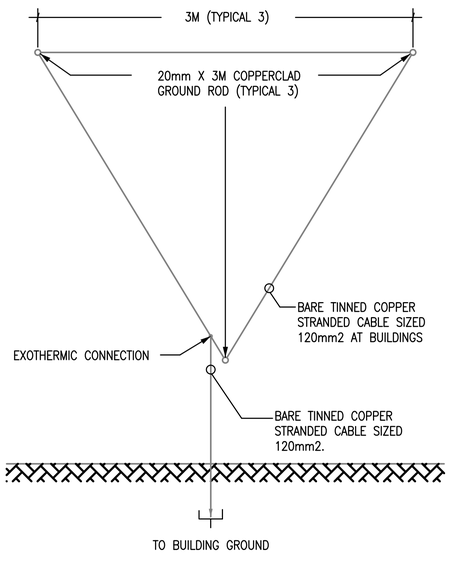

5 E2 | E2 GROUND TRIPOD SYSTEM DETAIL - PLAN

SCALE: N.T.S.

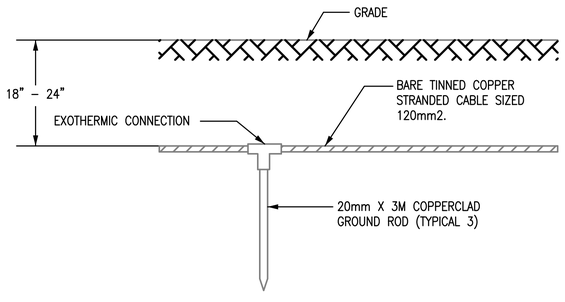

6 E2 | E2 GROUND TRIPOD SYSTEM DETAIL - ELEVATION

SCALE: N.T.S.

US Army Corps of Engineers
Afghanistan Engineer District

SYMBOL	DESCRIPTION	DATE	APR

DESIGNED BY: JRG
DATE: 09-30-09
DWN BY: JRG
SUBMITTED BY: BAKER
CHK BY: JRG
FILE NO.: ANPSDE-502XXX

Michael Baker Jr., Inc
A unit of Michael Baker Corporation
Airside Business Park
100 Airside Drive
Moon Township, PA 15108
www.mbakercorp.com

AFGHAN NATIONAL POLICE
STANDARD DESIGN
WELL HOUSE

DETAILS

SHEET REFERENCE NUMBER:
E2

100% SUBMISSION

FIXTURE MARK 'A'

PARABOLIC SURFACE/PENDANT MOUNTED 300MM x 1200MM FLUORESCET FIXTURE WITH ELECTRONIC BALLAST.

FIXTURE MARK 'A2':
SAME FIXTURE AS 'A' WITH EMERGENCY BALLAST.

FIXTURE MARK 'C'

INCANDESCENT ONE PIECE WITH APPROVED LENS, STABILIZED HIGH IMPACT POLY CARBONATE

FIXTURE MARK 'H'

REMOTE HEAD EXTERIOR LIGHT HEAD POWERED FROM EXIT SIGN BATTERY– 12V DOUBLE HEAD CORROSION RESISTANT WITH UL34 WEATHERPROOF CONSTRUCTION

FIXTURE MARK 'E'

UNIVERSAL MOUNT ENGINEER GRADE THERMOPLASTIC HOUSING EXIT SIGN WITH LED LAMPS, RED LETTERS 6" IN HEIGHT WITH ARROWS AS INDICATED, WITH 12V CADMIUM BATTERY

LIGHTING FIXTURE SCHEDULE

FIXTURE MARK	STYLE NUMBER AND TYPE	NUMBER AND TYPE OF LAMPS	VOLTAGE	MOUNTING	NOTES
A	PARABOLIC SURFACE/PENDANT MOUNTED 300MM X 1200MM FLUORESCENT FIXTURE WITH ELECTRONIC BALLAST	(2) 32W 3500K	220V – 1ø 50HZ	PENDANT MOUNTED FROM SLOPED CEILINGS	FURNISHED WITH ELECTRONIC BALLAST. PARABOLIC LOUVER SHALL BE SPECULAR LENS IRADESCENCE TYPE.
A2	SAME AS FIXTURE 'A' WITH EMERGENCY BALLAST	(2) 32W 3500K	220V – 1ø 50HZ	PENDANT MOUNTED FROM SLOPED CEILINGS	FURNISHED WITH ELECTRONIC BALLAST. PARABOLIC LOUVER SHALL BE SPECULAR LENS IRADESCENCE TYPE. EMERGENCY BALLAST SELF TEST.
C	INCANDESCENT ONE PIECE W/ APPROVED LENS STABILIZED HIGH IMPACT POLY CARBONATE.	(1) A19 – 100W INCANDESCENT	220V – 1ø 50HZ	WALL MOUNTED ABOVE EXTERIOR DOORS	
H	REMOTE HEAD EXTERIOR LIGHT HEAD POWERED FROM EXIT SIGN BATTERY– 12V DOUBLE HEAD CORROSION RESISTANT WITH UL34 WEATHERPROOF CONSTRUCTION	(2) 12W/12V HALOGEN LAMP	12V – 1ø 50HZ	EXTERIOR WALL MOUNTED AT TOP OF DOOR HEIGHT	
E	UNIVERSAL MOUNT ENGINEER GRADE THERMOPLASTIC HOUSING EXIT SIGN WITH LED LAMPS, RED LETTERS 6" IN HEIGHT WITH ARROWS AS INDICATED, WITH 12V CADMIUM BATTERY WITH REMOTE HEAD CAPABILITY	LED LAMPS	220V – 1ø 50HZ	UNIVERSAL MOUNTING	

US Army Corps of Engineers
Afghanistan Engineer District

SYMBOL	DESCRIPTION	DATE	APR

DESIGNED BY: JRG
DATE: 09-30-09
DWN BY: JRG
SUBMITTED BY: BAKER
CHK BY: JRG
FILE NO.: ANPSDE-603XXX

Michael Baker Jr., Inc
A unit of Michael Baker Corporation
Airside Business Park
100 Airside Drive
Moon Township, PA 15108
www.mbakercorp.com

AFGHAN NATIONAL POLICE
STANDARD DESIGN
WELL HOUSE

LIGHT FIXTURE SCHEDULE

SHEET REFERENCE NUMBER:
E3

100% SUBMISSION

PANELBOARD P1 SURFACE MOUNTED _____ ASYM. A.I.C. MIN.
_____ AMP. MAIN LUGS (OR) 100 AMP. MAIN BREAKER W/ 100 AMP. TRIP
CIRCUIT BREAKER TYPE 380/220 VOLTS 3 PHASE 4 WIRE 50 HZ 100 AMP. BUS

CKT. NO.	TRIP AMPS	NO. POLES	WIRE MM ²	GND MM²	CONDUIT MM	LOAD SERVED	LOAD-V.A. AØ	LOAD-V.A. BØ	LOAD-V.A. CØ	LOAD-V.A. AØ	LOAD-V.A. BØ	LOAD-V.A. CØ	LOAD SERVED	CONDUIT MM	GND MM²	WIRE MM²	NO. POLES	TRIP AMPS	CKT. NO.
1	20	3	4.0	4.0	20	WELL PUMP	3.7	3.7	3.7	0.5			LIGHTING AND RECEPTACLES	20	4.0	4.0	1	20	2
3											1.3	1.3	ELECTRIC UNIT HEATER	20	4.0	4.0	2	20	4
5																			6
7	20	1				CHLORINATION UNIT	2.2			0.2			EXHAUST FAN	20	4.0	4.0	1	20	8
9	20	1				SPARE							SPARE				1	20	10
11	20	1				SPARE							SPARE				1	20	12
							5.9	3.7	3.7	0.5	1.3	1.3							

TOTAL CONN. LOAD PER PHASE (KVA): AØ 4.2 BØ 5.0 CØ 5.0

TOTAL CONN. LOAD 16.4 KVA. 70 % DEMAND = ESTIMATED DEMAND LOAD 11.5 SUPPLIED FROM MAIN SWITCHGEAR DISTRIBUTION

• MAIN BREAKER SHALL BE 3P EARTH GROUND TYPE

US Army Corps of Engineers
Afghanistan Engineer District

SYMBOL	DESCRIPTION	DATE	APR

DESIGNED BY: JRG
DWN BY: JRG
CHK BY: JRG
DATE: 09-30-09
SUBMITTED BY: BAKER
FILE NO.: ANPSDE-604XXX

Michael Baker Jr., Inc
A unit of Michael Baker Corporation
Airside Business Park
100 Airside Drive
Moon Township, PA 15108
www.mbakercorp.com

AFGHAN NATIONAL POLICE
STANDARD DESIGN
WELL HOUSE

PANEL SCHEDULES AND RISER DIAGRAM

SHEET REFERENCE NUMBER:
E4

100% SUBMISSION

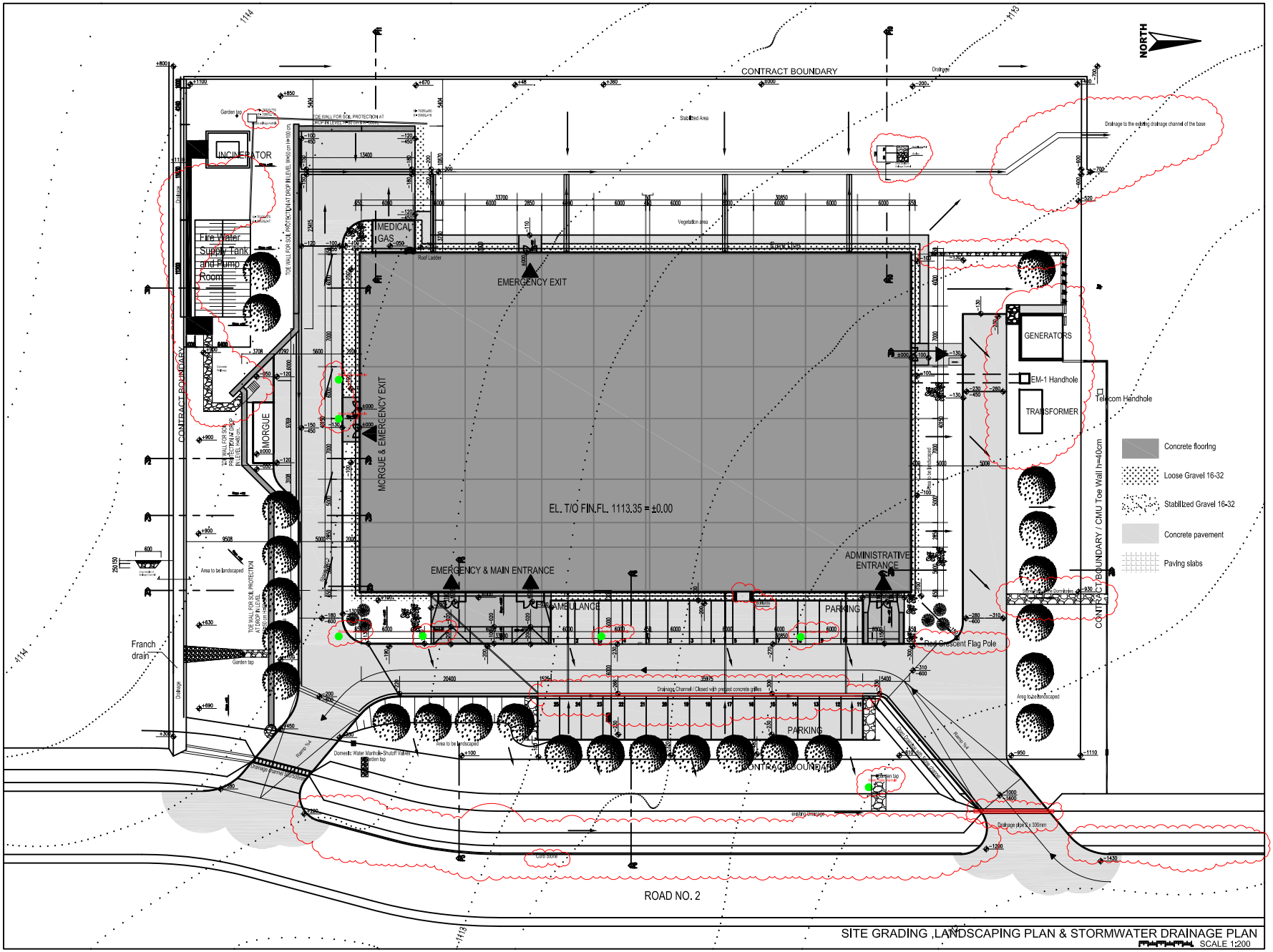

ASBUILT

SYMBOL	DESCRIPTION	DATE	APP
1	100% DESIGNS	06.05.06	
	REVISED AS BUILT	11.16.06	

DESIGNED BY : B.IRMAK
DATE : 06.05.2006
DWN BY : B.IRMAK
SUBMITTED BY: IRMAK
CHK BY : G.IRMAK
FILE NO : DP01-HH-A01

US Army Corps of Engineers
Afghanistan Engineer District
Kabul, Afghanistan

KOLIN
IRMAK, STAND, BESEL, DELTA OM

DESIGN/BUILD
50 BED REGIONAL HOSPITAL
HERAT - AFGHANISTAN

DRAWING OF WORK AS-BUILT
SITE GRADING & LANDSCAPING PLAN

SHEET REFERENCE NUMBER :
DP01-HH-A01

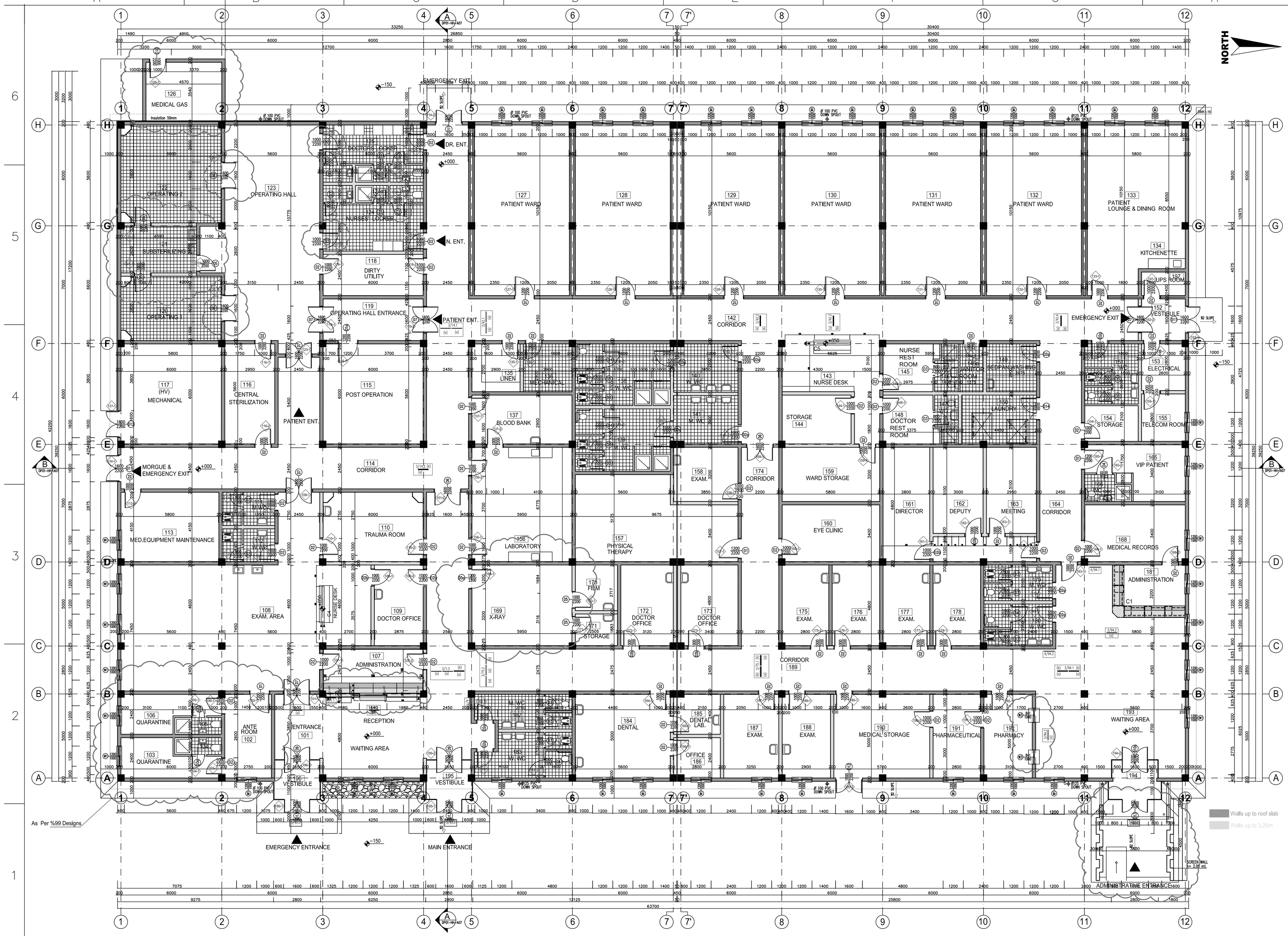

FLOOR PLAN

SYMBOL	DESCRIPTION	DATE	APR.
1	REVISED AS BUILT	06.05.06	
2	100K DESIGNS	11.16.05	

DESIGNED BY : B.IRMAK	DATE : 06.05.2006		
DWN BY : B.IRMAK	REVISED BY : IRMAK		
CHK BY : G.IRMAK	FILE NO : DP01–HH–A02		

US Army Corps of Engineers
Afghanistan Engineer District
Kabul, Afghanistan

KOLİN
CO.INC in association with
IRMAK, STAND, BESELI, DELTA OM
Design/Builder

DESIGN/BUILD
50 BED REGIONAL HOSPITAL
HERAT - AFGHANISTAN
DRAWING OF WORK AS–BUILT
FLOOR PLAN

SHEET REFERENCE NUMBER :
DP01–HH–A02

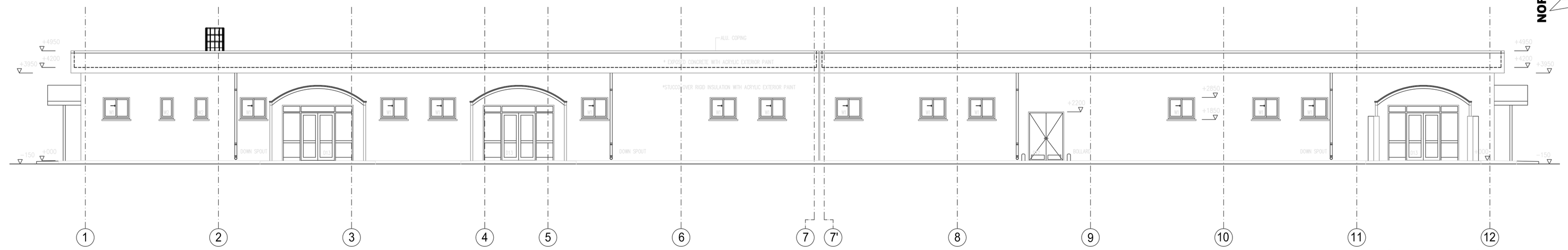

EAST ELEVATION
SCALE 1:100

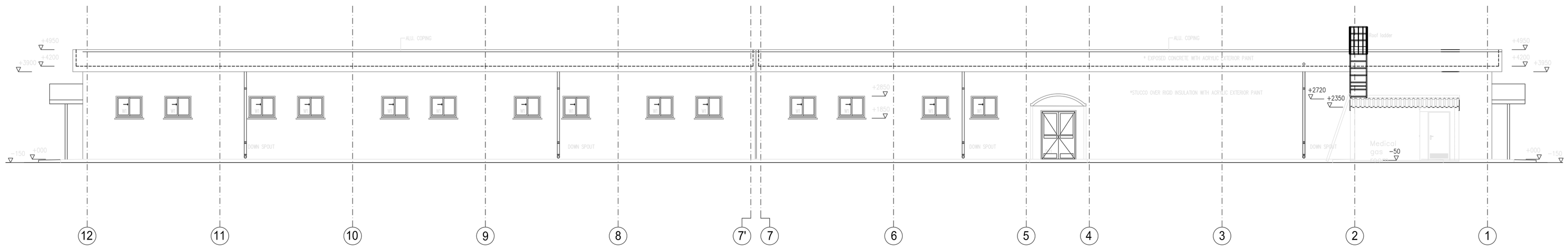

WEST ELEVATION
SCALE 1:100

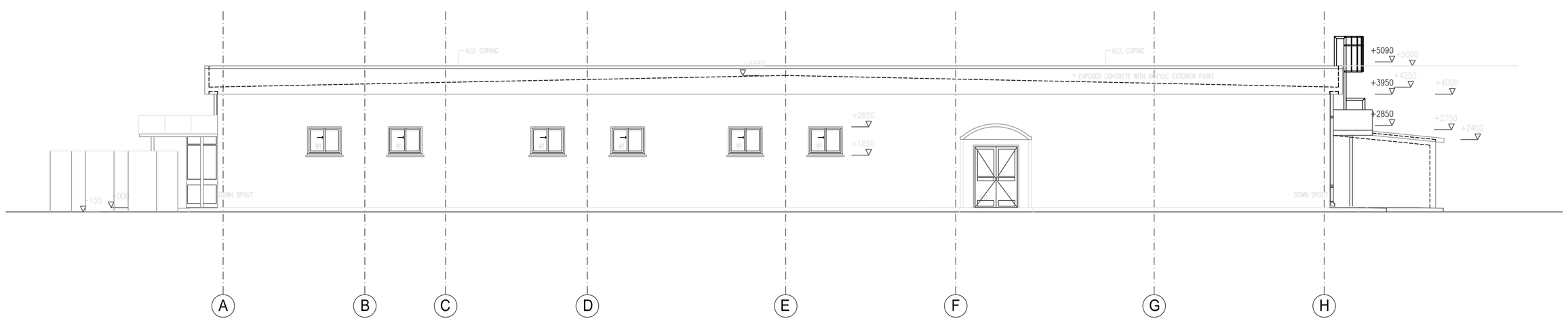

NORTH ELEVATION
SCALE 1:100

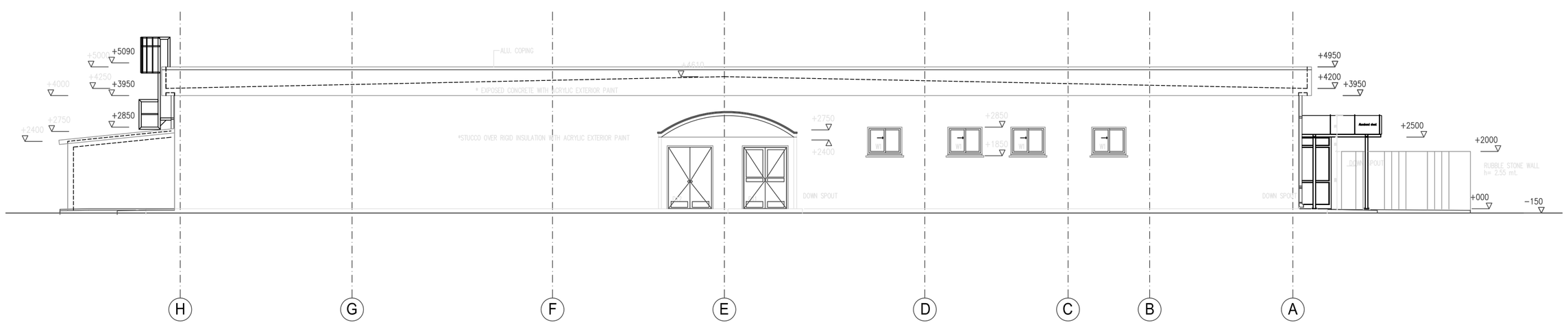

SOUTH ELEVATION
SCALE 1:100

NORTH

AS BUILT

SYMBOL	DESCRIPTION	DATE	APR.
1	REVISED AS BUILT 100% DESIGNS	06.05.06 11:16:05	

DESIGNED BY : B.IRMAK	DATE : 06.05.2006		
DWN BY : B.IRMAK	REVISED BY : IRMAK		
CHK BY : G.IRMAK	FILE NO : DP01-HH-A03		

US Army Corps of Engineers
Afghanistan Engineer District
Kabul, Afghanistan

KOLİN
IRMAK, STAND, BESELI, DELTA OM
CO.INC in association with
Design/Builder

DESIGN/BUILD
50 BED REGIONAL HOSPITAL
HERAT , AFGHANISTAN
DRAWING OF WORK AS-BUILT
ELEVATIONS

SHEET REFERENCE NUMBER :
DP01-HH-A03

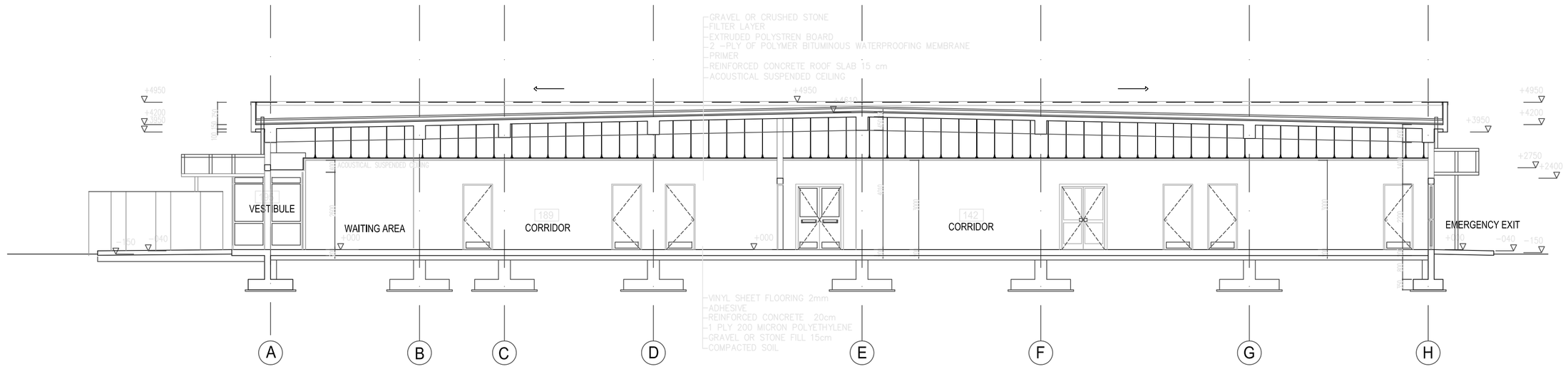

SECTION A-A
SCALE 1:100

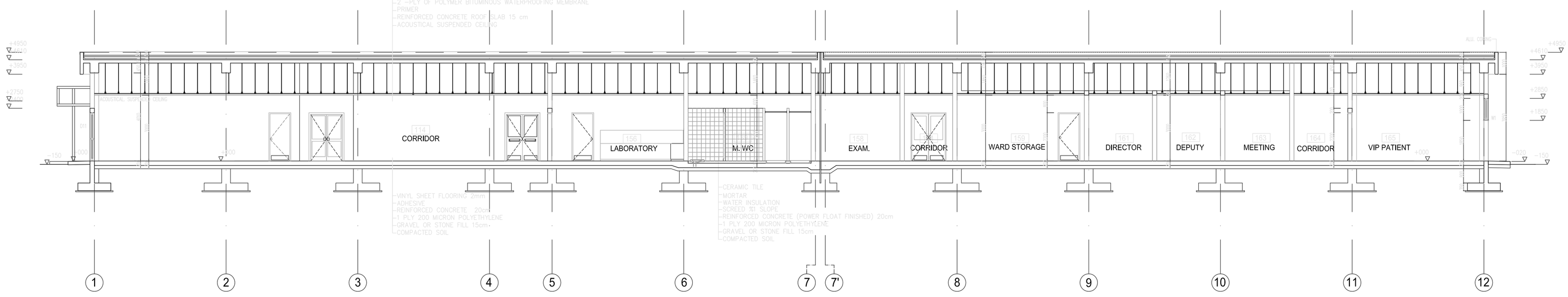

SECTION B-B
SCALE 1:100

NORTH

AS BUILT

SYMBOL	DESCRIPTION	DATE	APPR.
1	REVISED AS BUILT 100% DESIGNS	06.05.06 11.16.05	

DESIGNED BY B.IRMAK	DATE : 06.05.2006		
DWN BY : B.IRMAK	REVISED BY : IRMAK		
CHK BY : G.IRMAK	FILE NO : DP01–HH–A04		

US Army Corps of Engineers
Afghanistan Engineer District
Kabul, Afghanistan

KOLİN
CO.INC in association with
IRMAK, STAND, BESELI, DELTA OM
Design/Builder

50 BED REGIONAL HOSPITAL
HERAT , AFGHANISTAN
DRAWING OF WORK AS–BUILT
SECTIONS

SHEET REFERENCE NUMBER :
DP01–HH–A04

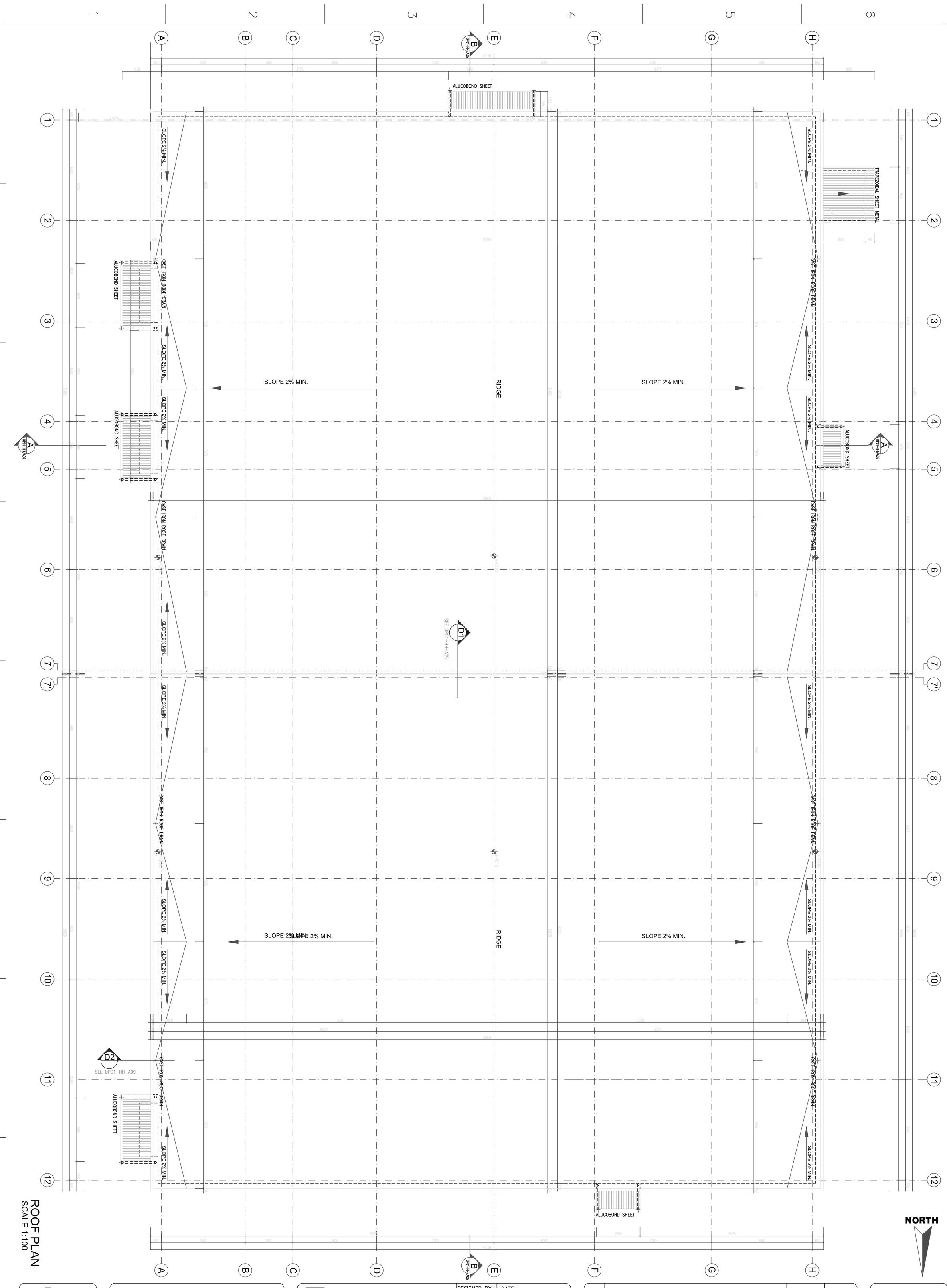

ROOF PLAN
SCALE 1:100

SHEET REFERENCE NUMBER : DP01-HH-A05

DESIGN/BUILD
50 BED REGIONAL HOSPITAL
HERAT , AFGHANISTAN
DRAWING OF WORK AS-BUILT
ROOF PLAN

US Army Corps of Engineers
Afghanistan Engineer District
Kabul, Afghanistan

KOLİN CO.INC in association with
IRMAK, STAND, BESELI, DELTA OM
Design/Builder

DESIGNED BY : B.IRMAK	DATE : 06.05.2006
DWN BY : B.IRMAK	REVISED BY : IRMAK
CHK BY : G.IRMAK	FILE NO : DP01-HH-A05

SYMBOL	DESCRIPTION	DATE	APR.
	REVISED AS BUILT	06.05.06	
0	100% DESIGNS	11.16.05	

AS BUILT

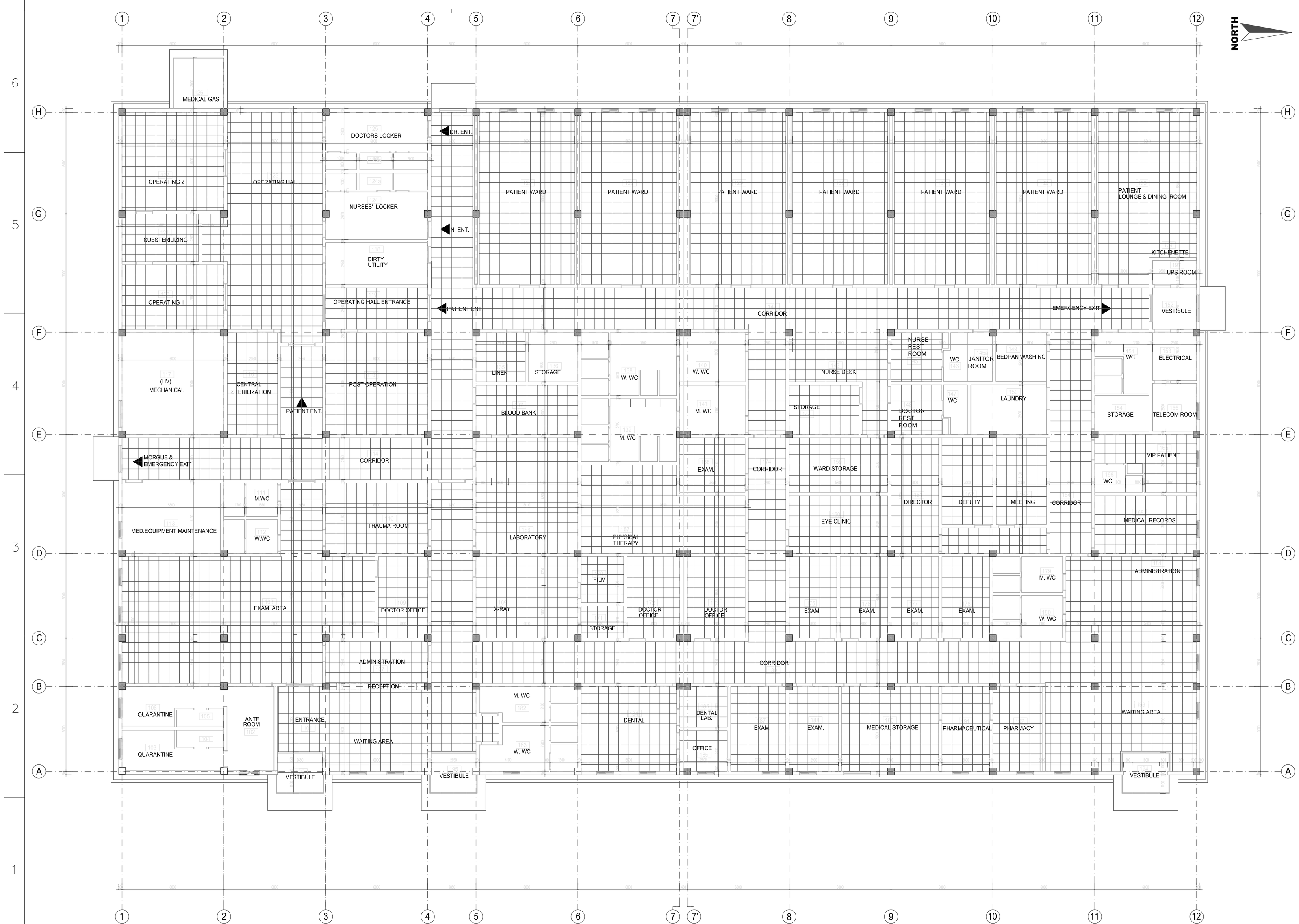

REFLECTED CEILING PLAN
SCALE 1:100

AS BUILT

SYMBOL	DESCRIPTION	DATE	APR.
1	REVISED AS BUILT	06.05.06	
1	100% DESIGNS	11.16.05	

DESIGNED BY : B.IRMAK
DATE : 06.05.2006
DWN BY : B.IRMAK
REVISED BY : IRMAK
CHK BY : G.IRMAK
FILE NO : DP01–HH–A06

US Army Corps of Engineers
Afghanistan Engineer District
Kabul, Afghanistan

KOLİN
CO.INC in association with
IRMAK, STAND, BESELI, DELTA OM
Design/Builder

DESIGN/BUILD
50 BED REGIONAL HOSPITAL
HERAT , AFGHANISTAN
DRAWING OF WORK AS–BUILT
REFLECTED CEILING PLAN

SHEET REFERENCE NUMBER :
DP01–HH–A06

FINISHING LEGEND

FLOORING

F1	SEALED CONCRETE
F2	CERAMIC TILE
F3	VINYL SHEET

BASE (SKIRTING)

B1	100 mm. VINYL
B2	100 mm. CERAMIC

WALL

W1	CERAMIC TILE DADO UP TO CEILING
W2	CEMENT PLASTER+WATER BASED ACRYLIC EMULSION SEMI-MATT PAINT
W3	LEAD LINING +GYPSUM BOARD +WATER BASED SEMI-MATT PAINT

CEILING

C1	WATER BASED ACRYLIC EMULSION SEMI-MATT ON SRUCTURAL CEILING
C2	SUSPENDED GYPSUM BOARD+WATER BASED ACRYLIC EMULSION SEMI-MATT PAINT
C3	FACTORY PAINTED ACCOUSTICAL SUSPENDED CEILING
C4	FACTORY PAINTED ACCOUSTICAL SUSPENDED CEILING(ANTI BACTERIAL)
C5	INSULATED SANDWICH PANEL BOARDS OVER METAL FRAMEWORK

ROOM NO	ROOM NAME	FLOOR	BASE	WALL	CEILING
101	ENTRANCE WAITING ROOM	F3	B1	W2	C3
102	ANTE ROOM	F3	B1	W2	C2
103	QUARANTINE	F3	B1	W2	C2
104	SHOWER & TOILET	F2	B2	W1	C2
105	SHOWER & TOILET	F2	B2	W1	C2
106	QUARANTINE	F3	B1	W2	C2
107	ADMINISTRATION	F3	B1	W2	C3
108	EXAM. AREA	F3	B1	W2	C3
109	DOCTOR OFFICE	F3	B1	W2	C3
110	TRAUMA ROOM	F3	B1	W2	C3
111	MEN'S TOILET	F2	B2	W1	C2
112	WOMEN'S TOILET	F2	B2	W1	C2
113	MED. EQUIPMENT MAINTENANCE	F3	B1	W2	C2
114	CORRIDOR	F3	B1	W2	C3
115	POST OPERATION	F2	B2	W2	C4
116	CENTRAL STERILIZATION	F3	B1	W2	C4
117	MECHANICAL ROOM	F1	B1	W1	C1
118	DIRTY UTILITY	F3	B1	W2	C2
119	OPERATING HALL ENTRANCE	F3	B1	W2	C4
120	OPERATING ROOM 1	F2	B2	W2	C4
121	SUBSTERILIZING	F2	B2	W2	C4
122	OPERATING ROOM 2	F2	B2	W2	C4
123	OPERATING HALL	F3	B1	W2	C4
124	NURSE'S LOCKER	F2	B2	W1	C2
124 A	NURSE'S SHOWER & TOILET	F2	B2	W1	C2
125	DOCTOR'S LOCKER	F2	B2	W1	C2
125 A	DOCTOR'S SHOWER & TOILET	F2	B2	W1	C2
126	MEDICAL GAS	F1		W2	C5
127	PATIENT WARD	F3	B1	W2	C3
128	PATIENT WARD	F3	B1	W2	C3
129	PATIENT WARD	F3	B1	W2	C3
130	PATIENT WARD	F3	B1	W2	C3
131	PATIENT WARD	F3	B1	W2	C3
132	PATIENT WARD	F3	B1	W2	C3
133	PATIENT LOUNGE & DINING	F3	B1	W2	C3
134	KITCHENETTE	F3	B1	W2	C3
135	LINEN	F3	B1	W2	C2
136	STORAGE	F2	B2	W1	C2
137	BLOOD BANK	F3	B1	W2	C3
138	WOMEN'S SHOWER & TOILET	F2	B2	W1	C2
139	MEN'S SHOWER & TOILET	F2	B2	W1	C2
140	WOMEN'S WASHBASIN	F2	B2	W1	C2
141	MEN'S WASHBASIN	F2	B2	W1	C2
142	CORRIDOR	F3	B1	W2	C3
143	NURSE DESK	F3	B1	W2	C3
144	STORAGE	F3	B1	W2	C3
145	NURSE'S REST ROOM	F3	B1	W2	C2
145A	JANITOR	F3	B1	W2	C1
146	NURSE'S SHOWER & TOILET	F2	B2	W1	C2
147	DOCTOR'S SHOWER & TOILET	F2	B2	W1	C2

		FLOOR	BASE	WALL	CEILING
148	DOCTOR'S REST ROOM	F2	B2	W1	C2
149	BEDPAN WASHING	F2	B2	W1	C2
150	LAUNDRY	F2	B2	W1	C2
151	TOILET	F2	B2	W1	C2
152	VESTIBULE	F3	B1	W2	C2
153	ELECTRICAL	F3	B1	W2	C2
154	STORAGE	F3	B1	W2	C2
155	TELECOM ROOM	F3	B1	W2	C2
156	LABORATORY	F3	B1	W2	C2
157	PHYSICAL THERAPY	F3	B1	W2	C2
158	EXAM. ROOM	F3	B1	W2	C2
159	WARD STORAGE	F3	B1	W2	C2
160	EYE CLINIC	F3	B1	W2	C2
161	DIRECTOR	F3	B1	W2	C2
162	DEPUTY	F3	B1	W2	C2
163	MEETING	F3	B1	W2	C2
164	CORRIDOR	F3	B1	W2	C2
165	VIP PATIENT	F3	B1	W2	C2
166	TOILET	F2	B2	W1	C2
167					
168	MEDICAL RECORDS	F3	B1	W2	C2
169	X - RAY	F3	B1	W3	C2
170	FILM	F3	B1	W2	C2
171	STORAGE	F3	B1	W2	C2
172	DOCTOR OFFICE	F3	B1	W2	C2
173	DOCTOR OFFICE	F3	B1	W2	C2
174	CORRIDOR	F3	B1	W2	C2
175	EXAM. ROOM	F3	B1	W2	C2
176	EXAM. ROOM	F3	B1	W2	C2
177	EXAM. ROOM	F3	B1	W2	C2
178	EXAM. ROOM	F3	B1	W2	C2
179	MEN'S TOILET	F2	B2	W1	C2
180	WOMEN'S TOILET	F2	B2	W1	C2
181	ADMINISTRATION	F3	B1	W2	C2
182	MEN'S TOILET	F2	B2	W1	C2
183	WOMEN'S TOILET	F2	B2	W1	C2
184	DENTAL ROOM	F3	B1	W2	C2
185	DENTAL LAB.	F3	B1	W2	C2
186	OFFICE	F3	B1	W2	C2
187	EXAM. ROOM	F3	B1	W2	C2
188	EXAM. ROOM	F3	B1	W2	C2
189	CORRIDOR	F3	B1	W2	C2
190	MEDICAL STORAGE	F3	B1	W2	C2
191	PHARMACEUTICAL	F3	B1	W2	C2
192	PHARMACY	F3	B1	W2	C2
193	WAITING AREA	F3	B1	W2	C2
194	VESTIBULE	F3	B1	W2	C2
195	VESTIBULE	F3	B1	W2	C2
196	VESTIBULE	F3	B1	W2	C2
197	UPS ROOM	F3	B1	W2	C2
200	MORGUE	F3	B1	W2	C2
201	PUMP HOUSE	F3	B1	W2	C2

AS BUILT

SYMBOL	DESCRIPTION	DATE	APPR.
1	REVISED AS BUILT 100% DESIGNS	06.05.06 11.16.05	

DESIGNED BY : B.IRMAK
DATE : 06.05.2006
DWN BY : B.IRMAK
REVISED BY : IRMAK
CHK BY : G.IRMAK
FILE NO : DP01-HH-A07

US Army Corps of Engineers
Afghanistan Engineer District
Kabul, Afghanistan

KOLIN CO.INC in association with IRMAK, STAND, BESELI, DELTA OM
Design/Builder

DESIGN/BUILD
50 BED REGIONAL HOSPITAL
HERAT , AFGHANISTAN
DRAWING OF WORK AS-BUILT
FINISHING SCHEDULE

SHEET REFERENCE NUMBER :
DP01-HH-A07