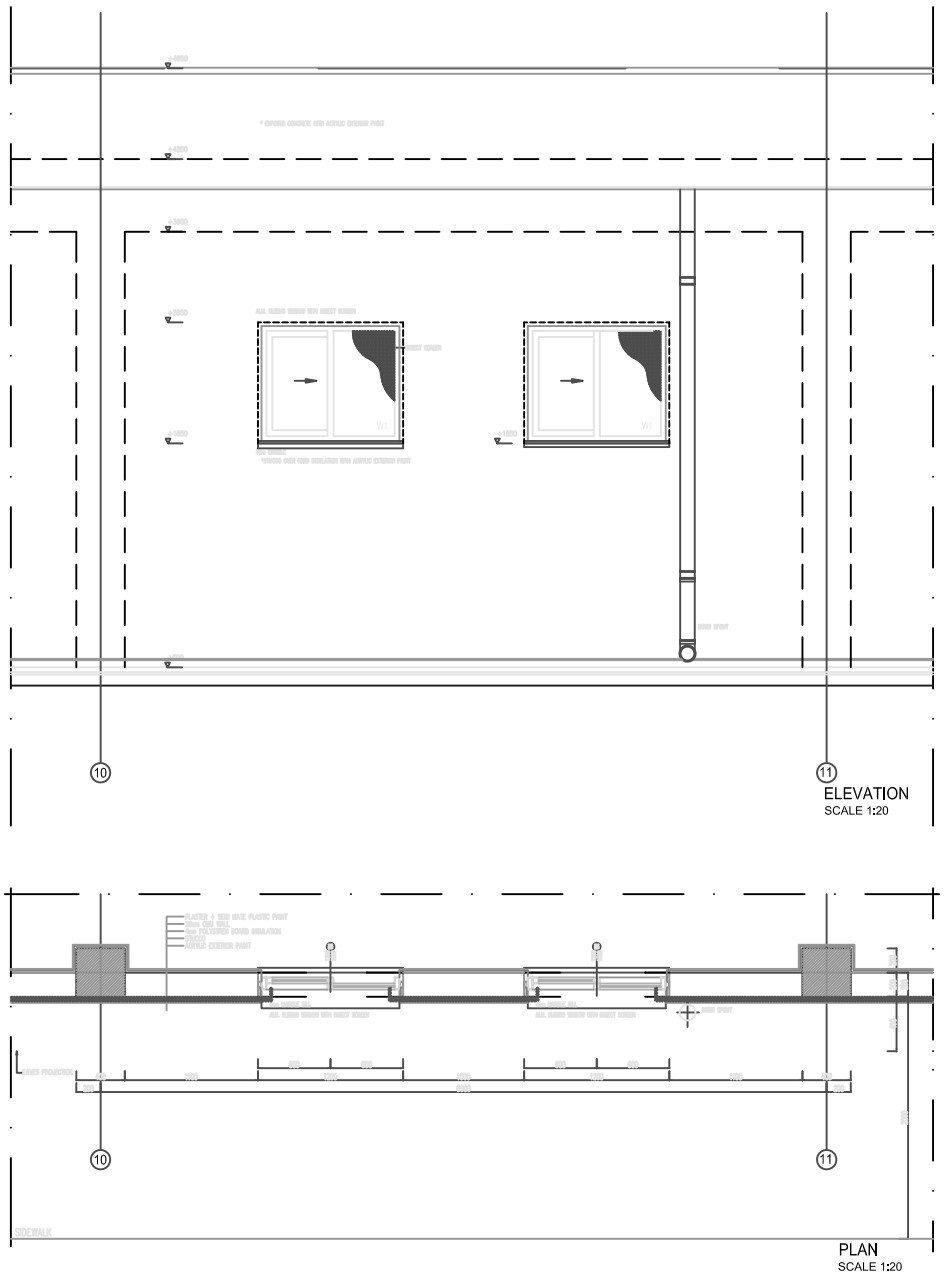

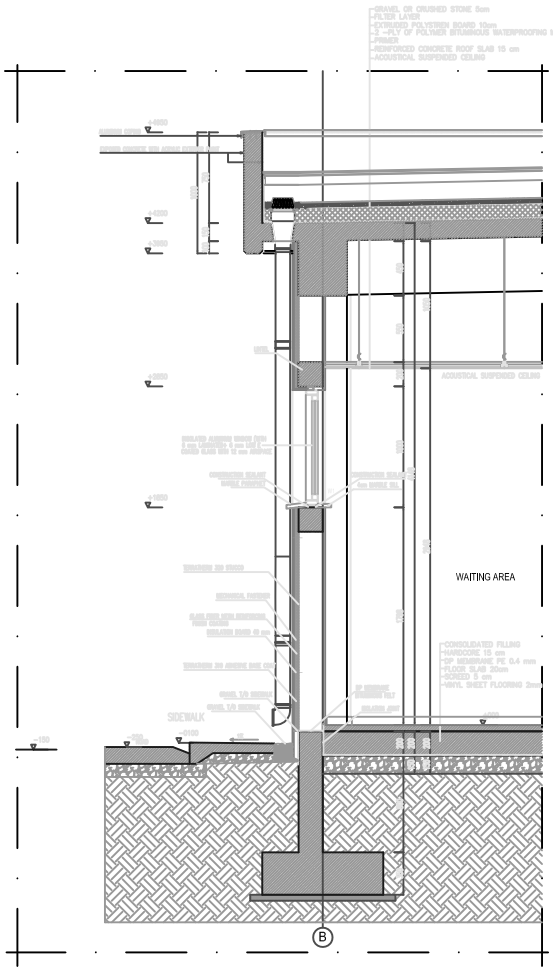

FRONT SIDE SYSTEM DETAIL

AS BUILT

SYMBOL	DESCRIPTION	DATE	APR.
	REVISED AS BUILT	06.05.06	
	100% DESIGNS	11.16.05	

US Army Corps of Engineers
Afghanistan Engineer District
Kabul, Afghanistan

KOLIN
CO.INC in association with
IRMAK, STAND, BESELI, DELTA OM
Design/Builder

DESIGNED BY : B.IRMAK
DATE : 06.05.2006
DWN BY : B.IRMAK
REVISED BY : IRMAK
CHK BY : G.IRMAK
FILE NO : DP01-HH-A08

DESIGN/BUILD
50 BED REGIONAL HOSPITAL
HERAT , AFGHANISTAN
DRAWING OF WORK AS-BUILT
FRONT SIDE SYSTEM DETAIL

SHEET REFERENCE NUMBER :
DP01-HH-A08

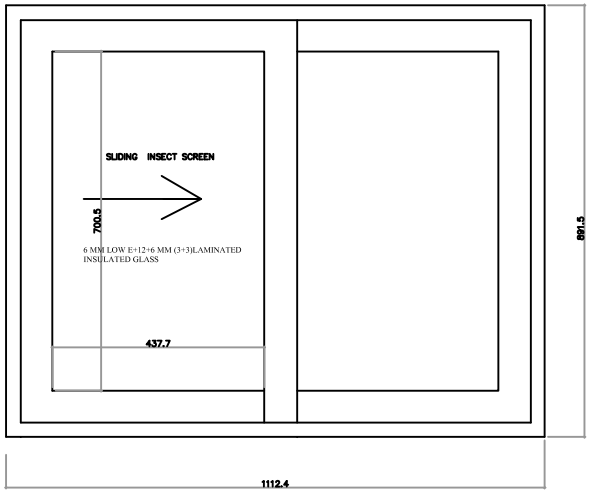

ELEVATION 1/5

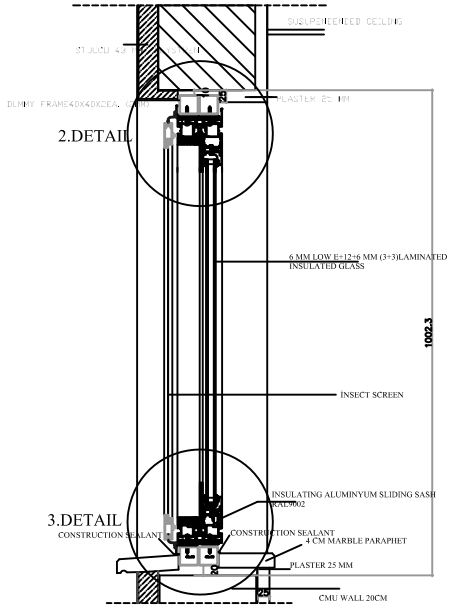

SECTION 1/5

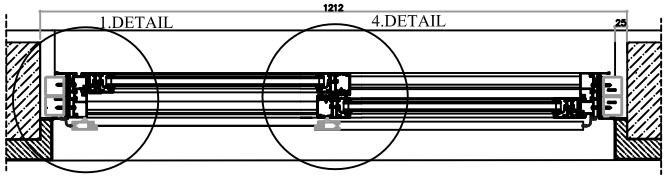

PLAN 1/5

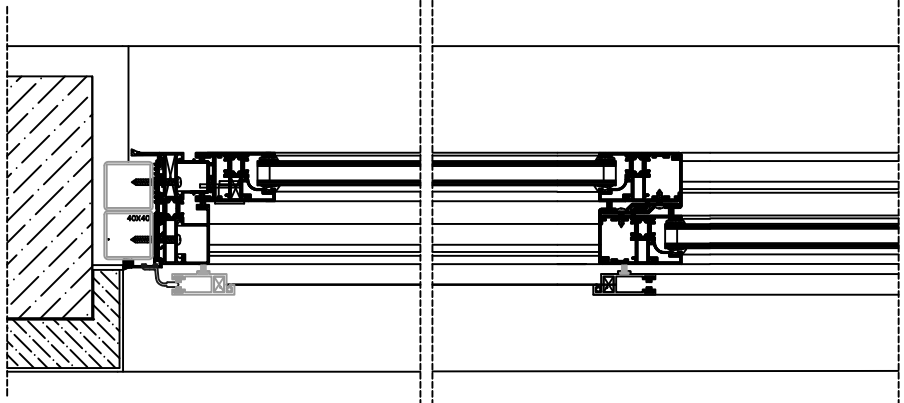

1.DETAIL 1/2

4.DETAIL 1/2

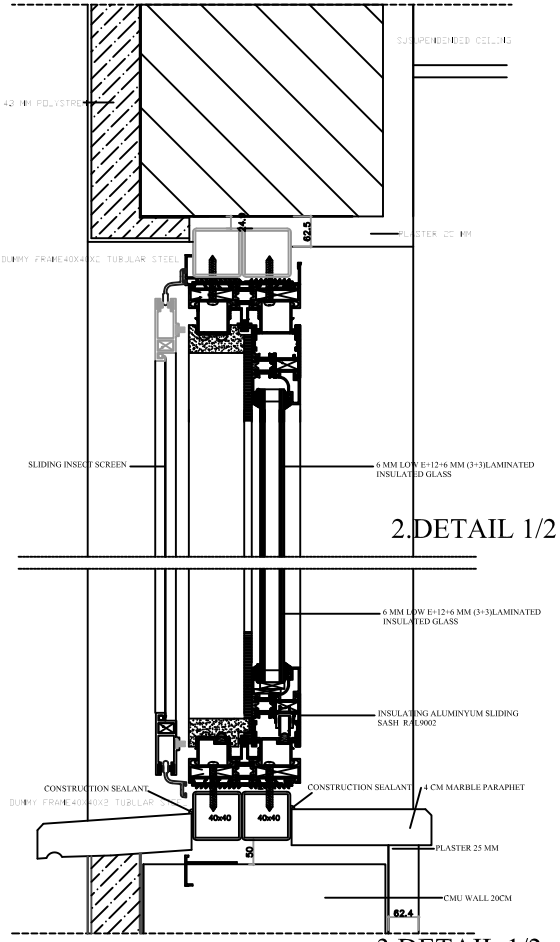

2.DETAIL 1/2

3.DETAIL 1/2

AS BUILT

SYMBOL	DESCRIPTION	DATE	APR.
1	REVISED AS BUILT	06.05.06	
	100% DESIGNS	11.16.05	

DESIGNED BY : ILIRMAK
DATE : 06.05.2006
DWN BY : ILIRMAK
REVISED BY : IRMAK
CHK BY : GURMAK
FILE NO : DP01-HH-A09

US Army Corps of Engineers
Afghanistan Engineer District
Kabul, Afghanistan

KOLİN
CO.,INC in association with Bezzaz/Rahaal
IRMAK, STAND, BESELL, DELTA OM

DESIGN/BUILD
50 BED REGIONAL HOSPITAL
HERAT , AFGHANISTAN
DRAWING OF WORK AS-BUILT
WINDOW DETAILS

SHEET REFERENCE NUMBER :
DP01-HH-A08a

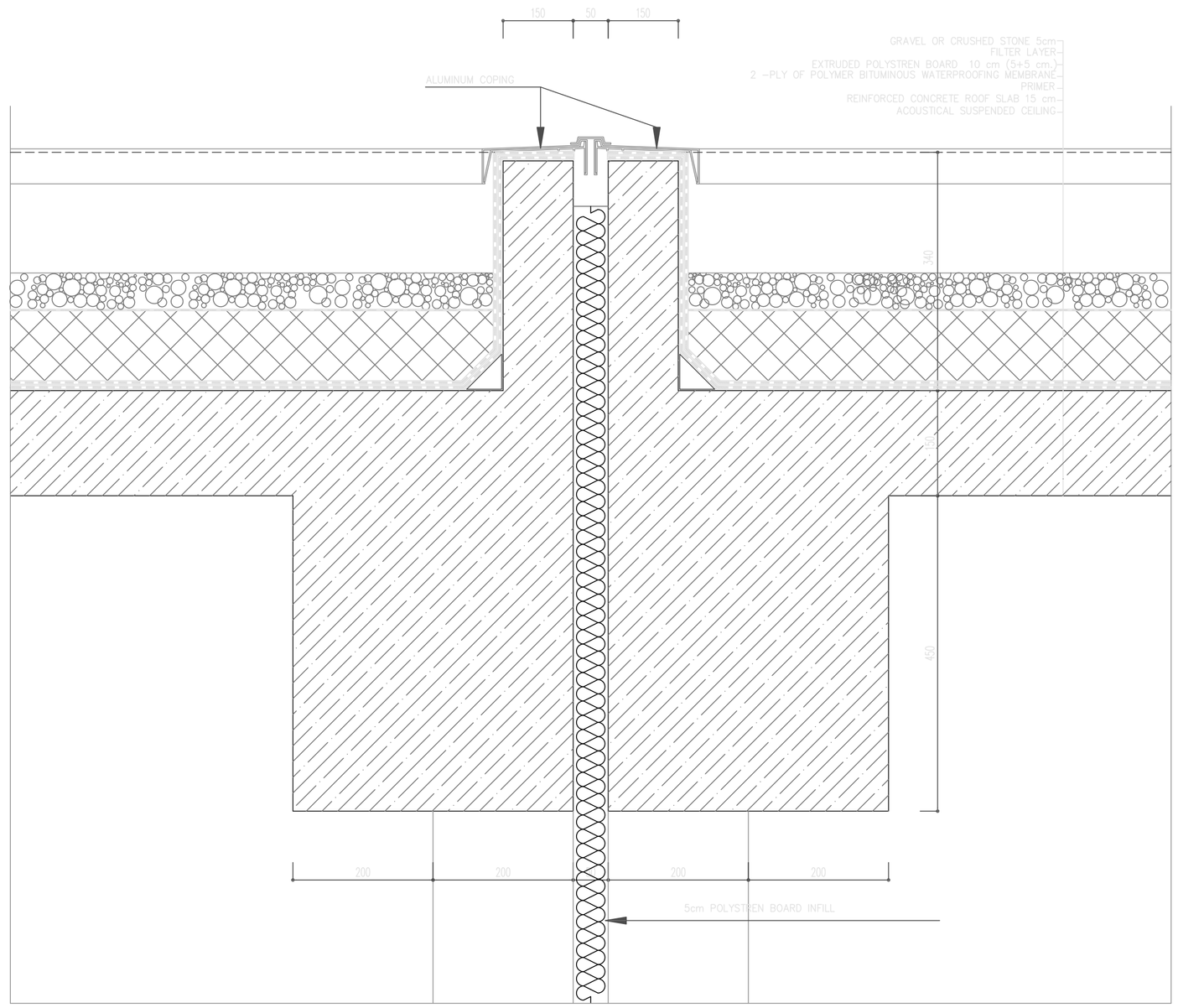

D1 DETAIL
ROOF PARAPET & EXPANSION JOINT DETAIL 1:5

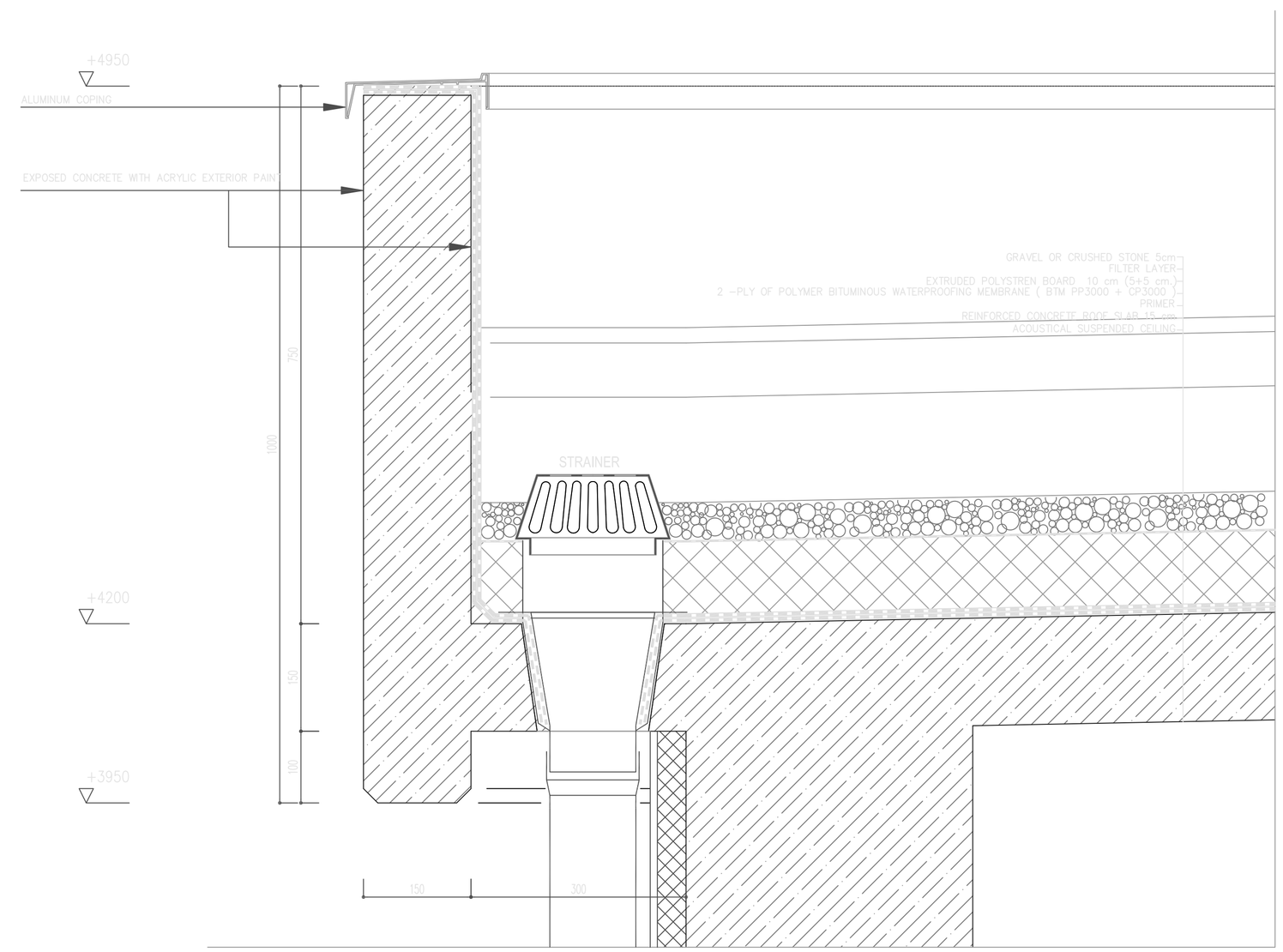

D2 DETAIL
ROOF PARAPET & STRAINER DETAIL 1:5

AS BUILT

SYMBOL	DESCRIPTION	DATE	APR.
1	REVISED AS BUILT	06.05.06	
	100% DESIGNS	11.16.05	

DESIGNED BY : B.IRMAK
DATE : 06.05.2006
DWN. BY : B.IRMAK
REVISED BY : IRMAK
CHK BY : G.IRMAK
FILE NO : DP01-HH-A09

US Army Corps of Engineers
Afghanistan Engineer District
Kabul, Afghanistan

KOLİN CO.INC in association with IRMAK, STAND, BESELI, DELTA OM
Design/Builder

DESIGN/BUILD
50 BED REGIONAL HOSPITAL
HERAT , AFGHANISTAN
DRAWING OF WORK AS-BUILT
ROOF POINT DETAILS

SHEET REFERENCE NUMBER :
DP01-HH-A09

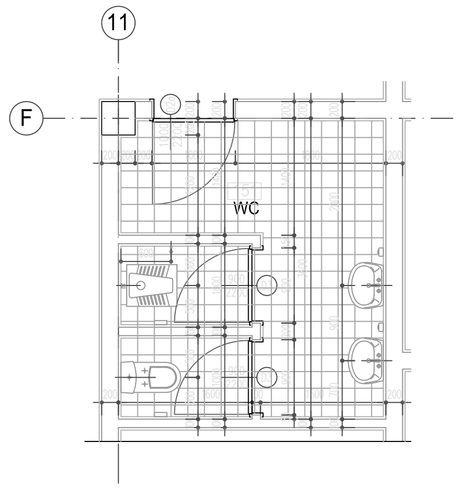

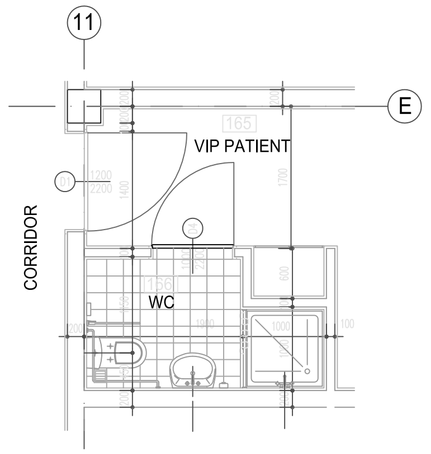

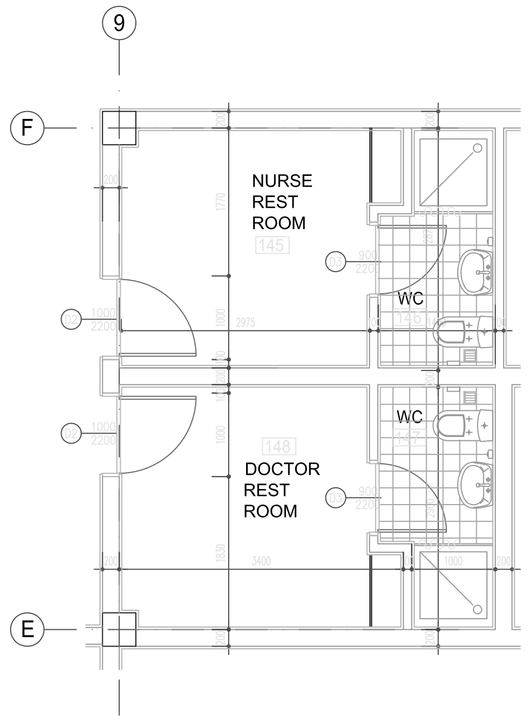

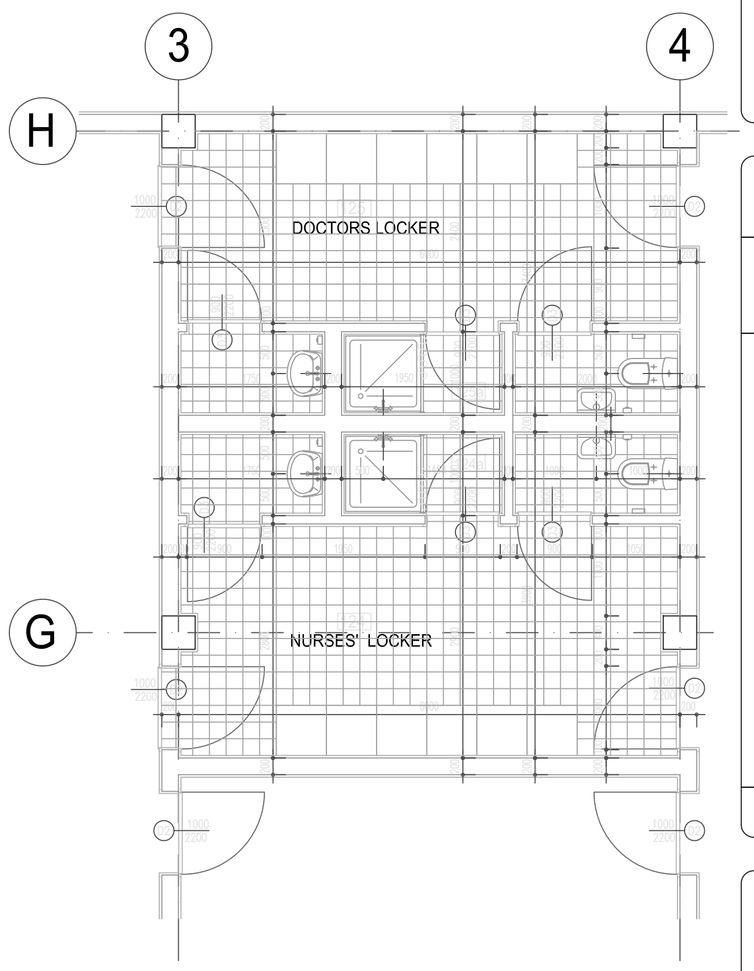

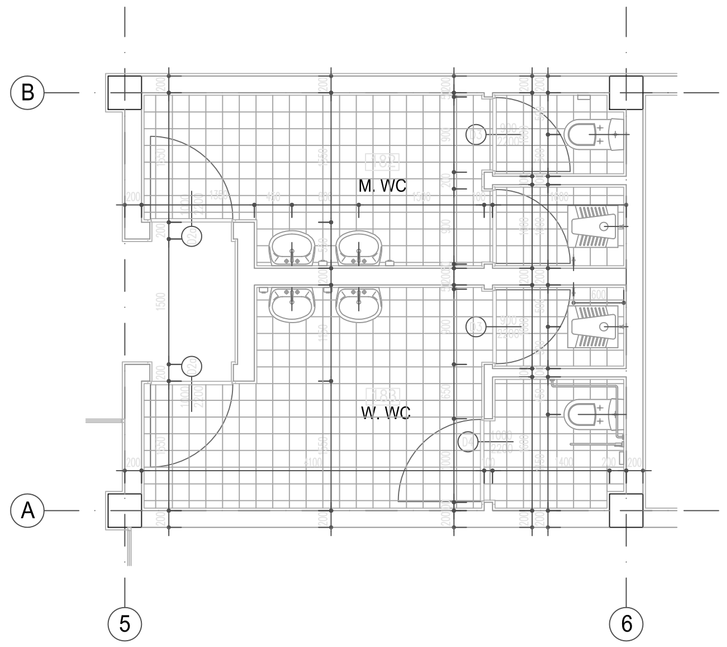

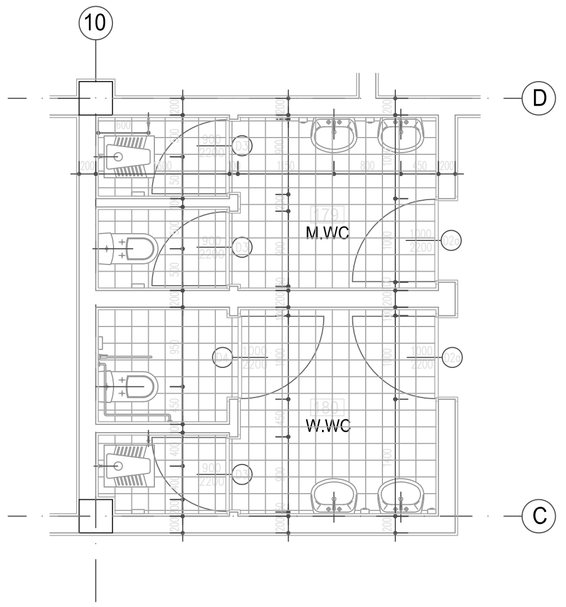

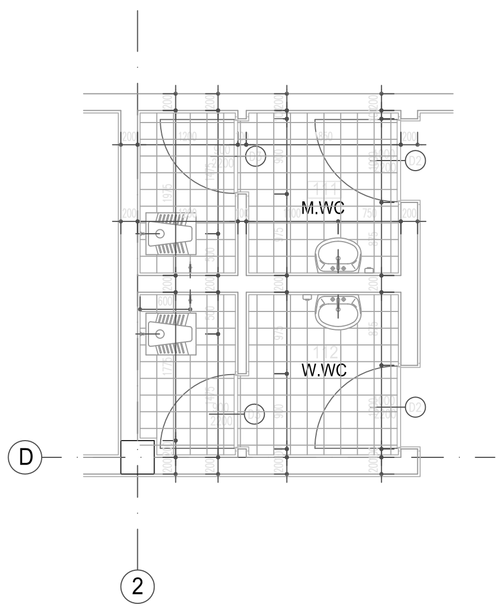

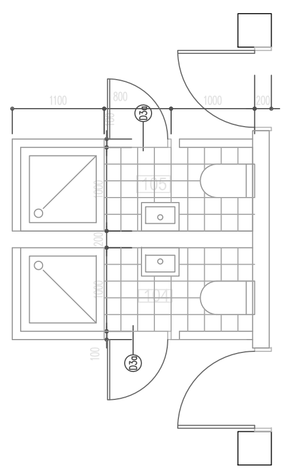

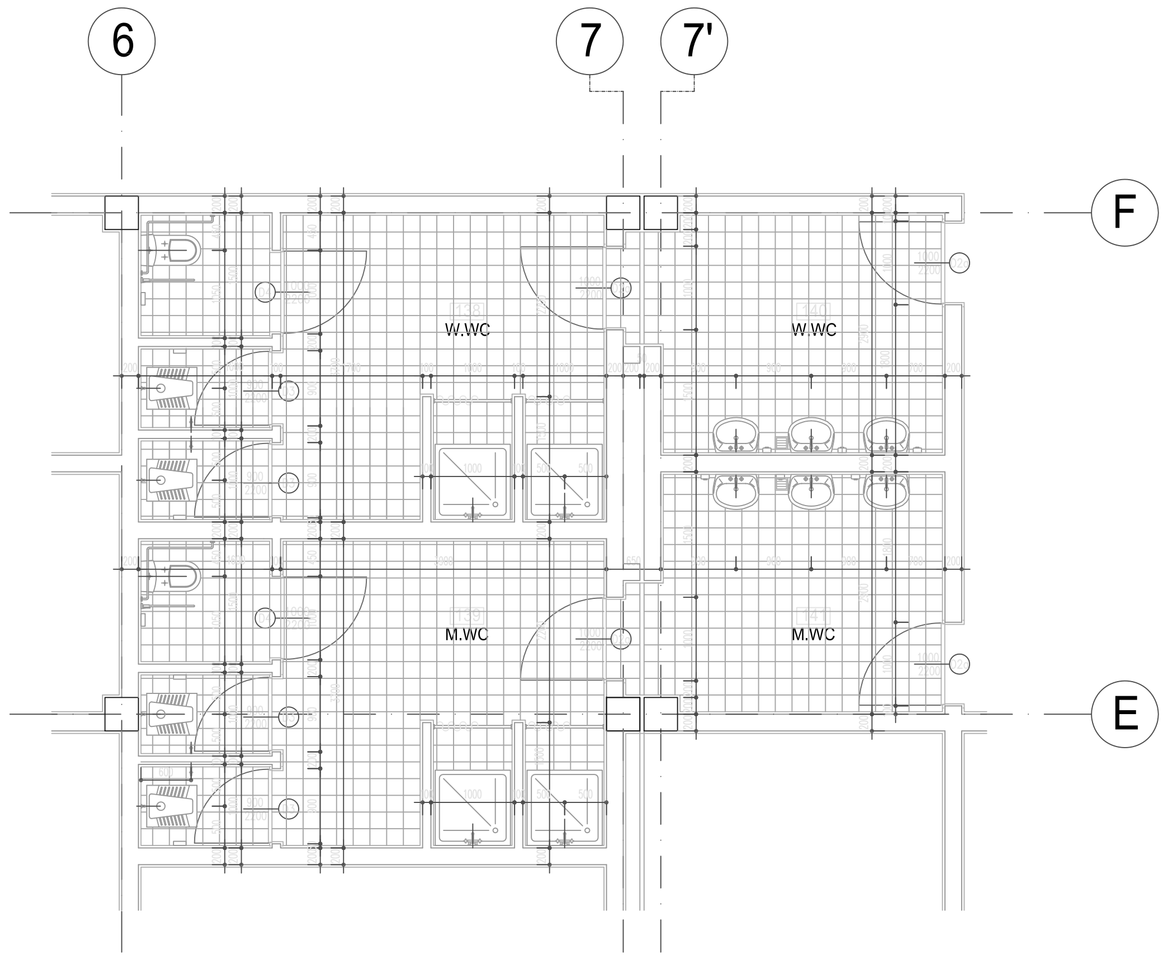

AS BUILT

SYMBOL	DESCRIPTION	DATE	APR.
1	REVISED AS BUILT 100% DESIGNS	06.05.06 11.16.05	

DESIGNED BY : B.IRMAK	DATE : 06.05.2006		
DWN BY : B.IRMAK	REVISED BY : IRMAK		
CHK BY : G.IRMAK	FILE NO : DP01–HH–A11		

US Army Corps of Engineers
Afghanistan Engineer District
Kabul, Afghanistan

KOLİN
CO.INC in association with
IRMAK, STAND, BESELI, DELTA OM
Design/Builder

DESIGN/BUILD
50 BED REGIONAL HOSPITAL
HERAT , AFGHANISTAN
DRAWING OF WORK AS–BUILT
WC DETAIL

SHEET REFERENCE NUMBER :
DP01–HH–A11

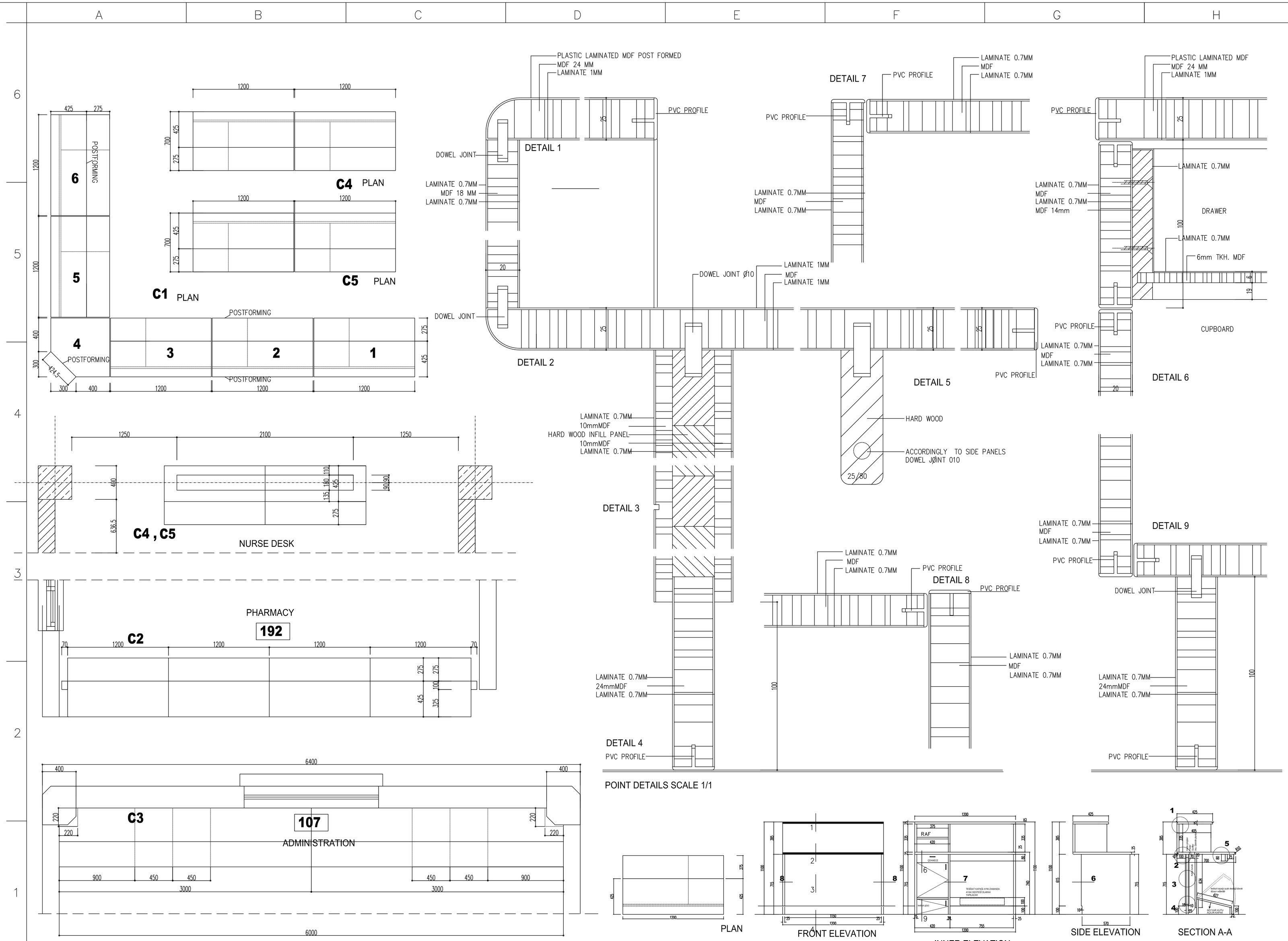
C1 PLAN
C4 PLAN
C5 PLAN
POSTFORMING
C4 , C5
NURSE DESK
PHARMACY
192
C2
C3
107
ADMINISTRATION
DETAIL 1
DETAIL 2
DETAIL 3
DETAIL 4
DETAIL 5
DETAIL 6
DETAIL 7
DETAIL 8
DETAIL 9
PLASTIC LAMINATED MDF POST FORMED
MDF 24 MM
LAMINATE 1MM
PVC PROFILE
DOWEL JOINT
LAMINATE 0.7MM
MDF 18 MM
DOWEL JOINT Ø10
10mmMDF
HARD WOOD INFILL PANEL
24mmMDF
HARD WOOD
ACCORDINGLY TO SIDE PANELS
DOWEL JØINT 010
MDF 14mm
DRAWER
6mm TKH. MDF
CUPBOARD
POINT DETAILS SCALE 1/1
PLAN
FRONT ELEVATION
INNER ELEVATION
SIDE ELEVATION
SECTION A-A
COUNTERS SYSTEM DETAIL
SCALE 1:20
AS BUILT
REVISED AS BUILT
100% DESIGNS
DESCRIPTION
DATE
APR.
DESIGNED BY : B.IRMAK
DWN BY : B.IRMAK
CHK BY : G.IRMAK
DATE : 06.05.2006
REVISED BY : IRMAK
FILE NO : DP01-HH-A15
US Army Corps of Engineers
Afghanistan Engineer District
Kabul, Afghanistan
KOLİN
CO.INC in association with
IRMAK, STAND, BESELI, DELTA OM
Design/Builder
DESIGN/BUILD
50 BED REGIONAL HOSPITAL
HERAT , AFGHANISTAN
DRAWING OF WORK AS-BUILT
COUNTERS SYSTEM & POINT DETAIL
SHEET REFERENCE NUMBER :
DP01-HH-A15

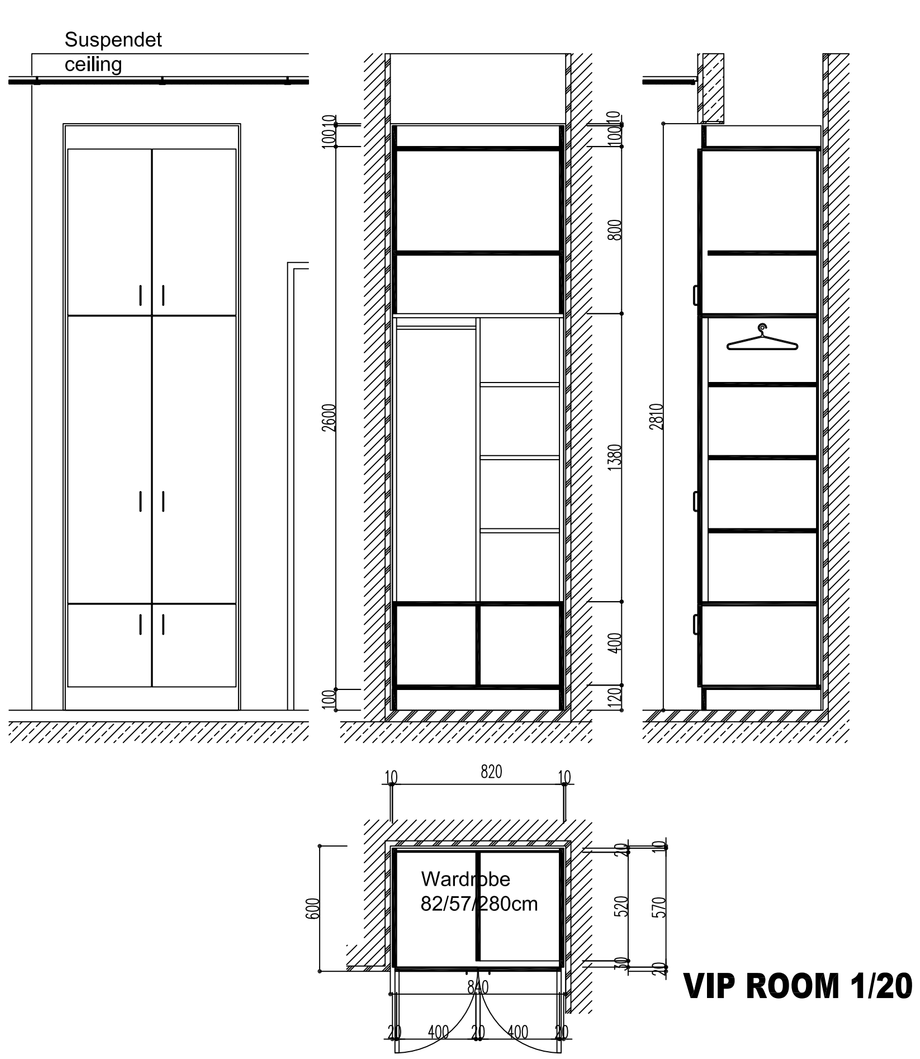

VIP ROOM 1/20

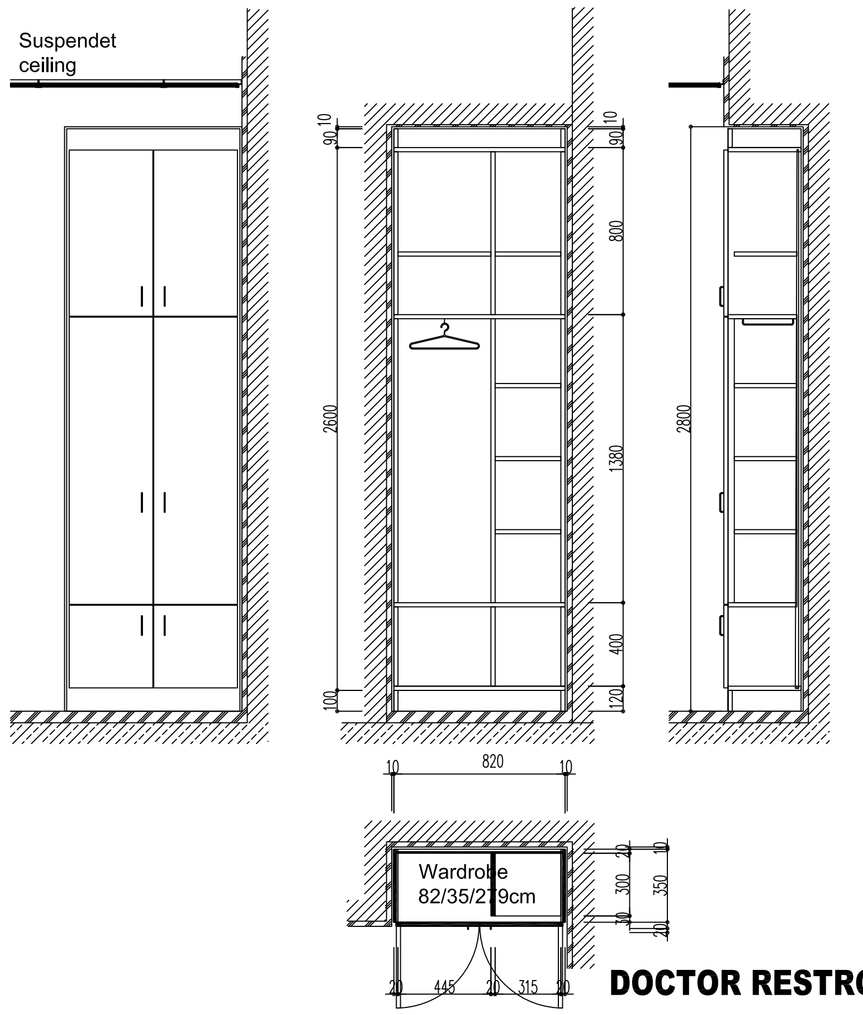

DOCTOR RESTROOM 1/20

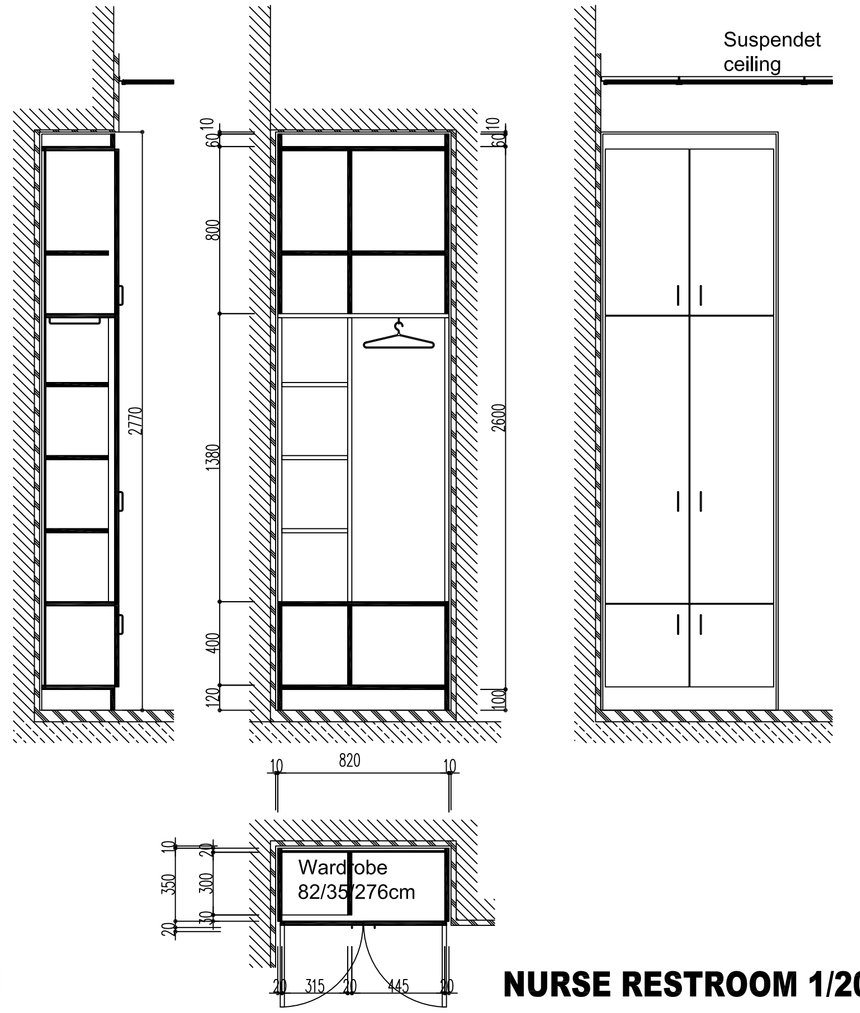

NURSE RESTROOM 1/20

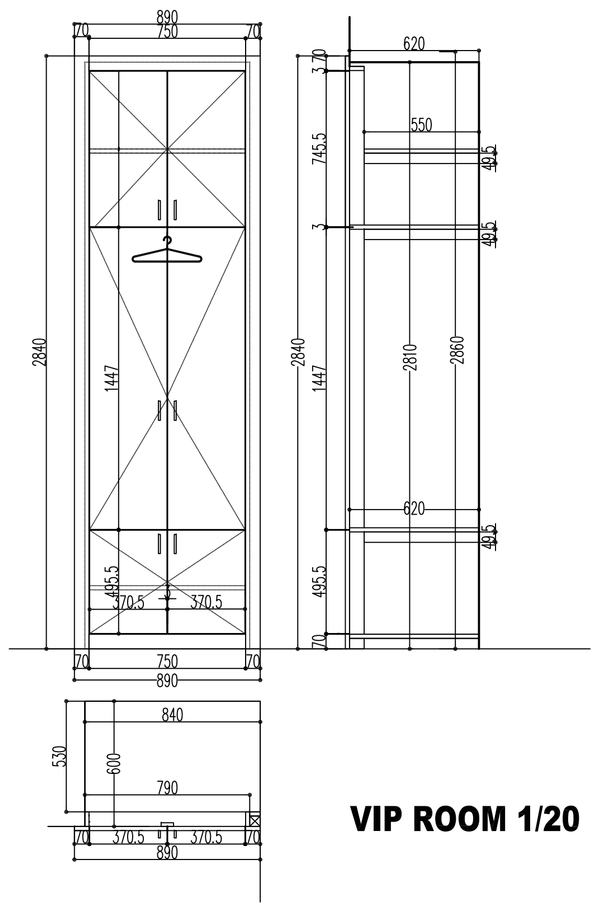

VIP ROOM 1/20

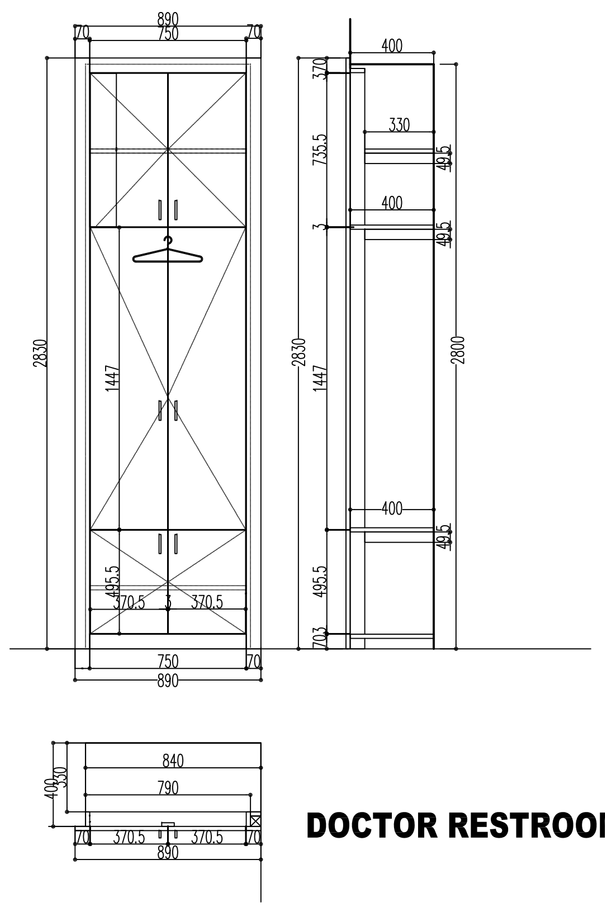

DOCTOR RESTROOM 1/20

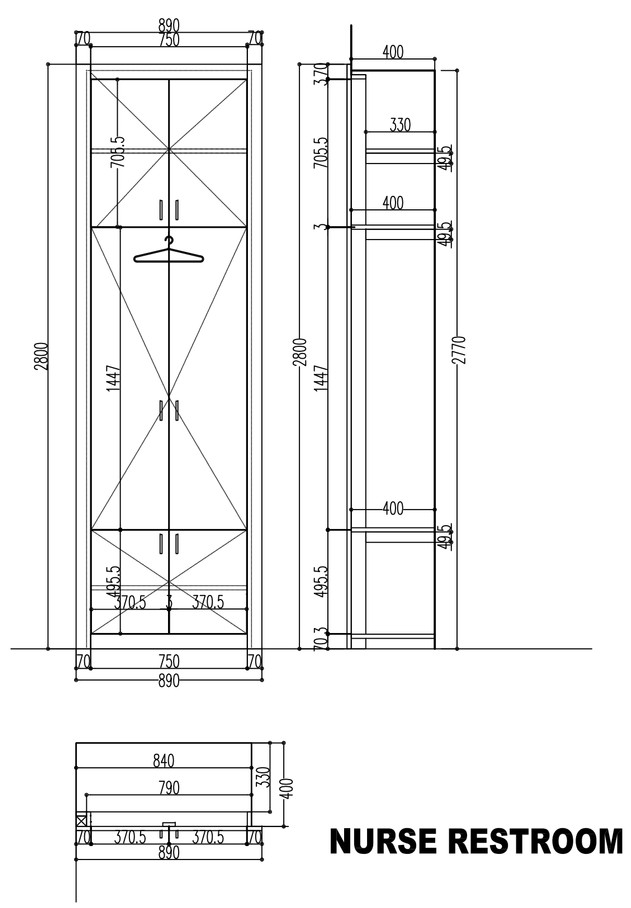

NURSE RESTROOM 1/20

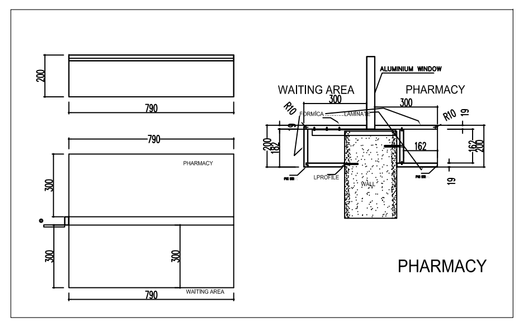

PHARMACY

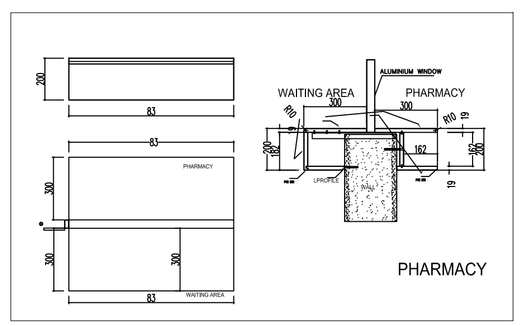

PHARMACY

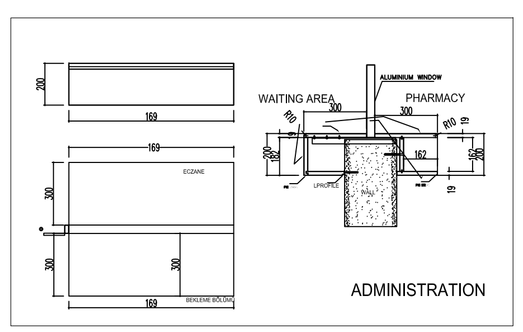

ADMINISTRATION

AS BUILT

SYMBOL	DESCRIPTION	DATE	APR.
	REVISED AS BUILT	06.05.06	
	100% DESIGNS	11.16.05	

DESIGNED BY : B.IRMAK
DATE : 06.05.2006
DWN BY : B.IRMAK
REVISED BY : IRMAK
CHK BY : G.IRMAK
FILE NO : DP01-HH-A15

US Army Corps of Engineers
Afghanistan Engineer District
Kabul, Afghanistan

KOLİN
CO.INC in association with
IRMAK, STAND, BESELI, DELTA OM
Design/Builder

DESIGN/BUILD
50 BED REGIONAL HOSPITAL
HERAT , AFGHANISTAN
DRAWING OF WORK AS-BUILT
COUNTERS SYSTEM & POINT DETAIL

SHEET REFERENCE NUMBER :
DP01-HH-A15a

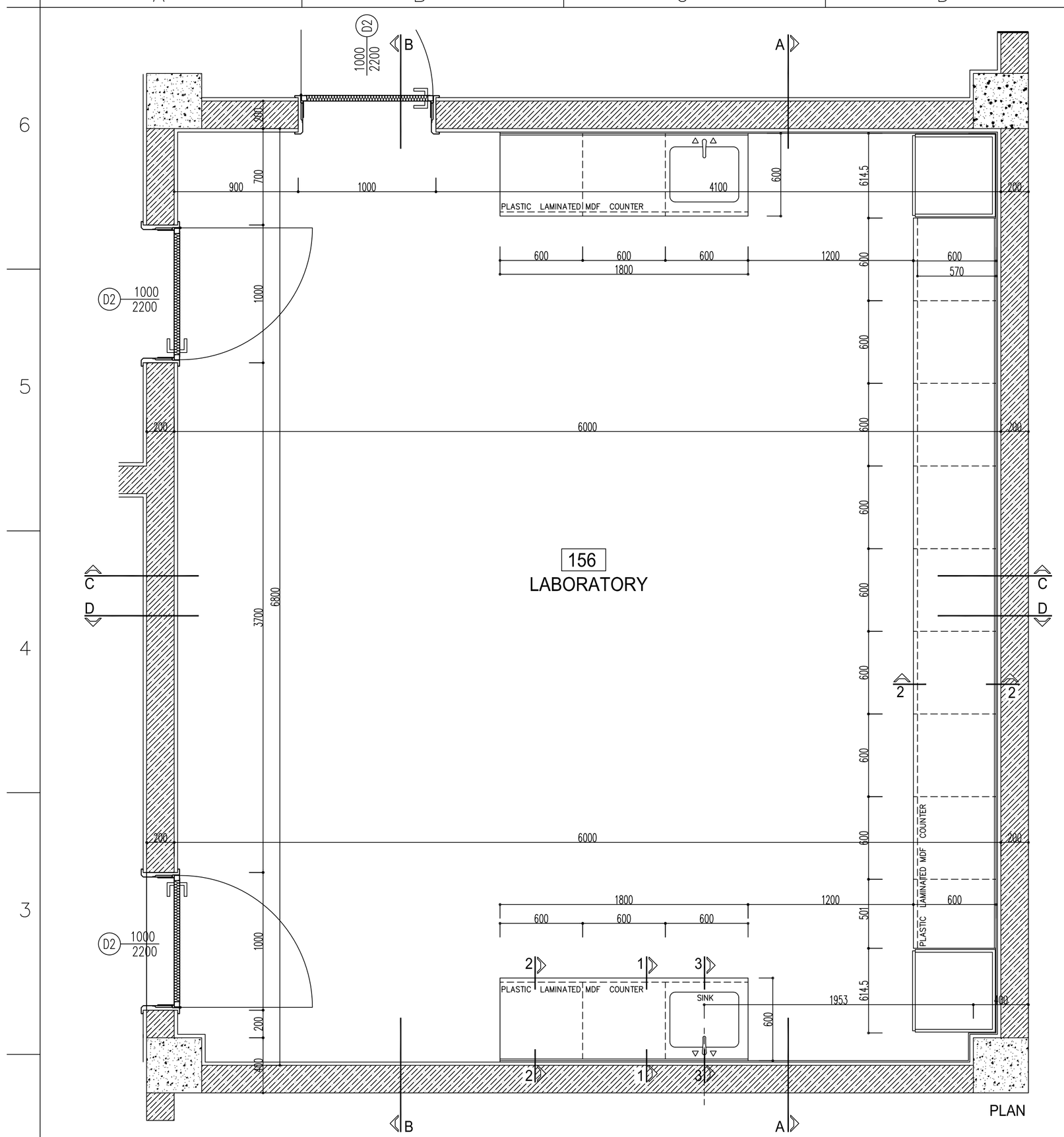

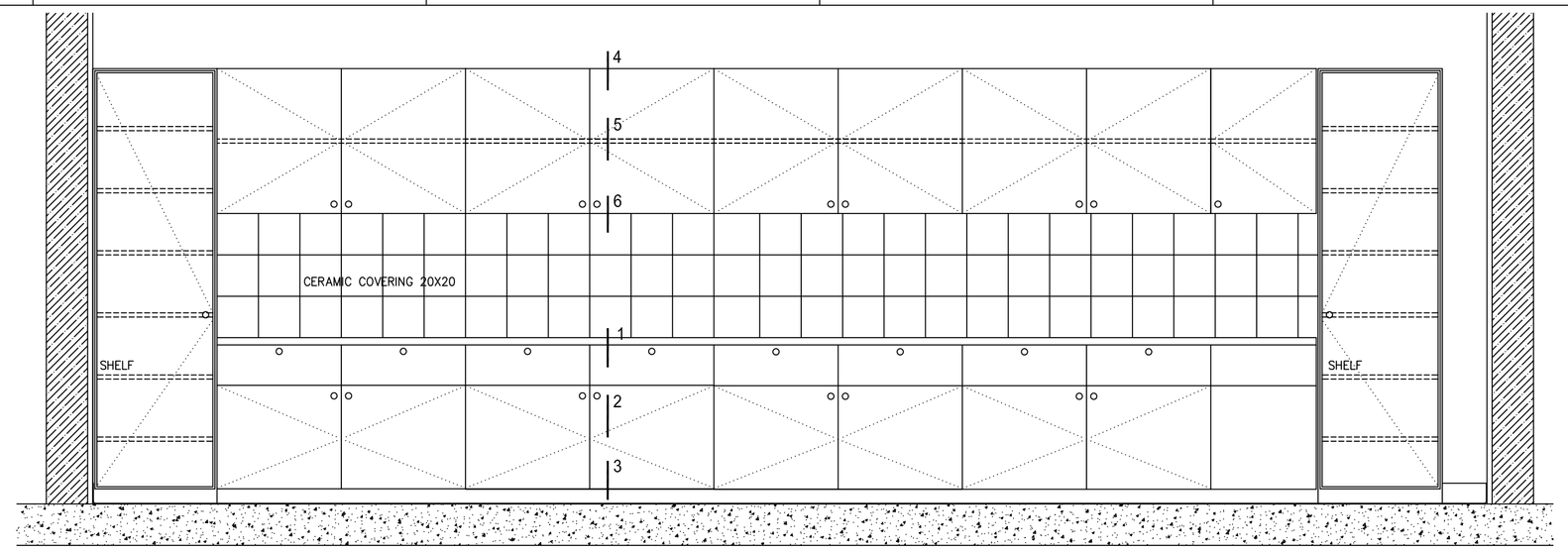

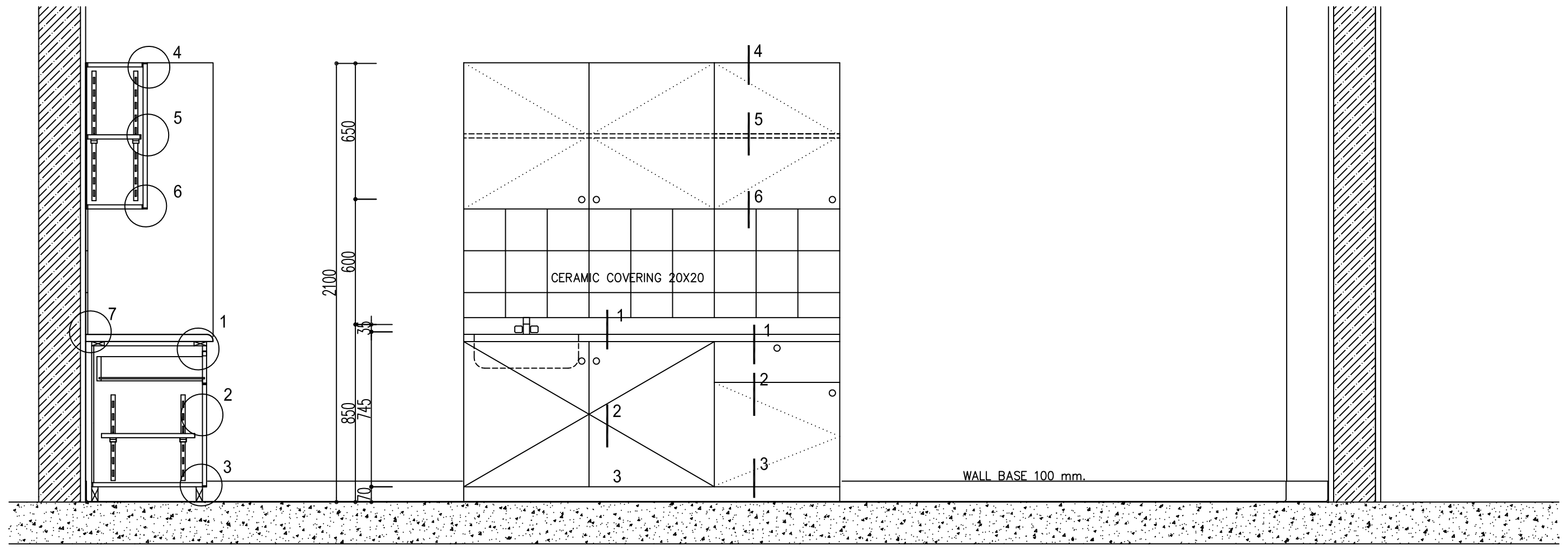

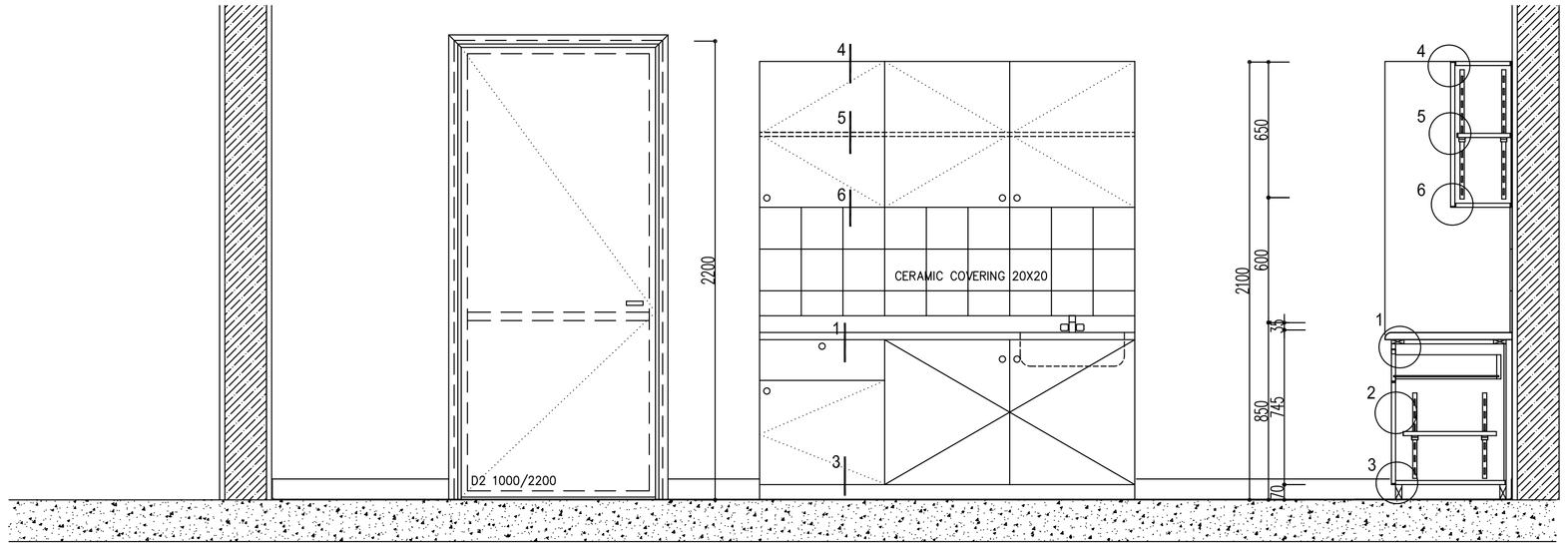

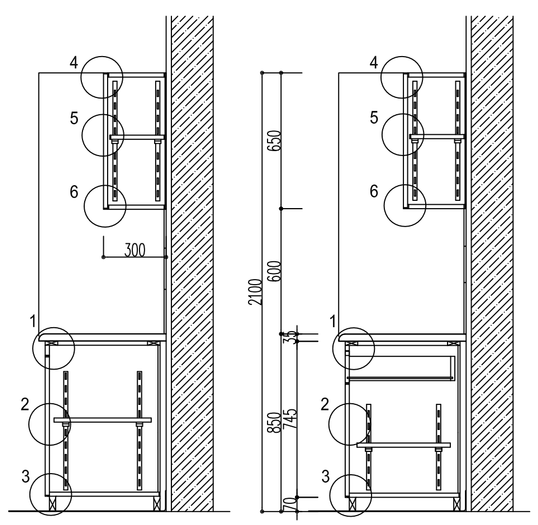

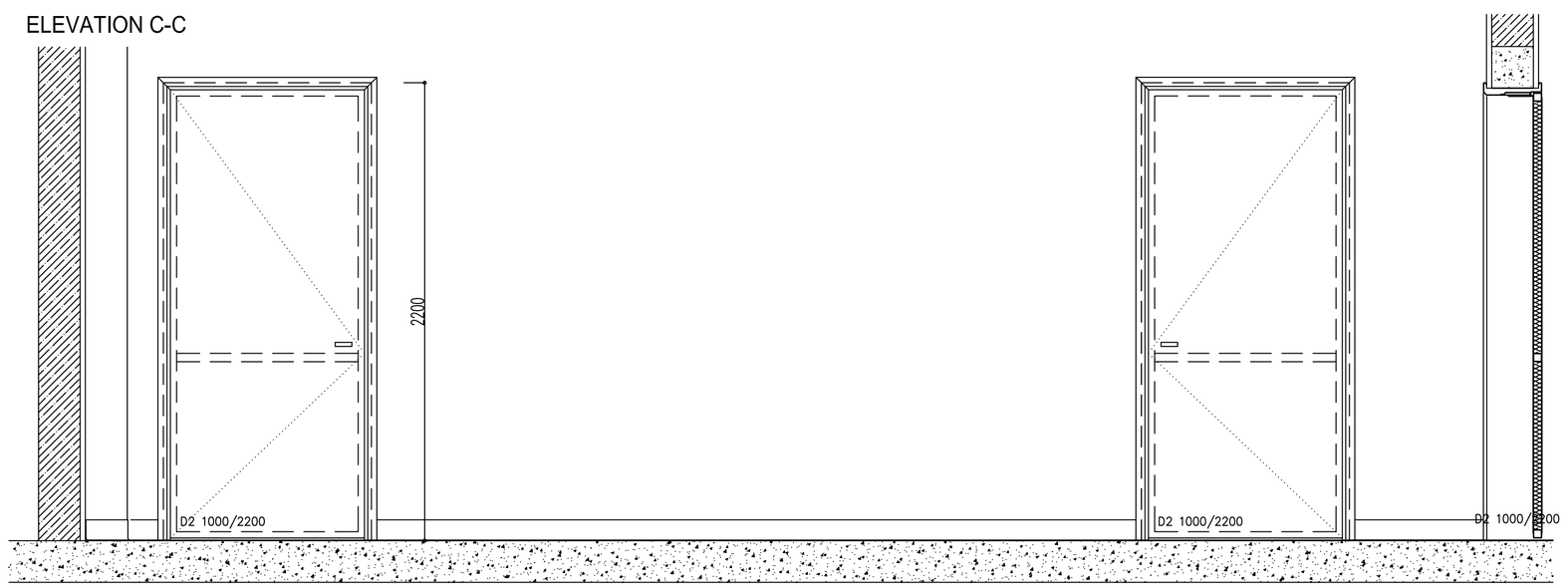

LABORATORY COUNTERS SYSTEM DETAIL
SCALE 1:20

AS BUILT

SYMBOL	DESCRIPTION	DATE	APR.
1	REVISED AS BUILT	06.05.06	
	100% DESIGNS	11.16.05	

DESIGNED BY : B.IRMAK	DATE : 06.05.2006	DWN BY : B.IRMAK	REVISED BY : IRMAK
CHK BY : G.IRMAK	FILE NO : DP01-HH-A16		

US Army Corps of Engineers
Afghanistan Engineer District
Kabul, Afghanistan

KOLİN
IRMAK, STAND, BESELI, DELTA OM
CO.INC in association with
Design/Builder

DESIGN/BUILD
50 BED REGIONAL HOSPITAL
HERAT , AFGHANISTAN
DRAWING OF WORK AS-BUILT
LABORATORY COUNTERS SYSTEM DETAIL

SHEET REFERENCE NUMBER :
DP01-HH-A16

COUNTER SECTIONS

SCALE 1:5

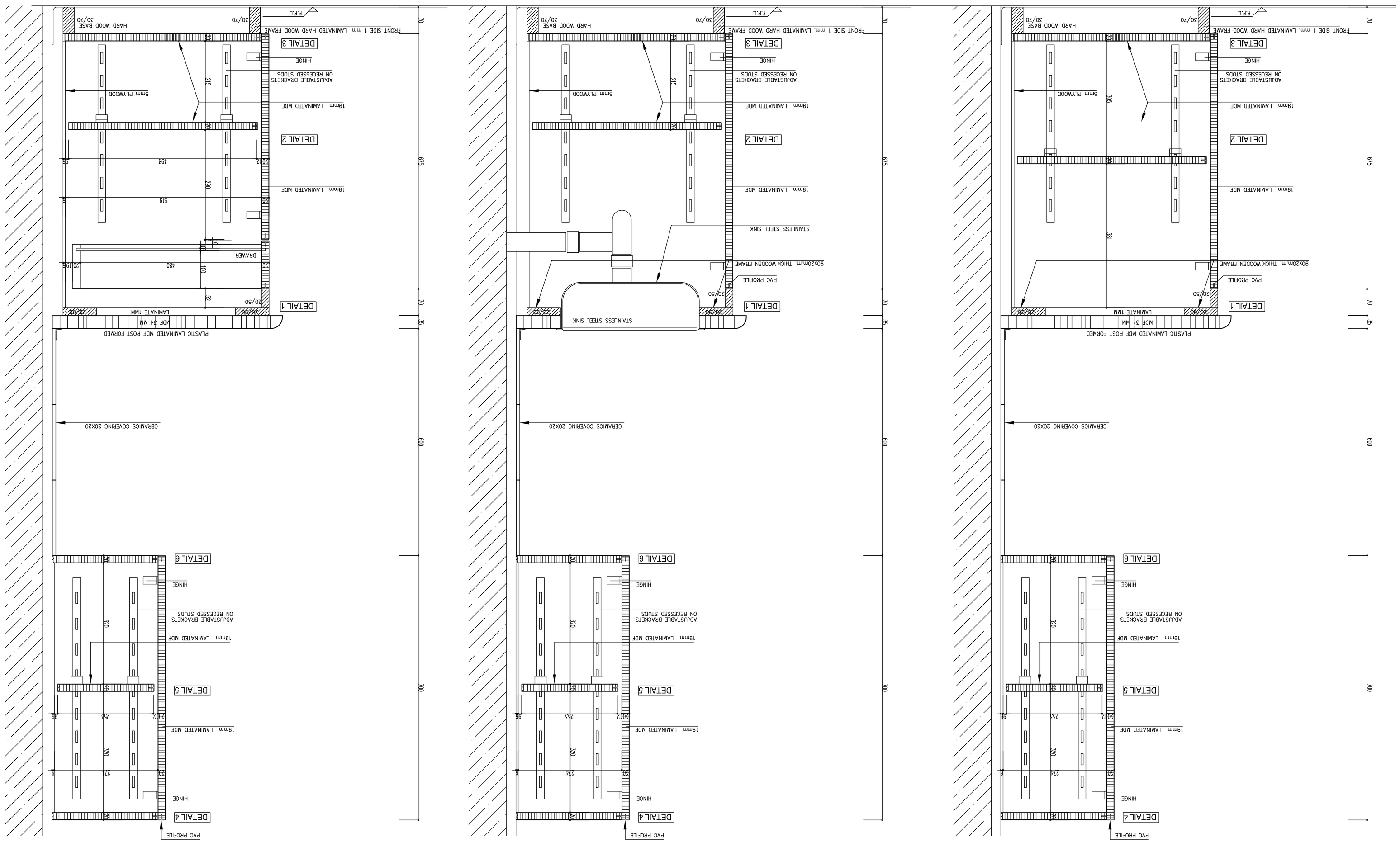

SHEET REFERENCE NUMBER : DP01-HH-A17

DESIGN/BUILD
50 BED REGIONAL HOSPITAL
HERAT , AFGHANISTAN
DRAWING OF WORK AS-BUILT
COUNTER SECTIONS

US Army Corps of Engineers
Afghanistan Engineer District
Kabul, Afghanistan

KOLİN
CO.INC in association with
IRMAK, STAND, BESELI, DELTA OM
Design/Builder

DESIGNED BY : B.IRMAK	DATE : 06.05.2006
DWN BY : B.IRMAK	REVISED BY : IRMAK
CHK BY : G.IRMAK	FILE NO : DP01-HH-A17

SYMBOL	DESCRIPTION	DATE	APR.
1	REVISED AS BUILT TOOR DESIGNS	06.05.06 11.16.05	

AS BUILT

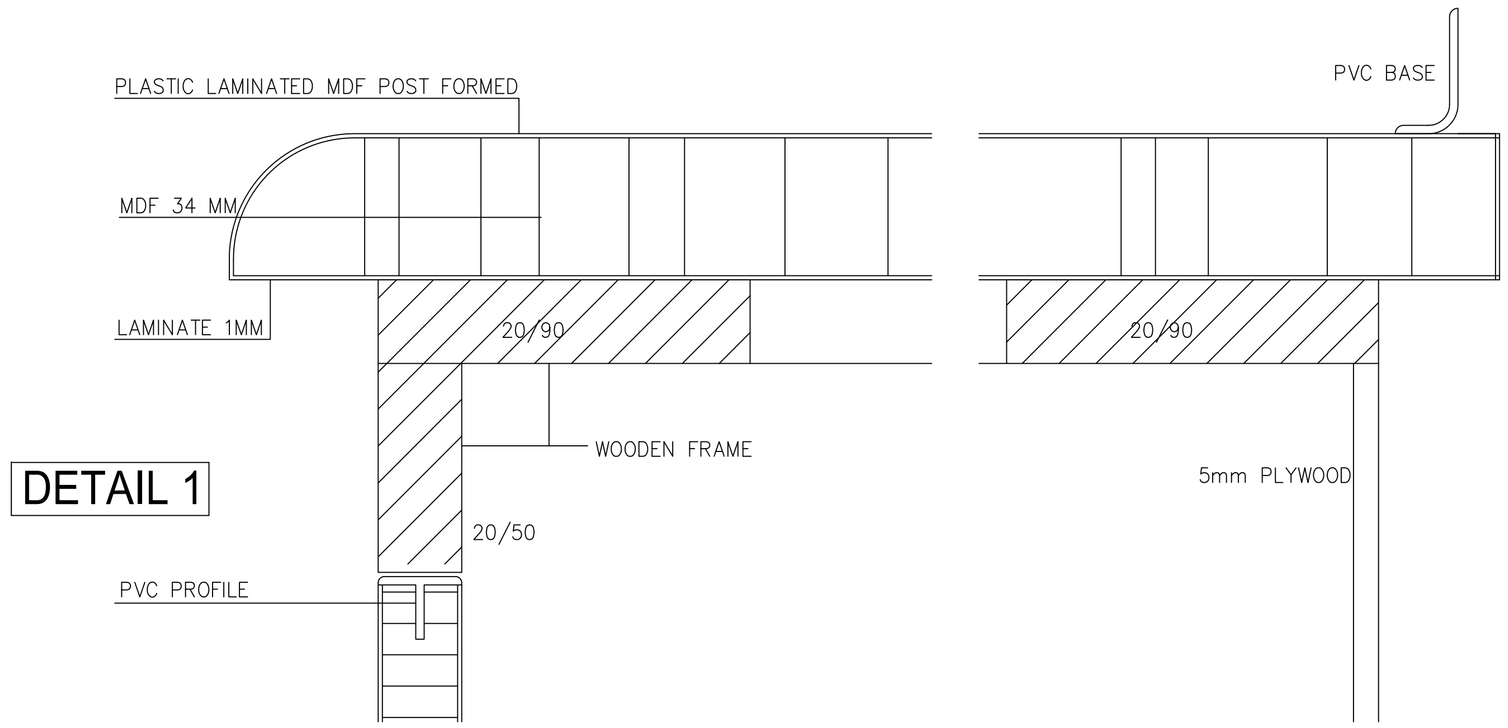

DETAIL 1

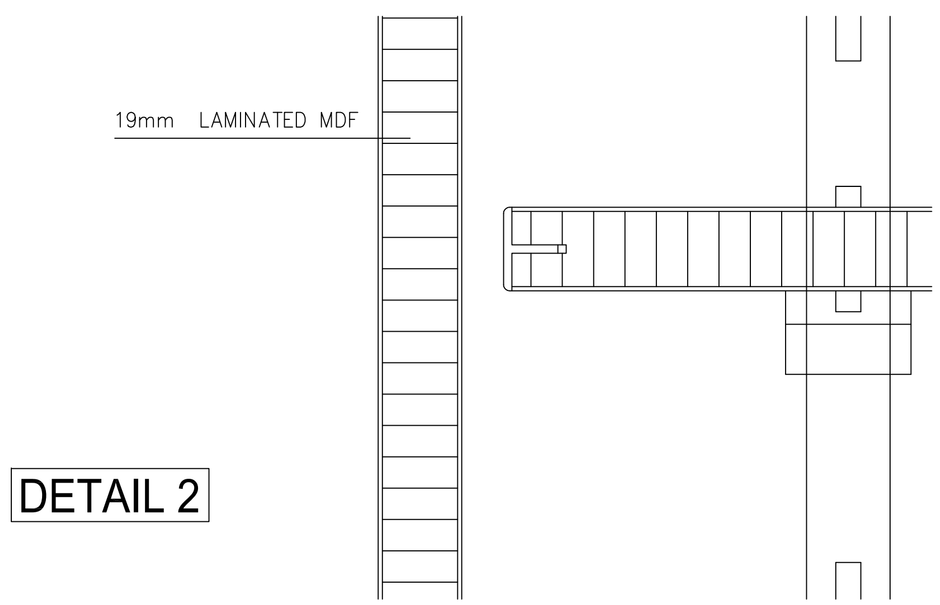

DETAIL 2

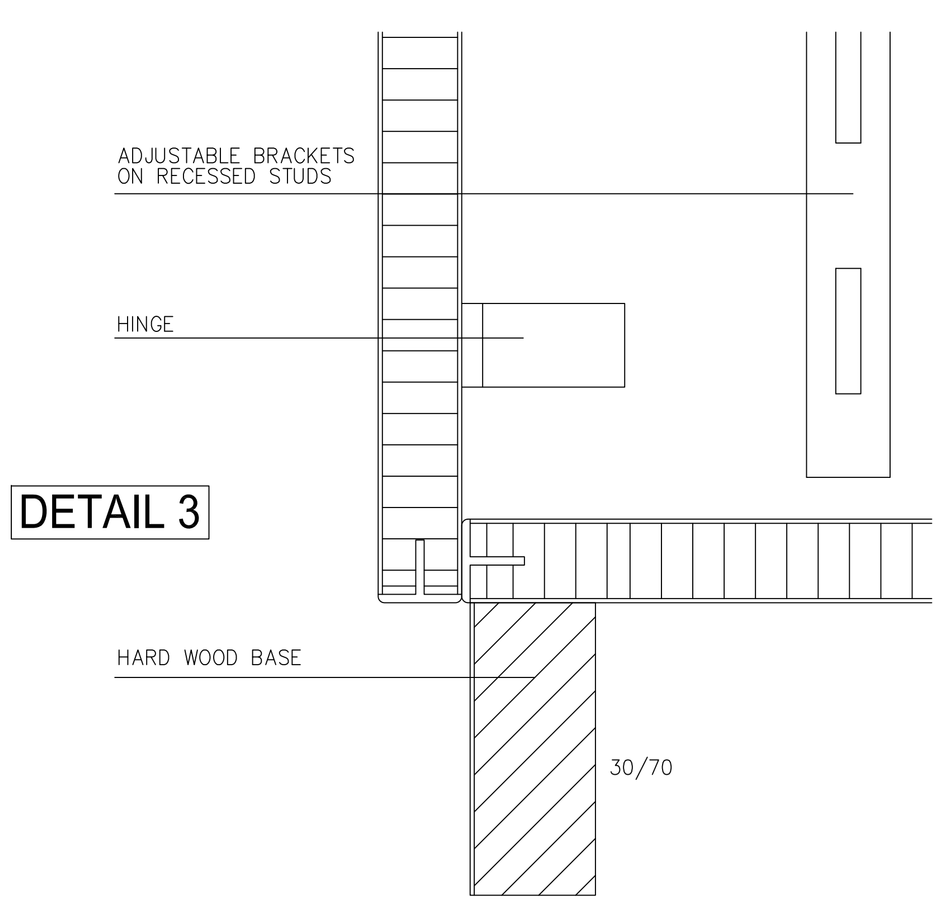

DETAIL 3

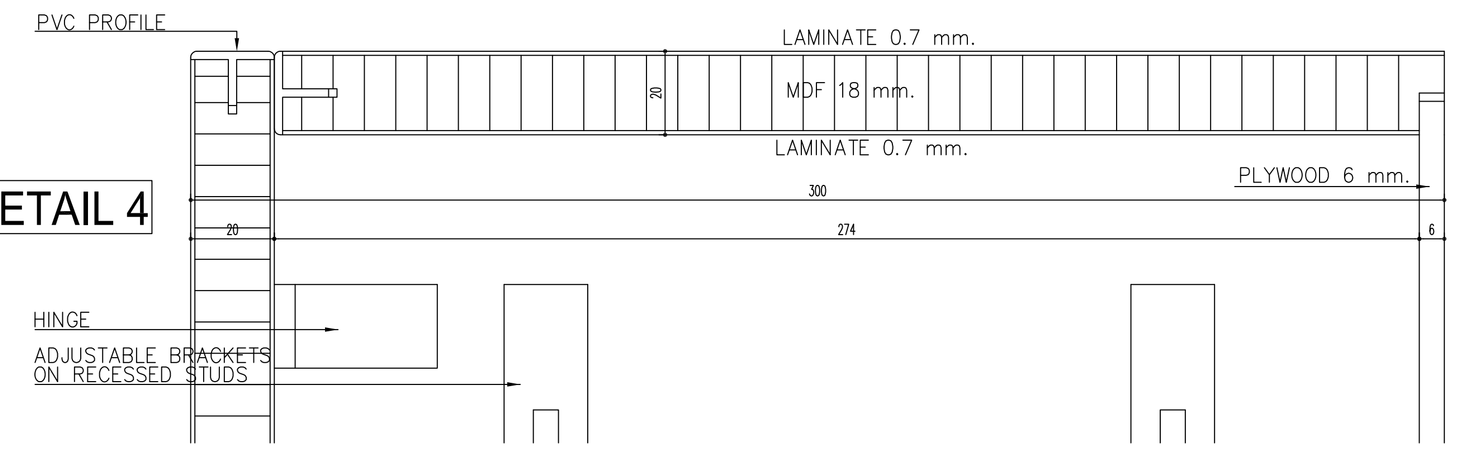

DETAIL 4

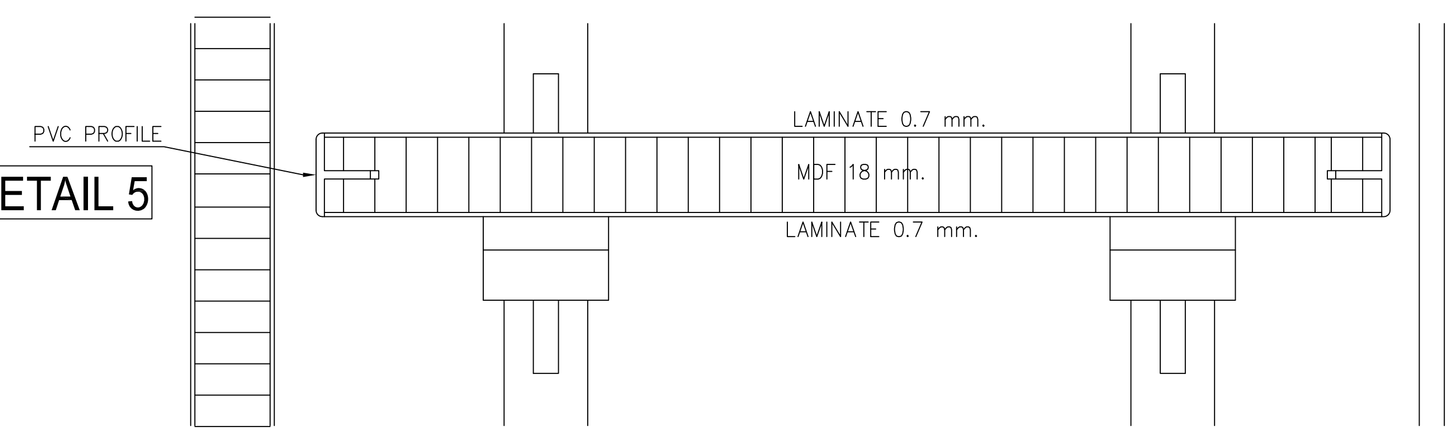

DETAIL 5

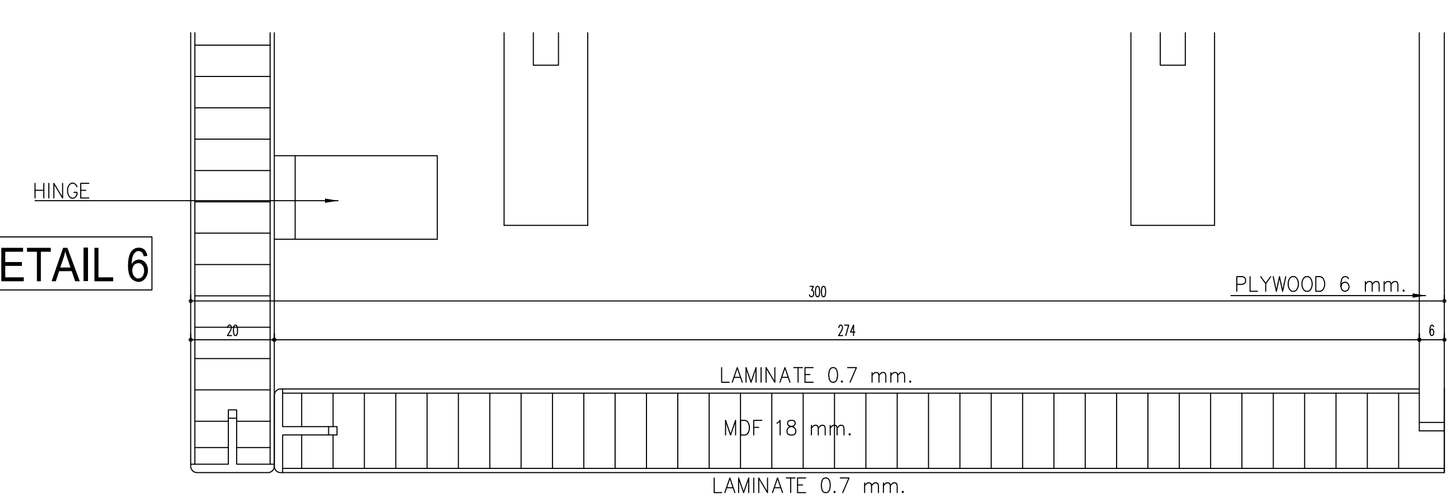

DETAIL 6

LABORATORY COUNTERS POINT DETAILS
SCALE 1:1

AS BUILT

SYMBOL	DESCRIPTION	DATE	APPR.
1	REVISED AS BUILT 100% DESIGNS	06.05.06 11.16.05	

DESIGNED BY : B.IRMAK
DATE : 06.05.2006
DWN BY : B.IRMAK
REVISED BY : IRMAK
CHK BY : G.IRMAK
FILE NO : DP01-HH-A18

US Army Corps of Engineers
Afghanistan Engineer District
Kabul, Afghanistan

KOLİN
CO.INC in association with
IRMAK, STAND, BESELI, DELTA OM
Design/Builder

DESIGN/BUILD
50 BED REGIONAL HOSPITAL
HERAT , AFGHANISTAN
DRAWING OF WORK AS-BUILT
LABORATORY COUNTERS POINT DETAILS

SHEET REFERENCE NUMBER :
DP01-HH-A18

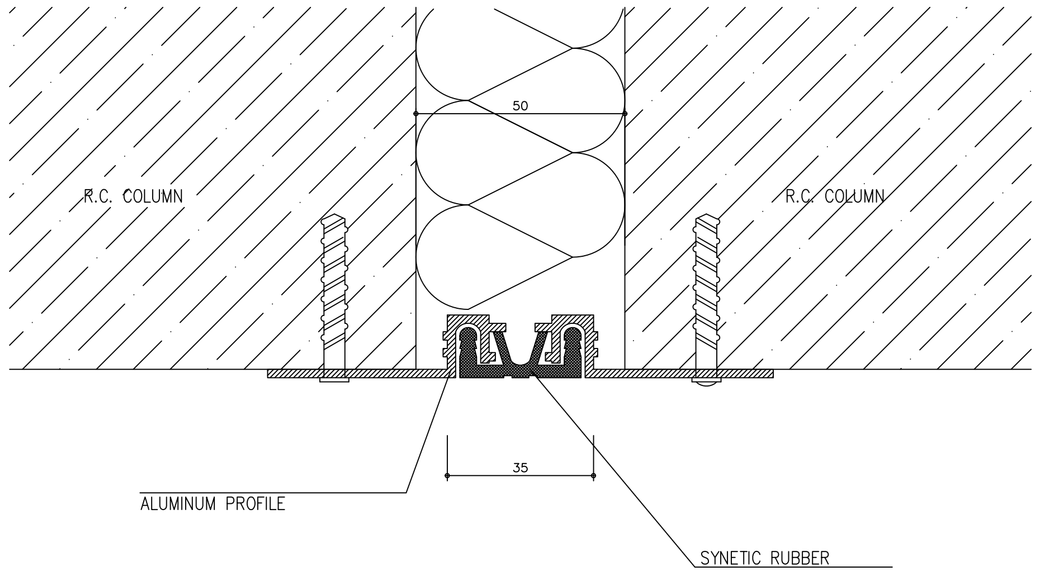

VERTICAL EXPANSION JOINTS
ON THE CONCRETE

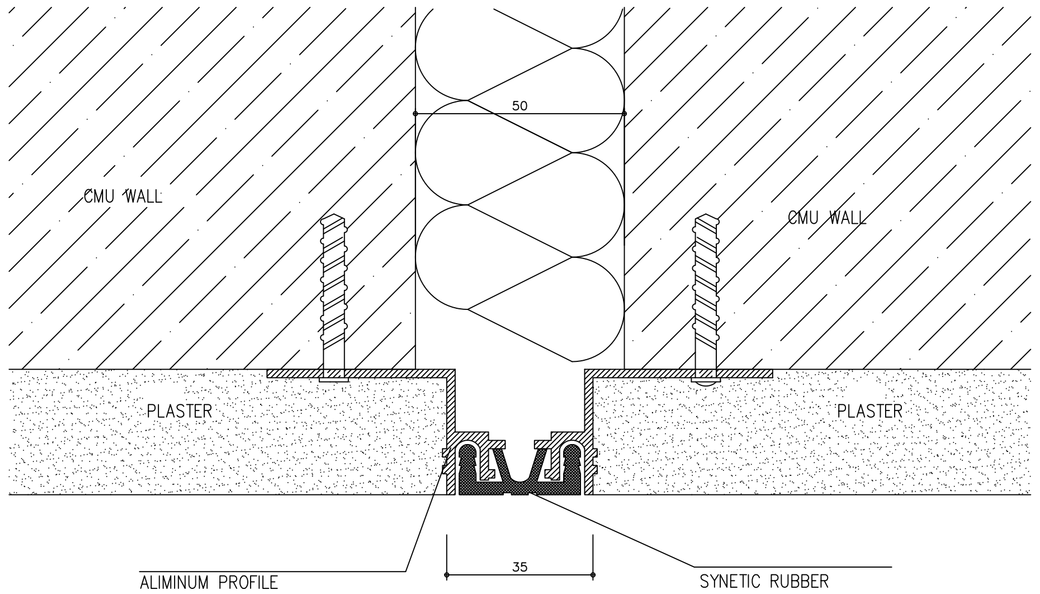

ON THE CMU WALLS (interior)

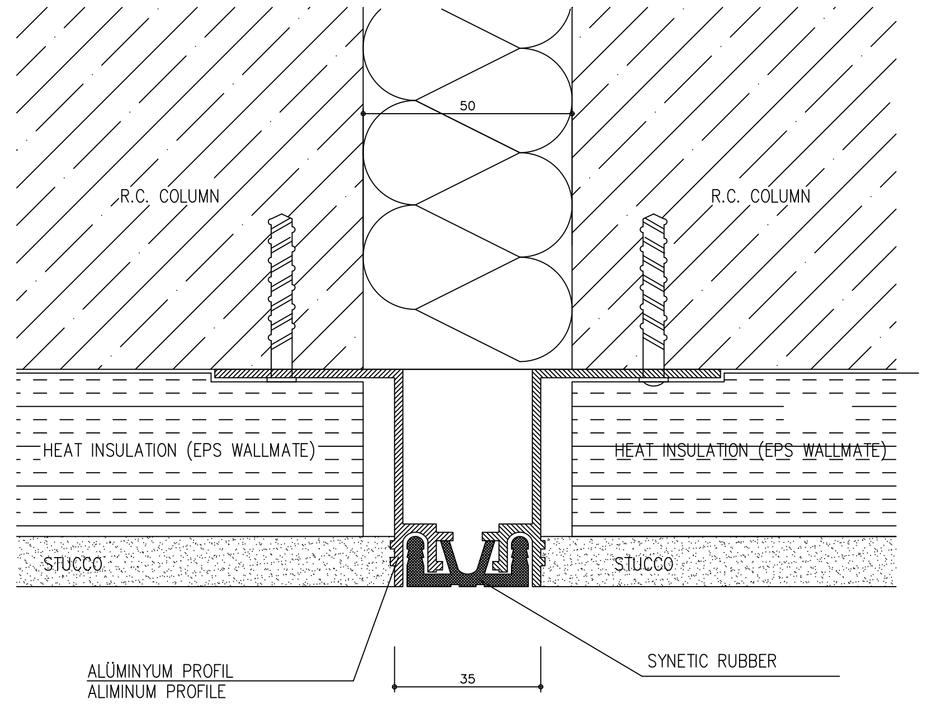

EXTERIOR WALLS

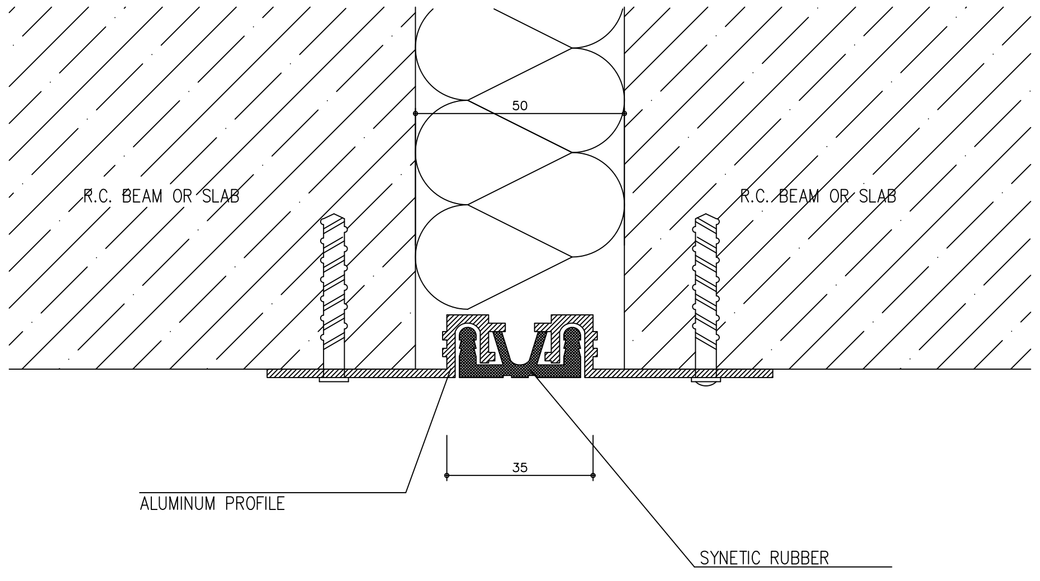

HORIZONTAL EXPANSION JOINTS
CEILING

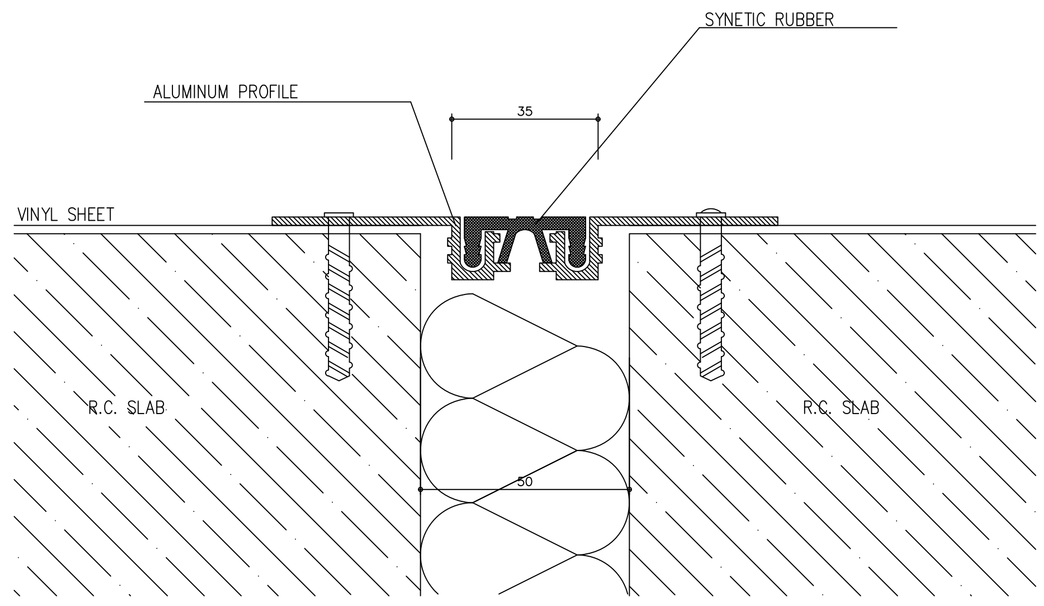

FLOOR

EXPANSION JOINT DETAILS
SCALE 1:1

AS BUILT

SYMBOL	DESCRIPTION	DATE	APR.
1	REVISED AS BUILT	06.05.06	
	100% DESIGNS	11.16.05	

DESIGNED BY : B.IRMAK
DATE : 06.05.2006
DWN BY : B.IRMAK
REVISED BY : IRMAK
CHK BY : G.IRMAK
FILE NO : DP01-HH-A19

US Army Corps of Engineers
Afghanistan Engineer District
Kabul, Afghanistan

KOLİN CO.INC in association with IRMAK, STAND, BESELI, DELTA OM
Design/Builder

DESIGN/BUILD
50 BED REGIONAL HOSPITAL
HERAT, AFGHANISTAN
DRAWING OF WORK AS-BUILT
EXPANSION JOINT DETAILS

SHEET REFERENCE NUMBER :
DP01-HH-A19

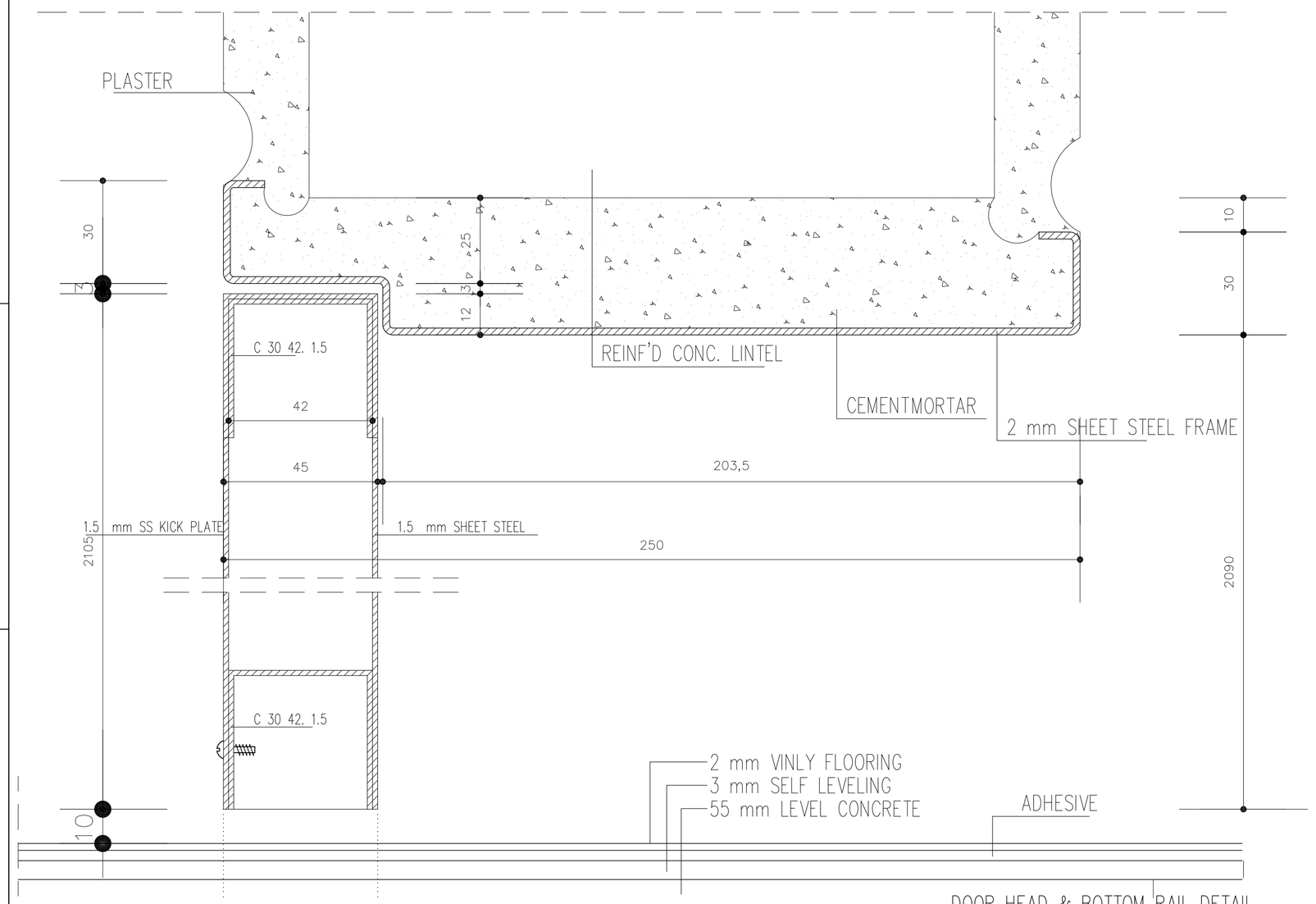

DOOR HEAD & BOTTOM RAIL DETAIL

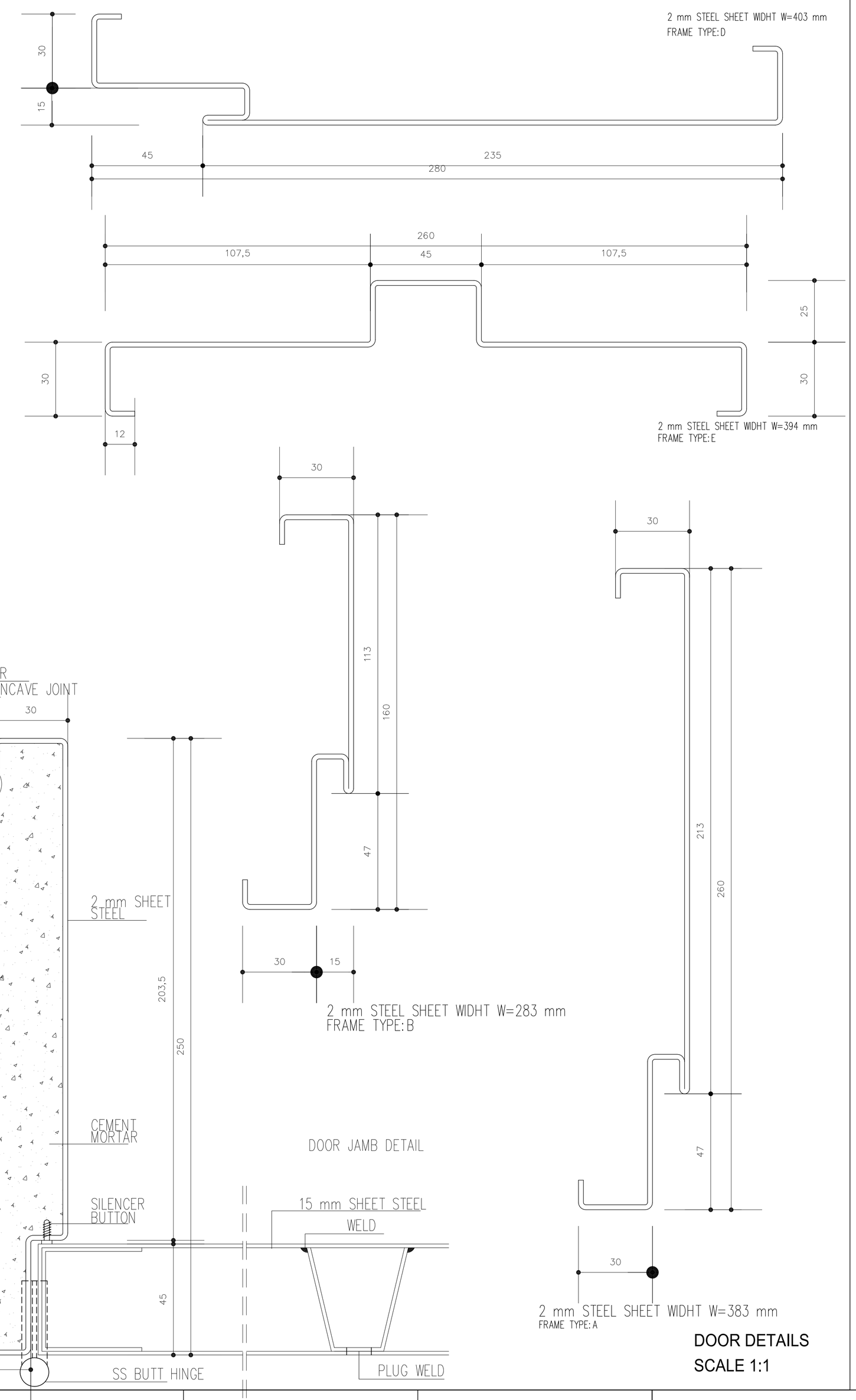

DOOR DETAILS
SCALE 1:1

ASBUILT

SYMBOL	DESCRIPTION	DATE	APPR.
1	REVISED AS BUILT	06.05.06	
	100% DESIGNS	11.16.05	

DESIGNED BY	B.IRMAK
DATE :	06.05.2006
DWN BY :	B.IRMAK
REVISED BY :	IRMAK
CHK BY :	G.IRMAK
FILE NO :	DP01-HH-A20

US Army Corps of Engineers
Afghanistan Engineer District
Kabul, Afghanistan

KOLİN IRMAK, STAND, BESELI, DELTA OM
CO.INC in association with Design/Build

DESIGN/BUILD
50 BED REGIONAL HOSPITAL
HERAT , AFGHANISTAN
DRAWING OF WORK AS-BUILT
DOOR DETAILS

SHEET REFERENCE NUMBER :
DP01-HH-A20

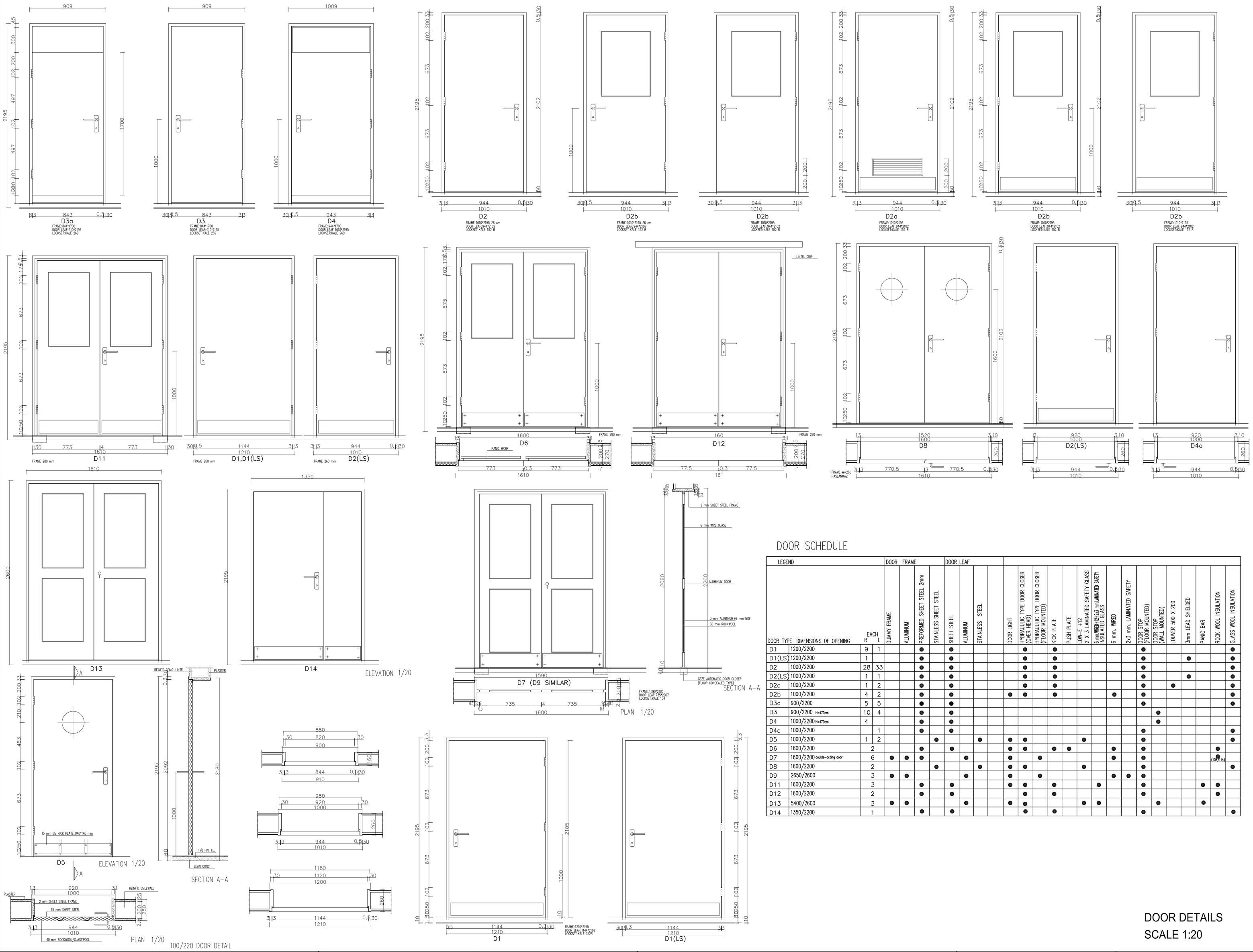

DOOR SCHEDULE

DOOR TYPE	DIMENSIONS OF OPENING	EACH R	EACH L	DOOR FRAME: DUMMY FRAME	DOOR FRAME: ALUMINUM	DOOR FRAME: PREFORMED SHEET STEEL 2mm	DOOR FRAME: STAINLESS SHEET STEEL	DOOR LEAF: SHEET STEEL	DOOR LEAF: ALUMINUM	DOOR LEAF: STAINLESS STEEL		DOOR LIGHT	HYDRAULIC TYPE DOOR CLOSER (OVER HEAD)	HYDRAULIC TYPE DOOR CLOSER (FLOOR MOUNTED)	KICK PLATE	PUSH PLATE	LOW-E +12 2 X 3 LAMINATED SAFETY GLASS	6 mm WIRED+12+2x3 mm LAMINATED SAFETY INSULATED GLASS	6 mm. WIRED	2x3 mm. LAMINATED SAFETY	DOOR STOP (FLOOR MOUNTED)	DOOR STOP (WALL MOUNTED)	LOUVER 500 X 200	3mm LEAD SHIELDED	PANIC BAR	ROCK WOOL INSULATION	GLASS WOOL INSULATION
D1	1200/2200	9	1			●		●					●		●						●						●
D1(LS)	1200/2200	1				●		●					●		●						●			●			●
D2	1000/2200	28	33			●		●					●		●						●						●
D2(LS)	1000/2200	1	1			●		●					●		●						●			●			●
D2a	1000/2200	1	2			●		●					●		●						●		●				●
D2b	1000/2200	4	2			●		●				●	●		●				●		●						●
D3a	900/2200	5	5			●		●													●						●
D3	900/2200 H=170cm	10	4			●		●														●					
D4	1000/2200 H=170cm	4				●		●														●					
D4a	1000/2200		1			●		●													●						●
D5	1000/2200	1	2				●			●		●	●				●				●						●
D6	1600/2200		2			●		●				●	●		●	●			●		●					●	
D7	1600/2200 double-acting door		6	●	●	●			●			●		●					●		●					(100/114)	
D8	1600/2200		2				●			●		●	●				●				●						●
D9	2650/2600		3	●	●				●			●		●					●	●	●						
D11	1600/2200		3			●		●				●	●		●			●			●				●		
D12	1600/2200		2			●		●					●		●						●				●		
D13	5400/2600		3	●	●				●			●	●				●	●				●			●		
D14	1350/2200		1			●		●					●		●						●						●

DOOR DETAILS
SCALE 1:20

AS BUILT

SYMBOL	DESCRIPTION	DATE	APR.
1	REVISED AS BUILT	06.05.06	
1	100% DESIGNS	11.16.05	

DESIGNED BY : B.IRMAK
DATE : 06.05.2006
DWN BY : B.IRMAK
REVISED BY : IRMAK
CHK BY : G.IRMAK
FILE NO : DP01-HH-A21

US Army Corps of Engineers
Afghanistan Engineer District
KABUL, Afghanistan

KOLİN
COINC in association with
IRMAK, STAND, BESELI, DELTA OM
Design/Build

DESIGN/BUILD
50 BED REGIONAL HOSPITAL
HERAT , AFGHANISTAN
DRAWING OF WORK AS-BUILT
DOOR DETAILS

SHEET REFERENCE NUMBER :
DP01-HH-A21

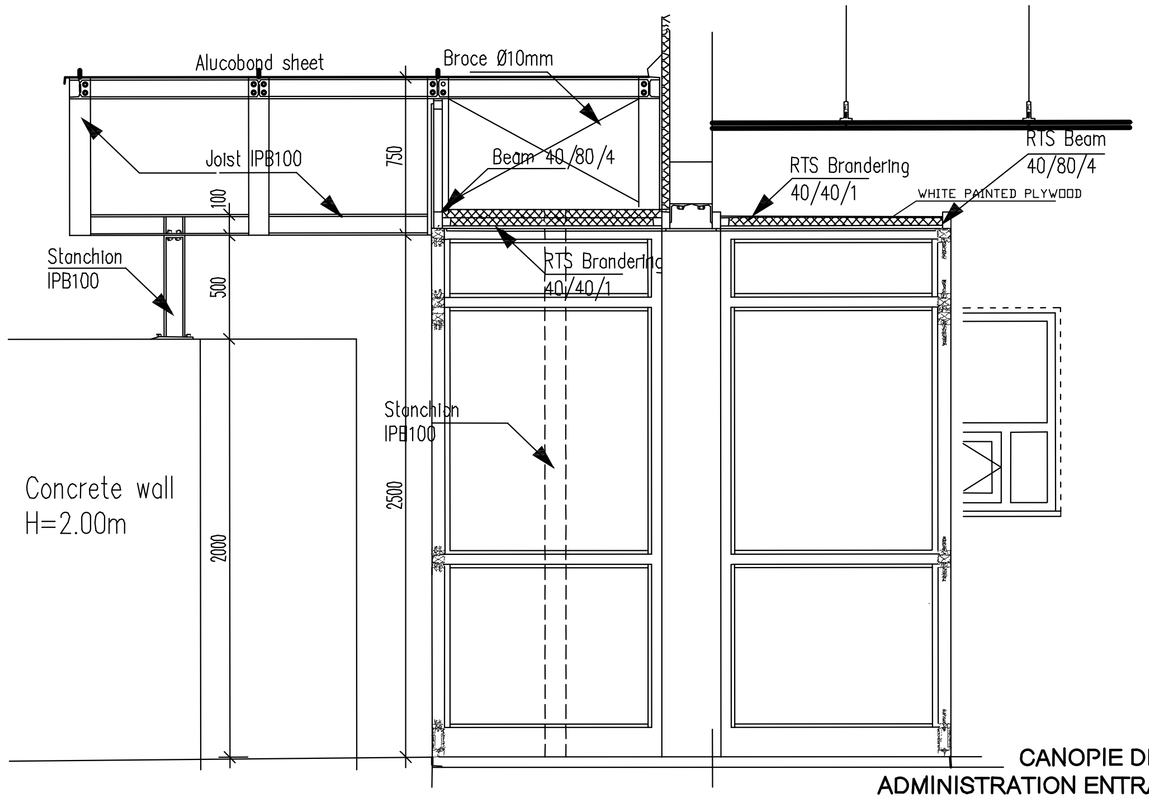

CANOPIE DETAIL
ADMINISTRATION ENTRANCE
SECTION
scale 1/20

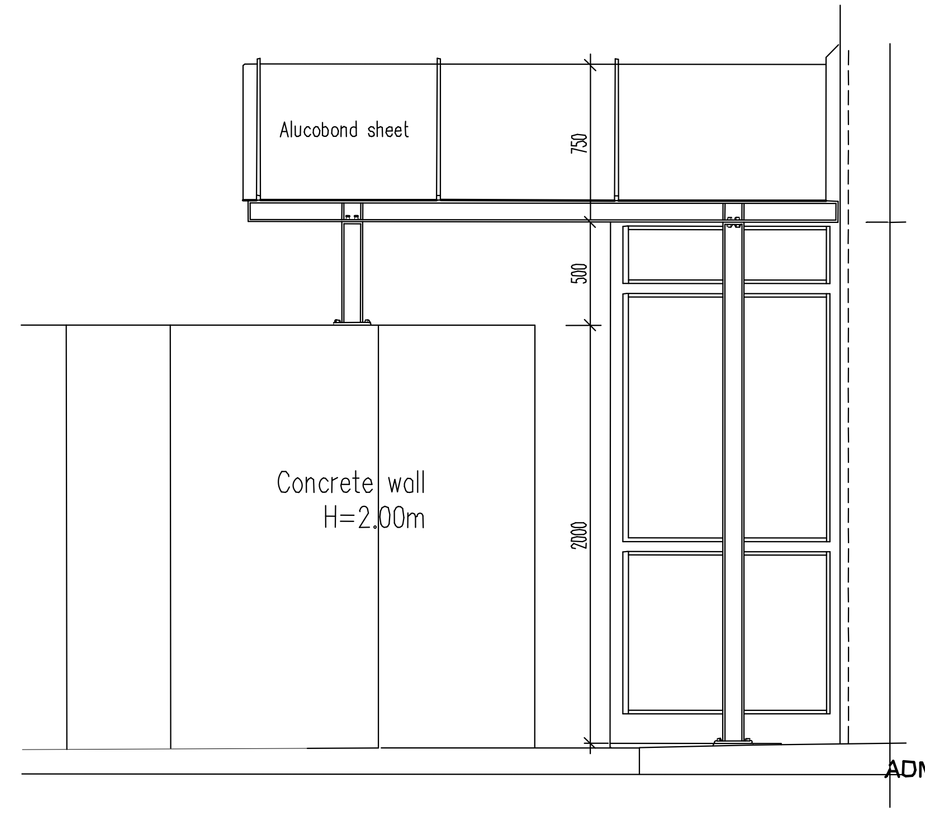

CANOPIE DETAIL
ADMINISTRATION ENTRANCE
NORTH ELEVATION
scale 1/20

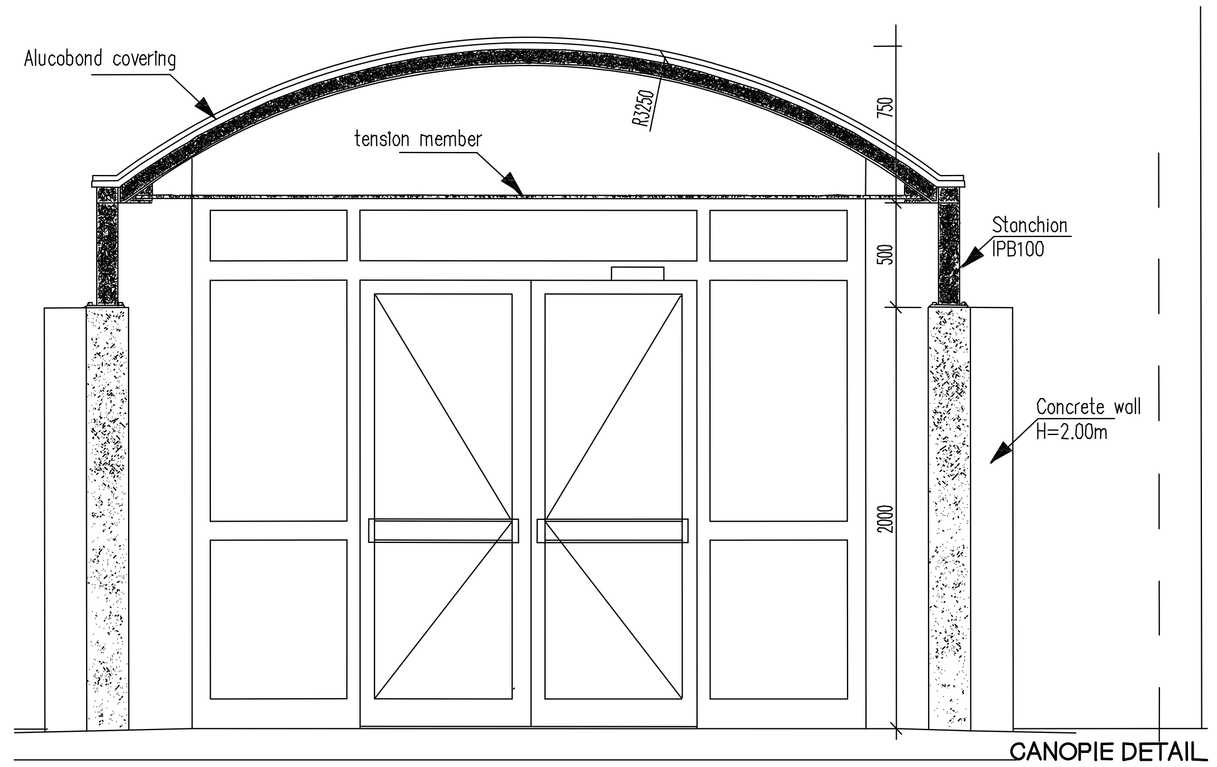

CANOPIE DETAIL
ADMINISTRATION ENTRANCE
EAST ELEVATION
scale 1/20

AS BUILT

SYMBOL	DESCRIPTION	DATE	APR.
1	REVISED AS BUILT	06.05.06	
	100% DESIGNS	11.16.05	

DESIGNED BY B.IRMAK	DATE : 06.05.2006
DWN BY : B.IRMAK	REVISED BY : IRMAK
CHK BY : G.IRMAK	FILE NO : DP01-HH-A22

US Army Corps of Engineers
Afghanistan Engineer District
Kabul, Afghanistan

KOLİN
CO.INC in association with
IRMAK, STAND, BESELI, DELTA DM
Design/Builder

DESIGN/BUILD
50 BED REGIONAL HOSPITAL
HERAT , AFGHANISTAN
DRAWING OF WORK AS-BUILT
CANOPY DETAILS

SHEET
REFERENCE
NUMBER :

DP01-HH-A22

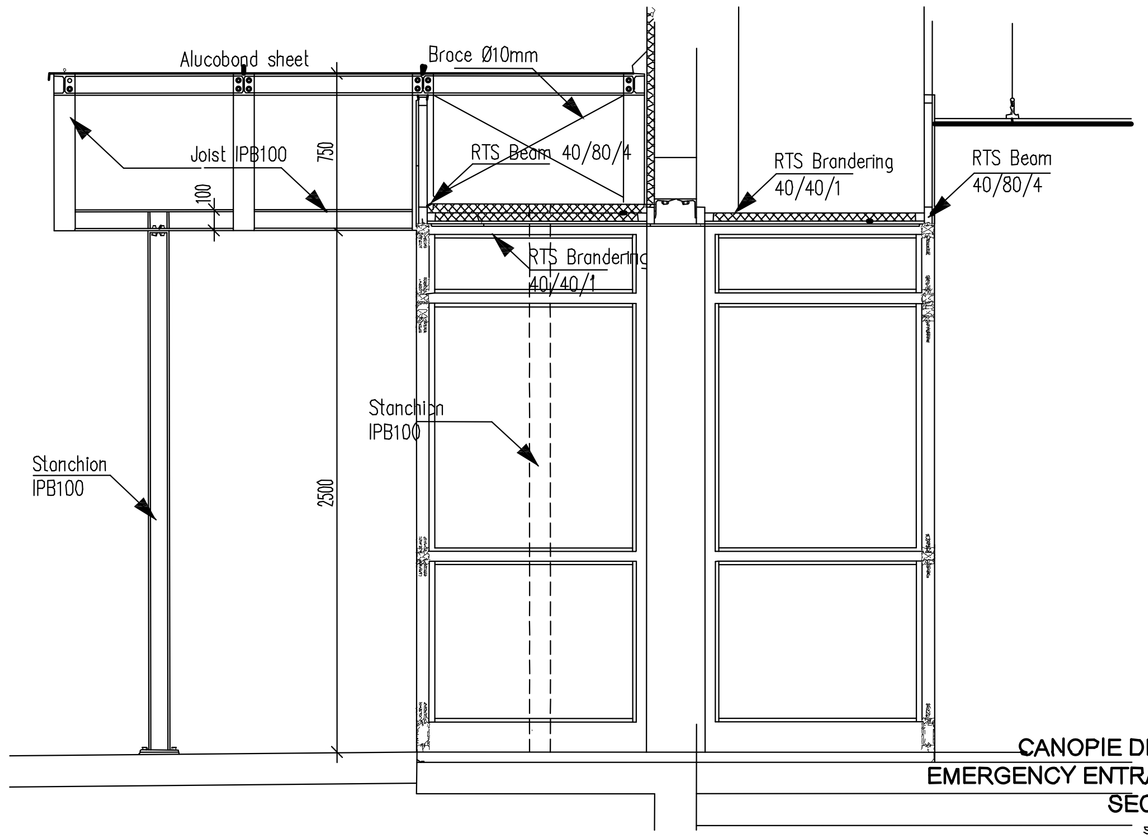

CANOPIE DETAIL
EMERGENCY ENTRANCE
SECTION
scale 1/20

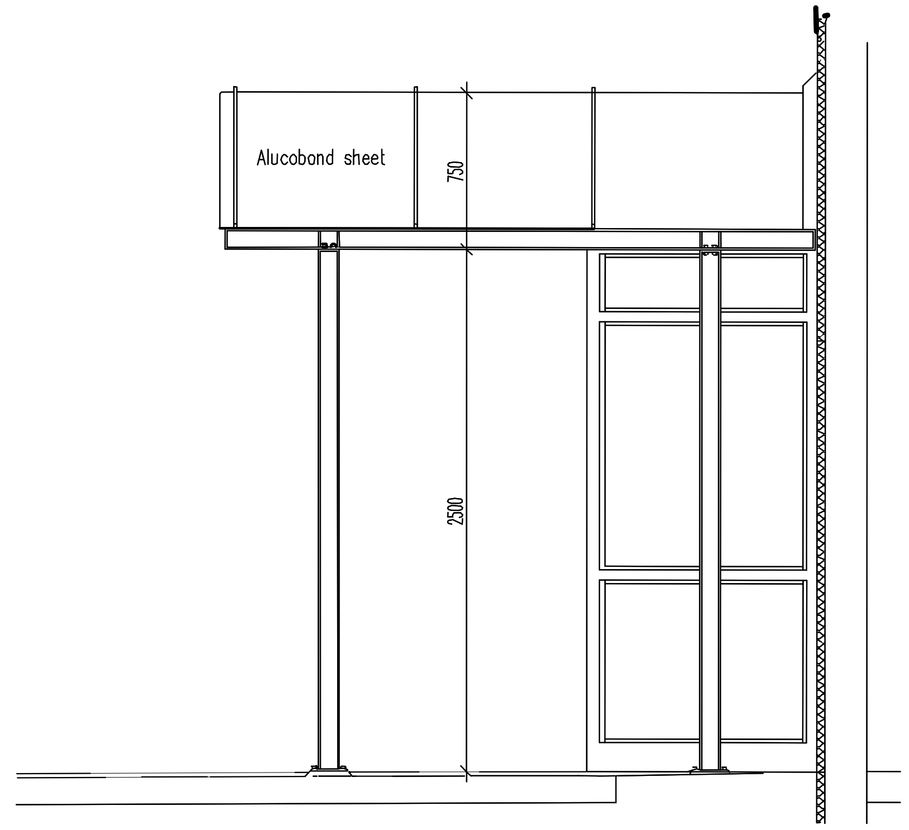

CANOPIE DETAIL
EMERGENCY ENTRANCE
NORTH ELEVATION
scale 1/20

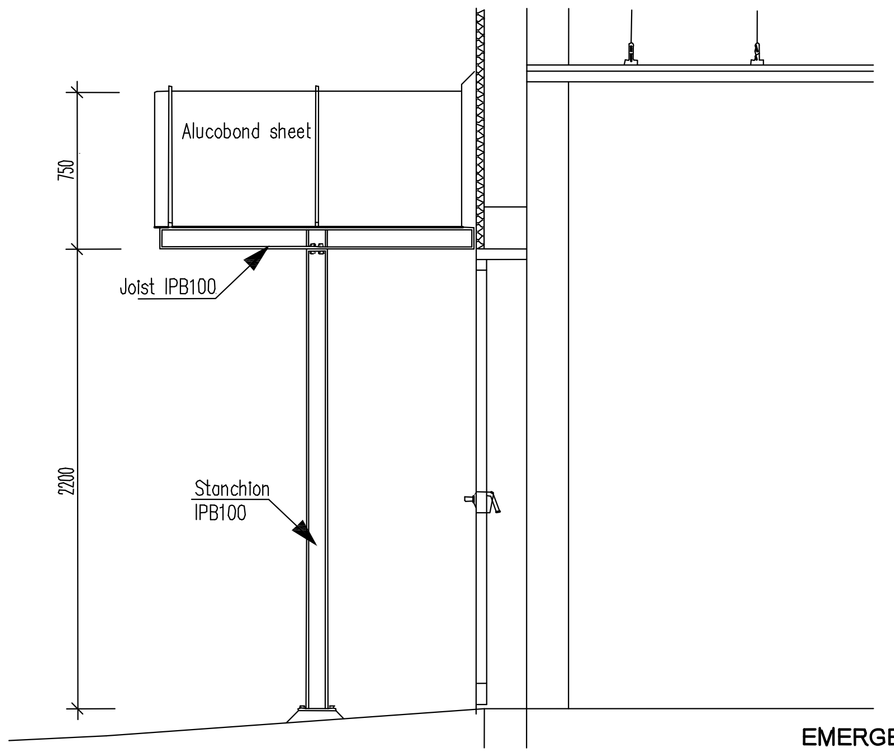

CANOPIE DETAIL
EMERGENCY EXIT SOUTH
EAST ELEVATION
scale 1/20

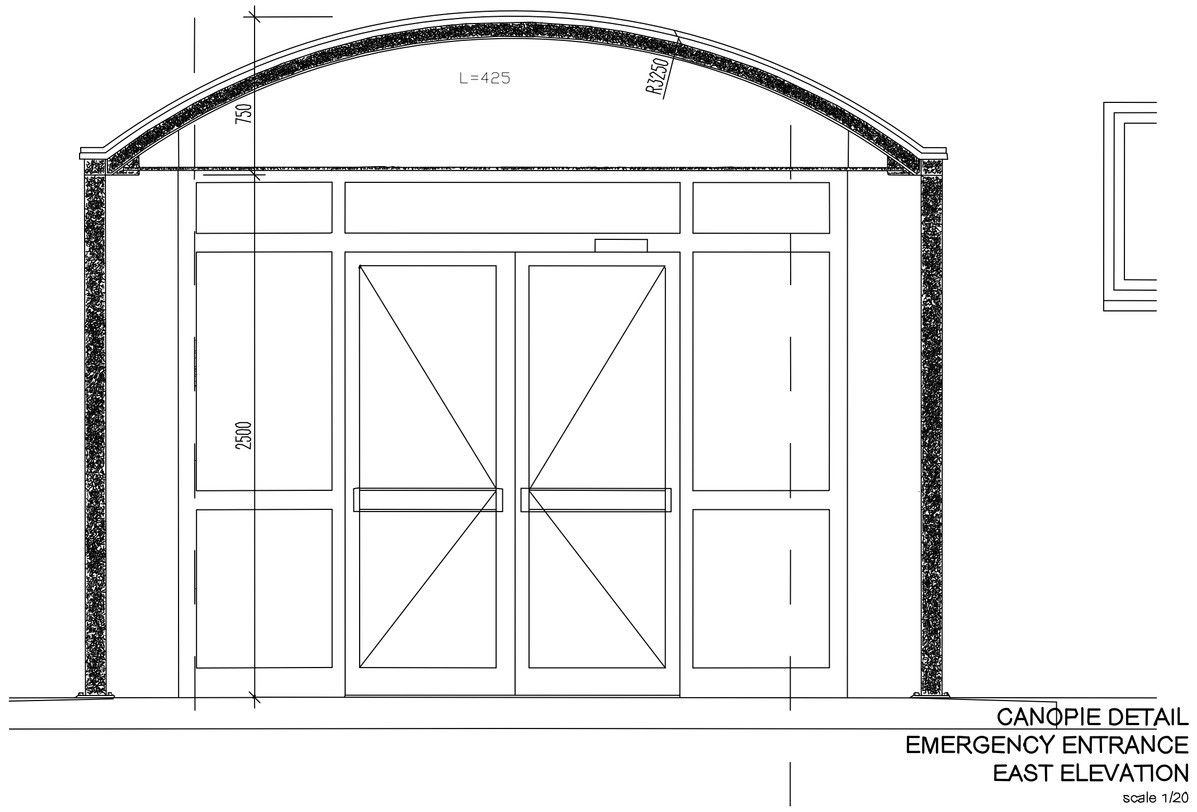

CANOPIE DETAIL
EMERGENCY ENTRANCE
EAST ELEVATION
scale 1/20

AS BUILT

SYMBOL	DESCRIPTION	DATE	APPR.
1	REVISED AS BUILT 100% DESIGNS	06.05.06 11.16.05	

DESIGNED BY B.IRMAK	DATE : 06.05.2006
DWN BY : B.IRMAK	REVISED BY : IRMAK
CHK BY : G.IRMAK	FILE NO : DP01-HH-A23

US Army Corps of Engineers
Afghanistan Engineer District
Kabul, Afghanistan

KOLİN
CO.INC in association with
Designer/Builder

IRMAK, STAND, BESELI, DELTA DM

DESIGN/BUILD
50 BED REGIONAL HOSPITAL
HERAT , AFGHANISTAN
DRAWING OF WORK AS-BUILT
CANOPY DETAILS

SHEET REFERENCE NUMBER :
DP01-HH-A23

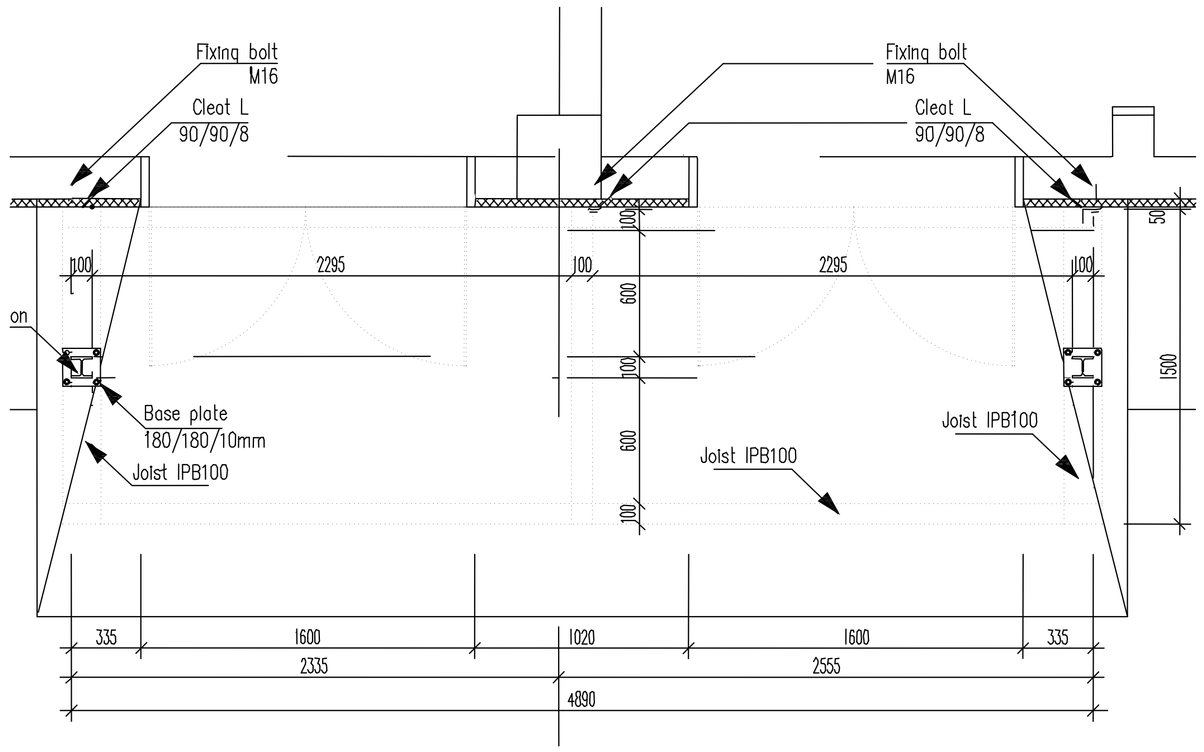

CANOPIE DETAIL
EMERGENCY EXIT SOUTH
PLAN
scale 1/20

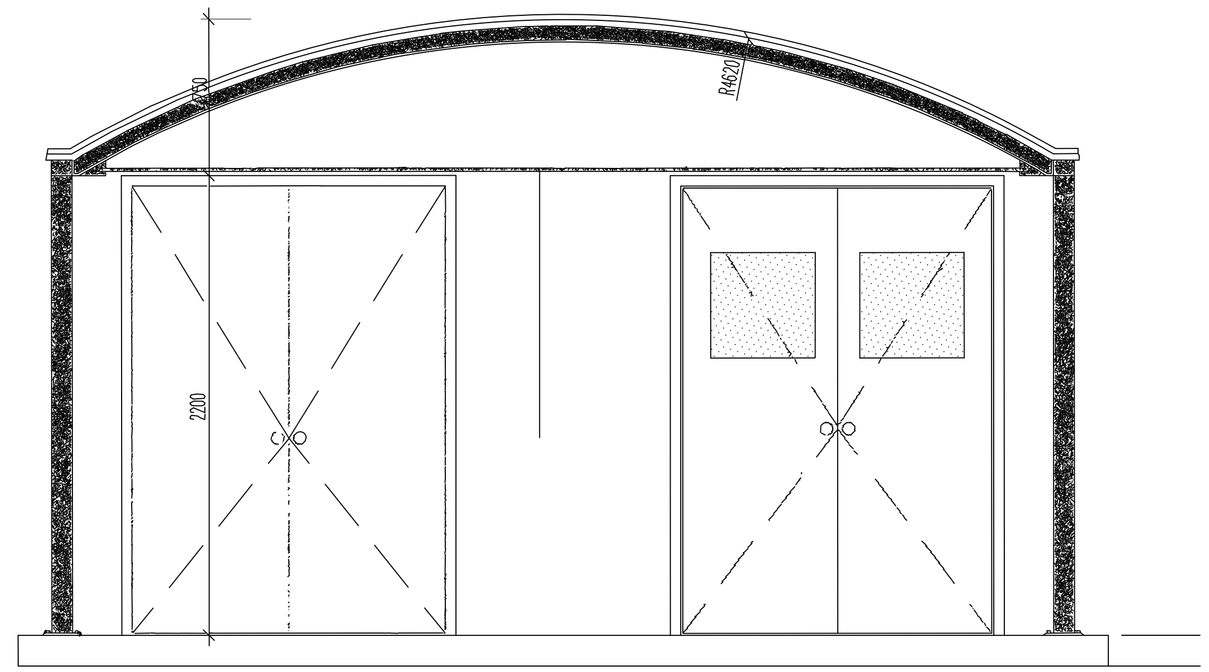

CANOPIE DETAIL
EMERGENCY EXIT SOUTH
SOUTH ELEVATION
scale 1/20

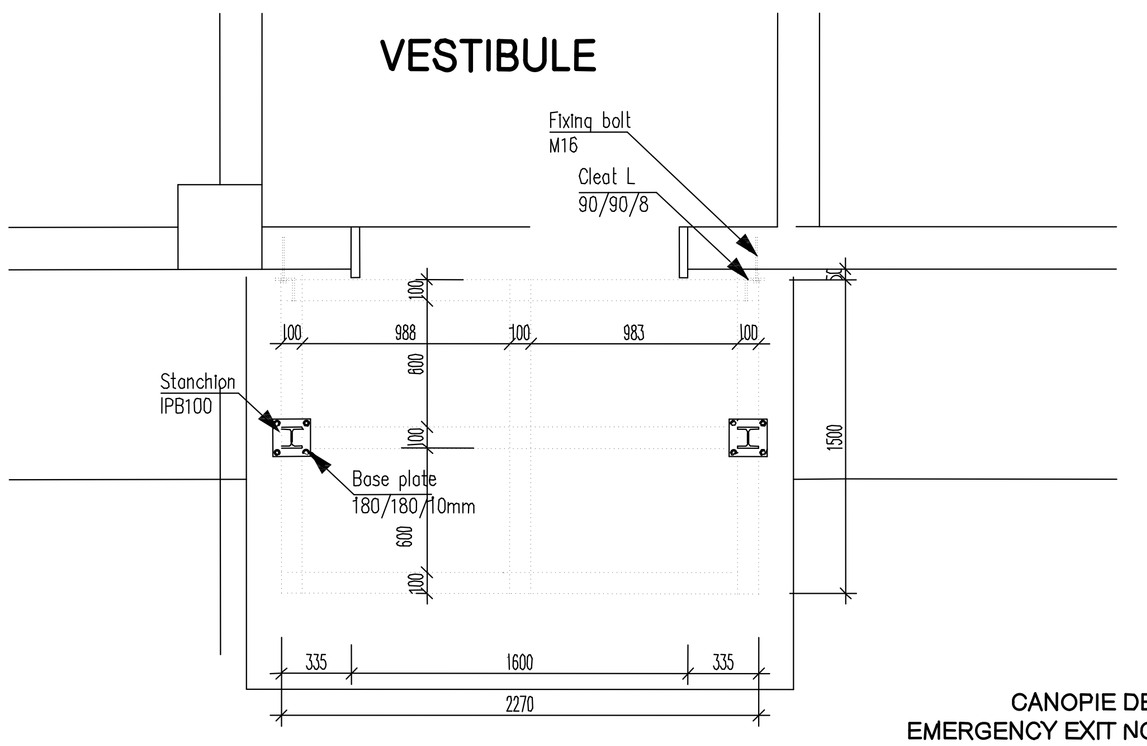

CANOPIE DETAIL
EMERGENCY EXIT NORTH
PLAN
scale 1/20

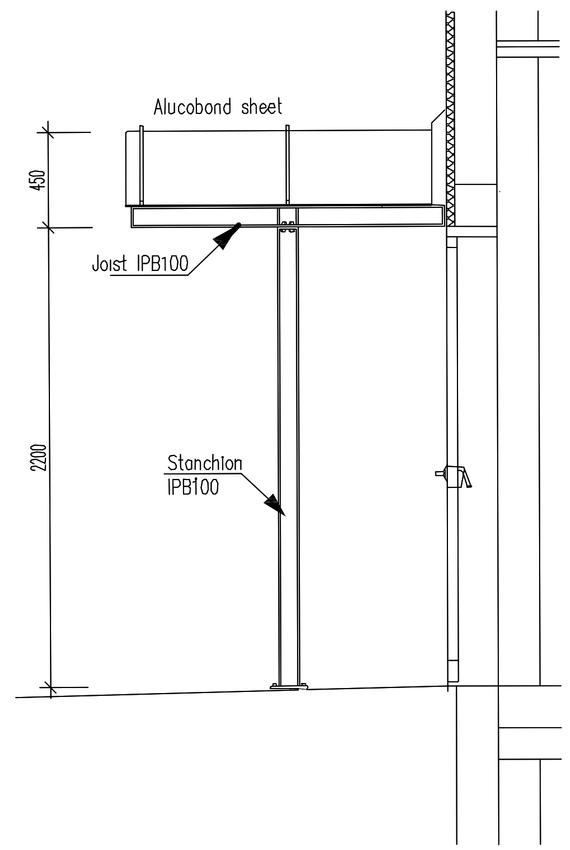

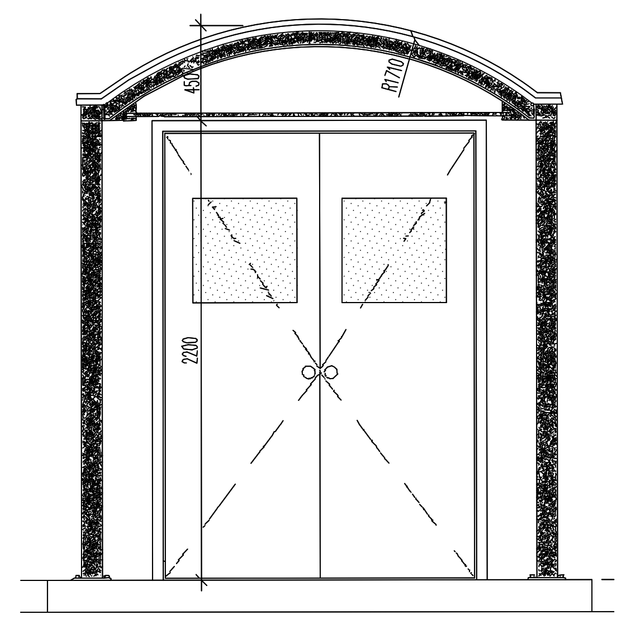

CANOPIE DETAIL
EMERGENCY EXIT NORTH
WEST & NORTH ELEVATIONS
scale 1/20

AS BUILT

SYMBOL	DESCRIPTION	DATE	APR.
1	REVISED AS BUILT	06.05.06	
	100% DESIGNS	11.16.05	

DESIGNED BY B.IRMAK	DATE : 06.05.2006
DWN BY : B.IRMAK	REVISED BY : IRMAK
CHK BY : G.IRMAK	FILE NO : DP01-HH-A24

US Army Corps of Engineers
Afghanistan Engineer District
Kabul, Afghanistan

KOLİN
CO.INC in association with
Designer/Builder
IRMAK, STAND, BESELI, DELTA DM

DESIGN/BUILD
50 BED REGIONAL HOSPITAL
HERAT , AFGHANISTAN
DRAWING OF WORK AS-BUILT
CANOPY DETAILS

SHEET
REFERENCE
NUMBER :

DP01-HH-A24

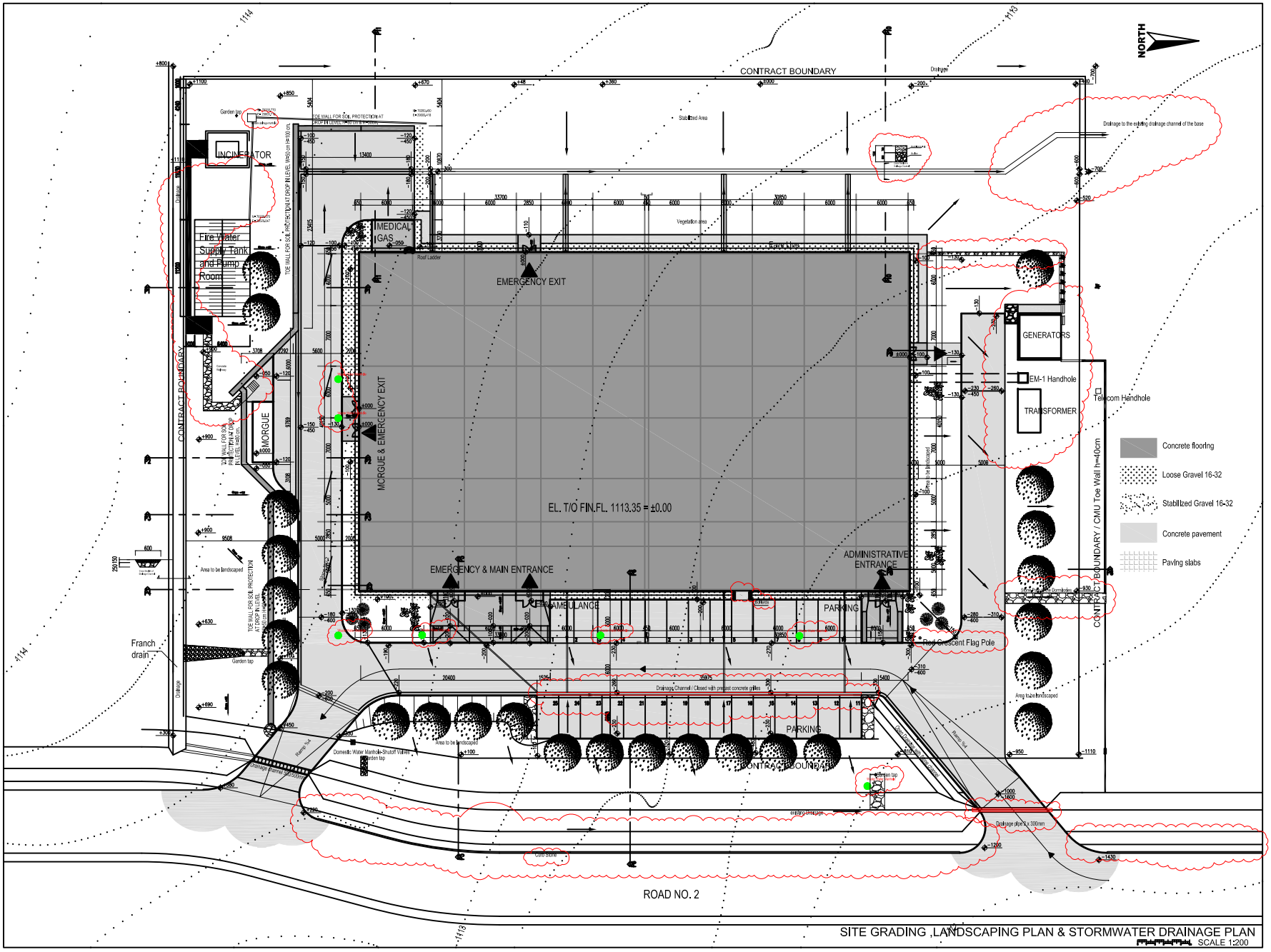

SITE GRADING ,LANDSCAPING PLAN & STORMWATER DRAINAGE PLAN

SCALE 1:200

ASBUILT

SYMBOL	DESCRIPTION	DATE	APR.
1	REVISED AS BUILT 100% DESIGNS	06.05.06 11.16.05	

US Army Corps of Engineers
Afghanistan Engineer District
Kabul, Afghanistan

KOLIN
IRMAK, STAND, BESEL, DELTA OM

DESIGNED BY : B.IRMAK
DATE : 06.05.2006
DWN BY : B.IRMAK
SUBMITTED BY: IRMAK
CHK BY : G.IRMAK
FILE NO : DP01-HH-A01

DESIGN/BUILD
50 BED REGIONAL HOSPITAL
HERAT , AFGHANISTAN
DRAWING OF WORK AS-BUILT
SITE GRADING & LANDSCAPING PLAN

SHEET REFERENCE NUMBER :
DP01-HH-A01

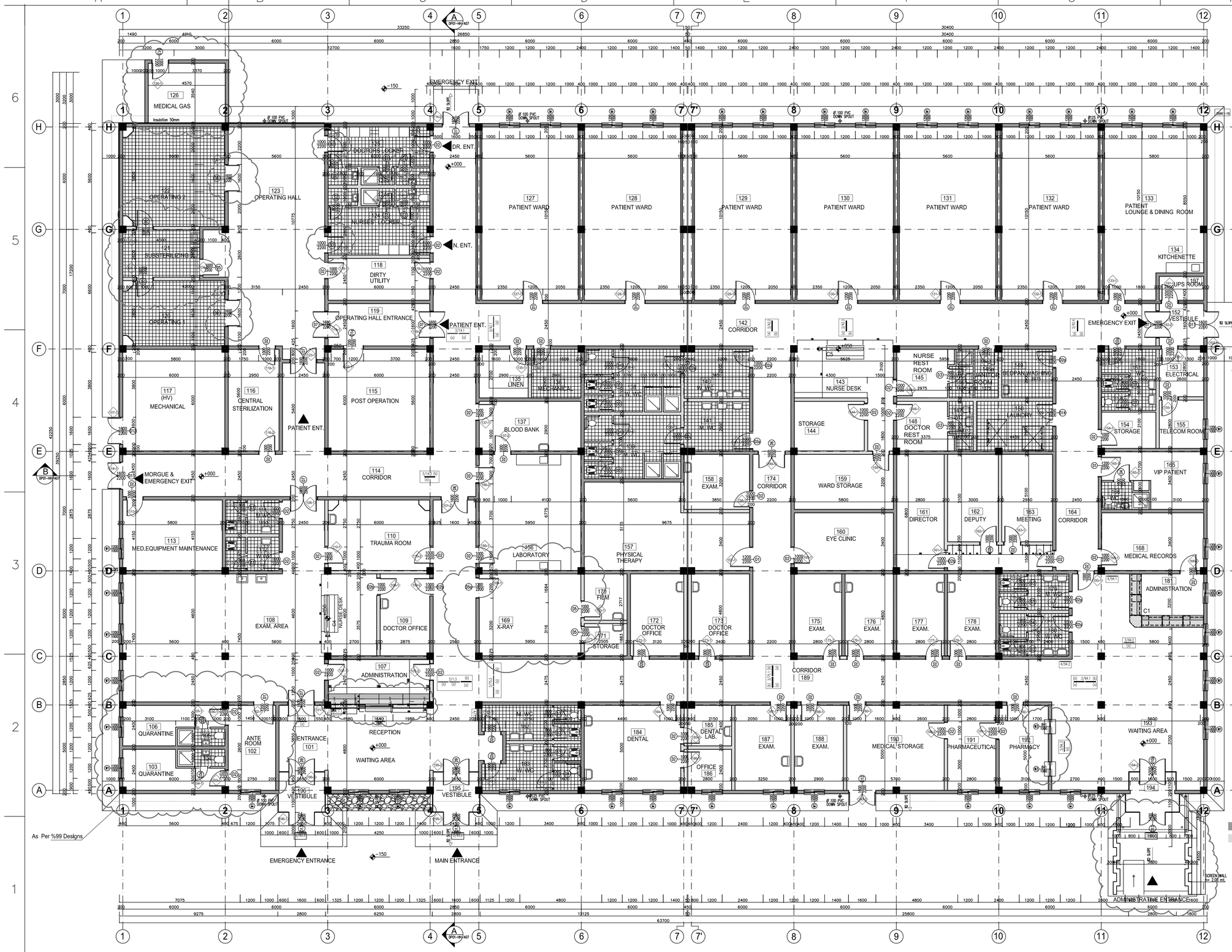

FLOOR PLAN

SYMBOL	DESCRIPTION	DATE	APR.
1	REVISED AS BUILT	06.05.06	
2	100X DESIGNS	11.16.05	

DESIGNED BY : B.IRMAK — DATE : 06.05.2006
DWN BY : B.IRMAK — REVISED BY : IRMAK
CHK BY : G.IRMAK — FILE NO : DP01–HH–A02

US Army Corps of Engineers
Afghanistan Engineer District
Kabul, Afghanistan

KOLİN
CO.INC in association with
IRMAK, STAND, BESELI, DELTA OM
Design/Builder

DESIGN/BUILD
50 BED REGIONAL HOSPITAL
HERAT, AFGHANISTAN
DRAWING OF WORK AS–BUILT
FLOOR PLAN

SHEET REFERENCE NUMBER :
DP01–HH–A02

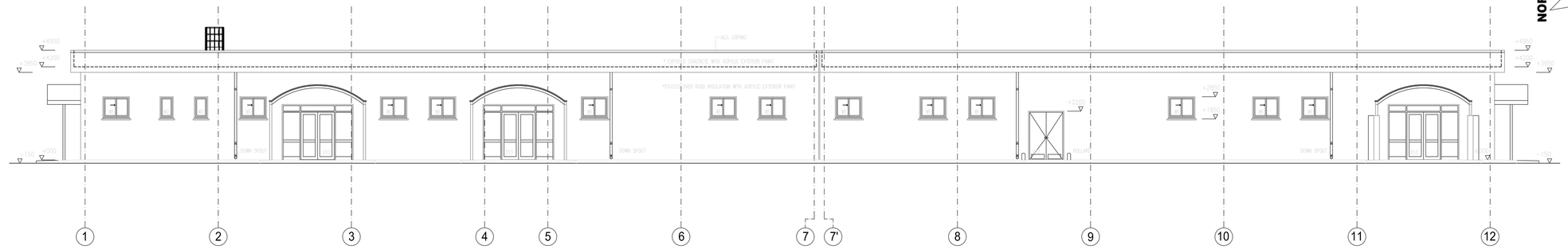

EAST ELEVATION
SCALE 1:100

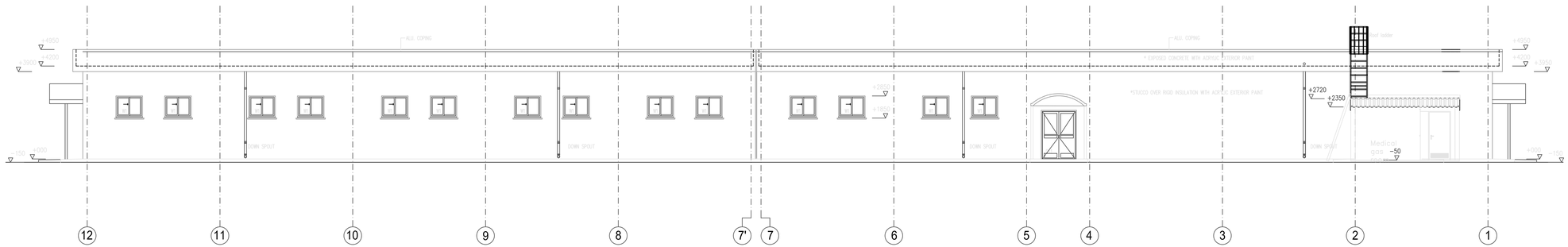

WEST ELEVATION
SCALE 1:100

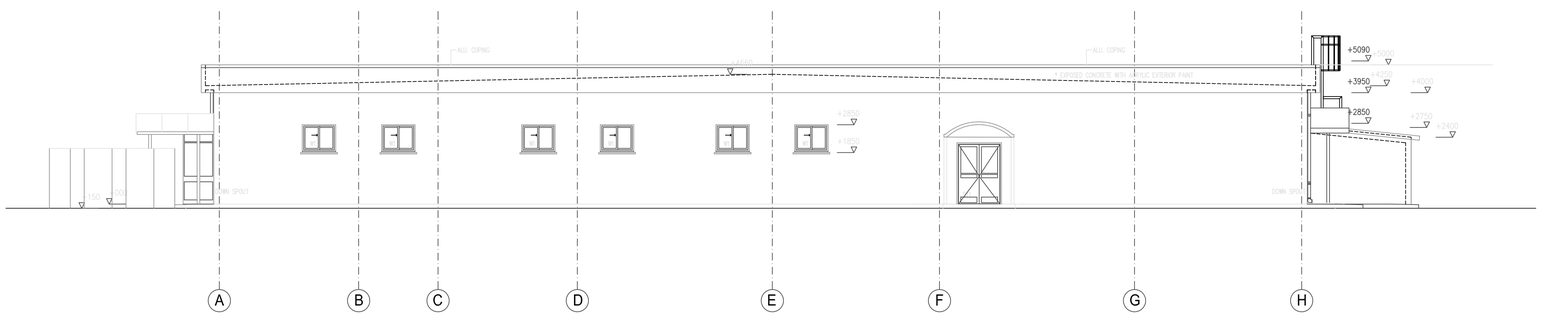

NORTH ELEVATION
SCALE 1:100

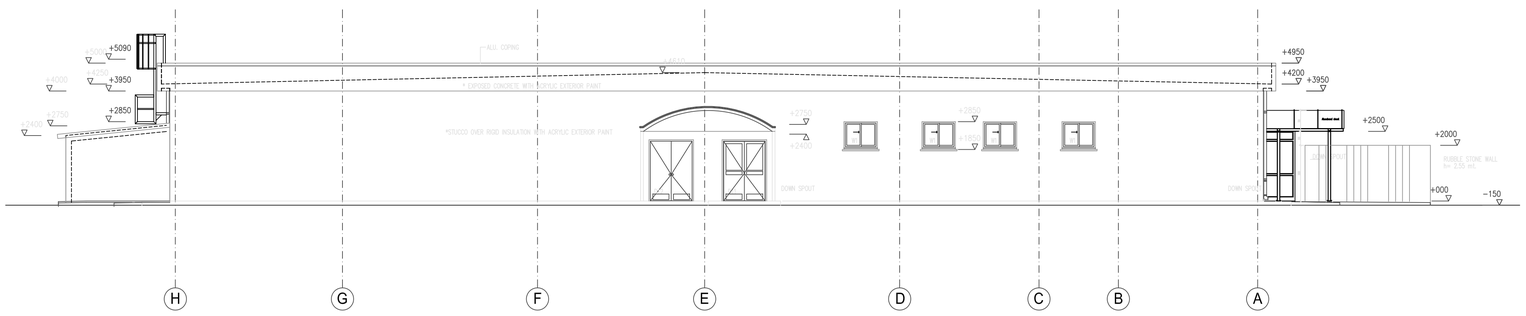

SOUTH ELEVATION
SCALE 1:100

NORTH

AS BUILT

SYMBOL	DESCRIPTION	DATE	APR.
1	REVISED AS BUILT 100% DESIGNS	06.05.06 11:16:05	

DESIGNED BY : B.IRMAK	DATE : 06.05.2006		
DWN BY : B.IRMAK	REVISED BY : IRMAK		
CHK BY : G.IRMAK	FILE NO : DP01-HH-A03		

US Army Corps of Engineers
Afghanistan Engineer District
Kabul, Afghanistan

KOLİN
CO.INC in association with
IRMAK, STAND, BESELI, DELTA OM
Design/Builder

DESIGN/BUILD
50 BED REGIONAL HOSPITAL
HERAT , AFGHANISTAN
DRAWING OF WORK AS-BUILT
ELEVATIONS

SHEET REFERENCE NUMBER :
DP01-HH-A03

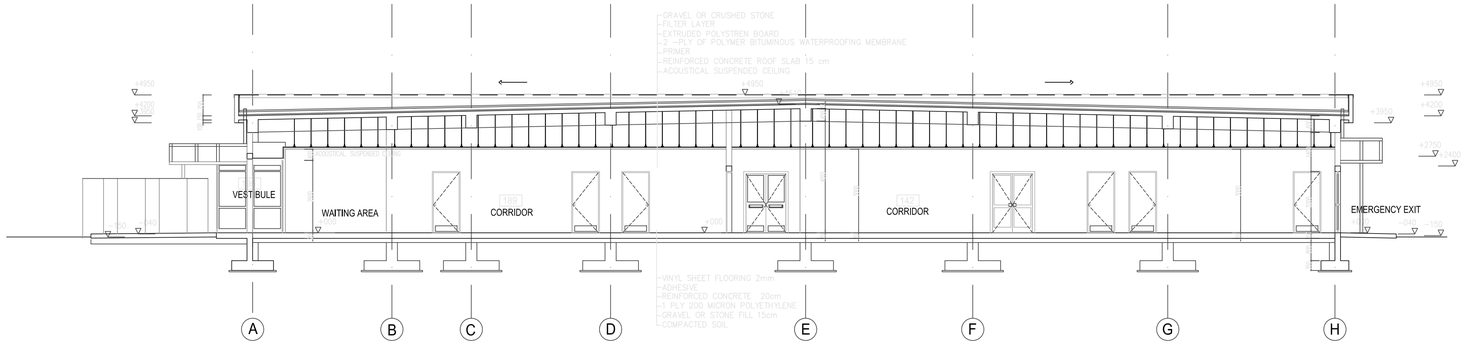

SECTION A-A
SCALE 1:100

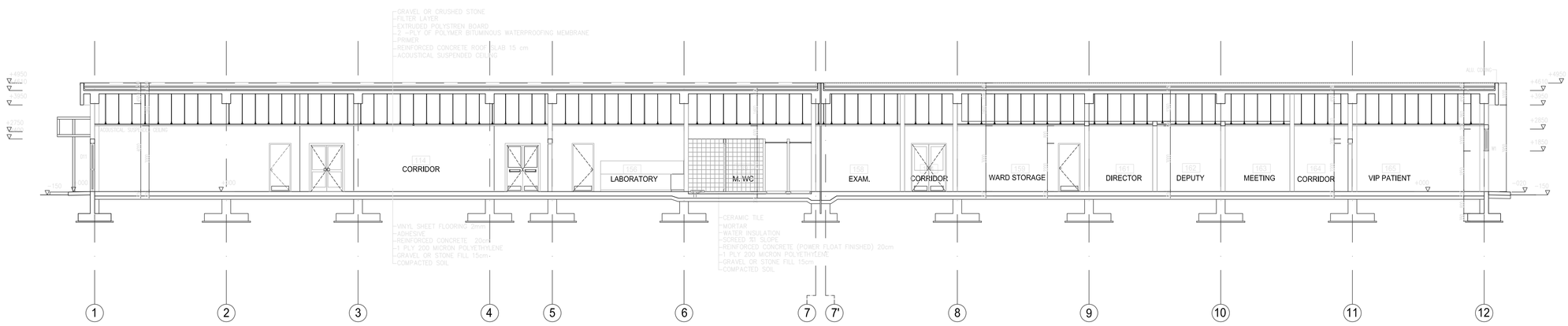

SECTION B-B
SCALE 1:100

NORTH

AS BUILT

SYMBOL	DESCRIPTION	DATE	APPR.
1	REVISED AS BUILT 100% DESIGNS	06.05.06 11.16.05	

DESIGNED BY B.IRMAK	DATE : 06.05.2006
DWN BY : B.IRMAK	REVISED BY : IRMAK
CHK BY : G.IRMAK	FILE NO : DP01–HH–A04

US Army Corps of Engineers
Afghanistan Engineer District
Kabul, Afghanistan

KOLİN
CO.INC in association with IRMAK, STAND, BESELI, DELTA OM
Design/Builder

50 BED REGIONAL HOSPITAL
HERAT , AFGHANISTAN
DRAWING OF WORK AS–BUILT
SECTIONS

SHEET REFERENCE NUMBER :
DP01–HH–A04

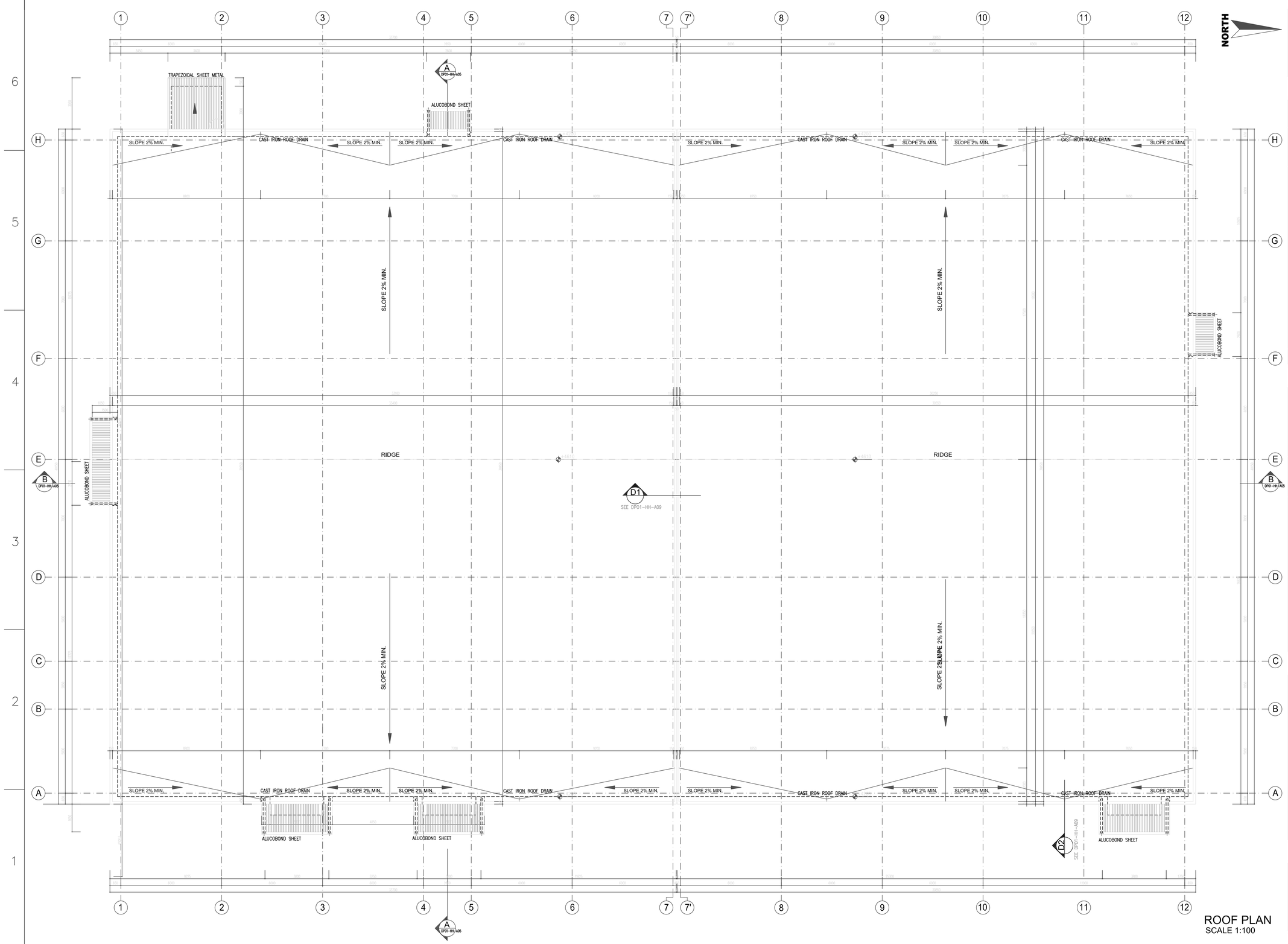

AS BUILT

SYMBOL	DESCRIPTION	DATE	APR.
1	REVISED AS BUILT	06.05.06	
	100% DESIGNS	11.16.05	

DESIGNED BY : B.IRMAK
DATE : 06.05.2006
DWN BY : B.IRMAK
REVISED BY : IRMAK
CHK BY : G.IRMAK
FILE NO : DP01-HH-A05

US Army Corps of Engineers
Afghanistan Engineer District
Kabul, Afghanistan

KOLİN CO.INC in association with IRMAK, STAND, BESELI, DELTA OM
Design/Builder

DESIGN/BUILD
50 BED REGIONAL HOSPITAL
HERAT, AFGHANISTAN
DRAWING OF WORK AS-BUILT
ROOF PLAN

SHEET REFERENCE NUMBER :
DP01-HH-A05

ROOF PLAN
SCALE 1:100

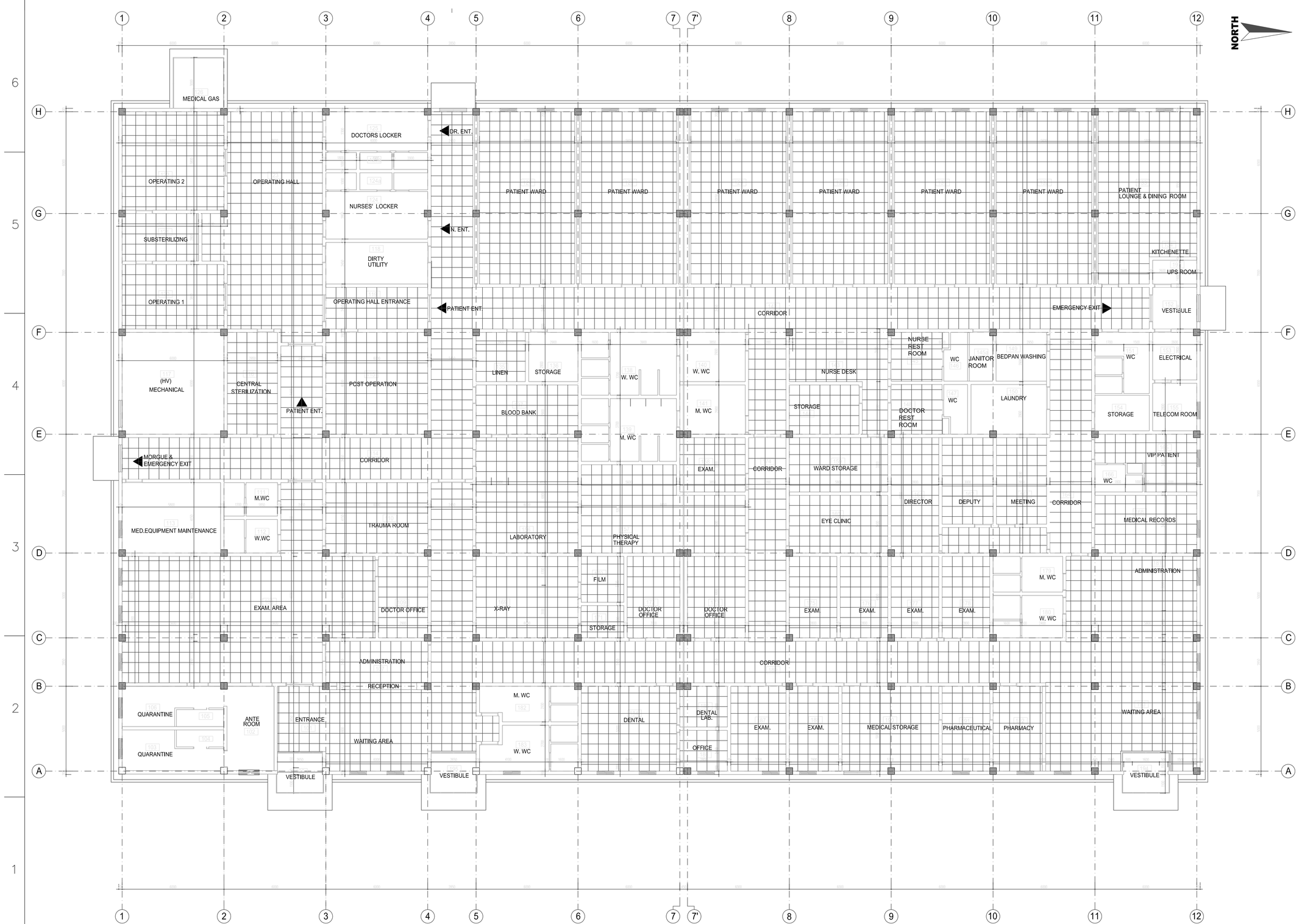

AS BUILT

SYMBOL	DESCRIPTION	DATE	APR.
	REVISED AS BUILT	06.05.06	
	100% DESIGNS	11.16.05	

DESIGNED BY : B.IRMAK
DATE : 06.05.2006
DWN BY : B.IRMAK
REVISED BY : IRMAK
CHK BY : G.IRMAK
FILE NO : DP01-HH-A06

US Army Corps of Engineers
Afghanistan Engineer District
Kabul, Afghanistan

KOLIN
CO.INC in association with
IRMAK, STAND, BESELI, DELTA OM
Design/Builder

DESIGN/BUILD
50 BED REGIONAL HOSPITAL
HERAT , AFGHANISTAN
DRAWING OF WORK AS-BUILT
REFLECTED CEILING PLAN

SHEET REFERENCE NUMBER :
DP01-HH-A06

REFLECTED CEILING PLAN
SCALE 1:100

FINISHING LEGEND

FLOORING

F1	SEALED CONCRETE
F2	CERAMIC TILE
F3	VINYL SHEET

BASE (SKIRTING)

B1	100 mm. VINYL
B2	100 mm. CERAMIC

WALL

W1	CERAMIC TILE DADO UP TO CEILING
W2	CEMENT PLASTER+WATER BASED ACRYLIC EMULSION SEMI-MATT PAINT
W3	LEAD LINING +GYPSUM BOARD +WATER BASED SEMI-MATT PAINT

CEILING

C1	WATER BASED ACRYLIC EMULSION SEMI-MATT ON SRUCTURAL CEILING
C2	SUSPENDED GYPSUM BOARD+WATER BASED ACRYLIC EMULSION SEMI-MATT PAINT
C3	FACTORY PAINTED ACCOUSTICAL SUSPENDED CEILING
C4	FACTORY PAINTED ACCOUSTICAL SUSPENDED CEILING(ANTI BACTERIAL)
C5	INSULATED SANDWICH PANEL BOARDS OVER METAL FRAMEWORK

ROOM NO	ROOM NAME	FLOOR	BASE	WALL	CEILING
101	ENTRANCE WAITING ROOM	F3	B1	W2	C3
102	ANTE ROOM	F3	B1	W2	C2
103	QUARANTINE	F3	B1	W2	C2
104	SHOWER & TOILET	F2	B2	W1	C2
105	SHOWER & TOILET	F2	B2	W1	C2
106	QUARANTINE	F3	B1	W2	C2
107	ADMINISTRATION	F3	B1	W2	C3
108	EXAM. AREA	F3	B1	W2	C3
109	DOCTOR OFFICE	F3	B1	W2	C3
110	TRAUMA ROOM	F3	B1	W2	C3
111	MEN'S TOILET	F2	B2	W1	C2
112	WOMEN'S TOILET	F2	B2	W1	C2
113	MED. EQUIPMENT MAINTENANCE	F3	B1	W2	C2
114	CORRIDOR	F3	B1	W2	C3
115	POST OPERATION	F2	B2	W2	C4
116	CENTRAL STERILIZATION	F3	B1	W2	C4
117	MECHANICAL ROOM	F1	B1	W1	C1
118	DIRTY UTILITY	F3	B1	W2	C2
119	OPERATING HALL ENTRANCE	F3	B1	W2	C4
120	OPERATING ROOM 1	F2	B2	W2	C4
121	SUBSTERILIZING	F2	B2	W2	C4
122	OPERATING ROOM 2	F2	B2	W2	C4
123	OPERATING HALL	F3	B1	W2	C4
124	NURSE'S LOCKER	F2	B2	W1	C2
124 A	NURSE'S SHOWER & TOILET	F2	B2	W1	C2
125	DOCTOR'S LOCKER	F2	B2	W1	C2
125 A	DOCTOR'S SHOWER & TOILET	F2	B2	W1	C2
126	MEDICAL GAS	F1		W2	C5
127	PATIENT WARD	F3	B1	W2	C3
128	PATIENT WARD	F3	B1	W2	C3
129	PATIENT WARD	F3	B1	W2	C3
130	PATIENT WARD	F3	B1	W2	C3
131	PATIENT WARD	F3	B1	W2	C3
132	PATIENT WARD	F3	B1	W2	C3
133	PATIENT LOUNGE & DINING	F3	B1	W2	C3
134	KITCHENETTE	F3	B1	W2	C3
135	LINEN	F3	B1	W2	C2
136	STORAGE	F2	B2	W1	C2
137	BLOOD BANK	F3	B1	W2	C3
138	WOMEN'S SHOWER & TOILET	F2	B2	W1	C2
139	MEN'S SHOWER & TOILET	F2	B2	W1	C2
140	WOMEN'S WASHBASIN	F2	B2	W1	C2
141	MEN'S WASHBASIN	F2	B2	W1	C2
142	CORRIDOR	F3	B1	W2	C3
143	NURSE DESK	F3	B1	W2	C3
144	STORAGE	F3	B1	W2	C3
145	NURSE'S REST ROOM	F3	B1	W2	C2
145A	JANITOR	F3	B1	W2	C1
146	NURSE'S SHOWER & TOILET	F2	B2	W1	C2
147	DOCTOR'S SHOWER & TOILET	F2	B2	W1	C2

		FLOOR	BASE	WALL	CEILING
148	DOCTOR'S REST ROOM	F2	B2	W1	C2
149	BEDPAN WASHING	F2	B2	W1	C2
150	LAUNDRY	F2	B2	W1	C2
151	TOILET	F2	B2	W1	C2
152	VESTIBULE	F3	B1	W2	C2
153	ELECTRICAL	F3	B1	W2	C2
154	STORAGE	F3	B1	W2	C2
155	TELECOM ROOM	F3	B1	W2	C2
156	LABORATORY	F3	B1	W2	C2
157	PHYSICAL THERAPY	F3	B1	W2	C2
158	EXAM. ROOM	F3	B1	W2	C2
159	WARD STORAGE	F3	B1	W2	C2
160	EYE CLINIC	F3	B1	W2	C2
161	DIRECTOR	F3	B1	W2	C2
162	DEPUTY	F3	B1	W2	C2
163	MEETING	F3	B1	W2	C2
164	CORRIDOR	F3	B1	W2	C2
165	VIP PATIENT	F3	B1	W2	C2
166	TOILET	F2	B2	W1	C2
167					
168	MEDICAL RECORDS	F3	B1	W2	C2
169	X - RAY	F3	B1	W3	C2
170	FILM	F3	B1	W2	C2
171	STORAGE	F3	B1	W2	C2
172	DOCTOR OFFICE	F3	B1	W2	C2
173	DOCTOR OFFICE	F3	B1	W2	C2
174	CORRIDOR	F3	B1	W2	C2
175	EXAM. ROOM	F3	B1	W2	C2
176	EXAM. ROOM	F3	B1	W2	C2
177	EXAM. ROOM	F3	B1	W2	C2
178	EXAM. ROOM	F3	B1	W2	C2
179	MEN'S TOILET	F2	B2	W1	C2
180	WOMEN'S TOILET	F2	B2	W1	C2
181	ADMINISTRATION	F3	B1	W2	C2
182	MEN'S TOILET	F2	B2	W1	C2
183	WOMEN'S TOILET	F2	B2	W1	C2
184	DENTAL ROOM	F3	B1	W2	C2
185	DENTAL LAB.	F3	B1	W2	C2
186	OFFICE	F3	B1	W2	C2
187	EXAM. ROOM	F3	B1	W2	C2
188	EXAM. ROOM	F3	B1	W2	C2
189	CORRIDOR	F3	B1	W2	C2
190	MEDICAL STORAGE	F3	B1	W2	C2
191	PHARMACEUTICAL	F3	B1	W2	C2
192	PHARMACY	F3	B1	W2	C2
193	WAITING AREA	F3	B1	W2	C2
194	VESTIBULE	F3	B1	W2	C2
195	VESTIBULE	F3	B1	W2	C2
196	VESTIBULE	F3	B1	W2	C2
197	UPS ROOM	F3	B1	W2	C2
200	MORGUE	F3	B1	W2	C2
201	PUMP HOUSE	F3	B1	W2	C2

AS BUILT

SYMBOL	DESCRIPTION	DATE	APPR.
1	REVISED AS BUILT	06.05.06	
	100% DESIGNS	11.16.05	

DESIGNED BY : B.IRMAK
DATE : 06.05.2006
DWN BY : B.IRMAK
REVISED BY : IRMAK
CHK BY : G.IRMAK
FILE NO : DP01-HH-A07

US Army Corps of Engineers
Afghanistan Engineer District
Kabul, Afghanistan

KOLIN CO.INC in association with IRMAK, STAND, BESELI, DELTA OM
Design/Builder

DESIGN/BUILD
50 BED REGIONAL HOSPITAL
HERAT , AFGHANISTAN
DRAWING OF WORK AS-BUILT
FINISHING SCHEDULE

SHEET REFERENCE NUMBER :
DP01-HH-A07

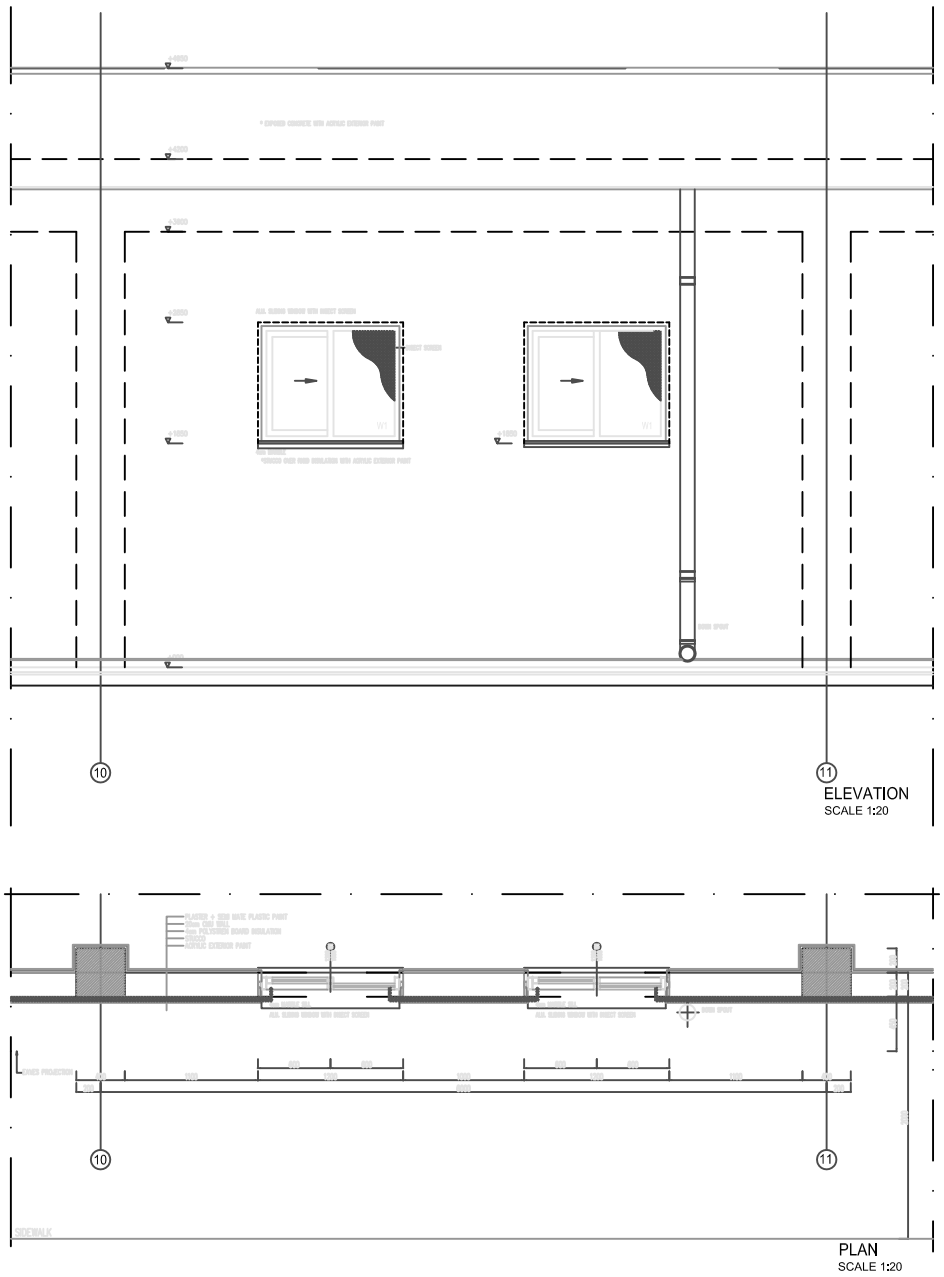

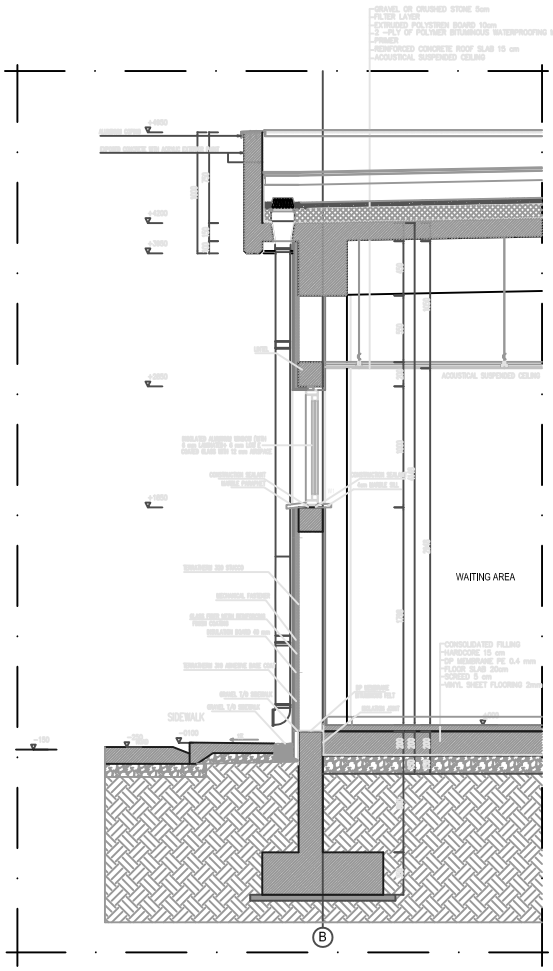

FRONT SIDE SYSTEM DETAIL

AS BUILT

SYMBOL	DESCRIPTION	DATE	APR.
	REVISED AS BUILT	06.05.06	
	100% DESIGNS	11.16.05	

DESIGNED BY : B.IRMAK
DATE : 06.05.2006
DWN BY : B.IRMAK
REVISED BY : IRMAK
CHK BY : G.IRMAK
FILE NO : DP01-HH-A08

US Army Corps of Engineers
Afghanistan Engineer District
Kabul, Afghanistan

KOLIN CO.INC in association with IRMAK, STAND, BESELI, DELTA OM Design/Builder

DESIGN/BUILD
50 BED REGIONAL HOSPITAL
HERAT , AFGHANISTAN
DRAWING OF WORK AS-BUILT
FRONT SIDE SYSTEM DETAIL

SHEET REFERENCE NUMBER :
DP01-HH-A08

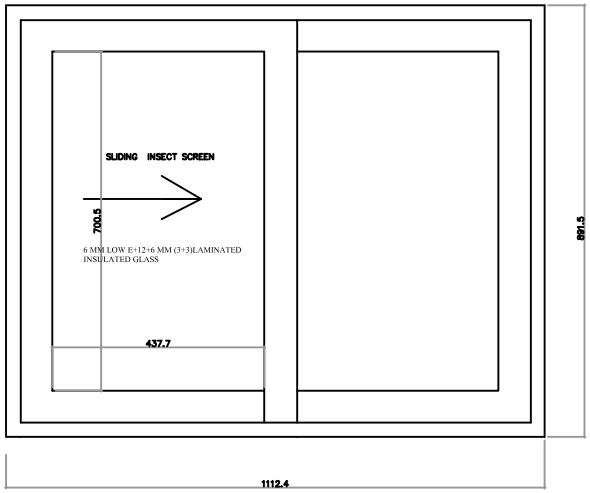

ELEVATION 1/5

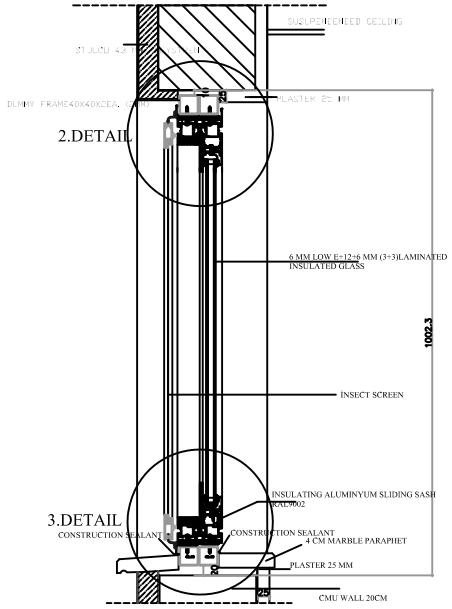

SECTION 1/5

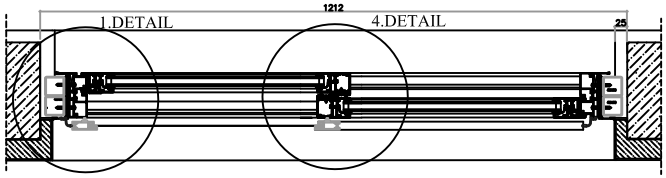

PLAN 1/5

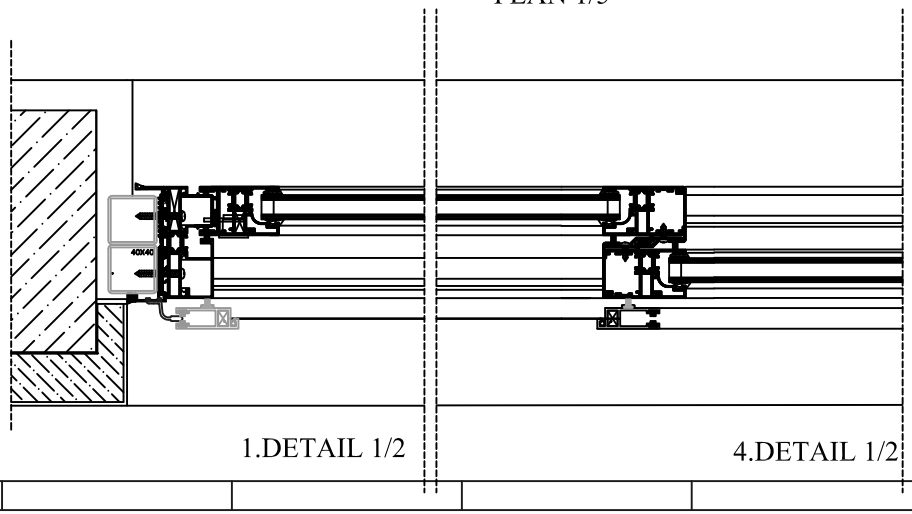

1.DETAIL 1/2

4.DETAIL 1/2

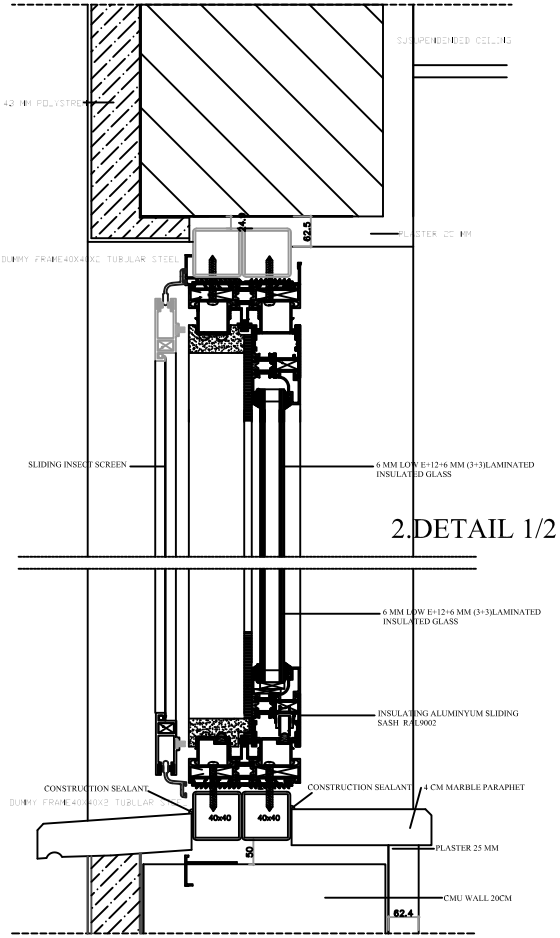

3.DETAIL 1/2

AS BUILT

SYMBOL	DESCRIPTION	DATE	APPR.
	REVISED AS BUILT	06.05.06	
	100% DESIGNS	11.16.05	

DESIGNED BY : B.IRMAK
DATE : 06.05.2006
DWN BY : B.IRMAK
REVISED BY : IRMAK
CHK BY : G.IRMAK
FILE NO : DP01-HH-A09

US Army Corps of Engineers
Afghanistan Engineer District
Kabul, Afghanistan

KOLİN
IRMAK, STAND, BESELI, DELTA OM
CO.INC in association with Design/Builder

DESIGN/BUILD
50 BED REGIONAL HOSPITAL
HERAT , AFGHANISTAN
DRAWING OF WORK AS-BUILT
WINDOW DETAILS

SHEET REFERENCE NUMBER :
DP01-HH-A08a

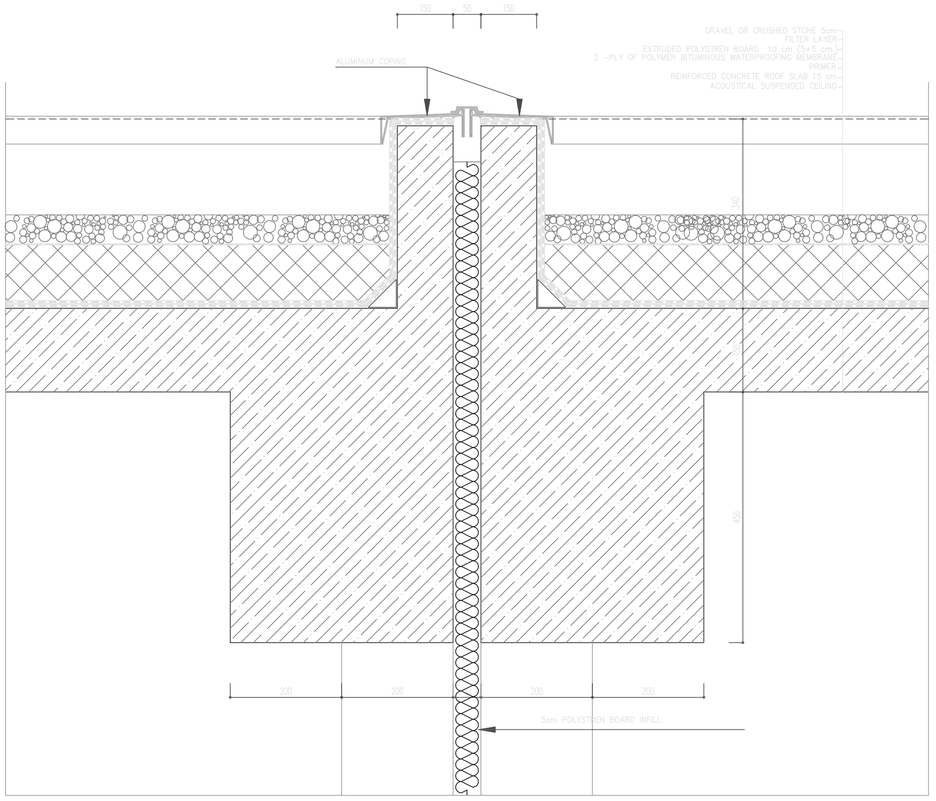

D1 DETAIL
ROOF PARAPET & EXPANSION JOINT DETAIL 1:5

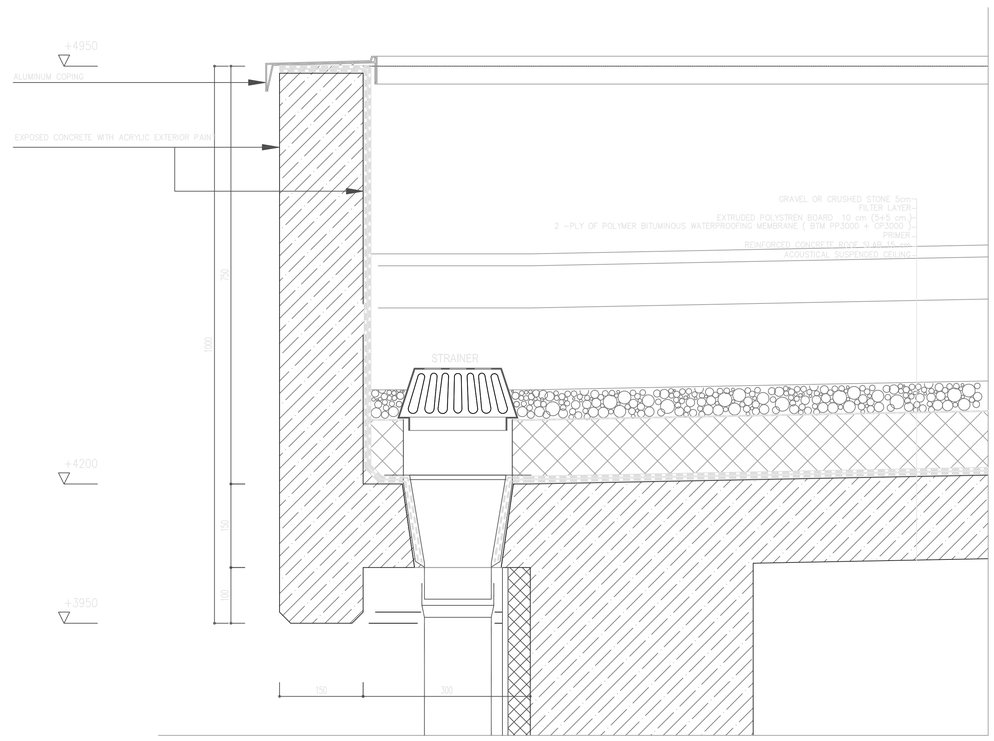

D2 DETAIL
ROOF PARAPET & STRAINER DETAIL 1:5

AS BUILT

SYMBOL	DESCRIPTION	DATE	APR.
1	REVISED AS BUILT	06.05.06	
	100% DESIGNS	11.16.05	

DESIGNED BY	B.IRMAK
DWN BY :	B.IRMAK
CHK BY :	G.IRMAK
DATE :	06.05.2006
REVISED BY :	IRMAK
FILE NO :	DP01–HH–A09

US Army Corps of Engineers
Afghanistan Engineer District
Kabul, Afghanistan

KOLİN CO.INC in association with IRMAK, STAND, BESELI, DELTA ÖM
Design/Builder

DESIGN/BUILD
50 BED REGIONAL HOSPITAL
HERAT , AFGHANISTAN
DRAWING OF WORK AS–BUILT
ROOF POINT DETAILS

SHEET REFERENCE NUMBER :
DP01–HH–A09

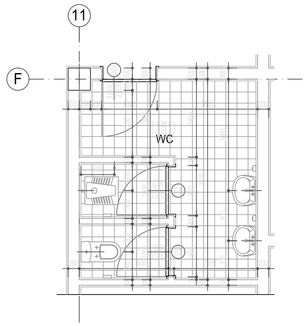

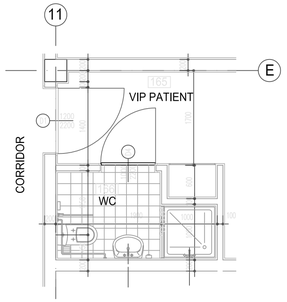

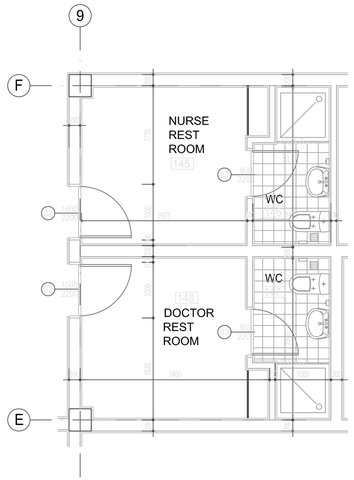

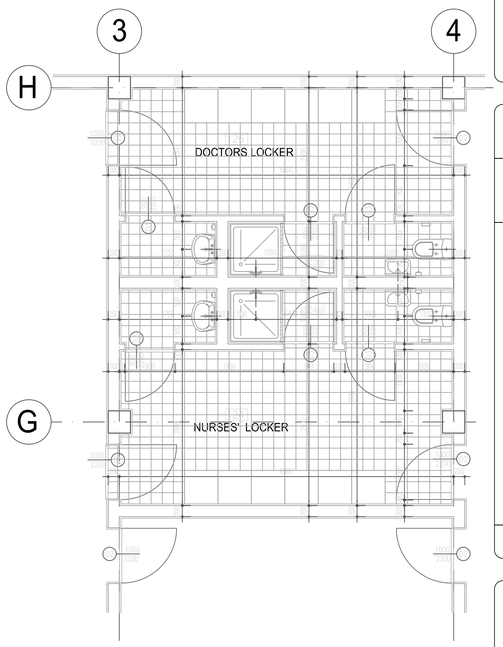

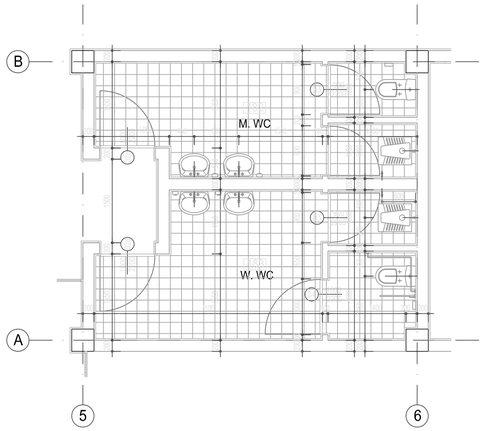

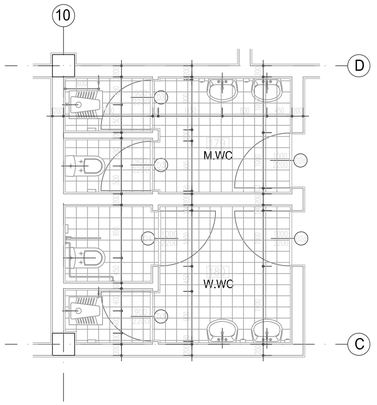

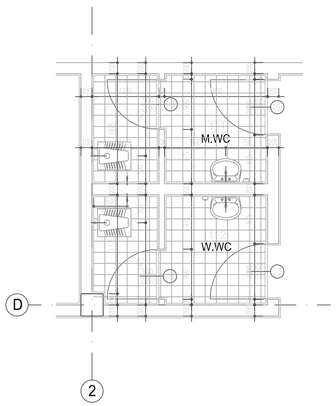

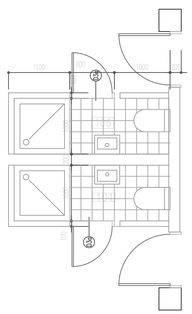

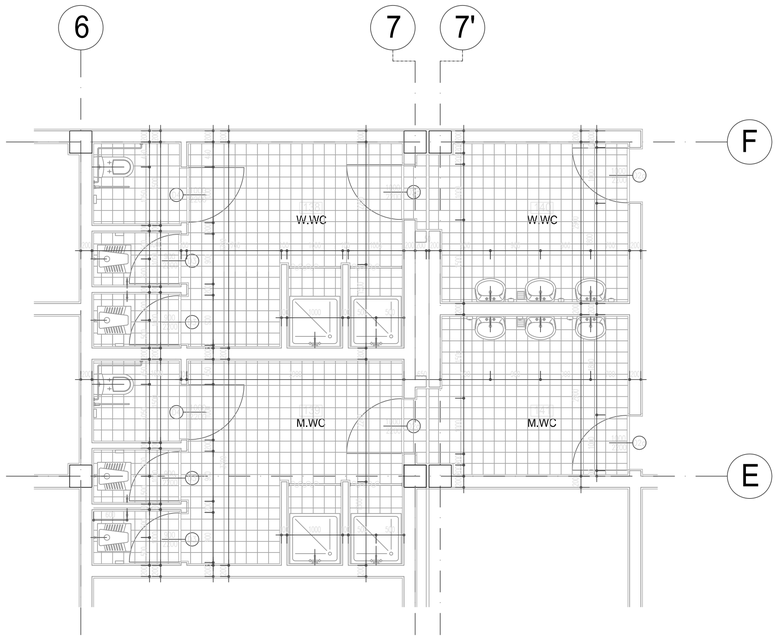

AS BUILT

SYMBOL	DESCRIPTION	DATE	APR.
1	REVISED AS BUILT 100% DESIGNS	06.05.06 11.16.05	

DESIGNED BY : B.IRMAK	DWN BY : B.IRMAK	CHK BY : G.IRMAK	DATE : 06.05.2006
			REVISED BY : IRMAK
			FILE NO : DP01–HH–A11

US Army Corps of Engineers
Afghanistan Engineer District
Kabul, Afghanistan

KOLİN
CO.INC in association with
IRMAK, STAND, BESELI, DELTA OM
Design/Builder

DESIGN/BUILD
50 BED REGIONAL HOSPITAL
HERAT , AFGHANISTAN
DRAWING OF WORK AS–BUILT
WC DETAIL

SHEET
REFERENCE
NUMBER :

DP01–HH–A11

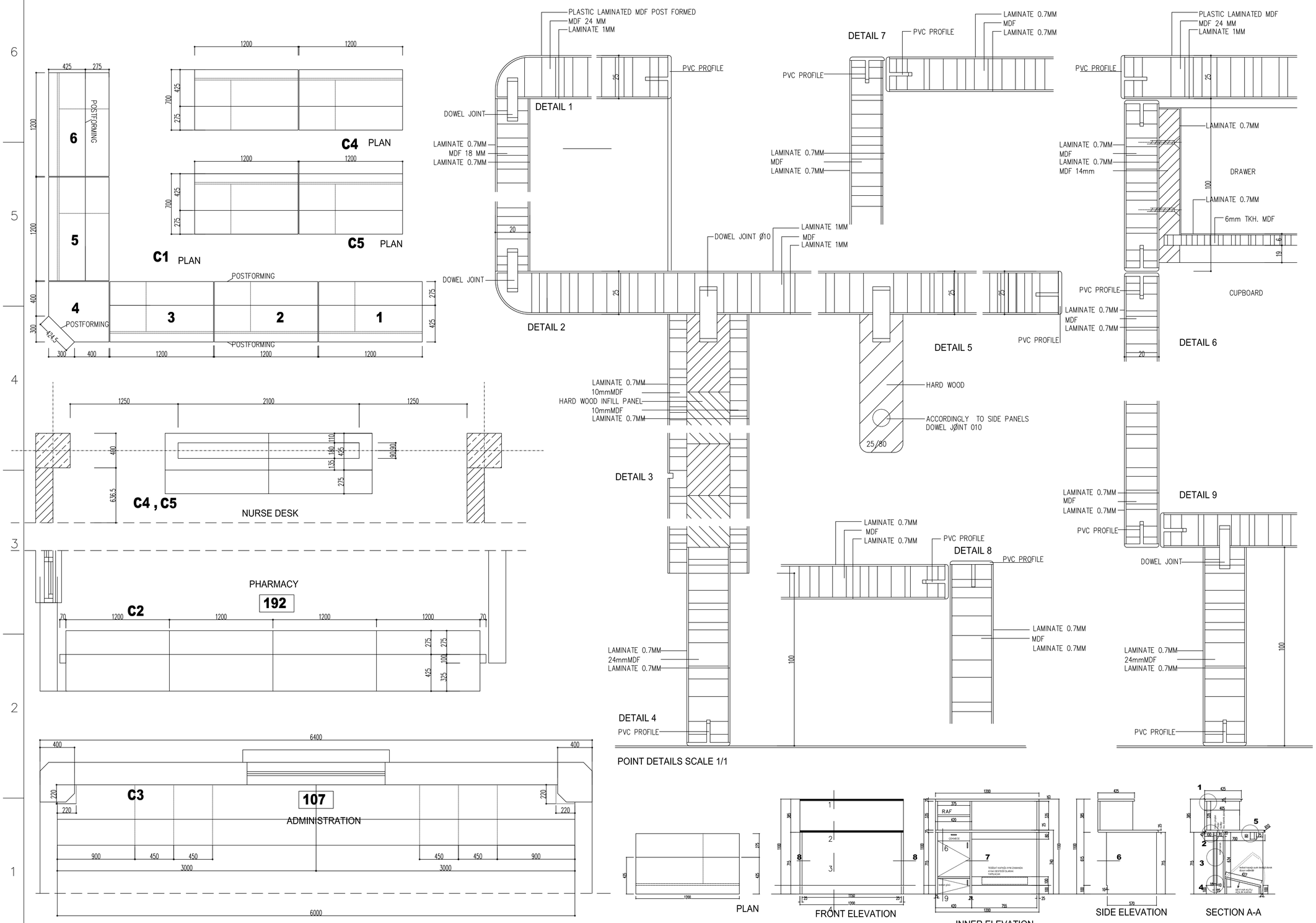

AS BUILT

SYMBOL	DESCRIPTION	DATE	APR.
2	REVISED AS BUILT	06.05.06	
1	100% DESIGNS	11.16.05	

DESIGNED BY : B.IRMAK
DWN BY : B.IRMAK
CHK BY : G.IRMAK
DATE : 06.05.2006
REVISED BY : IRMAK
FILE NO : DP01-HH-A15

US Army Corps of Engineers
Afghanistan Engineer District
Kabul, Afghanistan

KOLİN
CO.INC in association with
IRMAK, STAND, BESELI, DELTA OM
Design/Builder

DESIGN/BUILD
50 BED REGIONAL HOSPITAL
HERAT , AFGHANISTAN
DRAWING OF WORK AS-BUILT
COUNTERS SYSTEM & POINT DETAIL

SHEET REFERENCE NUMBER :
DP01-HH-A15

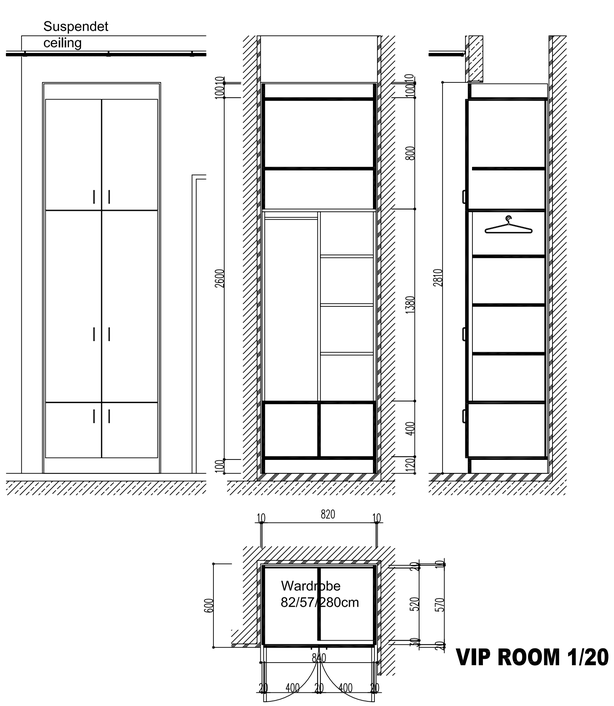

VIP ROOM 1/20

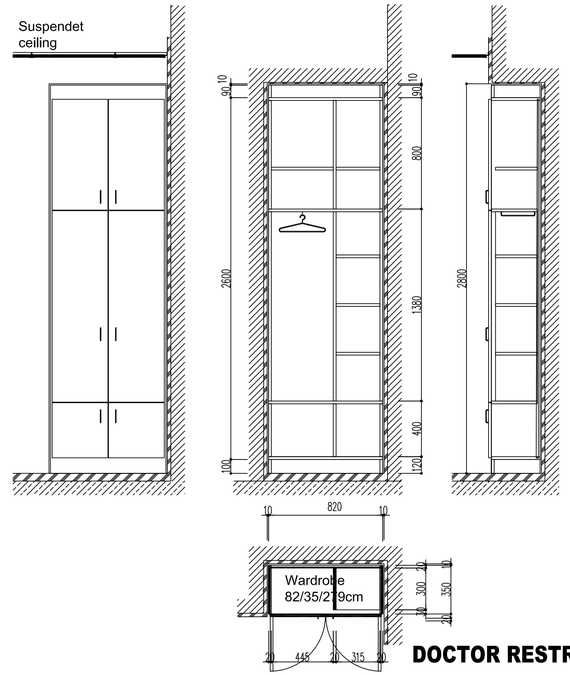

DOCTOR RESTROOM 1/20

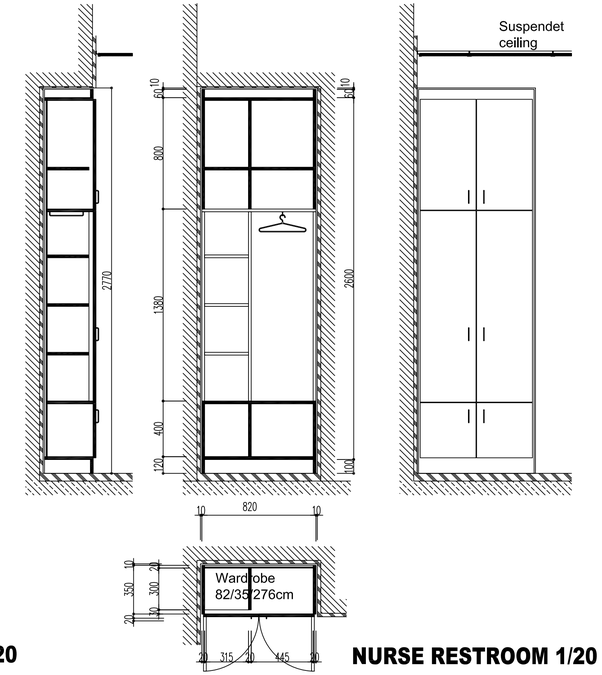

NURSE RESTROOM 1/20

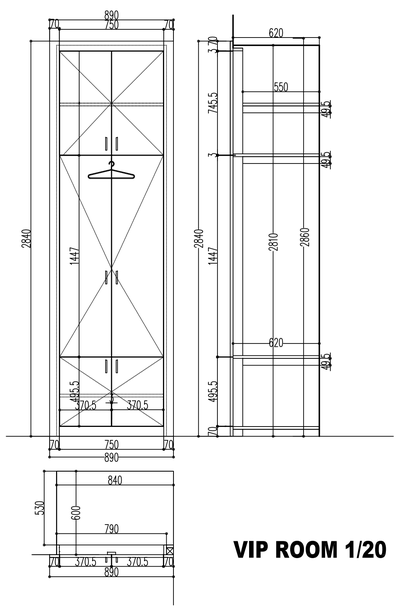

VIP ROOM 1/20

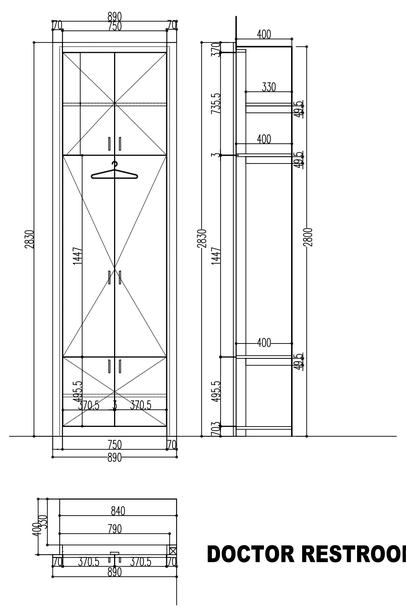

DOCTOR RESTROOM 1/20

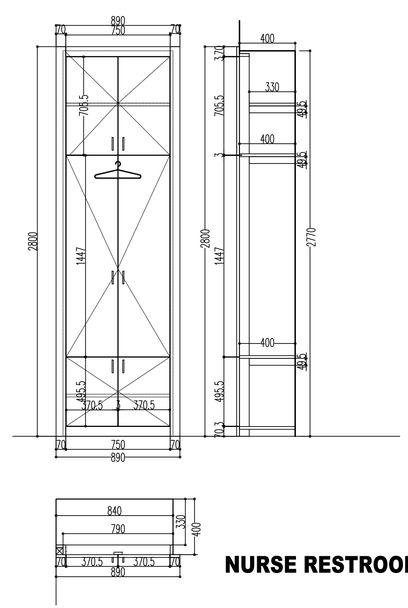

NURSE RESTROOM 1/20

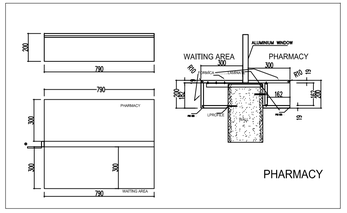

PHARMACY

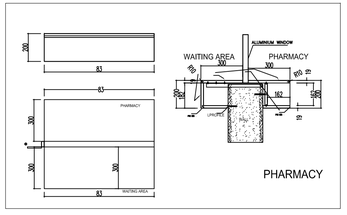

PHARMACY

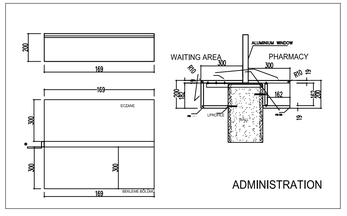

ADMINISTRATION

AS BUILT

SYMBOL	DESCRIPTION	DATE	APR.
	REVISED AS BUILT	06.05.06	
	100% DESIGNS	11.16.05	

DESIGNED BY : B.IRMAK
DATE : 06.05.2006
DWN BY : B.IRMAK
REVISED BY : IRMAK
CHK BY : G.IRMAK
FILE NO : DP01-HH-A15

US Army Corps of Engineers
Afghanistan Engineer District
Kabul, Afghanistan

KOLİN
CO.INC in association with
IRMAK, STAND, BESELI, DELTA OM
Design/Builder

DESIGN/BUILD
50 BED REGIONAL HOSPITAL
HERAT , AFGHANISTAN
DRAWING OF WORK AS-BUILT
COUNTERS SYSTEM & POINT DETAIL

SHEET REFERENCE NUMBER :
DP01-HH-A15a

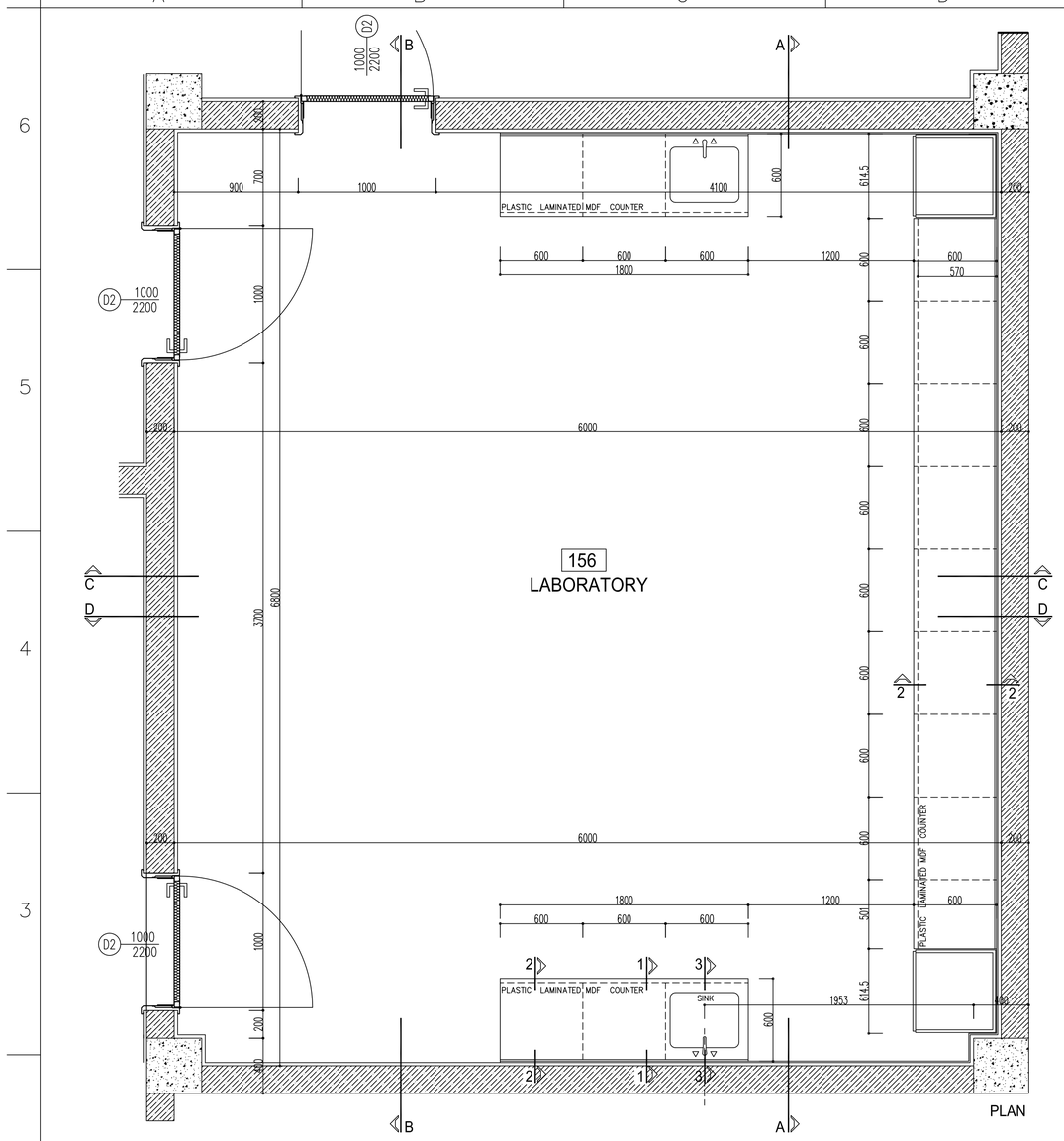

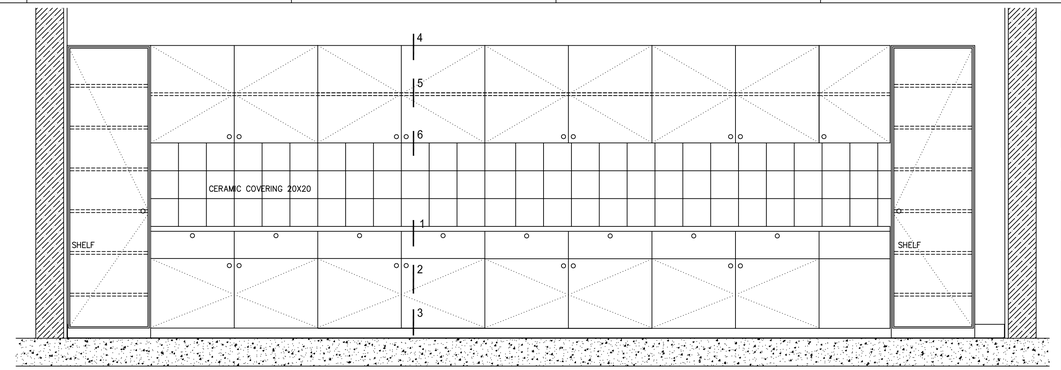

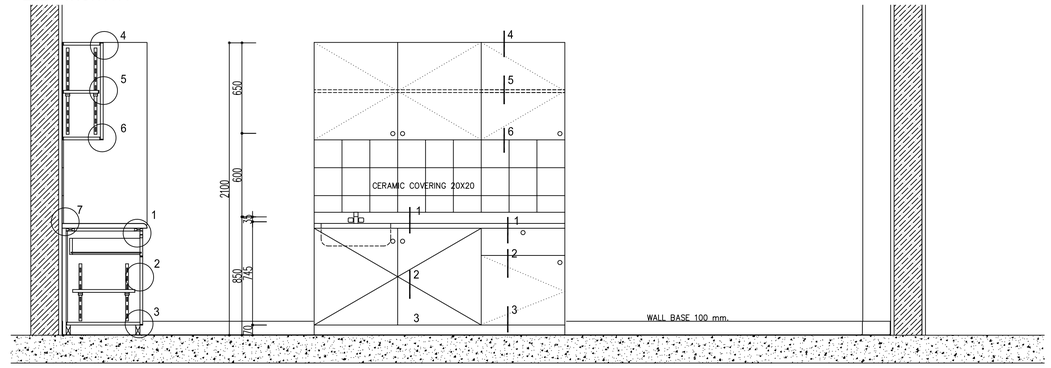

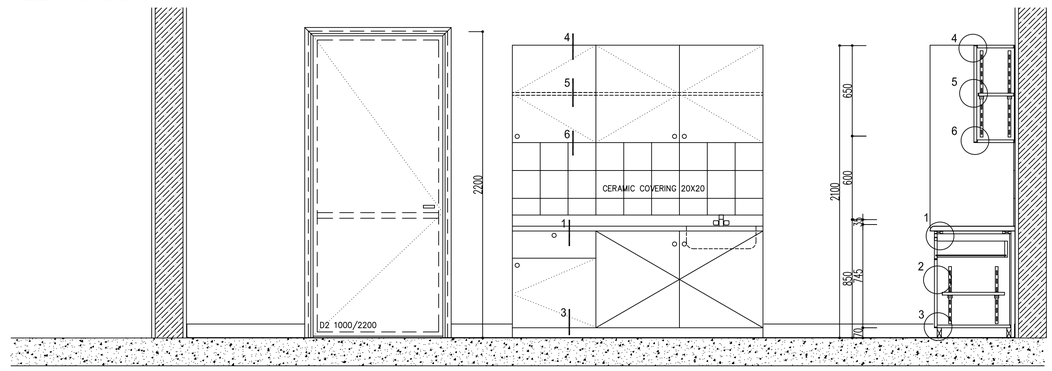

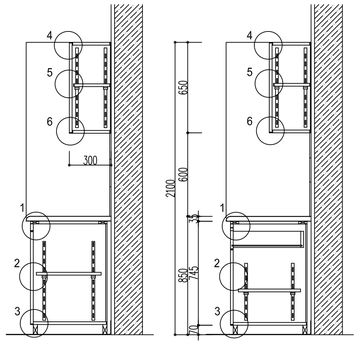

LABORATORY COUNTERS SYSTEM DETAIL
SCALE 1:20

AS BUILT

SYMBOL	DESCRIPTION	DATE	APR.
1	REVISED AS BUILT 100% DESIGNS	06.05.06 11.16.05	

DESIGNED BY B.IRMAK	DATE : 06.05.2006
DWN BY : B.IRMAK	REVISED BY : IRMAK
CHK BY : G.IRMAK	FILE NO : DP01–HH–A16

US Army Corps of Engineers
Afghanistan Engineer District
Kabul, Afghanistan

KOLİN
CO.INC in association with IRMAK, STAND, BESELI, DELTA OM
Design/Builder

DESIGN/BUILD
50 BED REGIONAL HOSPITAL
HERAT, AFGHANISTAN
DRAWING OF WORK AS–BUILT
LABORATORY COUNTERS SYSTEM DETAIL

SHEET REFERENCE NUMBER :
DP01–HH–A16