Afghanistan National Police (ANP)
Company Compound
Various Locations, Afghanistan

US Army Corps
of Engineers
Transatlantic Programs Center
Afghanistan Engineering District

Final Submittal

3 April 2007

AF0609--cvr

DRAWING INDEX

SHT.REF. NO.	FILE NO.	REVISIONS REV. NO.	REVISIONS AM/COP NO.	TITLE
				COVER SHEET
				SITE DESIGN
C-1	AF0609--CI01PN			SITE PLAN
C-2	AF0609--CI02DT			DETAILS
C-3	AF0609--CI03DT			DETAILS
C-4	AF0609--CI04DT			WELL DETAILS
C-5	AF0609--CI05DT			WELL PLAN
C-6	AF0609--CI06DT			BOOSTER STATION
C-7	AF0609--CI07DT			PIPING DETAILS
C-8	AF0609--CI08DT			STANDARD PLUMBING DETAILS
C-9	AF0609--CI09DT			SEPTIC TANK DETAILS
XM-1	AF0609--MS01PN			GENERATOR FUEL SUPPLY LAYOUT
XM-2	AF0609--MS02DI			FUEL OIL SCHEMATIC
XM-3	AF0609--MS03PN			VEHICLE FUEL POINT LAYOUT
XM-4	AF0609--MS04DT			FUEL DETAILS
XM-5	AF0609--MS05DT			FUEL DETAILS
XE-1	AF0609--ES01PN			ELECTRICAL SITE PLAN
XE-2	AF0609--ES02DI			ONE LINE DIAGRAM
XT-1	AF0609--XT01PN			COMMUNICATIONS SITE PLAN
				FACILITY "A" OFFICE BUILDING
A-1	AF0609A-AR01PN			FLOOR PLAN
A-2	AF0609A-AR02EL			BUILDING ELEVATIONS
A-3	AF0609A-AR03SE			BUILDING SECTIONS
A-4	AF0609A-AR04PN			ROOF PLAN
A-5	AF0609A-AR05SC			ROOM FINISH SCHEDULE AND DOOR SCHEDULE
A-6	AF0609A-AR06PN			ENLARGED TOILET PLANS ELEVATIONS AND NOTES
S-1	AF0609A-SB01PN			FOUNDATION AND SLAB PLAN
S-2	AF0609A-SF02PN			ROOF FRAMING PLAN
S-3	AF0609A-SB03DT			FOOTING DETAILS
M-1	AF0609A-MH01PN			HVAC PLAN
P-1	AF0609A-MP01PN			WATER SUPPLY LAYOUT
P-2	AF0609A-MP02PN			SANITARY DRAINAGE LAYOUT
P-3	AF0609A-MP03DI			RISER DIAGRAM
E-1	AF0609A-EL01PN			LIGHTING PLAN
E-2	AF0609A-EP02PN			POWER PLAN
E-3	AF0609A-EL03SC			PANEL SCHEDULE
E-4	AF0609A-EL04PN			GROUNDING AND LIGHTNING PROTECTION PLAN
TC-1	AF0609A-TC01PN			COMMUNICATION PLAN
TC-2	AF0609A-TC02DI			COMMUNICATIONS DIAGRAMS

SHT.REF. NO.	FILE NO.	REVISIONS REV. NO.	REVISIONS AM/COP NO.	TITLE
				FACILITY "B" DFAC/BARRACKS
A-1	AF0609B-AR01PN			FLOOR PLAN
A-2	AF0609B-AR02EL			BUILDING ELEVATIONS AND SECTIONS
A-3	–			NOT USED
A-4	AF0609B-AR04PN			ROOF PLAN
A-5	AF0609B-AR05SC			ROOM FINISH SCHEDULE AND DOOR SCHEDULE
A-6	AF0609B-AR06PN			ENLARGED TOILET PLANS ELEVATIONS AND NOTES
S-1	AF0609B-SB01PN			FOUNDATION AND SLAB PLAN
S-2	AF0609B-SF02PN			ROOF FRAMING PLAN
S-3	AF0609B-SB03DT			FOOTING DETAILS
M-1	AF0609B-MH01PN			HVAC PLAN
P-1	AF0609B-MP01PN			SANITARY LAYOUT
P-2	AF0609B-MP02PN			WATER SUPPLY LAYOUT
P-3	AF0609B-MP03DI			WASTE WATER RISER DIAGRM
P-4	AF0609B-MP04DI			WASTE WATER RISER DIAGRM
E-1	AF0609B-EL01PN			LIGHTING PLAN
E-2	AF0609B-EP02PN			POWER PLAN
E-3	AF0609B-EL03SC			PANEL SCHEDULE
E-4	AF0609B-EL04PN			GROUNDING AND LIGHTNING PROTECTION PLAN
TC-1	AF0609B-TC03PN			COMMUNICATION PLAN
				FACILITY "C" MAINTENANCE/WAREHOUSE
A-1	AF0609C-AR01PN			FLOOR PLAN
A-2	AF0609C-AR02EL			BUILDING ELEVATIONS
A-3	AF0609C-AR03SE			BUILDING SECTIONS
A-4	AF0609C-AR04PN			ROOF PLAN
A-5	AF0609C-AR05SC			ROOM FINISH SCHEDULE AND DOOR SCHEDULE
S-1	AF0609C-SB01PN			FOUNDATION AND SLAB PLAN
S-2	AF0609C-SF02PN			ROOF FRAMING PLAN
S-3	AF0609C-SB03DT			FOOTING DETAILS
S-4	AF0609C-SF04DT			COLUMN AND SLAB-ON-GRADE DETAILS
S-5	AF0609C-SF05DT			ROOF BEAM AND STRUCTURAL SLAB DETAILS
S-6	AF0609C-SB06DT			VEHICLE INSPCTION PIT PLAN DETAILS & SECTIONS
M-1	AF0609C-MH01PN			HVAC PLAN
P-1	AF0609C-MP01PN			PLUMBING LAYOUT
P-2	AF0609C-MP02PN			RISER DIAGRAMS
E-1	AF0609C-EL01PN			LIGHTING PLAN
E-2	AF0609C-EP02PN			POWER PLAN
E-3	AF0609C-EL03SC			PANEL SCHEDULE
E-4	AF0609C-EL04PN			GROUNDING AND LIGHTNING PROTECTION PLAN
TC-1	AF0609C-TC01PN			COMMUNICATIONS PLAN

REVISIONS			
SYMBOL	DESCRIPTION	DATE	APP
*		03/04/2007	

US Army Corps of Engineers
Transatlantic Programs Center

AFGHANISTAN NATIONAL POLICE COMPANY COMPOUND
VARIOUS LOCATIONS, AFGHANISTAN
DRAWING INDEX SHEET 1

AF0601--GI01GN

AED AED, USACE 3/30/2007 10:22 AM AF0609--gi01gn.dwg

DRAWING INDEX

SHT.REF. NO.	FILE NO.	REVISIONS REV. NO.	REVISIONS AM/COP NO.	TITLE
	AF0601--GI02GN			DRAWING INDEX SHEET 2
				FACILITY "D" GUARD HOUSE
A-1	AF0609D-AR01PN			FLOOR PLAN, ROOF PLAN, AND ELEVATIONS
A-2	AF0609D-AR02SC			BUILDING SECTIONS
S-1	AF0609D-SB01PN			FOUNDATION AND SLAB PLAN ROOF FRAMING PLAN
M-1	AF0609D-MH01PN			HVAC PLAN
E-1	AF0609D-EL01PN			LIGHTING AND POWER PLAN
				FACILITY "E" GUARD TOWER
A-1	AF0609E-AR01PN			FLOOR PLAN, ROOF PLAN, ELEVATIONS AND SECTIONS
S-1	AF0609E-SB01PN			FOUNDATION AND SLAB PLAN ROOF FRAMING PLAN
S-2	AF0609E-SB02DT			STAIR DETAILS
S-3	AF0609E-SF03DT			SLAB ON GRADE DETAILS
S-4	AF0609E-SF04DT			ROOF BEAM AND STRUCTURAL SLAB DETAILS
M-1	AF0609E-MH01PN			HVAC PLAN
E-1	AF0609E-EL01PN			LIGHTING AND POWER PLAN
				FACILITY "F" GUARD SHACK
A-1	AF0609F-AR01PN			FLOOR PLAN, ROOF PLAN, ELEVATIONS AND SECTIONS
S-1	AF0609F-SB01PN			FOUNDATION AND SLAB PLAN ROOF FRAMING PLAN
S-2	AF0609F-SB02DT			FOOTING DETAILS
M-1	AF0609F-MH01PN			HVAC PLAN
E-1	AF0609F-EL01PN			LIGHTING AND POWER PLAN

SHT.REF. NO.	FILE NO.	REVISIONS REV. NO.	REVISIONS AM/COP NO.	TITLE
				STANDARD DETAILS
SA-1	AF0609$-AR01GN			SYMBOLS AND ABBREVIATIONS
SA-2	AF0609$-AR02DT			DETAILS
SA-3	AF0609$-AR03DT			WALL TYPES
SA-4	AF0609$-AR04EL			DOORS AND WINDOWS
SS-1	AF0609$-SB01GN			GENERAL NOTES
SS-2	AF0609$-SF02GN			NOTATIONS AND BAR DELVELOPMENT LENGTHS
SS-3	AF0609$-SB03DT			MASONRY DETAILS
SS-4	AF0609$-SB04DT			SLAB-ON-GRADE DETAILS
SS-5	AF0609$-SB05DT			EXTRA REINFORCING AT OPENINGS AND CORNERS
SM-1	AF0609$-MH01GN			LEGENDS AND ABBREVIATIONS
SM-2	AF0609$-MH02SC			MECHANICAL SCHEDULES
SM-3	AF0609$-MH03DT			MECHANICAL STANDARD DETAILS
SP-1	AF0609$-MP01GN			LEGENDS AND ABBREVIATIONS
SP-2	AF0609$-MP02DT			PLUMBING STANDARD DETAILS
SP-3	AF0609$-MP03DT			STANDARD PLUMBING DETAILS
SE-1	AF0609$-EL01GN			LEGENDS AND ABBREVIATIONS
SE-2	AF0609$-EL02DT			STANDARD LIGHTING DETAILS
SE-3	AF0609$-EL03DT			STANDARD LIGHTING DETAILS
SE-4	AF0609$-EL04DT			DUCTBANK DETAILS
SE-5	AF0609$-EL05DT			STANDARD ELECTRICAL DETAILS
SE-6	AF0609$-EL06DT			POWER PLANT DETAILS
SE-7	AF0609$-EL07DT			LIGHTNING PROTECTION DETAILS
SE-8	AF0609$-EL08DT			HAND HOLE DETAILS

*	REVISIONS	SYMBOL	DESCRIPTION	DATE	APP
				03/04/2007	

US Army Corps of Engineers
Transatlantic Programs Center

AFGHANISTAN NATIONAL POLICE COMPANY COMPOUND
VARIOUS LOCATIONS, AFGHANISTAN
DRAWING INDEX SHEET 2

AF0609--gi02gn.dwg
3/30/2007 10:25 AM
AED AED, USACE

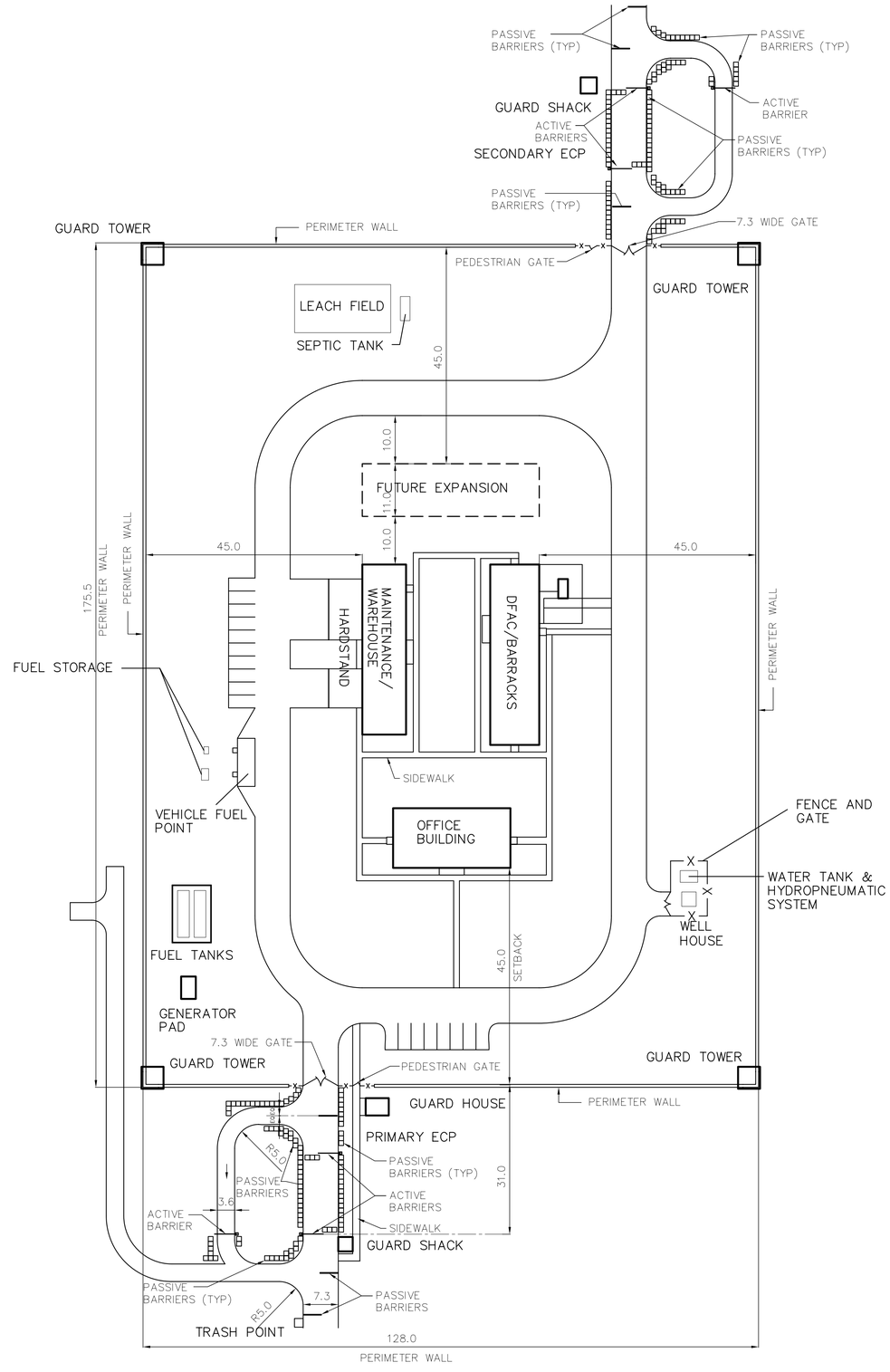

NOTE:
ONCE THE ACTUAL SITE DIMENSIONS ARE DEFINED, THE CONTRACTOR SHALL MAXIMIZE THE FORCE PROTECTION STANDOFF DISTANCE 45 METERS FROM PERIMETER WALL AND OTHER FORCE PROTECTION MEASURES AS APPLIABLE. CONTRACTOR MUST SUBMIT SITE LAYOUT PLAN FOR APPROVAL.

SITE NOTE:
CONTRACTOR SHALL PROVIDE STORMWATER GRADING TO PREVENT FLOODING BUILDINGS AND FACILITIES AND TO CARRY STORM WATER OFF SITE.
AS A MINIMUM GRADE 5% SLOPE AWAY FROM BUILDING FOR A DISTANCE OF 3 METERS.
CONTRACTOR SHALL PROVIDE ALL SITE UTILITY DRAWINGS FOR APPROVAL.

DIMENSIONS ARE GIVEN IN METERS.

SYMBOL	DESCRIPTION	DATE	APR
*	REVISIONS	03/04/2007	

DESIGNED BY: MW
DATE: 01-25-07
DWN BY: TSR
SUBMITTED BY: R. KOIRTYOHANN CHIEF, PROJ SITE DEV
CHK BY: REK/ HMH
FILE NO.: AF0609 --C101PN

US Army Corps of Engineers
Transatlantic Programs Center

AFGHAN NATIONAL POLICE COMPANY COMPOUND
VARIOUS, AFGHANISTAN

SITE PLAN

SHEET REFERENCE NUMBER:
C-1

af0609--c01pn.dwg
3/31/2007 1:21 PM
AED, AED, USACE

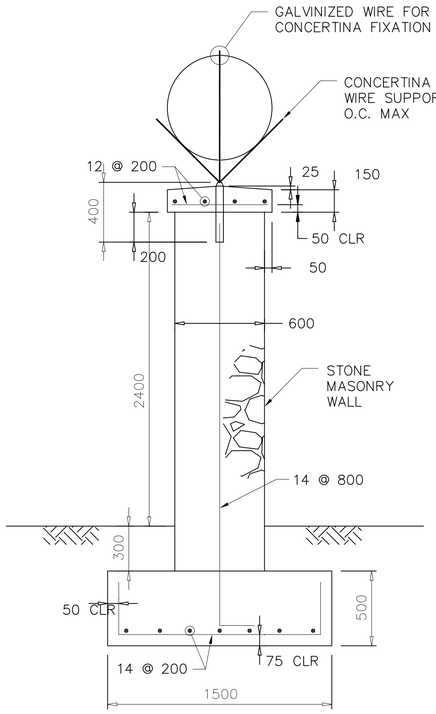

SECTION A
NOT TO SCALE

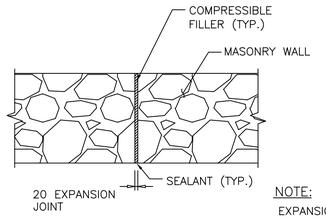

NOTE:
EXPANSION JOINTS SHALL BE SPACED A MAXIMUM OF 40,000.

STONE WALL
EXPANSION JOINT DETAIL
NOT TO SCALE

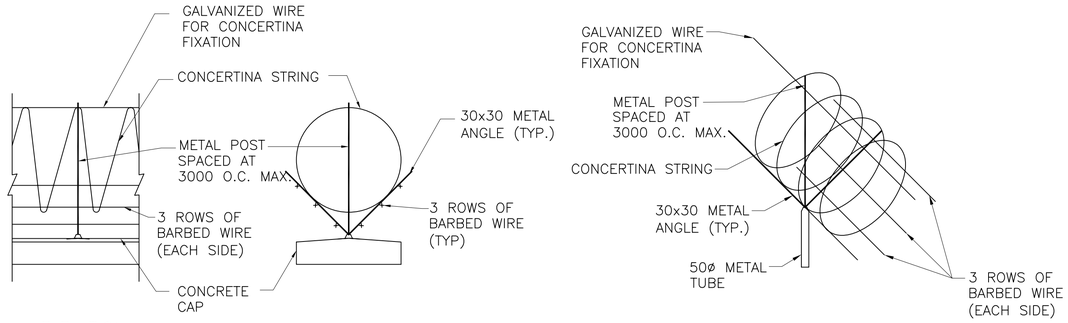

ELEVATION

SECTION

ISOMETRIC VIEW

CONCERTINA STRING & BARBED WIRE DETAILS
NOT TO SCALE

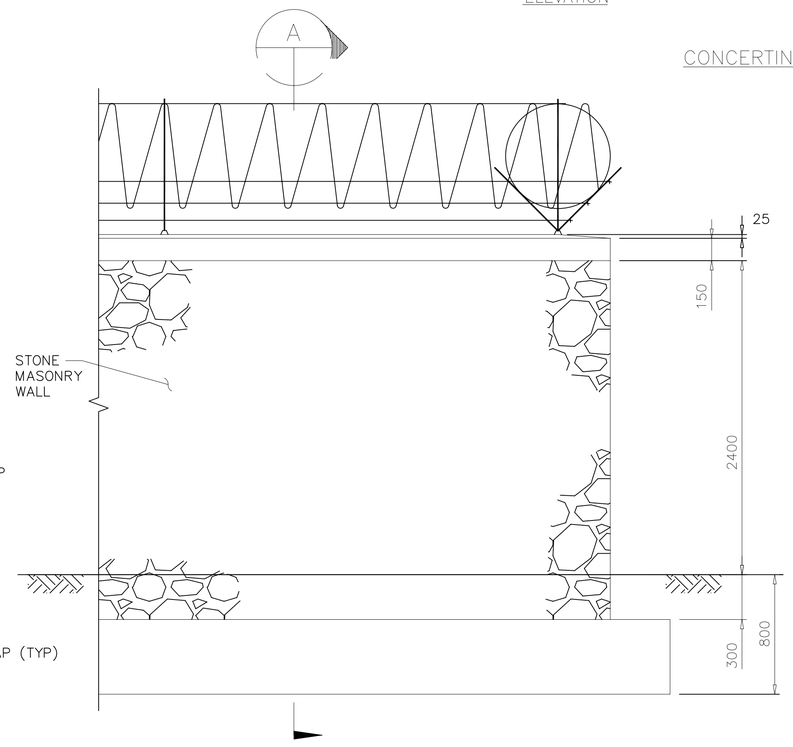

ELEVATION B
NOT TO SCALE

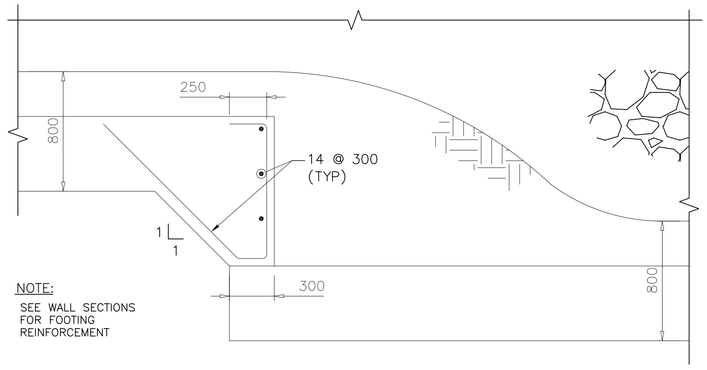

NOTE:
SEE WALL SECTIONS FOR FOOTING REINFORCEMENT

STEPPED FOOTING DETAIL FOR
GRADE CHANGE GREATER THAN 15 DEGREES
NOT TO SCALE

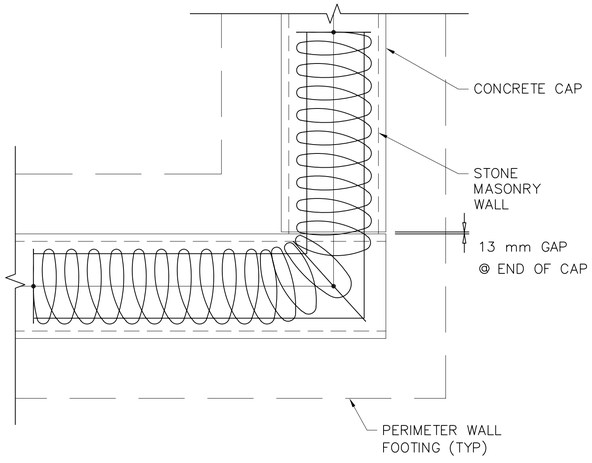

PERIMETER – STONE WALL CORNER – PLAN
(END CONDITION SIMILAR)
NOT TO SCALE

UNLESS OTHERWISE NOTED, LINEAR DIMENSIONS SHOWN ARE IN MILLIMETERS.

SYMBOL	DESCRIPTION	DATE	APR

DESIGNED BY: MW
DWN BY: TSR
CHK BY: REK
DATE: 01-25-07
SUBMITTED BY: R. KOIRTYOHANN
CHIEF, TECH SITE DEV
FILE NO.: AF0609 --CI02DT

US Army Corps of Engineers
Transatlantic Programs Center

AFGHAN NATIONAL POLICE COMPANY COMPOUND
VARIOUS, AFGHANISTAN

WALL DETAILS

SHEET REFERENCE NUMBER:
C-2

af0609--ci02dt.dwg
3/31/2007 1:24 PM
AED, AED, USACE

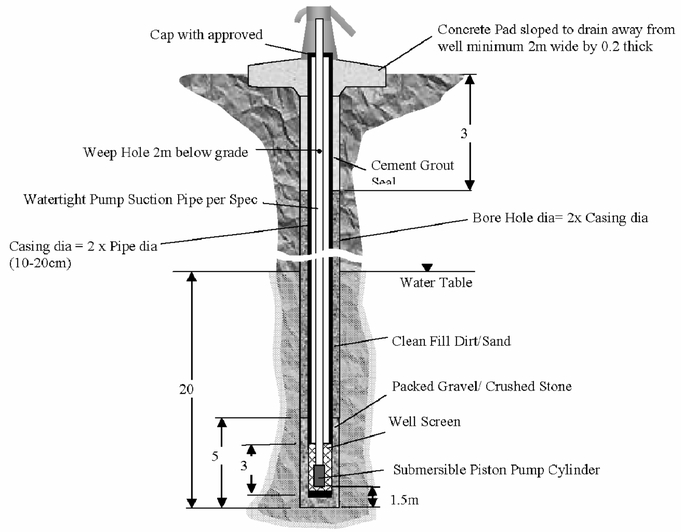

Sample Well Installation Drawing

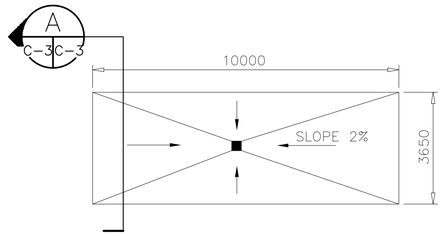

VEHICLE FUEL POINT PAVEMENT

NOT TO SCALE

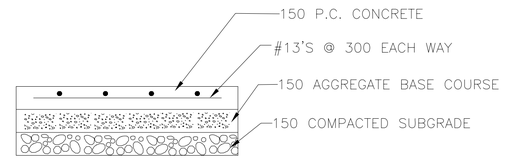

SECTION A C-3 C-3

NOT TO SCALE

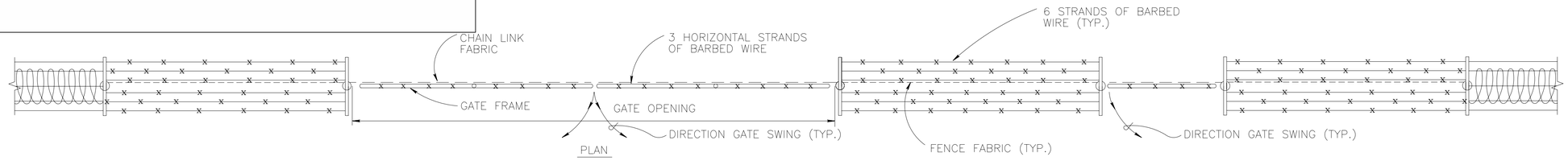

PLAN

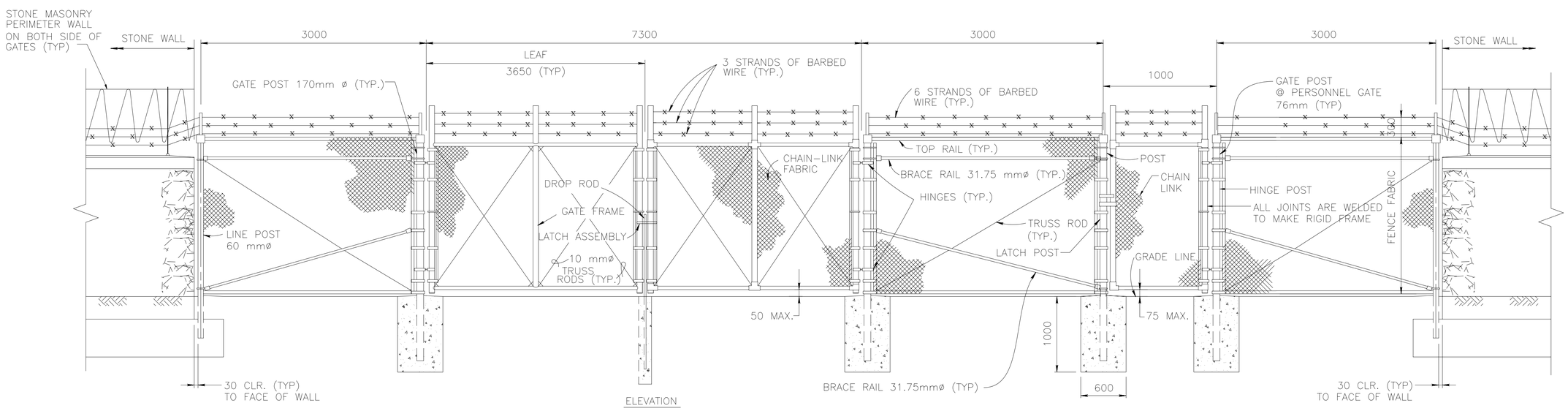

ELEVATION

DOUBLE SWING GATE

NTS

PERSONNEL GATE

NTS

UNLESS OTHERWISE NOTED, LINEAR DIMENSIONS SHOWN ARE IN MILLIMETERS.

SYMBOL	DESCRIPTION	DATE	APR

DESIGNED BY: MW
DWN BY: TSR
CHK BY: REK
DATE: 01-25-07
SUBMITTED BY: R. KOIRTYOHANN CHIEF, PROJ SITE DEV
FILE NO.: AF0609 ---CI03DT

US Army Corps of Engineers
Transatlantic Programs Center

AFGHAN NATIONAL POLICE COMPANY COMPOUND
VARIOUS, AFGHANISTAN

DETAILS

SHEET REFERENCE NUMBER:

C-3

3/31/2007 1:26 PM

AED AED, USACE

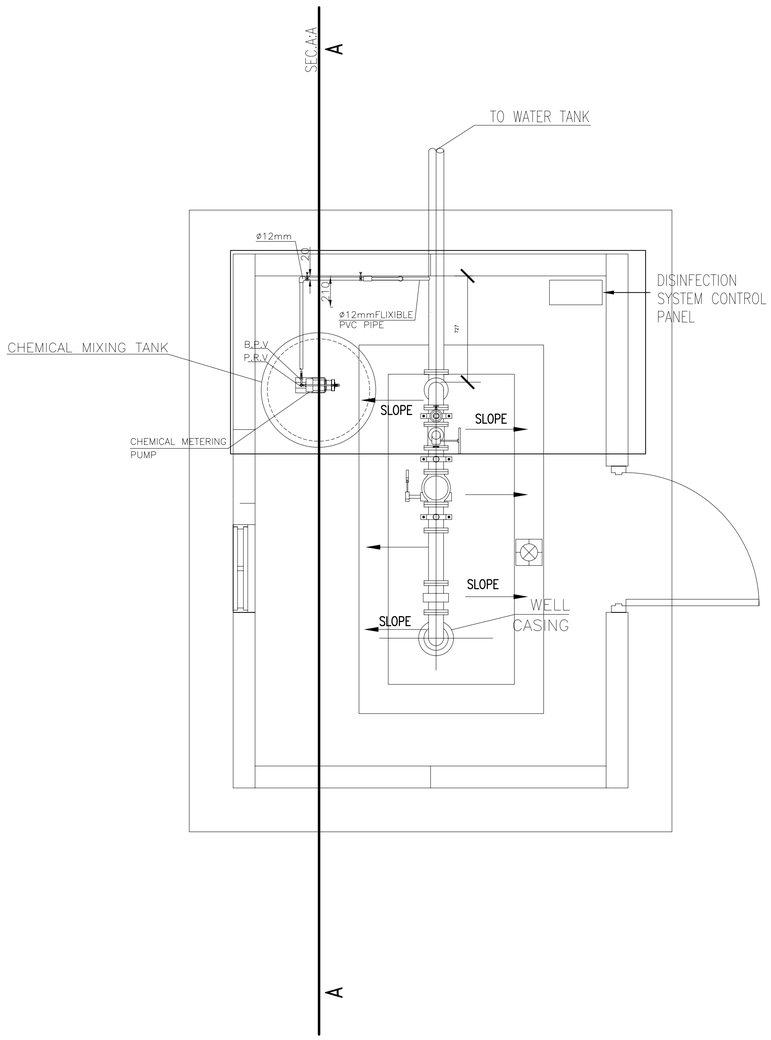

FLOOR PLAN
NOT TO SCALE

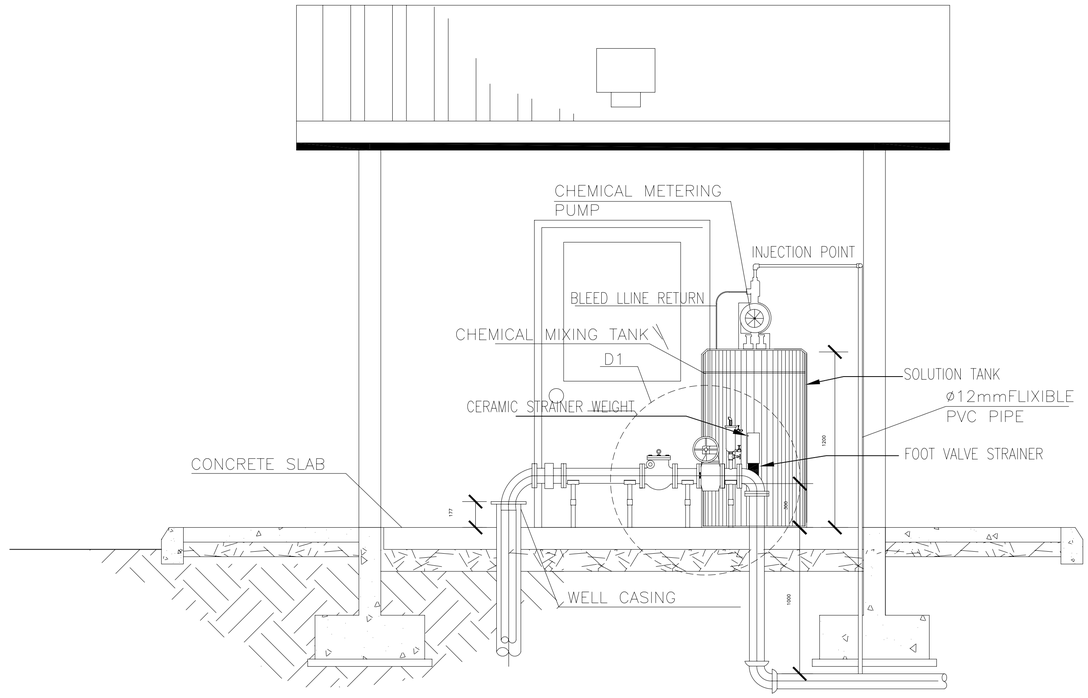

SECTION A–A
NOT TO SCALE

UNLESS OTHERWISE NOTED, LINEAR DIMENSIONS SHOWN ARE IN MILLIMETERS.

SYMBOL	DESCRIPTION	DATE	APR

DESIGNED BY: MW
DATE: 01–25–07
DWN BY: TSR
SUBMITTED BY: R. KOIRTYOHANN CHIEF, CPD SITE DEV
CHK BY: REK
FILE NO.: AF0609 ––CI04DT

US Army Corps of Engineers
Transatlantic Programs Center

AFGHAN NATIONAL POLICE COMPANY COMPOUND
VARIOUS, AFGHANISTAN

WELL PLAN DETAILS

SHEET REFERENCE NUMBER:
C–4

af0609––ci02dt.dwg
3/31/2007 1:24 PM
AED, AED, USACE

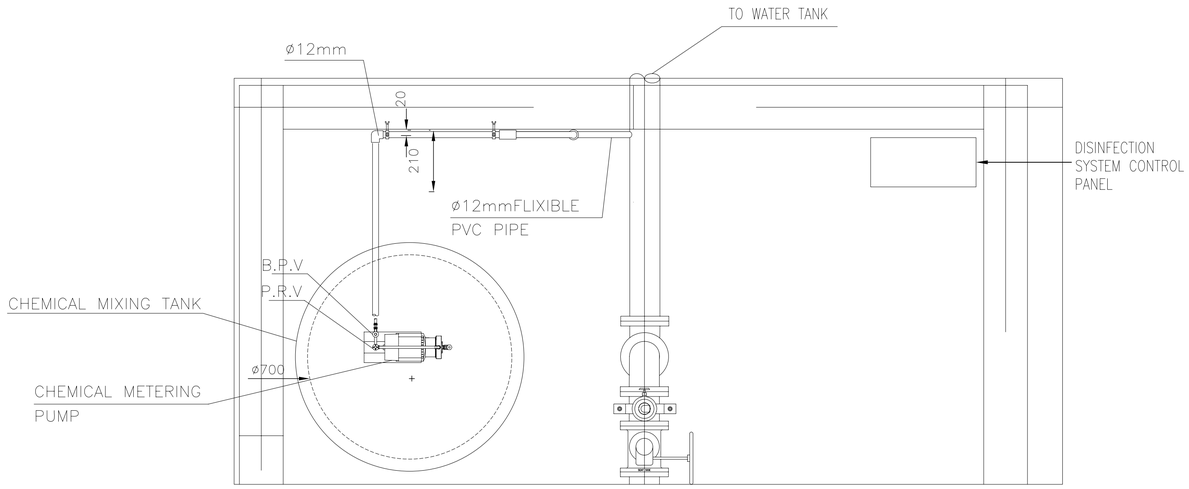

DETAIL 2
NOT TO SCALE

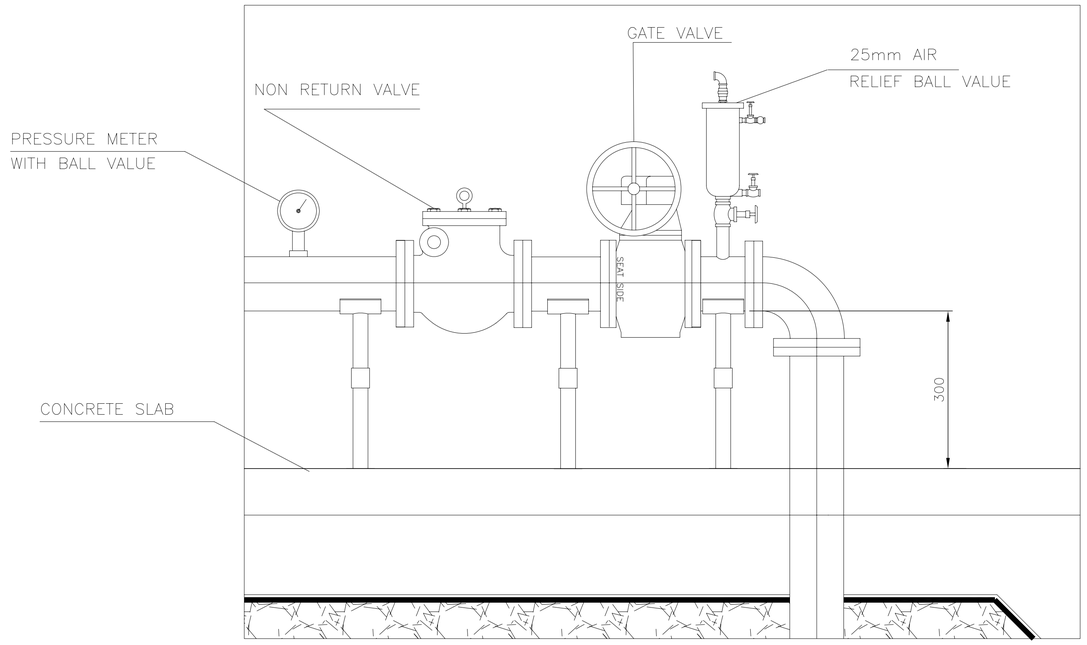

DETAIL 1
NOT TO SCALE

UNLESS OTHERWISE NOTED, LINEAR DIMENSIONS SHOWN ARE IN MILLIMETERS.

SYMBOL	DESCRIPTION	DATE	APR

DESIGNED BY: MW
DATE: 01-25-07
DWN BY: TSR
SUBMITTED BY: R. KOIRTYOHANN
CHIEF, PROJ SITE DEV
CHK BY: REK
FILE NO.: AF0609 --CI05DT

US Army Corps of Engineers
Transatlantic Programs Center

AFGHAN NATIONAL POLICE COMPANY COMPOUND
VARIOUS, AFGHANISTAN

WELL PLAN AND SECTION

SHEET REFERENCE NUMBER:
C-5

af0609---ci02dt.dwg
3/31/2007 1:24 PM
AED AED, USACE

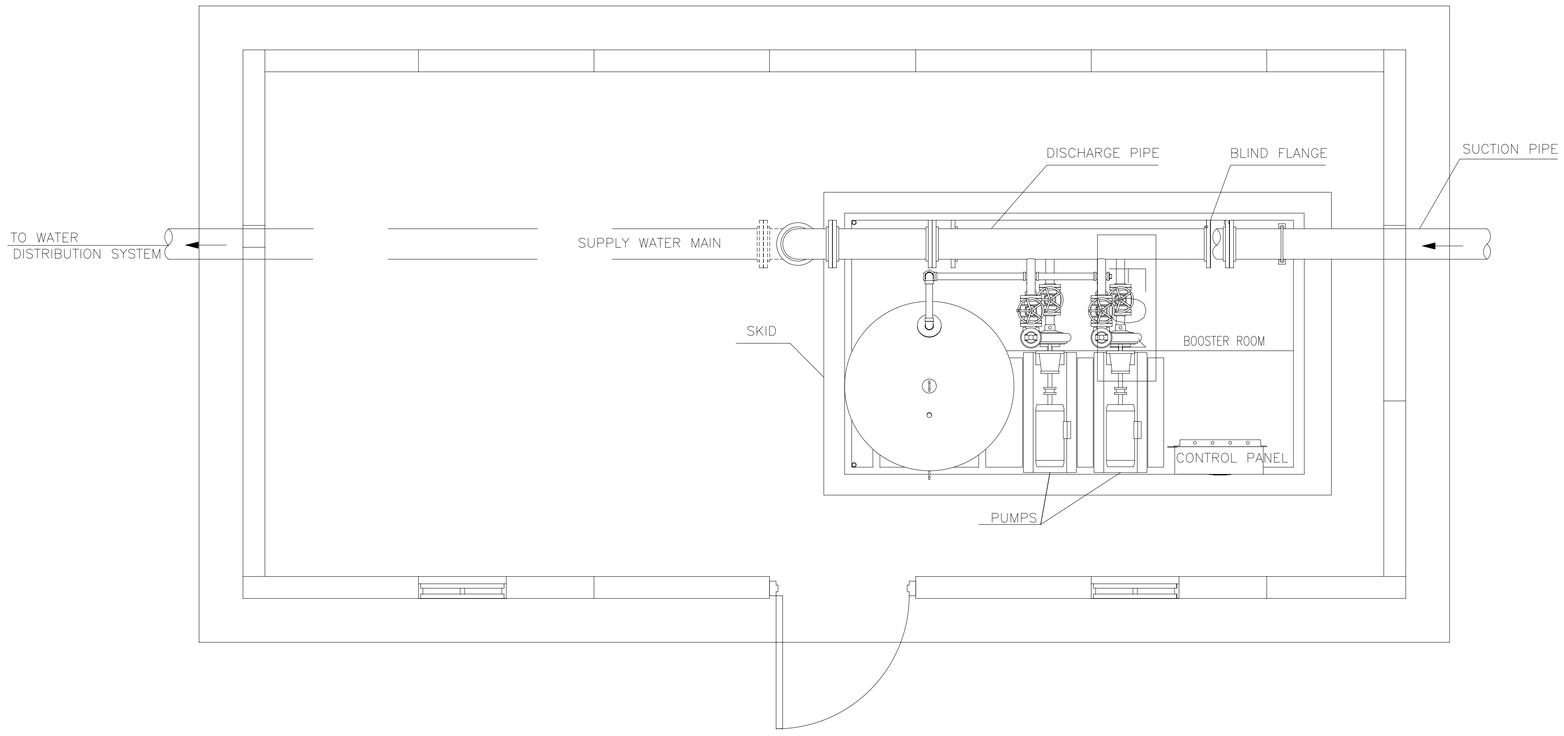

BOOSTER STATION DETAIL

NTO TO SCALE

UNLESS OTHERWISE NOTED, LINEAR DIMENSIONS SHOWN ARE IN MILLIMETERS.

SYMBOL	DESCRIPTION	DATE	APR

DESIGNED BY: MW
DATE: 01-25-07
DWN BY: TSR
SUBMITTED BY: R. KOIRTYOHANN
CHIEF, PROJ SITE DEV
CHK BY: REK
FILE NO.: AF0609 --CI06DT

US Army Corps of Engineers
Transatlantic Programs Center

AFGHAN NATIONAL POLICE COMPANY COMPOUND
VARIOUS, AFGHANISTAN

BOOSTER STATION

SHEET REFERENCE NUMBER:
C-6

af0609--ci02dt.dwg
3/31/2007 1:24 PM
AED, AED, USACE

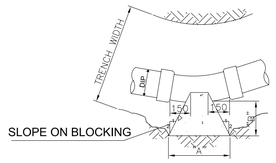

PLAN VIEW

NOTE:
VERTICAL HIGHT "C" DIMENSION

45°	A	B	C
50	100	NOTE 9	300
75	200	NOTE 9	400
100	300	NOTE 9	400
150	500	NOTE 9	500

22 1/2°	A	B	C
50	100	NOTE 9	200
75	200	NOTE 9	300
100	200	NOTE 9	300
150	400	NOTE 9	400

BLOCKING DETAIL FOR 22 1/2° & 45° BENDS

SCALE :NTS

D1

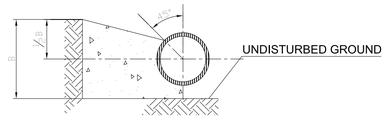

BENDS & TEES

SCALE 1:20

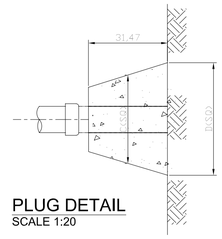

PLUG DETAIL

SCALE 1:20

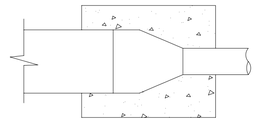

REDUCER DETAIL

SCALE 1:20

D2

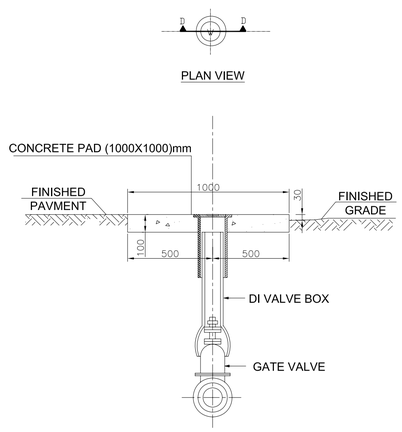

INLINE VALVE BLOCKING DETAIL

SCALE :NTS

D3

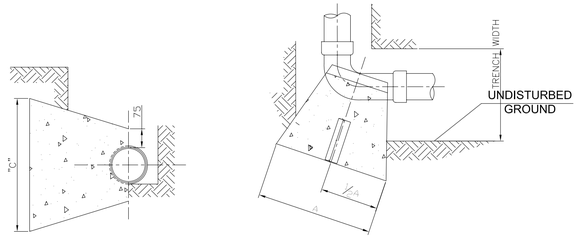

CROSS SECTION

PLAN VIEW

90°	A	B	C
50	200	NOTE 9	300
75	300	NOTE 9	400
100	400	NOTE 9	500
150	600	NOTE 9	700

BLOCKING DETAIL FOR 90° ELBOWS

SCALE :NTS

D4

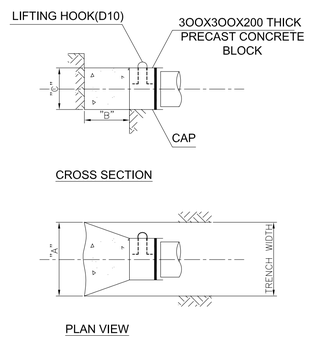

	A	B	C
50	200	NOTE 9	300
75	300	NOTE 9	400
100	300	NOTE 9	500
150	500	NOTE 9	700

BLOCKING DETAIL FOR DEADEND AND BRANCHES

SCALE :NTS

D5

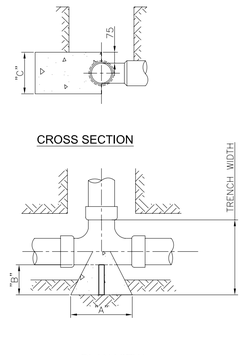

TEE	A	B	C
50	200	NOTE 9	300
75	300	NOTE 9	400
100	300	NOTE 9	500
150	500	NOTE 9	700

BLOCKING DETAIL FOR TEE

SCALE :NTS

D6

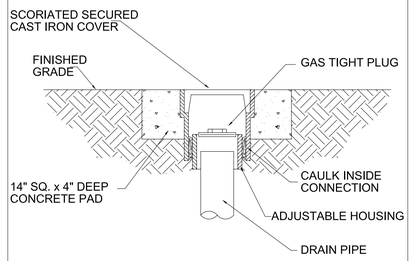

CLEANOUT TO GRADE

SCALE. NTS

D7

NOTE

1. REACTION BEARING AREAS SHALL BE IN A VERTICAL PLAN IN THE TRENCH SIDE AT AN ANGLE OF 90° TO THE THRUST VECTOR.
2. CONCRETE BLOCKING IS TO BE FORMED TO ENSURE ACCESSIBILITY TO FITTING AND POURED AGAINST UNDISTURBED EARTH.
3. FITTING ARE TO COMPLETELY WRAPPED WITH PLASTIC,PRIOR TO POURING CONCRETE.
4. CONCRETE SHALL BE 20 MPa.
5. CONCRETE SHALL NOT CONTACT BOLTS OR ENDS OF MECHANICAL JOINT FITTINGS.
6. TRENCHES SHALL CONFORM TO STANDARD BEDDING DETAIL
7. NOT USED
8. ALL BENDS AND INTERSECTION SHALL HAVE CONCRETE THRUST BLOCKING .
9. USE ONE HALF TRENCH WIDTH PLUS 75mm.

UNLESS OTHERWISE NOTED, LINEAR DIMENSIONS SHOWN ARE IN MILLIMETERS.

SYMBOL	DESCRIPTION	DATE	APR

DESIGNED BY: MW
DATE: 01-25-07
DWN BY: TSR
SUBMITTED BY: R. KOIRTYOHANN CHIEF, CONTRACT SITE OPS
CHK BY: REK
FILE NO.: AF0609 --CI07DT

US Army Corps of Engineers
Transatlantic Programs Center

AFGHAN NATIONAL POLICE COMPANY COMPOUND
VARIOUS, AFGHANISTAN

PIPING DETAILS

SHEET REFERENCE NUMBER:
C-7

af0609---ci02dt.dwg
3/31/2007 1:24 PM
AED AED, USACE

NOTE: Hand tamp the backfill fully at the sides of the pipe while tamping lightly over the crown. Hand tamping should continue until a minimum thickness of 300mm has been placed over the pipe.

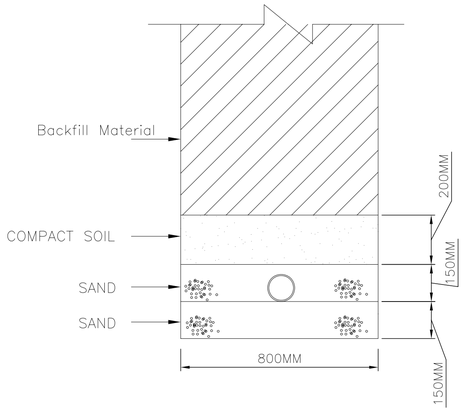

FOR WATER PIPES

NOTE: Hand tamp the backfill fully at the sides of the pipe while tamping lightly over the crown.Hand tamping should continue until a minimum thickness of 300mm has been placed over the pipe.

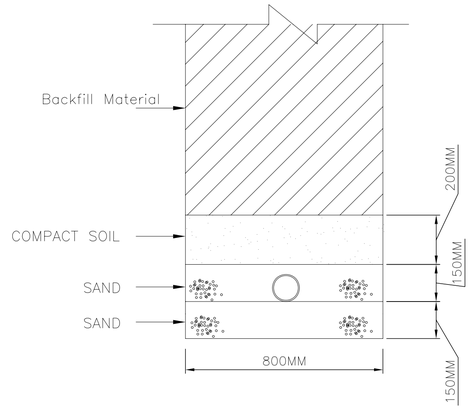

FOR SEWER PIPES

NOTE:WATER LINES LESS THAN 1250mm DEEP UNDER ROAD CROSSING SHALL HAVE A REINFORCED CONCRETE COVER OF AT LEAST 150mm THICKNESS AROUND THE PIPE

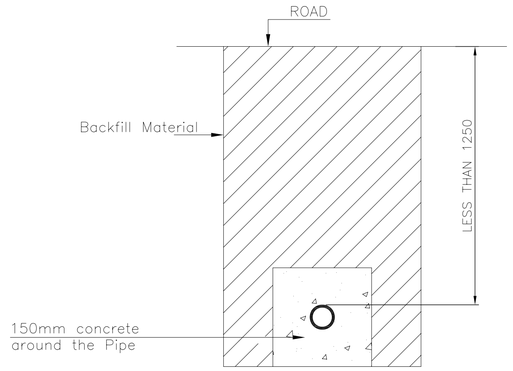

WATER OR SEWER PIPES UNDER THE ROAD

NOTE:

1. WHERE WATER LINES CROSS UNDER GRAVITY FLOW SEWER LINES, THE SEWER PIPE, FOR A DISTANCE OF AT LEAST 3000MM EACH SIDE OF THE CROSSING, SHALL BE FULLY ENCASED IN CONCRETE OR SHALL BE MADE OF PRESSURE PIPE WITH NO JOINT LOCATED WITHIN 900MM HORIZONTALLY OF THE CROSSING.

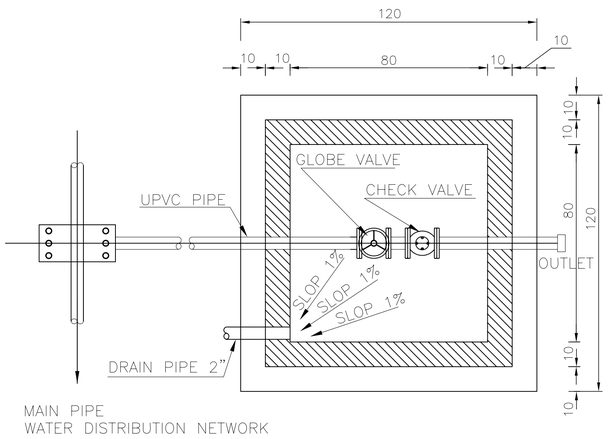

PIPE CONNECTION TO BUILDING PLAN

SCALE: 1:20

A
CO-P-08

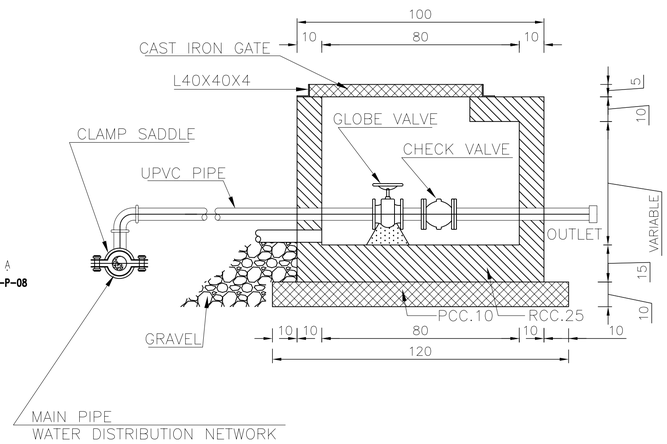

WATER DISTRIBUTION SECTION A–A

SCALE: 1:20

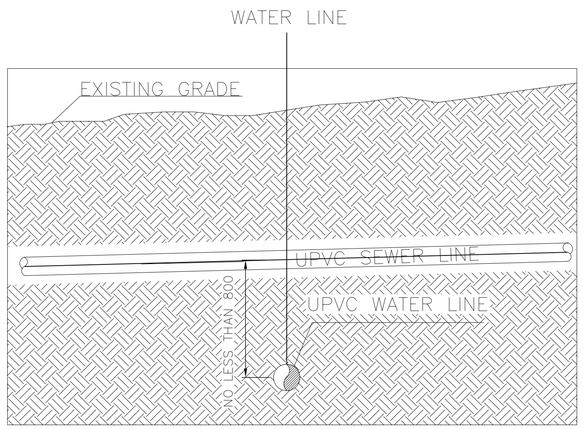

WATER AND SEWER PIPE VERTICAL CROSS SECTION

SCALE: NTS

UNLESS OTHERWISE NOTED, LINEAR DIMENSIONS SHOWN ARE IN MILLIMETERS.

SYMBOL	DESCRIPTION	DATE	APR

DESIGNED BY: MW	DATE: 01–25–07	
DWN BY: TSR	SUBMITTED BY: R. KOIRTYOHANN CHIEF, CPD SITE DEV	
CHK BY: REK	FILE NO.: AF0609 ––CI08DT	

US Army Corps of Engineers
Transatlantic Programs Center

AFGHAN NATIONAL POLICE COMPANY COMPOUND
VARIOUS, AFGHANISTAN

STANDARD PLUMBING DETAILS

SHEET REFERENCE NUMBER:
C–8

af0609––ci02dt.dwg
3/31/2007 1:24 PM
AED, AED, USACE

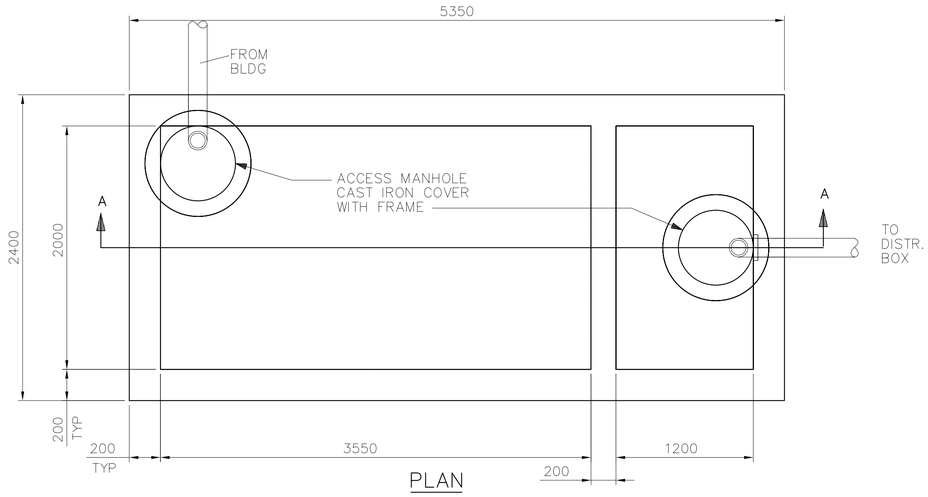

PLAN

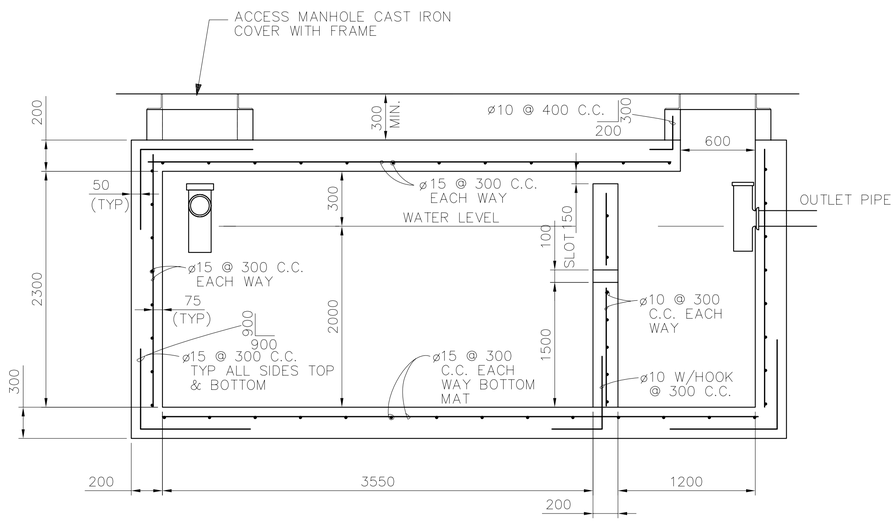

SECTION A–A

CONCRETE SEPTIC TANK DETAILS

NOT TO SCALE

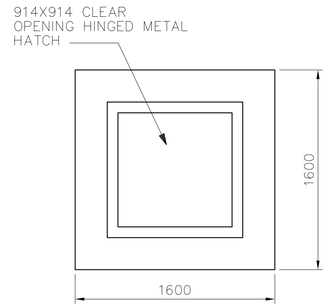

TOP SLAB PLAN

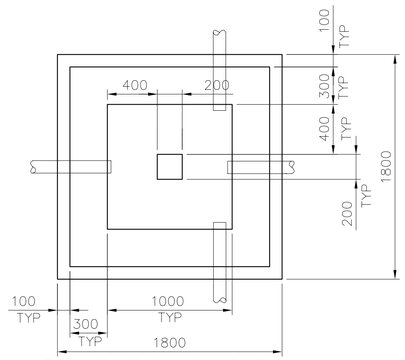

FOUNDATION SLAB PLAN

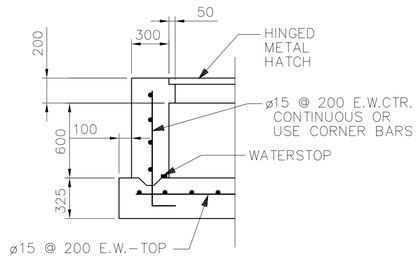

TYP WALL SECTION

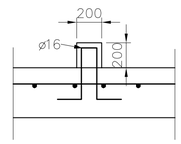

SECTION

DISTRIBUTION BOX

NOT TO SCALE

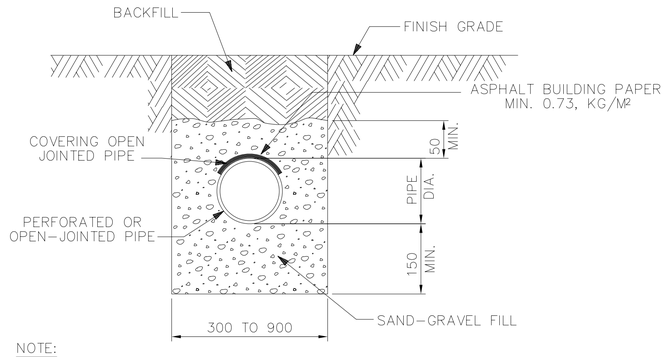

NOTE:
OPEN JOINTS SHALL BE 5 – 10mm WIDE.

TILE FIELD, TRENCH

NOT TO SCALE

UNLESS OTHERWISE NOTED, LINEAR DIMENSIONS SHOWN ARE IN MILLIMETERS.

SYMBOL	DESCRIPTION	DATE	APR

DESIGNED BY: MW
DWN BY: TSR
CHK BY: REK
DATE: 01–25–07
SUBMITTED BY: R. KOIRTYOHANN
CHIEF, CONTRACT SITE DEV
FILE NO.: AF0609 ---CI09DT

US Army Corps of Engineers
Transatlantic Programs Center

AFGHAN NATIONAL POLICE COMPANY COMPOUND
VARIOUS, AFGHANISTAN

SEPTIC TANK DETAILS

SHEET REFERENCE NUMBER:
C–9

af0609---ci02dt.dwg
3/31/2007 1:24 PM
AED, AED, USACE

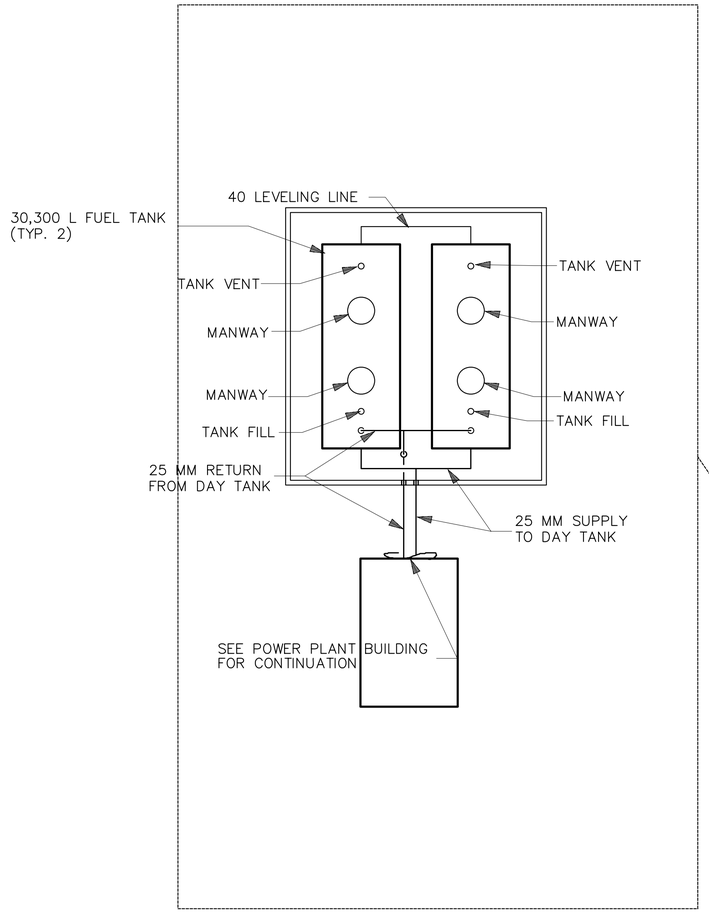

ENLARGED MECHANICAL SITE PLAN

SCALE 1: 100

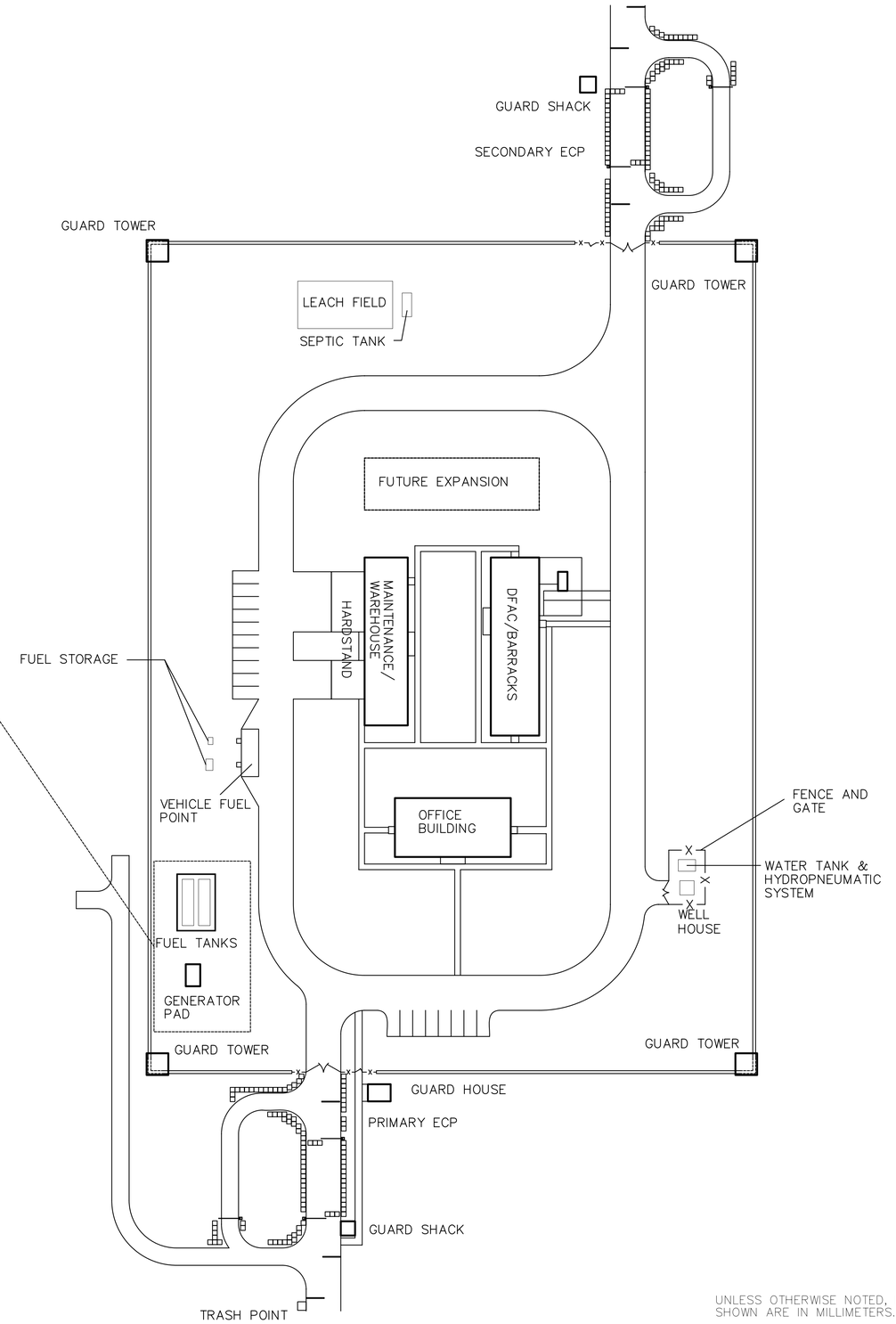

UNLESS OTHERWISE NOTED, LINEAR DIMENSIONS SHOWN ARE IN MILLIMETERS.

SYMBOL	DESCRIPTION	DATE	APR

DESIGNED BY: JMR
DATE: 01-25-07
DWN BY: JMR
SUBMITTED BY: MICHAEL HOWELL (PRIME FOTT BLDG SYSTEMS)
CHK BY: RMS/HMH
FILE NO.: AF0609 -MS01PN

US Army Corps of Engineers
Transatlantic Programs Center

AFGHAN NATIONAL POLICE COMPANY COMPOUND
VARIOUS, AFGHANISTAN
SITE DESIGN
GENERATOR FUEL SUPPLY LAYOUT

SHEET REFERENCE NUMBER:
XM-1

af0609-MS01PN.dwg
3/31/2007 3:58 PM
AED AED, USACE

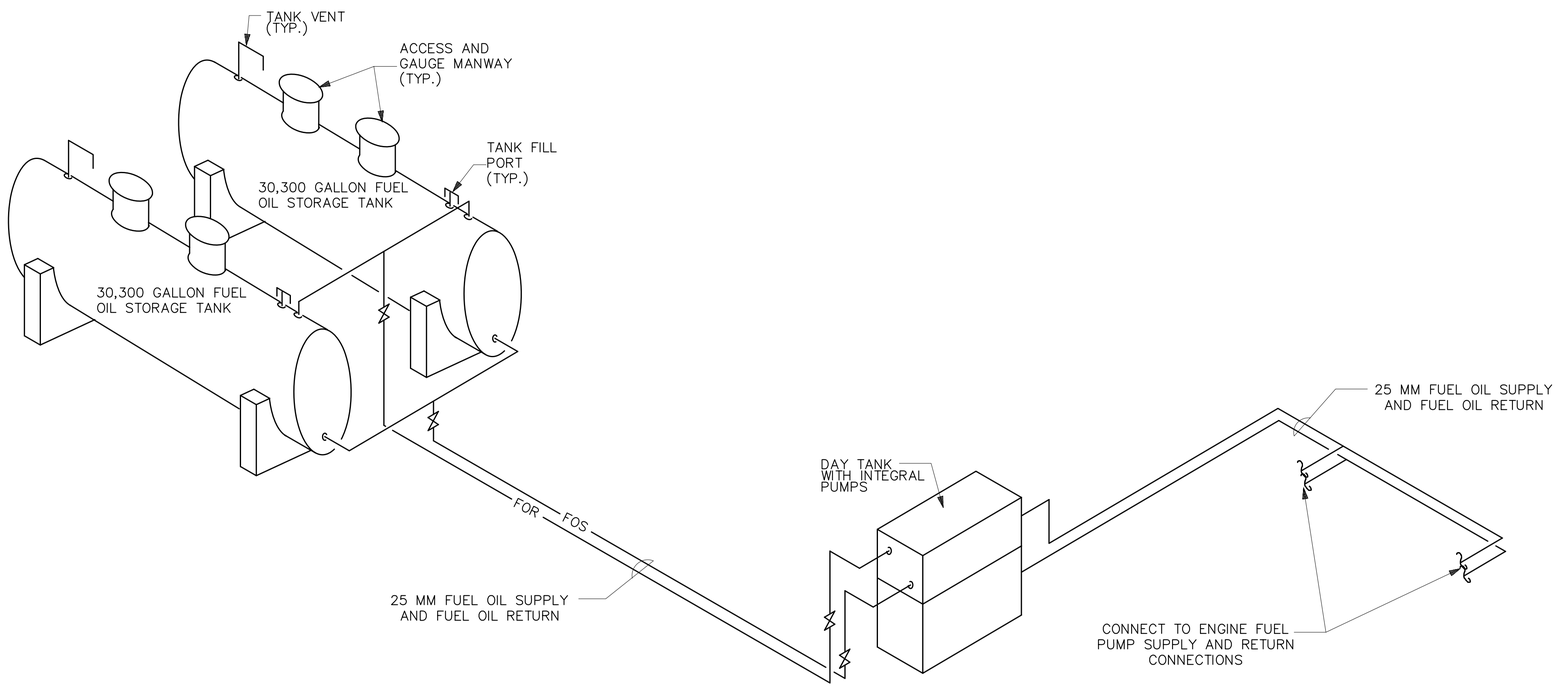

FUEL OIL SCHEMATIC
N.T.S.

UNLESS OTHERWISE NOTED, LINEAR DIMENSIONS SHOWN ARE IN MILLIMETERS.

SYMBOL	DESCRIPTION	DATE	APR

DESIGNED BY: JMR
DWN BY: JMR
CHK BY: RMS
DATE: 01-25-07
SUBMITTED BY: MICHAEL HOWELL
CHIEF, FDTD BLDG SYSTEMS
FILE NO.: AF0609 -- MS02DI

US Army Corps of Engineers
Transatlantic Programs Center

AFGHAN NATIONAL POLICE COMPANY COMPOUND
VARIOUS, AFGHANISTAN
SITE DESIGN
FUEL OIL SCHEMATIC

SHEET REFERENCE NUMBER:
XM-2

af0609-MS02PN.dwg
3/31/2007 4:01 PM
AED AED, USACE

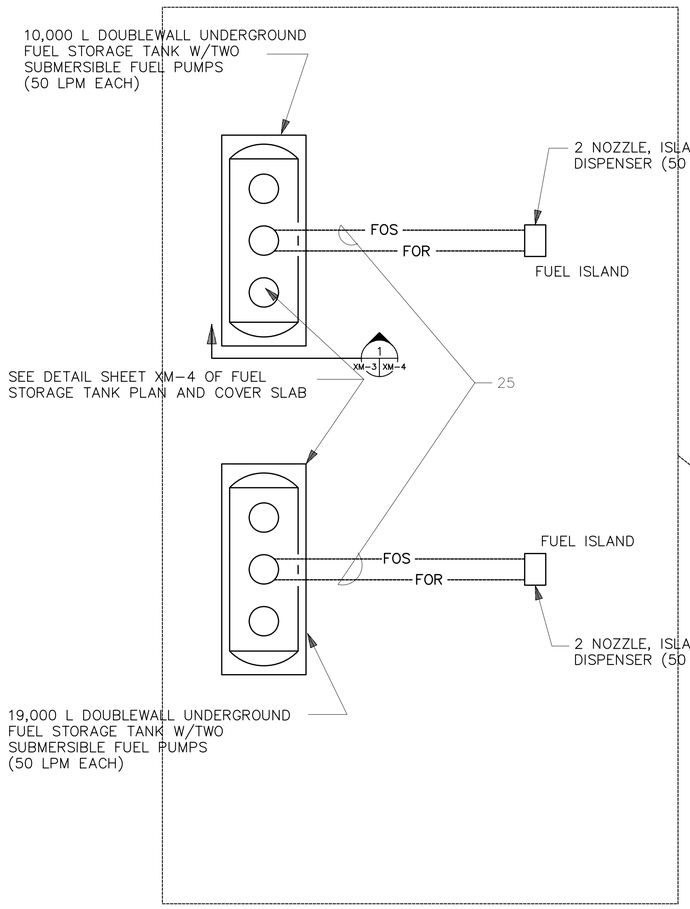

ENLARGED MECHANICAL SITE PLAN

SCALE: NTS

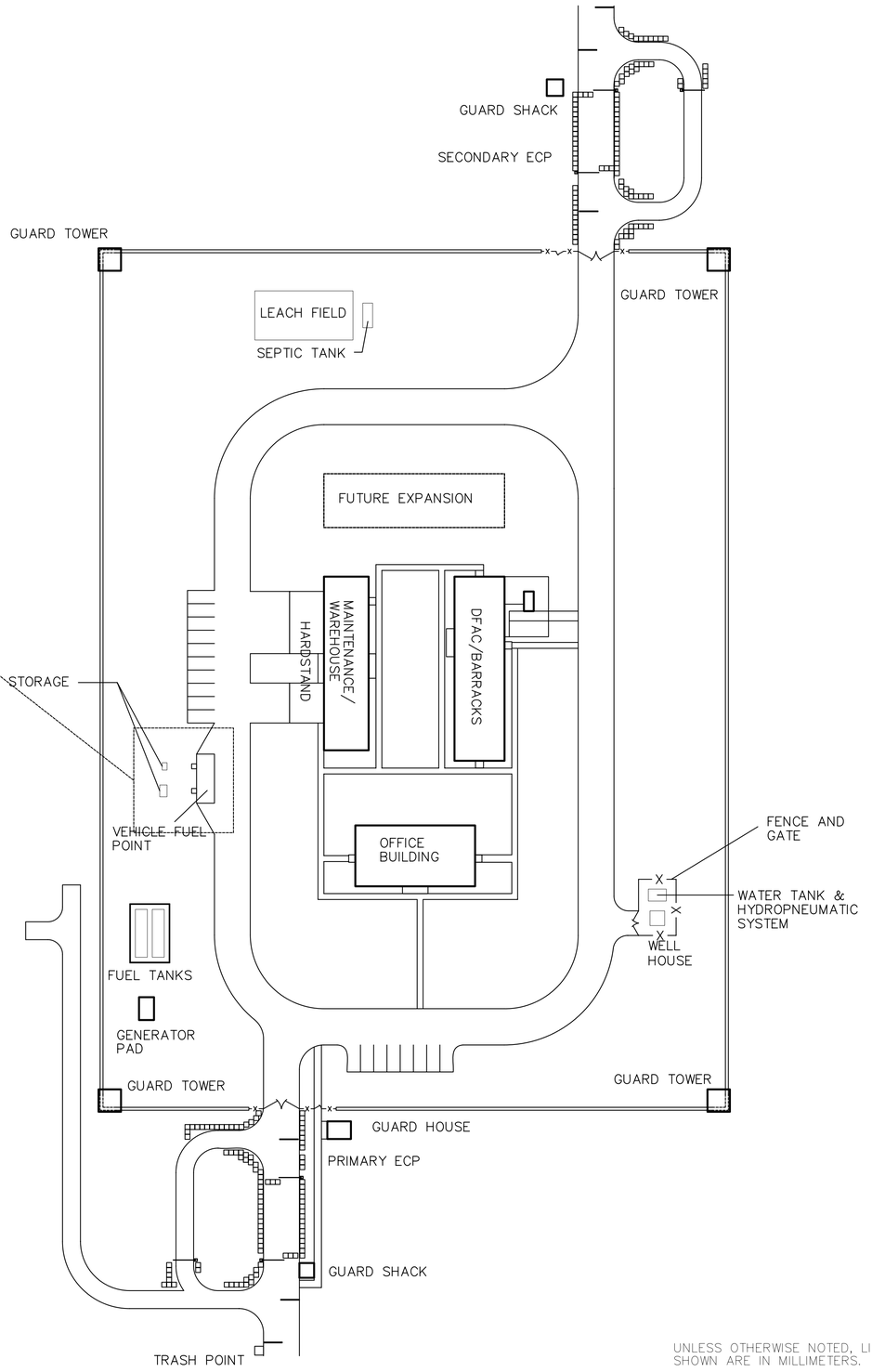

UNLESS OTHERWISE NOTED, LINEAR DIMENSIONS SHOWN ARE IN MILLIMETERS.

SYMBOL	DESCRIPTION	DATE	APR

DESIGNED BY: JMR
DATE: 01-25-07
DWN BY: JMR
SUBMITTED BY: MICHAEL HOWELL PROJECT MGT BLDG SYSTEMS
CHK BY: RMS/HMH
FILE NO.: AF0609 -MS03PN

US Army Corps of Engineers
Transatlantic Programs Center

AFGHAN NATIONAL POLICE COMPANY COMPOUND
VARIOUS, AFGHANISTAN
SITE DESIGN
VEHICLE FUEL POINT LAYOUT

SHEET REFERENCE NUMBER:
XM-3

af0609-MS03PN.dwg
3/31/2007 4:06 PM
AED AED, USACE

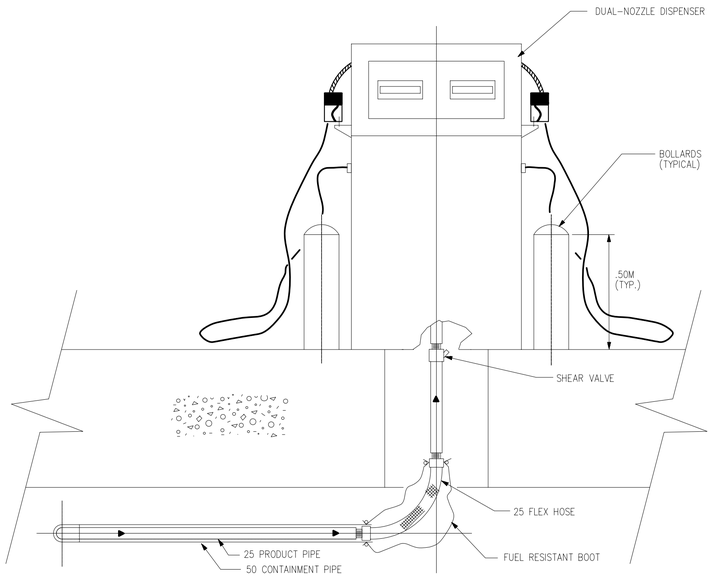

DISPENSER PIPING SECTION 2 MP1MP2

NTS

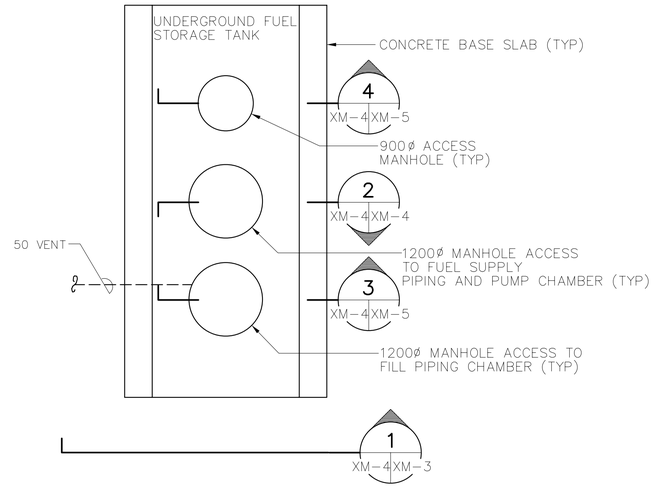

FUEL STORAGE TANK AND COVER SLAB PLAN

NOT TO SCALE

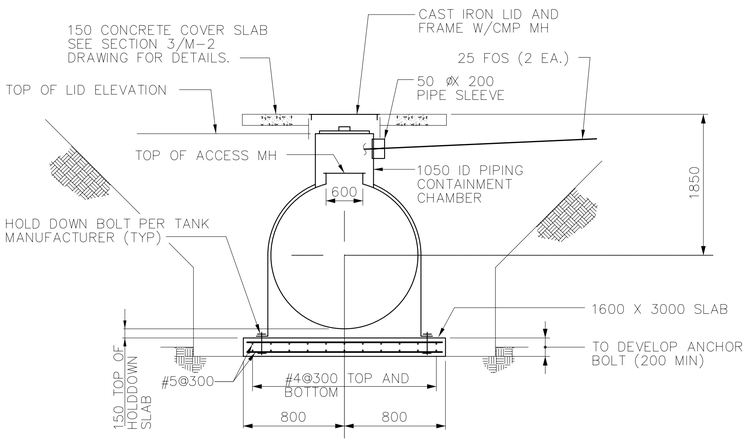

SECTION 1

NOT TO SCALE XM-4 XM-4

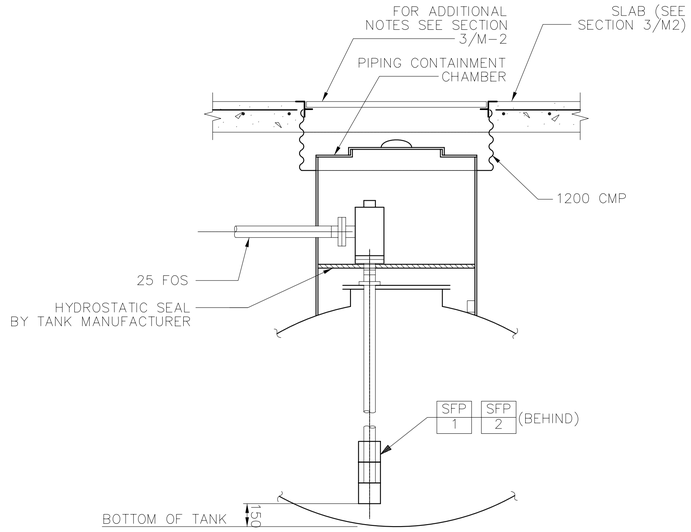

SECTION 2

NOT TO SCALE XM-4 XM-4

UNLESS OTHERWISE NOTED, LINEAR DIMENSIONS SHOWN ARE IN MILLIMETERS.

SYMBOL	DESCRIPTION	DATE	APR

DESIGNED BY: JMR
DATE: 01-25-07
DWN BY: JMR
SUBMITTED BY: MICHAEL HOWELL, PE, PTD, BLDG SYSTEMS
CHK BY: RMS
FILE NO.: AF0609 -- MS04DT

US Army Corps of Engineers
Transatlantic Programs Center

AFGHAN NATIONAL POLICE COMPANY COMPOUND
VARIOUS, AFGHANISTAN
SITE DESIGN
FUEL DETAILS

SHEET REFERENCE NUMBER:
XM-4

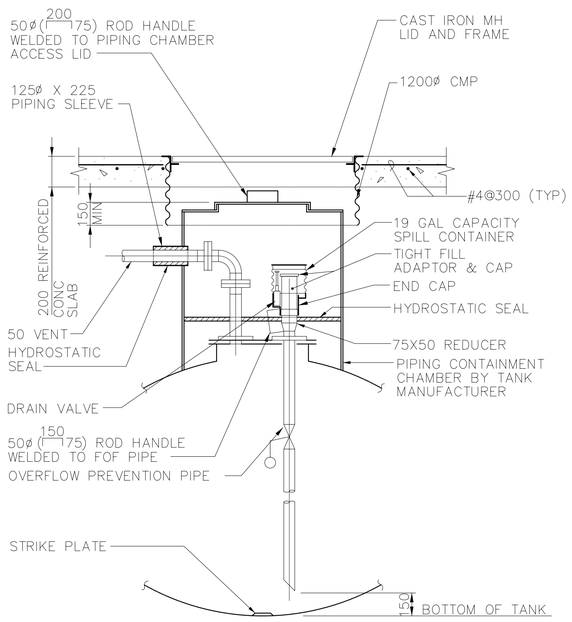

SECTION 3
NO SCALE XM-4 XM-5

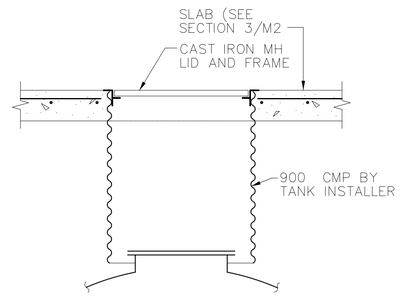

SECTION 4
NO SCALE XM-4 XM-5

SFP/X SUBMERSIBLE FUEL PUMP SCHEDULE

UNIT NUMBER	LOCATION	TYPE	FLOW RATE (LPM)	TOTAL HEAD (KPa)	ELECTRICAL REQUIREMENTS				REMARKS
					KW INPUT	VOLTS	PH	HZ	
SFP-1	FUEL TANK	SUBMERSIBLE	50	85	0.26	240	1	50	DISPENSER ON-OFF SWITCH
SFP-2	FUEL TANK	SUBMERSIBLE	50	85	0.26	240	1	50	DISPENSER ON-OFF SWITCH

UNLESS OTHERWISE NOTED, LINEAR DIMENSIONS SHOWN ARE IN MILLIMETERS.

SYMBOL	DESCRIPTION	DATE	APR

DESIGNED BY: JMR
DATE: 01-25-07
DWN BY: JMR
SUBMITTED BY: MICHAEL HOWELL
CHIEF, FOT, BLDG SYSTEMS
CHK BY: RMS
FILE NO.: AF0609 -MS05DT

US Army Corps of Engineers
Transatlantic Programs Center

AFGHAN NATIONAL POLICE COMPANY COMPOUND
VARIOUS, AFGHANISTAN
SITE DESIGN
FUEL DETAILS

SHEET REFERENCE NUMBER:
XM-5

af0609-MS05DT.dwg
3/31/2007 4:11 PM
AED, AED, USACE

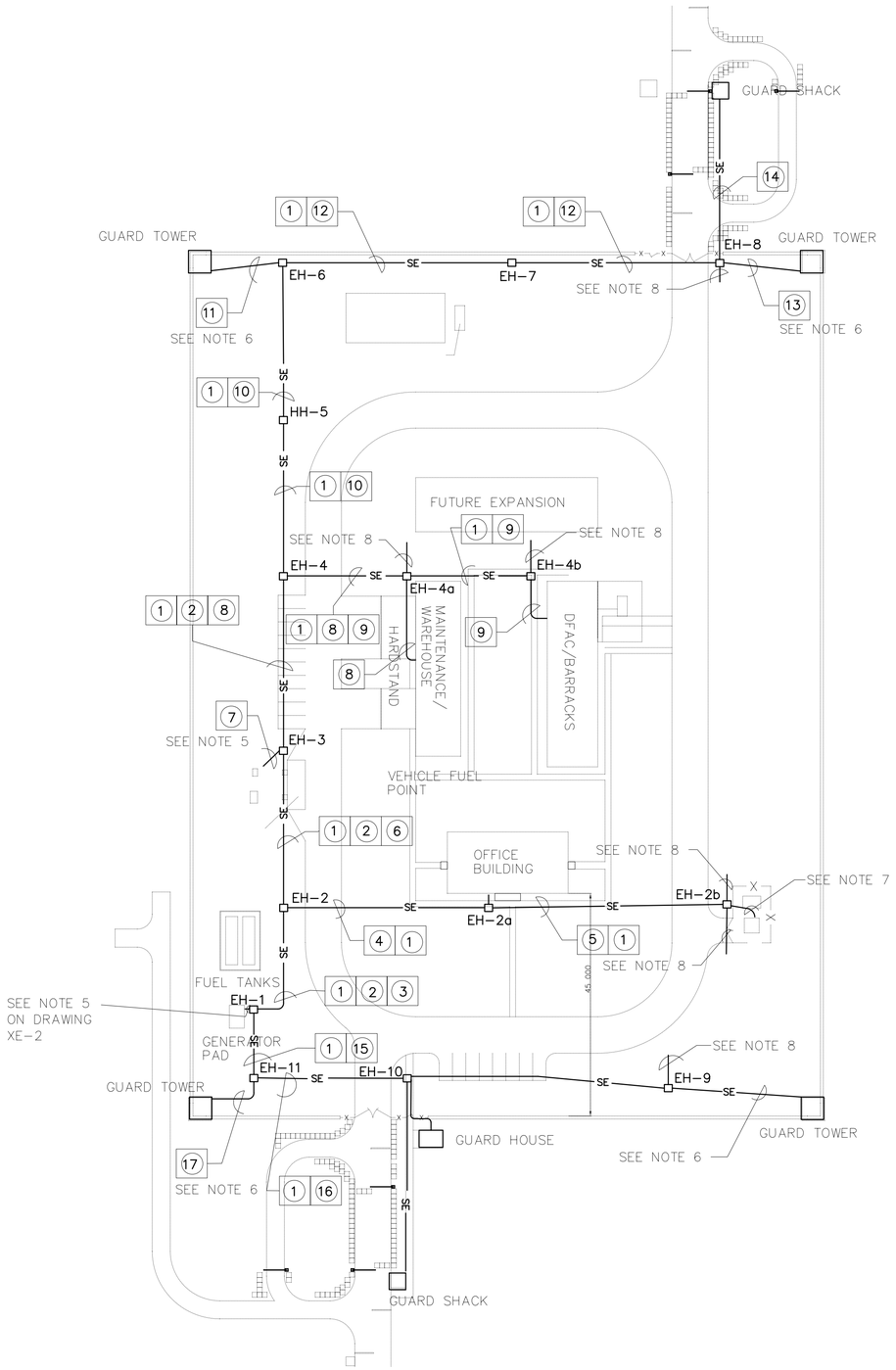

NOTES:

1. FOR LEGEND AND ABBREVIATIONS SEE DRAWING SE-1.
2. FOR SECONDARY DISTRIBUTION DIRECT BURIED (DB) DUCT DETAILS AND GENERATOR POWER PLANT DETAILS SEE SHEET SE-4 AND SE-6. FOR ELECTRICAL HAND HOLE (EH) DETAILS SEE SHEET SE-8.
3. FOR POWER PLANT ONE LINE DIAGRAM SEE DRAWING XE-2.
4. ALL SECONDARY DISTRIBUTION CABLES SHALL BE RACKED ON THE SIDES OF THE EH, SEE DETAIL ON SHEET SE-4.
5. PROVIDE DIRECT BURIED 50mm C FROM EH-3 TO FUEL PUMPING STATION DISCONNECT FOR SECONDARY POWER CKT PPSB-9. SEE DRAWING XE-2. CONTRACTOR SHALL COORDINATE LOCATION OF DISCONNECT AND DESIGN-BUILD FINAL POWER CKTs TO EACH FUEL PUMP AS REQUIRED AND AS APPROVED BY THE COR.
6. PROVIDE 50mm C FROM EH TO GUARD TOWER JUNCTION BOX FOR SECONDARY POWER CKT FROM PPSB. SEE DRAWING XE-2 AND GUARD TOWER DRAWING E-1 FOR SECONDARY POWER DISTRIBUTION SERVICE ENTRANCE.
7. PROVIDE DIRECT BURIED 50mm C FROM EH-2b TO CONTRACTOR DESIGN-BUILD WELL HOUSE POWER PANEL FOR SECONDARY POWER CKT PPSB-10.
8. PROVIDE DIRECT BURIED 100mm C FROM EH AS SHOWN STUBBED OUT 1.5M BEYOND THE EH, SIDE WALK, OR ROADWAY AS SHOWN. PROVIDE PULL STRING, CAP OFF CONDUIT, AND PROVIDE DUCT BANK MARKER ABOVE STUBBED OUT C.
9. ALL DIRECT BURIED PVC C 90 DEGREE BENDS SHALL HAVE A RADIUS OF NOT LESS THAN 92mm, OR NOT LESS THAN THE CABLE MANUFACTURERS RECOMMENCED CABLE BENDING RADIUS, WHICH EVER BEND RADIUS IS LARGER.
10. ALL CABLE SPLICES SHALL BE MADE IN AN EH AND IN ACCORDANCE WITH THE CABLE MANUFACTURERS RECOMMENDATIONS.

DIRECT BURIED DUCT SCHEDULE	
1	SPARE 100mm C, DIRECT BURIED (DB)
2	PPSB-CKT # 2, 6, 7, & 8 in 100mm C, DB
3	PPSB-CKT # 1, 3, 9, & 10 in 100mm C, DB
4	PPSB-CKT # 1 & 10 in 100mm C, DB
5	PPSB-CKT #10 in 100mm C, DB
6	PPSB-CKT # 3 & 9 in 100mm C, DB
7	PPSB-CKT # 9 in 50mm C, DB
8	PPSB-CKT # 3 in 100mm C, DB
9	PPSB-CKT # 2 in 100mm C, DB
10	PPSB-CKT # 6, 7, & 8 in 100mm C, DB
11	PPSB-CKT # 6 in 50mm C, DB
12	PPSB-CKT # 7 & 8 in 100mm C, DB
13	PPSB-CKT # 7 in 50mm C, DB
14	PPSB-CKT # 8 in 100mm C, DB
15	PPSB-CKT # 4 & 5 in 100mm C, DB
16	PPSB-CKT # 4 in 100mm C, DB
17	PPSB-CKT # 5 in 50mm C, DB
18	NOT USED
19	NOT USED

UNLESS OTHERWISE NOTED, LINEAR DIMENSIONS SHOWN ARE IN MILLIMETERS.

SYMBOL	DESCRIPTION	DATE	APR

DESIGNED BY: DLF
DATE: 01-25-07
DWN BY: FHG
SUBMITTED BY: MICHAEL HOWELL
CHK BY: RMS/HMH
FILE NO.: AF0609 --ES01PN

US Army Corps of Engineers
Transatlantic Programs Center

AFGHAN NATIONAL POLICE COMPANY COMPOUND
VARIOUS, AFGHANISTAN
SITE DESIGN
ELECTRICAL SITE PLAN

SHEET REFERENCE NUMBER:
XE-1

af0609--es01pn.dwg
3/31/2007 4:21 PM
AED AED, USACE

GENERATORS OPERATING LOGIC:

1. ONE GENERATOR SHALL OPERATE AT ALL TIMES.

2. WHEN THE OPERATING GENERATOR REACHES 90% OF IT'S RATED CAPACITY (104KW), THE SECOND GENERATOR SHALL START, SYNCHRONIZE WITH THE OPERATING GENERATOR AND COME ON-LINE TO SHARE THE TOTAL DEMAND LOAD EQUALLY.

3. WHEN THE TOTAL DEMAND LOAD ON THE SWITCHBOARD REACHES 80% OF THE FIRST GENERATOR RATING (92KW), THE SECOND GENERATOR SHALL COME OFF-LINE, RUN THROUGH A COOL DOWN CYCLE AND GO INTO A STAND-BY MODE.

4. GENERATOR SYNCHRONIZING EQUIPMENT SHALL BE ADJUSTABLE BETWEEN 60% TO 95% OF THE GENERATOR RATING.

NOTES:

1. FOR LEGEND AND ABBREVIATIONS SEE DRAWING SE-1.
2. FOR POWER PLANT GROUNDING DETAILS SEE SHEET SE-6.
3. CONTRACTOR SHALL CONFIRM THAT ALL FINAL CIRCUIT RATINGS ARE BASED ON THE ACTUAL NAMEPLATE OF THE CONTRACTOR SUPPLIED EQUIPMENT.
4. ALL SECONDARY DISTRIBUTION CABLE LENGTHS ARE ESTIMATED BASED ON THE CIVIL SITE PLAN. ALL SECONDARY DISTRIBUTION CABLE LENGTHS MAY VARY DEPENDENT ON ACTUAL SITE CONDITIONS AND THE FINAL APPROVED FACILITY SITE PLAN. THE CONTRACTOR SHALL VERIFY ALL FINAL CABLE LENGTHS.
5. ALL PPSB SECONDARY DISTRIBUTION CIRCUIT CONDUITS SHALL BE RAN FROM THE BOTTOM OF PPSB THROUGH GENERATOR CONCRETE SLAB TO EH-1 IN SCH 80 PVC CONDUIT AS INDICATED ON THE PANEL SCH. PPSB CKTs #1, 4, 5, 6, 9, & 10 CAN BE RAN THROUGH ANY OF THE 100mm CONDUITS. SEE DRAWING XE-1.
6. ALL SECONDARY DISTRIBUTION CABLES SHALL BE 600V - FOUR CORE OR TWO CORE (AS INDICATED) COPPER CONDUCTOR PVC INSULATED PVC SHEATHED CABLES (CU/PVC/PVC).
7. THE POWER PLANT SWITCHBOARD SHALL BE A MANUFACTURERS STANDARD PRODUCT WITH MOLDED CASE CKT BREAKERS, DEAD FRONT CONSTRUCTION IN AN APPROVED IP54 ENCLOSURE.
8. FOR A TYPICAL POWER PLANT EQUIPMENT LAYOUT SEE THE GROUNDING PLAN ON SHEET SE-6. THE CONTRACTOR SHALL DESIGN-BUILD THE POWER PLANT AND SUBMIT TO THE COR FOR APPROVAL.

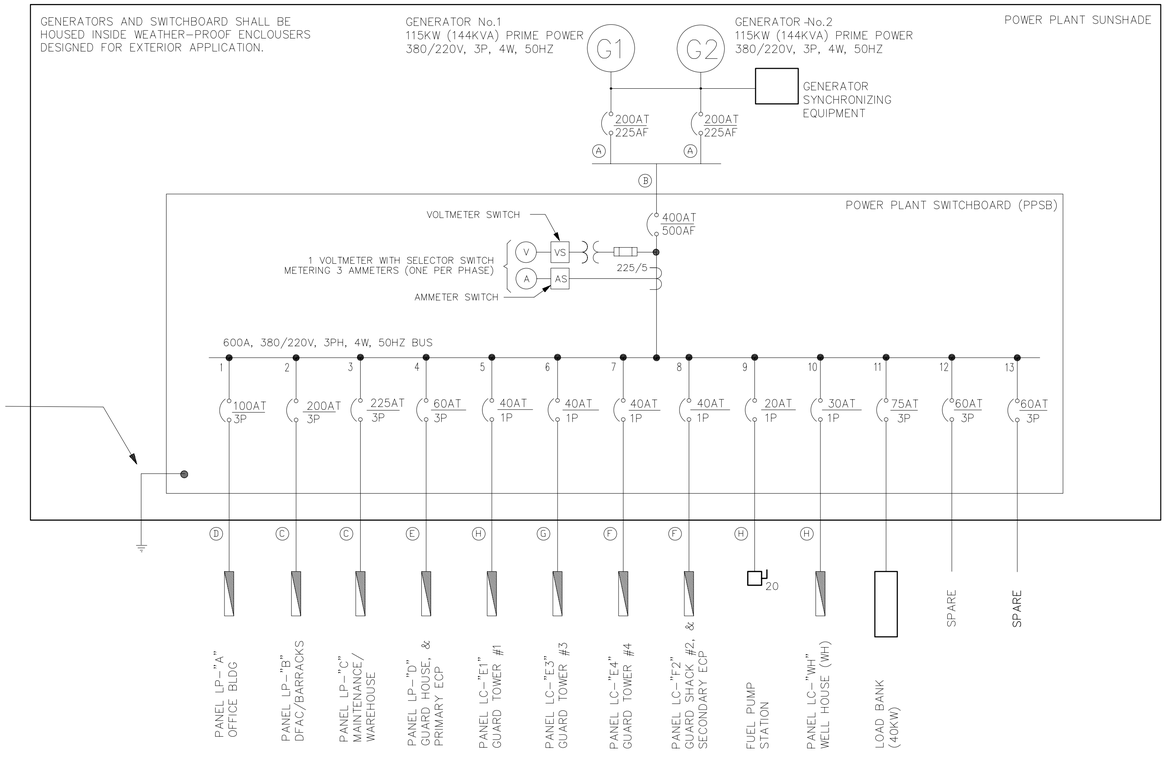

ONE LINE DIAGRAM
NOT TO SCALE

PANELBOARD: PPSB
MOUNTED: FLOOR
ASYM. A.I.C. MIN: MINIMUM 22,000
MAIN BREAKER (AT/AF): 400/500
VOLTAGE RATING: 380/220V, 3PH, 4W, 50HZ
BUS AMP. RATING: 600

CKT. NO.	TRIP AMPS	NO. POLES	WIRE MM2	GND MM2	CONDUIT MM *	CONN. KW	REMARKS
1	100	3	35	--	--	36.8	PANEL LP-"A": OFFICE BLDG
2	200	3	150	--	100	74.4	PANEL LP-"B": DFAC/BARRACKS
3	225	3	150	--	100	98.9	PANEL LP-"C": MAINTENANCE/WAREHOUSE BLDG
4	60	3	16	--	---	13.4	PANEL LP-"D": GUARD HOUSE, PRIMARY ECP, GUARD SHACK #1, GUARD TOWER #2
5	40	1	16	--	---	5.0	PANEL LC-"E1": GUARD TOWER #1
6	40	1	35	--	---	5.0	PANEL LC-"E3": GUARD TOWER #3
7	40	1	50	--	100	5.0	PANEL LC-"E4": GUARD TOWER #4
8	40	1	50	--	100	4.3	PANEL LC-"F2": GUARD SHACK #2 & SECONDARY ECP
9	20	1	16	--	--	3.5	FUEL PUMPS
10	30	3	16	--	--	4.9	PANEL LC-"WH": WELL HOUSE (WH)
11	75	3	70	70	50	---	LOAD BANK
12	60	3					SPARE
13	60	3					SPARE
14	--	1					SPACE
15	--	3					SPACE
16	--	3					SPACE
				TOTAL CONN. KW		251.2	314.0 KVA.

CONN. LOAD: 251.2 KW. 80 % DEMAND = EST DEM LOAD 201.0 KW
SUPPLIED FROM: GENERATORS

* SEE NOTE 5

CABLE LENGTH SCHEDULE			
PPSB	LENGTH		PPSB
CKT-1	80M	285M	CKT-7
CKT-2	175M	300M	CKT-8
CKT-3	153M	75M	CKT-9
CKT-4	71M	130M	CKT-10
CKT-5	21M		
CKT-6	186M		

SEE NOTE 4

CABLE SIZE SCHEDULE	
Ⓐ	4-70mm²+ 1-35mm² G IN 2-100mm C
Ⓑ	4-185mm² + 1-95mm² G IN 2-100mm C
Ⓒ	4-150mm²; 4 CORE, 600V, CU/PVC/PVC
Ⓓ	4-35mm²; 4 CORE, 600V, CU/PVC/PVC
Ⓔ	4-16mm²; 4 CORE, 600V, CU/PVC/PVC
Ⓕ	2-50mm²; 2 CORE, 600V, CU/PVC/PVC
Ⓖ	2-35mm²; 2 CORE, 600V, CU/PVC/PVC
Ⓗ	2-16mm²; 2 CORE, 600V, CU/PVC/PVC
Ⓘ	NOT USED

SEE NOTE 6

UNLESS OTHERWISE NOTED, LINEAR DIMENSIONS SHOWN ARE IN MILLIMETERS.

SYMBOL	DESCRIPTION	DATE	APR

DESIGNED BY: DLF
DATE: 01-25-07
DWN BY: FHG
SUBMITTED BY:
CHK BY: RMS/DK
FILE NO.: AF0609 --AF02DI

US Army Corps of Engineers
Transatlantic Programs Center

AFGHAN NATIONAL POLICE COMPANY COMPOUND
VARIOUS, AFGHANISTAN
SITE DESIGN
ONE LINE DIAGRAM

SHEET REFERENCE NUMBER:
XE-2

af0609--es02di.dwg
3/31/2007 4:51 PM
AED, AED, USACE

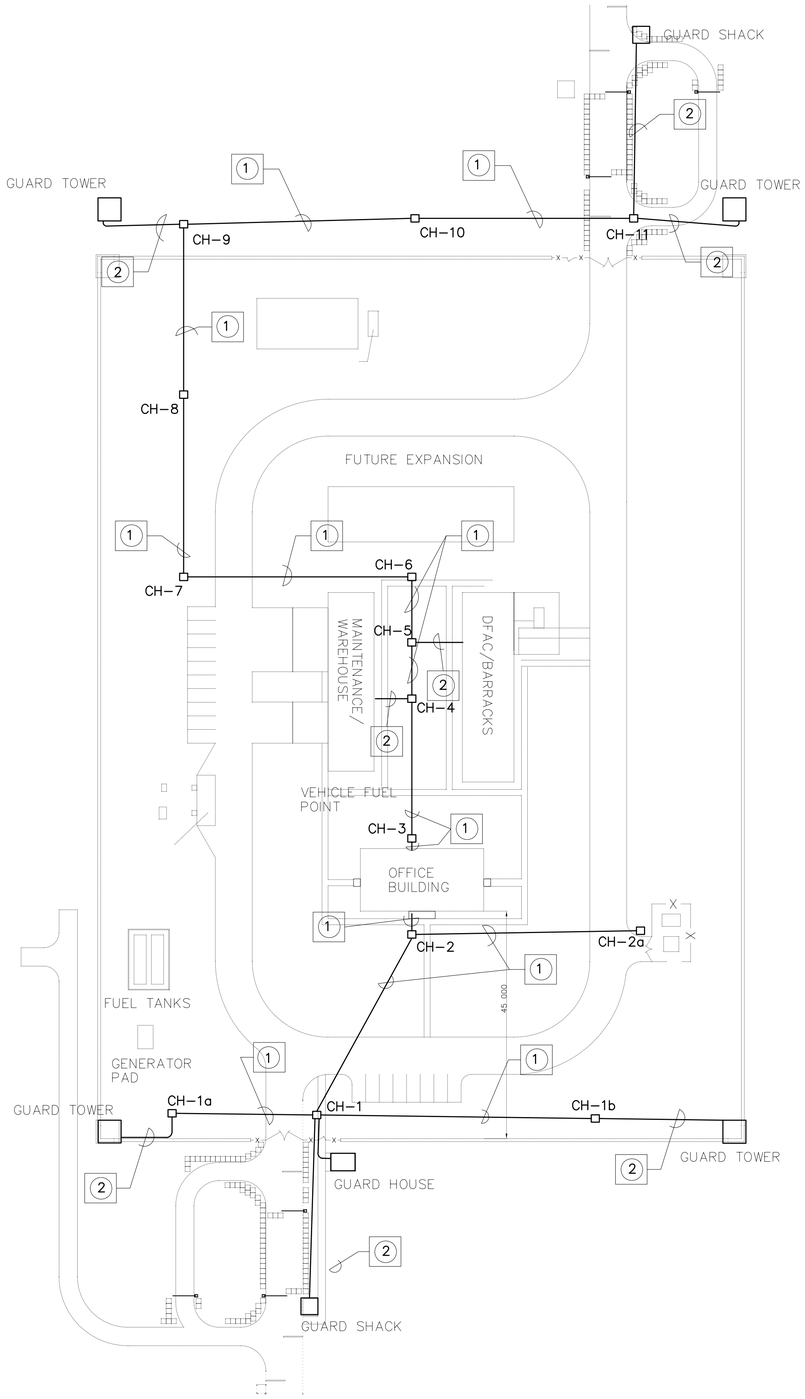

NOTES:

1. FOR LEGEND AND ABBREVIATIONS SEE DRAWING SE-1.
2. FOR DIRECT BURIED (DB) DUCT DETAILS SEE SHEET SE-4. FOR COMMUNICATIONS HAND HOLE (CH) DETAILS SEE SHEET SE-8.
3. PROVIDE COMMUNICATIONS CH AND DIRECT BURIED DUCT SYSTEM AS SHOWN. ALL COMMUNICATIONS CABLES WILL BE PROVIDED BY OTHERS. ALL DB C SHALL BE SCH 40 PVC UNO.
4. ALL DIRECT BURIED PVC C 90 DEGREE BENDS SHALL HAVE A RADIUS OF NOT LESS THAN 92mm.
5. PROVIDE PULL STRING IN ALL CONDUITS AND INNERDUCT SECURED AT BOTH ENDS.

DIRECT BURIED DUCT SCHEDULE	
1	100mm C WITH 4 – 25mm COMM INNERDUCT DIRECT BURIED (DB)
2	1 – 50mm C DB
3	NOT USED
4	NOT USED

UNLESS OTHERWISE NOTED, LINEAR DIMENSIONS SHOWN ARE IN MILLIMETERS.

SYMBOL	DESCRIPTION	DATE	APR

DESIGNED BY: DLF
DATE: 01-25-07
DWN BY: FHG
SUBMITTED BY: MICHAEL HOWELL CHIEF, ELECTRICAL SYSTEMS
CHK BY: RMS
FILE NO.: AF0609 --XT01PN

US Army Corps of Engineers
Transatlantic Programs Center

AFGHAN NATIONAL POLICE COMPANY COMPOUND
VARIOUS, AFGHANISTAN
SITE DESIGN
COMMUNICATIONS SITE PLAN

SHEET REFERENCE NUMBER:
XT-1

af0609--xt01pn.dwg
3/31/2007 5:05 PM
AED AED, USACE

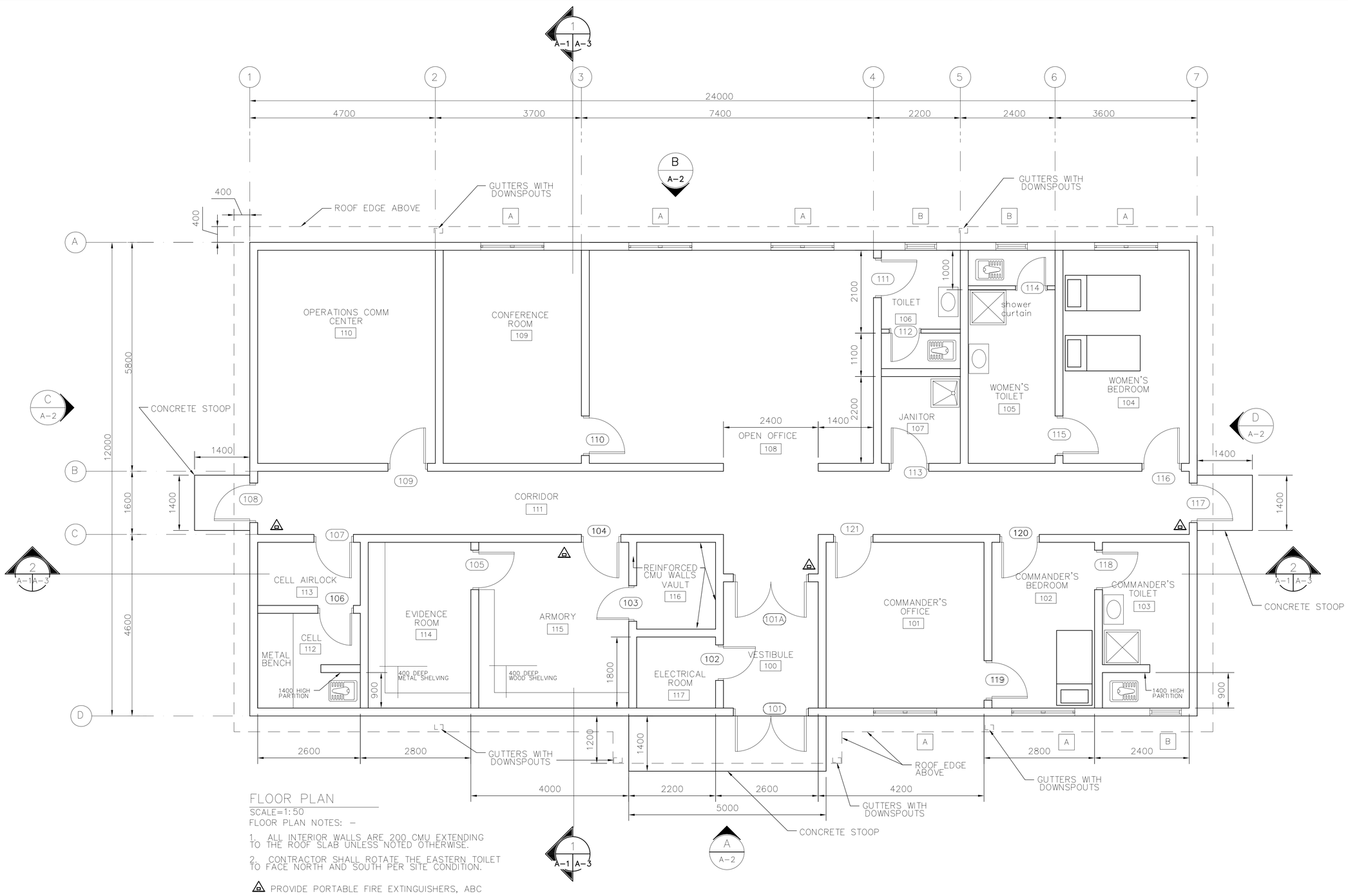

FLOOR PLAN

SCALE=1:50

FLOOR PLAN NOTES: –

1. ALL INTERIOR WALLS ARE 200 CMU EXTENDING TO THE ROOF SLAB UNLESS NOTED OTHERWISE.
2. CONTRACTOR SHALL ROTATE THE EASTERN TOILET TO FACE NORTH AND SOUTH PER SITE CONDITION.

PROVIDE PORTABLE FIRE EXTINGUISHERS, ABC DRY CHEMICAL 4A:60B:C

1:50

UNLESS OTHERWISE NOTED, LINEAR DIMENSIONS SHOWN ARE IN MILLIMETERS.

SYMBOL	DESCRIPTION	DATE	APR
*	REVISIONS	03/04/2007	

DESIGNED BY: HMH
DATE: 01-25-07
DWN BY: HMH
SUBMITTED BY: PHILIP L. DINELLO CHIEF, PD, FACILITIES DEV
CHK BY: HMH
FILE NO.: AF0609 A-AR01PN

US Army Corps of Engineers
Transatlantic Programs Center

AFGHAN NATIONAL POLICE COMPANY COMPOUND
VARIOUS, AFGHANISTAN
OFFICE BUILDING
FLOOR PLAN

SHEET REFERENCE NUMBER:
A
A–1

$$DATE$
$$FILE$

ELEVATION A (A-1/A-2)
SCALE 1:50

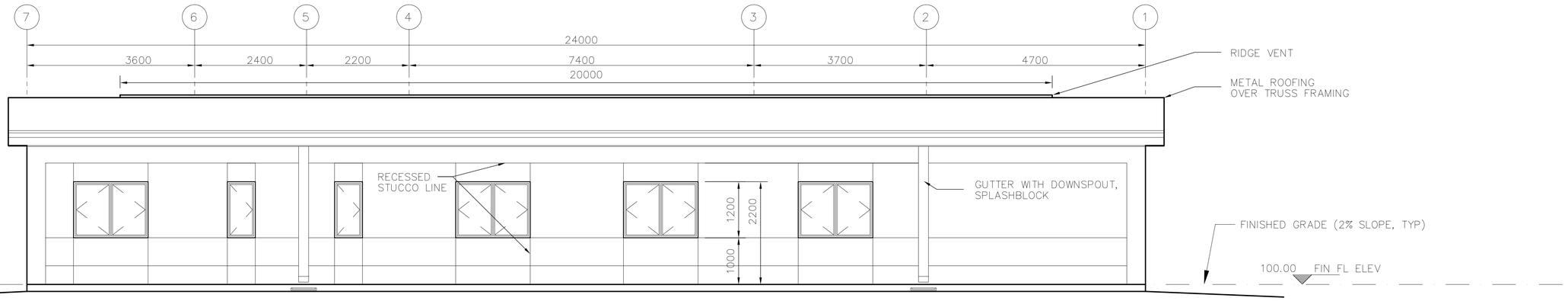

ELEVATION B (A-1/A-2)
SCALE 1:50

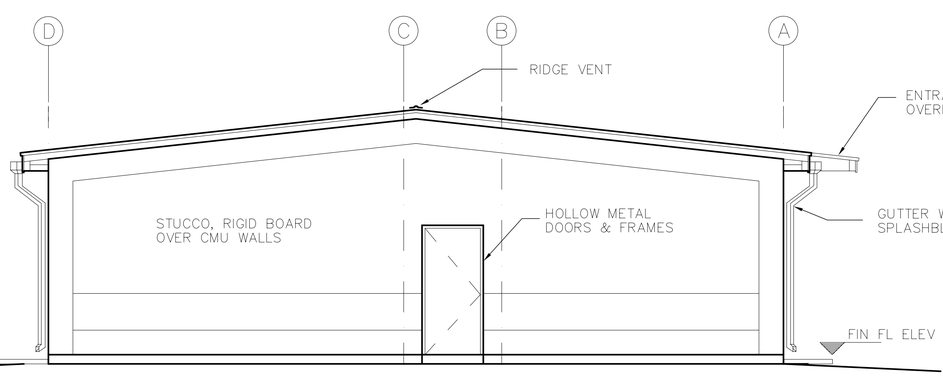

ELEVATION C (A-1/A-2)
SCALE 1:50

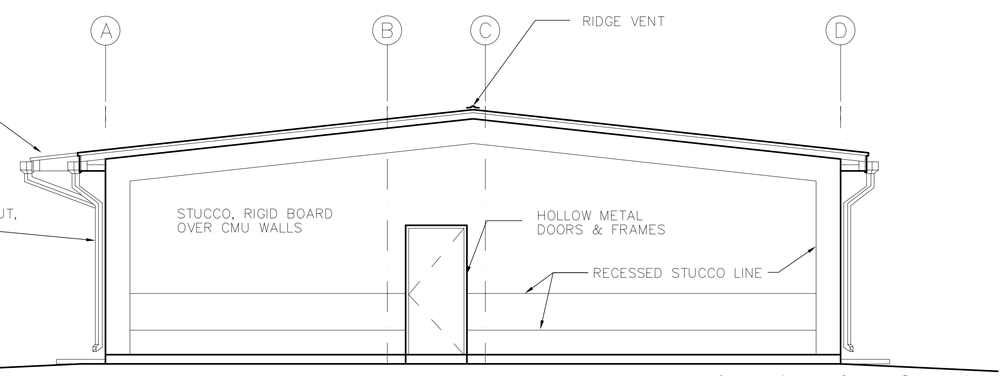

ELEVATION D (A-1/A-2)
SCALE 1:50

0 1 2 3 4
1:50

UNLESS OTHERWISE NOTED, LINEAR DIMENSIONS SHOWN ARE IN MILLIMETERS.

SYMBOL	DESCRIPTION	DATE	APR
	REVISIONS	03/04/2007	

DESIGNED BY: HMH
DWN BY: HMH
CHK BY: HMH
DATE: 01-25-07
SUBMITTED BY: PHILIP L. DINELLO
CHIEF, PROJ. MGT. PROJECTS DEV.
FILE NO.: AF0609 A-AR02EL

US Army Corps of Engineers
Transatlantic Programs Center

AFGHAN NATIONAL POLICE COMPANY COMPOUND
VARIOUS, AFGHANISTAN
OFFICE BUILDING
BUILDING ELEVATIONS

SHEET REFERENCE NUMBER:
A
A-2

SHEET SIZE

auto_sylime

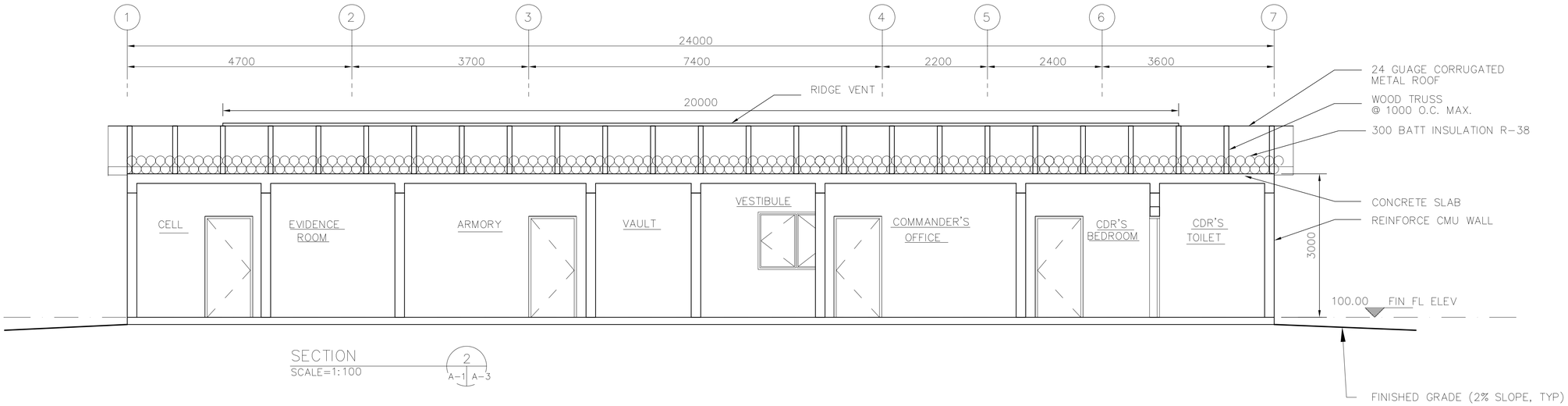

SECTION
SCALE=1:100
2
A-1 A-3

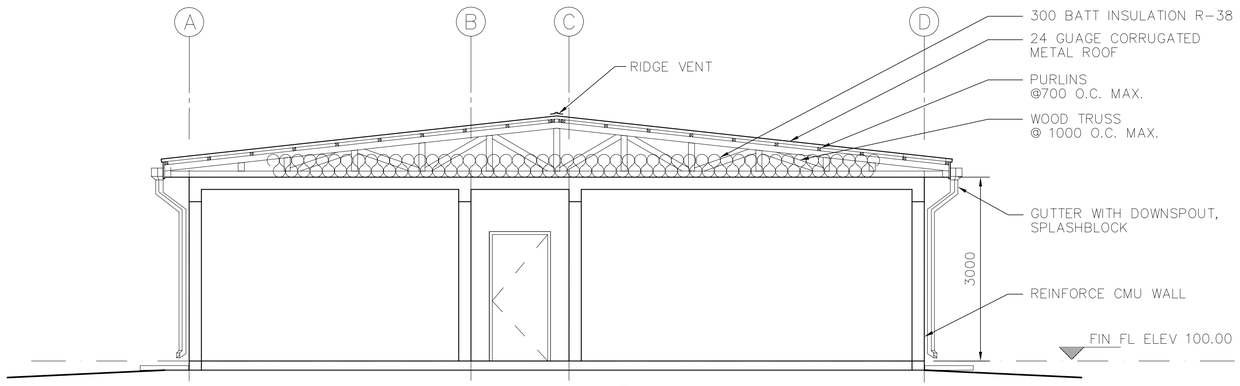

SECTION
SCALE=1:100
1
A-1 A-3

1 0 1 2 3 4
1:50

UNLESS OTHERWISE NOTED, LINEAR DIMENSIONS SHOWN ARE IN MILLIMETERS.

*	REVISIONS	DESCRIPTION	DATE	APR
			03/04/2007	

DESIGNED BY: HMH
DWN BY: HMH
CHK BY: HMH
DATE: 01-25-07
SUBMITTED BY: PHILIP L. DINELLO
CHIEF, PD PROJECTS DEV
FILE NO.: AF0609 A-AR03SE

US Army Corps of Engineers
Transatlantic Programs Center

AFGHAN NATIONAL POLICE COMPANY COMPOUND
VARIOUS, AFGHANISTAN
OFFICE BUILDING
BUILDING SECTIONS

SHEET REFERENCE NUMBER:
A
A-3

af0609A-ar03se.dwg
3/28/2007 9:26 PM
AED AED, USACE

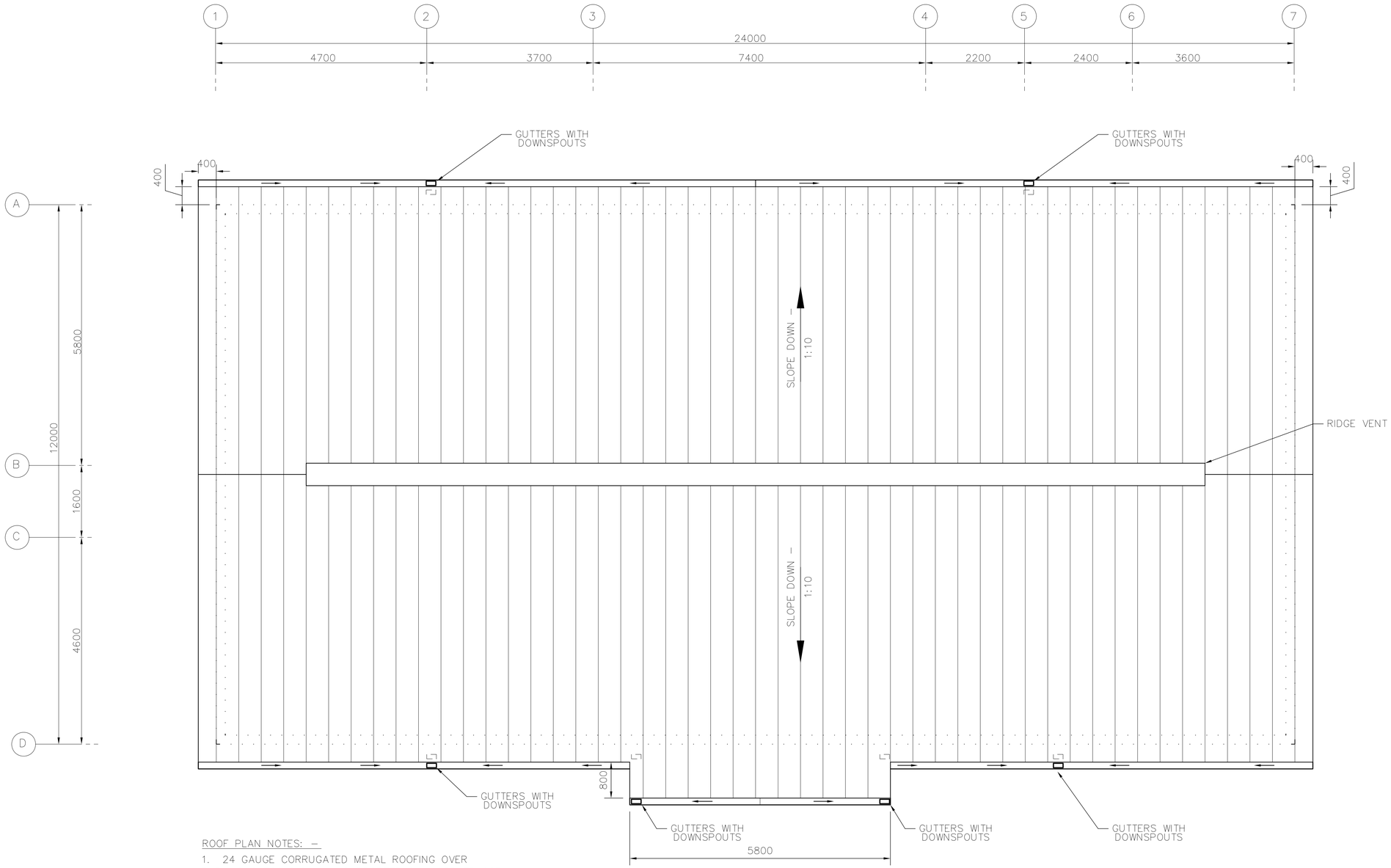

ROOF PLAN NOTES: –

1. 24 GAUGE CORRUGATED METAL ROOFING OVER PURLINS @ 700 O.C. MAX SUPPORTED ON WOOD TRUSSE SYSTEM @ 1000 O.C. MAX.
2. 24 GAUGE METAL GUTTERS SLOPE TO DOWN SPOUT.

1 0 1 2 3 4
1:50

UNLESS OTHERWISE NOTED, LINEAR DIMENSIONS SHOWN ARE IN MILLIMETERS.

SYMBOL	DESCRIPTION	DATE	APR
*	REVISIONS	03/04/2007	

DESIGNED BY: HMH
DWN BY: HMH
CHK BY: HMH
DATE: 01–25–07
SUBMITTED BY: PHILIP L. DINELLO
CHIEF, PD PACKAGES DEV
FILE NO.: AF0609A–AR04PN

US Army Corps of Engineers
Transatlantic Programs Center

AFGHAN NATIONAL POLICE COMPANY COMPOUND
VARIOUS, AFGHANISTAN
OFFICE BUILDING
ROOF PLAN

SHEET REFERENCE NUMBER:
A
A–4

$DATE$
$FILE$

ROOM FINISH SCHEDULE

ROOM NO.	ROOM NAME	FLOOR		BASE		WALLS		CEILING			REMARKS
		MAT'L.	COLOR	MAT'L.	COLOR	MAT'L.	COLOR	MAT'L.	COLOR	HEIGHT	
100	VESTIBULE	F2	2	B2	11	W2	21	C2	31	--	
101	COMMANDER'S OFFICE	F2	2	B2	11	W2	21	C2	31	--	
102	COMMANDER'S BEDROOM	F2	2	B2	11	W2	21	C2	31	--	
103	COMMANDER'S TOILET	F3	3	B3	12	W3	23	C2	31	--	
104	WOMEN'S BEDROOM	F2	2	B2	11	W2	21	C2	31	--	
105	WOMEN'S TOILET	F3	3	B3	12	W3	23	C2	31	--	
106	TOILET	F3	3	B3	12	W3	23	C2	31	--	
107	JANITOR	F3	3	B3	12	W3	23	C2	31	--	
108	OPEN OFFICE	F2	2	B2	11	W2	21	C2	31	--	
109	EVIDENCE ROOM	F2	2	B2	11	W2	21	C2	31	--	
110	OPERATIONS COMM CENTER	F2	2	B2	11	W2	21	C2	31	--	
111	CORRIDOR	F2	2	B2	11	W2	21	C2	31	--	
112	CELL	F2	2	B2	11	W2	21	C2	31	--	
113	CELL AIRLOCK	F2	2	B2	11	W2	21	C2	31	--	
114	EVIDENCE ROOM	F2	2	B2	11	W2	21	C2	31	--	
115	ARMORY	F2	2	B2	11	W2	21	C2	31	--	
116	VAULT	F2	2	B2	11	W2	21	C2	31	--	
117	ELECTRICAL ROOM	F2	2	B2	11	W2	21	C2	31	--	

ROOM FINISH SCHEDULE LEGEND

FLOOR TYPE

F1 SEALED CONCRETE
F2 TERRAZZO TILE
F3 CERAMIC TILE
F4 QUARRY TILE

FLOOR COLOR

1 SEALED CONCRETE – NATURAL FINISH
2 TERRAZZO TILE – NAT'L TERRAZZO & MOSAIC ASSN, INC, NO. S–330
3 CERAMIC TILE – AMERICAN OLEAN, C–11, ALABASTER
4 QUARRY TILE – AMERICAN OLEAN, NO. Q03, SAHARA

BASE TYPE

B2 TERRAZZO
B3 CERAMIC
B4 QUARRY
B5 NO BASE

BASE COLOR

11 TERRAZZO TILE – NAT'L TERRAZZO & MOSAIC ASSN, INC, NO. S–330
12 CERAMIC TILE – AMERICAN OLEAN, D–12, ALMOND
13 QUARRY TILE –AMERICAN OLEAN, NO. Q03, SAHARA

WALL TYPE

W1 PAINTED CMU
W2 PAINTED PLASTER
W3 CERAMIC TILE

WALL COLOR

20 PAINTED CMU –HEMPEL, 1005–Y50R–25400, LIGHT BEIGE
21 PAINTED PLASTER–HEMPEL, 0502–Y–15420, OFF WHITE
22 METAL PANEL – HEMPEL, 0502–Y–15420, OFF WHITE
23 CERAMIC TILE –AMERICAN OLEAN, D–12, ALMOND

CEILING TYPE

C1 PAINTED EXPOSED STRUCTURE
C2 PAINTED PLASTER

CEILING COLOR

30 PAINTED EXPOSED STRUCTURE – HEMPEL, 0502–Y–15420, OFF WHITE
31 PAINTED SUSPENDED PLASTER HEMPEL, 0502–Y–15420, OFF WHITE

NOTE: PATTERN AND COLOR ARE SHOWN FOR REFERENCE ONLY, OTHER MANUFACTURER'S SIMILAR PATTERN AND COLOR MAY BE USED AS APPROVED BY THE CONTRACTING OFFICER.

DOOR SCHEDULE

NO.	LOCATION	DOOR TYPE	DOOR MAT'L	DOOR WIDTH	DOOR HEIGHT	DOOR THICK	FRAME HEAD	FRAME JAMB	FRAME SILL	FRAME MAT"L	FIRE LABEL	HDW SET	REMARKS
101	VESTIBULE	G (PR)	HM	1800	2150	45	H–1	J–1	S–1	HM		2	
101A	VESTIBULE	G (PR)	HM	1800	2150	45	H–2	J–2	S–2	HM		2	
102	ELECTRICAL RM.	F	HM	900	2150	45	H–2	J–2	S–2	HM		6	NOTE #2
103	VAULT	V	STL	900	2150		H–2	J–2	S–2	STL		8	NOTE #5
104	ARMORY	F	STL	900	2150	45	H–2	J–2	S–2	STL		6	NOTE #5
105	EVIDENCE RM.	F	STL	900	2150	45	H–2	J–2	S–2	STL		6	NOTE #4
106	CELL	F (C)	STL	900	2150	45	H–2	J–2	S–2	STL		11	NOTES 1 & 3
107	CELL AIRLOCK	F	STL	900	2150	45	H–2	J–2	S–2	STL		4	NOTE #4
108	CORRIDOR	F	HM	900	2150	45	H–1	J–1	S–1	HM		1	NOTE #2
109	OPS COM CTR	F	HM	900	2150	45	H–2	J–2	S–2	HM		4	
110	CONFERENCE	F	HM	900	2150	45	H–2	J–2	S–2	HM		4	
111	TOILET	F	PVC	900	2150	45	H–2	J–2	S–2	PVC		5	NOTE #3
112	TOIILET	F	PVC	800	2150	45	H–2	J–2	S–2	PVC		3	NOTE #2
113	JANITOR	L	HM	900	2150	45	H–2	J–2	S–2	HM		6	NOTE #2
114	WOMEN'S TOILET	F	PVC	800	2150	45	H–2	J–2	S–2	PVC		3	NOTE #3
115	WOMEN'S TOILET	F	PVC	900	2150	45	H–2	J–2	S–2	PVC		3	NOTE #3
116	WOMEN'S BEDROOM	F	HM	900	2150	45	H–2	J–2	S–2	HM		7	
117	CORRIDOR	F	HM	900	2150	45	H–1	J–1	S–1	HM		1	
118	CMDR'S TOILET	F	PVC	900	2150	45	H–2	J–2	S–2	PVC		3	NOTE #3
119	CMDR'S OFFICE	F	HM	900	2150	45	H–2	J–2	S–2	HM		7	
120	CMDR'S BEDROOM	F	HM	900	2150	45	H–2	J–2	S–2	HM		7	
121	CMDR'S OFFICE	F	HM	900	2150	45	H–2	J–2	S–2	HM		3	

ROOM FINISH SCHEDULE NOTES:

1. ALL WALL PENETRATIONS SHALL BE SEALED TO PROVIDE A NEAT APPEARANCE. PENETRATIONS OF EXTERIOR WALLS SHALL BE SEALED TO BE WATER–TIGHT.

2. SEALANTS SHALL MATCH THE COLOR OF ADJACENT SURFACES.

DOOR SCHEDULE NOTES:

1. CELL DOOR SHALL BE 11 GA STEEL DOOR WITH PASS–THRU WINDOWS AS SHOWN ON SA–2. PROVIDE HINGED DOORS TO THESE PASS–THRU WINDOWS WITH PADLOCKS TO THE OUTSIDE.

2. PROVIDE 600 X 400 LOUVERS IN DOOR.

3. UNDERCUT DOOR BY 20mm.

4. DOOR AND FRAME SHALL BE 11 GA STEEL WITH HEAVY DUTY HINGES AND CYPHER LOCK.

5. DOOR AND FRAME SHALL BE 11 GA STEEL WITH HEAVY DUTY HINGES AND HEAVY DUTY DEAD–BOLT LOCK.

*	REVISIONS		
SYMBOL	DESCRIPTION	DATE	APR
		03/04/2007	

DESIGNED BY: YSK
DWN BY: JSG
CHK BY: HMH
DATE: 01–25–07
SUBMITTED BY: PHILIP L. DINELLO
CHIEF, PROJECTS DEVELOPMENTS DEV
FILE NO.: AF0609 A–AR05SC

US Army Corps of Engineers
Transatlantic Programs Center

AFGHAN NATIONAL POLICE COMPANY COMPOUND
VARIOUS, AFGHANISTAN
OFFICE BUILDING
ROOM FINISH SCHEDULE AND AND DOOR SCHEDULE

SHEET REFERENCE NUMBER:
A
A–5

auto_short_design
auto_scale
$DATE$
$FILE$

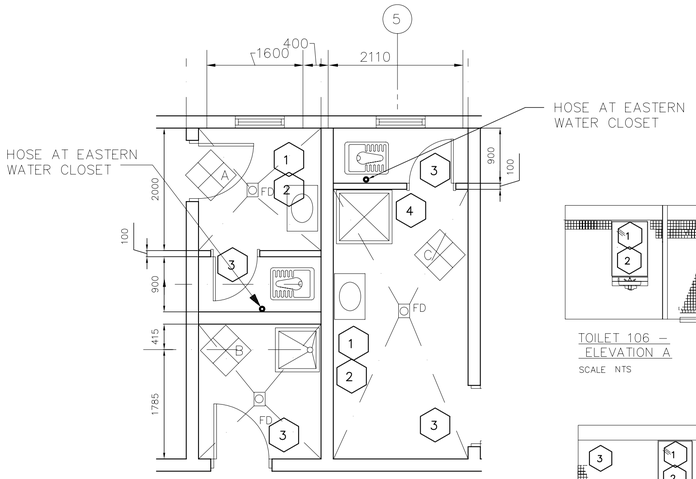

ENLARGED TOILET PLAN
SCALE=1:50

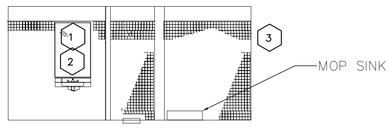

TOILET 106 – ELEVATION A
SCALE NTS

TOILET 107 – ELEVATION B
SCALE NTS

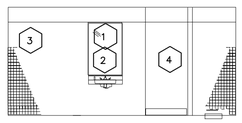

TOILET 105 – ELEVATION C
SCALE NTS

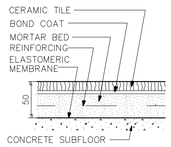

DETAIL
SCALE NTS

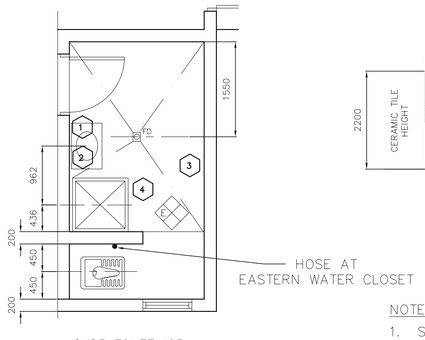

CMDR TOILET 103
ENLARGED TOILET PLAN
SCALE=1:50

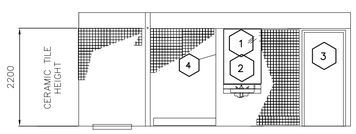

COMMANDER'S TOILET ROOM 103
ELEVATION– E
SCALE NTS

TOILET ACCESSORIES

1. LIQUID SOAP DISPENSER (SD)
2. MIRROR – GLASS (MG)
3. ROBE HOOK (RBH)
4. SHOWER CURTAIN AND SHOWER ROD

NOTES:

1. SLOPE ALL FLOORS TO DRAIN WHERE FLOOR DRAIN OCCURS.
2. PROVIDE FAUCET WITH FLEXIBLE HOSE AT ALL EASTERN WATER CLOSETS.

1 0 1 2 3 4
1:50

UNLESS OTHERWISE NOTED, LINEAR DIMENSIONS SHOWN ARE IN MILLIMETERS.

SYMBOL	DESCRIPTION	DATE	APR
*	REVISIONS	03/04/2007	

DESIGNED BY: YSK
DWN BY: JSG
CHK BY: HMH
DATE: 01-25-07
SUBMITTED BY: PHILIP L. DINELLO
CHIEF, PD PROJECTS DEV
FILE NO.: AF0609A-AR06PN

US Army Corps of Engineers
Transatlantic Programs Center

AFGHAN NATIONAL POLICE COMPANY COMPOUND
VARIOUS, AFGHANISTAN
OFFICE BUILDING
ENLARGED TOILET PLANS ELEVATIONS AND NOTES

SHEET REFERENCE NUMBER:
A
A–6

$DATE$
$FILE$

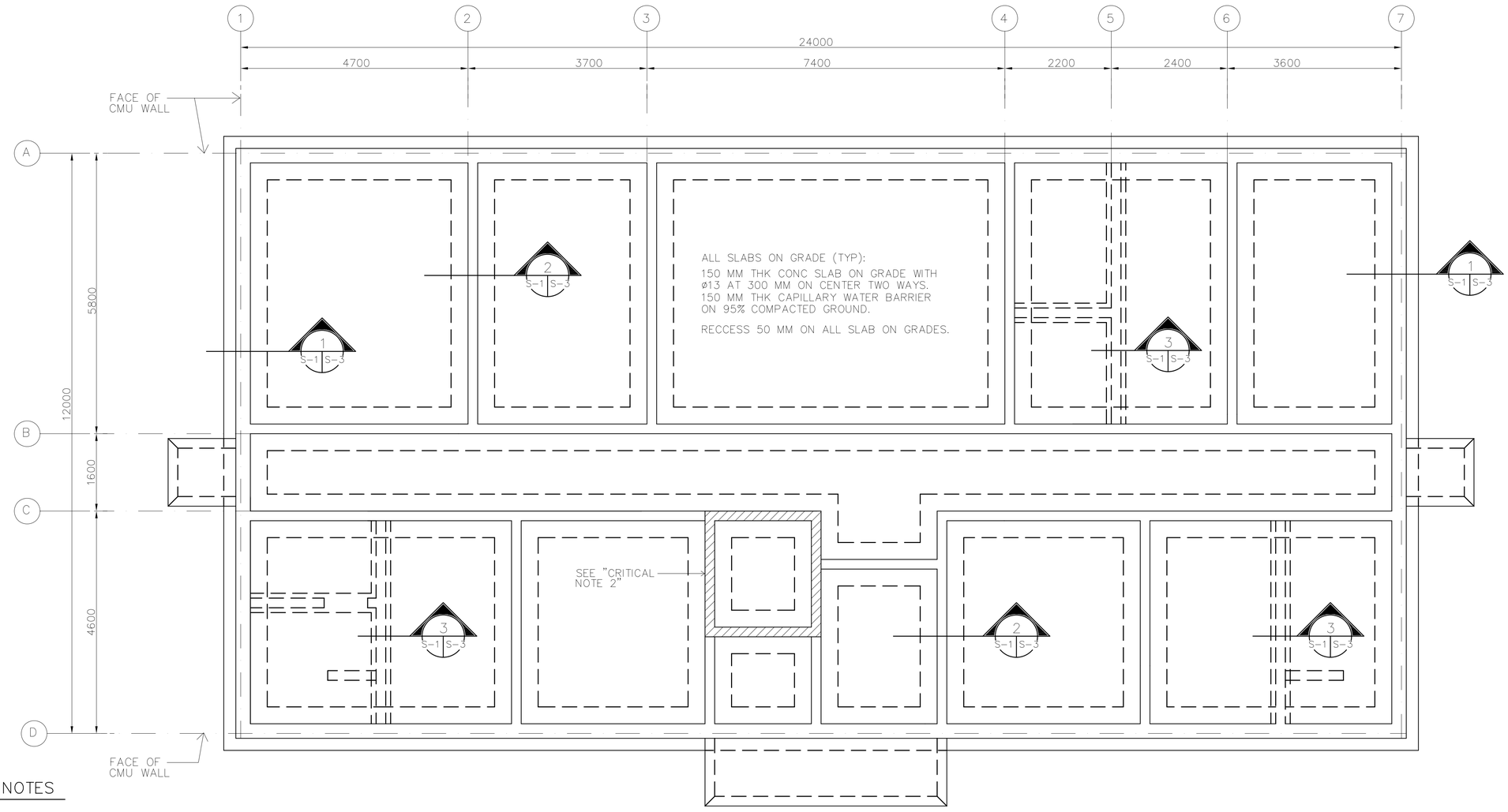

FOUNDATION AND SLAB PLAN

SCALE= 1:50

N

PLAN NORTH

CRITICAL NOTES

1. SEE "ARCHITECTURAL PLAN" FOR WALL LOCATIONS AND THE DIMENSIONS.
2. ALL CELLS OF CMU WALL SHALL BE FULLY GROUTED AND PROVIDE 16 MM RE-BARS AT 60 CM ON CENTER.
3. VAULT AREA: ALL CELLS OF CMU WALL SHALL BE FULLY GROUTED AND PROVIDE 16 MM RE-BARS AT 40 CM ON CENTER VERTICAL AND HORIZONTAL.

GENERAL NOTES

1. DESIGN LOADS (SERVICE)

LIVE LOADS:

ROOF: 1.0 KPA (20 PSF)
OTHERS: 4.8 KPA (100 PSF)
8.9 KN (2.0 K) CONCENTRATED LOAD

WIND LOADS PER IBC-2003

USING A "3-SECOND" WIND VELOCITY OF 125 KPH, EXPOSURE C AND IMPORTANCE FACTOR I=1.0

EARTHQUAKE LOADS PER IBC-2003:

USING A SEISMICITY: S_s=1.65g AND S_1 =0.75g

2. MATERIALS:

CONCRETE: 28 MPa (4 KSI) CYLINDER STRENGTH AT 28 DAYS

REINFORCING: ASTM A615 GRADE 60 (60 KSI)

WELDED WIRE FABRIC: ASTM A185

CONCRETE MASONRY UNITS: ASTM C90, TYPE I (NORMAL WEIGHT, MOISTURE CONTROLLED) MORTAR, ASTM C270, TYPE S GROUT, ASTM C 476 JOINT REINFORCEMENT, LADDER TYPE

3. WORK THESE STRUCTURAL DRAWINGS WITH THE STANDARD-DETAILS DRAWINGS.

4. A RELATIVE (DATUM) FINISH FLOOR ELEVATION EQUAL TO 100.00 M. IS USED AS REFERENCE ELEVATION FOR ALL STRUCTURAL DRAWINGS. REFER TO CIVIL DRAWINGS FOR ACTUAL FINISH ELEVATIONS.

5. SLAB JOINTS SHOWN ON PLAN, SHALL BE CJT OR CJ JOINTS. CONTRACTOR HAS THE OPTION FOR THE SELECTION OF TYPE OF JOINTS TO BE USED FOR CONCRETE PLACEMENT. REFER TO DET. A/SS-4 AND B/SS-4, FOR CJT AND CJ DETAILS.

6. FOUNDATIONS ARE DESIGNED USING AN ALLOWABLE BEARING PRESSURE OF 0.75 KG/SQ. CM (1500 PSF), AND BOTTOM OF FOOTINGS ARE PLACED AS SHOWN ON DRAWINGS. GEOTECHNICAL INVESTIGATION SHALL CONFIRM BEARING CAPACITY TO BE NO LESS THAN 0.75 KG/SQ CM. IF GEOTECHNICAL INVESTIGATION SHOWS LESS THAN 0.75 KG/SQ CM THE CONTRACTOR SHALL REDESIGN FOOTINGS BASED ON THE GEOTECHNICAL INVESTIGATION. SEE SPECIFICAITON 01015 PARAGRAPH, GEOTECHNICAL, FOUNDATION AND SURVEY.

1 0 1 2 3 4
1:50

UNLESS OTHERWISE NOTED, LINEAR DIMENSIONS SHOWN ARE IN MILLIMETERS.

*	REVISIONS	DATE	APR
SYMBOL	DESCRIPTION	03/04/2007	

DESIGNED BY: JK
DWN BY: JK
CHK BY: JK
DATE: 01-25-07
SUBMITTED BY: PHILIP L. DINELLO
CHIEF, PD FACILITIES DEV.
FILE NO.: AF0609 A-SB01PN

US Army Corps of Engineers
Transatlantic Programs Center

AFGHAN NATIONAL POLICE COMPANY COMPOUND
VARIOUS, AFGHANISTAN
OFFICE BUILDING
FOUNDATION AND SLAB PLAN

SHEET REFERENCE NUMBER:
A
S-1

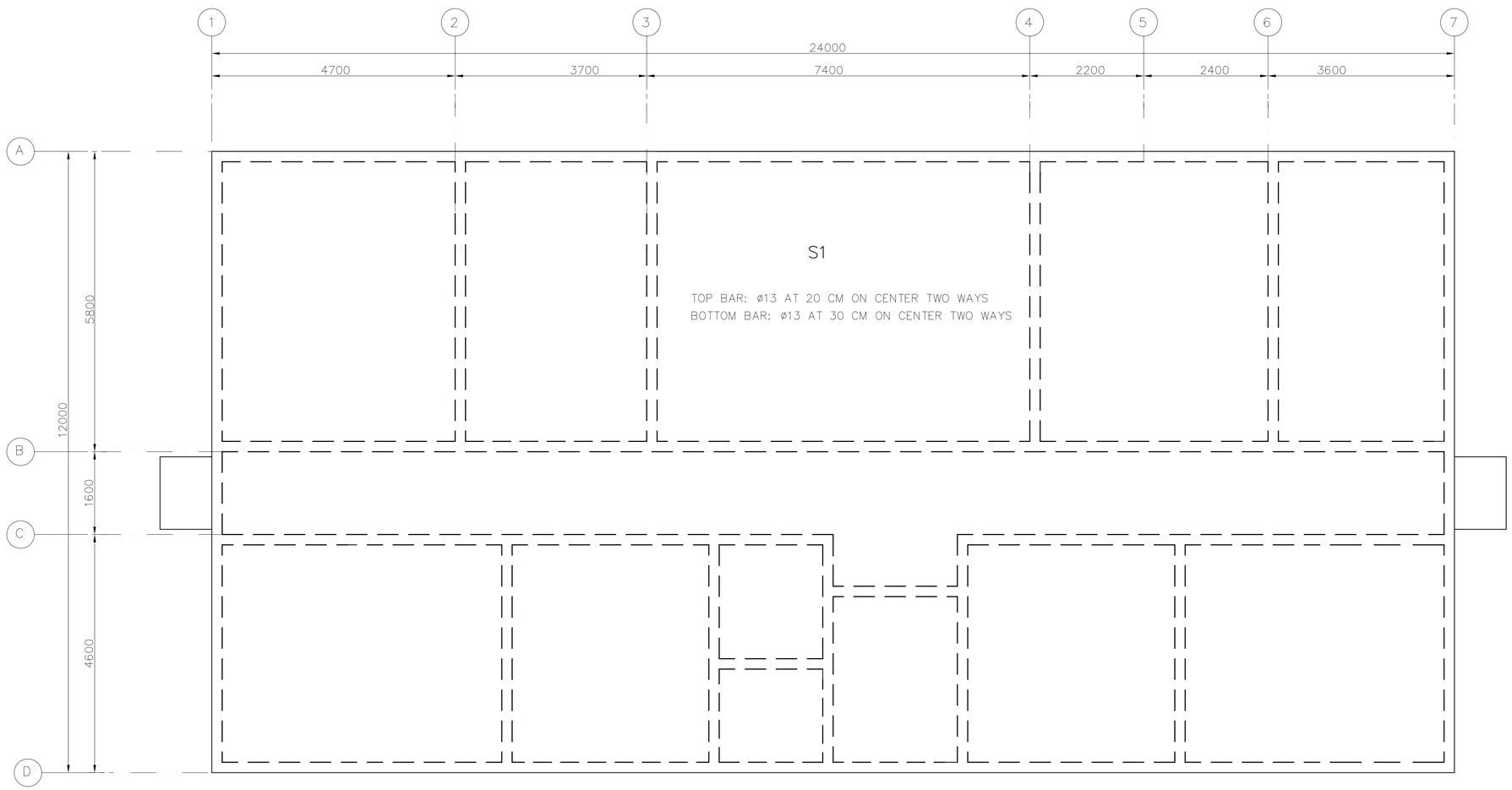

ROOF FRAMING PLAN

SCALE= 1:50

N

PLAN NORTH

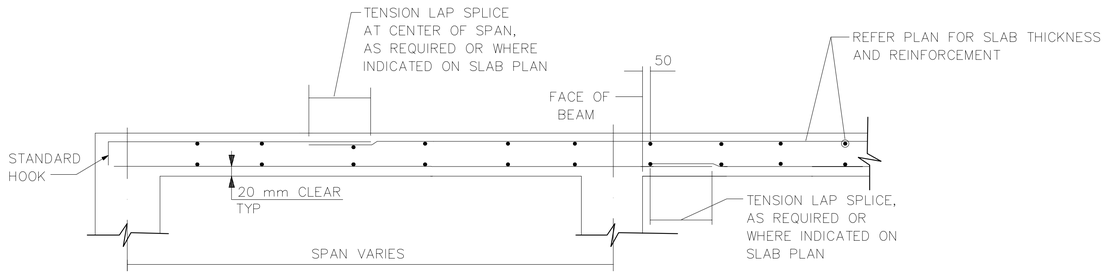

TYPICAL SECTIONS FOR STRUCTURAL SLABS

NOT TO SCALE

CRITICAL NOTES

1. ALL CONCRETE ROOF SLABS ARE 200 MM THICK.
2. ALL SLAB RE-BARS EXCEPT S1:
   TOP BAR: ø13 AT 300 MM ON CENTER TWO WAYS
   BOTTOM BAR: ø 13 AT 300 MM ON CENTER TWO WAYS.

1 0 1 2 3 4
1:50

UNLESS OTHERWISE NOTED, LINEAR DIMENSIONS SHOWN ARE IN MILLIMETERS.

SYMBOL	DESCRIPTION	DATE	APR
*	REVISIONS	03/04/2007	

DESIGNED BY: JK
DWN BY: JK
CHK BY: JK
DATE: 01-25-07
SUBMITTED BY: PHILIP L. DINELLO
PROJECT MGR, PACKARD DEV.
FILE NO.: AF0609 A-SF02PN

US Army Corps of Engineers
Transatlantic Programs Center

AFGHAN NATIONAL POLICE COMPANY COMPOUND
VARIOUS, AFGHANISTAN
OFFICE BUILDING
ROOF FRAMING PLAN

SHEET REFERENCE NUMBER:
A
S-2

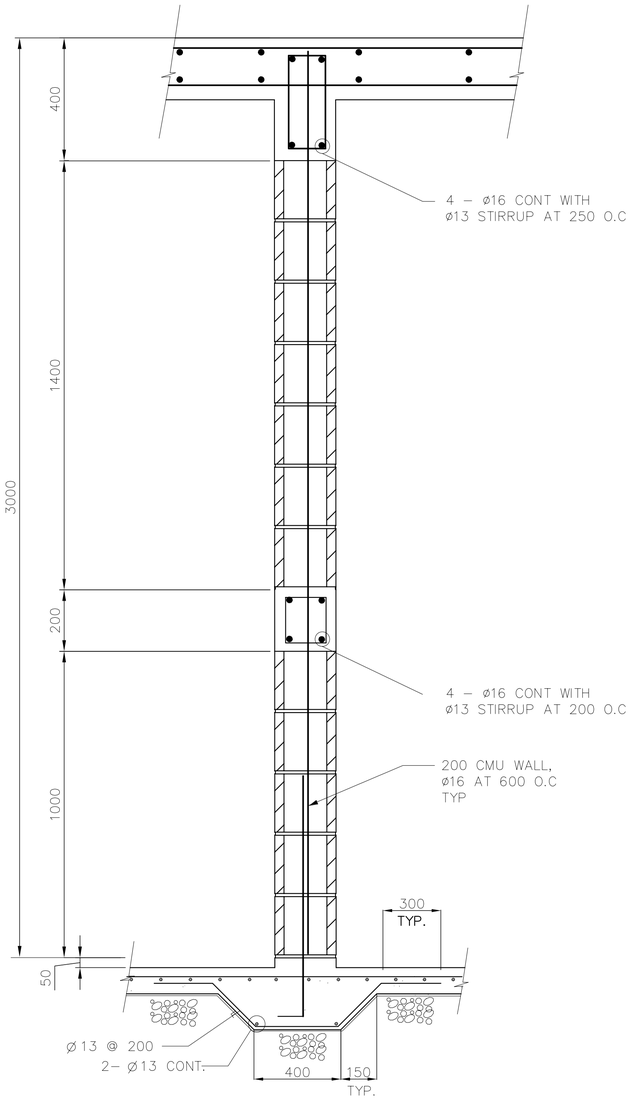

WALL SECTION 3 S-1 S-3
N.T.S.

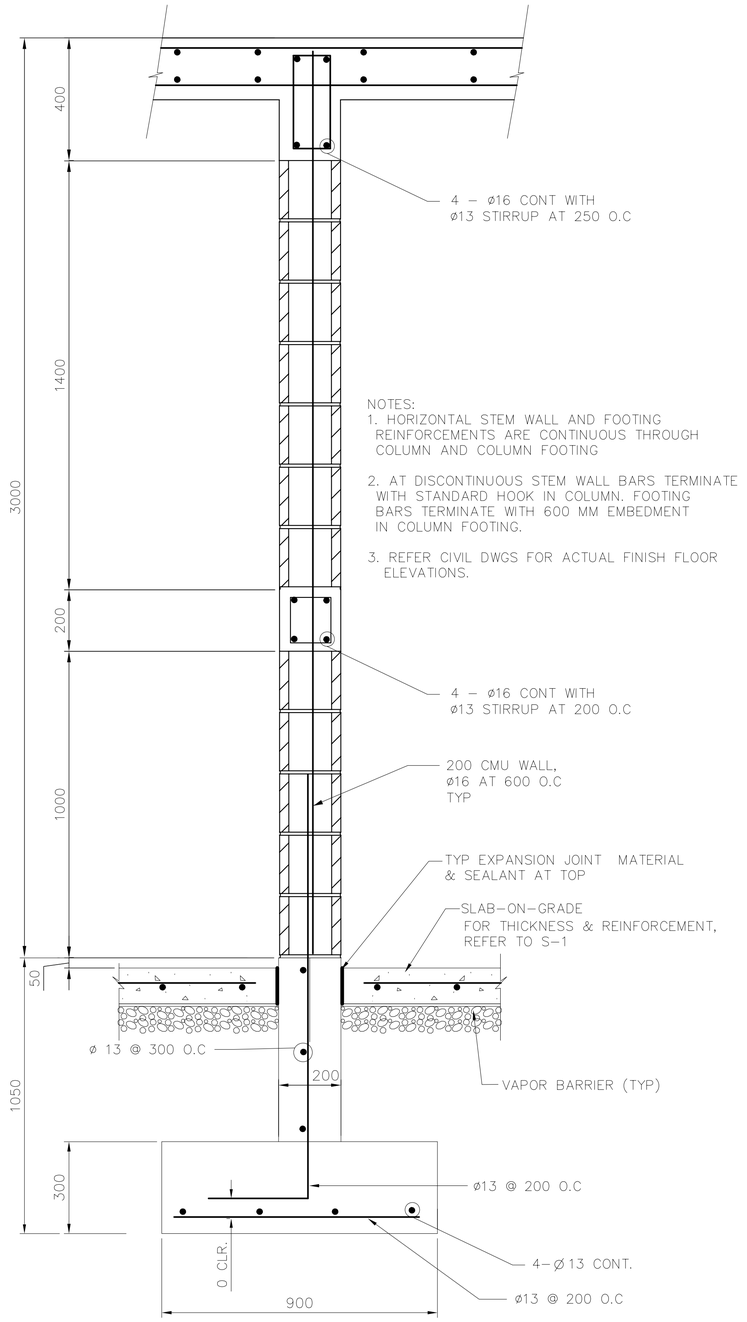

NOTES:
1. HORIZONTAL STEM WALL AND FOOTING REINFORCEMENTS ARE CONTINUOUS THROUGH COLUMN AND COLUMN FOOTING
2. AT DISCONTINUOUS STEM WALL BARS TERMINATE WITH STANDARD HOOK IN COLUMN. FOOTING BARS TERMINATE WITH 600 MM EMBEDMENT IN COLUMN FOOTING.
3. REFER CIVIL DWGS FOR ACTUAL FINISH FLOOR ELEVATIONS.

TYP INTERIOR WALL SECTION 2 S-1 S-3
N.T.S.

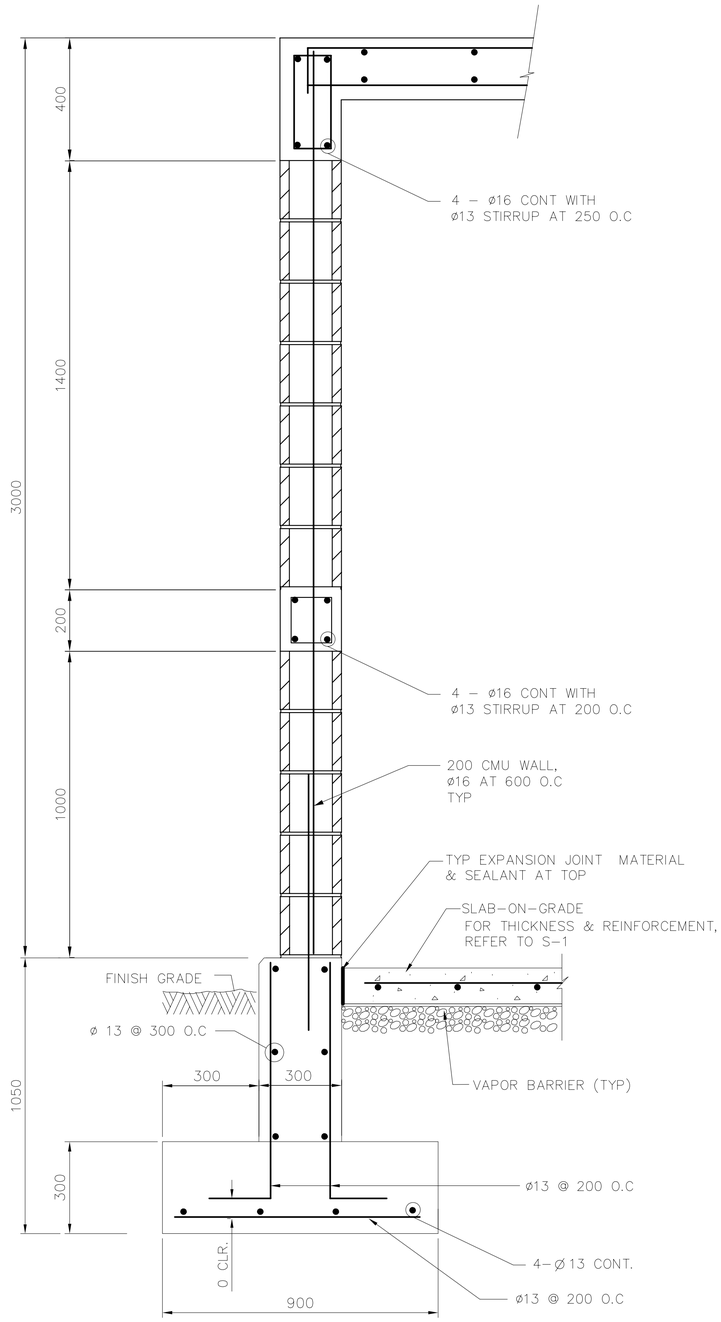

TYP EXTERIOR WALL SECTION 1 S-1 S-3
N.T.S.

UNLESS OTHERWISE NOTED, LINEAR DIMENSIONS SHOWN ARE IN MILLIMETERS.

*	REVISIONS		
SYMBOL	DESCRIPTION	DATE	APR
		03/04/2007	

DESIGNED BY: JK
DATE: 01-25-07
DWN BY: JK
SUBMITTED BY: PHILIP L. DINELLO PROJECT MGR. FACILITIES DEV.
CHK BY: JK
FILE NO.: AF0609 A-SB03DT

US Army Corps of Engineers
Transatlantic Programs Center

AFGHAN NATIONAL POLICE COMPANY COMPOUND
VARIOUS, AFGHANISTAN
OFFICE BUILDING
FOOTING DETAILS

SHEET REFERENCE NUMBER:
A
S-3

AF0609A-sf03dt.dwg
3/28/2007 9:56 PM
AED AED, USACE

NOTES:

1. SEE SPECIFICATION 01015, PARAGRAPH 7.9 FOR WOOD STOVE DETAILS.

2. SEE SPECIFICATION 01015, PARAGRAPH 7.7 FOR CEILING FAN DATA.

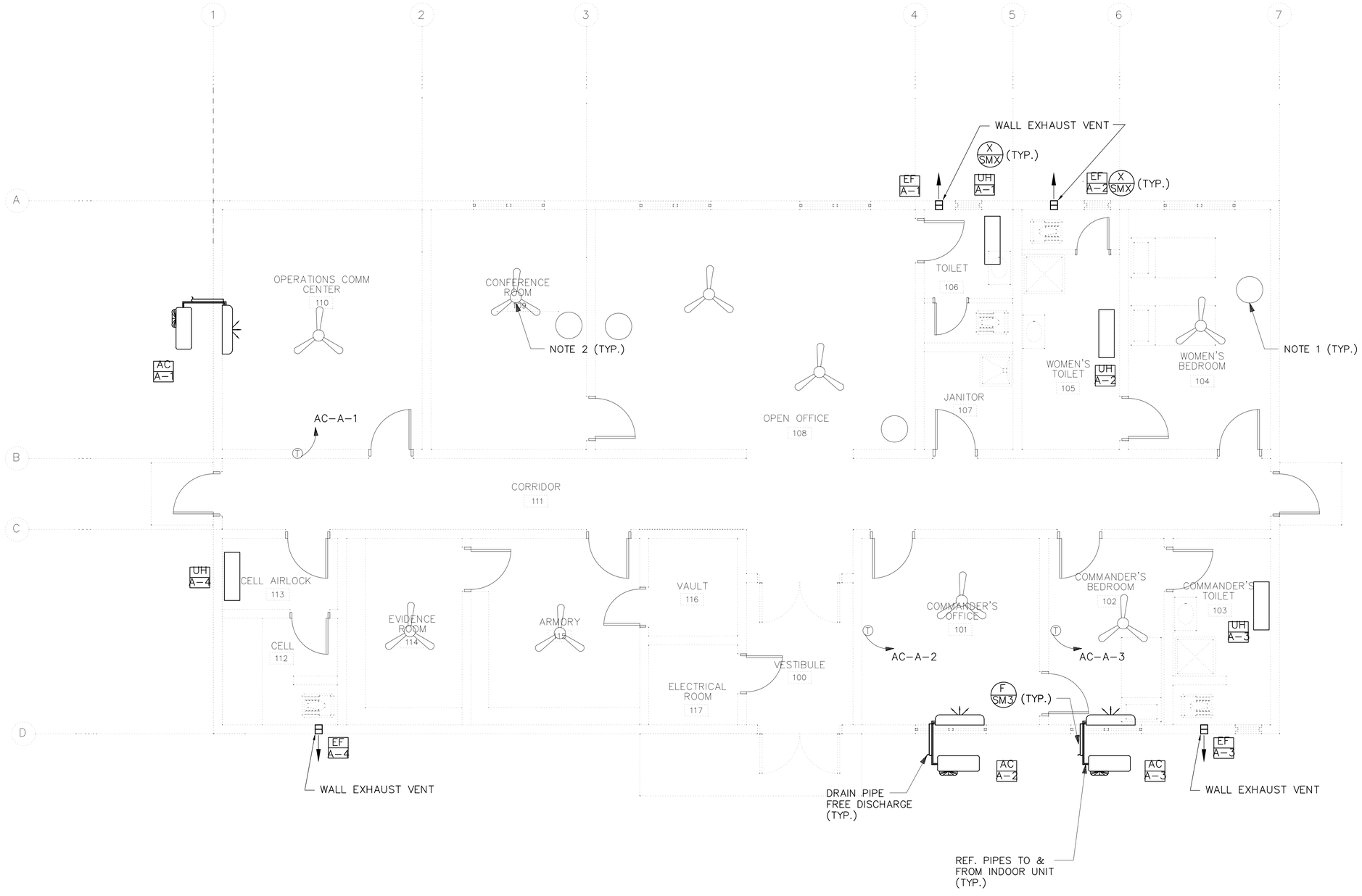

HVAC PLAN
SCALE: 1:50

UNLESS OTHERWISE NOTED, LINEAR DIMENSIONS SHOWN ARE IN MILLIMETERS.

SYMBOL	REVISIONS DESCRIPTION	DATE	APR
*		03/04/2007	

DESIGNED BY: JMR
DATE: 01-25-07
DWN BY: JMR
SUBMITTED BY: MICHAEL HOWELL, CHIEF, FDTD BLDG SYSTEMS
CHK BY: RMS/HMH
FILE NO.: AF0609 A-MH01PN

US Army Corps of Engineers
Transatlantic Programs Center

AFGHAN NATIONAL POLICE COMPANY COMPOUND
VARIOUS, AFGHANISTAN
OFFICE BUILDING
HVAC PLAN

SHEET REFERENCE NUMBER:
A
M-1

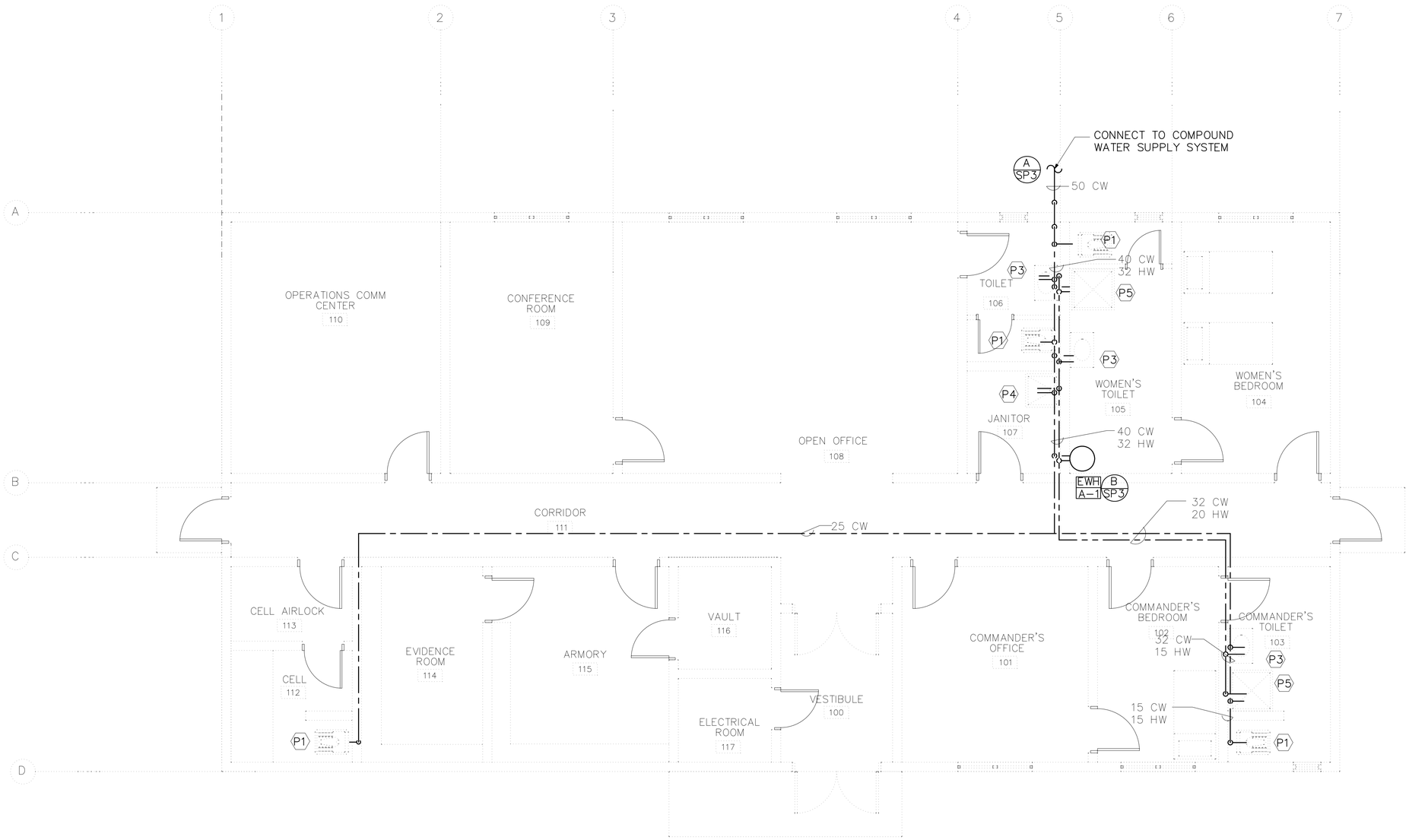

WATER SUPPLY LAYOUT

SCALE: 1:100

EWH X — ELECTRIC WATER HEATER SCHEDULE

UNIT NUMBER	LOCATION (ROOM NO.)	STORAGE CAPACITY (LITERS)	MINIMUM RECOVERY RATE (LITERS/HOUR) @ 55.5 C RISE	NUMBER OF ELEMENTS	ELECTRICAL REQUIREMENTS				REMARKS
					KW INPUT	VOLTS	PH	HZ	
A-1	106	190	25	2	2 @ 3.8	240	1	50	NON-SIMULTANEOUS ELEMENT OPERATION

UNLESS OTHERWISE NOTED, LINEAR DIMENSIONS SHOWN ARE IN MILLIMETERS.

*	REVISIONS		
	SYMBOL	DESCRIPTION	DATE
			03/04/2007 APR

DESIGNED BY: JMR
DATE: 01-25-07
DWN BY: JMR
SUBMITTED BY: MICHAEL HOWELL CHIEF, FDTD BLDG SYSTEMS
CHK BY: RMS/HMH
FILE NO.: AF0609 MP01PN

US Army Corps of Engineers
Transatlantic Programs Center

AFGHAN NATIONAL POLICE COMPANY COMPOUND
VARIOUS, AFGHANISTAN
OFFICE BUILDING
WATER SUPPLY LAYOUT

SHEET REFERENCE NUMBER:
A
P-1

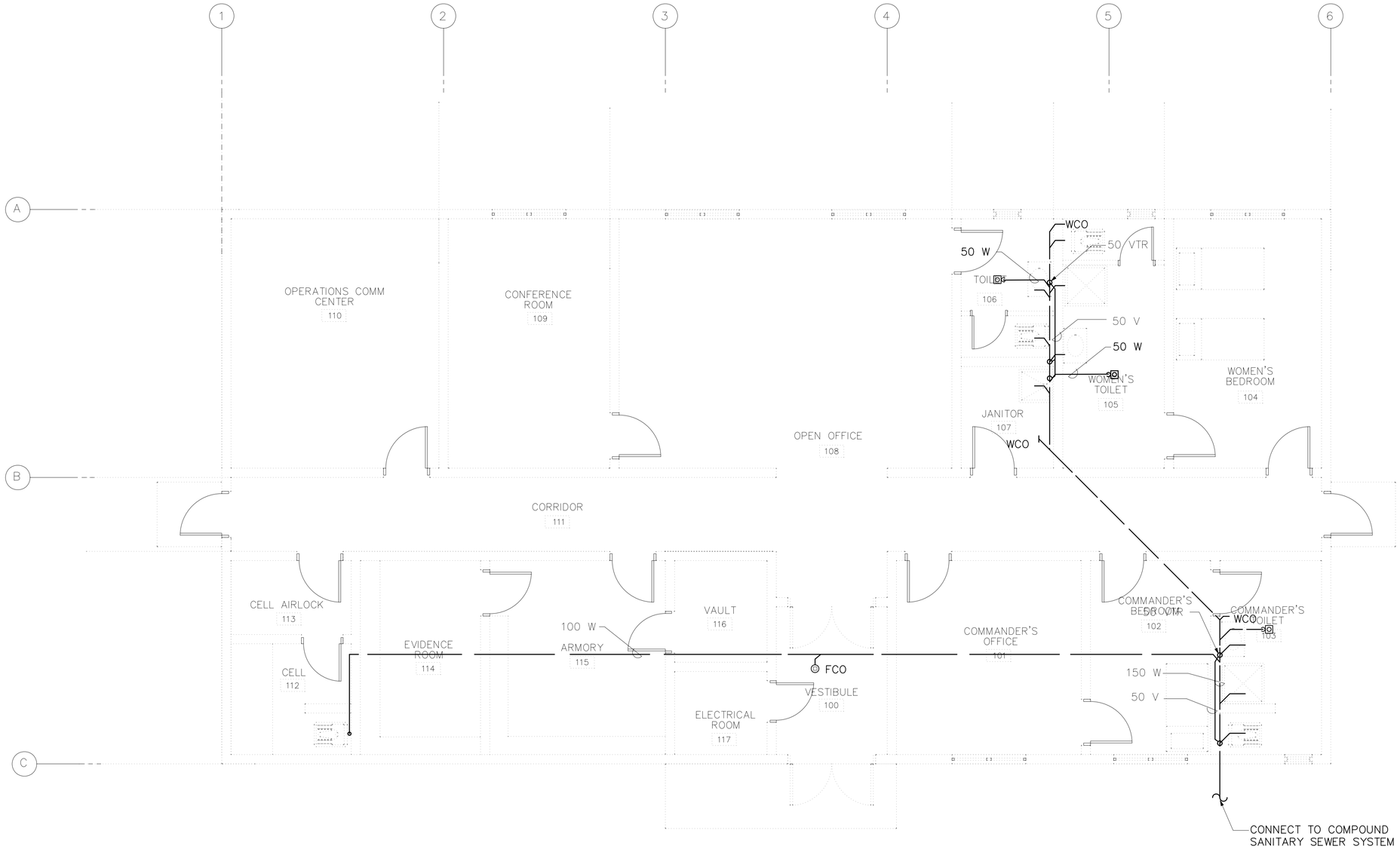

UNLESS OTHERWISE NOTED, LINEAR DIMENSIONS SHOWN ARE IN MILLIMETERS.

SYMBOL	DESCRIPTION	DATE	APR
*	REVISIONS	03/04/2007	

DESIGNED BY: JMR
DATE: 01-25-07
DWN BY: JMR
SUBMITTED BY: MICHAEL HOWELL CHIEF, FDTD BLDG SYSTEMS
CHK BY: RMS/HMH
FILE NO.: AF0609 A-MP02PN

US Army Corps of Engineers
Transatlantic Programs Center

AFGHAN NATIONAL POLICE COMPANY COMPOUND
VARIOUS, AFGHANISTAN
OFFICE BUILDING
SANITARY DRAINAGE LAYOUT

SHEET REFERENCE NUMBER:
A
P-2

AF0609A-MP02PN.dwg
3/31/2007 7:18 PM
AED AED, USACE

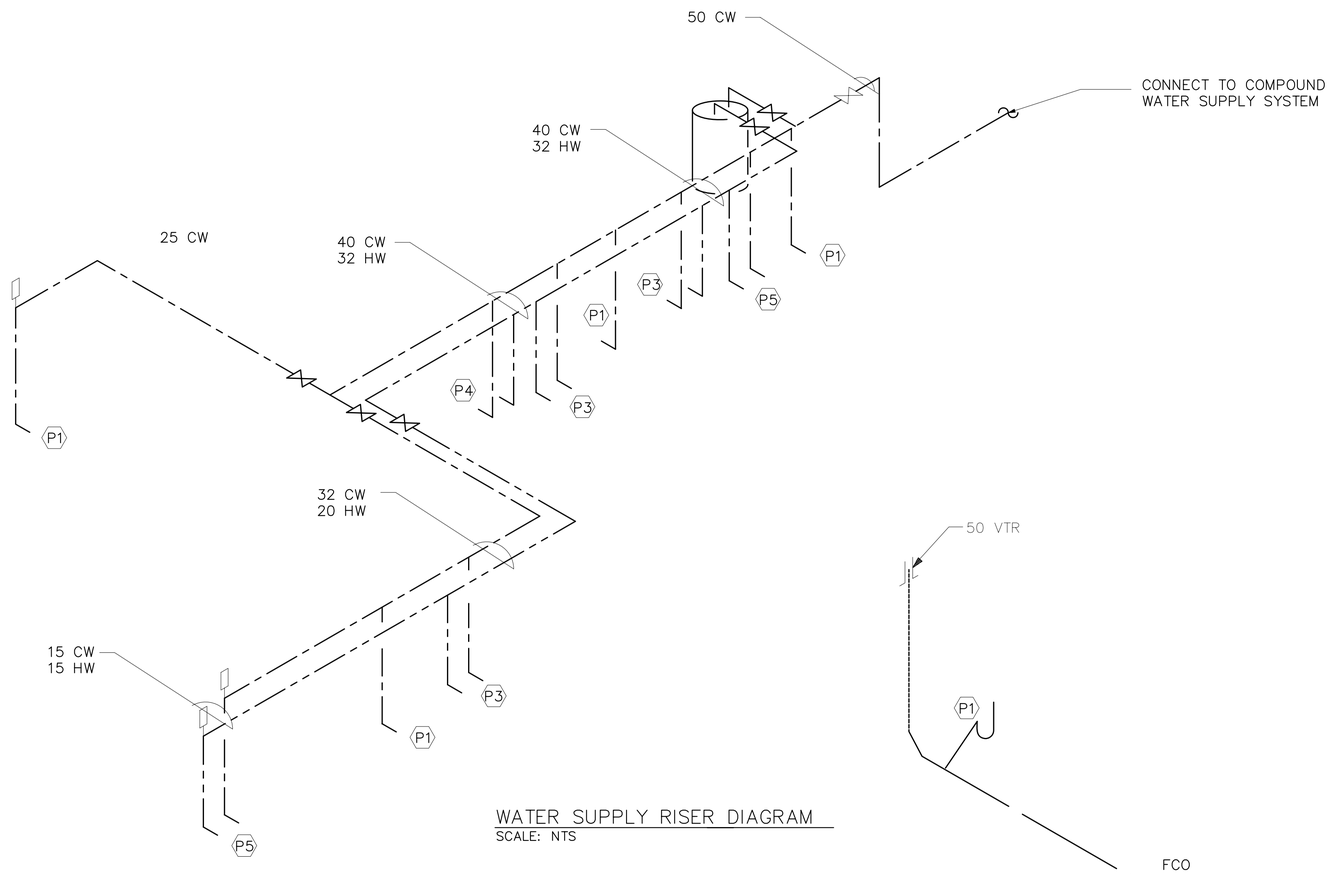

WATER SUPPLY RISER DIAGRAM
SCALE: NTS

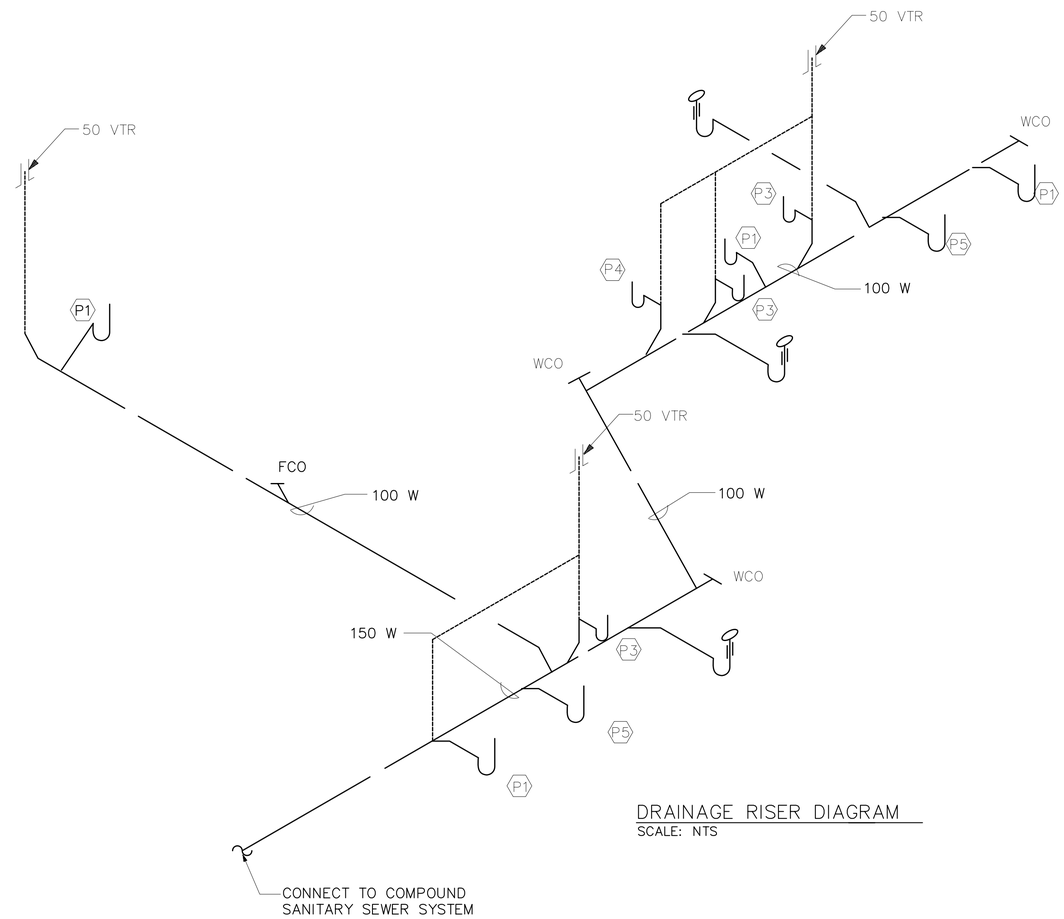

DRAINAGE RISER DIAGRAM
SCALE: NTS

UNLESS OTHERWISE NOTED, LINEAR DIMENSIONS SHOWN ARE IN MILLIMETERS.

SYMBOL	DESCRIPTION	DATE	APR
*	REVISIONS	03/04/2007	

DESIGNED BY: JMR
DATE: 01-25-07
DWN BY: JMR
SUBMITTED BY: MICHAEL HOWELL
CHK BY: RMS
FILE NO.: AF0609 A-MP03DI

US Army Corps of Engineers
Transatlantic Programs Center

AFGHAN NATIONAL POLICE
COMPANY COMPOUND
VARIOUS, AFGHANISTAN
OFFICE BUILDING
RISER DIAGRAMS

SHEET REFERENCE NUMBER:
A
P-3

AF0609A-MP03DI.dwg
3/31/2007 7:22 PM
AED AED, USACE

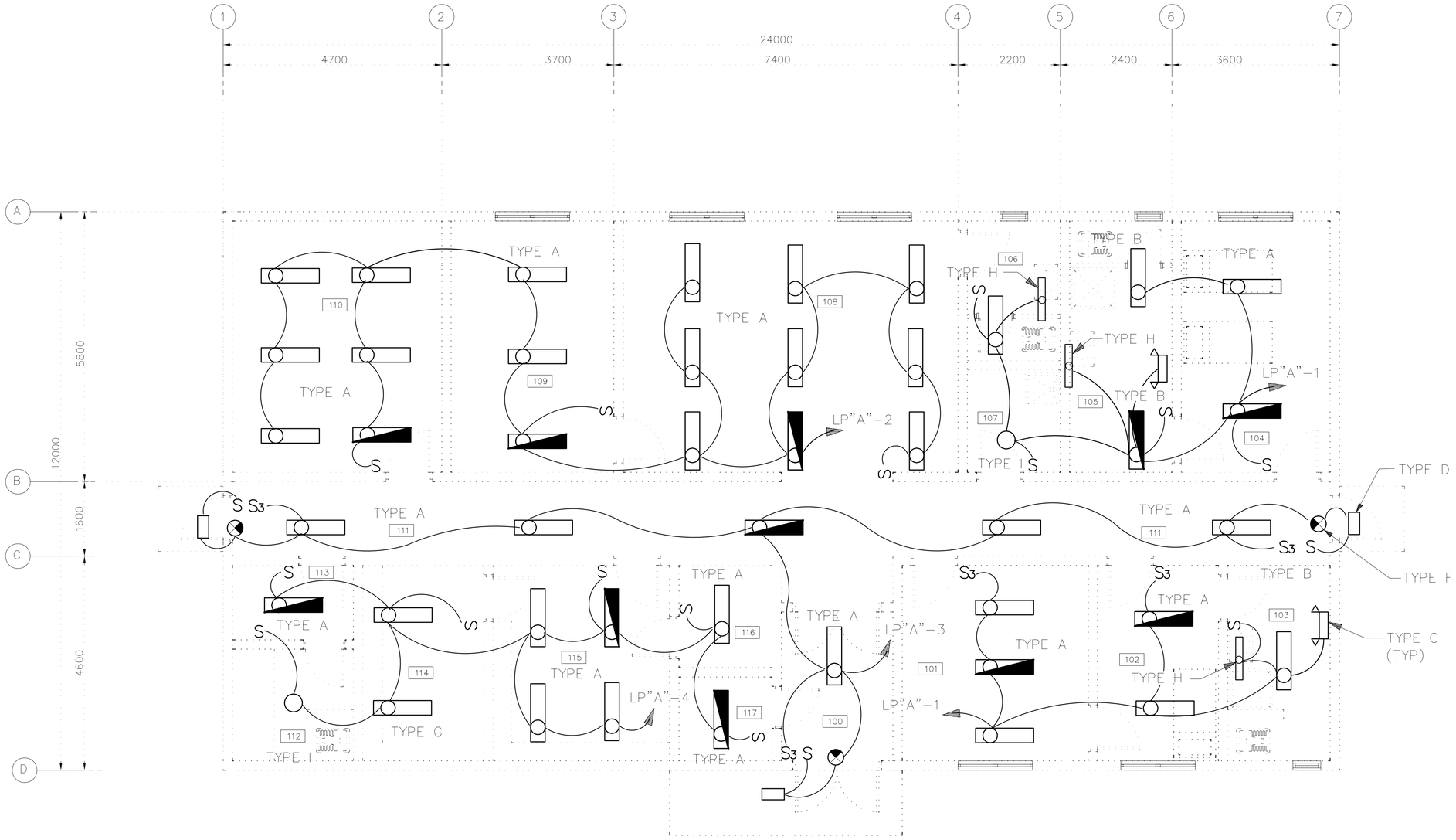

NOTES:

1. FOR LEGEND, ABBREVIATIONS, AND LIGHT FIXTURE SCHEDULE SEE DRAWING SE-1.
2. FOR LIGHT FIXTURE DETAILS SEE DRAWING SE-2 AND SE-3.
3. FOR PANEL SCHEDULE SEE DRAWING E-3.
4. COORDINATE LOCATION OF ALL ELECTRICAL DEVICES AND EQUIPMENT WITH ALL OTHER TRADES.
5. ALL WIRING SHALL BE IN CONCEALED OR SURFACE MOUNTED METAL CONDUIT.

UNLESS OTHERWISE NOTED, LINEAR DIMENSIONS SHOWN ARE IN MILLIMETERS.

SYMBOL	DESCRIPTION	DATE	APR
REVISIONS		03/04/2007	

DESIGNED BY: DLF
DATE: 01-25-07
DWN BY: FHG
SUBMITTED BY: MICHAEL HOWELL
CHK BY: RMS/DK
FILE NO.: AF0609 A-EL01PN

US Army Corps of Engineers
Transatlantic Programs Center

AFGHAN NATIONAL POLICE COMPANY COMPOUND
VARIOUS, AFGHANISTAN
OFFICE BUILDING
LIGHTING PLAN

SHEET REFERENCE NUMBER:
A
E-1

AF0609A-EL01PN.dwg
3/31/2007 7:27 PM
AED AED, USACE

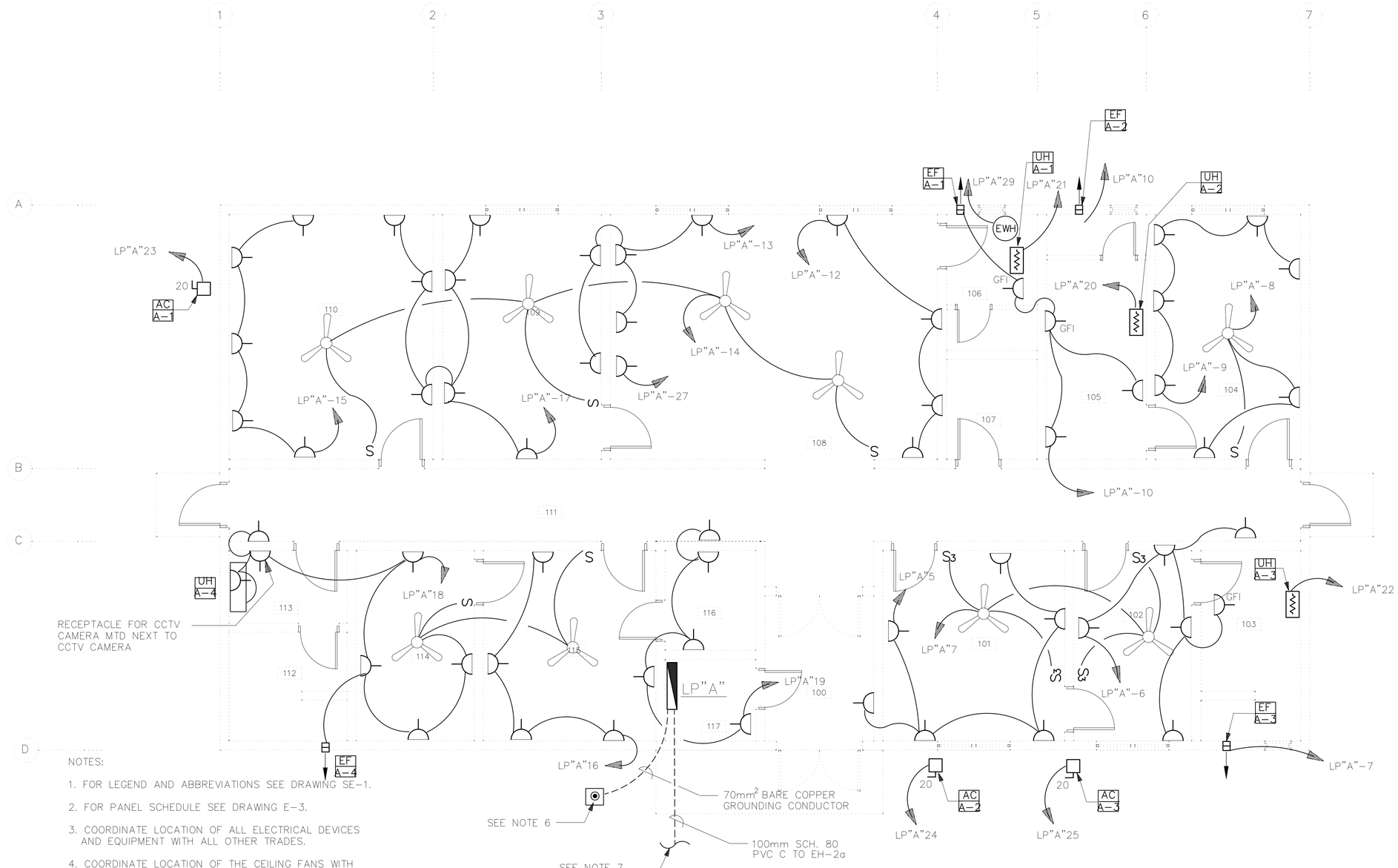

POWER PLAN

SCALE: 1:50

NOTES:

1. FOR LEGEND AND ABBREVIATIONS SEE DRAWING SE-1.
2. FOR PANEL SCHEDULE SEE DRAWING E-3.
3. COORDINATE LOCATION OF ALL ELECTRICAL DEVICES AND EQUIPMENT WITH ALL OTHER TRADES.
4. COORDINATE LOCATION OF THE CEILING FANS WITH LIGHT FIXTURES.
5. EXHAUST FANS SHALL BE CONTROLLED BY SEPERATE SWITCH , SEE DETAIL ON SHEET SM-3.
6. FOR GROUNDING ROD ACCESS BOX DETAIL SEE DRAWING SE-3.
7. FOR CONTINUATION TO SECONDARY DISTRIBUTION SYSTEM SEE DRAWINGS XE-1 AND XE-2.

1 0 1 2 3 4
1:50

UNLESS OTHERWISE NOTED, LINEAR DIMENSIONS SHOWN ARE IN MILLIMETERS.

SYMBOL	DESCRIPTION	DATE	APR

DESIGNED BY: DLF	DATE: 01-25-07	
DWN BY: FHG	SUBMITTED BY: MICHAEL HOWELL CHIEF, EPD ELECTRICAL SYSTEMS	
CHK BY: RMS	FILE NO.: AF0609 A-EP02PN	

US Army Corps of Engineers
Transatlantic Programs Center

AFGHAN NATIONAL POLICE
COMPANY COMPOUND
VARIOUS, AFGHANISTAN
OFFICE BUILDING
POWER PLAN

SHEET REFERENCE NUMBER:
A
E-2

AF0609A-ep02pn.dwg
3/31/2007 7:55 PM
AED AED, USACE

PANELBOARD LP "A" FLUSH MOUNTED MINIMUM 22,000 ASYM. A.I.C. MIN.

_____ AMP. MAIN LUGS (OR) 100 AMP. MAIN BREAKER W/ 100 AMP. TRIP

CIRCUIT BREAKER TYPE 380/220 VOLTS 3 PHASE 4 WIRE 200 AMP. BUS

CKT. NO.	TRIP AMPS	NO. POLES	WIRE MM2	GND MM2	CONDUIT MM	LOAD SERVED	LOAD-V.A. AO	LOAD-V.A. BO	LOAD-V.A. CO	LOAD-V.A. AO	LOAD-V.A. BO	LOAD-V.A. CO	LOAD SERVED	CONDUIT MM	GND MM2	WIRE MM2	NO. POLES	TRIP AMPS	CKT. NO.
1	20	1	4	4	20	LIGHTING RMS. 101-107	2100			2700			LIGHTING; RMS 108-110	20	4	4	1	20	2
3	20	1	4	4	20	LIGHTING RMS. 100,111, EXT.		1290			1500		LIGHTING; RMS 112-117	20	4	4	1	20	4
5	20	1	4	4	20	RECEPTACLES-RM 100-101			1080			1080	RECEP-RM 102-103,111	20	4	4	1	20	6
7	20	1	4	4	20	FANS RMS 101-102;EF-A-3	700			600			FAN 104, REC 104	20	4	4	1	20	8
9	20	1	4	4	20	RECEPTACLES-RM 104		900			1190		REC 105-106; EF-A-1,2	20	4	4	1	20	10
11	20	1				SPARE			---			720	RECEPTACLES-RM 108	20	4	4	1	20	12
13	20	1	4	4	20	RECEPTACLES-RM 108-109	900			932			FANS 108-110	20	4	4	1	20	14
15	20	1	4	4	20	RECEPTACLES 110		900			720		RECEPTACLES-RM 115	20	4	4	1	20	16
17	20	1	4	4	20	RECEPTACLES-RMS 109-110			1260			1546	FAN 114-115;REC.111,113-114	20	4	4	1	20	18
19	20	1	4	6	20	RECEPTACLES-RMS 111,116-117	900			4000			UH-A-2 RM 105	20	6	6	1	25	20
21	25	1	6	6	20	UH-A-1 RM 110		4000			4000		UH-A-3 RM 103	20	6	6	1	25	22
23	20	1	6	6	20	AC-1 RM 110			3150			3150	AC-2 RM 101	20	6	6	1	20	24
25	20	1	6	6	20	AC-3 RM 102	3150						SPACE				3		26
27	20	1	4	4	20	CCTV CONSOLE		750											28
29	20	1	4	4	20	EWH-A-1 RM106			2000										30
31	20	1				SPARE							SPACE				3		32
33						SPACE													34
35						SPACE													36
37						SPACE							SPACE				3		38
39						SPACE													40
41						SPACE													42
							7750	7840	8210	8232	7410	6496							

TOTAL CONN. LOAD 46.0 KVA. 80 % DEMAND = ESTIMATED DEMAND LOAD: 36.8 KVA

TOTAL CONN. LOAD 36.8 KW 80 % DEMAND = ESTIMATED DEMAND LOAD: 29.4 KW

TOTAL CONN. LOAD PER PHASE (KVA): AO 16.0 BO 15.3 CO 14.71

SUPPLIED FROM POWER PLANT SWITCHBOARD

UNLESS OTHERWISE NOTED, LINEAR DIMENSIONS SHOWN ARE IN MILLIMETERS.

SYMBOL	DESCRIPTION	DATE	APR
*	REVISIONS	03/04/2007	

DESIGNED BY: DLF
DATE: 01-25-07
DWN BY: FHG
SUBMITTED BY: MICHAEL HOWELL PROJECT MGT BLDG SYSTEMS
CHK BY: RMS/DK
FILE NO.: AF0609 A-EL03SC

US Army Corps of Engineers
Transatlantic Programs Center

AFGHAN NATIONAL POLICE COMPANY COMPOUND
VARIOUS, AFGHANISTAN
OFFICE BUILDING
PANEL SCHEDULE

SHEET REFERENCE NUMBER:
A
E-3

AF0609A-el03sc.dwg
3/31/2007 8:17 PM
AED AED, USACE

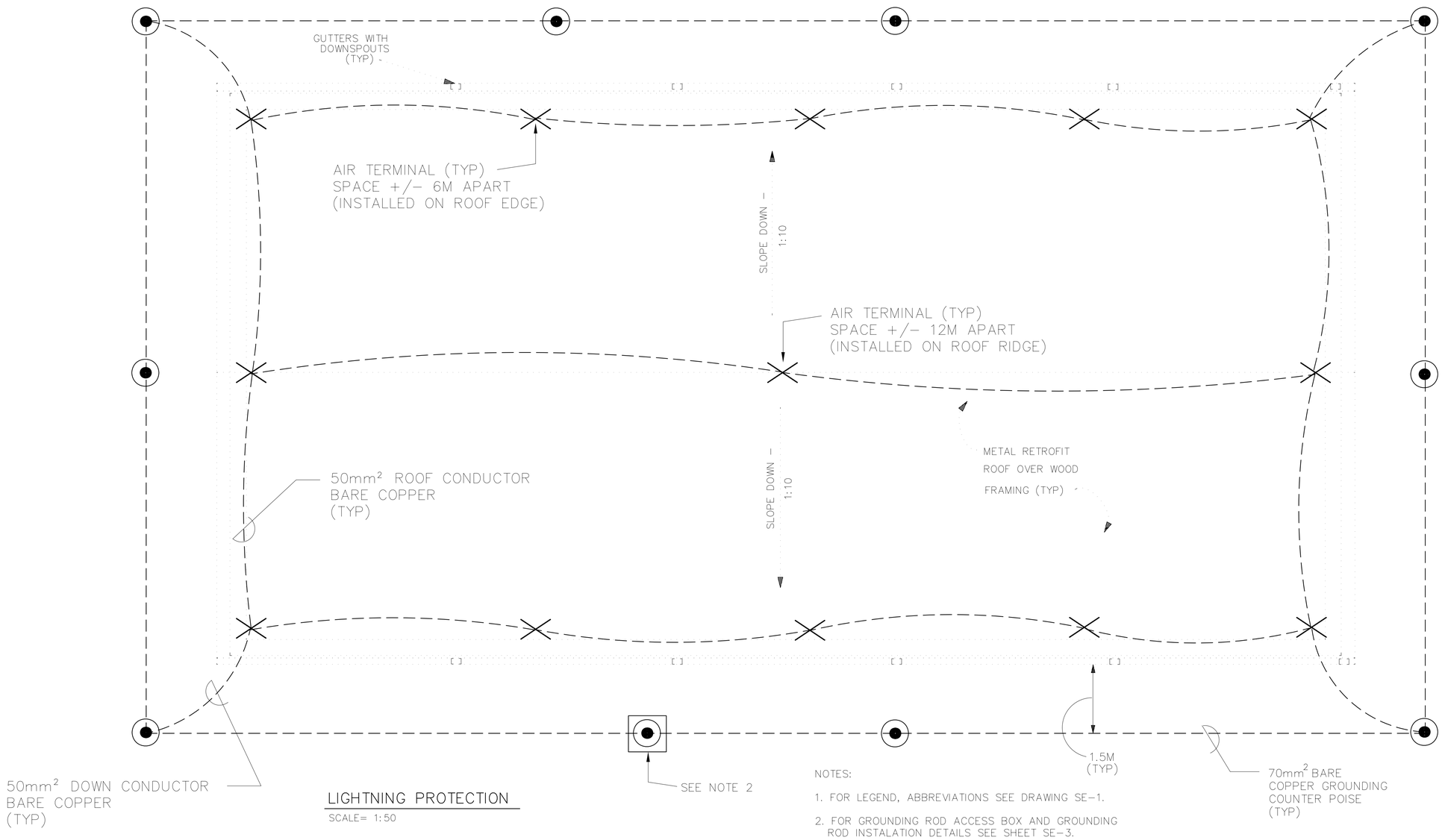

LIGHTNING PROTECTION

SCALE= 1:50

NOTES:

1. FOR LEGEND, ABBREVIATIONS SEE DRAWING SE-1.
2. FOR GROUNDING ROD ACCESS BOX AND GROUNDING ROD INSTALATION DETAILS SEE SHEET SE-3.
3. FOR LIGHTNING PROTECTION INSTALATION DETAILS SEE SHEET SE-7.
4. CONTRACTOR SHALL INSTALL LIGHTNING PROTECTION SYSTEM IN ACCORDANCE WITH THE MOST CURRENT ADDITION OF THE NFPA 780.
5. BOND LIGHTNING PROTECTION GROUND SYSTEM TO BUILDING ELECTRICAL GROUND SYSTEM PER NEC 250.106.

1 0 1 2 3 4
1:50

UNLESS OTHERWISE NOTED, LINEAR DIMENSIONS SHOWN ARE IN MILLIMETERS.

SYMBOL	DESCRIPTION	DATE	APR
*	REVISIONS	03/04/2007	

DESIGNED BY: DLF
DATE: 01-25-07
DWN BY: FHG
SUBMITTED BY: PHILLIP L. DINELLO PROJECT MGR. PACIFICS DEV.
CHK BY: RMS/DK
FILE NO.: AF0609A-EL04PN

US Army Corps of Engineers
Transatlantic Programs Center

AFGHAN NATIONAL POLICE COMPANY COMPOUND
VARIOUS, AFGHANISTAN
OFFICE BUILDING
GROUNDING AND LIGHTNING PROTECTION PLAN

SHEET REFERENCE NUMBER:
A
E-4

AF0609A-EL04PN.dwg
3/31/2007 8:22 PM
AED AED, USACE

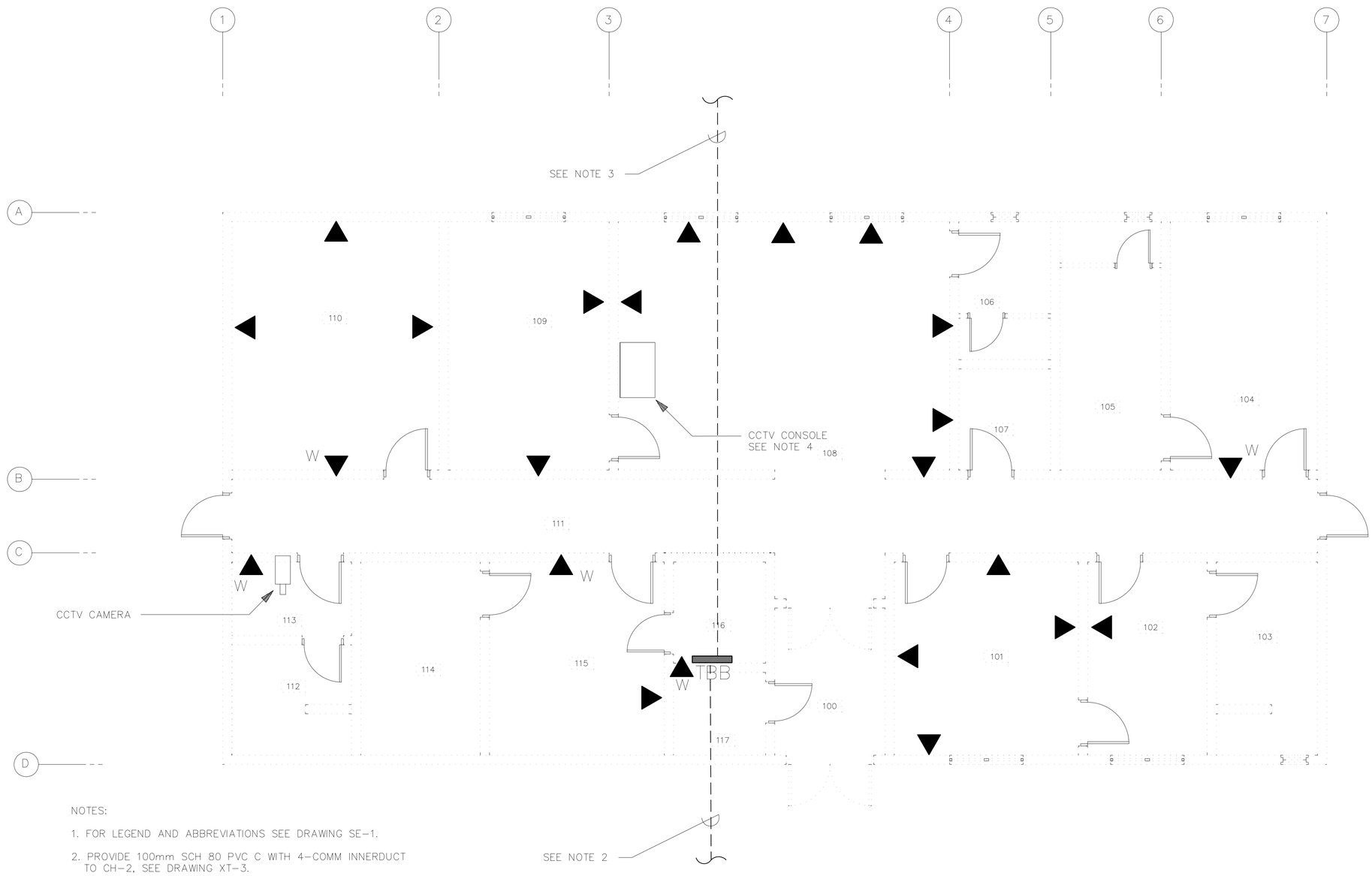

COMMUNICATIONS PLAN

SCALE: 1:50

NOTES:

1. FOR LEGEND AND ABBREVIATIONS SEE DRAWING SE-1.
2. PROVIDE 100mm SCH 80 PVC C WITH 4-COMM INNERDUCT TO CH-2, SEE DRAWING XT-3.
3. PROVIDE 100mm SCH 80 PVC C WITH 4-COMM INNERDUCT TO CH-3, SEE DRAWING XT-3.
4. PROVIDE CCTV SYSTEM: CONSOLE WITH DIGITAL VIDEO RECORDER, CCTV MONITOR, AND CAMERA WHERE SHOWN; AS APPROVED BY THE COR.
5. FOR COMMUNICATIONS RISER DIAGRAMS SEE DRAWING TC-2.

1 0 1 2 3 4
1:50

UNLESS OTHERWISE NOTED, LINEAR DIMENSIONS SHOWN ARE IN MILLIMETERS.

REVISIONS			
SYMBOL	DESCRIPTION	DATE	APR
*		03/04/2007	

DESIGNED BY: DLF
DATE: 01-25-07
DWN BY: FHG
SUBMITTED BY: MICHAEL HOWELL, CHIEF, FDTD BLDGS SYSTEMS
CHK BY: RMS
FILE NO.: AF0609 A-TC01PN

US Army Corps of Engineers
Transatlantic Programs Center

AFGHAN NATIONAL POLICE COMPANY COMPOUND
VARIOUS, AFGHANISTAN
OFFICE BUILDING
COMMUNICATION PLAN

SHEET REFERENCE NUMBER:
A
TC-1

AF0609A-tc01pn.dwg
3/31/2007 8:26 PM
AED, AED, USACE

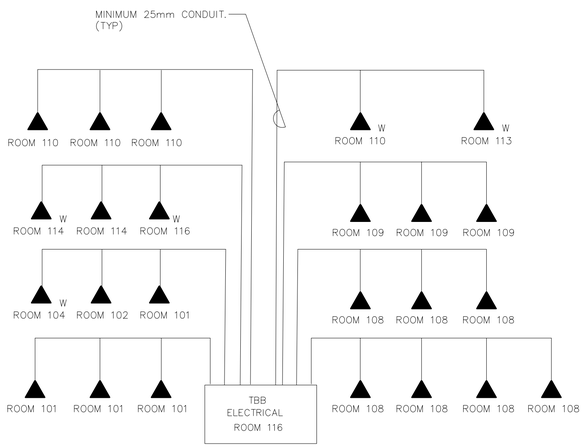

TELEPHONE RISER DIAGRAM

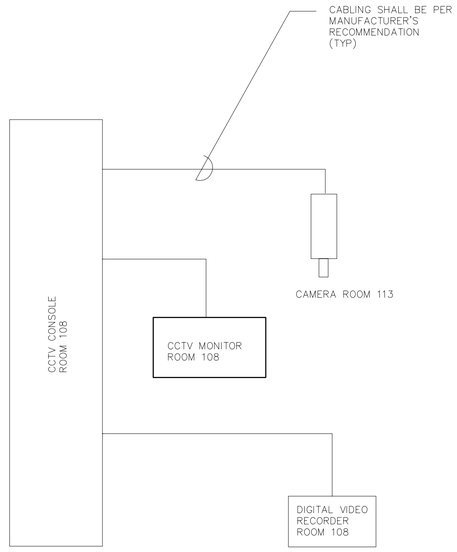

CCTV RISER DIAGRAM

UNLESS OTHERWISE NOTED, LINEAR DIMENSIONS SHOWN ARE IN MILLIMETERS.

SYMBOL	REVISIONS DESCRIPTION	DATE	APR
*		03/04/2007	

DESIGNED BY: DLF
DATE: 01-25-07
DWN BY: FHG
SUBMITTED BY: MICHAEL HOWELL
CHIEF, PDTD BLDG SYSTEMS
CHK BY: RMS
FILE NO.: AF0609 A-TC02DI

US Army Corps of Engineers
Transatlantic Programs Center

AFGHAN NATIONAL POLICE
COMPANY COMPOUND
VARIOUS, AFGHANISTAN
OFFICE BUILDING
COMMUNICATIONS DIAGRAMS

SHEET REFERENCE NUMBER:
A
TC-2

AF0609A-tc02di.dwg
3/31/2007 8:32 PM
AED AED, USACE

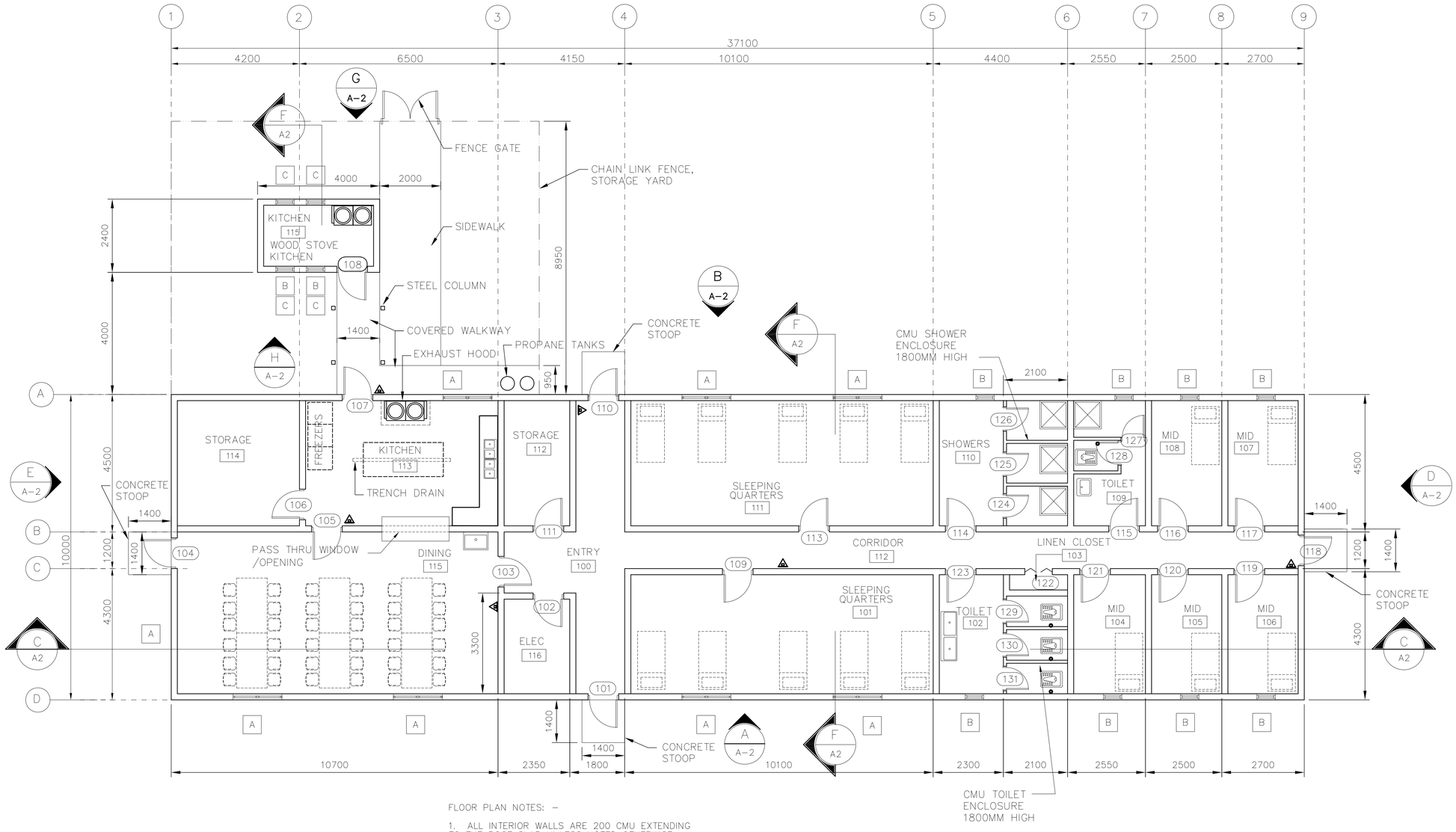

FLOOR PLAN
SCALE=1:75

FLOOR PLAN NOTES: –

1. ALL INTERIOR WALLS ARE 200 CMU EXTENDING TO THE ROOF SLAB UNLESS NOTED OTHERWISE.

2. CONTRACTOR SHALL ROTATE ALL EASTERN TOILETS NORTH AND SOUTH PER CONSTRUCTION SITE.

PROVIDE PORTABLE FIRE EXTINGUISHERS, ABC DRY CHEMICAL 4A:60B:C

3 1.50 0 3 4.5
1:75

UNLESS OTHERWISE NOTED, LINEAR DIMENSIONS SHOWN ARE IN MILLIMETERS.

SYMBOL	REVISIONS DESCRIPTION	DATE	APR
*		03/04/2007	

DESIGNED BY: HMH
DATE: 01-25-07
DWN BY: HMH
SUBMITTED BY: PHILIP L. DINELLO PROJ. MGR. PACIFICS DEV.
CHK BY: HMH
FILE NO.: AF0609 B-AR01PN

US Army Corps of Engineers
Transatlantic Programs Center

AFGHAN NATIONAL POLICE COMPANY COMPOUND
VARIOUS, AFGHANISTAN
DFAC/BARRACKS
FLOOR PLAN

SHEET REFERENCE NUMBER:
B
A-1

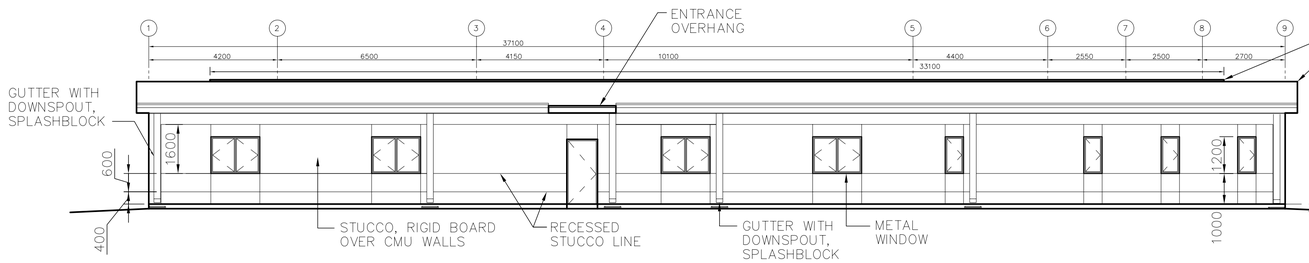

ELEVATION A (A-1/A-2)
SCALE 1:100

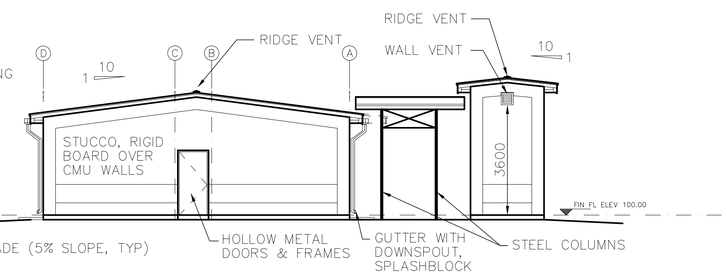

ELEVATION D (A-1/A-2)
SCALE 1:100

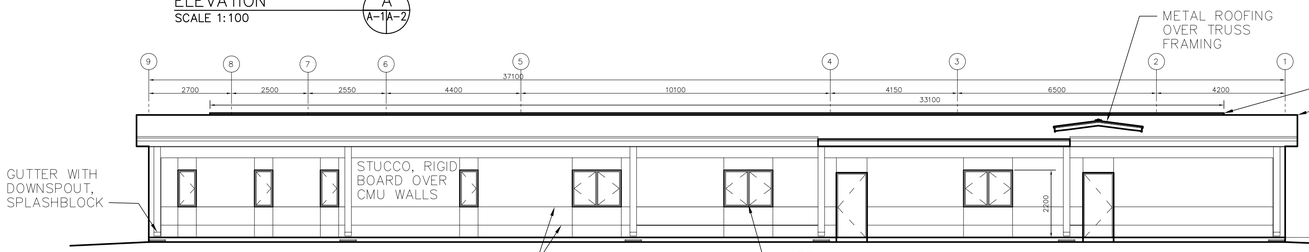

ELEVATION B (A-1/A-2)
SCALE 1:100

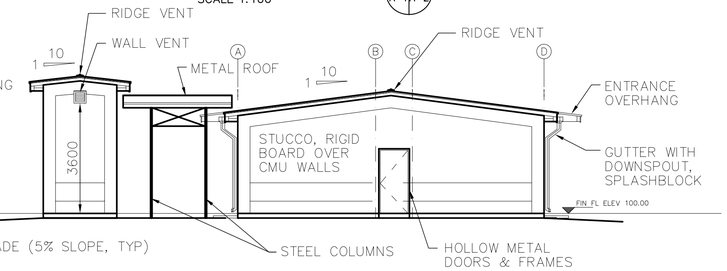

ELEVATION E (A-1/A-2)
SCALE 1:100

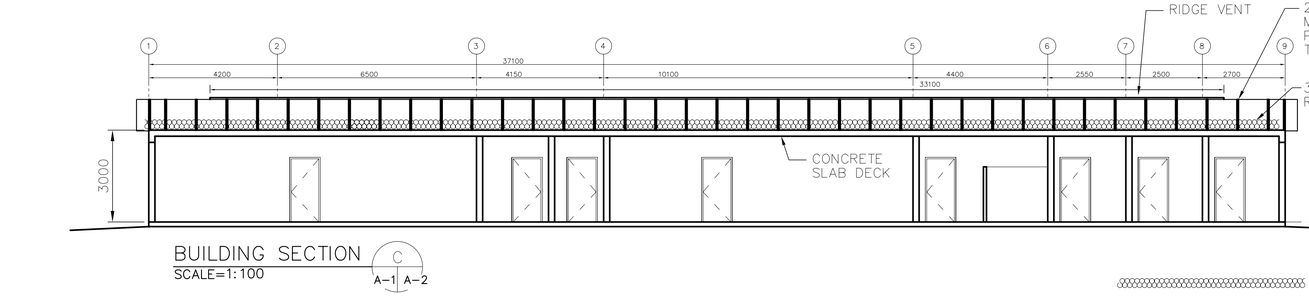

BUILDING SECTION C (A-1/A-2)
SCALE=1:100

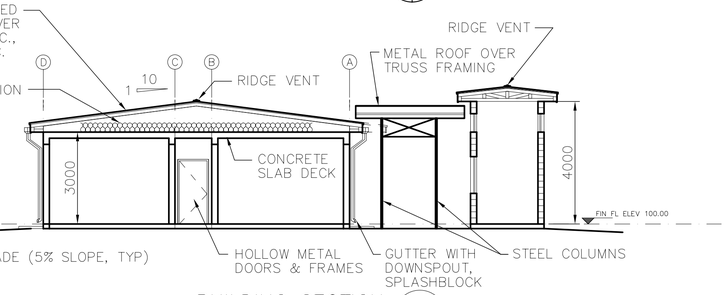

BUILDING SECTION F (A-1/A-2)
SCALE=1:100

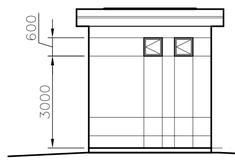

ELEVATION G (A-1/A-2)
SCALE 1:100

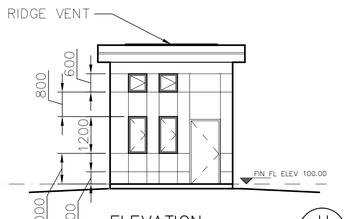

ELEVATION H (A-1/A-2)
SCALE 1:100

NOTE:
1. 24 GAUGE CORRUGATED GALVANIZED METAL ROOF
2. 24 GAUGE GALVANIZED GUTTER AND DOWNSPOUT

UNLESS OTHERWISE NOTED, LINEAR DIMENSIONS SHOWN ARE IN MILLIMETERS.

SYMBOL	REVISIONS	DATE	APR
*	DESCRIPTION	03/04/2007	

DESIGNED BY: HMH
DWN BY: HMH
CHK BY: HMH
DATE: 01-25-07
SUBMITTED BY: PHILIP L. DINELLO, CHIEF, ED PROJECTS DEV
FILE NO.: AF0609 B-AR02EL

US Army Corps of Engineers
Transatlantic Programs Center

AFGHAN NATIONAL POLICE COMPANY COMPOUND
VARIOUS, AFGHANISTAN
DFAC/BARRACKS
BLDG ELEVATIONS AND SECTIONS

SHEET REFERENCE NUMBER:
B
A-2

SHEET SIZE

auto_sytime

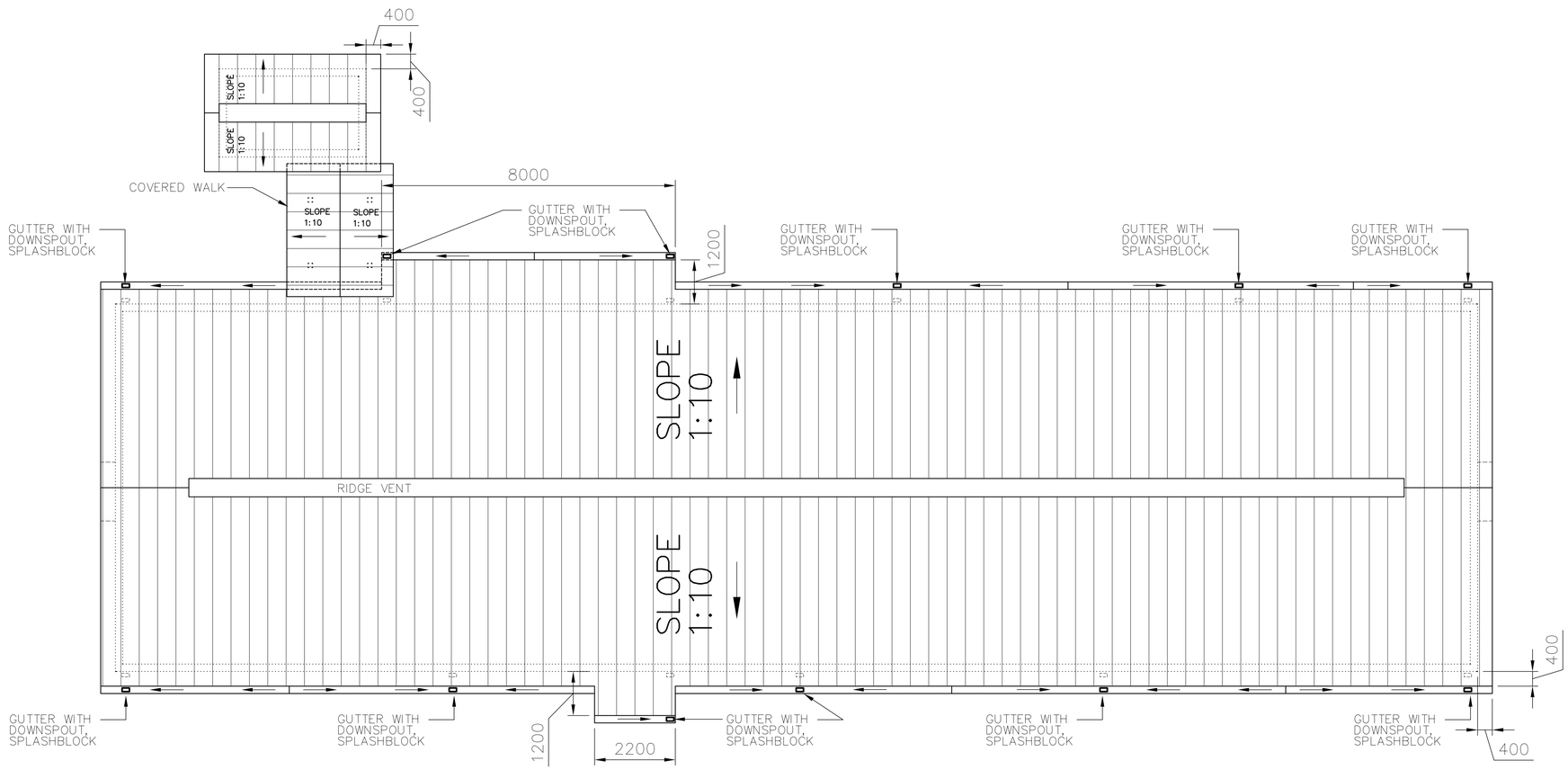

ROOF PLAN

SCALE=1:75

ROOF PLAN NOTES:

1. REFER TO MECHANICAL DRAWINGS FOR ALL ROOF PENETRATION LOCATIONS.
2. ALL ROOF PENETRATIONS SHALL RECEIVE WATERTIGHT ASSEMBLIES PER MANUFACTURERS RECOMMENDATIONS.

3 1.50 0 3 4.5
1:75

UNLESS OTHERWISE NOTED, LINEAR DIMENSIONS SHOWN ARE IN MILLIMETERS.

SYMBOL	REVISIONS	DATE	APR
*		03/04/2007	

DESIGNED BY: HMH
DWN BY: HMH
CHK BY: HMH
DATE: 01-25-07
SUBMITTED BY: PHILIP L. DINELLO, PROJ. MGR. PLANNING DEV.
FILE NO.: AF0609 B-AR04PN

US Army Corps of Engineers
Transatlantic Programs Center

AFGHAN NATIONAL POLICE COMPANY COMPOUND
VARIOUS, AFGHANISTAN
DFAC/BARRACKS
ROOF PLAN

SHEET REFERENCE NUMBER:
B
A-4

$DATE$
$FILE$

ROOM FINISH SCHEDULE

ROOM NO.	ROOM NAME	FLOOR MAT'L.	FLOOR COLOR	BASE MAT'L.	BASE COLOR	WALLS MAT'L.	WALLS COLOR	CEILING MAT'L.	CEILING COLOR	CEILING HEIGHT	REMARKS
100	ENTRY	F2	2	B2	11	W2	21	C2	31	--	
101	SLEEPING QUARTERS	F2	2	B2	11	W2	21	C2	31	--	
102	TOILET	F3	3	B3	12	W3	23	C2	31	--	
103	LINEN CLOSET	F2	2	B2	11	W2	21	C2	31	--	
104	MID	F2	2	B2	11	W2	21	C2	31	--	
105	MID	F2	2	B2	11	W2	21	C2	31	--	
106	MID	F2	2	B2	11	W2	21	C2	31	--	
107	MID	F2	2	B2	11	W2	21	C2	31	--	
108	MID	F2	2	B2	11	W2	21	C2	31	--	
109	TOILET	F3	3	B3	12	W3	23	C2	31	--	
110	SHOWERS	F3	3	B3	12	W3	23	C2	31	--	
111	SLEEPING QUARTERS	F2	2	B2	11	W2	21	C2	31	--	
112	STORAGE	F2	2	B2	11	W2	21	C2	31	--	
113	KITCHEN	F2	2	B2	11	W2	21	C2	31	--	
114	STORAGE	F2	2	B2	11	W2	21	C2	31	--	
115	KITCHEN	F2	2	B2	11	W2	21	C2	31	--	

DOOR SCHEDULE

DOOR NO.	LOCATION	TYPE	MAT'L	WIDTH	HEIGHT	THICK	FRAME HEAD	FRAME JAMB	FRAME SILL	FRAME MAT'L	FIRE LABEL	HDW SET	REMARKS
101	ENTRY	G	HM	900	2150	45	H-1	J-1	S-1	HM		1	
102	ELEC RM	L	HM	900	2150	45	H-2	J-2	S-2	HM		6	NOTE #1.
103	ENTRY	F	HM	900	2150	45	H-2	J-2	S-2	HM		3	
104	DINING	F	HM	900	2150	45	H-1	J-1	S-1	HM		1	
105	KITCHEN	F	HM	900	2150	45	H-2	J-2	S-2	HM		4	
106	STORAGE	F	HM	900	2150	45	H-2	J-2	S-2	HM		6	
107	KITCHEN	G	HM	900	2150	45	H-1	J-1	S-1	HM		1	
108	KITCHEN	G	HM	900	2150	45	H-1	J-1	S-1	HM		1	
109	SLEEPING QTRS.	F	HM	800	2150	45	H-2	J-2	S-2	HM		4	
110	ENTRY	G	HM	900	2150	45	H-1	J-1	S-1	HM		1	
111	STORAGE	F	HM	900	2150	45	H-2	J-2	S-2	HM		6	
112	CORRIDOR									HM		1	
113	SLEEPING QTRS.	F	HM	900	2150	45	H-2	J-2	S-2	HM		4	
114	SHOWERS	F	PVC	900	2150	45	H-2	J-2	S-2	PVC		5	NOTE #2.
115	TOILET	F	PVC	900	2150	45	H-2	J-2	S-2	PVC		3	NOTE #2.
116	MID	F	HM	900	2150	45	H-2	J-2	S-2	HM		7	
117	MID	F	HM	900	2150	45	H-2	J-2	S-2	HM		7	
118	CORRIDOR	F	HM	900	2150	45	H-1	J-1	S-1	HM		1	
119	MID	F	HM	900	2150	45	H-2	J-2	S-2	HM		7	
120	MID	F	HM	900	2150	45	H-2	J-2	S-2	HM		7	
121	MID	F	HM	900	2150	45	H-2	J-2	S-2	HM		7	
122	LINEN CLOSET	BF	WD	1800	2000	45	H-2	J-2	S-2	WD		10	WIRE MESH TRACK
123	TOILET	F	PVC	900	2150	45	H-2	J-2	S-2	PVC		5	NOTE #2.
124	SHOWERS	F	PVC	800	2150	45	H-2	J-2	S-2	PVC		2	
125	SHOWERS	F	PVC	800	2150	45	H-2	J-2	S-2	PVC		2	
126	SHOWERS	F	PVC	800	2150	45	H-2	J-2	S-2	PVC		2	
127	TOILET	F	PVC	900	2150	45	H-2	J-2	S-2	PVC		3	
128	TOILET	F	PVC	800	2150	45	H-2	J-2	S-2	PVC		3	
129	TOILET	F	PVC	800	2150	45	H-2	J-2	S-2	PVC		2	
130	TOILET	F	PVC	800	2150	45	H-2	J-2	S-2	PVC		2	
131	TOILET	F	PVC	800	2150	45	H-2	J-2	S-2	PVC		2	

DOOR SCHEDULE NOTES:

1. PROVIDE 600 X 400 LOUVERS IN DOOR.
2. UNDERCUT DOOR 200mm.

ROOM FINISH SCHEDULE LEGEND

FLOOR TYPE

F1 SEALED CONCRETE
F2 TERRAZZO TILE
F3 CERAMIC TILE
F4 QUARRY TILE

FLOOR COLOR

1 SEALED CONCRETE – NATURAL FINISH
2 TERRAZZO TILE – NAT'L TERRAZZO & MOSAIC ASSN, INC, NO. S–330
3 CERAMIC TILE – AMERICAN OLEAN, C–11, ALABASTER
4 QUARRY TILE – AMERICAN OLEAN, NO. Q03, SAHARA

BASE TYPE

B2 TERRAZZO
B3 CERAMIC
B4 QUARRY
B5 NO BASE

BASE COLOR

11 TERRAZZO TILE – NAT'L TERRAZZO & MOSAIC ASSN, INC, NO. S–330
12 CERAMIC TILE – AMERICAN OLEAN, D–12, ALMOND
13 QUARRY TILE –AMERICAN OLEAN, NO. Q03, SAHARA

WALL TYPE

W1 PAINTED CMU
W2 PAINTED PLASTER
W3 CERAMIC TILE

WALL COLOR

20 PAINTED CMU –HEMPEL, 1005–Y50R–25400, LIGHT BEIGE
21 PAINTED PLASTER–HEMPEL, 0502–Y–15420, OFF WHITE
22 METAL PANEL – HEMPEL, 0502–Y–15420, OFF WHITE
23 CERAMIC TILE –AMERICAN OLEAN, D–12, ALMOND

CEILING TYPE

C1 PAINTED EXPOSED STRUCTURE
C2 PAINTED PLASTER

CEILING COLOR

30 PAINTED EXPOSED STRUCTURE – HEMPEL, 0502–Y–15420, OFF WHITE
31 PAINTED SUSPENDED PLASTER HEMPEL, 0502–Y–15420, OFF WHITE

NOTE: PATTERN AND COLOR ARE SHOWN FOR REFERENCE ONLY, OTHER MANUFACTURER'S SIMILAR PATTERN AND COLOR MAY BE USED AS APPROVED BY THE CONTRACTING OFFICER.

ROOM FINISH SCHEDULE NOTES:

1. ALL WALL PENETRATIONS SHALL BE SEALED TO PROVIDE A NEAT APPEARANCE. PENETRATIONS OF EXTERIOR WALLS SHALL BE SEALED TO BE WATER–TIGHT.

2. SEALANTS SHALL MATCH THE COLOR OF ADJACENT SURFACES.

*	REVISIONS	03/04/2007
SYMBOL	DESCRIPTION	DATE APR

DESIGNED BY: YSK
DWN BY: JSG
CHK BY: HMH
DATE: 01–25–07
SUBMITTED BY: PHILIP L. DINELLO CHIEF, PD PROJECTS DEV.
FILE NO.: AF0609 B–AR05SC

US Army Corps of Engineers
Transatlantic Programs Center

AFGHAN NATIONAL POLICE COMPANY COMPOUND
VARIOUS, AFGHANISTAN
DFAC/BARRACKS
ROOM FINISH SCHEDULE AND DOOR SCHEDULE

SHEET REFERENCE NUMBER:
B
A–5

$DATE$
$FILE$

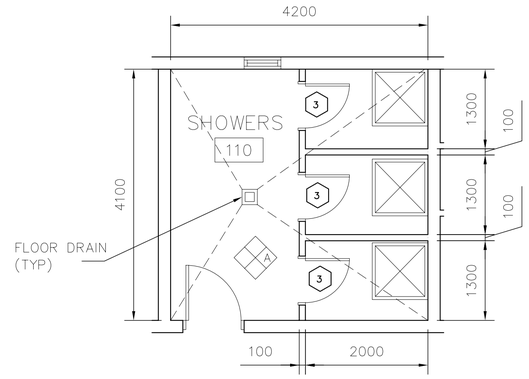

ENLARGED TOILET #110
PLAN

SCALE=1:50

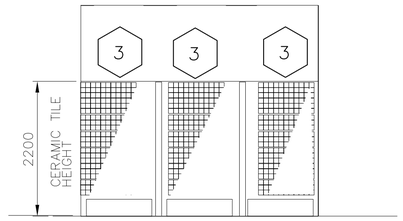

ROOM 110 – SHOWERS
ELEVATION A (without doors)

SCALE NTS

TOILET ACCESSORIES

1. LIQUID SOAP DISPENSER (SD)
2. MIRROR – GLASS (MG)
3. ROBE HOOK (RBH)

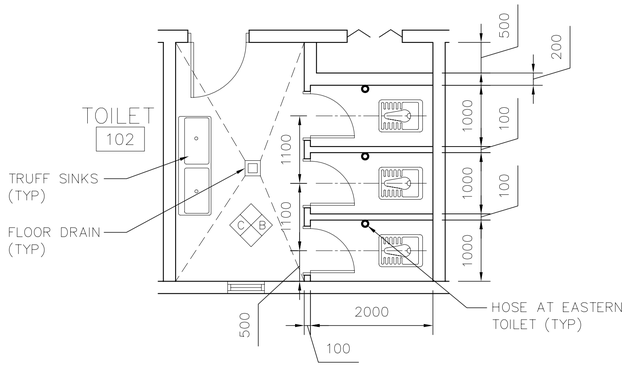

ENLARGED TOILET
PLAN – ROOM 102

SCALE=1:50

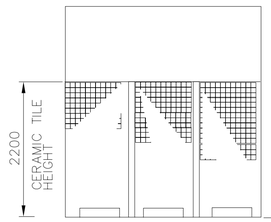

TOILET #102
ELEVATION B

SCALE NTS

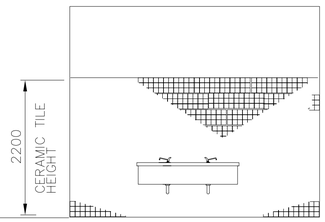

TOILET #102
ELEVATION C

SCALE NTS

NOTES:

1. SLOPE ALL FLOORS TO DRAIN WHERE FLOOR DRAIN OCCURS.

2. PROVIDE FAUCETS WITH FLEXIBLE HOSE AT ALL EASTERN WATER CLOSETS.

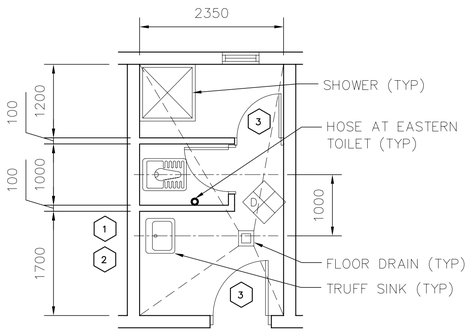

ENLARGED
TOILET PLAN
RM 109

SCALE=1:50

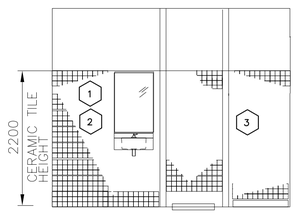

TOILET #109
ELEVATION D

SCALE NTS

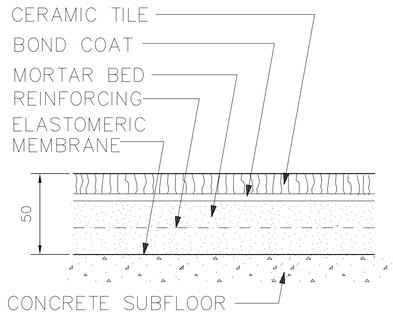

DETAIL

SCALE NTS

1 0 1 2 3 4
1:50

REVISIONS			
SYMBOL	DESCRIPTION	DATE	APR
		03/04/2007	

DESIGNED BY: HMH
DATE: 01-25-07
DWN BY: JSG
SUBMITTED BY:
CHK BY: HMH
FILE NO.: AF0609

US Army Corps of Engineers
Transatlantic Programs Center

AFGHAN NATIONAL POLICE
COMPANY COMPOUND
VARIOUS, AFGHANISTAN
DFAC/BARRACKS
ENLARGED TOILET PLANS
ELEVATION AND SCHEDULE

SHEET REFERENCE NUMBER:
B
A-6

$DATE$
$FILE$

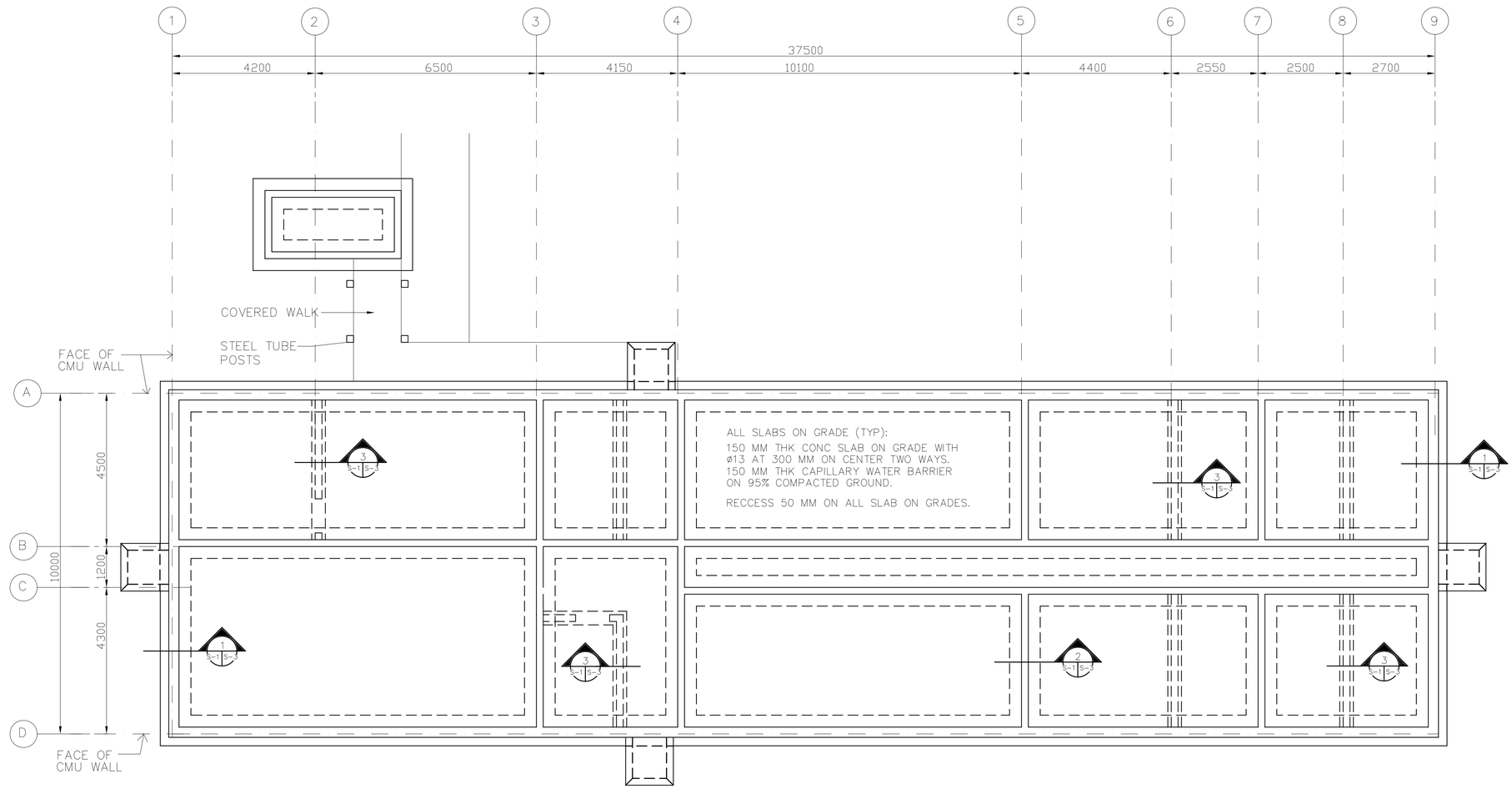

FOUNDATION AND SLAB PLAN

SCALE= 1:75

N
PLAN NORTH

CRITICAL NOTES

1. SEE "ARCHITECTURAL PLAN" FOR WALL LOCATIONS AND THE DIMENSIONS.
2. ALL CELLS OF CMU WALL SHALL BE FULLY GROUTED AND PROVIDE 16 MM RE-BARS AT 60 CM ON CENTER.

GENERAL NOTES

1. DESIGN LOADS (SERVICE)

LIVE LOADS:

ROOF: 1.0 KPA (20 PSF)
OTHERS: 4.8 KPA (100 PSF)
8.9 KN (2.0 K) CONCENTRATED LOAD

WIND LOADS PER IBC-2003

USING A "3-SECOND" WIND VELOCITY OF 125 KPH, EXPOSURE C AND IMPORTANCE FACTOR I=1.0

EARTHQUAKE LOADS PER IBC-2003:

USING A SEISMICITY: Ss=1.65g AND S_1 =0.75g

2. MATERIALS:

CONCRETE: 28 MPa (4 KSI)
CYLINDER STRENGTH AT 28 DAYS

REINFORCING: ASTM A615 GRADE 60 (60 KSI)

WELDED WIRE FABRIC: ASTM A185

CONCRETE MASONRY UNITS:
ASTM C90, TYPE I (NORMAL WEIGHT, MOISTURE CONTROLLED) MORTAR, ASTM C270, TYPE S
GROUT, ASTM C 476
JOINT REINFORCEMENT, LADDER TYPE

3. WORK THESE STRUCTURAL DRAWINGS WITH THE STANDARD-DETAILS DRAWINGS.
4. A RELATIVE (DATUM) FINISH FLOOR ELEVATION EQUAL TO 100.00 M. IS USED AS REFERENCE ELEVATION FOR ALL STRUCTURAL DRAWINGS. REFER TO CIVIL DRAWINGS FOR ACTUAL FINISH ELEVATIONS.
5. SLAB JOINTS SHOWN ON PLAN, SHALL BE CJT OR CJ JOINTS. CONTRACTOR HAS THE OPTION FOR THE SELECTION OF TYPE OF JOINTS TO BE USED FOR CONCRETE PLACEMENT. REFER TO DET. A/SS-4 AND B/SS-4, FOR CJT AND CJ DETAILS.
6. FOUNDATIONS ARE DESIGNED USING AN ALLOWABLE BEARING PRESSURE OF 0.75 KG/SQ. CM (1500 PSF), AND BOTTOM OF FOOTINGS ARE PLACED AS SHOWN ON DRAWINGS. GEOTECHNICAL INVESTIGATION SHALL CONFIRM BEARING CAPACITY TO BE NO LESS THAN 0.75 KG/SQ CM. IF GEOTECHNICAL INVESTIGATION SHOWS LESS THAN 0.75 KG/SQ CM THE CONTRACTOR SHALL REDESIGN FOOTINGS BASED ON THE GEOTECHNICAL INVESTIGATION. SEE SPECIFICAITON 01015 PARAGRAPH, GEOTECHNICAL, FOUNDATION AND SURVEY.
7. LEGEND:

3 1.50 0 3 4.5
1:75
UNLESS OTHERWISE NOTED, LINEAR DIMENSIONS SHOWN ARE IN MILLIMETERS.

*	REVISIONS		
SYMBOL	DESCRIPTION	DATE	APR
		03/04/2007	

DESIGNED BY: JK
DATE: 01-25-07
DWN BY: JK
SUBMITTED BY: PHILIP L. DINELLO CHIEF, PD FACILITIES DEV
CHK BY: JK
FILE NO.: AF0609 B-SB01PN

US Army Corps of Engineers
Transatlantic Programs Center

AFGHAN NATIONAL POLICE COMPANY COMPOUND
VARIOUS, AFGHANISTAN
DFAC/BARRACKS
FOUNDATION AND SLAB PLAN

SHEET REFERENCE NUMBER:
B
S-1

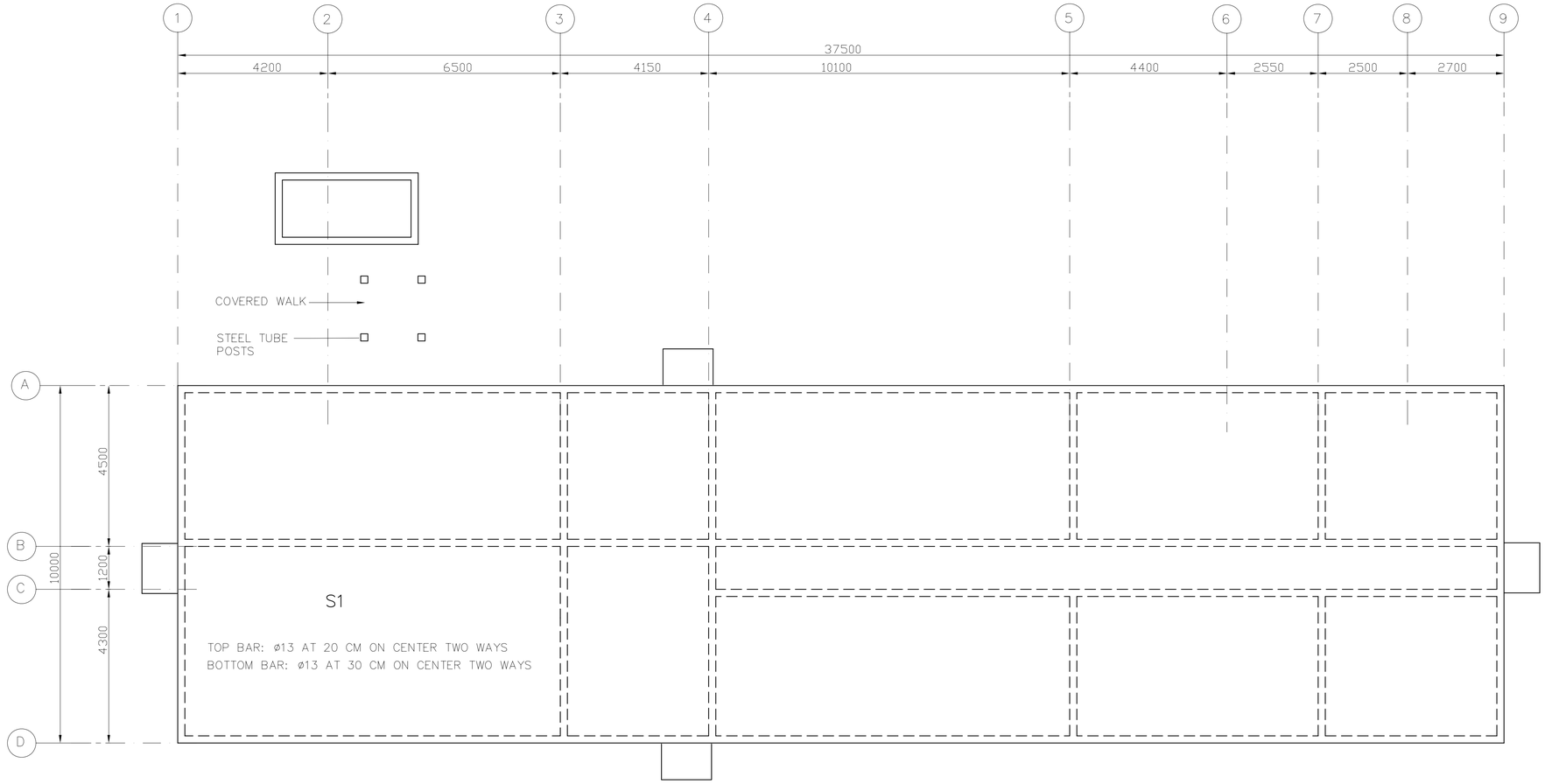

ROOF FRAMIMG AND SLAB PLAN

SCALE= 1:75

N
PLAN NORTH

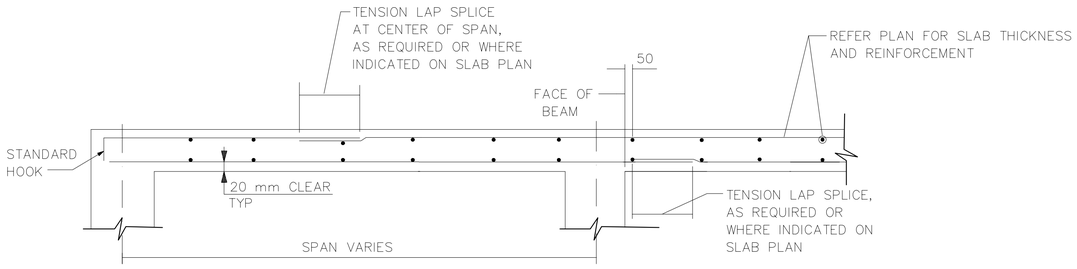

TYPICAL SECTIONS FOR STRUCTURAL SLABS

NOT TO SCALE

CRITICAL NOTES

1. ALL CONCRETE ROOF SLABS ARE 200 MM THICK.
2. ALL SLAB RE-BARS EXCEPT S1:
   TOP BAR: ø13 AT 300 MM ON CENTER TWO WAYS
   BOTTOM BAR: ø 13 AT 300 MM ON CENTER TWO WAYS.

3 1.50 0 3 4.5
1:75

UNLESS OTHERWISE NOTED, LINEAR DIMENSIONS SHOWN ARE IN MILLIMETERS.

SYMBOL	REVISIONS	DESCRIPTION	DATE	APR
*			03/04/2007	

DESIGNED BY: JK
DATE: 01-25-07
DWN BY: JK
SUBMITTED BY: PHILIP L. DINELLO PROJECT MGR, PROJECTS DEV.
CHK BY: JK
FILE NO.: AF0609 B-SF02PN

US Army Corps of Engineers
Transatlantic Programs Center

AFGHAN NATIONAL POLICE COMPANY COMPOUND
VARIOUS, AFGHANISTAN
DFAC/BARRACKS
ROOF FRAMING PLAN

SHEET REFERENCE NUMBER:
B
S-2

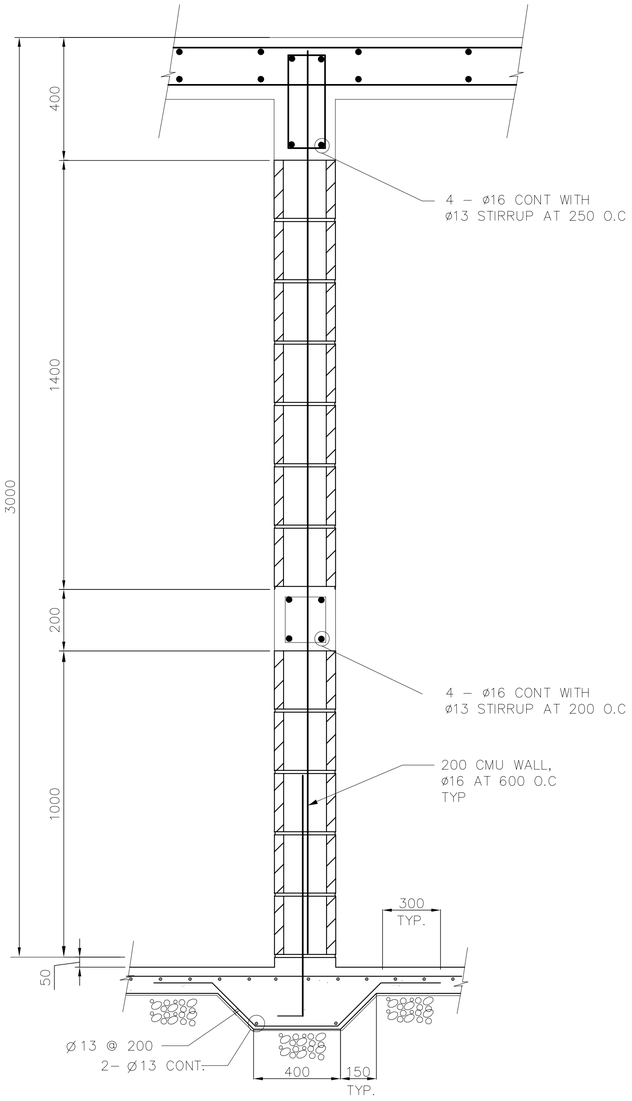

WALL SECTION 3 S–1 S–3
N.T.S.

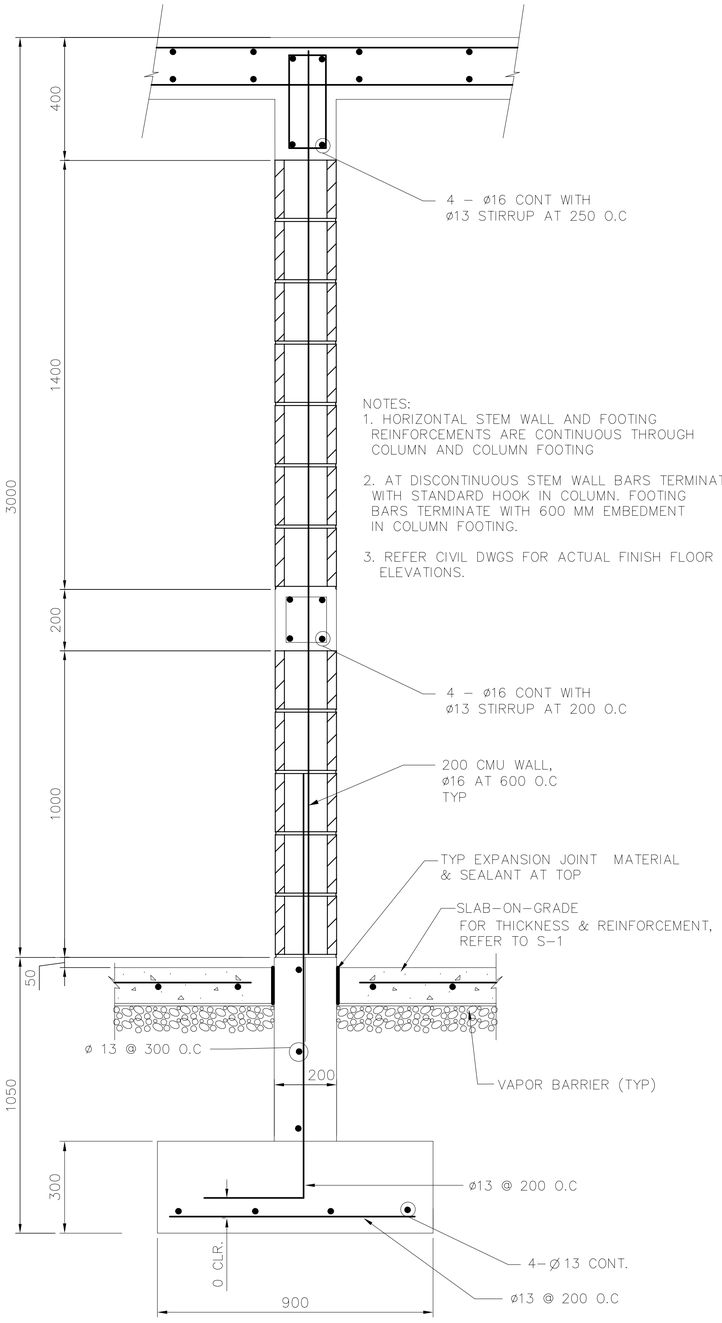

NOTES:
1. HORIZONTAL STEM WALL AND FOOTING REINFORCEMENTS ARE CONTINUOUS THROUGH COLUMN AND COLUMN FOOTING
2. AT DISCONTINUOUS STEM WALL BARS TERMINATE WITH STANDARD HOOK IN COLUMN. FOOTING BARS TERMINATE WITH 600 MM EMBEDMENT IN COLUMN FOOTING.
3. REFER CIVIL DWGS FOR ACTUAL FINISH FLOOR ELEVATIONS.

TYP INTERIOR WALL SECTION 2 S–1 S–3
N.T.S.

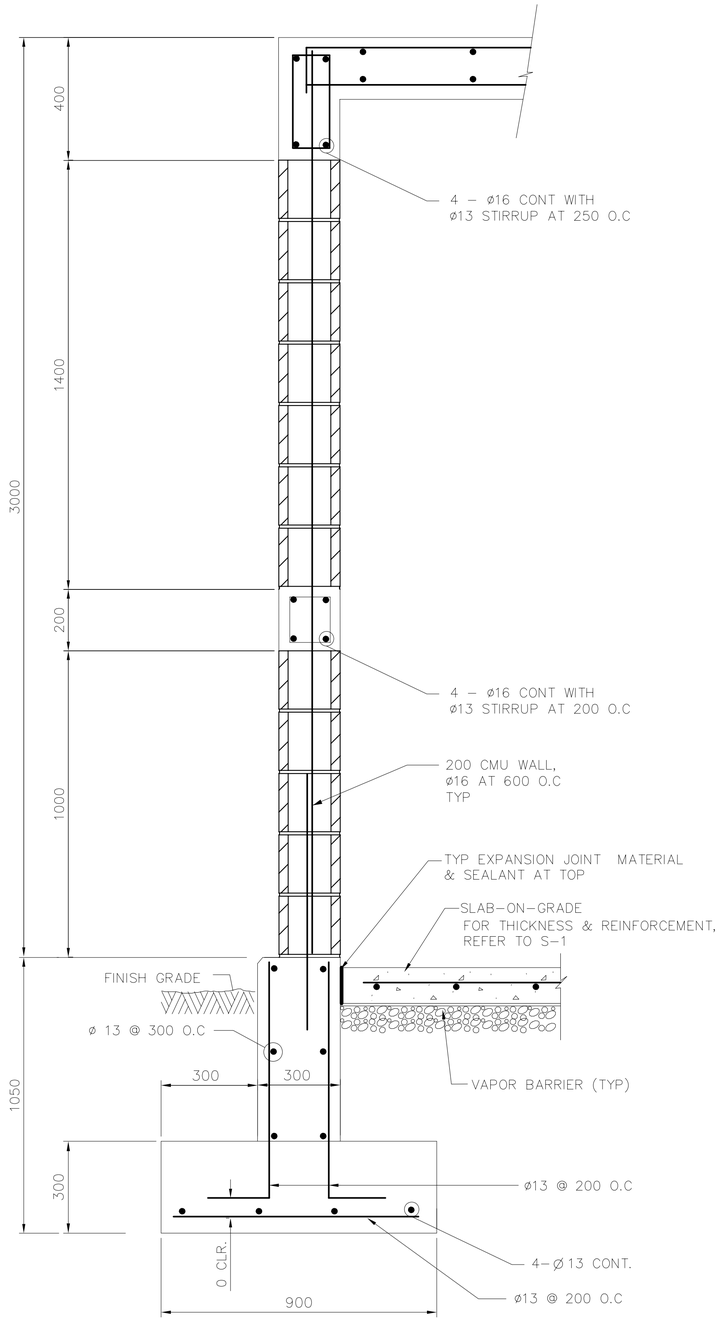

TYP EXTERIOR WALL SECTION 1 S–1 S–3
N.T.S.

UNLESS OTHERWISE NOTED, LINEAR DIMENSIONS SHOWN ARE IN MILLIMETERS.

REVISIONS			
*		03/04/2007	APR
SYMBOL	DESCRIPTION	DATE	

DESIGNED BY: JK	DATE: 01–25–07	
DWN BY: JK	SUBMITTED BY: PHILIP L. DINELLO PROJ. MGR. PACIFICS DEV	
CHK BY: JK	FILE NO.: AF0609 B–SB03DT	

US Army Corps of Engineers
Transatlantic Programs Center

AFGHAN NATIONAL POLICE COMPANY COMPOUND
VARIOUS, AFGHANISTAN
DFAC/BARRACKS
FOOTING DETAILS

SHEET REFERENCE NUMBER:
B
S–3

NOTES:

1. KITCHEN EXHAUST HOOD SEALED DUCT CONNECTION TO EXHAUST FAN MOUNTED ON HIGH WALL. SIZE OF HOOD TO BE DETERMINED BY COOKING EQUIPMENT PROVIDED

2. SEE SPECIFICATION 01015 PARAGRAPH 7.9 FOR WOOD STOVE DETAILS

3. SEE SPECIFICATION 01015 PARAGRAPH 7.7 FOR CEILING FAN DATA.

4. LOUVERED INTAKE PENTHOUSE WITH FILTER.

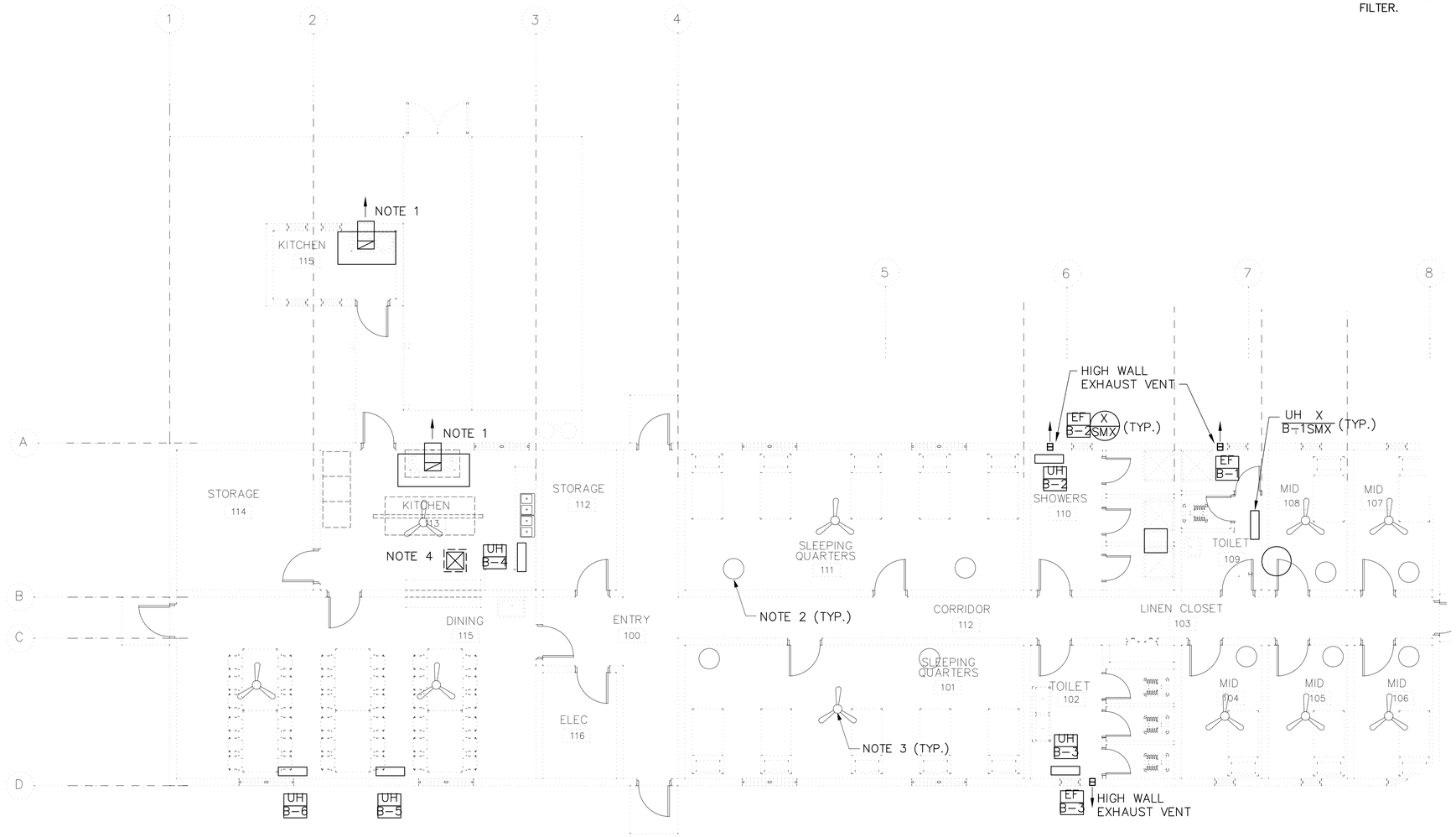

HVAC PLAN
SCALE: 1:75

UNLESS OTHERWISE NOTED, LINEAR DIMENSIONS SHOWN ARE IN MILLIMETERS.

*	REVISIONS	03/04/2007
SYMBOL	DESCRIPTION	DATE APR

DESIGNED BY: JMR
DATE: 01-25-07
DWN BY: JMR
SUBMITTED BY: MICHAEL HOWELL CHIEF, FPD BLDG SYSTEMS
CHK BY: RMS/HMH
FILE NO.: AF0609 B MH01PN

US Army Corps of Engineers
Transatlantic Programs Center

AFGHAN NATIONAL POLICE COMPANY COMPOUND
VARIOUS, AFGHANISTAN
DFAC/BARRACKS
HVAC PLAN

SHEET REFERENCE NUMBER:
B
M-1

AF0609B-MH01PN.dwg
3/31/2007 8:46 PM
AED AED, USACE

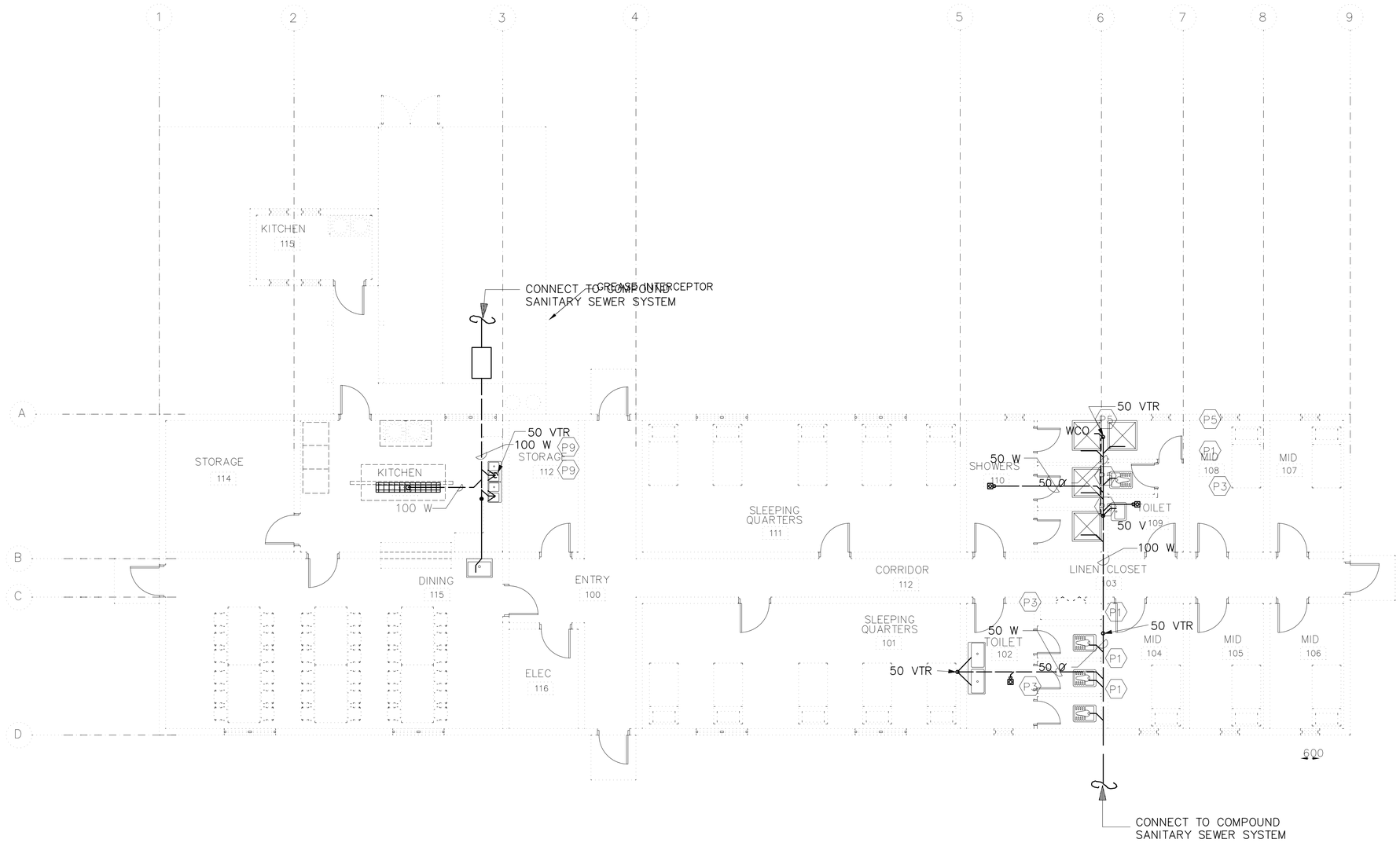

SANITARY LAYOUT
SCALE: 1:75

UNLESS OTHERWISE NOTED, LINEAR DIMENSIONS SHOWN ARE IN MILLIMETERS.

SYMBOL	DESCRIPTION	DATE	APR

DESIGNED BY: JMR
DWN BY: JMR
CHK BY: RMS
DATE: 01-25-07
SUBMITTED BY: MICHAEL HOWELL
CHIEF, FDTD BLDG SYSTEMS
FILE NO.: AF0609 B MP01PN

US Army Corps of Engineers
Transatlantic Programs Center

AFGHAN NATIONAL POLICE
COMPANY COMPOUND
VARIOUS, AFGHANISTAN
DFAC/BARRACKS
SANITARY LAYOUT

SHEET REFERENCE NUMBER:
B
P-1

AF0609B-MP01PN.dwg
3/31/2007 9:04 PM
AED AED, USACE

AF0609B-MP02PN.dwg

3/31/2007 8:59 PM

EWH X	ELECTRIC WATER HEATER SCHEDULE								
UNIT NUMBER	LOCATION (ROOM NO.)	STORAGE CAPACITY (LITERS)	MINIMUM RECOVERY RATE (LITERS/HOUR) @ 55.5 C RISE	NUMBER OF ELEMENTS	ELECTRICAL REQUIREMENTS				REMARKS
					KW INPUT	VOLTS	PH	HZ	
B-1	106	400	80-120	2	2 @ 5.5	240	1	50	NON-SIMULTANEOUS ELEMENT OPERATION

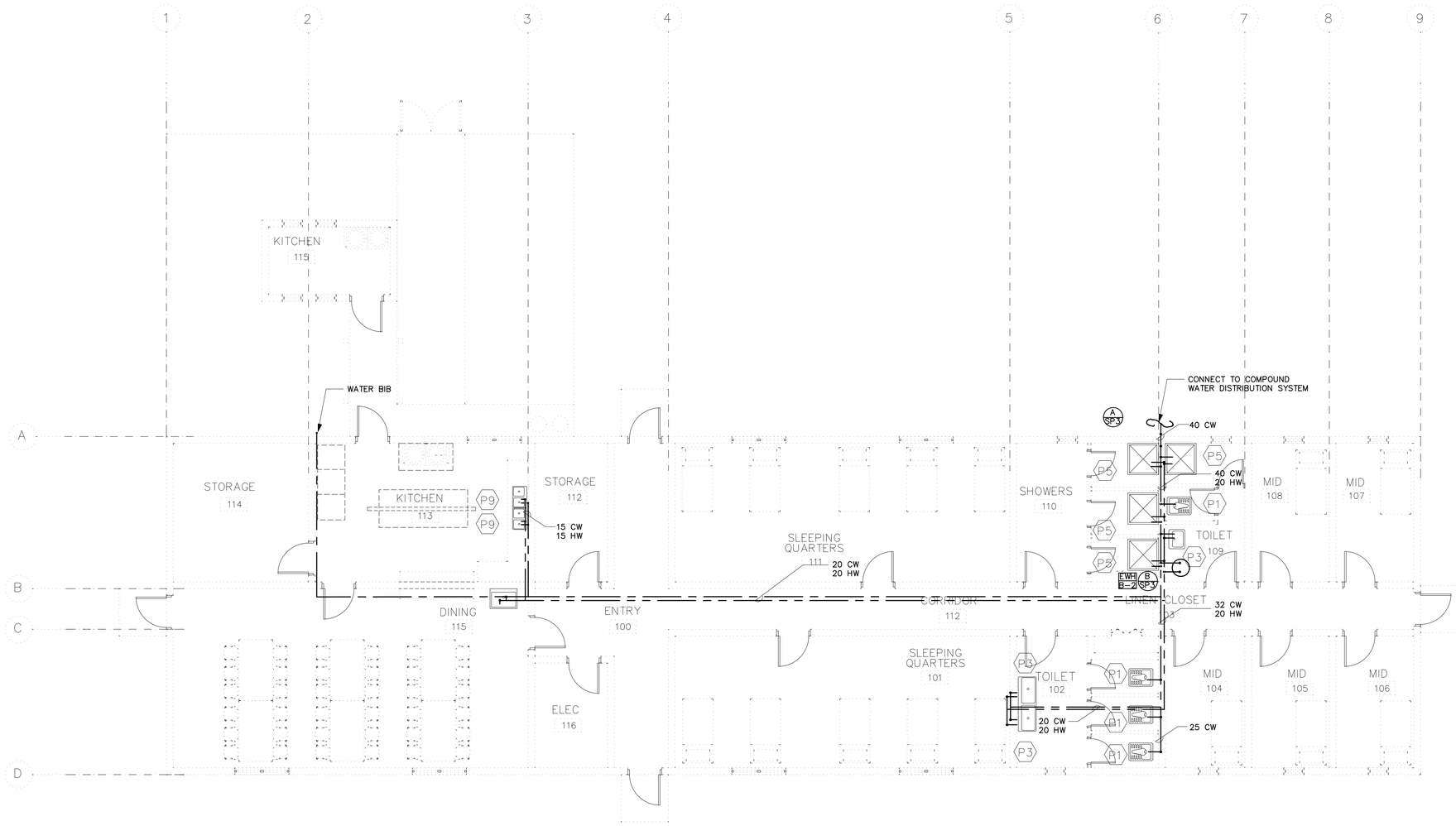

WATER SUPPLY LAYOUT
SCALE: 1:100

UNLESS OTHERWISE NOTED, LINEAR DIMENSIONS SHOWN ARE IN MILLIMETERS.

*	REVISIONS		
SYMBOL	DESCRIPTION	DATE	APR
		03/04/2007	

DESIGNED BY: JMR
DWN BY: JMR
CHK BY: RMS/BM
DATE: 01-25-07
SUBMITTED BY: MICHAEL HOWELL
CHIEF, FPTP BLDGS SYSTEMS
FILE NO.: AF0609 B MP02PN

US Army Corps of Engineers
Transatlantic Programs Center

AFGHAN NATIONAL POLICE COMPANY COMPOUND
VARIOUS, AFGHANISTAN
DFAC/BARRACKS
WATER SUPPLY LAYOUT

SHEET REFERENCE NUMBER:
B
P-2

AED AED, USACE

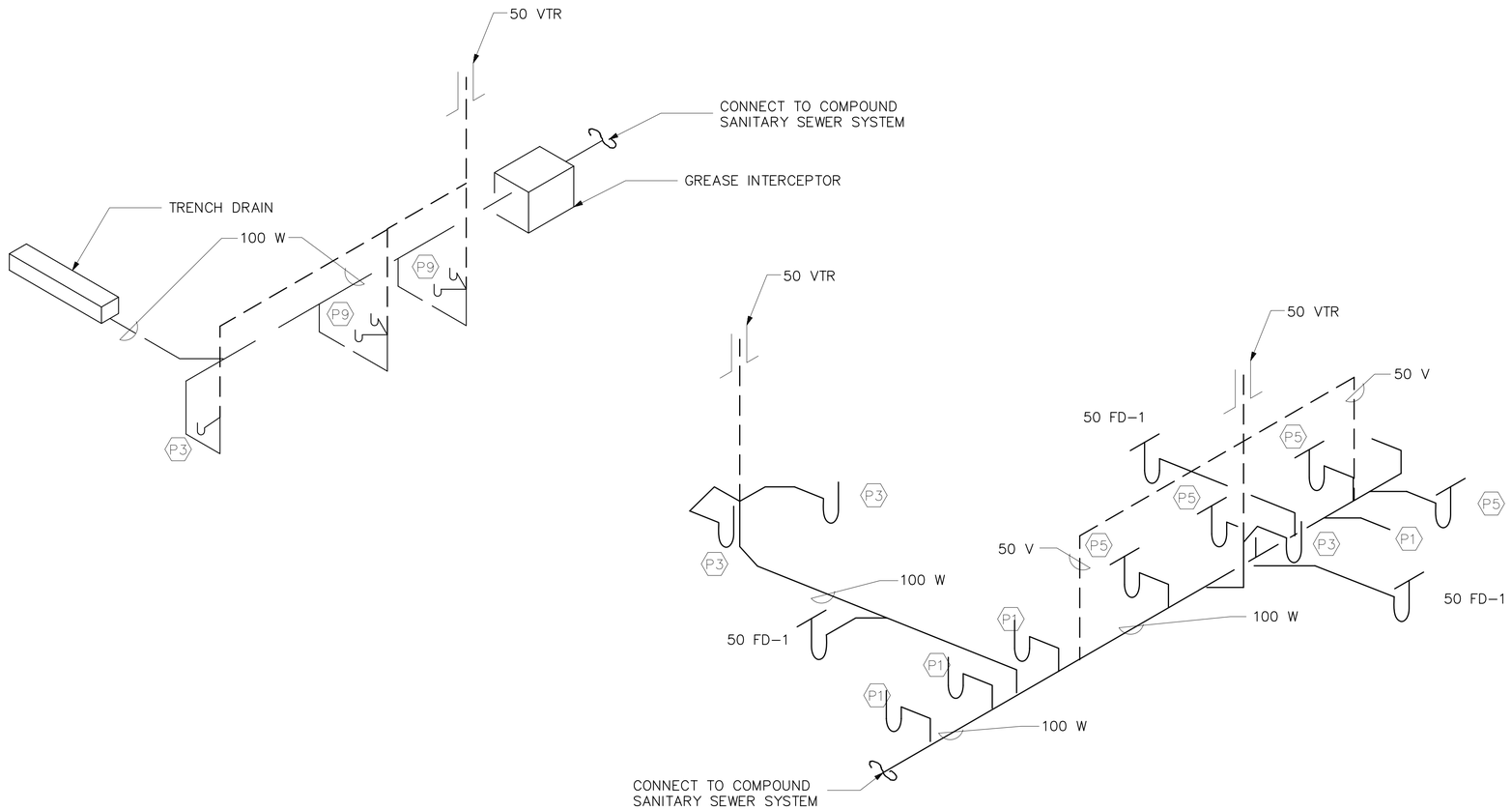

WASTE WATER RISER DIAGRAM
SCALE: NTS

UNLESS OTHERWISE NOTED, LINEAR DIMENSIONS SHOWN ARE IN MILLIMETERS.

SYMBOL	REVISIONS DESCRIPTION	DATE
*		03/04/2007 APR

DESIGNED BY: JMR
DWN BY: JMR
CHK BY: RMS
DATE: 01-25-07
SUBMITTED BY: MICHAEL HOWELL
CHIEF, CIVIL & MECH SYSTEMS
FILE NO.: AF0609 B-MP03DI

US Army Corps of Engineers
Transatlantic Programs Center

AFGHAN NATIONAL POLICE COMPANY COMPOUND
VARIOUS, AFGHANISTAN
DFAC/BARRACKS
WASTE WATER RISER DIAGRAM

SHEET REFERENCE NUMBER:
B
P-3

AF0609B-MP03DI.dwg
4/1/2007 4:10 PM
AED AED, USACE

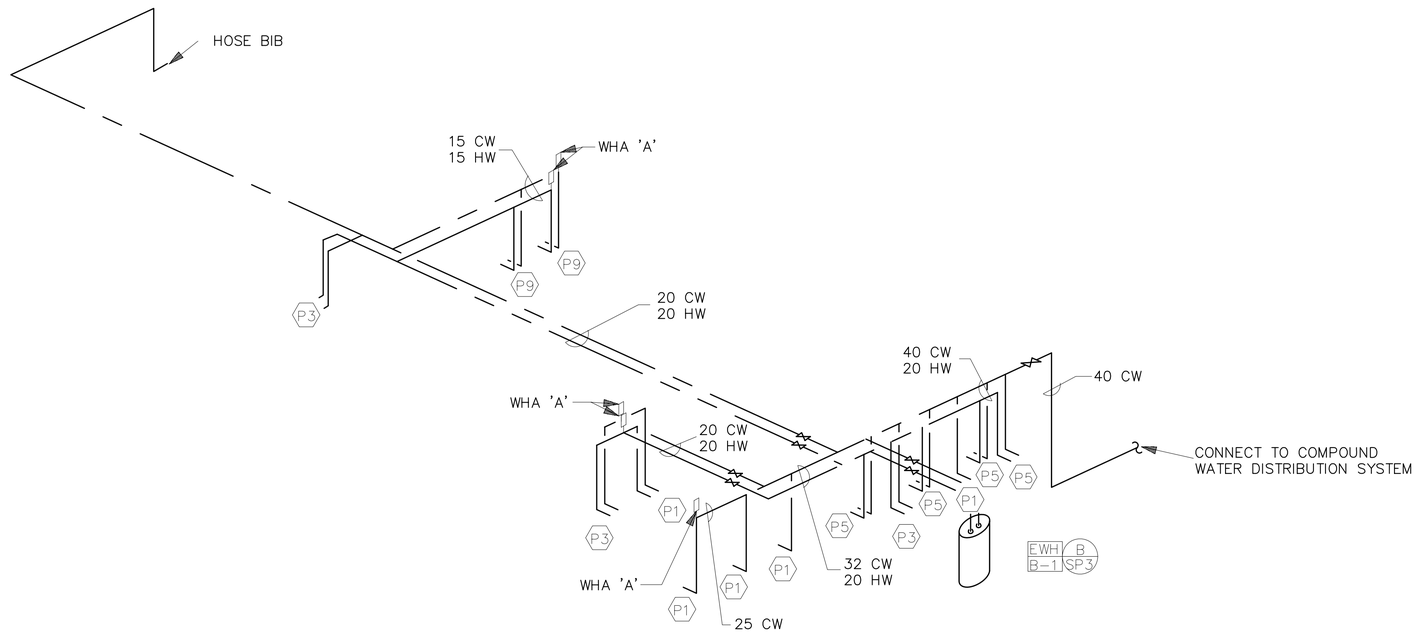

WATER SUPPLY RISER DIAGRAM
SCALE: NTS

UNLESS OTHERWISE NOTED, LINEAR DIMENSIONS SHOWN ARE IN MILLIMETERS.

SYMBOL	REVISIONS	DESCRIPTION	DATE
*			03/04/2007

DESIGNED BY: JMR
DATE: 01-25-07
DWN BY: JMR
SUBMITTED BY: MICHAEL HOWELL
CHK BY: RMS/HMH
FILE NO.: AF0609 B-MP04DI

US Army Corps of Engineers
Transatlantic Programs Center

AFGHAN NATIONAL POLICE
COMPANY COMPOUND
VARIOUS, AFGHANISTAN
DFAC/BARRACKS
WATER SUPPLY RISER DIAGRAM

SHEET REFERENCE NUMBER:
B
P-4

AF0609B-MP04DI.dwg
3/31/2007 9:54 PM
AED, AED, USACE

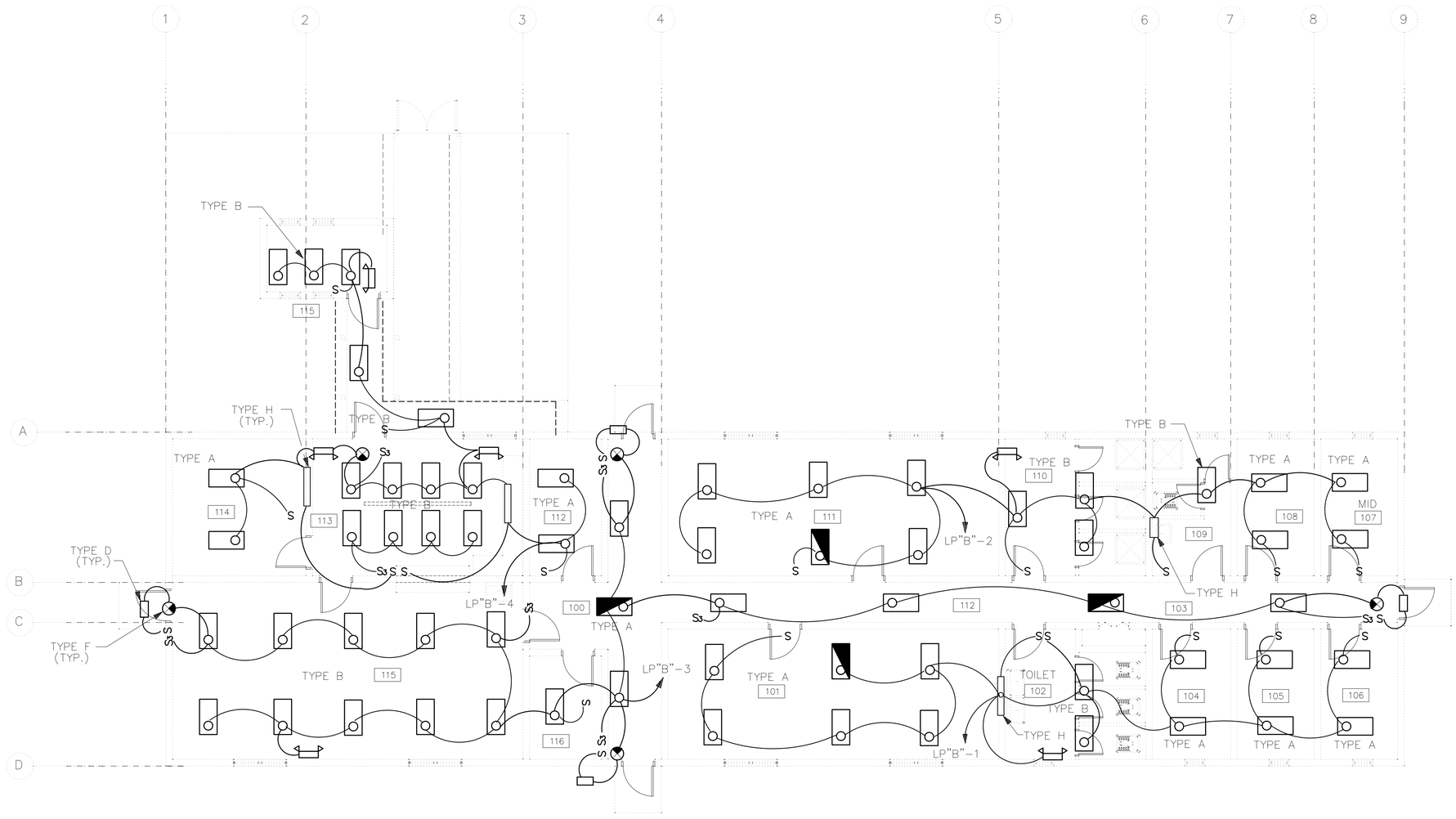

LIGHTING PLAN

SCALE 1:75

NOTES:

1. FOR LEGEND, ABBREVIATIONS, AND LIGHT FIXTURE SCHEDULE SEE DRAWING SE-1.
2. FOR LIGHT FIXTURE DETAILS SEE DRAWING SE-2 AND SE-3.
3. FOR PANEL SCHEDULE SEE DRAWING E-3.
4. COORDINATE LOCATION OF ALL ELECTRICAL DEVICES AND EQUIPMENT WITH ALL OTHER TRADES.
5. ALL WIRING SHALL BE IN CONCEALED OR SURFACE MOUNTED METAL CONDUIT.

UNLESS OTHERWISE NOTED, LINEAR DIMENSIONS SHOWN ARE IN MILLIMETERS.

SYMBOL	REVISIONS DESCRIPTION	DATE	APR
*		03/04/2007	

DESIGNED BY: DLF
DWN BY: FHG
CHK BY: RMS
DATE: 01-25-07
SUBMITTED BY: MICHAEL HOWELL
CHIEF, FPD, BLDG SYSTEMS
FILE NO.: AF0609 B-EL01PN

US Army Corps of Engineers
Transatlantic Programs Center

AFGHAN NATIONAL POLICE COMPANY COMPOUND
VARIOUS, AFGHANISTAN
DFAC/BARRACKS
LIGHTING PLAN

SHEET REFERENCE NUMBER:
B
E-1

AF0609B-el01pn.dwg
3/31/2007 9:57 PM
AED, AED, USACE

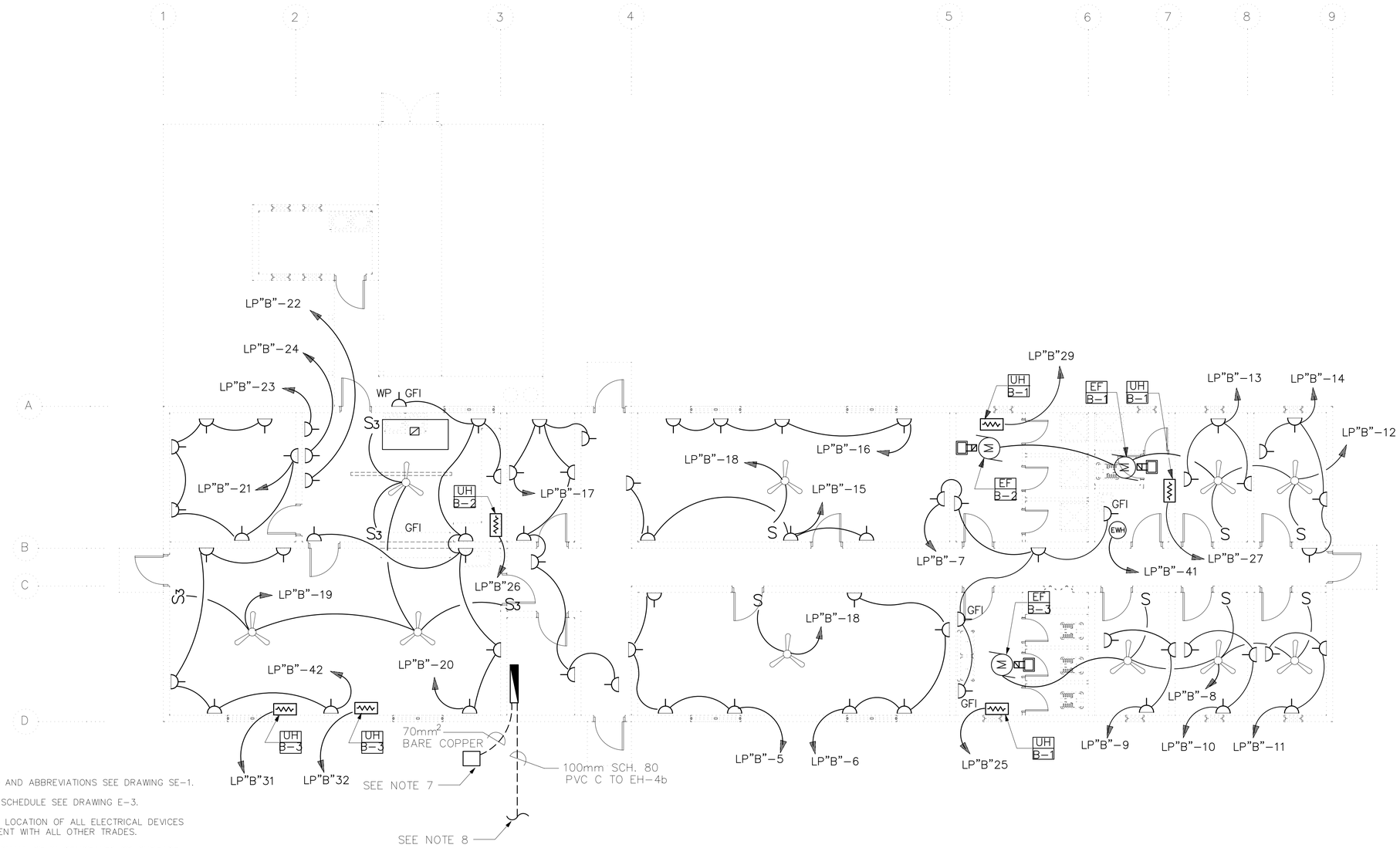

NOTES:

1. FOR LEGEND AND ABBREVIATIONS SEE DRAWING SE-1.
2. FOR PANEL SCHEDULE SEE DRAWING E-3.
3. COORDINATE LOCATION OF ALL ELECTRICAL DEVICES AND EQUIPMENT WITH ALL OTHER TRADES.
4. ALL WIRING SHALL BE IN CONCEALED OR SURFACE MOUNTED METAL CONDUIT.
5. COORDINATE LOCATION OF THE CEILING FANS WITH LIGHT FIXTURES.
6. EXHAUST FANS SHALL BE CONTROLLED BY SEPERATE SWITCH AS SHOWN; SEE DETAIL ON SHEET SM-3.
7. FOR GROUNDING ROD ACCESS BOX DETAIL SEE SHEET SE-3.
8. FOR CONTINUATION TO SECONDARY DISTRIBUTION SYSTEM SEE DRAWINGS XE-1 AND XE-2.

POWER PLAN

SCALE 1:75

UNLESS OTHERWISE NOTED, LINEAR DIMENSIONS SHOWN ARE IN MILLIMETERS.

SYMBOL	REVISIONS	DESCRIPTION	DATE	APR
*			03/04/2007	

DESIGNED BY: DLF
DWN BY: FHG
CHK BY: RMS
DATE: 01-25-07
SUBMITTED BY: MICHAEL HOWELL
CHIEF, EPDT BLDGS SYSTEMS
FILE NO.: AF0609 B-EP02PN

US Army Corps of Engineers
Transatlantic Programs Center

AFGHAN NATIONAL POLICE COMPANY COMPOUND
VARIOUS, AFGHANISTAN
DFAC/BARRACKS
POWER PLAN

SHEET REFERENCE NUMBER:
B
E-2

AF0609B-ep02pn.dwg
3/31/2007 10:02 PM
AED AED, USACE

PANELBOARD LP "B" SURFACE MOUNTED MINIMUM 22,000 ASYM. A.I.C. MIN.

_____ AMP. MAIN LUGS (OR) 200 AMP. MAIN BREAKER W/ 200 AMP. TRIP

CIRCUIT BREAKER TYPE 380/220 VOLTS 3 PHASE 4 WIRE 200 AMP. BUS

CKT. NO.	TRIP AMPS	NO. POLES	WIRE MM2	GND MM2	CONDUIT MM	LOAD SERVED	LOAD-V.A. A0	LOAD-V.A. B0	LOAD-V.A. C0	LOAD-V.A. A0	LOAD-V.A. B0	LOAD-V.A. C0	LOAD SERVED	CONDUIT MM	GND MM2	WIRE MM2	NO. POLES	TRIP AMPS	CKT. NO.
1	20	1	4	4	20	LIGHTING RMS. 101,102,1045-106	2270			2270			LIGHTING; RMS 107-111	20	4	4	1	15	2
3	20	1	4	4	20	LIGHTING RMS. 100,112,115,116,EXTER		3220			2460		LIGHTING; RMS 112-115	20	4	4	1	20	4
5	20	1	4	4	20	RECEPTACLES-RM 101			720			720	RECEP-RM 101	20	4	4	1	20	6
7	20	1	4	4	20	RECEPTACLES-RM 102,109-111	1080			932			FAN 104-106; EF-A-3	20	4	4	1	20	8
9	20	1	4	4	20	RECEPTACLES-RM 104		540			540		REC 105	20	4	4	1	20	10
11	20	1	4	4	20	RECEPTACLES-RM 106			540			932	FANS 107-108; EF-A-1, 2	20	4	4	1	20	12
13	20	1	4	4	20	RECEPTACLES-RM 108	540			720			RECEPTACLES-RM 107	20	4	4	1	20	14
15	20	1	4	4	20	RECEPTACLES-RM 111		720			720		RECEPTACLES-RM 111	20	4	4	1	20	16
17	20	1	4	4	20	RECEPTACLES-RMS 100,112,116			1440			466	FAN 101, 111	20	4	4	1	20	18
19	20	1	4	4	20	FAN RM 113,115	700			1080			RECEPTACLES-RM 113,115	20	4	4	1	20	20
21	20	1	4	4	20	RECEPTACLES-RM 114		1080			1500		FREEZER RM 113	20	6	6	1	20	22
23	20	1	6	6	20	FREEZER RM 113			1500			1500	FREEZER RM 113	20	6	6	1	20	24
25	30	1	6	6	20	UH-B-1 RM 102	4000			3411			UH-B-1 RM 113	20	6	6	3	30	26
27	30	1	6	6	20	UH-B-1 RM 109		4000			3411								28
29	30	1	6	6	20	UH-B-1 RM 110			4000			3411							30
31	40	3	10	10	20	UH-B-3 RM 115	6770			6770			UH-B-3 RM 115	20	10	10	3	40	32
33								6770			6770								34
35									6770			6770							36
37	20	1	4	4	20	RECEPTACLES-RM 115	900						SPACE				1		38
39	20	1				SPARE											1		40
41	20	1	4	4		EWH-A-1 RM 106			2000			900	RECEPTACLES RM 115	20	6	6	1	20	42
							16260	16330	16970	15183	15405	6496							

TOTAL CONN. LOAD 93.9 KVA 80 % DEMAND = ESTIMATED DEMAND LOAD: 75.2 KVA

TOTAL CONN. LOAD 75.2 KW 80 % DEMAND = ESTIMATED DEMAND LOAD: 60.2 KW

TOTAL CONN. LOAD PER PHASE (KVA): A0 31.4 B0 31.7 C0 30.8

SUPPLIED FROM POWER PLANT SWITCHBOARD

UNLESS OTHERWISE NOTED, LINEAR DIMENSIONS SHOWN ARE IN MILLIMETERS.

SYMBOL	REVISIONS	DESCRIPTION	DATE	APR
*			03/04/2007	

DESIGNED BY: DLF
DATE: 01-25-07
DWN BY: FHG
SUBMITTED BY: MICHAEL HOWELL, PROJECT MGR, BLDG SYSTEMS
CHK BY: RMS/DK
FILE NO.: AF0609 B-EL03SC

US Army Corps of Engineers
Transatlantic Programs Center

AFGHAN NATIONAL POLICE COMPANY COMPOUND
VARIOUS, AFGHANISTAN
DFAC/BARRACKS
PANEL SCHEDULE

SHEET REFERENCE NUMBER:
B
E-3

AF0609B-el03sc.dwg
3/31/2007 10:06 PM
AED, AED, USACE

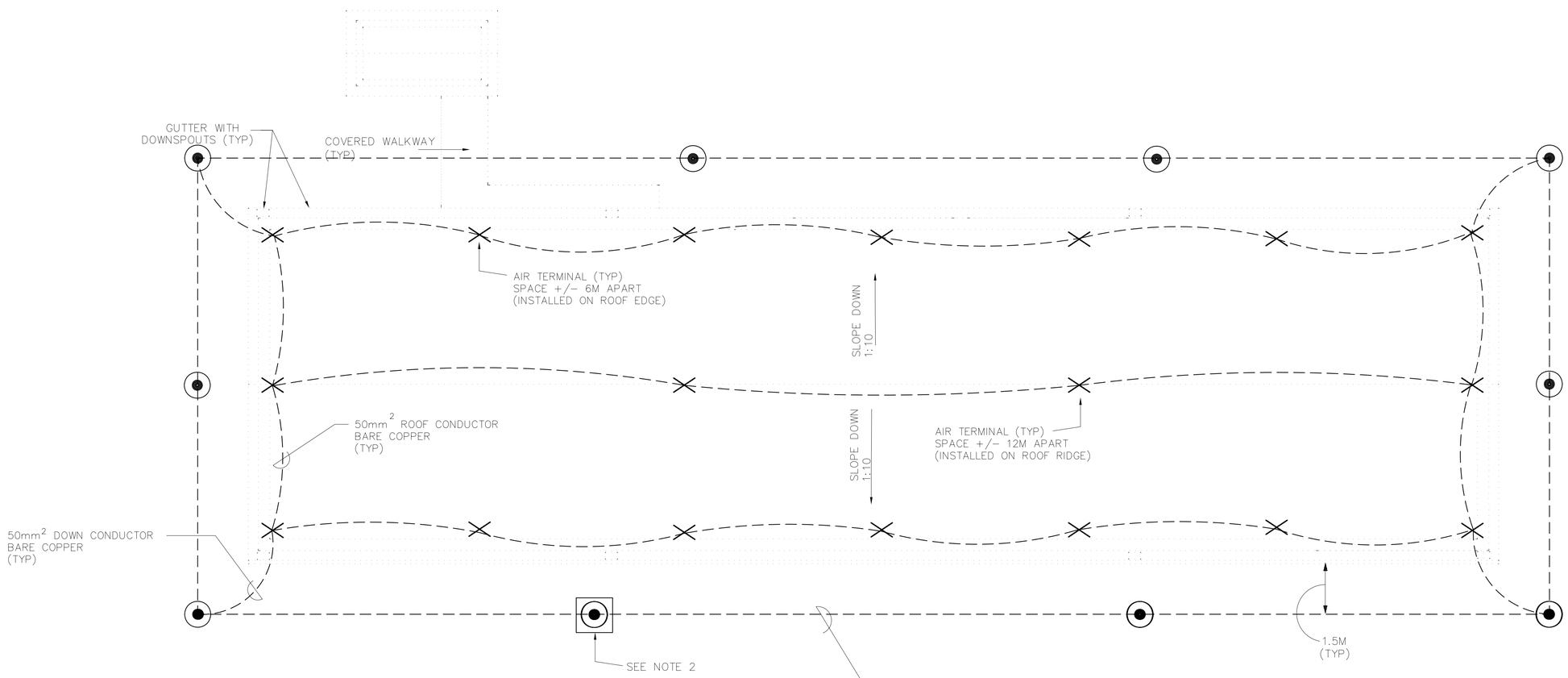

LIGHTNING PROTECTION

SCALE=1:75

NOTES:

1. FOR LEGEND, ABBREVIATIONS SEE DRAWING SE-1.
2. FOR GROUNDING ROD ACCESS BOX AND GROUNDING ROD INSTALATION DETAILS SEE SHEET SE-3.
3. FOR LIGHTNING PROTECTION INSTALATION DETAILS SEE SHEET SE-7.
4. CONTRACTOR SHALL INSTALL LIGHTNING PROTECTION SYSTEM IN ACCORDANCE WITH THE MOST CURRENT ADDITION OF THE NFPA 780.
5. ENSURE COMPLIANCE WITH NEC 250.106 BOND LIGHTING GROUND SYSTEM TO BUILDING ELECTRICAL GROUND SYSTEM.

3 1.50 0 3 4.5
1:75

UNLESS OTHERWISE NOTED, LINEAR DIMENSIONS SHOWN ARE IN MILLIMETERS.

SYMBOL	REVISIONS DESCRIPTION	DATE	APR
*		03/04/2007	

DESIGNED BY: DLF
DWN BY: FHG
CHK BY: RMS
DATE: 01-25-07
SUBMITTED BY: MICHAEL HOWELL (CEPE-PDT BLDG SYSTEMS)
FILE NO.: AF0609 B-EL04PN

US Army Corps of Engineers
Transatlantic Programs Center

AFGHAN NATIONAL POLICE COMPANY COMPOUND
VARIOUS, AFGHANISTAN
DFAC/BARRACKS
GROUNDING AND LIGHTNING PROTECTION PLAN

SHEET REFERENCE NUMBER:
B
E-4

AF0609B-el04pn.dwg
3/31/2007 10:08 PM
AED AED, USACE

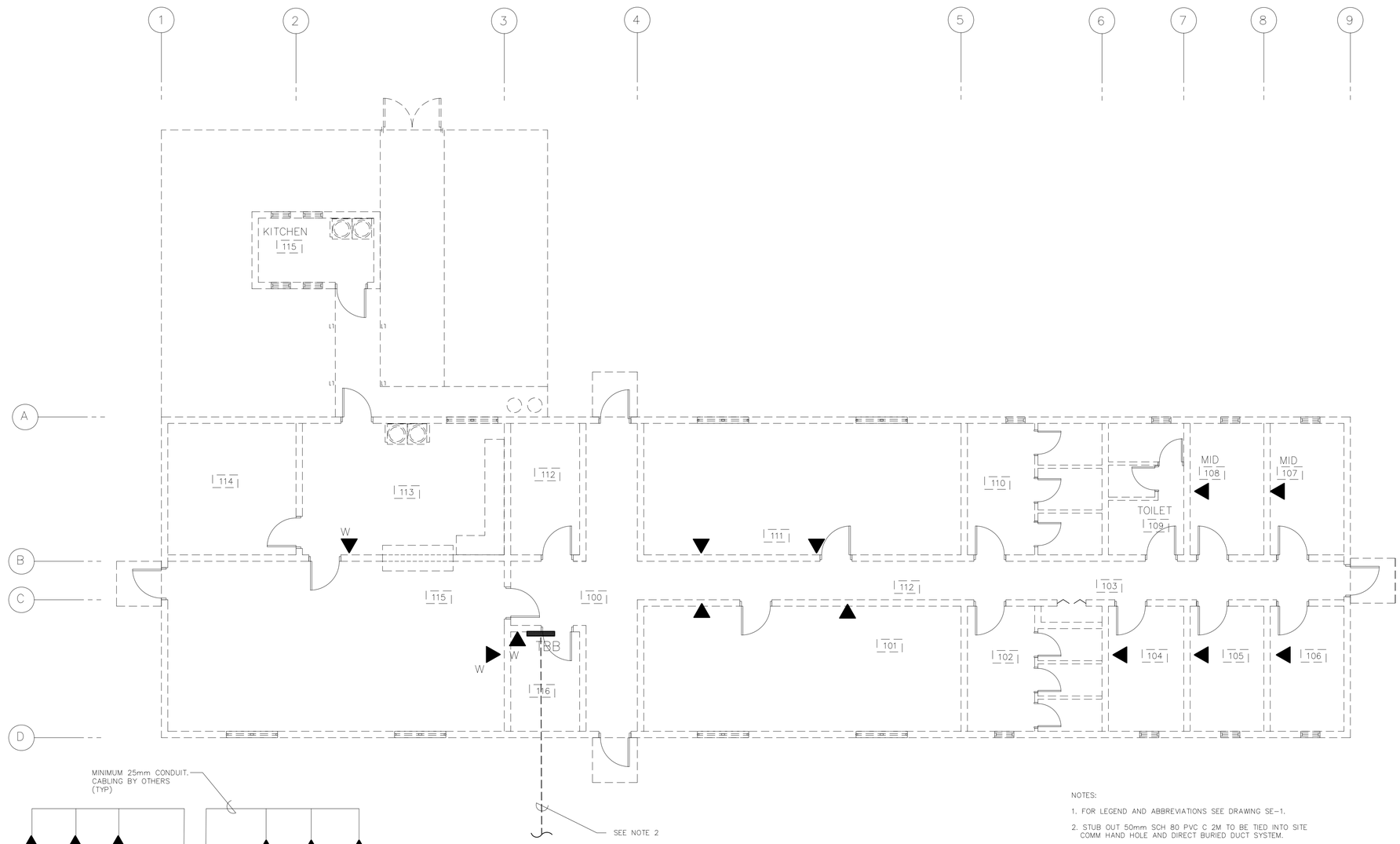

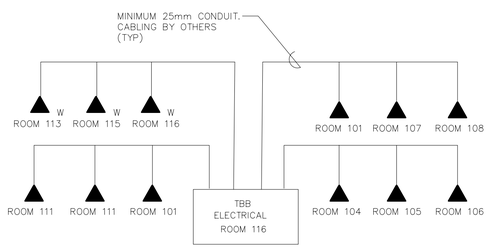

TELEPHONE RISER DIAGRAM

NOTES:

1. FOR LEGEND AND ABBREVIATIONS SEE DRAWING SE-1.
2. STUB OUT 50mm SCH 80 PVC C 2M TO BE TIED INTO SITE COMM HAND HOLE AND DIRECT BURIED DUCT SYSTEM.

COMMUNICATIONS PLAN

SCALE 1:75

UNLESS OTHERWISE NOTED, LINEAR DIMENSIONS SHOWN ARE IN MILLIMETERS.

SYMBOL	DESCRIPTION	DATE	APR

DESIGNED BY: DLF
DATE: 01-25-07
DWN BY: FHG
SUBMITTED BY: MICHAEL HOWELL
CHK BY: RMS
FILE NO.: AF0609 B-TC03PN

US Army Corps of Engineers
Transatlantic Programs Center

AFGHAN NATIONAL POLICE COMPANY COMPOUND
VARIOUS, AFGHANISTAN
DFAC/BARRACKS
COMMUNICATION PLAN

SHEET REFERENCE NUMBER:
B
TC-1

AF0609B-tc01pn.dwg
3/31/2007 10:11 PM
AED, AED, USACE

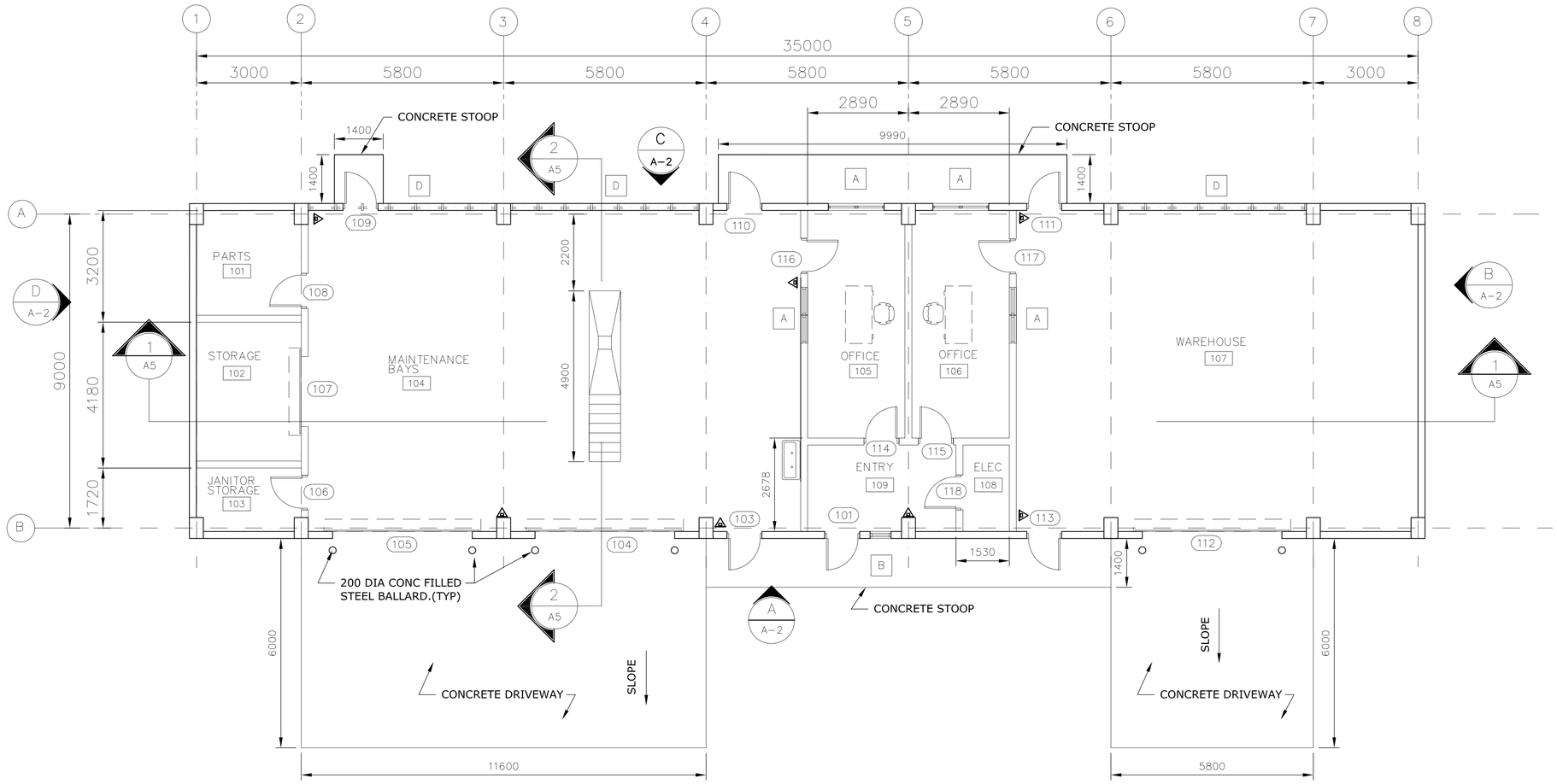

FLOOR PLAN

SCALE: 1:75

FLOOR PLAN NOTES: –

1. ALL INTERIOR WALLS ARE 200 CMU EXTENDING TO THE ROOF SLAB UNLESS NOTED OTHERWISE.

△ PROVIDE PORTABLE FIRE EXTINGUISHERS, ABC DRY CHEMICAL 4A:60B:C

3 1.50 0 3 4.5
1:75

UNLESS OTHERWISE NOTED, LINEAR DIMENSIONS SHOWN ARE IN MILLIMETERS.

*	REVISIONS		
SYMBOL	DESCRIPTION	DATE	APR
		03/04/2007	

DESIGNED BY: GA
DATE: 01-25-07
DWN BY: JSG
SUBMITTED BY: PHILIP L. DINELLO
CHK BY: ABB
FILE NO.: AF0609 C-AR01PN

US Army Corps of Engineers
Transatlantic Programs Center

AFGHAN NATIONAL POLICE COMPANY COMPOUND
VARIOUS, AFGHANISTAN
MAINTENANCE/WAREHOUSE
FLOOR PLAN

SHEET REFERENCE NUMBER:
C
A-1

$DATE$
$FILE$

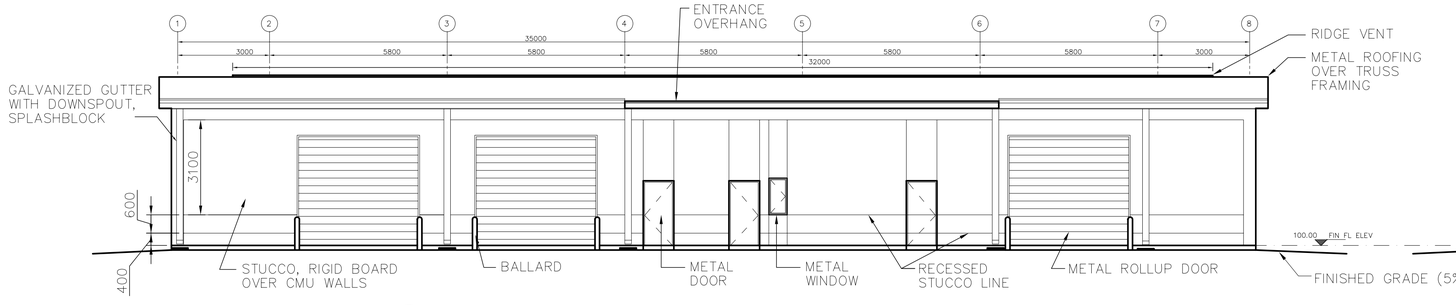

ELEVATION A (A-1/A-2)
SCALE 1:100

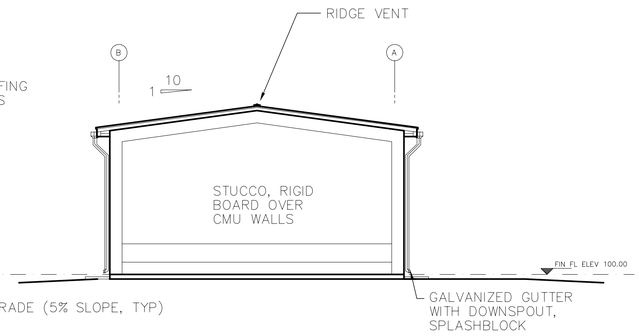

ELEVATION C (A-1/A-2)
SCALE 1:100

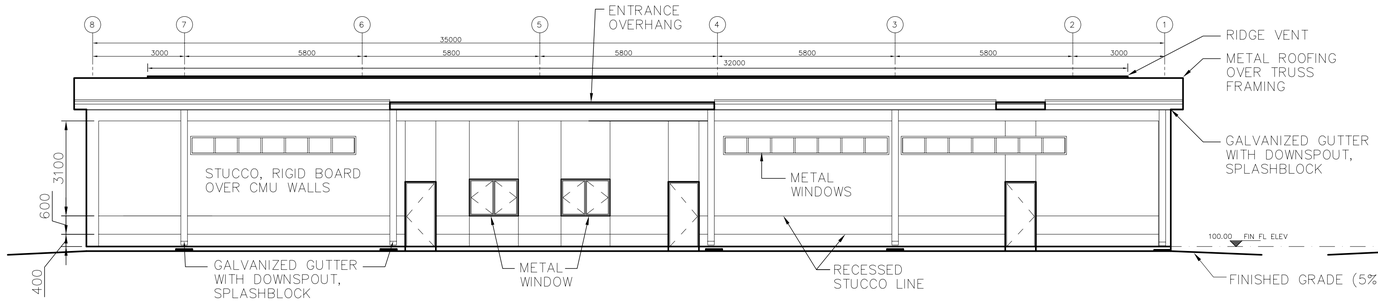

ELEVATION B (A-1/A-2)
SCALE 1:100

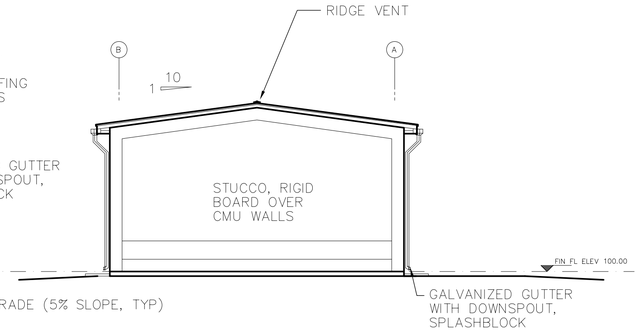

ELEVATION D (A-1/A-2)
SCALE 1:100

1 0 1 2 3 4 5 6 7 8 9
1:100

UNLESS OTHERWISE NOTED, LINEAR DIMENSIONS SHOWN ARE IN MILLIMETERS.

*	REVISIONS		
	SYMBOL	DESCRIPTION	DATE

03/04/2007

DESIGNED BY: HMH
DATE: 01-25-07
DWN BY: HMH
SUBMITTED BY: PHILIP L. DINELLO
CHK BY: HMH
FILE NO.: AF0609 C-AR02EL

US Army Corps of Engineers
Transatlantic Programs Center

AFGHAN NATIONAL POLICE COMPANY COMPOUND
VARIOUS, AFGHANISTAN
MAINTENANCE/WAREHOUSE
BUILDING ELEVATIONS

SHEET REFERENCE NUMBER:
C
A-2

SHEET SIZE

af0609c-ar02el.dwg
3/28/2007 9:20 PM
AED AED, USACE

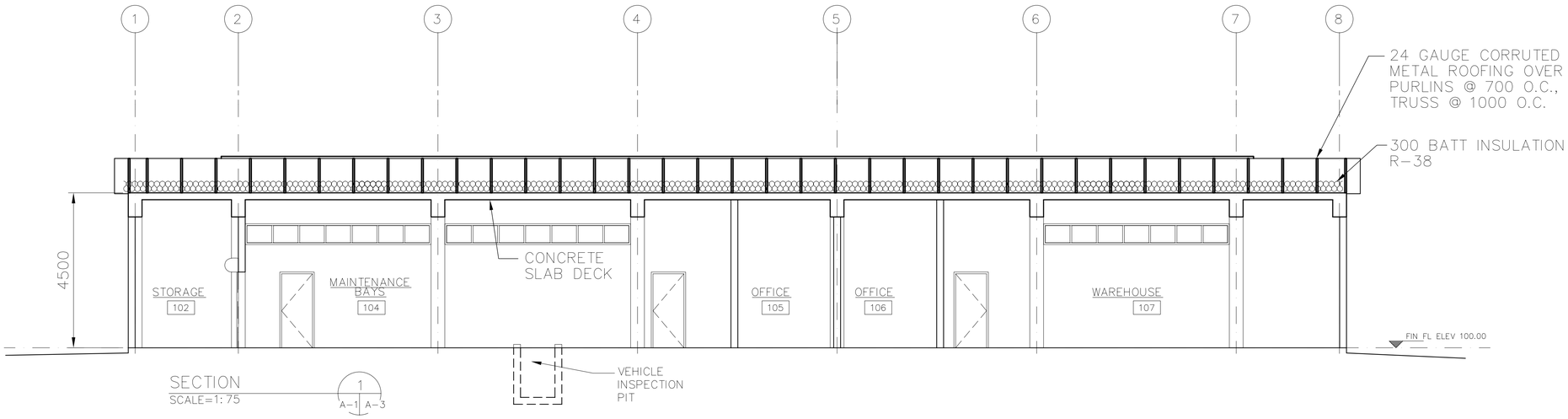

SECTION 1
SCALE=1:75
A-1 A-3

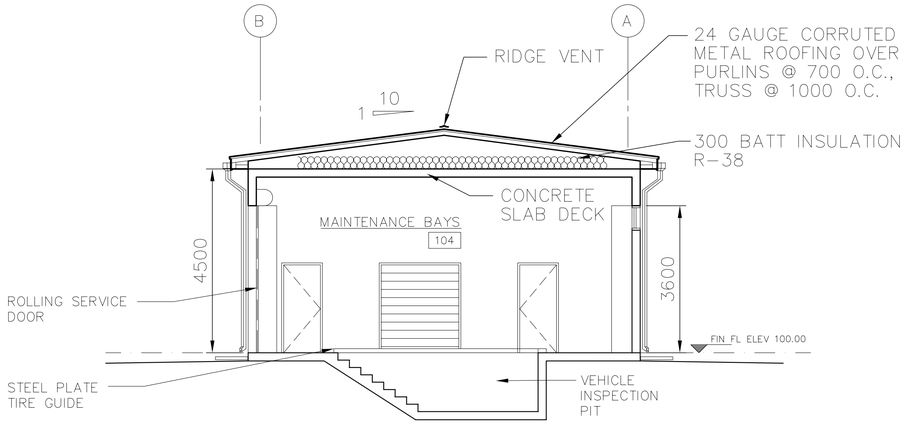

SECTION 2
SCALE=1:75
A-1 A-3

3 1.50 0 3 4.5
1:75

UNLESS OTHERWISE NOTED, LINEAR DIMENSIONS SHOWN ARE IN MILLIMETERS.

REVISIONS			
SYMBOL	DESCRIPTION	DATE	APR
		03/04/2007	

DESIGNED BY: HMH
DWN BY: HMH
CHK BY: HMH
DATE: 01-25-07
SUBMITTED BY: PHILIP L. DINELLO
CHIEF, ED PACIFICS DEV
FILE NO.: AF0609C-AR03SE

US Army Corps of Engineers
Transatlantic Programs Center

AFGHAN NATIONAL POLICE COMPANY COMPOUND
VARIOUS, AFGHANISTAN
MAINTENANCE/WAREHOUSE
BUILDING SECTIONS

SHEET REFERENCE NUMBER:
C
A-3

AF0609C-ar03se.dwg
3/28/2007 9:19 PM
AED AED, USACE

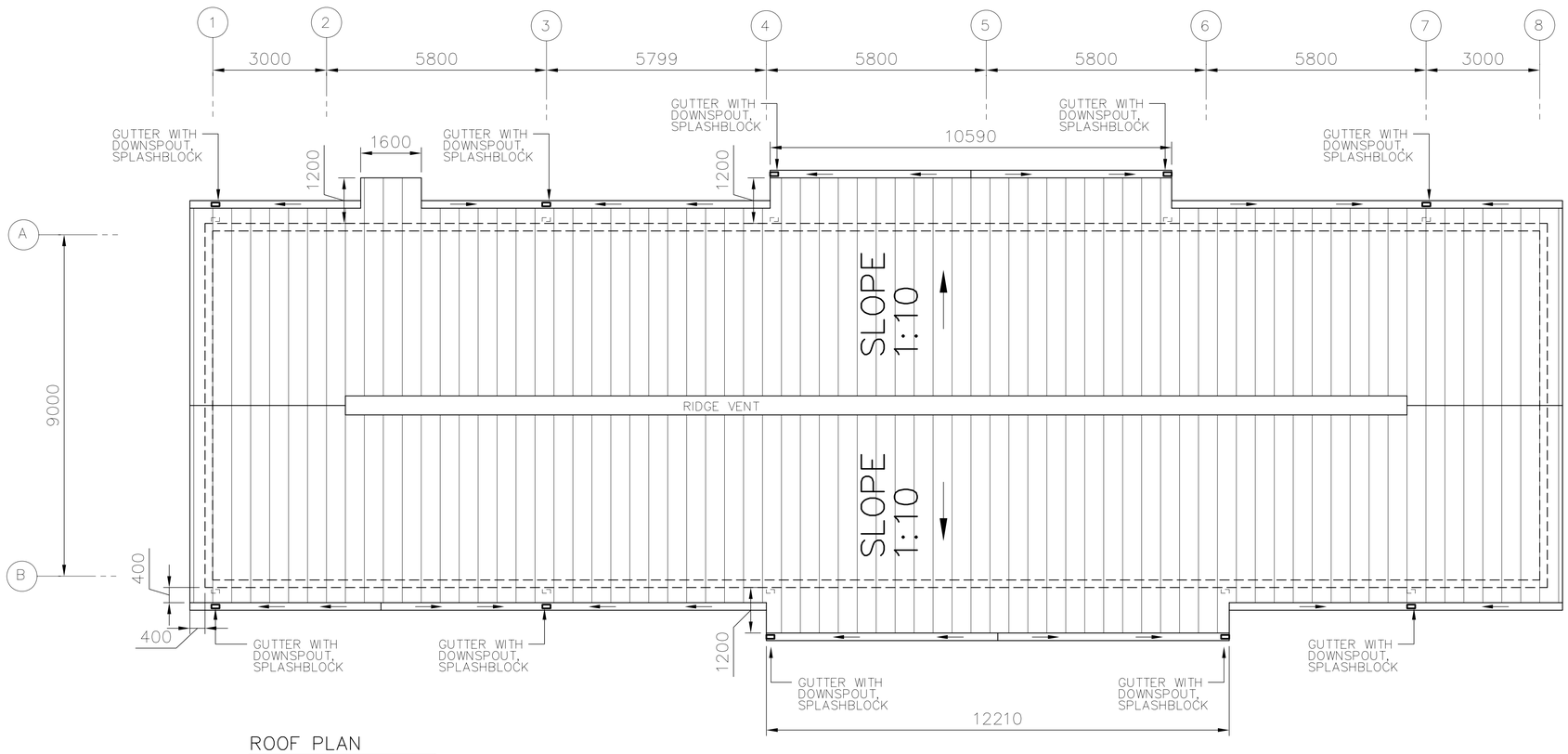

ROOF PLAN

SCALE=1:75

ROOF PLAN NOTES:

1. REFER TO MECHANICAL DRAWINGS FOR ALL ROOF PENETRATION LOCATIONS.
2. ALL ROOF PENETRATIONS SHALL RECEIVE WATERTIGHT ASSEMBLIES PER MANUFACTURERS RECOMMENDATIONS.

3 1.50 0 3 4.5
1:75

UNLESS OTHERWISE NOTED, LINEAR DIMENSIONS SHOWN ARE IN MILLIMETERS.

SYMBOL	REVISIONS	DESCRIPTION	DATE	APR
*			03/04/2007	

DESIGNED BY: HMH
DATE: 01-25-07
DWN BY: HMH
SUBMITTED BY: PHILIP L. DINELLO
CHK BY: HMH
FILE NO.: AF0609C-AR04PN

US Army Corps of Engineers
Transatlantic Programs Center

AFGHAN NATIONAL POLICE COMPANY COMPOUND
VARIOUS, AFGHANISTAN
MAINTENANCE/WAREHOUSE
ROOF PLAN

SHEET REFERENCE NUMBER:
C
A-4

$DATE$
$FILE$

ROOM FINISH SCHEDULE

ROOM NO.	ROOM NAME	FLOOR MAT'L.	FLOOR COLOR	BASE MAT'L.	BASE COLOR	WALLS MAT'L.	WALLS COLOR	CEILING MAT'L.	CEILING COLOR	CEILING HEIGHT	REMARKS
101	PARTS	F1	1	B5	--	W2	21	C2	31	--	XXXXXXXXXX
102	STORAGE	F1	1	B5	--	W2	21	C2	31	--	
103	JANITOR STORAGE	F1	1	B5	--	W2	21	C2	31	--	
104	MAINTENANCE BAYS	F1	1	B5	--	W2	21	C2	31	--	
105	OFFICE	F1	1	B5	--	W2	21	C2	31	--	
106	OFFICE	F1	1	B5	--	W2	21	C2	31	--	
107	MAINTENANCE	F1	1	B5	--	W2	21	C2	31	--	
108	ELEC	F1	1	B5	--	W2	21	C2	31	--	
109	ENTRY	F1	1	B2	--	W2	21	C2	31	--	
110											

DOOR SCHEDULE

DOOR NO.	DOOR LOCATION	DOOR TYPE	DOOR MAT'L	DOOR WIDTH	DOOR HEIGHT	DOOR THICK	FRAME HEAD	FRAME JAMB	FRAME SILL	FRAME MAT"L	FIRE LABEL	HDW SET	REMARKS
101	ENTRY	F	HM	900	2150	45	H-1	J-1	S-1	HM		1	
102	–												
103	MAINT BAYS	L	HM	900	2150	45	H-1	J-1	S-1	HM		1	
104	MAINT BAYS	R	STL	3600	4000	_	H-3	J-3	S-3	STL		9	
105	MAINT BAYS	R	STL	3600	4000	–	H-3	J-3	S-3	STL		9	
106	JANITOR ST	F	HM	900	2150	45	H-2	J-2	S-2	HM		6	
107	STORAGE	R	STL	2000	2150	–	H-3	J-3	S-3	STL		9	SIM
108	PARTS	F	HM	900	2150	45	H-2	J-2	S-2	HM		6	
109	MAINT BAYS	L	HM	900	2150	45	H-1	J-1	S-1	HM		1	
110	MAINT BAYS	L	HM	900	2150	45	H-1	J-1	S-1	HM		1	
111	WAREHOUSE	F	HM	900	2150	45	H-1	J-1	S-1	HM		1	
112	WAREHOUSE	R	STL	3600	4000	–	H-3	J-3	S-3	STL		9	
113	WAREHOUSE	F	HM	900	2150	45	H-1	J-1	S-1	HM		1	
114	OFFICE	F	HM	900	2150	45	H-2	J-2	S-2	HM		4	
115	OFFICE	F	HM	900	2150	45	H-2	J-2	S-2	HM		4	
116	OFFICE	F	HM	900	2150	45	H-2	J-2	S-2	HM		4	
117	OFFICE	F	HM	900	2150	45	H-2	J-2	S-2	HM		4	
118	ELEC	L	HM	900	2150	45	H-2	J-2	S-2	HM		6	

ROOM FINISH SCHEDULE LEGEND

FLOOR TYPE
F1 SEALED CONCRETE
F2 TERRAZZO TILE
F3 CERAMIC TILE
F4 QUARRY TILE

FLOOR COLOR
1 SEALED CONCRETE – NATURAL FINISH
2 TERRAZZO TILE – NAT'L TERRAZZO & MOSAIC ASSN, INC, NO. S-330
3 CERAMIC TILE – AMERICAN OLEAN, C-11, ALABASTER
4 QUARRY TILE – AMERICAN OLEAN, NO. Q03, SAHARA

BASE TYPE
B2 TERRAZZO
B3 CERAMIC
B4 QUARRY
B5 NO BASE

BASE COLOR
11 TERRAZZO TILE – NAT'L TERRAZZO & MOSAIC ASSN, INC, NO. S-330
12 CERAMIC TILE – AMERICAN OLEAN, D-12, ALMOND
13 QUARRY TILE –AMERICAN OLEAN, NO. Q03, SAHARA

WALL TYPE
W1 PAINTED CMU
W2 PAINTED PLASTER
W3 CERAMIC TILE

WALL COLOR
20 PAINTED CMU –HEMPEL, 1005-Y50R-25400, LIGHT BEIGE
21 PAINTED PLASTER-HEMPEL, 0502-Y-15420, OFF WHITE
22 METAL PANEL – HEMPEL, 0502-Y-15420, OFF WHITE
23 CERAMIC TILE –AMERICAN OLEAN, D-12, ALMOND

CEILING TYPE
C1 PAINTED EXPOSED STRUCTURE
C2 PAINTED PLASTER

CEILING COLOR
30 PAINTED EXPOSED STRUCTURE – HEMPEL, 0502-Y-15420, OFF WHITE
31 PAINTED SUSPENDED PLASTER HEMPEL, 0502-Y-15420, OFF WHITE

NOTE: PATTERN AND COLOR ARE SHOWN FOR REFERENCE ONLY, OTHER MANUFACTURER'S SIMILAR PATTERN AND COLOR MAY BE USED AS APPROVED BY THE CONTRACTING OFFICER.

ROOM FINISH SCHEDULE NOTES:

1. ALL WALL PENETRATIONS SHALL BE SEALED TO PROVIDE A NEAT APPEARANCE. PENETRATIONS OF EXTERIOR WALLS SHALL BE SEALED TO BE WATER-TIGHT.

2. SEALANTS SHALL MATCH THE COLOR OF ADJACENT SURFACES.

SYMBOL	DESCRIPTION	DATE	APR
*	REVISIONS	03/04/2007	

DESIGNED BY: YSK
DATE: 01-25-07
DWN BY: JSG
SUBMITTED BY: PHILIP L. DINELLO PROJ. MGT. PACKAGES DEV.
CHK BY: HMH
FILE NO.: AF0609 C-AR05SC

US Army Corps of Engineers
Transatlantic Programs Center

AFGHAN NATIONAL POLICE COMPANY COMPOUND
VARIOUS, AFGHANISTAN
MAINTENANCE/WAREHOUSE
DOOR SCHEDULE AND ROOM FINISH SCHEDULE

SHEET REFERENCE NUMBER:
C
A-5

AF0609C-ar05sc.dwg
4/1/2007 2:50 PM
AED AED, USACE

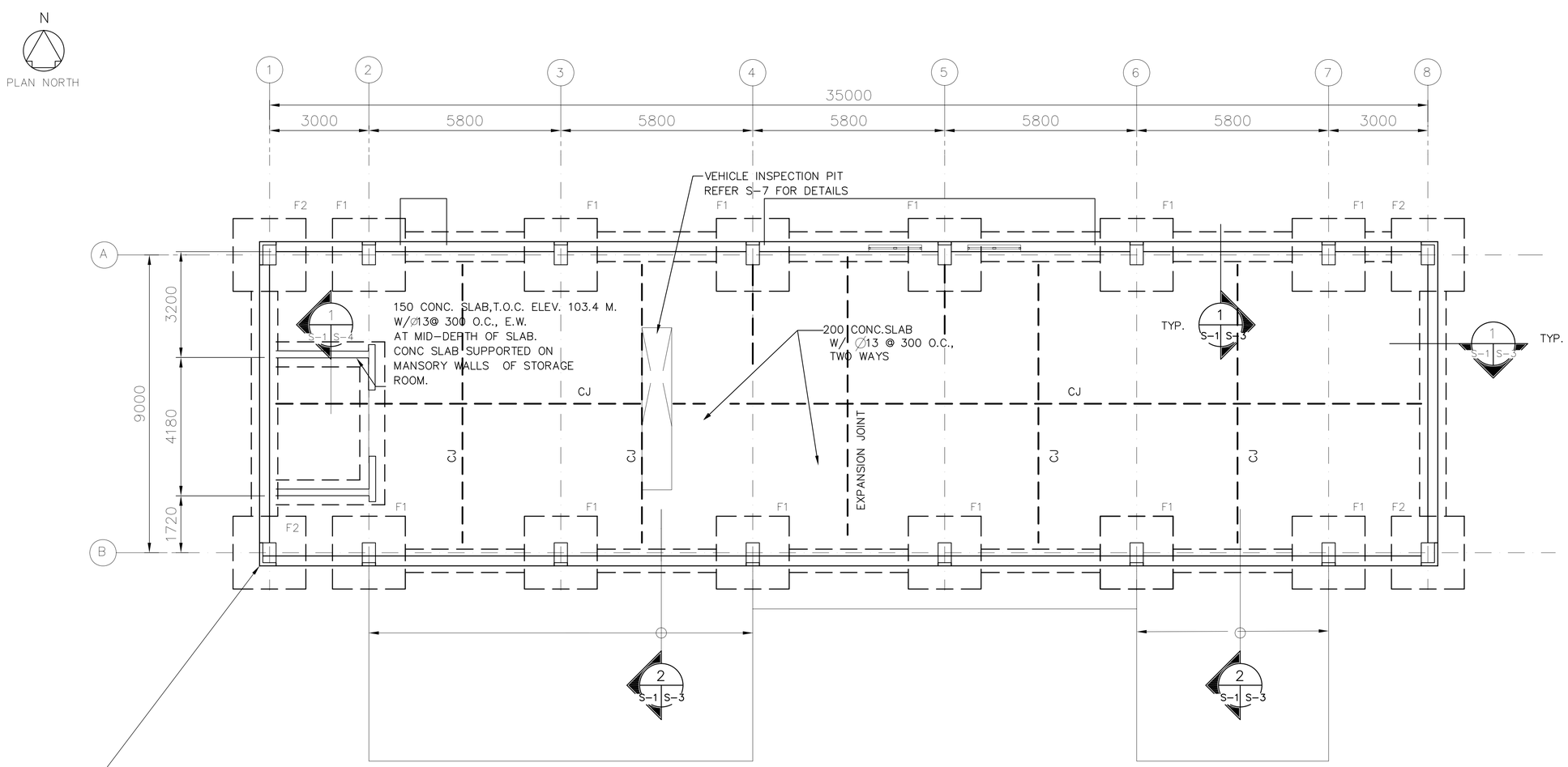

CRITICAL NOTE:
SEE "DETAIL A" ON S-3 FOR BOTTOM PORTION OF COLUMNS.
(TYPICAL FOR ALL COLUMNS)

FOUNDATION AND SLAB PLAN

SCALE= 1:75

1. DESIGN LOADS (SERVICE)

LIVE LOADS:

ROOF: 1.0 KPA (20 PSF)
OTHERS: 4.8 KPA (100 PSF)
8.9 KN (2.0 K) CONCENTRATED LOAD

WIND LOADS PER IBC-2003

USING A "3-SECOND" WIND VELOCITY OF 125 KPH (78 MPH), EXPOSURE C AND IMPORTANCE FACTOR I=1.0

EARTHQUAKE LOADS PER IBC-2003:

USING A SEISMICITY: Ss=1.65g AND S_1 =0.75g

2.0 METRIC TON OVERHEAD CRANE
IN MAINTENANCE BAYS

2. MATERIALS:

CONCRETE: 28 MPa (4 KSI)
CYLINDER STRENGTH AT 28 DAYS

REINFORCING: ASTM A615 GRADE 60 (60 KSI)

WELDED WIRE FABRIC: ASTM A185

CONCRETE MASONRY UNITS:
ASTM C90, TYPE I (NORMAL WEIGHT, MOISTURE CONTROLLED) MORTAR, ASTM C270, TYPE S
GROUT, ASTM C 476
JOINT REINFORCEMENT, LADDER TYPE

3. WORK THESE STRUCTURAL DRAWINGS WITH THE STANDARD-DETAILS DRAWINGS.

4. A RELATIVE (DATUM) FINISH FLOOR ELEVATION EQUAL TO 100.00 M. IS USED AS REFERENCE ELEVATION FOR ALL STRUCTURAL DRAWINGS. REFER TO CIVIL DRAWINGS FOR ACTUAL FINISH ELEVATIONS.

5. SLAB JOINTS SHOWN ON PLAN, SHALL BE CJT OR CJ JOINTS. CONTRACTOR HAS THE OPTION FOR THE SELECTION OF TYPE OF JOINTS TO BE USED FOR CONCRETE PLACEMENT. REFER TO DET. A/SS-4 AND B/SS-4, FOR CJT AND CJ DETAILS.

6. FOUNDATIONS ARE DESIGNED USING AN ALLOWABLE BEARING PRESSURE OF 0.75 KG/SQ. CM (1500 PSF), AND BOTTOM OF FOOTINGS ARE PLACED AS SHOWN ON DRAWINGS. GEOTECHNICAL INVESTIGATION SHALL CONFIRM BEARING CAPACITY TO BE NO LESS THAN 0.75 KG/SQ CM. IF GEOTECHNICAL INVESTIGATION SHOWS LESS THAN 0.75 KG/SQ CM, THE CONTRACTOR SHALL REDESIGN FOOTINGS BASED ON THE GEOTECHNICAL INVESTIGATION. SEE SPECIFICAITON 01015 PARAGRAPH, GEOTECHNICAL, FOUNDATION AND SURVEY.

7. LEGEND:

SLAB JOINTS

3 1.50 0 3 4.5
1:75

UNLESS OTHERWISE NOTED, LINEAR DIMENSIONS SHOWN ARE IN MILLIMETERS.

SYMBOL	DESCRIPTION	DATE	APR
*	REVISIONS	03/04/2007	

DESIGNED BY: RG
DATE: 01-25-07
SUBMITTED BY: PHILIP L. DINELLO
CHIEF, PD PROJECTS DEV.
DWN BY: RG
FILE NO.: AF0609 C-SB01PN
CHK BY: JK

US Army Corps of Engineers
Transatlantic Programs Center

AFGHAN NATIONAL POLICE COMPANY COMPOUND
VARIOUS, AFGHANISTAN
MAINTENANCE/WAREHOUSE
FOUNDATION AND SLAB PLAN

SHEET REFERENCE NUMBER:
C
S-1

AF0609C-sb01pn.dwg
3/30/2007 4:40 PM
AED AED, USACE

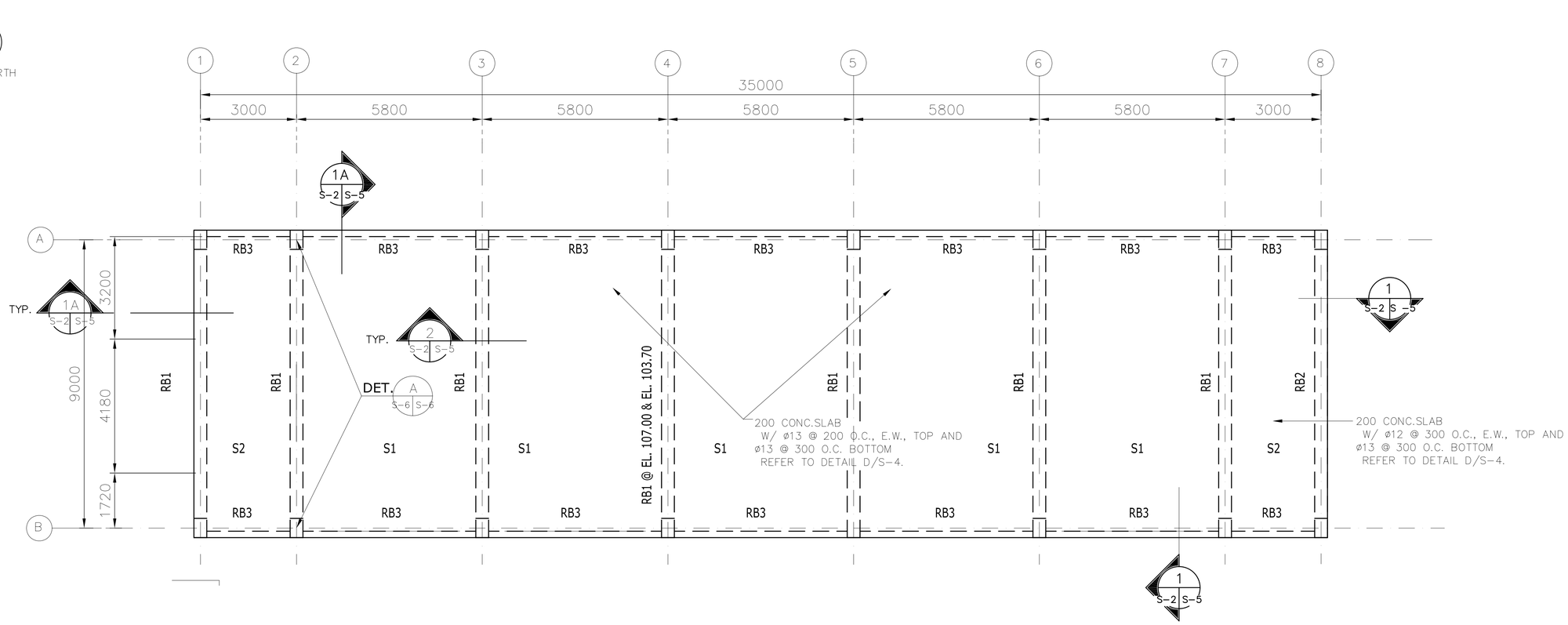

ROOF FRAMING PLAN

SCALE: 1:75

3 1.50 0 3 4.5
1:75

UNLESS OTHERWISE NOTED, LINEAR DIMENSIONS SHOWN ARE IN MILLIMETERS.

REVISIONS			
SYMBOL	DESCRIPTION	DATE	APR
		03/04/2007	

DESIGNED BY: RG
DWN BY: RG
CHK BY: JK
DATE: 01-25-07
SUBMITTED BY: PHILIP L. DINELLO
CHIEF, PROJ. FACILITIES DEV.
FILE NO.: AF0609 C-SF02PN

US Army Corps of Engineers
Transatlantic Programs Center

AFGHAN NATIONAL POLICE COMPANY COMPOUND
VARIOUS, AFGHANISTAN
MAINTENANCE/WAREHOUSE
ROOF FRAMING PLAN

SHEET REFERENCE NUMBER:
C
S-2

AF0609C-SF02PN.dwg
3/30/2007 4:47 PM
AED AED, USACE

FOOTING SCHEDULE

NOTE:
REFER TO A/S-3 FOR TYPICAL SECTION OF FOOTINGS AND PLAN NORTH.
FOOTING ORIENTATION DEFINED BY A/S-3 AND S-1 PLAN NORTH'S.

MARK	CONCRETE DIMENSIONS			REINFORCEMENT		FTG. BOTTOM EL. METERS	REMARKS
	WIDTH	LENGTH	THICKNESS	TOP	BOTTOM		
F1	2000	2000	450	—	Ø19 E.W. @ 250 O.C.		
F2	1500	1500	450	—	Ø19 E.W. @ 250 O.C.		

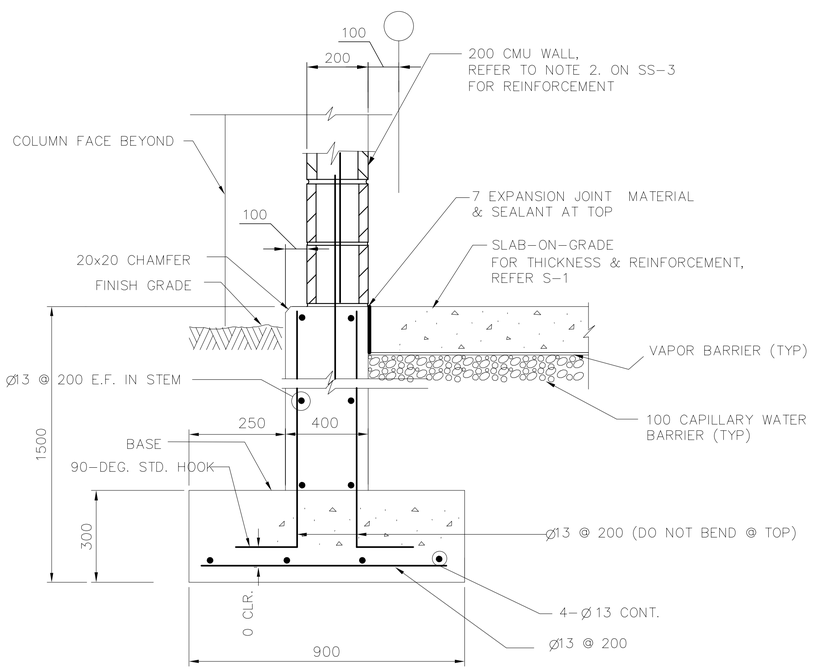

SECTION 1 (S-1 | S-3)
N.T.S.

NOTES:
1. HORIZONTAL STEM WALL AND FOOTING REINFORCEMENTS ARE CONTINUOUS THROUGH COLUMN AND COLUMN FOOTING
2. AT DISCONTINUOUS STEM WALL BARS TERMINATE WITH STANDARD HOOK IN COLUMN. FOOTING BARS TERMINATE WITH 600 MM EMBEDMENT IN COLUMN FOOTING.
3. REFER CIVIL DWGS FOR ACTUAL FINISH FLOOR ELEVATIONS.

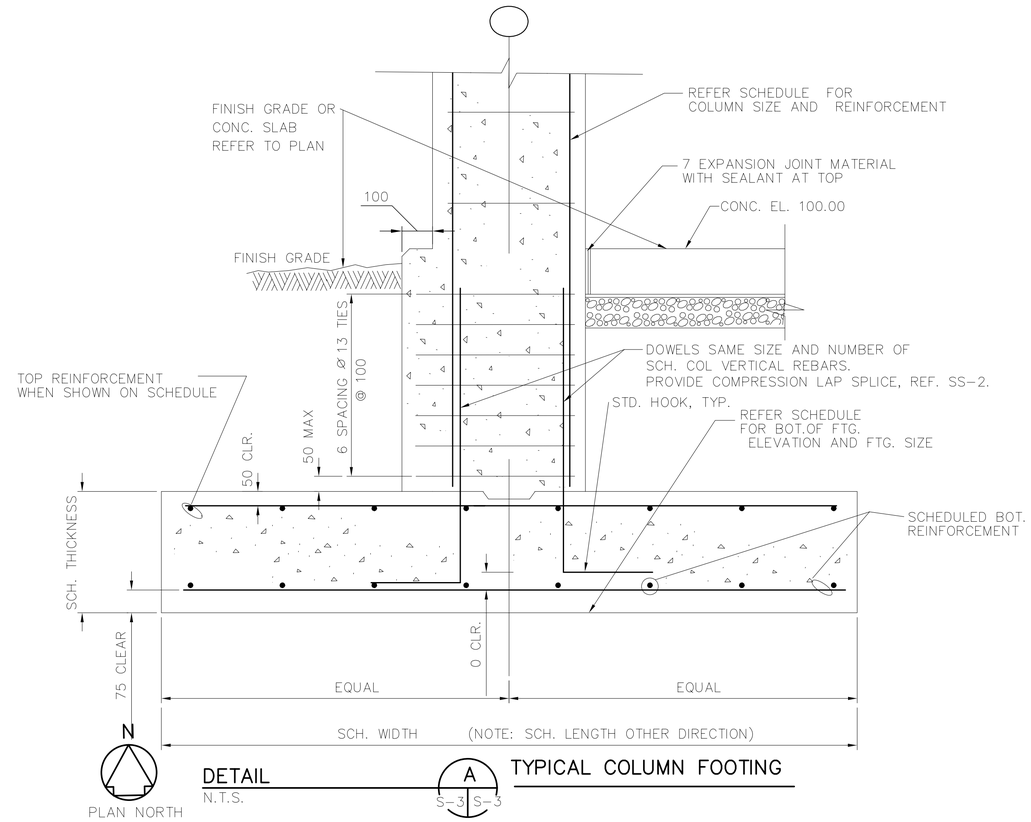

DETAIL A (S-3 | S-3)
N.T.S.
TYPICAL COLUMN FOOTING

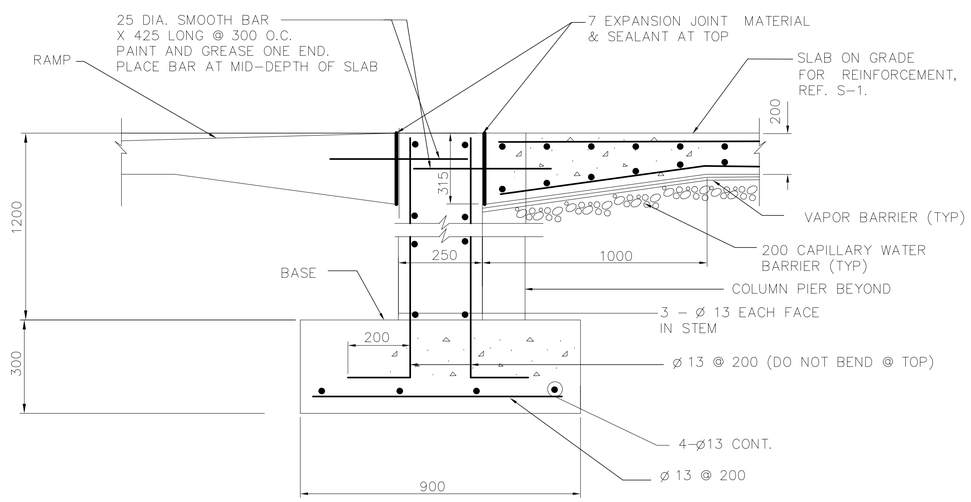

SECTION 2 (S-1 | S-3)
NTS

UNLESS OTHERWISE NOTED, LINEAR DIMENSIONS SHOWN ARE IN MILLIMETERS.

REVISIONS			
SYMBOL	DESCRIPTION	DATE	APR
		03/04/2007	

DESIGNED BY: RG
DWN BY: RG
CHK BY: KGO/JK
DATE: 01-25-07
SUBMITTED BY: PHILIP L. DINELLO, CHIEF, PD PROJECTS DEV
FILE NO.: AF0609 C-SB03DT

US Army Corps of Engineers
Transatlantic Programs Center

AFGHAN NATIONAL POLICE COMPANY COMPOUND
VARIOUS, AFGHANISTAN
MAINTENANCE/WAREHOUSE
FOOTING DETAILS

SHEET REFERENCE NUMBER:
C
S-3

AF0609C-st03dt.dwg
3/30/2007 4:57 PM
AED AED, USACE

COLUMN SCHEDULE

COLUMN GRIDS	COLUMN TYPE	CONCRETE DIMENSIONS		VERTICAL REINFORCEMENT	TIE REINFORCEMENT	
		WIDTH	DEPTH		SIZE	SPACING
A–2, A–3, A–4,A–5,A–6,A–7 B–2, B–3, B–4,B–5,B–6,B–7	C1	400	600	14–ø25	ø10	300
A–1, A–8 B–1, B–8	C2	400	600	10–ø25	ø10	300

NOTE: 1. REFER DETAILS B&C/S–4 AND A/S–3 FOR TYPICAL COLUMN DETAILS.
2. REFER TO COLUMN TYPE DETAIL FOR PLAN NORTH. COLUMN ORIENTATION DEFINED BY COLUMN TYPE DETAIL AND S–1 PLAN NORTH'S.

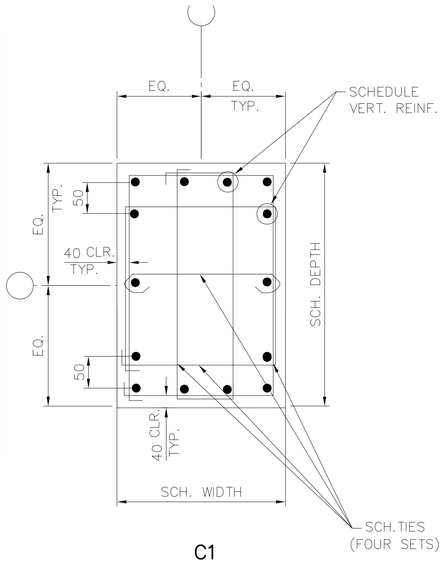

C1

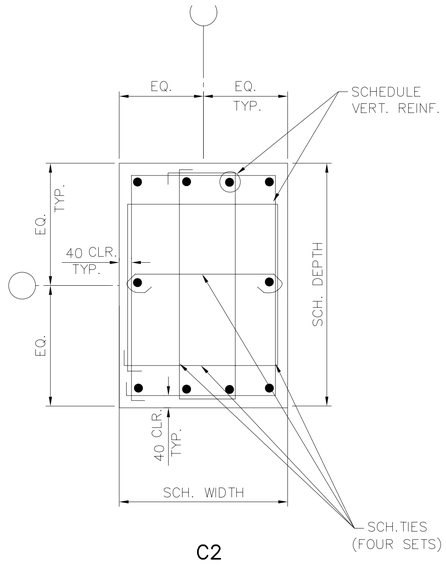

C2

COLUMN TYPE

DETAIL A
N.T.S. S–4 | S–4

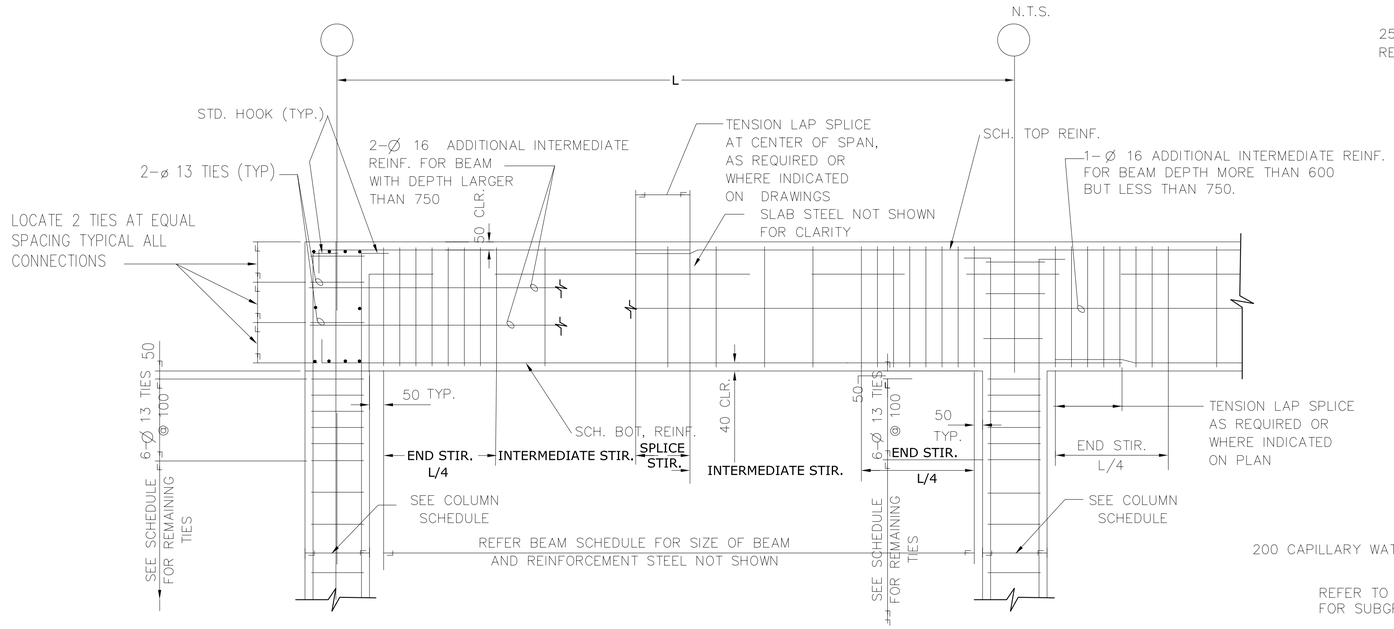

TYPICAL BEAM TO COLUMN END CONNECTION

TYPICAL BEAM TO COLUMN INTERIOR CONNECTION

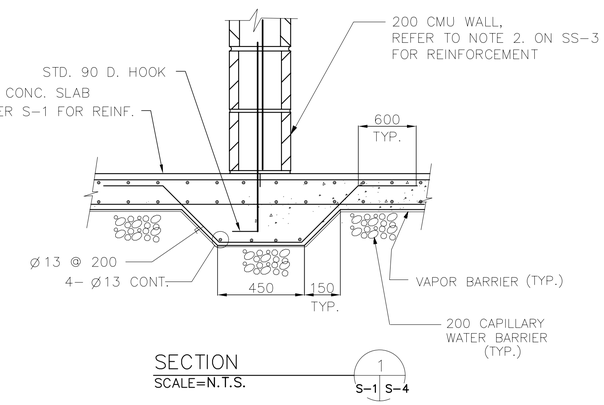

SECTION 1 S–1 | S–4
SCALE=N.T.S.

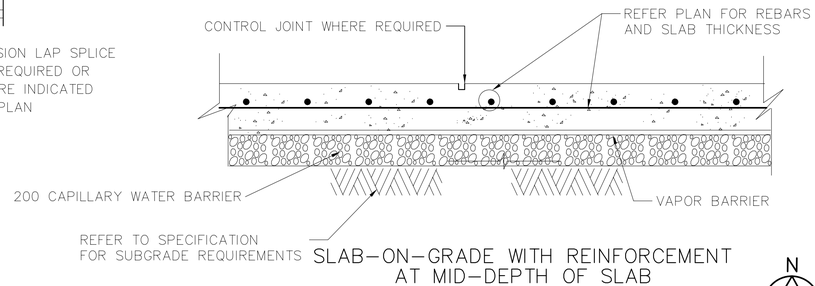

SLAB–ON–GRADE WITH REINFORCEMENT AT MID–DEPTH OF SLAB

TYPICAL SECTIONS FOR SLAB–ON–GRADE

N

PLAN NORTH

DETAIL B
N.T.S. S–4 | S–4

DETAIL C
N.T.S. S–4 | S–4

DETAIL D
N.T.S. S–4 | S–4

UNLESS OTHERWISE NOTED, LINEAR DIMENSIONS SHOWN ARE IN MILLIMETERS.

*	REVISIONS		
SYMBOL	DESCRIPTION	DATE	APR
		03/04/2007	

DESIGNED BY: RG
DWN BY: RG
CHK BY: KGO/JK
DATE: 01–25–07
SUBMITTED BY: PHILIP L. DINELLO, PROJECT MANAGER, PROJECTS DEV.
FILE NO.: AF0609 C–SF04DT

US Army Corps of Engineers
Transatlantic Programs Center

AFGHAN NATIONAL POLICE COMPANY COMPOUND
VARIOUS, AFGHANISTAN
MAINTENANCE/WAREHOUSE
COLUMN AND SLAB–ON–GRADE DETAILS

SHEET REFERENCE NUMBER:
C
S–4

BEAM SCHEDULE

MARK	CONCRETE DIMENSIONS		REINFORCEMENT SCHEDULE		STIRRUP REINFORCEMENT				REMARKS
					SIZE	TYPE	SPACING		
	WIDTH	DEPTH	TOP	BOTTOM			ENDS & SPLICE	INTERMEDIATE	
RB1	400	700	5–ø25	5–ø25	ø13		200	300	
RB2	400	700	3–ø25	3–ø25	ø13		200	300	
RB3	200	900	2–ø22	2–ø22	ø13		300	300	4–ø16 INTERMEDIATE BARS

NOTE: REFER TO B&C/S–4 FOR TYPICAL BEAM ELEVATIONS AND 1&2/S–5 FOR TYPICAL BEAM SECTIONS.

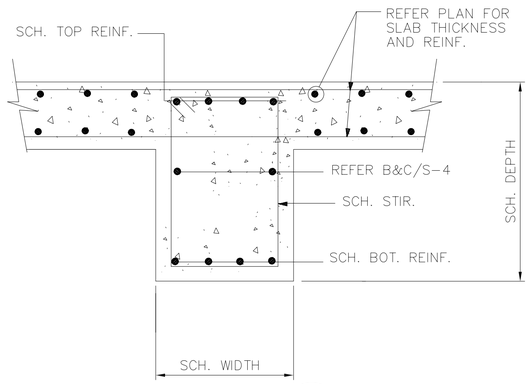

SECTION 2 S–2 S–5
N.T.S.

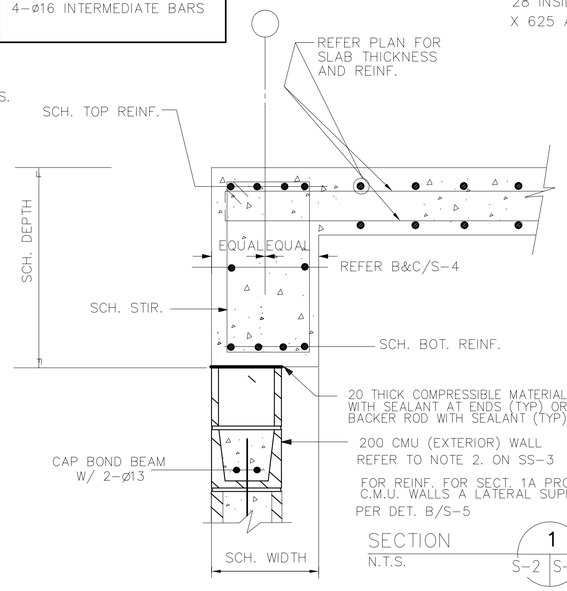

SECTION 1 S–2 S–5 1A S–2 S–5
N.T.S.

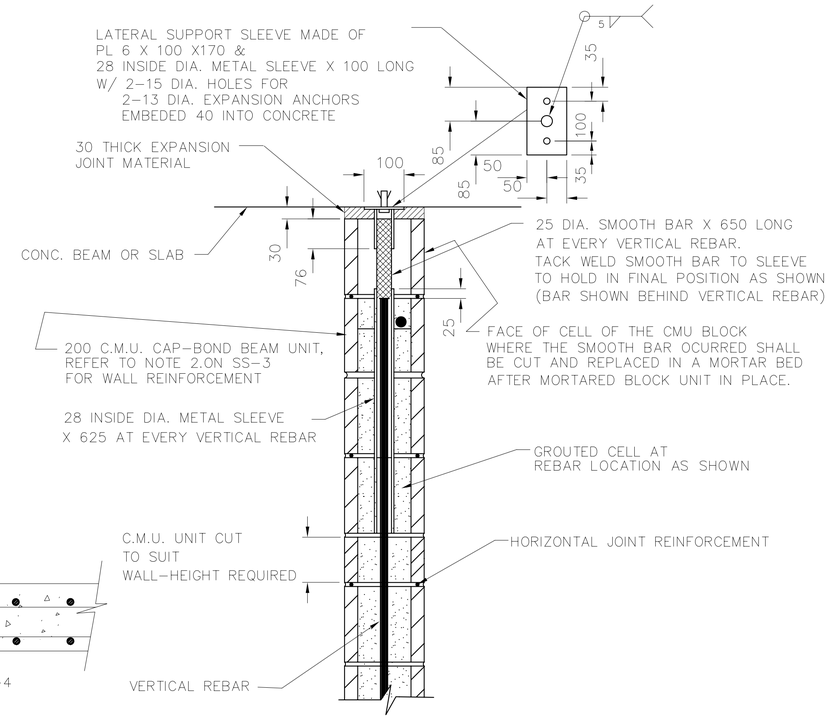

TOP LATERAL SUPPORT FOR C.M.U. WALLS

DET. B S–5 S–5

NOTE:
PROVIDE SLAB AND BEAMS STRUCTURAL SLOPES IF ARE DETAILED ON PLANS.

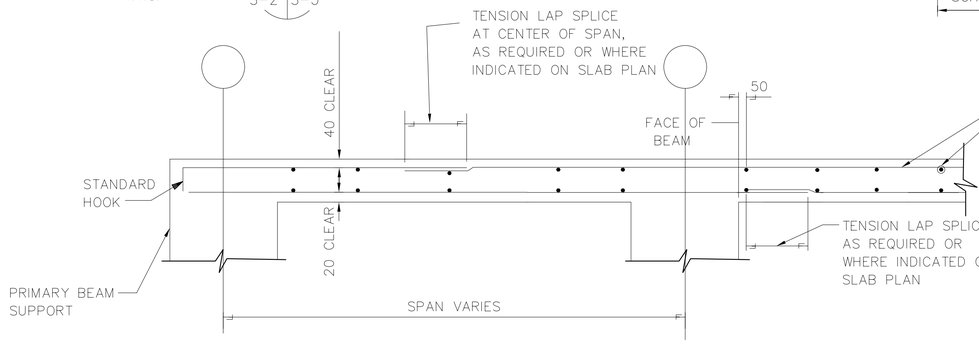

STRUCTURAL SLAB WITH TOP & BOTTOM REINFORCEMENTS

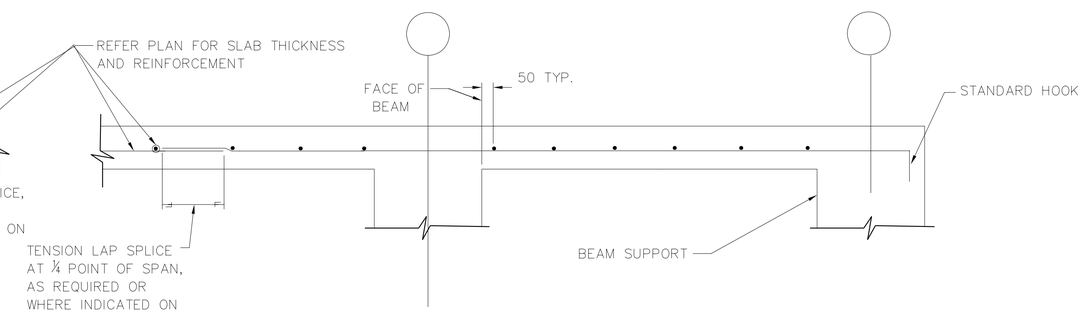

STRUCTURAL SLAB WITH REINFORCEMENT AT MID–DEPTH OF SLAB

NOTE:

1. PROVIDE SIMILAR REINFORCEMENT PATTERNS FOR REINFORCEMENT RUNNING PERPENDICULAR TO SECTIONS.
2. PROVIDE SLAB AND BEAMS STRUCTURAL SLOPES IF ARE DETAILED ON PLANS.

UNLESS OTHERWISE NOTED, LINEAR DIMENSIONS SHOWN ARE IN MILLIMETERS.

A S–5 S–5 TYPICAL SECTIONS FOR STRUCTURAL SLABS
N.T.S.

*	REVISIONS		
SYMBOL	DESCRIPTION	DATE	APR
		03/04/2007	

DESIGNED BY: RG
DATE: 01–25–07
DWN BY: JSG/RG
SUBMITTED BY: PHILIP L. DINELLO PROJECT MANAGER, FACILITIES DEV
CHK BY: JK
FILE NO.: AF0609 C–SF05DT

US Army Corps of Engineers
Transatlantic Programs Center

AFGHAN NATIONAL POLICE COMPANY COMPOUND
VARIOUS, AFGHANISTAN
MAINTENANCE/WAREHOUSE
ROOF BEAM AND STRUCTURAL SLAB DETAILS

SHEET REFERENCE NUMBER:
C
S–5

AF0609C–sf05dt.dwg
3/28/2007 9:15 PM
AED, AED, USACE

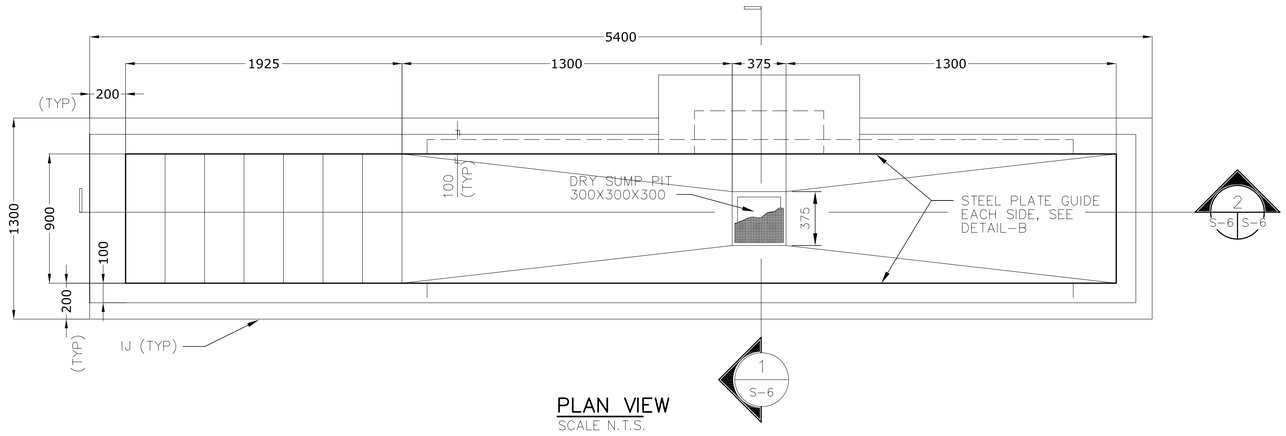

PLAN VIEW
SCALE N.T.S.

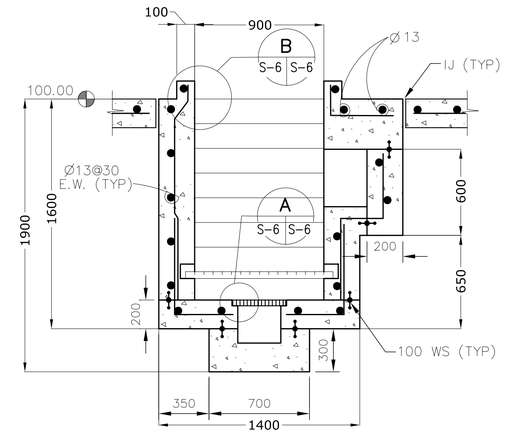

FOR GRATING REQUIREMENTS
SEE NOTE THIS SHEET

SECTION
SCALE N.T.S.
1
S-6 S-6

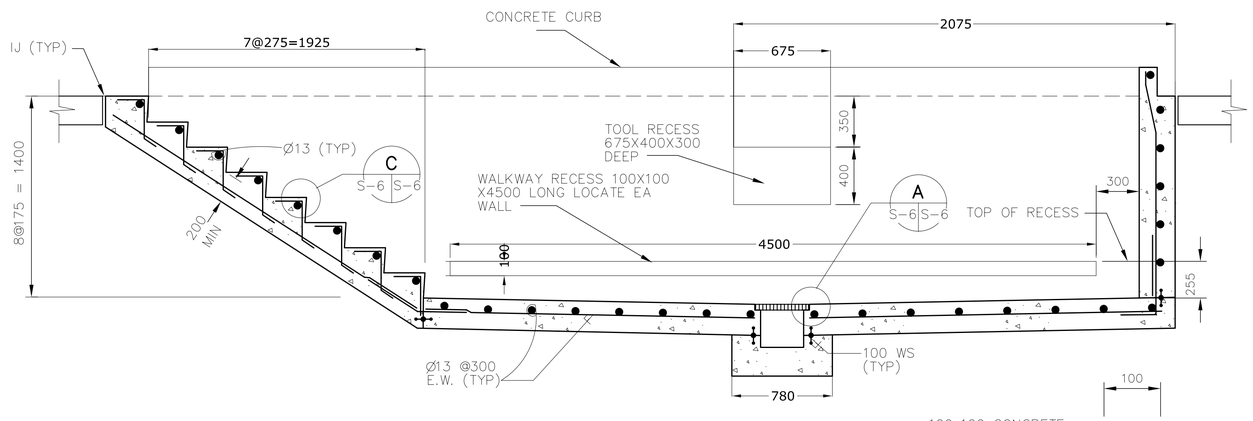

SECTION
SCALE N.T.S.
2
S-6 S-6

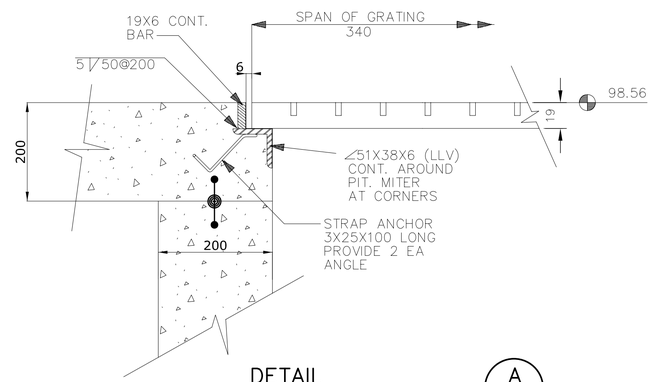

DETAIL
SCALE: NTS
A
S-6 S-6

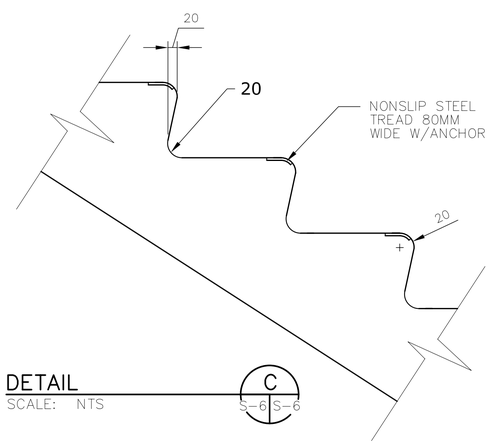

DETAIL
SCALE: NTS
C
S-6 S-6

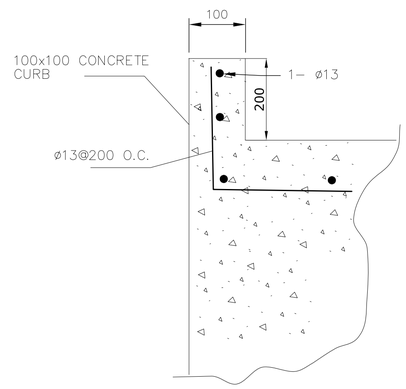

DETAIL
SCALE: NTS
B
S-6 S-6

SPECIFIC NOTES:

1. WORK THIS SHEET WITH NOTES ON SHEET S-1.
2. PROVIDE A BROOM FINISH TO STAIR STEPS.
3. WALKWAY AND PIT GRATING SHALL BE CONSTRUCTED OF GALVANIZED STEEL. PLAN, STRAIGHT AND PARALLEL BEARING BARS SHALL BE PLACED EDGEWISE AND JOINED BY PLAIN, STRAIGHT AND PARALLEL CROSS BARS. BEARING BAR SHALL HAVE MINIMUM DIMENSION OF 19 MILLIMETERS DEEP BY 3 MILLIMETERS THICK AND PLACED AT A MAXIMUM SPACING OF 32 MILLIMETERS ON CENTERS. MINIMUM DIMENSION OF CROSS BARS SHALL NOT BE LESS THAN 6 MILLIMETERS. MINIMUM PROPERTIES OF SECTION MODULUS (S) AND MOMENT OF INERTIA (I) OF BEARING BARS IS 7 MM^3/MM AND 66 MM^4/MM RESPECTIVELY. CROSS BARS SHALL BE SPACED A MAXIMUM OF 50 MILLIMETERS. MINIMUM MATERIAL GRADE FOR BEARING AND CROSS BARS SHALL BE ASTM A36.

UNLESS OTHERWISE NOTED, LINEAR DIMENSIONS SHOWN ARE IN MILLIMETERS.

REVISIONS			
*	SYMBOL	DESCRIPTION	DATE
			03/04/2007

DESIGNED BY: RG	DATE: 01-25-07	
DWN BY: RG	SUBMITTED BY: PHILIP L. DINELLO CHIEF, PLD, PLANNING DEV.	
CHK BY: KGO/JK	FILE NO.: AF0609 C-SB07DT	

US Army Corps of Engineers
Transatlantic Programs Center

AFGHAN NATIONAL POLICE COMPANY COMPOUND
VARIOUS, AFGHANISTAN
MAINTENANCE/WAREHOUSE
VEHICLE INSPECTION PIT PLAN DETAILS AND SECTIONS

SHEET REFERENCE NUMBER:
C
S-6

AF0609C-SB07DT.dwg
3/29/2007 9:16 PM
AED AED, USACE

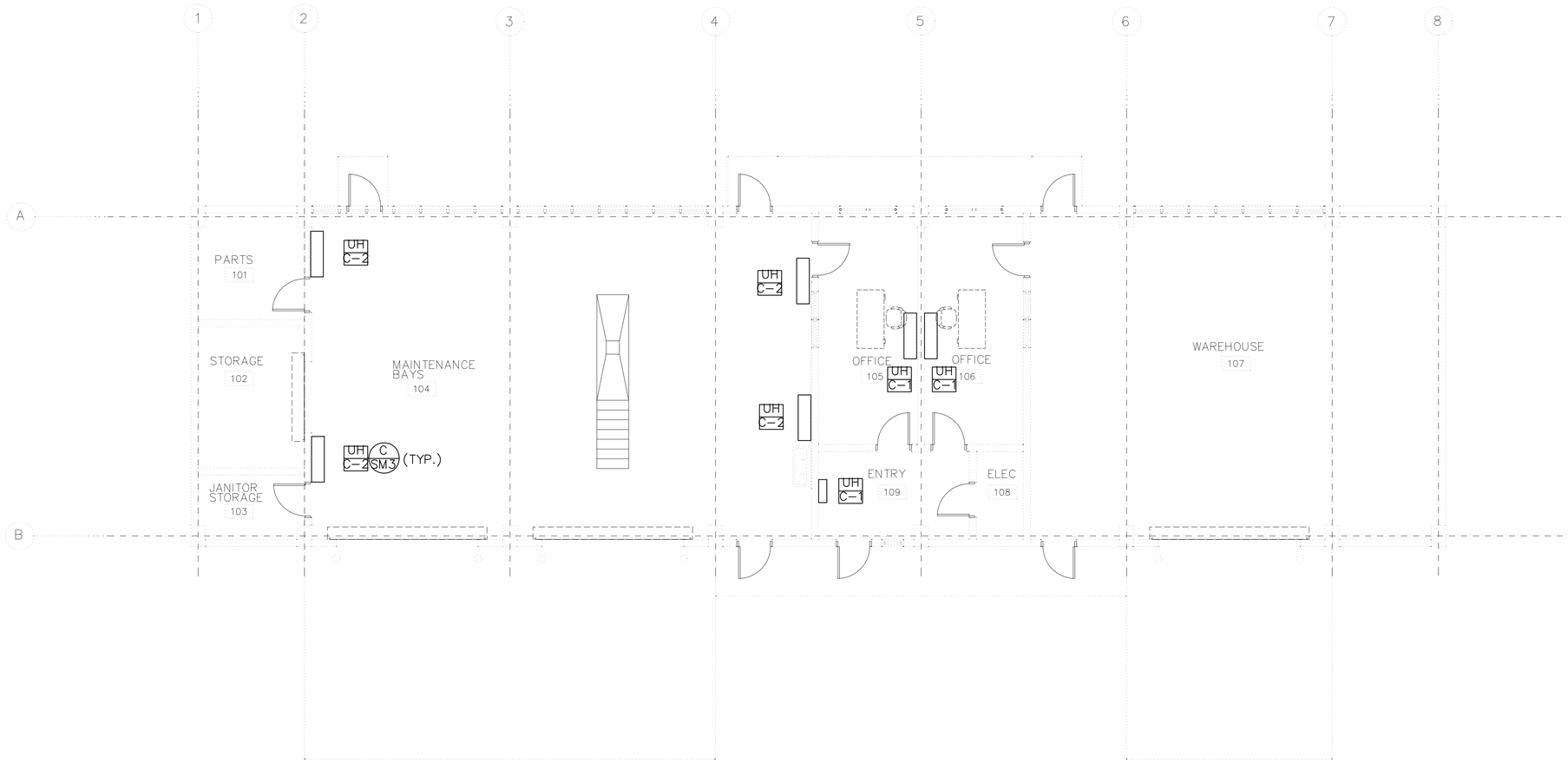

UNLESS OTHERWISE NOTED, LINEAR DIMENSIONS SHOWN ARE IN MILLIMETERS.

SYMBOL	REVISIONS DESCRIPTION	DATE	APR
*		03/04/2007	

DESIGNED BY: JMR
DATE: 01-25-07
DWN BY: JMR
SUBMITTED BY: MICHAEL HOWELL
CHK BY: RMS
FILE NO.: AF0609 C MH01PN

US Army Corps of Engineers
Transatlantic Programs Center

AFGHAN NATIONAL POLICE COMPANY COMPOUND
VARIOUS, AFGHANISTAN
MAINTENANCE/WAREHOUSE
HVAC PLAN

SHEET REFERENCE NUMBER:
C
M-1

AF0609B-MH01PN.dwg
3/31/2007 10:17 PM
AED AED, USACE

AF0609B-MP01PN.dwg

3/31/2007 10:22 PM

AED, AED, USACE

EWH X ELECTRIC WATER HEATER SCHEDULE									
UNIT NUMBER	LOCATION (ROOM NO.)	STORAGE CAPACITY (LITERS)	MINIMUM RECOVERY RATE (LITERS/HOUR) @ 55.5 C RISE	NUMBER OF ELEMENTS	ELECTRICAL REQUIREMENTS				REMARKS
					KW INPUT	VOLTS	PH	HZ	
C-1	104	20	5.5	1	1 @ 1.5	240	1	50	NON-SIMULTANEOUS ELEMENT OPERATION WALL MOUNT UNIT

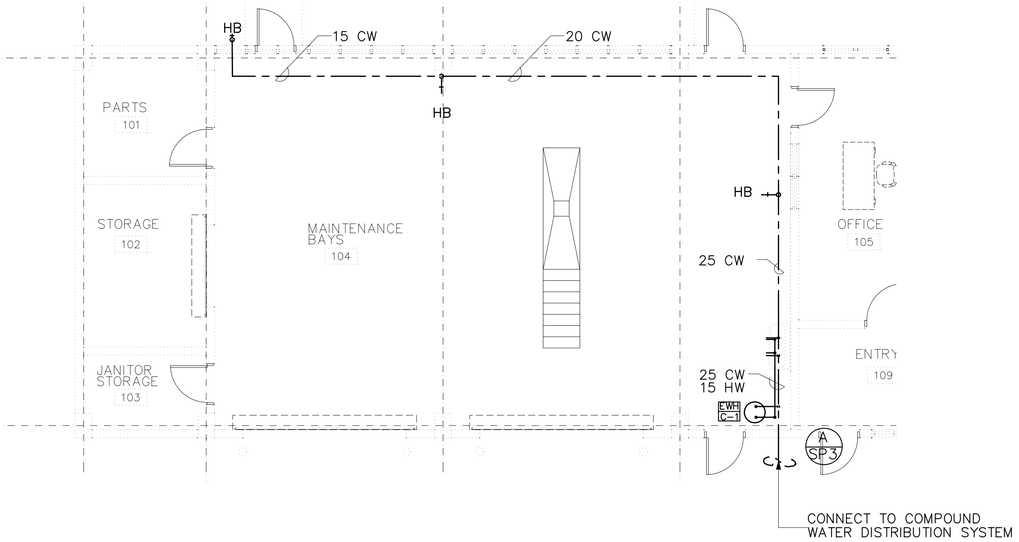

WATER SUPPLY LAYOUT
SCALE: 1:75

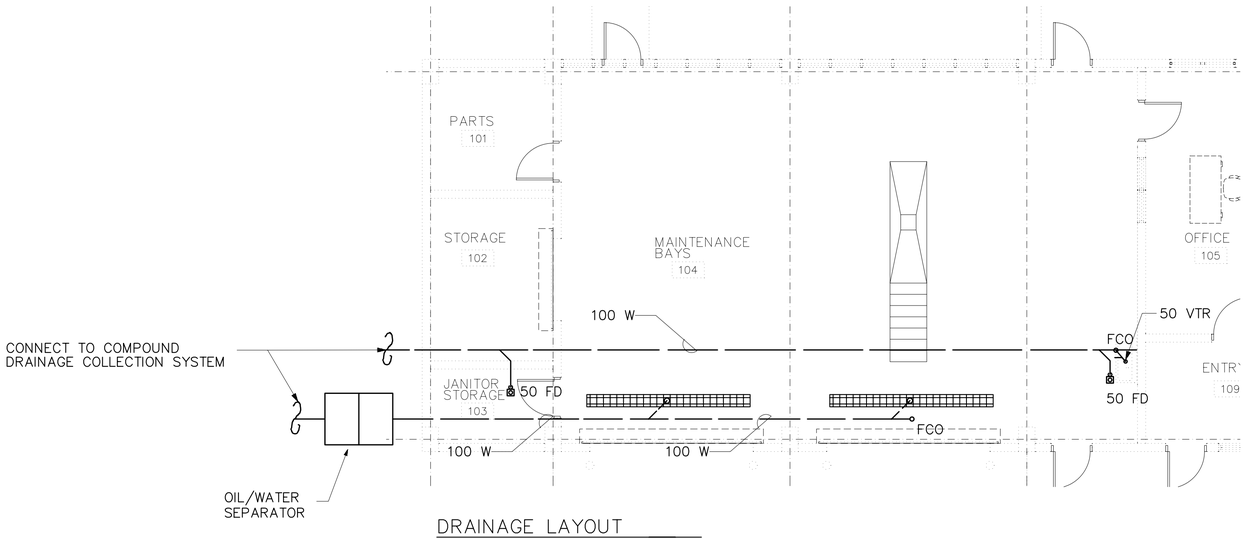

DRAINAGE LAYOUT
SCALE: 1:75

UNLESS OTHERWISE NOTED, LINEAR DIMENSIONS SHOWN ARE IN MILLIMETERS.

*	REVISIONS		
SYMBOL	DESCRIPTION	DATE	APR
		03/04/2007	

DESIGNED BY: JMR
DWN BY: JMR
CHK BY: RMS/HMH
DATE: 01-25-07
SUBMITTED BY: MICHAEL HOWELL
CHIEF, FDTD BLDGS SYSTEMS
FILE NO.: AF0609 C MP01PN

US Army Corps of Engineers
Transatlantic Programs Center

AFGHAN NATIONAL POLICE COMPANY COMPOUND
VARIOUS, AFGHANISTAN
MAINTENANCE/WAREHOUSE
PLUMBING LAYOUT

SHEET REFERENCE NUMBER:
C
P-1

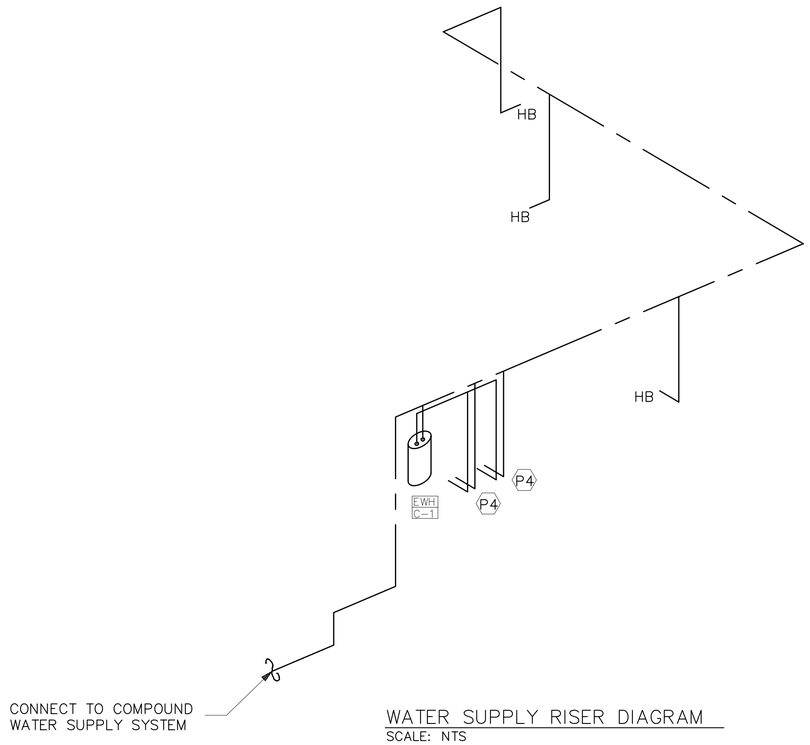

WATER SUPPLY RISER DIAGRAM
SCALE: NTS

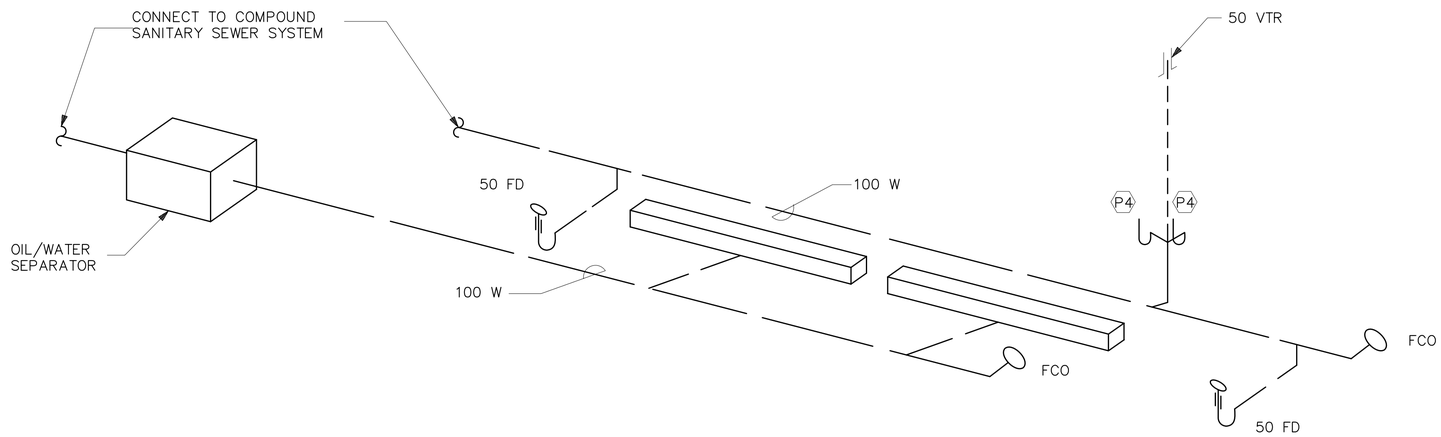

WASTER WATER RISER DIAGRAM
SCALE: NTS

UNLESS OTHERWISE NOTED, LINEAR DIMENSIONS SHOWN ARE IN MILLIMETERS.

SYMBOL	REVISIONS	DESCRIPTION	DATE	APR
*			03/04/2007	

DESIGNED BY: JMR
DWN BY: JMR
CHK BY: RMS
DATE: 01-25-07
SUBMITTED BY: MICHAEL HOWELL
CHIEF, FDT BLDG SYSTEMS
FILE NO.: AF0609 C-MP02DI

US Army Corps of Engineers
Transatlantic Programs Center

AFGHAN NATIONAL POLICE COMPANY COMPOUND
VARIOUS, AFGHANISTAN
MAINTENANCE/WAREHOUSE
RISER DIAGRAMS

SHEET REFERENCE NUMBER:
C
P-2

AF0609B-MP02DI.dwg
3/31/2007 10:28 PM
AED AED, USACE

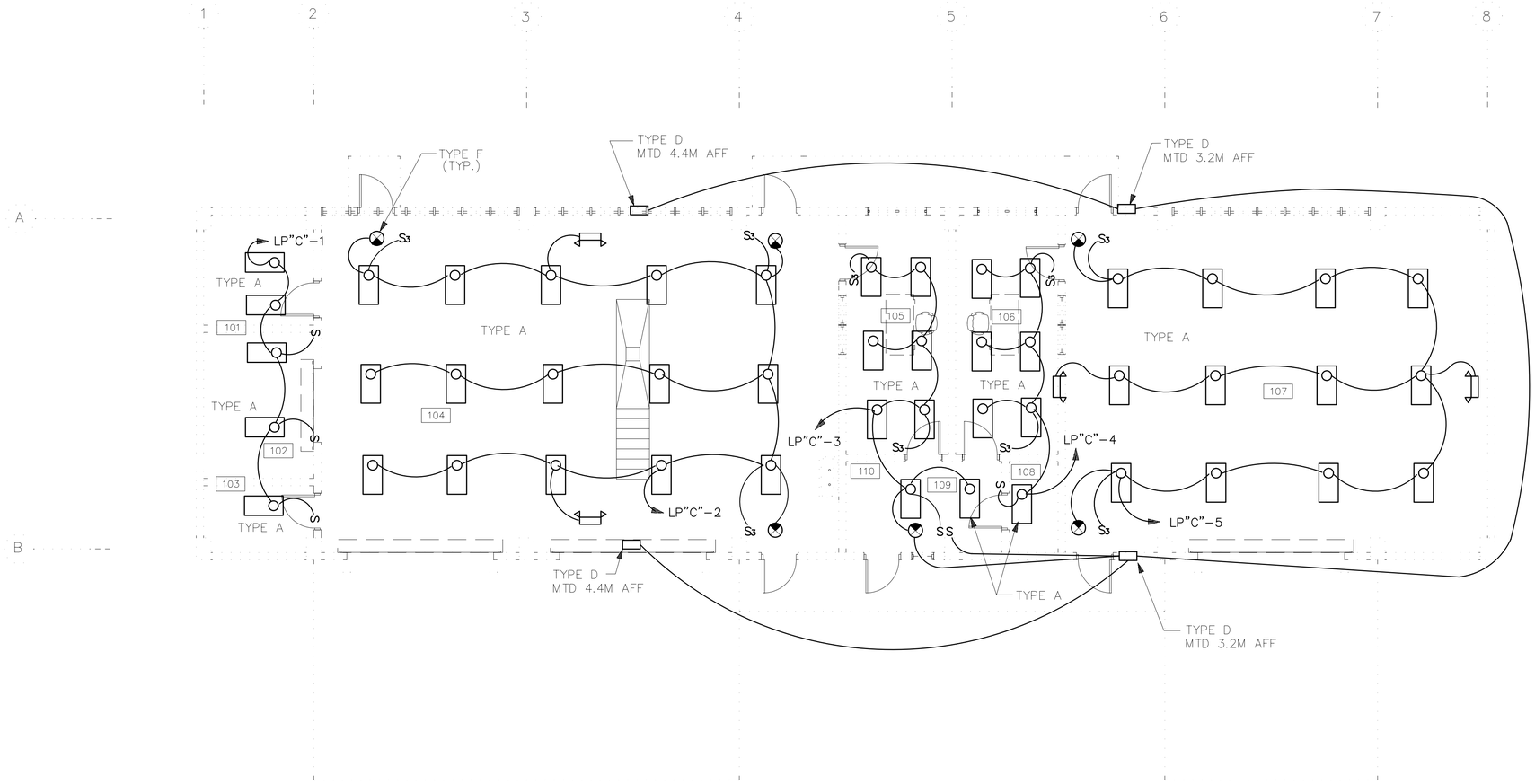

LIGHTING PLAN

SCALE+1:75

NOTES:

1. FOR LEGEND, ABBREVIATIONS, AND LIGHT FIXTURE SCHEDULE SEE DRAWING SE-1.
2. FOR LIGHT FIXTURE DETAILS SEE DRAWING SE-2 AND SE-3.
3. FOR PANEL SCHEDULE SEE DRAWING E-3.
4. COORDINATE LOCATION OF ALL ELECTRICAL DEVICES AND EQUIPMENT WITH ALL OTHER TRADES.
5. ALL WIRING SHALL BE IN CONCEALED OR SURFACE MOUNTED METAL CONDUIT.
6. PROVIDE MANUFACTURER'S CLEAR GLOBE WITH LIGHT FIXTURE.

UNLESS OTHERWISE NOTED, LINEAR DIMENSIONS SHOWN ARE IN MILLIMETERS.

SYMBOL	DESCRIPTION	DATE	APR

DESIGNED BY: DLF
DWN BY: FHG
CHK BY: RMS
DATE: 01-25-07
SUBMITTED BY: MICHAEL HOWELL
CHIEF, FDTD BLDGS SYSTEMS
FILE NO.: AF0609 C-EL01PN

US Army Corps of Engineers
Transatlantic Programs Center

AFGHAN NATIONAL POLICE COMPANY COMPOUND
VARIOUS, AFGHANISTAN
MAINTENANCE/WAREHOUSE
LIGHTING PLAN

SHEET REFERENCE NUMBER:
C
E-1

AF0609C-e01pn.dwg
4/1/2007 5:10 PM
AED AED, USACE

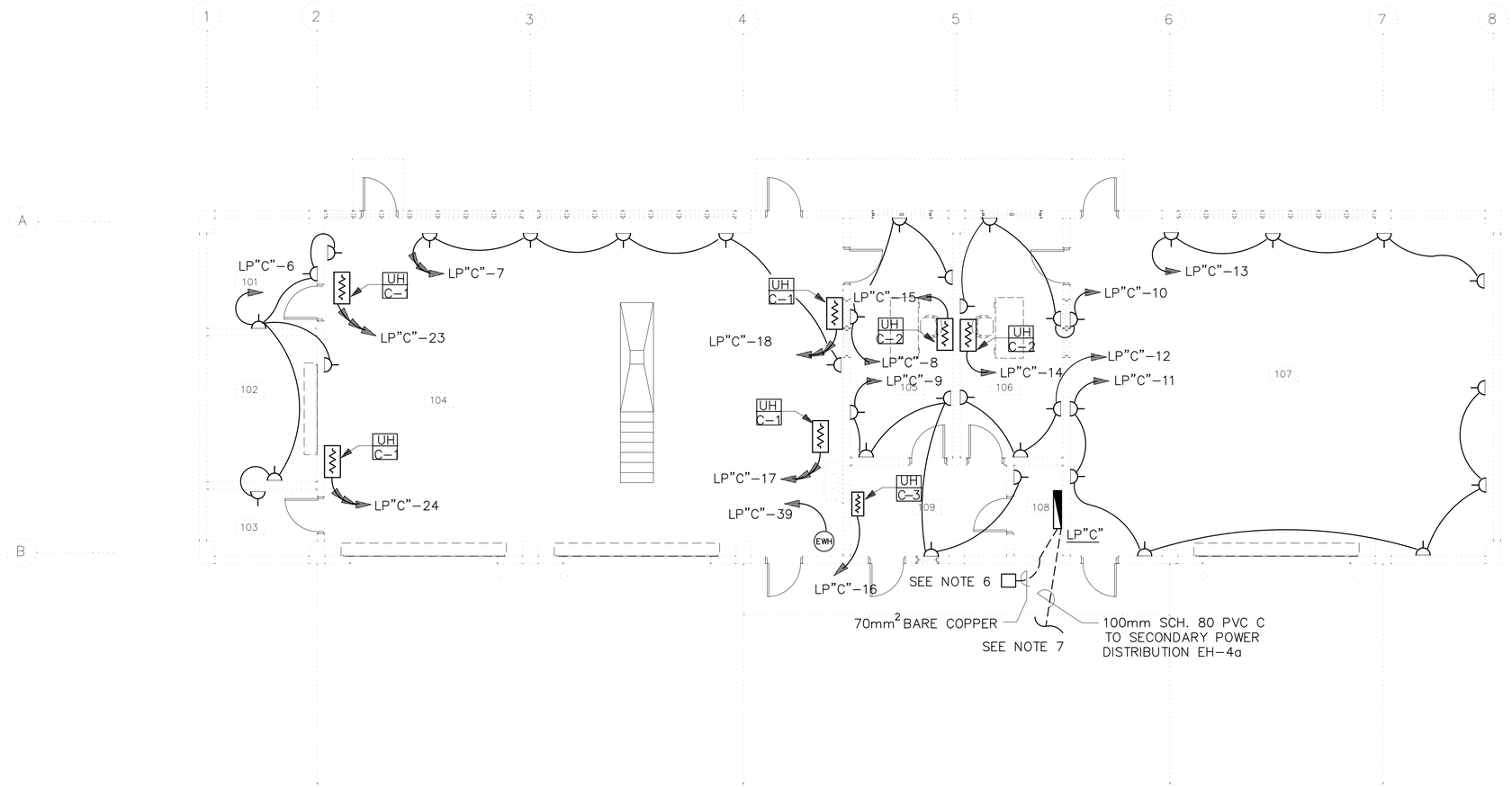

POWER PLAN

SCALE+1:75

NOTES:

1. FOR LEGEND AND ABBREVIATIONS SEE DRAWING SE-1.
2. FOR PANEL SCHEDULE SEE DRAWING E-4.
3. COORDINATE LOCATION OF ALL ELECTRICAL DEVICES AND EQUIPMENT WITH ALL OTHER TRADES.
4. ALL WIRING SHALL BE IN CONCEALED OR SURFACE MOUNTED METAL CONDUIT.
5. EXHAUST FANS SHALL BE CONTROLLED BY SEPERATE SWITCH, SEE DETAIL ON SM-3.
6. FOR GROUNDING ROD ACCESS BOX DETAIL SEE SHEET SE-3.
7. FOR CONTINUATION TO SECONDARY DISTRIBUTION SYSTEM SEE DRAWINGS XE-1 AND XE-2.

UNLESS OTHERWISE NOTED, LINEAR DIMENSIONS SHOWN ARE IN MILLIMETERS.

REVISIONS			
SYMBOL	DESCRIPTION	DATE	APR
		03/04/2007	

DESIGNED BY: DLF
DATE: 01-25-07
DWN BY: FHG
SUBMITTED BY: MICHAEL HOWELL
CHK BY: RMS/HMH
FILE NO.: AF0609 C-EP02PN

US Army Corps of Engineers
Transatlantic Programs Center

AFGHAN NATIONAL POLICE COMPANY COMPOUND
VARIOUS, AFGHANISTAN
MAINTENANCE/WAREHOUSE
POWER PLAN

SHEET REFERENCE NUMBER:
C
E-2

AF0609C-ep02pn.dwg
4/1/2007 8:42 AM
AED AED, USACE

PANELBOARD LP "C" SURFACE MOUNTED MINIMUM 22,000 ASYM. A.I.C. MIN.

_____ AMP. MAIN LUGS (OR) 225 AMP. MAIN BREAKER W/ 225 AMP. TRIP

CIRCUIT BREAKER TYPE 380/220 VOLTS 3 PHASE 4 WIRE 400 AMP. BUS

CKT. NO.	TRIP AMPS	NO. POLES	WIRE MM2	GND MM2	CONDUIT MM	LOAD SERVED	LOAD-V.A. A0	B0	C0	LOAD-V.A. A0	B0	C0	LOAD SERVED	CONDUIT MM	GND MM2	WIRE MM2	NO. POLES	TRIP AMPS	CKT. NO.
1	20	1	4	4	20	LIGHTING RMS. 101-103	750			2400			LIGHTING; RMS 104	20	4	4	1	20	2
3	20	1	4	4	20	LIGHTING RMS. 109-110,105,EXTER		1760			1050		LIGHTING; RMS 106,108	20	4	4	1	20	4
5	20	1	4	4	20	LIGHTING RMS. 107			1900			1080	RECEP-RM 101-104	20	4	4	1	20	6
7	20	1	4	4	20	RECEPTACLES-RM 104	900			540			RECEPTACLES-RM 105	20	4	4	1	20	8
9	20	1	4	4	20	RECEPTACLES-RM 105,109,108		900			720		RECEPTACLES-RM 106,107	20	4	4	1	20	10
11	20	1	4	4	20	RECEPTACLES-RM 107			1080			540	RECEPTACLES-RM 106	20	4	4	1	20	12
13	20	1	4	4	20	RECEPTACLES-RM 107	720			4000			UH-C-1 RM 106	20	6	6	1	30	14
15	30	1	6	6	20	UH-C-1 RM 105		4000			4000		UH-C-1 RM 110	20	6	6	1	30	16
17	40	3	10	10	20	UH-C-2 RM 104			6770			6770	UH-C-2 RM 104	20	10	10	3	40	18
19	↓	↓	↓	↓	↓	↓	6770			6770			↓	↓	↓	↓	↓	↓	20
21	↓	↓	↓	↓	↓	↓		6770			6770		↓	↓	↓	↓	↓	↓	22
23	40	3	10	10	20	UH-C-2 RM 104			6770			6770	UH-C-2 RM 104	20	10	10	3	40	24
25	↓	↓	↓	↓	↓	↓	6770			6770			↓	↓	↓	↓	↓	↓	26
27	↓	↓	↓	↓	↓	↓		6770			6770		↓	↓	↓	↓	↓	↓	28
29	40	3	10	10	20	SPARE			2915			1250	SPARE	20	4	4	1	20	30
31	↓	↓	↓	↓	↓	↓	2915			2016			SPARE	20	4	4	3	20	32
33	↓	↓	↓	↓	↓	↓		2915			2016		↓	↓	↓	↓	↓	↓	34
35	20	1				SPARE						2016	↓	↓	↓	↓	↓	↓	36
37	20	1				SPARE							SPACE				3		38
39	20	1	4	4	20	RECEPTACLES-RM 104			1500								↓		40
41		1				SPACE											↓		42
							18825	23115	19435	22496	21326	18426							

TOTAL CONN. LOAD 123.6 KVA 80 % DEMAND = ESTIMATED DEMAND LOAD: 98.9 KVA

TOTAL CONN. LOAD 98.9 KW 80 % DEMAND = ESTIMATED DEMAND LOAD: 79.0 KW

TOTAL CONN. LOAD PER PHASE (KVA): A0 41.3 B0 44.4 C0 37.9

SUPPLIED FROM POWER PLANT SWITCHBOARD

UNLESS OTHERWISE NOTED, LINEAR DIMENSIONS SHOWN ARE IN MILLIMETERS.

*	REVISIONS	03/04/2007
SYMBOL	DESCRIPTION	DATE APR

DESIGNED BY: DLF
DATE: 01-25-07
DWN BY: FHG
SUBMITTED BY: MICHAEL HOWELL PROJECT MGR BLDG SYSTEMS
CHK BY: RMS
FILE NO.: AF0609 C-EL03SC

US Army Corps of Engineers
Transatlantic Programs Center

AFGHAN NATIONAL POLICE COMPANY COMPOUND
VARIOUS, AFGHANISTAN
MAINTENANCE/WAREHOUSE
PANEL SCHEDULE

SHEET REFERENCE NUMBER:
C
E-3

AF0609C-el03sc.dwg
4/1/2007 9:09 AM
AED AED, USACE

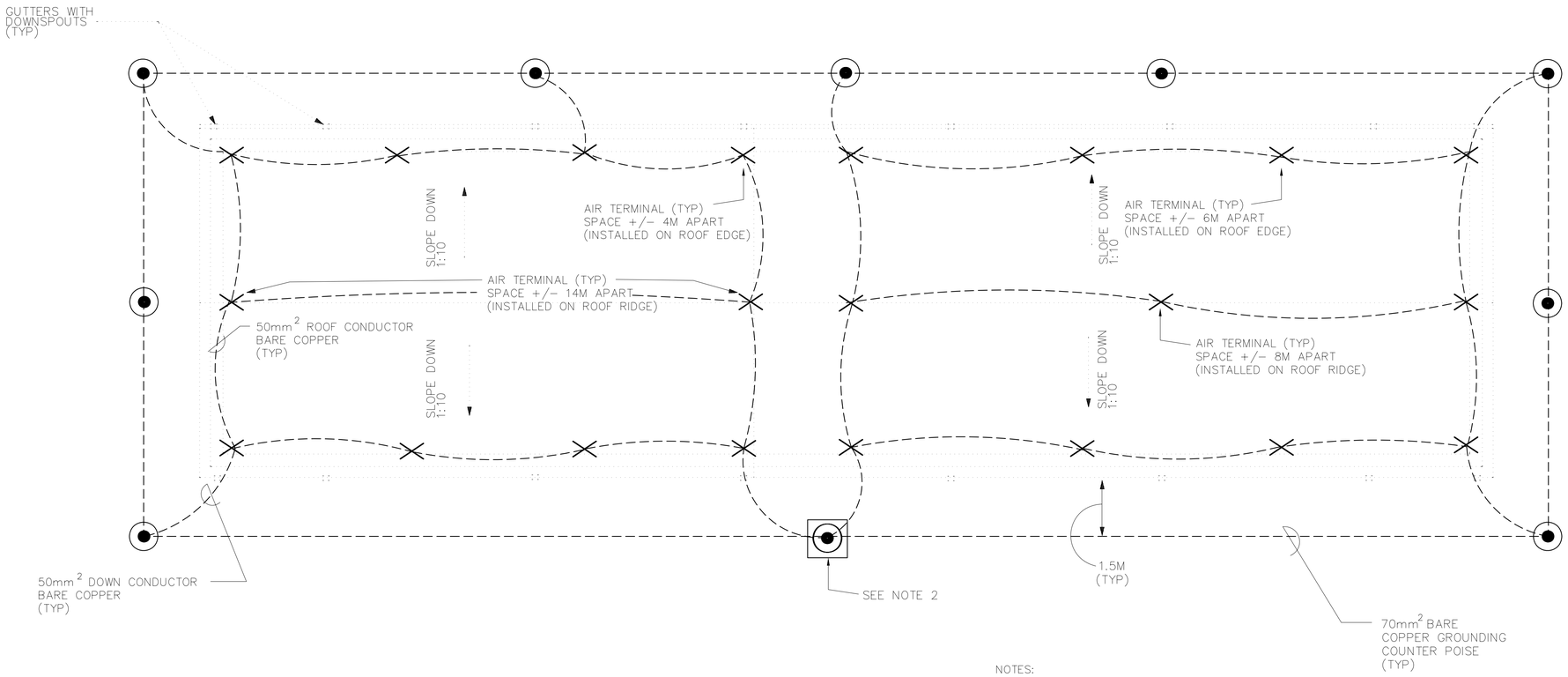

LIGHTNING PROTECTION

SCALE=1:75

NOTES:

1. FOR LEGEND, ABBREVIATIONS SEE DRAWING SE-1.
2. FOR GROUNDING ROD ACCESS BOX AND GROUNDING ROD INSTALATION DETAILS SEE SHEET SE-3.
3. FOR LIGHTNING PROTECTION INSTALATION DETAILS SEE SHEET SE-7.
4. CONTRACTOR SHALL INSTALL LIGHTNING PROTECTION SYSTEM IN ACCORDANCE WITH THE MOST CURRENT ADDITION OF THE NFPA 780.

3 1.50 0 3 4.5
1:75

UNLESS OTHERWISE NOTED, LINEAR DIMENSIONS SHOWN ARE IN MILLIMETERS.

SYMBOL	DESCRIPTION	DATE	APR

DESIGNED BY: DLF
DATE: 01-25-07
DWN BY: FHG
SUBMITTED BY: MICHAEL HOWELL
CHK BY: RMS
FILE NO.: AF0609C-EL04PN

US Army Corps of Engineers
Transatlantic Programs Center

AFGHAN NATIONAL POLICE COMPANY COMPOUND
VARIOUS, AFGHANISTAN

MAINTENANCE/WAREHOUSE
GROUNDING AND LIGHTNING PROTECTION PLAN

SHEET REFERENCE NUMBER:
C
E-4

AF0609C-el04pn.dwg
4/1/2007 9:11 AM
AED AED, USACE

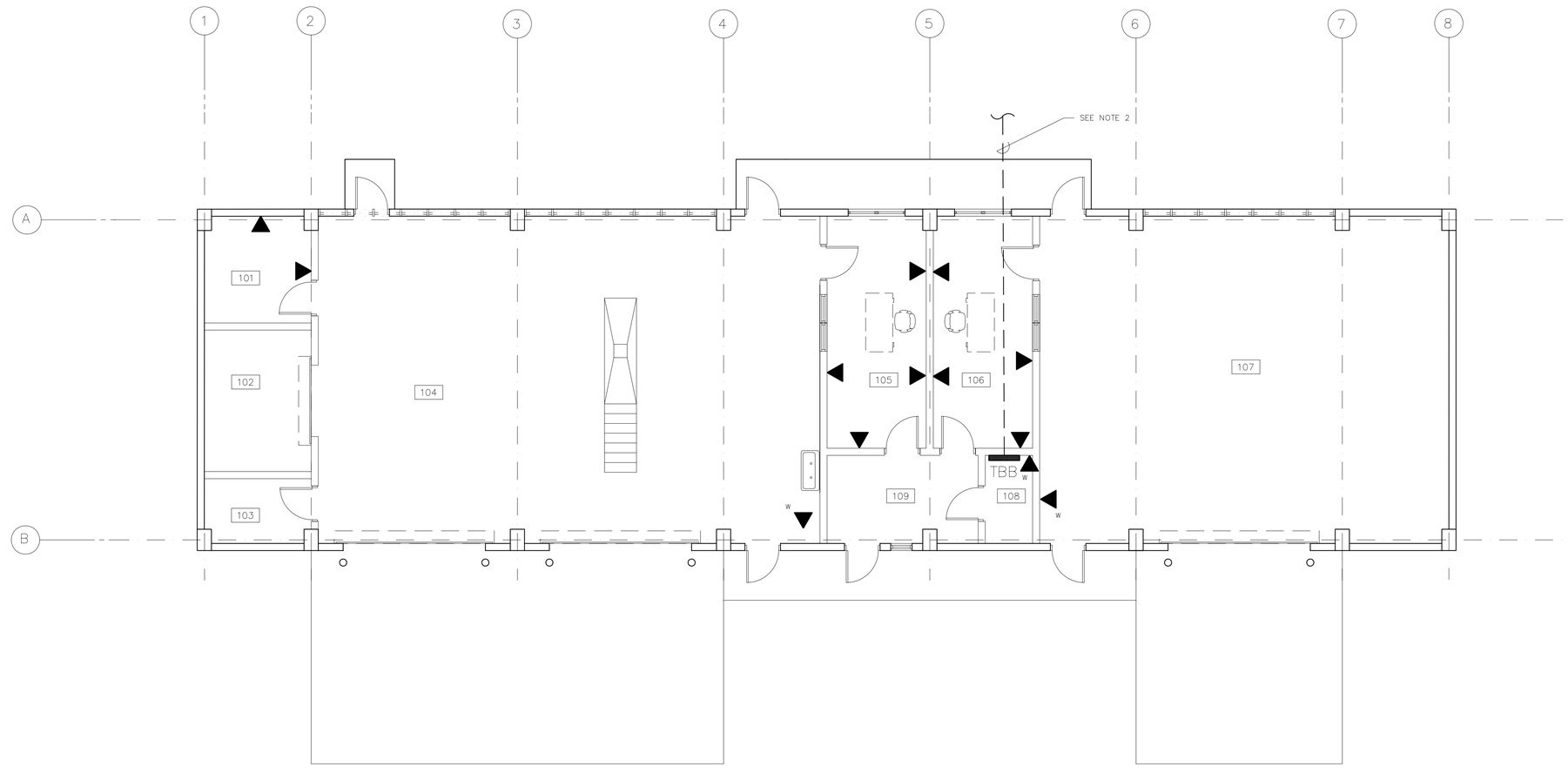

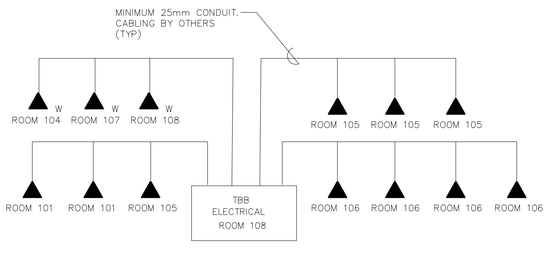

TELEPHONE RISER DIAGRAM

COMMUNICATIONS PLAN
SCALE+1:75

NOTES:

1. FOR LEGEND AND ABBREVIATIONS SEE DRAWING SE-1.
2. STUB OUT 50mm SCH 80 PVC C 2M TO BE TIED INTO SITE COMM HAND HOLE AND DIRECT BURIED DUCT SYSTEM.

UNLESS OTHERWISE NOTED, LINEAR DIMENSIONS SHOWN ARE IN MILLIMETERS.

SYMBOL	DESCRIPTION	DATE	APR

DESIGNED BY: DLF
DATE: 01-25-07
DWN BY: FHG
SUBMITTED BY: MICHAEL HOWELL
CHIEF, FDTD BLDG SYSTEMS
CHK BY: RMS
FILE NO.: AF0609 C-TC01PN

US Army Corps of Engineers
Transatlantic Programs Center

AFGHAN NATIONAL POLICE COMPANY COMPOUND
VARIOUS, AFGHANISTAN
MAINTENANCE/WAREHOUSE
COMMUNICATIONS PLAN

SHEET REFERENCE NUMBER:
C
TC-1

AF0609C-tc01pn.dwg
4/1/2007 9:13 AM
AED AED, USACE

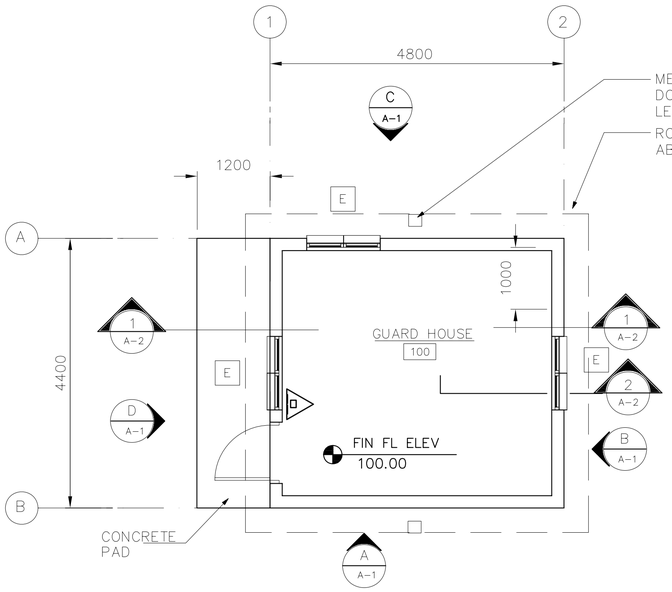

FLOOR PLAN
SCALE=1:50

PROVIDE PORTABLE FIRE EXTINGUISHER, ABC

DRY CHEMICAL 4A:60B:C

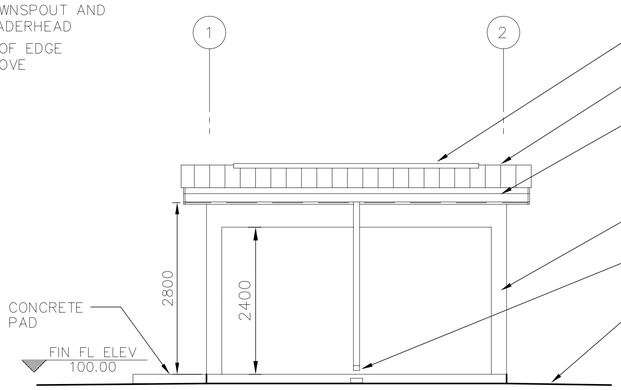

ELEVATION
SCALE=1: 50

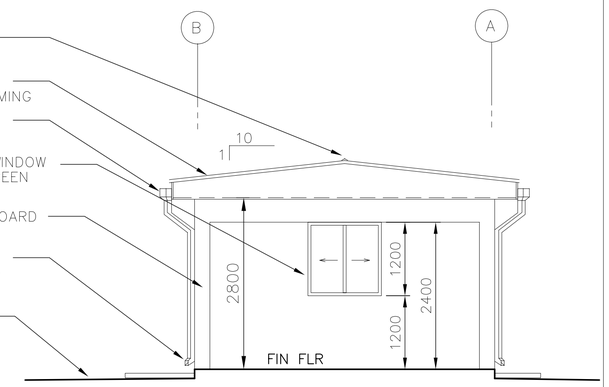

ELEVATION
SCALE=1: 50

NOTE:
1. Provide window units meeting UL 752, level 5, but no less than 16 mm laminated single glazed. This standard shall apply to all window units within guard shack, guard house, guard tower, and guard rooms in Headquarters Building.

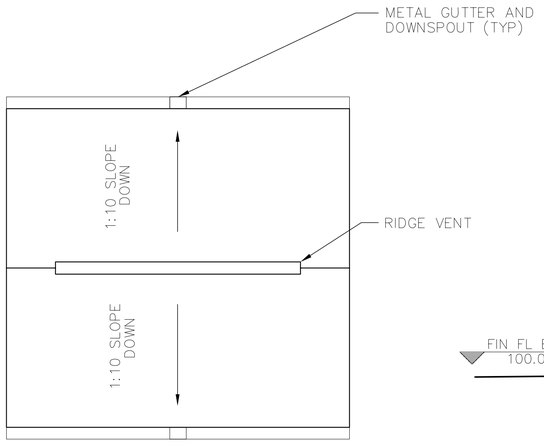

ROOF PLAN
SCALE= 1:50

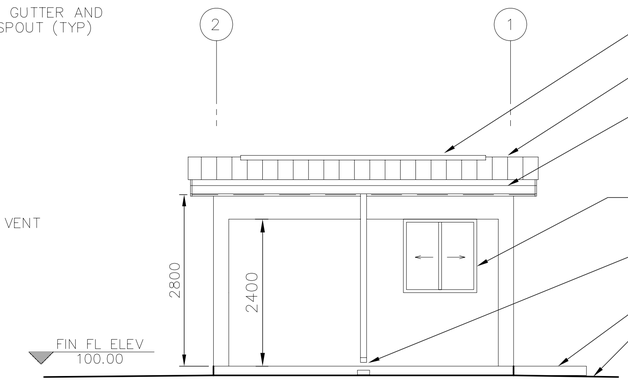

ELEVATION
SCALE=1: 50

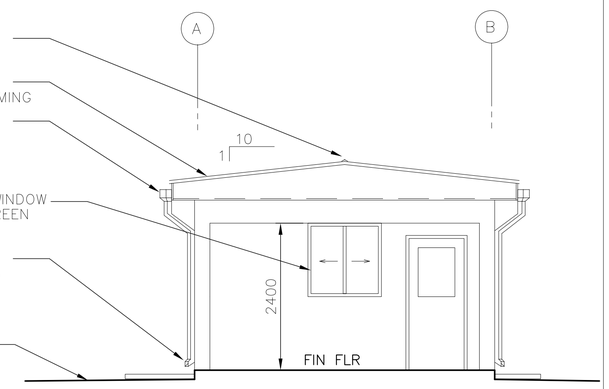

ELEVATION
SCALE=1: 50

1 0 1 2 3 4
1:50

UNLESS OTHERWISE NOTED, LINEAR DIMENSIONS SHOWN ARE IN MILLIMETERS.

SYMBOL	REVISIONS	DESCRIPTION	DATE	APR
			03/04/2007	

DESIGNED BY: YSK
DATE: 01-25-07
DWN BY: JSG/YSK
SUBMITTED BY: PHILIP L. DINELLO, CHIEF, PD PROJECTS DEV.
CHK BY: YSK/HMH
FILE NO.: AF0609 D-AR01PN

US Army Corps of Engineers
Transatlantic Programs Center

AFGHAN NATIONAL POLICE COMPANY COMPOUND
VARIOUS, AFGHANISTAN
GUARD HOUSE
FLOOR PLAN, ROOF PLAN, AND ELEVATIONS

SHEET REFERENCE NUMBER:
D
A-1

af0609d-ar01pn.dwg
4/1/2007 4:19 PM
AED AED, USACE

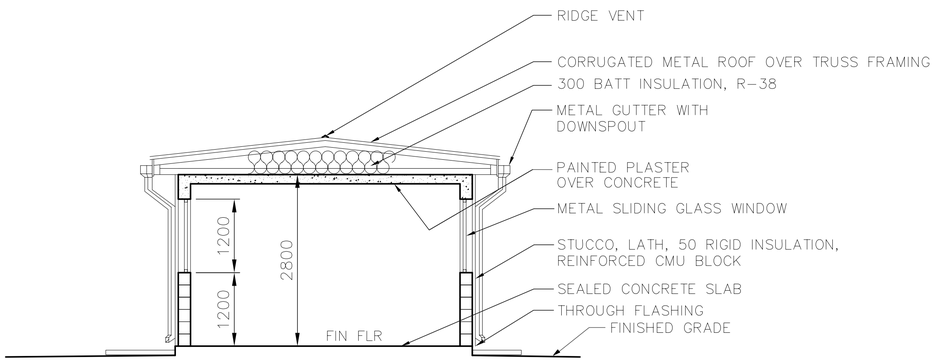

SECTION 1 (A-1 / A-2)
SCALE 1 : 50

1:50

UNLESS OTHERWISE NOTED, LINEAR DIMENSIONS SHOWN ARE IN MILLIMETERS.

SYMBOL	REVISIONS	DATE
*		03/04/2007

DESIGNED BY: YSK
DATE: 01-25-07
DWN BY: JSG
SUBMITTED BY: PHILIP L. DINELLO, PROJ. MGR. PACTES DEV
CHK BY: HMH
FILE NO.: AF0609 D-AR02SC

US Army Corps of Engineers
Transatlantic Programs Center

AFGHAN NATIONAL POLICE COMPANY COMPOUND
VARIOUS, AFGHANISTAN
GUARD HOUSE
BUILDING SECTION

SHEET REFERENCE NUMBER:
D
A-2

AF0609d-ar02sc.dwg
4/1/2007 4:21 PM
AED, AED, USACE

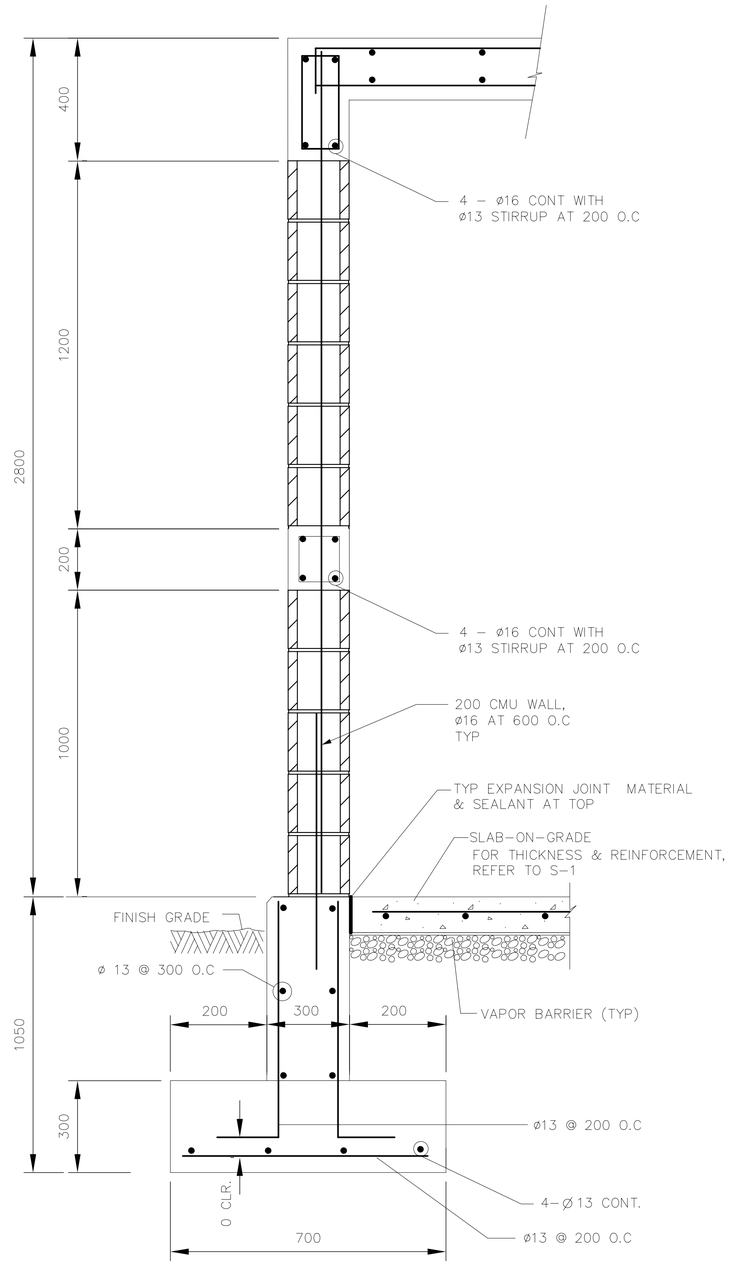

TYP EXTERIOR WALL SECTION

NOT TO SCALE

1 S–1 | S–1

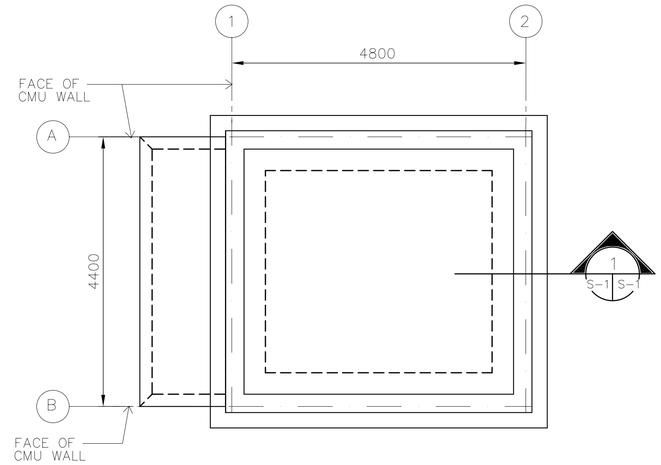

SLABS ON GRADE (TYP):

150 MM THK CONC SLAB ON GRADE WITH ø13 AT 300 MM ON CENTER TWO WAYS. 150 MM THK CAPILLARY WATER BARRIER ON 95% COMPACTED GROUND.

FOUNDATION AND SLAB PLAN

SCALE= 1:50

N

PLAN NORTH

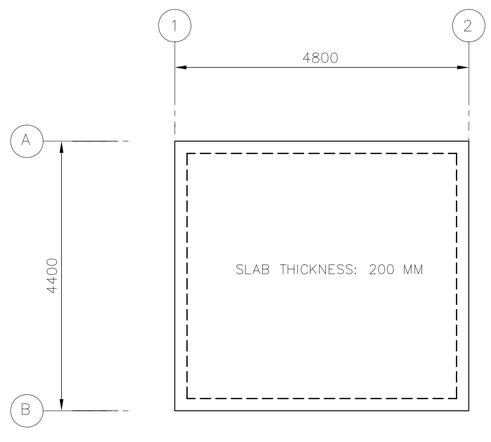

TOP BAR: ø13 AT 300 MM ON CENTER TWO WAYS
BOTTOM BAR: ø 13 AT 300 MM ON CENTER TWO WAYS.

ROOF FRAMING AND SLAB PLAN

SCALE= 1:50

GENERAL NOTES

1. DESIGN LOADS (SERVICE)

   LIVE LOADS:

   ROOF: 1.0 KPA (20 PSF)
   OTHERS: 4.8 KPA (100 PSF)
   8.9 KN (2.0 K) CONCENTRATED LOAD

   WIND LOADS PER IBC–2003

   USING A "3–SECOND" WIND VELOCITY OF 125 KPH
   EXPOSURE C AND IMPORTANCE FACTOR I=1.0

   EARTHQUAKE LOADS PER IBC–2003:

   USING A SEISMICITY: Ss=1.65g AND S_1 =0.75g

2. MATERIALS:

   CONCRETE: 28 MPa (4 KSI)
   CYLINDER STRENGTH AT 28 DAYS

   REINFORCING: ASTM A615 GRADE 60 (60 KSI)

   WELDED WIRE FABRIC: ASTM A185

   CONCRETE MASONRY UNITS:
   ASTM C90, TYPE I (NORMAL WEIGHT, MOISTURE CONTROLLED) MORTAR, ASTM C270, TYPE S
   GROUT, ASTM C 476
   JOINT REINFORCEMENT, LADDER TYPE

3. WORK THESE STRUCTURAL DRAWINGS WITH THE STANDARD–DETAILS DRAWINGS.

4. A RELATIVE (DATUM) FINISH FLOOR ELEVATION EQUAL TO 100.00 M. IS USED AS REFERENCE ELEVATION FOR ALL STRUCTURAL DRAWINGS. REFER TO CIVIL DRAWINGS FOR ACTUAL FINISH ELEVATIONS.

5. FOUNDATIONS ARE DESIGNED USING AN ALLOWABLE BEARING PRESSURE OF 0.75 KG/SQ. CM (1500 PSF), AND BOTTOM OF FOOTINGS ARE PLACED AS SHOWN ON DRAWINGS. GEOTECHNICAL INVESTIGATION SHALL CONFIRM BEARING CAPACITY TO BE NO LESS THAN 0.75 KG/SQ CM. IF GEOTECHNICAL INVESTIGATION SHOWS LESS THAN 0.75 KG/SQ CM THE CONTRACTOR SHALL REDESIGN FOOTINGS BASED ON THE GEOTECHNICAL INVESTIGATION. SEE SPECIFICAITON 01015 PARAGRAPH, GEOTECHNICAL, FOUNDATION AND SURVEY.

CRITICAL NOTES

1. ALL CELLS OF CMU WALL SHALL BE FULLY GROUTED AND PROVIDE 16 MM RE–BARS AT 60 CM ON CENTER.

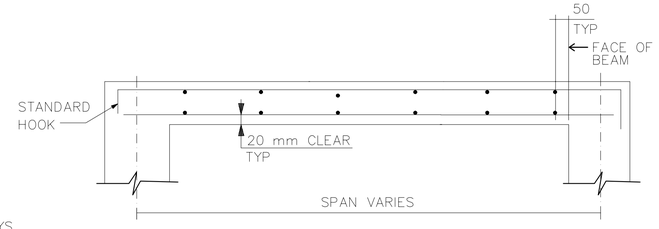

TYPICAL SECTIONS FOR STRUCTURAL SLABS

NOT TO SCALE

1 0 1 2 3 4
1:50

UNLESS OTHERWISE NOTED, LINEAR DIMENSIONS SHOWN ARE IN MILLIMETERS.

*	REVISIONS		
SYMBOL	DESCRIPTION	DATE	APR
		03/04/2007	

DESIGNED BY: JK
DATE: 01–25–07
DWN BY: JK
SUBMITTED BY: PHILLIP L. DINELLO CHIEF, PD FACILITIES DEV
CHK BY: JK
FILE NO.: AF0609 D–SB01PN

US Army Corps of Engineers
Transatlantic Programs Center

AFGHAN NATIONAL POLICE COMPANY COMPOUND
VARIOUS, AFGHANISTAN
GUARD HOUSE
FOUNDATION AND SLAB PLAN
ROOF FRAMING PLAN

SHEET REFERENCE NUMBER:
D
S–1

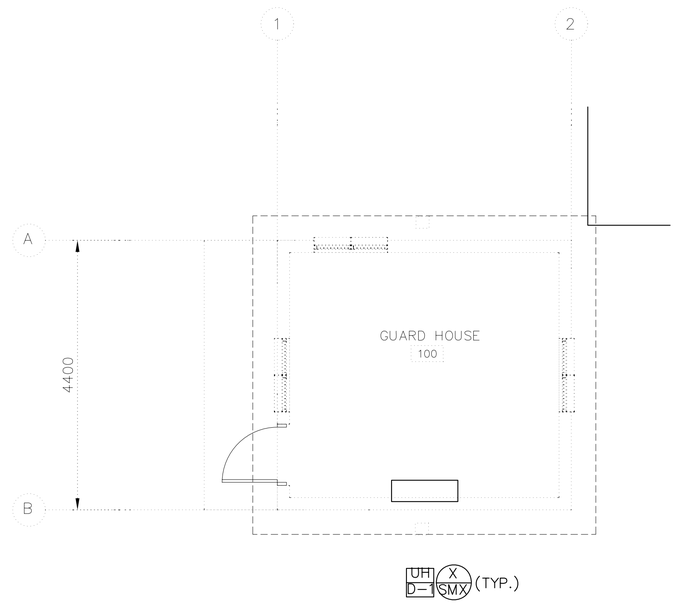

HAVC PLAN
SCALE: 1:50

UNLESS OTHERWISE NOTED, LINEAR DIMENSIONS SHOWN ARE IN MILLIMETERS.

SYMBOL	DESCRIPTION	DATE	APR

DESIGNED BY: JMR
DWN BY: JMR
CHK BY: RMS
DATE: 01-25-07
SUBMITTED BY: MICHAEL HOWELL
CHIEF, ELECTRICAL SYSTEMS
FILE NO.: AF0609 D MH01PN

US Army Corps of Engineers
Transatlantic Programs Center

AFGHAN NATIONAL POLICE COMPANY COMPOUND
VARIOUS, AFGHANISTAN
GUARD HOUSE
HVAC PLAN

SHEET REFERENCE NUMBER:
D
M-1

AF0609D-MH01PN.dwg
4/1/2007 10:20 AM
AED AED, USACE

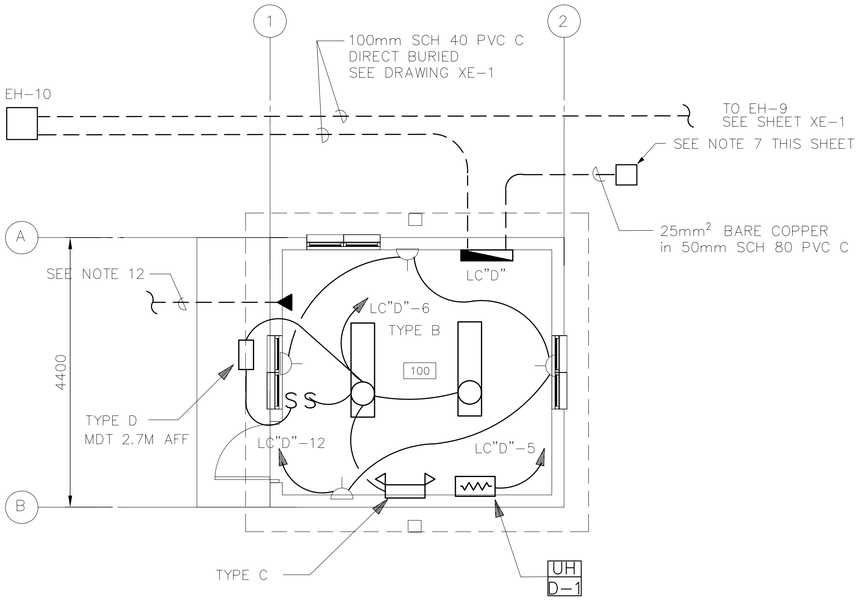

LIGHTING & POWER
NOT TO SCALE

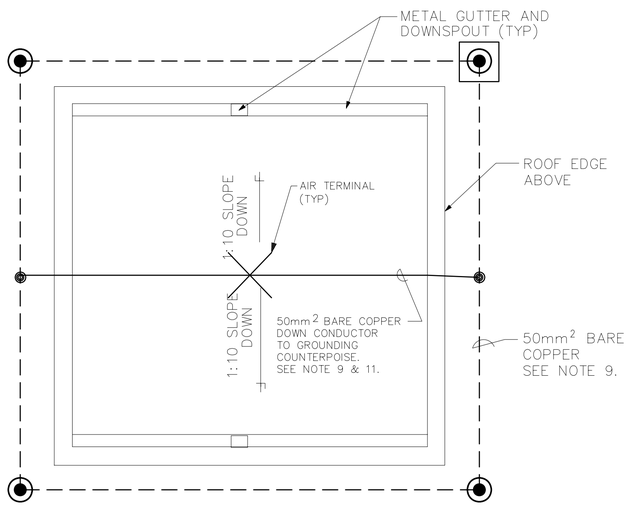

LIGHTNING PROTECTION
NOT TO SCALE

NOTES:

1. FOR LEGEND AND ABBREVIATIONS SEE DRAWING SE-1.
2. EMERGENCY LIGHT SHALL BE CONNECTED AHEAD OF LIGHT SWITCH.
3. FOR LIGHT FIXTURE SCHEDULE SEE DRAWING SE-1.
4. COORDINATE LOCATION OF ALL ELECTRICAL FIXTURES AND MECHANICAL EQUIPMENT WITH ALL OTHER TRADES.
5. ALL WIRING SHALL BE IN CONCEALED OR SURFACE MOUNTED METAL CONDUIT.
6. SEE DRAWING XE-1 FOR LOCATION OF GUARD SHACK AND GUARD TOWER.
7. FOR GROUNDING ROD ACCESS BOX DETAIL SEE SHEET SE-3.
8. FOR SECONDARY DISTRIBUTION SYSTEM (SDS) SEE SHEET XE-1 & XE-2. FOR SDS DETAILS SEE SHEET SE-4.
9. GROUNDING COUNTERPOISE 760 BELOW FINISHED GRADE (BFG) 1.5M FROM BUILDING FOUNDATION. ALL CONNECTIONS SHALL BE EXOTHERMIC WELD. SEE DETAILS ON SHEET SE-3 AND SE-7.
10. SERVICE FEEDERS FOR GUARD SHACK (LC-F1) AND GUARD TOWER (LC-E2) SHALL BE ROUTED THROUGH 100mm C TO EH-10 AND THEN TO LC-F1 AND LC-E2. THE APPROXIMATE CABLE LENGHTS FOR LC-F1 SERVICE FEEDER IS 50M, AND 80M FOR LC-E2.
11. FOR LIGHTNING PROTECTION DETAILS SE SHEET SE-7.
12. PROVIDE SCH 80 25mm C STUBBED OUT 1.5M TO BE TIED INTO SITE COMM CH AND DIRECT BURIED DUCT SYSTEM.

PANELBOARD LP "D" SURFACE MOUNTED MINIMUM 14,000 ASYM. A.I.C. MIN.

_____ AMP. MAIN LUGS (OR) 60 AMP. MAIN BREAKER W/ 60 AMP. TRIP

CIRCUIT BREAKER TYPE 380/220 VOLTS 3 PHASE 4 WIRE 100 AMP. BUS

CKT. NO.	TRIP AMPS	NO. POLES	WIRE MM2	GND MM2	CONDUIT MM	LOAD SERVED	LOAD-V.A. A0	LOAD-V.A. B0	LOAD-V.A. C0	LOAD-V.A. A0	LOAD-V.A. B0	LOAD-V.A. C0	LOAD SERVED	CONDUIT MM	GND MM2	WIRE MM2	NO. POLES	TRIP AMPS	CKT. NO.
1	40	1	16	16	*	PANEL LC"F1" (GUARD SHACK #1)	5400						SPARE				1	20	2
3	40	1	16	16	*	PANEL LC"E2" (GUARD TOWER #2)		6280					SPARE				1	20	4
5	25	1	6	6	20	ELECT UNIT HEATER			4000			310	LIGHTING CIRCUITS	20	4	4	1	20	6
7		3				SPACE							SPARE				1	20	8
9						SPACE							SPARE				1	20	10
11						SPACE						720	RECEPTICAL CIRCUITS	20	4	4	1	20	12
13						SPACE							SPACE						14
15						SPACE							SPACE						16
							5400	6280	4000	0	0	1030							

TOTAL CONN. LOAD 16.7 KVA 80 % DEMAND = ESTIMATED DEMAND LOAD: 13.4 KVA

TOTAL CONN. LOAD 13.4 KW 80 % DEMAND = ESTIMATED DEMAND LOAD: 10.7 KW

TOTAL CONN. LOAD PER PHASE (KVA): A0 5.4 B0 6.3 C0 5.0

SUPPLIED FROM POWER PLANT SWITCHBOARD

* SEE NOTE 10

1 .50 0 1 1.5
1:25

UNLESS OTHERWISE NOTED, LINEAR DIMENSIONS SHOWN ARE IN MILLIMETERS.

SYMBOL	DESCRIPTION	DATE	APR

DESIGNED BY: DLF
DATE: 01-25-07
DWN BY: FHG
SUBMITTED BY: MICHAEL HOWELL
CHIEF, ELECTRICAL SYSTEMS
CHK BY: RMS
FILE NO.: AF0609 D-EL01PN

US Army Corps of Engineers
Transatlantic Programs Center

AFGHAN NATIONAL POLICE COMPANY COMPOUND
VARIOUS, AFGHANISTAN
GUARD HOUSE
LIGHTING & POWER PLAN

SHEET REFERENCE NUMBER:
D
E-1

AF0609D-el01pn.dwg
4/1/2007 10:22 AM
AED, AED, USACE

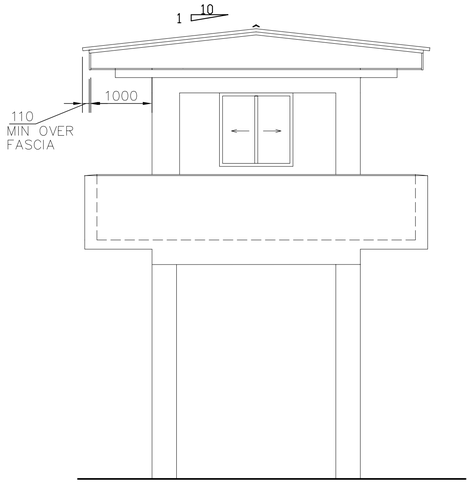

ELEVATION 3 A-1 A-1
SCALE=1:50

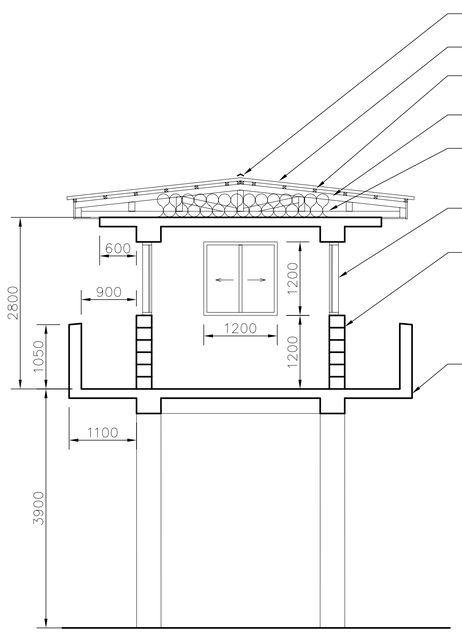

SECTION 2 A-1 A-1
SCALE=1:50

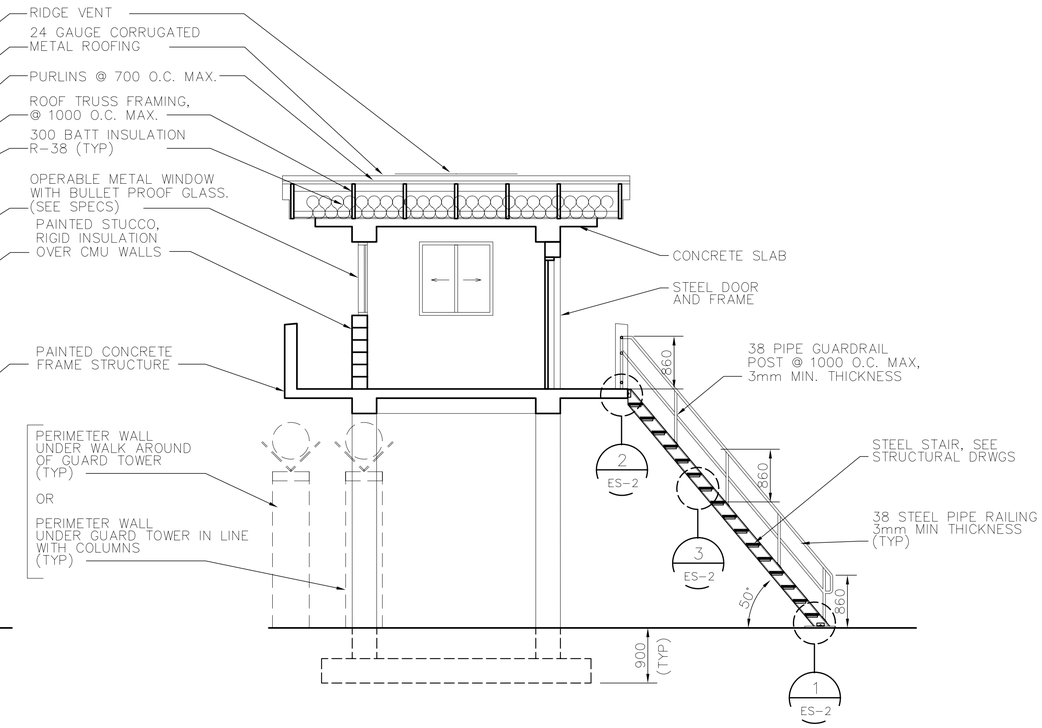

SECTION 1 A-1 A-1
SCALE=1:50

NOTE:
1. Provide window units meeting UL 752, level 5, but no less than 16 mm laminated single glazed. This standard shall apply to all window units within guard shack, guard house, guard tower, and guard rooms in Headquarters Building.

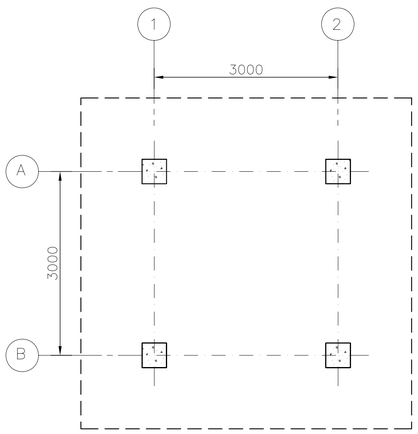

GROUND LEVEL PLAN
SCALE=1:50

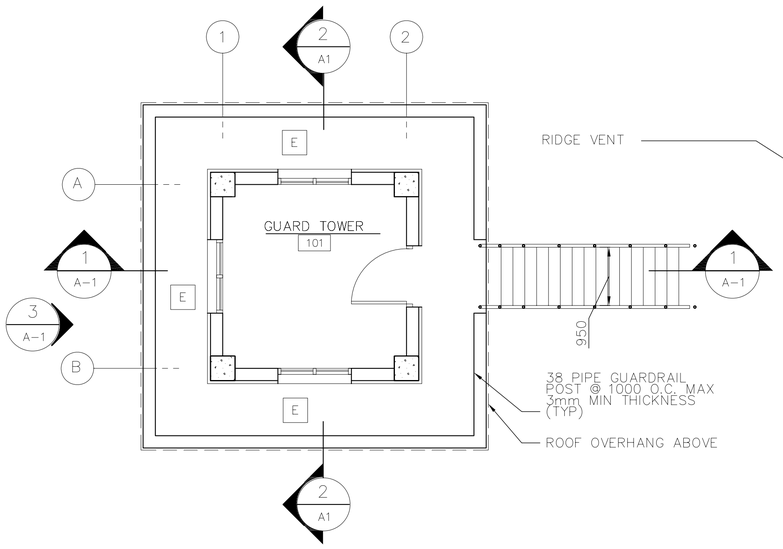

FIRST FLOOR PLAN
SCALE=1:50

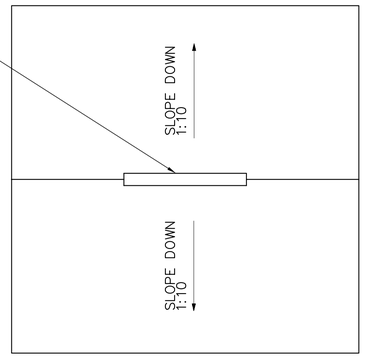

ROOF PLAN
SCALE=1:50

UNLESS OTHERWISE NOTED, LINEAR DIMENSIONS SHOWN ARE IN MILLIMETERS.

REVISIONS			
SYMBOL	DESCRIPTION	DATE	APR
		03/04/2007	

DESIGNED BY: HMH
DATE: 01-25-07
DWN BY: HMH
SUBMITTED BY: PHILIP L. DINELLO
CHIEF, PD PROJECTS DEV
CHK BY: HMH
FILE NO.: AF0609 E-AR01PN

US Army Corps of Engineers
Transatlantic Programs Center

AFGHAN NATIONAL POLICE
COMPANY COMPOUND
VARIOUS, AFGHANISTAN
GUARD TOWER
FLOOR PLAN, SECTION
ELEVATION AND ROOF PLAN

SHEET REFERENCE NUMBER:
E
A-1

AF0609E-ar01pn.dwg
3/29/2007 4:33 PM
AED AED, USACE

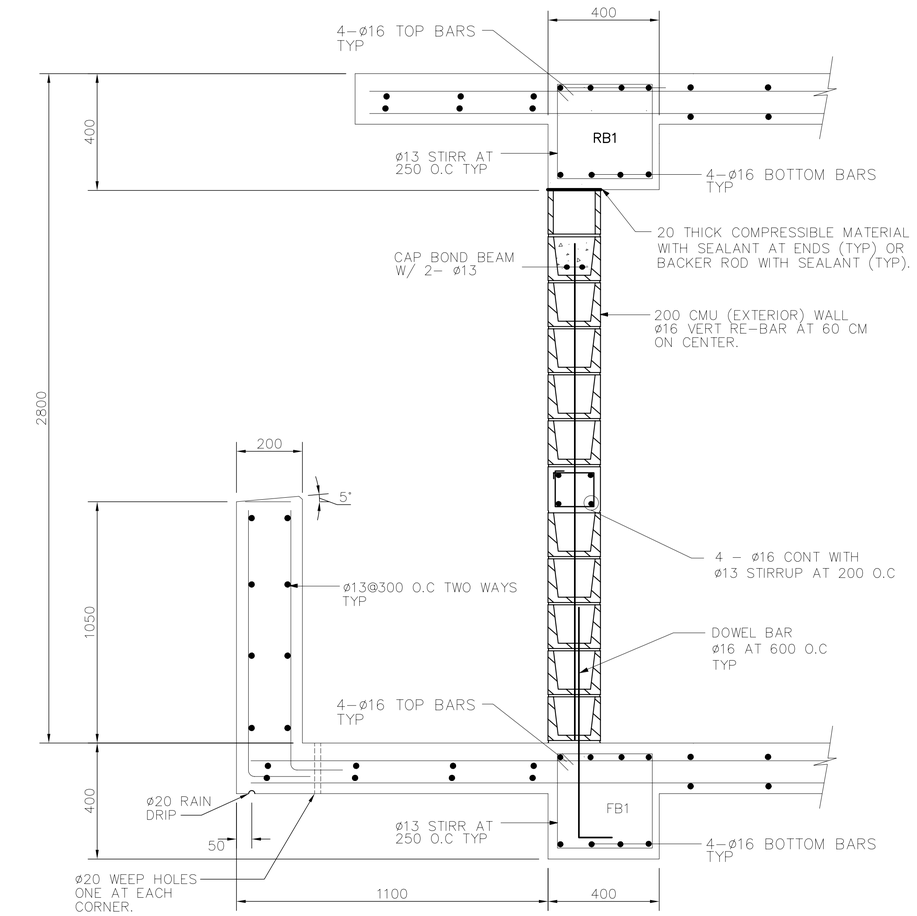

DETAIL "A"
NOT TO SCALE

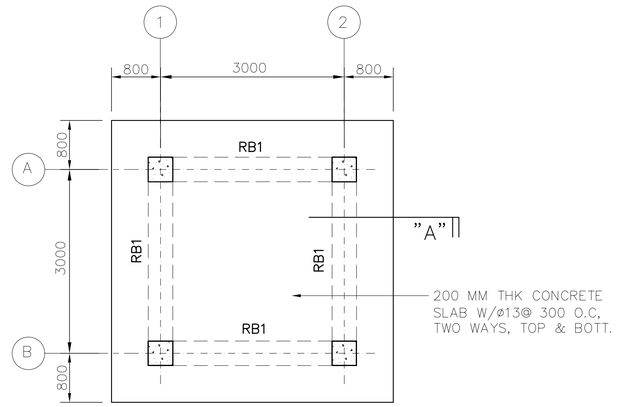

ROOF FRAMING PLAN
SCALE= 1:50

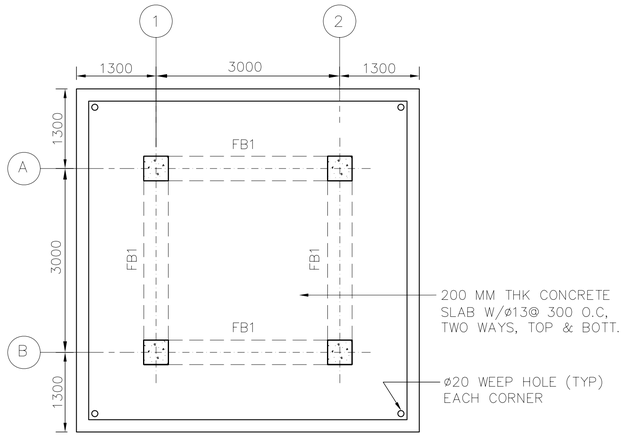

FIRST FLOOR PLAN
SCALE= 1:50

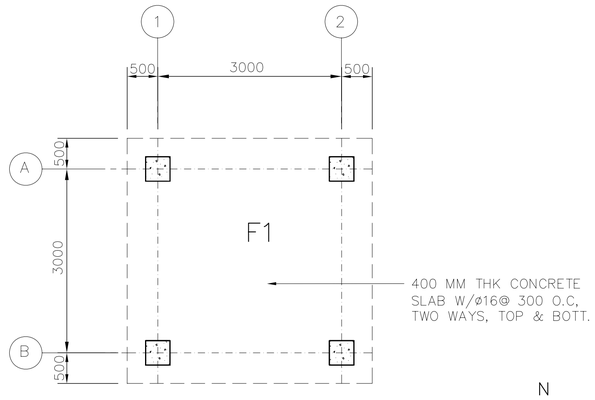

FOUNDATION AND SLAB PLAN
SCALE= 1:50

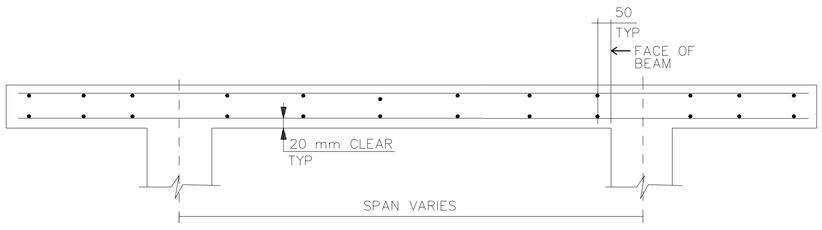

TYPICAL SECTIONS FOR STRUCTURAL SLABS
NOT TO SCALE

GENERAL NOTES

1. DESIGN LOADS (SERVICE)

   LIVE LOADS:

   ROOF: 1.0 KPA (20 PSF)
   OTHERS: 4.8 KPA (100 PSF)
   8.9 KN (2.0 K) CONCENTRATED LOAD

   WIND LOADS PER IBC–2003

   USING A "3–SECOND" WIND VELOCITY OF 125 KPH
   EXPOSURE C AND IMPORTANCE FACTOR I=1.0

   EARTHQUAKE LOADS PER IBC–2003:

   USING A SEISMICITY: Ss=1.65g AND S_1 =0.75g

2. MATERIALS:

   CONCRETE: 28 MPa (4 KSI)
   CYLINDER STRENGTH AT 28 DAYS

   REINFORCING: ASTM A615 GRADE 60 (60 KSI)

   WELDED WIRE FABRIC: ASTM A185

   CONCRETE MASONRY UNITS:
   ASTM C90, TYPE I (NORMAL WEIGHT, MOISTURE CONTROLLED) MORTAR, ASTM C270, TYPE S
   GROUT, ASTM C 476
   JOINT REINFORCEMENT, LADDER TYPE

3. WORK THESE STRUCTURAL DRAWINGS WITH THE STANDARD–DETAILS DRAWINGS.

4. A RELATIVE (DATUM) FINISH FLOOR ELEVATION EQUAL TO 100.00 M. IS USED AS REFERENCE ELEVATION FOR ALL STRUCTURAL DRAWINGS. REFER TO CIVIL DRAWINGS FOR ACTUAL FINISH ELEVATIONS.

5. FOUNDATIONS ARE DESIGNED USING AN ALLOWABLE BEARING PRESSURE OF 0.75 KG/SQ. CM (1500 PSF), AND BOTTOM OF FOOTINGS ARE PLACED AS SHOWN ON DRAWINGS. GEOTECHNICAL INVESTIGATION SHALL CONFIRM BEARING CAPACITY TO BE NO LESS THAN 0.75 KG/SQ CM. IF GEOTECHNICAL INVESTIGATION SHOWS LESS THAN 0.75 KG/SQ CM THE CONTRACTOR SHALL REDESIGN FOOTINGS BASED ON THE GEOTECHNICAL INVESTIGATION. SEE SPECIFICAITON 01015 PARAGRAPH, GEOTECHNICAL, FOUNDATION AND SURVEY.

CRITICAL NOTES

1. ALL CELLS OF CMU WALL SHALL BE FULLY GROUTED AND PROVIDE 16 MM RE–BARS AT 60 CM ON CENTER.

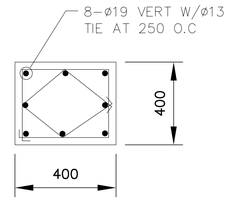

TYP COLUMN
REINFORCING DET

N
PLAN NORTH

1 0 1 2 3 4
1:50

UNLESS OTHERWISE NOTED, LINEAR DIMENSIONS SHOWN ARE IN MILLIMETERS.

SYMBOL	REVISIONS	DESCRIPTION	DATE	APR
*			03/04/2007	

DESIGNED BY: JK
DWN BY: JK
CHK BY: JK
DATE: 01–25–07
SUBMITTED BY: PHILIP L. DINELLO
CHIEF, PROJECT DELIVERIES DEV
FILE NO.: AF0609 E–SB01PN

US Army Corps of Engineers
Transatlantic Programs Center

AFGHAN NATIONAL POLICE COMPANY COMPOUND
VARIOUS, AFGHANISTAN
GUARD TOWER
FOUNDATION AND SLAB PLAN
ROOF FRAMING PLAN

SHEET REFERENCE NUMBER:
E
S–1

AR0609E–SB01PN.dwg
3/29/2007 2:48 PM
AED, AED, USACE

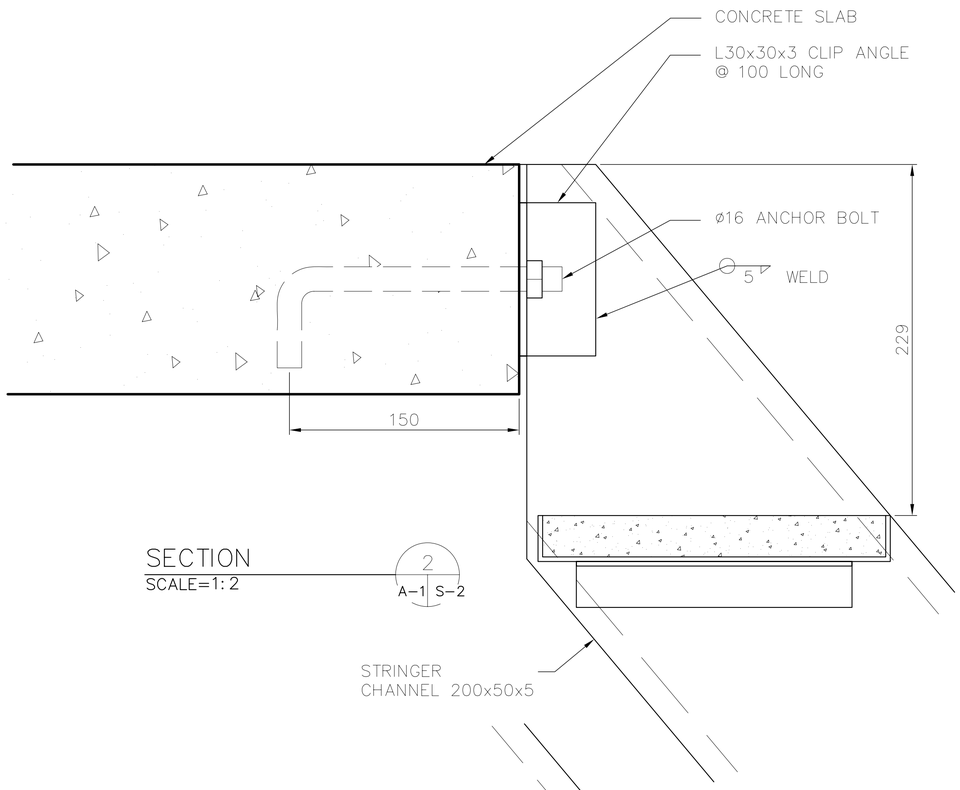

SECTION
SCALE=1:2
2
A-1 S-2

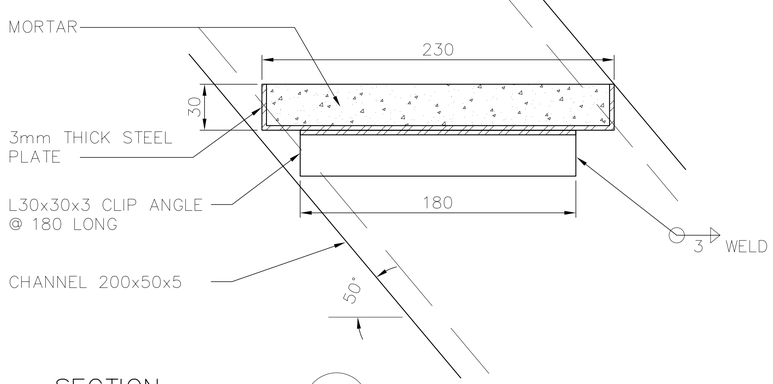

SECTION
SCALE=1:2
3
A-1 S-2

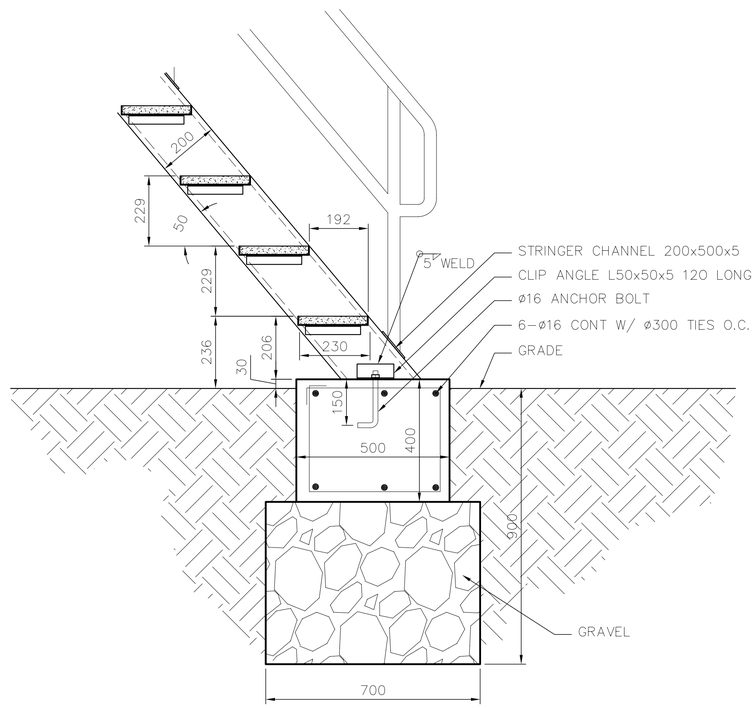

SECTION
SCALE=1:10
1
A-1 S-2

UNLESS OTHERWISE NOTED, LINEAR DIMENSIONS SHOWN ARE IN MILLIMETERS.

REVISIONS			
*	SYMBOL	DESCRIPTION	DATE
			03/04/2007 APR

DESIGNED BY: JK
DATE: 01-25-07
DWN BY: HMH
SUBMITTED BY: PHILIP L. DINELLO PROJECT MGR. PACIFICS DEV.
CHK BY: JK
FILE NO.: AF0609 E-SB02DT

US Army Corps of Engineers
Transatlantic Programs Center

AFGHAN NATIONAL POLICE COMPANY COMPOUND
VARIOUS, AFGHANISTAN
GUARD TOWER
STAIR DETAILS

SHEET REFERENCE NUMBER:
E
S-2

AR0609E-SB02DT.dwg
3/29/2007 7:06 PM
AED, AED, USACE

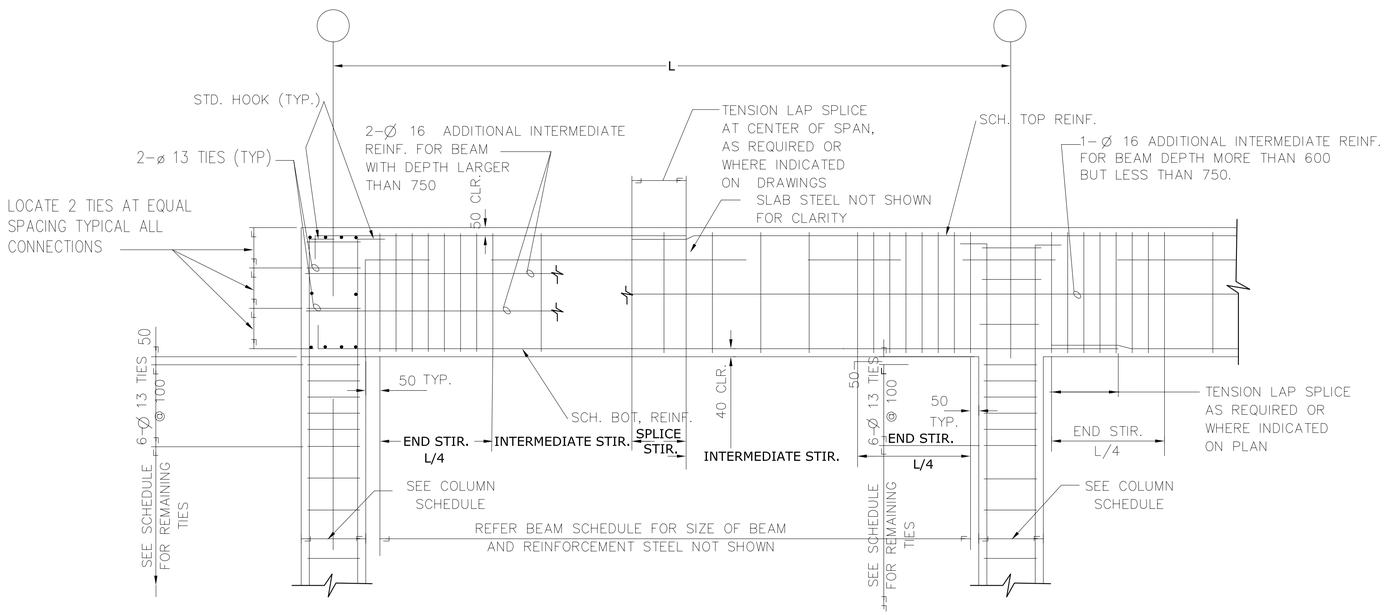

TYPICAL BEAM TO COLUMN END CONNECTION

DETAIL B S-3 S-3
SCALE=N.T.S.

TYPICAL BEAM TO COLUMN INTERIOR CONNECTION

DETAIL C S-3 S-3
SCALE=N.T.S.

UNLESS OTHERWISE NOTED, LINEAR DIMENSIONS SHOWN ARE IN MILLIMETERS.

SYMBOL	DESCRIPTION	DATE	APR
*	REVISIONS	03/04/2007	

DESIGNED BY: RG
DATE: 01-25-07
DWN BY: VLC
SUBMITTED BY: PHILIP L. DINELLO PROJECT MANAGER, DEV.
CHK BY: JK
FILE NO.: AF0609 E-SF03DT

US Army Corps of Engineers
Transatlantic Programs Center

AFGHAN NATIONAL POLICE COMPANY COMPOUND
VARIOUS, AFGHANISTAN
GUARD TOWER
SLAB-ON-GRADE DETAILS

SHEET REFERENCE NUMBER:
E
S-3

AR0609E-SF03DT.dwg
3/29/2007 7:33 PM
AED, AED, USACE

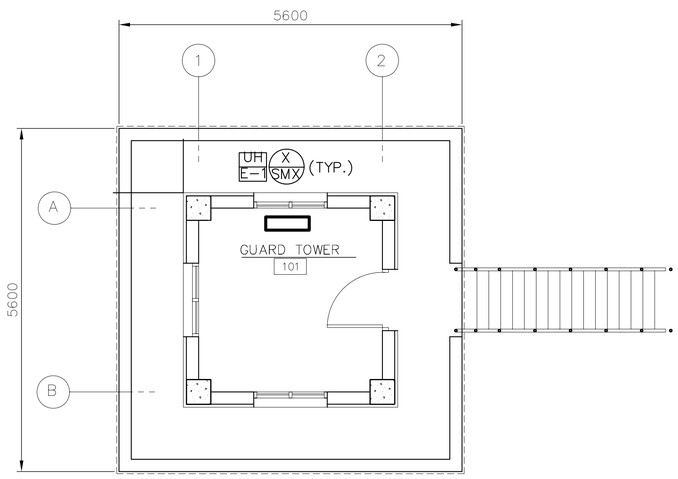

HVAC PLAN
SCALE: 1:50

UNLESS OTHERWISE NOTED, LINEAR DIMENSIONS SHOWN ARE IN MILLIMETERS.

SYMBOL	DESCRIPTION	DATE	APR

DESIGNED BY: JMR
DWN BY: JMR
CHK BY: RMS/HMH
DATE: 01-25-07
SUBMITTED BY: MICHAEL HOWELL
CHIEF, FDTD BLDGS SYSTEMS
FILE NO.: AF0609 E-MH01PN

US Army Corps of Engineers
Transatlantic Programs Center

AFGHAN NATIONAL POLICE COMPANY COMPOUND
VARIOUS, AFGHANISTAN
GUARD TOWER
HVAC PLAN

SHEET REFERENCE NUMBER:
E
M-1

AF0609E-MH01PN.dwg
4/1/2007 4:32 PM
AED, AED, USACE

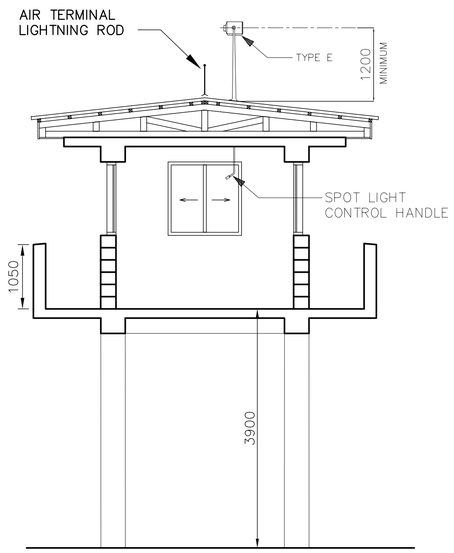

SPOTLIGHT MOUNTING DETAIL

NOT TO SCALE

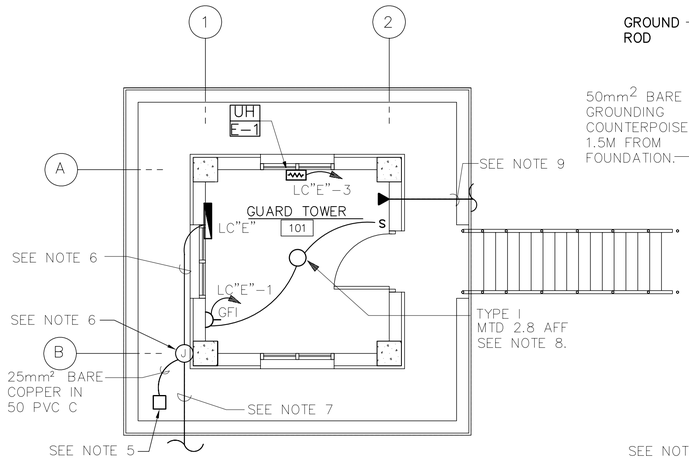

LIGHTING & POWER

NOT TO SCALE

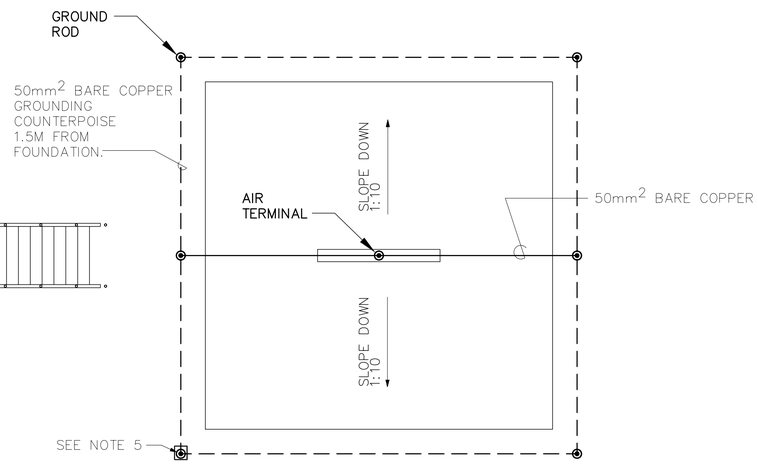

GROUNDING SYSTEM

NOT TO SCALE

NOTES:

1. FOR LEGEND, ABBREVIATIONS AND LIGHT FIXTURE SCHEDULE SEE DRAWING SE-1.
2. COORDINATE LOCATION OF ALL ELECTRICAL DEVICES AND EQUIPMENT WITH ALL OTHER TRADES.
3. ALL WIRING SHALL BE IN CONCEALED OR SURFACE MOUNTED METAL CONDUIT.
4. PLAN IS TYPICAL FOR ALL GUARD TOWERS 1-4. GUARD TOWERS #1, 3, & 4 ARE POWERED FROM PPSB. GUARD TOWER #2 IS POWERED FROM THE GUARD HOUSE PANEL LC"D", SEE GUARD HOUSE PANEL SCHEDULE DRAWING E-1.
5. FOR GROUNDING ROD ACCESS BOX DETAIL SEE SHEET SE-3.
6. PROVIDE 50 METAL C WITH TWO 16mm^2 COPPER CONDUCTORS AND 16mm^2 COPPER GROUNDING CONDUCTOR TO JUNCTION BOX. FOR JUNCTION BOX DETAIL SEE SHEET SE-5.
7. FOR CONTINUATION TO SECONDARY DISTRIBUTION SYSTEM SEE DRAWINGS XE-1 AND XE-2.
8. PROVIDE A MANUFACTURER SUPPLIED RED, BLUE, AND BLACK LIGHT FIXTURE GLOBE.
9. PROVIDE SCH 80 PVC 25mm C STUBBED OUT 1.5M BEYOND GUARD TOWER FOUNDATION AND 600 BFG TO BE TIED INTO SITE COMM CH AND DIRECT BURIED DUCT SYSTEM.

LOAD CENTER "E" GUARD TOWER #1, 2, 3, & 4

40 AMP MAIN CIRCUIT BREAKER, 220V, 1 PH, 2W, 50 HZ, 100A BUS, 10000 AIC

CKT. NO.	TRIP AMPS	NO. POLES	WIRE MM^2	GND MM^2	CONDUIT MM	LOAD SERVED	LOAD-V.A.
1	20	1	4	4	20	LIGHTING & RECEPTACLES	280
2	20	1	4	4	20	SPOT LIGHT, 1000W	1000
3	25	1	6	6	20	ELECT.HEAT GUARD SHACK#2	4000
4	20	1				SPARE	500
5	20	1				SPARE	500
6						SPACE	
7						SPACE	
8						SPACE	
						TOTAL CONN. LOAD	6280

TOTAL CONN. LOAD 6.3 KVA.

80 %DEMAND = EST. DEMAND LOAD: 5.0 SERVED FROM: PPSB

UNLESS OTHERWISE NOTED, LINEAR DIMENSIONS SHOWN ARE IN MILLIMETERS.

SYMBOL	REVISIONS	DESCRIPTION	DATE	APR
*			03/04/2007	

DESIGNED BY: DLF
DATE: 01-25-07
DWN BY: FHG
SUBMITTED BY: MICHAEL HOWELL CHIEF, ELECTRICAL BLDGS SYSTEMS
CHK BY: RMS/DK
FILE NO.: AF0609 E-EL01PN

US Army Corps of Engineers
Transatlantic Programs Center

AFGHAN NATIONAL POLICE COMPANY COMPOUND
VARIOUS, AFGHANISTAN
GUARD TOWER
LIGHTING & POWER PLAN

SHEET REFERENCE NUMBER:
E
E-1

AF0609E-el01pn.dwg
4/1/2007 1:38 PM
AED AED, USACE

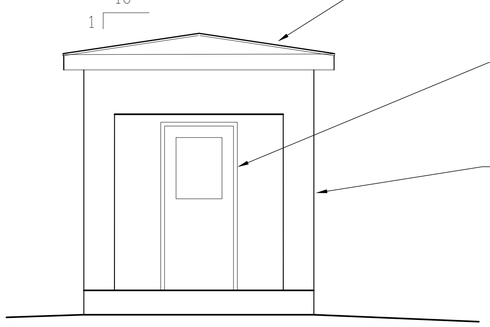

ELEVATION
SCALE=1:50
A
A-1 A-1

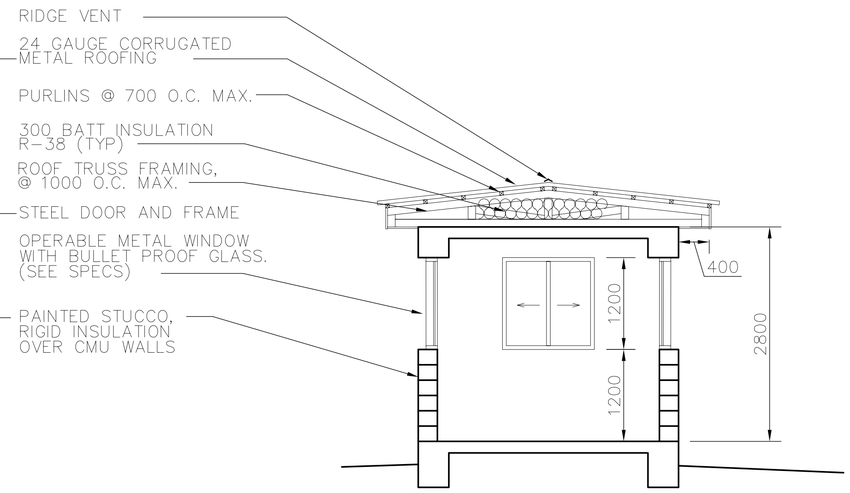

SECTION
SCALE=1:50
B
A-1 A-1

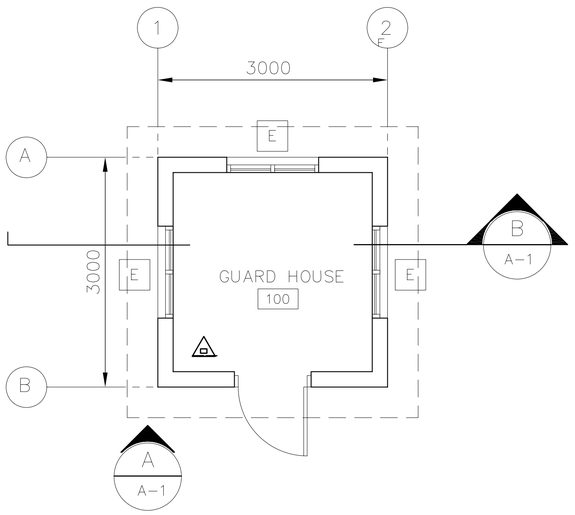

FLOOR PLAN
SCALE= 1:50

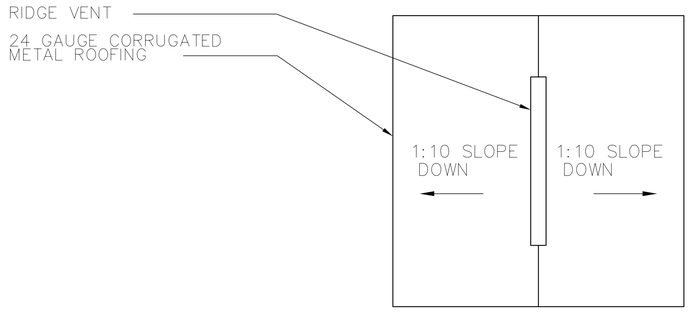

ROOF PLAN
SCALE= 1:50

NOTE:
1. Provide window units meeting UL 752, level 5, but no less than 16 mm laminated single glazed. This standard shall apply to all window units within guard shack, guard house, guard tower, and guard rooms in Headquarters Building.

△ PROVIDE PORTABLE FIRE EXTINGUISHERS, ABC DRY CHEMICAL 4A:60B:C

1 0 1 2 3 4
1:50

UNLESS OTHERWISE NOTED, LINEAR DIMENSIONS SHOWN ARE IN MILLIMETERS.

SYMBOL	REVISIONS	DESCRIPTION	DATE	APR
*			03/04/2007	

DESIGNED BY: HMH
DWN BY: HMH
CHK BY: HMH
DATE: 01-25-07
SUBMITTED BY: PHILIP L. DINELLO
PROJ. MGR. PACIFICS DEV.
FILE NO.: AF0609 F-AR01PN

US Army Corps of Engineers
Transatlantic Programs Center

AFGHAN NATIONAL POLICE COMPANY COMPOUND
VARIOUS, AFGHANISTAN
GUARD SHACK
FLOOR PLAN, SECTION ELEVATION AND ROOF PLAN

SHEET REFERENCE NUMBER:
F
A-1

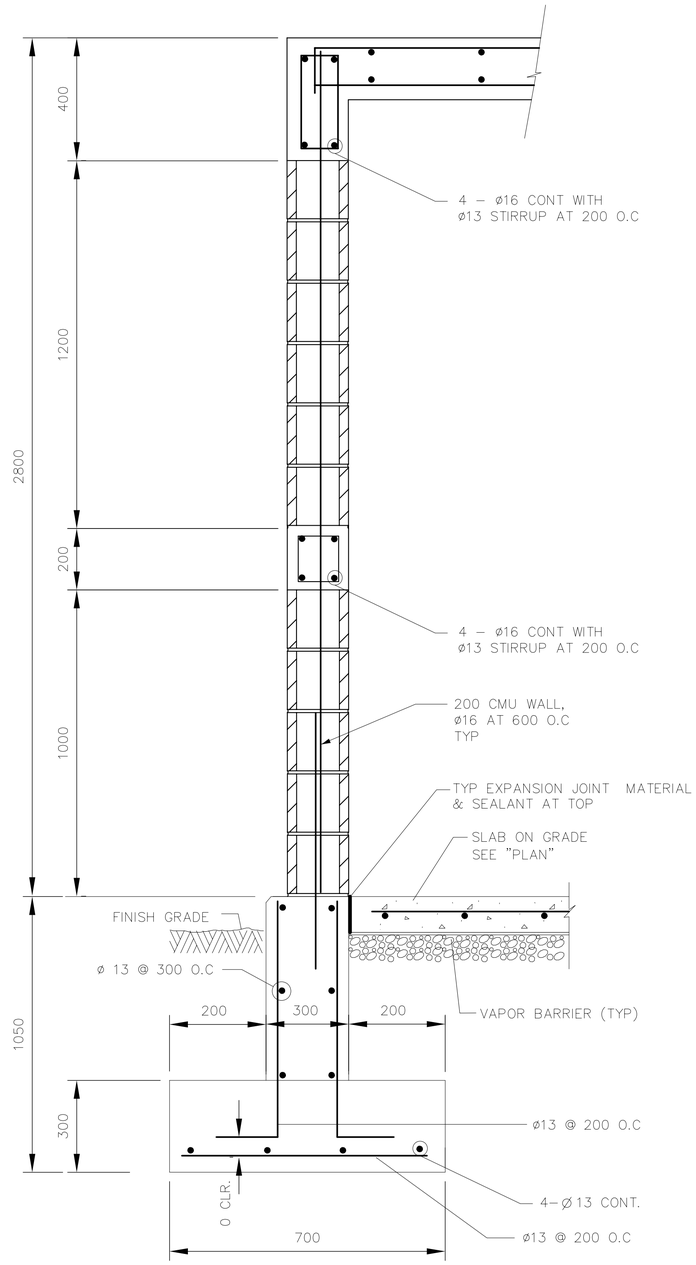

TYP EXTERIOR WALL SECTION

NOT TO SCALE

1
S-1 S-1

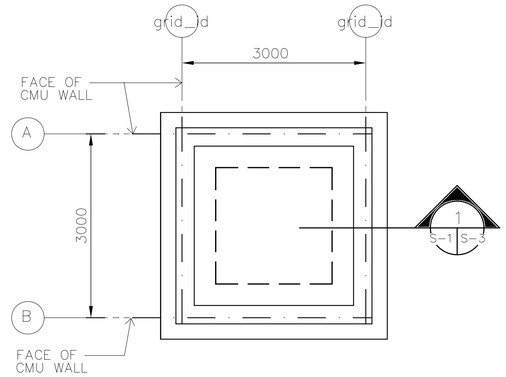

ALL SLABS ON GRADE (TYP):
150 MM THK CONC SLAB ON GRADE WITH ø13 AT 300 MM ON CENTER TWO WAYS.
150 MM THK CAPILLARY WATER BARRIER ON 95% COMPACTED GROUND.

FOUNDATION AND SLAB PLAN

SCALE= 1:50

N
PLAN NORTH

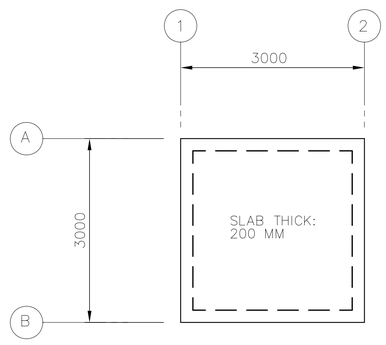

TOP BAR: ø13 AT 300 MM ON CENTER TWO WAYS
BOTTOM BAR: ø 13 AT 300 MM ON CENTER TWO WAYS.

ROOF FRAMING AND SLAB PLAN

SCALE= 1:50

GENERAL NOTES

1. DESIGN LOADS (SERVICE)

   LIVE LOADS:

   ROOF: 1.0 KPA (20 PSF)
   OTHERS: 4.8 KPA (100 PSF)
   8.9 KN (2.0 K) CONCENTRATED LOAD

   WIND LOADS PER IBC–2003

   USING A "3–SECOND" WIND VELOCITY OF 125 KPH
   EXPOSURE C AND IMPORTANCE FACTOR I=1.0

   EARTHQUAKE LOADS PER IBC–2003:

   USING A SEISMICITY: Ss=1.65g AND S_1 =0.75g

2. MATERIALS:

   CONCRETE: 28 MPa (4 KSI)
   CYLINDER STRENGTH AT 28 DAYS

   REINFORCING: ASTM A615 GRADE 60 (60 KSI)

   WELDED WIRE FABRIC: ASTM A185

   CONCRETE MASONRY UNITS:
   ASTM C90, TYPE I (NORMAL WEIGHT, MOISTURE CONTROLLED) MORTAR, ASTM C270, TYPE S
   GROUT, ASTM C 476
   JOINT REINFORCEMENT, LADDER TYPE

3. WORK THESE STRUCTURAL DRAWINGS WITH THE STANDARD–DETAILS DRAWINGS.

4. A RELATIVE (DATUM) FINISH FLOOR ELEVATION EQUAL TO 100.00 M. IS USED AS REFERENCE ELEVATION FOR ALL STRUCTURAL DRAWINGS. REFER TO CIVIL DRAWINGS FOR ACTUAL FINISH ELEVATIONS.

5. FOUNDATIONS ARE DESIGNED USING AN ALLOWABLE BEARING PRESSURE OF 0.75 KG/SQ. CM (1500 PSF), AND BOTTOM OF FOOTINGS ARE PLACED AS SHOWN ON DRAWINGS. GEOTECHNICAL INVESTIGATION SHALL CONFIRM BEARING CAPACITY TO BE NO LESS THAN 0.75 KG/SQ CM. IF GEOTECHNICAL INVESTIGATION SHOWS LESS THAN 0.75 KG/SQ CM THE CONTRACTOR SHALL REDESIGN FOOTINGS BASED ON THE GEOTECHNICAL INVESTIGATION. SEE SPECIFICAITON 01015 PARAGRAPH, GEOTECHNICAL, FOUNDATION AND SURVEY.

CRITICAL NOTES

1. ALL CELLS OF CMU WALL SHALL BE FULLY GROUTED AND PROVIDE 16 MM RE–BARS AT 60 CM ON CENTER.

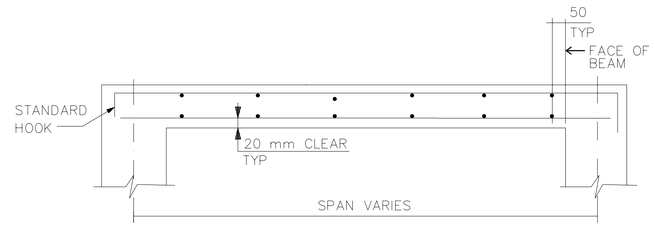

TYPICAL SECTIONS FOR STRUCTURAL SLABS

NOT TO SCALE

1 0 1 2 3 4
1:50

UNLESS OTHERWISE NOTED, LINEAR DIMENSIONS SHOWN ARE IN MILLIMETERS.

*	REVISIONS		
SYMBOL	DESCRIPTION	DATE	APR
		03/04/2007	

DESIGNED BY: JK
DATE: 01-25-07
DWN BY: JK
SUBMITTED BY: PHILIP L. DINELLO
CHIEF, PD, FACILITIES DEV
CHK BY: JK
FILE NO.: AF0609 F-SB01PN

US Army Corps of Engineers
Transatlantic Programs Center

AFGHAN NATIONAL POLICE COMPANY COMPOUND
VARIOUS, AFGHANISTAN
GUARD SHACK
FOUNDATION AND SLAB PLAN
ROOF FRAMING PLAN

SHEET REFERENCE NUMBER:
F
S-1

FOOTING SCHEDULE

NOTE:
REFER TO A/S-2 FOR TYPICAL SECTION OF FOOTINGS AND PLAN NORTH.
FOOTING ORIENTATION DEFINED BY A/S-2 AND S-1 PLAN NORTH'S.

MARK	CONCRETE DIMENSIONS			REINFORCEMENT		FTG. BOTTOM EL. METERS	REMARKS
	WIDTH	LENGTH	THICKNESS	TOP	BOTTOM		
F1	1600	1600	300	——	5-Ø 25 E.W.	98.5	

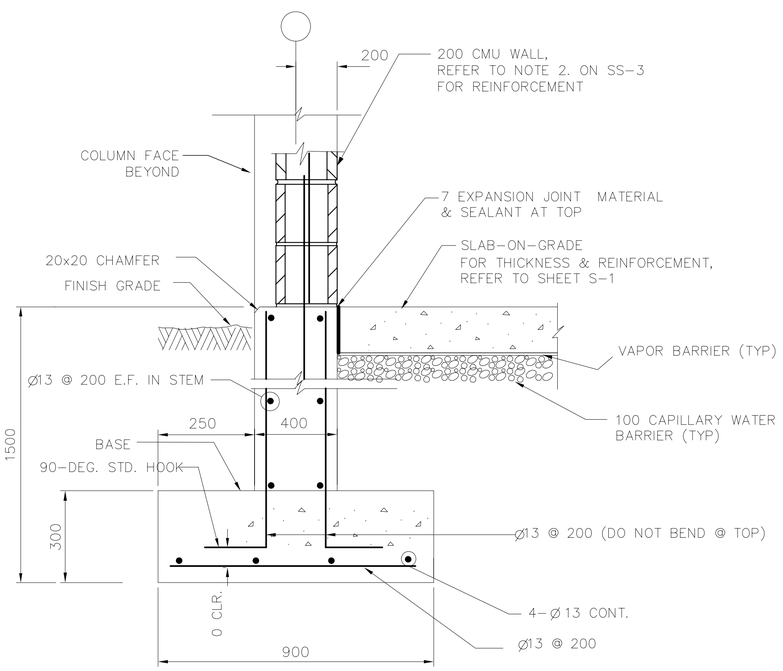

SECTION 1 S-1 S-2
SCALE=N.T.S.

NOTES:
1. HORIZONTAL STEM WALL AND FOOTING REINFORCEMENTS ARE CONTINUOUS THROUGH COLUMN AND COLUMN FOOTING
2. AT DISCONTINUOUS STEM WALL BARS TERMINATE WITH STANDARD HOOK IN COLUMN. FOOTING BARS TERMINATE WITH 600 MM EMBEDMENT IN COLUMN FOOTING.
3. REFER TO CIVIL DWGS FOR ACTUAL FINISH FLOOR ELEVATIONS.

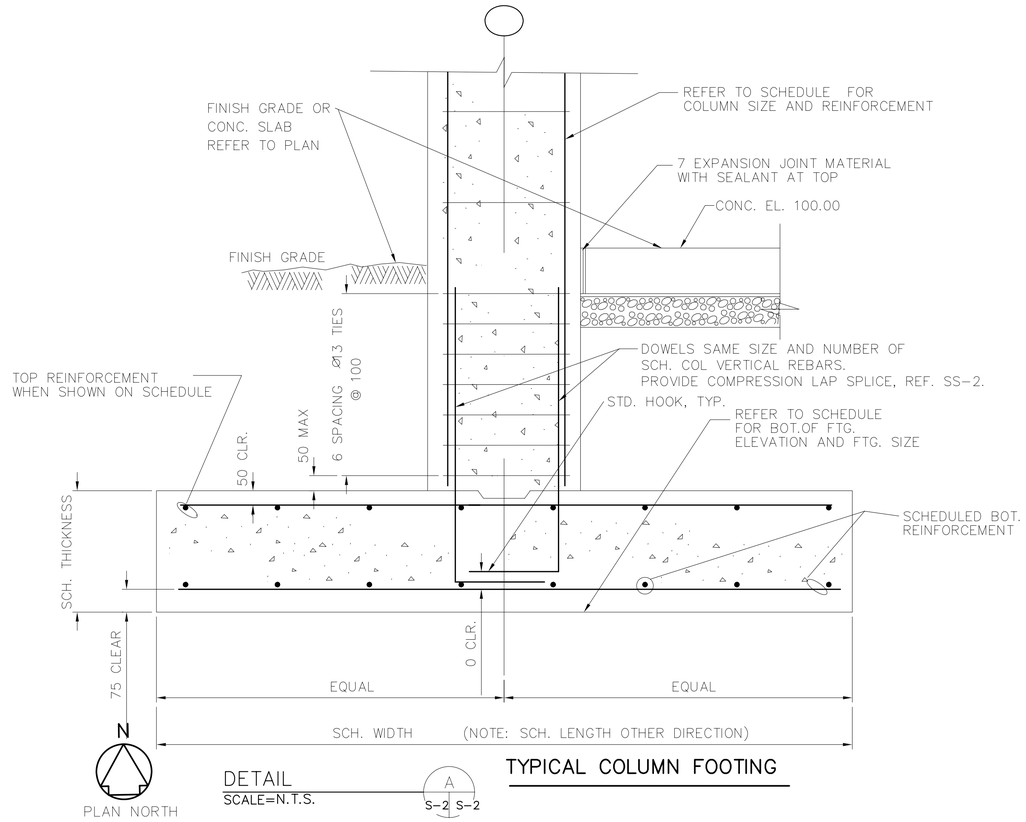

DETAIL A S-2 S-2
SCALE=N.T.S.

TYPICAL COLUMN FOOTING

UNLESS OTHERWISE NOTED, LINEAR DIMENSIONS SHOWN ARE IN MILLIMETERS.

SYMBOL	DESCRIPTION	DATE	APR

DESIGNED BY: RG
DWN BY: VLC
CHK BY: KGO
DATE: 01-25-07
SUBMITTED BY: PHILIP L. DINELLO
CHIEF, PD PACKAGES DEV
FILE NO.: AF0609 E-SB02DT

US Army Corps of Engineers
Transatlantic Programs Center

AFGHAN NATIONAL POLICE COMPANY COMPOUND
VARIOUS, AFGHANISTAN
GUARD SHACK
FOOTING DETAILS

SHEET REFERENCE NUMBER:
F
S-2

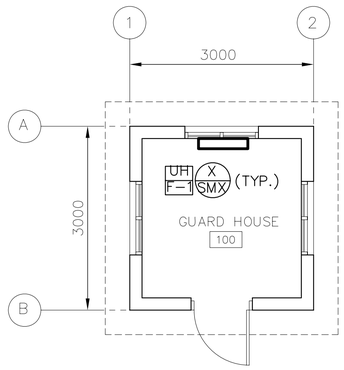

HVAC PLAN

SCALE: 1:50

UNLESS OTHERWISE NOTED, LINEAR DIMENSIONS SHOWN ARE IN MILLIMETERS.

SYMBOL	DESCRIPTION	DATE	APR

DESIGNED BY: JMR
DWN BY: JMR
CHK BY: RMS
DATE: 01-25-07
SUBMITTED BY: MICHAEL HOWELL
CHIEF, FDTD BLDGS SYSTEMS
FILE NO.: AF0609 F-MH01PN

US Army Corps of Engineers
Transatlantic Programs Center

AFGHAN NATIONAL POLICE COMPANY COMPOUND
VARIOUS, AFGHANISTAN
GUARD SHACK
HVAC PLAN

SHEET REFERENCE NUMBER:
F
M-1

AF0609F-MH01PN.dwg
4/1/2007 2:15 PM
AED AED, USACE

NOTES:

1. FOR LEGEND AND ABBREVIATIONS SEE DRAWING SE-1.
2. EMERGENCY LIGHT SHALL BE CONNECTED AHEAD OF LIGHT SWITCH.
3. FOR LIGHT FIXTURE SCHEDULE SEE DRAWING SE-1.
4. COORDINATE LOCATION OF ALL ELECTRICAL FIXTURES AND MECHANICAL EQUIPMENT WITH ALL OTHER TRADES.
5. ALL WIRING SHALL BE CONCEALED OR SURFACE MOUNTED IN METAL CONDUIT.
6. PLAN IS TYPICAL FOR GUARD SHACK #1 AND #2. GUARD SHACK #1 SECONDARY SERVICE IS SUPPLIED FROM PANEL LOAD CENTER "D" (LC "D") LOCATED IN THE GUARD HOUSE (GH). GUARD SHACK #2 SECONDARY SERVICE IS SUPPLIED FROM PPSB.
7. SEE DRAWING XE-1 FOR LOCATION OF GUARD SHACKS.
8. FOR GROUNDING ROD ACCESS BOX SEE SHEET SE-3.
9. FOR SECONDARY DISTRIBUTION SEE DRAWINGS XE-1 AND XE-2.
10. PROVIDE SCH 80 PVC 25mm C STUBBED OUT 1.5M, 600 BFG, TO BE TIED INTO SITE COMM CH AND DIRECT BURIED DUCT SYSTEM.

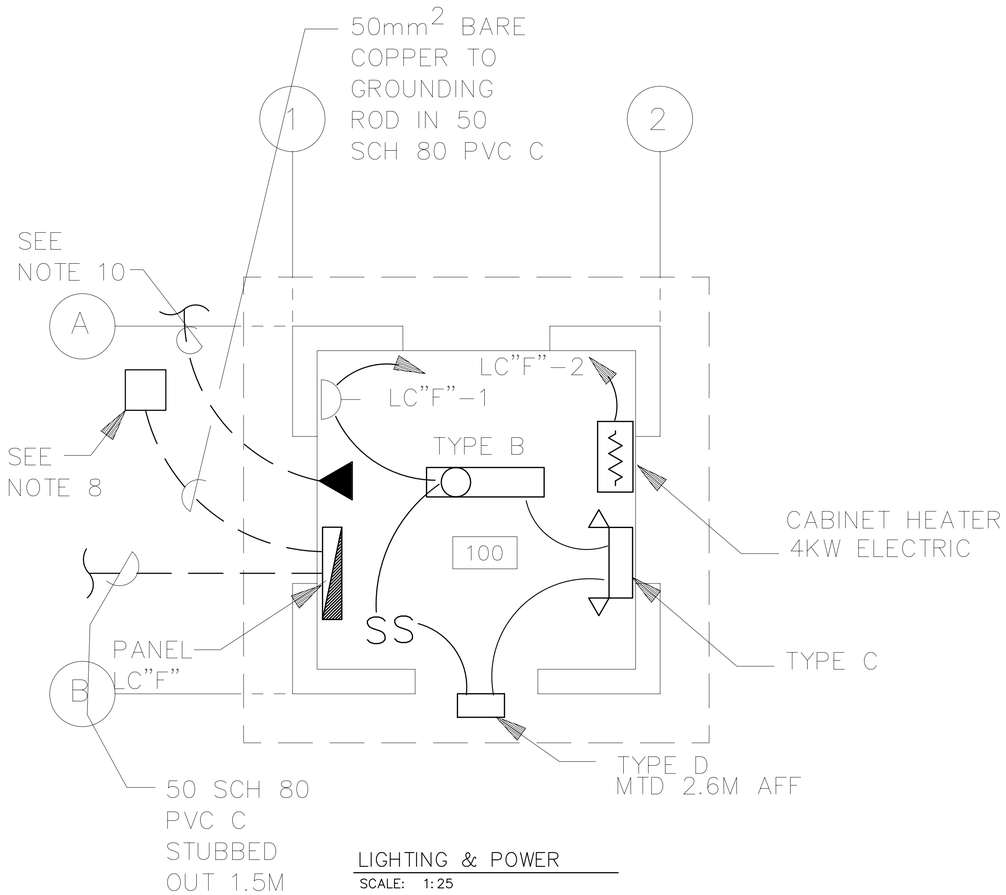

LIGHTING & POWER
SCALE: 1:25

LOAD CENTER "F" GUARD SHACK #1 & #2

40 AMP MAIN CIRCUIT BREAKER, 220V, 1 PH, 2W, 50 HZ, 100A BUS, 10000 AIC

CKT. NO.	TRIP AMPS	NO. POLES	WIRE MM²	GND MM²	CONDUIT MM	LOAD SERVED	LOAD-V.A.
1	20	1	4	4	20	LIGHTING& RECEP.GUARD SHACK#2	400
2	25	1	6	6	20	ELECT.HEAT GUARD SHACK#2	4000
3	20	1				SPARE	500
4	20	1				SPARE	500
5						SPACE	
6						SPACE	
7						SPACE	
8						SPACE	
						TOTAL CONN. LOAD	5400

TOTAL CONN. LOAD 5.4 KVA.
80 %DEMAND = EST. DEMAND LOAD: 4.3 SERVED FROM: PPSB

UNLESS OTHERWISE NOTED, LINEAR DIMENSIONS SHOWN ARE IN MILLIMETERS.

SYMBOL	DESCRIPTION	DATE	APR

DESIGNED BY: DLF
DATE: 01-25-07
DWN BY: FHG
SUBMITTED BY: MICHAEL HOWELL, PROJECT MGR, BLDG SYSTEMS
CHK BY: RMS
FILE NO.: AF0609 F-EL01PN

US Army Corps of Engineers
Transatlantic Programs Center

AFGHAN NATIONAL POLICE COMPANY COMPOUND
VARIOUS, AFGHANISTAN
GUARD SHACK
LIGHTING & POWER PLAN

SHEET REFERENCE NUMBER:
F
E-1

AF0609F-el01pn.dwg
4/1/2007 2:20 PM
AED AED, USACE

ARCHITECTURAL ABBREVIATIONS AND SYMBOLS

ABBREVIATIONS

A

@	AT
AC	AIR CONDITIONER
ACCFLR	RAISED FLOOR SYSTEM
ACFT	AIRCRAFT
ACST	ACOUSTICAL
AD	AREA DRAIN
A/E	ARCHITECT/ENGINEERS
AFF	ABOVE FINISH FLOOR
ALUM	ALUMINUM
ANOD	ANODIZED
AOC	AIR OPERATIONS CENTER
APPROX	APPROXIMATELY
ARCH	ARCHITECTURAL
ASPH	ASPHALT
ATC	ACOUSTICAL TILE CEILING
AWP	ACOUSTICAL WALL PANEL

B

BB	BALL BEARING
BMUM	BITUMINOUS
BL	BASE LINE
BLDG	BUILDING
BLK	BLOCK
B/M	BENCH MARK OR BEAM
BOM	BILL OF MATERIALS
BRKT	BRACKET
BOT	BOTTOM
BRD	BOARD

C

CARP	CARPET
CB	CORE BORING
C TO C	CENTER TO CENTER
CEM	CEMENT
CH	CLEAR HEART
CFM	CUBIC FEET PER MINUTE
CI	CAST IRON
CIP	CAST IN PLACE
CJ OR CJT	CONTROL JOINT
℄	CENTER LINE
CLF	CHAIN LINK FENCE
CLG	CEILING
CLR	CLEAR
CM	CENTIMETER
CMDR	COMMANDER
CMP	CORRUGATED METAL PIPE
CMU	CONCRETE MASONRY UNIT
CO	CLEANOUT
COE	CORPS OF ENGINEERS
CONCR	CONCRETE
CONN	CONNECTION
CONST	CONSTRUCTION
CONT	CONTINUOUS
CONTAM	CONTAMINATED
CONTR	CONTRACTOR
CORR	CORRUGATED
CPRSR	COMPRESSOR
CT	CERAMIC TILE
CTR	CENTER
CUL	CULVERT
CUM	CUBIC METERS
CWT	COUNTERWEIGHT
COORD	COORDINATE

D

D	DEPTH
DECON	DECONTAMINATION
DET	DETAIL
DI	DRAIN INLET
DIA	DIAMETER
DIM	DIMENSION
DISP	DISPENSER
DJ	DUMMY JOINT
DRWG	DRAWING
DS	DOWNSPOUT
DW	DRINKING WATER

E

E	EAST
EA	EACH
EG	EXISTING GRADE
EJ	EXPANSION JOINT
EL OR ELEV	ELEVATION
ELEC	ELECTRICAL
ENCL	ENCLOSURE
ENGR	ENGINEER
ENT	ENTRANCE
EPDM	ELASTOMERIC ROOFING
EPX	EPOXY COATING
EQ	EQUAL
ES/EW	EMERGENCY SHOWER/EYE WASH
EW	EACH WAY
EXCA	EXCAVATE
EXH	EXHAUST
EXIST	EXISTING
EXP	EXPANSION OR EXPOSED
EWC	ELECTRIC WATER COOLER
EWH	ELECTRIC WATER HEATER

ABBREVIATIONS

F

F	FEET
FD	FLOOR DRAIN
FDN	FOUNDATION
FF & E	FURNITURE, FURNISHINGS AND EQUIPMENT
F TO F	FACE TO FACE
FE	FIRE EXTINGUISHER
FFLEL	FINISH FLOOR ELEVATION
FG	FINISH GRADE
FH	FIRE HYDRANT
FIN	FINISH
FL	FLOOR
FPM	FEET PER MINUTE
FTG	FOOTING

G

GA	GAUGE
GALV	GALVANIZED
GPM	GALLONS PER MINUTE
GR	GRADE
GT	GATE (FENCE)
GVL	GRAVEL
GYP	GYPSUM

H

HB	HOSE BIB
HDW	HARDWARE
HDWD	HARDWOOD
HZ	HERTZ
HF	HIGH FREQUENCY
HGT	HEIGHT
HM	HOLLOW METAL
HORIZ	HORIZONTAL
HP	HIGH POINT
HH	HEX HEAD
HC	HANDICAPPED
HR	HOUR

I

ID	INSIDE DIAMETER
INSTL	INSTALL
INTEL	INTELLIGENCE
INTER	INTERIOR
INV	INVERT
INSUL	INSULATION

J

JAN	JANITOR
JB	JUNCTION BOX
JCT	JUNCTION
JT	JOINT

K

KG	KILOGRAM
KM	KILOMETER
KPA	KILO PASCAL
KPH	KILOMETERS PER HOUR

L

LAM	LAMINATE
LAT	LATITUDE
LAV	LAVATORY
LBY	LOBBY
LBS	POUNDS
LG	LONG
LINMET	LINEAR METAL CEILING SYSTEM
LNRPNL	METAL LINER PANEL
LOC	LIMITS OF CONSTRUCTION
LONG	LONGITUDE
LP	LOW POINT
LSD	LARGE SCREEN DISPLAY
LTG P	LIGHTING PANEL
LVR	LOUVER

M

M	METER
MATL	MATERIAL
MAX	MAXIMUM
MECH	MECHANICAL
MH	MANHOLE
MISC	MISCELLANEOUS
MIN	MINIMUM
ML	MATCH LINE
MM	MILLIMETERS
MO	MASONRY OPENING
MON	MONUMENT
MOIST	MOISTURE
MPH	MILES PER HOUR
MTD	MOUNTED
MTL	METAL
MSNRY	MASONRY
MFR	MANUFACTURER
MATL	MATERIAL
MW	FORCE PROTECTION DOOR

ABBREVIATIONS

N

N	NORTH
NA	NOT APPLICABLE
NIC	NOT IN CONTRACT
NICAD	NICKEL CADMIUM
NO	NUMBER
NTS	NOT TO SCALE

O

OC	ON CENTER
OD	OUTSIDE DIAMETER
OPH	OPPOSITE HAND
OPNG	OPENING
OPP	OPPOSITE
OPS	OPERATIONS

P

PANL	PANEL
PCS	PIECES
PE	POLYETHYLENE
PKG	PARKING OR PACKAGE
PL	PLATE
PLAS	PLASTER
PLBG	PLUMBING
POL	PETROLEUM OIL LUBRICANT
PP	POWER PANEL
PRCST	PRECAST
PROP	PROPERTY
PSF	POUNDS PER SQUARE FOOT
PTD	PAINTED
PTR	PIPE TRENCH
PVMT	PAVEMENT

Q

Q	DESIGN DISCHARGE
QD	QUICK DISCONNECT

R

R	RADIUS OR REINFORCED
RCP	REINFORCED CONCRETE PIPE
RD	ROOF DRAIN
RE	REFERENCE
REINF	REINFORCED
REQD	REQUIRED
REV	REVISION
RH	RIGHT HAND
RI	RISER
RM	ROOM
RO	ROUGH OPENING
ROW	RIGHT OF WAY
RP	RADIUS POINT
RR	RAILROAD
RT	RIGHT
RTU	ROOF TOP UNIT
RVS	REVERSE
RW	RAW WATER

S

S OR SO	SOUTH
SCH	SCHEDULE
SECT	SECTION
SD	SMOKE DETECTOR
SG	SUB GRADE
SH OR SHT	SHEET
SHWR	SHOWER
SIM	SIMILIAR
SL	SLOPE
SMH	SEWER MANHOLE
SOC	STRATEGIC OPERATIONS CENTER
SPEC	SPECIFICATION
SPFC	SPECIFIC
SQ	SQUARE
SS	SANITARY SEWER
SST	STAINLESS STEEL
STA	STATION
STD	STANDARD
STL	STEEL
STRUCT	STRUCTURAL
SUSPLAS	SUSPENDED PLASTER
SVC	SERVICE CONNECTION

ABBREVIATIONS

T

TC	TOP OF CURB
TELE C	TELEPHONE CABINET
TER	TERRAZZO
TG	TOP OF GRATE
TK	TANK
TO	TECHNICAL ORDER
TOS	TOP OF STEEL
TOW	TOP OF WALL
TP	TEST PIT
TR	TRENCH
TSW	TOP OF SIDEWALK
TYP	TYPICAL
TP	TOP OF PAVEMENT
TH/THK	THICK / THICKNESS

U

UBC	UNIFORM BUILDING CODE
UG	UNDERGROUND
UNO	UNLESS NOTED OTHERWISE
UPS	UNINTERRUPTIBLE POWER SUPPLY
UTIL	UTILITY

V

VB	VALVE BOX
VC	VERTICAL CURVE
VCT	VINYL COMPOSITION TILE
VEH	VEHICLE
VEL	VELOCITY
VERT	VERTICAL
VEST	VESTIBULE
VIP	VERY IMPORTANT PERSON
VTR	VENT THRU ROOF

W

W	WEST, WIDE
WC	WATER CLOSET
WM	WIRE MESH PARTITION
WSP	WELDED STEEL PIPE
WT	WEIGHT
W/O	WITHOUT
W/	WITH
WWF	WELDED WIRE FABRIC

REFERENCE SYMBOLS

A / A-1 A-9	DETAIL IDENTIFICATION NO.OF SHEET ON WHICH DETAIL IS DRAWN NO. OF SHEET ON WHICH CONDITION IS REFERENCED
1 / A-3	BUILDING SECTION IDENTIFICATION NO.OF SHEET ON WHICH SECTION IS DRAWN
A / A-3	WALL SECTION IDENTIFICATION NO.OF SHEET ON WHICH SECTION IS DRAWN
102	ROOM NUMBER
102	DOOR NUMBER
H	COLUMN LINE
A	WINDOW TYPE
A	WALL TYPE IDENTIFIER
102	EQUIPMENT IDENTIFIER
102	FURNITURE IDENTIFIER
FIN FL ELEV 100.00	FINISH FLOOR EL. SYMBOL IN PLAN
FIN FL ELEV 100.00	FINISH FLOOR EL. SYMBOL IN SECT. AND ELEV.
A B C D	INTERIOR ELEVATION KEY SYMBOL
A / A-3	EXTERIOR ELEVATION IDENTIFIER
	STUCCO CONTROL JOINT
L2	LOUVER IDENTIFIER
	STRUCTURAL CONTROL JOINT
	WALLS TO THE UNDERSIDE OF THE STRUCTURE

MATERIAL SYMBOLS

	EARTH
	CAST CONCRETE (SECTION)
	LIGHTWEIGHT CONCRETE (SECTION)
	CONCRETE MASONRY UNIT (LARGE SCALE–PLAN)
	STEEL
	ROUGH WOOD
	FINISHED WOOD
	WOOD BLOCKING
	PLYWOOD–LARGE SCALE
	GLASS (ELEVATION)
	BATT FILL INSULATION (SECTION)
	LOOSE FILL INSULATION (PLAN)
	RIGID BOARD INSULATION
	CERAMIC TILE–LARGE SCALE
	CONCRETE (PLAN & ELEVATION)
	CERAMIC TILE (PLAN & ELEVATION)
	PLASTER OR STUCCO (ELEVATION)
	SHEET MEMBRANE
	LANDSCAPING (TREE, SHRUB, ETC.)
	CHAIN LINK PARTITION

GENERAL NOTES:

1. THE LIST OF ABBREVIATIONS IS SHOWN AS A GUIDE ONLY AND DOES NOT NECESSARILY INCLUDE ALL ABBREVIATIONS USED. OTHER ABBREVIATIONS MAY BE FOUND AMONG THE DRAWINGS. SOME ABBREVIATIONS LISTED MAY NOT HAVE BEEN USED.
2. FOR REFERENCE PURPOSES, A FINISHED FLOOR ELEVATION OF 100.00 HAS BEEN ESTABLISHED FOR GRADE LEVEL FLOOR PLANS. ON ARCHITECTURAL DRAWINGS. SEE CIVIL DRAWINGS FOR ACTUAL FINISHED FLOOR AND FINISHED GRADE ELEVATIONS.
3. HOUSEKEEPING PADS FOR MECHANICAL EQUIPMENT SHALL BE PROVIDED AS REQUIRED BY MECHANICAL DRAWINGS. SIZE AND LOCATION SHALL BE COORDINATED WITH MECHANICAL EQUIPMENT PROVIDED.

UNLESS OTHERWISE NOTED, LINEAR DIMENSIONS SHOWN ARE IN MILLIMETERS.

SYMBOL	DESCRIPTION	DATE	APR

DESIGNED BY: YSK
DWN BY: JSG
CHK BY: YSK
DATE: 01-25-07
SUBMITTED BY: PHILIP J. DINELLO
CHIEF, PLANS & PROJECTS DEV
FILE NO.: AF0609 $–AR01GN

US Army Corps of Engineers
Transatlantic Programs Center

AFGHAN NATIONAL POLICE COMPANY COMPOUND
VARIOUS, AFGHANISTAN
STANDARD DETAILS
SYMBOLS AND ABBREVIATIONS

SHEET REFERENCE NUMBER:
SA–1

af0609$–ar01gn.dwg
3/30/2007 8:19 AM
AED, AED, USACE

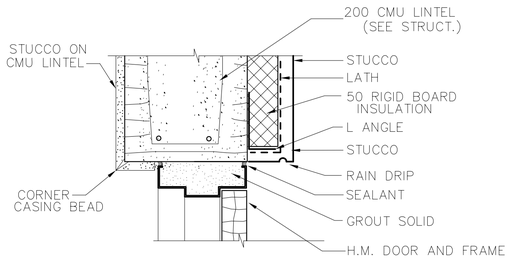

HEAD DETAIL (H-1 / SA2)
SCALE 1:5

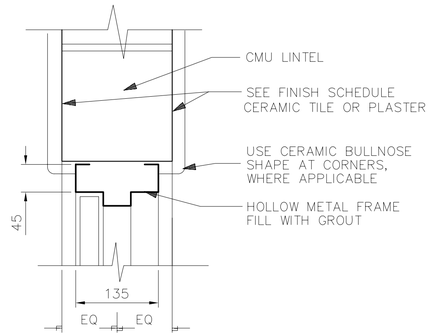

HEAD DETAIL (H-2 / SA2)
SCALE 1:5

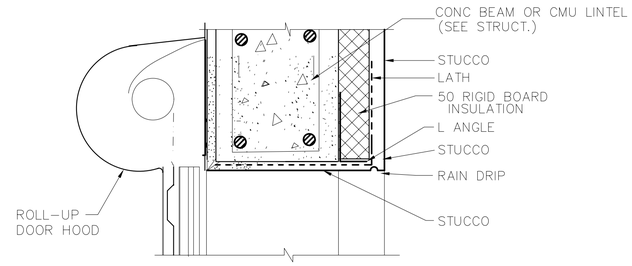

HEAD DETAIL (H-3 / SA2)
SCALE 1:5

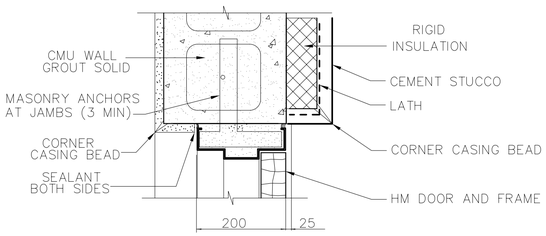

JAMB DETAIL (J-1 / SA2)
SCALE 1:5

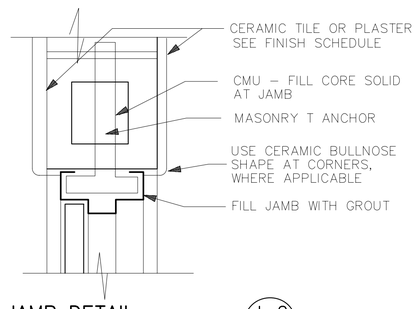

JAMB DETAIL (J-2 / SA2)
SCALE 1:5

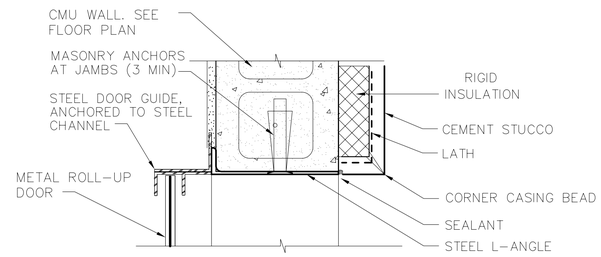

JAMB DETAIL (J-3 / SA2)
SCALE 1:5

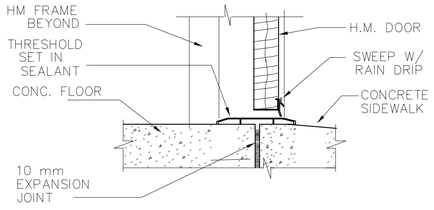

SILL DETAIL (S-1 / SA2)
SCALE 1:5

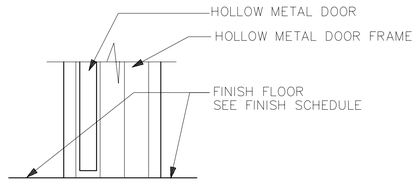

SILL DETAIL (S-2 / SA2)
SCALE 1:5

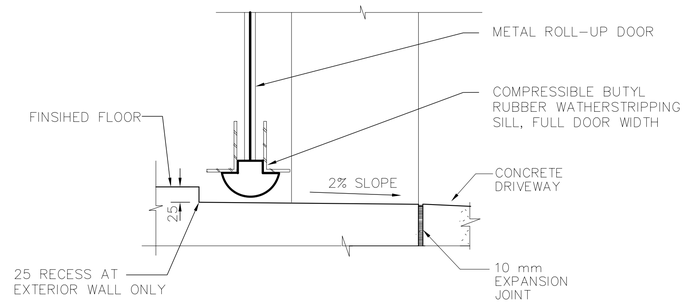

SILL DETAIL (S-3 / SA2)
SCALE 1:5

UNLESS OTHERWISE NOTED, LINEAR DIMENSIONS SHOWN ARE IN MILLIMETERS.

SYMBOL	REVISIONS	DESCRIPTION	DATE	APR
*			03/04/2007	

DESIGNED BY: HMH
DWN BY: HMH
CHK BY: HMH
DATE: 01-25-07
SUBMITTED BY: PHILIP L. DINELLO, CHIEF, PD PROJECTS DEV
FILE NO.: AF0609 $-AR02DT

US Army Corps of Engineers
Transatlantic Programs Center

AFGHAN NATIONAL POLICE COMPANY COMPOUND
VARIOUS, AFGHANISTAN
STANDARD DETAILS
DOOR DETAILS

SHEET REFERENCE NUMBER:
SA-2

$DATE$
$FILE$

STRUCTURAL NOTE:
REFER TO STRUCTURAL DRAWINGS FOR ALL REINFORCEMENTS, BEAMS, SLABS, AND COLUMN INFORMATION.

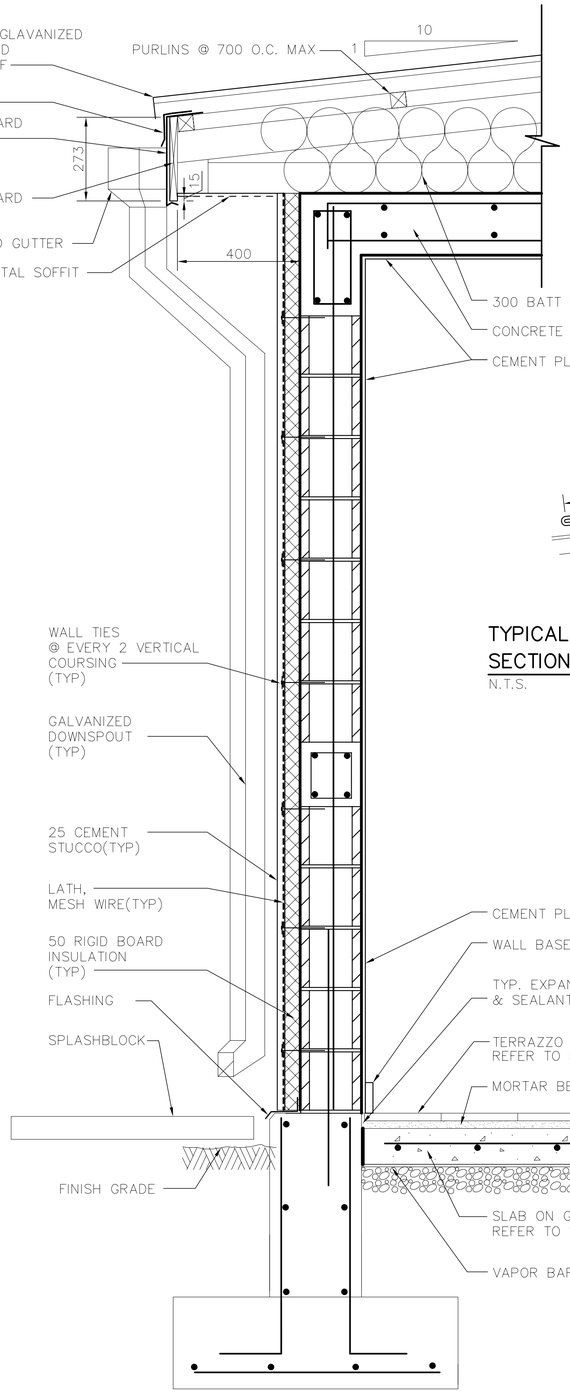

TYP EXTERIOR WALL SECTION 1 (S-1 / S-3)
N.T.S.

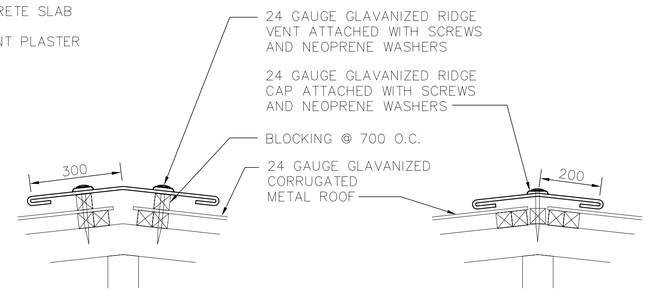

TYPICAL RIDGE VENT SECTION 4 (S-1 / S-3)
N.T.S.

TYPICAL RIDGE CAP SECTION 5 (S-1 / S-3)
N.T.S.

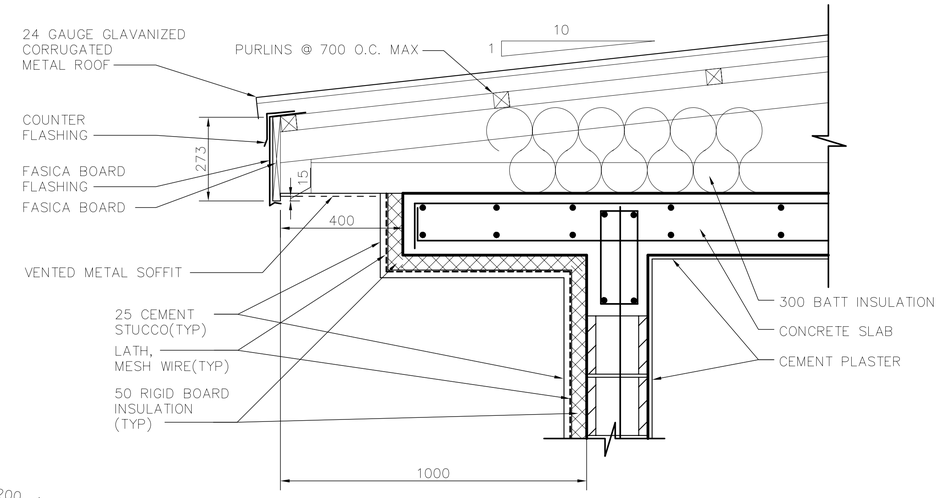

GUARD TOWER OVERHANG SECTION 6 (S-1 / S-3)
N.T.S.

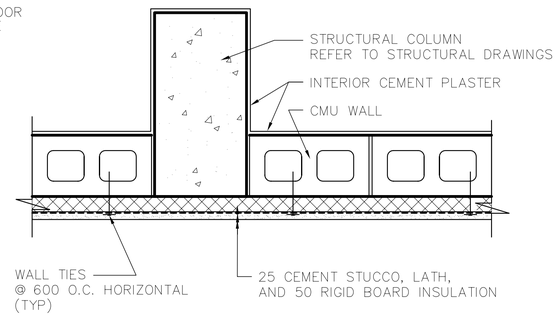

TYPICAL EXTERIOR WALL PLAN SECTION 2 (S-1 / S-3)
N.T.S.

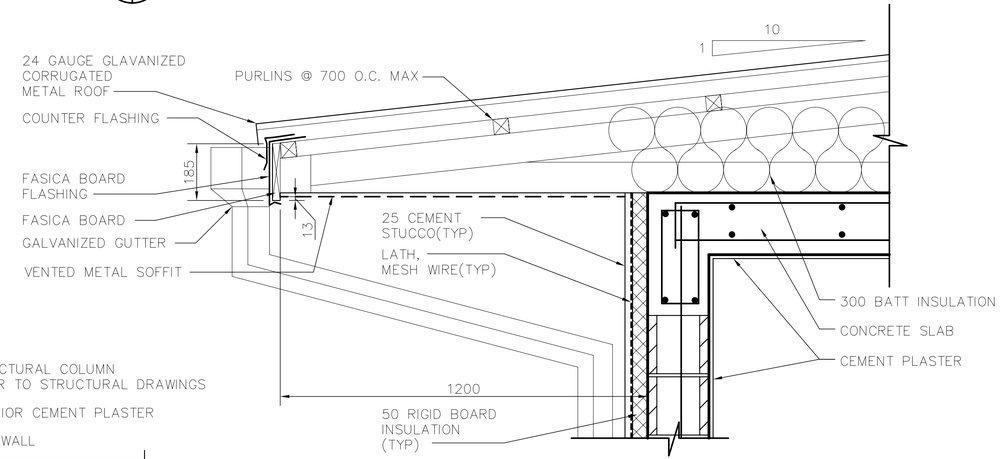

TYPICAL EXTENDED OVERHANG SECTION 3 (S-1 / S-3)
N.T.S.

NOTE:
1. WALL TIES, VERTICAL SPACING SHALL BE 400 (16 INCH) O.C. AND HORIZONTAL SPACING SHALL BE 600 (24 INCH) O.C.

2. WALL TIES SHALL BE GALVANIZED AND HAVE WASHERS NO SMALLER THAN 40 (1.5 INCH) DIAMETER.

1 .50 0 1 1.5
1:25

UNLESS OTHERWISE NOTED, LINEAR DIMENSIONS SHOWN ARE IN MILLIMETERS.

REVISIONS			
SYMBOL	DESCRIPTION	DATE	APR
*		03/04/2007	

DESIGNED BY: HMH
DWN BY: HMH
CHK BY: HMH
DATE: 01-25-07
SUBMITTED BY: PHILIP L. DINELLO
CHIEF, PD PROJECTS DEV.
FILE NO.: AF0609 C-AR02EL

US Army Corps of Engineers
Transatlantic Programs Center

AFGHAN NATIONAL POLICE COMPANY COMPOUND
VARIOUS, AFGHANISTAN
STANDARD DETAILS
WALL SECTION AND ROOF

SHEET REFERENCE NUMBER:
SA-3

32 X 20.5

af0609$-ar03cl.dwg
3/28/2007 11:31 PM
AED, AED, USACE

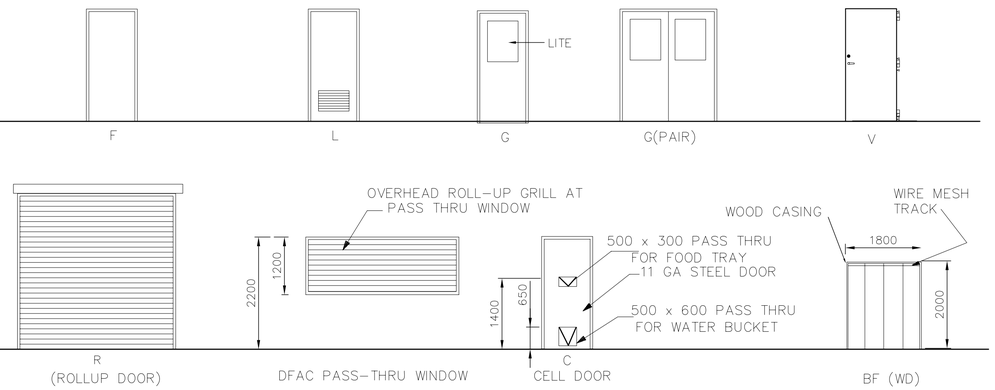

TYPICAL DOOR TYPES
(NOT TO SCALE)

DOOR NOTES:

1. FOR HEAD, JAMB AND SILL DETAILS, SEE SHEET SA-2.
2. SEE DOOR SCHEDULE FOR DOOR AND FRAME SIZES.

ROOM FINISH SCHEDULE

ROOM NO.	ROOM NAME	FLOOR		BASE		WALLS		CEILING			REMARKS
		MAT'L.	COLOR	MAT'L.	COLOR	MAT'L.	COLOR	MAT'L.	COLOR	HEIGHT	
–	GUARD TOWERS	F1	1	B5	–	W2	21	C2	31	--	
–	GUARD SHACKS	F1	1	B5	–	W2	21	C2	31	--	
–	GUARD HOUSE	F1	1	B5	–	W2	21	C2	31	--	

DOOR SCHEDULE

DOOR							FRAME				FIRE LABEL	HDW SET	REMARKS
NO.	LOCATION	TYPE	MAT'L	WIDTH	HEIGHT	THICK	HEAD	JAMB	SILL	MAT"L			
–	GUARD TOWERS	G	STL	900	2150	45	H-1	J-1	S-1	STL		1	
–	GUARD SHACKS	G	STL	900	2150	45	H-1	J-1	S-1	STL		1	
–	GUARD HOUSE	G	STL	900	2150	45	H-1	J-1	S-1	STL		1	

ROOM FINISH SCHEDULE NOTES:

1. ALL WALL PENETRATIONS SHALL BE SEALED TO PROVIDE A NEAT APPEARANCE. PENETRATIONS OF EXTERIOR WALLS SHALL BE SEALED TO BE WATER-TIGHT.
2. SEALANTS SHALL MATCH THE COLOR OF ADJACENT SURFACES.

DOOR SCHEDULE NOTES:

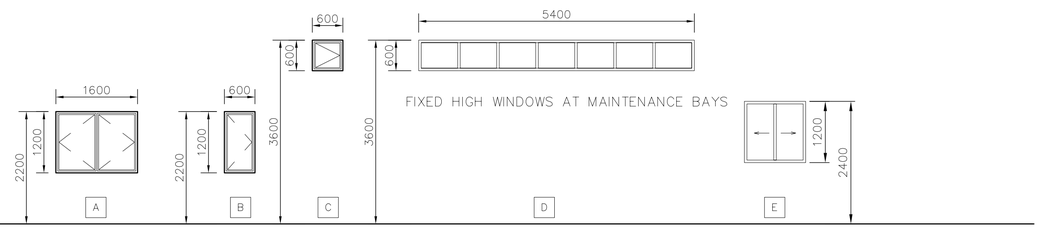

TYPE A TYPE B TYPE C TYPE D TYPE E

WINDOW NOTES:

1. THE CONTRACTOR SHALL COORDINATE THE ACTUAL WINDOW SIZES WITH THE SUPPLIER. THE DIMENSIONS SHOWN ON THE WINDOW SCHEDULE ARE ROUGH MASONRY OPENING DIMENSIONS. CONTRACTOR MUST SUBMIT SHOP DRAWINGS FOR REVIEW.
2. PROVIDE PROTECTIVE COATING AT ALL DISSIMILAR METALS CONTACT AREAS.WITH APPROPRIATE COATINGS.
3. ALL OPERABLE EXTERIOR WINDOWS SHALL BE PROVIDED WITH INSECT SCREENS.
4. ALL GLAZING AT GUARD HOUSE, GUARD TOWERS, AND GUARD SHACK, PROVIDE WINDOWS MEETING UL 752, LEVEL 5, BUT NO LESS THAN 16mm THICK LAMINATED SINGLE GLAZING.

TYPICAL WINDOW TYPES
SCALE: NTS

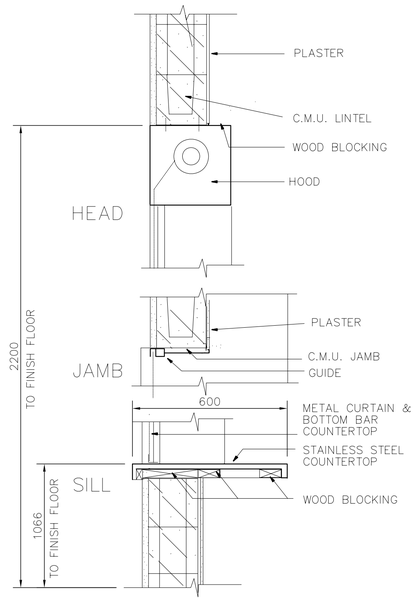

SECTION AT ROLL-UP COUNTER SHUTTER
SCALE: NTS

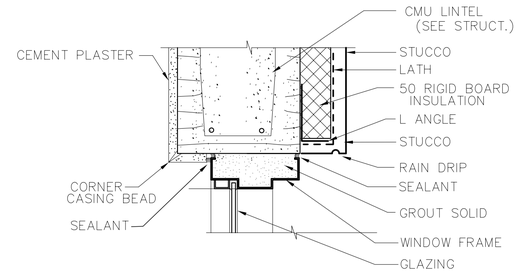

TYPICAL HEAD DETAIL
1:5

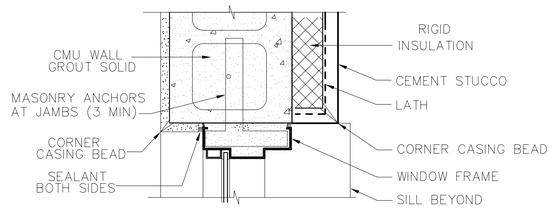

TYPICAL JAMB DETAIL

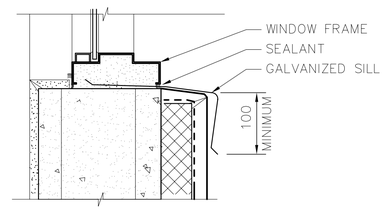

TYPICAL SILL DETAIL

WINDOW SECTION AT MASONRY WALL

SCALE NTS

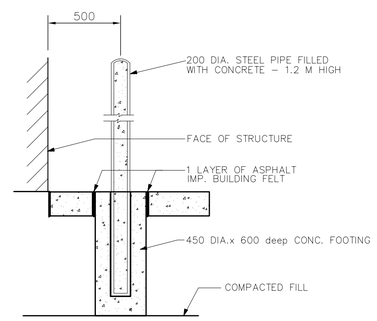

SECTION – PIPE GUARD DETAIL (B / SA-4)
SCALE NTS

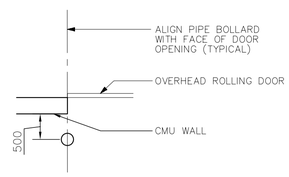

PLAN – PIPE GUARD AT DOOR

UNLESS OTHERWISE NOTED, LINEAR DIMENSIONS SHOWN ARE IN MILLIMETERS.

*	REVISIONS		
SYMBOL	DESCRIPTION	DATE	APR
		03/04/2007	

DESIGNED BY: HMH
DATE: 01-25-07
DWN BY: HMH
SUBMITTED BY: PHILIP L. DINELLO, PROJECT MGR. PLANNING DEV
CHK BY: HMH
FILE NO.: AF0609 $-AR04EL

US Army Corps of Engineers
Transatlantic Programs Center

AFGHAN NATIONAL POLICE COMPANY COMPOUND
VARIOUS, AFGHANISTAN
STANDARD DETAILS
DOOR AND WINDOW SCHEDULES
DOOR AND WINDOW DETAILS

SHEET REFERENCE NUMBER:
SA-4

af0609$-ar04dt.dwg
3/28/2007 9:01 PM
AED AED, USACE

GENERAL NOTES

GENERAL

1. DESIGN REFERENCES:

   A. AMERICAN CONCRETE INSTITUTE (ACI) BUILDING CODE REQUIREMENTS FOR REINFORCED CONCRETE (ACI 318).

   B. SPECIFICATION FOR STRUCTURAL STEEL BUILDINGS – ALLOWABLE STRESS DESIGN AND PLASTIC DESIGN (S335).

   C. AMERICAN WELDING SOCIETY (AWS) STRUCTURAL WELDING CODE – STEEL (AWS D1.1).

   D. INTERNATIONAL BUILDING CODE (IBC–2003).

   E. BUILDING CODE REQUIREMENTS FOR MASONRY STRUCTURES (ACI 530–05).

   F. STEEL JOIST INSTITUTE (SJI) STANDARD SPECIFICATIONS, AND WEIGHT TABLES FOR STEEL JOIST AND JOIST GIRDERS.

   G. STEEL DECK INSTITUTE (SDI) DESIGN MANUAL FOR COMPOSITE DECKS, FORM DECKS, AND ROOF DECKS.

   H. MBMA MANUAL FOR LOW RISE BUILDINGS SYSTEMS.

2. DIMENSIONS PROVIDED IN SECTIONS OR DETAILS AND ON PLAN AND ELEVATION VIEWS ARE SHOWN USING MILLIMETERS, UNLESS OTHERWISE NOTED.

3. ALL BUILDING ELEVATIONS ARE GIVEN AS REFERENCE ELEVATIONS TO THE FINISHED GROUND FLOOR ELEVATION. A REFERENCE FLOOR ELEVATION OF 100.00 IS USED FOR THE FINISHED GROUND FLOOR.

4. CONTRACTOR SHALL VERIFY ALL DIMENSIONS AND CONDITIONS AFFECTING THE WORK AT THE JOB SITE.

5. ALL STRUCTURAL WORK AND MATERIALS SHALL CONFORM TO THE REQUIREMENTS OF THE PROJECT SPECIFICATIONS.

6. DO NOT SCALE DRAWINGS.

7. FOR LOCATION AND DIMENSIONS OF PARTITIONS, DEPRESSIONS, GROOVES, SLEEVES, CURBS, OPENINGS, EMBEDDED OR ATTACHED ITEMS, REFER TO ARCHITECTURAL, MECHANICAL, ELECTRICAL, AND PLUMBING DRAWINGS

8. FOR ADDITIONAL INFORMATION REFER TO INDIVIDUAL SHEETS FOR EACH STRUCTURE.

9. METAL BUILDING SYSTEMS SHALL BE AS REQUIRED IN THE SPECIFICATIONS.

10. FOOTING ELEVATIONS GIVEN ARE AT TOP OF FOOTING BASE.

11. ALL STRUCTURES SHALL BE FOUNDED ENTIRELY ON NATURAL MATERIAL OR ENTIRELY ON COMPACTED STRUCTURAL FILL, FOR STRUCTURES FOUNDED ON BEDROCK, PROVIDE A MEDIUM OF LEAN CONCRETE HAVING A MINIMUM 28–DAY COMPRESSIVE STRENGTH OF 14 MPA (2000 PSI) BETWEEN FOOTING BASES AND BEDROCK LAYER, AS REQUIRED.

12. ALL FOOTING EXCAVATIONS SHALL BE INSPECTED AND APPROVED BY THE CONTRACTING OFFICER OR HIS APPROVED AGENT PRIOR TO PLACING CONCRETE.

CONCRETE

1. EMBEDDED MATERIAL:

   A. BEFORE PLACING CONCRETE, CARE SHALL BE TAKEN TO INSURE THAT ALL EMBEDDED ITEMS ARE IN POSITION AND SECURELY FASTENED IN PLACE.

   B. ELECTRIC CONDUITS AND PIPING TO BE EMBEDDED IN CONCRETE SHALL MEET THE APPLICABLE REQUIREMENTS OF ACI 38.

   C. WATERSTOPS, WHERE REQUIRED, SHALL BE MADE CONTINUOUS, ALL PROJECTING WATERSTOPS SHALL BE SUPPORTED AND PROTECTED FROM DAMAGE DURING CONSTRUCTION.

2. PROVIDED 20 MILLIMETER CHAMFER FOR ALL EXPOSED EDGES OF COLUMNS, BEAMS, WALLS AND ANY OTHER MEMBERS AS DIRECTED BY THE CONTRACTING OFFICER.

3. EVERY INTERIOR SLAB–ON–GRADE SHALL HAVE ONE LAYER OF ASPHALT IMPREGNATED 30# BUILDING FELT BETWEEN THE SLAB AND ADJACENT WALL, UNLESS OTHERWISE NOTED.

4. PROVIDE APPROPRIATE DEPRESSION IN SLABS FOR TILE OR OTHER SIMILAR MATERIALS. MAINTAIN FULL SLAB THICKNESS BELOW THESE DEPRESSIONS. SEE ARCHITECTURAL INTERIOR FINISH SCHEDULES, FLOOR PLANS, AND DETAILS FOR REQUIRED DEPRESSIONS.

5. JOINTS SHALL BE LOCATED AS SHOWN ON DRAWINGS.

6. FOR SLABS ON GRADE, CONTROL JOINTS SHALL BE LOCATED NOT MORE THAN 7.6 METERS APART IN EITHER DIRECTION.

7. CONSTRUCTION JOINTS FOR STRUCTURAL SLABS, BEAMS AND GIRDERS SHALL BE LOCATED WITHIN THE MIDDLE THIRD OF THEIR SPAN. JOINTS IN GIRDERS SHALL BE OFFSET A MINIMUM DISTANCE OF TWO TIMES THE WIDTH OF AN INTERSECTING BEAM.

8. A SET OF DRAWINGS SHOWING CONCRETE PLACING SEQUENCE AND LOCATION OF JOINTS SHALL BE SUBMITTED TO THE CONTRACTING OFFICER FOR APPROVAL PRIOR TO PREPARATION OF AFFECTED REINFORCING SHOP DRAWINGS.

9. ALL REINFORCING BARS SHALL BE PLACED IN ACCORDANCE WITH ACI BUILDING CODE (ACI–318).

10. ALL REINFORCING BARS SHALL BE DEFORMED BILLET–STEEL CONFORMING TO ASTM A–615, GRADE 60 OR APPROVED EQUAL WITH THE FOLLOWING MINIMUM REQUIREMENTS: MINIMUM YIELD STRENGTH 413 MPa (60,000 PSI).

11. WELDED WIRE FABRIC SHALL BE COLD DRAWN CONFORMING TO ASTM A–185, GRADE 60, OR APPROVED EQUAL WITH THE FOLLOWING MINIMUM REQUIREMENTS: MINIMUM YIELD STRENGTH 413 MPa (60,000 PSI).

12. DETAILING OF REINFORCEMENT SHALL BE IN ACCORDANCE WITH THE LATEST ACI MANUAL FOR DETAILING (SP–66)

13. DIMENSION AND SPACING OF BARS ARE IN MILLIMETERS UNLESS OTHERWISE NOTED. THUS, ø 19 X 300 LG.

14. CONCRETE SHALL HAVE A MINIMUM 28 DAY COMPRESSIVE STRENGTH OF 28 MPa (4,000 PSI) AND CONTAIN ASTM C–150 TYPE I CEMENT UNLESS OTHERWISE NOTED.

15. REINFORCEMENT MAY BE MOVED WITH APPROVAL OF THE CONTRACTING OFFICER TO CLEAR PIPES, SEALS, RECESSES, EMBEDDED METAL WORK AND CONDUITS.

16. CLEAR CONCRETE COVER FOR REINFORCING BARS IN CAST–IN–PLACE CONCRETE SHALL BE PROVIDED AS FOLLOWS, UNLESS OTHERWISE NOTED:

    A. FOOTINGS OR BEAMS CAST AGAINST AND PERMANENTLY EXPOSED TO EARTH: 75mm
    B. FORMED SURFACES EXPOSED TO WEATHER OR EARTH:
       (1) 16 BARS OR SMALLER: 40mm
       (2) ALL OTHERS: 50 mm
    C. FORMED SURFACES NOT EXPOSED DIRECTLY TO WEATHER OR EARTH:
       (1) SLABS, WALLS: 20mm
       (2) BEAMS, GIRDERS, COLUMNS:
       PRINCIPLE REINFORCEMENT, TIES OR STIRRUPS: 40mm

17. REINFORCEMENT SHALL BE CONTINUOUS THROUGH ALL CONSTRUCTION JOINTS, BUT DISCONTINUOUS AT ALL CONTROL JOINTS, UNLESS OTHERWISE INDICATED.

18. REINFORCING BARS SHALL NOT BE BENT OR STRAIGHTENED IN A MANNER THAT WILL INJURE THE MATERIAL. BARS WITH KINKS OR IMPROPER BENDS SHALL NOT BE USED.

19. THE FIRST AND LAST BAR IN SLABS AND WALLS SHALL BE PLACED AT A MAXIMUM OF ONE–HALF OF THE BAR SPACING SHOWN, UNLESS OTHERWISE NOTED.

20. THE CLEAR DISTANCE BETWEEN PARALLEL BARS IN A LAYER SHALL NOT BE LESS THAN THE NOMINAL DIAMETER OF THE BAR, NOR 25mm. THE CLEAR DISTANCE BETWEEN LONGITUDINAL BARS IN COLUMNS SHALL NOT BE LESS THAN 1.5 TIMES THE NOMINAL BAR DIAMETER NOR 40mm OF THE CURRENT AWS, D1.1, STRUCTURAL WELDING CODE – STEEL.

21. PROVIDE 1– ø 13 REBAR IN MID–DEPTH OF SLAB AT ALL RE–ENTRANT CORNERS.

22. PROVIDE SEALANT INDICATED AT ALL CONTROL AND ISOLATION JOINTS. WHERE CONCRETE SLAB WORK WILL NOT BE COVERED BY SOME OTHER FINISH FLOOR MATERIAL, PROVIDE TOOLED CONTROL JOINTS HAVING A RADIUS OF 3mm.

UNLESS OTHERWISE NOTED, LINEAR DIMENSIONS SHOWN ARE IN MILLIMETERS.

*	REVISIONS		
SYMBOL	DESCRIPTION	DATE	APR
		03/04/2007	

DESIGNED BY: RG
DATE: 01–25–07
DWN BY: JSG
SUBMITTED BY: PHILIP L. DINELLO
CHIEF, PD, PACIFICS DEV
CHK BY: KGO/JK
FILE NO.: AF0609 $–SB01GN

US Army Corps of Engineers
Transatlantic Programs Center

AFGHAN NATIONAL POLICE COMPANY COMPOUND
VARIOUS, AFGHANISTAN

STANDARD DETAILS
GENERAL NOTES

SHEET REFERENCE NUMBER:
SS–1

AF0609$–ss01gn.dwg
3/30/2007 8:32 AM
AED, AED, USACE

LEGENDS AND NOTATIONS:

A. PLATE SIZES ARE GIVEN IN MILLIMETERS, THUS, PL 10 X 200 X 600.

B. ROLLED STEEL SHAPES ARE INDICATED BY AISC METRIC NOTATION THUS, W200 X 150.

C. ANGLE SIZES ARE GIVEN IN MILLIMETERS. THUS, L100 X 100 X 600 LG.

D. WELDING NOTATION SIZE, LENGTH AND SPACING ARE GIVEN IN MILLIMETERS WITH SYMBOLS IN ACCORDANCE WITH AWS.

E. BOLT SIZE AND LENGTH ARE GIVEN IN MILLIMETERS, THUS, 10Ø X 300 LG.

ABBREVIATIONS

A.B.	ANCHOR BOLT
ADD	ADDED OR ADDITIONAL
AFF	ABOVE FINISH FLOOR
ARCH	ARCHITECTURAL
@	AT THE RATE OF
BM	BEAM
BRG	BEARING
B OR BOT	BOTTOM
℄	CENTERLINE
CONC	CONCRETE
CJ	CONTROL JOINT
CJT	CONSTRUCTION JOINT
CIP	CAST-IN-PLACE
COL	COLUMN
CONT	CONTINUOUS
DIA OR Ø	DIAMETER
DIR	DIRECTION
DWG	DRAWING
EE	EACH END
EF	EACH FACE
⊕ OR ELEV	ELEVATION
ES	EACH SIDE
EW	EACH WAY
EJT	EXPANSION JOINT
FF	FAR FACE
FTG	FOOTING
FDN	FOUNDATION
GB	GRADE BEAM
H OR HORZ	HORIZONTAL
HP	HIGH POINT
IJ	ISOLATION JOINT
JT	JOINT
KSM	KILOGRAMS PER SQUARE METER
LG	LONG
LL	LOWER LAYER
LP	LOW POINT
MCJ	MASONRY CONTROL JOINT
M	METERS
MM	MILLIMETERS
MAX	MAXIMUM
MECH	MECHANICAL
MIN	MINIMUM
NF	NEAR FACE
NO OR #	NUMBER
NTS	NOT TO SCALE
O/C	ON CENTER
OPNG	OPENING
PC	PRECAST
PEJ	PRE MOLDED EXPANSION JOINT
PL	PLATE
PSF	POUNDS PER SQUARE FOOT
PSI	POUNDS PER SQUARE INCH
REINF	REINFORCEMENT
REF	REFERENCE
REQ	REQUIRED
SCH	SCHEDULE
SHT	SHEET
SIM	SIMILAR
STD	STANDARD
SQ	SQUARE
T	TOP
TB	TIE BEAM
T & B	TOP AND BOTTOM
TOC	TOP OF CONCRETE
TOF	TOP OF FOOTING
TOS	TOP OF SLAB OR TOP OF STEEL
TYP	TYPICAL
UL	UPPER LAYER
UON	UNLESS OTHERWISE NOTED
VERT	VERTICAL
WWF	WELDED WIRE FABRIC
WP	WORKING POINT
W/	WITH

SPLICES

LOCATION OF SOME SPLICES ARE SHOWN ON DRAWINGS. SPLICES NOT SHOWN ON DRAWINGS SHALL BE IN ACCORDANCE WITH THE APPLICABLE REQUIREMENTS FOR DETAILING REINFORCEMENT AND AS APPROVED BY THE CONTRACTING OFFICER.

WHEN REINFORCEMENT OF DIFFERENT SIZE SPLICES, THE LAP LENGTH IS GOVERNED BY THE SMALLER BAR UNLESS NOTED OTHERWISE.

WALL AND SLAB REINFORCEMENT SPLICES ARE TO BE MADE SO THAT REQUIRED CLEARANCES ARE MAINTAINED.

TENSION LAP SPLICES		
AS (PROVIDED) / AS (REQUIRED)	MAXIMUM % OF REBARS SPLICED WITHIN REQ. LAP LENGTH	
	50	100
EQUAL TO OR GREATER THAN 2	CLASS A	CLASS B
LESS THAN 2	CLASS B	CLASS B

TENSION LAP SPLICE LENGTH SHALL BE AS FOLLOWS:

TEFOR CLASS "A" SPLICES 1.0 ld
FOR CLASS "B" SPLICES 1.3 ld

WHERE ld IS THE BASIC TENSION DEVELOPMENT LENGTH.

BASIC TENSION DEVELOPMENT ld (mm)& TENSION DOWEL EMBEDMENT LENGTH

CONCRETE	TYPE OF BARS	BAR SIZE								
		#3	#4	#5	#6	#7	#8	#9	#10	#11
28 MPa	TOP BARS	400	500	600	700	800	1000	1200	1600	2000
	OTHERS	300	400	450	600	600	750	950	1200	1500

NOTES:

1. FOR BARS WITH CLEAR SPACING NOT LESS THAN 5 TIMES BAR DIAMETER AND WITH COVER FROM FACE OF MEMBER TO EDGE BARS, MEASURED IN THE PLANE OF THE BARS, NOT LESS THAN 2.5 TIMES BAR DIAMETER USE 0.8 ID, BUT THE LAP SPLICE LENGTH SHALL NOT BE LESS THAN 300mm.
2. TOP BARS ARE HORIZONTAL AND INCLINED REINFORCING BARS PLACED SO THAT MORE THAN 300mm OF CONCRETE IS CAST IN THE MEMBER BELOW THE BARS.

STANDARD COMPRESSION LAP SPLICE LENGTH (MM)

SPLICE LENGTH	300 380 480 580 660 760 860 960 1070

BASIC COMPRESSION DEVELOPMENT (MM) & COMPRESSION DOWEL EMBEDMENT LENGTH

CONCRETE	BAR SIZE								
	#3	#4	#5	#6	#7	#8	#9	#10	#11
4000 PSI	200	250	300	360	420	480	550	610	680

ALL BARS MARKED CONTINUOUS SHALL BE PROPERLY LAPPED AT SPLICES AND CORNERS AND HOOKED AT NON-CONTINUOUS ENDS.

DESIGN LOADS

SERVICE LOADS

DEAD ----------CALCULATED
LIVE ----------REFER TO INDIVIDUAL SHEETS

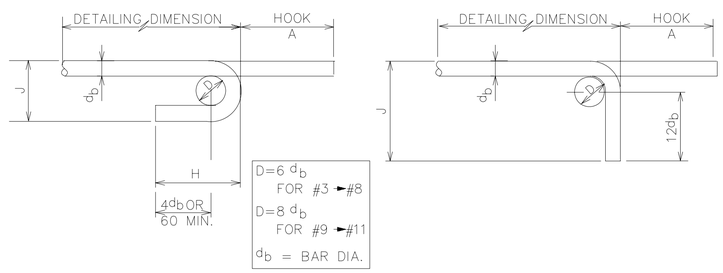

SIZES OF 180° HOOK			
BAR SIZE	A	J	APPROX H
# 3	130	80	100
# 4	150	100	110
# 5	180	130	130
# 6	200	150	150
# 7	250	180	180
# 8	280	200	200
# 9	380	290	260
#10	430	320	290
#11	480	360	320

SIZES OF 90° HOOK		
BAR SIZE	A	J
# 3	140	150
# 4	190	220
# 5	230	270
# 6	270	320
# 7	320	370
# 8	370	430
# 9	420	480
#10	470	580
#11	520	610

FILLET WELD STRENGTH *	
SIZE INCHES	STRENGTH KIPS/INCH
1/8	1.86
3/16	2.78
1/4	3.71
5/16	4.64
3/8	5.57
7/16	6.50
1/2	7.42
9/16	8.35

* AWS A5.1 OR A5.5 E70 XX ELECTRODES FOR A36 MATCHING BASE MATERIAL

BAR BENDING DETAILS

EQUIVALENT REINFORCING BAR SIZE CHART	
ACI DESIGNATION	METRIC DIAMETER (MM)
#3	Ø10
#4	Ø13
#5	Ø16
#6	Ø19
#7	Ø22
#8	Ø25
#9	Ø29
#10	Ø32
#11	Ø36

EQUIVALENT STEEL FABRIC SIZE CHART		
WIRE REINFORCING INSTITUTE DESIGNATION	METRIC SIZES (MM)	
	WIRE SPACING	WIRE DIAMETER
6 x 6 – W1.4 x W1.4	150 x 150	3.0 x 3.0
6 x 6 – W2.1 x W2.1	150 x 150	4.0 x 4.0
6 x 6 – W2.9 x W2.9	150 x 150	5.0 x 5.0
6 x 6 – W4.0 x W4.0	150 x 150	6.0 x 6.0

UNLESS OTHERWISE NOTED, LINEAR DIMENSIONS SHOWN ARE IN MILLIMETERS.

*	REVISIONS		DATE	APR
			03/04/2007	
		SYMBOL	DESCRIPTION	

DESIGNED BY: RG
DWN BY: JSG
CHK BY: KGO
DATE: 01-25-07
SUBMITTED BY: PHILIP L. DINELLO PROJECT MGR. PACIFICS DEV
FILE NO.: AF0609 $-SB02GN

US Army Corps of Engineers
Transatlantic Programs Center

AFGHAN NATIONAL POLICE COMPANY COMPOUND
VARIOUS, AFGHANISTAN

STANDARD DETAILS
NOTATIONS AND BAR DEVELOPMENT LENGTHS

SHEET REFERENCE NUMBER:
SS-2

AF0609$-sb02gn.dwg
3/30/2007 9:00 AM
AED, AED, USACE

MASONRY LINTEL SCHEDULE			
OPENING WIDTH	NOMINAL SIZE	REBAR BOTTOM	DETAIL
0–1800	200X200	2–Ø13	A
1800–2000	200X200	2–Ø16	A
2000–2200	200X200	2–Ø19	A
2200–4000	200X400	2–Ø13	B
4000–4400	200X400	2–Ø16	B
4400–4600	200X400	2–Ø19	B
0–1350	150X200	1–Ø13	C

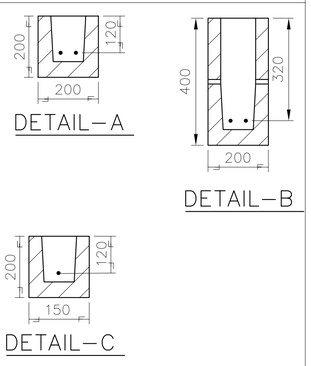

DETAIL
SCALE=N.T.S.
A
SS-3 SS-3

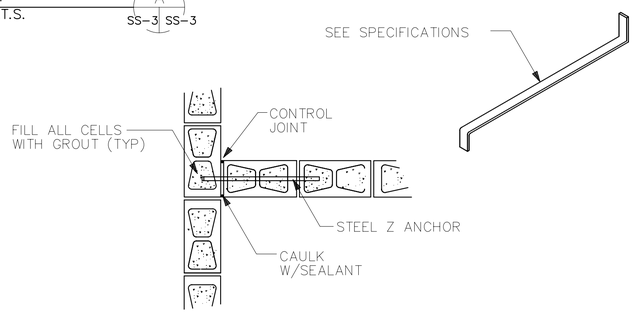

INTERSECTION OF WALLS OR PARTITIONS

SEE NOTES 10 AND 11

DETAIL
SCALE=N.T.S.
C
SS-3 SS-3

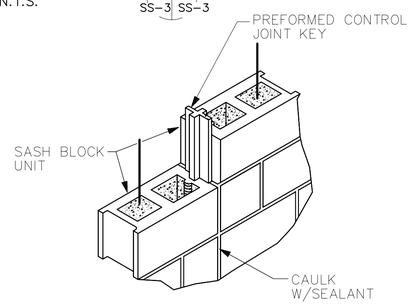

MASONRY CONTROL JOINT DETAILS

DETAIL
SCALE=N.T.S.
D
SS-3 SS-3

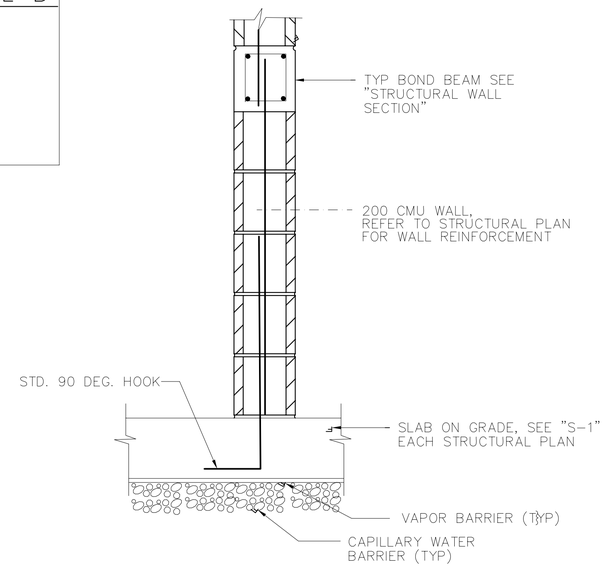

INTERIOR WALL DETAIL

SCALE: 1:10

DETAIL
SCALE=N.T.S.
E
SS-3 SS-3

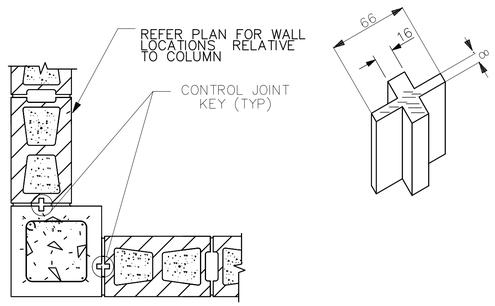

MASONRY CONTROL JOINT AT COLUMNS

N.T.S.

MASONRY NOTES:

1. WORK THIS SHEET WITH ARCHITECTURAL SHEETS.
2. EXCEPT AS AND WHERE SPECIFICALLY NOTED OR INDICATED ON THE DRAWINGS, VERTICAL AND HORIZONTAL REINFORCEMENT FOR THE CMU WALLS SHALL BE AS FOLLOWS:

   A. 200 CMU WALLS

      1. 1Ø @ 600 VERTICAL AT EXTERIOR WALLS
      2. 1Ø @ 1000 VERTICAL AT INTERIOR WALLS
      3. 9 GAGE SIDE RODS @ 400 LADDER TYPE HORIZONTAL JOINT REINFORCEMENT
      4. 1– 13 BOND BEAMS @ 1000
      5. 2– 13 AT CAP–BOND BEAMS

3. IN ADDITION TO JOINT REINFORCEMENT IDENTIFIED FOR PLACEMENT IN NOTE 2 ABOVE, PROVIDE JOINT REINFORCEMENT ADJACENT TO SILLS AND HEADS OF ALL OPENINGS HAVING A MASONRY WIDTH GREATER THAN 1.60 METERS. EXTEND (OR OTHERWISE ANCHOR) SUCH REINFORCEMENT A MINIMUM OF 600 MILLIMETERS BEYOND EACH FACE OF OPENING.
4. DISCONTINUE BOND BEAM AND JOINT REINFORCEMENT AT MASONRY CONTROL JOINTS UNLESS OTHERWISE NOTED.
5. UNLESS NOTED OTHERWISE, PROVIDE A MINIMUM OF 2– 13 REBAR IN LINTEL BEAMS SPANNING MASONRY OPENINGS HAVING A WIDTH GREATER THAN ONE METER. EXTEND (OR OTHERWISE ANCHOR) SUCH REINFORCEMENT A MINIMUM OF 600 MILLIMETERS BEYOND EACH FACE OF OPENING.
6. WHERE REINFORCEMENT FOR A BOND BEAM AND LINTEL ARE ALIGNED WITHIN A MINIMUM OF 600 MILLIMETERS BEYOND EACH FACE OF OPENING. A MASONRY COURSING EXTEND (OR OTHERWISE ANCHOR) REBAR FOR THE LINTEL
7. PROVIDE A MASONRY BOND TO INTERSECTING LOAD–BEARING WALLS AT CORNERS ONLY. WHERE A LOAD–BEARING WALL TERMINATES AT THE FACE OF ANOTHER LOAD–BEARING WALL, PROVIDE A CONTROL JOINT. FOR LATERAL SUPPORT BETWEEN SUCH WALLS PROVIDE STEEL TIE BARS, SPACED NOT MORE THAN 800 MM ON CENTER VERTICALLY.
8. IN ADDITION TO THE VERTICAL REINFORCEMENT INDICATED ON WALL DETAILS FOR PLACEMENT, PROVIDE 1 – 13ØREBAR ADJACENT TO SIDES OF MASONRY OPENINGS.
9. CMU BLOCK DETAILS SHALL MATCH DETAILING OF EXISTING BUILDINGS ON SITE.
10. THERE SHALL BE A FOUNDATION DOWEL FOR EACH VERTICAL REINFORCING BAR. FOUNDATION DOWELS SHALL EXTEND A MINIMUM OF 30 DIAMETERS INTO THE THE FOUNDATION CONCRETE, AND 40 DIAMETERS OR 600 MINIMUM INTO THE MASONRY WALL. LAPS OR SPLICES OF REINFORCING STEEL IN MASONRY SHALL BE 40 DIAMETERS OR 600 MINIMUM.
11. PROVIDE MASONRY CONTROL JOINT LOCATIONS WITHOUT CUTTING BLOCK. MAXIMUM SPACING OF CONTROL JOINTS SHALL BE 7.2 METERS.

0 .50 1.00
1:10
UNLESS OTHERWISE NOTED, LINEAR DIMENSIONS SHOWN ARE IN MILLIMETERS.

*	REVISIONS		
SYMBOL	DESCRIPTION	DATE	APR
		03/04/2007	

DESIGNED BY: RG
DATE: 01-25-07
DWN BY: JSG
SUBMITTED BY: PHILIP L. DINELLO, PROJECT DEVELOPMENT
CHK BY: KGO/JK
FILE NO.: AF0609 $–SB03DT

US Army Corps of Engineers
Transatlantic Programs Center

AFGHAN NATIONAL POLICE COMPANY COMPOUND
VARIOUS, AFGHANISTAN

STANDARD DETAILS
MASONRY DETAILS

SHEET REFERENCE NUMBER:
SS–3

AF0609$–sb03dt.dwg
3/30/2007 9:07 AM
AED AED, USACE

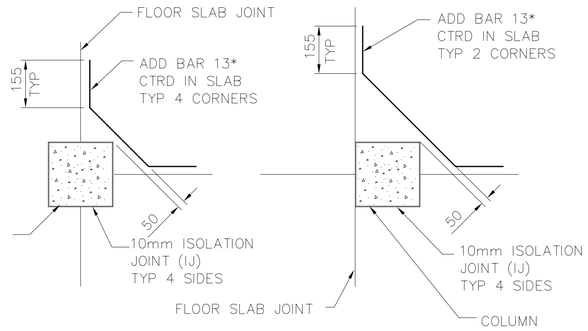

TYP SLAB JOINT DETAIL AROUND COLUMNS

NOT TO SCALE

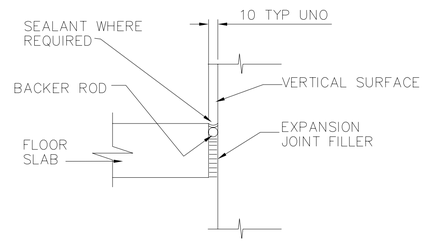

TYP SLAB ISOLATION JOINT (IJ) DETAIL

NOT TO SCALE

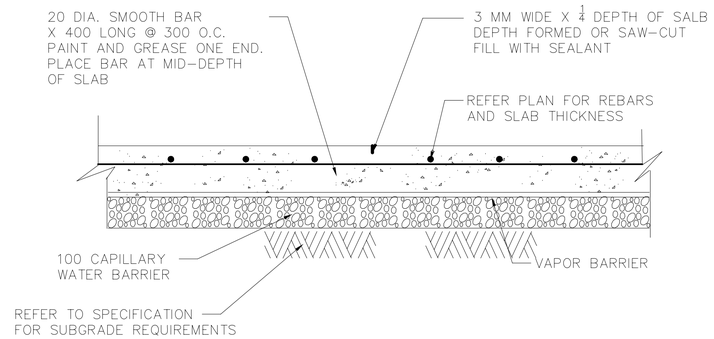

TYP CRACK CONTROL JOINT (CJ) ON SLAB ON GRADE

NOT TO SCALE

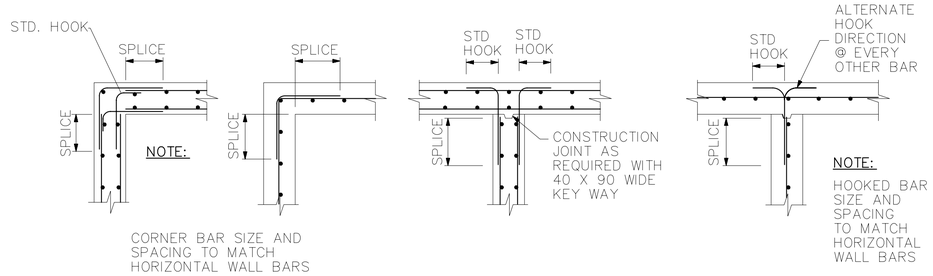

AT CORNERS

AT INTERSECTIONS

TYPICAL WALL AND GRADE BEAM REINFORCEMENT DETAILS

NOT TO SCALE

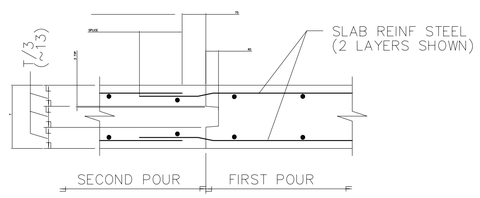

NOTE:

1. LOCATE CONSTRUCTION JOINTS BETWEEN 1/4 TO 1/3 POINT OF THE SLAB SPAN. ALL CONSTRUCTION JOINT LOCATIONS NOT SPECIALLY INDICATED SHALL BE APPROVED BY THE CONTRACTING OFFICER PRIOR TO CONSTRUCTION.

2. AT CONTRACTORS OPTION, STANDARD LAP MAY BE OMITTED BY PROVIDING CONTINUOUS REINFORCEMENT.

IN SLABS

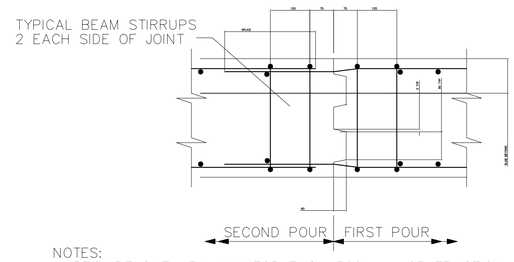

NOTES:
1. PROVIDE ONE KEY WAY FOR EACH 300 mm OR FRACTION OF BEAM DEPTH DISCONTINUE KEY WAY AT A DISTANCE OF 60mm FROM EXPOSED SURFACES.

2. LOCATE CONSTRUCTION JOINTS BETWEEN 1/4 TO 1/3 POINT OF THE SPAN ALL CONSTRUCTION JOINT LOCATIONS NOT SPECIFICALLY INDICATED SHALL BE APPROVED BY THE CONTRACTING OFFICER PRIOR TO CONSTRUCTION.

3. AT CONSTRUCTION OPTION STANDARD LAP MAY BE OMITTED BY PROVIDING CONTINUOUS REINFORCEMENT.

IN JOISTS, BEAMS AND GIRDERS

TYPICAL ELEVATED SLAB SYSTEM CONSTRUCTION JOINT DETAILS

NOT TO SCALE

UNLESS OTHERWISE NOTED, LINEAR DIMENSIONS SHOWN ARE IN MILLIMETERS.

REVISIONS			
SYMBOL	DESCRIPTION	DATE	APR
*		03/04/2007	

DESIGNED BY: RG	DATE: 01-25-07
DWN BY: JSG/ JK	SUBMITTED BY: PHILIP L. DINELLO CHIEF, PD PROJECTS DEV.
CHK BY: KGO/ JK	FILE NO.: AF0609 $-SB04DT

US Army Corps of Engineers
Transatlantic Programs Center

AFGHAN NATIONAL POLICE COMPANY COMPOUND
VARIOUS, AFGHANISTAN

STANDARD DETAILS
SLAB-ON-GRADE DETAILS

SHEET REFERENCE NUMBER:

SS-4

AF0609$-sb04dt.dwg

3/30/2007 9:13 AM

AED AED, USACE

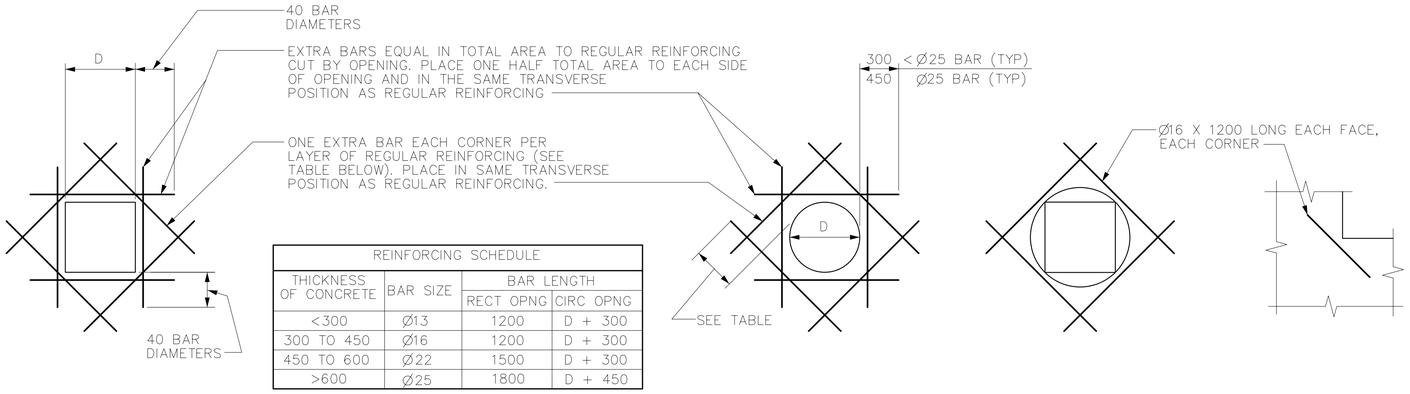

REINFORCING SCHEDULE			
THICKNESS OF CONCRETE	BAR SIZE	BAR LENGTH	
		RECT OPNG	CIRC OPNG
<300	Ø13	1200	D + 300
300 TO 450	Ø16	1200	D + 300
450 TO 600	Ø22	1500	D + 300
>600	Ø25	1800	D + 450

RECTANGULAR OPENINGS

CIRCULAR OPENINGS

FOR OPENING LARGER THAN 500 IN DIAMETER OR DIAGONAL

FOR OPENINGS 500 AND SMALLER IN DIAMETER OR DIAGONAL

ISOLATED RE-ENTRANT CORNERS

TYPICAL EXTRA REINFORCING AT OPENINGS IN WALLS AND SLABS

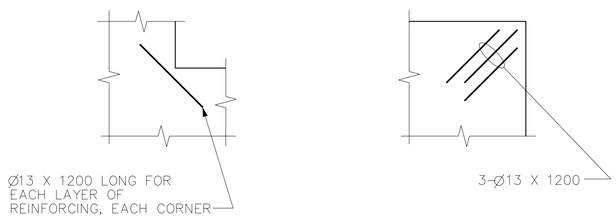

RE-ENTRANT CORNERS

EXTERIOR CORNERS

TYPICAL EXTRA REINFORCING IN SLABS ON GRADE

UNLESS OTHERWISE NOTED, LINEAR DIMENSIONS SHOWN ARE IN MILLIMETERS.

SYMBOL	DESCRIPTION	DATE	APR
*	REVISIONS	03/04/2007	

DESIGNED BY: RG
DATE: 01-25-07
DWN BY: JSG
SUBMITTED BY: PHILIP L. DINELLO, PROJECT DEVELOPMENT
CHK BY: KGO
FILE NO.: AF0609 $-SB06DT

US Army Corps of Engineers
Transatlantic Programs Center

AFGHAN NATIONAL POLICE COMPANY COMPOUND
VARIOUS, AFGHANISTAN

STANDARD DETAILS
EXTRA REINFORCING AT OPENINGS AND CORNERS

SHEET REFERENCE NUMBER:
SS-5

AF0609$-sb05dt.dwg
3/30/2007 9:15 AM
AED, AED, USACE

PIPING LEGEND

SYMBOL	DESCRIPTION
	THREE-WAY VALVE (ANY TYPE OF OPERATOR)
	GATE VALVE
	BALL VALVE
	GLOBE VALVE
	ANGLE GLOBE VALVE
	PRESSURE RELIEF VALVE
	PRESSURE-TEMPERATURE RELIEF VALVE
	BALANCING COCK
	BUTTERFLY VALVE
	CHECK VALVE
	UNION (SCREWED)
	PRESSURE CONTROL VALVE (SELF-CONTAINED)
S	SOLENOID VALVE
M	MOTOR OPERATED CONTROL VALVE
	AIR ELIMINATOR
AAV	AIR VENT, AUTOMATIC
	AIR VENT, MANUAL
	BACK PRESSURE VALVE
	PRESSURE REDUCING VALVE
	"Y" STRAINER
	AIR VALVE
	TEMPERATURE REGULATING VALVE
	EXPANSION VALVE, HAND
	EXPANSION VALVE, THERMOSTATIC
T	THERMOMETER, DIAL TYPE
T	THERMOMETER, VERTICAL TYPE
P	PRESSURE GAGE
	RISER DOWN (ELBOW)
	RISER UP (ELBOW)
	PITCH DOWN IN DIRECTION OF FLOW
	RISE OR DROP
— CHS —	CHILLED WATER SUPPLY
— CHR —	CHILLED WATER RETURN
— C —	CONDENSATE DRAIN

SYMBOL	DESCRIPTION
	BRANCH CONNECTION OUT OF TOP
	BRANCH CONNECTION OUT OF BOTTOM
	BRANCH CONNECTION OUT OF SIDE
	CAP ON END OF PIPE
	CONCENTRIC REDUCER
	ECCENTRIC REDUCER
	ANCHOR POINT
	FLEXIBLE CONNECTION
FS	FLOW SWITCH
	EXPANSION JOINT
	FLUSH VALVE
HB	HOSE BIBB
	WATER FIXTURE
	MIXING FAUCET COLD & HOT WATER
DV	DRAIN VALVE
	SIGHT GLASS
FM	FLOW METER
	PET COCK
	FLOW DIRECTION
	INLINE-PUMP
	CALIBRATED BALANCE VALVE
T	AQUASTAT
M	MOTOR OPERATED BUTTERFLY VALVE

FACILITY DESIGNATION	
A	OFFICE BUILDING
B	DFAC/BARRACKS
C	MAINTENANCE/WAREHOUSE
D	GUARD HOUSE
E	GUARD TOWER
F	GUARD SHACK

* NO MECHANICAL WORK IN THESE FACILITIES

ABBREVIATIONS

AAV	AIR VENT AUTOMATIC
AC	AIR CURTAIN FAN
ACMH	ACTUAL CUBIC METERS PER HOUR
ACC	AIR COOLED CHILLER
ACCU	AIR COOLED CONDENSING UNIT
AF	AIR FILTER
AFF	ABOVE FINISHED FLOOR
AD	AREA DRAIN
AHU	AIR HANDLING UNIT
AP	ACCESS PANEL
BF	BOTTOM FLAT
BD	BALANCING DAMPER
BDD	BACKDRAFT DAMPER
BFP	BACKFLOW PREVENTER
BHP	BRAKE HORSEPOWER
BOD	BOTTOM OF DUCT
°C	DEGREES CELSIUS
CD	CEILING DIFFUSER
CHW	CHILLED WATER
CLG	CEILING
CM	CENTIMETER
CMH	CUBIC METER PER HOUR
CONN	CONNECTION
CONT	CONTINUATION
CW	CHILLED WATER COOLING COIL
D	DROP/DEPTH
DB	DRY BULB
DET	DETAIL
DIA	DIAMETER
DH	DUCT HEATER
DIFF	DIFFERENTIAL
DG	DOOR GRILLE
DN	DOWN
DWG	DRAWING
DX	DIRECT EXPANSION
EA	EXHAUST AIR
EAT	ENTERING AIR TEMPERATURE
EDB	ENTERING DRY BULB
EDH	ELECTRIC DUCT HEATER
EF	EXHAUST FAN
EG	EXHAUST GRILLE
EL	ELEVATION
ELEC	ELECTRICITY/ELECTRICAL
EQUIP	EQUIPMENT
ER	EXHAUST REGISTER
EWB	ENTERING WET BULB
EWH	ELECTRIC WATER HEATER
EWT	ENTERING WATER TEMPERATURE
EXH	EXHAUST
EXT	EXTERNAL/EXTERIOR
FCO	FLOOR CLEAN OUT
FCU	FAN COIL UNIT
FCV	FLOW CONTROL VALVE
FD	FLOOR DRAIN/FIRE DAMPER
FIN	FINISHED
FL	FLOOR
FS	FLOOR SINK
FSD	COMBINATION FIRE/SMOKE DAMPER
GA	GAUGE
HB	HOSE BIBB
HC	HEATING COIL
HORIZ	HORIZONTAL
HP	HORSEPOWER
HR	HOUR
HVAC	HEATING, VENTILATING & AIR CONDITIONING
HZ	HERTZ
ID	INSIDE DIAMETER
IH	INTAKE HOOD
IS	INERTIAL SEPARATOR
INV.EL.	INVERT ELEVATION
KG	KILOGRAM
KH	KITCHEN HOOD
KW	KILOWATT
KPa	KILO PASCALS

LAT	LEAVING AIR TEMPERATURE
LAV	LAVATORY
LFACP	LOCAL FIRE ALARM CONTROL PANEL
LPM	LITERS PER MINUTE
LPH	LITERS PER HOUR
LS	LEVEL SWITCH
LVG	LEAVING
LVR	LOUVER
M	METER
M^2	SQUARE METER
M^3	CUBIC METER
MAX	MAXIMUM
MECH	MECHANICAL
MIN	MINIMUM
MISC	MISCELLANEOUS
MM	MILLIMETER
MVD	MANUAL VOLUME DAMPER
NC	NORMALLY CLOSED
NFPA	NATIONAL FIRE PROTECTION ASSOCIATION
NO	NORMALLY OPEN/NUMBER
NOM	NOMINAL
NTS	NOT TO SCALE
OA	OUTSIDE AIR
OC	ON CENTER
OD	OVERFLOW DRAIN
OI	OIL INTERCEPTOR
ϕ	PHASE
P	PUMP
PD	PRESSURE DIFFERENTIAL
PRESS	PRESSURE
PRV	PRESSURE REDUCING VALVE
PS	PRESSURE SWITCH
QTY	QUANTITY
R	RISE
RA	RETURN AIR
RC	REFRIGERATION COOLER
RD	ROOF DRAIN
REQD	REQUIRED
RF	RETURN FAN
RG	RETURN GRILLE
RH	RELATIVE HUMIDITY
RL	REFRIGERANT LIQUID
RM	ROOM
RPM	REVOLUTIONS PER MINUTE
RR	RETURN REGISTER
RS	REFRIGERANT SUCTION
S	SOIL/SOUTH/SECOND
SA	SUPPLY AIR
SD	SUPPLY AIR DIFFUSER
SENS	SENSIBLE
SF	SUPPLY FAN
SG	SUPPLY GRILLE
SH	SHEET
SMACNA	SHEET METAL AND AIR CONDITIONING CONTRACTORS NATIONAL ASSOCIATION
SOV	SHUT-OFF VALVE
SP	STATIC PRESSURE
SQ FT	SQUARE FOOT/SQUARE FEET
SR	SUPPLY REGISTER
SST	SATURATED SUCTION TEMPERATURE
TCP	TEMPERATURE CONTROL PANEL
TCV	TEMPERATURE CONTROL VALVE
TEMP	TEMPERATURE
TG	TRANSFER GRILLE
TK	TANK
TP	TRAP PRIMER
TYP	TYPICAL
UC	UNDERCUT DOOR
UL	UNDERWRITER'S LABORATORIES
V	VOLTS
VEL	VELOCITY
VH	VENT HOOD
WCCU	WATER COOLED CONDENSING UNIT
WG	WATER GAGE

GENERAL NOTES:

1. SEE ARCHITECTURAL DRAWINGS FOR EXACT LOCATION OF LOUVERS, EQUIPMENT PADS AND SUPPORT PLATFORMS.
2. SEE ARCHITECTURAL REFLECTED CEILING PLAN FOR EXACT LOCATION OF DIFFUSERS, REGISTERS, AND GRIILLES.
3. INSULATE DUCTWORK AND CHILLED WATER AND REFRIGERANT PIPING SYSTEMS IN ACCORDANCE WITH SPEC. SECTION 01015, THERMAL INSULATION FOR MECHANICAL SYSTEMS.
4. ALL DIMENSIONS SHOWN IN mm UNLESS INDICATED OTHERWISE.
5. ALL DUCT DIMENSIONS SHOWN ON THE DRAWINGS ARE CLEAR INSIDE DIMENSIONS.
6. MOUNT WALL THERMOSTATS 1.5M ABOVE FINISHED FLOOR.
7. FACTORY PACKAGED CENTRAL AIR HANDLING UNITS SHALL BE PROVIDED COMNPLETE WITH VIBRATION ISOLATORS AND STEEL BASE (SUPPORT).

CONTROL LEGEND

SYMBOL	DESCRIPTION
M	MOTORIZED CONTROL DAMPER
	CONTROL CONNECTION
S/S	START/STOP CONTROL
H	HUMIDISTAT, TWO POSITION
Hm	HUMIDISTAT, MODULATING
H	HUMIDITY SENSOR
SD	SMOKE DETECTOR
T_2	THERMOSTAT, TWO POSITION
T	SPACE THERMOSTAT
FS	FLOW SWITCH
TI	TEMPERATURE INDICATOR
T_S	SPACE TEMPERATURE SENSOR

UNLESS OTHERWISE NOTED, LINEAR DIMENSIONS SHOWN ARE IN MILLIMETERS.

*	REVISIONS	DATE	APR
	DESCRIPTION		
	SYMBOL		

03/04/2007

DESIGNED BY: JMR | DATE: 01-25-07
DWN BY: JMR | SUBMITTED BY: MICHAEL HOWELL, PROJECT DEVELOPMENT SYSTEMS
CHK BY: RMS | FILE NO.: AF0609 $-MH01GN

US Army Corps of Engineers
Transatlantic Programs Center

AFGHAN NATIONAL POLICE COMPANY COMPOUND
VARIOUS, AFGHANISTAN
STANDARD DETAILS
LEGENDS AND ABREVIATIONS

SHEET REFERENCE NUMBER:
SM-1

AF0609$-MH0107.dwg
3/30/2007 9:19 AM
AED AED, USACE

SPLIT SYSTEM SCHEDULE

EQUIPT. NO.	LOCATION	CAPACITY MBTUH	SEER	AIR QUNTITY CMH	ELECTRICAL DATA				CONTROL DIAGRAM	COP	REMARKS
					W	VOLTS	PH	HZ			
AC-1	OFFICE RM. 110	24	10	1020	2520	240	1	50	T-1	2.9	HIGH WALL MOUNTED. PROVISION FOR FRESH AIR THROUGH MOVABLE LOUVERS.
AC-2,3	OFFICE RM. 101,102	12	10	700	2520	240	1	50	T-1	2.9	HIGH WALL MOUNTED. PROVISION FOR FRESH AIR THROUGH MOVABLE LOUVERS.

EXHAUST FAN SCHEDULE

EQUIPT. NO.	LOCATION	AIR QUANTITY CMH	S.P. MM-W.G.	FAN TYPE	ELECTRICAL DATA				CONTROL DIAGRAM	SOUND POWER dBA	REMARKS
					HP	VOLTS	PH	HZ			
EF-A-1,2,3,4	TOILETS	85	6	WALL CENTRIFUGAL	1/4	240	1	50	E4		HIGH WALL MOUNTED WITH BACKDRAFT DAMPER
EF-B-1,2	TOILETS/ SHOWERS	85	6	WALL CENTRIFUGAL	1/4	240	1	50	E4		HIGH WALL MOUNTED WITH BACKDRAFT DAMPER
EF-B-3	TOILETS	255	6	WALL CENTRIFUGAL	1/3	240	1	50	E4		HIGH WALL MOUNTED WITH BACKDRAFT DAMPER

UNIT HEATER SCHEDULE

EQUIPT. NO.	LOCATION	DISCHARGE	CAPACITY (KW)	AIR FLOW (CMH)	ELECTRICAL DATA				TEMP. RISE DEG C	SOUND POWER dBA	REMARKS
					HP	VOLTS	PH	HZ			
UH-A-1,2,3,4	TOILETS	HORIZONTAL	4	50	1/70	240	1	50	17		WALL MOUNTED CABINET HEATER
UH-B-1	TOILETS/ SHOWERS	HORIZONTAL	4	50	1/70	240	1	50	17		WALL MOUNTED CABINET HEATER
UH-B-2	KITCHEN	HORIZONTAL	10	144	1/4	380	3	50	20		WALL MOUNTED UNIT HEATER SEE DETAIL SM3 FOR DETAILS
UH-B-3	DINING	HORIZONTAL	20	212	1/3	380	3	50	30		WALL MOUNTED UNIT HEATER SEE DETAIL SM3 FOR DETAILS
UH-C-1	OFFICE	HORIZONTAL	4	50	1/70	240	1	50	17		FLOOR MOUNTED CABINET HEATER
UH-C-2	MAINT. BAY	HORIZONTAL	20	212	1/3	380	3	50	30		WALL MOUNTED UNIT HEATER SEE DETAIL SM3 FOR DETAILS
UH-D-1, UH-E-1, UH-F-1	GUARD BLDGS	HORIZONTAL	4	50	1/70	240	1	50	17		FLOOR MOUNTED CABINET HEATER

UNLESS OTHERWISE NOTED, LINEAR DIMENSIONS SHOWN ARE IN MILLIMETERS.

*	REVISIONS	03/04/2007
SYMBOL	DESCRIPTION	DATE APR

DESIGNED BY: JMR
DWN BY: JMR
CHK BY: RMS/HMH
DATE: 01-25-07
SUBMITTED BY: MICHAEL HOWELL
CHIEF, FDTD BLDGS SYSTEMS
FILE NO.: AF0609 $-MH02SC

US Army Corps of Engineers
Transatlantic Programs Center

AFGHAN NATIONAL POLICE COMPANY COMPOUND
VARIOUS, AFGHANISTAN
STANDARD DETAILS
MECHANICAL SCHEDULES

SHEET REFERENCE NUMBER:
SM-2

AF0609$-MH02DT.dwg
3/30/2007 9:21 AM
AED, AED, USACE

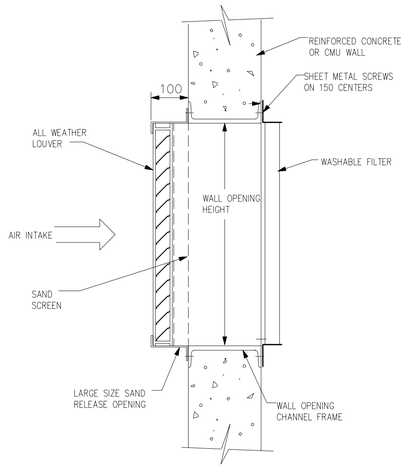

SAND TRAP TYPE LOUVER (A / SM3)
NOT TO SCALE

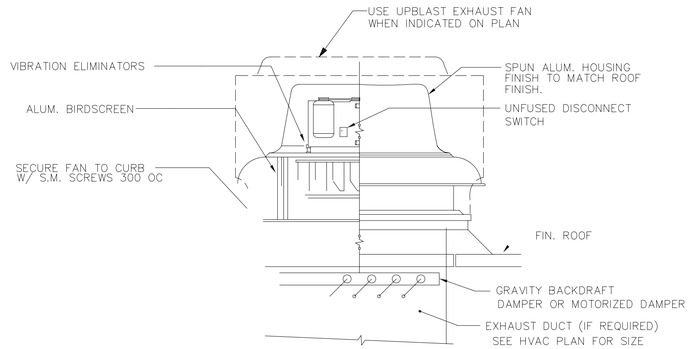

ROOF MOUNTED CENTRIFUGAL EXHAUST FAN DETAIL (B / SM3)

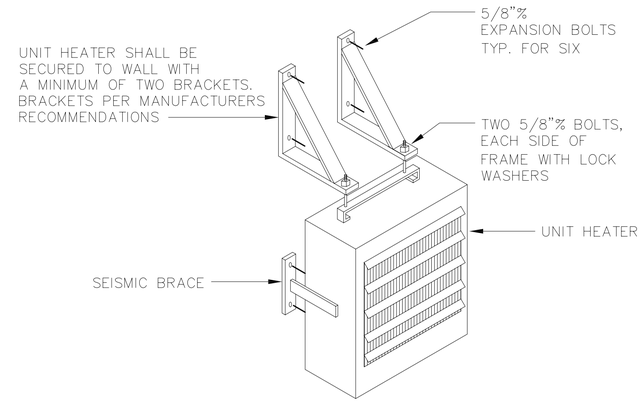

ELECTRIC UNIT HEATER DETAIL (C / SM3)
N.T.S.

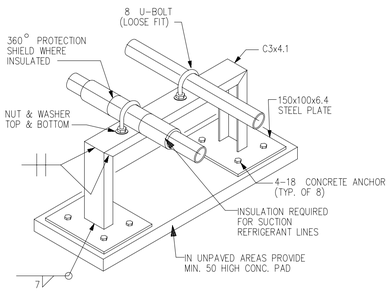

NOTES:
1. INSULATION AND METAL CLADDING REQUIRED AS PER SPECIFICATION SECTION 15250.

REFRIGERANT PIPING SUPPORT DETAIL (D / SM3)
NOT TO SCALE
(SIMILAR FOR CHILLED WATER AND OTHER PIPING SYSTEMS)

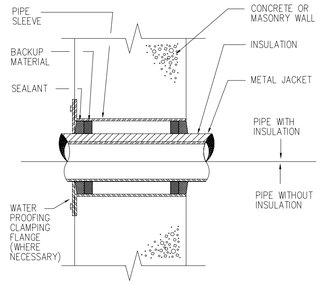

PIPE SLEEVE THRU WALL (E / SM3)
NOT TO SCALE

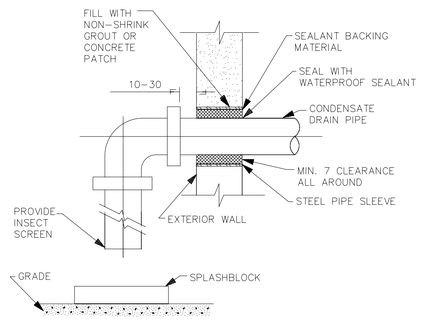

CONDENSATE DRAIN THRU EXTERIOR WALL (F / SM3)
NOT TO SCALE

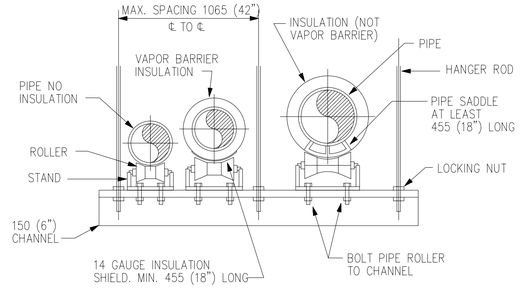

TRAPEZE HANGER DETAIL (G / SM3)
NOT TO SCALE

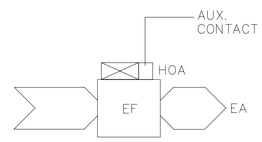

TEMPERATURE CONTROL DIAGRAM E1

E1 SEQUENCE OF CONTROL

START-UP
THE EXHAUST FAN SHALL BE STARTED MANUALLY BY PLACING THE HAND-OFF-AUTO (HOA) SWITCH IN THE HAND POSITION. IN THE AUTO POSITION, AN AUXILIARY CONTACT IN THE INTERLOCKED EQUIPMENT MOTOR STARTER SHALL START THE FAN.

UNLESS OTHERWISE NOTED, LINEAR DIMENSIONS SHOWN ARE IN MILLIMETERS.

SYMBOL	DESCRIPTION	DATE	APR

DESIGNED BY: JMR
DATE: 01-25-07
DWN BY: JMR
SUBMITTED BY: MICHAEL HOWELL
CHK BY: RMS
FILE NO.: AF0609 $-MH03DT

US Army Corps of Engineers
Transatlantic Programs Center

AFGHAN NATIONAL POLICE COMPANY COMPOUND
VARIOUS, AFGHANISTAN
STANDARD DETAILS
MECHANICAL STANDARD DETAILS

SHEET REFERENCE NUMBER:
SM-3

AF0609$-MH03DT.dwg
3/30/2007 9:24 AM
AED AED, USACE

LEGEND

- GATE VALVE
- GLOBE VALVE
- BUTTERFLY VALVE
- CHECK VALVE
- STOP CHECK VALVE
- PLUG VALVE
- 3-WAY VALVE
- RELIEF OR SAFETY VALVE
- ANGLE VALVE
- ANGLE GLOBE VALVE
- BALANCING COCK
- AIR VALVE
- HOSE GATE DRAIN VALVE
- EXPANSION VALVE
- AAV — AIR VENT, AUTOMATIC
- AIR VENT, MANUAL
- M — MOTORIZED VALVE (MODULATING OR TWO POSITION)
- S — SOLENOID VALVE
- M — 3-WAY MOTORIZED VALVE (MOD. OR 3-POSITION)
- S — 3-WAY SOLENOID VALVE
- TEMPERATURE REGULATING VALVE
- AIR ELIMINATOR
- BACK PRESSURE VALVE
- PRESSURE REDUCING VALVE
- D.V. — DRAIN VALVE
- SLEEVE COUPLING (SC)
- BP — BACKFLOW PREVENTER
- WHA "A" — WATER HAMMER ARRESTOR

LEGEND

- P — PRESSURE GAUGE
- T — THERMOMETER, DIAL TYPE
- T — THERMOMETER, VERTICAL TYPE
- H.B. — HOSE BIBB, PLAN
- H.B. — HOSE BIBB, ELEV.
- W.H. — WALL HYDRANT
- CO — EXPOSED CLEANOUT
- FCO — FLOOR CLEANOUT
- WCO — WALL CLEANOUT
- BALL VALVE
- UNION
- FLANGE SET
- FLEXIBLE HOSE/CONNECTION
- Y-TYPE STRAINER
- SIGHT GLASS
- GAUGE GLASS W/COCKS
- FILTER / DRYER
- TANK AIR CONTROL FITTING
- CAPPED / PLUGGED CONNECTION
- REDUCER - INCREASER
- EXPANSION LOOP
- EXPANSION JOINT
- SUPPORT LOCATION
- PIPE TURNING DOWN
- PIPE TURNING UP
- FD — FLOOR DRAIN
- ROOF DRAIN
- POINT OF CONNECTION TO EXISTING SYSTEM

LEGEND

- A — COMPRESSED AIR DROP
- HU — HUMIDIFIER
- I.F. — INSULATING FLANGE
- THERMAL RELIEF VALVE W/ SIGHT FLOW INDICATOR
- S — BASKET STRAINER
- W — WATER METER
- TS — FLOW CONTROL VALVE
- SAMPLE CONNECTION
- FIRE SAFETY VALVE
- C — NON - SURGE CHECK VALVE
- F — FLOW CONTROL VALVE
- P — PRESSURE REGULATING VALVE
- W — WATER SLUG VALVE (WSV)

ABBREVIATIONS

A A	AMERICAN DISABILITIES ACT
CO	EXPOSED CLEAN OUT
CW	COLD WATER
EWH	ELECTRIC WATER HEATER
FCO	FLOOR CLEAN OUT
FD	FLOOR DRAIN
FFE	FINISHED FLOOR ELEVATION
FS	FLOOR SINK
GWH	GAS WATER HEATER
HB	HOSE BIBB
HW	HOT WATER
HWR	HOT WATER CIRCULATION
N.C.	NORMALLY CLOSED
P	PUMP
S.R.	SHORT RADIUS
S.S.	STAINLESS STEEL
V	VENT
VTR	VENT THROUGH ROOF
W	WASTE
WCO	WALL CLEAN OUT
WH	WALL HYDRANT

- SOIL OR WASTE PIPE ABOVE FLOOR
- SOIL OR WASTE PIPE BELOW FLOOR (MIN. 50 SIZE)
- COLD WATER, DOMESTIC (PLAN)
- HOT WATER, DOMESTIC (PLAN)
- HOT WATER, CIRCULATION, DOMESTIC (PLAN)
- VENT PIPE
- C — CONDENSATE DRAIN
- CA — COMPRESSED AIR
- HPIW — HIGH PRESSURE INDUSTRIAL WATER
- IW — INDUSTRIAL WATER

EQUIPMENT DESIGNATION

EF — EQUIPMENT TYPE
A-1 — EQUIPMENT NUMBER
BUILDING NUMBER

DETAIL REFERENCE

X — REFERENCE DESIGNATION LETTER
X — DETAIL SHEET LOCATION

PLUMBING FIXTURE SCHEDULE

FIX. NO.	SYMBOL	FIXTURE NAME	C.W.	H.W.	WASTE (W)	VENT (V)	REMARKS
P1		EASTERN WATER CLOSET (FLUSH VALVE)	25	--	100	50	CW CONNECTION SHALL BE 25 UNLESS NOTED OTHERWISE. FLOOR OUTLET.
P2		NOT USED					
P3		LAVATORY (COUNTER MOUNTED)	15	15	32	32	
P3A		LAVATORY (2 STATION GANG)	15	15	32	32	
P4		MOP SINK (FLOOR MOUNT JANITOR TYPE)	15	15	50	40	DRAIN ON FLOOR OR AS INDICATED
P5		SHOWER	15	15	40	32	
P6		NOT USED					
P7		NOT USED					
P8		NOT USED					
P9		KITCHEN SINK	15	15	40	32	
FD		FLOOR DRAIN			VARIES		SEE FLOOR PLAN FOR SIZE

FACILITY DESIGNATION

A	OFFICE BUILDING
B	DFAC/BARRACKS
C	MAINTENANCE WHAREHOUSE
D	GUARD HOUSE *
E	GUARD TOWER *

* NO PLUMBING WORK IN THESE FACILITIES

WATER HAMMER ARRESTOR SIZING CHART

P.D.I. SYMBOL	FIXTURE UNIT RATING	NIPPLE SIZE (MM)	CHAMBER HEIGHT (MM)
A	1-11	20	100
B	12-32	25	125
C	33-60	25	150
D	61-113	25	175
E	114-154	25	200
F	155-330	25	225

P. D. I. = PLUMBING AND DRAINAGE INSTITUTE.

GENERAL NOTES:

1. DRAINAGE PIPING LOCATED BELOW FLOORS SHALL BE ROUTED BELOW FOOTINGS UNLESS INDICATED OTHERWISE.
2. INTERIOR SOIL AND WASTE PIPING 80mm AND SMALLER SHALL BE ROUTED WITH A 2% SLOPE. INTERIOR SOIL AND WASTE PIPING 100mm AND LARGER SHALL BE ROUTED WITH A MINIMUM 1% SLOPE.
3. ALL DIMENSIONS SHOWN HERE AND ON PLANS ARE IN MM UNLESS INDICATED OTHERWISE.
4. MINIMUM BURIED PIPE SIZE SHALL BE 50 mm.
5. SEE STANDARD SHEET SM-1 FOR ADDITIONAL ABBREVIATIONS.
6. FOR FOOD SERVICE EQUIPMENT DESCRIPTION, SEE ARCHITECTURAL DRAWINGS.

UNLESS OTHERWISE NOTED, LINEAR DIMENSIONS SHOWN ARE IN MILLIMETERS.

*	REVISIONS		
SYMBOL	DESCRIPTION	DATE	APR
		03/04/2007	

DESIGNED BY: JMR
DWN BY: JMR
CHK BY: RMS
DATE: 01-25-07
SUBMITTED BY: MICHAEL HOWELL
CHIEF, FDTD BLDGS SYSTEMS
FILE NO.: AF0609 $-MP01GN

US Army Corps of Engineers
Transatlantic Programs Center

AFGHAN NATIONAL POLICE COMPANY COMPOUND
VARIOUS, AFGHANISTAN
STANDARD DETAILS
LEGENDS AND ABREVIATIONS

SHEET REFERENCE NUMBER:
SP-1

AF0609-MP01GN.dwg
3/30/2007 9:27 AM
ED AED, USACE

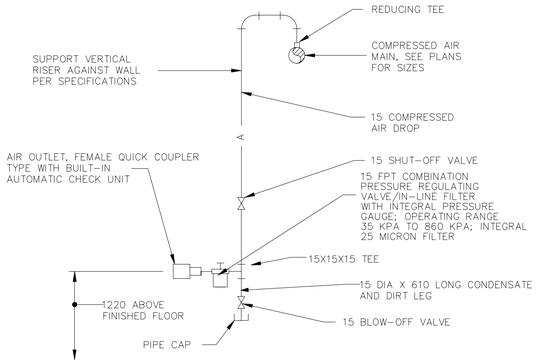

COMPRESSED AIR OUTLET DETAIL (B / SP2)
NOT TO SCALE

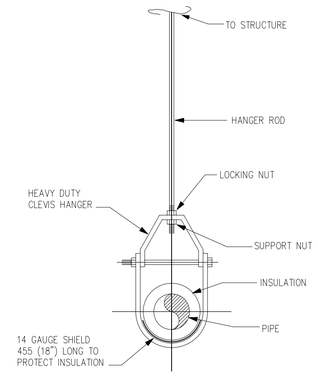

CLEVIS HANGER DETAIIL (E / SP2)
NOT TO SCALE

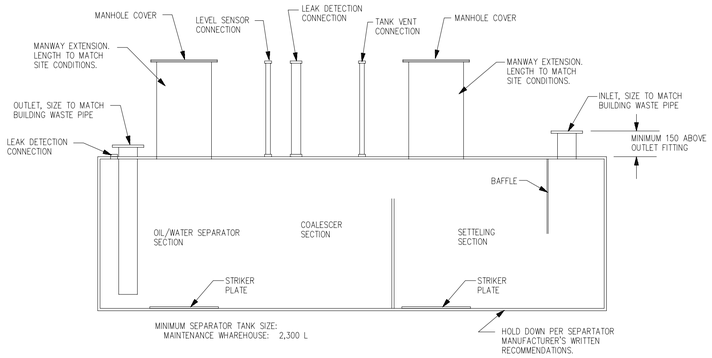

UNDERGROUND COALESCER TYPE OIL/WATER SEPARATOR DETAIL (D / SP2)
NOT TO SCALE

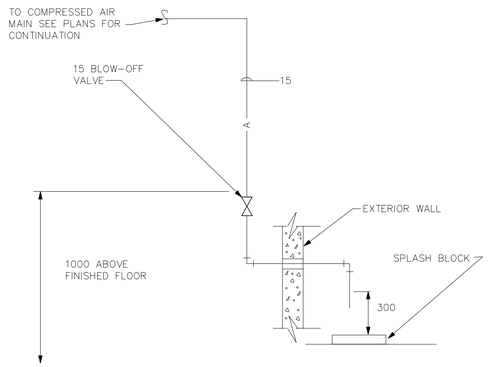

CONDENSATE BLOW-OFF DETAIL (D / SP2)
NOT TO SCALE

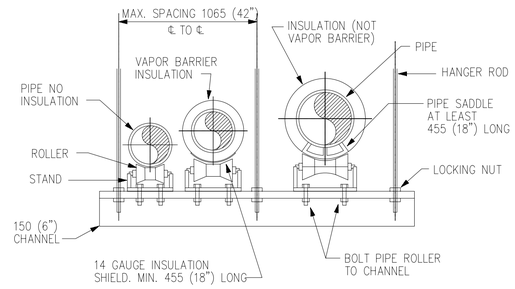

TRAPEZE HANGER DETAIL (F / SP2)
NOT TO SCALE

UNLESS OTHERWISE NOTED, LINEAR DIMENSIONS SHOWN ARE IN MILLIMETERS.

*	REVISIONS		
SYMBOL	DESCRIPTION	DATE	APR
		03/04/2007	

DESIGNED BY: JMR
DWN BY: JMR
CHK BY: RMS/HMH
DATE: 01-25-07
SUBMITTED BY: MICHAEL HOWELL
FILE NO.: AF0609 $-MP02DT

US Army Corps of Engineers
Transatlantic Programs Center

AFGHAN NATIONAL POLICE COMPANY COMPOUND
VARIOUS, AFGHANISTAN
STANDARD DETAILS
PLUMBING STANDARD DETAILS

SHEET REFERENCE NUMBER:
SP-2

AF0609-MP02DT.dwg
3/30/2007 9:30 AM
AED, AED, USACE

NOTES:
1. PIPING SHALL BE PLASTIC PVC TO MATCH WATER DISTRIBUTION SYSTEM.
2. CONTRACTOR SHALL INSTALL DIELECTRIC UNION BETWEEN CONNECTIONS OF DISSIMILAR METALS.

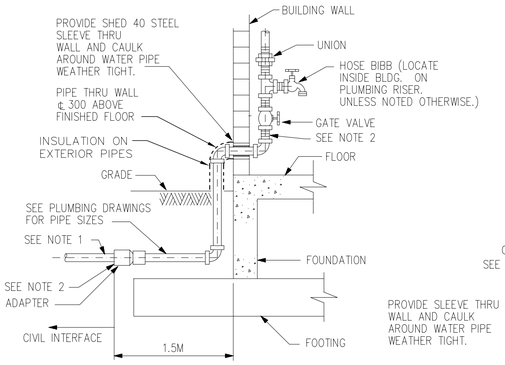

WATER SERVICE ENTRANCE SIDE VIEW

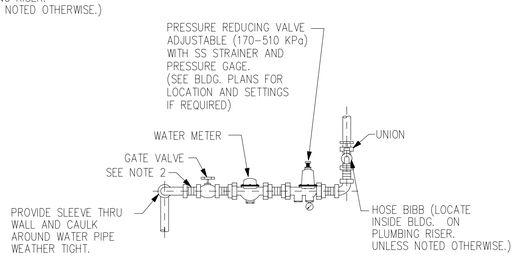

WATER SERVICE ENTRANCE FRONT VIEW

WATER SERVICE ENTRANCE DETAILS (A / SP3)
NOT TO SCALE

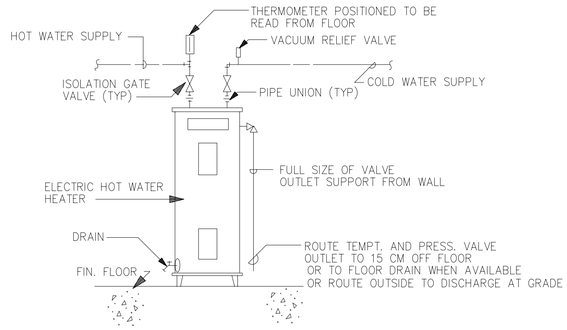

ELECTRIC WATER HEATER DETAIL (B / SP3)
NOT TO SCALE

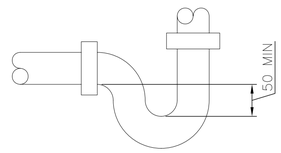

P-TRAP (TYPICAL) (H / SP3)
NOT TO SCALE

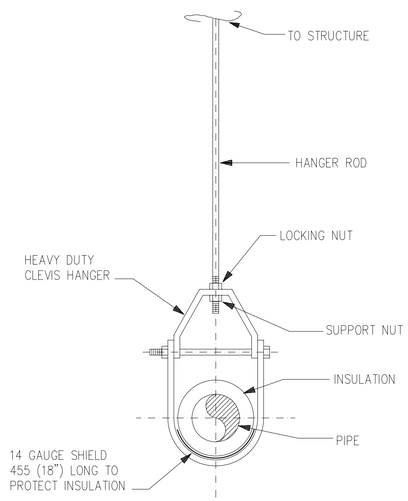

CLEVIS HANGER DETAIL (D / SP3)
NOT TO SCALE

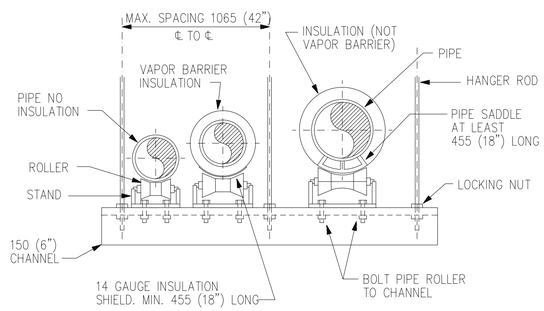

TRAPEZE HANGER DETAIL (E / SP3)
NOT TO SCALE

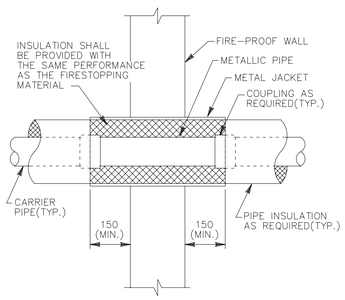

INSULATED OR NON-INSULATED, ABOVE GRADE

TYPICAL FIRE-PROOF, FRAMED WALL PENETRATION DETAIL (F / SP3)
NOT TO SCALE

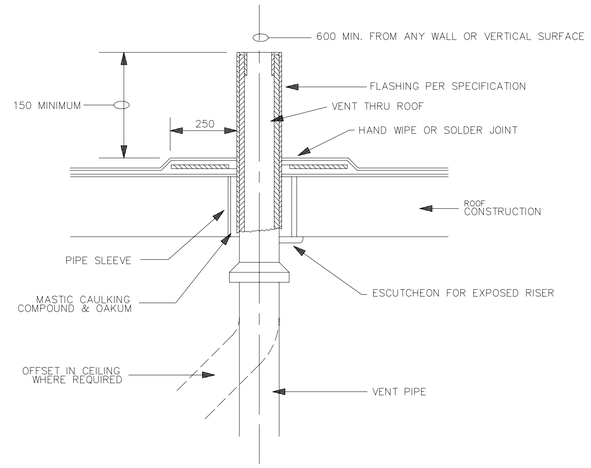

VENT THRU ROOF DETAIL (G / SP3)
NOT TO SCALE

UNLESS OTHERWISE NOTED, LINEAR DIMENSIONS SHOWN ARE IN MILLIMETERS.

*	REVISIONS	DATE	APR
	DESCRIPTION	03/04/2007	

DESIGNED BY: JMR	DATE: 01-25-07
DWN BY: JMR	SUBMITTED BY: MICHAEL HOWELL PROJECT MGR BLDG SYSTEMS
CHK BY: RMS/HMH	FILE NO.: AF0609 $-MP03DT

US Army Corps of Engineers
Transatlantic Programs Center

AFGHAN NATIONAL POLICE COMPANY COMPOUND
VARIOUS, AFGHANISTAN
STANDARD DETAILS
STANDARD PLUMBING DETAILS

SHEET REFERENCE NUMBER:
SP-3

AF0609-MP03DT.dwg
3/30/2007 9:37 AM
AED AED, USACE

LEGEND

- WALL MOUNTED FLUORESCENT LIGHT FIXTURE
- FLUORESCENT LIGHT FIXTURE,
- NIGHT LIGHT\EMERGENCY LIGHT FIXTURE–EQUIPED WITH EMI TYPE 200
- LIGHT FIXTURES, FIXTURE MARK AS INDICATED
- EXIT SIGN, TYPE F FIXTURE, MTD 2.2M AFF
- EMERGENCY LIGHT, TYPE C FIXTURE, MTD 2.4M AFF
- WP,S — DUPLEX SOCKET OUTLET (13A, 250V), BS 1363
  S – A/C OR WATER HEATER SWITCH–RECEPTACLE COMBINATION
  WP – WEATHERPROOF
- J — JUNCTION BOX
- S 3,WP — SWITCH, WP–WEATHERPROOF, 3–3 WAY, EP–EXPLOSION PROOF
- S — LIGHT SWITCH, EXHAUST FAN SWITCH
- J 20 — SAFETY DISCONNECT SWITCH, SWITCH SHALL BE 1P56 ENCLOSURE, 20A UNO
- 1/3 — MOTOR (1/3 HP)
- ELECTRIC UNIT HEATER
- EWH — ELECTRIC WATER HEATER
- LP–2 — HOMERUN, PNL LP, CIRCUIT 2
- LP–2 — HOMERUN, PNL LP, 3PH CKT, CIRCUIT 2
- COMBINATION LIGHTING AND POWER PANEL (LP), OR LOAD CENTER (LC)
- 380/220V — 380V LINE–LINE/220V LINE–NUETRAL
- 400AT / 600AF — 3 POLE, 600A ADJUSTABLE TRIP CIRCUIT BREAKER
- 150AT / 3P — 3 POLE, 150A CIRCUIT BREAKER
- COMBINATION TELEPHONE/DATA OUTLET. SEE DETAIL SHEET SE–5 MOUNTED 0.5M AFF
- W — SINGLE TELEPHONE ONLY OUTLET, WALL MOUNTED 1.2m AFF
- TBB — TELEPHONE BACK BOARD (TVBB INDICATES TELEVISION BACKBOARD) (1200mmx600mmx12mm)UNLESS NOTED OTHERWISE
- WALL MOUNTED CLOSED CIRCUIT TELEVISION (CCTV) CAMERA, FIXED TYPE UNLESS PAN–TILT–ZOOM (PTZ) IS INDICATED, MH 2.4M AFF UNO
- EXOTHERMIC WELDED GROUND CONNECTION
- GROUND ROD (EARTH ELECTRODE) WITH EXOTHERMIC WELD CONNECTION, COPPER, 20mm DIA X 3.0m LENGTH
- EM 1 — ELECTRIC POWER MANHOLE, H INDICATES HANDHOLE.
- CM 1 — COMMUNICATIONS MANHOLE, H INDICATES HANDHOLE.
- SE — UNDERGROUND SECONDARY DISTRIBUTION POWER LINE, DIRECT BURIED IN SCHEDULE 40 PVC C, UNO
- UNDERGROUND DIRECT BURIED SCH 40 PVC C, AS INDICATED, 600 BFG, UNO

GENERAL NOTES:

1. REFER TO SECTION 01015 FOR ADDITIONAL / DETAIL REQUIREMENTS.
2. ALL WIRING INSTALLATION FOR LIGHTING, POWER, TELECOMMUNICATIONS, AND CCTV SHALL BE IN APPROVED METAL CONDUIT, EITHER CONCEALED OR SURFACE MTD.
3. EXIT AND EMERGENCY LIGHTING FIXTURES SHALL BE CONNECTED TO AN UN SWITCHED POWER CIRCUIT.
4. MOUNTING HEIGHT FOR ALL PENDANT MTD LIGHT FIXTURE IS 3M AFF UNO ON THE DRAWINGS OR IN THE LIGHT FIXTURE SCH.
5. MOUNT ALL LIGHT AND FAN SWITCHES 1.2M AFF UNO.
6. MOUNT ALL RECEPTACLES 500 AFF UNO. MOUNT ALL COUNTER TOP RECEPTACLES 100 ABOVE COUNTER TOP, AND PROVIDE GFI PROTECTION.
7. ALL SPARE OR EMPTY CONDUITS SHALL HAVE A PULL STRING SECURED AT BOTH ENDS OF CONDUIT.
8. ALL ELECTRICAL SYSTEMS SHALL BE INSTALLED IN ACCORDANCE WITH THE MANUFACTURERS RECOMMENDATIONS AND THE NEC.
9. BOND LIGHTNING PROTECTION GROUND SYSTEMS TO BUILDING ELECTRICAL GROUND SYSTEM PER NEC 250.106

LIGHTING FIXTURE SCHEDULE — * SEE LIGHTING FIXTURE DETAILS ON DRAWINGS SE–2 & SE–3

FIXTURE MARK	LINE VOLT.	TYPE	LAMPS NO.	LAMPS WATTAGE	MOUNTING	REMARKS
A	220	230B1	3	40	SURFACE/PENDANT	INDUSTRIAL FLUORESCENT, WITH ELECTRONIC BALLAST
B	220	232	2	40	SURFACE/PENDANT	VAPORTIGHT FLUORESCENT
C	220	603	2	20	SURFACE	EMERGENCY LIGHT WITH BATTERY PACK, MTD 2.4M AFF
D	220	502B	1	70	SURFACE	HID EXTERIOR WALL LIGHT, WITH INTEGRAL PHOTOCELL, MTD 3.2M AFF UNO
E	220	–	1	1000	ROOF	SPOT LIGHT
F	220	XF2	1	8	SURFACE/PENDANT	EXIT LIGHT MTD 2.2M AFF
G	220	709B2	3	60	PENDENT	EXPLOSIVE PROOF INDUSTRIAL FLOURESCENT
H	220	223	2	40	SURFACE	ENCLOSED, WALL MOUNTED DIRECT FLUORESCENT, MTD 2.4M AFF
I	220	SF–11	1	100	SURFACE	VAPOR PROOF PROTECTED INCANDESCENT WITH CLEAR, RED, BLUE, OR BLACK GLOBE AS INDICATED ON THE DRAWINGS

ABBREVIATIONS

AFG	ABOVE FINISHED GRADE
AFF	ABOVE FINISHED FLOOR
AF	AMP FRAME
AT	AMP TRIP
ACCU	AIR COOLED CONDENSING UNIT
A	AMPERE
AHU	AIR HANDLING UNIT
AIC	AMPERE INTERRUPTING CAPACITY
BFG	BELOW FINISHED GRADE
CH	COMMUNICATIONS HANDHOLE
CKT	CIRCUIT
CM	COMMUNICATIONS MANHOLE
CND	CONDUCTOR(S)
C	CONDUIT
COR	CONTRACTING OFFICERS REPRESENTATIVE
EF	EXHAUST FAN
EH	ELECTRIC POWER HANDHOLE
EM	ELECTRIC POWER MANHOLE
EP	EXPLOSION PROOF
ELCB	EARTH LEAKAGE CIRCUIT BREAKER
FACP	FIRE ALARM CONTROL PANEL
GFI	GROUND FAULT INTERRUPTING
GFCI	GOVERNMENT FURNISHED CONTRACTOR INSTALLED
HP	HORSEPOWER
HPS	HIGH PRESSURE SODIUM
HZ	HERTZ
KV	KILOVOLT
KW	KILOWATT
KVA	KILOVOLT–AMPERE
M	METERS
MBB	METERING BACK BOARD
MDF	MAIN DISTRIBUTION FRAME
MEW	HOST NATION MINISTRY OF ELECTRICITY AND WATER
MTD	MOUNTED
NEC	NATIONAL ELECTRICAL CODE
NFPA	NATIONAL FIRE PROTECTION ASSOCIATION
NIC	NOT IN CONTRACT
PH, Ø	PHASE
P	POLE
XXX	HOST NATION ARMED FORCES
TEL	TEL CO.
RM	ROOM
SCH	SCHEDULE
SN	SOLID NEUTRAL
TBB	TELEPHONE TERMINAL BACKBOARD
TCB	TELEPHONE CONNECTION BOX (BY TEL CO)
TYP.	TYPICAL
UNO	UNLESS NOTED OTHERWISE
V	VOLT
W	WIRE
WP	WEATHERPROOF
XFMR,T	TRANSFORMER

EQUIVALENT CONDUIT SIZE

mm	INCHES
20	3/4
25	1
32	1 1/4
38	1 1/2
50	2
60	2 1/2
80	3
90	3 1/2
100	4

METRIC COPPER CONDUCTOR CONVERSION CHART

AWG KCMIL	COMPUTED CONVERSION mm 2	ADVISED CROSS SECTION mm 2
16	1.31	1.5
14	2.08	2.5
12	3.31	4
10	5.27	6
8	8.4	10
6	13.3	16
4	21.2	25
3	26.7	25
2	33.6	35
1	42.4	50
1/0	53.4	50
2/0	67.5	70
3/0	85.0	95
4/0	107.2	120
250	126.7	120
300	152.0	150
350	177.4	185
400	202.7	240
500	253.4	300

UNLESS OTHERWISE NOTED, LINEAR DIMENSIONS SHOWN ARE IN MILLIMETERS.

*	REVISIONS	03/04/2007
SYMBOL	DESCRIPTION	DATE APR

DESIGNED BY: DLF
DWN BY: FHG
CHK BY: RMS/DK
DATE: 01–25–07
SUBMITTED BY: MICHAEL HOWELL
CHIEF, CPD BLDGS SYSTEMS
FILE NO.: AF0609 $–EL01GN

US Army Corps of Engineers
Transatlantic Programs Center

AFGHAN NATIONAL POLICE COMPANY COMPOUND
VARIOUS, AFGHANISTAN
STANDARD DETAILS
LEGEND & ABBREVATIONS

SHEET REFERENCE NUMBER:
SE–1

AF0609$–el01gn.dwg
3/30/2007 9:47 AM
AED AED, USACE

FIXTURE MARK A

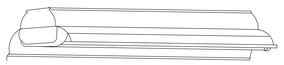

TYPE 230
SUSPENSION MOUNTED, INDUSTRIAL,
OPEN TYPE FLUORESCENT FIXTURE, 4-FOOT

FIRST SUFFIX	SECOND-SUFFIX	DESCRIPTION
A		TWO LAMPS
B		THREE LAMPS
C		FOUR LAMPS
	1	8 TO 15 PERCENT UPLIGHT
	2	18 TO 25 PERCENT UPLIGHT

FIXTURE SHALL CONFORM TO UL1570. STANDARD BALLAST(S) SHALL BE THE CLASS P, HIGH POWER FACTOR TYPE APPROVED FOR THE APPLICATION BY THE CERTIFIED BALLAST MANUFACTURERS. CHANNEL HOUSING, END FITTINGS, AND REFLECTOR SHALL BE CONSTRUCTED WITH DIE-FORMED, COLD-ROLLED STEEL. REFLECTOR FINISH SHALL BE PORCELIAN ENAMEL, BAKED WHITE ENAMEL OR ALUMINUM OXIDE. SOCKETS SHALL BE OF THE TYPE REQUIRING A FORCED MOVEMENT ALONG THE LONGITUDINAL AXIS OF THE LAMP FOR INSERTION AND REMOVAL OF THE LAMP. FIXTURE SHALL BE PREWIRED. FLUORESCENT TUBES SHALL BE PROTECTED BY A VIRGIN ACRYLIC PROTECTIVE SLEEVE AND CLEAR PLASTIC VENTED END CAPS.

FIXTURE MARK B

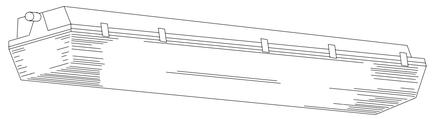

TYPE 232
4-FOOT FIXTURE LENGTH

ENCLOSED AND GASKETED, VAPOR-TIGHT FLUORESCENT FIXTURE
FOR SURFACE OR PENDANT MOUNTING

FIXTURE SHALL CONFORM TO UL1570 AND SHALL BE VAPOR-TIGHT AND SUITABLE FOR USE IN WET LOCATIONS. FIXTURE SHALL HAVE ONE-PIECE HOUSINGOF MOLDED HIGH-IMPACT PLASTIC OR REINFORCED FIBERGLASS. HOUSING BODY SHALL HAVE AN INTERNAL, DIE-FORMED, COLD-ROLLED STEEL CHANNEL WITH COVER TO PROVIDE FIXTURE RIGIDITY AND TO CONTAIN ELECTRIC COMPONENTS. THE METAL CHANNEL AND COVER SHALL RECEIVE A RUST INHIBITIVE COATING BEFORE APPLICATION OF THE FINISH COAT, WHICH SHALL CONSIST OF BAKED WHITE ENAMEL OR PORCELAIN ENAMEL. THE LENS SHALL BE ONE PIECE, OF HIGH-IMPACT-RESISTANT ACRYLIC, AND SHALL HAVE SMOOTH EXTERIOR SURFACE AND STIPPLED OR PEBBLED INTERIOR SURFACE. THE LENS SHALL BE SECURED TO THE HOUSING WITH CAPTIVE MOLDED PLASTIC OR STAINLESS STEEL SPRING LATCHES. A CONTINUOUS GASKET SHALL BE PROVIDED TO FORM A VAPOR SEAL BETWEEN THE LENS AND THE FIXTURE BODY. ALL OPENINGS IN THE HOUSING FOR MOUNTING, CONDUIT, ETC., SHALL BE CAPABLE OF FORMING A VAPOR-TIGHT SEAL. BALLAST(S) SHALL BE COLD WEATHER TYPE FOR STARTING TEMPERATURES DOWN TO MINUS 20 DEGREES F. STANDARD BALLAST(S) SHALL BE THE CLASS P, HIGH POWER FACTOR TYPE APPROVED FOR THE APPLICATION BY THE CERTIFIED BALLAST MANUFACTURERS. FIXTURE SHALL BE PREWIRED, AND PROVIDED WITH LAMPS THAT ARE PROPERLY MATED TO THE BALLAST OPERATING CHARACTERISTICS.

FIXTURE MARK C

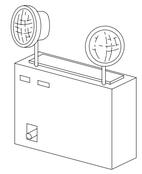

TYPE 603

UNIT SHALL CONFORM TO IEC 60598-2-22 AND SHALL HAVE AN IP20 RATED ENCLOSURE. THE UNIT SHALL BE RATED FOR USE AT VOLTAGE OF LIGHTING CIRCUIT. FIXTURE SHALL HAVE 2 x 20W TUNSGSTEN HALOGEN SPOT LIGHTS. FOLLOWING SUSTAINED LOSS OF THE NORMAL POWER SUPPLY, THE UNIT SHALL BE CAPABLE OF AUTOMATICALLY AND INSTANTANEOUSLY ILLUMINATING THE TWO 12-VOLT LIGHTING FIXTURES FOR A PERIOD OF NOT LESS THAN 3 HOURS AT A BATTERY VOLTAGE IN EXCESS OF 87.5 PERCENT OF THE NOMINAL VOLTAGE RATING.THE BATTERY SHALL BE DESIGNED TO BE MAINTENANCE FREE DURING THE EXPECTED BATTERY LIFE, AND SHALL BE WARRANTED FOR NOT LESS THAN 3 YEARS FROM THE DATE OF PURCHASE OF THE UNIT, AND SHALL BE FIELD REPLACEABLE WITHOUT REQUIRING REMOVAL OF OTHER COMPONENTS. THE BATTERY CHARGER SHALL BE THE SOLID-STATE TYPE AND SHALL PROVIDE A CONTINUOUS, VARIABLE, CURRENT LIMITED, FILTERED, AND REGULATED CHARGE RATE. THE BATTERY AND CHARGER SHALL BE CONTAINED IN A STEEL CABINET NOT LESS THAN 18 GAUGE THICKNESS WITH AN ENAMEL FINISH, UNLESS OTHERWISE APPROVED, WHICH SHALL BE EQUIPPED WITH A PUSH-TO-TEST SWITCH. MOUNTING BRACKETS OR SHELF SHALL BE PROVIDED, COMPLETE WITH ALL MOUNTING HARDWARE, ALL WITH A FINISH TO MATCH THE FINISH OR COLOR OF THE CABINET. THE UNIT SHALL BE PREWIRED AND EQUIPPED WITH TWO 12-VOLT, 20 WATT FLOODLIGHTS AS INDICATED.

FIXTURE MARK D

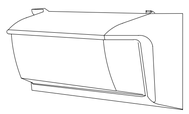

TYPE 502
HIGH INTENSITY DISCHARGE FIXTURE FOR EXTERIOR WALL MOUNTING,
MEDIUM OUTPUT

FIRST-SUFFIX	DESCRIPTION RATED FOR:
A	50 WATT HIGH PRESSURE SODIUM LAMP
B	70 WATT HIGH PRESSURE SODIUM LAMP
C	100 WATT HIGH PRESSURE SODIUM LAMP
D	150 WATT HIGH PRESSURE SODIUM LAMP
E	250 WATT METAL HALIDE LAMP

FIXTURE SHALL CONFORM TO UL 1572 AND SHALL BE RATED FOR USE IN WET LOCATIONS. THE FIXTURE HOUSING, DOOR ASSEMBLY, AND BACKPLATE SHALL BE DIE-CAST ALUMINUM. THE DOOR ASSEMBLY SHALL HAVE INTEGRAL CAST ALUMINUM HINGES. THE DOOR ASSEMBLY SHALL BE HELD SECURLY TO THE FIXTURE HOUSING WITH A STAINLESS STEEL SAFETY STRAP WHEN THE DOOR IS IN THE OPEN POSITION. THE ASSEMBLY SHALL BE HELD FIRMLY AGAINST A SEALING GASKET BETWEEN THE FIXTURE DOOR AND HOUSING BY STAINLESS STEEL LATCHES OR WITH STAINLESS STEEL OR BRASS CAPTIVE SCREWS WHEN THE FIXTURE DOOR IS CLOSED. THE REFACTOR SHALL BE PRISMATIC BOROSILICATE GLASS OR POLYCARBONATE RESIN. THE REFACTOR SHALL BE GASKETED AND SECURLY HELD IN THE DOOR FRAME, BUT SHALL BE EASILY REMOVED FOR REPLACEMENT WITH A COMMON TOOL. THE REFLECTOR SHALL BE ALUMINUM WITH THE MANUFACTURER'S STANDARD COMMERCIAL PRODUCT FINISH SUITABLE FOR THE TYPE AND RATING OF THE LAMP. THE FIXTURE SHALL HAVE MANUFACTURERS STANDARD PROTECTIVE COATING. CAST KNOCKOUTS SHALL BE PROVIDED IN THE BACKPLATE FOR RECESSED OUTLET BOX MOUNTING. BALLAST SHALL BE OF THE HIGH POWER FACTOR TYPE. BALLAST SHALL BE OF THE LEAD-PEAK AUTOTRANSFORMER TYPE FOR METAL HALIDE LAMPS AND THE REGULATING TYPE FOR HIGH PRESSURE SODIUM LAMPS. BALLAST SHALL BE CAPABLE OF STARTING AND OPERATING THE LAMP AT AMBIENT TEMPRATURES FROM MINUS 20 DEGREES F TO 105 DEGREES F. THE FIXTURE SHALL BE PREWIRED, AND SHALL HAVE A FIELD ADJUSTABLE, MOGUL BASE GLAZED PORCELAIN LAMPHOLDER. FIXTURE SHALL HAVE FACTORY FITTED INTEGRAL PHOTOCELL.

ABOVE DESCRIPTION IS PROVIDED TO ESTABLISH ACCEPTABLE QUALITY OF FIXTURE. CONTRACTOR SHALL PROVIDE ALOCALLY AVAILABLE SIMILAR QUALITY FIXTURE COMPLYING WITH IEC (EUROPEAN),BS (BRITISH STANDARD), VDE/DIN (GERMAN STANDARD) AND IN COMPLIANCE WITH THE REQUIREMENTS OF STATE OF QATAR MINISTRY OF ELECTRICITY AND WATER.

FIXTURE MARK E

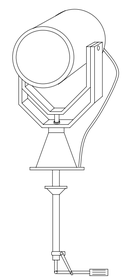

SEALED BEAM SPOTLIGHT, MOUNTED TO GUARD TOWER ROOF, WITH 1000 WATT HALOGEN NARROW SPOT PAR 56 LAMP. SPOTLIGHT SHALL BE PROVIDED WITH TWIST LEVER CONTROL, MINIMUM 10" DIAMETER LIGHT HEAD, WORKING RANGE OF 1/2 MILE, COUPLING FOR OPERATION FROM GUARD TOWER PLATFORM AND RATED FOR OUTDOOR ROUGH SERVICE.

FIXTURE TYPE INDICATED ON THIS SHEET SHALL ALSO CONFORM TO REQUIREMENTS SPECIFIED AND INDICATED IN THE CONTRACT DOCUMENTS.

FIXTURE MARK F

TYPE: XF2

FEATURES
LAMP TYPE: T5,8W
PROFILE: 1 LAMP
MOUNTING: UNIVERSAL
SHIELDING: FLAT SHEET ACRYLIC
LETTERS: GREEN
NOM. DIMENSIONS: 400mm W x 185mm H x 85mm D

GENERAL DESCRIPTION
HOUSING: DIE-CAST ALUMINUM OR 20 GA. CRS, HARDWARE FINISH TO MATCH HOUSING FINISH. SIGN TO COMPLY WITH EN 60598-2.22
ELECTRICAL: 230/240 VOLT AC, 50/60 HZ -
OTHER: BATTERY BACKUP TO MAINTAIN OPERATION FOR MINIMUM 3 HOUR DURATION

FLOURESCENT STENCIL FACE EXIT SIGN

UNLESS OTHERWISE NOTED, LINEAR DIMENSIONS SHOWN ARE IN MILLIMETERS.

SYMBOL	DESCRIPTION	DATE	APR

DESIGNED BY: DLF
DATE: 01-25-07
DWN BY: FHG
SUBMITTED BY: MICHAEL HOWELL
CHK BY: RMS
FILE NO.: AF0609 $-EL02DT

US Army Corps of Engineers
Transatlantic Programs Center

AFGHAN NATIONAL POLICE COMPANY COMPOUND
VARIOUS, AFGHANISTAN
STANDARD DETAILS
STANDARD LIGHTING DETAILS

SHEET REFERENCE NUMBER:
SE-2

AF0609$-el02dt.dwg
3/30/2007 9:49 AM
AED AED, USACE

FIXTURE MARK EM1

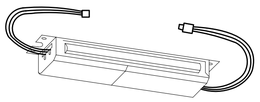

TYPE 200

EMERGENCY BATTERY AND LAMP SUPPLY UNIT FOR FLUORESCENT FIXTURES

THE UNIT SHALL CONFORM TO UL 924 AND BE UL LISTED FOR FIELD OR FACTORY INSTALLATION. THE UNIT SHALL BE RATED FOR USE ON THE VOLTAGE OF THE LIGHTING CIRCUITS, AND SHALL MEET OR EXCEED NFPA 70 TIME AND VOLTAGE REQUIREMENTS. THE UNIT SHALL BE CAPABLE OF AUTOMATICALLY SUPPLYING A MINIMUM OF 15 PERCENT OF THE RATED LUMEN OUTPUT OF A STANDARD 4-FOOT, 36 WATT RAPID START FLUORESCENT LAMP IN ONE MINUTE FOLLOWING THE FAILURE OF THE NORMAL POWER SUPPLY. IT SHALL PROVIDE A MINIMUM OF 60 PERCENT OF THE INITIAL EMERGENCY ILLUMINATION AT THE END OF THE 90-MINUTE DISCHARGE PERIOD. THE BATTERY CHARGER SHALL BE CAPABLE OF FULLY RECHARGING THE BATTERY WITHIN 24 HOURS AFTER THE RETURN OF THE NORMAL POWER SUPPLY AND, UNDER NORMAL OPERATIONS, SHALL TRICKLE CHARGE THE BATTERY TO MAINTAIN IT IN A FULLY CHARGED CONDITION. THE UNIT SHALL BE CAPABLE OF OPERATING AT LEAST ONE OF THE LAMPS IN THE FIXTURE WHICH ALSO HOUSES THE UNIT AND SHALL CONSIST OF A HIGH TEMPERATURE, POCKET-PLATE TYPE OF NICKEL CADMIUM BATTERY, CHARGER, AND ELECTRONIC CIRCUITRY IN ONE COMPACT HOUSING. A CONVENIENTLY LOCATED TEST SWITCH SHALL BE PROVIDED TO TEST THE SOLID-STATE CIRCUITRY AND THE READINESS OF THE BATTERY. THE BATTERY SHALL BE DESIGNED TO REQUIRE NO MAINTENANCE DURING THE EXPECTED LIFE, BE WARRANTED FOR NOT LESS THAN THREE YEARS FROM THE DATE OF THE PURCHASE OF THE UNIT, AND BE FIELD REPLACEABLE WITHOUT REQUIRING REMOVAL OF OTHER COMPONENTS OF THE UNIT. OTHER COMPONENTS OF THE UNIT SHALL BE FULLY WARRANTED FOR NOT LESS THAN 18 MONTHS FROM THE DATE OF PURCHASE OF THE UNIT.

THE EMERGENCY BATTERY AND LAMP SUPPLY UNIT INDICATED ON THIS SHEET SHALL BE PROVIDED AS INDICATED ON OTHER SHEETS, AND ALSO CONFORM TO REQUIREMENTS SPECIFIED OR INDICATED IN THE CONTRACT DOCUMENTS.

ABOVE DESCRIPTION IS PROVIDED TO ESTABLISH ACCEPTABLE QUALITY OF FIXTURE. CONTRACTOR SHALL PROVIDE ALOCALLY AVAILABLE SIMILAR QUALITY FIXTURE COMPLYING WITH IEC (EUROPEAN),BS (BRITISH STANDARD), VDE/DIN (GERMAN STANDARD) AND IN COMPLIANCE WITH THE REQUIREMENTS OF STATE OF QATAR MINISTRY OF ELECTRICITY AND WATER.

FIXTURE MARK G

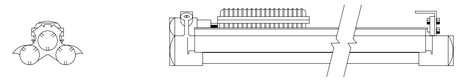

TYPE 709

LEFT END VIEW SIDE VIEW

FOUR-FOOT INDUSTRIAL LIGHTING FIXTURE FOR USE IN CLASS I, DIV. 1 AND 2, GROUPS C AND D; CLASS II, DIV. 1 AND 2, GROUPS E, F, AND G, AND CLASS III LOCATIONS.

FIRST SUFFIX	DESCRIPTION	SECOND SUFFIX	DESCRIPTION
A	TWO LAMPS	1	RATED FOR RAPID START 40 WATT, 430 mA LAMPS
B	THREE LAMPS	2	RATED FOR 60 WATT, 800 mA LAMPS

FIXTURE SHALL CONFORM TO UL 595 AND 844 OR SIMILAR INTERNATIONAL STANDARD. FIXTURE SHALL BE SUITABLE FOR LOCATIONS WHERE HAZARDOUS FUMES, GASES, OR DUST ARE PRESENT AND FOR WET LOCATIONS IF SPECIFIED IN OTHER CONTRACT DOCUMENTS. FIXTURE, EXCLUDING REFLECTORS, SHALL BE CONSTRUCTED OF COPPER-FREE ALUMINUM AND SHALL BE PROVIDED WITH LAMPS, TEMPERED, HEAT AND IMPACT RESISTANCE LAMP TUBES. REFLECTORS SHALL BE HEAVY GAUGE EXTRUDED ALUMINUM WHICH SHALL HAVE A HIGH GLOSS REFLECTIVE FINISH. FIXTURE SHALL BE CAPABLE OF BEING RELAMPED FROM EITHER END AND SHALL BE PROVIDED WITH LAMP GUIDES AT EACH END FOR EASE OF RELAMPING. LAMP ACCESS COVERS SHALL BE INTERCHANGEABLE, SCREW TYPE, WITH NEOPRENE, "O-RING" SEALS. SOCKETS ON BOTH ENDS SHALL BE SPRING LOADED FOR MAXIMUM SHOCK AND VIBRATION PROTECTION, AND SHALL BE THE T-12 MEDIUM BI-PIN TYPE FOR THE 40 WATT LAMPS AND THE T-12 RECESSED TYPE FOR THE 60 AND 110 WATT LAMPS UNLESS OTHERWISE APPROVED. BALLAST SHALL BE ELECTRONIC. REPLACEMENT OF BALLAST SHALL BE FEASIBLE WITH FIXTURE IN PLACE. FIXTURE SHALL BE FACTORY SEALED AND SHALL BE SUITABLE FOR VERTICAL OR HORIZONTAL MOUNTING WITH 360 DEGREES PERMISSIBLE. FIXTURE SHALL HAVE 90 DEGREES AND 45 DEGREES MOUNTING PROVISIONS AS STANDARD.

NOTE:
ABOVE DESCRIPTION IS PROVIDED TO ESTABLISH ACCEPTABLE QUALITY OF FIXTURE. CONTRACTOR SHALL PROVIDE A LOCALLY AVAILABLE SIMILAR QUALITY FIXTURE COMPLYING WITH IEC (EURPOEAN), BS (BRITISH STANDARD) OR VDE/DIN (GERMAN STANDARD) AND IN COMPLIANCE WITH MEW REQUIREMENTS.

FIXTURE MARK H

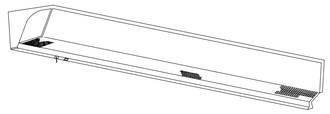

TYPE 223

TWO LAMPS

ENCLOSED, WALL MOUNTED, DIRECT AND/OR INDIRECT FLUORESCENT FIXTURE

FIXTURE SHALL BE CONTRUCTED OF COLD-ROLLED STEEL AND SHALL CONFORM TO UL 1570 OR SIMILAR INTERNATIONAL STANDARD. FERROUS METAL SURFACES SHALL BE TREATED WITH 5-STAGE COATING OF ZINC PHOSPHATE AND FINISHED IN BAKED WHITE ENAMEL. SEAMS SHALL BE SEALED OR GASKETED TO PREVENT LIGHT LEAKAGE. THE LENS SHALL BE 0.125 INCH NOMINAL THICKNESS (MINIMUM 0.115 INCH) OF 100 PERCENT VIRGIN CLEAR ACRYLIC PLASTIC, WITH A REGULAR ARRAY OF PRISMATIC ELEMENTS ON ONE SURFACE AND SMOOTH ON THE OTHER. RECEPTACLE SHALL BE 2-POLE, 3-WIRE, RATED AT 15 AMPERES AND 125 VOLTS, AND SHALL BE OF THE GROUNDING TYPE. ON/OFF PULL CHAIN SWITCH SHALL BE PROVIDED FOR DOWNLIGHT. UPWARD LIGHT SHALL BE CONTROLLED FROM A WALL SWITCH. FIXTURE SHALL HAVE KNOCKOUTS IN THE BACK FOR WIRING THROUGH AN OUTLET BOX AND A GROUNDING TERMINAL. ELECTRONIC BALLAST(S) SHALL BE WHICH HAS BEEN APPROVED FOR THE APPLICATION BY THE CERTIFIED BALLAST MANUFACTURERS. FIXTURE SHALL BE PREWIRED.

NOTE:
ABOVE DESCRIPTION IS PROVIDED TO ESTABLISH ACCEPTABLE QUALITY OF FIXTURE. CONTRACTOR SHALL PROVIDE A LOCALLY AVAILABLE SIMILAR QUALITY FIXTURE COMPLYING WITH IEC (EURPOEAN), BS (BRITISH STANDARD) OR VDE/DIN (GERMAN STANDARD) AND IN COMPLIANCE WITH MEW REQUIREMENTS.

FIXTURE MARK I

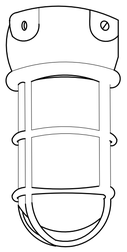

TYPE SF11

FEATURES

LAMP TYPE: INCCANDESCENT BULB: 100W
GLASS GLOBE CLEAR, BLUE, RED, OR BLACK AS INDICATED ON THE DRAWINGS
PROFILE: 1 LAMP
SHIELDING: CLEAR GLASS GLOBE

OPTIONS

GLASS GLOBE: CLEAR, RED, BLUE, OR BLACK
LAMP TYPE: 75W, 100W, 150W
MOUNTING: PENDANT OR SURFACE
SHIELDING: HEAT RESISTANT

NOM. DIMENSIONS: 111mm X 251mm

GENERAL DESCRIPTION

HOUSING: 30 PERCENT GLASS FILLED THERMOPLASTIC POLYSTER
ELECTRICAL: 220 - 240 VOLT
FINISH: MOLDED IN NON-GRAYING FINISH

SURFACE MOUNTED INCANDESCENT
VAPOR TIGHT JELLY JAR WITH WIRE GUARD

NOT TO SCALE

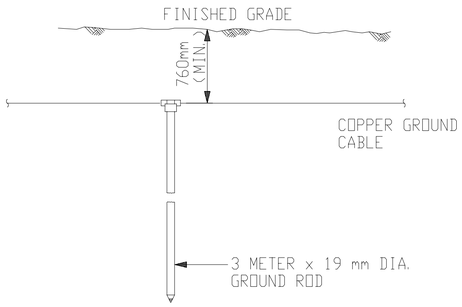

NOTES:

1. CONDUCTOR SIZE SHALL BE AS INDICATED ON PLANS.
2. EXOTHERMIC WELDS SHALL BE AS RECOMMENDED BY MANUFACTURER FOR THE SIZE OF CONNECTION AND MATERIAL INVOLVED. SEE DETAIL 5 ON SHEET SE-7.

BELOW GRADE GROUNDING ROD DETAIL

NOT TO SCALE

DETAIL 1
NOT TO SCALE

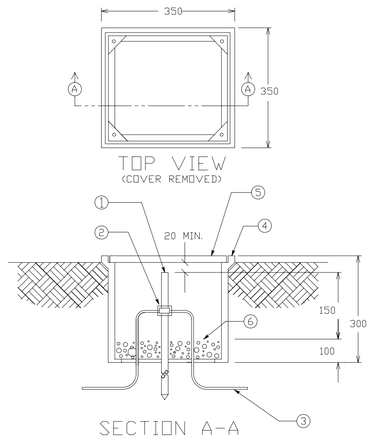

MATERIAL LIST

1. GROUND ROD
2. EXOTHERMIC WELD
3. GROUNDING CONDUCTOR 70mm² COPPER
4. POLYMER CONCRETE FIBERGLASS REINFORCED BOX
5. COVER FOR ABOVE BOX
6. GRAVEL OR CRUSHED STONE

GROUND ROD ACCESS
BOX INSTALLATION DETAIL

NOT TO SCALE

DETAIL 2
NOT TO SCALE

UNLESS OTHERWISE NOTED, LINEAR DIMENSIONS SHOWN ARE IN MILLIMETERS.

*	REVISIONS	03/04/2007
SYMBOL	DESCRIPTION	DATE APR

DESIGNED BY: DLF
DATE: 01-25-07
DWN BY: FHG
SUBMITTED BY: MICHAEL HOWELL
CHK BY: RMS
FILE NO.: AF0609 $-EL03DT

US Army Corps of Engineers
Transatlantic Programs Center

AFGHAN NATIONAL POLICE COMPANY COMPOUND
VARIOUS, AFGHANISTAN
STANDARD DETAILS
STANDARD LIGHTING DETAILS

SHEET REFERENCE NUMBER:
SE-3

AF0609$-EL03dt.dwg
3/30/2007 9:51 AM
AED AED, USACE

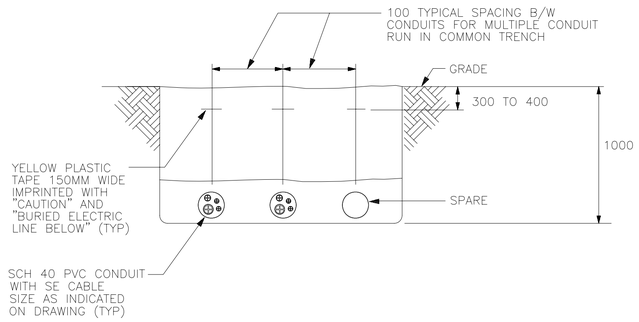

SECONDARY DISTRIBUTION CONDUIT TRENCH DETAIL

NOT TO SCALE

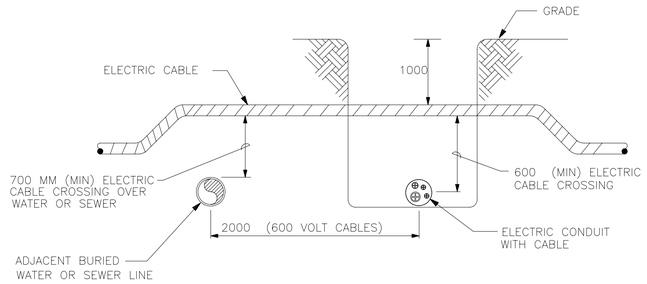

UNDERGROUND UTILITIES CROSSING DETAIL

NOT TO SCALE

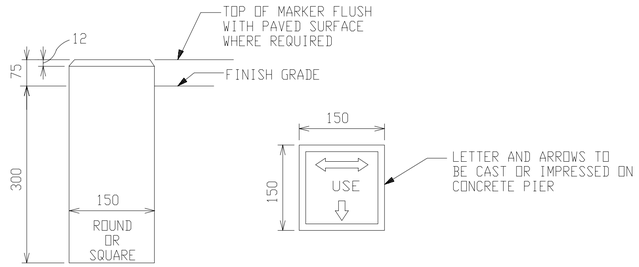

DIRECT BURIED CABLE MARKER DETAIL

NOT TO SCALE

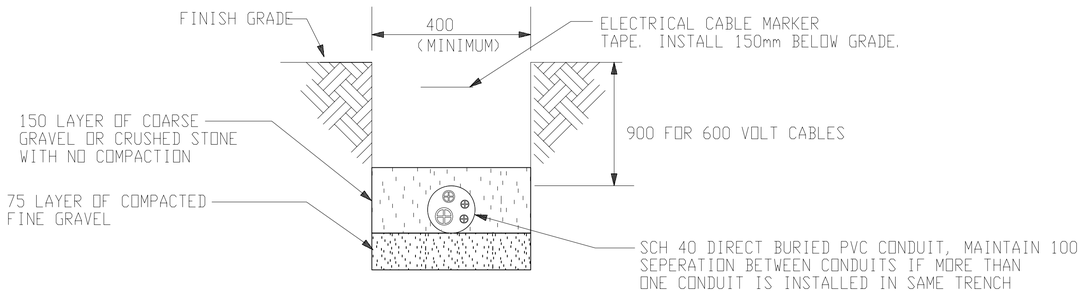

DIRECT BURIED DUCT DETAIL

NOT TO SCALE

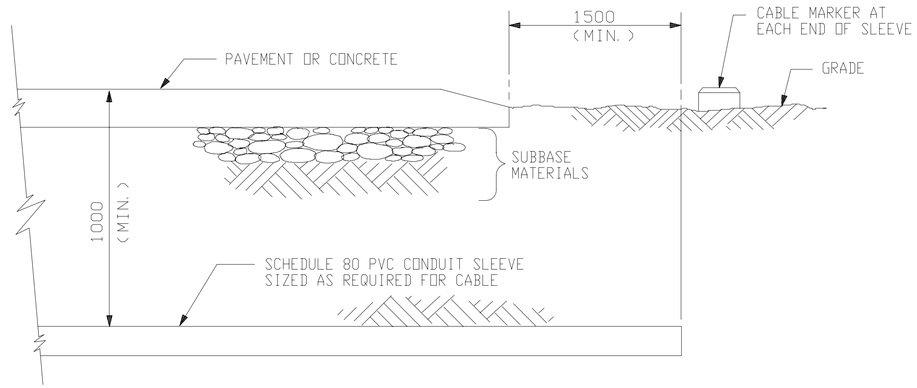

UNDER ROADWAY DUCT CROSSING SLEEVE DETAIL

NOT TO SCALE

UNLESS OTHERWISE NOTED, LINEAR DIMENSIONS SHOWN ARE IN MILLIMETERS.

SYMBOL	DESCRIPTION	DATE	APR

DESIGNED BY: DLF
DATE: 01-25-07
DWN BY: FHG
SUBMITTED BY: MICHAEL HOWELL, CHIEF, PDD, EL/DS SYSTEMS
CHK BY: RMS
FILE NO.: AF0609 $-EL04DT

US Army Corps of Engineers
Transatlantic Programs Center

AFGHAN NATIONAL POLICE COMPANY COMPOUND
VARIOUS, AFGHANISTAN

STANDARD DETAILS
DUCTBANK DETAILS

SHEET REFERENCE NUMBER:
SE-4

AF0609$-el04dt.dwg
3/30/2007 9:54 AM
AED, AED, USACE

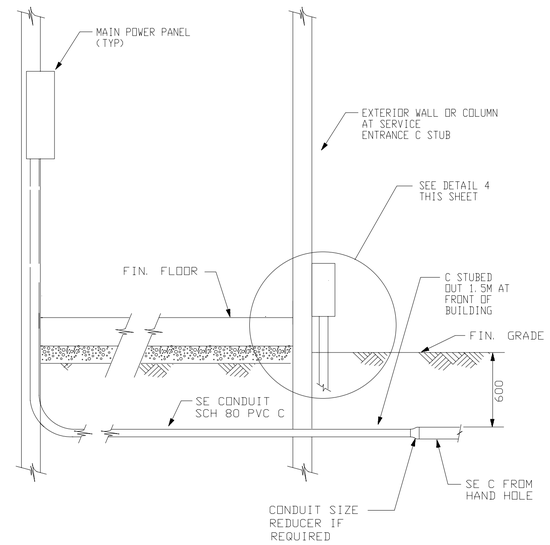

SERVICE PANEL CABLE ENTRANCE DIAGRAM

NOT TO SCALE

TELEPHONE AND DATA OUTLET DETAILS

NOT TO SCALE

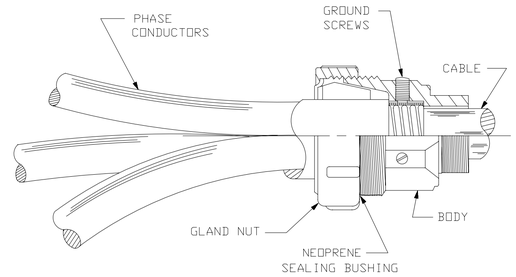

TYPICAL 600V CABLE TERMINATOR DETAIL

NOT TO SCALE

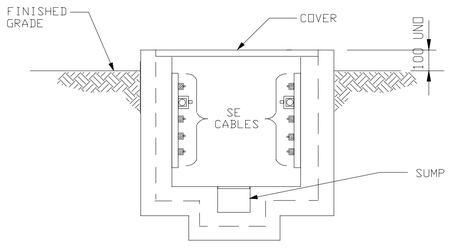

HANDHOLE CABLE INSTALLATION

NOT TO SCALE

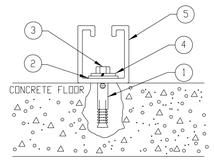

CHANNEL STRUT INSTALATION

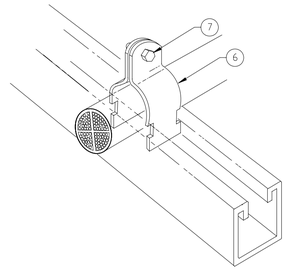

CABLE CLAMP INSTALLATION

NOT TO SCALE

CHANNEL SYSTEM LIST OF MATERIALS					
ITEM	SML	DESCRIPTION	PART NO/NSN	UI	QTY
1		SHIELD, EXPANSION			
2		WASHER, FLAT 3/8 " ID			
3		BOLT,LAG,HEX HEAD, 3/8 "-16 X 1 1/4 "			
4		WASHER, LOCK 3/8 " ID			
5		CHANNEL, CONT. SLOTTED 1-5/8"			
6		CONDUIT / CONDUCTOR CLAMP			
7		SLOTTED HEX MACHINE SCREW & SQUARE NUT			

CONDUIT / CONDUCTOR CHANNEL SYSTEM INSTALLATION DETAIL

NOT TO SCALE

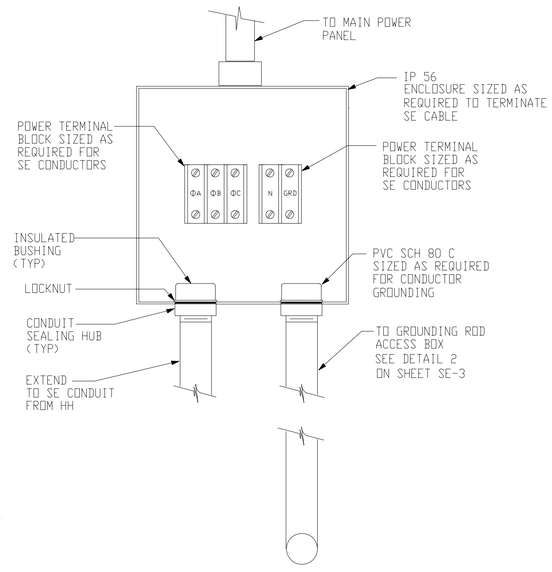

NOTE:

1. CONTRACTOR SHALL PROVIDE AND INSTALL SE JUNCTION BOX FOR EACH GUARD TOWER. IF BUILDING (BLDG) SE CABLES ARE TOO LARGE TO TERMINATE AT MAIN POWER PANEL CONTRACTOR SHALL PROVIDE SE JUNCTION BOX TO TERMINATE SE CABLES FROM HH.
2. CONTRACTOR SHALL SIZE AND PROVIDE SE CONDUIT FROM SE JUNCTION BOX TO BLDG MAIN POWER PANEL. CONTRACTOR SHALL ALSO SIZE AND PROVIDE SERVICE FEEDERS FROM SE JUNCTION BOX TO MAIN POWER PANEL.

SE JUNCTION BOX

NOT TO SCALE

DETAIL 4

NOT TO SCALE

UNLESS OTHERWISE NOTED, LINEAR DIMENSIONS SHOWN ARE IN MILLIMETERS.

SYMBOL	DESCRIPTION	DATE	APR

DESIGNED BY: DLF
DATE: 01-25-07
DWN BY: FHG
SUBMITTED BY: MICHAEL HOWELL CHIEF, EPD ELECTRICAL SYSTEMS
CHK BY: RMS
FILE NO.: AF0609 $-EL05DT

US Army Corps of Engineers
Transatlantic Programs Center

AFGHAN NATIONAL POLICE COMPANY COMPOUND
VARIOUS, AFGHANISTAN
STANDARD DETAILS
STANDARD ELECTRICAL DETAILS

SHEET REFERENCE NUMBER:
SE-5

AF06099-EL05dt.dwg
3/30/2007 9:56 AM
AED AED, USACE

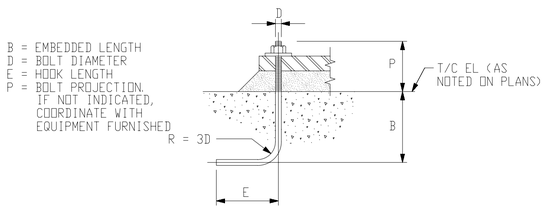

NOTE:
UNLESS OTHERWISE INDICATED, TYPE V OR VI ANCHOR RODS MAY BE USED AT THE CONTRACTOR'S OPTION

SCHEDULE			
D (IN)	B (mm)	E (mm)	REMARKS
3/8"	125	125	
1/2"	150	150	
5/8"	200	180	
3/4"	255	220	
7/8"	305	280	
1"	355	330	

TYPE V ANCHOR RODS
HOOKED BOLT

SCHEDULE			
D (IN)	B (mm)	E (mm)	REMARKS
3/8"	180	75	
1/2"	230	75	
5/8"	280	100	
3/4"	355	125	
7/8"	405	180	
1"	485	200	

TYPE VI ANCHOR RODS
HOOKED BOLT

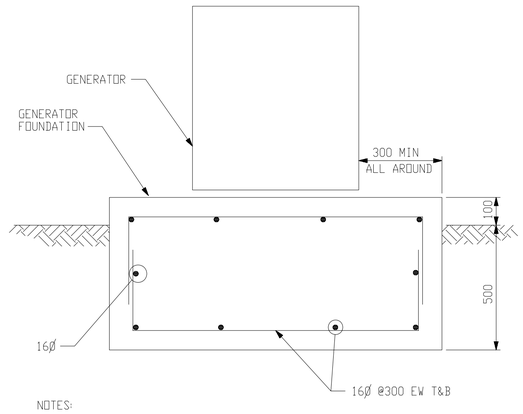

NOTES:

1. SEE DRAWING XE-1 FOR GENERATOR LOCATIONS.
2. COORDINATE PAD SIZE AND ANCHOR BOLT REQUIREMENTS WITH THE EQUIPMENT SUPPLIED.

TYPICAL EXTERIOR GENERATOR FOUNDATION
NOT TO SCALE

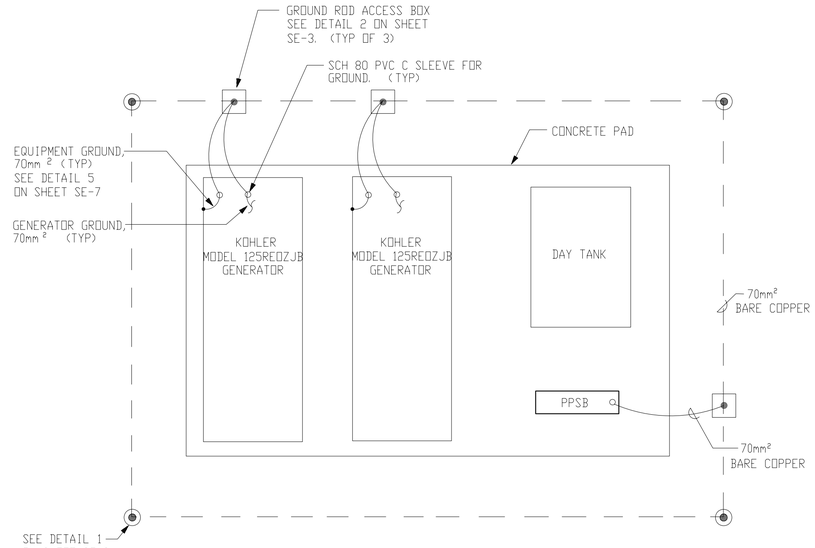

GENERATOR POWER PLANT GROUNDING PLAN
NOT TO SCALE

NOTES:

1. GROUNDING COUNTERPOISE SHALL BE 1.5M AWAY FROM GENERATOR PAD FOUNDATION AND 0.760M BELOW FINISHED GRADE.
2. ALL GROUNDING CONNECTIONS SHALL BE EXOTHERMIC WELD CONNECTIONS, SEE DETAIL 5 ON SHEET SE-7.
3. THE DAY TANK MAY BE AN INTEGRAL PART OF EACH GENERATOR SET.

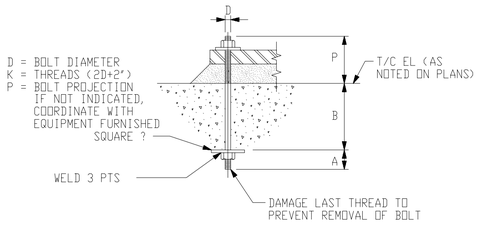

SCHEDULE				
D	A	B	SQUARE ?	REMARKS
3/4	50mm	250mm	?13x75x75	
7/8	75mm	300mm	?16x90x90	
1 1/8	75mm	400mm	?20x100x100	
1 1/4	75mm	460mm	?20x110x110	

TYPE II ANCHOR RODS
UNSLEEVED BOLT

TYPICAL ANCHOR ROD DETAILS
NOT TO SCALE

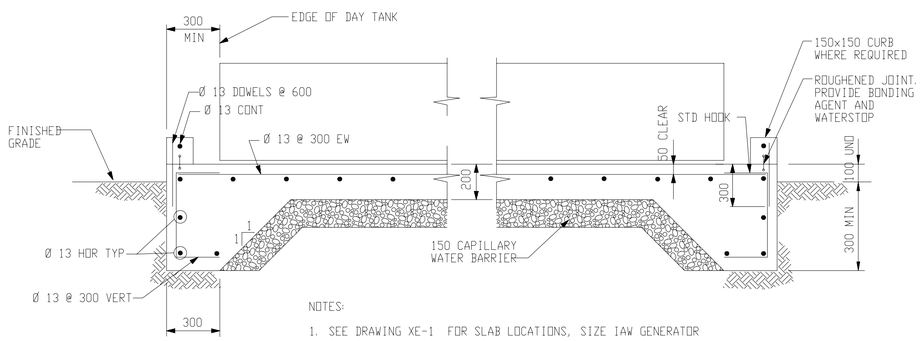

NOTES:

1. SEE DRAWING XE-1 FOR SLAB LOCATIONS, SIZE IAW GENERATOR DAY TANK REQUIREMENTS, COORDINATE WITH EQUIPMENT FURNISHED. PROVIDE MINIMUM EDGE CLEARANCE AS INDICATED.

TYPICAL DAY TANK SLAB
NOT TO SCALE

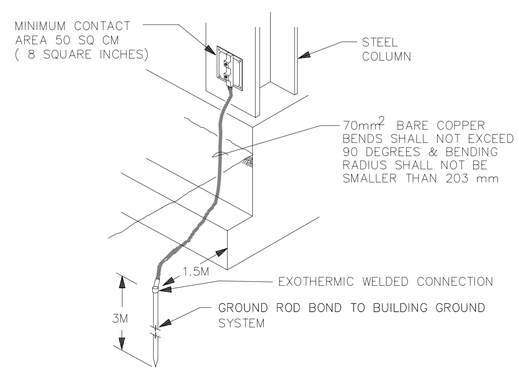

COLUMN GROUNDING DETAIL
NOT TO SCALE

DETAIL 6/1
NOT TO SCALE

UNLESS OTHERWISE NOTED, LINEAR DIMENSIONS SHOWN ARE IN MILLIMETERS.

*	REVISIONS		
	SYMBOL	DESCRIPTION	DATE	APR
			03/04/2007	

DESIGNED BY: DLF
DATE: 01-25-07
DWN BY: FHG
SUBMITTED BY: MICHAEL HOWELL
CHIEF, FDTD BLDGS SYSTEMS
CHK BY: RMS/ DK
FILE NO.: AF0609 $-EL06DT

US Army Corps of Engineers
Transatlantic Programs Center

AFGHAN NATIONAL POLICE COMPANY COMPOUND
VARIOUS, AFGHANISTAN
STANDARD DETAILS
POWER PLANT DETAILS

SHEET REFERENCE NUMBER:
SE-6

AF0609$-el06dt.dwg
3/30/2007 9:59 AM
AED AED, USACE

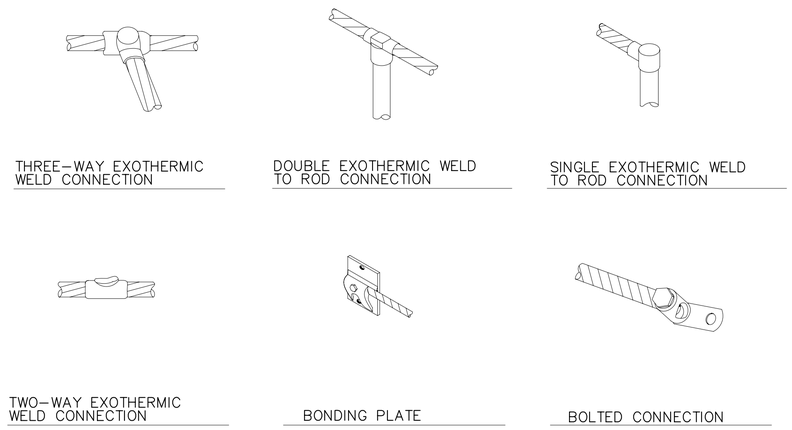

GROUNDING CONDUCTOR CONNECTION DETAILS
NOT TO SCALE

DETAIL 5
NOT TO SCALE

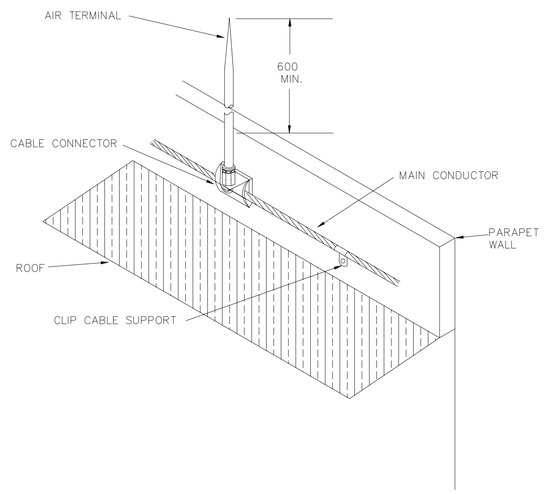

AIR TERMINAL DETAIL
NOT TO SCALE

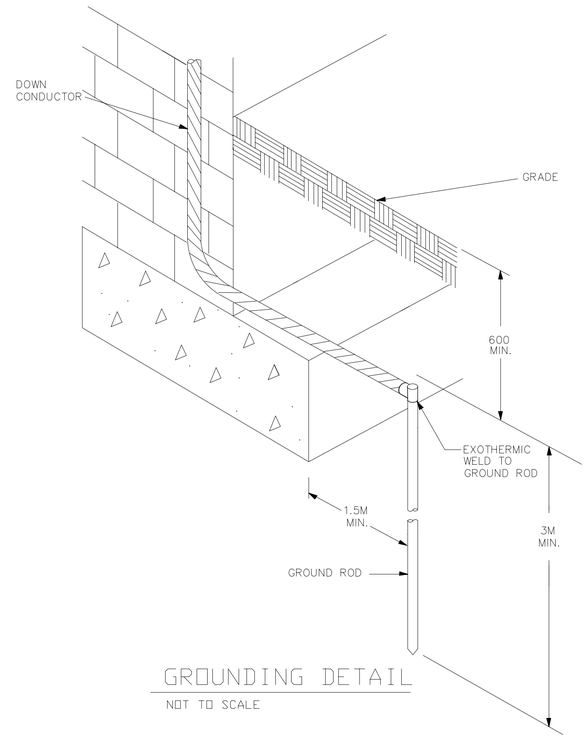

GROUNDING DETAIL
NOT TO SCALE

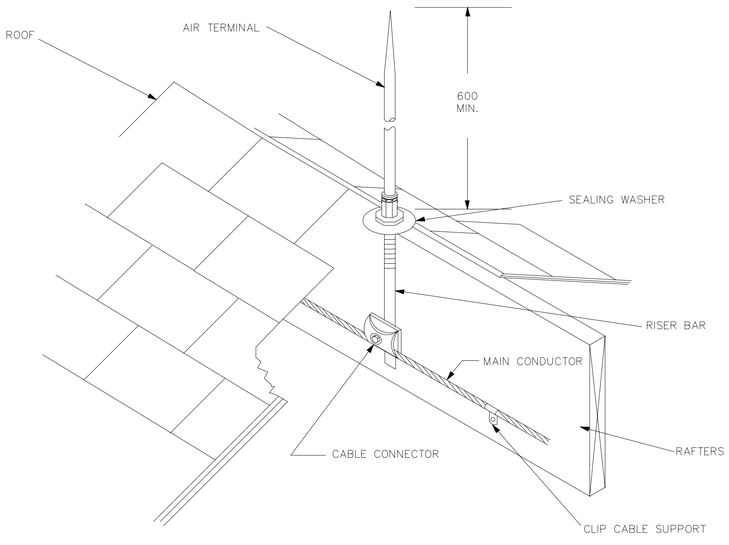

AIR TERMINAL DETAIL
NOT TO SCALE

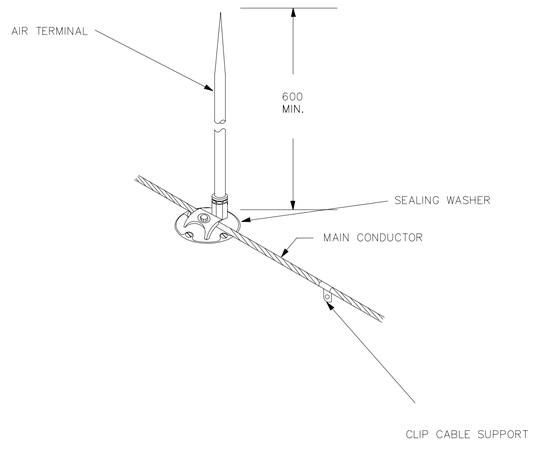

AIR TERMINAL DETAIL
NOT TO SCALE

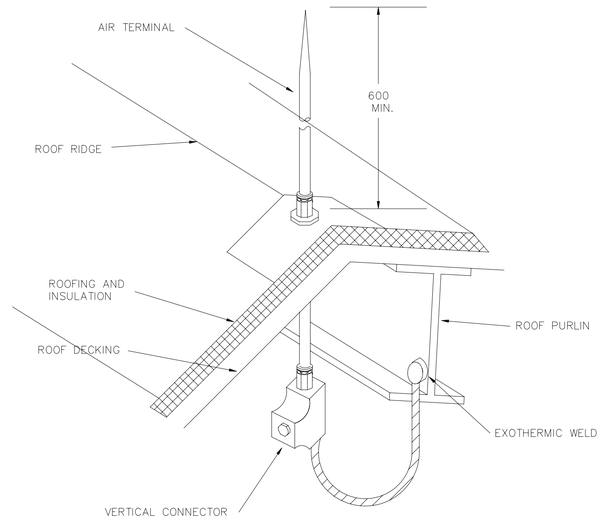

AIR TERMINAL DETAIL
NOT TO SCALE

UNLESS OTHERWISE NOTED, LINEAR DIMENSIONS SHOWN ARE IN MILLIMETERS.

SYMBOL	DESCRIPTION	DATE	APR

DESIGNED BY: DLF
DATE: 01-25-07
DWN BY: FHG
SUBMITTED BY: MICHAEL HOWELL
CHK BY: RMS
FILE NO.: AF0609 $-EL07DT

US Army Corps of Engineers
Transatlantic Programs Center

AFGHAN NATIONAL POLICE COMPANY COMPOUND
VARIOUS, AFGHANISTAN
STANDARD DETAILS
LIGHTNING PROTECTION DETAILS

SHEET REFERENCE NUMBER:
SE-7

AF0609$-el07dt.dwg
3/30/2007 10:01 AM
AED AED, USACE

CONSTRUCTION REQUIREMENTS				
CLEAR MINIMUM INSIDE REQUIREMENTS FOR INSTALLATION AND MAINTENANCE PURPOSES				
TYPE	HEIGHT	LENGTH	WIDTH	SUMP DEPTH
HH	1.2M	1.2M	1.2M	0.3M

MINIMUM CONCRETE THICKNESS	
HANDHOLE WALLS TOP, AND FLOORS	SUMP WALLS AND FLOOR
150mm	100mm

MINIMUM REINFORCING

1. BARS WILL BE A MINIMUM OF 13ϕ ROUND DEFORMED.
2. WALLS AND FLOOR WILL HAVE BARS AT 200mm MAXIMUM ON CENTERS WITH A MINIMUM 300mm HOOK AT CORNERS AND INTERSECTIONS.
3. THE TOP SHALL HAVE BARS INSTALLED AS SHOWN AT A MINIMUM OF 50mm FROM THE OPENING AND WITH A MINIMUM 100mm SPACING BETWEEN BARS.

NOTE: REINFORCING SHALL BE INCREASED WHERE REQUIRED TO SUIT ACTUAL INSTALLATION. MINIMUM REQUIREMENTS ARE FOR A H20 WHEEL LOADING (ASSHTO).

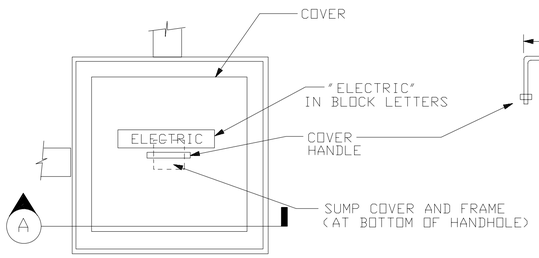

HANDHOLE COVER DETAIL
NOT TO SCALE

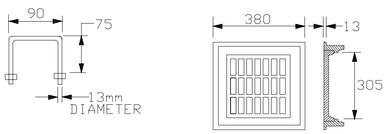

SUMP FRAME AND COVER DETAIL
NOT TO SCALE

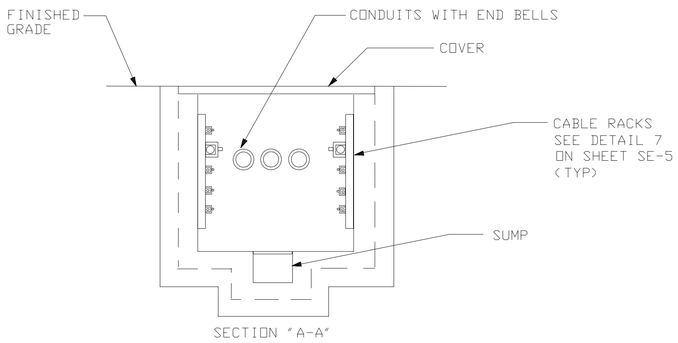

HANDHOLE DETAIL
NOT TO SCALE

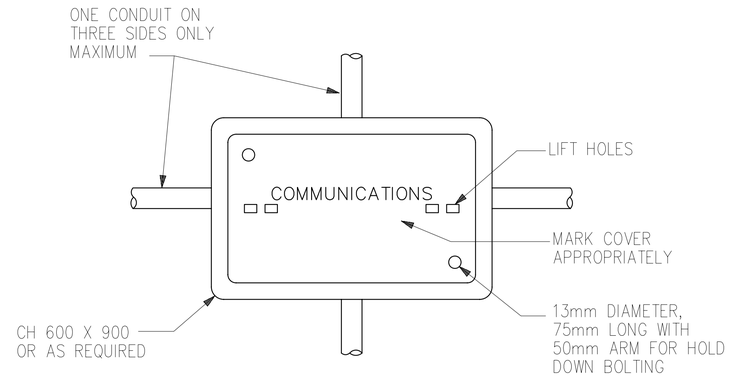

PLAN

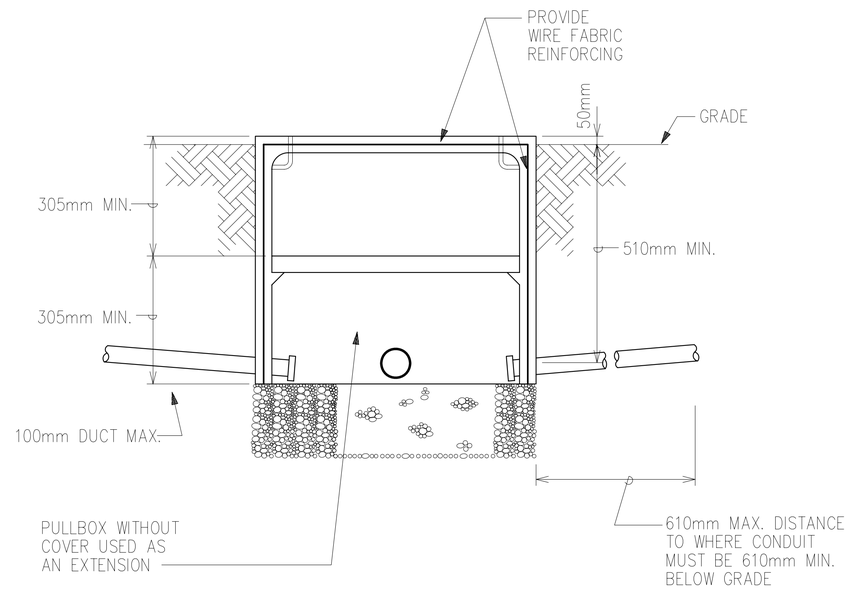

ELEVATION

COMMUNICATIONS AND SIGNAL CIRCUIT

PULLBOX DETAIL

CONTRACTOR MAY PROVIDE POURED CONCRETE BOX AS OPTION, CONTRACTOR MUST SUBMIT SHOP DRAWINGS FOR REVIEW.

UNLESS OTHERWISE NOTED, LINEAR DIMENSIONS SHOWN ARE IN MILLIMETERS.

SYMBOL	DESCRIPTION	DATE	APR
*	REVISIONS	03/04/2007	

DESIGNED BY: DLF
DATE: 01-25-07
DWN BY: FHG
SUBMITTED BY: MICHAEL HOWELL
CHK BY: RMS/ DK
FILE NO.: AF0609 $-EL08DT

US Army Corps of Engineers
Transatlantic Programs Center

AFGHAN NATIONAL POLICE COMPANY COMPOUND
VARIOUS, AFGHANISTAN

STANDARD DETAILS
HAND HOLE DETAILS

SHEET REFERENCE NUMBER:
SE-8

AF0609$-el08dt.dwg
3/30/2007 10:10 AM
AED AED, USACE