APPENDIX B-2

PDF DRAWINGS

APPENDIX B
TABLE OF CONTENTS

SITE ADAPT DRAWINGS FOR:

1 Story UP District Headquarters

- UP DISTRICT HQ CONCEPT SITE PLAN
- DISTRICT HEADQUARTERS COMPOUNDS 1 STORY
- OPEN BARRACKS WITH LATRINE
- 20 METER WATER TOWER

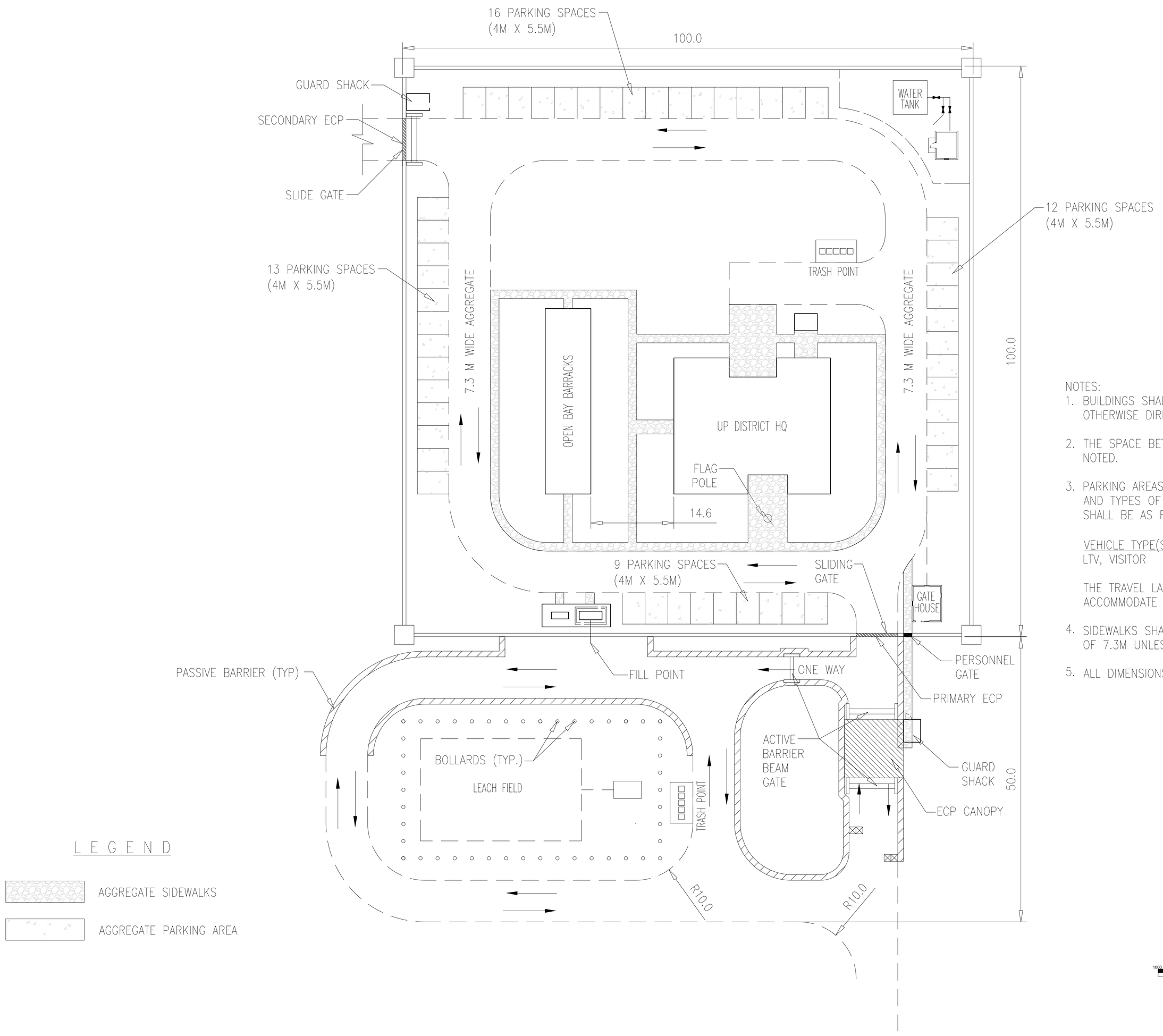

NOTES:

1. BUILDINGS SHALL BE CONSTRUCTED AT THE LOCATIONS SHOWN UNLESS OTHERWISE DIRECTED.
2. THE SPACE BETWEEN BUILDINGS SHALL BE AT LEAST 10M UNLESS OTHERWISE NOTED.
3. PARKING AREAS SHALL BE OF SUFFICIENT SIZE TO ACCOMMODATE THE NUMBER AND TYPES OF VEHICLE SPACES SHOWN. THE SIZE OF EACH SPACE PROVIDED SHALL BE AS FOLLOWS:

VEHICLE TYPE(S):	SPACE SIZE (WIDTH x DEPTH)
LTV, VISITOR	4M x 5.5M

THE TRAVEL LANE ABUTTING PARKING SPACES SHALL HAVE SUFFICIENT WIDTH TO ACCOMMODATE THE VEHICLE TURNING RADIUS.

4. SIDEWALKS SHALL HAVE A WIDTH OF 1.5M. AND ROADS SHALL HAVE A WIDTH OF 7.3M UNLESS OTHERWISE NOTED.
5. ALL DIMENSIONS ARE SHOWN IN METERS UNLESS OTHERWISE NOTED.

GRAPHIC SCALE

SCALE: 1 : 20

US Army Corps of Engineers®
AFGHANISTAN ENGINEER DISTRICT

MARK	DESCRIPTION	DATE	APPR.	MARK	DESCRIPTION	DATE	APPR.

DESIGNED BY: | DATE:
DWN BY: | CKD BY: | SOLICITATION NO.:
SUBMITTED BY: | CONTRACT NO.:
PLOT SCALE: | PLOT DATE: | FILE NUMBER:
SIZE: | FILE NAME:

U.S. ARMY CORPS OF ENGINEERS
AFGHANISTAN DISTRICT
APO AE 96338

ENGINEERING AND CONSTRUCTION DIVISION

STANDARD DRAWING

UP DISTRICT HQ
CONCEPT SITE PLAN

SHEET IDENTIFICATION
C-101
SHEET OF

ENGINEERING AND CONSTRUCTION DIVISION
US ARMY ENGINEER DISTRICT, AFGHANISTAN
APO AE, 09356

AFGHANISTAN NATIONAL POLICE (ANP) DISTRICT HEADQUARTERS COMPOUNDS 1 STORY HQ

APPENDIX A

VARIOUS LOCATIONS, AFGHANISTAN

SECTION/DETAIL CROSS REFERENCING CONVENTIONS

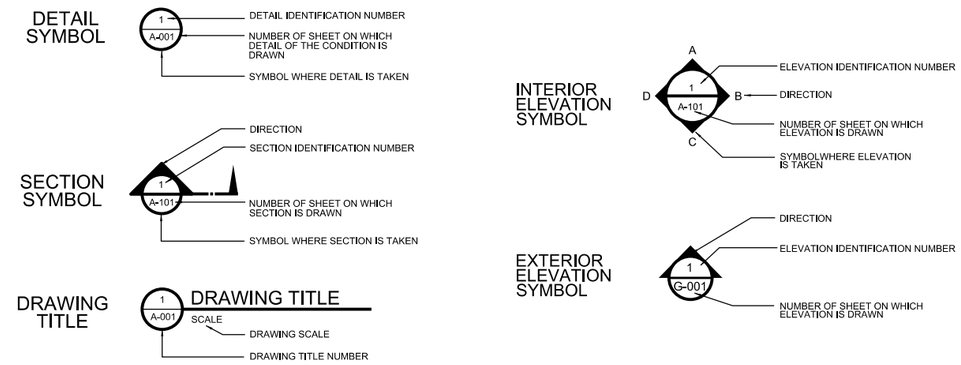

SCHEDULE OF DRAWINGS

SHEET NO	DWG CODE	SHEET REFERENCE NO	DESCRIPTION	REV STATUS
			GENERAL	
1		G-001	TITLE SHEET & SCHEDULE OF DRAWINGS	
			SITE DESIGN	
		C-1	SITE PLAN	
		C-2	DETAILS	
		C-3	DETAILS	
		C-4	WELL HOUSE PLAN AND SECTION	
		C-5	SEPTIC TANK DETAILS	
		XM-1	MECHANICAL SITE PLAN	
		XE-1	ELECTRICAL SITE PLAN	
			1 STORY BUILDING (A)	
		A-1	FIRST FLOOR PLAN	
		A-2	ROOF PLAN	
		A-3	BUILDING SECTIONS	
		A-4	WALL SECTION	
		A-5	BUILDING ELEVATIONS	
		A-6	BUILDING ELEVATIONS	
		A-7	ENLARGED TOILET PLANS	
		A-8	DOOR SCHEDULE AND DOOR TYPES	
		A-9	ROOM FINISH SCHEDULE	
		S-1	FOUNDATION PLAN	
		S-2	GRADE BEAM PLAN	
		S-3	LOWER ROOF BEAM PLAN	
		S-4	HIGH ROOF BEAM PLAN	
		S-5	FOOTING AND COLUMN DETAILS	
		S-6	BEAM DETAILS	
		S-7	STANDARD BEAM AND COLUMN DETAILS	
		M-1	HVAC PLAN	
		M-2	HEATING PLAN	
		M-3	ROOF PLAN	
		P-1	PLUMBING PLAN	
		P-2	ENLARGED PLUMBING PLANS -DOMESTIC WATER	
		P-3	ENLARGED PLUMBING PLANS -WASTE AND DRAINS	
		P-4	ENLARGED PLUMBING PLANS -WASTE AND DRAINS	
		P-5	DOMESTIC WATER RISER DIAGRAM	
		P-6	PLUMBING SCHEDULES	
		E-1	LIGHTING PLAN	
		E-2	POWER PLAN	
		E-3	PANEL SCHEDULE	

SHEET NO	DWG CODE	SHEET REFERENCE NO	DESCRIPTION	REV STATUS
			GUARD TOWER (B)	
		A-1	FLOOR PLAN, SECTION ELEVATION AND ROOF PLAN	
		S-1	FOUNDATION AND SLAB PLAN ROOF FRAMING PLAN	
		E-1	LIGHTING & POWER PLAN	
			GUARD SHACK (C)	
		A-1	FLOOR PLANS AND ELEVATIONS	
		S-1	FOUNDATION AND SLAB PLAN ROOF FRAMING PLAN	
		E-1	LIGHTING PLAN	
			POWER PLANT (D)	
		E-1	ONE LINE DIAGRAM	
			WELL HOUSE (E)	
		A-1	FLOOR PLAN, ELEVATIONS AND SCHEDULES	
		S-1	FOUNDATION PLAN AND ROOF PLAN	
		S-2	FOOTING DETAILS	
		S-3	SLAB-ON-GRADE DETAILS	
		M-1	HVAC PLAN	
		E-1	LIGHTING AND POWER PLAN	
		E-2	ELECTRICAL SCHEDULES	
			STANDARD DETAILS	
		SA-1	ABBREVIATIONS AND SYMBOLS	
		SA-2	WALL SECTION AND ROOF DETAILS	
		SA-3	VEHICLE RE-FUELING POINT	
		SS-1	GENERAL NOTES AND ABBREVIATIONS	
		SS-2	STANDARD DETAILS	
		SS-3	DETAILS	
		SS-4	MANUAL DROP ARM GATE	
		SM-1	LEGEND AND ABBREVIATIONS	
		SM-2	MECHANICAL SCHEDULES	
		SM-3	MECHANICAL STANDARD DETAILS	
		SM-4	PROPANE COOKING STOVE	
		SP-1	LEGENDS AND ABBREVIATIONS	
		SP-2	STANDARD PLUMBING DETAILS	
		SP-3	STANDARD PLUMBING DETAILS	
		SE-1	LEGEND AND ABBREVIATIONS	
		SE-2	STANDARD LIGHTING DETAILS	

SHEET NO	DWG CODE	SHEET REFERENCE NO	DESCRIPTION	REV STATUS
			STANDARD DETAILS	
		SE-3	DUCTBANK DETAILS	
		SE-4	STANDARD ELECTRICAL DETAILS	
		SE-5	POWER PLANT DETAILS	
		SE-6	HAND HOLE DETAILS	
		SE-7	WATER & SEWER TRENCH DETAIL	
		SE-8	TRUST BLOCK DETAIL	
		G-001	20M WATER TOWER DRAWINGS	
			20M WATER TOWER	
		G-001	INDEX SHEET	
			REFER TO INDIVIDUAL DRAWINGS FOR TOWER DESIGN PACKAGE	

PROJECT COORDINATION

U.S. ARMY ENGINEER DISTRICT, AFGHANISTAN

PROJECT MANAGER — DATE

CHIEF, DESIGN BRANCH — DATE

THIS PROJECT WAS DESIGNED BY AFGHANASTAN ENGINEER DISTRICT OF THE U.S ARMY CORPS OF ENGINEERS. THE INITIALS OR SIGNATURES AND REGISTRATION DESIGNATIONS OF INDIVIDUALS APPEAR ON THESE DOCUMENTS WITHIN THE SCOPE OF THEIR EMPLOYMENT AS REQUIRED BY ER 1110-1-8152.

US ARMY CORPS OF ENGINEERS AFGHANISTAN ENGINEER DISTRICT

SYMBOL	DESCRIPTION	DATE	APPR.

SYMBOL	DESCRIPTION	DATE	APPR.

DESIGNED BY: DATE: XXXXXXX REV: ___
DWN BY: CKD BY: DESIGN FILE NO.
REVIEWED BY: DRAWING CODE:
SUBMITTED BY: FILE NAME: G-TS.DGN
PLOT SCALE: ___
PLOT DATE: XXXXXXX

U.S. ARMY ENGINEER DISTRICT, AFGHANISTAN
CORPS OF ENGINEERS
APO AE 96338

ENGINEERING AND CONSTRUCTION DIVISION

AFGHANISTAN NATIONAL POLICE (ANP) DISTRICT HEADQUARTERS COMPOUNDS - 1 STORY HQ
VARIOUS LOCATIONS, AFGHANISTAN

TITLE SHEET
SCHEDULE OF DRAWINGS

SHEET REFERENCE NUMBER:
G-001
SHEET 1 OF –

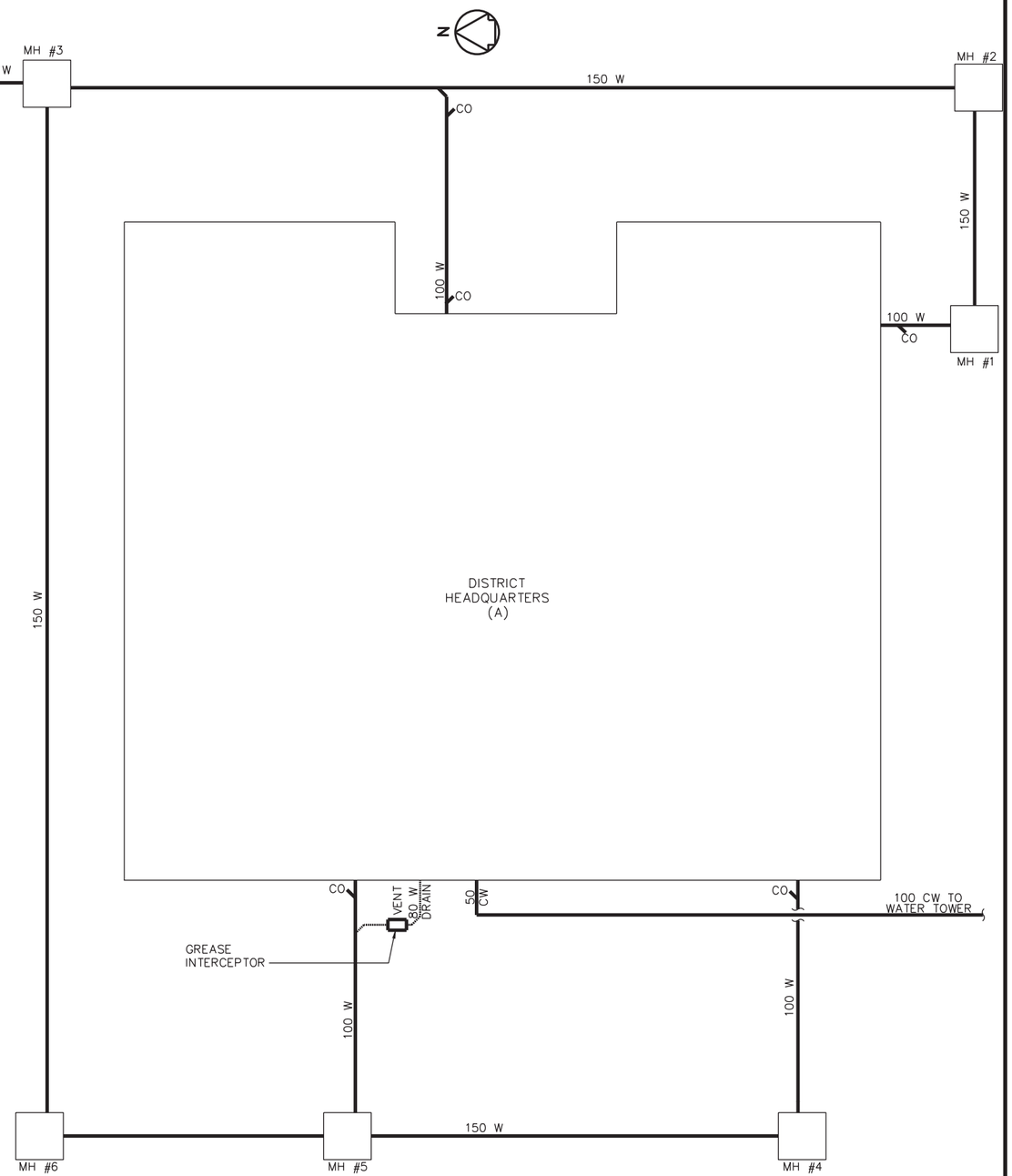

LEGEND

W – PVC WATER PIPING

CW – PVC COLD WATER

CO – PIPING CLEAN OUT

ENLARGED UTILITY SITE PLAN

NTS

1 0 1 2 3 4 5 6 7 8 9

1:100

US ARMY CORPS OF ENGINEERS AFGHANISTAN ENGINEER DISTRICT

SYMBOL	DESCRIPTION	DATE	APPR.	SYMBOL	DESCRIPTION	DATE	APPR.

DESIGNED BY: DATE: xx-xx-xx REV. ___

DWN BY: CKD BY: DESIGN FILE NO.

REVIEWED BY: DRAWING CODE:

SUBMITTED BY: FILE NAME: ___

PLOT SCALE: ___

PLOT DATE: xx-xx-xx

U.S. ARMY ENGINEER DISTRICT, AFGHANISTAN
CORPS OF ENGINEERS
APO AE 96338

ENGINEERING AND CONSTRUCTION DIVISION

AFGHANISTAN NATIONAL POLICE (ANP) DISTRICT HEADQUARTERS COMPOUNDS - 1 STORY HQ
VARIOUS LOCATIONS, AFGHANISTAN

SITE DESIGN

SITE PLAN

SHEET REFERENCE NUMBER:

C-1

A1 Size 594mm x 841mm

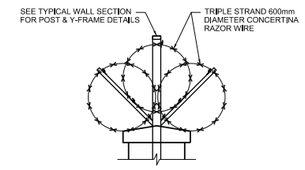

1A OPTIONAL CONCERTINA
SCALE: 1:25

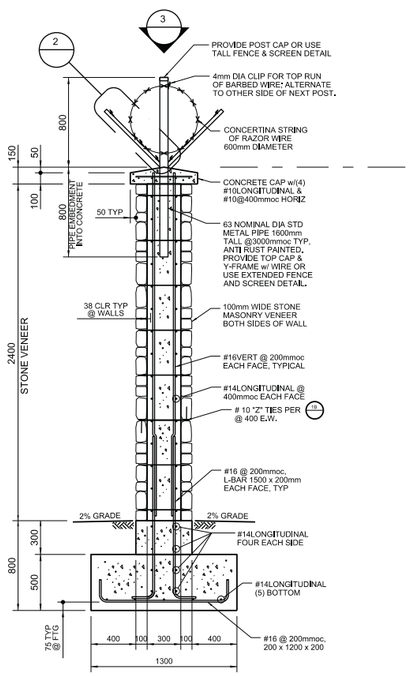

NOTE: IF PROPER GROUTING AND CONSTRUCTION TECHNIQUES ARE USED THE STONE VENEER FACES MAY BE USED TO FORM THE 300 CONCRETE WALL

1 STONE VENEER WALL SECTION
SCALE: 1:25

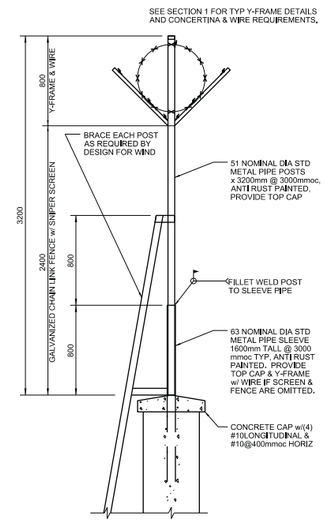

1B OPTIONAL SNIPER SCREEN
SCALE: 1:25

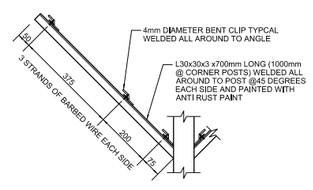

2 Y-FRAME ENLARGED DETAIL
SCALE: 1:10

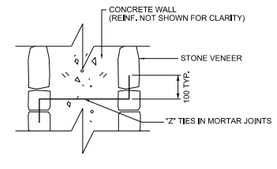

1B PLAN "Z"-TIES
SCALE: N.T.S.

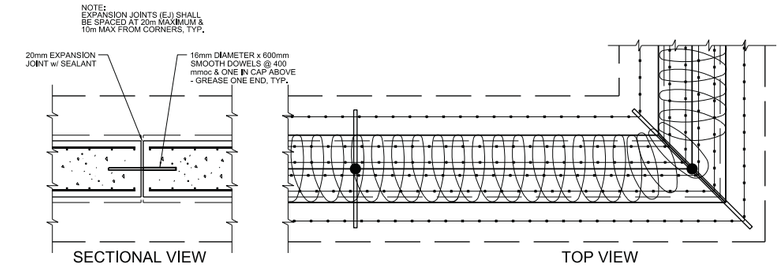

3 EXPANSION JOINT DETAIL AND WALL CORNER PLAN
SCALE: 1:25

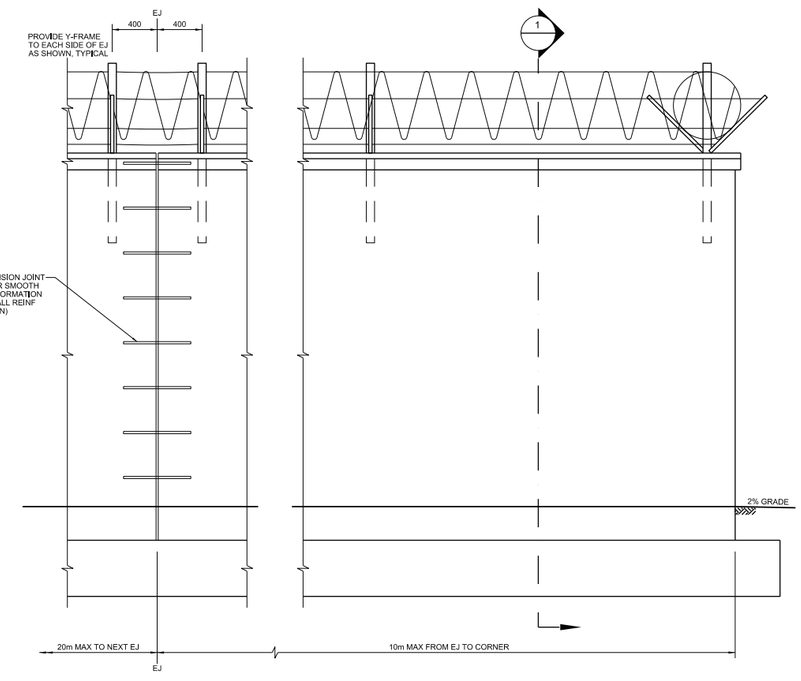

4 WALL ELEVATION SHOWING EXPANSION JOINT & CORNER
SCALE: 1:25

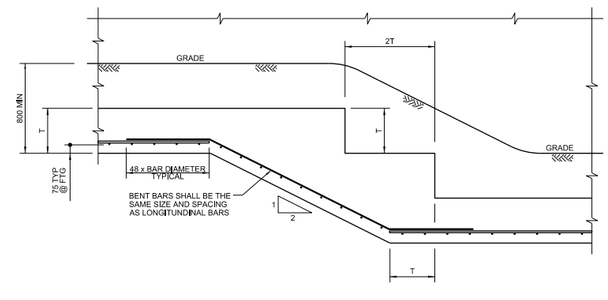

5 STEP FOOTING DETAIL AS REQUIRED FOR GRADE CHANGES
NO SCALE

US ARMY CORPS OF ENGINEERS
AFGHANISTAN ENGINEER DISTRICT

SYMBOL	DESCRIPTION	DATE	APPR.	SYMBOL	DESCRIPTION	DATE	APPR.

DESIGNED BY: | DATE: XX-XX-XX | REV. ___
DWN BY: | CAD BY: | DESIGN FILE NO. | DRAWING CODE:
REVIEWED BY: | FILE NAME:
SUBMITTED BY: | PLOT SCALE:
PLOT DATE: XX-XX-XX

U.S. ARMY ENGINEER DISTRICT, AFGHANISTAN
CORPS OF ENGINEERS
APO AE 96338

ENGINEERING AND CONSTRUCTION DIVISION

AFGHANISTAN NATIONAL POLICE (ANP) DISTRICT HEADQUARTERS COMPOUNDS - 1 STORY HQ
VARIOUS LOCATIONS, AFGHANISTAN
SITE DESIGN

DETAILS

SHEET REFERENCE NUMBER:
C-2

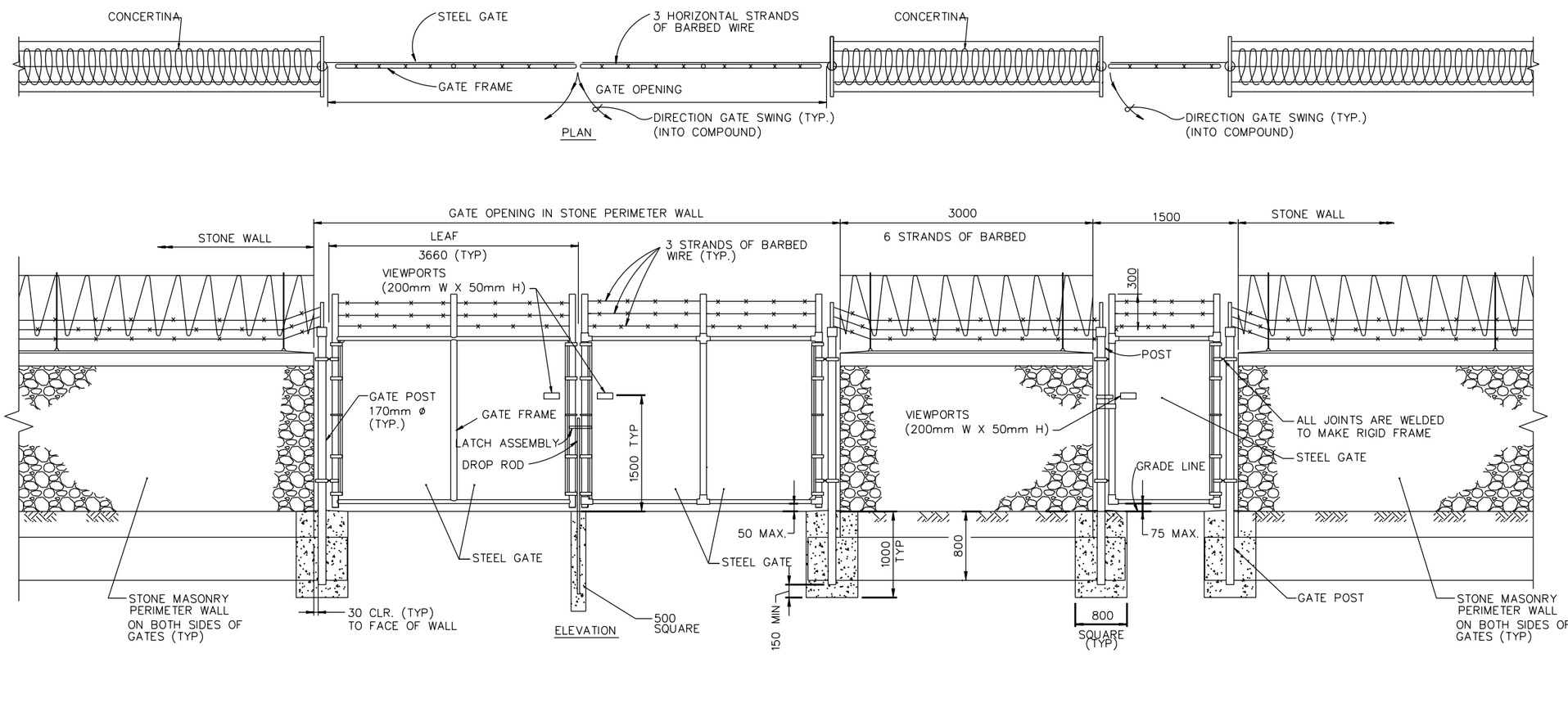

US ARMY CORPS OF ENGINEERS AFGHANISTAN ENGINEER DISTRICT

SYMBOL	DESCRIPTION	DATE	APPR.	SYMBOL	DESCRIPTION	DATE	APPR.

DESIGNED BY: DATE: xx-xx-xx REV.
DWN BY: CKD BY: DESIGN FILE NO.
REVIEWED BY: DRAWING CODE:
SUBMITTED BY: FILE NAME:
PLOT SCALE:
PLOT DATE: xx-xx-xx

U.S. ARMY ENGINEER DISTRICT, AFGHANISTAN
CORPS OF ENGINEERS
APO AE 96338

ENGINEERING AND CONSTRUCTION DIVISION

AFGHANISTAN NATIONAL POLICE (ANP) DISTRICT HEADQUARTERS COMPOUNDS - 1 STORY HQ
VARIOUS LOCATIONS, AFGHANISTAN
SITE PLAN

DETAILS

SHEET REFERENCE NUMBER:
C-3

A1 Size 594mm x 841mm

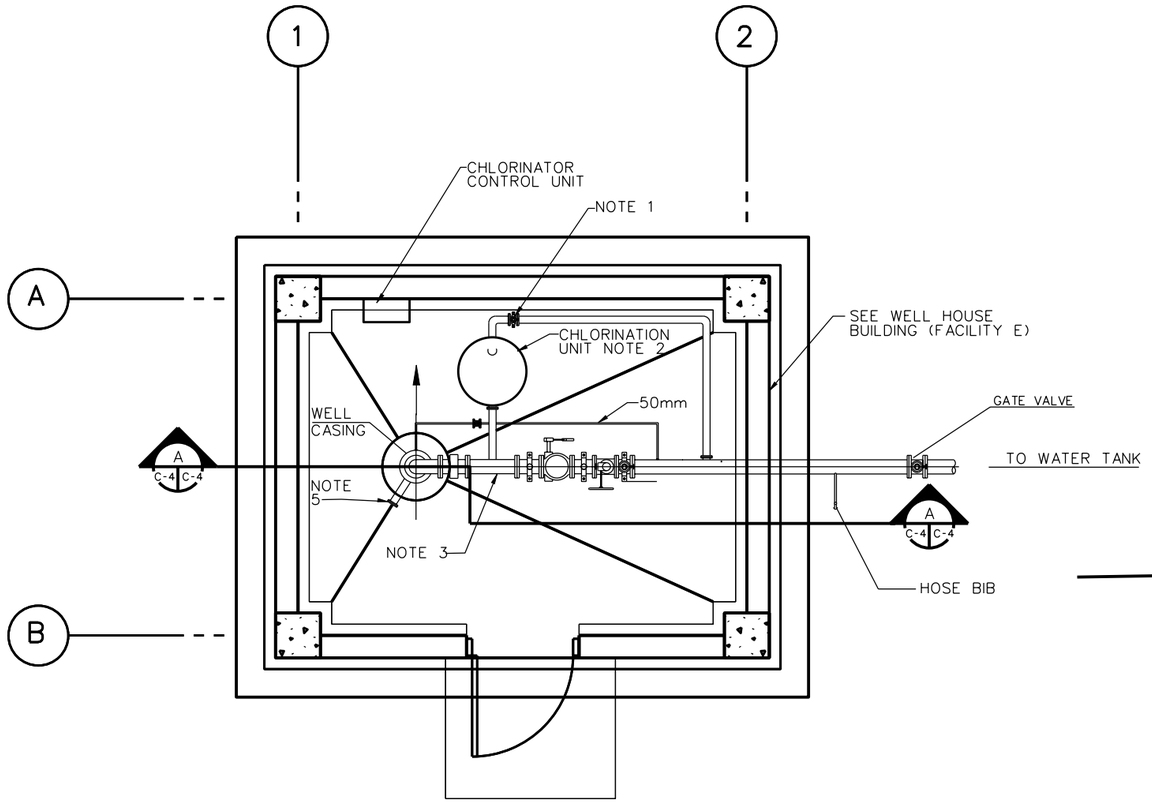

FLOOR PLAN
NOT TO SCALE

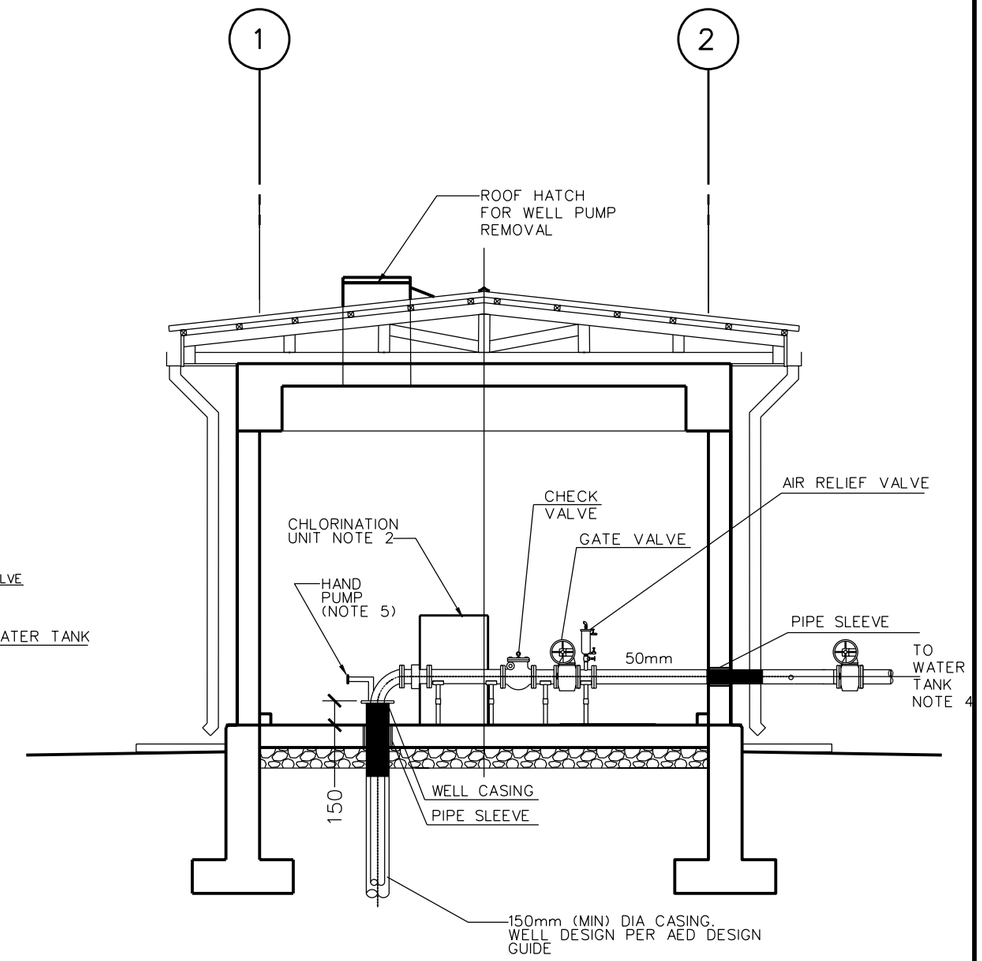

A C-4 C-4 BUILDING SECTION
NOT TO SCALE

NOTES:

1. 25mm PVC FILL PIPING WITH GATE VALVE. SECURE TO WALL USING PIPE CLAMPS.

2. CHLORINATION UNIT SHALL BE A PACKAGE UNIT TO INCLUDE MIXER, FEED PUMP, TANK WITH COVER AND DRY CHEMICAL FEED PORT, AND WALL MOUNTED CHLORINE SENSOR/CONTROLLER.

3. CHLORINE FEED POINT SHALL INCLUDE PVC PIPE WITH TAPPED BLIND FLANGE, PVC BALL OR GATE VALVE AND 12mm FLEXIBLE PIPING FROM DOSING PUMP.

4. PUMP DISCHARGE PIPING SHALL BE SCH80 PVC. EXTERIOR PIPING, VALVES AND HOSE BIB SHALL BE INSULATED TO PREVENT FREEZING.

5. HAND PUMP SUCTION PIPING TO BE SEPARATE FROM ELECTRIC PUMP PIPING. HAND PUMP DISCHARGE PIPING (50mm) SHALL CONNECT TO STORAGE TANK FEED PIPING AS SHOWN AND SHALL BE VALVED TO FEED WATER STORAGE TANK OR EXTERIOR HOSE BIB.

US ARMY CORPS OF ENGINEERS AFGHANISTAN ENGINEER DISTRICT

SYMBOL	DESCRIPTION	DATE	APPR.	SYMBOL	DESCRIPTION	DATE	APPR.

DESIGNED BY: DWN BY: CKD BY: REVIEWED BY: SUBMITTED BY: DATE: XX-XX-XX DESIGN FILE NO.: DRAWING CODE: FILE NAME: PLOT SCALE: PLOT DATE: XX-XX-XX REV. 1

U.S. ARMY ENGINEER DISTRICT, AFGHANISTAN CORPS OF ENGINEERS APO AE 96338

ENGINEERING AND CONSTRUCTION DIVISION

AFGHANISTAN NATIONAL POLICE (ANP) DISTRICT HEADQUARTERS COMPOUNDS - 1 STORY HQ
VARIOUS LOCATIONS, AFGHANISTAN
SITE DESIGN
WELL HOUSE PLAN & SECTION

SHEET REFERENCE NUMBER:
C-4

A1 Size 594mm x 841mm

NOTE:
1. SEE CIVIL SITE PLAN FOR ORIENTATION OF INLET AND OUTLET CONNECTIONS.

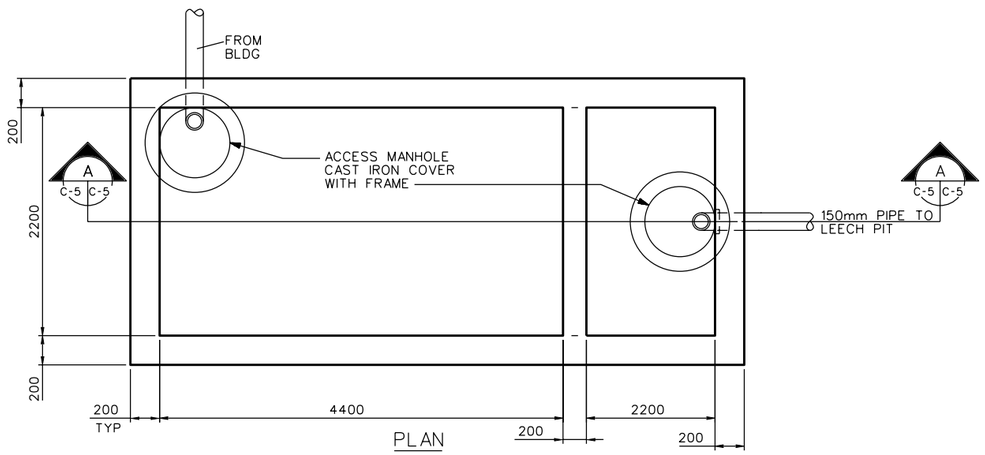

PLAN

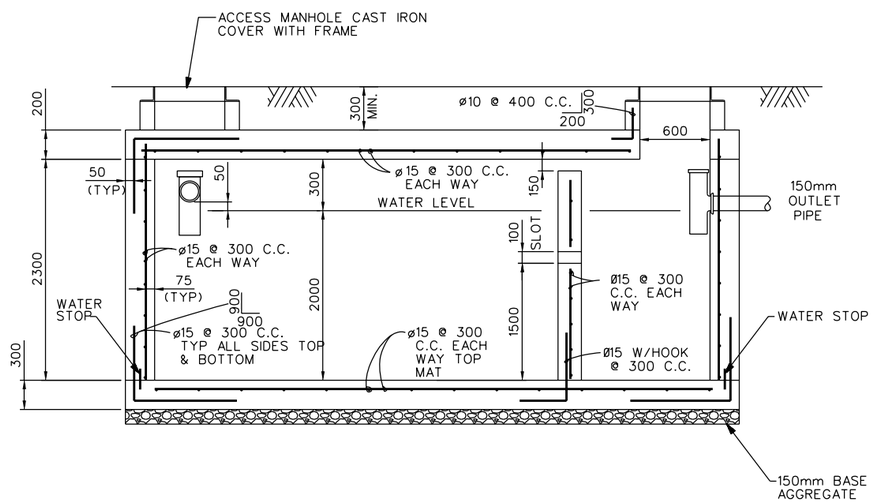

SECTION A-A
SCALE - NONE
C-5 C-5

CONCRETE SEPTIC TANK DETAILS
NOT TO SCALE

US ARMY CORPS OF ENGINEERS
AFGHANISTAN ENGINEER DISTRICT

SYMBOL	DESCRIPTION	DATE	APPR.	SYMBOL	DESCRIPTION	DATE	APPR.

DESIGNED BY: DWN BY: CKD BY: REVIEWED BY: SUBMITTED BY:
DATE: XX-XX-XX DESIGN FILE NO.: DRAWING CODE: FILE NAME: PLOT SCALE: PLOT DATE: XX-XX-XX
REV. —

U.S. ARMY ENGINEER DISTRICT, AFGHANISTAN
CORPS OF ENGINEERS
APO AE 98338
ENGINEERING AND CONSTRUCTION DIVISION

AFGHANISTAN NATIONAL POLICE (ANP) DISTRICT HEADQUARTERS COMPOUNDS - 1 STORY HQ
VARIOUS LOCATIONS, AFGHANISTAN
SITE DESIGN

SEPTIC TANK DETAILS

SHEET REFERENCE NUMBER:
C-5

A1 Size 594mm x 841mm

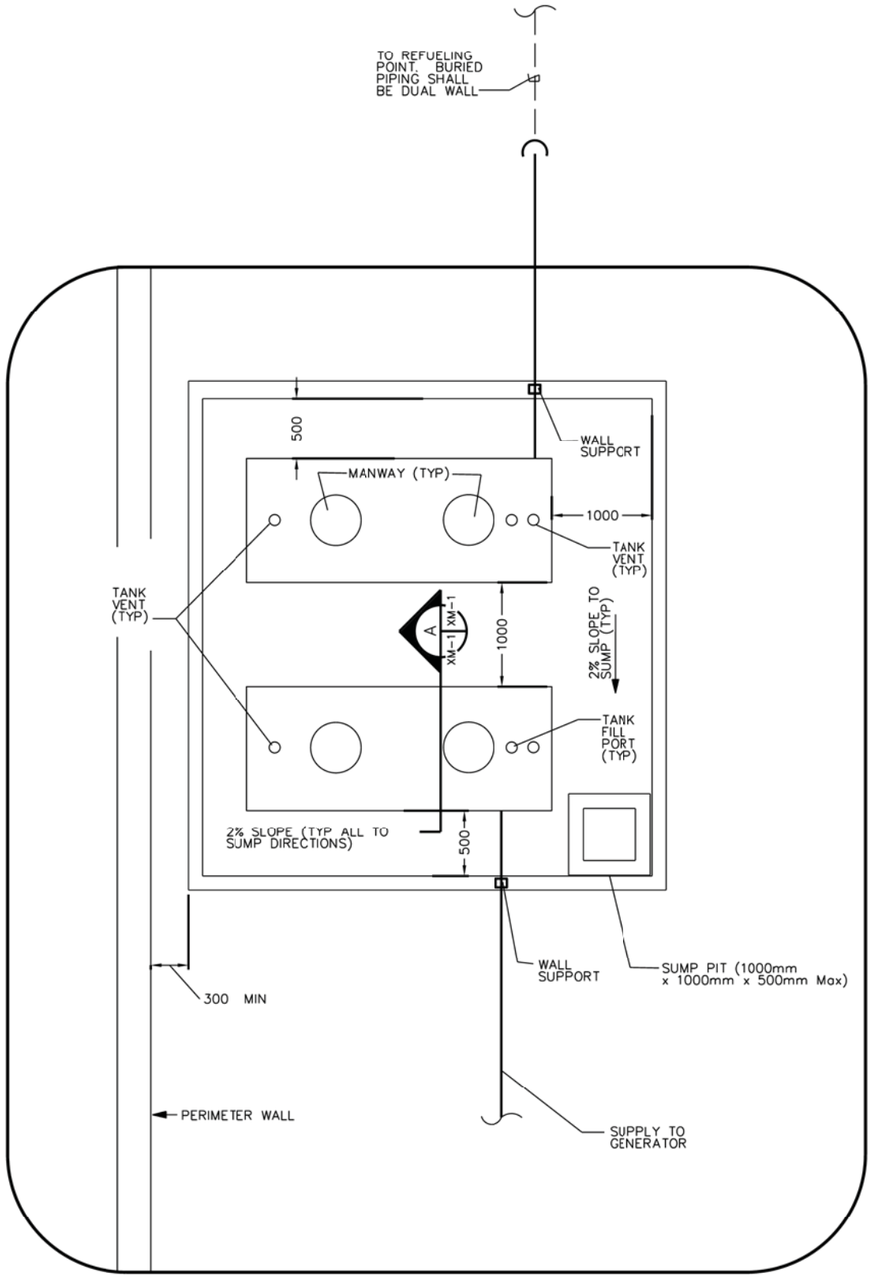

ENLARGED MECHANICAL SITE PLAN
NTS

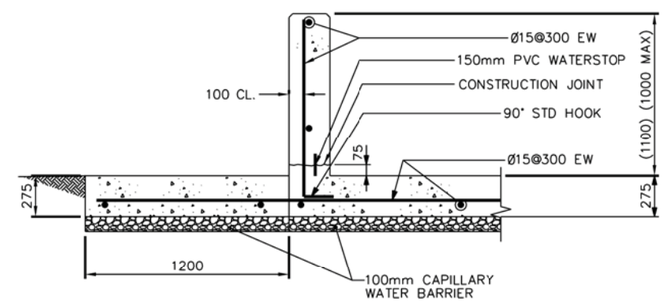

CONTAINMENT WALL DETAIL
SCALE= NO SCALE
1
XM-1 XM-1

MECHANICAL SITE PLAN
SCALE= 1:600

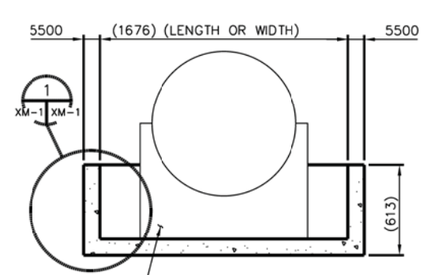

SEE SPEC FOR SADDLE REQUIREMENTS

(*) – COORDINATE LENGTH, WIDTH, AND HEIGHT OF CONTAINMENT DIKE WITH TANK REQUIREMENTS. HEIGHT OF WALL IS TO BE DETERMINED BASED ON SPECIFICATION 01015. FOR HEIGHTS GREATER THAN 1000mm, REINFORCEMENT SHOWN REQUIRES VERIFICATION BY ENGINEER.

SECTION
SCALE=1:50
A–A
XM-1 XM-1

1 0 1 2 3 4
1:50

10 0 10 20 30 40 50
1:600

US ARMY CORPS OF ENGINEERS AFGHANISTAN ENGINEER DISTRICT

SYMBOL	DESCRIPTION	DATE	APPR.

SYMBOL	DESCRIPTION	DATE	APPR.

DESIGNED BY:
DWN BY:
CKD BY:
REVIEWED BY:
SUBMITTED BY:
DATE: XX-XX-XX
DESIGN FILE NO.
DRAWING CODE:
FILE NAME:
PLOT SCALE:
PLOT DATE: XX-XX-XX
REV.

U.S. ARMY ENGINEER DISTRICT, AFGHANISTAN
CORPS OF ENGINEERS
APO AE 96338

ENGINEERING AND CONSTRUCTION DIVISION

AFGHANISTAN NATIONAL POLICE (ANP) DISTRICT HEADQUARTERS COMPOUNDS - 1 STORY HQ
VARIOUS LOCATIONS, AFGHANISTAN

SITE DESIGN
MECHANICAL SITE PLAN

SHEET REFERENCE NUMBER:
XM-1

A1 Size 594mm x 841mm

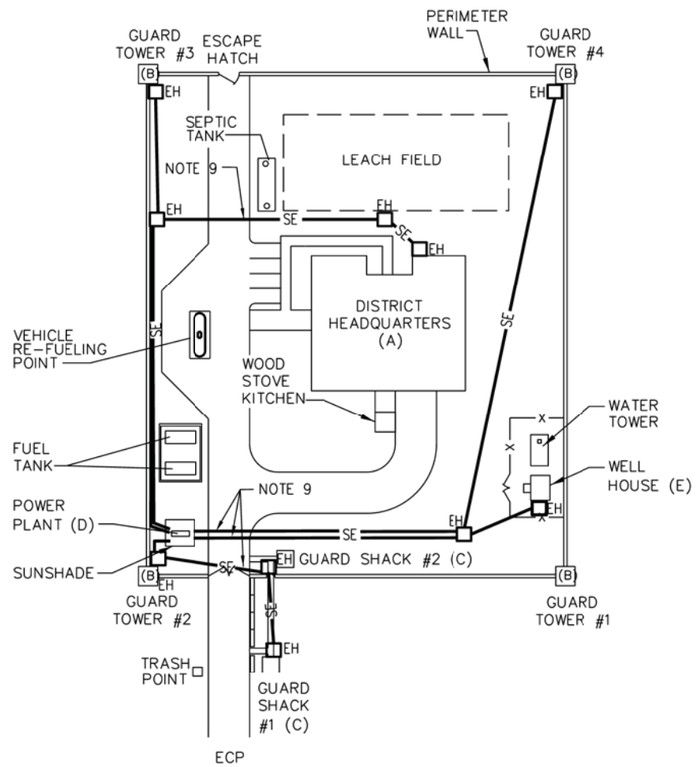

ELECTRICAL SITE PLAN
SCALE= 1:500

NOTES:

1. FOR LEGENDS AND ABBREVIATIONS SEE PLATE SE-1.
2. FOR SECONDARY DISTRIBUTION DIRECT BURIED (DB) DUCT DETAILS AND GENERATOR POWER PLANT DETAILS SEE PLATES SE-3 AND SE-5.
3. FOR ELECTRICAL HAND HOLE (EH) SEE PLATE SE-6.
4. FOR POWER PLANT ONE LINE DIAGRAM SEE PLATE D/E-1, POWER PLANT.
5. ALL SECONDARY DISTRIBUTION CABLES SHALL BE RACKED ON THE SIDES OF EH. SEE DETAIL ON PLATE SE-4.
6. ALL DIRECT BURIED PVC CONDUIT 90 DEGREE BENDS SHALL HAVE A RADIUS OF NOT LESS THAN 92mm, OR NOT LESS THAN THE CABLE MANUFACTURER'S RECOMMENDED CABLE BENDING RADIUS, WHICH EVER BEND RADIUS IS LARGER.
7. ALL CABLE SPLICES SHALL BE MADE IN AN EH AND IN ACCORDANCE WITH THE CABLE MANUFACTURER'S RECOMMENDATIONS.
8. COORDINATE ROUTING OF SECONDARY SERVICES AS NECESSARY TO AVOID FACILITIES AND STRUCTURES.
9. PROVIDE CONCRETE ENCASED DUCT BANK UNDER TRAFFIC AREAS.

- SINGLE BUILDING CONCEPT ELECTRICAL SITE PLAN.
- SEE SHEET C-001 FOR SITE PLAN.
- CONTRACTOR IS RESPONSIBLE FOR ELECTRICAL ROUTING TO ALL BUILDINGS AS REQUIRED BY THE SCOPE OF WORK.

US ARMY CORPS OF ENGINEERS AFGHANISTAN ENGINEER DISTRICT

SYMBOL	DESCRIPTION	DATE	APPR.

SYMBOL	DESCRIPTION	DATE	APPR.

DESIGNED BY: | DATE: XX-XX-XX | REV.
DWN BY: | CKD BY: | DESIGN FILE NO.
REVIEWED BY: | DRAWING CODE:
SUBMITTED BY: | FILE NAME: | PLOT SCALE: | PLOT DATE: XX-XX-XX

U.S. ARMY ENGINEER DISTRICT, AFGHANISTAN
CORPS OF ENGINEERS
APO AE 96338

ENGINEERING AND CONSTRUCTION DIVISION

AFGHANISTAN NATIONAL POLICE (ANP) DISTRICT HEADQUARTERS COMPOUNDS - 1 STORY HQ
VARIOUS LOCATIONS, AFGHANISTAN

SITE DESIGN
ELECTRICAL SITE PLAN

SHEET REFERENCE NUMBER:
XE-1

A1 Size 594mm x 841mm

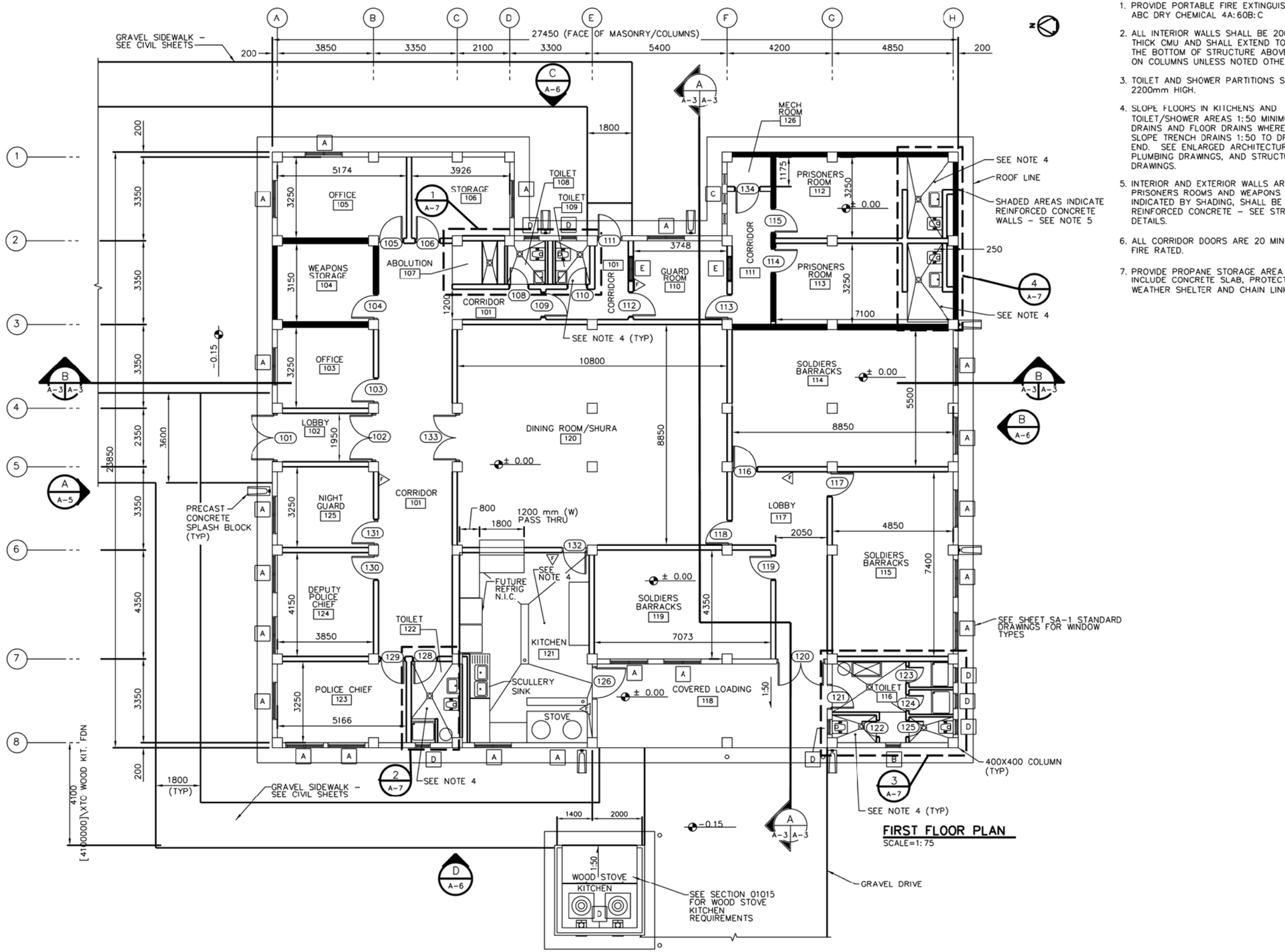

FIRST FLOOR PLAN

SCALE=1:75

GENERAL NOTES:

1. PROVIDE PORTABLE FIRE EXTINGUISHERS, ABC DRY CHEMICAL 4A:60B:C
2. ALL INTERIOR WALLS SHALL BE 200 mm THICK CMU AND SHALL EXTEND TO THE BOTTOM OF STRUCTURE ABOVE AND CENTER ON COLUMNS UNLESS NOTED OTHERWISE.
3. TOILET AND SHOWER PARTITIONS SHALL BE 2200mm HIGH.
4. SLOPE FLOORS IN KITCHENS AND TOILET/SHOWER AREAS 1:50 MINIMUM TO TRENCH DRAINS AND FLOOR DRAINS WHERE INDICATED. SLOPE TRENCH DRAINS 1:50 TO DRAIN AT ONE END. SEE ENLARGED ARCHITECTURAL DRAWINGS, PLUMBING DRAWINGS, AND STRUCTURAL DRAWINGS.
5. INTERIOR AND EXTERIOR WALLS AROUND PRISONERS ROOMS AND WEAPONS STORAGE, AS INDICATED BY SHADING, SHALL BE 200mm THICK REINFORCED CONCRETE – SEE STRUCTURAL FOR DETAILS.
6. ALL CORRIDOR DOORS ARE 20 MINUTE FIRE RATED.
7. PROVIDE PROPANE STORAGE AREA TO INCLUDE CONCRETE SLAB, PROTECTIVE WALL WEATHER SHELTER AND CHAIN LINK FENCING

US ARMY CORPS OF ENGINEERS AFGHANISTAN ENGINEER DISTRICT

SYMBOL	DESCRIPTION	DATE	APPR.	SYMBOL	DESCRIPTION	DATE	APPR.

REV.
DATE: XX-XX-XX
DESIGN FILE NO.
DRAWING CODE
FILE NAME:
PLOT SCALE:
PLOT DATE: XX-XX-XX

DESIGNED BY:
DWN BY: CKD BY:
REVIEWED BY:
SUBMITTED BY:

U.S. ARMY ENGINEER DISTRICT, AFGHANISTAN
CORPS OF ENGINEERS
APO AE 96338

ENGINEERING AND CONSTRUCTION DIVISION

AFGHANISTAN NATIONAL POLICE (ANP) DISTRICT HEADQUARTERS COMPOUNDS - 1 STORY HQ
VARIOUS LOCATIONS, AFGHANISTAN
1 STORY BUILDING

FIRST FLOOR PLAN

SHEET REFERENCE NUMBER:
A
A-1

A1 Size 594mm x 841mm

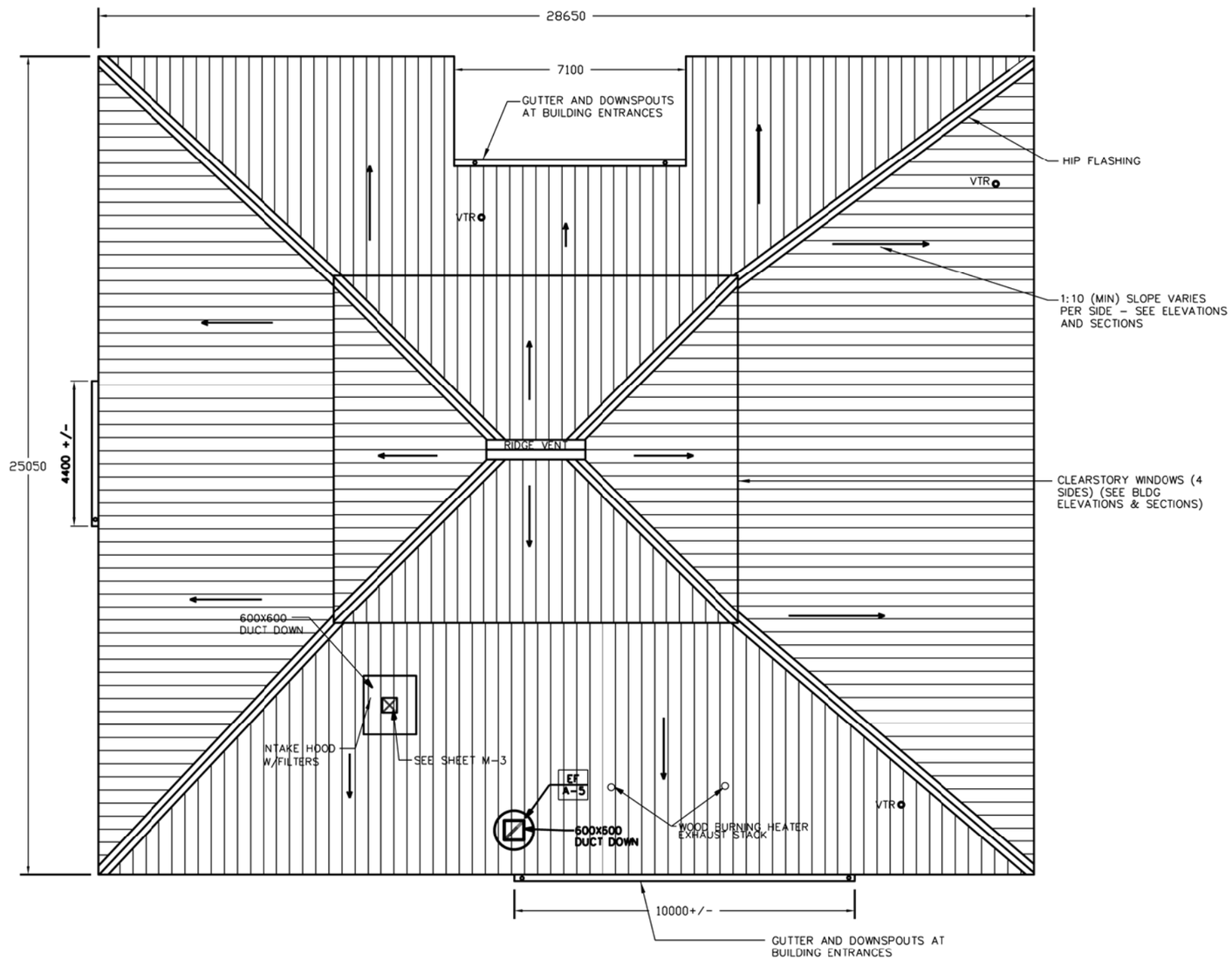

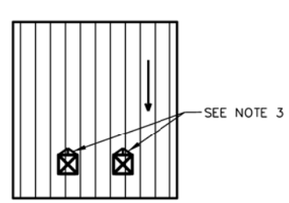

ROOF PLAN
SCALE= 1:75

NOTE:

1. TYPICAL ROOF SLOPE IS 1 IN 10.
2. ALL ROOF PENETRATIONS SHALL BE PROPERLY FLASHED AND SEALED WEATHER TIGHT.
3. PROVIDE WATER TIGHT SHEET METAL CRICKETS, FLASHING AND SEALANT PER ROOFING MANUFACTURERS RECOMMENDATIONS AT EACH PENETRATION. ALIGN STANDING SEAMS WITH FLASHING AT CRICKETS SUCH THAT WATER IS DIVERTED AROUND PENETRATIONS.
4. ROOF DIMENSIONS IN METERS AS SHOWN
5. EXHAUST STACK FOR KITCHEN STOVE MUST MIN 1020 mm ABOVE ROOF LINE.

3 1.50 0 3 4.5
1:75

US ARMY CORPS OF ENGINEERS AFGHANISTAN ENGINEER DISTRICT

SYMBOL	DESCRIPTION	DATE	APPR	SYMBOL	DESCRIPTION	DATE	APPR

DESIGNED BY: DATE: XX-XX-XX REV: __
DWN BY: CKD BY: DESIGN FILE NO.
REVIEWED BY: DRAWING CODE
SUBMITTED BY: FILE NAME: PLOT SCALE: PLOT DATE: XX-XX-XX

U.S. ARMY ENGINEER DISTRICT, AFGHANISTAN
CORPS OF ENGINEERS
APO AE 96338

ENGINEERING AND CONSTRUCTION DIVISION

AFGHANISTAN NATIONAL POLICE (ANP) DISTRICT HEADQUARTERS COMPOUNDS - 1 STORY HQ
VARIOUS LOCATIONS, AFGHANISTAN
1 STORY BUILDING

ROOF PLAN

SHEET REFERENCE NUMBER:
A
A-2

A1 Size 594mm x 841mm

GENERAL NOTES:

1. UNLESS NOTED OTHERWISE, ELEVATIONS ARE SHOWN IN METERS ABOVE OR BELOW FINISHED FLOOR.

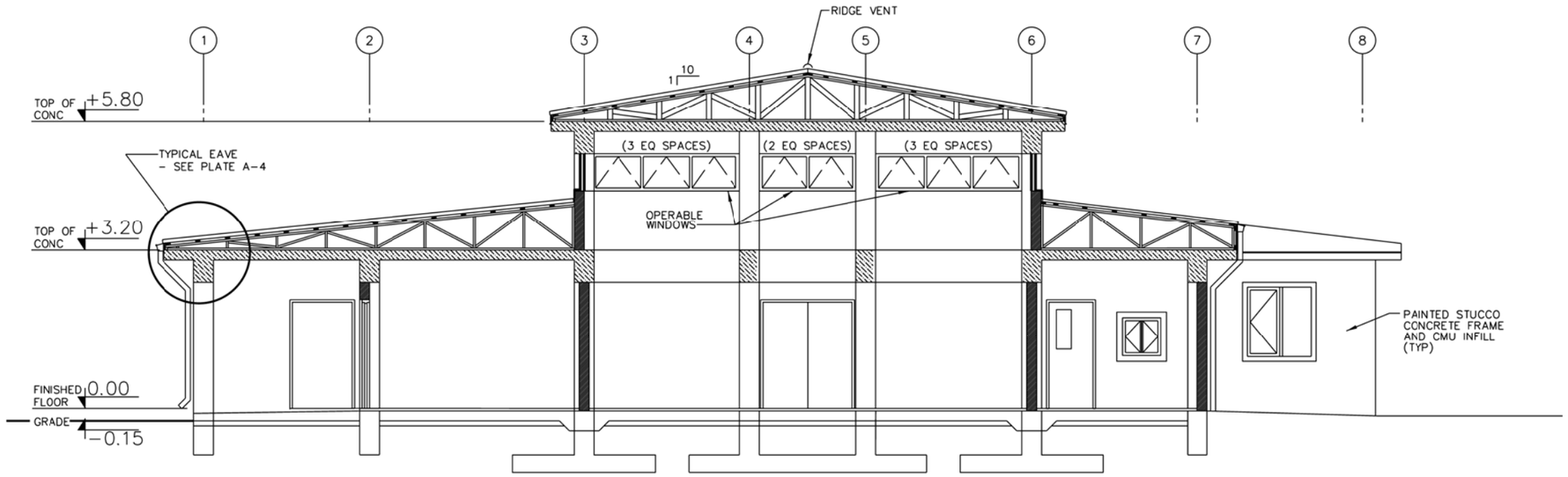

BUILDING SECTION A-A
SCALE=1:50
A-1 A-3

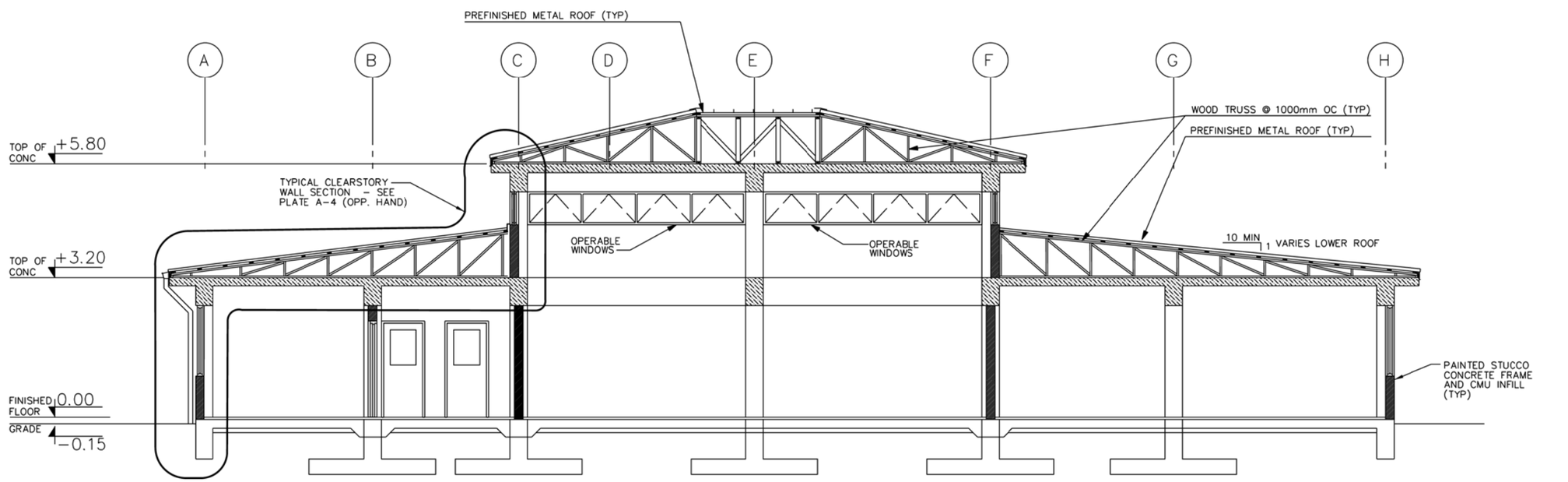

BUILDING SECTION B-B
SCALE=1:50
A-1 A-3

1:50

US ARMY CORPS OF ENGINEERS AFGHANISTAN ENGINEER DISTRICT

SYMBOL	DESCRIPTION	DATE	APPR.	SYMBOL	DESCRIPTION	DATE	APPR.

DESIGNED BY: DWN BY: CKD BY: REVIEWED BY: SUBMITTED BY: DATE: XX-XX-XX DESIGN FILE NO: DRAWING CODE: FILE NAME: PLOT SCALE: PLOT DATE: XX-XX-XX REV:

U.S. ARMY ENGINEER DISTRICT, AFGHANISTAN
CORPS OF ENGINEERS
APO AE 96338

ENGINEERING AND CONSTRUCTION DIVISION

AFGHANISTAN NATIONAL POLICE (ANP) DISTRICT HEADQUARTERS COMPOUNDS - 1 STORY HQ
VARIOUS LOCATIONS, AFGHANISTAN
1 STORY BUILDING

BUILDING SECTION

SHEET REFERENCE NUMBER:
A
A-3

A1 Size 594mm x 841mm

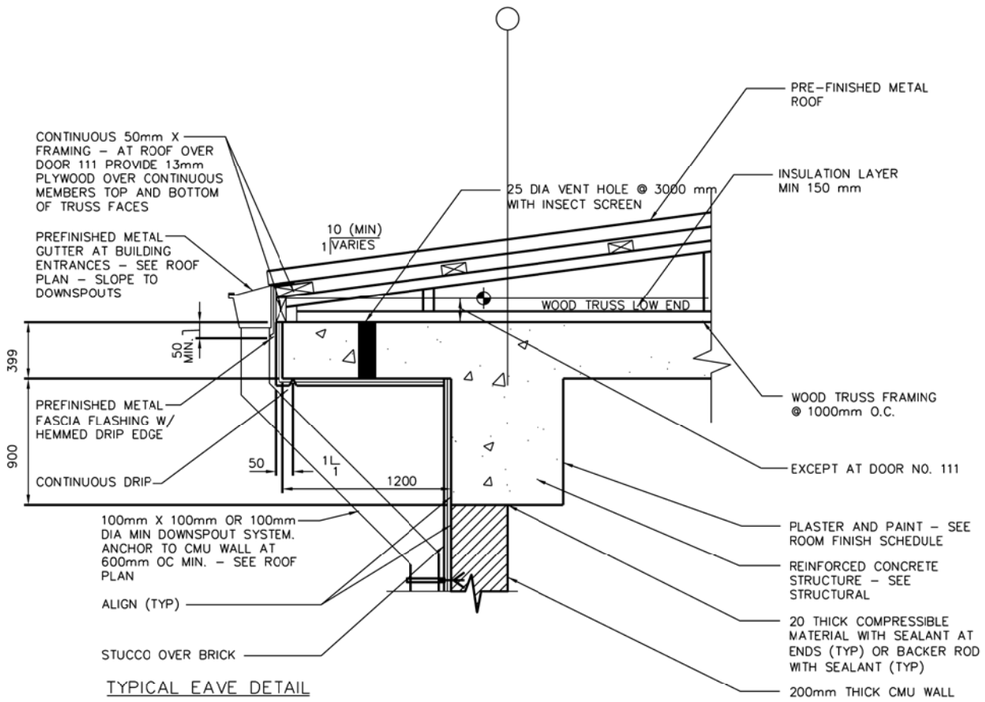

TYPICAL EAVE DETAIL

SCALE: 1:10

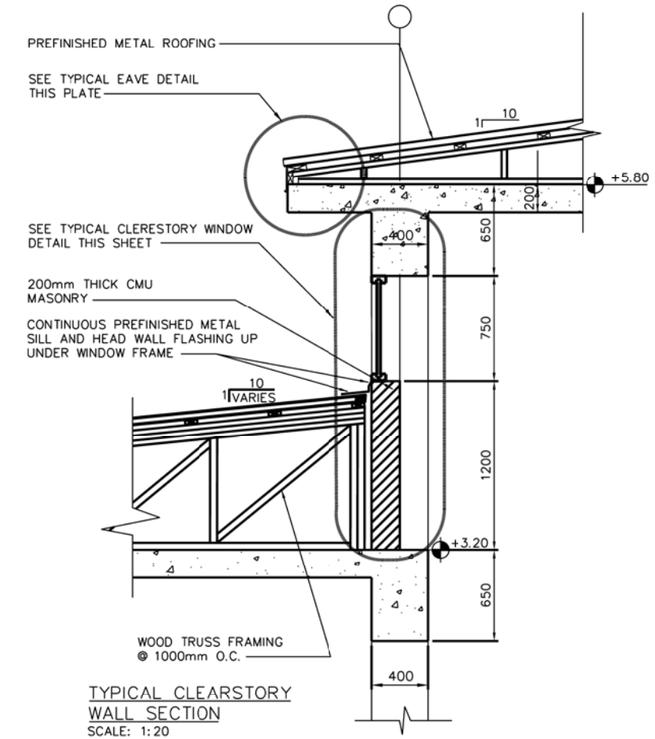

TYPICAL CLEARSTORY WALL SECTION

SCALE: 1:20

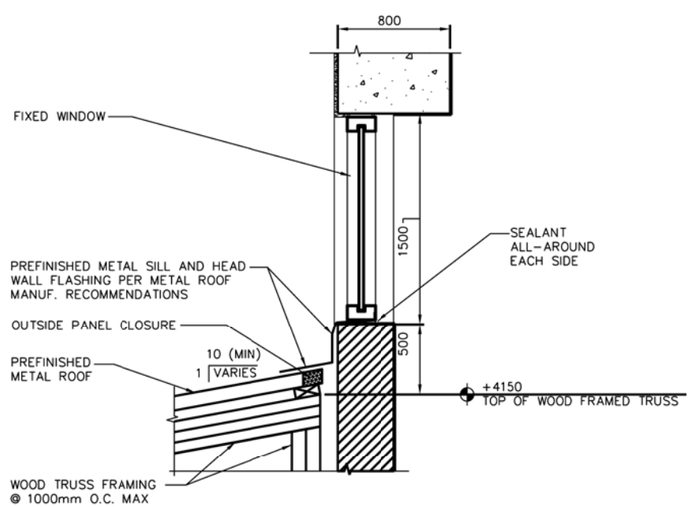

TYPICAL CLERESTORY WINDOW DETAIL

SCALE: 1:10

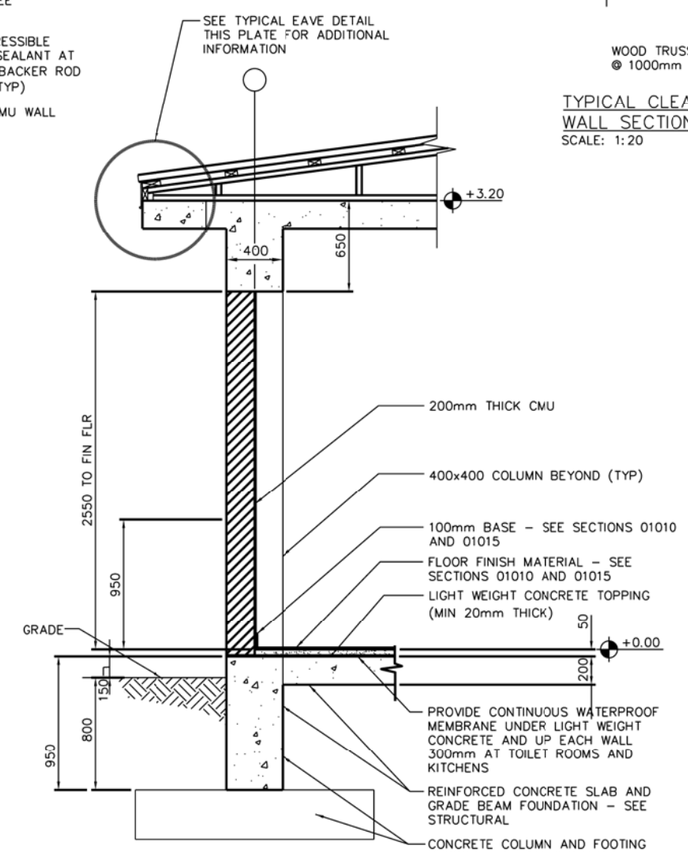

TYPICAL WALL SECTION

SCALE: 1:20

0 .50 1.00
1:10

1 .50 0 1
1:20

US ARMY CORPS OF ENGINEERS AFGHANISTAN ENGINEER DISTRICT

SYMBOL	DESCRIPTION	DATE	APPR.	SYMBOL	DESCRIPTION	DATE	APPR.

DESIGNED BY: DATE: XX-XX-XX
DWN BY: CKD BY: DESIGN FILE NO.
REVIEWED BY: DRAWING CODE
SUBMITTED BY: FILE NAME:
PLOT SCALE:
PLOT DATE: XX-XX-XX
REV.

U.S. ARMY ENGINEER DISTRICT, AFGHANISTAN
CORPS OF ENGINEERS
APO AE 96338

ENGINEERING AND CONSTRUCTION DIVISION

AFGHANISTAN NATIONAL POLICE (ANP) DISTRICT HEADQUARTERS COMPOUNDS - 1 STORY HQ
VARIOUS LOCATIONS, AFGHANISTAN
1 STORY BUILDING

WALL SECTION

SHEET REFERENCE NUMBER:
A
A-4

A1 Size 594mm x 841mm

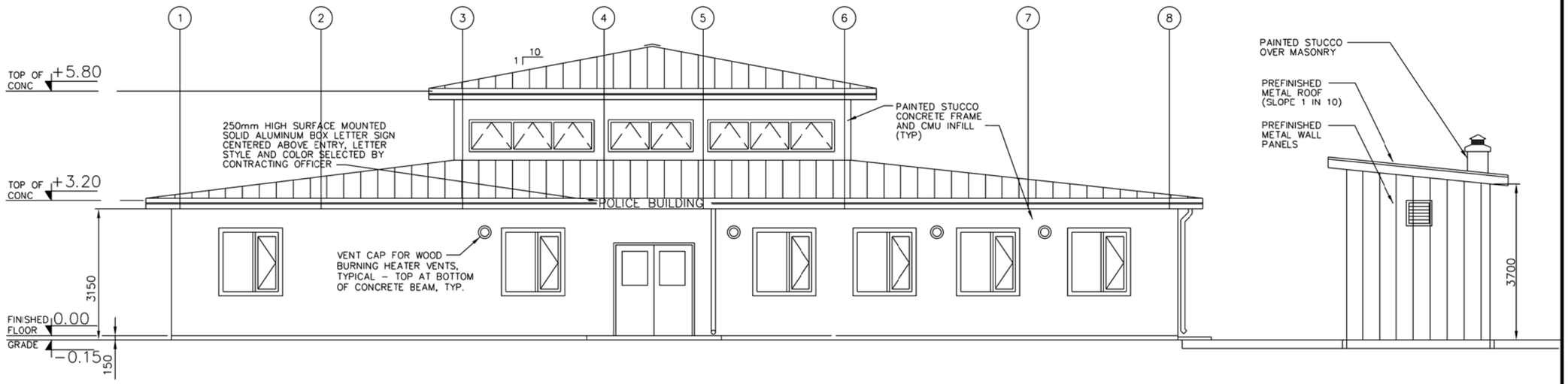

NORTH ELEVATION (A / A-1 A-5)
SCALE=1:50

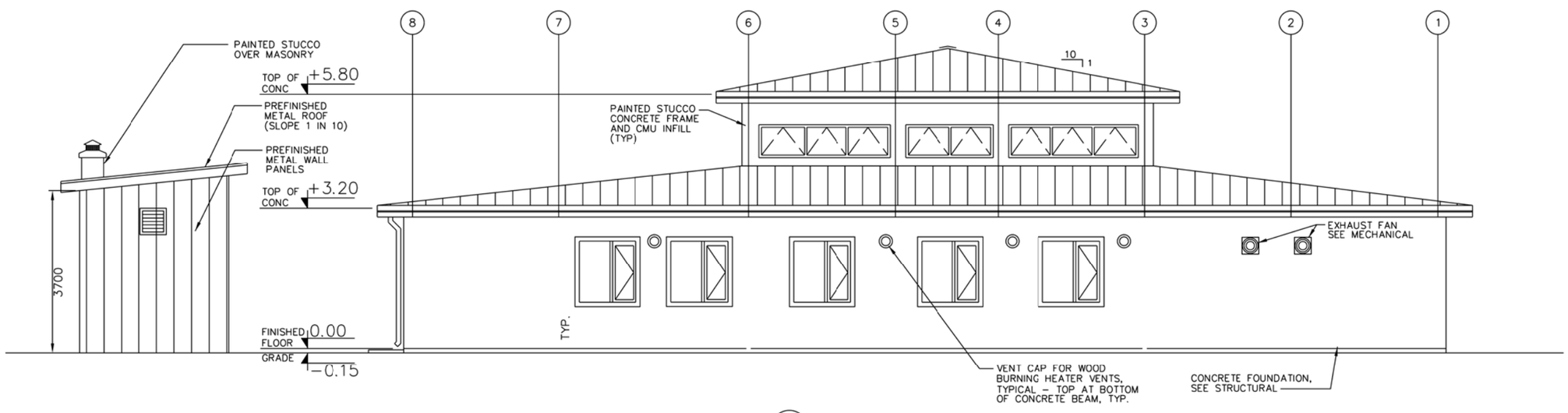

SOUTH ELEVATION (B / A-1 A-5)
SCALE=1:50

NOTE: SEE STANDARD DETAILS FOR ADDITIONAL NOTES.

1:50

US ARMY CORPS OF ENGINEERS AFGHANISTAN ENGINEER DISTRICT

SYMBOL	DESCRIPTION	DATE	APPR.	SYMBOL	DESCRIPTION	DATE	APPR.

DESIGNED BY: DWN BY: CKD BY: REVIEWED BY: SUBMITTED BY: DATE: XX-XX-XX DESIGN FILE NO: DRAWING CODE: FILE NAME: PLOT SCALE: PLOT DATE: XX-XX-XX REV:

U.S. ARMY ENGINEER DISTRICT, AFGHANISTAN CORPS OF ENGINEERS APO AE 96338

ENGINEERING AND CONSTRUCTION DIVISION

AFGHANISTAN NATIONAL POLICE (ANP) DISTRICT HEADQUARTERS COMPOUNDS - 1 STORY HQ
VARIOUS LOCATIONS, AFGHANISTAN
1 STORY BUILDING

BUILDING ELEVATIONS

SHEET REFERENCE NUMBER:
A
A-5

A1 Size 594mm x 841mm

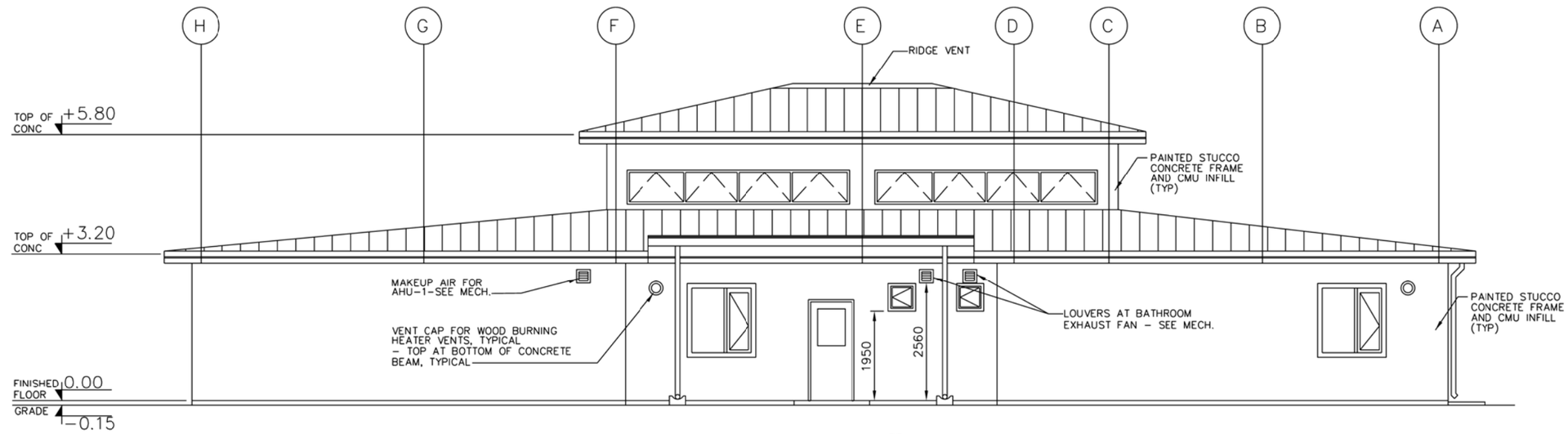

EAST ELEVATION
SCALE = 1:50
C
A-1 A-6

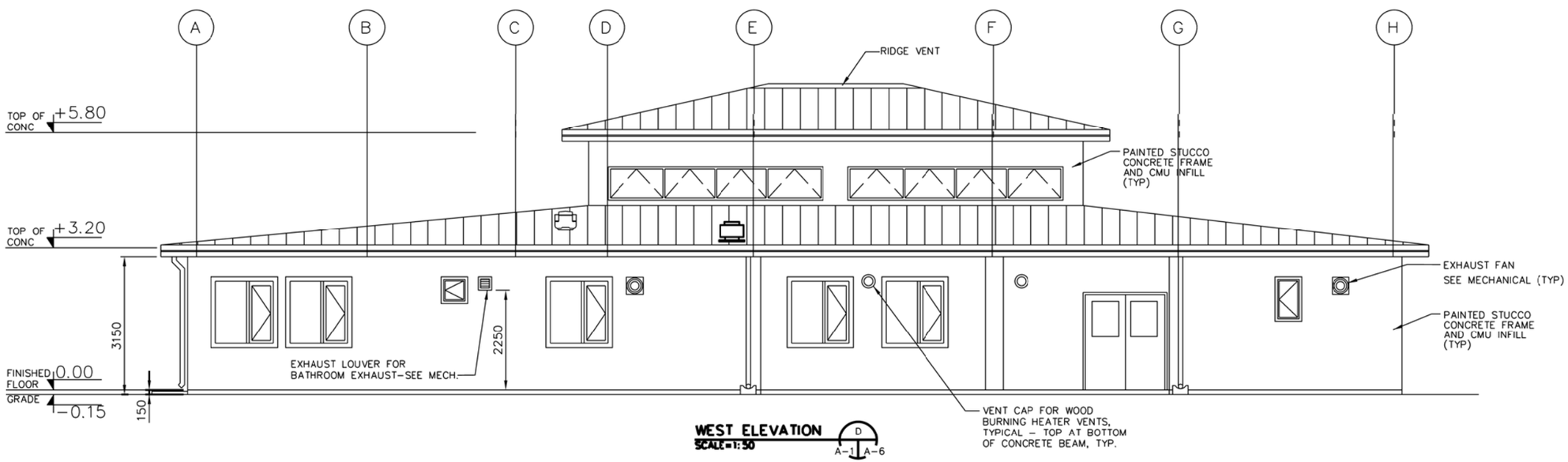

WEST ELEVATION
SCALE = 1:50
D
A-1 A-6

1 0 1 2 3 4
1:50

US ARMY CORPS OF ENGINEERS AFGHANISTAN ENGINEER DISTRICT

SYMBOL	DESCRIPTION	DATE	APPR.	SYMBOL	DESCRIPTION	DATE	APPR.

DESIGNED BY: DWN BY: CKD BY: REVIEWED BY: SUBMITTED BY:
DATE: XX-XX-XX
DESIGN FILE NO.
DRAWING CODE
FILE NAME:
PLOT SCALE:
PLOT DATE: XX-XX-XX
REV.

U.S. ARMY ENGINEER DISTRICT, AFGHANISTAN
CORPS OF ENGINEERS
APO AE 96338

ENGINEERING AND CONSTRUCTION DIVISION

AFGHANISTAN NATIONAL POLICE (ANP) DISTRICT HEADQUARTERS COMPOUNDS - 1 STORY HQ
VARIOUS LOCATIONS, AFGHANISTAN
1 STORY BUILDING

BUILDING ELEVATIONS

SHEET REFERENCE NUMBER:
A
A-6

A1 Size 594mm x 841mm

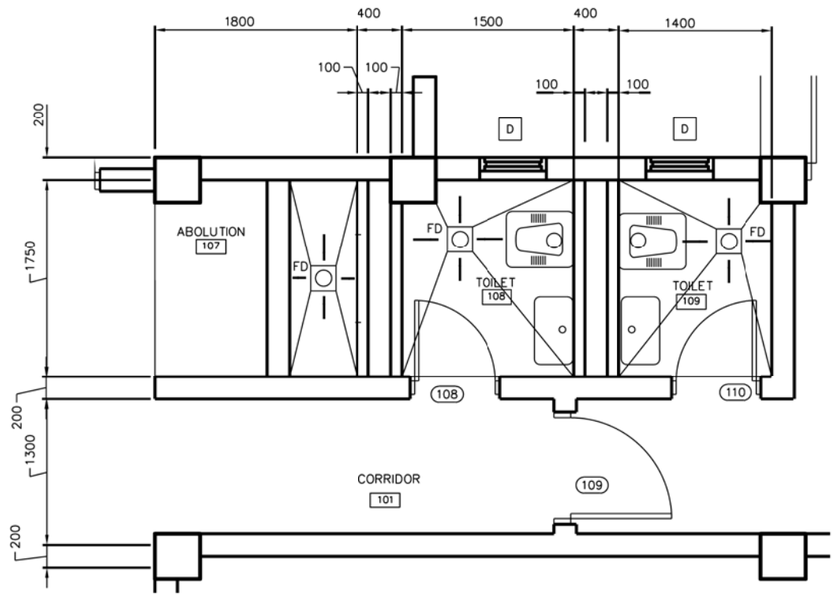

DETAIL
SCALE = 1:25
1
A-1 A-7

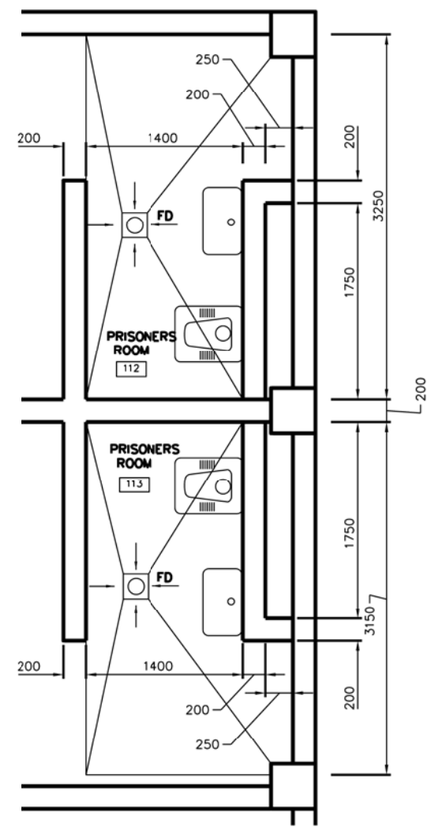

DETAIL
SCALE = 1:25
4
A-1 A-7

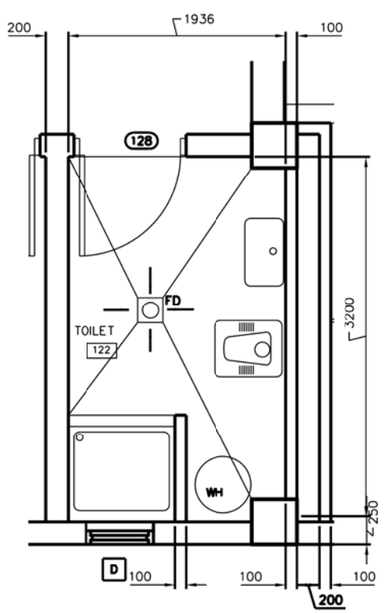

DETAIL
SCALE = 1:25
2
A-1 A-7

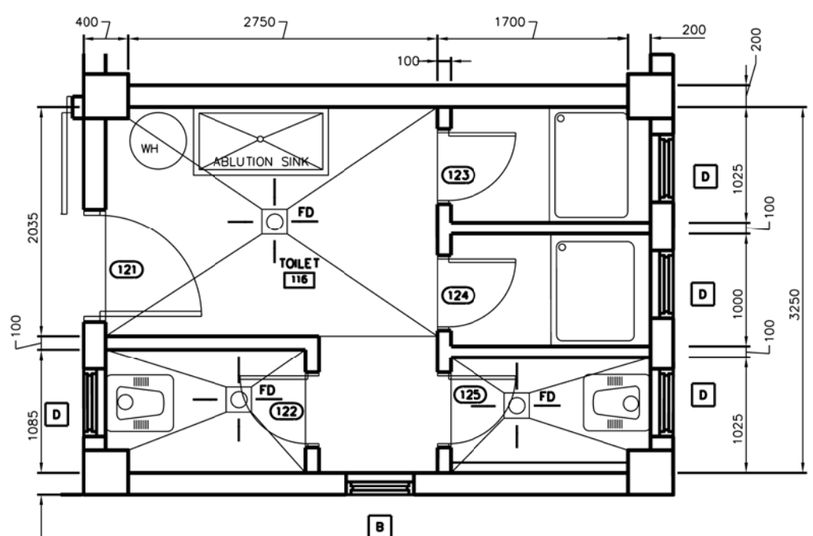

DETAIL
SCALE = 1:25
3
A-1 A-7

NOTE: PARTITION WALLS BETWEEN TOILET STALLS TO BE 2200mm HIGH.

NOTE:

1. ALL WATER CLOSETS SHALL FACE NORTH OR SOUTH DIRECTION.

1 .50 0 1 1.5
1:25

US ARMY CORPS OF ENGINEERS AFGHANISTAN ENGINEER DISTRICT

SYMBOL	DESCRIPTION	DATE	APPR.	SYMBOL	DESCRIPTION	DATE	APPR.

DESIGNED BY: | DWN BY: | CKD BY: | REVIEWED BY: | SUBMITTED BY: | DATE: XX-XX-XX | DESIGN FILE NO. | DRAWING CODE | FILE NAME: | PLOT SCALE: | PLOT DATE: XX-XX-XX | REV.

U.S. ARMY ENGINEER DISTRICT, AFGHANISTAN
CORPS OF ENGINEERS
APO AE 96338

ENGINEERING AND CONSTRUCTION DIVISION

AFGHANISTAN NATIONAL POLICE (ANP) DISTRICT HEADQUARTERS COMPOUNDS - 1 STORY HQ
VARIOUS LOCATIONS, AFGHANISTAN
1 STORY BUILDING

ENLARGED TOILET PLANS

SHEET REFERENCE NUMBER:
A
A-7

A1 Size 594mm x 841mm

DOOR SCHEDULE

NO.	LOCATION	DOOR TYPE	DOOR MAT'L	DOOR WIDTH	DOOR HEIGHT	DOOR THICK	FRAME MAT"L	HDW SET	REMARKS
101	LOBBY	G (PR)	WOOD	1800	2100	45	WOOD	2	4, 7 20 MINUTE FIRE RATING
102	CORRIDOR	G (PR)	WOOD	1800			WOOD	8	4, 7 20 MINUTE FIRE RATING
103	OFFICE	F	WOOD	900			WOOD	4	20 MINUTE FIRE RATING
104	WEAPONS STORAGE	F	STEEL	900			STEEL	11	5 45 MINUTE FIRE RATING
105	OFFICE	F	WOOD	900			WOOD	4	20 MINUTE FIRE RATING
106	STORAGE	F	WOOD	900			WOOD	6	45 MINUTE FIRE RATING
107	NOT USED								
108	TOILET	L	WOOD	700			WOOD	5	2 20 MINUTE FIRE RATING
109	CORRIDOR	N	WOOD	900			WOOD	4	7 20 MINUTE FIRE RATING
110	TOILET	L	WOOD	700			WOOD	5	2 20 MINUTE FIRE RATING
111	CORRIDOR	G	WOOD	900			WOOD	1	7 20 MINUTE FIRE RATING
112	TO GUARD RM.	N	WOOD	900			WOOD	4	7 20 MINUTE FIRE RATING
113	CORRIDOR	N	WOOD	900			WOOD	4	7 20 MINUTE FIRE RATING
114	Prisoners Rm	C	STEEL	900			NOTE 1	11	CELL DOOR
115	Prisoners Rm	C	STEEL	900			NOTE 1	11	CELL DOOR
116	SOLDIERS BARRACKS	F	WOOD	900			WOOD	7	6 45 MINUTE FIRE RATING
117	SOLDIERS BARRACKS	F	WOOD	900			WOOD	7	6 45 MINUTE FIRE RATING
118	DINING ROOM	F	WOOD	900			WOOD	7	4, 6 90 MINUTE FIRE RATING – PANIC
119	SOLDIERS BARRACKS	F	WOOD	900			WOOD	7	6 45 MINUTE FIRE RATING
120	LOBBY	G (PR)	WOOD	1800			WOOD	2	4, 7 45 MINUTE FIRE RATING
121	TOILET	L	WOOD	900			WOOD	10	2 20 MINUTE FIRE RATING
122	TOILET STALL	L	WOOD	600			WOOD	3	2
123	TOILET STALL	L	WOOD	600			WOOD	3	2
124	TOILET STALL	L	WOOD	600			WOOD	3	2
125	TOILET STALL	L	WOOD	600			WOOD	3	2
126	KITCHEN	F	WOOD	1200			WOOD	1	4 90 MINUTE FIRE RATING – PANIC
127	NOT USED								
128	TOILET	L	WOOD	900			WOOD	5	2 20 MINUTE FIRE RATING
129	POLICE CHIEF	F	WOOD	900			WOOD	4	20 MINUTE FIRE RATING
130	DEPUTY POLICE CHIEF	F	WOOD	900			WOOD	4	20 MINUTE FIRE RATING
131	NIGHT GUARD	F	WOOD	900			WOOD	4	20 MINUTE FIRE RATING
132	KITCHEN	N	WOOD	900			WOOD	9	7 90 MINUTE FIRE RATING – PANIC
133	DINING ROOM	G (PR)	WOOD	1800			WOOD	2	4, 6 90 MINUTE FIRE RATING – PANIC
134	MECHANICAL ROOM	F	WOOD	900			WOOD	6	45 MINUTE FIRE RATING

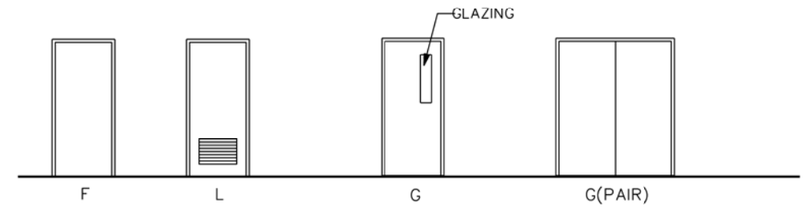

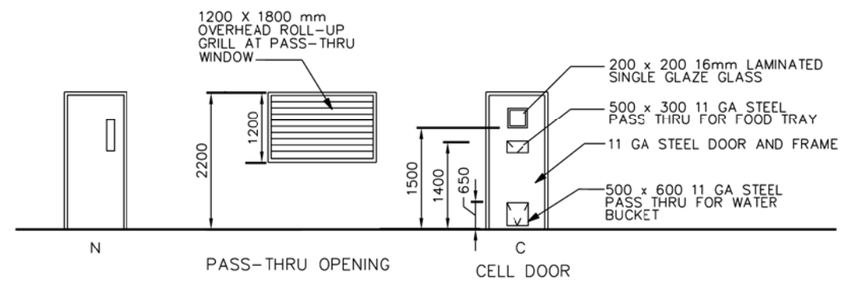

DOOR NOTES:
1. SEE DOOR SCHEDULE FOR DOOR AND FRAME SIZES.

TYPICAL DOOR TYPES
(NOT TO SCALE)

DOOR SCHEDULE NOTES:

1. CELL DOOR SHALL BE 11 GA STEEL DOOR WITH PASS-THRU WINDOWS. PROVIDE HINGED DOORS TO THESE PASS-THRU WINDOWS WITH PADLOCKS TO THE OUTSIDE.
2. PROVIDE 600 X 400 LOUVERS IN DOOR TYPE (L)
3. UNDERCUT DOORS BY 12 mm REQUIRED, EXCEPT NO UNDERCUT AT DOOR TYPE C.
4. PROVIDE PANIC HARDWARE, FOR DINING ROOM EXIT DOORS.
5. PROVIDE 11 GA STEEL DOOR AND FRAME.
6. NO THRESHOLD OR DOOR SWEEP REQUIRED.
7. ALL DOOR GLAZING SHALL BE MIN. 8mm THICK PLEXIGLASS EXCEPT AT CELL DOORS WHERE GLAZING SHALL BE LAMINATED GLASS.
8. ALL DOOR GLAZING IS FIRE RATED

US ARMY CORPS OF ENGINEERS AFGHANISTAN ENGINEER DISTRICT

SYMBOL	DESCRIPTION	DATE	APPR.	SYMBOL	DESCRIPTION	DATE	APPR.

DESIGNED BY: DATE: XX-XX-XX REV: __
DWN BY: CKD BY: DESIGN FILE NO. DRAWING CODE
REVIEWED BY: FILE NAME: PLOT SCALE:
SUBMITTED BY: PLOT DATE: XX-XX-XX

U.S. ARMY ENGINEER DISTRICT, AFGHANISTAN
CORPS OF ENGINEERS
APO AE 96338

ENGINEERING AND CONSTRUCTION DIVISION

AFGHANISTAN NATIONAL POLICE (ANP) DISTRICT HEADQUARTERS COMPOUNDS - 1 STORY HQ
VARIOUS LOCATIONS, AFGHANISTAN
1 STORY BUILDING

DOOR SCHEDULE AND DOOR TYPES

SHEET REFERENCE NUMBER:
A
A-8

A1 Size 594mm x 841mm

ROOM FINISH SCHEDULE

ROOM NO.	ROOM NAME	FLOOR FINISH	BASE FINISH	WALLS FINISH	CEILING FINISH	CEILING HEIGHT	REMARKS
101	CORRIDOR	F2	B2	W2	C2	3.0 m	
102	LOBBY	F2	B2	W2	C2		
103	OFFICE	F2	B2	W2	C2		
104	WEAPONS STORAGE	F1	B2	W2	C2		
105	OFFICE	F2	B2	W2	C2		
106	STORAGE	F1	B2	W2	C2		
107	ABOLUTION	F3	B3	W3	C2		
108	TOILET	F3	B3	W3	C2		
109	TOILET	F3	B3	W3	C2		
110	GUARD ROOM	F2	B2	W2	C2		
111	CORRIDOR	F2	B2	W2	C2		
112	PRISONER'S ROOM	F2	B2	W2	C2		
113	PRISONER'S ROOM	F2	B2	W2	C2		
114	SOLDIER'S BARRACKS	F2	B2	W2	C2		
115	SOLDIER'S BARRACKS	F2	B2	W2	C2		
116	TOILET	F3	B3	W3	C2		
117	LOBBY	F2	B2	W2	C2		
118	COVERED LOADING	F1	B5	--	--		
119	SOLDIER'S BARRACKS	F2	B2	W2	C2		
120	DINING ROOM/SHURA	F2	B2	W2	C2	5.6 m	
121	KITCHEN	F2	B2	W2	C2	3.0 m	
122	TOILET	F3	B3	W3	C2		
123	POLICE CHIEF	F2	B2	W2	C2		
124	DEPUTY POLICE CHIEF	F2	B2	W2	C2		
125	NIGHT GUARD	F2	B2	W2	C2		
126	MECHANICAL ROOM	F2	B2	W2	C2		

ROOM FINISH SCHEDULE LEGEND

FLOOR FINISH
- F1 SEALED CONCRETE
- F2 TERRAZZO TILE
- F3 CERAMIC TILE

BASE FINISH
- B2 TERRAZZO
- B3 CERAMIC TILE
- B5 NO BASE

WALL FINISH
- W2 PAINTED PLASTER
- W3 CERAMIC TILE

CEILING FINISH
- C2 PAINTED PLASTER

ROOM FINISH SCHEDULE NOTES:

1. ALL INTERIOR SURFACES NOT PROVIDED WITH A COLOR FACTORY FINISH SHALL RECEIVE A PAINT FINISH.
2. PAINTED PLASTER CEILING FINISH SHALL BE OFF-WHITE IN COLOR. ALL OTHER INTERIOR COLORS SHALL BE SELECTED FROM EARTH TONE COLORS; GRAYS, BEIGES, ETC. SUBMIT PAINT COLOR BOARD TO CONTRACTING OFFICER'S REPRESENTATIVE FOR APPROVAL PRIOR TO INSTALLATION.
3. ALL INTERIOR DOORS, WINDOWS, AND FRAMES SHALL HAVE A SEMI-GLOSS FINISH.
4. ALL WALL PENETRATIONS SHALL BE SEALED TO PROVIDE A NEAT APPEARANCE.
5. SEALANT COLORS SHALL MATCH COLOR OF ADJACENT FINISH.
6. PLASTER AND CERAMRIC TILE WALL FINISH, WHERE SCHEDULED, SHALL EXTEND TO UNDERSIDE OF CEILING.
7. PLASTER CEILINGS SHALL HAVE A FLAT PAINT FINISH EXCEPT AT TOILETS, ABOLUTION, AND KITCHEN WHERE PAINT FINISH SHALL BE SEMI-GLOSS.

EXTERIOR FINISH NOTES:

1. ALL EXTERIOR SURFACES NOT PROVIDED WITH A COLOR FACTORY FINISH SHALL RECEIVE A PAINT FINISH.
2. ALL EXTERIOR COLORS SHALL MATCH ADJACENT BUILDINGS TO THE GREATEST EXTENT POSSIBLE. SUBMIT PAINT COLOR BOARD TO CONTRACTING OFFICER'S REPRESENTATIVE FOR APPROVAL PRIOR TO INSTALLATION.
3. ALL EXTERIOR DOORS, WINDOWS, FRAMES, SOFFIT, FASCIA, AND TRIM SHALL HAVE A SEMI-GLOSS FINISH.
4. ALL WALL PENETRATIONS SHALL BE SEALED WATER-TIGHT AND SHALL HAVE A NEAT APPEARANCE.
5. SEALANT COLORS SHALL MATCH COLOR OF ADJACENT FINISH.

US ARMY CORPS OF ENGINEERS AFGHANISTAN ENGINEER DISTRICT

SYMBOL	DESCRIPTION	DATE	APPR.	SYMBOL	DESCRIPTION	DATE	APPR.

DESIGNED BY: DATE: XX-XX-XX REV: __
DWN BY: CKD BY: DESIGN FILE NO.
REVIEWED BY: DRAWING CODE
SUBMITTED BY: FILE NAME: PLOT SCALE: PLOT DATE: XX-XX-XX

U.S. ARMY ENGINEER DISTRICT, AFGHANISTAN
CORPS OF ENGINEERS
APO AE 96338

ENGINEERING AND CONSTRUCTION DIVISION

AFGHANISTAN NATIONAL POLICE (ANP) DISTRICT HEADQUARTERS COMPOUNDS - 1 STORY HQ
VARIOUS LOCATIONS, AFGHANISTAN
1 STORY BUILDING

ROOF FINISH SCHEDULE

SHEET REFERENCE NUMBER:
A
A-9

A1 Size 594mm x 841mm

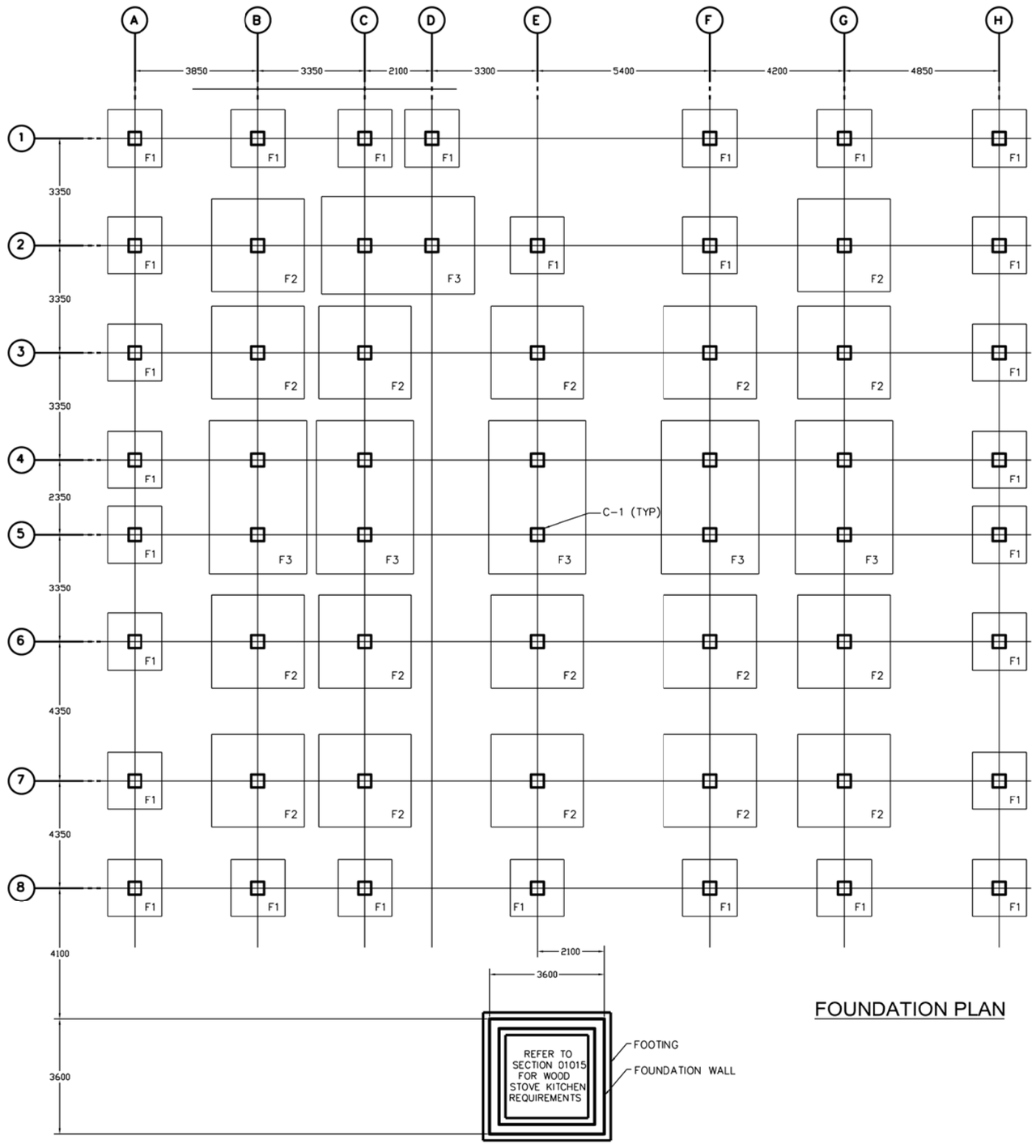

FOUNDATION PLAN

NOTES:

1. GEOTECHNICAL INVESTIGATION SHALL CONFIRM BEARING CAPACITY TO BE NO LESS THAN 0.75 KG/SQ CM. IF GEOTECHNICAL INVESTIGATION SHOWS LESS THAN 0.75 KG/SQ CM. CONTRACTOR SHALL REDESIGN FOOTINGS BASED ON THE GEOTECHNICAL INVESTIGATION, SEE SPECIFICATION 01015 PARA 2.1, GEOTECHNICAL, FOUNDATION AND SURVEY.
2. DEAD LOADS CONSIST OF THE WEIGHTS OF ALL MATERIAL OF CONSTRUCTION INCORPORATED IN THE BUILDING. LIVE LOADS USED FOR DESIGN SHAL LBE IN ACCORDANCE WITH THE ASCE STANDARDS AND MINIMUM DESIGN LOADS FOR BUILDINGS AND OTHER STRUCTURES, ASCE 7-02.
3. WIND LOADS SHALL BE CALCULATED IN ACCORDANCE WITH ASCE 7-02 USING A "3 SECOND GUST" WIND SPEED OF 125 KM/HR. ALL FACILITIES SHALL BE CLASSIFIED AS A MINIMUM OF CATEGORY II IN ACCORDANCE WITH TABLE 1-1 IN ASCE 7-02.
4. THE BULDING AND ALL PARTS THEREOF SHALL BE DESIGNED FOR THE SEISMIC REQUIREMENTS AS DEFINED BY THE INTERNATIONAL BUILDING CODE 2000. SITE SPECIFIC DATA: SPECTRAL COORDINATES SS=1.65g AND S1=0.75g.
5. REFER TO DWG S-5 FOR FOOTING SCHEDULE. TOP OF FOOTING SHALL BE LOCATED AT ELEV. -1.00.
6. ALL CONCRETE COLUMNS ARE TYPE C-1, REFER TO SECTION 10 S-5.

3 1.50 0 3 4.5
1:75

US ARMY CORPS OF ENGINEERS AFGHANISTAN ENGINEER DISTRICT

SYMBOL	DESCRIPTION	DATE	APPR.

SYMBOL	DESCRIPTION	DATE	APPR.

DESIGNED BY: DATE: XX-XX-XX REV.
DWN BY: CKD BY: DESIGN FILE NO.
REVIEWED BY: DRAWING CODE:
SUBMITTED BY: FILE NAME:
PLOT SCALE:
PLOT DATE: XX-XX-XX

U.S. ARMY ENGINEER DISTRICT, AFGHANISTAN
CORPS OF ENGINEERS
APO AE 96338

ENGINEERING AND CONSTRUCTION DIVISION

AFGHANISTAN NATIONAL POLICE (ANP) DISTRICT HEADQUARTERS COMPOUNDS - 1 STORY HQ
VARIOUS LOCATIONS, AFGHANISTAN
1 STORY BUILDING

FOUNDATION PLAN

SHEET REFERENCE NUMBER:
A
S-1

A1 Size 594mm x 841mm

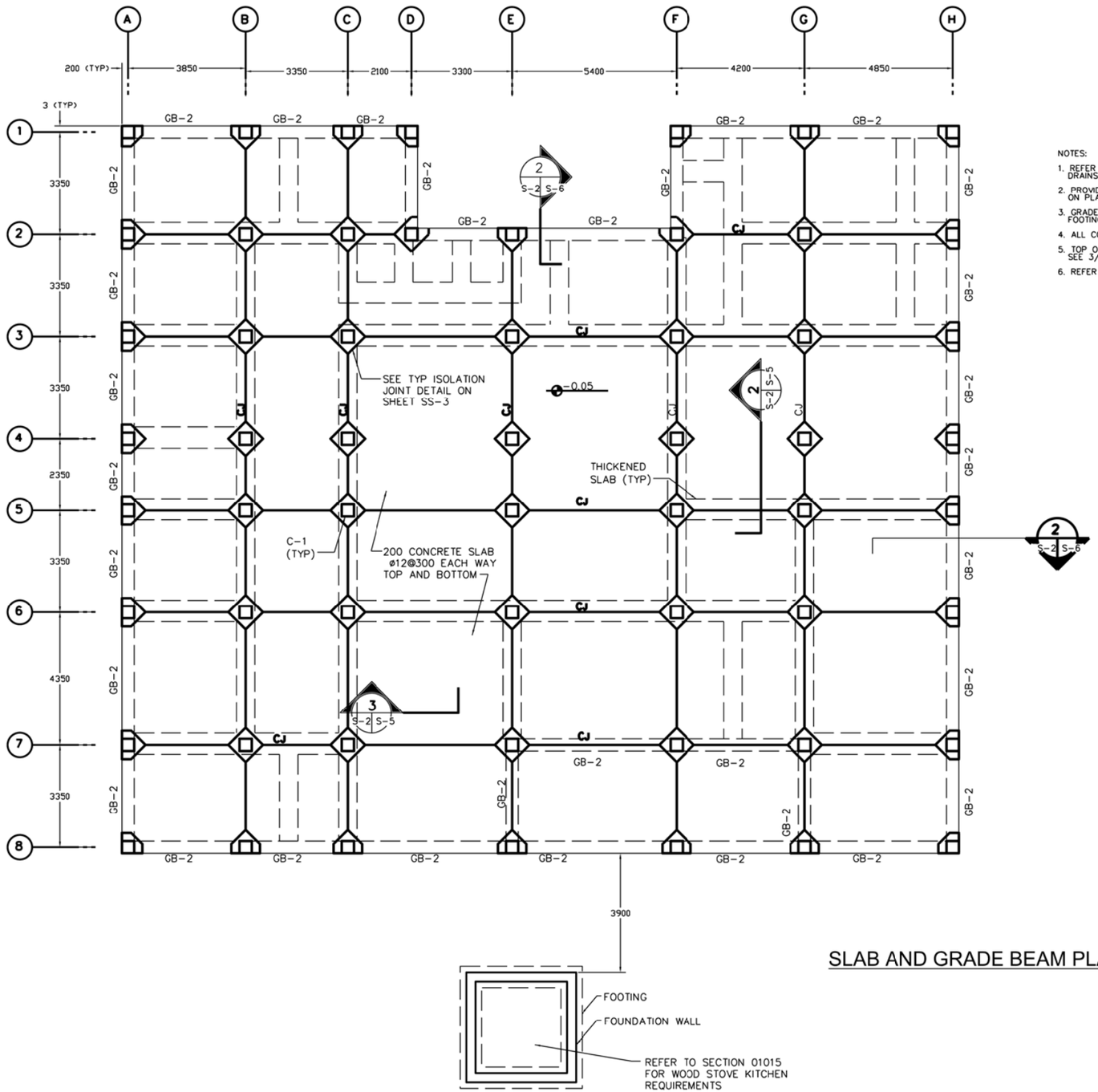

SLAB AND GRADE BEAM PLAN

NOTES:

1. REFER TO PLUMBING AND ARCHITECTURAL PLANS FOR FLOOR DRAIN LOCATIONS. NOT ALL DRAINS HAVE BEEN SHOWN. FLOOR SHALL BE SLOPED TO DRAIN.
2. PROVIDE THICKENED SLAB UNDER ALL INTERIOR PARTITIONS. REFER TO SECTIONS 1 AND 2 ON PLATE S-5 FOR ADDITIONAL INFORMATION.
3. GRADE BEAM SHALL EXTEND FROM COLUMN SPREAD FOOTING TO COLUMN SPREAD FOOTING. BOTTOM OF GRADE BEAM TO COINCIDE WITH TOP OF COLUMN FOOTING.
4. ALL CONCRETE COLUMNS ARE TYPE C-1. REFER TO SECTION 10 S-5.
5. TOP OF SLAB AND GRADE BEAM ELEVATIONS ARE AT 50mm BELOW FINISHED FLOOR. SEE 3/S-5.
6. REFER TO SHEET SS-3 FOR TYPICAL CONTROL JOINT (CJ) DETAIL.

US ARMY CORPS OF ENGINEERS AFGHANISTAN ENGINEER DISTRICT

SYMBOL	DESCRIPTION	DATE	APPR.	SYMBOL	DESCRIPTION	DATE	APPR.

DESIGNED BY: DATE: XX-XX-XX
DWN BY: CKD BY: DESIGN FILE NO.
REVIEWED BY: DRAWING CODE
SUBMITTED BY: FILE NAME: PLOT SCALE: PLOT DATE: XX-XX-XX
REV.

U.S. ARMY ENGINEER DISTRICT, AFGHANISTAN
CORPS OF ENGINEERS
APO AE 96338

ENGINEERING AND CONSTRUCTION DIVISION

AFGHANISTAN NATIONAL POLICE (ANP) DISTRICT HEADQUARTERS COMPOUNDS - 1 STORY HQ
VARIOUS LOCATIONS, AFGHANISTAN
1 STORY BUILDING

GRADE BEAM PLAN

SHEET REFERENCE NUMBER:
A
S-2

A1 Size 594mm x 841mm

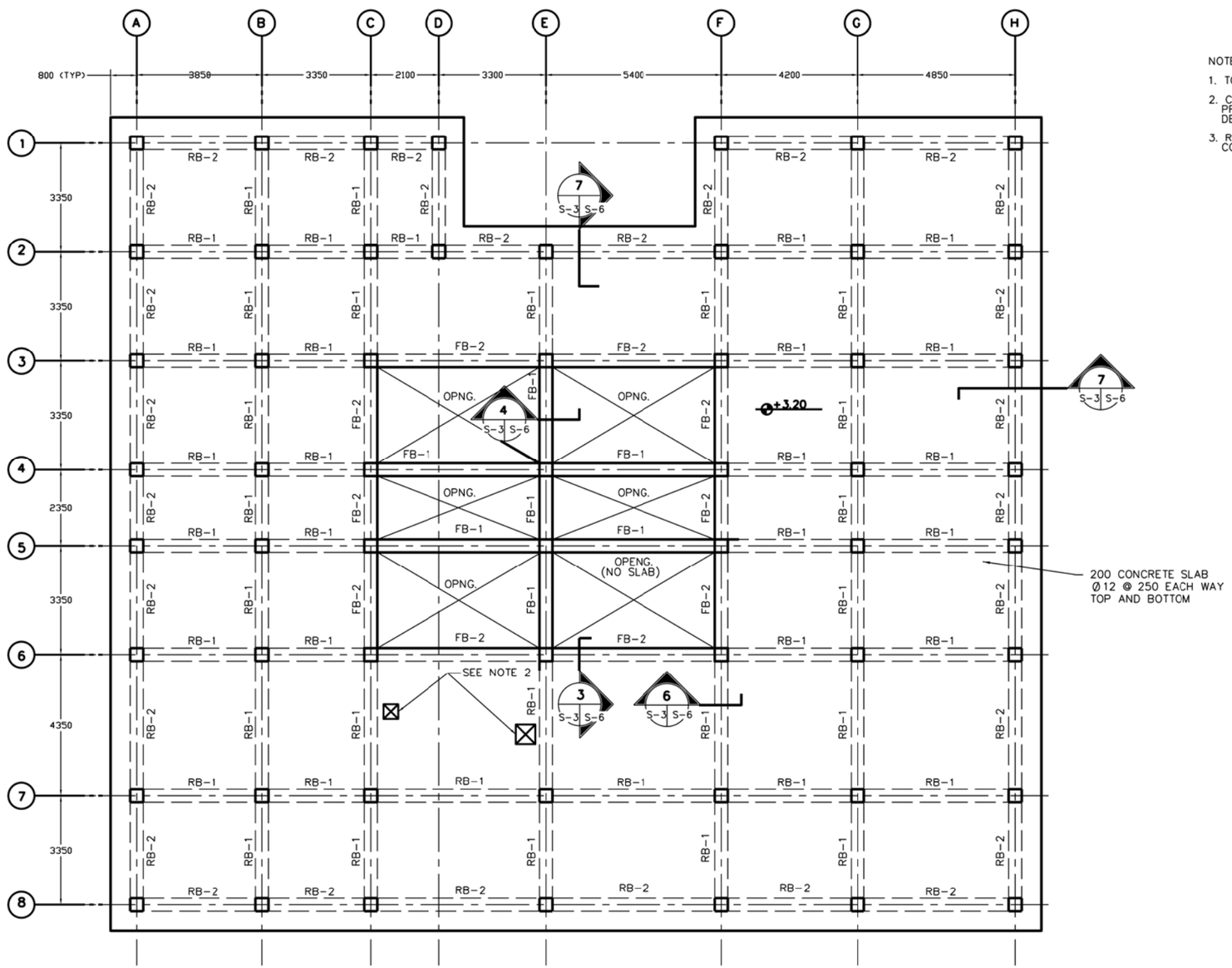

LOW ROOF BEAM AND SLAB PLAN

SCALE = 1:75

NOTES:

1. TOP OF LOW ROOF SLAB AND LOW ROOF BEAMS IS AT 3200 A.F.F.
2. COORDINATE ROOF OPENING REQUIREMENST WITH OTHER DISCIPLINES. PROVIDE ADDITIONAL REINFORCEMENT AROUND OPENINGS PER TYPICAL DETAIL ON DWG SS-2.
3. REFER TO SHEET S-7 FOR STANDARD BEAM AND COLUMN CONSTRUCTION DETAILS.

3 1.50 0 3 4.5
1:75

US ARMY CORPS OF ENGINEERS AFGHANISTAN ENGINEER DISTRICT

SYMBOL	DESCRIPTION	DATE	APPR.	SYMBOL	DESCRIPTION	DATE	APPR.

REV. ___
DATE: XX-XX-XX
DESIGN FILE NO.
DRAWING CODE
FILE NAME:
PLOT SCALE:
PLOT DATE: XX-XX-XX
DESIGNED BY:
DWN BY: CKD BY:
REVIEWED BY:
SUBMITTED BY:

U.S. ARMY ENGINEER DISTRICT, AFGHANISTAN
CORPS OF ENGINEERS
APO AE 96338

ENGINEERING AND CONSTRUCTION DIVISION

AFGHANISTAN NATIONAL POLICE (ANP) DISTRICT HEADQUARTERS COMPOUNDS - 1 STORY HQ
VARIOUS LOCATIONS, AFGHANISTAN
1 STORY BUILDING

LOWER ROOF BEAM PLAN

SHEET REFERENCE NUMBER:
A
S-3

A1 Size 594mm x 841mm

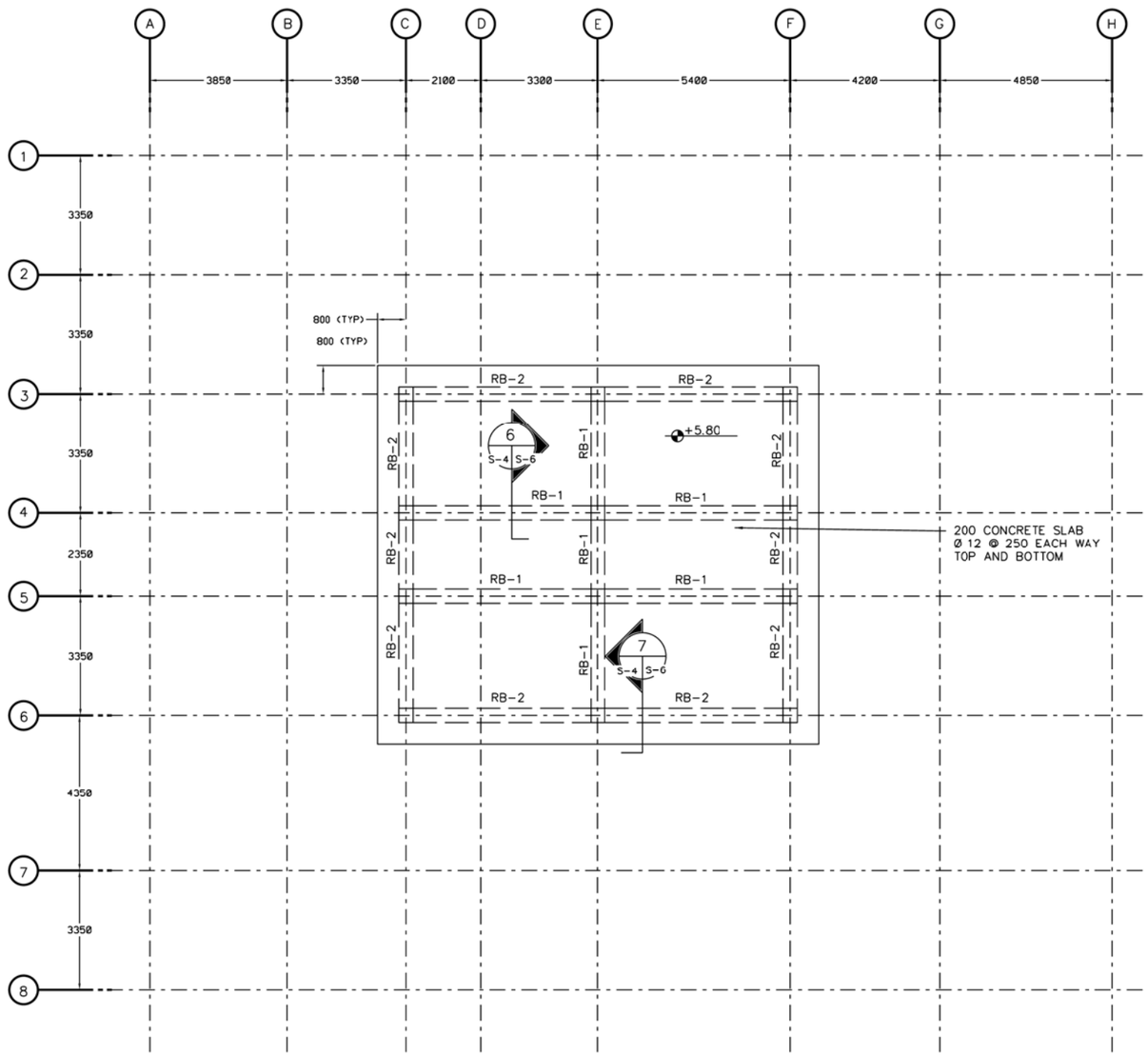

HIGH ROOF BEAM & SLAB PLAN

SCALE

1:75

NOTES:

1. TOP OF HIGH ROOF SLAB AND HIGH ROOF BEAMS IS AT 5800 A.F.F.
2. COORDINATE ROOF OPENING REQUIREMENTS WITH OTHER DISCIPLINES. PROVIDE ADDITIONAL REINFORCEMENT AROUND OPENINGS PER TYPICAL DETAIL ON DWG SS-2.
3. REFER TO SHEET S-7 FOR STANDARD BEAM AND COLUMN CONSTRUCTION DETAILS.

US ARMY CORPS OF ENGINEERS AFGHANISTAN ENGINEER DISTRICT

SYMBOL	DESCRIPTION	DATE	APPR.	SYMBOL	DESCRIPTION	DATE	APPR.

DESIGNED BY: DATE: XX-XX-XX
DWN BY: CKD BY: DESIGN FILE NO.
REVIEWED BY: DRAWING CODE
SUBMITTED BY: FILE NAME: PLOT SCALE: PLOT DATE: XX-XX-XX
REV.

U.S. ARMY ENGINEER DISTRICT, AFGHANISTAN
CORPS OF ENGINEERS
APO AE 96338

ENGINEERING AND CONSTRUCTION DIVISION

AFGHANISTAN NATIONAL POLICE (ANP) DISTRICT HEADQUARTERS COMPOUNDS - 1 STORY HQ
VARIOUS LOCATIONS, AFGHANISTAN
1-STORY BUILDING

HIGH ROOF BEAM PLAN

SHEET REFERENCE NUMBER:
A
S-4

A1 Size 594mm x 841mm

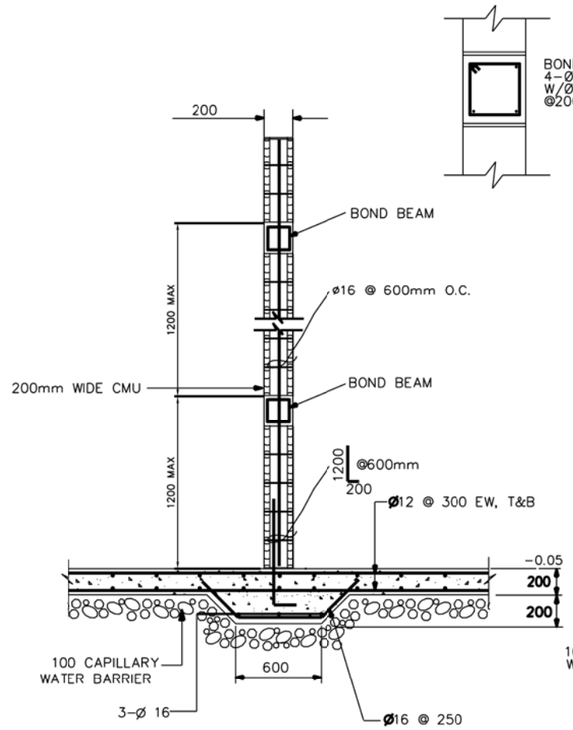

NOTE:
1. ALL EXTERIOR WALLS TO BE GROUTED SOLID.

TYPICAL PARTITION DETAIL (2 / S-2 / S-5)
NOT TO SCALE

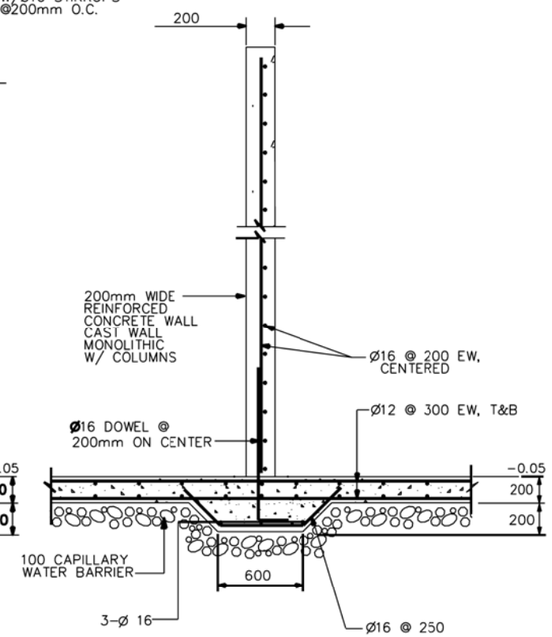

NOTES:
1. SEE ARCHITECTURAL FLOOR PLANS FOR LOCATION OF CONCRETE PARTITIONS.

REINF. CONCRETE PARTITION DETAIL (1 / S-2 / S-5)
NOT TO SCALE

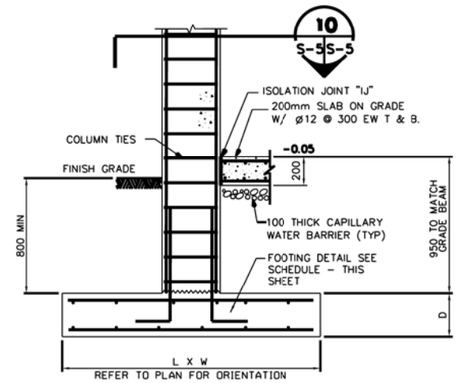

TYPICAL COLUMN AND FOOTING
NOT TO SCALE

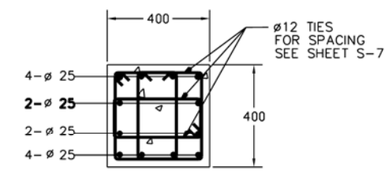

C-1
SECTION (10 / S-5 / S-5)
SCALE=1:10

FOOTING SCHEDULE

FTG TYPE	SIZE (L X W)	DEPTH (D)*	REINFORCING	
			TOP EW	BOTT EW
F1	1700 X 1700	**250**	**ø25 @ 300**	ø25 @ 300
F2	2700 X 2700	**425**	ø25 @ 350	ø25 @ 350
F3	4800 X 3050	**425**	ø25 @ 350	**ø25 @ 350**

*TOP FOOTING ELEVATION SHALL BE THE SAME FOR ALL FOOTINGS.
*FOR THE COMBINED FOOTINGS, CENTER ON THE CENTROID FOR THE TWO COLUMNS.
*REFER TO FOUNDATION PLAN FOR ORIENTATION.

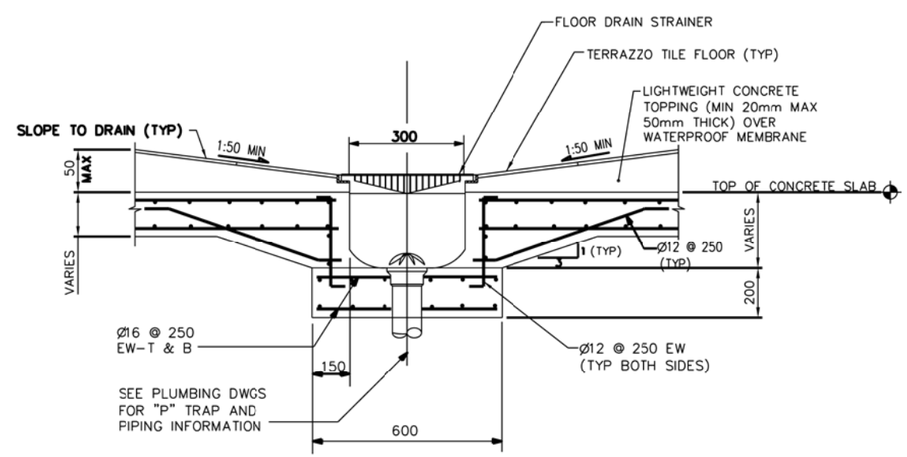

SECTION (3 / S-2 / S-5)
NOT TO SCALE

0 .50 1.00
1:10

UNLESS OTHERWISE NOTED, LINEAR DIMENSIONS SHOWN ARE IN MILLIMETERS.

US ARMY CORPS OF ENGINEERS
AFGHANISTAN ENGINEER DISTRICT

SYMBOL	DESCRIPTION	DATE	APPR.	SYMBOL	DESCRIPTION	DATE	APPR.

DESIGNED BY: DATE: XX-XX-XX
DWN BY: CKD BY: DESIGN FILE NO.
DRAWING CODE:
REVIEWED BY: FILE NAME:
SUBMITTED BY: PLOT SCALE:
PLOT DATE: XX-XX-XX
REV.

U.S. ARMY ENGINEER DISTRICT, AFGHANISTAN
CORPS OF ENGINEERS
APO AE 96338

ENGINEERING AND CONSTRUCTION DIVISION

AFGHANISTAN NATIONAL POLICE (ANP) DISTRICT HEADQUARTERS COMPOUNDS - 1 STORY HQ
VARIOUS LOCATIONS, AFGHANISTAN

1 STORY BUILDING
FOOTING AND COLUMN DETAILS

SHEET REFERENCE NUMBER:
A
S-5

A1 Size 594mm x 841mm

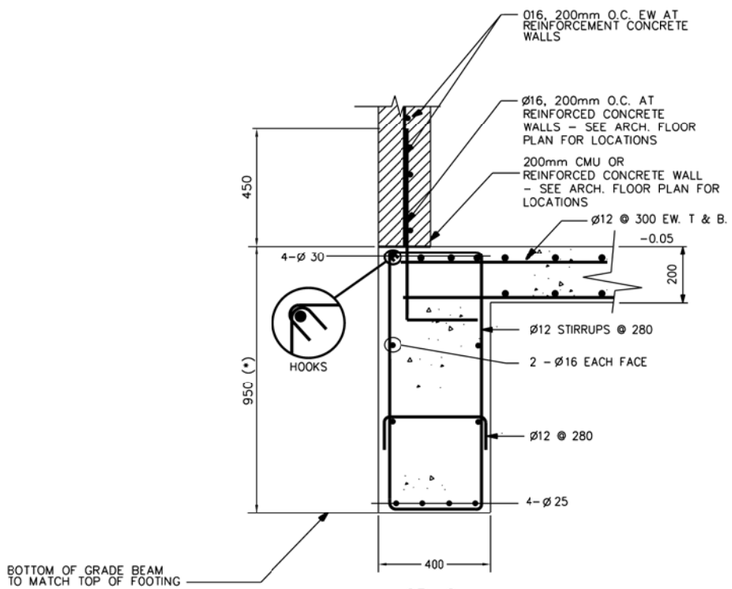

GB–2

SECTION 2 S–2 S–6
SCALE 1:10

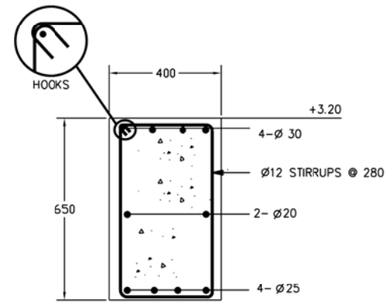

FB–1

SECTION 4 S–3 S–6
SCALE 1:10

NOTE:

1. GRADE BEAM REINFORCING IS CONTINUOUS THROUGH THE COLUMN.

2. COORDINATE REBAR PLACEMENT BETWEEN BEAMS SO THAT A MAXIMUM NUMBER OF REBAR ARE CONTINUOUS. BEND BARS AS REQUIRED.

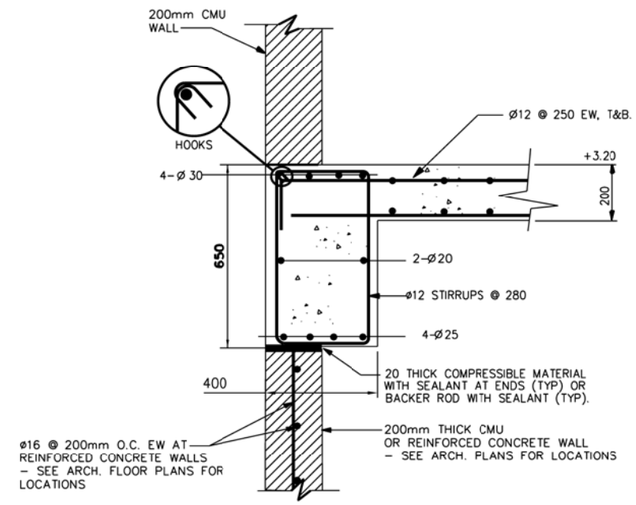

FB–2

SECTION 3 S–3 S–6
SCALE 1:10

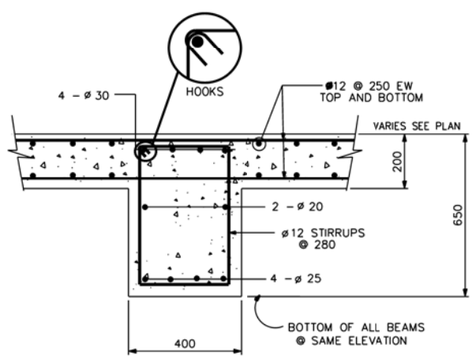

RB–1

SECTION 6 S–3,S–4 S–6
SCALE= NONE

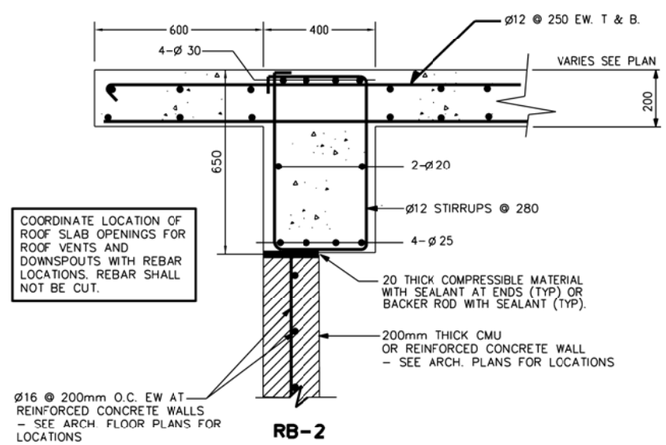

COORDINATE LOCATION OF ROOF SLAB OPENINGS FOR ROOF VENTS AND DOWNSPOUTS WITH REBAR LOCATIONS. REBAR SHALL NOT BE CUT.

RB–2

SECTION 7 S–3,S–4 S–6
SCALE 1:10

US ARMY CORPS OF ENGINEERS
AFGHANISTAN ENGINEER DISTRICT

SYMBOL	DESCRIPTION	DATE	APPR.	SYMBOL	DESCRIPTION	DATE	APPR.

DESIGNED BY: DWN BY: CKD BY: REVIEWED BY: SUBMITTED BY:
DATE: XX-XX-XX DESIGN FILE NO. DRAWING CODE: FILE NAME: PLOT SCALE: PLOT DATE: XX-XX-XX REV. __

U.S. ARMY ENGINEER DISTRICT, AFGHANISTAN
CORPS OF ENGINEERS
APO AE 96338

ENGINEERING AND CONSTRUCTION DIVISION

AFGHANISTAN NATIONAL POLICE (ANP) DISTRICT HEADQUARTERS COMPOUNDS - 1 STORY HQ
VARIOUS LOCATIONS, AFGHANISTAN
1 STORY BUILDING

BEAM DETAILS

SHEET REFERENCE NUMBER:
A
S-6
SHEET --- OF ---

A1 Size 594mm x 841mm

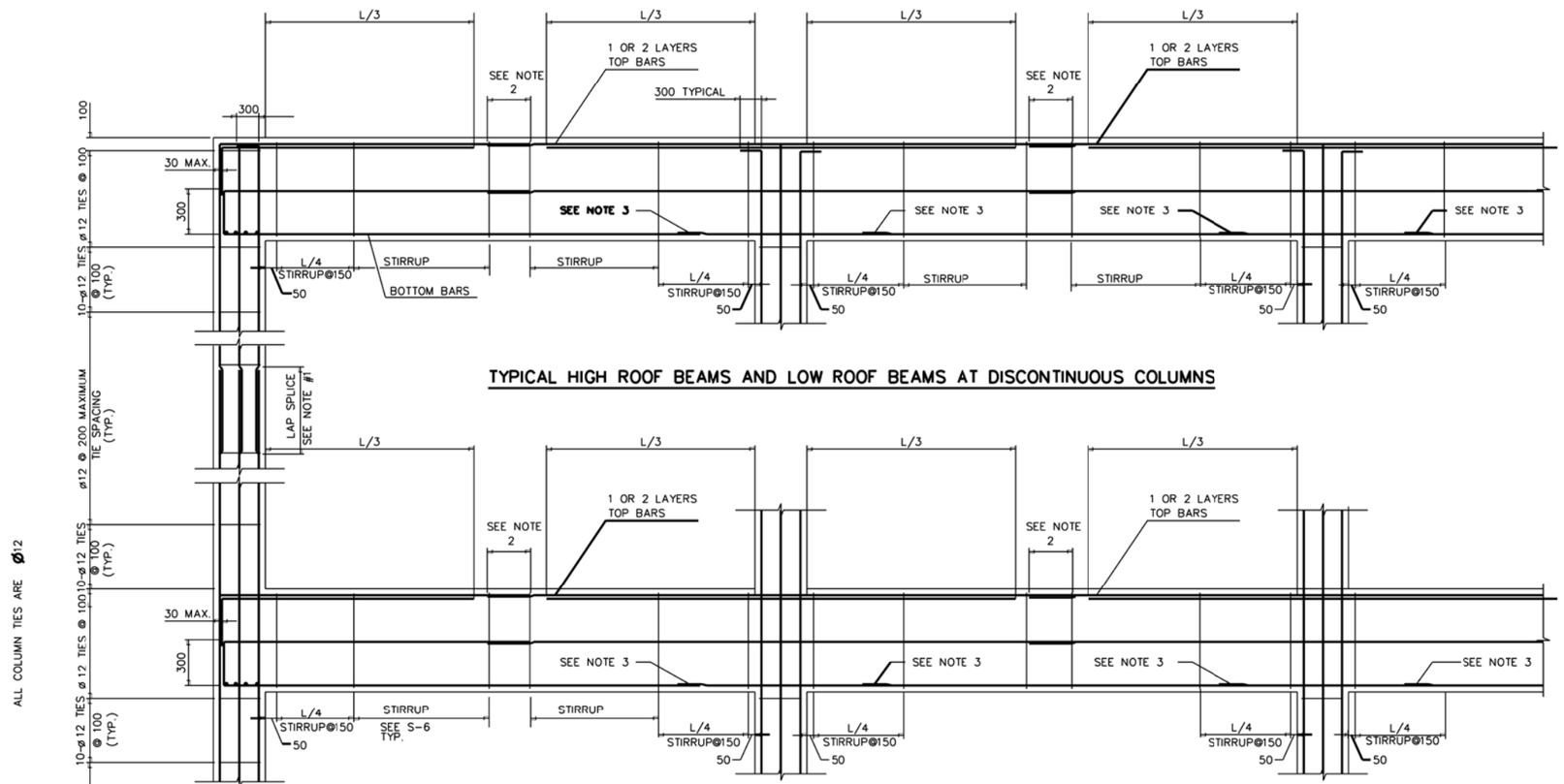

TYPICAL HIGH ROOF BEAMS AND LOW ROOF BEAMS AT DISCONTINUOUS COLUMNS

TYPICAL LOW ROOF BEAMS

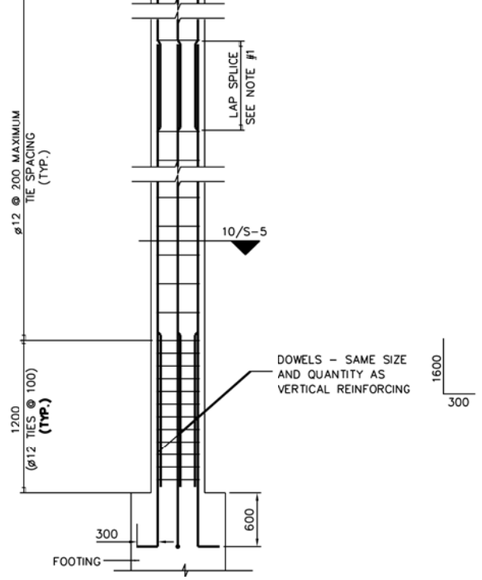

ALL COLUMN TIES ARE Ø12

NOTES:

1. ALL LAP SPLICES IN BEAMS AND COLUMNS SHALL BE CLASS B SPLICES

2. PROVIDE A 150mm MAXIMUM STIRRUP SPACING AT LAP SPLICES, AS SHOWN ON DRAWING. ALL SPLICES EXEPT BOTTOM BARS SHALL OCCUR AT MIDSPAN. REFER INDIVIDUAL BEAM DETAILS FOR STIRRUP SPACING.

3. THE LAP SPLICES SHOWN SHALL BE PERMITTED IN SPANS MEASURING 6 METERS OR MORE FROM CENTERLINES OF SUPPORTS (COLUMNS OR WALLS) ONLY. SPLICES INDICATED SHALL BE LOCATED ONE METER FROM THE FACE OF THE COLUMN, AS SHOWN.

4. BEAM STEEL NOT SHOWN FOR CLARITY.

5. LAP SPLICE = 927mm

STANDARD BEAM AND COLUMN DETAIL

US ARMY CORPS OF ENGINEERS AFGHANISTAN ENGINEER DISTRICT

SYMBOL	DESCRIPTION	DATE	APPR.	SYMBOL	DESCRIPTION	DATE	APPR.

DESIGNED BY: DATE: XX-XX-XX REV: __
DWN BY: CKD BY: DESIGN FILE NO. DRAWING CODE
REVIEWED BY: FILE NAME: PLOT SCALE:
SUBMITTED BY: PLOT DATE: XX-XX-XX

U.S. ARMY ENGINEER DISTRICT, AFGHANISTAN
CORPS OF ENGINEERS
APO AE 96338

ENGINEERING AND CONSTRUCTION DIVISION

AFGHANISTAN NATIONAL POLICE (ANP) DISTRICT HEADQUARTERS COMPOUNDS - 1 STORY HQ
VARIOUS LOCATIONS, AFGHANISTAN
1 STORY BUILDING

STANDARD BEAM AND COLUMN DETAIL

SHEET REFERENCE NUMBER:
A
S-7
SHEET --- OF ---

A1 Size 594mm x 841mm

NOTES:
1. FOR LEGENDS, ABBREVIATIONS AND STANDARD MECHANICAL DETAILS SEE SHEETS SM-1 AND SM-3.
2. FOR EQUIPMENT SCHEDULES AND CONTROL DIAGRAMS SEE SHEET SM-2.
3. ALL DIMENSIONS ARE IN MM UNLESS NOTED OTHERWISE.
4. PROVIDE EACH EXHAUST FAN WITH MANUFACTURER'S STANDARD EXHAUST GRILL AND GRAVITY BACKDRAFT DAMPER.
5. PROVIDE 200 x 100 ALL-WEATHER LOUVER WITH BIRDSCREEN.
6. KITCHEN EXHAUST HOOD WITH ALUMINUM FILTERS AND SEALED DUCT CONNECTION TO EXHAUST FAN. SIZE OF HOOD TO MATCH COOKING EQUIPMENT PROVIDED.
7. EXHAUST FAN EF-A-5 CAPACITY INDICATED HERE IS MINIMUM BASED ON 1200W X 2500 L HOOD: ITS CAPACITY SHALL BE REVISED UPWARD TO MATCH AIRFLOW PERFORMANCE REQUIRED BY THE KITCHEN HOOD EQUIPMENT MANUFACTURER. PROPANE STOVE FLUE DUCT SHALL CONNECT TO KITCHEN EXHAUST HOOD.

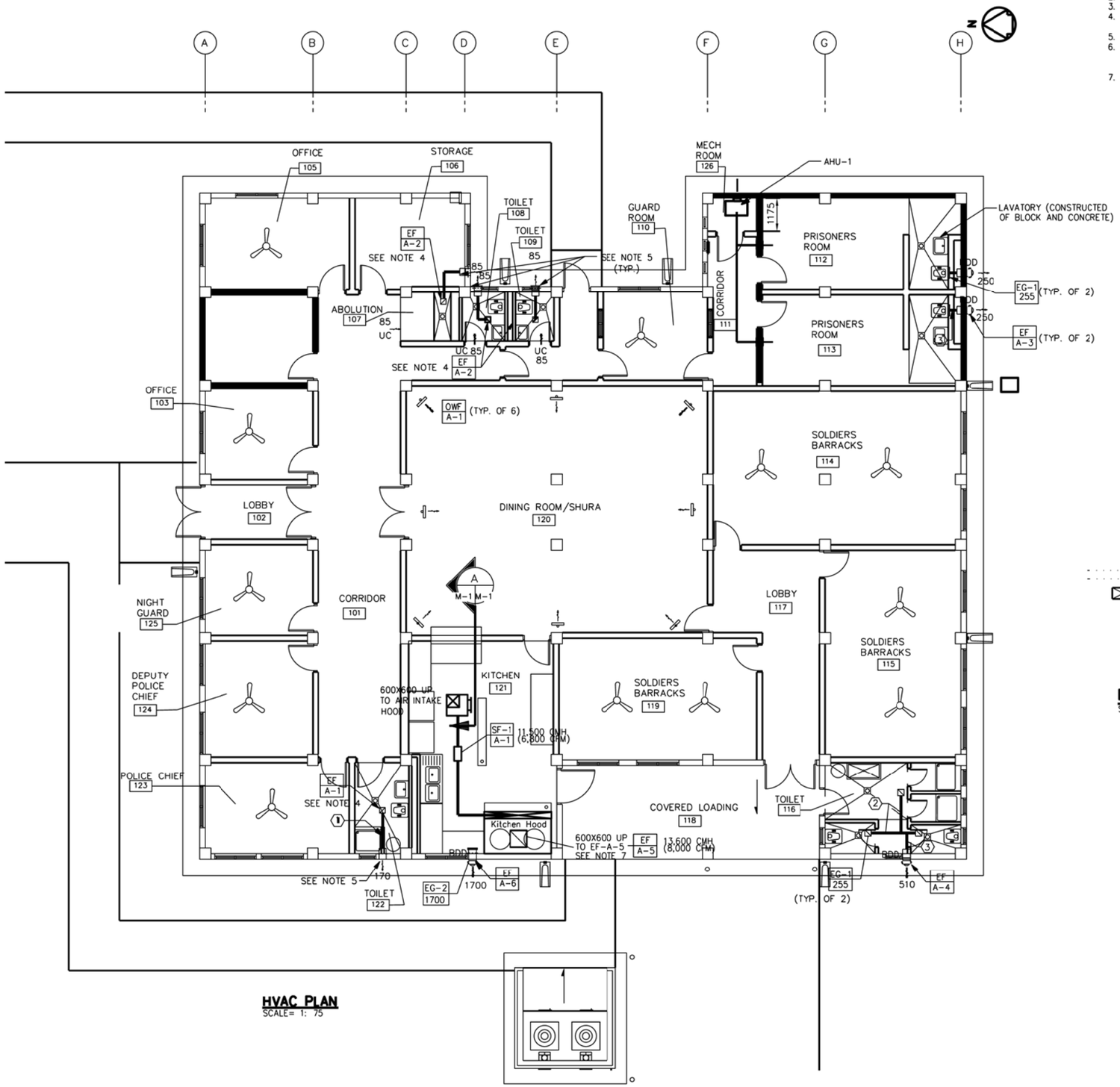

HVAC PLAN
SCALE= 1: 75

DUCT SIZING LEGEND

1	200 x 100
2	200 x 150
3	200 x 200
4	600 x 300

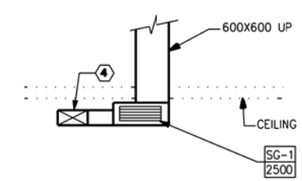

KITCHEN

DETAIL
SCALE 1: 50

A M-1

1:50 0 1 2 3 4

1:75 3 1.50 0 3 4.5

US ARMY CORPS OF ENGINEERS AFGHANISTAN ENGINEER DISTRICT

SYMBOL	DESCRIPTION	DATE	APPR.

SYMBOL	DESCRIPTION	DATE	APPR.

DESIGNED BY: DATE: XX-XX-XX REV.
DWN BY: CKD BY: DESIGN FILE NO.
REVIEWED BY: DRAWING CODE:
SUBMITTED BY: FILE NAME:
PLOT SCALE:
PLOT DATE: XX-XX-XX

U.S. ARMY ENGINEER DISTRICT, AFGHANISTAN
CORPS OF ENGINEERS
APO AE 96338

ENGINEERING AND CONSTRUCTION DIVISION

AFGHANISTAN NATIONAL POLICE (ANP) DISTRICT HEADQUARTERS COMPOUNDS - 1 STORY HQ
VARIOUS LOCATIONS, AFGHANISTAN
1 STORY BUILDING

HVAC PLAN

SHEET REFERENCE NUMBER:
A
M-1

A1 Size 594mm x 841mm

NOTES:
1. PROVIDE DOUBLE WALL TYPE METAL VENT THROUGH EXTERIOR WALL FOR VENTING OF WOOD STOVES. TOP AT BOTTOM OF CONCRETE BEAM. WOOD STOVES TO BE PROVIDED BY OCCUPANTS. COORDINATE SIZE OF VENT THROUGH WALL WITH WOOD STOVE MANUFACTURER'S RECOMMENDATIONS.

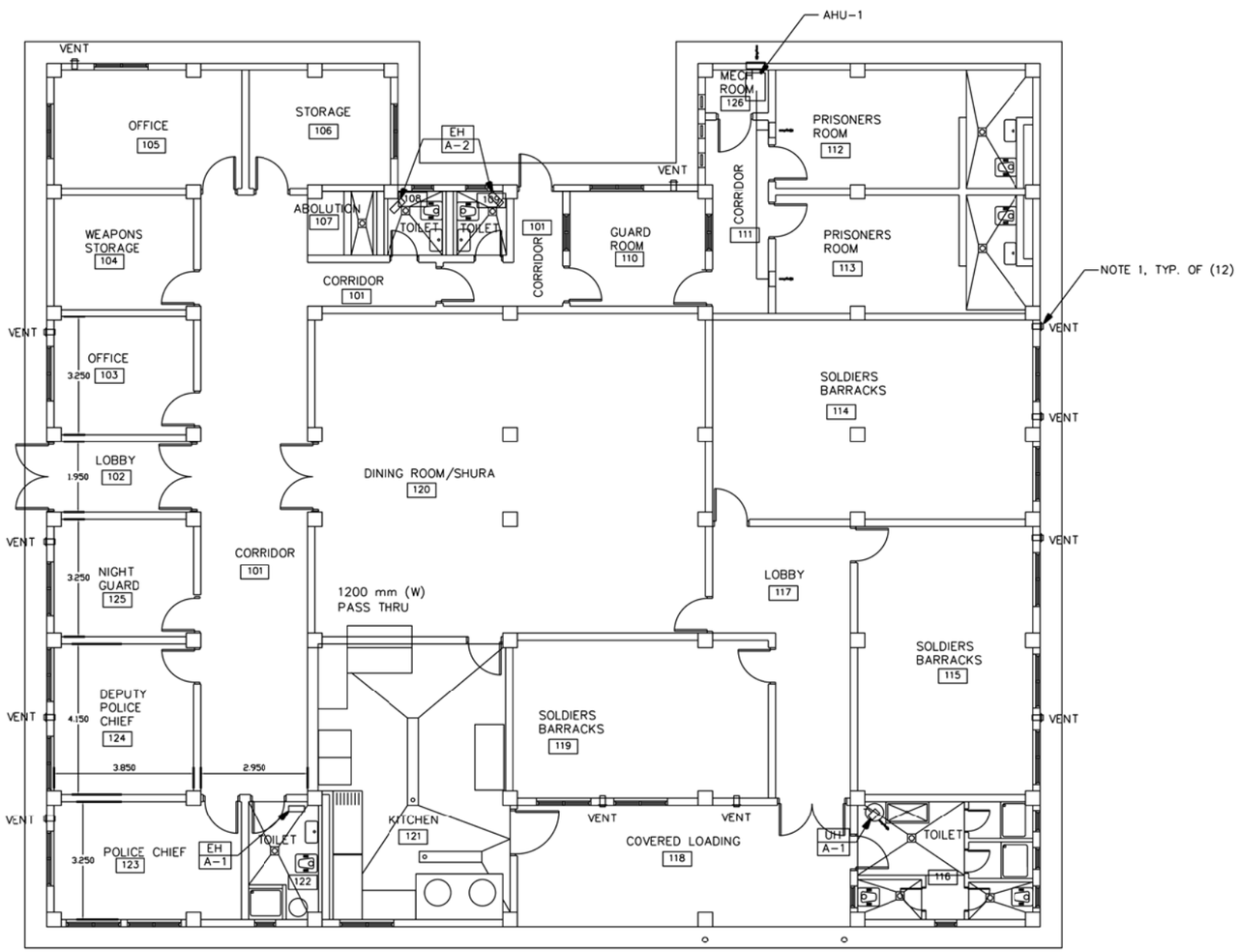

HEATING PLAN
SCALE= 1: 75

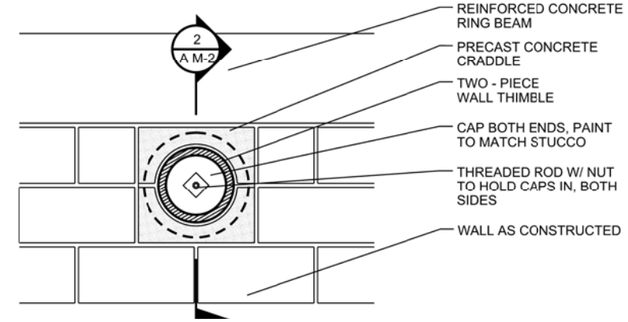

1 AM-2 THIMBLE ELEVATION DETAIL
SCALE 1:10

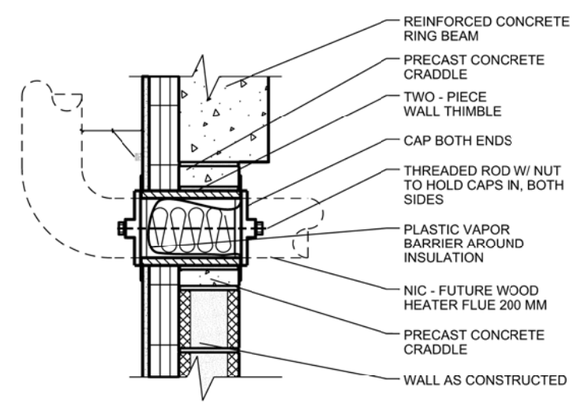

2 AM-2 THIMBLE SECTION DETAIL
SCALE 1:10

US ARMY CORPS OF ENGINEERS
AFGHANISTAN ENGINEER DISTRICT

SYMBOL	DESCRIPTION	DATE	APPR.	SYMBOL	DESCRIPTION	DATE	APPR.

REV: __
DATE: XX-XX-XX
DESIGN FILE NO.
DRAWING CODE
FILE NAME:
PLOT SCALE:
PLOT DATE: XX-XX-XX
DESIGNED BY:
DWN BY:
CKD BY:
REVIEWED BY:
SUBMITTED BY:

U.S. ARMY ENGINEER DISTRICT, AFGHANISTAN
CORPS OF ENGINEERS
APO AE 96338

ENGINEERING AND CONSTRUCTION DIVISION

AFGHANISTAN NATIONAL POLICE (ANP) DISTRICT HEADQUARTERS COMPOUNDS - 1 STORY HQ
VARIOUS LOCATIONS, AFGHANISTAN
1 STORY BUILDING

HEATING PLAN

SHEET REFERENCE NUMBER:
A
M-2

A1 Size 594mm x 841mm

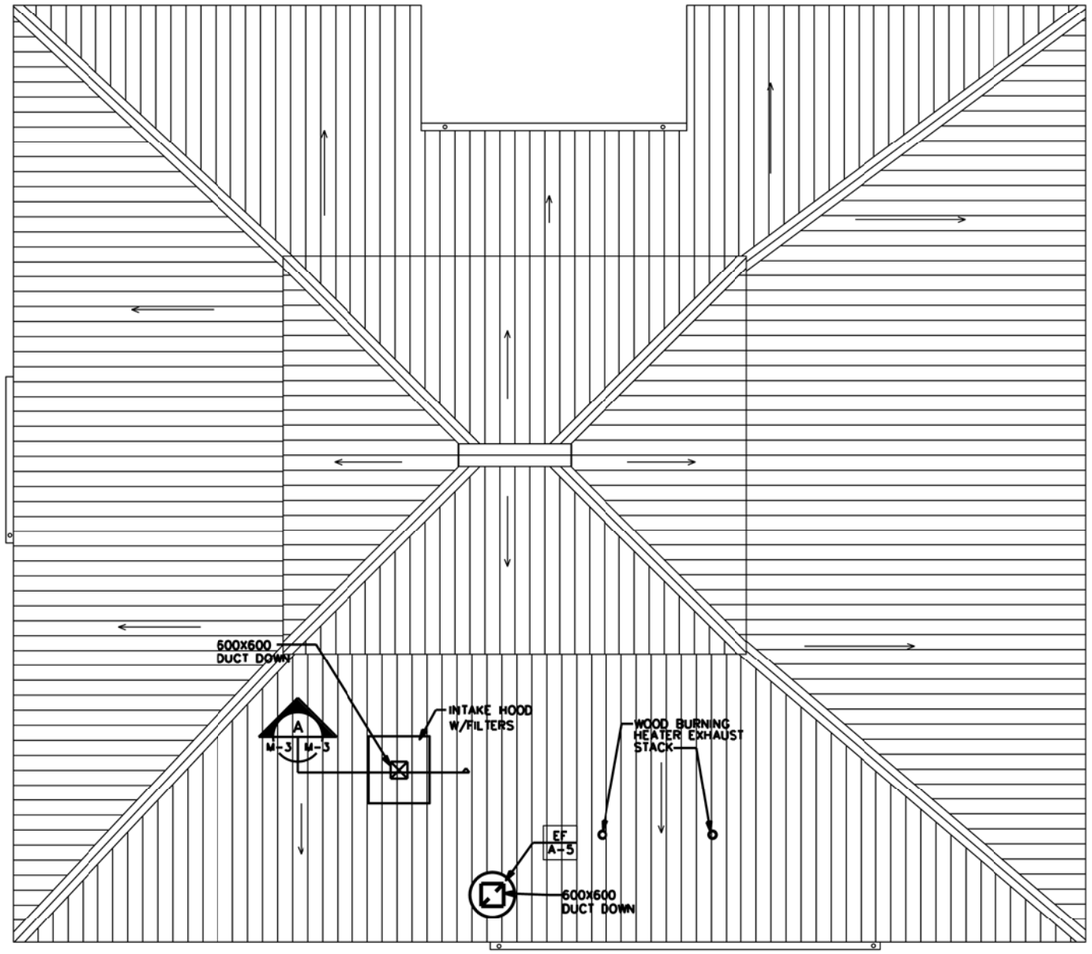

ROOF PLAN
SCALE= 1: 75

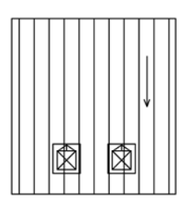

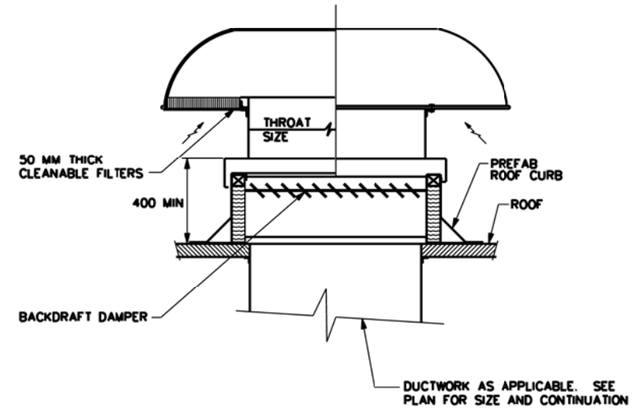

NOTE:
1. FILTER AREA SELECTION AT MAXIMUM FACE VELOCITY OF 300 FPM OR 1.52 MPS.

AIR INTAKE HOOD (A / M-3)
NOT TO SCALE

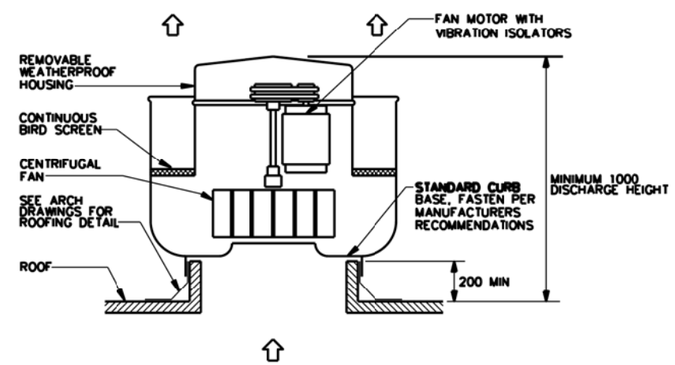

UPBLAST POWER ROOF VENTILATOR (B / M-3)
NOT TO SCALE

US ARMY CORPS
OF ENGINEERS
AFGHANISTAN
ENGINEER DISTRICT

SYMBOL	DESCRIPTION	DATE	APPR.	SYMBOL	DESCRIPTION	DATE	APPR.

DESIGNED BY: DATE: XX-XX-XX
DWN BY: CKD BY: DESIGN FILE NO.
REVIEWED BY: DRAWING CODE
SUBMITTED BY: FILE NAME:
PLOT SCALE:
PLOT DATE: XX-XX-XX
REV.

U.S. ARMY ENGINEER DISTRICT, AFGHANISTAN
CORPS OF ENGINEERS
APO AE 96338

ENGINEERING AND
CONSTRUCTION DIVISION

AFGHANISTAN NATIONAL POLICE
(ANP) DISTRICT HEADQUARTERS
COMPOUNDS - 1 STORY HQ
VARIOUS LOCATIONS, AFGHANISTAN
1 STORY BUILDING

ROOF PLAN

SHEET
REFERENCE
NUMBER:
A
M-3

A1 Size 594mm x 841mm

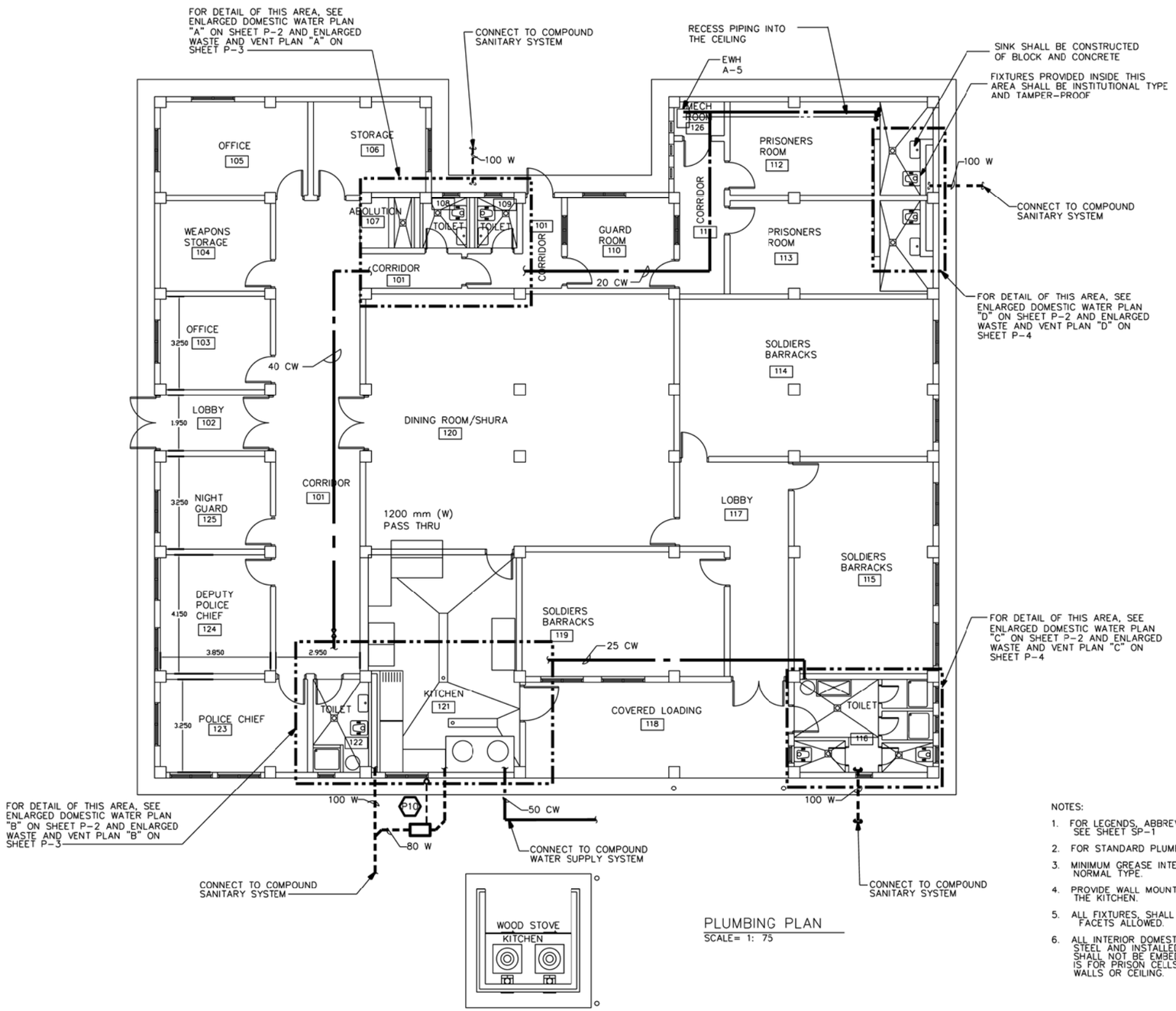

PLUMBING PLAN
SCALE= 1: 75

NOTES:

1. FOR LEGENDS, ABBREVIATION S AND PLUMBING FIXTURE SCHEDULE SEE SHEET SP-1
2. FOR STANDARD PLUMBING DETAILS SEE SHEET SP-2
3. MINIMUM GREASE INTERCEPTOR FLOW RATE SHALL BE 135 LPM NORMAL TYPE.
4. PROVIDE WALL MOUNTED, 15MM DIA. 12.5M LONG HOSE REEL IN THE KITCHEN.
5. ALL FIXTURES, SHALL BE COMMERCIAL GRADE. NO GOOSENECK FACETS ALLOWED.
6. ALL INTERIOR DOMESTIC WATER PIPING SHALL BE GALVANIZED STEEL AND INSTALLED TIGHT TO THE WALL OR CEILING. PIPING SHALL NOT BE EMBEDED IN THE CONCRETE WALLS. EXCEPTION IS FOR PRISON CELLS, WHERE PIPING SHALL BE INSTALLED IN THE WALLS OR CEILING.

US ARMY CORPS OF ENGINEERS AFGHANISTAN ENGINEER DISTRICT

SYMBOL	DESCRIPTION	DATE	APPR.	SYMBOL	DESCRIPTION	DATE	APPR.

DESIGNED BY: DATE: XX-XX-XX
DWN BY: CKD BY: DESIGN FILE NO.
REVIEWED BY: DRAWING CODE
SUBMITTED BY: FILE NAME:
PLOT SCALE:
PLOT DATE: XX-XX-XX
REV.

U.S. ARMY ENGINEER DISTRICT, AFGHANISTAN
CORPS OF ENGINEERS
APO AE 96338

ENGINEERING AND CONSTRUCTION DIVISION

AFGHANISTAN NATIONAL POLICE (ANP) DISTRICT HEADQUARTERS COMPOUNDS - 1 STORY HQ
VARIOUS LOCATIONS, AFGHANISTAN
1 STORY BUILDING

PLUMBING PLAN

SHEET REFERENCE NUMBER:
A
P-1

A1 Size 594mm x 841mm

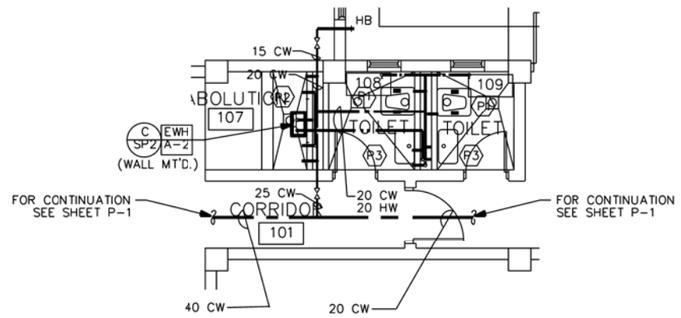

ENLARGED PLAN "A"- DOMESTIC WATER
SCALE= 1: 50

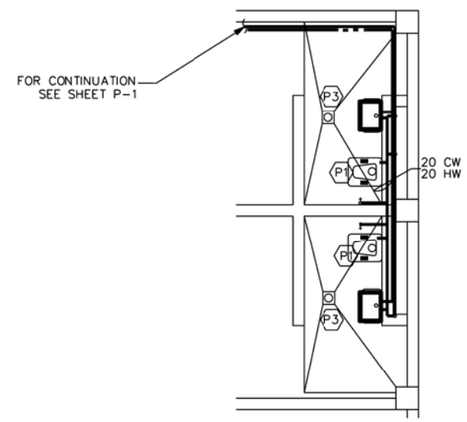

ENLARGED PLAN "D"- DOMESTIC WATER
SCALE= 1: 50

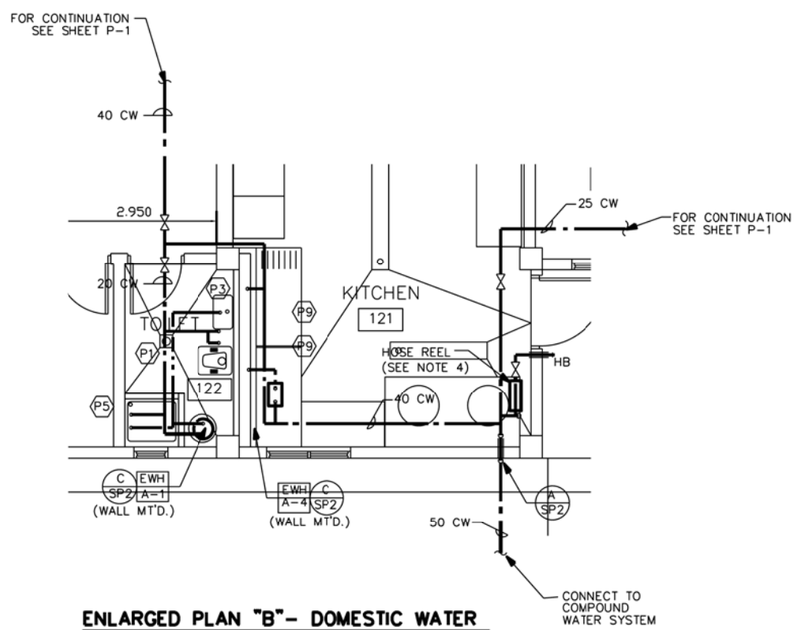

ENLARGED PLAN "B"- DOMESTIC WATER
SCALE= 1: 50

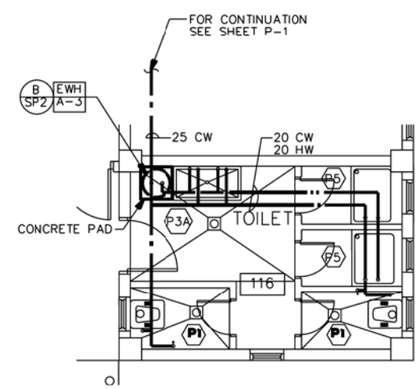

ENLARGED PLAN "C"- DOMESTIC WATER
SCALE= 1: 50

1 0 1 2 3 4
1:50

US ARMY CORPS OF ENGINEERS AFGHANISTAN ENGINEER DISTRICT

SYMBOL	DESCRIPTION	DATE	APPR.	SYMBOL	DESCRIPTION	DATE	APPR.

DESIGNED BY: DATE: XX-XX-XX REV.
DWN BY: CKD BY: DESIGN FILE NO.
REVIEWED BY: DRAWING CODE:
SUBMITTED BY: FILE NAME:
PLOT SCALE:
PLOT DATE: XXXXXXX

U.S. ARMY ENGINEER DISTRICT, AFGHANISTAN
CORPS OF ENGINEERS
APO AE 96338

ENGINEERING AND CONSTRUCTION DIVISION

AFGHANISTAN NATIONAL POLICE (ANP) DISTRICT HEADQUARTERS COMPOUNDS - 1 STORY HQ
VARIOUS LOCATIONS, AFGHANISTAN
1 STORY BUILDING

ENLARGED PLUMBING PLANS- DOMESTIC WATER

SHEET REFERENCE NUMBER:
A
P-2

A1 Size 594mm x 841mm

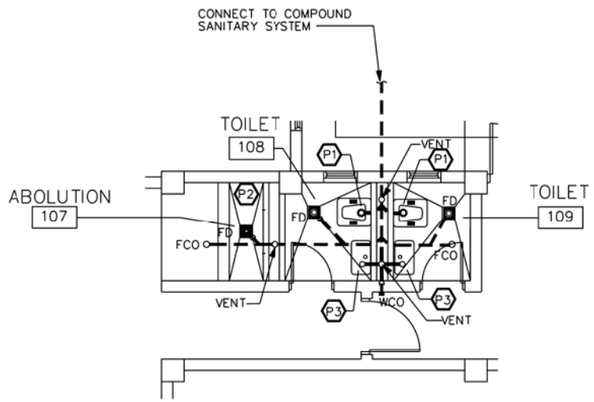

ENLARGED PLAN "A"– WASTE AND DRAINS
SCALE= 1: 50

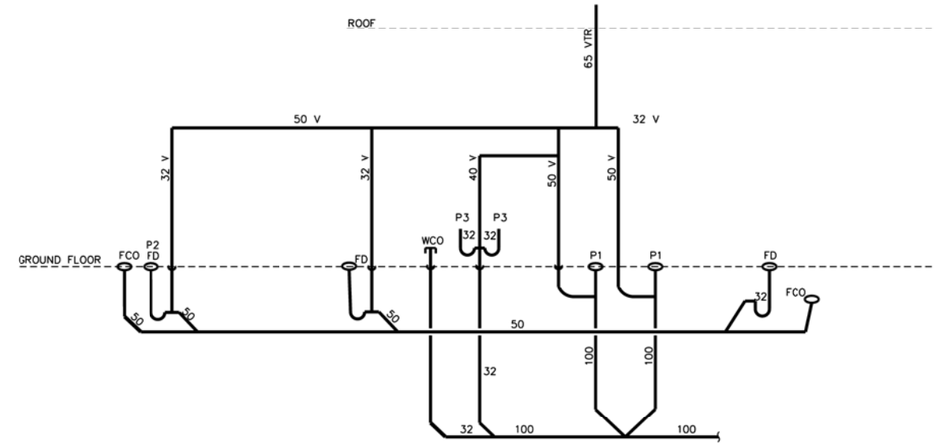

ENLARGED PLAN "A"– WASTE AND DRAIN PIPING SCHEMATIC
SCALE= NO SCALE

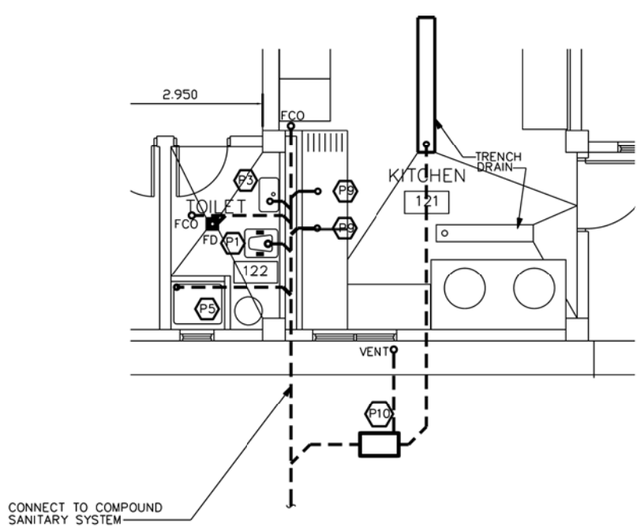

ENLARGED PLAN "B"– WASTE AND DRAINS
SCALE= 1: 50

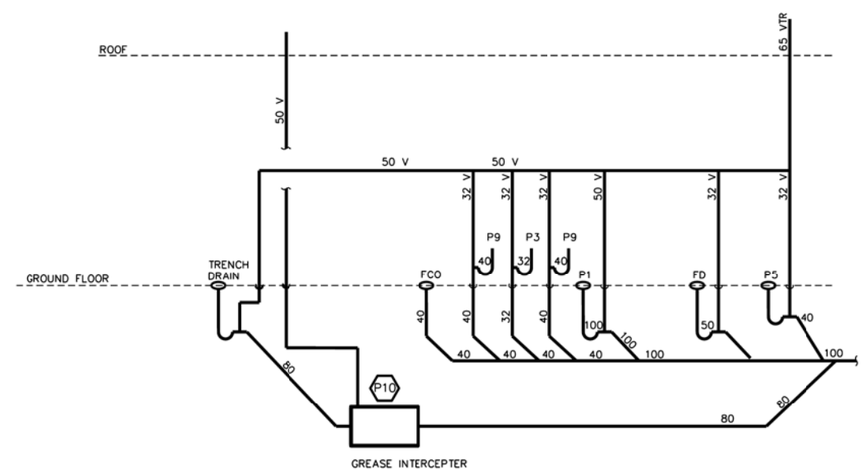

ENLARGED PLAN "B"– WASTE AND DRAIN PIPING SCHEMATIC
SCALE= NO SCALE

1 0 1 2 3 4
1:50

US ARMY CORPS OF ENGINEERS AFGHANISTAN ENGINEER DISTRICT

SYMBOL	DESCRIPTION	DATE	APPR.

SYMBOL	DESCRIPTION	DATE	APPR.

U.S. ARMY ENGINEER DISTRICT, AFGHANISTAN
CORPS OF ENGINEERS
APO AE 96338

ENGINEERING AND CONSTRUCTION DIVISION

DESIGNED BY:
DWN BY:
CKD BY:
REVIEWED BY:
SUBMITTED BY:
DATE: XX-XX-XX
DESIGN FILE NO.
DRAWING CODE:
FILE NAME:
PLOT SCALE:
PLOT DATE: XX-XX-XX
REV.

AFGHANISTAN NATIONAL POLICE (ANP) DISTRICT HEADQUARTERS COMPOUNDS - 1 STORY HQ
VARIOUS LOCATIONS, AFGHANISTAN
1 STORY BUILDING

ENLARGED PLUMBING PLANS- WASTE AND DRAINS

SHEET REFERENCE NUMBER:
A
P-3

A1 Size 594mm x 841mm

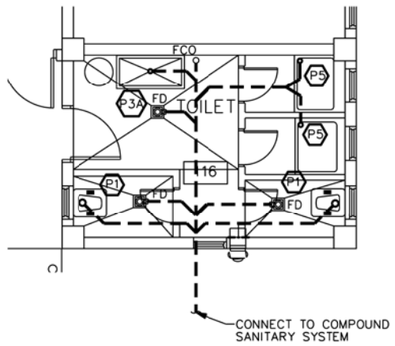

ENLARGED PLAN "C"– WASTE AND DRAINS
SCALE= 1: 50

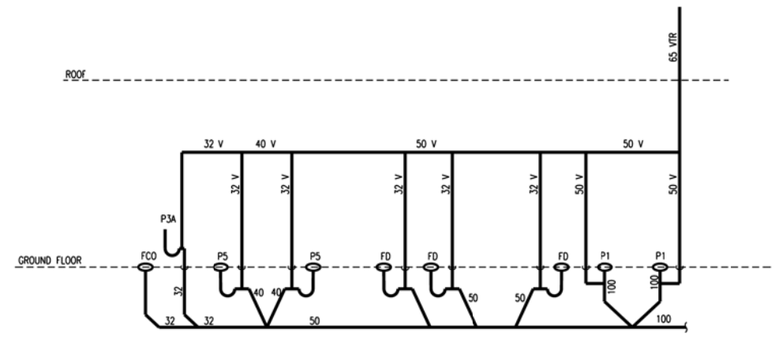

ENLARGED PLAN "C"– WASTE AND DRAIN PIPING SCHEMATIC
SCALE= NO SCALE

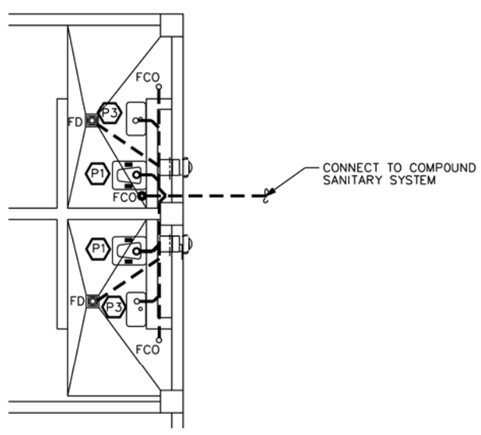

ENLARGED PLAN "D"– WASTE AND DRAINS
SCALE= 1: 50

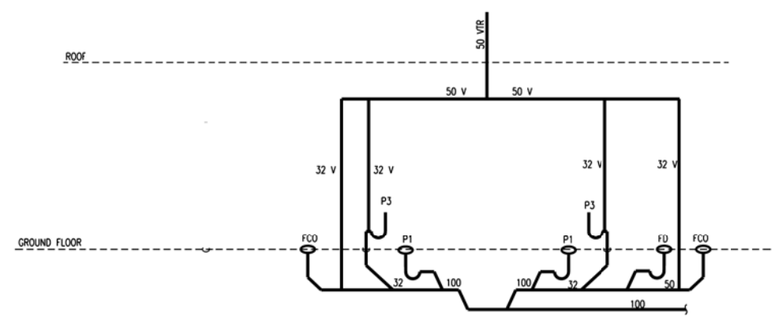

ENLARGED PLAN "D"– WASTE AND DRAIN PIPING SCHEMATIC
SCALE= NO SCALE

1 0 1 2 3 4
1:50

US ARMY CORPS OF ENGINEERS AFGHANISTAN ENGINEER DISTRICT

SYMBOL	DESCRIPTION	DATE	APPR.	SYMBOL	DESCRIPTION	DATE	APPR.

DESIGNED BY: | DATE: XX-XX-XX | REV.
DWN BY: | CKD BY: | DESIGN FILE NO.
REVIEWED BY: | DRAWING CODE:
SUBMITTED BY: | FILE NAME:
PLOT SCALE:
PLOT DATE: XX-XX-XX

U.S. ARMY ENGINEER DISTRICT, AFGHANISTAN
CORPS OF ENGINEERS
APO AE 96338

ENGINEERING AND CONSTRUCTION DIVISION

AFGHANISTAN NATIONAL POLICE (ANP) DISTRICT HEADQUARTERS COMPOUNDS - 1 STORY HQ
VARIOUS LOCATIONS, AFGHANISTAN
1 STORY BUILDING

ENLARGED PLUMBING PLANS- WASTE AND DRAINS

SHEET REFERENCE NUMBER:
A
P-4

A1 Size 594mm x 841mm

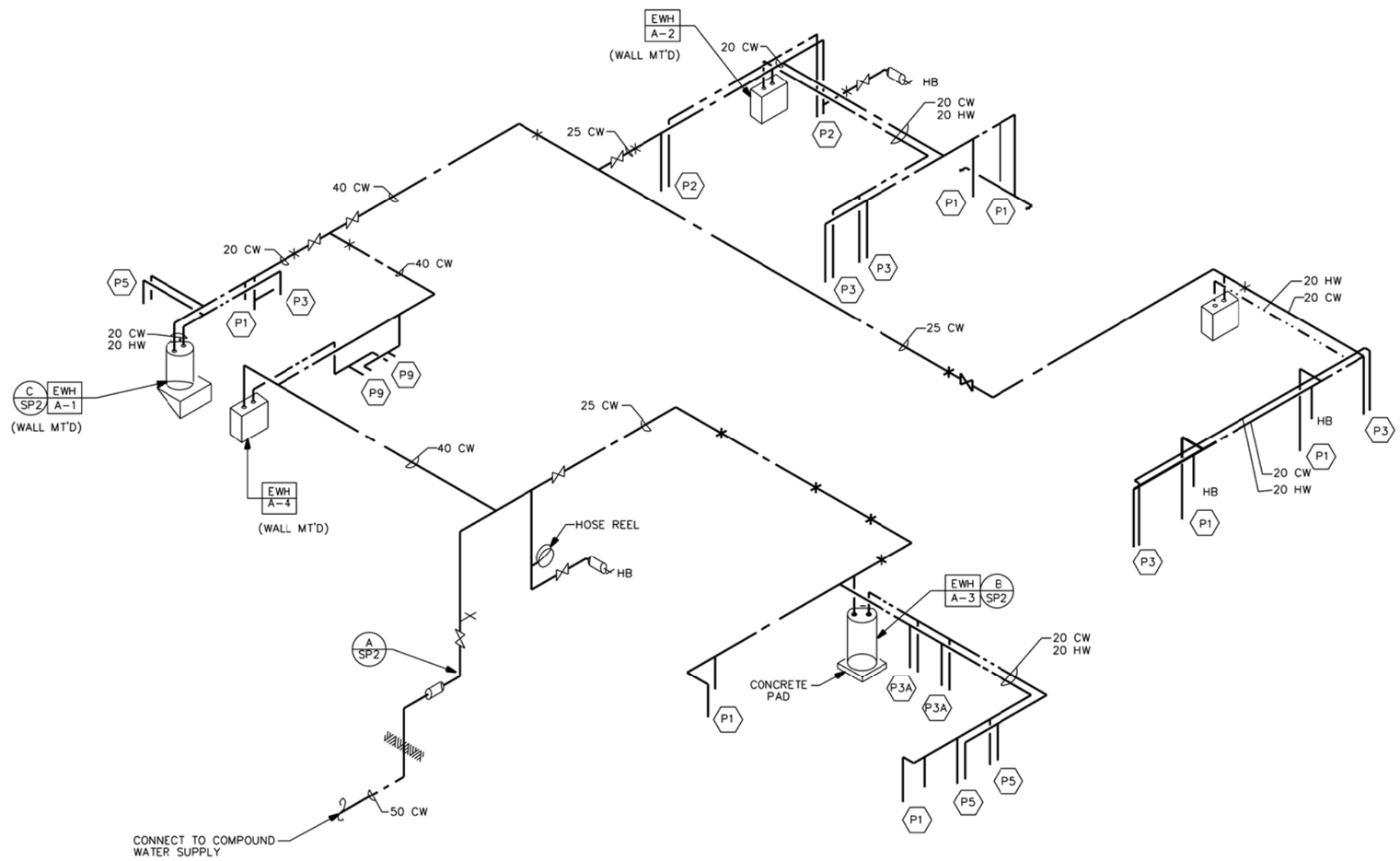

DOMESTIC WATER RISER DIAGRAM

NOT TO SCALE

US ARMY CORPS OF ENGINEERS AFGHANISTAN ENGINEER DISTRICT

SYMBOL	DESCRIPTION	DATE	APPR.

SYMBOL	DESCRIPTION	DATE	APPR.

DESIGNED BY: | DATE: XX-XX-XX | REV.
DWN BY: | CKD BY: | DESIGN FILE NO.
REVIEWED BY: | DRAWING CODE:
SUBMITTED BY: | FILE NAME:
PLOT SCALE:
PLOT DATE: XX-XX-XX

U.S. ARMY ENGINEER DISTRICT, AFGHANISTAN
CORPS OF ENGINEERS
APO AE 96338

ENGINEERING AND CONSTRUCTION DIVISION

AFGHANISTAN NATIONAL POLICE (ANP) DISTRICT HEADQUARTERS COMPOUNDS - 1 STORY HQ
VARIOUS LOCATIONS, AFGHANISTAN
1 STORY BUILDING

DOMESTIC WATER RISER DIAGRAM

SHEET REFERENCE NUMBER:
A
P-5

A1 Size 594mm x 841mm

EWH A-X ELECTRIC WATER HEATER SCHEDULE

UNIT NUMBER	LOCATION (ROOM NO.)	TYPE	STORAGE CAPACITY (LITERS)	MINIMUM RECOVERY RATE (LITERS/HOUR) @ 55.5 C RISE	NUMBER OF ELEMENTS	ELECTRICAL REQUIREMENTS				REMARKS
						KW INPUT	VOLTS	PH	HZ	
A-1	TOILET 122	STORAGE TANK	50	43	1	2.5	220	1	50	WALL MOUNTED
A-2	TOILET 108 & 109	STORAGE TANK	50	45	1	3.0	220	1	50	WALL MOUNTED
A-3	TOILET 116	STORAGE TANK	100	86	2	6.0	220	1	50	FLOOR MOUNTED
A-4	KITCHEN 121	STORAGE TANK	100	90	2	6.0	220	1	50	FLOOR MOUNTED
A-5	CELLS 112 & 113	STORAGE TANK	20	14	1	1.5	220	1	50	WALL MOUNTED

US ARMY CORPS OF ENGINEERS AFGHANISTAN ENGINEER DISTRICT

SYMBOL	DESCRIPTION	DATE	APPR.	SYMBOL	DESCRIPTION	DATE	APPR.

U.S. ARMY ENGINEER DISTRICT, AFGHANISTAN
CORPS OF ENGINEERS
APO AE 96338

DESIGNED BY: DATE: XX-XX-XX REV: __
DWN BY: CKD BY: DESIGN FILE NO.
REVIEWED BY: DRAWING CODE
SUBMITTED BY: FILE NAME: PLOT SCALE: PLOT DATE: XX-XX-XX

ENGINEERING AND CONSTRUCTION DIVISION

AFGHANISTAN NATIONAL POLICE (ANP) DISTRICT HEADQUARTERS COMPOUNDS - 1 STORY HQ
VARIOUS LOCATIONS, AFGHANISTAN
1 STORY BUILDING

PLUMBING SCHEDULE

SHEET REFERENCE NUMBER:
A
P-6

A1 Size 594mm x 841mm

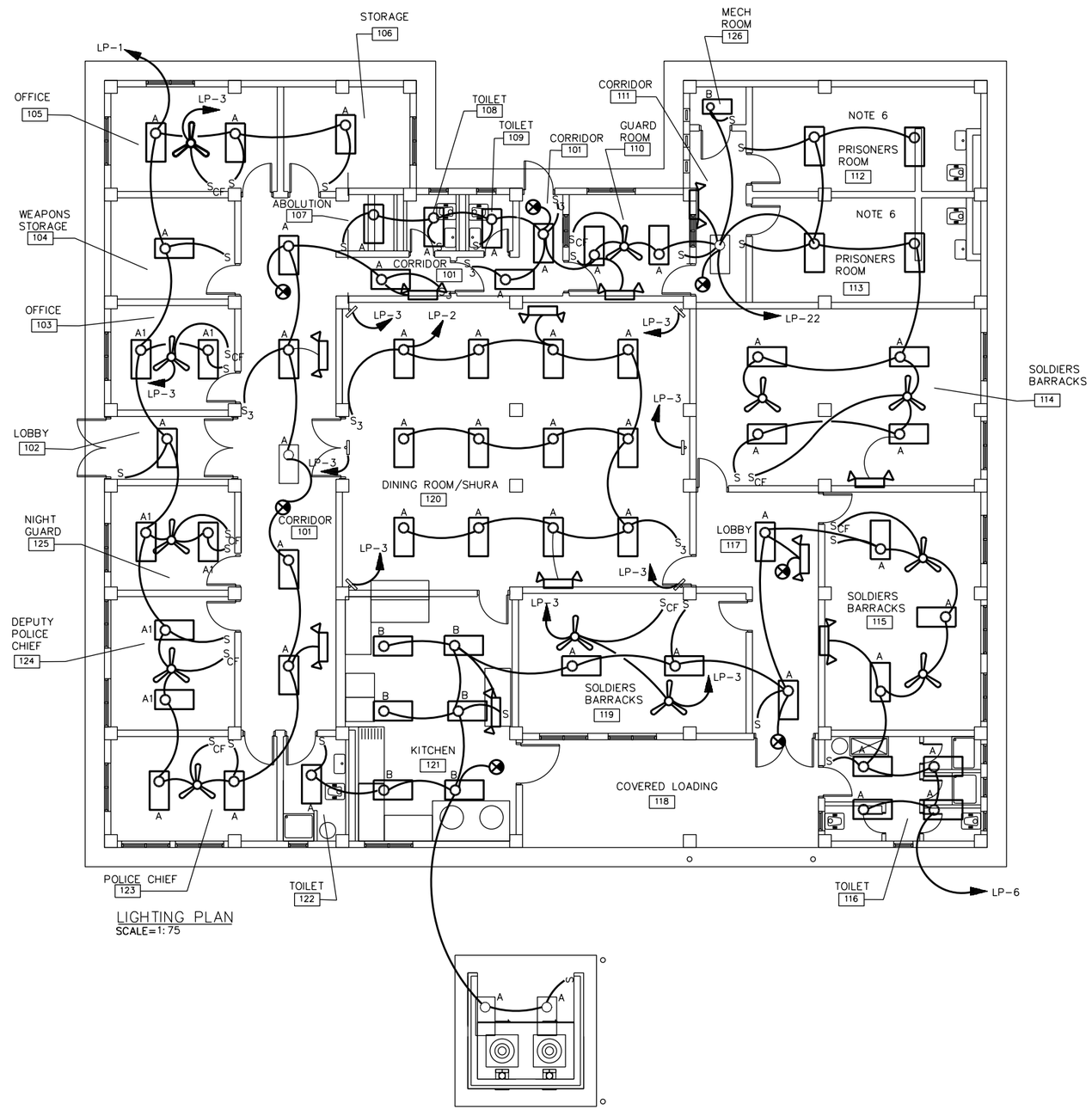

LIGHTING PLAN
SCALE=1:75

NOTES:

1. FOR LEGEND AND ABBREVIATIONS SEE DRAWING SE-1.

2. EXIT LIGHTS AND EMERGENCY LIGHTS SHALL BE CONNECTED TO AN UNSWITCHED POWER CIRCUIT.

3. FOR LIGHT FIXTURE SCHEDULE SEE DRAWING SE-1.

4. COORDINATE LOCATION OF ALL ELECTRICAL FIXTURES AND EQUIPMENT WITH ALL OTHER TRADES.

5. FOR ONE LINE DIAGRAM SEE DRAWING XE- I, POWER PLANT.

6. ALL LIGHT FIXTURES IN JAIL CELLS SHALL BE TWO LAMP FLUORESCENT TYPE FIXTURES SUITABLE FOR VANDAL RESISTANCE/ DETENTION CENTER. LIGHT FIXTURES SHALL WITHSTAND THE PHYSICAL ABUSE AND THE INTENT- TO- DESTROY TYPE ABUSE.

7. ALL WIRING INSTALLATION FOR LIGHTING AND POWER SHALL BE IN APPROVED METAL CONDUIT, EITHER CONCEALED OR SURFACE MOUNTED.

8. COORDINATE LOCATION OF THE CEILING FANS WITH LIGHT FIXTURES.

9. COORDINATE LOCATION AND MOUNTING HEIGHT OF THE LIGHT FIXTURE IN THIS ROOM WITH EXHAUST FAN AND THE DUCT TO PROVIDE REQUIRED CLEARANCE.

10. ALL WIRING INSTALLATION FOR LIGHTING, POWER, AND TELECOMMUNICATIONS SHALL BE IN APPROVED METAL CONDUIT, EITHER CONCEALED OR SURFACE MTD.

US ARMY CORPS OF ENGINEERS
AFGHANISTAN ENGINEER DISTRICT

SYMBOL	DESCRIPTION	DATE	APPR.	SYMBOL	DESCRIPTION	DATE	APPR.

DESIGNED BY: DWN BY: CKD BY: REVIEWED BY: SUBMITTED BY:
DATE: XX-XX-XX DESIGN FILE NO.: DRAWING CODE: FILE NAME: PLOT SCALE: PLOT DATE: XX-XX-XX
REV. __

U.S. ARMY ENGINEER DISTRICT, AFGHANISTAN
CORPS OF ENGINEERS
APO AE 98338

ENGINEERING AND CONSTRUCTION DIVISION

AFGHANISTAN NATIONAL POLICE (ANP) DISTRICT HEADQUARTERS COMPOUNDS - 1 STORY HQ
VARIOUS LOCATIONS, AFGHANISTAN
1 STORY BUILDING

LIGHTING PLAN

SHEET REFERENCE NUMBER:
A
E-1

A1 Size 594mm x 841mm

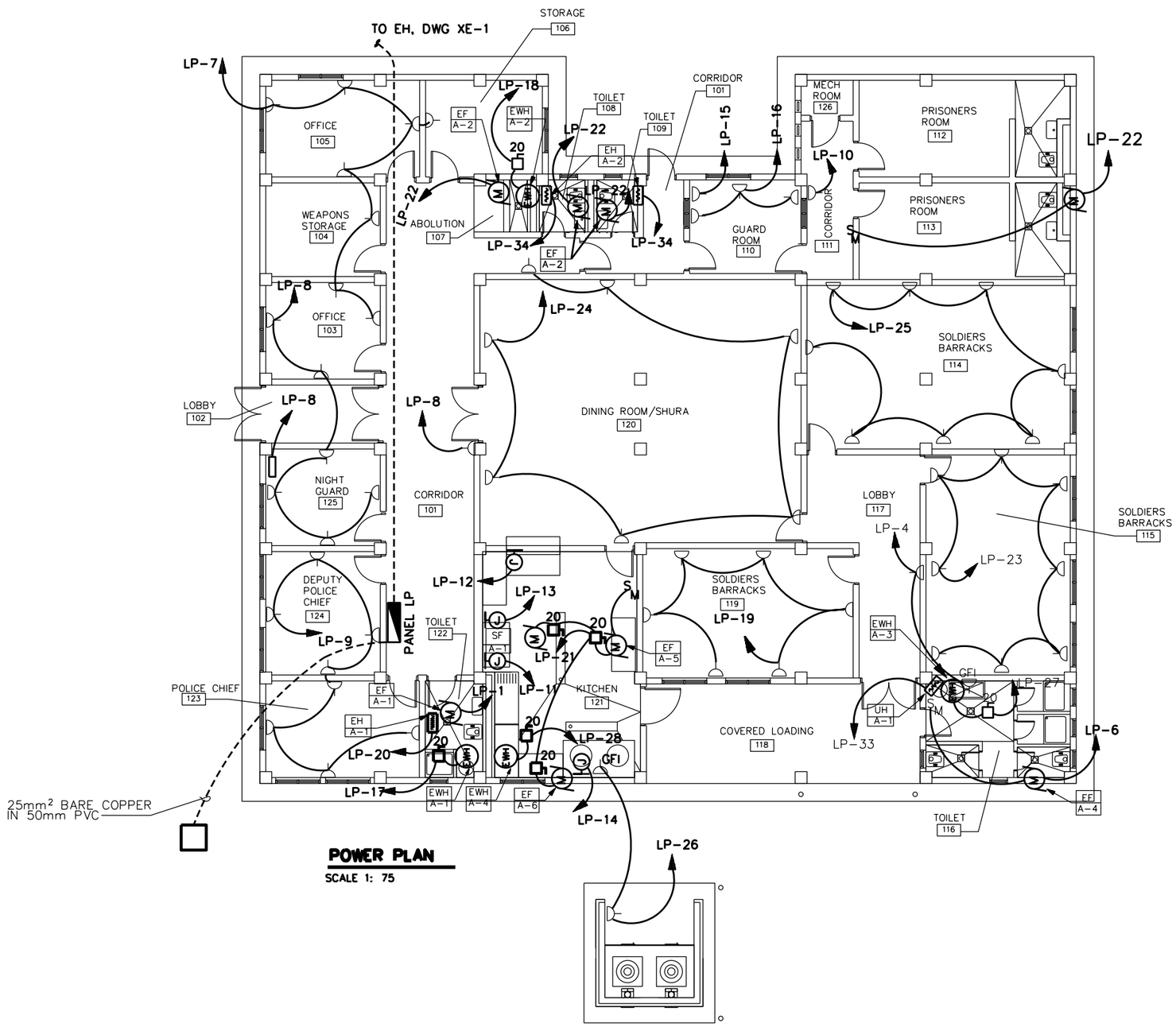

POWER PLAN

SCALE 1: 75

NOTES:

1. FOR LEGEND AND ABBREVIATIONS SEE DRAWING SE-1.
2. COORDINATE LOCATION OF ALL ELECTRICAL FIXTURES AND EQUIPMENT WITH ALL OTHER TRADES.
3. FOR ONE LINE DIAGRAM SEE DRAWING D/E-1, POWER PLANT.
4. COORDINATE LOCATION OF ALL ELECTRICAL FIXTURES AND EQUIPMENT WITH ALL OTHER TRADES.
5. FOR EXACT LOCATION OF MECHANICAL EQUIPMENT SEE MECHANICAL DRAWINGS.
6. EXHAUST FAN EF-A-1 AND EF-A-2 SHALL BE CONTROLLED BY THE LIGHT SWITCH IN THEIR RESPECTIVE ROOM.
7. EXHAUST FAN EF-A-3, EF-A-4, AND EF-A-5 SHALL BE CONTROLLED BY A MANUAL MOTOR STARTER FROM THE LOCATION AS SHOWN ON THIS DRAWING.
8. EXHAUST FAN EF-A-6 SHALL BE CONTROLLED BY A THERMOSTAT. REFER TO MECHANICAL DRAWING FOR LOCATION OF THE THERMOSTAT.
9. ALL WIRING INSTALLATION FOR LIGHTING, POWER, AND TELECOMMUNICATIONS SHALL BE IN APPROVED METAL CONDUIT, EITHER CONCEALED OR SURFACE MTD.

US ARMY CORPS OF ENGINEERS AFGHANISTAN ENGINEER DISTRICT

SYMBOL	DESCRIPTION	DATE	APPR.	SYMBOL	DESCRIPTION	DATE	APPR.

DESIGNED BY: | DATE: XX-XX-XX | REV. —
DWN BY: | CKD BY: | DESIGN FILE NO.
REVIEWED BY: | DRAWING CODE:
SUBMITTED BY: | FILE NAME: | PLOT SCALE: | PLOT DATE: XX-XX-XX

U.S. ARMY ENGINEER DISTRICT, AFGHANISTAN
CORPS OF ENGINEERS
APO AE 96338

ENGINEERING AND CONSTRUCTION DIVISION

AFGHANISTAN NATIONAL POLICE (ANP) DISTRICT HEADQUARTERS COMPOUNDS - 1 STORY HQ
VARIOUS LOCATIONS, AFGHANISTAN
1 STORY BUILDING

POWER PLAN

SHEET REFERENCE NUMBER:
A
E-2

A1 Size 594mm x 841mm

PANELBOARD LP FLUSH MOUNTED MINIMUM 22,000 ASYM. A.I.C. MIN.

AMP. MAIN LUGS (OR) 150 AMP. MAIN BREAKER W/ 150 AMP. TRIP

CIRCUIT BREAKER TYPE 380/220 VOLTS 3 PHASE 4 WIRE 150 AMP. BUS 50 HZ

CKT. NO.	TRIP AMPS	NO. POLES	WIRE mm2	GND mm2	CONDUIT mm	LOAD SERVED	LOAD-V.A. A0	LOAD-V.A. B0	LOAD-V.A. C0	LOAD-V.A. A0	LOAD-V.A. B0	LOAD-V.A. C0	LOAD SERVED	CONDUIT mm	GND 2 mm	WIRE 2 mm	NO. POLES	TRIP AMPS	CKT. NO.
1	20	1	4	4	20	LIGHTING,FANS, EF-A-1	3230			1440			LIGHTING	20	4	4	1	20	2
3	20	1	4	4	20	FANS		2000			360		RECEPTACLES	20	4	4	1	20	4
5	20	1				SPARE						3415	LIGHTING, FANS,EF-A-4	20	4	4	1	20	6
7	20	1	4	4	20	RECEPTACLES	1440			1260			RECEPTACLES	20	4	4	1	20	8
9	20	1	4	4	20	RECEPTACLES		1440			180		RECEPTACLE	20	4	4	1	20	10
11	20	1	4	4	20	JB FOR REFRIGERATOR/FREEZER			2000			2000	JB FOR REFRIGERATOR/FREEZER	20	4	4	1	20	12
13	20	1	4	4	20	JB FOR REFRIGERATOR/FREEZER	2000			2000			JB FOR REFRIGERATOR/FREEZER	20	4	4	1	20	14
15	20	1	4	4	20	RECEPTACLES		500			540		RECEPTACLES	20	4	4	1	20	16
17	20	1	4	4	20	ELECTRIC WATER HEATER A-1			2500			9000	ELECTRIC WATER HEATER A-2	20	6	10	1	50	18
19	20	1	4	4	20	RECEPTACLES	1080			1550			EH-A-1	20	4	4	1	20	20
21	20	1	4	4	20	EXHAUST FAN EF-A-5, A-6		1585			2800		LIGHTING,FANS,EF-A-2,EF-A-3	20	4	4	1	20	22
23	20	1	4	4	20	RECEPTACLES			1440			1260	RECEPTACLES	20	4	4	1	20	24
25	20	1	4	4	20	RECEPTACLES	1440			720			RECEPTACLES	20	4	4	1	20	26
27	20	3	4	4	20	EWH-A-3		3000			12000		ELECTRIC WATER HEATER A-4	20	6	16	1	70	28
29	↓	↓	↓	↓	↓	↓			3000				SPARE				1	20	30
31							3000						SPARE				1	20	32
33	20	1	4	4	20	UH-A-1		3000			2080		EH-A-2	20	4	4	1	20	34
35	20	1				SPARE							SPARE				1	20	36
37	20	1				SPARE							SPARE				1	20	38
39	20	1				SPARE							SPACE						40
41						SPACE							SPACE						42
							12190	11525	8940	6970	17960	15675							

TOTAL CONN. LOAD 73.26 KVA. 85 % DEMAND = ESTIMATED DEMAND LOAD: 62.27 kVA

TOTAL CONN. LOAD PER PHASE (KVA): A0 19.16 B0 29.49 C0 24.62

SUPPLIED FROM POWER PLANT SWITCHBOARD

NOTES:

1. FOR LEGEND AND ABBREVIATIONS SEE DRAWING SE-1.
2. CONTRACTOR SHALL CONFIRM THAT ALL CIRCUIT RATINGS ARE BASED ON THE ACTUAL NAMEPLATE OF THE SUPPLIED EQUIPMENT.

US ARMY CORPS OF ENGINEERS AFGHANISTAN ENGINEER DISTRICT

SYMBOL	DESCRIPTION	DATE	APPR.	SYMBOL	DESCRIPTION	DATE	APPR.

U.S. ARMY ENGINEER DISTRICT, AFGHANISTAN
CORPS OF ENGINEERS
APO AE 96338

DESIGNED BY: DATE: XX-XX-XX
DWN BY: CKD BY: DESIGN FILE NO.
REVIEWED BY: DRAWING CODE
SUBMITTED BY: FILE NAME:
PLOT SCALE:
PLOT DATE: XX-XX-XX
REV.

ENGINEERING AND CONSTRUCTION DIVISION

AFGHANISTAN NATIONAL POLICE (ANP) DISTRICT HEADQUARTERS COMPOUNDS - 1 STORY HQ
VARIOUS LOCATIONS, AFGHANISTAN
1 STORY BUILDING

PANEL SCHEDULE

SHEET REFERENCE NUMBER:
A
E-3

A1 Size 594mm x 841mm

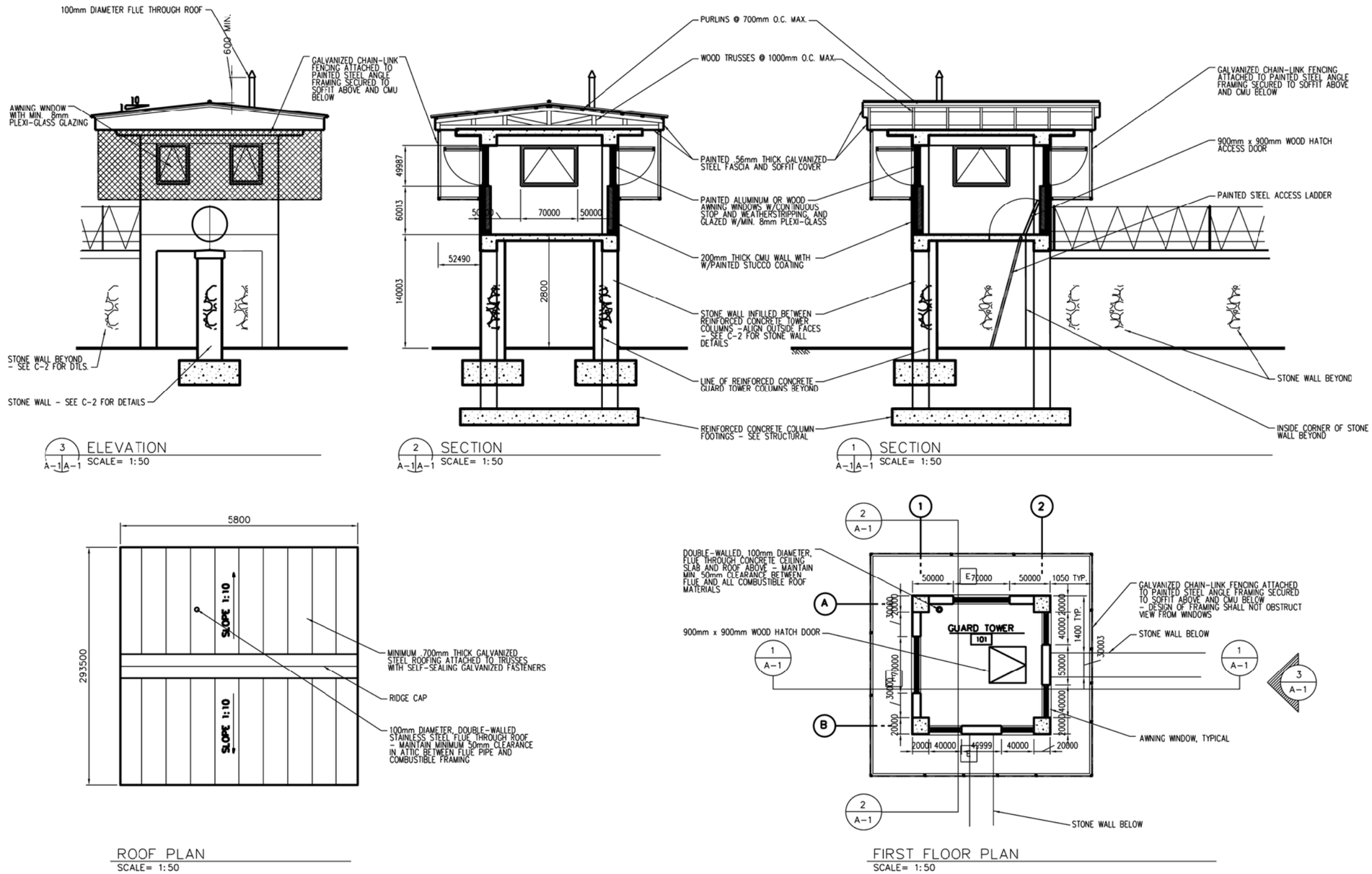

US ARMY CORPS OF ENGINEERS AFGHANISTAN ENGINEER DISTRICT

SYMBOL	DESCRIPTION	DATE	APPR.

DESIGNED BY: | DATE: XX-XX-XX | REV.
DWN BY: | CKD BY: | DESIGN FILE NO.
REVIEWED BY: | DRAWING CODE:
SUBMITTED BY: | FILE NAME: | PLOT SCALE: | PLOT DATE: XX-XX-XX

U.S. ARMY ENGINEER DISTRICT, AFGHANISTAN
CORPS OF ENGINEERS
APO AE 96338

ENGINEERING AND CONSTRUCTION DIVISION

AFGHANISTAN NATIONAL POLICE (ANP) DISTRICT HEADQUARTERS COMPOUNDS - 1 STORY HQ
VARIOUS LOCATIONS, AFGHANISTAN
GUARD TOWER

FLOOR PLAN, SECTION ELEVATION AND ROOF PLAN

SHEET REFERENCE NUMBER:
B
A-1

A1 Size 594mm x 841mm

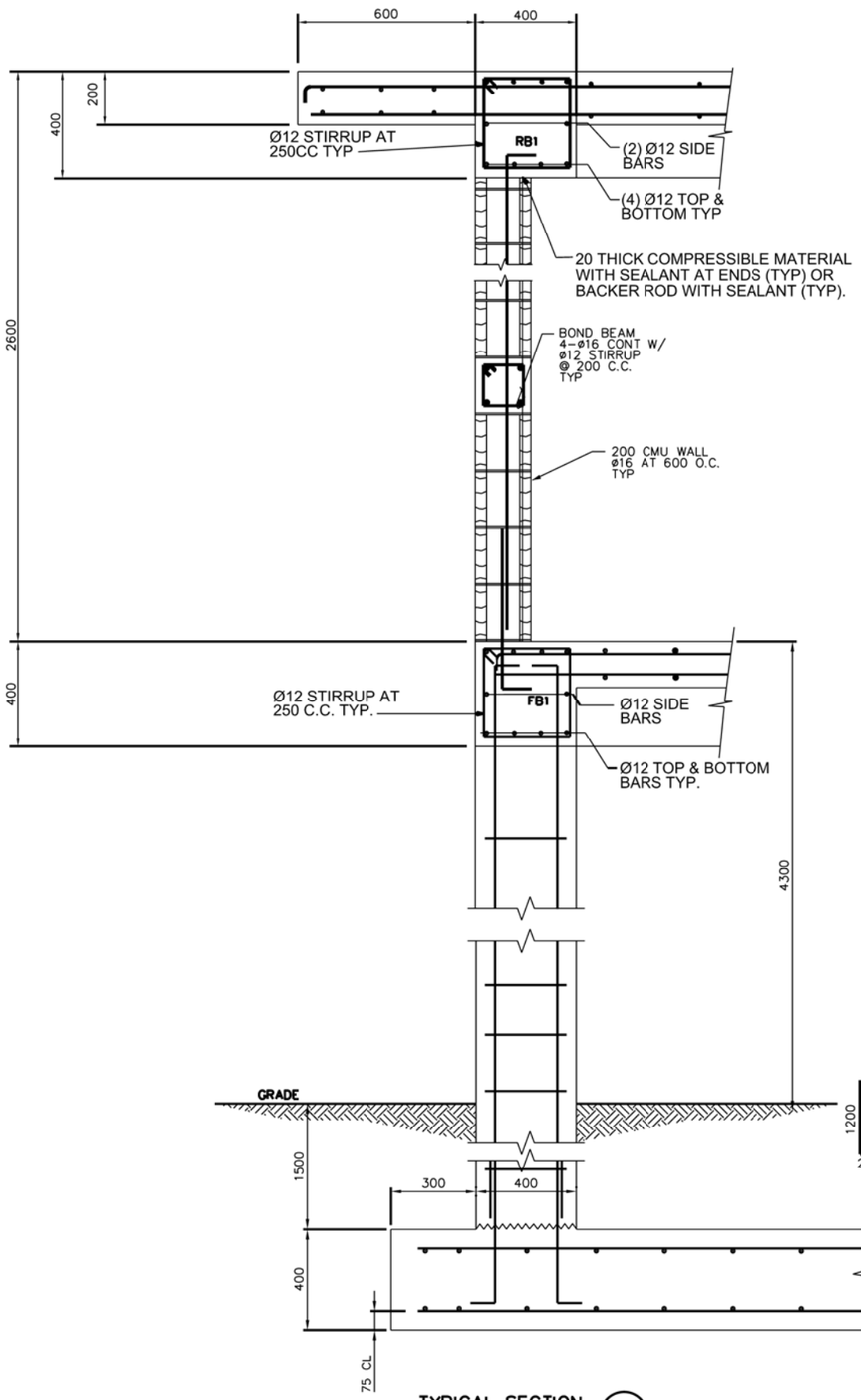

TYPICAL SECTION (A-A / S-1 | S-1)
SCALE=NTS

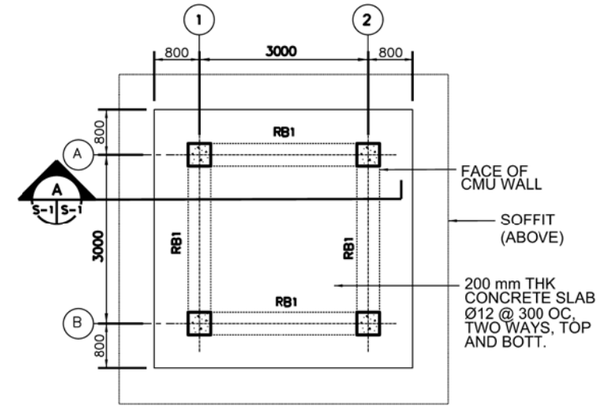

ROOF FRAMING PLAN
SCALE= 1:50

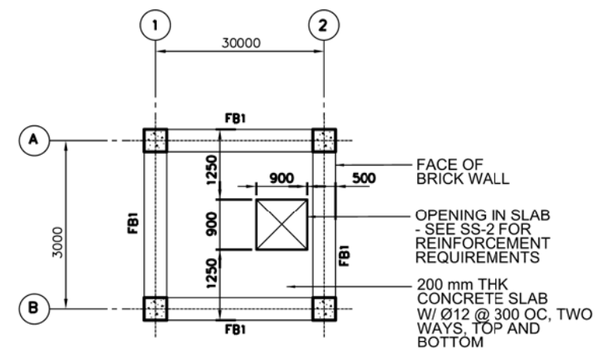

FIRST FLOOR PLAN
SCALE= 1:50

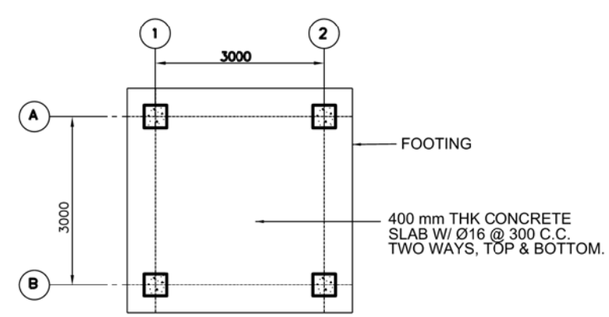

FOUNDATION SLAB PLAN
SCALE= 1:50

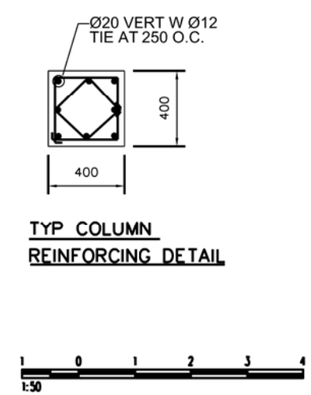

TYP COLUMN REINFORCING DETAIL

GENERAL NOTES

1. DESIGN LOADS (SERVICE)

   LIVE LOADS:
   ROOF: 1.0 KPA (20 PSF)
   OTHERS: 4.8 KPA (100 PSF)
   8.9 KN (2.0 K)
   CONCENTRATED LOAD

   WIND LOADS PER IBC-2003:
   USING A "3-SECOND" WIND VELOCITY OF 125 KPH
   EXPOSURE C AND IMPORTANCE FACTOR I=1.0

   EARTHQUAKE LOADS PER IBC-2003:
   USING A SEISMICITY: Ss=1.65g AND S_1 =0.75g

2. MATERIALS:

   CONCRETE: 28 MPa (4 KSI)
   CYLINDER STRENGTH AT 28 DAYS

   REINFORCING: ASTM A615 GRADE 60 (60 KSI)

3. WORK THESE STRUCTURAL DRAWINGS WITH THE STANDARD-DETAILS DRAWINGS.

4. A RELATIVE (DATUM) FINISH FLOOR ELEVATION EQUAL TO 0.00M IS USED AS REFERENCE ELEVATION FOR ALL STRUCTURAL DRAWINGS. COORDINATE WITH SITE SPECIFIC GRADING PLAN TO BE PROVIDED BY CONTRACTOR.

5. FOUNDATIONS ARE DESIGNED USING AN ALLOWABLE BEARING PRESSURE OF 0.75 KG/SQ. CM (1500 PSF), AND BOTTOM OF FOOTINGS ARE PLACED AS SHOWN ON DRAWINGS. GEOTECHNICAL INVESTIGATION SHALL CONFIRM BEARING CAPACITY TO BE NO LESS THAN 0.75 KG/SQ CM. IF GEOTECHNICAL INVESTIGATION SHOWS LESS THAN 0.75 KG/SQ CM THE CONTRACTOR SHALL REDESIGN FOOTINGS BASED ON THE GEOTECHNICAL INVESTIGATION. SEE SPECIFICATION 01015 PARAGRAPH, GEOTECHNICAL, FOUNDATION AND SURVEY.

US ARMY CORPS OF ENGINEERS AFGHANISTAN ENGINEER DISTRICT

SYMBOL	DESCRIPTION	DATE	APPR.	SYMBOL	DESCRIPTION	DATE	APPR.

DESIGNED BY: DATE: REV.
DWN BY: CKD BY: XX-XX-XX DESIGN FILE NO.
REVIEWED BY: DRAWING CODE:
SUBMITTED BY: FILE NAME: PLOT SCALE: PLOT DATE: XXXX-XX

U.S. ARMY ENGINEER DISTRICT, AFGHANISTAN
CORPS OF ENGINEERS
APO AE 96338

ENGINEERING AND CONSTRUCTION DIVISION

AFGHANISTAN NATIONAL POLICE (ANP) DISTRICT HEADQUARTERS COMPOUNDS - 1 STORY HQ
VARIOUS LOCATIONS, AFGHANISTAN
GUARD TOWER

FOUNDATION AND SLAB PLAN
ROOF FRAMING PLAN

SHEET REFERENCE NUMBER:
B
S-1
SHEET --- OF ---

A1 Size 594mm x 841mm

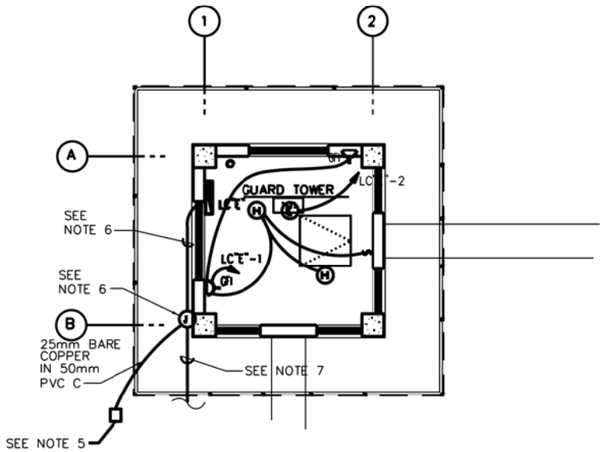

LIGHTING & POWER
NOT TO SCALE

LOAD CENTER "E" GUARD TOWER #1, 2, 3, & 4

40 AMP MAIN CIRCUIT BREAKER, 220V, 1 PH, 2W, 50 HZ, 100A BUS, 10000 AIC

CKT. NO.	TRIP AMPS	NO. POLES	WIRE MM^2	GND MM^2	CONDUIT MM	LOAD SERVED	LOAD - V.A.
1	20	1	4	4	20	LIGHTING & RECEPTACLES	560
2	20	1	4	4	20	SPOT LIGHT, 1000W	1000
3	20	1				SPARE	
4	20	1				SPARE	
5						SPACE	
6						SPACE	
7						SPACE	
8						SPACE	
						TOTAL CONN. LOAD	1560

TOTAL CONN. LOAD 1.56 KVA.
100 %DEMAND = EST. DEMAND LOAD: 1.56 SERVED FROM: PPSB

NOTES:

1. FOR LEGEND, ABBREVIATIONS AND LIGHT FIXTURE SCHEDULE SEE DRAWING SE-1.
2. COORDINATE LOCATION OF ALL ELECTRICAL DEVICES AND EQUIPMENT WITH ALL OTHER TRADES.
3. ALL WIRING SHALL BE IN CONCEALED OR SURFACE MOUNTED METAL CONDUIT.
4. PLAN IS TYPICAL FOR ALL GUARD TOWERS 1-4.
5. FOR GROUNDING ROD ACCESS BOX DETAIL SEE SHEET SE-2.
6. PROVIDE 50 METAL C WITH TWO 16mm2 COPPER CONDUCTORS AND 16mm2 COPPER GROUNDING CONDUCTOR TO JUNCTION BOX. FOR JUNCTION BOX DETAIL SEE SHEET SE-5.
7. FOR CONTINUATION TO SECONDARY DISTRIBUTION SYSTEM SEE DRAWING XE-1.
8. PROVIDE MANUFACTURER SUPPLIED RED, BLUE, AND BLACK LAMPS.
9. FOR BUILDING NORTH ORIENTATION SEE SHEET C-1.

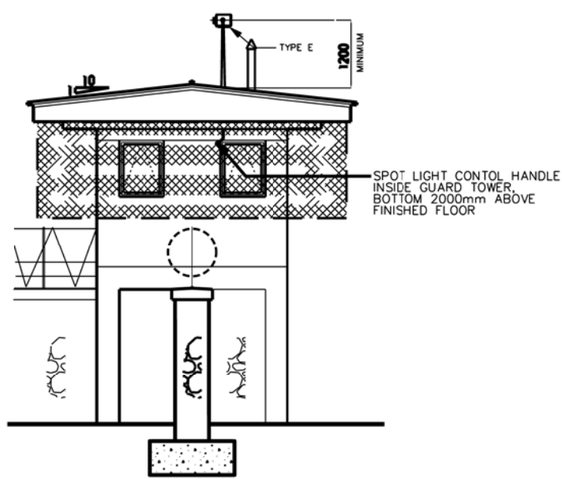

SPOTLIGHT MOUNTING DETAIL
NOT TO SCALE

US ARMY CORPS OF ENGINEERS
AFGHANISTAN ENGINEER DISTRICT

SYMBOL	DESCRIPTION	DATE	APPR.	SYMBOL	DESCRIPTION	DATE	APPR.

DESIGNED BY: DATE: XX-XX-XX
DWN BY: CKD BY: DESIGN FILE NO.
REVIEWED BY: DRAWING CODE
SUBMITTED BY: FILE NAME: PLOT SCALE: PLOT DATE: XX-XX-XX
REV.

U.S. ARMY ENGINEER DISTRICT, AFGHANISTAN
CORPS OF ENGINEERS
APO AE 96338

ENGINEERING AND CONSTRUCTION DIVISION

AFGHANISTAN NATIONAL POLICE (ANP) DISTRICT HEADQUARTERS COMPOUNDS - 1 STORY HQ
VARIOUS LOCATIONS, AFGHANISTAN
GUARD TOWERS

LIGHTING & POWER PLAN

SHEET REFERENCE NUMBER:
B
E-1

A1 Size 594mm x 841mm

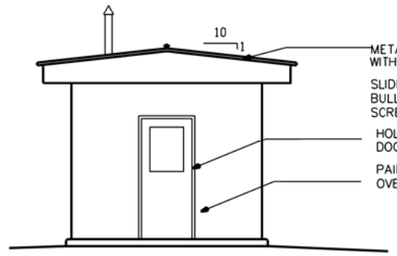

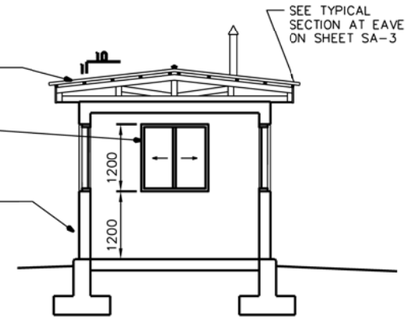

ELEVATION
SCALE=1:50

SECTION
SCALE=1:50

GENERAL NOTES:

1. ALL CMU WALLS AND CEILINGS SHALL BE PLASTERED AND PAINTED.
2. CONTRACTOR SHALL CONFIGURE THE METAL ROOFING AS SHOWN AND CONSTRUCT WITH APPROPRIATE WOOD FRAMING.
3. FLOOR SHALL BE SEALED CONCRETE.
4. PROVIDE WINDOW UNITS MEETING UL 752, LEVEL 5, BUT NO LESS THAN 16 MM LAMINATED SINGLE GLAZED. THIS STANDARD SHALL APPLY TO ALL WINDOW UNITS IN THE GUARD SHACK.

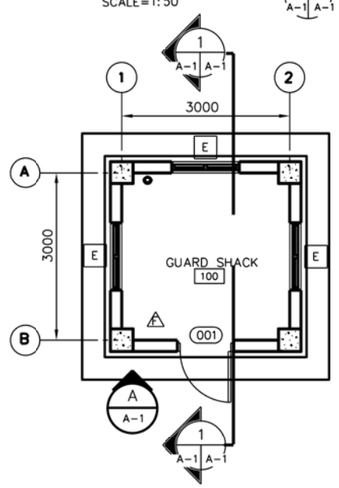

FIRST FLOOR PLAN
SCALE=1:50

⚠ PROVIDE PORTABLE FIRE EXTINGUISHERS, ABC DRY CHEMICAL 4A:60B:C

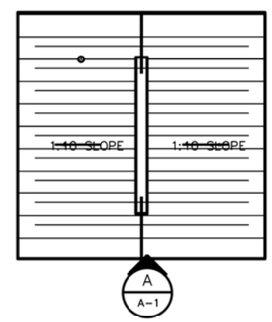

ROOF PLAN
SCALE=1:50

ROOM FINISH SCHEDULE LEGEND

FLOOR TYPE
F1 SEALED CONCRETE

FLOOR COLOR
1 SEALED CONCRETE – NATURAL FINISH

WALL TYPE
W1 PAINTED CMU

WALL COLOR
20 PAINTED CMU –HEMPEL, 1005–Y50R–25400,

CEILING TYPE
C1 PAINTED EXPOSED STRUCTURE

CEILING COLOR
30 PAINTED EXPOSED STRUCTURE – HEMPEL, 0502–Y–15420, OFF WHITE

ROOM FINISH SCHEDULE

ROOM NO.	ROOM NAME	FLOOR		BASE		WALLS		CEILING			REMARKS
		MAT'L.	COLOR	MAT'L.	COLOR	MAT'L.	COLOR	MAT'L.	COLOR	HEIGHT	
101	GUARD SHACK	F1	1	--	--	W1	20	C1	30	3400	

DOOR SCHEDULE

DOOR							FRAME				FIRE LABEL	HDW SET	REMARKS
NO.	LOCATION	TYPE	MAT'L	WIDTH	HEIGHT	THICK	HEAD	JAMB	SILL	MAT"L			
001	GUARD SHACK	F	HM	1800	2150	45	H-1/SA2	J-1/SA2	S-1/SA2	HM	--	2	

ROOM FINISH SCHEDULE NOTES:

1. ALL WALL PENETRATIONS SHALL BE SEALED TO PROVIDE A NEAT APPEARANCE. PENETRATIONS OF EXTERIOR WALLS SHALL BE SEALED TO BE WATER–TIGHT.
2. SEALANTS SHALL MATCH THE COLOR OF ADJACENT SURFACES.

US ARMY CORPS OF ENGINEERS AFGHANISTAN ENGINEER DISTRICT

SYMBOL	DESCRIPTION	DATE	APPR	SYMBOL	DESCRIPTION	DATE	APPR

DESIGNED BY: DATE: XX-XX-XX REV: __
DWN BY: CKD BY: DESIGN FILE NO.
DRAWING CODE
REVIEWED BY: FILE NAME:
SUBMITTED BY: PLOT SCALE:
PLOT DATE: XX-XX-XX

U.S. ARMY ENGINEER DISTRICT, AFGHANISTAN
CORPS OF ENGINEERS
APO AE 96338

ENGINEERING AND CONSTRUCTION DIVISION

AFGHANISTAN NATIONAL POLICE (ANP) DISTRICT HEADQUARTERS COMPOUNDS - 1 STORY HQ
VARIOUS LOCATIONS, AFGHANISTAN
GUARD SHACK

FLOOR PLAN AND ELEVATIONS

SHEET REFERENCE NUMBER:
C
A-1

A1 Size 594mm x 841mm

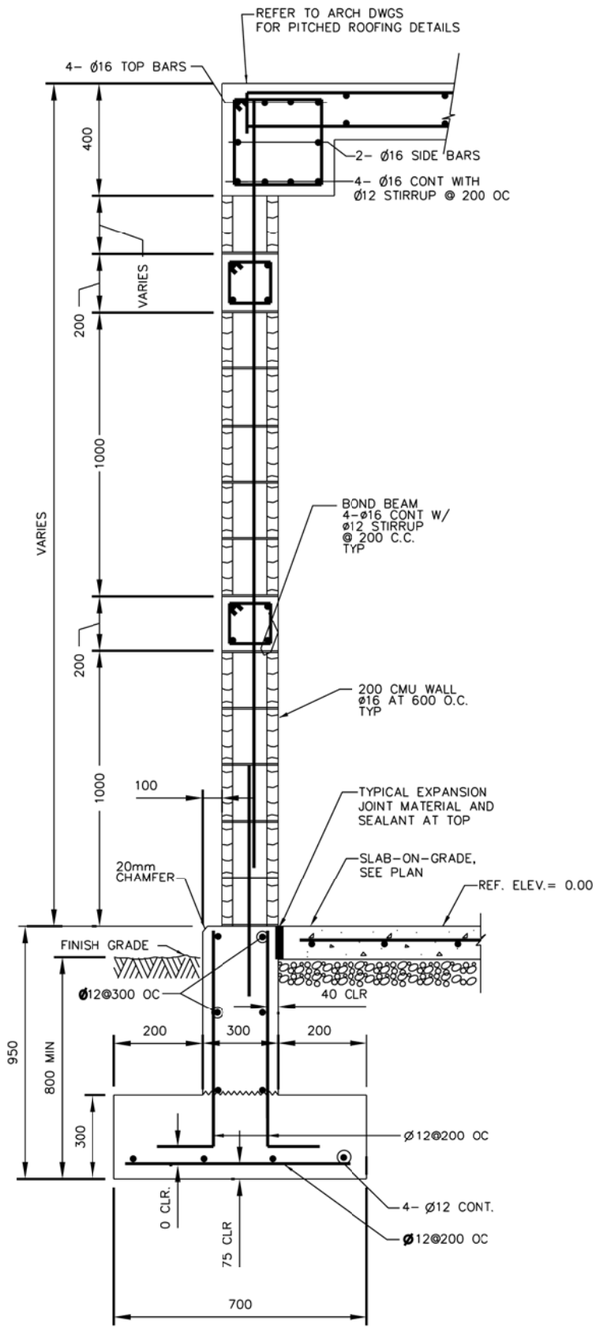

TYP EXTERIOR WALL SECTION
NOT TO SCALE

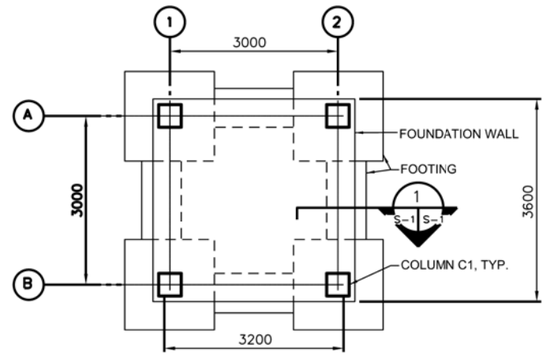

ALL SLABS ON GRADE (TYP): 150 MM THICK CONC SLAB ON GRADE WITH Ø12@ 300 MM ON CENTER TWO WAYS. 100mm THK CAPILLARY WATER BARRIER ON 95% COMPACTED GROUND.

FOUNDATION AND SLAB PLAN
SCALE= 1:50

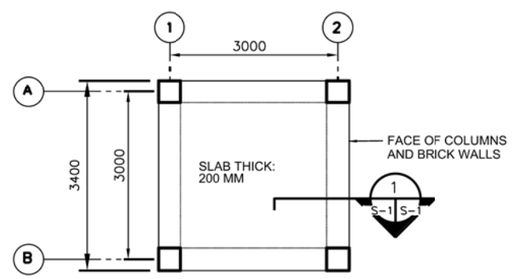

TOP BAR: Ø12@ 300 CENTER TWO WAYS
BOTTOM BAR: Ø12@ 300 ON CENTER TWO WAYS

ROOF FRAMING AND SLAB PLAN
SCALE= 1:50

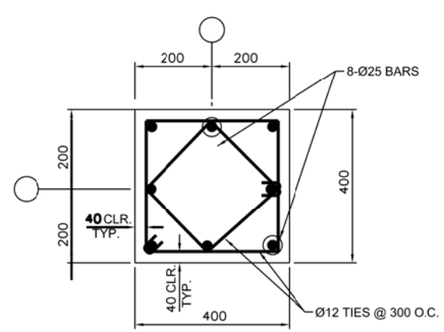

C1
COLUMN TYPE

NOTE: SEE WELL HOUSE (E) STRUCTURAL PLATES FOR COLUMN DETAILS AND SCHEDULES

GENERAL NOTES

1. DESIGN LOADS (SERVICE)

   LIVE LOADS:

   ROOF: 1.0 KPA (20 PSF)
   OTHERS: 4.8 KPA (100 PSF)
   8.9 KN (2.0 K) CONCENTRATED LOAD

   WIND LOADS PER IBC–2003

   USING A "3–SECOND" WIND VELOCITY OF 125 KPH
   EXPOSURE C AND IMPORTANCE FACTOR I=1.0

   EARTHQUAKE LOADS PER IBC–2003:

   USING A SEISMICITY: Ss=1.65g AND S_1 =0.75g

2. MATERIALS:

   CONCRETE: 28 MPa (4 KSI)
   CYLINDER STRENGTH AT 28 DAYS

   REINFORCING: ASTM A615 GRADE 60 (60 KSI)

3. WORK THESE STRUCTURAL DRAWINGS WITH THE STANDARD–DETAILS DRAWINGS.

4. A RELATIVE (DATUM) FINISH FLOOR ELEVATION EQUAL TO 0.00 M. IS USED AS REFERENCE ELEVATION FOR ALL STRUCTURAL DRAWINGS. COORDINATE WITH SITE SPECIFIC GRADING PLAN TO BE PROVIDED BY CONTRACTOR.

5. FOUNDATIONS ARE DESIGNED USING AN ALLOWABLE BEARING PRESSURE OF 0.75 KG/SQ. CM (1500 PSF), AND BOTTOM OF FOOTINGS ARE PLACED AS SHOWN ON DRAWINGS. GEOTECHNICAL INVESTIGATION SHALL CONFIRM BEARING CAPACITY TO BE NO LESS THAN 0.75 KG/SQ CM. IF GEOTECHNICAL INVESTIGATION SHOWS LESS THAN 0.75 KG/SQ CM THE CONTRACTOR SHALL REDESIGN FOOTINGS BASED ON THE GEOTECHNICAL INVESTIGATION. SEE SPECIFICAITON 01015 PARAGRAPH, GEOTECHNICAL, FOUNDATION AND SURVEY.

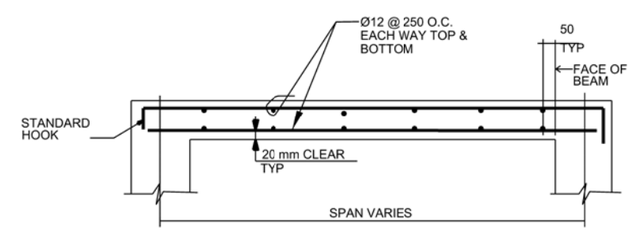

TYPICAL SECTION FOR STRUCTURAL SLABS
NOT TO SCALE

1 0 1 2 3 4
1:50

US ARMY CORPS OF ENGINEERS AFGHANISTAN ENGINEER DISTRICT

SYMBOL	DESCRIPTION	DATE	APPR	SYMBOL	DESCRIPTION	DATE	APPR

DESIGNED BY: DATE: XX-XX-XX REV: __
DWN BY: CKD BY: DESIGN FILE NO. DRAWING CODE
REVIEWED BY: FILE NAME: PLOT SCALE:
SUBMITTED BY: PLOT DATE: XX-XX-XX

U.S. ARMY ENGINEER DISTRICT, AFGHANISTAN
CORPS OF ENGINEERS
APO AE 96338

ENGINEERING AND CONSTRUCTION DIVISION

AFGHANISTAN NATIONAL POLICE (ANP) DISTRICT HEADQUARTERS COMPOUNDS - 1 STORY HQ
VARIOUS LOCATIONS, AFGHANISTAN
GUARD SHACKS

FOUNDATION AND SLAB PLAN
ROOF FRAMING PLAN

SHEET REFERENCE NUMBER:
C
S-1
SHEET --- OF ---

A1 Size 594mm x 841mm

NOTES:

1. FOR LEGEND AND ABBREVIATIONS SEE DRAWING SE-1.
2. EMERGENCY LIGHT SHALL BE UNSWITCHED.
3. FOR LIGHT FIXTURE SCHEDULE SEE DRAWING SE-1.
4. COORDINATE LOCATION OF ALL ELECTRICAL FIXTURES AND MECHANICAL EQUIPMENT WITH ALL OTHER TRADES.
5. ALL WIRING SHALL BE CONCEALED OR SURFACE MOUNTED IN METAL CONDUIT.
6. PLAN IS TYPICAL FOR GUARD SHACK #1 AND #2. SECONDARY SERVICE IS SUPPLIED FROM PANEL LOAD CENTER "C" (LC "C") LOCATED IN THE GUARD TOWER #2.
7. SEE DRAWING XE-1 FOR LOCATION OF GUARD SHACKS.
8. FOR GROUNDING ROD ACCESS BOX SEE SHEET SE-2.
9. FOR SECONDARY DISTRIBUTION SEE DRAWING XE-1.
10. PROVIDE 53mm RGS C STUBBED OUT 1.5M, 600 BFG, TO BE TIED INTO SITE COMM CH AND DIRECT BURIED DUCT SYSTEM.
11. FOR BUILDING NORTH ORIENTATION SEE SHEET C-1.

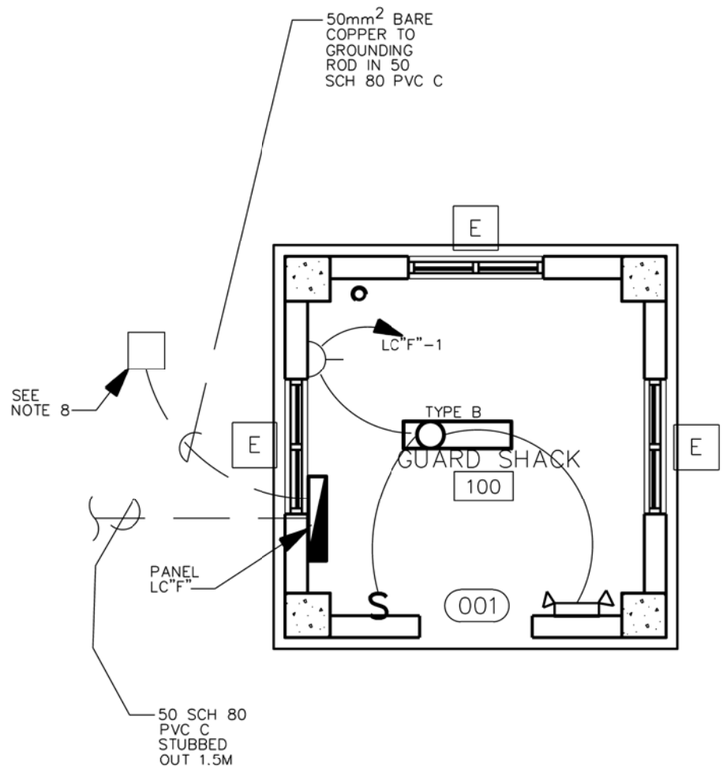

LIGHTING & POWER
SCALE: 1:25

LOAD CENTER "F" GUARD SHACK #1 & #2

40 AMP MAIN CIRCUIT BREAKER, 220V, 1 PH, 2W, 50 HZ, 100A BUS, 10000 AIC

CKT. NO.	TRIP AMPS	NO. POLES	WIRE MM²	GND MM²	CONDUIT MM	LOAD SERVED	LOAD-V.A
1	20	1	4	4	20	LIGHTING& RECEP.GUARD SHACK#2	300
2	25	1	6	6	20	ELECT.HEAT GUARD SHACK#2	4000
3	20	1				SPARE	
4	20	1				SPARE	
5						SPACE	
6						SPACE	
7						SPACE	
8						SPACE	
						TOTAL CONN. LOAD	4300

TOTAL CONN. LOAD 4.30 KVA.
100 %DEMAND = EST. DEMAND LOAD: 4.30 SERVED FROM: LC-"C"

1 .50 0 1 1.5
1:25

US ARMY CORPS OF ENGINEERS AFGHANISTAN ENGINEER DISTRICT

SYMBOL	DESCRIPTION	DATE	APPR.	SYMBOL	DESCRIPTION	DATE	APPR.

DESIGNED BY: DATE: XX-XX-XX REV.
DWN BY: CKD BY: DESIGN FILE NO.
REVIEWED BY: DRAWING CODE:
SUBMITTED BY: FILE NAME: PLOT SCALE: PLOT DATE: XX-XX-XX

U.S. ARMY ENGINEER DISTRICT, AFGHANISTAN
CORPS OF ENGINEERS
APO AE 96338

ENGINEERING AND CONSTRUCTION DIVISION

AFGHANISTAN NATIONAL POLICE (ANP) DISTRICT HEADQUARTERS COMPOUNDS - 1 STORY HQ
VARIOUS LOCATIONS, AFGHANISTAN
GUARD SHACKS
LIGHTING PLAN

SHEET REFERENCE NUMBER:
C
E-1

A1 Size 594mm x 841mm

NOTES:

1. FOR LEGEND AND ABBREVIATIONS SEE DRAWING SE-1.
2. FOR POWER PLANT GROUNDING DETAILS SEE SHEET SE-5.
3. CONTRACTOR SHALL CONFIRM THAT ALL FINAL CIRCUIT RATINGS ARE BASED ON THE ACTUAL NAMEPLATE OF THE SUPPLIED EQUIPMENT.
4. ALL PPSB SECONDARY DISTRIBUTION CIRCUIT CONDUITS SHALL BE RAN FROM THE BOTTOM OF PPSB THROUGH GENERATOR CONCRETE SLAB TO ELECRIC HAND HOLES IN SCHEDULE 40 PVC CONDUIT.
5. ALL SECONDARY DISTRIBUTION CABLES SHALL BE 600V – FOUR CORE OR TWO CORE (AS INDICATED) COPPER CONDUCTOR PVC INSULATED PVC SHEATHED CABLES (CU/PVC/PVC).
6. THE POWER PLANT SWITCHBOARD SHALL BE A MANUFACTURERS STANDARD PRODUCT WITH MOLDED CASE CKT BREAKERS, DEAD FRONT CONSTRUCTION IN AN APPROVED IP54 ENCLOSURE.
7. FOR A TYPICAL POWER PLANT EQUIPMENT LAYOUT SEE THE GROUNDING PLAN ON SHEET SE-5.

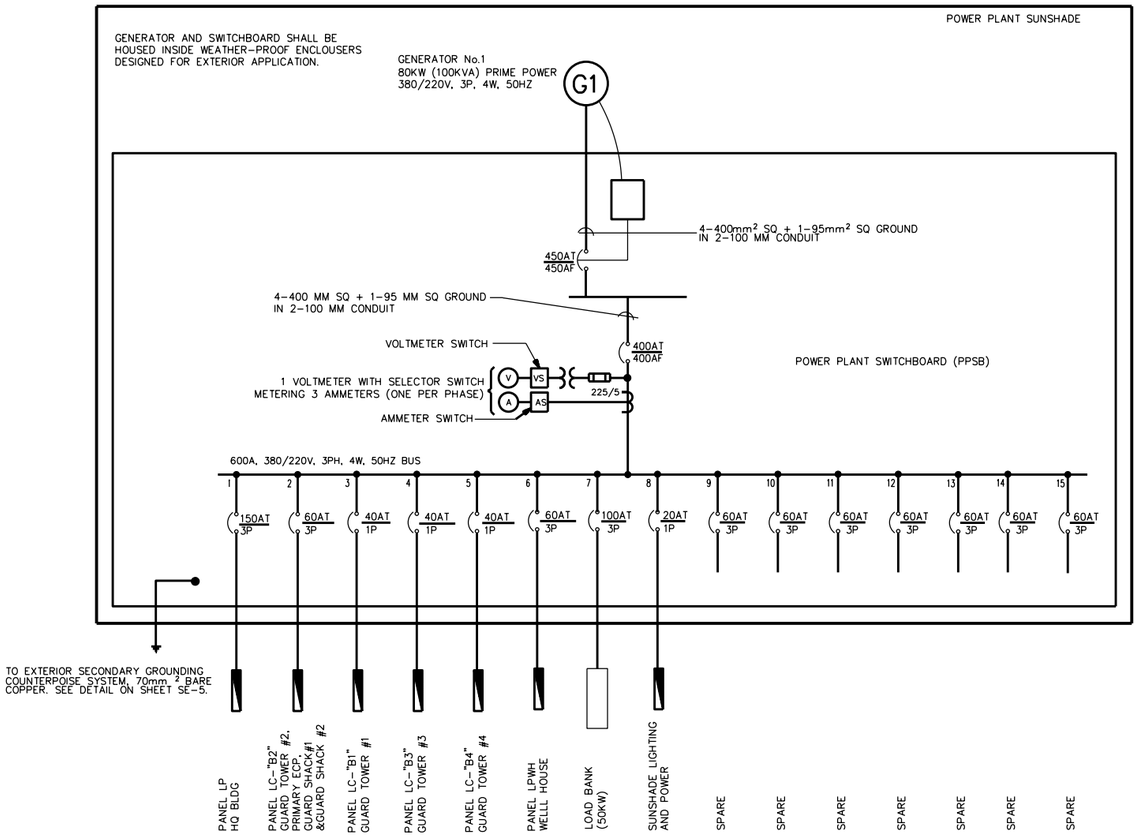

ONE LINE DIAGRAM
NOT TO SCALE

PANELBOARD: PPSB
MOUNTED: FLOOR
ASYM. A.I.C. MIN: MINIMUM 22,000
MAIN BREAKER (AT/AF): 300/400
VOLTAGE RATING: 380/220V, 3PH, 4W, 50HZ
BUS AMP. RATING: 400

CKT. NO.	TRIP AMPS	NO. POLES	WIRE MM²	GND MM²	CONDUIT MM	CONNECTED	REMARKS
1	150	3	70	50	75	73.26	PANEL LP, HEADQUARTERS BUILDING
2	60	3	16	6	38	10.16	PANEL LC-"B2": GUARD TOWER #2, PRIMARY ECP, GUARD SHACK #1, GUARD SHACK #2
3	40	1	10	6	25	1.56	PANEL LC-"B1": GUARD TOWER #1
4	40	1	25	16	38	1.56	PANEL LC-"B3": GUARD TOWER #3
5	40	1	25	16	38	1.56	PANEL LC-"B4": GUARD TOWER #4
6	60	3	16	6	38	9.81	PANEL LPWH,WELL HOUSE BUILDING
7	100	3	35	10	38		LOAD BANK
8	20	1	6	4	25	0.51	SUNSHADE LIGHTING AND POWER
9	60	3					SPARE
10	60	3					SPARE
11	60	3					SPARE
12	60	3					SPARE
13	60	3					SPARE
14	60	3					SPARE
15	60	3					SPARE
					TOTAL CONNECTED LOAD	98.42 KVA	

CONN. LOAD: 98.42 KVA 80 % DEMAND = EST DEM LOAD 78.74 KVA
SUPPLIED FROM: GENERATORS

78.74 KVA x 1.20 (SPARE) = 94.49 KVA = 75.52 KW

US ARMY CORPS OF ENGINEERS AFGHANISTAN ENGINEER DISTRICT

SYMBOL	DESCRIPTION	DATE	APPR.	SYMBOL	DESCRIPTION	DATE	APPR.

DESIGNED BY: DWN BY: CKD BY: REVIEWED BY: SUBMITTED BY: DATE: XX-XX-XX DESIGN FILE NO.: DRAWING CODE: FILE NAME: PLOT SCALE: PLOT DATE: XX-XX-XX REV. —

U.S. ARMY ENGINEER DISTRICT, AFGHANISTAN CORPS OF ENGINEERS APO AE 96338

ENGINEERING AND CONSTRUCTION DIVISION

AFGHANISTAN NATIONAL POLICE (ANP) DISTRICT HEADQUARTERS COMPOUNDS - 1 STORY HQ
VARIOUS LOCATIONS, AFGHANISTAN
POWER PLANT

ONE LINE DIAGRAM

SHEET REFERENCE NUMBER:
D
E-1

A1 Size 594mm x 841mm

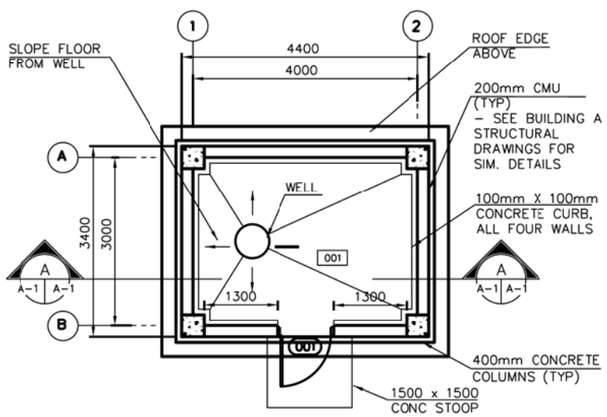

FLOOR PLAN
SCALE=1 : 50

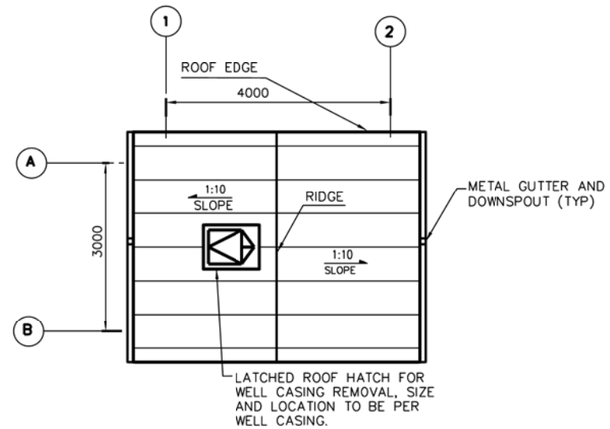

ROOF PLAN
SCALE= 1:50

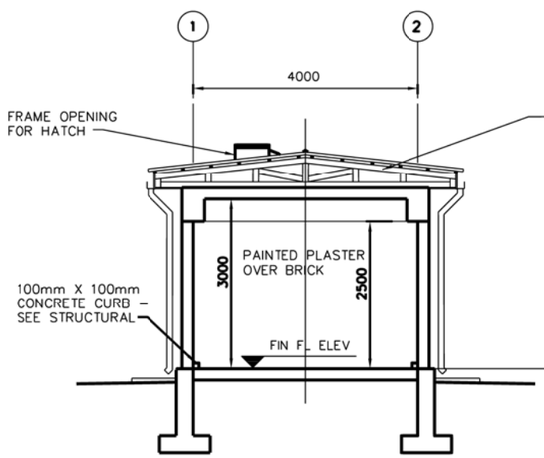

BUILDING SECTION A–A
SCALE=1:100

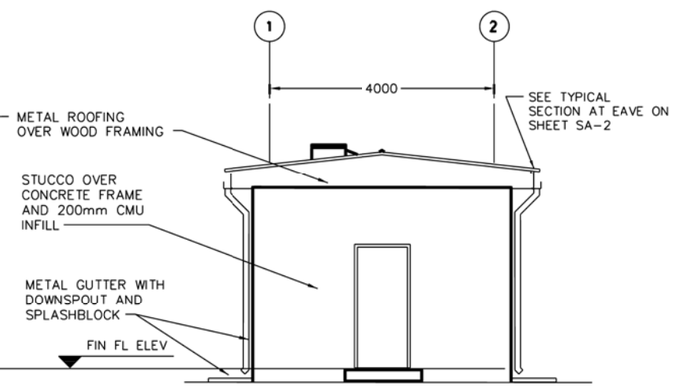

ELEVATION B
SCALE=1:50

ROOM FINISH SCHEDULE LEGEND

FLOOR TYPE
F1 SEALED CONCRETE

WALL TYPE
W1 PAINTED PLASTER – OFF WHITE

CEILING TYPE
C1 PAINTED EXPOSED STRUCTURE – OFF WHITE

ROOM FINISH SCHEDULE NOTES:

1. ALL WALL PENETRATIONS SHALL BE SEALED TO PROVIDE A NEAT APPEARANCE. PENETRATIONS OF EXTERIOR WALLS SHALL BE SEALED TO BE WATER–TIGHT.
2. SEALANTS SHALL MATCH THE COLOR OF ADJACENT SURFACES.

ROOM FINISH SCHEDULE

ROOM NO.	ROOM NAME	FLOOR MAT'L.	BASE MAT'L.	WALLS MAT'L.	CEILING MAT'L.	CEILING HEIGHT	REMARKS
001	WELL HOUSE ROOM	F1	--	W1	C1	3000	

DOOR SCHEDULE

DOOR NO.	DOOR LOCATION	DOOR TYPE	DOOR MAT'L	DOOR WIDTH	DOOR HEIGHT	DOOR THICK	FRAME MAT"L	FIRE LABEL	HDW SET	REMARKS
001	WELL HOUSE ROOM	F	WOOD	900	2150	45	WOOD	--	6	

1 0 1 2 3 4
1:50

US ARMY CORPS OF ENGINEERS AFGHANISTAN ENGINEER DISTRICT

SYMBOL	DESCRIPTION	DATE	APPR.

SYMBOL	DESCRIPTION	DATE	APPR.

DESIGNED BY: | DWN BY: | CKD BY: | REVIEWED BY: | SUBMITTED BY: | DATE: XX-XX-XX | DESIGN FILE NO. | DRAWING CODE: | FILE NAME: | PLOT SCALE: | PLOT DATE: XXXX-XX | REV.

U.S. ARMY ENGINEER DISTRICT, AFGHANISTAN
CORPS OF ENGINEERS
APO AE 96338

ENGINEERING AND CONSTRUCTION DIVISION

AFGHANISTAN NATIONAL POLICE (ANP) DISTRICT HEADQUARTERS COMPOUNDS - 1 STORY HQ
VARIOUS LOCATIONS, AFGHANISTAN
WELL HOUSE

FLOOR PLAN, ELEVATIONS & SCHEDULES

SHEET REFERENCE NUMBER:
E
A-1

A1 Size 594mm x 841mm

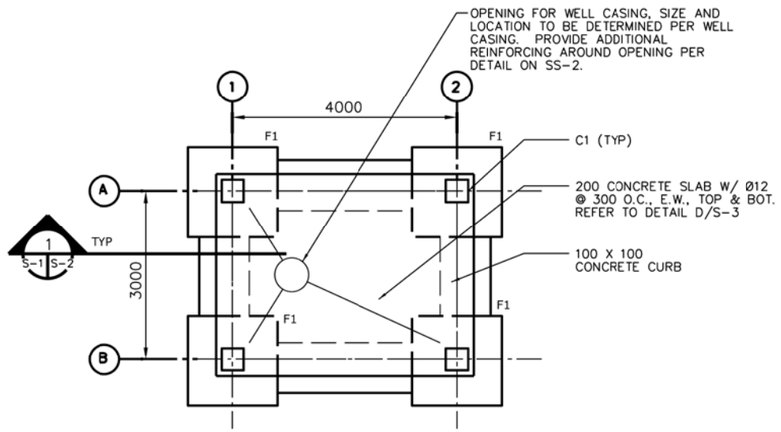

FOUNDATION AND SLAB PLAN
SCALE=1:50

1. DESIGN LOADS (SERVICE)

   LIVE LOADS:

   ROOF: 1.0 KPA (20 PSF)
   OTHERS: 4.8 KPA (100 PSF)
   8.9 KN (2.0 K) CONCENTRATED LOAD

   WIND LOADS PER IBC-2003

   USING A "3-SECOND" WIND VELOCITY OF 125 KPH (78 MPH), EXPOSURE C AND IMPORTANCE FACTOR I=1.0

   EARTHQUAKE LOADS PER IBC-2003:

   USING A SEISMICITY: Ss=1.65g AND S_1=0.75g

2. MATERIALS:

   CONCRETE: 28 MPa (4 KSI)
   CYLINDER STRENGTH AT 28 DAYS

   REINFORCING: ASTM A615 GRADE 60 (60 KSI)

3. WORK THESE STRUCTURAL DRAWINGS WITH THE STANDARD-DETAILS DRAWINGS.

4. A RELATIVE (DATUM) FINISH FLOOR ELEVATION EQUAL TO 0.00 M. IS USED AS REFERENCE ELEVATION FOR ALL STRUCTURAL DRAWINGS. COORDINATE WITH SITE SPECIFIC GRADING PLAN TO BE PROVIDED BY CONTRACTOR.

5. FOUNDATIONS ARE DESIGNED USING AN ALLOWABLE BEARING PRESSURE OF 0.75 KG/SQ CM (1500 PSF), AND BOTTOM OF FOOTINGS ARE PLACED AS SHOWN ON DRAWINGS. GEOTECHNICAL INVESTIGATION SHALL CONFIRM BEARING CAPACITY TO BE NO LESS THAN 0.75 KG/SQ CM. IF GEOTECHNICAL INVESTIGATION SHOWS LESS THAN 0.75 KG/SQ CM THE CONTRACTOR SHALL REDESIGN FOOTINGS BASED ON THE GEOTECHNICAL INVESTIGATION. SEE SPECIFICATION 01015 PARAGRAPH, GEOTECHNICAL, FOUNDATION AND SURVEY.

6. REFER TO DWG S-3 FOR COLUMN SCHEDULE.

7. REFER TO DWG S-2 FOR FOOTING SCHEDULE.

8. REFER TO DWG S-4 FOR BEAM SCHEDULE.

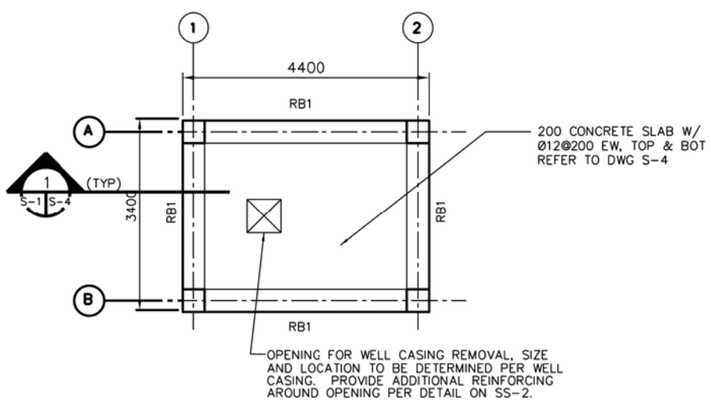

ROOF FRAMING PLAN
SCALE=1:50

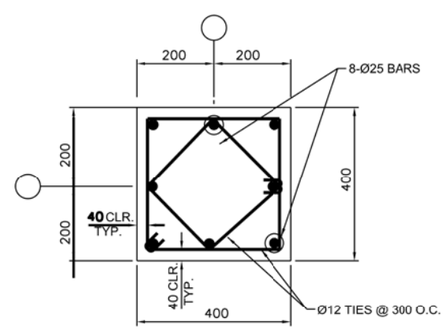

C1
COLUMN TYPE

NOTE: SEE WELL HOUSE (E) STRUCTURAL PLATES FOR COLUMN DETAILS AND SCHEDULES

US ARMY CORPS OF ENGINEERS AFGHANISTAN ENGINEER DISTRICT

SYMBOL	DESCRIPTION	DATE	APPR.

SYMBOL	DESCRIPTION	DATE	APPR.

DESIGNED BY: | DATE: XX-XX-XX | REV.
DWN BY: | CKD BY: | DESIGN FILE NO.
REVIEWED BY: | DRAWING CODE:
SUBMITTED BY: | FILE NAME:
PLOT SCALE:
PLOT DATE: XXXXXXX

U.S. ARMY ENGINEER DISTRICT, AFGHANISTAN
CORPS OF ENGINEERS
APO AE 96338

ENGINEERING AND CONSTRUCTION DIVISION

AFGHANISTAN NATIONAL POLICE (ANP) DISTRICT HEADQUARTERS COMPOUNDS - 1 STORY HQ
VARIOUS LOCATIONS, AFGHANISTAN

WELL HOUSE
FOUNDATION PLAN AND ROOF PLAN

SHEET REFERENCE NUMBER:
E
S-1
SHEET --- OF ---

A1 Size 594mm x 841mm

FOOTING SCHEDULE

MARK	CONCRETE DIMENSIONS			REINFORCEMENT		REMARKS
	WIDTH	LENGTH	THICKNESS	TOP	BOTTOM	
F1	1600	1600	300	—	5-Ø 25 E.W.	REFER TO TYPICAL COLUMN FOOTING DETAIL THIS SHEET.

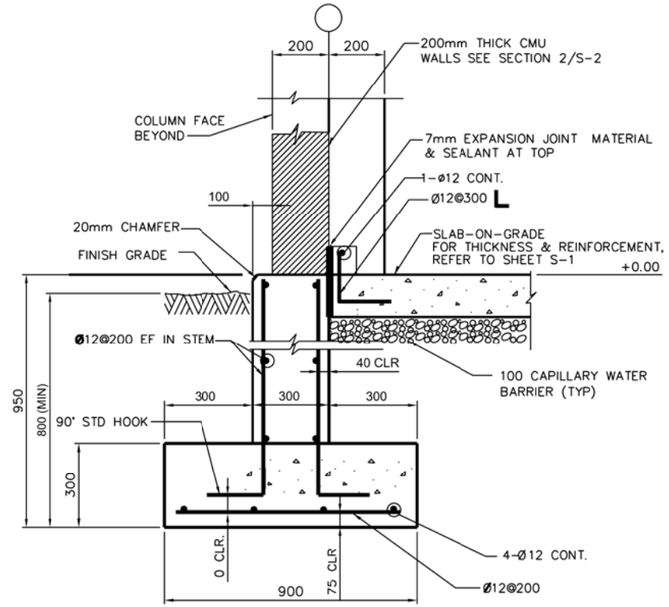

TYPICAL WALL FOOTING

SECTION 1 S-1 S-2
SCALE=N.T.S.

NOTES:
1. HORIZONTAL STEM WALL AND FOOTING REINFORCEMENTS ARE CONTINUOUS THROUGH COLUMN AND COLUMN FOOTING
2. AT DISCONTINUOUS STEM WALL BARS TERMINATE WITH STANDARD HOOK IN COLUMN. FOOTING BARS TERMINATE WITH 600 MM EMBEDMENT IN COLUMN FOOTING.

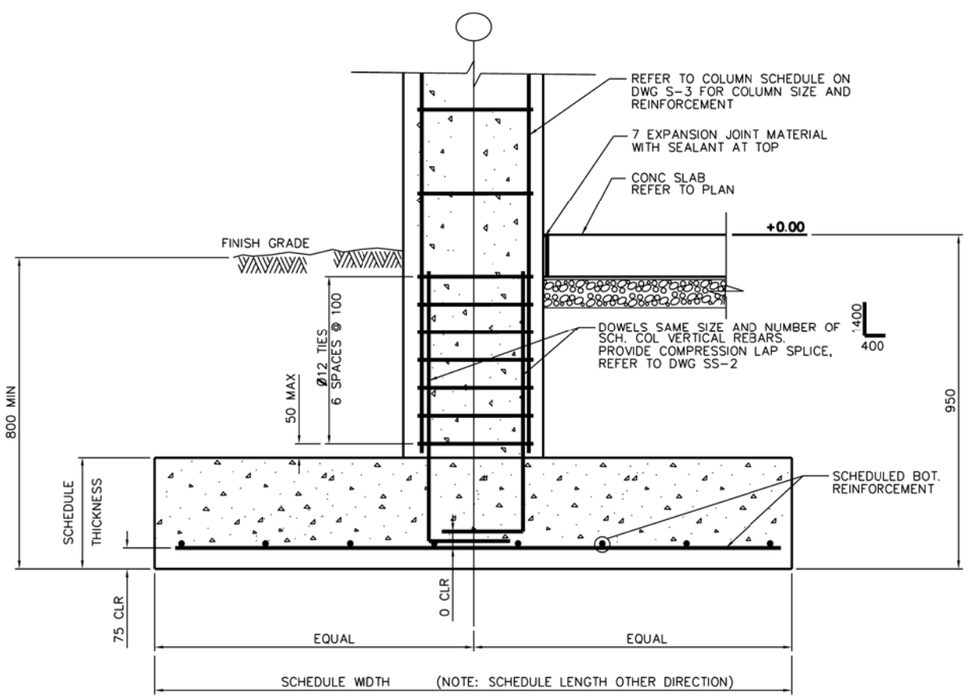

DETAIL A S-2 S-2
SCALE=N.T.S.

TYPICAL COLUMN FOOTING

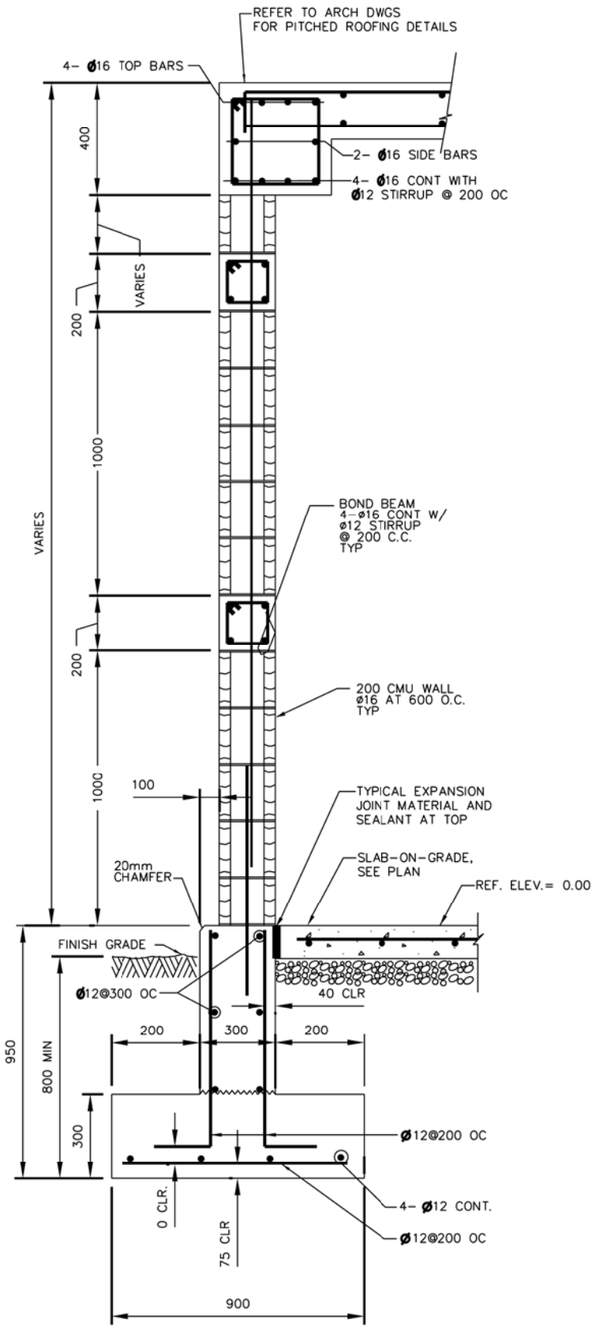

TYP EXTERIOR WALL SECTION 2 S-2 S-2
NOT TO SCALE

US ARMY CORPS OF ENGINEERS AFGHANISTAN ENGINEER DISTRICT

SYMBOL	DESCRIPTION	DATE	APPR.

SYMBOL	DESCRIPTION	DATE	APPR.

DESIGNED BY: DATE: XX-XX-XX REV.
DWN BY: CKD BY: DESIGN FILE NO.
REVIEWED BY: DRAWING CODE:
SUBMITTED BY: FILE NAME:
PLOT SCALE:
PLOT DATE: XXXXXXX

U.S. ARMY ENGINEER DISTRICT, AFGHANISTAN
CORPS OF ENGINEERS
APO AE 96338

ENGINEERING AND CONSTRUCTION DIVISION

AFGHANISTAN NATIONAL POLICE (ANP) DISTRICT HEADQUARTERS COMPOUNDS - 1 STORY HQ
VARIOUS LOCATIONS, AFGHANISTAN
WELL HOUSE

FOOTING DETAILS

SHEET REFERENCE NUMBER:
E
S-2
SHEET --- OF ---

A1 Size 594mm x 841mm

BEAM SCHEDULE

MARK	CONCRETE DIMENSIONS		FLEXURAL REINFORCEMENT		STIRRUP REINFORCEMENT				REMARKS
					SIZE	TYPE	SPACING		
	WIDTH	DEPTH	TOP	BOTTOM			ENDS & SPLICE	INTERMEDIATE	
RB1	400	700	4-ø 22	4-ø 22	ø12		160	320	

NOTE: REFER TO DETAILS ON PLATE S-2 FOR TYPICAL BEAM ELEVATIONS AND SECTION 1 THIS PLATE FOR TYPICAL BEAM SECTION.

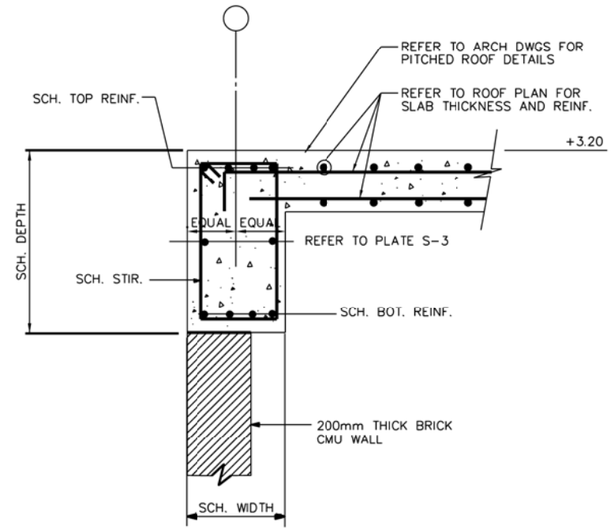

SECTION
SCALE = N.T.S.
1 S-1 S-4

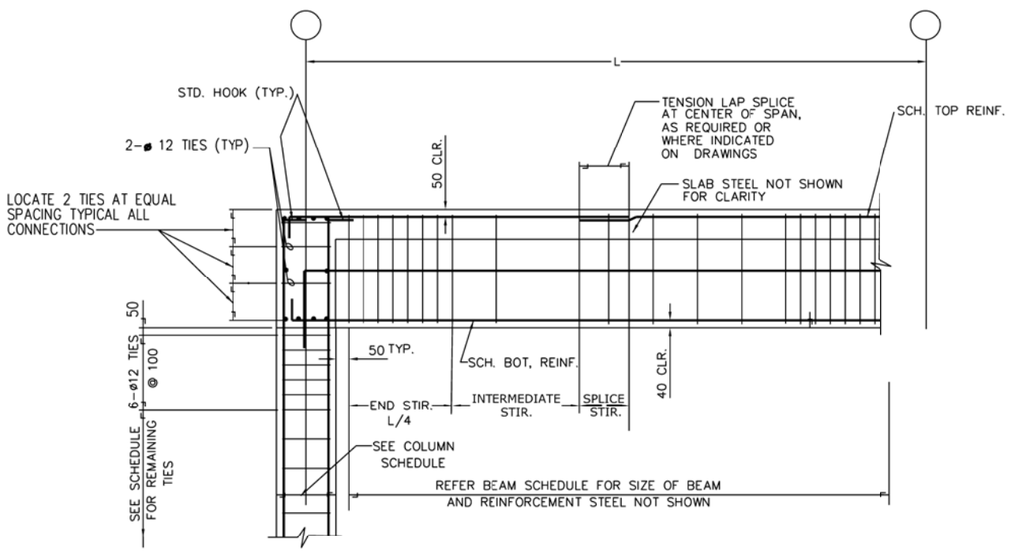

TYPICAL BEAM TO COLUMN END CONNECTION

DETAIL
SCALE = N.T.S.
B S-3 S-3

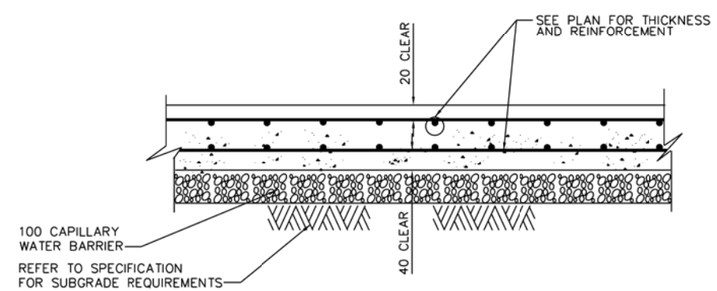

SLAB-ON-GRADE WITH TOP & BOTTOM REINFORCEMENTS

DETAIL
SCALE = N.T.S.
D S-1 S-3

US ARMY CORPS OF ENGINEERS AFGHANISTAN ENGINEER DISTRICT

SYMBOL	DESCRIPTION	DATE	APPR.	SYMBOL	DESCRIPTION	DATE	APPR.

DESIGNED BY: DATE: XX-XX-XX
DWN BY: CKD BY: DESIGN FILE NO.
REVIEWED BY: DRAWING CODE:
SUBMITTED BY: FILE NAME: PLOT SCALE: PLOT DATE: XX-XX-XX
REV.

U.S. ARMY ENGINEER DISTRICT, AFGHANISTAN
CORPS OF ENGINEERS
APO AE 96338

ENGINEERING AND CONSTRUCTION DIVISION

AFGHANISTAN NATIONAL POLICE (ANP) DISTRICT HEADQUARTERS COMPOUNDS - 1 STORY HQ
VARIOUS LOCATIONS, AFGHANISTAN
WELL HOUSE

SLAB-ON-GRADE DETAILS

SHEET REFERENCE NUMBER:
E
S-3
SHEET --- OF ---

A1 Size 594mm x 841mm

NOTES:
1. FOR LEGENDS, ABBREVIATIONS AND STANDARD MECHANICAL DETAILS, SEE SHEETS SM-1 AND SM-3.
2. FOR EQUIPMENT SCHEDULES AND CONTROL DIAGRAMS, SEE SHEET SM-2.
3. PROVIDE EACH EXHAUST FAN WITH MANUFACTURERS STANDARD EXHAUST GRILL AND GRAVITY BACKDRAFT DAMPER.
4. PROVIDE 400x400 SAND LOUVER WITH 50mm THICK WASHABLE METAL FILTERS.

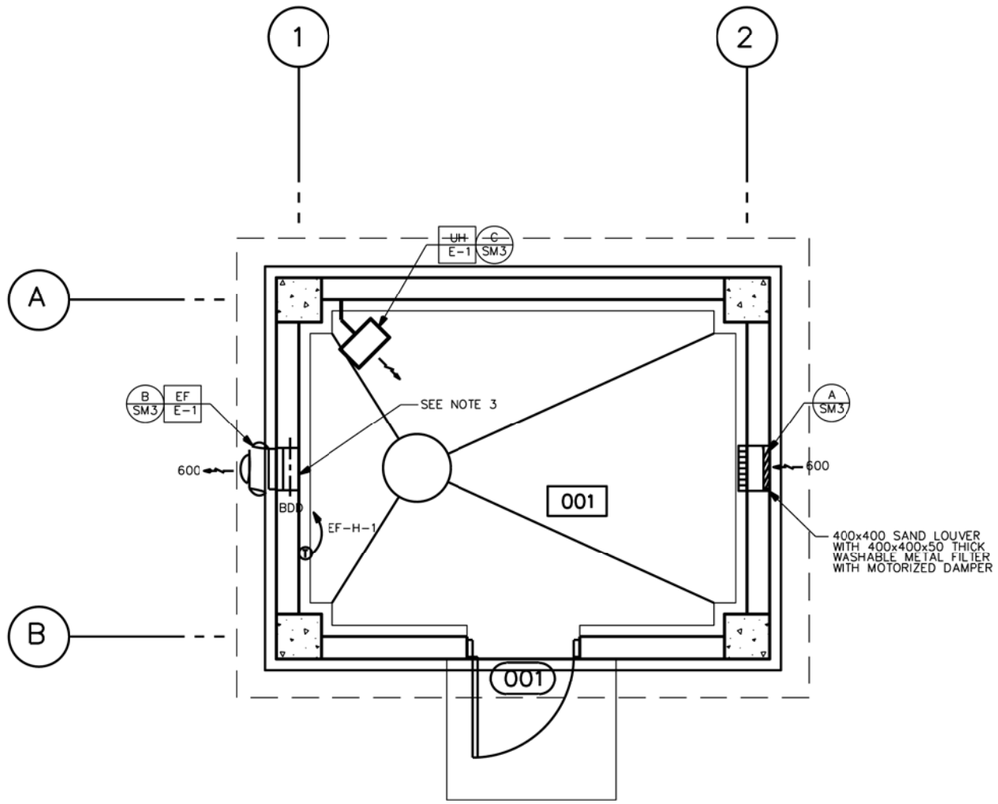

HVAC PLAN
SCALE= 1: 25

US ARMY CORPS OF ENGINEERS AFGHANISTAN ENGINEER DISTRICT

SYMBOL	DESCRIPTION	DATE	APPR.	SYMBOL	DESCRIPTION	DATE	APPR.

DESIGNED BY: DATE: XX-XX-XX
DWN BY: CKD BY: DESIGN FILE NO.
REVIEWED BY: DRAWING CODE
SUBMITTED BY: FILE NAME: PLOT SCALE: PLOT DATE: XX-XX-XX
REV.

U.S. ARMY ENGINEER DISTRICT, AFGHANISTAN
CORPS OF ENGINEERS
APO AE 96338

ENGINEERING AND CONSTRUCTION DIVISION

AFGHANISTAN NATIONAL POLICE (ANP) DISTRICT HEADQUARTERS COMPOUNDS - 1 STORY HQ
VARIOUS LOCATIONS, AFGHANISTAN
WELL HOUSE

HVAC PLAN

SHEET REFERENCE NUMBER:
E
M-1

A1 Size 594mm x 841mm

NOTES:

1. FOR LEGEND AND ABBREVIATIONS SEE DRAWING SE-1.
2. COORDINATE LOCATION OF ALL ELECTRICAL FIXTURES AND EQUIPMENT WITH ALL OTHER TRADES.
3. FOR ONE LINE DIAGRAM SEE DRAWING D/E- 1, POWER PLANT.
4. ALL WIRING SHALL BE SURFACE MOUNTED IN METAL CONDUIT.
5. FOR EXACT LOCATION OF MECHANICAL EQUIPMENT SEE MECHANICAL DRAWINGS.
6. DESIGN IS BASED ON A 5 HP PUMP. IT IS CONTRACTOR'S RESPONSIBILITY TO DESIGN AND PROVIDE PROPERLY SIZED PUMP AS REQUIRED BY THE CONTRACT DOCUMENTS.
7. CONTRACTOR SHALL CONFIRM THAT ALL CIRCUIT RATINGS ARE BASED ON THE ACTUAL NAMEPLATE OF THE SUPPLIED EQUIPMENT.

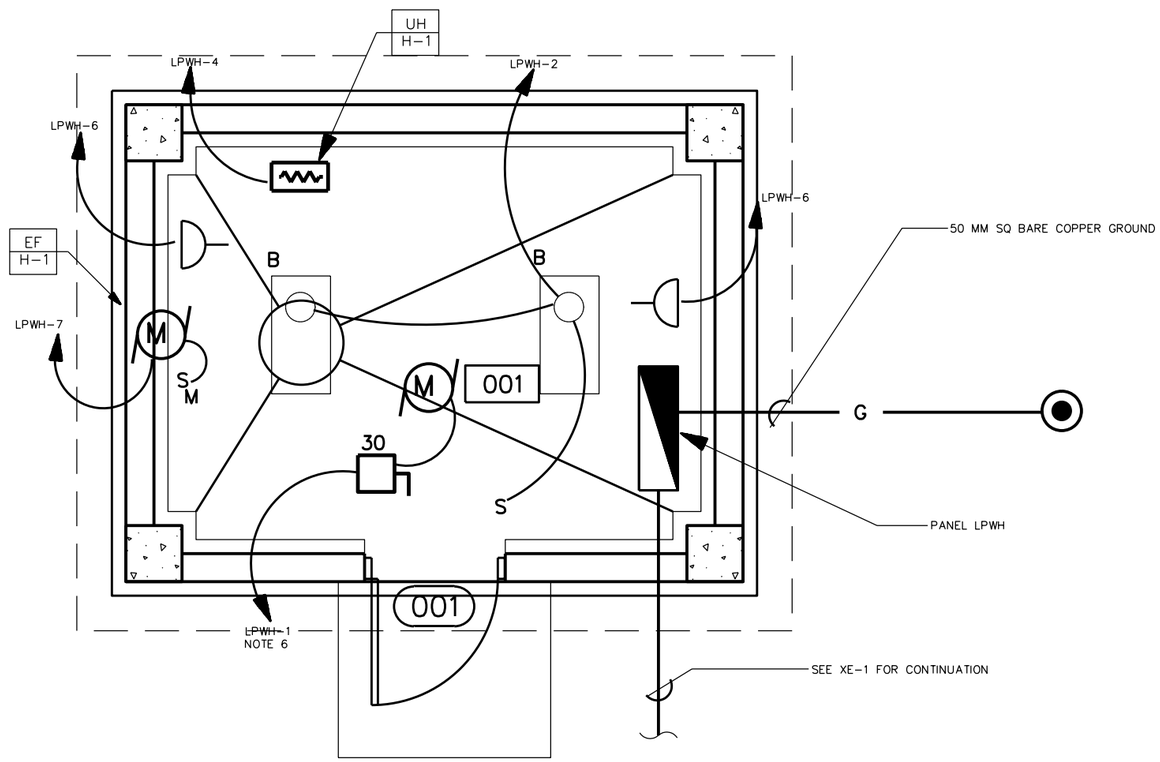

LIGHTING AND POWER PLAN

SCALE= 1:25

1 .50 0 1 1.5
1:25

US ARMY CORPS OF ENGINEERS AFGHANISTAN ENGINEER DISTRICT

SYMBOL	DESCRIPTION	DATE	APPR.	SYMBOL	DESCRIPTION	DATE	APPR.

DESIGNED BY: DATE: 00-00-00 REV. —
DWN BY: CKD BY: DESIGN FILE NO.
REVIEWED BY: DRAWING CODE:
SUBMITTED BY: FILE NAME:
PLOT SCALE:
PLOT DATE: 00-00-00

U.S. ARMY ENGINEER DISTRICT, AFGHANISTAN
CORPS OF ENGINEERS
APO AE 96338

ENGINEERING AND CONSTRUCTION DIVISION

AFGHANISTAN NATIONAL POLICE (ANP) DISTRICT HEADQUARTERS COMPOUNDS - 1 STORY HQ
VARIOUS LOCATIONS, AFGHANISTAN
WELL HOUSE

LIGHTING AND POWER PLAN

SHEET REFERENCE NUMBER:
E
E-1

A1 Size 594mm x 841mm

PANELBOARD LPWH SURFACE MOUNTED MINIMUM 14,000 ASYM. A.I.C. MIN.

_____ AMP. MAIN LUGS (OR) 40 AMP. MAIN BREAKER W/ 40 AMP. TRIP

CIRCUIT BREAKER TYPE 380/220 VOLTS 3 PHASE 4 WIRE 100 AMP. BUS

CKT. NO.	TRIP AMPS	NO. POLES	WIRE MM2	GND MM2	CONDUIT MM	LOAD SERVED	LOAD-V.A. A0	LOAD-V.A. B0	LOAD-V.A. C0	LOAD-V.A. A0	LOAD-V.A. B0	LOAD-V.A. C0	LOAD SERVED	CONDUIT MM	GND 2 MM	WIRE 2 MM	NO. POLES	TRIP AMPS	CKT. NO.
1	40	1	6	6	25	WELL PUMP	6048			150			LIGHTING	20	4	4	1	20	2
3	20	1	4	4	20	EF-H-1	250	0			3000		ELECTRIC HEAT, UH-E-1	20	4	4	1	20	4
5	20	1				SPARE			0			360	RECEPTACLES	20	4	4	1	20	6
7						SPACE							SPARE				1	20	8
9						SPACE							SPACE						10
11						SPACE							SPACE						12
13						SPACE							SPACE						14
15						SPACE							SPACE						16
							6298	0	0	150	3000	360							

TOTAL CONN. LOAD 9.81 KVA 100 % DEMAND = ESTIMATED DEMAND LOAD: 9.81 KVA

TOTAL CONN. LOAD PER PHASE (KVA): A0 6.45 B0 3.00 C0 .36

SUPPLIED FROM POWER PLANT SWITCHBOARD(PPSB)

NOTES:

1. FOR LEGEND AND ABBREVIATIONS SEE DRAWING SE-1.
2. EMERGENCY LIGHT SHALL BE CONNECTED AHEAD OF LIGHT SWITCH.
3. FOR LIGHT FIXTURE SCHEDULE SEE DRAWING SE-1.
4. COORDINATE LOCATION OF ALL ELECTRICAL FIXTURES AND EQUIPMENT WITH ALL OTHER TRADES.
5. ALL WIRING SHALL BE IN CONCEALED OR SURFACE MOUNTED METAL CONDUIT.
6. FOR ONE LINE DIAGRAM SEE DRAWING D/E-1, POWER PLANT.
7. CONTRACTOR SHALL CONFIRM THAT ALL CIRCUIT RATING IS BASED ON THE ACTUAL NAME PLATE OF THE SUPPLIED EQUIPMENT.

US ARMY CORPS OF ENGINEERS AFGHANISTAN ENGINEER DISTRICT

SYMBOL	DESCRIPTION	DATE	APPR.	SYMBOL	DESCRIPTION	DATE	APPR.

DESIGNED BY: DWN BY: CKD BY: REVIEWED BY: SUBMITTED BY: DATE: XX-XX-XX DESIGN FILE NO: DRAWING CODE: FILE NAME: PLOT SCALE: PLOT DATE: XX-XX-XX REV.

U.S. ARMY ENGINEER DISTRICT, AFGHANISTAN CORPS OF ENGINEERS APO AE 96338

ENGINEERING AND CONSTRUCTION DIVISION

AFGHANISTAN NATIONAL POLICE (ANP) DISTRICT HEADQUARTERS COMPOUNDS - 1 STORY HQ
VARIOUS LOCATIONS, AFGHANISTAN
WELL HOUSE

ELECTRICAL SCHEDULES

SHEET REFERENCE NUMBER:
E
E-2

A1 Size 594mm x 841mm

ARCHITECTURAL ABBREVIATIONS AND SYMBOLS

ABBREVIATIONS

A

@	AT
AC	AIR CONDITIONER
ACCFLR	RAISED FLOOR SYSTEM
ACFT	AIRCRAFT
ACST	ACOUSTICAL
AD	AREA DRAIN
A/E	ARCHITECT/ENGINEERS
AFF	ABOVE FINISH FLOOR
ALUM	ALUMINUM
ANOD	ANODIZED
AOC	AIR OPERATIONS CENTER
APPROX	APPROXIMATELY
ARCH	ARCHITECTURAL
ASPH	ASPHALT
ATC	ACOUSTICAL TILE CEILING
AWP	ACOUSTICAL WALL PANEL

B

BB	BALL BEARING
BMUM	BITUMINOUS
BL	BASE LINE
BLDG	BUILDING
BLK	BLOCK
B/M	BENCH MARK OR BEAM
BOM	BILL OF MATERIALS
BRKT	BRACKET
BOT	BOTTOM
BRD	BOARD

C

CARP	CARPET
CB	CORE BORING
C TO C	CENTER TO CENTER
CEM	CEMENT
CH	CLEAR HEART
CFM	CUBIC FEET PER MINUTE
CI	CAST IRON
CIP	CAST IN PLACE
CJ OR CJT	CONTROL JOINT
℄	CENTER LINE
CLF	CHAIN LINK FENCE
CLG	CEILING
CLR	CLEAR
CM	CENTIMETER
CMDR	COMMANDER
CMP	CORRUGATED METAL PIPE
CMU	CONCRETE MASONRY UNIT
CO	CLEANOUT
COE	CORPS OF ENGINEERS
CONCR	CONCRETE
CONN	CONNECTION
CONST	CONSTRUCTION
CONT	CONTINUOUS
CONTAM	CONTAMINATED
CONTR	CONTRACTOR
CORR	CORRUGATED
CPRSR	COMPRESSOR
CT	CERAMIC TILE
CTR	CENTER
CUL	CULVERT
CUM	CUBIC METERS
CWT	COUNTERWEIGHT
COORD	COORDINATE

D

D	DEPTH
DECON	DECONTAMINATION
DET	DETAIL
DI	DRAIN INLET
DIA	DIAMETER
DIM	DIMENSION
DISP	DISPENSER
DJ	DUMMY JOINT
DRWG	DRAWING
DS	DOWNSPOUT
DW	DRINKING WATER

E

E	EAST
EA	EACH
EG	EXISTING GRADE
EJ	EXPANSION JOINT
EL OR ELEV	ELEVATION
ELEC	ELECTRICAL
ENCL	ENCLOSURE
ENGR	ENGINEER
ENT	ENTRANCE
EPDM	ELASTOMERIC ROOFING
EPX	EPOXY COATING
EQ	EQUAL
ES/EW	EMERGENCY SHOWER/EYE WASH
EW	EACH WAY
EXCA	EXCAVATE
EXH	EXHAUST
EXIST	EXISTING
EXP	EXPANSION OR EXPOSED
EWC	ELECTRIC WATER COOLER
EWH	ELECTRIC WATER HEATER

ABBREVIATIONS

F

F	FEET
FD	FLOOR DRAIN
FDN	FOUNDATION
FF & E	FURNITURE, FURNISHINGS AND EQUIPMENT
F TO F	FACE TO FACE
FE	FIRE EXTINGUISHER
FFLEL	FINISH FLOOR ELEVATION
FG	FINISH GRADE
FH	FIRE HYDRANT
FIN	FINISH
FL	FLOOR
FPM	FEET PER MINUTE
FTG	FOOTING

G

GA	GAUGE
GALV	GALVANIZED
GPM	GALLONS PER MINUTE
GR	GRADE
GT	GATE (FENCE)
GVL	GRAVEL
GYP	GYPSUM

H

HB	HOSE BIB
HDW	HARDWARE
HDWD	HARDWOOD
HZ	HERTZ
HF	HIGH FREQUENCY
HGT	HEIGHT
HM	HOLLOW METAL
HORIZ	HORIZONTAL
HP	HIGH POINT
HH	HEX HEAD
HC	HANDICAPPED
HR	HOUR

I

ID	INSIDE DIAMETER
INSTL	INSTALL
INTEL	INTELLIGENCE
INTER	INTERIOR
INV	INVERT
INSUL	INSULATION

J

JAN	JANITOR
JB	JUNCTION BOX
JCT	JUNCTION
JT	JOINT

K

KG	KILOGRAM
KM	KILOMETER
KPA	KILO PASCAL
KPH	KILOMETERS PER HOUR

L

LAM	LAMINATE
LAT	LATITUDE
LAV	LAVATORY
LBY	LOBBY
LBS	POUNDS
LG	LONG
LINMET	LINEAR METAL CEILING SYSTEM
LNRPNL	METAL LINER PANEL
LOC	LIMITS OF CONSTRUCTION
LONG	LONGITUDE
LP	LOW POINT
LSD	LARGE SCREEN DISPLAY
LTG P	LIGHTING PANEL
LVR	LOUVER

M

M	METER
MATL	MATERIAL
MAX	MAXIMUM
MECH	MECHANICAL
MH	MANHOLE
MISC	MISCELLANEOUS
MIN	MINIMUM
ML	MATCH LINE
MM	MILLIMETERS
MO	MASONRY OPENING
MON	MONUMENT
MOIST	MOISTURE
MPH	MILES PER HOUR
MTD	MOUNTED
MTL	METAL
MSNRY	MASONRY
MFR	MANUFACTURER
MATL	MATERIAL
MW	FORCE PROTECTION DOOR

ABBREVIATIONS

N

N	NORTH
NA	NOT APPLICABLE
NIC	NOT IN CONTRACT
NICAD	NICKEL CADMIUM
NO	NUMBER
NTS	NOT TO SCALE

O

OC	ON CENTER
OD	OUTSIDE DIAMETER
OPH	OPPOSITE HAND
OPNG	OPENING
OPP	OPPOSITE
OPS	OPERATIONS

P

PANL	PANEL
PCS	PIECES
PE	POLYETHYLENE
PKG	PARKING OR PACKAGE
PL	PLATE
PLAS	PLASTER
PLBG	PLUMBING
POL	PETROLEUM OIL LUBRICANT
PP	POWER PANEL
PRCST	PRECAST
PROP	PROPERTY
PSF	POUNDS PER SQUARE FOOT
PTD	PAINTED
PTR	PIPE TRENCH
PVMT	PAVEMENT

Q

Q	DESIGN DISCHARGE
QD	QUICK DISCONNECT

R

R	RADIUS OR REINFORCED
RCP	REINFORCED CONCRETE PIPE
RD	ROOF DRAIN
RE	REFERENCE
REINF	REINFORCED
REQD	REQUIRED
REV	REVISION
RH	RIGHT HAND
RI	RISER
RM	ROOM
RO	ROUGH OPENING
ROW	RIGHT OF WAY
RP	RADIUS POINT
RR	RAILROAD
RT	RIGHT
RTU	ROOF TOP UNIT
RVS	REVERSE
RW	RAW WATER

S

S OR SO	SOUTH
SCH	SCHEDULE
SECT	SECTION
SD	SMOKE DETECTOR
SG	SUB GRADE
SH OR SHT	SHEET
SHWR	SHOWER
SIM	SIMILIAR
SL	SLOPE
SMH	SEWER MANHOLE
SOC	STRATEGIC OPERATIONS CENTER
SPEC	SPECIFICATION
SPFC	SPECIFIC
SQ	SQUARE
SS	SANITARY SEWER
SST	STAINLESS STEEL
STA	STATION
STD	STANDARD
STL	STEEL
STRUCT	STRUCTURAL
SUSPLAS	SUSPENDED PLASTER
SVC	SERVICE CONNECTION

ABBREVIATIONS

T

TC	TOP OF CURB
TELE C	TELEPHONE CABINET
TER	TERRAZZO
TG	TOP OF GRATE
TK	TANK
TO	TECHNICAL ORDER
TOS	TOP OF STEEL
TOW	TOP OF WALL
TP	TEST PIT
TR	TRENCH
TSW	TOP OF SIDEWALK
TYP	TYPICAL
TP	TOP OF PAVEMENT
TH/THK	THICK / THICKNESS

U

UBC	UNIFORM BUILDING CODE
UG	UNDERGROUND
UNO	UNLESS NOTED OTHERWISE
UPS	UNINTERRUPTIBLE POWER SUPPLY
UTIL	UTILITY

V

VB	VALVE BOX
VC	VERTICAL CURVE
VCT	VINYL COMPOSITION TILE
VEH	VEHICLE
VEL	VELOCITY
VERT	VERTICAL
VEST	VESTIBULE
VIP	VERY IMPORTANT PERSON
VTR	VENT THRU ROOF

W

W	WEST, WIDE
WC	WATER CLOSET
WM	WIRE MESH PARTITION
WSP	WELDED STEEL PIPE
WT	WEIGHT
W/O	WITHOUT
W/	WITH
WWF	WELDED WIRE FABRIC

REFERENCE SYMBOLS

A / A-1 A-2	DETAIL IDENTIFICATION NO.OF SHEET ON WHICH DETAIL IS DRAWN NO. OF SHEET ON WHICH CONDITION IS REFERENCED
1 / A-3	BUILDING SECTION IDENTIFICATION NO.OF SHEET ON WHICH SECTION IS DRAWN
A / A-3	WALL SECTION IDENTIFICATION NO.OF SHEET ON WHICH SECTION IS DRAWN
102	ROOM NUMBER
102	DOOR NUMBER
H	COLUMN LINE
A	WINDOW TYPE
A	WALL TYPE IDENTIFIER
102	EQUIPMENT IDENTIFIER
102	FURNITURE IDENTIFIER
FIN FL ELEV 100.00	FINISH FLOOR EL. SYMBOL IN PLAN
FIN FL ELEV 100.00	FINISH FLOOR EL. SYMBOL IN SECT. AND ELEV.
A B C D	INTERIOR ELEVATION KEY SYMBOL
A / A-3	EXTERIOR ELEVATION IDENTIFIER
	STUCCO CONTROL JOINT
L2	LOUVER IDENTIFIER
	STRUCTURAL CONTROL JOINT
	WALLS TO THE UNDERSIDE OF THE STRUCTURE
F	FIRE EXTINGUISHER

GENERAL NOTES:

1. THE LIST OF ABBREVIATIONS IS SHOWN AS A GUIDE ONLY AND DOES NOT NECESSARILY INCLUDE ALL ABBREVIATIONS USED. OTHER ABBREVIATIONS MAY BE FOUND AMONG THE DRAWINGS. SOME ABBREVIATIONS LISTED MAY NOT HAVE BEEN USED.
2. FOR REFERENCE PURPOSES, A FINISHED FLOOR ELEVATION OF 100.00 HAS BEEN ESTABLISHED FOR GRADE LEVEL FLOOR PLANS. ON ARCHITECTURAL DRAWINGS. SEE CIVIL DRAWINGS FOR ACTUAL FINISHED FLOOR AND FINISHED GRADE ELEVATIONS.
3. HOUSEKEEPING PADS FOR MECHANICAL EQUIPMENT SHALL BE PROVIDED AS REQUIRED BY MECHANICAL DRAWINGS. SIZE AND LOCATION SHALL BE COORDINATED WITH MECHANICAL EQUIPMENT PROVIDED.

MATERIAL SYMBOLS

	EARTH
	CAST CONCRETE (SECTION)
	LIGHTWEIGHT CONCRETE (SECTION)
	CONCRETE MASONRY UNIT (LARGE SCALE-PLAN)
	STEEL
	ROUGH WOOD
	FINISHED WOOD
	WOOD BLOCKING
	PLYWOOD-LARGE SCALE
	GLASS (ELEVATION)
	BATT FILL INSULATION (SECTION)
	LOOSE FILL INSULATION (PLAN)
	RIGID BOARD INSULATION
	CERAMIC TILE-LARGE SCALE
	CONCRETE (PLAN & ELEVATION)
	CERAMIC TILE (PLAN & ELEVATION)
	PLASTER OR STUCCO (ELEVATION)
	SHEET MEMBRANE
	LANDSCAPING (TREE, SHRUB, ETC.)

US ARMY CORPS OF ENGINEERS AFGHANISTAN ENGINEER DISTRICT

NO.	DESCRIPTION	DRAWN	CHKD	DATE	APPR

DESIGNED BY: DWN BY: CKD BY: REVIEWED BY: SUBMITTED BY: DATE: XX-XX-XX DESIGN FILE NO: DRAWING CODE: FILE NAME: PLOT SCALE: PLOT DATE: XX-XX-XX REV

U.S. ARMY ENGINEER DISTRICT, AFGHANISTAN
CORPS OF ENGINEERS
APO AE 96338

ENGINEERING AND CONSTRUCTION DIVISION

AFGHANISTAN NATIONAL POLICE (ANP) DISTRICT HEADQUARTERS COMPOUNDS - 1 STORY HQ
VARIOUS LOCATIONS, AFGHANISTAN
STANDARD DETAIL

ABBREVIATIONS & SYMBOLS

SHEET REFERENCE NUMBER:
SA-1

A1 Size 594mm x 841mm

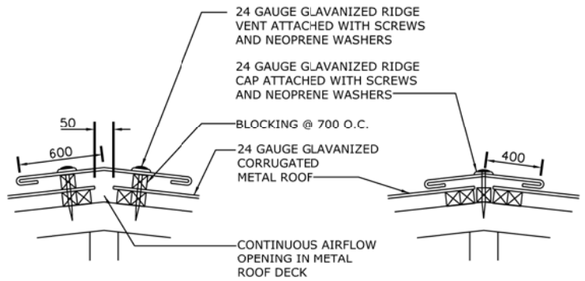

TYPICAL RIDGE VENT SECTION
NOT TO SCALE

TYPICAL RIDGE CAP SECTION
NOT TO SCALE

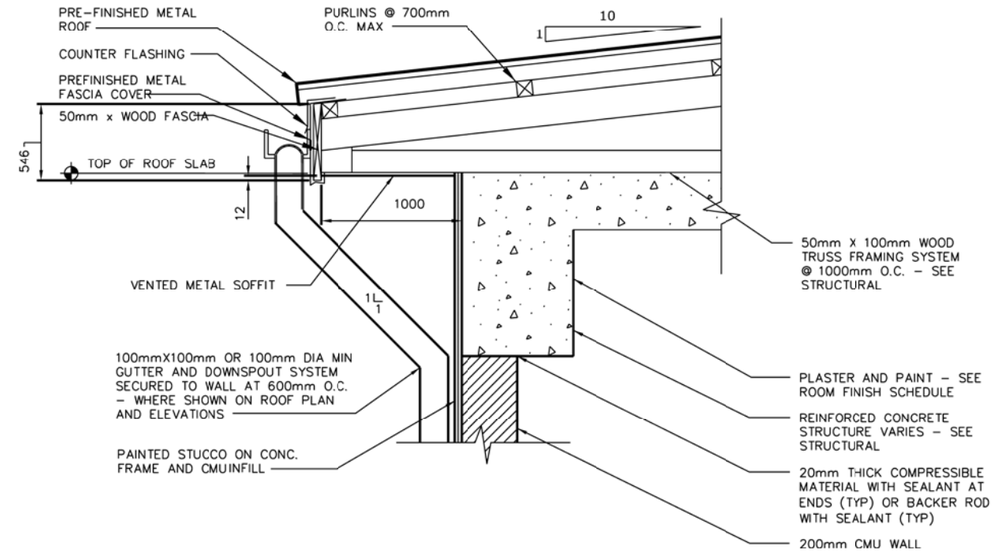

TYPICAL SECTION AT EAVE
FOR BUILDINGS C, D, H, AND I
SCALE= 1:10

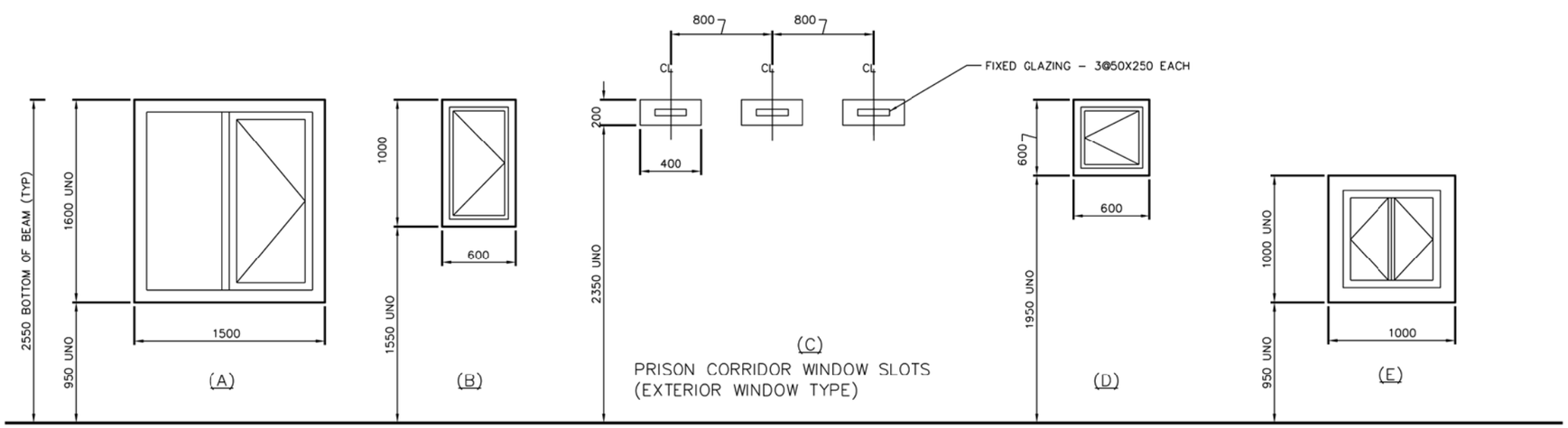

NOTES:
1.? ALL EXTERIOR WINDOWS SHALL UTILIZE MIN. 8mm THICK PLEXIGLASS.
2.? PROVIDE PROTECTIVE COATING AT ALL DISSIMILAR METALS CONTACT AREAS, AS APPROPRIATE.
3.? ALL OPERABLE EXTERIOR WINDOWS SHALL BE PROVIDED WITH INSECT SCREENS.
4.? FIXED WINDOWS AND CLEARSTORY WINDOWS ARE SHOWN ON BUILDING ELEVATIONS AND SECTIONS.

US ARMY CORPS OF ENGINEERS AFGHANISTAN ENGINEER DISTRICT

SYMBOL	DESCRIPTION	DATE	APPR.	SYMBOL	DESCRIPTION	DATE	APPR.

DESIGNED BY: DWN BY: CKD BY: REVIEWED BY: SUBMITTED BY:
DATE: XX-XX-XX DESIGN FILE NO: DRAWING CODE: FILE NAME: PLOT SCALE: PLOT DATE: XX-XX-XX
REV: __

U.S. ARMY ENGINEER DISTRICT, AFGHANISTAN
CORPS OF ENGINEERS
APO AE 96338

ENGINEERING AND CONSTRUCTION DIVISION

AFGHANISTAN NATIONAL POLICE (ANP) DISTRICT HEADQUARTERS COMPOUNDS - 1 STORY HQ
VARIOUS LOCATIONS, AFGHANISTAN
STANDARD DETAIL

WALL SECTION & ROOF DETAILS

SHEET REFERENCE NUMBER:
SA-2

A1 Size 594mm x 841mm

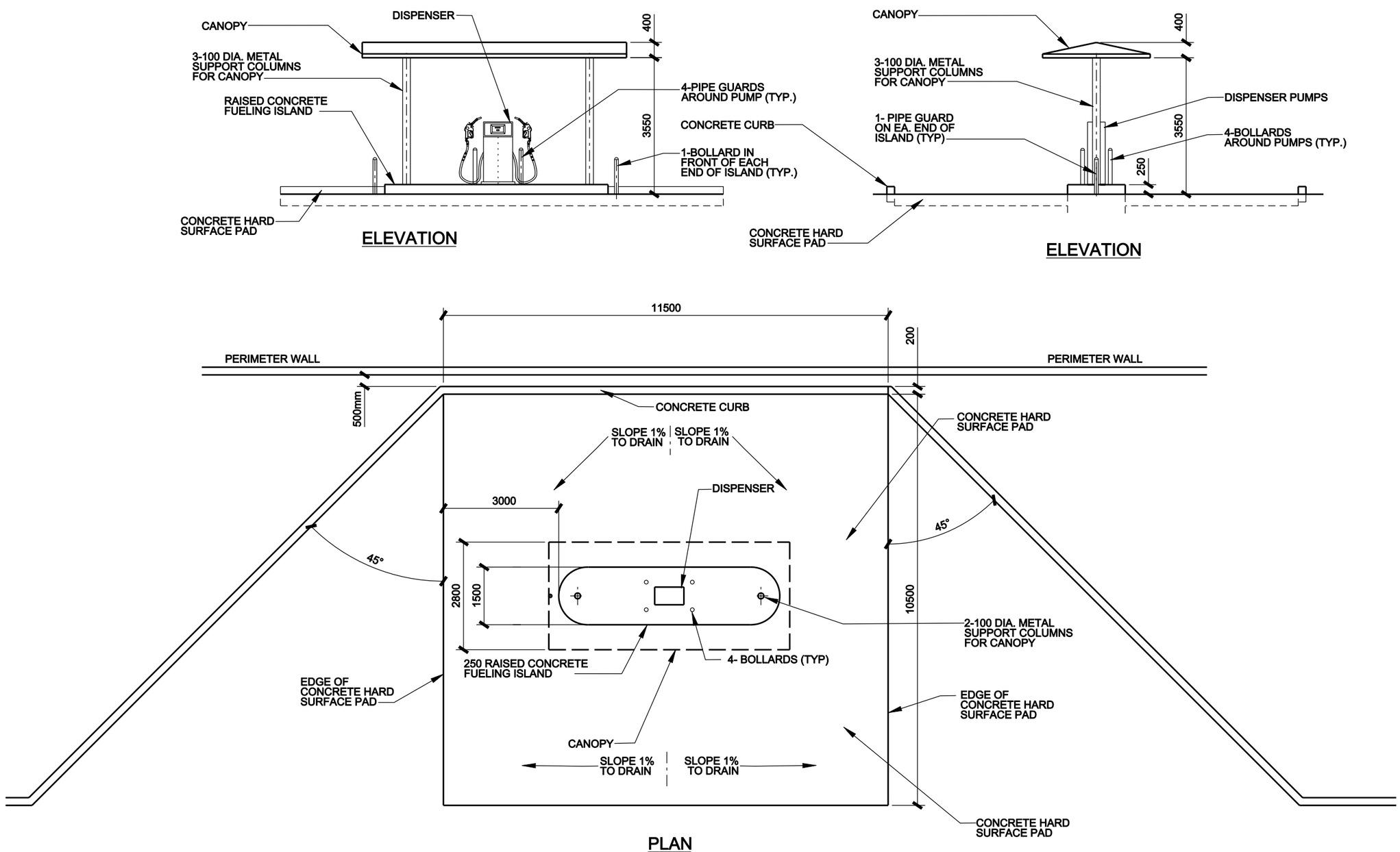

US ARMY CORPS OF ENGINEERS AFGHANISTAN ENGINEER DISTRICT

SYMBOL	DESCRIPTION	DATE	APPR.	SYMBOL	DESCRIPTION	DATE	APPR.

DESIGNED BY: DWN BY: CKD BY: REVIEWED BY: SUBMITTED BY: DATE: xx-xx-xx DESIGN FILE NO. DRAWING CODE: FILE NAME: PLOT SCALE: PLOT DATE: xx-xx-xx REV.

U.S. ARMY ENGINEER DISTRICT, AFGHANISTAN
CORPS OF ENGINEERS
APO AE 96338

ENGINEERING AND CONSTRUCTION DIVISION

AFGHANISTAN NATIONAL POLICE (ANP) DISTRICT HEADQUARTERS COMPOUNDS - 1 STORY HQ
VARIOUS LOCATIONS, AFGHANISTAN

VEHICLE RE -FUELING POINT

PLAN AND ELEVATION

SHEET REFERENCE NUMBER:
SA-3
SHEET — OF —

A1 Size 594mm x 841mm

GENERAL NOTES

GENERAL

1. DESIGN REFERENCES:
   A. AMERICAN CONCRETE INSTITUTE (ACI) BUILDING CODE REQUIREMENTS OR REINFORCED CONCRETE (ACI 318).
   B. SPECIFICATION FOR STRUCTURAL STEEL BUILDINGS – ALLOWABLE STRESS DESIGN AND PLASTIC DESIGN (S335).
   C. AMERICAN WELDING SOCIETY (AWS) STRUCTURAL WELDING CODE – STEEL (AWS D 1.1).
   D. BUILDING CODE REQUIREMENTS AND SPECIFICATIONS FOR MASONRY STRUCTURES (ACI 530).
   E. STEEL DECK INSTITUTE (SDI) DESIGN MANUAL FOR COMPOSITE DECKS, FORM DECKS, AND ROOF DECKS.
2. DIMENSIONS PROVIDED IN SECTIONS OR DETAILS AND ON PLAN AND ELEVATION VIEWS ARE SHOWN USING MILLIMETERS. UNLESS OTHERWISE NOTED.
3. ALL BUILDING ELEVATIONS ARE GIVEN AS REFERENCE ELEVATIONS TO THE FINISHED GROUND FLOOR ELEVATION. A REFERENCE FLOOR ELEVATION OF 0.000 IS USED FOR THE FINISHED GROUND FLOOR.
4. CONTRACTOR SHALL VERIFY ALL DIMENSIONS AND CONDITIONS AFFECTING THE WORK AT THE JOB SITE.
5. ALL STRUCTURAL WORK AND MATERIALS SHALL CONFORM TO THE REQUIREMENTS OF THE PROJECT SPECIFICATIONS.
6. DO NOT SCALE DRAWINGS.
7. FOR LOCATION AND DIMENSIONS OF PARTITIONS, DEPRESSIONS, GROOVES, SLEEVES, CURBS, OPENINGS, EMBEDDED OR ATTACHED ITEMS, REFER TO ARCHITECTURAL, MECHANICAL, ELECTRICAL, AND PLUMBING DRAWINGS.
8. FOR ADDITIONAL INFORMATION REFER TO INDIVIDUAL SHEETS FOR EACH STRUCTURE.
8 FOR ADDITIONAL INFORMATION REFER TO INDIVIDUAL SHEETS FOR EACH STRUCTURE.
9. METAL BUILDING SYSTEMS SHALL BE AS REQUIRED ON THE DRAWINGS AND NOTES.
10. FOOTING ELEVATIONS GIVEN ARE AT TOP OF FOOTING BASE.
11. ALL FOOTING EXCAVATIONS SHALL BE INSPECTED AND APPROVED BY THE CONTRACTING OFFICER OR HIS APPROVED AGENT PRIOR TO PLACING CONCRETE.

CONCRETE

1. EMBEDDED MATERIAL:
   A. BEFORE PLACING CONCRETE, CARE SHALL BE TAKEN TO INSURE THAT ALL EMBEDDED ITEMS ARE IN POSITION AND SECURELY FASTENED IN PLACE.
   B. ELECTRIC CONDUITS AND PIPING TO BE EMBEDDED IN CONCRETE SHALL MEET THE APPLICABLE REQUIREMENTS OF ACI 318.
   C. WATERSTOPS, WHERE REQUIRED, SHALL BE MADE CONTINUOUS. ALL PROJECTING WATERSTOPS SHALL BE SUPPORTED AND PROTECTED FROM DAMAGE DURING CONSTRUCTION.
2. PROVIDE 20 MILLIMETER CHAMFER FOR ALL EXPOSED EDGES OF COLUMNS, BEAMS, WALLS AND ANY OTHER MEMBERS AS DIRECTED BY THE CONTRACTING OFFICER.
3. PROVIDE APPROPRIATE DEPRESSIONS IN SLABS FOR TILE OR OTHER SIMILAR MATERIALS. MAINTAIN FULL SLAB THICKNESS BELOW THESE DEPRESSIONS. SEE ARCHITECTURAL INTERIOR FINISH SCHEDULES, FLOOR PLANS, AND DETAILS FOR REQUIRED DEPRESSIONS.
4. JOINTS SHALL BE LOCATED IN ACCORDANCE WITH ACI–318.
5. FOR SLABS ON GRADE, CONTROL JOINTS SHALL BE LOCATED NOT MORE THAN 7.6 METERS APART IN EITHER DIRECTION UNLESS OTHERWISE NOTED.
6. CONSTRUCTION JOINTS FOR STRUCTURAL SLABS, BEAMS AND GIRDERS SHALL BE LOCATED WITHIN THE MIDDLE THIRD OF THEIR SPAN. JOINTS IN GIRDERS SHALL BE OFFSET A MINIMUM DISTANCE OF TWO TIMES THE WIDTH OF AN INTERSECTING BEAM.
7. A SET OF DRAWINGS SHOWING CONCRETE PLACING SEQUENCE AND LOCATION OF JOINTS SHALL BE SUBMITTED TO THE CONTRACTING OFFICER FOR APPROVAL PRIOR TO PREPARATION OF AFFECTED REINFORCING SHOP DRAWINGS.
8. ALL REINFORCING BARS SHALL BE PLACED IN ACCORDANCE WITH ACI BUILDING CODE (ACI–318).
9. ALL REINFORCING BARS SHALL BE DEFORMED BILLET–STEEL CONFORMING TO ASTM A 615, GRADE 60, OR APPROVED EQUAL WITH THE FOLLOWING MINIMUM REQUIREMENTS: MINIMUM YIELD STRENGTH 413 MPa (60000 PSI).
10. WELDED WIRE FABRIC SHALL BE COLD DRAWN CONFORMING TO ASTM A–185, GRADE 60, OR APPROVED EQUAL WITH THE FOLLOWING MINIMUM REQUIREMENTS: MINIMUM YIELD STRENGTH 413 MPa. (60000 PSI)
11. DETAILING OF REINFORCEMENT SHALL BE IN ACCORDANCE WITH THE LATEST ACI MANUAL FOR DETAILING (SP–66).
12. DIMENSIONS AND SPACING OF BARS ARE IN MILLIMETERS UNLESS OTHERWISE NOTED THUS, ø20@300.
13. CONCRETE SHALL HAVE A MINIMUM 28 DAY COMPRESSIVE STRENGTH OF 28 MPa (4,000 PSI) AND CONTAIN ASTM C–150 TYPE I CEMENT UNLESS OTHERWISE NOTED.
14. REINFORCEMENT MAY BE MOVED WITH APPROVAL OF THE CONTRACTING OFFICER TO CLEAR PIPES, SEALS, RECESSES, EMBEDDED METALWORK, AND CONDUITS.
15. CLEAR CONCRETE COVER FOR REINFORCING BARS IN CAST–IN–PLACE CONCRETE SHALL BE PROVIDED AS FOLLOWS, UNLESS OTHERWISE NOTED:
    A. FOOTINGS OR BEAMS CAST AGAINST AND PERMANENTLY EXPOSED TO EARTH 75mm.
    B. FORMED SURFACES EXPOSED TO WEATHER OR EARTH:
       (1)ø16 BARS OR SMALLER 40mm
       (2).ALL OTHERS 50mm
    C. FORMED SURFACES NOT EXPOSED DIRECTLY TO WEATHER OR EARTH:
       (1). SLABS, WALLS 20mm
       (2). BEAMS, GIRDERS, COLUMNS: PRINCIPAL REINFORCEMENT, TIES OR STIRRUPS 40mm
16. REFER TO DWG SS–4 FOR CONSTRUCTION JOINT (CJ) AND CONTROL JOINT (CJT) DETAILS.
17. REINFORCING BARS SHALL NOT BE BENT OR STRAIGHTENED IN A MANNER THAT WILL INJURE THE MATERIAL. BARS WITH KINKS OR IMPROPER BENDS SHALL NOT BE USED.
18. THE FIRST AND LAST BAR IN SLABS AND WALLS SHALL BE PLACED A MAXIMUM OF ONE–HALF OF THE BAR SPACING SHOWN UNLESS OTHERWISE NOTED.
19. THE CLEAR DISTANCE BETWEEN PARALLEL BARS IN A LAYER SHALL NOT BE LESS THAN THE NOMINAL DIAMETER OF THE BAR, NOR 33mm, THE CLEAR DISTANCE BETWEEN LONGITUDINAL BARS IN COLUMNS SHALL NOT BE LESS THAN 1.5 TIMES THE NOMINAL BAR DIAMETER NOR 40mm.
20. PROVIDE 1–912 REBAR IN MID – DEPTH OF SLAB AT ALL RE–ENTRANT CORNERS.
21. PROVIDE SEALANT AT ALL CONTROL AND ISOLATION JOINTS. WHERE CONCRETE SLAB WORK WILL NOT BE COVERED BY SOME OTHER FINISH FLOOR MATERIAL PROVIDE TOOLED CONTROL JOINTS HAVING A RADIUS OF 3 MILLMETERS.
22. ALL CMU WALLS SHALL BE REINFORCED AS SHOWN ON THE DRAWINGS.

STRUCTURAL STEEL

1. ALL METAL WORK SHOWN ON DRAWINGS SHALL BE FABRICATED OF STRUCTURAL STEEL UNLESS OTHERWISE NOTED.
2. DESIGN OF STRUCTURAL STEEL WORK SHALL BE IN ACCORDANCE WITH THE REQUIREMENTS OF THE SPECIFICATION FOR STRUCTURAL STEEL BUILDINGS–ALLOWABLE STRESS DESIGN AND PLASTIC DESIGN (S335).
3. ALL WELDING SHALL BE IN ACCORDANCE WITH THE APPLICABLE REQUIREMENTS OF THE CURRENT AWS, D1.1, STRUCTURAL WELDING CODE–STEEL.
4. WHERE WELD SIZE IS NOT CALLED OUT, USE AISC MINIMUM SIZE.
5. STRUCTURAL STEEL SHALL CONFORM TO THE REQUIREMENTS OF ASTM A500, GRADE B OR STRUCTURAL TUBING AND ASTM A36 FOR OTHER STRUCTURAL SHAPES (UNLESS OTHERWISE NOTED).
6. ALL BOLTED CONNECTIONS SHALL BE BEARING TYPE CONNECTIONS MADE WITH 19 DIAMETER BOLTS MEETING REQUIREMENTS OF ASTM A325, TYPE X (UNLESS NOTED OTHERWISE)
7. SHOP CONNECTIONS MAY BE EITHER BOLTED OR WELDED. ALL FIELD CONNECTIONS SHALL BE BOLTED UNLESS OTHERWISE SHOWN ON THE DRAWINGS.
8. UNLESS OTHERWISE NOTED BEAM END CONNECTIONS SHALL COMFORMTO A.I.S.C. STANDARD TWO ANGLE WEB CONNECTIONS. WHETHER BOLTED OR WELDED, EACH END CONNECTION SHALL BE CAPABLE OF SUPPORTING ONE–HALF THE TOTAL UNIFORM LOAD CAPACITY SHOWN IN THE ALLOWABLE UNIFORM LOAD TABLES, PART II , OF THE A.I.S.C. MANUAL OF STEEL CONSTRUCTION. HOLES WILL BE SHORT–SLOTTED IN THE OUTSTANDING ANGLE LEGS (THOSE CONNECTED TO THE SUPPORTING MEMBER) AND STANDARD OTHERWISE.
9. NO CONNECTION SHALL CONSIST OF LESS THAN 2–?919 BOLTS OR A WELD CAPABLE OF RESISTING 2720 KILOGRAMS.
10. ALL ANCHOR BOLTS SHALL BE ASTM A36, EXCEPT AS OTHERWISE NOTED.
11. STRUCTURAL STEEL DESIGN IS BASED ON ALLOWABLE STRESS DESIGN.

LEGENDS AND NOTATIONS: (UNLESS OTHERWISE NOTED)

A. PLATE SIZES ARE GIVEN IN MILLIMETERS. THUS, PL 200 x 600 X 10

B. ROLLED STEEL SHAPES ARE INDICATED BY AISC METRIC NOTATION THUS, W200 x 150.

C. ANGLE SIZES ARE GIVEN IN MILLIMETERS. THUS, 100 x 100 x 10 x 600 LG.

D. WELDING NOTATION SIZE, LENGTH AND SPACING ARE GIVEN IN MILLIMETERS WITH SYMBOLS IN ACCORDANCE WITH AWS.

E. BOLT SIZE DIAMETERS ARE GIVEN IN MILLIMETERS. LENGTH IS GIVEN IN MILLIMETERS. THUS, 919 X 300 LG.

MASONRY

A. CMU = CONCRETE MASONRY UNITS
B. CMU SHALL BE TYPE 1, NORMAL WEIGHT, MOISTURE CONTROL
C. MORTAR SHALL BE TYPE S (13MPa).
D. GROUT SHALL BE 14MPa, WITH SLUMP BETWEEN 200mm TO 250mm.
E. CMU REINFORCEMENT SHALL FOLLOW ACI 530.
F. ALL CELLS OF EXTERIOR CMU WALLS SHALL BE FULLY GROUTED

ABBREVIATIONS

A.B.	ANCHOR BOLT
ADD	ADDED OR ADDITIONAL
AFF	ABOVE FINISH FLOOR
ARCH	ARCHITECTURAL
@	AT THE RATE OF
BM	BEAM
BRG	BEARING
B OR BOT	BOTTOM
℄	CENTERLINE
CONC	CONCRETE
CJ	CONTROL JOINT
CJT	CONSTRUCTION JOINT
CIP	CAST–IN–PLACE
COL	COLUMN
CONT	CONTINUOUS
DIA OR Ø	DIAMETER
DIR	DIRECTION
DWG	DRAWING
EE	EACH END
EF	EACH FACE
⊕ OR ELEV	ELEVATION
ES	EACH SIDE
EW	EACH WAY
EJT	EXPANSION JOINT
FF	FAR FACE
FTG	FOOTING
FDN	FOUNDATION
GB	GRADE BEAM
H OR HORZ	HORIZONTAL
HP	HIGH POINT
IJ	ISOLATION JOINT
JT	JOINT
KSM	KILOGRAMS PER SQUARE METER
LG	LONG
LL	LOWER LAYER
LP	LOW POINT
MCJ	MASONRY CONTROL JOINT
M	METERS
MM	MILLIMETERS
MAX	MAXIMUM
MECH	MECHANICAL
MIN	MINIMUM
NF	NEAR FACE
NO OR #	NUMBER
NTS	NOT TO SCALE
O/C	ON CENTER
OPNG	OPENING
PC	PRECAST
PEJ	PREMOLDED EXPANSION JOINT
PL	PLATE
PSF	POUNDS PER SQUARE FOOT
PSI	POUNDS PER SQUARE INCH
REINF	REINFORCEMENT
REF	REFERENCE
REQ	REQUIRED
SCH	SCHEDULE
SHT	SHEET
SIM	SIMILAR
STD	STANDARD
SQ	SQUARE
T	TOP
TB	TIE BEAM
T & B	TOP AND BOTTOM
TOC	TOP OF CONCRETE
TOF	TOP OF FOOTING
TOS	TOP OF SLAB OR TOP OF STEEL
TYP	TYPICAL
UL	UPPER LAYER
UNO	UNLESS NOTED OTHERWISE
VERT	VERTICAL
WWF	WELDED WIRE FABRIC
WP	WORKING POINT
W/	WITH

US ARMY CORPS OF ENGINEERS AFGHANISTAN ENGINEER DISTRICT

SYMBOL	DESCRIPTION	DATE	APPR.	SYMBOL	DESCRIPTION	DATE	APPR.

DESIGNED BY: DATE: XX-XX-XX
DWN BY: CKD BY: DESIGN FILE NO.
REVIEWED BY: DRAWING CODE
SUBMITTED BY: FILE NAME: PLOT SCALE: PLOT DATE: XX-XX-XX
REV.

U.S. ARMY ENGINEER DISTRICT, AFGHANISTAN
CORPS OF ENGINEERS
APO AE 96338

ENGINEERING AND CONSTRUCTION DIVISION

AFGHANISTAN NATIONAL POLICE (ANP) DISTRICT HEADQUARTERS COMPOUNDS - 1 STORY HQ
VARIOUS LOCATIONS, AFGHANISTAN

STANDARD DETAILS GENERAL NOTES AND ABBREVIATIONS

SHEET REFERENCE NUMBER:
SS-1

A1 Size 594mm x 841mm

MINIMUM LAP SPICES OF REINFORCING BARS IN TENSION (PER ACI 318) (MM)

f'c = 27.5MPa CONCRETE

BAR SIZE \ CENTER TO CENTER BAR SPACING	(---TOP BARS---) LESS THAN 4db	(---TOP BARS---) 4db OR MORE	(---OTHER BARS---) LESS THAN 4db	(---OTHER BARS---) 4db OR MORE	(---OTHER BARS---) 4db
#10	460	460	410	410	40
#12	660	610	510	480	50
#16	1020	760	790	580	60
#18	1450	910	1120	710	80
#22	1960	1090	1500	840	90
#25	2590	1450	1980	1120	100
#30	3280	1830	2510	1420	110
#32	4140	2340	3200	1780	130
#36	5080	2840	3910	2180	140

NOTES:

1. LAP SPLICES ABOVE ARE IN MILLIMETERS UNO.
2. YIELD STRENGTH OF REINFORCEMENT fy IS 420MPa (LAP SPLICE LENGTH IS IN MILLIMETERS)
3. CONCRETE IS NORMAL WEIGTH (28 MPa).
4. TOP BAR INDICATES HORIZONTAL REONFORCEMENT WHICH IS PLACED ABOVE 300mm OR MORE OF FRESH CONCRETE.
5. SEE COLUMN SCHEDULE FOR COLUMN AND SHEAR WALL VERTICAL LAP SPLICE.
6. STRAIGHT DEVELOPMENT LENGTH OF AN UNLAPPED BAR IS EQUAL TO VALVE FROM TABLE DIVIDED BY 1.3.
7. CATEGORY FOR BARS SPACED LESS THAN 4d, OR ON CENTER CORRESPONDS TO CATEGORY 1 IN THE CRSI HANDBOOK WHEREAS FOR BARS SPACED 4d, OR MORE ON CENTER CORRESPOND TO CRSI CATEGORY 5

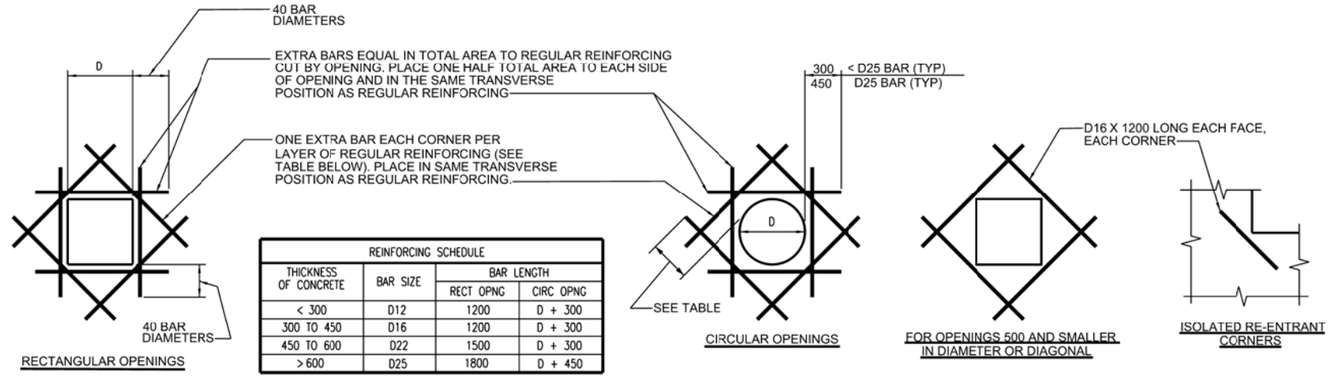

REINFORCING SCHEDULE			
THICKNESS OF CONCRETE	BAR SIZE	BAR LENGTH RECT OPNG	BAR LENGTH CIRC OPNG
< 300	D12	1200	D + 300
300 TO 450	D16	1200	D + 300
450 TO 600	D22	1500	D + 300
> 600	D25	1800	D + 450

FOR OPENING LARGER THAN 500 IN DIAMETER OR DIAGONAL

TYPICAL EXTRA REINFORCING AT OPENINGS IN WALLS AND SLABS

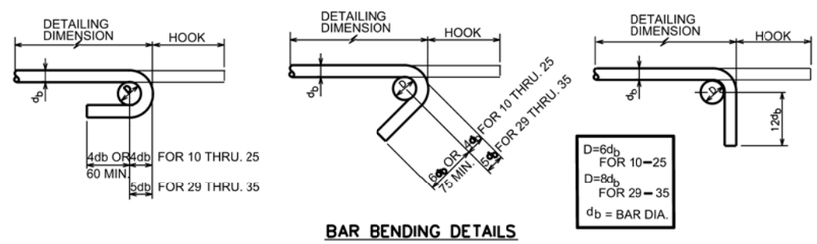

BAR BENDING DETAILS

DESIGN LOADS

SERVICE LOADS

DEAD ----------CALCULATED

LIVE ----------REFER TO INDIVIDUAL SHEETS

WIND LOAD

BASIC WIND VELOCITY IS 125 KM/H

EARTHQUAKE:

SITE SEISMICITY:

Ss = 1.65g, S1= 0.75g

EQUIVALENT REINFORCING BAR SIZE CHART

ACI DESIGNATION	METRIC DIAMETER (MM)
#3	10
#4	13 (Ø12 ACCEPTABLE)
#5	16
#6	19 (Ø20 ACCEPTABLE)
#7	22
#8	25
#9	29
#10	32
#11	35

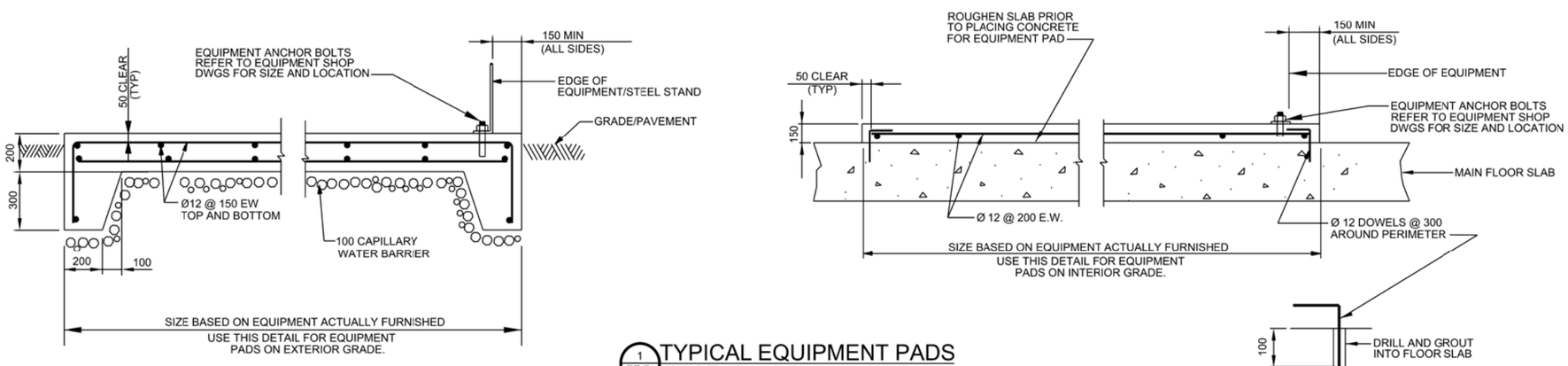

1 / SS-2 TYPICAL EQUIPMENT PADS

NOT TO SCALE

US ARMY CORPS OF ENGINEERS AFGHANISTAN ENGINEER DISTRICT

SYMBOL	DESCRIPTION	DATE	APPR.	SYMBOL	DESCRIPTION	DATE	APPR.

DESIGNED BY: DATE: XX-XX-XX REV: __

DWN BY: CKD BY: DESIGN FILE NO. DRAWING CODE

REVIEWED BY: FILE NAME: PLOT SCALE:

SUBMITTED BY: PLOT DATE: XX-XX-XX

U.S. ARMY ENGINEER DISTRICT, AFGHANISTAN CORPS OF ENGINEERS APO AE 96338

ENGINEERING AND CONSTRUCTION DIVISION

AFGHANISTAN NATIONAL POLICE (ANP) DISTRICT HEADQUARTERS COMPOUNDS - 1 STORY HQ

VARIOUS LOCATIONS, AFGHANISTAN

STANDARD DETAILS

STANDARD DETAILS

SHEET REFERENCE NUMBER:

SS-2

SHEET --- OF ---

A1 Size 594mm x 841mm

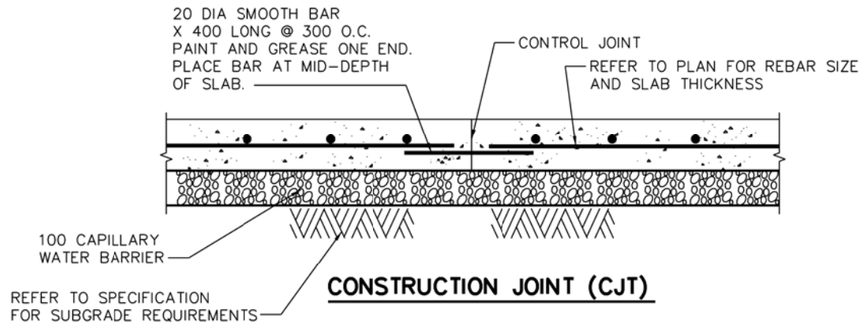

CONSTRUCTION JOINT (CJT)

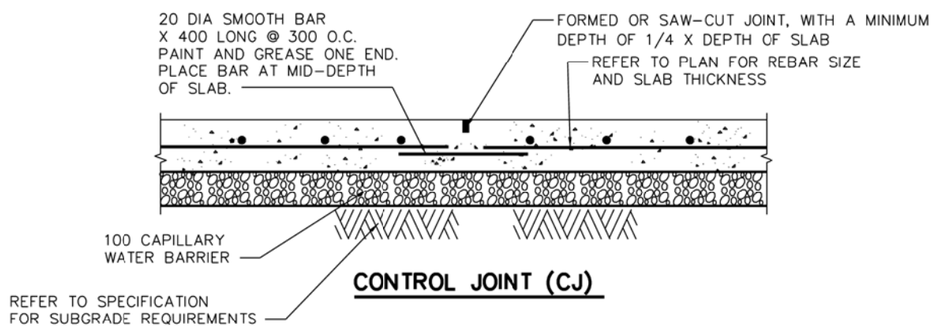

CONTROL JOINT (CJ)

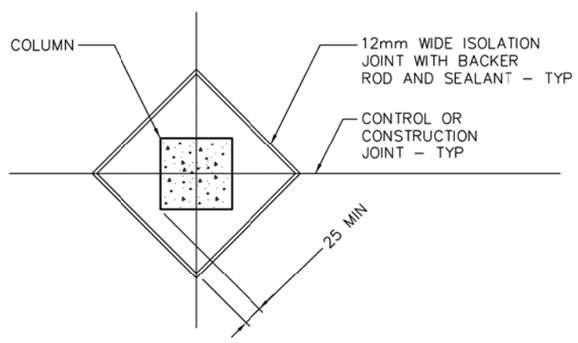

TYPICAL ISOLATION JOINT

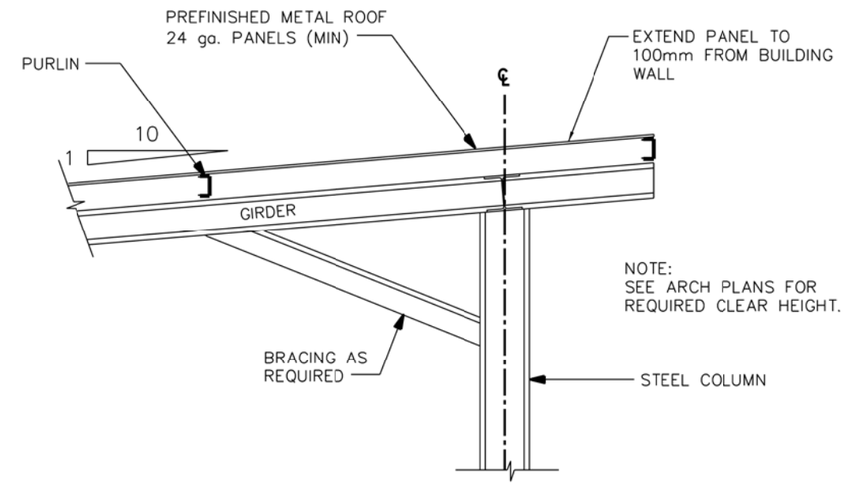

TYPICAL SUNSHADE FRAMING

SCALE= NONE

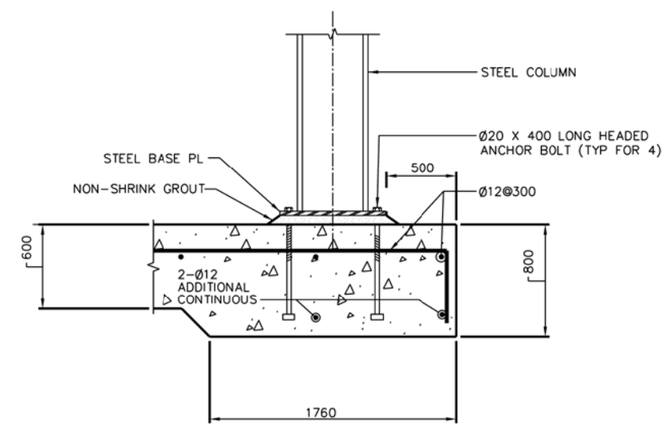

TYPICAL SUNSHADE COLUMN BASE

SCALE= NONE

TYPICAL SUNSHADE NOTES:

1. PER SPECIFICATION 01015, PARAGRAPH 3.6.6, DESIGN CALCULATIONS AND FABRICATION DRAWINGS FOR SUNSHADES SHALL BE SUBMITTED FOR APPROVAL.
2. FRAMING PLAN AND SECTION SHOWN ON THIS DRAWING ARE SCHEMATIC ONLY. ACTUAL MEMBER SIZES AND LAYOUT SHALL BE AS REQUIRED BY DESIGN CALCULATIONS.
3. REFER TO ARCHITECTURAL DRAWINGS FOR ADDITIONAL INFORMATION.

UNLESS OTHERWISE NOTED, LINEAR DIMENSIONS SHOWN ARE IN MILLIMETERS.

US ARMY CORPS OF ENGINEERS AFGHANISTAN ENGINEER DISTRICT

SYMBOL	DESCRIPTION	DATE	APPR.	SYMBOL	DESCRIPTION	DATE	APPR.

DESIGNED BY: DATE: XX-XX-XX REV: __
DWN BY: CKD BY: DESIGN FILE NO. DRAWING CODE
REVIEWED BY: FILE NAME: PLOT SCALE:
SUBMITTED BY: PLOT DATE: XX-XX-XX

U.S. ARMY ENGINEER DISTRICT, AFGHANISTAN
CORPS OF ENGINEERS
APO AE 96338

ENGINEERING AND CONSTRUCTION DIVISION

AFGHANISTAN NATIONAL POLICE (ANP) DISTRICT HEADQUARTERS COMPOUNDS - 1 STORY HQ
VARIOUS LOCATIONS, AFGHANISTAN
STANDARD DETAILS

DETAILS

SHEET REFERENCE NUMBER:
SS-3
SHEET --- OF ---

A1 Size 594mm x 841mm

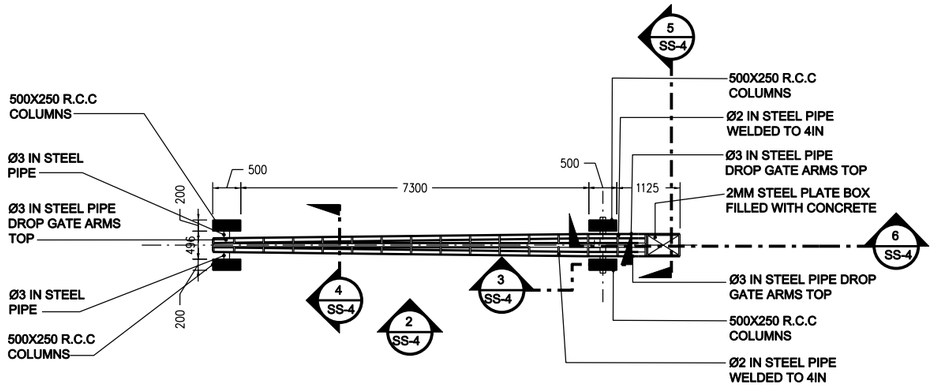

1 SS-4 PLAN VIEW
SCALE = 1:50

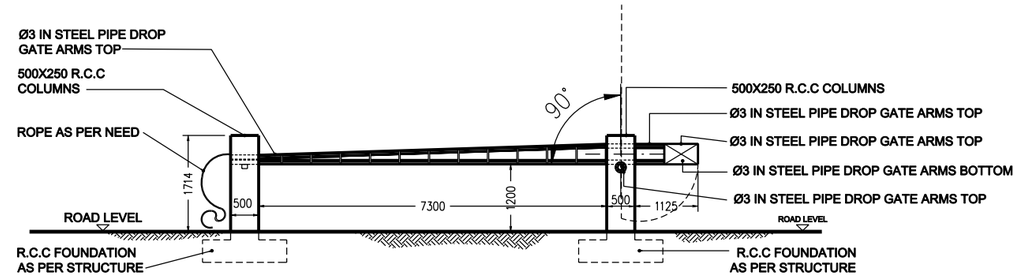

2 SS-4 ELEVATION VIEW
SCALE = 1:50

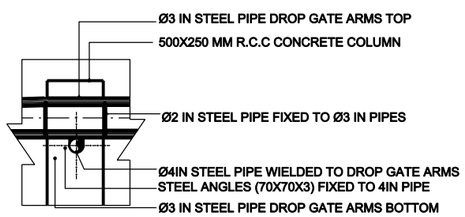

3 SS-4 SECTION
SCALE = 1:50

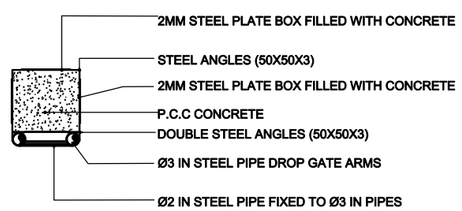

5 SS-4 SECTION
SCALE = 1:50

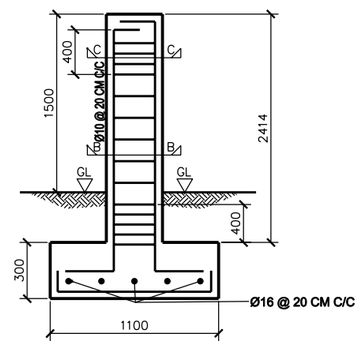

7 SS-4 SECTION A-A
SCALE = NTS

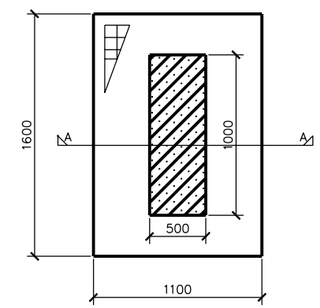

8 SS-4 TOP VIEW
SCALE = NTS

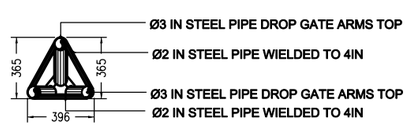

4 SS-4 SECTION
SCALE = 1:50

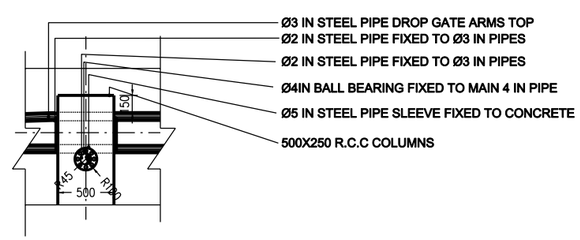

6 SS-4 SECTION
SCALE = 1:50

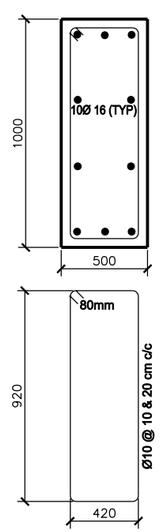

9 SS-4 SECTION B-B
SCALE = NTS

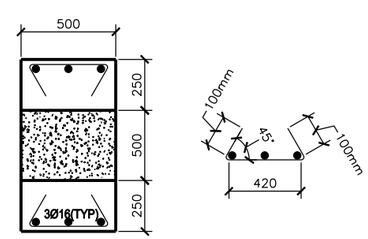

9 SS-4 SECTION C-C
SCALE = NTS

GRAPHIC SCALE

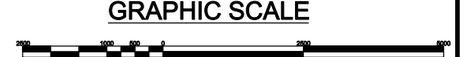

US ARMY CORPS OF ENGINEERS AFGHANISTAN ENGINEER DISTRICT

SYMBOL	DESCRIPTION	DATE	APPR.	SYMBOL	DESCRIPTION	DATE	APPR.

DESIGNED BY: DATE: xxxxxxxx REV. ___
DWN BY: ___ CKD BY: ___ DESIGN FILE NO. ___
REVIEWED BY: ___ DRAWING CODE: ___
SUBMITTED BY: ___ FILE NAME: ___ PLOT SCALE: ___ PLOT DATE: xxxxxxxx

U.S. ARMY ENGINEER DISTRICT, AFGHANISTAN
CORPS OF ENGINEERS
APO AE 96338

ENGINEERING AND CONSTRUCTION DIVISION

AFGHANISTAN NATIONAL POLICE (ANP) DISTRICT HEADQUARTERS COMPOUNDS - 1 STORY HQ
VARIOUS LOCATIONS, AFGHANISTAN

MANUAL DROP ARM GATE PLAN, ELEVATION & SECTIONS

SHEET REFERENCE NUMBER:
SS-4
SHEET — OF —

A1 Size 594mm x 841mm

PIPING AND HVAC LEGEND

SYMBOL	DESCRIPTION
	THREE-WAY VALVE (ANY TYPE OF OPERATOR)
	GATE VALVE
	BALL VALVE
	GLOBE VALVE
	ANGLE GLOBE VALVE
	PRESSURE RELIEF VALVE
	PRESSURE-TEMPERATURE RELIEF VALVE
	BALANCING COCK
	BUTTERFLY VALVE
	CHECK VALVE
	UNION (SCREWED)
	PRESSURE CONTROL VALVE (SELF-CONTAINED)
	SOLENOID VALVE
	MOTOR OPERATED CONTROL VALVE
	AIR ELIMINATOR
AAV	AIR VENT, AUTOMATIC
	AIR VENT, MANUAL
	BACK PRESSURE VALVE
	PRESSURE REDUCING VALVE
	"Y" STRAINER
	AIR VALVE
	TEMPERATURE REGULATING VALVE
	EXPANSION VALVE, HAND
	EXPANSION VALVE, THERMOSTATIC
T	THERMOMETER, DIAL TYPE
T	THERMOMETER, VERTICAL TYPE
P	PRESSURE GAGE
	RISER DOWN (ELBOW)
	RISER UP (ELBOW)
	PITCH DOWN IN DIRECTION OF FLOW
	RISE OR DROP
CHS	CHILLED WATER SUPPLY
CHR	CHILLED WATER RETURN
C	CONDENSATE DRAIN

SYMBOL	DESCRIPTION
	BRANCH CONNECTION OUT OF TOP
	BRANCH CONNECTION OUT OF BOTTOM
	BRANCH CONNECTION OUT OF SIDE
	CAP ON END OF PIPE
	CONCENTRIC REDUCER
	ECCENTRIC REDUCER
	ANCHOR POINT
	FLEXIBLE CONNECTION
FS	FLOW SWITCH
	EXPANSION JOINT
	FLUSH VALVE
HB HB	HOSE BIBB
	WATER FIXTURE
	MIXING FAUCET COLD & HOT WATER
DV	DRAIN VALVE
	SIGHT GLASS
FM	FLOW METER
	PET COCK
	FLOW DIRECTION
	INLINE-PUMP
	CALIBRATED BALANCE VALVE
T	AQUASTAT
	MOTOR OPERATED BUTTERFLY VALVE
	CEILING FAN
	OSCILATING WALL FAN

ABBREVIATIONS

AAV	AIR VENT AUTOMATIC
AC	AIR CONDITIONING UNIT
ACMH	ACTUAL CUBIC METERS PER HOUR
ACC	AIR COOLED CHILLER
ACCU	AIR COOLED CONDENSING UNIT
AF	AIR FILTER
AFF	ABOVE FINISHED FLOOR
AD	AREA DRAIN
AHU	AIR HANDLING UNIT
AP	ACCESS PANEL
BF	BOTTOM FLAT
BD	BALANCING DAMPER
BDD	BACKDRAFT DAMPER
BFP	BACKFLOW PREVENTER
BHP	BRAKE HORSEPOWER
BOD	BOTTOM OF DUCT
°C	DEGREES CELSIUS
CD	CEILING DIFFUSER
CF	CEILING FAN
CHW	CHILLED WATER
CLG	CEILING
CM	CENTIMETER
CMH	CUBIC METER PER HOUR
CONN	CONNECTION
CONT	CONTINUATION
CU	CONDENSING UNIT
CW	CHILLED WATER COOLING COIL
D	DROP/DEPTH
DB	DRY BULB
DET	DETAIL
DIA	DIAMETER
DH	DUCT HEATER
DIFF	DIFFERENTIAL
DG	DOOR GRILLE
DN	DOWN
DWG	DRAWING
DX	DIRECT EXPANSION
EA	EXHAUST AIR
EAT	ENTERING AIR TEMPERATURE
EDB	ENTERING DRY BULB
EDH	ELECTRIC DUCT HEATER
EF	EXHAUST FAN
EG	EXHAUST GRILLE
EH	ELECTRICAL CABINET HEATER
EL	ELEVATION
ELEC	ELECTRICITY/ELECTRICAL
EQUIP	EQUIPMENT
ER	EXHAUST REGISTER
EWB	ENTERING WET BULB
EWH	ELECTRIC WATER HEATER
EWT	ENTERING WATER TEMPERATURE
EXH	EXHAUST
EXT	EXTERNAL/EXTERIOR
FCO	FLOOR CLEAN OUT
FCU	FAN COIL UNIT
FCV	FLOW CONTROL VALVE
FD	FLOOR DRAIN/FIRE DAMPER
FIN	FINISHED
FL	FLOOR
FOS	FUEL OIL SUPPLY
FOR	FUEL OIL RETURN
FS	FLOOR SINK
FSD	COMBINATION FIRE/SMOKE DAMPER
GA	GAUGE
HB	HOSE BIBB
HC	HEATING COIL
HORIZ	HORIZONTAL
HP	HORSEPOWER
HR	HOUR
HVAC	HEATING, VENTILATING & AIR CONDITIONING
HZ	HERTZ
ID	INSIDE DIAMETER
IH	INTAKE HOOD
IS	INERTIAL SEPARATOR
INV.EL.	INVERT ELEVATION
KG	KILOGRAM
KH	KITCHEN HOOD
KW	KILOWATT
KPa	KILO PASCALS
LAT	LEAVING AIR TEMPERATURE
LAV	LAVATORY
LFACP	LOCAL FIRE ALARM CONTROL PANEL
LPM	LITERS PER MINUTE
LPH	LITERS PER HOUR
LS	LEVEL SWITCH
LVG	LEAVING
LVR	LOUVER
M	METER
M^2	SQUARE METER
M^3	CUBIC METER
MAX	MAXIMUM
MECH	MECHANICAL
MIN	MINIMUM
MISC	MISCELLANEOUS
MM	MILLIMETER
MVD	MANUAL VOLUME DAMPER
NC	NORMALLY CLOSED
NFPA	NATIONAL FIRE PROTECTION ASSOCIATION
NO	NORMALLY OPEN/NUMBER
NOM	NOMINAL
NTS	NOT TO SCALE
OA	OUTSIDE AIR
OC	ON CENTER
OD	OVERFLOW DRAIN
OI	OIL INTERCEPTOR
OWF	OSCILATING WALL FAN
ϕ	PHASE
P	PUMP
PD	PRESSURE DIFFERENTIAL
PH	PROPANE SPACE HEATER
PRESS	PRESSURE
PRV	PRESSURE REDUCING VALVE
PS	PRESSURE SWITCH
QTY	QUANTITY
R	RISE
RA	RETURN AIR
RC	REFRIGERATION COOLER
RD	ROOF DRAIN
REQD	REQUIRED
RF	RETURN FAN
RG	RETURN GRILLE
RH	RELATIVE HUMIDITY
RL	REFRIGERANT LIQUID
RM	ROOM
RPM	REVOLUTIONS PER MINUTE
RR	RETURN REGISTER
RS	REFRIGERANT SUCTION
S	SOIL/SOUTH/SECOND
SA	SUPPLY AIR
SD	SUPPLY AIR DIFFUSER
SENS	SENSIBLE
SF	SUPPLY FAN
SG	SUPPLY GRILLE
SH	SHEET
SMACNA	SHEET METAL AND AIR CONDITIONING CONTRACTORS NATIONAL ASSOCIATION
SOV	SHUT-OFF VALVE
SP	STATIC PRESSURE
SQ FT	SQUARE FOOT/SQUARE FEET
SR	SUPPLY REGISTER
SST	SATURATED SUCTION TEMPERATURE
TCP	TEMPERATURE CONTROL PANEL
TCV	TEMPERATURE CONTROL VALVE
TEMP	TEMPERATURE
TG	TRANSFER GRILLE
TK	TANK
TP	TRAP PRIMER
TYP	TYPICAL
UC	UNDERCUT DOOR
UH	UNIT HEATER
UL	UNDERWRITER'S LABORATORIES
V	VOLTS
VEL	VELOCITY
VH	VENT HOOD
WCCU	WATER COOLED CONDENSING UNIT
WG	WATER GAGE

GENERAL NOTES:

1. SEE ARCHITECTURAL DRAWINGS FOR EXACT LOCATION OF LOUVERS, EQUIPMENT PADS AND SUPPORT PLATFORMS.
2. SEE ARCHITECTURAL REFLECTED CEILING PLAN FOR EXACT LOCATION OF DIFFUSERS, REGISTERS, AND GRIILLES.
3. INSULATE DUCTWORK AND REFRIGERANT PIPING SYSTEMS IN ACCORDANCE WITH SPEC. SECTION 01015, THERMAL INSULATION FOR MECHANICAL SYSTEMS.
4. ALL DIMENSIONS SHOWN IN mm UNLESS INDICATED OTHERWISE.
5. ALL DUCT DIMENSIONS SHOWN ON THE DRAWINGS ARE CLEAR INSIDE DIMENSIONS.
6. MOUNT WALL THERMOSTATS 1.5M ABOVE FINISHED FLOOR.
7. OUTDOOR CONDENSING UNITS SHALL BE INSTALLED ON 300 HIGH STEEL PLATFORM ON A CONCRETE PAD AND PROVIDED WITH VIBRATION PADS.

CONTROL LEGEND

SYMBOL	DESCRIPTION
M	MOTORIZED CONTROL DAMPER
	CONTROL CONNECTION
S/S	START/STOP CONTROL
H	HUMIDISTAT, TWO POSITION
Hm	HUMIDISTAT, MODULATING
H	HUMIDITY SENSOR
SD	SMOKE DETECTOR
T_2	THERMOSTAT, TWO POSITION
T	SPACE THERMOSTAT
FS	FLOW SWITCH
TI	TEMPERATURE INDICATOR
T_S	SPACE TEMPERATURE SENSOR

US ARMY CORPS OF ENGINEERS AFGHANISTAN ENGINEER DISTRICT

SYMBOL	DESCRIPTION	DATE	APPR.	SYMBOL	DESCRIPTION	DATE	APPR.

DESIGNED BY: DATE: XX-XX-XX REV. __
DWN BY: CKD BY: DESIGN FILE NO. DRAWING CODE
REVIEWED BY: FILE NAME: PLOT SCALE: PLOT DATE: XX-XX-XX
SUBMITTED BY:

U.S. ARMY ENGINEER DISTRICT, AFGHANISTAN
CORPS OF ENGINEERS
APO AE 96338

ENGINEERING AND CONSTRUCTION DIVISION

AFGHANISTAN NATIONAL POLICE (ANP) DISTRICT HEADQUARTERS COMPOUNDS - 1 STORY HQ
VARIOUS LOCATIONS, AFGHANISTAN
STANDARD DETAILS

LEGENDS AND ABBREVIATIONS

SHEET REFERENCE NUMBER:
SM-1

A1 Size 594mm x 841mm

ELECTRIC CABINET/UNIT HEATER SCHEDULE

EH X-X | UH X-X

EQUIPT. NO.	LOCATION (1)	DISCHARGE	CAPACITY (KW)	AIR FLOW (CMH)	ELECTRICAL DATA				TEMP. RISE DEG C	SOUND POWER dBA	REMARKS
					HP	VOLTS	PH	HZ			
EH-A-1	CHIEF'S TOILET	HORIZONTAL	1.5	136	50 W	220	1	50	30		WALL MOUNTED CABINET HEATER
EH-A-2	TOILETS (2)	HORIZONTAL	1	68	40 W	220	1	50	40		WALL MOUNTED CABINET HEATER
UH-A-1	TOILETS/ SHOWERS	HORIZONTAL	3.0	510	1/20	220	1	50	17		WALL MOUNTED UNIT HEATER SEE DETAIL C ON SHT. SM3.
UH-C-1	GUARD SHACK	HORIZONTAL	4	425	1/30	220	1	50	10		FLOOR MOUNTED CABINET HEATER
UH-E-1	WELL HOUSE	HORIZONTAL	3.0	510	1/20	220	1	50	17		WALL MOUNTED UNIT HEATER SEE DETAIL C ON SHT. SM3.

(1) SEE PLANS FOR LOCATION AND QUANTITY.

EXHAUST FAN SCHEDULE

EF A-X

EQUIPT. NO.	LOCATION	AIR QUANTITY CMH	S.P. MM-W.G.	FAN TYPE	ELECTRICAL DATA				CONTROL DIAGRAM	SOUND POWER dWA	REMARKS
					HP	VOLTS	PH	HZ			
EF-A-1	CHIEF'S TOILET	170	7	CEILING CABINET	80 WATTS	220	1	50	E1	50	CEILING MOUNTED WITH GRAVITY BACKDRAFT DAMPER AND CEILING GRILL
EF-A-2	TOILETS (3)	85	7	CEILING CABINET	80 WATTS	220	1	50	E1	50	CEILING MOUNTED WITH GRAVITY BACKDRAFT DAMPER AND CEILING GRILL
EF-A-3	PRISONER CELLS	510	7	WALL CENTRIFUGAL	1/12	220	1	50	E2	50	WALL MOUNTED WITH BACKDRAFT DAMPER
EF-A-4	MEN'S TOILET	510	7	WALL CENTRIFUGAL	1/12	220	1	50	E2	50	WALL MOUNTED WITH BACKDRAFT DAMPER
EF-A-5	KITCHEN	6,000	44	ROOF CENTRIFUGAL UPBLAST	2.0	220	1	50	E2	65	RATED FOR 175° C AND KITCHEN HOOD
EF-A-6	KITCHEN	1,700	8	WALL CENTRIFUGAL	1/4	220	1	50	E4	60	WALL MOUNTED WITH BACKDRAFT DAMPER
EF-E-1	WELL HOUSE	600	10	WALL CENTRIFUGAL	1/4	220	1	50	E4	65	WALL MOUNTED WITH BACKDRAFT DAMPER

CEILING AND OSCILLATING WALL FAN SCHEDULE

CF A-1 | OWF A-1

EQUIPT. NO.	AIR QUALITY CMH	FAN TYPE	ELECTRICAL DATA				REMARKS
			HP	VOLTS	PH	HZ	
CF-A-1	13,600	CEILING FAN	85 WATTS	220	1	50	CEILING MOUNTED
OWF-A-1	5,000	OSCILLATING WALL FAN	1/4	220	1	50	WALL MOUNTED

AIR HANDLING UNIT SCHEDULE

EQUIPT. NO.	LOCATION	DISCHARGE	CAPACITY (KW)	AIR FLOW (CMH)	ELECTRICAL DATA				TEMP. RISE DEG C	SOUND POWER dBA	REMARKS
					HP	VOLTS	PH	HZ			
AHU-1	CELLS	VERTICAL	5.2	1200	.25	220	1	50	35	45	DUCT MOUNTED HEATER

SUPPLY FAN SCHEDULE

SF A-X

EQUIPT. NO.	LOCATION	AIR QUANTITY CMH	S.P. MM-W.G.	FAN TYPE	ELECTRICAL DATA				CONTROL DIAGRAM	SOUND POWER dWA	REMARKS
					HP	VOLTS	PH	HZ			
SF-A-1	KITCHEN	5,100	25	INLINE CENTRIFUGAL	1.0	220	1	50	E2	60	CEILING MOUNTED W/GRAVITY BACKDRAFT DAMPER

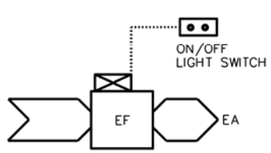

TEMPERATURE CONTROL DIAGRAM E1

E1 SEQUENCE OF CONTROL

START-UP

THE EXHAUST FAN SHALL BE STARTED MANUALLY FROM A LOCAL START/STOP LIGHT SWITCH.

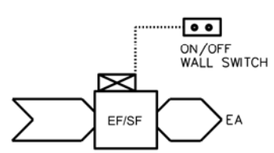

TEMPERATURE CONTROL DIAGRAM E2

E2 SEQUENCE OF CONTROL

START-UP

THE EXHAUST/SUPPLY FAN SHALL BE STARTED MANUALLY FROM A LOCAL START/STOP LIGHT SWITCH.

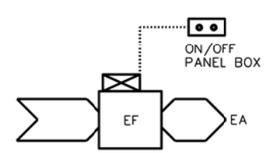

TEMPERATURE CONTROL DIAGRAM E3

E3 SEQUENCE OF CONTROL

START-UP

THE EXHAUST FAN SHALL BE STARTED MANUALLY FROM AN THE ON-OFF SWITCH IN THE PANEL BOX.

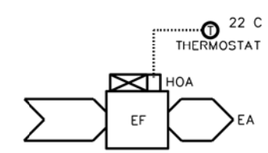

TEMPERATURE CONTROL DIAGRAM E4

E4 SEQUENCE OF CONTROL

START-UP

THE EXHAUST FAN SHALL BE STARTED MANUALLY BY PLACING THE HAND-OFF-AUTO (HOA) SWITCH IN THE HAND POSITION. IN THE AUTO POSITION, FAN OPERATION SHALL BE CONTROLLED OFF AN ADJUSTABLE THERMOSTAT.

US ARMY CORPS OF ENGINEERS AFGHANISTAN ENGINEER DISTRICT

SYMBOL	DESCRIPTION	DATE	APPR.	SYMBOL	DESCRIPTION	DATE	APPR.

U.S. ARMY ENGINEER DISTRICT, AFGHANISTAN
CORPS OF ENGINEERS
APO AE 96338

DESIGNED BY: | DATE: XX-XX-XX | REV. ___
DWN BY: | CKD BY: | DESIGN FILE NO.
REVIEWED BY: | DRAWING CODE
SUBMITTED BY: | FILE NAME: | PLOT SCALE: | PLOT DATE: XX-XX-XX

ENGINEERING AND CONSTRUCTION DIVISION

AFGHANISTAN NATIONAL POLICE (ANP) DISTRICT HEADQUARTERS COMPOUNDS - 1 STORY HQ
VARIOUS LOCATIONS, AFGHANISTAN
STANDARD DETAILS

MECHANICAL SCHEDULES

SHEET REFERENCE NUMBER:
SM-2

A1 Size 594mm x 841mm

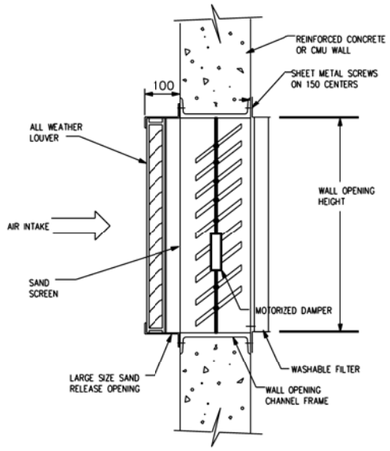

SAND TRAP TYPE LOUVER (A / SM3)
NOT TO SCALE

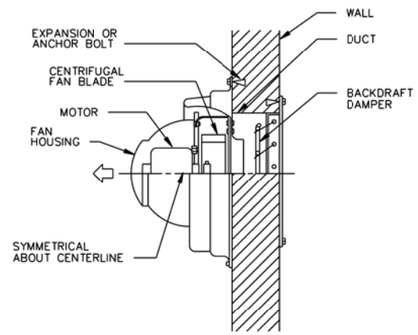

POWER WALL VENTILATOR DETAIL (B / SM3)
NOT TO SCALE

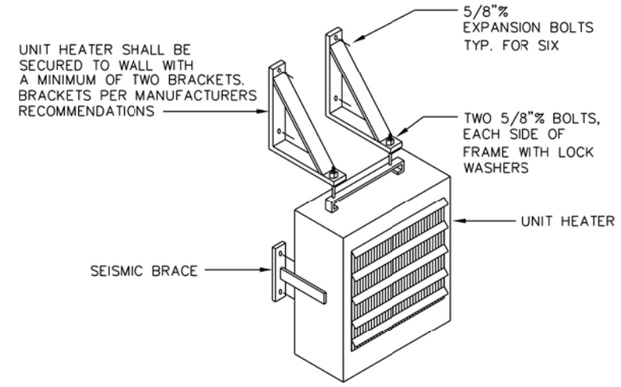

ELECTRIC UNIT HEATER DETAIL (C / SM3)
NOT TO SCALE

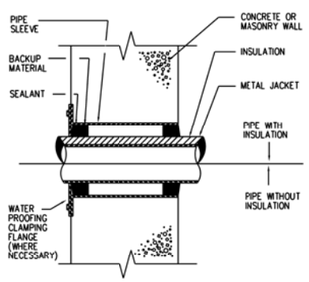

PIPE SLEEVE THRU WALL (E / SM3)
NOT TO SCALE

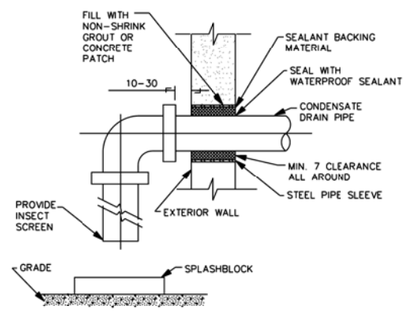

CONDENSATE DRAIN THRU EXTERIOR WALL (F / SM3)
NOT TO SCALE

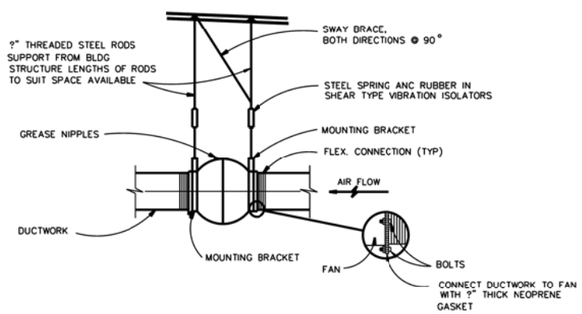

CENTRIFUGAL IN-LINE FAN (G / SM3)
NOT TO SCALE

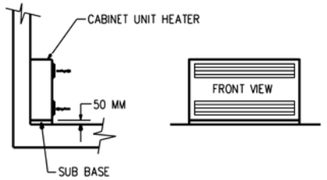

CABINET UNIT HEATER (H / SM3)
NOT TO SCALE

US ARMY CORPS OF ENGINEERS AFGHANISTAN ENGINEER DISTRICT

SYMBOL	DESCRIPTION	DATE	APPR.	SYMBOL	DESCRIPTION	DATE	APPR.

DESIGNED BY: | DATE: XX-XX-XX | REV.
DWN BY: | CKD BY: | DESIGN FILE NO.
REVIEWED BY: | DRAWING CODE:
SUBMITTED BY: | FILE NAME:
PLOT SCALE:
PLOT DATE: XX-XX-XX

U.S. ARMY ENGINEER DISTRICT, AFGHANISTAN
CORPS OF ENGINEERS
APO AE 96338

ENGINEERING AND CONSTRUCTION DIVISION

AFGHANISTAN NATIONAL POLICE (ANP) DISTRICT HEADQUARTERS COMPOUNDS - 1 STORY HQ
VARIOUS LOCATIONS, AFGHANISTAN
STANDARD DETAILS

MECHANICAL STANDARD DETAILS

SHEET REFERENCE NUMBER:
SM-3

A1 Size 594mm x 841mm

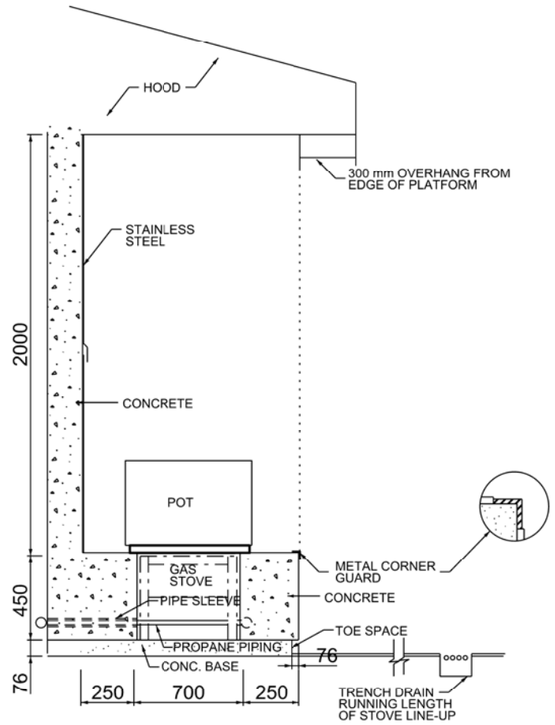

GAS STOVE SECTION
SCALE: NTS

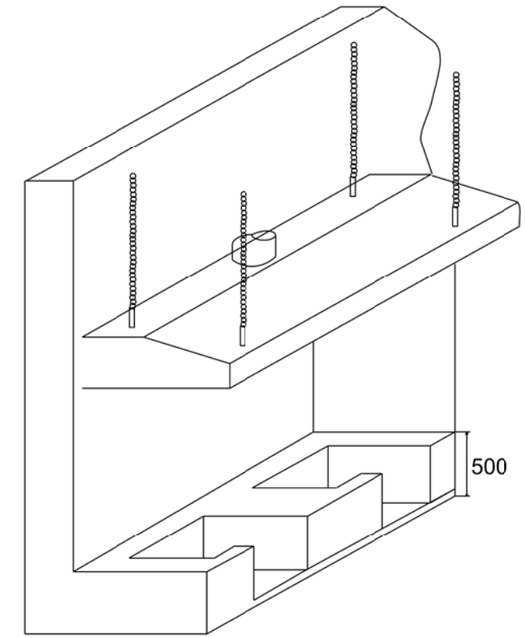

ISOMETRIC VIEW
SCALE: NTS

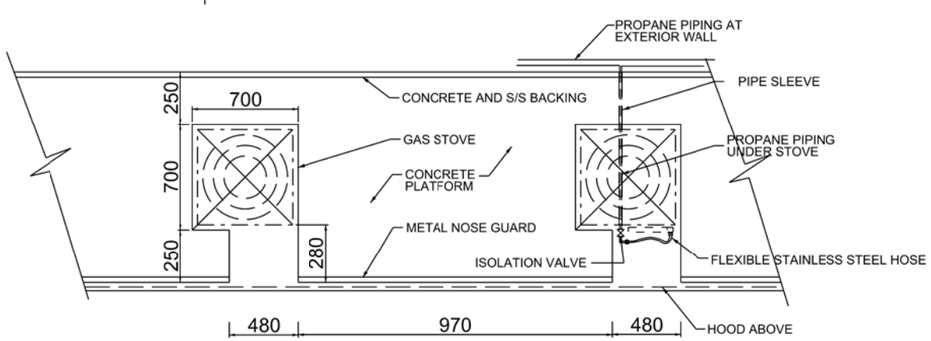

GAS STOVE PLAN
SCALE: NTS

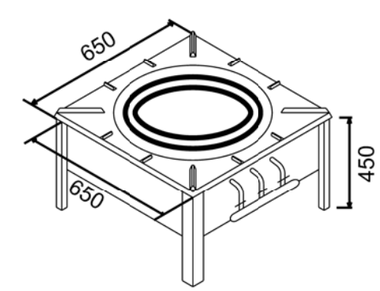

GAS STOVE VIEW
SCALE: NTS

NOTES:
- DIMENSIONS SHOWN ARE BASED ON A SPECIFIC STOVE MODEL
- CONTRACTOR SHALL ADJUST THE DIMENSIONS BASED ON THE ACTUAL STOVE DIMENSIONS
- THE SURFACE OF THE STOVE SHALL BE FLUSH WITH THE CONCRETE PLATFORM

US ARMY CORPS OF ENGINEERS AFGHANISTAN ENGINEER DISTRICT

SYMBOL	DESCRIPTION	DATE	APPR.

SYMBOL	DESCRIPTION	DATE	APPR.

DESIGNED BY: DATE: xx-xx-xx REV.
DWN BY: CKD BY: DESIGN FILE NO.
REVIEWED BY: DRAWING CODE:
SUBMITTED BY: FILE NAME:
PLOT SCALE:
PLOT DATE: xx-xx-xx

U.S. ARMY ENGINEER DISTRICT, AFGHANISTAN
CORPS OF ENGINEERS
APO AE 96338

ENGINEERING AND CONSTRUCTION DIVISION

AFGHANISTAN NATIONAL POLICE (ANP) DISTRICT HEADQUARTERS COMPOUNDS - 1 STORY HQ
VARIOUS LOCATIONS, AFGHANISTAN
STANDARD DETAILS

PROPANE COOKING STOVE

SHEET REFERENCE NUMBER:
SM-4
SHEET --- OF ---

A1 Size 594mm x 841mm

LEGEND

- GATE VALVE
- GLOBE VALVE
- BUTTERFLY VALVE
- CHECK VALVE
- STOP CHECK VALVE
- PLUG VALVE
- 3-WAY VALVE
- RELIEF OR SAFETY VALVE
- ANGLE VALVE
- ANGLE GLOBE VALVE
- BALANCING COCK
- AIR VALVE
- HOSE GATE DRAIN VALVE
- EXPANSION VALVE
- AAV — AIR VENT, AUTOMATIC
- AIR VENT, MANUAL
- M — MOTORIZED VALVE (MODULATING OR TWO POSITION)
- S — SOLENOID VALVE
- M — 3-WAY MOTORIZED VALVE (MOD. OR 3-POSITION)
- S — 3-WAY SOLENOID VALVE
- TEMPERATURE REGULATING VALVE
- AIR ELIMINATOR
- BACK PRESSURE VALVE
- PRESSURE REDUCING VALVE
- D.V. — DRAIN VALVE
- SLEEVE COUPLING (SC)
- BP — BACKFLOW PREVENTER
- WHA 'A' — WATER HAMMER ARRESTOR

LEGEND

- P — PRESSURE GAUGE
- T — THERMOMETER, DIAL TYPE
- T — THERMOMETER, VERTICAL TYPE
- H.B. — HOSE BIBB, PLAN
- H.B. — HOSE BIBB, ELEV.
- W.H. — WALL HYDRANT
- CO — EXPOSED CLEANOUT
- FCO — FLOOR CLEANOUT
- WCO — WALL CLEANOUT
- BALL VALVE
- UNION
- FLANGE SET
- FLEXIBLE HOSE/CONNECTION
- Y-TYPE STRAINER
- SIGHT GLASS
- GAUGE GLASS W/COCKS
- FILTER / DRYER
- TANK AIR CONTROL FITTING
- CAPPED / PLUGGED CONNECTION
- REDUCER - INCREASER
- EXPANSION LOOP
- EXPANSION JOINT
- SUPPORT LOCATION
- PIPE TURNING DOWN
- PIPE TURNING UP
- FD — FLOOR DRAIN
- ROOF DRAIN
- POINT OF CONNECTION TO EXISTING SYSTEM

LEGEND

- A — COMPRESSED AIR DROP
- HU — HUMIDIFIER
- I.F. — INSULATING FLANGE
- THERMAL RELIEF VALVE W/ SIGHT FLOW INDICATOR
- S — BASKET STRAINER
- W — WATER METER
- TS — FLOW CONTROL VALVE
- SAMPLE CONNECTION
- FIRE SAFETY VALVE
- C — NON - SURGE CHECK VALVE
- FLOW CONTROL VALVE
- P — PRESSURE REGULATING VALVE
- W — WATER SLUG VALVE (WSV)

ABBREVIATIONS

A A	AMERICAN DISABILITIES ACT
CO	EXPOSED CLEAN OUT
CW	COLD WATER
EWH	ELECTRIC WATER HEATER
FCO	FLOOR CLEAN OUT
FD	FLOOR DRAIN
FFE	FINISHED FLOOR ELEVATION
FS	FLOOR SINK
GWH	GAS WATER HEATER
HB	HOSE BIBB
HW	HOT WATER
HWR	HOT WATER CIRCULATION
N.C.	NORMALLY CLOSED
P	PUMP
S.R.	SHORT RADIUS
S.S.	STAINLESS STEEL
V	VENT
VTR	VENT THROUGH ROOF
W	WASTE
WCO	WALL CLEAN OUT
WH	WALL HYDRANT

- SOIL OR WASTE PIPE ABOVE FLOOR
- SOIL OR WASTE PIPE BELOW FLOOR (MIN. 50 SIZE)
- COLD WATER, DOMESTIC (PLAN)
- HOT WATER, DOMESTIC (PLAN)
- HOT WATER, CIRCULATION, DOMESTIC (PLAN)
- VENT PIPE
- C — CONDENSATE DRAIN
- CA — COMPRESSED AIR
- HPIW — HIGH PRESSURE INDUSTRIAL WATER
- IW — INDUSTRIAL WATER

EQUIPMENT DESIGNATION

EF — EQUIPMENT TYPE
A-1 — EQUIPMENT NUMBER
BUILDING NUMBER

DETAIL REFERENCE

X — REFERENCE DESIGNATION LETTER
X — DETAIL SHEET LOCATION

PLUMBING FIXTURE SCHEDULE

FIX. NO.	SYMBOL	FIXTURE NAME	C.W.	H.W.	WASTE (W)	VENT (V)	REMARKS
P1		EASTERN WATER CLOSET (FLUSH TANK)	15	--	100	50	CW CONNECTION SHALL BE 25 UNLESS NOTED OTHERWISE. FLOOR OUTLET
P2		ABOLUTION (2 STATION)	15	--	50	32	(2) COMPLETE WALL MOUNTED LAVATORY VALVE ASSEMBLIES AND TRIM MOUNTED 600mm A.F.F.
P3		LAVATORY	15	15	32	32	
P3A		LAVATORY (2 STATION GANG)	15	15	32	32	
P4		MOP SINK (FLOOR MOUNT JANITOR TYPE)	15	15	50	40	DRAIN ON FLOOR OR AS INDICATED
P5		SHOWER	15	15	40	32	
P6		NOT USED					
P7		NOT USED					
P8		NOT USED					
P9		KITCHEN SINK	15	15	40	32	
P10		GREASE INTERCEPTOR			80	50	MANUAL CLEANING TYPE, WITH 135 LPM FLOW RATE

WATER HAMMER ARRESTOR SIZING CHART

P.D.I. SYMBOL	FIXTURE UNIT RATING	NIPPLE SIZE (MM)	CHAMBER HEIGHT (MM)
A	1-11	20	100
B	12-32	25	125
C	33-60	25	150
D	61-113	25	175
E	114-154	25	200
F	155-330	25	225

P. D. I. = PLUMBING AND DRAINAGE INSTITUTE.

GENERAL NOTES:

1. DRAINAGE PIPING LOCATED BELOW FLOORS SHALL BE ROUTED BELOW FOOTINGS UNLESS INDICATED OTHERWISE.
2. INTERIOR SOIL AND WASTE PIPING 80mm AND SMALLER SHALL BE ROUTED WITH A 2% SLOPE. INTERIOR SOIL AND WASTE PIPING 100mm AND LARGER SHALL BE ROUTED WITH A MINIMUM 1% SLOPE.
3. ALL DIMENSIONS SHOWN HERE AND ON PLANS ARE IN MM UNLESS INDICATED OTHERWISE.
4. MINIMUM BURIED PIPE SIZE SHALL BE 50 mm.
5. SEE STANDARD SHEET SM-1 FOR ADDITIONAL ABBREVIATIONS.
6. FOR FOOD SERVICE EQUIPMENT DESCRIPTION, SEE ARCHITECTURAL DRAWINGS.

US ARMY CORPS OF ENGINEERS AFGHANISTAN ENGINEER DISTRICT

SYMBOL	DESCRIPTION	DATE	APPR.	SYMBOL	DESCRIPTION	DATE	APPR.

DESIGNED BY: DATE: XX-XX-XX REV. __
DWN BY: CKD BY: DESIGN FILE NO. DRAWING CODE
REVIEWED BY: FILE NAME: PLOT SCALE:
SUBMITTED BY: PLOT DATE: XX-XX-XX

U.S. ARMY ENGINEER DISTRICT, AFGHANISTAN
CORPS OF ENGINEERS
APO AE 96338

ENGINEERING AND CONSTRUCTION DIVISION

AFGHANISTAN NATIONAL POLICE (ANP) DISTRICT HEADQUARTERS COMPOUNDS - 1 STORY HQ
VARIOUS LOCATIONS, AFGHANISTAN
STANDARD DETAILS

LEGEND AND ABBREVIATIONS

SHEET REFERENCE NUMBER:
SP-1

A1 Size 594mm x 841mm

NOTES:
1. PIPING SHALL BE PLASTIC PVC TO MATCH WATER DISTRIBUTION SYSTEM.
2. CONTRACTOR SHALL INSTALL DIELECTRIC UNION BETWEEN CONNECTIONS OF DISSIMILAR METALS.

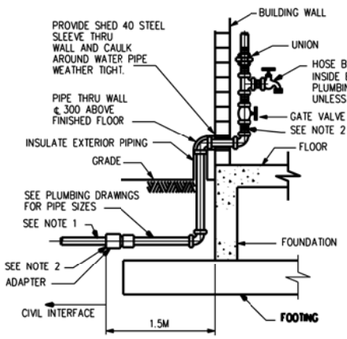

WATER SERVICE ENTRANCE SIDE VIEW

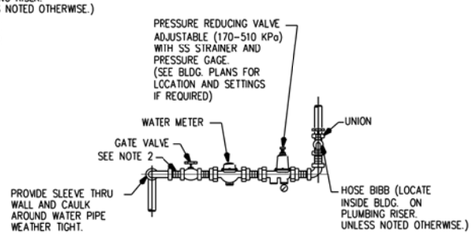

WATER SERVICE ENTRANCE FRONT VIEW

WATER SERVICE ENTRANCE DETAILS (A / SP2)
NOT TO SCALE

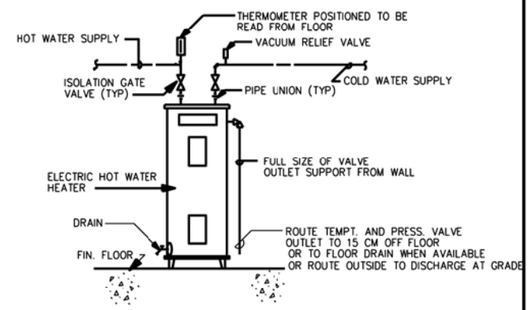

ELECTRIC WATER HEATER DETAIL (B / SP2)
NOT TO SCALE

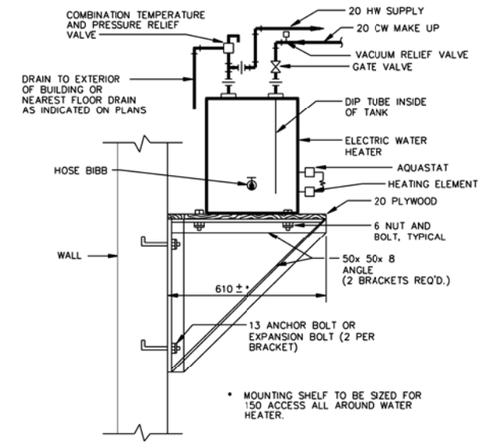

IF WATER HEATER COMES EQUIPPED WITH A MOUNTING BRACKET, CONTRACTOR WILL SUBMIT TO THE ENGINEER FOR APPROVAL, ALTERNATE INSTALLATION DETAIL AS RECOMMENDED BY HEATER MANUFACTURER FOR THE TYPE OF WALL (CMU,METAL STUD, ETC.) APPLICABLE

WALL MOUNTED ELECTRIC WATER HEATER DETAIL (C / SP2)
NOT TO SCALE

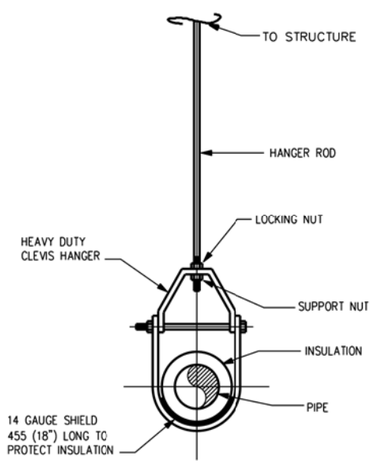

CLEVIS HANGER DETAIL (D / SP2)
NOT TO SCALE

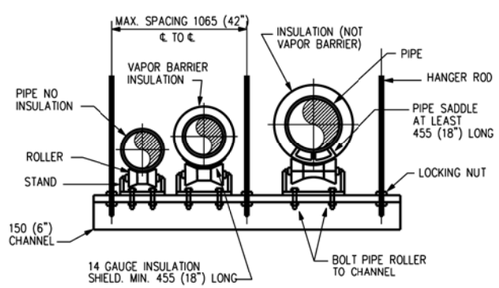

TRAPEZE HANGER DETAIL (E / SP2)
NOT TO SCALE

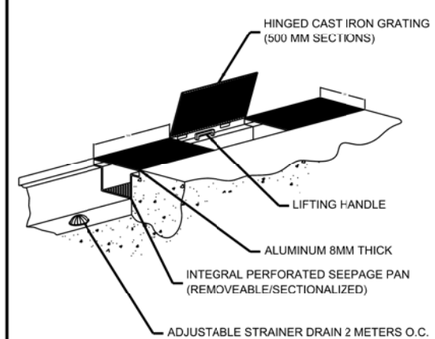

FLOOR TRENCH DRAIN DETAIL (F / SP2)
NOT TO SCALE

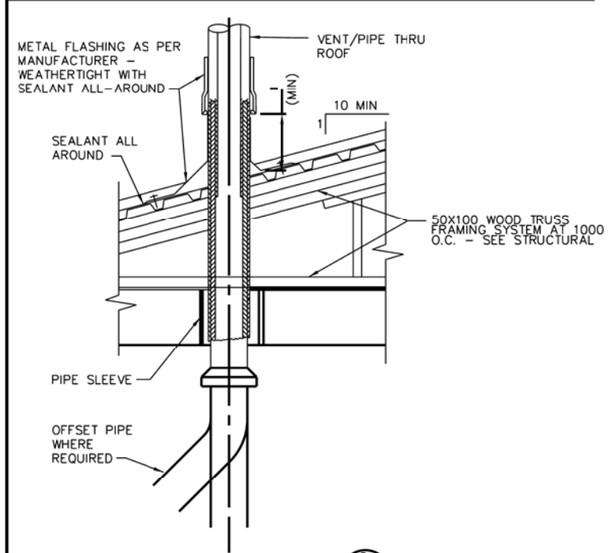

VENT THRU ROOF DETAIL (G / SP2)
NOT TO SCALE

US ARMY CORPS OF ENGINEERS AFGHANISTAN ENGINEER DISTRICT

SYMBOL	DESCRIPTION	DATE	APPR.	SYMBOL	DESCRIPTION	DATE	APPR.

DESIGNED BY: | DATE: XX-XX-XX | REV. ___
DWN BY: | CKD BY: | DESIGN FILE NO.
REVIEWED BY: | DRAWING CODE
SUBMITTED BY: | FILE NAME: | PLOT SCALE: | PLOT DATE: XXXX-XX

U.S. ARMY ENGINEER DISTRICT, AFGHANISTAN
CORPS OF ENGINEERS
APO AE 96338

ENGINEERING AND CONSTRUCTION DIVISION

AFGHANISTAN NATIONAL POLICE (ANP) DISTRICT HEADQUARTERS COMPOUNDS - 1 STORY HQ
VARIOUS LOCATIONS, AFGHANISTAN
STANDARD DETAILS

STANDARD PLUMBING DETAILS

SHEET REFERENCE NUMBER:
SP-2

A1 Size 594mm x 841mm

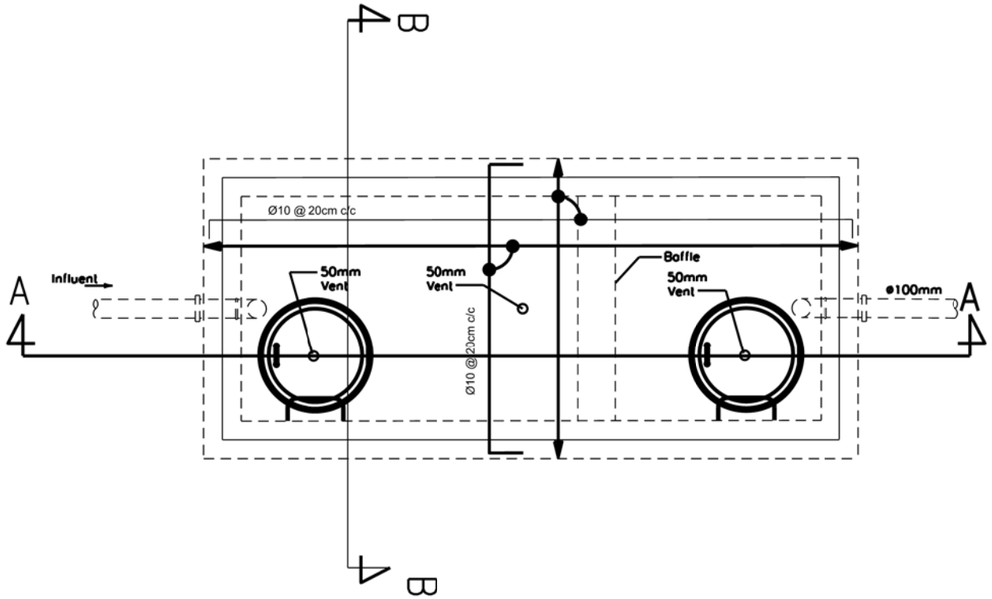

01 GREASE & OIL/WATER SEPARATOR PLAN

SP-3 REF:

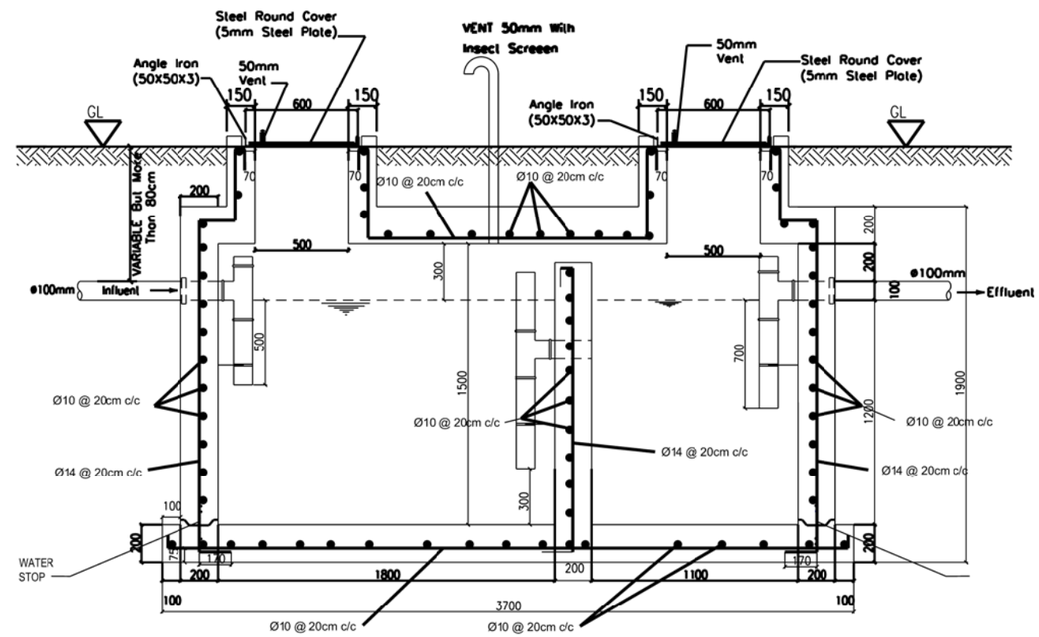

02 SECTION (A-A)

SP-3 REF:

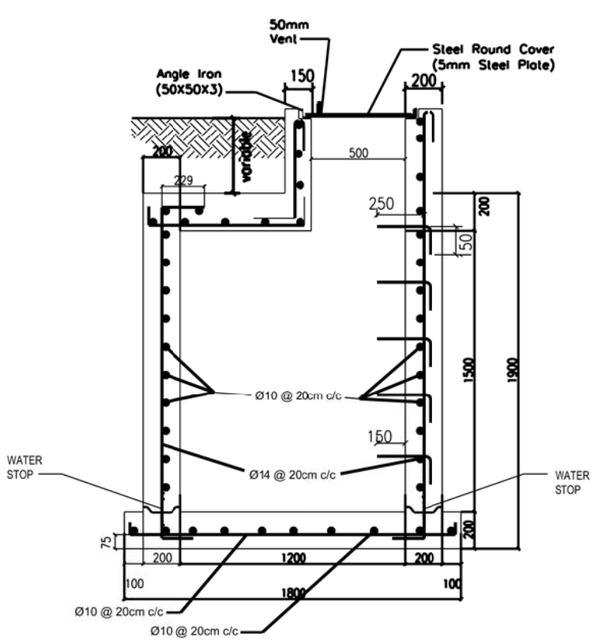

03 SECTION (B-B)

SP-3 REF:

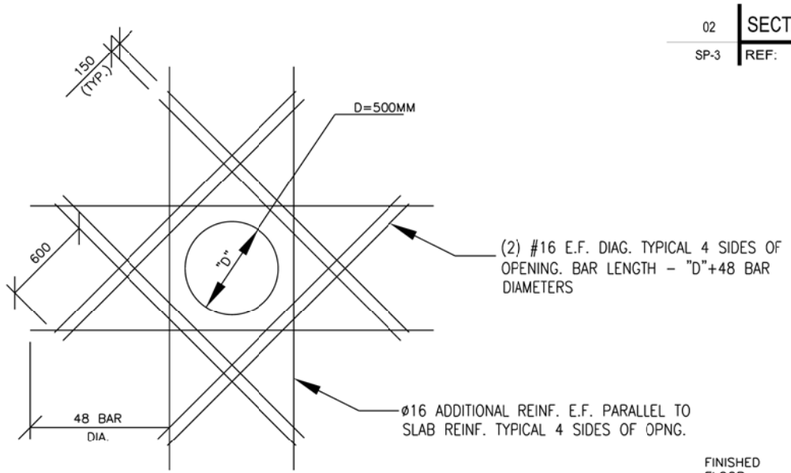

04 OPENING REINFORCEMENT

SP-3 REF :

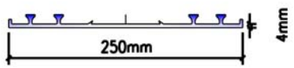

Water Stop Details

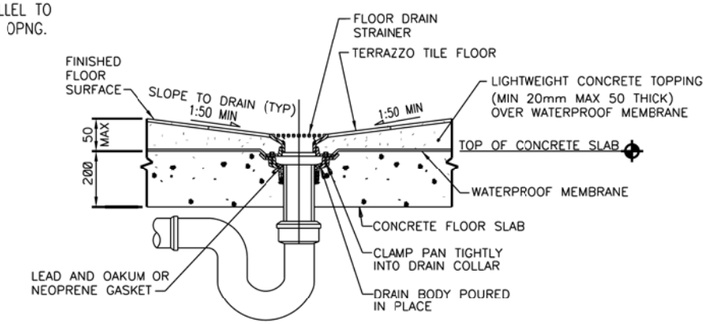

TYPICAL FLOOR DRAIN DETAIL (B / SP3)

NOT TO SCALE

US ARMY CORPS OF ENGINEERS AFGHANISTAN ENGINEER DISTRICT

SYMBOL	DESCRIPTION	DATE	APPR	SYMBOL	DESCRIPTION	DATE	APPR

DESIGNED BY: DWN BY: CKD BY: REVIEWED BY: SUBMITTED BY: DATE: XX-XX-XX DESIGN FILE NO. DRAWING CODE: FILE NAME: PLOT SCALE: PLOT DATE: XX-XX-XX REV

U.S. ARMY ENGINEER DISTRICT, AFGHANISTAN CORPS OF ENGINEERS APO AE 96338

ENGINEERING AND CONSTRUCTION DIVISION

AFGHANISTAN NATIONAL POLICE (ANP) DISTRICT HEADQUARTERS COMPOUNDS - 1 STORY HQ

VARIOUS LOCATIONS, AFGHANISTAN

STANDARD DETAILS

STANDARD PLUMBING DETAILS

SHEET REFERENCE NUMBER:

SP-3

A1 Size 594mm x 841mm

LEGEND

- FLUORESCENT LIGHT FIXTURE.
- LIGHT FIXTURES, FIXTURE MARK AS INDICATED
- EXIT SIGN, TYPE F FIXTURE, MTD 2.2M AFF
- EMERGENCY LIGHT, TYPE C FIXTURE, MTD 2.4M AFF
- WP,S — DUPLEX SOCKET OUTLET (13A, 250V), BS 1363
  S – A/C OR WATER HEATER SWITCH-RECEPTACLE COMBINATION
  WP – WEATHERPROOF
- J — JUNCTION BOX
- $S_{3,WP}$ — SWITCH, WP-WEATHERPROOF, 3-3 WAY, EP-EXPLOSION PROOF
- S — LIGHT SWITCH
- S_F — EXHAUST FAN SWITCH
- S_{CF} — CEILING FAN SWITCH
- J_{20} — SAFETY DISCONNECT SWITCH, SWITCH SHALL BE 1P56 ENCLOSURE, 20A UNO
- 1/3 — MOTOR (1/3 HP)
- S_M — MANUAL MOTOR STARTER
- ELECTRIC CABINET/ UNIT HEATER
- EWH — ELECTRIC WATER HEATER
- LP-2 — HOMERUN, PNL LP, CIRCUIT 2
- LP-2 — HOMERUN, PNL LP, 3PH CKT, CIRCUIT 2
- COMBINATION LIGHTING AND POWER PANEL (LP), OR LOAD CENTER (LC)
- 400AT/600AF — 3 POLE, 600A ADJUSTABLE TRIP CIRCUIT BREAKER
- 150AT/3P — 3 POLE, 150A CIRCUIT BREAKER
- COMBINATION TELEPHONE/DATA OUTLET. SEE DETAIL SHEET SE-5 MOUNTED 0.5M AFF
- W — SINGLE TELEPHONE ONLY OUTLET, WALL MOUNTED 1.2m AFF
- TBB — TELEPHONE BACK BOARD (TVBB INDICATES TELEVISION BACKBOARD) (1200mmx600mmx12mm)NLESS NOTED OTHERWISE
- EXOTHERMIC WELDED GROUND CONNECTION
- GROUND ROD (EARTH ELECTRODE) WITH EXOTHERMIC WELD CONNECTION, COPPER, 20mm DIA X 3.0m LENGTH
- EM 1 — ELECTRIC POWER MANHOLE, H INDICATES HANDHOLE.
- CM 1 — COMMUNICATIONS MANHOLE, H INDICATES HANDHOLE.
- SE — UNDERGROUND SECONDARY DISTRIBUTION POWER LINE, DIRECT BURIED IN SCHEDULE 80 PVC C, UNO
- UNDERGROUND DIRECT BURIED SCH 40 PVC C, AS INDICATED, 600 BFG, UNO

GENERAL NOTES:

1. REFER TO SECTION 01015 FOR ADDITIONAL / DETAIL REQUIREMENTS.
2. ALL WIRING INSTALLATION FOR LIGHTING, POWER, AND TELECOMMUNICATIONS, SHALL BE IN APPROVED METAL CONDUIT, EITHER CONCEALED OR SURFACE MTD.
3. EXIT AND EMERGENCY LIGHTING FIXTURES SHALL BE CONNECTED TO AN UN SWITCHED POWER CIRCUIT.
4. MOUNTING HEIGHT FOR ALL PENDANT MTD LIGHT FIXTURE IS 3M AFF UNO ON THE DRAWINGS OR IN THE LIGHT FIXTURE SCH.
5. MOUNT ALL LIGHT AND FAN SWITCHES 1.2M AFF UNO.
6. MOUNT ALL RECEPTACLES 500 AFF UNO. MOUNT ALL COUNTER TOP RECEPTACLES 100 ABOVE COUNTER TOP, AND PROVIDE GFI PROTECTION.
7. ALL SPARE OR EMPTY CONDUITS SHALL HAVE A PULL STRING SECURED AT BOTH ENDS OF CONDUIT.
8. ALL ELECTRICAL SYSTEMS SHALL BE INSTALLED IN ACCORDANCE WITH THE MANUFACTURERS RECOMMENDATIONS AND THE NEC.
9. BOND LIGHTING PROTECTION GROUND SYSTEMS TO BUILDING ELECTRICAL GROUND SYSTEM PER NEC 250.16

LIGHTING FIXTURE SCHEDULE

* SEE LIGHTING FIXTURE DETAILS ON DRAWINGS SE-2 & SE-3

FIXTURE MARK	LINE VOLT.	TYPE	LAMPS NO.	LAMPS WATTAGE	MOUNTING	REMARKS
A	240	230B1	3	40	SURFACE/PENDANT	INDUSTRIAL FLUORESCENT, WITH ELECTRONIC BALLAST
A1	240	230A1	2	40	SURFACE/PENDANT	INDUSTRIAL FLUORESCENT, WITH ELECTRONIC BALLAST
B	240	232	2	40	SURFACE/PENDANT	VAPORTIGHT FLUORESCENT
C	240	603	–	–	SURFACE	EMERGENCY BATTERY PACK, MTD 2.4M AFF
D	240	PH8	1	250	PENDANT	METAL HALIDE LOW BAY INDUSTRIAL
E	240	–	1	1000	ROOF	SPOT LIGHT
F	240	XF2	1	8	SURFACE/PENDANT	EXIT LIGHT MTD 2.2M AFF
G	240	502R	1	70	SURFACE	HID EXTERIOR WALLL LIGHT
H	240	SF-11	1	100	SURFACE	VAPOR PROOF PROTECTED INCANDESCENT WITH CLEAR, RED, BLUE, OR BLACK GLOBE AS INDICATED ON THE DRAWINGS

ABBREVIATIONS

AFG	ABOVE FINISHED GRADE
AFF	ABOVE FINISHED FLOOR
AF	AMP FRAME
AT	AMP TRIP
ACCU	AIR COOLED CONDENSING UNIT
A	AMPERE
AHU	AIR HANDLING UNIT
AIC	AMPERE INTERRUPTING CAPACITY
BFG	BELOW FINISHED GRADE
CH	COMMUNICATIONS HANDHOLE
CKT	CIRCUIT
CM	COMMUNICATIONS MANHOLE
CND	CONDUCTOR(S)
C	CONDUIT
COR	CONTRACTING OFFICERS REPRESENTATIVE
EF	EXHAUST FAN
EH	ELECTRIC POWER HANDHOLE
EM	ELECTRIC POWER MANHOLE
EP	EXPLOSION PROOF
ELCB	EARTH LEAKAGE CIRCUIT BREAKER
FACP	FIRE ALARM CONTROL PANEL
GFI	GROUND FAULT INTERRUPTING
GFCI	GOVERNMENT FURNISHED CONTRACTOR INSTALLED
HP	HORSEPOWER
HPS	HIGH PRESSURE SODIUM
HZ	HERTZ
KV	KILOVOLT
KW	KILOWATT
KVA	KILOVOLT-AMPERE
M	METERS
MBB	METERING BACK BOARD
MDF	MAIN DISTRIBUTION FRAME
MEW	HOST NATION MINISTRY OF ELECTRICITY AND WATER
MTD	MOUNTED
NEC	NATIONAL ELECTRICAL CODE
NFPA	NATIONAL FIRE PROTECTION ASSOCIATION
NIC	NOT IN CONTRACT
PH, Ø	PHASE
P	POLE
XXX	HOST NATION ARMED FORCES
TEL	TEL CO.
RM	ROOM
SCH	SCHEDULE
SN	SOLID NEUTRAL
TBB	TELEPHONE TERMINAL BACKBOARD
TCB	TELEPHONE CONNECTION BOX (BY TEL CO)
TYP.	TYPICAL
UNO	UNLESS NOTED OTHERWISE
V	VOLT
W	WIRE
WP	WEATHERPROOF
XFMR,T	TRANSFORMER

EQUIVALENT CONDUIT SIZE

mm	INCHES
20	3/4
25	1
32	1 1/4
38	1 1/2
50	2
60	2 1/2
80	3
90	3 1/2
100	4

METRIC COPPER CONDUCTOR CONVERSION CHART

AWG KCMIL	COMPUTED CONVERSION mm^2	ADVISED CROSS SECTION mm^2
16	1.31	1.5
14	2.08	2.5
12	3.31	4
10	5.27	6
8	8.4	10
6	13.3	16
4	21.2	25
3	26.7	25
2	33.6	35
1	42.4	50
1/0	53.4	50
2/0	67.5	70
3/0	85.0	95
4/0	107.2	120
250	126.7	120
300	152.0	150
350	177.4	185
400	202.7	240
500	253.4	300

US ARMY CORPS OF ENGINEERS AFGHANISTAN ENGINEER DISTRICT

SYMBOL	DESCRIPTION	DATE	APPR.	SYMBOL	DESCRIPTION	DATE	APPR.

U.S. ARMY ENGINEER DISTRICT, AFGHANISTAN
CORPS OF ENGINEERS
APO AE 96338

DESIGNED BY: DATE: XX-XX-XX REV. __
DWN BY: CKD BY: DESIGN FILE NO.
REVIEWED BY: DRAWING CODE
SUBMITTED BY: FILE NAME: PLOT SCALE: PLOT DATE: XX-XX-XX

ENGINEERING AND CONSTRUCTION DIVISION

AFGHANISTAN NATIONAL POLICE (ANP) DISTRICT HEADQUARTERS COMPOUNDS - 1 STORY HQ
VARIOUS LOCATIONS, AFGHANISTAN
STANDARD DETAILS

LEGEND & ABBREVIATIONS

SHEET REFERENCE NUMBER:
SE-1

A1 Size 594mm x 841mm

FIXTURE MARK A

TYPE 230
SUSPENSION MOUNTED, INDUSTRIAL,
OPEN TYPE FLUORESCENT FIXTURE, 4-FOOT

FIRST SUFFIX	SECOND-SUFFIX	DESCRIPTION
A		TWO LAMPS
B		THREE LAMPS
C		FOUR LAMPS
	1	8 TO 15 PERCENT UPLIGHT
	2	18 TO 25 PERCENT UPLIGHT

FIXTURE SHALL CONFORM TO UL1570. STANDARD BALLAST(S) SHALL BE THE CLASS P, HIGH POWER FACTOR TYPE APPROVED FOR THE APPLICATION BY THE CERTIFIED BALLAST MANUFACTURERS. CHANNEL HOUSING, END FITTINGS, AND REFLECTOR SHALL BE CONSTRUCTED WITH DIE-FORMED, COLD-ROLLED STEEL. REFLECTOR FINISH SHALL BE PORCELIAN ENAMEL, BAKED WHITE ENAMEL OR ALUMINUM OXIDE. SOCKETS SHALL BE OF THE TYPE REQUIRING A FORCED MOVEMENT ALONG THE LONGITUDINAL AXIS OF THE LAMP FOR INSERTION AND REMOVAL OF THE LAMP. FIXTURE SHALL BE PREWIRED. FLUORESCENT TUBES SHALL BE PROTECTED BY A VIRGIN ACRYLIC PROTECTIVE SLEEVE AND CLEAR PLASTIC VENTED END CAPS.

FIXTURE MARK B

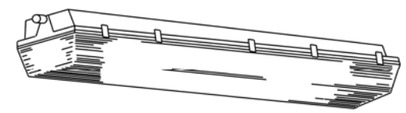

TYPE 232
4-FOOT FIXTURE LENGTH

ENCLOSED AND GASKETED, VAPOR-TIGHT FLUORESCENT FIXTURE
FOR SURFACE OR PENDANT MOUNTING

FIXTURE SHALL CONFORM TO UL1570 AND SHALL BE VAPOR-TIGHT AND SUITABLE FOR USE IN WET LOCATIONS. FIXTURE SHALL HAVE ONE-PIECE HOUSINGOF MOLDED HIGH-IMPACT PLASTIC OR REINFORCED FIBERGLASS. HOUSING BODY SHALL HAVE AN INTERNAL, DIE-FORMED, COLD-ROLLED STEEL CHANNEL WITH COVER TO PROVIDE FIXTURE RIGIDITY AND TO CONTAIN ELECTRIC COMPONENTS. THE METAL CHANNEL AND COVER SHALL RECEIVE A RUST INHIBITIVE COATING BEFORE APPLICATION OF THE FINISH COAT, WHICH SHALL CONSIST OF BAKED WHITE ENAMEL OR PORCELAIN ENAMEL. THE LENS SHALL BE ONE PIECE, OF HIGH-IMPACT-RESISTANT ACRYLIC, AND SHALL HAVE SMOOTH EXTERIOR SURFACE AND STIPPLED OR PEBBLED INTERIOR SURFACE. THE LENS SHALL BE SECURED TO THE HOUSING WITH CAPTIVE MOLDED PLASTIC OR STAINLESS STEEL SPRING LATCHES. A CONTINUOUS GASKET SHALL BE PROVIDED TO FORM A VAPOR SEAL BETWEEN THE LENS AND THE FIXTURE BODY. ALL OPENINGS IN THE HOUSING FOR MOUNTING, CONDUIT, ETC., SHALL BE CAPABLE OF FORMING A VAPOR-TIGHT SEAL. BALLAST(S) SHALL BE COLD WEATHER TYPE FOR STARTING TEMPERATURES DOWN TO MINUS 20 DEGREES F. STANDARD BALLAST(S) SHALL BE THE CLASS P, HIGH POWER FACTOR TYPE APPROVED FOR THE APPLICATION BY THE CERTIFIED BALLAST MANUFACTURERS. FIXTURE SHALL BE PREWIRED, AND PROVIDED WITH LAMPS THAT ARE PROPERLY MATED TO THE BALLAST OPERATING CHARACTERISTICS.

FIXTURE MARK E

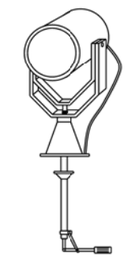

SEALED BEAM SPOTLIGHT, MOUNTED TO GUARD TOWER ROOF, WITH 1000 WATT HALOGEN NARROW SPOT PAR 56 LAMP. SPOTLIGHT SHALL BE PROVIDED WITH TWIST LEVER CONTROL, MINIMUM 10" DIAMETER LIGHT HEAD, WORKING RANGE OF 1/2 MILE, COUPLING FOR OPERATION FROM GUARD TOWER PLATFORM AND RATED FOR OUTDOOR ROUGH SERVICE WITH ANTI-SHOCK LAMPHOLDER.

FIXTURE MARK H

TYPE SF11

FEATURES

LAMP TYPE: INCCANDESCENT BULB: 100W
GLASS GLOBE CLEAR, BLUE, RED, AND BLACK LAMPS INDICATED ON THE DRAWINGS
PROFILE: 1 LAMP
SHIELDING: CLEAR GLASS GLOBE

OPTIONS

GLASS GLOBE: CLEAR, RED, BLUE, OR BLACK
LAMP TYPE: 75W, 100W, 150W
MOUNTING: PENDANT OR SURFACE
SHIELDING: HEAT RESISTANT

NOM. DIMENSIONS: 111mm X 251mm

GENERAL DESCRIPTION

HOUSING: 30 PERCENT GLASS FILLED THERMOPLASTIC POLYSTER
ELECTRICAL: 220 - 240 VOLT
FINISH: MOLDED IN NON-GRAYING FINISH

SURFACE MOUNTED INCANDESCENT
VAPOR TIGHT JELLY JAR WITH WIRE GUARD

NOT TO SCALE

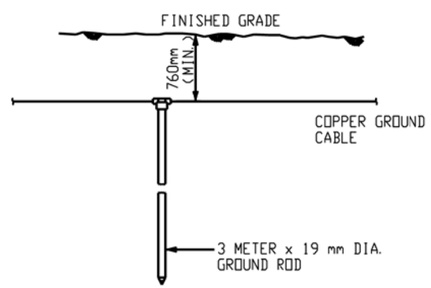

NOTES:

1. CONDUCTOR SIZE SHALL BE AS INDICATED ON PLANS.
2. EXOTHERMIC WELDS SHALL BE AS RECOMMENDED BY MANUFACTURER FOR THE SIZE OF CONNECTION AND MATERIAL INVOLVED. SEE DETAIL 5 ON SHEET SE-7.

BELOW GRADE GROUNDING ROD DETAIL

NOT TO SCALE

DETAIL 1
NOT TO SCALE

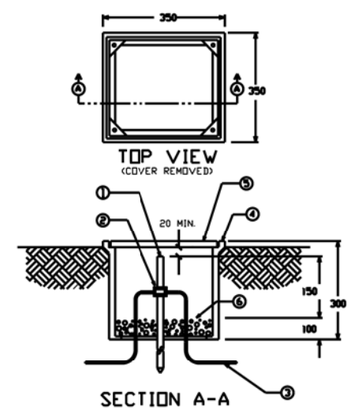

MATERIAL LIST

1. GROUND ROD
2. EXOTHERMIC WELD
3. GROUNDING CONDUCTOR 70mm² COPPER
4. POLYMER CONCRETE FIBERGLASS REINFORCED BOX
5. COVER FOR ABOVE BOX
6. GRAVEL OR CRUSHED STONE

GROUND ROD ACCESS
BOX INSTALLATION DETAIL

NOT TO SCALE

DETAIL 2
NOT TO SCALE

US ARMY CORPS OF ENGINEERS
AFGHANISTAN ENGINEER DISTRICT

SYMBOL	DESCRIPTION	DATE	APPR	COMPUTED	DESCRIPTION	DATE	APPR

DESIGNED BY: DATE: XX-XX-XX REV: __
DWN BY: CKD BY: DESIGN FILE NO.
REVIEWED BY: DRAWING CODE
SUBMITTED BY: FILE NAME: PLOT SCALE: PLOT DATE: XX-XX-XX

U.S. ARMY ENGINEER DISTRICT, AFGHANISTAN
CORPS OF ENGINEERS
APO AE 96338

ENGINEERING AND CONSTRUCTION DIVISION

AFGHANISTAN NATIONAL POLICE (ANP) DISTRICT HEADQUARTERS COMPOUNDS - 1 STORY HQ
VARIOUS LOCATIONS, AFGHANISTAN
STANDARD DETAILS

LIGHTING DETAILS

SHEET REFERENCE NUMBER:
SE-2

A1 Size 594mm x 841mm

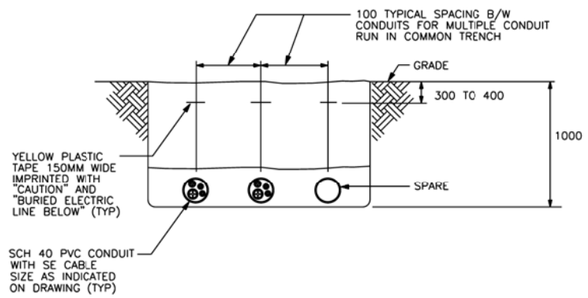

SECONDARY DISTRIBUTION CONDUIT TRENCH DETAIL

NOT TO SCALE

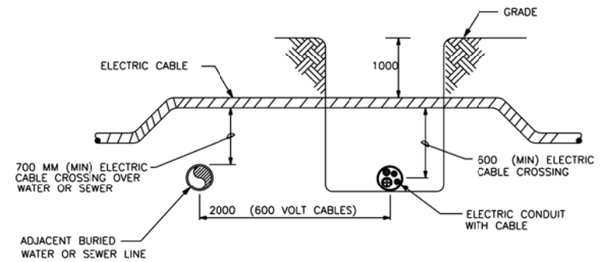

UNDERGROUND UTILITIES CROSSING DETAIL

NOT TO SCALE

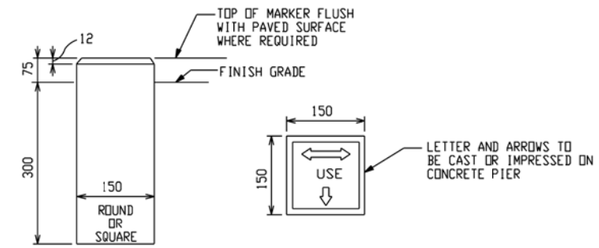

DIRECT BURIED CABLE MARKER DETAIL

NOT TO SCALE

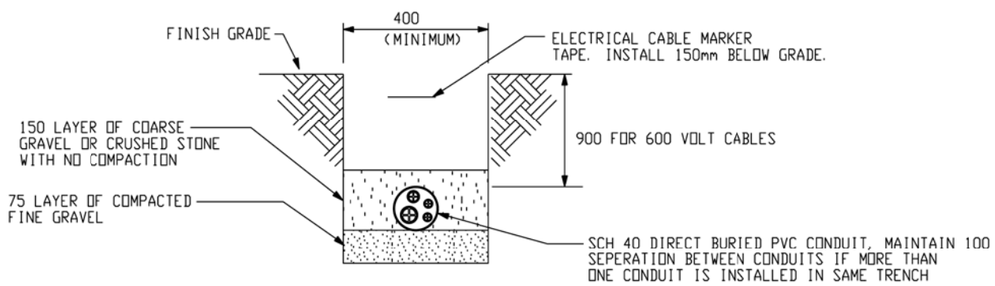

DIRECT BURIED DUCT DETAIL

NOT TO SCALE

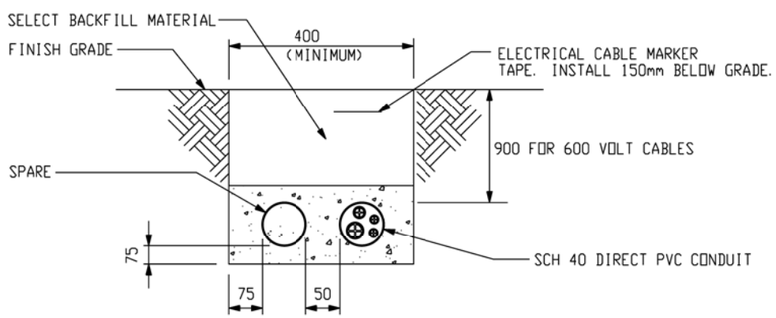

CONCRETE-ENCASED DUCT DETAIL FOR TRAFFIC AREAS

NOT TO SCALE

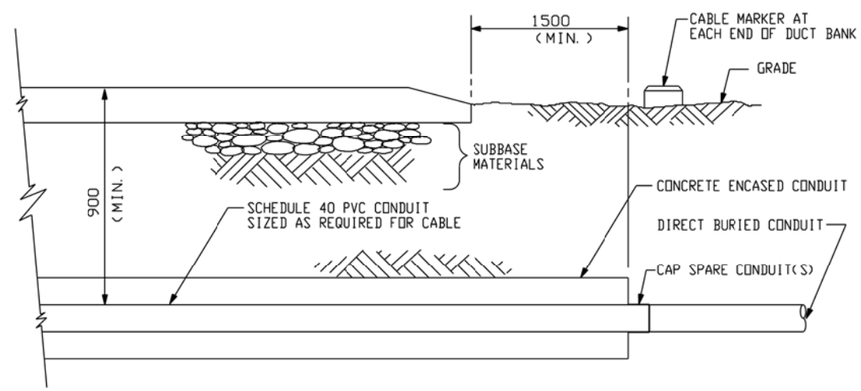

UNDER ROADWAY DUCT CROSSING DETAIL

NOT TO SCALE

US ARMY CORPS OF ENGINEERS AFGHANISTAN ENGINEER DISTRICT

SYMBOL	DESCRIPTION	DATE	APPR.	SYMBOL	DESCRIPTION	DATE	APPR.

DESIGNED BY: DATE: XX-XX-XX REV: __
DWN BY: CKD BY: DESIGN FILE NO.
REVIEWED BY: DRAWING CODE
SUBMITTED BY: FILE NAME: PLOT SCALE: PLOT DATE: XX-XX-XX

U.S. ARMY ENGINEER DISTRICT, AFGHANISTAN
CORPS OF ENGINEERS
APO AE 96338

ENGINEERING AND CONSTRUCTION DIVISION

AFGHANISTAN NATIONAL POLICE (ANP) DISTRICT HEADQUARTERS COMPOUNDS - 1 STORY HQ
VARIOUS LOCATIONS, AFGHANISTAN
STANDARD DETAILS

DUCTBANK DETAILS

SHEET REFERENCE NUMBER:

SE-3

A1 Size 594mm x 841mm

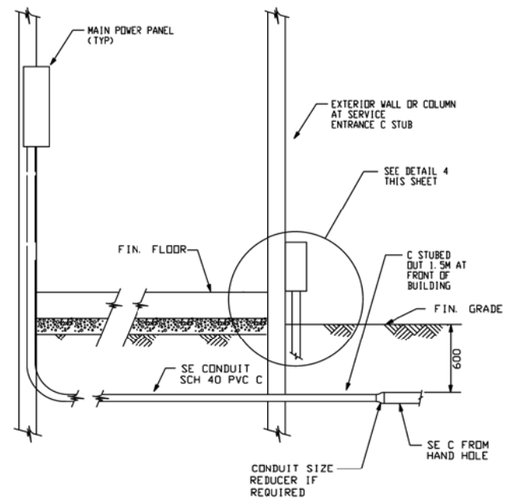

SERVICE PANEL CABLE ENTRANCE DIAGRAM
NOT TO SCALE

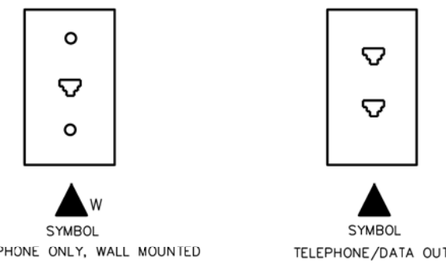

TELEPHONE AND DATA OUTLET DETAILS
NOT TO SCALE

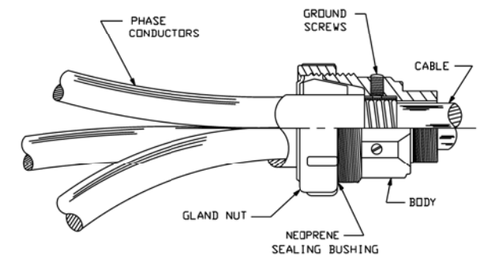

TYPICAL 600V CABLE TERMINATOR DETAIL
NOT TO SCALE

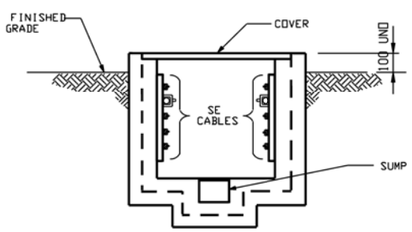

HANDHOLE CABLE INSTALLATION
NOT TO SCALE

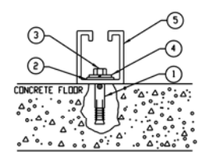

CHANNEL STRUT INSTALATION

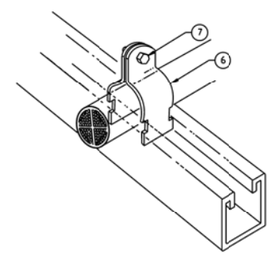

CABLE CLAMP INSTALLATION
NOT TO SCALE

CHANNEL SYSTEM LIST OF MATERIALS					
ITEM	SML	DESCRIPTION	PART NO/NSN	UI	QTY
1		SHIELD, EXPANSION			
2		WASHER, FLAT 3/8 " ID			
3		BOLT,LAG,HEX HEAD, 3/8 "-16 X 1 1/4 "			
4		WASHER, LOCK 3/8 " ID			
5		CHANNEL, CONT. SLOTTED 1-5/8"			
6		CONDUIT / CONDUCTOR CLAMP			
7		SLOTTED HEX MACHINE SCREW & SQUARE NUT			

CONDUIT / CONDUCTOR CHANNEL SYSTEM INSTALLATION DETAIL
NOT TO SCALE

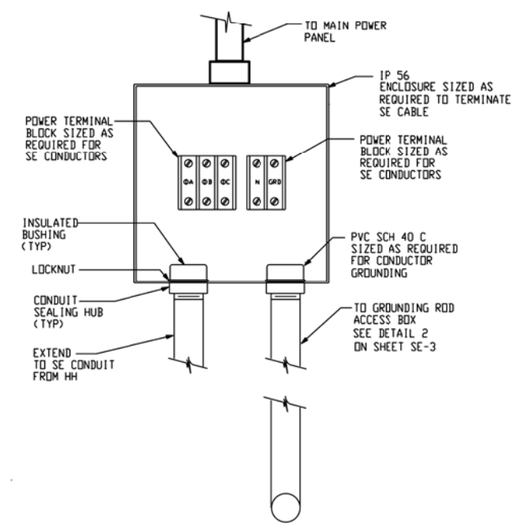

SE JUNCTION BOX
NOT TO SCALE

DETAIL 4
NOT TO SCALE

US ARMY CORPS OF ENGINEERS AFGHANISTAN ENGINEER DISTRICT

SYMBOL	DESCRIPTION	DATE	APPR.	SYMBOL	DESCRIPTION	DATE	APPR.

DESIGNED BY: DWN BY: CKD BY: REVIEWED BY: SUBMITTED BY: DATE: XX-XX-XX DESIGN FILE NO: DRAWING CODE: FILE NAME: PLOT SCALE: PLOT DATE: XX-XX-XX REV:

U.S. ARMY ENGINEER DISTRICT, AFGHANISTAN
CORPS OF ENGINEERS
APO AE 96338

ENGINEERING AND CONSTRUCTION DIVISION

AFGHANISTAN NATIONAL POLICE (ANP) DISTRICT HEADQUARTERS COMPOUNDS - 1 STORY HQ
VARIOUS LOCATIONS, AFGHANISTAN
STANDARD DETAILS

ELECTRICAL DETAILS

SHEET REFERENCE NUMBER:
SE-4

A1 Size 594mm x 841mm

B = EMBEDDED LENGTH
D = BOLT DIAMETER
E = HOOK LENGTH
P = BOLT PROJECTION.
IF NOT INDICATED,
COORDINATE WITH
EQUIPMENT FURNISHED

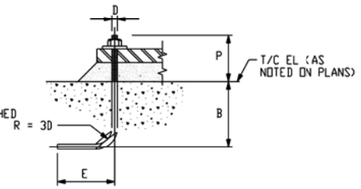

NOTE:
UNLESS OTHERWISE INDICATED, TYPE V OR VI ANCHOR RODS MAY BE USED AT THE CONTRACTOR'S OPTION

SCHEDULE			
D (IN)	B (mm)	E (mm)	REMARKS
3/8"	125	125	
1/2"	150	150	
5/8"	200	180	
3/4"	255	220	
7/8"	305	280	
1"	355	330	

TYPE V ANCHOR RODS
HOOKED BOLT

SCHEDULE			
D (IN)	B (mm)	E (mm)	REMARKS
3/8"	180	75	
1/2"	230	75	
5/8"	280	100	
3/4"	355	125	
7/8"	405	180	
1"	485	200	

TYPE VI ANCHOR RODS
HOOKED BOLT

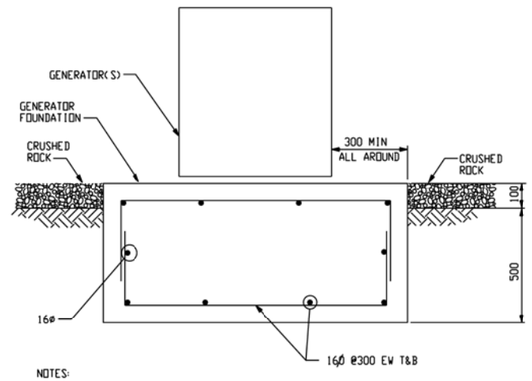

NOTES:
1. SEE DRAWING XE-1 FOR GENERATOR LOCATIONS.
2. COORDINATE PAD SIZE AND ANCHOR BOLT REQUIREMENTS WITH THE EQUIPMENT SUPPLIED.

TYPICAL EXTERIOR GENERATOR FOUNDATION
NOT TO SCALE

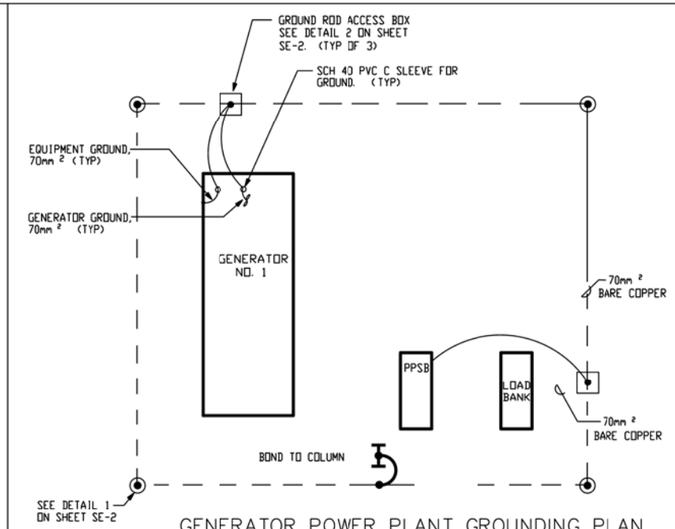

GENERATOR POWER PLANT GROUNDING PLAN
NOT TO SCALE

NOTES:
1. GROUNDING COUNTERPOISE SHALL BE 1.5M AWAY FROM GENERATOR PAD FOUNDATION AND 0.760M BELOW FINISHED GRADE.
2. ALL GROUNDING CONNECTIONS SHALL BE EXOTHERMIC WELD CONNECTIONS,
3. A DAY TANK SHALL BE AN INTEGRAL PART OF EACH GENERATOR SET.
4. GENERATORS, DAYTANKS, PPSB AND LOAD BANK SHALL HAVE NEMA 3R OR EQUAL ENCLOSURES.

D = BOLT DIAMETER
K = THREADS (2D+2")
P = BOLT PROJECTION
IF NOT INDICATED,
COORDINATE WITH
EQUIPMENT FURNISHED

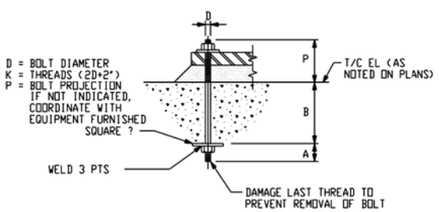

SCHEDULE				
D	A	B	SQUARE	REMARKS
3/4"	50mm	250mm	13x75x75	
7/8"	75mm	300mm	16x90x90	
1 1/8"	75mm	400mm	20x100x100	
1 1/4"	75mm	460mm	20x110x110	

TYPE II ANCHOR RODS
UNSLEEVED BOLT

TYPICAL ANCHOR ROD DETAILS
NOT TO SCALE

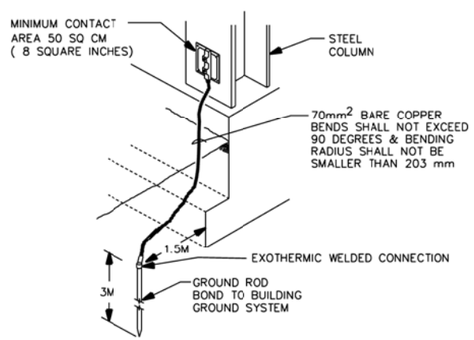

COLUMN GROUNDING DETAIL
NOT TO SCALE

US ARMY CORPS
OF ENGINEERS
AFGHANISTAN
ENGINEER DISTRICT

SYMBOL	DESCRIPTION	DATE	APPR	SYMBOL	DESCRIPTION	DATE	APPR

DESIGNED BY:
DWN BY:
CKD BY:
REVIEWED BY:
SUBMITTED BY:
DATE: XX-XX-XX
DESIGN FILE NO.
DRAWING CODE:
FILE NAME:
PLOT SCALE:
PLOT DATE: XX-XX-XX
REV.

U.S. ARMY ENGINEER DISTRICT, AFGHANISTAN
CORPS OF ENGINEERS
APO AE 96338

ENGINEERING AND
CONSTRUCTION DIVISION

AFGHANISTAN NATIONAL POLICE
(ANP) DISTRICT HEADQUARTERS
COMPOUNDS - 1 STORY HQ
VARIOUS LOCATIONS, AFGHANISTAN
STANDARD DETAILS

POWER PLANT DETAILS

SHEET
REFERENCE
NUMBER:
SE-5

A1 Size 594mm x 841mm

CONSTRUCTION REQUIREMENTS				
CLEAR MINIMUM INSIDE REQUIREMENTS FOR INSTALLATION AND MAINTENANCE PURPOSES				
TYPE	HEIGHT	LENGTH	WIDTH	SUMP DEPTH
HH	1.2M	1.2M	1.2M	0.3M

MINIMUM CONCRETE THICKNESS	
HANDHOLE WALLS TOP, AND FLOORS	SUMP WALLS AND FLOOR
150mm	100mm

MINIMUM REINFORCING

1. BARS WILL BE A MINIMUM OF 130 ROUND DEFORMED.
2. WALLS AND FLOOR WILL HAVE BARS AT 200mm MAXIMUM ON CENTERS WITH A MINIMUM 300mm HOOK AT CORNERS AND INTERSECTIONS.
3. THE TOP SHALL HAVE BARS INSTALLED AS SHOWN AT A MINIMUM OF 50mm FROM THE OPENING AND WITH A MINIMUM 100mm SPACING BETWEEN BARS.

NOTE: REINFORCING SHALL BE INCREASED WHERE REQUIRED TO SUIT ACTUAL INSTALLATION. MINIMUM REQUIREMENTS ARE FOR A H20 WHEEL LOADING (ASSHTO).

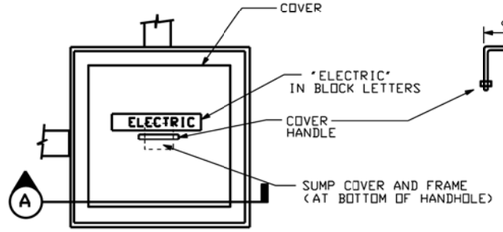

HANDHOLE COVER DETAIL
NOT TO SCALE

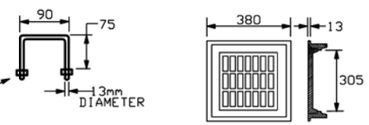

SUMP FRAME AND COVER DETAIL
NOT TO SCALE

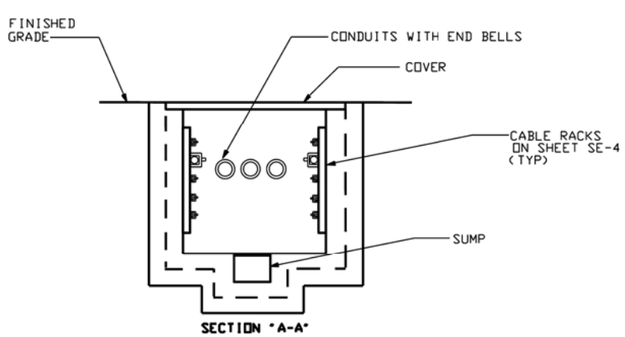

HANDHOLE DETAIL
NOT TO SCALE

US ARMY CORPS OF ENGINEERS AFGHANISTAN ENGINEER DISTRICT

SYMBOL	DESCRIPTION	DATE	APPR	CHANGE	DESCRIPTION	DATE	APPR

DESIGNED BY: DATE: XX-XX-XX REV: __
DWN BY: CKD BY: DESIGN FILE NO:
REVIEWED BY: DRAWING CODE:
SUBMITTED BY: FILE NAME: PLOT SCALE: PLOT DATE: XX-XX-XX

U.S. ARMY ENGINEER DISTRICT, AFGHANISTAN
CORPS OF ENGINEERS
APO AE 96338

ENGINEERING AND CONSTRUCTION DIVISION

AFGHANISTAN NATIONAL POLICE (ANP) DISTRICT HEADQUARTERS COMPOUNDS - 1 STORY HQ
VARIOUS LOCATIONS, AFGHANISTAN
STANDARD DETAILS

HANDHOLE DETAILS

SHEET REFERENCE NUMBER:
SE-6

A1 Size 594mm x 841mm

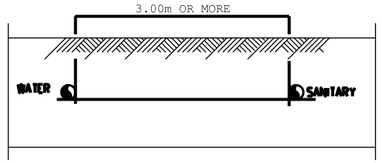

CASE 1

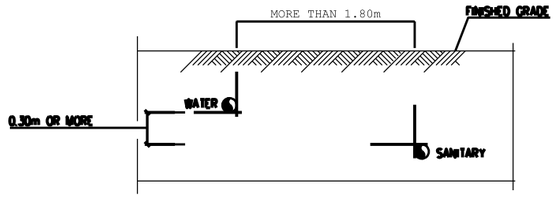

CASE 2

PARALLEL PIPES
N.T.S

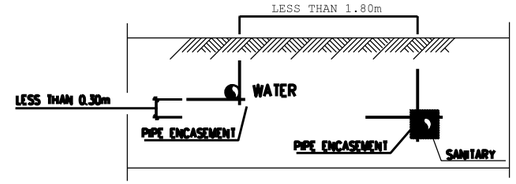

CASE 3

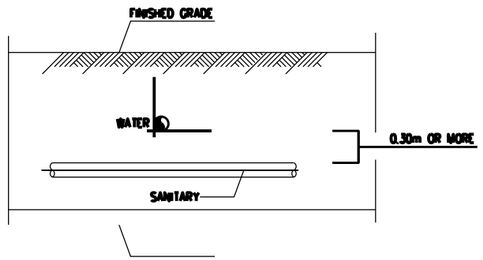

CASE 1

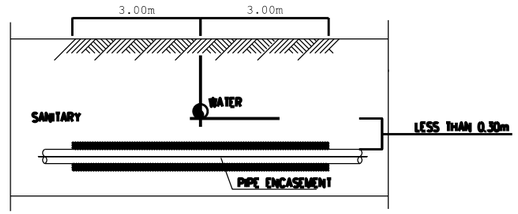

CASE 2

PERPENDICULAR PIPES
N.T.S

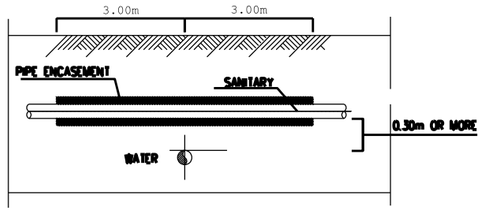

CASE 3

NOTE :

HAND TAMP THE BACKFILL FULLY AT THE SIDES OF THE PIPE WHILE TAMPING LIGHTLY OVER THE CROWN-HAND TAMPING SHOULD CONTINUE UNTIL A MINIMUM THICKNESS OF 300MM HAS BEEN PLACED OVER THE PIPE.

TYPICAL WATER/SANITARY CROSSING DETAILS
N.T.S

NOTE:
REQUIRED FOR ROAD CROSSINGS WITH LESS THAN 1.2m COVER OR WHERE SANITARY AND WATER MAIN SEPARATION CANNOT BE MET.

NOTE :

HAND TAMP THE BACKFILL FULLY AT THE SIDES OF THE PIPE WHILE TAMPING LIGHTLY OVER THE CROWN-HAND TAMPING SHOULD CONTINUE UNTIL A MINIMUM THICKNESS OF 300MM HAS BEEN PLACED OVER THE PIPE.

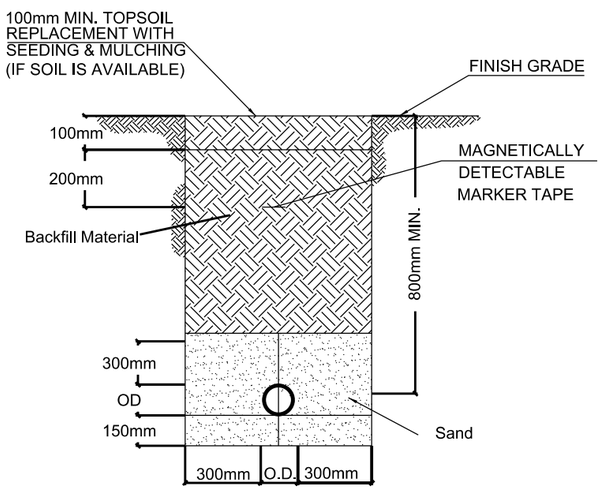

03 WATER PIPE DETAIL
Ref:

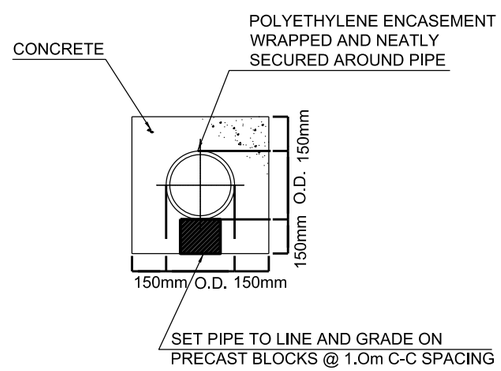

04 DETAIL OF TRENCH UNDER THE ROAD (WATER & SANITARY PIPES)
Ref:

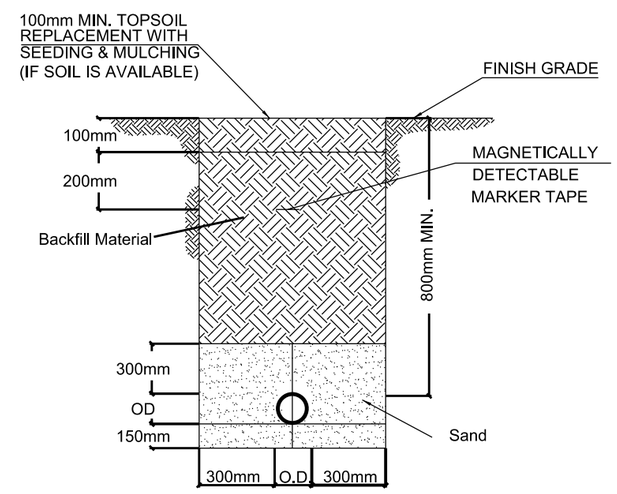

05 SANITARY PIPE DETAIL
Ref:

US ARMY CORPS OF ENGINEERS AFGHANISTAN ENGINEER DISTRICT

SYMBOL	DESCRIPTION	DATE	APPR.	SYMBOL	DESCRIPTION	DATE	APPR.

DESIGNED BY: DATE: REV. ___
DWN BY: CKD BY: DESIGN FILE NO.
REVIEWED BY: DRAWING CODE:
SUBMITTED BY: FILE NAME: ___ PLOT SCALE: ___ PLOT DATE: xx-xx-xx

U.S. ARMY ENGINEER DISTRICT, AFGHANISTAN
CORPS OF ENGINEERS
APO AE 96338

ENGINEERING AND CONSTRUCTION DIVISION

AFGHANISTAN NATIONAL POLICE (ANP) DISTRICT HEADQUARTERS COMPOUNDS - 1 STORY HQ
VARIOUS LOCATIONS, AFGHANISTAN
STANDARD DETAILS

WATER AND SEWER TRENCH DETAIL

SHEET REFERENCE NUMBER:
SE-07

A1 Size 594mm x 841mm

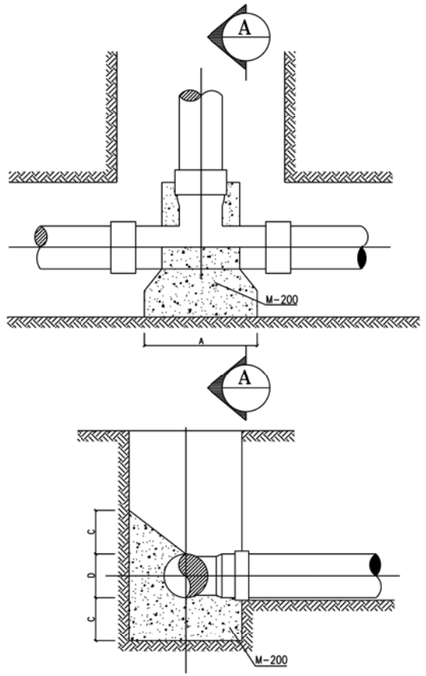

SECTION A–A
N.T.S

D	A m	C m	E m
≤100	0.10	0.10	0.10
150	0.15	0.15	0.10
200	0.25	0.20	0.15
250	0.25	0.20	0.15
300	0.30	0.25	0.20

ANCHORAGE DIMENSIONS

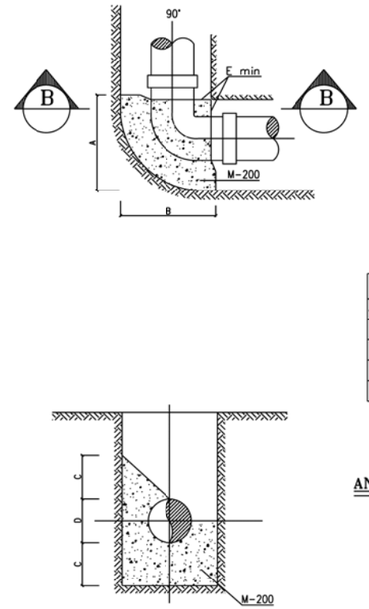

SECTION B–B
N.T.S

D	A m	B m	C m	E m
≤100	0.20	0.20	0.15	0.10
150	0.35	0.30	0.20	0.10
200	0.40	0.40	0.20	0.15
250	0.55	0.55	0.25	0.15
300	0.65	0.65	0.35	0.20

ANCHORAGE DIMENSIONS

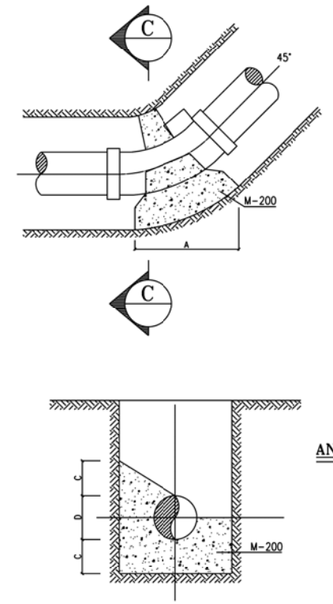

SECTION C–C
N.T.S

D	A m	C m	E m
≤100	0.10	0.10	0.10
150	0.10	0.10	0.10
200	0.15	0.15	0.15
250	0.20	0.15	0.15
300	0.25	0.20	0.20

ANCHORAGE DIMENSIONS

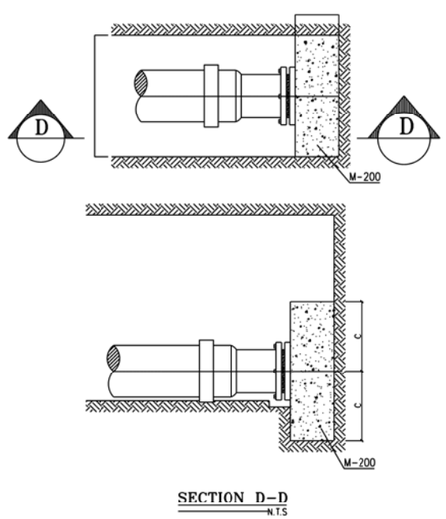

SECTION D–D
N.T.S

D	W m	B m	C m
≤100	0.55	0.15	0.10
150	0.60	0.15	0.20
200	0.60	0.20	0.30
250	0.70	0.25	0.40
300	0.80	0.30	0.50

ANCHORAGE DIMENSIONS

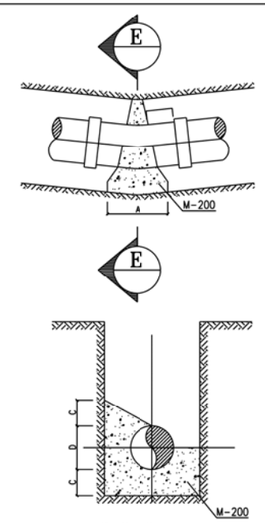

SECTION E–E
N.T.S

D	A m	C m	E m
≤100	0.15	0.10	0.10
150	0.20	0.10	0.10
200	0.25	0.15	0.15
250	0.35	0.15	0.15
300	0.40	0.20	0.20

ANCHORAGE DIMENSIONS

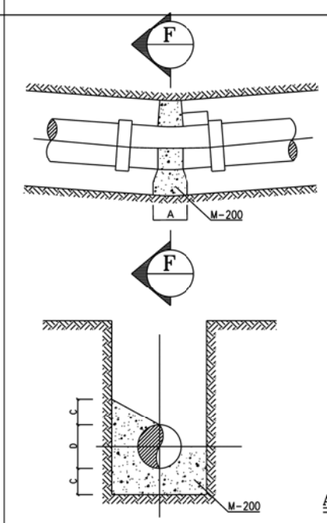

SECTION F–F
N.T.S

D	A m	C m	E m
≤100	0.20	0.10	0.10
150	0.30	0.15	0.10
200	0.40	0.20	0.15
250	0.60	0.20	0.15
300	0.70	0.25	0.20

ANCHORAGE DIMENSIONS

US ARMY CORPS OF ENGINEERS AFGHANISTAN ENGINEER DISTRICT

SYMBOL	DESCRIPTION	DATE	APPR.	SYMBOL	DESCRIPTION	DATE	APPR.

DESIGNED BY: | DWN BY: | CKD BY: | REVIEWED BY: | SUBMITTED BY: | DATE: XX-XX-XX | DESIGN FILE NO. | DRAWING CODE: | FILE NAME: | PLOT SCALE: | PLOT DATE: XX-XX-XX | REV.

U.S. ARMY ENGINEER DISTRICT, AFGHANISTAN
CORPS OF ENGINEERS
APO AE 96338

ENGINEERING AND CONSTRUCTION DIVISION

AFGHANISTAN NATIONAL POLICE (ANP) DISTRICT HEADQUARTERS COMPOUNDS - 1 STORY HQ
VARIOUS LOCATIONS, AFGHANISTAN
STANDARD DETAILS

THRUST BLOCK DETAILS

SHEET REFERENCE NUMBER:
SE-08

A1 Size 594mm x 841mm

AFGHAN NATIONAL ARMY

STANDARD BUILDING DESIGN

OPEN BARRACKS WITH LATRINE

100% DESIGN SUBMITTAL

SHEET INDEX

G-001 COVER SHEET

STRUCTURAL

S-001 GENERAL NOTES & DESIGN CRITERIA
S-101 FOUNDATION/SLAB & ROOF FRAMING PLAN
S-401 BUILDING SECTIONS
S-501 FOUNDATION SECTIONS
S-502 FOUNDATION & FRAMING SECTIONS
S-503 BEAM & COLUMN DETAILS
S-504 BEAM & COLUMN DETAILS
S-601 SCHEDULES
S-701 TYPICAL DETAILS
S-702 TYPICAL DETAILS

ARCHITECTURAL

A-001 LIFE SAFETY PLAN
A-101 FLOOR PLAN
A-102 ROOF PLAN
A-201 ELEVATIONS
A-301 BUILDING SECTIONS
A-401 WALL SECTIONS
A-402 ENLARGED PLAN
A-501 EXTERIOR DETAILS
A-502 HEAD, JAMB, & SILL DETAILS
A-503 STOOP & CANOPY DETAILS
A-504 TOILET, LAVATORY, & ABLUTION DETAILS
A-505 SHOWER DETAILS
A-601 WINDOW & DOOR SCHEDULES

MECHANICAL

P-101 FLOOR PLAN – PLUMBING
P-102 FLOOR PLAN – PLUMBING (WATER)
P-501 PLUMBING DETAILS
P-502 PLUMBING DETAILS
P-901 PLUMBING ISOMETRICS

M-101 HVAC FLOOR PLAN

ELECTRICAL

E-001 ELECTRICAL – SYMBOLS, NOTES, & ABBREVIATIONS
E-101 ELECTRICAL – LIGHTING PLAN
E-102 ELECTRICAL – POWER PLAN
E-501 ELECTRICAL – DETAILS
E-502 ELECTRICAL – DETAILS
E-601 ELECTRICAL – LIGHTING SCHEDULE
E-602 ELECTRICAL – PANEL SCHEDULES

APPROVED:

A/E DESIGNER OF RECORD

SEAL:

US ARMY CORPS OF ENGINEERS
AFGHANISTAN ENGINEER DISTRICT

Mark	Description	Date	Appr.	Mark	Description	Date	Appr.

Designed by: KMP/MMY
Dwn by: RCG
Ckd by: CWW
Reviewed by: LHM
Submitted by: BAKER
Date: 8/16/10
Rev: 0
Design file no.
Drawing code:
File name: ANABOBG-001CS
Plot date: 8/24/2010
Plot scale: X:X

U.S. ARMY CORPS OF ENGINEERS
AFGHANISTAN ENGINEER DISTRICT
APO AE 96338

Michael Baker Jr., Inc
A unit of Michael Baker Corporation
Airside Business Park
100 Airside Drive
Moon Township PA 15108
www.mbakercorp.com

AFGHAN NATIONAL ARMY
STANDARD DESIGN
OPEN BARRACKS WITH LATRINE
COVER SHEET

Sheet reference number:
G-001

STRUCTURAL ABBREVIATIONS:

ACI	AMERICAN CONCRETE INSTITUTE
ADD'L	ADDITIONAL
AISC	AMERICAN INSTITUTE OF STEEL CONSTRUCTION
AISI	AMERICAN IRON AND STEEL INSTITUTE
ASTM	AMERICAN SOCIETY FOR TESTING AND MATERIALS
ARCH	ARCHITECTURAL
B	BOTTOM
BLDG	BUILDING
BOTT	BOTTOM
℄	CENTER LINE
CFMRF	COLD FORM METAL ROOF FRAME
CFMF	COLD FORM METAL FRAME
CFS	COLD FORMED STEEL
CIP	CAST–IN–PLACE
CIPL	CAST–IN–PLACE LINTEL
CJ	CONTROL JOINT
CLR	CLEAR
CMU	CONCRETE MASONRY UNIT
COEFF	COEFFICIENT
COL	COLUMN
CONC	CONCRETE
CONT	CONTINUOUS
COORD	COORDINATE
CRSI	CONCRETE REINFORCING STEEL INSTITUTE
CSJ	CONSTRUCTION JOINT
DIA	DIAMETER
DIAG	DIAGONAL
DIM	DIMENSION
DWG	DRAWING
DWL	DOWEL
EA	EACH
EF	EACH FACE
ELEC	ELECTRICAL
ELEV	ELEVATION
EMBED	EMBEDMENT
EQUIV	EQUIVALENT
ETC	ET CETERA
EW	EACH WAY
EXP	EXPANSION
EXT	EXTERIOR
FTG	FOOTING
GA	GAUGE
GB	GRADE BEAM
HORIZ	HORIZONTAL
h	HOUR
HRS	HOURS
IBC	INTERNATIONAL BUILDING CODE
ID	INSIDE DIAMETER
INFO	INFORMATION
INT	INTERIOR
kg	KILOGRAM
km	KILOMETER
kN	KILONEWTON
kPa	KILOPASCAL
L#	ANGLE (# INDICATES SIZE)
LONG	LONGITUDINAL
LLV	LONG LEG VERTICAL
m	METER
MAX	MAXIMUM
MECH	MECHANICAL
MFG	MANUFACTURER
MID	MIDDLE
MIN	MINIMUM
MISC	MISCELLANEOUS
mm	MILLIMETER
MPa	MEGAPASCAL
MTL	METAL
MWFRS	MAIN WIND FORCE RESISTING SYSTEM
N	NEWTON
N	NORTH
N/A	NOT APPLICABLE
#	NUMBER SYMBOL FOR REBAR SIZE
NTS	NOT TO SCALE
OC	ON CENTER
OD	OUTSIDE DIAMETER
OPNG	OPENING
ℙ or PL	PLATE
PRE–ENG	PRE–ENGINEERED
RB	ROOF BEAM
REINF	REINFORCED
REQ'D	REQUIRED
SIM	SIMILAR
SPECS	SPECIFICATIONS
STD	STANDARD
STRUCT	STRUCTURAL
SW	SHEAR WALL
T	TOP
T/	TOP OF
T/ELEV	TOP ELEVATION
T/SLAB	TOP OF SLAB
T&B	TOP AND BOTTOM
THK	THICK
TYP	TYPICAL
UFC	UNIFIED FACILITIES CRITERIA
UON	UNLESS OTHERWISE NOTED
VERT	VERTICAL
W	WIDTH
W/	WITH

1.0 GENERAL NOTES:

1.1 THIS PROJECT HAS BEEN DESIGNED FOR THE WEIGHTS AND MATERIALS INDICATED ON THE SHEETS AND FOR THE LIVE LOADS INDICATED IN THE DESIGN DATA. IT IS THE CONTRACTOR'S RESPONSIBILITY TO DETERMINE ALLOWABLE CONSTRUCTION LOADS AND TO PROVIDE PROPER DESIGN AND CONSTRUCTION OF FALSEWORK, FORMWORK, STAGING, BRACING, SHEETING AND SHORING, ETC.

1.1 COORDINATE THESE SHEETS WITH THE ARCHITECTURAL, MECHANICAL, ELECTRICAL, PLUMBING, AND CIVIL SHEETS. ALL DIMENSIONS SHOWN ON THE SHEETS ARE MILLIMETERS UNLESS NOTED OTHERWISE.

1.2 THE CONTRACTOR SHALL VERIFY AND COORDINATE ALL FLOOR AND ROOF OPENING SIZES AND LOCATIONS, EQUIPMENT PAD SIZES AND LOCATIONS, ANCHOR BOLT LAYOUTS, ETC WITH EQUIPMENT SELECTED. THE CONTRACTOR SHALL MAKE ANY REQUIRED MODIFICATIONS AT NO ADDITIONAL COST.

1.3 THE CONTRACTOR SHALL REFER TO THE ARCHITECTURAL, MECHANICAL, ELECTRICAL AND PLUMBING SHEETS FOR SLEEVES, CURBS, INSERTS OR OPENINGS, ETC. NOT HEREIN INDICATED.

1.4 WORK NOT INCLUDED ON THE SHEETS BUT IMPLIED TO BE SIMILAR TO THAT SHOWN AT CORRESPONDING PLACES ELSEWHERE ON THE SHEETS SHALL BE REPEATED.

1.5 IN CASE OF CONFLICT BETWEEN THE NOTES, DETAILS AND SPECIFICATIONS THE MOST RIGID REQUIREMENTS SHALL GOVERN.

1.6 SEE ARCHITECTURAL SHEETS FOR LOCATIONS OF MASONRY AND NON–LOAD BEARING PARTITIONS. PROVIDE COMPRESSIBLE FIRESAFING AT TOP OF WALL AS REQUIRED BY ARCHITECTURAL SHEETS.

1.7 COORDINATE FINISHED FLOOR DATUM ELEVATION 0.0m WITH THE CIVIL SHEETS.

2.0 FOUNDATION NOTES

2.1 THE GEOTECHNICAL ANALYSIS FOR THIS PROJECT IS THE RESPONSIBILITY OF THE CONTRACTOR AWARDED THE WORK. AN ASSUMED ALLOWABLE SOIL BEARING VALUE OF 72 kPa HAS BEEN USED IN THE STRUCTURAL ANALYSIS OF THE BUILDING HEREIN AND SHALL BE CONFIRMED AND VERIFIED AS PART OF THE GEOTECHNICAL INVESTIGATION. VALUES WHICH DO NOT MEET THE REQUIREMENTS INDICATED ON THE BASIS OF DESIGN SHEET SHALL BE IMMEDIATELY BROUGHT TO THE ATTENTION OF THE CONTRACTING OFFICER FOR CONSIDERATION AND DETERMINATION ON THE NEXT APPROPRIATE COURSE OF ACTION.

2.2 SEE THE SPECIFICATION FOR ADDITIONAL REQUIREMENTS TO THOSE OUTLINED IN THE GEOTECHNICAL INVESTIGATION FOR EXCAVATION AND PREPARATION OF THE FOUNDATION AND THE SLAB ON GRADE SUBGRADE INCLUDING COMPACTION PROCEDURES.

2.3 EXCAVATIONS FOR FOOTINGS SHALL HAVE THE SIDES AND BOTTOMS TEMPORARILY LINED WITH 0.25mm POLYETHYLENE IF PLACEMENT OF CONCRETE DOES NOT OCCUR WITHIN 24 HRS OF THE EXCAVATION OF THE FOOTING.

2.4 FOUNDATION CONDITIONS NOTED DURING CONSTRUCTION WHICH DIFFER FROM THOSE DESCRIBED IN THE GEOTECHNICAL REPORT SHALL BE REPORTED TO THE GENERAL CONTRACTOR BEFORE FURTHER CONSTRUCTION IS ATTEMPTED. SEE PROJECT SPECIFICATIONS.

2.5 NO FOOTINGS OR SLABS SHALL BE POURED INTO OR AGAINST SUBGRADE CONTAINING FREE WATER, FROST, ICE OR LOOSE MATERIAL. FROST DEPTH ASSUMED TO BE 800mm.

2.6 ALL SLAB–ON–GRADE, TRENCH BOTTOMS AND OTHER ON–GRADE INTERIOR HORIZONTAL SURFACES SHALL BE PLACED OVER A 0.25mm POLYETHYLENE VAPOR RETARDER OVER A 100mm #57 STONE WATER CAPILLARY BARRIER PLACED ON SUBGRADE PROPERLY PREPARED IN ACCORDANCE WITH THE CONTRACT SPECIFICATIONS. (UON)

2.7 PRIOR TO START OF FOUNDATION OR SLAB–ON–GRADE CONSTRUCTION, EXISTING SUBGRADES SHALL BE COMPACTED TO MINIMUM OF 95% MAXIMUM DRY DENSITY OBTAINED THRU ASTM D 1557 MODIFIED PROCTOR TESTING.

2.8 SEE PLUMBING, ELECTRICAL & CIVIL SHEETS FOR REQUIRED UNDERSLAB UTILITIES.

2.9 SEE ARCHITECTURAL SHEETS FOR ALL WATERPROOFING DETAILS AND MATERIALS.

2.10 IF UNDERMINING OF FOOTINGS OCCURS, FILL VOIDS WITH 18 MPa CONCRETE. DO NOT ATTEMPT TO REPLACE AND RE–COMPACT SOIL.

3.0 CONCRETE

3.1 CONCRETE SHALL HAVE THE UNIT WEIGHT OF 2400 kg/m^3 AND A MINIMUM COMPRESSIVE STRENGTH (f'c) OF 28 MPa AT 28 DAYS. ALL CONCRETE SHALL HAVE A MAXIMUM WATER–CEMENT RATIO OF 0.45. SEE SPECIFICATIONS FOR ADDITIONAL INFORMATION. ENTRAIN AIR TO PRODUCE TOTAL AIR CONTENT ACCORDING TO THE SPECIFICATIONS FOR CONCRETE EXPOSED TO FREEZING TEMPERATURES (EXTERIOR FOOTINGS, SLAB TURNDOWNS, EXTERIOR SLABS AND SLABS–ON–GRADE, EXTERIOR RETAINING WALLS, AND EXTERIOR GRADE BEAMS.)

3.2 NO CALCIUM CHLORIDE SHALL BE USED IN ANY CONCRETE.

3.3 MIXING, TRANSPORTING AND PLACING OF CONCRETE SHALL CONFORM TO ACI 301M–05.

3.4 ALL CONCRETE WORK SHALL CONFORM TO THE REQUIREMENTS OF THE AMERICAN CONCRETE INSTITUTE (ACI) 318M MANUAL (metric), "BUILDING CODE REQUIREMENTS FOR REINFORCED CONCRETE", AND REQUIREMENTS OUTLINED IN THE CONTRACT SPECIFICATIONS. WHEN THERE IS A CONFLICT BETWEEN ACI AND THE SPECIFICATIONS, THE MORE STRINGENT SHALL GOVERN.

3.5 CHAMFER ALL EXPOSED EXTERNAL CORNERS OF CONCRETE WITH 20mm x45 DEGREE CHAMFER UON.

3.6 CONCRETE REINFORCEMENT BARS SHALL CONFORM TO ASTM A615M–96a, GRADE 420 MPa, REINFORCING BARS SHALL NOT BE TACK WELDED, WELDED, HEATED OR CUT, UNLESS INDICATED ON THE CONTRACT DOCUMENTS. ALL LAP SPLICES SHALL BE CLASS "B" UON.

3.7 HORIZONTAL FOOTING AND HORIZONTAL WALL REINFORCEMENT SHALL BE CONTINUOUS AND SHALL HAVE 90 DEGREE BENDS AND EXTENSIONS, OR CORNER BARS OF EQUIVALENT SIZE LAPPED WITH A CLASS B TENSION SPLICE AT CORNERS AND INTERSECTIONS. TOP BAR CRITERIA SHALL APPLY IF 300mm OR MORE OF FRESH CONCRETE IS PLACED BELOW BAR.

3.8 SLABS–ON–GRADE SHALL HAVE CONSTRUCTION JOINTS OR CRACK CONTROL JOINTS AS SHOWN ON THE DRAWINGS. CONSTRUCTION JOINTS CAN BE USED AT CONTROL JOINT LOCATIONS AT CONTRACTORS OPTION. SEE SLAB PLANS & JOINT DETAILS FOR ADDITIONAL INFORMATION. FOR AREAS NOT SHOWN ON DWGS, THE MAXIMUM SPACING OF CONSTRUCTION/ CRACK CONTROL JOINTS SHALL BE 4800mm

3.9 ALL CONCRETE REINFORCEMENT SHALL BE DETAILED, FABRICATED, LABELED, SUPPORTED, AND SPACED IN FORMS AND SECURED IN PLACE IN ACCORDANCE WITH THE PROCEDURES AND REQUIREMENTS OUTLINED IN THE LATEST EDITION OF THE "BUILDING CODE REQUIREMENTS FOR REINFORCED CONCRETE", ACI 318M, AND THE "MANUAL OF STANDARD PRACTICE FOR DETAILING REINFORCED CONCRETE STRUCTURES", ACI 315M, LATEST EDITION. BASED ON IN COUNTRY REINFORCEMENT AVAILABILITY, IT IS THE CONTRACTOR'S OPTION TO ROUND DESIGNATED ODD NUMBERED REINFORCEMENT SIZES UP (1) ONE BAR SIZE.

3.10 ALL DOWELS SHALL MATCH SIZE AND NUMBER OF MAIN REINFORCING, UNLESS NOTED OTHERWISE ON THE SHEETS.

3.11 ADDITIONAL BARS SHALL BE PROVIDED AROUND ALL FLOOR AND WALL OPENINGS AS SHOWN ON THE SHEETS.

3.12 SEE ARCHITECTURAL SHEETS FOR TYPE AND LOCATION OF ALL FLOOR FINISHES.

3.13 THE CONTRACTOR SHALL COORDINATE ADDITIONAL WALL/SLAB OPENINGS NOT SHOWN ON STRUCTURAL SHEETS. SEE MECHANICAL, ELECTRICAL, PLUMBING AND CIVIL SHEETS.

3.14 UNLESS NOTED OTHERWISE, ALL CURBS SHALL BE REINFORCED WITH AT LEAST (1)–#13 CONTINUOUS AND #13 AT 300mm O.C. DOWELS TO STRUCTURE BELOW.

3.15 THE CONTRACTOR SHALL VERIFY ALL OPENINGS, PAD SIZES, AND ANCHOR BOLTS WITH EQUIPMENT SELECTED.

3.16 FOR ALL WALLS & PIERS, PROVIDE DOWELS INTO FOOTING AT EACH VERT REINF BAR, UON DOWEL SIZE SHALL BE SAME AS VERT REINF.

3.17 PROVIDE CONCRETE POUR STOPS OR FORMED AS REQUIRED FOR INSTALLATION OF ALL CONCRETE WORK.

3.18 PROVIDE ADDITIONAL (2)–#13 x 600mm REINFORCING BARS IN SLAB–ON GRADE AT ALL RE–ENTRANT CORNERS. PLACE BARS AT MID–DEPTH OF SLAB WITH A CLEARANCE OF 50mm FROM CORNER UON.

3.19 COLD–WEATHER PLACEMENT: COMPLY WITH ACI 306.1 AND AS FOLLOWS. PROTECT CONCRETE WORK FROM PHYSICAL DAMAGE OR REDUCED STRENGTH THAT COULD BE CAUSED BY FROST, FREEZING ACTIONS, OR LOW TEMPERATURES. SUBMIT A COLD WEATHER CONCRETING PLAN FOR APPROVAL.

3.20 PROVIDE BONDING COMPOUND PER ASTM C 1059–99: SPECIFICATION FOR LATEX AGENTS FOR BONDING FRESH CONCRETE (GROUT) TO HARDENED CONCRETE.

3.21 THE FORMED SURFACES FOR REINFORCED CONCRETE SHALL ACHIEVE A "CLASS A" FINISH WHEN RECEIVING PAINT OR A "CLASS B" FINISH WHEN RECEIVING PLASTER OR TILE AS PER SPECIFICATION SECTION 03 31 00 CAST–IN–PLACE STRUCTURAL CONCRETE.

3.22 AT INTERSECTING GRADE BEAMS AND SHEAR WALLS, PROVIDE CORNER BARS AT INTERSECTIONS WITH SAME QUANTITY, SIZE AND SPACING AS HORIZONTAL BARS WITH LEG LENGTH = 50db.

4.0 CONCRETE MASONRY

4.1 MASONRY CONSTRUCTION SHALL CONFORM TO SPECIFICATION FOR MASONRY STRUCTURES (ACI 530.1) UON.

4.2 STRENGTH OF MASONRY MATERIALS SHALL BE AS FOLLOWS:

a. CONCRETE MASONRY UNITS SHALL BE NORMAL WEIGHT, GRADE N, TYPE 1, CONFORMING TO ASTM C–90 AND HAVE A MINIMUM COMPRESSIVE STRENGTH OF 10.4 MPa ON THE NET AREA.
b. MORTAR SHALL CONFORM TO ASTM C–270 TYPE S.
c. GROUT FOR MASONRY SHALL BE NORMAL WEIGHT AND HAVE A MINIMUM COMPRESSIVE STRENGTH OF 14 MPa AT 28 DAYS. GROUT SHALL CONFORM TO ASTM C476M. GROUT LIFTS SHALL NOT EXCEED 1,400mm.
d. REINFORCED MASONRY SHALL HAVE A STRENGTH F'm = 10 MPa. (F'm IS THE COMPRESSIVE STRENGTH OF THE MASONRY AT 28 DAYS AS DETERMINED BY PRISM TESTS).

4.3 ALL VERTICAL REINFORCEMENT FOR CONCRETE MASONRY SHALL BE ASTM A615M, GRADE 420 MPa. ALL SPLICES SHALL BE LAPPED 48 BAR DIAMETERS MINIMUM.

4.4 BOND BEAMS SHALL BE SPACED AT 1200mm OC MAXIMUM VERTICALLY. BOND BEAM REINFORCING SHALL BE CONTINUOUS AND PROVIDED AT WALL INTERSECTIONS AND WALL CORNERS (REFERENCE CONCRETE MASONRY NOTE 4.11). ALL BOND BEAM REINFORCING SHALL BE CONTINUOUS AND HAVE STANDARD ACI HOOKS AT EACH END. PROVIDE STANDARD BAR SPLICES AS SPECIFIED. AS AN ALTERNATE TO CMU BOND BEAMS, IT IS THE CONTRACTOR'S OPTION TO PROVIDE 200mm x 200mm CONTINUOUS CAST–IN–PLACE CONCRETE BOND BEAMS WITH (2)–#16 IN LIEU OF CMU BOND BEAMS INDICATED ON THE DRAWINGS.

4.5 SEE TYPICAL DETAILS FOR MINIMUM REINFORCEMENT REQUIREMENTS FOR CMU WALLS. PROVIDE STANDARD BAR SPLICES AS SPECIFIED. ALL VERTICAL REINFORCEMENT EXTENDS FULL HEIGHT OF WALL.

4.6 CMU CELLS THAT REQUIRE VERTICAL REINFORCING BARS AS INDICATED ON THE CONTRACT DRAWINGS AND/OR SPECS SHALL HAVE REINF BARS PLACED IN CENTERS OF CMU CELLS AND CONTINUOUSLY GROUTED UON.

4.7 ALL CMU CELLS, OPEN CAVITIES, AND AIR SPACES OF ALL EXTERIOR WALLS SHALL BE GROUTED TO STOP FRAGMENTS FROM MORTAR BLAST.

4.8 CONTRACTOR SHALL COORDINATE LOCATION OF ALL OPENINGS SEE ARCH, MECH, ELEC, AND PLUMBING SHEETS FOR SIZE AND LOCATION OF OPENINGS.

4.9 MASONRY WALLS SHALL NOT BE BACK FILLED PRIOR TO THE MORTAR AND GROUT ATTAINING THEIR RESPECTIVE MAXIMUM DESIGN STRENGTHS PER SPECIFICATIONS.

4.10 PROVIDE GALVANIZED MORTAR/GROUT SCREEN W/ 3mm MESH WHERE CELLS BELOW ARE NOT GROUTED.

4.11 AT INTERSECTING BOND BEAMS, PROVIDE CORNER BAR FOR EACH HORIZONTAL BAR IN BOND BEAMS AT INTERSECTING WALLS. USE SAME SIZE AND SPACING AS HORIZONTAL BARS WITH LEG LENGTH = 50db.

4.12 THE ALTERNATE TOP OF CMU WALL BRACING DETAIL(S) SHOWN ON S–701 CAN BE UTILIZED AT THE CONTRACTOR'S OPTION IN PLACE OF THE "SLEEVED DOWEL" WALL CONNECTIONS DEPICTED ON S–400 AND S–500 SERIES DRAWINGS. IN ADDITION, ALTERNATE DETAIL(S) SHOW CAST–IN–PLACE WALL BOND BEAMS THAT CAN BE UTILIZED AT THE CONTRACTOR'S OPTION IN PLACE OF THE STANDARD CMU BOND BEAMS CONSTRUCTED OF CMU BLOCKS.

5.0 COLD–FORMED METAL FRAMING

5.1 ALL COLD–FORMED METAL FRAMING MEMBERS SHALL CONFORM TO ASTM A1003M, STRUCTURAL GRADE ST340 (MPa), WITH A GALVANIZED COATING OF Z275 OR BETTER IN ACCORDANCE WITH ASTM A653M.

5.2 ALL COLD–FORMED METAL FRAMING MEMBERS SHALL HAVE THE FOLLOWING MINIMUM PROPERTIES:

a. MINIMUM METAL THICKNESS:
TRACK = 1.37mm;
STUD/OTHER = 1.09mm
b. MINIMUM FLANGE WIDTH:
TRACK = 38mm;
STUD/OTHER = 35mm
c. MINIMUM MEMBER DEPTH:
ALL SECTIONS = 152.2mm
d. PURLIN (HAT CHANNEL)
DEPTHxWIDTH(FLAT TOP)xTHICK = 25mmx42mmx1.59mm

5.3 ALL CONNECTIONS SHALL BE MADE WITH CORROSION RESISTANT (ASTM A153M), SELF–DRILLING, SELF–TAPPING STEEL DRILL SCREWS IN ACCORDANCE WITH ASTM C1513. SCREWS SHALL HAVE A LOW PROFILE HEAD BENEATH ROOF DECK, AND STANDARD HEAD ALL OTHER LOCATIONS.

5.4 FABRICATE COLD FORMED METAL FRAMING AND ACCESSORIES PLUMB, SQUARE AND TRUE TO LINE, WITH CONNECTIONS SECURELY FASTENED ACCORDING TO AISI STANDARD FOR COLD FORMED STEEL FRAMING.

5.5 CUT FRAMING MEMBERS BY SAWING OR SHEATHING, DO NOT TORCH CUT.

5.6 INSTALL FRAMING MEMBERS IN ONE–PIECE LENGTHS UNLESS SPLICE CONNECTIONS ARE INDICATED FOR TRACK OR TENSION MEMBERS

5.7 INSTALL TEMPORARY BRACING AND SUPPORTS TO SECURE FRAMING DURING CONSTRUCTION. MAINTAIN BRACING AND SUPPORTS IN PLACE UNTIL THE STRUCTURE HAS BEEN COMPLETED WITH ALL CONNECTIONS AND PERMANENT BRACING SECURED.

6.0 STRUCTURAL DESIGN CRITERIA

6.1 ALL DESIGNS SHALL CONFORM TO THE PROVISIONS OF THE IBC 2006 AND UFC AS APPLICABLE.

6.2 DESIGN LOADS

6.2.1 DEAD LOADS (PER IBC 2006 & UFC 3–310–01)

MECH/ELEC/PLUMBING	0.20 kPa
MISCELLANEOUS	0.15 kPa
COLD–FORMED FRAMING	0.20 kPa
INSULATION	0.10 kPa
METAL ROOF PANEL	0.14 kPa
	0.79 kPa

6.2.2 LIVE LOADS (PER IBC 2006 & UFC 3–310–01)

ROOF	1.00 kPa
SLAB ON GRADE	4.80 kPa

6.2.3 SNOW LOADS (PER IBC 2006 & UFC 3–310–01)

GROUND SNOW LOAD (Pg)	1.2 kPa
SLOPED ROOF SNOW LOAD (Ps)	0.84 kPa
SNOW IMPORTANCE FACTOR (I)	1.0
SNOW EXPOSURE FACTOR (Ce)	1.0
THERMAL FACTOR (Ct)	1.0

6.2.4 WIND LOADS (PER IBC 2006)

BASIC WIND SPEED	137 km/h
WIND IMPORTANCE FACTOR	1.0
WIND EXPOSURE CATEGORY	D
DIRECTIONALITY COEFFICIENT (Kd)	0.85
TOPOGRAPHIC FACTOR (Kzt)	1.0
WIND BASE SHEAR: E–W	16.0 kN
WIND BASE SHEAR: N–S	74.0 kN

6.2.5 SEISMIC LOADS (PER IBC 2006 & UFC 3–310–04)

OCCUPANCY USE CATEGORY	II
SEISMIC IMPORTANCE FACTOR (Ie)	1.0
SEISMIC SITE CLASS	D

S_s = 1.50 (REDUCED FROM DESIGN STANDARD OF 2.40 PER ASCE 7–05,12.81.3. FOR A BUILDING WITHOUT IRREGULARITIES. REDUCTION APPLIES ONLY FOR Cs DETERMINATION.)

S_1 = 1.20
S_{DS} = 1.60
S_{D1} = 1.20

SEISMIC DESIGN CATEGORY E
SEISMIC RESISTING SYSTEM:
–SPECIAL REINFORCED CONCRETE SHEAR WALL (TYPE B.5 PER ASCE TABLE 12.2–1)

RESPONSE MODIFICATION FACTOR (R)	6
RESPONSE COEFFICIENT (Cs) – REGULAR PORTION	0.167
SEISMIC ANALYTICAL PROCEDURE =	EQUIV LATERAL FORCE
SEISMIC BASE SHEAR:	585 kN

APPROVED:
A/E DESIGNER OF RECORD
SEAL:
GEORGIA REGISTERED 8/23/10 No. 27141 PROFESSIONAL ENGINEER CHRISTOPHER W. WHITMORE

US ARMY CORPS OF ENGINEERS
AFGHANISTAN ENGINEER DISTRICT

Mark	Description	Date	Appr.

Mark	Description	Date	Appr.

Designed by: KMP | Date: 8/16/10 | Rev: 0
Dwn by: RCG | Ckd by: CWW | Design file no.
Reviewed by: LHM | Drawing code:
Submitted by: BAKER | File name: ANABOBS-001GN | Plot date: 8/24/2010 | Plot scale: X:X

U.S. ARMY CORPS OF ENGINEERS
AFGHANISTAN ENGINEER DISTRICT
APO AE 96338

Michael Baker Jr., Inc
A unit of Michael Baker Corporation
Airside Business Park
100 Airside Drive
Moon Township PA 15108
www.mbakercorp.com

AFGHAN NATIONAL ARMY
STANDARD DESIGN
OPEN BARRACKS WITH LATRINE
GENERAL NOTES & DESIGN CRITERIA

Sheet reference number:
S–001

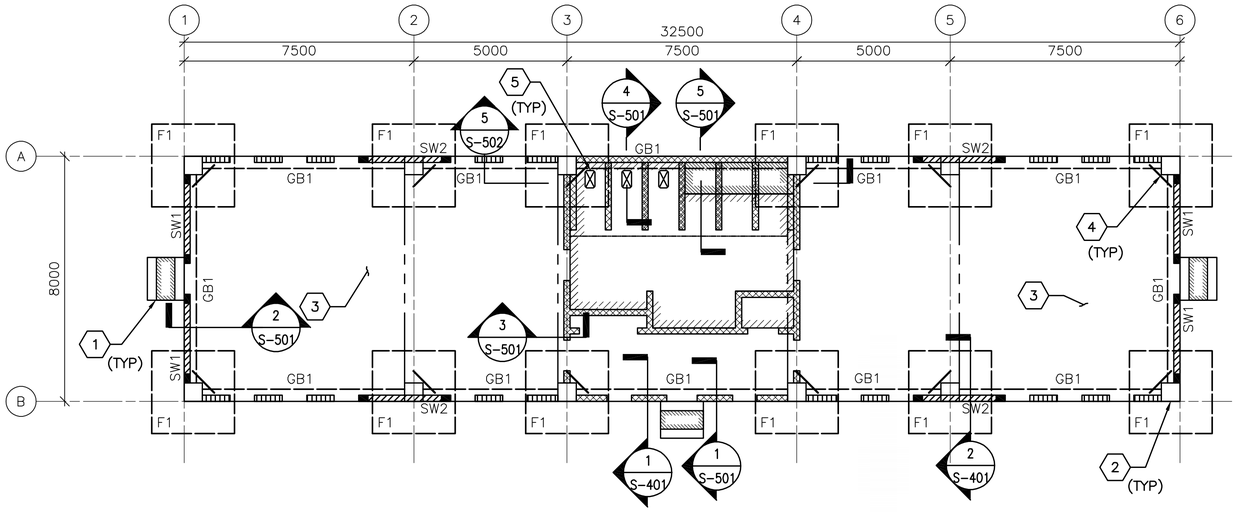

1 S-101 FOUNDATION/SLAB PLAN

SCALE: 1:100

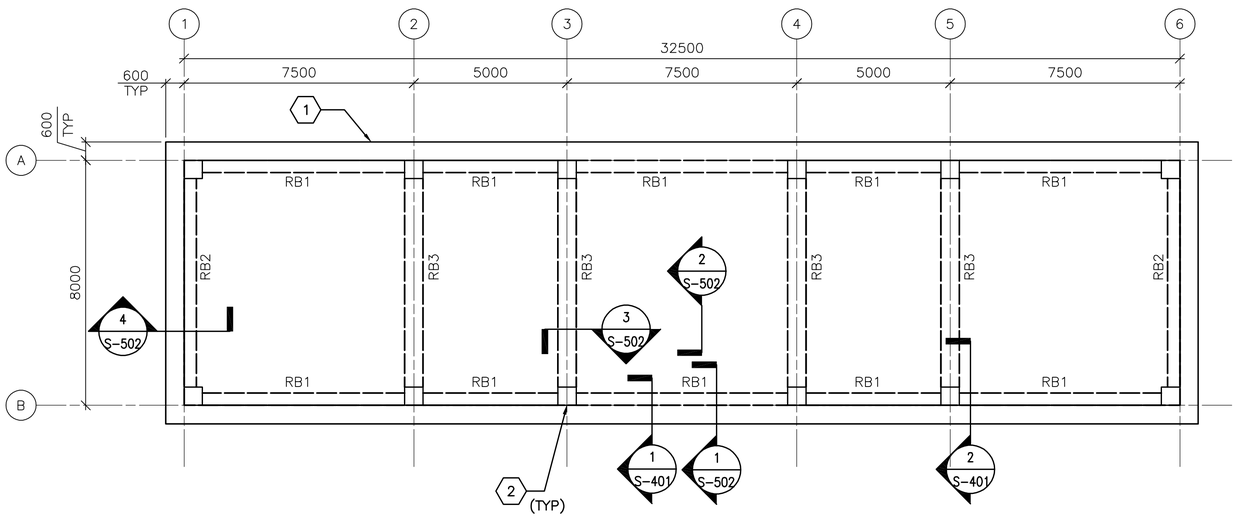

1 S-101 ROOF FRAMING PLAN

SCALE: 1:100

FOUNDATION/SLAB PLAN NOTES:

1. REFER TO SHEET S-001 FOR STRUCTURAL NOTES AND DESIGN CRITERIA.
2. FINISH FIRST FLOOR ELEVATION SHALL BE (DATUM 0.00) ALL PLUS OR MINUS DIMENSIONS INDICATED ON PLAN OR REFERRED TO IN NOTES RELATE TO FINISH FIRST FLOOR ELEVATION.
3. SLAB-ON-GRADE IS 150 WITH #13 @ 300 OC EW LOCATED 38 FROM T/SLAB. UON. WHERE NOTED, 300 SLAB-ON-GRADE SHALL BE REINFORCED W/ #13@300 OC EW T&B.
4. TOP OF EXTERIOR FOOTINGS SHALL BE -950 UNLESS OTHERWISE INDICATED
5. COLUMN FOOTINGS INDICATED BY F# ON PLAN. REFER TO COLUMN FOOTING SCHEDULE ON SHEET S-601.
6. REFER TO COLUMN SCHEDULE ON SHEET S-601.
7. GRADE BEAM INDICATED BY GB# ON PLAN, REFER TO BEAM SCHEDULE ON SHEET S-601.
8. SHEARWALL INDICATED BY SW# ON PLAN, REFER TO SHEARWALL SCHEDULE ON SHEET S-601.
9. SEE TYPICAL EXTERIOR AND INTERIOR CMU WALL REINF DETAILS ON SHEET S-701.
10. SEE MECHANICAL AND ELECTRICAL SHEETS FOR CONCRETE PAD LOCATIONS, SIZES, AND THICKNESS NOT SHOWN. SEE SHEET S-701 FOR DETAILS.
11. THICKENED SLAB UNDER CMU PERIMETER/PARTITION WALLS NOT SHOWN FOR CLARITY.

FOUNDATION/SLAB PLAN KEY NOTES: (X)

1. CONC PAD (ENTRANCE) – SEE ARCH DWGS FOR INFORMATION
2. REINF CONC COLUMN
3. REINF CONC SLAB-ON-GRADE
4. (2)-#13 @ RE-ENTRANT CORNERS – SEE S-701 FOR INFORMATION
5. SLAB OPENING – COORD W/ ARCH AND PLUMBING DWGS

FOUNDATION/SLAB PLAN LEGEND:

- REINF CONC SHEAR WALL
- REINF CONCRETE INFILL WALL
- REINF CMU WALL
- CONTROL JOINT
- INDICATES DROP SLAB 65 BELOW FINISH FLOOR
- INDICATES DROP SLAB FOR DOOR STOOP 4/A-503
- SLAB OPENING
- OUTLINE OF THICKENED SLAB AREAS
- INDICATES DROP SLAB 200 BELOW FINISH FLOOR

ROOF FRAMING PLAN NOTES:

1. REFER TO SHEETS S-001 FOR STRUCTURAL NOTES AND DESIGN CRITERIA.
2. TOP OF SLAB ELEVATION = 3700 UNLESS NOTED OTHERWISE.
3. ROOF SLAB IS 200 WITH #16 @ 300 OC EW T&B.
4. ROOF BEAM INDICATED BY RB# ON PLAN. REFER TO BEAM SCHEDULE ON SHEET S-601.
5. COORDINATE WITH ARCHITECTURAL SHEETS FOR COLD-FORMED STEEL OVERBUILD FRAMING ABOVE ROOF SLAB.
6. COLD-FORMED METAL OVERBUILD ROOF FRAMING NOT SHOWN FOR CLARITY. SEE OVERBUILD ROOF FRAMING DETAILS AND SECTIONS ON SHEET S-702.
7. CMU PARTITION WALL (BELOW ROOF SLAB) NOT SHOWN FOR CLARITY.
8. OVERHANG AREAS OF ROOF SLAB CONTAIN ROOF VENT PENETRATIONS. REFERENCE ARCHITECTURAL DRAWINGS FOR INFORMATION.

ROOF FRAMING PLAN KEY NOTES: (X)

1. CONC ROOF SLAB (BELOW ROOF OVERBUILD)
2. REINF CONC COLUMN (BELOW CONC ROOF SLAB)

0 2000 4000
SCALE: 1:100

UNLESS OTHERWISE NOTED, LINEAR DIMENSIONS SHOWN ON DRAWINGS ARE IN MILLIMETERS (mm)

APPROVED:

A/E DESIGNER OF RECORD

SEAL:

GEORGIA REGISTERED 8/23/10 No. 27141 PROFESSIONAL ENGINEER CHRISTOPHER W. WHITMORE

US ARMY CORPS OF ENGINEERS
AFGHANISTAN ENGINEER DISTRICT

Mark	Description	Date	Appr.	Mark	Description	Date	Appr.

U.S. ARMY CORPS OF ENGINEERS
AFGHANISTAN ENGINEER DISTRICT
APO AE 96338

Michael Baker Jr., Inc
A unit of Michael Baker Corporation
Airside Business Park
100 Airside Drive
Moon Township, PA 15108
www.mbakercorp.com

Designed by: KMP
Dwn by: RCG
Ckd by: CWW
Reviewed by: LHM
Submitted by: BAKER
Date: 8/16/10
Rev: 0
Design file no.
Drawing code:
File name: AN4BOBS-101FNP
Plot date: 8/24/2010
Plot scale: X:X

AFGHAN NATIONAL ARMY
STANDARD DESIGN

OPEN BARRACKS WITH LATRINE

FOUNDATION/SLAB & ROOF FRAMING PLAN

Sheet reference number:
S-101

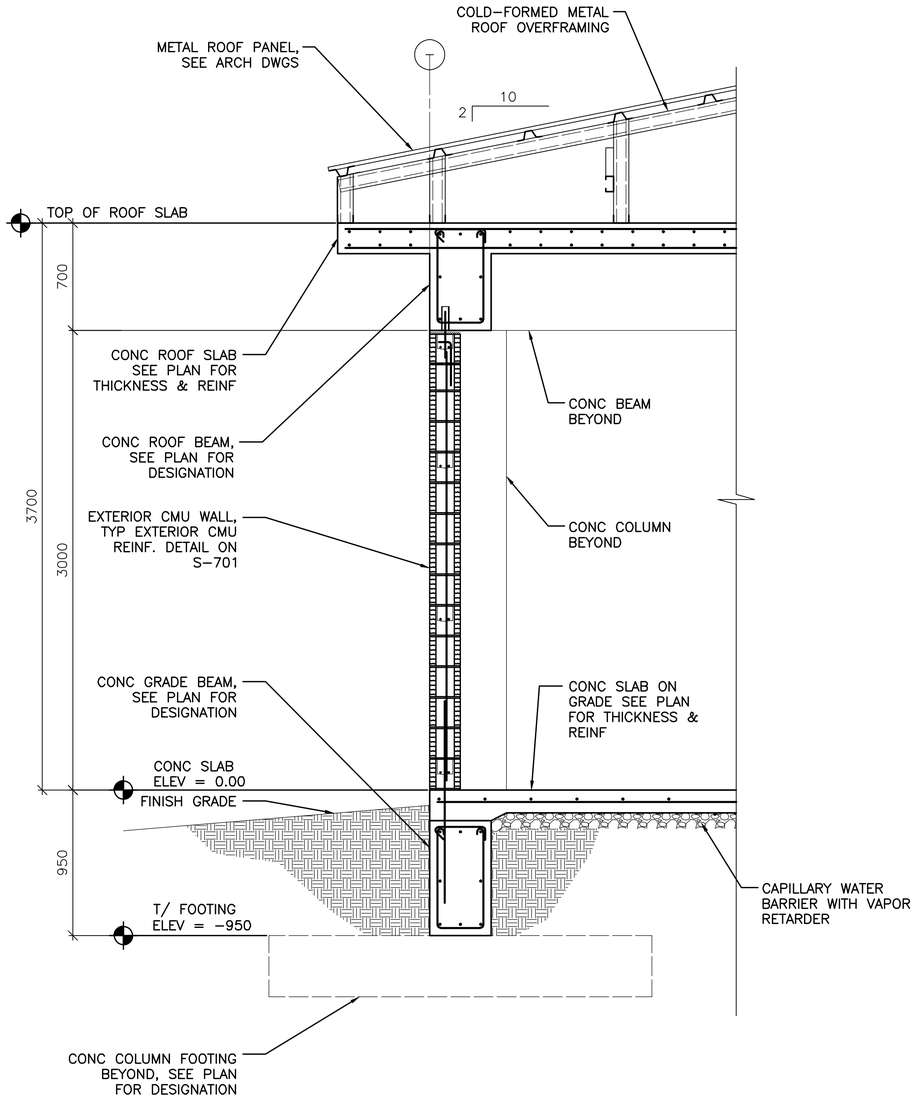

1 S-101 TYPICAL WALL SECTION AT EXTERIOR MASONRY WALL

SCALE: 1:20

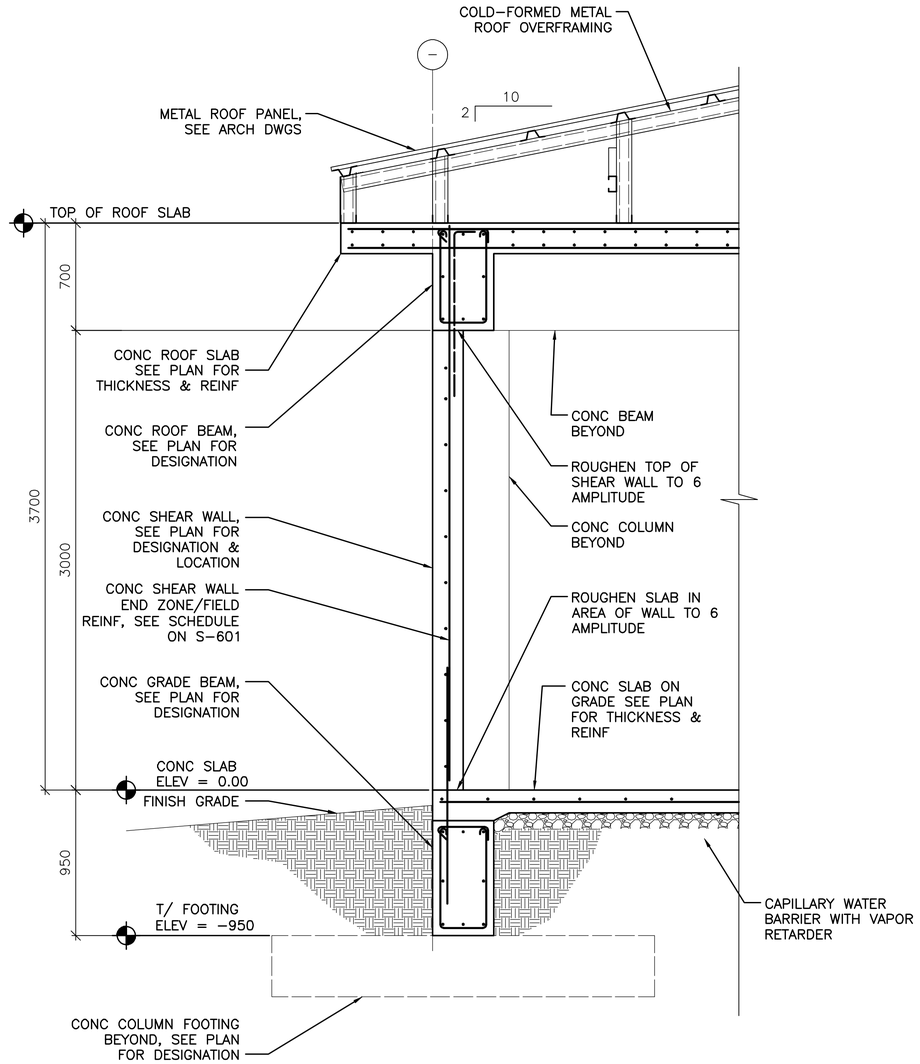

2 S-101 TYPICAL WALL SECTION AT CONCRETE SHEAR WALL

SCALE: 1:20

0 400 800
SCALE: 1:20

UNLESS OTHERWISE NOTED, LINEAR DIMENSIONS SHOWN ON DRAWINGS ARE IN MILLIMETERS (mm)

APPROVED:

A/E DESIGNER OF RECORD

SEAL:

GEORGIA REGISTERED 8/23/10 No. 27141 PROFESSIONAL ENGINEER CHRISTOPHER W. WHITMORE

US ARMY CORPS OF ENGINEERS
AFGHANISTAN ENGINEER DISTRICT

Mark	Description	Date	Appr.	Mark	Description	Date	Appr.

Designed by: KMP
Dwn by: RCG
Ckd by: CWW
Reviewed by: LHM
Submitted by: BAKER
Date: 8/16/10
Rev: 0
Design file no.
Drawing code:
File name: ANABOBS-401BS
Plot date: 8/24/2010
Plot scale: X:X

U.S. ARMY CORPS OF ENGINEERS
AFGHANISTAN ENGINEER DISTRICT
APO AE 96338

Michael Baker Jr., Inc
A unit of Michael Baker Corporation
Airside Business Park
100 Airside Drive
Moon Township PA 15108
www.mbakercorp.com

AFGHAN NATIONAL ARMY
STANDARD DESIGN
OPEN BARRACKS WITH LATRINE
BUILDING SECTIONS

Sheet reference number:
S-401

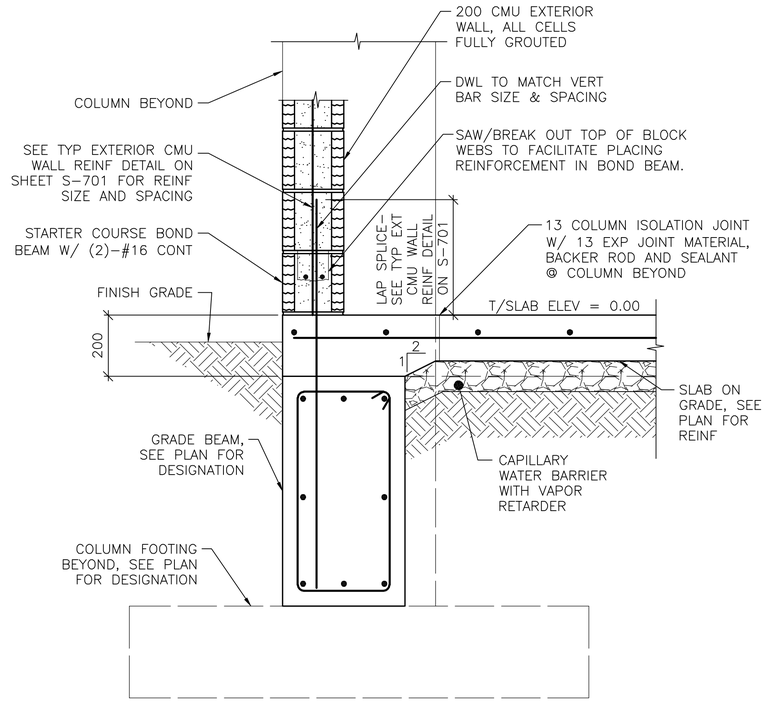

1 S-101 **SECTION**
SCALE: 1:10

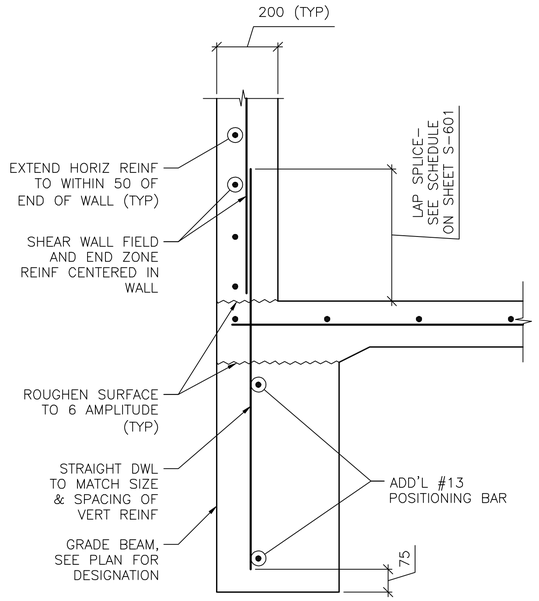

NOTE:
1. SECTION DEPICTS SHEAR WALL TERMINATION ONLY. GRADE BEAM REINFORCING NOT SHOWN FOR CLARITY
2. SEE SHEET S-601 AND SHEET S-702 FOR SCHEDULED FIELD AND END ZONE REINF.

2 S-101 **SECTION**
SCALE: 1:10

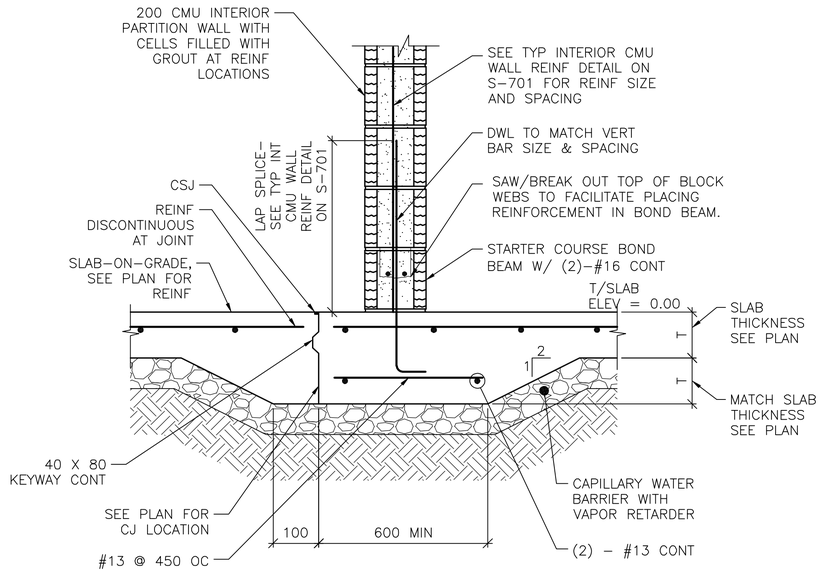

NOTE:
1. DETAIL IS APPLICABLE AT CONTROL JOINTS RUNNING PARALLEL TO CMU WALLS AND WITHIN 300 OF FACE OF WALL.

3 S-101 **SECTION**
SCALE: 1:10

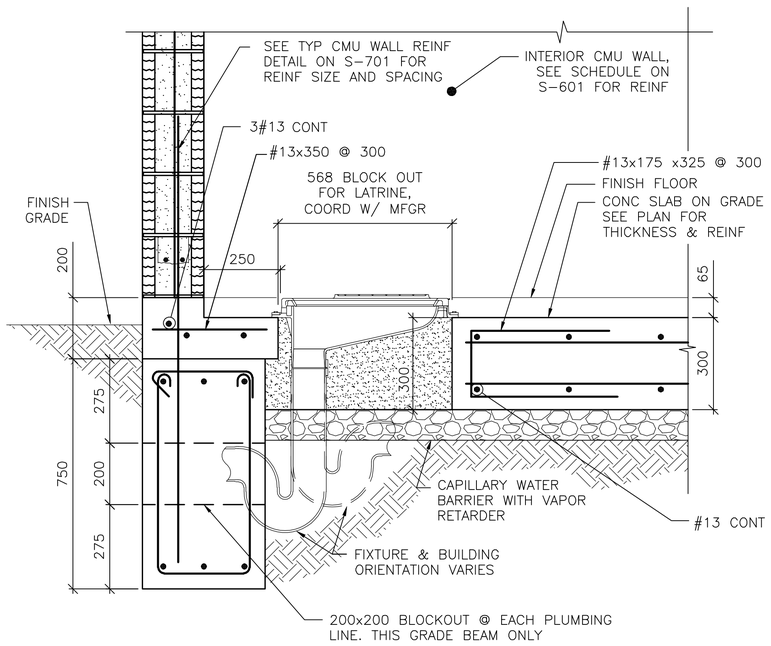

4 S-101 **SECTION**
SCALE: 1:10

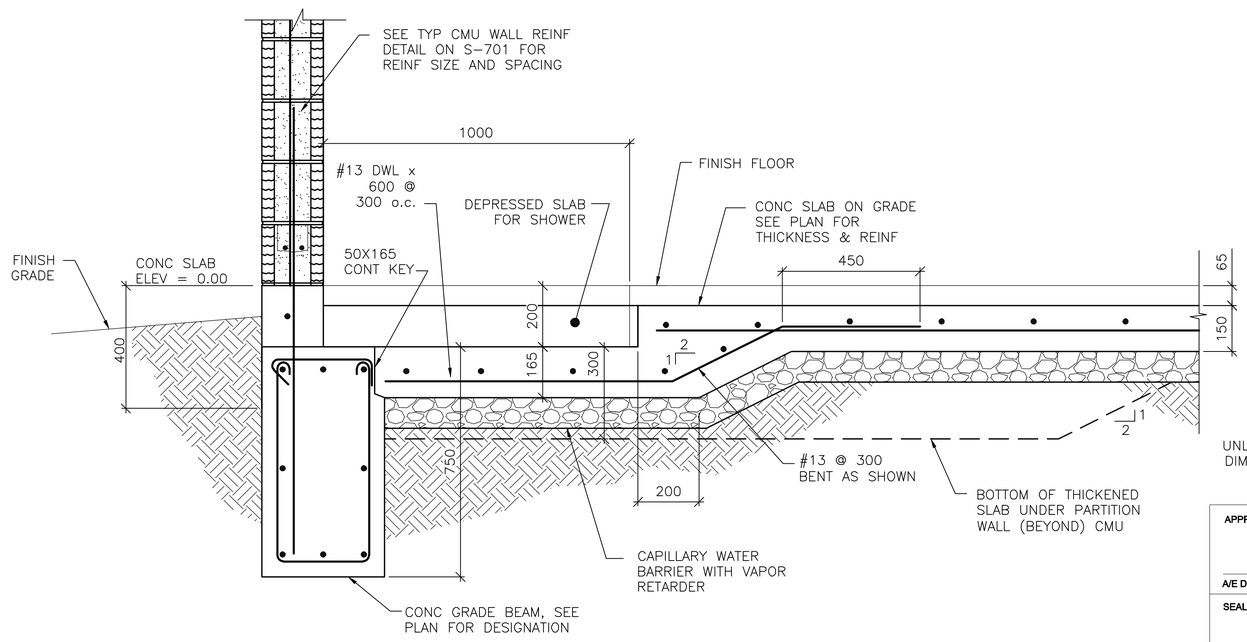

5 S-101 **SECTION**
SCALE: 1:10

0 200 400
SCALE: 1:10

UNLESS OTHERWISE NOTED, LINEAR DIMENSIONS SHOWN ON DRAWINGS ARE IN MILLIMETERS (mm)

APPROVED:

A/E DESIGNER OF RECORD

SEAL:

GEORGIA REGISTERED 9/23/10 No. 27141 PROFESSIONAL ENGINEER CHRISTOPHER W. WHITMORE

US ARMY CORPS OF ENGINEERS
AFGHANISTAN ENGINEER DISTRICT

Mark	Description	Date	Appr.	Mark	Description	Date	Appr.

Date: 8/16/10
Rev: 0
Design file no.
Drawing code:
File name: AN4BOBS-501SC
Plot date: 9/24/2010
Plot scale: x:X

Designed by: KMP
Dwn by: RCG
Ckd by: CWW
Reviewed by: LHM
Submitted by:
BAKER

U.S. ARMY CORPS OF ENGINEERS
AFGHANISTAN ENGINEER DISTRICT
APO AE 96338

Michael Baker Jr., Inc.
A unit of Michael Baker Corporation
Airside Business Park
100 Airside Drive
Moon Township, PA 15108
www.mbakercorp.com

AFGHAN NATIONAL ARMY
STANDARD DESIGN
OPEN BARRACKS WITH LATRINE
FOUNDATION SECTIONS

Sheet reference number:
S-501

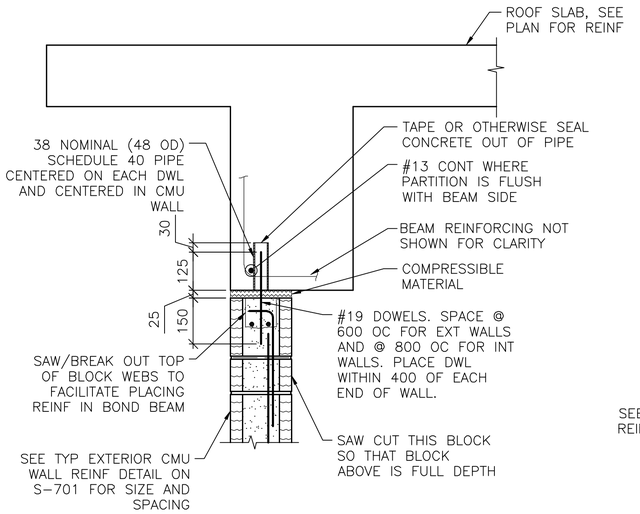

NOTES:
1. EXTEND DOWEL REINF TO 25 CLEAR FROM TOP OF CMU WALL.

1 / S-101 **SECTION**
SCALE: 1:10

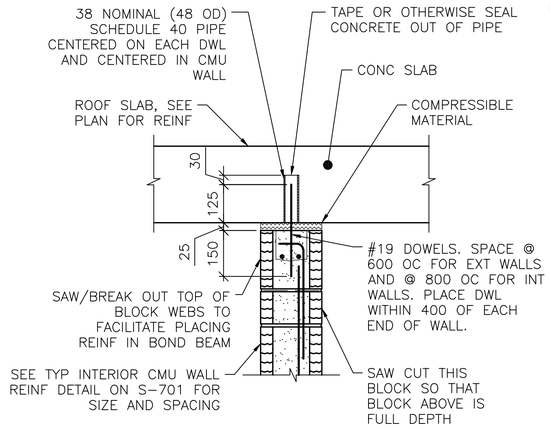

NOTES:
1. EXTEND DOWEL REINF TO 25 CLEAR FROM TOP OF CMU WALL.
2. SLAB REINF NOT SHOWN FOR CLARITY.

2 / S-101 **SECTION**
SCALE: 1:10

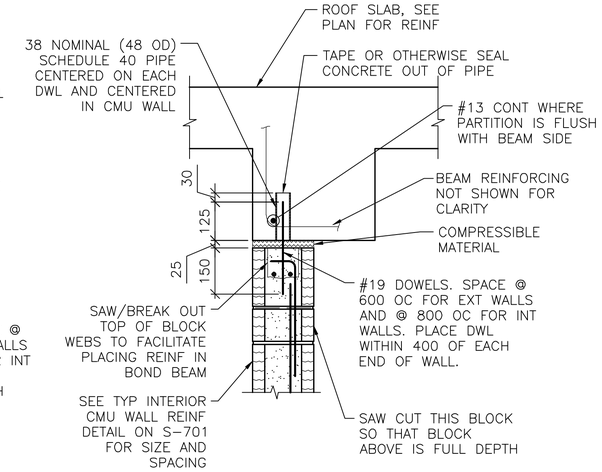

NOTES:
1. EXTEND DOWEL REINF TO 25 CLEAR FROM TOP OF CMU WALL.
2. PARTITION WALL MAY BE CENTERED UNDER THE BEAM OR FLUSH AS SHOWN. SEE PLAN FOR LOCATION.
3. SLAB REINF NOT SHOWN FOR CLARITY.

3 / S-101 **SECTION**
SCALE: 1:10

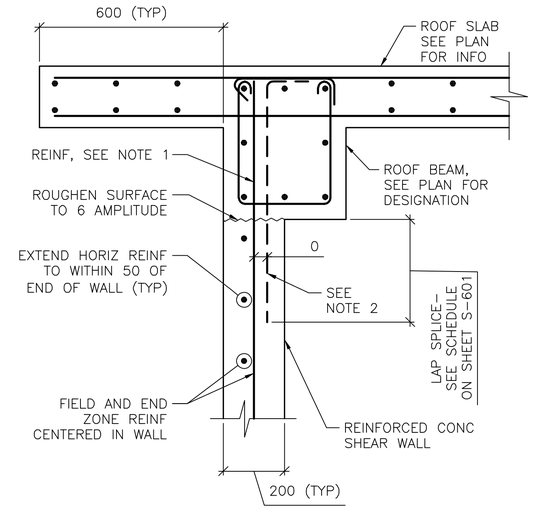

NOTES:
1. TERMINATE "FIELD" VERT REINF & END ZONE REINF @ 50 CLEAR FROM TOP OF ROOF SLAB.
2. WHERE END ZONE REINFORCING CANNOT BE DEVELOPED IN BEAM DEPTH, PROVIDE HOOKED DWLS SAME SIZE & SPACING. PROVIDE TENSION LAP BELOW ROOF BEAM.
3. SEE SHEET S-601 AND SHEET S-702 FOR SCHEDULED FIELD AND END ZONE REINF.

4 / S-101 **SECTION**
SCALE: 1:10

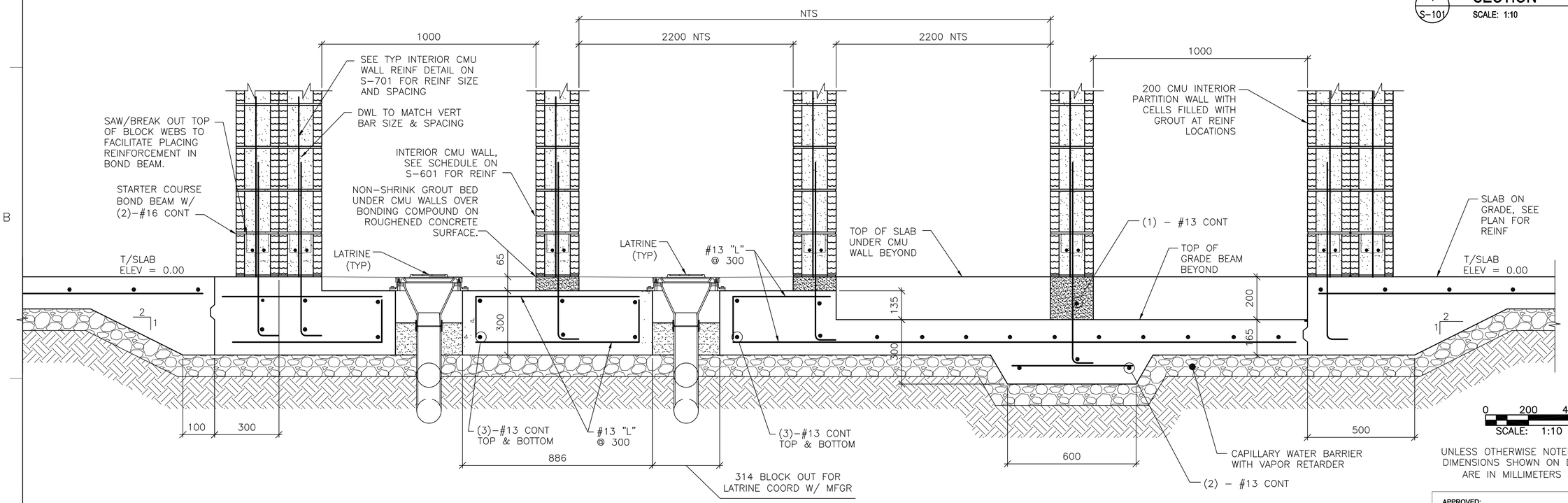

0 200 400
SCALE: 1:10

UNLESS OTHERWISE NOTED, LINEAR DIMENSIONS SHOWN ON DRAWINGS ARE IN MILLIMETERS (mm)

NOTES:
1. SECTION DOES NOT SHOW ALL WALLS THRU WHICH THE SECTION IS CUT, BUT ALL TYPICAL CONDITIONS THAT OCCUR THRU THE SECTION CUT.
2. COLUMN & COLUMN FOOTING BEYOND NOT SHOWN FOR CLARITY.

5 / S-101 **SECTION**
SCALE: 1:10

APPROVED:

A/E DESIGNER OF RECORD

SEAL:

GEORGIA REGISTERED 8/23/10 No. 27141 PROFESSIONAL ENGINEER CHRISTOPHER W. WHITMORE

US ARMY CORPS OF ENGINEERS
AFGHANISTAN ENGINEER DISTRICT

Mark	Description	Date	Appr.	Mark	Description	Date	Appr.

U.S. ARMY CORPS OF ENGINEERS
AFGHANISTAN ENGINEER DISTRICT
APO AE 96338

Michael Baker Jr., Inc
A unit of Michael Baker Corporation
Airside Business Park
100 Airside Drive
Moon Township, PA 15108
www.mbakercorp.com

Designed by: KMP
Dwn by: RCG
Ckd by: CWW
Reviewed by: LHM
Submitted by: BAKER
Date: 8/16/10
Rev: 0
Design file no.
Drawing code:
File name: ANABDBS-5025C
Plot date: 8/24/2010
Plot scale: X:X

AFGHAN NATIONAL ARMY
STANDARD DESIGN

OPEN BARRACKS WITH LATRINE

FOUNDATION & FRAMING SECTIONS

Sheet reference number:
S-502

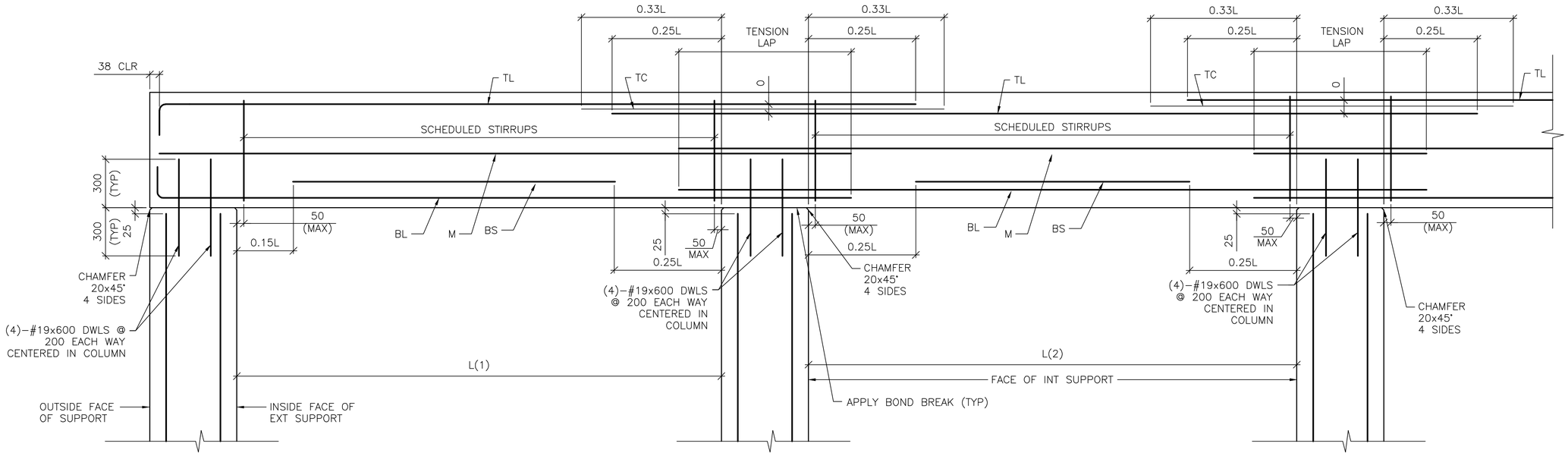

DETAIL NOTE:
1. WORK THIS DETAIL WITH BEAM SCHEDULE ON SHEET S-601.
2. L=GREATEST OF ADJACENT SPANS L(1) OR L(2)
3. ONLY COLUMN CORNER BARS ARE SHOWN

1 S-503 **ROOF BEAM REINFORCING DETAIL**

SCALE: NTS

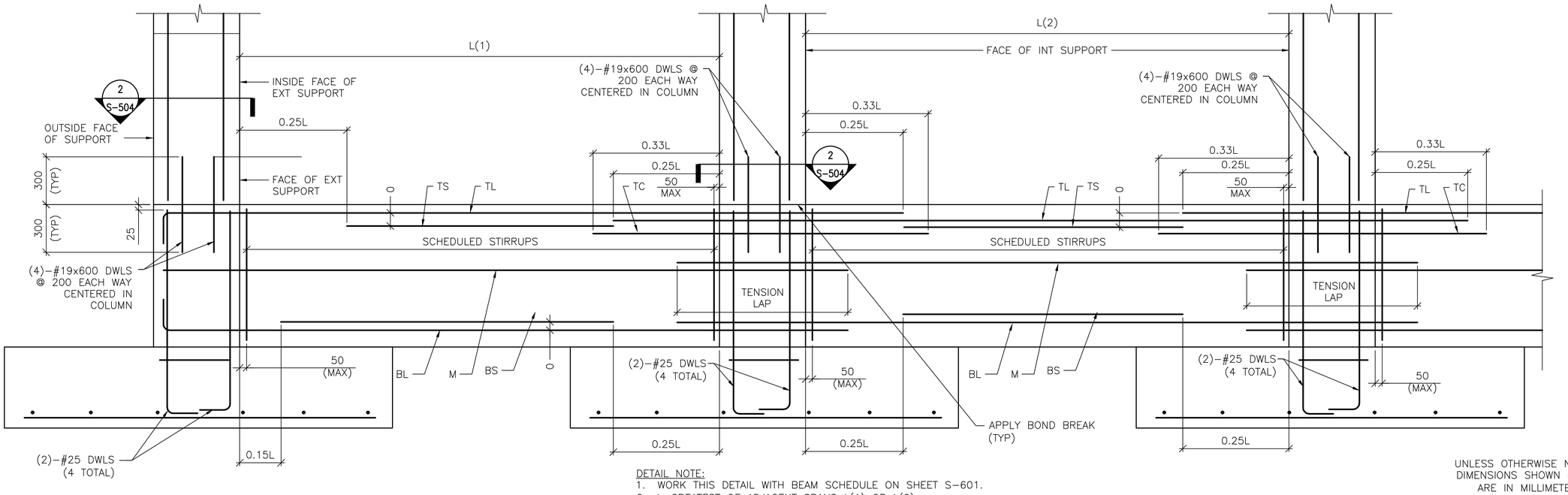

DETAIL NOTE:
1. WORK THIS DETAIL WITH BEAM SCHEDULE ON SHEET S-601.
2. L=GREATEST OF ADJACENT SPANS L(1) OR L(2)
3. ONLY COLUMN CORNER BARS ARE SHOWN.

2 S-503 **GRADE BEAM REINFORCING DETAIL**

SCALE: NTS

UNLESS OTHERWISE NOTED, LINEAR DIMENSIONS SHOWN ON DRAWINGS ARE IN MILLIMETERS (mm)

APPROVED:

A/E DESIGNER OF RECORD

SEAL:

GEORGIA REGISTERED 8/23/10 No. 27141 PROFESSIONAL ENGINEER CHRISTOPHER W. WHITMORE

US ARMY CORPS OF ENGINEERS
AFGHANISTAN ENGINEER DISTRICT

Mark	Description	Date	Appr.	Mark	Description	Date	Appr.

Designed by: KMP
Dwn by: RCG
Ckd by: CWW
Reviewed by: LHM
Submitted by: BAKER
Date: 8/16/10
Rev: 0
Design file no.
Drawing code:
File name: ANABOBS-503DT
Plot date: 8/24/2010
Plot scale: X:X

U.S. ARMY CORPS OF ENGINEERS
AFGHANISTAN ENGINEER DISTRICT
APO AE 96338

Michael Baker Jr., Inc
A unit of Michael Baker Corporation
Airside Business Park
100 Airside Drive
Moon Township, PA 15108
www.mbakercorp.com

AFGHAN NATIONAL ARMY
STANDARD DESIGN

OPEN BARRACKS WITH LATRINE

BEAM & COLUMN DETAILS

Sheet reference number:
S-503

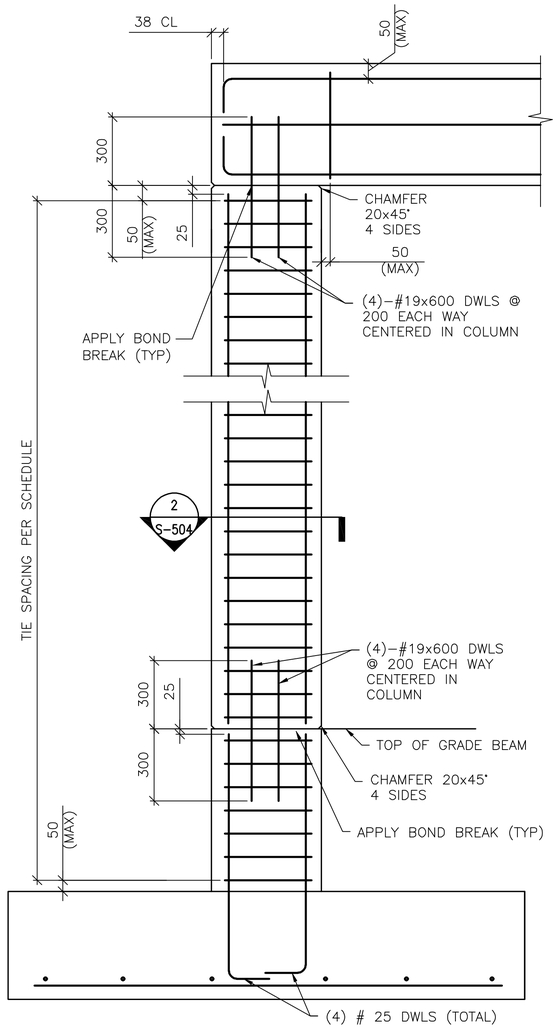

DETAIL NOTE:
1. ONLY COLUMN CORNER BARS ARE SHOWN

1 / S-504 1-STORY COLUMN REINF DETAILS

SCALE: NTS

(WITH GRADE BEAM)

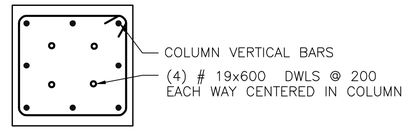

2 / S-503 2 / S-504 SECTION

SCALE: NTS

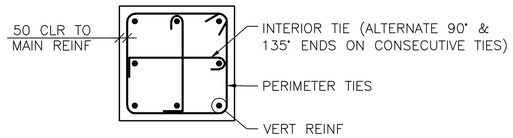

A / S-504 8 BAR COLUMN

SCALE: NTS

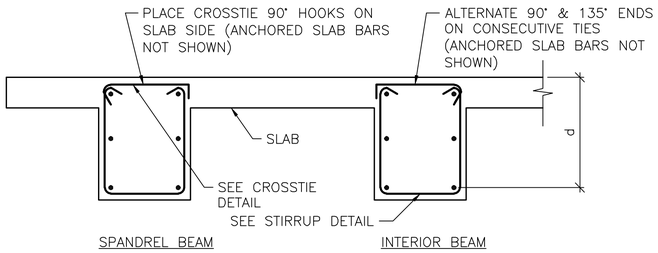

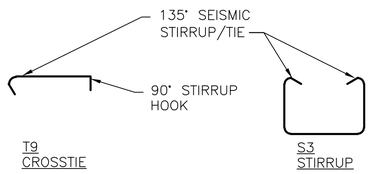

B / S-504 BEAM REINFORCEMENT DETAILS

SCALE: NTS

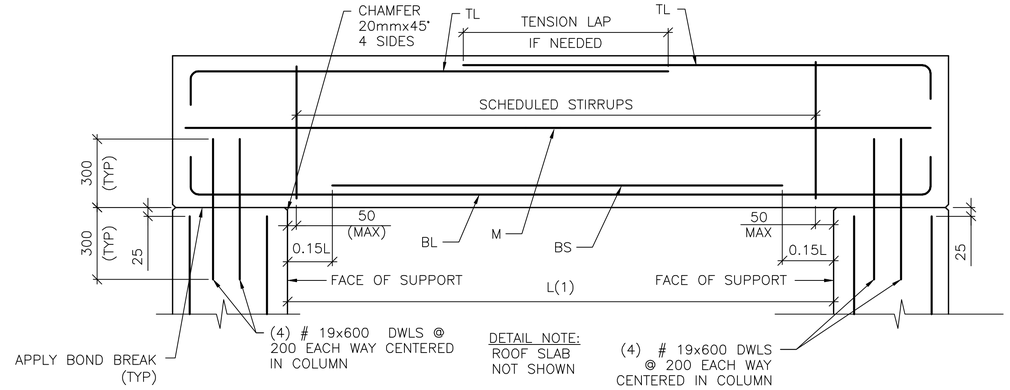

3 / S-504 SINGLE SPAN ROOF BEAM REINFORCING DETAIL

SCALE: NTS

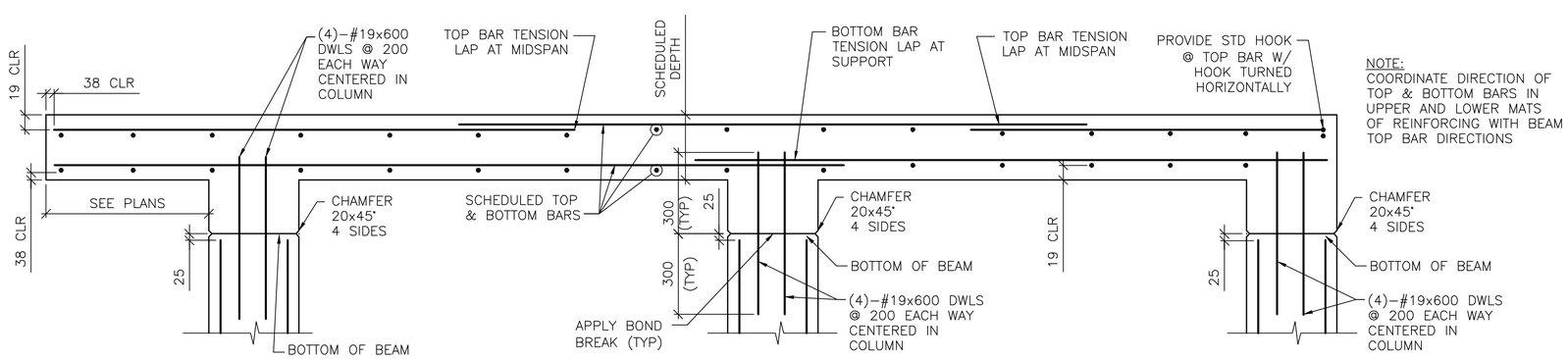

4 / S-504 FRAMED SLAB REINFORCING DETAIL

SCALE: NTS

UNLESS OTHERWISE NOTED, LINEAR DIMENSIONS SHOWN ON DRAWINGS ARE IN MILLIMETERS (mm)

APPROVED:

A/E DESIGNER OF RECORD

SEAL:

GEORGIA REGISTERED 8/23/10 No. 27141 PROFESSIONAL ENGINEER CHRISTOPHER W. WHITMORE

US ARMY CORPS OF ENGINEERS
AFGHANISTAN ENGINEER DISTRICT

Mark	Description	Date	Appr.	Mark	Description	Date	Appr.

U.S. ARMY CORPS OF ENGINEERS
AFGHANISTAN ENGINEER DISTRICT
APO AE 96338

Michael Baker Jr., Inc
A unit of Michael Baker Corporation
Airside Business Park
100 Airside Drive
Moon Township, PA 15108
www.mbakercorp.com

Designed by: KMP		Date: 8/16/10	Rev: 0
Dwn by: RCG	Ckd by: CWW	Design file no.	
Reviewed by: LHM		Drawing code:	
Submitted by: BAKER		File name: AN8R08S-504DT Plot date: 8/24/2010 Plot scale: X:X	

AFGHAN NATIONAL ARMY
STANDARD DESIGN

OPEN BARRACKS WITH LATRINE

BEAM & COLUMN DETAILS

Sheet reference number:
S-504

CONCRETE REINFORCEMENT TENSION DEVELOPMENT/LAP SPLICE SCHEDULE

f'c = 28 MPa	LAP CLASS	UNCOATED BARS			
		TOP BARS		OTHER BARS	
BAR SIZES		CASE 1	CASE 2	CASE 1	CASE 2
#10 TO #19	A	50 BAR DIA	74 BAR DIA	38 BAR DIA	57 BAR DIA
	B	64 BAR DIA	96 BAR DIA	50 BAR DIA	74 BAR DIA
#22 TO #57	A	62 BAR DIA	93 BAR DIA	48 BAR DIA	71 BAR DIA
	B	80 BAR DIA	121 BAR DIA	62 BAR DIA	93 BAR DIA

NOTES:
1. TABULATED TENSION DEVELOPMENT LENGTH VALUES ARE TAKEN FROM CRSI DESIGN HANDBOOK 2008 10TH ED.
2. TENSION DEVELOPMENT & TENSION LAP SPLICE LENGTHS ARE EXPRESSED AS MULTIPLES OF BAR DIAMETERS.
3. TABULATED VALUES ARE BASED ON MINIMUM YIELD STRENGTH OF REINFORCEMENT, fy, OF 420MPa.
4. CONCRETE IS NORMAL WEIGHT (2400Kg/m³) AND 28 DAY COMPRESSIVE STRENGTH = 28MPa.
5. TABULATED VALUES FOR BEAMS & COLUMNS ARE BASED ON TRANSVERSE REINFORCEMENT AND CONCRETE COVER MEETING MINIMUM CODE REQUIREMENTS.
6. CASES 1 & 2, WHICH DEPEND ON THE TYPE OF STRUCTURAL MEMBER, CONCRETE COVER, AND CENTER-TO-CENTER SPACING OF THE BARS ARE DEFINED IN THE TABLE BELOW.
7. LAP SPLICE LENGTHS (MINIMUM 300mm) ARE MULTIPLES OF TENSION DEVELOPMENT LENGTHS: CLASS A = 1.0(TENSION DEVELOPMENT LENGTH) & CLASS B = 1.3(TENSION DEVELOPMENT LENGTH)
8. TOP BARS ARE HORIZONTAL REINFORCEMENT WITH MORE THAN 300mm OF CONCRETE CAST BELOW THE BARS.
9. IT SHALL BE PERMISSIBLE TO CALCULATE WALL AND SLAB REINFORCEMENT TENSION DEVELOPMENT/SPLICE LENGTHS IN ACCORDANCE WITH ACI 12.2.3 OR TABLE 5.3(b) OF CRSI 2008 IN LIEU OF VALUES TABULATED ABOVE.

BEAMS, COLUMNS	CASE 1	CONCRETE COVER AT LEAST 1 BAR DIA AND CENTER-TO-CENTER SPACING AT LEAST 2 BAR DIA
	CASE 2	CONCRETE COVER LESS THAN 1 BAR DIA OR CENTER-TO-CENTER SPACING LESS THAN 2 BAR DIA
ALL OTHERS	CASE 1	CONCRETE COVER AT LEAST 1 BAR DIA AND CENTER-TO-CENTER SPACING AT LEAST 3 BAR DIA
	CASE 2	CONCRETE COVER LESS THAN 1 BAR DIA OR CENTER-TO-CENTER SPACING LESS THAN 3 BAR DIA

CONCRETE COVER SCHEDULE

MINIMUM CONCRETE COVER PROTECTION FOR REINFORCEMENT BARS SHALL BE AS LISTED BELOW: (SEE ACI 318M-05, SECTION 7.7 FOR CONDITIONS NOT NOTED). DIMENSIONS FOR BAR PLACEMENT GIVEN IN SECTIONS AND DETAILS SHALL SUPERSEDE MINIMUM COVER REQUIREMENTS GIVEN HERE. DIMENSIONS ARE IN mm. PROVIDE STANDARD BAR CHAIRS AND SUPPORT BARS @1200mm MAXIMUM AS REQUIRED TO MAINTAIN CONCRETE PROTECTION SPECIFIED.

FOOTINGS (EARTH FORMED):		70
COLUMNS / PIERS (TO TIES)		40
GRADE BEAMS OR SLAB TURNED DOWN EDGES:		
TOP		40
BOTTOM (EARTH FORMED)		70
SIDES (EARTH FORMED)		70
SIDES (BOARD FORMED)	#16 BAR & SMALLER	40
	#19 THRU #36 BAR	50
ELEVATED BEAMS & SLABS:		
BEAM TIES & STIRRUPS (NOT EXPOSED TO WEATHER)		40
BEAM TIES & STIRRUPS (EXPOSED TO WEATHER)		50
FLOOR SLABS (NOT EXPOSED TO WEATHER)		20
FLOOR SLABS (EXPOSED TO WEATHER)		
#19 & LARGER		50
#13 & SMALLER		40
ROOF SLAB BARS		25
SLABS ON GRADE		
NOT EXPOSED TO WEATHER (FROM TOP)		20
EXPOSED TO WEATHER (FROM TOP)		40
UTILITY TUNNEL WALLS, RETAINING WALLS AND SHEAR WALLS. (NO SURFACES SHALL BE EARTH FORMED)		
EARTH SIDE AND FRONT SIDE (EXPOSED TO WEATHER)		
#16 BAR AND SMALLER		40
#19 THRU #36 BAR		50

COLUMN FOOTING SCHEDULE

MARK	FOOTING SIZE (mm)			FOOTING REINFORCING	REMARKS
	LENGTH	WIDTH	THICKNESS		
F1	2700	2700	300	(10)-#16 EW BOTT	-----

COLUMN SCHEDULE

COLUMN MARK / DESCRIPTION	TYP UON	---	---
TYPE	8-BAR	---	---
DIMENSION	600mm SQ.	---	---
VERTICAL REINFORCEMENT	(8)-#25	---	---
TIES	#13 @ d/2	---	---
TOP OF ROOF ELEVATION	3700mm	---	---
TOP OF GRADE BEAM ELEVATION	-200mm	---	---
TOP OF FOOTING ELEVATION	-950mm	---	---

NOTES:
1. WORK THIS SCHEDULE WITH COLUMN DETAILS ON SHEET S-504.
2. SEE FOOTING SCHEDULE ON THIS SHEET FOR FOOTING INFORMATION.
3. COLUMN TIES: INTERIOR TIES TO MATCH SIZE & SPACING OF PERIMETER TIES.
4. HOOKS SHOWN ON SECTIONS & DETAILS SHALL BE 90° STD UON.

CONCRETE SHEAR WALL SCHEDULE

MARK	TYPE	WALL LENGTH (L) (mm)	WALL REINFORCEMENT		REMARKS
			END ZONE	FIELD	
SW1	B	2900	(4)-#16 @ 150mm OC	#13 @ 300mm OC	-----
SW2	A	3000	(4)-#16 @ 150mm OC	#13 @ 300mm OC	-----

NOTES:
1. WORK THIS SCHEDULE WITH SHEAR WALL DETAILS ON SHEETS S-702
2. SEE PLAN FOR LOCATION OF SHEAR WALL(S).
3. VERTICAL "FIELD" BARS MAY BE OMITTED IN LOCATION OF "END ZONE" REINFORCEMENT.
4. WALL FIELD REINFORCEMENT LISTED APPLIES TO VERTICAL & HORIZONTAL BARS.
5. WALL FIELD REINFORCEMENT SHOULD BE CENTERED IN WALL.

REINFORCED CONCRETE INFILL WALL SCHEDULE

HORIZONTAL REINF	VERTICAL REINF	REMARKS
#13 @ 300	#13 @ 300	SEE DETAIL ON S-702 CENTER VERTICAL REINF

BEAM SCHEDULE

MARK	BEAM SIZE (mm)		BEAM REINFORCING						STIRRUPS			REMARKS
	DEPTH	WIDTH	BL	BS	TL	TS	TC	M	SIZE	TYPE	SPACING	-----
GRADE BEAMS												
GB1	750	400	(2)-#19	---	(2)-#19	---	---	---	#13	S3 + T9	d/2	-----
ROOF BEAMS												
RB1	700	400	(2)-#25	---	(2)-#25	---	---	---	#13	S3 + T9	d/2	-----
RB2	700	400	(2)-#25	(1)-#25	(2)-#22	---	---	---	#13	S3 + T9	d/2	
RB3	700	600	(2)-#32	(3)-#32	(2)-#32	---	---	---	#13	S3 + T9	d/2	

NOTES:
1. WORK THIS SCHEDULE WITH BEAM REINFORCING DETAILS ON SHEETS S-503 AND S-504.
2. HOOKS SHOWN ON SECTIONS AND DETAILS SHALL BE 90° STD UON.
3. USE ONLY (1) TS AT BEAM COLUMN INTERSECTION WHERE REQ'D.

CMU OR CAST IN PLACE CONC LINTEL SCHEDULE (TYP)

OPENING TYPE OR SIZE, BEAM LOCATION OR TYPE	MAX SPAN (mm)	LINTEL DEPTH (mm)	REINFORCING BOTTOM
WALL OPENING	4000	600	(2)-#16 T&B
WALL OPENING	1900	400	(2)-#16 T&B
WALL OPENING	1000	400	(2)-#13 B

1. STRUCTURAL SHEETS DO NOT INDICATE ALL OPENINGS IN MASONRY WALLS. VERIFY NUMBER, SIZE AND LOCATION OF ALL OPENINGS IN MASONRY WALLS FROM ARCHITECTURAL SHEETS AND APPROVED PLUMBING, MECHANICAL, AND ELECTRICAL SHOP DRAWINGS.
2. PROVIDE 200mm BEARING EA END.
3. FOR HEAD DETAILS REFER TO ARCHITECTURAL SHEETS.
4. REINFORCING SHALL BE ASTM A615M, GRADE 420. GROUT FOR CMU LINTELS SHALL HAVE A MINIMUM COMPRESSIVE STRENGTH OF 14MPa AT 28 DAYS.
5. CONTRACTOR SHALL SUBMIT FOR APPROVAL SHOP DRAWINGS AND SCHEDULES SHOWING SIZE, SPAN, REINFORCEMENT, DETAILS, LOCATIONS, ETC.

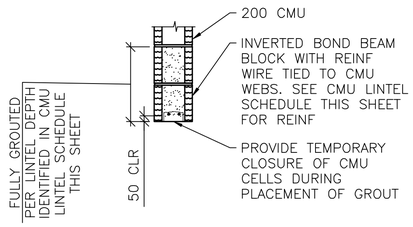

A S-601 **LINTEL DETAILS**
SCALE: NTS

STANDARD HOOKS IN TENSION PER (ACI 318M-05)

HOOK DEVELOPMENT LENGTH (mm)

BAR SIZE	f'c 28 MPa
#10	180
#13	250
#16	300
#19	380
#22	430
#25	480
#29	560
#32	610
#36	690

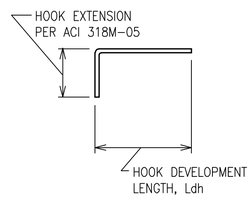

NOTES:
1. CONCRETE IS NORMAL WEIGHT CONCRETE.
2. BAR YIELD STRENGTH, fy = 420 MPa
3. SIDE COVER REQUIREMENTS OF ACI SECT. 12.5.3 ARE ASSUMED TO NOT BE MET.
4. TIE OR STIRRUP REQUIREMENTS OF ACI SECT. 12.5.3 ARE ASSUMED TO NOT BE MET.
5. REDUCTION FOR EXCESS REINFORCEMENT IS NOT TAKEN.
6. HOOK DEVELOPMENT LENGTH IS VALID FOR 180° HOOKS ALSO.

UNLESS OTHERWISE NOTED, LINEAR DIMENSIONS SHOWN ARE IN MILLIMETERS (mm)

APPROVED:
A/E DESIGNER OF RECORD
SEAL:

US ARMY CORPS OF ENGINEERS
AFGHANISTAN ENGINEER DISTRICT

Mark	Description	Date	Appr.	Mark	Description	Date	Appr.

Date: 8/16/10 | Rev: 0
Design file no.
Drawing code:
File name: ai-sbdoc-601sch
Plot date: 8/24/2010
Plot scale: X:X

Designed by: KMP | Dwn by: RCG | Ckd by: CWW | Reviewed by: LHM | Submitted by: BAKER

U.S. ARMY CORPS OF ENGINEERS
AFGHANISTAN ENGINEER DISTRICT
APO AE 96338

Michael Baker Jr., Inc
A unit of Michael Baker Corporation
Airside Business Park
100 Airside Drive
Moon Township, PA 15108
www.mbakercorp.com

AFGHAN NATIONAL ARMY
STANDARD DESIGN
OPEN BARRACKS WITH LATRINE
SCHEDULES

Sheet reference number:
S-601

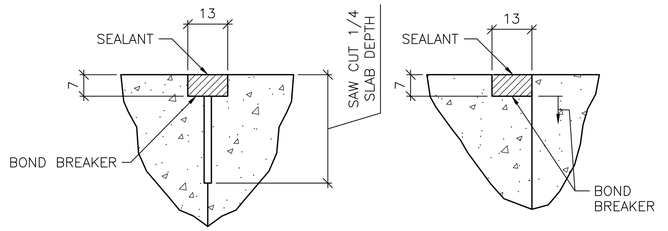

CONTROL JOINT DETAIL

CONSTRUCTION JOINT DETAIL

TYPICAL CONCRETE SLAB JOINT FINISH DETAILS

1 / S-701 SCALE: NTS

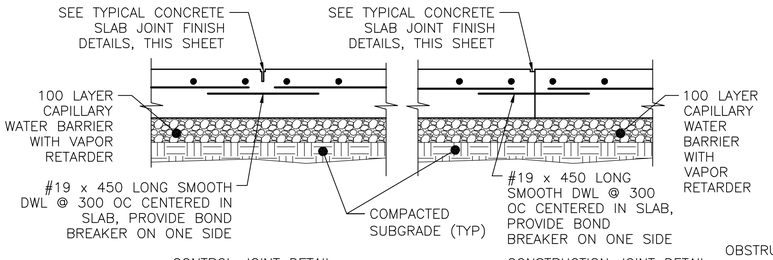

CONTROL JOINT DETAIL

CONSTRUCTION JOINT DETAIL

TYPICAL SLAB ON GRADE JOINT DETAIL

2 / S-701 SCALE: NTS

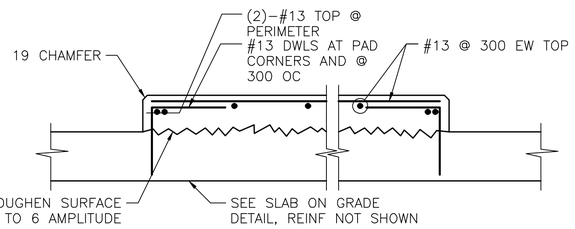

INTERIOR EQUIPMENT PAD DETAIL

3 / S-701 SCALE: NTS

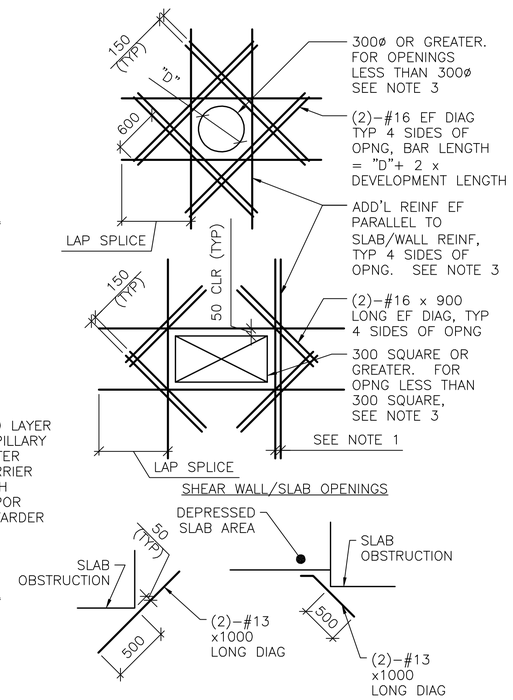

DETAIL NOTES:

1. WHERE MORE THAN ONE ADDITIONAL BAR IS REQUIRED PARALLEL TO THE EXISTING SLAB/WALL REINFORCING THE ADDITIONAL REINFORCING BARS SHALL BE SPACED AT 100 ON CENTER.
2. ADDITIONAL REINFORCING PARALLEL TO THE SLAB/WALL REINFORCING SHALL BE #16 BARS THAT PROVIDE A STEEL AREA ON EACH SIDE OF THE OPENING EQUAL TO 1/2 THE AREA OF THE REINFORCING CUT BY THE OPENING.
3. FOR OPENINGS WITH SIDES OR DIAMETERS LESS THAN 300 SPREAD THE SLAB/WALL REINFORCING TO CLEAR THE OPENING.

ADD'L CONCRETE REINFORCEMENT DETAILS

4 / S-701 SCALE: NTS

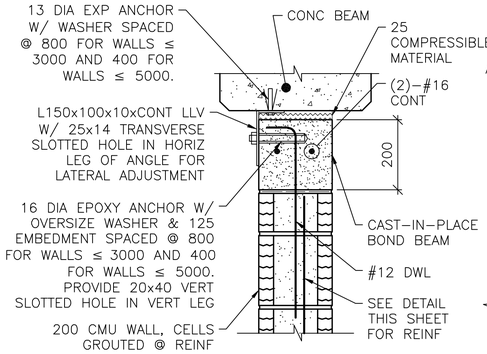

NOTE:

1. AT ANCHOR BOLTS, ADD AN ADDITIONAL 25 COMPRESSIBLE MATERIAL BELOW EXP ANCHOR HEAD.

INTERIOR BEAM

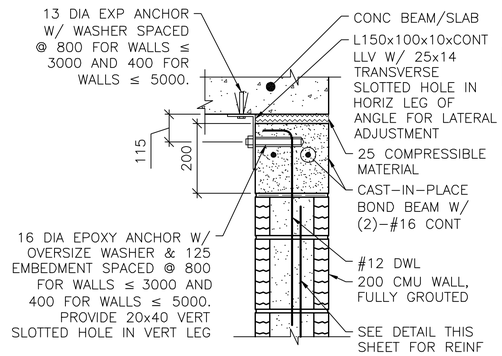

EXTERIOR WALL OR SLAB

NOTES:

1. THIS DETAIL IS AN ALTERNATE TOP OF WALL ANCHORAGE DETAIL TO BE USED AT THE CONTRACTOR'S OPTION IN LIEU OF DETAILS SHOWN ON S-400 & S-500 DRAWINGS.
2. CAST-IN-PLACE BOND BEAM SHOWN AT TOP OF WALL IS ALSO APPLICABLE FOR INTERMEDIATE AND STARTER COURSE BOND BEAMS WITHIN WALL.

ALTERNATE TOP OF CMU WALL BRACING DETAILS

5 / S-701 SCALE: NTS

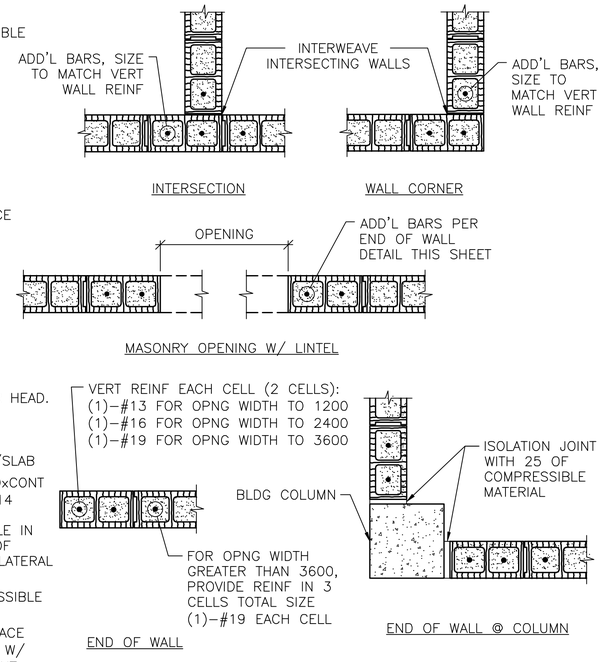

NOTES:

1. OPENING WIDTH SHALL NOT EXCEED 3600 FOR THIS TYPE OF JAMB.
2. ALL CELLS FULLY GROUTED AT EXTERIOR WALLS. AT INTERIOR WALLS, ONLY GROUT CELLS CONTAINING REINF.

TYP CMU DETAILS

6 / S-701 SCALE: NTS

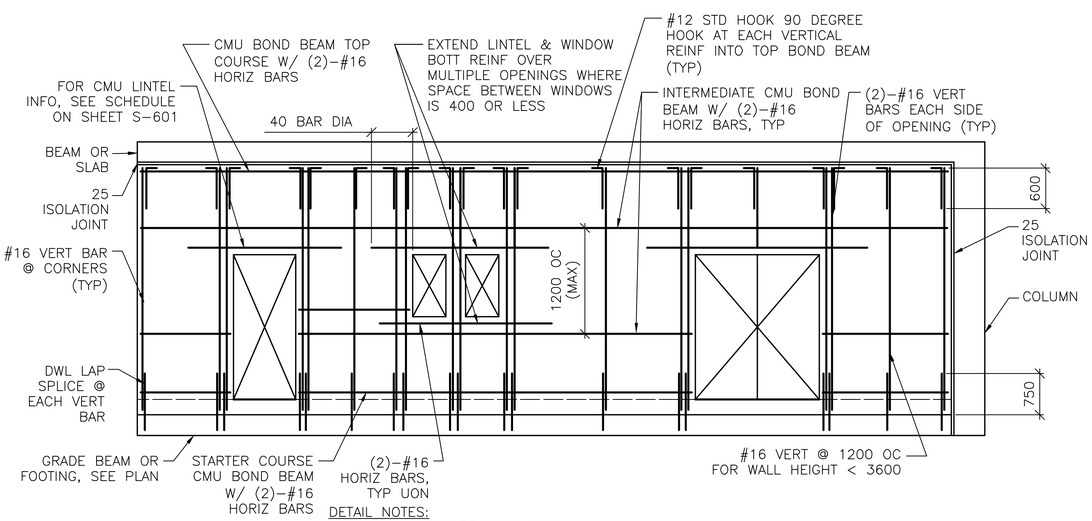

DETAIL NOTES:

1. CENTER VERT REINF IN WALL.
2. GROUT ALL CMU CELLS IN EXTERIOR WALLS & REINFORCED CELLS IN INTERIOR WALLS.
3. REFERENCE ARCH DWGS FOR JOINT INFORMATION
4. DOWELS BETWEEN TOP BOND BEAM AND BEAM/SLAB ABOVE (INCLUDING EMBEDDED PIPE SLEEVE) NOT SHOWN FOR CLARITY. SEE SPECIFIC S-500 SERIES DWGS FOR INFO.
5. FOR INFORMATION ON ALTERNATE CAST-IN-PLACE WALL BOND BEAMS, REFERENCE ALTERNATE TOP OF CMU WALL BRACING DETAILS THIS SHEET.

TYP CMU WALL REINF DETAIL

7 / S-701 SCALE: NTS

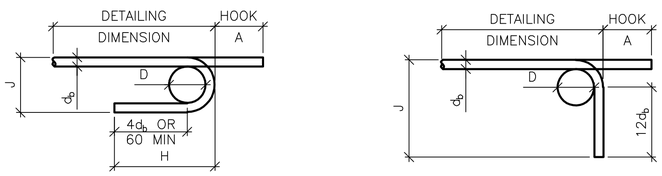

SIZES OF 180° HOOK			
BAR SIZE	A	J	APPROX H
#10	130	80	100
#13	150	100	110
#16	180	130	130
#19	200	150	150
#22	250	180	180
#25	280	200	200
#29	380	290	260
#32	430	320	290
#36	480	360	320

$D = 6d_b$ FOR #10–#25
$D = 6d_b$ FOR #29–#36
d_b = BAR DIA

SIZES OF 90° HOOK		
BAR SIZE	A	J
#10	140	150
#13	190	220
#16	230	270
#19	270	320
#22	320	370
#25	370	430
#29	420	480
#32	470	580
#36	520	610

TYP REINFORCEMENT BAR BENDING DETAILS

8 / S-701 SCALE: NTS

UNLESS OTHERWISE NOTED, LINEAR DIMENSIONS SHOWN ARE IN MILLIMETERS (mm)

APPROVED:

A/E DESIGNER OF RECORD

SEAL:

GEORGIA REGISTERED 8/23/10 No. 27141 PROFESSIONAL ENGINEER CHRISTOPHER W. WHITMORE

US ARMY CORPS OF ENGINEERS
AFGHANISTAN ENGINEER DISTRICT

Mark	Description	Date	Appr.	Mark	Description	Date	Appr.

Rev: 0
Date: 8/16/10
Design file no.
Drawing code:
File name: ANABDB5-701TDT
Plot date: 8/24/2010
Plot scale: X/X

Designed by: KMP
Dwn by: RCG
Ckd by: CWW
Reviewed by: LHM
Submitted by: BAKER

U.S. ARMY CORPS OF ENGINEERS
AFGHANISTAN ENGINEER DISTRICT
APO AE 96338

Michael Baker Jr., Inc
A unit of Michael Baker Corporation
Airside Business Park
100 Airside Drive
Moon Township, PA 15108
www.mbakercorp.com

AFGHAN NATIONAL ARMY
STANDARD DESIGN
OPEN BARRACKS WITH LATRINE
TYPICAL DETAILS

Sheet reference number:
S-701

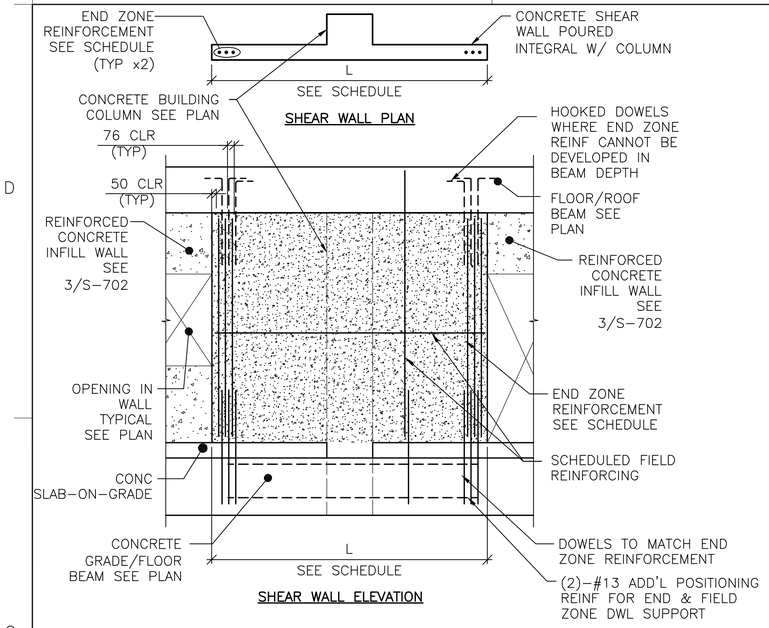

DETAIL NOTES:
1. FIELD REINFORCEMENT IN SHEAR WALL NOT COMPLETELY SHOWN FOR CLARITY.
2. FIELD REINFORCEMENT CENTERED IN WALL.
3. MINIMUM CONC CLEAR DISTANCE FOR END ZONE REINF = 76
4. SEE CONC SHEAR WALL SCHEDULE ON SHEET S-601

TYPE "A" SHEAR WALL DETAIL

1 / S-702 SCALE: NTS

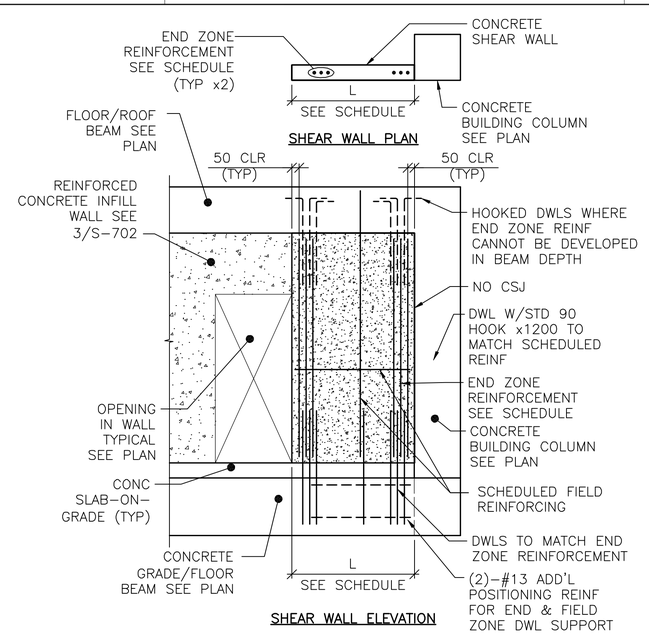

DETAIL NOTES:
1. FIELD REINFORCEMENT IN SHEAR WALL NOT SHOWN COMPLETELY FOR CLARITY.
2. FIELD REINFORCEMENT CENTERED IN WALL.
3. MINIMUM CONC CLEAR DISTANCE FOR END ZONE REINF = 76
4. SEE CONC SHEAR WALL SCHEDULE ON SHEET S-601

TYPE "B" SHEAR WALL DETAIL

2 / S-702 SCALE: NTS

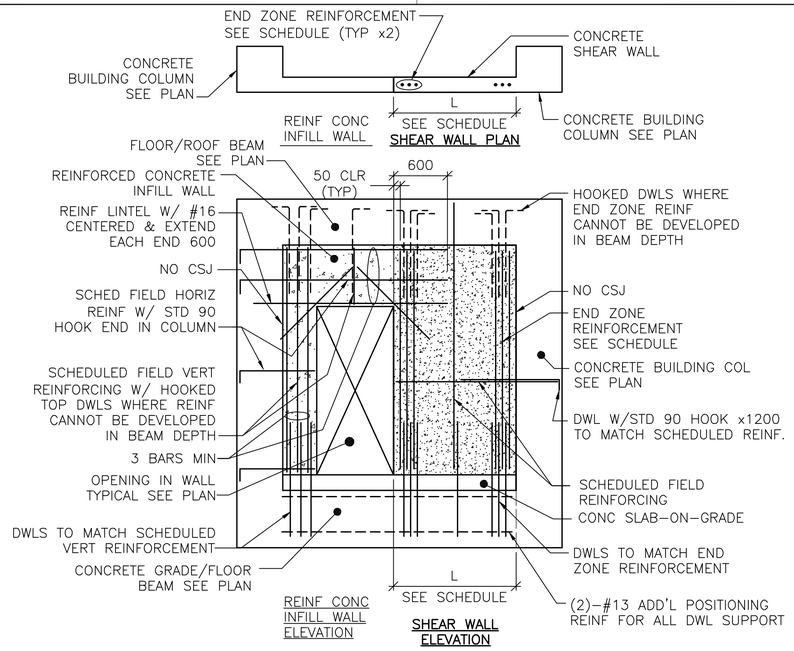

DETAIL NOTES:
1. FIELD REINFORCEMENT IN WALLS NOT SHOWN COMPLETELY FOR CLARITY.
2. FIELD REINFORCEMENT CENTERED IN WALL.
3. MINIMUM CONC CLEAR DISTANCE FOR END ZONE REINF = 76
4. SEE CONC SHEAR WALL SCHEDULE ON SHEET S-601
5. SEE REINF CONC INFILL WALL SCHEDULE ON SHEET S-601
6. SEE ARCH DWGS FOR JOINT INFORMATION

SHEAR WALL / REINF CONC INFILL WALL DETAIL DETAIL

3 / S-702 SCALE: NTS

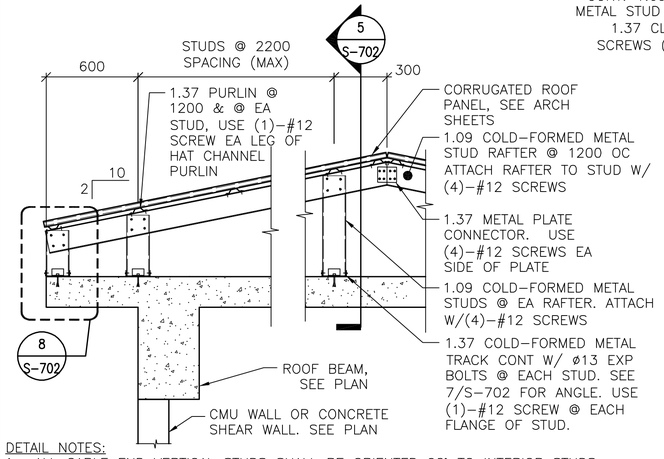

DETAIL NOTES:
1. ALL GABLE END VERTICAL STUDS SHALL BE ORIENTED 90° TO INTERIOR STUDS & SPACED @ 600 OC. GABLE END RAFTER SHALL BE 1.37 METAL TRACK SPANNING CONTINUOUSLY OVER GABLE END STUDS. INSET GIRTS AT GABLE END SHALL BE 1.09 COLD-FORMED METAL STUDS @ 1200 OC ATTACHED VIA 1.37 THICKNESS CLIP ANGLE W/ (2) #12 SCREWS EA LEG.
2. ALL INTERIOR, NON-GABLE END VERTICAL STUDS GREATER THAN 2400 IN LENGTH SHALL BE BACK-TO-BACK W/ #12 SCREWS @ 200 OC STAGGERED.

TYPICAL OVERBUILT ROOF FRAMING DETAIL

4 / S-702 SCALE: NTS

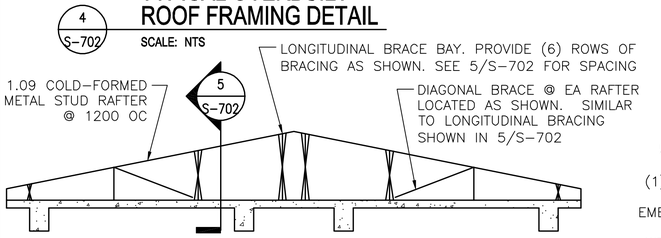

TYPICAL ROOF BRACE LAYOUT

7 / S-702 SCALE: NTS

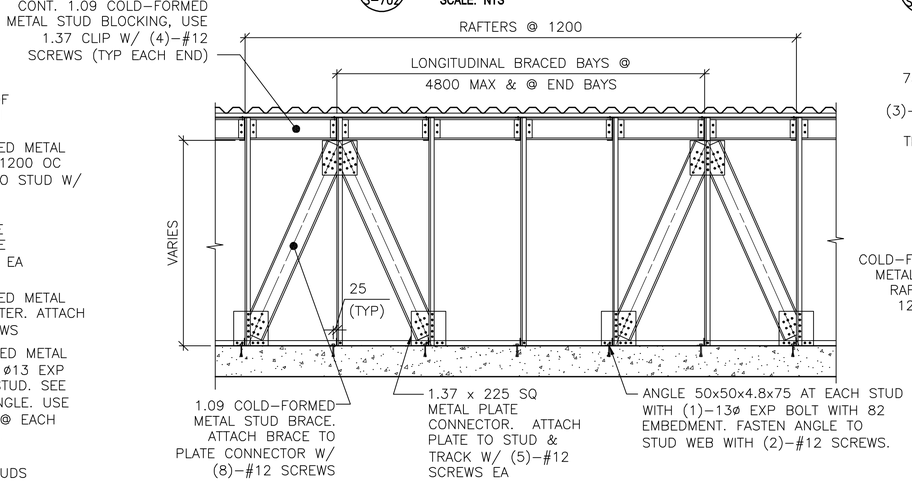

SECTION

5 / S-702 SCALE: NTS

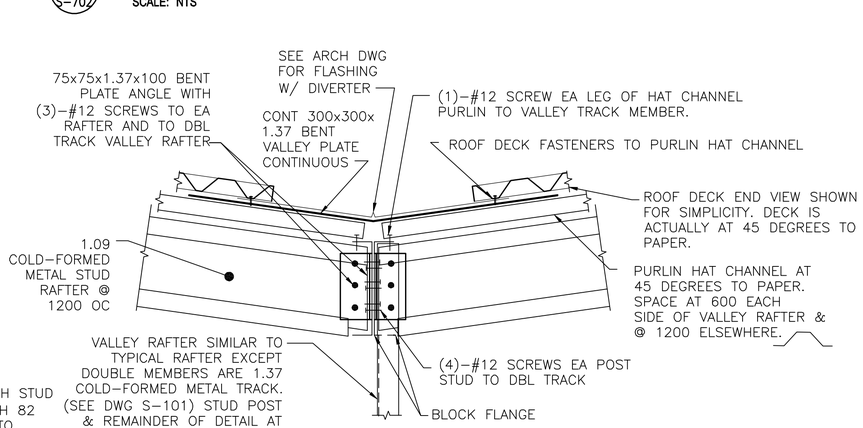

TYPICAL OVERBUILT ROOF SECTION THROUGH VALLEY

6 / S-702 SCALE: NTS

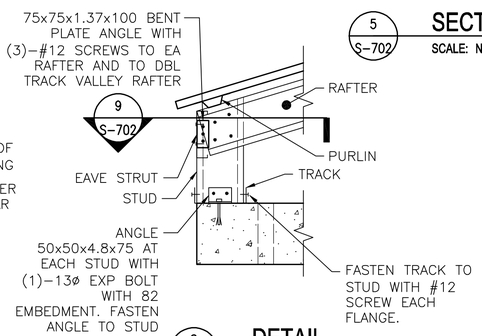

DETAIL

8 / S-702 SCALE: NTS

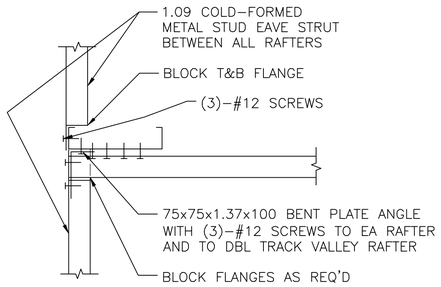

SECTION

9 / S-702 SCALE: NTS

UNLESS OTHERWISE NOTED, LINEAR DIMENSIONS SHOWN ARE IN MILLIMETERS (mm)

APPROVED:

A/E DESIGNER OF RECORD

SEAL:

GEORGIA REGISTERED 8/23/10 No. 27141 PROFESSIONAL ENGINEER CHRISTOPHER W. WHITMORE

US ARMY CORPS OF ENGINEERS
AFGHANISTAN ENGINEER DISTRICT

Mark	Description	Date	Appr.	Mark	Description	Date	Appr.

Date: 8/16/10 | Rev: 0
Design file no.
Drawing code:
File name: AN4BOBS-702TDT
Plot date: 8/24/2010
Plot scale: x:X

Designed by: KMP | Ckd by: CWW
Dwn by: RCG
Reviewed by: LHM
Submitted by: BAKER

U.S. ARMY CORPS OF ENGINEERS
AFGHANISTAN ENGINEER DISTRICT
APO AE 96338

Michael Baker Jr., Inc
A unit of Michael Baker Corporation
Airside Business Park
100 Airside Drive
Moon Township, PA 15108
www.mbakercorp.com

AFGHAN NATIONAL ARMY
STANDARD DESIGN
OPEN BARRACKS WITH LATRINE
TYPICAL DETAILS

Sheet reference number:
S-702

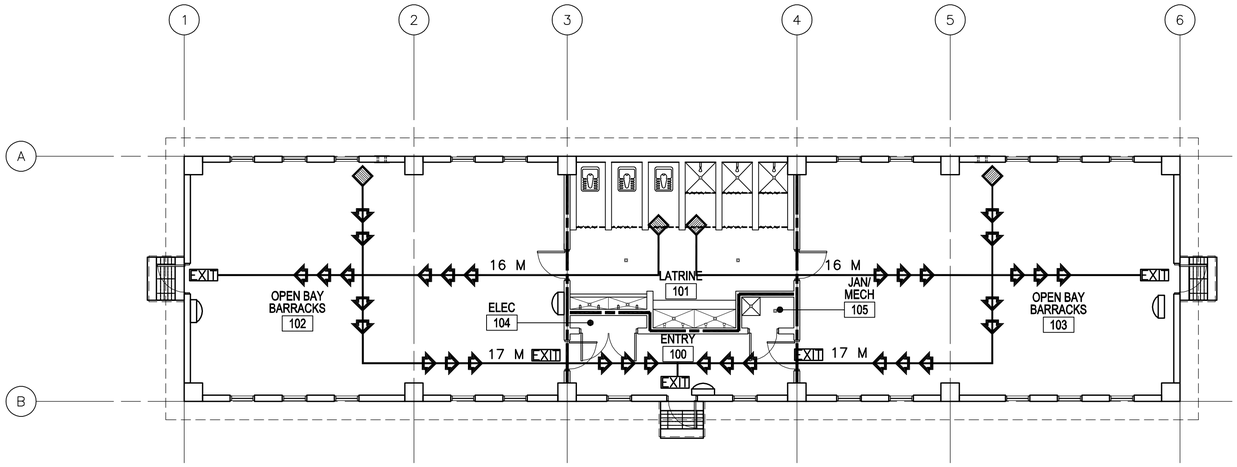

1 A-001 **LIFE SAFETY PLAN**

SCALE: 1:100

LEGEND:

- DENOTES PATHS OF EXIT TRAVEL
- EXIT — DENOTES DOOR AS AN EMERGENCY EXIT; SEE E-101 FOR ILLUMINATED EXIT SIGNS
- DENOTES STARTING POINT FOR MAX. TRAVEL DISTANCE
- DENOTES FIRE EXTINGUISHER LOCATIONS
- (1) HOUR RATED WALL

CODE ANALYSIS:

1. REFERENCES:
   2006 INTERNATIONAL BUILDING CODE (2006 IBC)
   2006 LIFE SAFETY CODE (2006 NFPA 101)

2. IBC OCCUPANCY CLASSIFICATION:
   GROUP R-2 (NEW HOTELS AND DORMITORIES NFPA 101 6.1.8 AND CHAPTER 28)

3. TYPE OF CONSTRUCTION (IBC): TYPE II-B (UNPROTECTED/NONSPRINKLERED)

4. IBC TABLE 503: ALLOWABLE HEIGHT AND BUILDING AREAS:
   GROUP R-2
   ALLOWABLE AREA: 1486 SM
   ALLOWABLE HEIGHT: 4 STORIES (16 M)

   GROUP R-2
   PROPOSED AREA: 260 SM
   PROPOSED HEIGHT: 1 STORY (<16 M)

5. IBC TABLE 601 & 602: FIRE RESISTANCE RATING REQUIREMENTS FOR BUILDING ELEMENTS FOR TYPE II-B

BUILDING ELEMENT	RATING (HOUR)	REFERENCE
STRUCTURAL FRAME (COLUMNS, GIRDERS & TRUSSES)	0	TABLE 601
BEARING WALLS		
EXTERIOR	0	TABLE 601
INTERIOR	0	TABLE 601
NONBEARING WALLS & PARTITIONS		
INTERIOR	0	TABLE 601
FLOOR CONSTRUCTION	0	TABLE 601
ROOF CONSTRUCTION	0	TABLE 601
EXTERIOR WALL	0	TABLE 602

6. IBC TABLE 803.5 – INTERIOR WALL AND CEILING FINISH REQUIREMENTS FOR R-2 OCCUPANCY/NONSPRINKLERED

GROUP	EXIT ENCLOSURES AND EXIT PASSAGEWAY	CORRIDORS	ROOMS AND ENCLOSED SPACES
R-2	B	B	C

7. NFPA 101 TABLE 7.3.1.2 – OCCUPANT LOAD (SEE NFPA 101 PARAGRAPH 28.1.7)
   HOTELS AND DORMITORIES = 18.6 SM/PERSON
   CALCULATED = 14 OCCUPANTS (260 / 18.6 = 13.98)
   DESIGNED = 48 OCCUPANTS* (BASED ON NUMBER OF BEDS)
   *NOTE THAT 7.3.1.3 "OCCUPANT LOAD INCREASES" ALLOWS INCREASES TO THE NUMBER OF OCCUPANTS PROVIDED EGRESS AND OTHER ASPECTS OF THE CODE ARE MET.

8. NFPA 101 TABLE 7.3.3.1 – EGRESS CAPACITY
   HOTELS AND DORMITORIES = 5 MM PER OCCUPANT
   CALCULATED MINIMUM REQUIRED: 130 MM
   (14 OCCUPANTS x 5 MM PER OCCUPANT = 130 MM)
   DESIGNED MINIMUM REQUIRED: 240 MM
   (48 OCCUPANTS x 5 MM PER OCCUPANT = 240 MM)
   ACTUAL EGRESS WIDTH PROVIDED = 2700 MM
   (3 DOORS X 900 MM EACH = 2700 MM)

9. NFPA 101 PARAGRAPH 28.2.6 – EXIT ACCESS TRAVEL DISTANCE
   MAXIMUM ALLOWED WITHIN ROOM OR SUITE TO CORRIDOR: 23 METERS
   MAXIMUM ALLOWED CORRIDOR DOOR OF ANY ROOM OR SUITE TO NEAREST EXIT: 30 METERS

   PROPOSED WITHIN ROOM OR SUITE TO CORRIDOR: 17 METERS
   PROPOSED CORRIDOR DOOR OF ANY ROOM OR SUITE TO NEAREST EXIT: 16 METERS

10. NFPA 101 PARAGRAPH 28.3.6.1.2 – CORRIDOR FIRE-RESISTANCE RATING (HOUR)
    REQUIRED: WALLS NOT LESS THAN ONE HOUR FIRE RESISTANCE RATING
    PROPOSED: 1 HOUR RATED WALLS

11. NFPA 101 PARAGRAPH 28.3.6.2 & TABLE 8.3.4.2 – DOORS INTO EXIT ACCESS CORRIDORS
    REQUIRED MINIMUM: 20 MINUTE FIRE PROTECTION RATING
    PROPOSED: 20 MINUTE DOORS

12. NFPA 101 PARAGRAPH 28.2.3.3 – CORRIDOR WIDTH
    REQUIRED: SUFFICIENT FOR OCCUPANT LOAD, BUT NOT LESS THAN 1120 MM
    CALCULATED WIDTH REQUIRED PER OCCUPANT LOAD: 130 (26 OCCUPANTS X 5 MM)
    PROVIDED: 2700 MM

13. NFPA 101 PARAGRAPH 28.2.5.3 – COMMON PATH OF TRAVEL
    MAXIMUM ALLOWED: 10.7 METERS
    PROVIDED: 0 METERS

14. NFPA 101 PARAGRAPH 28.2.5.5 – DEAD END CORRIDORS
    PERMITTED: 10.7 METERS
    PROPOSED: NO DEAD END CORRIDORS

15. NFPA 101 PARAGRAPH 28.2.4.1 AND 7.4.1.1 – MINIMUM NUMBER OF EXITS
    REQUIRED: 2 MINIMUM
    PROPOSED: 3 EXITS

16. NFPA 101 PARAGRAPH 28.2.1.2 & 24.2 – SECONDARY MEANS OF ESCAPE
    ONE OF THE FOLLOWING REQUIRED:
    1)DOOR, SIMILAR TO PRIMARY, BUT REMOTE FROM PRIMARY
    2) OPERABLE WINDOW, 0.53 SM, NOT LESS THAN 510 MM WIDE, 610 MM HIGH, NOT MORE THAN 1120 MM AFF, WITHIN 6100 MM OF GRADE
    PROVIDED: OPERABLE WINDOWS, 0.93 SM EACH, MULTIPLE PER ROOM

17. NFPA 101 PARAGRAPH 28.3.7.1 – SUBDIVISION OF BUILDING SPACES – NONSPRINKLERED
    REQUIRED: EACH GUEST ROOM OR DORMITORY ROOM SHALL BE SEPARATED FROM OTHER GUEST OR DORMITORY ROOMS BY FIRE BARRIERS HAVING FIRE RESISTANCE RATING OF NOT LESS THAN 1 HOUR
    PROVIDED: 1 HOUR SEPARATION

18. HAZARDOUS AREA PROTECTION TABLE 28.3.2.2.2
    STORAGE ROOMS: 1 HOUR SEPARATION REQUIRED

19. NFPA 101 A.3.3.53 DORMITORY: ROOMS WITHIN DORMITORIES INTENDED FOR THE USE OF INDIVIDUALS FOR COMBINED LIVING AND SLEEPING PURPOSES ARE GUEST ROOMS OR GUEST SUITES. EXAMPLES OF DORMITORIES ARE COLLEGE DORMITORIES, FRATERNITY AND SORORITY HOUSES AND MILITARY BARRACKS.

20. NFPA 101 28.3.5.2 EXTINGUISHMENT REQUIREMENTS: AUTOMATIC SPRINKLER PROTECTION REQUIRED UNLESS SLEEPING ROOMS HAVE DOORS DIRECTLY TO OUTSIDE.
    DOORS ACCESS DIRECTLY TO OUTSIDE.

LINEAR DIMENSIONS SHOWN ARE IN MILLIMETERS (MM), UNLESS OTHERWISE NOTED

0 2000 4000
SCALE: 1:100

APPROVED:

A/E DESIGNER OF RECORD

SEAL:

STATE OF SOUTH CAROLINA
KEVIN L. CHAPIN
N. Charleston, SC
6374
12-23-10
REGISTERED ARCHITECT

US ARMY CORPS OF ENGINEERS
AFGHANISTAN ENGINEER DISTRICT

Mark	Description	Date	Appr.	Mark	Description	Date	Appr.

Designed by: KRC
Dwn by: KJG
Ckd by: NLJ
Reviewed by: LHM
Submitted by: BAKER
Date: 8/16/10
Rev: 0
Design file no.
Drawing code:
File name: AN4B08A-001LSP
Plot date: 8/24/2010
Plot scale:

U.S. ARMY CORPS OF ENGINEERS
AFGHANISTAN ENGINEER DISTRICT
APO AE 96338

Michael Baker Jr., Inc.
A unit of Michael Baker Corporation
Airside Business Park
100 Airside Drive
Moon Township, PA 15108
www.mbakercorp.com

AFGHAN NATIONAL ARMY
STANDARD DESIGN

OPEN BARRACKS WITH LATRINE

LIFE SAFETY PLAN

Sheet reference number:
A-001

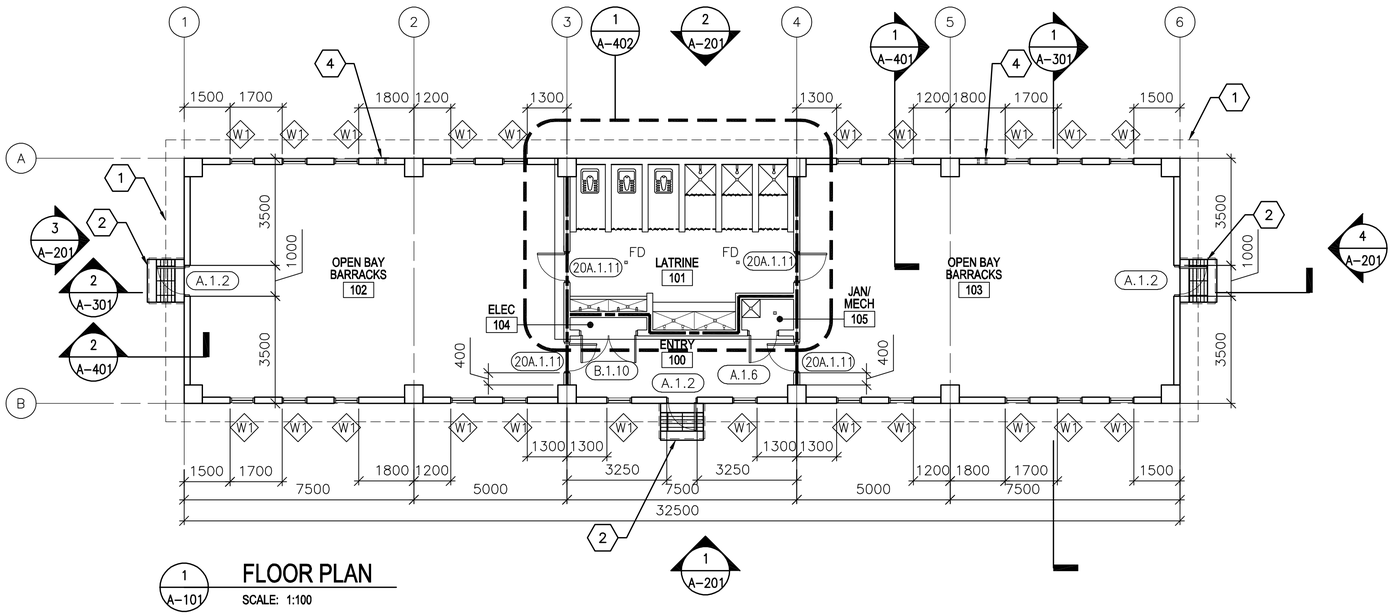

1 A-101 **FLOOR PLAN**

SCALE: 1:100

GENERAL NOTES:

A. DIMENSIONS ARE SHOWN TO OUTER EDGE OF EXTERIOR STRUCTURAL COLUMNS, STRUCTURAL COLUMN GRID, EDGE OF INTERIOR PARTITIONS, EDGE OF WINDOW ROUGH OPENINGS, AND TO HINGED SIDE OF DOOR FRAME OPENINGS.

B. HINGE SIDE OF OPENINGS FOR DOORS AND FRAMES SHALL BE LOCATED 200 MM FROM THE ADJACENT WALL OR COLUMN, UNLESS NOTED OTHERWISE.

C. INTERIOR PARTITIONS SHALL BE 200 MM CMU. SEE STRUCTURAL DRAWINGS FOR LOCATION OF CONCRETE SHEAR WALLS.

D. COSMETIC REPAIR OF MINOR DEFECTS: REPAIR OR FILL MORTAR JOINTS AND MINOR DEFECTS, INCLUDING BUT NOT LIMITED TO SPALLS, IN ACCORDANCE WITH MANUFACTURER'S RECOMMENDATIONS AND PRIOR TO COATING APPLICATION. SURFACES TO BE PAINTED SHALL BE CLEAN AND FREE OF FOREIGN MATTER BEFORE APPLICATION OF PAINT. CLEANING SHALL BE SCHEDULED SO THAT DUST AND OTHER CONTAMINANTS WILL NOT FALL ON NEWLY PAINTED SURFACES.

E. PLASTER AND MASONRY SURFACES SHALL BE ALLOWED TO CURE FOR AT LEAST 30 DAYS BEFORE PAINTING. CONCRETE SLABS-ON-GRADE SHALL BE ALLOWED TO CURE 90 DAYS BEFORE STAINING OR SEALING.

F. DO NOT USE PAINT MATERIALS CONTAINING LEAD CONTENT IN EXCESS OF 0.009 PERCENT OF THE WEIGHT OF THE TOTAL NONVOLATILE CONTENT OF THE PAINT OR THE WEIGHT OF THE DRIED PAINT FILM.

G. DO NOT USE ANY ASBESTOS CONTAINING MATERIALS (ACM) IN PROJECT. ACM IS DEFINED AS 1% OR MORE BY VOLUME.

H. DO NOT USE PAINT MATERIALS CONTAINING MERCURIAL FUNGICIDES.

I. FACTORY PRIMED METAL DOORS AND FRAMES SHALL RECEIVE TWO COATS OF PAINT.

J. FILL REMAINING SPACE AT PENETRATIONS IN FIRE-RATED FLOORS, PARTITIONS AND CEILINGS WITH APPROPRIATE FIRESTOPPING MATERIALS.

K. ALL CEILING FINISHES SHALL BE PAINTED PLASTER APPLIED TO STRUCTURE.

L. ALL WALL FINISHES SHALL BE PAINTED PLASTER APPLIED TO STRUCTURE, UNLESS NOTED OTHERWISE.

M. ALL FLOOR FINISHES SHALL BE EPOXY SEALED CONCRETE, UNLESS NOTED OTHERWISE

N. PROVIDE TILE FINISHES AS INDICATED IN DETAILS.

O. HEIGHT OF ALL TOILET AND SHOWER PARTITIONS SHALL BE 2000 MM ABOVE FINISHED FLOOR.

P. PROVIDE POLISHED STAINLESS STEEL MIRROR 600 X 800 ABOVE LAVATORY FAUCET.

KEY NOTES: (X)

1. LINE OF ROOF OVERHANG ABOVE.
2. CONCRETE STOOP WITH GRATE – SEE DETAIL 4/A-503.
3. CANOPY – SEE DETAIL 2/A-503.
4. THIMBLE – SEE SHEET A-401.

LEGEND:

(XXX) DOOR FRAME AND HARDWARE TYPE, SEE SHEET A-601

(A) WINDOW TYPE, SEE SHEET A-601

(X) KEY NOTE

ABBREVIATIONS:

COMM	COMMUNICATIONS
ELEC	ELECTRICAL
MECH	MECHANICAL
JAN	JANITOR
CLOS	CLOSET
FD	FLOOR DRAIN

LINEAR DIMENSIONS SHOWN ARE IN MILLIMETERS (MM), UNLESS OTHERWISE NOTED

0 2000 4000
SCALE: 1:100

APPROVED:

A/E DESIGNER OF RECORD

SEAL:

STATE OF SOUTH CAROLINA
KEVIN L. CHAPIN
N. Charleston, SC
6374
12-23-10
REGISTERED ARCHITECT

US ARMY CORPS OF ENGINEERS
AFGHANISTAN ENGINEER DISTRICT

Mark	Description	Date	Appr.	Mark	Description	Date	Appr.

Rev: 0
Date: 8/16/10
Design file no.
Drawing code:
File name: AN4B08A-101FP
Plot date: 8/24/2010
Plot scale: x:X

Designed by: KRC
Dwn by: KJG
Ckd by: NLJ
Reviewed by: LHM
Submitted by:
BAKER

U.S. ARMY CORPS OF ENGINEERS
AFGHANISTAN ENGINEER DISTRICT
APO AE 96338

Michael Baker Jr., Inc.
A unit of Michael Baker Corporation
Airside Business Park
100 Airside Drive
Moon Township, PA 15108
www.mbakercorp.com

AFGHAN NATIONAL ARMY
STANDARD DESIGN

OPEN BARRACKS WITH LATRINE

FLOOR PLAN

Sheet reference number:
A-101

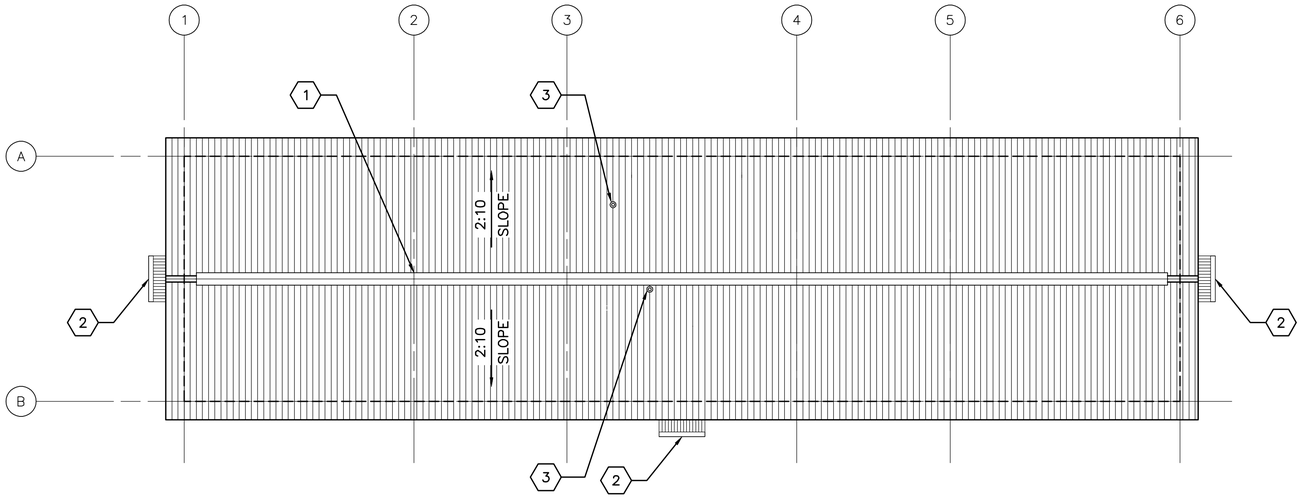

1 / A–102 **ROOF PLAN**

SCALE: 1:100

GENERAL NOTES:

A. THE APPROXIMATE LOCATION OF ROOF DEVICES AND PENETRATIONS ARE SHOWN ON THE ROOF PLAN FOR INFORMATION ONLY. THE CONTRACTOR SHALL BE RESPONSIBLE FOR UNDERSTANDING THE ACTUAL LOCATION OF THESE AND ALL OTHER ITEMS PRIOR TO BEGINNING CONSTRUCTION. COORDINATE ALL ROOF PENETRATIONS WITH STRUCTURAL, MECHANICAL AND PLUMBING WORK.

B. PLUMBING VENT PENETRATIONS SHALL TERMINATE 300 MM MINIMUM ABOVE THE ROOF.

C. UNLESS OTHERWISE NOTED, NOTES, DETAILS OR FEATURES INDICATED FOR ONE CONDITION SHALL BE APPLICABLE FOR ALL ALIKE AND SIMILAR CONDITIONS.

D. STOCKPILING OF MATERIALS, EQUIPMENT AND ANY OTHER ITEMS ON THE ROOF IS PROHIBITED.

E. ROOFS SHALL BE CORRUGATED METAL ROOF PANELS ON COLD–FORMED METAL FRAMING ON CONCRETE SLAB.

KEY NOTES: (X)

1. CONTINUOUS METAL RIDGE VENT – SEE DETAIL 4/A–501.
2. CANOPY – SEE DETAIL 2/A–503.
3. PLUMBING VENT – SEE DETAIL 5/A–501.

LINEAR DIMENSIONS SHOWN ARE IN MILLIMETERS (MM), UNLESS OTHERWISE NOTED

0 2000 4000
SCALE: 1:100

APPROVED:

A/E DESIGNER OF RECORD

SEAL:

STATE OF SOUTH CAROLINA
JOHN N. CHAPIN
N. Charleston, SC
6374
12-23-10
REGISTERED ARCHITECT

US ARMY CORPS OF ENGINEERS
AFGHANISTAN ENGINEER DISTRICT

Mark	Description	Date	Appr.	Mark	Description	Date	Appr.

U.S. ARMY CORPS OF ENGINEERS
AFGHANISTAN ENGINEER DISTRICT
APO AE 96338

Michael Baker Jr., Inc.
A unit of Michael Baker Corporation
Airside Business Park
100 Airside Drive
Moon Township, PA 15108
www.mbakercorp.com

Designed by: KRC
Dwn by: KJG
Ckd by: NLJ
Reviewed by: LHM
Submitted by: BAKER
Date: 8/16/10
Rev: 0
Design file no.
Drawing code:
File name: ANA8OBA-102RP
Plot date: 8/24/2010
Plot scale: x:X

AFGHAN NATIONAL ARMY
STANDARD DESIGN

OPEN BARRACKS WITH LATRINE

ROOF PLAN

Sheet reference number:
A–102

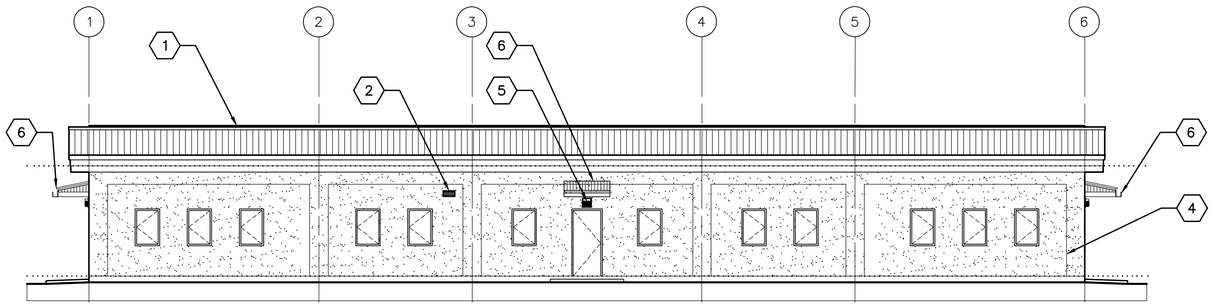

1 A-201 **ELEVATION**
SCALE: 1:100

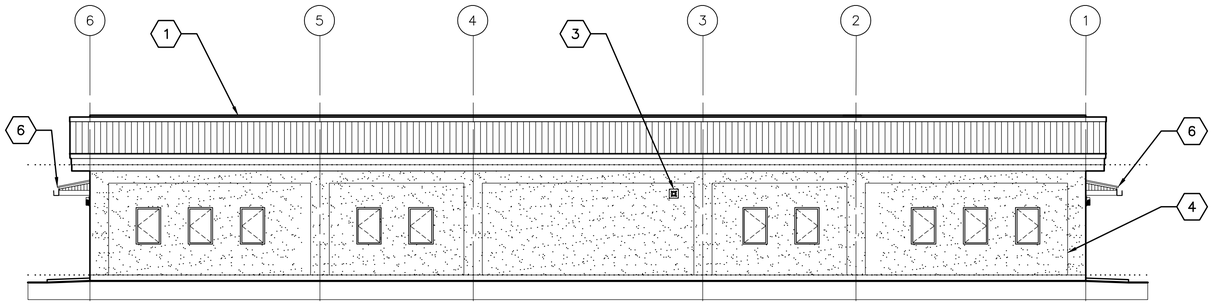

2 A-201 **ELEVATION**
SCALE: 1:100

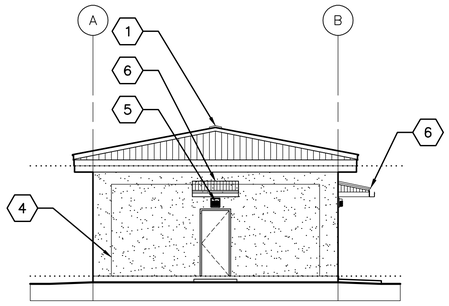

3 A-201 **ELEVATION**
SCALE: 1:100

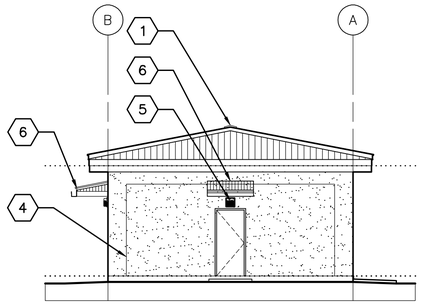

4 A-201 **ELEVATION**
SCALE: 1:100

GENERAL NOTES:

A. COORDINATE SIZE AND LOCATION OF OPENINGS FOR MECHANICAL ITEMS WITH MECHANICAL DRAWINGS.

B. PROVIDE STRUCTURAL LINTELS AS REQUIRED – SEE STRUCTURAL DRAWINGS.

C. ALL EXTERIOR WALL FINISHES SHALL BE STUCCO OVER CMU AND CONCRETE SUBSTRATES. PROVIDE CONTROL JOINTS IN STUCCO WALL FINISH AS NOTED. SEE DETAIL 2A/A-501.

D. ROOF SHALL BE CORRUGATED METAL ROOF PANELS ON COLD-FORMED METAL FRAMING ON CONCRETE SLAB.

KEY NOTES: (X)

1. CONTINUOUS METAL RIDGE VENT – SEE DETAIL 4/A-501.
2. LOUVER, LOCATE TOP OF WALL PENETRATION 2800 MM ABOVE FINISHED FLOOR – SEE MECHANICAL DRAWINGS.
3. EXHAUST FAN, LOCATE TOP OF WALL PENETRATION 2800 MM ABOVE FINISHED FLOOR – SEE MECHANICAL DRAWINGS.
4. STUCCO CONTROL JOINT – SEE DETAIL 2A/A-501.
5. EXTERIOR LIGHT FIXTURE – SEE ELECTRICAL.
6. CANOPY – SEE DETAIL 2/A-503.

LINEAR DIMENSIONS SHOWN ARE IN MILLIMETERS (MM), UNLESS OTHERWISE NOTED

0 2000 4000
SCALE: 1:100

APPROVED:

A/E DESIGNER OF RECORD

SEAL:

STATE OF SOUTH CAROLINA
KEVIN L. CHAPIN
N. Charleston, SC
6374
12-23-10
REGISTERED ARCHITECT

US ARMY CORPS OF ENGINEERS
AFGHANISTAN ENGINEER DISTRICT

Mark	Description	Date	Appr.	Mark	Description	Date	Appr.

Date: 8/16/10
Rev: 0
Design file no.
Drawing code:
File name: AN4B0BA-201EL
Plot date: 8/24/2010
Plot scale: x:X

Designed by: KRC
Dwn by: KJG
Ckd by: NLJ
Reviewed by: LHM
Submitted by: BAKER

U.S. ARMY CORPS OF ENGINEERS
AFGHANISTAN ENGINEER DISTRICT
APO AE 96338

Michael Baker Jr., Inc.
A unit of Michael Baker Corporation
Airside Business Park
100 Airside Drive
Moon Township, PA 15108
www.mbakercorp.com

AFGHAN NATIONAL ARMY
STANDARD DESIGN

OPEN BARRACKS WITH LATRINE

ELEVATIONS

Sheet reference number:
A-201

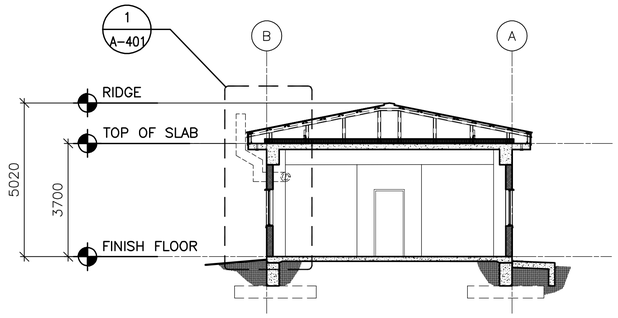

1 A-301 **BUILDING SECTION**
SCALE: 1:100

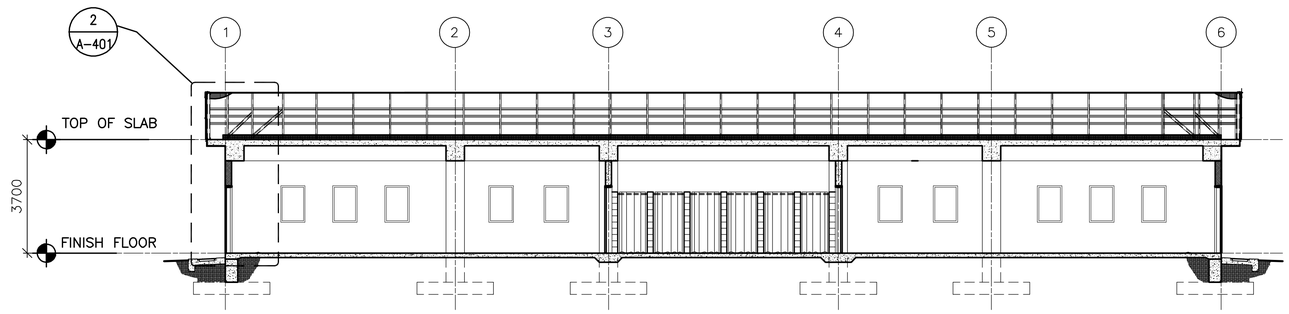

2 A-301 **BUILDING SECTION**
SCALE: 1:100

LINEAR DIMENSIONS SHOWN ARE IN MILLIMETERS (MM), UNLESS OTHERWISE NOTED

0 2000 4000
SCALE: 1:100

APPROVED:

A/E DESIGNER OF RECORD

SEAL:

STATE OF SOUTH CAROLINA
JOHN L. CHAPIN
N. Charleston, SC
6374
12-23-10
REGISTERED ARCHITECT

US ARMY CORPS OF ENGINEERS
AFGHANISTAN ENGINEER DISTRICT

Mark	Description	Date	Appr.	Mark	Description	Date	Appr.

Date: 8/16/10
Rev: 0
Design file no.
Drawing code:
File name: AMABOBA-301BS
Plot date: 8/24/2010
Plot scale:

Designed by: KRC
Dwn by: KJG
Ckd by: NLJ
Reviewed by: LHM
Submitted by: BAKER

U.S. ARMY CORPS OF ENGINEERS
AFGHANISTAN ENGINEER DISTRICT
APO AE 96338

Michael Baker Jr., Inc
A unit of Michael Baker Corporation
Airside Business Park
100 Airside Drive
Moon Township, PA 15108
www.mbakercorp.com

AFGHAN NATIONAL ARMY
STANDARD DESIGN

OPEN BARRACKS WITH LATRINE

BUILDING SECTIONS

Sheet reference number:
A-301

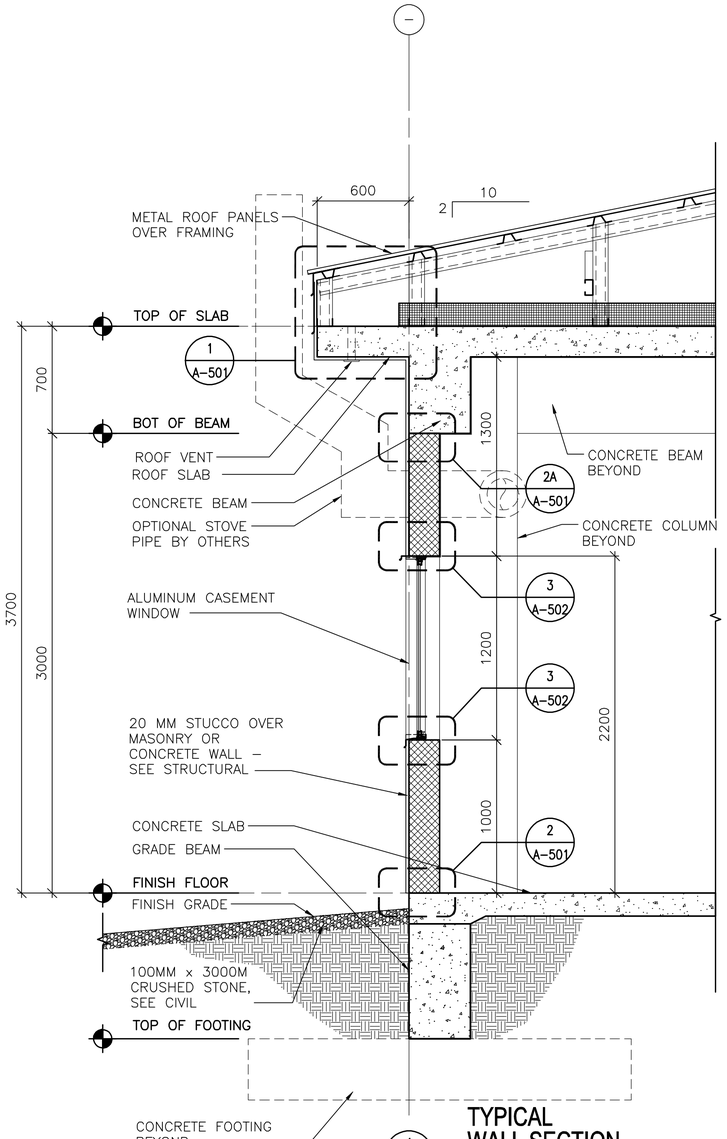

1 A-401 **TYPICAL WALL SECTION**

SCALE: 1:20

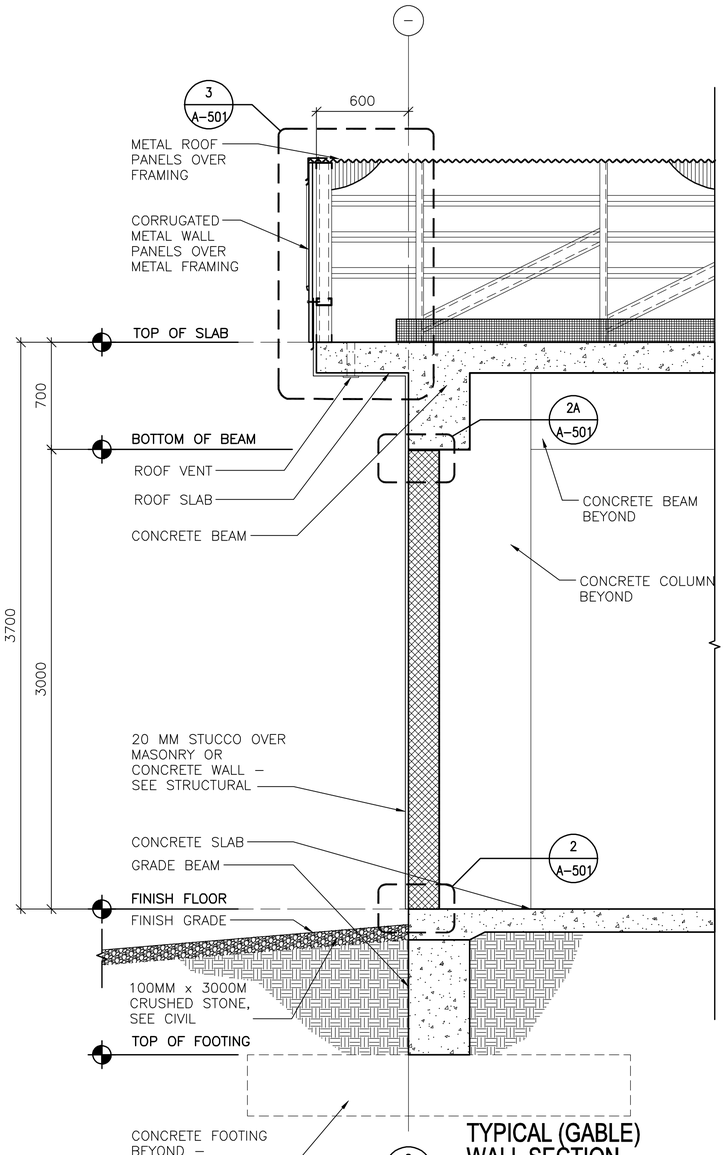

2 A-401 **TYPICAL (GABLE) WALL SECTION**

SCALE: 1:20

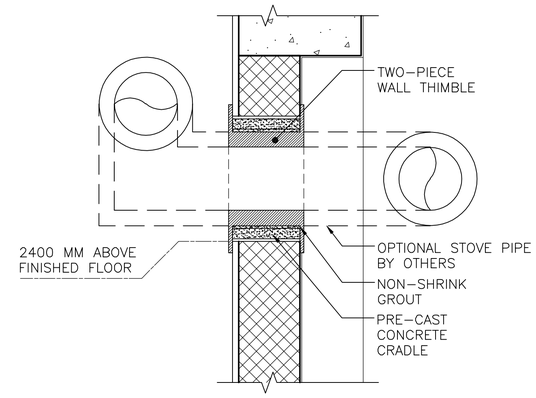

3 A-401 **THIMBLE DETAIL, TYPICAL**

SCALE: 1:10

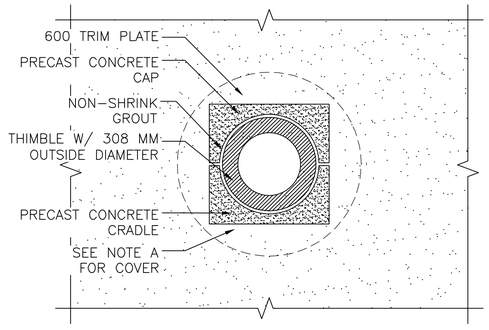

4 A-401 **THIMBLE DETAIL, TYPICAL**

SCALE: 1:10

NOTE:

A. PROVIDE 480 MM SQUARE, 1.5 MM THICK GALVANIZED SHEET METAL COVER WITH 13 MM HEMMED EDGE FOR WALL THIMBLE UNTIL STOVE PIPE IS PROVIDED. INSTALL COVER ON EXTERIOR FACE OF THIMBLE TRIM PLATE. COVER SHALL BE SET IN SILICONE SEALANT AND FASTENED WITH 4 STAINLESS STEEL SCREWS. ALIGN FASTENER LOCATIONS WITH COVER PLATE FASTENER OPENINGS SO ADDITIONAL FASTENER PENETRATIONS ARE NOT CREATED IN EXTERIOR FINISH. IF THIMBLE IS INSTALLED WITHOUT DUCTWORK, PROVIDE INSULATION TO FILL ENTIRE VOID AND PROVIDE 600MM ø 2.5MM SHEET METAL TRIM PIECE AND FASTEN WITH 4 STAINLESS STEEL SCREWS, BOTH SIDES.

LINEAR DIMENSIONS SHOWN ARE IN MILLIMETERS (MM), UNLESS OTHERWISE NOTED

0 400 800

SCALE: 1:20

APPROVED:

A/E DESIGNER OF RECORD

SEAL:

STATE OF SOUTH CAROLINA
KEVIN R. CHAFIN
N. Charleston, SC
6374
9-23-10
REGISTERED ARCHITECT

US ARMY CORPS OF ENGINEERS
AFGHANISTAN ENGINEER DISTRICT

Mark	Description	Date	Appr.	Mark	Description	Date	Appr.

Rev: 0
Date: 8/16/10
Design file no.
Drawing code:
File name: ANABDBA-401W8
Plot date: 9/24/2010
Plot scale: X:X

Designed by: KRC
Dwn by: KJG
Ckd by: NLJ
Reviewed by: LHM
Submitted by: BAKER

U.S. ARMY CORPS OF ENGINEERS
AFGHANISTAN ENGINEER DISTRICT
APO AE 96338

Michael Baker Jr., Inc
A unit of Michael Baker Corporation
Airside Business Park
100 Airside Drive
Moon Township, PA 15108
www.mbakercorp.com

AFGHAN NATIONAL ARMY
STANDARD DESIGN
OPEN BARRACKS WITH LATRINE
WALL SECTIONS

Sheet reference number:
A–401

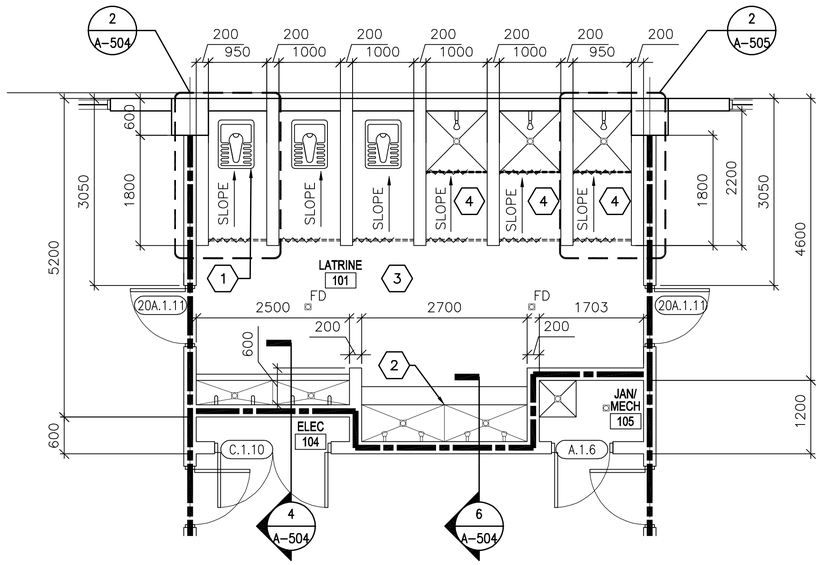

1 A-402 **ENLARGED PLAN**

SCALE: 1:50

LINEAR DIMENSIONS SHOWN ARE IN MILLIMETERS (MM), UNLESS OTHERWISE NOTED

0 1000 2000

SCALE: 1:50

GENERAL NOTES:

A. DIMENSIONS ARE SHOWN TO OUTER EDGE OF EXTERIOR STRUCTURAL COLUMNS, STRUCTURAL COLUMN GRID, EDGE OF INTERIOR PARTITIONS, EDGE OF WINDOW OPENINGS, AND TO HINGE SIDE OF DOOR FRAME OPENINGS.

B. HINGE SIDE OF OPENINGS FOR DOORS AND FRAMES SHALL BE LOCATED 200 MM FROM THE ADJACENT WALL OR COLUMN, UNLESS NOTED OTHERWISE.

C. INTERIOR PARTITIONS SHALL BE 200 MM CMU, UNLESS NOTED OTHERWISE.

D. COSMETIC REPAIR OF MINOR DEFECTS: REPAIR OR FILL MORTAR JOINTS AND MINOR DEFECTS, INCLUDING BUT NOT LIMITED TO SPALLS, IN ACCORDANCE WITH MANUFACTURER'S RECOMMENDATIONS AND PRIOR TO COATING APPLICATION. SURFACES TO BE PAINTED SHALL BE CLEAN AND FREE OF FOREIGN MATTER BEFORE APPLICATION OF PAINT. CLEANING SHALL BE SCHEDULED SO THAT DUST AND OTHER CONTAMINANTS WILL NOT FALL ON NEWLY PAINTED SURFACES.

E. CONCRETE, PLASTER AND MASONRY SURFACES SHALL BE ALLOWED TO CURE FOR AT LEAST 30 DAYS BEFORE PAINTING. CONCRETE SLABS-ON-GRADE SHALL BE ALLOWED TO CURE 90 DAYS BEFORE STAINING OR SEALING.

F. DO NOT USE PAINT MATERIALS CONTAINING LEAD CONTENT IN EXCESS OF 0.009 PERCENT OF THE WEIGHT OF THE TOTAL NONVOLATILE CONTENT OF THE PAINT OR THE WEIGHT OF THE DRIED PAINT FILM.

G. DO NOT USE ANY ASBESTOS CONTAINING MATERIALS (ACM) IN PROJECT. ACM IS DEFINED AS 1% OR MORE BY VOLUME.

H. DO NOT USE PAINT MATERIALS CONTAINING MERCURIAL FUNGICIDES.

I. FACTORY PRIMED METAL DOORS AND FRAMES SHALL RECEIVE TWO COATS OF PAINT.

J. FILL REMAINING SPACE AT PENETRATIONS IN FIRE-RATED FLOORS, PARTITIONS AND CEILINGS WITH APPROPRIATE FIRESTOPPING MATERIALS.

K. ALL CEILING FINISHES SHALL BE PAINTED PLASTER APPLIED TO STRUCTURE.

L. ALL WALL FINISHES SHALL BE PAINTED PLASTER APPLIED TO STRUCTURE UNLESS OTHERWISE NOTED.

M. ALL FLOOR FINISHES SHALL BE SEALED CONCRETE, UNLESS NOTED OTHERWISE.

N. PROVIDE TILE FINISHES AS INDICATED IN DETAILS AND KEY NOTES.

O. HEIGHT OF ALL TOILET AND SHOWER PARTITIONS SHALL BE 2400 MM ABOVE FINISHED FLOOR.

P. PROVIDE POLISHED STAINLESS STEEL MIRROR 600 X 800 ABOVE EVERY LAVATORY FAUCET.

Q. PROVIDE 2 SHOWER RODS, 1 SOAP DISPENSER, AND 1 ROBE HOOK PER SHOWER STALL. PROVIDE 1 SHOWER ROD AND 1 ROBE HOOK PER LATRINE STALL. SEE SPECIFICATIONS FOR SHOWER RODS, SOAP DISPENSERS, AND ROBE HOOKS.

KEY NOTES: (X)

1. TYPICAL TOILET STALL LAYOUT – SEE DETAIL 2/A-504.
2. RECESSED TROUGH – SEE DETAIL 7/A-504.
3. TERRAZZO FLOOR TILE AND CERAMIC WALL TILE TO 2000 MM ABOVE FINISHED FLOOR UNLESS OTHERWISE NOTED.
4. RECESSED SHOWER – SEE DETAIL 1/A-505

LEGEND:

(XXX) DOOR FRAME AND HARDWARE TYPE, SEE SHEET A-601

(A) WINDOW TYPE, SEE SHEET A-601

(X) KEY NOTE

ABBREVIATIONS:

ELEC	ELECTRICAL
MECH	MECHANICAL
JAN	JANITOR
CLOS	CLOSET
COMM	COMMUNICATIONS
FD	FLOOR DRAIN

APPROVED:

A/E DESIGNER OF RECORD

SEAL:

STATE OF SOUTH CAROLINA
KEVIN L. CHAFIN
N. Charleston, SC
8374
12-23-10
REGISTERED ARCHITECT

US ARMY CORPS OF ENGINEERS
AFGHANISTAN ENGINEER DISTRICT

Mark	Description	Date	Appr.	Mark	Description	Date	Appr.

Designed by: KRC
Dwn by: KJG
Ckd by: NLJ
Reviewed by: LHM
Submitted by: BAKER
Date: 8/16/10
Rev: 0
Design file no.
Drawing code:
File name: ANA8O8A-402BP
Plot date: 8/24/2010
Plot scale: X:X

U.S. ARMY CORPS OF ENGINEERS
AFGHANISTAN ENGINEER DISTRICT
APO AE 96338

Michael Baker Jr., Inc.
A unit of Michael Baker Corporation
Airside Business Park
100 Airside Drive
Moon Township, PA 15108
www.mbakercorp.com

AFGHAN NATIONAL ARMY
STANDARD DESIGN

OPEN BARRACKS WITH LATRINE

ENLARGED PLAN

Sheet reference number:
A-402

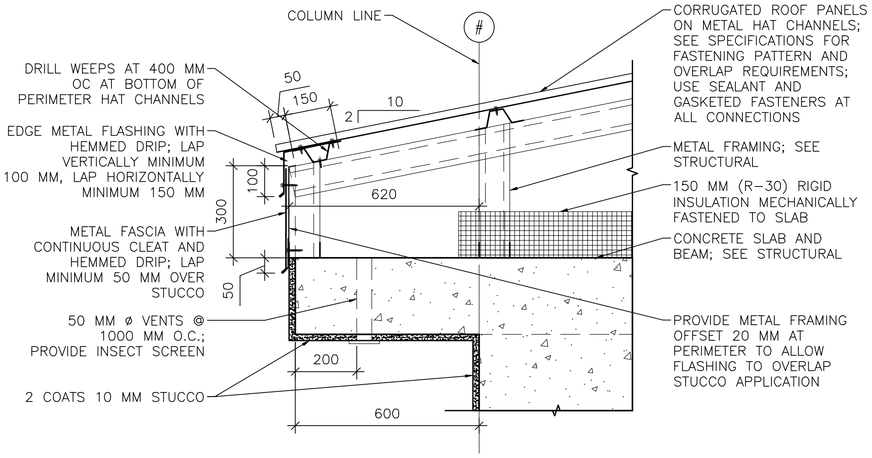

1 / A-501 **EAVE DETAIL**
SCALE: 1:10

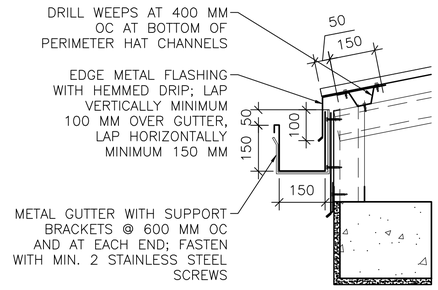

1A / A-501 **GUTTER DETAIL**
SCALE: 1:10

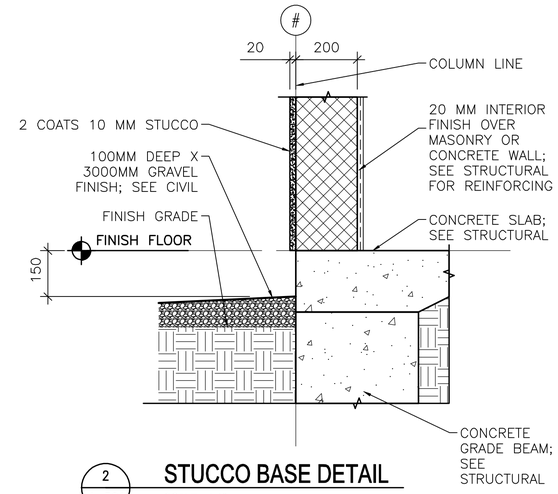

2 / A-501 **STUCCO BASE DETAIL**
SCALE: 1:10

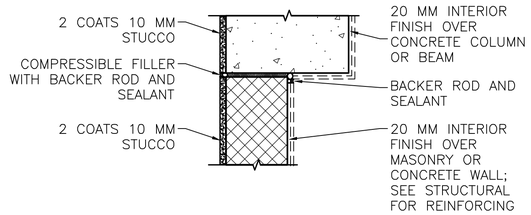

NOTE: DETAIL TYPICAL AT ALL WALL/COLUMN AND WALL/BEAM LOCATIONS, SEE ALTERNATE BRACING DETAIL BELOW 2B/A-501.

2A / A-501 **STUCCO/CONTROL JOINT DETAIL**
SCALE: 1:10

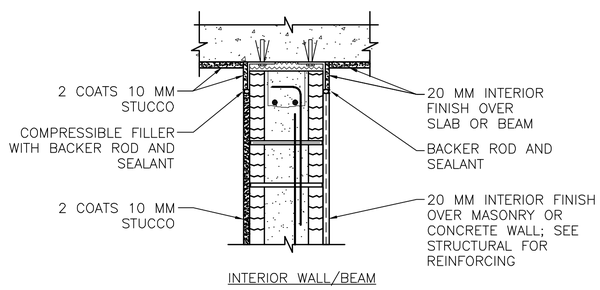

2B / A-501 **STUCCO @ BRACING DETAIL**
SCALE: 1:10

NOTE:
DETAIL FOR FINISHES ONLY. SEE STRUCTURAL FOR INFORMATION.

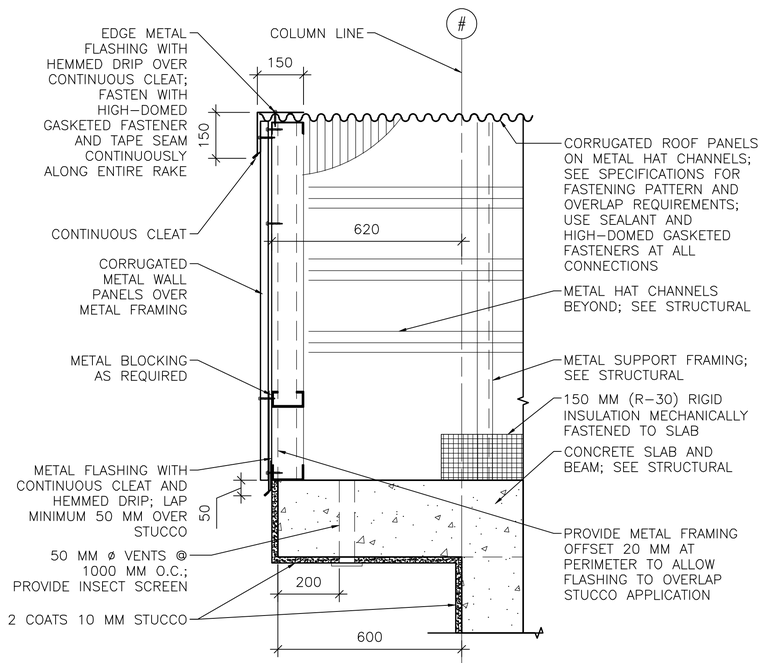

3 / A-501 **RAKE/EAVE DETAIL**
SCALE: 1:10

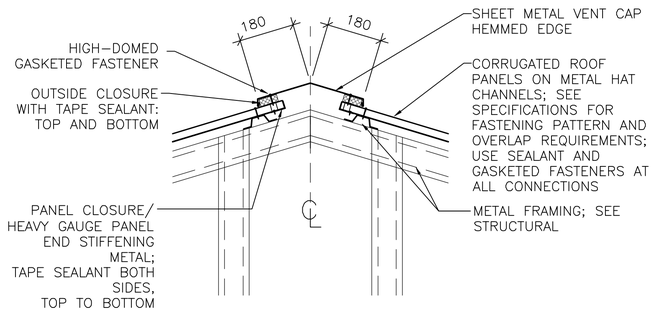

4 / A-501 **RIDGE VENT DETAIL**
SCALE: 1:10

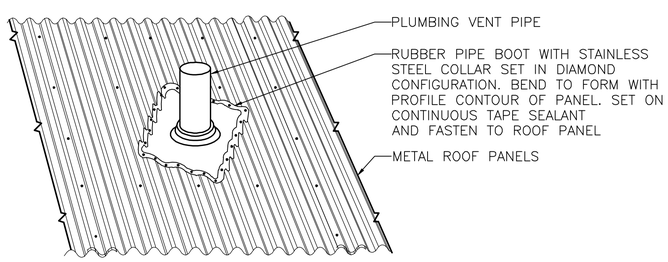

5 / A-501 **PLUMBING VENT DETAIL**
SCALE: NTS

LINEAR DIMENSIONS SHOWN ARE IN MILLIMETERS (MM), UNLESS OTHERWISE NOTED

0 200 400
SCALE: 1:10

APPROVED:

A/E DESIGNER OF RECORD

SEAL:

STATE OF SOUTH CAROLINA
KEVIN L. CHAFIN
N. Charleston, SC
6374
8-23-10
REGISTERED ARCHITECT

US ARMY CORPS OF ENGINEERS
AFGHANISTAN ENGINEER DISTRICT

Mark	Description	Date	Appr.	Mark	Description	Date	Appr.

Designed by: KRC
Dwn by: KJG
Ckd by: NLJ
Reviewed by: LHM
Submitted by: BAKER
Date: 8/16/10
Design file no.
Rev: 0
Drawing code:
File name: AN4B08A-50107
Plot date: 8/24/2010
Plot scale: x:X

U.S. ARMY CORPS OF ENGINEERS
AFGHANISTAN ENGINEER DISTRICT
APO AE 96338

Michael Baker Jr., Inc
A unit of Michael Baker Corporation
Airside Business Park
100 Airside Drive
Moon Township, PA 15108
www.mbakercorp.com

AFGHAN NATIONAL ARMY
STANDARD DESIGN

OPEN BARRACKS WITH LATRINE

EXTERIOR DETAILS

Sheet reference number:
A-501

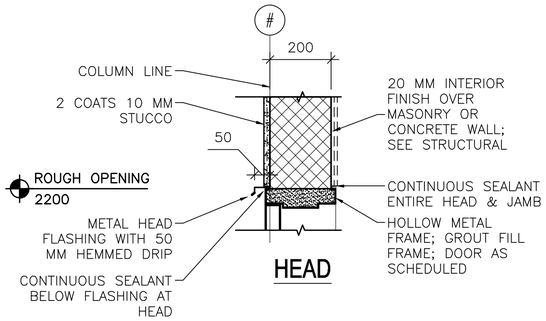

HEAD

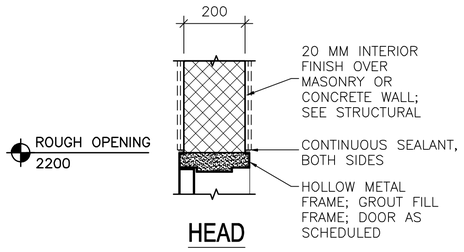

HEAD

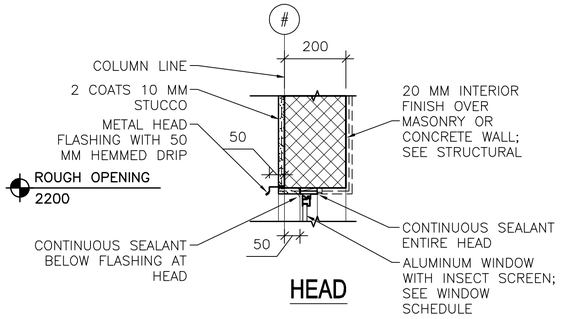

HEAD

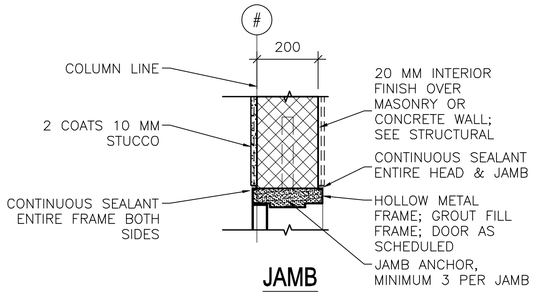

JAMB

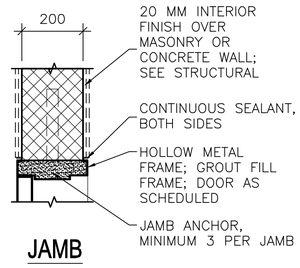

JAMB

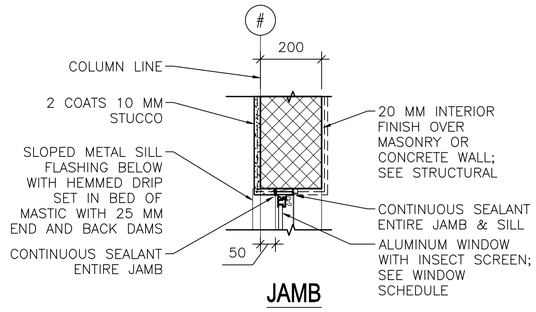

JAMB

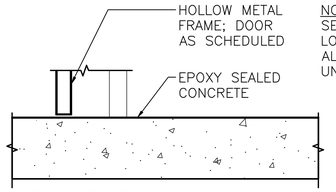

NOTE:
SEE M-101 FOR LOCATIONS OF ALL INTERIOR UNDERCUT DOORS

THRESHOLD

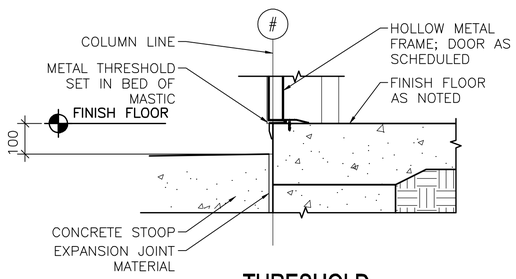

THRESHOLD

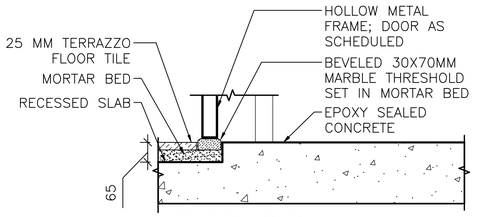

THRESHOLD

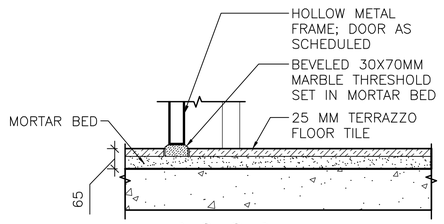

THRESHOLD

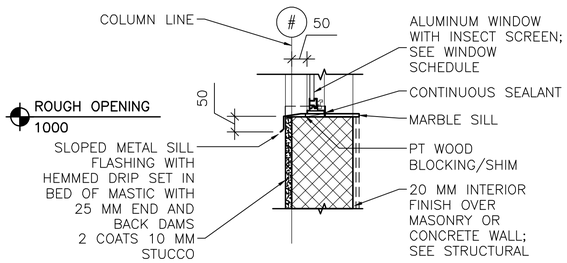

SILL

GENERAL NOTES:
A. ALL EXTERIOR DOOR AND WINDOW WOOD BLOCKING SHALL BE PRESERVATIVE TREATED.

1 A-502 **EXTERIOR DOOR DETAILS**
SCALE: 1:10

2 A-502 **INTERIOR DOOR DETAILS**
SCALE: 1:10

3 A-502 **EXTERIOR WINDOW DETAILS**
SCALE: 1:10

LINEAR DIMENSIONS SHOWN ARE IN MILLIMETERS (MM), UNLESS OTHERWISE NOTED

0 200 400
SCALE: 1:10

APPROVED:

A/E DESIGNER OF RECORD

SEAL:

STATE OF SOUTH CAROLINA
JOHN W. CHAPIN
N. Charleston, SC
6374
12-23-10
REGISTERED ARCHITECT

US ARMY CORPS OF ENGINEERS
AFGHANISTAN ENGINEER DISTRICT

Mark	Description	Date	Appr.	Mark	Description	Date	Appr.

Date: 8/16/10
Rev: 0
Design file no.
Drawing code:
File name: AN4B08A-502H4S
Plot date: 8/24/2010
Plot scale: x:X

Designed by: KRC
Ckd by: NLJ
Dwn by: EBB
Reviewed by: LHM
Submitted by:
BAKER

U.S. ARMY CORPS OF ENGINEERS
AFGHANISTAN ENGINEER DISTRICT
APO AE 96338

Michael Baker Jr., Inc.
A unit of Michael Baker Corporation
Airside Business Park
100 Airside Drive
Moon Township, PA 15108
www.mbakercorp.com

AFGHAN NATIONAL ARMY
STANDARD DESIGN

OPEN BARRACKS WITH LATRINE

HEAD, JAMB & SILL DETAILS

Sheet reference number:
A-502

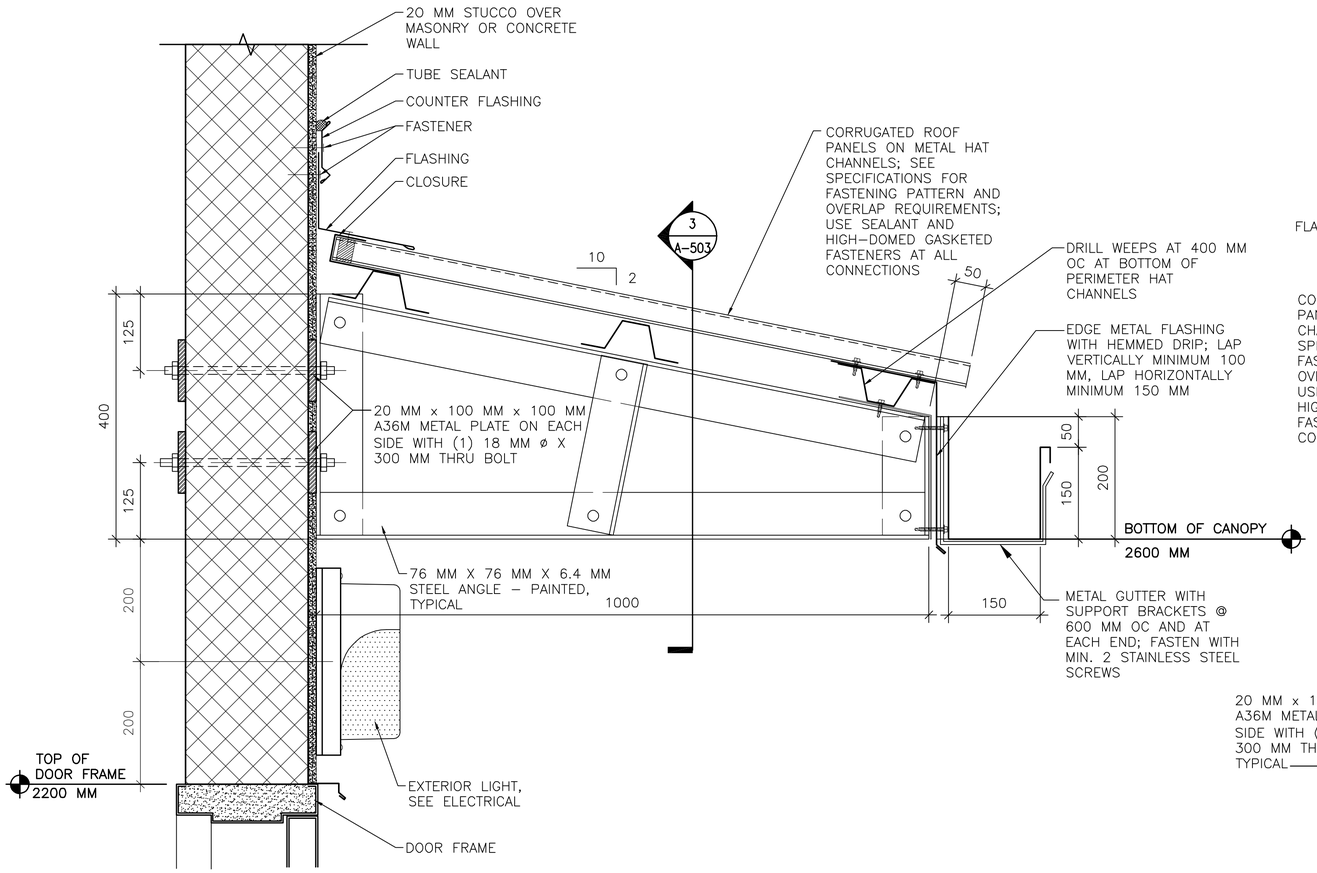

1 A-503 **CANOPY CONNECTION DETAILS**
SCALE: 1:5

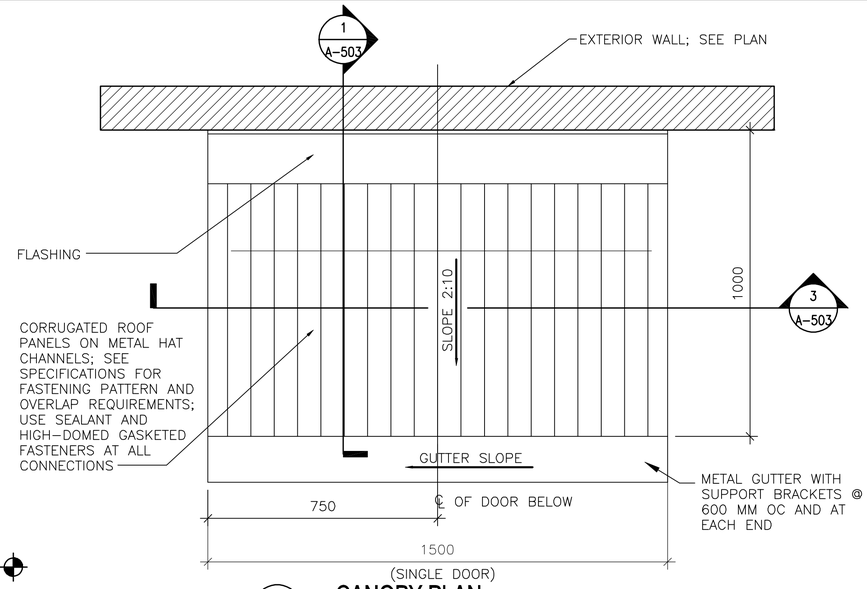

2 A-503 **CANOPY PLAN**
SCALE: 1:10

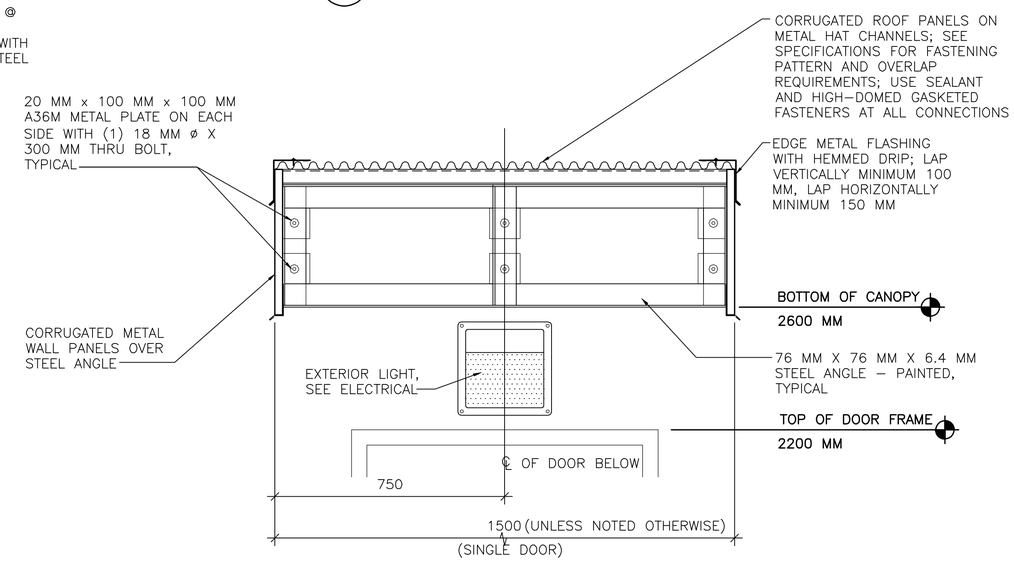

3 A-503 **CANOPY CONNECTION DETAILS**
SCALE: 1:10

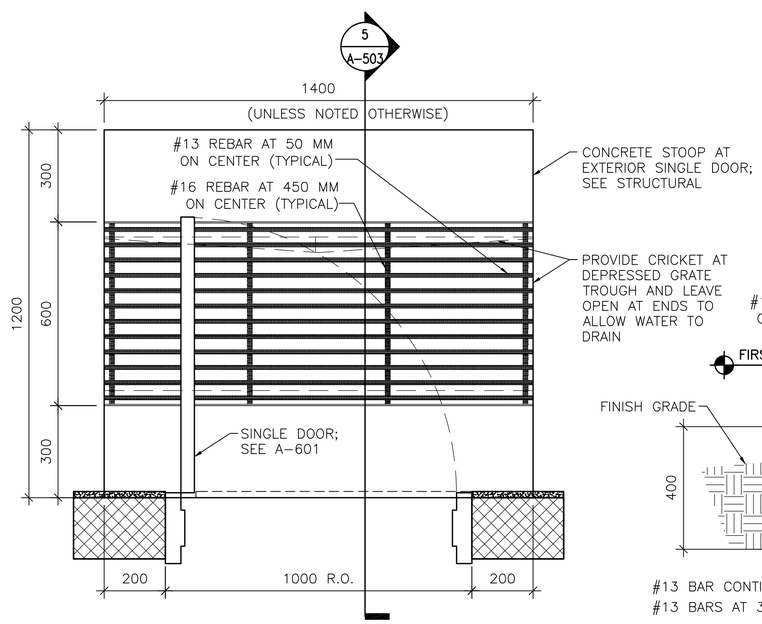

4 A-503 **DOOR STOOP PLAN (WITH GRATE)**
SCALE: 1:10

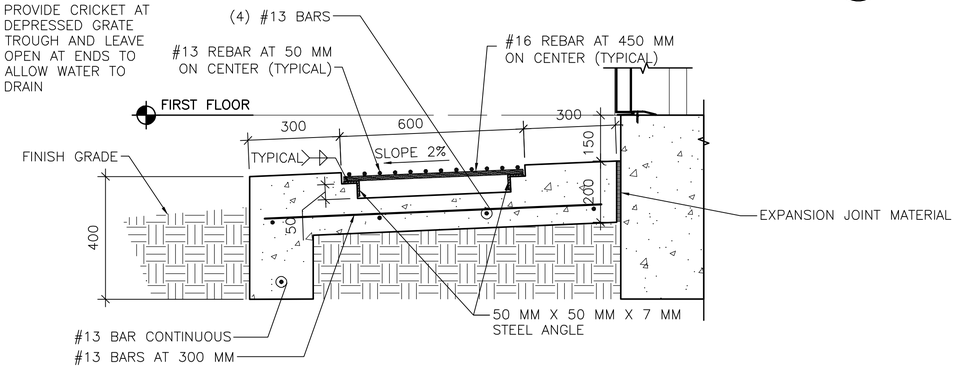

5 A-503 **DOOR STOOP DETAIL**
SCALE: 1:10

SHEET NOTES:

1. SEE A–102 FOR FLOOR PLANS AND CANOPY LOCATIONS.

APPROVED:

A/E DESIGNER OF RECORD

SEAL:

STATE OF SOUTH CAROLINA — KEVIN B. CHAFIN, N. Charleston, SC, 6374, 11-23-10 — REGISTERED ARCHITECT

0 200 400
SCALE: 1:10

0 100 200
SCALE: 1:5

LINEAR DIMENSIONS SHOWN ARE IN MILLIMETERS (MM), UNLESS OTHERWISE NOTED

US ARMY CORPS OF ENGINEERS
AFGHANISTAN ENGINEER DISTRICT

Mark	Description	Date	Appr.	Mark	Description	Date	Appr.

Date: 8/16/10
Rev: 0
Design file no.
Drawing code:
File name: AN4809A-503CDT
Plot date: 8/24/2010
Plot scale: x:X

Designed by: DLB
Dwn by: ECN
Ckd by: KRC
Reviewed by: LHM
Submitted by:
BAKER

U.S. ARMY CORPS OF ENGINEERS
AFGHANISTAN ENGINEER DISTRICT
APO AE 96338

Michael Baker Jr., Inc
A unit of Michael Baker Corporation
Airside Business Park
100 Airside Drive
Moon Township, PA 15108
www.mbakercorp.com

AFGHAN NATIONAL ARMY
STANDARD DESIGN
OPEN BARRACKS WITH LATRINE
STOOP & CANOPY DETAILS

Sheet reference number:
A–503

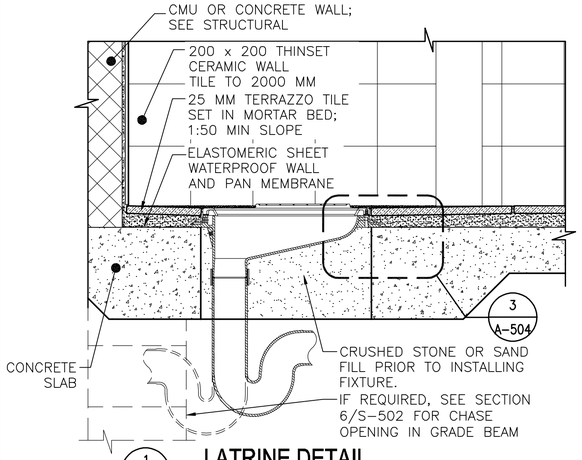

LATRINE DETAIL

1 A-504 SCALE: 1:10

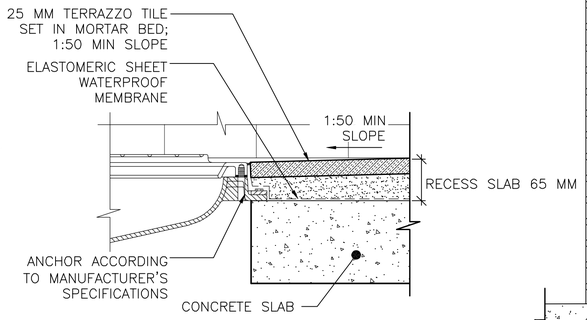

MOUNTING DETAIL

3 A-504 SCALE: 1:5

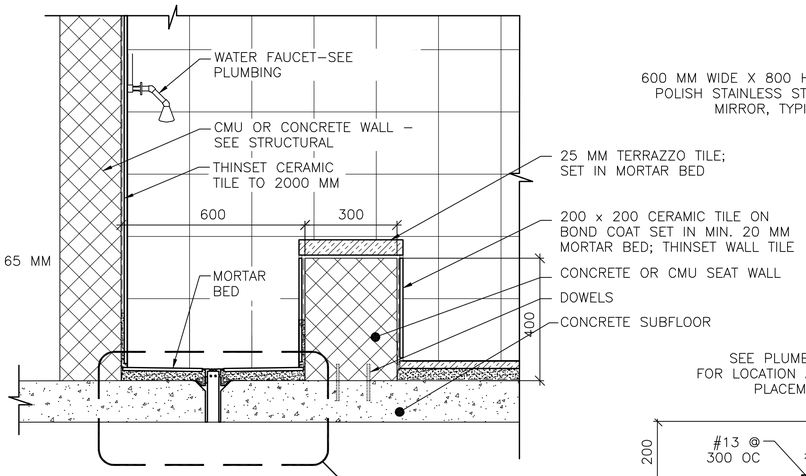

ABLUTION DETAIL

6 A-504 SCALE: 1:10

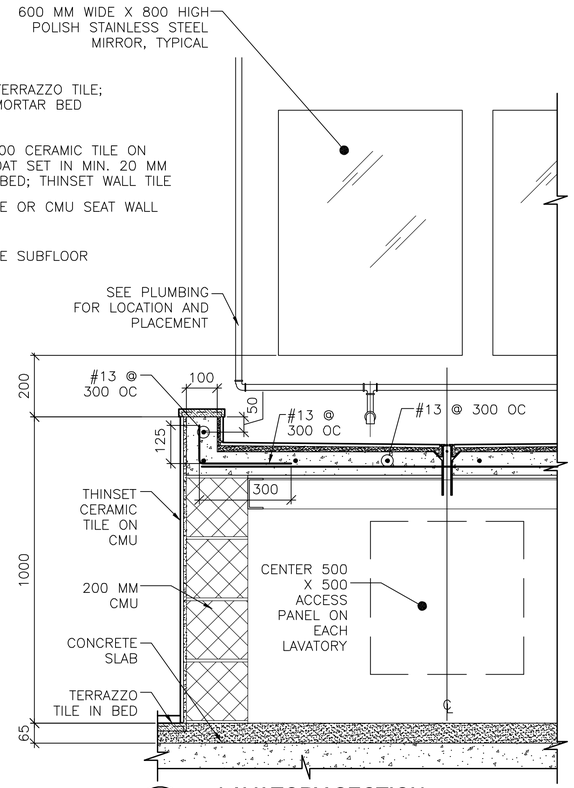

LAVATORY SECTION

9 A-504 SCALE: 1:10

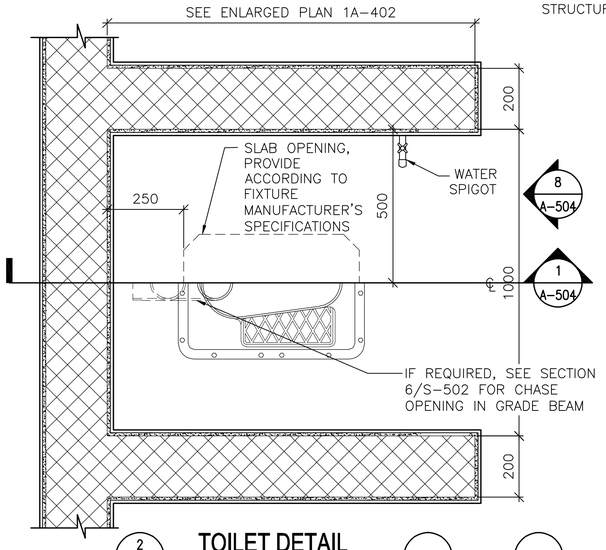

TOILET DETAIL

2 A-504 SCALE: 1:10

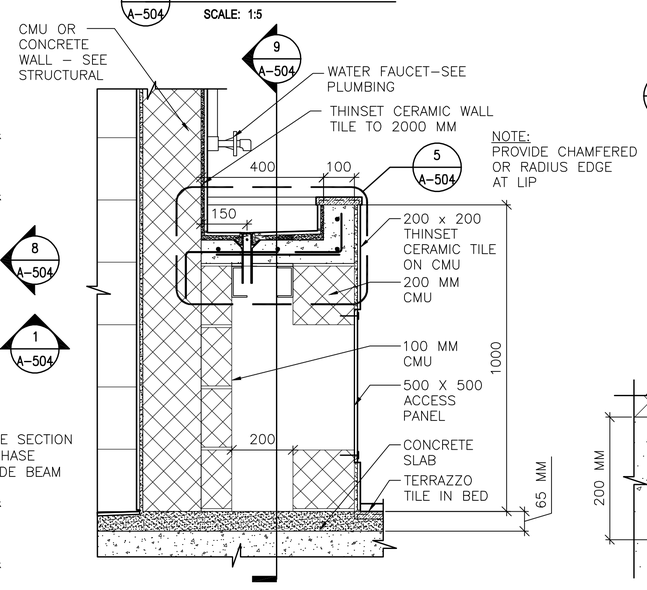

LAVATORY SECTION

4 A-504 SCALE: 1:10

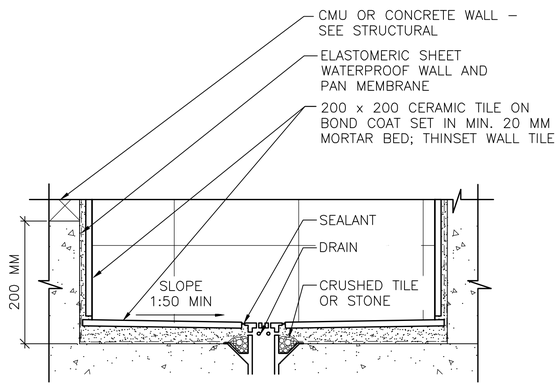

RECESSED TROUGH

7 A-504 SCALE: 1:5

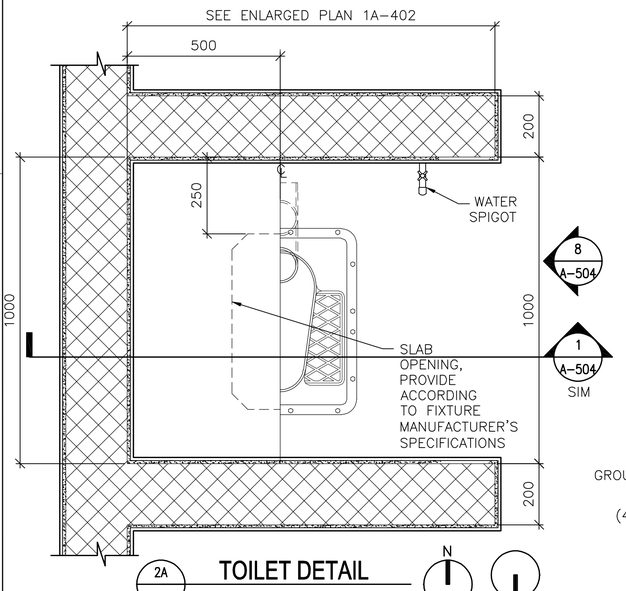

TOILET DETAIL

2A A-504 SCALE: 1:10

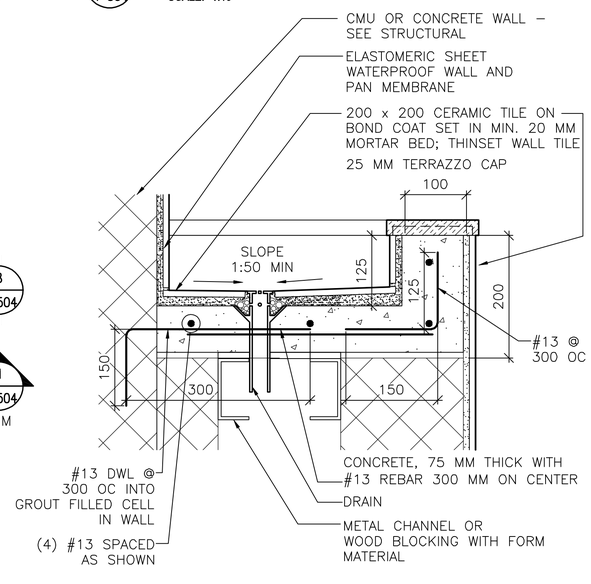

LAVATORY DETAIL

5 A-504 SCALE: 1:5

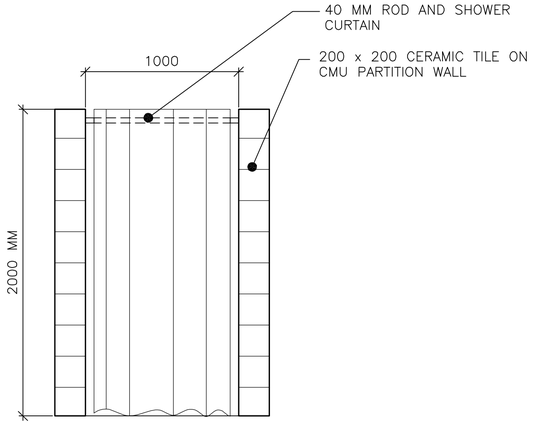

TOILET PARTITION ELEVATION

8 A-504 SCALE: 1:20

LINEAR DIMENSIONS SHOWN ARE IN MILLIMETERS (MM), UNLESS OTHERWISE NOTED

0 100 200 SCALE: 1:5

0 200 400 SCALE: 1:10

0 400 800 SCALE: 1:20

APPROVED:

A/E DESIGNER OF RECORD

SEAL:

STATE OF SOUTH CAROLINA KEVIN R. CHAFIN Mt. Charleston, SC 8374 8-23-10 REGISTERED ARCHITECT

US ARMY CORPS OF ENGINEERS
AFGHANISTAN ENGINEER DISTRICT

Mark	Description	Date	Appr.	Mark	Description	Date	Appr.

Date: 8/16/10 Rev: 0
Design file no.
Drawing code:
File name: AN4B08A-504OT
Plot date: 8/24/2010
Plot scale: X:X

Designed by: KRC
Dwn by: KJG
Ckd by: NLJ
Reviewed by: LHM
Submitted by: BAKER

U.S. ARMY CORPS OF ENGINEERS
AFGHANISTAN ENGINEER DISTRICT
APO AE 96338

Michael Baker Jr., Inc
A unit of Michael Baker Corporation
Airside Business Park
100 Airside Drive
Moon Township, PA 15108
www.mbakercorp.com

AFGHAN NATIONAL ARMY
STANDARD DESIGN

OPEN BARRACKS WITH LATRINE

TOILET, LAVATORY & ABLUTION DETAILS

Sheet reference number:
A-504

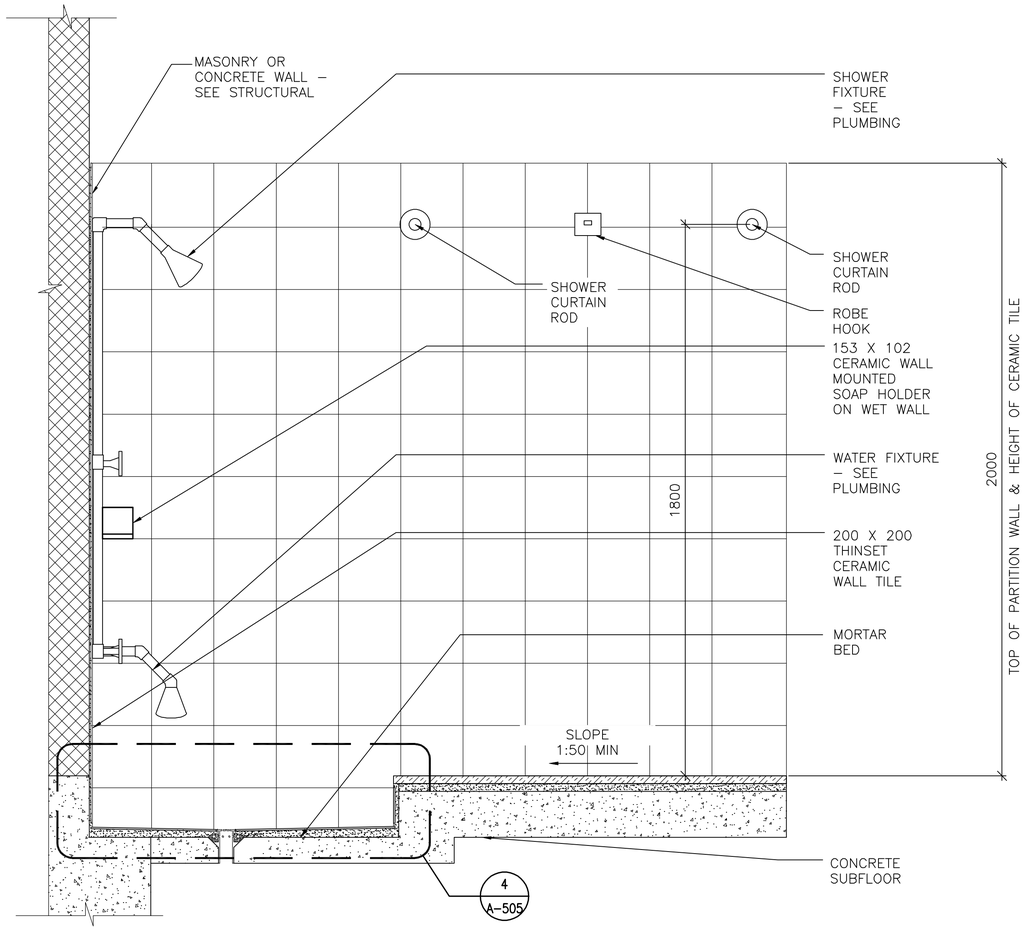

1 A-505 **SHOWER DETAIL**
SCALE: 1:10

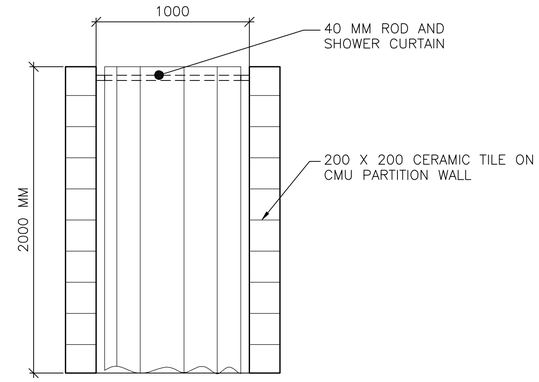

3 A-505 **SHOWER PARTITION ELEVATION**
SCALE: 1:20

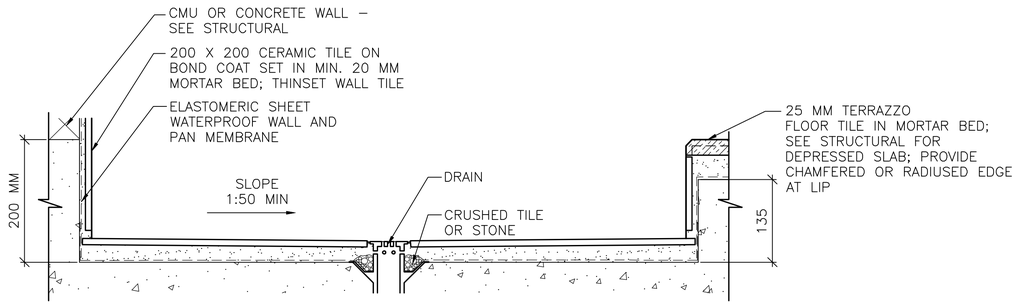

4 A-505 **SHOWER RECESS**
SCALE: 1:5

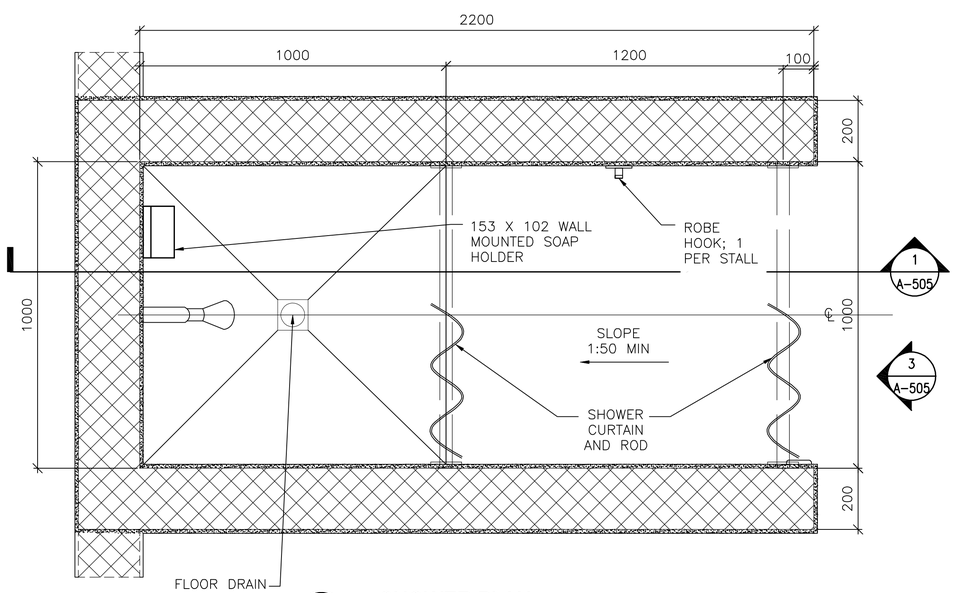

2 A-505 **SHOWER PLAN**
SCALE: 1:10

0 100 200
SCALE: 1:5

0 200 400
SCALE: 1:10

0 400 800
SCALE: 1:20

LINEAR DIMENSIONS SHOWN ARE IN MILLIMETERS (MM), UNLESS OTHERWISE NOTED

APPROVED:

A/E DESIGNER OF RECORD

SEAL:

STATE OF SOUTH CAROLINA
KEVIN P. CHAFIN
N. Charleston, SC
6374
07-23-10
REGISTERED ARCHITECT

US ARMY CORPS OF ENGINEERS
AFGHANISTAN ENGINEER DISTRICT

Mark	Description	Date	Appr.	Mark	Description	Date	Appr.

Designed by: KRC
Dwn by: KJG
Ckd by: NLJ
Reviewed by: LHM
Submitted by: BAKER
Date: 8/16/10
Rev: 0
Design file no.
Drawing code:
File name: ANABOBA-505SDT
Plot date: 8/24/2010
Plot scale: X:X

U.S. ARMY CORPS OF ENGINEERS
AFGHANISTAN ENGINEER DISTRICT
APO AE 96338

Michael Baker Jr., Inc
A unit of Michael Baker Corporation
Airside Business Park
100 Airside Drive
Moon Township, PA 15108
www.mbakercorp.com

AFGHAN NATIONAL ARMY
STANDARD DESIGN
OPEN BARRACKS WITH LATRINE
SHOWER DETAILS

Sheet reference number:
A-505

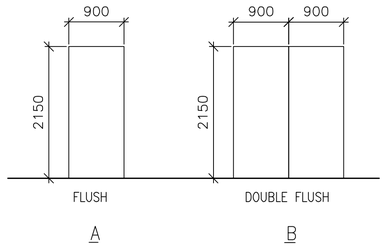

1 A-601 **DOOR TYPES**
SCALE: 1:50

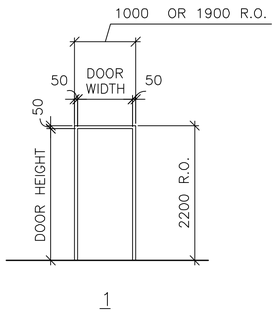

2 A-601 **FRAME TYPES**
SCALE: 1:50

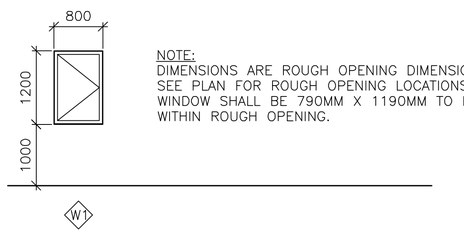

NOTE:
DIMENSIONS ARE ROUGH OPENING DIMENSIONS. SEE PLAN FOR ROUGH OPENING LOCATIONS. WINDOW SHALL BE 790MM X 1190MM TO FIT WITHIN ROUGH OPENING.

3 A-601 **WINDOW TYPES**
SCALE: 1:50

4 A-601 **DOOR TAG**
SCALE: NTS

5 A-601 **RATED DOOR TAG**
SCALE: NTS

WINDOW TYPE NOTES:

1. ALL EXTERIOR WINDOWS SHALL BE ALUMINUM WITH INSECT SCREENS. WINDOWS SHALL BE COMMERCIAL GRADE.
2. ALL EXTERIOR WINDOWS SHALL BE OPERABLE.

DOOR TAG NOTES:

1. THE DOOR TAG INDICATES THE DOOR TYPE, FRAME TYPE AND HARDWARE SET FOR EACH DOOR.
2. THE DOOR TAG FOR RATED DOORS INCLUDES THE RATING OF THE DOOR IN MINUTES.

THIS SHEET IS STANDARD AND IS INCLUSIVE OF ALL THE DOOR/ WINDOW/ HARDWARE TYPES FOR THE ENTIRE CONTRACT. NOT ALL DOOR/ WINDOW/ HARDWARE TYPES ARE USED FOR ANY PARTICULAR BUILDING DESIGN. CONTRACTOR SHALL REFER TO THE FLOOR PLAN FOR THE TYPES BEING USED.

EXTERIOR DOOR HARDWARE TYPES:

HW-1
1-1/2 PR HINGES, A5112 114 X 114
1 EA RIM EXIT DEVICE, TYPE 1
1 EA CYLINDER. E09221A, GRADE 1
1 EA OVERHEAD CLOSER, C02061, LOW RESISTANCE
1 EA THRESHOLD, J32130
3 EA DOOR SILENCERS, L03011
1 EA WEATHERSTRIPPING

HW-2
1-1/2 PR HINGES, A5112 114 X 114
1 EA LOCKSET, F13 ENTRY LOCK W/LEVER HANDLES, GRADE 1
1 EA OVERHEAD CLOSER, C02061, LOW RESISTANCE
1 EA THRESHOLD, J32130
3 EA DOOR SILENCERS, L03011
1 EA WEATHERSTRIPPING

HW-3
3 PR HINGES, A5112 114 X 114
2 EA RIM EXIT DEVICE, TYPE 1
2 EA CYLINDER. GRADE 1
2 EA OVERHEAD CLOSER, C02061, LOW RESISTANCE
1 EA DOOR COORDINATOR, TYPE 21
1 EA ASTRAGAL
1 EA THRESHOLD, J32130
2 EA DOOR SILENCERS, L03011
1 EA WEATHERSTRIPPING

HW-4
3 PR HINGES, A5112 114 X 114
1 EA LOCKSET W/LEVER HANDLES. GRADE 1, F13
1 EA OVERHEAD CLOSER, C02061, LOW RESISTANCE
2 EA MAGNETIC HOLDER PIN, ATTACHED TO DOOR LEAF
2 EA MAGNETIC HOLDER RECEIVER, ATTACHED TO STOOP
2 EA LEVER EXTENSION FLUSH BOLTS, L04081
1 EA ASTRAGAL
1 EA THRESHOLD, J32130
2 EA DOOR SILENCERS, L03011
1 EA WEATHERSTRIPPING

DOOR AND HARDWARE NOTES:

1. INTERIOR AND EXTERIOR METAL DOORS AND FRAME COLORS SHALL MATCH ADJACENT WALL COLORS AS SELECTED BY THE CONTRACTING OFFICER.
2. FRAMES, EXCEPT FIRE-RATED FRAMES, SHALL BE MOUNTED AND ADJUSTED IN ACCORDANCE WITH MANUFACTURER'S INSTRUCTIONS. FRAMES SHALL BE FASTENED WITH MINIMUM OF THREE ANCHORS PER JAMB AT EQUAL INTERVALS.
3. DIMENSIONS SHOWN ON DOOR TYPES DETAIL ARE BASED UPON MODULAR MASONRY (OR ROUGH OPENING) WIDTH OF 1000MM AND HEIGHT OF 2200 MM FOR STANDARD PERSONNEL DOORS. CONTRACTOR SHALL COORDINATE WITH DOOR SUPPLIER TO ENSURE THAT DIMENSIONS OF DOORS AND FRAMES PROVIDED ARE COMPATIBLE WITH DOOR OPENING DIMENSIONS.
4. HARDWARE SHALL BE HEAVY DUTY, COMMERCIAL GRADE, STAINLESS STEEL WITH A SATIN OR BRUSHED FINISH.
5. HARDWARE TYPES INCLUDE BUILDERS HARDWARE MANUFACTURERS ASSOCIATION (BMHA) NUMBER.
6. DOORS IN 2 HOUR RATED PARTITIONS SHALL BE 1.5 HOUR (90 MINUTE) RATED DOORS IN ACCORDANCE WITH NFPA 101, TABLE 8.3.4.2.
7. DOORS IN 1 HOUR RATED WALLS SHALL BE 3/4 HOUR (45 MINUTE) RATED DOORS IN ACCORDANCE WITH NFPA 101, TABLE 8.3.4.2.
8. DOORS IN 1 HOUR RATED CORRIDOR WALLS SHALL BE 1/3 HOUR (20 MINUTE) IN ACCORDANCE WITH NFPA 101, TABLE 8.3.4.2.
10. PROVIDE DOOR STOPS TO PROTECT WALLS ON LOCATIONS WHERE DOOR SWING WILL STRIKE WALL.
11. SEE M-101 FOR LOCATIONS OF ALL UNDERCUT DOORS.

INTERIOR DOOR HARDWARE TYPES:

HW-5
1-1/2 PR HINGES, A8133 114 X 114
1 EA LOCKSET W/LEVER HANDLES, F08, GRADE 1
1 EA WALL STOP, L02101 OR L02161
3 EA DOOR SILENCERS, L03011

HW-6
1-1/2 PR HINGES, A8112 114 X 114
1 EA LOCKSET W/LEVER HANDLES, F08, GRADE 1
1 EA WALL STOP, L02101 OR L02161
1 EA OVERHEAD CLOSER, C02061, LOW RESISTANCE
3 EA DOOR SILENCERS, L03011

HW-7
1-1/2 PR HINGES, A8133
1 EA LOCKSET W/LEVER HANDLES, F13 GRADE 1
1 EA WALL STOP, L02101 OR L02161
2 EA MOP PLATE, J103
3 EA DOOR SILENCERS, L03011

HW-8
1-1/2 PR HINGES, A8112
1 EA LOCKSET W/LEVER HANDLES, F13 GRADE 1
1 EA WALL STOP, L02101 OR L02161
2 EA MOP PLATE, J103
1 EA OVERHEAD CLOSER, C02061, LOW RESISTANCE
3 EA DOOR SILENCERS, L03011

HW-9
1-1/2 PR HINGES, A5112 114 X 114
1 EA RIM EXIT DEVICE, TYPE 1
1 EA CYLINDER. E09221A, GRADE 1
1 EA OVERHEAD CLOSER, C02061, LOW RESISTANCE
3 EA DOOR SILENCERS, L03011

HW-10
3 PR HINGES, A5112 114 X 114
1 EA LOCKSET W/LEVER HANDLES. GRADE 1, F13
2 EA LEVER EXTENSION FLUSH BOLTS, L04081
1 EA ASTRAGAL
2 EA DOOR SILENCERS, L03011

HW-11
1-1/2 PR HINGES, A8112 114 X 114
1 EA LOCKSET W/LEVER HANDLES, F13, GRADE 1
1 EA WALL STOP, L02101 OR L02161
1 EA OVERHEAD CLOSER, C02061, LOW RESISTANCE
3 EA DOOR SILENCERS, L03011
1 EA ROBE HOOK

HW-12
1-1/2 PR HINGES, A8133
1 EA LATCHSET W/LEVER HANDLES, F76 GRADE 1
1 EA WALL STOP, L02101 OR L02161
2 EA MOP PLATE, J103
3 EA DOOR SILENCERS, L03011
1 EA ROBE HOOK

HW-13
3 PR HINGES, A5112 114 X 114
1 EA LOCKSET W/LEVER HANDLES. GRADE 1, F13
1 EA OVERHEAD CLOSER, C02061, LOW RESISTANCE
2 EA LEVER EXTENSION FLUSH BOLTS, L04081
1 EA ASTRAGAL
2 EA DOOR SILENCERS, L03011

HW-14
3 PR HINGES, A5112 114 X 114
2 EA RIM EXIT DEVICE, TYPE 1
2 EA CYLINDER. GRADE 1
2 EA OVERHEAD CLOSER, C02061, LOW RESISTANCE
1 EA DOOR COORDINATOR, TYPE 21
1 EA ASTRAGAL
2 EA DOOR SILENCERS, L03011

APPROVED:
A/E DESIGNER OF RECORD
SEAL:
STATE OF SOUTH CAROLINA
JOHN W. CHAPIN
N. Charleston, SC
6374
12-23-10
REGISTERED ARCHITECT

US ARMY CORPS OF ENGINEERS
AFGHANISTAN ENGINEER DISTRICT

Mark	Description	Date	Appr.	Mark	Description	Date	Appr.

Designed by: KRC
Dwn by: KJG
Ckd by: NLJ
Reviewed by: LHM
Submitted by: BAKER
Date: 8/16/10
Rev: 0
Design file no.
Drawing code:
File name: ANA80BA-601SCH
Plot date: 8/24/2010
Plot scale: x:X

U.S. ARMY CORPS OF ENGINEERS
AFGHANISTAN ENGINEER DISTRICT
APO AE 96338

Michael Baker Jr., Inc.
A unit of Michael Baker Corporation
Airside Business Park
100 Airside Drive
Moon Township, PA 15108
www.mbakercorp.com

AFGHAN NATIONAL ARMY
STANDARD DESIGN
OPEN BARRACKS WITH LATRINE
WINDOW AND DOOR SCHEDULES

Sheet reference number:
A-601

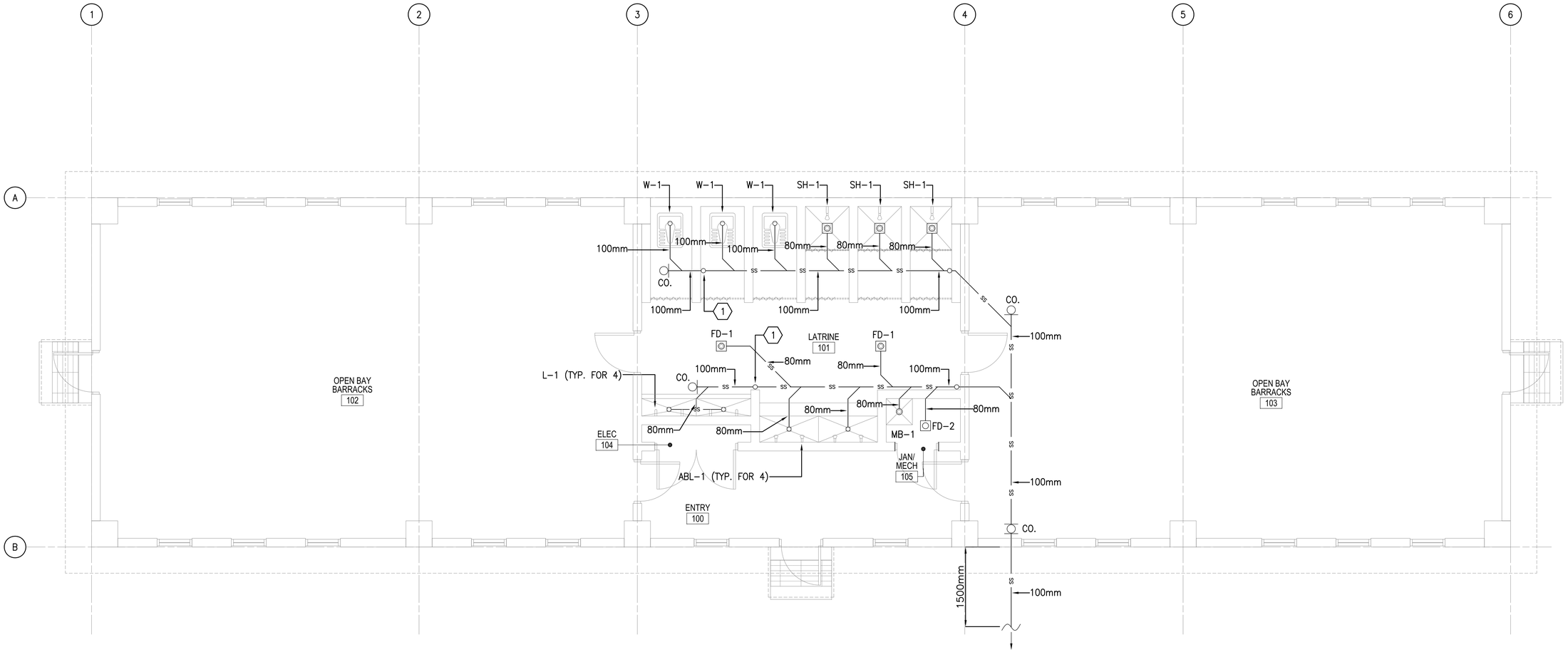

1 P-101 FLOOR PLAN - PLUMBING (SANITARY AND VENT)

SCALE: 1:50

FLOOR PLAN NOTES:

1. DO NOT SCALE DRAWINGS – ALL DIMENSIONS AND CONDITIONS SHALL BE CHECKED AND VERIFIED BY THE CONTRACTOR AT THE SITE.
2. ALL WORK PERFORM ON THIS BUILDING SHALL BE IN COMPLIANCE WITH ALL PERTINENT CODES, RULES, ORDINANCES AND REGULATIONS OF THE GOVERNING AUTHORITIES.
3. ALL WORK PERFORM ON UNDER AND IN CONNECTION WITH THESE DRAWINGS AND SPECIFICATIONS SHALL BE IN STRICT COMPLIANCE WITH THE LATEST SAFETY AND HEALTH STANDARDS.
4. REPORT ANY DISCREPANCIES FOUND IN THE PLUMBING DRAWINGS AND/OR IN THE SPECIFICATIONS DURING THE BIDDING PROCESS FOR CLARIFICATION BY THE ENGINEER.
5. ALL EASTERN STYLE WATER CLOSETS IN THIS FACILITY ARE TO HAVE THE FIXTURE DESIGNATION OF W-1. EACH FIXTURE SHALL HAVE A 25mm COLD WATER LINE AND A 100mm SANITARY CONNECTION.
6. ALL LAV (TROUGH) FIXTURES ARE TO HAVE THE FIXTURE DESIGNATION OF L-1. EACH FIXTURE SHALL HAVE A 15mm COLD WATER, 15mm HOT WATER CONNECTION AND A 80mm SANITARY CONNECTION.
7. ALL ABLUTION FIXTURES ARE TO HAVE THE FIXTURE DESIGNATION OF ABL-1. EACH FIXTURE SHALL HAVE A 15mm COLD WATER, 15mm HOT WATER CONNECTION AND A 80mm SANITARY CONNECTION.
8. ALL SHOWER FIXTURES ARE TO HAVE THE FIXTURE DESIGNATION OF SH-1. EACH FIXTURE SHALL HAVE A 15mm COLD WATER, 15mm HOT WATER CONNECTION AND A 80mm SANITARY CONNECTION.
9. ALL WATER, SANITARY AND VENT PIPING SHALL BE EXPOSED. RUN LINES TIGHT TO THE CEILING AND WALL.
10. REFER TO SHEETS P501 AND P502 FOR DETAILS.
11. ALL SANITARY BRANCH LINES SHALL BE SLOPED AT 6mm PER 0.3m, AND ALL MAIN LINES SHALL BE SLOPED AT 3mm PER 0.3m, UNLESS OTHERWISE NOTED OR AS REQUIRED BY THE LOCAL AUTHORITY HAVING JURISDICTION.

CODED NOTES:

1. 100mm VENT STACK THRU ROOF.

LINEAR DIMENSIONS SHOWN ARE IN MILLIMETERS (MM), UNLESS OTHERWISE NOTED

0 1000 2000
SCALE: 1:50

APPROVED:

A/E DESIGNER OF RECORD

SEAL:

COMMONWEALTH OF PENNSYLVANIA
REGISTERED PROFESSIONAL
MATTHEW R. SOTOSKY
ENGINEER
045576-E

US ARMY CORPS OF ENGINEERS
AFGHANISTAN ENGINEER DISTRICT

Mark	Description	Date	Appr.	Mark	Description	Date	Appr.

Designed by: RHM
Dwn by: MM
Ckd by: NLJ
Reviewed by: CJM
Submitted by: BAKER
Date: 06/30/10
Rev: 0
Design file no.
Drawing code:
File name: ANABDBP-101
Plot date: 07/30/2010
Plot scale: X:X

U.S. ARMY CORPS OF ENGINEERS
AFGHANISTAN ENGINEER DISTRICT
APO AE 96338

Michael Baker Jr., Inc
A unit of Michael Baker Corporation
Airside Business Park
100 Airside Drive
Moon Township PA 15108
www.mbakercorp.com

AFGHAN NATIONAL ARMY
STANDARD DESIGN

OPEN BARRACKS WITH LATRINE

FLOOR PLAN – PLUMBING (SANITARY AND VENT)

Sheet reference number:
P-101

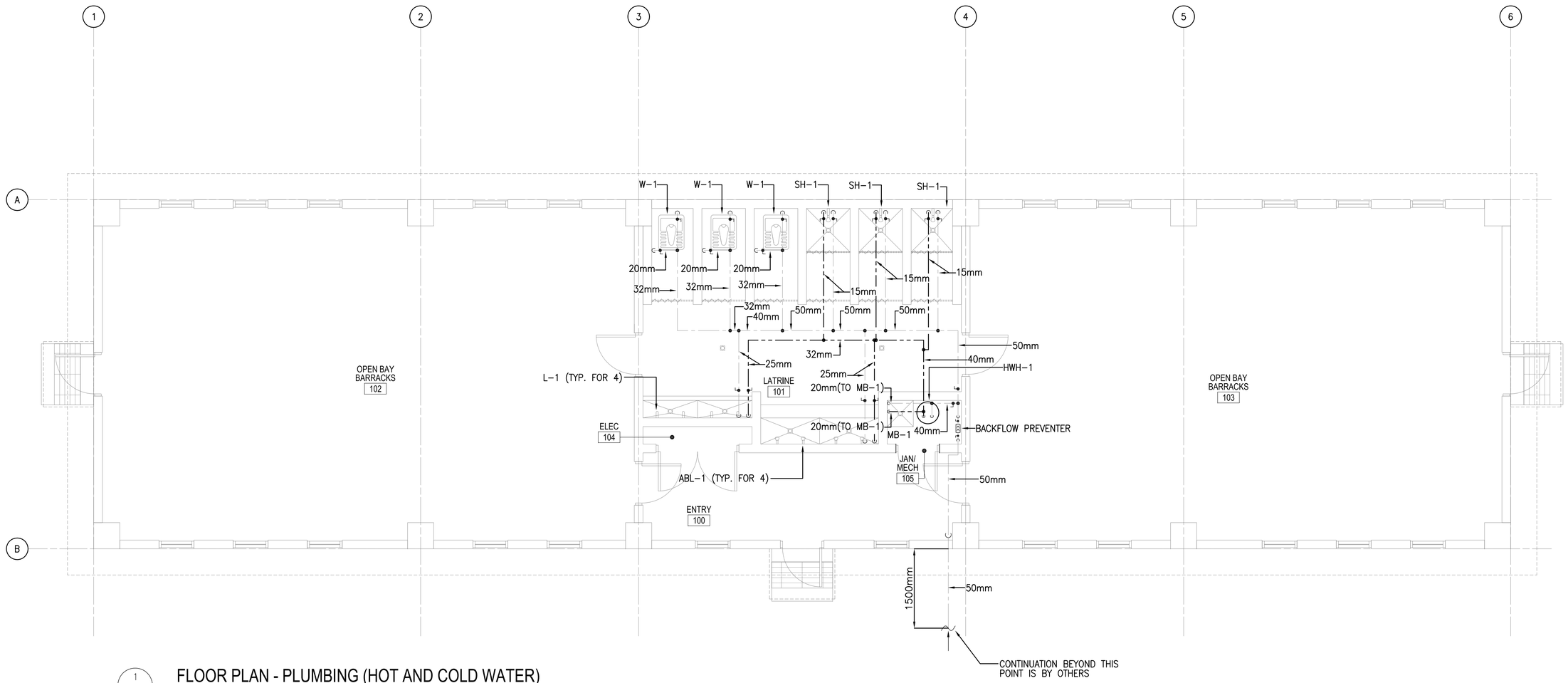

1 / P-102 FLOOR PLAN - PLUMBING (HOT AND COLD WATER)

SCALE: 1:50

FLOOR PLAN NOTES:

1. DO NOT SCALE DRAWINGS – ALL DIMENSIONS AND CONDITIONS SHALL BE CHECKED AND VERIFIED BY THE CONTRACTOR AT THE SITE.
2. ALL WORK PERFORM ON THIS BUILDING SHALL BE IN COMPLIANCE WITH ALL PERTINENT CODES, RULES, ORDINANCES AND REGULATIONS OF THE GOVERNING AUTHORITIES.
3. ALL WORK PERFORM ON UNDER AND IN CONNECTION WITH THESE DRAWINGS AND SPECIFICATIONS SHALL BE IN STRICT COMPLIANCE WITH THE LATEST SAFETY AND HEALTH STANDARDS.
4. REPORT ANY DISCREPANCIES FOUND IN THE PLUMBING DRAWINGS AND/OR IN THE SPECIFICATIONS DURING THE BIDDING PROCESS FOR CLARIFICATION BY THE ENGINEER.
5. ALL EASTERN STYLE WATER CLOSETS IN THIS FACILITY ARE TO HAVE THE FIXTURE DESIGNATION OF W-1. EACH FIXTURE SHALL HAVE A 25mm COLD WATER LINE AND A 100mm SANITARY CONNECTION.
6. ALL LAV (TROUGH) FIXTURES ARE TO HAVE THE FIXTURE DESIGNATION OF L-1. EACH FIXTURE SHALL HAVE A 15mm COLD WATER, 15mm HOT WATER CONNECTION AND A 80mm SANITARY CONNECTION.
7. ALL ABLUTION FIXTURES ARE TO HAVE THE FIXTURE DESIGNATION OF ABL-1. EACH FIXTURE SHALL HAVE A 15mm COLD WATER, 15mm HOT WATER CONNECTION AND A 80mm SANITARY CONNECTION.
8. ALL SHOWER FIXTURES ARE TO HAVE THE FIXTURE DESIGNATION OF SH-1. EACH FIXTURE SHALL HAVE A 15mm COLD WATER, 15mm HOT WATER CONNECTION AND A 80mm SANITARY CONNECTION.
9. ALL WATER, SANITARY AND VENT PIPING SHALL BE EXPOSED. RUN LINES TIGHT TO THE CEILING AND WALL.
10. REFER TO SHEETS P501 AND P502 FOR DETAILS.
11. ALL SANITARY BRANCH LINES SHALL BE SLOPED AT 6mm PER 0.3m, AND ALL MAIN LINES SHALL BE SLOPED AT 3mm PER 0.3m, UNLESS OTHERWISE NOTED OR AS REQUIRED BY THE LOCAL AUTHORITY HAVING JURISDICTION.

0 1000 2000
SCALE: 1:50

LINEAR DIMENSIONS SHOWN ARE IN MILLIMETERS (MM), UNLESS OTHERWISE NOTED

APPROVED:

A/E DESIGNER OF RECORD

SEAL:

COMMONWEALTH OF PENNSYLVANIA
REGISTERED PROFESSIONAL
MATTHEW R. SOTOSKY
ENGINEER
045576-E

US ARMY CORPS OF ENGINEERS
AFGHANISTAN ENGINEER DISTRICT

Mark	Description	Date	Appr.

Mark	Description	Date	Appr.

U.S. ARMY CORPS OF ENGINEERS
AFGHANISTAN ENGINEER DISTRICT
APO AE 96338

Michael Baker Jr., Inc
A unit of Michael Baker Corporation
Airside Business Park
100 Airside Drive
Moon Township, PA 15108
www.mbakercorp.com

Designed by: RHM
Dwn by: RMH
Ckd by: CJM
Reviewed by: CJM
Submitted by: BAKER
Date: 06/30/10
Rev: 0
Design file no.
Drawing code:
File name: ANMBGIP-102
Plot date: 07/30/2010
Plot scale: XX

AFGHAN NATIONAL ARMY
STANDARD DESIGN
OPEN BARRACKS WITH LATRINE

FLOOR PLAN – PLUMBING (WATER)

Sheet reference number:
P-102

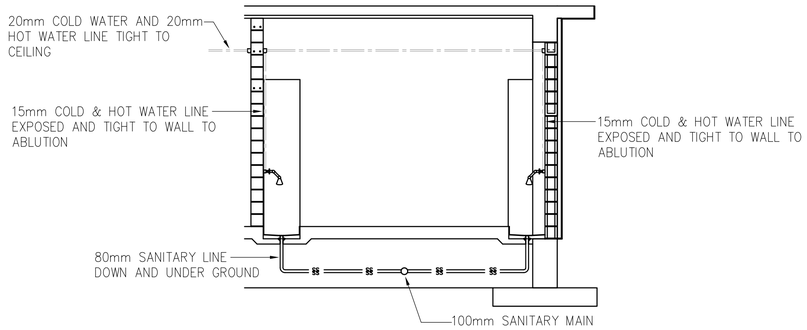

TYPICAL ABLUTION SANITARY & WATER INSTALLATION SCHEMATIC

1 / P-501 SCALE: N.T.S.

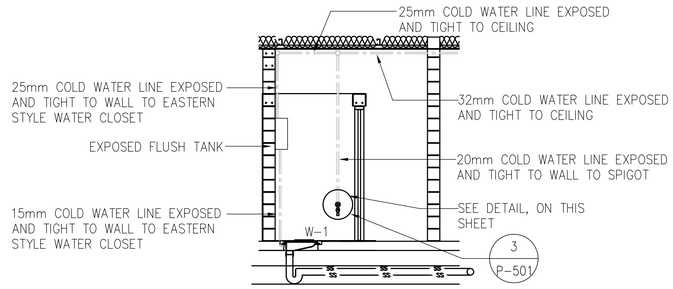

TYPICAL EASTERN STYLE WATER CLOSET SANITARY & WATER INSTALLATION SCHEMATIC

2 / P-501 SCALE: N.T.S.

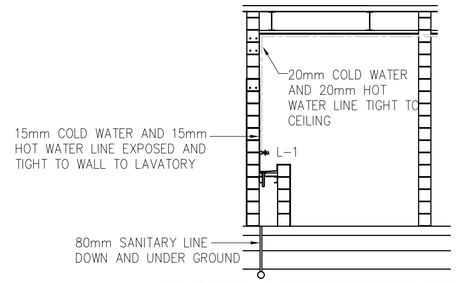

TYPICAL LAVATORY SANITARY & WATER INSTALLATION SCHEMATIC

3 / P-501 SCALE: N.T.S.

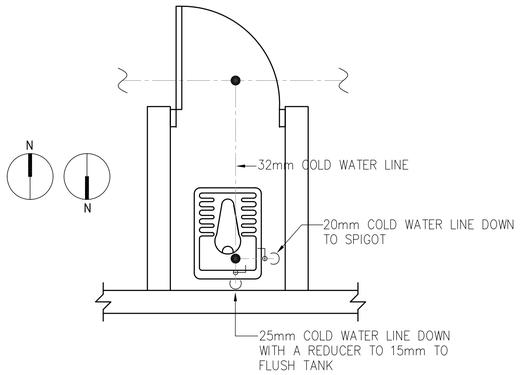

TYPICAL EASTERN STYLE WATER CLOSET WITH SPIGOT WATER PIPING DETAIL

4 / P-501 SCALE: N.T.S.

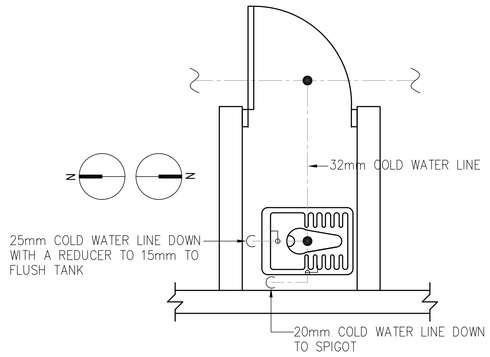

TYPICAL EASTERN STYLE WATER CLOSET WITH SPIGOT WATER PIPING DETAIL

5 / P-501 SCALE: N.T.S.

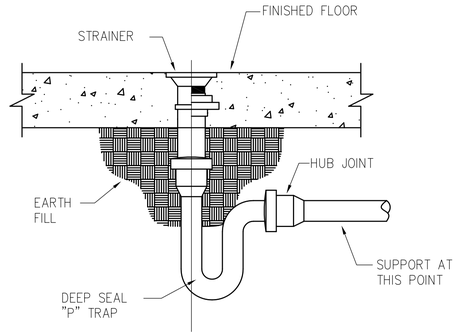

ALL FLOOR DRAINS SHALL HAVE DEEP SEAL TRAPS WITH A MINIMUM 4" WATER SEAL.

FLOOR DRAIN DETAIL

6 / P-501 SCALE: N.T.S.

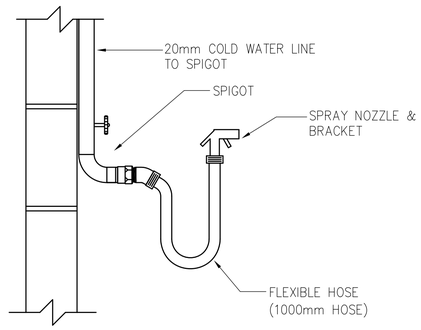

TYPICAL DETAIL - SPIGOT, FLEXIBLE HOSE, AND SPRAY NOZZLE

7 / P-501 SCALE: N.T.S.

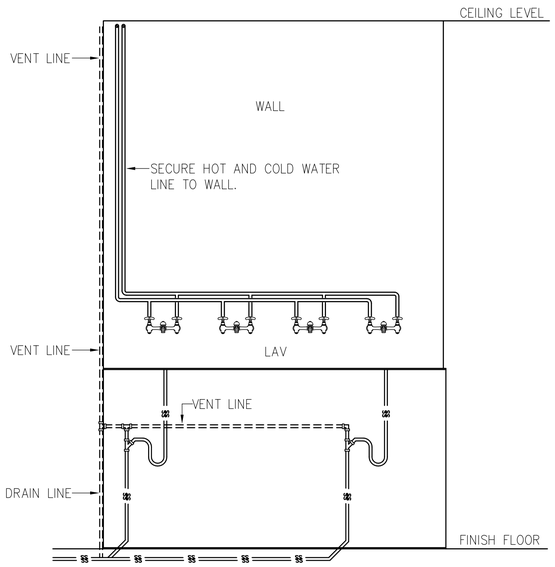

LAVATORY ELEVATION PLAN - PLUMBING

8 / P-501 SCALE: N.T.S.

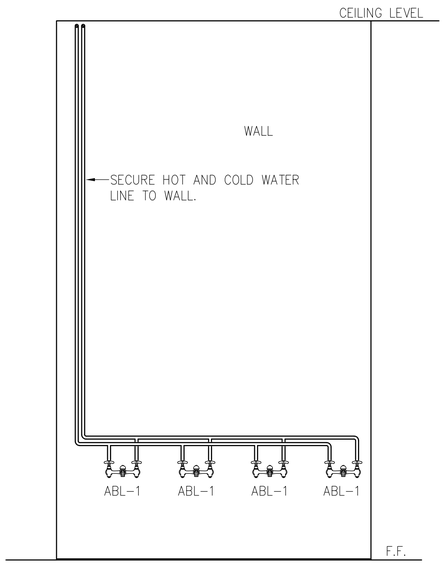

TYPICAL ABLUTION ELEVATION PLUMBING PLAN - WATER INSTALLATION SCHEMATIC

9 / P-501 SCALE: N.T.S.

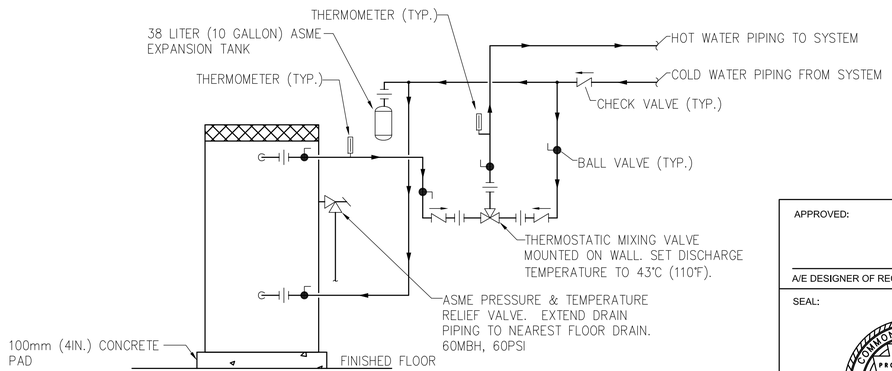

ELECTRIC WATER HEATER PIPING SCHEMATIC

10 / P-501 SCALE: N.T.S.

APPROVED:

A/E DESIGNER OF RECORD

SEAL:

COMMONWEALTH OF PENNSYLVANIA
REGISTERED PROFESSIONAL
MATTHEW R. SOTOSKY
ENGINEER
045576-E

US ARMY CORPS OF ENGINEERS
AFGHANISTAN ENGINEER DISTRICT

Mark	Description	Date	Appr.	Mark	Description	Date	Appr.

Designed by: RMH
Dwn by: RMH
Ckd by: CJM
Reviewed by: CJM
Submitted by:
Date: 06/30/10
Rev: 0
Design file no.
Drawing code:
File name: ANABGBP-501
Plot date: 07/30/2010
Plot scale: 1:100

U.S. ARMY CORPS OF ENGINEERS
AFGHANISTAN ENGINEER DISTRICT
APO AE 96338

Michael Baker Jr., Inc
A unit of Michael Baker Corporation
Airside Business Park
100 Airside Drive
Moon Township, PA 15108
www.mbakercorp.com

AFGHAN NATIONAL ARMY
STANDARD DESIGN

OPEN BARRACKS WITH LATRINE
PLUMBING DETAILS

Sheet reference number:
P-501

FIXTURE LIST

TYPE	ITEM	SOIL & WASTE	VENT	COLD WATER	HOT WATER	REMARKS	REMARKS 2
W-1	EASTERN STYLE WATER CLOSET	100mm	50mm	25mm	------	FLUSH VALVE	LOW FLOW EFFICIENT TYPE
L-1	TROUGH FIXTURE	40mm	40mm	15mm	15mm	FABRICATED IN FIELD	LOW FLOW EFFICIENT TYPE
ABL-1	ABLUTION	FLOOR DRAIN	------	15mm	15mm	FABRICATED IN FIELD	----------
SH-1	SHOWER	80mm	---	15mm	15mm	FABRICATED IN FIELD	----------
MB-1	MOP BASIN	80mm	---	20mm	20mm	----------	----------
HWH-1	WATER HEATER	---	---	SEE DWG.	SEE DWG.	303 LITER ELECTRIC WATER HEATER, 220/50/3, 6kW	----------
FD-1	FLOOR DRAIN	50mm	---	---	---	FINISH FLOOR SPACES	----------
FD-2	FLOOR DRAIN	50mm	---	---	---	MECHANICAL ROOMS AND JANITORS CLOSETS	----------

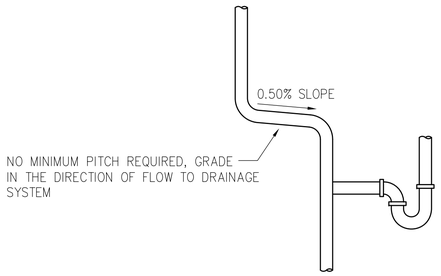

1 P-502 TYPICAL VENT SLOPE DETAILS
SCALE: N.T.S.

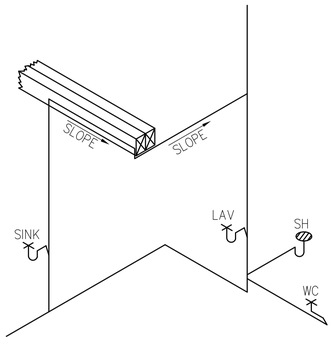

2 P-502 TYPICAL VENT SLOPE DETAILS
SCALE: N.T.S.

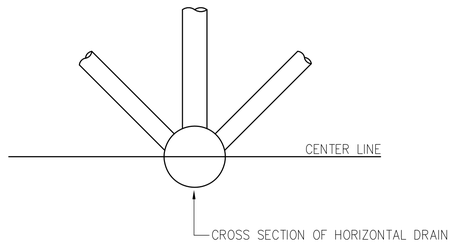

3 P-502 ACCEPTABLE VENT CONNECTIONS TO HORIZONTAL DRAIN - DETAIL
SCALE: N.T.S.

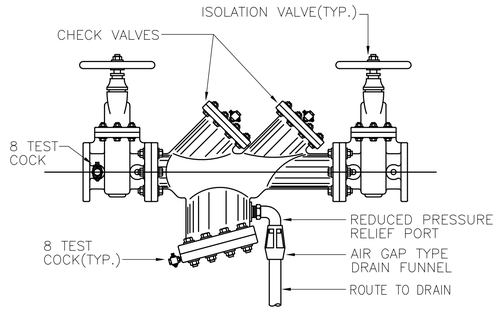

4 P-502 TYPICAL BACKFLOW PREVENTER DETAIL
SCALE: N.T.S.

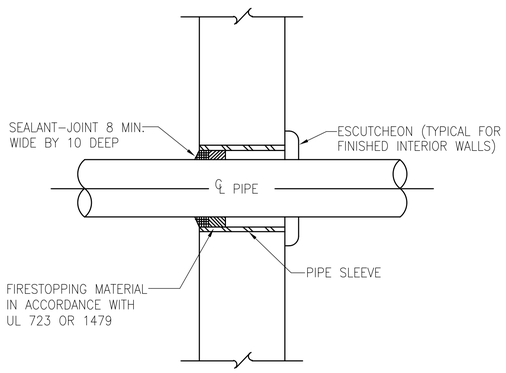

5 P-502 TYPICAL WALL PENETRATION DETAIL
SCALE: N.T.S.

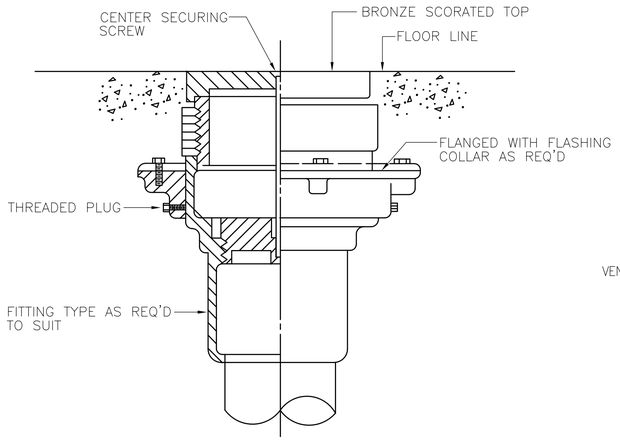

6 P-502 TYPICAL FLOOR CLEANOUT DETAIL
SCALE: N.T.S.

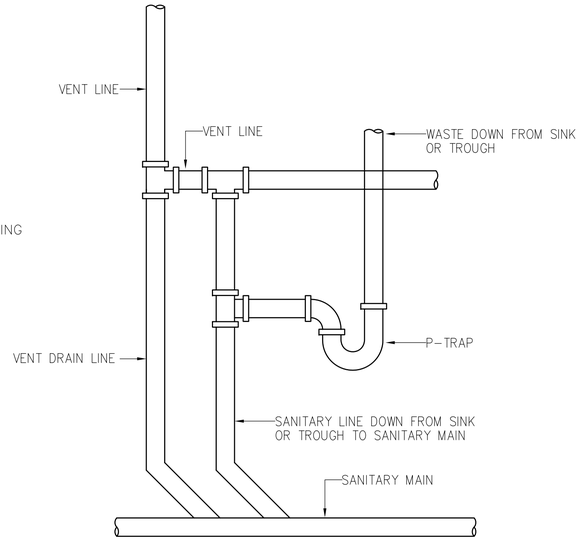

7 P-502 TYPICAL LAVATORY VENT DETAIL
SCALE: N.T.S.

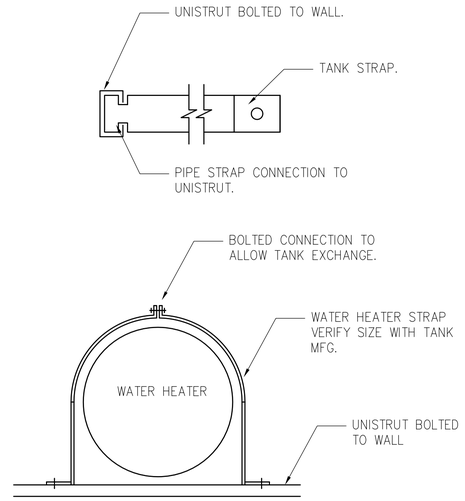

8 P-502 WATER HEATER SEISMIC SUPPORT DETAIL
SCALE: N.T.S.

APPROVED:

A/E DESIGNER OF RECORD

SEAL:

COMMONWEALTH OF PENNSYLVANIA
REGISTERED PROFESSIONAL
MATTHEW R. SOTOSKY
ENGINEER
045576-E

US ARMY CORPS OF ENGINEERS
AFGHANISTAN ENGINEER DISTRICT

Mark	Description	Date	Appr.	Mark	Description	Date	Appr.

Designed by: RMH
Dwn by: RMH
Ckd by: CJM
Reviewed by:
Submitted by: MRS
Date: 06/30/10
Rev: 0
Design file no.
Drawing code:
File name: ANABGBP-502
Plot date: 07/30/2010
Plot scale: 1:100

U.S. ARMY CORPS OF ENGINEERS
AFGHANISTAN ENGINEER DISTRICT
APO AE 96338

Michael Baker Jr., Inc.
A unit of Michael Baker Corporation
Airside Business Park
100 Airside Drive
Moon Township, PA 15108
www.mbakercorp.com

AFGHAN NATIONAL ARMY
STANDARD DESIGN

OPEN BARRACKS WITH LATRINE
PLUMBING DETAILS

Sheet reference number:
P-502

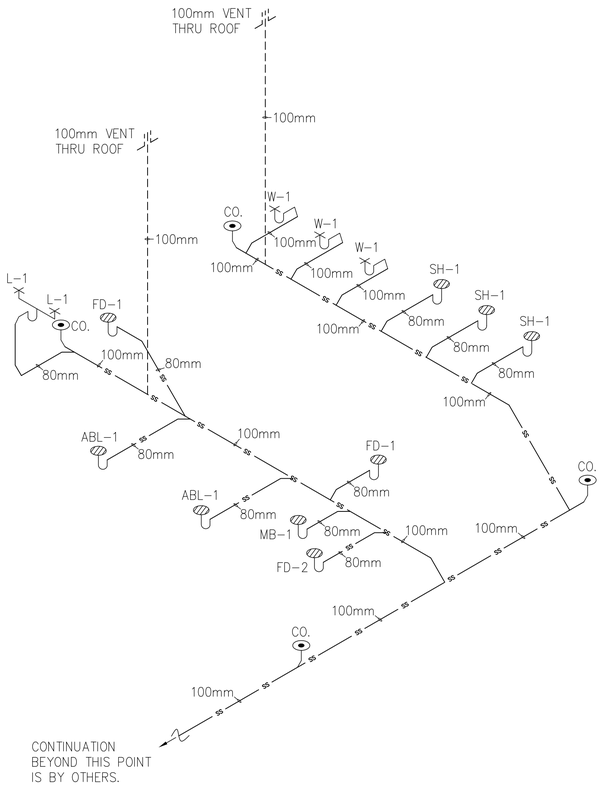

1 / P-901 OPEN BAY BARRACKS DRAINAGE ISOMETRIC

SCALE: N.T.S.

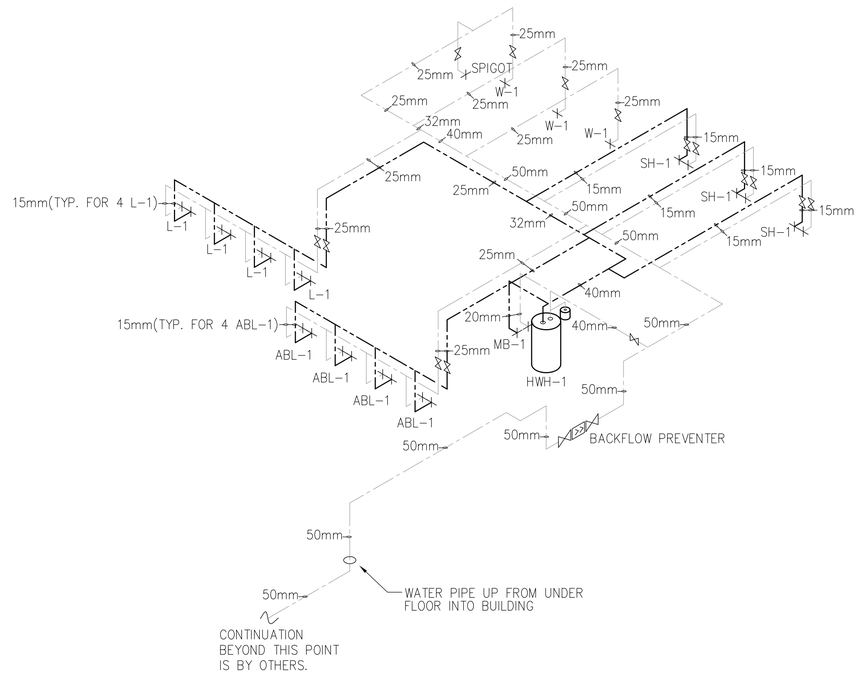

2 / P-901 OPEN BAY BARRACKS HOT AND COLD WATER ISOMETRIC

SCALE: N.T.S.

GENERAL PLUMBING NOTES:

1. CONTRACTOR TO REFER TO ARCHITECTURAL DRAWINGS FOR DETAIL OF VENT THRU ROOF AND RESPONSIBILITY OF VENT THRU ROOF.

PLUMBING SYMBOLS

- SANITARY SEWER PIPING (BELOW GROUND)
- SANITARY SEWER PIPING (ABOVE GROUND)
- VENT PIPING (V)
- COLD WATER PIPING (CW)
- HOT WATER PIPING (HW)
- BALL VALVE
- BACKFLOW PREVENTER
- OR — CLEANOUT (CO.)
- ROOF PENETRATION

APPROVED:

A/E DESIGNER OF RECORD

SEAL:

COMMONWEALTH OF PENNSYLVANIA
REGISTERED PROFESSIONAL
MATTHEW R. SOTOSKY
ENGINEER
045576-E

US ARMY CORPS OF ENGINEERS
AFGHANISTAN ENGINEER DISTRICT

Mark	Description	Date	Appr.	Mark	Description	Date	Appr.

Designed by: RMH
Dwn by: RMH
Ckd by: CJM
Reviewed by:
Submitted by: BAKER
Date: 06/30/10
Rev: 0
Design file no.
Drawing code:
File name: AMABQBP-001
Plot date: 07/30/2010
Plot scale: N.T.S.

U.S. ARMY CORPS OF ENGINEERS
AFGHANISTAN ENGINEER DISTRICT
APO AE 96338

Michael Baker Jr., Inc
A unit of Michael Baker Corporation
Airside Business Park
100 Airside Drive
Moon Township, PA 15108
www.mbakercorp.com

AFGHAN NATIONAL ARMY
STANDARD DESIGN

OPEN BARRACKS WITH LATRINE
PLUMBING ISOMETRICS

Sheet reference number:
P-901

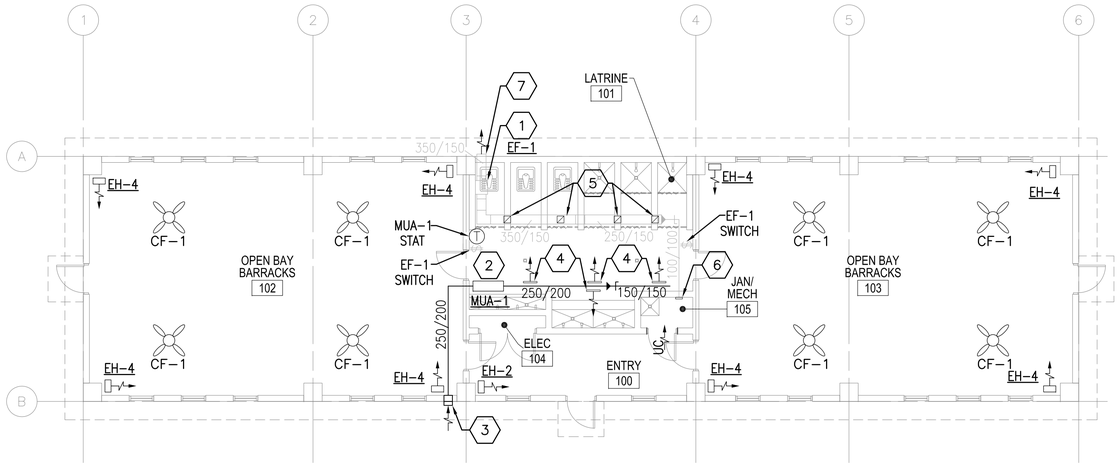

1 M-101 HVAC - FLOOR PLAN

SCALE: 1:100

EXHAUST FAN SCHEDULE

NO.	TYPE	FAN CMS	DRIVE	HP	SP mmH20	ELECTRICAL DATA	SWITCH
EF-1	INLINE	0.165	DIRECT	1/6	13	220/1/50	@ WALL

NOTES:
1. FANS SHALL HAVE LOW LEAKAGE GRAVITY LOUVER.
2. PROVIDE FAN WITH 3-WAY SWITCHING.

MAKE UP AIR HEATERS

NO.	BLOWER CMS	FUSE	KW	MIN. TEMP RISE °C	SP mmH20	ELECTRICAL DATA	CONTROL
MUA-1	0.142	30	5	20	13	220/1/50	REMOTE

NOTES:
1. PROVIDE REMOTE MOUNTED THERMOSTAT WITH LOCKING COVER.
2. INTERLOCK BLOWER OPERATION WITH EXHAUST FAN EF-1 & STAT.
3. PROVIDE AIR SENSING SWITCH FOR HEATING OPERATION.

ELECTRIC UNIT HEATER SCHEDULE

NO.	CMS	KW	F.A.T. °C	ELECT. CHAR.	MOUNTING
EH-2	0.200	2.6	38	220/1/50	WALL HUNG
EH-4	0.200	4	38	220/1/50	WALL HUNG

NOTES:
1. UNIT HEATERS SHALL HAVE TAMPER PROOF INTEGRAL STATS.
2. COORDINATE LOCATION AND ORIENTATION IN FIELD.

CEILING FAN

NO.	BLADE SIZE mm	BLADE SIZE IN	VOLTAGE	SWITCH	REMARKS
CF-1	1320	52	220/1/50	@ WALL	3 SPEED REVERSIBLE MOTOR

NOTES:
1 INSTALL FANS 2.5M AFF.
2. PROVIDE WITH OUT LIGHT FIXTURE.
3. PROVIDE WITH REMOTE MOUNTED ON-OFF SWITCH SHOWN ON ELECTRICAL DRAWINGS.

GENERAL NOTES:

1. DO NOT SCALE DRAWINGS – ALL DIMENSIONS AND CONDITIONS SHALL BE CHECKED AND VERIFIED BY THE CONTRACTOR AT THE SITE.
2. ALL WORK PERFORMED ON THIS BUILDING SHALL BE IN COMPLIANCE WITH ALL PERTINENT CODES, RULES, ORDINANCES AND REGULATIONS OF THE GOVERNING AUTHORITIES.
3. ALL WORK PERFORMED UNDER AND IN CONNECTION WITH THESE DRAWINGS AND SPECIFICATIONS SHALL BE IN STRICT COMPLIANCE WITH THE LATEST SAFETY AND HEALTH STANDARDS.

SYMBOLS:

- (X) KEY NOTE
- (0.050) AIR VOLUME IN CUBIC METERS PER SECOND (CMS)
- UC DOOR UNDERCUT 25mm
- TG 200x400 (8x16) TRANSFER GRILLE
- $ SINGLE POLE SWITCH FOR EXHAUST FAN – 20A RATED
- ELECTRIC HEATER
- CEILING FAN
- DIRECTION OF AIR FLOW

ABBREVIATIONS:

AFF	ABOVE FINISH FLOOR
CF	CEILING FANS
CMS	CUBIC METERS PER SECOND
EF	EXHAUST FAN
EH	ELECTRIC HEATER
MUA	MAKE UP AIR
STATS	THERMOSTATS

KEY NOTE:

1. INLINE EXHAUST FAN DUCTED TO WALL CAP WITH LOW LEAKAGE GRAVITY BACK-DRAFT DAMPER. SECURE FAN TO STRUCTURE ABOVE AND INTERLOCK WITH MAKE UP AIR HEATER.
2. ELECTRIC MAKE UP AIR HEATER SECURED TO STRUCTURE ABOVE. BLOWER SHALL BE SET TO ENERGIZE WITH EXHAUST FAN EF-1 & STAT, HEAT SHALL BE CONTROLLED BY STAT.
3. 300X300 (12X12) INTAKE LOUVER FOR MAKE UP AIR UNIT. PROVIDE WEATHER PROOF LOUVER WITH 50mm (2") WASHABLE FILTER AND SAND TRAP. PROVIDE 310x310 WALL ROUGH OPENING, VERIFY OPENING SIZE WITH ACTUAL PROVIDED LOUVER.
4. 200x100 (8x4) ALUMINUM DUCT MOUNTED SUPPLY GRILLE WITH ADJUSTABLE OPPOSED BLADE DAMPERS. BALANCE EACH GRILLE TO 0.0355 CMS.
5. 150x150 (6x6) ALUMINUM DUCT MOUNTED EXHAUST GRILLE WITH ADJUSTABLE OPPOSED BLADE DAMPERS. BALANCE EACH GRILLE TO 0.0375 CMS.
6. 100x100 (4x4) ALUMINUM WALL MOUNTED EXHAUST GRILLE WITH ADJUSTABLE OPPOSED BLADE DAMPERS. BALANCE GRILLE TO 0.015 CMS.
7. 400x200 GRILLE, PROVIDE 360x160 WALL ROUGH OPENING FOR DUCT PENETRATION.

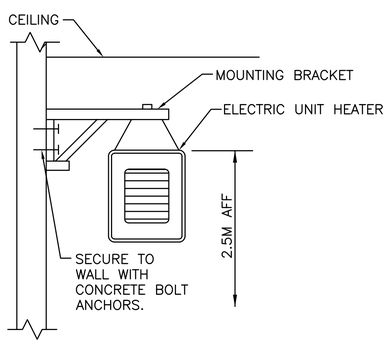

2 M-101 ELECTRIC UNIT HEATER MOUNTING DETAIL
N.T.S.

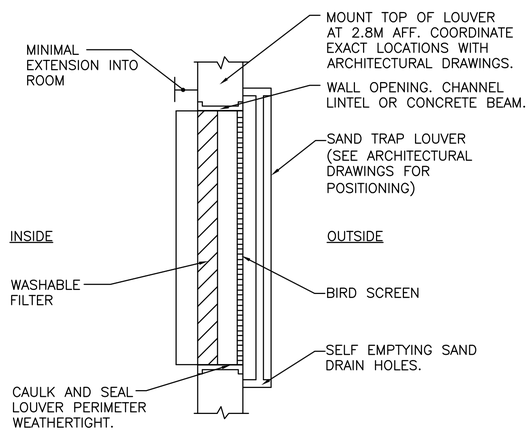

3 M-101 FILTERED SAND TRAP LOUVER
N.T.S.

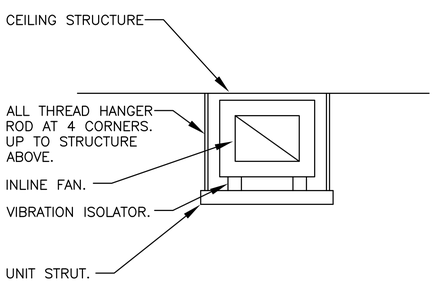

4 M-101 INLINE FAN SUPPORT DETAIL
N.T.S.

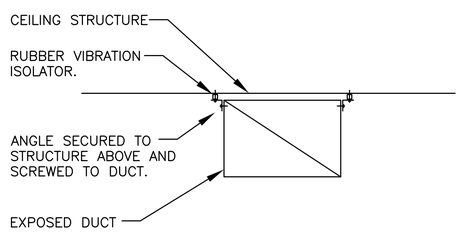

5 M-101 EXPOSED DUCT SUPPORT DETAIL
N.T.S.

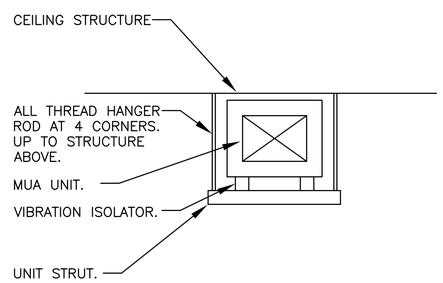

6 M-101 MAKE UP AIR UNIT SUPPORT DETAIL
N.T.S.

LINEAR DIMENSIONS SHOWN ARE IN MILLIMETERS (MM), UNLESS OTHERWISE NOTED

0 2000 4000
SCALE: 1:100

APPROVED:

A/E DESIGNER OF RECORD

SEAL:

COMMONWEALTH OF PENNSYLVANIA
REGISTERED PROFESSIONAL
MATTHEW R. SOTOSKY
ENGINEER
045576-E

US ARMY CORPS OF ENGINEERS
AFGHANISTAN ENGINEER DISTRICT

Mark	Description	Date	Appr.

Mark	Description	Date	Appr.

U.S. ARMY CORPS OF ENGINEERS
AFGHANISTAN ENGINEER DISTRICT
APO AE 96338

Michael Baker Jr., Inc
A unit of Michael Baker Corporation
Airside Business Park
100 Airside Drive
Moon Township, PA 15108
www.mbakercorp.com

Designed by: RML
Dwn by: JJN
Ckd by: CJM
Reviewed by: MRS
Submitted by: BAKER
Date: 06/30/10
Rev: 0
Drawing code:
Design file no.
File name: AMA903M-101
Plot date: 07/30/2010
Plot scale: XX

AFGHAN NATIONAL ARMY
STANDARD DESIGN
OPEN BARRACKS WITH LATRINE

HVAC FLOOR PLAN

Sheet reference number:
M-101

POWER

- DISTRIBUTION PANELBOARD
- NEW PANELBOARD - SURFACE
- NEW PANELBOARD - RECESSED
- GENERATOR
- TRANSFORMER (DRAWN TO SIZE)
- JUNCTION BOX
- JUNCTION BOX - CEILING
- FUSIBLE SAFETY SWITCH
- MOTOR
- M — MOTOR STARTING SWITCH - 220V, 20A RATED UNLESS OTHERWISE NOTED
- ELECTRIC WATER HEATER
- CEILING FAN - REFER TO SPECIFICATION SECTION 26 20 00

RECEPTACLES

- DUPLEX 20A TYPE CEE 7/7 "SCHUKO STYLE" UNSWITCHED RECEPTACLE
- GF — DUPLEX 20A TYPE CEE 7/7 "SCHUKO STYLE" UNSWITCHED RECEPTACLES - 10mA GROUND FAULT INTERRUPTER TYPE
- WP — DUPLEX 20A TYPE CEE 7/7 "SCHUKO STYLE" UNSWITCHED TYPE WITH WEATHERPROOF COVER - 10mA GROUND FAULT INTERRUPTER TYPE
- EXP — DUPLEX 20A TYPE CEE 7/7 "SCHUKO STYLE" UNSWITCHED RECEPTACLES - EXPLOSION PROOF
- * — INDICATES MOUNT DEVICE ABOVE COUNTERTOP OR AT 1070mm ABOVE FINISHED FLOOR WHERE NO COUNTER IS TO BE INSTALLED.

LIGHTNING PROTECTION

- AIR TERMINAL 20mm O.D. X 450mm SOLID COPPER, NICKEL PLATED ON ADHESIVE BASE
- EQ — EQUIPMENT AIR TERMINAL
- TEST WELL WITH GROUND ROD(S)
- GROUND ROD
- G — GROUND PLATE
- G — MAIN GROUND CONDUCTOR CONCEALED WITHIN CONSTRUCTION
- G — MAIN GROUND CONDUCTOR EXPOSED ON EXPOSED ON BUILDING EXTERIOR SURFACE
- G — GROUND CONDUCTOR CAD WELDED TO GROUND CABLE OR EQUIPMENT
- G — GROUND ROD TRIPOD, SPACED 3 METERS APART.
- LEVEL TO LEVEL CABLE

LIGHTING

- LIGHTING FIXTURE - SEE FIXTURE SCHEDULE FOR MORE INFORMATION
- EMERGENCY LIGHTING FIXTURE - SEE FIXTURE SCHEDULE FOR MORE INFORMATION
- DOWNLIGHT
- LIGHTING FIXTURE ON NORMAL/EMERGENCY
- WALL MOUNTED LIGHT FIXTURE
- E — EXIT SIGN - DIRECTIONAL ARROWS AS INDICATED ON DRAWINGS
- REMOTE HEAD FOR BATTERY PACK
- $ — SINGLE POLE SWITCH - 20A RATED
- $3 — 3-WAY SWITCH - 20A RATED
- $4 — 4-WAY SWITCH - 20A RATED
- LC — LIGHTING CONTACTOR
- POLE MOUNTED SITE LIGHTING FIXTURE- NUMBER OF FIXTURES PER POLE AS INDICATED ON DRAWINGS
- EXTERIOR DIRECTIONAL LIGHTING FIXTURE
- a — SMALL CASE LETTERS REPRESENTS LAMP(S) / SWITCHES.

TELECOMMUNICATIONS

- ▼ — TELEPHONE OUTLET(S) @ 45cm AFF. U.N.O. WITH 20mm RACEWAY TERMINATED TO TELEDATA TERMINAL BOARD.
- ▽ — DATA OUTLET(S) @ 45cm AFF. U.N.O. WITH 20mm RACEWAY TERMINATED TO TELEDATA TERMINAL BOARD.

TELECOMMUNICATIONS (CONTINUED)

- ▼▽ — COMBINATION TELEPHONE/DATA OUTLET(S) @ 45cm AFF. U.N.O. WITH 27mm RACEWAY TERMINATED TO TELEDATA TERMINAL BOARD.
- W▼ — WALL MTD. TELEPHONE OUTLET WITH 20mm RACEWAY TO TELEDATA TERMINAL BOARD.
- (x)T — INDICATES NUMBER OF TELEPHONE OUTLET(S) AND ASSOCIATED CABLING
- (x)D — INDICATES NUMBER OF DATA OUTLET(S) AND ASSOCIATED CABLING
- (x)TF — INDICATES NUMBER OF TELEPHONE OUTLETS AND ASSOCIATED CABLING WITH 1 OUTLET AND CABLE DEDICATED FOR FAX

SINGLE LINE SYMBOLS

- SWITCH
- BREAKER
- FUSE
- TRANSFORMER
- GROUND
- CONTACT (NORMALLY OPEN)
- CONTACT (NORMALLY CLOSED)
- TRANSFER SWITCH
- CURRENT TRANSFORMER
- INDICATES NEW ELECTRICAL EQUIPMENT
- C — INDICATES NEW CONTROL WIRING AND CONDUIT
- EQUIPMENT OUTLINE

MISCELLANEOUS

- BRANCH CIRCUIT WIRING, SURFACE MOUNTED ON WALLS
- BRANCH CIRCUIT WIRING - 6mm²
- BRANCH CIRCUIT WIRING - UNDER FLOOR
- HOME RUN BACK TO PANEL
- CONDUIT TURNED DOWN
- CONDUIT TURNED UP
- LV — LOW VOLTAGE WIRING AND CONDUIT
- INDICATES CONTINUATION OF LINE

FIRE ALARM

- FACP — FIRE ALARM CONTROL PANEL WITH BATTERY BACKUP
- F — FIRE ALARM PULL STATION

FIRE ALARM (CONTINUED)

- F — FIRE ALARM STROBE - WALL MOUNTED
- F — FIRE ALARM AUDIBLE/STROBE - WALL MOUNTED
- F — FIRE ALARM HORN/STROBE - WALL MOUNTED
- S — SMOKE DETECTOR
- H — HEAT DETECTOR CEILING MOUNTED
- D — DUCT DETECTOR - PROVIDED BY EC, INSTALLED BY MC AND CONNECTED BY EC

DENOTATIONS & ABBREVIATIONS

AFF	ABOVE FINISHED FLOOR
C	CEILING MOUNTED
E	EMERGENCY
EC	ELECTRICAL CONTRACTOR
EPO	EMERGENCY POWER OFF
EXP	EXPLOSION PROOF
F	FIRE ALARM
FF	FLUSH FLOOR MOUNTED
FL	FLUORESCENT
FO	FIBER OPTIC
FSS	FUSED SAFETY SWITCH
GF	GROUND FAULT INTERRUPTER
GC	GENERAL CONTRACTOR
IG	ISOLATED GROUND
K	KEY
LV	LOW VOLTAGE
M	MOTOR
MC	MECHANICAL CONTRACTOR
NE	NORMAL/EMERGENCY
NFSS	NON-FUSED SAFETY SWITCH
PA	PAGING SYSTEM
PLC	PLUMBING CONTRACTOR
SL	SINGLE LINE
T	TELEPHONE

DENOTATIONS & ABBREVIATIONS (CONT.)

TP	TAMPER PROOF
UE	UNDERGROUND ELECTRIC
W	WALL MOUNTED
WP	WEATHERPROOF WITH GROUND FAULT INTERRUPTION
WT	WATER TIGHT

GENERAL PROJECT NOTES:

G1. UNLESS OTHERWISE NOTED, PROVIDE ALL EQUIPMENT SHOWN ON THE PLANS. THE ELECTRICAL CONTRACTOR SHALL COORDINATE ALL SYMBOLS SHOWN ON THE PLANS WITH THE SYMBOL LIST. IT SHALL BE THE RESPONSIBILITY OF THE CONTRACTOR TO VERIFY THE INTENT OF ANY SYMBOL THAT IS SHOWN ON THE PLANS AND NOT INDICATED ON THE SYMBOL LIST WITH THE ENGINEER PRIOR TO BID.

G2. THE CONTRACTOR SHALL VERIFY THE LOCATION OF ALL UNDERGROUND UTILITIES WITHIN THE CONSTRUCTION AREA THREE (3) WORKING DAYS NOTICE BEFORE COMMENCING DIGGING. NOTIFY THE LOCAL AUTHORITY HAVING JURISDICTION AND WAIT THE REQUIRED TIME BEFORE COMMENCING TO DIG.

G3. THE CONTRACTOR SHALL COORDINATE CONDUIT RUNS, LIGHTING FIXTURES AND OTHER EQUIPMENT LOCATIONS WITH THE OTHER TRADE CONTRACTORS TO AVOID CONFLICTS.

G4. WHERE VOLTAGES AND FREQUENCIES ON THE DRAWINGS AND IN THE SPECIFICATIONS DIFFER FROM THE LOCAL ONES, ALL WORK SHALL BE PERFORMED USING THE LOCAL VOLTAGES AND FREQUENCIES.

G5. THE MINIMUM WIRE SIZE ON THE PROJECT SHALL BE 4mm². THE MINIMUM CONDUIT SIZE SHALL BE 20mm. THE MINIMUM BREAKER SIZE SHALL BE 20 AMPS.

G6. THE CONTRACTOR SHALL PUT A MAXIMUM OF 6 DUPLEX RECEPTACLES ON A 20A SINGLE POLE CIRCUIT.

G7. WHERE THE 1010 SCOPE REVIEW, 1015 TECHNICAL REVIEW, DRAWINGS, AND SPECIFICATIONS DIFFER FROM AMERICAN CODES OR STANDARDS, THE 1010, 1015, DRAWINGS, AND SPECIFICATIONS SHALL RULE.

G8. ALL CONDUIT AND DEVICES SHALL BE SURFACE MOUNTED UNLESS OTHERWISE INDICATED.

G9. CONTRACTOR SHALL COORDINATE ALL WORK WITH ALL OTHER TRADES TO ENSURE ALL WORK IS COMPLETED IN A PROFESSIONAL, WORKMAN-LIKE MANNER.

APPROVED:

A/E DESIGNER OF RECORD

SEAL:

COMMONWEALTH OF PENNSYLVANIA
REGISTERED PROFESSIONAL ENGINEER
JOSEPH R. GAUS
PE-074251

US ARMY CORPS OF ENGINEERS
AFGHANISTAN ENGINEER DISTRICT

Mark	Description	Date	Appr.	Mark	Description	Date	Appr.

Date: 08/23/10
Rev: 0
Design file no.
Drawing code:
File name: ANA8OB-E-001
Plot date: 8/24/2010
Plot scale: X:X

Designed by: ALF
Dwn by: BJB
Ckd by: JRG
Reviewed by: MRS
Submitted by: BAKER

U.S. ARMY CORPS OF ENGINEERS
AFGHANISTAN ENGINEER DISTRICT
APO AE 96338

Michael Baker Jr., Inc.
A unit of Michael Baker Corporation
Airside Business Park
100 Airside Drive
Moon Township, PA 15108
www.mbakercorp.com

AFGHAN NATIONAL ARMY
STANDARD DESIGN

OPEN BARRACKS WITH LATRINE

ELECTRICAL – SYMBOLS, NOTES, AND ABBREVIATIONS

Sheet reference number:
E-001

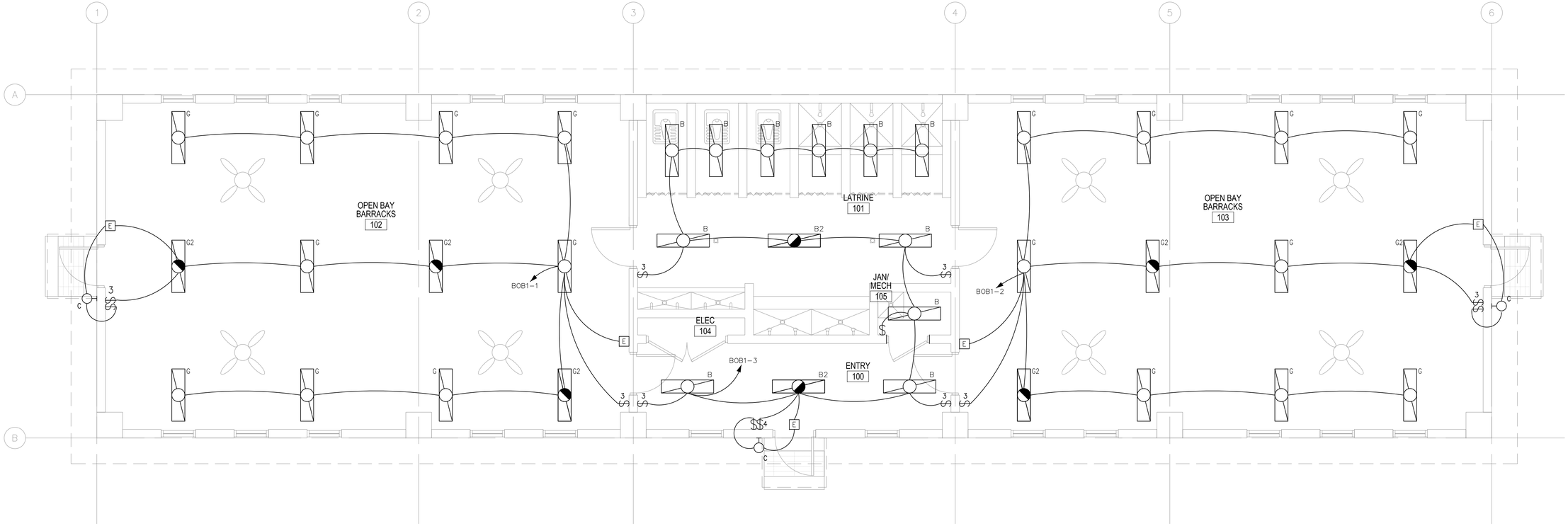

1 / E-101 ELECTRICAL LIGHTING PLAN

SCALE: 1:100

GENERAL NOTES:

1. REFER TO DRAWING #E-001 FOR THE ELECTRICAL SYMBOLS LIST.
2. REFER TO DRAWING #E-501 FOR THE POWER RISER.
3. REFER TO DRAWING #E-602 FOR PANEL SCHEDULES.
4. COORDINATE EXACT MOUNTING LOCATION OF DISCONNECTING MEANS FOR MECHANICAL AND PLUMBING EQUIPMENT IN THE FIELD.
5. FUSIBLE SAFETY SWITCHES THAT ARE NOT OTHERWISE IDENTIFIED SHALL BE 220V, 1P, 30A FUSED SAFETY SWITCHES WITH 20A FUSES.
6. LIGHT FIXTURES INDICATED AS EMERGENCY SHALL BE PROVIDED WITH A BATTERY BACK UP BALLAST. SEE WIRING DIAGRAM DETAIL 3 ON DRAWING #E-501.

LINEAR DIMENSIONS SHOWN ARE IN MILLIMETERS (MM), UNLESS OTHERWISE NOTED

0 2000 4000
SCALE: 1:100

APPROVED:

A/E DESIGNER OF RECORD

SEAL:

COMMONWEALTH OF PENNSYLVANIA
REGISTERED PROFESSIONAL ENGINEER
JOSEPH R. GAUS
8/24/2010
PE-074251

US ARMY CORPS OF ENGINEERS
AFGHANISTAN ENGINEER DISTRICT

Mark	Description	Date	Appr.	Mark	Description	Date	Appr.

Date: 08/23/10
Rev: 0
Design file no.
Drawing code:
File name: ANA8OB-E-101
Plot date: 8/24/2010
Plot scale: 1:100

Designed by: ALF
Dwn by: BJB
Ckd by: JRG
Reviewed by: MRS
Submitted by: BAKER

U.S. ARMY CORPS OF ENGINEERS
AFGHANISTAN ENGINEER DISTRICT
APO AE 96338

Michael Baker Jr., Inc.
A unit of Michael Baker Corporation
Airside Business Park
100 Airside Drive
Moon Township, PA 15108
www.mbakercorp.com

AFGHAN NATIONAL ARMY STANDARD DESIGN

OPEN BARRACKS WITH LATRINE

ELECTRICAL – LIGHTING PLAN

Sheet reference number:
E-101

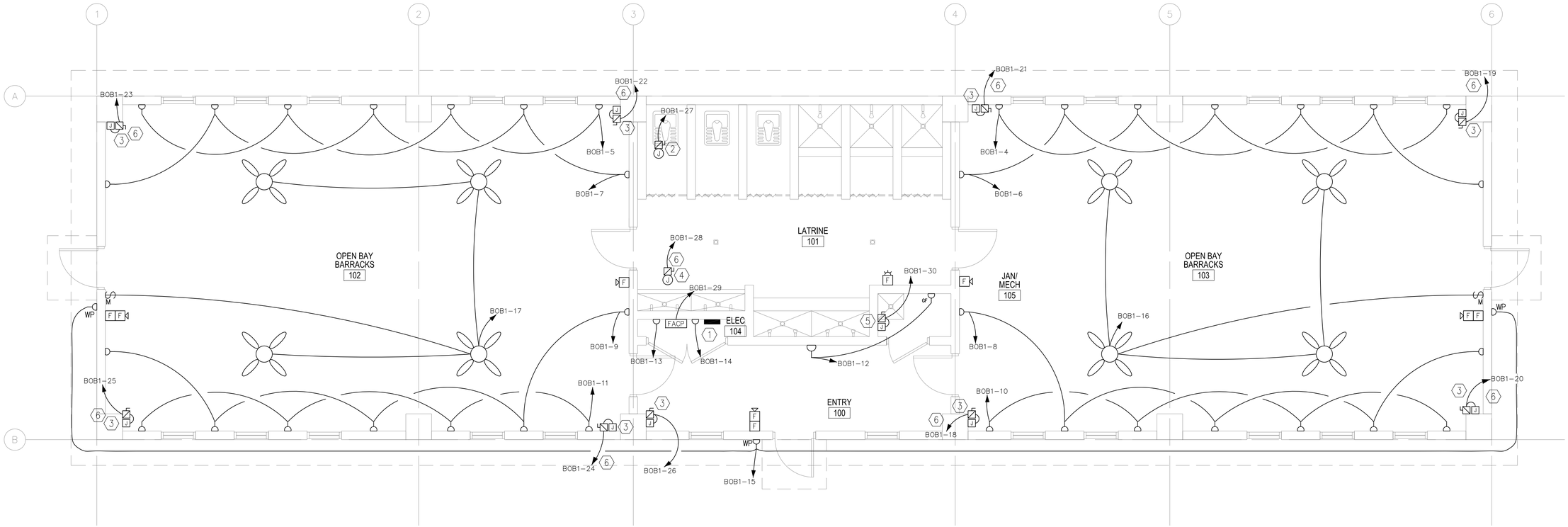

1 / E-102 ELECTRICAL POWER AND SYSTEMS PLAN

SCALE: 1:50

NUMBERED NOTES:

1. PANEL BOB1.
2. PROVIDE POWER CONNECTION TO EXHAUST FANS. SEE DRAWINGS #M-101 AND #E-601 FOR MORE INFORMATION.
3. PROVIDE POWER CONNECTION TO ELECTRIC UNIT HEATER. SEE DRAWINGS #M-101 AND #E-601 FOR MORE INFORMATION.
4. PROVIDE POWER CONNECTION TO MAKE UP AIR UNIT. SEE DRAWINGS #M-101 AND #E-601 FOR MORE INFORMATION.
5. PROVIDE POWER CONNECTION TO ELECTRIC WATER HEATER. SEE DRAWINGS #P-501 AND #E-602 FOR MORE INFORMATION. PROVIDE 220V, 1PH, 30A FUSED SAFETY SWITCH WITH 30A FUSES.
6. PROVIDE 220V, 1PH, 30A FUSED SAFETY SWITCH WITH 30A FUSES.

GENERAL NOTES:

1. REFER TO DRAWING #E-001 FOR THE ELECTRICAL SYMBOLS LIST.
2. REFER TO DRAWING #E-501 FOR THE POWER RISER.
3. REFER TO DRAWING #E-602 AND #E-603 FOR PANEL SCHEDULES.
4. COORDINATE EXACT MOUNTING LOCATION OF DISCONNECTING MEANS FOR MECHANICAL AND PLUMBING EQUIPMENT IN THE FIELD.
5. FUSIBLE SAFETY SWITCHES THAT ARE NOT OTHERWISE IDENTIFIED SHALL BE 220V, 1P, 30A FUSED SAFETY SWITCHES WITH 30A FUSES.
6. LIGHT FIXTURES INDICATED AS EMERGENCY SHALL BE PROVIDED WITH A BATTERY BACK UP BALLAST. SEE WIRING DIAGRAM DETAIL 7 ON DRAWING #E-501.

LINEAR DIMENSIONS SHOWN ARE IN MILLIMETERS (MM), UNLESS OTHERWISE NOTED

0 1000 2000
SCALE: 1:50

APPROVED:

A/E DESIGNER OF RECORD

SEAL:

COMMONWEALTH OF PENNSYLVANIA
REGISTERED PROFESSIONAL
JOSEPH R. GAUS
8/24/2010
ENGINEER
PE-074251

US ARMY CORPS OF ENGINEERS
AFGHANISTAN ENGINEER DISTRICT

Mark	Description	Date	Appr.	Mark	Description	Date	Appr.

Date: 08/23/10
Rev: 0
Design file no.
Drawing code:
File name: ANABOB-E-102
Plot date: 8/24/2010
Plot scale: 1:50

Designed by: RML
Dwn by: JJN
Ckd by: CJM
Reviewed by: MRS
Submitted by: BAKER

U.S. ARMY CORPS OF ENGINEERS
AFGHANISTAN ENGINEER DISTRICT
APO AE 96338

Michael Baker Jr., Inc.
A unit of Michael Baker Corporation
Airside Business Park
100 Airside Drive
Moon Township, PA 15108
www.mbakercorp.com

AFGHAN NATIONAL ARMY STANDARD DESIGN

OPEN BARRACKS WITH LATRINE

ELECTRICAL – POWER PLAN

Sheet reference number:
E-102

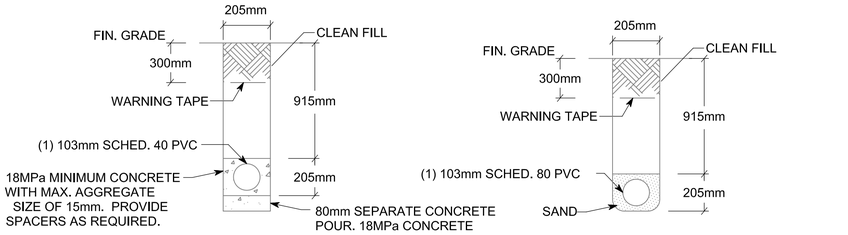

NOTE: PVC CONDUIT SHALL BE DIRECT BURIED SCHEDULE 80 FOR NO TRAFFIC AREAS AND CONCRETE-ENCASED SCHEDULE 40 FOR UNDER ROADWAYS OR TRAFFIC AREAS.

1 / E-501 TYPICAL DUCT BANK DETAILS FOR CONDUIT IN SAND OR CONCRETE

SCALE: N.T.S.

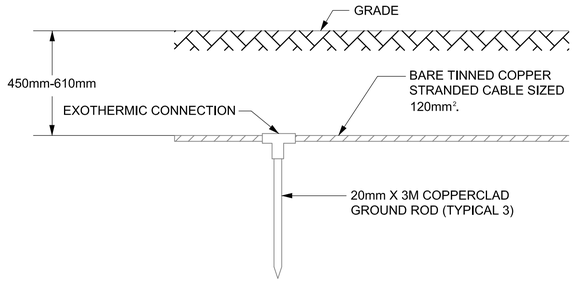

2 / E-501 GROUND TRIPOD SYSTEM DETAIL - ELEVATION

SCALE: N.T.S.

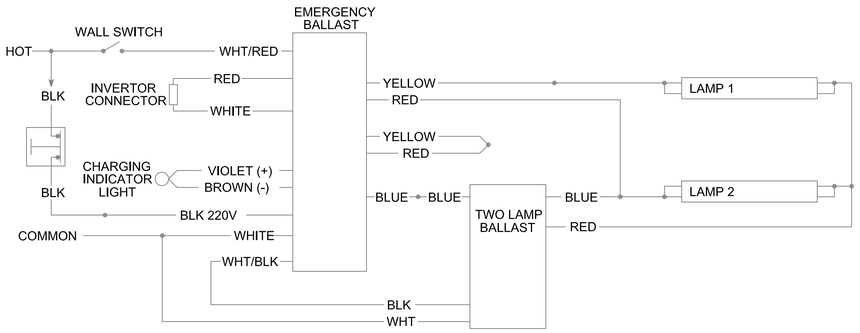

3 / E-501 EMERGENCY FIXTURE WIRING DIAGRAM

SCALE: N.T.S.

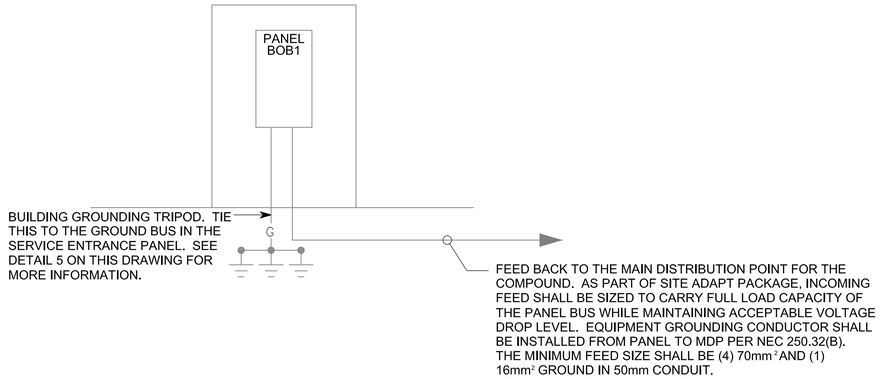

4 / E-501 OPEN BARRACKS RISER DIAGRAM

SCALE: N.T.S.

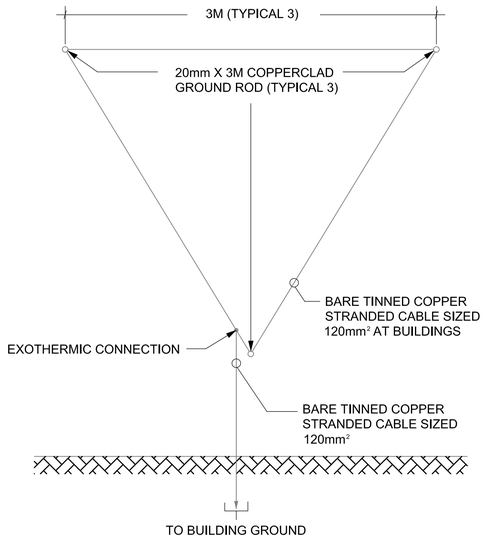

5 / E-501 GROUND TRIPOD SYSTEM DETAIL - PLAN

SCALE: N.T.S.

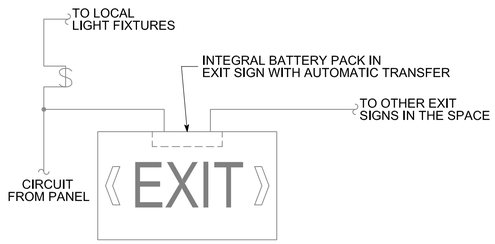

6 / E-501 EXIT SIGN WIRING DIAGRAM

SCALE: N.T.S.

APPROVED:

A/E DESIGNER OF RECORD

SEAL:

COMMONWEALTH OF PENNSYLVANIA
REGISTERED PROFESSIONAL ENGINEER
JOSEPH R. GAUS
PE-074251

US ARMY CORPS OF ENGINEERS
AFGHANISTAN ENGINEER DISTRICT

Mark	Description	Date	Appr.	Mark	Description	Date	Appr.

Rev: 0
Date: 08/23/10
Design file no.
Drawing code:
File name: ANABOB-E-501
Plot date: 8/24/2010
Plot scale: 1:100

Designed by: ALF
Dwn by: BJB
Ckd by: JRG
Reviewed by: MRS
Submitted by: BAKER

U.S. ARMY CORPS OF ENGINEERS
AFGHANISTAN ENGINEER DISTRICT
APO AE 96338

Michael Baker Jr., Inc.
A unit of Michael Baker Corporation
Airside Business Park
100 Airside Drive
Moon Township, PA 15108
www.mbakercorp.com

AFGHAN NATIONAL ARMY STANDARD DESIGN

OPEN BARRACKS WITH LATRINE

ELECTRICAL - DETAILS

Sheet reference number:
E-501

(A) LARGER OF THE TWO SIZES GIVEN IN THE TABLES BELOW	
GROUNDING ELECTRODE CONDUCTOR (BASED ON AIC RATING)	
AIC RATING OF SERVICE EQUIPMENT	NECESSARY GROUNDING ELECTRODE CONDUCTOR SIZE
10K	(1) 35mm²
14K	(1) 50mm²
18K	(1) 70mm²
22K	(1) 70mm²
25K	(1) 70mm²
30K	(1) 95mm²
35K	(1) 120mm²
42K	(1) 150mm²
65K	(1) 185mm²
100K	(1) 300mm²
125K	(2) 185mm²
200K	(2) 300mm²
GROUNDING ELECTRODE CONDUCTOR (BASED ON NEC TABLE 250.66)	
SIZE OF LARGEST UNGROUNDED SERVICE CONDUCTOR OR EQUIVALENT AREA FOR PARALLEL CONDUCTORS	NECESSARY GROUNDING ELECTRODE CONDUCTOR SIZE
185mm² OR SMALLER	35mm²
OVER 185mm² TO 300mm²	70mm²
OVER 300mm² TO 630mm²	70mm²
OVER 630mm²	95mm²

NOTE: ALL SIZES ARE BASED ON COPPER CONDUCTORS.

(B) EQUIPMENT GROUNDING CONDUCTOR	
RATING OR SETTING OF AUTOMATIC OVERCURRENT DEVICE IN CIRCUIT AHEAD OF EQUIPMENT, CONDUIT, ETC. NOT EXCEEDING (AMPERES)	NECESSARY EQUIPMENT GROUNDING CONDUCTOR SIZE
15	4.0mm²
20	4.0mm²
30	6.0mm²
40	6.0mm²
60	6.0mm²
100	10mm²
200	16mm²
300	25mm²
400	25mm²
500	35mm²
600	50mm²
800	70mm²
1000	70mm²
1200	95mm²
1600	120mm²
2000	150mm²
2500	185mm²
3000	240mm²
4000	300mm²
5000	400mm²
6000	400mm²

NOTE: ALL SIZES ARE BASED ON COPPER CONDUCTORS.

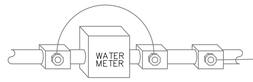

METAL UNDERGROUND WATER PIPE
A METAL UNDERGROUND WATER PIPE IN DIRECT CONTACT WITH THE EARTH FOR 3.1m. OR MORE AND ELECTRICALLY CONTINUOUS (OR MADE CONTINUOUS BY BONDING AROUND INSULATING JOINTS OR INSULATING PIPE). INTERIOR METAL WATER PIPING LOCATED MORE THAN 5FT. FROM THE POINT OF ENTRANCE SHALL NOT BE USED FOR SERVICE ENTRANCE GROUNDING.

CONCRETE ENCASED ELECTRODE
AN ELECTRODE ENCASED BY AT LEAST 51mm. OF CONCRETE , LOCATED WITHIN AND NEAR THE BOTTOM OF A CONCRETE FOUNDATION OR FOOTING THAT IS IN DIRECT CONTACT WITH THE EARTH, CONSISTING OF AT LEAST 6.1m. OF ONE OR MORE BARE OR ZINC GALVANIZED OR OTHER ELECTRICALLY CONDUCTIVE COATED STEEL REINFORCING BARS OR RODS OF NOT LESS THAN 13mm DIAMETER OR BARE COPPER CONDUCTOR NOT SMALLER THAN 25mm².

GND BUS
INTEGRAL TO PANEL

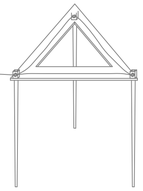

GROUNDING TRIPOD AT SERVICE ENTRANCE
THREE 20mm DIAMETER BY 3m. LONG COPPER CLAD GROUND RODS. GROUND RODS SHALL BE DRIVEN IN A TRIANGULAR SHAPE WITH 3m. ON EACH SIDE OF THE TRIANGLE. GROUND RODS SHALL BE CONNECTED BY WAY OF A 13mm X 102mm X 102mm COPPER PLATE TO A 460g COPPER STRIP ELEMENT. THE COPPER STRIP ELEMENT SHALL BE A 305mm WIDE CONTINUOUS TRIANGLE. GROUND RODS SHALL ALSO BE CONNECTED WITH (1) 120mm² BARE TINNED COPPER CABLE 19 STRAND. ALL CONNECTIONS SHALL BE MADE WITH A TYPE PCC-2Q2Q EXOTHERMIC CONNECTION OR APPROVED COMPRESSION FITTING.

LOAD OR DOWNSTREAM PANEL
ALL LOADS IN THE BUILDING SHALL HAVE AN EQUIPMENT GROUNDING CONDUCTOR PULLED TO THEM.

1
E-502

SERVICE ENTRANCE GROUNDING DETAIL

SCALE: N.T.S.

APPROVED:

A/E DESIGNER OF RECORD

SEAL:

COMMONWEALTH OF PENNSYLVANIA
REGISTERED PROFESSIONAL
JOSEPH R. GAUS
8/24/2010
ENGINEER
PE-074251

US ARMY CORPS OF ENGINEERS
AFGHANISTAN ENGINEER DISTRICT

Mark	Description	Date	Appr.	Mark	Description	Date	Appr.

Date: 08/23/10 Rev: 0
Design file no.
Drawing code:
File name: ANABOB-E-502
Plot date: 8/24/2010
Plot scale: 1:100

Designed by: ALF
Dwn by: RJR
Ckd by: JJRG
Reviewed by: MRS
Submitted by: BAKER

U.S. ARMY CORPS OF ENGINEERS
AFGHANISTAN ENGINEER DISTRICT
APO AE 96338

Michael Baker Jr., Inc.
A unit of Michael Baker Corporation
Airside Business Park
100 Airside Drive
Moon Township, PA 15108
www.mbakercorp.com

AFGHAN NATIONAL ARMY
STANDARD DESIGN

OPEN BARRACKS WITH LATRINE

ELECTRICAL - DETAILS

Sheet reference number:
E-502

FIXTURE MARK 'A'

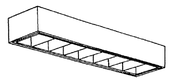

FIXTURE MARK 'B'

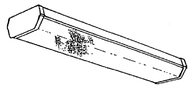

FIXTURE MARK 'C'

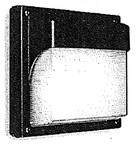

FIXTURE MARK 'G'

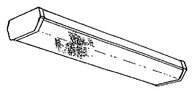

FIXTURE MARK 'E'

LIGHT FIXTURE SCHEDULE

FIXTURE MARK	STYLE NUMBER AND TYPE	NUMBER AND TYPE OF LAMPS	VOLTAGE	MOUNTING	NOTES
A	PARABOLIC SURFACE/PENDANT MOUNTED 300MM X 1200MM FLUORESCENT FIXTURE WITH ELECTRONIC BALLAST	(2) 32W 3500K	220V – 1ø 50HZ	SURFACE MOUNTED	FURNISHED WITH ELECTRONIC BALLAST. PARABOLIC LOUVER SHALL BE SPECULAR LENS IRIDESCENCE TYPE.
A2	SAME AS FIXTURE 'A' WITH EMERGENCY BALLAST	(2) 32W 3500K	220V – 1ø 50HZ	SURFACE MOUNTED	FURNISHED WITH ELECTRONIC BALLAST. PARABOLIC LOUVER SHALL BE SPECULAR LENS IRIDESCENCE TYPE. EMERGENCY BALLAST SELF TEST.
B	WET LOCATION WRAP AROUND SURFACE/PENDANT MOUNTED FLUORESCENT FIXTURE WITH PRISMATIC ACRYLIC LENS AND ELECTRONIC BALLAST	(2) 32W 3500K	220V – 1ø 50HZ	SURFACE MOUNTED	FURNISHED WITH ELECTRONIC BALLAST, VIRGIN ACRYLIC WRAP AROUND LENS.
B2	SAME AS FIXTURE 'B' WITH EMERGENCY BALLAST	(2) 32W 3500K	220V – 1ø 50HZ	SURFACE MOUNTED	FURNISHED WITH ELECTRONIC BALLAST, VIRGIN ACRYLIC WRAP AROUND LENS. EMERGENCY BALLAST WITH SELF TEST SWITCH.
C	INCANDESCENT ONE PIECE W/ APPROVED LENS STABILIZED HIGH IMPACT POLYCARBONATE.	(1) A19 – 100W INCANDESCENT	220V – 1ø 50HZ	WALL MOUNTED ABOVE EXTERIOR DOORS	
G	WRAP AROUND SURFACE/PENDANT MOUNTED FLUORESCENT FIXTURE WITH PRISMATIC ACRYLIC LENS AND ELECTRONIC BALLAST	(2) 32W 3500K	220V – 1ø 50HZ	SURFACE MOUNTED	FURNISHED WITH ELECTRONIC BALLAST, VIRGIN ACRYLIC WRAP AROUND LENS.
G2	SAME AS FIXTURE 'B' WITH EMERGENCY BALLAST	(2) 32W 3500K	220V – 1ø 50HZ	SURFACE MOUNTED	FURNISHED WITH ELECTRONIC BALLAST, VIRGIN ACRYLIC WRAP AROUND LENS. EMERGENCY BALLAST WITH SELF TEST SWITCH.
E	UNIVERSAL MOUNT ENGINEER GRADE THERMOPLASTIC HOUSING EXIT SIGN WITH LED LAMPS, RED LETTERS 6" IN HEIGHT WITH ARROWS AS INDICATED, WITH 12V CADMIUM BATTERY WITH REMOTE HEAD CAPABILITY	LED LAMPS	220V – 1ø 50HZ	UNIVERSAL MOUNTING	

APPROVED:

A/E DESIGNER OF RECORD

SEAL:

COMMONWEALTH OF PENNSYLVANIA
REGISTERED PROFESSIONAL ENGINEER
JOSEPH R. GAUS
PE-074251
8/24/2010

US ARMY CORPS OF ENGINEERS
AFGHANISTAN ENGINEER DISTRICT

Mark	Description	Date	Appr.	Mark	Description	Date	Appr.

Designed by: ALF
Dwn by: BJB
Ckd by: JRG
Reviewed by: MRS
Submitted by: BAKER
Date: 08/23/10
Rev: 0
Design file no.
Drawing code:
File name: AN4809E-E601
Plot date: 8/24/2010
Plot scale: 1:100

U.S. ARMY CORPS OF ENGINEERS
AFGHANISTAN ENGINEER DISTRICT
APO AE 96338

Michael Baker Jr., Inc.
A unit of Michael Baker Corporation
Airside Business Park
100 Airside Drive
Moon Township, PA 15108
www.mbakercorp.com

AFGHAN NATIONAL ARMY
STANDARD DESIGN

OPEN BARRACKS WITH LATRINE

ELECTRICAL – LIGHTING SCHEDULE

Sheet reference number:
E–601

PANELBOARD BOB1 SURFACE MOUNTED

AMP. MAIN LUGS (OR) 150 AMP. MAIN BREAKER W/ 150 AMP. TRIP

CIRCUIT BREAKER TYPE 380/220 VOLTS 3 PHASE 4 WIRE 50 HZ 225 AMP. BUS

CKT. NO.	TRIP AMPS	NO. POLES	WIRE MM ²	GND MM²	CONDUIT MM	LOAD SERVED	LOAD-KVA A0	LOAD-KVA B0	LOAD-KVA C0	LOAD-KVA A0	LOAD-KVA B0	LOAD-KVA C0	LOAD SERVED	CONDUIT MM	GND MM²	WIRE MM²	NO. POLES	TRIP AMPS	CKT. NO.
1	20	1	4.0	4.0	20	LIGHTING – 102	1.3			1.3			LIGHTING – 103	20	4.0	4.0	1	20	2
3	20	1	4.0	4.0	20	LTG – 100, 101,105		1.4			0.8		RECEPTACLES – 103	20	4.0	4.0	1	20	4
5	20	1	4.0	4.0	20	RECEPTACLES – 102			0.8			1.0	RECEPTACLES – 103	20	4.0	4.0	1	20	6
7	20	1	4.0	4.0	20	RECEPTACLES – 102	1.0			1.0			RECEPTACLES – 103	20	4.0	4.0	1	20	8
9	20	1	4.0	4.0	20	RECEPTACLES – 102		1.0			0.8		RECEPTACLES – 103	20	4.0	4.0	1	20	10
11	20	1	4.0	4.0	20	RECEPTACLES – 102			0.8			0.4	RECEPTACLES – 100,105	20	4.0	4.0	1	20	12
13	20	1	4.0	4.0	20	RECEPTACLE – 104	1.0			1.0			RECEPTACLES – 104	20	4.0	4.0	1	20	14
15	20	1	4.0	4.0	20	RECEPTACLES – EXTERIOR		0.6			1.0		CEILING FANS – 100, 103	20	4.0	4.0	1	20	16
17	20	1	4.0	4.0	20	CEILING FANS – 102			0.8			4.0	ELECTRIC HEATER – 103	20	6.0	6.0	1	30	18
19	30	1	6.0	6.0	20	ELECTRIC HEATER – 103	4.0			4.0			ELECTRIC HEATER – 103	20	6.0	6.0	1	30	20
21	30	1	6.0	6.0	20	ELECTRIC HEATER – 103		4.0			4.0		ELECTRIC HEATER – 102	20	6.0	6.0	1	30	22
23	30	1	6.0	6.0	20	ELECTRIC HEATER – 102			4.0			4.0	ELECTRIC HEATER – 102	20	6.0	6.0	1	30	24
25	30	1	6.0	6.0	20	ELECTRIC HEATER – 102	4.0			5.2			ELECTRIC HEATER – 100	20	6.0	6.0	1	30	26
27	20	1	4.0	4.0	20	EXHAUST FAN – 101		0.5			5.0		MAKE UP AIR UNIT – 101	20	6.0	6.0	1	30	28
29	20	1	4.0	4.0	20	FIRE ALARM PANEL			0.5			6.0	ELECTRIC WATER HEATER – 105	20	6.0	10.0	1	40	30
31	20	1				SPARE							SPARE				1	20	32
33	20	1				SPARE							SPARE				1	20	34
35	20	1				SPARE							SPARE				1	20	36
37	20	1				SPARE							SPARE				1	20	38
39	20	1				SPARE							SPARE				1	20	40
41	20	1				SPARE							SPARE				1	20	42
							11.3	7.5	6.9	12.5	11.6	15.4							

TOTAL CONN. LOAD PER PHASE (KVA): A0 23.8 B0 19.1 C0 22.3

TOTAL CONN. LOAD 65.2 KVA. ESTIMATED DEMAND LOAD 74.3 KVA.

* MAIN BREAKER SHALL BE 3P EARTH GROUND TYPE (GROUND FAULT).
** PANELBOARD SHALL BE SERVICE ENTRANCE RATED.
*** PROVIDE A SURGE PROTECTIVE DEVICE PER THE SPECIFICATIONS.
**** SITE ADAPT CONTRACTOR SHALL BE RESPONSIBLE FOR SHORT CIRCUIT CALCULATIONS BASED ON SITE CONDITIONS.
***** ESTIMATED DEMAND LOAD INCLUDES 25% SPARE CAPACITY.

GENERAL NOTES:

1. ALL PANELBOARDS SHALL BE PROVIDED WITH 25% SPARE BREAKER CAPACITY

APPROVED:

A/E DESIGNER OF RECORD

SEAL:

COMMONWEALTH OF PENNSYLVANIA
REGISTERED PROFESSIONAL
JOSEPH R. GAUS
8/24/2010
ENGINEER
PE-074251

US ARMY CORPS OF ENGINEERS
AFGHANISTAN ENGINEER DISTRICT

Mark	Description	Date	Appr.

Mark	Description	Date	Appr.

U.S. ARMY CORPS OF ENGINEERS
AFGHANISTAN ENGINEER DISTRICT
APO AE 96338

Michael Baker Jr., Inc.
A unit of Michael Baker Corporation
Airside Business Park
100 Airside Drive
Moon Township, PA 15108
www.mbakercorp.com

Designed by: ALF
Dwn by: BJB
Ckd by: JRG
Reviewed by: MRS
Submitted by: BAKER
Date: 08/23/10
Rev: 0
Design file no.
Drawing code:
File name: ANA8OB-E-602
Plot date: 8/24/2010
Plot scale: 1:100

AFGHAN NATIONAL ARMY
STANDARD DESIGN

OPEN BARRACKS WITH LATRINE

ELECTRICAL – PANEL SCHEDULES

Sheet reference number:
E-602

20 METER WATER TOWER

U.S. Army Corps
OF Engineers
AFGHANISTAN ENGINEER DISTRICT
AFGHANISTAN, APO AE, 09356

17 DECEMBER 2009

ENGINEERING AND CONSTRUCTION DIVISION
US ARMY ENGINEER DISTRICT, AFGHANISTAN
APO AE, 09356

20 METER WATER TOWER

APPENDIX A

AFGHANISTAN

SECTION/DETAIL CROSS REFERENCING CONVENTIONS

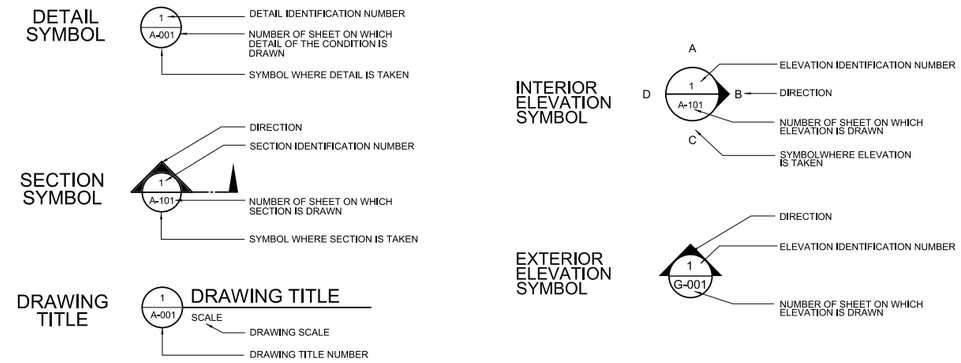

SCHEDULE OF DRAWINGS

SHEET NO	DWG CODE	SHEET REFERENCE NO	DESCRIPTION	REV STATUS
			GENERAL	
			COVER SHEET	
1		G-001	TITLE SHEET & SCHEDULE OF DRAWINGS	
			STRUCTURAL	
2		S-01	GENERAL NOTES	
3		S-02	FOUNDATION PLAN	
4		S-03	PLATFORM AND CATWALK FRAMING PLAN	
5		S-04	ELEVATIONS	
6		S-05	FOUNDATION SECTIONS	
7		S-06	FOUNDATION STEEL FRAMING SECTIONS	
8		S-07	SECTIONS AND DETAILS	
9		S-08	SECTIONS AND DETAILS	
10		S-09	SECTIONS AND DETAILS	
11		S-10	MEMBER DETAILS	
12		S-11	MEMBER DETAILS	
13		S-12	MEMBER DETAILS	
14		S-13	MEMBER DETAILS	
15		S-14	MEMBER DETAILS	
16		S-15	MEMBER DETAILS	
17		S-16	MEMBER DETAILS	
18		S-17	MEMBER DETAILS	
19		S-18	MEMBER DETAILS	
20		S-19	MEMBER DETAILS	
21		S-20	MEMBER DETAILS	
			PLUMBING	
22		P-01	NOT USED	
23		P-02	NOT USED	
24		P-03	NOT USED	
25		P-04	ELEVATION AND DETAIL	
			ELECTRICAL	
26		E-01	LIGHTNING PROTECTION DETAILS	

PROJECT COORDINATION

U.S. ARMY ENGINEER DISTRICT, AFGHANISTAN

PROJECT MANAGER — DATE

CHIEF, DESIGN BRANCH — DATE

THIS PROJECT WAS DESIGNED BY AFGHANASTAN ENGINEER DISTRICT OF THE U.S ARMY CORPS OF ENGINEERS. THE INITIALS OR SIGNATURES AND REGISTRATION DESIGNATIONS OF INDIVIDUALS APPEAR ON THESE DOCUMENTS WITHIN THE SCOPE OF THEIR EMPLOYMENT AS REQUIRED BY ER 1110-1-8152.

US ARMY CORPS OF ENGINEERS
AFGHANISTAN ENGINEER DISTRICT

SYMBOL	DESCRIPTION	DATE	APPR.	SYMBOL	DESCRIPTION	DATE	APPR.

DESIGNED BY: DWN BY: CKD BY: REVIEWED BY: SUBMITTED BY:
DATE: 17 DEC 2009 DESIGN FILE NO. REV.
DRAWING CODE:
FILE NAME: G-TSJDGN
PLOT SCALE:
PLOT DATE: XX-XX-XXX

U.S. ARMY ENGINEER DISTRICT, AFGHANISTAN
CORPS OF ENGINEERS
APO AE 96338

ENGINEERING AND CONSTRUCTION DIVISION

AFGHANISTAN ENGINEER DISTRICT
20 METER WATER TOWER

TITLE SHEET
SCHEDULE OF DRAWINGS

SHEET REFERENCE NUMBER:
G-001
SHEET 1 OF 26

GENERAL:

1. CONTRACTOR SHALL VERIFY ALL DIMENSIONS AND CONDITIONS AFFECTING THE WORK AT JOBSITE.

2. ALL STRUCTURAL WORK AND MATERIALS SHALL CONFORM TO THE REQUIREMENTS OF THE PROJECT.

3. FOR LOCATION AND DIMENSIONS OF GROOVES, REGLETS, SLEEVES, OPENINGS, AND EMBEDDED OR ATTACHED ITEMS, REFER TO ELECTRICAL, AND PIPING DRAWINGS.

CODES:

1. ALL PARTS SHALL BE FURNISHED AND ERECTED ACCORDING TO THE LATEST VERSION OF THE APPLICABLE CODES OF THE FOLLOWING:

AMERICAN CONCRETE INSTITUTE	(ACI)
AMERICAN INSTITUTE OF STEEL CONSTRUCTION	(AISC)
AMERICAN IRON AND STEEL INSTITUTE	(AISI)
AMERICAN WATER WORKS ASSOCIATION	(AWWA)

2. ALL PARTS SHALL BE FURNISHED AND ERECTED ACCORDING TO THE APPLICABLE CODES OF THE FOLLOWING:

MINIMUM DESIGN LOADS FOR BUILDINGS AND OTHER STRUCTURES	(ASCE 7-05)
INTERNATIONAL BUILDING CODE	(IBC-2006)
BUILDING CODE REQUIREMENTS FOR STRUCTURAL CONCRETE	(ACI 318-08)
SPECIFICATIONS FOR STRUCTURAL STEEL BUILDINGS	(AISC 13TH EDITION)

DESIGN LOADS:

1. ROOF LOADING

A. LIVE LOAD 195 KG/SQ METER (40 PSF)
B. SNOW LOAD 75 KG/SQ METER (15 PSF)
C. COLLATERAL LOAD 50 KG/SQ METER (10 PSF)

2. WIND LOADING

A. BASIC WIND SPEED 135 KM/HR (85 MPH)
B. EXPOSURE CATEGORY "B"
C. IMPORTANCE FACTOR, Iw = 1.00
D. BUILDING CATEGORY "II"

3. SEISMIC LOADING:

A. Ss = 1.28g
B. S1 = 0.51g
C. SEISMIC USE GROUP "I"
D. SITE CLASSIFICATION "D"
E. IMPORTANCE FACTOR I = 1.0

BASIC SEISMIC FORCE RESISTING SYSTEM:

CROSS-BRACED COLUMN-SUPPORTED ELEVATED TANK
DESIGN BASE SHEAR: 0.284W

ANALYSIS PROCEDURE: EQUIVALENT LATERAL FORCE METHOD

4. THE WATER TOWER IS DESIGNED TO SUPPORT A 26,500 LITER (7,000 GALLON) WATER TANK, UNIFORMLY LOADING THE PLATFORM IN A BALANCED CONFIGURATION. SEE SHEET S-3 FOR TANK LIMITS.

600 0 600mm
SCALE: 1 = 30

UNLESS NOTED OTHERWISE, LINEAR DIMENSIONS ARE IN MILLIMETERS.

FOUNDATIONS:

1. ALL FOOTINGS SHALL BEAR ON SOIL CAPABLE OF SUSTAINING THE LOADS. GEOTECHNICAL INVESTIGATIONS TO VERIFY THIS REQUIREMENT ARE CONTAINED IN THE AED DESIGN GUIDE – GEOTECHNICAL INVESTIGATIONS (LATEST VERSION). ALL REQUIREMENTS OF THIS PUBLICATION SHALL BE FOLLOWED, WITH EMPHASIS ON PARAGRAPH 2.2, DEPTH, LOCATION, SPACINT OF EXPLORATION.

2. FOUNDATION DESIGNED FOR A MAXIMUM BEARING CAPACITY OF 7323 KG/SQ. METER (1500 PSF).

3. ELEVATIONS SHOWN ON PLANS FOR TOP OF FOOTINGS ARE MINIMUM DEPTH. BOTTOM OF FOOTING SHALL BE A MINIMUM 800mm BELOW GRADE. DIFFERENT OR UNUSUAL CONDITIONS SHALL BE REPORTED TO THE CONTRACTING OFFICER.

4. ALL FOOTING REINFORCEMENT SHALL BE SECURELY SUPPORTED ABOVE GROUND. SUPPORT REINFORCEMENT WITH CONCRETE BRICK OR WITH ADEQUATE NUMBER AND SIZE OF REBAR CHAIRS.

5. ALL FOUNDATION FORMWORK SHALL BE ADEQUATELY PREPARED FOR CONCRETE PLACEMENT; SUFFICIENTLY BRACED; PROPER ELEVATIONS AND ALIGNMENT; NO STANDING WATER OR DEBRIS; ETC.

CONCRETE:

1. STRUCTURAL CONCRETE FOR THE BUILDING STRUCTURE SHALL HAVE THE FOLLOWING PROPERTIES:

ALL CONCRETE
UNLESS NOTED OTHERWISE: f'c = 280 KG/SQ. CM (4,000 PSI) AT 28 DAYS WITH MAXIMUM WATER/CEMENT RATIO OF 0.45. MIX DESIGN SHALL BE APPROVED BY COR PRIOR TO PLACEMENT.

2. ALL REINFORCING STEEL SHALL BE DEFORMED BARS CONFORMING TO ASTM A615 GRADE 60 UNLESS NOTED OTHERWISE.

3. MINIMUM PROTECTIVE COVER OF REINFORCEMENT (SEE DETAILS) SHALL BE AS FOLLOWS:

FOOTINGS, 75mm CLEAR BOTTOM AND SIDES, 40mm CLEAR TOP.
CONCRETE PIERS, 40mm CLEAR TO TIES.

4. MINIMUM CONCRETE SPLICES AND HOOKS FOR REINFORCING STEEL SHALL CONFORM TO ACI 318, CURRENT EDITION.

5. CONCRETE WORK SHALL BE COORDINATED WITH DRAINS, UNDERGROUND UTILITIES, MECHANICAL, ELECTRICAL, AND ARCHITECTURAL PLANS. CONCRETE SHALL NOT BE CAST UNTIL THESE ITEMS HAVE BEEN INSTALLED AND ACCEPTED.

6. CONCRETE OPERATIONS SHALL BE APPROVED BY COR PRIOR TO CONCRETE PLACEMENT. PLAN SHALL BE IN WRITING AND INCLUDE THE FOLLOWING:

a. PORTLAND CEMENT CONCRETE (PCC) PLACEMENT.

b. EMBEDDED METALS PLAN SHALL DESCRIBE HOW REINFORCEMENT AND TOWER LEG ANCHORAGE PLATES WILL BE INSTALLED. SPECIFIC DISCUSSION OF ANCHORAGE PLATES SHALL INCLUDE HOW THESE CRITICAL COMPONENTS WILL BE ACCURATELY LOCATED AND SECURED FOR TRUE PLAN, ELEVATION AND VERTICAL POSITION, WITH NO ROTATION, PRIOR TO, DURING AND AFTER CONCRETING OPERATIONS. THE FOUR CORNERS SHALL BE LAID OUT TO BE DIMENSIONALLY SQUARE AS PER DRAWINGS.

c. PLAN SHALL ADDRESS CONCRETE DELIVERY (BATCHING EQUIPMENT, CAPACITY AND LOCATION); CONCRETE PLACEMENT OPERATIONS INTO THE FORMWORK; NUMBER AND USE OF VIBRATORS; FIELD AND LABORATORY TESTING REQUIRED; HOT OR COLD WEATHER PLACEMENT REQUIREMENTS; MANPOWER REQUIRED; AND OTHER PROCEDURES TO BE FOLLOWED TO COMPLETE SUCCESSFUL CONCRETING OPERATIONS. SUFFICIENT CONCRETE DELIVERY SHALL BE SHOWN TO ELIMINATE THE POTENTIAL FOR CONCRETE DEFECTS IN THE FINAL PRODUCT, INCLUDING COLD JOINTS, VOIDS, SEGREGATION OF AGGREGATE, AND EXCESSIVE REWORK LEADING TO STRENGTH REDUCTION.

STRUCTURAL STEEL:

1. STRUCTURAL STEEL SHALL BE FABRICATED AND ERECTED IN ACCORDANCE WITH THE AMERICAN INSTITUTE OF STEEL CONSTRUCTION, "SPECIFICATION FOR STRUCTURAL STEEL BUILDINGS", 2005 (AISC MANUAL, 13TH EDITION).

2. STEEL SHALL CONFORM TO THE FOLLOWING REQUIREMENTS UNLESS NOTED OTHERWISE:

MISCELLANEOUS PLATES AND ANGLES – ASTM A36 250MPa (Fy = 36 KSI)
"W" SHAPES – ASTM A36 250MPa (Fy = 36 KSI)

3. NO STRUCTURAL STEEL SHALL BE FABRICATED OR ERECTED UNTIL SHOP DRAWINGS HAVE BEEN APPROVED.

4. NO HOLES OTHER THAN THOSE SPECIFICALLY DETAILED SHALL BE ALLOWED THROUGH STRUCTURAL STEEL MEMBERS. FIELD CUTTING OF STEEL SHALL NOT BE PERMITTED WITHOUT APPROVAL OF THE CONTRACTING OFFICER.

5. THE CONTRACTOR SHALL VERIFY ALL SHOP DRAWING DIMENSIONS WITH THE STRUCTURAL PLANS AND DETAILS, AND WITH DIMENSIONS OF COLUMN LAYOUT.

6. BOLTED CONNECTIONS: BOLTS SHALL CONFORM TO ASTM A307, 20MM DIAMETER MINIMUM UNLESS NOTED OTHERWISE AND HOT-DIP GALVANIZED; NUTS SHALL CONFORM TO ASTM A563 HOT DIP GALVANIZED; WASHERS SHALL NOT BE USED.

7. BOLTS SHALL BE TIGHTENED TO ADEQUATELY DEVELOP BOLT TENSION.

FABRICATION NOTES

1. THE CONTRACTOR SHALL SUBMIT A SEPARATE, SPECIFIC ERECTION AND SAFETY PLAN ADDRESSING ALL FACETS OF TOWER CONSTRUCTION.

2. THIS SET OF DRAWINGS WAS DEVELOPED AS A SOLUTION TO MEET AED REQUIREMENTS FOR THE CONSTRUCTION OF WATER TOWERS THAT MEET U.S. STANDARDS FOR DESIGN, TO INCLUDE SEISMIC CRITERIA, USING MATERIALS AND CONSTRUCTION METHODS THAT REDUCE OR ELIMINATE THE NEED FOR LARGE CRANES THAT MAY NOT BE ABLE TO ACCESS PROJECT SITES, AND ENABLE EASE OF CONSTRUCTION QUALITY CONTROL. WATER TOWER HAS BEEN DESIGNED TO SUPPORT A PRE-FABRICATED WATER TANK.

3. ALL ANGLES, BEAMS AND PLATES ARE TO BE FABRICATED IN A SHOP WHERE THE STRICTEST TOLERANCES FOR FABRICATION (MEMBER LENGTHS, LOCATION AND SIZE OF BOLT HOLES) CAN BE MAINTAINED. THESE COMPONENTS WOULD THEN BE TRANSPORTED TO PROJECT SITES AND ERECTED WITHOUT THE USE OF HEAVY EQUIPMENT AS THE MAXIMUM WEIGHT PER PIECE IS UNDER 90 KG. THIS DESIGN SHALL NOT BE MODIFIED, IN EITHER THE FABRICATION SHOP OR AT THE PROJECT SITE. UNDER NO CONDITIONS SHALL BOLT HOLES BE MODIFIED OR ADDED AT THE PROJECT SITE AS A RESULT OF INACCURATE CONSTRUCTION PRACTICES. CONTRACTOR SHALL ASSEMBLE PLATFORM IN SHOP, POSITION STEEL CHECKER PLATE SECTIONS IN FINAL LOCATION, AND DRILL HOLES IN PLATE TO ALIGH WITH FLANGES OF STRUCTURAL MEMBERS (SEE FUTHER NOTES ON S-3). LIMITED FIELD DRILLING OF HOLES FOR WATER TANK ERECTION MAY BE REQUIRED AND WILL BE SUBMITTED FOR APPROVAL.

4. IF THE CONTRACTOR CANNOT OBTAIN THE REQUIRED ANGLE, BEAM, OR PLATES, ANY MODIFICATIONS OR SUBSTITUTIONS WILL REQUIRE A SUBMISSION OF COMPLETE ALTERNATE FABRICATION DRAWINGS FOR REVIEW AND APPROVAL, AND ONLY INCREASES IN MEMBER SIZE WILL BE CONSIDERED.

5. WELDING WILL ABSOLUTELY NOT BE ALLOWED ON THIS TOWER.

6. FABRICATION SHALL BE DONE IN A SHOP WITH TOLERANCES PER AISC MANUAL OF STEEL CONSTRUCTION AND ALL ADDITIONAL CODES REFERENCED THERE IN. CONTRACTOR SHALL ESTABLISH A SYSTEM OF MARKING MEMBERS TO FACILITATE ASSEMBLY IN THE FIELD.

7. STEEL FINISH REQUIREMENTS SHALL INCLUDE REMOVAL OF ALL SCALE AND RUST PRIOR TO APPLICATION OF A BASE COAT PRIMER ON ALL METAL SURFACES. THIS WILL BE FOLLOWED BY TWO FINISH COATS OF EPOXY ENAMEL PAINT. IF AVAILABLE, HOT-DIP GALVANIZING OF TOWER ELEMENTS IS ACCEPTABLE, BUT GALVANIZED BOLTS AND NUTS MUST THEN BE PROVIDED, AND CARE MUST BE TAKEN TO PREVENT DAMAGING THE SURFACE FINISH.

8. TO AID IN MEANS OF CONSTRUCTION, THE 2L100x100 HANDRAIL PIECE HAS BEEN DESIGNED FOR A LOAD OF 250KG AT MIDSPAN. THE CONTRACTOR MAY USE THIS PIECE IN A PULLEY MECHANISM TO RAISE THE PLATFORM FRAMING TO THE REQUIRED ELEVATION. THE CONTRACTOR ASSUMES ALL RESPONSIBILITY FOR MEANS OF CONSTRUCTION AND SHALL NOT HOLD THE GOVERNMENT LIABLE.

9. FIT-UP FOR DIMENSIONAL CHECK SHALL BE MADE BY THE CONTRACTOR.

WATER TANK

1. WATER TOWER HAS BEEN DESIGNED TO ACCEPT A PRE-FABRICATED WATER TANK. ONLY METAL TANKS SHALL BE PERMITTED. FULL DETAILS OF THE PROPOSED TANK SHALL BE SUBMITTED FOR APPROVAL.

2. A PARTIAL LIST OF WTER TANK SUPPLIERS:

http://www.alibaba.com/product-free/100696118/Panel Water tank.html

http://www.alibaba.com/product/my100479764-100277497-0/prodductdetail.html

http://www.modutank.com/

http://www.binasteel.com.my/stainless-steel-tank.html

http://www.sunnik.com.my/products01.htm

http://www.watertank.com/products.asp#eltank

3. CONTRACTOR SHALL COORDINATE WATER TANK CONNECTIONS WITH SHOP FABRICATOR.

US Army Corps of Engineers ®
Mobile District

Symbol	No.	Description	Date	Approved
		Revisions		

Date: 17 DECEMBER 2009
Contract No:
CADD CODE: M010TG17
Solicitation Number:
FILENAME:
Designed By:
Drawn By:
Checked By:
Reviewed By:
SIZE: 559x864mm

U.S. ARMY ENGINEER DISTRICT
CORPS OF ENGINEERS
MOBILE, ALABAMA

AFGHANISTAN ENGINEER DISTRICT
20 METER WATER TOWER

GENERAL NOTES

SHEET IDENTIFICATION
S-1

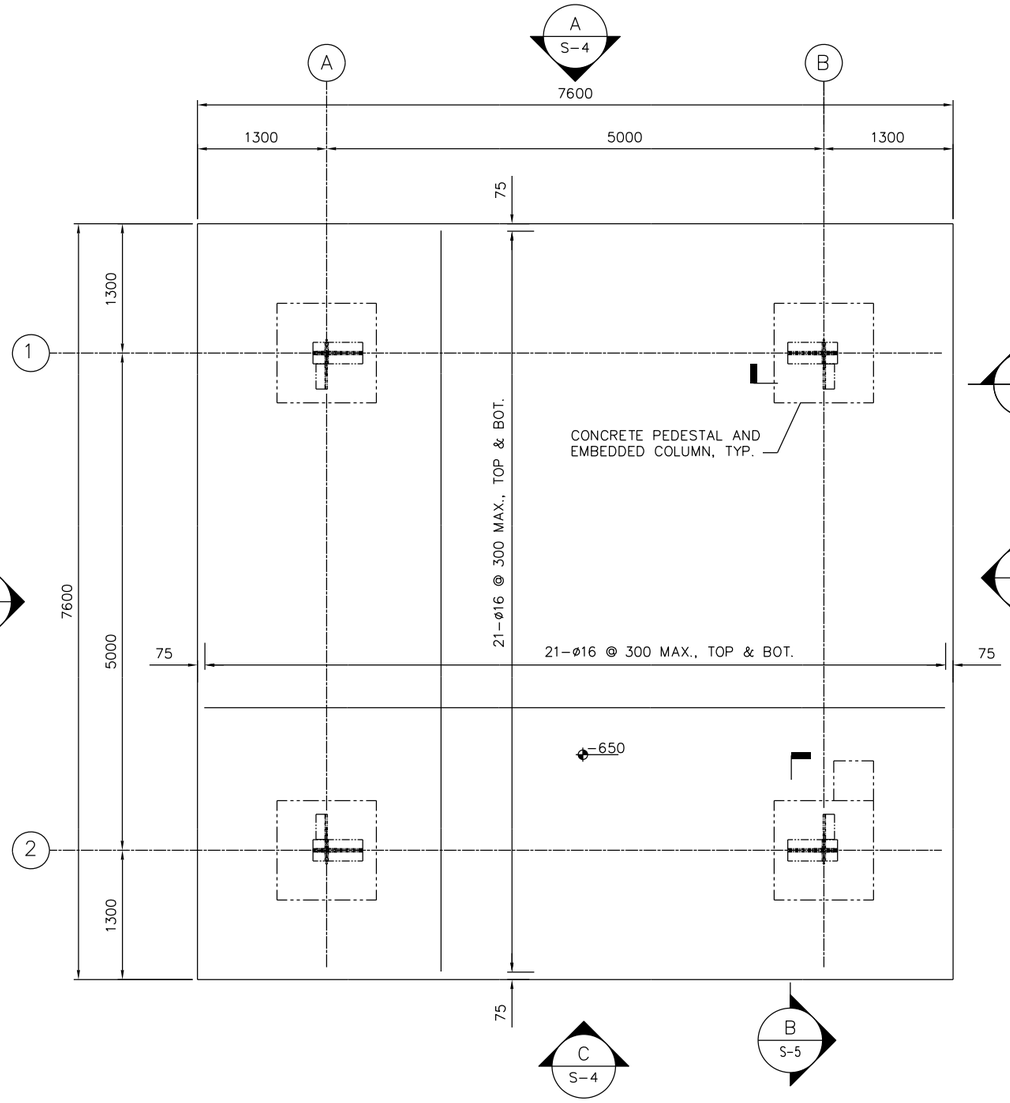

FOUNDATION PLAN
AT ELEVATION -650mm
1:30

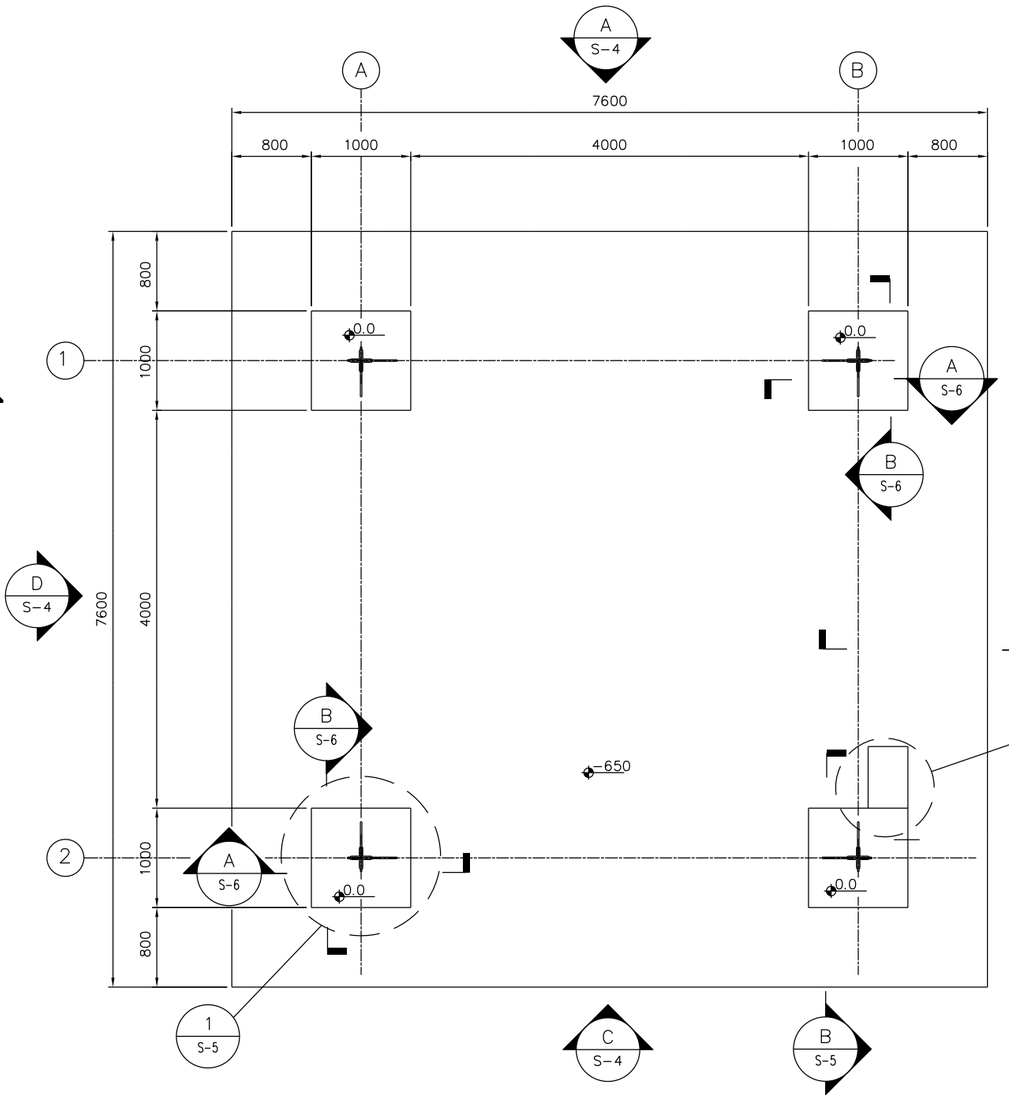

FOUNDATION PLAN
AT ELEVATION 0.0mm
1:30

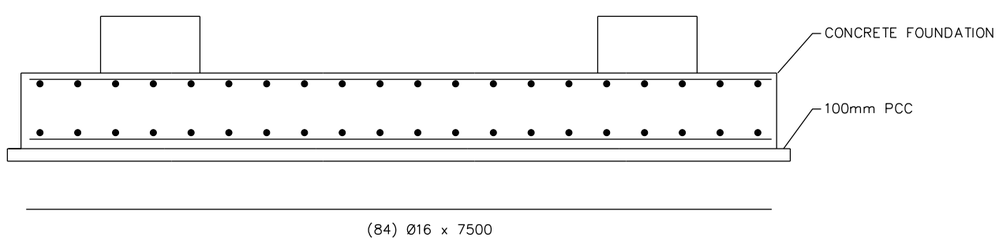

REBAR DETAIL

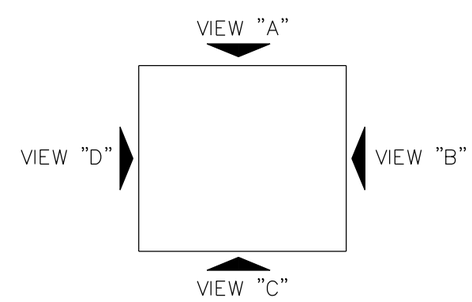

NOTES:

1. TOWER WAS DESIGNED FOR A 535mm BACKFILL OVER THE FOUNDATION SLAB. THE PEDESTALS SHALL BE A MAXIMUM OF 115mm ABOVE GRADE.

600 0 600mm
SCALE: 1 = 30

UNLESS NOTED OTHERWISE, LINEAR DIMENSIONS ARE IN MILLIMETERS.

US Army Corps of Engineers
Mobile District

Symbol	No.	Description	Date	Approved
		Revisions		

Designed By:
Drawn By:
Checked By:
Reviewed By:
Date: 17 DECEMBER 2009
Contract No:
CADD CODE: MOTOG17
Solicitation Number:
SIZE: 559x864mm
FILENAME:

U.S. ARMY ENGINEER DISTRICT
CORPS OF ENGINEERS
MOBILE, ALABAMA

AFGHANISTAN ENGINEER DISTRICT
20 METER WATER TOWER

FOUNDATION PLAN

SHEET IDENTIFICATION
S-2

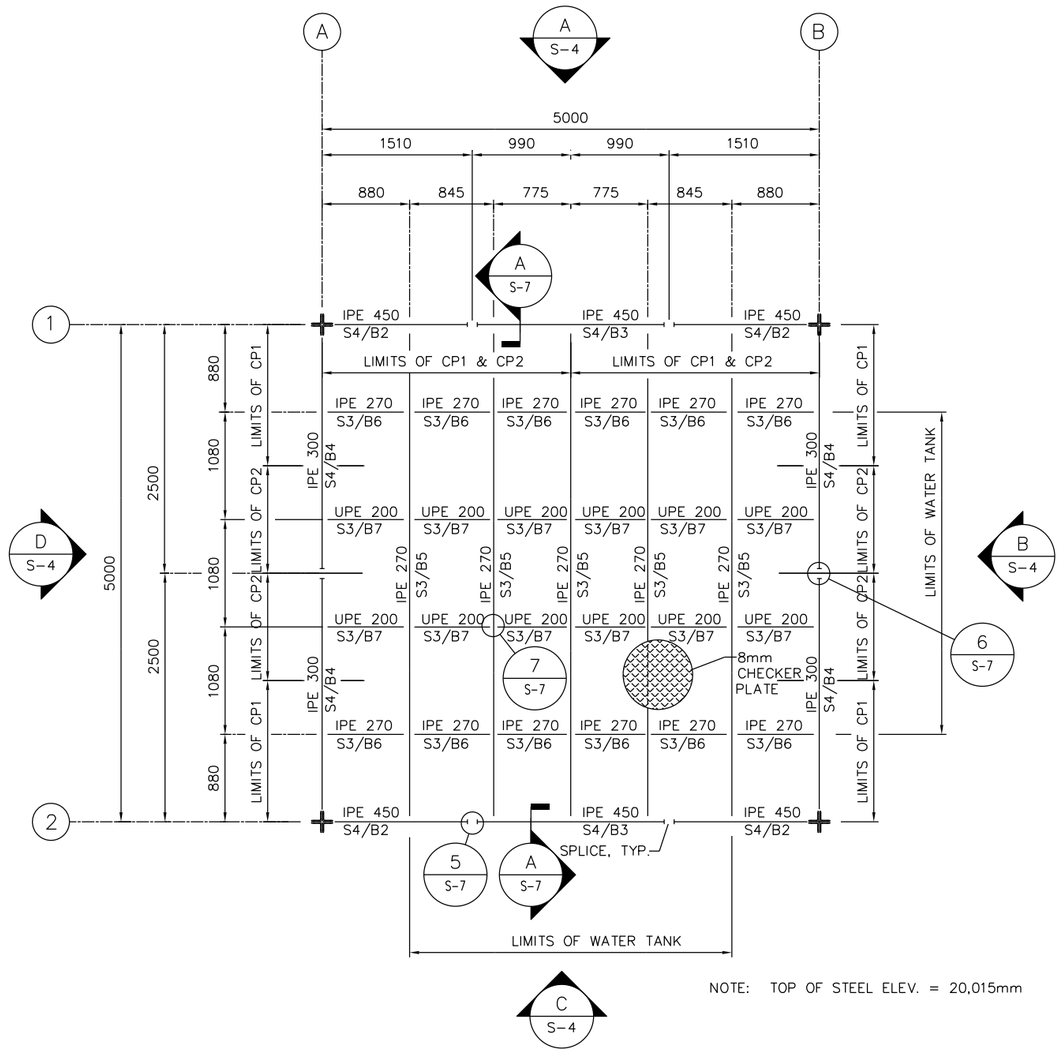

NOTE: TOP OF STEEL ELEV. = 20,015mm

PLATFORM FRAMING PLAN

1:30

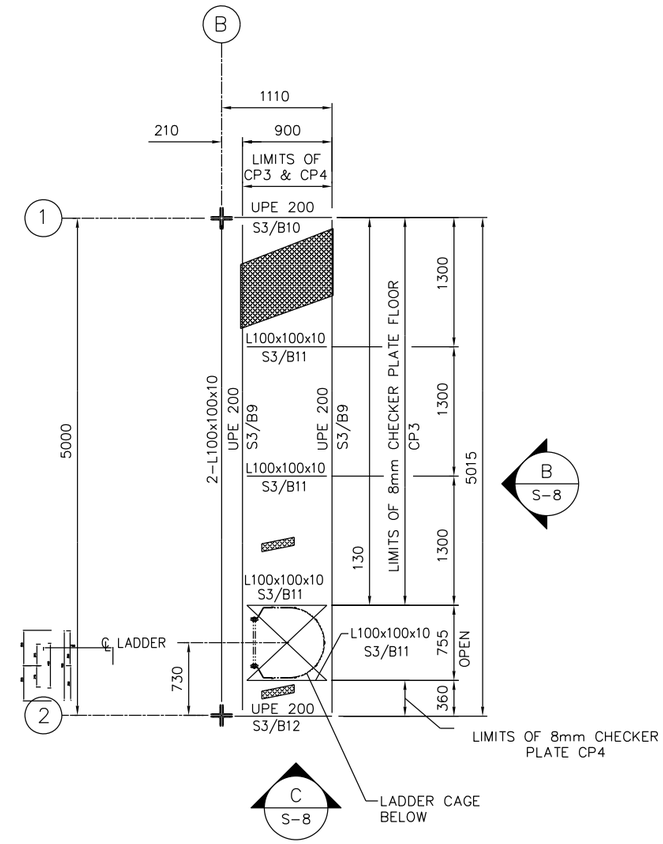

NOTE: TOP OF PLATFORM STEEL ELEV. = 9790mm

STAIR LANDING FRAMING PLAN

1:30

CHECKER PLATE NOTES:

PLATFORM

1. PLATFORM CHECKER PLATE SHALL BE INSTALLED IN SIX (6) SEPARATE PIECES; FOUR (4) EACH CP1'S AND TWO (2) EACH CP2'S.

2. PLATES WILL BE ATTACHED WITH 12mm ø BOLTS TO THE SUPPORTING MEMBERS AT A MAXIMUM SPACING IF 700mm AROUND PERIMETER BEAMS AND WALKWAY AREA. COORDINATE BOLT LOCATION AND INTERFERENCE WITH WATER TANK ON BOLTS UNDER THE WATER TANK.

3. CUT OUT PLATES AROUND BEAM SPLICE PLATES WHERE NECESSARY.

LANDING

4. LANDING CHECKER PLATE SHALL BE INSTALLED IN TWO (2) SEPARATE PIECES; ONE (1) EACH CP3 AND ONE (1) EACH CP4.

5. PLATES WILL BE ATTACHED WITH 12mm ø BOLTS TO THE SUPPORTING MEMBERS AT A MAXIMUM SPACING IF 700mm AROUND PERIMETER BEAMS.

CHECKER PLATE DIMENSIONS:

CP1 – 2470mm x 1390mm
CP2 – 2470mm x 1080mm
CP3 – 3885mm x 895mm
CP4 – 355mm x 895mm

LEGEND:

CPX – 8mm CHECKER PLATE NUMBER
SX/XX – MEMBER MARK NUMBER

NOTES:

1. PLAN DIMENSIONS ON IPE SHAPES ARE MEASURED TO THE CENTERLINE MEMBERS. PLAN DIMENSIONS ON UPE AND L SHAPES ARE MEASURED TO THE OUTSIDE OF THE VERTICAL FACE OF THE WEB OR LEG.

600 0 600mm
SCALE: 1 = 30

UNLESS NOTED OTHERWISE, LINEAR DIMENSIONS ARE IN MILLIMETERS.

US Army Corps of Engineers
Mobile District

Symbol	No.	Description	Date	Approved
		Revisions		

Designed By:
Drawn By:
Checked By:
Reviewed By:
Date: 17 DECEMBER 2009
Contract No:
CADD CODE: M010TG17
Solicitation Number:
FILENAME:
SIZE: 559x864mm

U.S. ARMY ENGINEER DISTRICT
CORPS OF ENGINEERS
MOBILE, ALABAMA

AFGHANISTAN ENGINEER DISTRICT
20 METER WATER TOWER

PLANFORM & CATWALK FRAMING PLAN

SHEET IDENTIFICATION
S-3

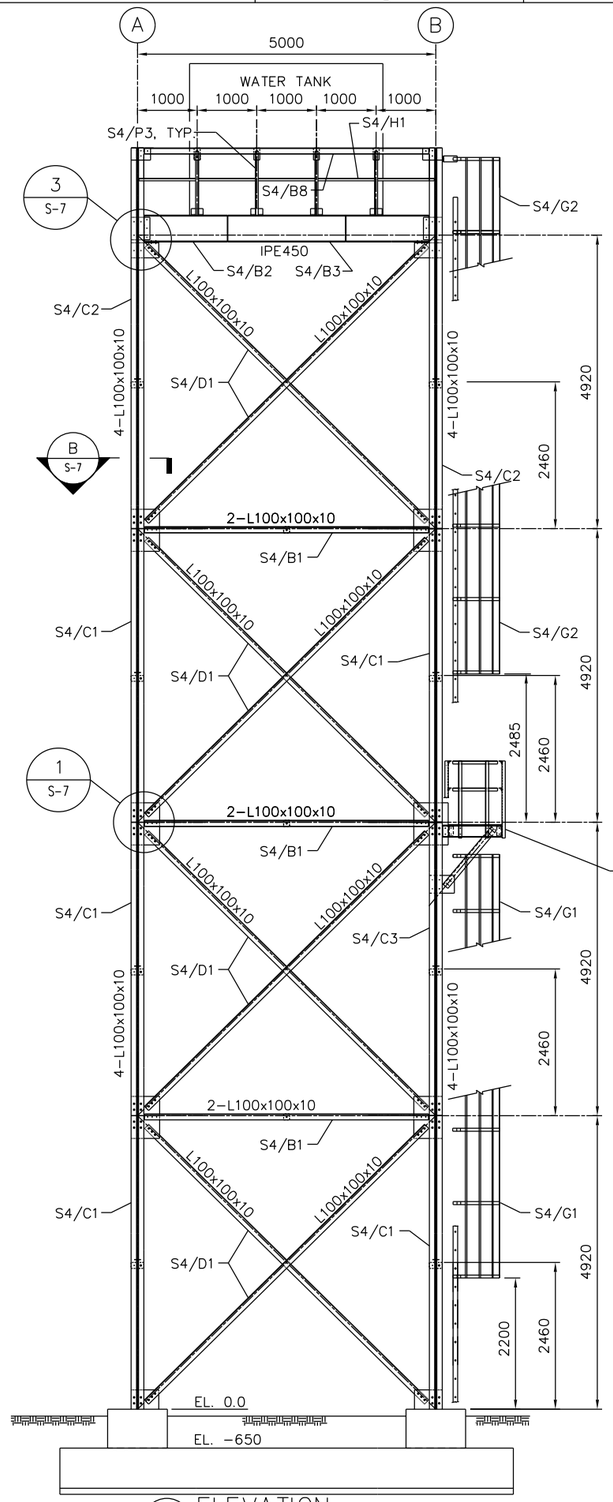

C S-2 ELEVATION
1:50

A S-2 ELEVATION (REVERSE VIEW)
1:50

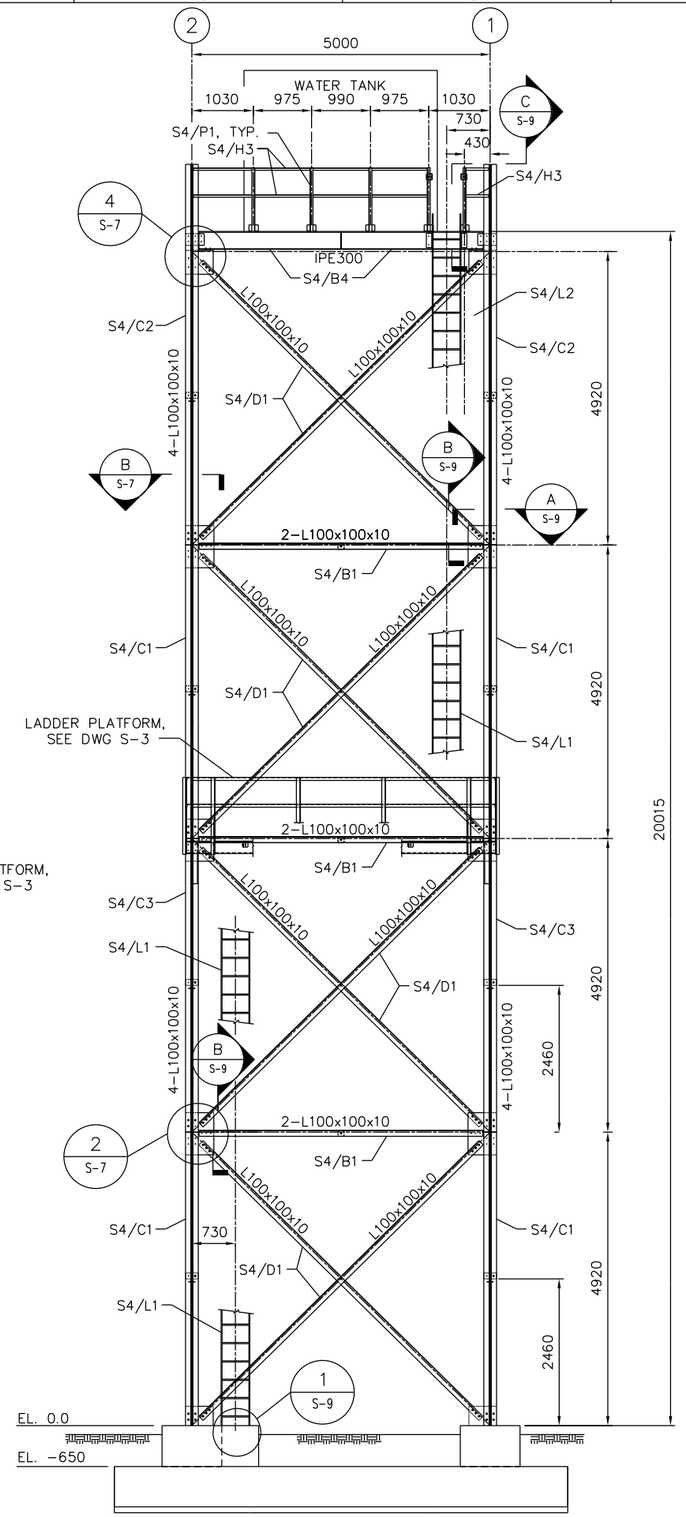

B S-2 ELEVATION
1:50

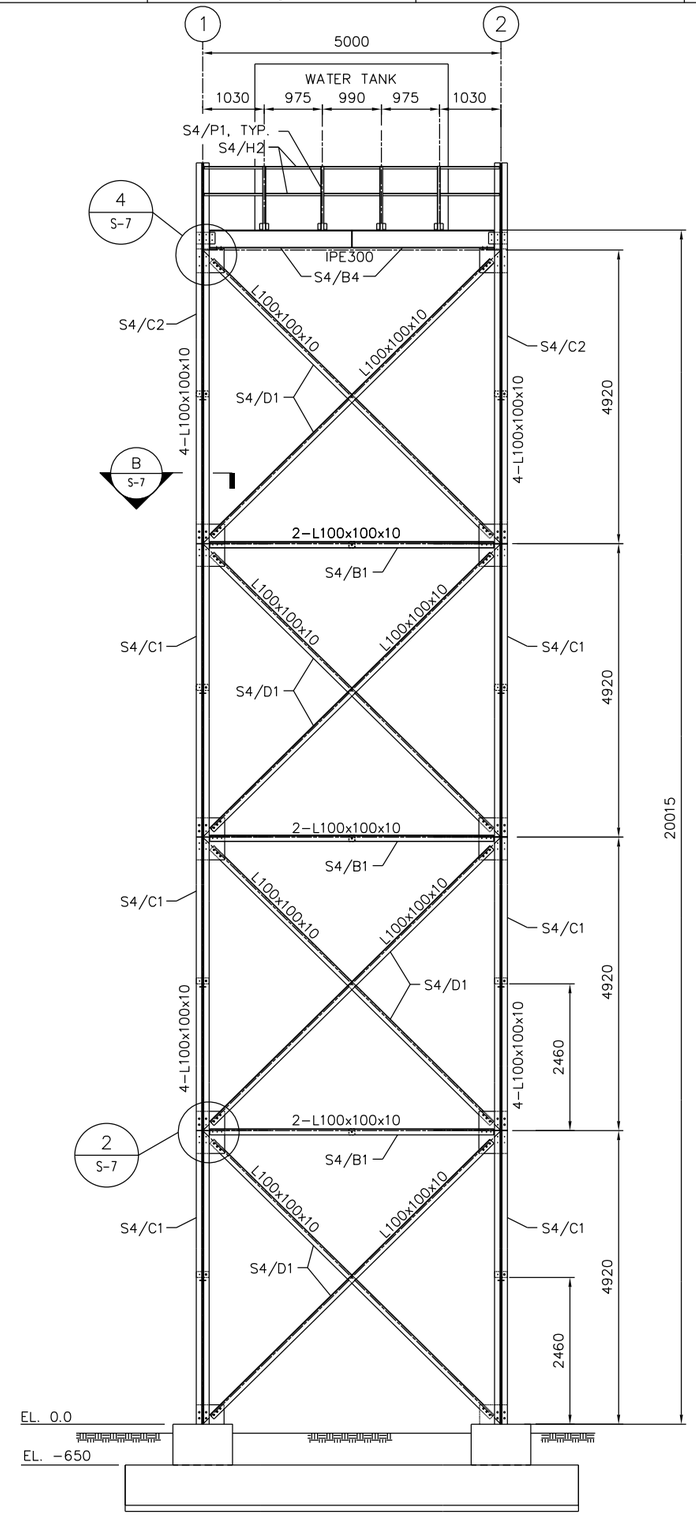

D S-2 ELEVATION
1:50

1000 0 1000mm
SCALE: 1 = 50

UNLESS NOTED OTHERWISE, LINEAR DIMENSIONS ARE IN MILLIMETERS.

US Army Corps of Engineers®
Mobile District

Symbol	No.	Description	Date	Approved
		Revisions		

Designed By:
Date: 17 DECEMBER 2009
Drawn By:
Contract No:
Checked By:
CADD CODE: M010TG17
Reviewed By:
Specification Number:
SIZE: 559x864mm
FILENAME:

U.S. ARMY ENGINEER DISTRICT
CORPS OF ENGINEERS
MOBILE, ALABAMA

AFGHANISTAN ENGINEER DISTRICT
20 METER WATER TOWER

ELEVATIONS

SHEET IDENTIFICATION
S-4

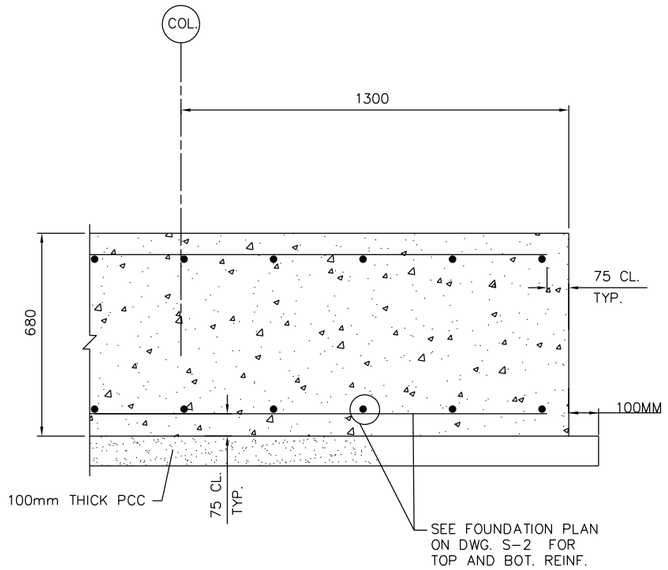

SECTION A / S-2
1:10

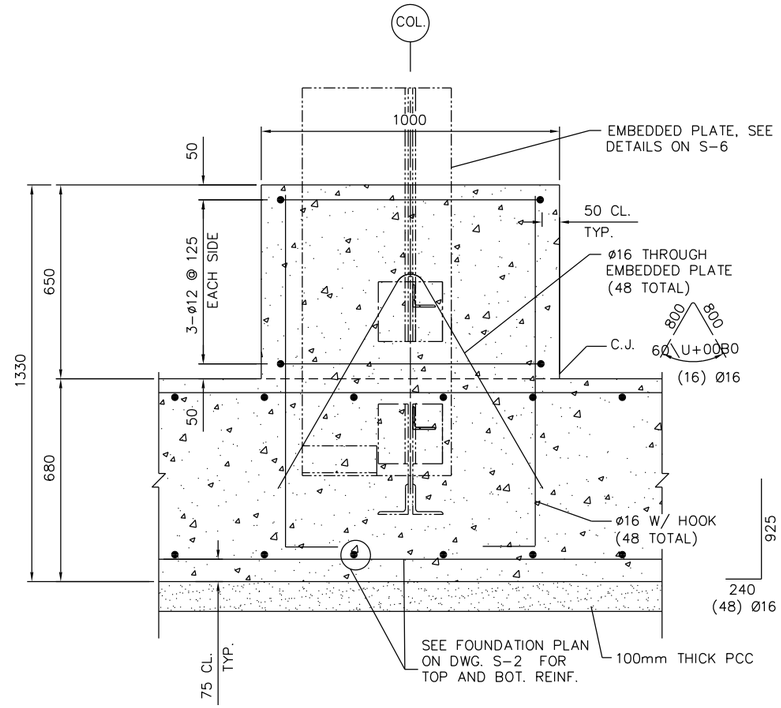

SECTION B / S-2, S-5
1:10

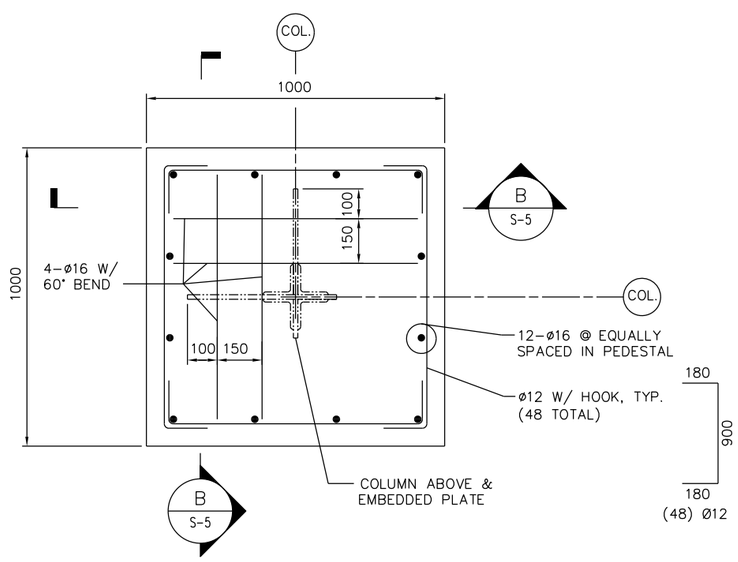

DETAIL 1 / S-2
1:10

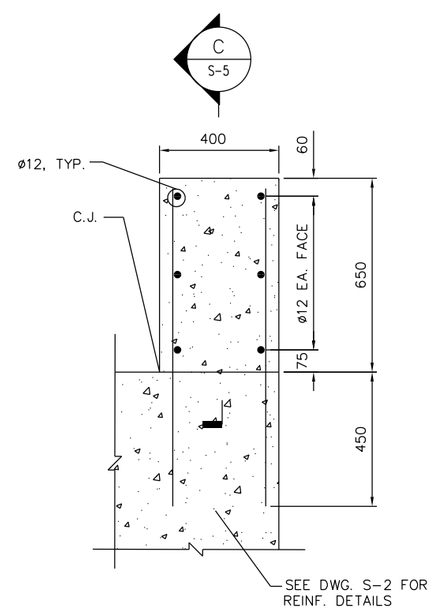

DETAIL 2 / S-2
1:10

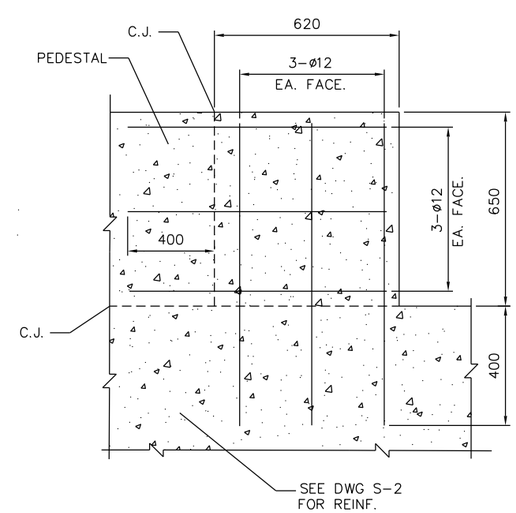

SECTION C / S-5
1:10

200 0 200mm
SCALE: 1 = 10

NOTE: SEPARATE CONCRETE PLACEMENT. SEE DETAIL 1 ON DRAWING S-9 FOR ANCHOR BOLT REQUIREMENTS.

UNLESS NOTED OTHERWISE, LINEAR DIMENSIONS ARE IN MILLIMETERS.

US Army Corps of Engineers ®
Mobile District

Symbol	No.	Description	Date	Approved
		Revisions		

Designed By:
Date: 17 DECEMBER 2009
Drawn By:
Contract No:
Checked By:
CADD CODE: MM01DG17
Reviewed By:
Solicitation Number:
SIZE: 559x864mm
FILENAME:

U.S. ARMY ENGINEER DISTRICT
CORPS OF ENGINEERS
MOBILE, ALABAMA

AFGHANISTAN ENGINEER DISTRICT
20 METER WATER TOWER

FOUNDATION SECTIONS

SHEET IDENTIFICATION
S-5

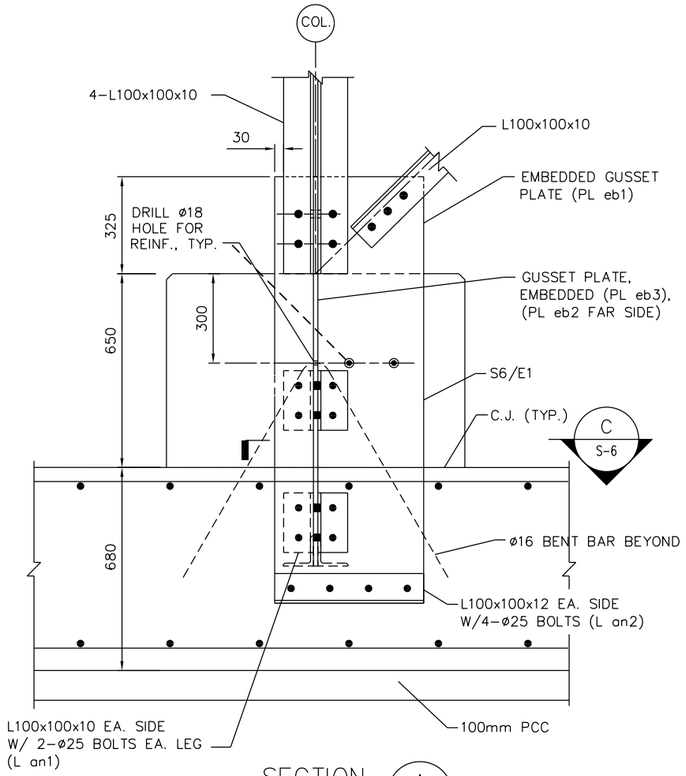

SECTION A S-2
1:10

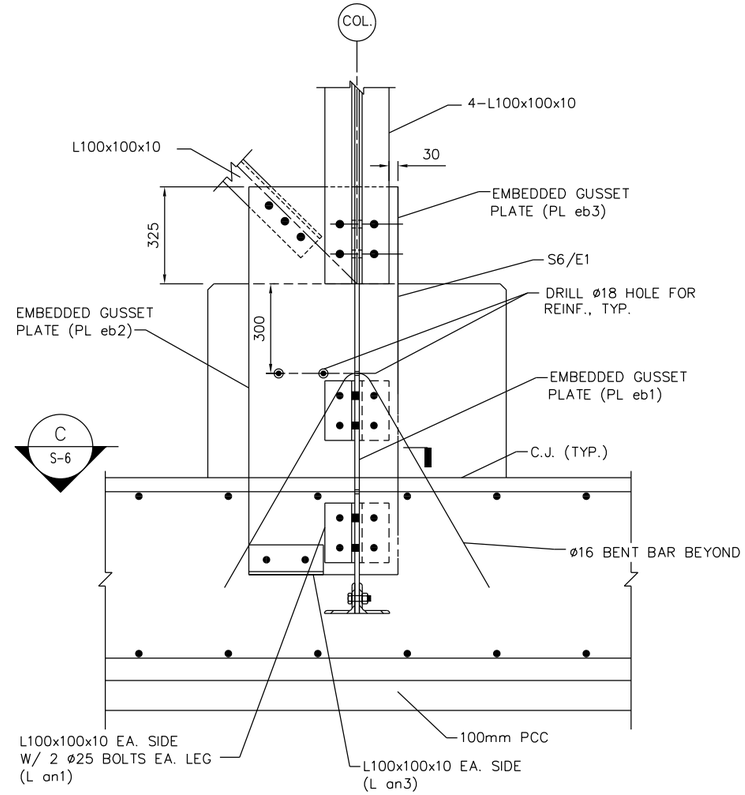

SECTION B S-2
1:10

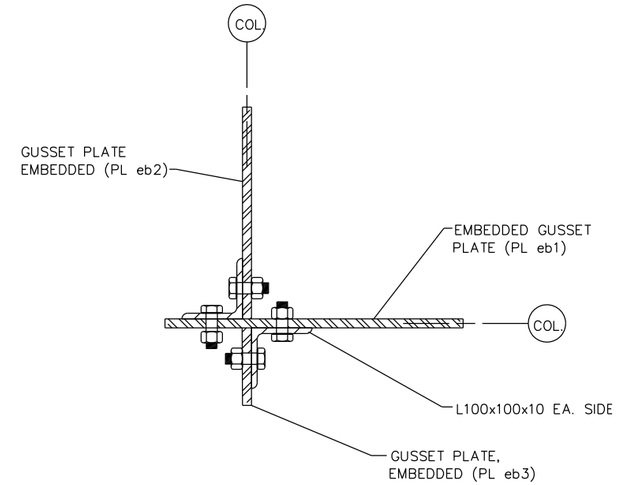

SECTION C S-6
1:5

UNLESS NOTED OTHERWISE, LINEAR DIMENSIONS ARE IN MILLIMETERS.

US Army Corps of Engineers ®
Mobile District

Symbol	No.	Description	Date	Approved
		Revisions		

Designed By:
Drawn By:
Checked By:
Reviewed By:
SIZE: 559x864mm
Date: 17 DECEMBER 2009
Contract No:
CADD CODE: MO10TG17
Specification Number:
FILENAME:

U.S. ARMY ENGINEER DISTRICT
CORPS OF ENGINEERS
MOBILE, ALABAMA

AFGHANISTAN ENGINEER DISTRICT
20 METER WATER TOWER

FOUNDATION STEEL
FRAMING SECTIONS

SHEET IDENTIFICATION
S-6

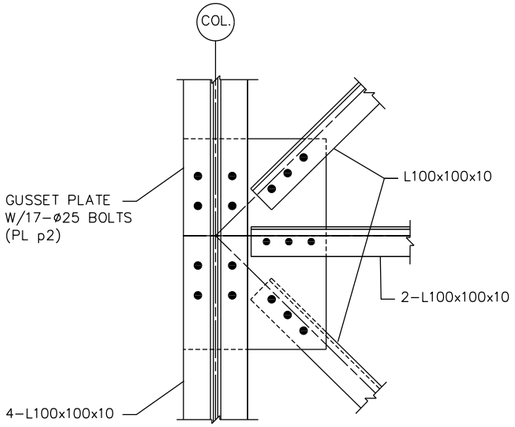

DETAIL 1 / S-4
1:10

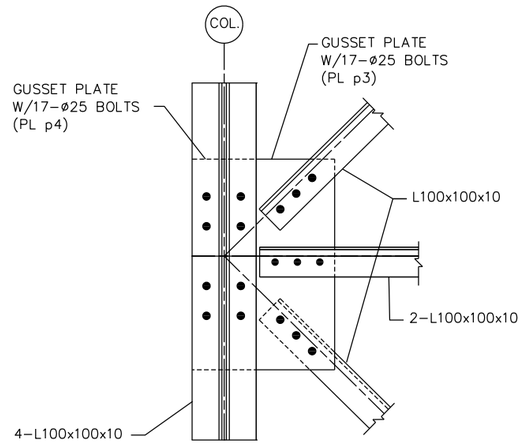

DETAIL 2 / S-4
1:10

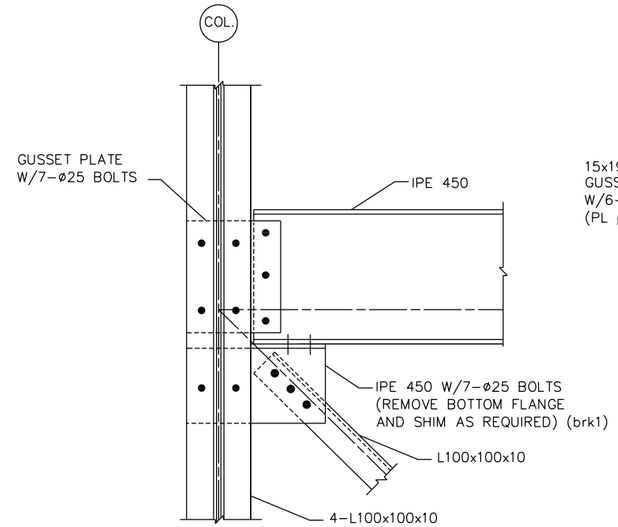

DETAIL 3 / S-4
1:10

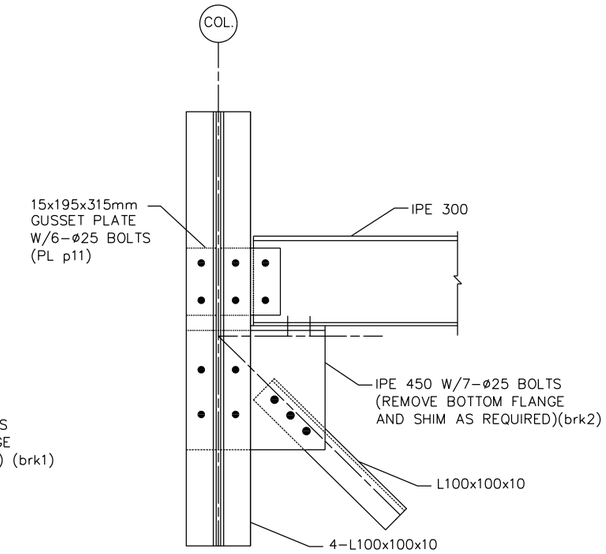

DETAIL 4 / S-4
1:10

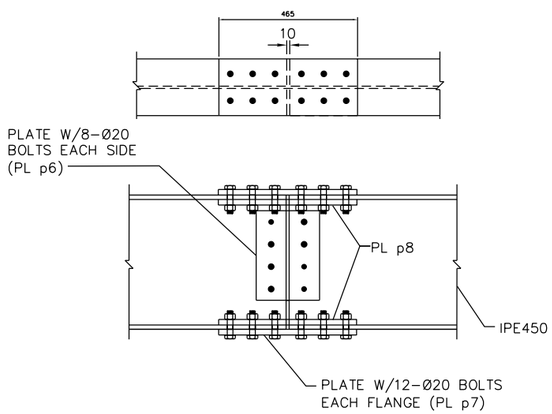

DETAIL 5 / S-3
1:10

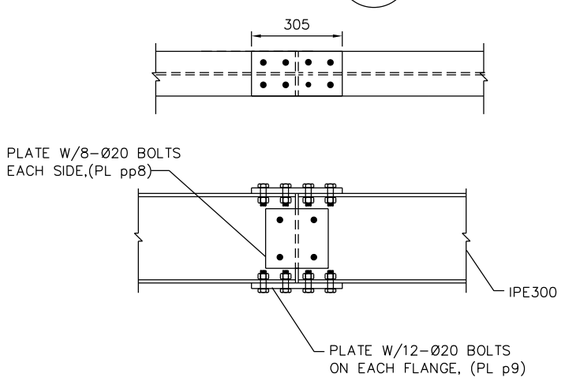

DETAIL 6 / S-3
1:10

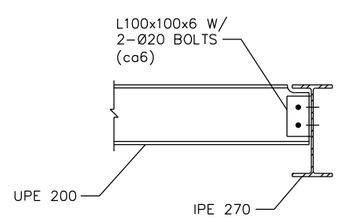

DETAIL 7 / S-3
1:10

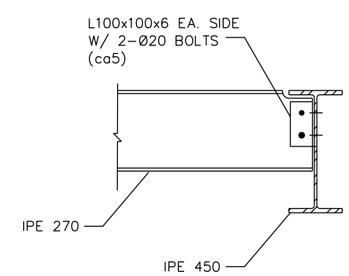

SECTION A / S-3
1:10

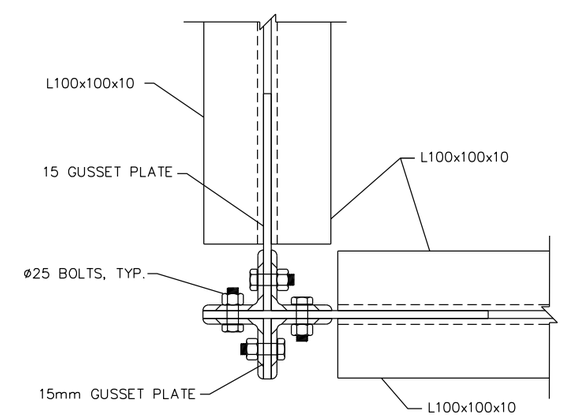

SECTION B / S-4
1:5

1000 0 1000mm
SCALE: 1 = 50

UNLESS NOTED OTHERWISE, LINEAR DIMENSIONS ARE IN MILLIMETERS.

US Army Corps of Engineers
Mobile District

Symbol	No.	Description	Date	Approved
		Revisions		

Designed By:
Date: 17 DECEMBER 2009
Drawn By:
Contract No:
Checked By:
CADD CODE: M010TC17
Reviewed By:
Solicitation Number:
SIZE: 559x864mm
FILENAME:

U.S. ARMY ENGINEER DISTRICT
CORPS OF ENGINEERS
MOBILE, ALABAMA

AFGHANISTAN ENGINEER DISTRICT
20 METER WATER TOWER

SECTIONS & DETAILS

SHEET IDENTIFICATION
S-7

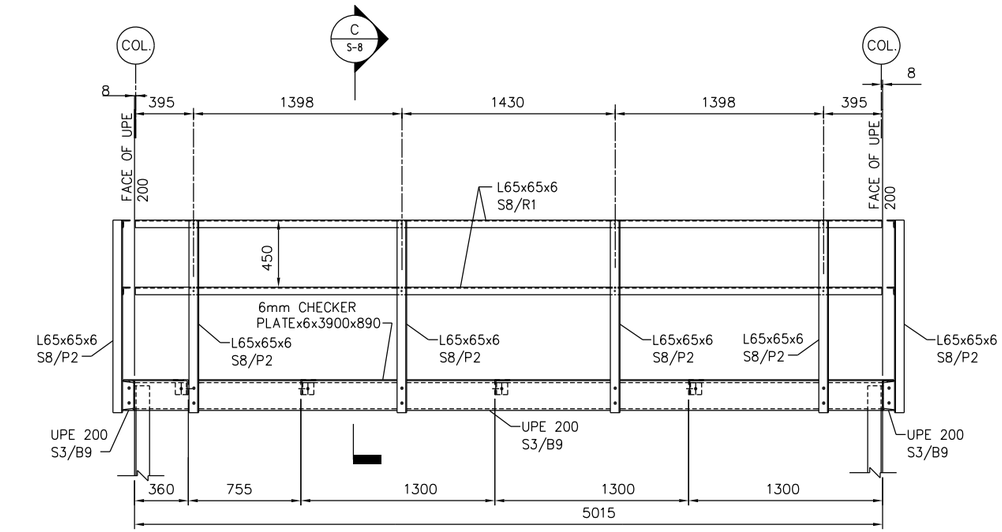

PLATFORM ELEVATION (A / S-3)
1:20

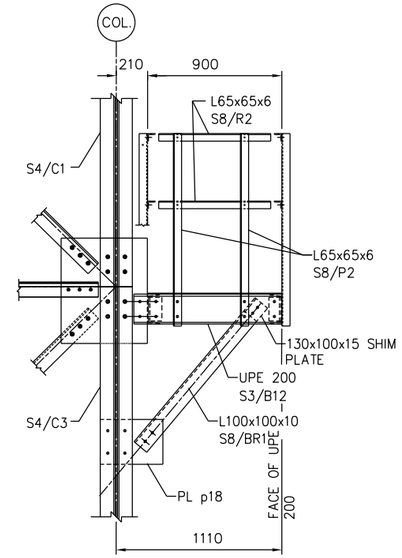

PLATFORM ELEVATION (B / S-3)
1:20

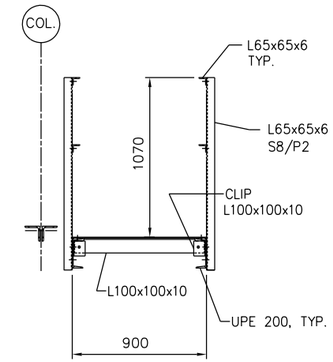

SECTION (C / S-8)
1:20

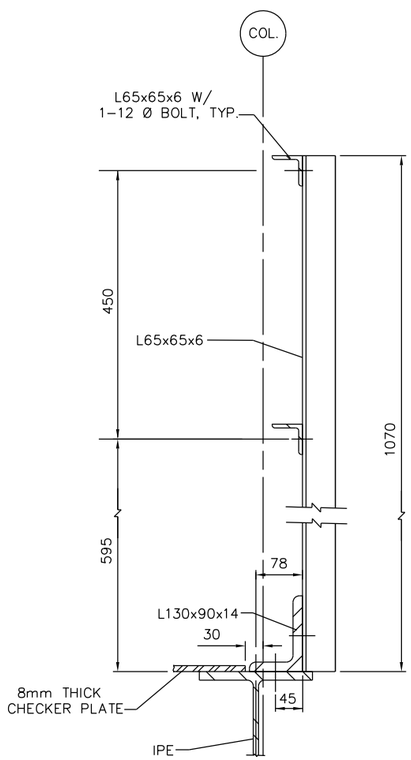

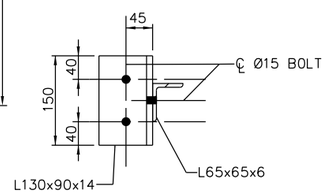

PLATFORM HANDRAIL DETAIL
1:5

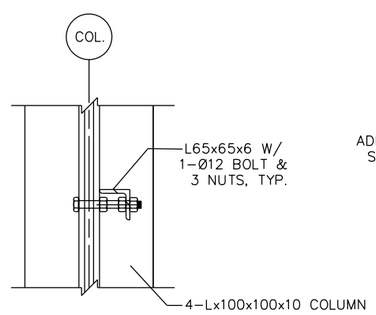

COLUMN/HANDRAIL CONNECTION DETAIL
1:5

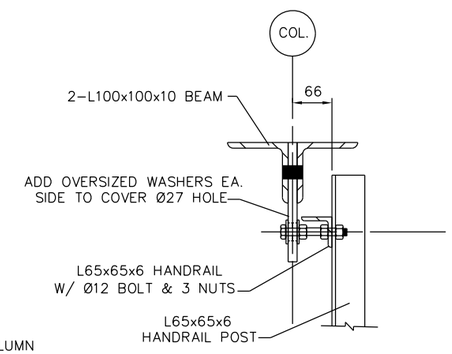

BEAM/HANDRAIL CONNECTION DETAIL
1:5

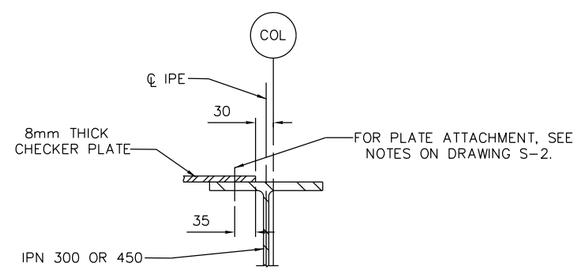

CHECKER PLATE ATTACHMENT DETAIL
1:5

100 0 100mm
SCALE: 1 = 5

UNLESS NOTED OTHERWISE, LINEAR DIMENSIONS ARE IN MILLIMETERS.

US Army Corps of Engineers
Mobile District

Symbol	No.	Description	Date	Approved
		Revisions		

Designed By:
Date: 17 DECEMBER 2009
Drawn By:
Contract No:
Checked By:
CADD CODE: MOTOT17
Reviewed By:
Solicitation Number:
SIZE: 559x864mm
FILENAME:

U.S. ARMY ENGINEER DISTRICT
CORPS OF ENGINEERS
MOBILE, ALABAMA

AFGHANISTAN ENGINEER DISTRICT
20 METER WATER TOWER

SECTIONS & DETAILS

SHEET IDENTIFICATION
S-8

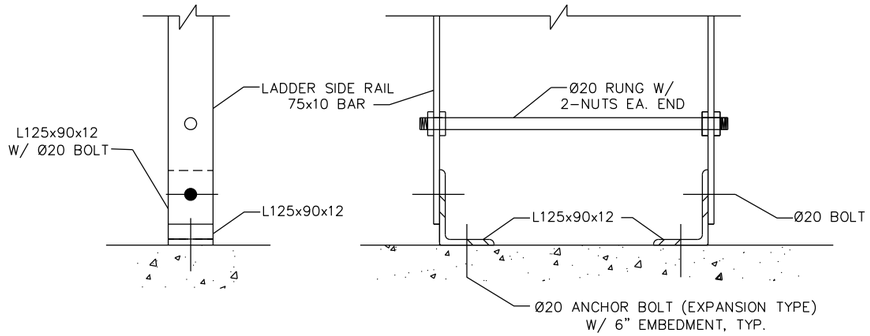

DETAIL 1/S-4
1:5

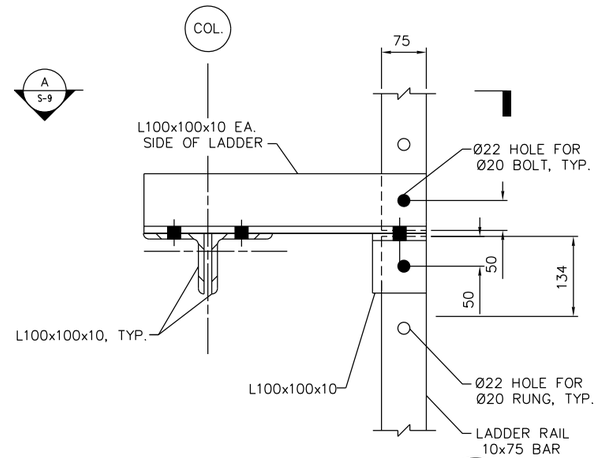

SECTION B/S-4
1:5

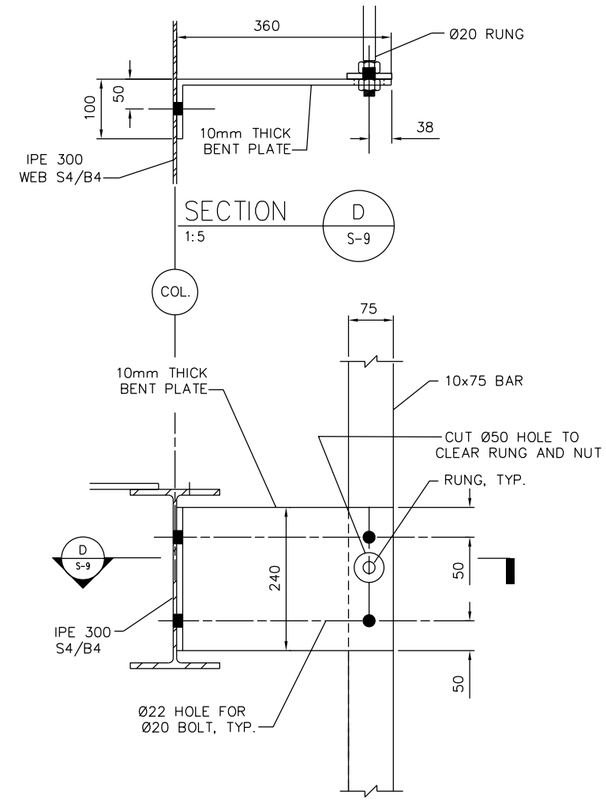

SECTION D/S-9
1:5

SECTION C/S-4
1:5

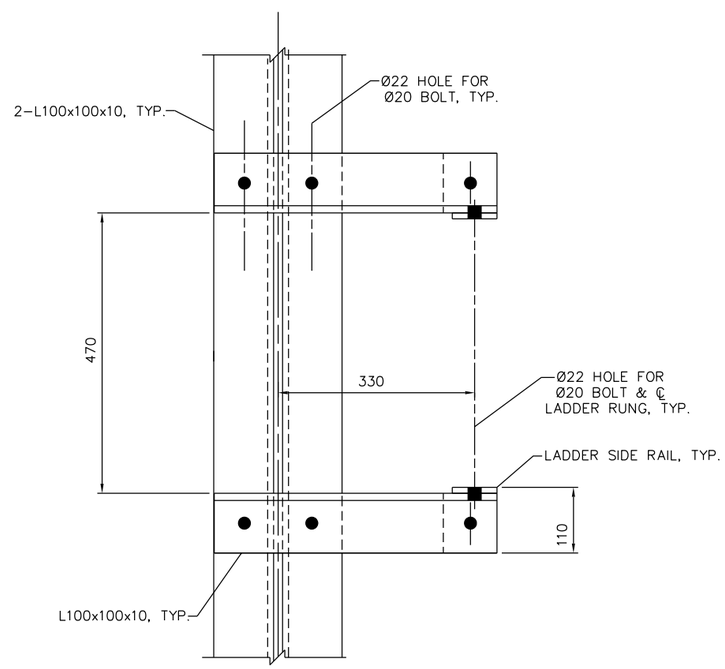

SECTION A/S-4 S-9
1:5

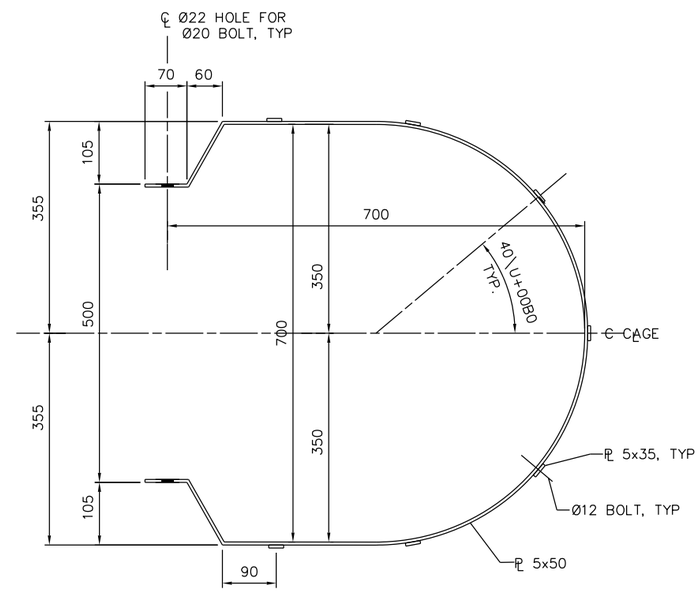

LADDER CAGE DETAIL
1:5

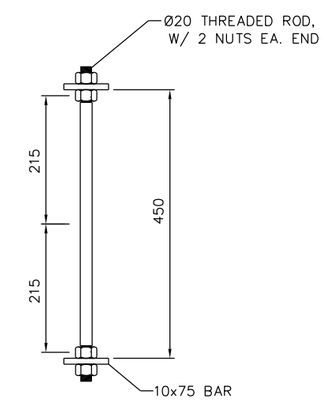

LADDER RUNG & SIDE RAIL
1:5

100 0 100mm
SCALE: 1 = 5

UNLESS NOTED OTHERWISE, LINEAR DIMENSIONS ARE IN MILLIMETERS.

US Army Corps of Engineers
Mobile District

Symbol	No.	Description	Date	Approved
		Revisions		

Designed By:
Date: 17 DECEMBER 2009
Drawn By:
Contract No:
Checked By:
CADD CODE: M010TG17
Reviewed By:
Solicitation Number:
SIZE: 559x864mm
FILENAME:

U.S. ARMY ENGINEER DISTRICT
CORPS OF ENGINEERS
MOBILE, ALABAMA

AFGHANISTAN ENGINEER DISTRICT
20 METER WATER TOWER

SECTIONS & DETAILS

SHEET IDENTIFICATION
S-9

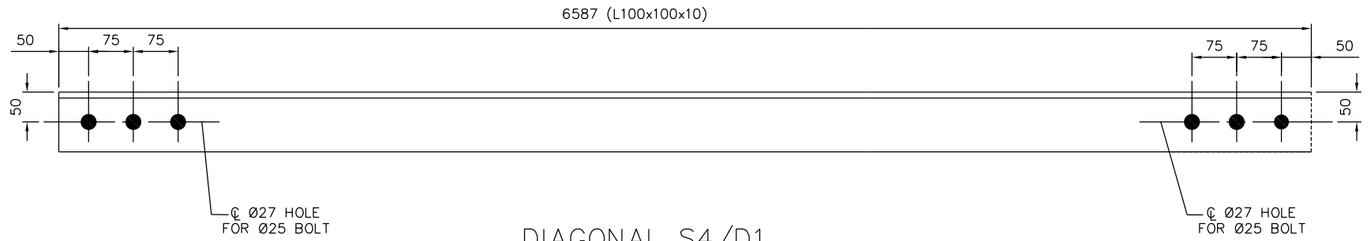

DIAGONAL S4/D1
MAKE: 32

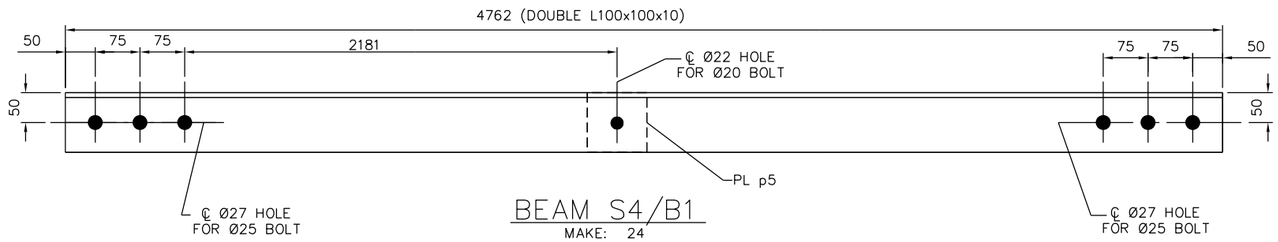

BEAM S4/B1
MAKE: 24
24-Ø20 A307 BOLTS

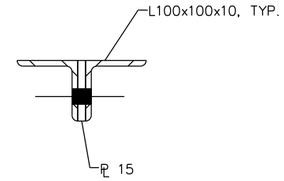

SHIP	MARK	NO. PCS	DESCRIPTION	LENGTH (mm)	FAB. MARK	NOTES
32	S4/D1		L100x100x10	6587		
24	S4/B1		2L100x100x10	4762		
		12	PL 15x100	100	PL p5	
4	S4/B2		IPE 450	1388		
		4	PL 10x215	300	PL p6	
		8	PL 20x190	465	PL p7	
		16	PL 20x80	465	PL p8	
		8	L100x100x10	200	ca5	
2	S4/B3		IPE 450	1970		
		12	L100x100x10	200	ca5	

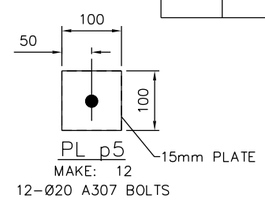

PL p5
MAKE: 12
12-Ø20 A307 BOLTS

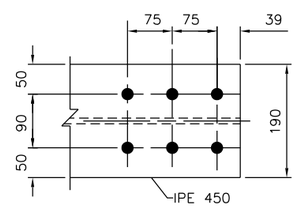

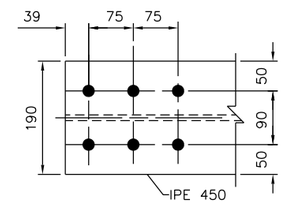

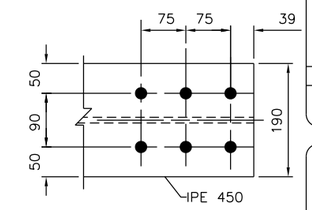

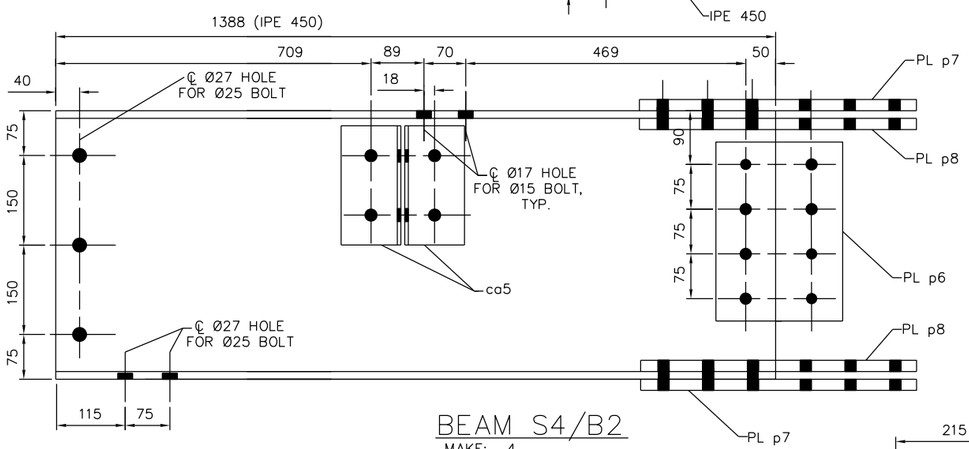

BEAM S4/B2
MAKE: 4
12-Ø25 A307 BOLTS

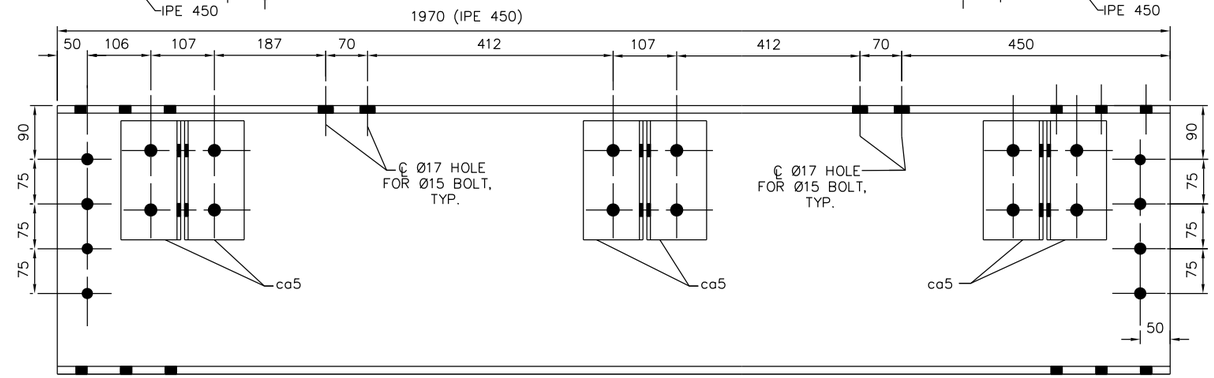

BEAM S4/B3
MAKE: 2

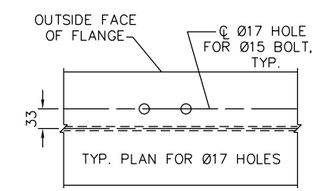

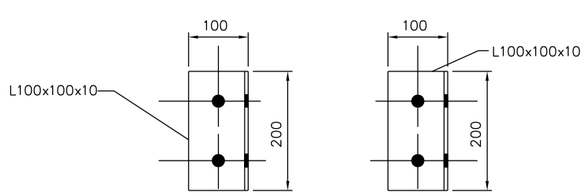

ca5
MAKE: 20
40-Ø25 A307 BOLTS

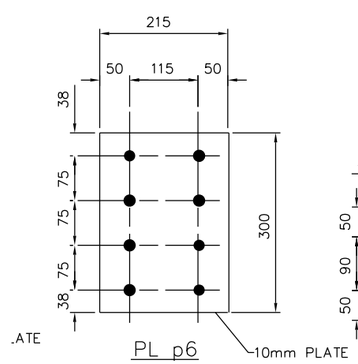

PL p6
MAKE: 8
32-Ø20 A307 BOLTS

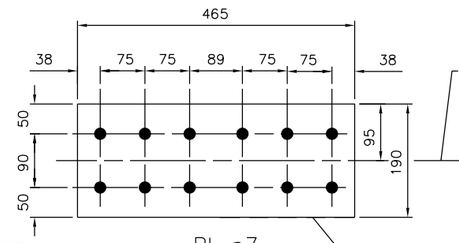

PL p7
MAKE: 8
96-Ø20 A307 BOLTS

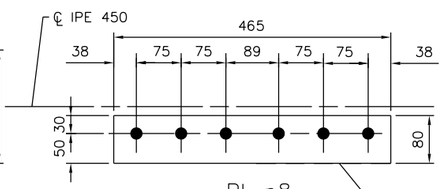

PL p8
MAKE: 16

UNLESS NOTED OTHERWISE, LINEAR DIMENSIONS ARE IN MILLIMETERS.

US Army Corps of Engineers
Mobile District

Symbol	No.	Description	Date	Approved
		Revisions		

Designed By:
Drawn By:
Checked By:
Reviewed By:
Date: 17 DECEMBER 2009
Contract No:
CADD CODE: M01DTG17
Solicitation Number:
FILENAME:
SIZE: 559x864mm

U.S. ARMY ENGINEER DISTRICT
CORPS OF ENGINEERS
MOBILE, ALABAMA

AFGHANISTAN ENGINEER DISTRICT
20 METER WATER TOWER

MEMBER DETAILS

SHEET IDENTIFICATION
S-10

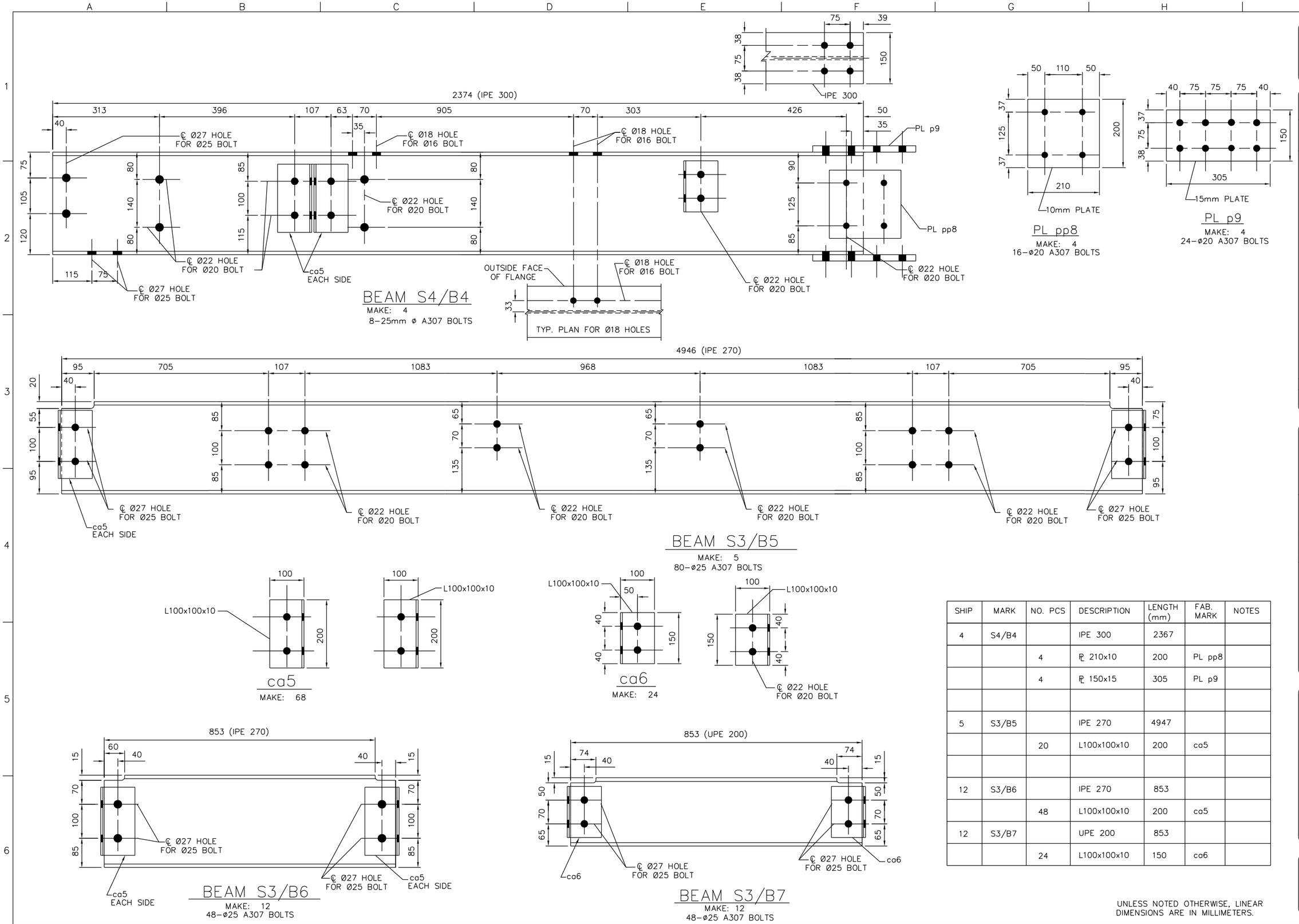

BEAM S4/B4
MAKE: 4
8–25mm ø A307 BOLTS

PL pp8
MAKE: 4
16–ø20 A307 BOLTS

PL p9
MAKE: 4
24–ø20 A307 BOLTS

BEAM S3/B5
MAKE: 5
80–ø25 A307 BOLTS

ca5
MAKE: 68

ca6
MAKE: 24

BEAM S3/B6
MAKE: 12
48–ø25 A307 BOLTS

BEAM S3/B7
MAKE: 12
48–ø25 A307 BOLTS

SHIP	MARK	NO. PCS	DESCRIPTION	LENGTH (mm)	FAB. MARK	NOTES
4	S4/B4		IPE 300	2367		
		4	PL 210x10	200	PL pp8	
		4	PL 150x15	305	PL p9	
5	S3/B5		IPE 270	4947		
		20	L100x100x10	200	ca5	
12	S3/B6		IPE 270	853		
		48	L100x100x10	200	ca5	
12	S3/B7		UPE 200	853		
		24	L100x100x10	150	ca6	

UNLESS NOTED OTHERWISE, LINEAR DIMENSIONS ARE IN MILLIMETERS.

US Army Corps of Engineers
Mobile District

Symbol | No. | Description | Date | Approved
Revisions

Designed By:
Drawn By:
Checked By:
Reviewed By:
Date: 17 DECEMBER 2009
Contract No:
CADD CODE: M010TG17
Solicitation Number: –
FILENAME:
SIZE: 559x864mm

U.S. ARMY ENGINEER DISTRICT
CORPS OF ENGINEERS
MOBILE, ALABAMA

AFGHANISTAN ENGINEER DISTRICT
20 METER WATER TOWER

MEMBER DETAILS

SHEET IDENTIFICATION
S–11

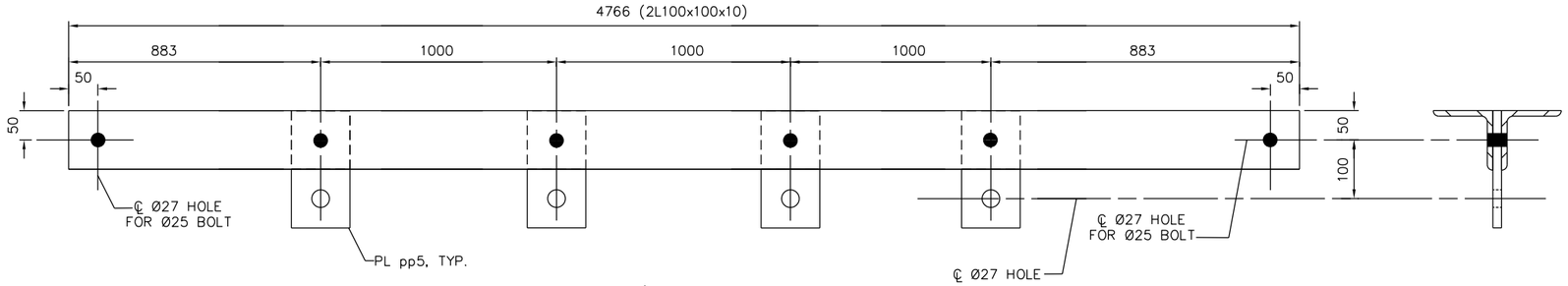

BEAM S4/B8

MAKE: 2
4-ø25 A307 BOLTS

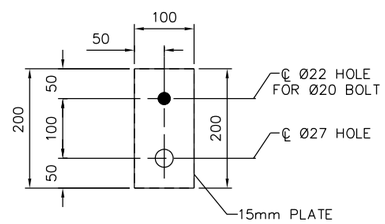

PL pp5

MAKE: 8
8-ø20 A307 BOLTS

SHIP	MARK	NO. PCS	DESCRIPTION	LENGTH (mm)	FAB. MARK	NOTES
4	S4/B8		2L100x100x10	4766		
		4	ℙ 15x100	200	PL pp5	

UNLESS NOTED OTHERWISE, LINEAR DIMENSIONS ARE IN MILLIMETERS.

US Army Corps of Engineers ®
Mobile District

Symbol	No.	Description	Date	Approved
		Revisions		

Designed By:
Date: 17 DECEMBER 2009
Drawn By:
Contract No:
Checked By:
CADD CODE: M010TG17
Reviewed By:
Solicitation Number:
SIZE: 559x864mm
FILENAME:

U.S. ARMY ENGINEER DISTRICT
CORPS OF ENGINEERS
MOBILE, ALABAMA

AFGHANISTAN ENGINEER DISTRICT
20 METER WATER TOWER

MEMBER DETAILS

SHEET IDENTIFICATION

S-12

SHIP	MARK	NO. PCS	DESCRIPTION	LENGTH (mm)	FAB. MARK	WEIGHT	NOTES
10	S4/C1		4–L100x100x10	4920			
		40	L100x100x10	4920	L am1		
		20	PL 100x15	215	PL p1		
		10	PL 480x15	705	PL p2		
		10	PL 100x15	705	PL p3		
		10	PL 365x15	705	PL p4		
		4	PL 100X15	515	PL pp1		
		4	PL 100X15	515	PL pp2		

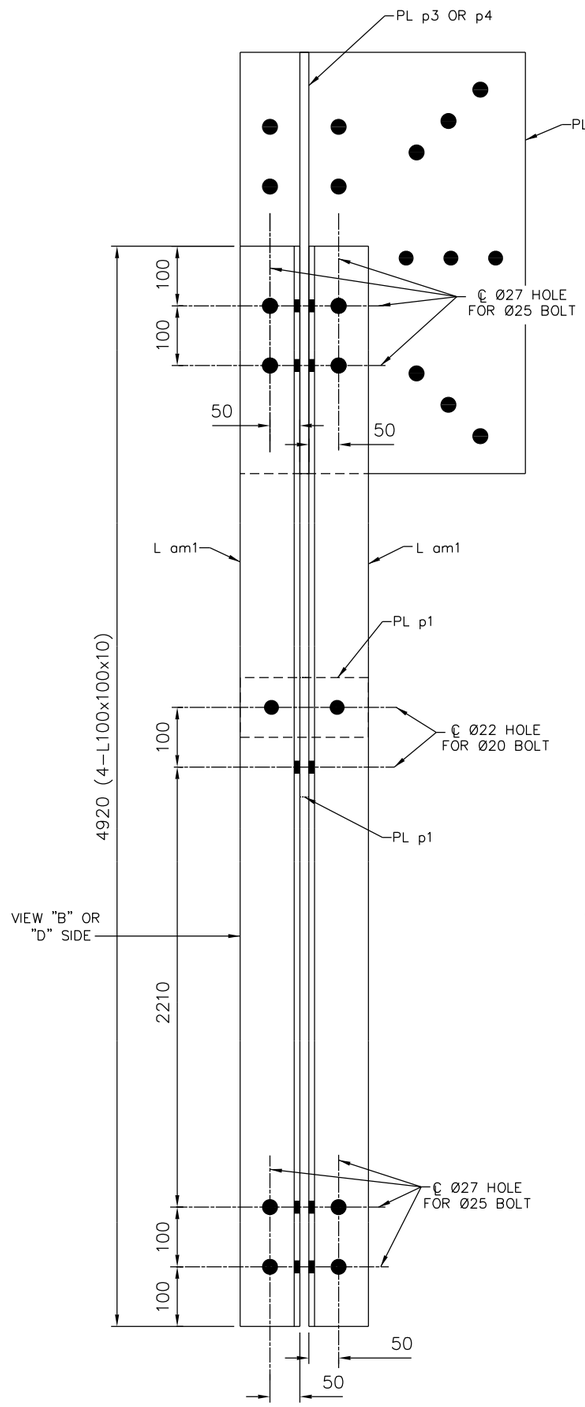

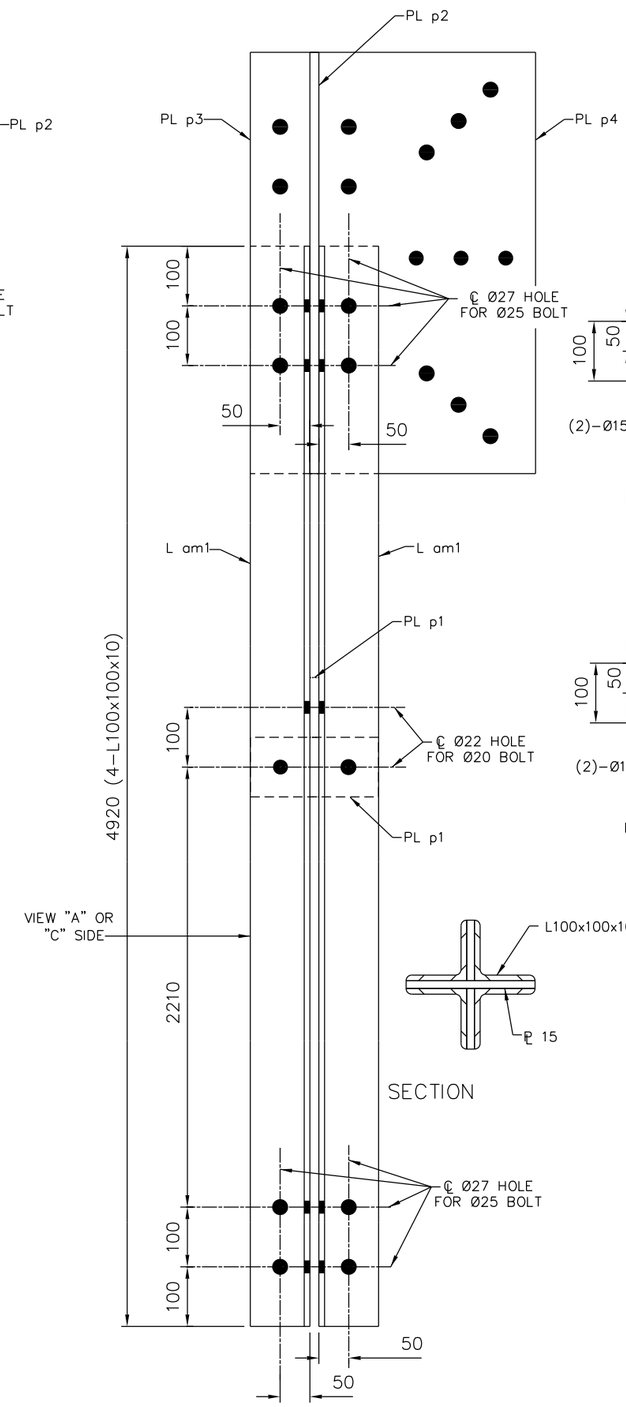

SECTION

COLUMN S4/C1
MAKE: 10

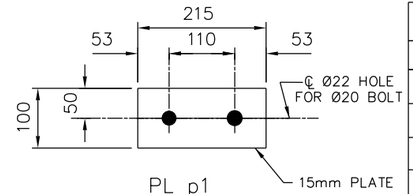

PL p1
MAKE: 20
40–Ø20 A307 BOLTS

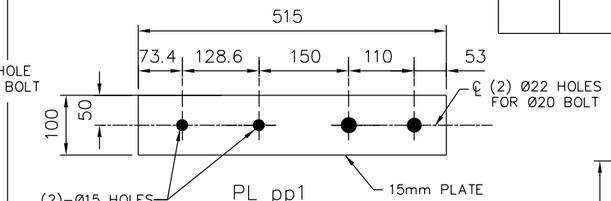

PL pp1
MAKE: 4
16–Ø20 A307 BOLTS

NOTE: PLUMBING PIPE SUPPORT (PL pp1) MAY BE INTERCHANGED WITH PL p1 TO ATTACH PLUMBING.

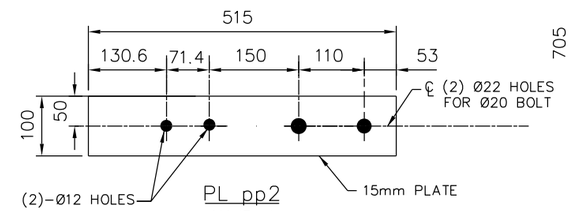

PL pp2
MAKE: 4
16–Ø20 A307 BOLTS

NOTE: PLUMBING PIPE SUPPORT (PL pp2) MAY BE INTERCHANGED WITH PL p1 TO ATTACH PLUMBING.

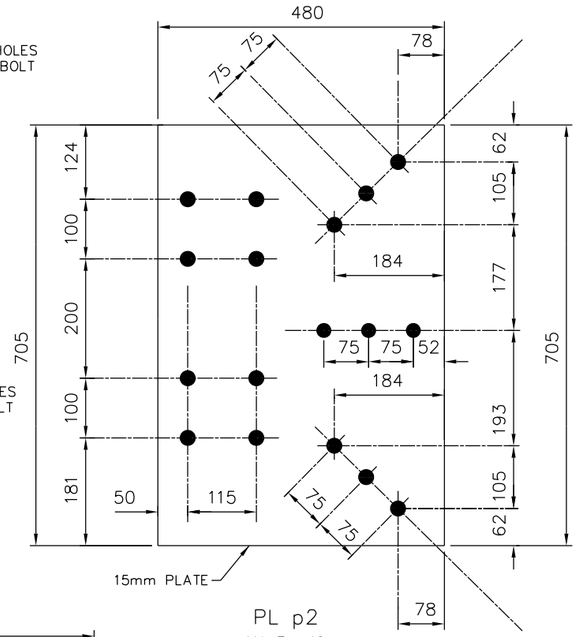

PL p2
MAKE: 10
170–Ø25 A307 BOLTS

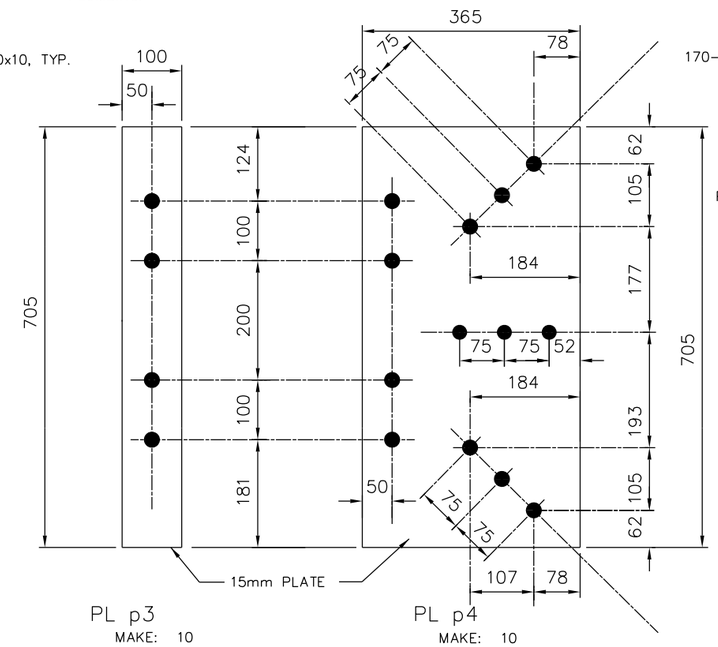

PL p3
MAKE: 10
40–Ø25 A307 BOLTS

PL p4
MAKE: 10
130–Ø25 A307 BOLTS

NOTE: BOLT HOLES IN PL p2, p3, & p4 ARE Ø27

UNLESS NOTED OTHERWISE, LINEAR DIMENSIONS ARE IN MILLIMETERS.

US Army Corps of Engineers
Mobile District

Symbol	No.	Description	Date	Approved
		Revisions		

Designed By:
Drawn By:
Checked By:
Reviewed By:
Date: 17 DECEMBER 2009
Contract No:
CADD CODE: M010TG17
Specification Number:
FILENAME:
SIZE: 559x864mm

U.S. ARMY ENGINEER DISTRICT
CORPS OF ENGINEERS
MOBILE, ALABAMA

AFGHANISTAN ENGINEER DISTRICT
20 METER WATER TOWER

MEMBER DETAILS

SHEET IDENTIFICATION
S–13

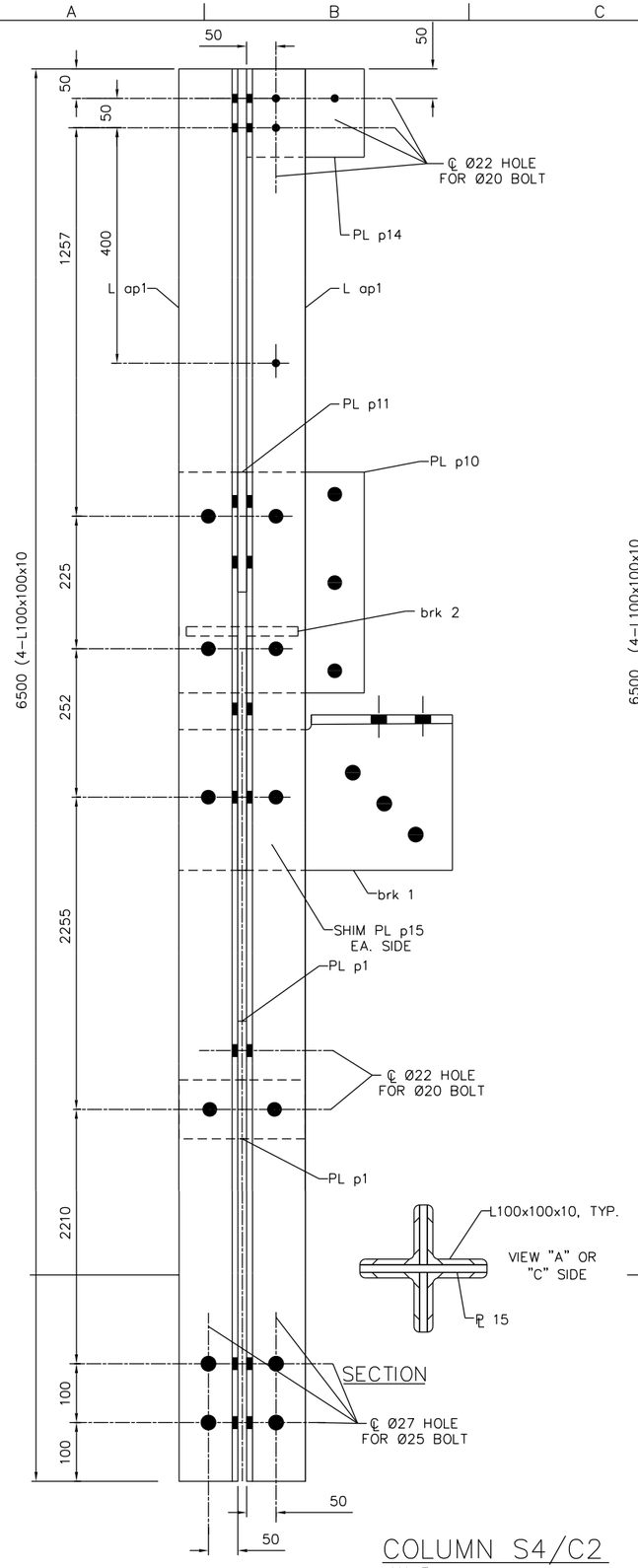

COLUMN S4/C2
MAKE: 4

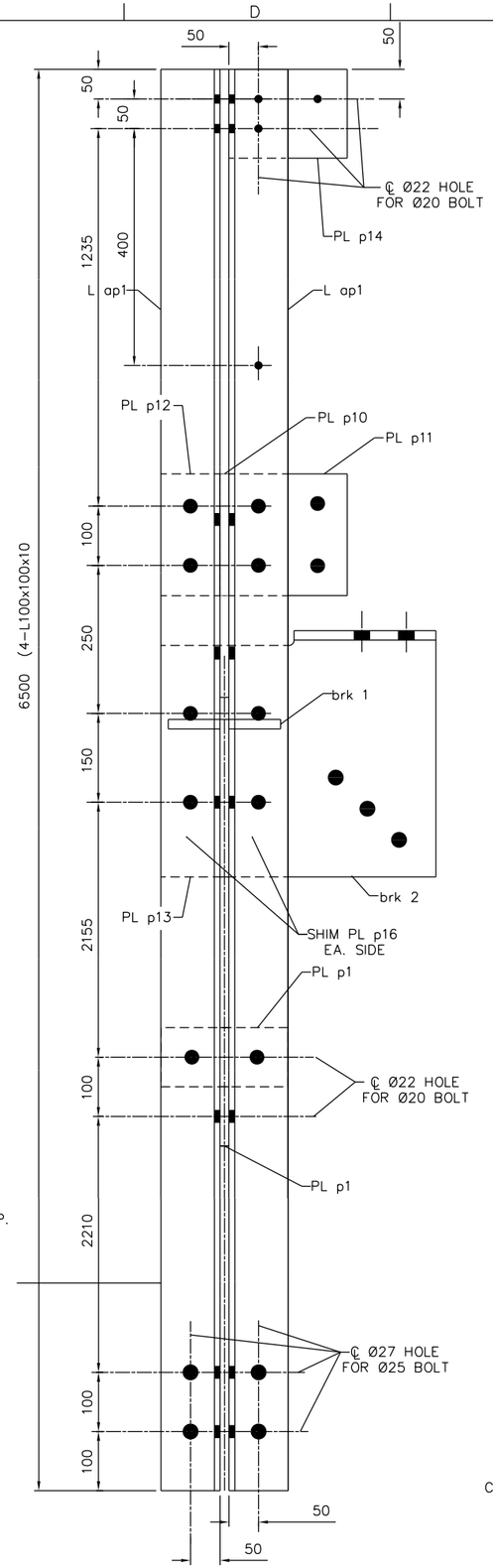

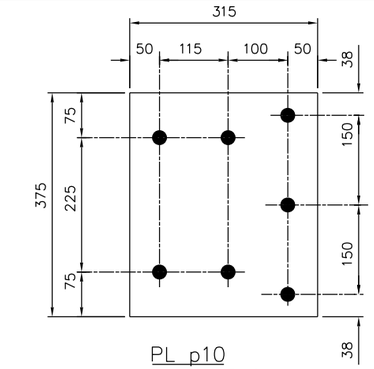

PL p10
MAKE: 4
28-ø25 A307 BOLTS

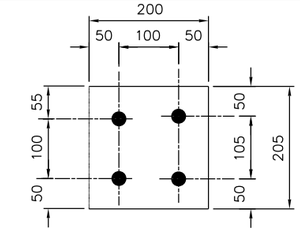

PL p11
MAKE: 4
16-ø25 A307 BOLTS

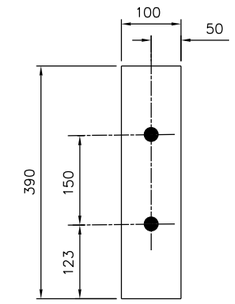

PL p13
MAKE: 4
8-ø25 A307 BOLTS

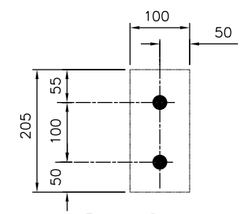

PL p12
MAKE: 4
8-ø25 A307 BOLTS

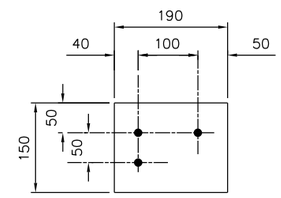

PL p14
MAKE: 8
12-ø20 A307 BOLTS

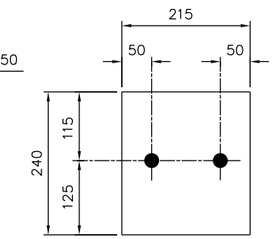

SHIM PL p15
MAKE: 8
2mm SHIM PLATES

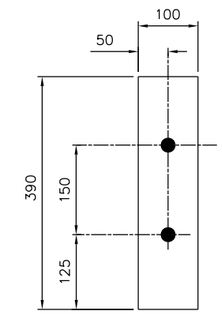

SHIM PL p16
MAKE: 16
2mm SHIM PLATES

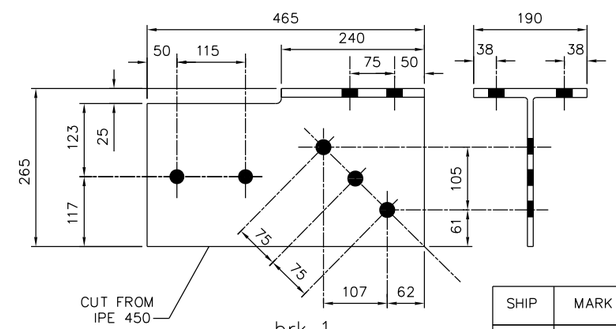

brk 1
MAKE: 4
28-ø25 A307 BOLTS

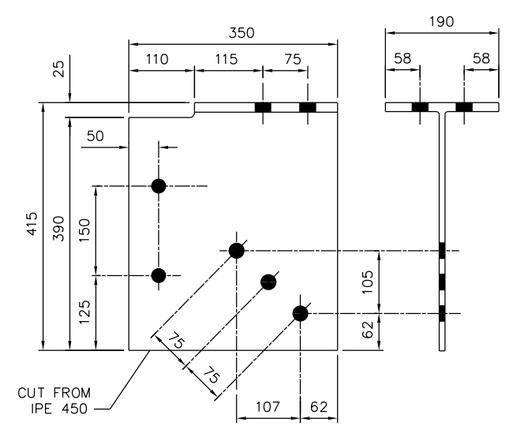

brk 2
MAKE: 4
28-ø25 A307 BOLTS

SHIP	MARK	NO. PCS	DESCRIPTION	LENGTH (mm)	FAB. MARK	NOTES
4	S4/C2		4-L100x100x10	6500		
		16	L100x100x10	6500	L ap1	
		4	ℙ 315x15	375	PL p10	
		4	ℙ 200x15	205	PL p11	
		4	ℙ 100x15	205	PL p12	
		4	ℙ 100x15	390	PL p13	
		8	ℙ 150x15	190	PL p14	
		8	ℙ 215x2	240	SHIM PL p15	
		16	ℙ 100x2	390	SHIM PL p16	
		4	ℙ 265x15	465	brk 1	
		4	ℙ 350x15	415	brk 2	

UNLESS NOTED OTHERWISE, LINEAR DIMENSIONS ARE IN MILLIMETERS.

US Army Corps of Engineers ®
Mobile District

Symbol	No.	Description	Date	Approved
		Revisions		

Designed By:
Date: 17 DECEMBER 2009
Drawn By:
Contract No:
Checked By:
CADD CODE: MOT0T017
Reviewed By:
Solicitation Number:
SIZE: 559x864mm
FILENAME:

U.S. ARMY ENGINEER DISTRICT
CORPS OF ENGINEERS
MOBILE, ALABAMA

AFGHANISTAN ENGINEER DISTRICT
20 METER WATER TOWER

MEMBER DETAILS

SHEET IDENTIFICATION
S-14

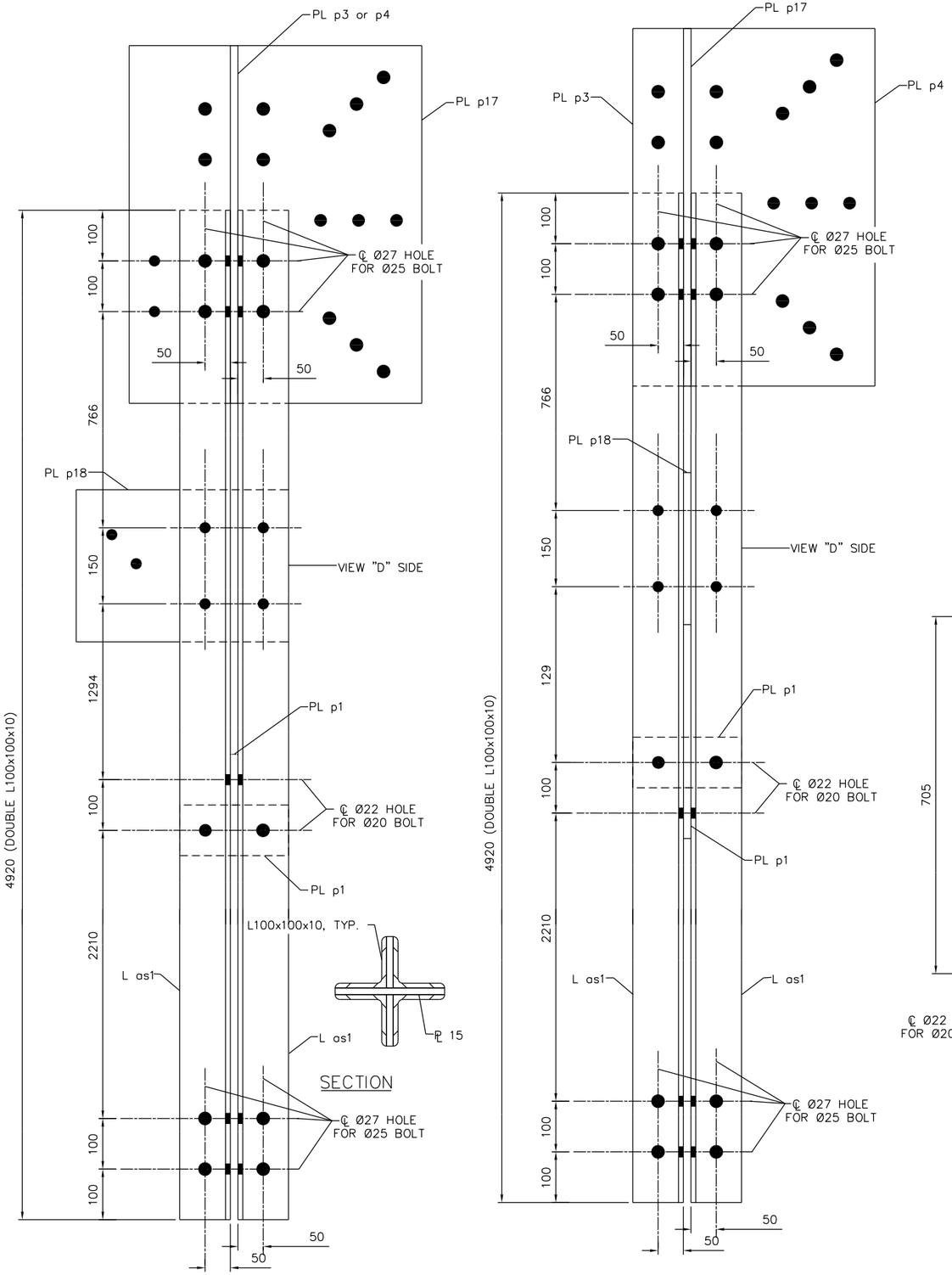

COLUMN S4/C3

MAKE: 2

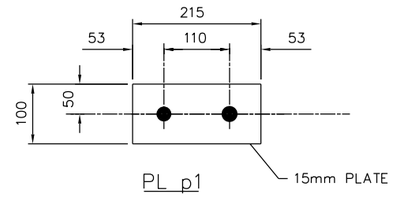

PL p1

MAKE: 4

64–ø20 A307 BOLTS

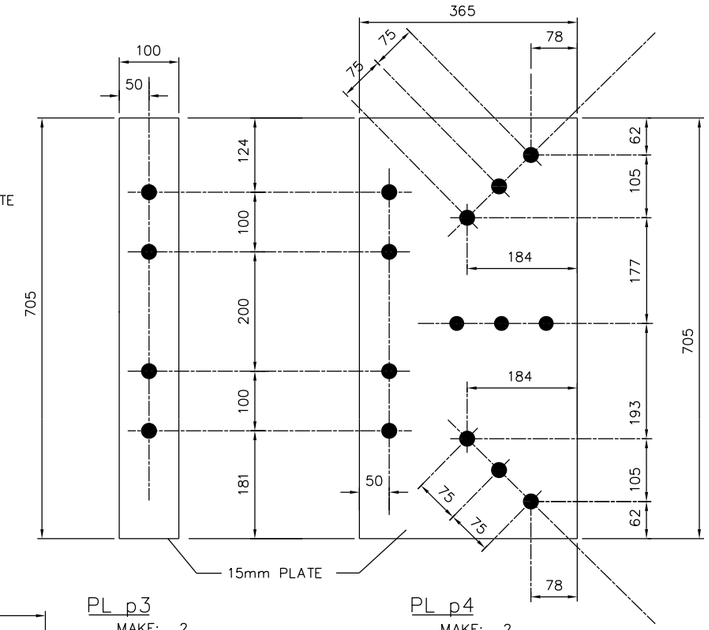

PL p3

MAKE: 2

8–ø25 A307 BOLTS

PL p4

MAKE: 2

26–ø25 A307 BOLTS

TE: HOLES IN PL p3, p4, , & p18 ARE Ø27 UNLESS SHOWN OTHERWISE.

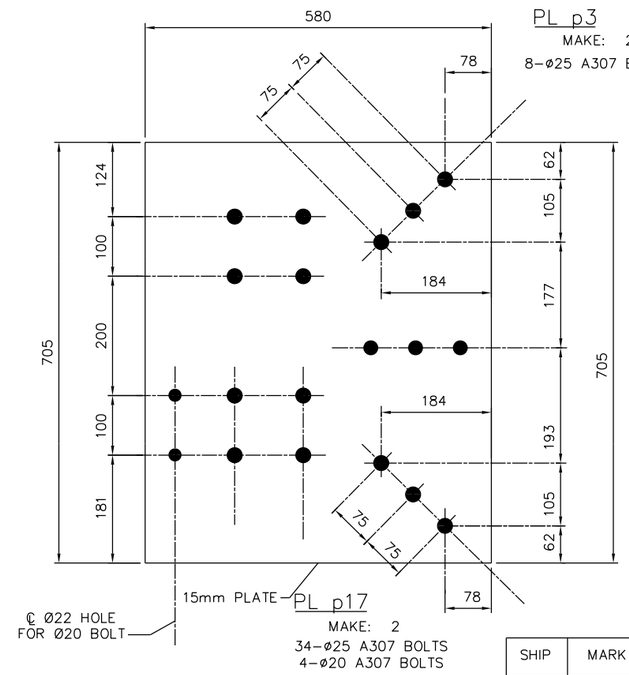

PL p17

MAKE: 2

34–ø25 A307 BOLTS

4–ø20 A307 BOLTS

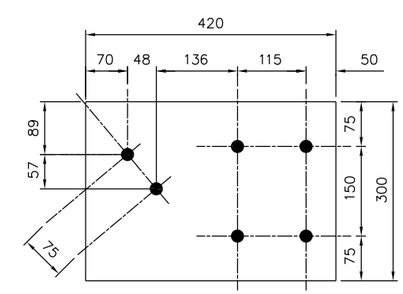

PL p18

MAKE: 2

12–ø25 A307 BOLTS

SHIP	MARK	NO. PCS	DESCRIPTION	LENGTH (mm)	FAB. MARK	WEIGHT	NOTES
2	S4/C3		4–L100x100x10	4920			
		8	4–L100x100x10	4920	L as1		
		4	℞ 100x15	215	PL p1		
		2	℞ 100x15	705	PL p3		
		2	℞ 100x15	705	PL p4		
		2	℞ 580x15	705	PL p17		
		2	℞ 300x15	420	PL p18		

UNLESS NOTED OTHERWISE, LINEAR DIMENSIONS ARE IN MILLIMETERS.

US Army Corps of Engineers ®
Mobile District

Symbol	No.	Description	Date	Approved
		Revisions		

Designed By:
Date: 17 DECEMBER 2009
Drawn By:
Contract No:
Checked By:
CADD CODE: M010TC17
Reviewed By:
Solicitation Number:
SIZE: 559x864mm
FILENAME:

U.S. ARMY ENGINEER DISTRICT
CORPS OF ENGINEERS
MOBILE, ALABAMA

AFGHANISTAN ENGINEER DISTRICT
20 METER WATER TOWER

MEMBER DETAILS

SHEET IDENTIFICATION

S–15

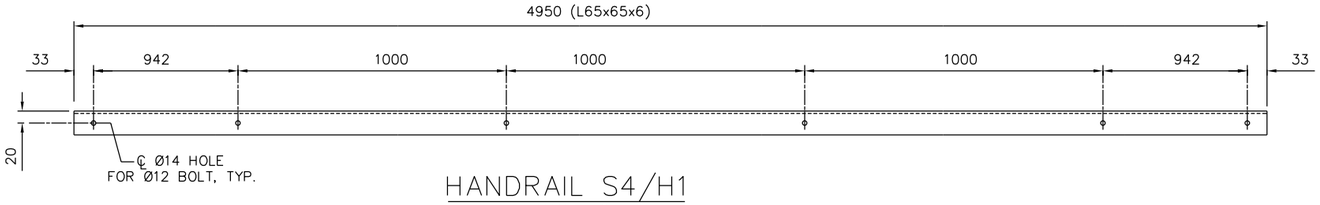

HANDRAIL S4/H1

MAKE: 2
24–Ø12 A307 BOLTS

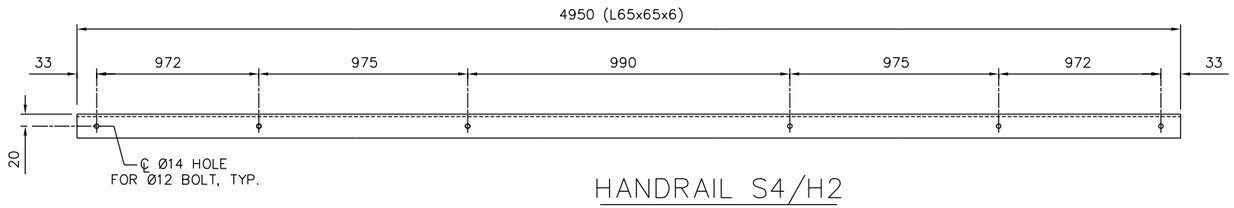

HANDRAIL S4/H2

MAKE: 2
20–Ø12 A307 BOLTS

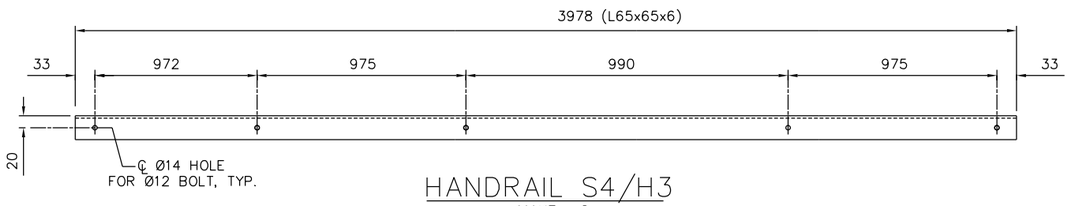

HANDRAIL S4/H3

MAKE: 2
10–Ø12 A307 BOLTS

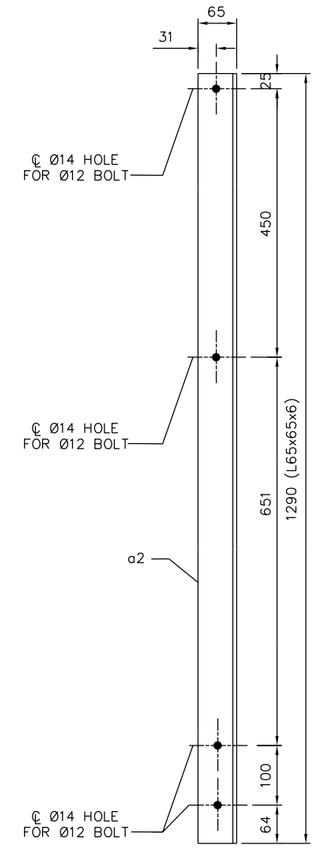

HANDRAIL POST S8/P2

MAKE: 12
48–12 ø A307 BOLTS

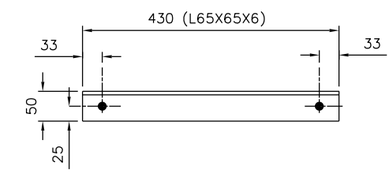

HANDRAIL S4/H4

MAKE: 2
4–Ø12 A307 BOLTS

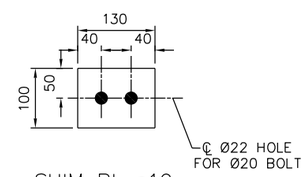

SHIM PL p19

MAKE: 2
15mm SHIM PLATES

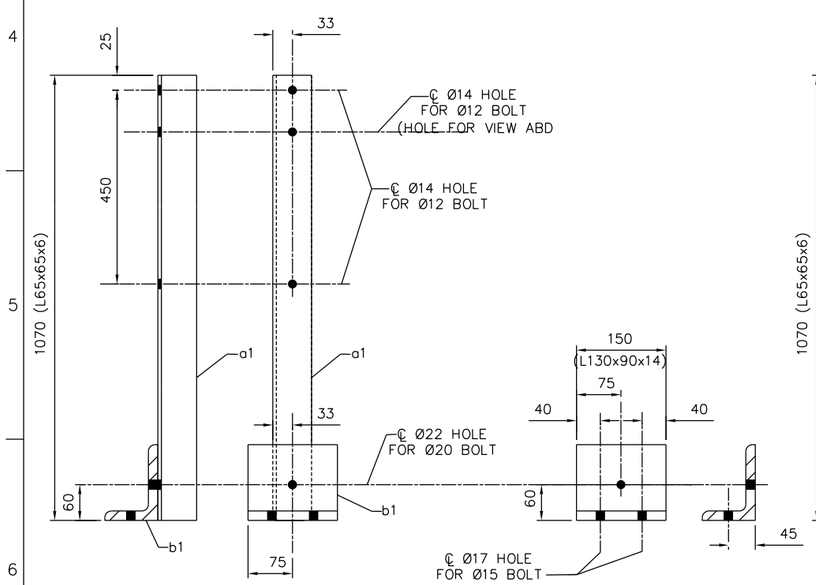

HANDRAIL POST S4/P1

MAKE: 9
28–Ø12 A307 BOLTS
42–Ø15 A307 BOLTS

b1

8–Ø20 A307 BOLTS

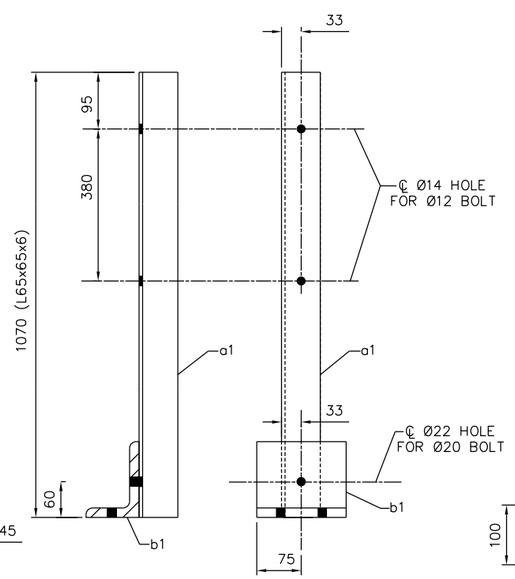

HANDRAIL POST S4/P3

MAKE: 8
28–Ø12 A307 BOLTS
42–Ø15 A307 BOLTS

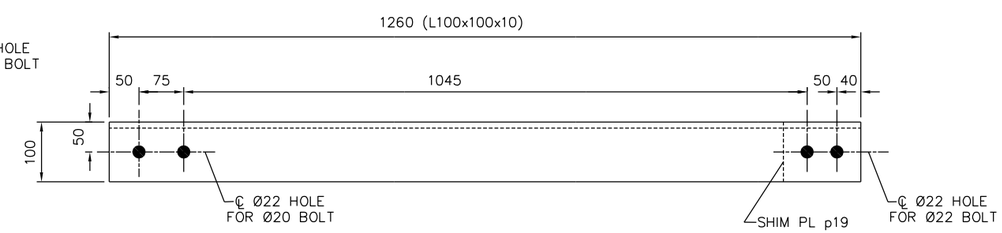

BEAM S8/BR1

MAKE: 2
4–Ø15 A307 BOLTS

UNLESS NOTED OTHERWISE, LINEAR DIMENSIONS ARE IN MILLIMETERS.

SHIP	MARK	NO. PCS	DESCRIPTION	LENGTH (mm)	FAB. MARK	NOTES
2	S4/H1		L65x65x6	4950		
2	S4/H2		L65x65x6	4950		
2	S4/H3		L65x65x6	3978		
2	S4/H4		L65x65x6	3978		
14	S4/P1					
			L65x65x6	1070		
		14	L130x90x14	150	b1	
12	S4/P2		HANDRAIL POST	1290		
		14	L65x65x6	1290	a2	
2	S8/BR1		L100x100x10	1260		
		2	PL 100x15	130	PL p19	

US Army Corps of Engineers ®
Mobile District

Symbol	No.	Description	Date	Approved
		Revisions		

Designed By:
Date: 17 DECEMBER 2009
Drawn By:
Contract No:
Checked By:
CADD CODE: M010TG17
Reviewed By:
Specification Number:
SIZE: 559x864mm
FILENAME:

U.S. ARMY ENGINEER DISTRICT
CORPS OF ENGINEERS
MOBILE, ALABAMA

AFGHANISTAN ENGINEER DISTRICT
20 METER WATER TOWER

MEMBER DETAILS

SHEET IDENTIFICATION
S–16

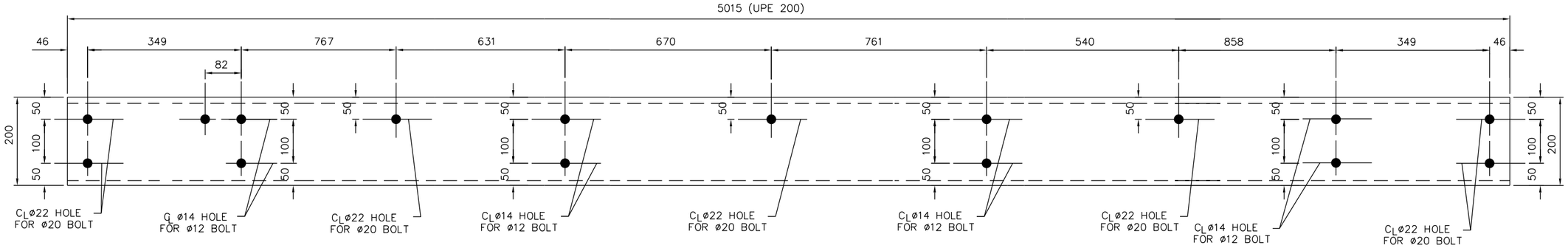

BEAM S3/B9

MAKE: 2

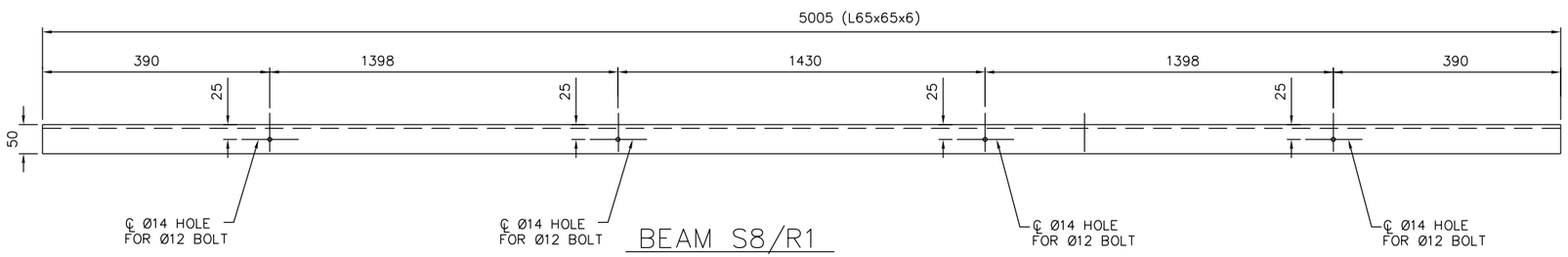

BEAM S8/R1

MAKE: 2

SHIP	MARK	NO. PCS	DESCRIPTION	LENGTH (mm)	FAB. MARK	NOTES
2	S3/B9		UPE 200	5015		
2	S8/R1		L65x65x6	5005		
2	S8/R2		L65x65x6	750		
1	S3/B10		UPE 200	992		
		1	L100x100x10	160	ca1	
4	S3/B11		L100x100x10	870		
		8	L100x100x10	100	ca2	
1	S3/B12		UPE 200	992		
		1	L100x100x10	100	ca1	

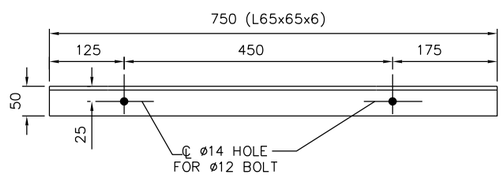

BEAM S8/R2

MAKE: 2

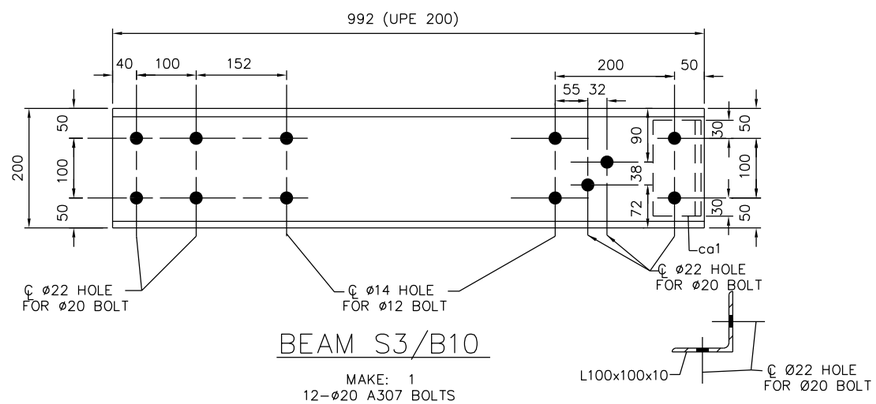

BEAM S3/B10

MAKE: 1
12-ø20 A307 BOLTS

MAKE: 2

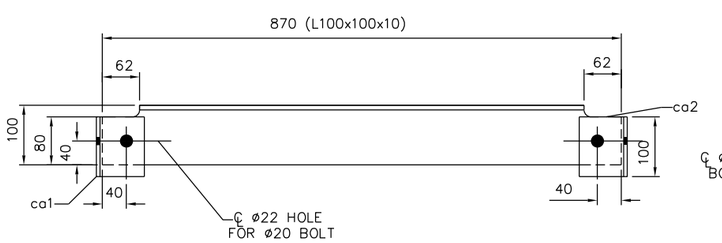

BEAM S3/B11

MAKE: 4
16-ø20 A307 BOLTS

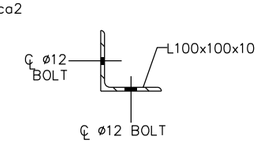

MAKE: 8

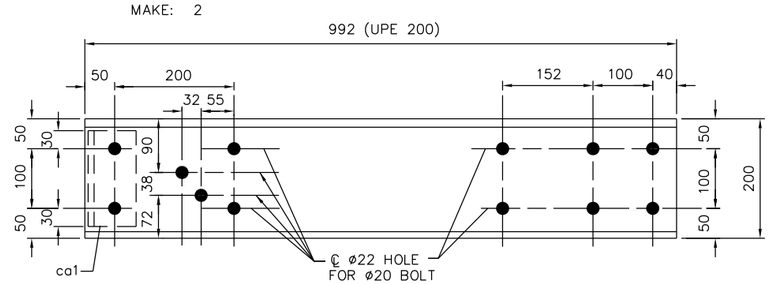

BEAM S3/B12

MAKE: 1
12-ø20 A307 BOLTS

100 0 100mm
SCALE: 1 = 5

UNLESS NOTED OTHERWISE, LINEAR DIMENSIONS ARE IN MILLIMETERS.

US Army Corps of Engineers
Mobile District

Symbol	No.	Description	Date	Approved
		Revisions		

Date: 17 DECEMBER 2009
Contract No:
CADD CODE: M010TG17
Solicitation Number:
FILENAME:
Designed By:
Drawn By:
Checked By:
Reviewed By:
SIZE: 559x864mm

U.S. ARMY ENGINEER DISTRICT
CORPS OF ENGINEERS
MOBILE, ALABAMA

AFGHANISTAN ENGINEER DISTRICT
20 METER WATER TOWER

SECTIONS & DETAILS

SHEET IDENTIFICATION

S-17

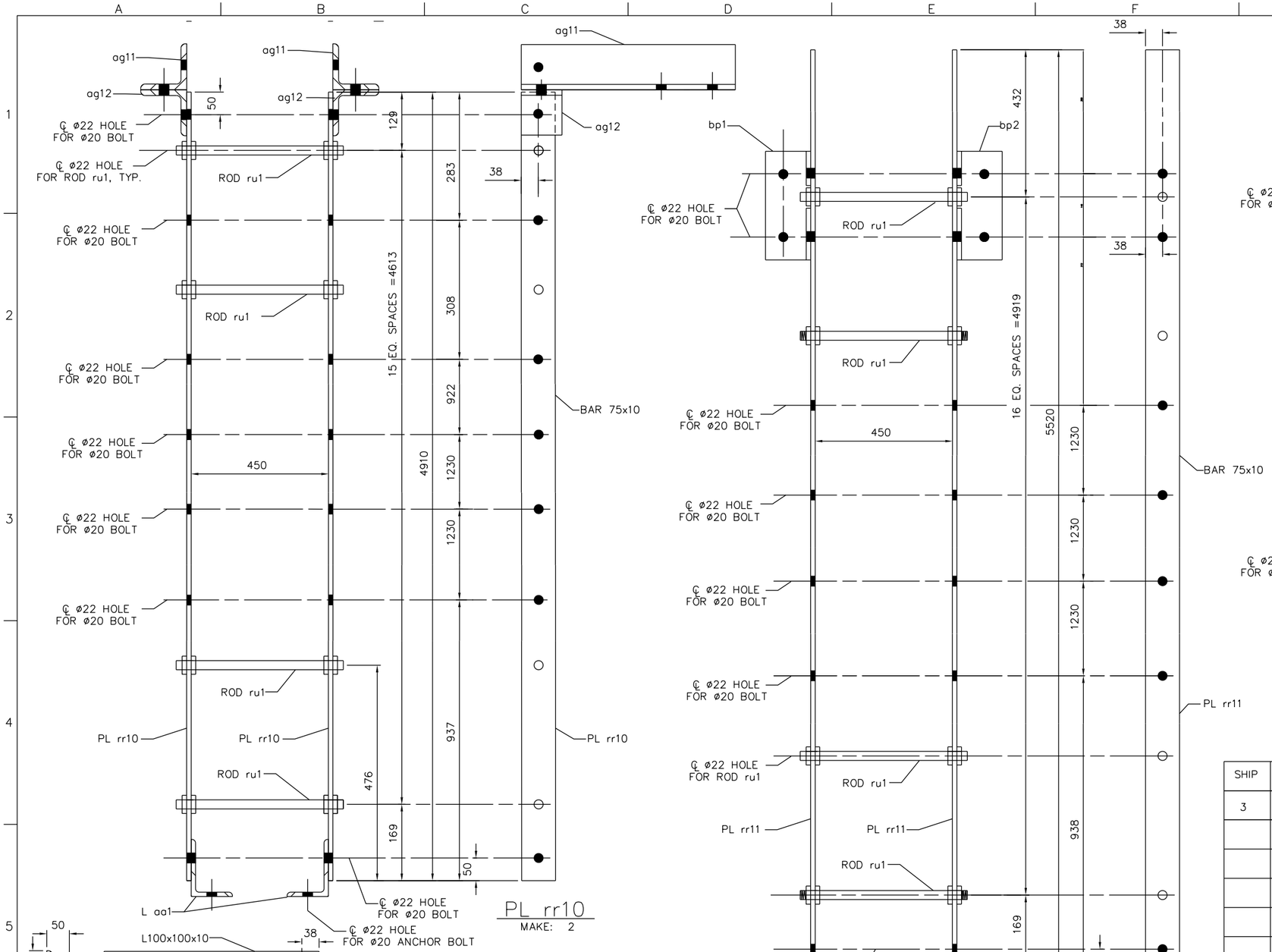

PL rr10
MAKE: 2

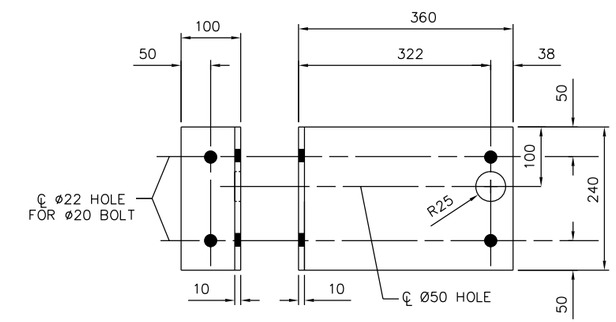

bp1
MAKE: 1

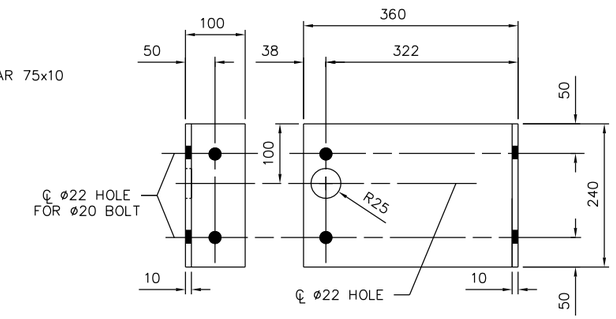

bp2
MAKE: 1

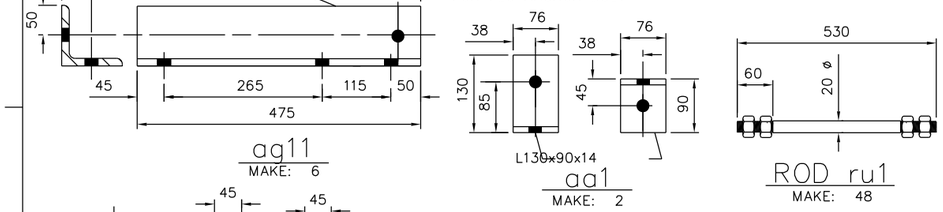

ag11
MAKE: 6

aa1
MAKE: 2

ROD ru1
MAKE: 48

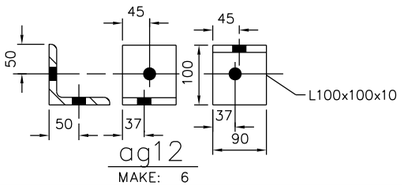

ag12
MAKE: 6

LADDER S4/L1
MAKE: 3
54-ø20 A307 BOLTS
2-ø20 A307 ANCHOR BOLTS

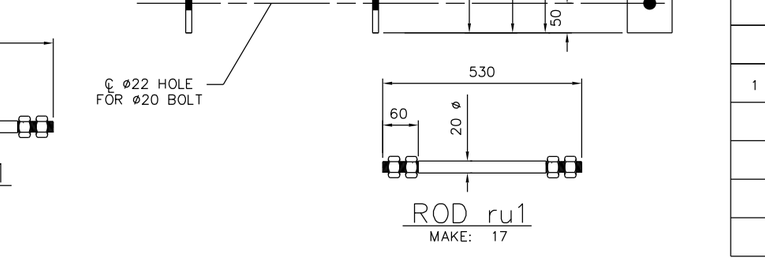

ROD ru1
MAKE: 17

LADDER S4/L2
MAKE: 1

SHIP	MARK	NO. PCS	DESCRIPTION	LENGTH (mm)	FAB. MARK	WEIGHT	NOTES
3	S4/L1		LADDER	4910			
		6	PL 10x75	4910	PL rr10		
		48	ø20	530	ROD ru1		
		2	L130x90x14	75	aa1		
		6	L100x100x10	475	ag11		
		6	L100x100x10	76	ag12		
1	S4/L2		LADDER	4910			
		2	PL 10x75	5920	PL rr11		
		17	ø20	530	ROD ru1		
		1	PL 10x460	240	bp1		
		1	PL 10x460	240	bp2		

UNLESS NOTED OTHERWISE, LINEAR DIMENSIONS ARE IN MILLIMETERS.

US Army Corps of Engineers
Mobile District

Symbol	No.	Description	Date	Approved
		Revisions		

Designed By:
Date: 17 DECEMBER 2009
Drawn By:
Contract No:
Checked By:
CADD CODE: M010TG17
Reviewed By:
Solicitation Number:
SIZE: 559x864mm
FILENAME:

U.S. ARMY ENGINEER DISTRICT
CORPS OF ENGINEERS
MOBILE, ALABAMA

AFGHANISTAN ENGINEER DISTRICT
20 METER WATER TOWER

SECTIONS & DETAILS

SHEET IDENTIFICATION
S-18

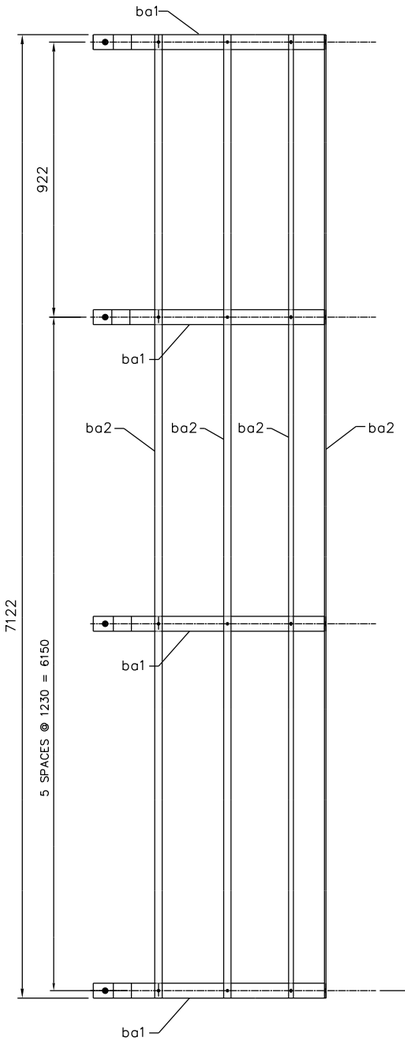

LADDER CAGE S4/G1
MAKE: 1

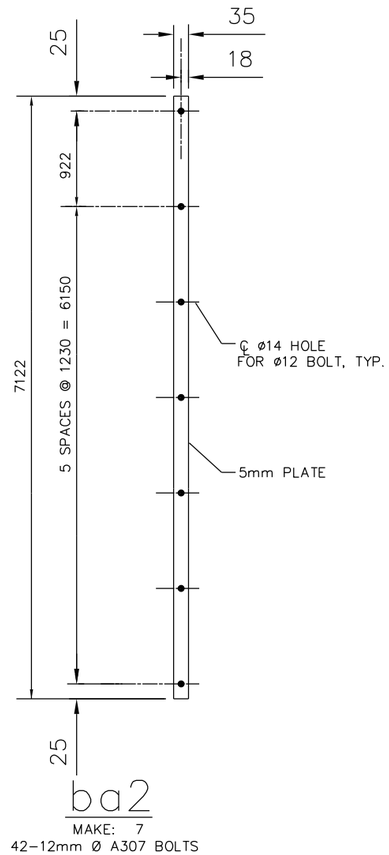

ba2
MAKE: 7
42–12mm Ø A307 BOLTS

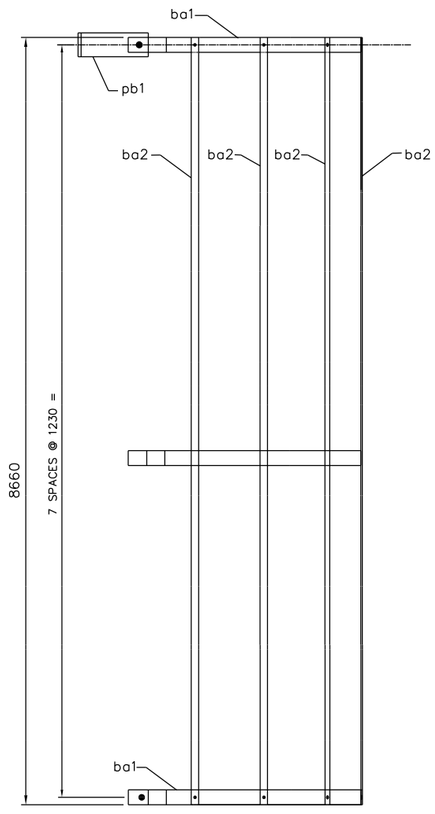

LADDER CAGE S4/G2
MAKE: 1

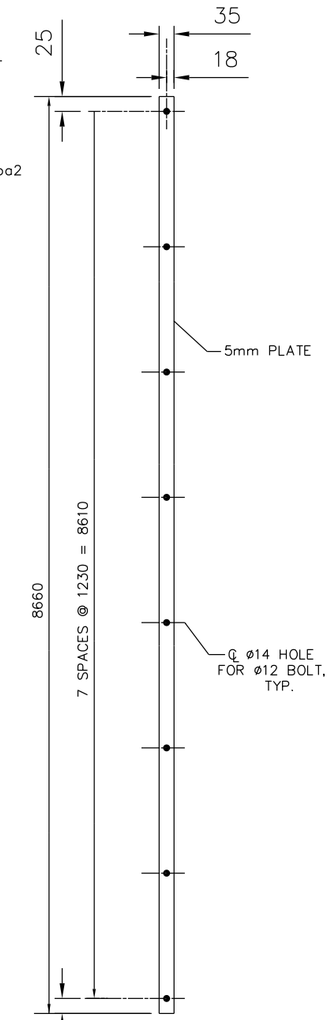

ba3
MAKE: 7

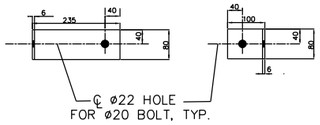

pb1
MAKE: 2

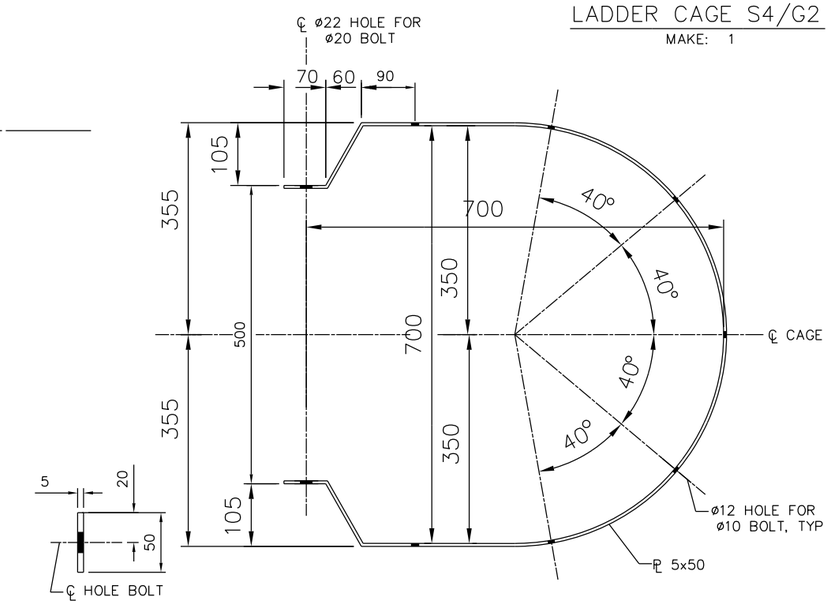

ba1
MAKE: 15

SHIP	MARK	NO. PCS	DESCRIPTION	LENGTH (mm)	FAB. MARK	WEIGHT	NOTES
1	S4/G1		LADDER CAGE	7150			
		6	PL 5x50	1990	ba1		
		7	PL 5x35	7122	ba2		
1	S4/G2		LADDER CAGE	8660			
		8	PL 5x50	1990	ba1		
		7	PL 5x35	8660	ba2		
		2	PL 6x80	335	pb1		

UNLESS NOTED OTHERWISE, LINEAR DIMENSIONS ARE IN MILLIMETERS.

US Army Corps of Engineers
Mobile District

Symbol	No.	Description	Date	Approved
		Revisions		

Designed By:
Drawn By:
Checked By:
Reviewed By:
Date: 17 DECEMBER 2009
Contract No:
CADD CODE: M010TG17
Specification Number:
FILENAME:
SIZE: 559x864mm

U.S. ARMY ENGINEER DISTRICT
CORPS OF ENGINEERS
MOBILE, ALABAMA

AFGHANISTAN ENGINEER DISTRICT
20 METER WATER TOWER

MEMBER DETAILS

SHEET IDENTIFICATION
S–19

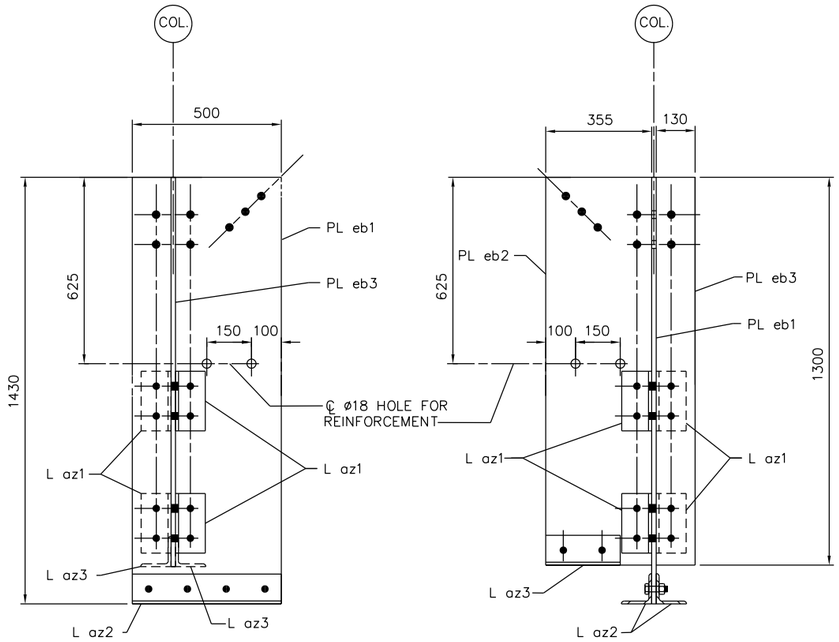

EMBEDDED ANCHOR PLATE S6/E1

MAKE: 4

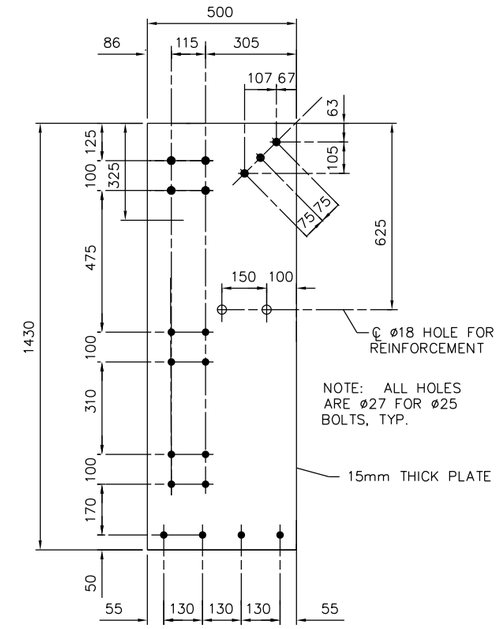

PL eb1

MAKE: 4
76–ø25 A307 BOLTS

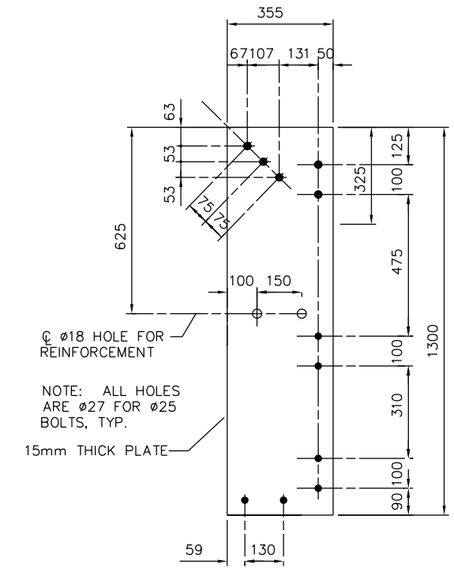

PL eb2

MAKE: 4
44–ø25 A307 BOLTS

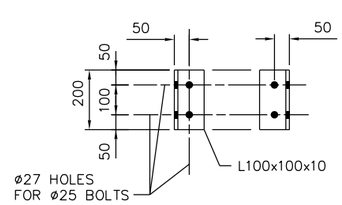

L az1

MAKE: 16

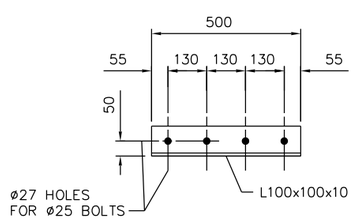

L az2

MAKE: 8

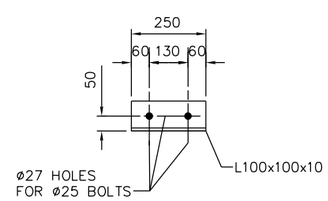

L az3

MAKE: 8

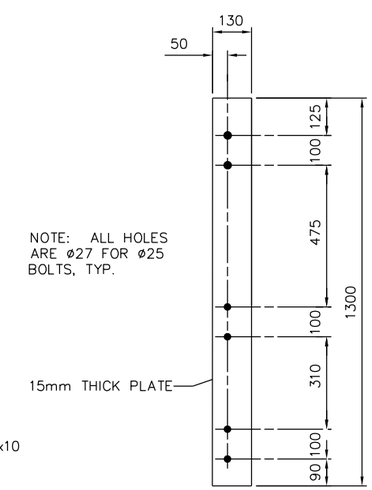

PL eb3

MAKE: 4
24–ø25 A307 BOLTS

SHIP	MARK	NO. PCS	DESCRIPTION	LENGTH (mm)	FAB. MARK	WEIGHT	NOTES
4	S6/E1		EMBEDDED ANCHOR PLATE	1430			
		4	PL 15x500	1430	PL eb1		
		4	PL 15x355	1300	PL eb2		
		4	PL 15x130	1300	PL eb3		
		16	L100x100x10	200	L az1		
		8	L100x100x10	500	L az2		
		8	L100x100x10	250	L az3		

UNLESS NOTED OTHERWISE, LINEAR DIMENSIONS ARE IN MILLIMETERS.

US Army Corps of Engineers®
Mobile District

Symbol	No.	Description	Date	Approved
		Revisions		

Designed By:
Date: 17 DECEMBER 2009
Drawn By:
Contract No:
Checked By:
CADD CODE: M010TG17
Reviewed By:
Solicitation Number:
SIZE: 559x864mm
FILENAME:

U.S. ARMY ENGINEER DISTRICT
CORPS OF ENGINEERS
MOBILE, ALABAMA

AFGHANISTAN ENGINEER DISTRICT
20 METER WATER TOWER

MEMBER DETAILS

SHEET IDENTIFICATION

S-20

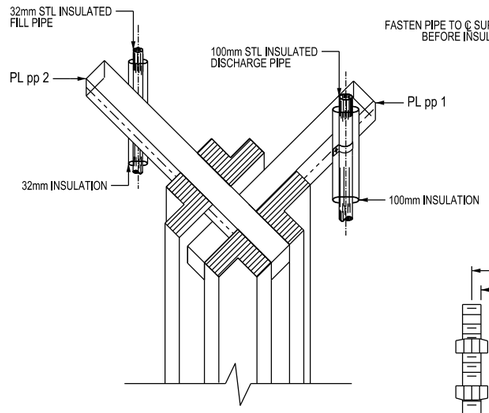

CONNECTION OF WATER PIPE DETAIL:
SCALE: NTS

NOTE: SEE STRUCTURAL SHEET S-13 FOR PLUMBING SUPPORT PLATES

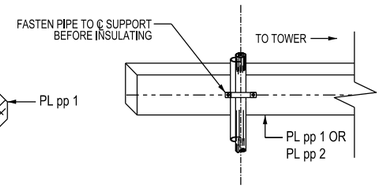

CONNECTION PIPE SUPPORT DETAIL:
SCALE: NTS

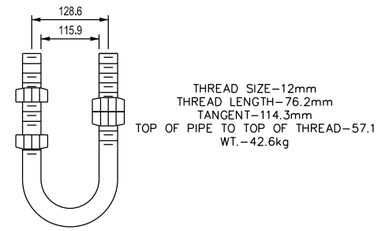

PIPE CLAMP DETAILS: NOMINAL 100mm
SCALE: NTS

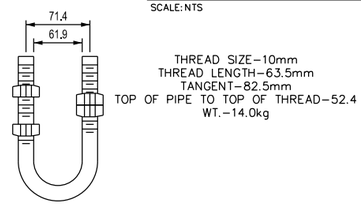

PIPE CLAMP DETAILS: NOMINAL 50mm
SCALE: NTS

PLUMBING NOTES:

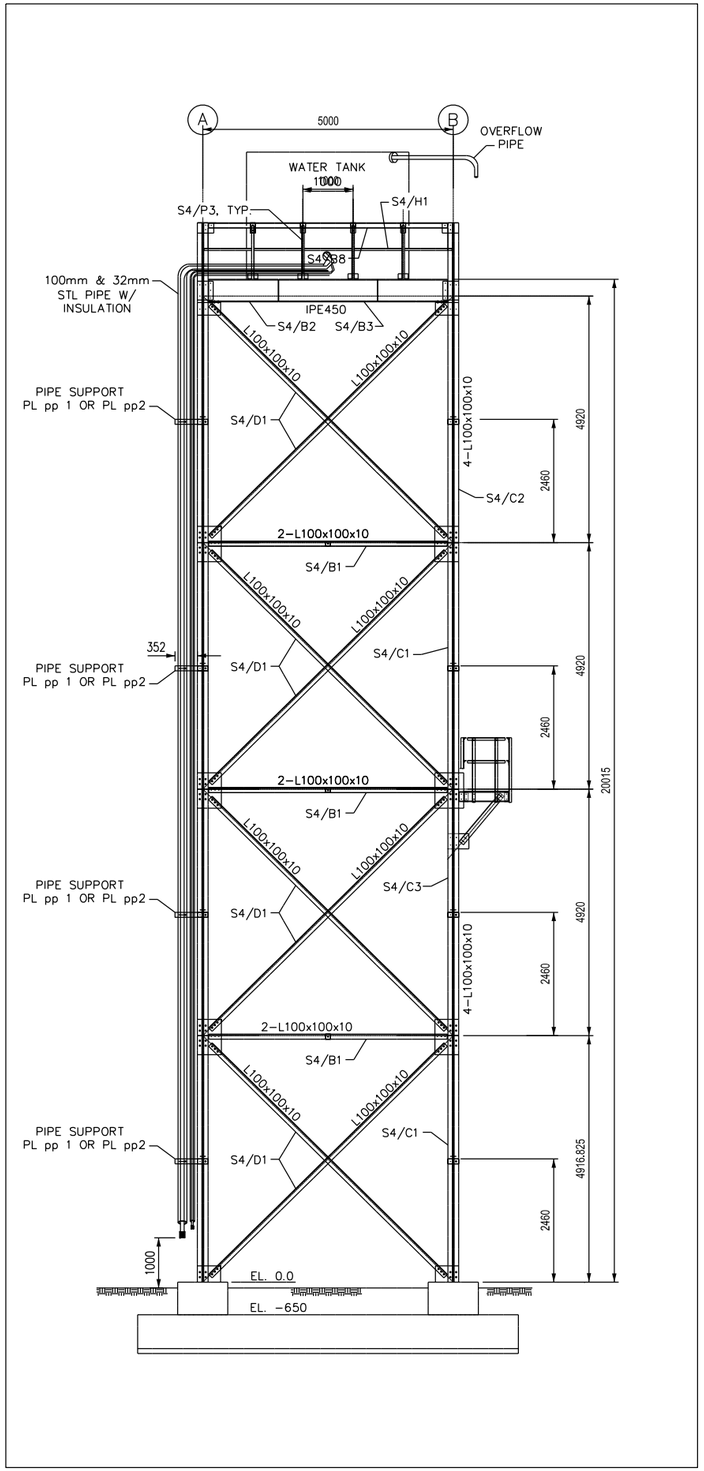

PIPING ELEVATION
1:50

US ARMY CORPS OF ENGINEERS AFGHANISTAN ENGINEER DISTRICT

SYMBOL	DESCRIPTION	DATE	APPR.	SYMBOL	DESCRIPTION	DATE	APPR.

DESIGNED BY: DWN BY: CKD BY: REVIEWED BY: SUBMITTED BY:
DATE: 17 DEC 2009
REV.
DESIGN FILE NO.
DRAWING CODE:
FILE NAME:
PLOT SCALE:
PLOT DATE: xx-xx-xx

U.S. ARMY ENGINEER DISTRICT, AFGHANISTAN
CORPS OF ENGINEERS
APO AE 96338

ENGINEERING AND CONSTRUCTION DIVISION

20 METER WATER TANK
AFGHANISTAN

PIPING ELEVATION

SHEET REFERENCE NUMBER:
P-04

A1 Size 594mm x 841mm

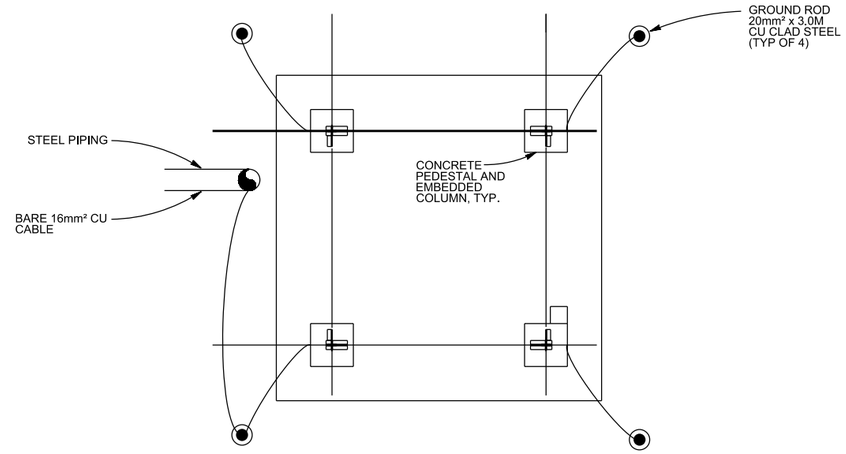

01 GROUNDING ELECTRODE PLAN
N.T.S.

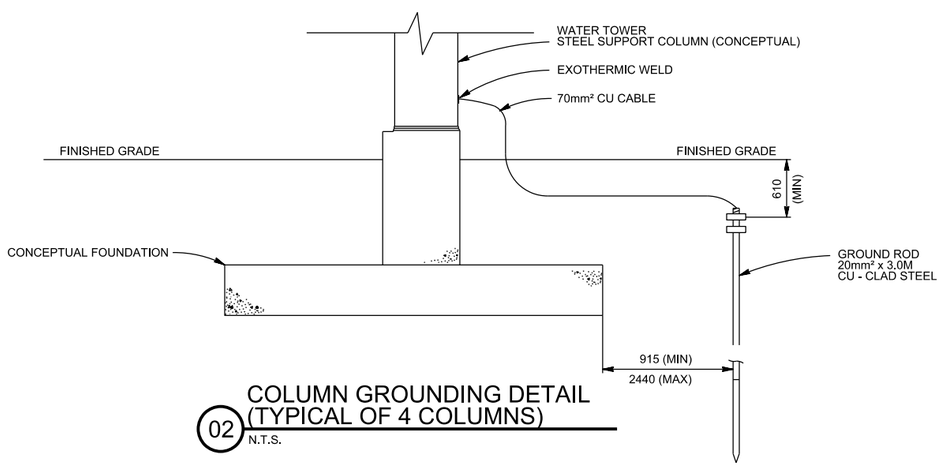

02 COLUMN GROUNDING DETAIL
(TYPICAL OF 4 COLUMNS)
N.T.S.

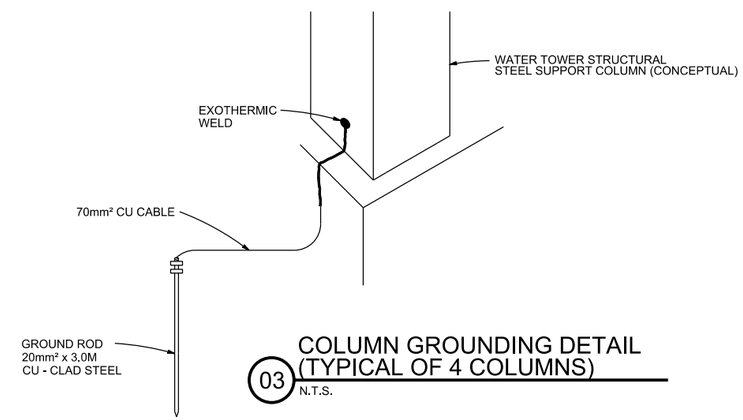

03 COLUMN GROUNDING DETAIL
(TYPICAL OF 4 COLUMNS)
N.T.S.

LIGHTING PROTECTION PLANS AND DETAILS
N.T.S.

NOTES:
1. CONTRACTOR SHALL MAKE ALL METALLIC ELEMENTS OF WATER TOWER TANK AND SUPPORT STRUCTURE ELECTRICALLY CONTINUOUS BY BOLTING REINFORCEMENT STEEL SHALL BE MADE ELECTRICALLY CONTINUOUS BY METALLIC WIRE TIES.
2. BOND EACH METALLIC UNDERGROUND PIPE TO AT LEAST ONE GROUND ROD WITH 16mm² CU CABLE.
3. EACH COLUMN SHALL BE BONDED TO A 20mm² x 3.0M CU CLAD STEEL GROUND ROD VIA A BARE 70mm² CU CABLE. CABLE SHALL BE EXOTHERMIC ALLY WELDED TO COLUMN 150mm ABOVE CONCRETE FOUNDATION.

US ARMY CORPS OF ENGINEERS AFGHANISTAN ENGINEER DISTRICT

SYMBOL	DESCRIPTION	DATE	APPR.	SYMBOL	DESCRIPTION	DATE	APPR.

DESIGNED BY: DATE: 17 DEC 2009 REV.
DWN BY: CKD BY: DESIGN FILE NO.
REVIEWED BY: DRAWING CODE:
SUBMITTED BY: FILE NAME:
PLOT SCALE:
PLOT DATE: XX-XX-XX

U.S. ARMY ENGINEER DISTRICT, AFGHANISTAN
CORPS OF ENGINEERS
APO AE 96338

ENGINEERING AND CONSTRUCTION DIVISION

20 METER WATER TANK
AFGHANISTAN

LIGHTING PROTECTION DETAILS

SHEET REFERENCE NUMBER:
E-01

A1 Size 594mm x 841mm