SYMBOLS

STANDARD REFERENCE BUBBLE

4 — DETAIL NUMBER
A–005 | A–006 — SHEET DETAIL IS LOCATED ON
SHEET(S) DETAIL IS CALLED OUT ON

FLOOR PLAN
SCALE 1:100 — DRAWING TITLE AND SCALE

BUILDING / WALL SECTION

A — DETAIL LETTER
A–104 | A–105 — SHEET DETAIL IS LOCATED ON
SHEET(S) DETAIL IS CALLED OUT ON

EXTERIOR ELEVATION

4 — DETAIL NUMBER
A–104 | A–105 — SHEET ELEVATION IS LOCATED ON
SHEET(S) DETAIL IS CALLED OUT ON

4 / A–104 | A–105 — DETAIL

INTERIOR ELEVATION

1 / 2 / 3 / 4 — DWG — DETAIL NUMBER
SHEET DETAIL IS LOCATED ON

OFFICE 100 — ROOM NAME AND NUMBER

F — COLUMN CENTER LINE

CUT LINE

CENTER LINE

100.000m T.O. — ELEVATION IN RELATION TO BENCHMARK

PARTIAL HEIGHT CMU WALL

CMU WALL

CONCRETE WALL

A1 — PARTITION TYPE

105 — SINGLE SWING DOOR AND DOOR TAG

DOOR SYMBOL (ELEVATION)
HINGE SIDE

ROOF SYMBOLS

ROOF HATCH SYMBOL (PLAN)
HINGE SIDE

PLUMBING VENT

DOWNSPOUT

ABBREVIATIONS

REFER TO ROOM FINISH LEGEND FOR ADDITIONAL ABBREVIATIONS

ADDL	ADDITIONAL
ADH	ADHESIVE
ADJ	ADJACENT
AFF	ABOVE FINISH FLOOR
ALUM	ALUMINUM
AHU	AIR HANDLING UNIT
APPROX	APPROXIMATE (LY)
ARCH	ARCHITECT (URAL)
AVE	AVERAGE
B	BOTTOM
BD	BOARD
BLDG	BUILDING
BLK	BLOCKING/BLKG
BO	BY OTHERS
BOM	BOTTOM OF MASONRY
BOS	BOTTOM OF STRUCTURE
BS	BOTH SIDES, BOTTOM OF STAIR
CIP	CAST IN PLACE
CJ	CONTROL JOINT
CL	CENTER LINE
CLKG	CAULKING
CLR	CLEAR (ING) (ANCE)
CMT	CERAMIC MOSAIC TILE
CMU	CONCRETE MASONRY UNIT
COL	COLUMN
COM	COMMUNICATIONS
COMB	COMBINATION
COMP	COMPOSITE
CONC	CONCRETE
CONT	CONTINOUS
COORD	COORDINATE
CORR	CORRUGATED, CORRIDOR
CTR	CENTER
DET	DETAIL (ED)
DIA	DIAMETER
DIM	DIMENSION
DIST	DISTANCE
DN	DOWN
DR	DOOR
DWG(S)	DRAWING(S)
DS	DOWNSPOUT
DTL	DETAIL
EA	EACH
EJ	EXPANSION JOINT
ELEC	ELECTRIC (AL)
ELEV	ELEVATION
ENC	ENCLOSURE
EQ	EQUAL
EPDM	ETHYLENE PROPYLENE DIENE MONOMER
ES	EXPOSED STRUCTURE
EW	EACH WAY
EXP	EXPANSION
EXT	EXTERIOR
FE	FIRE EXTINGUISHER
FEC	FIRE EXTINGUISHER CABINET
FF	FINISH FLOOR, FACTORY FINISH
FFE	FINISH FLOOR ELEVATION
FIN	FINISH (ED)
FLR, FL	FLOOR (ING)
FLUOR	FLUORESCENT
FND	FOUNDATION
FP	FIRE PROTECTION
GA	GAUGE
GALV	GALVANIZED
GL	GLASS, GLAZING
GND	GROUND
GWB	GYPSUM WALL BOARD
GYP	GYPSUM
H	HEIGHT
HDW	HARDWARE
HM (D)	HOLLOW METAL (DOOR)
HORZ	HORIZONTAL
HR	HANDRAIL, HOUR
HVAC	HEATING/ VENTILATING/AIR CONDITIONING
HW	HOT WATER
HWG	HARDWARE GROUP
IBC	INTERNATIONAL BUILDING CODE
INCL	INCLUDE (D) (ING)
INS	INSULATE (D) (ION)
INSUL	INSULATION
INT	INTERIOR
JAN	JANITORS CLOSET
JT	JOINT
L	LENGTH, LONG
LAV	LAVATORY
LEV	LEVEL
LG	LENGTH, LONG
M (m)	METER
MM(mm)	MILLIMETER
MAS	MASONRY
MAT	MATERIAL
MAX	MAXIMUM
MDF	MEDIUM DENSITY FIBERBOARD
MECH	MECHANICAL
MFR	MANUFACTURE (R)
MIN	MINIMUM
MIR	MIRROR
MLP	METAL LINER PANEL
MO	MASONRY OPENING
NIC	NOT IN CONTRACT
NFPA	NATIONAL FIRE PROTECTION ASSOCIATION
NTS	NOT TO SCALE
OA	OVERALL
OC	ON CENTER
OPP	OPPOSITE
OPP HD	OPPOSITE HAND
P	PAINT SURFACE(S)
PAR	PARALLEL
PART	PARTITION
PL	PLASTER
PLUMB	PLUMBING
PNL	PANEL
PR	PAIR
PTD	PAINTED, PAPER TOWEL DISPENSER
PVC	POLYVINYL CHLORIDE
QTY	QUANTITY
R	RADIUS, RISERS
RCP	REFLECTED CEILING PLAN
REF	REFERENCE
REQD	REQUIRED
RFG	ROOFING
RLG	RAIL (ING)
RM	ROOM
SCHED	SCHEDULE
SHTHG	SHEATHING
SIM	SIMILAR
SK	SINK
SM	SQUARE METER
SOG	SLAB ON GRADE
SP	SPACE (ING) (ES)
SPEC	SPECIFICATION (S)
SQ	SQUARE
SS	STAINLESS STEEL
STD	STANDARD
STL	STEEL
STOR	STORAGE
STRU	STRUCTURAL
SURF	SURFACE
T	TREAD, TOILET ROOM
TO	TOP OF
TB	TOP AND BOTTOM
TBD	TO BE DETERMINED
THK	THICKNESS
TOM	TOP OF MASONRY
TS	TOP OF STAIR
TYP	TYPICAL
UNO	UNLESS NOTED OTHERWISE
V	VENT
VAR	VARIES, VARIABLE
VERT	VERTICAL
VEST	VESTIBULE
VIF	VERIFY IN FIELD
W	WIDTH, WIDE
WC	WATER CLOSET
WD	WOOD
WDW	WINDOW
WP	WORKING POINT
W/	WITH
W/O	WITHOUT

UNLESS OTHERWISE NOTED, ALL DIMENSIONS SHOWN ARE IN MILLIMETERS.

REFER TO LIFE SAFETY DRAWINGS FOR BUILDING CODE AND CONSTRUCTION DATA INFORMATION

NOTE: THERE IS A DESIGN OPTION TO DELETE THE LATRINES AND BUILD DRY BARRACKS. REFER TO DRAWING 0A–001.

THESE DRAWINGS ARE "NOT APPROVED FOR CONSTRUCTION" SINCE THESE ARE BASED UPON ASSUMED CONDITIONS. THE CONTRACTOR SHALL NOT PROCEED WITH CONSTRUCTION UNTIL THE ASSUMED CONDITIONS ARE VALIDATED AND APPROVAL IS RECEIVED FROM THE CONTRACTING OFFICER.

CORRECTED FINAL DESIGN SUBMITTAL

SYMB	DESCRIPTION	DATE	APR
0	CORRECTED FINAL DESIGN SUBMITTAL	09/15/10	WESR
B	FINAL DESIGN SUBMITTAL	09/02/10	WESR
A	MID–POINT DESIGN SUBMITTAL	08/13/10	WESR

DESIGNED BY: KCB
DATE: 09/15/10
DRAWN BY: NLL
SUBMITTED BY: TETRA TECH
CHECKED BY: KCB
FILE NO.: AF1081A–AR001GN

US Army Corps of Engineers
Middle East District

TETRA TECH

AUSTERE STANDARD DESIGNS–PHASE 4
FY11 BARRACKS – PN74127–CLN03
KANDAHAR AIR BASE, AFGHANISTAN

ARCHITECTURAL SYMBOLS AND ABBREVIATIONS, BUILDING CODE AND CONSTRUCTION DATA

SHEET REFERENCE NUMBER:
AF1081A
A–001

W:\23308\127–23308–10010\CAD\SheetFiles\ASD03_KAND\03_Architectural\AF1081A–AR001GN.dwg 10/14/2010 3:12:34 PM Barrett, Patrick

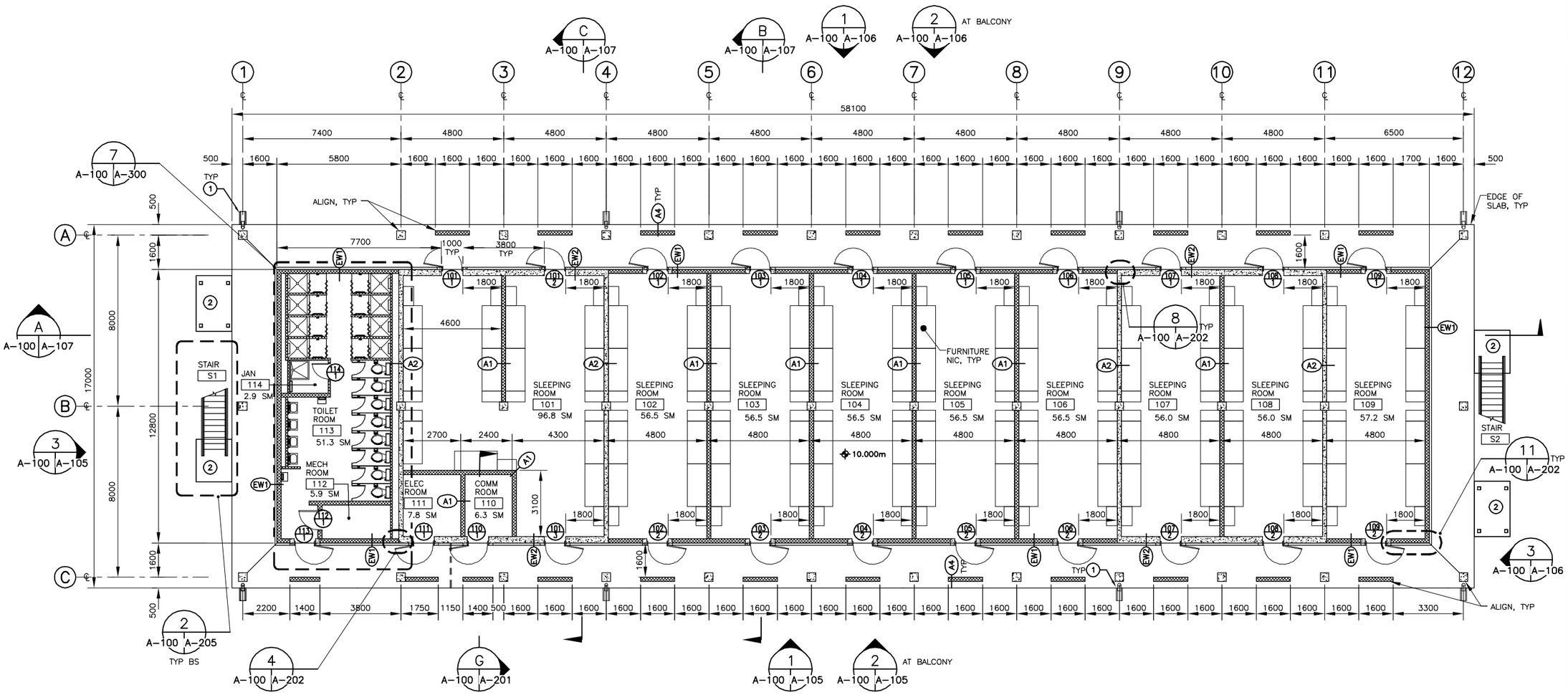

GROUND FLOOR PLAN
SCALE 1:100

GENERAL NOTES:

1. UNO, ALL MASONRY/ROUGH OPENINGS FOR DOORS ARE 100mm FROM FACE OF MASONRY.
2. REFER TO DRAWING A-202 FOR WALL TYPE AND PARTITION TYPE DETAILS.
3. REFER TO LIFE SAFETY PLANS FOR FIRE RATINGS
4. REFER TO MECH, PLUMB, FP, FA, ELEC, AND TC DWGS FOR PENETRATION LOCATIONS, SEE 5/A-203 FOR PIPE PENETRATION DETAIL AND 6/M-201 FOR DUCT PENETRATION DETAIL.

SPECIFIC NOTES:

1. SPLASH BLOCK. SEE DETAIL 7/A-202.
2. POURED CONCRETE PAD, REFER TO CIVIL AND STRUCTURAL DRAWINGS.

UNLESS OTHERWISE NOTED, ALL DIMENSIONS SHOWN ARE IN MILLIMETERS.

1:100

THESE DRAWINGS ARE "NOT APPROVED FOR CONSTRUCTION" SINCE THESE ARE BASED UPON ASSUMED CONDITIONS. THE CONTRACTOR SHALL NOT PROCEED WITH CONSTRUCTION UNTIL THE ASSUMED CONDITIONS ARE VALIDATED AND APPROVAL IS RECEIVED FROM THE CONTRACTING OFFICER.

REGISTERED ARCHITECT
WENDY ELIZABETH WEBBER ROBERTS
023999-1
STATE OF NEW YORK

CORRECTED FINAL DESIGN SUBMITTAL

SYMB	DESCRIPTION	DATE	APR
0	CORRECTED FINAL DESIGN SUBMITTAL	09/15/10	WESR
B	FINAL DESIGN SUBMITTAL	09/02/10	WESR
A	MID-POINT DESIGN SUBMITTAL	08/13/10	WESR

DATE: 09/15/10
SUBMITTED BY: TETRA TECH
FILE NO.: AF1081A-AR100PN
DESIGNED BY: KCB
DRAWN BY: NLL
CHECKED BY: KCB

US Army Corps of Engineers
Middle East District

TETRA TECH

AUSTERE STANDARD DESIGNS-PHASE 4
FY11 BARRACKS - PN74127-CLN03
KANDAHAR AIR BASE, AFGHANISTAN

GROUND FLOOR PLAN

SHEET REFERENCE NUMBER:
AF1081A
A-100

W:\23308\127-23308-10010\CAD\SheetFiles\ASD03_KAND\03_Architectural\AF1081A-AR100PN.dwg 10/14/2010 3:12:46 PM Barrett, Patrick

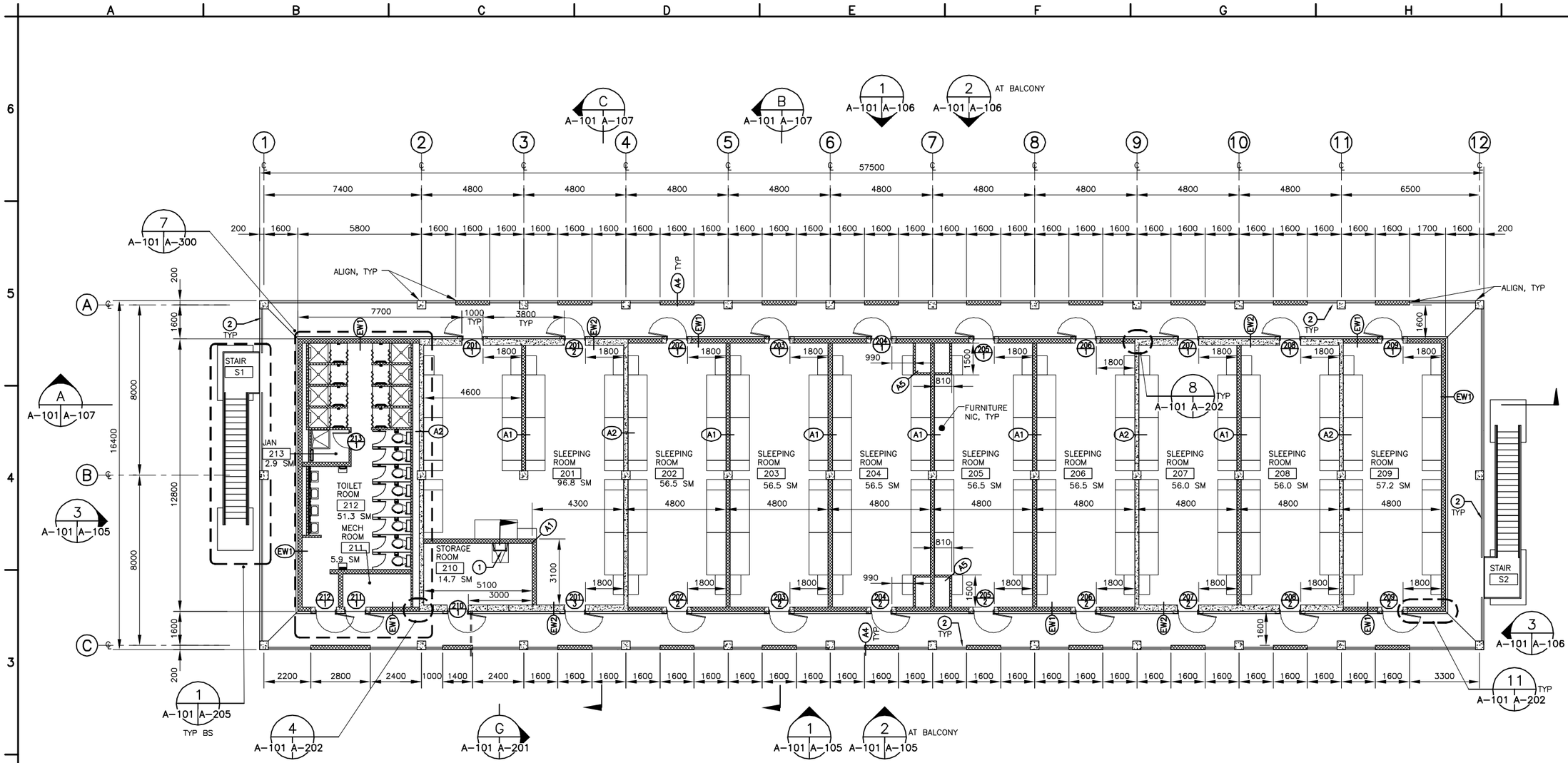

FIRST FLOOR PLAN
SCALE 1:100

1:100

GENERAL NOTES:

1. UNO, ALL MASONRY/ROUGH OPENINGS FOR DOORS ARE 100mm FROM FACE OF MASONRY.
2. REFER TO DRAWING A-202 FOR WALL TYPE AND PARTITION TYPE DETAILS.
3. REFER TO LIFE SAFETY PLANS FOR FIRE RATINGS
4. REFER TO MECH, PLUMB, FP, FA, ELEC, AND TC DWGS FOR PENETRATION LOCATIONS, SEE 5/A-203 FOR PIPE PENETRATION DETAIL AND 6/M-201 FOR DUCT PENETRATION DETAIL.

SPECIFIC NOTES:

1. ROOF ACCESS LADDER. SEE DETAIL 2/A-203.
2. GUARD RAILINGS. SEE DETAIL 6/A-206.

UNLESS OTHERWISE NOTED, ALL DIMENSIONS SHOWN ARE IN MILLIMETERS.

THESE DRAWINGS ARE "NOT APPROVED FOR CONSTRUCTION" SINCE THESE ARE BASED UPON ASSUMED CONDITIONS. THE CONTRACTOR SHALL NOT PROCEED WITH CONSTRUCTION UNTIL THE ASSUMED CONDITIONS ARE VALIDATED AND APPROVAL IS RECEIVED FROM THE CONTRACTING OFFICER.

REGISTERED ARCHITECT — STATE OF NEW YORK

CORRECTED FINAL DESIGN SUBMITTAL

SYMB	DESCRIPTION	DATE	APR
0	CORRECTED FINAL DESIGN SUBMITTAL	09/15/10	WESR
B	FINAL DESIGN SUBMITTAL	09/02/10	WESR
A	MID-POINT DESIGN SUBMITTAL	08/13/10	WESR

DESIGNED BY: KCB
DATE: 09/15/10
DRAWN BY: NLL
SUBMITTED BY: TETRA TECH
CHECKED BY: KCB
FILE NO.: AF1081A-AR101PN

US Army Corps of Engineers Middle East District

TETRA TECH

AUSTERE STANDARD DESIGNS-PHASE 4
FY11 BARRACKS - PN74127-CLN03
KANDAHAR AIR BASE, AFGHANISTAN

FIRST FLOOR PLAN

SHEET REFERENCE NUMBER:
AF1081A
A-101

W:\23308\127-23308-10010\CAD\SheetFiles\ASD03_KAND\03_Architectural\AF1081A-AR101PN.dwg 10/14/2010 3:12:56 PM Barrett, Patrick

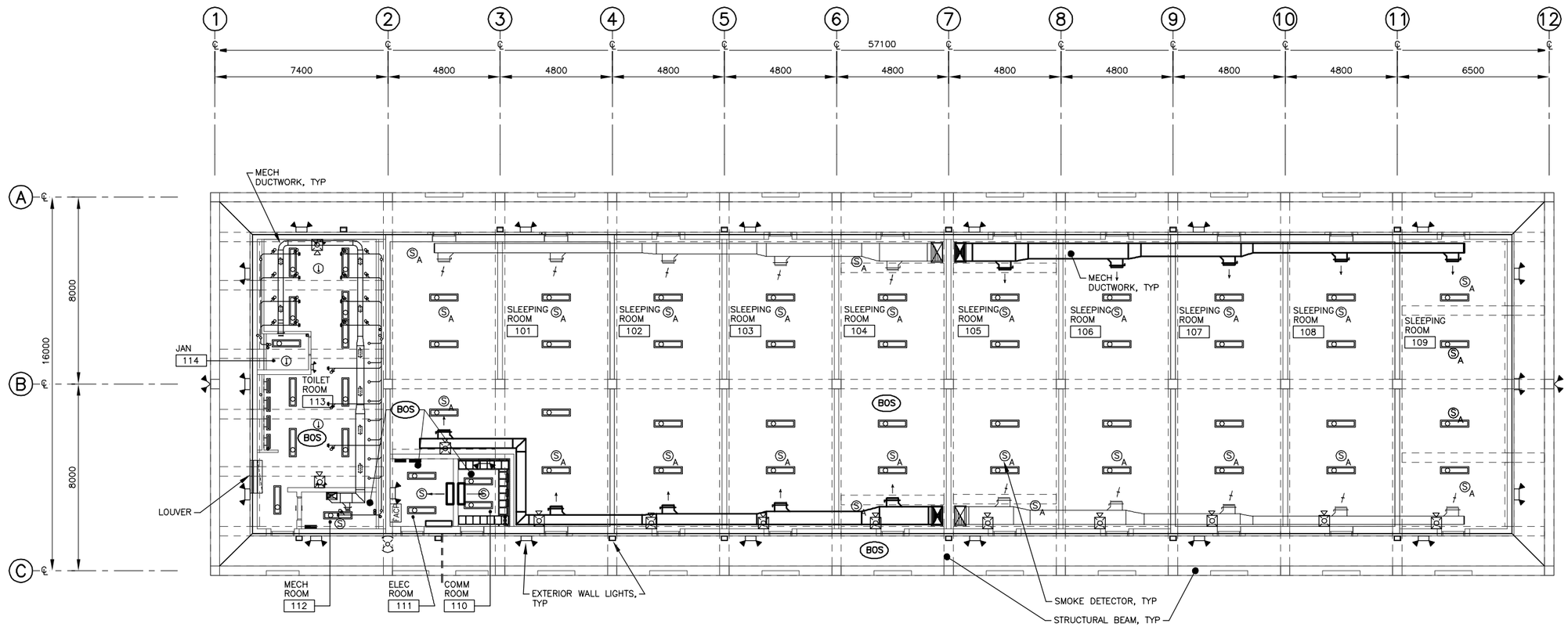

GROUND FLOOR REFLECTED PLAN

SCALE 1:100

UNLESS OTHERWISE NOTED, ALL DIMENSIONS SHOWN ARE IN MILLIMETERS.

CEILING LEGEND

- LIGHT FIXTURES, SEE ELEC
- SMOKE ALARMS/DETECTORS, SEE LIFE SAFETY
- EMERGENCY AND EXIT LIGHT FIXTURES, SEE ELEC
- FIRE PROTECTION SPEAKER/STROBE
- EXTERIOR LIGHT FIXTURE, SEE ELEC
- RETURN GRILLE, SEE MECH
- DUCTWORK SEE MECH
- UNIT HEATER, SEE HVAC
- EXPOSED STRUCTURE
- DESIGNATES BOTTOM OF CEILING AFF AT THAT POINT UNO

NOTE:

1. ALL ROOMS ARE EXPOSED CONCRETE CEILING. PAINT ALL EXPOSED SURFACES IN ACCORDANCE WITH SECTION 09 90 00.

2. THIS LAYOUT IS FOR COORDINATION PURPOSES ONLY. REFER TO MECHANICAL, TELECOMMUNICATIONS, STRUCTURAL, LIFE SAFETY, AND ELECTRICAL DRAWINGS FOR ADDITIONAL INFORMATION.

1 0 1 2 3 4 5 6 7 8 9
1:100

THESE DRAWINGS ARE "NOT APPROVED FOR CONSTRUCTION" SINCE THESE ARE BASED UPON ASSUMED CONDITIONS. THE CONTRACTOR SHALL NOT PROCEED WITH CONSTRUCTION UNTIL THE ASSUMED CONDITIONS ARE VALIDATED AND APPROVAL IS RECEIVED FROM THE CONTRACTING OFFICER.

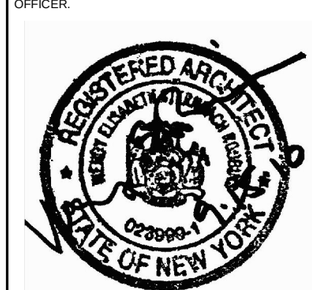

CORRECTED FINAL DESIGN SUBMITTAL

SYMB	DESCRIPTION	DATE	APR
0	CORRECTED FINAL DESIGN SUBMITTAL	09/15/10	WESR
B	FINAL DESIGN SUBMITTAL	09/02/10	WESR
A	MID-POINT DESIGN SUBMITTAL	08/13/10	WESR

DESIGNED BY: KCB
DATE: 09/15/10
DRAWN BY: NLL
SUBMITTED BY: TETRA TECH
CHECKED BY: KCB
FILE NO.: AF1081A-AR102PN

US Army Corps of Engineers
Middle East District

TETRA TECH

AUSTERE STANDARD DESIGNS-PHASE 4
FY11 BARRACKS - PN74127-CLN03
KANDAHAR AIR BASE, AFGHANISTAN

GROUND FLOOR
REFLECTED CEILING PLAN

SHEET REFERENCE NUMBER:
AF1081A
A-102

W:\23308\127-23308-10010\CAD\SheetFiles\ASD03_KAND\03_Architectural\AF1081A-AR102PN.dwg 10/14/2010 3:13:08 PM Barrett, Patrick

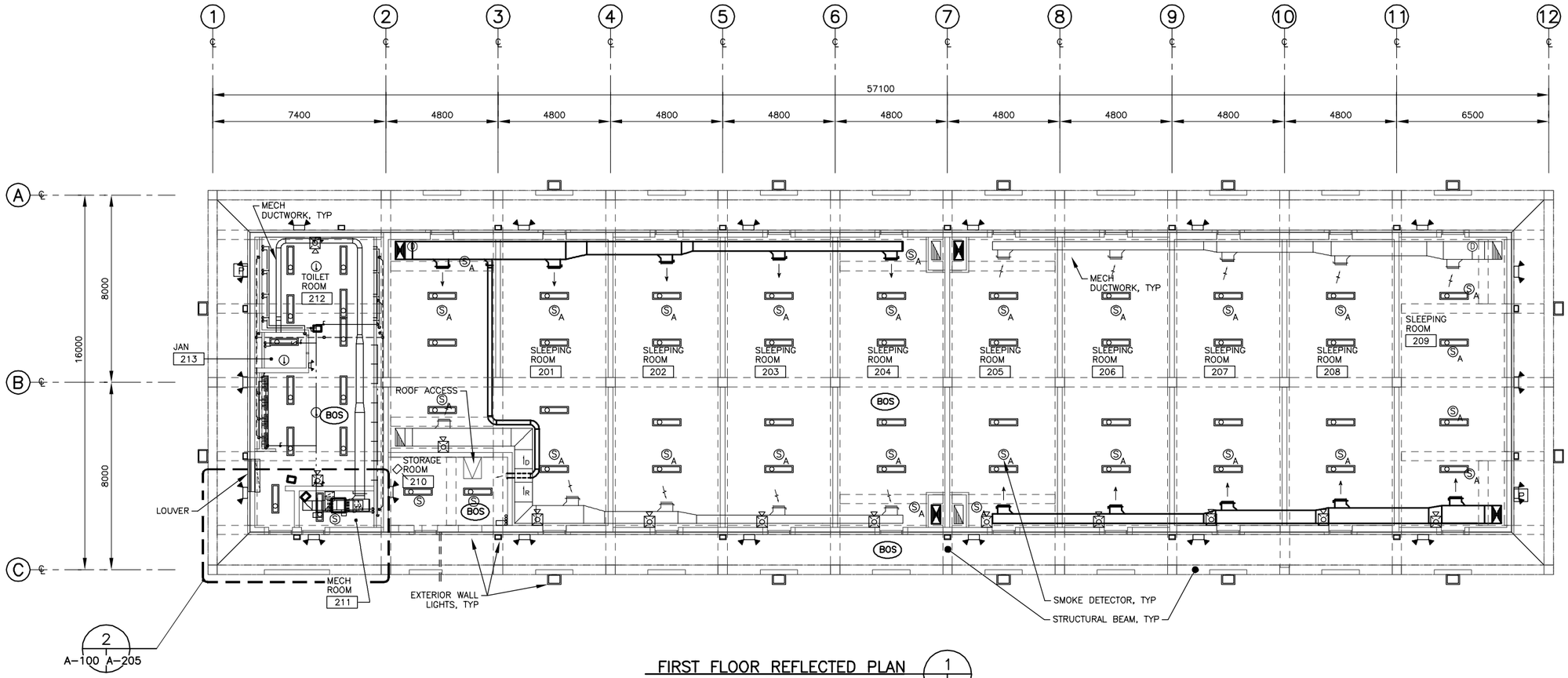

FIRST FLOOR REFLECTED PLAN (1 / A-103 | A-103)
SCALE 1:100

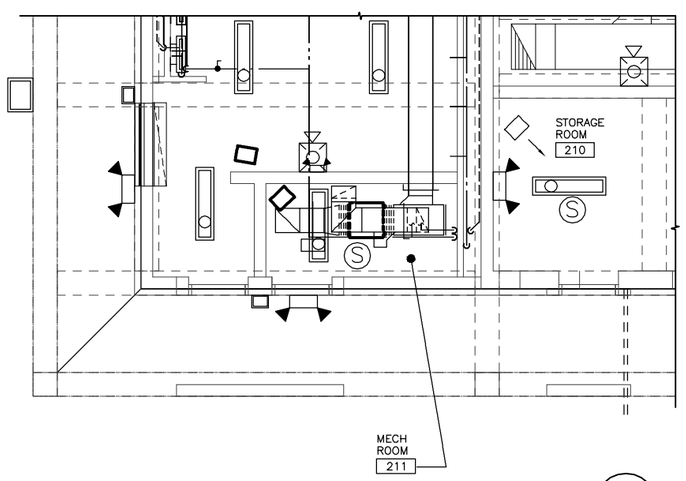

ENLARGED MECHANICAL REFLECTED PLAN (2 / A-103 | A-103)
SCALE 1:50

CEILING LEGEND

- LIGHT FIXTURES, SEE ELEC
- SMOKE ALARMS/DETECTORS, SEE LIFE SAFETY
- EMERGENCY AND EXIT LIGHT FIXTURES, SEE ELEC
- FIRE PROTECTION SPEAKER/STROBE
- EXTERIOR LIGHT FIXTURE, SEE ELEC
- RETURN GRILLE, SEE MECH
- DUCTWORK SEE MECH
- UNIT HEATER, SEE HVAC
- EXPOSED STRUCTURE
- DESIGNATES BOTTOM OF CEILING AFF AT THAT POINT UNO

NOTE:

1. ALL ROOMS ARE EXPOSED CONCRETE CEILING. PAINT ALL EXPOSED SURFACES IN ACCORDANCE WITH SECTION 09 90 00.
2. THIS LAYOUT IS FOR COORDINATION PURPOSES ONLY. REFER TO MECHANICAL, TELECOMMUNICATIONS, STRUCTURAL, LIFE SAFETY, AND ELECTRICAL DRAWINGS FOR ADDITIONAL INFORMATION.

UNLESS OTHERWISE NOTED, ALL DIMENSIONS SHOWN ARE IN MILLIMETERS.

1:50 (1 0 1 2 3 4)
1:100 (1 0 1 2 3 4 5 6 7 8 9)

THESE DRAWINGS ARE "NOT APPROVED FOR CONSTRUCTION" SINCE THESE ARE BASED UPON ASSUMED CONDITIONS. THE CONTRACTOR SHALL NOT PROCEED WITH CONSTRUCTION UNTIL THE ASSUMED CONDITIONS ARE VALIDATED AND APPROVAL IS RECEIVED FROM THE CONTRACTING OFFICER.

CORRECTED FINAL DESIGN SUBMITTAL

SYMB	DESCRIPTION	DATE	APR
0	CORRECTED FINAL DESIGN SUBMITTAL	09/15/10	WESR
B	FINAL DESIGN SUBMITTAL	09/02/10	WESR
A	MID-POINT DESIGN SUBMITTAL	08/13/10	WESR

DESIGNED BY: KCB
DATE: 09/15/10
DRAWN BY: NLL
SUBMITTED BY: TETRA TECH
CHECKED BY: KCB
FILE NO.: AF1081A-AR103PN

US Army Corps of Engineers Middle East District

TETRA TECH

AUSTERE STANDARD DESIGNS-PHASE 4
FY11 BARRACKS - PN74127-CLN03
KANDAHAR AIR BASE, AFGHANISTAN

FIRST FLOOR
REFLECTED CEILING PLAN

SHEET REFERENCE NUMBER:
AF1081A
A-103

W:\23308\127-23308-10010\CAD\SheetFiles\ASD03_KAND\03_Architectural\AF1081A-AR103PN.dwg 10/14/2010 3:13:23 PM Barrett, Patrick

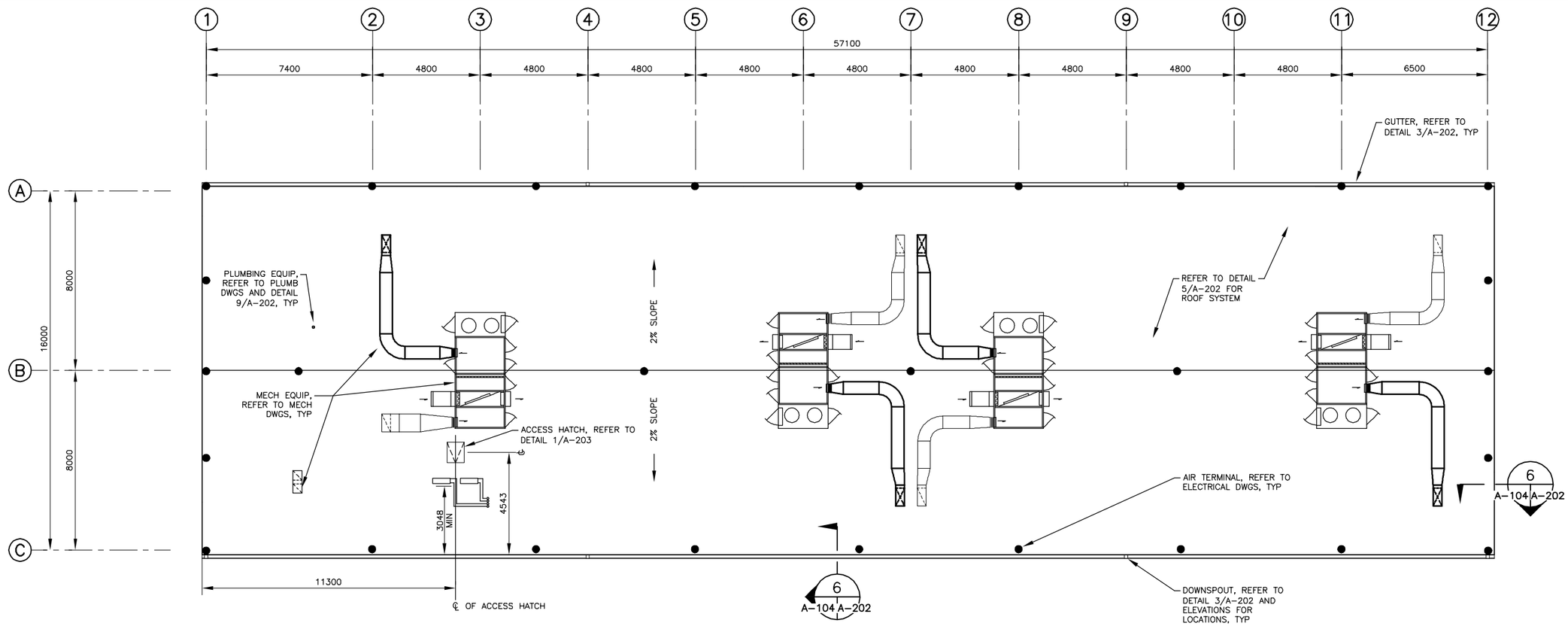

ROOF PLAN
SCALE 1:100

1 0 1 2 3 4 5 6 7 8 9
1:100

GENERAL NOTES:

1. REFER TO DETAILS 3 AND 4 ON DRAWING A-203 FOR ROOF PENETRATION AND CURB FLASHING DETAILS.

UNLESS OTHERWISE NOTED, ALL DIMENSIONS SHOWN ARE IN MILLIMETERS.

THESE DRAWINGS ARE "NOT APPROVED FOR CONSTRUCTION" SINCE THESE ARE BASED UPON ASSUMED CONDITIONS. THE CONTRACTOR SHALL NOT PROCEED WITH CONSTRUCTION UNTIL THE ASSUMED CONDITIONS ARE VALIDATED AND APPROVAL IS RECEIVED FROM THE CONTRACTING OFFICER.

CORRECTED FINAL DESIGN SUBMITTAL

SYMB	DESCRIPTION	DATE	APR
0	CORRECTED FINAL DESIGN SUBMITTAL	09/15/10	WESR
B	FINAL DESIGN SUBMITTAL	09/02/10	WESR
A	MID-POINT DESIGN SUBMITTAL	08/13/10	WESR

DESIGNED BY: KCB
DATE: 09/15/10
DRAWN BY: NLL
SUBMITTED BY: TETRA TECH
CHECKED BY: KCB
FILE NO.: AF1081A-AR104PN

US Army Corps of Engineers
Middle East District

TETRA TECH

AUSTERE STANDARD DESIGNS-PHASE 4
FY11 BARRACKS - PN74127-CLN03
KANDAHAR AIR BASE, AFGHANISTAN

ROOF PLAN

SHEET REFERENCE NUMBER:
AF1081A
A-104

W:\23308\127-23308-10010\CAD\SheetFiles\ASD03_KAND\03_Architectural\AF1081A-AR104PN.dwg 10/14/2010 3:13:35 PM Barrett, Patrick

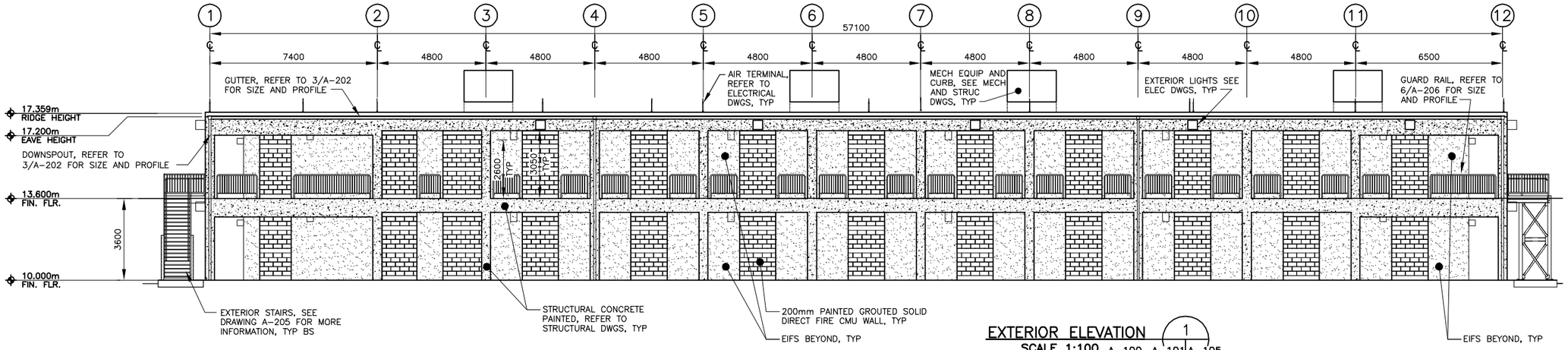

EXTERIOR ELEVATION 1
SCALE 1:100 A-100, A-101 A-105

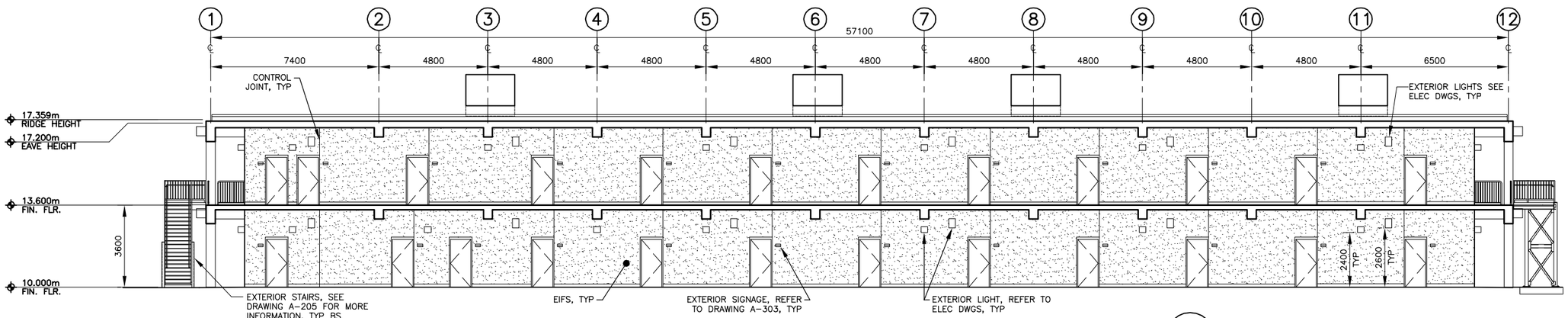

EXTERIOR ELEVATION 2
SCALE 1:100 A-100, A-101 A-105

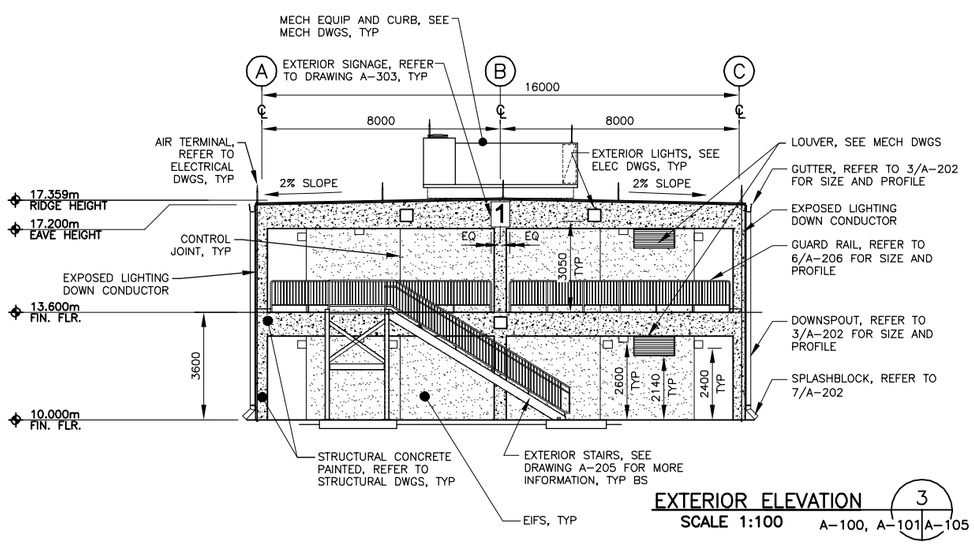

EXTERIOR ELEVATION 3
SCALE 1:100 A-100, A-101 A-105

KEY PLAN

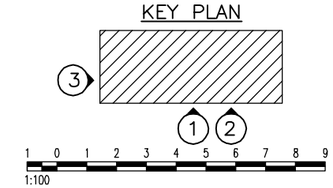

GENERAL NOTES:

1. PROVIDE ADDITIONAL EIFS CONTROL JOINTS PER MANUFACTURER'S RECOMMENDATIONS.

UNLESS OTHERWISE NOTED, ALL DIMENSIONS SHOWN ARE IN MILLIMETERS.

THESE DRAWINGS ARE "NOT APPROVED FOR CONSTRUCTION" SINCE THESE ARE BASED UPON ASSUMED CONDITIONS. THE CONTRACTOR SHALL NOT PROCEED WITH CONSTRUCTION UNTIL THE ASSUMED CONDITIONS ARE VALIDATED AND APPROVAL IS RECEIVED FROM THE CONTRACTING OFFICER.

CORRECTED FINAL DESIGN SUBMITTAL

SYMB	DESCRIPTION	DATE	APR
0	CORRECTED FINAL DESIGN SUBMITTAL	09/15/10	WESR
B	FINAL DESIGN SUBMITTAL	09/02/10	WESR
A	MID-POINT DESIGN SUBMITTAL	08/13/10	WESR

DESIGNED BY: KCB
DATE: 09/15/10
DRAWN BY: NLL
SUBMITTED BY: TETRA TECH
CHECKED BY: KCB
FILE NO.: AF1081A-AR105EL

US Army Corps of Engineers Middle East District

TETRA TECH

AUSTERE STANDARD DESIGNS-PHASE 4
FY11 BARRACKS - PN74127-CLN03
KANDAHAR AIR BASE, AFGHANISTAN

EXTERIOR ELEVATIONS
SHEET 1 OF 2

SHEET REFERENCE NUMBER:
AF1081A
A-105

W:\23308\127-23308-10010\CAD\SheetFiles\ASD03_KAND\03_Architectural\AF1081A-AR105EL.dwg 10/14/2010 3:13:46 PM Barrett, Patrick

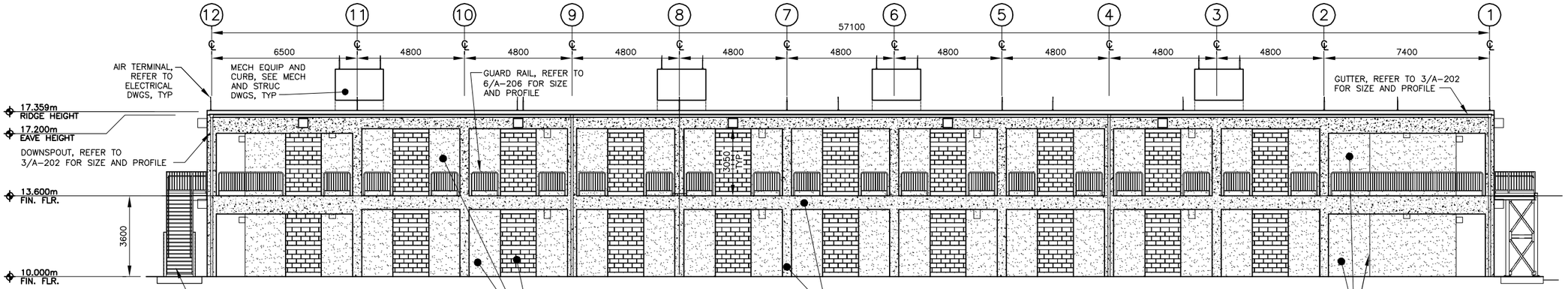

EXTERIOR ELEVATION 1
SCALE 1:100
A-100, A-101 A-106

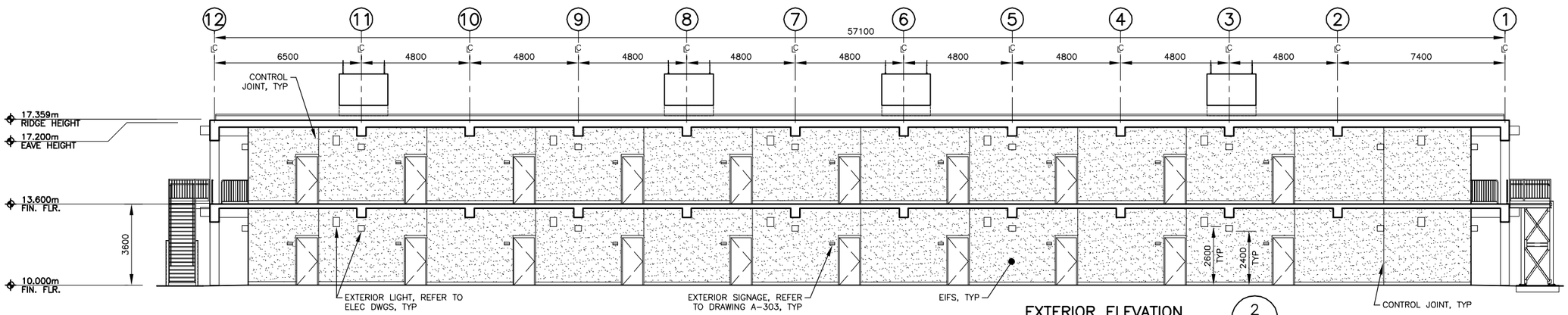

EXTERIOR ELEVATION 2
SCALE 1:100
A-100, A-101 A-106

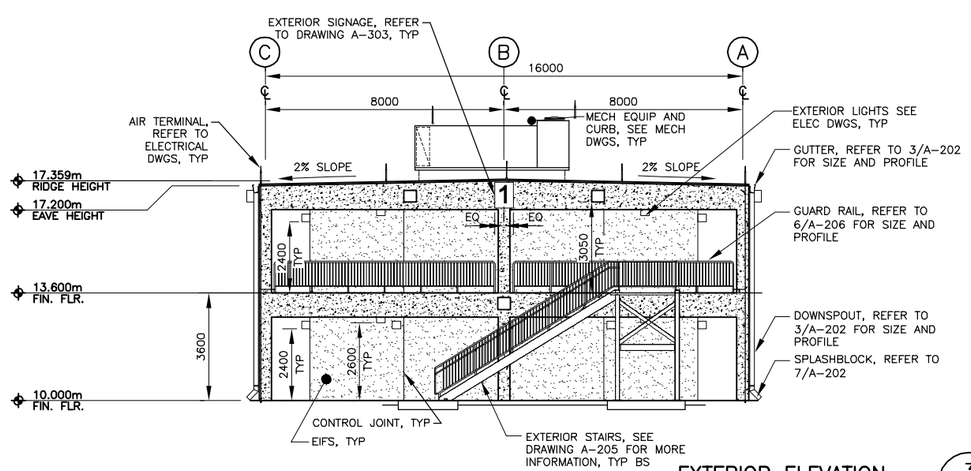

EXTERIOR ELEVATION 3
SCALE 1:100
A-100, A-101 A-106

GENERAL NOTES:

1. PROVIDE ADDITIONAL EIFS CONTROL JOINTS PER MANUFACTURER'S RECOMMENDATIONS.

UNLESS OTHERWISE NOTED, ALL DIMENSIONS SHOWN ARE IN MILLIMETERS.

KEY PLAN

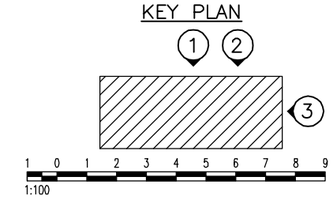

THESE DRAWINGS ARE "NOT APPROVED FOR CONSTRUCTION" SINCE THESE ARE BASED UPON ASSUMED CONDITIONS. THE CONTRACTOR SHALL NOT PROCEED WITH CONSTRUCTION UNTIL THE ASSUMED CONDITIONS ARE VALIDATED AND APPROVAL IS RECEIVED FROM THE CONTRACTING OFFICER.

CORRECTED FINAL DESIGN SUBMITTAL

SYMB	DESCRIPTION	DATE	APR
0	CORRECTED FINAL DESIGN SUBMITTAL	09/15/10	WESR
B	FINAL DESIGN SUBMITTAL	09/02/10	WESR
A	MID-POINT DESIGN SUBMITTAL	08/13/10	WESR

DESIGNED BY: KCB
DATE: 09/15/10
DRAWN BY: NLL
SUBMITTED BY: TETRA TECH
CHECKED BY: KCB
FILE NO.: AF1081A-AR106EL

US Army Corps of Engineers Middle East District

TETRA TECH

AUSTERE STANDARD DESIGNS-PHASE 4
FY11 BARRACKS - PN74127-CLN03
KANDAHAR AIR BASE, AFGHANISTAN

EXTERIOR ELEVATIONS
SHEET 2 OF 2

SHEET REFERENCE NUMBER:
AF1081A
A-106

W:\23308\127-23308-10010\CAD\SheetFiles\ASD03_KAND\03_Architectural\AF1081A-AR106EL.dwg 10/14/2010 3:13:57 PM Barrett, Patrick

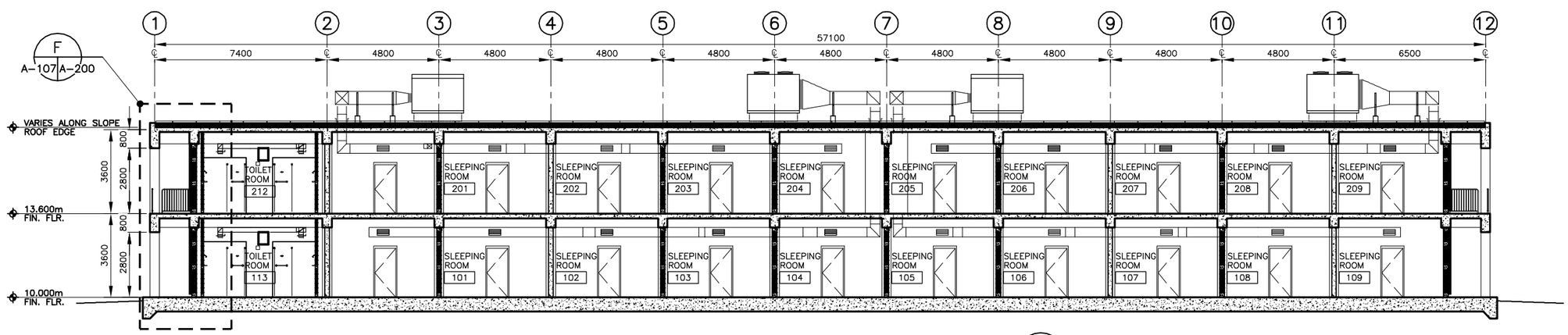

BUILDING SECTION A
SCALE 1:100
A-100, A-101 A-107

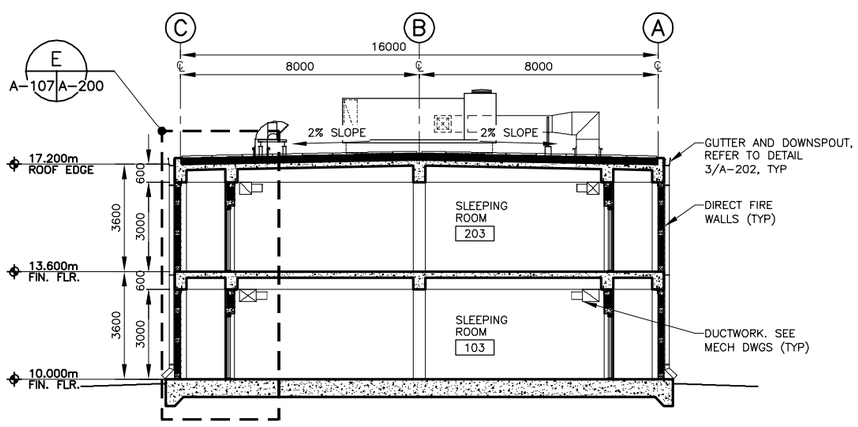

BUILDING SECTION B
SCALE 1:100
A-100, A-101 A-107

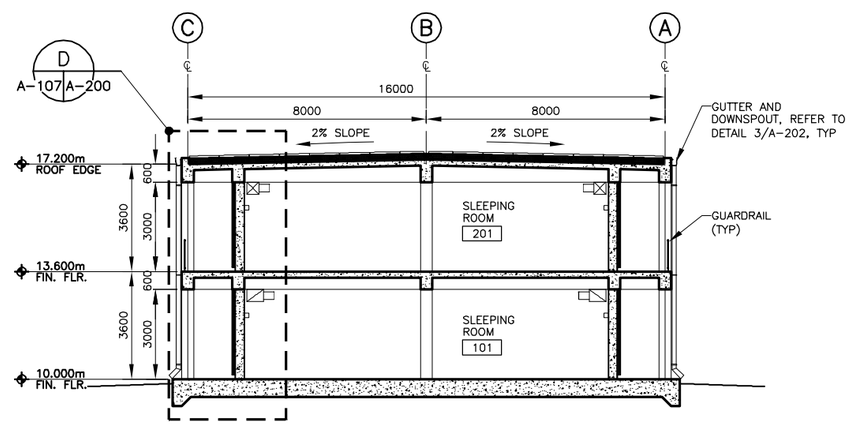

BUILDING SECTION C
SCALE 1:100
A-100, A-101 A-107

KEY PLAN

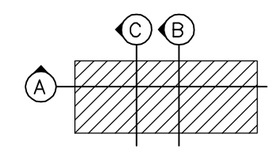

1:100

THESE DRAWINGS ARE "NOT APPROVED FOR CONSTRUCTION" SINCE THESE ARE BASED UPON ASSUMED CONDITIONS. THE CONTRACTOR SHALL NOT PROCEED WITH CONSTRUCTION UNTIL THE ASSUMED CONDITIONS ARE VALIDATED AND APPROVAL IS RECEIVED FROM THE CONTRACTING OFFICER.

CORRECTED FINAL DESIGN SUBMITTAL

SYMB	DESCRIPTION	DATE	APR
0	CORRECTED FINAL DESIGN SUBMITTAL	09/15/10	WESR
B	FINAL DESIGN SUBMITTAL	09/02/10	WESR
A	MID-POINT DESIGN SUBMITTAL	08/13/10	WESR

DESIGNED BY: KCB
DATE: 09/15/10
DRAWN BY: NLL
SUBMITTED BY: TETRA TECH
CHECKED BY: KCB
FILE NO.: AF1081A-AR107SE

US Army Corps of Engineers
Middle East District

TETRA TECH

AUSTERE STANDARD DESIGNS-PHASE 4
FY11 BARRACKS - PN74127-CLN03
KANDAHAR AIR BASE, AFGHANISTAN

BUILDING SECTIONS

SHEET REFERENCE NUMBER:
AF1081A
A-107

UNLESS OTHERWISE NOTED, ALL DIMENSIONS SHOWN ARE IN MILLIMETERS.

W:\23308\127-23308-10010\CAD\SheetFiles\ASD03_KAND\03_Architectural\AF1081A-AR107SE.dwg 10/14/2010 3:14:09 PM Barrett, Patrick

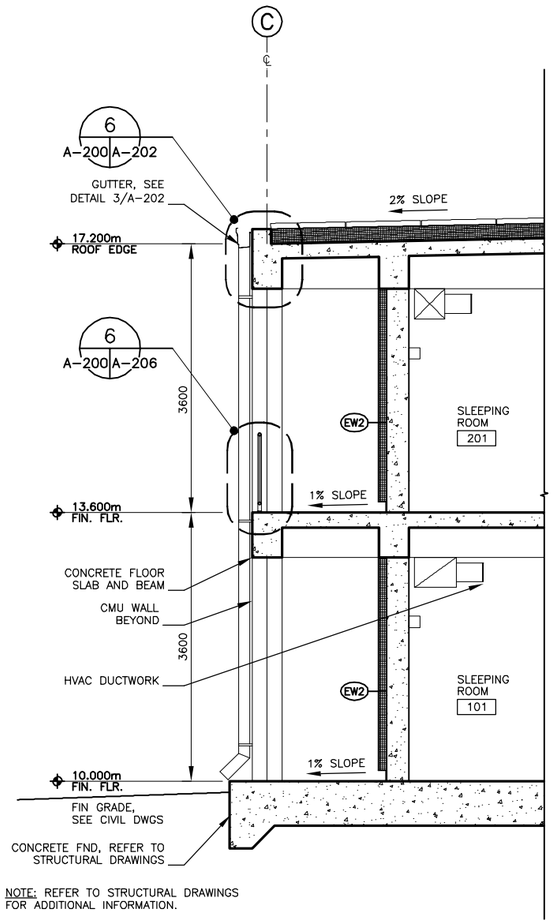

NOTE: REFER TO STRUCTURAL DRAWINGS FOR ADDITIONAL INFORMATION.

WALL SECTION D
SCALE 1:40
A-107 A-200

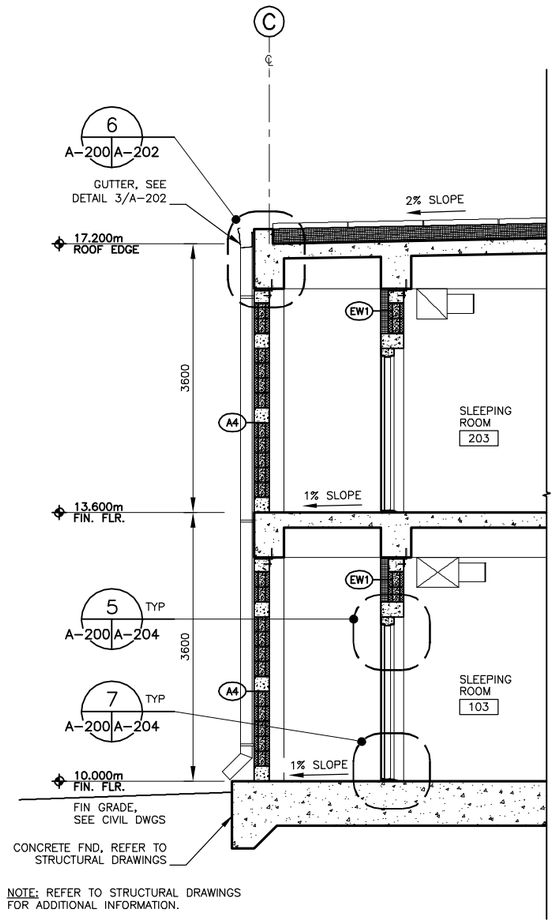

NOTE: REFER TO STRUCTURAL DRAWINGS FOR ADDITIONAL INFORMATION.

WALL SECTION E
SCALE 1:40
A-107 A-200

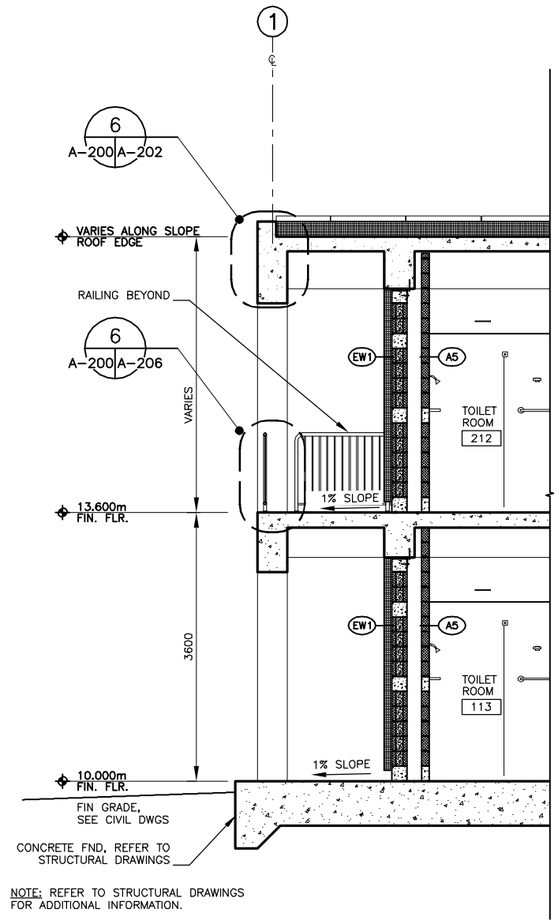

NOTE: REFER TO STRUCTURAL DRAWINGS FOR ADDITIONAL INFORMATION.

WALL SECTION F
SCALE 1:40
A-107 A-200

0 .5 1 2 3 4
1:40

THESE DRAWINGS ARE "NOT APPROVED FOR CONSTRUCTION" SINCE THESE ARE BASED UPON ASSUMED CONDITIONS. THE CONTRACTOR SHALL NOT PROCEED WITH CONSTRUCTION UNTIL THE ASSUMED CONDITIONS ARE VALIDATED AND APPROVAL IS RECEIVED FROM THE CONTRACTING OFFICER.

UNLESS OTHERWISE NOTED, ALL DIMENSIONS SHOWN ARE IN MILLIMETERS.

CORRECTED FINAL DESIGN SUBMITTAL

SYMB	DESCRIPTION	DATE	APR
0	CORRECTED FINAL DESIGN SUBMITTAL	09/15/10	WESR
B	FINAL DESIGN SUBMITTAL	09/02/10	WESR
A	MID-POINT DESIGN SUBMITTAL	08/13/10	WESR

DESIGNED BY: KCB
DATE: 09/15/10
DRAWN BY: NLL
SUBMITTED BY: TETRA TECH
CHECKED BY: KCB
FILE NO.: AF1081A-AR200SE

US Army Corps of Engineers Middle East District

TETRA TECH

AUSTERE STANDARD DESIGNS-PHASE 4
FY11 BARRACKS - PN74127-CLN03
KANDAHAR AIR BASE, AFGHANISTAN

WALL SECTIONS
SHEET 1 OF 2

SHEET REFERENCE NUMBER:
AF1081A
A-200

W:\23308\127-23308-10010\CAD\SheetFiles\ASD03_KAND\03_Architectural\AF1081A-AR200SE.dwg 10/14/2010 3:14:25 PM Barrett, Patrick

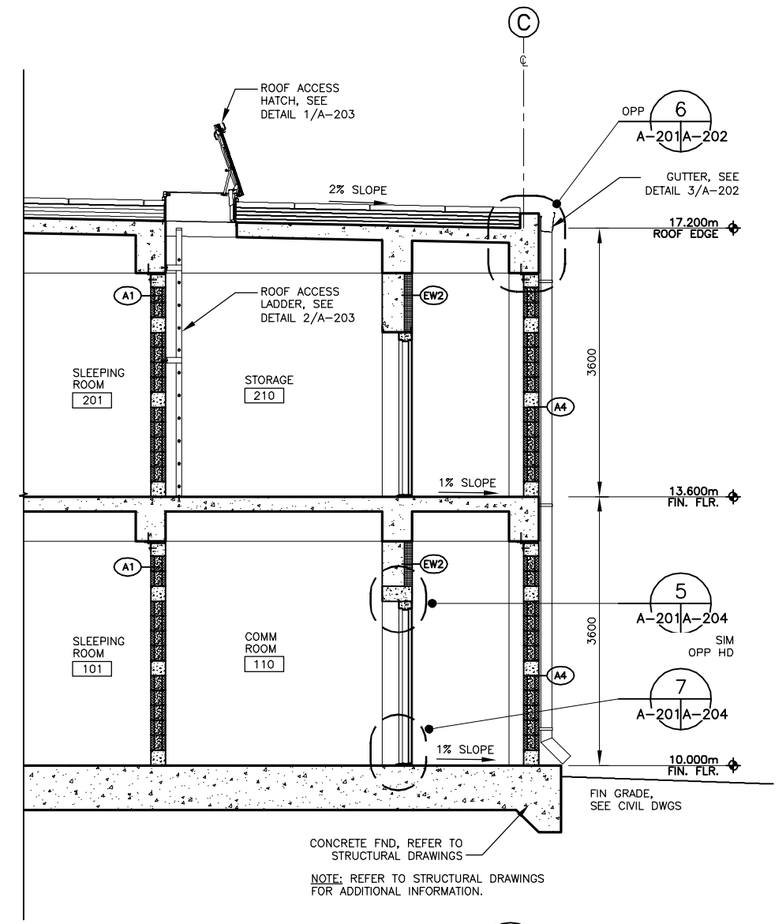

WALL SECTION G A-100, A-101 A-201

SCALE 1:40

0 .5 1 2 3 4
1:40

THESE DRAWINGS ARE "NOT APPROVED FOR CONSTRUCTION" SINCE THESE ARE BASED UPON ASSUMED CONDITIONS. THE CONTRACTOR SHALL NOT PROCEED WITH CONSTRUCTION UNTIL THE ASSUMED CONDITIONS ARE VALIDATED AND APPROVAL IS RECEIVED FROM THE CONTRACTING OFFICER.

CORRECTED FINAL DESIGN SUBMITTAL

SYMB	DESCRIPTION	DATE	APR.
0	CORRECTED FINAL DESIGN SUBMITTAL	09/15/10	WESR
B	FINAL DESIGN SUBMITTAL	09/02/10	WESR
A	MID-POINT DESIGN SUBMITTAL	08/13/10	WESR

DESIGNED BY: KCB
DATE: 09/15/10
DRAWN BY: NLL
SUBMITTED BY: TETRA TECH
CHECKED BY: KCB
FILE NO.: AF1081A-AR201SE

US Army Corps of Engineers Middle East District

TETRA TECH

AUSTERE STANDARD DESIGNS-PHASE 4
FY11 BARRACKS - PN74127-CLN03
KANDAHAR AIR BASE, AFGHANISTAN

WALL SECTIONS
SHEET 2 OF 2

SHEET REFERENCE NUMBER:
AF1081A
A-201

UNLESS OTHERWISE NOTED, ALL DIMENSIONS SHOWN ARE IN MILLIMETERS.

W:\23308\127-23308-10010\CAD\SheetFiles\ASD03_KAND\03_Architectural\AF1081A-AR201SE.dwg 10/14/2010 3:14:37 PM Barrett, Patrick

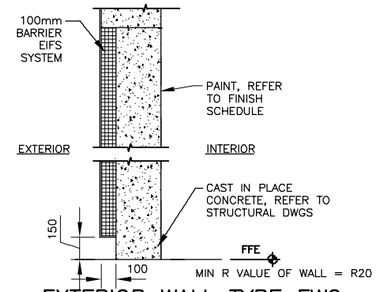

EXTERIOR WALL TYPE EW2
SCALE 1:20

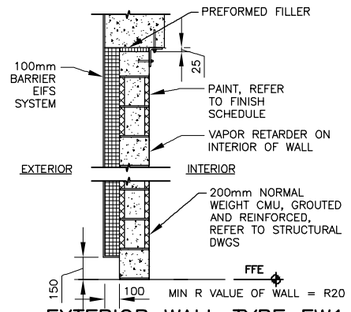

EXTERIOR WALL TYPE EW1
SCALE 1:20

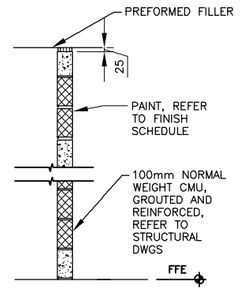

PARTITION TYPE A5
SCALE 1:20

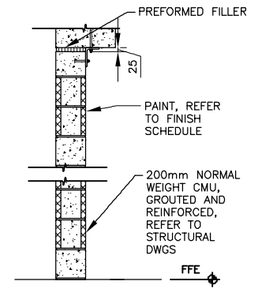

PARTITION TYPE A4
SCALE 1:20

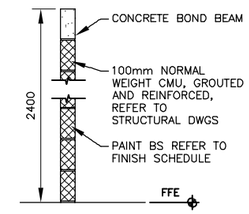

PARTITION TYPE A3

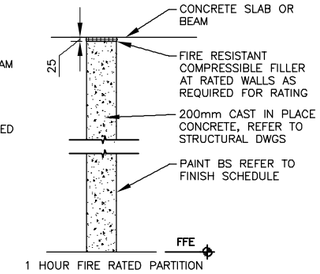

PARTITION TYPE A2
SCALE 1:20

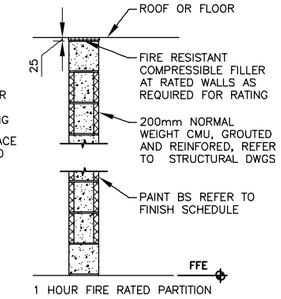

PARTITION TYPE A1
SCALE 1:20

EXTERIOR WALL TYPES (1)
SCALE 1:10 A-100, A-101 A-202

PARTITION TYPES (2)
SCALE 1:20 A-100, A-101 A-202

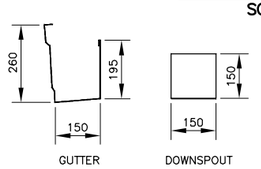

GUTTER/DOWNSPOUT DETAIL (3)
SCALE 1:10 OA-001, A-104, A-105, A-106, A-200 A-202

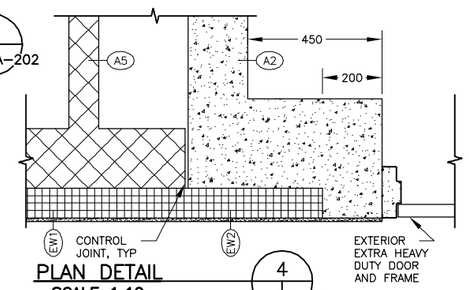

PLAN DETAIL (4)
SCALE 1:10 A-100, A-101 A-202

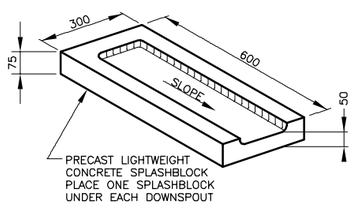

SPLASH BLOCK DETAIL (7)
SCALE 1:10 OA-001, A-100, A-202 A-202

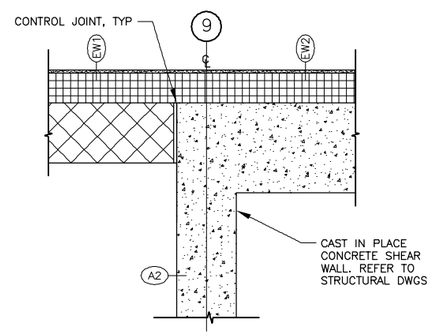

PLAN DETAIL (8)
SCALE 1:10 A-100, A-101 A-202

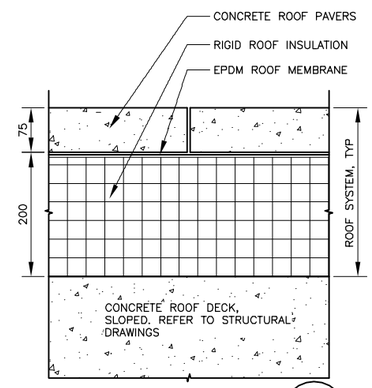

ROOF SYSTEM DETAIL (5)
SCALE 1:5 A-104 A-202

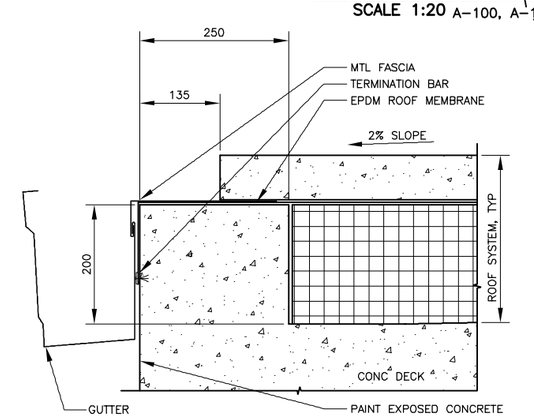

ROOF EDGE DETAIL (6)
SCALE 1:5 A-104, A-200, A-201 A-202

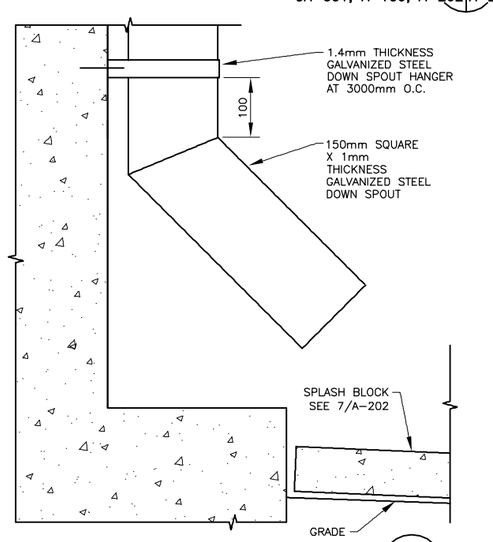

DOWNSPOUT DETAIL (10)
SCALE 1:5 A-105, A-106 A-202

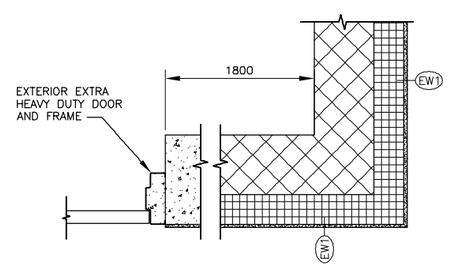

PLAN DETAIL (11)
SCALE 1:10 A-100, A-101 A-202

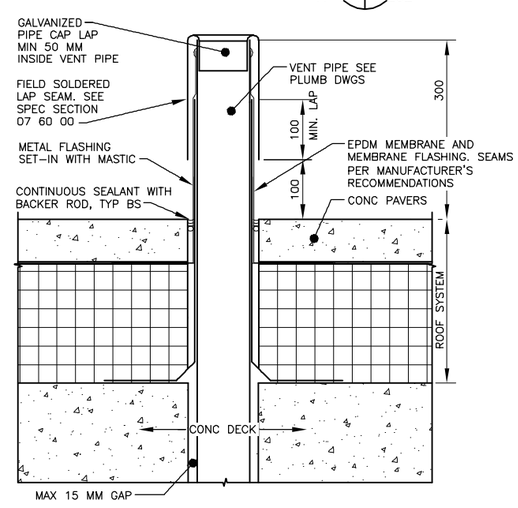

ROOF VENT DETAIL (9)
SCALE 1:5 A-104 A-202

UNLESS OTHERWISE NOTED, ALL DIMENSIONS SHOWN ARE IN MILLIMETERS.

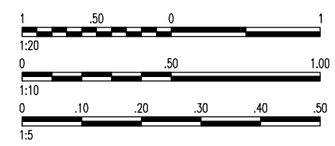

THESE DRAWINGS ARE "NOT APPROVED FOR CONSTRUCTION" SINCE THESE ARE BASED UPON ASSUMED CONDITIONS. THE CONTRACTOR SHALL NOT PROCEED WITH CONSTRUCTION UNTIL THE ASSUMED CONDITIONS ARE VALIDATED AND APPROVAL IS RECEIVED FROM THE CONTRACTING OFFICER.

CORRECTED FINAL DESIGN SUBMITTAL

SYMB	DESCRIPTION	DATE	APR
0	CORRECTED FINAL DESIGN SUBMITTAL	09/15/10	WESR
B	FINAL DESIGN SUBMITTAL	09/02/10	WESR
A	MID-POINT DESIGN SUBMITTAL	08/13/10	WESR

DESIGNED BY: KCB
DATE: 09/15/10
DRAWN BY: NLL
SUBMITTED BY: TETRA TECH
CHECKED BY: KCB
FILE NO.: AF1081A-AR202DT

US Army Corps of Engineers Middle East District

TETRA TECH

AUSTERE STANDARD DESIGNS-PHASE 4
FY11 BARRACKS - PN74127-CLN03
KANDAHAR AIR BASE, AFGHANISTAN

MISCELLANEOUS DETAILS
SHEET 1 OF 2

SHEET REFERENCE NUMBER:
AF1081A
A-202

W:\23308\127-23308-10010\CAD\SheetFiles\ASD03_KAND\03_Architectural\AF1081A-AR202DT.dwg 10/14/2010 3:14:52 PM Barrett, Patrick

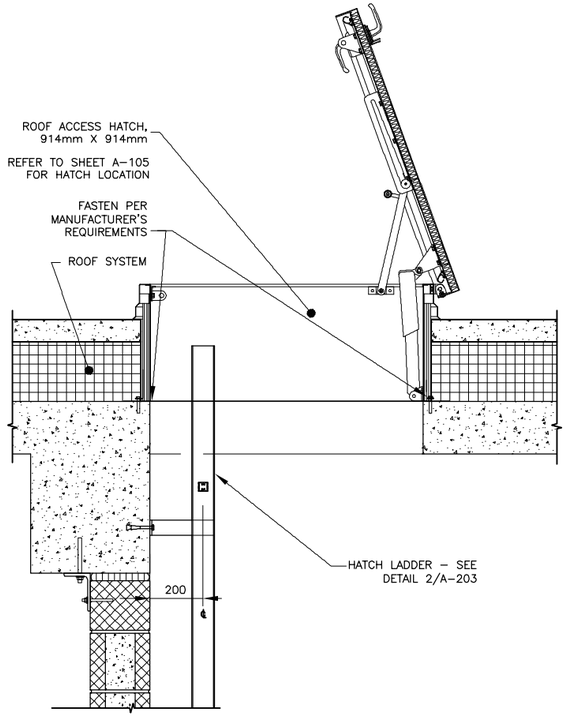

ROOF HATCH DETAIL (1) SCALE 1:10 A-104, A-201, A-203 | A-203

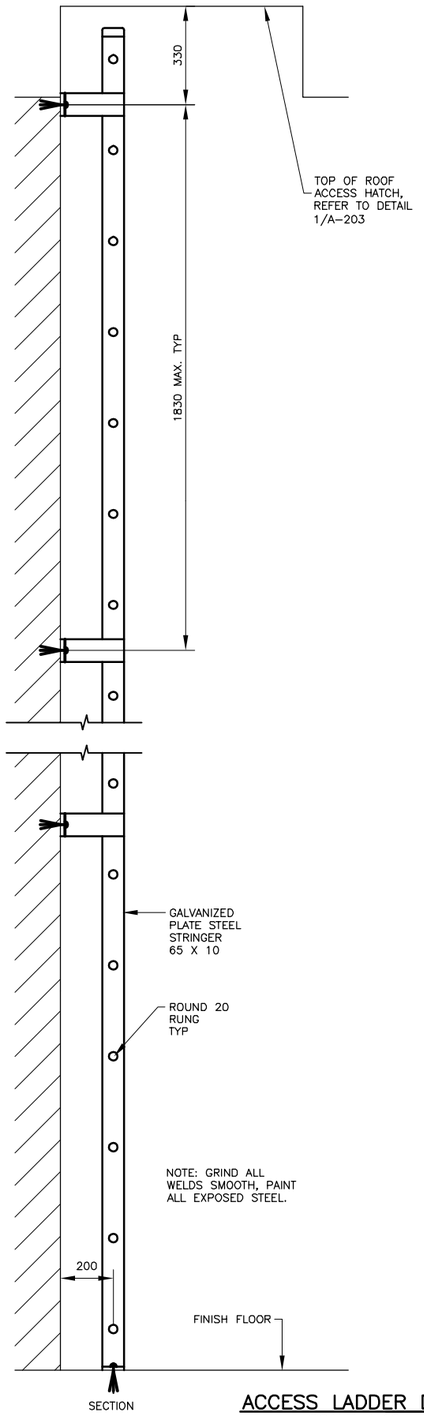

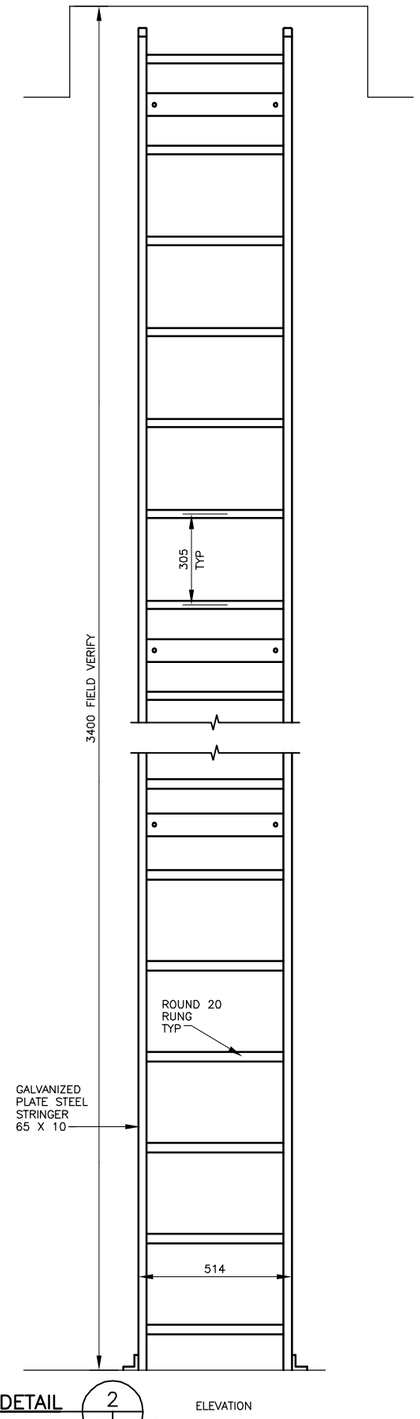

ACCESS LADDER DETAIL (2) SCALE 1:10 A-101 | A-203

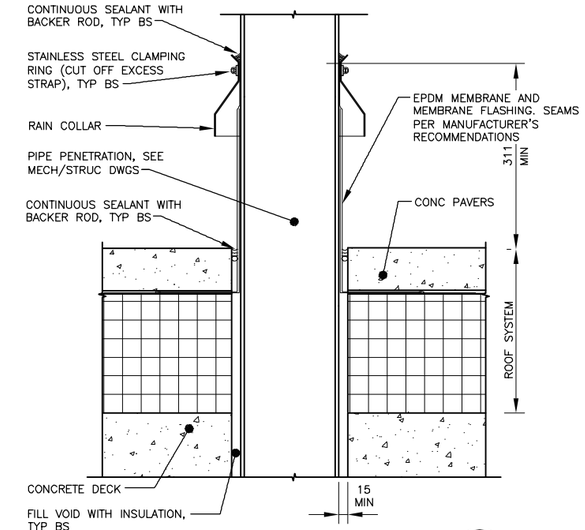

PIPE PENETRATION DETAIL (3) SCALE 1:5 M-102, A-104 | A-203

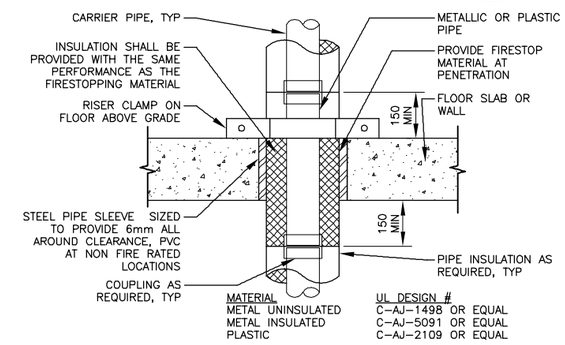

TYPICAL FIRE-RATED CONC FLOOR AND CONC OR MAS WALL PENETRATION (5) A-100, A-101 | A-203

NTS

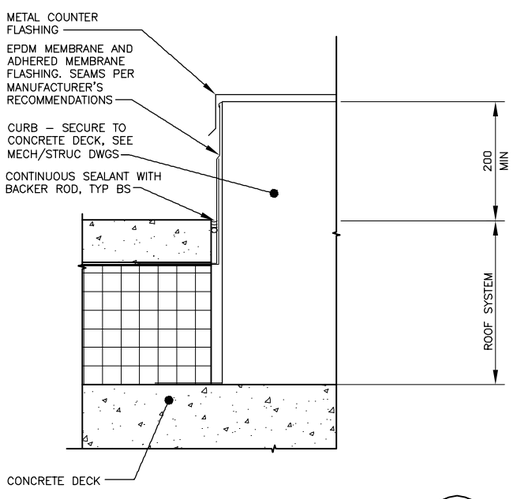

TYPICAL CURB FLASHING DETAIL (4) SCALE 1:5 M-102, A-104 | A-203

UNLESS OTHERWISE NOTED, ALL DIMENSIONS SHOWN ARE IN MILLIMETERS.

0 .10 .20 .30 .40 .50
1:5
0 .50 1.00
1:10

THESE DRAWINGS ARE "NOT APPROVED FOR CONSTRUCTION" SINCE THESE ARE BASED UPON ASSUMED CONDITIONS. THE CONTRACTOR SHALL NOT PROCEED WITH CONSTRUCTION UNTIL THE ASSUMED CONDITIONS ARE VALIDATED AND APPROVAL IS RECEIVED FROM THE CONTRACTING OFFICER.

CORRECTED FINAL DESIGN SUBMITTAL

SYMB	DESCRIPTION	DATE	APR
0	CORRECTED FINAL DESIGN SUBMITTAL	09/15/10	WESR
B	FINAL DESIGN SUBMITTAL	09/02/10	WESR
A	MID-POINT DESIGN SUBMITTAL	08/13/10	WESR

DATE: 09/15/10
SUBMITTED BY: TETRA TECH
FILE NO.: AF1081A-AR2030T
DESIGNED BY: KCB
DRAWN BY: NLL
CHECKED BY: KCB

US Army Corps of Engineers Middle East District

TETRA TECH

AUSTERE STANDARD DESIGNS-PHASE 4
FY11 BARRACKS – PN74127-CLN03
KANDAHAR AIR BASE, AFGHANISTAN

MISCELLANEOUS DETAILS
SHEET 2 OF 2

SHEET REFERENCE NUMBER:
AF1081A
A-203

W:\23308\127-23308-10010\CAD\SheetFiles\ASD03_KAND\03_Architectural\AF1081A-AR2030T.dwg 10/14/2010 3:15:01 PM Barrett, Patrick

DOOR SCHEDULE

DOOR TAG ROOM	DOOR TAG DOOR	DOOR TO	DOOR TYPE	DOOR MATERIAL	DOOR RATING	QTY	DOOR WIDTH	DOOR HEIGHT	DOOR THK	DOOR GLAZING	FRAME MAT	FRAME TYPE	FRAME HEAD	FRAME JAMB1	FRAME JAMB2	FRAME SILL	HARD WARE	REMARKS
101	1	SLEEPING ROOM	F	HMD-E	–	1	900	2100	45	–	STL	AA	5/A-204	6/A-204	–	7/A-204	HWG-1	
101	2	SLEEPING ROOM	F	HMD-E	–	1	900	2100	45	–	STL	AA	5/A-204	6/A-204	–	7/A-204	HWG-1	
101	3	SLEEPING ROOM	F	HMD-E	–	1	900	2100	45	–	STL	AA	5/A-204	6/A-204	–	7/A-204	HWG-1	
102	1	SLEEPING ROOM	F	HMD-E	–	1	900	2100	45	–	STL	AA	5/A-204	6/A-204	–	7/A-204	HWG-1	
102	2	SLEEPING ROOM	F	HMD-E	–	1	900	2100	45	–	STL	AA	5/A-204	6/A-204	–	7/A-204	HWG-1	
103	1	SLEEPING ROOM	F	HMD-E	–	1	900	2100	45	–	STL	AA	5/A-204	6/A-204	–	7/A-204	HWG-1	
103	2	SLEEPING ROOM	F	HMD-E	–	1	900	2100	45	–	STL	AA	5/A-204	6/A-204	–	7/A-204	HWG-1	
104	1	SLEEPING ROOM	F	HMD-E	–	1	900	2100	45	–	STL	AA	5/A-204	6/A-204	–	7/A-204	HWG-1	
104	2	SLEEPING ROOM	F	HMD-E	–	1	900	2100	45	–	STL	AA	5/A-204	6/A-204	–	7/A-204	HWG-1	
105	1	SLEEPING ROOM	F	HMD-E	–	1	900	2100	45	–	STL	AA	5/A-204	6/A-204	–	7/A-204	HWG-1	
105	2	SLEEPING ROOM	F	HMD-E	–	1	900	2100	45	–	STL	AA	5/A-204	6/A-204	–	7/A-204	HWG-1	
106	1	SLEEPING ROOM	F	HMD-E	–	1	900	2100	45	–	STL	AA	5/A-204	6/A-204	–	7/A-204	HWG-1	
106	2	SLEEPING ROOM	F	HMD-E	–	1	900	2100	45	–	STL	AA	5/A-204	6/A-204	–	7/A-204	HWG-1	
107	1	SLEEPING ROOM	F	HMD-E	–	1	900	2100	45	–	STL	AA	5/A-204	6/A-204	–	7/A-204	HWG-1	
107	2	SLEEPING ROOM	F	HMD-E	–	1	900	2100	45	–	STL	AA	5/A-204	6/A-204	–	7/A-204	HWG-1	
108	1	SLEEPING ROOM	F	HMD-E	–	1	900	2100	45	–	STL	AA	5/A-204	6/A-204	–	7/A-204	HWG-1	
108	2	SLEEPING ROOM	F	HMD-E	–	1	900	2100	45	–	STL	AA	5/A-204	6/A-204	–	7/A-204	HWG-1	
109	1	SLEEPING ROOM	F	HMD-E	–	1	900	2100	45	–	STL	AA	5/A-204	6/A-204	–	7/A-204	HWG-1	
109	2	SLEEPING ROOM	F	HMD-E	–	1	900	2100	45	–	STL	AA	5/A-204	6/A-204	–	7/A-204	HWG-1	
110	1	COMM ROOM	F	HMD-E	–	1	900	2100	45	–	STL	AA	5/A-204	6/A-204	–	7/A-204	HWG-2	
111	1	ELECTRICAL ROOM	F	HMD-E	–	1	900	2100	45	–	STL	AA	5/A-204	6/A-204	–	7/A-204	HWG-2	
112	1	MECHANICAL ROOM	F	HMD-E	–	1	900	2100	45	–	STL	AA	9/A-204	8/A-204	–	7/A-204	HWG-2	
113	1	TOILET ROOM	F	HMD-E	–	1	900	2100	45	–	STL	AA	5/A-204	6/A-204	–	7/A-204	HWG-3	
114	1	JANITOR	F.1	HMD	–	1	720	2100	45	–	STL	BB	3/A-204	4/A-204	–	–	HWG-4	
201	1	SLEEPING ROOM	F	HMD-E	–	1	900	2100	45	–	STL	AA	5/A-204	6/A-204	–	7/A-204	HWG-1	
201	2	SLEEPING ROOM	F	HMD-E	–	1	900	2100	45	–	STL	AA	5/A-204	6/A-204	–	7/A-204	HWG-1	
201	3	SLEEPING ROOM	F	HMD-E	–	1	900	2100	45	–	STL	AA	5/A-204	6/A-204	–	7/A-204	HWG-1	
202	1	SLEEPING ROOM	F	HMD-E	–	1	900	2100	45	–	STL	AA	5/A-204	6/A-204	–	7/A-204	HWG-1	
202	2	SLEEPING ROOM	F	HMD-E	–	1	900	2100	45	–	STL	AA	5/A-204	6/A-204	–	7/A-204	HWG-1	
203	1	SLEEPING ROOM	F	HMD-E	–	1	900	2100	45	–	STL	AA	5/A-204	6/A-204	–	7/A-204	HWG-1	
203	2	SLEEPING ROOM	F	HMD-E	–	1	900	2100	45	–	STL	AA	5/A-204	6/A-204	–	7/A-204	HWG-1	
204	1	SLEEPING ROOM	F	HMD-E	–	1	900	2100	45	–	STL	AA	5/A-204	6/A-204	–	7/A-204	HWG-1	
204	2	SLEEPING ROOM	F	HMD-E	–	1	900	2100	45	–	STL	AA	5/A-204	6/A-204	–	7/A-204	HWG-1	
205	1	SLEEPING ROOM	F	HMD-E	–	1	900	2100	45	–	STL	AA	5/A-204	6/A-204	–	7/A-204	HWG-1	
205	2	SLEEPING ROOM	F	HMD-E	–	1	900	2100	45	–	STL	AA	5/A-204	6/A-204	–	7/A-204	HWG-1	
206	1	SLEEPING ROOM	F	HMD-E	–	1	900	2100	45	–	STL	AA	5/A-204	6/A-204	–	7/A-204	HWG-1	
206	2	SLEEPING ROOM	F	HMD-E	–	1	900	2100	45	–	STL	AA	5/A-204	6/A-204	–	7/A-204	HWG-1	
207	1	SLEEPING ROOM	F	HMD-E	–	1	900	2100	45	–	STL	AA	5/A-204	6/A-204	–	7/A-204	HWG-1	
207	2	SLEEPING ROOM	F	HMD-E	–	1	900	2100	45	–	STL	AA	5/A-204	6/A-204	–	7/A-204	HWG-1	
208	1	SLEEPING ROOM	F	HMD-E	–	1	900	2100	45	–	STL	AA	5/A-204	6/A-204	–	7/A-204	HWG-1	
208	2	SLEEPING ROOM	F	HMD-E	–	1	900	2100	45	–	STL	AA	5/A-204	6/A-204	–	7/A-204	HWG-1	
209	1	SLEEPING ROOM	F	HMD-E	–	1	900	2100	45	–	STL	AA	5/A-204	6/A-204	–	7/A-204	HWG-1	
209	2	SLEEPING ROOM	F	HMD-E	–	1	900	2100	45	–	STL	AA	5/A-204	6/A-204	–	7/A-204	HWG-1	
210	1	STORAGE ROOM	F	HMD-E	–	1	900	2100	45	–	STL	AA	5/A-204	6/A-204	–	7/A-204	HWG-2	
211	1	MECHANICAL ROOM	F	HMD-E	–	1	900	2100	45	–	STL	AA	5/A-204	6/A-204	–	7/A-204	HWG-2	
212	1	TOILET ROOM	F	HMD-E	–	1	900	2100	45	–	STL	AA	5/A-204	6/A-204	–	7/A-204	HWG-3	
213	1	JANITOR	F.1	HMD	–	1	720	2100	45	–	STL	BB	3/A-204	4/A-204	–	–	HWG-4	

HMD-E = EXTERIOR EXTRA HEAVY DUTY DOORS
HMD = HEAVY DUTY METAL DOORS
REFER TO FRAME TYPES ON 2/A-204
REFER TO DOOR TYPES ON 1/A-204

FINISH SCHEDULE

ROOM NO.	NAME	FLOOR MATERIAL	FLOOR BASE	WALLS INTERIOR MATERIAL	WALLS INTERIOR FINISH	CEILINGS MATERIAL	CEILINGS FINISH	CEILINGS HEIGHT	REMARKS
101-109	SLEEPING ROOMS	S-CONC	–	CONC, CMU	P	ES	P	BOS	
110	COMM ROOM	S-CONC	–	CONC, CMU	P	ES	P	BOS	
111	ELEC ROOM	S-CONC	–	CONC, CMU	P	ES	P	BOS	
112	MECH ROOM	HPC	–	CONC, CMU	P	ES	P	BOS	NON SLIP
113	TOILET ROOM	HPC	–	CONC, CMU	P	ES	P	BOS	NON SLIP
114	JANITOR	HPC	–	CONC, CMU	P	ES	P	BOS	NON SLIP
201-209	SLEEPING ROOMS	S-CONC	–	CONC, CMU	P	ES	P	BOS	
210	STORAGE ROOM	S-CONC	–	CONC, CMU	P	ES	P	BOS	
211	MECH ROOM	HPC	–	CONC, CMU	P	ES	P	BOS	NON SLIP
212	TOILET ROOM	HPC	–	CONC, CMU	P	ES	P	BOS	NON SLIP
213	JANITOR	HPC	–	CONC, CMU	P	ES	P	BOS	NON SLIP

LEGEND

BOS	Bottom of Structure
CONC	Concrete
S-CONC	Sealed Concrete
CMU	Concrete Masonry Unit
FF	Factory Finish
ES	Exposed Structure
P	Paint
HPC	High Performance Coating

GENERAL NOTE:
1. ALL DOORS, DOOR FRAMES, AND TRIM TO RECEIVE P
2. PAINT ALL EXPOSED STRUCTURE.
3. PAINT EXPOSED SIDE OF CHASE WALL ONLY. INTERIOR SIDE OF CHASE WALL DOES NOT RECEIVE PAINT.

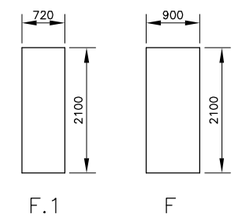

DOOR TYPE 1 — SCALE 1:50 — A-204 | A-204

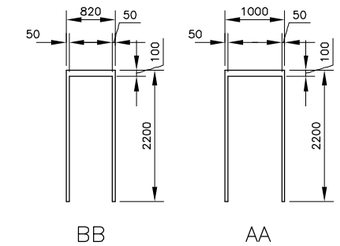

FRAME TYPE 2 — SCALE 1:50 — A-204 | A-204

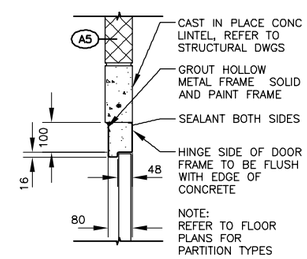

DOOR HEAD DETAIL 3 — SCALE 1:10 — A-204 | A-204

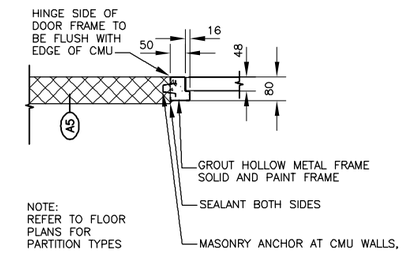

DOOR JAMB DETAIL 4 — SCALE 1:10 — A-204 | A-204

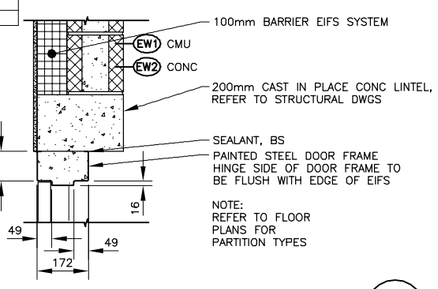

DOOR HEAD DETAIL (EXTERIOR) 5 — SCALE 1:10 — A-200, A-201, A-204 | A-204

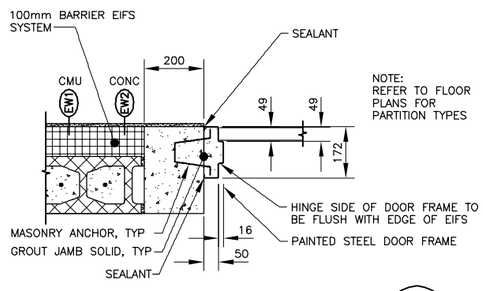

DOOR JAMB DETAIL (EXTERIOR) 6 — SCALE 1:10 — A-200, A-201, A-204 | A-204

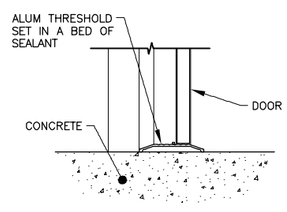

DOOR THRESHOLD DETAIL 7 — SCALE 1:10 — A-200, A-201, A-204 | A-204

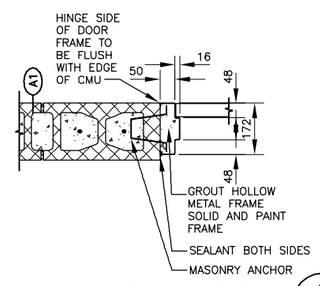

DOOR JAMB DETAIL 8 — SCALE 1:10 — A-204 | A-204

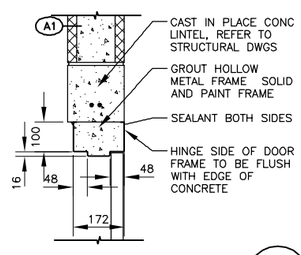

DOOR HEAD DETAIL 9 — SCALE 1:10 — A-204 | A-204

UNLESS OTHERWISE NOTED, ALL DIMENSIONS SHOWN ARE IN MILLIMETERS.

CORRECTED FINAL DESIGN SUBMITTAL

SYMB	DESCRIPTION	DATE	APR
0	CORRECTED FINAL DESIGN SUBMITTAL	09/15/10	WESR
B	FINAL DESIGN SUBMITTAL	09/02/10	WESR
A	MID-POINT DESIGN SUBMITTAL	08/13/10	WESR

DESIGNED BY: KCB
DATE: 09/15/10
DRAWN BY: NLL
SUBMITTED BY: TETRA TECH
CHECKED BY: KCB
FILE NO.: AF1081A-AR204SC

US Army Corps of Engineers Middle East District

TETRA TECH

0 .50 1.00
1:10
1 0 1 2 3 4
1:50

THESE DRAWINGS ARE "NOT APPROVED FOR CONSTRUCTION" SINCE THESE ARE BASED UPON ASSUMED CONDITIONS. THE CONTRACTOR SHALL NOT PROCEED WITH CONSTRUCTION UNTIL THE ASSUMED CONDITIONS ARE VALIDATED AND APPROVAL IS RECEIVED FROM THE CONTRACTING OFFICER.

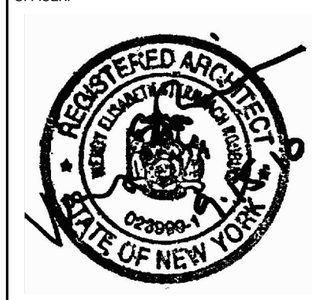

AUSTERE STANDARD DESIGNS-PHASE 4
FY11 BARRACKS - PN74127-CLN03
KANDAHAR AIR BASE, AFGHANISTAN

DOOR DETAILS, DOOR AND FINISH SCHEDULES

SHEET REFERENCE NUMBER:
AF1081A
A-204

W:\23308\127-23308-10010\CAD\SheetFiles\ASD03_KAND\03_Architectural\AF1081A-AR204SC.dwg 10/14/2010 3:15:14 PM Barrett, Patrick

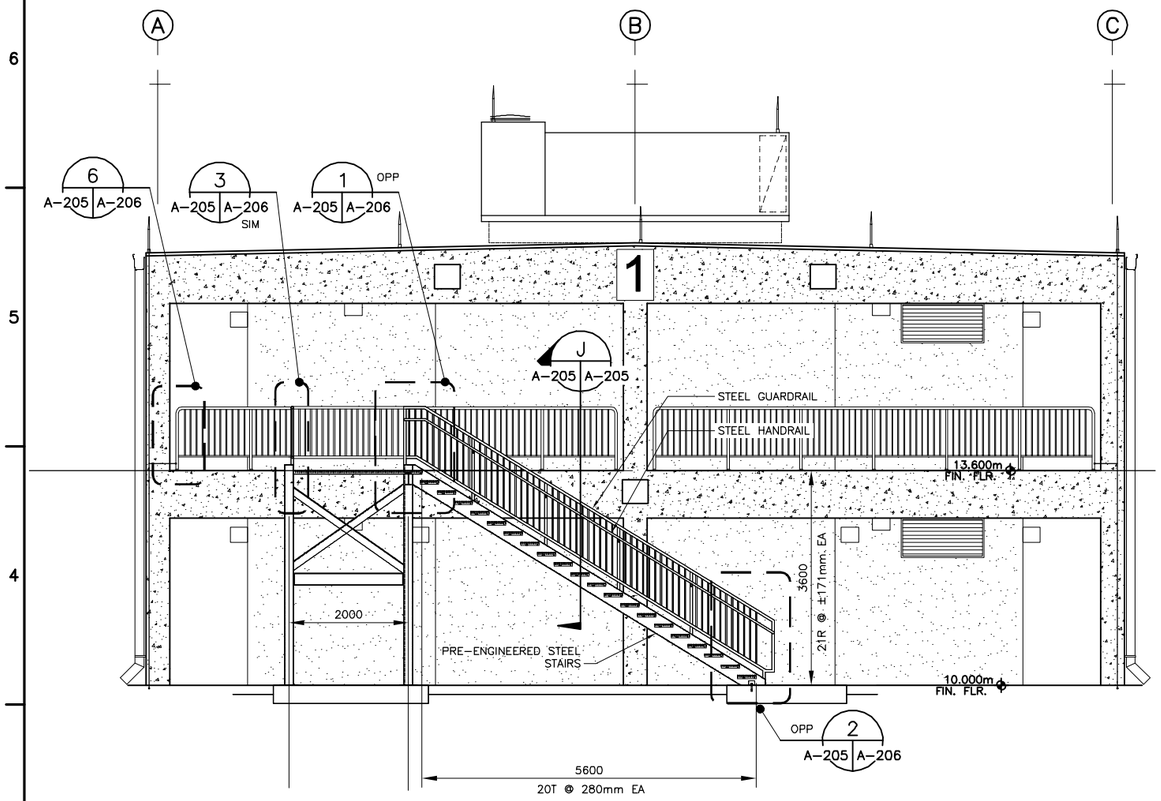

(STAIR 2 SIM) STAIR 1 – SECTION
SCALE 1:50
H
A-105, A-106, A-205 A-205

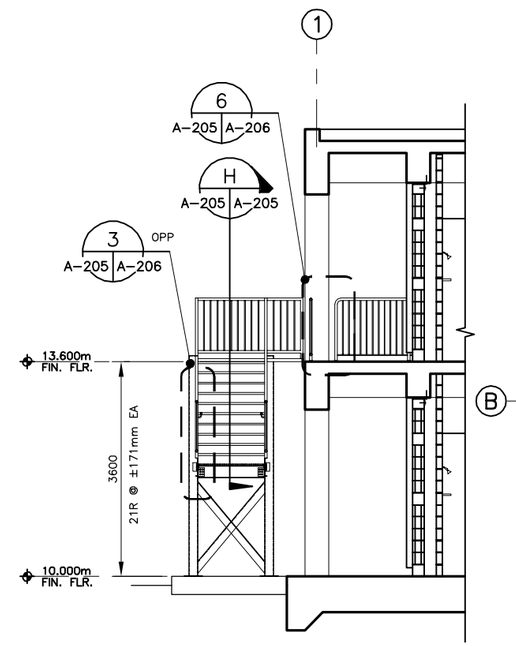

(STAIR 2 SIM) STAIR 1 – SECTION
SCALE 1:50
J
A-205 A-205

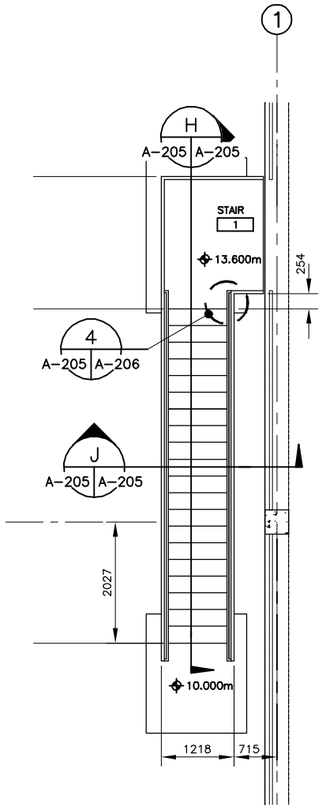

STAIR 1 – FIRST FLOOR ENLARGED PLAN
(STAIR 2 – SIMILAR)
SCALE 1:50
1
A-205 A-205

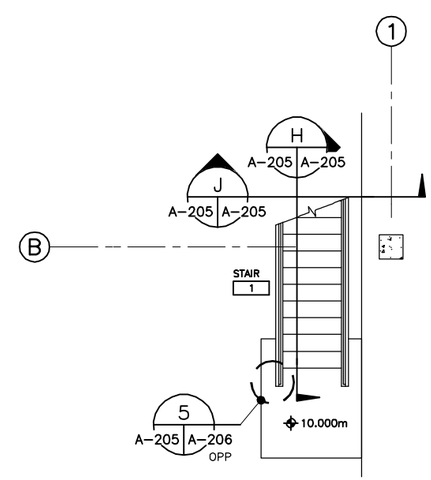

STAIR 1 – GROUND FLOOR ENLARGED PLAN
(STAIR 2 – SIMILAR)
SCALE 1:50
2
A-100 A-205

1 0 1 2 3 4
1:50

THESE DRAWINGS ARE "NOT APPROVED FOR CONSTRUCTION" SINCE THESE ARE BASED UPON ASSUMED CONDITIONS. THE CONTRACTOR SHALL NOT PROCEED WITH CONSTRUCTION UNTIL THE ASSUMED CONDITIONS ARE VALIDATED AND APPROVAL IS RECEIVED FROM THE CONTRACTING OFFICER.

UNLESS OTHERWISE NOTED, ALL DIMENSIONS SHOWN ARE IN MILLIMETERS.

CORRECTED FINAL DESIGN SUBMITTAL

SYMB	DESCRIPTION	DATE	APR
0	CORRECTED FINAL DESIGN SUBMITTAL	09/15/10	WESR
B	FINAL DESIGN SUBMITTAL	09/02/10	WESR
A	MID-POINT DESIGN SUBMITTAL	08/13/10	WESR

DESIGNED BY: KCB
DATE: 09/15/10
DRAWN BY: NLL
SUBMITTED BY: TETRA TECH
CHECKED BY: KCB
FILE NO.: AF1081A-AR205LS

US Army Corps of Engineers
Middle East District

TETRA TECH

AUSTERE STANDARD DESIGNS-PHASE 4
FY11 BARRACKS – PN74127-CLN03
KANDAHAR AIR BASE, AFGHANISTAN

ENLARGED STAIR PLANS AND SECTIONS

SHEET REFERENCE NUMBER:
AF1081A
A-205

W:\23308\127-23308-10010\CAD\SheetFiles\ASD03_KAND\03_Architectural\AF1081A-AR205LS.dwg 10/14/2010 3:15:33 PM Barrett, Patrick

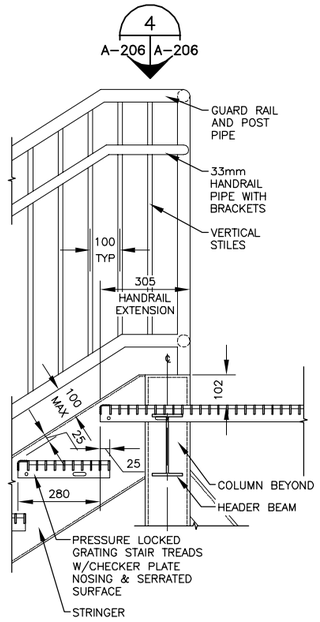

STAIR HEADER DETAIL 1 A-205 A-206
SCALE 1:10

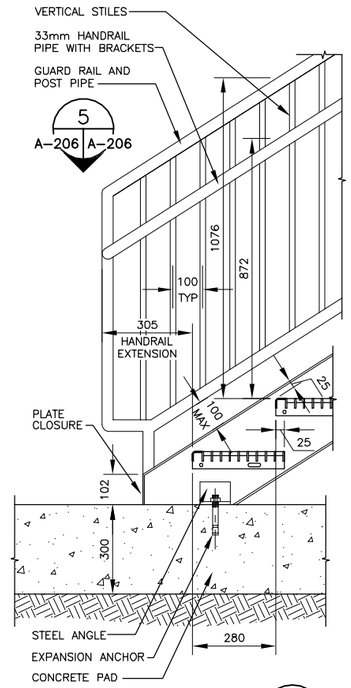

STAIR BASE DETAIL 2 A-205 A-206
SCALE 1:10

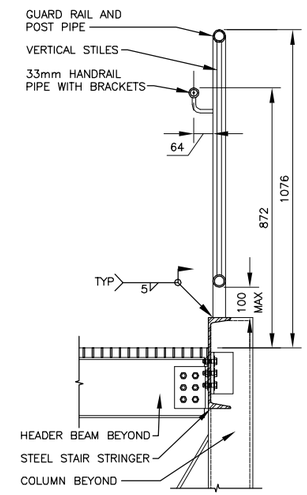

GUARDRAIL DETAIL 3 A-205 A-206
SCALE 1:10

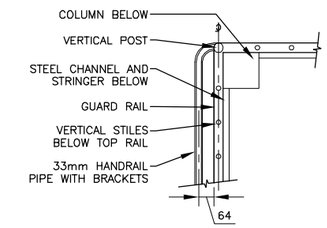

HANDRAIL DETAIL 4 A-205, A-206 A-206
SCALE 1:10

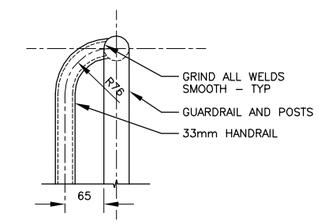

HANDRAIL DETAIL 5 A-205, A-206 A-206
SCALE 1:5

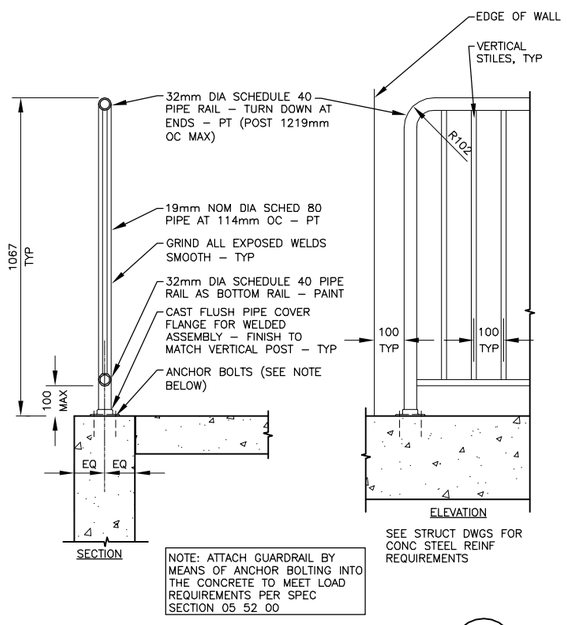

SEE STRUCT DWGS FOR CONC STEEL REINF REQUIREMENTS

NOTE: ATTACH GUARDRAIL BY MEANS OF ANCHOR BOLTING INTO THE CONCRETE TO MEET LOAD REQUIREMENTS PER SPEC SECTION 05 52 00

GUARDRAIL DETAIL 6 A-101, A-106, A-200, A-205 A-206
SCALE 1:10

UNLESS OTHERWISE NOTED, ALL DIMENSIONS SHOWN ARE IN MILLIMETERS.

0 .10 .20 .30 .40 .50
1:5
0 .50 1.00
1:10

THESE DRAWINGS ARE "NOT APPROVED FOR CONSTRUCTION" SINCE THESE ARE BASED UPON ASSUMED CONDITIONS. THE CONTRACTOR SHALL NOT PROCEED WITH CONSTRUCTION UNTIL THE ASSUMED CONDITIONS ARE VALIDATED AND APPROVAL IS RECEIVED FROM THE CONTRACTING OFFICER.

CORRECTED FINAL DESIGN SUBMITTAL

SYMB	DESCRIPTION	DATE	APR
0	CORRECTED FINAL DESIGN SUBMITTAL	09/15/10	WESR
B	FINAL DESIGN SUBMITTAL	09/02/10	WESR
A	MID-POINT DESIGN SUBMITTAL	08/13/10	WESR

DESIGNED BY: KCB
DATE: 09/15/10
DRAWN BY: NLL
SUBMITTED BY: TETRA TECH
CHECKED BY: KCB
FILE NO.: AF1081A-AR206DT

US Army Corps of Engineers
Middle East District

TETRA TECH

AUSTERE STANDARD DESIGNS-PHASE 4
FY11 BARRACKS – PN74127-CLN03
KANDAHAR AIR BASE, AFGHANISTAN

STAIR DETAILS

SHEET REFERENCE NUMBER:
AF1081A
A-206

W:\23308\127-23308-10010\CAD\SheetFiles\ASD03_KAND\03_Architectural\AF1081A-AR206DT.dwg 10/14/2010 3:15:43 PM Barrett, Patrick

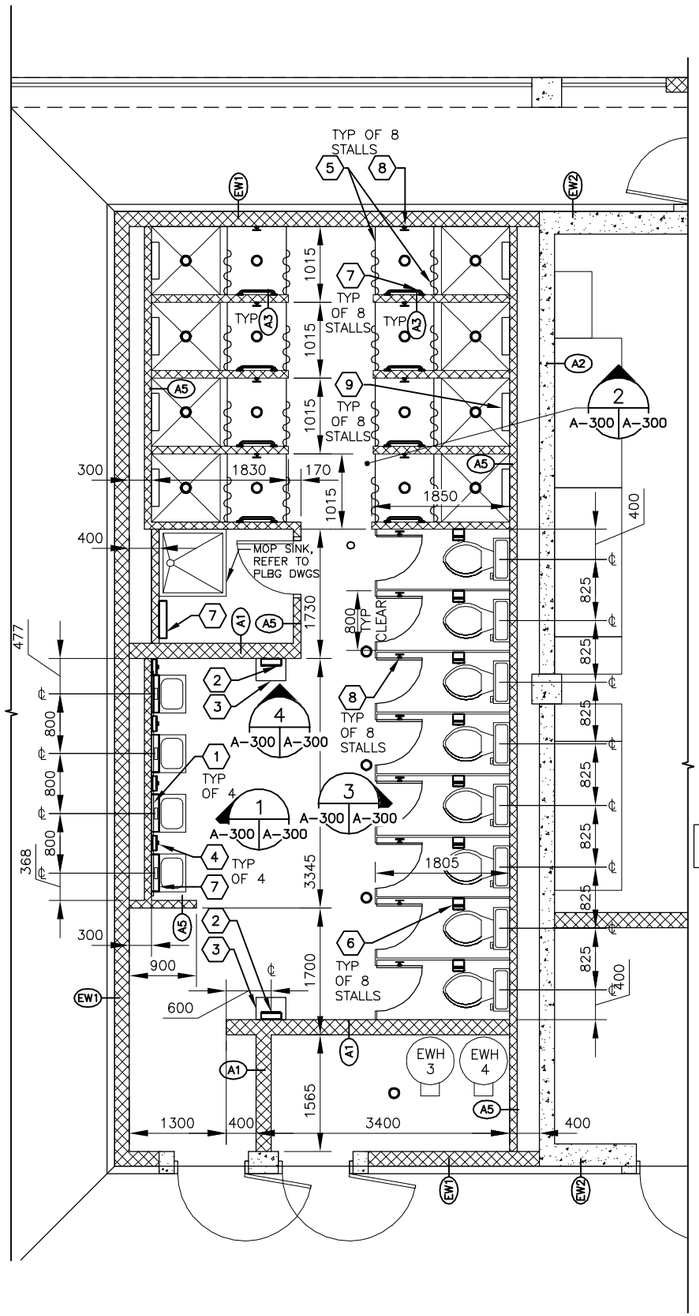

(GROUND FL SIM) ENLARGED FIRST FLOOR PLAN

SCALE 1:40 — A-100, A-101 | A-300

NOTE: FOR FLOOR SLOPES AND DRAIN LOCATIONS REFER TO STRUCTURAL AND PLUMBING DRAWINGS.

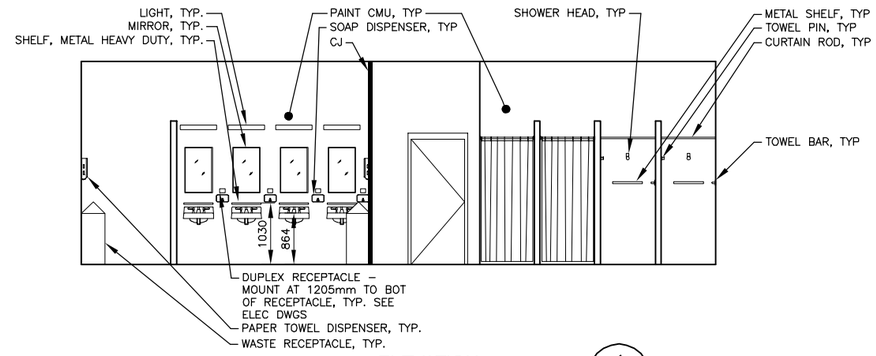

ELEVATION 1

SCALE 1:50 — A-300 | A-300

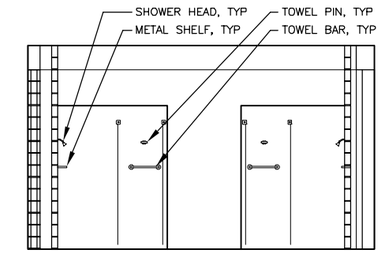

ELEVATION 2

SCALE 1:50 — A-300 | A-300

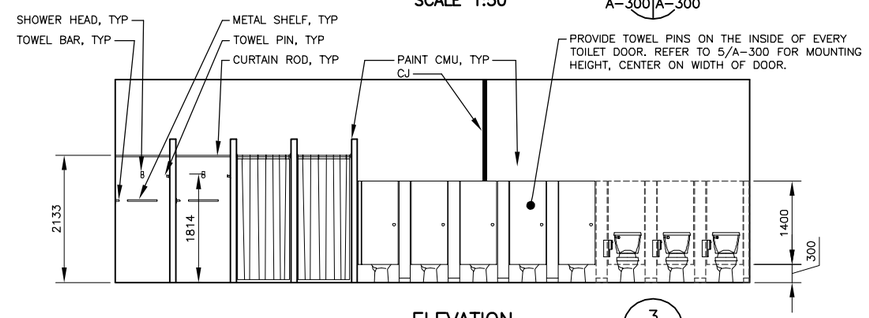

ELEVATION 3

SCALE 1:50 — A-300 | A-300

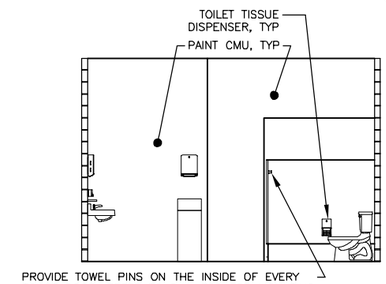

ELEVATION 4

SCALE 1:50 — A-300 | A-300

TOILET ACCESSORIES SCHEDULE

1.	MIRROR, 460mm x 760mm (MG)
2.	PAPER TOWEL DISPENSER (PTD)
3.	WASTE RECEPTACLE (WR)
4.	SOAP DISPENSER (SD)
5.	SHOWER CURTAIN WITH ROD (SC), (SCR)
6.	TOILET TISSUE DISPENSER (TTD)
7.	METAL SHELF, 500mm LONG (SMHD), SEE 6/A-300
8.	TOWEL PIN, SEE 8/A-300
9.	TOWEL BAR, SEE 9/A-300

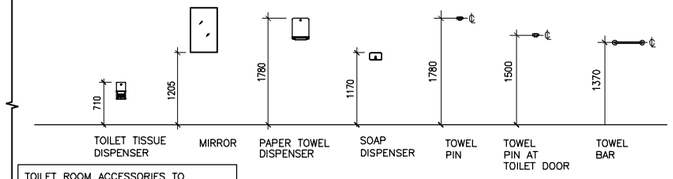

TOILET ROOM ACCESSORIES TO BE MOUNTED AS PER MANUFACTURERS' INSTRUCTIONS

ACCESSORY MOUNTING HEIGHTS

SCALE 1:50 — A-300 | A-300

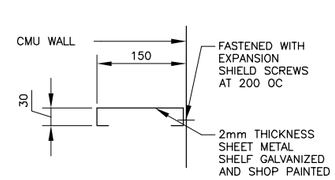

METAL SHELF DETAIL

SCALE 1:5 — A-300 | A-300

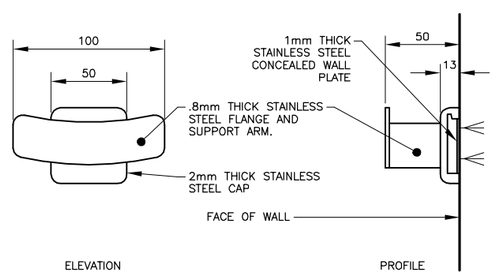

TOWEL PIN DETAIL

SCALE 1:2 — A-300 | A-300

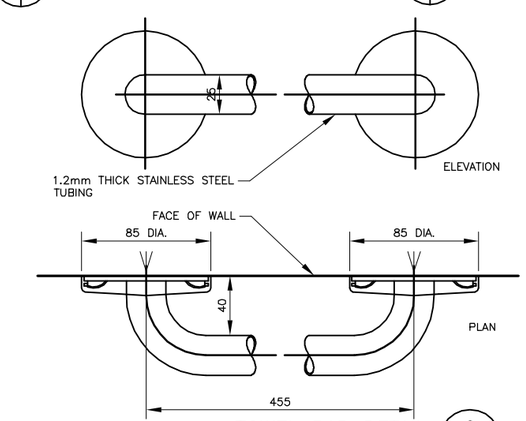

TOWEL BAR DETAIL

SCALE 1:2 — A-300 | A-300

UNLESS OTHERWISE NOTED, ALL DIMENSIONS SHOWN ARE IN MILLIMETERS.

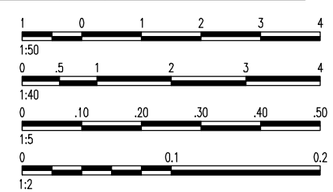

THESE DRAWINGS ARE "NOT APPROVED FOR CONSTRUCTION" SINCE THESE ARE BASED UPON ASSUMED CONDITIONS. THE CONTRACTOR SHALL NOT PROCEED WITH CONSTRUCTION UNTIL THE ASSUMED CONDITIONS ARE VALIDATED AND APPROVAL IS RECEIVED FROM THE CONTRACTING OFFICER.

CORRECTED FINAL DESIGN SUBMITTAL

SYMB	DESCRIPTION	DATE	
0	CORRECTED FINAL DESIGN SUBMITTAL	09/15/10	WESR
B	FINAL DESIGN SUBMITTAL	09/02/10	WESR
A	MID-POINT DESIGN SUBMITTAL	08/13/10	WESR

DESIGNED BY: KCB	DATE: 09/15/10	
DRAWN BY: NLL	SUBMITTED BY: TETRA TECH	
CHECKED BY: KCB	FILE NO.: AF1081A-AR300SC	

US Army Corps of Engineers Middle East District

TETRA TECH

AUSTERE STANDARD DESIGNS–PHASE 4
FY11 BARRACKS – PN74127–CLN03
KANDAHAR AIR BASE, AFGHANISTAN

ENLARGED FLOOR PLAN, INTERIOR ELEVATIONS AND ACCESSORY SCHEDULE

SHEET REFERENCE NUMBER:
AF1081A
A-300

W:\23308\127-23308-10010\CAD\SheetFiles\ASD03_KAND\03_Architectural\AF1081A-AR300SC.dwg 10/14/2010 3:15:55 PM Barrett, Patrick

EXTERIOR SIGNAGE SCHEDULE

NO.	ROOM NAME	SIGN TYPE	QTY	SIGNAGE TEXT	NOTES
TBD	NUMBER TBD	5	2	BUILDING IDENTIFICATION	REFER TO EXTERIOR ELEVATIONS
TBD	TBD	3	2	BUILDING IDENTIFICATION	LOCATED TBD IN FIELD

INTERIOR SIGNAGE SCHEDULE

NO.	ROOM NAME	SIGN TYPE	QTY	SIGNAGE TEXT	NOTES
101	SLEEPING ROOM	2/4	3	ROOM NAME	ADJACENT TO DOOR 101/1, 101/2, 101/3
102	SLEEPING ROOM	2/4	2	ROOM NAME	ADJACENT TO DOOR 102/1, 102/2
103	SLEEPING ROOM	2/4	2	ROOM NAME	ADJACENT TO DOOR 103/1, 103/2
104	SLEEPING ROOM	2/4	2	ROOM NAME	ADJACENT TO DOOR 104/1, 104/2
105	SLEEPING ROOM	2/4	2	ROOM NAME	ADJACENT TO DOOR 105/1, 105/2
106	SLEEPING ROOM	2/4	2	ROOM NAME	ADJACENT TO DOOR 106/1, 106/2
107	SLEEPING ROOM	2/4	2	ROOM NAME	ADJACENT TO DOOR 107/1, 107/2
108	SLEEPING ROOM	2/4	2	ROOM NAME	ADJACENT TO DOOR 108/1, 108/2
109	SLEEPING ROOM	2/4	2	ROOM NAME	ADJACENT TO DOOR 109/1, 109/2
110	COMM ROOM	2/4	1	ROOM NAME	ADJACENT TO DOOR 110/1
111	ELEC ROOM	2/4	1	ROOM NAME	ADJACENT TO DOOR 111/1
112	MECH ROOM	2/4	1	ROOM NAME	ADJACENT TO DOOR 112/1
113	TOILET ROOM	1	1	ROOM NAME	ADJACENT TO DOOR 113/1
114	JANITOR	2	1	ROOM NAME	ADJACENT TO DOOR 114/1
201	SLEEPING ROOM	2/4	3	ROOM NAME	ADJACENT TO DOOR 201/1, 201/2, 201/3
202	SLEEPING ROOM	2/4	2	ROOM NAME	ADJACENT TO DOOR 202/1, 202/2
203	SLEEPING ROOM	2/4	2	ROOM NAME	ADJACENT TO DOOR 203/1, 203/2
204	SLEEPING ROOM	2/4	2	ROOM NAME	ADJACENT TO DOOR 204/1, 204/2
205	SLEEPING ROOM	2/4	2	ROOM NAME	ADJACENT TO DOOR 205/1, 205/2
206	SLEEPING ROOM	2/4	2	ROOM NAME	ADJACENT TO DOOR 206/1, 206/2
207	SLEEPING ROOM	2/4	2	ROOM NAME	ADJACENT TO DOOR 207/1, 207/2
208	SLEEPING ROOM	2/4	2	ROOM NAME	ADJACENT TO DOOR 208/1, 208/2
209	SLEEPING ROOM	2/4	2	ROOM NAME	ADJACENT TO DOOR 209/1, 209/2
210	STORAGE ROOM	2/4	1	ROOM NAME	ADJACENT TO DOOR 210/1
211	MECH ROOM	2/4	1	ROOM NAME	ADJACENT TO DOOR 211/1
212	TOILET ROOM	1	1	ROOM NAME	ADJACENT TO DOOR 212/1
213	JANITOR	2	1	ROOM NAME	ADJACENT TO DOOR 213/1

NOTE:
LOCATIONS OF TYPE 4 EXTINGUISHER SIGNAGE IS SHOWN ON LS-DRAWINGS.

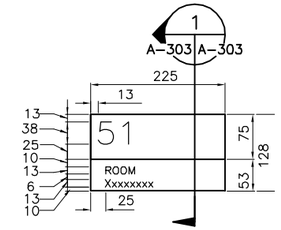

ROOM IDENTIFICATION SIGNS TYPE 2
SCALE 1:5

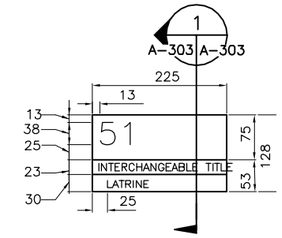

REST ROOM SIGNS TYPE 1
SCALE 1:5

NOTE: COORDINATE WITH BASE ENGINEER AND CONTRACTING OFFICER AS TO CORRECT BUILDING ROOM NAMES, NUMBERS AND AND LABEL FOR INTERCHANGEABLE SIGN.

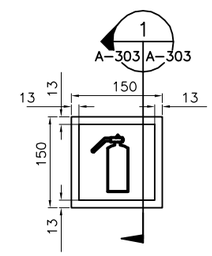

EXTINGUISHER SIGN TYPE 4
SCALE 1:5

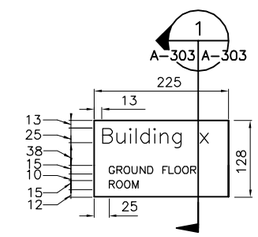

BUILDING IDENTIFICATION SIGNS TYPE 3
SCALE 1:5

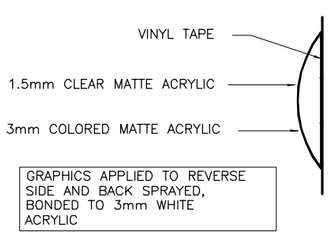

SIGN SECTION
SCALE 1:5
1 A-303 A-303

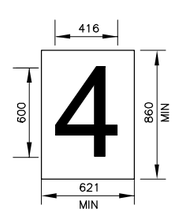

NOTE:
REFER TO EXTERIOR ELEVATIONS FOR EXTERIOR BUILDING SIGNAGE LOCATIONS- CENTER BUILDING NUMBER IN PLAQUE.

EXTERIOR BUILDING SIGNAGE TYPE 5
SCALE 1:20
2 A-105, A-106 A-303

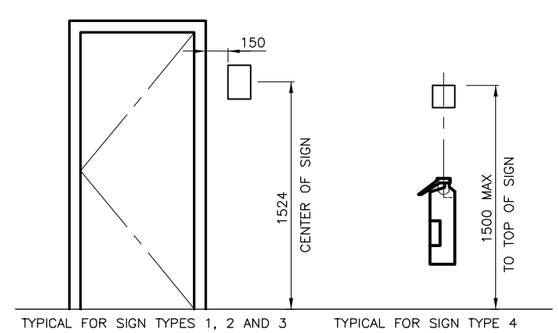

MOUNTING HEIGHTS – IDENTIFICATION SIGNS
SCALE 1:20
3 A-303 A-303

UNLESS OTHERWISE NOTED, ALL DIMENSIONS SHOWN ARE IN MILLIMETERS.

1 .50 0 1
1:20
0 .10 .20 .30 .40 .50
1:5

THESE DRAWINGS ARE "NOT APPROVED FOR CONSTRUCTION" SINCE THESE ARE BASED UPON ASSUMED CONDITIONS. THE CONTRACTOR SHALL NOT PROCEED WITH CONSTRUCTION UNTIL THE ASSUMED CONDITIONS ARE VALIDATED AND APPROVAL IS RECEIVED FROM THE CONTRACTING OFFICER.

CORRECTED FINAL DESIGN SUBMITTAL

SYMB	DESCRIPTION	DATE	APR
0	CORRECTED FINAL DESIGN SUBMITTAL	09/15/10	WESR
B	FINAL DESIGN SUBMITTAL	09/02/10	WESR
A	MID-POINT DESIGN SUBMITTAL	08/13/10	WESR

DESIGNED BY: KCB
DATE: 09/15/10
DRAWN BY: NLL
SUBMITTED BY: TETRA TECH
CHECKED BY: KCB
FILE NO.: AF1081A-AR3030T

US Army Corps of Engineers Middle East District

TETRA TECH

AUSTERE STANDARD DESIGNS-PHASE 4
FY11 BARRACKS – PN74127-CLN03
KANDAHAR AIR BASE, AFGHANISTAN

SIGNAGE DETAILS

SHEET REFERENCE NUMBER:
AF1081A
A-303

W:\23308\127-23308-10010\CAD\SheetFiles\ASD03_KAND\03_Architectural\AF1081A-AR3030T.dwg 10/14/2010 3:16:04 PM Barrett, Patrick

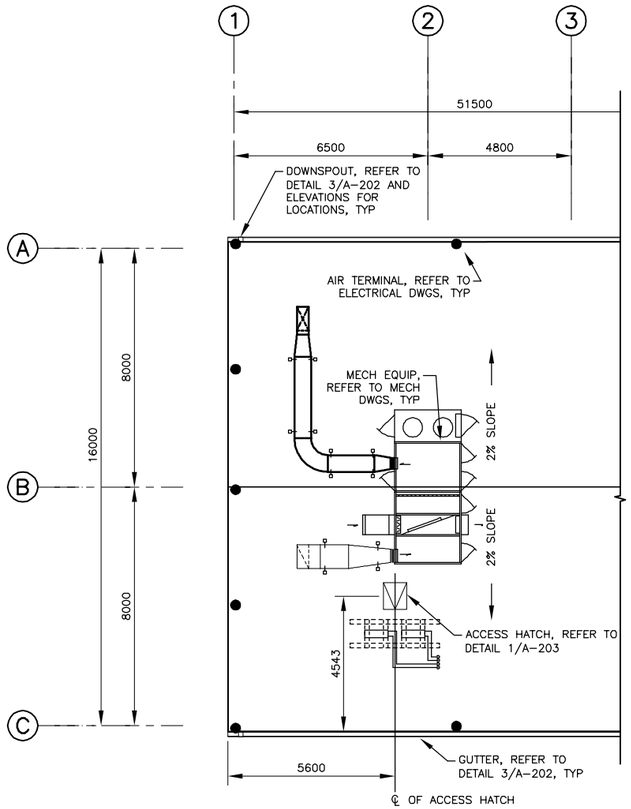

ROOF PLAN
SCALE 1:100
3 OA-001 OA-001

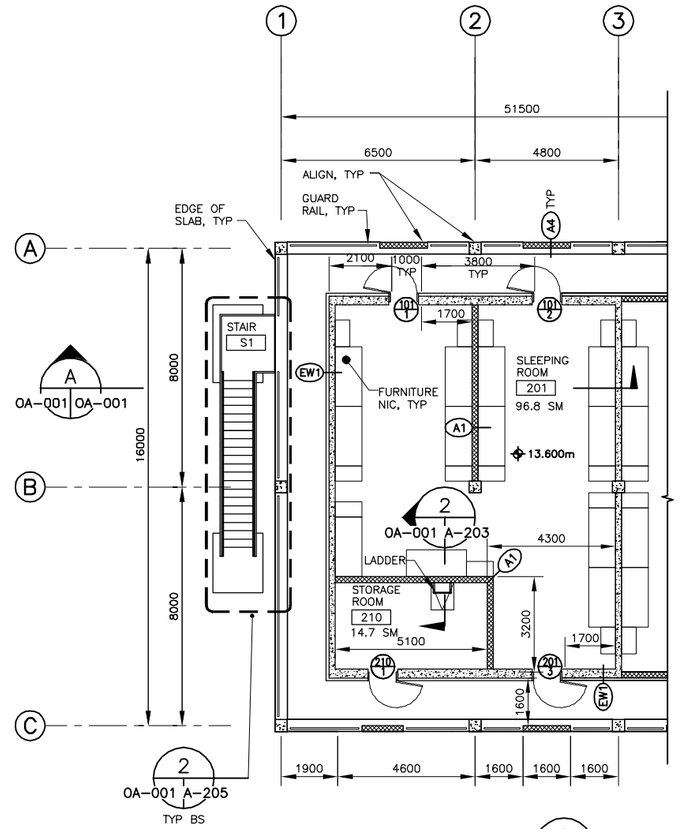

FIRST FLOOR PLAN
SCALE 1:100
2 OA-001 OA-001

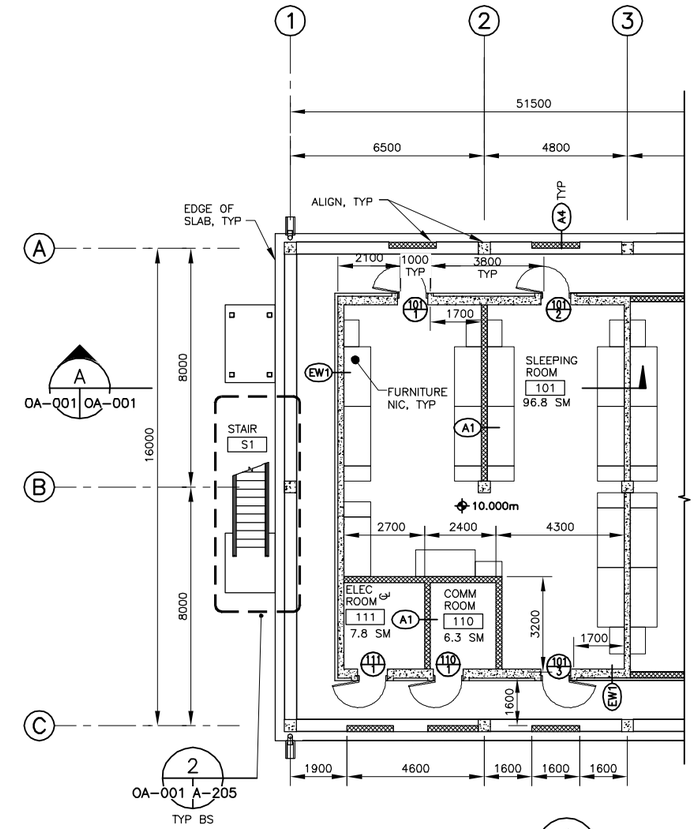

GROUND FLOOR PLAN
SCALE 1:100
1 OA-001 OA-001

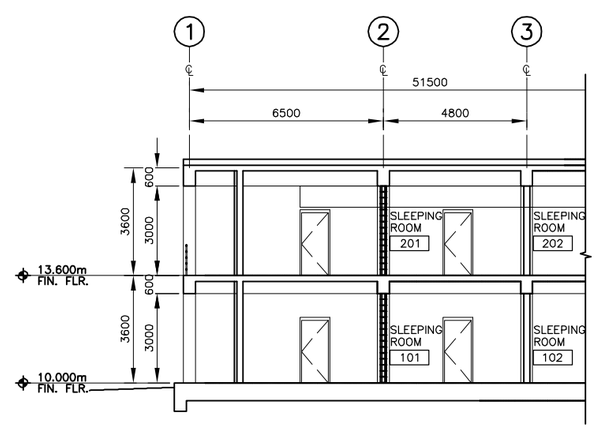

PARTIAL SECTION
SCALE 1:100
A OA-001 OA-001

UNLESS OTHERWISE NOTED, ALL DIMENSIONS SHOWN ARE IN MILLIMETERS.

GENERAL NOTES:

1. UNO, ALL MASONRY/ROUGH OPENINGS FOR DOORS ARE 100mm FROM FACE OF MASONRY.

2. REFER TO DRAWING A-202 FOR WALL TYPE AND PARTITION TYPE DETAILS.

1:100

THESE DRAWINGS ARE "NOT APPROVED FOR CONSTRUCTION" SINCE THESE ARE BASED UPON ASSUMED CONDITIONS. THE CONTRACTOR SHALL NOT PROCEED WITH CONSTRUCTION UNTIL THE ASSUMED CONDITIONS ARE VALIDATED AND APPROVAL IS RECEIVED FROM THE CONTRACTING OFFICER.

CORRECTED FINAL DESIGN SUBMITTAL

SYMB	DESCRIPTION	DATE	
0	CORRECTED FINAL DESIGN SUBMITTAL	09/15/10	WESR
B	FINAL DESIGN SUBMITTAL	09/02/10	WESR
A	MID-POINT DESIGN SUBMITTAL	08/13/10	WESR

APR

DESIGNED BY: KCB
DATE: 09/15/10
DRAWN BY: NLL
SUBMITTED BY: TETRA TECH
CHECKED BY: KCB
FILE NO.: AF1081A-0AR001PN

US Army Corps of Engineers Middle East District

TETRA TECH

AUSTERE STANDARD DESIGNS-PHASE 4
FY11 BARRACKS - PN74127-CLN03
KANDAHAR AIR BASE, AFGHANISTAN

ARCHITECTURAL
LATRINE DELETION OPTION

SHEET REFERENCE NUMBER:
AF1081A
OA-001

W:\23308\127-23308-10010\CAD\SheetFiles\ASD03_KAND\11_LotOption\AF1081A-0AR001PN.dwg 10/14/2010 12:42:15 PM Barrett, Patrick