PLAN LEGEND (LIGHTING)

FOR LIGHT FIXTURE SYMBOLS REFER TO LIGHT FIXTURE SCHEDULE ON DRAWING E–200

$	SWITCH
$3	3–WAY SWITCH
$4	4–WAY SWITCH
LPB1–2	HOMERUN TO PANELBOARD. SYMBOL SHOWN INDICATES CIRCUIT NO. 2 PANEL LPB1. REFER TO PANELBOARD SCHEDULE FOR FURTHER INFORMATION.

PLAN LEGEND (POWER)

	PANELBOARD
XXX–## / ##	MOTOR XXXX–## = PANEL AND CIRCUIT NUMBER. ## = MOTOR NUMBER IN MOTOR CONNECTION SCHEDULE.
GFI	20A, 120V, 60 Hz DUPLEX RECEPTACLE GFI SUBSCRIPT INDICATES GROUND FAULT INTERRUPTER. LABEL RECEPTACLE WITH VOLTAGE, FREQUENCY & BRANCH CIRCUIT CONNECTED.
	20A, 120V, 60 Hz DOUBLE DUPLEX RECEPTACLE LABEL RECEPTACLE WITH VOLTAGE, FREQUENCY & BRANCH CIRCUIT CONNECTED.
T#	TRANSFORMER – # DENOTES DESIGNATION
J	DISCONNECT SWITCH
	EQUIPMENT CONNECTION – TYPE AS INDICATED.
	MDP
	LIGHTNING PROTECTION AIR TERMINAL

ONE–LINE AND CONTROL SCHEMATIC LEGEND

GEN	GENERATOR
##A	CIRCUIT BREAKER
	TRANSFORMER
	HIGH VOLTAGE FUSE
	HIGH VOLTAGE SWITCH
	FUSED DISCONNECT SWITCH

PLAN LEGEND (SITE)

SMDP#	SITE MAIN DISTRIBUTION PANEL # DENOTES DESIGNATION (PAD MOUNTED)
T#	TRANSFORMER (PAD MOUNTED)
PB	PULLBOX
E	ELECRIC MANHOLE
— E —	NEW UNDERGROUND ELECTRIC

ALLOWABLE AMPACITIES OF CONDUCTORS		
NOT MORE THAN 3 CURRENT–CARRYING CONDUCTORS IN RACEWAY/CABLE/EARTH (30°C)		
SIZE AWG (CU)	SIZE mm²	AMPACITY
12	4	20*
10	6	30*
8	10	40*
6	16	55*
4	25	70*
3	35	85*
2	35	89**
1	50	108**
1/0	70	136**
2/0	70	136**
3/0	95	164**
4/0	120	188**
250	150	216**
300	150	216**
350	185	245**
400	240	286**
500	300	328**
600	300	328**

*BASED ON NEC TABLE 310.16
**BASED ON IEC 60364–5–52 TABLE A.52–4

MINIMUM INSIDE DIAMETER EQUIVALENT CONDUIT SIZE	
mm	INCH
20	3/4
25	1
32	1 1/4
38	1 1/2
50	2
64	2 1/2
76	3
90	3 1/2
100	4

UNLESS NOTED ELSEWHERE ON THE CONTRACT DOCUMENTS, THE FOLLOWING LIST REPRESENTS THE TYPICAL MOUNTING HEIGHTS FOR THE DEVICES SHOWN:

a. SWITCHES	1,220 mm (TO TOP)
b. RECEPTACLES	500 mm (TO BOTTOM)
c. POWER PANELS	1,830 mm (TO TOP)
d. DISCONNECT SWITCHES	1,520 mm (TO TOP)
e. MOTOR STARTERS	1,520 mm (TO TOP)

DETAIL CALLOUT

2 — REFERENCE DESIGNATION NUMBER
CURRENT SHEET — E–102 | E–104 — DETAIL SHEET LOCATION

DETAIL TITLE

2 — DESIGNATION NUMBER
DETAIL CALLOUT SHEET — E–102 | E–104 — CURRENT SHEET

ELEVATION/SECTION CALLOUT

2 — DESIGNATION NUMBER
DETAIL CALLOUT SHEET — E–102 | E–104 — ELEVATION/SECTION LOCATION

UNLESS OTHERWISE NOTED, ALL DIMENSIONS SHOWN ARE IN MILLIMETERS.

GENERAL NOTES:

1. ALL CIRCUITS SHALL CONTAIN AN EQUIPMENT GROUNDING CONDUCTOR SIZED PER N.E.C.
2. ALL SERVICE ENTRANCE CONDUITS/DUCTS WITH CABLES SHALL BE SEALED AT BOTH ENDS WITH APPROPRIATE SEALER. EMPTY CONDUITS SHALL BE CLEANED AND CAPPED.
3. ALL PANELBOARD DIRECTORIES SHALL BE TYPEWRITTEN AND COMPLETE IN ENGLISH.
4. ALL CONDUIT PENETRATIONS THRU 1 HOUR FIRE RATED WALLS SHALL BE SEALED/FIRESTOPPED. SEE SHEET E–204 FOR DETAILS.
5. ALL LIGHT SWITCHES SHALL BE RATED 20 AMPERES UNLESS OTHERWISE NOTED.
6. FOR ELECTRICAL INSTALLATION SEISMIC REQUIREMENTS, SEE SPECIFICATION SEISMIC PROTECTION FOR ELECTRICAL EQUIPMENT, SECTIONS 26 05 48. 0010.
7. FOR ABOVE GRADE FLOOR/WALL PENETRATION DETAILS REFER TO APPROPRIATE DETAILS.
8. ALL RACEWAYS CONTAINING CONDUCTORS 25mm² OR LARGER SHALL HAVE AN INSULATED BUSHING INSTALLED ON EACH END WHERE ENTERING A CABINET, BOX OR ENCLOSURE, PER NEC 300.4(G) AND 312.16(C).
9. ALL ABOVE GRADE RACEWAYS SHALL BE SURFACED MOUNTED.

ABBREVIATIONS

AFG	ABOVE FINISHED GRADE
AFF	ABOVE FINISHED FLOOR
ACCU	AIR COOLED CONDENSING UNIT
A	AMPERE
AHU	AIR HANDLING UNIT
AIC	AMPERE INTERRUPTING CAPACITY
BFG	BELOW FINISHED GRADE
BLDG	BUILDING
CATV	CABLE TELEVISION
CC	COMMUNICATIONS CABINET
CKT	CIRCUIT
C	CONDUIT
CE	CONCRETE ENCASED
CND	CONDUCTOR
COR	CONTRACTING OFFICERS REPRESENTATIVE
DC	DIRECT CURRENT
ECP	ENTRY CONTROL POINT
EDC	ELECTRIC DUCT HEATER
EF	EXHAUST FAN
EP	EXPLOSION PROOF
EPO	EMERGENCY POWER OFF
ESS	ELECTRONIC SECURITY SYSTEM
EWH	ELECTRIC WATER HEATER
FACP	FIRE ALARM CONTROL PANEL
FO	FIBER OPTIC
FPP	FIRE PUMP PANEL
GFI	GROUND FAULT INTERRUPTING
GFE	GOVERNMENT FURNISHED CONTRACTOR INSTALLED
GND	GROUND
GR	GROUND ROD
GRS	GALVANIZED RIGID STEEL CONDUIT
HH	HANDHOLE
HP	HORSEPOWER
HPS	HIGH PRESSURE SODIUM
HZ	HERTZ
IDS	INTRUSION DETECTION SYSTEM
KV	KILOVOLT
KW	KILOWATT
KVA	KILOVOLT–AMPERE
M	METERS
MM	MULTIMODE
mm	MILIMETER
MH	MANHOLE
MDP	MAIN DISTRIBUTION PANEL
MTD	MOUNTED
NL	NIGHT LIGHT
OSP	OUTSIDE PLANT
PH, ϕ	PHASE
P	POLE
PVC	POLYVINYL CHLORIDE
RM	ROOM
SM	SINGLEMODE
SN	SOLID NEUTRAL
TBB	TELEPHONE BACKBOARD
TTC	TELEPHONE TERMINAL CABINET
TYP.	TYPICAL
UNO	UNLESS NOTED OTHERWISE
V	VOLT
W	WIRE
WP	WEATHERPROOF
W/	WITH
W/O	WITHOUT
XFMR, T	TRANSFORMER

THESE DRAWINGS ARE "NOT APPROVED FOR CONSTRUCTION" SINCE THESE ARE BASED UPON ASSUMED CONDITIONS. THE CONTRACTOR SHALL NOT PROCEED WITH CONSTRUCTION UNTIL THE ASSUMED CONDITIONS ARE VALIDATED AND APPROVAL IS RECEIVED FROM THE CONTRACTING OFFICER.

STATE OF NEW YORK · KEVIN CHARLES TERRY · 079083 · LICENSED PROFESSIONAL ENGINEER
9/15/10

CORRECTED FINAL DESIGN SUBMITTAL

SYMB	DESCRIPTION	DATE		
O	CORRECTED FINAL DESIGN SUBMITTAL	09/15/10	KCT	
B	FINAL DESIGN SUBMITTAL	09/02/10	KCT	
A	MID–POINT DESIGN SUBMITTAL	08/13/10	KCT	APR

DESIGNED BY: JAS | DATE: 09/15/10
DRAWN BY: SES | SUBMITTED BY: TETRA TECH
CHECKED BY: KCT | FILE NO.: AF1082A–EL001GN

US Army Corps of Engineers
Middle East District

TETRA TECH

AUSTERE STANDARD DESIGNS–PHASE 5
FY11 BARRACKS – PN74129–CLN04
KANDAHAR AIR BASE, AFGHANISTAN

ELECTRICAL
LEGEND, ABBREVIATIONS, SYMBOLS AND GENERAL NOTES

SHEET REFERENCE NUMBER:
AF1082A
E–001

W:\23308\127–23308–10010\CAD\SheetFiles\ASD04_KAND\07_Electrical\AF1082A–EL001GN.dwg 10/14/2010 1:41:20 PM Barrett, Patrick

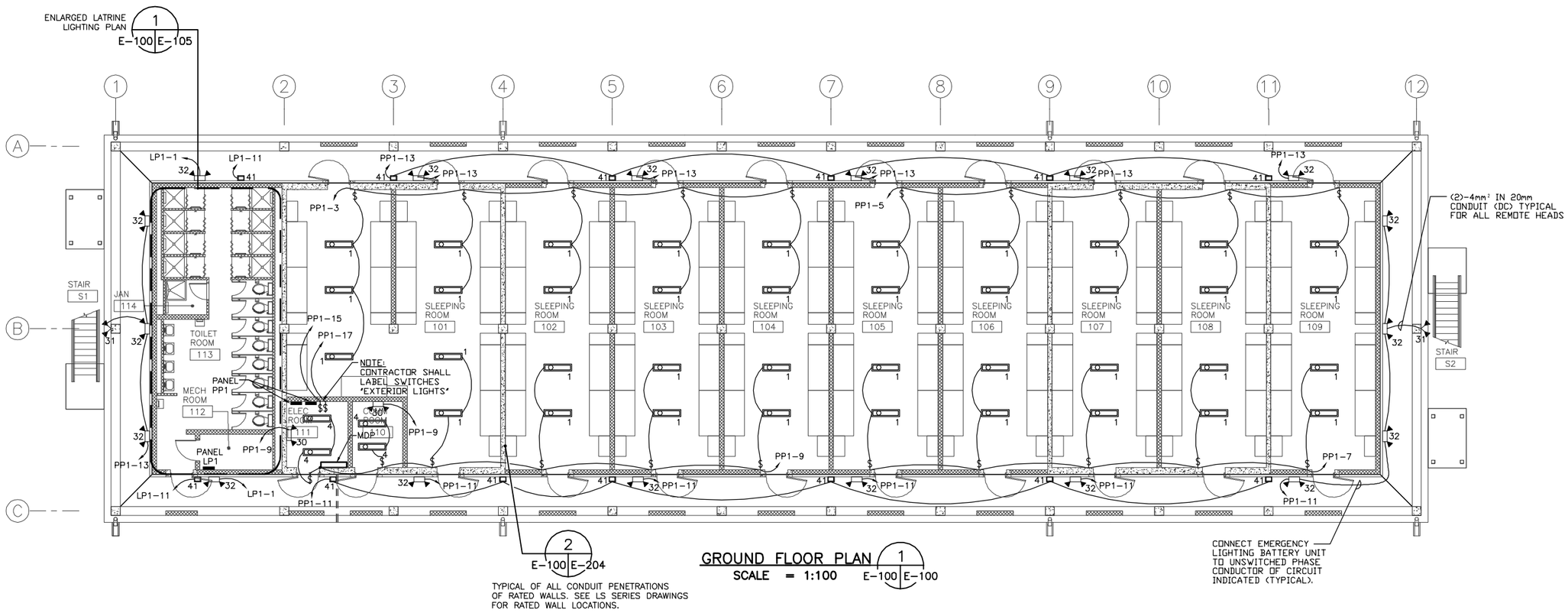

GROUND FLOOR PLAN 1 E-100 E-100
SCALE = 1:100

1 0 1 2 3 4 5 6 7 8 9
1:100

THESE DRAWINGS ARE "NOT APPROVED FOR CONSTRUCTION" SINCE THESE ARE BASED UPON ASSUMED CONDITIONS. THE CONTRACTOR SHALL NOT PROCEED WITH CONSTRUCTION UNTIL THE ASSUMED CONDITIONS ARE VALIDATED AND APPROVAL IS RECEIVED FROM THE CONTRACTING OFFICER.

STATE OF NEW YORK
KEVIN CHARLES TERRY
079083
LICENSED PROFESSIONAL ENGINEER
9/15/10

UNLESS OTHERWISE NOTED, ALL DIMENSIONS SHOWN ARE IN MILLIMETERS.

CORRECTED FINAL DESIGN SUBMITTAL

SYMB	DESCRIPTION	DATE		
0	CORRECTED FINAL DESIGN SUBMITTAL	09/15/10	KCT	
B	FINAL DESIGN SUBMITTAL	09/02/10	KCT	
A	MID-POINT DESIGN SUBMITTAL	08/13/10	KCT	APR

DESIGNED BY: JAS
DATE: 09/15/10
DRAWN BY: SES
SUBMITTED BY: TETRA TECH
CHECKED BY: KCT
FILE NO.: AF1082A-EL100PN

US Army Corps of Engineers Middle East District

TETRA TECH

AUSTERE STANDARD DESIGNS-PHASE 5
FY11 BARRACKS - PN74129-CLN04
KANDAHAR AIR BASE, AFGHANISTAN

GROUND FLOOR LIGHTING PLAN

SHEET REFERENCE NUMBER:
AF1082A
E-100

W:\23308\127-23308-10010\CAD\SheetFiles\ASD04_KAND\07_Electrical\AF1082A-EL100PN.dwg 10/14/2010 1:41:28 PM Barrett, Patrick

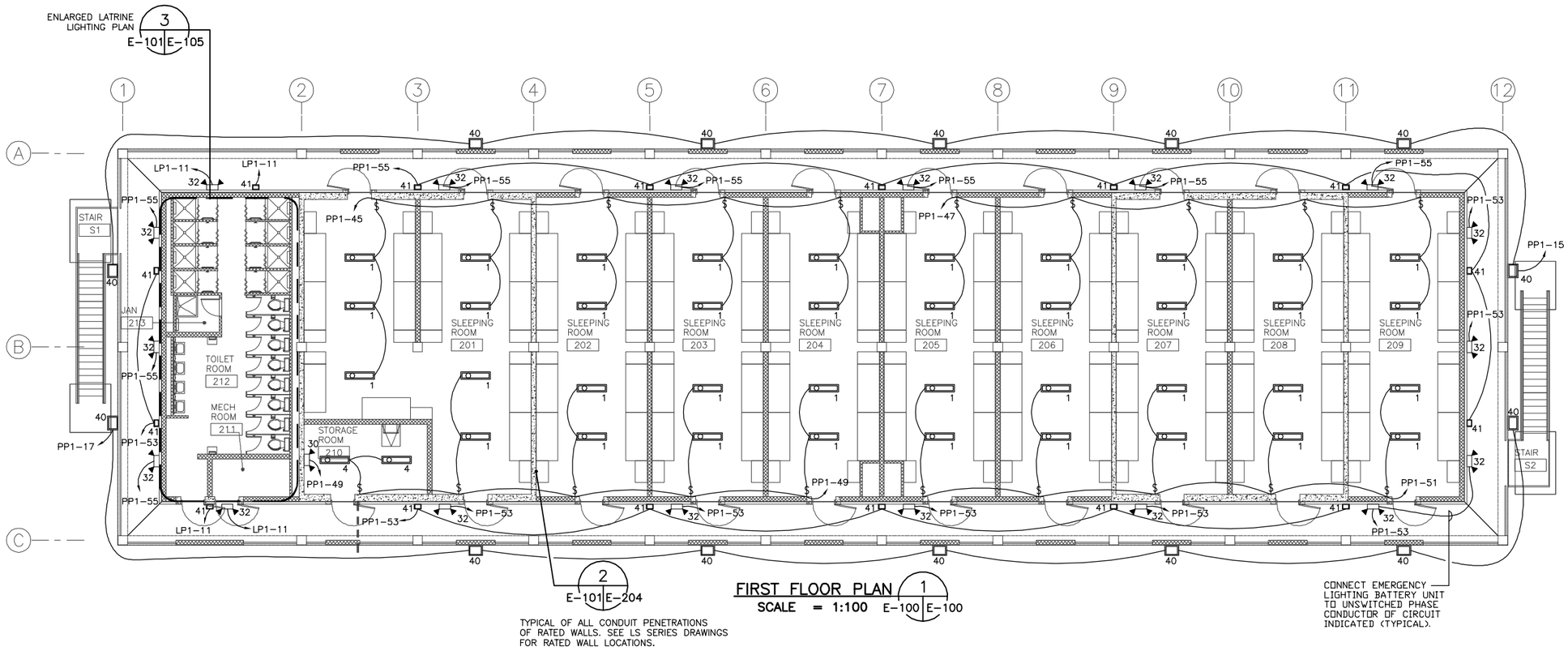

FIRST FLOOR PLAN (1 / E-100 E-100)
SCALE = 1:100

1 0 1 2 3 4 5 6 7 8 9
1:100

THESE DRAWINGS ARE "NOT APPROVED FOR CONSTRUCTION" SINCE THESE ARE BASED UPON ASSUMED CONDITIONS. THE CONTRACTOR SHALL NOT PROCEED WITH CONSTRUCTION UNTIL THE ASSUMED CONDITIONS ARE VALIDATED AND APPROVAL IS RECEIVED FROM THE CONTRACTING OFFICER.

STATE OF NEW YORK
KEVIN CHARLES TERRY
079083
LICENSED PROFESSIONAL ENGINEER
9/15/10

UNLESS OTHERWISE NOTED, ALL DIMENSIONS SHOWN ARE IN MILLIMETERS.

CORRECTED FINAL DESIGN SUBMITTAL

SYMB	DESCRIPTION	DATE	
0	CORRECTED FINAL DESIGN SUBMITTAL	09/15/10	KCT
B	FINAL DESIGN SUBMITTAL	09/02/10	KCT
A	MID-POINT DESIGN SUBMITTAL	08/13/10	KCT

DESIGNED BY: JAS
DATE: 09/15/10
DRAWN BY: SES
SUBMITTED BY: TETRA TECH
CHECKED BY: KCT
FILE NO.: AF1082A-EL101PN

US Army Corps of Engineers
Middle East District

TETRA TECH

AUSTERE STANDARD DESIGNS-PHASE 5
FY11 BARRACKS - PN74129-CLN04
KANDAHAR AIR BASE, AFGHANISTAN

FIRST FLOOR
LIGHTING PLAN

SHEET REFERENCE NUMBER:
AF1082A
E-101

W:\23308\127-23308-10010\CAD\SheetFiles\ASD04_KAND\07_Electrical\AF1082A-EL101PN.dwg 10/14/2010 1:41:40 PM Barrett, Patrick

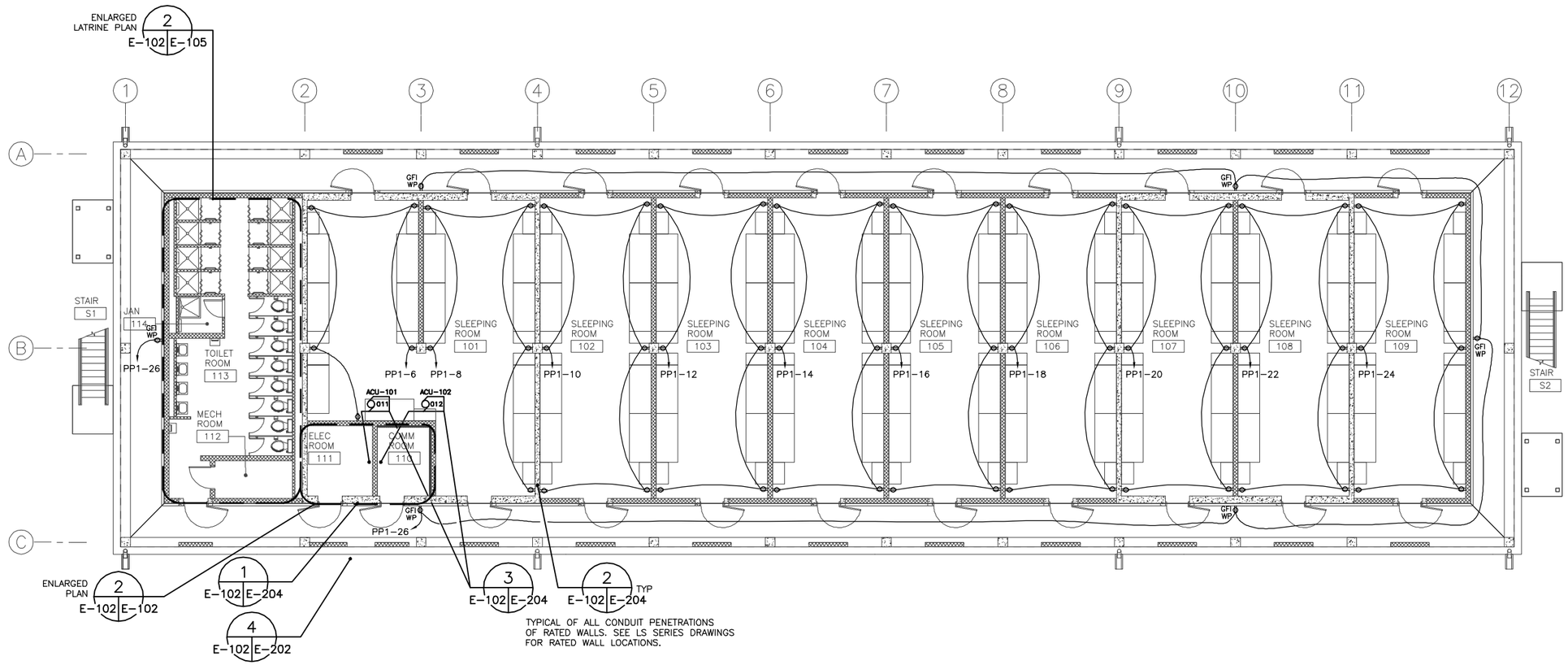

GROUND FLOOR PLAN 1 E-102 E-102
SCALE = 1:100

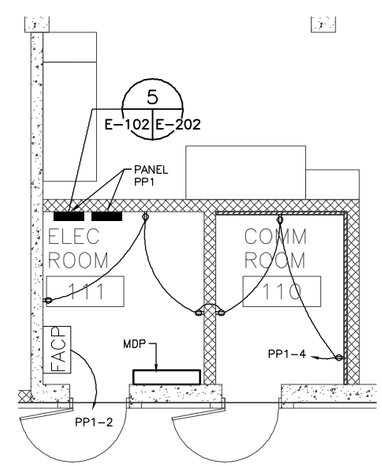

ENLARGED PLAN 2 E-102 E-102
SCALE = 1:50

UNLESS OTHERWISE NOTED, ALL DIMENSIONS SHOWN ARE IN MILLIMETERS.

1:50 (1 0 1 2 3 4)

1:100 (1 0 1 2 3 4 5 6 7 8 9)

THESE DRAWINGS ARE "NOT APPROVED FOR CONSTRUCTION" SINCE THESE ARE BASED UPON ASSUMED CONDITIONS. THE CONTRACTOR SHALL NOT PROCEED WITH CONSTRUCTION UNTIL THE ASSUMED CONDITIONS ARE VALIDATED AND APPROVAL IS RECEIVED FROM THE CONTRACTING OFFICER.

STATE OF NEW YORK · KEVIN CHARLES TERRY · 079083 · LICENSED PROFESSIONAL ENGINEER
9/15/10

CORRECTED FINAL DESIGN SUBMITTAL

SYMB	DESCRIPTION	DATE		
0	CORRECTED FINAL DESIGN SUBMITTAL	09/15/10	KCT	
B	FINAL DESIGN SUBMITTAL	09/02/10	KCT	
A	MID-POINT DESIGN SUBMITTAL	08/13/10	KCT	APR

DESIGNED BY: JAS
DATE: 09/15/10
DRAWN BY: SES
SUBMITTED BY: TETRA TECH
CHECKED BY: KCT
FILE NO.: AF1082A-EL102PN

US Army Corps of Engineers
Middle East District

TETRA TECH

AUSTERE STANDARD DESIGNS-PHASE 5
FY11 BARRACKS - PN74129-CLN04
KANDAHAR AIR BASE, AFGHANISTAN

GROUND FLOOR POWER PLAN

SHEET REFERENCE NUMBER:
AF1082A
E-102

W:\23308\127-23308-10010\CAD\SheetFiles\ASD04_KAND\07_Electrical\AF1082A-EL102PN.dwg 10/14/2010 1:41:54 PM Barrett, Patrick

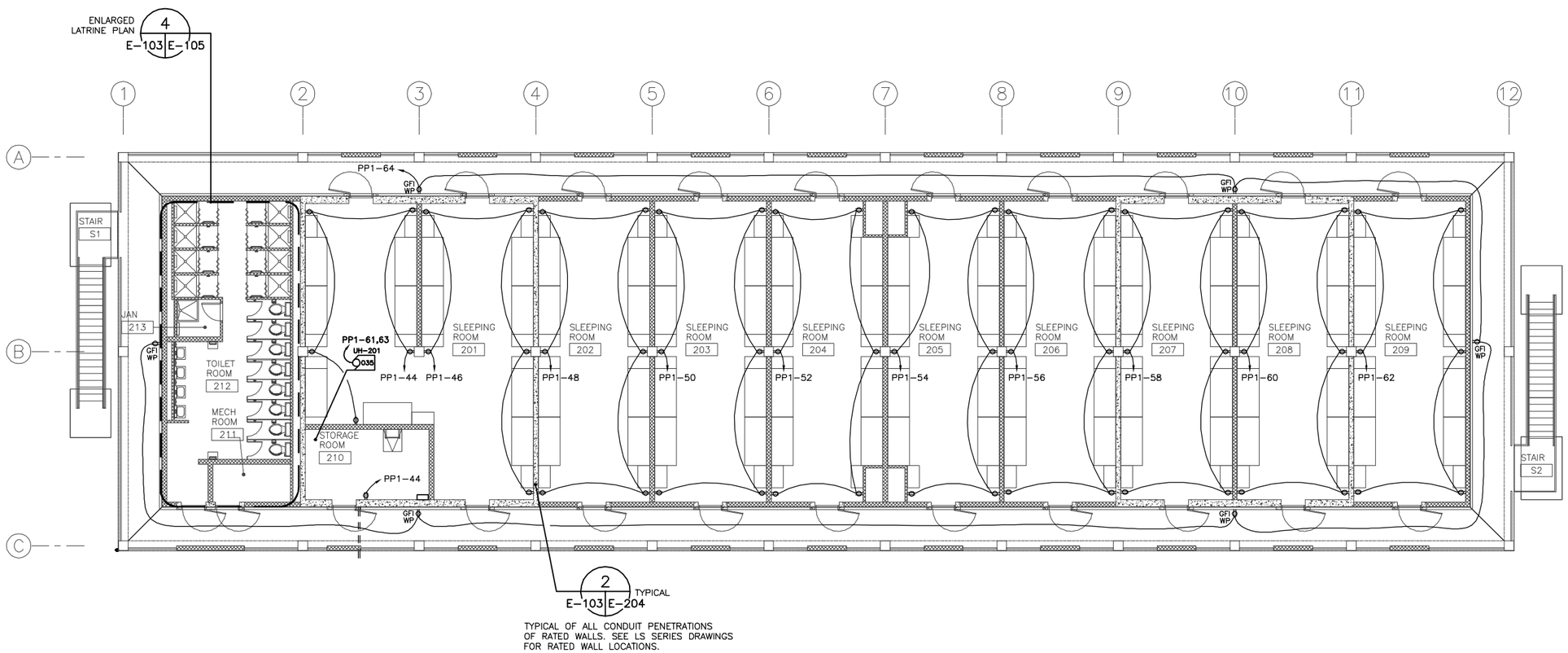

TYPICAL OF ALL CONDUIT PENETRATIONS OF RATED WALLS. SEE LS SERIES DRAWINGS FOR RATED WALL LOCATIONS.

FIRST FLOOR PLAN (1 / E-103 E-103)
SCALE = 1:100

1 0 1 2 3 4 5 6 7 8 9
1:100

THESE DRAWINGS ARE "NOT APPROVED FOR CONSTRUCTION" SINCE THESE ARE BASED UPON ASSUMED CONDITIONS. THE CONTRACTOR SHALL NOT PROCEED WITH CONSTRUCTION UNTIL THE ASSUMED CONDITIONS ARE VALIDATED AND APPROVAL IS RECEIVED FROM THE CONTRACTING OFFICER.

STATE OF NEW YORK
KEVIN CHARLES TERRY
079083
LICENSED PROFESSIONAL ENGINEER
9/15/10

UNLESS OTHERWISE NOTED, ALL DIMENSIONS SHOWN ARE IN MILLIMETERS.

CORRECTED FINAL DESIGN SUBMITTAL

SYMB	DESCRIPTION	DATE		APR
0	CORRECTED FINAL DESIGN SUBMITTAL	09/15/10	KCT	
B	FINAL DESIGN SUBMITTAL	09/02/10	KCT	
A	MID-POINT DESIGN SUBMITTAL	08/13/10	KCT	

DESIGNED BY: JAS
DATE: 09/15/10
DRAWN BY: SES
SUBMITTED BY: TETRA TECH
CHECKED BY: KCT
FILE NO.: AF1082A-EL103PN

US Army Corps of Engineers
Middle East District

TETRA TECH

AUSTERE STANDARD DESIGNS-PHASE 5
FY11 BARRACKS - PN74129-CLN04
KANDAHAR AIR BASE, AFGHANISTAN

FIRST FLOOR POWER PLAN

SHEET REFERENCE NUMBER:
AF1082A
E-103

W:\23308\127-23308-10010\CAD\SheetFiles\ASD04_KAND\07_Electrical\AF1082A-EL103PN.dwg 10/14/2010 1:42:05 PM Barrett, Patrick

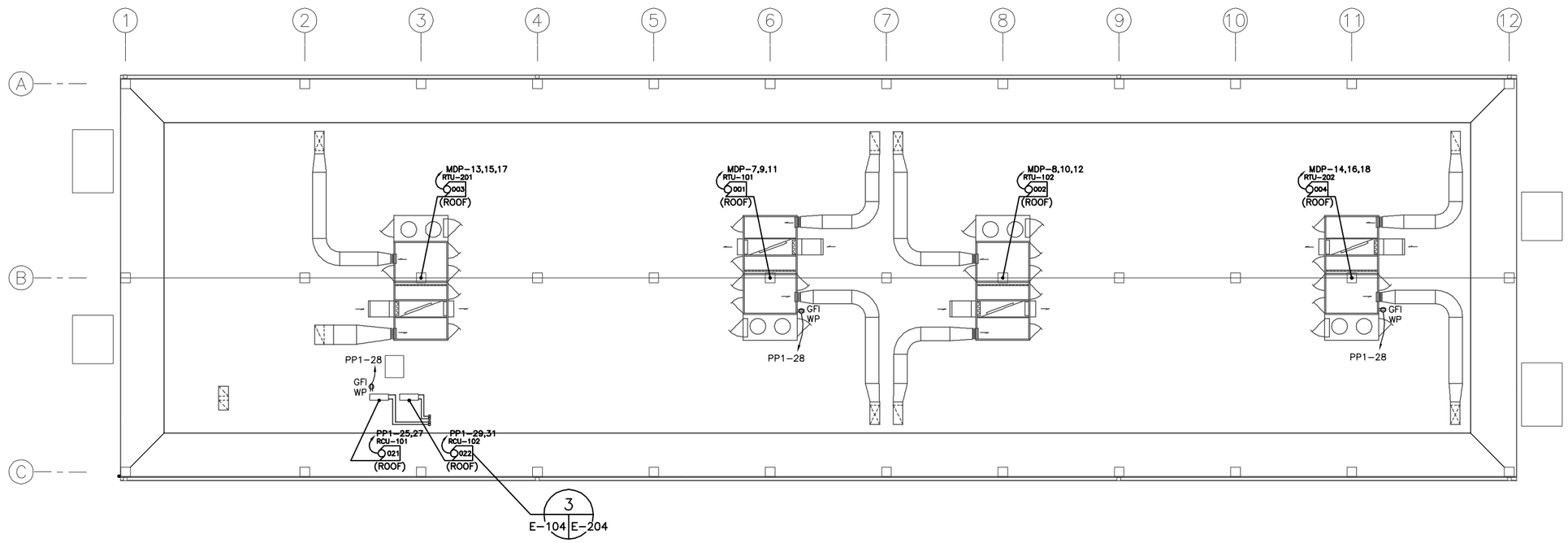

ROOF POWER PLAN (1 / E-104 | E-104)
SCALE = 1:100

1 0 1 2 3 4 5 6 7 8 9
1:100

THESE DRAWINGS ARE "NOT APPROVED FOR CONSTRUCTION" SINCE THESE ARE BASED UPON ASSUMED CONDITIONS. THE CONTRACTOR SHALL NOT PROCEED WITH CONSTRUCTION UNTIL THE ASSUMED CONDITIONS ARE VALIDATED AND APPROVAL IS RECEIVED FROM THE CONTRACTING OFFICER.

STATE OF NEW YORK
KEVIN CHARLES TERRY
079083
LICENSED PROFESSIONAL ENGINEER
9/15/10

UNLESS OTHERWISE NOTED, ALL DIMENSIONS SHOWN ARE IN MILLIMETERS.

CORRECTED FINAL DESIGN SUBMITTAL

SYMB	DESCRIPTION	DATE	APR
0	CORRECTED FINAL DESIGN SUBMITTAL	09/15/10	KCT
B	FINAL DESIGN SUBMITTAL	09/02/10	KCT
A	MID-POINT DESIGN SUBMITTAL	08/13/10	KCT

DESIGNED BY: JAS
DATE: 09/15/10
DRAWN BY: SES
SUBMITTED BY: TETRA TECH
CHECKED BY: KCT
FILE NO.: AF1082A-EL104PN

US Army Corps of Engineers
Middle East District

TETRA TECH

AUSTERE STANDARD DESIGNS-PHASE 5
FY11 BARRACKS - PN74129-CLN04
KANDAHAR AIR BASE, AFGHANISTAN

ROOF
POWER PLAN

SHEET REFERENCE NUMBER:
AF1082A
E-104

W:\23308\127-23308-10010\CAD\SheetFiles\ASD04_KAND\07_Electrical\AF1082A-EL104PN.dwg 10/14/2010 1:42:13 PM Barrett, Patrick

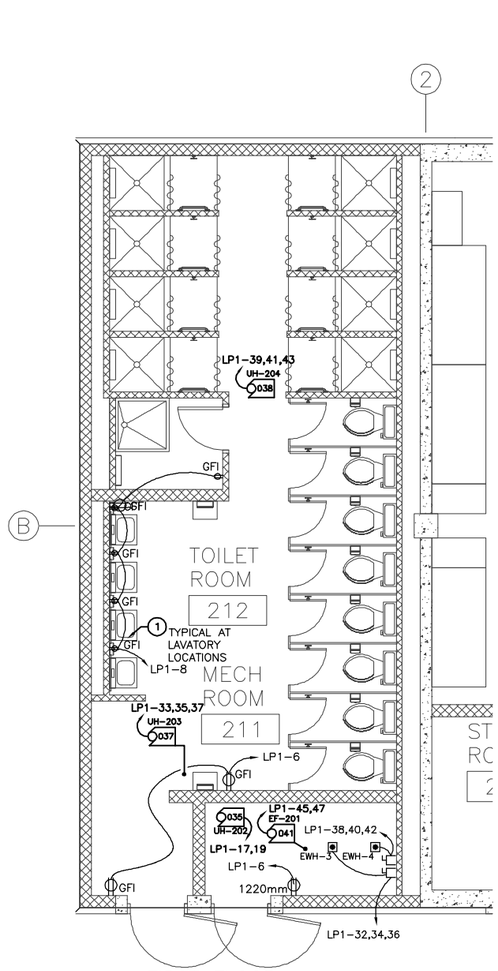

FIRST FLOOR
LATRINE PLAN – POWER (4)
SCALE = 1:50 E-103 | E-105

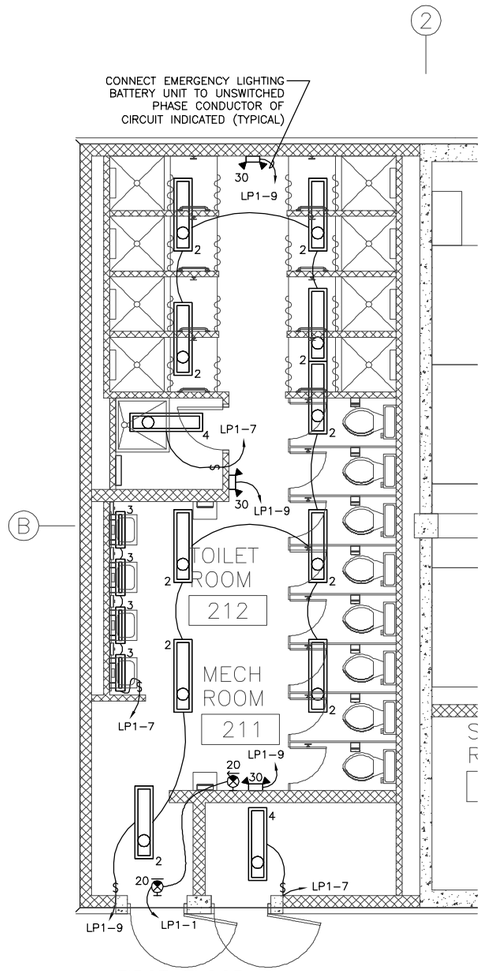

FIRST FLOOR
LATRINE PLAN – LIGHTING (3)
SCALE = 1:50 E-101 | E-105

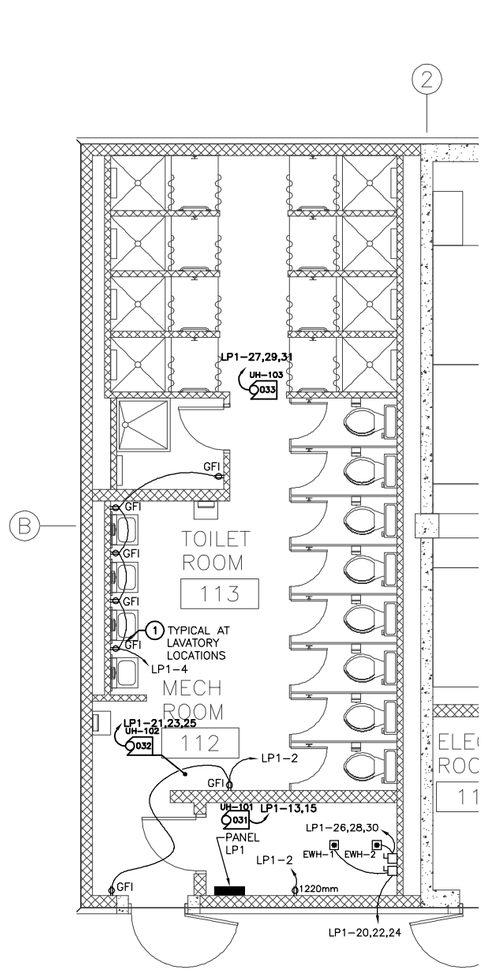

GROUND FLOOR
LATRINE PLAN – POWER (2)
SCALE = 1:50 E-102 | E-105

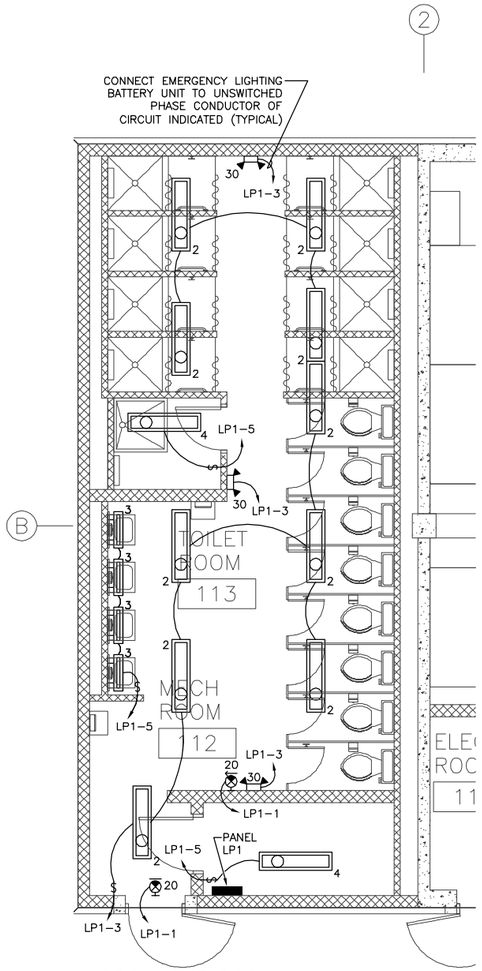

GROUND FLOOR
LATRINE PLAN – LIGHTING (1)
SCALE = 1:50 E-100 | E-105

KEY NOTES:

(1) MOUNT RECEPTACLES HORIZONTAL, 1205mm AFF. SEE A-300 FOR DETAILS.

UNLESS OTHERWISE NOTED, ALL DIMENSIONS SHOWN ARE IN MILLIMETERS.

1:50

THESE DRAWINGS ARE "NOT APPROVED FOR CONSTRUCTION" SINCE THESE ARE BASED UPON ASSUMED CONDITIONS. THE CONTRACTOR SHALL NOT PROCEED WITH CONSTRUCTION UNTIL THE ASSUMED CONDITIONS ARE VALIDATED AND APPROVAL IS RECEIVED FROM THE CONTRACTING OFFICER.

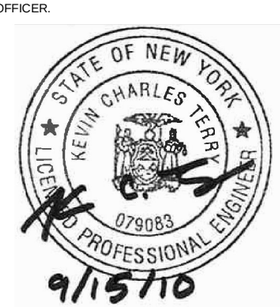

CORRECTED FINAL DESIGN SUBMITTAL

SYMB	DESCRIPTION	DATE		
0	CORRECTED FINAL DESIGN SUBMITTAL	09/15/10	KCT	
B	FINAL DESIGN SUBMITTAL	09/02/10	KCT	
A	MID-POINT DESIGN SUBMITTAL	08/13/10	KCT	APR

DESIGNED BY: JAS
DATE: 09/15/10
DRAWN BY: SES
SUBMITTED BY: TETRA TECH
CHECKED BY: KCT
FILE NO.: AF1082A-EL105LS

US Army Corps of Engineers
Middle East District

TETRA TECH

AUSTERE STANDARD DESIGNS-PHASE 5
FY11 BARRACKS – PN74129-CLN04
KANDAHAR AIR BASE, AFGHANISTAN

ENLATGED ELECTRICAL PLANS
LATRINE AREA
LIGHTING AND POWER

SHEET REFERENCE NUMBER:
AF1082A
E-105

W:\23308\127-23308-10010\CAD\SheetFiles\ASD04_KAND\07_Electrical\AF1082A-EL105LS.dwg 10/14/2010 2:17:38 PM Barrett, Patrick

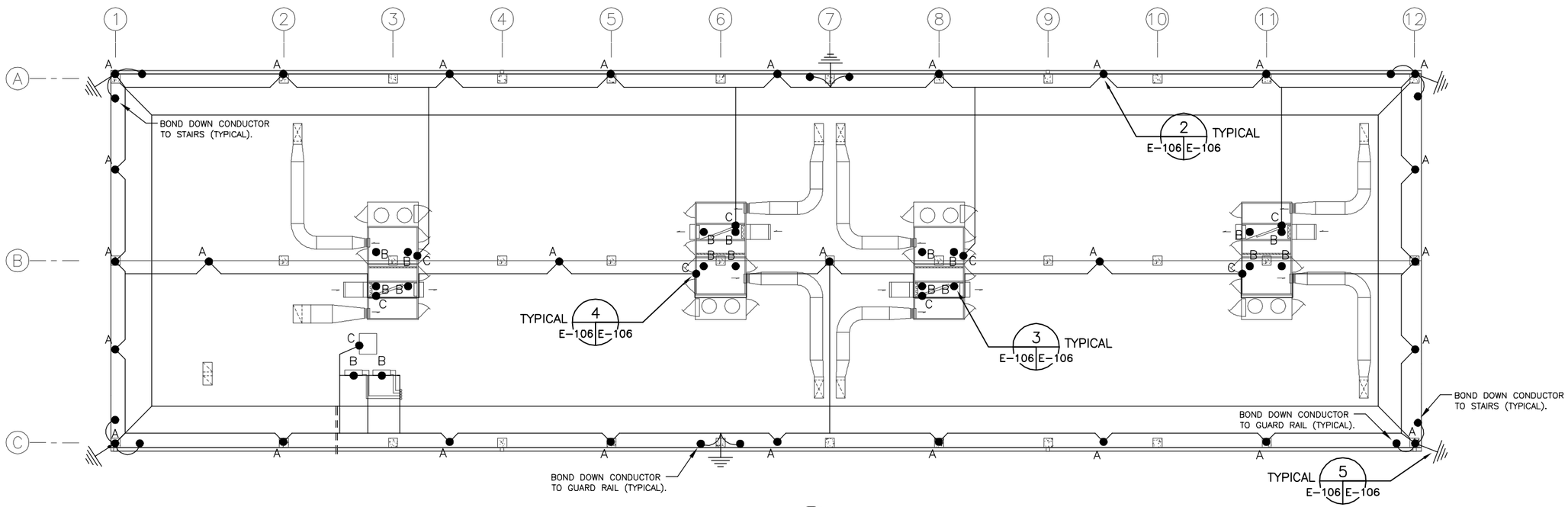

ROOF LIGHTNING PROTECTION PLAN (1 / E-106 E-106)
SCALE = 1:100

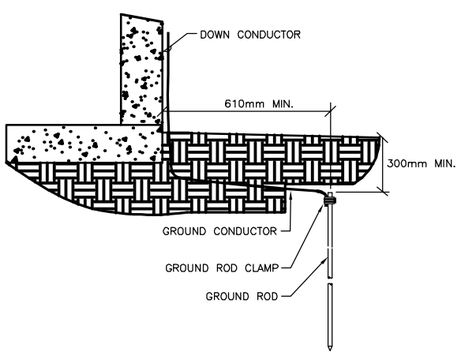

TYPICAL GROUND DETAIL (5 / E-106 E-106)
N.T.S.

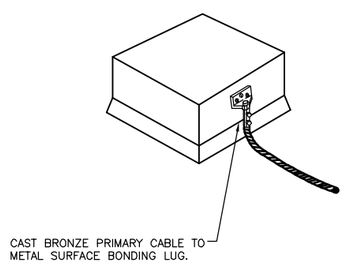

BONDING LUG DETAIL 'C' (4 / E-106 E-106)
N.T.S.

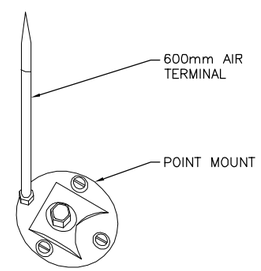

EQUIPMENT AIR TERMINAL AND FLAT SURFACE MOUNTING PLATE DETAIL 'B' (3 / E-106 E-106)
N.T.S.

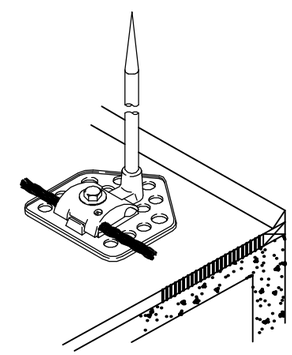

AIR TERMINAL DETAIL 'A' (2 / E-106 E-106)
N.T.S.

1 0 1 2 3 4 5 6 7 8 9
1:100

THESE DRAWINGS ARE "NOT APPROVED FOR CONSTRUCTION" SINCE THESE ARE BASED UPON ASSUMED CONDITIONS. THE CONTRACTOR SHALL NOT PROCEED WITH CONSTRUCTION UNTIL THE ASSUMED CONDITIONS ARE VALIDATED AND APPROVAL IS RECEIVED FROM THE CONTRACTING OFFICER.

STATE OF NEW YORK
KEVIN CHARLES TERRY
079083
LICENSED PROFESSIONAL ENGINEER
9/15/10

UNLESS OTHERWISE NOTED, ALL DIMENSIONS SHOWN ARE IN MILLIMETERS.

CORRECTED FINAL DESIGN SUBMITTAL

SYMB	DESCRIPTION	DATE		APR
0	CORRECTED FINAL DESIGN SUBMITTAL	09/15/10	KCT	
B	FINAL DESIGN SUBMITTAL	09/02/10	KCT	
A	MID-POINT DESIGN SUBMITTAL	08/13/10	KCT	

DESIGNED BY: JAS
DATE: 09/15/10
DRAWN BY: SES
SUBMITTED BY: TETRA TECH
CHECKED BY: KCT
FILE NO.: AF1082A-EL106DT

US Army Corps of Engineers
Middle East District

TETRA TECH

AUSTERE STANDARD DESIGNS-PHASE 5
FY11 BARRACKS - PN74129-CLN04
KANDAHAR AIR BASE, AFGHANISTAN

ROOF LIGHTNING PROTECTION PLAN AND DETAILS

SHEET REFERENCE NUMBER:
AF1082A
E-106

W:\23308\127-23308-10010\CAD\SheetFiles\ASD04_KAND\07_Electrical\AF1082A-EL106DT.dwg 10/14/2010 1:42:43 PM Barrett, Patrick

CONNECTION SCHEDULE

MTR NO.	DESCRIPTION	HP (KW)	CIRCUIT	LOCATION	VOLTAGE	WIRE AND CONDUIT	STARTER					DISCONNECT				CIRCUIT BREAKER	NOTES/ ADDITIONAL REQUIREMENTS	MTR NO.
							TYPE	BY	LOC.	NEMA ENCL.	AUX.	BY	LOC.	NEMA ENCL.	SIZE			
001	RTU-101	(31)	MDP-7,9,11	BARRACKS ROOF	208V	SEE FEEDER SCHEDULE	--	MFR	UNIT	--	--	MFR	UNIT	4	--	175A 3P	–	001
002	RTU-102	(31)	MDP-8,10,12	BARRACKS ROOF	208V	SEE FEEDER SCHEDULE	--	MFR	UNIT	--	--	MFR	UNIT	4	--	175A 3P	–	002
003	RTU-201	(31)	MDP-13,15,17	BARRACKS ROOF	208V	SEE FEEDER SCHEDULE	--	MFR	UNIT	--	--	MFR	UNIT	4	--	175A 3P	–	003
004	RTU-202	(31)	MDP-14,16,18	BARRACKS ROOF	208V	SEE FEEDER SCHEDULE	--	MFR	UNIT	--	--	MFR	UNIT	4	--	175A 3P	–	004
011	ACU-101	--	–	ELEC ROOM	208V	(3) 4mm², (1) 4mm² G, 20mm C	--	--	--	--	--	EC	UNIT	1	30A	–	CONNECTED TO RCU-101	011
012	ACU-102	--	–	COMM ROOM	208V	(3) 4mm², (1) 4mm² G, 20mm C	--	--	--	--	--	EC	UNIT	1	30A	–	CONNECTED TO RCU-102	012
021	RCU-101	(1.3)	PP1-25	ELEC ROOM	208V	(3) 4mm², (1) 4mm² G, 20mm C	--	--	--	--	--	EC	UNIT	4	30A	15A 2P	CONNECTED TO ACU-101	021
022	RCU-102	(1.3)	PP1-27	COMM ROOM	208V	(3) 4mm², (1) 4mm² G, 20mm C	--	--	--	--	--	EC	UNIT	4	30A	15A 2P	CONNECTED TO ACU-102	022
031	UH-101	(2.6)	LP1-13,15	LATRINE (GROUND FLOOR)	208V	(3) 4mm², (1) 4mm² G, 20mm C	--	--	--	--	--	MFR	UNIT	1	--	20A 2P	–	031
032	UH-102	(10)	LP1-21,23,25	LATRINE (GROUND FLOOR)	208V	(3) 16mm², (1)10mm² G, 25mm C	--	--	--	--	--	MFR	UNIT	1	--	35A 3P	–	032
033	UH-103	(10)	LP1-27,29,31	LATRINE (GROUND FLOOR)	208V	(3) 16mm², (1)10mm² G, 25mm C	--	--	--	--	--	MFR	UNIT	1	--	35A 3P	–	033
035	UH-201	(2.6)	PP1-61,63	STORAGE (FIRST FLOOR)	208V	(3) 4mm², (1) 4mm² G, 20mm C	--	--	--	--	--	MFR	UNIT	1	--	20A 2P	–	035
036	UH-202	(2.6)	LP1-17,19	MECHANICAL (FIRST FLOOR)	208V	(3) 4mm², (1) 4mm² G, 20mm C	--	--	--	--	--	MFR	UNIT	1	--	20A 2P	–	036
037	UH-203	(10)	LP1-33,35,37	LATRINE (FIRST FLOOR)	208V	(3) 16mm², (1)10mm² G, 25mm C	--	--	--	--	--	MFR	UNIT	1	--	35A 3P	–	037
038	UH-204	(10)	LP1-39,41,43	LATRINE (FIRST FLOOR)	208V	(3) 16mm², (1)10mm² G, 25mm C	--	--	--	--	--	MFR	UNIT	1	--	35A 3P	–	038
041	EF-201	(8.3)	LP1-45,47	MECHANICAL (FIRST FLOOR)	208V	(3) 4mm², (1) 4mm² G, 20mm C	--	--	--	--	--	MFR	UNIT	1	--	15A 2P	* SEE NOTE	041
051	EWH-1	(9)	LP1-20,22,24	MECH ROOM 112	208V	(3) 4mm², (1) 4mm² G, 20mm C	--	--	--	--	--	EC	UNIT	1	60A	35A 3P	–	051
052	EWH-2	(9)	LP1-26,28,30	MECH ROOM 112	208V	(3) 4mm², (1) 4mm² G, 20mm C	--	--	--	--	--	EC	UNIT	1	60A	35A 3P	–	052
053	EWH-3	(9)	LP1-32,34,36	MECH ROOM 212	208V	(3) 4mm², (1) 4mm² G, 20mm C	--	--	--	--	--	EC	UNIT	1	60A	35A 3P	–	053
054	EWH-4	(9)	LP1-38,40,42	MECH ROOM 212	208V	(3) 4mm², (1) 4mm² G, 20mm C	--	--	--	--	--	EC	UNIT	1	60A	35A 3P	–	054

*NOTE:
CONTROL VIA LIGHT SWITCHES IN TOILET ROOMS 113 AND 212, SUITABLE CONTACTOR AND RELAYS.
FAN SHALL RUN IF THE LIGHT SWITCH IN EITHER TOILET TROOM IS TURNED ON.

LIGHT FIXTURE SCHEDULE

TYPE	SYMBOL	ITEM	LAMPS			MANUFACTURERS (OR EQUAL) *	
			NO.	WATTAGE	TYPE	NAME	MODEL OR SERIES
1		COMMERCIAL 133mm X 1231mm,LOW-PROFILE WRAP AROUND WIITH STEEL HOUSING, WHITE ENAMEL, SURFACE MOUNT, 2-LAMP, MOUNTING HEIGHT 3600mm AFF	2	32 (64)	F32T8	LITHONIA	CA-2-32-AR-MVOLT-GEB10IS 120V 60HZ
2		COMMERCIAL 206mm X 1270mm ENCLOSED AND GASKETED INDUSTRIAL WITH FIBERGLASS REINFORCED POLYESTER HOUSING, SURFACE MOUNTING, 2 LAMP, MOUNTING HEIGHT 3600mm AFF	2	32 (64)	F32T8	LITHONIA	DMW232MVOLT-GEB10IS 120V 60HZ SURFACE MOUNT
3		COMMERCIAL 182mm X 610mm WALL BRACKET WITH STEEL HOUSING, WHITE ENAMEL, 2 LAMP, MOUNTING HEIGHT 2300mm AFF	2	17 (34)	F17T8	LITHONIA	WP117MVOLT-GEB10IS 120V 60HZ
4		COMMERCIAL 300mm X 1220mm INDUSTRIAL REFLECTOR W/STEEL HOUSING, WHITE ENAMEL, SURFACE MOUNT, 2 LAMP, WIRE GUARD, MOUNTING HEIGHT 3600mm AFF	2	32 (64)	32 (64)	LITHONIA	L232MVOLT-GEB10IS 120V 60HZ SURFACE MOUNT
20		EXIT LIGHT (SINGLE FACE WALL MOUNTED) WITH BATTERY BACKUP, MOUNTING HEIGHT 2400mm AFF	–	–	LED	LITHONIA	LQC1RELN 120V 60HZ
30		BATTERY PACK EMERGENCY LIGHT, WHITE, MOUNTING HEIGHT 2300mm AFF	2	12 (24)	HALOGEN	LITHONIA	ELT50MTH1212 120V 60HZ
31		EMERGENCY SEALED REMOTE FIXTURE, EXTERIOR NEMA 4, MOUNTING HEIGHT 2300mm AFF	2	12 (24)	HALOGEN	LITHONIA	ELATNXH1212
32		BATTERY PACK EMERGENCY LIGHT, EXTERIOR NEMA 4, MOUNTING HEIGHT 2300mm AFF	2	12 (24)	HALOGEN	LITHONIA	INDX1236WH1212PREM 120V 60HZ
40		BUILDING MOUNTED WALL PACK TYPE FIXTURE WITH PHOTOCELL, SEE ARCHITECTURAL ELEVATION FOR MOUNTING HEIGHT	1	150	MH	LITHONIA	TWR1C-150MTB-PE-LPI 120V 60HZ
41		BUILDING MOUNTED WALL PACK TYPE FIXTURE WITH PHOTOCELL, SEE ARCHITECTURAL ELEVATION FOR MOUNTING HEIGHT	1	50	MH	LITHONIA	TWRC-42TRT-MVOLT-PE-LPI 120V 60HZ

* MANUFACTURER AND MODEL NUMBER ARE PROVIDED TO SHOW BASIS OF DESIGN ONLY.

UNLESS OTHERWISE NOTED, ALL DIMENSIONS SHOWN ARE IN MILLIMETERS.

THESE DRAWINGS ARE "NOT APPROVED FOR CONSTRUCTION" SINCE THESE ARE BASED UPON ASSUMED CONDITIONS. THE CONTRACTOR SHALL NOT PROCEED WITH CONSTRUCTION UNTIL THE ASSUMED CONDITIONS ARE VALIDATED AND APPROVAL IS RECEIVED FROM THE CONTRACTING OFFICER.

CORRECTED FINAL DESIGN SUBMITTAL

SYMB	DESCRIPTION	DATE	APR
0	CORRECTED FINAL DESIGN SUBMITTAL	09/15/10	KCT
B	FINAL DESIGN SUBMITTAL	09/02/10	KCT
A	MID-POINT DESIGN SUBMITTAL	08/13/10	KCT

DESIGNED BY: JAS
DATE: 09/15/10
DRAWN BY: SES
SUBMITTED BY: TETRA TECH
CHECKED BY: KCT
FILE NO.: AF1082A-EL200SC

US Army Corps of Engineers
Middle East District

TETRA TECH

AUSTERE STANDARD DESIGNS-PHASE 5
FY11 BARRACKS - PN74129-CLN04
KANDAHAR AIR BASE, AFGHANISTAN

LIGHT FIXTURE SCHEDULE AND CONNECTION SCHEDULE

SHEET REFERENCE NUMBER:
AF1082A
E-200

W:\23308\127-23308-10010\CAD\SheetFiles\ASD04_KAND\07_Electrical\AF1082A-EL200SC.dwg 10/14/2010 1:42:51 PM Barrett, Patrick

LOCATION: ELEC ROOM 111
PANELBOARD PP1 SURFACE MOUNTED 45,000 SYM. A.I.C. MIN.
— AMP. MAIN LUGS (OR) 300 AMP. MAIN BREAKER W/ 300 AMP. TRIP
CIRCUIT BREAKER TYPE 208Y/120 VOLTS 3 PHASE 4 WIRE 60 HZ 400 AMP. BUS

CKT. NO.	NO. POLES	TRIP AMPS	WIRE MM²	GND MM²	CONDUIT MM	LOAD SERVED	LOAD-V.A. A0	B0	C0	LOAD-V.A. A0	B0	C0	LOAD SERVED	CONDUIT MM	GND MM²	WIRE MM²	TRIP AMPS	NO. POLES	CKT. NO.
1	1	20	4	4	20	EMERGENCY EXIT LIGHTS	650			300			FACP	20	4	4	20	1	2
3	1	20	4	4	20	LTG: 101,102,103,104		704			1200		RECEPTS: 110, 111	20	4	4	20	1	4
5	1	20	4	4	20	LTG: 105,106,107,108,109			640			1000	RECEPTS: 101	20	4	4	20	1	6
7	1	20	4	4	20	LTG: 101,102,103,104,110,111	768			1000			RECEPTS: 101	20	4	4	20	1	8
9	1	20	4	4	20	LTG: 105,106,107,108,109		640			1200		RECEPTS: 102	20	4	4	20	1	10
11	1	20	4	4	20	LTG: EXTERIOR (EGRESS)			500			1200	RECEPTS: 103	20	4	4	20	1	12
13	1	20	4	4	20	LTG: EXTERIOR (EGRESS)	450			1200			RECEPTS: 104	20	4	4	20	1	14
15	1	20	4	4	20	LTG: EXTERIOR (BUILDING)		1350			1200		RECEPTS: 105	20	4	4	20	1	16
17	1	20	4	4	20	LTG: EXTERIOR (BUILDING)			1350			1200	RECEPTS: 106	20	4	4	20	1	18
19	1	20	—	—	—	SPARE	—			1200			RECEPTS: 107	20	4	4	20	1	20
21	1	20	—	—	—	SPARE		—			1200		RECEPTS: 108	20	4	4	20	1	22
23	1	20	—	—	—	SPARE			—			1200	RECEPTS: 109	20	4	4	20	1	24
25	2	15	4	4	20	RCU/ACU-101	336			1200			RECEPTS: EXTERIOR	20	4	4	20	1	26
27	↓	↓	↓	↓	↓	↓		336			600		RECEPTS: EXTERIOR ROOF	20	4	4	20	1	28
29	2	15	4	4	20	RCU/ACU-102			336			—	SPARE	—	—	—	20	1	30
31	↓	↓	↓	↓	↓	↓	336			—			SPARE	—	—	—	20	1	32
33	1	—	—	—	—	SPACE		—			—		SPARE	—	—	—	20	1	34
35	1	—	—	—	—	SPACE			—			—	SPARE	—	—	—	20	1	36
37	1	—	—	—	—	SPACE	—			—			TVSS	—	—	—	***	3	38
39	1	—	—	—	—	SPACE		—			—		↓	↓	↓	↓	↓	↓	40
41	1	—	—	—	—	SPACE			—			—	↓	↓	↓	↓	↓	↓	42
							2540	3030	2823	4900	5400	4600		*=GFI	**=SHUNT TRIP				

***=SIZED PER MANUFACTURER'S RECOMMENDATION
TOTAL CONN. LOAD PER PHASE (KVA): A0 7.4 B0 8.4 C0 7.4
TOTAL CONN. LOAD 43.2 KVA. — % DEMAND = ESTIMATED DEMAND LOAD — KVA SUPPLIED FROM: MDP

LOCATION: ELEC ROOM 111
PANELBOARD MDP SURFACE MOUNTED 45,000 SYM. A.I.C. MIN.
— AMP. MAIN LUGS (OR) 600 AMP. MAIN BREAKER W/ 600 AMP. TRIP
CIRCUIT BREAKER TYPE 208Y/120 VOLTS 3 PHASE 4 WIRE 60 HZ 600 AMP. BUS

CKT. NO.	NO. POLES	TRIP AMPS	WIRE MM²	GND MM²	CONDUIT MM	LOAD SERVED	LOAD-V.A. A0	B0	C0	LOAD-V.A. A0	B0	C0	LOAD SERVED	CONDUIT MM	GND MM²	WIRE MM²	TRIP AMPS	NO. POLES	CKT. NO.
1	3	—	—	—	—	PANEL PP1	15408			30256			PANEL LP1	—	—	—	—	3	2
3	↓	↓	↓	↓	↓	↓		15674			28886		↓	↓	↓	↓	↓	↓	4
5	↓	↓	↓	↓	↓	↓			12166			28986	↓	↓	↓	↓	↓	↓	6
7	3	175	70	16	50	RTU-101	10376			10376			RTU-102	—	—	—	—	3	8
9	↓	↓	↓	↓	↓	↓		10376			10376		↓	↓	↓	↓	↓	↓	10
11	↓	↓	↓	↓	↓	↓			10376			10376	↓	↓	↓	↓	↓	↓	12
13	3	175	70	16	50	RTU-201	10376			10376			RTU-202	—	—	—	—	3	14
15	↓	↓	↓	↓	↓	↓		10376			10376		↓	↓	↓	↓	↓	↓	16
17	↓	↓	↓	↓	↓	↓			10376			10376	↓	↓	↓	↓	↓	↓	18
19	3	—	—	—	—	—	—			—			SPARE	—	—	—	—	3	20
21	↓	↓	↓	↓	↓	↓		—			—		↓	↓	↓	↓	↓	↓	22
23	↓	↓	↓	↓	↓	↓			—			—	↓	↓	↓	↓	↓	↓	24
25	3	—	—	—	—	—	—			—			—	—	—	—	—	3	26
27	↓	↓	↓	↓	↓	↓		—			—		↓	↓	↓	↓	↓	↓	28
29	↓	↓	↓	↓	↓	↓			—			—	↓	↓	↓	↓	↓	↓	30
31	3	—	—	—	—	—	—			—			TVSS	—	—	—	#	3	32
33	↓	↓	↓	↓	↓	↓		—			—		↓	↓	↓	↓	↓	↓	34
35	↓	↓	↓	↓	↓	↓			—			—	↓	↓	↓	↓	↓	↓	36
						*=GFI **=SHUNT TRIP	36160	36426	32918	51008	49638	49738							

—PROVIDE BREAKER AS REQUIRED BY MANUFACTURER FOR TVSS
TOTAL CONN. LOAD PER PHASE (KVA): A0 87.2 B0 86.1 C0 82.7
TOTAL CONN. LOAD 255.9 KVA. — % DEMAND = ESTIMATED DEMAND LOAD — KVA SUPPLIED FROM: SERVICE

LOCATION: ELEC ROOM 111
PANELBOARD PP1 (SECTION 2) SURFACE MOUNTED 45,000 SYM. A.I.C. MIN.
— AMP. MAIN LUGS (OR) 300 AMP. MAIN BREAKER W/ 300 AMP. TRIP
CIRCUIT BREAKER TYPE 208Y/120 VOLTS 3 PHASE 4 WIRE 60 HZ 400 AMP. BUS

CKT. NO.	NO. POLES	TRIP AMPS	WIRE MM²	GND MM²	CONDUIT MM	LOAD SERVED	LOAD-V.A. A0	B0	C0	LOAD-V.A. A0	B0	C0	LOAD SERVED	CONDUIT MM	GND MM²	WIRE MM²	TRIP AMPS	NO. POLES	CKT. NO.
43	1	20	4	4	20	EMERGENCY EXIT LIGHTS	650			1200			RECEPTS: 201, 210	20	4	4	20	1	44
45	1	20	4	4	20	LTG: 201,202,203,204		704			1000		RECEPTS: 201	20	4	4	20	1	46
47	1	20	4	4	20	LTG: 205,206,207,208,209			640			1200	RECEPTS: 202	20	4	4	20	1	48
49	1	20	4	4	20	LTG: 201,202,203,204,210	768			1200			RECEPTS: 203	20	4	4	20	1	50
51	1	20	4	4	20	LTG: 205,206,207,208,209		640			1200		RECEPTS: 204	20	4	4	20	1	52
53	1	20	4	4	20	LTG: EXTERIOR (EGRESS)			500			1200	RECEPTS: 205	20	4	4	20	1	54
55	1	20	4	4	20	LTG: EXTERIOR (EGRESS)	450			1200			RECEPTS: 206	20	4	4	20	1	56
57	1	20	—	—	—	SPARE		—			1200		RECEPTS: 207	20	4	4	20	1	58
59	1	20	—	—	—	SPARE			—			1200	RECEPTS: 208	20	4	4	20	1	60
61	2	20	4	4	20	UH-201	1300			1200			RECEPTS: 209	20	4	4	20	1	62
63	↓	↓	↓	↓	↓	↓		1300			1200		RECEPTS: EXTERIOR	20	4	4	20	1	64
65	1	20	—	—	—	SPARE			—			—	SPARE	—	—	—	20	1	66
67	1	20	—	—	—	SPARE	—			—			SPARE	—	—	—	20	1	68
69	1	—	—	—	—	SPACE		—			—		SPARE	—	—	—	20	1	70
71	1	—	—	—	—	SPACE			—			—	SPARE	—	—	—	20	1	72
73	1	—	—	—	—	SPACE	—			—			SPARE	—	—	—	20	1	74
75	1	—	—	—	—	SPACE		—			—		SPARE	—	—	—	20	1	76
77	1	—	—	—	—	SPACE			—			—	SPARE	—	—	—	20	1	78
79	1	—	—	—	—	SPACE	—			—			TVSS	—	—	—	***	3	80
81	1	—	—	—	—	SPACE		—			—		↓	↓	↓	↓	↓	↓	82
83	1	—	—	—	—	SPACE			—			—	↓	↓	↓	↓	↓	↓	84
							3168	2644	1140	4800	4600	3600		*=GFI	**=SHUNT TRIP				

***=SIZED PER MANUFACTURER'S RECOMMENDATION
TOTAL CONN. LOAD PER PHASE (KVA): A0 8.0 B0 7.2 C0 4.7
TOTAL CONN. LOAD 20.0 KVA. — % DEMAND = ESTIMATED DEMAND LOAD — KVA SUPPLIED FROM: MDP

LOCATION: MECH ROOM 112
PANELBOARD LP1 SURFACE MOUNTED 45,000 SYM. A.I.C. MIN.
— AMP. MAIN LUGS (OR) 300 AMP. MAIN BREAKER W/ 300 AMP. TRIP
CIRCUIT BREAKER TYPE 208Y/120 VOLTS 3 PHASE 4 WIRE 60 HZ 400 AMP. BUS

CKT. NO.	NO. POLES	TRIP AMPS	WIRE MM²	GND MM²	CONDUIT MM	LOAD SERVED	LOAD-V.A. A0	B0	C0	LOAD-V.A. A0	B0	C0	LOAD SERVED	CONDUIT MM	GND MM²	WIRE MM²	TRIP AMPS	NO. POLES	CKT. NO.
1	1	20	4	4	20	EMERGENCY EXIT LIGHTS	324			800			RECEPTS: 112, 113, EXT.	20	4	4	20	1	2
3	1	20	4	4	20	LTG: 112, 113, 114		200			1000		RECEPTS: 113, 114	20	4	4	20	1	4
5	1	20	4	4	20	LTG: 112			640			800	RECEPTS: 211, 212, EXT.	20	4	4	20	1	6
7	1	20	4	4	20	LTG: 211, 212, 213	200			1000			RECEPTS: 212, 213	20	4	4	20	1	8
9	1	20	4	4	20	LTG: 212		640			—		SPARE	—	—	—	20	1	10
11	1	20	4	4	20	LTG: EXTERIOR (EGRESS)			500			—	SPARE	—	—	—	20	1	12
13	2	20	4	4	20	UH-101	1300			—			SPARE	—	—	—	20	1	14
15	↓	↓	↓	↓	↓	↓		1300			—		SPARE	—	—	—	20	1	16
17	2	20	4	4	20	UH-202			1300			—	SPARE	—	—	—	20	1	18
19	↓	↓	↓	↓	↓	↓	1300			3000			EWH-1	20	4	4	35	3	20
21	3	35	10	10	20	UH-102		3333			3000								22
23	↓	↓	↓	↓	↓	↓			3333			3000	↓	↓	↓	↓	↓	↓	24
25	↓	↓	↓	↓	↓	↓	3333			3000			EWH-2	20	4	4	35	3	26
27	3	35	10	10	20	UH-103		3333			3000								28
29	↓	↓	↓	↓	↓	↓			3333			3000	↓	↓	↓	↓	↓	↓	30
31	↓	↓	↓	↓	↓	↓	3333			3000			EWH-3	20	4	4	35	3	32
33	3	35	10	10	20	UH-203		3333			3000								34
35	↓	↓	↓	↓	↓	↓			3333			3000	↓	↓	↓	↓	↓	↓	36
37	↓	↓	↓	↓	↓	↓	3333			3000			EWH-4	20	4	4	35	3	38
39	3	35	10	10	20	UH-204		3333			3000								40
41	↓	↓	↓	↓	↓	↓			3333			3000	↓	↓	↓	↓	↓	↓	42
43	↓	↓	↓	↓	↓	↓	3333			—			SPARE	—	—	—	20	1	44
45	2	15	4	4	20	EF-201		414			—		SPARE	—	—	—	20	1	46
47	↓	↓	↓	↓	↓	↓			414			—	SPARE	—	—	—	20	1	48
49	1	20	—	—	—	SPARE	—			—			SPACE	—	—	—	—	1	50
51	1	20	—	—	—	SPARE		—			—		SPACE	—	—	—	—	1	52
53	1	20	—	—	—	SPARE			—			—	SPACE	—	—	—	—	1	54
							16456	15886	16186	13800	13000	12800		*=GFI	**=SHUNT TRIP				

***=SIZED PER MANUFACTURER'S RECOMMENDATION
TOTAL CONN. LOAD PER PHASE (KVA): A0 30.3 B0 28.9 C0 29.0
TOTAL CONN. LOAD 88.2 KVA. — % DEMAND = ESTIMATED DEMAND LOAD — KVA SUPPLIED FROM: MDP

THESE DRAWINGS ARE "NOT APPROVED FOR CONSTRUCTION" SINCE THESE ARE BASED UPON ASSUMED CONDITIONS. THE CONTRACTOR SHALL NOT PROCEED WITH CONSTRUCTION UNTIL THE ASSUMED CONDITIONS ARE VALIDATED AND APPROVAL IS RECEIVED FROM THE CONTRACTING OFFICER.

STATE OF NEW YORK · KEVIN CHARLES TERRY · 079083 · LICENSED PROFESSIONAL ENGINEER
9/15/10

CORRECTED FINAL DESIGN SUBMITTAL

SYMB	DESCRIPTION	DATE			
0	CORRECTED FINAL DESIGN SUBMITTAL	09/15/10	KCT	KCT	KCT
B	FINAL DESIGN SUBMITTAL	09/02/10	KCT		
A	MID-POINT DESIGN SUBMITTAL	08/13/10	KCT		

DATE: 09/15/10 SUBMITTED BY: TETRA TECH FILE NO.: AF1082A-EL201SC
DESIGNED BY: JAS DRAWN BY: SES CHECKED BY: KCT

US Army Corps of Engineers Middle East District
TETRA TECH

AUSTERE STANDARD DESIGNS-PHASE 5
FY11 BARRACKS - PN74129-CLN04
KANDAHAR AIR BASE, AFGHANISTAN

PANEL SCHEDULES

SHEET REFERENCE NUMBER:
AF1082A
E-201

UNLESS OTHERWISE NOTED, ALL DIMENSIONS SHOWN ARE IN MILLIMETERS.

W:\23308\127-23308-10010\CAD\SheetFiles\ASD04_KAND\07_Electrical\AF1082A-EL201SC.dwg 10/14/2010 1:43:03 PM Barrett, Patrick

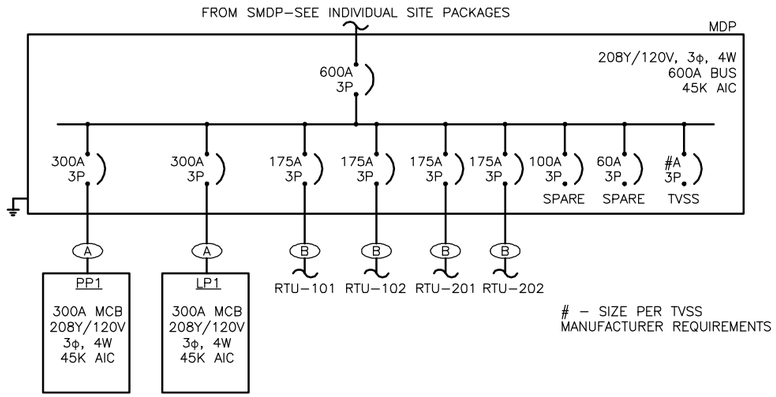

FEEDER SIZE TABLE							
FEEDER ID	AMPS	SETS PARALLEL CONDUCTORS AND RACEWAYS	PHASE CONDUCTOR	NEUTRAL	GROUND	RACEWAY SIZE	NOTES
A	300	1	(3)–300mm²	(1)–300mm²	(1)–35mm²	100mm	--
B	175	1	(3)–70mm²	(1)70mm²	(1)–16mm²	50mm	--

ELECTRICAL ONE–LINE DIAGRAM
N.T.S.

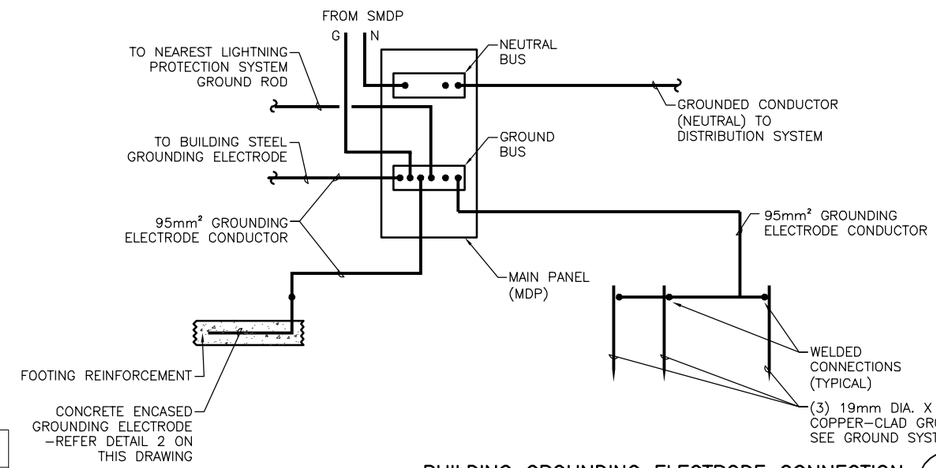

NOTES:
1. BOND OTHER METAL PIPING GROUND TERMINALS TO THE BUILDING GROUNDING ELECTRODE SYSTEM.
2. THE GROUNDING ELECTRODE CONDUCTOR SHALL ONLY BE CONNECTED TO GROUNDING ELECTRODES THAT ARE AVAILABLE ON THE PREMISES.
3. PROTECT GROUNDING ELECTRODE CONDUCTOR WITH NONMETALLIC RACEWAY WHEN CONDUCTOR PENETRATES FLOOR SLABS AND WALLS.
4. ALL GROUNDING ELECTRODE CONDUCTORS, BONDING JUMPERS AND GROUNDING CONDUCTORS SHALL BE COPPER.

BUILDING GROUNDING ELECTRODE CONNECTION (1 / E–202 | E–202)
N.T.S.

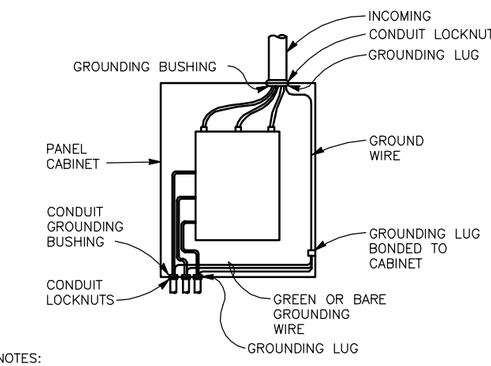

NOTES:
1. ALL WIRES TO BE NEATLY LACED.
2. AT THE POINT OF ATTACHMENT OF THE GROUNDING LUG TO THE CABINET, THE SURFACES SHALL BE SCRAPED FREE OF PAINT AND THOROUGHLY CLEANED TO INSURE PROPER BONDING.
3. NEUTRAL CONDUCTOR NOT SHOWN FOR CLARITY.
4. ALL GROUNDING LUGS AND CONDUCTORS SHALL BE COPPER.

TYPICAL PANEL GROUNDING (3 / E–202 | E–202)
N.T.S.

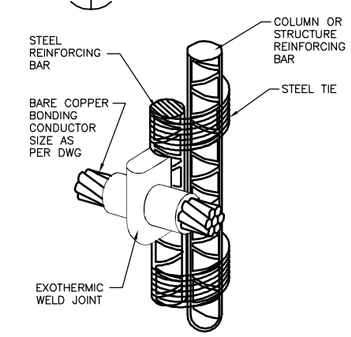

WELDING TO STEEL REINFORCING BAR DETAIL (2 / E–202 | E–202)
N.T.S.

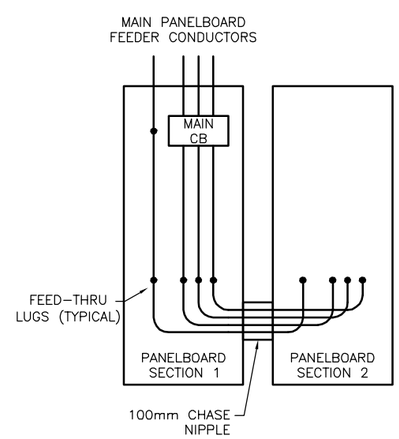

MULTI–SECTION PANELBOARD (5 / E–102 | E–202)
N.T.S.

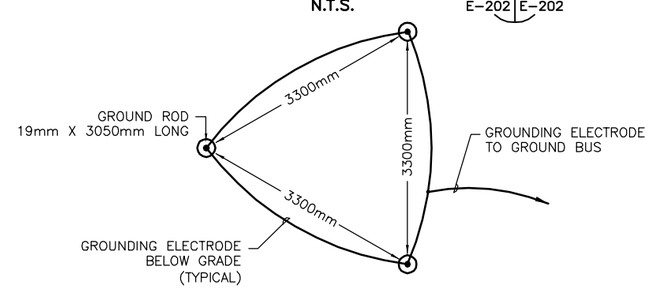

GROUND SYSTEM SHALL BE LOCATED APPROXIMATELY 1000mm OUTSIDE OF BUILDING FOOTINGS AND AT MDP.

GROUND SYSTEM (4 / E–102 | E–202)
N.T.S.

UNLESS OTHERWISE NOTED, ALL DIMENSIONS SHOWN ARE IN MILLIMETERS.

THESE DRAWINGS ARE "NOT APPROVED FOR CONSTRUCTION" SINCE THESE ARE BASED UPON ASSUMED CONDITIONS. THE CONTRACTOR SHALL NOT PROCEED WITH CONSTRUCTION UNTIL THE ASSUMED CONDITIONS ARE VALIDATED AND APPROVAL IS RECEIVED FROM THE CONTRACTING OFFICER.

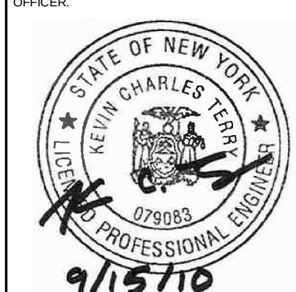

CORRECTED FINAL DESIGN SUBMITTAL

SYMB	DESCRIPTION	DATE			
O	CORRECTED FINAL DESIGN SUBMITTAL	09/15/10	KCT		
B	FINAL DESIGN SUBMITTAL	09/02/10	KCT		
A	MID–POINT DESIGN SUBMITTAL	08/13/10	KCT		

DESIGNED BY: JAS	DATE: 09/15/10		
DRAWN BY: SES	SUBMITTED BY: TETRA TECH		
CHECKED BY: KCT	FILE NO.: AF1082A–EL202DT		

US Army Corps of Engineers Middle East District

TETRA TECH

AUSTERE STANDARD DESIGNS–PHASE 5
FY11 BARRACKS – PN74129–CLN04
KANDAHAR AIR BASE, AFGHANISTAN

BUILDING ONE–LINE DIAGRAM AND GROUNDING DETAILS

SHEET REFERENCE NUMBER:
AF1082A
E–202

W:\23308\127–23308–10010\CAD\SheetFiles\ASD04_KAND\07_Electrical\AF1082A–EL202DT.dwg 10/14/2010 1:43:11 PM Barrett, Patrick

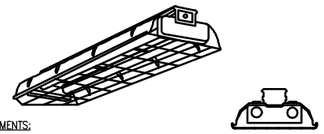

LUMINAIRE REQUIREMENTS:

1. HOUSING – DIE-FORMED, COLD-ROLLED STEEL, WITH REINFORCEMENT RIBS FOR RIGIDITY. ENDCAPS SECURED WITH TABS, SCREWS OR RIVETS. FIXTURE SHALL NOT PERMANENTLY DEFORM OUT OF "SQUARE" WHEN PICKED UP FROM ANY CORNER.
2. FINISH – MULTI-STAGE PHOSPHATE BONDING TREATMENT FINISHED WITH HIGH REFLECTANCE (MINIMUM 85%), BAKED WHITE ENAMEL FINISH.
3. LAMPHOLDERS– PRESSURE-LOCKED TYPE ENCLOSED IN TURRET HOUSING.
4. REFLECTOR – DIE-FORMED, COLD-ROLLED STEEL WITH TRANSVERSE RIBS FOR RIGIDITY. SOLID, 10% UPLIGHT APERATURE OR 20% UPLIGHT APERATURE AS INDICATED IN LIGHTING FIXTURE SCHEDULE.
5. LAMPS – LINEAR FLUORESCENT T8, TYPICALLY WITH WATTAGES AS INDICATED. SEE LIGHTING FIXTURE SCHEDULE.
6. BALLAST – CLASS P, THERMALLY-PROTECTED, HIGH POWER FACTOR (≥.95), ELECTRONIC TYPE WITH SOUND RATING A. SEE SPECIFICATION OR LIGHTING FIXTURE SCHEDULE FOR BALLAST OPTIONS AND SPECIFICS.
7. CERTIFICATION – UL LISTED AND LABELED.
8. OPTIONS – CHAIN HANGER AND PLATED STEEL WIRE GUARD.
9. PHOTOMETRICS – MINIMUM VALUE OF COEFFICIENT OF UTILIZATION (CU) AND EFFICIENCY, GIVEN INTERIOR CAVITY REFLECTANCES OF 80-50-20:

2 LAMP (F32/T8)

RCR	CU
1	90
2	79
3	69
4	61

EFFICIENCY – 90%

INDUSTRIAL FLUORESCENT
N.T.S. (TYPE 4)

LUMINAIRE REQUIREMENTS:

HOUSING – DIE-FORMED, HEAVY-GAUGE, COLD-ROLLED STEEL WITH ENDCAPS MADE
1. FROM THE SAME MATERIAL AS HOUSING.
FINISH – MULTI-STAGE PHOSPHATE BONDING TREATMENT FINISHED WITH HIGH
2. REFLECTANCE (MINIMUM 85%), BAKED WHITE ENAMEL FINISH. DARK BRONZE OR BLACK FINISH AVAILABLE. SEE LIGHTING FIXTURE SCHEDULE.
LENS – 100% ACRYLIC, HIGH-IMPACT, CLEAR PRISMATIC DIFFUSER.
3. LAMPS – LINEAR FLUORESCENT T8, TYPICALLY WITH WATTAGES AS INDICATED. SEE
4. LIGHTING FIXTURE SCHEDULE.
BALLAST – CLASS P, THERMALLY-PROTECTED, HIGH POWER FACTOR (≥.95),
5. ELECTRONIC TYPE WITH SOUND RATING A. SEE SPECIFICATION OR LIGHTING FIXTURE SCHEDULE FOR BALLAST OPTIONS AND SPECIFICS.
CERTIFICATION – UL LISTED AND LABELED.
6. FIXED UP AND DOWN LIGHT
SWITCHED UP AND/OR DOWN LIGHT
DOWN LIGHT ONLY WITH SOLID TOP

WALL MOUNTED FLUORESCENT
N.T.S. (TYPE 3)

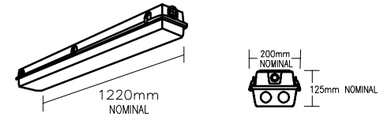

LUMINAIRE REQUIREMENTS:

1. HOUSING – ONE-PIECE, IMPACT-RESISTANT, FIBERGLASS REINFORCED POLYESTER WITH ENCLOSED COLD-ROLLED STEEL WIREWAY.
2. FINISH – STEEL REFLECTOR WITH MULTI-STAGE PHOSPHATE BONDING TREATMENT FINISHED WITH HIGH REFLECTANCE (MINIMUM 85%), BAKED WHITE ENAMEL FINISH.
3. LENS – 100% CLEAR ACRYLIC/DR OPTICAL DIFFUSER. STIPPLED INTERIOR SURFACES AND SMOOTH EXTERIOR. CLOSED CELL NEOPRENE GASKET WITH CAPTIVE NONMETALLIC, SNAP ACTION CAM LATCHES TO SECURE LENS TO HOUSING.
4. LAMPS – LINEAR FLUORESCENT T8, TYPICALLY WITH WATTAGES AS INDICATED. SEE LIGHTING FIXTURE SCHEDULE.
5. BALLAST – CLASS P, THERMALLY-PROTECTED, HIGH POWER FACTOR (≥.95), ELECTRONIC TYPE WITH SOUND RATING A. SEE SPECIFICATION OR LIGHTING FIXTURE SCHEDULE FOR BALLAST OPTIONS AND SPECIFICS.
6. CERTIFICATION – UL LISTED AND LABELED. SUITABLE FOR DAMP OR WET LOCATION AS DESIGNATED IN LIGHTING FIXTURE SCHEDULE.
7. PHOTOMETRICS – MINIMUM VALUE OF COEFFICIENT OF UTILIZATION (CU) AND EFFICIENCY, GIVEN INTERIOR CAVITY REFLECTANCES OF 80-50-20:

2 LAMP (F32/T8)

RCR	CU
1	78
2	67
3	58
4	51

EFFICIENCY – 76%

FIBERGLASS HOUSING DAMP/WET FLUORESCENT
N.T.S. (TYPE 2)

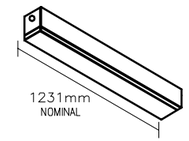

LUMINAIRE REQUIREMENTS:

1. HOUSING – ONE-PIECE, 16 GUAGE COLD ROLLED STEEL. DIE FORMED AND WELDED TOGETHER WITH REINFORCING MEMBERS FOR STRENGTH.
2. FINISH – METAL PARTS ARE POST PAINTED IN WHITE POLYESTER POWDER COAT FOR SMOTH FINISHED EDGES AND CORROSION RESISTANCE.
3. LENS – PRIMATIC HIGH IMPACT ACRYLIC.
4. LAMPS – LINEAR FLUORESCENT T8, TYPICALLY WITH WATTAGES AS INDICATED. SEE LIGHTING FIXTURE SCHEDULE.
5. BALLAST – ELECTRONIC ,≥10% THD, INSTANT START.
6. CERTIFICATION – UL LISTED FOR 25°C AMBINET AS DESIGNATED IN LIGHTING FIXTURE SCHEDULE.
7. PHOTOMETRICS – MINIMUM VALUE OF COEFFICIENT OF UTILIZATION (CU) AND EFFICIENCY, GIVEN INTERIOR CAVITY REFLECTANCES OF 80-50-20:

2 LAMP (F32/T8)

RCR	CU
1	78
2	67
3	58
4	51

EFFICIENCY – 76%

ROUGH SERVICE WRAP AROUND
N.T.S. (TYPE 1)

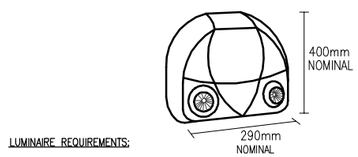

LUMINAIRE REQUIREMENTS:

1. HOUSING – RUGGED, HEAVY – DUTY POLYCARBONATE, SEALED, GASKETED AND CORROSION RESISTANT. NEMA 4 RATED.
2. INTERNAL COMPONENTS – FULLY AUTOMATIC, SOLID STATE, CONSTANT VOLTAGE, CURRENT-LIMITED BATTERY CHARGER; MAINTENANCE-FREE LEAD-ACID BATTERY; AND BUILT-IN OVERLOAD PROTECTION; TIME-DELAY.
3. FACEPLATE INDICATORS – LED AC-ON INDICATOR AND INTEGRAL TEST SWITCH.
4. LAMP HEADS – UL FLAME RATED THERMOPLASTIC; FULLY ADJUSTABLE HORIZONTALLY AND VERTICALLY. SEALED BEAM, PAR 36 HALOGEN LAMPS SHALL BE 12 WATTS OR AS INDICATED IN LIGHTING FIXTURE SCHEDULE.
5. MOUNTING – DIRECTLY TO WALL USING MOUNTING HOLES IN REAR OF CABINET, ACCESSORY WALL BRACKETS, OR MOUNTING SHELF.
6. CERTIFICATION – UL LISTED AND LABELED. COMPLIES WITH UL 924 AND NFPA 101 REQUIREMENTS.

EMERGENCY LIGHTING UNIT
N.T.S. (TYPE 32)

TYPE A – TWIN ROUND SWIVEL HEAD

REQUIREMENTS:

1. LAMPS SHALL BE COMPATIBLE WITH PRIMARY POWER SOURCE USED.
2. FIXTURE HOUSING AND FINISH SHALL BE AS SPECIFIED IN LIGHTING FIXTURE SCHEDULE.

EM DOUBLE HEAD
N.T.S. (TYPE 31)

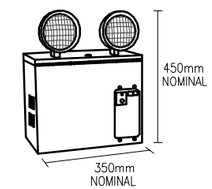

LUMINAIRE REQUIREMENTS:

1. HOUSING – HEAVY-GAUGE STEEL WITH BAKED-ON DARK BROWN ENAMEL FINISH. ACCESS INTO TOP OF FIXTURE BY FULL PIANO HINGE COVER. NON-METALLIC HOUSING OPTIONAL AS INDICATED.
2. INTERNAL COMPONENTS – FULLY AUTOMATIC, SOLID STATE, CONSTANT VOLTAGE, CURRENT-LIMITED BATTERY CHARGER; MAINTENANCE-FREE LEAD-ACID BATTERY; AND BUILT-IN OVERLOAD PROTECTION; TIME-DELAY.
3. FACEPLATE INDICATORS – LED AC-ON INDICATOR AND INTEGRAL TEST SWITCH.
4. LAMP HEADS – UL FLAME RATED THERMOPLASTIC; FULLY ADJUSTABLE HORIZONTALLY AND VERTICALLY. SEALED BEAM, PAR 36 HALOGEN LAMPS SHALL BE 12 WATTS OR AS INDICATED IN LIGHTING FIXTURE SCHEDULE.
5. MOUNTING – DIRECTLY TO WALL USING MOUNTING HOLES IN REAR OF CABINET, ACCESSORY WALL BRACKETS, OR MOUNTING SHELF.
6. CERTIFICATION – UL LISTED AND LABELED. COMPLIES WITH UL 924 AND NFPA 101 REQUIREMENTS.
7. OPTIONS – VOLTMETER, AMMETER, THREE-CONDUCTOR CORD SET, OR WIRE GUARD.

EMERGENCY LIGHTING UNIT
N.T.S. (TYPE 30)

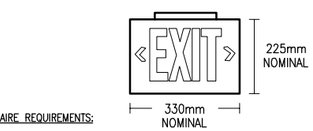

LUMINAIRE REQUIREMENTS:

1. HOUSING – DIE-CAST ALUMINUM OR HIGH-IMPACT, UV-STABILIZED, INJECTION-MOLDED THERMOPLASTIC. SINGLE OR DOUBLE-FACED AS INDICATED.
2. FINISH (ON CAST ALUMINUM HOUSING ONLY) – TEXTURED POWDER COAT FINISH OPTIONS INCLUDE WHITE, WHITE WITH BRUSHED ALUMINUM FACE, BLACK, OR BLACK WITH BRUSHED ALUMINUM FACE.
3. LETTERS/CHEVRONS – MINIMUM 150mm HIGH WITH 19mm STROKE. RED OR GREEN LETTERS AS INDICATED. PROVIDE CHEVRONS AS INDICATED EITHER LEFT, RIGHT OR BOTH DIRECTIONS AS INDICATED. CHEVRONS PUNCHED OUT THROUGH HOUSING AS REQUIRED.
4. EMERGENCY PACK – SOLID-STATE, CONSTANT-CURRENT TYPE BATTERY CHARGER WITH MAINTENANCE-FREE, NICKEL-CADMIUM BATTERY, AC-ON INDICATOR LAMP AND TEST SWITCH.
5. MOUNTING – UNIVERSAL MOUNTING KIT FOR CEILING, WALL OR END-OF-FIXTURE MOUNTING.
6. ILLUMINATION – PROVIDED BY RED, GREEN OR WHITE HIGH-OUTPUT LEDS INSIDE OF FIXTURE HOUSING. PROVIDE POLYSTYRENE DIFFUSER IN COLOR INDICATED WITH FREQUENCY-MATCHED SILKSCREEN COATING FOR MAXIMUM LED LIGHT OUTPUT.
7. CERTIFICATION – UL LISTED AND CERTIFIED FOR DAMP LOCATIONS.

LED STENCIL FACE EXIT SIGN
N.T.S. (TYPE 20)

LUMINAIRE REQUIREMENTS:

1. HOUSING – ONE-PIECE, DIE-CAST ALUMINUM WITH BAKED-ON POLYESTER POWDER COAT FINISH IN BLACK.
2. DIFFUSER – CLEAR PRISMATIC, UV-STABILIZED, INJECTION-MOLDED POLYCARBONATE WITH MINIMUM 3mm THICKNESS. DIFFUSER SECURED WITH TAMPER-RESISTANT STAINLESS STEEL SCREWS.
3. GASKET – ONE-PIECE, CLOSED-CELL NEOPRENE TO DISCOURAGE MOISTURE, INSECTS AND DEBRIS.
4. CERTIFICATION – UL LISTED AND LABELED FOR WET LOCATIONS.
5. FIXTURE TYPE – COMPACT FLUORESCENT (42 TRT WATT), 120 VOLT AC, 60HZ.
6. DIMENSIONS – FIXTURE DIMENSIONS ARE APPROXIMATELY 165mm WIDE X 279mm TALL X 133mm DEEP.
7. INTEGRAL PHOTO CELL CONTROL

SMALL WALL PACK (TYPE 41)
N.T.S. (TYPE 41)

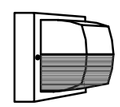

LUMINAIRE REQUIREMENTS:

1. HOUSING – ONE-PIECE, DIE-CAST ALUMINUM WITH BAKED-ON POLYESTER POWDER COAT FINISH IN BLACK.
2. DIFFUSER – CLEAR PRISMATIC, UV-STABILIZED, INJECTION-MOLDED POLYCARBONATE WITH MINIMUM 3mm THICKNESS. DIFFUSER SECURED WITH TAMPER-RESISTANT STAINLESS STEEL SCREWS. BLACK HORIZONTAL FRONT EYELID FOR CUTOFF.
3. GASKET – ONE-PIECE, CLOSED-CELL NEOPRENE TO DISCOURAGE MOISTURE, INSECTS AND DEBRIS.
4. CERTIFICATION – UL LISTED AND LABELED FOR WET LOCATIONS.
5. FIXTURE TYPE – METAL HALIDE (150 WATT)
6. DIMENSIONS – FIXTURE DIMENSIONS ARE APPROXIMATELY 216mm WIDE X 150mm TALL X 190mm DEEP.
7. INTEGRAL PHOTO CELL CONTROL

WALL PACK
N.T.S. (TYPE 40)

UNLESS OTHERWISE NOTED, ALL DIMENSIONS SHOWN ARE IN MILLIMETERS.

THESE DRAWINGS ARE "NOT APPROVED FOR CONSTRUCTION" SINCE THESE ARE BASED UPON ASSUMED CONDITIONS. THE CONTRACTOR SHALL NOT PROCEED WITH CONSTRUCTION UNTIL THE ASSUMED CONDITIONS ARE VALIDATED AND APPROVAL IS RECEIVED FROM THE CONTRACTING OFFICER.

CORRECTED FINAL DESIGN SUBMITTAL

SYMB	DESCRIPTION	DATE	APR
O	CORRECTED FINAL DESIGN SUBMITTAL	09/15/10	KCT
B	FINAL DESIGN SUBMITTAL	09/02/10	KCT
A	MID-POINT DESIGN SUBMITTAL	08/13/10	KCT

DESIGNED BY: JAS
DATE: 09/15/10
DRAWN BY: SES
SUBMITTED BY: TETRA TECH
CHECKED BY: KCT
FILE NO.: AF1082A-EL2030T

US Army Corps of Engineers
Middle East District

TETRA TECH

AUSTERE STANDARD DESIGNS-PHASE 5
FY11 BARRACKS – PN74129-CLN04
KANDAHAR AIR BASE, AFGHANISTAN

LIGHTING DETAILS

SHEET REFERENCE NUMBER:
AF1082A
E-203

W:\23308\127-23308-10010\CAD\SheetFiles\AS004_KAND\07_Electrical\AF1082A-EL2030T.dwg 10/14/2010 1:43:21 PM Barrett, Patrick

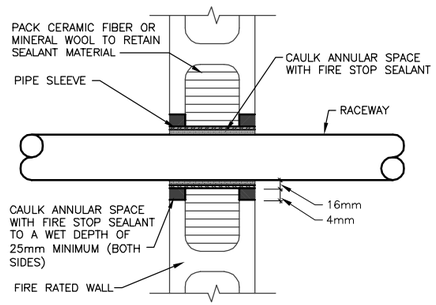

FIRE RATED (1 HOUR) CMU WALL PENETRATION DETAIL (2)
N.T.S. E-100,E-101,E-102,E-103 | E-204

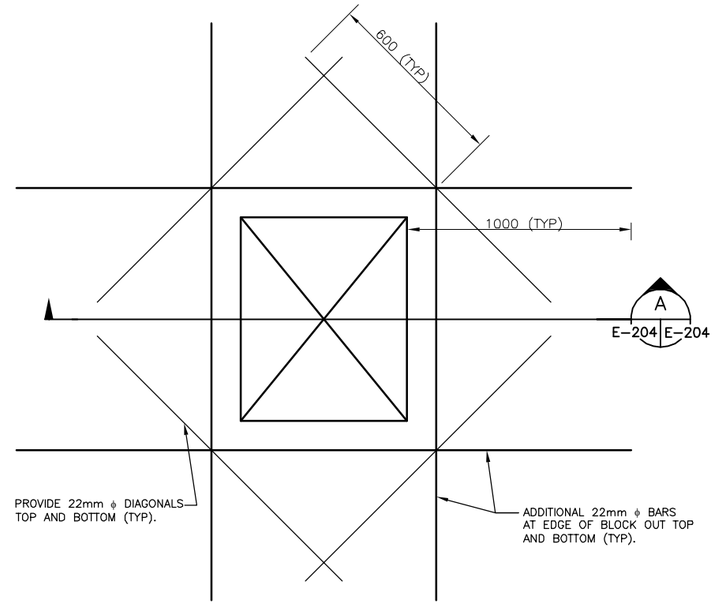

TYPICAL BLOCK OUT DETAIL
N.T.S.

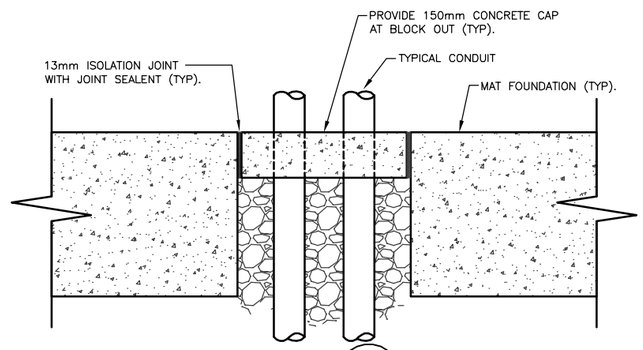

SECTION (A)
N.T.S E-204 | E-204

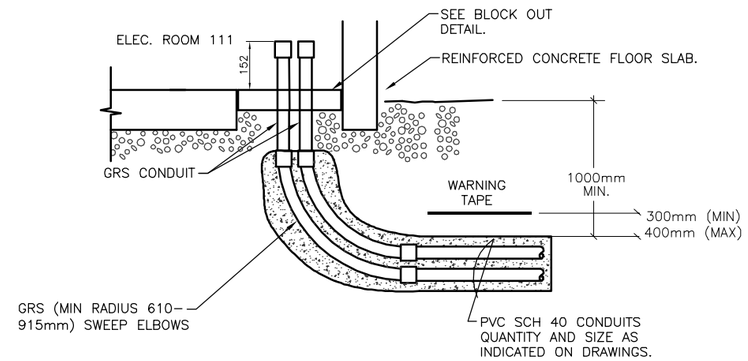

FRONT ELEVATION

SECONDARY SERVICE ELEVATION (1)
N.T.S. E-102 | E-204

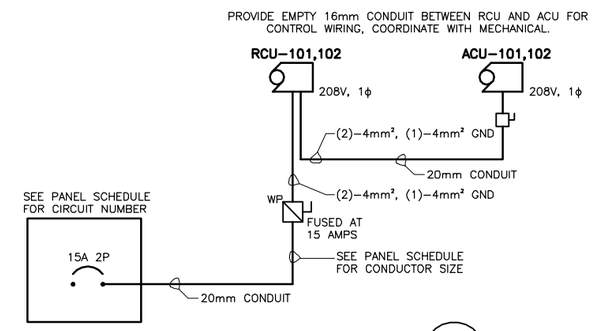

TYPICAL ACU, RCU WIRING DIAGRAM (3)
N.T.S. E-104 | E-204

THESE DRAWINGS ARE "NOT APPROVED FOR CONSTRUCTION" SINCE THESE ARE BASED UPON ASSUMED CONDITIONS. THE CONTRACTOR SHALL NOT PROCEED WITH CONSTRUCTION UNTIL THE ASSUMED CONDITIONS ARE VALIDATED AND APPROVAL IS RECEIVED FROM THE CONTRACTING OFFICER.

UNLESS OTHERWISE NOTED, ALL DIMENSIONS SHOWN ARE IN MILLIMETERS.

CORRECTED FINAL DESIGN SUBMITTAL

SYMB	DESCRIPTION	DATE	APR
0	CORRECTED FINAL DESIGN SUBMITTAL	09/15/10	KCT
B	FINAL DESIGN SUBMITTAL	09/02/10	KCT
A	MID-POINT DESIGN SUBMITTAL	08/13/10	KCT

DESIGNED BY: JAS
DATE: 09/15/10
DRAWN BY: SES
SUBMITTED BY: TETRA TECH
CHECKED BY: KCT
FILE NO.: AF1082A-EL2040T

US Army Corps of Engineers Middle East District

TETRA TECH

AUSTERE STANDARD DESIGNS-PHASE 5
FY11 BARRACKS - PN74129-CLN04
KANDAHAR AIR BASE, AFGHANISTAN

ELECTRICAL DETAILS

SHEET REFERENCE NUMBER:
AF1082A
E-204

W:\23308\127-23308-10010\CAD\SheetFiles\ASD04_KAND\07_Electrical\AF1082A-EL2040T.dwg 10/14/2010 1:43:31 PM Barrett, Patrick

DUCTWORK LEGEND

SYMBOL	DESCRIPTION
500X300	DUCTWORK. FIRST FIGURE IS SIZE OF SIDE IN VIEW.
R	DUCT OFFSET RISE IN DIRECTION OF FLOW
D	DUCT OFFSET DROP IN DIRECTION OF FLOW
	FLEXIBLE CONNECTION
	CURVED ELBOW, MIN. R=1.5 WIDTH
	90° ELBOW WITH TURNING VANES
	MANUAL VOLUME DAMPER
	SUPPLY AIR DUCT IN SECTION (POSITIVE PRESSURE)
	RETURN, EXHAUST OR OUTSIDE AIR DUCT IN SECTION
	RETURN OR EXHAUST AIR GRILLE
	RETURN OR EXHAUST AIR REGISTER W/ VOLUME DAMPER
	FIRE DAMPER

EQUIPMENT SYMBOLS

SYMBOL	DESCRIPTION
	EXHAUST REGISTER
	BACKDRAFT OR BAROMETRIC DAMPER
	SUPPLY REGISTER
	INLINE EXHAUST FAN (CENTRIFUGAL TYPE)
T	THERMOSTAT
D	DUCT SMOKE DETECTOR

PIPING LEGEND

SYMBOL	DESCRIPTION
COND	CONDENSATE
RL	REFRIGERANT LIQUID
RS	REFRIGERANT SUCTION
	PIPE UP
	PIPE DOWN

ABBREVIATIONS

A.F.F.	ABOVE FINISHED FLOOR
ALUM	ALUMINUM
CMH	CUBIC METERS PER HOUR
M^3/HR	CUBIC METERS PER HOUR
FD	FIRE DAMPER
GA	GAUGE
KW	KILOWATT
MAX	MAXIMUM
MIN	MINIMUM
mm	MILLIMETER
MPM	METERS PER MINUTE
OA	OUTSIDE AIR
OBD	OPPOSED BLADE DAMPER
O.C.	ON CENTER
EA	EXHAUST AIR
RA	RETURN AIR
SA	SUPPLY AIR
SPEC	SPECIFICATION
S.M.	SQUARE METERS
TYP	TYPICAL
VD	VOLUME DAMPER
WG	WATER GAUGE
WWM	WELDED WIRE MESH

GENERAL NOTES

1. SEE ARCHITECTURAL DRAWINGS FOR EXACT LOCATION OF LOUVERS, DIFFUSERS, REGISTERS, AND GRILLES.
2. ALL DUCT DIMENSIONS SHOWN ON THE DRAWINGS ARE CLEAR INSIDE DIMENSIONS.
3. PROVIDE SUPPORT OF MECHANICAL SYSTEMS IN ACCORDANCE WITH MANUFACTURER'S RECOMMENDATION.
4. ALL DIMENSIONS AND CAPACITIES SHOWN IN METRIC UNITS UNLESS OTHERWISE NOTED.
5. EXTERIOR ENVIRONMENTAL DESIGN CONDITIONS:
   SUMMER: 50.0°C(122°F)db; 21.1°C(70°F)wb
   WINTER: −17.8°C(0°F)
6. INTERIOR DESIGN CONDITIONS:
   SLEEPING QUARTERS:
   SUMMER: 23.9°C(75°F)db
   WINTER: 21.1°C(70°F)db
   COMMUNICATIONS/ELECTRIC ROOMS:
   SUMMER: 23.9°C(75°F)db
   WINTER: 23.9°C(75°F)db
   LATRINE FACILITY:
   SUMMER: VENTILATION PROVIDED
   WINTER: 20.0°C(68°F)db
7. TYPICAL DETAILS ON SHEETS M−201 AND M−202.
8. PROVIDE SEISMIC RESTRAINTS AS REQUIRED BY SPECIFICATION.
9. CONTROL SEQUENCES AND EQUIPMENT SCHEDULES ARE ON SHEETS M−203.
10. INSULATE ALL SUPPLY AND RETURN DUCTS AS WELL AS PROVIDE WEATHERPROOF COVERING ON ALL EXTERIOR DUCTS PER SPECIFICATION 23 07 00.

NOT CONSTRUCTING THE LATRINE SHALL BE CONSIDERED A CONSTRUCTION OPTION. IF THE BUILDING IS CONSTRUCTED PER THE "LATRINE DELETION OPTION", THE PORTION OF THE BUILDING BETWEEN COLUMN LINES 1 AND 2 WILL NOT BE CONSTRUCTED. SEE ALSO ARCHITECTURAL AND STRUCTURAL DRAWINGS.

DETAIL TITLE

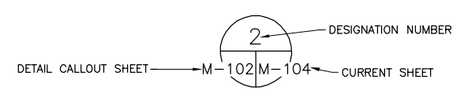

DETAIL CALLOUT

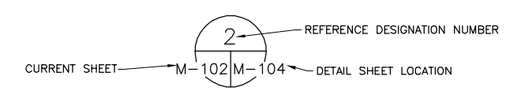

ELEVATION/SECTION CALLOUT

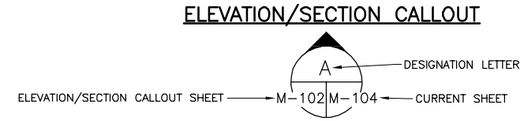

AIR REGISTER DESIGNATION

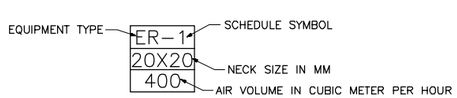

ER	EXHAUST AIR REGISTER
RR	RETURN AIR REGISTER
SR	SUPPLY AIR REGISTER
TA	TRANSFER AIR REGISTER/GRILLE

EQUIPMENT DESIGNATION

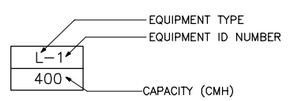

EQUIPMENT TAG (NON MOTORIZED)

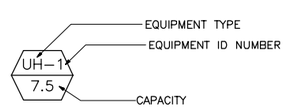

EQUIPMENT TAG (MOTORIZED)

ACU	AIR CONDITIONING UNIT (CAPACITY IN KW−COOLING)
EF	EXHAUST FAN
L	LOUVER
UH	UNIT HEATER (CAPACITY IN KW−HEATING)
RCU	REMOTE CONDENSING UNIT (CAPACITY IN KW−COOLING)
AHU	AIR HANDLING UNIT

UNLESS OTHERWISE NOTED, ALL DIMENSIONS SHOWN ARE IN MILLIMETERS.

THESE DRAWINGS ARE "NOT APPROVED FOR CONSTRUCTION" SINCE THESE ARE BASED UPON ASSUMED CONDITIONS. THE CONTRACTOR SHALL NOT PROCEED WITH CONSTRUCTION UNTIL THE ASSUMED CONDITIONS ARE VALIDATED AND APPROVAL IS RECEIVED FROM THE CONTRACTING OFFICER.

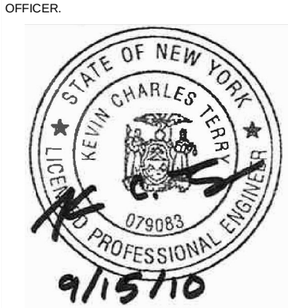

CORRECTED FINAL DESIGN SUBMITTAL

SYMB	DESCRIPTION	DATE	
0	CORRECTED FINAL DESIGN SUBMITTAL	09/15/10	KCT
B	FINAL DESIGN SUBMITTAL	09/02/10	KCT
A	MID−POINT DESIGN SUBMITTAL	08/13/10	KCT

APR

DESIGNED BY: SRZ	DATE: 09/15/10	
DRAWN BY: RRS	SUBMITTED BY: TETRA TECH	
CHECKED BY: KCT	FILE NO.: AF1082A−MH001GN	

US Army Corps of Engineers
Middle East District

TETRA TECH

AUSTERE STANDARD DESIGNS−PHASE 5
FY11 BARRACKS − PN74129−CLN04
KANDAHAR AIR BASE, AFGHANISTAN

MECHANICAL SYMBOLS, ABBREVIATIONS, LEGEND AND GENERAL NOTES

SHEET REFERENCE NUMBER:
AF1082A
M−001

W:\23308\127−23308−10010\CAD\SheetFiles\ASD04_KAND\05_Mechanical\AF1082A−MH001GN.dwg 10/14/2010 1:16:54 PM Barrett, Patrick

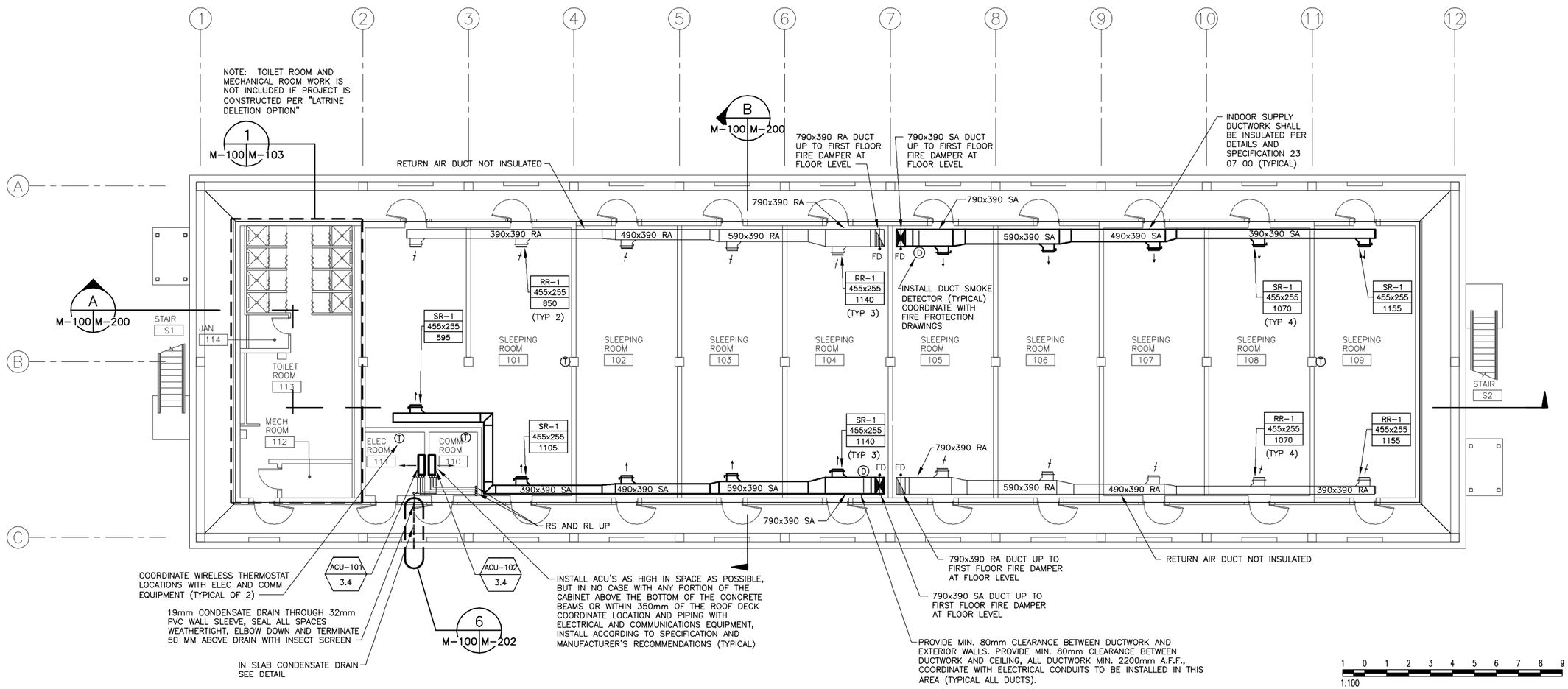

GROUND FLOOR PLAN
SCALE 1:100

UNLESS OTHERWISE NOTED, ALL DIMENSIONS SHOWN ARE IN MILLIMETERS.

THESE DRAWINGS ARE "NOT APPROVED FOR CONSTRUCTION" SINCE THESE ARE BASED UPON ASSUMED CONDITIONS. THE CONTRACTOR SHALL NOT PROCEED WITH CONSTRUCTION UNTIL THE ASSUMED CONDITIONS ARE VALIDATED AND APPROVAL IS RECEIVED FROM THE CONTRACTING OFFICER.

STATE OF NEW YORK · KEVIN CHARLES TERRY · 079083 · LICENSED PROFESSIONAL ENGINEER
9/15/10

CORRECTED FINAL DESIGN SUBMITTAL

SYMB	DESCRIPTION	DATE	APR
0	CORRECTED FINAL DESIGN SUBMITTAL	09/15/10	KCT
B	FINAL DESIGN SUBMITTAL	09/02/10	KCT
A	MID-POINT DESIGN SUBMITTAL	08/13/10	KCT

DESIGNED BY: SRZ
DRAWN BY: RRS
CHECKED BY: KCT
DATE: 09/15/10
SUBMITTED BY: TETRA TECH
FILE NO.: AF1082A-MH100PN

US Army Corps of Engineers Middle East District

TETRA TECH

AUSTERE STANDARD DESIGNS-PHASE 5
FY11 BARRACKS - PN74129-CLN04
KANDAHAR AIR BASE, AFGHANISTAN

GROUND FLOOR MECHANICAL PLAN

SHEET REFERENCE NUMBER:
AF1082A
M-100

W:\23308\127-23308-10010\CAD\SheetFiles\ASD04_KAND\05_Mechanical\AF1082A-MH100PN.dwg 10/14/2010 1:17:08 PM Barrett, Patrick

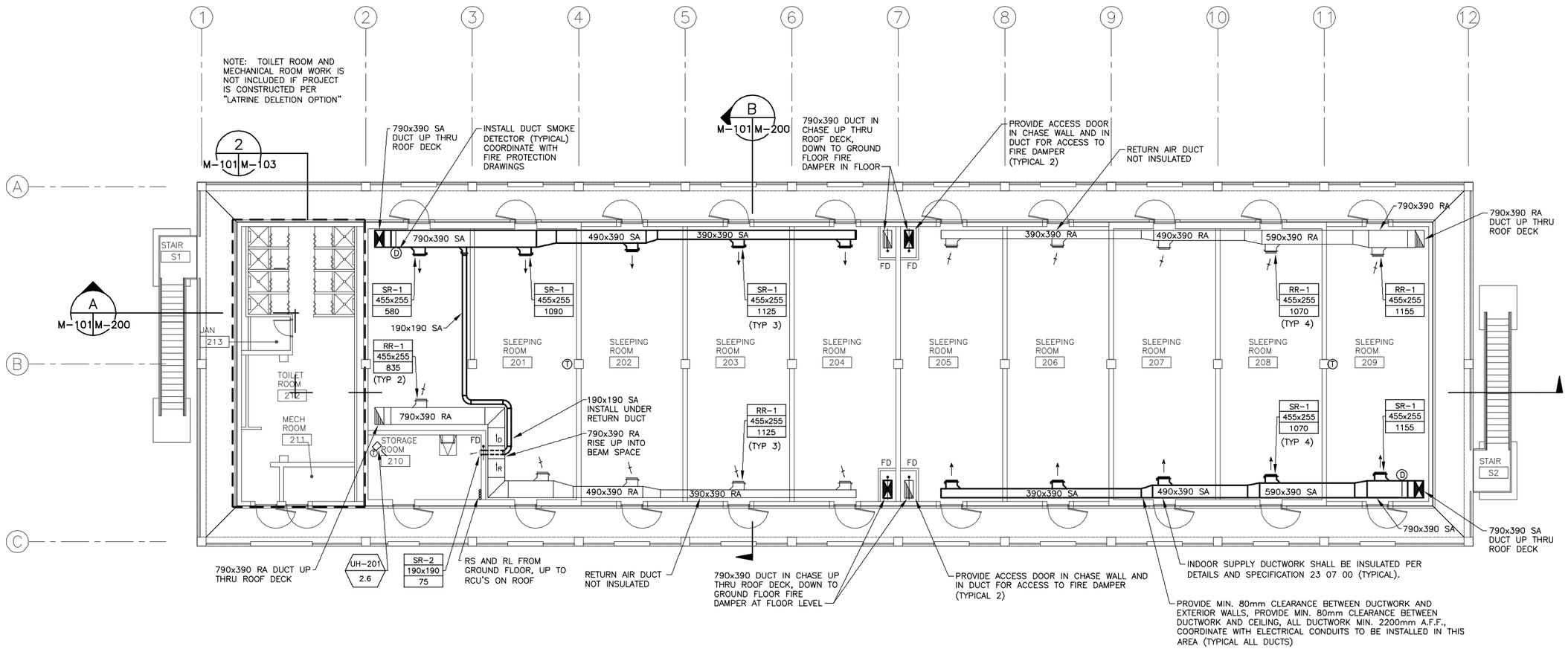

FIRST FLOOR PLAN
SCALE 1:100

1 0 1 2 3 4 5 6 7 8 9
1:100

UNLESS OTHERWISE NOTED, ALL DIMENSIONS SHOWN ARE IN MILLIMETERS.

THESE DRAWINGS ARE "NOT APPROVED FOR CONSTRUCTION" SINCE THESE ARE BASED UPON ASSUMED CONDITIONS. THE CONTRACTOR SHALL NOT PROCEED WITH CONSTRUCTION UNTIL THE ASSUMED CONDITIONS ARE VALIDATED AND APPROVAL IS RECEIVED FROM THE CONTRACTING OFFICER.

STATE OF NEW YORK
KEVIN CHARLES TERRY
079083
LICENSED PROFESSIONAL ENGINEER
9/15/10

CORRECTED FINAL DESIGN SUBMITTAL

SYMB	DESCRIPTION	DATE	
0	CORRECTED FINAL DESIGN SUBMITTAL	09/15/10	KCT
B	FINAL DESIGN SUBMITTAL	09/02/10	KCT
A	MID-POINT DESIGN SUBMITTAL	08/13/10	KCT

DESIGNED BY: SRZ
DATE: 09/15/10
DRAWN BY: RRS
SUBMITTED BY: TETRA TECH
CHECKED BY: KCT
FILE NO.: AF1082A-MH101PN

US Army Corps of Engineers Middle East District
TETRA TECH

AUSTERE STANDARD DESIGNS-PHASE 5
FY11 BARRACKS - PN74129-CLN04
KANDAHAR AIR BASE, AFGHANISTAN

FIRST FLOOR MECHANICAL PLAN

SHEET REFERENCE NUMBER:
AF1082A M-101

W:\23308\127-23308-10010\CAD\SheetFiles\ASD04_KAND\05_Mechanical\AF1082A-MH101PN.dwg 10/14/2010 1:17:18 PM Barrett, Patrick

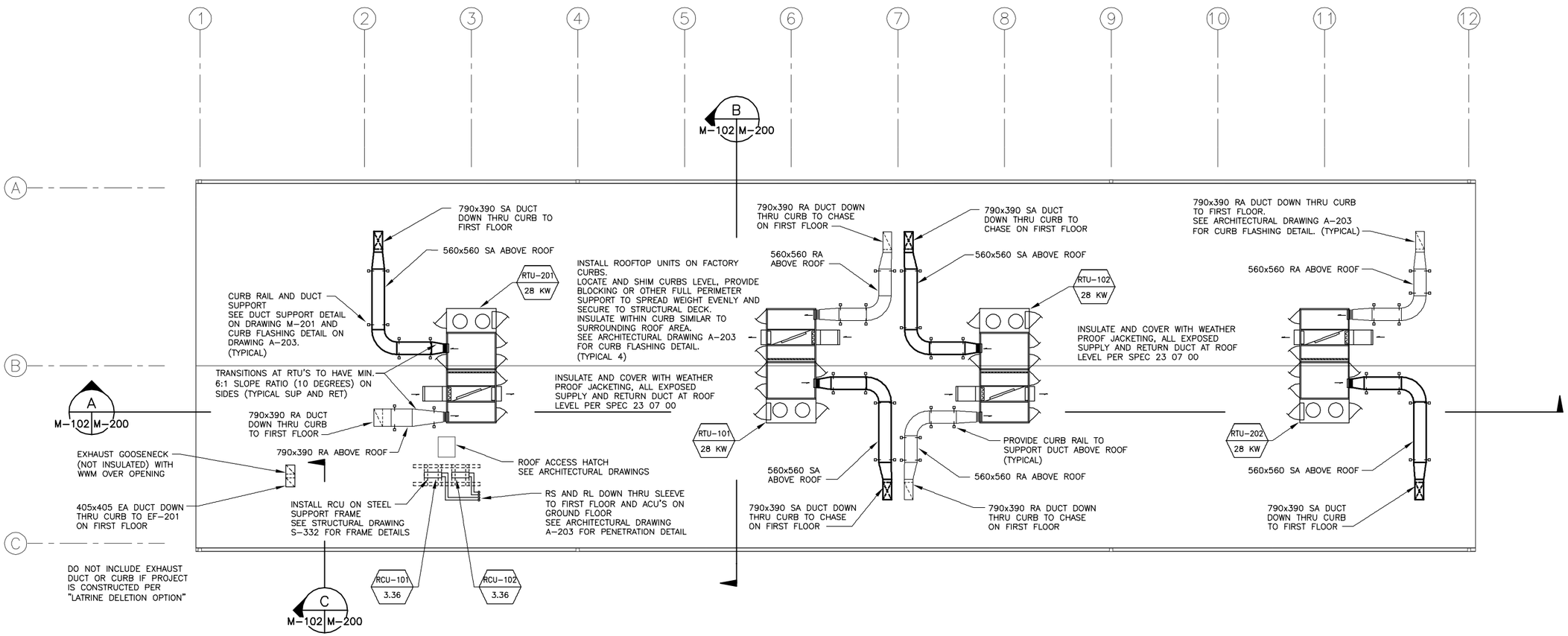

ROOF PLAN
SCALE 1:100

1:100

UNLESS OTHERWISE NOTED, ALL DIMENSIONS SHOWN ARE IN MILLIMETERS.

THESE DRAWINGS ARE "NOT APPROVED FOR CONSTRUCTION" SINCE THESE ARE BASED UPON ASSUMED CONDITIONS. THE CONTRACTOR SHALL NOT PROCEED WITH CONSTRUCTION UNTIL THE ASSUMED CONDITIONS ARE VALIDATED AND APPROVAL IS RECEIVED FROM THE CONTRACTING OFFICER.

STATE OF NEW YORK
KEVIN CHARLES TERRY
079083
LICENSED PROFESSIONAL ENGINEER
9/15/10

CORRECTED FINAL DESIGN SUBMITTAL

SYMB	DESCRIPTION	DATE		
0	CORRECTED FINAL DESIGN SUBMITTAL	09/15/10	KCT	
B	FINAL DESIGN SUBMITTAL	09/02/10	KCT	
A	MID-POINT DESIGN SUBMITTAL	08/13/10	KCT	APR

DESIGNED BY: SRZ
DATE: 09/15/10
DRAWN BY: RRS
SUBMITTED BY: TETRA TECH
CHECKED BY: KCT
FILE NO.: AF1082A-MH102PN

US Army Corps of Engineers
Middle East District

TETRA TECH

AUSTERE STANDARD DESIGNS-PHASE 5
FY11 BARRACKS - PN74129-CLN04
KANDAHAR AIR BASE, AFGHANISTAN

ROOF
MECHANICAL PLAN

SHEET REFERENCE NUMBER:
AF1082A
M-102

W:\23308\127-23308-10010\CAD\SheetFiles\ASD04_KAND\05_Mechanical\AF1082A-MH102PN.dwg 10/14/2010 1:17:27 PM Barrett, Patrick

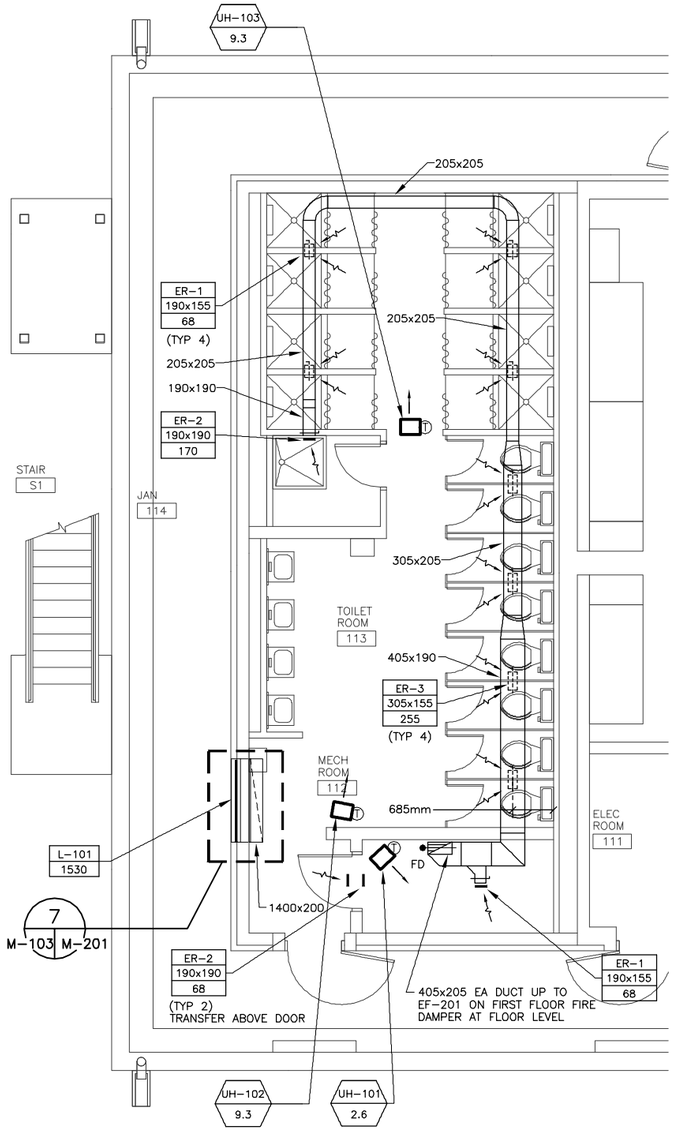

GROUND FLOOR LATRINE PLAN (1 / M-100 M-103)

SCALE 1:50

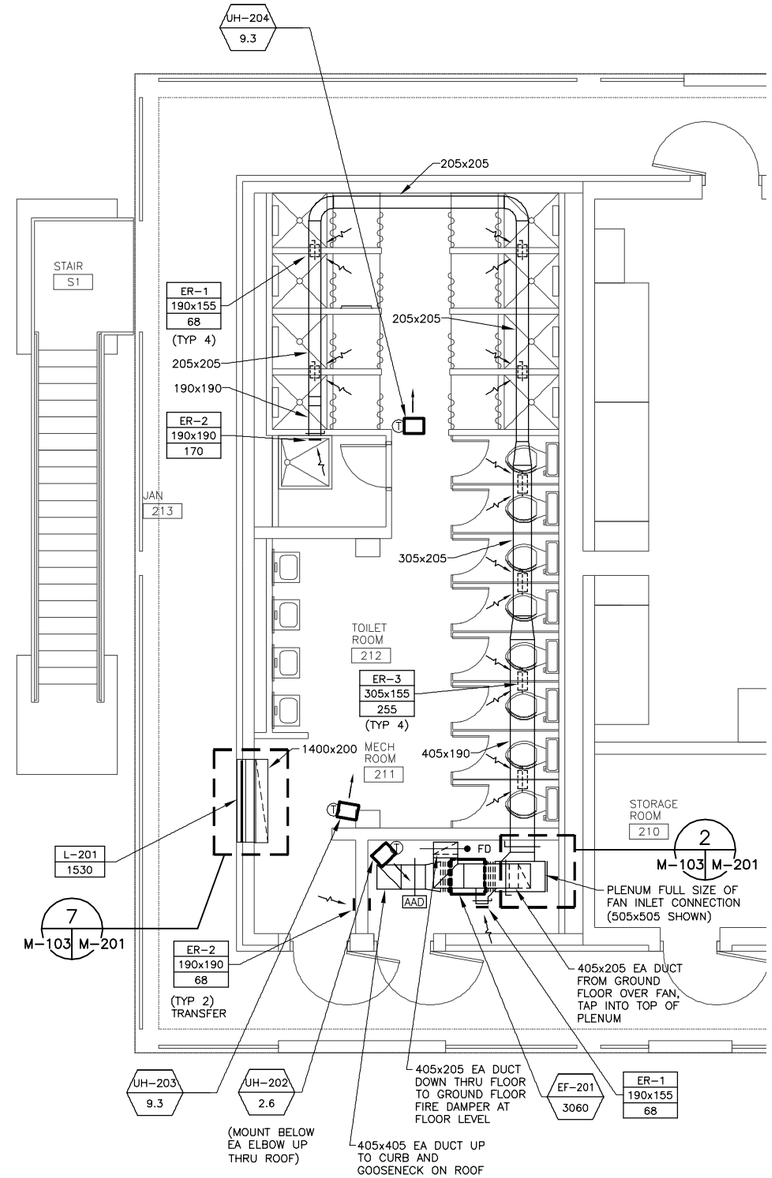

FIRST FLOOR LATRINE PLAN (2 / M-101 M-103)

SCALE 1:50

NOTE: ALL WORK SHOWN ON THIS DRAWING IS NOT INCLUDED IF PROJECT IS CONSTRUCTED PER "LATRINE DELETION OPTION"

UNLESS OTHERWISE NOTED, ALL DIMENSIONS SHOWN ARE IN MILLIMETERS.

CORRECTED FINAL DESIGN SUBMITTAL

SYMB	DESCRIPTION	DATE	APR
0	CORRECTED FINAL DESIGN SUBMITTAL	09/15/10	KCT
B	FINAL DESIGN SUBMITTAL	09/02/10	KCT
A	MID-POINT DESIGN SUBMITTAL	08/13/10	KCT

DESIGNED BY: SRZ
DATE: 09/15/10
DRAWN BY: RRS
SUBMITTED BY: TETRA TECH
CHECKED BY: KCT
FILE NO.: AF1082A-MH103LS

US Army Corps of Engineers
Middle East District

TETRA TECH

1 0 1 2 3 4
1:50

THESE DRAWINGS ARE "NOT APPROVED FOR CONSTRUCTION" SINCE THESE ARE BASED UPON ASSUMED CONDITIONS. THE CONTRACTOR SHALL NOT PROCEED WITH CONSTRUCTION UNTIL THE ASSUMED CONDITIONS ARE VALIDATED AND APPROVAL IS RECEIVED FROM THE CONTRACTING OFFICER.

STATE OF NEW YORK
KEVIN CHARLES TERRY
079083
LICENSED PROFESSIONAL ENGINEER
9/15/10

AUSTERE STANDARD DESIGNS-PHASE 5
FY11 BARRACKS - PN74129-CLN04
KANDAHAR AIR BASE, AFGHANISTAN

ENLARGED MECHANICAL PLANS
LATRINE AREA

SHEET REFERENCE NUMBER:
AF1082A
M-103

W:\23308\127-23308-10010\CAD\SheetFiles\ASD04_KAND\05_Mechanical\AF1082A-MH103LS.dwg 10/14/2010 1:17:38 PM Barrett, Patrick

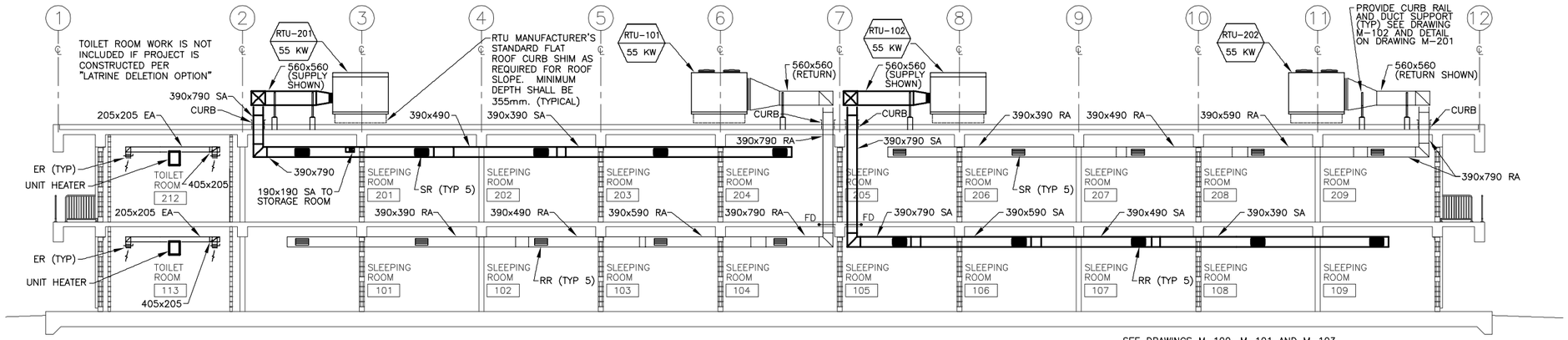

SEE DRAWINGS M-100, M-101 AND M-103 FOR EXACT REGISTER SIZES AND AIRFLOWS

SECTION A
SCALE 1:100 M-100,M-101,M-102 M-200

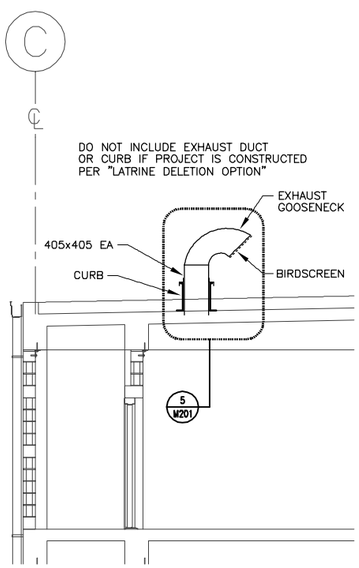

SECTION C
SCALE 1:50 M-102 M-200

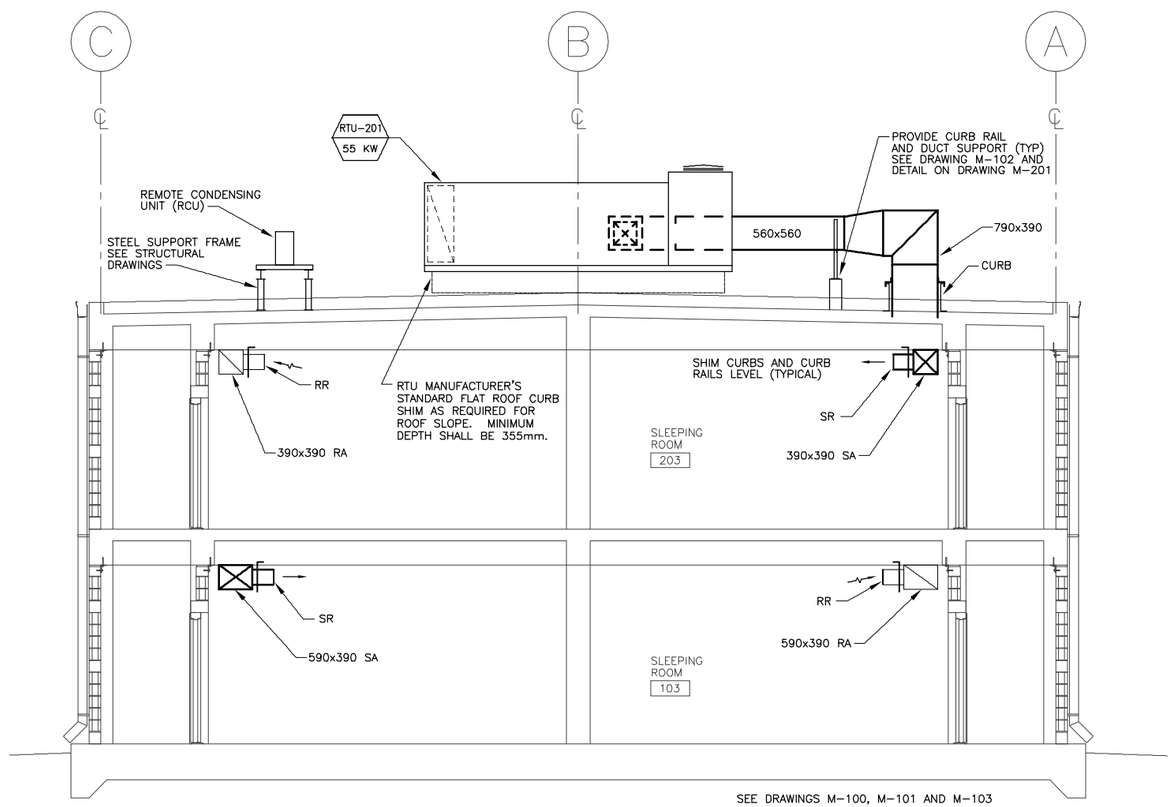

SEE DRAWINGS M-100, M-101 AND M-103 FOR EXACT REGISTER SIZES AND AIRFLOWS

SECTION B
SCALE 1:50 M-100,M-101,M-102 M-200

UNLESS OTHERWISE NOTED, ALL DIMENSIONS SHOWN ARE IN MILLIMETERS.

1:50 (1 0 1 2 3 4)

1:100 (1 0 1 2 3 4 5 6 7 8 9)

THESE DRAWINGS ARE "NOT APPROVED FOR CONSTRUCTION" SINCE THESE ARE BASED UPON ASSUMED CONDITIONS. THE CONTRACTOR SHALL NOT PROCEED WITH CONSTRUCTION UNTIL THE ASSUMED CONDITIONS ARE VALIDATED AND APPROVAL IS RECEIVED FROM THE CONTRACTING OFFICER.

STATE OF NEW YORK · KEVIN CHARLES TERRY · 079083 · LICENSED PROFESSIONAL ENGINEER

9/15/10

CORRECTED FINAL DESIGN SUBMITTAL

SYMB	DESCRIPTION	DATE	APR
0	CORRECTED FINAL DESIGN SUBMITTAL	09/15/10	KCT
B	FINAL DESIGN SUBMITTAL	09/02/10	KCT
A	MID-POINT DESIGN SUBMITTAL	08/13/10	KCT

DESIGNED BY: SRZ
DATE: 09/15/10
DRAWN BY: RRS
SUBMITTED BY: TETRA TECH
CHECKED BY: KCT
FILE NO.: AF1082A-MH200EL

US Army Corps of Engineers Middle East District

TETRA TECH

AUSTERE STANDARD DESIGNS-PHASE 5
FY11 BARRACKS - PN74129-CLN04
KANDAHAR AIR BASE, AFGHANISTAN

MECHANICAL SECTIONS AND ELEVATIONS

SHEET REFERENCE NUMBER:
AF1082A
M-200

W:\23308\127-23308-10010\CAD\SheetFiles\ASD04_KAND\05_Mechanical\AF1082A-MH200EL.dwg 10/14/2010 1:17:48 PM Barrett, Patrick

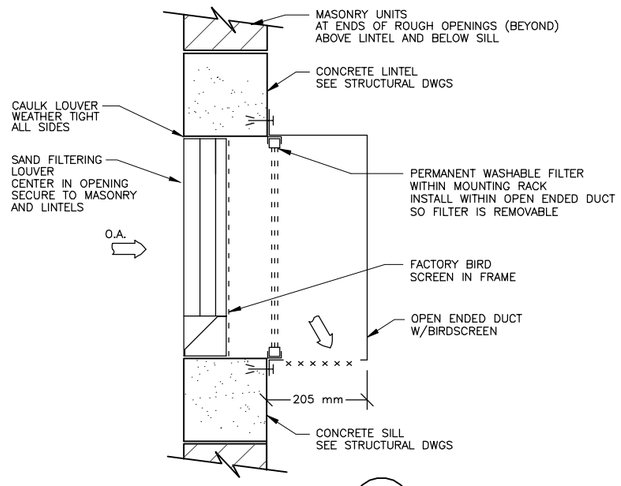

LOUVER DETAIL (7) M-103 | M-201
N.T.S.

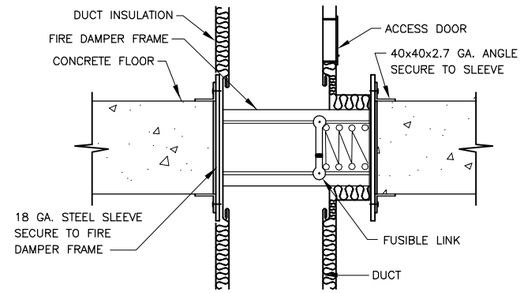

VERTICAL AIR FLOW FIRE DAMPER DETAIL (4) M-201 | M-201
N.T.S.

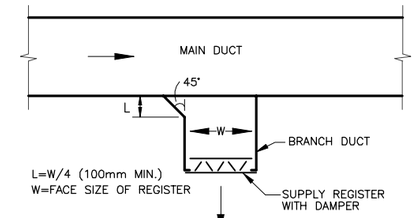

TYPICAL SUPPLY BRANCH CONNECTION (1) M-100,M-101,M-103 | M-201
N.T.S.

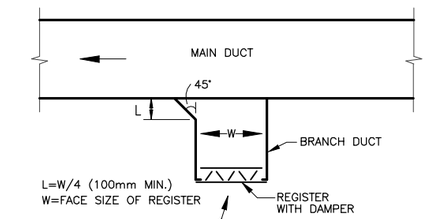

TYPICAL EXHAUST/RETURN BRANCH CONNECTION (2) M-100,M-101,M-103 | M-201
N.T.S.

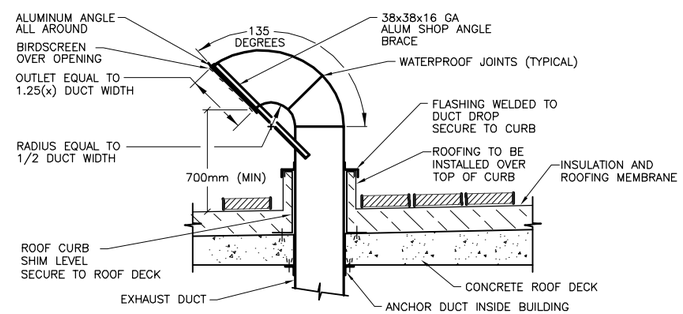

EXHAUST GOOSENECK (5) M-102,M-200 | M-201
N.T.S.

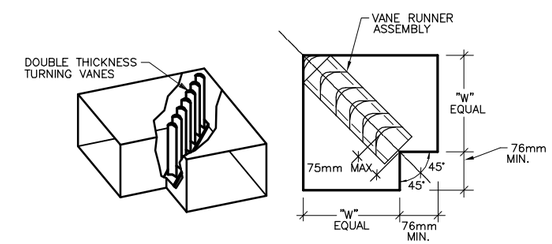

TYPICAL ELBOW DETAIL 90 DEGREE WITH VANES (3) M-201 | M-201
N.T.S.

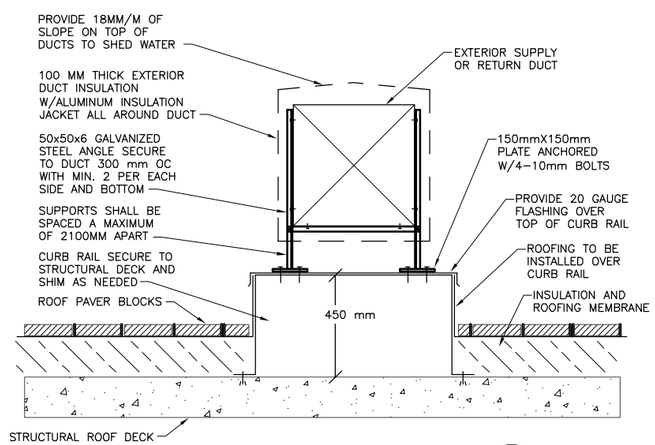

ROOF DUCT SUPPORT DETAIL (8) M-102 | M-201
N.T.S.

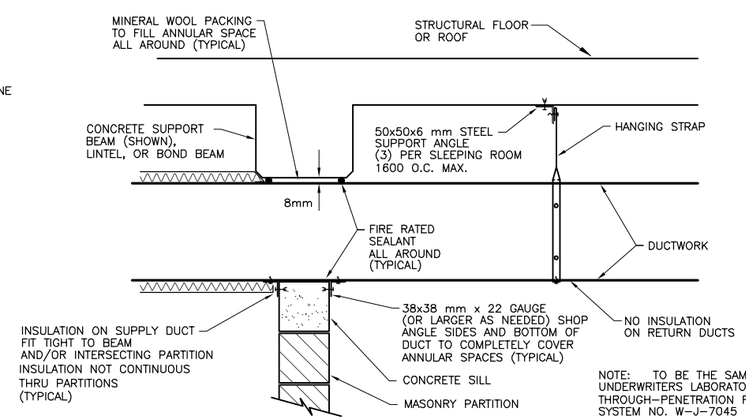

NOTE: TO BE THE SAME AS OR SIMILAR TO UNDERWRITERS LABORATORIES INC. THROUGH-PENETRATION FIRESTOPPING SYSTEM SYSTEM NO. W-J-7045

TYPICAL DUCT PENETRATION THROUGH PARTITIONS (6) A-100,A-101,M-100,M-101,M-103,M-200 | M-201
N.T.S.

UNLESS OTHERWISE NOTED, ALL DIMENSIONS SHOWN ARE IN MILLIMETERS.

THESE DRAWINGS ARE "NOT APPROVED FOR CONSTRUCTION" SINCE THESE ARE BASED UPON ASSUMED CONDITIONS. THE CONTRACTOR SHALL NOT PROCEED WITH CONSTRUCTION UNTIL THE ASSUMED CONDITIONS ARE VALIDATED AND APPROVAL IS RECEIVED FROM THE CONTRACTING OFFICER.

CORRECTED FINAL DESIGN SUBMITTAL

SYMB	DESCRIPTION	DATE	
0	CORRECTED FINAL DESIGN SUBMITTAL	09/15/10	KCT
B	FINAL DESIGN SUBMITTAL	09/02/10	KCT
A	MID-POINT DESIGN SUBMITTAL	08/13/10	KCT

DATE: 09/15/10
SUBMITTED BY: TETRA TECH
FILE NO.: AF1082A-MH201DT
DESIGNED BY: SRZ
DRAWN BY: RRS
CHECKED BY: KCT

US Army Corps of Engineers
Middle East District

TETRA TECH

AUSTERE STANDARD DESIGNS-PHASE 5
FY11 BARRACKS - PN74129-CLN04
KANDAHAR AIR BASE, AFGHANISTAN

MECHANICAL DETAILS
SHEET 1 OF 2

SHEET REFERENCE NUMBER:
AF1082A
M-201

W:\23308\127-23308-10010\CAD\SheetFiles\ASD04_KAND\05_Mechanical\AF1082A-MH201DT.dwg 10/14/2010 1:17:57 PM Barrett, Patrick

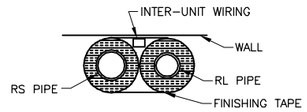

INTERIOR PIPING FOR SPLIT SYSTEM LINES

N.T.S. — 4 / M-100 | M-202

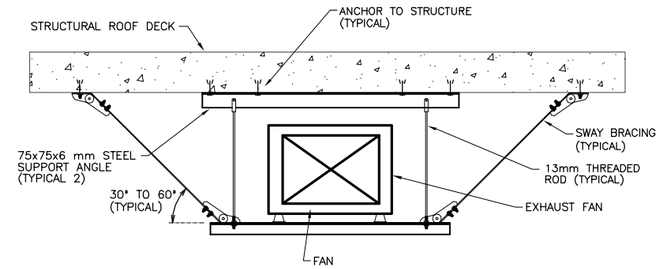

PROVIDE SEISMIC RESTRAINTS AS REQUIRED BY SPECIFICATION.

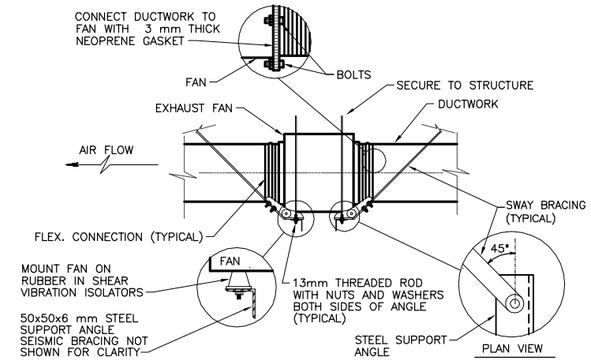

INLINE EXHAUST FAN DETAIL

N.T.S. — 1 / M-103 | M-202

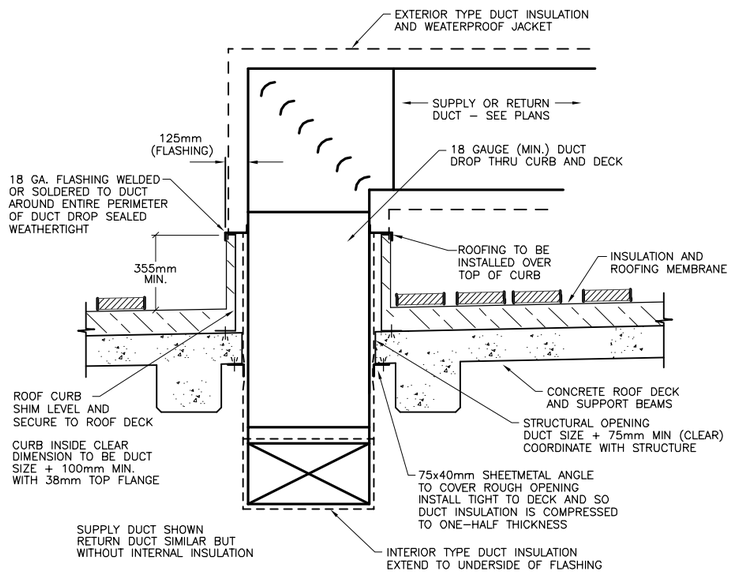

TYPICAL DUCT THRU ROOF DECK DETAIL

N.T.S. — 7 / M-102,M-200 | M-202

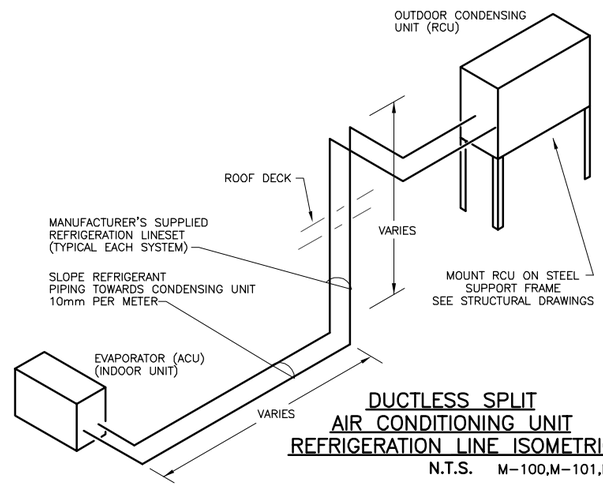

DUCTLESS SPLIT AIR CONDITIONING UNIT REFRIGERATION LINE ISOMETRIC

N.T.S. — 3 / M-100,M-101,M-102 | M-202

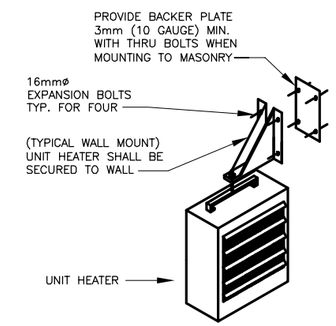

ELECTRIC UNIT HEATER DETAIL

N.T.S. — 2 / M-101,M-103 | M-202

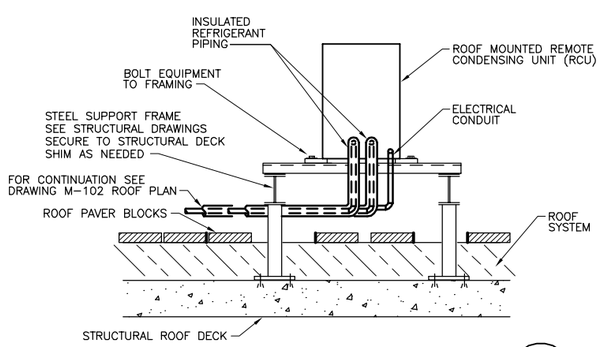

ROOF CONDENSER SUPPORT DETAIL

N.T.S. — 5 / M-102 | M-202

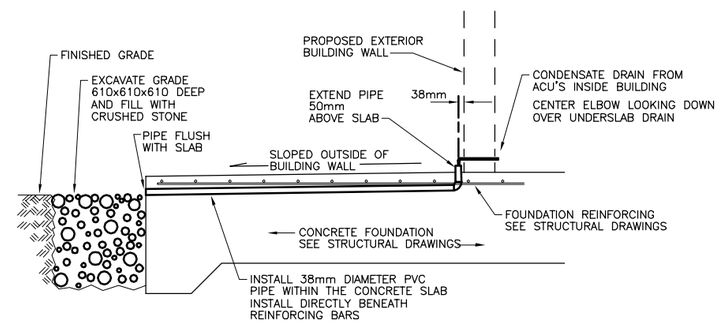

AIR CONDITIONING IN SLAB CONDENSATE DRAIN DETAIL

N.T.S. — 6 / M-100 | M-202

UNLESS OTHERWISE NOTED, ALL DIMENSIONS SHOWN ARE IN MILLIMETERS.

THESE DRAWINGS ARE "NOT APPROVED FOR CONSTRUCTION" SINCE THESE ARE BASED UPON ASSUMED CONDITIONS. THE CONTRACTOR SHALL NOT PROCEED WITH CONSTRUCTION UNTIL THE ASSUMED CONDITIONS ARE VALIDATED AND APPROVAL IS RECEIVED FROM THE CONTRACTING OFFICER.

STATE OF NEW YORK — KEVIN CHARLES TERRY — 079083 — LICENSED PROFESSIONAL ENGINEER

9/15/10

CORRECTED FINAL DESIGN SUBMITTAL

SYMB	DESCRIPTION	DATE	APR
0	CORRECTED FINAL DESIGN SUBMITTAL	09/15/10	KCT
B	FINAL DESIGN SUBMITTAL	09/02/10	KCT
A	MID-POINT DESIGN SUBMITTAL	08/13/10	KCT

DESIGNED BY: SRZ — DATE: 09/15/10
DRAWN BY: RRS — SUBMITTED BY: TETRA TECH
CHECKED BY: KCT — FILE NO.: AF1082A-MH2020T

US Army Corps of Engineers Middle East District

TETRA TECH

AUSTERE STANDARD DESIGNS-PHASE 5
FY11 BARRACKS – PN74129-CLN04
KANDAHAR AIR BASE, AFGHANISTAN

MECHANICAL DETAILS
SHEET 2 OF 2

SHEET REFERENCE NUMBER:
AF1082A
M-202

W:\23308\127-23308-10010\CAD\SheetFiles\ASD04_KAND\05_Mechanical\AF1082A-MH2020T.dwg 10/14/2010 1:18:05 PM Barrett, Patrick

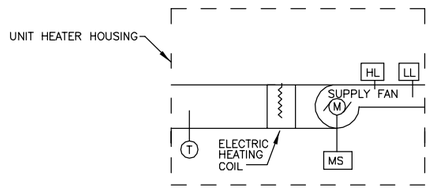

A. UH CONTROL

1. UNITS SHALL BE CONTROLLED WITH THE UNIT PROVIDED CONTROLS, SAFETIES, AND INTEGRAL THERMOSTATS.

ELECTRIC UNIT HEATER CONTROL SEQUENCE 3

N.T.S. M-101,M-103,M-200 | M-203

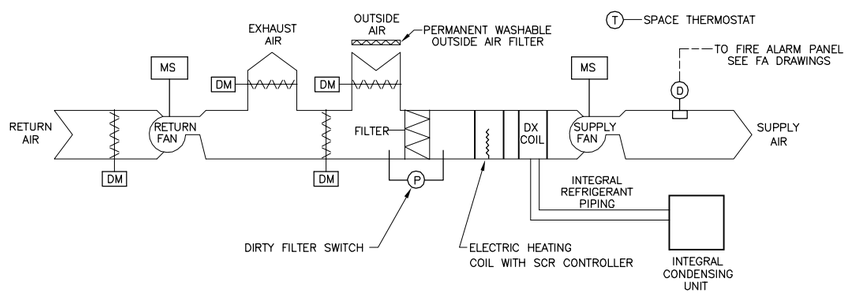

PACKAGED AIR HANDLING UNIT – ELECTRIC HEATING AND DX COOLING (SELF-CONTAINED UNIT SHOWN FOR CLARITY) – SEQUENCE OF OPERATIONS (STAND ALONE CONTROLS – SINGLE ZONE WITH MICROPROCESSOR ENABLED THERMOSTAT):

1. SEQUENCE OF OPERATIONS:

   a. SUPPLY FAN AND RETURN FAN SHALL RUN CONTINUOUSLY EXCEPT IN CASE OF ALARM.
   b. THE OUTSIDE AIR DAMPER SHALL OPEN TO THE POSITION REQUIRED TO MAINTAIN THE MINIMUM OUTSIDE AIR QUANTITY INDICATED.
   c. WHEN THE SPACE TEMPERATURE IS AT OR BELOW THE HEATING SETPOINT, THE ELECTRIC HEATING COIL SHALL BE ENERGIZED TO MAINTAIN SPACE HEATING SETPOINT SUBJECT TO DISCHARGE HIGH LIMIT OF 43°C (ADJUSTABLE) AND DISCHARGE LOW LIMIT OF 21°C (ADJUSTABLE).
   d. WHEN THE SPACE TEMPERATURE IS 1.7°C (ADJUSTABLE) ABOVE THE COOLING SETPOINT THE CONDENSING UNIT SHALL BE CYCLED TO MAINTAIN SPACE TEMPERATURE WITH THE ELECTRIC HEATING COIL DISABLED. USE 2.8°C (ADJUSTABLE) DEADBAND BETWEEN HEATING AND COOLING SETPOINTS.

2. SAFETIES

   a. WHEN DUCT SMOKE DETECTOR SENSES SMOKE, THE AHU SHALL BE DISABLED AND AN ALARM SHALL BE GENERATED.
   b. DIFFERENTIAL PRESSURE ACROSS THE AIR FILTERS SHALL GENERATE AN ALARM WHENEVER THE DIFFERENTIAL PRESSURE EXCEEDS IT'S ADJUSTABLE SETPOINT. THE UNIT SHALL CONTINUE TO OPERATE NORMALLY.

(NOTE: SMOKE DETECTORS ARE SHOWN FOR COORDINATION PURPOSES. REFER TO FIRE PROTECTION DRAWINGS AND SPECIFICATIONS FOR SPECIFIC REQUIREMENTS.)

RTU CONTROL SEQUENCE 4

N.T.S. M-100,M-101,M-102 | M-203

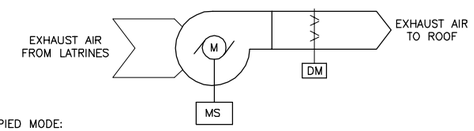

1. OCCUPIED MODE:

   a. ENABLE THE EXHAUST FAN TO RUN WHEN THE GROUND FLOOR, THE FIRST FLOOR, OR BOTH FLOOR'S LATRINE LIGHTS ARE ON. DISABLE THE EXHAUST FAN WHEN BOTH THE GROUND FLOOR AND FIRST FLOOR LIGHTS ARE OFF.
   b. WHEN THE EXHAUST FAN IS ENABLED THE DISCHARGE DAMPER SHALL BE OPEN

POWERED EXHAUST CONTROL SEQUENCE 1

N.T.S. M-103 | M-203

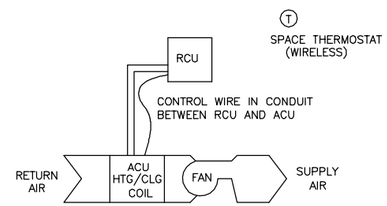

ACU CONTROL (DUCTLESS SPLIT SYSTEMS)

1. UNITS SHALL BE CONTROLLED WITH THE UNIT PROVIDED CONTROLS AND REMOTE WIRELESS THERMOSTATS.
2. PROVIDE 7 DAY PROGRAMMABLE CAPABILITY.

SPLIT SYSTEM CONTROL SEQUENCE 2

N.T.S. M-100,M-102 | M-203

TEMPERATURE CONTROLS SYMBOLS LIST

- MS MOTOR STARTER
- DM DAMPER MOTOR
- T THERMOSTAT
- D DUCT SMOKE DETECTOR
- HL HIGH LIMIT SENSOR
- LL LOW LIMIT SENSOR
- P DIFFERENTIAL PRESSURE SWITCH

FOR ENVIRONMENTAL DESIGN CONDITIONS AND TEMPERATURES SEE DRAWING M-001

THESE DRAWINGS ARE "NOT APPROVED FOR CONSTRUCTION" SINCE THESE ARE BASED UPON ASSUMED CONDITIONS. THE CONTRACTOR SHALL NOT PROCEED WITH CONSTRUCTION UNTIL THE ASSUMED CONDITIONS ARE VALIDATED AND APPROVAL IS RECEIVED FROM THE CONTRACTING OFFICER.

UNLESS OTHERWISE NOTED, ALL DIMENSIONS SHOWN ARE IN MILLIMETERS.

CORRECTED FINAL DESIGN SUBMITTAL

SYMB	DESCRIPTION	DATE	APR
0	CORRECTED FINAL DESIGN SUBMITTAL	09/15/10	KCT
B	FINAL DESIGN SUBMITTAL	09/02/10	KCT
A	MID-POINT DESIGN SUBMITTAL	08/13/10	KCT

DESIGNED BY: SRZ | DATE: 09/15/10
DRAWN BY: RRS | SUBMITTED BY: TETRA TECH
CHECKED BY: KCT | FILE NO.: AF1082A-MH203DI

US Army Corps of Engineers Middle East District

TETRA TECH

AUSTERE STANDARD DESIGNS–PHASE 5
FY11 BARRACKS – PN74129–CLN04
KANDAHAR AIR BASE, AFGHANISTAN

MECHANICAL CONTROL SCHEMATICS

SHEET REFERENCE NUMBER:
AF1082A
M-203

W:\23308\127-23308-10010\CAD\SheetFiles\ASD04_KAND\05_Mechanical\AF1082A-MH203DI.dwg 10/14/2010 1:18:16 PM Barrett, Patrick

FAN SCHEDULE – (EF)

DWG LABEL	SERVES	TYPE	MODEL NO.	M³/HR	FAN DATA SP (mm WG)	SONES	RPM	OPENING (SQ. M)	DRIVE	BHP	ELECTRICAL HP	V/PH/HZ	NOTES
EF–201	TOILET/SHOWER 113, 212	INLINE	BSQ–140–3	3060	12.7	8.9	1212	0.26	BELT	0.15	1/3	208/1/60	ALL

NOTES:
1. DESIGN BASIS: GREENHECK
2. FACTORY WIRED DISCONNECT
3. VIBRATION ISOLATORS
4. MOTOR GUARD
5. DO NOT INCLUDE IF PROJECT IS CONSTRUCTED PER "LATRINE DELETION OPTION"

PACKAGED AIR HANDLING UNIT W/DX COOLING SCHEDULE – (RTU)

DWG LABEL	UNIT LOCATION	SERVES	MODEL NO.	SUPPLY FAN SA M³/HR	MIN OA M³/HR	DISCH ARR	ESP (mm)	FAN RPM	ELECTRICAL BHP	HP	V/PH/HZ	RETURN FAN RA M³/HR	DISCH ARR	ESP (mm)	FAN RPM	ELECTRICAL BHP	HP	V/PH/HZ	MCA	MOP	NOTES
RTU–101	ROOF	FIRST FLR	PPHC8	5115	1223	SIDE	25	1396	2.3	3	208/3/60	5115	SIDE	25	846	1.2	2	208/3/60	108	175	ALL
RTU–102	ROOF	GROUND FLR	PPHC8	5435	1360	SIDE	25	1396	2.3	3	208/3/60	5435	SIDE	25	846	1.2	2	208/3/60	108	175	ALL
RTU–201	ROOF	FIRST FLR	PPHC8	5115	1223	SIDE	25	1396	2.3	3	208/3/60	5115	SIDE	25	846	1.2	2	208/3/60	108	175	ALL
RTU–202	ROOF	GROUND FLR	PPHC8	5435	1360	SIDE	25	1396	2.3	3	208/3/60	5435	SIDE	25	846	1.2	2	208/3/60	108	175	ALL

NOTES:
1. DESIGN BASIS: PETRA
2. PROVIDE WITH SINGLE POINT ELECTRICAL CONNECTION, INCLUDE FACTORY INSTALLED FUSED DISCONNECT SWITCH AND MOTOR STARTER.
3. PROVIDE WITH MANUFACTURER'S STANDARD FACTORY CURB.
4. SEE DRAWING M–001 FOR DESIGN CONDENSING TEMPERATURES.
5. PROVIDE WITH 50 mm WASHABLE PERMANENT FILTER AND RACK AT OUTSIDE AIR INTAKE.
6. PROVIDE WITH SAND ELIMINATION LOUVER AT OUTSIDE AIR INTAKE.
7. PROVIDE AIR FILTERS PER SPECIFICATION 23 00 00.
8. BOTTOM OF OUTSIDE AIR INTAKE 915mm ABOVE ROOF MINIMUM.

RTU COIL SCHEDULE

COIL LOCATION	HEATING DATA EAT (°C)	LAT (°C)	CAPACITY (KW)	APD (MM WG)	COOLING DATA REFRIG.	NO. ROWS	EDB (°C)	EWB (°C)	LDB (°C)	LWB (°C)	TC (KW)	SC (KW)	NOTES
RTU–101	12.2	28.3	28	9	407c	8	30	16.67	11.25	9.6	32.10	32.10	ALL
RTU–102	12.2	28.3	28	10	407c	8	30	16.67	12.17	10.0	32.5	32.5	ALL
RTU–201	12.2	28.3	28	9	407c	8	30	16.67	11.25	9.6	32.10	32.10	ALL
RTU–202	12.2	28.3	28	10	407c	8	30	16.67	12.17	10.0	32.5	32.5	ALL

NOTES:
1. DESIGN BASIS: PETRA
2. PROVIDE TWO STAGE ELECTRIC HEAT
3. PROVIDE WITH MANUFACTURER INSTALLED SAFETIES AND THERMAL OVERLOADS.
4. FIELD CHARGE REFRIGERANT CIRCUIT.
5. PROVIDE 2 STAGE COOLING CAPACITY WITH HOT GAS BYPASS ON LEAD STAGE.
6. 0 – 100 PERCENT SCR ELECTRIC HEAT.

LOUVER SCHEDULE – (L)

DWG LABEL	SERVES	TYPE	LENGTH (mm)	HEIGHT (mm)	DEPTH (mm)	FREE AREA (S.M.)	M³/HR	VELOCITY (MPM)	MAX APD (mm WG)	NOTES
L–101	LATRINE MAKE UP AIR – GROUND FLOOR	INTAKE	1390	590	150	0.21	1530	121	2.5	ALL
L–201	LATRINE MAKE UP AIR – FIRST FLOOR	INTAKE	1390	590	150	0.21	1530	121	2.5	ALL

NOTES:
1. DESIGN BASIS: GREENHECK FSL–401 SAND LOUVER – MATERIAL: STEEL.
2. PROVIDE WITH KYNAR (5 YEAR) FINISH.
3. PROVIDE WITH BIRDSCREEN IN REMOVABLE FRAME.
4. PROVIDE WITH 50mm WASHABLE ALUMINUM FILTER INCLUDING FILTER RACK.
5. DO NOT INCLUDE IF PROJECT IS CONSTRUCTED PER "LATRINE DELETION OPTION"

AIR CONDITIONING UNIT SCHEDULE – (ACU)

DWG LABEL	UNIT LOCATION	MODEL NO.	SA M³/HR	FAN SPEED	FACE DIMENSION (MM x MM)	UNIT DEPTH (MM)	HEATING (KW)	COOLING DATA LDB (°C)	LWB (°C)	AMB. (°C)	TC (KW)	ELECTRICAL FLA	V/PH/HZ	MCA	NOTES
ACU–101	ELECTRICAL ROOM	FTXS12DVJU	420	3	785 x 275	197	3.4	23	15.6	52	3.4	0.18	208/1/60	0.18	ALL
ACU–102	COMM ROOM	FTXS12DVJU	420	3	785 x 275	197	3.4	23	15.6	52	3.4	0.18	208/1/60	0.18	ALL

NOTES:
1. DESIGN BASIS: DAIKIN
2. PROVIDE REMOTE WIRELESS THERMOSTAT AND HOLDER WITH UNIT AND MOUNT ON WALLS.

REMOTE CONDENSING UNIT SCHEDULE – (RCU)

DWG LABEL	SERVES	MODEL NO.	REFRIG.	SUCTION SIZE (MIN)	LIQUID SIZE (MIN)	NOMINAL HEATING/COOLING CAPACITY (KW)	OUTDOOR COMPRESSORS NO.	TYPE	CONDENSER FANS NO.	DRIVE TYPE	ELECTRICAL V/PH/HZ	MOP	MCA	NOTES
RCU–101	ACU–101	RXS12DVJU	R–410A	10	6	3.4/3.4	1	SCROLL	1	DIRECT	208/1/60	15	7.9	ALL
RCU–102	ACU–102	RXS12DVJU	R–410A	10	6	3.4/3.4	1	SCROLL	1	DIRECT	208/1/60	15	7.9	ALL

NOTES:
1. DESIGN BASIS: DAIKIN
2. PROVIDE BRAZED TUBING REFRIGERANT LINE SETS, COUPLINGS AND ACCESSORIES.
3. PROVIDE FOR LOW AMBIENT OPERATION TO –18°C.
4. FIELD CHARGE SYSTEM WITH REFRIGERANT.
5. VERIFY LINE SIZES WITH MANUFACTURER, PROVIDE AS REQUIRED TO CERTIFY PERFORMANCE.
6. PROVIDE RATED CAPACITIES AT 52°C (125°F) CONDENSING AMBIENT CONDITION.

REGISTER SCHEDULE (ER, RR, SR)

TAG	MODEL	TYPE	MOUNT	NECK SIZE	FACE SIZE	M³/HR MAX	NC (MAX)	MATERIAL	NOTES
SR–1	T54	SUPPLY	SURFACE	510x255	560x305	1200	25	STEEL	1,2,3,4
SR–2	T54	SUPPLY	SURFACE	190x190	240x240	400	30	STEEL	1,2,3,4
RR–1	T70	RETURN	SURFACE	510x255	560x305	1200	25	STEEL	1,2,3,4
ER–1	A75D	EXHAUST	SURFACE	190x155	240x205	100	30	ALUMINUM	1,2,3,4,5
ER–2	A75D	EXHAUST/TRANSFER	SURFACE	190x190	240x240	200	30	ALUMINUM	1,2,3,4.5
ER–3	A75D	EXHAUST	SURFACE	305x155	355x205	300	30	ALUMINUM	1,2,3,4.5

NOTES:
1. DESIGN BASIS: TUTTLE AND BAILEY.
2. PROVIDE WITH FACTORY WHITE FINISH.
3. PROVIDE WITH OPPOSED BLADE DAMPER.
4. SEE PLAN VIEWS FOR INDIVIDUAL DEVICE AIRFLOWS.
5. DO NOT INCLUDE IF PROJECT IS CONSTRUCTED PER "LATRINE DELEITON OPTION".

UNIT HEATER SCHEDULE – (UH)

DWG LABEL	UNIT LOCATION	MODEL NO.	TYPE	ELECTRIC HEAT (KW)	TEMP RISE (C)	AIRFLOW M³/HR	ELECTRICAL V/PH/HZ	FLA	NOTES
UH–201	STORAGE RM 210 FIRST FLOOR	HVH–02	FAN	2.6	11.6	697	208/1/60	11.4	1,2,3,4,5
UH–101	MECH ROOM 112 GND FLOOR	HVH–04	FAN	2.6	11.6	697	208/1/60	11.4	ALL
UH–102	TOILET ROOM 113 GND FLOOR	HVH–12	FAN	9.3	20.0	1444	208/3/60	26.3	ALL
UH–103	TOILET ROOM 113 GND FLOOR	HVH–12	FAN	9.3	20.0	1444	208/3/60	26.3	ALL
UH–202	MECH ROOM 211 FIRST FLOOR	HVH–04	FAN	2.6	11.6	697	208/1/60	11.4	ALL
UH–203	TOILET ROOM 212 FIRST FLOOR	HVH–12	FAN	9.3	20.0	1444	208/3/60	26.3	ALL
UH–204	TOILET ROOM 212 FIRST FLOOR	HVH–12	FAN	9.3	20.0	1444	208/3/60	26.3	ALL

NOTES:
1. DESIGN BASIS: CHROMALOX.
2. PROVIDE WITH DISCONNECT SWITCH AND SAFETIES.
3. PROVIDE WITH INTEGRAL THERMOSTAT SET TO MAINTAIN SPECIFIED CONDITIONS.
4. PROVIDE WITH MANUFACTURER'S OPTIONAL WALL SWIVEL MOUNTING BRACKET.
5. MOUNTING HEIGHT IS AT ELEVATION AS HIGH AS POSSIBLE WITHIN INTERIOR SPACE. MINIMUM OF 2200 MM ABOVE FINISHED FLOOR.
6. DO NOT INCLUDE IF PROJECT IS CONSTRUCTED PER "LATRINE DELETION OPTION"

UNLESS OTHERWISE NOTED, ALL DIMENSIONS SHOWN ARE IN MILLIMETERS.

THESE DRAWINGS ARE "NOT APPROVED FOR CONSTRUCTION" SINCE THESE ARE BASED UPON ASSUMED CONDITIONS. THE CONTRACTOR SHALL NOT PROCEED WITH CONSTRUCTION UNTIL THE ASSUMED CONDITIONS ARE VALIDATED AND APPROVAL IS RECEIVED FROM THE CONTRACTING OFFICER.

STATE OF NEW YORK · KEVIN CHARLES TERRY · 079083 · LICENSED PROFESSIONAL ENGINEER
9/15/10

CORRECTED FINAL DESIGN SUBMITTAL

SYMB	DESCRIPTION	DATE		
0	CORRECTED FINAL DESIGN SUBMITTAL	09/15/10	KCT	
B	FINAL DESIGN SUBMITTAL	09/02/10	KCT	
A	MID–POINT DESIGN SUBMITTAL	08/13/10	KCT	APR

DESIGNED BY: SRZ
DATE: 09/15/10
DRAWN BY: RRS
SUBMITTED BY: TETRA TECH
CHECKED BY: KCT
FILE NO.: AF1082A–MH2045C

US Army Corps of Engineers
Middle East District

TETRA TECH

AUSTERE STANDARD DESIGNS–PHASE 5
FY11 BARRACKS – PN74129–CLN04
KANDAHAR AIR BASE, AFGHANISTAN

MECHANICAL SCHEDULES

SHEET REFERENCE NUMBER:
AF1082A
M–204

W:\23308\127–23308–10010\CAD\SheetFiles\ASD04_KAND\05_Mechanical\AF1082A–MH2045C.dwg 10/14/2010 1:18:25 PM Barrett, Patrick

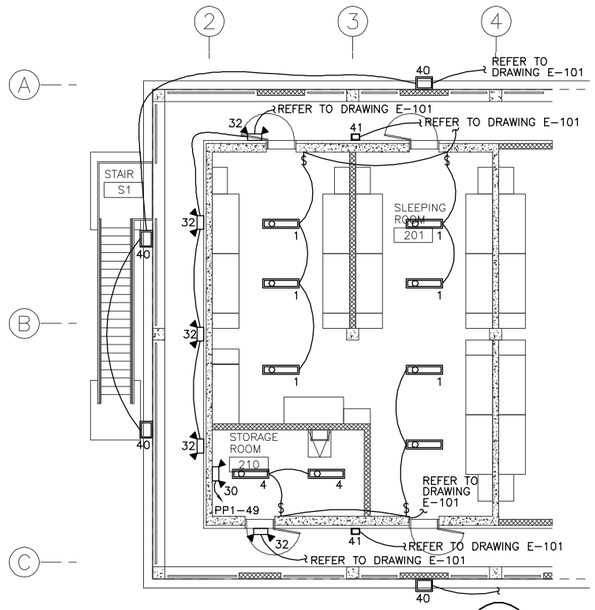

FIRST FLOOR PLAN – LIGHTING 3
SCALE = 1:100 OE-001 OE-001

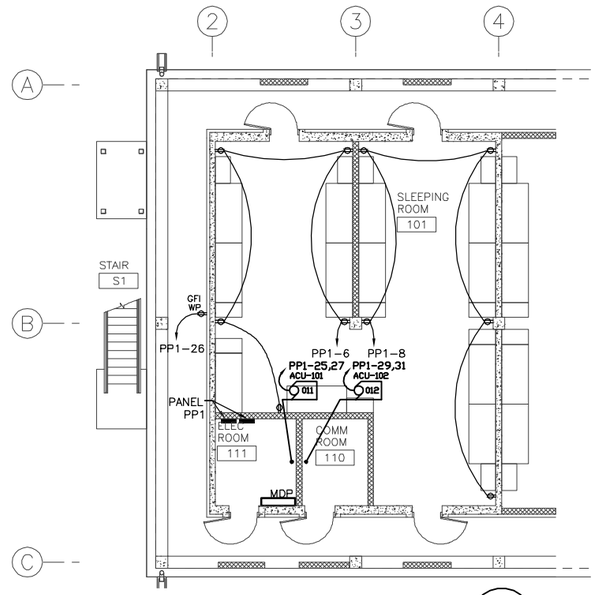

GROUND FLOOR PLAN – POWER 2
SCALE = 1:100 OE-001 OE-001

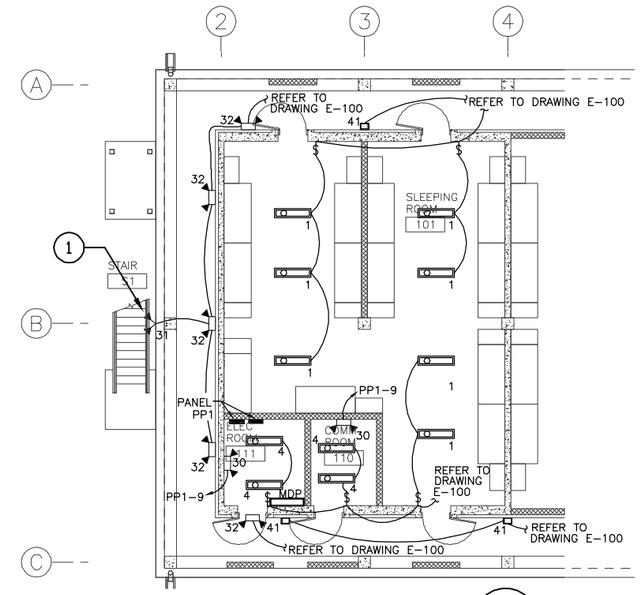

GROUND FLOOR PLAN – LIGHTING 1
SCALE = 1:100 OE-001 OE-001

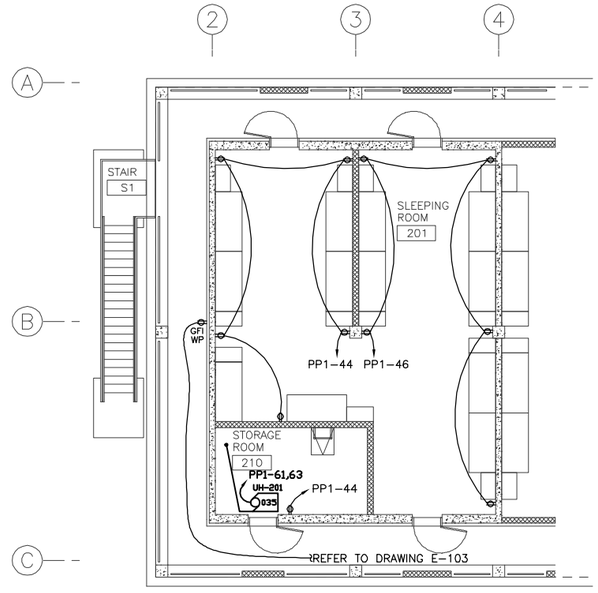

FIRST FLOOR PLAN – POWER 4
SCALE = 1:100 OE-001 OE-001

1 (2)-4mm² IN 20mm CONDUIT (DC) TYPICAL FOR ALL REMOTE HEADS.

1:100

THESE DRAWINGS ARE "NOT APPROVED FOR CONSTRUCTION" SINCE THESE ARE BASED UPON ASSUMED CONDITIONS. THE CONTRACTOR SHALL NOT PROCEED WITH CONSTRUCTION UNTIL THE ASSUMED CONDITIONS ARE VALIDATED AND APPROVAL IS RECEIVED FROM THE CONTRACTING OFFICER.

STATE OF NEW YORK
KEVIN CHARLES TERRY
079083
LICENSED PROFESSIONAL ENGINEER
9/15/10

UNLESS OTHERWISE NOTED, ALL DIMENSIONS SHOWN ARE IN MILLIMETERS.

CORRECTED FINAL DESIGN SUBMITTAL

SYMB	DESCRIPTION	DATE	APR
0	CORRECTED FINAL DESIGN SUBMITTAL	09/15/10	KCT
B	FINAL DESIGN SUBMITTAL	09/02/10	KCT
A	MID-POINT DESIGN SUBMITTAL	08/13/10	KCT

DESIGNED BY: JAS
DATE: 09/15/10
DRAWN BY: SES
SUBMITTED BY: TETRA TECH
CHECKED BY: KCT
FILE NO.: AF1082A-OEL001PN

US Army Corps of Engineers
Middle East District

TETRA TECH

AUSTERE STANDARD DESIGNS–PHASE 5
FY11 BARRACKS – PN74129–CLN04
KANDAHAR AIR BASE, AFGHANISTAN

GROUND FLOOR AND FIRST FLOOR LIGHTING AND POWER PLANS

SHEET REFERENCE NUMBER:
AF1082A
OE–001

W:\23308\127-23308-10010\CAD\SheetFiles\ASD04_KAND\11_LatOption\AF1082A-OEL001PN.dwg 10/14/2010 2:13:00 PM Barrett, Patrick

LEGEND

- BALL VALVE
- BUTTERFLY VALVE
- GATE VALVE
- SOLENOID VALVE
- EMERGENCY VALVE
- CHECK VALVE
- CIRC PUMP
- D.V. DRAIN VALVE
- UNION
- CAPPED / PLUGGED CONNECTION
- REDUCER – INCREASER
- PIPE TURNING DOWN
- PIPE TURNING DOWN WITH SHUT–OFF
- PIPE TURNING UP
- SUPPORT LOCATION
- HOSE BIBB

DETAIL TITLE

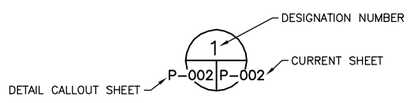

DETAIL CALLOUT

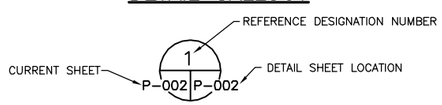

GENERAL NOTES:

1. ALL DIMENSIONS HERE ON PLANS ARE IN mm UNLESS OTHERWISE INDICATED.
2. REFER TO CIVIL DRAWINGS FOR DOMESTIC WATER SUPPLY
3. FOR FLOOR/ WALL PENETRATION DETAILS, REFER TO "A" DRAWINGS.
4. INTERIOR SOIL AND WASTE PIPING 80mm AND SMALLER SHALL BE ROUTED WITH A 2% SLOPE. INTERIOR SOIL AND WASTE PIPING 100mm AND LARGER SHALL BE ROUTED WITH A MINIMUM 1% SLOPE.
5. MINIMUM BURIED PIPE SIZE SHALL BE 50 mm.
6. MANUFACTURER BRAND NAMES AND MODEL NUMBERS GIVEN ON PLANS ARE FOR INFORMATION PURPOSES ONLY. THESE AND SIMILAR PRODUCTS FROM OTHER MANUFACTURERS THAT MEET THE SPECIFICATIONS WILL BE APPROVED AS AN ACCEPTABLE ALTERNATIVE.

- SOIL OR WASTE PIPE ABOVE FLOOR
- SOIL OR WASTE PIPE BELOW FLOOR (MIN. 50mm SIZE)
- COLD WATER, DOMESTIC (PLAN)
- HOT WATER, DOMESTIC (PLAN)
- VENT PIPE

ABBREVIATIONS

AAV	AUTOMATIC AIR VENT
AFF	ABOVE FINISHED FLOOR
ALUM	ALUMINUM
AP	ACCESS PANEL
°C	DEGREES CELSIUS
CA	COMPRESSED AIR
CKT	CIRCUIT
CLG	CEILING
CM	CENTIMETER
CO	CLEAN OUT
CONN	CONNECTION
CONT	CONTINUATION
COWP	CLEAN OUT WALL PLATE
CSK	COUNTERSUNK
CW	COLD WATER
D	DROP/DEPTH
DET	DETAIL
DIA	DIAMETER
DIFF	DIFFERENTIAL
DN	DOWN
DWG	DRAWING
EL	ELEVATION
ELEC	ELECTRICITY/ELECTRICAL
EM SHR	EMERGENCY SHOWER
EQ	EQUAL
EQUIP	EQUIPMENT
EWH	ELECTRIC WATER HEATER
EXT	EXTERNAL/EXTERIOR
°F	DEGREES FAHRENHEIT
FCO	FLOOR CLEAN OUT
FCV	FLOW CONTROL VALVE
FD	FLOOR DRAIN
FFE	FINISHED FLOOR ELEVATION
FIN	FINISH
FLR	FLOOR
FS	FLOOR SINK
FTD	FLOOR TRENCH DRAIN
GA	GAUGE
GAL	GALLON
GPH	GALLONS PER HOUR
HORIZ	HORIZONTAL
HP	HORSEPOWER
HR	HOUR
HTR	HEATER
HU	HUMIDIFIER
HW	HOT WATER
HWR	HOT WATER RETURN
HZ	HERTZ
ID	INSIDE DIAMETER
IN	INCH
INT	INTERIOR
INV EL	INVERT ELEVATION
KG	KILOGRAM
KW	KILOWATT
KPa	KILO PASCALS
L	LITER
LAV	LAVATORY
LPM	LITERS PER MINUTE
LPH	LITERS PER HOUR
LS	LEVEL SWITCH
LVG	LEAVING
M_3	METER
M^2	SQUARE METER
M^3	CUBIC METER
MAX	MAXIMUM
MECH	MECHANICAL
MIN	MINIMUM
MISC	MISCELLANEOUS
MM	MILLIMETER
MS	MOP SINK
NC	NORMALLY CLOSED
NFPA	NATIONAL FIRE PROTECTION ASSOCIATION
NO	NORMALLY OPEN/NUMBER
NOM	NOMINAL
NST	NATIONAL STANDARD THREAD
NTS	NOT TO SCALE
OC	ON CENTER
OD	OVERFLOW DRAIN
Ø	PHASE
PD	PRESSURE DIFFERENTIAL
PRESS	PRESSURE
PRV	PRESSURE REDUCING VALVE
QTY	QUANTITY
R	RISE
RD	ROOF DRAIN
REQ'D	REQUIRED
RM	ROOM
S	SOIL/SOUTH/SECOND
SAN	SANITARY
SH	SHEET
SOV	SHUT–OFF VALVE
SP	STATIC PRESSURE
SQ M	SQUARE METER
SS	STAINLESS STEEL
TCV	TEMPERATURE CONTROL VALVE
TEMP	TEMPERATURE
THRU	THROUGH
TK	TANK
TMV	THERMOSTATIC MIXING VALVE
TYP	TYPICAL
UL	UNDERWRITER'S LABORATORIES
UR	URINAL
V	VENT
VEL	VELOCITY
VTR	VENT THROUGH ROOF
W/	WITH
WF	WALL FAUCET
W	WASTE
WCO	WALL CLEAN OUT
WG	WATER GAGE
WH	WALL HYDRANT
WC	WATER CLOSET

MATERIAL SPECIFICATIONS

SANITARY SEWER AND VENT: SCHEDULE 40 POLYVINYL CHLORIDE (PVC) CONFORMING TO ASTM D 2665. JOINTS SHALL BE MADE USING SOLVENT CEMENTS MEETING THE REQUIREMENTS OF ASTM D 2564.

DOMESTIC WATER PIPING: ASTM D 2846, USING ASTM F441 SCHEDULE 80 CHLORINATED POLYVINYL CHLORIDE (CPVC) PIPE. JOINTS SHALL BE MADE USING SOLVENT CEMENTS MEETING THE REQUIREMENTS OF ASTM F493. DOMESTIC WATER DISTRIBUTION SYSTEM SHALL BE INSULATED WITH CELLULAR GLASS OR FLEXIBLE ELASTOMERIC CELLULAR INSULATION AND INSULATED FITTING COVERS.

PLUMBING FIXTURES: WATER CLOSETS AND LAVATORIES SHALL BE COMMERCIAL GRADE FIXTURES MADE FROM VITREOUS CHINA. THE WATER CLOSETS SHALL BE FLOOR MOUNTED, ELONGATED BOWL, TANK TYPE DESIGN. LAVATORIES SHALL BE WALL HUNG AND SHALL INCLUDE CAST BRASS, SINGLE LEVER MIXING TYPE FAUCET.

THE MOP SINK SHALL BE COMMERCIAL GRADE MOLDED STONE MATERIAL WITH A COMMERCIAL CAST BRASS FAUCET.

SHOWER: FOUR PIECE SOLID ACRYLIC PRESSURE MOLDED FIBERGLASS REINFORCED PLASTIC STALL WITH SHOWER HEAD, CONTROLS AND SHOWER BASE FLOOR DRAIN.

PLUMBING FIXTURE SCHEDULE

SYMBOL	FIXTURE NAME	CW (mm)	HW (mm)	WASTE (mm)	VENT (mm)	REMARKS
	WESTERN WATER CLOSET (FLUSH TANK)	15	--	100	50	ELONGATED BOWL, FLOOR MOUNTED FLUSH TANK
	LAVATORY	15	15	50	32	
	MOP SINK FLOOR MOUNT (JANITOR'S TYPE)	20	20	75	50	FLOOR MOUNT JANITOR TYPE
	FLOOR DRAIN	--	--	VARIES	50	
	SHOWER	15	15	VARIES	VARIES	

PLUMBING FIXTURES REQUIRED

OCCUPANCY	WATER CLOSETS	SHOWERS	LAVATORIES
152 SOLDIERS	1 PER 10	1 PER 10	1 PER 20

ELECTRIC WATER HEATER SCHEDULE

DESIGNATION	NO. REQUIRED	MANUFACTURER AND MODEL NUMBER	RECOVERY RATE (LPH)/(GPH)	TEMPERATURE RISE (°C)/(°F)	ELECTRIC LOAD (K.W.)	VOLTS	PHASE	HERTZ	DIMENSIONS DIA (mm)/(in.)	DIMENSIONS HEIGHT(mm)/(in.)	CAPACITY (LITERS/GAL)	DRAWING NO.
EWH	4	AO SMITH DVE–80–18	280/74	37/100	9	208	3	60	641/25 1/4	1511/59 1/2	302/80	P–104

NOTE: FOR EACH PAIR OF HEATERS: PROVIDE ONE EXPANSION TANK WITH A TOTAL VOLUME 24 LITERS (6.4GAL) WITH A MAX ACCEPTANCE VOLUME OF 12L (3.2GAL) SIMILAR TO AMTROL ST–12–C OR APPROVED EQUAL.

THERMOSTATIC MIXING VALVE: SELF ACTUATING, BRONZE BODY, SELF ALIGNING, CHECKSTOPS, MINIMUM FLOW RATE 4 LPM TO ASSE 1017 STANDARD FLOWING 102 LPM AT 69 KPa PRESSURE DROP. SIMILAR TO POWERS SH1432 OR APPROVED EQUAL.

UNLESS OTHERWISE NOTED, ALL DIMENSIONS SHOWN ARE IN MILLIMETERS.

THESE DRAWINGS ARE "NOT APPROVED FOR CONSTRUCTION" SINCE THESE ARE BASED UPON ASSUMED CONDITIONS. THE CONTRACTOR SHALL NOT PROCEED WITH CONSTRUCTION UNTIL THE ASSUMED CONDITIONS ARE VALIDATED AND APPROVAL IS RECEIVED FROM THE CONTRACTING OFFICER.

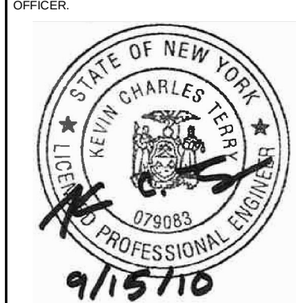

CORRECTED FINAL DESIGN SUBMITTAL

SYMB	DESCRIPTION	DATE			
O	CORRECTED FINAL DESIGN SUBMITTAL	09/15/10	KCT		
B	FINAL DESIGN SUBMITTAL	09/02/10	KCT		
A	MID–POINT DESIGN SUBMITTAL	08/13/10	KCT		

DATE: 09/15/10
SUBMITTED BY: TETRA TECH
FILE NO.: AF1082A–PL001GN
DESIGNED BY: DCG
DRAWN BY: BCL
CHECKED BY: KCT

US Army Corps of Engineers Middle East District

TETRA TECH

AUSTERE STANDARD DESIGNS–PHASE 5
FY11 BARRACKS – PN74129–CLN04
KANDAHAR AIR BASE, AFGHANISTAN
PLUMBING
LEGEND, ABBREVIATIONS, SYMBOLS AND GENERAL NOTES

SHEET REFERENCE NUMBER:
AF1082A
P–001

W:\23308\127–23308–10010\CAD\SheetFiles\ASD04_KAND\06_Plumbing\AF1082A–PL001GN.dwg 10/14/2010 1:35:02 PM Barrett, Patrick

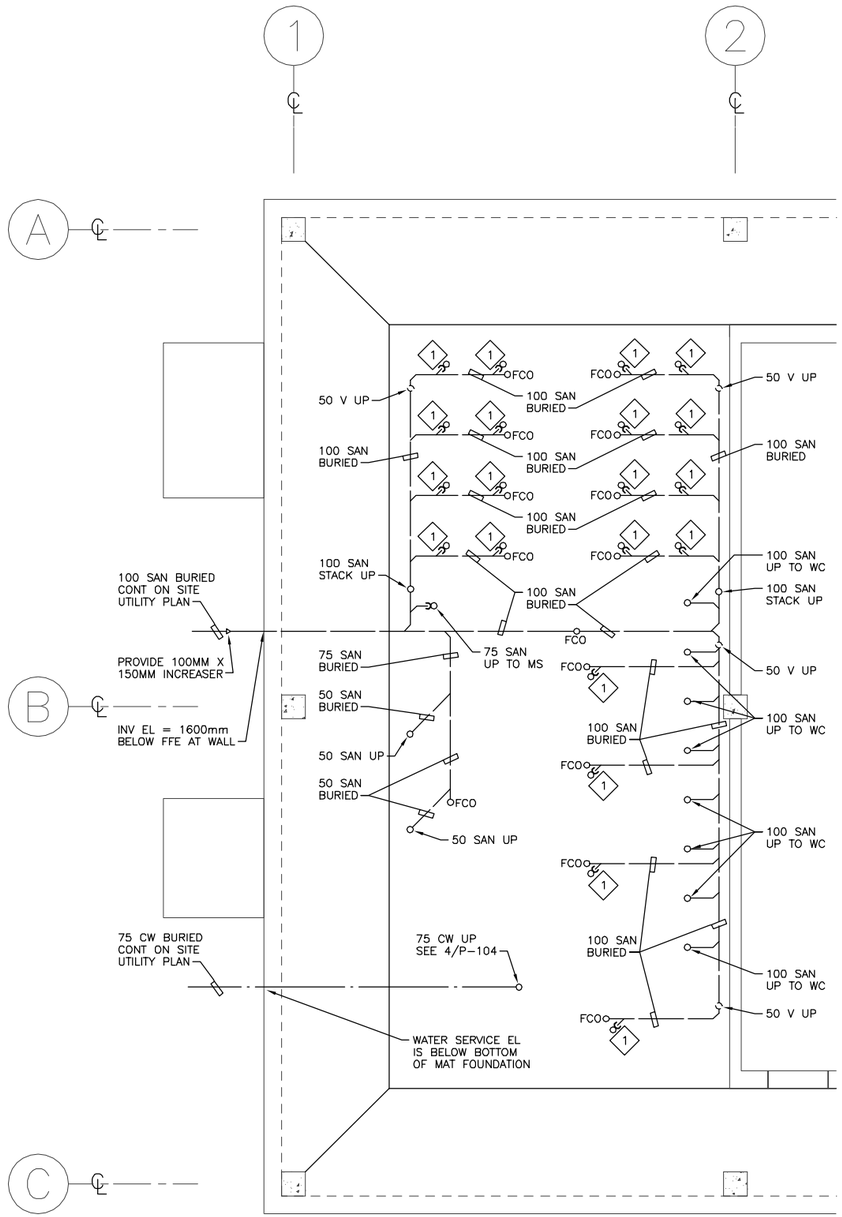

FOUNDATION PLAN (2) P-100 | P-100
SCALE 1:50

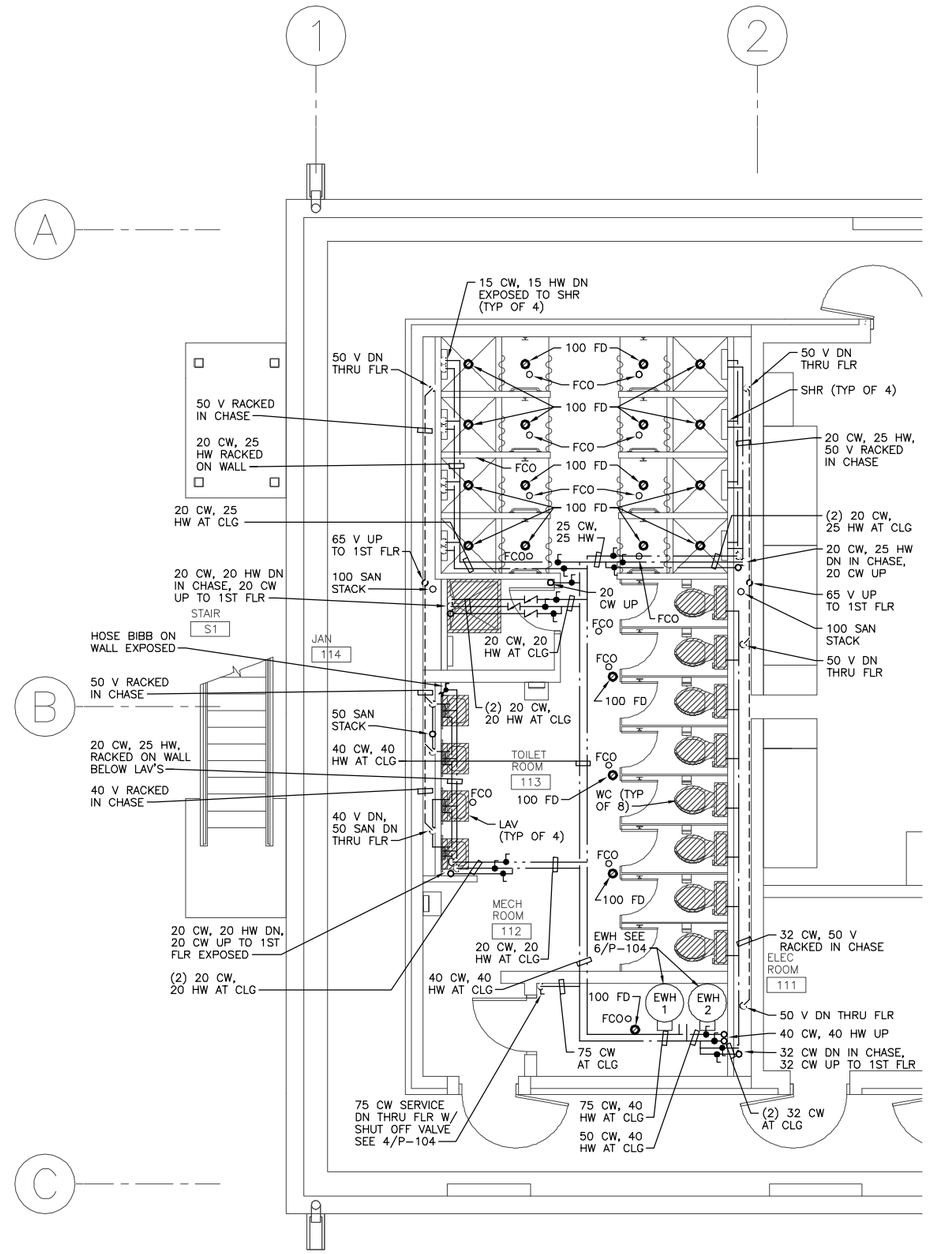

GROUND FLOOR PLAN (1) P-100 | P-100
SCALE 1:50

PLUMBING NOTES:

1. 100 SANITARY WITH "P" TRAP AND TRAP GUARD UP TO FLOOR DRAIN SEE 3/P-104

1 0 1 2 3 4
1:50

THESE DRAWINGS ARE "NOT APPROVED FOR CONSTRUCTION" SINCE THESE ARE BASED UPON ASSUMED CONDITIONS. THE CONTRACTOR SHALL NOT PROCEED WITH CONSTRUCTION UNTIL THE ASSUMED CONDITIONS ARE VALIDATED AND APPROVAL IS RECEIVED FROM THE CONTRACTING OFFICER.

STATE OF NEW YORK
KEVIN CHARLES TERRY
079083
LICENSED PROFESSIONAL ENGINEER
9/15/10

UNLESS OTHERWISE NOTED, ALL DIMENSIONS SHOWN ARE IN MILLIMETERS.

CORRECTED FINAL DESIGN SUBMITTAL

SYMB	DESCRIPTION	DATE	APR
0	CORRECTED FINAL DESIGN SUBMITTAL	09/15/10	KCT
B	FINAL DESIGN SUBMITTAL	09/02/10	KCT
A	MID-POINT DESIGN SUBMITTAL	08/13/10	KCT

DESIGNED BY: DCG
DATE: 09/15/10
DRAWN BY: BCL
SUBMITTED BY: TETRA TECH
CHECKED BY: KCT
FILE NO.: AF1082A-PL100PN

US Army Corps of Engineers Middle East District
TETRA TECH

AUSTERE STANDARD DESIGNS-PHASE 5
FY11 BARRACKS - PN74129-CLN04
KANDAHAR AIR BASE, AFGHANISTAN

GROUND FLOOR AND FOUNDATION PLANS

SHEET REFERENCE NUMBER:
AF1082A
P-100

W:\23308\127-23308-10010\CAD\SheetFiles\ASD04_KAND\06_Plumbing\AF1082A-PL100PN.dwg 10/14/2010 1:35:11 PM Barrett, Patrick

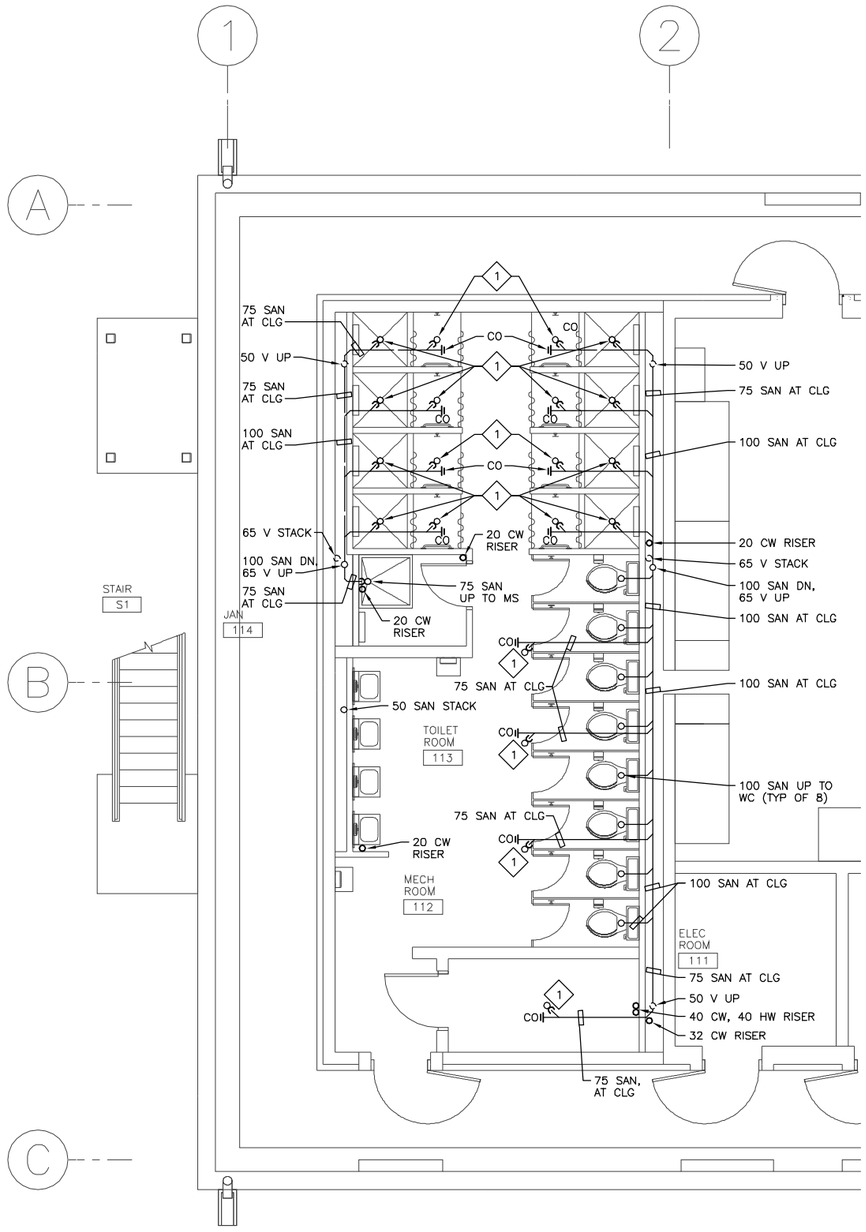

FIRST FLOOR SANITARY (2 / P-101 | P-101)
SCALE 1:50

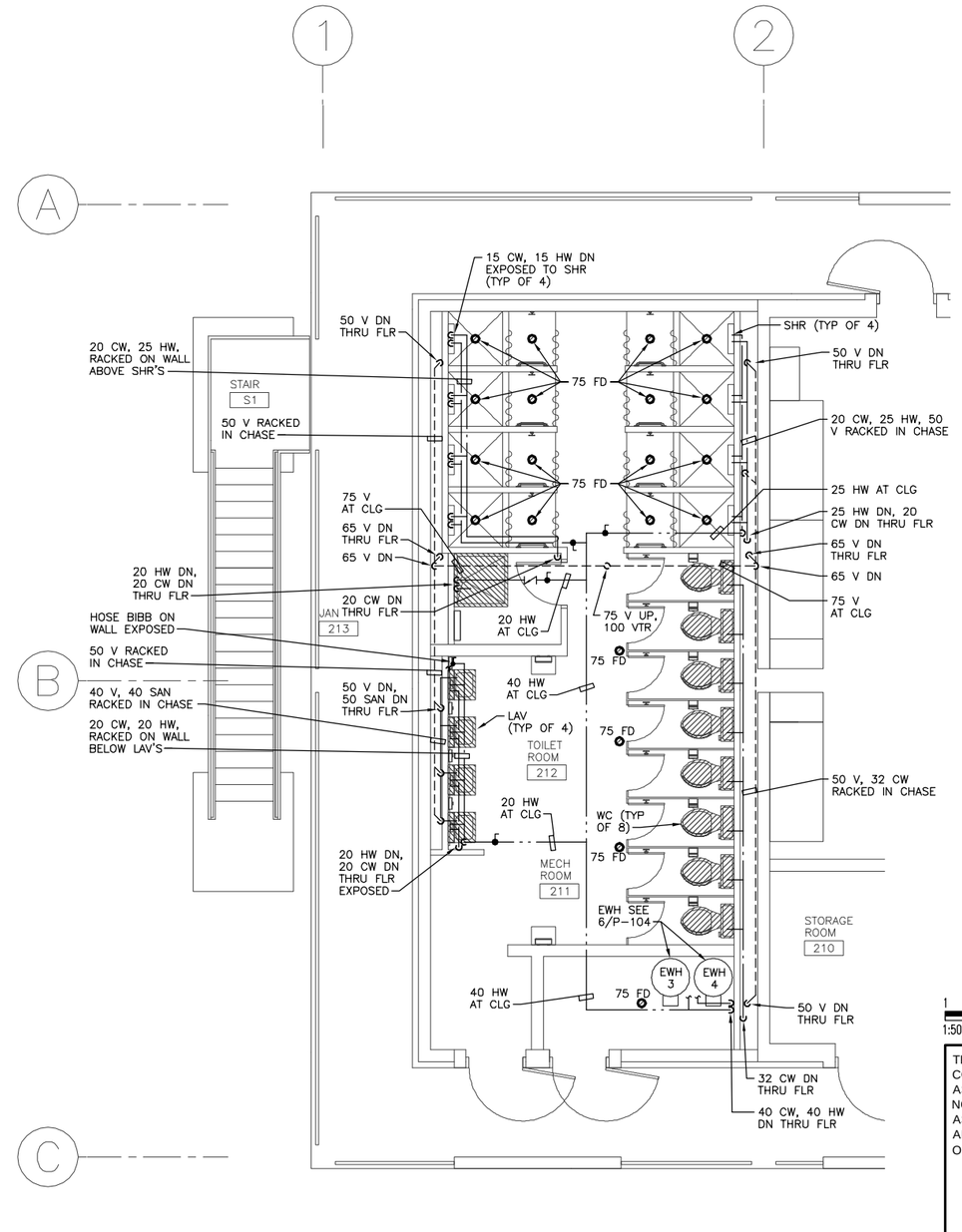

FIRST FLOOR PLAN (1 / P-101 | P-101)
SCALE 1:50

PLUMBING NOTES:

1. 75 SANITARY WITH "P" TRAP AND TRAP GUARD UP TO FLOOR DRAIN SEE 3/P-104

1:50

THESE DRAWINGS ARE "NOT APPROVED FOR CONSTRUCTION" SINCE THESE ARE BASED UPON ASSUMED CONDITIONS. THE CONTRACTOR SHALL NOT PROCEED WITH CONSTRUCTION UNTIL THE ASSUMED CONDITIONS ARE VALIDATED AND APPROVAL IS RECEIVED FROM THE CONTRACTING OFFICER.

STATE OF NEW YORK · KEVIN CHARLES TERRY · 079083 · LICENSED PROFESSIONAL ENGINEER
9/15/10

UNLESS OTHERWISE NOTED, ALL DIMENSIONS SHOWN ARE IN MILLIMETERS.

CORRECTED FINAL DESIGN SUBMITTAL

SYMB	DESCRIPTION	DATE	APR
0	CORRECTED FINAL DESIGN SUBMITTAL	09/15/10	KCT
B	FINAL DESIGN SUBMITTAL	09/02/10	KCT
A	MID-POINT DESIGN SUBMITTAL	08/13/10	KCT

DESIGNED BY: DCG
DATE: 09/15/10
DRAWN BY: BCL
SUBMITTED BY: TETRA TECH
CHECKED BY: KCT
FILE NO.: AF1082A-PL101PN

US Army Corps of Engineers Middle East District

TETRA TECH

AUSTERE STANDARD DESIGNS-PHASE 5
FY11 BARRACKS - PN74129-CLN04
KANDAHAR AIR BASE, AFGHANISTAN

FIRST FLOOR AND FIRST FLOOR SANITARY PLANS

SHEET REFERENCE NUMBER:
AF1082A
P-101

W:\23308\127-23308-10010\CAD\SheetFiles\ASD04_KAND\06_Plumbing\AF1082A-PL101PN.dwg 10/14/2010 1:35:21 PM Barrett, Patrick

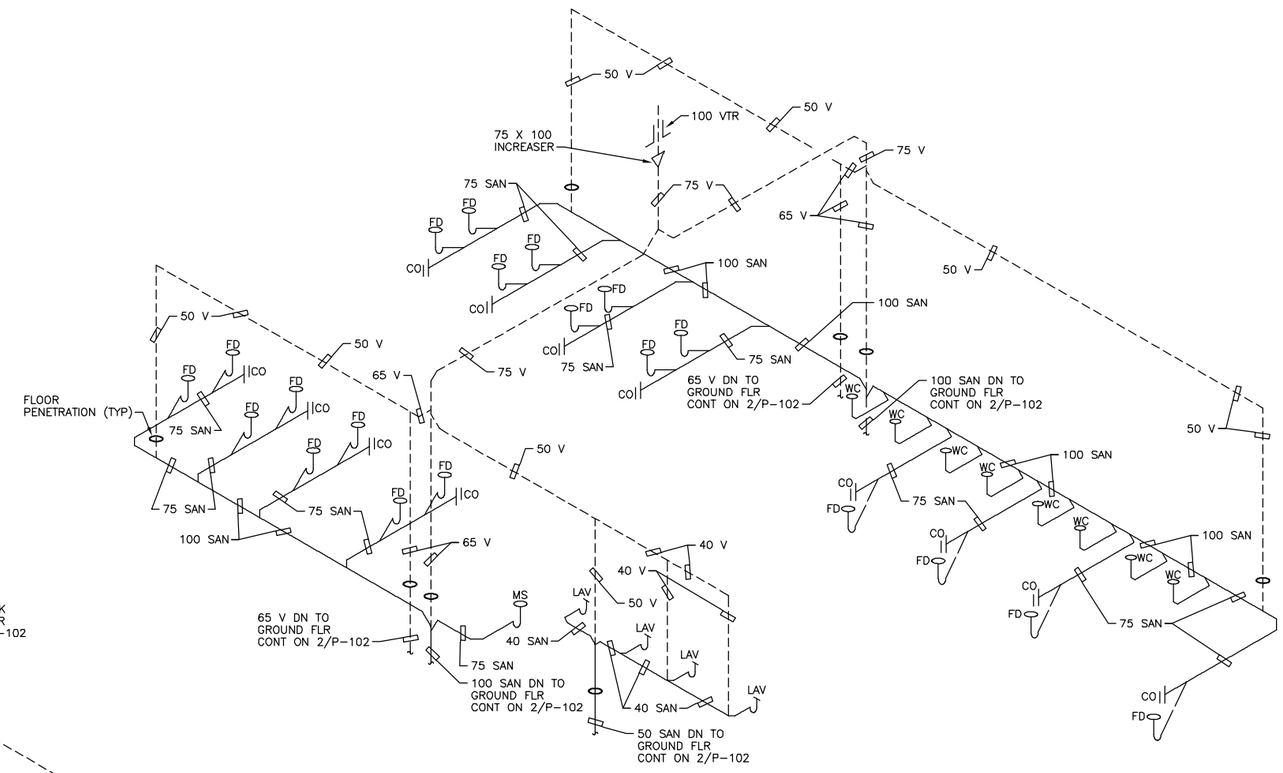

FIRST FLOOR SANITARY
AND VENT ISOMETRIC
SCALE: NONE
1
P-102 | P-102

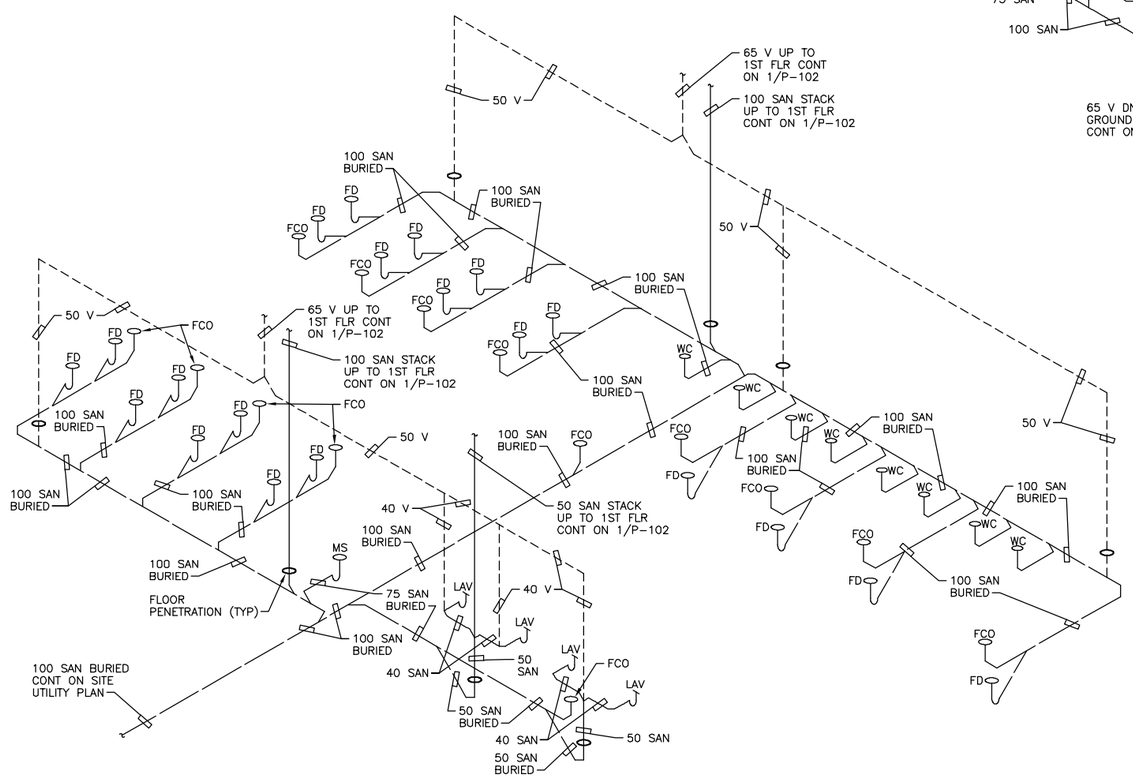

GROUND FLOOR SANITARY
AND VENT ISOMETRIC
SCALE: NONE
2
P-102 | P-102

UNLESS OTHERWISE NOTED, ALL
DIMENSIONS SHOWN ARE IN MILLIMETERS.

THESE DRAWINGS ARE "NOT APPROVED FOR CONSTRUCTION" SINCE THESE ARE BASED UPON ASSUMED CONDITIONS. THE CONTRACTOR SHALL NOT PROCEED WITH CONSTRUCTION UNTIL THE ASSUMED CONDITIONS ARE VALIDATED AND APPROVAL IS RECEIVED FROM THE CONTRACTING OFFICER.

STATE OF NEW YORK
KEVIN CHARLES TERRY
079083
LICENSED PROFESSIONAL ENGINEER
9/15/10

CORRECTED
FINAL
DESIGN
SUBMITTAL

SYMB	DESCRIPTION	DATE		APR
0	CORRECTED FINAL DESIGN SUBMITTAL	09/15/10	KCT	
B	FINAL DESIGN SUBMITTAL	09/02/10	KCT	
A	MID-POINT DESIGN SUBMITTAL	08/13/10	KCT	

DESIGNED BY: DCG
DATE: 09/15/10
DRAWN BY: BCL
SUBMITTED BY: TETRA TECH
CHECKED BY: KCT
FILE NO.: AF1082A-PL102IS

US Army Corps of Engineers
Middle East District

TETRA TECH

AUSTERE STANDARD DESIGNS-PHASE 5
FY11 BARRACKS - PN74129-CLN04
KANDAHAR AIR BASE, AFGHANISTAN

SANITARY AND VENT
ISOMETRIC PLANS

SHEET
REFERENCE
NUMBER:
AF1082A
P-102

W:\23308\127-23308-10010\CAD\SheetFiles\ASD04_KAND\06_Plumbing\AF1082A-PL102IS.dwg 10/14/2010 1:35:29 PM Barrett, Patrick

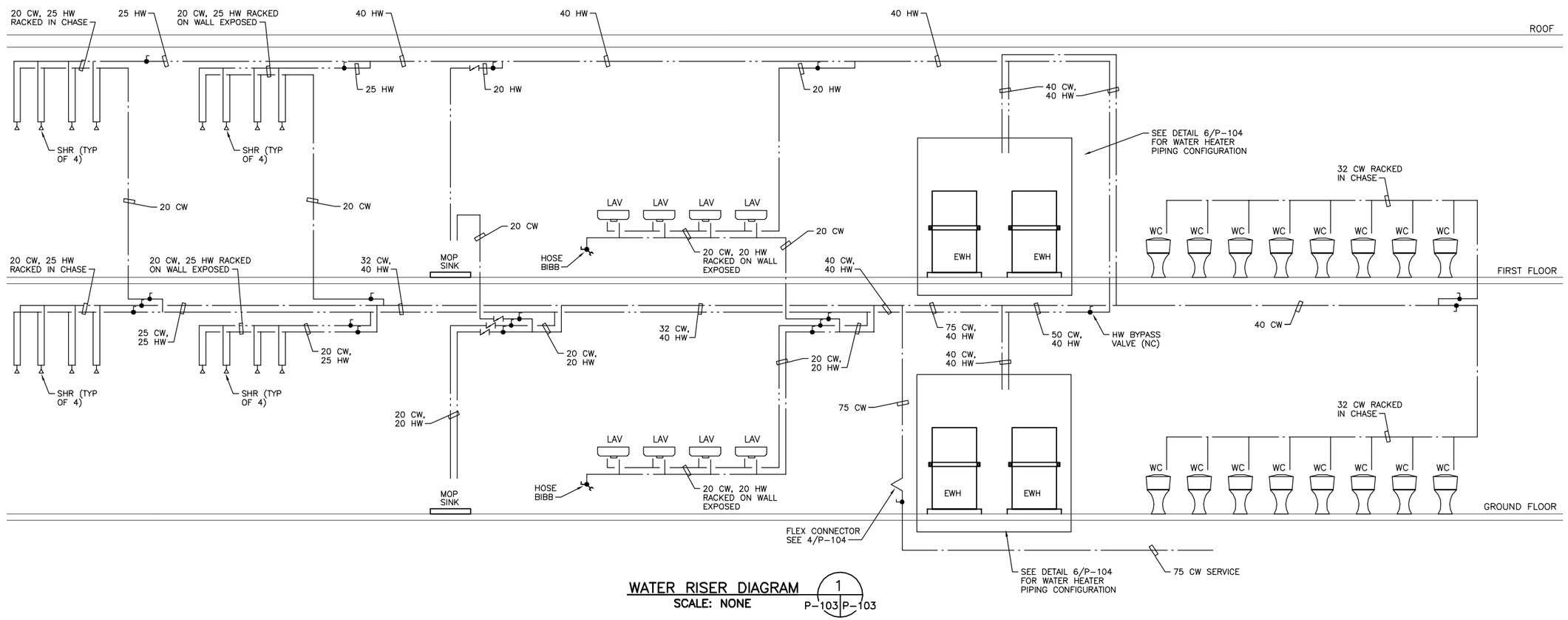

WATER RISER DIAGRAM (1 / P-103 | P-103)

SCALE: NONE

UNLESS OTHERWISE NOTED, ALL DIMENSIONS SHOWN ARE IN MILLIMETERS.

THESE DRAWINGS ARE "NOT APPROVED FOR CONSTRUCTION" SINCE THESE ARE BASED UPON ASSUMED CONDITIONS. THE CONTRACTOR SHALL NOT PROCEED WITH CONSTRUCTION UNTIL THE ASSUMED CONDITIONS ARE VALIDATED AND APPROVAL IS RECEIVED FROM THE CONTRACTING OFFICER.

STATE OF NEW YORK · KEVIN CHARLES TERRY · 079083 · LICENSED PROFESSIONAL ENGINEER

9/15/10

CORRECTED FINAL DESIGN SUBMITTAL

SYMB	DESCRIPTION	DATE	APR
0	CORRECTED FINAL DESIGN SUBMITTAL	09/15/10	KCT
B	FINAL DESIGN SUBMITTAL	09/02/10	KCT
A	MID-POINT DESIGN SUBMITTAL	08/13/10	KCT

DESIGNED BY: DCG
DATE: 09/15/10
DRAWN BY: BCL
SUBMITTED BY: TETRA TECH
CHECKED BY: KCT
FILE NO.: AF1082A-PL103DI

US Army Corps of Engineers Middle East District

TETRA TECH

AUSTERE STANDARD DESIGNS-PHASE 5
FY11 BARRACKS - PN74129-CLN04
KANDAHAR AIR BASE, AFGHANISTAN

PLUMBING
WATER RISER DIAGRAM

SHEET REFERENCE NUMBER:
AF1082A
P-103

W:\23308\127-23308-10010\CAD\SheetFiles\ASD04_KAND\06_Plumbing\AF1082A-PL103DI.dwg 10/14/2010 1:35:38 PM Barrett, Patrick

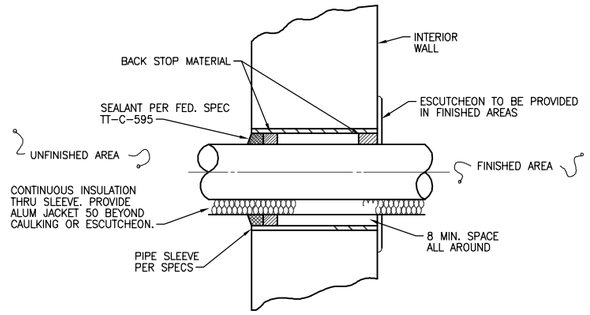

WALL PIPE SLEEVE DETAIL (5 / P-104 | P-104)
SCALE: NONE

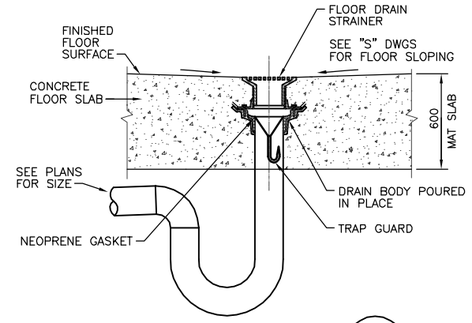

DEEP SEAL "P" TRAP (3 / P-104 | P-104)
SCALE: NONE
NOTE: TYPICAL ALL FLOOR DRAINS

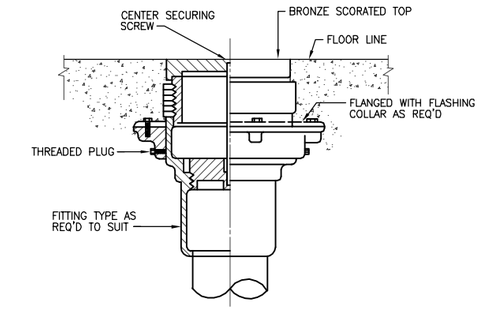

FLOOR CLEANOUT (FCO) (1 / P-104 | P-104)
SCALE: NONE

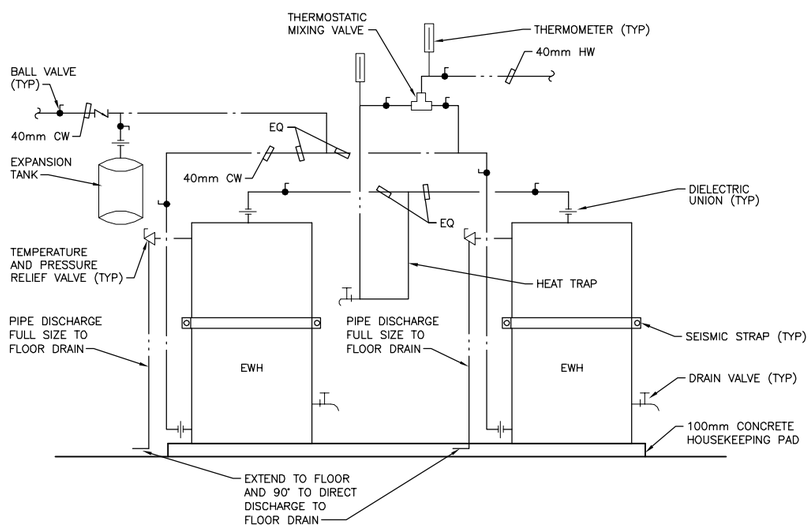

DOMESTIC ELECTRIC WATER HEATER (6 / P-103 | P-104)
SCALE: NONE

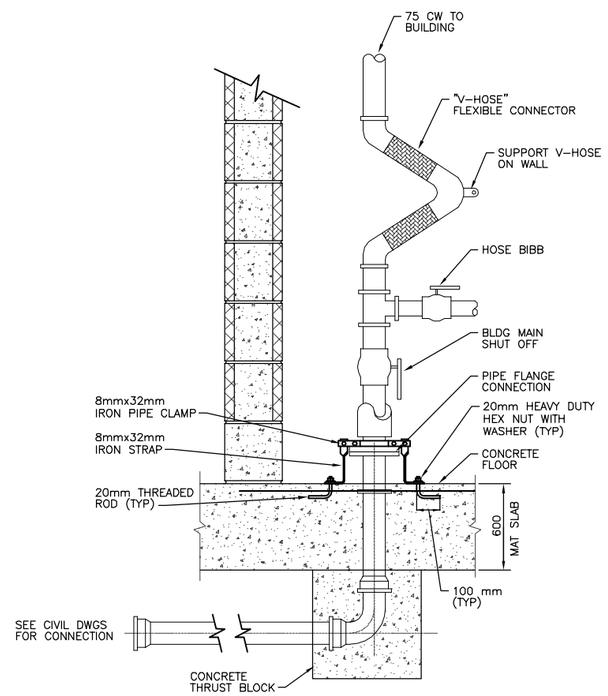

WATER SERVICE DETAIL (4 / P-104 | P-104)
SCALE: NONE

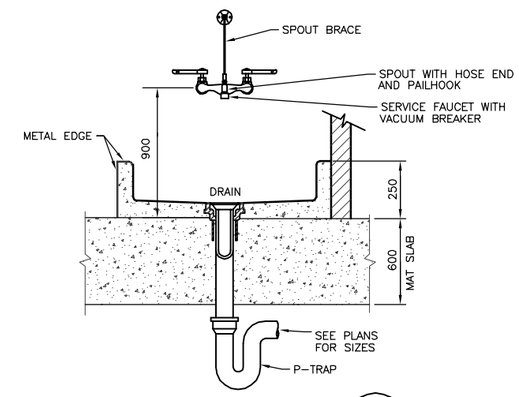

MOP SINK DETAIL (2 / P-104 | P-104)
SCALE: NONE

THESE DRAWINGS ARE "NOT APPROVED FOR CONSTRUCTION" SINCE THESE ARE BASED UPON ASSUMED CONDITIONS. THE CONTRACTOR SHALL NOT PROCEED WITH CONSTRUCTION UNTIL THE ASSUMED CONDITIONS ARE VALIDATED AND APPROVAL IS RECEIVED FROM THE CONTRACTING OFFICER.

STATE OF NEW YORK · KEVIN CHARLES TERRY · 079083 · LICENSED PROFESSIONAL ENGINEER
9/15/10

UNLESS OTHERWISE NOTED, ALL DIMENSIONS SHOWN ARE IN MILLIMETERS.

CORRECTED FINAL DESIGN SUBMITTAL

SYMB	DESCRIPTION	DATE	APR.
0	CORRECTED FINAL DESIGN SUBMITTAL	09/15/10	KCT
B	FINAL DESIGN SUBMITTAL	09/02/10	KCT
A	MID-POINT DESIGN SUBMITTAL	08/13/10	KCT

DESIGNED BY: DCG
DRAWN BY: BCL
CHECKED BY: KCT
DATE: 09/15/10
SUBMITTED BY: TETRA TECH
FILE NO.: AF1082A-PL1040T

US Army Corps of Engineers Middle East District
TETRA TECH

AUSTERE STANDARD DESIGNS-PHASE 5
FY11 BARRACKS - PN74129-CLN04
KANDAHAR AIR BASE, AFGHANISTAN

PLUMBING DETAILS

SHEET REFERENCE NUMBER:
AF1082A
P-104

W:\23308\127-23308-10010\CAD\SheetFiles\ASD04_KAND\06_Plumbing\AF1082A-PL1040T.dwg 10/14/2010 1:35:50 PM Barrett, Patrick