PLUMBING LEGEND

SYMBOL	DESCRIPTION
AV	ANGLE VALVE
BV	BALL VALVE
CV	CHECK VALVE
	COCK VALVE
DV	DRAIN VALVE
P7	EMERGENCY SHOWER AND EYE–WASH
FCO	FLOOR CLEANOUT
FD	FLOOR DRAIN
FS	FLOOR SIPHON
P13	FLOOR SINK (FS)
	GALITRAP
GV	GATE VALVE
HB	HOSE BIBB, PLAN
	INSPECTION MANHOLE
	PIPE TURNING DOWN
	PIPE TURNING UP
CO	PLUG CLEANOUT
	REDUCER–INCREASER
	SUPPORT LOCATION
	Y–TYPE STRAINER
U	UNION
WHA	WATER HAMMER ARRESTOR

ABBREVIATION	DESCRIPTION
AC	AIR COMPRESSOR
℄	CENTER LINE
CA	COMPRESSED AIR
CO	CLEANOUT
COYB	CLEANOUT IN YARD BOX
CW	COLD WATER PIPES
DT	DAY TANK
FOR	FUEL OIL RETURN
FOS	FUEL OIL SUPPLY
FT	FLASH TANK
FS	FLOOR SINK
GT	GALITRAP
H/L	HIGH LEVEL
HW	HOT WATER PIPES
IC	INSPECTION CHAMBER
I.L	INVERT LEVEL
LD	LEAK DETECTOR
L/L	LOW LEVEL
LSH	LEVEL SWITCH HIGH
LSHH	LEVEL SWITCH HIGH HIGH
LSL	LEVEL SWITCH LOW
LSLL	LEVEL SWITCH LOW LOW
LT	LEVEL TRANSMITTER
OW	OILY WASTE
OWS	OIL WATER SEPARATOR
P	PUMP
RP	RECIRCULATION PUMP
YCO	YARD CLEANOUT

ABBREVIATION	DESCRIPTION
SP	SOIL PIPE
SR	SHORT RADIUS
U.G.	UNDER GROUND
VP	VENT PIPE
V.R.V	VACUUM RELIEF VALVE
WCO	WALL CLEANOUT
WHA	WATER HAMMER ARRESTOR
WO	WASTE OIL
WP	WASTE PIPE

LINE STYLE	DESCRIPTION
	COLD WATER (CW)
	HOT WATER (HW)
	VENT PIPE (VP)
	SOIL PIPE (SP)
	WASTE PIPE (WS)
	HOT WATER RETURN (HWR)
CA	COMPRESSED AIR

EQUIPMENT IDENTIFICATION

EWH–XX–XX
- EWH: ELECTRIC WATER HEATER
- XX: UNIT NUMBER
- XX: BUILDING ABBREVIATION

PIPE SIZE	SIZE OF STEEL UPPER	SIZE OF STEEL LOWER	A	B	C	ROD TAKE OUT E	G	ADJUST–MENT	MAX. SPACING BET. HANGERS
15	3.2x25.4	3.2x25.4	9.5	50	62	33	6.35	9.5	2400
20	3.2x25.4	3.2x25.4	9.5	52	65.1	35	6.35	13	2700
25	3.2x25.4	3.2x25.4	9.5	59	80	41.2	6.35	16	2700
32	3.2x25.4	3.2x25.4	9.5	60	82.6	43	6.35	16	2700
40	3.8x25.4	3.2x25.4	9.5	71	71.4	54	6.35	22	3700
50	3.8x25.4	3.2x25.4	9.5	84	114.3	66.7	6.35	28.5	4000
65	4.8x31.7	4.8x31.7	13	103	139.7	81	9.5	33	4300
80	4.8x31.7	4.8x31.7	13	209	166.7	100	9.5	46	4600

NOTE :
(1) ALL DIMENSIONS ARE IN mm

HEAVY DUTY CLEVIS HANGER FOR COMP. AIR PIPE

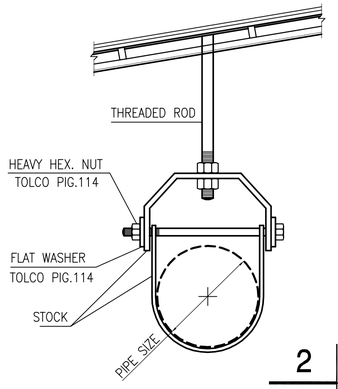

MATERIAL: MALLEABLE IRON
STANDARD FINISH: PLAIN OR ELECTRO–PLATED
SERVICE: DESIGNED FOR ATTACHING a HANGER ROD TO THE BOTTOM FLANGE OF a Z–PURLIN.
WEIGHT: Wt./C 90 lbs. (40.8kg)
DESIGN LOAD: 500 lbs. (2.22kn)
APPROVALS: UNDERWRITERS LABORATORIES LISTED
COMPLIES WITH FEDERAL SPECIFICATION WW–H–171E TYPE 23 AND MANUFACTURERS STANDARDIZATION SOCIETY SP–69 & SP–58 TYPE 19.

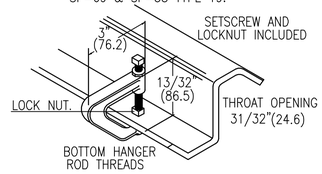

2 PIPE HANGER DETAIL
MF–P–03 NOT TO SCALE

WATER HAMMER ARRESTOR SIZING CHART

P.D.I. SYMBOL	FIXTURE UNIT RATING	NIPPLE SIZE (MM)
A	1–11	20
B	12–32	25
C	33–60	25

NOTES:

1. INTERIOR SOIL AND WASTE PIPING 80 (3") AND SMALLER SHALL BE ROUTED WITH A 2% SLOPE. INTERIOR SOIL AND WASTE PIPING 100 (4") AND LARGER SHALL BE ROUTED WITH A MINIMUM 1% SLOPE.
2. EXTERIOR SOIL OR WASTE PIPING SHALL BE ROUTED WITH A 2% SLOPE WHEREVER POSSIBLE, OTHERWISE A MINIMUM SLOPE OF 1% SHALL BE USED.
3. WATER AND DRAINAGE PIPING SHALL BE EXTENDED 1.5 m OUTSIDE THE BUILDING UNLESS OTHERWISE INDICATED

PIPE SIZE (mm)	BOLT SIZE	H (mm)	STEEL SIZE (mm)
15	2XM10X40	11.1	(4.8x31.7)
20	2XM10X40	11.1	(4.8x31.7)
25	2XM10X40	11.1	(4.8x31.7)
32	2XM10X40	11.1	(4.8x31.7)
40	2XM10X40	11.1	(6.3x31.7)
50	2XM10X45	11.1	(6.3x31.7)
65	2XM10X45	11.1	(6.3x31.7)
80	2XM10X45	11.1	(6.3x31.7)
100	2XM12X50	14.3	(6.3x38.1)
125	2XM12X60	14.3	(6.3x38.1)

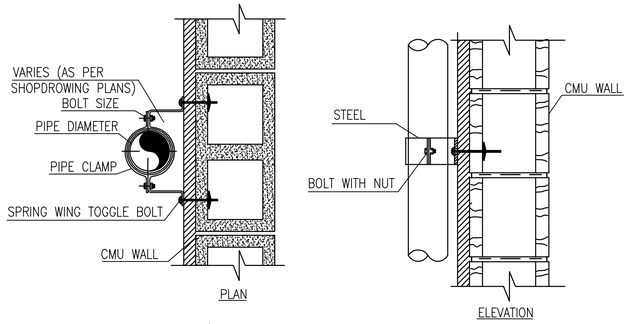

1 OFFSET PIPE CLAMPS DETAIL
MF–P–03 NOT TO SCALE

DWG.NO.	DRAWING TITLE	REMARKS
	REFERENCE DRAWINGS	

REV.	Date	DESCRIPTION	Prep.	Drew.	Check.	App.
3	FEB. 01, 2005	100% DESIGN SUBMISSION			JG	AZ
2	DEC. 13, 2004	100% DESIGN COMPLETION			JG	AZ
1	NOV. 16, 2004	99% FINAL REVIEW SUBMITTAL			JG	AZ
0	SEPT. 24, 2004	35% CONCEPT REVIEW SUBMITTAL				

REVISIONS

CLIENT : U.S. ARMY CORPS OF ENGINEERS
TRANSATLANTIC PROGRAMS CENTER

CONTRACTOR: CONTRACK INTERNATIONAL INC.
1001 N. Fairfax Street – Suite 1220 Arlington
VIRGINIA 22203
Tel: (703)358–8800 Fax: (703)358–8808

DESIGNER: CONTRACK INTERNATIONAL INC.
SOUTH TOWER 22ND FLOOR CORNER EL-MALZ
MAALIET BEAULIC, CAIRO-EGYPT
Tel: 20–24–811900 Fax: 20–24–819402

DESIGNER JOB #: 151709
DMJMH+N
2101 WILSON BLVD. SUITE 900
ARLINGTON, VIRGINIA 22201
Tel: (703)522–8900 Fax: (703)522–4901

DESIGNER:

PROJECT :
ANA
REGIONAL BRIGADE
AFGHANISTAN

TITLE :
STANDAED PLUMBING LEGEND
CHARTS AND NOTES

ACTION	NAME	DATE	DOCUMENT NO.:	Task:	
Prepared By:				6	CO-P-07
Drawn By:			CAD FILE:		
Checked By:			Scale: AS NOTED	DIMS. IN	Sheet Of Sheets / Rev.
Approved By:					

CONTRACK ENGINEERING A1 sheet/Cutting edges:841*594/DWG Actual Worksheet:796*566

DWG: H:\AFGHANISTAN\TASK04-HERAT\CAD\00-STANDARD DETAILS\CO\SHEET\CO-P-07.DWG Ver: 15.06s (LMS Tech) User: delrosario
TIME: 11-15-2004 08:12:43 With 1 Xrefs
XREF: ..\XREF\XBOR.DWG

FUEL OIL FILTERS SCHEDULE

UNIT NO.	TYPE	LOCATION	RATED L/S (GPM)	MICRON RATING	MAX PRESS. DROP KPA (PSI)	DESIGN PRESSURE KPA (PSIG)	REMARKS
F-PP-1	IN-LINE	MECHANICAL ROOM	1.26 (20)	10	34.5 (5)	1034 (150)	
F-PP-2	IN-LINE	MECHANICAL ROOM	1.26 (20)	10	34.5 (5)	1034 (150)	

PUMP SCHEDULE

PUMP NO.	LOCATION	SERVICE	TYPE	L/s (GPM)	TOTAL HEAD M (FT)	SHUT OFF HEAD FT.	IMPELLER DIA. INCHES	DESIGN PRESS kPa (PSIG)	MFR.	MODEL NO.	MOTOR BHP	MOTOR HP	MOTOR RPM	TYPE SEAL	REMARKS
P-1 P-2	DUPLEX FUEL OIL TRANSFER PUMP SET	FUEL OIL	–	1.26 (20)	19.81 (65)	–	–	1034 (150)	SIMPLEX	SKS-30	–	2 EACH @ 1 1/2	–	–	
P-3 P-4	DUPLEX FUEL OIL UNLOADING PUMP STATION	FUEL OIL	–	18.93 (300)	34.44 (113)	–	–	1034 (150)	SIMPLEX	SP-30	–	2 EACH @ 15.0	–	–	
RP-BOQ3-1	MECHANICAL RM	HOT WATER RETURN	IN-LINE	0.063 (5)	6.06 (20)	–	–	–	SIMPLEX	–	–	1/5	–	–	
RP-BOQ4-1	MECHANICAL RM	HOT WATER RETURN	IN-LINE	0.063 (5)	6.06 (20)	–	–	–	SIMPLEX	–	–	1/5	–	–	
RP-DF-1	MECHANICAL RM	HOT WATER RETURN	IN-LINE	0.063 (5)	6.06 (20)	–	–	–	SIMPLEX	–	–	1/5	–	–	
RP-DF-2	MECHANICAL RM	HOT WATER RETURN	IN-LINE	0.063 (5)	6.06 (20)	–	–	–	SIMPLEX	–	–	1/5	–	–	

STORAGE TANK SCHEDULE

TAG	SERVICE	CAPACITY LITERS	CAPACITY GAL.	DIMENSIONS (APPROXIMATE) DIAMETER (NOMINAL) mm	DIMENSIONS (APPROXIMATE) LENGTH (NOMINAL) mm	REMARKS
T-1 THRU T-10	BULK STORAGE	94,635	25,000	3,000	15,000	HORIZONTAL, NOTES 1 & 2
WST-1 & 3	WASTE OIL STORAGE	3,786	1000	1500	3000	HORIZONTAL, NOTES 3 & 4
WST-2	WASTE OIL STORAGE	9,465	2500	1,905	4,115	HORIZONTAL, NOTES 3 & 4
DT-1 THRU DT-6	GEN SET DAY TANK	2,271	600	1,219	2,286	HORIZONTAL, NOTE 5

NOTES:

1- STEEL CONSTRUCTION, WEATHERPROOF COATING, EXTERIOR LADDER, STEEL SUPPORT SADDLES
2- TAPPINGS FOR FILL, VENT SOUNDING ENTRY (GAGE ROD), OIL SUPPLY, DRAIN, LEVEL CONTROLS
3- STEEL OR FIBERGLASS CONSTRUCTION, DUAL WALL CONSTRUCTION WITH HOLD-DOWN STRAPS.
4- 100mm (4") WASTE OIL CONSTRUCTION, 100mm (4") EXTRACTION TUBE AND CAP, HOLD DOWN STRAPS, 50mm (2") VENT.
5- STEEL CONSTRUCTION, SINGLE WALL CONSTRUCTION, 10 GA., WEATHERPROOF COATING, LEVEL CONTROLS, GAUGE GLASS, UL 142 APPROVED 25 mm (1") TANK DRAIN, 50 mm (2") TANK LEAK PORT, 25 mm (1") FLOAT SWITCH MOUNTING PORT, 100 mm (4") TANK EMERGENCY VENT, 50 mm (2") TANK WORKING VENT, 50 mm (2") FUEL OIL RETURN, 50 mm (2") OVERFLOW, 50 MM (2") MANUAL FILL FILL PORT, 50 mm (2") FUEL OIL SUPPLY, NEMA 4X ENCLOSED CONTROLLER, FLOAT SWITCH FOR PUMP START, PUMP STOP, HIGH-HIGH LEVEL AND LOW-LOW LEVEL SWITCHES, OVERFLOW PUMP AND CONTROLLER.

AIR COMPRESSOR SCHEDULE

UNIT SYMBOL	AIR QUANTITY LMH/CFM	FULL LOAD PRESSURE kPa/PSI	NO. OF COMP.'S	MOTOR KW (HP)	ELECTRICAL DATA V/PH/HZ	STORAGE CAPACITY LITERS (GAL)	STORAGE PRESSURE kPa (PSI)	REMARKS
AC-PP-1	2420/85	1400/203	1	22 (30)	380/3/50	500 (132)	1400 (203)	WITH AIRCOOLED AFTER COOLER, SEPARATOR, AND COALESCING FILTER.
AC-MG-1	– /30	1400/203	2	5.5 (7.5)	380/3/50	450 (120)	1400 (203)	WITH AIRCOOLED AFTER COOLER, SEPARATOR, COALESCING FILTER AND RAD-MG-01.
AC-BG-1	855/30	1400/203	2	5.5 (7.5)	380/3/50	450 (120)	1400 (203)	WITH AIRCOOLED AFTER COOLER, SEPARATOR, COALESCING FILTER AND RAD-MG-01.

OIL WATER SEPARATOR SCHEDULE (OWS)

SYMBOL	SERVICE	CAPACITY LITERS (GAL)	LOCATION	FLOW L/SEC (GPM)	DIMENSIONS (NOMINAL)	MFR	MODEL NO.	REMARKS
OWS-PP-01 OWS-MG-01 OWS-BG-01		2082 (550)	UNDERGROUND	3.5 (55)	1067 mm X 2362 mm	HIGHLAND	HT-550	POWER PLANT MAINTENANCE GARAGE CS BATTALION GARAGE

*SEE DETAIL CO-P-04

DWG.NO.	DRAWING TITLE	REMARKS
	REFERENCE DRAWINGS	

REV	Date	DESCRIPTION	Prep.	Drw.	Check.	App.
3	FEB. 01, 2005	100% DESIGN SUBMISSION			JG	AZ
2	DEC. 13, 2004	100% DESIGN COMPLETION			JG	AZ
1	NOV. 16, 2004	99% FINAL REVIEW SUBMITTAL			JG	AZ
0	SEPT. 24, 2004	35% CONCEPT REVIEW SUBMITTAL				

REVISIONS

CLIENT :
U.S. ARMY CORPS OF ENGINEERS
TRANSATLANTIC PROGRAMS CENTER

CONTRACTOR:
CONTRACK INTERNATIONAL INC.
1001 N 19 Street ~ Suite 1220 Arlington, Virginia 22209
Tel: (703)358-8600 Fax: (703)358-8608

DESIGNER:
CONTRACK ENGINEERS
SOUTH TOWER 22ND FLOOR CORNISH EL-HILE
Tel: 20-24-611800 Fax: 20-24-619402

DESIGNER JOB #: 151709
DMJMH+N
2101 WILSON BLVD. SUITE 800
ARLINGTON, VIRGINIA 22201
Tel: (703)243-4900 Fax: (703)522-4901

DESIGNER:

PROJECT :
ANA
REGIONAL BRIGADE
AFGHANISTAN

TITLE :
STANDARD PLUMBING SCHEDULES

ACTION	NAME	DATE	DOCUMENT NO.:	Task:	
Prepared By:			CAD FILE:	6	CO-P-08
Drawn By:					
Checked By:			Scale: AS NOTED	DIMS. IN	Sheet Of Sheets / Rev.
Approved By:					

DWG: H:\AFGHANISTAN\TASK04-HERAT\CAD\00-STANDARD DETAILS\D\CO\SHEET\CO-P-08.DWG Ver: 15.06s (LMS Tech) User: delrosario
TIME: 11-15-2004 08:12:59 With 1 Xrefs
XREF: ..\XREF\XBDR.DWG

LINTEL SCHEDULE		
Lintel Type	**Opening Width**	
Lintel 1	UP TO 2000mm	
Lintel 2	2000 TO 3600mm	
Lintel 3	3600 TO 5900mm	
NOTE: BEARING AT EACH END = 600mm MINIMUM		

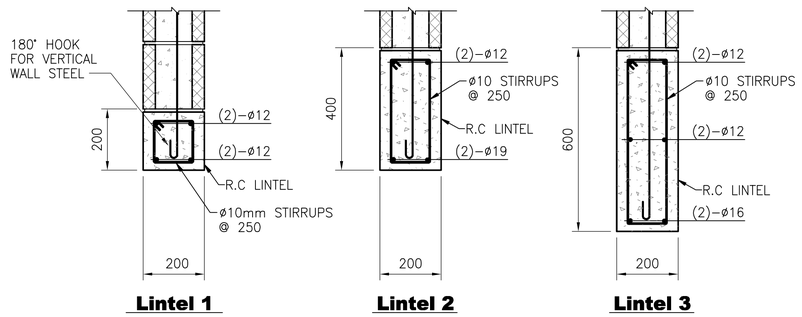

6 LINTEL REINFORCEMENT SCHEDULE AND SECTIONS

CO-S-01 REF. SCALE: 1:10

SLAB ON GRADE NOTES:

1. THE SLAB ON GRADE THICKNESS IS 150 mm UNLESS NOTED OTHERWISE.
2. MAXIMUM DIMENSIONS OF ANY PANEL IS 4000x4000 mm.
3. CONTROL JOINT FOR THE SLAB ON GRADE SHALL BE DONE EVERY MAXIMUM 4000 mm.
4. EXPANSION JOINT FOR THE SLAB ON GRADE SHALL BE DONE AT MAX. SPACING 40,000 mm

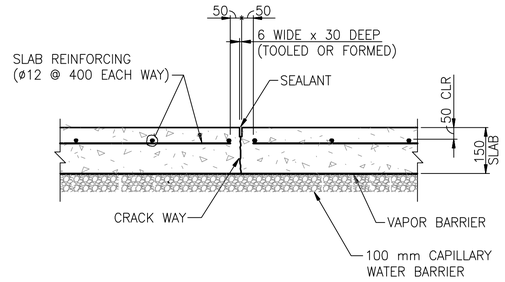

3 SLAB ON GRADE CONTROL JOINT

CO-S-01 REF. SCALE: 1:10

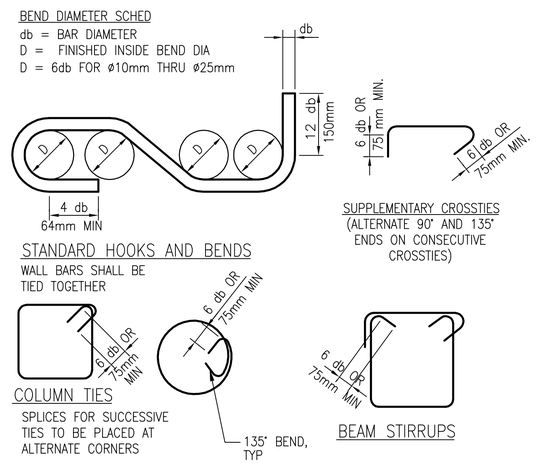

8 TYP. REINF BAR, BENDS, STIRRUPS AND TIES

CO-S-01 REF. SCALE: NONE

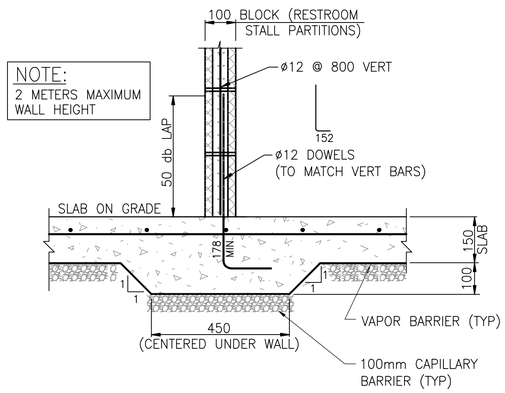

5 RESTROOM STALL PARTITION OR SHOWER BLOCK WALL

CO-S-01 REF. SCALE: 1:10

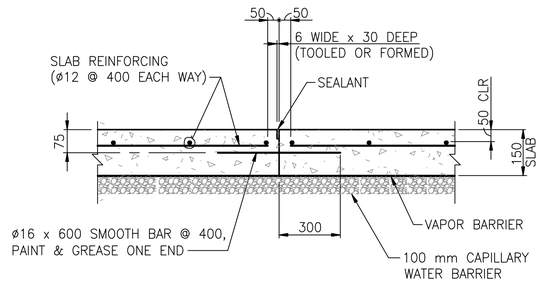

2 SLAB ON GRADE CONSTRUCTION JOINT

CO-S-01 REF. SCALE: 1:10

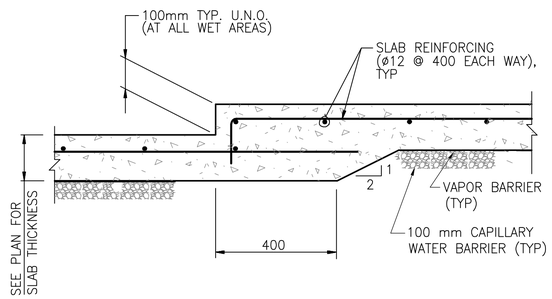

7 DEPRESSED SLAB

CO-S-01 REF. SCALE: 1:10

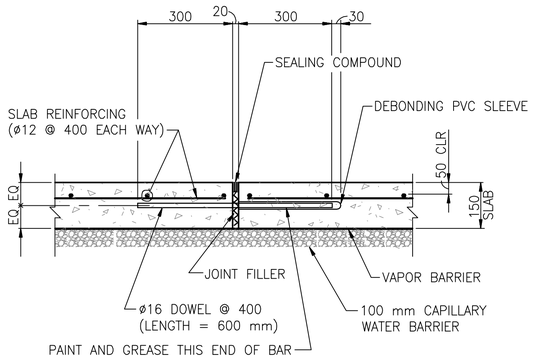

4 SLAB ON GRADE EXPANSION JOINT

CO-S-01 REF. SCALE: 1:10

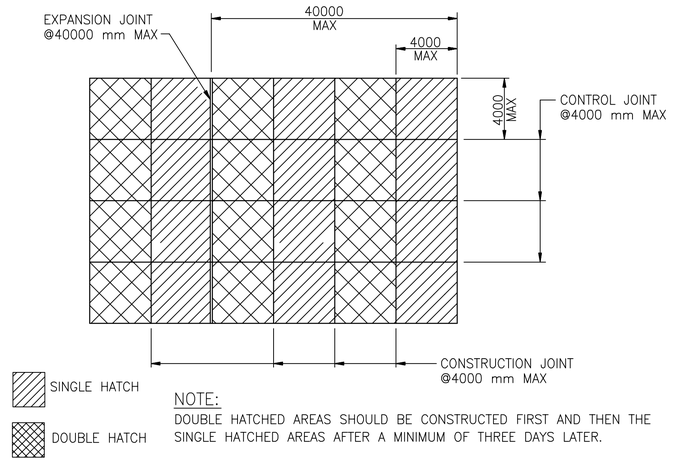

NOTE:
DOUBLE HATCHED AREAS SHOULD BE CONSTRUCTED FIRST AND THEN THE SINGLE HATCHED AREAS AFTER A MINIMUM OF THREE DAYS LATER.

1 TYPICAL SLAB ON GRADE POURING PATTERN

CO-S-01 REF. SCALE: 1:50

DWG.NO.	DRAWING TITLE	REMARKS
	REFERENCE DRAWINGS	

REV.	Date	DESCRIPTION	Prep.	Drw.	Check.	App.
		REVISIONS				
3	FEB. 01, 2005	100% DESIGN SUBMISSION			JG	AZ
2	DEC. 13, 2004	100% DESIGN COMPLETION			JG	AZ
1	NOV. 16, 2004	99% FINAL REVIEW SUBMITTAL			JG	AZ
0	SEPT. 24, 2004	35% CONCEPT REVIEW SUBMITTAL				

CLIENT :
U.S. ARMY CORPS OF ENGINEERS
TRANSATLANTIC PROGRAMS CENTER

CONTRACTOR:
CONTRACK INTERNATIONAL INC.
1001 N. 19 Street – Suite 1220 Arlington
Virginia 22209
Tel: (703)528-8800 Fax: (703)276-8808

DESIGNER:
CONTRACK ENGINEERING
SOUTH TOWER 22ND FLOOR CORNIS EL-MILE
Hamdan St. Kabul, Afghanistan
Tel: 20-24-819904 Fax: 20-24-819902

DESIGNER JOB #: 151709
DMJMH+N
2101 WILSON BLVD. SUITE 900
ARLINGTON, VIRGINIA 22201
Tel: (703)882-4900 Fax: (703)882-4901

DESIGNER:

PROJECT :
ANA REGIONAL BRIGADE AFGHANISTAN

TITLE :
TYPICAL SLAB ON GRADE AND LINTEL DETAILS

ACTION	NAME	DATE	DOCUMENT NO.:	Task:	
Prepared By:			CAD FILE:	6	CO-S-01
Drawn By:					
Checked By:			Scale	DIMS. IN	Sheet Of Sheets	Rev.
Approved By:			AS NOTED		

CONTRACK ENGINEERING A1 sheet/Cutting edges:841*594/DWG Actual Worksheet:796*566

DWG: V:\PROJECTS\151709\TASK_04_HERAT\CAD\00-STANDARD DETAILS\D\CO\SHEET\CO-S-01.DWG Ver: 15.06s (LMS Tech) User: genotoz
TIME: 01-12-2005 15:19:29 With 1 Xrefs
XREF: ..\XREF\XBDR.DWG

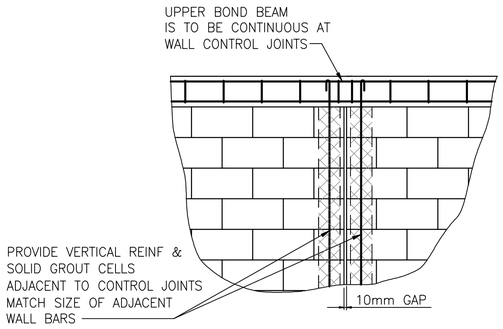

10 CMU WALL CONTROL JOINT

CO-S-02 REF. SCALE: 1:20

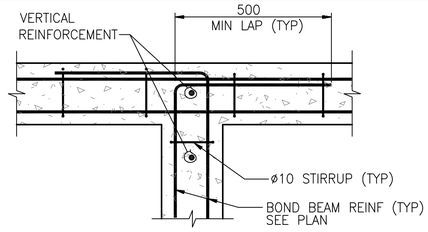

9 TYPICAL CAST-IN-PLACE CONCRETE BOND BEAM INTERSECTION PLAN

CO-S-02 REF. SCALE: 1:10

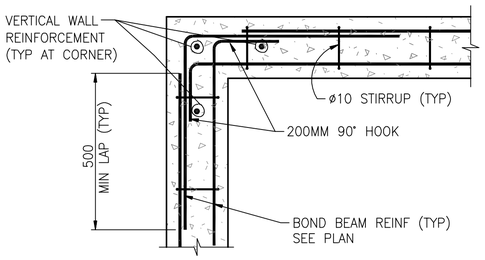

8 TYPICAL CAST-IN-PLACE CONCRETE BOND BEAM CORNER PLAN

CO-S-02 REF. SCALE: 1:10

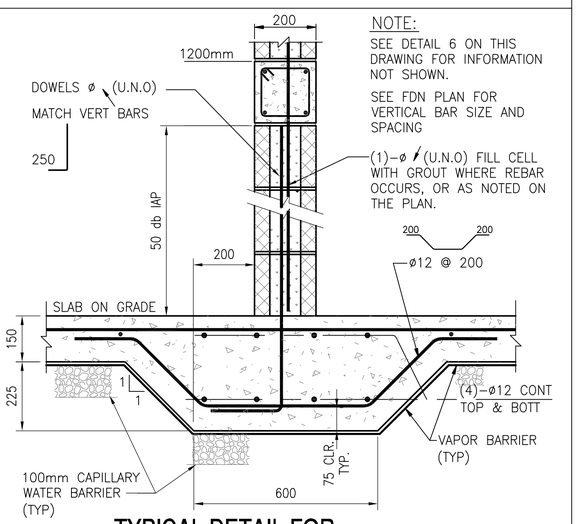

NOTE:
SEE DETAIL 6 ON THIS DRAWING FOR INFORMATION NOT SHOWN.
SEE FDN PLAN FOR VERTICAL BAR SIZE AND SPACING

7 TYPICAL DETAIL FOR INTEROR CMU WALLS

CO-S-02 REF. SCALE: 1:10

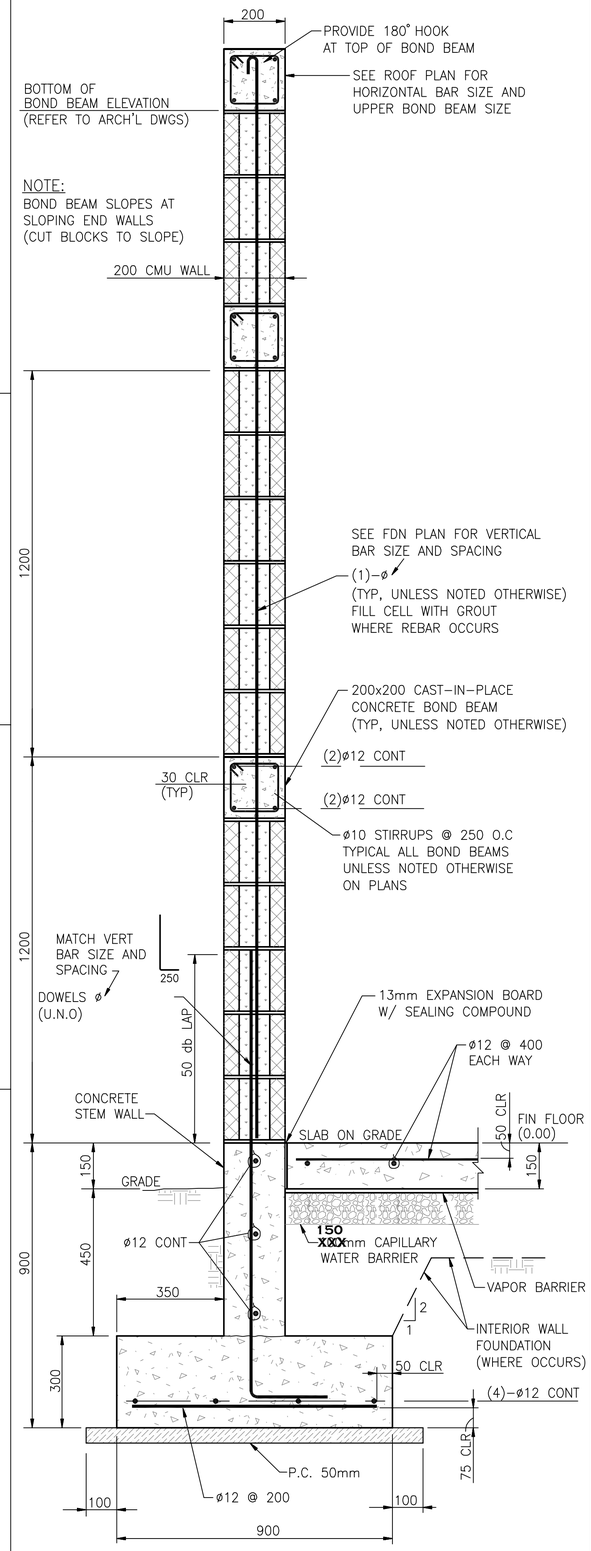

6 SECTION THROUGH EXTERIOR PERIMETER CMU WALL

CO-S-02 REF. SCALE: 1:10

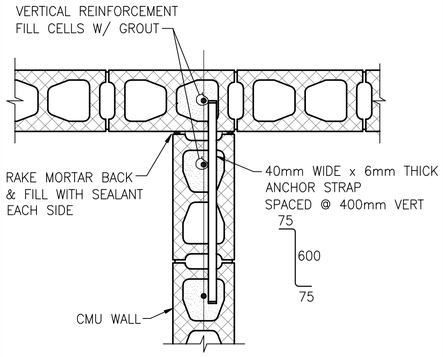

4 TYPICAL CMU WALL INTERSECTION

CO-S-02 (SHOWN BETWEEN BOND BEAMS) SCALE: 1:10

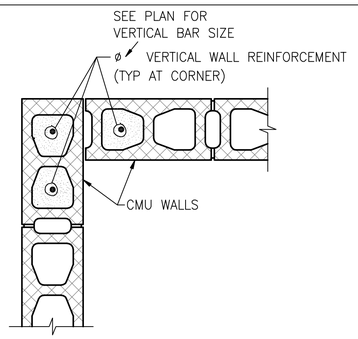

3 TYPICAL CMU WALL CORNER REINFORCING DETAIL

CO-S-02 (SHOWN BETWEEN BOND BEAMS) SCALE: 1:10

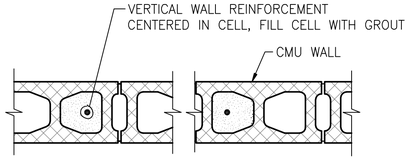

2 TYPICAL CMU WALL REINFORCING

CO-S-02 REF. SCALE: 1:10

FOUNDATION NOTES:

1. FOUNDATION DESIGN IS BASED. ALLOWABLE MINIMUM BEARING CAPACITY OF 3000 PSF (1.5 Kg/cm^2)
2. ALL FOOTINGS SHALL BE FOUNDED ON SATISFACTORY MATERIAL.
3. SEE SPECIFICATION 03200 FOR REINFORCING STEEL. THE MINIMUM GRADE SHALL BE F_Y=60KSI (4218 Kg/cm^2).
4. SEE SPECIFICATION 03300 FOR CAST-IN-PLACE STRUCTURAL CONCRETE. MINIMUM 28 DAY, CYLINDER STRENGTH f'c=4000PSI (280 Kg/cm^2).
5. FOR PLAIN CONCRETE USE 140kg/cm^2
6. SEE SPECIFICATION 04200 FOR MASONRY BLOCK. ALL VERTICAL CELLS OF MASONRY BLOCK WITH REINFORCING SHALL BE GROUTED SOLID TO FORM A COMPOSITE MASONRY AND STEEL ASSEMBLY.
7. ALL DIMENSIONS ARE IN MILLIMETERS.

CMU WALL NOTES:

GENERAL:

1. ENGINEERED MASONRY IS DESIGNED IN ACCORDANCE WITH "BUILDING CODE REQUIREMENTS FOR MASONRY STRUCTURES" (ACI 530-99/ ASCE 5-99/TMS 402-99).
2. UNITS: ASTM C90, TYPE (I) (NORMAL WEIGHT, MOISTURE CONTROLLED) (OR EQUIVALENT DIN, ACI OR EN STANDARDS)
   MORTAR: ASTM C270 TYPE S (OR EQUIVALENT DIN, ACI OR EN STANDARDS)
3. FULLY GROUT ALL CELLS CONTAINING REINFORCING STEEL OR ANCHORS.
4. USE FULL CONTACT LAP SPLICES FOR REINFORCING STEEL IN CMU WALLS AS FOLLOWS UNLESS NOTED OTHERWISE: 48 db

VERTICAL REINFORCEMENT:

1. PROVIDE AN ADDITIONAL VERTICAL REINFORCEMENT AT EACH SIDE OF INTERSECTION OF EXTERIOR WALLS, AND AT EACH SIDE OF ALL MASONRY OPENINGS GREATER THAN 250mm IN WIDTH. IN OPENINGS WIDER THAN 600mm, PROVIDE ADDITIONAL VERTICAL REINFORCEMENT IN TWO ADJACENT CELLS ON EACH SIDE OF THE OPENING. ADDED VERTICAL REINFORCEMENT SHALL BE CONTINUOUS FOR THE FULL HEIGHT OF WALL UNLESS NOTED OTHERWISE.

HORIZONTAL REINFORCEMENT:

1. PROVIDE BOND BEAMS AT 1200mm MAXIMUM VERTICAL SPACING. (EXCEPT AT RESTROOM AND SHOWER STALL PARTITION WALLS)
2. PROVIDE BOND BEAM BELOW ALL MASONRY OPENINGS AND EXTEND A MINIMUM OF 400mm BEYOND EACH SIDE OF OPENING.

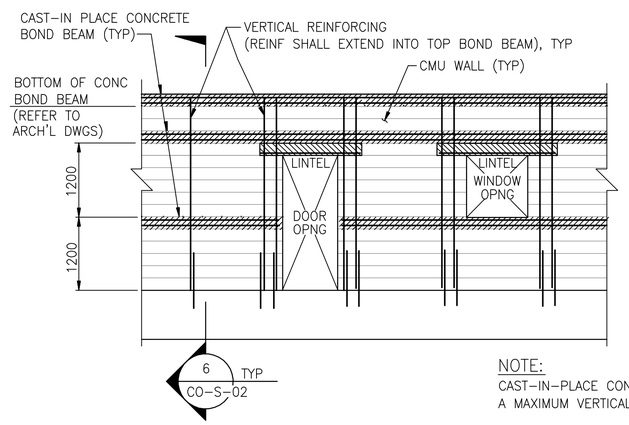

NOTE:
CAST-IN-PLACE CONCRETE BOND BEAMS SHALL HAVE A MAXIMUM VERTICAL SPACING OF 1200mm C/C.

1 TYPICAL DIAGRAMMATIC CMU WALL ELEVATION

CO-S-02 REF. SCALE: 1:50

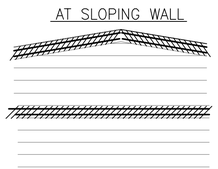

DWG.NO.	DRAWING TITLE	REMARKS
	REFERENCE DRAWINGS	

REV.	Date	DESCRIPTION	Prep.	Drw.	Check.	App.
3	FEB. 01, 2005	100% DESIGN SUBMISSION			JG	AZ
2	DEC. 13, 2004	100% DESIGN COMPLETION			JG	AZ
1	NOV. 16, 2004	99% FINAL REVIEW SUBMITTAL			JG	AZ
0	SEPT. 24, 2004	35% CONCEPT REVIEW SUBMITTAL				

REVISIONS

CLIENT : U.S. ARMY CORPS OF ENGINEERS
TRANSATLANTIC PROGRAMS CENTER

CONTRACTOR: CONTRACK INTERNATIONAL INC. 1001 N 18 Street – Suite 1220 Arlington VIRGINIA 22209 Tel: (703)358-8800 Fax: (703)358-8808

DESIGNER: CONTRACK INTERNATIONAL SOUTH TOWER 22ND FLOOR CORNISH EL-NILE MAALET SEAULIL, CAIRO-EGYPT Tel: 20-24-911900 Fax: 20-24-919402

DESIGNER JOB #: 151709
DMJMH+N 3101 WILSON BLVD. SUITE 900 ARLINGTON, VIRGINIA 22201 Tel: (703)682-4900 Fax: (703)682-4901

DESIGNER:

PROJECT : ANA REGIONAL BRIGADE AFGHANISTAN

TITLE : TYPICAL FOUNDATION AND MASONRY WALL DETAILS

ACTION	NAME	DATE	DOCUMENT NO.:	Task:	
Prepared By:			CAD FILE:	6	CO-S-02
Drawn By:					
Checked By:			Scale / DIMS. IN	Sheet Of Sheets	Rev.
Approved By:			AS NOTED		

CONTRACK ENGINEERING A1 sheet/Cutting edges:841*594/DWG Actual Worksheet:796*566

V:\PROJECTS\151709\TASK_04_HERAT\CAD\00-STANDARD DETAILS\D\CO\SHEET\CO-S-02.DWG Ver: 15.06s (LMS Tech) User: genotoz
DWG: 01-17-2005 11:40:45 With 1 Xrefs
TIME:
XREF: ..\XREF\XBDR.DWG

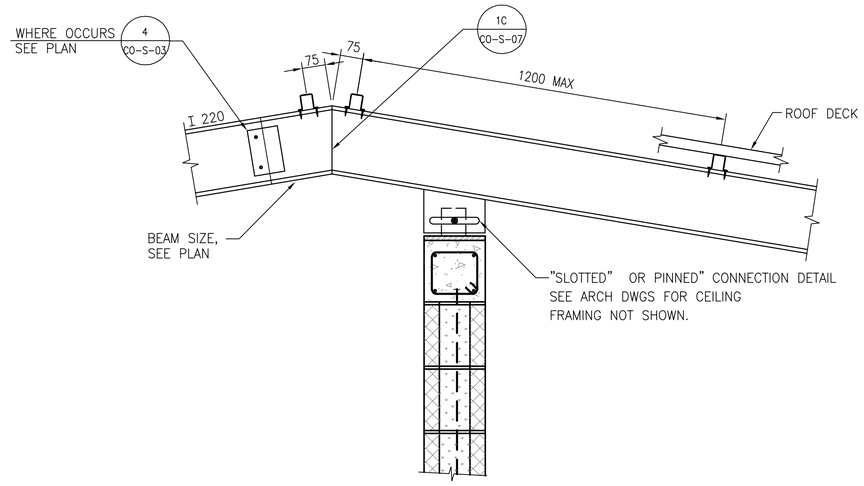

3 ROOF RIDGE CONNECTION DETAIL AT W GIRDERS

CO-S-03

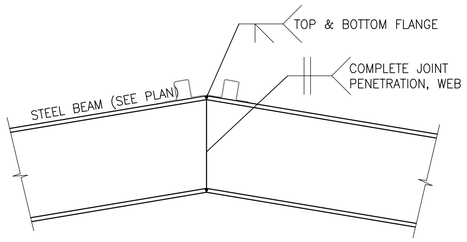

5 BENT BEAM AT RIDGE

CO-S-03 | REF. | SCALE: 1:10

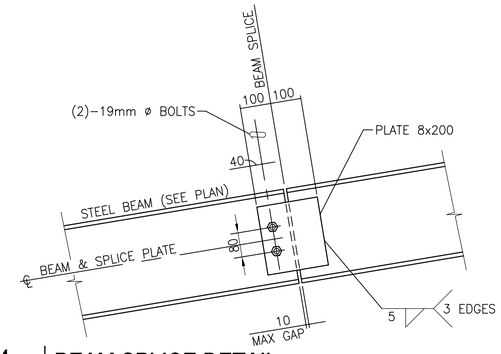

4 BEAM SPLICE DETAIL

CO-S-03 | REF. | SCALE: 1:10

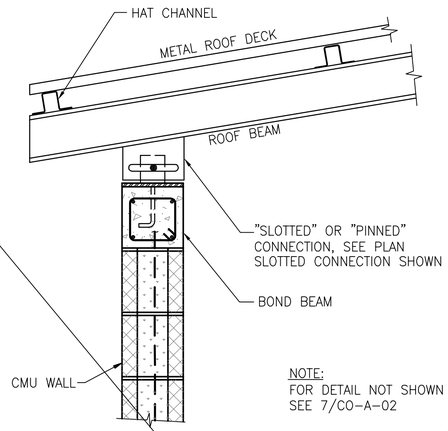

NOTE:
FOR DETAIL NOT SHOWN
SEE 7/CO-A-02

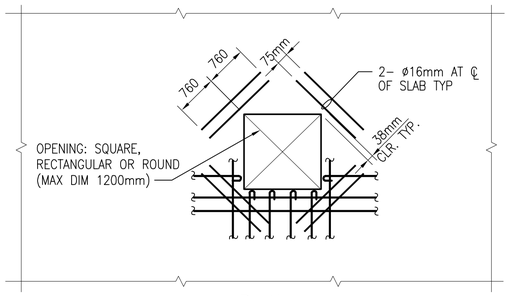

PLAN

NOTES:

1. ALL TOP AND BOTTOM SLAB BARS INTERRUPTED BY OPENING SHALL BE REPLACED BY ADDITIONAL REINFORCING EQUAL TO THAT INTERRUPTED. PLACE HALF OF THE ADDITIONAL REINFORCING ON EACH SIDE OF OPENING AND EXTEND SAME LENGTH AS REQUIRED FOR BAR LAP OF INTERRUPTED REINFORCING.
2. BOXED OUT OPENINGS, BOXED RECESSES AND PIPE SLEEVE CLUSTERS SHALL BE TREATED AS FRAMED SLAB OPENINGS.

2 REINFORCING AROUND STRUCTURAL SLAB OPENINGS & RE-ENTRANT CORNERS

CO-S-03

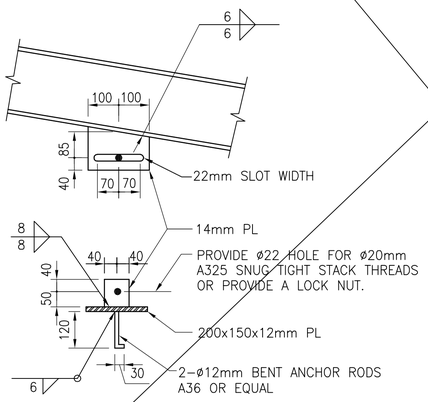

1A "SLOTTED CONNECTION"

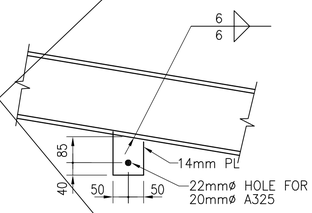

1B "PINNED CONNECTION"

NOTE:
FOR EMBEDDED PLATE,
SEE SLOTTED CONDITION

NOT USED

1 DETAIL (STEEL GIRDER TO MASONRY WALL)

CO-S-03

REV.	Date	DESCRIPTION	Prep.	Drew.	Check.	App.
		REVISIONS				
3	FEB. 01, 2005	100% DESIGN SUBMISSION			JG	AZ
2	DEC. 13, 2004	100% DESIGN COMPLETION			JG	AZ
1	NOV. 16, 2004	99% FINAL REVIEW SUBMITTAL			JG	AZ
0	SEPT. 24, 2004	35% CONCEPT REVIEW SUBMITTAL				

DWG.NO. | DRAWING TITLE | REMARKS

REFERENCE DRAWINGS

CLIENT : U.S. ARMY CORPS OF ENGINEERS
TRANSATLANTIC PROGRAMS CENTER

CONTRACTOR: CONTRACK INTERNATIONAL INC.
1001 N 18 Street – Suite 1200 Arlington, Virginia 22209
Tel: (703)358-8800 Fax: (703)358-8808

DESIGNER: CONTRACK INTERNATIONAL INC.
SOUTH TOWER 22ND FLOOR CORNER EL-MILE RAHALET BOULAQ, CAIRO-EGYPT
Tel: 20-24-611900 Fax: 20-24-619402

DESIGNER JOB #: 151709
DMJMH+N
3101 WILSON BLVD. SUITE 900
ARLINGTON, VIRGINIA 22201
Tel: (703)682-6800 Fax: (703)682-4901

DESIGNER:

PROJECT :
ANA
REGIONAL BRIGADE
AFGHANISTAN

TITLE :
TYPICAL ROOF
FRAMING DETAILS

ACTION	NAME	DATE	DOCUMENT NO.:	Task:	
Prepared By:			CAD FILE:	6	CO-S-03
Drawn By:					
Checked By:			Scale / DIMS. IN	Sheet Of Sheets	Rev.
Approved By:			AS NOTED		

CONTRACK ENGINEERING A1 sheet/Cutting edges:841*594/DWG Actual Worksheet:796*566

DWG: V:\PROJECTS\151709\TASK_04_HERAT\CAD\00-STANDARD DETAILS\D\CO\SHEET\CO-S-03.DWG Ver: 15.0ß (LMS Tech) User: genatoz
TIME: 01-17-2005 11:41:17 With 1 Xrefs
XREF: ..\XREF\XBDR.DWG

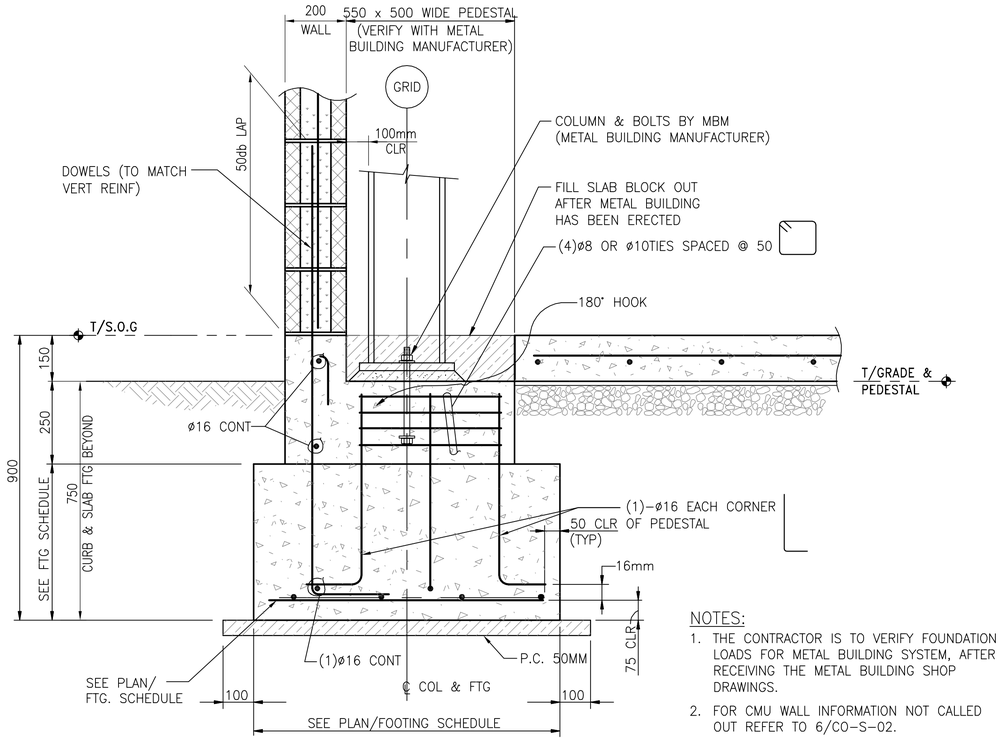

NOTES:

1. THE CONTRACTOR IS TO VERIFY FOUNDATION LOADS FOR METAL BUILDING SYSTEM, AFTER RECEIVING THE METAL BUILDING SHOP DRAWINGS.
2. FOR CMU WALL INFORMATION NOT CALLED OUT REFER TO 6/CO-S-02.

2B SECTION AT EXTERIOR COLUMN FOOTING

CO-S-04 REF. SCALE: 1:10

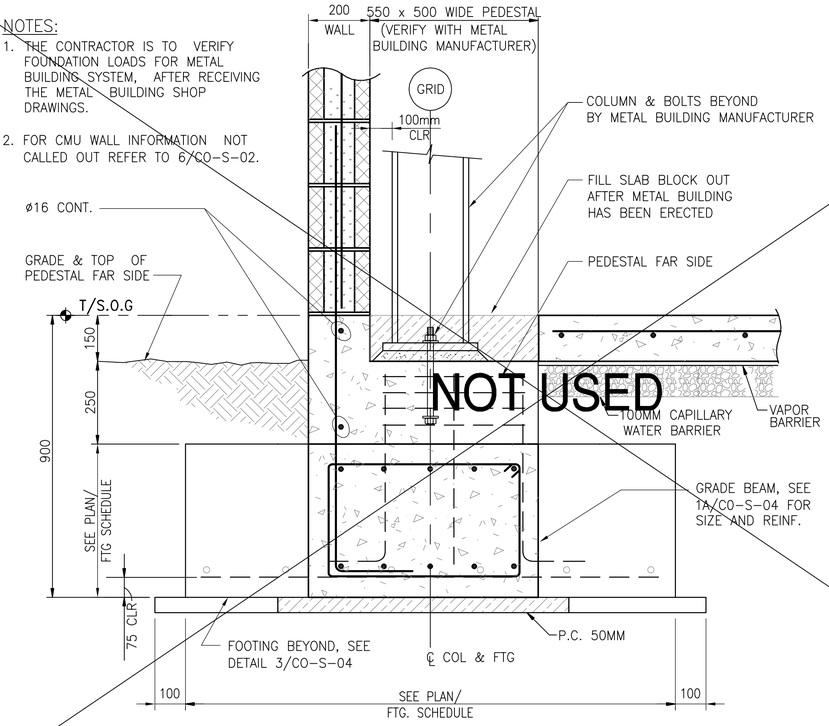

NOTES:

1. THE CONTRACTOR IS TO VERIFY FOUNDATION LOADS FOR METAL BUILDING SYSTEM, AFTER RECEIVING THE METAL BUILDING SHOP DRAWINGS.
2. FOR CMU WALL INFORMATION NOT CALLED OUT REFER TO 6/CO-S-02.

2 SECTION AT FOOTING AND GRADE BEAM

CO-S-04 REF. SCALE: 1:10

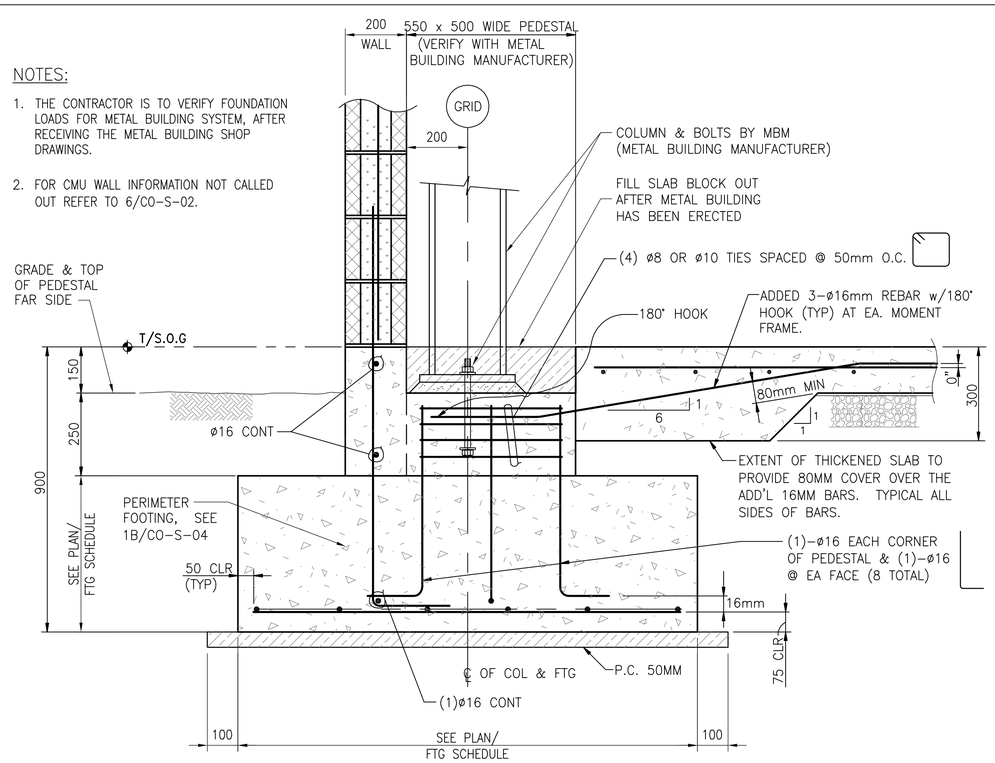

NOTES:

1. THE CONTRACTOR IS TO VERIFY FOUNDATION LOADS FOR METAL BUILDING SYSTEM, AFTER RECEIVING THE METAL BUILDING SHOP DRAWINGS.
2. FOR CMU WALL INFORMATION NOT CALLED OUT REFER TO 6/CO-S-02.

3 SECTION AT EXTERIOR COLUMN FOOTING AT MOMENT FRAME LINES

CO-S-04 REF. SCALE: 1:10

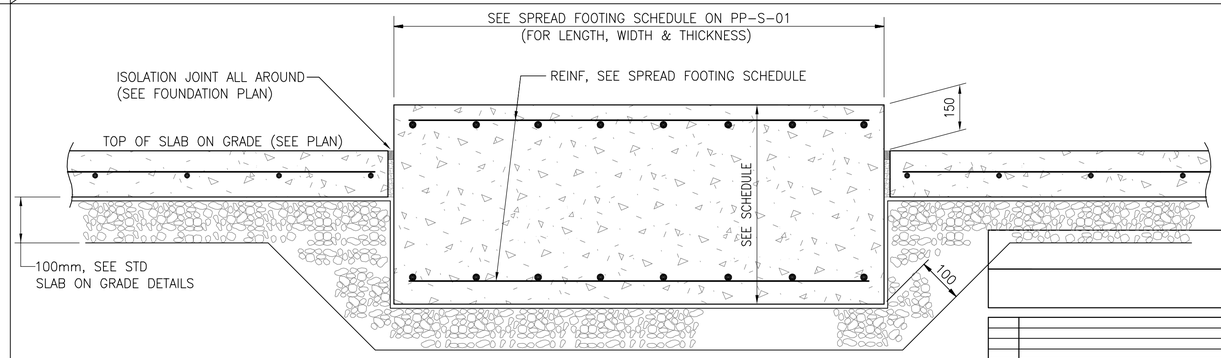

1C SECTION AT EQUIPMENT PADS

CO-S-04 REF. SCALE: 1:10

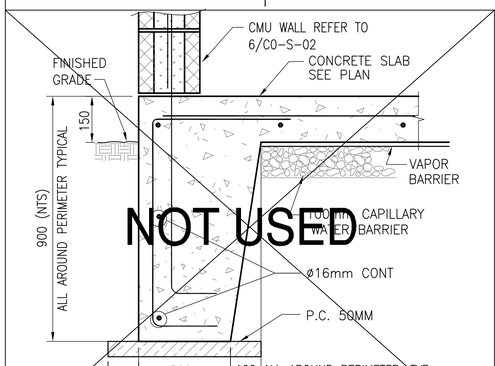

1B PERIMETER FOOTING DETAIL

CO-S-04 REF. SCALE: 1:10

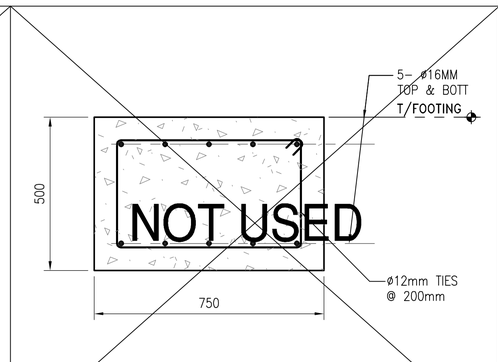

1A GRADE BEAM DETAIL

CO-S-04 REF. SCALE: 1:10

DWG.NO.	DRAWING TITLE	REMARKS
	REFERENCE DRAWINGS	

REV.	Date	DESCRIPTION	Prep.	Drw.	Check.	App.
3	FEB. 01, 2005	100% DESIGN SUBMISSION			JG	AZ
2	DEC. 13, 2004	100% DESIGN COMPLETION			JG	AZ
1	NOV. 16, 2004	99% FINAL REVIEW SUBMITTAL			JG	AZ
0	SEPT. 24, 2004	35% CONCEPT REVIEW SUBMITTAL				

REVISIONS

CLIENT : U.S. ARMY CORPS OF ENGINEERS
TRANSATLANTIC PROGRAMS CENTER

CONTRACTOR: CONTRACK INTERNATIONAL
1001 N 18 Street - Suite 1320 Arlington, Virginia 22209
Tel: (703)358-8800 Fax: (703)358-8808

DESIGNER: CONTRACK ENGINEERING
SOUTH TOWER 22ND FLOOR CORNICHE EL-NILE, MAALET BEAULAC, CAIRO-EGYPT
Tel. 20-24-819500 Fax: 20-24-819402

DESIGNER JOB #: 151709
DMJMH+N
3101 WILSON BLVD. SUITE 900
ARLINGTON, VIRGINIA 22201
Tel: (703)682-4900 Fax: (703)682-4901

DESIGNER:

PROJECT : ANA REGIONAL BRIGADE AFGHANISTAN

TITLE : FOUNDATION DETAILS FOR METAL BUILDING SYSTEMS

ACTION	NAME	DATE	DOCUMENT NO.:	Task:	CO-S-04
Prepared By:			CAD FILE:	6	
Drawn By:					
Checked By:			Scale	DIMS. IN	Sheet Of Sheets	Rev.
Approved By:			AS NOTED		

CONTRACK ENGINEERING A1 sheet/Cutting edges:841*594/DWG Actual Worksheet:796*566

DWG: V:\PROJECTS\151709\TASK_04_HERAT\CAD\00-STANDARD DETAILS\D\CO\SHEET\CO-S-04.DWG Ver: 15.06s (LMS Tech) User: genotoz
TIME: 01-17-2005 11:41:45 With 1 Xrefs
XREF: ..\XREF\XBORD.DWG

NOTES:

1. THE CONTRACTOR IS TO VERIFY FOUNDATION LOADS FOR METAL BUILDING SYSTEM, AFTER RECEIVING THE METAL BUILDING SHOP DRAWINGS.
2. FOR CMU WALL INFORMATION NOT CALLED OUT REFER TO 6/CO-S-02.

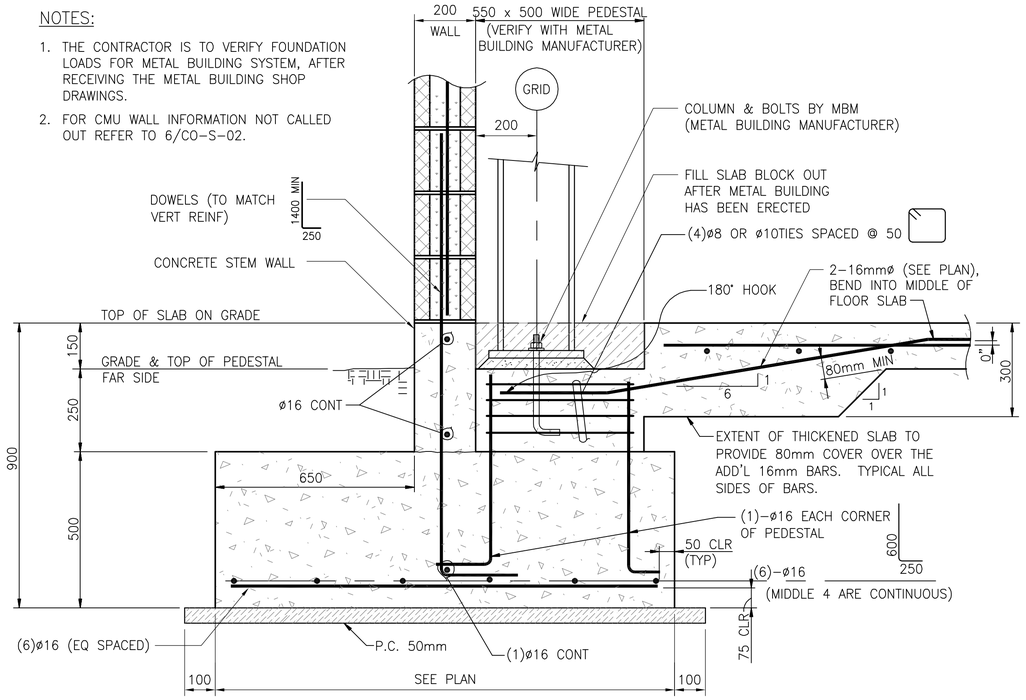

2B SECTION AT EXTERIOR COLUMN FOOTING AT MOMENT FRAME LINES

CO-S-05 SCALE: 1:10

NOTES:

1. THE CONTRACTOR IS TO VERIFY FOUNDATION LOADS FOR METAL BUILDING SYSTEM, AFTER
2. RECEIVING THE METAL BUILDING SHOP DRAWINGS.

FOR CMU WALL INFORMATION NOT CALLED OUT REFER TO 6/CO-S-02.

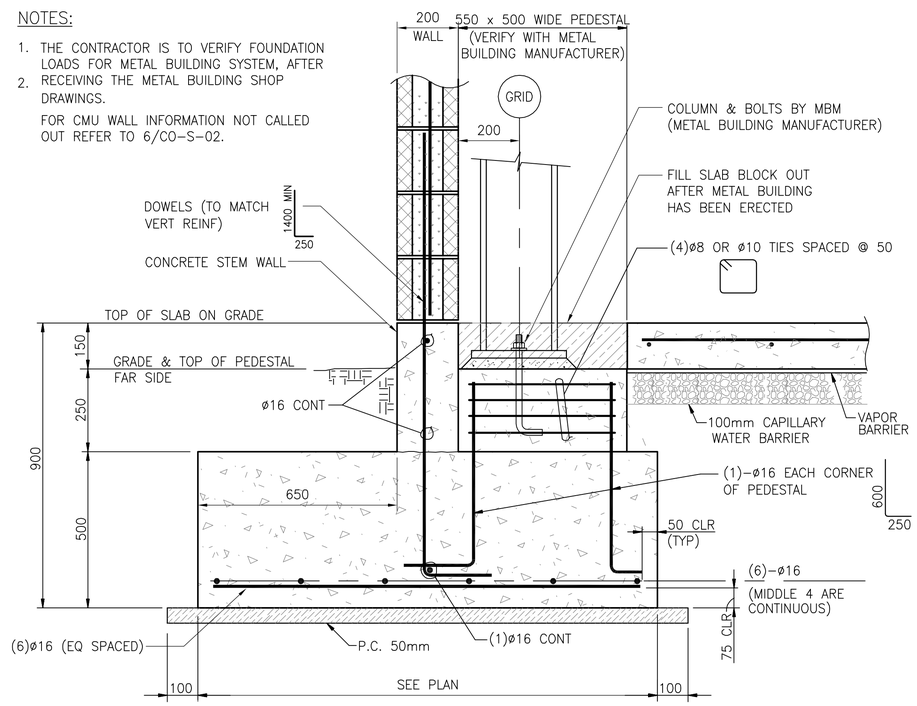

2 SECTION AT EXTERIOR COLUMN FOOTING

CO-S-05 SCALE: 1:10

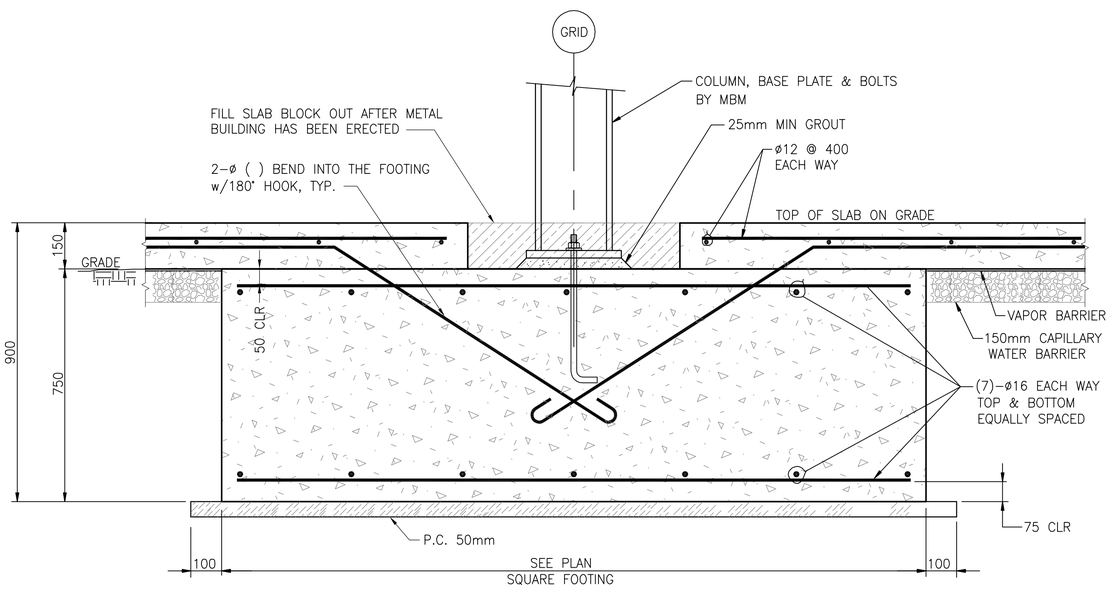

NOTES:

1. THE CONTRACTOR IS TO VERIFY FOUNDATION LOADS FOR METAL BUILDING SYSTEM, AFTER RECEIVING THE METAL BUILDING SHOP DRAWINGS.
2. FOR CMU WALL INFORMATION NOT CALLED OUT REFER TO 6/CO-S-02.

3 SECTION AT INTERIOR COLUMN FOOTING

CO-S-05 SCALE: 1:10

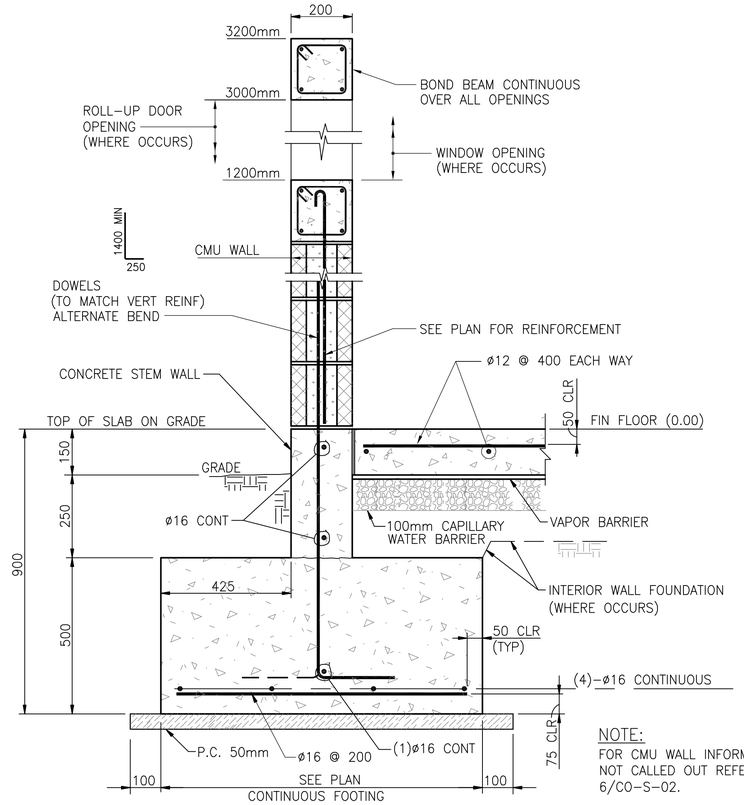

NOTE:

FOR CMU WALL INFORMATION NOT CALLED OUT REFER TO 6/CO-S-02.

1 SECTION AT EXTERIOR WALL FOOTING

CO-S-05 SCALE: 1:10

DWG.NO.	DRAWING TITLE	REMARKS
	REFERENCE DRAWINGS	

REV	Date	DESCRIPTION	Prep.	Drw.	Check.	App.
		REVISIONS				
3	FEB. 01, 2005	100% DESIGN SUBMISSION			JG	AZ
2	DEC. 13, 2004	100% DESIGN COMPLETION			JG	AZ
1	NOV. 16, 2004	99% FINAL REVIEW SUBMITTAL				
0	SEPT. 24, 2004	35% CONCEPT REVIEW SUBMITTAL				

CLIENT :
U.S. ARMY CORPS OF ENGINEERS
TRANSATLANTIC PROGRAMS CENTER

CONTRACTOR: CONTRACK INTERNATIONAL INC. 1001 N. 18 Street - Suite 1220 Arlington TOWER, 22202 Tel: (703)306-8800 Fax: (703)306-8808

DESIGNER: CONTRACK ENGINEERING SOUTH TOWER 22ND FLOOR CORNIEH EL-MILE RAMLET BEAULAC CAIRO-EGYPT Tel: 20-24-811050 Fax: 20-24-818402

DESIGNER JOB #: 151709

DESIGNER: DMJMH+N 2101 WILSON BLVD. SUITE 900 ARLINGTON, VIRGINIA 22201 Tel: (703)882-4800 Fax: (703)882-4801

PROJECT :
ANA REGIONAL BRIGADE AFGHANISTAN

TITLE :
FOUNDATION DETAILS FOR METAL BUILDING SYSTEMS

ACTION	NAME	DATE	DOCUMENT NO.:	Task:	
Prepared By:			CAD FILE:	6	CO-S-05
Drawn By:					
Checked By:			Scale / DIMS. IN	Sheet Of Sheets	Rev.
Approved By:			AS NOTED		

CONTRACK ENGINEERING A1 sheet/Cutting edges:841*594/DWG Actual Worksheet:796*566

DWG: V:\PROJECTS\151709\TASK_04_HERAT\CAD\00-STANDARD DETAILS\D\CO\SHEET\CO-S-05.DWG Ver: 15.06s (LMS Tech) User: genotaz
TIME: 01-17-2005 10:19:03 With 1 Xrefs
XREF: V:\PROJECTS\151709\TASK_04_HERAT\CAD\00-STANDARD DETAILS\D\CO\XREF\XBDR.DWG

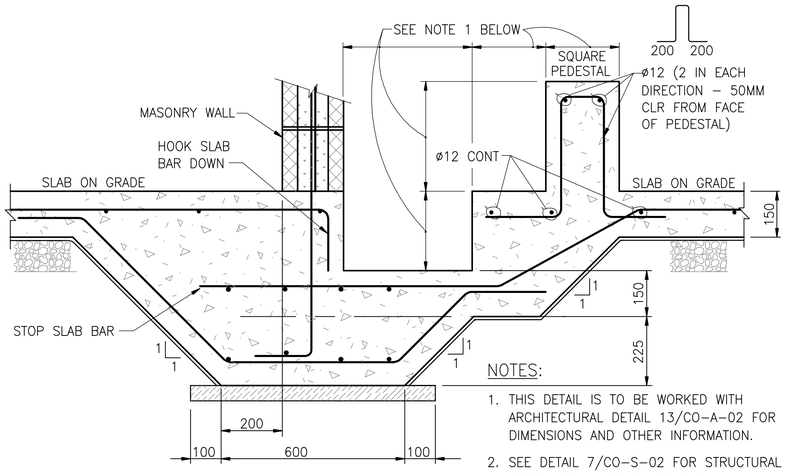

NOTES:

1. THIS DETAIL IS TO BE WORKED WITH ARCHITECTURAL DETAIL 13/CO-A-02 FOR DIMENSIONS AND OTHER INFORMATION.
2. SEE DETAIL 7/CO-S-02 FOR STRUCTURAL INFORMATION NOT CALLED OUT.

8 TYPICAL SECTION AT ABLUTION DRAIN DETAIL

CO-S-06 REF. SCALE: 1:10

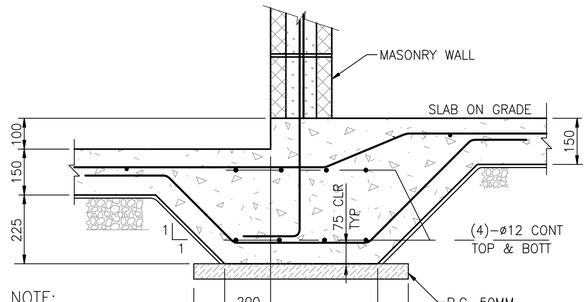

NOTE:
SEE DETAIL 7/CO-S-02 FOR INFORMATION NOT CALLED OUT.

7 DEPRESSED SLAB AT EDGE OF MASONRY WALL

CO-S-06 REF. SCALE: 1:10

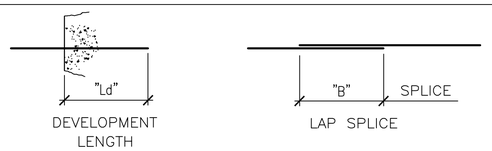

NOTE: $f'c = 280\ Kg/cm^2$ $fy = 4218\ kg/sqcm$

BOTTOM LAYER IN GRADE BEAMS, FOOTINGS, SLABS & VERTICAL WALL BARS									
LENGTH	BAR SIZE	ø10 ø12	ø14	ø16	ø18	ø19	ø22		
"B"	—	610	711	813	889	940	1372		
"Ld"	—	460	533	610	686	738	1068		
TOP LAYER IN GRADE BEAMS, FOOTINGS & HORIZONTAL WALL BARS (TOP BARS)									
LENGTH	BAR SIZE	ø10 ø12	ø14	ø16	ø18	ø19	ø22		
"B"	—	788	914	1041	1168	1320	1780		
"Ld"	—	610	711	813	889	940	1372		

6 LAP SPLICE & DEVELOPMENT LENGTH IN CONCRETE

CO-S-06 REF. SCALE: NONE

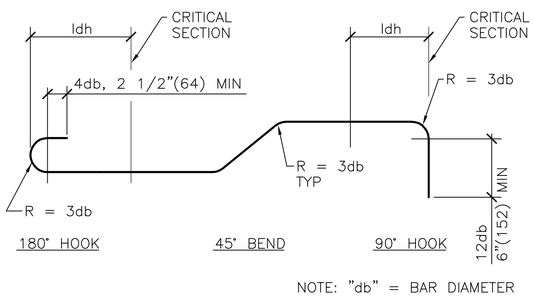

NOTE: "db" = BAR DIAMETER

LEGEND (FOR REINFORCING SHOWN IN PLAN OR ELEVATION)

- 90° HOOK IN THE PLANE OF THE DRAWING
- 90° BEND PERPENDICULAR TO THE PLANE OF THE DRAWING
- HOOK PERPENDICULAR TO THE PLANE OF THE DRAWING
- 180° HOOK IN THE PLANE OF THE DRAWING
- OFFSET IN THE PLANE OF THE DRAWING

BAR SIZE	ø10	ø12	ø14	ø16	ø18	ø19	ø22
ldh	152	178	203	230	254	280	322

3 BENDS IN REINFORCING BARS

CO-S-06 REF. SCALE: NONE

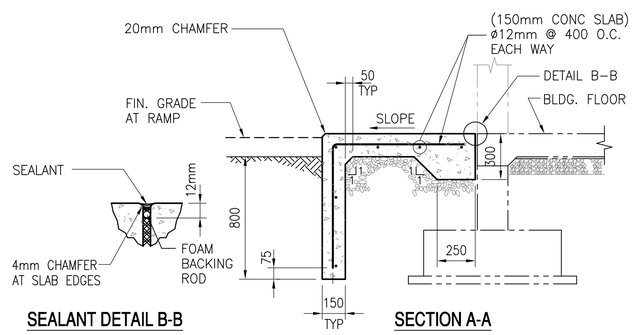

SEALANT DETAIL B-B

SECTION A-A

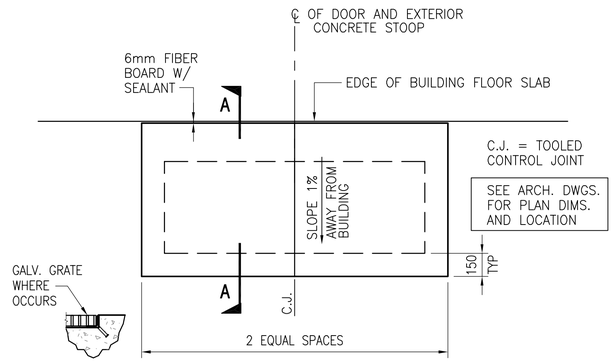

DETAIL D-D

EXTERIOR STOOPS

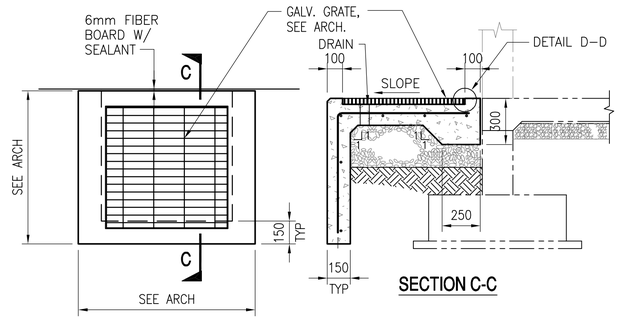

SECTION C-C

EXTERIOR STOOPS @ BARRACKS & HQ BLDG'S ONLY

4 CONCRETE STOOP - RAMP SIM.

CO-S-06 REF. SCALE: 1:20

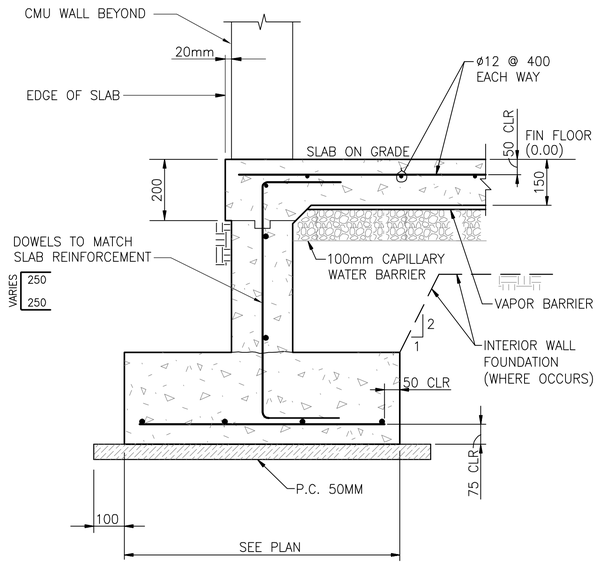

2 SLAB SECTION AT DOOR OPENING

CO-S-06 SCALE: 1:10

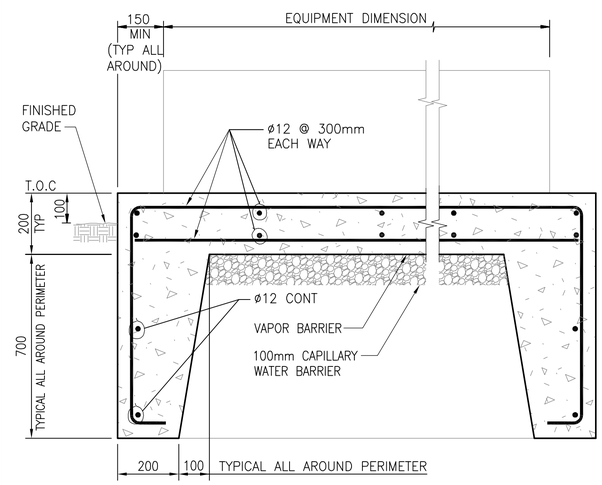

NOTE:
PAD DIMENSIONS, ANCHOR BOLT SIZE AND LOCATIONS, AND OTHER EMBEDDED ITEMS SHALL CONFORM TO EQUIPMENT MANUFACTURER'S REQUIREMENTS.

1 CONCRETE PAD FOR EXTERIOR EQUIPMENT

CO-S-06 SCALE: 1:10

DWG.NO.	DRAWING TITLE	REMARKS
	REFERENCE DRAWINGS	

REV.	Date	DESCRIPTION	Prep.	Drw.	Check.	App.
		REVISIONS				
3	FEB. 01, 2005	100% DESIGN SUBMISSION			JG	AZ
2	DEC. 13, 2004	100% DESIGN COMPLETION			JG	AZ
1	NOV. 16, 2004	99% FINAL REVIEW SUBMITTAL			JG	AZ
0	SEPT. 24, 2004	35% CONCEPT REVIEW SUBMITTAL				

CLIENT: U.S. ARMY CORPS OF ENGINEERS TRANSATLANTIC PROGRAMS CENTER

CONTRACTOR: CONTRACK INTERNATIONAL INC. 1001 N 19 Street – Suite 1220 Arlington, VIRGINIA 22209 Tel: (703)358-8600 Fax: (703)358-8608

DESIGNER: CONTRACK ENGINEERING SOUTH TOWER 22ND FLOOR CORNISH EL-HILE COMMERCIAL CENTER BAHRAIN Tel: 30-24-611800 Fax: 30-24-619402

DESIGNER JOB #: 151709

DESIGNER: DMJMH+N 3101 WILSON BLVD. SUITE 800 ARLINGTON, VIRGINIA 22201 Tel: (703)682-4900 Fax: (703)682-4901

PROJECT: ANA REGIONAL BRIGADE AFGHANISTAN

TITLE: MISCELLANEOUS SECTIONS AND DETAILS

ACTION	NAME	DATE	DOCUMENT NO.:	Task:	CO-S-06
Prepared By:			CAD FILE:	6	
Drawn By:					
Checked By:			Scale	DIMS. IN	Sheet Of Sheets	Rev.
Approved By:			AS NOTED		

CONTRACK ENGINEERING A1 sheet/Cutting edges:841*594/DWG Actual Worksheet:796*566

DWG: V:\PROJECTS\151709\TASK_04_HERAT\CAD\00-STANDARD DETAILS\D\CO\SHEET\CO-S-06.DWG Ver: 15.06s (LMS Tech) User: genotaz
TIME: 01-17-2005 11:42:57 With 1 Xrefs
XREF: ..\XREF\XBDR.DWG

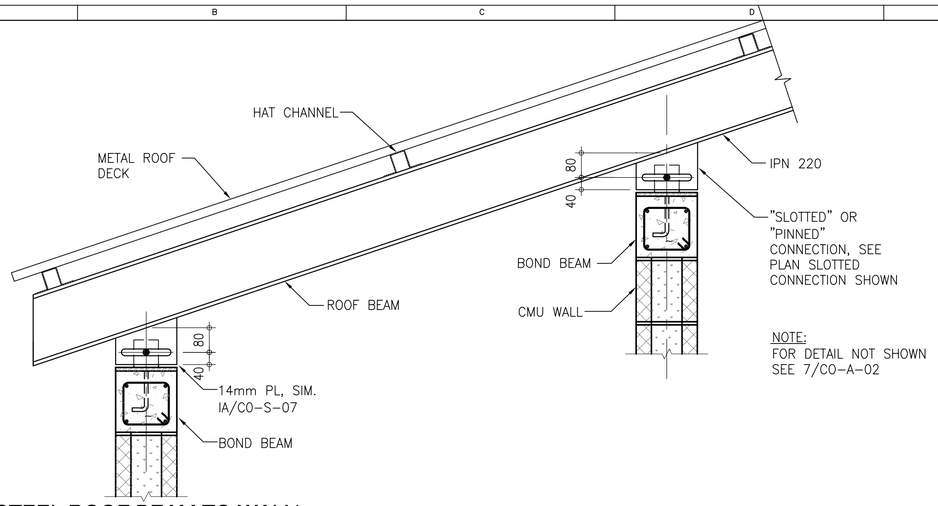

5 DETAIL (STEEL ROOF BEAM TO WALL)

CO-S-07 REF. SCALE: 1:10

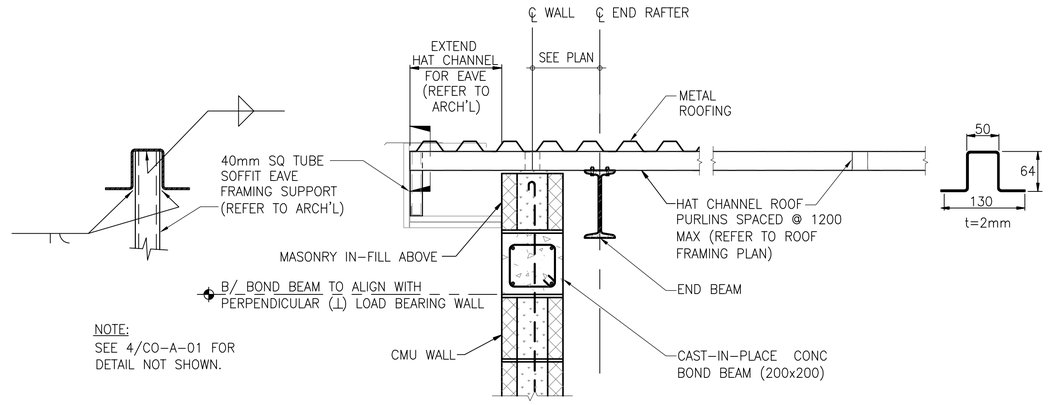

2 DETAIL (HAT CHANNEL OVER MASONRY WALL)

CO-S-07 REF. SCALE: 1:10

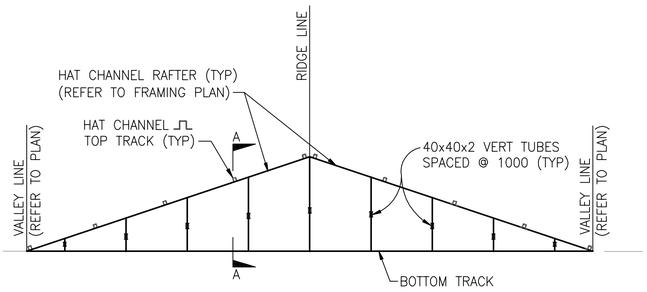

ELEVATION (SECTION) THROUGH TRANSITION ROOF

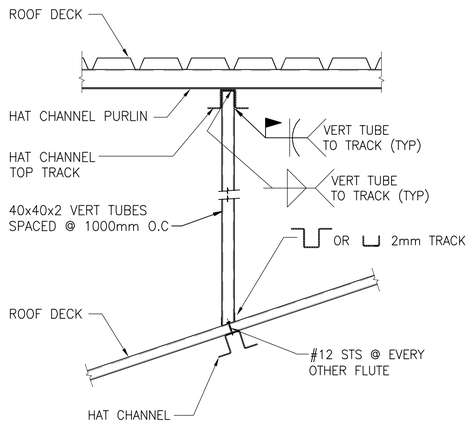

SECTION A-A

4 TRANSITION ROOF DETAILS

CO-S-07 REF. SCALE: 1:10

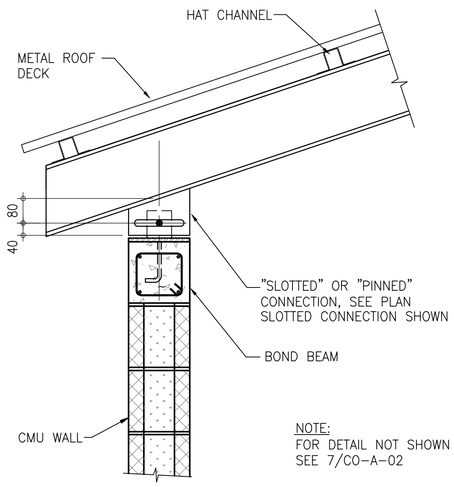

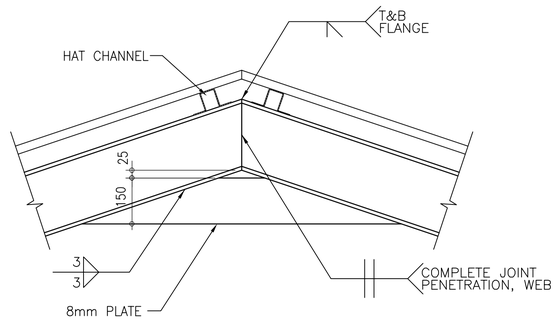

1C BEAM DETAIL AT RIDGE

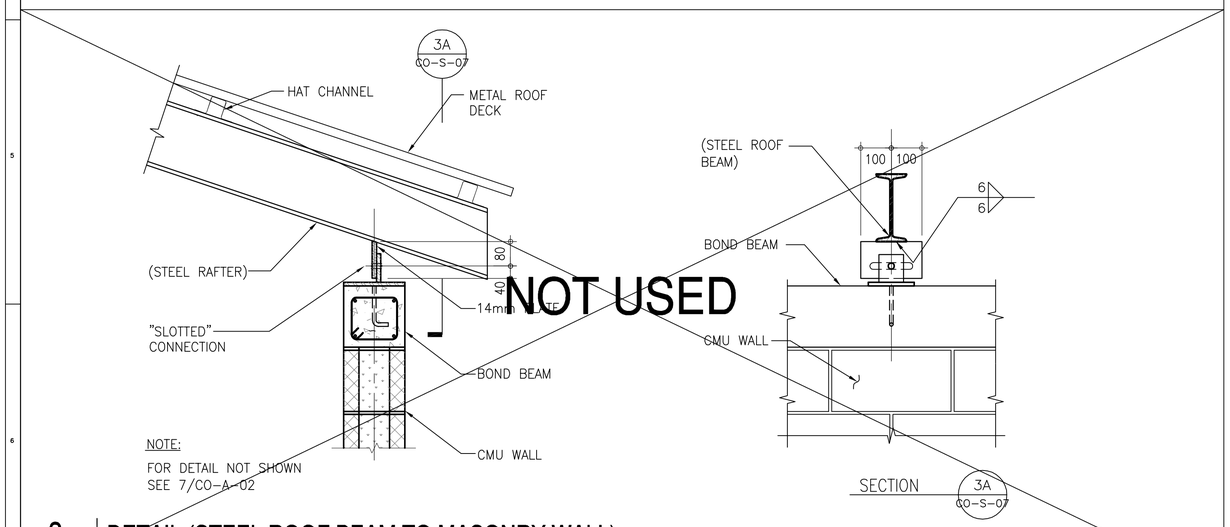

NOT USED

3 DETAIL (STEEL ROOF BEAM TO MASONRY WALL)

CO-S-07

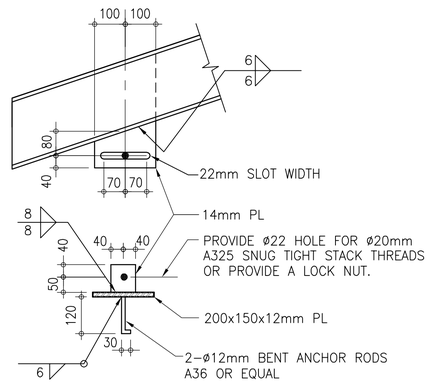

1A "SLOTTED CONNECTION"

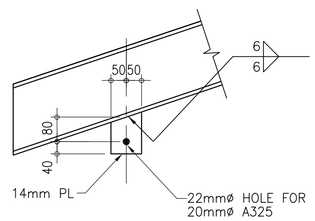

1B "PINNED CONNECTION"

NOTE:
FOR EMBEDDED PLATE, SEE SLOTTED CONDITION

1 DETAIL (STEEL ROOF BEAM TO MASONRY WALL)

CO-S-07 REF. SCALE: 1:10

0 0.1 0.2 0.3 0.4 0.5 METER
Scale 1:10

DWG.NO.	DRAWING TITLE	REMARKS
	REFERENCE DRAWINGS	

REV.	Date	DESCRIPTION	Prep.	Drw.	Check.	App.
		REVISIONS				
3	FEB. 01, 2005	100% DESIGN SUBMISSION			JG	AZ
2	DEC. 13, 2004	100% DESIGN COMPLETION			JG	AZ
1	NOV. 16, 2004	99% FINAL REVIEW SUBMITTAL			JG	AZ
0	SEPT. 24, 2004	35% CONCEPT REVIEW SUBMITTAL				

CLIENT : U.S. ARMY CORPS OF ENGINEERS TRANSATLANTIC PROGRAMS CENTER

CONTRACTOR: CONTRACK INTERNATIONAL, 1001 N. 19 Street - Suite 1220 Arlington, Virginia 22209 Tel: (703)358-8800 Fax: (703)358-8808

DESIGNER: CONTRACK ENGINEERING, SOUTH TOWER 22nd FLOOR CORNIER G.I.-HALE PRAULT BEAULIC, CABO-EGYPT Tel: 20-24-819500 Fax: 20-24-819502

DESIGNER JOB #: 151709

DMJMH+N 3101 WILSON BLVD. SUITE 900 ARLINGTON, VIRGINIA 22201 Tel: (703)682-4900 Fax: (703)682-4901

DESIGNER:

PROJECT : ANA REGIONAL BRIGADE AFGHANISTAN

TITLE : TYPICAL ROOF FRAMING DETAILS

ACTION	NAME	DATE	DOCUMENT NO.:	Task:	CO-S-07
Prepared By:	AP		CAD FILE:	6	
Drawn By:	ZPG				
Checked By:	AP		Scale / DIMS. IN	Sheet Of Sheets	Rev.
Approved By:	AJS		AS NOTED		

CONTRACK ENGINEERING A1 sheet/Cutting edges:841*594/DWG Actual Worksheet:796*566

DWG: V:\PROJECTS\151709\TASK_04_HERAT\CAD\00-STANDARD DETAILS\D\CO\SHEET\CO-S-07.DWG Ver: 15.06s (LMS Tech) User: genotoz
TIME: 02-01-2005 11:49:51 With 1 Xrefs
XREF: ..\XREF\XBLOK.DWG

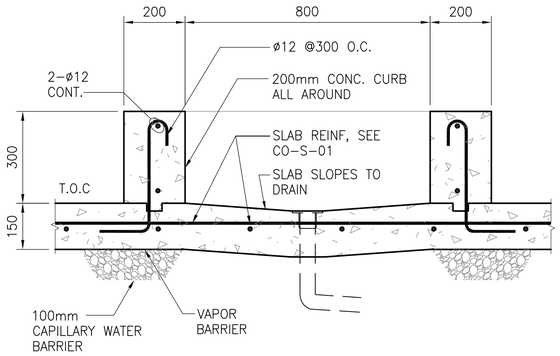

7 TYPICAL POT WASHING BASIN

CO–S–08 SCALE: 1:10

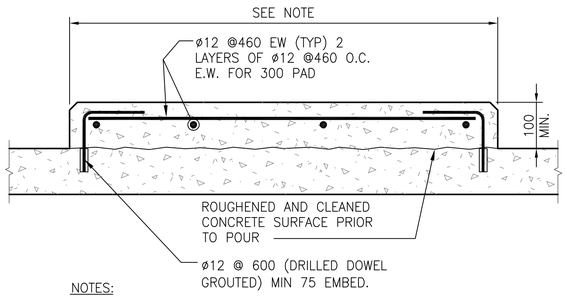

NOTES:

1. CONTRACTOR TO COORDINATE SIZE AND LOCATION OF PADS WITH ELECTRICAL AND MECHANICAL CONTRACTORS.
2. SIZE & LOCATION OF EQUIPMENT PADS SHALL BE COORDINATED WITH THE EQUIPMENT FURNISHED. PADS SHALL BE 100mm LARGER THAN EQUIPMENT ON EACH SIDE.
3. SEE MECHANICAL, ELECTRICAL AND PLUMBING DRAWINGS FOR THE HEIGHT OF EACH PAD.

6 TYPICAL EQUIPMENT PAD DETAIL

CO–S–08 SCALE: 1:10

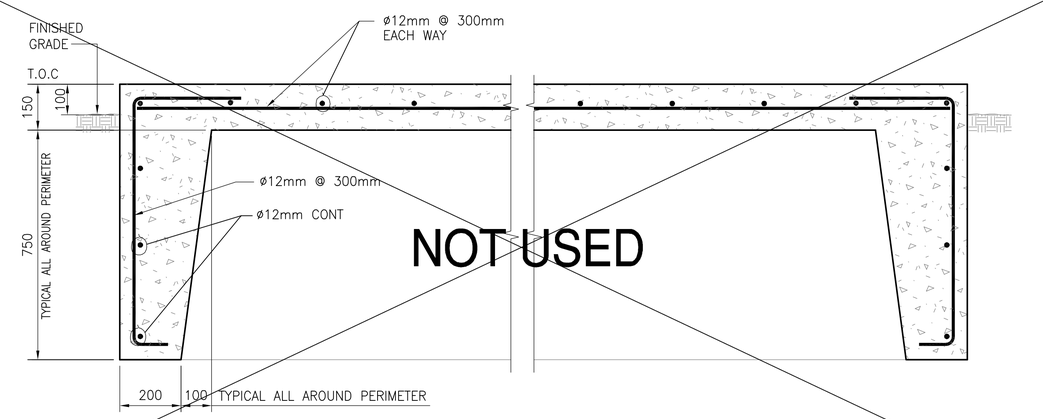

NOT USED

3 TYPICAL HOSPITAL SLAB DETAIL

CO–S–08 SCALE: 1:10

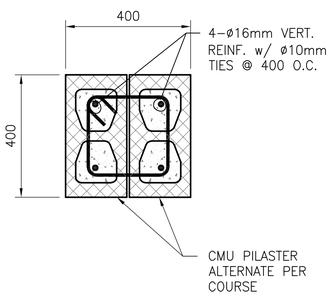

5 CMU PILASTER DETAIL

CO–S–08 SCALE: 1:10

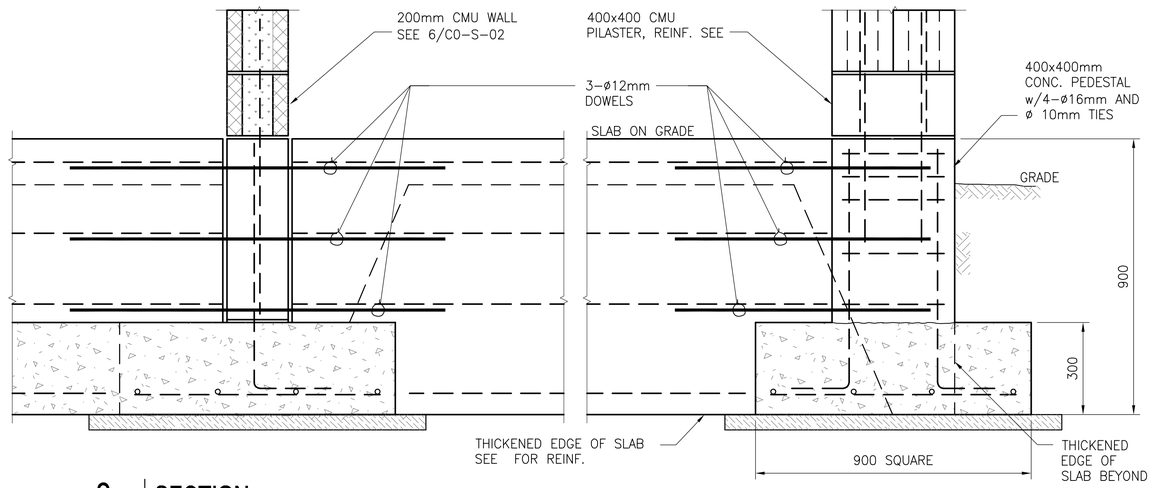

2 SECTION

CO–S–08 SCALE: 1:10

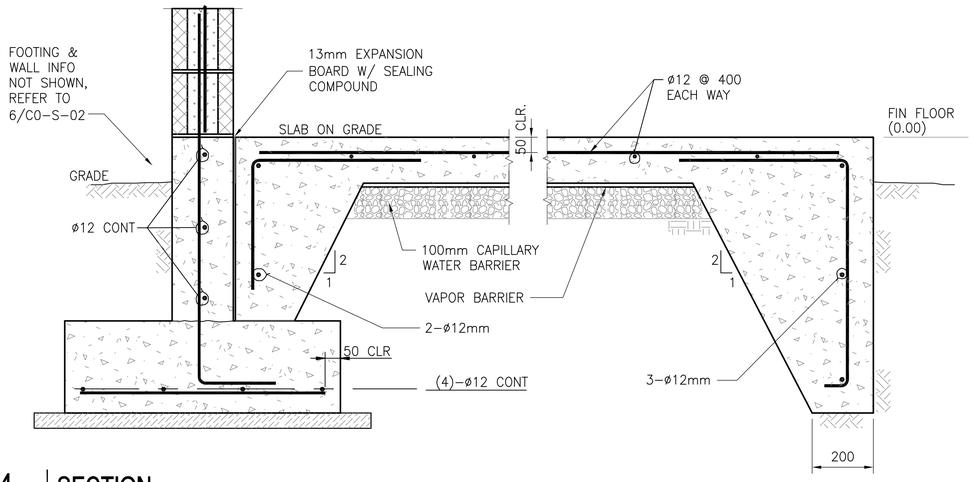

4 SECTION

CO–S–08 SCALE: 1:10

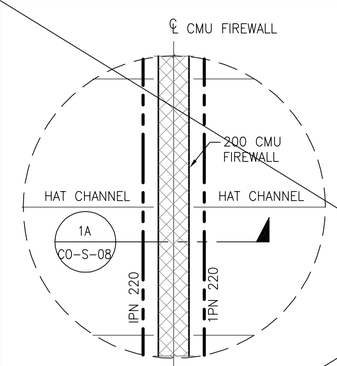

PARTIAL PLAN (1)

NOTE:
BOND BEAM SLOPES AT SLOPING END WALLS (CUT BLOCKS TO SLOPE)

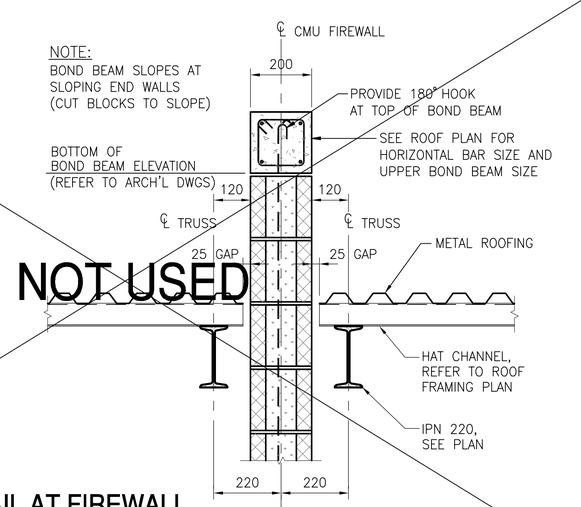

NOT USED

1A TYPICAL DETAIL AT FIREWALL

CO–S–08 SCALE: 1:10

DWG.NO.	DRAWING TITLE	REMARKS
	REFERENCE DRAWINGS	

REV	Date	DESCRIPTION	Prep.	Drw.	Check.	App.
3	FEB. 01, 2005	100% DESIGN SUBMISSION		JG	AZ	
2	DEC. 13, 2004	100% DESIGN COMPLETION		JG	AZ	
1	NOV. 16, 2004	99% FINAL REVIEW SUBMITTAL				
0	SEPT. 24, 2004	35% CONCEPT REVIEW SUBMITTAL				

REVISIONS

CLIENT : U.S. ARMY CORPS OF ENGINEERS TRANSATLANTIC PROGRAMS CENTER

CONTRACTOR: CONTRACK INTERNATIONAL, INC. 1001 N. 19 Street • Suite 1220 Arlington, Virginia 22209 Tel: (703)358–8800 Fax: (703)358–8808

DESIGNER: CONTRACK ENGINEERING SOUTH TOWER 22nd FLOOR CORNIXH ELMALE RMALET BEAULAC, CAIRO–EGYPT Tel: 20–24–819000 Fax: 20–24–819402

DESIGNER JOB #: 151709
DMJMH+N 3101 WILSON BLVD. SUITE 900 ARLINGTON, VIRGINIA 22201 Tel: (703)682–4900 Fax: (703)682–4901

DESIGNER:

PROJECT : ANA REGIONAL BRIGADE AFGHANISTAN

TITLE : MISCELLANEOUS SECTIONS AND DETAILS

ACTION	NAME	DATE	DOCUMENT NO.:	Task:	
Prepared By:			CAD FILE:	6	CO-S-08
Drawn By:					
Checked By:			Scale	DIMS. IN	Sheet Of Sheets	Rev.
Approved By:			AS NOTED		

CONTRACK ENGINEERING A1 sheet/Cutting edges:841*594/DWG Actual Worksheet:796*566

DWG: V:\PROJECTS\151709\TASK_04_HERAT\CAD\00–STANDARD DETAILS\D\CO\SHEET\CO–S–08.DWG Ver: 15.06s (LMS Tech) User: genotoz
TIME: 02–03–2005 09:35:22 With 1 Xrefs
XREF: ..\XREF\XBORDER.DWG

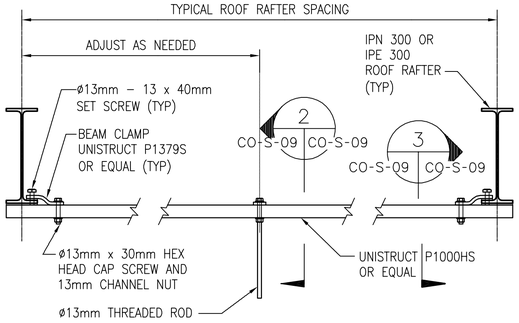

NOTES:

1. LOCATION TO BE DETERMINED IN THE FIELD AND ADJUSTED AS NECESSARY.
2. STEEL TUBING AND GYPSUM WALL BOARD (GPW) NOT SHOWN FOR CLARITY.
3. HOLES THROUGH THE GPW AT APPROPRIATE LOCATIONS SHALL BE MADE TO ACCOMMODATE THE LIGHT & CEILING FAN FIXTURES.

1 TYPICAL LIGHT FIXTURE & CEILING FAN SUPPORT DETAIL

CO-S-09 SCALE: 1:10

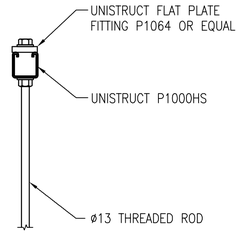

2 DETAIL

CO-S-09 SCALE: 1:10

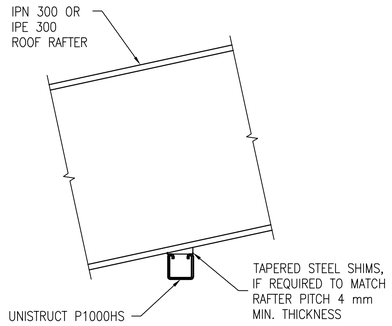

NOTE: BEAM CLAMP ASSEMBLY NOT SHOWN FOR CLARITY.

3 DETAIL

CO-S-09 SCALE: 1:10

DWG.NO.	DRAWING TITLE	REMARKS
	REFERENCE DRAWINGS	

REV.	Date	DESCRIPTION	Prep.	Drw.	Check.	App.
3	FEB. 01, 2005	100% DESIGN SUBMISSION				
2	DEC. 13, 2004	100% DESIGN COMPLETION				
1	NOV. 16, 2004	99% FINAL REVIEW SUBMITTAL				
0	SEPT. 24, 2004	35% CONCEPT REVIEW SUBMITTAL				

REVISIONS

CLIENT :
U.S. ARMY CORPS OF ENGINEERS
TRANSATLANTIC PROGRAMS CENTER

CONTRACTOR:
CONTRACK INTERNATIONAL
1001 N 18 Street – Suite 1201 Arlington, Virginia 22209
Tel: (703)358-8800 Fax: (703)358-8808

DESIGNER:
CONTRACK ENGINEERING
SOUTH TOWER 22ND FLOOR CORNISH CLINIC
RMAILET BEAULAC, CAIRO-EGYPT
Tel: 20-24-611900 Fax: 20-24-619402

DESIGNER JOB #: 151709
DMJMH+N
3101 WILSON BLVD. SUITE 900
ARLINGTON, VIRGINIA 22201
Tel: (703)243-4600 Fax: (703)882-4901

DESIGNER:

PROJECT :
ANA
REGIONAL BRIGADE
AFGHANISTAN

TITLE :
MISCELLANEOUS
SECTIONS AND DETAILS

ACTION	NAME	DATE	DOCUMENT NO.:	Task:	
Prepared By:			CAD FILE:	6	CO-S-09
Drawn By:					
Checked By:			Scale: AS NOTED	DIMS. IN	Sheet Of Sheets / Rev.
Approved By:					

AFGHAN NATIONAL POLICE

STANDARD BUILDING DESIGNS

WELL HOUSE

SHEET INDEX

G1 COVER SHEET

S1 GENERAL NOTES
S2 DESIGN CRITERIA & SCHEDULES
S3 FOUNDATION & ROOF FRAMING PLANS
S4 SECTIONS AND DETAILS
S5 TYPICAL DETAILS

A1 FLOOR AND ROOF PLANS AND DETAILS
A2 EXTERIOR ELEVATIONS
A3 DOOR & WINDOW & FINISH TYPES & DETAILS

P1 PLUMBING SCHEMATIC AND DETAILS

M1 HVAC PLAN

E0 ELECTRICAL SYMBOLS AND ABBREVIATIONS
E1 LIGHTING AND POWER PLAN
E2 DETAILS
E3 LIGHT FIXTURE SCHEDULE
E4 PANEL SCHEDULES AND RISER DIAGRAM

US Army Corps of Engineers
Afghanistan Engineer District

SYMBOL	DESCRIPTION	DATE	APR

DESIGNED BY: JDS
DWN BY: JDS
CHK BY: JDS
DATE: 09-30-09
SUBMITTED BY: BAKER
FILE NO.: ANPSDG-001XXX

Michael Baker Jr., Inc
A unit of Michael Baker Corporation
Airside Business Park
100 Airside Drive
Moon Township, PA 15108
www.mbakercorp.com

AFGHAN NATIONAL POLICE
STANDARD DESIGN
WELL HOUSE

COVER SHEET

SHEET REFERENCE NUMBER:
G1

100% SUBMISSION

STRUCTURAL ABBREVIATIONS:

ACI	AMERICAN CONCRETE INSTITUTE
AISC	AMERICAN INSTITUTE OF STEEL CONSTRUCTION
ALT	ALTERNATE
ASTM	AMERICAN SOCIETY FOR TESTING AND MATERIALS
AWS	AMERICAN WELDING SOCIETY
ARCH	ARCHITECTURAL
B	BOTTOM
BLDG	BUILDING
BOTT	BOTTOM
℄	CENTER LINE
CFMF	COLD FORM METAL FRAME
CFS	COLD FORMED STEEL
CIP	CAST IN PLACE
CIPL	CAST-IN-PLACE LINTEL
CJ	CONTROL JOINT
CLR	CLEAR
CMU	CONCRETE MASONRY UNIT
COEFF	COEFFICIENT
COL	COLUMN
CONC	CONCRETE
CONT	CONTINUOUS
COORD	COORDINATE
CSJ	CONSTRUCTION JOINT
CTJ	CONTROL JOINT
DIA	DIAMETER
DIAG	DIAGONAL
DIM	DIMENSION
DWG	DRAWING
DWL	DOWEL
EA	EACH
ELEC	ELECTRICAL
ELEV	ELEVATION
EMBED	EMBEDMENT
EQUIV	EQUIVALENT
ETC	ET CETERA
EW	EACH WAY
EXT	EXTERIOR
FTG	FOOTING
GA	GAUGE
HORIZ	HORIZONTAL
HRS	HOURS
IBC	INTERNATIONAL BUILDING CODE
INT	INTERIOR
Kg	KILOGRAM
KIP	KIPS (1 KIP = 1,000 POUNDS)
kN	KILONEWTON
kPa	KILOPASCAL
L#	ANGLE (# INDICATES SIZE)
LLV	LONG LEG VERTICAL
M	METER
MAX	MAXIMUM
MBM	METAL BUILDING MANUFACTURER
MECH	MECHANICAL
MFG	MANUFACTURER
MID	MIDDLE
MIN	MINIMUM
MISC	MISCELLANEOUS
MM	MILLIMETER
MPa	MEGAPASCAL
MTL	METAL
MWFRS	MAIN WIND FORCE RESISTING SYSTEM
N	NEWTON
N	NORTH
N/A	NOT APPLICABLE
#	NUMBER SYMBOL FOR REBAR SIZE
NTS	NOT TO SCALE
OC	ON CENTER
OPNG	OPENING
ℙ or PL	PLATE
PRE-ENG	PRE-ENGINEERED
REINF	REINFORCED
REQ'D	REQUIRED
SIM	SIMILAR
SPECS	SPECIFICATIONS
STD	STANDARD
STRUCT	STRUCTURAL
SW	SHEAR WALL
T	TOP
T/	TOP OF
T/ELEV	TOP ELEVATION
T&B	TOP AND BOTTOM
THK	THICK
TM	TRADE MARK
TYP	TYPICAL
UON	UNLESS OTHERWISE NOTED
VERT	VERTICAL
W	WIDTH
W/	WITH

GENERAL NOTES

1.0 THIS PROJECT HAS BEEN DESIGNED FOR THE WEIGHTS AND MATERIALS INDICATED ON THE SHEETS AND FOR THE LIVE LOADS INDICATED IN THE DESIGN DATA. IT IS THE CONTRACTOR'S RESPONSIBILITY TO DETERMINE ALLOWABLE CONSTRUCTION LOADS AND TO PROVIDE PROPER DESIGN AND CONSTRUCTION OF FALSEWORK, FORMWORK, STAGING, BRACING, SHEETING AND SHORING, ETC.

1.1 COORDINATE THESE SHEETS WITH THE ARCHITECTURAL, MECHANICAL, ELECTRICAL, PLUMBING, AND CIVIL SHEETS. ALL DIMENSIONS SHOWN ON THE SHEETS ARE MILLIMETERS UNLESS NOTED OTHERWISE.

1.2 THE CONTRACTOR SHALL VERIFY AND COORDINATE ALL FLOOR AND ROOF OPENING SIZES AND LOCATIONS, EQUIPMENT PAD SIZES AND LOCATIONS, ANCHOR BOLT LAYOUTS, ETC WITH EQUIPMENT SELECTED. THE CONTRACTOR SHALL MAKE ANY REQUIRED MODIFICATIONS AT NO ADDITIONAL COST.

1.3 THE CONTRACTOR SHALL REFER TO THE ARCHITECTURAL, MECHANICAL, ELECTRICAL AND PLUMBING SHEETS FOR SLEEVES, CURBS, INSERTS OR OPENINGS, ETC. NOT HEREIN INDICATED.

1.4 SLAB OPENINGS SMALLER THAN 250mm DIA TO BE CORE DRILLED IN FIELD UON. SEE MECHANICAL, ELECTRICAL AND PLUMBING SHEETS FOR LOCATIONS OF THESE OPENINGS.

1.5 WORK NOT INCLUDED ON THE SHEETS BUT IMPLIED TO BE SIMILAR TO THAT SHOWN AT CORRESPONDING PLACES ELSEWHERE ON THE SHEETS SHALL BE REPEATED.

1.6 IN CASE OF CONFLICT BETWEEN THE NOTES, DETAILS AND SPECIFICATIONS THE MOST RIGID REQUIREMENTS SHALL GOVERN.

1.7 SEE ARCHITECTURAL SHEETS FOR LOCATIONS OF MASONRY AND DRYWALL NON-LOAD BEARING PARTITIONS. PROVIDE COMPRESSIBLE FIRESAFING AT TOP OF WALL AS REQUIRED BY ARCHITECTURAL SHEETS.

1.8 COORDINATE FINISHED FLOOR DATUM ELEVATION 0.0m WITH THE CIVIL SHEETS.

2.0 FOUNDATION NOTES

2.1 THE GEOTECHNICAL ANALYSIS FOR THIS PROJECT IS THE RESPONSIBILITY OF THE CONTRACTOR AWARDED THE WORK. DESIGN VALUES USED IN THE STRUCTURAL ANALYSIS OF THE BUILDINGS HEREIN INDICATED HAVE BEEN ASSUMED AND SHALL BE CONFIRMED AND VERIFIED AS PART OF THE GEOTECHNICAL INVESTIGATION. VALUES WHICH DO NOT MEET THE REQUIREMENTS INDICATED ON SHEET S2 SHALL BE IMMEDIATELY BROUGHT TO THE ATTENTION OF THE CONTRACTING OFFICER FOR CONSIDERATION AND DETERMINATION ON THE NEXT APPROPRIATE COURSE OF ACTION.

2.2 SEE THE SPECIFICATION FOR ADDITIONAL REQUIREMENTS TO THOSE OUTLINED IN THE GEOTECHNICAL INVESTIGATION FOR EXCAVATION AND PREPARATION OF THE FOUNDATION AND THE SLAB ON GRADE SUBGRADE INCLUDING COMPACTION PROCEDURES.

2.3 EXCAVATIONS FOR FOOTINGS SHALL HAVE THE SIDES AND BOTTOMS TEMPORARILY LINED WITH 0.25mm POLYETHYLENE IF PLACEMENT OF CONCRETE DOES NOT OCCUR WITHIN 24 HRS OF THE EXCAVATION OF THE FOOTING.

2.4 FOUNDATION CONDITIONS NOTED DURING CONSTRUCTION WHICH DIFFER FROM THOSE DESCRIBED IN THE GEOTECHNICAL REPORT SHALL BE REPORTED TO THE GENERAL CONTRACTOR BEFORE FURTHER CONSTRUCTION IS ATTEMPTED. SEE PROJECT SPECIFICATIONS.

2.5 NO FOOTINGS OR SLABS SHALL BE POURED INTO OR AGAINST SUBGRADE CONTAINING FREE WATER, FROST, ICE OR LOOSE MATERIAL. FROST DEPTH ASSUMED TO BE 800MM

2.6 ALL SLAB-ON-GRADE, TRENCH BOTTOMS AND OTHER ON-GRADE INTERIOR HORIZONTAL SURFACES SHALL BE PLACED OVER A 0.25mm VAPOR RETARDER OVER A 100mm #57 STONE WATER BARRIER PLACED ON SUBGRADE PROPERLY PREPARED IN ACCORDANCE WITH THE CONTRACT SPECIFICATIONS. (UON)

2.7 SEE PLUMBING, ELECTRICAL & CIVIL SHEETS FOR REQUIRED UNDERSLAB UTILITIES.

2.8 SEE ARCHITECTURAL SHEETS FOR ALL WATERPROOFING DETAILS AND MATERIALS.

2.9 IF UNDERMINING OF FOOTINGS OCCURS, FILL VOIDS WITH 15MPa CONCRETE. DO NOT ATTEMPT TO REPLACE AND RECOMPACT SOIL.

3.0 CONCRETE

3.1 CONCRETE SHALL HAVE THE UNIT WEIGHT AND THE MINIMUM COMPRESSIVE STRENGTHS (f'c) AT 28 DAYS AS SHOWN IN THE CONCRETE MATERIALS SCHEDULE ON THIS SHEET. SEE SPECIFICATIONS FOR ADDITIONAL INFORMATION. ENTRAIN AIR TO PRODUCE TOTAL AIR CONTENT ACCORDING TO THE SPECIFICATIONS FOR CONCRETE EXPOSED TO FREEZING TEMPERATURES (EXTERIOR FOOTINGS, SLAB TURNDOWNS, EXTERIOR SLABS AND SLABS-ON-GRADE, EXTERIOR RETAINING WALLS, AND EXTERIOR GRADE BEAMS.)

3.2 GROUT FOR BASE PLATES SHALL BE NON-SHRINKABLE GROUT AND SHALL HAVE A MINIMUM SPECIFIED COMPRESSIVE STRENGTH AT 28 DAYS OF 35MPa, UNLESS NOTED OTHERWISE.

3.3 NO CALCIUM CHLORIDE SHALL BE USED IN ANY CONCRETE.

3.4 MIXING, TRANSPORTING AND PLACING OF CONCRETE SHALL CONFORM TO ACI 301M-05.

3.5 ALL CONCRETE WORK SHALL CONFORM TO THE REQUIREMENTS OF THE AMERICAN CONCRETE INSTITUTE (ACI) 318M MANUAL (metric), "BUILDING CODE REQUIREMENTS FOR REINFORCED CONCRETE", AND REQUIREMENTS OUTLINED IN THE CONTRACT SPECIFICATIONS. WHEN THERE IS A CONFLICT BETWEEN ACI AND THE SPECIFICATIONS, THE MORE STRINGENT SHALL GOVERN.

3.6 CHAMFER ALL EXPOSED EXTERNAL CORNERS OF CONCRETE WITH 20mm x45 DEGREE CHAMFER UON.

3.7 CONCRETE REINFORCEMENT BARS SHALL CONFORM TO ASTM A615M, GRADE 420, REINFORCING BARS SHALL NOT BE TACK WELDED, WELDED, HEATED OR CUT, UNLESS INDICATED ON THE CONTRACT DOCUMENTS. ALL LAP SPLICES SHALL BE CLASS "B" UON.

3.8 HORIZONTAL FOOTING AND HORIZONTAL WALL REINFORCEMENT SHALL BE CONTINUOUS AND SHALL HAVE 90 DEGREE BENDS AND EXTENSIONS, OR CORNER BARS OF EQUIVALENT SIZE LAPPED WITH A CLASS B TENSION SPLICE AT CORNERS AND INTERSECTIONS. TOP BAR CRITERIA SHALL APPLY IF 300mm OR MORE OF FRESH CONCRETE IS PLACED BELOW BAR.

3.9 SLABS-ON-GRADE SHALL HAVE CONSTRUCTION JOINTS OR CRACK CONTROL JOINTS AS SHOWN ON THE SHEETS. CONSTRUCTION JOINTS CAN BE USED AT CONTROL JOINT LOCATIONS AT CONTRACTORS OPTION. SEE SLAB PLANS & JOINT DETAILS FOR ADDITIONAL INFORMATION. FOR AREAS NOT SHOWN ON THE SHEETS, THE MAXIMUM SPACING OF CONSTRUCTION/ CRACK CONTROL JOINTS SHALL BE 4800 mm.

3.10 SEE SPECIFICATIONS FOR ALL WATERPROOFING/DAMPPROOFING REQUIREMENT.

3.11 ALL CONCRETE REINFORCEMENT SHALL BE DETAILED, FABRICATED, LABELED, SUPPORTED, AND SPACED IN FORMS AND SECURED IN PLACE IN ACCORDANCE WITH THE PROCEDURES AND REQUIREMENTS OUTLINED IN THE LATEST EDITION OF THE "BUILDING CODE REQUIREMENTS FOR REINFORCED CONCRETE", ACI 318M, AND THE "MANUAL OF STANDARD PRACTICE FOR DETAILING REINFORCED CONCRETE STRUCTURES", ACI 315M, LATEST EDITION.

3.12 SHOP DRAWINGS SHOWING REINFORCING DETAILS, INCLUDING STEEL SIZES, SPACING AND PLACEMENT, SHALL BE SUBMITTED FOR REVIEW PRIOR TO FABRICATION.

3.13 ALL DOWELS SHALL MATCH SIZE AND NUMBER OF MAIN REINFORCING, UNLESS NOTED OTHERWISE ON THE SHEETS.

3.14 ADDITIONAL BARS SHALL BE PROVIDED AROUND ALL FLOOR AND WALL OPENINGS AS SHOWN ON THE SHEETS.

3.15 SEE ARCHITECTURAL SHEETS FOR TYPE AND LOCATION OF ALL FLOOR FINISHES.

3.16 THE CONTRACTOR SHALL COORDINATE ADDITIONAL WALL/SLAB OPENINGS NOT SHOWN ON STRUCTURAL SHEETS. SEE MECHANICAL, ELECTRICAL, PLUMBING AND CIVIL SHEETS.

3.17 THE SUB-CONTRACTOR SHALL VERIFY ALL OPENINGS, PAD SIZES, AND ANCHOR BOLTS WITH EQUIPMENT SELECTED.

3.18 FOR ALL WALLS & PIERS, PROVIDE DOWELS INTO FOOTING AT EACH VERT REINF BAR, UON DOWEL SIZE SHALL BE SAME AS VERT REINF.

3.19 ALL REINFORCING INDICATED TO BE WELDED SHALL BE IN ACCORDANCE WITH ASTM A706M. "LOW ALLOY STEEL DEFORMED BARS FOR CONCRETE REINFORCEMENT". ANY INSTALLATIONS USING MANUFACTURER'S EQUIPMENT SHALL BE PER MANUFACTURER'S RECOMMENDATIONS.

3.20 PROVIDE CONCRETE POUR STOPS OR FORMED AS REQUIRED FOR INSTALLATION OF ALL CONCRETE WORK.

3.21 PROVIDE ADDITIONAL (2)-#13 x 600mm REINFORCING BARS IN SLAB-ON GRADE AT ALL RE-ENTRANT CORNERS. PLACE BARS AT MID-DEPTH OF SLAB WITH A CLEARANCE OF 50mm FROM CORNER UON.

4.0 CONCRETE MASONRY

4.1 MASONRY CONSTRUCTION AND MATERIALS SHALL CONFORM TO ALL REQUIREMENTS OF THESE CONTRACT DOCUMENTS AND THE PROJECT SPECIFICATIONS.

4.2 THE SPECIFIED ULTIMATE COMPRESSIVE STRENGTH OF CONCRETE MASONRY (f'm) ON THE NET AREA IS A MINIMUM OF 10.4 MPa.

4.3 PROVIDE TWO #16 BARS CONTINUOUS IN ALL CMU AND CAST-IN-PLACE BOND BEAMS UON ON THE SHEETS. BOND BEAMS SHALL BE CONTINUOUS AND SPACED AT A MAXIMUM OF 1200mm OC VERTICALLY. PROVIDE BOND BEAM STARTER COURSE AT BOTTOM OR FIRST COURSE ON ALL MASONRY WALLS AND PARTITIONS. ALL BOND BEAMS SHALL BE A MINIMUM OF 200mm IN DEPTH WITH REINFORCING BEING CONTINUOUS AND HAVING STANDARD ACI 180° HOOKS AT EACH END. PROVIDE STANDARD BAR SPLICES AS SPECIFIED.

4.4 FOR WALL REINFORCING, SEE DETAIL 7 ON SHEET S5

4.5 CMU CELLS THAT REQUIRE VERTICAL REINFORCING BARS AS INDICATED ON THE CONTRACT DRAWINGS AND/OR SPECS SHALL HAVE REINF BARS PLACED IN CENTERS OF CMU CELLS AND CONTINUOUSLY GROUTED UON.

4.6 PROVIDE LADDER TYPE JOINT REINFORCEMENT AT (200mm EXTERIOR & 400mm INTERIOR) ON CENTER MAXIMUM UON MINIMUM ROD SIZE USED SHALL BE 9 GA. DEFORMED WIRE AND CONFORM TO ASTM A82M, UON.

4.7 PROVIDE CONTROL JOINTS AS INDICATED ON THE ARCHITECTURAL SHEETS.

4.8 GROUT FOR MASONRY SHALL BE NORMAL WEIGHT AND HAVE A MINIMUM COMPRESSIVE STRENGTH OF 25 MPa AT 28 DAYS. GROUT SHALL CONFORM TO ASTM C476M. GROUT LIFTS SHALL NOT EXCEED 1400mm.

4.9 USE MORTAR TYPE S CONFORMING TO ASTM C270M, SEE SPECIFICATIONS.

4.10 CONCRETE MASONRY UNITS SHALL BE NORMAL WEIGHT AND CONFORM TO ASTM C90M.

4.11 ALL CMU CELLS, OPEN CAVITIES, AND AIR SPACES SHALL BE GROUTED TO STOP FRAGMENTS FROM MORTAR BLAST

4.12 BOND BEAM REINFORCING SHALL BE DISCONTINUOUS AT CONTROL JOINTS (UON). MAXIMUM CONTROL JOINT SPACING SHALL BE AS INDICATED ON THE ARCHITECTURAL SHEETS.

4.13 CONTRACTOR SHALL COORDINATE LOCATION OF ALL OPENINGS SEE ARCH, MECH, ELEC, AND PLUMBING SHEETS. FOR SIZE AND LOCATION OF OPENINGS.

4.14 MASONRY WALLS SHALL NOT BE BACK FILLED PRIOR TO THE MORTAR AND GROUT ATTAINING THEIR RESPECTIVE MAXIMUM DESIGN STRENGTHS PER SPECIFICATIONS.

5.0 CFMRF - COLD FORM METAL ROOF FRAMING SYSTEM

5.1 CFMF SHALL BE DESIGNED BY CFMF MANUFACTURER'S ENGINEER FOR ALL LOADING PER CODE AND AS INDICATED ON THE SHEETS.

5.2 FOR WIND LOADS, SEE THE DESIGN CRITERIA ON SHEET S2.

5.3 SUBMIT VENDOR'S PUBLISHED LITERATURE, TEST DATA AND INSTALLATION INSTRUCTIONS FOR METAL STUD ASSEMBLY AND ACCESSORIES INCLUDING OTHER DATA AS MAY BE REQUIRED TO CERTIFY COMPLIANCE WITH PERFORMANCE REQUIREMENTS SPECIFIED HEREIN.

5.4 SHOP DRAWINGS AND DESIGN ANALYSIS SHALL BE STAMPED AND APPROVED BY A LICENSED PROFESSIONAL ENGINEER.

5.5 CONNECTIONS AND GAUGE SIZES ARE MINIMUM AND SHALL BE INCREASED AS NECESSARY TO PROVIDE A STRUCTURALLY ADEQUATE SYSTEM. KICKERS MAY BE ADDED TO REDUCE THE STUD HEIGHTS WHERE ACCEPTABLE AND COORDINATED WITH THE ARCHITECTURAL DRAWINGS.

5.6 CRMRF SHALL HAVE THE FOLLOWING MINIMUM PROPERTIES:

STUD/RAFTER/EAVE STRUT:
Fy = 344 MPa
GAUGE = 18
DEPTH = 152.3 mm
WIDTH = 34.8 mm
MOMENT OF INERTIA, Ix = 847×10^3 mm^4
SECTION MODULUS, Sx = 11.2×10^3 mm^3

TRACK:
Fy = 344 MPa
GAUGE = 16
DEPTH = 152.3 mm
WIDTH = 38 mm
MOMENT OF INERTIA, Ix = 1083×10^3 mm^4
SECTION MODULUS, Sx = 13.8×10^3 mm^3

PURLIN:
Fy = 393 MPa
GAUGE = 16
MOMENT OF INTERTIA (TOP COMPRESSION), Ixt = 23.7×10^3 mm^4
MOMENT OF INTERTIA (BOTT COMPRESSION), Ixb = 22.7×10^3 mm^4
SECTION MODULUS (TOP COMPRESSION), Sxt = 1.8×10^3 mm^3
SECTION MODULUS (BOTT COMPRESSION), Sxb = 1.7×10^3 mm^3

CONCRETE MATERIALS SCHEDULE

STRUCTURAL ELEMENT	f'c CONCRETE COMPRESSIVE STRENGTH @ 28 DAYS (MPa)
SLAB-ON-GRADE/TURN-DOWN SLABS	28
ROOF AND FLOOR SLABS	28
ALL FOOTINGS (UON)	28
MISC. CURBS, WALLS AND PADS UON	28
CAST-IN-PLACE LINTEL	28

NOTES:
1. ALL CONCRETE SHALL BE NORMAL WEIGHT CONCRETE. (2400 Kg/m^3 UON)
2. ALL CONCRETE SHALL HAVE A WATER-CEMENT RATIO OF 0.45.

MASONRY REINFORCING MINIMUM LAP SPLICES

BAR SIZE	BASIC LAP SPLICE Ld FOR CMU REINFORCING(mm)
#10	450
#13	600
#16	750

MINIMUM LAP SPLICES OF REINFORCING BARS IN TENSION (PER ACI 318M-05)

f'c = 28 MPa CONCRETE

BAR SIZE \ CENTER TO CENTER BAR SPACING	(---TOP BARS--) LESS THAN 4db	(---TOP BARS--) 4db OR MORE	(--OTHER BARS--) LESS THAN 4db	(--OTHER BARS--) 4db OR MORE	4db
#10	460	460	410	410	40
#13	660	610	510	480	50
#16	1020	760	790	580	60

NOTES:
1. LAP SPLICES ABOVE ARE IN MILLIMETERS UON.
2. YIELD STRENGTH OF REINFORCEMENT, fy, IS 420MPa (LAP SPLICE LENGTH IS IN MILLIMETERS).
3. CONCRETE IS NORMAL WEIGHT (2400Kg/m^3).
4. TOP BAR INDICATES HORIZONTAL REINFORCEMENT WHICH IS PLACED ABOVE 300mm OR MORE OF FRESH CONCRETE.
5. SEE COLUMN SCHEDULE FOR COLUMN AND SHEAR WALL VERTICAL LAP SPLICE.
6. STRAIGHT DEVELOPMENT LENGTH OF AN UNLAPPED BAR IS EQUAL TO VALUE FROM TABLE DIVIDED BY 1.3.
7. CATEGORY FOR BARS SPACED LESS THAN 4d, OR ON CENTER CORRESPONDS TO CATEGORY 1 IN THE CRSI HANDBOOK WHEREAS FOR BARS SPACED 4d, OR MORE ON CENTER CORRESPOND TO CRSI CATEGORY 5.

STANDARD HOOKS IN TENSION PER (ACI 318M-05)

HOOK DEVELOPMENT LENGTH Ldh (mm)	
BAR SIZE	f'c 28 MPa
#10	180
#13	250
#16	300
#19	380
#22	430
#25	480
#29	560
#32	610
#36	690

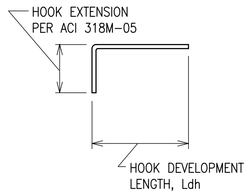

NOTES:
1. CONCRETE IS NORMAL WEIGHT CONCRETE.
2. BAR YIELD STRENGTH, fy = 420 MPa
3. SIDE COVER REQUIREMENTS OF ACI SECT. 12.5.3 ARE ASSUMED TO NOT BE MET.
4. TIE OR STIRRUP REQUIREMENTS OF ACI SECT. 12.5.3 ARE ASSUMED TO NOT BE MET.
5. REDUCTION FOR EXCESS REINFORCEMENT IS NOT TAKEN.
6. HOOK DEVELOPMENT LENGTH IS VALID FOR 180° HOOKS ALSO.

US Army Corps of Engineers
Afghanistan Engineer District

SYMBOL	DESCRIPTION	DATE	APR

DESIGNED BY: GDH
DATE: 09-30-09
DWN BY: MDB
SUBMITTED BY: BAKER
CHK BY: CWW
FILE NO.: ANPSDS-001XXX

Michael Baker Jr., Inc
A unit of Michael Baker Corporation
Airside Business Park
100 Airside Drive
Moon Township, PA 15108
www.mbakercorp.com

AFGHAN NATIONAL POLICE
STANDARD DESIGN
WELL HOUSE
GENERAL NOTES

SHEET REFERENCE NUMBER:
S1

100% SUBMISSION

STRUCTURAL DESIGN CRITERIA

ALL DESIGNS SHALL CONFORM TO THE PROVISIONS OF THE IBC 2006 AS APPLICABLE

1.0 DESIGN LOADS

1.1 DEAD LOADS

1.1.1 ROOF DEAD LOADS – CONVENTIONAL FRAMING

	MAXIMUM GRAVITY LOAD	MINIMUM GRAVITY LOAD
LIGHT GAUGE FRAMING	0.20 KPa	0.15 KPa
METAL ROOFING	0.14 KPa	0.05 KPa
INSULATION	0.10 KPa	0.05 KPa
MISC	0.05 KPa	0.00 KPa
	0.49 KPa	0.25 KPa

1.1.2 ROOF DEAD LOADS – CONCRETE FRAMING

	MAXIMUM GRAVITY LOAD
CONC FLAT SLAB	4.80 KPa
MECH/ELEC/PLUMBING	0.15 KPa
MISC	0.05 KPa
	5.00 KPa

1.2 LIVE LOADS (PER IBC 2006)

1.2.1 ROOF LIVE LOADS: ALL BUILDINGS

GREATER OF 1.0 KPa MINIMUM OR SNOW LOAD

1.2.2 SLAB-ON-GRADE LIVE LOADS

ALL BUILDINGS 4.80 KPa

1.3 SNOW LOADS (PER IBC 2006)

1.3.1 DESIGN PARAMETERS

GROUND SNOW LOAD (per UFC 3-310-01)	PER LOCAL CONDITION
SNOW IMPORTANCE FACTOR	1.0 KPa
SNOW EXPOSURE FACTOR	1.0 KPa

1.4 SEISMIC LOADS (PER IBC 2006 & UFC 3-310-04)

1.4.1 SEISMIC PARAMETERS – LOAD BEARING MASONRY

SEISMIC OCCUPANCY CATEGORY	II
SEISMIC IMPORTANCE FACTOR (I)	1.0
SEISMIC SITE CLASS	D
Ss	1.280
S_1	0.510
Sds	0.853
Sd1	0.510
SEISMIC DESIGN CATEGORY	D
SEISMIC RESISTING SYSTEM	BEARING WALL SYSTEM SPECIAL REINF MASONRY SHEAR WALLS
RESPONSE MODIFICATION FACTOR (R)	5.0
RESPONSE CEFFICIENT (Cs)	0.17
SEISMIC ANALYTICAL PROCEDURE	EQUIV LATERAL FORCE
SEISMIC BASE SHEAR	49 kN

1.6 WIND LOADS (PER IBC 2006)

1.6.1 DESIGN PARAMETERS

BASIC WIND SPEED	137 Km/h
WIND IMPORTANCE FACTOR	1.0
WIND EXPOSURE CATEGORY	D
DIRECTIONALITY COEFFICIENT (Kd)	0.85
TOPOGRAPHIC FACTOR (Kzt)	1.0

1.6.2 DESIGN WIND PRESSURE – MAIN WINDFORCE RESISTING SYSTEM

LOCATION	CORNER ZONE WIDTH "a"	MEAN ROOF HEIGHT (h)	WINDWARD WALL (@ MEAN ROOF HEIGHT)	LEEWARD WALL (@ MEAN ROOF HEIGHT)	ROOF
FIELD ZONE	N/A	3890mm	582 N/m^2	−463 N/m^2	−803 N/m^2
CORNER ZONE	900mm	3890mm	883 N/m^2	−689 N/m^2	−1244 N/m^2

a = 10% OF LEAST HORIZONTAL DIMENSION OR 0.4h, WHICHEVER IS SMALLER, BUT NOT LESS THAN EITHER 4% OF LEAST HORIZONTAL DIMENSION OR 0.9M.
h = MEAN ROOF HIEGHT, IN METERS, EXCEPT THAT EAVE HIEGHT SHALL BE USED FOR ANGLE GREATER THAN 10°.

1.6.3 DESIGN WIND PRESSURE – WALL COMPONENTS AND CLADDING

EXTERIOR WALL SYSTEMS & THEIR ATTACHMENTS TO THE PRIMARY STRUCTURE SHALL BE DESIGNED FOR THE PRESSURES SHOWN IN THE DIAGRAM BELOW:

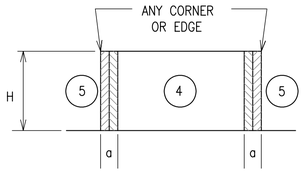

LOCATION	WINDWARD PRESSURE N/m^2 (inward)		LEEWARD PRESSURE N/m^2 (outward)		a
	4	5	4	5	
MAIN BUILDING					(mm)
AREA = 1 m^2	627	627	−986	−1216	900
AREA = 2 m^2	589	589	−948	−1134.8	900
AREA = 5 m^2	565	565	−910	−1086.9	900
AREA = 10 m^2	565	565	−910	−1086.9	900

NOTES:
1. DESIGN WIND PRESSURES ABOVE REPRESENT THE NET PRESSURE (SUM OF INTERNAL AND EXTERNAL PRESSURE) APPLIED NORMAL TO ALL SURFACES.
2. LINEAR INTERPOLATION BETWEEN VALUES OF TRIBUTARY AREA IS PERMISSIBLE.
3. PLUS AND MINUS SIGNS SIGNIFY PRESSURE TOWARD AND AWAY FROM THE EXTERIOR SURFACE, RESPECTIVELY.

1.6.4 DESIGN WIND PRESSURE – ROOF COMPONENTS AND CLADDING

ROOF COMPONENTS & THEIR ATTACHMENTS SHALL BE DESIGNED FOR THE PRESSURES SHOWN IN THE ADJACENT DIAGRAM & TABLE BELOW:

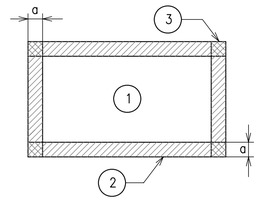

ROOF MEAN HEIGHT

1.6 WIND LOADS (CON'T)

LOCATION	GROSS UPLIFT PRESSURE N/m^2 (upward)			a
	1	2	3	
MAIN BUILDING				(mm)
AREA = 1 m^2	−838	−1460	−1460	900
AREA = 2 m^2	−838	−1460	−1460	900
AREA = 5 m^2	−838	−1460	−1460	900
AREA = 10 m^2	−838	−1460	−1460	900

NOTES:
1. DESIGN WIND PRESSURES ABOVE REPRESENT THE NET PRESSURE (SUM OF INTERNAL AND EXTERNAL PRESSURE) APPLIED NORMAL TO ALL SURFACES.
2. LINEAR INTERPOLATION BETWEEN VALUES OF TRIBUTARY AREA IS PERMISSIBLE.
3. PLUS AND MINUS SIGNS SIGNIFY PRESSURE TOWARD AND AWAY FROM THE EXTERIOR SURFACE, RESPECTIVELY.

2.0 FOUNDATION DESIGN CRITERIA (TO BE CONFIRMED BY THE CONTRACTOR)

THE GEOTECHNICAL ANALYSIS FOR THIS PROJECT IS THE RESPONSIBILITY OF THE CONTRACTOR AWARDED THE WORK. DESIGN VALUES USED IN THE STRUCTURAL ANALYSIS OF THE BUILDINGS HEREIN INDICATED HAVE BEEN ASSUMED AND SHALL BE CONFIRMED AND VERIFIED AS PART OF THE GEOTECHNICAL INVESTIGATION. VALUES WHICH DO NOT MEET THE REQUIREMENTS INDICATED BELOW SHALL BE IMMEDIATELY BROUGHT TO THE ATTENTION OF THE CONTRACTING OFFICER FOR CONSIDERATION AND DETERMINATION ON THE NEXT APPROPRIATE COURSE OF ACTION.

2.1.1 SOIL DESIGN PARAMETERS

NET ALLOWABLE SOIL BEARING CAPACITY	96.0 KPa
UNIT WEIGHT OF SOIL (moist)	1800 Kg/m^3
COEFF ACTIVE EARTH PRESSURE (Kpa)	0.30
COEFF PASSIVE EARTH PRESSURE (Kpp)	3.33
COEFF AT-REST EARTH PRESSURE (Kpr)	.55
COEFF OF SOIL FRICTION	.35
SUBGRADE MODULUS	4120 g/m^3
MINIMUM BEARING DEPTH BELOW GRADE	800mm
SEISMIC SITE CLASS (based on in-situ soil)	D

MASONRY CONCRETE LINTEL SCHEDULE

OPENING TYPE OR SIZE, BEAM LOCATION OR TYPE	MAX SPAN (mm)	BEAM DEPTH (mm)	MAIN REINFORCING			SHEAR REINF STIRRUPS
			TOP	BOTTOM	OTHER	
EXT WINDOW OR DOOR	900	400	(2)-#13	(2)-#13		----
INT WALL OPENING, NON-BEARING	1800	400		(2)-#13		----
INT WALL OPENING, NON-BEARING	900	200		(2)-#13		----

1. STRUCTURAL DRAWINGS DO NOT INDICATE ALL OPENINGS IN MASONRY WALLS. VERIFY NUMBER, SIZE AND LOCATION OF ALL OPENINGS IN MASONRY WALLS FROM ARCHITECTURAL SHEETS AND APPROVED PLUMBING, MECHANICAL, AND ELECTRICAL SHOP DRAWINGS.
2. PROVIDE 200mm BEARING EA END FOR 200mm DEEP CMU LINTEL PROVIDE 400mm BEARING EA END FOR 400mm DEEP CIPL.
3. FOR HEAD DETAILS REFER TO ARCHITECTURAL SHEETS.
4. REINFORCING SHALL BE ASTM A615M, GRADE 400. CONCRETE FOR CAST-IN-PLACE BEAMS SHALL HAVE A MINIMUM COMPRESSIVE STRENGTH OF 28 MPa AT 28 DAYS.
5. CONTRACTOR SHALL SUBMIT FOR APPROVAL SHOP DRAWINGS AND SCHEDULES SHOWING SIZE, DETAILS, LOCATIONS, ETC FOR ALL CAST-IN-PLACE BEAMS IN CMU WALLS.

CONCRETE COVER SCHEDULE

MINIMUM CONCRETE COVER PROTECTION FOR REINFORCEMENT BARS SHALL BE AS FOLLOWS: (SEE ACI 318M-05, SECTION 7.7 FOR CONDITIONS NOT NOTED). DIMENSIONS FOR BAR PLACEMENT GIVEN IN SECTIONS AND DETAILS SHALL SUPERSEDE MINIMUM COVER REQUIREMENTS GIVEN HERE. DIMENSIONS ARE IN mm.

FOOTINGS (EARTH FORMED)		70
COLUMNS / PIERS (TO TIES)		40
GRADE BEAMS OR SLAB TURNED DOWN EDGES:		
TOP		40
BOTTOM (EARTH FORMED)		70
SIDES (EARTH FORMED)		70
SIDES (BOARD FORMED)	#16 BAR & SMALLER	40
	#19 THRU #36 BAR	50
ELEVATED BEAMS & SLABS:		
BEAM TIES & STIRRUPS (NOT EXPOSED TO WEATHER)		40
BEAM TIES & STIRRUPS (EXPOSED TO WEATHER)		50
FLOOR SLABS (NOT EXPOSED TO WEATHER)		20
FLOOR SLABS (EXPOSED TO WEATHER)		
#19 & LARGER		50
#13 & SMALLER		40
ROOF SLAB BARS		25
SLABS-ON-GRADE (NO EXPOSURE TO WEATHER) FROM TOP		20
SLABS-ON-GRADE (EXPOSURE TO WEATHER) FROM TOP		40
UTILITY TUNNEL WALLS, RETAINING WALLS AND SHEAR WALLS, (NO SURFACES SHALL BE EARTH FORMED) EARTH SIDE AND FRONT SIDE (EXPOSED TO WEATHER):		
#16 BAR AND SMALLER		40
#19 THRU #36 BAR		50

PROVIDE STANDARD BAR CHAIRS AND SPACERS AS REQUIRED TO MAINTAIN CONCRETE PROTECTION SPECIFIED.

US Army Corps of Engineers
Afghanistan Engineer District

SYMBOL	DESCRIPTION	DATE	APR

DESIGNED BY: GDH
DWN BY: MDB
CHK BY: CWW
DATE: 09-30-09
SUBMITTED BY: BAKER
FILE NO.: ANPSDS-002XXX

Michael Baker Jr., Inc
A unit of Michael Baker Corporation
Airside Business Park
100 Airside Drive
Moon Township, PA 15108
www.mbakercorp.com

AFGHAN NATIONAL POLICE
STANDARD DESIGN
WELL HOUSE

DESGIN CRITERIA & SCHEDULES

SHEET REFERENCE NUMBER:
S2

100% SUBMISSION

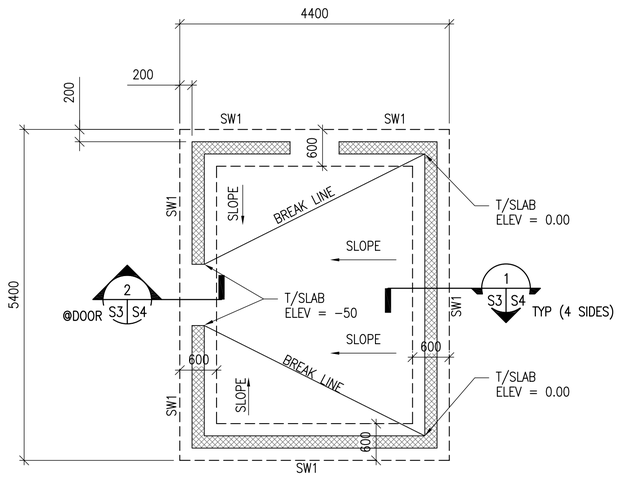

1 S3 S3 **WELL HOUSE FOUNDATION PLAN**

SCALE: 1:50

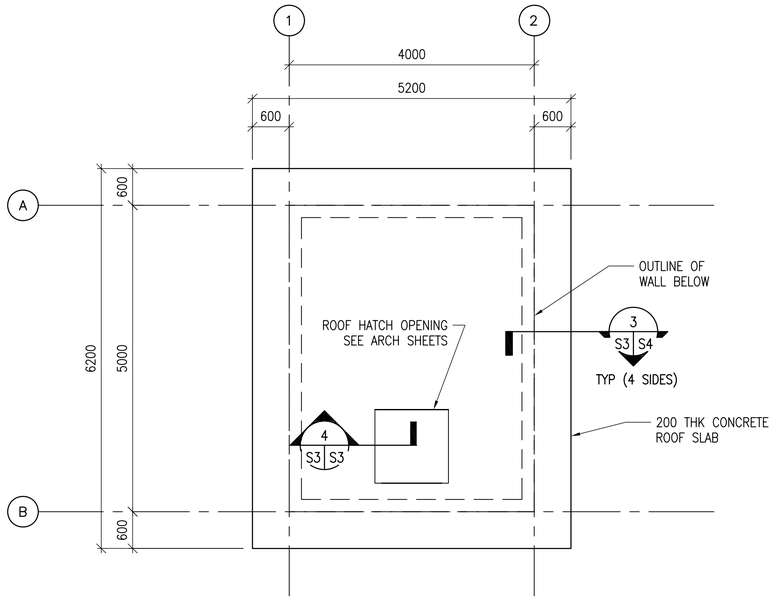

2 S3 S3 **WELL HOUSE ROOF FRAMING PLAN**

SCALE: 1:50

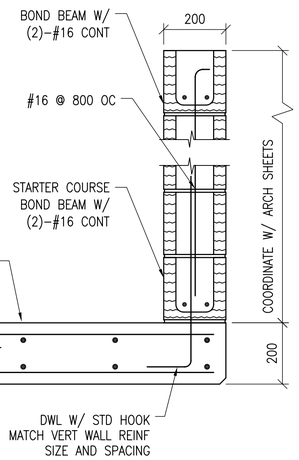

4 S3 S3 **SECTION**

SCALE: 1:10

NOTES:

1. FINISH FIRST FLOOR ELEVATION SHALL BE (DATUM 0.0) ALL PLUS OR MINUS DIMENSIONS INDICATED ON PLAN OR REFERRED TO IN NOTES RELATE TO FINISH FIRST FLOOR ELEVATION.
2. TOP OF EXTERIOR FOOTINGS SHALL BE -600 UNLESS OTHERWISE INDICATED.
3. UNLESS OTHERWISE INDICATED, FLOORS SHALL BE 150 THICK CONCRETE SLAB-ON-GRADE W/ 13 DIA REBAR @ 450 OC E.W. (38 CLR. TOP)
4. REFER TO SHEET S1 AND S2 FOR STRUCTURAL NOTES, ABBREVIATIONS AND SYMBOLS.
5. REFER TO ARCHITECTURAL SHEETS FOR MASONRY PARTITION TYPES AND SHEET S5 REINFORCEMENT.
6. SEE MECHANICAL AND ELECTRICAL SHEETS FOR CONCRETE PAD LOCATIONS, SIZES, AND THICKNESS NOT SHOWN. SEE SHEET S5 FOR DETAILS.
7. ⟶ INDICATES SLOPE IN SLAB ON GRADE. COORDINATE LOCATION AND ELEVATION WITH ARCHITECTURAL AND PLUMBING SHEETS (TYP).
8. COORD W/ ARCHITECTURAL SHEETS FOR COLD-FORMED STEEL OVERBUILT FRAMING ABOVE ROOF SLAB.
9. COLD-FORMED METAL OVERBUILT ROOF FRAMING NOT SHOWN FOR CLARITY. SEE OVERBUILT ROOF FRAMING DETAILS AND SECTIONS ON SHEET S4.

UNLESS OTHERWISE NOTED, LINEAR DIMENSIONS SHOWN ARE IN MILLIMETERS (MM)

0 200 400 800

SCALE: 1: 10

0 1000 2000 4000

SCALE: 1: 50

US Army Corps of Engineers

Afghanistan Engineer District

SYMBOL	DESCRIPTION	DATE	APR

DESIGNED BY: GDH	DATE: 09-30-09
DWN BY: MDB	SUBMITTED BY: BAKER
CHK BY: CWW	FILE NO.: ANPSDS-103XXX

Michael Baker Jr., Inc
A unit of Michael Baker Corporation
Airside Business Park
100 Airside Drive
Moon Township, PA 15108
www.mbakercorp.com

AFGHAN NATIONAL POLICE
STANDARD DESIGN
WELL HOUSE

FOUNDATION & ROOF FRAMING PLANS

SHEET REFERENCE NUMBER:

S3

100% SUBMISSION

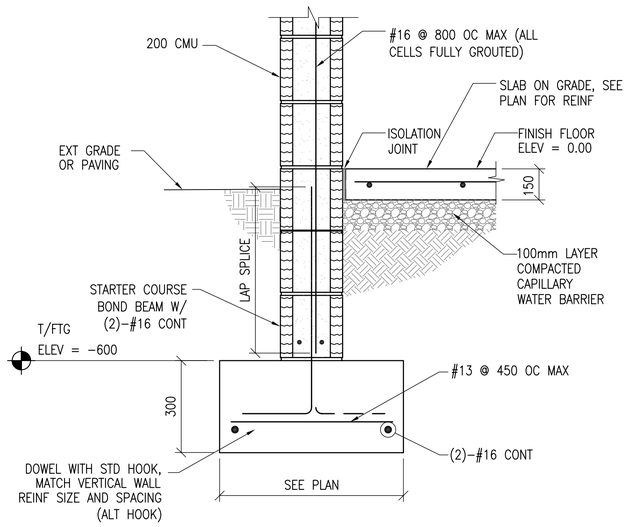

1 S3 S4 SECTION
SCALE: 1:10

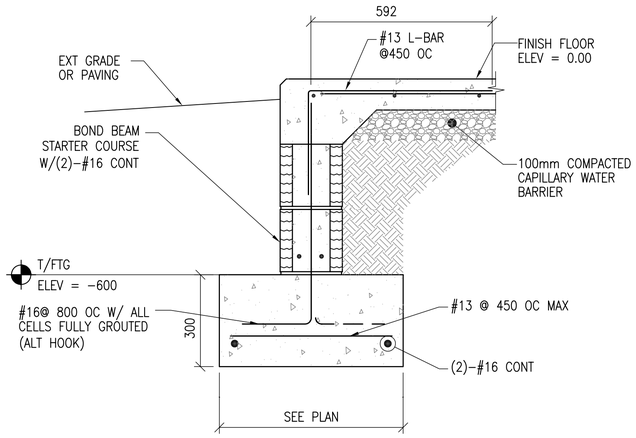

2 S3 S4 SECTION
SCALE: 1:10

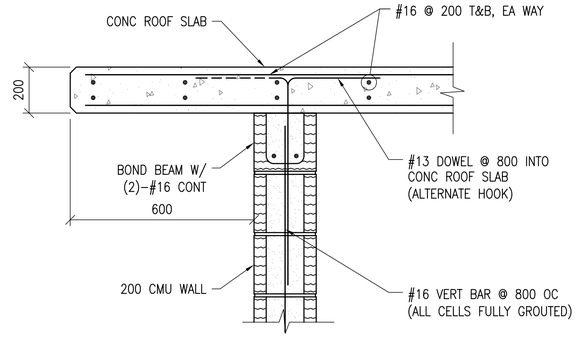

3 S3 S4 SECTION
SCALE: 1:10

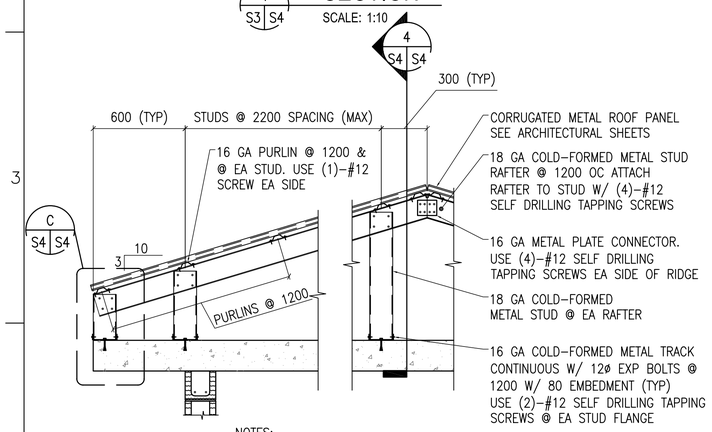

NOTES:
1. SEE NOTES ON SHEET S1 FOR OVERBUILT ROOF FRAMING MEMBER SECTION PROPERTY MINIMUM REQUIREMENTS
2. AT END OF BLDG PROVIDE TRANSVERSE BRACE @ 2400 OC SIMILAR TO LONGITUDINAL BRACING

A S4 S4 TYPICAL OVERBUILT ROOF FRAMING DETAIL
SCALE: 1:20

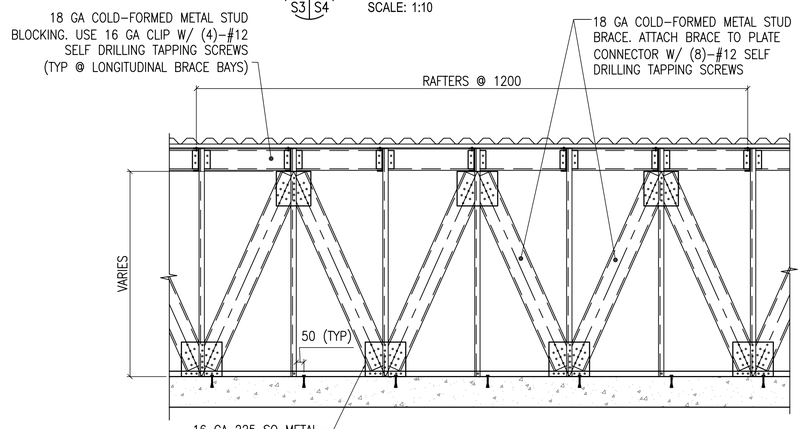

4 S4 S4 SECTION
SCALE: NTS

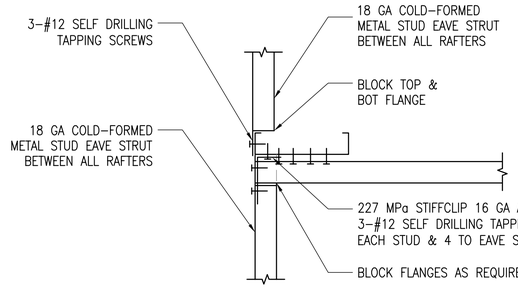

5 S4 S4 SECTION
SCALE: 1:5

DETAIL NOTE:
PROVIDE TRANSVERSE BRACE @ 2400 OC & @ END BAYS SIMILAR TO LONGITUDINAL BRACING

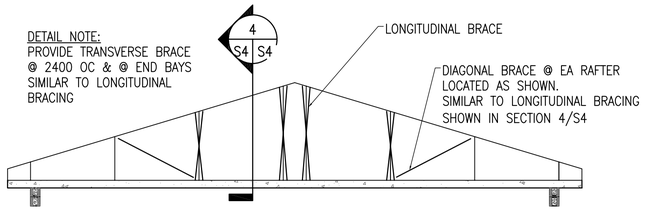

B S4 S4 TYPICAL ROOF BRACE LAYOUT DETAIL
SCALE: NTS

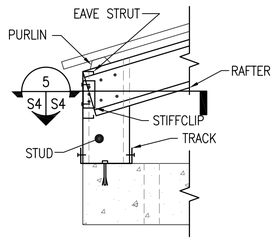

C S4 S4 DETAIL
SCALE: 1:10

DOUBLE LEDGE MEMBERS ARE 18 GA COLD-FORMED METAL STUD.
FY = 344 MPa
DEPTH = 88.9mm
WIDTH = 34.8mm
MOMENT OF INERTIA, Ix = 236x103 mm4
SECTION MODULUS, SX = 5.3x103 mm3

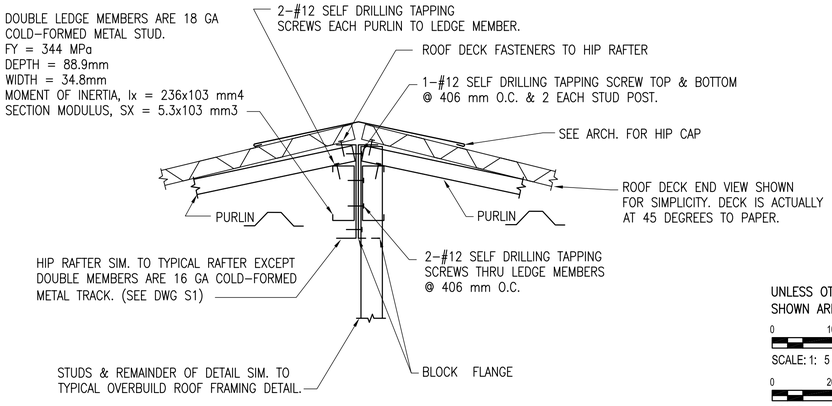

TYPICAL HIP FRAMING DETAIL
SCALE: 1:5

UNLESS OTHERWISE NOTED, LINEAR DIMENSIONS SHOWN ARE IN MILLIMETERS (MM)

0 100 200 400
SCALE: 1: 5

0 200 400 800
SCALE: 1: 10

0 400 800 1600
SCALE: 1: 20

US Army Corps of Engineers
Afghanistan Engineer District

SYMBOL	DESCRIPTION	DATE	APR

DESIGNED BY: GDH
DATE: 09-30-09
DWN BY: MDB
SUBMITTED BY: BAKER
CHK BY: CWW
FILE NO.: ANPSDS-304XXX

Michael Baker Jr., Inc
A unit of Michael Baker Corporation
Airside Business Park
100 Airside Drive
Moon Township, PA 15108
www.mbakercorp.com

AFGHAN NATIONAL POLICE
STANDARD DESIGN
WELL HOUSE

SECTIONS AND DETAILS

SHEET REFERENCE NUMBER:
S4

100% SUBMISSION

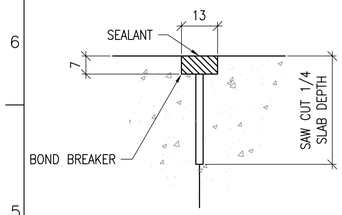

CONTROL JOINT DETAIL

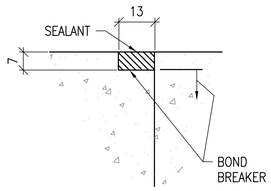

CONSTRUCTION JOINT DETAIL

TYPICAL CONCRETE SLAB JOINT FINISH DETAIL

1 / S5

SCALE: NTS

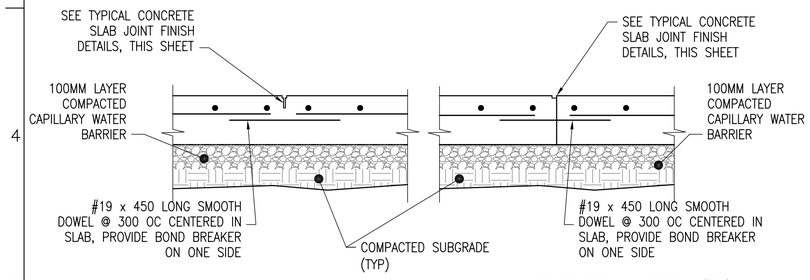

CONTROL JOINT DETAIL (CTJ)

CONSTRUCTION JOINT DETAIL (CSJ)

TYPICAL SLAB ON GRADE JOINT DETAILS

2 / S5

SCALE: NTS

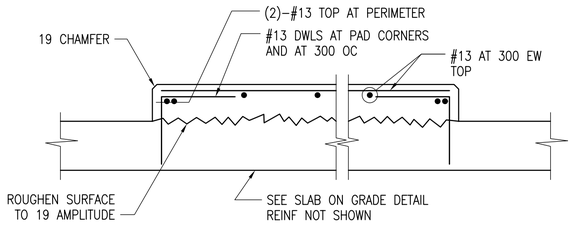

DETAIL NOTE:
1. COORDINATE EQUIPMENT PAD SIZE AND LOCATIONS W/ ELECTRICAL/MECHANICAL SHEETS AND EQUIPMENT MANUFACTURER.

INTERIOR EQUIPMENT PAD DETAIL

3 / S5

SCALE: NTS

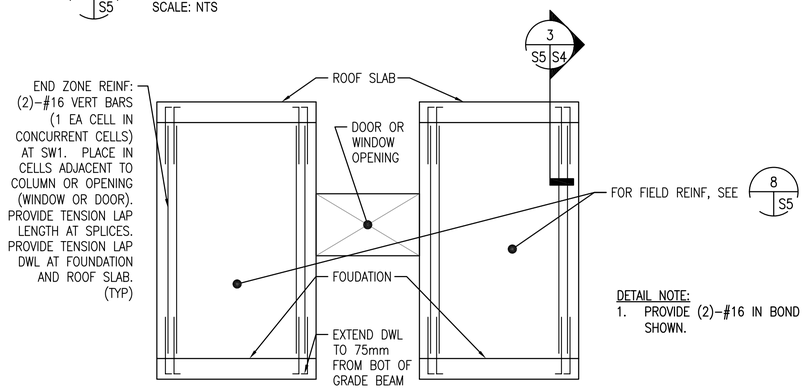

DETAIL NOTE:
1. PROVIDE (2)-#16 IN BOND BEAMS AT 1200 OC, NOT SHOWN.

SPECIAL REINFORCED MASONRY SHEAR WALL ELEVATION

4 / S5

SCALE: NTS

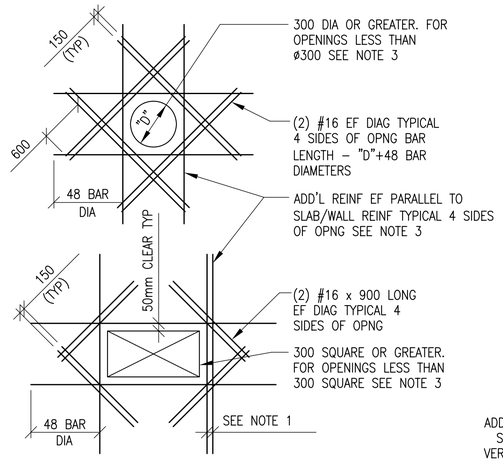

SLAB OPENINGS

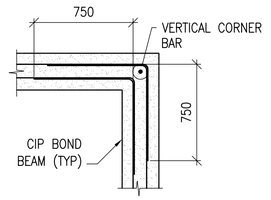

BOND BEAM CORNER

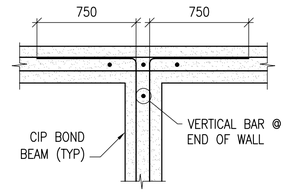

BOND BEAM INTERSECTION

CIP BOND BEAM DETAILS

5 / S5

SCALE: NTS

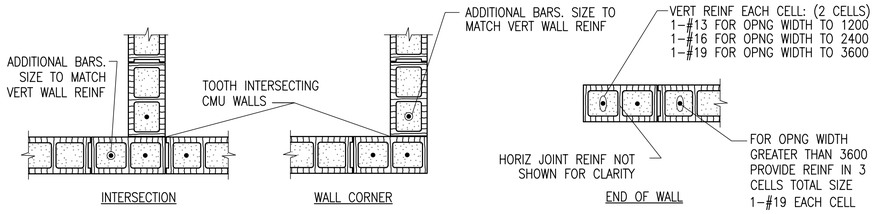

INTERSECTION

WALL CORNER

END OF WALL

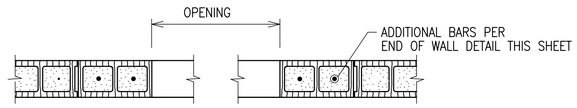

MASONRY OPENING W/ LINTEL

NOTES:
1. OPNG WIDTH SHALL NOT EXCEED 3600 FOR THIS TYPE OF JAMB
2. ALL CELLS FULLY GROUTED

TYPICAL CMU DETAILS

6 / S5

SCALE: NTS

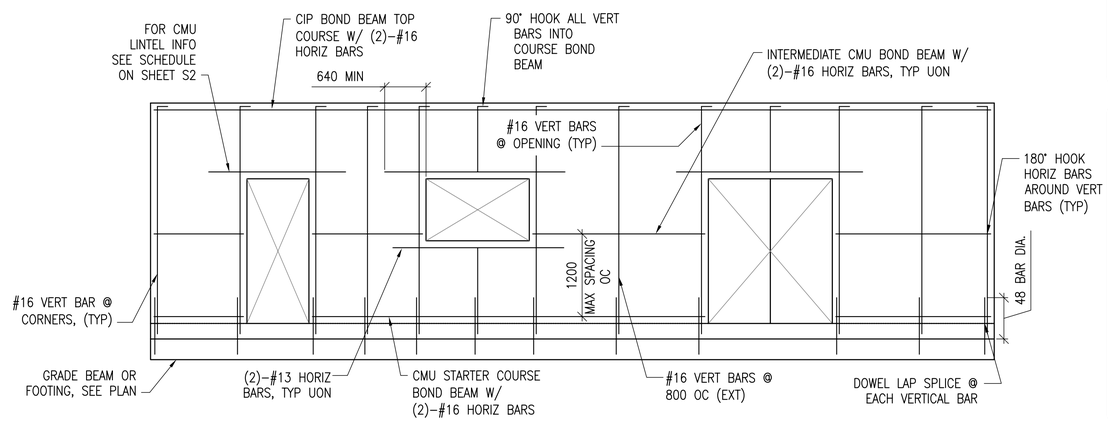

MIN CMU WALL REINFORCING

7 / S5

SCALE: NTS

UNLESS OTHERWISE NOTED, LINEAR DIMENSIONS SHOWN ARE IN MILLIMETERS (MM)

US Army Corps of Engineers
Afghanistan Engineer District

SYMBOL	DESCRIPTION	DATE	APR

DESIGNED BY: GDH
DWN BY: RCG
CHK BY: CWW
DATE: 09-30-09
SUBMITTED BY: BAKER
FILE NO.: ANPSDS-505XXX

Michael Baker Jr., Inc
A unit of Michael Baker Corporation
Airside Business Park
100 Airside Drive
Moon Township, PA 15108
www.mbakercorp.com

AFGHAN NATIONAL POLICE
STANDARD DESIGN
WELL HOUSE

TYPICAL DETAILS

SHEET REFERENCE NUMBER:
S5

100% SUBMISSION

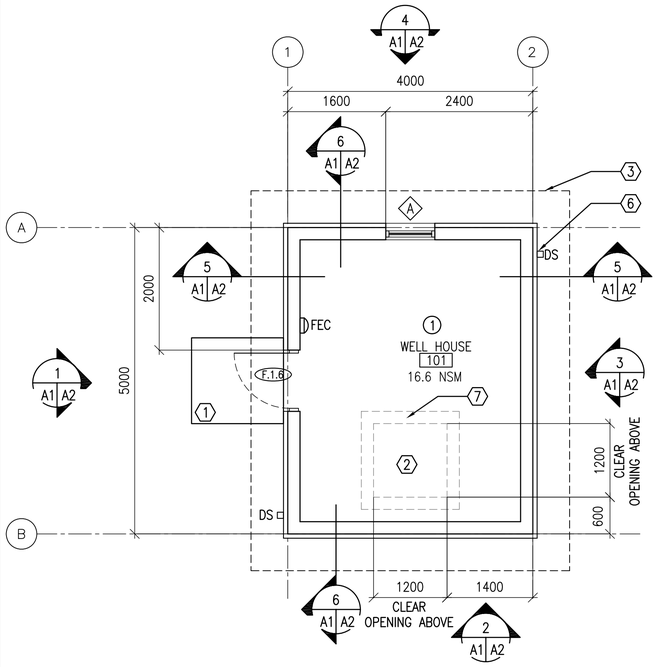

FLOOR PLAN

1 | A1 | A1 — SCALE: 1:50

20.0 GSM

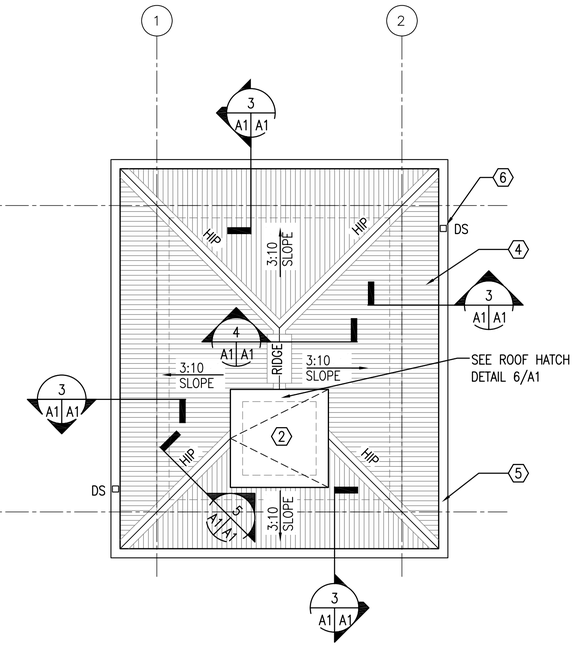

ROOF PLAN

2 | A1 | A1 — SCALE: 1:50

GENERAL NOTES:

A. OPENINGS FOR DOORS SHALL BE LOCATED 200 FROM THE ADJACENT WALL UNLESS NOTED OTHERWISE

B. SURFACES TO BE PAINTED SHALL BE CLEAN AND FREE OF FOREIGN MATTER BEFORE APPLICATION OF PAINT. CLEANING SHALL BE SCHEDULED SO THAT DUST AND OTHER CONTAMINANTS WILL NOT FALL ON WET, NEWLY PAINTED SURFACES.

C. CONCRETE AND INTERIOR MASONRY SURFACES GROUTED SOLID SHALL BE ALLOWED TO DRY AT LEAST 30 DAYS BEFORE PAINTING EXCEPT CONCRETE SLAB ON GRADE WHICH SHALL BE ALLOWED TO CURE 90 DAYS BEFORE PAINTING.

D. PAINTS CONTAINING LEAD IN EXCESS OF 0.06 PERCENT BY WEIGHT OF THE TOTAL NONVOLATILE CONTENT SHALL NOT BE USED.

E. MERCURIAL FUNGICIDES SHALL NOT BE USED IN OIL–BASE PAINT.

F. REMOVE LOOSE DIRT AND CLEAN SURFACES BEFORE PAINTING. APPLY PAINT TO INTERIOR STRUCTURAL RIGID FRAMINGS AND CEILINGS AND TEST FOR ADHESION. PRIMER COAT FOR MASONRY. INITIAL FIRST COAT WITH AN ACRYLIC LATEX PAINT FOR EXTERIOR SURFACES AND A SECOND COAT WITH A WATER REPELLENT ACRYLIC LATEX PAINT.

G. METAL DOORS AND FRAMES SHALL RECEIVE A PRIMER COAT PLUS TWO COATS OF PAINT.

H. DIMENSIONS ARE TO STRUCTURAL COLUMN GRID, EDGE OF WINDOW OPENINGS, AND TO HINGE SIDE OF DOOR OPENINGS.

KEY NOTES: (X)

1. CONCRETE STOOP – RE: DETAIL 7/A3
2. ROOF HATCH ABOVE, CENTER ON WELL PUMP
3. LINE OF ROOF OVERHANG ABOVE.
4. CORRUGATED METAL ROOF PANEL ON COLD–FORMED METAL FRAMING
5. METAL GUTTER.
6. METAL DOWNSPOUT WITH SPLASH BLOCK.
7. 200 MM CMU WITH EXTERIOR STUCCO

ROOM FINISHES: (X)

1. WALLS: PAINTED PLASTER,
   FLOOR: SEALED CONCRETE
   CEILING: PAINTED PLASTER APPLIED TO STRUCTURE

LEGEND:

- (F.1.4) DOOR TYPE, SEE SHEET A3
- (A) WINDOW TYPE, SEE SHEET A3
- (X) KEY NOTE
- FEC FIRE EXTINGUISHER CABINET
- (1) ROOM FINISH DESIGNATION

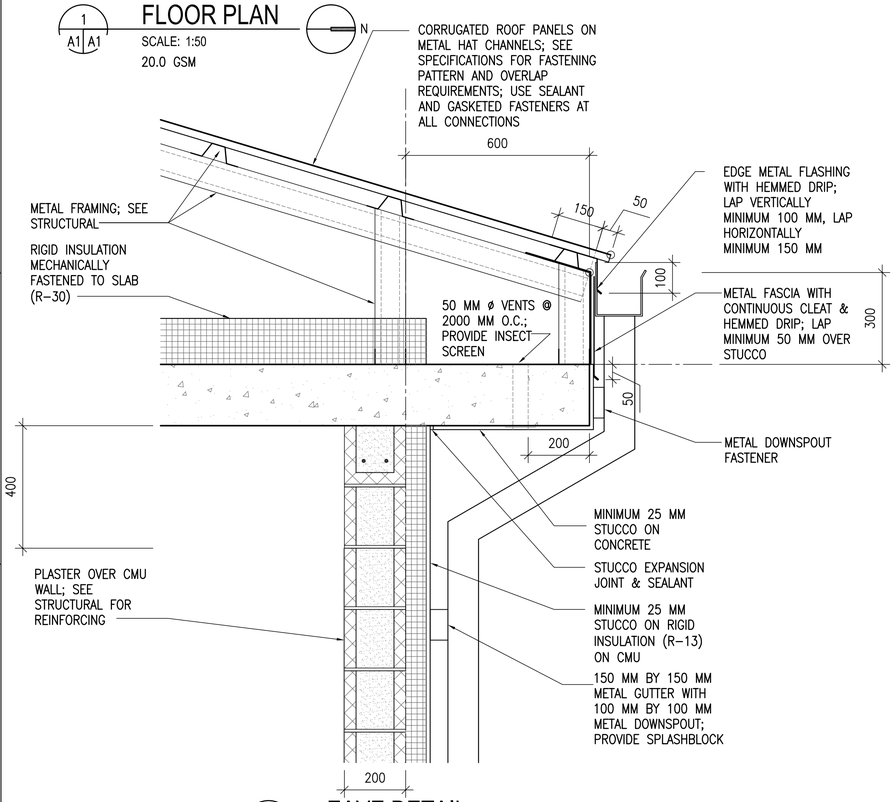

EAVE DETAIL

3 | A1 | A1 — SCALE: 1:10

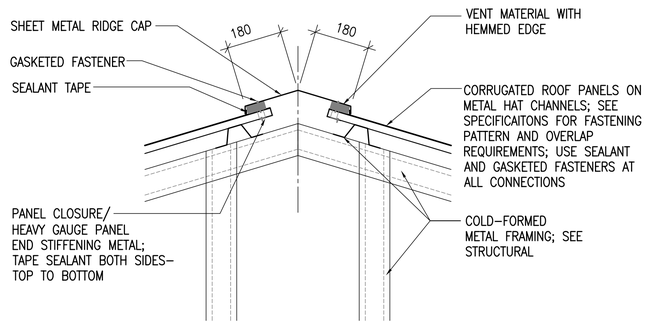

RIDGE VENT DETAIL

4 | A1 | A1 — SCALE: 1:10

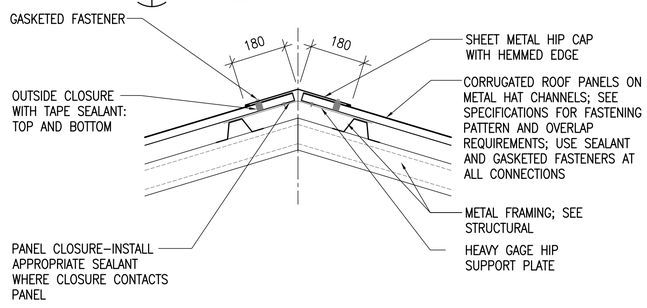

HIP DETAIL

5 | A1 | A1 — SCALE: 1:10

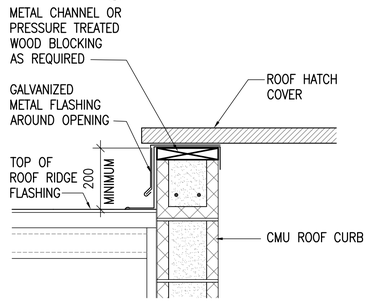

ROOF HATCH TO BE CENTERED ON WELL PUMP – SEE P1

ROOF HATCH

6 | A1 | A1 — SCALE: 1:10

UNLESS OTHERWISE NOTED, LINEAR DIMENSIONS SHOWN ARE IN MILLIMETERS (MM)

0 200 400 800 — SCALE: 1: 10

0 1000 2000 4000 — SCALE: 1: 50

US Army Corps of Engineers
Afghanistan Engineer District

SYMBOL	DESCRIPTION	DATE	APR

DESIGNED BY: PFF | DATE: 09–30–09
DWN BY: ECN | SUBMITTED BY: BAKER
CHK BY: NLJ | FILE NO.: ANPSDA–101XXX

Michael Baker Jr., Inc
A unit of Michael Baker Corporation
Airside Business Park
100 Airside Drive
Moon Township, PA 15108
www.mbakercorp.com

AFGHAN NATIONAL POLICE
STANDARD DESIGN
WELL HOUSE

FLOOR AND ROOF PLANS AND DETAILS

SHEET REFERENCE NUMBER:
A1

100% SUBMISSION

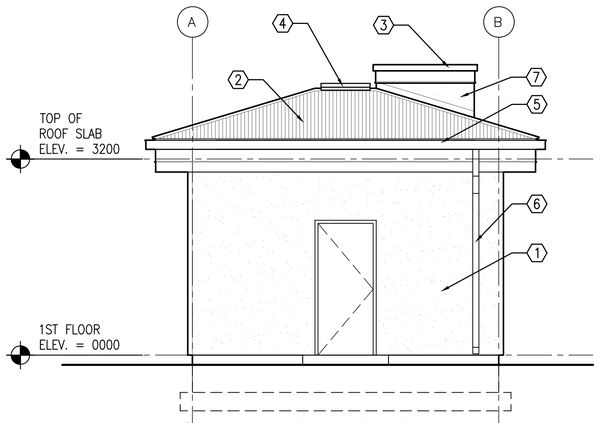

1 A1 A2 SOUTH ELEVATION
SCALE: 1:50

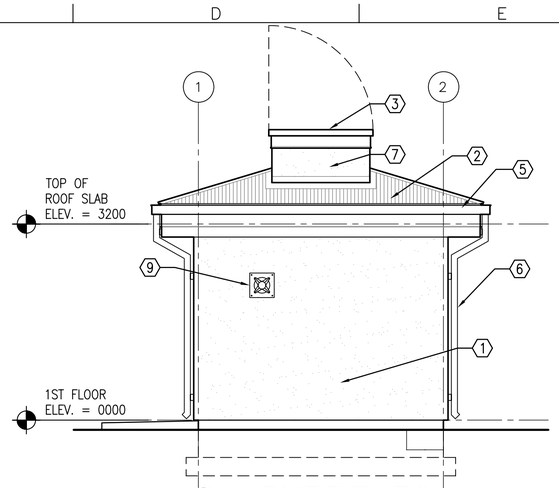

2 A1 A2 EAST ELEVATION
SCALE: 1:50

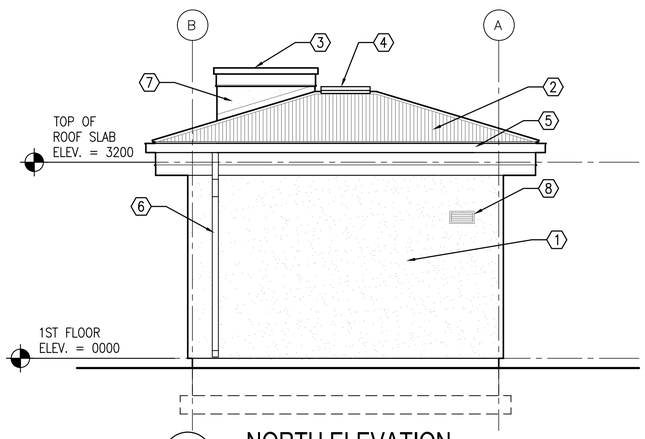

3 A1 A2 NORTH ELEVATION
SCALE: 1:50

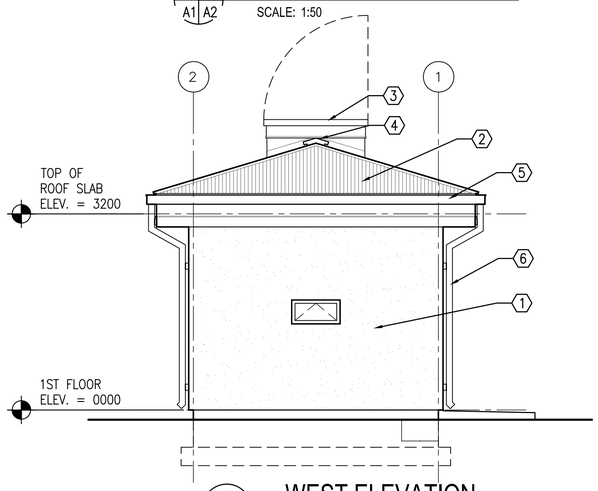

4 A1 A2 WEST ELEVATION
SCALE: 1:50

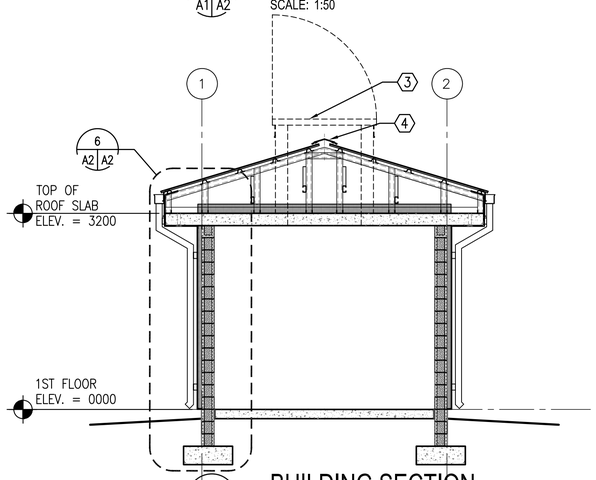

5 A1 A2 BUILDING SECTION
SCALE: 1:50

KEY NOTES:

1. STUCCO AND RIGID INSULATION SYSTEM ON CMU
2. CORRUGATED METAL ROOF PANELS ON COLD-FORMED METAL FRAMING
3. ROOF HATCH WITH CURB. CENTER ON WELL PUMP – RE: CIVIL
4. RIDGE VENT
5. METAL GUTTER
6. METAL DOWNSPOUT WITH SPLASH BLOCK
7. STUCCO ON CMU
8. LOUVER – RE: MECHANICAL
9. EXHAUST FAN – RE: MECHANICAL

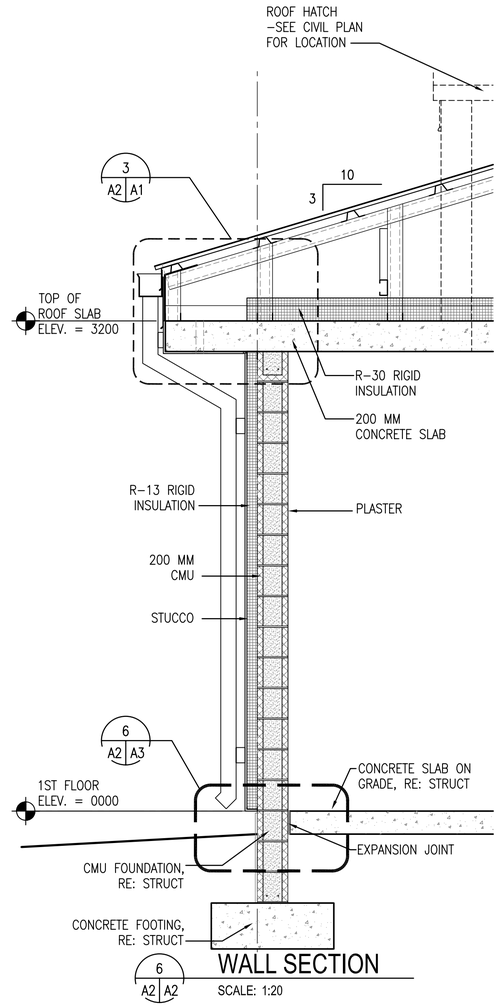

6 A2 A2 WALL SECTION
SCALE: 1:20

UNLESS OTHERWISE NOTED, LINEAR DIMENSIONS SHOWN ARE IN MILLIMETERS (MM)

0 400 800 1600
SCALE: 1: 20

0 1000 2000 4000
SCALE: 1: 50

US Army Corps of Engineers
Afghanistan Engineer District

SYMBOL	DESCRIPTION	DATE	APR

DESIGNED BY: PFF
DATE: 09-30-09
DWN BY: ECN
SUBMITTED BY: BAKER
CHK BY: NLJ
FILE NO.: ANPSDA-202XXX

Michael Baker Jr, Inc
A unit of Michael Baker Corporation
Airside Business Park
100 Airside Drive
Moon Township, PA 15108
www.mbakercorp.com

AFGHAN NATIONAL POLICE
STANDARD DESIGN
WELL HOUSE

EXTERIOR ELEVATIONS

SHEET REFERENCE NUMBER:
A2

100% SUBMISSION

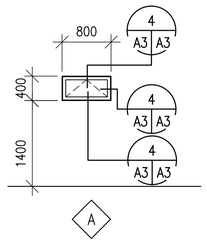

1 A3 A3 WINDOW TYPES
SCALE: 1:50

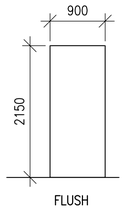

2 A3 A3 DOOR TYPES
SCALE: 1:50

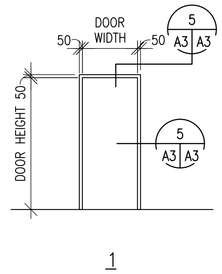

3 A3 A3 FRAME TYPES
SCALE: 1:50

WINDOW TYPES NOTES:

1. ALL EXTERIOR WINDOWS SHALL BE WOOD WITH INSECT SCREENS. WINDOWS SHALL BE COMMERCIAL GRADE.
2. GLAZING SHALL BE ACRYLIC SHEET.

DOOR TYPES NOTES:

1. INTERIOR AND EXTERIOR METAL DOORS AND FRAME COLORS SHALL MATCH ADJACENT WALL COLORS AS SELECTED BY THE CONTRACTING OFFICER.
2. HARDWARE SHALL BE HEAVY DUTY, COMMERCIAL GRADE, STAINLESS STEEL WITH A MATTE FINISH.
3. FRAMES, EXCEPT FIRE-RATED FRAMES, SHALL BE MOUNTED AND ADJUSTED IN ACCORDANCE WITH MANUFACTURER'S INSTRUCTIONS. FRAMES SHALL BE FASTENED WITH MINIMUM OF THREE FASTENING POINTS PER SIDE AT REGULAR INTERVALS.
4. DIMENSIONS SHOWN ON DOOR SCHEDULE ARE BASED UPON MODULAR MASONRY (OR ROUGH OPENING), HEIGHT OF 2200mm FOR STANDARD PERSONNEL DOORS. CONTRACTOR SHALL COORDINATE WITH DOOR SUPPLIER TO ENSURE THAT DIMENSIONS OF DOORS AND FRAMES PROVIDED ARE COMPATIBLE WITH DOOR OPENING DIMENSIONS.

HARDWARE TYPES:

HW-6 1-1/2 PR HINGES
1 EA LOCKSET,F04 ENTRY LOCK W/LEVERS. GRADE 1
1 EA DOOR CLOSER, C02061,LOW RESISTANCE
1 EA THRESHOLD J32130

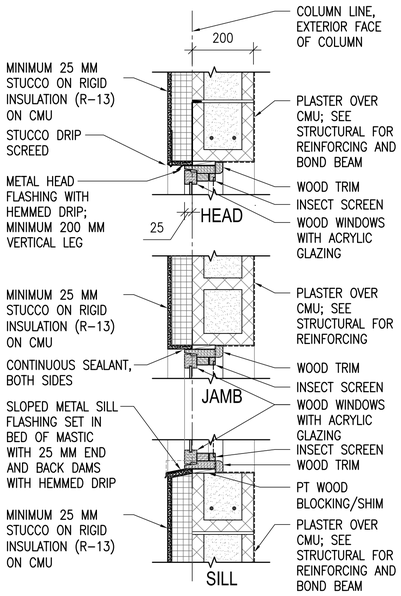

4 A3 A3 WINDOW DETAILS
SCALE: 1:10

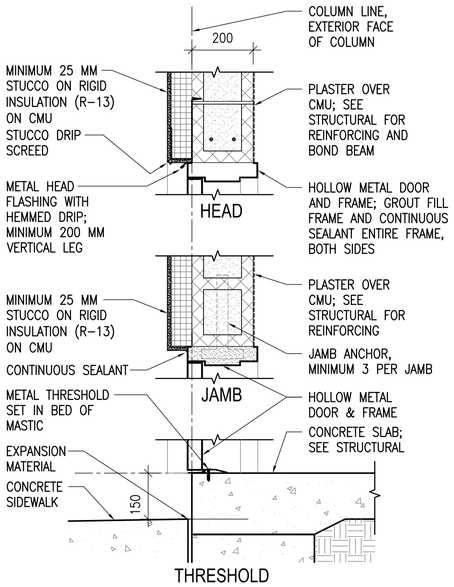

5 A3 A3 EXTERIOR DOOR DETAILS
SCALE: 1:10

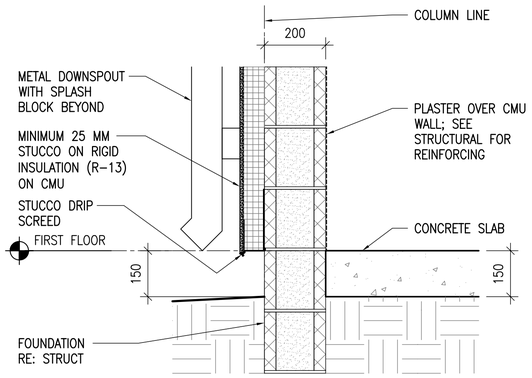

6 A3 A3 STUCCO BASE DETAIL
SCALE: 1:10

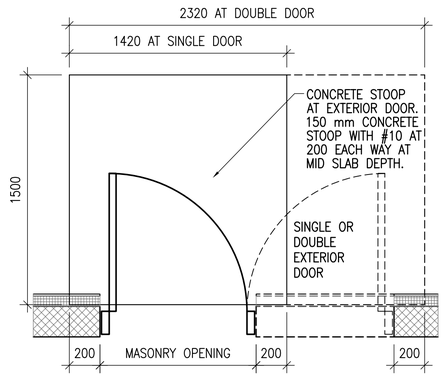

7 A3 A3 CONCRETE STOOP PLAN DETAIL
SCALE: 1:20

UNLESS OTHERWISE NOTED, LINEAR DIMENSIONS SHOWN ARE IN MILLIMETERS (MM)

0 200 400 800
SCALE: 1: 10

0 1000 2000 4000
SCALE: 1: 50

US Army Corps of Engineers
Afghanistan Engineer District

SYMBOL	DESCRIPTION	DATE	APR

DESIGNED BY: PFF
DATE: 09-30-09
DWN BY: ECN
SUBMITTED BY: BAKER
CHK BY: NLJ
FILE NO.: ANPSDA-303XXX

Michael Baker Jr., Inc
A unit of Michael Baker Corporation
Airside Business Park
100 Airside Drive
Moon Township, PA 15108
www.mbakercorp.com

AFGHAN NATIONAL POLICE
STANDARD DESIGN
WELL HOUSE

DOOR, WINDOW & FINISH TYPES & DETAILS

SHEET REFERENCE NUMBER:
A3

100% SUBMISSION

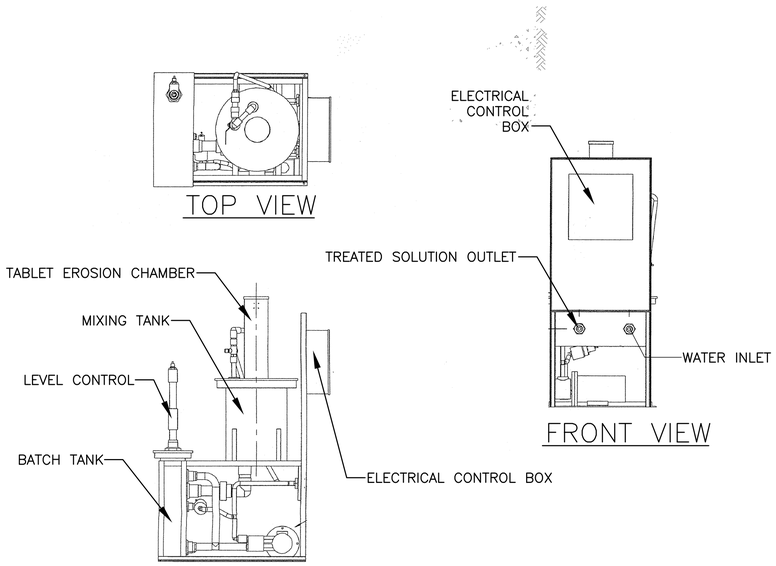

CHLORINE FEED SYSTEM
(Calcium Hypochorite Tablet Feeder)
N.T.S.

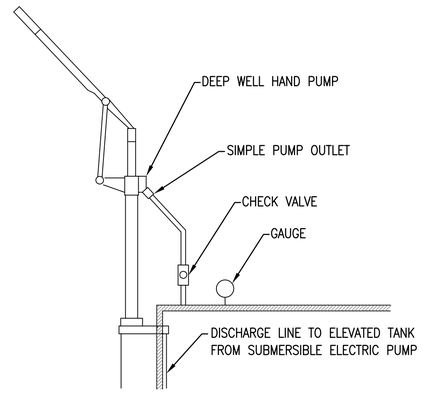

HAND PUMP
INSTALLATION DETAIL
N.T.S.

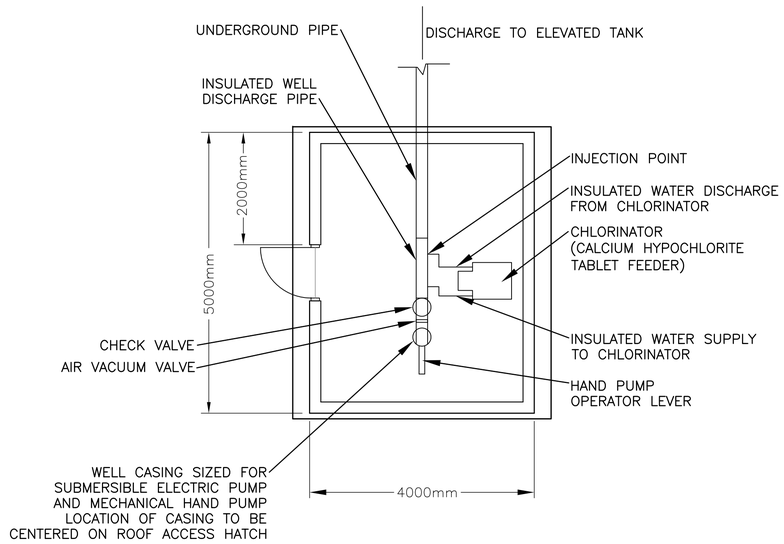

WELL HOUSE
PLUMBING SCHEMATIC
N.T.S.

US Army Corps of Engineers
Afghanistan Engineer District

SYMBOL	DESCRIPTION	DATE	APR

DESIGNED BY: BAKER
DATE: 09-30-09
DWN BY: BAKER
SUBMITTED BY: BAKER
CHK BY: GPH
FILE NO.: ANPSDP-501XXX

Michael Baker Jr., Inc
A unit of Michael Baker Corporation
Airside Business Park
100 Airside Drive
Moon Township, PA 15108
www.mbakercorp.com

AFGHAN NATIONAL POLICE
STANDARD DESIGN
WELL HOUSE

PLUMBING SCHEMATIC AND DETAILS

SHEET REFERENCE NUMBER:
P1

100% SUBMISSION

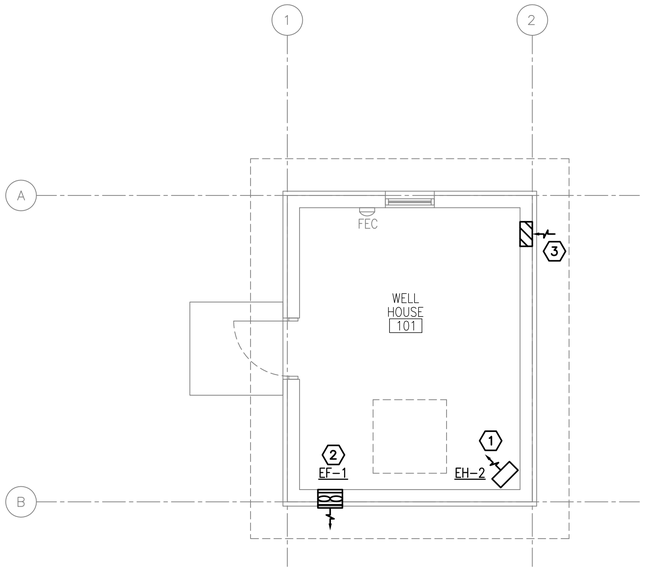

1 M1 M1 HVAC PLAN

SCALE: 1:50

N

GENERAL NOTES:

1. DO NOT SCALE DRAWINGS – ALL DIMENSIONS AND CONDITIONS SHALL BE CHECKED AND VERIFIED BY THE CONTRACTOR AT THE SITE.
2. ALL WORK PERFORMED ON THIS BUILDING SHALL BE IN COMPLIANCE WITH ALL PERTINENT CODES, RULES, ORDINANCES AND REGULATIONS OF THE GOVERNING AUTHORITIES.
3. ALL WORK PERFORMED UNDER AND IN CONNECTION WITH THESE DRAWINGS AND SPECIFICATIONS SHALL BE IN STRICT COMPLIANCE WITH THE LATEST SAFETY AND HEALTH STANDARDS.

NUMBERED NOTE:

(1) CORROSION RESISTANT ELECTRIC UNIT HEATER SUSPENDED FROM STRUCTURE ABOVE.

(2) CORROSION RESISTANT WALL MOUNTED EXHAUST FAN.

(3) 200x400 (8x16) LOW LEAKAGE GRAVITY WALL LOUVER FOR INTAKE. PROVIDE WEATHER PROOF LOUVER W/0.05mm (2") WASH DOWN FILTER AND SAND TRAP.

ELECTRIC UNIT HEATER SCHEDULE

NO.	CMS	KW	F.A.T. °C	ELECT. CHAR.	MOUNTING
EH–2	.200	2.6	33	370/1/50	CEILING

NOTES:
1. HEATERS SHALL BE CORROSION RESISTANT

EXHAUST FAN SCHEDULE

NO.	TYPE	FAN CMS	DRIVE	HP	SP mmH20	ELECT. CHAR.	SWITCH
EF–1	WALL	0.100	DIRECT	FRACT	13	220/1/50	@ WALL

NOTES:
1. WALL MOUNTED EXHAUST FAN MOUNT AT 600mm BELOW CEILING.
2. FANS SHALL HAVE LOW LEAKAGE GRAVITY LOUVER AND SECURITY GRILLE.
3. FANS SHALL BE EXPLOSION PROOF.

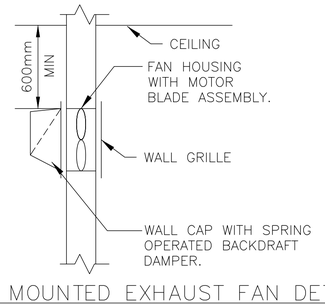

WALL MOUNTED EXHAUST FAN DETAIL

N.T.S.

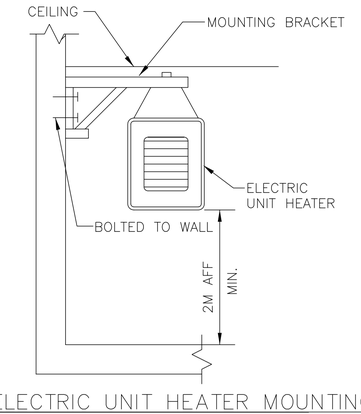

ELECTRIC UNIT HEATER MOUNTING

N.T.S.

US Army Corps of Engineers

Afghanistan Engineer District

SYMBOL	DESCRIPTION	DATE	APR.

DESIGNED BY: RML
DATE: 09-30-09
DWN BY: JJN
SUBMITTED BY: BAKER
CHK BY: CJM
FILE NO.: ANPSDM-101XXX

Michael Baker Jr., Inc
A unit of Michael Baker Corporation
Airside Business Park
100 Airside Drive
Moon Township, PA 15108
www.mbakercorp.com

AFGHAN NATIONAL POLICE
STANDARD DESIGN
WELL HOUSE

HVAC PLAN

SHEET REFERENCE NUMBER:

M1

100% SUBMISSION

POWER

- DISTRIBUTION PANELBOARD
- NEW PANELBOARD – SURFACE
- NEW PANELBOARD – RECESSED
- EXISTING PANELBOARD
- GENERATOR
- TVSS — TRANSIENT VOLTAGE SURGE SURPRESSOR
- TRANSFORMER (DRAWN TO SIZE)
- PS — POWER SUPPLY
- CP — CONTROL PANEL
- TC — TIME CLOCK
- TIM — ASTRONOMICAL TIME CLOCK– "SEE SPEC."
- R — RELAY WITH RATING AND NUMBER OF POLES AS NOTED ON DRAWINGS– "SEE SPEC."
- J — JUNCTION BOX
- J — JUNCTION BOX – CEILING
- PB — PULL BOX
- BD — BUS DUCT HORIZONTAL
- BUS DUCT VERTICAL
- EMERGENCY POWER OFF PUSH BUTTON
- NON–FUSIBLE SAFETY SWITCH
- FUSIBLE SAFETY SWITCH
- M — MOTOR
- $M — MOTOR STARTING SWITCH – 20A RATED
- $K — KEY SWITCH – 20A RATED
- FC — FAN COIL – FURNISHED BY MECHANICAL CONTRACTOR, ELECTRICAL CONTRACTOR SHALL INSTALL AND PROVIDE POWER CONNECTION
- UH — UNIT HEATER – FURNISHED BY MECHANICAL CONTRACTOR, ELECTRICAL CONTRACTOR SHALL INSTALL AND PROVIDE POWER CONNECTION
- D — JUNCTION BOX FOR CONNECTION TO GARBAGE DISPOSAL
- CF — LIGHT/HEATER/FAN – FURNISHED BY MECHANICAL CONTRACTOR, ELECTRICAL CONTRACTOR SHALL INSTALL AND PROVIDE POWER CONNECTION
- ELECTRIC WATER HEATER
- EPO — WEATHERPROOF / EXPLOSION PROOF EMERGENCY POWER OFF PUSH–BUTTON TO BE INTERCONNECTED WITH GENERATOR SHUT DOWN CONTROL
- CF — CEILING FAN – REFER TO SPECIFICATION SECTION 26 20 00

RECEPTACLES

- DUPLEX 20A BRITISH STANDARD UNSWITCHED SOCKETS
- GF — DUPLEX 20A BRITISH STANDARD UNSWITCHED SOCKETS – 10mA GROUND FAULT INTERRUPTER TYPE
- WP — DUPLEX 20A BRITISH STANDARD UNSWITCHED SOCKETS – 10mA GROUND FAULT INTERRUPTER TYPE WITH WEATHERPROOF COVER
- EXP — DUPLEX 20A BRITISH STANDARD UNSWITCHED SOCKETS – EXPLOSION PROOF
- * — INDICATES MOUNT DEVICE ABOVE COUNTER TOP

LIGHTNING PROTECTION

- AIR TERMINAL 200mm O.D. X 4m SOLID COPPER, NICKEL PLATED ON ADHESIVE BASE.
- EQ — EQUIPMENT AIR TERMINAL
- TEST WELL WITH GROUND ROD(S)
- GROUND ROD
- G — GROUND PLATE
- G — MAIN GROUND CONDUCTER CONCEALED WITHIN CONSTRUCTION
- G — MAIN GROUND CONDUCTOR EXPOSED ON EXPOSED ON BUILDING EXTERIOR SURFACE
- G — GROUND CONDUCTOR CAD WELDED TO GROUND CABLE OR EQUIPMENT
- G — GROUND CONDUCTOR CAD WELDED TO BUILDING STEEL COLUMN
- GROUND ROD TRIPOD, SPACED 10 FEET APART.
- LEVEL TO LEVEL CABLE

LIGHTING

- LIGHTING FIXTURE – SEE FIXTURE SCHEDULE FOR MORE INFORMATION
- LIGHTING FIXTURE – SEE FIXTURE SCHEDULE FOR MORE INFORMATION
- DOWNLIGHT
- LIGHTING FIXTURE ON NORMAL/EMERGENCY
- WALL MOUNTED LIGHT FIXTURE
- E — EXIT SIGN – DIRECTIONAL ARROWS AS INDICATED ON DRAWINGS
- B — BATTERY PACK WITH HEADS AS INDICATED ON DRAWINGS
- REMOTE HEAD FOR BATTERY PACK
- $ — SINGLE POLE SWITCH – 20A RATED
- $3 — 3–WAY SWITCH – 20A RATED
- $4 — 4–WAY SWITCH – 20A RATED
- PC — PHOTOCELL VOLTAGE TO MATCH CIRCUITRY
- LC — LIGHTING CONTACTOR
- POLE MOUNTED SITE LIGHTING FIXTURE– NUMBER OF FIXTURES PER POLE AS INDICATED ON DRAWINGS
- EXTERIOR DIRECTIONAL LIGHTING FIXTURE
- a — SMALL CASE LETTERS REPRESENTS LAMP(S) / SWITCHES. WHEN USED WITH AN OCCUPANCY SENSOR THIS INDICATES SENSOR WITH MANUAL OVERRIDE SWITCH

TELECOMMUNICATIONS

- TELEPHONE OUTLET(S) @ 18" AFF. U.N.O. WITH 3/4" RACEWAY TERMINATED ABOVE NEAREST ACCESSIBLE CEILING OR TO TELEPHONE TERMINAL BOARD IF NO ACCESSIBLE CEILING AVAILABLE. SEE TELE/DATA RISER DIAGRAM FOR OUTLET AND CABLE DESCRIPTION
- DATA OUTLET(S) @ 18" AFF. U.N.O. WITH 3/4" RACEWAY TERMINATED ABOVE NEAREST ACCESSIBLE CEILING OR TO DATA EQUIPMENT RACK IF NO ACCESSIBLE CEILING AVAILABLE. SEE TELE/DATA RISER DIAGRAM FOR OUTLET AND CABLE DESCRIPTION

TELECOMMUNICATIONS (CONTINUED)

- COMBINATION TELEPHONE/DATA OUTLET(S) @ 18" AFF. U.N.O. WITH 1" RACEWAY TERMINATED ABOVE NEAREST ACCESSIBLE CEILING OR TO TELE/DATA TERMINAL AREA IF NO ACCESSIBLE CEILING AVAILABLE. SEE TELE/DATA RISER DIAGRAM FOR OUTLET AND CABLE DESCRIPTION
- W — WALL MTD. TELEPHONE OUTLET WITH 3/4" RACEWAY TERMINATED ABOVE NEAREST ACCESSIBLE CEILING OR TO TELEPHONE TERMINAL BOARD IF NO ACCESSIBLE CEILING AVAILABLE. SEE TELE/DATA RISER DIAGRAM FOR OUTLET AND CABLE DESCRIPTION
- (x)T — INDICATES NUMBER OF TELEPHONE OUTLET(S) AND ASSOCIATED CABLING
- (x)D — INDICATES NUMBER OF DATA OUTLET(S) AND ASSOCIATED CABLING
- (x)TF — INDICATES NUMBER OF TELEPHONE OUTLETS AND ASSOCIATED CABLING WITH 1 OUTLET AND CABLE DEDICATED FOR FAX

SINGLE LINE SYMBOLS

- SWITCH
- BREAKER
- FUSE
- TRANSFORMER
- CAPACITOR
- GROUND
- CONTACT (NORMALLY OPEN)
- CONTACT (NORMALLY CLOSED)
- AUTOMATIC TRANSFER SWITCH
- MANUAL DOUBLE THROW SWITCH
- CURRENT TRANSFORMER
- INDICATES NEW ELECTRICAL EQUIPMENT
- C — INDICATES NEW CONTROL WIRING AND CONDUIT
- EQUIPMENT OUTLINE

MISCELLANEOUS

- BRANCH CIRCUIT WIRING CONCEALED ABOVE CEILINGS, SURFACE MOUNTED ON WALLS
- BRANCH CIRCUIT WIRING – #10 AWG
- BRANCH CIRCUIT WIRING – UNDER FLOOR
- HOME RUN BACK TO PANEL
- CONDUIT TURNED DOWN
- CONDUIT TURNED UP
- LV — LOW VOLTAGE WIRING AND CONDUIT
- CT–X — CABLE TRAY ("X" DENOTES WIDTH)
- INDICATES CONTINUATION OF LINE

FIRE ALARM

- FACP — FIRE ALARM CONTROL PANEL WITH BATTERY BACKUP
- F — FIRE ALARM PULL STATION

FIRE ALARM (CONTINUED)

- F — FIRE ALARM STROBE – WALL MOUNTED
- F — FIRE ALARM AUDIBLE/STROBE – WM
- F — FIRE ALARM HORN/STROBE – WM
- S — SMOKE DETECTOR
- H — HEAT DETECTOR CEILING MOUNTED
- D — DUCT DETECTOR – PROVIDED BY EC, INSTALLED BY MC AND CONNECTED BY EC

DENOTATIONS & ABBREVIATIONS

AFF	ABOVE FINISHED FLOOR
C	CEILING MOUNTED
E	EMERGENCY
EC	ELECTRICAL CONTRACTOR
EPO	EMERGENCY POWER OFF
EXP	EXPLOSION PROOF
F	FIRE ALARM
FF	FLUSH FLOOR MOUNTED
FL	FLUORESCENT
FO	FIBER OPTIC
FSS	FUSED SAFETY SWITCH
G	GROUND FAULT INTERRUPTER
GC	GENERAL CONTRACTOR
HOA	HAND–OFF AUTO
I	INFRARED
ICD	INCANDESCENT
IG	ISOLATED GROUND
K	KEY
LV	LOW VOLTAGE
M	MOTOR
MC	MECHANICAL CONTRACTOR
NE	NORMAL/EMERGENCY
NFSS	NON–FUSED SAFETY SWITCH
PA	PAGING SYSTEM
PLC	PLUMBING CONTRACTOR
REL	RELOCATE
RED	RELOCATED
SL	SINGLE LINE
SS	SURGE SUPPRESSION
T	TELEPHONE
TL	TWIST LOCK

DENOTATIONS & ABBREVIATIONS (CONT.)

TP	TAMPER PROOF
UE	UNDERGROUND ELECTRIC
UF	UNDERGROUND FIBER
UT	UNDERGROUND TELEPHONE
W	WALL MOUNTED
WG	WIRE GUARD
WP	WEATHERPROOF
WPG	WEATHERPROOF/GROUND FAULT INTERRUPTER
WT	WATER TIGHT

GENERAL PROJECT NOTES:

G1. UNLESS OTHERWISE NOTED, PROVIDE ALL EQUIPMENT SHOWN ON THE PLANS. THE ELECTRICAL CONTRACTOR SHALL COORDINATE ALL SYMBOLS SHOWN ON THE PLANS WITH THE SYMBOL LIST. IT SHALL BE THE RESPONSIBILITY OF THE CONTRACTOR TO VERIFY THE INTENT OF ANY SYMBOL THAT IS SHOWN ON THE PLANS AND NOT INDICATED ON THE SYMBOL LIST WITH THE ENGINEER PRIOR TO BID.

G2. COORDINATE THE FINAL LOCATIONS OF ALL LIGHT FIXTURES WITH THE ARCHITECT'S REFLECTED CEILING PLANS. REPORT ANY DISCREPANCIES TO THE ARCHITECT PRIOR TO INSTALLATION.

G3. THE CONTRACTOR SHALL VERIFY THE LOCATION OF ALL UNDERGROUND UTILITIES WITHIN THE CONSTRUCTION AREA THREE (3) WORKING DAYS NOTICE BEFORE COMMENCE DIGGING. NOTIFY THE LOCAL OR STATE AUTHORITY HAVING JURISDICTION AND WAIT THE REQUIRED TIME BEFORE COMMENCING TO DIG.

G4. THE CONTRACTOR SHALL COORDINATE CONDUIT RUNS, CABLE TRAY, LIGHTING FIXTURES AND OTHER EQUIPMENT LOCATIONS WITH THE OTHER TRADE CONTRACTORS TO AVOID CONFLICTS.

G5. WHERE VOLTAGES AND FREQUENCIES ON THE DRAWINGS AND IN THE SPECIFICATIONS DIFFER FROM THE LOCAL ONES, ALL WORK SHALL BE PERFORMED USING THE LOCAL VOLTAGES AND FREQUENCIES.

G6. THE MINIMUM WIRE SIZE ON THE PROJECT SHALL BE 4mm2. THE MINIMUM CONDUIT SIZE SHALL BE 20mm. THE MINIMUM BREAKER SIZE SHALL BE 20 AMPS.

G7. THE CONTRACTOR SHALL PUT A MAXIMUM OF 6 DUPLEX SOCKETS ON A 20A SINGLE POLE CIRCUIT.

G8. WHERE THE 1010 SCOPE REVIEW, 1015 TECHNICAL REVIEW, DRAWINGS, AND SPECIFICATIONS DIFFER FROM AMERICAN CODES OR STANDARDS THE 1010, 1015, DRAWINGS, AND SPECIFICATIONS SHALL RULE.

G9. WORK FOR THE AMMUNITION SUPPLY POINT SHALL BE DONE IN ACCORDANCE WITH DEPARTMENT OF DEFENSE STANDARD DOD 6055.9–STD.

G10. ALL CONDUIT AND DEVICES SHALL BE SURFACE MOUNTED UNLESS OTHERWISE INDICATED.

US Army Corps of Engineers
Afghanistan Engineer District

SYMBOL	DESCRIPTION	DATE	APR

DESIGNED BY: JRG
DATE: 09-30-09
DWN BY: JRG
SUBMITTED BY: BAKER
CHK BY: JRG
FILE NO.: ANPSDE-000XXX

Michael Baker Jr., Inc
A unit of Michael Baker Corporation
Airside Business Park
100 Airside Drive
Moon Township, PA 15108
www.mbakercorp.com

AFGHAN NATIONAL POLICE
STANDARD DESIGN
WELL HOUSE

ELECTRICAL SYMBOLS AND ABBREVIATIONS

SHEET REFERENCE NUMBER:
E0

100% SUBMISSION

GENERAL NOTES:

1. REFER TO DRAWING #E0 FOR THE ELECTRICAL SYMBOLS LIST.
2. EXIT SIGNS SHALL BE WIRED AHEAD OF ANY LOCAL SWITCHING ON CIRCUITS.
3. REFER TO DRAWING #E3 FOR THE LIGHTING FIXTURE SCHEDULE.
4. REFER TO DRAWING #E2 FOR THE POWER RISER.
5. REFER TO DRAWING #E4 FOR PANEL SCHEDULES.
6. LIGHT FIXTURES INDICATED AS EMERGENCY SHALL BE PROVIDED WITH A BATTERY BACKUP BALLAST.

NUMBERED NOTE:

1. REFER TO RISER DIAGRAM FOR FEEDER SIZE.
2. WELL WATER PUMP.
3. PANEL P1
4. 3 4mm + 1 4mm GND. IN 20mm C.
5. PROVIDE POWER CONNECTION TO ELECTRIC UNIT HEATER #2. SEE DRAWINGS #E5 AND #M1 FOR MORE INFORMATION.
6. PROVIDE POWER CONNECTION TO EXHAUST FAN. SEE DRAWINGS #E5 AND #M1 FOR MORE INFORMATION.
7. PROVIDE POWER CONNECTION TO CHLORINATION UNIT. COORDINATE FINAL LOCATION IN THE FIELD.

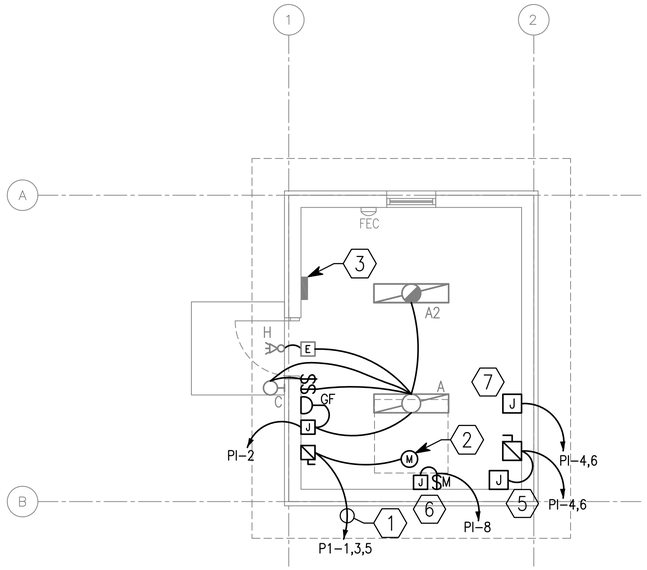

1 / E1 E1 LIGHTING AND POWER PLAN

SCALE: 1:50

N

UNLESS OTHERWISE NOTED, LINEAR DIMENSIONS SHOWN ARE IN MILLIMETERS (MM)

1 0 1 2 3 4

1:50

US Army Corps of Engineers

Afghanistan Engineer District

SYMBOL	DESCRIPTION	DATE	APR

DESIGNED BY: JRG	DATE: 09-30-09
DWN BY: JRG	SUBMITTED BY: BAKER
CHK BY: JRG	FILE NO.: ANPSDE-101XXX

Michael Baker Jr., Inc.
A unit of Michael Baker Corporation
Airside Business Park
100 Airside Drive
Moon Township, PA 15108
www.mbakercorp.com

AFGHAN NATIONAL POLICE
STANDARD DESIGN
WELL HOUSE

LIGHTING AND POWER PLAN

SHEET REFERENCE NUMBER:

E1

100% SUBMISSION

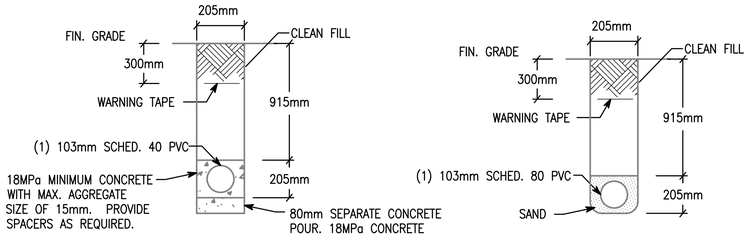

NOTE: PVC CONDUIT SHALL BE DIRECT BURIED SCHEDULE 80 FOR NO TRAFFIC AREAS AND CONCRETE-ENCASED SCHEDULE 40 FOR UNDER ROADWAYS OR TRAFFIC AREAS.

1 E2 | E2 TYPICAL DUCT BANK DETAILS FOR CONDUIT IN SAND OR CONCRETE

SCALE: N.T.S.

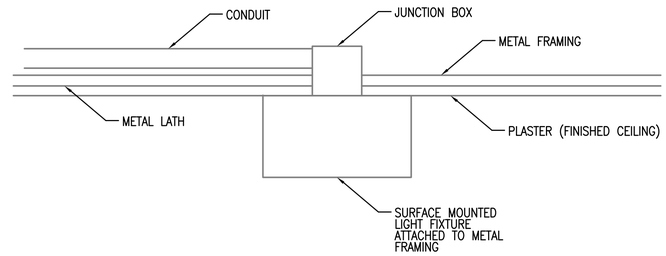

2 E2 | E2 TYPICAL DETAIL FOR SURFACE MOUNTED LIGHT FIXTURES

SCALE: N.T.S.

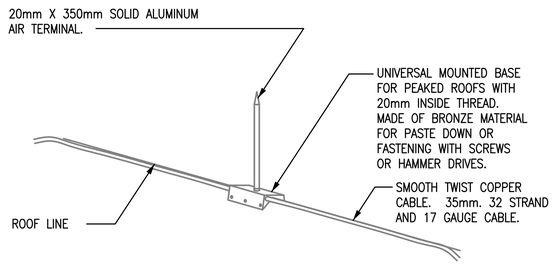

3 E2 | E2 LIGHTNING PROTECTION AIR TERMINAL DETAIL

SCALE: N.T.S.

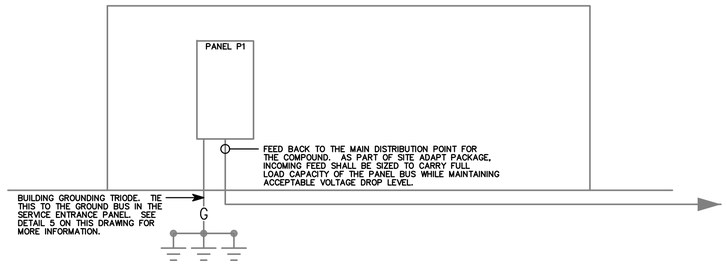

4 E2 | E2 WELLHOUSE RISER DIAGRAM

SCALE: N.T.S.

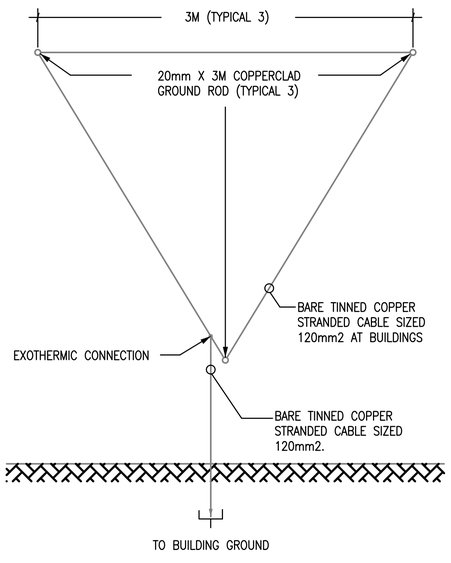

5 E2 | E2 GROUND TRIPOD SYSTEM DETAIL - PLAN

SCALE: N.T.S.

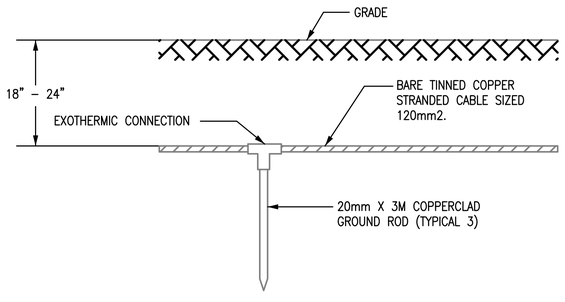

6 E2 | E2 GROUND TRIPOD SYSTEM DETAIL - ELEVATION

SCALE: N.T.S.

US Army Corps of Engineers
Afghanistan Engineer District

SYMBOL	DESCRIPTION	DATE	APR

DESIGNED BY: JRG
DATE: 09-30-09
DWN BY: JRG
SUBMITTED BY: BAKER
CHK BY: JRG
FILE NO.: ANPSDE-502XXX

Michael Baker Jr., Inc
A unit of Michael Baker Corporation
Airside Business Park
100 Airside Drive
Moon Township, PA 15108
www.mbakercorp.com

AFGHAN NATIONAL POLICE
STANDARD DESIGN
WELL HOUSE

DETAILS

SHEET REFERENCE NUMBER:
E2

100% SUBMISSION

FIXTURE MARK 'A'

PARABOLIC SURFACE/PENDANT MOUNTED 300MM x 1200MM FLUORESCET FIXTURE WITH ELECTRONIC BALLAST.

FIXTURE MARK 'A2':
SAME FIXTURE AS 'A' WITH EMERGENCY BALLAST.

FIXTURE MARK 'C'

INCANDESCENT ONE PIECE WITH APPROVED LENS, STABILIZED HIGH IMPACT POLY CARBONATE

FIXTURE MARK 'H'

REMOTE HEAD EXTERIOR LIGHT HEAD POWERED FROM EXIT SIGN BATTERY– 12V DOUBLE HEAD CORROSION RESISTANT WITH UL34 WEATHERPROOF CONSTRUCTION

FIXTURE MARK 'E'

UNIVERSAL MOUNT ENGINEER GRADE THERMOPLASTIC HOUSING EXIT SIGN WITH LED LAMPS, RED LETTERS 6" IN HEIGHT WITH ARROWS AS INDICATED, WITH 12V CADMIUM BATTERY

LIGHTING FIXTURE SCHEDULE

FIXTURE MARK	STYLE NUMBER AND TYPE	NUMBER AND TYPE OF LAMPS	VOLTAGE	MOUNTING	NOTES
A	PARABOLIC SURFACE/PENDANT MOUNTED 300MM X 1200MM FLUORESCENT FIXTURE WITH ELECTRONIC BALLAST	(2) 32W 3500K	220V – 1ø 50HZ	PENDANT MOUNTED FROM SLOPED CEILINGS	FURNISHED WITH ELECTRONIC BALLAST. PARABOLIC LOUVER SHALL BE SPECULAR LENS IRADESCENCE TYPE.
A2	SAME AS FIXTURE 'A' WITH EMERGENCY BALLAST	(2) 32W 3500K	220V – 1ø 50HZ	PENDANT MOUNTED FROM SLOPED CEILINGS	FURNISHED WITH ELECTRONIC BALLAST. PARABOLIC LOUVER SHALL BE SPECULAR LENS IRADESCENCE TYPE. EMERGENCY BALLAST SELF TEST.
C	INCANDESCENT ONE PIECE W/ APPROVED LENS STABILIZED HIGH IMPACT POLY CARBONATE.	(1) A19 – 100W INCANDESCENT	220V – 1ø 50HZ	WALL MOUNTED ABOVE EXTERIOR DOORS	
H	REMOTE HEAD EXTERIOR LIGHT HEAD POWERED FROM EXIT SIGN BATTERY– 12V DOUBLE HEAD CORROSION RESISTANT WITH UL34 WEATHERPROOF CONSTRUCTION	(2) 12W/12V HALOGEN LAMP	12V – 1ø 50HZ	EXTERIOR WALL MOUNTED AT TOP OF DOOR HEIGHT	
E	UNIVERSAL MOUNT ENGINEER GRADE THERMOPLASTIC HOUSING EXIT SIGN WITH LED LAMPS, RED LETTERS 6" IN HEIGHT WITH ARROWS AS INDICATED, WITH 12V CADMIUM BATTERY WITH REMOTE HEAD CAPABILITY	LED LAMPS	220V – 1ø 50HZ	UNIVERSAL MOUNTING	

US Army Corps of Engineers
Afghanistan Engineer District

SYMBOL	DESCRIPTION	DATE	APR

DESIGNED BY: JRG
DATE: 09-30-09
DWN BY: JRG
SUBMITTED BY: BAKER
CHK BY: JRG
FILE NO.: ANPSDE-603XXX

Michael Baker Jr., Inc
A unit of Michael Baker Corporation
Airside Business Park
100 Airside Drive
Moon Township, PA 15108
www.mbakercorp.com

AFGHAN NATIONAL POLICE
STANDARD DESIGN
WELL HOUSE

LIGHT FIXTURE SCHEDULE

SHEET REFERENCE NUMBER:
E3

100% SUBMISSION

PANELBOARD P1 SURFACE MOUNTED _____ ASYM. A.I.C. MIN.
_____ AMP. MAIN LUGS (OR) 100 AMP. MAIN BREAKER W/ 100 AMP. TRIP
CIRCUIT BREAKER TYPE 380/220 VOLTS 3 PHASE 4 WIRE 50 HZ 100 AMP. BUS

CKT. NO.	TRIP AMPS	NO. POLES	WIRE MM ²	GND MM²	CONDUIT MM	LOAD SERVED	LOAD-V.A. AØ	LOAD-V.A. BØ	LOAD-V.A. CØ	LOAD-V.A. AØ	LOAD-V.A. BØ	LOAD-V.A. CØ	LOAD SERVED	CONDUIT MM	GND MM²	WIRE MM²	NO. POLES	TRIP AMPS	CKT. NO.
1	20	3	4.0	4.0	20	WELL PUMP	3.7	3.7	3.7	0.5			LIGHTING AND RECEPTACLES	20	4.0	4.0	1	20	2
3											1.3	1.3	ELECTRIC UNIT HEATER	20	4.0	4.0	2	20	4
5																			6
7	20	1				CHLORINATION UNIT	2.2			0.2			EXHAUST FAN	20	4.0	4.0	1	20	8
9	20	1				SPARE							SPARE				1	20	10
11	20	1				SPARE							SPARE				1	20	12
							5.9	3.7	3.7	0.5	1.3	1.3							

TOTAL CONN. LOAD PER PHASE (KVA): AØ 4.2 BØ 5.0 CØ 5.0

TOTAL CONN. LOAD 16.4 KVA. 70 % DEMAND = ESTIMATED DEMAND LOAD 11.5 SUPPLIED FROM MAIN SWITCHGEAR DISTRIBUTION

• MAIN BREAKER SHALL BE 3P EARTH GROUND TYPE

US Army Corps of Engineers
Afghanistan Engineer District

SYMBOL	DESCRIPTION	DATE	APR

DESIGNED BY: JRG
DWN BY: JRG
CHK BY: JRG
DATE: 09-30-09
SUBMITTED BY: BAKER
FILE NO.: ANPSDE-604XXX

Michael Baker Jr., Inc
A unit of Michael Baker Corporation
Airside Business Park
100 Airside Drive
Moon Township, PA 15108
www.mbakercorp.com

AFGHAN NATIONAL POLICE
STANDARD DESIGN
WELL HOUSE

PANEL SCHEDULES AND RISER DIAGRAM

SHEET REFERENCE NUMBER:
E4

100% SUBMISSION

NOTES FOR SCOPE ITEMS INCLUDED IN WATER TOWER CONSTRUCTION:

COMPONENTS LISTED AND SHOWN ARE INTENDED TO PROVIDE A DRAIN LINE FOR THE FEED POWER TO THE WATER TOWER. THE SOLENOID VALVE IS TO REMAIN OPEN EXCEPT WHEN THE PUMP IS RUNNING. PIPING FROM THE TOWER WILL DRAIN BACK INTO THE WELL.

1. 16MM SOLENOID VALVE; NORMALLY OPEN; POWER TO CLOSE; SPRING OPEN; FAIL OPEN. PROVIDE POWER TO OPEN THE SOLENOID FROM THE WELL PUMP CONTROL PANEL. POWER SHALL CLOSE THE VALVE WHEN THE PUMP TURNS ON AND INTERNAL VALVE SPRING SHALL OPEN THE VALVE WHEN THE PUMP MOTOR IS TURNED OFF.

2. SUPPORT 16MM PVC DRAIN LINE AT EVERY PIPE SUPPORT USING PIPE CLAMPS.

3. 16MM DRAIN PIPING WITH GATE VALVE AND STRAINER.

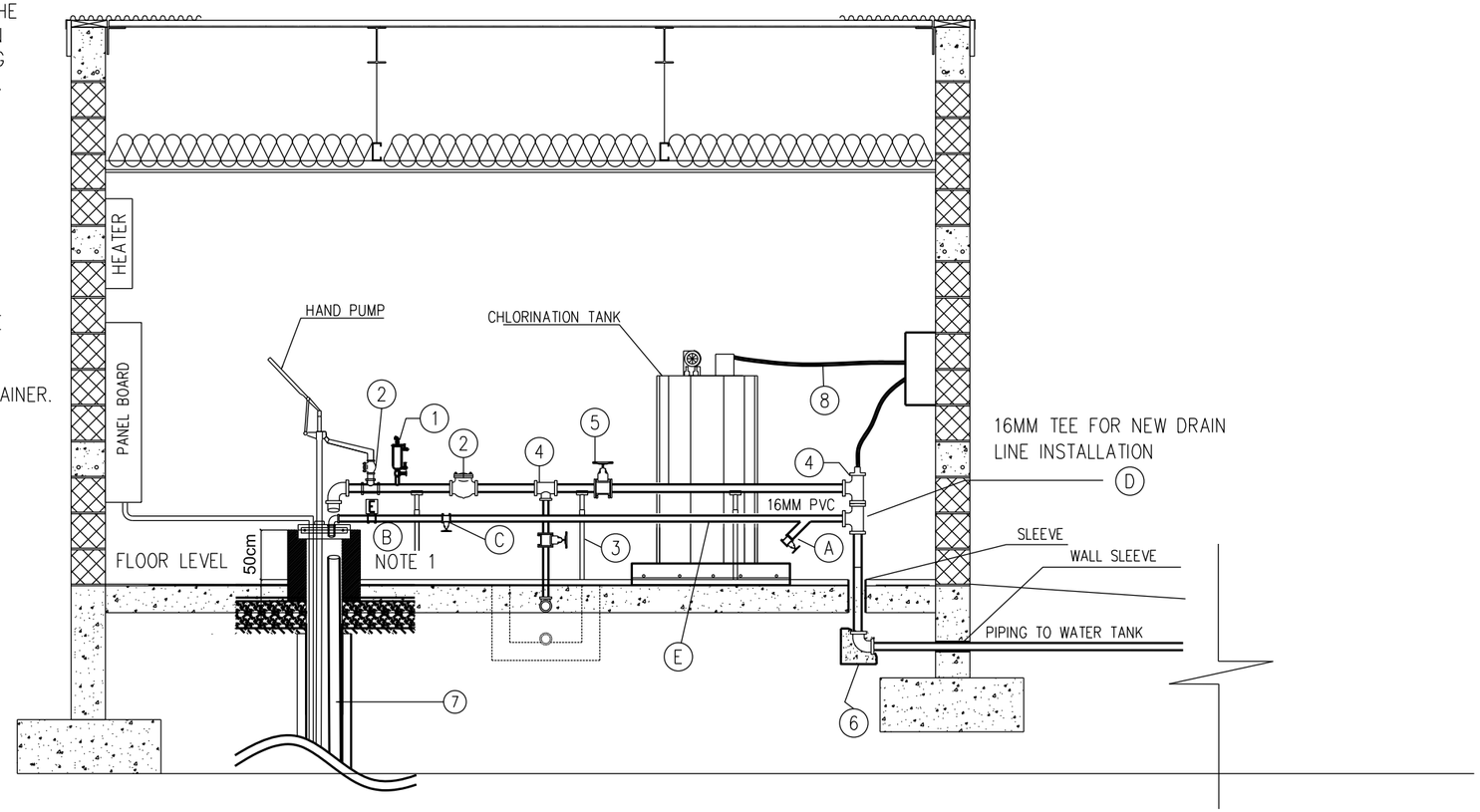

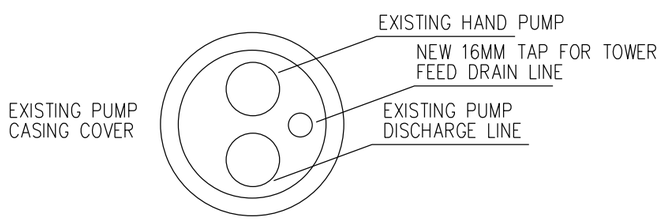

EXISTING EQUIPMENT DESCRIPTION	
ITEM	DESCRIPTION
1	AIR RELEASE VALVE
2	CHECK VALVE
3	PIPE SADDLE SUPPORT
4	TEE
5	GATE VALVE
6	90° ELBOW
7	RISER PIPE 80
8	ø12MM FLEXIBLE PVC PIPE

TOWER ADDITION EQUIPMENT DESCRIPTION	
ITEM	DESCRIPTION
A	16MM STRAINER W/ GATE VALVE
B	16MM ELECTRIC SOLENOID
C	GATE VALVE
D	16MM TEE
E	16MM SCH 80 PVC

WELL HOUSE SECTION PIPING

NTS

US ARMY CORPS OF ENGINEERS AFGHANISTAN ENGINEER DISTRICT

SYMBOL	DESCRIPTION	DATE	APPR.	SYMBOL	DESCRIPTION	DATE	APPR.

DESIGNED BY: DATE: 17 DEC 2009 REV: ___
DWN BY: CKD BY: DESIGN FILE NO.: DRAWING CODE:
REVIEWED BY: FILE NAME:
SUBMITTED BY: PLOT SCALE:
PLOT DATE: XX-XX-XX

U.S. ARMY ENGINEER DISTRICT, AFGHANISTAN
CORPS OF ENGINEERS
APO AE 96338

ENGINEERING AND CONSTRUCTION DIVISION

XXXXXXXXXXXXXXXX
AFGHANISTAN

WELL HOUSE SECTION PIPING

SHEET REFERENCE NUMBER:
XXX

A1 Size 594mm x 841mm

AFGHAN NATIONAL ARMY

STANDARD BUILDING DESIGN

POL STORAGE

100% FINAL DESIGN SUBMITTAL

SHEET INDEX

G-001 COVER SHEET

STRUCTURAL

S-001 GENERAL NOTES & DESIGN CRITERIA
S-101 FOUNDATION/SLAB & ROOF FRAMING PLANS
S-401 BUILDING SECTIONS
S-501 SECTIONS & DETAILS
S-601 SCHEDULES
S-701 TYPICAL DETAILS
S-702 TYPICAL DETAILS
S-801 PLANS & DETAILS

ARCHITECTURAL

A-001 LIFE SAFETY PLAN
A-101 FLOOR PLAN & ROOF PLAN
A-201 ELEVATIONS
A-301 BUILDING SECTIONS
A-401 WALL SECTIONS
A-501 EXTERIOR DETAILS
A-502 HEAD, JAMB, & SILL DETAILS
A-503 STOOP DETAILS
A-601 WINDOW & DOOR SCHEDULES

MECHANICAL

M-101 HVAC FLOOR PLAN, SCHEDULES, & DETAILS

ELECTRICAL

E-001 ELECTRICAL SYMBOLS & ABBREVIATIONS
E-101 ELECTRICAL LIGHTING PLAN
E-102 ELECTRICAL POWER AND SYSTEMS PLAN
E-103 ELECTRICAL LIGHTNING PROTECTION PLAN
E-501 ELECTRICAL DETAILS
E-502 ELECTRICAL DETAILS
E-601 ELECTRICAL LIGHT FIXTURE SCHEDULE
E-602 ELECTRICAL PANEL SCHEDULES

US ARMY CORPS OF ENGINEERS
AFGHANISTAN ENGINEER DISTRICT

Mark	Description	Date	Appr.	Mark	Description	Date	Appr.

Designed by: KRC
Dwn by: KJG
Ckd by: NLJ
Reviewed by: LHM
Submitted by: BAKER
Date: 3/07/2010
Rev: 0
Design file no.
Drawing code:
File name: ANAPOLG-001
Plot date: 3/5/2010
Plot scale: X:X

U.S. ARMY CORPS OF ENGINEERS
AFGHANISTAN ENGINEER DISTRICT
APO AE 96338

Michael Baker Jr., Inc
A unit of Michael Baker Corporation
Airside Business Park
100 Airside Drive
Moon Township, PA 15108
www.mbakercorp.com

AFGHAN NATIONAL ARMY
REGIONAL MILITARY TRAINING CENTER
STANDARD DESIGN

POL STORAGE

COVER SHEET

Sheet reference number:
G-001

STRUCTURAL ABBREVIATIONS:

ACI	AMERICAN CONCRETE INSTITUTE
ADD'L	ADDITIONAL
AISC	AMERICAN INSTITUTE OF STEEL CONSTRUCTION
AISI	AMERICAN IRON AND STEEL INSTITUTE
ASTM	AMERICAN SOCIETY FOR TESTING AND MATERIALS
ARCH	ARCHITECTURAL
B	BOTTOM
BLDG	BUILDING
BOTT	BOTTOM
℄	CENTER LINE
CFMRF	COLD FORM METAL ROOF FRAME
CFMF	COLD FORM METAL FRAME
CFS	COLD FORMED STEEL
CIP	CAST-IN-PLACE
CIPL	CAST-IN-PLACE LINTEL
CJ	CONTROL JOINT
CLR	CLEAR
CMU	CONCRETE MASONRY UNIT
COEFF	COEFFICIENT
COL	COLUMN
CONC	CONCRETE
CONT	CONTINUOUS
COORD	COORDINATE
CRSI	CONCRETE REINFORCING STEEL INSTITUTE
CSJ	CONSTRUCTION JOINT
DIA	DIAMETER
DIAG	DIAGONAL
DIM	DIMENSION
DWG	DRAWING
DWL	DOWEL
EA	EACH
EF	EACH FACE
ELEC	ELECTRICAL
ELEV	ELEVATION
EMBED	EMBEDMENT
EQUIV	EQUIVALENT
ETC	ET CETERA
EW	EACH WAY
EXP	EXPANSION
EXT	EXTERIOR
FTG	FOOTING
GA	GAUGE
GB	GRADE BEAM
HORIZ	HORIZONTAL
h	HOUR
HRS	HOURS
IBC	INTERNATIONAL BUILDING CODE
INFO	INFORMATION
INT	INTERIOR
kg	KILOGRAM
km	KILOMETER
kN	KILONEWTON
kPa	KILOPASCAL
L#	ANGLE (# INDICATES SIZE)
LONG	LONGITUDINAL
LLV	LONG LEG VERTICAL
m	METER
MAX	MAXIMUM
MECH	MECHANICAL
MFG	MANUFACTURER
MID	MIDDLE
MIN	MINIMUM
MISC	MISCELLANEOUS
mm	MILLIMETER
MPa	MEGAPASCAL
MTL	METAL
MWFRS	MAIN WIND FORCE RESISTING SYSTEM
N	NEWTON
N	NORTH
N/A	NOT APPLICABLE
#	NUMBER SYMBOL FOR REBAR SIZE
NTS	NOT TO SCALE
OC	ON CENTER
OPNG	OPENING
ℙ or PL	PLATE
PRE-ENG	PRE-ENGINEERED
RB	ROOF BEAM
REINF	REINFORCED
REQ'D	REQUIRED
SIM	SIMILAR
SPECS	SPECIFICATIONS
STD	STANDARD
STRUCT	STRUCTURAL
SW	SHEAR WALL
T	TOP
T/	TOP OF
T/ELEV	TOP ELEVATION
T/SLAB	TOP OF SLAB
T&B	TOP AND BOTTOM
THK	THICK
TYP	TYPICAL
UFC	UNIFIED FACILITIES CRITERIA
UON	UNLESS OTHERWISE NOTED
VERT	VERTICAL
W	WIDTH
W/	WITH

1.0 GENERAL NOTES:

1.1 THIS PROJECT HAS BEEN DESIGNED FOR THE WEIGHTS AND MATERIALS INDICATED ON THE SHEETS AND FOR THE LIVE LOADS INDICATED IN THE DESIGN DATA. IT IS THE CONTRACTOR'S RESPONSIBILITY TO DETERMINE ALLOWABLE CONSTRUCTION LOADS AND TO PROVIDE PROPER DESIGN AND CONSTRUCTION OF FALSEWORK, FORMWORK, STAGING, BRACING, SHEETING AND SHORING, ETC.

1.1 COORDINATE THESE SHEETS WITH THE ARCHITECTURAL, MECHANICAL, ELECTRICAL, PLUMBING, AND CIVIL SHEETS. ALL DIMENSIONS SHOWN ON THE SHEETS ARE MILLIMETERS UNLESS NOTED OTHERWISE.

1.2 THE CONTRACTOR SHALL VERIFY AND COORDINATE ALL FLOOR AND ROOF OPENING SIZES AND LOCATIONS, EQUIPMENT PAD SIZES AND LOCATIONS, ANCHOR BOLT LAYOUTS, ETC WITH EQUIPMENT SELECTED. THE CONTRACTOR SHALL MAKE ANY REQUIRED MODIFICATIONS AT NO ADDITIONAL COST.

1.3 THE CONTRACTOR SHALL REFER TO THE ARCHITECTURAL, MECHANICAL, ELECTRICAL AND PLUMBING SHEETS FOR SLEEVES, CURBS, INSERTS OR OPENINGS, ETC. NOT HEREIN INDICATED.

1.4 WORK NOT INCLUDED ON THE SHEETS BUT IMPLIED TO BE SIMILAR TO THAT SHOWN AT CORRESPONDING PLACES ELSEWHERE ON THE SHEETS SHALL BE REPEATED.

1.5 IN CASE OF CONFLICT BETWEEN THE NOTES, DETAILS AND SPECIFICATIONS THE MOST RIGID REQUIREMENTS SHALL GOVERN.

1.6 SEE ARCHITECTURAL SHEETS FOR LOCATIONS OF MASONRY AND NON-LOAD BEARING PARTITIONS. PROVIDE COMPRESSIBLE FIRESAFING AT TOP OF WALL AS REQUIRED BY ARCHITECTURAL SHEETS.

1.7 COORDINATE FINISHED FLOOR DATUM ELEVATION 0.0m WITH THE CIVIL SHEETS.

2.0 FOUNDATION NOTES

2.1 THE GEOTECHNICAL ANALYSIS FOR THIS PROJECT IS THE RESPONSIBILITY OF THE CONTRACTOR AWARDED THE WORK. AN ASSUMED ALLOWABLE SOIL BEARING VALUE OF 72 kPa HAS BEEN USED IN THE STRUCTURAL ANALYSIS OF THE BUILDING HEREIN AND SHALL BE CONFIRMED AND VERIFIED AS PART OF THE GEOTECHNICAL INVESTIGATION. VALUES WHICH DO NOT MEET THE REQUIREMENTS INDICATED ON THE BASIS OF DESIGN SHEET SHALL BE IMMEDIATELY BROUGHT TO THE ATTENTION OF THE CONTRACTING OFFICER FOR CONSIDERATION AND DETERMINATION ON THE NEXT APPROPRIATE COURSE OF ACTION.

2.2 SEE THE SPECIFICATION FOR ADDITIONAL REQUIREMENTS TO THOSE OUTLINED IN THE GEOTECHNICAL INVESTIGATION FOR EXCAVATION AND PREPARATION OF THE FOUNDATION AND THE SLAB ON GRADE SUBGRADE INCLUDING COMPACTION PROCEDURES.

2.3 EXCAVATIONS FOR FOOTINGS SHALL HAVE THE SIDES AND BOTTOMS TEMPORARILY LINED WITH 0.25mm POLYETHYLENE IF PLACEMENT OF CONCRETE DOES NOT OCCUR WITHIN 24 HRS OF THE EXCAVATION OF THE FOOTING.

2.4 FOUNDATION CONDITIONS NOTED DURING CONSTRUCTION WHICH DIFFER FROM THOSE DESCRIBED IN THE GEOTECHNICAL REPORT SHALL BE REPORTED TO THE GENERAL CONTRACTOR BEFORE FURTHER CONSTRUCTION IS ATTEMPTED. SEE PROJECT SPECIFICATIONS.

2.5 NO FOOTINGS OR SLABS SHALL BE POURED INTO OR AGAINST SUBGRADE CONTAINING FREE WATER, FROST, ICE OR LOOSE MATERIAL. FROST DEPTH ASSUMED TO BE 800mm.

2.6 ALL SLAB-ON-GRADE, TRENCH BOTTOMS AND OTHER ON-GRADE INTERIOR HORIZONTAL SURFACES SHALL BE PLACED OVER A 0.25mm POLYETHYLENE VAPOR RETARDER OVER A 100mm #57 STONE WATER CAPILLARY BARRIER PLACED ON SUBGRADE PROPERLY PREPARED IN ACCORDANCE WITH THE CONTRACT SPECIFICATIONS. (UON)

2.7 PRIOR TO START OF FOUNDATION OR SLAB-ON-GRADE CONSTRUCTION, EXISTING SUBGRADES SHALL BE COMPACTED TO MINIMUM OF 95% MAXIMUM DRY DENSITY OBTAINED THRU ASTM D 1557 MODIFIED PROCTOR TESTING.

2.8 SEE PLUMBING, ELECTRICAL & CIVIL SHEETS FOR REQUIRED UNDERSLAB UTILITIES.

2.9 SEE ARCHITECTURAL SHEETS FOR ALL WATERPROOFING DETAILS AND MATERIALS.

2.10 IF UNDERMINING OF FOOTINGS OCCURS, FILL VOIDS WITH 18 MPa CONCRETE. DO NOT ATTEMPT TO REPLACE AND RE-COMPACT SOIL.

3.0 CONCRETE

3.1 CONCRETE SHALL HAVE THE UNIT WEIGHT OF 2400 kg/m^3 AND A MINIMUM COMPRESSIVE STRENGTH (f'c) OF 28 MPa AT 28 DAYS. ALL CONCRETE SHALL HAVE A WATER-CEMENT RATIO OF 0.45. SEE SPECIFICATIONS FOR ADDITIONAL INFORMATION. ENTRAIN AIR TO PRODUCE TOTAL AIR CONTENT ACCORDING TO THE SPECIFICATIONS FOR CONCRETE EXPOSED TO FREEZING TEMPERATURES (EXTERIOR FOOTINGS, SLAB TURNDOWNS, EXTERIOR SLABS AND SLABS-ON-GRADE, EXTERIOR RETAINING WALLS, AND EXTERIOR GRADE BEAMS.)

3.2 NO CALCIUM CHLORIDE SHALL BE USED IN ANY CONCRETE.

3.3 MIXING, TRANSPORTING AND PLACING OF CONCRETE SHALL CONFORM TO ACI 301M-05.

3.4 ALL CONCRETE WORK SHALL CONFORM TO THE REQUIREMENTS OF THE AMERICAN CONCRETE INSTITUTE (ACI) 318M MANUAL (metric), "BUILDING CODE REQUIREMENTS FOR REINFORCED CONCRETE", AND REQUIREMENTS OUTLINED IN THE CONTRACT SPECIFICATIONS. WHEN THERE IS A CONFLICT BETWEEN ACI AND THE SPECIFICATIONS, THE MORE STRINGENT SHALL GOVERN.

3.5 CHAMFER ALL EXPOSED EXTERNAL CORNERS OF CONCRETE WITH 20mm x45 DEGREE CHAMFER UON.

3.6 CONCRETE REINFORCEMENT BARS SHALL CONFORM TO ASTM A615M-96a, GRADE 420 MPa, REINFORCING BARS SHALL NOT BE TACK WELDED, WELDED, HEATED OR CUT, UNLESS INDICATED ON THE CONTRACT DOCUMENTS. ALL LAP SPLICES SHALL BE CLASS "B" UON.

3.7 HORIZONTAL FOOTING AND HORIZONTAL WALL REINFORCEMENT SHALL BE CONTINUOUS AND SHALL HAVE 90 DEGREE BENDS AND EXTENSIONS, OR CORNER BARS OF EQUIVALENT SIZE LAPPED WITH A CLASS B TENSION SPLICE AT CORNERS AND INTERSECTIONS. TOP BAR CRITERIA SHALL APPLY IF 300mm OR MORE OF FRESH CONCRETE IS PLACED BELOW BAR.

3.8 SLABS-ON-GRADE SHALL HAVE CONSTRUCTION JOINTS OR CRACK CONTROL JOINTS AS SHOWN ON THE DRAWINGS. CONSTRUCTION JOINTS CAN BE USED AT CONTROL JOINT LOCATIONS AT CONTRACTORS OPTION. SEE SLAB PLANS & JOINT DETAILS FOR ADDITIONAL INFORMATION. FOR AREAS NOT SHOWN ON DWGS, THE MAXIMUM SPACING OF CONSTRUCTION/ CRACK CONTROL JOINTS SHALL BE 4800mm

3.9 ALL CONCRETE REINFORCEMENT SHALL BE DETAILED, FABRICATED, LABELED, SUPPORTED, AND SPACED IN FORMS AND SECURED IN PLACE IN ACCORDANCE WITH THE PROCEDURES AND REQUIREMENTS OUTLINED IN THE LATEST EDITION OF THE "BUILDING CODE REQUIREMENTS FOR REINFORCED CONCRETE", ACI 318M, AND THE "MANUAL OF STANDARD PRACTICE FOR DETAILING REINFORCED CONCRETE STRUCTURES", ACI 315M, LATEST EDITION. BASED ON IN COUNTRY REINFORCEMENT AVAILABILITY, IT IS THE CONTRACTOR'S OPTION TO ROUND DESIGNATED ODD NUMBERED REINFORCEMENT SIZES UP (1) ONE BAR SIZE.

3.10 ALL DOWELS SHALL MATCH SIZE AND NUMBER OF MAIN REINFORCING, UNLESS NOTED OTHERWISE ON THE SHEETS.

3.11 ADDITIONAL BARS SHALL BE PROVIDED AROUND ALL FLOOR AND WALL OPENINGS AS SHOWN ON THE SHEETS.

3.12 SEE ARCHITECTURAL SHEETS FOR TYPE AND LOCATION OF ALL FLOOR FINISHES.

3.13 THE CONTRACTOR SHALL COORDINATE ADDITIONAL WALL/SLAB OPENINGS NOT SHOWN ON STRUCTURAL SHEETS. SEE MECHANICAL, ELECTRICAL, PLUMBING AND CIVIL SHEETS.

3.14 UNLESS NOTED OTHERWISE, ALL CURBS SHALL BE REINFORCED WITH AT LEAST (1)-#13 CONTINUOUS AND #13 AT 300mm O.C. DOWELS TO STRUCTURE BELOW.

3.15 THE CONTRACTOR SHALL VERIFY ALL OPENINGS, PAD SIZES, AND ANCHOR BOLTS WITH EQUIPMENT SELECTED.

3.16 FOR ALL WALLS & PIERS, PROVIDE DOWELS INTO FOOTING AT EACH VERT REINF BAR, UON DOWEL SIZE SHALL BE SAME AS VERT REINF.

3.17 PROVIDE CONCRETE POUR STOPS OR FORMED AS REQUIRED FOR INSTALLATION OF ALL CONCRETE WORK.

3.18 PROVIDE ADDITIONAL (2)-#13 x 600mm REINFORCING BARS IN SLAB-ON GRADE AT ALL RE-ENTRANT CORNERS. PLACE BARS AT MID-DEPTH OF SLAB WITH A CLEARANCE OF 50mm FROM CORNER UON.

3.19 COLD-WEATHER PLACEMENT: COMPLY WITH ACI 306.1 AND AS FOLLOWS. PROTECT CONCRETE WORK FROM PHYSICAL DAMAGE OR REDUCED STRENGTH THAT COULD BE CAUSED BY FROST, FREEZING ACTIONS, OR LOW TEMPERATURES. SUBMIT A COLD WEATHER CONCRETING PLAN FOR APPROVAL.

3.20 PROVIDE BONDING COMPOUND PER ASTM C 1059-99: SPECIFICATION FOR LATEX AGENTS FOR BONDING FRESH CONCRETE (GROUT) TO HARDENED CONCRETE.

3.21 THE FORMED SURFACES FOR REINFORCED CONCRETE SHALL ACHIEVE A "CLASS A" FINISH WHEN RECEIVING PAINT OR A "CLASS B" FINISH WHEN RECEIVING PLASTER OR TILE AS PER SPECIFICATION SECTION 03 31 00 CAST-IN-PLACE STRUCTURAL CONCRETE.

3.22 AT INTERSECTING GRADE BEAMS AND SHEAR WALLS, PROVIDE CORNER BARS AT INTERSECTIONS WITH SAME QUANTITY, SIZE AND SPACING AS HORIZONTAL BARS WITH LEG LENGTH = 50db.

3.23 REFER TO S-800 SERIES REINFORCING BAR PLACEMENT DRAWINGS DEFINING LENGTHS, BENDS, AND SPACINGS FOR ALL STRUCTURAL CONCRETE. THE S-800 SERIES DRAWING ARE BASED ON THE S-400, S-500, S-600, AND S-700 SERIES DRAWING SCHEDULES, DETAILS, AND DIAGRAMS.

4.0 CONCRETE MASONRY

4.1 MASONRY CONSTRUCTION SHALL CONFORM TO SPECIFICATION FOR MASONRY STRUCTURES (ACI 530.1) UON.

4.2 STRENGTH OF MASONRY MATERIALS SHALL BE AS FOLLOWS:

a. CONCRETE MASONRY UNITS SHALL BE NORMAL WEIGHT, GRADE N, TYPE 1, CONFORMING TO ASTM C-90 AND HAVE A MINIMUM COMPRESSIVE STRENGTH OF 10.4 MPa ON THE NET AREA.

b. MORTAR SHALL CONFORM TO ASTM C-270 TYPE S.

c. GROUT FOR MASONRY SHALL BE NORMAL WEIGHT AND HAVE A MINIMUM COMPRESSIVE STRENGTH OF 14 MPa AT 28 DAYS. GROUT SHALL CONFORM TO ASTM C476M. GROUT LIFTS SHALL NOT EXCEED 1,400mm.

d. REINFORCED MASONRY SHALL HAVE A STRENGTH F'm = 10 MPa. (F'm IS THE COMPRESSIVE STRENGTH OF THE MASONRY AT 28 DAYS AS DETERMINED BY PRISM TESTS).

4.3 ALL VERTICAL REINFORCEMENT FOR CONCRETE MASONRY SHALL BE ASTM A615M-96a, GRADE 420 MPa. ALL SPLICES SHALL BE LAPPED 48 BAR DIAMETERS MINIMUM.

4.4 BOND BEAMS SHALL BE SPACED AT 1200mm OC VERTICALLY. BOND BEAM REINFORCING SHALL BE CONTINUOUS AND PROVIDED AT WALL INTERSECTIONS AND WALL CORNERS (REFERENCE CONCRETE MASONRY NOTE 4.11). ALL BOND BEAM REINFORCING SHALL BE CONTINUOUS AND HAVE STANDARD ACI HOOKS AT EACH END. PROVIDE STANDARD BAR SPLICES AS SPECIFIED. AS AN ALTERNATE TO CMU BOND BEAMS, IT IS THE CONTRACTOR'S OPTION TO PROVIDE 200mm x 200mm CONTINUOUS CAST-IN-PLACE CONCRETE BOND BEAMS WITH (2)-#16 IN LIEU OF CMU BOND BEAMS INDICATED ON THE DRAWINGS.

4.5 SEE TYPICAL DETAILS FOR MINIMUM REINFORCEMENT REQUIREMENTS FOR CMU WALLS. PROVIDE STANDARD BAR SPLICES AS SPECIFIED. ALL VERTICAL REINFORCEMENT EXTENDS FULL HEIGHT OF WALL.

4.6 CMU CELLS THAT REQUIRE VERTICAL REINFORCING BARS AS INDICATED ON THE CONTRACT DRAWINGS AND/OR SPECS SHALL HAVE REINF BARS PLACED IN CENTERS OF CMU CELLS AND CONTINUOUSLY GROUTED UON.

4.7 ALL CMU CELLS, OPEN CAVITIES, AND AIR SPACES OF ALL EXTERIOR WALLS SHALL BE GROUTED TO STOP FRAGMENTS FROM MORTAR BLAST.

4.8 CONTRACTOR SHALL COORDINATE LOCATION OF ALL OPENINGS SEE ARCH, MECH, ELEC, AND PLUMBING SHEETS FOR SIZE AND LOCATION OF OPENINGS.

4.9 MASONRY WALLS SHALL NOT BE BACK FILLED PRIOR TO THE MORTAR AND GROUT ATTAINING THEIR RESPECTIVE MAXIMUM DESIGN STRENGTHS PER SPECIFICATIONS.

4.10 PROVIDE GALVANIZED MORTAR/GROUT SCREEN W/ 3mm MESH WHERE CELLS BELOW ARE NOT GROUTED.

4.11 AT INTERSECTING BOND BEAMS, PROVIDE CORNER BAR FOR EACH HORIZONTAL BAR IN BOND BEAMS AT INTERSECTING WALLS. USE SAME SIZE AND SPACING AS HORIZONTAL BARS WITH LEG LENGTH = 50db.

4.12 THE ALTERNATE CMU BRACE DETAILS SHOWN ON S-701 CAN BE UTILIZED AT THE CONTRACTOR'S OPTION IN PLACE OF THE "FLOATING PIN" WALL BRACE CONNECTIONS AT TOP OF CMU WALLS DEPICTED ON S-400 AND S-500 SERIES DRAWINGS THESE ALTERNATE DETAILS ALSO SHOW ALTERNATE CAST-IN-PLACE WALL BOND BEAMS THAT CAN BE UTILIZED AT THE CONTRACTOR'S OPTION IN PLACE OF THE STANDARD CMU BOND BEAMS CONSTRUCTED OF CMU BLOCKS.

5.0 COLD-FORMED METAL FRAMING

5.1 ALL COLD-FORMED METAL FRAMING MEMBERS SHALL CONFORM TO ASTM A1003M, STRUCTURAL GRADE ST340 (MPa), WITH A GALVANIZED COATING OF Z275 OR BETTER IN ACCORDANCE WITH ASTM A653M.

5.2 ALL COLD-FORMED METAL FRAMING MEMBERS SHALL HAVE THE FOLLOWING MINIMUM PROPERTIES:

a. MINIMUM METAL THICKNESS:
TRACK = 1.37mm;
STUD/OTHER = 1.09mm

b. MINIMUM FLANGE WIDTH:
TRACK = 38mm;
STUD/OTHER = 35mm

c. MINIMUM MEMBER DEPTH:
ALL SECTIONS = 152.2mm

d. PURLIN (HAT CHANNEL)
DEPTHxWIDTH(FLAT TOP)xTHICK = 25mmx42mmx1.59mm

5.3 ALL CONNECTIONS SHALL BE MADE WITH CORROSION RESISTANT (ASTM A153M), SELF-DRILLING, SELF-TAPPING STEEL DRILL SCREWS IN ACCORDANCE WITH ASTM C1513. SCREWS SHALL HAVE A LOW PROFILE HEAD BENEATH ROOF DECK, AND STANDARD HEAD ALL OTHER LOCATIONS.

5.4 FABRICATE COLD FORMED METAL FRAMING AND ACCESSORIES PLUMB, SQUARE AND TRUE TO LINE, WITH CONNECTIONS SECURELY FASTENED ACCORDING TO AISI STANDARD FOR COLD FORMED STEEL FRAMING.

5.5 CUT FRAMING MEMBERS BY SAWING OR SHEATHING, DO NOT TORCH CUT.

5.6 INSTALL FRAMING MEMBERS IN ONE-PIECE LENGTHS UNLESS SPLICE CONNECTIONS ARE INDICATED FOR TRACK OR TENSION MEMBERS

5.7 INSTALL TEMPORARY BRACING AND SUPPORTS TO SECURE FRAMING DURING CONSTRUCTION. MAINTAIN BRACING AND SUPPORTS IN PLACE UNTIL THE STRUCTURE HAS BEEN COMPLETED WITH ALL CONNECTIONS AND PERMANENT BRACING SECURED.

6.0 STRUCTURAL DESIGN CRITERIA

6.1 ALL DESIGNS SHALL CONFORM TO THE PROVISIONS OF THE IBC 2006 AND UFC AS APPLICABLE.

6.2 DESIGN LOADS

6.2.1 DEAD LOADS (PER IBC 2006 & UFC 3-310-01)

MECH/ELEC/PLUMBING	0.20 kPa
MISCELLANEOUS	0.15 kPa
COLD-FORMED FRAMING	0.20 kPa
INSULATION	0.10 kPa
METAL ROOF PANEL	0.14 kPa
	0.79 kPa
FLOOR PARTITION ALLOWANCE	0.96 kPa

6.2.2 LIVE LOADS (PER IBC 2006 & UFC 3-310-01)

ROOF	1.00 kPa
CORRIDOR (2-STORY BLDG ONLY)	4.80 kPa
ALL OTHERS (2-STORY BLDG ONLY)	2.40 kPa
SLAB ON GRADE	4.80 kPa

6.2.3 SNOW LOADS (PER IBC 2006 & UFC 3-310-01)

GROUND SNOW LOAD (Pg)	1.2 kPa
SNOW IMPORTANCE FACTOR (I)	1.0
SNOW EXPOSURE FACTOR (Ce)	1.0
THERMAL FACTOR (Ct)	1.0

6.2.4 WIND LOADS (PER IBC 2006)

BASIC WIND SPEED	137 km/h
WIND IMPORTANCE FACTOR	1.0
WIND EXPOSURE CATEGORY	D
DIRECTIONALITY COEFFICIENT (Kd)	0.85
TOPOGRAPHIC FACTOR (Kzt)	1.0

6.2.5 SEISMIC LOADS (PER IBC 2006 & UFC 3-310-04)

OCCUPANCY USE CATEGORY	II
SEISMIC IMPORTANCE FACTOR (Ie)	1.0
SEISMIC SITE CLASS	D
S_s = 2.40 (BUILDING IS IRREGULAR PER ASCE 7-05, 12.3)	
S_1 = 1.20	
S_{DS} = 1.60	
S_{D1} = 1.20	
SEISMIC DESIGN CATEGORY	E
SEISMIC RESISTING SYSTEM: -SPECIAL REINFORCED CONCRETE SHEAR WALL (BEARING WALLS)	
RESPONSE MODIFICATION FACTOR (R)	5
RESPONSE COEFFICIENT (Cs)	0.320
SEISMIC ANALYTICAL PROCEDURE =	EQUIV LATERAL FORCE
SEISMIC BASE SHEAR	105 kN

APPROVED:

A/E DESIGNER OF RECORD

SEAL:

GEORGIA REGISTERED 1-29-10 No. 27141 PROFESSIONAL ENGINEER CHRISTOPHER W. WHITMORE

US ARMY CORPS OF ENGINEERS
AFGHANISTAN ENGINEER DISTRICT

Mark	Description	Date	Appr.	Mark	Description	Date	Appr.

Rev: 0
Date: 2/23/10
Design file no.
Drawing code:
File name: ANAPOLIS-001GN
Plot date: 2/23/2010
Plot scale: X:X

Designed by: KMP/MMY
Dwn by: RCG
Ckd by: CWW
Reviewed by: LHM
Submitted by: BAKER

U.S. ARMY CORPS OF ENGINEERS
AFGHANISTAN ENGINEER DISTRICT
APO AE 96338

Michael Baker Jr., Inc
A unit of Michael Baker Corporation
Airside Business Park
100 Airside Drive
Moon Township, PA 15108
www.mbakercorp.com

AFGHAN NATIONAL ARMY
REGIONAL MILITARY TRAINING CENTER
STANDARD DESIGN

POL STORAGE

GENERAL NOTES & DESIGN CRITERIA

Sheet reference number:
S-001

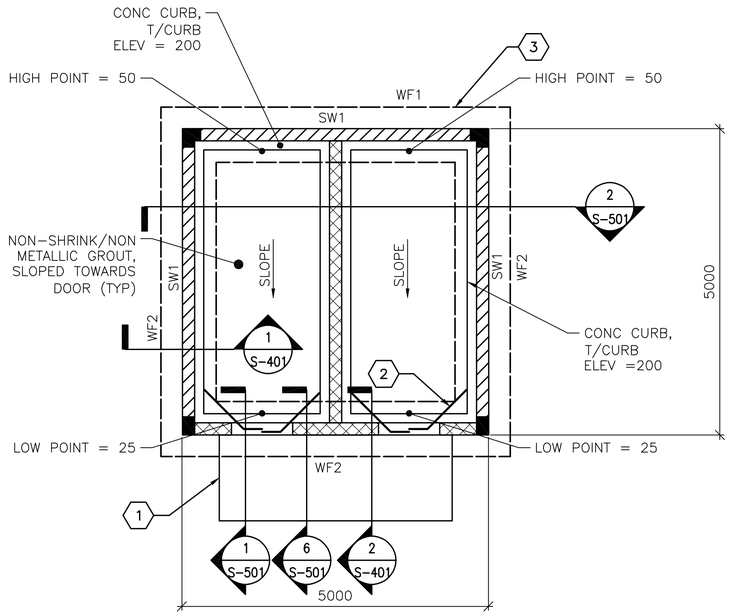

1 S-101 **FOUNDATION/SLAB PLAN**

SCALE: 1:50

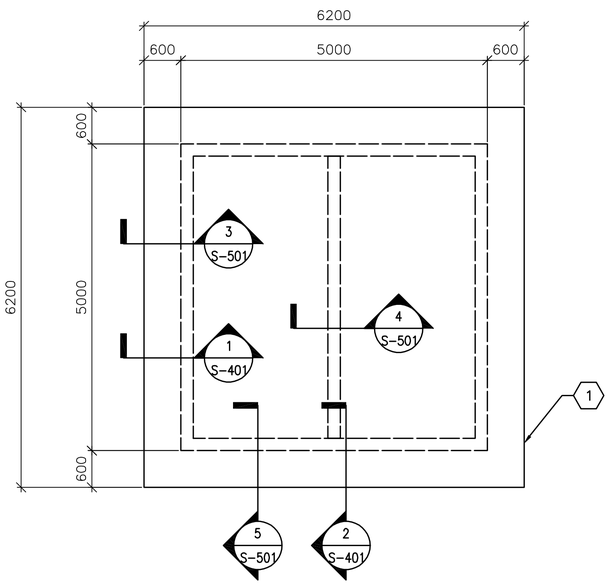

2 S-101 **ROOF PLAN**

SCALE: 1:50

FOUNDATION/SLAB PLAN NOTES:

1. REFER TO SHEET S-001 FOR STRUCTURAL NOTES AND DESIGN CRITERIA.
2. FINISH FIRST FLOOR ELEVATION SHALL BE (DATUM 0.00) ALL PLUS OR MINUS DIMENSIONS INDICATED ON PLAN OR REFERRED TO IN NOTES RELATE TO FINISH FIRST FLOOR ELEVATION.
3. SLAB-ON-GRADE IS 150 WITH #13 @ 300 OC EW LOCATED 38 FROM T/SLAB.
4. TOP OF EXTERIOR FOOTINGS SHALL BE -600 UNLESS OTHERWISE INDICATED.
5. FLOOR TO BE SLOPED USING NON-SHRINK/ NON-METALIC GROUT.
6. WALL FOOTINGS INDICATED BY WF# ON PLAN. REFER TO WALL FOOTING SCHEDULE ON SHEET S-601.
7. SHEARWALL INDICATED BY SW# ON PLAN, REFER TO SHEARWALL SCHEDULE ON SHEET S-601.
8. SEE TYP EXTERIOR & INTERIOR CMU WALL REINF DETAILS ON S-701.
9. SEE MECHANICAL AND ELECTRICAL SHEETS FOR CONCRETE PAD LOCATIONS, SIZES, AND THICKNESS NOT SHOWN. SEE SHEET S-701 FOR DETAILS.
10. THICKENED SLAB UNDER PERIMETER/PARTITION CMU WALLS NOT SHOWN FOR CLARITY.

FOUNDATION/SLAB PLAN KEY NOTES: (X)

1. CONC PAD (ENTRANCE)-SEE ARCH DWGS FOR INFORMATION
2. (2)-#13 @ RE-ENTRANT CORNERS - SEE S-701 FOR INFORMATION
3. WALL FOOTINGS, SEE SECTIONS

PLAN LEGEND:

REINF CONC SHEAR WALL

REINF CMU WALL

CONTROL JOINT

ROOF FRAMING PLAN NOTES:

1. REFER TO SHEETS S-001 FOR STRUCTURAL NOTES AND DESIGN CRITERIA.
2. TOP OF SLAB ELEVATION = 2800 UNLESS NOTED OTHERWISE.
3. ROOF SLAB IS 200 WITH #13 @ 300 OC EW T&B.
4. ROOF BEAM INDICATED BY RB# ON PLAN. REFER TO BEAM SCHEDULE ON SHEET S-601.
5. COORDINATE WITH ARCHITECTURAL SHEETS FOR COLD-FORMED STEEL OVERBUILD FRAMING ABOVE ROOF SLAB.
6. COLD-FORMED METAL OVERBUILD ROOF FRAMING NOT SHOWN FOR CLARITY. SEE OVERBUILD ROOF FRAMING DETAILS AND SECTIONS ON SHEET S-702.
7. OVERHANG AREAS OF ROOF SLAB CONTAIN ROOF VENT PENETRATIONS. REFERENCE ARCHITECTURAL DRAWINGS FOR INFORMATION.

ROOF FRAMING PLAN KEY NOTES: (X)

1. CONC ROOF SLAB (BELOW ROOF OVERBUILD)

0 1000 2000

SCALE: 1:50

UNLESS OTHERWISE NOTED, LINEAR DIMENSIONS SHOWN ON DRAWINGS ARE IN MILLIMETERS (mm)

APPROVED:

A/E DESIGNER OF RECORD

SEAL:

GEORGIA REGISTERED 1-29-10 No. 27141 PROFESSIONAL ENGINEER CHRISTOPHER W. WHITMORE

US ARMY CORPS OF ENGINEERS
AFGHANISTAN ENGINEER DISTRICT

Mark	Description	Date	Appr.	Mark	Description	Date	Appr.

U.S. ARMY CORPS OF ENGINEERS
AFGHANISTAN ENGINEER DISTRICT
APO AE 96338

Michael Baker Jr., Inc.
A unit of Michael Baker Corporation
Airside Business Park
100 Airside Drive
Moon Township, PA 15108
www.mbakercorp.com

Designed by: KMF/MMY
Dwn by: RCG
Ckd by: CWW
Reviewed by: LHM
Submitted by: BAKER
Date: 2/23/10
Design file no.
Drawing code:
File name: ANAPOLS-101FFP
Plot date: 2/23/2010
Plot scale: x:X
Rev: 0

AFGHAN NATIONAL ARMY
REGIONAL MILITARY TRAINING CENTER
STANDARD DESIGN

POL STORAGE

FOUNDATION/SLAB & ROOF FRAMING PLANS

Sheet reference number:
S-101

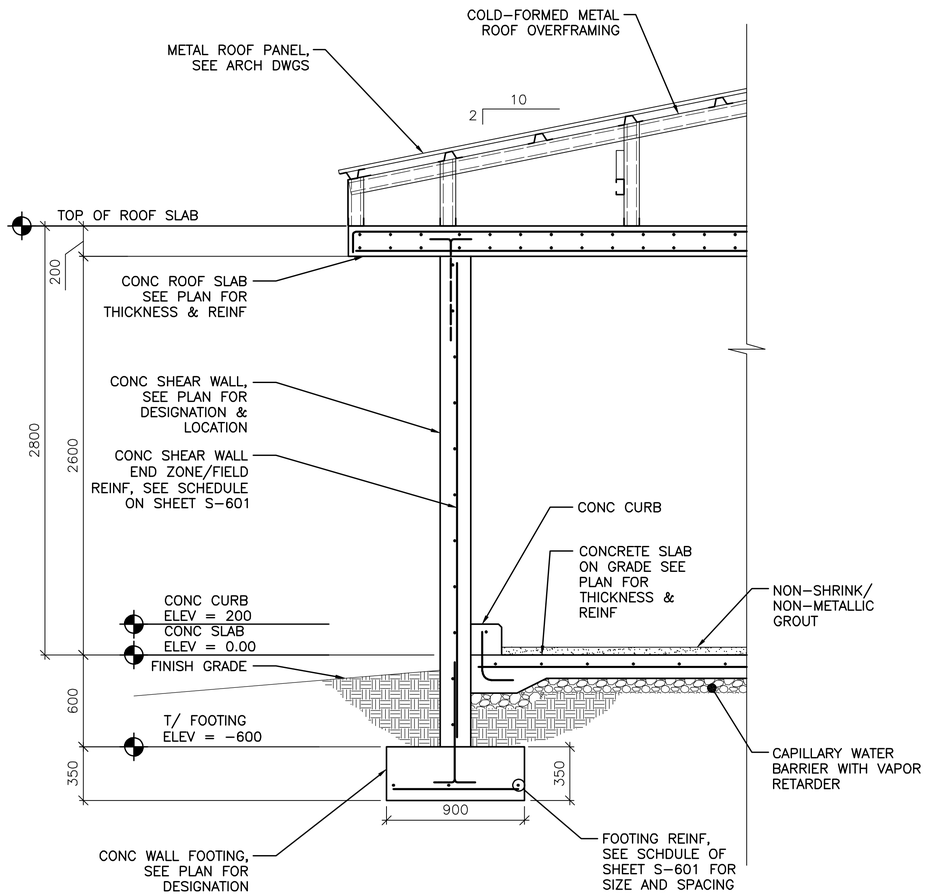

1 S-101 **TYPICAL WALL SECTION AT EXTERIOR WALL**

SCALE: 1:20

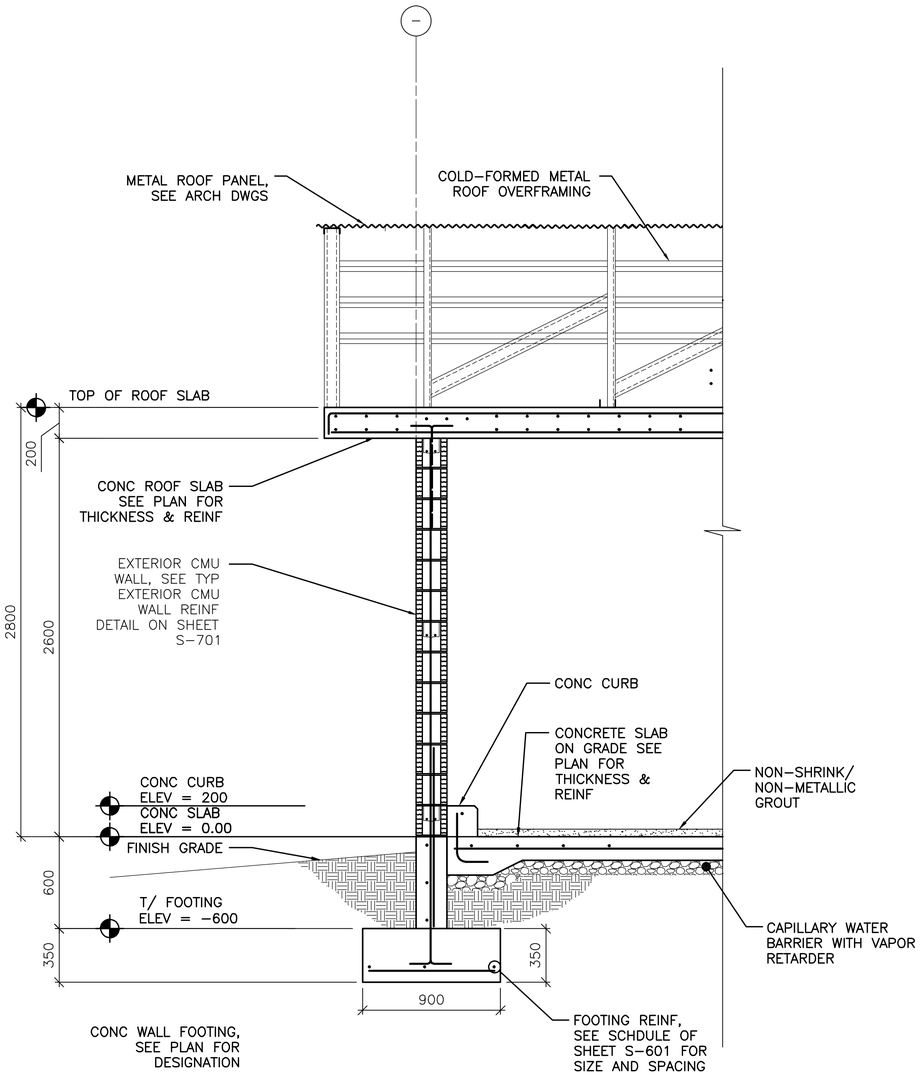

2 S-101 **TYPICAL WALL SECTION AT MASONRY WALL**

SCALE: 1:20

0 400 800
SCALE: 1:20

UNLESS OTHERWISE NOTED, LINEAR DIMENSIONS SHOWN ON DRAWINGS ARE IN MILLIMETERS (mm)

APPROVED:

A/E DESIGNER OF RECORD

SEAL:

GEORGIA REGISTERED 1-29-10 No. 27141 PROFESSIONAL ENGINEER CHRISTOPHER W. WHITMORE

US ARMY CORPS OF ENGINEERS
AFGHANISTAN ENGINEER DISTRICT

Mark	Description	Date	Appr.	Mark	Description	Date	Appr.

U.S. ARMY CORPS OF ENGINEERS
AFGHANISTAN ENGINEER DISTRICT
APO AE 96338

Michael Baker Jr., Inc
A unit of Michael Baker Corporation
Airside Business Park
100 Airside Drive
Moon Township, PA 15108
www.mbakercorp.com

Designed by: KMP/MMY
Dwn by: RCG
Ckd by: CWW
Reviewed by: LHM
Submitted by: BAKER
Date: 2/23/10
Rev: 0
Design file no.
Drawing code:
File name: ANAPOLS-401BS
Plot date: 2/23/2010
Plot scale: X:X

AFGHAN NATIONAL ARMY
REGIONAL MILITARY TRAINING CENTER
STANDARD DESIGN

POL STORAGE

BUILDING SECTIONS

Sheet reference number:
S-401

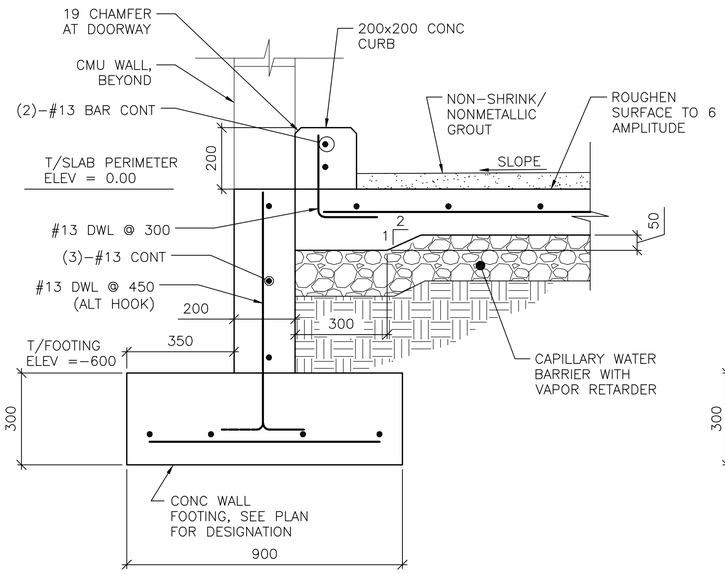

SECTION NOTES:
1. CONCRETE PAD AT ENTRANCE NOT SHOWN FOR CLARITY
2. MINIMUM GROUT THICKNESS 25

1 S–101 **SECTION**
SCALE: 1:10

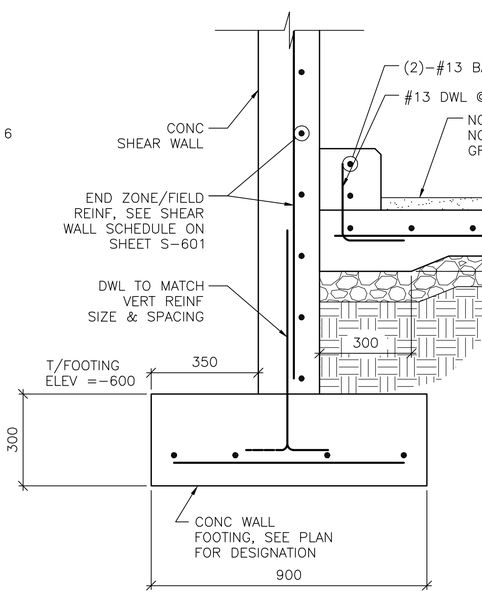

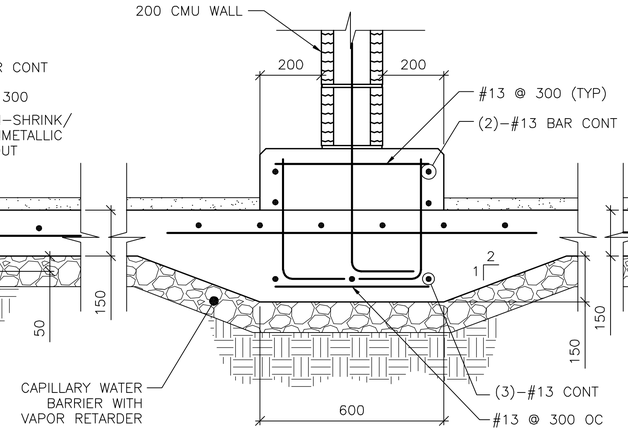

2 S–101 **SECTION**
SCALE: 1:10

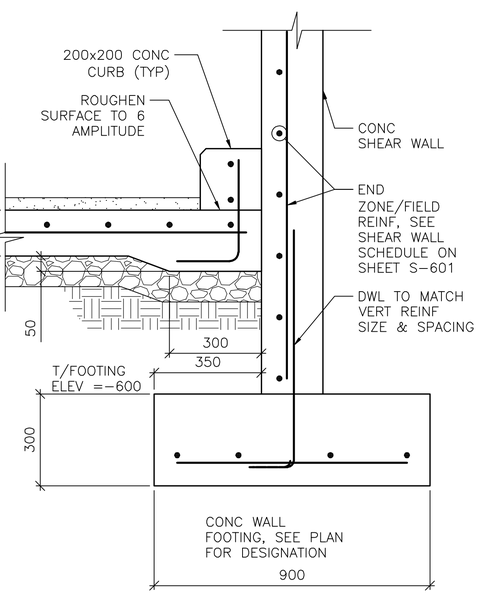

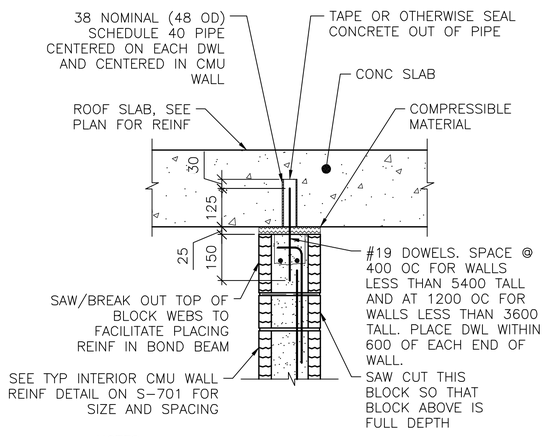

NOTES:
1. EXTEND DOWEL REINF TO 25 CLEAR FROM TOP OF CMU WALL.
2. SLAB REINF NOT SHOWN FOR CLARITY.

4 S–101 **SECTION**
SCALE: 1:10

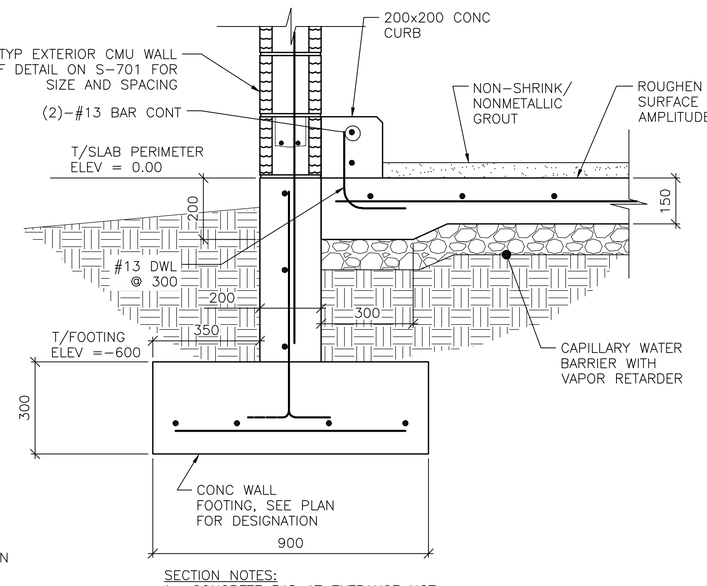

SECTION NOTES:
1. CONCRETE PAD AT ENTRANCE NOT SHOWN FOR CLARITY
2. MINIMUM GROUT THICKNESS 25
3. SEE SECTION 1 ON THIS SHEET FOR STEM WALL REINF

6 S–101 **SECTION**
SCALE: 1:10

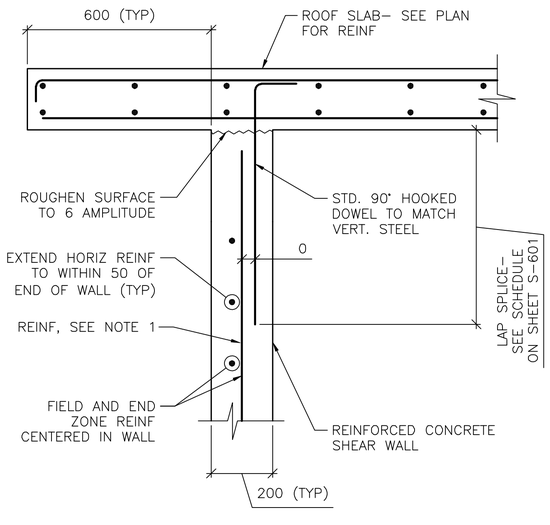

NOTES:
1. TERMINATE "FIELD" VERT REINF & END ZONE REINF @ 50 CLEAR FROM TOP OF ROOF SLAB.
2. SEE SHEET S–601 AND SHEET S–702 FOR SCHEDULED FIELD AND END ZONE REINF.

3 S–101 **SECTION**
SCALE: 1:10

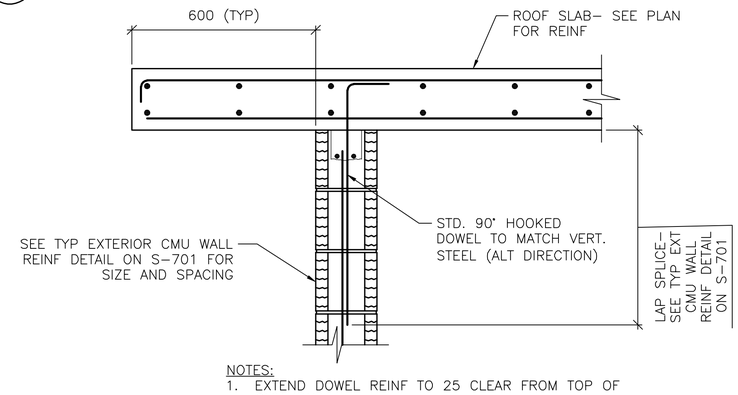

NOTES:
1. EXTEND DOWEL REINF TO 25 CLEAR FROM TOP OF CMU WALL.

5 S–101 **SECTION**
SCALE: 1:10

0 200 400
SCALE: 1:10

UNLESS OTHERWISE NOTED, LINEAR DIMENSIONS SHOWN ON DRAWINGS ARE IN MILLIMETERS (mm)

APPROVED:

A/E DESIGNER OF RECORD

SEAL:

GEORGIA REGISTERED 2-23-10 No. 27141 PROFESSIONAL ENGINEER CHRISTOPHER W. WHITMORE

US ARMY CORPS OF ENGINEERS
AFGHANISTAN ENGINEER DISTRICT

Mark	Description	Date	Appr.	Mark	Description	Date	Appr.

Rev: 0
Date: 2/23/10
Design file no.
Drawing code:
File name: ANAPOLS-501SC
Plot date: 2/23/2010
Plot scale: x:X

Designed by: KMP/MMY
Dwn by: RCG
Ckd by: CWW
Reviewed by: LHM
Submitted by: BAKER

U.S. ARMY CORPS OF ENGINEERS
AFGHANISTAN ENGINEER DISTRICT
APO AE 96338

Michael Baker Jr., Inc
A unit of Michael Baker Corporation
Airside Business Park
100 Airside Drive
Moon Township, PA 15108
www.mbakercorp.com

AFGHAN NATIONAL ARMY
REGIONAL MILITARY TRAINING CENTER
STANDARD DESIGN

POL STORAGE

SECTIONS AND DETAILS

Sheet reference number:
S–501

CONCRETE REINFORCEMENT TENSION DEVELOPMENT/LAP SPLICE SCHEDULE

f'c = 28 MPa	LAP CLASS	UNCOATED BARS			
		TOP BARS		OTHER BARS	
BAR SIZES		CASE 1	CASE 2	CASE 1	CASE 2
#10 TO #19	A	50 BAR DIA	74 BAR DIA	38 BAR DIA	57 BAR DIA
	B	64 BAR DIA	96 BAR DIA	50 BAR DIA	74 BAR DIA
#22 TO #57	A	62 BAR DIA	93 BAR DIA	48 BAR DIA	71 BAR DIA
	B	80 BAR DIA	121 BAR DIA	62 BAR DIA	93 BAR DIA

NOTES:
1. TABULATED TENSION DEVELOPMENT LENGTH VALUES ARE TAKEN FROM CRSI DESIGN HANDBOOK 2008 10TH ED.
2. TENSION DEVELOPMENT & TENSION LAP SPLICE LENGTHS ARE EXPRESSED AS MULTIPLES OF BAR DIAMETERS.
3. TABULATED VALUES ARE BASED ON MINIMUM YIELD STRENGTH OF REINFORCEMENT, fy, OF 420MPa.
4. CONCRETE IS NORMAL WEIGHT (2400Kg/m^3) AND 28 DAY COMPRESSIVE STRENGTH = 28MPa.
5. TABULATED VALUES FOR BEAMS & COLUMNS ARE BASED ON TRANSVERSE REINFORCEMENT AND CONCRETE COVER MEETING MINIMUM CODE REQUIREMENTS.
6. CASES 1 & 2, WHICH DEPEND ON THE TYPE OF STRUCTURAL MEMBER, CONCRETE COVER, AND CENTER-TO-CENTER SPACING OF THE BARS ARE DEFINED IN THE TABLE BELOW.
7. LAP SPLICE LENGTHS (MINIMUM 300mm) ARE MULTIPLES OF TENSION DEVELOPMENT LENGTHS: CLASS A = 1.0(TENSION DEVELOPMENT LENGTH) & CLASS B = 1.3(TENSION DEVELOPMENT LENGTH)
8. TOP BARS ARE HORIZONTAL REINFORCEMENT WITH MORE THAN 300mm OF CONCRETE CAST BELOW THE BARS.
9. IT SHALL BE PERMISSIBLE TO CALCULATE WALL AND SLAB REINFORCEMENT TENSION DEVELOPMENT/SPLICE LENGTHS IN ACCORDANCE WITH ACI 12.2.3 OR TABLE 5.3(b) OF CRSI 2008 IN LIEU OF VALUES TABULATED ABOVE.

BEAMS, COLUMNS	CASE 1	CONCRETE COVER AT LEAST 1 BAR DIA AND CENTER-TO-CENTER SPACING AT LEAST 2 BAR DIA
	CASE 2	CONCRETE COVER LESS THAN 1 BAR DIA OR CENTER-TO-CENTER SPACING LESS THAN 2 BAR DIA
ALL OTHERS	CASE 1	CONCRETE COVER AT LEAST 1 BAR DIA AND CENTER-TO-CENTER SPACING AT LEAST 3 BAR DIA
	CASE 2	CONCRETE COVER LESS THAN 1 BAR DIA OR CENTER-TO-CENTER SPACING LESS THAN 3 BAR DIA

CONCRETE COVER SCHEDULE

MINIMUM CONCRETE COVER PROTECTION FOR REINFORCEMENT BARS SHALL BE AS LISTED BELOW: (SEE ACI 318M-05, SECTION 7.7 FOR CONDITIONS NOT NOTED). DIMENSIONS FOR BAR PLACEMENT GIVEN IN SECTIONS AND DETAILS SHALL SUPERSEDE MINIMUM COVER REQUIREMENTS GIVEN HERE. DIMENSIONS ARE IN mm. PROVIDE STANDARD BAR CHAIRS AND SUPPORT BARS @1200mm MAXIMUM AS REQUIRED TO MAINTAIN CONCRETE PROTECTION SPECIFIED.

FOOTINGS (EARTH FORMED):		70
COLUMNS / PIERS (TO TIES)		40
GRADE BEAMS OR SLAB TURNED DOWN EDGES:		
TOP		40
BOTTOM (EARTH FORMED)		70
SIDES (EARTH FORMED)		70
SIDES (BOARD FORMED)	#16 BAR & SMALLER	40
	#19 THRU #36 BAR	50
ELEVATED BEAMS & SLABS:		
BEAM TIES & STIRRUPS (NOT EXPOSED TO WEATHER)		40
BEAM TIES & STIRRUPS (EXPOSED TO WEATHER)		50
FLOOR SLABS (NOT EXPOSED TO WEATHER)		20
FLOOR SLABS (EXPOSED TO WEATHER)		
#19 & LARGER		50
#13 & SMALLER		40
ROOF SLAB BARS		25
SLABS ON GRADE		
NOT EXPOSED TO WEATHER (FROM TOP)		20
EXPOSED TO WEATHER (FROM TOP)		40
UTILITY TUNNEL WALLS, RETAINING WALLS AND SHEAR WALLS. (NO SURFACES SHALL BE EARTH FORMED)		
EARTH SIDE AND FRONT SIDE (EXPOSED TO WEATHER)		
#16 BAR AND SMALLER		40
#19 THRU #36 BAR		50

CONCRETE SHEAR WALL SCHEDULE

MARK	TYPE	WALL LENGTH (L) (mm)	WALL REINFORCEMENT		REMARKS
			END ZONE	FIELD	
SW1	E	5000	(2)-#16 @ 75mm OC	#13 @ 250mm OC	-----

NOTES:
1. WORK THIS SCHEDULE WITH SHEAR WALL DETAILS ON SHEETS S-702
2. SEE PLAN FOR LOCATION OF SHEAR WALL(S).
3. WALL "FIELD" REINFORCEMENT LISTED APPLIES TO VERTICAL & HORIZONTAL BARS.
4. WALL "FIELD" REINFORCEMENT SHOULD BE CENTERED IN WALL.
5. VERTICAL "FIELD" BARS MAY BE OMITTED IN LOCATION OF "END ZONE" REINFORCEMENT.

STANDARD HOOKS IN TENSION PER (ACI 318M-05)

HOOK DEVELOPMENT LENGTH (mm)

BAR SIZE	f'c 28 MPa
#10	180
#13	250
#16	300
#19	380
#22	430
#25	480
#29	560
#32	610
#36	690

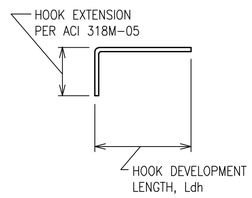

NOTES:
1. CONCRETE IS NORMAL WEIGHT CONCRETE.
2. BAR YIELD STRENGTH, fy = 420 MPa
3. SIDE COVER REQUIREMENTS OF ACI SECT. 12.5.3 ARE ASSUMED TO NOT BE MET.
4. TIE OR STIRRUP REQUIREMENTS OF ACI SECT. 12.5.3 ARE ASSUMED TO NOT BE MET.
5. REDUCTION FOR EXCESS REINFORCEMENT IS NOT TAKEN.
6. HOOK DEVELOPMENT LENGTH IS VALID FOR 180° HOOKS ALSO.

WALL FOOTING SCHEDULE

MARK	FOOTING SIZE (mm)			FOOTING REINFORCING		REMARKS
	LENGTH	WIDTH	THICKNESS	LONGITUDINAL	TRANSVERSE	
WF1	---	900	350	(6)-#16	#16 @ 450mm	-----
WF2	---	900	350	(4)-#16	#16 @ 450mm	-----

CMU OR CAST IN PLACE CONC LINTEL SCHEDULE (TYP)

OPENING TYPE OR SIZE, BEAM LOCATION OR TYPE	MAX SPAN (mm)	LINTEL DEPTH (mm)	REINFORCING BOTTOM
WALL OPENING	4000	600	(2)-#16 T&B
WALL OPENING	1900	400	(2)-#16 T&B
WALL OPENING	1000	400	(2)-#13 B

1. STRUCTURAL SHEETS DO NOT INDICATE ALL OPENINGS IN MASONRY WALLS. VERIFY NUMBER, SIZE AND LOCATION OF ALL OPENINGS IN MASONRY WALLS FROM ARCHITECTURAL SHEETS AND APPROVED PLUMBING, MECHANICAL, AND ELECTRICAL SHOP DRAWINGS.
2. PROVIDE 200mm BEARING EA END.
3. FOR HEAD DETAILS REFER TO ARCHITECTURAL SHEETS.
4. REINFORCING SHALL BE ASTM A615M, GRADE 420. CONCRETE FOR CAST-IN-PLACE BEAMS SHALL HAVE A MINIMUM COMPRESSIVE STRENGTH OF 28 MPa AT 28 DAYS.
5. CONTRACTOR SHALL SUBMIT FOR APPROVAL SHOP DRAWINGS AND SCHEDULES SHOWING SIZE, SPAN, REINFORCEMENT, DETAILS, LOCATIONS, ETC.

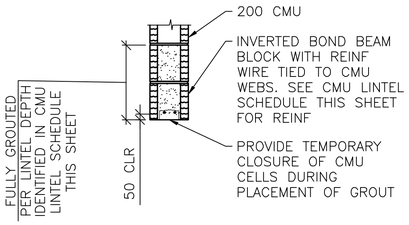

A / S-601 **LINTEL DETAIL**
SCALE: NTS

UNLESS OTHERWISE NOTED, LINEAR DIMENSIONS SHOWN ARE IN MILLIMETERS (mm)

APPROVED:

A/E DESIGNER OF RECORD

SEAL:

GEORGIA REGISTERED 1-27-10 No. 27141 PROFESSIONAL ENGINEER CHRISTOPHER W. WHITMORE

US ARMY CORPS OF ENGINEERS
AFGHANISTAN ENGINEER DISTRICT

Mark	Description	Date	Appr.	Mark	Description	Date	Appr.

Designed by: KMP/MMY
Dwn by: RCG
Ckd by: CWW
Reviewed by: LHM
Submitted by: BAKER
Date: 2/23/10
Rev: 0
Design file no.
Drawing code:
File name: AMPOLS-601SCH
Plot date: 2/23/2010
Plot scale: X:X

U.S. ARMY CORPS OF ENGINEERS
AFGHANISTAN ENGINEER DISTRICT
APO AE 96338

Michael Baker Jr., Inc
A unit of Michael Baker Corporation
Airside Business Park
100 Airside Drive
Moon Township, PA 15108
www.mbakercorp.com

AFGHAN NATIONAL ARMY
REGIONAL MILITARY TRAINING CENTER
STANDARD DESIGN

POL STORAGE

SCHEDULES

Sheet reference number:
S-601

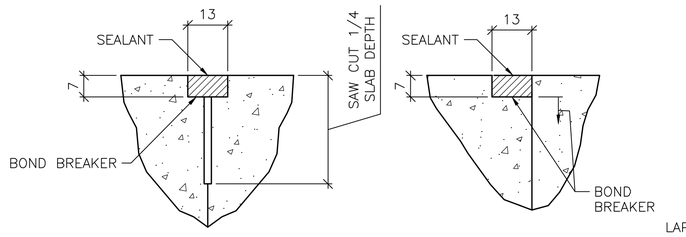

CONTROL JOINT DETAIL

CONSTRUCTION JOINT DETAIL

1 S-701 TYPICAL CONCRETE SLAB JOINT FINISH DETAILS

SCALE: NTS

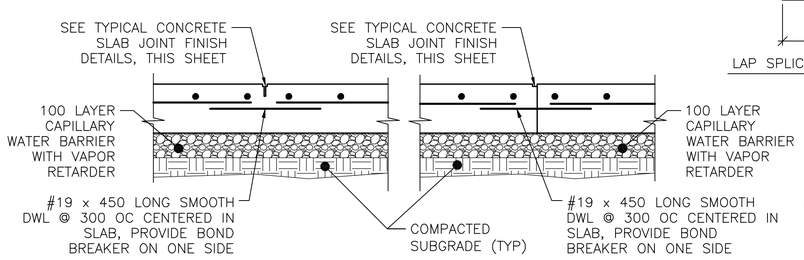

CONTROL JOINT DETAIL

CONSTRUCTION JOINT DETAIL

2 S-701 TYPICAL SLAB ON GRADE JOINT DETAIL

SCALE: NTS

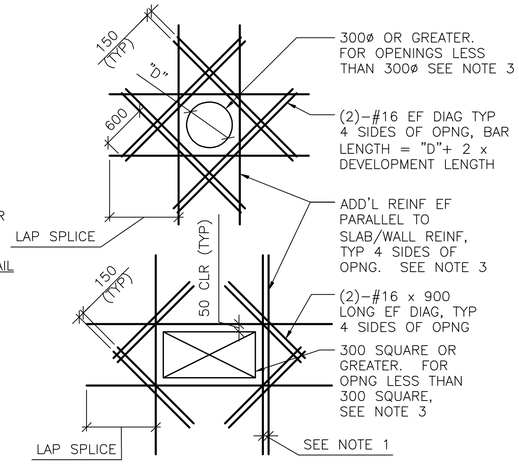

SHEAR WALL/SLAB OPENINGS

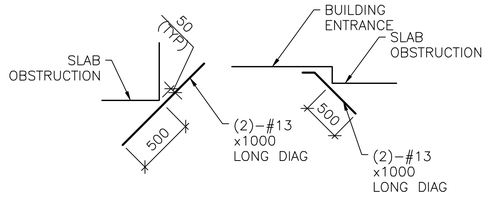

RE–ENTRANT CORNERS

DETAIL NOTES:

1. WHERE MORE THAN ONE ADDITIONAL BAR IS REQUIRED PARALLEL TO THE EXISTING SLAB/WALL REINFORCING THE ADDITIONAL REINFORCING BARS SHALL BE SPACED AT 100 ON CENTER.
2. ADDITIONAL REINFORCING PARALLEL TO THE SLAB/WALL REINFORCING SHALL BE #16 BARS THAT PROVIDE A STEEL AREA ON EACH SIDE OF THE OPENING EQUAL TO 1/2 THE AREA OF THE REINFORCING CUT BY THE OPENING.
3. FOR OPENINGS WITH SIDES OR DIAMETERS LESS THAN 300 SPREAD THE SLAB/WALL REINFORCING TO CLEAR THE OPENING.

4 S-701 ADD'L CONCRETE REINFORCEMENT DETAILS

SCALE: NTS

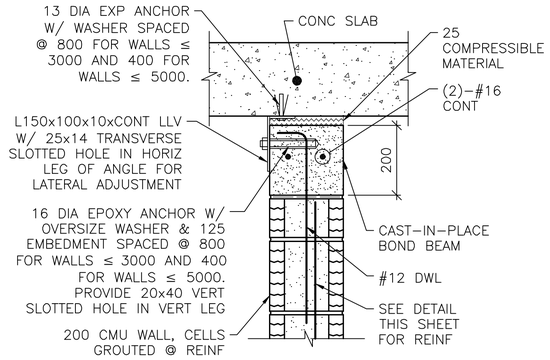

NOTE:

1. AT ANCHOR BOLTS, ADD AN ADDITIONAL 25 COMPRESSIBLE MATERIAL BELOW EXP ANCHOR HEAD.

INTERIOR WALL

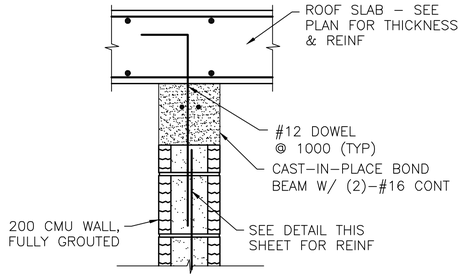

EXTERIOR WALL

NOTES:

1. THIS DETAIL IS AN ALTERNATE TOP OF WALL ANCHORAGE DETAIL TO BE USED AT THE CONTRACTOR'S OPTION IN LIEU OF DETAILS SHOWN ON S–400 & S–500 DRAWINGS.
2. CAST–IN–PLACE BOND BEAM SHOWN AT TOP OF WALL IS ALSO APPLICABLE FOR INTERMEDIATE AND STARTER COURSE BOND BEAMS WITHIN WALL.

5 S-701 ALTERNATE TOP OF CMU WALL BRACING DETAILS

SCALE: NTS

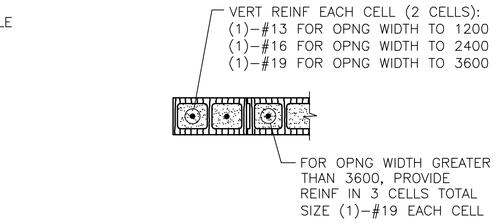

END OF WALL

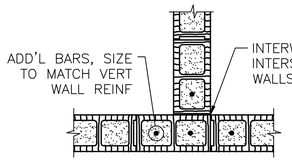

INTERSECTION

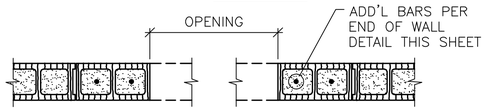

MASONRY OPENING W/ LINTEL

NOTES:

1. OPENING WIDTH SHALL NOT EXCEED 3600 FOR THIS TYPE OF JAMB.
2. ALL CELLS FULLY GROUTED AT EXTERIOR WALLS. AT INTERIOR WALLS, ONLY GROUT CELLS CONTAINING REINF.

6 S-701 TYP CMU DETAILS

SCALE: NTS

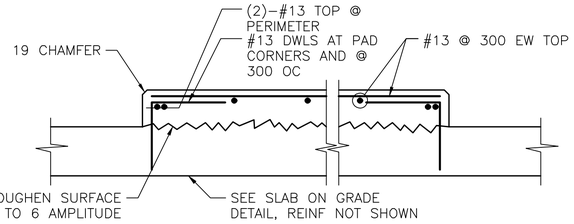

3 S-701 INTERIOR EQUIPMENT PAD DETAIL

SCALE: NTS

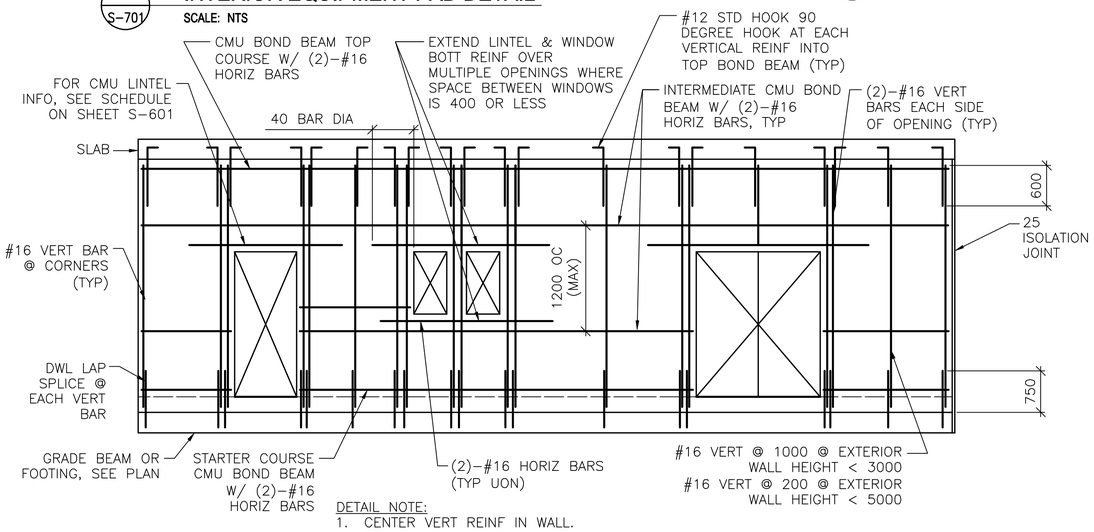

DETAIL NOTE:

1. CENTER VERT REINF IN WALL.
2. GROUT ALL CMU CELLS.
3. REFERENCE ARCH DWGS FOR JOINT INFORMATION
4. DOWELS BETWEEN TOP BOND BEAM AND BEAM/SLAB ABOVE (INCLUDING EMBEDDED PIPE SLEEVE) NOT SHOWN FOR CLARITY. SEE SPECIFIC S–500 SERIES DWGS FOR INFO.
5. FOR INFORMATION ON ALTERNATE CAST–IN–PLACE WALL BOND BEAMS, REFERENCE ALTERNATE TOP OF CMU WALL BRACING DETAILS THIS SHEET.

7 S-701 TYP EXTERIOR CMU WALL REINF DETAIL

SCALE: NTS

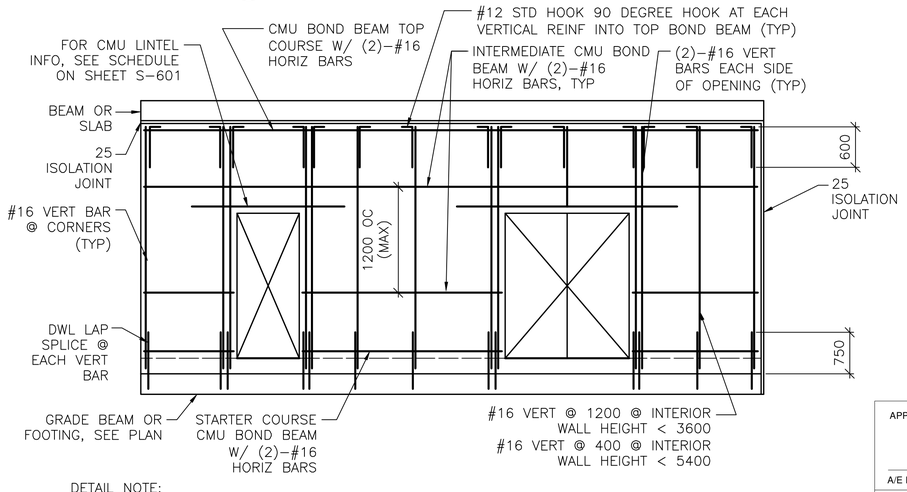

DETAIL NOTE:

1. CENTER VERT REINF IN WALL.
2. GROUT ALL CMU CELLS.
3. REFERENCE ARCH DWGS FOR JOINT INFORMATION
4. DOWELS BETWEEN TOP BOND BEAM AND BEAM/SLAB ABOVE (INCLUDING EMBEDDED PIPE SLEEVE) NOT SHOWN FOR CLARITY. SEE SPECIFIC S–500 SERIES DWGS FOR INFO.
5. FOR INFORMATION ON ALTERNATE CAST–IN–PLACE WALL BOND BEAMS, REFERENCE ALTERNATE TOP OF CMU WALL BRACING DETAILS THIS SHEET.

8 S-701 TYP INTERIOR CMU WALL REINF DETAIL

SCALE: NTS

UNLESS OTHERWISE NOTED, LINEAR DIMENSIONS SHOWN ARE IN MILLIMETERS (mm)

APPROVED:

A/E DESIGNER OF RECORD

SEAL:

GEORGIA REGISTERED 1-29-10 No. 27141 PROFESSIONAL ENGINEER CHRISTOPHER W. WHITMORE

US ARMY CORPS OF ENGINEERS
AFGHANISTAN ENGINEER DISTRICT

Mark	Description	Date	Appr.	Mark	Description	Date	Appr.

Designed by: KMP/MMY
Dwn by: RCG
Ckd by: CWW
Reviewed by: LHM
Submitted by: BAKER
Date: 2/23/10
Rev: 0
Design file no.
Drawing code:
File name: ANAPOLS-701.TIF
Plot date: 2/23/2010
Plot scale: X:X

U.S. ARMY CORPS OF ENGINEERS
AFGHANISTAN ENGINEER DISTRICT
APO AE 96338

Michael Baker Jr., Inc
A unit of Michael Baker Corporation
Airside Business Park
100 Airside Drive
Moon Township, PA 15108
www.mbakercorp.com

AFGHAN NATIONAL ARMY
REGIONAL MILITARY TRAINING CENTER
STANDARD DESIGN

POL STORAGE

TYPICAL DETAILS

Sheet reference number:
S–701

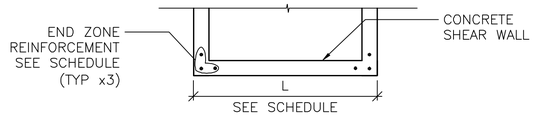

SHEAR WALL PLAN

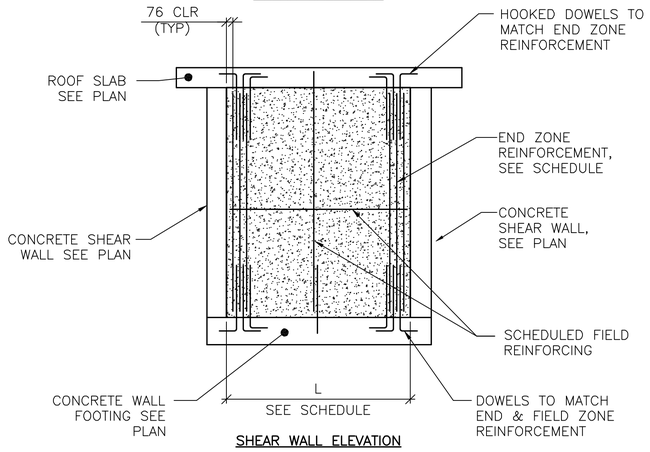

SHEAR WALL ELEVATION

DETAIL NOTES:
1. FIELD REINFORCEMENT IN SHEAR WALL NOT COMPLETELY SHOWN FOR CLARITY.
2. CENTER FIELD REINF IN WALL.
3. MINIMUM CONC CLEAR DISTANCE FOR END ZONE REINF = 76
4. SEE CONC SHEAR WALL SCHEDULE ON SHEET S-601

1/S-702 TYPE "E" SHEAR WALL DETAIL

SCALE: NTS

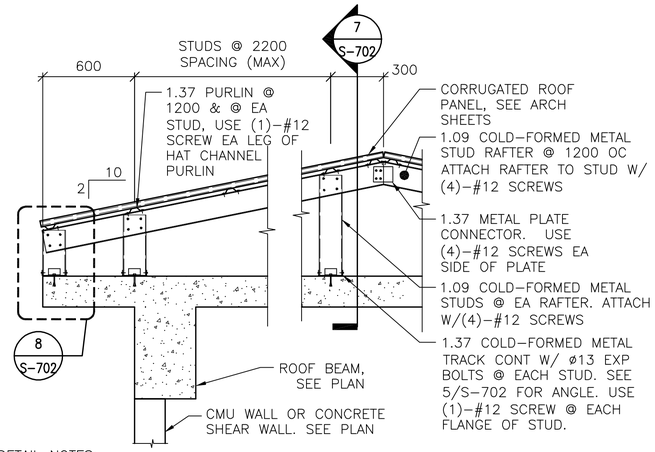

DETAIL NOTES:
1. ALL GABLE END VERTICAL STUDS SHALL BE ORIENTED 90° TO INTERIOR STUDS & SPACED @ 600 OC. GABLE END RAFTER SHALL BE 1.37 METAL TRACK SPANNING CONTINUOUSLY OVER GABLE END STUDS. INSET GIRTS AT GABLE END SHALL BE 1.09 COLD-FORMED METAL STUDS @ 1200 OC ATTACHED VIA 1.37 THICKNESS CLIP ANGLE W/ (2) #12 SCREWS EA LEG.
2. ALL INTERIOR, NON-GABLE END VERTICAL STUDS GREATER THAN 2400 IN LENGTH SHALL BE BACK-TO-BACK W/ #12 SCREWS @ 200 OC STAGGERED.

2/S-702 TYPICAL OVERBUILT ROOF FRAMING DETAIL

SCALE: NTS

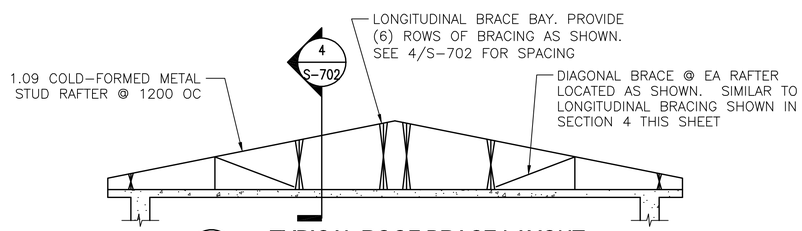

3/S-702 TYPICAL ROOF BRACE LAYOUT

SCALE: NTS

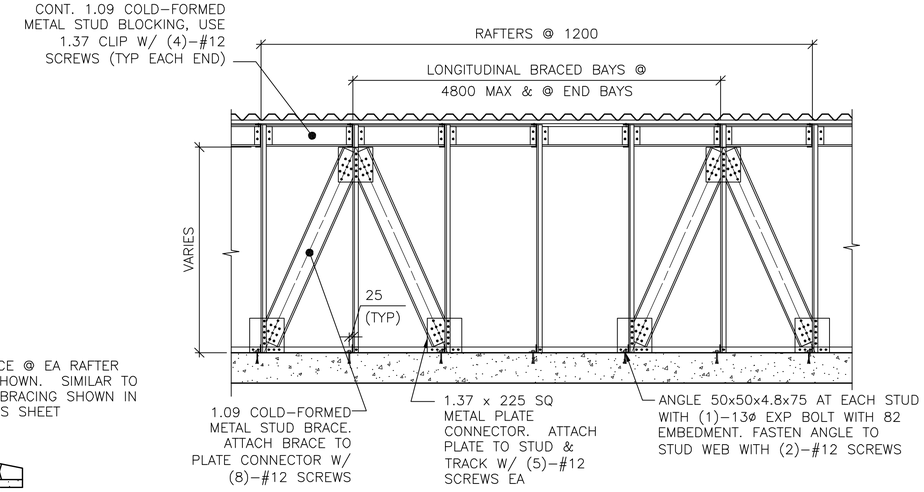

4/S-702 SECTION

SCALE: NTS

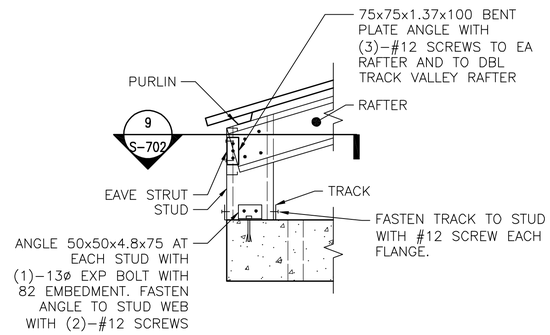

5/S-702 DETAIL

SCALE: NTS

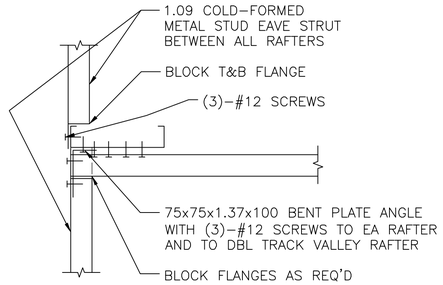

6/S-702 SECTION

SCALE: NTS

UNLESS OTHERWISE NOTED, LINEAR DIMENSIONS SHOWN ARE IN MILLIMETERS (mm)

APPROVED:

A/E DESIGNER OF RECORD

SEAL:

US ARMY CORPS OF ENGINEERS
AFGHANISTAN ENGINEER DISTRICT

Mark	Description	Date	Appr.	Mark	Description	Date	Appr.

Rev: 0
Date: 2/23/10
Design file no.
Drawing code:
File name: ANAPOLS-702TDT
Plot date: 2/23/2010
Plot scale: X:X

Designed by: KMF/MMY
Dwn by: RCG
Ckd by: CWW
Reviewed by: LHM
Submitted by:
BAKER

U.S. ARMY CORPS OF ENGINEERS
AFGHANISTAN ENGINEER DISTRICT
APO AE 96338

Michael Baker Jr., Inc.
A unit of Michael Baker Corporation
Airside Business Park
100 Airside Drive
Moon Township, PA 15108
www.mbakercorp.com

AFGHAN NATIONAL ARMY
REGIONAL MILITARY TRAINING CENTER
STANDARD DESIGN

POL STORAGE

TYPICAL DETAILS

Sheet reference number:
S-702

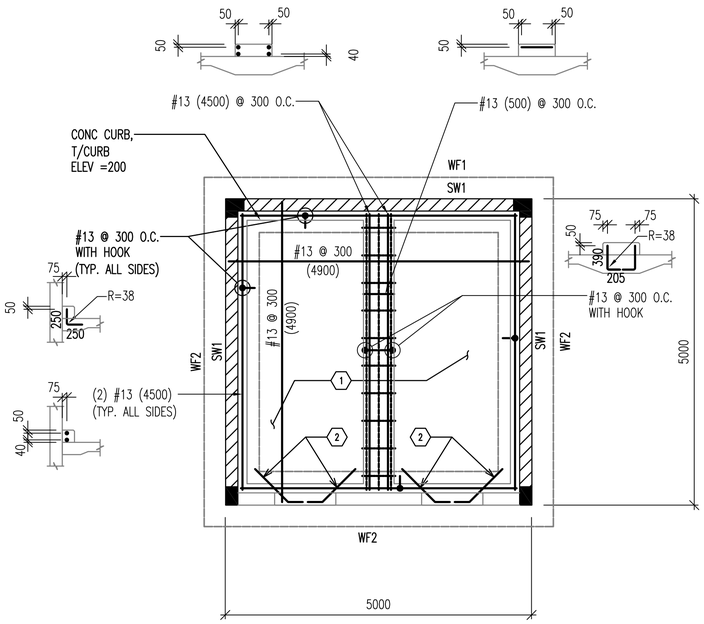

1 S-801 FOUNDATION/SLAB PLAN

SCALE: 1:50

FOUNDATION/SLAB PLAN NOTES:

1. SLAB-ON-GRADE REINFORCING ARE LOCATED 40mm FROM T/SLAB & B/SLAB, 50mm FROM EDGES & AND CONTROL JOINT. LENGTH NOTED AS THUS (6600). REFER TO DETAIL 5/S-801.
2. COLUMN FOOTINGS INDICATED BY WF# ON PLAN, REFER TO WALL FOOTING PLAN ON THIS SHEET.

FOUNDATION/SLAB PLAN KEY NOTES: (X)

1. REINF. CONC. SLAB-ON-GRADE.
2. (2)-#13 RE-ENTRANT CORNER BARS (SEE DETAIL 4/S-801)

FOUNDATION/SLAB PLAN LEGEND:

REINF CONC SHEAR WALL (SEE DETAIL 1/S-801)

SLAB REINFORCING TOP BARS

THICKENED SLAB REINFORCING BENEATH CMU WALLS
#13 x 540 @ 450 – SHORT DIRECTION
#13 x (LENGTH OF WALL) – LONG DIRECTION
(SEE 2/S-501 & 5/S501)

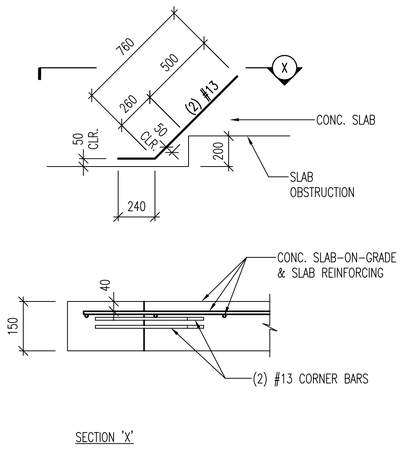

4 S-801 RE-ENTRANT CORNER BAR DETAIL

SCALE: 1:20

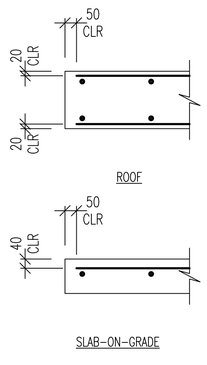

5 S-801 TYPICAL SLAB REBAR CLEARANCES

SCALE: 1:20

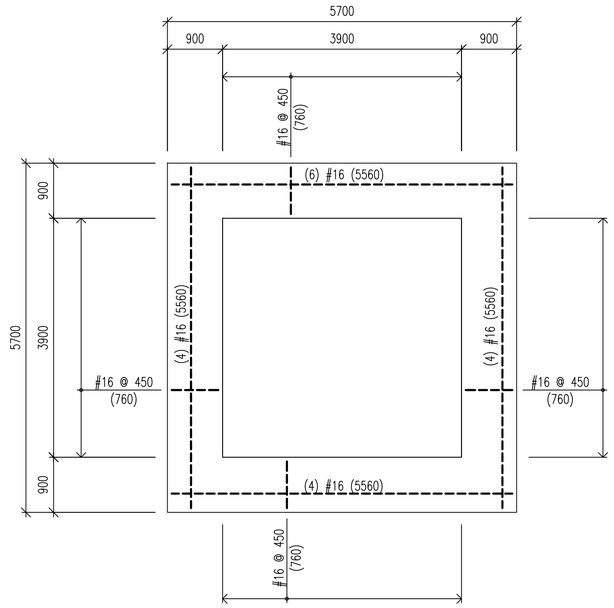

2 S-801 WALL FOOTING PLAN

SCALE: 1:50

WALL FOOTING PLAN NOTES:

1. FOOTING REINFORCING ARE LOCATED 70mm FROM BOTTOM OF FOOTING & 70mm FROM ALL EDGES

WALL FOOTING PLAN LEGEND:

SLAB REINFORCING BOTTOM BARS

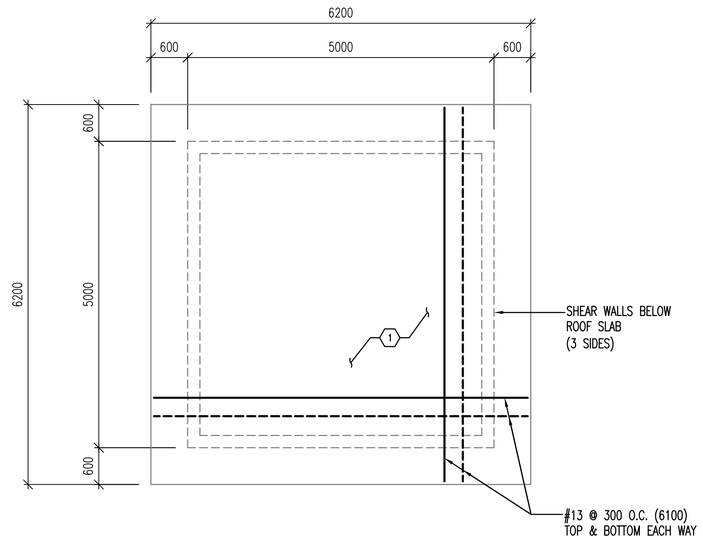

3 S-801 ROOF FRAMING PLAN

SCALE: 1:50

ROOF FRAMING PLAN NOTES:

1. ROOF SLAB REINFORCING BAR LENGTH IS NOTED THUS (6600).
2. SLAB REBAR COVER AT T&B IS 20mm, 50mm AT EDGES. REFER TO DETAIL 5/S-801.

ROOF FRAMING PLAN KEY NOTES: (X)

1. CONC ROOF SLAB.

ROOF FRAMING PLAN LEGEND:

SLAB REINFORCING BOTTOM BARS

SLAB REINFORCING TOP BARS

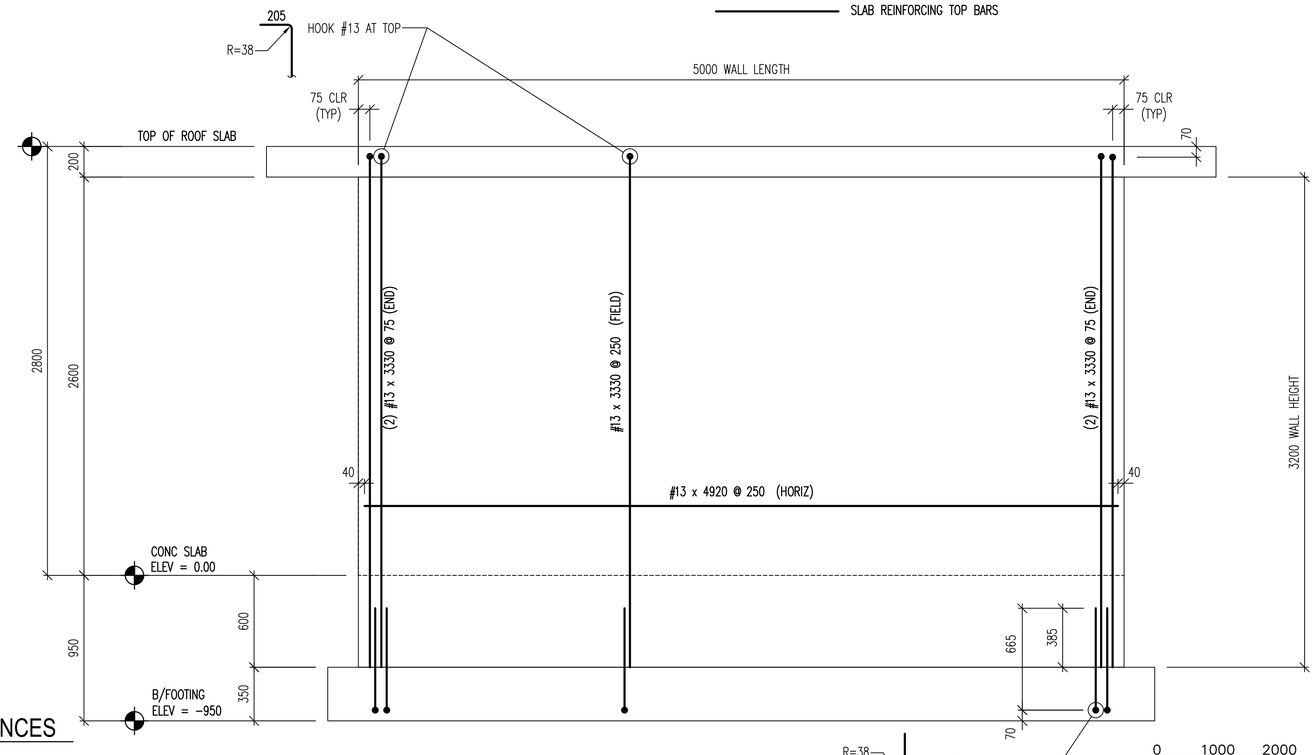

6 S-801 SHEAR WALL "SW1"

SCALE: 1:20

0 1000 2000
SCALE: 1:50

UNLESS OTHERWISE NOTED, LINEAR DIMENSIONS SHOWN ON DRAWINGS ARE IN MILLIMETERS (mm)

US ARMY CORPS OF ENGINEERS
AFGHANISTAN ENGINEER DISTRICT

Mark	Description	Date	Appr.	Mark	Description	Date	Appr.

Designed by: KMP/MMY
Dwn by: JLM
Ckd by: SCL
Reviewed by: RTD
Submitted by: BAKER
Date: 3/07/2010
Rev: 0
Design file no.
Drawing code:
File name: ANAPOLS-801
Plot date: 3/2/2010
Plot scale: 1:50

U.S. ARMY CORPS OF ENGINEERS
AFGHANISTAN ENGINEER DISTRICT
APO AE 96338

Michael Baker Jr., Inc.
A unit of Michael Baker Corporation
Airside Business Park
100 Airside Drive
Moon Township, PA 15108
www.mbakercorp.com

AFGHAN NATIONAL ARMY
REGIONAL MILITARY TRAINING CENTER
STANDARD DESIGN

POL STORAGE

REBAR PLACEMENT DRAWINGS
PLANS & DETAILS

Sheet reference number:
S-801

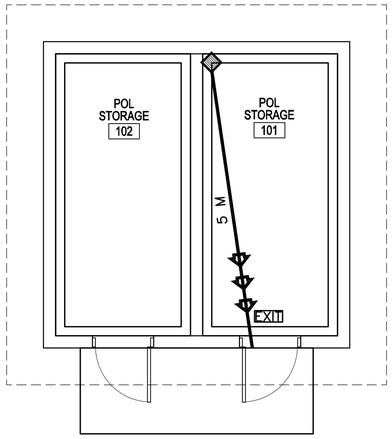

1
A-001

LIFE SAFETY PLAN

SCALE: 1:50

CODE ANALYSIS:

1. REFERENCES:
   2006 INTERNATIONAL BUILDING CODE (2006 IBC)
   2006 LIFE SAFETY CODE (2006 NFPA 101)

2. IBC OCCUPANCY CLASSIFICATION:
   GROUP H–3
   (STORAGE, HIGH HAZARD NFPA 101 6.1.13 & 6.2.2 AND CHAPTER 42)

3. TYPE OF CONSTRUCTION (IBC): TYPE II–B (UNPROTECTED/NONSPRINKLERED)

4. IBC TABLE 503: ALLOWABLE HEIGHT AND BUILDING AREAS:
   GROUP H–3
   ALLOWABLE AREA: 1300 SM
   ALLOWABLE HEIGHT: 2 STORIES (16 M)

   GROUP H–3
   PROPOSED AREA: 25 SM
   PROPOSED HEIGHT: 1 STORY (<16 M)

5. IBC TABLE 601 & 602: FIRE RESISTANCE RATING REQUIREMENTS FOR BUILDING ELEMENTS FOR TYPE II–B

BUILDING ELEMENT	RATING (HOUR)	REFERENCE
STRUCTURAL FRAME (COLUMNS, GIRDERS & TRUSSES)	0	TABLE 601
BEARING WALLS		
EXTERIOR	0	TABLE 601
INTERIOR	0	TABLE 601
NONBEARING WALLS & PARTITIONS		
INTERIOR	0	TABLE 601
FLOOR CONSTRUCTION	0	TABLE 601
ROOF CONSTRUCTION	0	TABLE 601
EXTERIOR WALL	0	TABLE 602

6. IBC TABLE 803.5 – INTERIOR WALL AND CEILING FINISH REQUIREMENTS FOR H–3 OCCUPANCY/NONSPRINKLERED

GROUP	EXIT ENCLOSURES AND EXIT PASSAGEWAY	CORRIDORS	ROOMS AND ENCLOSED SPACES
H	A	A	B

7. NFPA 101 TABLE 7.3.1.2 – OCCUPANT LOAD
   STORAGE = N/A
   NFPA 101 42.1.7: USE THE PROBABLE POPULATION: 1

8. NFPA 101 TABLE 7.3.3.1 – EGRESS CAPACITY
   STORAGE = 5 MM PER OCCUPANT

   REQUIRED: 5 MM (1 OCCUPANTS x 5 MM PER OCCUPANT)
   PROPOSED EGRESS CAPACITY: 900 MM: (1) 900 MM DOORS

9. NFPA 101 PARAGRAPH 42.2.6 AND TABLE 42.2.6 – EXIT ACCESS TRAVEL DISTANCE
   REQUIRED: 61 METERS
   PROPOSED: 5 METERS

10. NFPA 101 PARAGRAPH 42.3.6 – CORRIDORS
    CORRIDORS ARE NOT REQUIRED AS DOORS EXIT DIRECTLY TO OUTSIDE

11. NFPA 101 PARAGRAPH 42.2.4.1(2) AND 7.4.1.1 – MINIMUM NUMBER OF EXITS
    REQUIRED: 1 MINIMUM
    PROPOSED: 1 EXIT

12. NFPA 101 PARAGRAPH 42.3.2 – PROTECTION FROM HAZARDS
    NO REQUIREMENTS

LEGEND:

DENOTES PATHS OF EXIT TRAVEL

EXIT DENOTES DOOR AS AN EMERGENCY EXIT

DENOTES STARTING POINT FOR TRAVEL DISTANCE

DENOTES FIRE EXTINGUISHER LOCATIONS

LINEAR DIMENSIONS SHOWN ARE IN MILLIMETERS (MM), UNLESS OTHERWISE NOTED

0 1000 2000
SCALE: 1:50

APPROVED:

A/E DESIGNER OF RECORD

SEAL:

STATE OF SOUTH CAROLINA
KEVIN R. CHAFIN
N. Charleston, SC
6374
REGISTERED ARCHITECT

US ARMY CORPS OF ENGINEERS
AFGHANISTAN ENGINEER DISTRICT

Mark	Description	Date	Appr.	Mark	Description	Date	Appr.

Date: 2/23/10
Design file no.
Rev: 0
Drawing code:
File name: ANAPOLA-001LSP
Plot date: 2/23/2010
Plot scale: x:X

Designed by: KRC
Dwn by: KJG
Ckd by: NLJ
Reviewed by: LHM
Submitted by: BAKER

U.S. ARMY CORPS OF ENGINEERS
AFGHANISTAN ENGINEER DISTRICT
APO AE 96338

Michael Baker Jr., Inc.
A unit of Michael Baker Corporation
Airside Business Park
100 Airside Drive
Moon Township, PA 15108
www.mbakercorp.com

AFGHAN NATIONAL ARMY
REGIONAL MILITARY TRAINING CENTER
STANDARD DESIGN

POL STORAGE

LIFE SAFETY PLAN

Sheet reference number:
A–001

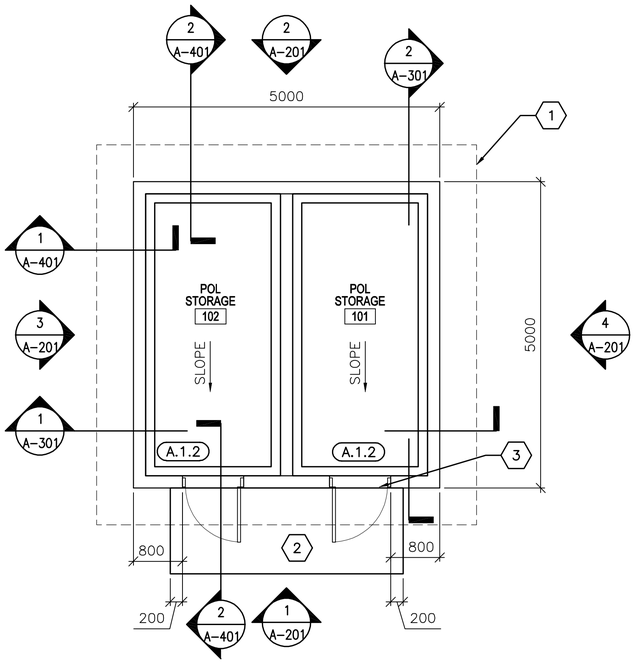

1 A-101 **FLOOR PLAN**
SCALE: 1:50

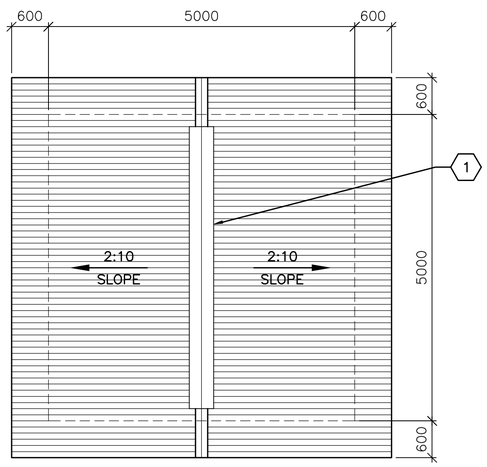

2 A-101 **ROOF PLAN**
SCALE: 1:50

FLOOR PLAN KEY NOTES:

1. LINE OF ROOF OVERHANG ABOVE.
2. CONCRETE STOOP – SEE DETAIL 1/A-503.
3. CURB AT DOOR – SEE DETAIL 1/A-502.

LEGEND:

XXX DOOR FRAME AND HARDWARE TYPE – SEE SHEET A-601

A WINDOW TYPE, SEE SHEET A-601

X KEY NOTE

ABBREVIATIONS:

ELEC	ELECTRICAL
MECH	MECHANICAL
JAN	JANITOR
CLOS	CLOSET
COMM	COMMUNICATIONS

FLOOR PLAN GENERAL NOTES:

A. DIMENSIONS ARE SHOWN TO OUTER EDGE OF EXTERIOR STRUCTURAL COLUMNS, STRUCTURAL COLUMN GRID, EDGE OF INTERIOR PARTITIONS, EDGE OF WINDOW OPENINGS, AND TO HINGE SIDE OF DOOR FRAME OPENINGS.

B. INTERIOR PARTITIONS SHALL BE 200 MM CMU. SEE STRUCTURAL DRAWINGS FOR LOCATION OF CONCRETE SHEAR WALLS.

C. COSMETIC REPAIR OF MINOR DEFECTS: REPAIR OR FILL MORTAR JOINTS AND MINOR DEFECTS, INCLUDING BUT NOT LIMITED TO SPALLS, IN ACCORDANCE WITH MANUFACTURER'S RECOMMENDATIONS AND PRIOR TO COATING APPLICATION. SURFACES TO BE PAINTED SHALL BE CLEAN AND FREE OF FOREIGN MATTER BEFORE APPLICATION OF PAINT. CLEANING SHALL BE SCHEDULED SO THAT DUST AND OTHER CONTAMINANTS WILL NOT FALL ON NEWLY PAINTED SURFACES.

D. CONCRETE, PLASTER AND MASONRY SURFACES SHALL BE ALLOWED TO CURE FOR AT LEAST 30 DAYS BEFORE PAINTING. CONCRETE SLABS-ON-GRADE SHALL BE ALLOWED TO CURE 90 DAYS BEFORE STAINING OR SEALING.

E. DO NOT USE PAINT MATERIALS CONTAINING LEAD CONTENT IN EXCESS OF 0.009 PERCENT OF THE WEIGHT OF THE TOTAL NONVOLATILE CONTENT OF THE PAINT OR THE WEIGHT OF THE DRIED PAINT FILM.

F. DO NOT USE ANY ASBESTOS CONTAINING MATERIALS (ACM) IN PROJECT. ACM IS DEFINED AS 1% OR MORE BY VOLUME.

G. DO NOT USE PAINT MATERIALS CONTAINING MERCURIAL FUNGICIDES.

H. FACTORY PRIMED METAL DOORS AND FRAMES SHALL RECEIVE TWO COATS OF PAINT.

I. FILL REMAINING SPACE AT PENETRATIONS IN FIRE-RATED FLOORS, PARTITIONS AND CEILINGS WITH APPROPRIATE FIRESTOPPING MATERIALS.

J. ALL CEILING FINISHES SHALL BE PAINTED STRUCTURE.

K. ALL WALL FINISHES SHALL BE PAINTED STRUCTURE.

L. ALL FLOOR FINISHES SHALL BE EPOXY SEALED CONCRETE.

ROOF PLAN GENERAL NOTES:

A. THE APPROXIMATE LOCATION OF ROOF DEVICES AND PENETRATIONS ARE SHOWN ON THE ROOF PLAN FOR INFORMATION ONLY. THE CONTRACTOR SHALL BE RESPONSIBLE FOR UNDERSTANDING THE ACTUAL LOCATION OF THESE AND ALL OTHER ITEMS PRIOR TO BEGINNING CONSTRUCTION. COORDINATE ALL ROOF PENETRATIONS WITH STRUCTURAL, MECHANICAL AND PLUMBING WORK.

B. UNLESS OTHERWISE NOTED, NOTES, DETAILS OR FEATURES INDICATED FOR ONE CONDITION SHALL BE APPLICABLE FOR ALL ALIKE AND SIMILAR CONDITIONS.

C. STOCKPILING OF MATERIALS, EQUIPMENT AND ANY OTHER ITEMS ON THE ROOF IS PROHIBITED.

D. ROOFS SHALL BE CORRUGATED METAL ROOF PANELS ON COLD-FORMED METAL FRAMING ON CONCRETE SLAB.

ROOF PLAN KEY NOTES:

1. CONTINUOUS METAL RIDGE VENT SEE DETAIL 4/A-501.

LINEAR DIMENSIONS SHOWN ARE IN MILLIMETERS (MM), UNLESS OTHERWISE NOTED

0 1000 2000
SCALE: 1:50

APPROVED:

A/E DESIGNER OF RECORD

SEAL:

STATE OF SOUTH CAROLINA
KEVIN R. CHAFIN
N. Charleston, SC
6374
REGISTERED ARCHITECT

US ARMY CORPS OF ENGINEERS
AFGHANISTAN ENGINEER DISTRICT

Mark	Description	Date	Appr.	Mark	Description	Date	Appr.

Date: 2/23/10
Rev: 0
Design file no.
Drawing code:
File name: ANAPOLA-101FRP
Plot date: 2/23/2010
Plot scale: x:X

Designed by: KRC
Dwn by: KJG
Ckd by: NLJ
Reviewed by: LHM
Submitted by: BAKER

U.S. ARMY CORPS OF ENGINEERS
AFGHANISTAN ENGINEER DISTRICT
APO AE 96338

Michael Baker Jr., Inc.
A unit of Michael Baker Corporation
Airside Business Park
100 Airside Drive
Moon Township, PA 15108
www.mbakercorp.com

AFGHAN NATIONAL ARMY
REGIONAL MILITARY TRAINING CENTER
STANDARD DESIGN

POL STORAGE

FLOOR PLAN
ROOF PLAN

Sheet reference number:
A-101

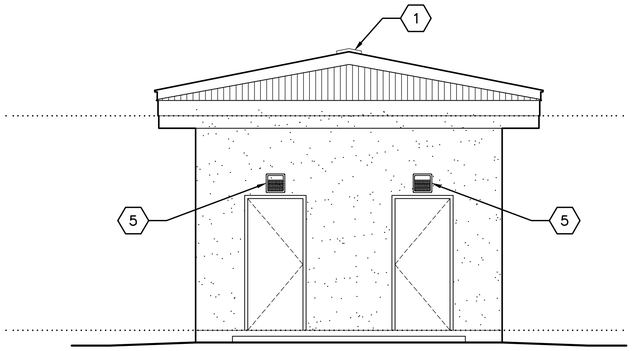

1 A-201 **ELEVATION**
SCALE: 1:50

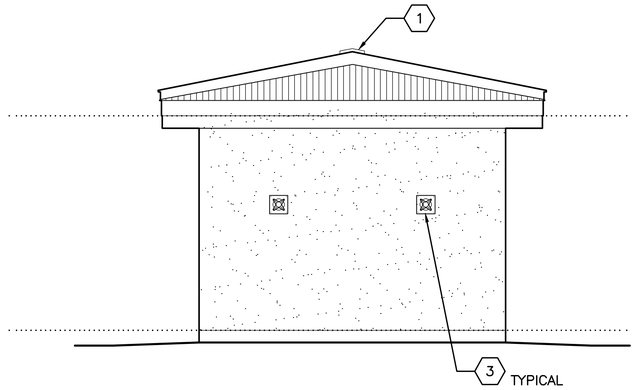

2 A-201 **ELEVATION**
SCALE: 1:50

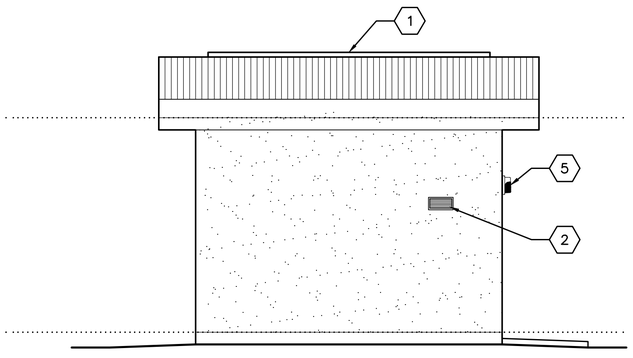

3 A-201 **ELEVATION**
SCALE: 1:50

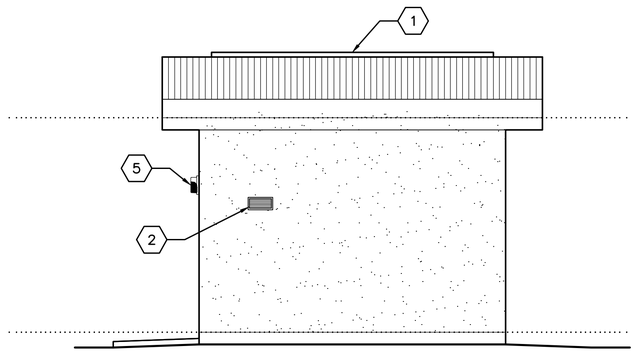

4 A-201 **ELEVATION**
SCALE: 1:50

GENERAL NOTES:

A. COORDINATE SIZE AND LOCATION OF OPENINGS FOR MECHANICAL ITEMS WITH MECHANICAL DRAWINGS.

B. PROVIDE STRUCTURAL LINTELS AS REQUIRED – SEE STRUCTURAL DRAWINGS

C. ALL EXTERIOR WALL FINISHES SHALL BE STUCCO OVER CMU AND CONCRETE SUBSTRATES.

D. ROOF SHALL BE CORRUGATED METAL ROOF PANELS ON COLD–FORMED METAL FRAMING ON CONCRETE SLAB.

KEY NOTES:

1. CONTINUOUS METAL RIDGE VENT – SEE DETAIL 4/A–501.
2. LOUVER, LOCATE TOP OF WALL PENETRATION 2200 MM ABOVE FINISHED FLOOR – SEE MECHANICAL DRAWINGS.
3. EXHAUST FAN, LOCATE TOP OF WALL PENETRATION 2200 MM ABOVE FINISHED FLOOR – SEE MECHANICAL DRAWINGS.
4. NOT USED
5. EXTERIOR LIGHT FIXTURE – SEE ELECTRICAL.

LINEAR DIMENSIONS SHOWN ARE IN MILLIMETERS (MM), UNLESS OTHERWISE NOTED

0 1000 2000
SCALE: 1:50

APPROVED:

A/E DESIGNER OF RECORD

SEAL:

STATE OF SOUTH CAROLINA
KEVIN R. CHAFIN
N. Charleston, SC
6374
REGISTERED ARCHITECT

US ARMY CORPS OF ENGINEERS
AFGHANISTAN ENGINEER DISTRICT

Mark	Description	Date	Appr.	Mark	Description	Date	Appr.

U.S. ARMY CORPS OF ENGINEERS
AFGHANISTAN ENGINEER DISTRICT
APO AE 96338

Michael Baker Jr., Inc
A unit of Michael Baker Corporation
Airside Business Park
100 Airside Drive
Moon Township, PA 15108
www.mbakercorp.com

Designed by: KRC	Date: 2/23/10
Dwn by: KJG	Ckd by: NLJ
Reviewed by: LHM	Design file no.
Submitted by: BAKER	Drawing code:
	File name: ANAPOLA-201ELV
	Plot date: 2/23/2010
	Plot scale: X:X
	Rev: 0

AFGHAN NATIONAL ARMY
REGIONAL MILITARY TRAINING CENTER
STANDARD DESIGN

POL STORAGE

ELEVATIONS

Sheet reference number:
A–201

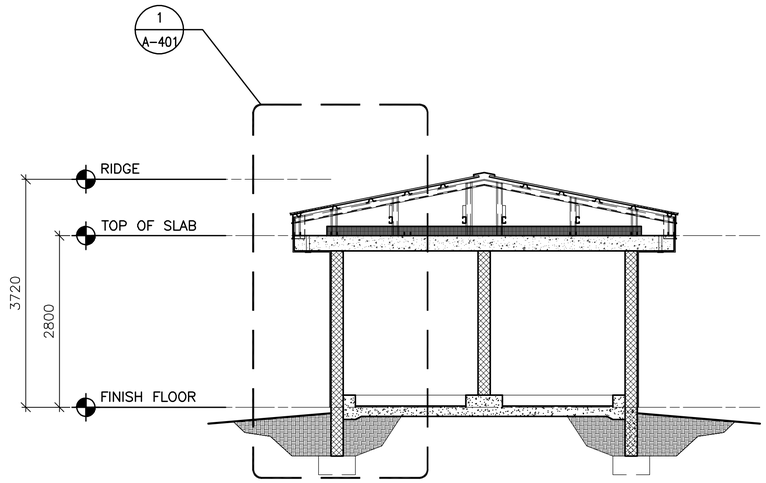

1 A-301 **BUILDING SECTION**
SCALE: 1:50

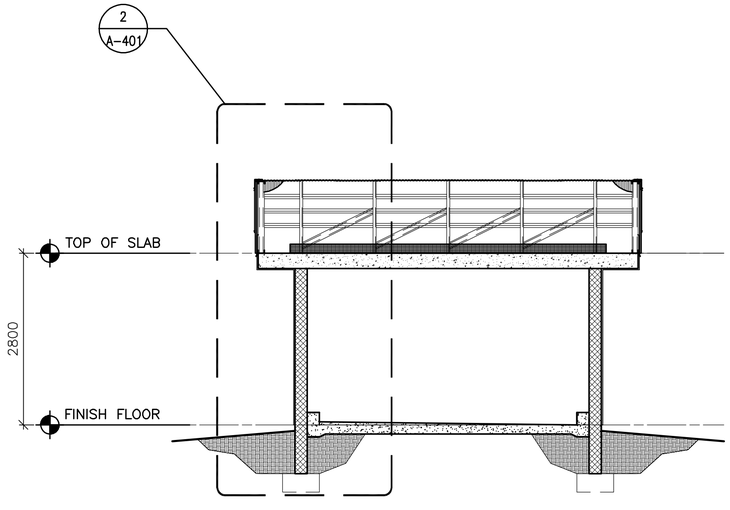

2 A-301 **BUILDING SECTION**
SCALE: 1:50

LINEAR DIMENSIONS SHOWN ARE IN MILLIMETERS (MM), UNLESS OTHERWISE NOTED

0 1000 2000
SCALE: 1:50

APPROVED:

A/E DESIGNER OF RECORD

SEAL:

STATE OF SOUTH CAROLINA
KEVIN R. CHAFIN
N. Charleston, SC
6374
REGISTERED ARCHITECT

US ARMY CORPS OF ENGINEERS
AFGHANISTAN ENGINEER DISTRICT

Mark	Description	Date	Appr.	Mark	Description	Date	Appr.

U.S. ARMY CORPS OF ENGINEERS
AFGHANISTAN ENGINEER DISTRICT
APO AE 96338

Michael Baker Jr., Inc
A unit of Michael Baker Corporation
Airside Business Park
100 Airside Drive
Moon Township, PA 15108
www.mbakercorp.com

Designed by: KRC
Dwn by: KJG
Ckd by: NLJ
Reviewed by: LHM
Submitted by: BAKER

Date: 2/23/10
Rev: 0
Design file no.
Drawing code:
File name: ANAPOLA-301BS
Plot date: 2/23/2010
Plot scale: x:X

AFGHAN NATIONAL ARMY
REGIONAL MILITARY TRAINING CENTER
STANDARD DESIGN

POL STORAGE

BUILDING SECTIONS

Sheet reference number:
A-301

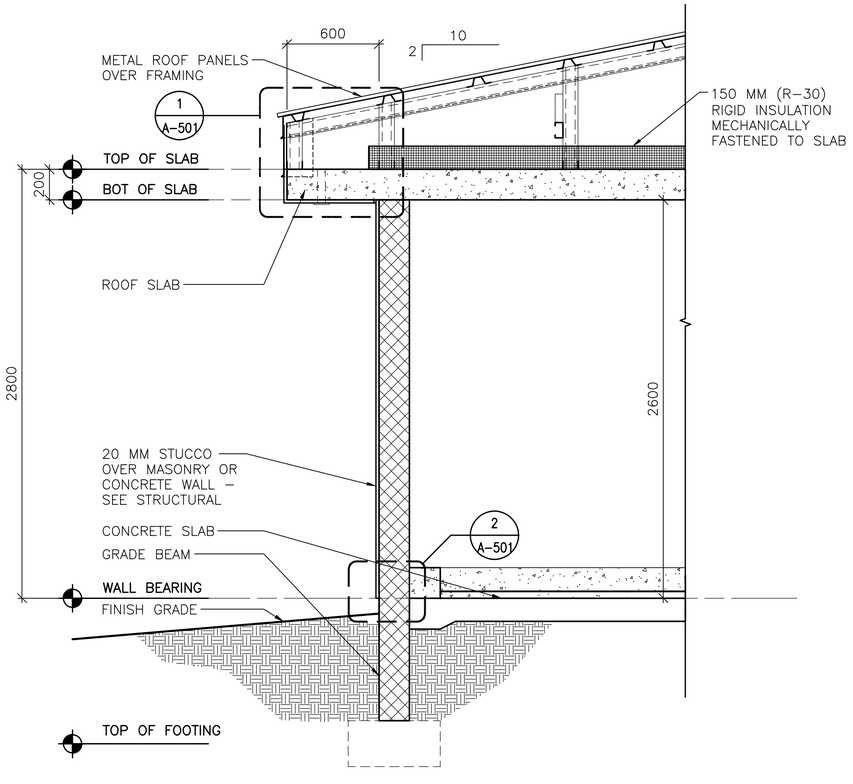

1 A-401 **TYPICAL WALL SECTION**

SCALE: 1:20

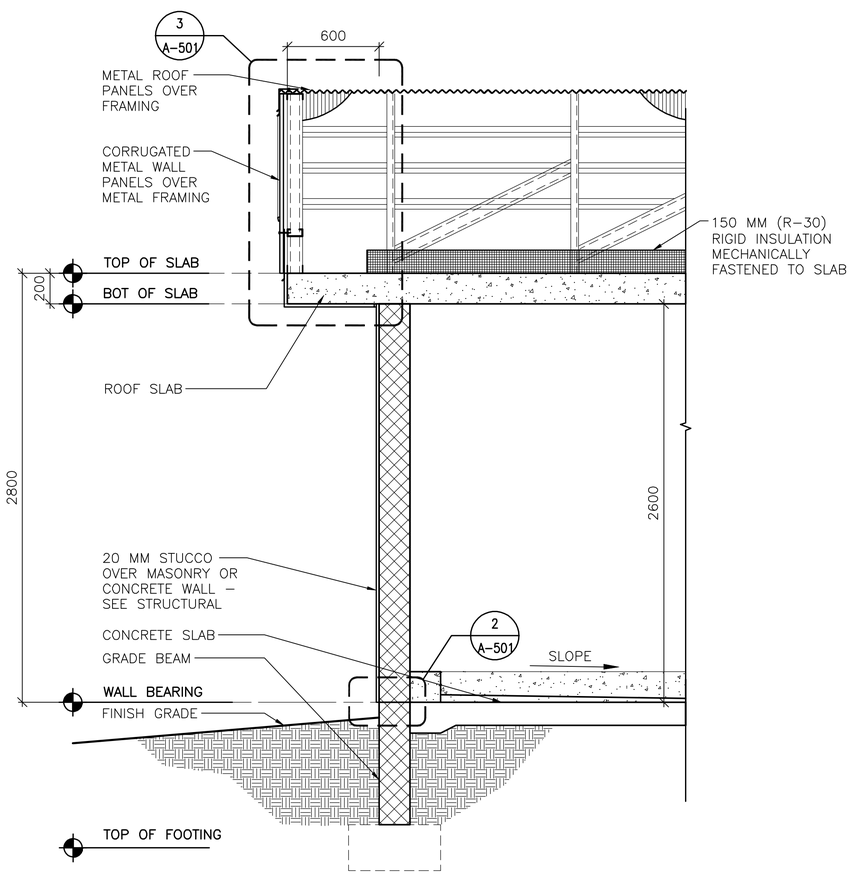

2 A-401 **TYPICAL (GABLE) WALL SECTION**

SCALE: 1:20

LINEAR DIMENSIONS SHOWN ARE IN MILLIMETERS (MM), UNLESS OTHERWISE NOTED

0 400 800

SCALE: 1:20

APPROVED:

A/E DESIGNER OF RECORD

SEAL:

STATE OF SOUTH CAROLINA
KEVIN R. CHAFIN
N. Charleston, SC
6374
REGISTERED ARCHITECT

US ARMY CORPS OF ENGINEERS
AFGHANISTAN ENGINEER DISTRICT

Mark	Description	Date	Appr.	Mark	Description	Date	Appr.

Rev: 0

Date: 2/23/10

Design file no.

Drawing code:

File name: ANAPOLA-401WS

Plot date: 2/23/2010

Plot scale: x:X

Designed by: KRC

Dwn by: KJG

Ckd by: NLJ

Reviewed by:

Submitted by: BAKER

U.S. ARMY CORPS OF ENGINEERS
AFGHANISTAN ENGINEER DISTRICT
APO AE 96338

Michael Baker Jr., Inc
A unit of Michael Baker Corporation
Airside Business Park
100 Airside Drive
Moon Township, PA 15108
www.mbakercorp.com

AFGHAN NATIONAL ARMY
REGIONAL MILITARY TRAINING CENTER
STANDARD DESIGN

POL STORAGE

WALL SECTIONS

Sheet reference number:

A-401

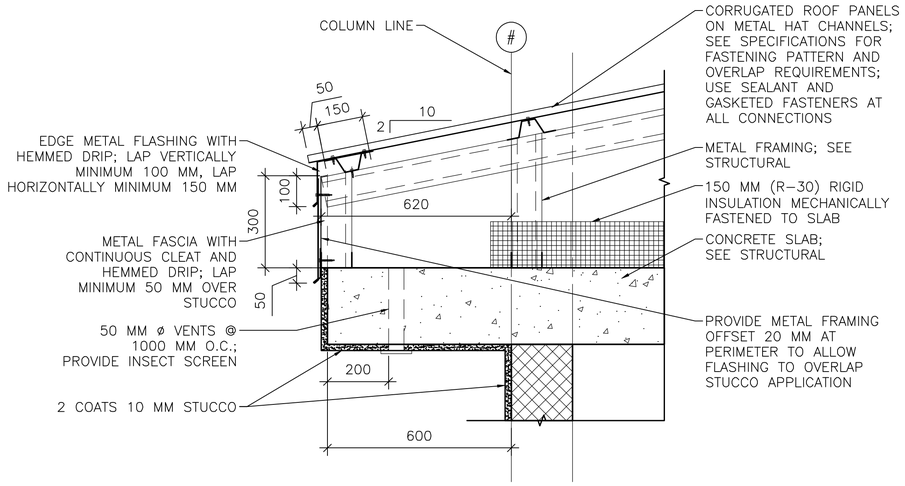

1 / A–501 **EAVE DETAIL**

SCALE: 1:10

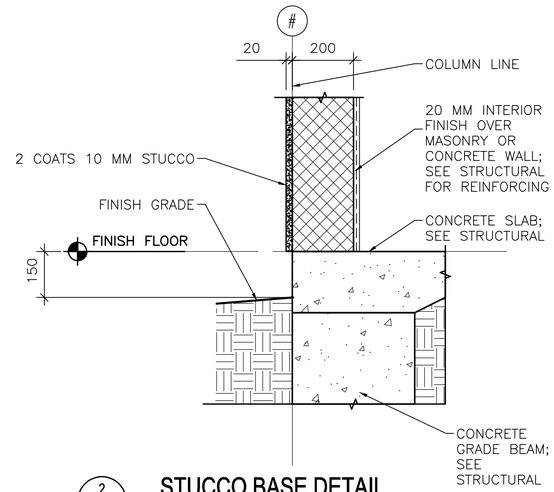

2 / A–501 **STUCCO BASE DETAIL**

SCALE: 1:10

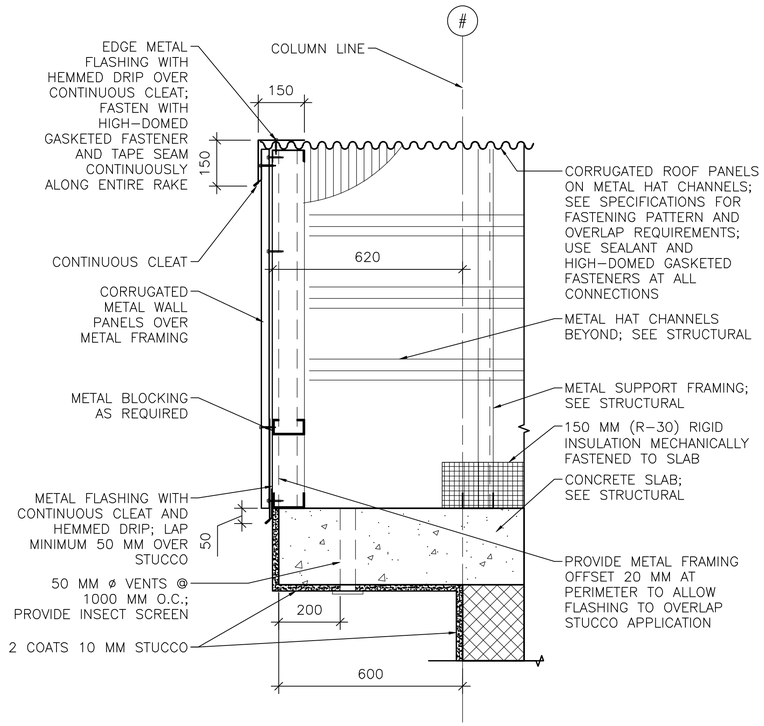

3 / A–501 **RAKE/EAVE DETAIL**

SCALE: 1:10

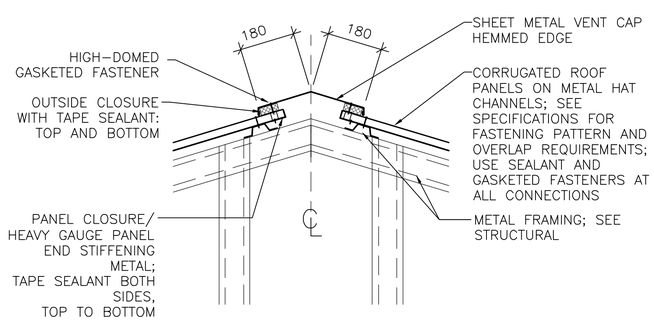

4 / A–501 **RIDGE VENT DETAIL**

SCALE: 1:10

LINEAR DIMENSIONS SHOWN ARE IN MILLIMETERS (MM), UNLESS OTHERWISE NOTED

0 200 400
SCALE: 1:10

APPROVED:

A/E DESIGNER OF RECORD

SEAL:

STATE OF SOUTH CAROLINA
KEVIN R. CHAFIN
N. Charleston, SC
6374
REGISTERED ARCHITECT

US ARMY CORPS OF ENGINEERS
AFGHANISTAN ENGINEER DISTRICT

Mark	Description	Date	Appr.	Mark	Description	Date	Appr.

U.S. ARMY CORPS OF ENGINEERS
AFGHANISTAN ENGINEER DISTRICT
APO AE 96338

Michael Baker Jr., Inc
A unit of Michael Baker Corporation
Airside Business Park
100 Airside Drive
Moon Township, PA 15108
www.mbakercorp.com

Designed by: KRC	Date: 2/23/10
Dwn by: KJG	Ckd by: NLJ
Reviewed by: LHM	Design file no.
Submitted by: BAKER	Drawing code:
	File name: ANAPOLA-501DT
	Plot date: 2/23/2010
	Plot scale: x:X

Rev: 0

AFGHAN NATIONAL ARMY
REGIONAL MILITARY TRAINING CENTER
STANDARD DESIGN

POL STORAGE

EXTERIOR DETAILS

Sheet reference number:
A–501

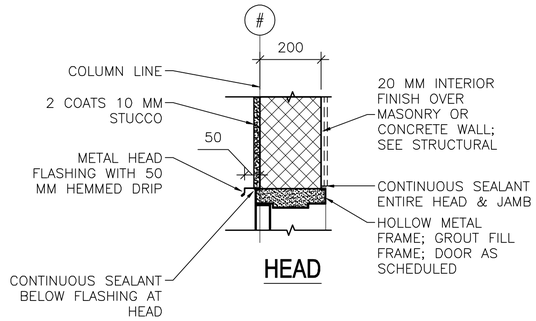

HEAD

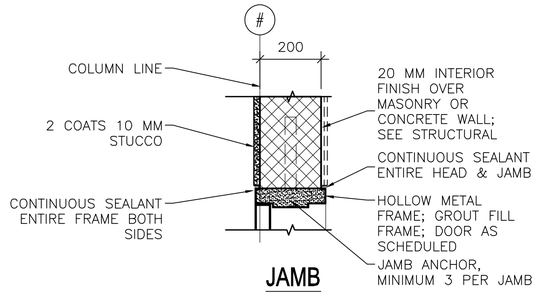

JAMB

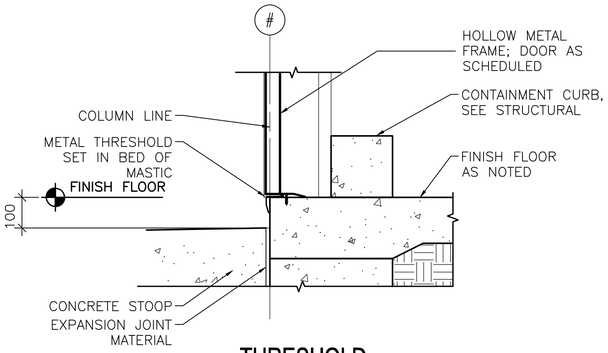

THRESHOLD

1 / A-502 **EXTERIOR DOOR DETAILS**

SCALE: 1:10

LINEAR DIMENSIONS SHOWN ARE IN MILLIMETERS (MM), UNLESS OTHERWISE NOTED

0 200 400
SCALE: 1:10

APPROVED:

A/E DESIGNER OF RECORD

SEAL:

STATE OF SOUTH CAROLINA
KEVIN R. CHAFIN
N. Charleston, SC
6374
REGISTERED ARCHITECT

US ARMY CORPS OF ENGINEERS
AFGHANISTAN ENGINEER DISTRICT

Mark	Description	Date	Appr.	Mark	Description	Date	Appr.

U.S. ARMY CORPS OF ENGINEERS
AFGHANISTAN ENGINEER DISTRICT
APO AE 96338

Michael Baker Jr., Inc.
A unit of Michael Baker Corporation
Airside Business Park
100 Airside Drive
Moon Township, PA 15108
www.mbakercorp.com

Designed by: KRC	Date: 2/23/10
Dwn by: KJG	Ckd by: NLJ
Reviewed by: LHM	Design file no.
Submitted by: BAKER	Drawing code:
File name: ANAPOLA-502HS	Rev: 0
Plot date: 2/23/2010	
Plot scale: x:X	

AFGHAN NATIONAL ARMY
REGIONAL MILITARY TRAINING CENTER
STANDARD DESIGN

POL STORAGE

HEAD, JAMB & SILL DETAILS

Sheet reference number:
A-502

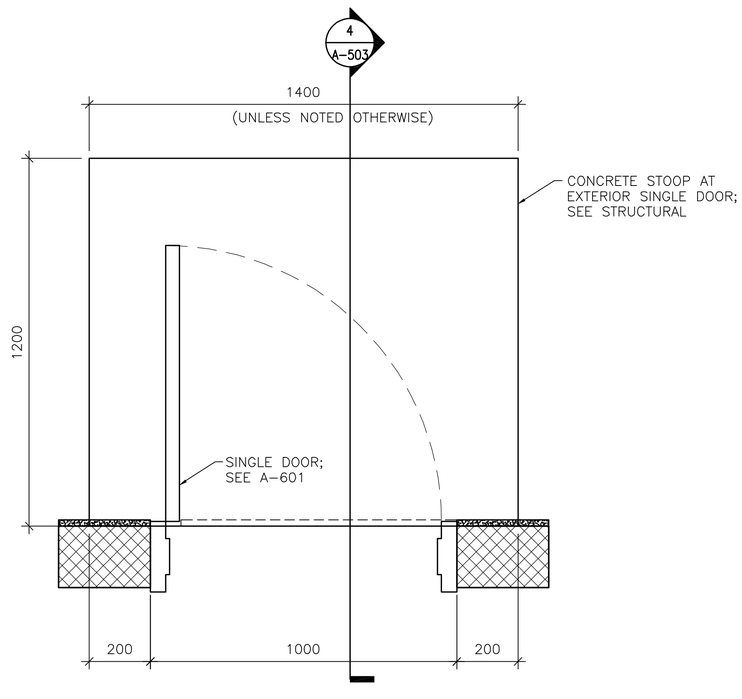

1 A-503 **DOOR STOOP PLAN (WITHOUT GRATE)**

SCALE: 1:10

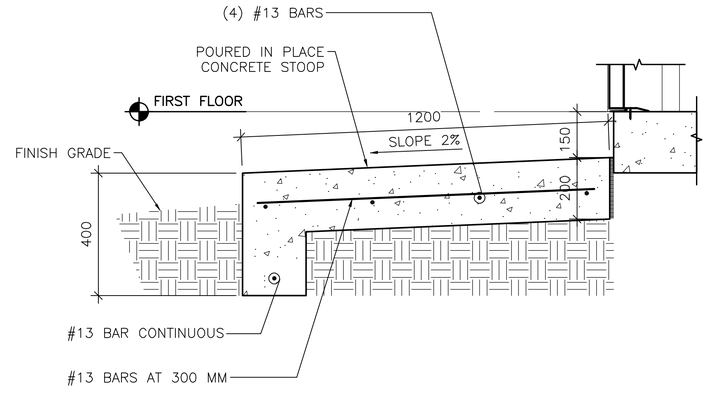

2 A-503 **DOOR STOOP DETAIL**

SCALE: 1:10

LINEAR DIMENSIONS SHOWN ARE IN MILLIMETERS (MM), UNLESS OTHERWISE NOTED

0 200 400
SCALE: 1:10

APPROVED:

A/E DESIGNER OF RECORD

SEAL:

STATE OF SOUTH CAROLINA
KEVIN R. CHAFIN
N. Charleston, SC
6374
REGISTERED ARCHITECT

US ARMY CORPS OF ENGINEERS
AFGHANISTAN ENGINEER DISTRICT

Mark	Description	Date	Appr.	Mark	Description	Date	Appr.

U.S. ARMY CORPS OF ENGINEERS
AFGHANISTAN ENGINEER DISTRICT
APO AE 96338

Michael Baker Jr., Inc
A unit of Michael Baker Corporation
Airside Business Park
100 Airside Drive
Moon Township, PA 15108
www.mbakercorp.com

Designed by: KRC
Dwn by: KJG
Ckd by: NLJ
Reviewed by: LHM
Submitted by: BAKER
Date: 3/05/10
Rev: 0
Design file no.
Drawing code:
File name: ANAPOLA-503DT
Plot date: 2/26/2010
Plot scale: x:X

AFGHAN NATIONAL ARMY
REGIONAL MILITARY TRAINING CENTER
STANDARD DESIGN

POL STORAGE

STOOP DETAILS

Sheet reference number:
A-503

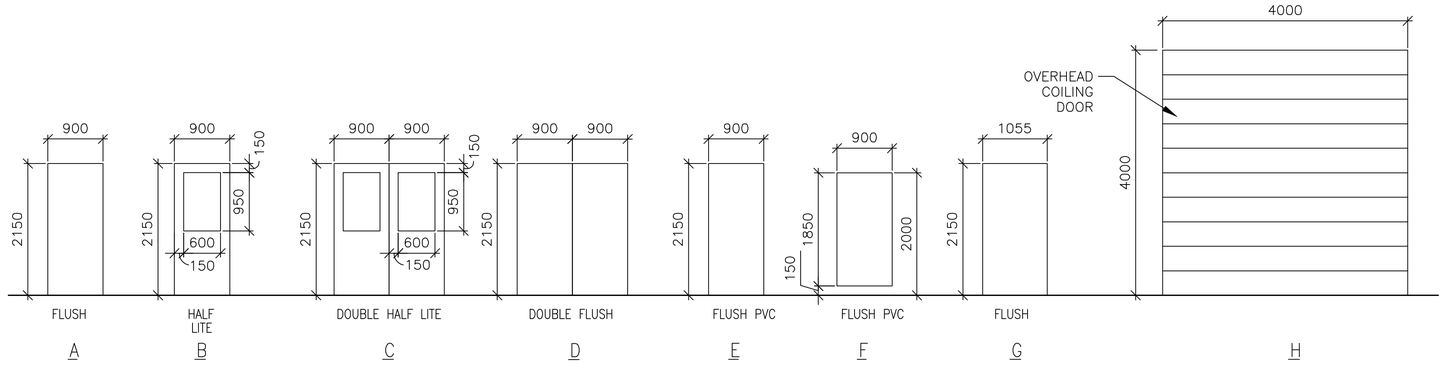

1 A-601 DOOR TYPES

SCALE: 1:50

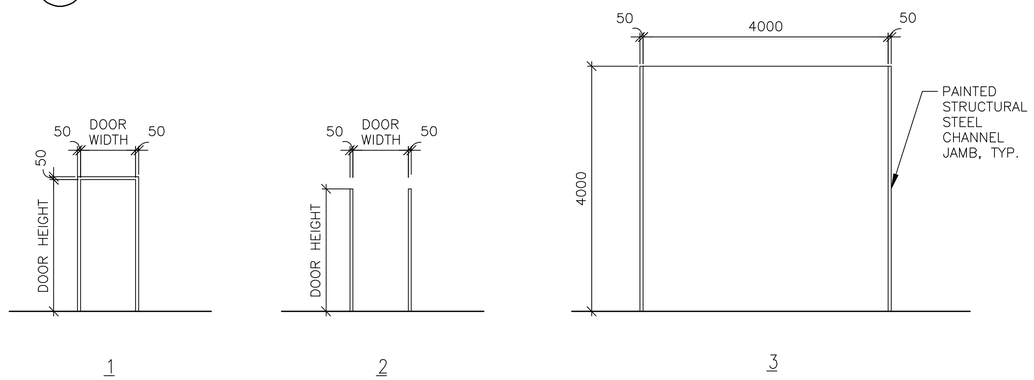

2 A-601 FRAME TYPES

SCALE: 1:50

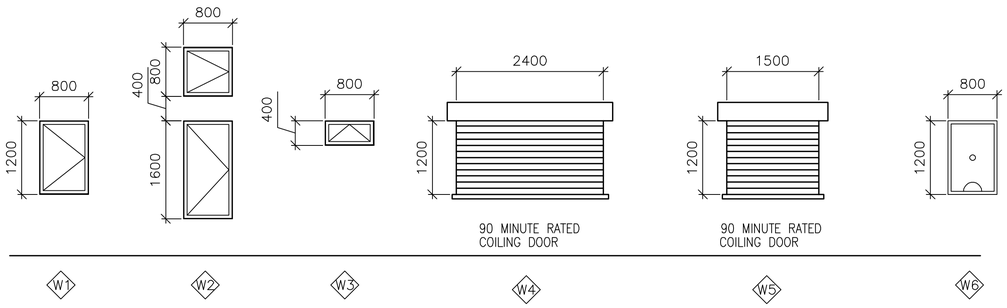

3 A-601 WINDOW TYPES

SCALE: 1:50

WINDOW TYPE NOTES:

1. ALL EXTERIOR WINDOWS SHALL BE ALUMINUM WITH INSECT SCREENS. WINDOWS SHALL BE COMMERCIAL GRADE.
2. ALL EXTERIOR WINDOWS SHALL BE OPERABLE.

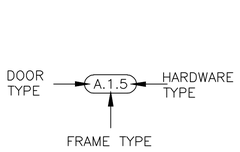

4 A-601 DOOR TAG

SCALE: NTS

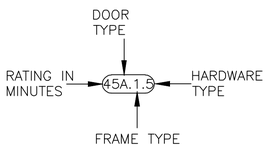

5 A-601 RATED DOOR TAG

SCALE: NTS

DOOR TAG NOTES:

1. THE DOOR TAG INDICATES THE DOOR TYPE, FRAME TYPE AND HARDWARE SET FOR EACH DOOR.
2. THE DOOR TAG FOR RATED DOORS INCLUDES THE RATING OF THE DOOR IN MINUTES.

EXTERIOR DOOR HARDWARE TYPES:

HW-1
1-1/2 PR HINGES, A5112 114 X 114
1 EA RIM EXIT DEVICE, TYPE 1
1 EA CYLINDER. E09221A, GRADE 1
1 EA OVERHEAD CLOSER, C02061, LOW RESISTANCE
1 EA THRESHOLD, J32130
3 EA DOOR SILENCERS, L03011

HW-2
1-1/2 PR HINGES, A5112 114 X 114
1 EA LOCKSET, F13 ENTRY LOCK W/LEVER HANDLES, GRADE 1
1 EA OVERHEAD CLOSER, C02061, LOW RESISTANCE
1 EA THRESHOLD, J32130
3 EA DOOR SILENCERS, L03011

HW-3
3 PR HINGES, A5112 114 X 114
2 EA RIM EXIT DEVICE, TYPE 1
2 EA CYLINDER. GRADE 1
2 EA OVERHEAD CLOSER, C02061, LOW RESISTANCE
1 EA DOOR COORDINATOR, TYPE 21
1 EA ASTRAGAL
1 EA THRESHOLD, J32130
2 EA DOOR SILENCERS, L03011

HW-4
3 PR HINGES, A5112 114 X 114
1 EA LOCKSET W/LEVER HANDLES. GRADE 1, F13
1 EA OVERHEAD CLOSER, C02061, LOW RESISTANCE
2 EA MAGNETIC HOLDER PIN, ATTACHED TO DOOR LEAF
2 EA MAGNETIC HOLDER RECEIVER, ATTACHED TO STOOP
2 EA LEVER EXTENSION FLUSH BOLTS, L04081
1 EA ASTRAGAL
1 EA THRESHOLD, J32130
2 EA DOOR SILENCERS, L03011

DOOR AND HARDWARE NOTES:

1. INTERIOR AND EXTERIOR METAL DOORS AND FRAME COLORS SHALL MATCH ADJACENT WALL COLORS AS SELECTED BY THE CONTRACTING OFFICER.
2. FRAMES, EXCEPT FIRE-RATED FRAMES, SHALL BE MOUNTED AND ADJUSTED IN ACCORDANCE WITH MANUFACTURER'S INSTRUCTIONS. FRAMES SHALL BE FASTENED WITH MINIMUM OF THREE ANCHORS PER JAMB AT EQUAL INTERVALS.
3. DIMENSIONS SHOWN ON DOOR TYPES DETAIL ARE BASED UPON MODULAR MASONRY (OR ROUGH OPENING), HEIGHT OF 2200 MM FOR STANDARD PERSONNEL DOORS. CONTRACTOR SHALL COORDINATE WITH DOOR SUPPLIER TO ENSURE THAT DIMENSIONS OF DOORS AND FRAMES PROVIDED ARE COMPATIBLE WITH DOOR OPENING DIMENSIONS.
4. HARDWARE SHALL BE HEAVY DUTY, COMMERCIAL GRADE, STAINLESS STEEL WITH A SATIN OR BRUSHED FINISH.
5. HARDWARE TYPES INCLUDE BUILDERS HARDWARE MANUFACTURERS ASSOCIATION (BMHA) NUMBER.
6. DOORS IN 2 HOUR RATED PARTITIONS SHALL BE 1.5 HOUR (90 MINUTE) RATED DOORS IN ACCORDANCE WITH NFPA 101, TABLE 8.3.4.2.
7. DOORS AT STAIR ENCLOSURES SHALL BE 1 HOUR (60 MINUTE) RATED AT 1 HOUR WALL IN ACCORDANCE WITH NFPA 101, TABLE 8.3.4.2.
8. DOORS IN 1 HOUR RATED WALLS SHALL BE 3/4 HOUR (45 MINUTE) RATED DOORS IN ACCORDANCE WITH NFPA 101, TABLE 8.3.4.2.
9. DOORS IN 1 HOUR RATED CORRIDOR WALLS SHALL BE 1/3 HOUR (20 MINUTE) IN ACCORDANCE WITH NFPA 101, TABLE 8.3.4.2.
10. PROVIDE DOOR STOPS TO PROTECT WALLS ON LOCATIONS WHERE DOOR SWING WILL STRIKE WALL.

THIS SHEET IS STANDARD AND IS INCLUSIVE OF ALL THE DOOR/ WINDOW/ HARDWARE TYPES FOR THE ENTIRE RMTC CONTRACT. NOT ALL DOOR/ WINDOW/ HARDWARE TYPES ARE USED FOR ANY PARTICULAR BUILDING DESIGN. CONTRACTOR SHALL REFER TO THE FLOOR PLAN FOR THE TYPES BEING USED.

INTERIOR DOOR HARDWARE TYPES:

HW-5
1-1/2 PR HINGES, A8133 114 X 114
1 EA LOCKSET W/LEVER HANDLES, F08, GRADE 1
1 EA WALL STOP, L02101 OR L02161
3 EA DOOR SILENCERS, L03011

HW-6
1-1/2 PR HINGES, A8112 114 X 114
1 EA LOCKSET W/LEVER HANDLES, F08, GRADE 1
1 EA WALL STOP, L02101 OR L02161
1 EA OVERHEAD CLOSER, C02061, LOW RESISTANCE
3 EA DOOR SILENCERS, L03011

HW-7
1-1/2 PR HINGES, A8133
1 EA LOCKSET W/LEVER HANDLES, F13 GRADE 1
1 EA WALL STOP, L02101 OR L02161
2 EA MOP PLATE, J103
3 EA DOOR SILENCERS, L03011

HW-8
1-1/2 PR HINGES, A8112
1 EA LOCKSET W/LEVER HANDLES, F13 GRADE 1
1 EA WALL STOP, L02101 OR L02161
2 EA MOP PLATE, J103
1 EA OVERHEAD CLOSER, C02061, LOW RESISTANCE
3 EA DOOR SILENCERS, L03011

HW-9
1-1/2 PR HINGES, A5112 114 X 114
1 EA RIM EXIT DEVICE, TYPE 1
1 EA CYLINDER. E09221A, GRADE 1
1 EA OVERHEAD CLOSER, C02061, LOW RESISTANCE
3 EA DOOR SILENCERS, L03011

HW-10
3 PR HINGES, A5112 114 X 114
1 EA LOCKSET W/LEVER HANDLES. GRADE 1, F13
2 EA LEVER EXTENSION FLUSH BOLTS, L04081
1 EA ASTRAGAL
2 EA DOOR SILENCERS, L03011

HW-11
1-1/2 PR HINGES, A8112 114 X 114
1 EA LOCKSET W/LEVER HANDLES, F13, GRADE 1
1 EA WALL STOP, L02101 OR L02161
1 EA OVERHEAD CLOSER, C02061, LOW RESISTANCE
3 EA DOOR SILENCERS, L03011
1 EA ROBE HOOK

HW-12
1-1/2 PR HINGES, A8133
1 EA LATCHSET W/LEVER HANDLES, F76 GRADE 1
1 EA WALL STOP, L02101 OR L02161
2 EA MOP PLATE, J103
3 EA DOOR SILENCERS, L03011
1 EA ROBE HOOK

HW-13
3 PR HINGES, A5112 114 X 114
1 EA LOCKSET W/LEVER HANDLES. GRADE 1, F13
1 EA OVERHEAD CLOSER, C02061, LOW RESISTANCE
2 EA LEVER EXTENSION FLUSH BOLTS, L04081
1 EA ASTRAGAL
2 EA DOOR SILENCERS, L03011

HW-14
3 PR HINGES, A5112 114 X 114
2 EA RIM EXIT DEVICE, TYPE 1
2 EA CYLINDER. GRADE 1
2 EA OVERHEAD CLOSER, C02061, LOW RESISTANCE
1 EA DOOR COORDINATOR, TYPE 21
1 EA ASTRAGAL
2 EA DOOR SILENCERS, L03011

APPROVED:

A/E DESIGNER OF RECORD

SEAL:

STATE OF SOUTH CAROLINA
KEVIN R. CHAFIN
N. Charleston, SC
63/4
REGISTERED ARCHITECT

US ARMY CORPS OF ENGINEERS
AFGHANISTAN ENGINEER DISTRICT

Mark	Description	Date	Appr.	Mark	Description	Date	Appr.

Date: 2/23/10 Rev: 0
Design file no.
Drawing code:
File name: ANAPOLA-601SCH
Plot date: 2/23/2010
Plot scale: X:X

Designed by: KRC
Dwn by: KJG
Ckd by: NLJ
Reviewed by: LHM
Submitted by:
BAKER

U.S. ARMY CORPS OF ENGINEERS
AFGHANISTAN ENGINEER DISTRICT
APO AE 96338

Michael Baker Jr., Inc.
A unit of Michael Baker Corporation
Airside Business Park
100 Airside Drive
Moon Township, PA 15108
www.mbakercorp.com

AFGHAN NATIONAL ARMY
REGIONAL MILITARY TRAINING CENTER
STANDARD DESIGN

POL STORAGE

WINDOW AND DOOR SCHEDULES

Sheet reference number:
A-601

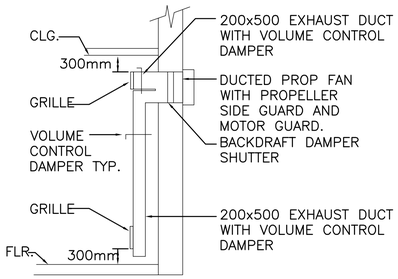

2 / M-101 TYPICAL FAN HIGH LOW GRILLE DETAIL
N.T.S.

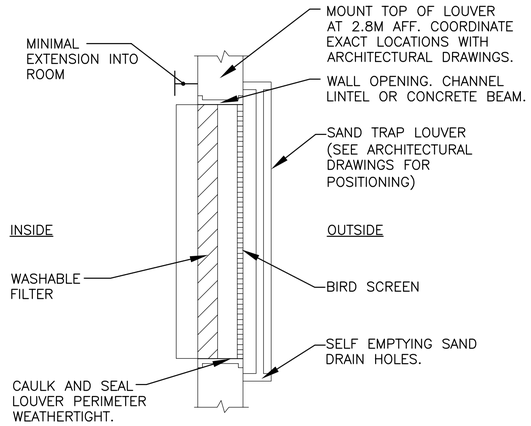

3 / M-101 FILTERED SAND TRAP LOUVER
N.T.S.

GENERAL NOTES:

1. DO NOT SCALE DRAWINGS – ALL DIMENSIONS AND CONDITIONS SHALL BE CHECKED AND VERIFIED BY THE CONTRACTOR AT THE SITE.
2. ALL WORK PERFORMED ON THIS BUILDING SHALL BE IN COMPLIANCE WITH ALL PERTINENT CODES, RULES, ORDINANCES AND REGULATIONS OF THE GOVERNING AUTHORITIES.
3. ALL WORK PERFORMED UNDER AND IN CONNECTION WITH THESE DRAWINGS AND SPECIFICATIONS SHALL BE IN STRICT COMPLIANCE WITH THE LATEST SAFETY AND HEALTH STANDARDS.

SYMBOLS:

(X) KEY NOTE

(0.050) AIR VOLUME IN CUBIC METERS PER SECOND (CMS)

(T) THERMOSTAT WITH LOCKING COVER

ABBREVIATIONS:

AFF	ABOVE FINISH FLOOR
CF	CEILING FANS
CMS	CUBIC METERS PER SECOND
EC	ELECTRICAL CONTRACTOR
STATS	THERMOSTATS

KEY NOTE:

1. WALL EXHAUST FAN MOUNTED AS HIGH AS POSSIBLE, EXTEND DUCT DOWN TO 150mm ABOVE FLOOR. PROVIDE 2 300X300 (12X12) GRILLES ONE LOCATED 300 (12") AFF AND THE OTHER AT 300 (12") BELOW CEILING. SEE DETAIL THIS SHEET. INTERLOCK FANS WITH LIGHTS. SEE DETAIL "2" THIS SHEET.
2. 400X200 (16X8) LOW LEAKAGE GRAVITY WALL LOUVER FOR INTAKE. PROVIDE WEATHER PROOF LOUVER W/ 50mm (2") WASHABLE FILTER AND SAND TRAP. SEE DETAIL "3" THIS SHEET.
3. THERMOSTAT MOUNTED ON SIDE OF DUCT AND AS HIGH AS POSSIBLE. INTERLOCK STAT WITH CORRESPONDING EXHAUST FAN, SET FAN TO ENERGIZE ON RISE IN TEMPERATURE ABOVE 25°C (77°F).

EXHAUST FAN SCHEDULE

NO.	TYPE	FAN CMS	DRIVE	HP	SP mmH20	ELECTRICAL DATA	SWITCH
EF–1	WALL	0.035	DIRECT	FRACT	9.5	220/1/50	W/ STAT
EF–2	WALL	0.035	DIRECT	FRACT	9.5	220/1/50	W/ STAT

NOTES:
1. FANS SHALL HAVE SPRING OPERATED BACK DRAFT DAMPER.
2. FANS AND CORRESPONDING THERMOSTATS SHALL BE EXPLOSION PROOF.

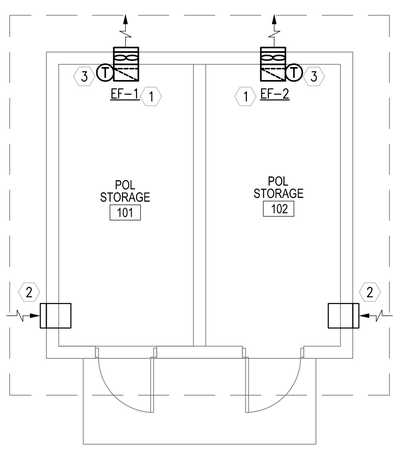

1 / M-101 FLOOR PLAN - HVAC
SCALE: 1:50

LINEAR DIMENSIONS SHOWN ARE IN MILLIMETERS (MM), UNLESS OTHERWISE NOTED

0 1000 2000
SCALE: 1:50

APPROVED:

A/E DESIGNER OF RECORD

SEAL:

COMMONWEALTH OF PENNSYLVANIA
REGISTERED PROFESSIONAL
MATTHEW R. SOTOSKY
ENGINEER
046576-E

US ARMY CORPS OF ENGINEERS
AFGHANISTAN ENGINEER DISTRICT

Mark	Description	Date	Appr.

Mark	Description	Date	Appr.

Designed by: RML
Dwn by: JJN
Ckd by: CJM
Reviewed by: MRS
Submitted by: BAKER
Date: 02/23/10
Rev: 0
Design file no.
Drawing code:
File name: ANAPOLMH-1010XX
Plot date: 02/08/2010
Plot scale: 1:50

U.S. ARMY CORPS OF ENGINEERS
AFGHANISTAN ENGINEER DISTRICT
APO AE 96338

Michael Baker Jr., Inc.
A unit of Michael Baker Corporation
Airside Business Park
100 Airside Drive
Moon Township, PA 15108
www.mbakercorp.com

AFGHAN NATIONAL ARMY
REGIONAL MILITARY TRAINING CENTER
STANDARD DESIGN

POL STORAGE
HVAC – FLOOR PLAN, SCHEDULES AND DETAILS

Sheet reference number:
M–101

POWER

- DISTRIBUTION PANELBOARD
- NEW PANELBOARD – SURFACE
- NEW PANELBOARD – RECESSED
- GENERATOR
- TRANSFORMER (DRAWN TO SIZE)
- JUNCTION BOX
- JUNCTION BOX – CEILING
- FUSIBLE SAFETY SWITCH
- MOTOR
- MOTOR STARTING SWITCH – 220V, 20A RATED UNLESS OTHERWISE NOTED
- ELECTRIC WATER HEATER
- CEILING FAN – REFER TO SPECIFICATION SECTION 26 20 00

RECEPTACLES

- DUPLEX 20A BRITISH STANDARD UNSWITCHED RECEPTACLES – 10mA GROUND FAULT INTERRUPTER TYPE
- GF DUPLEX 20A BRITISH STANDARD UNSWITCHED RECEPTACLES – 10mA GROUND FAULT INTERRUPTER TYPE
- WP DUPLEX 20A BRITISH STANDARD UNSWITCHED TYPE WITH WEATHERPROOF COVER – 10mA GROUND FAULT INTERRUPTER TYPE
- EXP DUPLEX 20A BRITISH STANDARD UNSWITCHED RECEPTACLES – EXPLOSION PROOF
- * INDICATES MOUNT DEVICE ABOVE COUNTER TOP OR AT 1070mm TO CENTER OF DEVICE ABOVE FINISHED FLOOR WHERE NO COUNTER IS TO BE INSTALLED.

LIGHTNING PROTECTION

- AIR TERMINAL 20mm O.D. X 450mm SOLID COPPER, NICKEL PLATED ON ADHESIVE BASE
- EQ EQUIPMENT AIR TERMINAL
- TEST WELL WITH GROUND ROD(S)
- GROUND ROD
- G GROUND PLATE
- MAIN GROUND CONDUCTER CONCEALED WITHIN CONSTRUCTION
- MAIN GROUND CONDUCTOR EXPOSED ON EXPOSED ON BUILDING EXTERIOR SURFACE
- GROUND CONDUCTOR CAD WELDED TO GROUND CABLE OR EQUIPMENT
- GROUND ROD TRIPOD, SPACED 3 METERS APART.
- LEVEL TO LEVEL CABLE

LIGHTING

- LIGHTING FIXTURE – SEE FIXTURE SCHEDULE FOR MORE INFORMATION
- EMERGENCY LIGHTING FIXTURE – SEE FIXTURE SCHEDULE FOR MORE INFORMATION
- DOWNLIGHT
- LIGHTING FIXTURE ON NORMAL/EMERGENCY
- WALL MOUNTED LIGHT FIXTURE
- E EXIT SIGN – DIRECTIONAL ARROWS AS INDICATED ON DRAWINGS
- REMOTE HEAD FOR BATTERY PACK
- $ SINGLE POLE SWITCH – 20A RATED
- $3 3-WAY SWITCH – 20A RATED
- $4 4-WAY SWITCH – 20A RATED
- LC LIGHTING CONTACTOR
- POLE MOUNTED SITE LIGHTING FIXTURE– NUMBER OF FIXTURES PER POLE AS INDICATED ON DRAWINGS
- EXTERIOR DIRECTIONAL LIGHTING FIXTURE
- a SMALL CASE LETTERS REPRESENTS LAMP(S) / SWITCHES.

TELECOMMUNICATIONS

- TELEPHONE OUTLET(S) @ 45cm AFF. U.N.O. WITH 20mm RACEWAY TERMINATED TO TELEDATA TERMINAL BOARD.
- DATA OUTLET(S) @ 45cm AFF. U.N.O. WITH 20mm RACEWAY TERMINATED TO TELEDATA TERMINAL BOARD.

TELECOMMUNICATIONS (CONTINUED)

- COMBINATION TELEPHONE/DATA OUTLET(S) @ 45cm AFF. U.N.O. WITH 27mm RACEWAY TERMINATED TO TELEDATA TERMINAL AREA.
- W WALL MTD. TELEPHONE OUTLET WITH 20mm RACEWAY TO TELEDATA TERMINAL BOARD.
- (x)T INDICATES NUMBER OF TELEPHONE OUTLET(S) AND ASSOCIATED CABLING
- (x)D INDICATES NUMBER OF DATA OUTLET(S) AND ASSOCIATED CABLING
- (x)TF INDICATES NUMBER OF TELEPHONE OUTLETS AND ASSOCIATED CABLING WITH 1 OUTLET AND CABLE DEDICATED FOR FAX

SINGLE LINE SYMBOLS

- SWITCH
- BREAKER
- FUSE
- TRANSFORMER
- GROUND
- CONTACT (NORMALLY OPEN)
- CONTACT (NORMALLY CLOSED)
- TRANSFER SWITCH
- CURRENT TRANSFORMER
- INDICATES NEW ELECTRICAL EQUIPMENT
- C INDICATES NEW CONTROL WIRING AND CONDUIT
- EQUIPMENT OUTLINE

MISCELLANEOUS

- BRANCH CIRCUIT WIRING, SURFACE MOUNTED ON WALLS
- BRANCH CIRCUIT WIRING – 6mm²
- BRANCH CIRCUIT WIRING – UNDER FLOOR
- HOME RUN BACK TO PANEL
- CONDUIT TURNED DOWN
- CONDUIT TURNED UP
- LV LOW VOLTAGE WIRING AND CONDUIT
- INDICATES CONTINUATION OF LINE

FIRE ALARM

- FACP FIRE ALARM CONTROL PANEL WITH BATTERY BACKUP
- F FIRE ALARM PULL STATION

FIRE ALARM (CONTINUED)

- F FIRE ALARM STROBE – WALL MOUNTED
- F FIRE ALARM AUDIBLE/STROBE – WALL MOUNTED
- F FIRE ALARM HORN/STROBE – WALL MOUNTED
- S SMOKE DETECTOR
- H HEAT DETECTOR CEILING MOUNTED
- D DUCT DETECTOR – PROVIDED BY EC, INSTALLED BY MC AND CONNECTED BY EC

DENOTATIONS & ABBREVIATIONS

AFF	ABOVE FINISHED FLOOR
C	CEILING MOUNTED
E	EMERGENCY
EC	ELECTRICAL CONTRACTOR
EPO	EMERGENCY POWER OFF
EXP	EXPLOSION PROOF
F	FIRE ALARM
FF	FLUSH FLOOR MOUNTED
FL	FLUORESCENT
FO	FIBER OPTIC
FSS	FUSED SAFETY SWITCH
GF	GROUND FAULT INTERRUPTER
GC	GENERAL CONTRACTOR
IG	ISOLATED GROUND
K	KEY
LV	LOW VOLTAGE
M	MOTOR
MC	MECHANICAL CONTRACTOR
NE	NORMAL/EMERGENCY
NFSS	NON-FUSED SAFETY SWITCH
PA	PAGING SYSTEM
PLC	PLUMBING CONTRACTOR
SL	SINGLE LINE
T	TELEPHONE

DENOTATIONS & ABBREVIATIONS (CONT.)

TP	TAMPER PROOF
UE	UNDERGROUND ELECTRIC
W	WALL MOUNTED
WP	WEATHERPROOF WITH GROUND FAULT INTERRUPTION
WT	WATER TIGHT

GENERAL PROJECT NOTES:

G1. UNLESS OTHERWISE NOTED, PROVIDE ALL EQUIPMENT SHOWN ON THE PLANS. THE ELECTRICAL CONTRACTOR SHALL COORDINATE ALL SYMBOLS SHOWN ON THE PLANS WITH THE SYMBOL LIST. IT SHALL BE THE RESPONSIBILITY OF THE CONTRACTOR TO VERIFY THE INTENT OF ANY SYMBOL THAT IS SHOWN ON THE PLANS AND NOT INDICATED ON THE SYMBOL LIST WITH THE ENGINEER PRIOR TO BID.

G2. THE CONTRACTOR SHALL VERIFY THE LOCATION OF ALL UNDERGROUND UTILITIES WITHIN THE CONSTRUCTION AREA THREE (3) WORKING DAYS NOTICE BEFORE COMMENCING DIGGING. NOTIFY THE LOCAL AUTHORITY HAVING JURISDICTION AND WAIT THE REQUIRED TIME BEFORE COMMENCING TO DIG.

G3. THE CONTRACTOR SHALL COORDINATE CONDUIT RUNS, LIGHTING FIXTURES AND OTHER EQUIPMENT LOCATIONS WITH THE OTHER TRADE CONTRACTORS TO AVOID CONFLICTS.

G4. WHERE VOLTAGES AND FREQUENCIES ON THE DRAWINGS AND IN THE SPECIFICATIONS DIFFER FROM THE LOCAL ONES, ALL WORK SHALL BE PERFORMED USING THE LOCAL VOLTAGES AND FREQUENCIES.

G5. THE MINIMUM WIRE SIZE ON THE PROJECT SHALL BE 4mm². THE MINIMUM CONDUIT SIZE SHALL BE 20mm. THE MINIMUM BREAKER SIZE SHALL BE 20 AMPS.

G6. THE CONTRACTOR SHALL PUT A MAXIMUM OF 6 DUPLEX RECEPTACLES ON A 20A SINGLE POLE CIRCUIT.

G7. WHERE THE 1010 SCOPE REVIEW, 1015 TECHNICAL REVIEW, DRAWINGS, AND SPECIFICATIONS DIFFER FROM AMERICAN CODES OR STANDARDS THE 1010, 1015, DRAWINGS, AND SPECIFICATIONS SHALL RULE.

G8. ALL CONDUIT AND DEVICES SHALL BE SURFACE MOUNTED UNLESS OTHERWISE INDICATED.

G9. CONTRACTOR SHALL COORDINATE ALL WORK WITH ALL OTHER TRADES TO ENSURE ALL WORK IS COMPLETED IN A PROFESSIONAL, WORKMAN-LIKE MANNER.

APPROVED:

A/E DESIGNER OF RECORD

SEAL:

COMMONWEALTH OF PENNSYLVANIA
REGISTERED PROFESSIONAL
JOSEPH R. GAUS
ENGINEER
PE-074251
1/29/10

US ARMY CORPS OF ENGINEERS
AFGHANISTAN ENGINEER DISTRICT

Mark	Description	Date	Appr.	Mark	Description	Date	Appr.

Rev: 0
Date: 2/23/10
Designed by: KJR
Dwn by: BJB
Ckd by: JRG
Reviewed by: JRG
Submitted by: BAKER
Design file no.
Drawing code:
File name:
Plot date:
Plot scale:

U.S. ARMY CORPS OF ENGINEERS
AFGHANISTAN ENGINEER DISTRICT
APO AE 96338

Michael Baker Jr., Inc
A unit of Michael Baker Corporation
Airside Business Park
100 Airside Drive
Moon Township, PA 15108
www.mbakercorp.com

AFGHAN NATIONAL ARMY
REGIONAL MILITARY TRAINING CENTER
STANDARD DESIGN

POL STORAGE

ELECTRICAL SYMBOLS & ABBREVIATIONS

Sheet reference number:
E-001

GENERAL NOTES:

1. REFER TO DRAWING #E-001 FOR THE ELECTRICAL SYMBOLS LIST.
2. EXIT SIGNS SHALL BE WIRED AHEAD OF ALL LOCAL SWITCHING. SEE WIRING DIAGRAM DETAIL 7, ON DRAWING #E-501.
3. REFER TO DRAWING #E-601 FOR THE LIGHTING FIXTURE SCHEDULE.
4. REFER TO DRAWING #E-602 FOR PANEL SCHEDULES.
5. LIGHT FIXTURES INDICATED AS EMERGENCY SHALL BE PROVIDED WITH A BATTERY BACKUP BALLAST. SEE WIRING DIAGRAM DETAIL 8, ON DRAWING #E-501.
6. ALL PANELS, DEVICES, EQUIPMENT, ETC. SHALL BE EXPLOSION-PROOF OR SHALL BE PROVIDED WITH AN EXPLOSION-PROOF ENCLOSURE. ALL WORK IN THIS BUILDING SHALL BE IN ACCORDANCE WITH NEC ARTICLE 511. EXPLOSION-PROOF EQUIPMENT SHALL BE USED FOR ALL FIXTURES AND DEVICES. PROVIDE CONDUIT SEALS WHERE REQUIRED. ALL WIRING SHALL BE IN ACCORDANCE WITH NEC ARTICLE 501 FOR CLASS I LOCATIONS.

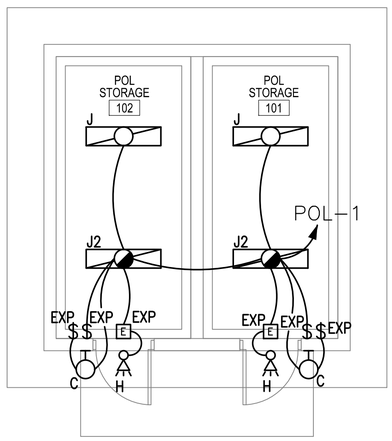

1
E-101

POL STORAGE
FLOOR PLAN - LIGHTING

SCALE: 1:50

0 1000 2000
SCALE: 1:50

APPROVED:

A/E DESIGNER OF RECORD

SEAL:

COMMONWEALTH OF PENNSYLVANIA
REGISTERED PROFESSIONAL
JOSEPH R. GAUS
1/29/10
ENGINEER
PE-074251

US ARMY CORPS OF ENGINEERS
AFGHANISTAN ENGINEER DISTRICT

Mark	Description	Date	Appr.	Mark	Description	Date	Appr.

Date: 2/23/10
Rev: 0
Design file no.
Drawing code:
File name:
Plot date:
Plot scale:

Designed by: KJR
Dwn by: BJB
Ckd by: JRG
Reviewed by: JRG
Submitted by: BAKER

U.S. ARMY CORPS OF ENGINEERS
AFGHANISTAN ENGINEER DISTRICT
APO AE 96338

Michael Baker Jr., Inc.
A unit of Michael Baker Corporation
Airside Business Park
100 Airside Drive
Moon Township, PA 15108
www.mbakercorp.com

AFGHAN NATIONAL ARMY
REGIONAL MILITARY TRAINING CENTER
STANDARD DESIGN

POL STORAGE
ELECTRICAL LIGHTING PLAN

Sheet reference number:
E-101

GENERAL NOTES:

1. REFER TO DRAWING #E-001 FOR THE ELECTRICAL SYMBOLS LIST.
2. REFER TO DRAWING #E-501 FOR THE POWER RISER.
3. REFER TO DRAWING #E-602 FOR PANEL SCHEDULES.
4. COORDINATE EXACT MOUNTING LOCATION OF DISCONNECTING MEANS FOR MECHANICAL AND PLUMBING EQUIPMENT IN THE FIELD.
5. FUSIBLE SAFETY SWITCHES THAT ARE NOT OTHERWISE IDENTIFIED SHALL BE 380V, 1P, 30A FUSED SAFETY SWITCHES WITH 20A FUSES.
6. ALL PANELS, DEVICES, EQUIPMENT, ETC. SHALL BE EXPLOSION-PROOF OR SHALL BE PROVIDED WITH AN EXPLOSION-PROOF ENCLOSURE. ALL WORK IN THIS BUILDING SHALL BE IN ACCORDANCE WITH NEC ARTICLE 511. EXPLOSION-PROOF EQUIPMENT SHALL BE USED FOR ALL FIXTURES AND DEVICES. PROVIDE CONDUIT SEALS WHERE REQUIRED. ALL WIRING SHALL BE IN ACCORDANCE WITH NEC ARTICLE 501 FOR CLASS I LOCATIONS.

NUMBERED NOTES:

1. PANEL POL WITH NEMA 3R LOCKABLE WEATHERPROOF HOUSING.
2. PROVIDE POWER CONNECTION TO EXHAUST FAN. SEE DRAWINGS #M-101 AND #E-602 FOR MORE INFORMATION.
3. FACP IN NEMA 3R LOCKABLE WEATHERPROOF HOUSING.

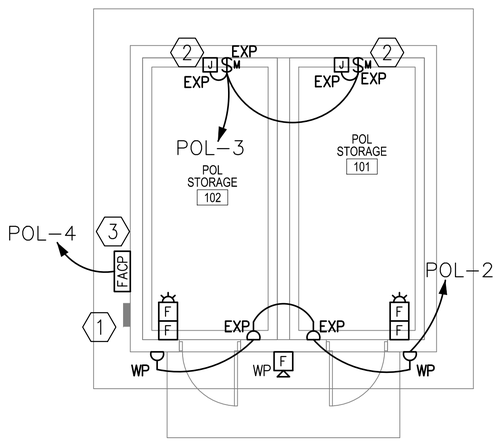

1
E-102

POL STORAGE
FLOOR PLAN - POWER AND SYSTEMS

SCALE: 1:50

0 1000 2000
SCALE: 1:50

APPROVED:

A/E DESIGNER OF RECORD

SEAL:

COMMONWEALTH OF PENNSYLVANIA
REGISTERED PROFESSIONAL
JOSEPH R. GAUS
ENGINEER
PE-074251
1/29/10

US ARMY CORPS OF ENGINEERS
AFGHANISTAN ENGINEER DISTRICT

Mark	Description	Date	Appr.	Mark	Description	Date	Appr.

Date: 2/23/10
Rev: 0
Design file no.
Drawing code:
File name:
Plot date:
Plot scale:

Designed by: KJR
Dwn by: BJB
Ckd by: JRG
Reviewed by: JRG
Submitted by: BAKER

U.S. ARMY CORPS OF ENGINEERS
AFGHANISTAN ENGINEER DISTRICT
APO AE 96338

Michael Baker Jr., Inc.
A unit of Michael Baker Corporation
Airside Business Park
100 Airside Drive
Moon Township, PA 15108
www.mbakercorp.com

AFGHAN NATIONAL ARMY
REGIONAL MILITARY TRAINING CENTER
STANDARD DESIGN

POL STORAGE
ELECTRICAL POWER AND SYSTEMS PLAN

Sheet reference number:
E-102

GENERAL NOTES:

1. REFER TO DRAWING #E-001 FOR THE ELECTRICAL SYMBOLS LIST.

NUMBERED NOTES:

1. (1) 120.0mm2 BARE, TINNED, COPPER COUNTERPOISE GROUND 700mm BELOW GRADE.
2. INSTALL DOWN CONDUCTOR IN 25mm SCHEDULE 80 PVC CONDUIT TO 20mm DIAMETER X 3 METERS SOLID COPPER TINNED GROUND ROD. (TYPICAL)
3. CADWELD TO BUILDING STRUCTURE AT 18 METERS ON CENTER AROUND THE ENTIRE PERIMETER OF THE BUILDING. (TYPICAL)
4. 120mm LIGHTNING PROTECTION CABLE.
5. AIR TERMINAL. TERMINALS SHALL BE PLACED AT MAXIMUM OF 6M ON CENTER PER NFPA 780 PARA. 4.8.2.1 AND WITHIN 0.6M OF RIDGE ENDS PER NFPA 780 PARA. 4.8 (TYPICAL)

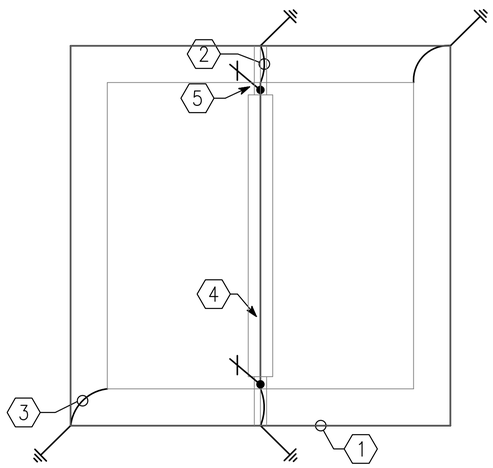

1
E-301

POL STORAGE
FLOOR PLAN - LIGHTNING PROTECTION
SCALE: 1:50

0 1000 2000
SCALE: 1:50

APPROVED:

A/E DESIGNER OF RECORD

SEAL:

COMMONWEALTH OF PENNSYLVANIA
REGISTERED PROFESSIONAL
JOSEPH R. GAUS
ENGINEER
PE-074251
1/29/10

US ARMY CORPS OF ENGINEERS
AFGHANISTAN ENGINEER DISTRICT

Mark	Description	Date	Appr.

Mark	Description	Date	Appr.

Designed by: KJR
Dwn by: BJB
Ckd by: JRG
Reviewed by: JRG
Submitted by: BAKER
Date: 2/23/10
Rev: 0
Design file no.
Drawing code:
File name:
Plot date:
Plot scale:

U.S. ARMY CORPS OF ENGINEERS
AFGHANISTAN ENGINEER DISTRICT
APO AE 96338

Michael Baker Jr., Inc.
A unit of Michael Baker Corporation
Airside Business Park
100 Airside Drive
Moon Township, PA 15108
www.mbakercorp.com

AFGHAN NATIONAL ARMY
REGIONAL MILITARY TRAINING CENTER
STANDARD DESIGN

POL STORAGE
ELECTRICAL LIGHTNING PROTECTION PLAN

Sheet reference number:
E-103

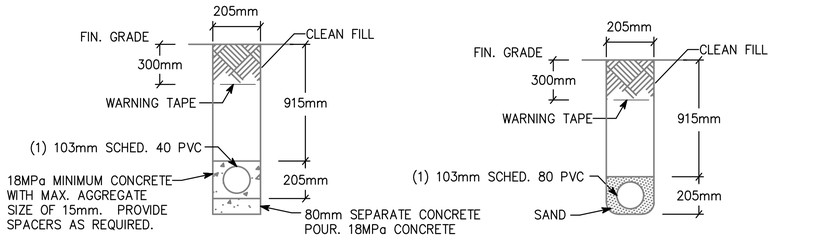

NOTE: PVC CONDUIT SHALL BE DIRECT BURIED SCHEDULE 80 FOR NO TRAFFIC AREAS AND CONCRETE-ENCASED SCHEDULE 40 FOR UNDER ROADWAYS OR TRAFFIC AREAS.

1 / E-501 TYPICAL DUCT BANK DETAILS FOR CONDUIT IN SAND OR CONCRETE

SCALE: N.T.S.

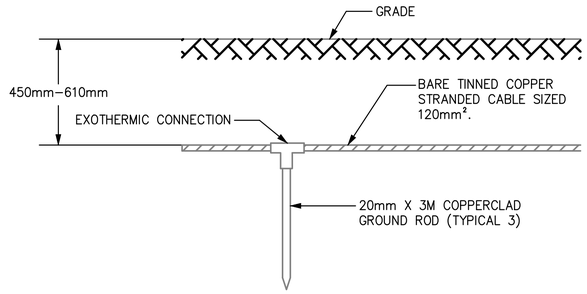

2 / E-501 GROUND TRIPOD SYSTEM DETAIL - ELEVATION

SCALE: N.T.S.

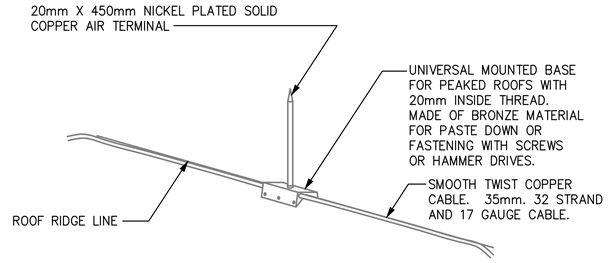

3 / E-501 LIGHTNING PROTECTION AIR TERMINAL DETAIL

SCALE: N.T.S.

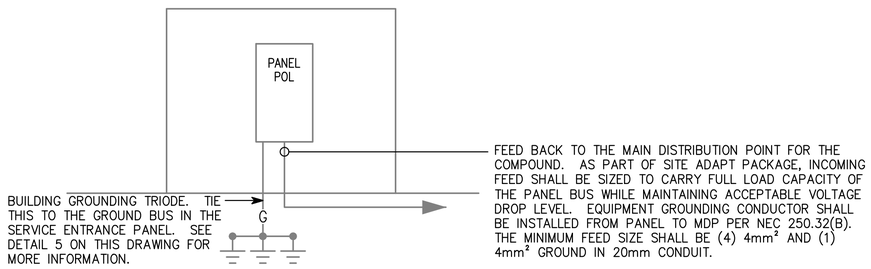

4 / E-501 POL RISER DIAGRAM

SCALE: N.T.S.

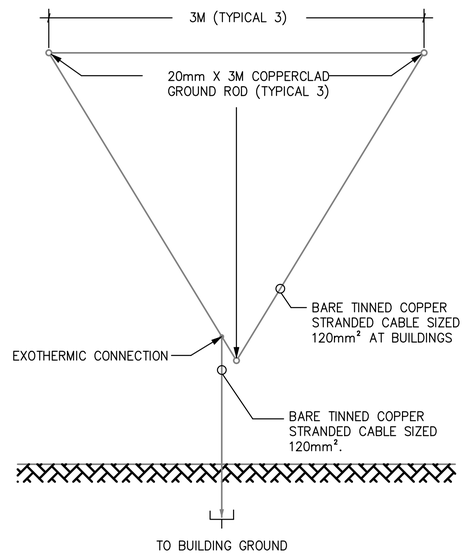

5 / E-501 GROUND TRIPOD SYSTEM DETAIL - PLAN

SCALE: N.T.S.

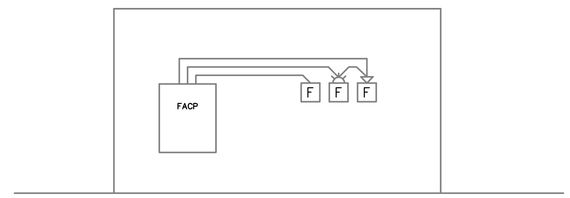

6 / E-501 TYPICAL ONE STORY FIRE ALARM RISER

SCALE: N.T.S.

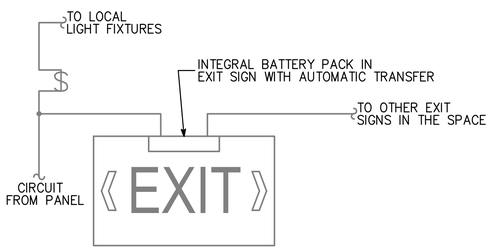

7 / E-501 EXIT SIGN WIRING DIAGRAM

SCALE: N.T.S.

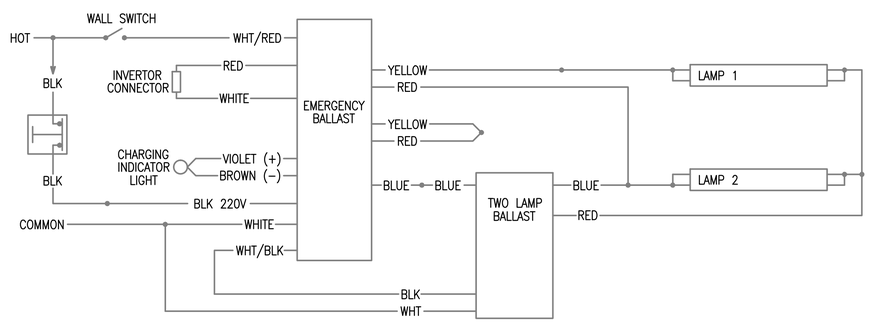

8 / E-501 EMERGENCY FIXTURE WIRING DIAGRAM

SCALE: N.T.S.

APPROVED:

A/E DESIGNER OF RECORD

SEAL:

COMMONWEALTH OF PENNSYLVANIA
REGISTERED PROFESSIONAL ENGINEER
JOSEPH R. GAUS
PE-074251

US ARMY CORPS OF ENGINEERS
AFGHANISTAN ENGINEER DISTRICT

Mark	Description	Date	Appr.	Mark	Description	Date	Appr.

Designed by: KJR
Dwn by: BJB
Ckd by: JRG
Reviewed by: JRG
Submitted by: BAKER
Date: 2/23/10
Rev: 0
Design file no.
Drawing code:
File name:
Plot date:
Plot scale:

U.S. ARMY CORPS OF ENGINEERS
AFGHANISTAN ENGINEER DISTRICT
APO AE 96338

Michael Baker Jr., Inc.
A unit of Michael Baker Corporation
Airside Business Park
100 Airside Drive
Moon Township, PA 15108
www.mbakercorp.com

AFGHAN NATIONAL ARMY
REGIONAL MILITARY TRAINING CENTER
STANDARD DESIGN

POL STORAGE
ELECTRICAL DETAILS

Sheet reference number:
E-501

(A) LARGER OF THE TWO SIZES GIVEN IN THE TABLES BELOW	
GROUNDING ELECTRODE CONDUCTOR (BASED ON AIC RATING)	
AIC RATING OF SERVICE EQUIPMENT	NECESSARY GROUNDING ELECTRODE CONDUCTOR SIZE
10K	(1) 35mm²
14K	(1) 50mm²
18K	(1) 70mm²
22K	(1) 70mm²
25K	(1) 70mm²
30K	(1) 95mm²
35K	(1) 120mm²
42K	(1) 150mm²
65K	(1) 185mm²
100K	(1) 300mm²
125K	(2) 185mm²
200K	(2) 300mm²
GROUNDING ELECTRODE CONDUCTOR (BASED ON NEC TABLE 250.66)	
SIZE OF LARGEST UNGROUNDED SERVICE CONDUCTOR OR EQUIVALENT AREA FOR PARALLEL CONDUCTORS	NECESSARY GROUNDING ELECTRODE CONDUCTOR SIZE
350 kcmil OR SMALLER	35mm²
OVER 350 kcmil TO 600 kcmil	70mm²
OVER 600 kcmil TO 1100 kcmil	70mm²
OVER 1100 kcmil	95mm²
NOTE: ALL SIZES ARE BASED ON COPPER CONDUCTORS.	

(B) EQUIPMENT GROUNDING CONDUCTOR	
RATING OR SETTING OF AUTOMATIC OVERCURRENT DEVICE IN CIRCUIT AHEAD OF EQUIPMENT, CONDUIT, ETC, NOT EXCEEDING (AMPERES)	NECESSARY EQUIPMENT GROUNDING CONDUCTOR SIZE
15	2.5mm²
20	4.0mm²
30	6.0mm²
40	6.0mm²
60	6.0mm²
100	10mm²
200	16mm²
300	25mm²
400	25mm²
500	35mm²
600	50mm²
800	70mm²
1000	70mm²
1200	95mm²
1600	120mm²
2000	150mm²
2500	185mm²
3000	240mm²
4000	300mm²
5000	400mm²
6000	400mm²
NOTE: ALL SIZES ARE BASED ON COPPER CONDUCTORS.	

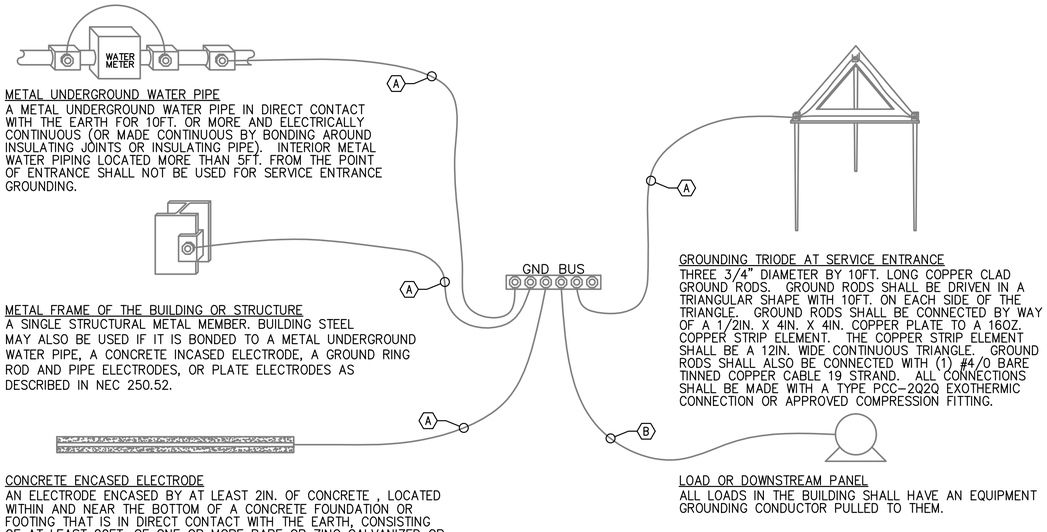

METAL UNDERGROUND WATER PIPE
A METAL UNDERGROUND WATER PIPE IN DIRECT CONTACT WITH THE EARTH FOR 10FT. OR MORE AND ELECTRICALLY CONTINUOUS (OR MADE CONTINUOUS BY BONDING AROUND INSULATING JOINTS OR INSULATING PIPE). INTERIOR METAL WATER PIPING LOCATED MORE THAN 5FT. FROM THE POINT OF ENTRANCE SHALL NOT BE USED FOR SERVICE ENTRANCE GROUNDING.

METAL FRAME OF THE BUILDING OR STRUCTURE
A SINGLE STRUCTURAL METAL MEMBER. BUILDING STEEL MAY ALSO BE USED IF IT IS BONDED TO A METAL UNDERGROUND WATER PIPE, A CONCRETE INCASED ELECTRODE, A GROUND RING ROD AND PIPE ELECTRODES, OR PLATE ELECTRODES AS DESCRIBED IN NEC 250.52.

CONCRETE ENCASED ELECTRODE
AN ELECTRODE ENCASED BY AT LEAST 2IN. OF CONCRETE , LOCATED WITHIN AND NEAR THE BOTTOM OF A CONCRETE FOUNDATION OR FOOTING THAT IS IN DIRECT CONTACT WITH THE EARTH, CONSISTING OF AT LEAST 20FT. OF ONE OR MORE BARE OR ZINC GALVANIZED OR OTHER ELECTRICALLY CONDUCTIVE COATED STEEL REINFORCING BARS OR RODS OF NOT LESS THAN 1/2" DIAMETER OR BARE COPPER CONDUCTOR NOT SMALLER THAN 4AWG.

GROUNDING TRIODE AT SERVICE ENTRANCE
THREE 3/4" DIAMETER BY 10FT. LONG COPPER CLAD GROUND RODS. GROUND RODS SHALL BE DRIVEN IN A TRIANGULAR SHAPE WITH 10FT. ON EACH SIDE OF THE TRIANGLE. GROUND RODS SHALL BE CONNECTED BY WAY OF A 1/2IN. X 4IN. X 4IN. COPPER PLATE TO A 16OZ. COPPER STRIP ELEMENT. THE COPPER STRIP ELEMENT SHALL BE A 12IN. WIDE CONTINUOUS TRIANGLE. GROUND RODS SHALL ALSO BE CONNECTED WITH (1) #4/0 BARE TINNED COPPER CABLE 19 STRAND. ALL CONNECTIONS SHALL BE MADE WITH A TYPE PCC-2Q2Q EXOTHERMIC CONNECTION OR APPROVED COMPRESSION FITTING.

LOAD OR DOWNSTREAM PANEL
ALL LOADS IN THE BUILDING SHALL HAVE AN EQUIPMENT GROUNDING CONDUCTOR PULLED TO THEM.

1
E-502

SERVICE ENTRANCE GROUNDING DETAIL

SCALE: N.T.S.

APPROVED:

A/E DESIGNER OF RECORD

SEAL:

COMMONWEALTH OF PENNSYLVANIA
REGISTERED PROFESSIONAL
JOSEPH R. GAUS
ENGINEER
PE-074251
1/29/10

US ARMY CORPS OF ENGINEERS
AFGHANISTAN ENGINEER DISTRICT

Mark	Description	Date	Appr.	Mark	Description	Date	Appr.

Rev: 0
Date: 2/23/10
Design file no.
Drawing code:
File name:
Plot date:
Plot scale:

Designed by: KJR
Dwn by: BJB
Ckd by: JRG
Reviewed by: JRG
Submitted by: BAKER

U.S. ARMY CORPS OF ENGINEERS
AFGHANISTAN ENGINEER DISTRICT
APO AE 96338

Michael Baker Jr., Inc.
A unit of Michael Baker Corporation
Airside Business Park
100 Airside Drive
Moon Township, PA 15108
www.mbakercorp.com

AFGHAN NATIONAL ARMY
REGIONAL MILITARY TRAINING CENTER
STANDARD DESIGN

POL STORAGE

ELECTRICAL DETAILS

Sheet reference number:
E-502

FIXTURE MARK 'C'

FIXTURE MARK 'H'

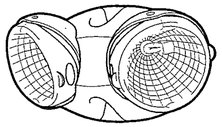

FIXTURE MARK 'E'

FIXTURE MARK 'J'

LIGHT FIXTURE SCHEDULE

FIXTURE MARK	STYLE NUMBER AND TYPE	NUMBER AND TYPE OF LAMPS	VOLTAGE	MOUNTING	NOTES
C	INCANDESCENT ONE PIECE W/ APPROVED LENS STABILIZED HIGH IMPACT POLY CARBONATE.	(1) A19 – 100W INCANDESCENT	220V – 1ø 50HZ	WALL MOUNTED ABOVE EXTERIOR DOORS	
H	REMOTE HEAD EXTERIOR LIGHT HEAD POWERED FROM EXIT SIGN BATTERY– 12V DOUBLE HEAD CORROSION RESISTANT WITH UL34 WEATHERPROOF CONSTRUCTION	(2) 12W/12V HALOGEN LAMP	12V – 1ø 50HZ	EXTERIOR WALL MOUNTED AT TOP OF DOOR HEIGHT	
J	EXPLOSION–PROOF (2) LAMP FIXTURE PROVIDED WITH LAMPS. COPPER FREE, ALUMINUM HOUSING, TEMPERED BOROSILICATE GLASS, AND BIAX LAMPS WITH WIRE GUARD	(2) 40W 3500K BIAX FLUORESCENT LAMPS	220V – 1ø 50HZ	PENDANT MOUNTED FROM CEILINGS	FURNISHED WITH LAMPS AND WIRE GUARD
J2	SAME AS FIXTURE 'J' WITH EMERGENCY BALLAST	(2) 40W 3500K BIAX FLUORESCENT LAMPS	220V – 1ø 50HZ	PENDANT MOUNTED FROM CEILINGS	FURNISHED WITH LAMPS, WIRE GUARD, EMERGENCY BALLAST WITH SELF TEST SWITCH
E	UNIVERSAL MOUNT ENGINEER GRADE THERMOPLASTIC HOUSING EXIT SIGN WITH LED LAMPS, RED LETTERS 6" IN HEIGHT WITH ARROWS AS INDICATED, WITH 12V CADMIUM BATTERY WITH REMOTE HEAD CAPABILITY	LED LAMPS	220V – 1ø 50HZ	UNIVERSAL MOUNTING	

APPROVED:

A/E DESIGNER OF RECORD

SEAL:

COMMONWEALTH OF PENNSYLVANIA
REGISTERED PROFESSIONAL
JOSEPH R. GAUS
ENGINEER
PE-074251
1/29/10

US ARMY CORPS OF ENGINEERS
AFGHANISTAN ENGINEER DISTRICT

Mark	Description	Date	Appr.	Mark	Description	Date	Appr.

Date: 2/23/10
Rev: 0
Design file no.
Drawing code:
File name:
Plot date:
Plot scale:

Designed by: KJR
Dwn by: BJB
Ckd by: JRG
Reviewed by: JRG
Submitted by: BAKER

U.S. ARMY CORPS OF ENGINEERS
AFGHANISTAN ENGINEER DISTRICT
APO AE 96338

Michael Baker Jr., Inc.
A unit of Michael Baker Corporation
Airside Business Park
100 Airside Drive
Moon Township, PA 15108
www.mbakercorp.com

AFGHAN NATIONAL ARMY
REGIONAL MILITARY TRAINING CENTER
STANDARD DESIGN

POL STORAGE
ELECTRICAL LIGHTING FIXTURE SCHEDULE

Sheet reference number:
E–601

PANELBOARD POL SURFACE MOUNTED

AMP. MAIN LUGS (OR) 20 AMP. MAIN BREAKER W/ 20 AMP. TRIP

CIRCUIT BREAKER TYPE 380/220 VOLTS 3 PHASE 4 WIRE 50 HZ 100 AMP. BUS

CKT. NO.	TRIP AMPS	NO. POLES	WIRE MM ²	GND MM ²	CONDUIT MM	LOAD SERVED	LOAD-KVA A0	LOAD-KVA B0	LOAD-KVA C0	LOAD-KVA A0	LOAD-KVA B0	LOAD-KVA C0	LOAD SERVED	CONDUIT MM	GND MM²	WIRE MM²	NO. POLES	TRIP AMPS	CKT. NO.
1	20	1	4.0	4.0	20	LIGHTING – RM 101, 102	0.5			0.8			RECEPTACLES – 101,102, EXTERIOR	20	4.0	4.0	1	20	2
3	20	1	4.0	4.0	20	EXHAUST FAN #1,#2, RM 101,102		1.0			0.5		FACP – EXTERIOR	20	4.0	4.0	1	20	4
5	20	1				SPARE							SPARE				1	20	6
7	20	1				SPARE							SPARE				1	20	8
9	20	1				SPARE							SPARE				1	20	10
11	20	1				SPARE							SPARE				1	20	12
							0.5	1.0	0.0	0.8	0.5	0.0							

TOTAL CONN. LOAD PER PHASE (KVA): A0 1.3 B0 1.5 C0 0.0

TOTAL CONN. LOAD 2.8 KVA. 70 % DEMAND = ESTIMATED DEMAND LOAD 1.96

* MAIN BREAKER SHALL BE 3P EARTH GROUND TYPE

APPROVED:

A/E DESIGNER OF RECORD

SEAL:

COMMONWEALTH OF PENNSYLVANIA
REGISTERED PROFESSIONAL
JOSEPH R. GAUS
ENGINEER
PE-074251
1/29/10

US ARMY CORPS OF ENGINEERS
AFGHANISTAN ENGINEER DISTRICT

Mark	Description	Date	Appr.	Mark	Description	Date	Appr.

Designed by: KJR
Dwn by: BJB
Ckd by: JRG
Reviewed by: JRG
Submitted by: BAKER
Date: 2/23/10
Rev: 0
Design file no.
Drawing code:
File name:
Plot date:
Plot scale:

U.S. ARMY CORPS OF ENGINEERS
AFGHANISTAN ENGINEER DISTRICT
APO AE 96338

Michael Baker Jr., Inc.
A unit of Michael Baker Corporation
Airside Business Park
100 Airside Drive
Moon Township, PA 15108
www.mbakercorp.com

AFGHAN NATIONAL ARMY
REGIONAL MILITARY TRAINING CENTER
STANDARD DESIGN

POL STORAGE
ELECTRICAL PANEL SCHEDULES

Sheet reference number:
E–602

AFGHAN NATIONAL ARMY

STANDARD BUILDING DESIGN

WASH RACK

100% FINAL DESIGN SUBMITTAL

SHEET INDEX

G–001 COVER SHEET

CIVIL

C–101 PLAN AND DETAILS

STRUCTURAL

S–801 SLAB PLAN

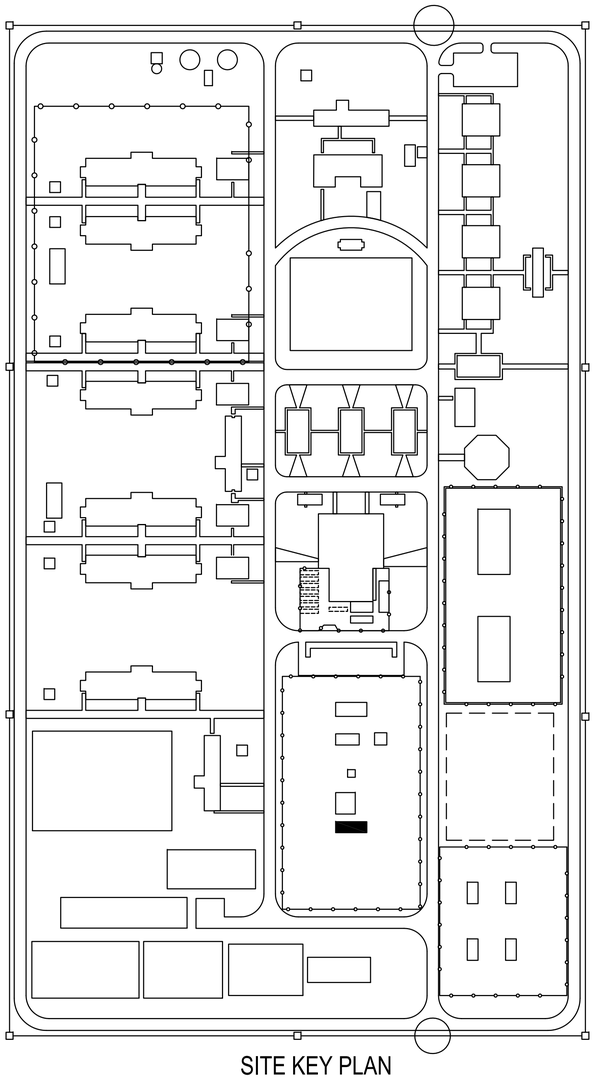

SITE KEY PLAN
NTS

US ARMY CORPS OF ENGINEERS
AFGHANISTAN ENGINEER DISTRICT

Mark	Description	Date	Appr.	Mark	Description	Date	Appr.

U.S. ARMY ENGINEER DISTRICT, AFGHANISTAN
CORPS OF ENGINEERS
APO AE 96338

Michael Baker Jr., Inc
A unit of Michael Baker Corporation
Airside Business Park
100 Airside Drive
Moon Township, PA 15108
www.mbakercorp.com

Designed by:
Dwn by: JDS
Ckd by: JDS
Reviewed by: LHM
Submitted by: BAKER
Date: 3/07/2010
Rev: 0
Design file no. G–001
Drawing code:
File name: ANAWSBKG-001
Plot date: 3/5/2010
Plot scale: 1:1

AFGHAN NATIONAL ARMY
REGIONAL MILITARY TRAINING CENTER
STANDARD DESIGN

WASH RACK

COVER SHEET

Sheet reference number:
G–001

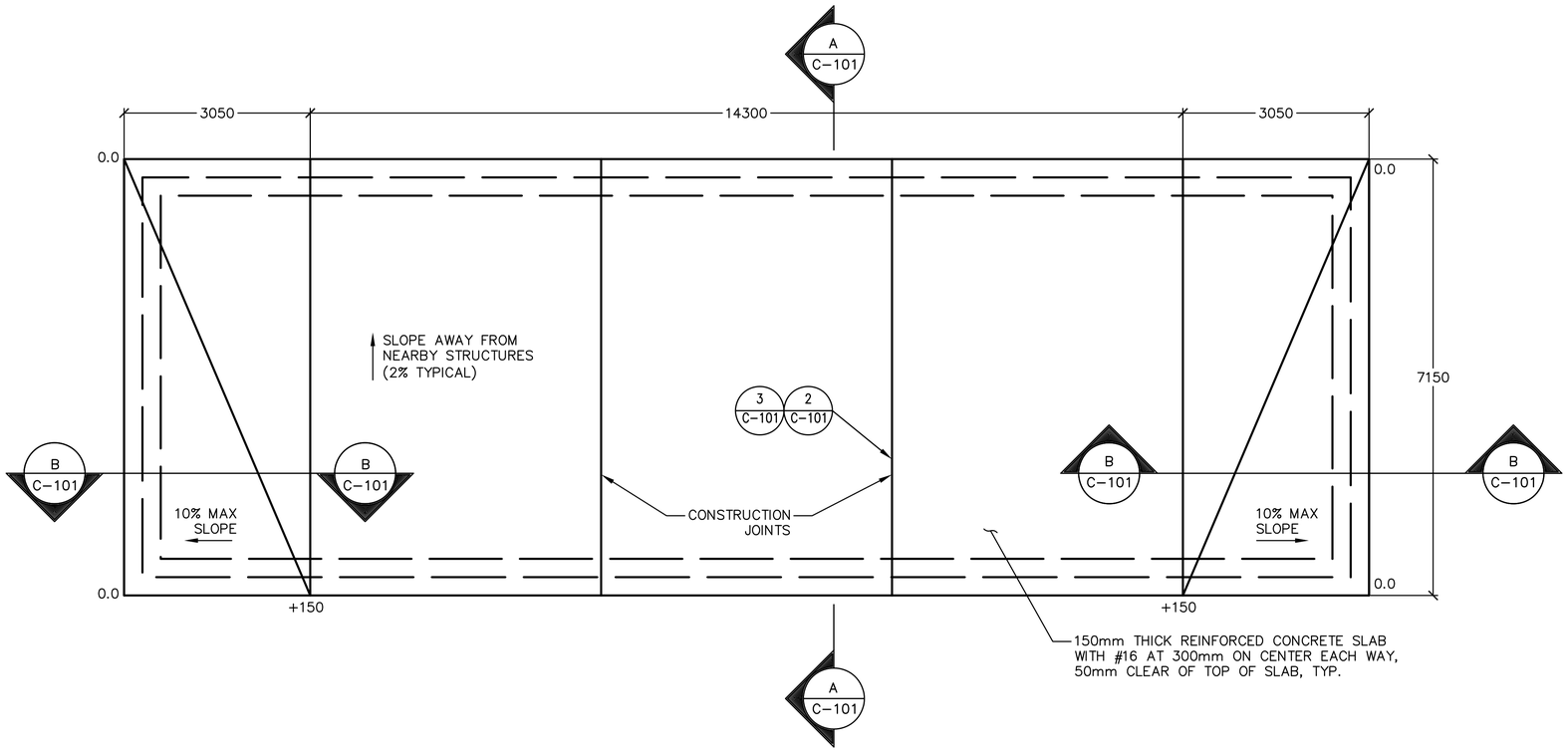

1 C-101 WASH RACK PLAN
SCALE: 1:50

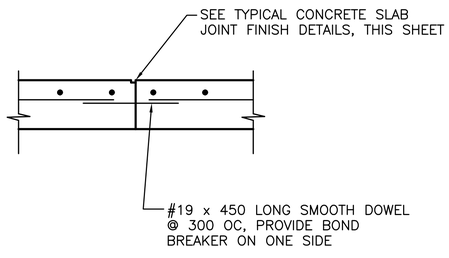

2 C-101 CONSTRUCTION JOINT DETAIL (CSJ)
SCALE: NTS

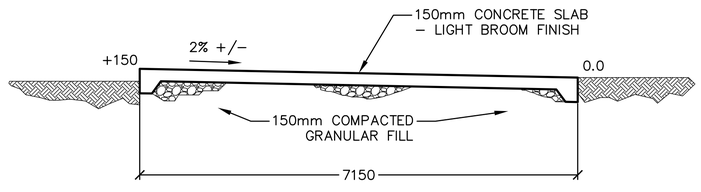

A C-101 SECTION A-A
SCALE: 1:50

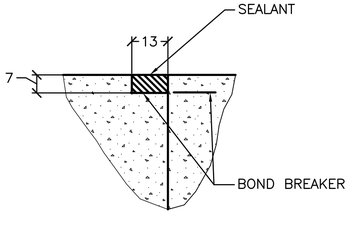

3 C-101 TYPICAL CONCRETE SLAB JOINT FINISH DETAIL
SCALE: NTS

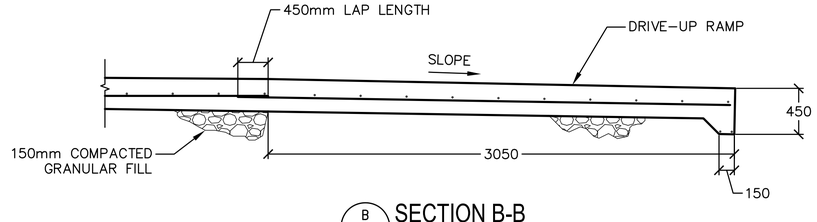

B C-101 SECTION B-B
SCALE: 1:20

0 200 400 800
SCALE: 1: 20

0 500 1000 2000
SCALE: 1: 50

APPROVED:

A/E DESIGNER OF RECORD

SEAL:

COMMONWEALTH OF PENNSYLVANIA
REGISTERED PROFESSIONAL
GREGORY P. HYNES
ENGINEER
044310-E

US ARMY CORPS OF ENGINEERS
AFGHANISTAN ENGINEER DISTRICT

Mark	Description	Date	Appr.	Mark	Description	Date	Appr.

Rev: 0
Date: 2/23/2010
Design file no.
Drawing code: C-101
File name: ANWSRK-CC-101XXX
Plot date: 2/23/2010
Plot scale: 1:50

Designed by: GPH
Dwn by: JDS
Ckd by: JMB
Reviewed by: LHM
Submitted by:
BAKER

U.S. ARMY ENGINEER DISTRICT, AFGHANISTAN
CORPS OF ENGINEERS
APO AE 96338

Michael Baker Jr., Inc.
A unit of Michael Baker Corporation
Airside Business Park
100 Airside Drive
Moon Township, PA 15108
www.mbakercorp.com

AFGHAN NATIONAL ARMY
REGIONAL MILITARY TRAINING CENTER
STANDARD DESIGN

WASH RACK
PLAN AND DETAILS

Sheet reference number:
C-101

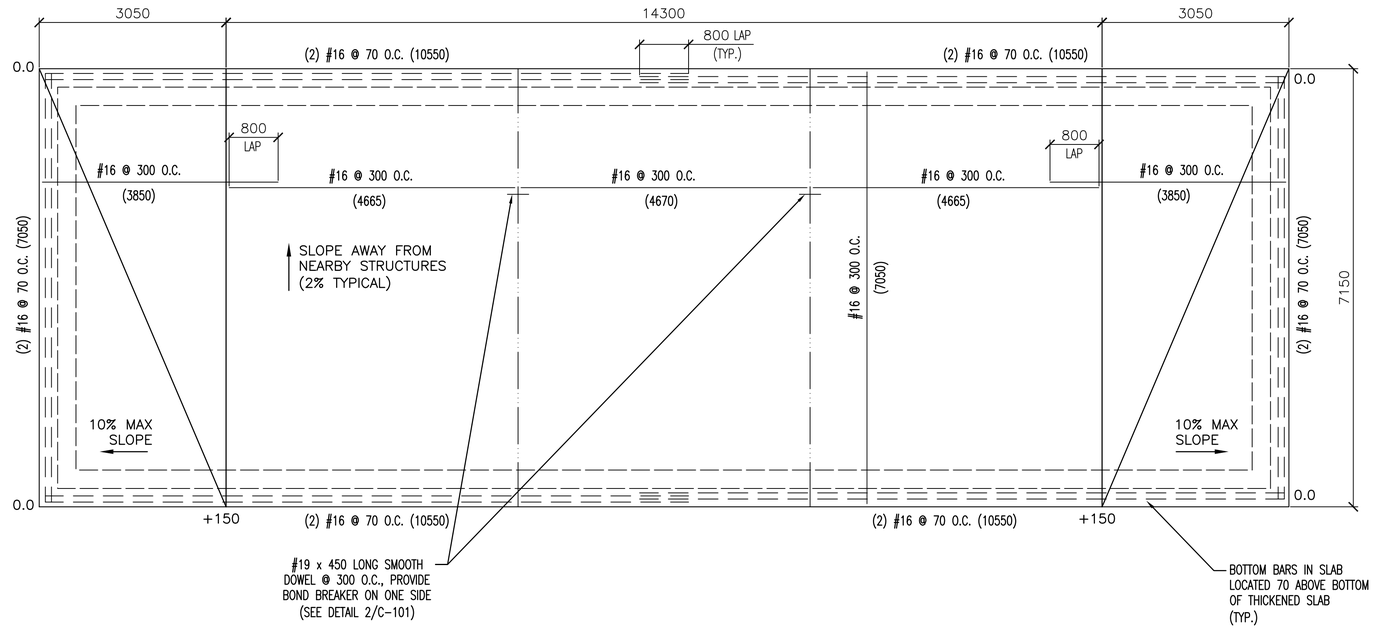

1 / S-801 WASH RACK PLAN
SCALE: 1:50

FOUNDATION/SLAB PLAN NOTES:

1. SLAB-ON-GRADE REINFORCING ARE LOCATED 40mm FROM T/SLAB, 50mm FROM EDGES & AND CONTROL JOINT. LENGTH NOTED AS THUS (6600)

FOUNDATION/SLAB PLAN LEGEND

- CONTROL JOINT (SEE DETAIL ON 2/C-101)
- SLAB REINF TOP BARS
- SLAB REINF BOTTOM BARS

0 500 1000 2000
SCALE: 1:50

US ARMY CORPS OF ENGINEERS
AFGHANISTAN ENGINEER DISTRICT

Mark	Description	Date	Appr.	Mark	Description	Date	Appr.

U.S. ARMY ENGINEER DISTRICT, AFGHANISTAN
CORPS OF ENGINEERS
APO AE 96338

Michael Baker Jr., Inc
A unit of Michael Baker Corporation
Airside Business Park
100 Airside Drive
Moon Township, PA 15108
www.mbakercorp.com

Designed by: GPH		Date: 3/07/2010	Rev: 0
Dwn by: NLA	Ckd by: BLF	Design file no. S-801	
Reviewed by: RTD		Drawing code:	
Submitted by: BAKER		File name: ANAWSRKS-801 Plot date: 3/5/2010 Plot scale: 1:50	

AFGHAN NATIONAL ARMY
REGIONAL MILITARY TRAINING CENTER
STANDARD DESIGN

WASH RACK

REBAR PLACEMENT DRAWINGS
SLAB PLAN

Sheet reference number:
S-801

AFGHAN NATIONAL ARMY

STANDARD BUILDING DESIGN

PARADE GROUND REVIEW STAND

100% FINAL DESIGN SUBMITTAL

SHEET INDEX

G–001 COVER SHEET

CIVIL

C–101 SITE PLAN

STRUCTURAL

S–001 GENERAL NOTES & DESIGN CRITERIA
S–101 FOUNDATION/SLAB PLAN
S–501 BUILDING SECTIONS & DETAILS
S–601 SCHEDULES
S–701 TYPICAL DETAILS
S–801 SLAB REINFORCING PLAN/WALL ELEVATIONS
S–802 STAIR SECTIONS & ELEVATION

US ARMY CORPS OF ENGINEERS
AFGHANISTAN ENGINEER DISTRICT

Mark	Description	Date	Appr.	Mark	Description	Date	Appr.

Date: 3/07/2010 Rev: 0
Design file no.
Drawing code:
File name: ANAPGRSC-001
Plot date: 3/8/2010
Plot scale: X:X

Designed by: KMP/MMY
Dwn by: CWW Ckd by: CWW
Reviewed by: LHM
Submitted by: BAKER

U.S. ARMY CORPS OF ENGINEERS
AFGHANISTAN ENGINEER DISTRICT
APO AE 96338

Michael Baker Jr., Inc.
A unit of Michael Baker Corporation
Airside Business Park
100 Airside Drive
Moon Township, PA 15108
www.mbakercorp.com

AFGHAN NATIONAL ARMY
REGIONAL MILITARY TRAINING CENTER
STANDARD DESIGN

PARADE GROUND REVIEW STAND

COVER SHEET

Sheet reference number:
G–001

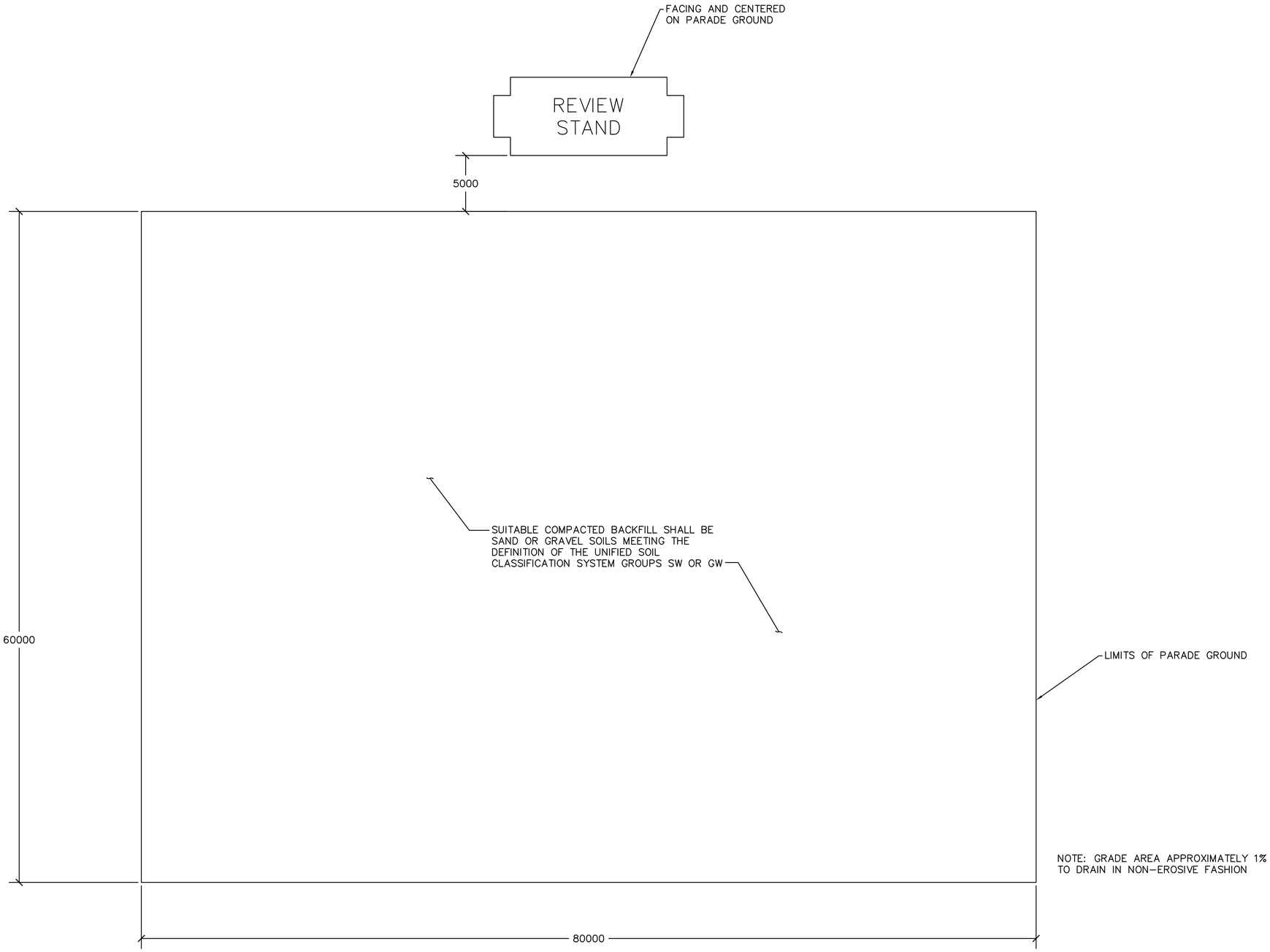

1 / C-101 PARADE GROUND AND REVIEW STAND
SCALE: 1:200

0 2000 4000 8000
SCALE: 1: 200

APPROVED:

A/E DESIGNER OF RECORD

SEAL:

COMMONWEALTH OF PENNSYLVANIA
REGISTERED PROFESSIONAL
GREGORY P. HYNES
ENGINEER
044310-E

US ARMY CORPS OF ENGINEERS
AFGHANISTAN ENGINEER DISTRICT

Mark	Description	Date	Appr.	Mark	Description	Date	Appr.

U.S. ARMY ENGINEER DISTRICT, AFGHANISTAN
CORPS OF ENGINEERS
APO AE 96338

Michael Baker Jr., Inc.
A unit of Michael Baker Corporation
Airside Business Park
100 Airside Drive
Moon Township, PA 15108
www.mbakercorp.com

Designed by: GPH	Date: 2/23/2010
Dwn by: JDS	Ckd by: JMB
Reviewed by: LHM	Design file no. C-101
Submitted by: BAKER	Drawing code:
File name: ANAPGRS-C-101XXX	Rev: 0
Plot date: 2/23/2010	
Plot scale: 1:200	

AFGHAN NATIONAL ARMY
REGIONAL MILITARY TRAINING CENTER
STANDARD DESIGN

PARADE GROUND REVIEW STAND

SITE PLAN

Sheet reference number:
C-101

STRUCTURAL ABBREVIATIONS:

ACI	AMERICAN CONCRETE INSTITUTE
ADD'L	ADDITIONAL
AISC	AMERICAN INSTITUTE OF STEEL CONSTRUCTION
AISI	AMERICAN IRON AND STEEL INSTITUTE
ASTM	AMERICAN SOCIETY FOR TESTING AND MATERIALS
ARCH	ARCHITECTURAL
B	BOTTOM
BLDG	BUILDING
BOTT	BOTTOM
℄	CENTER LINE
CFMRF	COLD FORM METAL ROOF FRAME
CFMF	COLD FORM METAL FRAME
CFS	COLD FORMED STEEL
CIP	CAST-IN-PLACE
CIPL	CAST-IN-PLACE LINTEL
CJ	CONTROL JOINT
CLR	CLEAR
CMU	CONCRETE MASONRY UNIT
COEFF	COEFFICIENT
COL	COLUMN
CONC	CONCRETE
CONT	CONTINUOUS
COORD	COORDINATE
CRSI	CONCRETE REINFORCING STEEL INSTITUTE
CSJ	CONSTRUCTION JOINT
DIA	DIAMETER
DIAG	DIAGONAL
DIM	DIMENSION
DWG	DRAWING
DWL	DOWEL
EA	EACH
EF	EACH FACE
ELEC	ELECTRICAL
ELEV	ELEVATION
EMBED	EMBEDMENT
EQUIV	EQUIVALENT
ETC	ET CETERA
EW	EACH WAY
EXP	EXPANSION
EXT	EXTERIOR
FTG	FOOTING
GA	GAUGE
GB	GRADE BEAM
HORIZ	HORIZONTAL
HP	HIGH POINT
h	HOUR
HRS	HOURS
IBC	INTERNATIONAL BUILDING CODE
INFO	INFORMATION
INT	INTERIOR
kg	KILOGRAM
km	KILOMETER
kN	KILONEWTON
kPa	KILOPASCAL
L#	ANGLE (# INDICATES SIZE)
LONG	LONGITUDINAL
LLV	LONG LEG VERTICAL
LP	LOW POINT
m	METER
MAX	MAXIMUM
MECH	MECHANICAL
MFG	MANUFACTURER
MID	MIDDLE
MIN	MINIMUM
MISC	MISCELLANEOUS
mm	MILLIMETER
MPa	MEGAPASCAL
MTL	METAL
MWFRS	MAIN WIND FORCE RESISTING SYSTEM
N	NEWTON
N	NORTH
N/A	NOT APPLICABLE
#	NUMBER SYMBOL FOR REBAR SIZE
NTS	NOT TO SCALE
OC	ON CENTER
OPNG	OPENING
ℙ or PL	PLATE
PRE-ENG	PRE-ENGINEERED
REINF	REINFORCED
REQ'D	REQUIRED
RB	ROOF BEAM
SIM	SIMILAR
SPECS	SPECIFICATIONS
STD	STANDARD
STRUCT	STRUCTURAL
SW	SHEAR WALL
T	TOP
T/	TOP OF
T/ELEV	TOP ELEVATION
T/SLAB	TOP OF SLAB
T&B	TOP AND BOTTOM
THK	THICK
TYP	TYPICAL
UFC	UNIFIED FACILITIES CRITERIA
UON	UNLESS OTHERWISE NOTED
VERT	VERTICAL
W	WIDTH
W/	WITH
WJ	WALL JOINT

1.0 GENERAL NOTES:

1.1 THIS PROJECT HAS BEEN DESIGNED FOR THE WEIGHTS AND MATERIALS INDICATED ON THE SHEETS AND FOR THE LIVE LOADS INDICATED IN THE DESIGN DATA. IT IS THE CONTRACTOR'S RESPONSIBILITY TO DETERMINE ALLOWABLE CONSTRUCTION LOADS AND TO PROVIDE PROPER DESIGN AND CONSTRUCTION OF FALSEWORK, FORMWORK, STAGING, BRACING, SHEETING AND SHORING, ETC.

1.1 COORDINATE THESE SHEETS WITH THE ARCHITECTURAL, MECHANICAL, ELECTRICAL, PLUMBING, AND CIVIL SHEETS. ALL DIMENSIONS SHOWN ON THE SHEETS ARE MILLIMETERS UNLESS NOTED OTHERWISE.

1.2 THE CONTRACTOR SHALL VERIFY AND COORDINATE ALL FLOOR AND ROOF OPENING SIZES AND LOCATIONS, EQUIPMENT PAD SIZES AND LOCATIONS, ANCHOR BOLT LAYOUTS, ETC WITH EQUIPMENT SELECTED. THE CONTRACTOR SHALL MAKE ANY REQUIRED MODIFICATIONS AT NO ADDITIONAL COST.

1.3 THE CONTRACTOR SHALL REFER TO THE ARCHITECTURAL, MECHANICAL, ELECTRICAL AND PLUMBING SHEETS FOR SLEEVES, CURBS, INSERTS OR OPENINGS, ETC. NOT HEREIN INDICATED.

1.4 WORK NOT INCLUDED ON THE SHEETS BUT IMPLIED TO BE SIMILAR TO THAT SHOWN AT CORRESPONDING PLACES ELSEWHERE ON THE SHEETS SHALL BE REPEATED.

1.5 IN CASE OF CONFLICT BETWEEN THE NOTES, DETAILS AND SPECIFICATIONS THE MOST RIGID REQUIREMENTS SHALL GOVERN.

1.7 COORDINATE FINISHED FLOOR DATUM ELEVATION 0.0m WITH THE CIVIL SHEETS.

2.0 FOUNDATION NOTES

2.1 THE GEOTECHNICAL ANALYSIS FOR THIS PROJECT IS THE RESPONSIBILITY OF THE CONTRACTOR AWARDED THE WORK. AN ASSUMED ALLOWABLE SOIL BEARING VALUE OF 72 kPa HAS BEEN USED IN THE STRUCTURAL ANALYSIS OF THE BUILDING HEREIN AND SHALL BE CONFIRMED AND VERIFIED AS PART OF THE GEOTECHNICAL INVESTIGATION. VALUES WHICH DO NOT MEET THE REQUIREMENTS INDICATED ON THE BASIS OF DESIGN SHEET SHALL BE IMMEDIATELY BROUGHT TO THE ATTENTION OF THE CONTRACTING OFFICER FOR CONSIDERATION AND DETERMINATION ON THE NEXT APPROPRIATE COURSE OF ACTION.

2.2 SEE THE SPECIFICATION FOR ADDITIONAL REQUIREMENTS TO THOSE OUTLINED IN THE GEOTECHNICAL INVESTIGATION FOR EXCAVATION AND PREPARATION OF THE FOUNDATION AND THE SLAB ON GRADE SUBGRADE INCLUDING COMPACTION PROCEDURES.

2.3 EXCAVATIONS FOR FOOTINGS SHALL HAVE THE SIDES AND BOTTOMS TEMPORARILY LINED WITH 0.25mm POLYETHYLENE IF PLACEMENT OF CONCRETE DOES NOT OCCUR WITHIN 24 HRS OF THE EXCAVATION OF THE FOOTING.

2.4 FOUNDATION CONDITIONS NOTED DURING CONSTRUCTION WHICH DIFFER FROM THOSE DESCRIBED IN THE GEOTECHNICAL REPORT SHALL BE REPORTED TO THE GENERAL CONTRACTOR BEFORE FURTHER CONSTRUCTION IS ATTEMPTED. SEE PROJECT SPECIFICATIONS.

2.5 NO FOOTINGS OR SLABS SHALL BE POURED INTO OR AGAINST SUBGRADE CONTAINING FREE WATER, FROST, ICE OR LOOSE MATERIAL. FROST DEPTH ASSUMED TO BE 800mm.

2.6 ALL SLAB-ON-GRADE, TRENCH BOTTOMS AND OTHER ON-GRADE INTERIOR HORIZONTAL SURFACES SHALL BE PLACED OVER A 0.25mm POLYETHYLENE VAPOR RETARDER OVER A 100mm #57 STONE WATER CAPILLARY BARRIER PLACED ON SUBGRADE PROPERLY PREPARED IN ACCORDANCE WITH THE CONTRACT SPECIFICATIONS. (UON)

2.7 PRIOR TO START OF FOUNDATION OR SLAB-ON-GRADE CONSTRUCTION, EXISTING SUBGRADES SHALL BE COMPACTED TO MINIMUM OF 95% MAXIMUM DRY DENSITY OBTAINED THRU ASTM D 1557 MODIFIED PROCTOR TESTING.

2.8 SEE PLUMBING, ELECTRICAL & CIVIL SHEETS FOR REQUIRED UNDERSLAB UTILITIES.

2.9 SEE ARCHITECTURAL SHEETS FOR ALL WATERPROOFING DETAILS AND MATERIALS.

2.10 IF UNDERMINING OF FOOTINGS OCCURS, FILL VOIDS WITH 18 MPa CONCRETE. DO NOT ATTEMPT TO REPLACE AND RE-COMPACT SOIL.

3.0 CONCRETE

3.1 CONCRETE SHALL HAVE THE UNIT WEIGHT OF 2400 kg/m^3 AND A MINIMUM COMPRESSIVE STRENGTH (f'c) OF 28 MPa AT 28 DAYS. ALL CONCRETE SHALL HAVE A WATER-CEMENT RATIO OF 0.45. SEE SPECIFICATIONS FOR ADDITIONAL INFORMATION. ENTRAIN AIR TO PRODUCE TOTAL AIR CONTENT ACCORDING TO THE SPECIFICATIONS FOR CONCRETE EXPOSED TO FREEZING TEMPERATURES (EXTERIOR FOOTINGS, SLAB TURNDOWNS, EXTERIOR SLABS AND SLABS-ON-GRADE, EXTERIOR RETAINING WALLS, AND EXTERIOR GRADE BEAMS.)

3.2 NO CALCIUM CHLORIDE SHALL BE USED IN ANY CONCRETE.

3.3 MIXING, TRANSPORTING AND PLACING OF CONCRETE SHALL CONFORM TO ACI 301M-05.

3.4 ALL CONCRETE WORK SHALL CONFORM TO THE REQUIREMENTS OF THE AMERICAN CONCRETE INSTITUTE (ACI) 318M MANUAL (metric), "BUILDING CODE REQUIREMENTS FOR REINFORCED CONCRETE", AND REQUIREMENTS OUTLINED IN THE CONTRACT SPECIFICATIONS. WHEN THERE IS A CONFLICT BETWEEN ACI AND THE SPECIFICATIONS, THE MORE STRINGENT SHALL GOVERN.

3.5 CHAMFER ALL EXPOSED EXTERNAL CORNERS OF CONCRETE WITH 20mm x45 DEGREE CHAMFER UON.

3.6 CONCRETE REINFORCEMENT BARS SHALL CONFORM TO ASTM A615M-96a, GRADE 420 MPa, REINFORCING BARS SHALL NOT BE TACK WELDED, WELDED, HEATED OR CUT, UNLESS INDICATED ON THE CONTRACT DOCUMENTS. ALL LAP SPLICES SHALL BE CLASS "B" UON.

3.7 HORIZONTAL FOOTING AND HORIZONTAL WALL REINFORCEMENT SHALL BE CONTINUOUS AND SHALL HAVE 90 DEGREE BENDS AND EXTENSIONS, OR CORNER BARS OF EQUIVALENT SIZE LAPPED WITH A CLASS B TENSION SPLICE AT CORNERS AND INTERSECTIONS. TOP BAR CRITERIA SHALL APPLY IF 300mm OR MORE OF FRESH CONCRETE IS PLACED BELOW BAR.

3.8 SLABS-ON-GRADE SHALL HAVE CONSTRUCTION JOINTS OR CRACK CONTROL JOINTS AS SHOWN ON THE DRAWINGS. CONSTRUCTION JOINTS CAN BE USED AT CONTROL JOINT LOCATIONS AT CONTRACTORS OPTION. SEE SLAB PLANS & JOINT DETAILS FOR ADDITIONAL INFORMATION. FOR AREAS NOT SHOWN ON DWGS, THE MAXIMUM SPACING OF CONSTRUCTION/ CRACK CONTROL JOINTS SHALL BE 4800mm

3.9 ALL CONCRETE REINFORCEMENT SHALL BE DETAILED, FABRICATED, LABELED, SUPPORTED, AND SPACED IN FORMS AND SECURED IN PLACE IN ACCORDANCE WITH THE PROCEDURES AND REQUIREMENTS OUTLINED IN THE LATEST EDITION OF THE "BUILDING CODE REQUIREMENTS FOR REINFORCED CONCRETE", ACI 318M, AND THE "MANUAL OF STANDARD PRACTICE FOR DETAILING REINFORCED CONCRETE STRUCTURES", ACI 315M, LATEST EDITION. BASED ON IN COUNTRY REINFORCEMENT AVAILABILITY, IT IS THE CONTRACTOR'S OPTION TO ROUND DESIGNATED ODD NUMBERED REINFORCEMENT SIZES UP (1) ONE BAR SIZE.

3.10 ALL DOWELS SHALL MATCH SIZE AND NUMBER OF MAIN REINFORCING, UNLESS NOTED OTHERWISE ON THE SHEETS.

3.11 ADDITIONAL BARS SHALL BE PROVIDED AROUND ALL FLOOR AND WALL OPENINGS AS SHOWN ON THE SHEETS.

3.12 SEE ARCHITECTURAL SHEETS FOR TYPE AND LOCATION OF ALL FLOOR FINISHES.

3.13 THE CONTRACTOR SHALL COORDINATE ADDITIONAL WALL/SLAB OPENINGS NOT SHOWN ON STRUCTURAL SHEETS. SEE MECHANICAL, ELECTRICAL, PLUMBING AND CIVIL SHEETS.

3.14 UNLESS NOTED OTHERWISE, ALL CURBS SHALL BE REINFORCED WITH AT LEAST (1)-#13 CONTINUOUS AND #13 AT 300mm O.C. DOWELS TO STRUCTURE BELOW.

3.15 THE CONTRACTOR SHALL VERIFY ALL OPENINGS, PAD SIZES, AND ANCHOR BOLTS WITH EQUIPMENT SELECTED.

3.16 FOR ALL WALLS & PIERS, PROVIDE DOWELS INTO FOOTING AT EACH VERT REINF BAR, UON DOWEL SIZE SHALL BE SAME AS VERT REINF.

3.17 PROVIDE CONCRETE POUR STOPS OR FORMED AS REQUIRED FOR INSTALLATION OF ALL CONCRETE WORK.

3.18 PROVIDE ADDITIONAL (2)-#13 x 600mm REINFORCING BARS IN SLAB-ON GRADE AT ALL RE-ENTRANT CORNERS. PLACE BARS AT MID-DEPTH OF SLAB WITH A CLEARANCE OF 50mm FROM CORNER UON.

3.19 COLD-WEATHER PLACEMENT: COMPLY WITH ACI 306.1 AND AS FOLLOWS. PROTECT CONCRETE WORK FROM PHYSICAL DAMAGE OR REDUCED STRENGTH THAT COULD BE CAUSED BY FROST, FREEZING ACTIONS, OR LOW TEMPERATURES. SUBMIT A COLD WEATHER CONCRETING PLAN FOR APPROVAL.

3.20 PROVIDE BONDING COMPOUND PER ASTM C 1059-99: SPECIFICATION FOR LATEX AGENTS FOR BONDING FRESH CONCRETE (GROUT) TO HARDENED CONCRETE.

3.21 THE FORMED SURFACES FOR REINFORCED CONCRETE SHALL ACHIEVE A "CLASS A" FINISH WHEN RECEIVING PAINT OR A "CLASS B" FINISH WHEN RECEIVING PLASTER OR TILE AS PER SPECIFICATION SECTION 03 31 00 CAST-IN-PLACE STRUCTURAL CONCRETE.

3.22 AT INTERSECTING GRADE BEAMS AND SHEAR WALLS, PROVIDE CORNER BARS AT INTERSECTIONS WITH SAME QUANTITY, SIZE AND SPACING AS HORIZONTAL BARS WITH LEG LENGTH = 50db.

3.23 REFER TO S-800 SERIES REINFORCING BAR PLACEMENT DRAWINGS DEFINING LENGTHS, BENDS, AND SPACINGS FOR ALL STRUCTURAL CONCRETE. THE S-800 SERIES DRAWING ARE BASED ON THE S-400, S-500, S-600, AND S-700 SERIES DRAWING SCHEDULES, DETAILS, AND DIAGRAMS.

4.0 CONCRETE MASONRY (NOT USED)

5.0 COLD-FORMED METAL FRAMING (NOT USED)

6.0 STRUCTURAL DESIGN CRITERIA

6.1 ALL DESIGNS SHALL CONFORM TO THE PROVISIONS OF THE IBC 2006 AND UFC AS APPLICABLE.

6.2 DESIGN LOADS

6.2.1 DEAD LOADS (PER IBC 2006 & UFC 3-310-01)

SUPERIMPOSED DEAD LOAD	0.00 kPa

6.2.2 LIVE LOADS (PER IBC 2006 & UFC 3-310-01)

FLOOR SLAB	4.80 kPa

6.2.3 SNOW LOADS (PER IBC 2006 & UFC 3-310-01)

GROUND SNOW LOAD (Pg)	1.2 kPa
SNOW IMPORTANCE FACTOR (I)	1.0
SNOW EXPOSURE FACTOR (Ce)	1.0
THERMAL FACTOR (Ct)	1.0

6.2.4 WIND LOADS (PER IBC 2006)

BASIC WIND SPEED	137 km/h
WIND IMPORTANCE FACTOR	1.0
WIND EXPOSURE CATEGORY	D
DIRECTIONALITY COEFFICIENT (Kd)	0.85
TOPOGRAPHIC FACTOR (Kzt)	1.0

6.2.5 SEISMIC LOADS (PER IBC 2006 & UFC 3-310-04)

OCCUPANCY USE CATEGORY	II
SEISMIC IMPORTANCE FACTOR (Ie)	1.0
SEISMIC SITE CLASS	D

S_s = 1.5 (REDUCED FROM 2.4 PER ASCE 7-05 12.8.1.3 FOR BUILDING WITHOUT IRREGULARITIES)

S_1 = 1.20

S_{DS} = 1.00

S_{D1} = 1.20

SEISMIC DESIGN CATEGORY	E
SEISMIC RESISTING SYSTEM: -SPECIAL REINFORCED CONCRETE SHEAR WALLS (BEARING WALL SYSTEM)	
RESPONSE MODIFICATION FACTOR (R)	5
RESPONSE COEFFICIENT (Cs)	0.200
SEISMIC ANALYTICAL PROCEDURE =	EQUIV LATERAL FORCE
SEISMIC BASE SHEAR	145 kN

APPROVED:

A/E DESIGNER OF RECORD

SEAL:

GEORGIA REGISTERED 22-10 No. 27141 PROFESSIONAL ENGINEER CHRISTOPHER W. WHITMORE

US ARMY CORPS OF ENGINEERS
AFGHANISTAN ENGINEER DISTRICT

Mark	Description	Date	Appr.	Mark	Description	Date	Appr.

Rev: 0

Date: 2/23/10

Designed by: KMP/MMY

Dwn by: RCG

Ckd by: CWW

Reviewed by: LHM

Submitted by: BAKER

Design file no.

Drawing code:

File name: ANAPGRBS-001GN

Plot date: 2/23/2010

Plot scale: X/X

U.S. ARMY CORPS OF ENGINEERS
AFGHANISTAN ENGINEER DISTRICT
APO AE 96338

Michael Baker Jr., Inc.
A unit of Michael Baker Corporation
Airside Business Park
100 Airside Drive
Moon Township, PA 15108
www.mbakercorp.com

AFGHAN NATIONAL ARMY
REGIONAL MILITARY TRAINING CENTER
STANDARD DESIGN

PARADE GROUND REVIEW STAND

GENERAL NOTES & DESIGN CRITERIA

Sheet reference number:
S-001

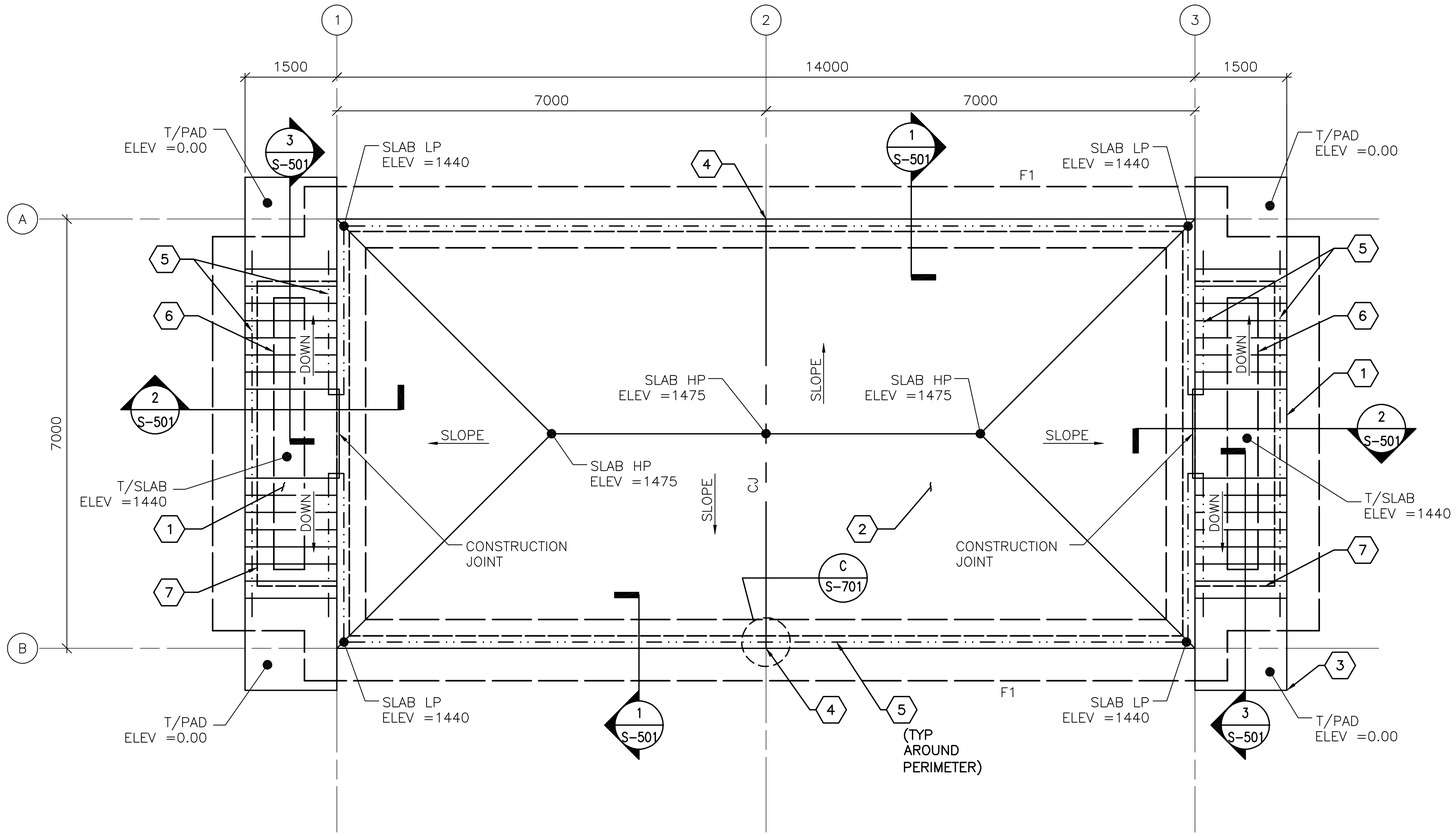

1 S-101 **FOUNDATION/SLAB PLAN**

SCALE: 1:50

FOUNDATION/SLAB PLAN NOTES:

1. REFER TO SHEET S-001 FOR STRUCTURAL NOTES AND DESIGN CRITERIA.
2. SLAB-ON-GRADE IS 150 WITH #13 @ 300 OC EW LOCATED 38 FROM T/SLAB.
3. PROVIDE LIGHT BROOM FINISH ON CONCRETE SLAB.
4. INSTALL SEALER COAT ON CONCRETE SLAB SURFACE.
5. TOP OF EXTERIOR FOOTINGS SHALL BE -600 UNLESS OTHERWISE INDICATED.
6. FINISH STAIR LANDING PAD @ GRADE SHALL BE (DATUM 0.00). ALL PLUS OR MINUS DIMENSIONS INDICATED ON PLAN OR REFERRED TO IN NOTES RELATE TO STAIR LANDING PAD ELEVATION.
7. FILL PLACED UNDER MAIN SLAB SHALL BE COMPACTED TO 95% MAXIMUM DRY DENSITY OBTAINED BY ASTM D1557 MODIFIED PROCTOR TESTING.

FOUNDATION/SLAB PLAN KEY NOTES: (X)

1. CONC STAIRS
2. REINF CONC SLAB-ON-GRADE
3. REINF CONC STAIR LANDING PAD
4. WALL JOINT
5. HANDRAIL/GUARDRAIL - SEE DETAILS ON SHEET S-501
6. EDGE OF FOOTING
7. EDGE OF WALL

FOUNDATION/SLAB PLAN LEGEND:

—-----— CONTROL JOINT (CJ)

—··—··— HANDRAIL

0 1000 2000
SCALE: 1:50

LINEAR DIMENSIONS SHOWN ARE IN MILLIMETERS (MM), UNLESS OTHERWISE NOTED

APPROVED:

A/E DESIGNER OF RECORD

SEAL:

GEORGIA REGISTERED 2-24-10 No. 27141 PROFESSIONAL ENGINEER CHRISTOPHER W. WHITMORE

US ARMY CORPS OF ENGINEERS
AFGHANISTAN ENGINEER DISTRICT

Mark	Description	Date	Appr.	Mark	Description	Date	Appr.

Designed by: KMP/MMY
Dwn by: RCG
Ckd by: CWW
Reviewed by: LHM
Submitted by: BAKER
Date: 2/23/10
Rev: 0
Design file no.
Drawing code:
File name: ANAPGRSS-101FNP
Plot date: 2/23/2010
Plot scale: x:X

U.S. ARMY CORPS OF ENGINEERS
AFGHANISTAN ENGINEER DISTRICT
APO AE 96338

Michael Baker Jr., Inc
A unit of Michael Baker Corporation
Airside Business Park
100 Airside Drive
Moon Township, PA 15108
www.mbakercorp.com

AFGHAN NATIONAL ARMY
REGIONAL MILITARY TRAINING CENTER
STANDARD DESIGN

PARADE GROUND REVIEW STAND

FOUNDATION/SLAB PLAN

Sheet reference number:
S-101

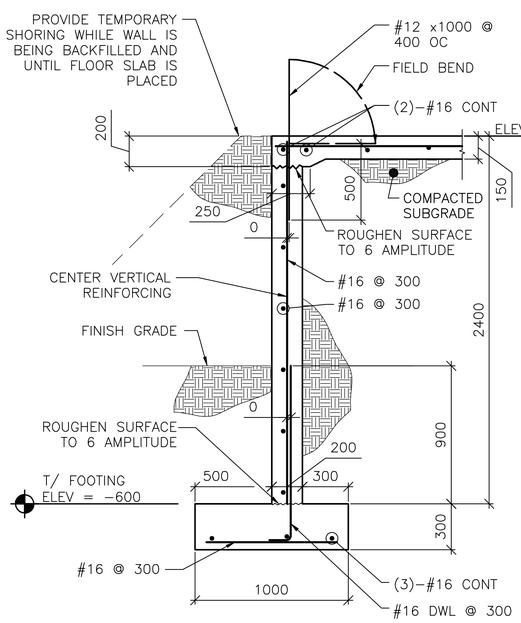

NOTE:
1. GUARDRAIL NOT SHOWN FOR CLARITY

1 S-501 **SECTION**
SCALE: 1:20

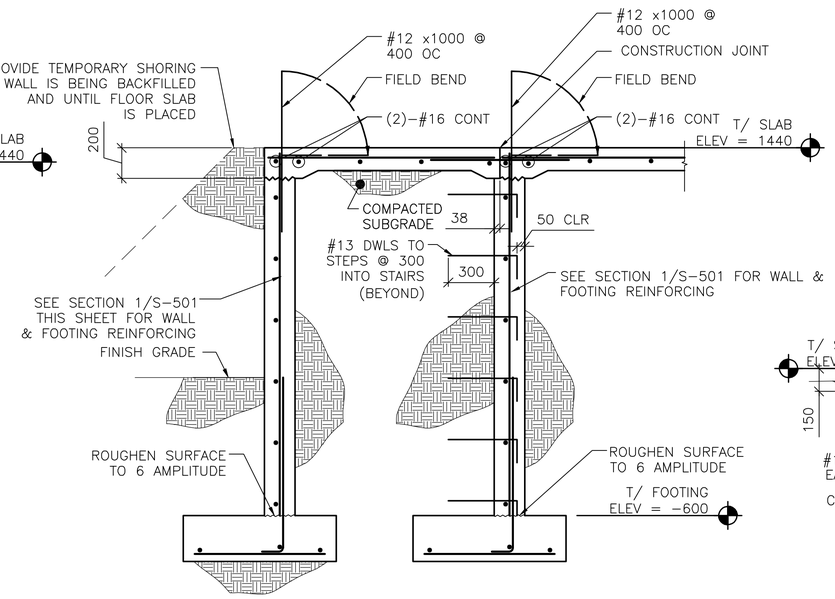

NOTE:
1. GUARDRAIL NOT SHOWN FOR CLARITY

2 S-501 **SECTION**
SCALE: 1:20

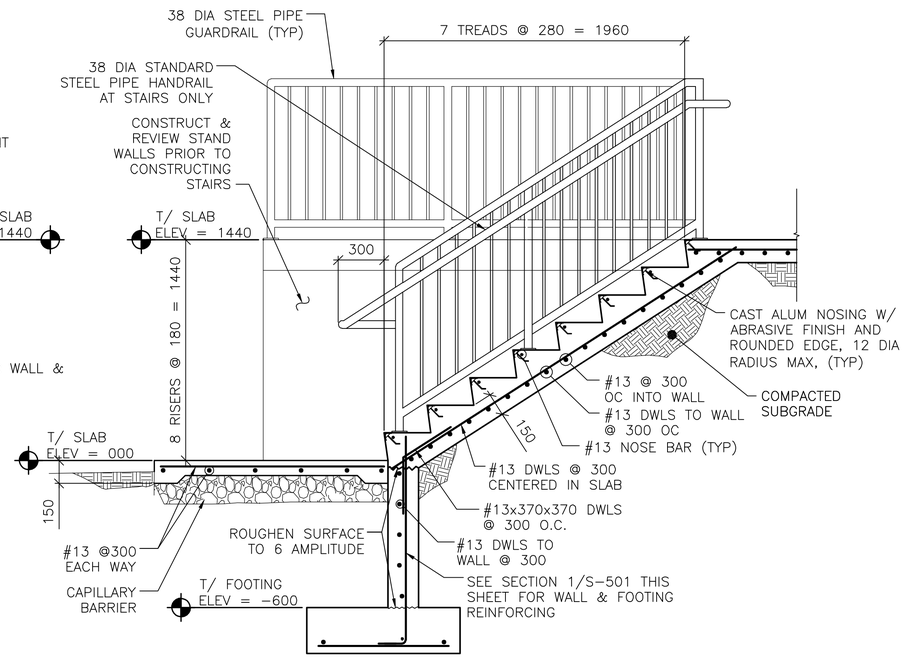

3 S-501 **SECTION**
SCALE: 1:20

NOTE:
SIMILAR MOUNTING DETAIL AT GUARDRAILS WITHOUT GRAB BARS

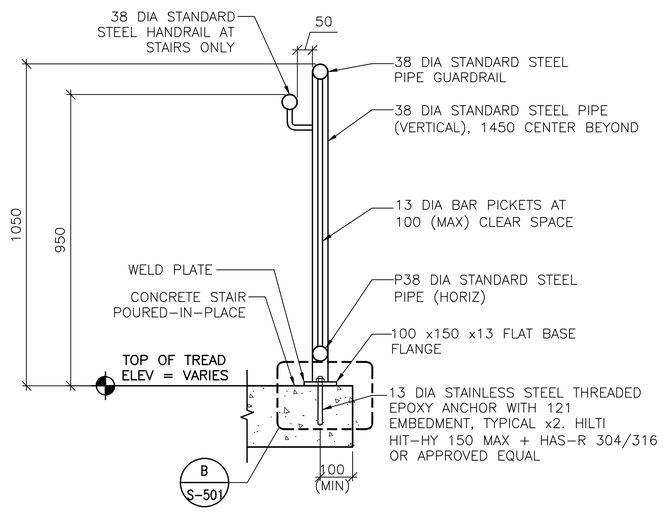

A S-501 **GUARDRAIL AND HANDRAIL DETAIL**
SCALE: 1:10

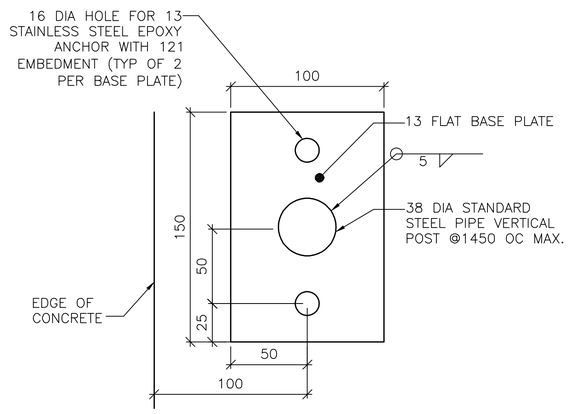

B S-501 **GUARDRAIL POST PLATE DETAIL**
SCALE: NOT TO SCALE

0 400 800
SCALE: 1:20

0 200 400
SCALE: 1:10

UNLESS OTHERWISE NOTED, LINEAR DIMENSIONS SHOWN ON DRAWINGS ARE IN MILLIMETERS (mm)

APPROVED:

A/E DESIGNER OF RECORD

SEAL:

GEORGIA REGISTERED 2-27-10 No. 27141 PROFESSIONAL ENGINEER CHRISTOPHER W. WHITMORE

US ARMY CORPS OF ENGINEERS
AFGHANISTAN ENGINEER DISTRICT

Mark	Description	Date	Appr.	Mark	Description	Date	Appr.

Date: 2/23/10
Rev: 0
Design file no. XXXXXX
Drawing code: XXXXXX
File name: AAKPGRSS-501SC
Plot date: 2/23/2010
Plot scale: x:X

Designed by: XXX
Dwn by: XXX
Ckd by: XXX
Reviewed by: XXXXXXX
Submitted by: XXXXXXX

U.S. ARMY CORPS OF ENGINEERS
AFGHANISTAN ENGINEER DISTRICT
APO AE 96338

Michael Baker Jr., Inc.
A unit of Michael Baker Corporation
Airside Business Park
100 Airside Drive
Moon Township, PA 15108
www.mbakercorp.com

AFGHAN NATIONAL ARMY
REGIONAL MILITARY TRAINING CENTER
STANDARD DESIGN

PARADE GROUND REVIEW STAND

SECTIONS & DETAILS

Sheet reference number:
S-501

CONCRETE REINFORCEMENT TENSION DEVELOPMENT/LAP SPLICE SCHEDULE

f'c = 28 MPa	LAP CLASS	UNCOATED BARS			
		TOP BARS		OTHER BARS	
BAR SIZES		CASE 1	CASE 2	CASE 1	CASE 2
#10 TO #19	A	50 BAR DIA	74 BAR DIA	38 BAR DIA	57 BAR DIA
	B	64 BAR DIA	96 BAR DIA	50 BAR DIA	74 BAR DIA
#22 TO #57	A	62 BAR DIA	93 BAR DIA	48 BAR DIA	71 BAR DIA
	B	80 BAR DIA	121 BAR DIA	62 BAR DIA	93 BAR DIA

NOTES:
1. TABULATED TENSION DEVELOPMENT LENGTH VALUES ARE TAKEN FROM CRSI DESIGN HANDBOOK 2008 10TH ED.
2. TENSION DEVELOPMENT & TENSION LAP SPLICE LENGTHS ARE EXPRESSED AS MULTIPLES OF BAR DIAMETERS.
3. TABULATED VALUES ARE BASED ON MINIMUM YIELD STRENGTH OF REINFORCEMENT, fy, OF 420MPa.
4. CONCRETE IS NORMAL WEIGHT (2400Kg/m^3) AND 28 DAY COMPRESSIVE STRENGTH = 28MPa.
5. TABULATED VALUES FOR BEAMS & COLUMNS ARE BASED ON TRANSVERSE REINFORCEMENT AND CONCRETE COVER MEETING MINIMUM CODE REQUIREMENTS.
6. CASES 1 & 2, WHICH DEPEND ON THE TYPE OF STRUCTURAL MEMBER, CONCRETE COVER, AND CENTER-TO-CENTER SPACING OF THE BARS ARE DEFINED IN THE TABLE BELOW.
7. LAP SPLICE LENGTHS (MINIMUM 300mm) ARE MULTIPLES OF TENSION DEVELOPMENT LENGTHS: CLASS A = 1.0(TENSION DEVELOPMENT LENGTH) & CLASS B = 1.3(TENSION DEVELOPMENT LENGTH)
8. TOP BARS ARE HORIZONTAL REINFORCEMENT WITH MORE THAN 300mm OF CONCRETE CAST BELOW THE BARS.
9. IT SHALL BE PERMISSIBLE TO CALCULATE WALL AND SLAB REINFORCEMENT TENSION DEVELOPMENT/SPLICE LENGTHS IN ACCORDANCE WITH ACI 12.2.3 OR TABLE 5.3(b) OF CRSI 2008 IN LIEU OF VALUES TABULATED ABOVE.

BEAMS, COLUMNS	CASE 1	CONCRETE COVER AT LEAST 1 BAR DIA AND CENTER-TO-CENTER SPACING AT LEAST 2 BAR DIA
	CASE 2	CONCRETE COVER LESS THAN 1 BAR DIA OR CENTER-TO-CENTER SPACING LESS THAN 2 BAR DIA
ALL OTHERS	CASE 1	CONCRETE COVER AT LEAST 1 BAR DIA AND CENTER-TO-CENTER SPACING AT LEAST 3 BAR DIA
	CASE 2	CONCRETE COVER LESS THAN 1 BAR DIA OR CENTER-TO-CENTER SPACING LESS THAN 3 BAR DIA

CONCRETE COVER SCHEDULE

MINIMUM CONCRETE COVER PROTECTION FOR REINFORCEMENT BARS SHALL BE AS LISTED BELOW: (SEE ACI 318M-05, SECTION 7.7 FOR CONDITIONS NOT NOTED). DIMENSIONS FOR BAR PLACEMENT GIVEN IN SECTIONS AND DETAILS SHALL SUPERSEDE MINIMUM COVER REQUIREMENTS GIVEN HERE. DIMENSIONS ARE IN mm. PROVIDE STANDARD BAR CHAIRS AND SUPPORT BARS @1200mm MAXIMUM AS REQUIRED TO MAINTAIN CONCRETE PROTECTION SPECIFIED.

FOOTINGS (EARTH FORMED):		70
COLUMNS / PIERS (TO TIES)		40
GRADE BEAMS OR SLAB TURNED DOWN EDGES:		
TOP		40
BOTTOM (EARTH FORMED)		70
SIDES (EARTH FORMED)		70
SIDES (BOARD FORMED)	#16 BAR & SMALLER	40
	#19 THRU #36 BAR	50
ELEVATED BEAMS & SLABS:		
BEAM TIES & STIRRUPS (NOT EXPOSED TO WEATHER)		40
BEAM TIES & STIRRUPS (EXPOSED TO WEATHER)		50
FLOOR SLABS (NOT EXPOSED TO WEATHER)		20
FLOOR SLABS (EXPOSED TO WEATHER)		
#19 & LARGER		50
#13 & SMALLER		40
ROOF SLAB BARS		25
SLABS ON GRADE		
NOT EXPOSED TO WEATHER (FROM TOP)		20
EXPOSED TO WEATHER (FROM TOP)		40
UTILITY TUNNEL WALLS, RETAINING WALLS AND SHEAR WALLS. (NO SURFACES SHALL BE EARTH FORMED)		
EARTH SIDE AND FRONT SIDE (EXPOSED TO WEATHER)		
#16 BAR AND SMALLER		40
#19 THRU #36 BAR		50

FOOTING SCHEDULE

MARK	FOOTING SIZE (mm)			FOOTING REINFORCING		REMARKS
	LENGTH	WIDTH	THICKNESS	LONGITUDINAL	TRANSVERSE	
F1	–	1000	300	(3)-#13 T&B	#16 @ 300	-----

STANDARD HOOKS IN TENSION PER (ACI 318M-05)

HOOK DEVELOPMENT LENGTH (mm)

BAR SIZE	f'c 28 MPa
#10	180
#13	250
#16	300
#19	380
#22	430
#25	480
#29	560
#32	610
#36	690

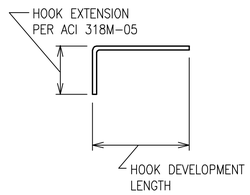

NOTES:
1. CONCRETE IS NORMAL WEIGHT CONCRETE.
2. BAR YIELD STRENGTH, fy = 420 MPa
3. SIDE COVER REQUIREMENTS OF ACI SECT. 12.5.3 ARE ASSUMED TO NOT BE MET.
4. TIE OR STIRRUP REQUIREMENTS OF ACI SECT. 12.5.3 ARE ASSUMED TO NOT BE MET.
5. REDUCTION FOR EXCESS REINFORCEMENT IS NOT TAKEN.
6. HOOK DEVELOPMENT LENGTH IS VALID FOR 180° HOOKS ALSO.

UNLESS OTHERWISE NOTED, LINEAR DIMENSIONS SHOWN ARE IN MILLIMETERS (mm)

APPROVED:

A/E DESIGNER OF RECORD

SEAL:

GEORGIA REGISTERED 2-21-10 No. 27141 PROFESSIONAL ENGINEER CHRISTOPHER W. WHITMORE

US ARMY CORPS OF ENGINEERS
AFGHANISTAN ENGINEER DISTRICT

Mark	Description	Date	Appr.	Mark	Description	Date	Appr.

Designed by: KMP/MMY
Dwn by: RCG
Ckd by: CWW
Reviewed by: LHM
Submitted by: BAKER
Date: 2/23/10
Design file no.
Drawing code:
File name: ANAPGRSS-S01SCH
Plot date: 2/23/2010
Plot scale: X:X
Rev: 0

U.S. ARMY CORPS OF ENGINEERS
AFGHANISTAN ENGINEER DISTRICT
APO AE 96338

Michael Baker Jr., Inc
A unit of Michael Baker Corporation
Airside Business Park
100 Airside Drive
Moon Township, PA 15108
www.mbakercorp.com

AFGHAN NATIONAL ARMY
REGIONAL MILITARY TRAINING CENTER
STANDARD DESIGN

PARADE GROUND REVIEW STAND

SCHEDULES

Sheet reference number:
S-601

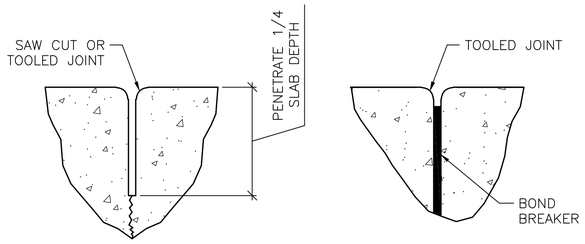

CONTROL JOINT DETAIL

CONSTRUCTION JOINT DETAIL

TYPICAL CONCRETE SLAB JOINT FINISH DETAILS

A / S-701

SCALE: NTS

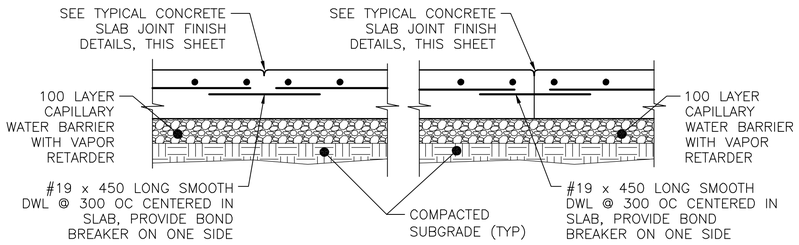

CONTROL JOINT DETAIL

CONSTRUCTION JOINT DETAIL

TYPICAL SLAB ON GRADE JOINT DETAIL

B / S-701

SCALE: NTS

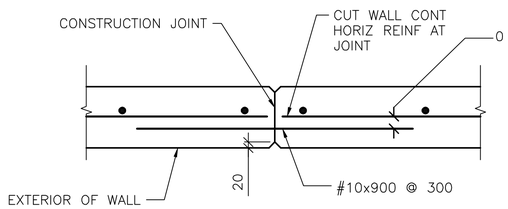

WALL JOINT DETAIL

C / S-101

SCALE: NTS

UNLESS OTHERWISE NOTED, LINEAR DIMENSIONS SHOWN ARE IN MILLIMETERS (mm)

APPROVED:

A/E DESIGNER OF RECORD

SEAL:

GEORGIA REGISTERED 2-23-10 No. 27141 PROFESSIONAL ENGINEER CHRISTOPHER W. WHITMORE

US ARMY CORPS OF ENGINEERS
AFGHANISTAN ENGINEER DISTRICT

Mark	Description	Date	Appr.	Mark	Description	Date	Appr.

U.S. ARMY CORPS OF ENGINEERS
AFGHANISTAN ENGINEER DISTRICT
APO AE 96338

Michael Baker Jr., Inc.
A unit of Michael Baker Corporation
Airside Business Park
100 Airside Drive
Moon Township, PA 15108
www.mbakercorp.com

Designed by: KMP/MMY
Dwn by: RCG
Ckd by: CWW
Reviewed by: LHM
Submitted by: BAKER
Date: 2/23/10
Rev: 0
Design file no.
Drawing code:
File name: AMAPGRSS:701TDT
Plot date: 2/23/2010
Plot scale: X:X

AFGHAN NATIONAL ARMY
REGIONAL MILITARY TRAINING CENTER
STANDARD DESIGN

PARADE GROUND REVIEW STAND

TYPICAL DETAILS

Sheet reference number:
S-701

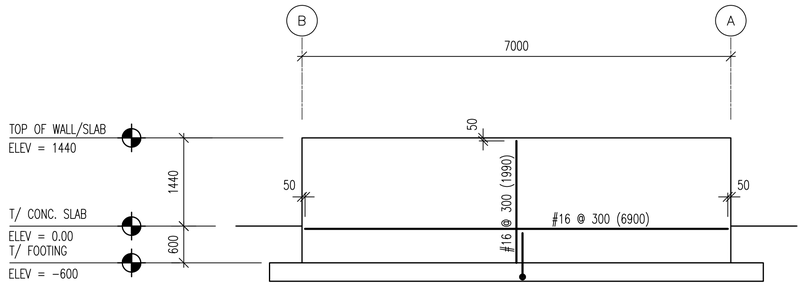

2 S-801 WALL ELEVATION AT GRID LINE 1 & 3

SCALE: 1:50

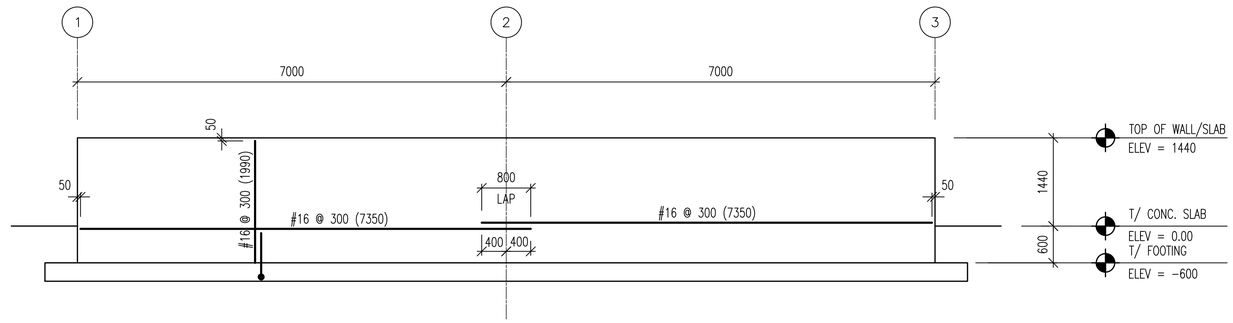

3 S-801 WALL ELEVATION AT GRID LINE A & B

SCALE: 1:50

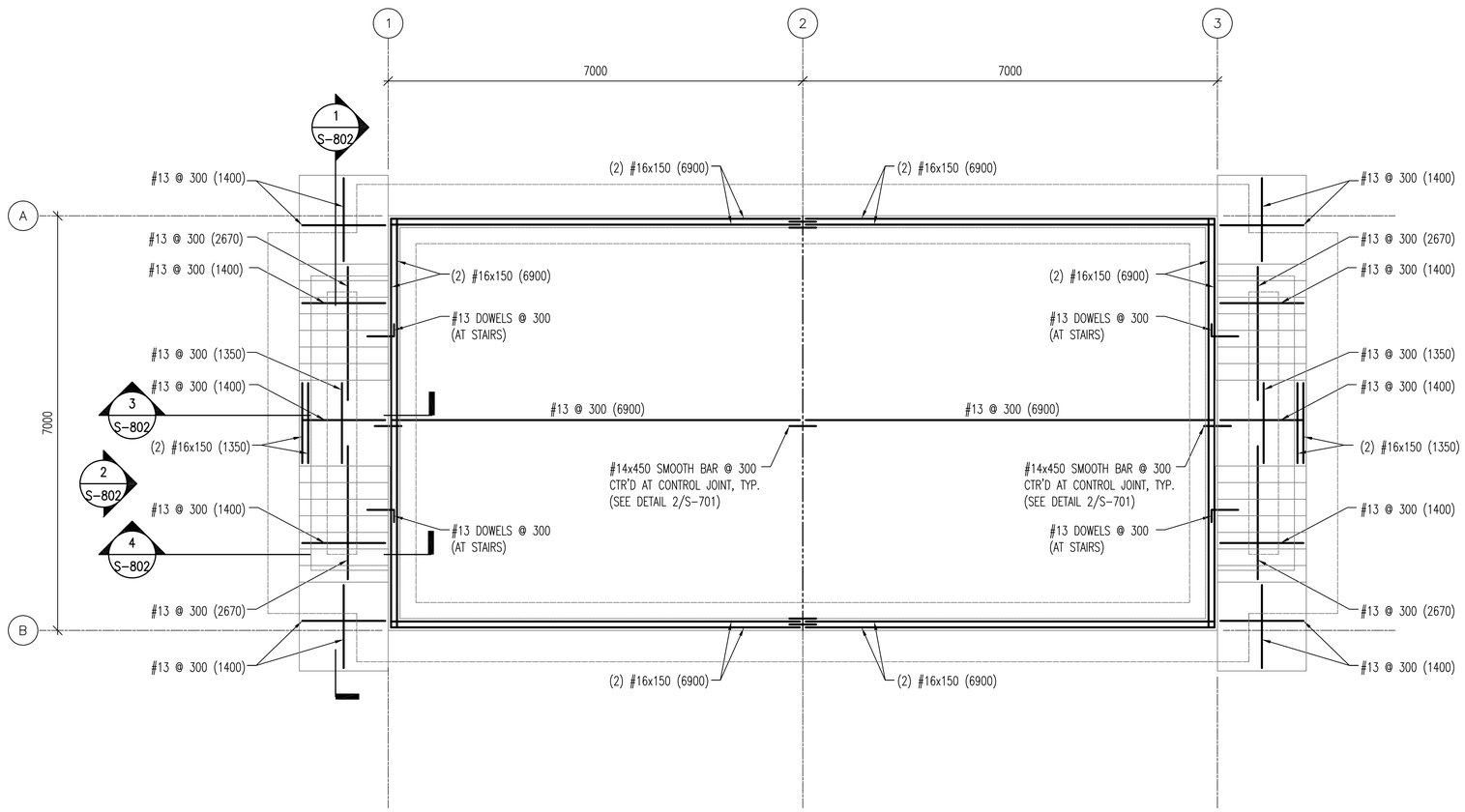

1 S-801 SLAB REINFORCING PLAN

SCALE: 1:50

0 1000 2000

SCALE: 1:50

UNLESS OTHERWISE NOTED, LINEAR DIMENSIONS SHOWN ON DRAWINGS ARE IN MILLIMETERS (mm)

US ARMY CORPS OF ENGINEERS
AFGHANISTAN ENGINEER DISTRICT

Mark	Description	Date	Appr.	Mark	Description	Date	Appr.

Designed by: KMP/MMY
Dwn by: JLM
Ckd by: BLF
Reviewed by: RTD
Submitted by: BAKER
Date: 3/07/2010
Rev: 0
Design file no.
Drawing code:
File name: ANAPGRSS-801
Plot date: 3/6/2010
Plot scale: 1:50

U.S. ARMY CORPS OF ENGINEERS
AFGHANISTAN ENGINEER DISTRICT
APO AE 96338

Michael Baker Jr., Inc.
A unit of Michael Baker Corporation
Airside Business Park
100 Airside Drive
Moon Township, PA 15108
www.mbakercorp.com

AFGHAN NATIONAL ARMY
REGIONAL MILITARY TRAINING CENTER
STANDARD DESIGN

PARADE GROUND REVIEW STAND

REBAR PLACEMENT DRAWINGS
SLAB REINFORCING PLAN/WALL ELEVATIONS

Sheet reference number:
S-801

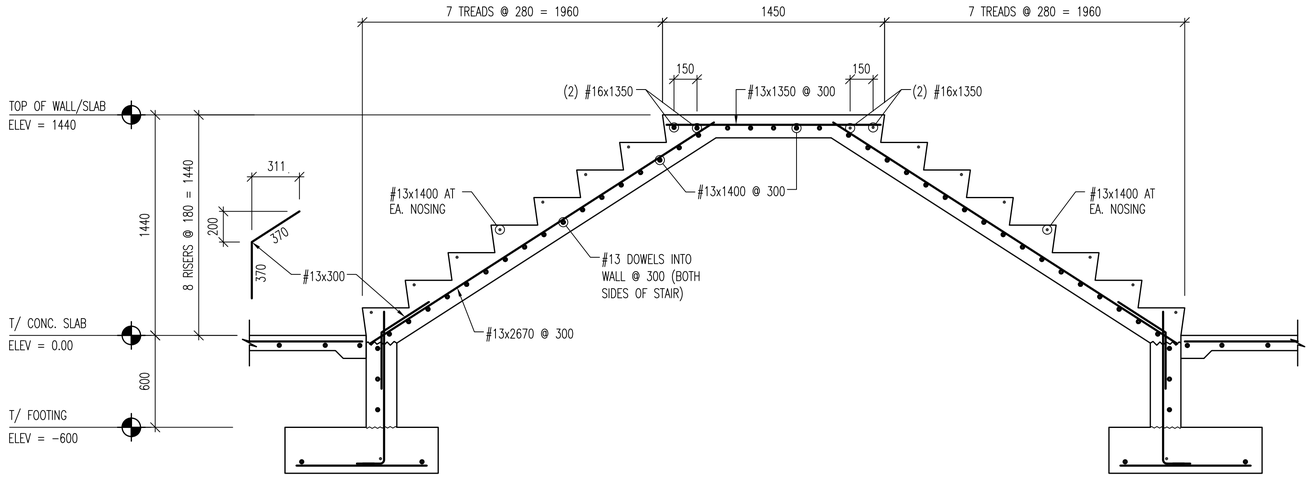

1 S-802 STAIR SECTION

SCALE: 1:20

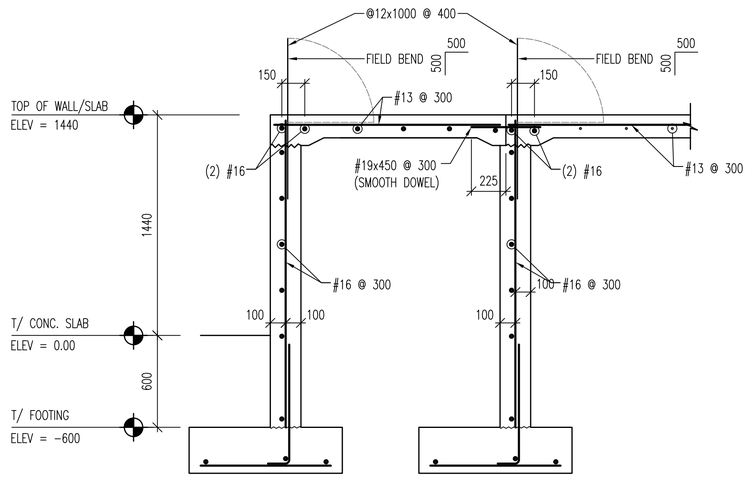

3 S-802 STAIR SECTION

SCALE: 1:20

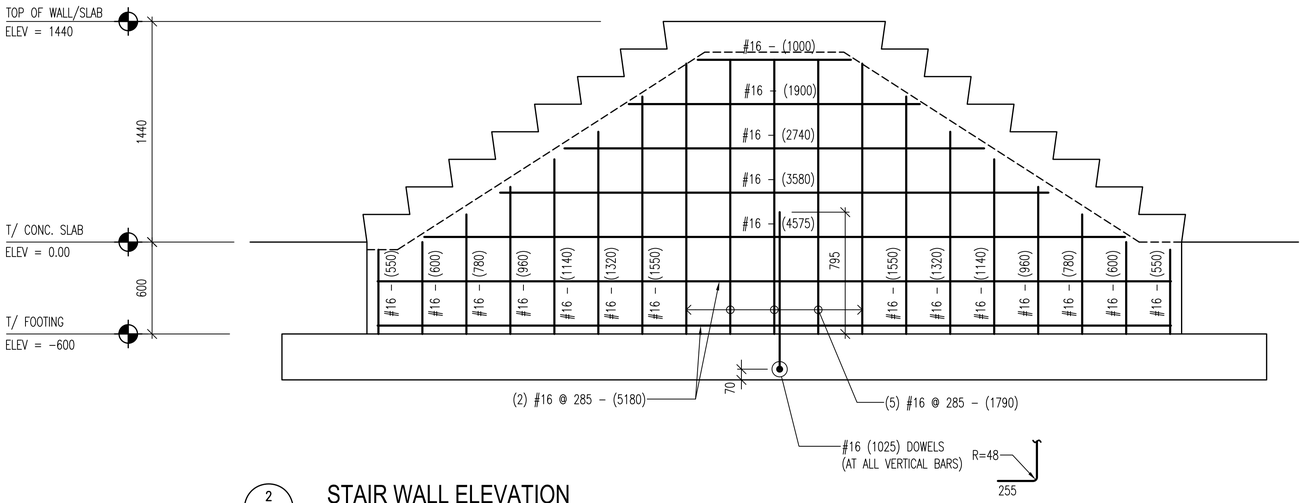

2 S-802 STAIR WALL ELEVATION

SCALE: 1:20

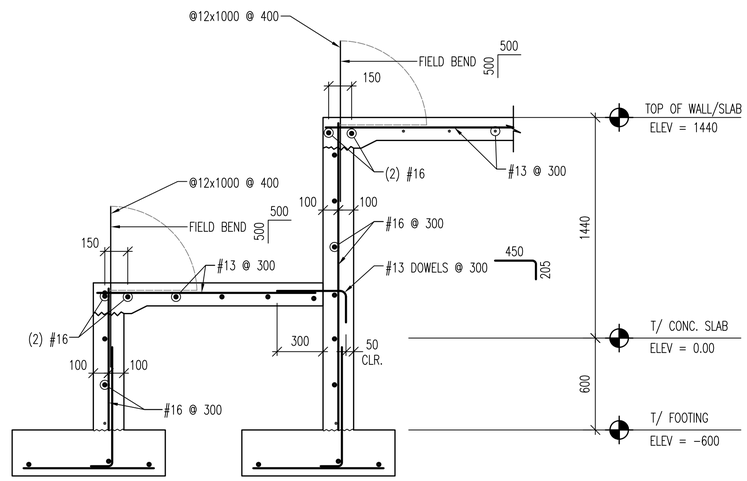

4 S-802 STAIR SECTION

SCALE: 1:20

0 400 800

SCALE: 1:20

UNLESS OTHERWISE NOTED, LINEAR DIMENSIONS SHOWN ON DRAWINGS ARE IN MILLIMETERS (mm)

US ARMY CORPS OF ENGINEERS
AFGHANISTAN ENGINEER DISTRICT

Mark	Description	Date	Appr.	Mark	Description	Date	Appr.

Date: 3/07/2010 Rev: 0
Design file no.
Drawing code:
File name: ANAPGRSS-802
Plot date: 3/8/2010
Plot scale: 1:50

Designed by: KMP/MMY
Dwn by: JLM
Ckd by: BLF
Reviewed by: RTD
Submitted by: BAKER

U.S. ARMY CORPS OF ENGINEERS
AFGHANISTAN ENGINEER DISTRICT
APO AE 96338

Michael Baker Jr., Inc
A unit of Michael Baker Corporation
Airside Business Park
100 Airside Drive
Moon Township, PA 15108
www.mbakercorp.com

AFGHAN NATIONAL ARMY
REGIONAL MILITARY TRAINING CENTER
STANDARD DESIGN

PARADE GROUND REVIEW STAND

REBAR PLACEMENT DRAWINGS
STAIR SECTIONS & ELEVATION

Sheet reference number:
S-802

SITE ADAPT DESIGN
CL08 - CLASSROOM BUILDING - ARCH SPAN

CONTRACT NUMBER:
W912ER-09-D-0002 TO:0027

US ARMY CORPS
OF ENGINEERS
AFGHANISTAN NORTH
DISTRICT

SYMBOL	DESCRIPTION	DATE	APPR.	SYMBOL	DESCRIPTION	DATE	APPR.

U.S. ARMY ENGINEER DISTRICT, AFGHANIST'AN
CORPS OF ENGINEERS
APO AE 09356

DESIGNED BY: JDS
DWN BY: JDS
CKD BY: JDS
REVIEWED BY: JH
SUBMITTED BY:
BAKER

DATE: 3-25-2011
REV: 0
CONTRACT NO. W912ER-09-D-0002
DRAWING CODE:
FILE NAME: ARCHIVE\Header\Cover-Arch.dwg
PLOT SCALE: NONE
PLOT DATE: 3/28/2011

SITE ADAPT DESIGN
CL08 - CLASSROOM BUILDING - ARCH SPAN
COVER SHEET

SHEET REFERENCE NUMBER:
G-001

3/28/2011 12:00 PM

A1 Size 594mm x 841mm

ENGINEERING AND CONSTRUCTION DIVISION
US ARMY ENGINEER DISTRICT, AFGHANISTAN
APO AE, 09356

CL08 CLASSROOM BUILDING

PROJECT COORDINATION

U.S. ARMY ENGINEER DISTRICT, AFGHANISTAN

PROJECT MANAGER _____ DATE _____

CHIEF, DESIGN BRANCH _____ DATE _____

THIS PROJECT WAS DESIGNED BY AFGHANASTAN ENGINEER DISTRICT OF THE U.S ARMY CORPS OF ENGINEERS. THE INITIALS OR SIGNATURES AND REGISTRATION DESIGNATIONS OF INDIVIDUALS APPEAR ON THESE DOCUMENTS WITHIN THE SCOPE OF THEIR EMPLOYMENT AS REQUIRED BY ER 1110-1-8152.

SECTION/DETAIL CROSS REFERENCING CONVENTIONS

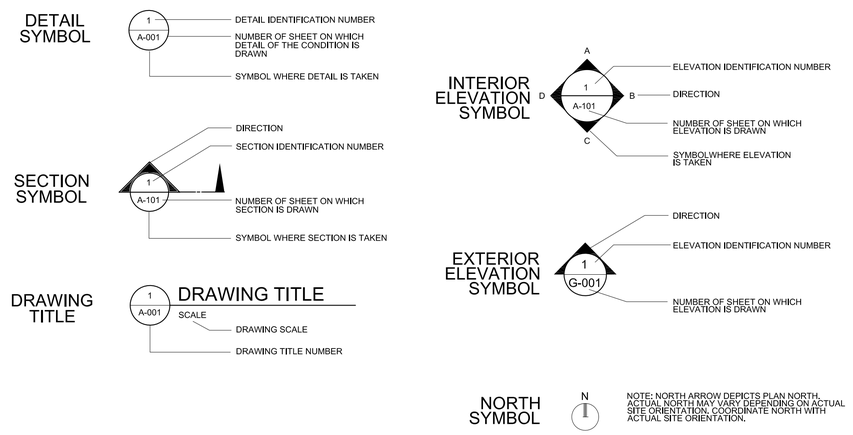

APPENDIX A

AFGHANISTAN

SCHEDULE OF DRAWINGS

SHEET NO	DWG CODE	SHEET REFERENCE NO	DESCRIPTION	REV STATUS
			GENERAL	
1	ARCHSPANCB200-G-001	G-001	COVER SHEET	
2	ARCHSPANCB200-G-002	G-002	INDEX SHEET	
3	ARCHSPANCB200-G-003	G-003	LIFE SAFETY PLAN AND CODE ANALYSIS	
			STRUCTURAL	
4	ARCHSPANCB200-S-001	S-001	ABBREVIATIONS AND GENERAL NOTES	
5	ARCHSPANCB200-S-002	S-002	GENERAL NOTES AND DESIGN CRITERIA	
6	ARCHSPANCB200-S-101	S-101	FOUNDATION PLAN	
7	ARCHSPANCB200-S-201	S-201	BUILDING ELEVATION AND DETAILS	
8	ARCHSPANCB200-S-202	S-202	BUILDING SECTION AND DETAILS	
9	ARCHSPANCB200-S-301	S-301	FOUNDATION SECTIONS	
10	ARCHSPANCB200-S-302	S-302	SECTIONS	
11	ARCHSPANCB200-S-303	S-303	SIDE WALL CONCRETE FRAMING SECTIONS	
12	ARCHSPANCB200-S-501	S-501	TYPICAL DETAILS	
13	ARCHSPANCB200-S-502	S-502	DOOR/WINDOW/MECHANICAL OPENING FRAME DETAILS	
14	ARCHSPANCB200-S-601	S-601	SCHEDULES	
			ARCHITECTURAL	
15	ARCHSPANCB200-A-001	A-001	ABBREVIATIONS, SYMBOLS AND GENERAL NOTES	
16	ARCHSPANCB200-A-101	A-101	FLOOR PLAN	
17	ARCHSPANCB200-A-102	A-102	REFLECTED CEILING PLAN	
18	ARCHSPANCB200-A-103	A-103	ROOF PLAN	
19	ARCHSPANCB200-A-201	A-201	BUILDING ELEVATIONS	
20	ARCHSPANCB200-A-301	A-301	BUILDING SECTIONS	
21	ARCHSPANCB200-A-302	A-302	WALL SECTIONS	
22	ARCHSPANCB200-A-303	A-303	WALL SECTIONS	
23	ARCHSPANCB200-A-501	A-501	EXTERIOR DETAILS	
24	ARCHSPANCB200-A-502	A-502	HEAD, JAMB & SILL DETAILS	
25	ARCHSPANCB200-A-503	A-503	STOOP DETAILS	
26	ARCHSPANCB200-A-601	A-601	WINDOW AND DOOR SCHEDULE	
27	ARCHSPANCB200-A-602	A-602	PARTITION TYPES	
28	ARCHSPANCB200-A-603	A-603	FINISH SCHEDULE	

SHEET NO	DWG CODE	SHEET REFERENCE NO	DESCRIPTION	REV STATUS
			MECHANICAL	
29	ARCHSPANCB200-M-101	M-101	HVAC - FLOOR PLAN, SCHEDULES, AND DETAILS	
			ELECTRICAL	
30	ARCHSPANCB200-E-001	E-001	ELECTRICAL SYMBOLS, NOTES, AND ABBREVIATIONS	
31	ARCHSPANCB200-E-101	E-101	ELECTRICAL LIGHTING PLAN	
32	ARCHSPANCB200-E-102	E-102	ELECTRICAL POWER AND SYSTEMS PLAN	
33	ARCHSPANCB200-E-501	E-501	ELECTRICAL DETAILS	
34	ARCHSPANCB200-E-601	E-601	ELECTRICAL LIGHTING FIXTURE SCHEDULE	
35	ARCHSPANCB200-E-602	E-602	ELECTRICAL PANEL SCHEDULES	

US ARMY CORPS OF ENGINEERS AFGHANISTAN NORTH DISTRICT

SYMBOL	DESCRIPTION	DATE	APPR.	SYMBOL	DESCRIPTION	DATE	APPR.

U.S. ARMY ENGINEER DISTRICT, AFGHANISTAN
CORPS OF ENGINEERS
APO AE 09356

DESIGNED BY: JDS
DWN BY: JDS
CKD BY: JDS
REVIEWED BY: JH
SUBMITTED BY:
DATE: 3-25-2011
CONTRACT NO. W912ER-09-D-0002
DRAWING CODE:
REV: 0
FILE NAME: ARCHSPANCB200-G-002.DWG
PLOT SCALE: NONE
PLOT DATE: 3/28/2011
BAKER

SITE ADAPT DESIGN
CL08 - CLASSROOM BUILDING - ARCH SPAN
INDEX SHEET

SHEET REFERENCE NUMBER:
G-002

A1 Size 594mm x 841mm

3/28/2011 12:00 PM

LEGEND:

- DENOTES PATHS OF EXIT TRAVEL
- EXIT — DENOTES DOOR AS AN EMERGENCY EXIT
- DENOTES STARTING POINT FOR TRAVEL DISTANCE
- FE — DENOTES FIRE EXTINGUISHER LOCATIONS
- (1) HOUR RATED WALL
- (2) HOUR RATED WALL
- FIRE RESISTANT CEILING
- NON-FIRE RESISTANT CEILING SYSTEM OR EXPOSED FIRE RESISTANT SPRAY-ON INSULATION SYSTEM AT ARCH-SPAN STRUCTURE

REFER TO REFLECTED CEILING PLANS FOR CEILING MATERIALS AND CONFIGURATION

PER MEMORANDUM FOR RECORD DATED 03 FEBRUARY 2011
ANSF CONSTRUCTION STANDARDS DIVISION 09 FINISHES:
CEILING **DO NOT** NEED TO MEET FIRE BOUNDARY CODE REQUIREMENTS.

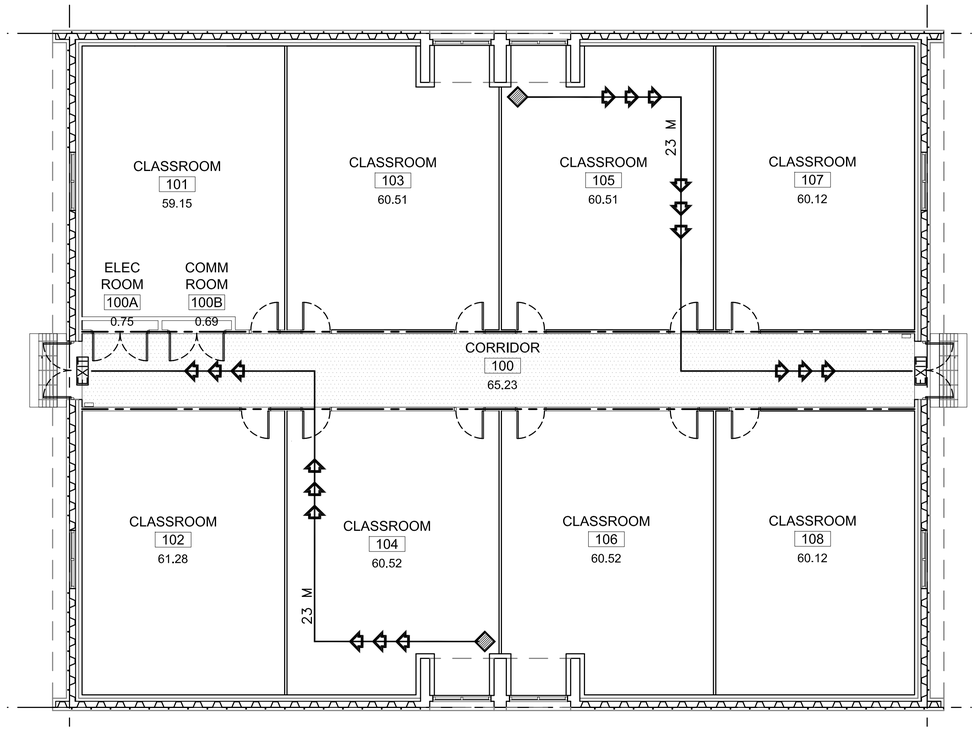

1 / G-003 LIFE SAFETY PLAN
SCALE: 1:100

CODE ANALYSIS:

REFERENCES:
2009 INTERNATIONAL BUILDING CODE (2009 IBC)
2009 LIFE SAFETY CODE (2009 NFPA 101)
2009 NFPA 10 - STANDARD FOR PORTABLE FIRE EXTINGUISHERS.

2. OCCUPANCY CLASSIFICATION:
IBC GROUP A-3 (ASSEMBLY)
NFPA BUISNESS PER NFPA 14.1.1.2 ITEMS (1,2)

3. TYPE OF CONSTRUCTION (IBC): TYPE II-B (UNPROTECTED/NONSPRINKLERED)

4. IBC TABLE 503: ALLOWABLE HEIGHT AND BUILDING AREAS:
GROUP A-3
ALLOWABLE AREA: 883 SM
ALLOWABLE HEIGHT: 2 STORIES (8 M)

GROUP A-3
PROPOSED AREA: 616 SM
PROPOSED HEIGHT: 1 STORY (<8 M)

5. IBC TABLE 601 & 602: FIRE RESISTANCE RATING REQUIREMENTS FOR BUILDING ELEMENTS FOR TYPE II-B

BUILDING ELEMENT	RATING (HOUR)	REFERENCE
STRUCTURAL FRAME (COLUMNS, GIRDERS & TRUSSES)	0	TABLE 601
BEARING WALLS		
EXTERIOR	0	TABLE 601
INTERIOR	0	TABLE 601
NONBEARING WALLS & PARTITIONS		
INTERIOR	0	TABLE 601
FLOOR CONSTRUCTION	0	TABLE 601
ROOF CONSTRUCTION	0	TABLE 601
EXTERIOR WALL	0	TABLE 602

6. IBC TABLE 803.5 - INTERIOR WALL AND CEILING FINISH

REQUIREMENTS FOR A-3 OCCUPANCY/NONSPRINKLERED

GROUP	EXIT ENCLOSURES AND EXIT PASSAGEWAY	CORRIDORS	ROOMS AND ENCLOSED SPACES
A-3	A	A	C

7. NFPA 101 TABLE 7.3.1.2 - OCCUPANT LOAD
ASSEMBLY 616 SM @ 1.4 NET SM/PERSON = 440 OCCUPANTS

8. NFPA 101 TABLE 7.3.3.1 - EGRESS CAPACITY
ASSEMBLY = 5 MM PER OCCUPANT

REQUIRED: 2200 MM (440 OCCUPANTS x 5 MM PER OCCUPANT)
PROPOSED EGRESS CAPACITY: 3600 MM: (2) 1800 MM DOORS

9. NFPA 101 PARAGRAPH 12.2.6 - EXIT ACCESS TRAVEL DISTANCE
REQUIRED: 60 METERS
PROPOSED: 24 METERS

10. NFPA 101 PARAGRAPH 7.1.31 (1) - CORRIDOR FIRE-RESISTANCE RATING (HOUR)
1-HOUR RATED WALL AND CEILINGS

11. NFPA 101 PARAGRAPH 12.2.4.1 AND 7.4.1.1 - MINIMUM NUMBER OF EXITS
REQUIRED: 1 MINIMUM PER CLASSROOM
PROPOSED: 2 EXITS PER CLASSROOM

12. NFPA 101 12.2.2.2.3 - EXIT HARDWARE:
OCCUPANT WAS LESS THAN 100, NO PANIC HARDWARE IS REQUIRED.

NATURAL VENTILATION CALCULATIONS

ROOMNUMBER	ROOM NAME	ROOM NSM	REQ'D WINDOW AREA @4%	WINDOWS TYPE #4	CRITERIA MET
100	CORRIDOR	65.23	2.61	NA	NA
100A	ELEC ROOM	0.75	0.03	NA	NA
100B	COMM ROOM	0.69	0.03	NA	NA
101	CLASSROOM	59.15	2.37	1	YES
102	CLASSROOM	61.28	2.45	1	YES
103	CLASSROOM	60.51	2.42	1	YES
104	CLASSROOM	60.51	2.42	1	YES
105	CLASSROOM	60.51	2.42	1	YES
106	CLASSROOM	60.51	2.42	1	YES
107	CLASSROOM	60.12	2.40	1	YES
108	CLASSROOM	60.12	2.40	1	YES
	TOTAL NET SM	549.38			
	TOTAL GROSS SM	616.00			

0 2000 4000
SCALE: 1:100

UNLESS OTHERWISE NOTED, LINEAR DIMENSIONS SHOWN ARE IN MILLIMETERS.

COMMONWEALTH OF VIRGINIA
PETER GARRETT SCHMIDT
No. 013167
ARCHITECT

US ARMY CORPS OF ENGINEERS
AFGHANISTAN NORTH DISTRICT

SYMBOL	DESCRIPTION	DATE	APPR.	SYMBOL	DESCRIPTION	DATE	APPR.

DATE: 3-25-2011
REV: ___
CONTRACT NO. W912ER-09-D-0002
DRAWING CODE: ___
FILE NAME: ___
PLOT SCALE: ___
PLOT DATE: 3/25/2011
DESIGNED BY: ___
DWN BY: ___
CKD BY: ___
REVIEWED BY: ___
SUBMITTED BY: ___
BAKER

U.S. ARMY ENGINEER DISTRICT, AFGHANISTAN
CORPS OF ENGINEERS
APO AE 09356

SITE ADAPT DESIGN
CL08 - CLASSROOM BUILDING - ARCH SPAN
LIFE SAFETY PLAN AND CODE ANALYSIS

SHEET REFERENCE NUMBER:
G-003

A1 Size 594mm x 841mm

3/25/2011 11:40 AM

STRUCTURAL ABBREVIATIONS:

ACI	AMERICAN CONCRETE INSTITUTE
ADD'L	ADDITIONAL
AISC	AMERICAN INSTITUTE OF STEEL CONSTRUCTION
AISI	AMERICAN IRON AND STEEL INSTITUTE
ASTM	AMERICAN SOCIETY FOR TESTING AND MATERIALS
ARCH	ARCHITECTURAL
B	BOTTOM
BLDG	BUILDING
BOTT	BOTTOM
℄	CENTER LINE
CFMRF	COLD FORM METAL ROOF FRAME
CFMF	COLD FORM METAL FRAME
CFS	COLD FORMED STEEL
CIP	CAST-IN-PLACE
CIPL	CAST-IN-PLACE LINTEL
CJ	CONTROL JOINT
CLR	CLEAR
CMU	CONCRETE MASONRY UNIT
COEFF	COEFFICIENT
COL	COLUMN
CONC	CONCRETE
CONT	CONTINUOUS
COORD	COORDINATE
CRSI	CONCRETE REINFORCING STEEL INSTITUTE
CSJ	CONSTRUCTION JOINT
DIA	DIAMETER
DIAG	DIAGONAL
DIM	DIMENSION
DWG	DRAWING
DWL	DOWEL
EA	EACH
EF	EACH FACE
ELEC	ELECTRICAL
ELEV	ELEVATION
EMBED	EMBEDMENT
EQUIV	EQUIVALENT
ETC	ET CETERA
EW	EACH WAY
EXP	EXPANSION
EXT	EXTERIOR
FND	FOUNDATION
FTG	FOOTING
GA	GAUGE
GB	GRADE BEAM
HORIZ	HORIZONTAL
h	HOUR
HRS	HOURS
IBC	INTERNATIONAL BUILDING CODE
INFO	INFORMATION
INT	INTERIOR
kg	KILOGRAM
km	KILOMETER
kN	KILONEWTON
kPa	KILOPASCAL
L#	ANGLE (# INDICATES SIZE)
LONG	LONGITUDINAL
LLV	LONG LEG VERTICAL
m	METER
MAX	MAXIMUM
MECH	MECHANICAL
MFG	MANUFACTURER
MID	MIDDLE
MIN	MINIMUM
MISC	MISCELLANEOUS
mm	MILLIMETER
MPa	MEGAPASCAL
MTL	METAL
MWFRS	MAIN WIND FORCE RESISTING SYSTEM
N	NEWTON
N	NORTH
N/A	NOT APPLICABLE
#	NUMBER SYMBOL FOR REBAR SIZE
NTS	NOT TO SCALE
OC	ON CENTER
OPNG	OPENING
℄ or PL	PLATE
PRE-ENG	PRE-ENGINEERED
RB	ROOF BEAM
REINF	REINFORCED
REQ'D	REQUIRED
SIM	SIMILAR
SOG	SLAB-ON-GRADE
SPECS	SPECIFICATIONS
STD	STANDARD
STRUCT	STRUCTURAL
SW	SHEAR WALL
T	TOP
T/	TOP OF
T/ELEV	TOP ELEVATION
T/SLAB	TOP OF SLAB
T&B	TOP AND BOTTOM
THK	THICK
TYP	TYPICAL
UFC	UNIFIED FACILITIES CRITERIA
UON	UNLESS OTHERWISE NOTED
VERT	VERTICAL
W	WIDTH
W/	WITH

1.0 GENERAL NOTES:

1.1 THIS PROJECT HAS BEEN DESIGNED FOR THE WEIGHTS AND MATERIALS INDICATED ON THE DRAWINGS AND FOR THE SUPERIMPOSED DEAD AND LIVE LOADS INDICATED IN THE STRUCTURAL DESIGN CRITERIA. IT IS THE CONTRACTOR'S RESPONSIBILITY TO DETERMINE ALLOWABLE CONSTRUCTION LOADS AND TO PROVIDE PROPER DESIGN AND CONSTRUCTION OF FALSEWORK, FORMWORK, STAGING, BRACING, SHEETING AND SHORING, ETC.

1.2 METHODS, PROCEDURES AND SEQUENCES OF CONSTRUCTION ARE THE RESPONSIBILITY OF THE CONTRACTOR. THE CONTRACTOR IS RESPONSIBLE FOR IDENTIFYING AND IMPLEMENTING THE NECESSARY PRECAUTIONS TO MAINTAIN AND ENSURE THE INTEGRITY OF THE STRUCTURE AT ALL STAGES OF CONSTRUCTION.

1.3 COORDINATE THESE DRAWINGS WITH THE ARCHITECTURAL, MECHANICAL, ELECTRICAL, PLUMBING, AND CIVIL DRAWINGS. ALL DIMENSIONS SHOWN ON THE DRAWINGS ARE MILLIMETERS UNLESS NOTED OTHERWISE.

1.4 SLEEVES OR BLOCK-OUTS REQUIRED FOR PASSAGE OF DUCTWORK, PIPING, DRAINS, CONDUIT, ETC, IN ADDITION TO ANCHORS, CURBS AND HANGERS REQUIRED FOR EQUIPMENT AND PIPING AND UNDER-SLAB UTILITIES ARE NOT SPECIFICALLY, NOR GENERALLY, INDICATED ON THE STRUCTURAL DRAWINGS. THE CONTRACTOR IS RESPONSIBLE FOR COORDINATING WORK SHOWN ON OTHER DISCIPLINE'S DRAWINGS AND DETERMINING SUCH REQUIREMENTS PRIOR TO FABRICATION OR ERECTION OF THE STRUCTURE. PENETRATIONS OF STRUCTURAL MEMBERS ARE SUBJECT TO APPROVAL BY THE CONTRACTING OFFICER. REFER TO GENERAL NOTE 8.9 FOR OPENINGS IN ARCH SPAN STRUCTURE.

1.5 DIMENSIONS AND INSTALLATION DETAILS OF PURCHASED EQUIPMENT MUST BE VERIFIED AND COORDINATED WITH THE SUPPORTING STRUCTURE. THE CONTRACTOR IS RESPONSIBLE FOR DETERMINING SUCH REQUIREMENTS FROM SUBCONTRACTORS AND EQUIPMENT SUPPLIERS ALONG WITH COORDINATING THE LOCATIONS AND DETAILS FOR THESE ITEMS PRIOR TO CONSTRUCTION OF EQUIPMENT PADS OR FABRICATION AND ERECTION OF FRAMING INTENDED TO SUPPORT SUCH EQUIPMENT. ANY CONFLICTS BETWEEN THESE ITEMS AND THE BUILDING STRUCTURE IS TO BE BROUGHT TO THE ATTENTION OF THE CONTRACTING OFFICER FOR RESOLUTION. REFER TO GENERAL NOTE 8.10 FOR HANGING LOADS ON ARCH SPAN STRUCTURE.

1.6 WORK NOT INCLUDED ON THE DRAWINGS BUT IMPLIED TO BE SIMILAR TO THAT SHOWN AT CORRESPONDING PLACES ELSEWHERE ON THE DRAWINGS SHALL BE REPEATED.

1.7 IN CASE OF CONFLICT BETWEEN THE NOTES, DETAILS AND SPECIFICATIONS THE MOST RIGID REQUIREMENTS SHALL GOVERN.

1.8 SEE ARCHITECTURAL DRAWINGS FOR LOCATIONS OF NON-LOAD BEARING PARTITIONS. PROVIDE COMPRESSIBLE FIRESAFING AT TOP OF WALL AS REQUIRED BY ARCHITECTURAL DRAWINGS.

1.9 COORDINATE FINISHED FLOOR DATUM ELEVATION 0.0m WITH THE CIVIL DRAWINGS.

2.0 FOUNDATION NOTES

2.1 THE GEOTECHNICAL ANALYSIS FOR THIS PROJECT IS THE RESPONSIBILITY OF THE CONTRACTOR AWARDED THE WORK. AN ASSUMED ALLOWABLE SOIL BEARING VALUE OF 72 kPa HAS BEEN USED IN THE STRUCTURAL ANALYSIS OF THE BUILDING AND SHALL BE CONFIRMED AND VERIFIED AS PART OF THE GEOTECHNICAL INVESTIGATION. VALUES WHICH DO NOT MEET THE REQUIREMENTS INDICATED IN THE STRUCTURAL DESIGN CRITERIA, FOUNDATION LOADS SECTION SHALL BE IMMEDIATELY BROUGHT TO THE ATTENTION OF THE CONTRACTING OFFICER FOR CONSIDERATION AND DETERMINATION ON THE NEXT APPROPRIATE COURSE OF ACTION.

2.2 ELEVATIONS SHOWN ON THE DRAWINGS AT WHICH FOUNDATIONS BEAR ARE APPROXIMATE AND MAY VARY TO SUIT SUBSURFACE SOIL CONDITIONS AND PROJECT GEOTECHNICAL ENGINEER'S RECOMMENDATIONS. ALL EXTERIOR FOOTINGS ARE TO BEAR A MINIMUM OF 800mm BELOW FINISHED GRADE.

2.3 SEE THE SPECIFICATION FOR ADDITIONAL REQUIREMENTS TO THOSE OUTLINED IN THE GEOTECHNICAL INVESTIGATION FOR EXCAVATION AND PREPARATION OF THE FOUNDATION AND THE SLAB ON GRADE SUBGRADE INCLUDING COMPACTION PROCEDURES.

2.4 EXCAVATIONS FOR FOOTINGS SHALL HAVE THE SIDES AND BOTTOMS TEMPORARILY LINED WITH 0.25mm POLYETHYLENE IF PLACEMENT OF CONCRETE DOES NOT OCCUR WITHIN 24 HRS OF THE EXCAVATION OF THE FOOTING.

2.5 FOUNDATION CONDITIONS NOTED DURING CONSTRUCTION WHICH DIFFER FROM THOSE DESCRIBED IN THE GEOTECHNICAL REPORT SHALL BE REPORTED TO THE GENERAL CONTRACTOR AND CONTRACTING OFFICER BEFORE FURTHER CONSTRUCTION IS ATTEMPTED.

2.6 NO FOOTINGS SHALL BE POURED INTO OR AGAINST SUBGRADE CONTAINING FREE WATER, FROST, ICE OR LOOSE MATERIAL.

2.7 CONCRETE SLABS ON GRADE HAVE BEEN DESIGNED TO BEAR ON PROPERLY COMPACTED SUB-BASE STONE AND SUB-GRADE SOILS. THE SUB-BASE MATERIAL BENEATH THE SLAB-ON-GRADE SHALL BE A WELL GRADED CRUSHED STONE (AASHTO #57 OR SIMILAR) AND BE COMPACTED IN ACCORDANCE WITH 95% MODIFIED DENSITY PER ASTM D 1557.

2.8 PRIOR TO START OF FOUNDATION OR SLAB-ON-GRADE CONSTRUCTION, EXISTING SUBGRADES SHALL BE COMPACTED TO MINIMUM OF 95% MAXIMUM DRY DENSITY OBTAINED THRU ASTM D 1557 MODIFIED PROCTOR TESTING.

2.9 SEE PLUMBING, ELECTRICAL & CIVIL DRAWINGS FOR REQUIRED UNDERSLAB UTILITIES.

2.10 SEE ARCHITECTURAL DRAWINGS FOR ALL WATERPROOFING DETAILS AND MATERIALS.

2.11 IF UNDERMINING OF FOOTINGS OCCURS, FILL VOIDS WITH 15 MPa CONCRETE. DO NOT ATTEMPT TO REPLACE AND RE-COMPACT SOIL.

3.0 CONCRETE

3.1 CONCRETE SHALL HAVE THE UNIT WEIGHT OF 2350 kg/m^3 AND A MINIMUM COMPRESSIVE STRENGTH (f'c) OF 28 MPa AT 28 DAYS. ALL CONCRETE SHALL HAVE A MAXIMUM WATER-CEMENT RATIO OF 0.45. SEE SPECIFICATIONS FOR ADDITIONAL INFORMATION. ENTRAIN AIR TO PRODUCE TOTAL AIR CONTENT ACCORDING TO THE SPECIFICATIONS FOR CONCRETE EXPOSED TO FREEZING TEMPERATURES (EXTERIOR FOOTINGS AND STEM WALLS, SLAB TURNDOWNS, EXTERIOR SLABS AND SLABS-ON-GRADE, EXTERIOR RETAINING WALLS.)

3.2 PRIOR TO CONCRETE PLACEMENT, THE CONTRACTOR MUST SUBMIT CONCRETE MIX DESIGNS FOR EACH TYPE OF CONCRETE TO BE USED, PREPARED IN ACCORDANCE WITH THE SPECIFICATIONS TO THE CONTRACTING OFFICER FOR REVIEW.

3.3 NO CALCIUM CHLORIDE SHALL BE USED IN ANY CONCRETE.

3.4 MIXING, TRANSPORTING AND PLACING OF CONCRETE SHALL CONFORM TO ACI 301M-05.

3.5 ALL CONCRETE WORK SHALL CONFORM TO THE REQUIREMENTS OF THE AMERICAN CONCRETE INSTITUTE (ACI) 318M-05 MANUAL (metric), "BUILDING CODE REQUIREMENTS FOR REINFORCED CONCRETE", ACI-301M-05 "SPECIFICATIONS FOR STRUCTURAL CONCRETE FOR BUILDINGS" AND REQUIREMENTS OUTLINED IN THE CONTRACT SPECIFICATIONS.

3.6 CHAMFER ALL EXPOSED EXTERNAL CORNERS OF CONCRETE WITH 20mm x45 DEGREE CHAMFER UON.

3.7 CONCRETE REINFORCEMENT BARS SHALL BE METRIC SIZE BARS AND SHALL CONFORM TO ASTM A615M-07, GRADE 420 MPa, REINFORCING BARS SHALL NOT BE TACK WELDED, WELDED, HEATED OR CUT, UNLESS INDICATED ON THE CONTRACT DOCUMENTS. ALL LAP SPLICES SHALL BE CLASS "B" UON.

3.8 HORIZONTAL FOOTING AND HORIZONTAL WALL REINFORCEMENT SHALL BE CONTINUOUS AND SHALL HAVE 90 DEGREE BENDS AND EXTENSIONS, OR CORNER BARS OF EQUIVALENT SIZE LAPPED WITH A CLASS B TENSION SPLICE AT CORNERS AND INTERSECTIONS. TOP BAR CRITERIA SHALL APPLY IF 300mm OR MORE OF FRESH CONCRETE IS PLACED BELOW BAR.

3.9 SLABS-ON-GRADE SHALL HAVE CONSTRUCTION JOINTS OR CRACK CONTROL JOINTS AS SHOWN ON THE DRAWINGS. CONSTRUCTION JOINTS CAN BE USED AT CONTROL JOINT LOCATIONS AT CONTRACTORS OPTION. SEE SLAB PLANS & JOINT DETAILS FOR ADDITIONAL INFORMATION. FOR AREAS NOT SHOWN ON DWGS, THE MAXIMUM SPACING OF CONSTRUCTION/ CRACK CONTROL JOINTS SHALL BE 3600mm.

3.10 ALL CONCRETE REINFORCEMENT SHALL BE DETAILED, FABRICATED, LABELED, SUPPORTED, AND SPACED IN FORMS AND SECURED IN PLACE IN ACCORDANCE WITH THE PROCEDURES AND REQUIREMENTS OUTLINED IN ACI 318M, AND THE "MANUAL OF STANDARD PRACTICE FOR DETAILING REINFORCED CONCRETE STRUCTURES", ACI 315M, LATEST EDITION.

3.11 ALL DOWELS SHALL MATCH SIZE AND NUMBER OF MAIN REINFORCING, UNLESS NOTED OTHERWISE ON THE DRAWINGS.

3.12 ADDITIONAL BARS SHALL BE PROVIDED AROUND ALL FLOOR AND WALL OPENINGS AS SHOWN ON THE DRAWINGS.

3.13 SEE ARCHITECTURAL DRAWINGS FOR TYPE AND LOCATION OF ALL FLOOR FINISHES.

3.14 SPLICES (LAPS) OF REINFORCING BARS SHALL BE CLASS 'B' TENSION LAPS PER ACI 318M-05 UNLESS NOTED OTHERWISE. SEE SCHEDULE ON S-601.

3.15 PROVIDE ADEQUATE CONCRETE COVER IN ACCORDANCE WITH THE REQUIREMENTS AS SET FORTH BY ACI 318M-05.

3.16 REINFORCEMENT IS TO BE SECURELY HELD IN PLACE WHILE PLACING CONCRETE. IF REQUIRED, ADDITIONAL BARS, STIRRUPS, OR CHAIRS WILL BE PROVIDED BY THE CONTRACTOR TO FURNISH SUPPORT FOR ALL BARS WHERE NECESSARY DURING CONSTRUCTION.

3.17 CONTINUOUS TOP BARS TO BE SPLICED AT MID-SPAN. CONTINUOUS BOTTOM BARS TO BE SPLICED AT CENTERLINE OF SUPPORTS (OR AS SHOWN ON DETAILS).

3.18 CONCRETE SLABS TO BE CURED BY METHOD COMPATIBLE WITH SPECIFIED FLOOR FINISH. WHERE ACCEPTABLE USE A LIQUID MEMBRANE-CURING COMPOUND AT THE MANUFACTURERS RECOMMENDED COVERAGE. SAW JOINTS TO BE CUT AS SOON AS POSSIBLE WITHOUT RAVELING THE SURFACE.

3.19 LEVELING GROUT TO BE NON-SHRINK, NON-METALLIC TYPE, FACTORY PREMIXED GROUT IN ACCORDANCE WITH ASTM C 1107, HAVING A MINIMUM COMPRESSIVE STRENGTH OF NOT LESS THAN 34.5 MPa.

3.20 SLEEVES, INSERTS, MECHANICAL OPENINGS, CONDUITS, PIPES, RECESSES. DEPRESSIONS, CURBS AND OTHER EMBEDDED ITEMS TO BE PROVIDED FOR AS SHOWN ON THE ARCHITECTURAL, MECHANICAL AND ELECTRICAL DRAWINGS AND AS REQUIRED BY EQUIPMENT MANUFACTURERS. INSTALLATION OF THESE ITEMS TO BE COORDINATED AND PROVIDED FOR PRIOR TO PLACING CONCRETE.

3.21 EPOXY ADHESIVE SUCH AS EUCO-#452 AS MANUFACTURED BY EUCLID CHEMICAL CO. OR HVA ADHESIVE SYSTEM AS MANUFACTURED BY HILTI, INC. SHALL BE USED WHERE REBAR DOWELS ARE TO BE INSTALLED INTO EXISTING CONCRETE.

3.0 CONCRETE CONT

3.22 ANCHOR RODS TO BE ASTM F 1554 FY=248 MPa MINIMUM, GALVANIZED, UNLESS NOTED OTHERWISE.

3.23 UNLESS NOTED OTHERWISE, ALL CURBS SHALL BE REINFORCED WITH AT LEAST (1)-#14 CONTINUOUS AND #14 AT 450mm O.C. DOWELS TO THE SLAB-ON-GRADE.

3.24 PROVIDE ADDITIONAL (2)-#14 x 600mm REINFORCING BARS IN SLAB-ON GRADE AT ALL RE-ENTRANT CORNERS. PLACE BARS AT MID-DEPTH OF SLAB WITH A CLEARANCE OF 50mm FROM CORNER UON.

3.25 COLD-WEATHER PLACEMENT: COMPLY WITH ACI 306.1 AND AS FOLLOWS. PROTECT CONCRETE WORK FROM PHYSICAL DAMAGE OR REDUCED STRENGTH THAT COULD BE CAUSED BY FROST, FREEZING ACTIONS, OR LOW TEMPERATURES. SUBMIT A COLD WEATHER CONCRETING PLAN FOR APPROVAL.

3.26 PROVIDE BONDING COMPOUND PER ASTM C 1059-99: SPECIFICATION FOR LATEX AGENTS FOR BONDING FRESH CONCRETE (GROUT) TO HARDENED CONCRETE.

3.27 THE FORMED SURFACES FOR REINFORCED CONCRETE SHALL ACHIEVE A "CLASS A" FINISH WHEN EXPOSED OR A "CLASS B" FINISH WHEN RECEIVING PLASTER OR TILE AS PER SPECIFICATION SECTION 03 31 00 CAST-IN-PLACE STRUCTURAL CONCRETE.

4.0 CONCRETE MASONRY

4.1 MASONRY CONSTRUCTION SHALL CONFORM TO SPECIFICATION FOR MASONRY STRUCTURES (ACI 530.1) UON.

4.2 STRENGTH OF MASONRY MATERIALS SHALL BE AS FOLLOWS:

A. CONCRETE MASONRY UNITS SHALL BE NORMAL WEIGHT, GRADE N, TYPE 1, CONFORMING TO ASTM C-90 AND HAVE A MINIMUM COMPRESSIVE STRENGTH OF 13.1 MPa ON THE NET AREA.

B. MORTAR SHALL CONFORM TO ASTM C-270 TYPE S.

C. GROUT FOR MASONRY SHALL BE NORMAL WEIGHT AND HAVE A MINIMUM COMPRESSIVE STRENGTH OF 14 MPa AT 28 DAYS. GROUT SHALL CONFORM TO ASTM C476M. GROUT LIFTS SHALL NOT EXCEED 1500mm.

D. REINFORCED MASONRY SHALL HAVE A STRENGTH F'm = 10.3 MPa. (F'm IS THE COMPRESSIVE STRENGTH OF THE MASONRY AT 28 DAYS AS DETERMINED BY PRISM TESTS).

4.3 ALL VERTICAL REINFORCEMENT FOR CONCRETE MASONRY SHALL BE ASTM A615M-07, GRADE 420 MPa. ALL SPLICES SHALL BE LAPPED 48 BAR DIAMETERS MINIMUM.

4.4 CMU CELLS THAT REQUIRE VERTICAL REINFORCING BARS AS INDICATED ON THE CONTRACT DRAWINGS AND/OR SPECS SHALL HAVE REINF BARS PLACED IN CENTERS OF CMU CELLS AND CONTINUOUSLY GROUTED UON.

4.5 CONTRACTOR SHALL COORDINATE LOCATION OF ALL OPENINGS SEE ARCH, MECH, ELEC, AND PLUMBING SHEETS FOR SIZE AND LOCATION OF OPENINGS. PROVIDE SINGLE COURSE SOLID GROUTED BOND BEAMS REINFORCED WITH 2 #14 OVER ALL OPENINGS IN CMU WALLS. BEAR BOND BEAMS AT LEAST 200mm ON SOLID GROUTED, VERTICALLY REINFORCED CMU AT EACH SIDE OF THE OPENING. PASS VERTICAL JAMB REINFORCING THROUGH THE BOND BEAM AND EXTEND TO TOP OF WALL. NO OPENING IN CMU WALLS SHALL EXCEED 800mm.

4.6 HORIZONTAL JOINT REINFORCING TO BE GALVANIZED, STANDARD CLASS, LADDER TYPE, CONFORMING TO ASTM A 82, SPACED AT EVERY OTHER COURSE UNO. SIDE RODS TO BE 5mm WITH 4mm CROSS RODS. PROVIDE ONE-PIECE PREFABRICATED REINFORCING UNITS AT EVERY COURSE AT ALL WALL CORNERS AND INTERSECTIONS AND IN THE FIRST TWO COURSES ABOVE AND BELOW MASONRY OPENINGS. PROVIDE LAP AS RECOMMENDED BY THE MANUFACTURER WITH A MINIMUM OF 300mm. DISCONTINUE HORIZONTAL JOINT REINFORCING AT CONTROL JOINTS.

4.7 ALL MASONRY TO BE CONSTRUCTED USING A RUNNING BOND PATTERN. FULL BED AND HEAD JOINTS MUST BE USED. ALL CORNERS TO BE TIED BY MASONRY BOND.

4.8 DOWEL REINFORCED MASONRY WALLS TO FOUNDATION. SIZE DOWELS TO MATCH WALL REINFORCEMENT. LOCATE DOWELS IN CELLS TO CONTAIN WALL REINFORCEMENT. LAP DOWELS AND WALL REINFORCEMENT A MINIMUM OF 48 BAR DIAMETERS UNO.

4.9 DURING CONSTRUCTION, COVER AND PROTECT THE TOPS OF MASONRY WALLS AT THE END OF EACH DAY.

UNLESS OTHERWISE NOTED, LINEAR DIMENSIONS SHOWN ARE IN MILLIMETERS.

COMMONWEALTH OF PENNSYLVANIA
REGISTERED PROFESSIONAL ENGINEER
JOSEPH D. MEIER
PE-039925E

US ARMY CORPS OF ENGINEERS AFGHANISTAN NORTH DISTRICT

SYMBOL	DESCRIPTION	DATE	APPR.

SYMBOL	DESCRIPTION	DATE	APPR.

U.S. ARMY ENGINEER DISTRICT, AFGHANISTAN
CORPS OF ENGINEERS
APO AE 09356

DESIGNED BY: JDM
DWN BY: RMS
CKD BY: EPS
REVIEWED BY: JH
SUBMITTED BY: BAKER
DATE: 3-25-2011
CONTRACT NO.: W912ER-09-D-0002
DRAWING CODE:
REV. 0
FILE NAME:
PLOT SCALE: NONE
PLOT DATE: 3/28/2011

SITE ADAPT DESIGN
CL08 - CLASSROOM BUILDING - ARCH SPAN
ABBREVIATIONS AND GENERAL NOTES

SHEET REFERENCE NUMBER:
S-001

3/28/2011 2:11 PM

5.0 STRUCTURAL STEEL

5.1 STRUCTURAL STEEL WORK IS TO BE DESIGNED AND CONSTRUCTED IN ACCORDANCE WITH THE AMERICAN INSTITUTE OF STEEL CONSTRUCTION (AISC) "SPECIFICATIONS FOR STRUCTURAL STEEL BUILDINGS" (THIRTEENTH EDITION) AND THE "CODE OF STANDARD PRACTICE FOR STEEL BUILDINGS AND BRIDGES".

5.2 STRUCTURAL STEEL, UNLESS NOTED OTHERWISE, SHALL CONFORM TO THE FOLLOWING:
- A. WIDE FLANGE SHAPES AND WT'S: ASTM A992.
- B. CHANNELS, ANGLES, PLATES AND MISC. CONNECTION MATERIAL: ASTM A-36.
- C. STEEL TUBING: ASTM A500, GRADE B, WITH FY = 290 MPa FOR ROUND AND FY = 315 MPa FOR RECTANGULAR.

5.3 PRIOR TO FABRICATION, THE STEEL FABRICATOR IS TO SUBMIT SHOP DRAWINGS SHOWING ERECTION PLANS, PIECE DRAWINGS, AND CONNECTION DETAILS TO THE CONTRACTING OFFICER FOR REVIEW.

5.4 STRUCTURAL STEEL FABRICATOR IS TO PROVIDE FOR VERTICAL AND HORIZONTAL FIELD ADJUSTMENT OF ALL SUPPORT ASSEMBLIES.

5.5 CUTS, HOLES, COPING, ETC REQUIRED FOR OTHER TRADES MUST BE SHOWN ON THE SHOP DRAWINGS AND MADE IN THE SHOP. CUTS OR BURNING OF HOLES IN THE FIELD WILL NOT BE PERMITTED.

5.6 FABRICATE FRAMING COMPONENTS IN THE SHOP TO THE GREATEST EXTENT POSSIBLE. IN GENERAL, STRUCTURAL STEEL CONNECTIONS TO BE SHOP AND FIELD WELDED. ALL WELDS SHALL BE 3/16" FILLET WELDS UNLESS NOTED OTHERWISE.

5.7 WELDING TO BE IN ACCORDANCE WITH THE AMERICAN WELDING SOCIETY (AWS) "STRUCTURAL WELDING CODE-ANSI/AWS D1.1/D1.1M" (LATEST EDITION). USE E70XX ELECTRODES UNLESS OTHERWISE INDICATED ON THE DRAWINGS.

5.8 POST INSTALLED BOLTS TO BE ADHESIVE TYPE ANCHORS. BOLTS SHALL BE CARBON STEEL THREADED RODS OF THE DIAMETER INDICATED ON THE DRAWINGS WITH APPROPRIATE NUT, WASHER AND INJECTABLE ADHESIVE MATERIAL. BASIS OF DESIGN ARE HILTI HVA ADHESIVE ANCHORS WITH STANDARD EMBEDMENT, MANUFACTURED BY HILTI FASTENING SYSTEMS. ANY ANCHOR MEETING PUBLISHED LOAD VALUES OF HILTI ANCHORS MAY BE USED WITH APPROPRIATE EMBEDMENT. INSTALL ANCHORS PER MANUFACTURERS RECOMMENDATIONS.

5.9 HEADED SHEAR STUDS CONNECTORS TO CONFORM TO ASTM A 108, GRADE 1015 OR 1020, COLD-FINISHED CARBON STEEL.

5.10 PAINT AND PROTECTION:
- A. STRUCTURAL STEEL, UNLESS INDICATED OTHERWISE, TO BE SHOP CLEANED PER SSPC SP3 AND PAINTED ONE SHOP COAT OF FABRICATOR'S STANDARD RUST INHIBITING PRIMER. TOUCH UP AFTER ERECTION.
- B. DO NOT PAINT STEEL WHERE ENCASED WITH CONCRETE, OR AT FIELD WELD AREAS.
- C. EXPOSED STRUCTURAL STEEL FOR BREEZEWAY ROOFS, EQUIPMENT PLATFORMS, ETC, TO BE HOT DIPPED GALVANIZED PER ASTM A-123
- D. GALVANIZED FASTENERS AND ACCESSORIES TO BE HOT DIPPED GALVANIZED PER ASTM A153/A153M.
- E. REPAIR DAMAGE TO GALVANIZED COATINGS USING ASTM A780 ZINC RICH PAINT.
- F. PROVIDE MINIMUM 75mm CONCRETE COVER FOR ALL STEEL BELOW GRADE.

6.0 METAL DECK - NOT USED

7.0 COLD-FORMED METAL FRAMING

7.1 SEE ARCHITECTURAL DRAWINGS FOR EXTENT OF COLD-FORMED METAL FRAMING, INCLUDING PARTITION WALLS AND CEILINGS. ALSO REFERENCE ARCHITECTURAL DRAWINGS FOR ADDITIONAL INFORMATION INCLUDING SHEATHING TYPE, FINISHES AND OPENINGS.

7.2 ALL COLD-FORMED METAL FRAMING MEMBERS SHALL CONFORM TO ASTM A1003M, STRUCTURAL GRADE ST230 (MPa), WITH A GALVANIZED COATING OF Z275 OR BETTER IN ACCORDANCE WITH ASTM A653M.

7.3 ALL COLD-FORMED METAL FRAMING MEMBERS SHALL HAVE THE FOLLOWING MINIMUM PROPERTIES:
- A. MINIMUM METAL THICKNESS:
  - TRACK = 1.37mm
  - CEILING JOIST = 1.09mm
  - WALL STUD/OTHER = 1.09mm
- B. MINIMUM FLANGE WIDTH:
  - TRACK = 38mm
  - CEILING JOIST = 35mm
  - WALL STUD/OTHER = 35mm
- C. MINIMUM MEMBER DEPTH:
  - CEILING JOIST = 152mm
  - WALL STUD/OTHER = 92mm

7.4 CEILING JOISTS HAVE BEEN DESIGNED TO CARRY 0.47KPA, INCLUDING SELF WEIGHT OF METAL FRAMING, TWO LAYERS OF GYPSUM WALL BOARD AND NOMINAL MEP LOADING. NO LIVE LOAD HAS BEEN INCLUDED. THE SPACE ABOVE THE CEILING IS NOT INTENDED FOR STORAGE OR TO BE USED AS A WALKWAY. PROVIDE CEILING JOIST FRAMING OF SIZE INDICATED IN NOTE 7.3 AND AS FOLLOWS:
- A. JOIST SPANS LESS THAN 4600: JOISTS SHALL BE SPACED AT 400 AND HAVE DIAGONAL OR SOLID BRIDGING AT EACH END AND AT THE MIDSPAN.
- B. JOIST SPANS BETWEEN 4600 AND 6400: JOISTS SHALL BE SPACED AT 400 AND HAVE DIAGONAL OR SOLID BRIDGING AT EACH END AND AT THE QUARTER POINTS.
- C. JOIST SPANS BETWEEN 6400 AND 7800: JOISTS SHALL BE SPACED AT 200 (OR DOUBLE JOISTS AT 400) AND HAVE DIAGONAL OR SOLID BRIDGING AT EACH END AND AT THE QUARTER POINTS.
- D. JOIST SPANS EQUAL TO OR OVER 7800: JOISTS SHALL HAVE DIAGONAL OR SOLID BRIDGING AT EACH END AND AT THE QUARTER POINTS AND SHALL BE SUSPENDED FROM THE ARCH-SPAN TABS ABOVE AT 1200 EACH WAY.
- E. HEADERS WITH SPANS LESS THAN OR EQUAL TO 3000 CARRYING CEILING JOISTS WITH UP TO 5400 IN TRIBUTARY WIDTH SHALL BE FULLY CONNECTED TO EACH JOIST AND SHALL BE DOUBLE MEMBERS. HEADERS WITH A LARGER SPAN OR MORE TRIBUTARY WIDTH SHALL BE SUSPENDED FROM THE ARCH-SPAN TABS AT 1200 OC. SEE GENERAL NOTE 8.1 FOR MAXIMUM LOADS ON TABS.

7.5 WALL STUDS HAVE BEEN DESIGNED TO CARRY CEILING LOADING NOTED IN NOTE 7.3, UP TO 7800 IN TRIBUTARY WIDTH. PROVIDE WALL STUD FRAMING OF SIZE INDICATED IN NOTE 7.3 AND AS FOLLOWS:
- A. WALL HEIGHTS LESS THAN 3000: STUDS SHALL BE SPACED AT 400 AND HAVE BLOCKING AT 1200 MAXIMUM.
- B. WALL HEIGHTS BETWEEN 3000 AND 4900: STUDS SHALL BE SPACED AT 300 AND HAVE BLOCKING AT 1200 MAXIMUM.
- C. WALL HEIGHTS OVER 4900 WHICH MUST ALSO SUPPORT CEILING WEIGHT SHALL BE DESIGNED BY THE METAL FRAMING CONTRACTOR'S ENGINEER.

7.6 WALL STUDS WITHOUT CEILING LOADS MUST BE BRACED BACK TO THE ARCH-SPAN TABS ABOVE AT 1200 MAXIMUM. SEE ARCHITECTURAL DRAWINGS FOR BRACING DETAILS. DO NOT SECURE TOPS OF STUD WALLS TO THE UNDERSIDE OF THE ARCH-SPAN BUILDING PANELS. THESE STUDS HAVE BEEN DESIGNED TO CARRY ONLY THEIR OWN SELF WEIGHT DURING A SEISMIC EVENT. PROVIDE WALL STUD FRAMING OF SIZE INDICATED IN NOTE 7.3 AND AS FOLLOWS:
- A. WALL HEIGHTS LESS THAN 5000: STUDS SHALL BE SPACED AT 400 AND HAVE BLOCKING AT 1200 MAXIMUM.
- B. WALL HEIGHTS BETWEEN 5000 AND 5500: STUDS SHALL BE SPACED AT 300 AND HAVE BLOCKING AT 1200 MAXIMUM.
- C. WALL HEIGHTS BETWEEN 5500 AND 6400: STUDS SHALL BE SPACED AT 200 AND HAVE BLOCKING AT 1200 MAXIMUM.
- D. WALL HEIGHTS BETWEEN 6400 AND 8700: STUDS SHALL BE THE SAME SIZE AS NOTED FOR JOISTS AND SPACED AT 300 AND HAVE BLOCKING AT 1200 MAXIMUM.
- E. CANTILEVERED HEIGHT PAST BRACE POINT IS NOT TO EXCEED 1/4 OF THE HEIGHTS NOTED IN NOTES A, B, AND C. IE, FOR STUDS SPACED AT 400 WITH BLOCKING AT 1200 MAXIMUM, HEIGHT ABOVE THE BRACE IS NOT TO EXCEED 1250.

7.7 FOR WALLS THAT CARRY CEILING LOAD AND EXTEND PAST THE CEILING, APPLY NOTES 7.4 AND 7.5 AS REQUIRED. USE THE MORE SEVERE WALL CONSTRUCTION FOR THE ENTIRE WALL CONSTRUCTION.

7.8 PROVIDE DOUBLE MEMBER JOISTS OR WALL STUDS AT EACH SIDE OF OPENINGS.

7.9 ALL CONNECTIONS SHALL BE MADE WITH CORROSION RESISTANT (ASTM A153M), SELF-DRILLING, SELF-TAPPING STEEL DRILL SCREWS IN ACCORDANCE WITH ASTM C1513.

7.10 FABRICATE COLD FORMED METAL FRAMING AND ACCESSORIES PLUMB, SQUARE AND TRUE TO LINE, WITH CONNECTIONS SECURELY FASTENED ACCORDING TO AISI STANDARD FOR COLD FORMED STEEL FRAMING.

7.11 FRAMING COMPONENTS ARE TO BE CUT SQUARELY FOR ATTACHMENT TO PERPENDICULAR MEMBERS OR AS REQUIRED FOR AN ANGULAR FIT AGAINST ABUTTING MEMBERS.

7.12 CUT FRAMING MEMBERS BY SAWING OR SHEATHING, DO NOT TORCH CUT.

7.13 INSTALL FRAMING MEMBERS IN ONE-PIECE LENGTHS.

7.14 INSTALL TEMPORARY BRACING AND SUPPORTS AS REQUIRED TO SECURE FRAMING DURING CONSTRUCTION. MAINTAIN BRACING AND SUPPORTS IN PLACE UNTIL THE STRUCTURE HAS BEEN COMPLETED WITH ALL CONNECTIONS AND PERMANENT BRACING SECURED.

8.0 ARCH SPAN

8.1 USE UBM OR ABM MACHINES OR EQUIVALENT THAT WILL PRODUCE THE ARCH SPAN PANELS OF PROFILE AND THICKNESS NOTED ON THE DRAWINGS.

8.2 ARCH-SPAN BASIS OF DESIGN ARE THE 240 PROFILE PANELS PRODUCED BY MIC INDUSTRIES MACHINES WITH A STEEL THICKNESS OF 1.52mm (16GA). SUBSTITUTE PANELS MUST MEET THE NOMINAL STRENGTH CAPACITIES LISTED WITH THE PANEL PROFILE SHOWN IN DETAIL 2/S-202. SUBSTITUTE PANEL STRENGTH CAPACITIES SHALL ACCOUNT FOR THE REDUCTION TO NOMINAL NEGATIVE MOMENT AND AXIAL LOAD CAPACITIES DUE TO THE CURVING PROCESS. CONTRACTORS PROVIDING SUBSTITUTE PANELS MUST ALSO REVISE DETAILS/DIMENSIONS WORKED SPECIFICALLY FOR THE PANEL PROFILES USED AS THE BASIS OF DESIGN. THIS INCLUDES, BUT MAY NOT BE LIMITED TO, FOUNDATIONS, ENDWALL OPENINGS, SIDEWALL OPENINGS, OPENING FRAMES AND OUT-BUILDING ROOF PANELS.

8.3 ARCH SPAN PANELS WILL BE ROLLED ON-SITE USING GALVANIZED STEEL COILS CONFORMING TO ASTM A653M-06A, STRUCTURAL QUALITY (SS), GRADE 340, CLASS Z275 FOR GALVANIZED COATING.

8.4 ENDWALL PANELS SHALL BE THE SAME PROFILE AND THICKNESS AS THE ARCH SPAN PANELS USED FOR THE ROOF.

8.6 CONTRACTOR IS TO ENGAGE AN EXPERIENCED INSTALLER TO ERECT THE ARCH SPAN BUILDING. CONSTRUCTION CREWS SHALL BE TRAINED IN THE USE OF THE PANEL ROLLING MACHINES AND IN THE ERECTION OF THE PANELS.

8.7 EXERCISE CARE IN DELIVERING, UNLOADING, STORING AND ERECTING STEEL COILS AND BUILDING PANELS TO PREVENT BENDING, WARPING, TWISTING AND SURFACE DAMAGE.

8.8 ERECT PANELS TRUE TO LINE, LEVEL AND PLUMB. ROOF LINE SHALL BE STRAIGHT AND LEVEL, RADIUS SHALL BE CONSISTENT THROUGHOUT AND ENDWALLS SHALL BE STRAIGHT AND PLUMB.

8.9 WINDOW AND DOOR OPENINGS SHALL BE FRAMED PER DETAILS ON THE DRAWINGS.

8.10 INCIDENTAL OPENINGS (COORDINATE WITH ARCHITECTURAL AND MEP DRAWINGS) IN THE PANELS SHALL BE NO MORE THAN 200mm IN DIAMETER AND SHALL BE PLACED THROUGH A "FLAT" PORTION OF THE PANEL. OPENINGS SHALL NOT BE CUT THROUGH ANY VERTICAL OR DIAGONAL RIB.

8.11 HANGER TABS AS DETAILED ON THE DRAWINGS SHALL BE INSTALLED PER LAYOUT ON THE TYPICAL BUILDING SECTION. ALL SUSPENDED LOADS SHALL BE CONNECTED TO HANGER TABS. HANGER TABS AT LESS THAN 30 DEGREES FROM VERTICAL CAN CARRY NO MORE THAN 100 KG EACH. HANGER TABS AT MORE THAN 30 DEGREES FROM VERTICAL CAN CARRY NO MORE THAN 25 KG EACH.

9.0 STRUCTURAL DESIGN CRITERIA

9.1 ALL DESIGNS SHALL CONFORM TO THE PROVISIONS OF THE IBC 2009 AND ASCE 7-05. OCCUPANCY CATEGORY II

9.2 DESIGN LOADS

9.2.1 DEAD LOADS (PER IBC 2009 & UFC 3-301-01)

MECH/ELEC/PLUMBING	0.10 kPa
SUSPENDED CEILING	0.24 kPa
INSULATION	0.10 kPa
ARCH SPAN STEEL: 240 PROFILE x 1.52mm	0.19 kPa
TOTAL DEAD LOAD	0.63 kPa
MINIMUM (FOR UPLIFT)	0.34 kPa

9.2.2 LIVE LOADS (PER IBC 2009 & UFC 3-301-01)

ROOF (CURVED)	0.57 kPa
ROOF (LOW SLOPE)	0.96 kPa
SLAB ON GRADE - DINING	4.80 kPa
SLAB ON GRADE - KITCHEN/WOOD STOVE/STORAGE	7.18 kPa
MECHANICAL PLATFORM	7.18 kPa

9.2.3 SNOW LOADS (PER IBC 2009 & UFC 3-301-01)

GROUND SNOW LOAD (Pg)	1.2 kPa
SNOW IMPORTANCE FACTOR (I)	1.0
SNOW EXPOSURE FACTOR (Ce)	0.9
THERMAL FACTOR (Ct)	1.1

9.2.4 WIND LOADS (PER IBC 2009)

BASIC WIND SPEED	137 km/h
WIND IMPORTANCE FACTOR	1.0
WIND EXPOSURE CATEGORY	C
DIRECTIONALITY COEFFICIENT (Kd)	0.85
TOPOGRAPHIC FACTOR (Kzt)	1.0

9.2.5 SEISMIC LOADS (PER IBC 2009 & UFC 3-310-04)

SEISMIC IMPORTANCE FACTOR (Ie)	1.0
SEISMIC SITE CLASS	D
S_s =	2.40
S_1 =	1.20
S_{DS} =	1.6
S_{D1} =	1.2
SEISMIC DESIGN CATEGORY	E

SEISMIC RESISTING SYSTEM: MAIN ARCH SPAN BUILDING
- -STRUCTURAL STEEL SYSTEMS NOT SPECIFICALLY DETAILED FOR SEISMIC RESISTANCE
- -RESPONSE MODIFICATION FACTOR (R) 2 (CONSERVATIVE)
- -RESPONSE COEFFICIENT (Cs) 0.5

SEISMIC RESISTING SYSTEM: WOOD STOVE BUILDING AND PROPANE ENCLOSURE
- -SPECIALLY REINFORCED CONCRETE SHEAR WALLS
- -RESPONSE MODIFICATION FACTOR (R) 5
- -RESPONSE COEFFICIENT (Cs) 0.2

SEISMIC RESISTING SYSTEM: BREEZEWAY CONNECTORS
- -CANTILEVERED COLUMN SYSTEM CONFORMING TO SPECIAL REINFORCED CONCRETE MOMENT FRAMES
- -RESPONSE MODIFICATION FACTOR (R) 2.5 (CONSERVATIVE)
- -RESPONSE COEFFICIENT (Cs) 0.4

SEISMIC RESISTING SYSTEM: PROPANE STORAGE BUILDING & MECHANICAL EQUIPMENT PLATFORM
- -ORDINARY STEEL MOMENT FRAMES [RE: ASCE 7-05 12.2.5.7]
- -RESPONSE MODIFICATION FACTOR (R) 3.5
- -RESPONSE COEFFICIENT (Cs) 0.286

SEISMIC ANALYTICAL PROCEDURE = EQUIV LATERAL FORCE

9.3 FOUNDATION DESIGN CRITERIA

9.3.1 FOUNDATION DESIGN IS BASED UPON THE FOLLOWING SOIL PARAMETERS:
ASSUMED NET ALLOWABLE SOIL BEARING PRESSURE FOR ALL SPREAD FOOTINGS: 72 kPa

9.3.2 ASSUMED LATERAL EARTH PRESSURE PARAMETERS:
- SOIL DENSITY = 1800 KG/M^3
- COEFFICIENT OF ACTIVE PRESSURE (KA) = 0.41
- COEFFICIENT OF AT-REST PRESSURE (KO) = 0.58
- COEFFICIENT OF PASSIVE EARTH PRESSURE (KP) = 2.44
- ANGLE OF INTERNAL FRICTION (PHI) = 25 DEGREES
- COEFFICIENT OF FRICTION (U) = 0.35
- MODULUS OF SUB-GRADE REACTION (KS) = 4150 G/CM^3

9.3.3 FROST DEPTH: ASSUMED TO BE 800mm

UNLESS OTHERWISE NOTED, LINEAR DIMENSIONS SHOWN ARE IN MILLIMETERS.

COMMONWEALTH OF PENNSYLVANIA REGISTERED PROFESSIONAL ENGINEER JOSEPH D. MEIER PE-039925E

US ARMY CORPS OF ENGINEERS AFGHANISTAN NORTH DISTRICT

DATE: 3-25-2011 REV. 0
CONTRACT NO. W912ER-09-D-0002
DRAWING CODE:
FILE NAME:
PLOT SCALE: NONE
PLOT DATE: 3/28/2011
DESIGNED BY: JDM
DWN BY: RMS
CKD BY: EPS
REVIEWED BY: JH
SUBMITTED BY:
BAKER

U.S. ARMY ENGINEER DISTRICT, AFGHANISTAN CORPS OF ENGINEERS APO AE 09356

SITE ADAPT DESIGN
CL08 - CLASSROOM BUILDING - ARCH SPAN
GENERAL NOTES AND DESIGN CRITERIA

SHEET REFERENCE NUMBER:
S-002

A1 Size 594mm x 841mm

3/28/2011 2:11 PM

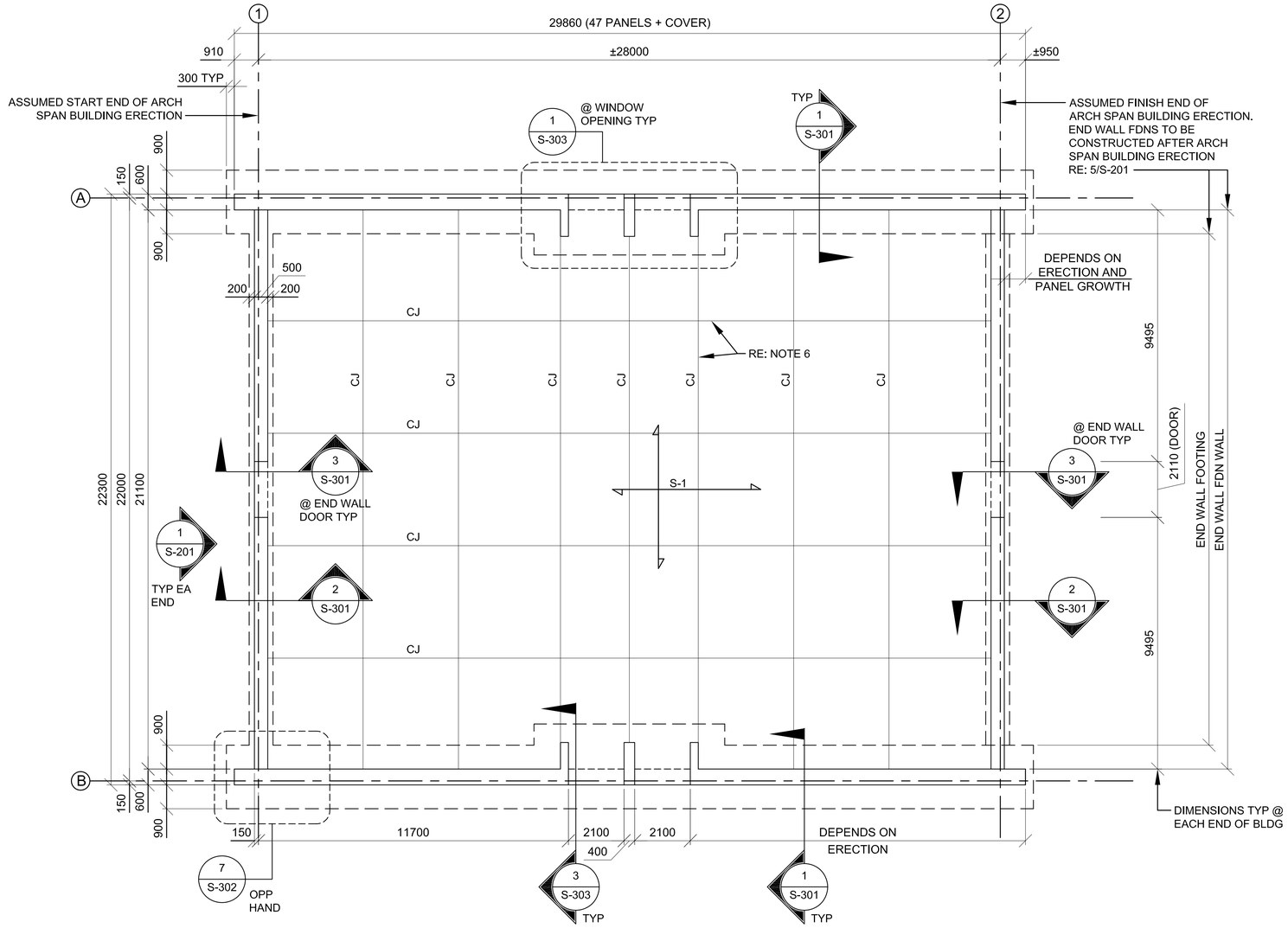

1 S-101 FOUNDATION PLAN

SCALE: 1:100

FOUNDATION PLAN NOTES:

1. RE: DRAWINGS S-001 AND S-002 FOR GENERAL NOTES AND DESIGN CRITERIA.
2. COORDINATE DIMENSIONS, WALL OPENINGS, ELEVATIONS, SECTIONS, AND DETAILS WITH ARCHITECTURAL DRAWINGS.
3. TOP OF SLAB ELEVATION MUST BE COORDINATED WITH SITE ADAPT CIVIL DRAWINGS. TOP OF FLOOR SLAB IS AT THE DATUM ELEVATION = 0. ALL ELEVATIONS ARE REFERENCED FROM THIS ELEVATION.
4. BOTTOM OF CONCRETE FOOTING ELEVATIONS = -950 (BELOW TOP OF SLAB, TYP UNO).
5. S-1 DENOTES A 100 CONCRETE SLAB-ON-GRADE REINFORCED WITH #10 @ 400. PLACE SLAB OVER 0.25 VAPOR RETARDER AND 100 COMPACTED GRANULAR SUB-BASE MATERIAL SUCH AS AASHTO #57 STONE.
6. SPACE SLAB CONTROL/CONSTRUCTION JOINTS AS SHOWN. CJ = CONTROL OR CONSTRUCTION JOINT, RE: 2/S-501.
7. PROVIDE ADDITIONAL SLAB REINFORCEMENT AT ALL RE-ENTRANT CORNERS, RE: 8/S-501.
8. RE: DRAWING S-501 FOR TYPICAL FOUNDATION AND SLAB DETAILS.
9. LOCATION OF FLOOR DRAINS ARE NOT SHOWN, COORDINATE LOCATIONS AND SLOPE OF SLAB WITH PLUMBING AND ARCHITECTURAL DRAWINGS.
10. COORDINATE MECHANICAL PENETRATIONS W/ M/E/P DRAWINGS.
11. TD INDICATES APPROXIMATE LOCATION OF TRENCH DRAIN. COORDINATE EXACT LOCATION W/ ARCHITECTURAL AND PLUMBING DRAWINGS.
12. PROVIDE REINFORCED CONCRETE WALK-OFF MATS AT ALL EXTERIOR DOORS RE: A-503 FOR DETAILS AND ARCHITECTURAL FLOOR PLAN FOR LOCATIONS.

N

0 2000 4000

SCALE: 1:100

UNLESS OTHERWISE NOTED, LINEAR DIMENSIONS SHOWN ARE IN MILLIMETERS.

COMMONWEALTH OF PENNSYLVANIA
REGISTERED PROFESSIONAL
JOSEPH D. MEIER
ENGINEER
PE-039920-E

US ARMY CORPS OF ENGINEERS
AFGHANISTAN NORTH DISTRICT

SYMBOL	DESCRIPTION	DATE	APPR.	SYMBOL	DESCRIPTION	DATE	APPR.

DESIGNED BY: JDM
DWN BY: RMS
CKD BY: EPS
REVIEWED BY: JH
SUBMITTED BY:
DATE: 3-25-2011
CONTRACT NO. W912ER-09-D-0002
DRAWING CODE:
REV: 0
FILE NAME: W912ER-09-D-0002-CL08-S-101.DWG
PLOT SCALE: 1:100
PLOT DATE: 3/28/2011

BAKER

U.S. ARMY ENGINEER DISTRICT, AFGHANISTAN
CORPS OF ENGINEERS
APO AE 09356

SITE ADAPT DESIGN
CL08 - CLASSROOM BUILDING - ARCH SPAN
FOUNDATION PLAN

SHEET REFERENCE NUMBER:
S-101

3/28/2011 2:11 PM

A1 Size 594mm x 841mm

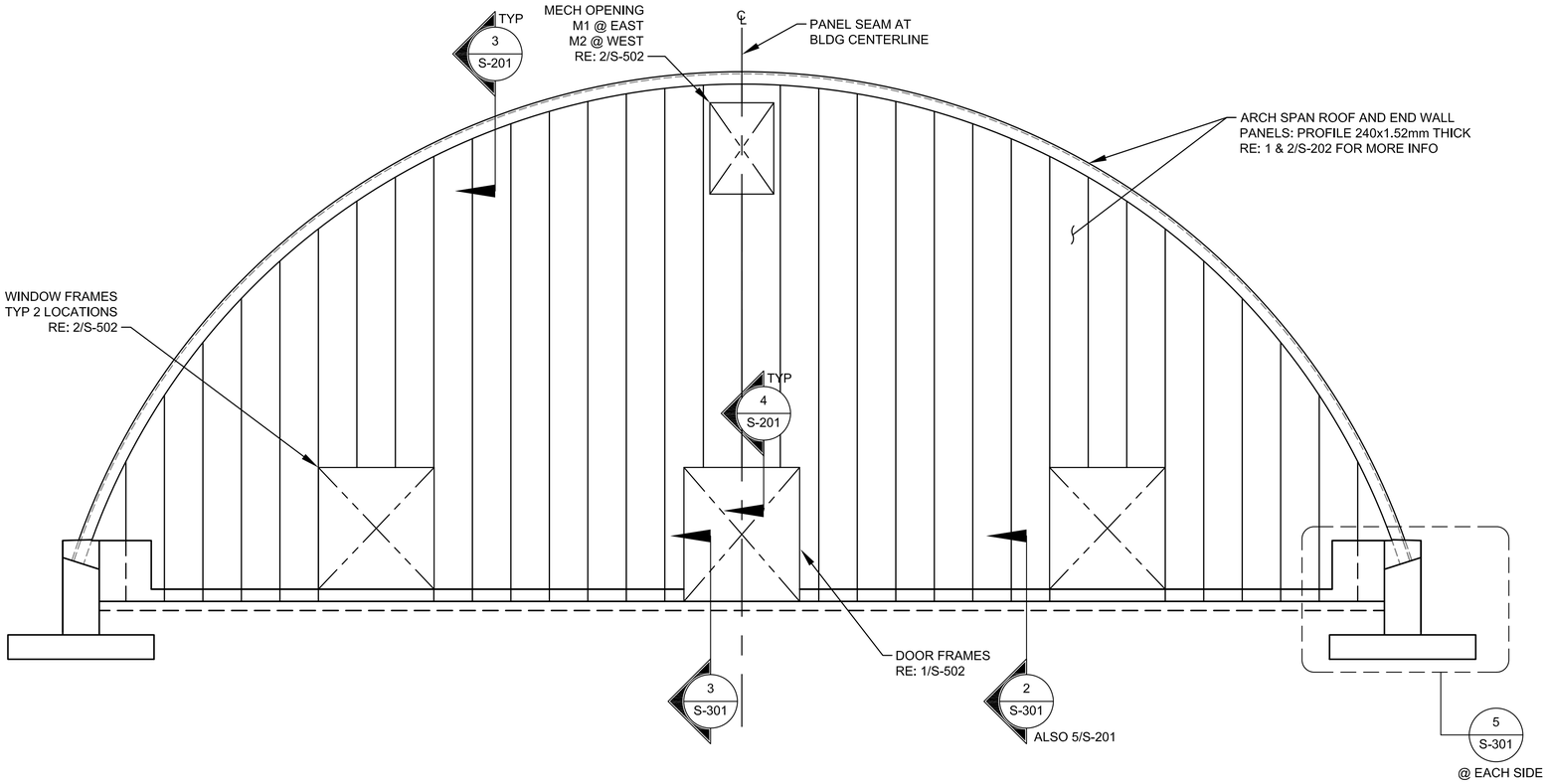

1 S-201 EAST AND WEST ELEVATION

SCALE: 1:50

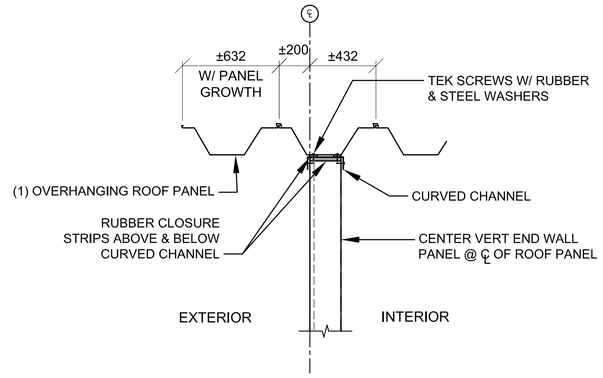

3 S-201 SECTION

SCALE: 1:20

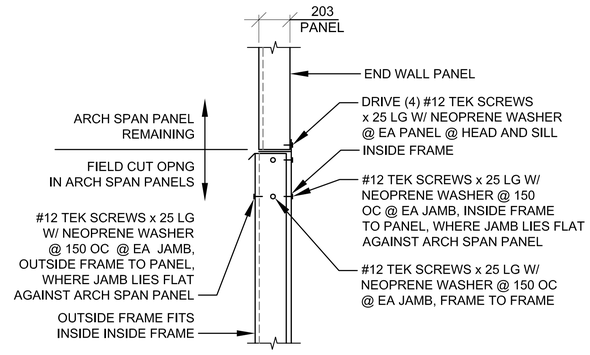

4 S-201 SECTION

SCALE: 1:20

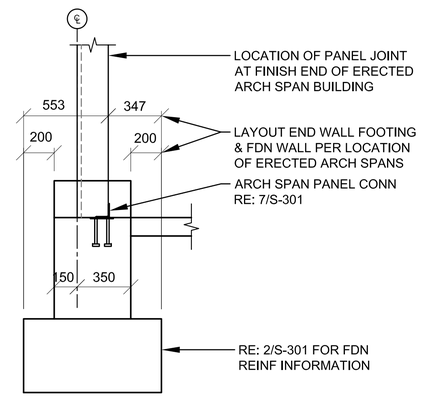

5 S-201 SECTION

SCALE: 1:20

2 S-201 NOT USED

SCALE: NTS

0 500 1000 2000

SCALE: 1:50

0 200 400 800

SCALE: 1:20

UNLESS OTHERWISE NOTED,
LINEAR DIMENSIONS
SHOWN ARE IN MILLIMETERS.

COMMONWEALTH OF PENNSYLVANIA
REGISTERED PROFESSIONAL
JOSEPH D. MEIER
ENGINEER
PE-039925E

US ARMY CORPS
OF ENGINEERS
AFGHANISTAN NORTH
DISTRICT

SYMBOL	DESCRIPTION	DATE	APPR.

SYMBOL	DESCRIPTION	DATE	APPR.

DESIGNED BY: JDM
DWN BY: RMS
CKD BY: EPS
REVIEWED BY: JH
SUBMITTED BY:
DATE: 3-25-2011
CONTRACT NO. W912ER-09-D-0002
DRAWING CODE:
REV: 0
FILE NAME: ...
PLOT SCALE: 1:100
PLOT DATE: 3/28/2011

BAKER

U.S. ARMY ENGINEER DISTRICT, AFGHANISTAN
CORPS OF ENGINEERS
APO AE 09356

SITE ADAPT DESIGN

CL08 - CLASSROOM BUILDING - ARCH SPAN

BUILDING ELEVATION AND DETAILS

SHEET
REFERENCE
NUMBER:

S-201

3/28/2011 2:11 PM

A1 Size 594mm x 841mm

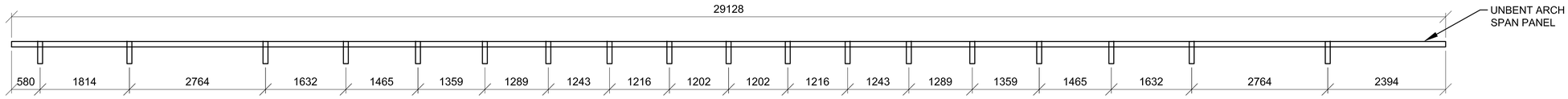

TAB LAYOUT ON PRE-BENT PANEL

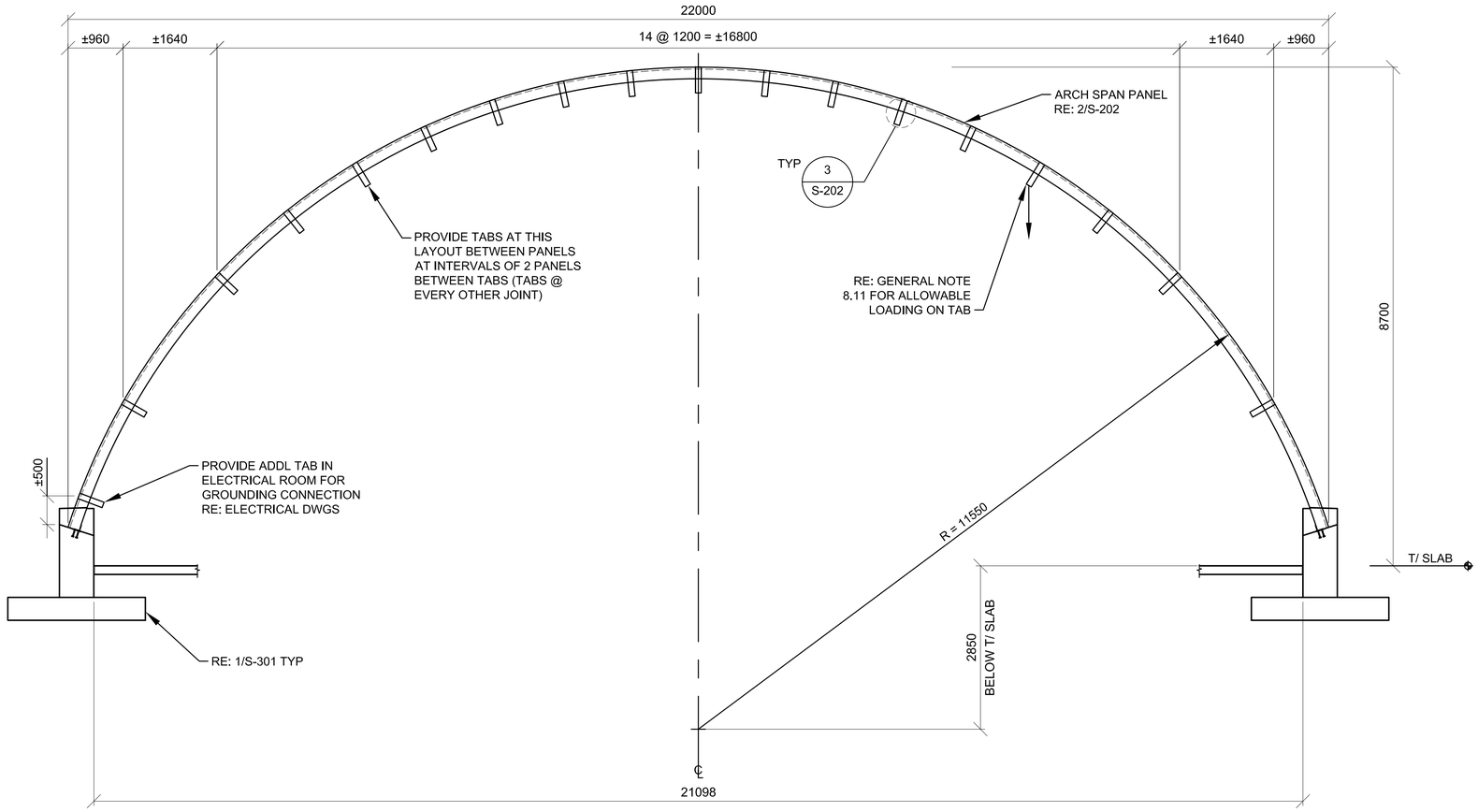

1 / S-202 — 22m BUILDING SECTION

SCALE: 1:50

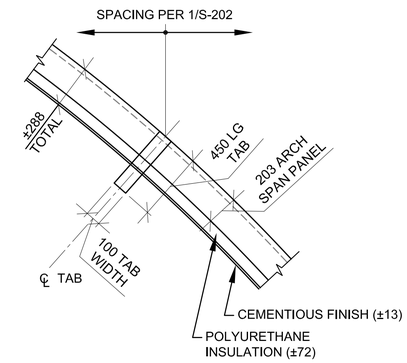

3 / S-202 — STEEL TAB DETAIL

SCALE: 1:20

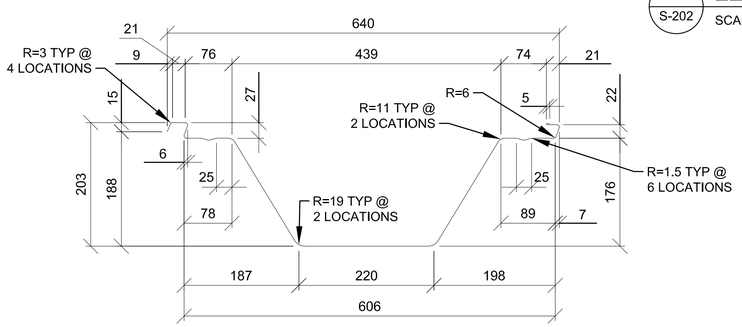

NOTE:
ALL DIMENSIONS ARE APPROXIMATE (±3mm)

2 / S-202 — 240 PROFILE - PROVIDE 1.52mm (16 GA) THICKNESS

SCALE: NTS

NOMINAL STRENGTH VALUES PER PANEL
(WITHOUT FACTOR OF SAFETY)

SHEAR : Vn = 1655.6 kg
AXIAL COMPRESSION : Pn = 11589.3 kg*
POSTITIVE MOMENT : +Mn = 2638.08 kg-m
NEGATIVE MOMENT : -Mn = 767.64 kg-m*

* THE CURVING PROCESS REDUCES THE NOMINAL STRENGTH OF ARCH-SPAN PANELS IN NEGATIVE FLEXURE AND COMPRESSION. THESE VALUES ARE BASED ON TESTING OF PANELS.

0 500 1000 2000
SCALE: 1:50

0 200 400 800
SCALE: 1:20

UNLESS OTHERWISE NOTED, LINEAR DIMENSIONS SHOWN ARE IN MILLIMETERS.

COMMONWEALTH OF PENNSYLVANIA
REGISTERED PROFESSIONAL
JOSEPH D. MEIER
PE-039026

US ARMY CORPS OF ENGINEERS
AFGHANISTAN NORTH DISTRICT

SYMBOL	DESCRIPTION	DATE	APPR.	SYMBOL	DESCRIPTION	DATE	APPR.

U.S. ARMY ENGINEER DISTRICT, AFGHANISTAN
CORPS OF ENGINEERS
APO AE 09356

DESIGNED BY: JDM
DWN BY: RMS
CKD BY: EPS
REVIEWED BY: JH
SUBMITTED BY:
DATE: 4-21-2011
REV: 0
CONTRACT NO. W912ER-09-D-0002
DRAWING CODE:
FILE NAME: ARCHITECTURAL-CL08-S-202.DWG
PLOT SCALE: 1:100
PLOT DATE: 4/21/2011

BAKER

SITE ADAPT DESIGN
CL08 - CLASSROOM BUILDING - ARCH SPAN
BUILDING SECTION AND DETAILS

SHEET REFERENCE NUMBER:
S-202

A1 Size 594mm x 841mm

4/21/2011 10:45 AM

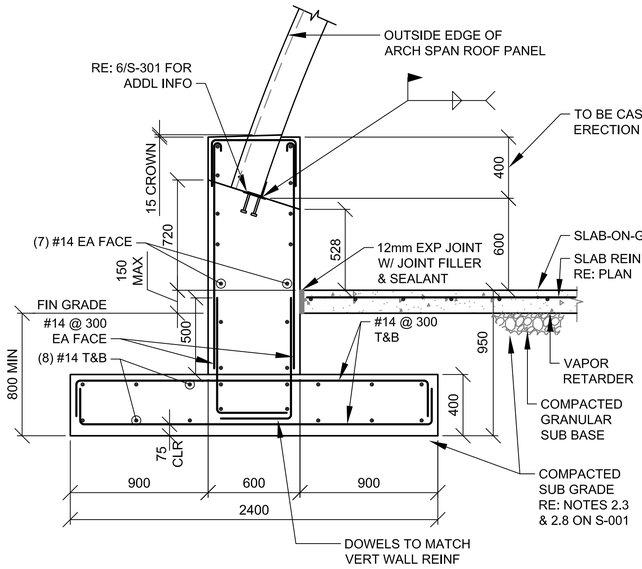

1 S-301 FOUNDATION WALL SECTION

SCALE: 1:20

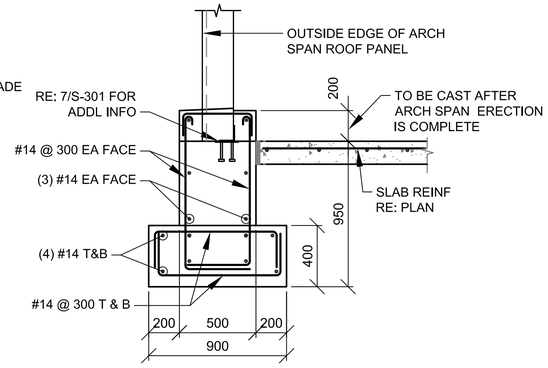

2 S-301 END WALL FOUNDATION SECTION

SCALE: 1:20

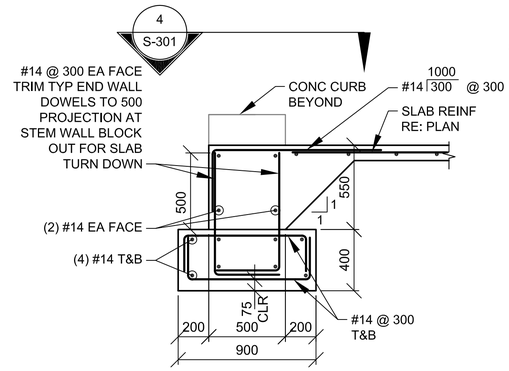

3 S-301 END WALL FDN SECTION TYP @ DOOR

SCALE: 1:20

NOTE:
PROVIDE OPENING IN STEM WALL PER PLAN (200mm WIDER THAN DOOR, 100mm EA SIDE)

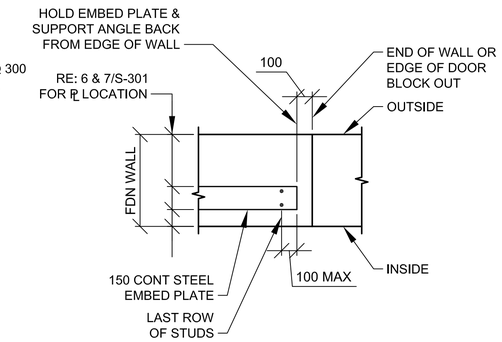

4 S-301 PLAN VIEW TYP AT END OF FDN WALL OR AT DOOR BLOCKOUT

SCALE: 1:20

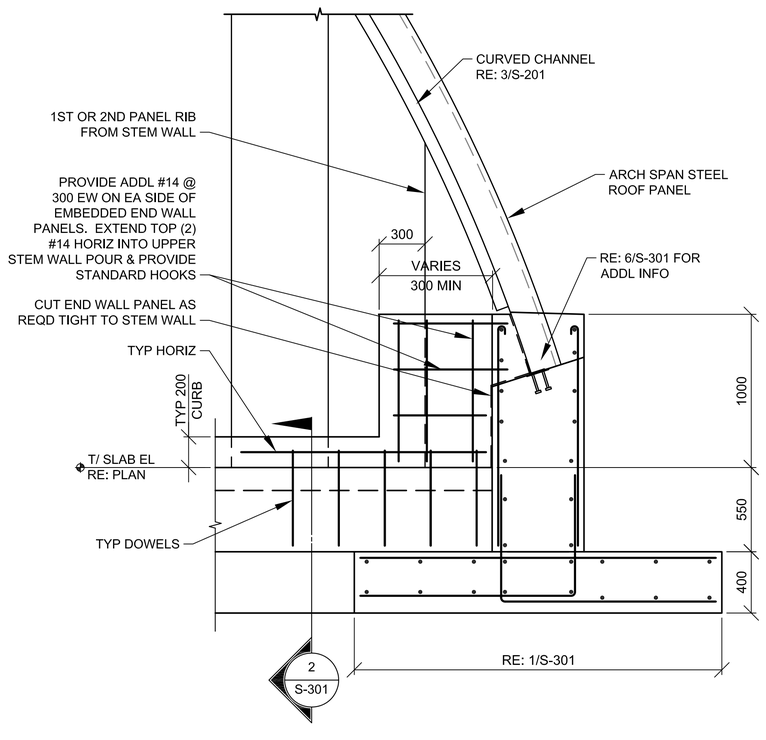

5 S-301 FOUNDATION END WALL SECTION

SCALE: 1:20

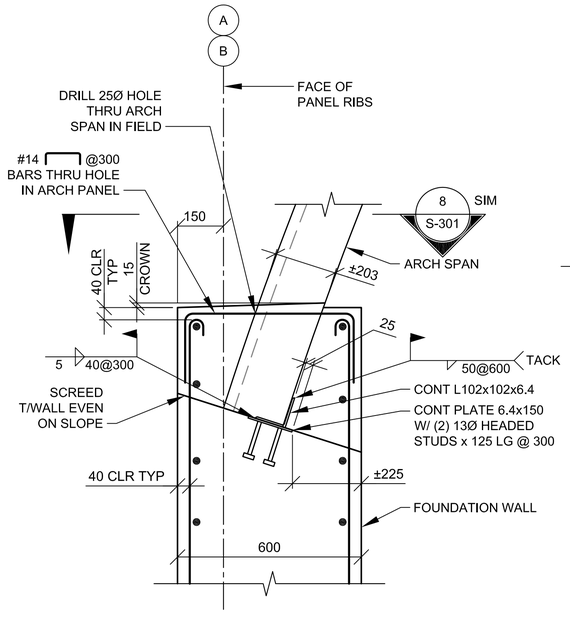

6 S-301 TYP ARCH SPAN CONN TO SIDE WALL FOUNDATION

SCALE: 1:10

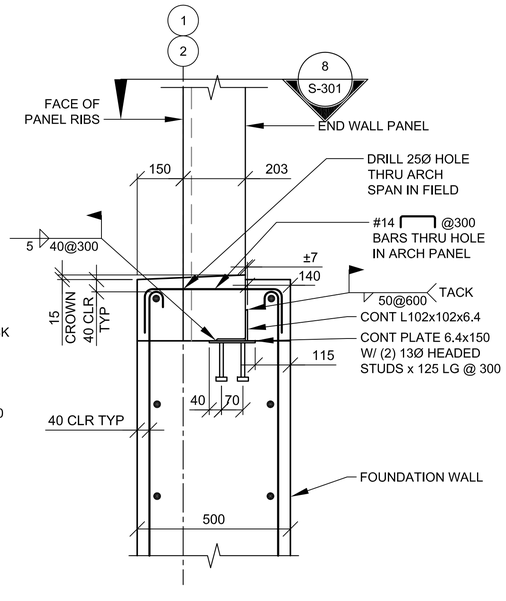

7 S-301 TYP ARCH SPAN CONN TO END WALL FOUNDATION

SCALE: 1:10

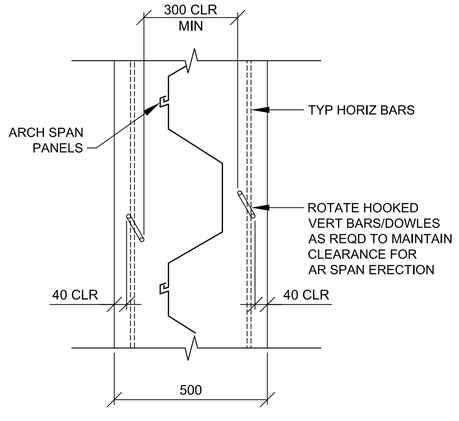

8 S-301 PLAN DETAIL

SCALE: 1:10

0 200 400 800
SCALE: 1:20

0 100 200 400
SCALE: 1:10

UNLESS OTHERWISE NOTED, LINEAR DIMENSIONS SHOWN ARE IN MILLIMETERS.

COMMONWEALTH OF PENNSYLVANIA
REGISTERED PROFESSIONAL ENGINEER
JOSEPH D. MEIER
PE-039920E

US ARMY CORPS OF ENGINEERS
AFGHANISTAN NORTH DISTRICT

SYMBOL	DESCRIPTION	DATE	APPR.	SYMBOL	DESCRIPTION	DATE	APPR.

DESIGNED BY: JDM
DWN BY: RMS
CKD BY: EPS
REVIEWED BY: JH
SUBMITTED BY: BAKER
DATE: 3-25-2011
CONTRACT NO. W912ER-09-D-0002
DRAWING CODE:
REV: 0
FILE NAME: 09-0002-CL08-S-301.DWG
PLOT SCALE: 1:100
PLOT DATE: 3/28/2011

U.S. ARMY ENGINEER DISTRICT, AFGHANISTAN
CORPS OF ENGINEERS
APO AE 09356

SITE ADAPT DESIGN
CL08 - CLASSROOM BUILDING - ARCH SPAN
FOUNDATION SECTIONS

SHEET REFERENCE NUMBER:
S-301

3/28/2011 2:12 PM

A1 Size 594mm x 841mm

NOT USED

1 S-302 LATRINE SECTION
SCALE: 1:20

NOT USED

2 S-302 LAVATORY SINK SECTION
SCALE: 1:20

NOT USED

3 S-302 TRENCH DRAIN SECTION
SCALE: 1:10

NOT USED

4 S-302 SECTION
SCALE: 1:20

NOT USED

5 S-302 SECTION
SCALE: 1:20

NOT USED

6 S-302 CHAI BOILER SECTION
SCALE: 1:20

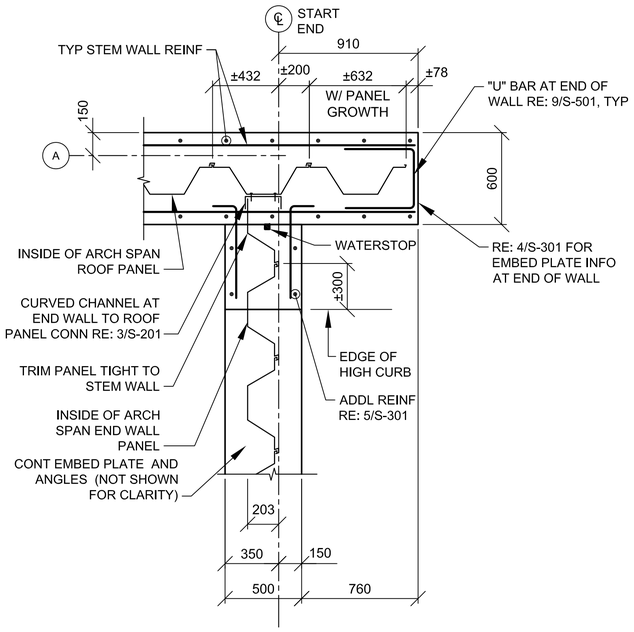

7 S-302 PLAN DETAIL
SCALE: 1:20

NOT USED

8 S-302 FIRE SHUTTER FDN SECTION
SCALE: 1:20

NOT USED

9 S-302 COLUMN/SLAB INT ISOLATION JOINT
SCALE: NTS

0 200 400 800
SCALE: 1:20

UNLESS OTHERWISE NOTED, LINEAR DIMENSIONS SHOWN ARE IN MILLIMETERS.

COMMONWEALTH OF PENNSYLVANIA
REGISTERED PROFESSIONAL ENGINEER
JOSEPH D. MEIER
PE-039925E

US ARMY CORPS OF ENGINEERS
AFGHANISTAN NORTH DISTRICT

SYMBOL	DESCRIPTION	DATE	APPR.	SYMBOL	DESCRIPTION	DATE	APPR.

U.S. ARMY ENGINEER DISTRICT, AFGHANISTAN
CORPS OF ENGINEERS
APO AE 09356

DESIGNED BY: JDM
DWN BY: RMS
CKD BY: EPS
REVIEWED BY: JH
SUBMITTED BY:
DATE: 3-25-2011
CONTRACT NO. W912ER-09-D-0002
DRAWING CODE:
FILE NAME: W912ER-09-D-0002-S-302.DWG
PLOT SCALE: VARIES
PLOT DATE: 3/28/2011
REV: 0

BAKER

SITE ADAPT DESIGN
CL08 - CLASSROOM BUILDING - ARCH SPAN
SECTIONS

SHEET REFERENCE NUMBER:
S-302

3/28/2011 2:12 PM

A1 Size 594mm x 841mm

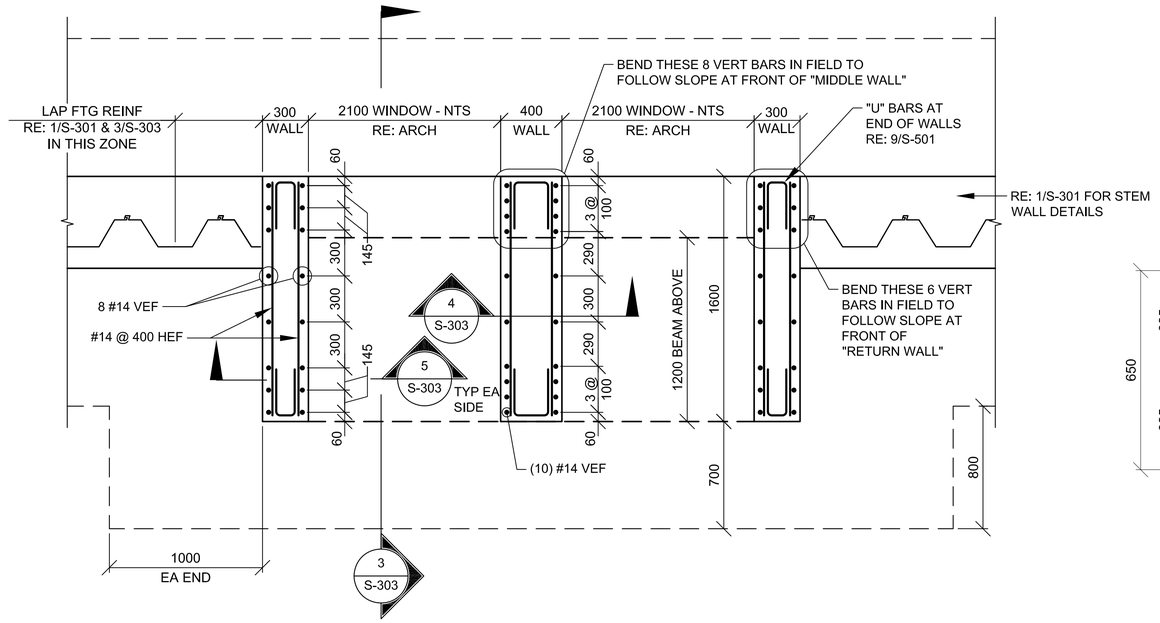

1 S-303 PLAN DETAIL AT SIDE WALL WINDOW

SCALE: 1:20

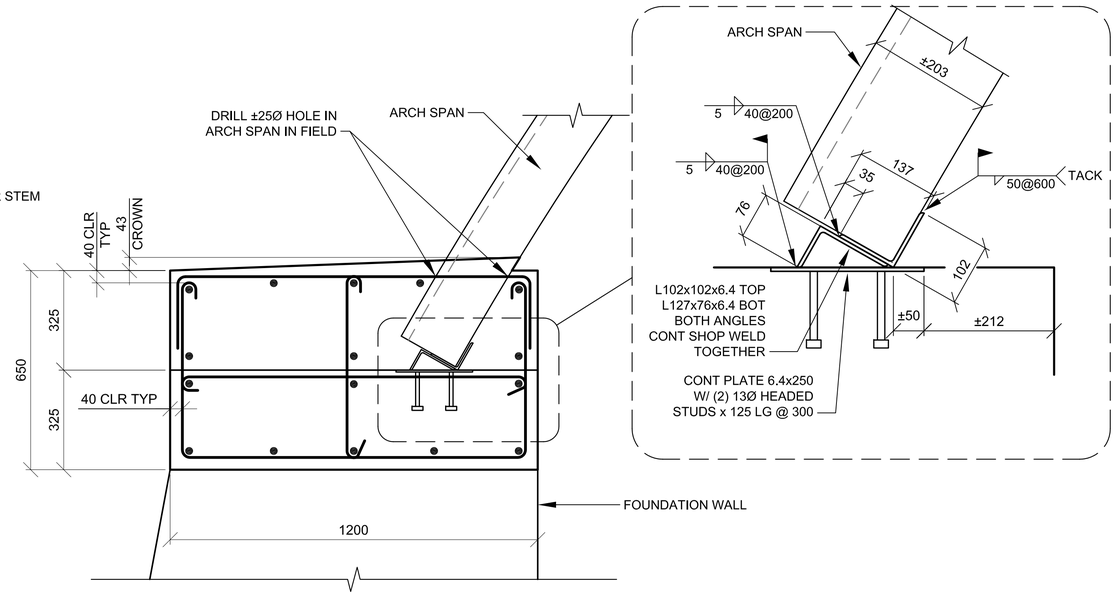

2 S-303 CONCRETE BEAM SECTION

SCALE: 1:10

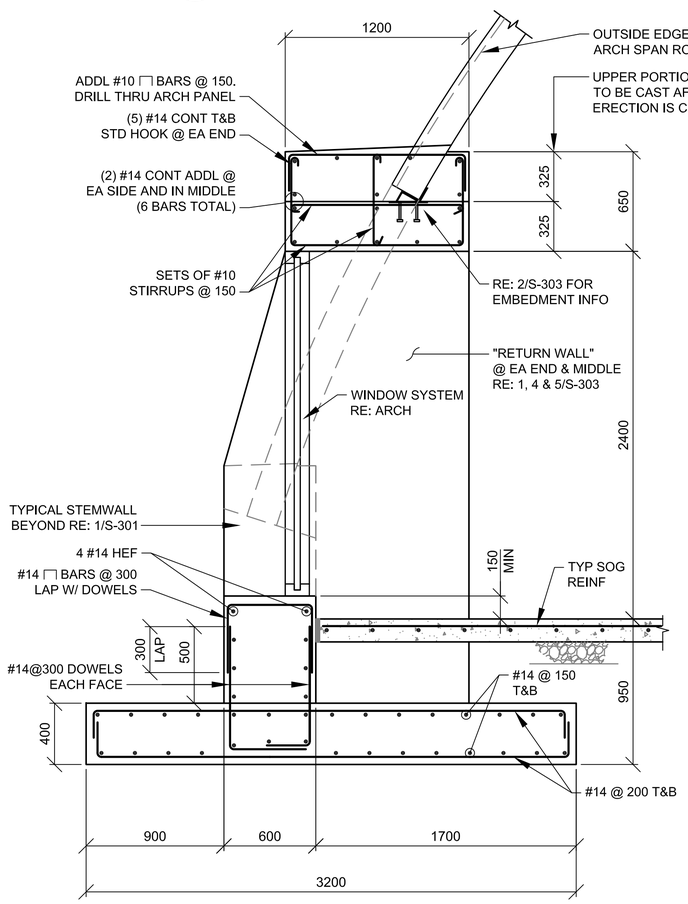

3 S-303 SECTION @ SIDEWALL WINDOW

SCALE: 1:20

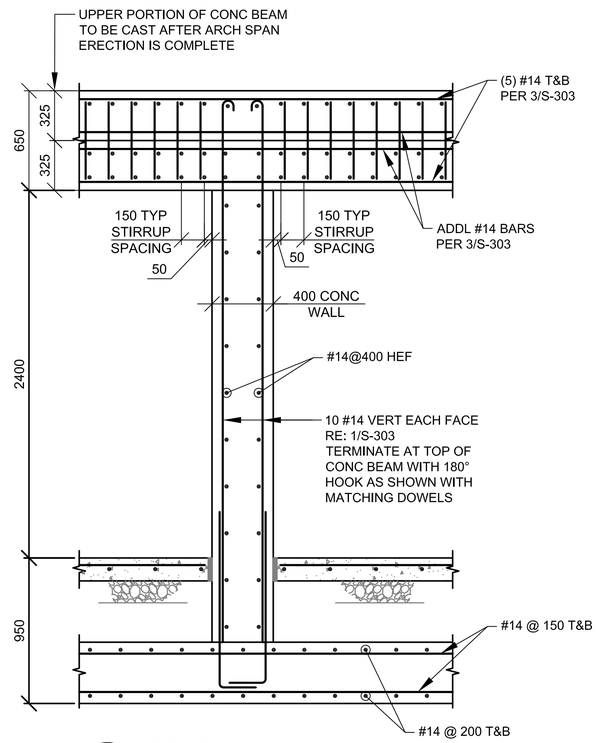

4 S-303 SECTION

SCALE: 1:20

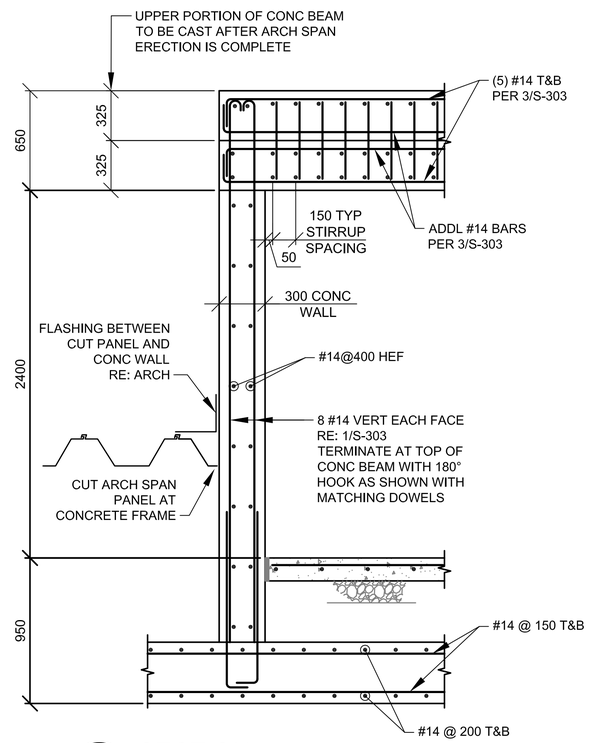

5 S-303 SECTION

SCALE: 1:20

0 200 400 800
SCALE: 1:20

0 100 200 400
SCALE: 1:10

UNLESS OTHERWISE NOTED,
LINEAR DIMENSIONS
SHOWN ARE IN MILLIMETERS.

COMMONWEALTH OF PENNSYLVANIA
REGISTERED
PROFESSIONAL
JOSEPH D. MEIER
ENGINEER
PE-039920E

US ARMY CORPS
OF ENGINEERS
AFGHANISTAN NORTH
DISTRICT

SYMBOL	DESCRIPTION	DATE	APPR.	SYMBOL	DESCRIPTION	DATE	APPR.

DESIGNED BY: JDM
DWN BY: RMS
CKD BY: EPS
REVIEWED BY: JH
SUBMITTED BY:
DATE: 3-25-2011
CONTRACT NO. W912ER-09-D-0002
DRAWING CODE:
REV: 0
FILE NAME:
PLOT SCALE: VARIES
PLOT DATE: 3/28/2011

BAKER

U.S. ARMY ENGINEER DISTRICT, AFGHANISTAN
CORPS OF ENGINEERS
APO AE 09356

SITE ADAPT DESIGN

CL08 - CLASSROOM BUILDING - ARCH SPAN

SIDE WALL CONCRETE FRAME SECTIONS

SHEET
REFERENCE
NUMBER:

S-303

3/28/2011 2:12 PM

A1 Size 594mm x 841mm

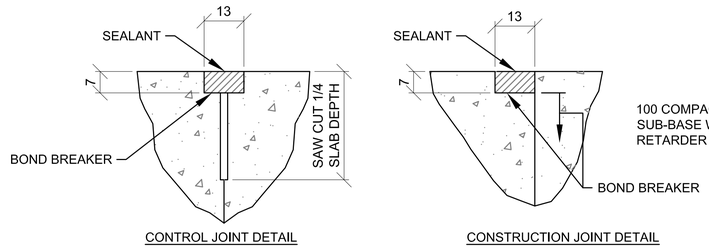

TYP CONCRETE SLAB JOINT FINISH DETAILS

1 / S-501 SCALE: NTS

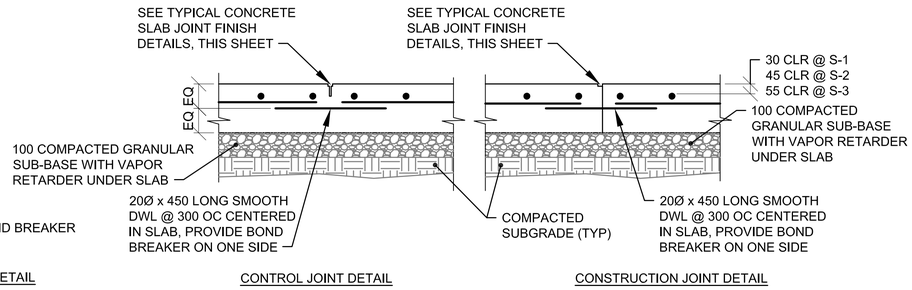

TYP SLAB ON GRADE JOINT DETAILS

2 / S-501 SCALE: NTS

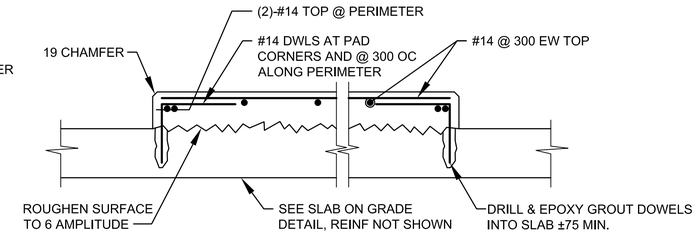

INTERIOR EQUIPMENT PAD DETAIL

3 / S-501 SCALE: NTS

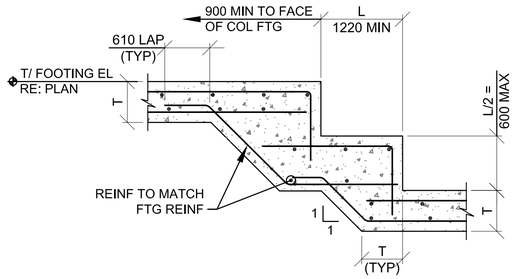

STEPPED FOOTING (2 LAYERS REINF)

4 / S-501 SCALE: NTS

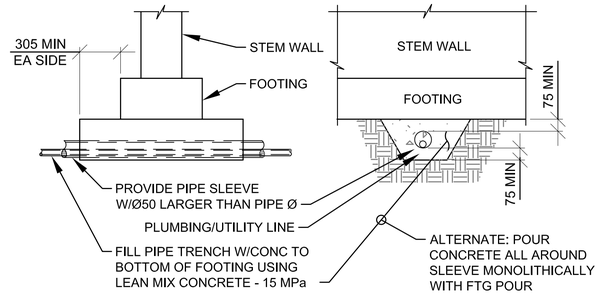

UTILITY PIPE UNDER WALL FTG

5 / S-501 SCALE: NTS

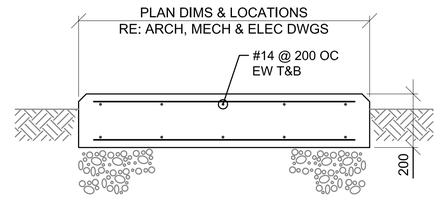

NOTES:
1. COORDINATE SIZE & LOCATION WITH EQUIPMENT REQUIREMENTS.
2. CHAMFER ALL EDGES 25 TYPICAL.

EQUIPMENT PAD (EXTERIOR)

6 / S-501 SCALE: NTS

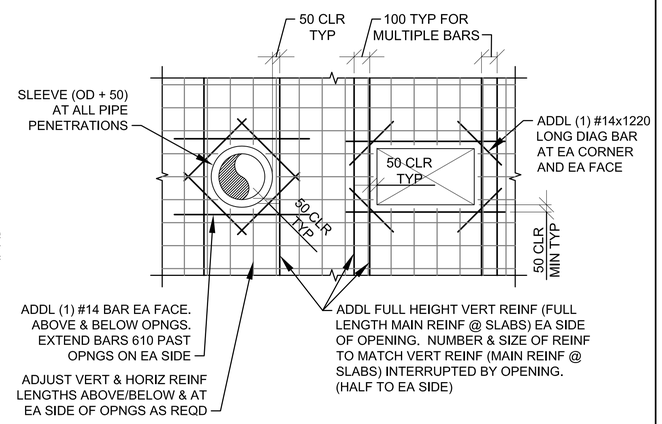

OPENING THRU CONC WALL

7 / S-501 SCALE: NTS

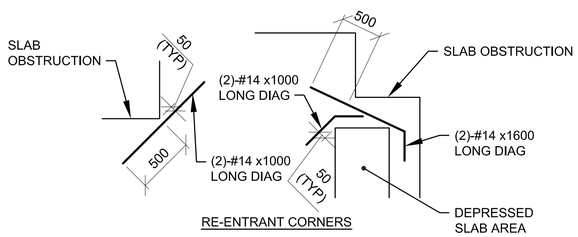

DETAIL NOTES:
1. WHERE MORE THAN ONE ADDITIONAL BAR IS REQUIRED PARALLEL TO THE EXISTING SLAB/WALL REINFORCING THE ADDITIONAL REINFORCING BARS SHALL BE SPACED AT 100 ON CENTER.
2. ADDITIONAL REINFORCING PARALLEL TO THE SLAB/WALL REINFORCING SHALL BE #16 BARS THAT PROVIDE A STEEL AREA ON EACH SIDE OF THE OPENING EQUAL TO 1/2 THE AREA OF THE REINFORCING CUT BY THE OPENING.
3. FOR OPENINGS WITH SIDES OR DIAMETERS LESS THAN 300 SPREAD THE SLAB/WALL REINFORCING TO CLEAR THE OPENING.

CONCRETE REINF DETAILS

8 / S-501 SCALE: NTS

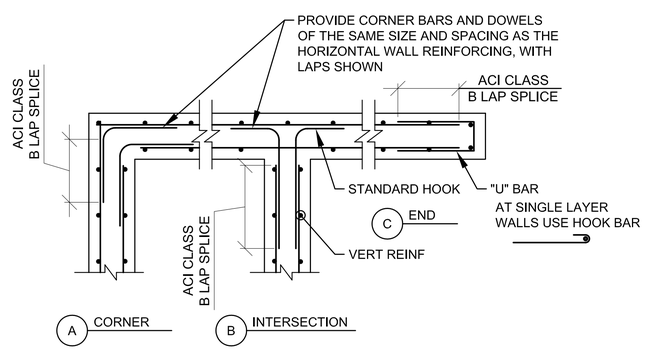

CONCRETE WALL CORNER REINFORCING

9 / S-501 SCALE: NTS

NOTE:
WALLS WITH SINGLE LAYER OF REINFORCING SIMILAR

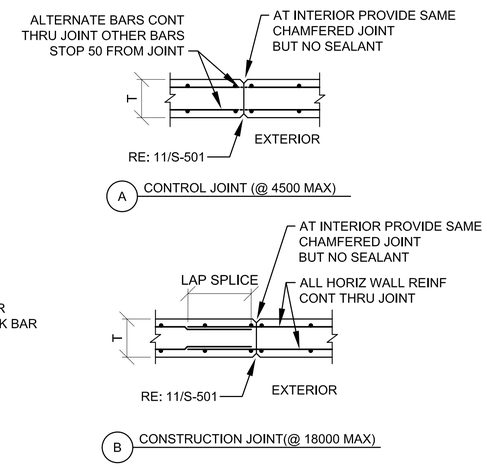

CONCRETE WALL JOINTS

10 / S-501 SCALE: NTS

NOTE:
WALLS WITH SINGLE LAYER OF REINFORCING SIMILAR

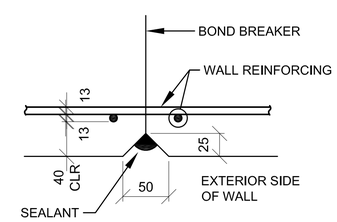

TYP CONCRETE WALL JOINT FINISH DETAIL

11 / S-501 SCALE: NTS

UNLESS OTHERWISE NOTED, LINEAR DIMENSIONS SHOWN ARE IN MILLIMETERS.

COMMONWEALTH OF PENNSYLVANIA REGISTERED PROFESSIONAL JOSEPH D. MEIER ENGINEER PE-039920E

US ARMY CORPS OF ENGINEERS AFGHANISTAN NORTH DISTRICT

SYMBOL	DESCRIPTION	DATE	APPR.	SYMBOL	DESCRIPTION	DATE	APPR.

DESIGNED BY: JDM
DWN BY: RMS
REVIEWED BY: JH
SUBMITTED BY:
CKD BY: EPS
DATE: 3-25-2011
CONTRACT NO. W912ER-09-D-0002
DRAWING CODE:
REV: 0
FILE NAME: 09920E-CL08-CL08-S-501.DWG
PLOT SCALE: NONE
PLOT DATE: 3/28/2011

BAKER

U.S. ARMY ENGINEER DISTRICT, AFGHANISTAN CORPS OF ENGINEERS APO AE 09356

SITE ADAPT DESIGN
CL08 - CLASSROOM BUILDING - ARCH SPAN
TYPICAL DETAILS

SHEET REFERENCE NUMBER:
S-501

A1 Size 594mm x 841mm

3/28/2011 2:12 PM

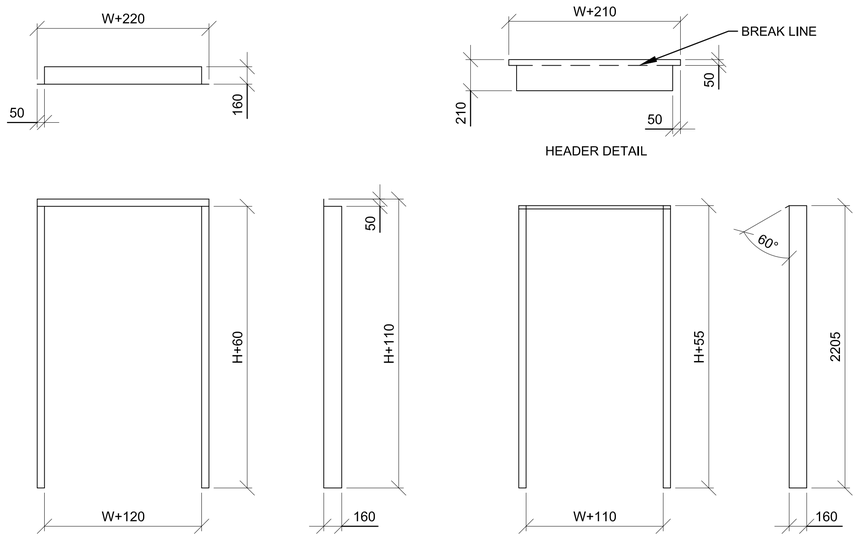

1 S-502 240 DOOR DETAIL

SCALE: NTS

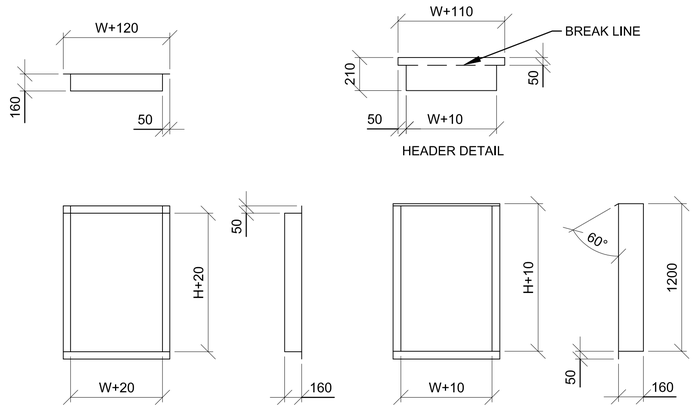

2 S-502 240 WINDOW/MECHANICAL OPENING DETAIL

SCALE: NTS

DOOR & WINDOW FRAME NOTES:

1. ALL DIMENSIONS ARE INSIDE DIMENSIONS.
2. WELD AND GRIND SMOOTH ALL CORNERS.
3. FRAME THICKNESS = 2.5mm.
4. ALL FRAMES, INTERIOR AND EXTERIOR, TO BE GALVANIZED.
5. RE: 1/A-601 FOR DOOR WIDTHS (W) AND HEIGHTS (H).
6. RE: 3/A-601 FOR WINDOW WIDTHS (W) AND HEIGHTS (H).
7. RE: SCHEDULE BELOW FOR LOUVER DIMENSIONS.
8. CUT OPENING DIMENSIONS:
   - WINDOW/LOUVER - W+130
   - DOOR - W+130
   - WINDOW/LOUVER - H+30
   - DOOR - H+65
9. RE: 3/S-502 FOR TYP JAMB DETAIL

MECH OPENING FRAME SCHEDULE		
TYPE	W	H
M1	787	787
M2	1050	1500

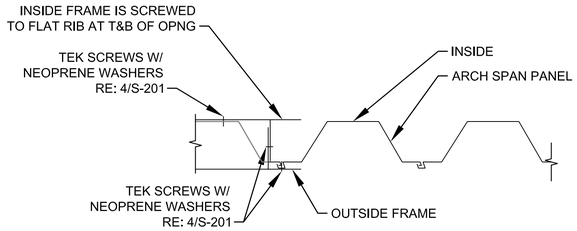

3 S-502 TYP JAMB SECTION

SCALE: NTS

UNLESS OTHERWISE NOTED, LINEAR DIMENSIONS SHOWN ARE IN MILLIMETERS.

COMMONWEALTH OF PENNSYLVANIA
REGISTERED PROFESSIONAL
JOSEPH D. MEIER
ENGINEER
PE-039920E

US ARMY CORPS OF ENGINEERS
AFGHANISTAN NORTH DISTRICT

SYMBOL	DESCRIPTION	DATE	APPR.	SYMBOL	DESCRIPTION	DATE	APPR.

U.S. ARMY ENGINEER DISTRICT, AFGHANIST'AN
CORPS OF ENGINEERS
APO AE 09356

DESIGNED BY: JDM
DWN BY: RMS
CKD BY: EPS
REVIEWED BY: JH
SUBMITTED BY:
DATE: 3-25-2011
REV: 0
CONTRACT NO. W912ER-09-D-0002
DRAWING CODE:
FILE NAME: 240-DOOR-WINDOW-MECHANICAL-OPENING-DETAILS.DWG
PLOT SCALE: NONE
PLOT DATE: 3/28/2011

BAKER

SITE ADAPT DESIGN

CL08 - CLASSROOM BUILDING - ARCH SPAN

DOOR/WINDOW/MECHANICAL OPENING FRAME DETAILS

SHEET REFERENCE NUMBER:

S-502

3/28/2011 2:12 PM

A1 Size 594mm x 841mm

CONCRETE REINFORCEMENT TENSION DEVELOPMENT/LAP SPLICE SCHEDULE

f'c = 28 MPa	LAP CLASS	UNCOATED BARS			
		TOP BARS		OTHER BARS	
METRIC BAR SIZES		CASE 1	CASE 2	CASE 1	CASE 2
#10 TO #20	A	50 BAR DIA	74 BAR DIA	38 BAR DIA	57 BAR DIA
	B	64 BAR DIA	96 BAR DIA	50 BAR DIA	74 BAR DIA
#25 TO #50	A	62 BAR DIA	93 BAR DIA	48 BAR DIA	71 BAR DIA
	B	80 BAR DIA	121 BAR DIA	62 BAR DIA	93 BAR DIA

NOTES:
1. TABULATED TENSION DEVELOPMENT LENGTH VALUES ARE TAKEN FROM CRSI DESIGN HANDBOOK 2008 10TH ED.
2. TENSION DEVELOPMENT & TENSION LAP SPLICE LENGTHS ARE EXPRESSED AS MULTIPLES OF BAR DIAMETERS.
3. TABULATED VALUES ARE BASED ON MINIMUM YIELD STRENGTH OF REINFORCEMENT, fy, OF 420MPa.
4. CONCRETE IS NORMAL WEIGHT (2400Kg/m^3) AND 28 DAY COMPRESSIVE STRENGTH = 28MPa.
5. TABULATED VALUES FOR BEAMS & COLUMNS ARE BASED ON TRANSVERSE REINFORCEMENT AND CONCRETE COVER MEETING MINIMUM CODE REQUIREMENTS.
6. CASES 1 & 2, WHICH DEPEND ON THE TYPE OF STRUCTURAL MEMBER, CONCRETE COVER, AND CENTER-TO-CENTER SPACING OF THE BARS ARE DEFINED IN THE TABLE BELOW.
7. LAP SPLICE LENGTHS (MINIMUM 300mm) ARE MULTIPLES OF TENSION DEVELOPMENT LENGTHS: CLASS A = 1.0(TENSION DEVELOPMENT LENGTH) & CLASS B = 1.3(TENSION DEVELOPMENT LENGTH)
8. TOP BARS ARE HORIZONTAL REINFORCEMENT WITH MORE THAN 300mm OF CONCRETE CAST BELOW THE BARS.
9. IT SHALL BE PERMISSIBLE TO CALCULATE WALL AND SLAB REINFORCEMENT TENSION DEVELOPMENT/SPLICE LENGTHS IN ACCORDANCE WITH ACI 12.2.3 OR TABLE 5.3(b) OF CRSI 2008 IN LIEU OF VALUES TABULATED ABOVE.

BEAMS, COLUMNS	CASE 1	CONCRETE COVER AT LEAST 1 BAR DIA AND CENTER-TO-CENTER SPACING AT LEAST 2 BAR DIA
	CASE 2	CONCRETE COVER LESS THAN 1 BAR DIA OR CENTER-TO-CENTER SPACING LESS THAN 2 BAR DIA
ALL OTHERS	CASE 1	CONCRETE COVER AT LEAST 1 BAR DIA AND CENTER-TO-CENTER SPACING AT LEAST 3 BAR DIA
	CASE 2	CONCRETE COVER LESS THAN 1 BAR DIA OR CENTER-TO-CENTER SPACING LESS THAN 3 BAR DIA

CONCRETE COVER SCHEDULE

MINIMUM CONCRETE COVER PROTECTION FOR REINFORCEMENT BARS SHALL BE AS LISTED BELOW: (SEE ACI 318M-05, SECTION 7.7 FOR CONDITIONS NOT NOTED). DIMENSIONS FOR BAR PLACEMENT GIVEN IN SECTIONS AND DETAILS SHALL SUPERSEDE MINIMUM COVER REQUIREMENTS GIVEN HERE. DIMENSIONS ARE IN mm. PROVIDE STANDARD BAR CHAIRS AND SUPPORT BARS @1200mm MAXIMUM AS REQUIRED TO MAINTAIN CONCRETE PROTECTION SPECIFIED.

FOOTINGS (EARTH FORMED):	70
COLUMNS / PIERS (TO TIES)	40
ELEVATED BEAMS & SLABS:	
BEAM TIES & STIRRUPS (NOT EXPOSED TO WEATHER)	40
BEAM TIES & STIRRUPS (EXPOSED TO WEATHER)	50
SLABS (NOT EXPOSED TO WEATHER)	20
SLABS (EXPOSED TO WEATHER)	
#19 & LARGER	50
#16 & SMALLER	40
SLABS ON GRADE	
NOT EXPOSED TO WEATHER (FROM TOP)	20
EXPOSED TO WEATHER (FROM TOP)	40
UTILITY TUNNEL WALLS, RETAINING WALLS AND SHEAR WALLS. (NO SURFACES SHALL BE EARTH FORMED)	
EARTH SIDE AND FRONT SIDE (EXPOSED TO WEATHER)	
#16 BAR AND SMALLER	40
#19 THRU #36 BAR	50

STANDARD HOOKS IN TENSION PER (ACI 318M-05) f'c = 28 MPa

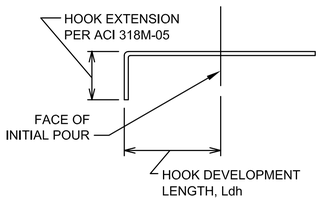

METRIC BAR SIZE	HOOK DEVELOPMENT LENGTH (mm) ldh
#10	190
#12	229
#14	267
#16	305
#20	381
#25	476
#28	533
#32	610
#40	762
#50	953

NOTES:
1. CONCRETE IS NORMAL WEIGHT CONCRETE.
2. BAR YIELD STRENGTH, fy = 420 MPa
3. SIDE COVER REQUIREMENTS OF ACI SECT. 12.5.3 ARE ASSUMED TO NOT BE MET.
4. TIE OR STIRRUP REQUIREMENTS OF ACI SECT. 12.5.3 ARE ASSUMED TO NOT BE MET.
5. REDUCTION FOR EXCESS REINFORCEMENT IS NOT TAKEN.
6. HOOK DEVELOPMENT LENGTH IS VALID FOR 180° HOOKS ALSO.

UNLESS OTHERWISE NOTED, LINEAR DIMENSIONS SHOWN ARE IN MILLIMETERS.

COMMONWEALTH OF PENNSYLVANIA
REGISTERED PROFESSIONAL
JOSEPH D. MEIER
ENGINEER
PE-039925E

US ARMY CORPS OF ENGINEERS
AFGHANISTAN NORTH DISTRICT

SYMBOL	DESCRIPTION	DATE	APPR.	SYMBOL	DESCRIPTION	DATE	APPR.

DESIGNED BY: JDM
DWN BY: RMS
CKD BY: EPS
REVIEWED BY: JH
SUBMITTED BY:
DATE: 3-25-2011
REV: 0
CONTRACT NO. W912ER-09-D-0002
DRAWING CODE:
FILE NAME: ARCHITECTURAL-CL08-S-601.DWG
PLOT SCALE: NONE
PLOT DATE: 3/28/2011

BAKER

U.S. ARMY ENGINEER DISTRICT, AFGHANISTAN
CORPS OF ENGINEERS
APO AE 09356

SITE ADAPT DESIGN
CL08 - CLASSROOM BUILDING - ARCH SPAN
SCHEDULES

SHEET REFERENCE NUMBER:
S-601

3/28/2011 2:12 PM

A1 Size 594mm x 841mm

SCOPE RESPONSIBILITIES SCHEDULE

ITEM	FURNISHED BY	INSTALLED BY	FINAL CONNECTION BY
FREESTANDING FURNITURE	GOVT	GOVT	--
SYSTEMS FURNITURE	GOVT	GOVT	CONTR
OFFICE EQUIPMENT, PERMANENTLY INSTALLED	GOVT	GOVT	GOVT
WORKBENCHES	GOVT	GOVT	CONTR
METAL UTILITY STORAGE SHELVING	CONTR	CONTR	--
EQUIPMENT, PORTABLE	GOVT	GOVT	--
EQUIPMENT, PERMANENTLY INSTALLED	CONTR	CONTR	CONTR
EQUIPMENT RACKS IN IT ROOMS	CONTR	CONTR	--
FIRE EXTINGUISHERS AND CABINETS	CONTR	CONTR	--
TELEPHONE SWITCH AND HANDSETS	GOVT	GOVT	GOVT
SECURE TELEPHONE INSTRUMENTS (STEs)	GOVT	GOVT	GOVT

ABBREVIATIONS

ACP	ACOUSTIC CEILING PANEL
AFF	ABOVE FINISH FLOOR
ALUM	ALUMINUM
AUTO	AUTOMATIC
ABV	ABOVE
AT/FP	ANTI-TERRORISM FORCE PROTECTION
BC	BOTTOM OF CURB
B.O.	BOTTOM OF
BLK	BLOCK
BRG	BEARING
BLKG	BLOCKING
BD	BOARD
BLDG	BUILDING
CLG	CEILING
CONC	CONCRETE
CONT	CONTINUOUS
CONTR	CONTRACTOR
CMU	CONCRETE MASONRY UNIT
CT	CERAMIC TILE
C.J.	CONTROL JOINT
CRS	COURSE
DIAM	DIAMETER
DN	DOWN
DTL	DETAIL
DWG	DRAWING
EA	EACH
EIFS	EXTERIOR INSULATION AND FINISH SYSTEM
EWC	ELECTRIC WATER COOLER
EXP	EXPANSION
EXT	EXTERIOR
EQUIP	EQUIPMENT
ELEC	ELECTRIC
EL	ELEVATION
EMER	EMERGENCY
EQ	EQUAL
F/	FACE OF
FE	FIRE EXTINGUISHER
FEC	FIRE EXTINGUISHER CABINET
FIBERBD	FIBER BOARD
FL	FLOOR
FD	FLOOR DRAIN
FTG	FOOTING
GA	GAUGE
GALV	GALVANIZED
GC	GENERAL CONTRACTOR
GL	GLASS
GOVT	GOVERNMENT
GYP	GYPSUM
GWB	GYPSUM WALLBOARD
HT	HEIGHT
HC	HANDICAPPED
HDW	HARDWARE
HTG	HEATING
HVAC	HEATING/VENTILATING/ AIR CONDITIONING
HM	HOLLOW METAL
INSUL	INSULATION
INT	INTERIOR
JT	JOINT
JAN	JANITOR
LAM	LAMINATE
LAV	LAVATORY
LH	LEFT HAND
LT	LIGHT
LVR	LOUVER
MAS	MASONRY
MAX	MAXIMUM
MECH	MECHANICAL
MFR	MANUFACTURER
MIN	MINIMUM
MIR	MIRROR
MISC	MISCELLANEOUS
MO	MASONRY OPENING
MR	MOISTURE RESISTANT
MS	METAL STUD
MTL	METAL
NA	NOT APPLICABLE
NO	NUMBER
NOM	NOMINAL
NTS	NOT TO SCALE
NIC	NOT IN CONTRACT
OPG	OPENING
OC	ON CENTER
OH	OVERHEAD
OPP	OPPOSITE
PL	PLATE
PLAM	PLASTIC LAMINATE
PLYWD	PLYWOOD
PNL	PANEL
PREF	PREFABRICATED
PERF	PERFORATED
PR	PAIR
PT	PAINT
QT	QUARRY TILE
R	RISER
RAD	RADIUS
RD	ROOF DRAIN
REF	REFERENCE
REINF	REINFORCED
RH	RIGHT HAND
ROW	RIGHT OF WAY
RM	ROOM
RO	ROUGH OPENING
RWC	RAINWATER CONDUCTOR
SIM	SIMILAR
STL	STEEL
STR	STRUCTURE
ST0	STORAGE
SPEC	SPECIFICATION
SS	STAINLESS STEEL
STN	STAIN
STD	STANDARD
SUSP	SUSPENDED
TC	TOP OF CURB
TH	THICK
TYP	TYPICAL
TR	TREAD
T.O.	TOP OF
TELE	TELEPHONE
TEMP	TEMPERED/TEMPORARY
UNF	UNFINISHED
UNO	UNLESS NOTED OTHERWISE
USAR	UNITED STATES ARMY RESERVE
VERT	VERTICAL
VIF	VERIFY IN FIELD
VTR	VENT THROUGH ROOF
WD	WOOD
WH	WATER HEATER
WWF	WELDED WIRE FABRIC
W/O	WITHOUT

PROJECT NOTES

STANDARDS AND REGULATIONS:

1) CONTRACTOR SHALL PERFORM ALL WORK IN CONFORMANCE WITH APPLICABLE BUILDING CODES, REGULATIONS, ORDINANCES, UTILITY PROVIDER REQUIREMENTS, AND SIMILAR STANDARDS.

2) CONTRACTOR SHALL OBTAIN ALL REQUIRED INSPECTIONS OF THE WORK. CONTRACTOR SHALL REGULARLY UPDATE OWNER AND ARCHITECT REGARDING THE STATUS OF INSPECTIONS.

3) CONTRACTOR SHALL COORDINATE WORK WITH APPLICABLE UTILITY PROVIDERS.

4) CONTRACTOR SHALL BE FAMILIAR WITH REQUIREMENTS AND CONSTRUCTION SHALL BE IN COMPLIANCE WITH REFERENCED FIRE-RATED ASSEMBLY TESTS AND STANDARDS.

ADMINISTRATION OF THE WORK:

1) CONTRACTOR SHALL BE SOLELY RESPONSIBLE FOR THE MEANS, METHODS, AND SEQUENCES OF CONSTRUCTION AND DIMENSIONS.

2) CONTRACTOR SHALL BE SOLELY RESPONSIBLE FOR THE SAFETY OF ALL CONSTRUCTION PERSONNEL AND AUTHORIZED VISITORS AT THE SITE.

3) CONTRACTOR SHALL BECOME FULLY ACQUAINTED WITH CONDITIONS RELATED TO THE WORK. ANY KNOWN DISCREPANCIES BETWEEN THE DOCUMENTS AND THE ACTUAL CONDITIONS SHALL BE REPORTED TO THE OWNER FOR RESOLUTION PRIOR TO PROCEEDING WITH WORK RELATED TO THE DISCREPANCY.

4) CONTRACTOR SHALL REMOVE AND PROPERLY DISPOSE OF ALL CONSTRUCTION AND DEMOLITION DEBRIS. CONTRACTOR SHALL OBTAIN APPROVAL OF OWNER FOR DETAILS RELATING TO THE REMOVAL OF TRASH, INCLUDING SUCH ISSUES AS PATH OF TRAVEL, USE OF STAIRS AND ELEVATORS, REMOVAL OF WINDOWS, LOCATION OF CHUTES AND DUMPSTERS, ETC., PRIOR TO REMOVAL OF DEBRIS. CONTRACTOR SHALL CLEAN AND REPAIR ANY DAMAGES TO EXISTING ITEMS SOILED OR DAMAGED BY THE DEBRIS REMOVAL PROCESS. IF CLEANING AND/OR REPAIR DOES NOT RETURN ITEMS TO ORIGINAL CONDITION CONTRACTOR SHALL INSTALL NEW ITEMS.

5) CONTRACTOR SHALL BECOME FAMILIAR WITH AND COMPLY WITH OWNER'S PROCEDURES FOR MAINTAINING A SECURE SITE AND BUILDING.

6) EACH INSTALLER SHALL EXAMINE ALL SUBSTRATE CONDITIONS AND/OR SITE CONDITIONS WHICH AFFECT THE QUALITY OF EACH PRODUCT TO BE INSTALLED. IF ANY CONDITIONS EXIST WHICH WILL HAVE A DETRIMENTAL EFFECT ON THE QUALITY OF THE INSTALLATION, THE INSTALLER SHALL IMMEDIATELY NOTIFY THE CONTRACTOR. INSTALLATION SHALL NOT PROCEED UNTIL THE UNSATISFACTORY CONDITIONS ARE CORRECTED. INSTALLATION SHALL SIGNIFY ACCEPTANCE OF THE CONDITIONS.

7) CONTRACTOR SHALL MAINTAIN RECORD DRAWINGS ON THE SITE AT ALL TIMES.

8) CONTRACTOR SHALL BE RESPONSIBLE FOR ENSURING COORDINATION EFFORTS OF ALL SUBCONTRACTORS.

9) CONTRACTOR SHALL LAY OUT ALL WORK AS SOON AS POSSIBLE. ANY DISCREPANCIES SHALL BE REPORTED TO THE OWNER FOR RESOLUTION PRIOR TO PROCEEDING WITH THE WORK IN QUESTION.

10) DO NOT ATTACH OR HANG ANY ITEMS DIRECTLY FROM ARCH-SPAN PANELS. ATTACH ONLY TO BUILDING TABS LOCATED WITHIN PANEL JOINTS

11) CONTRACTOR TO PROVIDE ALL NECESSARY BLOCKING TO SUPPORT WALL & CEILING MOUNTED EQUIPMENT, FIXTURES AND ACCESSORIES.

USE OF CONSTRUCTION DOCUMENTS:

1) DO NOT SCALE DRAWINGS. ONLY WRITTEN DIMENSIONS OR KEYED NOTES SHALL BE USED. CONTACT ARCHITECT IF CLARIFICATION OR ADDITIONAL INFORMATION IS REQUIRED.

2) THE DRAWINGS ARE SCHEMATIC IN NATURE. MODIFICATIONS IN DUCTS, PIPING, CONDUIT AND WIRING MAY BE REQUIRED TO ACCOMMODATE ACTUAL FIELD CONDITIONS.

3) DRAWINGS SHALL NOT BE REPRODUCED FOR SUBMITTALS.

4) DIMENSIONS ARE AS FOLLOWS UNLESS NOTED OTHERWISE:
   A) TO CENTER LINE OF INTERIOR PARTITIONS
   B) TO CENTERLINE OF COLUMNS.
   C) TO TOP OF FLOOR SLAB.
   D) TO BOTTOM OF FINISHED CEILING.
   E) TO EXTERIOR FACE OF ARCH SPAN PANEL OR TO FACE OF MASONRY OR CONCRETE.

5) VERIFY IN FIELD DIMENSIONS OF ALL DOOR, WINDOW AND LOUVER OPENINGS.

DEFINITIONS:

1) "ALIGN" AS USED IN THESE DOCUMENTS SHALL MEAN TO ACCURATELY LOCATE FINISH FACES IN THE SAME PLANE AND/OR TO INSTALL NEW CONSTRUCTION ADJACENT TO EXISTING CONSTRUCTION WITHOUT ANY VISIBLE JOINTS OR SURFACE IRREGULARITIES.

2) "CLEAR" AS USED IN THESE DOCUMENTS SHALL MEAN THAT THE CONDITION IS NOT ADJUSTABLE WITHOUT APPROVAL OF THE ARCHITECT. CLEAR DIMENSIONS ARE TYPICALLY TO FINISH FACE.

3) "MAXIMUM" OR "MAX" AS USED IN THESE DOCUMENTS SHALL MEAN THAT THE CONDITION IS SLIGHTLY ADJUSTABLE BUT MAY NOT VARY TO A DIMENSION OR QUANTITY GREATER THAN THAT SHOWN WITHOUT APPROVAL OF THE ARCHITECT.

4) "MINIMUM" OR "MIN" AS USED IN THESE DOCUMENTS SHALL MEAN THAT THE CONDITION IS SLIGHTLY ADJUSTABLE BUT MAY NOT VARY TO A DIMENSION OR QUANTITY LESS THAN THAT SHOWN WITHOUT APPROVAL OF THE ARCHITECT.

5) "TYPICAL" AS USED IN THESE DOCUMENTS SHALL MEAN THAT THE CONDITION OR DIMENSION IS THE SAME OR REPRESENTATIVE FOR SIMILAR CONDITIONS THROUGHOUT.

6) "*" AS USED IN THESE DOCUMENTS SHALL MEAN THAT THE DIMENSION OR QUALITY IS SLIGHTLY ADJUSTABLE TO ACCOMMODATE ACTUAL CONDITIONS. FIELD VERIFICATION AND COORDINATION WITH OTHER ELEMENTS MIGHT BE NECESSARY.

SYMBOLS LEGEND

ROOM NAME XXXX — ROOM NAME / ROOM NUMBER

X — PARTITION TYPE

XXXX, 150 UNO — DOOR NUMBER; PROVIDE 150 HINGE SIDE WALL RETURN ON DOORS, U.N.O. OR CENTER IN WALL

1 / A-101 — SECTION CALL-OUT

1 / A-101 — DETAIL CALL-OUT

A, B, C, D; 1 / A-101 — INTERIOR ELEVATION CALL-OUT

XX — KEYNOTE

X — WINDOW TYPE

1 / A-101 — ELEVATION CALL-OUT

/ A-### — DETAIL REFERENCE NUMBER; SHEET NUMBER DETAIL IS DRAWN ON

ELEVATION MARK

METAL STUD AND GWB PARTITION

CONCRETE

BRICK

CONCRETE BLOCK

FIBERGLASS BATT INSULATION

RIGID BOARD INSULATION

CONCRETE OR GROUT (DRAWN IN SECTION)

CONCRETE PAVING (DRAWN IN PLAN)

UNLESS OTHERWISE NOTED, LINEAR DIMENSIONS SHOWN ARE IN MILLIMETERS.

COMMONWEALTH OF VIRGINIA
PETER GARRETT SCHMIDT
No. 013167
ARCHITECT

US ARMY CORPS OF ENGINEERS
AFGHANISTAN NORTH DISTRICT

SYMBOL	DESCRIPTION	DATE	APPR.	SYMBOL	DESCRIPTION	DATE	APPR.

DESIGNED BY: PGS, SE, MR
DWN BY: SE, MDH, AH
CKD BY: PGS, SE, MR
REVIEWED BY:
SUBMITTED BY:
DATE: 3-25-2011
CONTRACT NO. W912ER-09-D-0002
DRAWING CODE:
FILE NAME: ARCHITECTURAL\CL08-A-001.DWG
PLOT SCALE: NONE
PLOT DATE: 3/25/2011
REV: 0

BAKER

U.S. ARMY ENGINEER DISTRICT, AFGHANISTAN
CORPS OF ENGINEERS
APO AE 09356

SITE ADAPT DESIGN
CL08 - CLASSROOM BUILDING - ARCH SPAN
ABBREVIATIONS, SYMBOLS, AND GENERAL NOTES

SHEET REFERENCE NUMBER:
A-001

3/25/2011 11:35 AM

A1 Size 594mm x 841mm

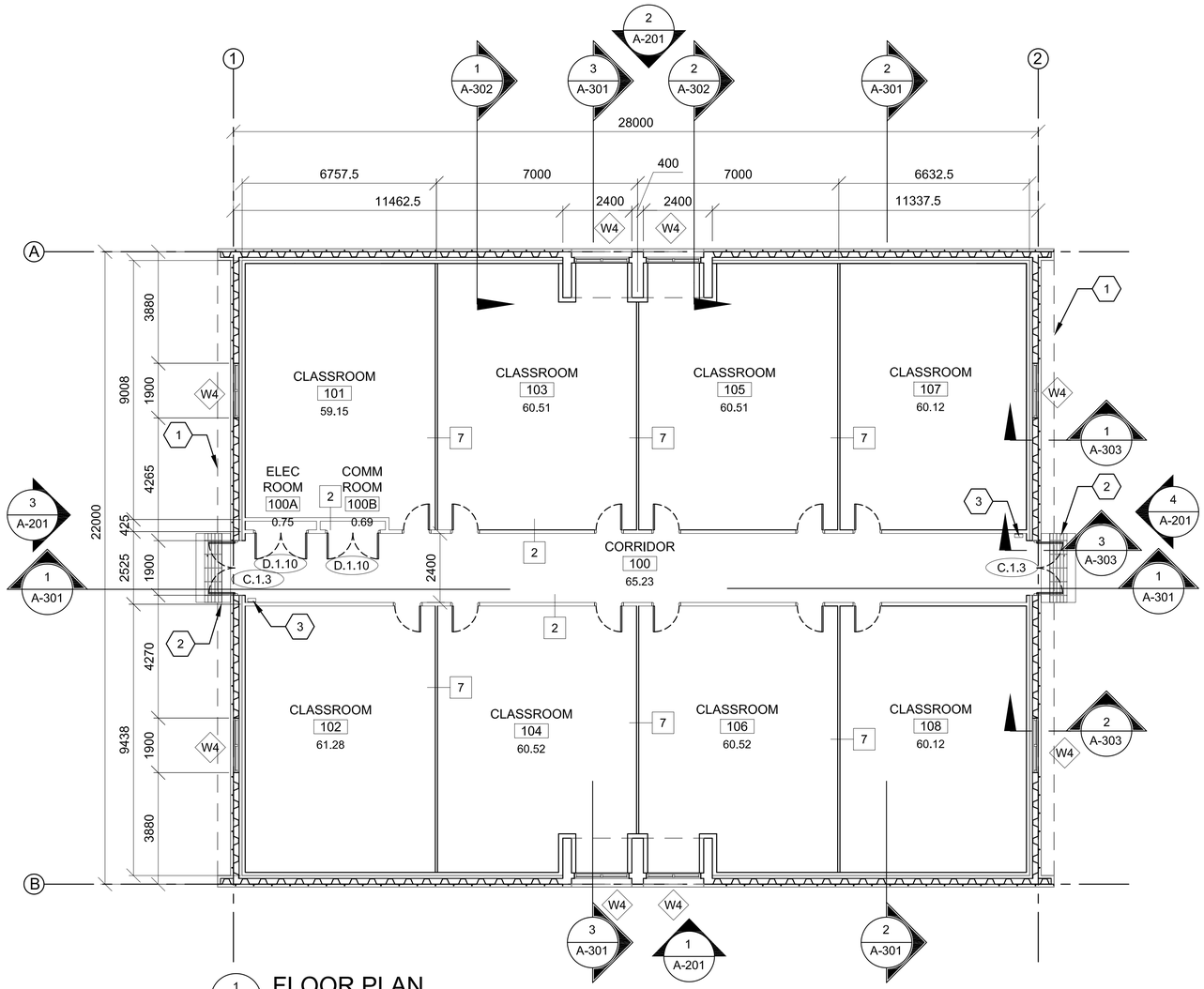

1 A-101 FLOOR PLAN

SCALE: 1:100

GENERAL NOTES:

A. DIMENSIONS ARE SHOWN TO OUTER EDGE OF EXTERIOR STRUCTURAL FACE OF ARCH SPAN PANEL(GRID LINES), CENTER LINE OF INTERIOR PARTITIONS, EDGE OF WINDOW OPENINGS, AND TO HINGE SIDE OF DOOR FRAME OPENING, UNLESS NOTED OTHERWISE.

B. HINGE SIDE OF OPENINGS FOR DOORS AND FRAMES SHALL BE LOCATED 200 MM FROM THE ADJACENT WALL OR COLUMN, UNLESS NOTED OTHERWISE.

C. INTERIOR PARTITIONS SHALL BE PARTITION TYPE 1, UNLESS NOTED OTHERWISE. REFER TO A-602 FOR PARTITION TYPES SCHEDULE

D. COSMETIC REPAIR OF MINOR DEFECTS: REPAIR OR FILL MORTAR JOINTS AND MINOR DEFECTS, INCLUDING BUT NOT LIMITED TO SPALLS, IN ACCORDANCE WITH MANUFACTURER'S RECOMMENDATIONS AND PRIOR TO COATING APPLICATION. SURFACES TO BE PAINTED SHALL BE CLEAN AND FREE OF FOREIGN MATTER BEFORE APPLICATION OF PAINT. CLEANING SHALL BE SCHEDULED SO THAT DUST AND OTHER CONTAMINANTS WILL NOT FALL ON NEWLY PAINTED SURFACES.

E. CONCRETE, PLASTER AND MASONRY SURFACES SHALL BE ALLOWED TO CURE FOR AT LEAST 30 DAYS BEFORE PAINTING. CONCRETE SLABS-ON-GRADE SHALL BE ALLOWED TO CURE 90 DAYS BEFORE STAINING OR SEALING.

F. DO NOT USE PAINT MATERIALS CONTAINING LEAD CONTENT IN EXCESS OF 0.009 PERCENT OF THE WEIGHT OF THE TOTAL NONVOLATILE CONTENT OF THE PAINT OR THE WEIGHT OF THE DRIED PAINT FILM.

G. DO NOT USE ANY ASBESTOS CONTAINING MATERIALS (ACM) IN PROJECT. ACM IS DEFINED AS 1% OR MORE BY VOLUME.

H. DO NOT USE PAINT MATERIALS CONTAINING MERCURIAL FUNGICIDES.

I. FACTORY PRIMED METAL DOORS AND FRAMES SHALL RECEIVE TWO COATS OF PAINT.

J. FILL REMAINING SPACE AT PENETRATIONS IN FIRE-RATED FLOORS, PARTITIONS AND CEILINGS WITH APPROPRIATE FIRESTOPPING MATERIALS.

K. ALL CEILING FINISHES SHALL AS NOTED ON REFLECTED CEILING PLANS OR FINISH SCHEDULE.

L. ALL WALL FINISHES SHALL AS NOTED ON FINISH SCHEDULE. REFER TO A-603

M. ALL FLOOR FINISHES SHALL BE SEALED CONCRETE, UNLESS NOTED OTHERWISE.

N. NOT USED

O. ALL DOOR, FRAME AND HARDWARE TYPES SHALL BE 20 MINUTE 20B.1.5A UNLESS NOTED OTHERWISE. REFER TO A-601 FOR DOOR INFORMATION.

P. NOT USED

Q. NOT USED

R. NOT USED

S. PLASTER MAY BE SUBSTITUTED FOR DRYWALL WALLS AND CEILINGS. MAINTAIN FIRE RATINGS AS NOTED

T. LOCATION OF EXTERIOR DOORS AND WINDOWS MUST BE COORDINATED WITH ARCH SPAN MODULE. PLAN DIMENSIONS OF THESE IS APPROXIMATE AND MAY BE SLIGHTLY ADJUSTED TO SUIT PANEL FABRICATION TOLERANCES.

KEY NOTES:

1. LINE OF ROOF OVERHANG ABOVE.
2. CONCRETE STOOP WITH GRATE - SEE DETAIL 1/A-503.
3. FIRE EXTINGUISHER

N

0 2000 4000

SCALE: 1:100

UNLESS OTHERWISE NOTED, LINEAR DIMENSIONS SHOWN ARE IN MILLIMETERS.

COMMONWEALTH OF VIRGINIA
PETER GARRETT SCHMIDT
No. 013167
ARCHITECT

US ARMY CORPS OF ENGINEERS AFGHANISTAN NORTH DISTRICT

SYMBOL	DESCRIPTION	DATE	APPR.	SYMBOL	DESCRIPTION	DATE	APPR.

DESIGNED BY: PGS, SE, MR
DWN BY: SE, MDH, AH
CKD BY: PGS, SE, MR
REVIEWED BY:
SUBMITTED BY:
DATE: 3-25-2011
CONTRACT NO. W912ER-09-D-0002
DRAWING CODE:
FILE NAME: \\BAKERMEDIA\DC\Data\Jobs\
PLOT SCALE: 1:100
PLOT DATE: 3/25/2011
REV: 0

BAKER

U.S. ARMY ENGINEER DISTRICT, AFGHANISTAN
CORPS OF ENGINEERS
APO AE 09356

SITE ADAPT DESIGN

CL08 - CLASSROOM BUILDING - ARCH SPAN

FLOOR PLAN

SHEET REFERENCE NUMBER:

A-101

3/25/2011 11:35 AM

A1 Size 594mm x 841mm

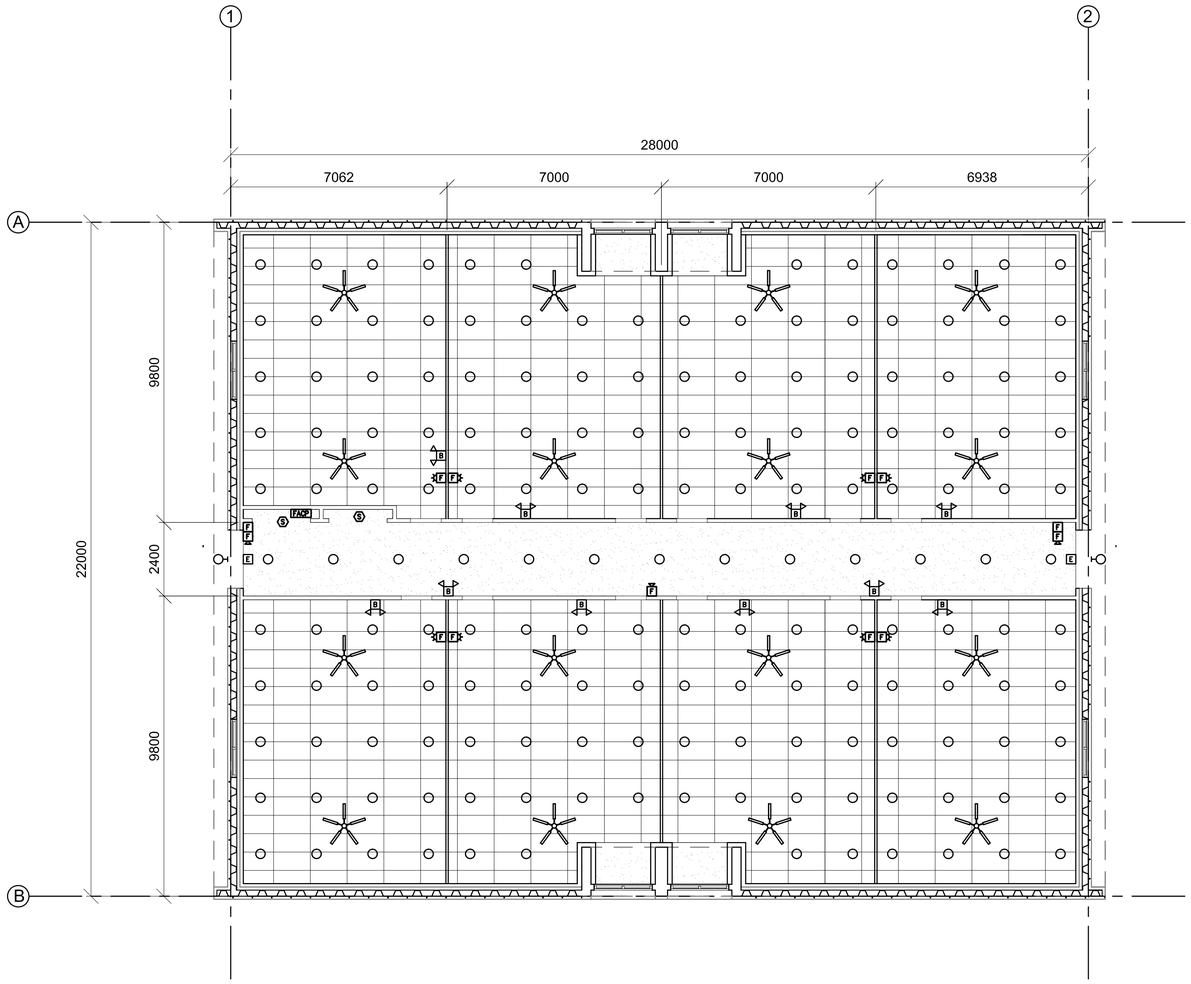

1 / A-101 REFLECTED CEILING PLAN

SCALE: 1:100

CEILING LEGEND:

- 600mm X 1200mm METAL PANEL SUSPENDED CEILING SYSTEM
- NO FINISHED CEILING, EXPOSED STRUCTURE (SEE FINISH SCHEDULE)
- GYPSUM WALLBOARD CEILING (SEE FINISH SCHEDULE)
- 300mm X 1200mm FLUORESCENT LIGHT FIXTURE
- 600mm X 1200mm FLUORESCENT LIGHT FIXTURE
- 300mm X 1200mm FLUORESCENT LIGHT FIXTURE NORMAL/EMERGENCY
- 600mm X 1200mm FLUORESCENT LIGHT FIXTURE NORMAL/EMERGENCY
- SUSPENDED LIGHT FIXTURE
- WALL MOUNTED LIGHT FIXTURE
- DOWNLIGHT
- EXIT SIGN
- SMOKE DETECTOR
- BATTERY PACK
- RELIEF RETURN DIFFUSER
- SUPPLY DIFFUSER
- EXHAUST DIFFUSER
- ACCESS PANEL
- CEILING FAN

KEY NOTES:

1. NOT USED

GENERAL NOTES:

A. CEILING SHALL BE 2.65M A.F.F. UNLESS NOTED OTHERWISE OR EXPOSED STRUCTURE.
B. REFER TO SHEET A603 FOR FINISH SCHEDULE
C. REFER TO STRUCTURAL DRAWINGS NOTES FOR LIGHT GAUGE CEILING FRAMING CRITERIA.
D. REFER TO ELECTRICAL DRAWINGS TO COORDINATE EQUIPMENT ABOVE CEILING GRID.
E. LOCATION OF LIGHT FIXTURES AND FANS AS INDICATED ON THIS REFLECTED CEILING PLAN TAKES PRECEDENCE OVER ALL RELATIVE POSITIONS AS SHOWN ON ELECTRIC AND MECHANICAL DRAWINGS. U.N.O. INSTALL FIXTURES WITH EQUAL SPACING BETWEEN EACH OTHER TO THE GREATEST EXTENT POSSIBLE AND AS GRAPHICALLY SHOWN IN THIS LAYOUT. SEE ELECTRICAL DRAWINGS FOR SUPPORT AND WIRING INFORMATION. IN AREA WHERE SUSPENDED CEILING SUPPORTS OVERLAP LIGHTING LOCATIONS SHIFT LIGHTING 25MM OFF OF GRID TO RESOLVE CONFLICT.

0 2000 4000
SCALE: 1:100

UNLESS OTHERWISE NOTED, LINEAR DIMENSIONS SHOWN ARE IN MILLIMETERS.

COMMONWEALTH OF VIRGINIA
PETER GARRETT SCHMIDT
No. 013167
ARCHITECT

US ARMY CORPS OF ENGINEERS
AFGHANISTAN NORTH DISTRICT

SYMBOL	DESCRIPTION	DATE	APPR.	SYMBOL	DESCRIPTION	DATE	APPR.

DESIGNED BY: PGS, SE, MR
DWN BY: SE, MDH, AH
CKD BY: PGS, SE, MR
REVIEWED BY:
SUBMITTED BY:
DATE: 4-25-2011
REV: 0
CONTRACT NO. W912ER-09-D-0002
DRAWING CODE:
FILE NAME: ARCHITECTURAL\CLASS-A-CL-01.DWG
PLOT SCALE: 1:100
PLOT DATE: 4/25/2011

BAKER

U.S. ARMY ENGINEER DISTRICT, AFGHANISTAN
CORPS OF ENGINEERS
APO AE 09356

SITE ADAPT DESIGN
CL08 - CLASSROOM BUILDING - ARCH SPAN
REFLECTED CEILING PLAN

SHEET REFERENCE NUMBER:
A-102

4/25/2011 3:55 PM

A1 Size 594mm x 841mm

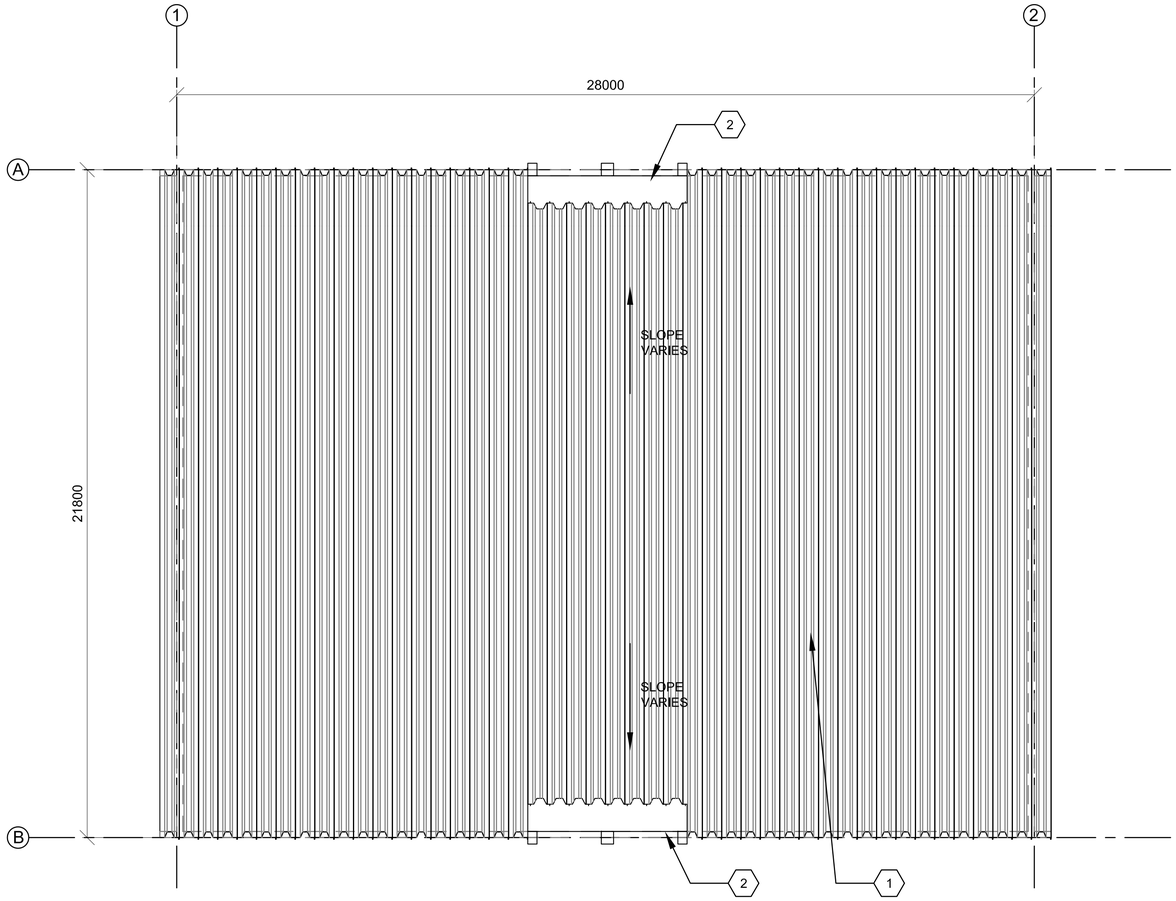

1 / A-101 FLOOR PLAN

SCALE: 1:100

KEY NOTES:

(X)

1. PRE-FINISHED METAL ARCH-SPAN CONSTRUCTION
2. DOOR OR WINDOW DORMER

GENERAL NOTES:

A. THE APPROXIMATE LOCATION OF ROOF DEVICES AND PENETRATIONS ARE SHOWN ON THE ROOF PLAN FOR INFORMATION ONLY. THE CONTRACTOR SHALL BE RESPONSIBLE FOR UNDERSTANDING THE ACTUAL LOCATION OF THESE AND ALL OTHER ITEMS PRIOR TO BEGINNING CONSTRUCTION. COORDINATE ALL ROOF PENETRATIONS WITH STRUCTURAL, MECHANICAL AND PLUMBING WORK.

B. NOT USED

C. UNLESS OTHERWISE NOTED, NOTES, DETAILS OR FEATURES INDICATED FOR ONE CONDITION SHALL BE APPLICABLE FOR ALL ALIKE AND SIMILAR CONDITIONS.

D. STOCKPILING OF MATERIALS, EQUIPMENT AND ANY OTHER ITEMS ON THE ROOF IS PROHIBITED.

E. ROOFS SHALL BE PRE-FINISHED METAL K-SPAN.

0 2000 4000

SCALE: 1:100

UNLESS OTHERWISE NOTED, LINEAR DIMENSIONS SHOWN ARE IN MILLIMETERS.

COMMONWEALTH OF VIRGINIA
PETER GARRETT SCHMIDT
No. 013167
ARCHITECT

US ARMY CORPS OF ENGINEERS
AFGHANISTAN NORTH DISTRICT

SYMBOL	DESCRIPTION	DATE	APPR.	SYMBOL	DESCRIPTION	DATE	APPR.

DESIGNED BY: PGS, SE, MR
DWN BY: SE, MDH, AH
CKD BY: PGS, SE, MR
REVIEWED BY:
SUBMITTED BY:
DATE: 3-25-2011
REV. 0
CONTRACT NO. W912ER-09-D-0002
DRAWING CODE:
FILE NAME: ae\cmmercial\cl08\cl08-a-101.dwg
PLOT SCALE: 1:100
PLOT DATE: 3/25/2011

BAKER

U.S. ARMY ENGINEER DISTRICT, AFGHANISTAN
CORPS OF ENGINEERS
APO AE 09356

SITE ADAPT DESIGN

CL08 - CLASSROOM BUILDING - ARCH SPAN

ROOF PLAN

SHEET REFERENCE NUMBER:

A-103

A1 Size 594mm x 841mm

3/25/2011 11:35 AM

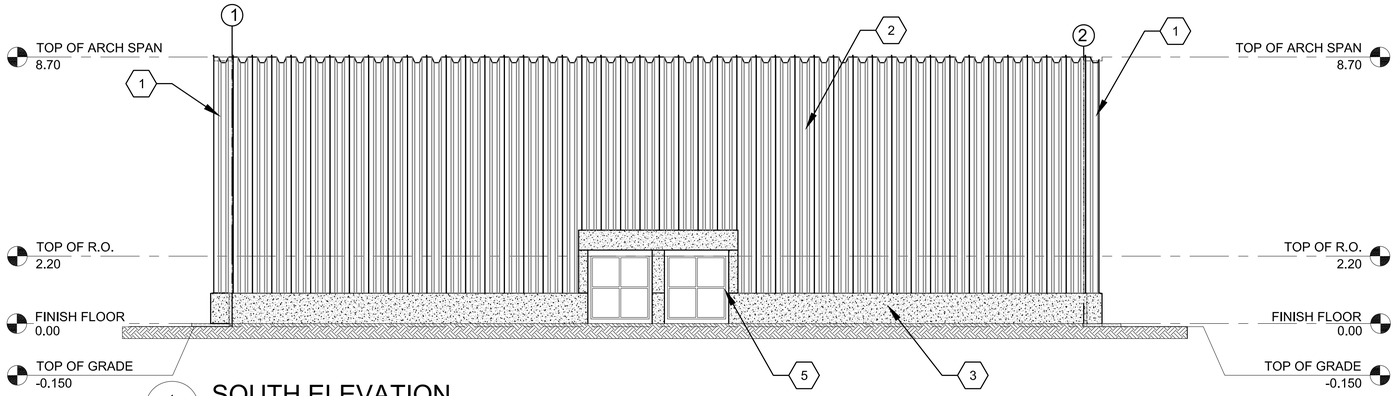

1 A-201 SOUTH ELEVATION
SCALE: 1:100

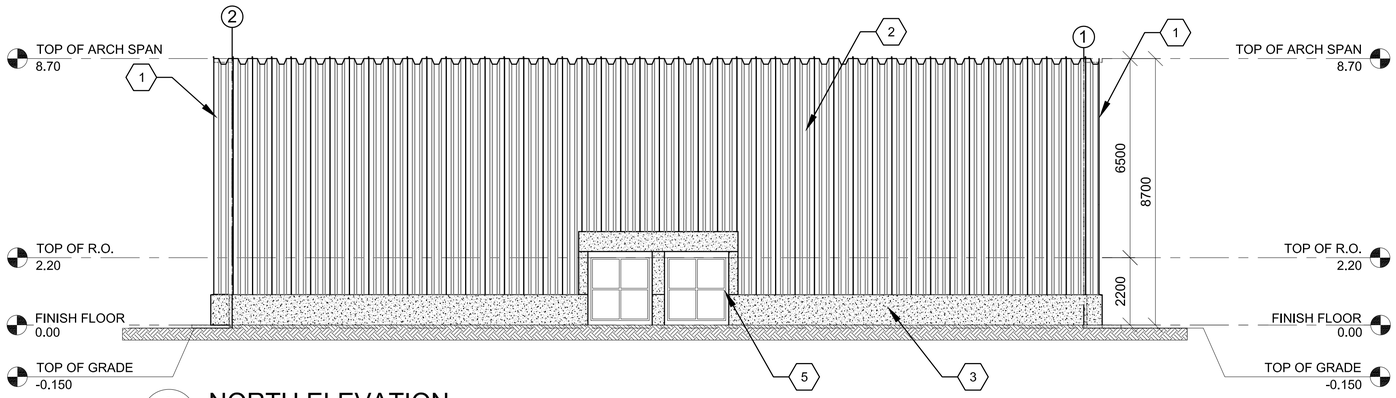

2 A-201 NORTH ELEVATION
SCALE: 1:100

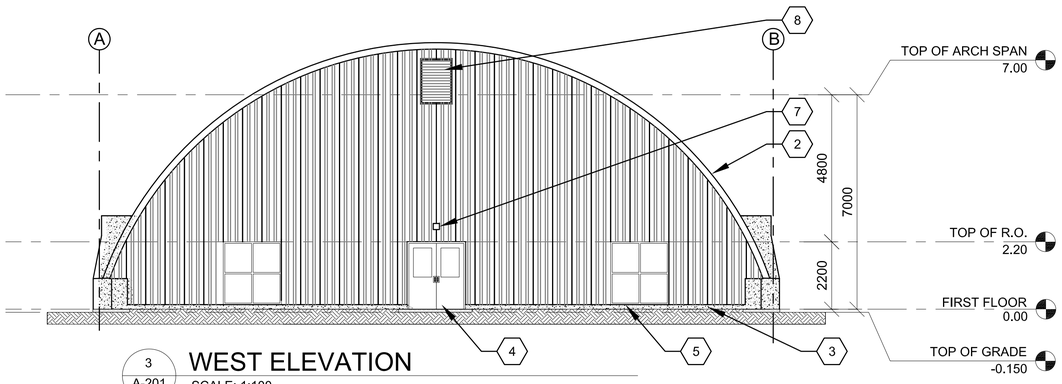

3 A-201 WEST ELEVATION
SCALE: 1:100

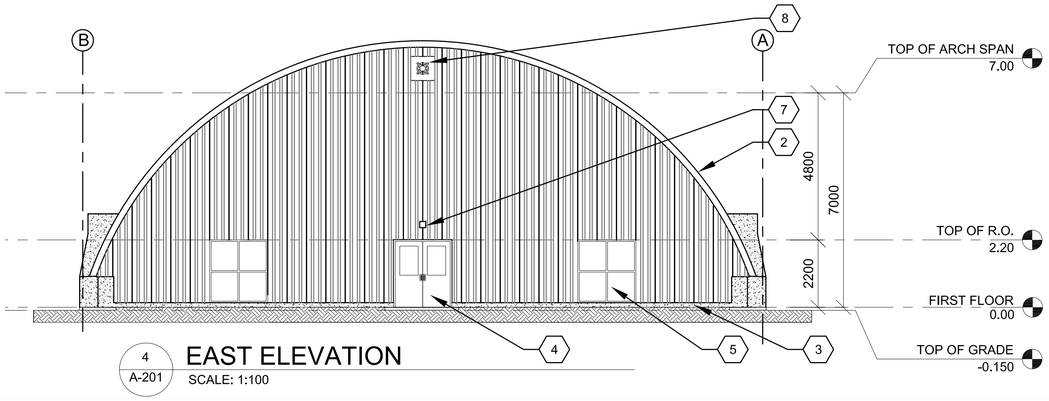

4 A-201 EAST ELEVATION
SCALE: 1:100

GENERAL NOTES:

A. FACTORY PRIMED METAL DOORS AND FRAMES SHALL RECEIVE TWO COATS OF PAINT.
B. LOCATION OF EXTERIOR DOORS AND WINDOWS MUST BE COORDINATED WITH ARCH SPAN MODULE. PLAN DIMENSIONS OF THESE IS APPROXIMATE AND MAY BE SLIGHTLY ADJUSTED TO SUIT PANEL FABRICATION TOLERANCES.
C. EXTERIOR CONCRETE BUILDING SURFACES TO RECEIVE PENETRATING CONCRETE SEALER
D. COORDINATE ALL HVAC OPENING SIZES AND LOCATIONS WITH HVAC CONTRACTOR PRIOR TO INSTALLATION.

KEY NOTES: (X)

1. EXTENSION OF ARCH SPAN
2. PRE-FINISHED METAL ARCH SPAN CONSTRUCTION WALL AND ROOF.
3. CONCRETE WALL.
4. PAINTED HOLLOW METAL DOOR & FRAME.
5. STEEL WINDOW PAINTED.
6. NOT USED
7. LIGHTING - SEE ELECTRICAL
8. ATTIC VENTILATION LOUVER OR FAN SEE MECHANICAL FOR SIZE AND TYPE

0 2000 4000
SCALE: 1:100

UNLESS OTHERWISE NOTED, LINEAR DIMENSIONS SHOWN ARE IN MILLIMETERS.

COMMONWEALTH OF VIRGINIA
PETER GARRETT SCHMIDT
No. 013167
ARCHITECT

US ARMY CORPS OF ENGINEERS
AFGHANISTAN NORTH DISTRICT

SYMBOL	DESCRIPTION	DATE	APPR.	SYMBOL	DESCRIPTION	DATE	APPR.

DESIGNED BY: PGS, SE, MR
DWN BY: SE, MDH, AH
CKD BY: PGS, SE, MR
REVIEWED BY: JH
SUBMITTED BY:
DATE: 3-25-2011
CONTRACT NO. W912ER-09-D-0002
DRAWING CODE:
FILE NAME:
PLOT SCALE: 1:100
PLOT DATE: 3/25/2011
REV: 0

BAKER

U.S. ARMY ENGINEER DISTRICT, AFGHANISTAN
CORPS OF ENGINEERS
APO AE 09356

SITE ADAPT DESIGN
CL08 - CLASSROOM BUILDING - ARCH SPAN
ELEVATIONS

SHEET REFERENCE NUMBER:
A-201

3/25/2011 11:36 AM

A1 Size 594mm x 841mm

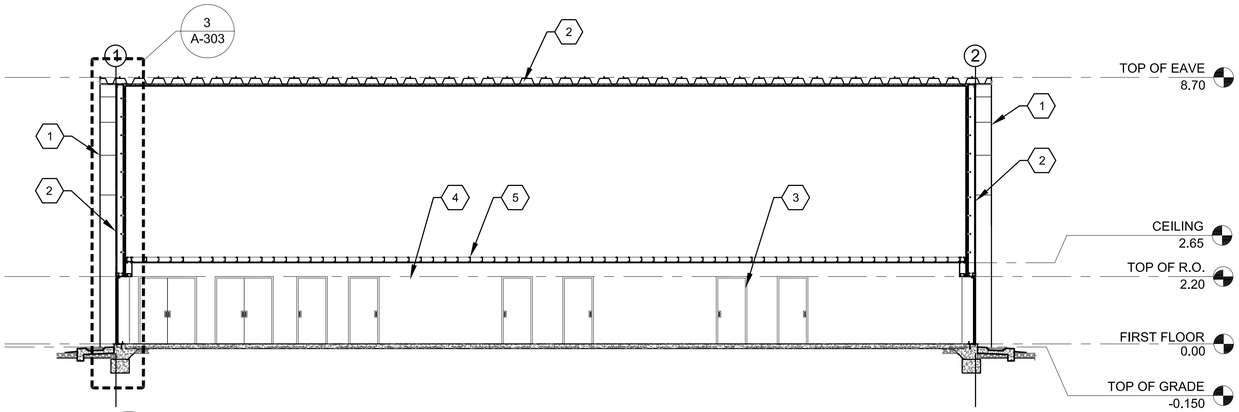

1 A-301 BUILDING SECTION
SCALE: 1:100

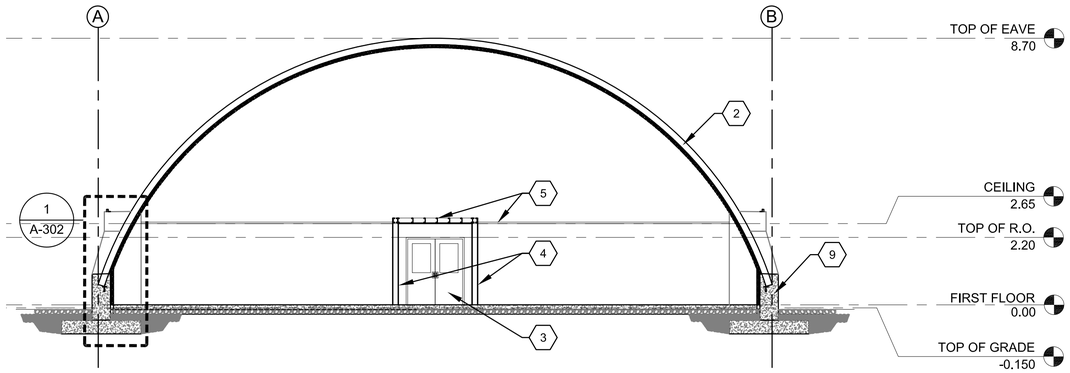

2 A-301 BUILDING SECTION
SCALE: 1:100

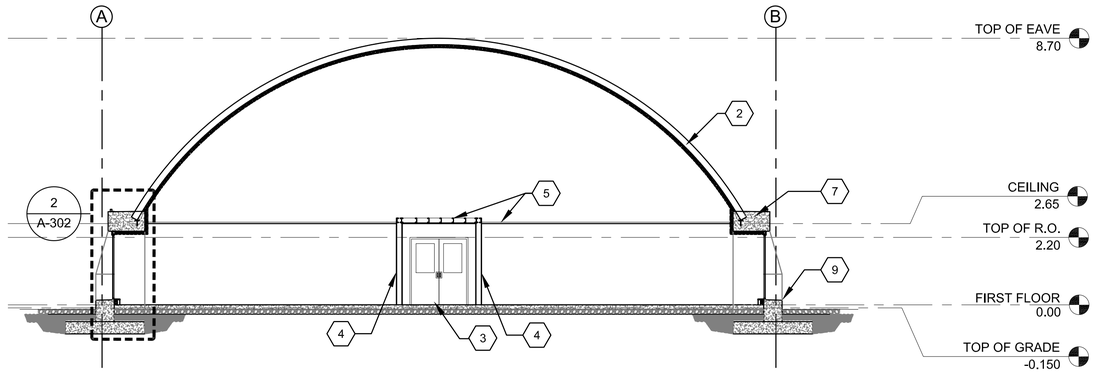

3 A-301 BUILDING SECTION
SCALE: 1:100

KEY NOTES:

1. EXTENSION OF ARCH SPAN
2. ARCH SPAN ROOF/WALL PANEL WITH POLYURETHANE/CEMENTITIOUS SPRAY - ON FIRE BARRIER
3. HOLLOW METAL FRAME WITH DOOR AS SCHEDULED
4. PARTITION AS SCHEDULED
5. CEILING SYSTEM AS SCHEDULED
6. NOT USED
7. SIDE WALL WINDOW AND DORMER FRAMING
8. NOT USED
9. CONCRETE STEM WALL
10. 300MMX300MM VENTILATION HOLE

0 2000 4000
SCALE: 1:100

UNLESS OTHERWISE NOTED, LINEAR DIMENSIONS SHOWN ARE IN MILLIMETERS.

COMMONWEALTH OF VIRGINIA
PETER GARRETT SCHMIDT
No. 013167
ARCHITECT

US ARMY CORPS OF ENGINEERS
AFGHANISTAN NORTH DISTRICT

SYMBOL	DESCRIPTION	DATE	APPR.	SYMBOL	DESCRIPTION	DATE	APPR.

DATE: 3-25-2011
CONTRACT NO. W912ER-09-D-0002
DRAWING CODE:
REV: 0
FILE NAME:
PLOT SCALE: 1:100
PLOT DATE: 3/25/2011

DESIGNED BY: SE PGS
DWN BY: AH,SE
CKD BY: SE,PGS
REVIEWED BY: JH
SUBMITTED BY:
BAKER

U.S. ARMY ENGINEER DISTRICT, AFGHANISTAN
CORPS OF ENGINEERS
APO AE 09356

SITE ADAPT DESIGN
CL08 - CLASSROOM BUILDING - ARCH SPAN
BUILDING SECTIONS

SHEET REFERENCE NUMBER:
A-301

A1 Size 594mm x 841mm

3/25/2011 11:36 AM

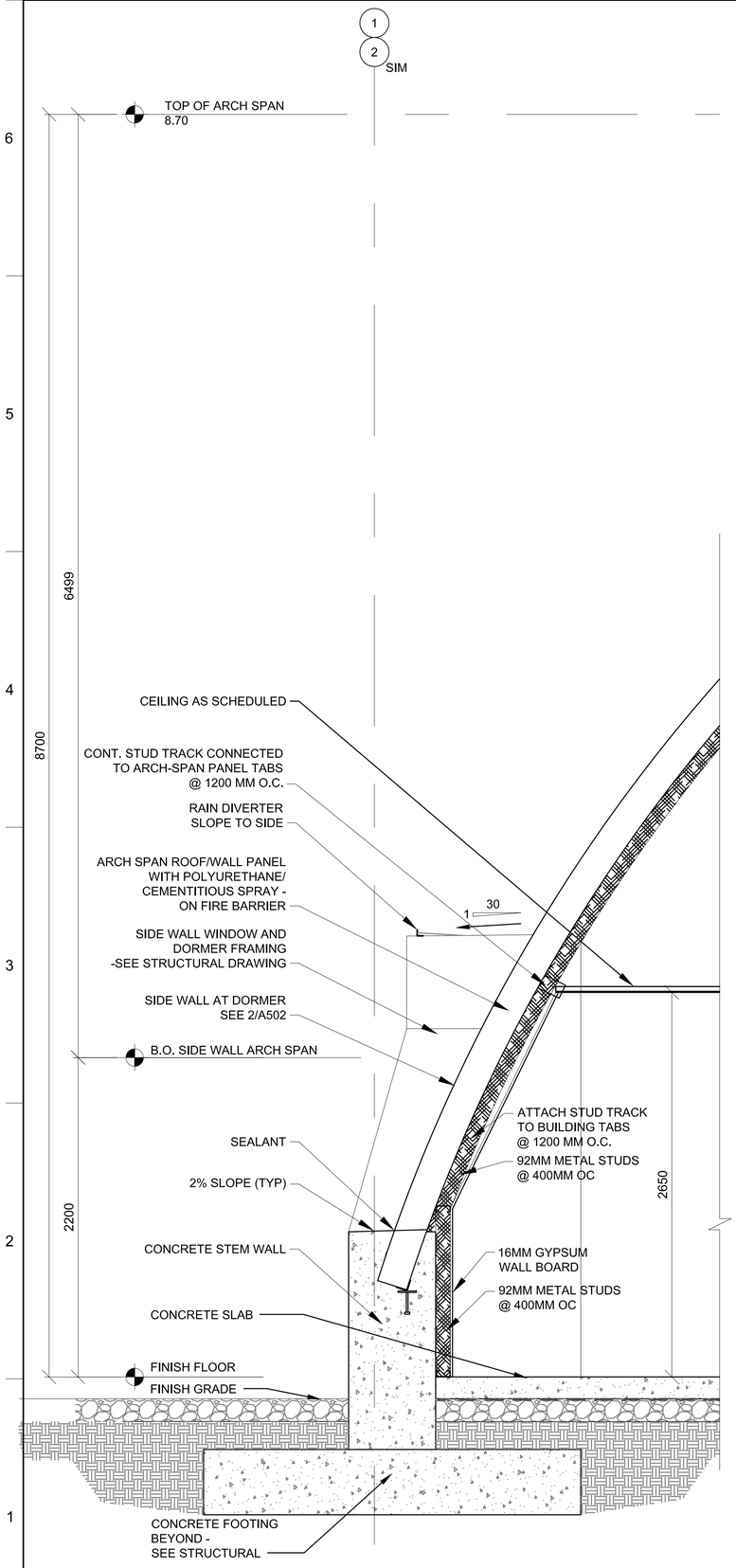

1 A-302 WALL SECTION - THRU SIDE WALL

SCALE: 1:50

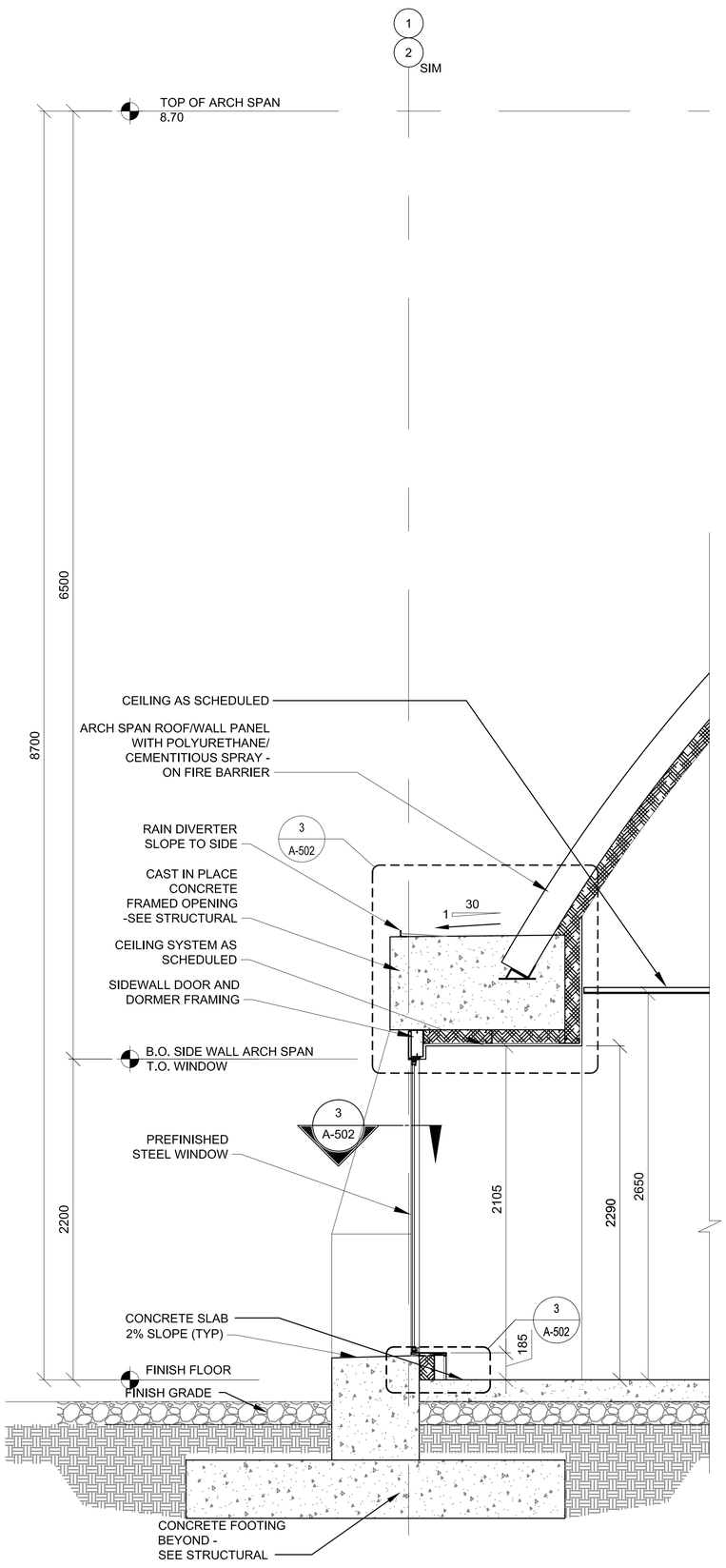

2 A-302 WALL SECTION - THRU SIDE WALL WINDOW

SCALE: 1:50

3 A-302 NOT USED

SCALE: 1:50

0 500 1000 2000

SCALE: 1:50

UNLESS OTHERWISE NOTED, LINEAR DIMENSIONS SHOWN ARE IN MILLIMETERS.

COMMONWEALTH OF VIRGINIA
PETER GARRETT SCHMIDT
No. 013167
ARCHITECT

US ARMY CORPS OF ENGINEERS
AFGHANISTAN NORTH DISTRICT

SYMBOL	DESCRIPTION	DATE	APPR.	SYMBOL	DESCRIPTION	DATE	APPR.

DESIGNED BY:
DWN BY: CKD BY:
REVIEWED BY:
SUBMITTED BY:
DATE: 3-25-2011
CONTRACT NO. W912ER-09-D-0002
DRAWING CODE:
FILE NAME:
PLOT SCALE: 1:50
PLOT DATE: 3/25/2011
REV. 0

BAKER

U.S. ARMY ENGINEER DISTRICT, AFGHANISTAN
CORPS OF ENGINEERS
APO AE 09356

SITE ADAPT DESIGN

CL08 - CLASSROOM BUILDING - ARCH SPAN

WALL SECTIONS

SHEET REFERENCE NUMBER:

A-302

3/25/2011 11:36 AM

A1 Size 594mm x 841mm

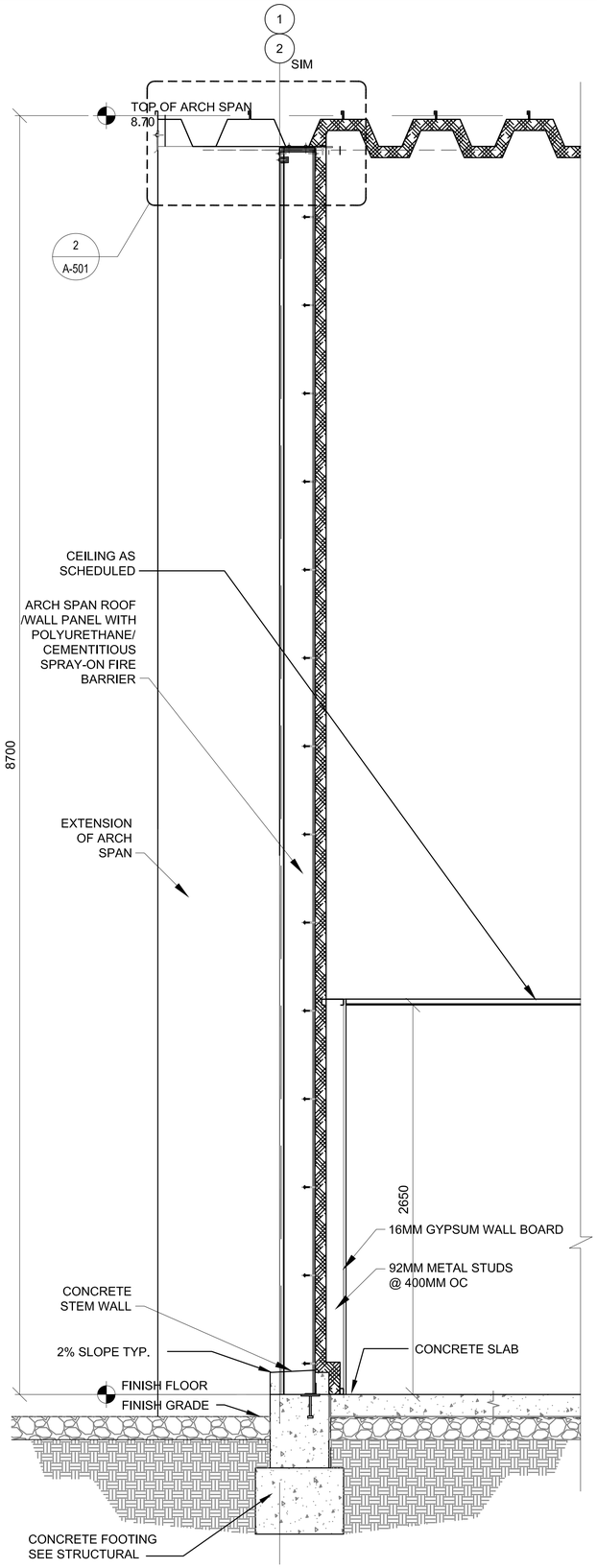

1 A-303 WALL SECTION - THRU END WALL

SCALE: 1:50

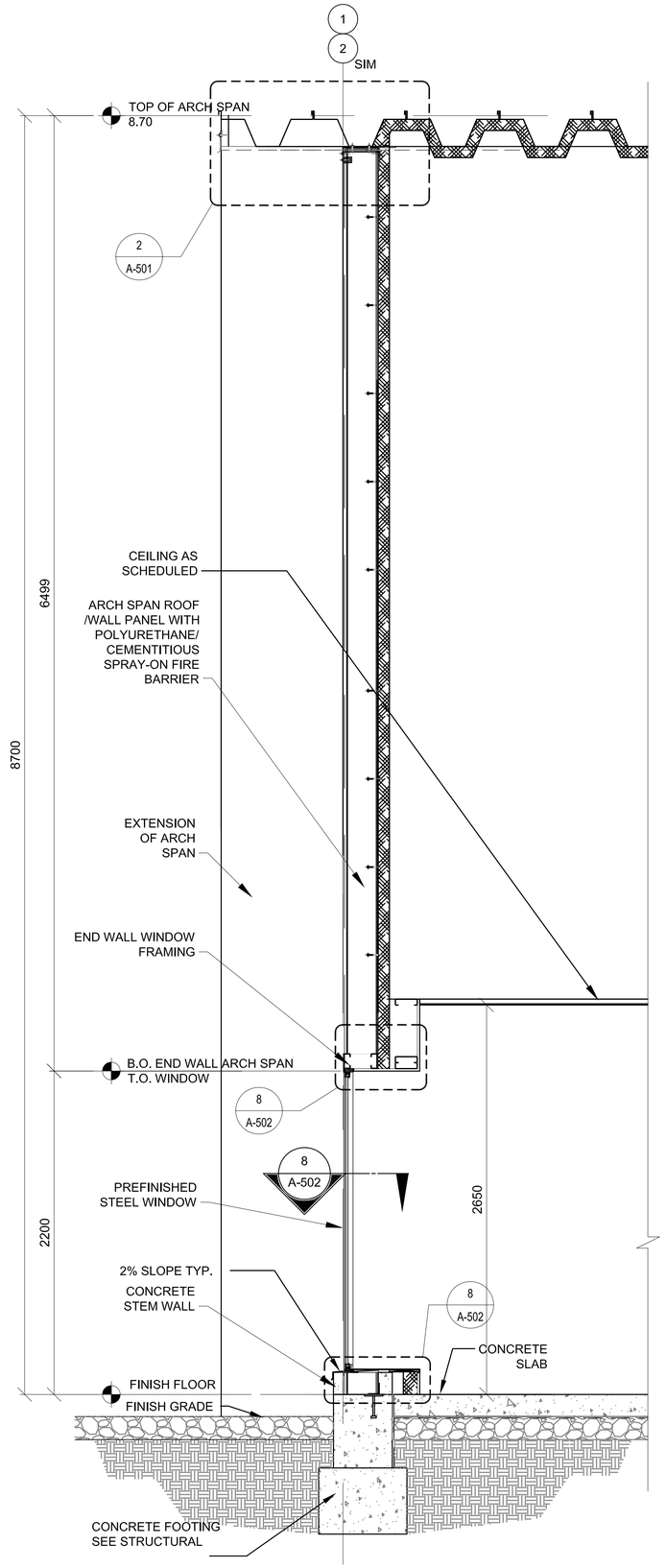

2 A-303 WALL SECTION - THRU END WALL WINDOW

SCALE: 1:50

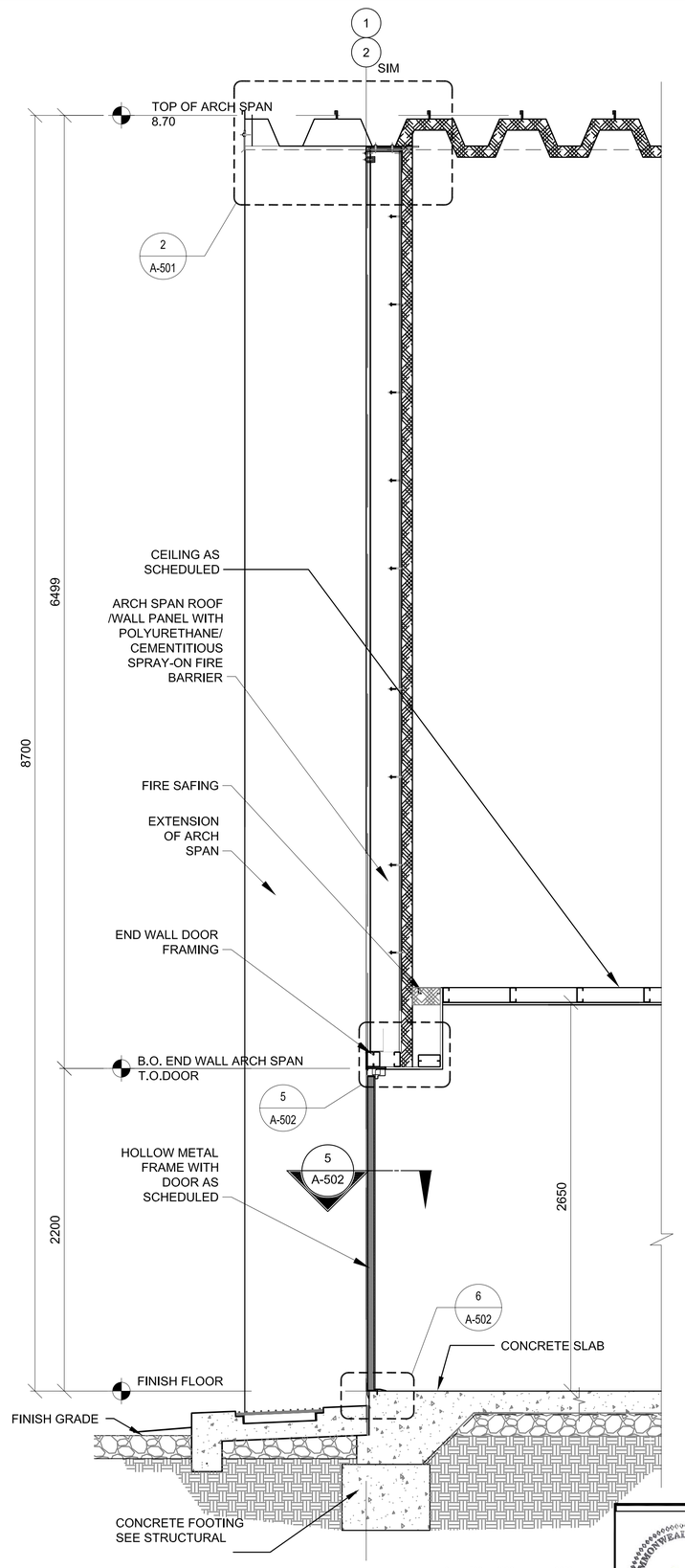

3 A-303 WALL SECTION - THRU END WALL DOOR

SCALE: 1:50

0 500 1000 2000

SCALE: 1:50

UNLESS OTHERWISE NOTED, LINEAR DIMENSIONS SHOWN ARE IN MILLIMETERS.

COMMONWEALTH OF PENNSYLVANIA
PETER GARRETT SCHMIDT
No. 013167
ARCHITECT

US ARMY CORPS OF ENGINEERS
AFGHANISTAN NORTH DISTRICT

SYMBOL	DESCRIPTION	DATE	APPR.	SYMBOL	DESCRIPTION	DATE	APPR.

DESIGNED BY:
DWN BY: CKD BY:
REVIEWED BY:
SUBMITTED BY:

DATE: 3-25-2011
CONTRACT NO. W912ER-09-D-0002
DRAWING CODE:
FILE NAME: ARCHITECTURAL\CL08-A-303.DWG
PLOT SCALE: 1:50
PLOT DATE: 3/25/2011
REV.:

BAKER

U.S. ARMY ENGINEER DISTRICT, AFGHANISTAN
CORPS OF ENGINEERS
APO AE 09356

SITE ADAPT DESIGN

CL08 - CLASSROOM BUILDING - ARCH SPAN

WALL SECTIONS

SHEET REFERENCE NUMBER:

A-303

3/25/2011 11:36 AM

A1 Size 594mm x 841mm

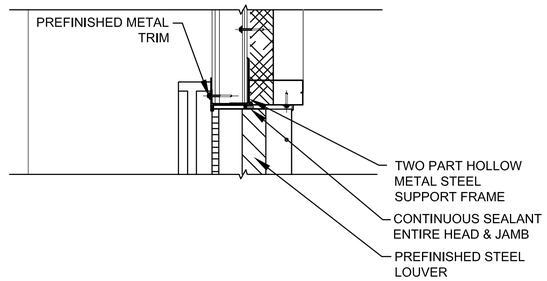

HEAD

1 / A-501 NOT USED

SCALE: NTS

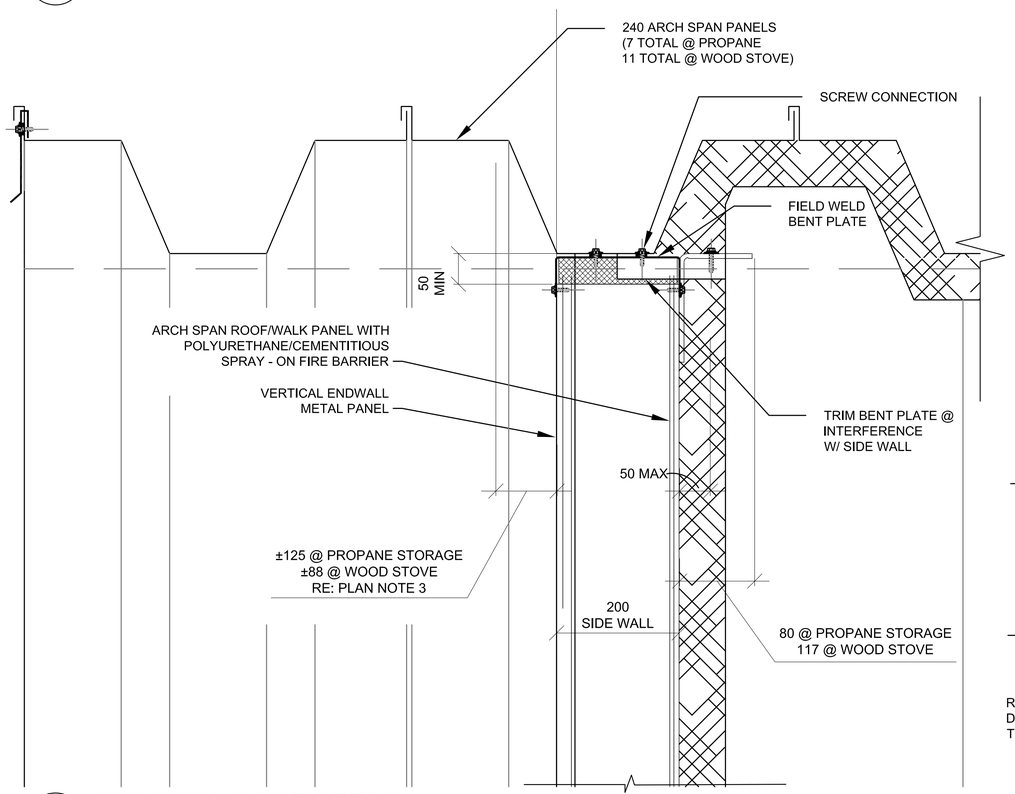

2 / A-501 END WALL ROOF DETAIL

SCALE: 1:5

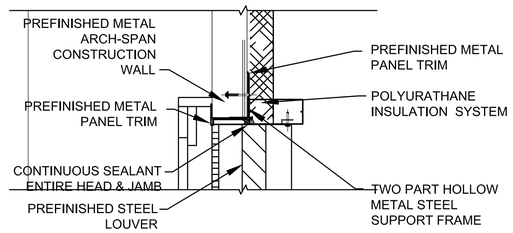

JAMB

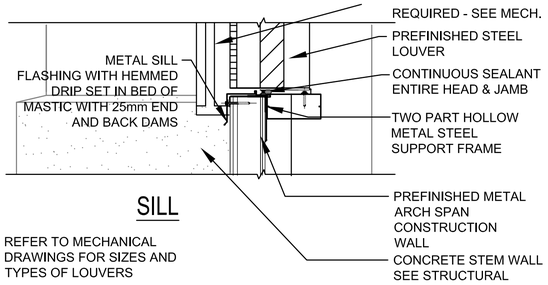

SILL

REFER TO MECHANICAL DRAWINGS FOR SIZES AND TYPES OF LOUVERS

3 / A-501 LOUVER EXTERIOR DETAIL

SCALE: 1:5

BRACING WIRES TO BE ATTACHED A MAXIMUM OF 45° TO THE CEILING AND PARALLEL TO THE COMPONENTS AT THE BRACING POINT. BRACE WIRES TO BE TAUT AND TIED BOTH ENDS WITH THREE TIGHT WRAPS. ATTACH TO ARCH SPAN SUPPORT TABS.

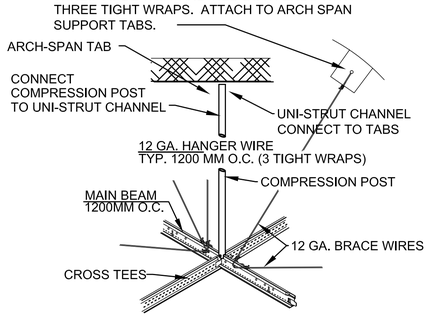

PROVIDE COMPRESSION POSTS PER MANUFACTURES INSTRUCTIONS FOR SEISMIC ZONE INDICATED. ATTACH TO ARCH SPAN SUPPORT FRAMING.

7 / A-501 CEILING GRID DETAIL

SCALE NTS

4 / A-501 NOT USED

SCALE 1:10

0 100 200 400

SCALE: 1:10

UNLESS OTHERWISE NOTED, LINEAR DIMENSIONS SHOWN ARE IN MILLIMETERS.

COMMONWEALTH OF PENNSYLVANIA
PETER GARRETT SCHMIDT
No. 013167
REGISTERED ARCHITECT

US ARMY CORPS OF ENGINEERS
AFGHANISTAN NORTH DISTRICT

SYMBOL	DESCRIPTION	DATE	APPR.	SYMBOL	DESCRIPTION	DATE	APPR.

DESIGNED BY:
DWN BY:
CKD BY:
REVIEWED BY:
SUBMITTED BY:
DATE: 3-25-2011
CONTRACT NO. W912ER-09-D-0002
DRAWING CODE:
REV: 0
FILE NAME: d:\projects\cl08\cl08-a-501.dwg
PLOT SCALE: VARIES
PLOT DATE: 3/25/2011

BAKER

U.S. ARMY ENGINEER DISTRICT, AFGHANISTAN
CORPS OF ENGINEERS
APO AE 09356

SITE ADAPT DESIGN
CL08 - CLASSROOM BUILDING - ARCH SPAN
EXTERIOR DETAILS

SHEET REFERENCE NUMBER:
A-501

3/25/2011 11:36 AM

A1 Size 594mm x 841mm

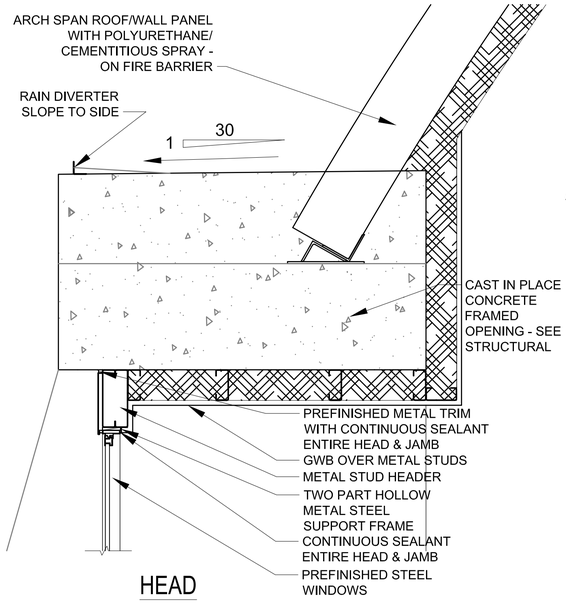

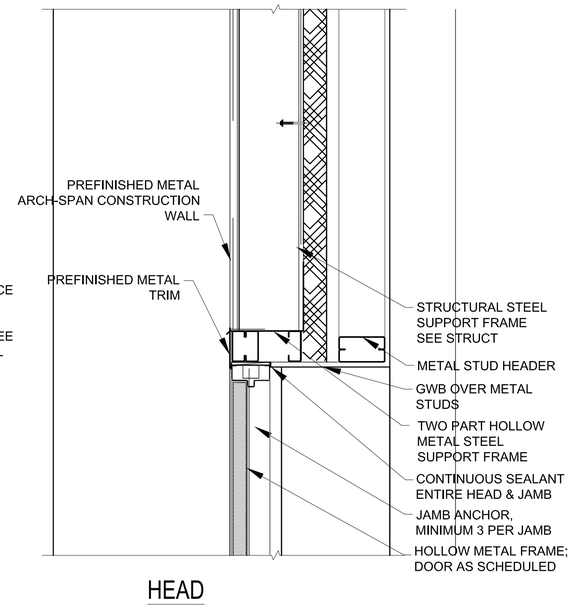

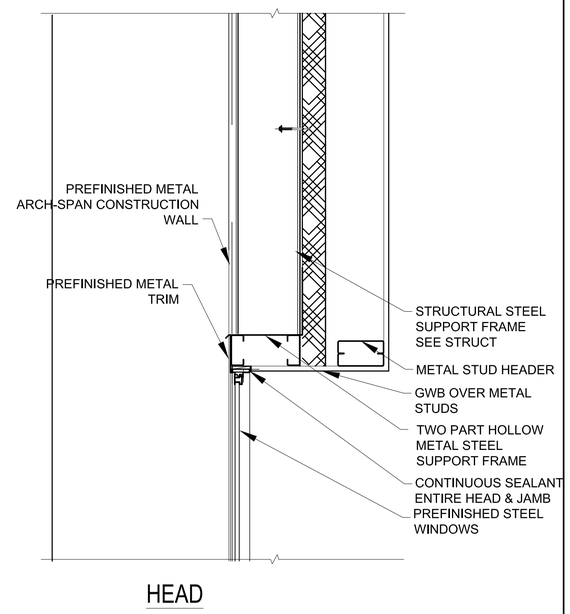

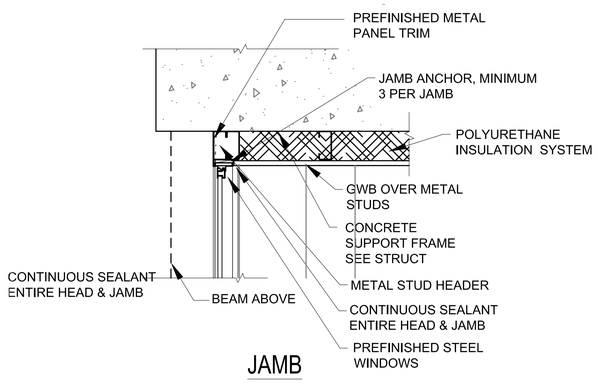

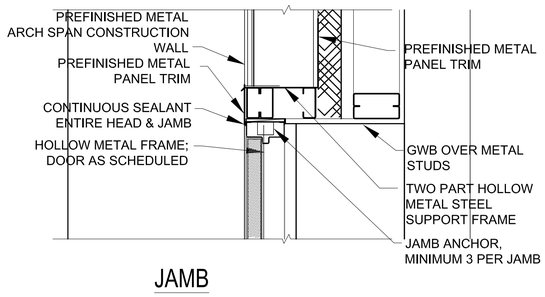

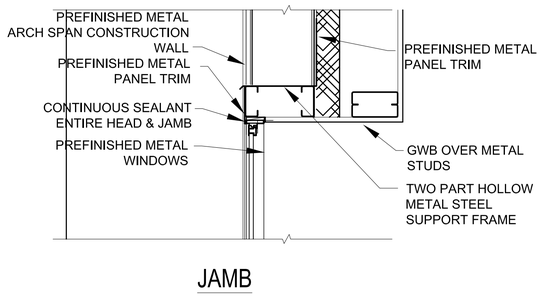

5 A-502 END WALL EXTERIOR DOOR DETAILS
SCALE: 1:10

1 A-502 NOT USED
SCALE: 1:10

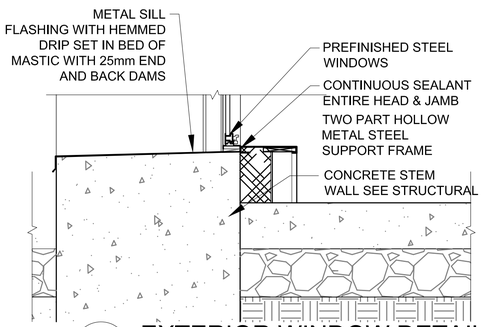

3 A-502 EXTERIOR WINDOW DETAILS
SCALE: 1:10

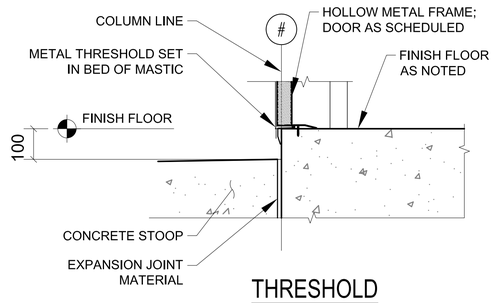

6 A-502 EXTERIOR DOOR DETAILS
SCALE: 1:10

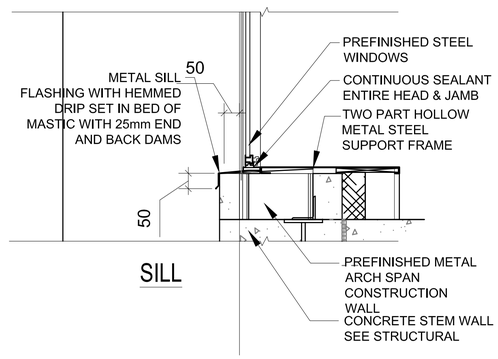

8 A-502 EXTERIOR WINDOWS DETAILS
SCALE: 1:10

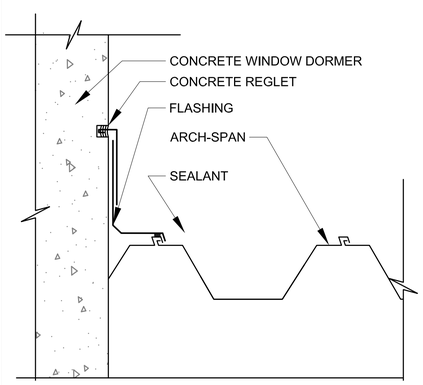

2 A-502 DORMER DETAILS
SCALE: 1:10

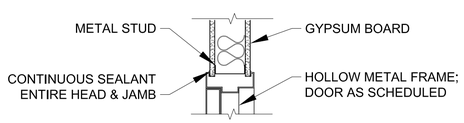

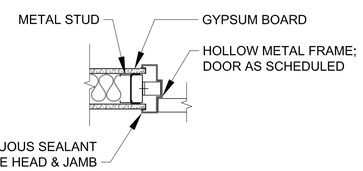

4 A-502 INTERIOR WALL DETAILS
SCALE: 1:10

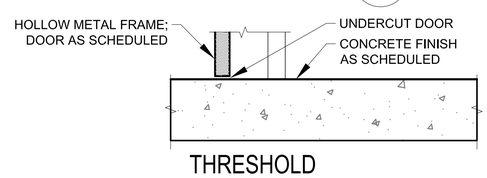

7 A-502 INTERIOR DOOR DETAILS
SCALE: 1:10

0 100 200 400
SCALE: 1:10

UNLESS OTHERWISE NOTED, LINEAR DIMENSIONS SHOWN ARE IN MILLIMETERS.

COMMONWEALTH OF PENNSYLVANIA
PETER GARRETT SCHMIDT
No. 013167
ARCHITECT

US ARMY CORPS OF ENGINEERS
AFGHANISTAN NORTH DISTRICT

SYMBOL	DESCRIPTION	DATE	APPR.	SYMBOL	DESCRIPTION	DATE	APPR.

DESIGNED BY:
DWN BY: CKD BY:
REVIEWED BY:
SUBMITTED BY:
DATE: 3-25-2011
CONTRACT NO. W912ER-09-D-0002
DRAWING CODE:
FILE NAME: ARCHITECTURAL-A-502.DWG
PLOT SCALE: 1:10
PLOT DATE: 3/25/2011
REV: 0

BAKER

U.S. ARMY ENGINEER DISTRICT, AFGHANISTAN
CORPS OF ENGINEERS
APO AE 09356

SITE ADAPT DESIGN
CL08 - CLASSROOM BUILDING - ARCH SPAN
HEAD, JAMB, AND SILL DETAILS

SHEET REFERENCE NUMBER:
A-502

3/25/2011 11:36 AM

A1 Size 594mm x 841mm

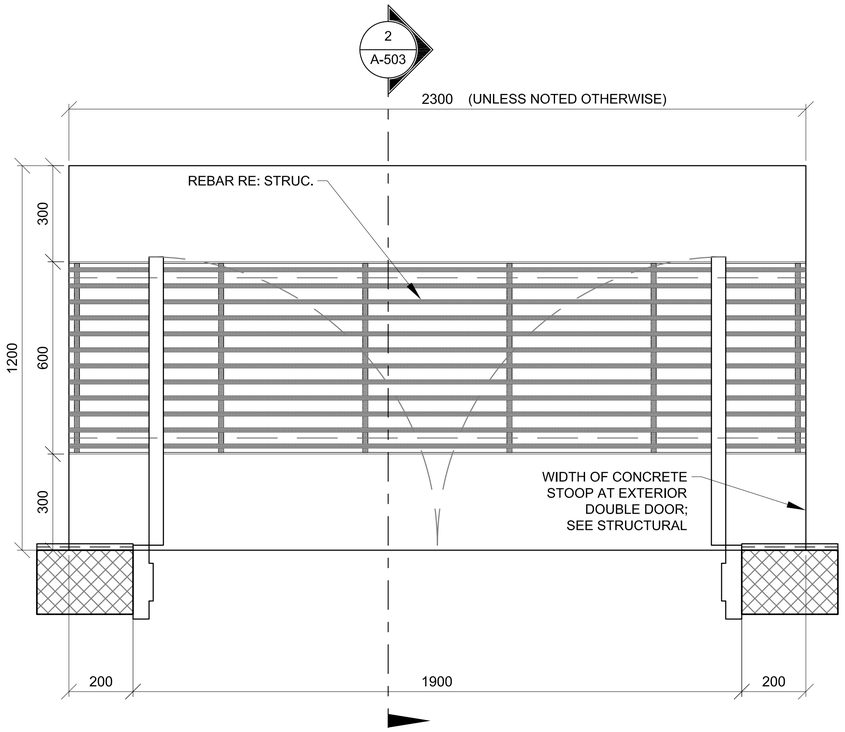

1 A-503 **1800mm DOOR/ STOOP PLAN (WITH GRATE)**

SCALE: 1:10

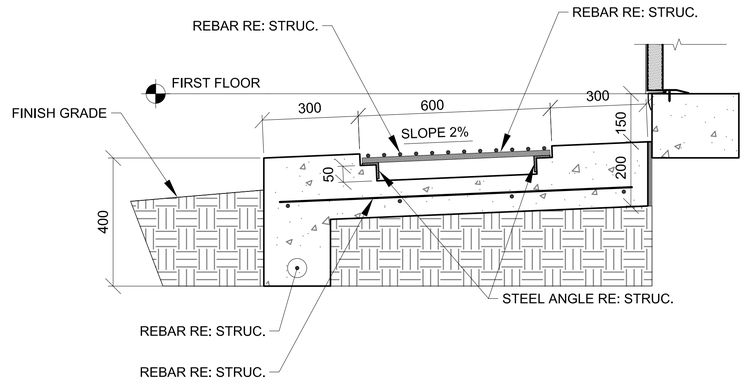

2 A-503 **DOOR STOOP (WTH GRATE) DETAIL**

SCALE: 1:10

0 100 200 400
SCALE: 1:10

UNLESS OTHERWISE NOTED,
LINEAR DIMENSIONS
SHOWN ARE IN MILLIMETERS.

COMMONWEALTH OF VIRGINIA
PETER GARRETT SCHMIDT
No. 013167
ARCHITECT

US ARMY CORPS
OF ENGINEERS
AFGHANISTAN NORTH
DISTRICT

SYMBOL	DESCRIPTION	DATE	APPR.	SYMBOL	DESCRIPTION	DATE	APPR.

U.S. ARMY ENGINEER DISTRICT, AFGHANIST'AN
CORPS OF ENGINEERS
APO AE 09356

DESIGNED BY:
DWN BY: CKD BY:
REVIEWED BY:
SUBMITTED BY:

DATE: 3-25-2011
CONTRACT NO. W912ER-09-D-0002
DRAWING CODE:
FILE NAME: 09-0002-TO-0002-CL08-CL-A-503.DWG
PLOT SCALE: 1:10
PLOT DATE: 3/25/2011

REV: 0

BAKER

SITE ADAPT DESIGN

CL08 - CLASSROOM BUILDING - ARCH SPAN

STOOP DETAILS

SHEET
REFERENCE
NUMBER:

A-503

3/25/2011 11:36 AM

A1 Size 594mm x 841mm

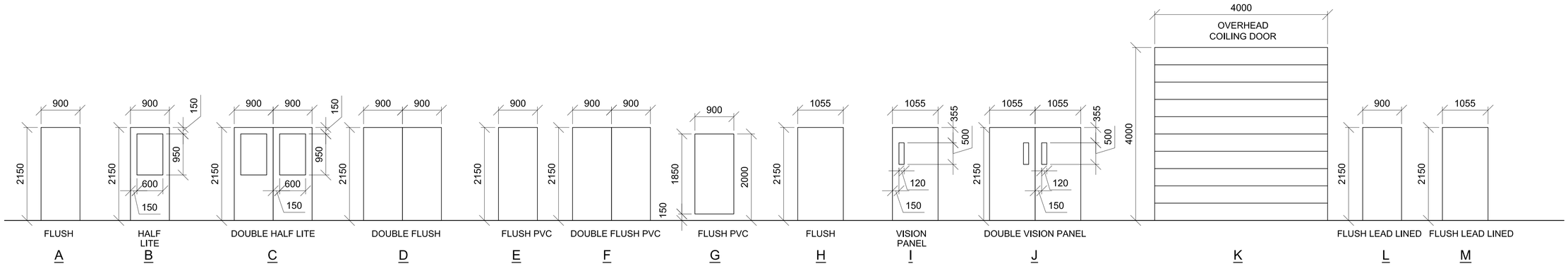

1 / A-601 DOOR TYPES

SCALE: 1:50

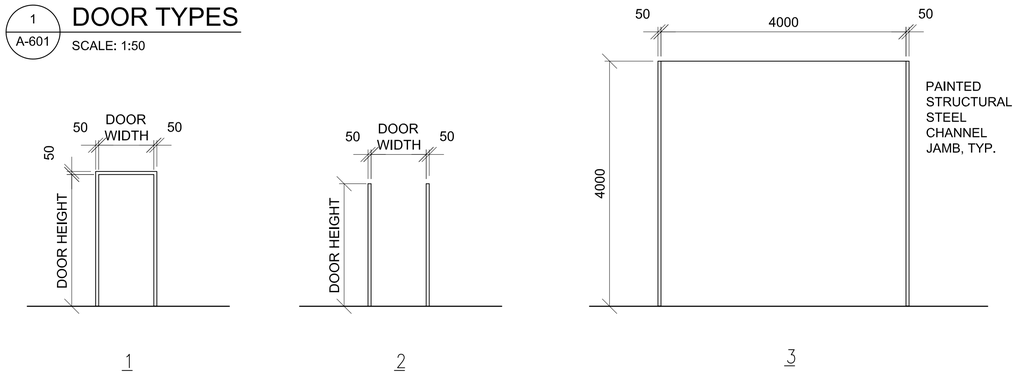

2 / A-601 FRAME TYPES

SCALE: 1:50

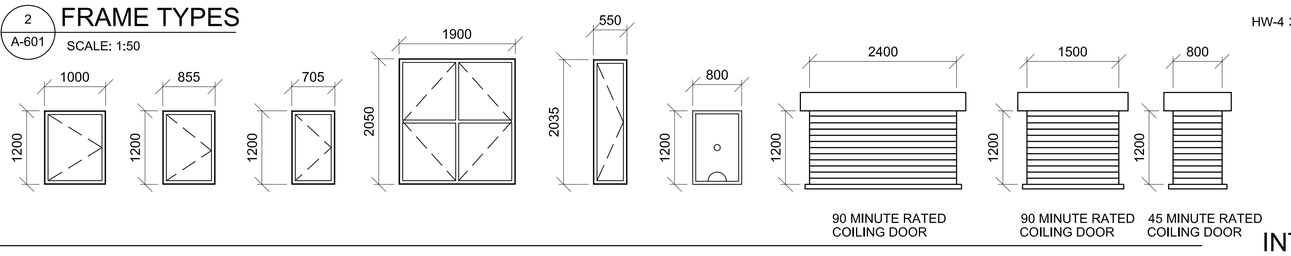

3 / A-601 WINDOW TYPES

SCALE: 1:50

WINDOW TYPE NOTES:

1. ALL EXTERIOR WINDOWS SHALL BE STEEL. PROVIDE INSECT SCREENS ONLY AT DFAC FACILITIES. WINDOWS SHALL BE COMMERCIAL GRADE.
2. ALL EXTERIOR WINDOWS SHALL BE OPERABLE.
3. WINDOWS IN LATRINES OR RESTROOM AREAS SHALL HAVE OBSCURE GLASS.
4. WINDOW TYPES ARE NOT APPLICABLE AT ALL BUILDINGS. SEE FLOOR PLAN FOR REQUIREMENTS

DOOR TYPE — A.1.5 — HARDWARE TYPE

FRAME TYPE

4 / A-601 DOOR TAG

SCALE: 1:50

DOOR TAG NOTES:

1. THE DOOR TAG INDICATES THE DOOR TYPE, FRAME TYPE AND HARDWARE SET FOR EACH DOOR.
2. THE DOOR TAG FOR RATED DOORS INCLUDES THE RATING OF THE DOOR IN MINUTES.
3. REFER TO FLOOR PLANS FOR DOOR TAG INFORMATION APPLICABLE TO EACH DOOR.

DOOR TYPE

RATING IN MINUTES — 45A.1.5 — HARDWARE TYPE

FRAME TYPE

5 / A-601 RATED DOOR TAGS

SCALE: NTS

DOOR AND HARDWARE NOTES:

1. INTERIOR AND EXTERIOR METAL DOORS AND FRAME COLORS SHALL MATCH ADJACENT WALL COLORS AS SELECTED BY THE CONTRACTING OFFICER.
2. FRAMES, EXCEPT FIRE-RATED FRAMES, SHALL BE MOUNTED AND ADJUSTED IN ACCORDANCE WITH MANUFACTURER'S INSTRUCTIONS. FRAMES SHALL BE FASTENED WITH MINIMUM OF THREE ANCHORS PER JAMB AT EQUAL INTERVALS.
3. DIMENSIONS SHOWN ON DOOR TYPES DETAIL ARE BASED UPON MODULAR MASONRY (OR ROUGH OPENING), HEIGHT OF 2150 MM FOR STANDARD PERSONNEL DOORS. CONTRACTOR SHALL COORDINATE WITH DOOR SUPPLIER TO ENSURE THAT DIMENSIONS OF DOORS AND FRAMES PROVIDED ARE COMPATIBLE WITH DOOR OPENING DIMENSIONS.
4. HARDWARE SHALL BE HEAVY DUTY, COMMERCIAL GRADE, STAINLESS STEEL WITH A SATIN OR BRUSHED FINISH.
5. HARDWARE TYPES INCLUDE BUILDERS HARDWARE MANUFACTURERS ASSOCIATION (BMHA) NUMBER.
6. DOORS IN 2 HOUR RATED PARTITIONS SHALL BE 1.5 HOUR (90 MINUTE) RATED DOORS IN ACCORDANCE WITH NFPA 101, TABLE 8.3.4.2.
7. DOORS IN 1 HOUR RATED WALLS SHALL BE 3/4 HOUR (45 MINUTE) RATED DOORS IN ACCORDANCE WITH NFPA 101, TABLE 8.3.4.2.
8. DOORS IN 1 HOUR RATED CORRIDOR WALLS SHALL BE 1/3 HOUR (20 MINUTE) IN ACCORDANCE WITH NFPA 101, TABLE 8.3.4.2.
10. PROVIDE DOOR STOPS TO PROTECT WALLS ON LOCATIONS WHERE DOOR SWING WILL STRIKE WALL.
11. FIRE RATED DOORS SHALL HAVE RATED GLASS NOT EXCEEDING ALLOWABLE SIZE PER NFPA 80. (836,125MM2 FOR MIN. DOORS & 64,500MM2 FOR 45 MIN OR GREATER DOORS
12. DOOR TYPES ARE NOT APPLICABLE AT ALL BUILDINGS. SEE FLOOR PLAN FOR REQUIREMENTS
13. REFER TO MECHANICAL DRAWINGS FOR LOCATIONS OF UNDERCUT DOORS

EXTERIOR DOOR HARDWARE TYPES:

HW-1 1-1/2 PR HINGES, A5112 114 X 114 (SINGLE EXIT DOOR)
1 EA RIM EXIT DEVICE, TYPE 1
1 EA CYLINDER. E09221A, GRADE 1
1 EA OVERHEAD CLOSER, C02061, LOW RESISTANCE
1 EA THRESHOLD, J32130
3 EA DOOR SILENCERS, L03011

HW-2 1-1/2 PR HINGES, A5112 114 X 114 (SINGLE ENTRY DOOR)
1 EA LOCKSET, F13 ENTRY LOCK W/LEVER HANDLES, GRADE 1
1 EA OVERHEAD CLOSER, C02061, LOW RESISTANCE
1 EA THRESHOLD, J32130
3 EA DOOR SILENCERS, L03011

HW-3 3 PR HINGES, A5112 114 X 114 (DOUBLE EXIT DOOR)
2 EA RIM EXIT DEVICE, TYPE 1
2 EA CYLINDER. GRADE 1
2 EA OVERHEAD CLOSER, C02061, LOW RESISTANCE
1 EA DOOR COORDINATOR, TYPE 21
1 EA ASTRAGAL
1 EA THRESHOLD, J32130
2 EA DOOR SILENCERS, L03011

HW-4 3 PR HINGES, A5112 114 X 114 (DOUBLE DOOR DORMITORY FUNCTION)
1 EA LOCKSET W/LEVER HANDLES. GRADE 1, F13
1 EA OVERHEAD CLOSER, C02061, LOW RESISTANCE
2 EA MAGNETIC HOLDER PIN, ATTACHED TO DOOR LEAF
2 EA MAGNETIC HOLDER RECEIVER, ATTACHED TO STOOP
2 EA LEVER EXTENSION FLUSH BOLTS, L04081
1 EA ASTRAGAL
1 EA THRESHOLD, J32130
2 EA DOOR SILENCERS, L03011

INTERIOR DOOR HARDWARE TYPES:

HW-5 1-1/2 PR HINGES, A8133 114 X 114 (SINGLE FRONT DOOR FUNCTION)
1 EA LOCKSET W/LEVER HANDLES, F08, GRADE 1
1 EA WALL STOP, L02101 OR L02161
3 EA DOOR SILENCERS, L03011

HW-5A 1-1/2 PR HINGES, A8133 114 X 114 (SINGLE OFFICE FUNCTION)
1 CLOSER
1 EA LOCKSET W/LEVER HANDLES, F05, GRADE 1
1 EA WALL STOP, L02101 OR L02161
3 EA DOOR SILENCERS, L03011

HW-6 1-1/2 PR HINGES, A8112 114 X 114 (SINGLE STOREROOM FUNCTION)
1 CLOSER
1 EA LOCKSET W/LEVER HANDLES, F07, GRADE 1
1 EA WALL STOP, L02101 OR L02161
3 EA DOOR SILENCERS, L03011

HW-7 1-1/2 PR HINGES, A8133 (SINGLE PASSAGE FUNCTION)
1 CLOSER
1 EA LOCKSET W/LEVER HANDLES, F01 GRADE 1
1 EA WALL STOP, L02101 OR L02161
2 EA MOP PLATE, J103
3 EA DOOR SILENCERS, L03011

HW-7A 1-1/2 PR HINGES, A8133 (SINGLE PASSAGE FUNCTION)
1 CLOSER
1 EA LOCKSET W/LEVER HANDLES, F01 GRADE 1
1 EA WALL STOP, L02101 OR L02161
3 EA DOOR SILENCERS, L03011

INTERIOR DOOR HARDWARE TYPES:

HW-8 1-1/2 PR HINGES, A8112 (SINGLE JAN/STOREROOM FUNCTION)
1 CLOSER
1 EA LOCKSET W/LEVER HANDLES, F07 GRADE 1
1 EA WALL STOP, L02101 OR L02161
2 EA MOP PLATE, J103
3 EA DOOR SILENCERS, L03011

HW-9 1-1/2 PR HINGES, A5112 114 X 114 (SINGLE EXIT DOOR)
1 EA RIM EXIT DEVICE, TYPE 1
1 EA CYLINDER. E09221A, GRADE 1
1 EA OVERHEAD CLOSER, C02061, LOW RESISTANCE
3 EA DOOR SILENCERS, L03011

HW-10 3 PR HINGES, A5112 114 X 114 (DOUBLE STOREROOM FUNCTION)
1 EA LOCKSET W/LEVER HANDLES. GRADE 1, F7
2 EA LEVER EXTENSION FLUSH BOLTS, L04081
1 EA ASTRAGAL
2 EA DOOR SILENCERS, L03011

HW-11 1-1/2 PR HINGES, A8112 114 X 114 (SINGLE DORMITORY FUNCTION)
1 EA LOCKSET W/LEVER HANDLES, F13, GRADE 1
1 EA WALL STOP, L02101 OR L02161
1 EA OVERHEAD CLOSER, CO2061, LOW RESISTANCE
3 EA DOOR SILENCERS, L03011
1 EA ROBE HOOK

HW-12 1-1/2 PR HINGES, A8133 (SINGLE PRIVACY-BATH FUNCTION)
1 EA LATCH SET W/LEVER HANDLES, F22 GRADE 1
1 EA WALL STOP, L02101 OR L02161
3 EA DOOR SILENCERS, L03011
1 EA ROBE HOOK

HW-13 3 PR HINGES, A5112 114 X 114 (DOUBLE DORMITORY FUNCTION)
1 EA LOCKSET W/LEVER HANDLES. GRADE 1, F13
1 EA OVERHEAD CLOSER, C02061, LOW RESISTANCE
2 EA LEVER EXTENSION FLUSH BOLTS, L04081
1 EA ASTRAGAL
2 EA DOOR SILENCERS, L03011

HW-14 3 PR HINGES, A5112 114 X 114 (DOUBLE EGRESS EXIT DOOR)
2 EA VERTICAL ROD EXIT DEVICE, TYPE 1
2 EA CYLINDER. GRADE 1
2 EA OVERHEAD CLOSER, C02061, LOW RESISTANCE
1 EA DOOR COORDINATOR, TYPE 21
1 EA ASTRAGAL
2 EA DOOR SILENCERS, L03011

HW-15 3 PR HINGES, A5112 114 X 114 (DOUBLE STOREROOM FUNCTION)
2 CLOSERS
1 COORDINATOR
1 EA LOCKSET W/LEVER HANDLES. GRADE 1, F7
2 EA LEVER EXTENSION FLUSH BOLTS, L04081
1 EA ASTRAGAL
2 EA DOOR SILENCERS, L03011

THIS SHEET IS STANDARD AND IS INCLUSIVE OF ALL THE DOOR/ WINDOW/ HARDWARE TYPES FOR THE ENTIRE CONTRACT. NOT ALL DOOR/ WINDOW/ HARDWARE TYPES ARE USED FOR ANY PARTICULAR BUILDING DESIGN. CONTRACTOR SHALL REFER TO THE FLOOR PLAN FOR THE TYPES BEING USED.

0 500 1000 2000
SCALE: 1:100

UNLESS OTHERWISE NOTED, LINEAR DIMENSIONS SHOWN ARE IN MILLIMETERS.

COMMONWEALTH OF VIRGINIA
PETER GARRETT SCHMIDT
No. 013167
ARCHITECT

US ARMY CORPS OF ENGINEERS
AFGHANISTAN NORTH DISTRICT

SYMBOL	DESCRIPTION	DATE	APPR.	SYMBOL	DESCRIPTION	DATE	APPR.

U.S. ARMY ENGINEER DISTRICT, AFGHANISTAN
CORPS OF ENGINEERS
APO AE 09356

DESIGNED BY: PGS, SE, MR
DWN BY: SE, MDH, AH
CKD BY: PGS, SE, MR
REVIEWED BY:
SUBMITTED BY:
DATE: 3-25-2011
CONTRACT NO. W912ER-09-D-0002
DRAWING CODE:
FILE NAME:
PLOT SCALE: 1:100
PLOT DATE: 3/25/2011
REV: 0

BAKER

SITE ADAPT DESIGN
CL08 - CLASSROOM BUILDING - ARCH SPAN
WINDOW AND DOOR SCHEDULE

SHEET REFERENCE NUMBER:
A-601

A1 Size 594mm x 841mm

3/25/2011 11:37 AM

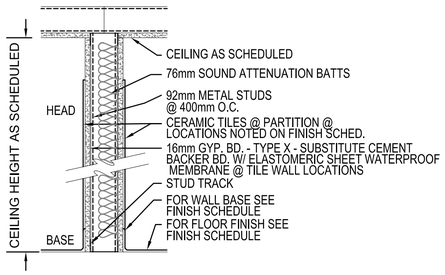

1 TYPE #1 - 1 HOUR FIRE RATED & NON-RATED
DESIGN NO. U419 OR U442
DESIGN NO. WHI 694-0300.1 (SIM)

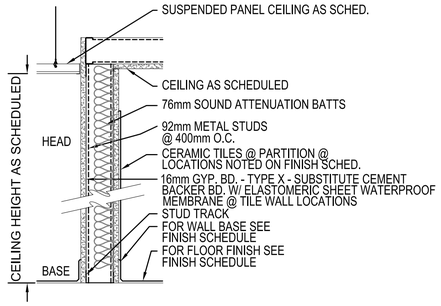

2 TYPE #2 - 1 HOUR FIRE RATED & NON-RATED
DESIGN NO. U419 OR U442/WALL
DESIGN NO. WHI 694-0300.1 (SIM)

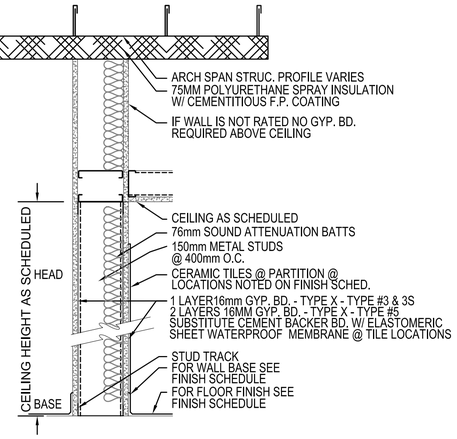

3 TYPE #3 - 1 HOUR FIRE RATED
DESIGN NO. U419
DESIGN NO. WHI 694-0300.1 (SIM)

3S TYPE #3S - 1 HOUR FIRE & SMOKE RATED
DESIGN NO. U419
DESIGN NO. WHI 694-0300.1 (SIM)

5 TYPE #5 - 2 HOUR FIRE RATED - PROVIDE 150 MM
METAL STUDS @ PARTITION TYPES 5 IN LIU OF 92 MM STUDS
DESIGN NO. U443
DESIGN NO. WHI 694-0300.1 (SIM)

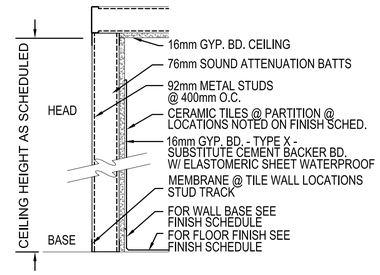

4 TYPE #4 - CHASE PARTITION

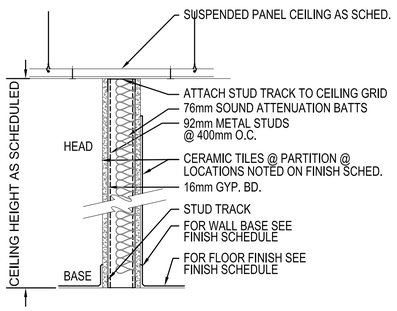

6 TYPE #6 - KITCHEN PARTITION

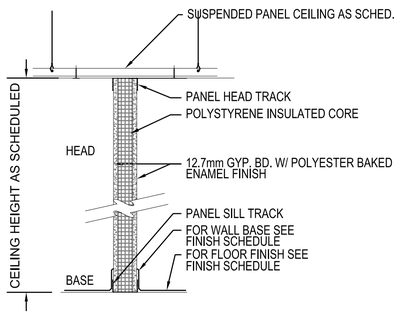

7 TYPE #7 - PANELIZED PARTITION

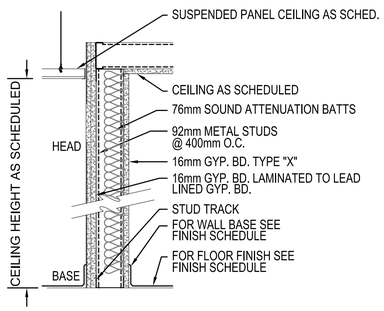

8 TYPE #8 - LEAD LINED PARTITION

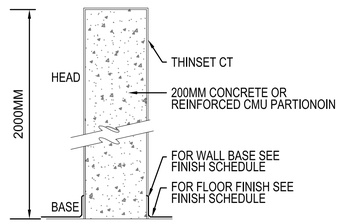

9 TYPE #9 - LOW WALL

1 A-602 PARTITION TYPES
SCALE: 1:10

GENERAL NOTES:

1. REFER TO DRAWING G-003 FOR LOCATION OF FIRE RATED WALLS & FIRE RESISTANT CEILINGS.
2. REFER TO FINISH SCHEDULE FOR LOCATION OF CERAMIC TILE WALL FINISH. AT THESE LOCATION SUBSTITUTE CEMENT BACKER BOARD AND ELASTOMERIC SHEET WATER PROOF MEMBRANE WITH THINSET CERAMIC TILE FOR GYPSUM BOARD AND PAINT FINISH TO C.T. HEIGHT.
3. REFER TO 6/A-501 FOR TYPE 3, 3S, & 5 BRACING DETAIL. INTERMEDIATE HT. BRACING DETAIL FOR FULL HT. WALLS WHERE APPLICABLE.
4. PARTITION TYPES ARE NOT APPLICABLE AT ALL BUILDINGS. SEE FLOOR PLAN & NOTES FOR REQUIRED TYPES
5. SEE COLD FORMED FRAMING NOTES PORTION OF STRUCTURAL DRAWINGS FOR ADDITIONAL INFORMATION
6. AT PHARMACY LOCATIONS PROVIDE EXPANDED METAL LATH BETWEEN STUDS AND DRYWALL FINISH

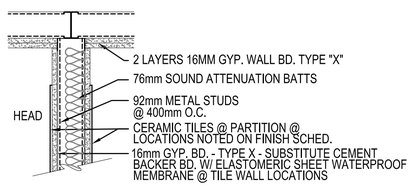

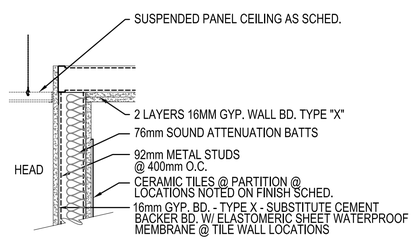

2 A-602 FIRE RESISTANT CEILING CONDITIONS
SCALE: 1:10

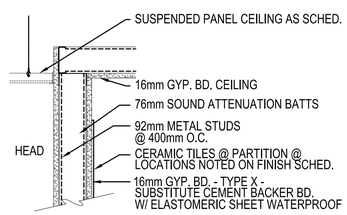

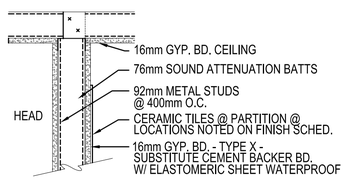

3 A-602 NON-RATED CEILING CONDITIONS
SCALE: 1:10

0 100 200 400
SCALE: 1:10
UNLESS OTHERWISE NOTED,
LINEAR DIMENSIONS
SHOWN ARE IN MILLIMETERS.

COMMONWEALTH OF VIRGINIA
PETER GARRETT SCHMIDT
No. 013167
ARCHITECT

US ARMY CORPS
OF ENGINEERS
AFGHANISTAN NORTH
DISTRICT

SYMBOL	DESCRIPTION	DATE	APPR.	SYMBOL	DESCRIPTION	DATE	APPR.

U.S. ARMY ENGINEER DISTRICT, AFGHANISTAN
CORPS OF ENGINEERS
APO AE 09356

DESIGNED BY: PGS
DWN BY: AMH
CKD BY: PGS
REVIEWED BY: JH
SUBMITTED BY:
DATE: 3.25.2011
REV: 0
CONTRACT NO. W912ER-09-D-0002
DRAWING CODE:
FILE NAME:
PLOT SCALE: 1:20
PLOT DATE: 3/25/2011

BAKER

SITE ADAPT DESIGN
CL08 - CLASSROOM BUILDING - ARCH SPAN
PARTITION TYPES

SHEET REFERENCE NUMBER:
A-602

A1 Size 594mm x 841mm

3/25/2011 11:37 AM

FINISHING SCHEDULE

FLOOR FINISHES

- (A) TROWEL FINISHED CONCRETE - BROOM FINISH @ TILE
- (B) NON-SLIP EPOXY FINISH
- (C) CERAMIC TILE
- (D) CONC. SEALER

WALL FINISHES

- (A) METAL STUD WALL WITH GYPSUM BOARD OR CEMENT PLASTER
- (B) SEMI-GLOSS PAINT
- (C) EPOXY PAINT
- (D) CERAMIC TILE UP TO 2.2M
- (E) CEMENTITIOUS FIREPROOFING - SPRAY ON
- (F) POLYURETHANE - SPRAY ON
- (G) 5cm SANDWICH PANEL
- (H) CONCRETE/CMU

CEILING FINISHES

- (A) GYPSUM BOARD
- (B) SEMI-GLOSS PAINT
- (C) EPOXY PAINT
- (D) POLYURETHANE - SPRAY ON
- (E) CEMENTITIOUS FIREPROOFING - SPRAY ON
- (F) 600mm x 1200mm METAL PANEL CEILING SYSTEM
- (G) OPEN "T" GRID CEILING SUSPENSION SYSTEM
- (H) EXPOSED ARCH SPAN PANELS

NOTES:

1. PROVIDE CEMENT BACKER BOARD & W.P. MEMBRANE @ ALL CERAMIC TILE WALLS. IN LIEU OF GYPSUM BOARD - MAINTAIN REQUIRED FIRE RATINGS.
2. SPRAY - ON POLYURETHANE AND SPRAY ON CEMENTITIOUS FIRE PROOFING SHALL BE APPLIED TO INTERIOR SURFACES OF ARCH SPAN PANELS, WINDOW, & DOOR ENCLOSURES & CONCRETE CURB/WALLS ONLY.
3. INSTALL 100MM PAINTED WOOD COVE BASE ON ALL PAINTED GYPSUM BOARD/ PLASTER WALLS EXCEPT WHERE CERAMIC TILE IS INDICATED.
4. PAINT WALL SURFACES ABOVE CERAMIC WALL TILE REFER TO REFLECTED CEILING PLAN FOR CEILING HEIGHTS.
5. POLYURETHANE INSULATION SHALL PROVIDE K=600.
6. REFER TO G-003 FOR FIRE RATED WALL & FIRE RESISTANT CEILING LOCATIONS & A-602 FOR DRYWALL CEILING CONSTRUCTION.

ITEM NO.	SPACE NO.	FLOOR FINISHING				WALL FINISHING				Ceiling Finishing				REMARKS
1	100	A	D			A	B			A	B			
2	100A	A	D			A	G	B		A	B			
3	100B	A	D			A	G	B		A	B			
4	101	A	D			A	G	B		F				
5	102	A	D			A	G	B		F				
6	103	A	D			A	G	B		F				
7	104	A	D			A	G	B		F				
8	105	A	D			A	G	B		F				
9	106	A	D			A	G	B		F				
10	107	A	D			A	G	B		F				
11	108	A	D			A	G	B		F				
12														
13														
14														
15														
16														
17														
18														
19														
20														
21														
22														
23														
24														
25														
26														
27														
28														
29														
30														
31														
32														
33														
34														
35														
36														
37														
38														
39														
40														
41														
42														
43														
44														
45														
46														
47														
48														
49														
50														

UNLESS OTHERWISE NOTED, LINEAR DIMENSIONS SHOWN ARE IN MILLIMETERS.

COMMONWEALTH OF VIRGINIA
PETER GARRETT SCHMIDT
No. 013167
REGISTERED ARCHITECT

US ARMY CORPS OF ENGINEERS
AFGHANISTAN NORTH DISTRICT

SYMBOL	DESCRIPTION	DATE	APPR.	SYMBOL	DESCRIPTION	DATE	APPR.

DATE: 3-25-2011
REV: 0
CONTRACT NO. W912ER-09-D-0002
DRAWING CODE:
FILE NAME: ARCHITECTURAL-CL08-A-603.DWG
PLOT SCALE: NONE
PLOT DATE: 3/25/2011

DESIGNED BY: PGS
DWN BY: AMH
CKD BY: PGS
REVIEWED BY: JH
SUBMITTED BY:
BAKER

U.S. ARMY ENGINEER DISTRICT, AFGHANISTAN
CORPS OF ENGINEERS
APO AE 09356

SITE ADAPT DESIGN
CL08 - CLASSROOM BUILDING - ARCH SPAN
FINISH SCHEDULE

SHEET REFERENCE NUMBER:
A-603

3/25/2011 11:37 AM

A1 Size 594mm x 841mm

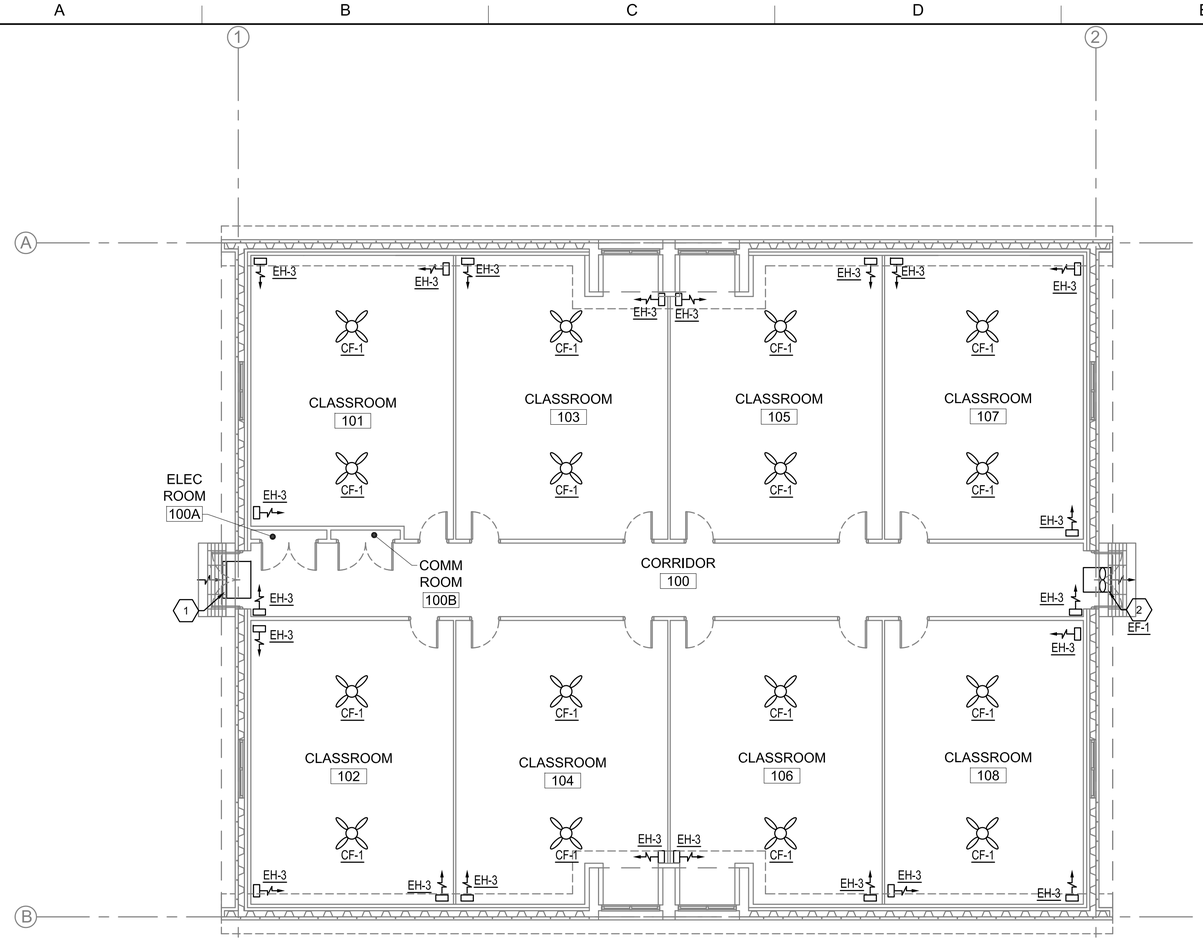

1 / M-101 HVAC - FLOOR PLAN

SCALE: 1:100

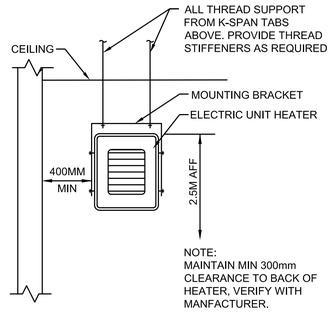

2 / M-101 ELECTRIC UNIT HEATER MOUNTING DETAIL

SCALE: N.T.S.

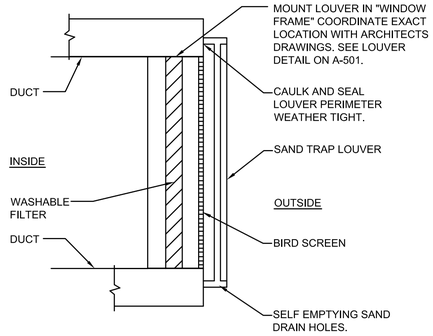

3 / M-101 FILTERED SAND TRAP LOUVER

SCALE: N.T.S.

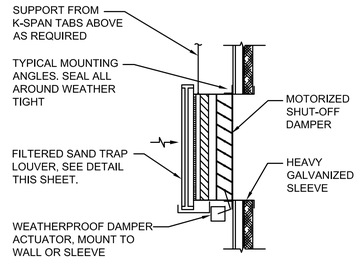

NOTE:
ALL COMPONENTS SHALL BE REMOVABLE & ACCESSIBLE THROUGH REMOVABLE SAND LOUVER

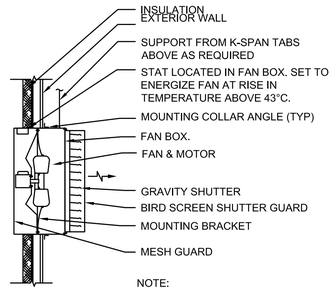

NOTE:
ALL FAN PARTS AND STAT SHALL BE REMOVABLE & ACCESSIBLE FROM OUTSIDE THROUGH FAN BOX.

4 / M-101 ATTIC VENTILATION SYSTEM DETAIL

SCALE: N.T.S.

GENERAL NOTES:

1. DO NOT SCALE DRAWINGS - ALL DIMENSIONS AND CONDITIONS SHALL BE CHECKED AND VERIFIED BY THE CONTRACTOR AT THE SITE.
2. ALL WORK PERFORMED ON THIS BUILDING SHALL BE IN COMPLIANCE WITH ALL PERTINENT CODES, RULES, ORDINANCES AND REGULATIONS OF THE GOVERNING AUTHORITIES.
3. ALL WORK PERFORMED UNDER AND IN CONNECTION WITH THESE DRAWINGS AND SPECIFICATIONS SHALL BE IN STRICT COMPLIANCE WITH THE LATEST SAFETY AND HEALTH STANDARDS.
4. COORDINATE ALL EQUIPMENT LOCATIONS WITH EQUIPMENT SHOWN ON OTHER DRAWINGS. VERIFY FINAL LOCATIONS IN FIELD.

SYMBOLS:

- (X) KEY NOTE
- (000) AIR VOLUME IN LITERS PER SECOND (LPS)
- UC DOOR UNDERCUT 25mm
- ELECTRIC HEATER
- CEILING FAN
- DIRECTION OF AIR FLOW

ABBREVIATIONS:

AFF	ABOVE FINISH FLOOR
CF	CEILING FANS
LPS	LITERS PER SECOND
EF	EXHAUST FAN
EH	ELECTRIC HEATER
STATS	THERMOSTATS
TYP	TYPICAL

KEY NOTES:

1. 1050x1500 (41x59) INTAKE LOUVER WITH MOTOR OPERATED DAMPER INTERLOCKED WITH ATTIC FAN. LOUVER LOCATED AS HIGH AS POSSIBLE IN ATTIC SPACE. SEE DETAIL THIS SHEET.
2. 787mm (31"sq) WALL MOUNTED ATTIC EXHAUST FAN INTERLOCKED WITH FAN BOX MOUNTED STAT. MOUNT FAN AS HIGH AS POSSIBLE IN ATTIC. SEE DETAIL THIS SHEET.

EXHAUST FAN SCHEDULE

NO.	TYPE	FLOW RATE (LPS)	DRIVE	HP	SP mmH20	ELECTRICAL DATA	SWITCH
EF-1	PROP	1390	DIRECT	3/4	13	220/1/50	W/ STAT

NOTES:
1. PROVIDE BACK DRAFT DAMPER AT EACH FAN.
2. PROVIDE TAMPER RESISTANT UNIT MOUNTED THERMOSTAT.

ELECTRIC UNIT HEATER SCHEDULE

NO.	FLOW RATE (LPS)	CAPACITY (KW)	F.A.T. (°C)	ELECT. CHAR.	MOUNTING
EH-3	200	3	38	220/1/50	SEE DETAIL

NOTES:
1. PROVIDE UNIT MOUNTED DISCONNECT SWITCH.
2. PROVIDE TAMPER RESISTANT UNIT MOUNTED THERMOSTAT.

CEILING FAN

NO.	BLADE SIZE		VOLTAGE	SWITCH	REMARKS
	mm	IN			
CF-1	1320	52	220/1/50	@ WALL	3 SPEED REVERSIBLE MOTOR

NOTES:
1. IF FANS ARE TO BE INSTALLED IN AN AREA WITHOUT A CEILING, PROVIDE EXTENSION DOWN RODS FROM ARCH-SPAN TABS, BRACE / GUY FAN AS REQUIRED AND INSTALL FANS 2.5M AFF. IF FANS ARE TO BE MOUNTED IN AREA WITH A CEILING GRID OR HARD CEILING, MOUNT PER MANUFACTURERS RECOMMENDATIONS. SEE ELECTRICAL DRAWINGS FOR MOUNTING OPTIONS.
2. PROVIDE WITHOUT LIGHT FIXTURE.
3. PROVIDE WITH REMOTE MOUNTED ON-OFF SWITCH. SWITCHES ARE SHOWN ON ELECTRICAL DRAWINGS.
4. COORDINATE CEILING FANS WITH LIGHTS, IN GENERAL FANS SHALL BE CENTERED BETWEEN LIGHTS WHEN POSSIBLE.

N

0 2000 4000

SCALE: 1:100

UNLESS OTHERWISE NOTED, LINEAR DIMENSIONS SHOWN ARE IN MILLIMETERS.

COMMONWEALTH OF PENNSYLVANIA
REGISTERED PROFESSIONAL
MATTHEW R. SOTOSKY
ENGINEER
045576-E

US ARMY CORPS OF ENGINEERS
AFGHANISTAN NORTH DISTRICT

SYMBOL	DESCRIPTION	DATE	APPR.	SYMBOL	DESCRIPTION	DATE	APPR.

DATE: 3-18-2011
REV: 0
CONTRACT NO. W912ER-09-D-0002
DRAWING CODE:
FILE NAME: M-HVAC-FloorPlan-Schedules-Details.dwg
PLOT SCALE: 1:100
PLOT DATE: 3/25/2011

DESIGNED BY: RML
DWN BY: LJN
CKD BY: CJM
REVIEWED BY: JH
SUBMITTED BY:
BAKER

U.S. ARMY ENGINEER DISTRICT, AFGHANISTAN
CORPS OF ENGINEERS
APO AE 09356

SITE ADAPT DESIGN
CL08 - CLASSROOM BUILDING - ARCH SPAN
HVAC - FLOOR PLAN SCHEDULES AND DETAILS

SHEET REFERENCE NUMBER:
M-101

A1 Size 594mm x 841mm

3/25/2011 10:02 AM

POWER

- DISTRIBUTION PANELBOARD
- NEW PANELBOARD - SURFACE
- NEW PANELBOARD - RECESSED
- GENERATOR
- TRANSFORMER (DRAWN TO SIZE)
- JUNCTION BOX
- JUNCTION BOX - CEILING
- FUSIBLE SAFETY SWITCH
- MOTOR
- MOTOR STARTING SWITCH - 220V, 20A RATED UNLESS OTHERWISE NOTED
- ELECTRIC WATER HEATER
- CEILING FAN - REFER TO SPECIFICATION SECTION 26 20 00

RECEPTACLES

- DUPLEX 20A TYPE CEE 7/7 "SCHUKO STYLE" UNSWITCHED RECEPTACLE
- GF — DUPLEX 20A TYPE CEE 7/7 "SCHUKO STYLE" UNSWITCHED RECEPTACLES - 10mA GROUND FAULT INTERRUPTER TYPE
- WP — DUPLEX 20A TYPE CEE 7/7 "SCHUKO STYLE" UNSWITCHED TYPE WITH WEATHERPROOF COVER - 10mA GROUND FAULT INTERRUPTER TYPE
- EXP — DUPLEX 20A TYPE CEE 7/7 "SCHUKO STYLE" UNSWITCHED RECEPTACLES - EXPLOSION PROOF
- * INDICATES MOUNT DEVICE ABOVE COUNTERTOP OR AT 1070mm ABOVE FINISHED FLOOR WHERE NO COUNTER IS TO BE INSTALLED.

SOME OF THESE SYMBOLS MAY NOT BE USED UNDER THIS PROJECT. SEE THE GENERAL PROJECT NOTES FOR ADDITIONAL REQUIREMENTS.

LIGHTNING PROTECTION

- AIR TERMINAL 20mm O.D. X 450mm SOLID COPPER, NICKEL PLATED ON ADHESIVE BASE
- EQ — EQUIPMENT AIR TERMINAL
- TEST WELL WITH GROUND ROD(S)
- GROUND ROD
- G — GROUND PLATE
- G — MAIN GROUND CONDUCTER CONCEALED WITHIN CONSTRUCTION
- G — MAIN GROUND CONDUCTOR EXPOSED ON EXPOSED ON BUILDING EXTERIOR SURFACE
- G — GROUND CONDUCTOR CAD WELDED TO GROUND CABLE OR EQUIPMENT
- G — GROUND ROD TRIPOD, SPACED 3 METERS APART.
- LEVEL TO LEVEL CABLE

LIGHTING

- LIGHTING FIXTURE - SEE FIXTURE SCHEDULE FOR MORE INFORMATION
- EMERGENCY LIGHTING FIXTURE - SEE FIXTURE SCHEDULE FOR MORE INFORMATION
- DOWNLIGHT
- LIGHTING FIXTURE ON NORMAL/EMERGENCY
- WALL MOUNTED LIGHT FIXTURE
- E — EXIT SIGN - DIRECTIONAL ARROWS AS INDICATED ON DRAWINGS
- REMOTE HEAD FOR BATTERY PACK
- $ — SINGLE POLE SWITCH - 20A RATED
- $3 — 3-WAY SWITCH - 20A RATED
- $4 — 4-WAY SWITCH - 20A RATED
- J — LIGHTING CONTACTOR
- POLE MOUNTED SITE LIGHTING FIXTURE- NUMBER OF FIXTURES PER POLE AS INDICATED ON DRAWINGS
- EXTERIOR DIRECTIONAL LIGHTING FIXTURE
- a — SMALL CASE LETTERS REPRESENTS LAMP(S) / SWITCHES.

TELECOMMUNICATIONS

- ▼ TELEPHONE OUTLET(S) @ 45cm AFF. U.N.O. WITH 20mm RACEWAY TERMINATED TO TELEDATA TERMINAL BOARD.
- ▽ DATA OUTLET(S) @ 45cm AFF. U.N.O. WITH 20mm RACEWAY TERMINATED TO TELEDATA TERMINAL BOARD.

TELECOMMUNICATIONS (CONTINUED)

- 21.25 ▼ COMBINATION TELEPHONE/DATA OUTLET(S) @ 45cm AFF. U.N.O. WITH 27mm RACEWAY TERMINATED TO TELEDATA TERMINAL BOARD.
- " ▼ WALL MTD. TELEPHONE OUTLET WITH 20mm RACEWAY TO TELEDATA TERMINAL BOARD.
- (x)T — INDICATES NUMBER OF TELEPHONE OUTLET(S) AND ASSOCIATED CABLING
- (x)D — INDICATES NUMBER OF DATA OUTLET(S) AND ASSOCIATED CABLING
- (x)TF — INDICATES NUMBER OF TELEPHONE OUTLETS AND ASSOCIATED CABLING WITH 1 OUTLET AND CABLE DEDICATED FOR FAX

SINGLE LINE SYMBOLS

- SWITCH
- BREAKER
- FUSE
- TRANSFORMER
- GROUND
- CONTACT (NORMALLY OPEN)
- CONTACT (NORMALLY CLOSED)
- TRANSFER SWITCH
- CURRENT TRANSFORMER
- INDICATES NEW ELECTRICAL EQUIPMENT
- C — INDICATES NEW CONTROL WIRING AND CONDUIT
- EQUIPMENT OUTLINE

MISCELLANEOUS

- BRANCH CIRCUIT WIRING, SURFACE MOUNTED ON WALLS
- BRANCH CIRCUIT WIRING - 6mm²
- BRANCH CIRCUIT WIRING - UNDER FLOOR
- HOME RUN BACK TO PANEL
- CONDUIT TURNED DOWN
- CONDUIT TURNED UP
- LV — LOW VOLTAGE WIRING AND CONDUIT
- ~ INDICATES CONTINUATION OF LINE

FIRE ALARM

- FACP — FIRE ALARM CONTROL PANEL WITH BATTERY BACKUP
- F — FIRE ALARM PULL STATION
- FA — FIRE FIGHTER ALERT SYSTEM STROBE STROBE SHALL BE AMBER

FIRE ALARM (CONTINUED)

- F — FIRE ALARM STROBE - WALL MOUNTED
- F — FIRE ALARM AUDIBLE/STROBE - WALL MOUNTED
- F — FIRE ALARM HORN/STROBE - WALL MOUNTED
- S — SMOKE DETECTOR
- H — HEAT DETECTOR CEILING MOUNTED
- D — DUCT DETECTOR - PROVIDED BY EC, INSTALLED BY MC AND CONNECTED BY EC
- FS — FIRE ALARM SPEAKER AND VISIBLE CEILING MOUNTED

DENOTATIONS & ABBREVIATIONS

AFF	ABOVE FINISHED FLOOR
C	CEILING MOUNTED
E	EMERGENCY
EC	ELECTRICAL CONTRACTOR
EPO	EMERGENCY POWER OFF
EXP	EXPLOSION PROOF
F	FIRE ALARM
FF	FLUSH FLOOR MOUNTED
FL	FLUORESCENT
FO	FIBER OPTIC
FSS	FUSED SAFETY SWITCH
GF	GROUND FAULT INTERRUPTER
GC	GENERAL CONTRACTOR
IG	ISOLATED GROUND
K	KEY
LV	LOW VOLTAGE
M	MOTOR
MC	MECHANICAL CONTRACTOR
NE	NORMAL/EMERGENCY
NFSS	NON-FUSED SAFETY SWITCH
PA	PAGING SYSTEM
PLC	PLUMBING CONTRACTOR
SL	SINGLE LINE
T	TELEPHONE

DENOTATIONS & ABBREVIATIONS (CONT.)

TP	TAMPER PROOF
UE	UNDERGROUND ELECTRIC
W	WALL MOUNTED
WP	WEATHERPROOF WITH GROUND FAULT INTERRUPTION
WT	WATER TIGHT

GENERAL PROJECT NOTES:

G1. UNLESS OTHERWISE NOTED, PROVIDE ALL EQUIPMENT SHOWN ON THE PLANS. THE ELECTRICAL CONTRACTOR SHALL COORDINATE ALL SYMBOLS SHOWN ON THE PLANS WITH THE SYMBOL LIST. IT SHALL BE THE RESPONSIBILITY OF THE CONTRACTOR TO VERIFY THE INTENT OF ANY SYMBOL THAT IS SHOWN ON THE PLANS AND NOT INDICATED ON THE SYMBOL LIST WITH THE ENGINEER PRIOR TO BID.

G2. THE CONTRACTOR SHALL VERIFY THE LOCATION OF ALL UNDERGROUND UTILITIES WITHIN THE CONSTRUCTION AREA THREE (3) WORKING DAYS NOTICE BEFORE COMMENCING DIGGING. NOTIFY THE LOCAL AUTHORITY HAVING JURISDICTION AND WAIT THE REQUIRED TIME BEFORE COMMENCING TO DIG.

G3. THE CONTRACTOR SHALL COORDINATE CONDUIT RUNS, LIGHTING FIXTURES AND OTHER EQUIPMENT LOCATIONS WITH THE OTHER TRADE CONTRACTORS TO AVOID CONFLICTS.

G4. WHERE VOLTAGES AND FREQUENCIES ON THE DRAWINGS AND IN THE SPECIFICATIONS DIFFER FROM THE LOCAL ONES, ALL WORK SHALL BE PERFORMED USING THE LOCAL VOLTAGES AND FREQUENCIES.

G5. THE MINIMUM WIRE SIZE ON THE PROJECT SHALL BE 2.5mm². THE MINIMUM CONDUIT SIZE SHALL BE 20mm. THE MINIMUM BREAKER SIZE SHALL BE 15 AMPS.

G6. THE CONTRACTOR SHALL PUT A MAXIMUM OF 6 DUPLEX RECEPTACLES ON A 20A SINGLE POLE CIRCUIT.

G7. WHERE THE 1010 SCOPE REVIEW, 1015 TECHNICAL REVIEW, DRAWINGS, AND SPECIFICATIONS DIFFER FROM AMERICAN CODES OR STANDARDS, THE 1010, 1015, DRAWINGS, AND SPECIFICATIONS SHALL RULE.

G8. ALL CONDUIT AND DEVICES SHALL BE SURFACE MOUNTED UNLESS OTHERWISE INDICATED.

G9. CONTRACTOR SHALL COORDINATE ALL WORK WITH ALL OTHER TRADES TO ENSURE ALL WORK IS COMPLETED IN A PROFESSIONAL, WORKMAN-LIKE MANNER.

UNLESS OTHERWISE NOTED, LINEAR DIMENSIONS SHOWN ARE IN MILLIMETERS.

COMMONWEALTH OF PENNSYLVANIA — REGISTERED PROFESSIONAL ENGINEER — JOSEPH R. GAUS — PE-074251

US ARMY CORPS OF ENGINEERS
AFGHANISTAN NORTH DISTRICT

SYMBOL	DESCRIPTION	DATE	APPR.	SYMBOL	DESCRIPTION	DATE	APPR.

DESIGNED BY: DWN BY: CKD BY: REVIEWED BY: SUBMITTED BY:
DATE: 3-25-2011 REV: 0
CONTRACT NO. W912ER-09-D-0002
DRAWING CODE:
FILE NAME: ARCHITECTURAL-CL08-E-001.DWG
PLOT SCALE: NONE
PLOT DATE: 3/28/2011
BAKER

U.S. ARMY ENGINEER DISTRICT, AFGHANISTAN
CORPS OF ENGINEERS
APO AE 09356

SITE ADAPT DESIGN
CL08 - CLASSROOM BUILDING - ARCH SPAN
ELECTRICAL SYMBOLS, NOTES, AND ABBREVIATIONS

SHEET REFERENCE NUMBER:
E-001

A1 Size 594mm x 841mm

3/28/2011 11:27 AM

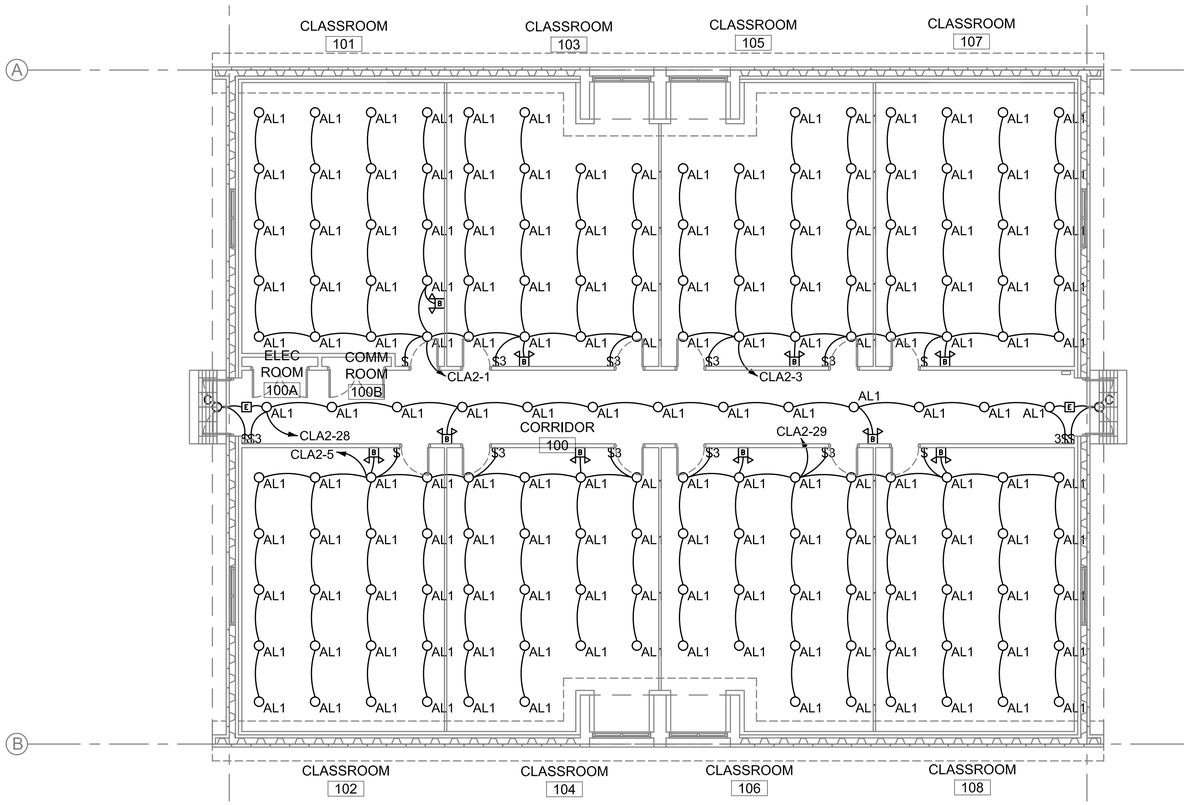

1 E-101 ELECTRICAL LIGHTING PLAN

SCALE: 1:100

GENERAL NOTES:

1. REFER TO DRAWING #E-001 FOR THE ELECTRICAL SYMBOLS LIST.
2. REFER TO DRAWING #E-601 FOR THE LIGHTING FIXTURE SCHEDULE.
3. REFER TO DRAWING #E-602 FOR PANEL SCHEDULES.
4. LIGHT FIXTURES INDICATED AS EMERGENCY SHALL BE PROVIDED WITH A BATTERY BACKUP BALLAST.
5. MOUNT BATHROOM LIGHT FIXTURES 600mm AWAY FROM THE SHOWER PAN AREA (BS7671 ZONE 1).
6. LIGHT SWITCHES AND CEILING FAN SWITCHES SHALL BE GANGED IN THE SAME FACEPLATE AT ROOM ENTRANCES.
7. CIRCUITS SHOWN INCLUDE ONE PHASE CONDUCTOR, ONE NEUTRAL, AND ONE EQUIPMENT GROUND CONDUCTOR UNLESS OTHERWISE SHOWN. THE CONDUCTOR SIZE SHALL BE 2.5mm² UNLESS INDICATED OTHERWISE ON THE PANEL SCHEDULE.

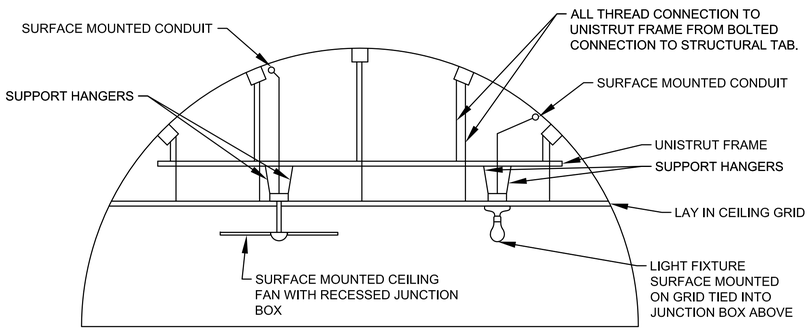

2 E-101 CEILING GRID MOUNTING DETAIL

NOT TO SCALE

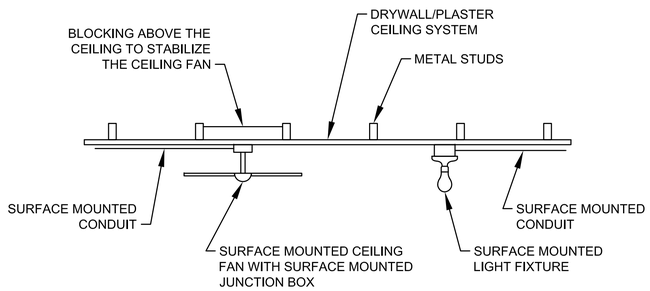

3 E-101 NON-OPEN BAY MOUNTING DETAIL

NOT TO SCALE

N

0 2000 4000

SCALE: 1:100

UNLESS OTHERWISE NOTED, LINEAR DIMENSIONS SHOWN ARE IN MILLIMETERS.

COMMONWEALTH OF PENNSYLVANIA
REGISTERED PROFESSIONAL ENGINEER
JOSEPH R. GAUS
PE-074261

US ARMY CORPS OF ENGINEERS
AFGHANISTAN NORTH DISTRICT

SYMBOL	DESCRIPTION	DATE	APPR.	SYMBOL	DESCRIPTION	DATE	APPR.

U.S. ARMY ENGINEER DISTRICT, AFGHANIST?AN
CORPS OF ENGINEERS
APO AE 09356

DESIGNED BY: DWN BY: CKD BY: REVIEWED BY: SUBMITTED BY:

DATE: 4-25-2011
CONTRACT NO. W912ER-09-D-0002
DRAWING CODE:
FILE NAME: ---
PLOT SCALE: ---
PLOT DATE: 4/25/2011
REV: ---

BAKER

SITE ADAPT DESIGN

CL08 - CLASSROOM BUILDING - ARCH SPAN

ELECTRICAL LIGHTING PLAN

SHEET REFERENCE NUMBER:

E-101

A1 Size 594mm x 841mm

4/25/2011 6:12 PM

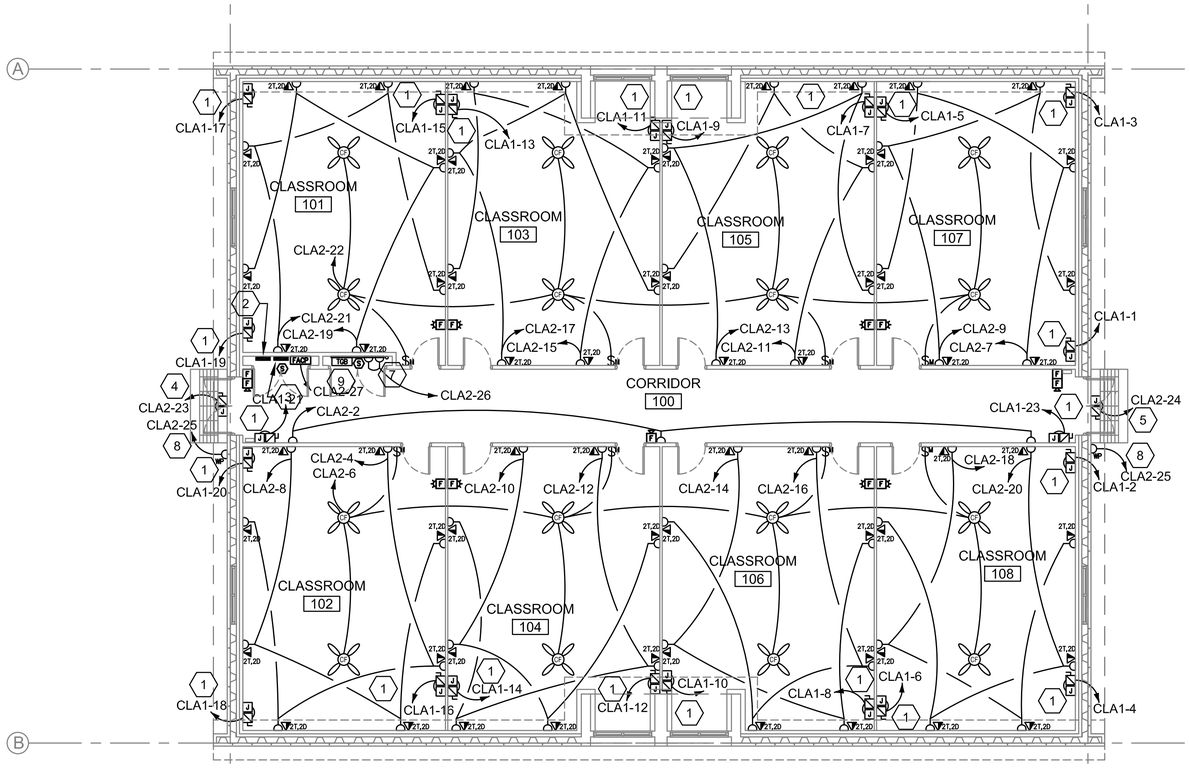

1 E-102 ELECTRICAL POWER AND SYSTEMS PLAN

SCALE: 1:100

GENERAL NOTES:

1. REFER TO DRAWING #E-001 FOR THE ELECTRICAL SYMBOLS LIST.
2. REFER TO DRAWING #E-501 FOR THE POWER RISER DIAGRAM.
3. REFER TO DRAWING #E602 FOR ELECTRICAL PANEL SCHEDULES.
4. COORDINATE EXACT MOUNTING LOCATION OF DISCONNECTING MEANS FOR MECHANICAL AND PLUMBING EQUIPMENT IN THE FIELD.
5. FUSIBLE SAFETY SWITCHES THAT ARE NOT OTHERWISE IDENTIFIED SHALL BE 380V, IP, 30A FUSED SAFETY SWITCHES WITH 20A FUSES.
6. LIGHT SWITCHES AND CEILING FAN SWITCHES SHALL BE GANGED IN THE SAME FACEPLATE AT ROOM ENTRANCES.
7. CIRCUITS SHOWN INCLUDE ONE PHASE CONDUCTOR, ONE NEUTRAL, AND ONE EQUIPMENT GROUND CONDUCTOR UNLESS OTHERWISE SHOWN. THE CONDUCTOR SIZE SHALL BE 2.5mm² UNLESS INDICATED OTHERWISE ON THE PANEL SCHEDULE.

KEY NOTES:

1. PROVIDE POWER CONNECTION TO ELECTRIC UNIT HEATER. REFER TO MECHANICAL PLANS AND PANEL SCHEDULES FOR MORE INFORMATION.
2. PANEL 'CLA1' 380/220V, 3Ø, 4W.
3. PANEL 'CLA2' 380/220V, 3Ø, 4W.
4. PROVIDE POWER CONNECTION TO MOTOR OPERATED DAMPER MOUNTED IN THE ATTIC.
5. PROVIDE POWER CONNECTION TO EXHAUST FAN MOUNTED IN THE ATTIC.
6. PROVIDE A 1200mm X 2400mm SHEET OF FIRE RESISTANT PLYWOOD FOR MOUNTING OF TELECOMMUNICATIONS EQUIPMENTS.
7. PROVIDE CONDUIT STUB UP IN THE ROOM FOR INCOMING TELECOM SERVICES FROM THE CENTRAL SYSTEM IN THE GARRISON.
8. REFER TO DETAIL #2, SHEET E501 FOR MORE INFORMATION.
9. TELECOMMUNICATIONS SERVICE ENTRANCE GROUND BUS.

N

0 2000 4000

SCALE: 1:100

UNLESS OTHERWISE NOTED, LINEAR DIMENSIONS SHOWN ARE IN MILLIMETERS.

COMMONWEALTH OF PENNSYLVANIA
REGISTERED PROFESSIONAL ENGINEER
JOSEPH R. GAUS
03/28/2011
PE-074251

US ARMY CORPS OF ENGINEERS
AFGHANISTAN NORTH DISTRICT

SYMBOL	DESCRIPTION	DATE	APPR.	SYMBOL	DESCRIPTION	DATE	APPR.

DESIGNED BY:
DWN BY: CKD BY:
REVIEWED BY:
SUBMITTED BY:

DATE: 3-25-2011
CONTRACT NO. W912ER-09-D-0002
DRAWING CODE:
FILE NAME: W912ER-09-D-0002-CL08-E-102.DWG
PLOT SCALE: NONE
PLOT DATE: 3/28/2011
REV: 0

BAKER

U.S. ARMY ENGINEER DISTRICT, AFGHANIST'AN
CORPS OF ENGINEERS
APO AE 09356

SITE ADAPT DESIGN

CL08 - CLASSROOM BUILDING - ARCH SPAN

ELECTRICAL POWER AND SYSTEMS PLAN

SHEET REFERENCE NUMBER:

E-102

A1 Size 594mm x 841mm

3/28/2011 11:28 AM

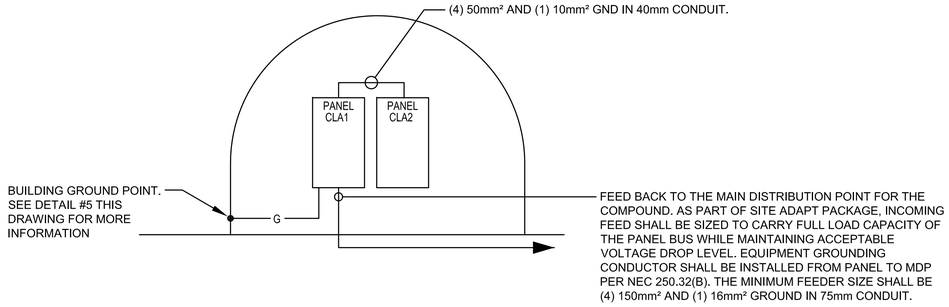

1 / E-501 CLA RISER DIAGRAM

SCALE: N.T.S.

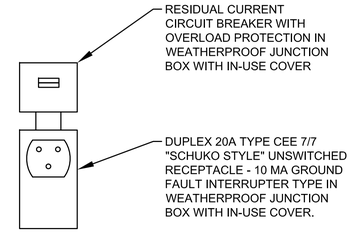

2 / E-501 RECEPTACLE DETAIL

SCALE: N.T.S.

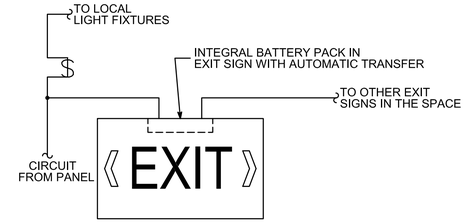

3 / E-501 EXIT SIGN WIRING DIAGRAM

SCALE: N.T.S.

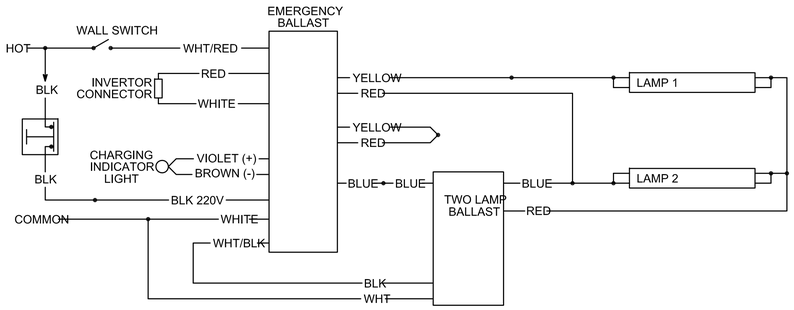

4 / E-501 EMERGENCY FIXTURE WIRING DIAGRAM

SCALE: N.T.S.

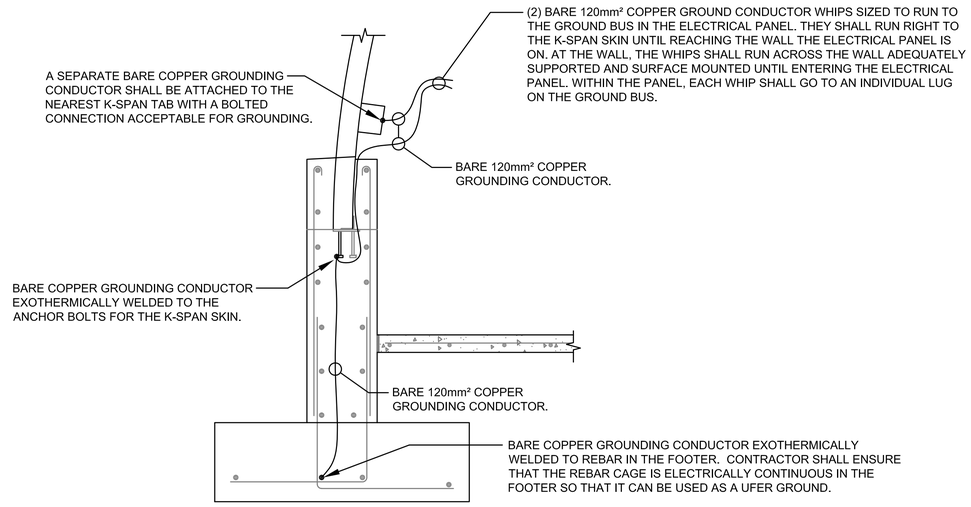

5 / E-501 BUILDING GROUNDING DETAIL

SCALE: N.T.S.

(A) LARGER OF THE TWO SIZES GIVEN IN THE TABLES BELOW	
GROUNDING ELECTRODE CONDUCTOR (BASED ON AIC RATING)	
AIC RATING OF SERVICE EQUIPMENT	NECESSARY GROUNDING ELECTRODE CONDUCTOR SIZE
10K	(1) 35mm²
14K	(1) 50mm²
18K	(1) 70mm²
22K	(1) 70mm²
25K	(1) 70mm²
30K	(1) 95mm²
35K	(1) 120mm²
42K	(1) 150mm²
65K	(1) 185mm²
100K	(1) 300mm²
125K	(2) 185mm²
200K	(2) 300mm²
GROUNDING ELECTRODE CONDUCTOR (BASED ON NEC TABLE 250.66)	
SIZE OF LARGEST UNGROUNDED SERVICE CONDUCTOR OR EQUIVALENT AREA FOR PARALLEL CONDUCTORS	NECESSARY GROUNDING ELECTRODE CONDUCTOR SIZE
350 kcmil OR SMALLER	35mm²
OVER 350 kcmil TO 600 kcmil	70mm²
OVER 600 kcmil TO 1100 kcmil	70mm²
OVER 1100 kcmil	95mm²
NOTE: ALL SIZES ARE BASED ON COPPER CONDUCTORS.	

(B) EQUIPMENT GROUNDING CONDUCTOR	
RATING OR SETTING OF AUTOMATIC OVERCURRENT DEVICE IN CIRCUIT AHEAD OF EQUIPMENT, CONDUIT, ETC, NOT EXCEEDING (AMPERES)	NECESSARY EQUIPMENT GROUNDING CONDUCTOR SIZE
15	2.5mm²
20	4.0mm²
30	6.0mm²
40	6.0mm²
60	6.0mm²
100	10mm²
200	16mm²
300	25mm²
400	25mm²
500	35mm²
600	50mm²
800	70mm²
1000	70mm²
1200	95mm²
1600	120mm²
2000	150mm²
2500	185mm²
3000	240mm²
4000	300mm²
5000	400mm²
6000	400mm²
NOTE: ALL SIZES ARE BASED ON COPPER CONDUCTORS.	

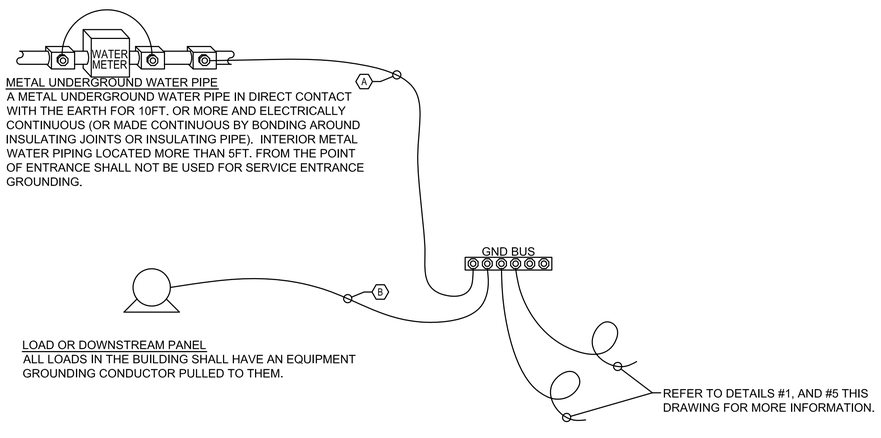

6 / E-501 SERVICE ENTRANCE GROUNDING DETAIL

SCALE: N.T.S.

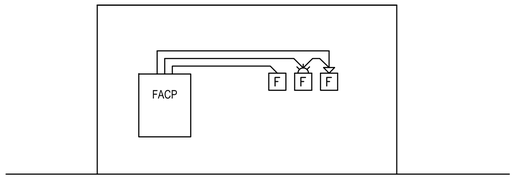

7 / E-501 TYPICAL ONE STORY FIRE ALARM RISER

SCALE: N.T.S.

UNLESS OTHERWISE NOTED, LINEAR DIMENSIONS SHOWN ARE IN MILLIMETERS.

COMMONWEALTH OF PENNSYLVANIA
REGISTERED PROFESSIONAL ENGINEER
JOSEPH R GAUS
03/28/2011
PE-074251

US ARMY CORPS OF ENGINEERS AFGHANISTAN NORTH DISTRICT

SYMBOL	DESCRIPTION	DATE	APPR.	SYMBOL	DESCRIPTION	DATE	APPR.

DESIGNED BY: DWN BY: CKD BY: REVIEWED BY: SUBMITTED BY:
DATE: 3-25-2011 CONTRACT NO. W912ER-09-D-0002 DRAWING CODE: FILE NAME: PLOT SCALE: NONE PLOT DATE: 3/28/2011 REV: 0
BAKER

U.S. ARMY ENGINEER DISTRICT, AFGHANISTAN CORPS OF ENGINEERS APO AE 09356

SITE ADAPT DESIGN
CL08 - CLASSROOM BUILDING - ARCH SPAN
ELECTRICAL DETAILS

SHEET REFERENCE NUMBER:
E-501

A1 Size 594mm x 841mm

3/28/2011 11:28 AM

LIGHT FIXTURE SCHEDULE

FIXTURE MARK	STYLE NUMBER AND TYPE	NUMBER AND TYPE OF LAMPS	VOLTAGE	MOUNTING	NOTES
AL1	PORCELAIN SOCKET WITH MEDIUM SCREW IN BASE	(1) 42W SELF BALLASTED COMPACT FLUORESCENT "TWISTER" LAMP	220V - 1Ø 50HZ	SURFACE MOUNTED	
C	INCANDESCENT ONE PIECE W/ APPROVED LENS STABILIZED HIGH IMPACT POLY CARBONATE. FIXTURE SHALL BE IP-44 RATED.	(1) 100W INCANDESCENT	220V - 1Ø 50HZ	WALL MOUNTED ABOVE EXTERIOR DOORS	FURNISHED WITH INTEGRAL PHOTOCELL.
E	UNIVERSAL MOUNT ENGINEER GRADE THERMOPLASTIC HOUSING EXIT SIGN WITH LED LAMPS, RED LETTERS 6" IN HEIGHT WITH ARROWS AS INDICATED, WITH 12V CADMIUM BATTERY WITH REMOTE HEAD CAPABILITY	LED LAMPS	220V - 1Ø 50HZ	UNIVERSAL MOUNTING	
B	EMERGENCY BATTERY PACK LIGHTING WITH TWO LOW VOLTAGE HEADS.	(2) 12W HALOGEN HEADS	220V - 1Ø 50HZ	SURFACE MOUNTING	

UNLESS OTHERWISE NOTED,
LINEAR DIMENSIONS
SHOWN ARE IN MILLIMETERS.

COMMONWEALTH OF PENNSYLVANIA
REGISTERED PROFESSIONAL
JOSEPH R. GAUS
04/25/2011
ENGINEER
PE-074261

US ARMY CORPS
OF ENGINEERS
AFGHANISTAN NORTH
DISTRICT

SYMBOL	DESCRIPTION	DATE	APPR.	SYMBOL	DESCRIPTION	DATE	APPR.

U.S. ARMY ENGINEER DISTRICT, AFGHANIST'AN
CORPS OF ENGINEERS
APO AE 09356

DESIGNED BY:
DWN BY: CKD BY:
REVIEWED BY:
SUBMITTED BY:

DATE: 4-25-2011
REV: 0
CONTRACT NO. W912ER-09-D-0002
DRAWING CODE:
FILE NAME: AFG-PRO-MAS-CL-CL08-E-601.DWG
PLOT SCALE: NONE
PLOT DATE: 4/25/2011

BAKER

SITE ADAPT DESIGN
CL08 - CLASSROOM BUILDING - ARCH SPAN
LIGHTING FIXTURE SCHEDULE

SHEET REFERENCE NUMBER:
E-601

A1 Size 594mm x 841mm

4/25/2011 6:13 PM

PANELBOARD: CLA1 SURFACE MOUNTED
AMP MAIN LUGS (OR) 200 AMP MAIN BREAKER W/ 200 AMP TRIP
CIRCUIT BREAKER TYPE: 380/220 VOLTS 3 PHASE 4 WIRE 50 HZ 200 AMP BUS

CCT #	TRIP AMPS	PH	WIRE MM²	GND MM²	CONDUIT MM	LOAD SERVED	LOAD-KVA A	LOAD-KVA B	LOAD-KVA C	LOAD-KVA A	LOAD-KVA B	LOAD-KVA C	LOAD SERVED	CONDUIT MM	GND MM²	WIRE MM²	PH	TRIP AMPS	CCT #
1	20	1	4	4	20	ELECTRIC HEATER - 107	3.0			3.0			ELECTRIC HEATER - 108	20	4	4	1	20	2
3	20	1	4	4	20	ELECTRIC HEATER - 107		3.0			3.0		ELECTRIC HEATER - 108	20	4	4	1	20	4
5	20	1	4	4	20	ELECTRIC HEATER - 107			3.0			3.0	ELECTRIC HEATER - 108	20	4	4	1	20	6
7	20	1	4	4	20	ELECTRIC HEATER - 105	3.0			3.0			ELECTRIC HEATER - 108	20	4	4	1	20	8
9	20	1	4	4	20	ELECTRIC HEATER - 105		3.0			3.0		ELECTRIC HEATER - 108	20	4	4	1	20	10
11	20	1	4	4	20	ELECTRIC HEATER - 103			3.0			3.0	ELECTRIC HEATER - 108	20	4	4	1	20	12
13	20	1	4	4	20	ELECTRIC HEATER - 103	3.0			3.0			ELECTRIC HEATER - 108	20	4	4	1	20	14
15	20	1	4	4	20	ELECTRIC HEATER - 101		3.0			3.0		ELECTRIC HEATER - 108	20	4	4	1	20	16
17	20	1	4	4	20	ELECTRIC HEATER - 101			3.0			3.0	ELECTRIC HEATER - 108	20	4	4	1	20	18
19	20	1	4	4	20	ELECTRIC HEATER - 101	3.0			3.0			ELECTRIC HEATER - 108	20	4	4	1	20	20
21	20	1	4	4	20	ELECTRIC HEATER - 100		3.0			0.0		SPARE				1	20	22
23	20	1	4	4	20	ELECTRIC HEATER - 100			3.0			0.0	SPARE				1	20	24
25	20	1				SPARE	0.0			0.0			SPARE				1	20	26
27	20	1				SPARE		0.0			0.0		SPACE						28
29						SPACE			0.0			0.0	SPACE						30
31						SPACE	0.0			0.0			SPACE						32
33						SPACE		0.0			0.0		SPACE						34
35						SPACE			0.0			0.0	SPACE						36
37						SPACE	0.0			8.2									38
39						SPACE		0.0			9.8		PANEL CLA2	40	10	50	3	100	40
41						SPACE			0.0			10.6							42
							12.0	12.0	12.0	20.2	18.8	19.6							

DIVERSIFIED LOADS:
LIGHTING: 8.9 X 0.7 = 6.2 HEATERS: 66.0 X 0.8 = 52.8
RECEPTACLES: 14.7 X 0.5 = 7.4 MOTORS: 5.0 X 0.6 = 3.0

TOTAL CONNECTED LOAD (PER PHASE) A: 32.2 B: 30.8 C: 31.6
TOTAL CONNECTED LOAD: 94.6
TOTAL DIVERSIFIED LOAD: 69.4

PANELBOARD: CLA2 SURFACE MOUNTED
AMP MAIN LUGS (OR) 100 AMP MAIN BREAKER W/ 100 AMP TRIP
CIRCUIT BREAKER TYPE: 380/220 VOLTS 3 PHASE 4 WIRE 50 HZ 100 AMP BUS

CCT #	TRIP AMPS	PH	WIRE MM²	GND MM²	CONDUIT MM	LOAD SERVED	LOAD-KVA A	LOAD-KVA B	LOAD-KVA C	LOAD-KVA A	LOAD-KVA B	LOAD-KVA C	LOAD SERVED	CONDUIT MM	GND MM²	WIRE MM²	PH	TRIP AMPS	CCT #
1	15	1	2.5	2.5	20	LIGHTING - 102, 104, 106	2.0			0.6			RECEPTS - 100	20	2.5	2.5	1	15	2
3	15	1	2.5	2.5	20	LIGHTING - 100, 107, 108		2.0			0.8		RECEPTS - 102	20	2.5	2.5	1	15	4
5	15	1	2.5	2.5	20	LIGHTING - 101, 103, 105			2.0			1.6	CEILING FANS - 102, 104, 106, 108	20	2.5	2.5	1	15	6
7	15	1	2.5	2.5	20	RECEPTS - 107	0.8			0.8			RECEPTS - 102	20	2.5	2.5	1	15	8
9	15	1	2.5	2.5	20	RECEPTS - 107		0.8			0.8		RECEPTS - 104	20	2.5	2.5	1	15	10
11	15	1	2.5	2.5	20	RECEPTS - 105			0.8			0.8	RECEPTS - 104	20	2.5	2.5	1	15	12
13	15	1	2.5	2.5	20	RECEPTS - 105	0.8			0.8			RECEPTS - 106	20	2.5	2.5	1	15	14
15	15	1	2.5	2.5	20	RECEPTS - 103		0.8			0.8		RECEPTS - 106	20	2.5	2.5	1	15	16
17	15	1	2.5	2.5	20	RECEPTS - 103			0.8			0.8	RECEPTS - 108	20	2.5	2.5	1	15	18
19	15	1	2.5	2.5	20	RECEPTS - 101	0.8			0.8			RECEPTS - 108	20	2.5	2.5	1	15	20
21	15	1	2.5	2.5	20	RECEPTS - 101		0.8			1.6		CEILING FANS - 101, 103, 105, 107	20	2.5	2.5	1	15	22
23	15	1	2.5	2.5	20	MOTORIZED DAMPER - ATTIC			0.5			1.3	EXHAUST FAN - ATTIC	20	2.5	2.5	1	15	24
25	15	1	2.5	2.5	20	RECEPTS - EXTERIOR	0.4			0.4			RECEPTS - 100B	20	2.5	2.5	1	15	26
27	15	1	2.5	2.5	20	FIRE ALARM CONTROL PANEL		0.5			0.9		LIGHTING - CORRIDOR	20	2.5	2.5	1	15	28
29	15	1	2.5	2.5	20	LIGHTING			2.0			0.0	SPARE				1	15	30
31	15	1				SPARE	0.0			0.0			SPARE				1	15	32
33	15	1				SPARE		0.0			0.0		SPARE				1	15	34
35	15	1				SPARE			0.0			0.0	SPARE				1	15	36
37	15	1				SPARE	0.0			0.0			SPARE				1	15	38
39	15	1				SPARE		0.0			0.0		SPARE				1	15	40
41	15	1				SPARE			0.0			0.0	SPARE				1	15	42
							4.8	4.9	6.1	3.4	4.9	4.5							

DIVERSIFIED LOADS:
LIGHTING: 8.9 X 0.7 = 6.3 HEATERS: 0.0 X 0.8 = 0.0
RECEPTACLES: 14.7 X 0.5 = 7.4 MOTORS: 5.0 X 0.6 = 3.0

TOTAL CONNECTED LOAD (PER PHASE) A: 8.2 B: 9.8 C: 10.6
TOTAL CONNECTED LOAD: 28.6
TOTAL DIVERSIFIED LOAD: 16.7

GENERAL NOTES:

1. CONTRACTOR SHALL PROVIDE TYPED PANEL SCHEDULES FOR EACH PANEL. IT SHALL BE THE RESPONSIBILITY OF THE CONTRACTOR TO VERIFY ROOM NUMBERS FOR EACH CIRCUIT IN THE FIELD WITH THE FINAL ROOM NUMBER PLAN. ROOM NUMBERS SHALL BE PROVIDED IN THE CIRCUIT DESCRIPTION FIELD FOR EACH CIRCUIT.
2. SITE ADAPT CONTRACTOR SHALL DETERMINE THE AVAILABLE SHORT CIRCUIT FAULT CURRENT FOR THE ELECTRICAL PANELS BASED ON THE SITE CONDITIONS.
3. CIRCUITS SHOWN AS 1 PH SHALL INCLUDE ONE PHASE CONDUCTOR, ONE NEUTRAL, AND ONE EQUIPMENT GROUND CONDUCTOR. CIRCUITS SHOWN AS 3 PH SHALL INCLUDE THREE PHASE CONDUCTORS, ONE NEUTRAL CONDUCTOR, AND ONE EQUIPMENT GROUND CONDUCTOR.

UNLESS OTHERWISE NOTED, LINEAR DIMENSIONS SHOWN ARE IN MILLIMETERS.

COMMONWEALTH OF PENNSYLVANIA
REGISTERED PROFESSIONAL ENGINEER
JOSEPH R. GAUS
PE-074261

US ARMY CORPS OF ENGINEERS
AFGHANISTAN NORTH DISTRICT

SYMBOL	DESCRIPTION	DATE	APPR.	SYMBOL	DESCRIPTION	DATE	APPR.

U.S. ARMY ENGINEER DISTRICT, AFGHANIST'AN
CORPS OF ENGINEERS
APO AE 09356

DESIGNED BY: DWN BY: CKD BY: REVIEWED BY: SUBMITTED BY:
DATE: 4-25-2011 REV: 0
CONTRACT NO. W912ER-09-D-0002
DRAWING CODE:
FILE NAME: ARCHIVE\CLA\CLA-E-602.DWG
PLOT SCALE: NONE
PLOT DATE: 4/25/2011

BAKER

SITE ADAPT DESIGN
CL08 - CLASSROOM BUILDING - ARCH SPAN
ELECTRICAL PANEL SCHEDULES

SHEET REFERENCE NUMBER:
E-602

A1 Size 594mm x 841mm

4/25/2011 6:14 PM

AFGHAN NATIONAL ARMY

STANDARD BUILDING DESIGN

TRASH COLLECTION POINT

100% FINAL DESIGN SUBMITTAL

SHEET INDEX

G–001 COVER SHEET

CIVIL

C–101 PLAN
C–501 1800 mm FENCING DETAILS

STRUCTURAL
S–001 GENERAL NOTES AND DESIGN CRITERIA
S–101 FOUNDATION/SLAB & ROOF FRAMING PLANS
S–401 BUILDING SECTIONS
S–701 TYPICAL DETAILS
S–801 FDN/SOG & ROOF FRAMING PLAN
S–802 BUILDING SECTION

APPROVED:

A/E DESIGNER OF RECORD

SEAL:

US ARMY CORPS OF ENGINEERS
AFGHANISTAN ENGINEER DISTRICT

Mark	Description	Date	Appr.	Mark	Description	Date	Appr.

Designed by:
Dwn by: JDS
Ckd by: JDS
Reviewed by: LHM
Submitted by: BAKER
Date: 3/07/2010
Rev: 0
Design file no. G–001
Drawing code:
File name: ANATCPG-001
Plot date: 3/5/2010
Plot scale: 1:1

U.S. ARMY CORPS OF ENGINEERS
AFGHANISTAN ENGINEER DISTRICT
APO AE 96338

Michael Baker Jr., Inc.
A unit of Michael Baker Corporation
Airside Business Park
100 Airside Drive
Moon Township, PA 15108
www.mbakercorp.com

AFGHAN NATIONAL ARMY
REGIONAL MILITARY TRAINING CENTER
STANDARD DESIGN

TRASH COLLECTION POINT

COVER SHEET

Sheet reference number:
G–001

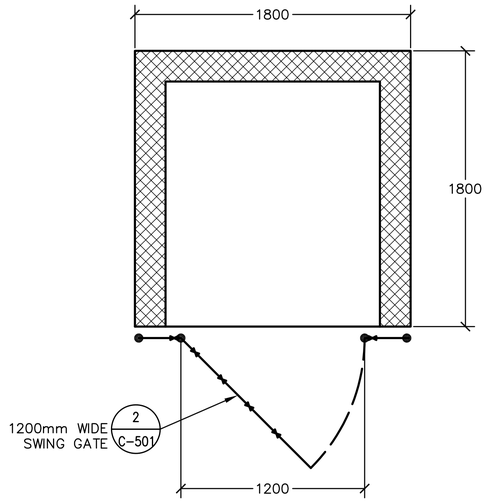

1 C-101 TRASH COLLECTION POINT
SCALE: 1:20

0 200 400 800
SCALE: 1:20

APPROVED:

A/E DESIGNER OF RECORD

SEAL:

COMMONWEALTH OF PENNSYLVANIA
REGISTERED PROFESSIONAL
GREGORY P. HYNES
ENGINEER
044310-E

US ARMY CORPS OF ENGINEERS
AFGHANISTAN ENGINEER DISTRICT

Mark	Description	Date	Appr.	Mark	Description	Date	Appr.

U.S. ARMY ENGINEER DISTRICT, AFGHANISTAN
CORPS OF ENGINEERS
APO AE 96338

Michael Baker Jr., Inc.
A unit of Michael Baker Corporation
Airside Business Park
100 Airside Drive
Moon Township, PA 15108
www.mbakercorp.com

Designed by: GPH
Dwn by: JDS
Ckd by: JMB
Reviewed by: LHM
Submitted by: BAKER
Date: 2/23/2010
Rev: 0
Design file no. C-101
Drawing code:
File name: ANATRSH-C-101XXX
Plot date: 2/23/2010
Plot scale: 1:20

AFGHAN NATIONAL ARMY
REGIONAL MILITARY TRAINING CENTER
STANDARD DESIGN

TRASH COLLECTION POINT
PLAN

Sheet reference number:
C-101

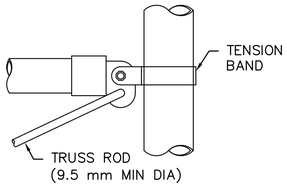

ROUND POST

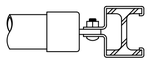

H-BEAM

BRACE RAIL CLAMP DETAILS

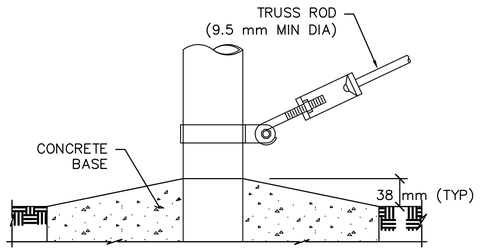

TRUSS ROD AND BAND

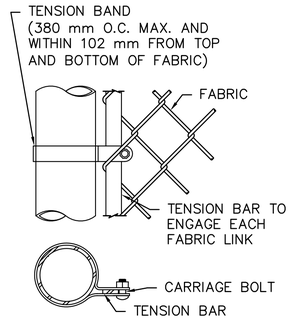

END OR GATE POST DETAIL

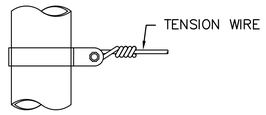

TENSION BAND DETAIL

FASTENING DETAILS

NTS

STEEL POST SCHEDULE	
USE AND SECTION	MINIMUM OUTSIDE DIMENSIONS (NOMINAL)
	FABRIC WIDTH 1829 mm OR LESS
CORNER, END & PULL POSTS	
TUBULAR – ROUND	60 mm O.D.
TUBULAR – SQUARE	51 mm SQ.
C–SECTION (ROLL–FORMED)	89 mm X 89 mm
LINE POSTS	
TUBULAR – ROUND	48 mm O.D.
H–SECTION	57 mm X 43 mm
C–SECTION (ROLL–FORMED)	48 mm X 41 mm
TOP, BOTTOM & BRACE RAILS	
TUBULAR – ROUND	42 mm O.D.
TUBULAR – SQUARE	38 mm SQ.
H–SECTION	41 mm X 38 mm
C–SECTION (ROLL–FORMED)	41 mm X 32 mm

NOTES:

1. DETAILS SHOWN ARE TO CLARIFY REQUIREMENTS AND ARE NOT INTENDED TO LIMIT OTHER TYPES OF FENCE SECTIONS AND METHODS OF INSTALLATION THAT COMPLY WITH THE SPECIFICATIONS.

2. WIRE TIES, RAILS, POSTS, AND BRACES SHALL BE CONSTRUCTED ON THE SECURE SIDE OF THE FENCE ALIGNMENT. CHAIN–LINK FABRIC SHALL BE PLACED ON THE SIDE OPPOSITE THE SECURE AREA.

3. C–SECTION POSTS SHALL BE INSTALLED SO THAT THE VOID INSIDE THE POST IS COMPLETELY FILLED WITH CONCRETE UP TO THE TOP OF THE FOUNDATION.

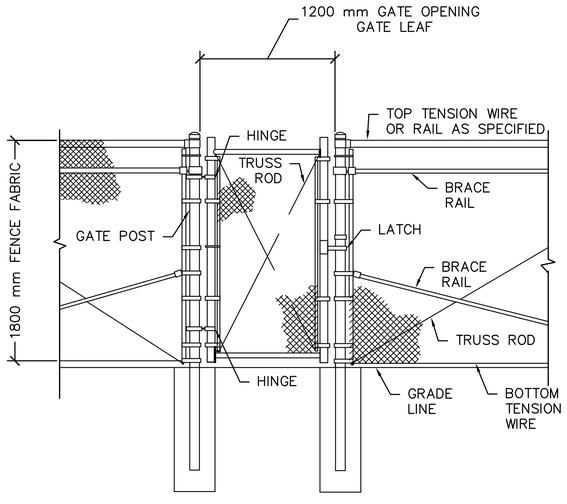

2 / C–501 PERSONNEL GATE 1800 mm FENCE

SCALE: NTS

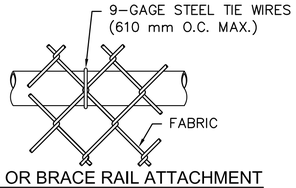

TOP OR BRACE RAIL ATTACHMENT

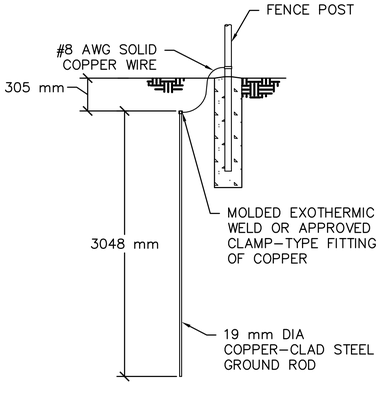

GROUNDING DETAIL

NTS

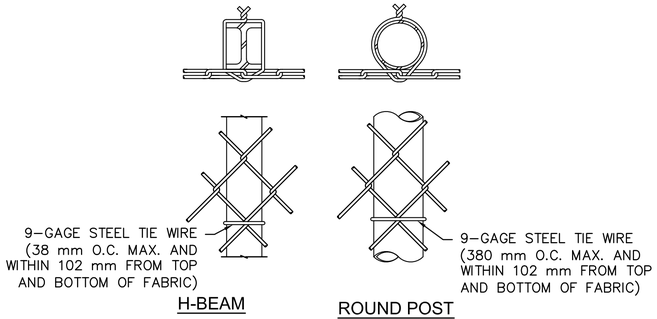

H-BEAM ROUND POST

LINE POST ATTACHMENTS

NTS

APPROVED:

A/E DESIGNER OF RECORD

SEAL:

COMMONWEALTH OF PENNSYLVANIA
REGISTERED PROFESSIONAL
GREGORY P. HYNES
ENGINEER
044310–E

US ARMY CORPS OF ENGINEERS
AFGHANISTAN ENGINEER DISTRICT

Mark	Description	Date	Appr.	Mark	Description	Date	Appr.

U.S. ARMY ENGINEER DISTRICT, AFGHANISTAN
CORPS OF ENGINEERS
APO AE 96338

Michael Baker Jr., Inc.
A unit of Michael Baker Corporation
Airside Business Park
100 Airside Drive
Moon Township, PA 15108
www.mbakercorp.com

Designed by: GPH | Dwn by: JDS | Ckd by: JMB | Reviewed by: LHM | Submitted by: BAKER

Date: 2/23/2010 | Rev: 0
Design file no. C–501
Drawing code:
File name: ANATRSH-C-501XXX
Plot date: 2/23/2010
Plot scale: 1:1

AFGHAN NATIONAL ARMY
REGIONAL MILITARY TRAINING CENTER
STANDARD DESIGN

TRASH COLLECTION POINT
1800 mm FENCING DETAILS

Sheet reference number:
C–501

STRUCTURAL ABBREVIATIONS:

ACI	AMERICAN CONCRETE INSTITUTE
ADD'L	ADDITIONAL
AISC	AMERICAN INSTITUTE OF STEEL CONSTRUCTION
AISI	AMERICAN IRON AND STEEL INSTITUTE
ASTM	AMERICAN SOCIETY FOR TESTING AND MATERIALS
ARCH	ARCHITECTURAL
B	BOTTOM
BLDG	BUILDING
BOTT	BOTTOM
℄	CENTER LINE
CFMRF	COLD FORM METAL ROOF FRAME
CFMF	COLD FORM METAL FRAME
CFS	COLD FORMED STEEL
CIP	CAST-IN-PLACE
CIPL	CAST-IN-PLACE LINTEL
CJ	CONTROL JOINT
CLR	CLEAR
CMU	CONCRETE MASONRY UNIT
COEFF	COEFFICIENT
COL	COLUMN
CONC	CONCRETE
CONT	CONTINUOUS
COORD	COORDINATE
CRSI	CONCRETE REINFORCING STEEL INSTITUTE
CSJ	CONSTRUCTION JOINT
DIA	DIAMETER
DIAG	DIAGONAL
DIM	DIMENSION
DWG	DRAWING
DWL	DOWEL
EA	EACH
EF	EACH FACE
ELEC	ELECTRICAL
ELEV	ELEVATION
EMBED	EMBEDMENT
EQUIV	EQUIVALENT
ETC	ET CETERA
EW	EACH WAY
EXP	EXPANSION
EXT	EXTERIOR
FTG	FOOTING
GA	GAUGE
GB	GRADE BEAM
HORIZ	HORIZONTAL
h	HOUR
HP	HIGH POINT
HRS	HOURS
IBC	INTERNATIONAL BUILDING CODE
ID	INSIDE DIAMETER
INFO	INFORMATION
INT	INTERIOR
kg	KILOGRAM
km	KILOMETER
kN	KILONEWTON
kPa	KILOPASCAL
L#	ANGLE (# INDICATES SIZE)
LP	LOW POINT
LONG	LONGITUDINAL
LLV	LONG LEG VERTICAL
m	METER
MAX	MAXIMUM
MECH	MECHANICAL
MFG	MANUFACTURER
MID	MIDDLE
MIN	MINIMUM
MISC	MISCELLANEOUS
mm	MILLIMETER
MPa	MEGAPASCAL
MTL	METAL
MWFRS	MAIN WIND FORCE RESISTING SYSTEM
N	NEWTON
N	NORTH
N/A	NOT APPLICABLE
#	NUMBER SYMBOL FOR REBAR SIZE
NTS	NOT TO SCALE
OC	ON CENTER
OD	OUTSIDE DIAMETER
OPNG	OPENING
ℙ or PL	PLATE
RB	ROOF BEAM
REINF	REINFORCED
REQ'D	REQUIRED
SIM	SIMILAR
SPECS	SPECIFICATIONS
STD	STANDARD
STRUCT	STRUCTURAL
SW	SHEAR WALL
T	TOP
T/	TOP OF
T/ELEV	TOP ELEVATION
T/SLAB	TOP OF SLAB
T&B	TOP AND BOTTOM
THK	THICK
TYP	TYPICAL
UFC	UNIFIED FACILITIES CRITERIA
UON	UNLESS OTHERWISE NOTED
VERT	VERTICAL
W	WIDTH
W/	WITH

1.0 GENERAL NOTES:

1.1 THIS PROJECT HAS BEEN DESIGNED FOR THE WEIGHTS AND MATERIALS INDICATED ON THE SHEETS AND FOR THE LIVE LOADS INDICATED IN THE DESIGN DATA. IT IS THE CONTRACTOR'S RESPONSIBILITY TO DETERMINE ALLOWABLE CONSTRUCTION LOADS AND TO PROVIDE PROPER DESIGN AND CONSTRUCTION OF FALSEWORK, FORMWORK, STAGING, BRACING, SHEETING AND SHORING, ETC.

1.1 COORDINATE THESE SHEETS WITH THE SHEETS OF THE OTHER TRADES.

1.2 ALL DIMENSIONS SHOWN ON THE SHEETS ARE MILLIMETERS UNLESS NOTED OTHERWISE.

1.3 WORK NOT INCLUDED ON THE SHEETS BUT IMPLIED TO BE SIMILAR TO THAT SHOWN AT CORRESPONDING PLACES ELSEWHERE ON THE SHEETS SHALL BE REPEATED.

1.4 IN CASE OF CONFLICT BETWEEN THE NOTES, DETAILS AND SPECIFICATIONS THE MOST RIGID REQUIREMENTS SHALL GOVERN.

1.5 COORDINATE FINISHED FLOOR DATUM ELEVATION 0.0m WITH THE CIVIL SHEETS.

2.0 FOUNDATION NOTES

2.1 THE GEOTECHNICAL ANALYSIS FOR THIS PROJECT IS THE RESPONSIBILITY OF THE CONTRACTOR AWARDED THE WORK. AN ASSUMED ALLOWABLE SOIL BEARING VALUE OF 72 kPa HAS BEEN USED IN THE STRUCTURAL ANALYSIS OF THE BUILDING HEREIN AND SHALL BE CONFIRMED AND VERIFIED AS PART OF THE GEOTECHNICAL INVESTIGATION. VALUES WHICH DO NOT MEET THE REQUIREMENTS INDICATED ON THE BASIS OF DESIGN SHEET SHALL BE IMMEDIATELY BROUGHT TO THE ATTENTION OF THE CONTRACTING OFFICER FOR CONSIDERATION AND DETERMINATION ON THE NEXT APPROPRIATE COURSE OF ACTION.

2.2 SEE THE SPECIFICATION FOR ADDITIONAL REQUIREMENTS TO THOSE OUTLINED IN THE GEOTECHNICAL INVESTIGATION FOR EXCAVATION AND PREPARATION OF THE FOUNDATION AND THE SLAB ON GRADE SUBGRADE INCLUDING COMPACTION PROCEDURES.

2.3 EXCAVATIONS FOR FOOTINGS SHALL HAVE THE SIDES AND BOTTOMS TEMPORARILY LINED WITH 0.25mm POLYETHYLENE IF PLACEMENT OF CONCRETE DOES NOT OCCUR WITHIN 24 HRS OF THE EXCAVATION OF THE FOOTING.

2.4 FOUNDATION CONDITIONS NOTED DURING CONSTRUCTION WHICH DIFFER FROM THOSE DESCRIBED IN THE GEOTECHNICAL REPORT SHALL BE REPORTED TO THE GENERAL CONTRACTOR BEFORE FURTHER CONSTRUCTION IS ATTEMPTED. SEE PROJECT SPECIFICATIONS.

2.5 NO FOOTINGS OR SLABS SHALL BE POURED INTO OR AGAINST SUBGRADE CONTAINING FREE WATER, FROST, ICE OR LOOSE MATERIAL. FROST DEPTH ASSUMED TO BE 800mm.

2.6 PRIOR TO START OF FOUNDATION OR SLAB-ON-GRADE CONSTRUCTION, EXISTING SUBGRADES SHALL BE COMPACTED TO MINIMUM OF 95% MAXIMUM DRY DENSITY OBTAINED THRU ASTM D 1557 MODIFIED PROCTOR TESTING.

2.7 SEE ELECTRICAL & CIVIL SHEETS FOR ANY REQUIRED UNDERSLAB UTILITIES.

2.8 IF UNDERMINING OF FOOTINGS OCCURS, FILL VOIDS WITH 18 MPa CONCRETE. DO NOT ATTEMPT TO REPLACE AND RE-COMPACT SOIL.

3.0 CONCRETE

3.1 CONCRETE SHALL HAVE THE UNIT WEIGHT OF 2400 kg/m^3 AND A MINIMUM COMPRESSIVE STRENGTH (f'c) OF 28 MPa AT 28 DAYS. ALL CONCRETE SHALL HAVE A WATER-CEMENT RATIO OF 0.45. SEE SPECIFICATIONS FOR ADDITIONAL INFORMATION. ENTRAIN AIR TO PRODUCE TOTAL AIR CONTENT ACCORDING TO THE SPECIFICATIONS FOR CONCRETE EXPOSED TO FREEZING TEMPERATURES (EXTERIOR FOOTINGS, SLAB TURNDOWNS, EXTERIOR SLABS AND SLABS-ON-GRADE, EXTERIOR RETAINING WALLS, AND EXTERIOR GRADE BEAMS.)

3.2 NO CALCIUM CHLORIDE SHALL BE USED IN ANY CONCRETE.

3.3 MIXING, TRANSPORTING AND PLACING OF CONCRETE SHALL CONFORM TO ACI 301M-05.

3.4 ALL CONCRETE WORK SHALL CONFORM TO THE REQUIREMENTS OF THE AMERICAN CONCRETE INSTITUTE (ACI) 318M MANUAL (metric), "BUILDING CODE REQUIREMENTS FOR REINFORCED CONCRETE", AND REQUIREMENTS OUTLINED IN THE CONTRACT SPECIFICATIONS. WHEN THERE IS A CONFLICT BETWEEN ACI AND THE SPECIFICATIONS, THE MORE STRINGENT SHALL GOVERN.

3.5 CHAMFER ALL EXPOSED EXTERNAL CORNERS OF CONCRETE WITH 20mm x45 DEGREE CHAMFER UON.

3.6 CONCRETE REINFORCEMENT BARS SHALL CONFORM TO ASTM A615M-96a, GRADE 420 MPa, REINFORCING BARS SHALL NOT BE TACK WELDED, WELDED, HEATED OR CUT, UNLESS INDICATED ON THE CONTRACT DOCUMENTS. ALL LAP SPLICES SHALL BE CLASS "B" UON.

3.7 HORIZONTAL FOOTING AND HORIZONTAL WALL REINFORCEMENT SHALL BE CONTINUOUS AND SHALL HAVE 90 DEGREE BENDS AND EXTENSIONS, OR CORNER BARS OF EQUIVALENT SIZE LAPPED WITH A CLASS B TENSION SPLICE AT CORNERS AND INTERSECTIONS. TOP BAR CRITERIA SHALL APPLY IF 300mm OR MORE OF FRESH CONCRETE IS PLACED BELOW BAR.

3.8 ALL CONCRETE REINFORCEMENT SHALL BE DETAILED, FABRICATED, LABELED, SUPPORTED, AND SPACED IN FORMS AND SECURED IN PLACE IN ACCORDANCE WITH THE PROCEDURES AND REQUIREMENTS OUTLINED IN THE LATEST EDITION OF THE "BUILDING CODE REQUIREMENTS FOR REINFORCED CONCRETE", ACI 318M, AND THE "MANUAL OF STANDARD PRACTICE FOR DETAILING REINFORCED CONCRETE STRUCTURES", ACI 315M, LATEST EDITION. BASED ON IN COUNTRY REINFORCEMENT AVAILABILITY, IT IS THE CONTRACTOR'S OPTION TO ROUND DESIGNATED ODD NUMBERED REINFORCEMENT SIZES UP (1) ONE BAR SIZE.

3.9 ALL DOWELS SHALL MATCH SIZE AND NUMBER OF MAIN REINFORCING, UNLESS NOTED OTHERWISE ON THE SHEETS.

3.10 ADDITIONAL BARS SHALL BE PROVIDED AROUND ALL FLOOR AND WALL OPENINGS AS SHOWN ON THE SHEETS.

3.11 THE CONTRACTOR SHALL COORDINATE ADDITIONAL WALL/SLAB OPENINGS NOT SHOWN ON STRUCTURAL SHEETS. SEE ELECTRICAL AND CIVIL SHEETS.

3.12 THE CONTRACTOR SHALL VERIFY ALL OPENINGS, PAD SIZES, AND ANCHOR BOLTS WITH EQUIPMENT SELECTED.

3.13 FOR ALL WALLS, PROVIDE DOWELS INTO FOOTING AT EACH VERT REINF BAR, UON DOWEL SIZE SHALL BE SAME AS VERT REINF.

3.14 PROVIDE CONCRETE POUR STOPS OR FORMED AS REQUIRED FOR INSTALLATION OF ALL CONCRETE WORK.

3.15 COLD-WEATHER PLACEMENT: COMPLY WITH ACI 306.1 AND AS FOLLOWS. PROTECT CONCRETE WORK FROM PHYSICAL DAMAGE OR REDUCED STRENGTH THAT COULD BE CAUSED BY FROST, FREEZING ACTIONS, OR LOW TEMPERATURES. SUBMIT A COLD WEATHER CONCRETING PLAN FOR APPROVAL.

3.16 THE FORMED SURFACES FOR REINFORCED CONCRETE SHALL ACHIEVE A "CLASS A" FINISH WHEN RECEIVING PAINT OR A "CLASS B" FINISH WHEN RECEIVING PLASTER OR TILE AS PER SPECIFICATION SECTION 03 31 00 CAST-IN-PLACE STRUCTURAL CONCRETE.

3.17 REFER TO S-800 SERIES REINFORCING BAR PLACEMENT DRAWINGS DEFINING LENGTHS, BENDS, AND SPACINGS FOR ALL STRUCTURAL CONCRETE. THE S-800 SERIES DRAWING ARE BASED ON THE S-400, S-500, S-600, AND S-700 SERIES DRAWING SCHEDULES, DETAILS, AND DIAGRAMS.

4.0 CONCRETE MASONRY

4.1 MASONRY CONSTRUCTION SHALL CONFORM TO SPECIFICATION FOR MASONRY STRUCTURES (ACI 530.1) UON.

4.2 STRENGTH OF MASONRY MATERIALS SHALL BE AS FOLLOWS:

a. CONCRETE MASONRY UNITS SHALL BE NORMAL WEIGHT, TYPE 1, CONFORMING TO ASTM C-90 AND HAVE A MINIMUM COMPRESSIVE STRENGTH OF 10.4 MPa ON THE NET AREA.

b. MORTAR SHALL CONFORM TO ASTM C-270 TYPE S.

c. GROUT FOR MASONRY SHALL BE NORMAL WEIGHT AND HAVE A MINIMUM COMPRESSIVE STRENGTH OF 14 MPa AT 28 DAYS. GROUT SHALL CONFORM TO ASTM C476M. GROUT LIFTS SHALL NOT EXCEED 1,400mm.

d. REINFORCED MASONRY SHALL HAVE A STRENGTH F'm = 10 MPa. (F'm IS THE COMPRESSIVE STRENGTH OF THE MASONRY AT 28 DAYS AS DETERMINED BY PRISM TESTS).

4.3 ALL VERTICAL REINFORCEMENT FOR CONCRETE MASONRY SHALL BE ASTM A615M-96a, GRADE 420 MPa. ALL SPLICES SHALL BE LAPPED 48 BAR DIAMETERS MINIMUM.

4.4 BOND BEAMS SHALL BE SPACED AT 1200MM OC VERTICALLY. BOND BEAM REINFORCING SHALL BE CONTINUOUS AND PROVIDED AT WALL INTERSECTIONS AND WALL CORNERS (REFERENCE CONCRETE MASONRY NOTE 4.11). ALL BOND BEAM REINFORCING SHALL BE CONTINUOUS AND HAVE STANDARD ACI HOOKS AT EACH END. PROVIDE STANDARD BAR SPLICES AS SPECIFIED. AS AN ALTERNATE TO CMU BOND BEAMS, IT IS THE CONTRACTOR'S OPTION TO PROVIDE 200mm X 200mm CONTINUOUS CAST-IN-PLACE CONCRETE BOND BEAMS WITH (2)-#16 IN LIEU OF CMU BOND BEAMS INDICATED ON THE DRAWINGS.

4.5 CMU CELLS THAT REQUIRE VERTICAL REINFORCING BARS AS INDICATED ON THE CONTRACT DRAWINGS AND/OR SPECS SHALL HAVE REINF BARS PLACED IN CENTERS OF CMU CELLS AND CONTINUOUSLY GROUTED UON. ALL VERTICAL REINFORCEMENT EXTENDS FULL HEIGHT OF WALL.

4.6 ALL CMU CELLS, OPEN CAVITIES, AND AIR SPACES OF ALL WALLS SHALL BE GROUTED TO STOP FRAGMENTS FROM MORTAR BLAST.

4.7 CONTRACTOR SHALL COORDINATE LOCATION OF ALL OPENINGS WITH OTHER TRADES.

4.8 AT INTERSECTING BOND BEAMS, PROVIDE CORNER BAR FOR EACH HORIZONTAL BAR IN BOND BEAMS AT INTERSECTING WALLS. USE SAME SIZE AND SPACING AS HORIZONTAL BARS WITH LEG LENGTH = 50db.

4.9 THE ALTERNATE TOP OF CMU WALL DETAIL(S) SHOWN ON S-701 CAN BE UTILIZED AT THE CONTRACTOR'S OPTION IN PLACE OF THE CMU BOND BEAM DEPICTED ON DRAWING S-401. ALTERNATE DETAIL SHOWS CAST-IN-PLACE WALL BOND BEAM THAT CAN BE UTILIZED AT THE CONTRACTOR'S OPTION IN PLACE OF THE STANDARD CMU BOND BEAMS CONSTRUCTED OF CMU BLOCKS.

5.0 STRUCTURAL DESIGN CRITERIA

5.1 ALL DESIGNS SHALL CONFORM TO THE PROVISIONS OF THE IBC 2006 AND UFC AS APPLICABLE.

5.2 DESIGN LOADS

5.2.1 DEAD LOADS (PER IBC 2006 & UFC 3-310-01)

MISCELLANEOUS	0.15 kPa

5.2.2 LIVE LOADS (PER IBC 2006 & UFC 3-310-01)

ROOF	1.00 kPa
SLAB ON GRADE	4.80 kPa

5.2.3 SNOW LOADS (PER IBC 2006 & UFC 3-310-01)

GROUND SNOW LOAD (Pg)	1.2 kPa
SNOW IMPORTANCE FACTOR (I)	1.0
SNOW EXPOSURE FACTOR (Ce)	1.0
THERMAL FACTOR (Ct)	1.0

5.2.4 WIND LOADS (PER IBC 2006)

BASIC WIND SPEED	137 km/h
WIND IMPORTANCE FACTOR	1.0
WIND EXPOSURE CATEGORY	D
DIRECTIONALITY COEFFICIENT (Kd)	0.85
TOPOGRAPHIC FACTOR (Kzt)	1.0

5.2.5 SEISMIC LOADS (PER IBC 2006 & UFC 3-310-04)

OCCUPANCY USE CATEGORY	I
SEISMIC IMPORTANCE FACTOR (Ie)	1.0
SEISMIC SITE CLASS	D
S_s = 2.40	
S_1 = 1.20	
S_{DS} = 1.60	
S_{D1} = 1.20	
SEISMIC DESIGN CATEGORY	E
SEISMIC RESISTING SYSTEM: -SPECIAL REINFORCED MASONRY SHEAR WALL	
RESPONSE MODIFICATION FACTOR (R)	5
RESPONSE COEFFICIENT (Cs)	0.32
SEISMIC ANALYTICAL PROCEDURE =	EQUIV LATERAL FORCE
SEISMIC BASE SHEAR	25 kN

APPROVED:

A/E DESIGNER OF RECORD

SEAL:

GEORGIA REGISTERED 2-24-10 No. 27141 PROFESSIONAL ENGINEER CHRISTOPHER W. WHITMORE

US ARMY CORPS OF ENGINEERS
AFGHANISTAN ENGINEER DISTRICT

Mark	Description	Date	Appr.	Mark	Description	Date	Appr.

Date: 2/23/10 | Rev: 0
Design file no.
Drawing code:
File name: ANATCPS-001GN
Plot date: 2/23/2010
Plot scale: X:X

Designed by: KMP/MMY
Dwn by: RCG | Ckd by: CWW
Reviewed by: LHM
Submitted by: BAKER

U.S. ARMY CORPS OF ENGINEERS
AFGHANISTAN ENGINEER DISTRICT
APO AE 96338

Michael Baker Jr., Inc
A unit of Michael Baker Corporation
Airside Business Park
100 Airside Drive
Moon Township, PA 15108
www.mbakercorp.com

AFGHAN NATIONAL ARMY
REGIONAL MILITARY TRAINING CENTER
STANDARD DESIGN

TRASH COLLECTION POINT

GENERAL NOTES & DESIGN CRITERIA

Sheet reference number:
S-001

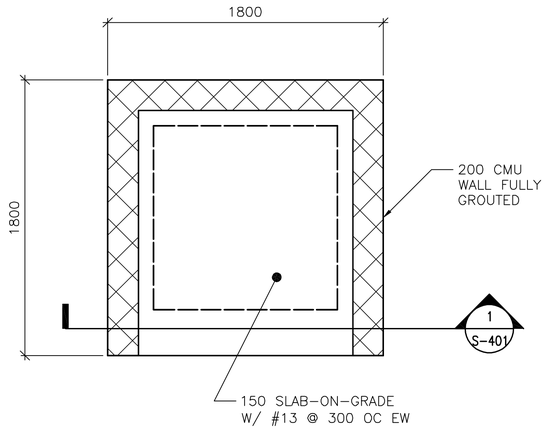

1 S-101 **FOUNDATION/SLAB PLAN**

SCALE: 1:20

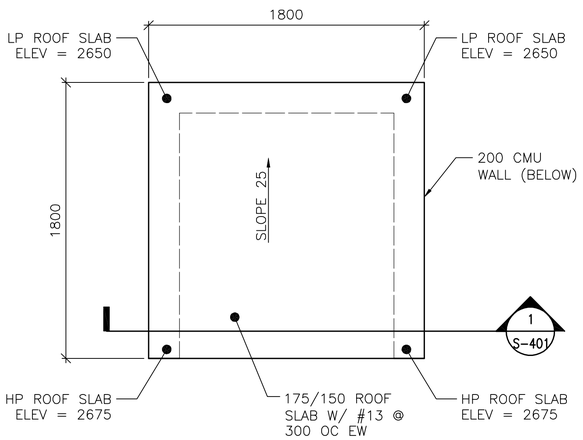

2 S-101 **ROOF PLAN**

SCALE: 1:20

FOUNDATION/SLAB PLAN NOTES:

1. REFER TO SHEET S-001 FOR STRUCTURAL NOTES AND DESIGN CRITERIA.
2. FINISH FLOOR ELEVATION SHALL BE (DATUM 0.00) ALL PLUS OR MINUS DIMENSIONS INDICATED ON PLAN OR REFERRED TO IN NOTES RELATE TO FINISH FLOOR ELEVATION.
3. SLAB-ON-GRADE IS 150 WITH #13 @ 300 OC EW LOCATED 38 FROM T/SLAB UON.
4. SEE TYP EXTERIOR CMU WALL REINFORCING DETAIL ON SHEET S-701.

FOUNDATION/SLAB PLAN LEGEND:

REINF CMU WALL

ROOF PLAN NOTES:

1. REFER TO SHEETS S-001 FOR STRUCTURAL NOTES AND DESIGN CRITERIA.
2. TOP OF SLAB ELEVATION = 2600 UNLESS NOTED OTHERWISE.
3. ROOF SLAB IS 175/150 WITH #13 @ 300 OC EW.

0 400 800
SCALE: 1:20

UNLESS OTHERWISE NOTED, LINEAR DIMENSIONS SHOWN ON DRAWINGS ARE IN MILLIMETERS (mm)

APPROVED:

A/E DESIGNER OF RECORD

SEAL:

GEORGIA REGISTERED 1-29-10 No. 27141 PROFESSIONAL ENGINEER CHRISTOPHER W. WHITMORE

US ARMY CORPS OF ENGINEERS
AFGHANISTAN ENGINEER DISTRICT

Mark	Description	Date	Appr.	Mark	Description	Date	Appr.

U.S. ARMY CORPS OF ENGINEERS
AFGHANISTAN ENGINEER DISTRICT
APO AE 96338

Michael Baker Jr., Inc.
A unit of Michael Baker Corporation
Airside Business Park
100 Airside Drive
Moon Township, PA 15108
www.mbakercorp.com

Designed by: KMP/MMY
Dwn by: RCG
Ckd by: CWW
Reviewed by: LHM
Submitted by: BAKER
Date: 2/23/10
Design file no.
Drawing code:
File name: ANATCPS-101FFP
Plot date: 2/23/2010
Plot scale: x:X
Rev: 0

AFGHAN NATIONAL ARMY
REGIONAL MILITARY TRAINING CENTER
STANDARD DESIGN

TRASH COLLECTION POINT

FOUNDATION/SLAB &
ROOF FRAMING PLAN

Sheet reference number:
S-101

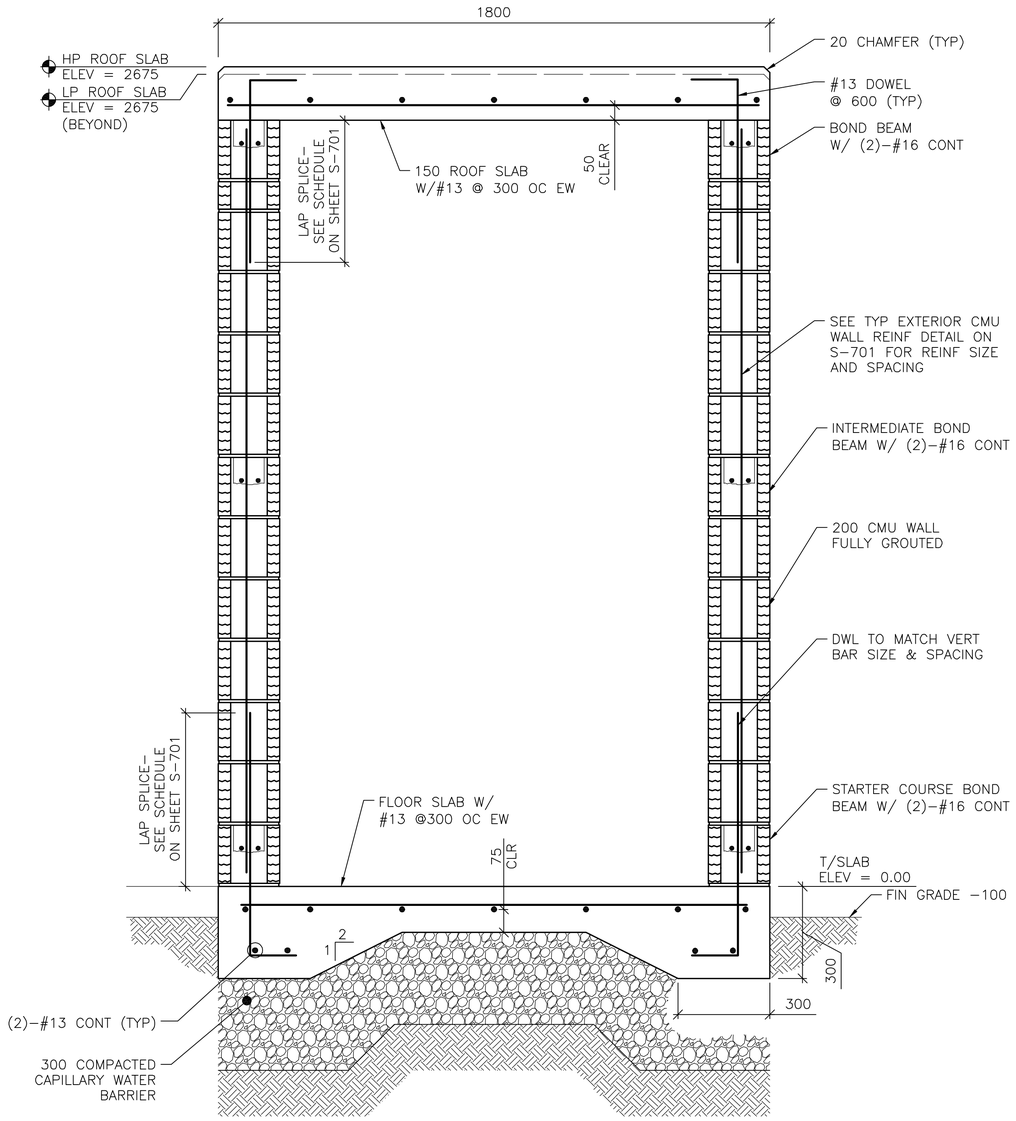

1 / S-101 **SECTION**

SCALE: 1:10

0 200 400

SCALE: 1:10

UNLESS OTHERWISE NOTED, LINEAR DIMENSIONS SHOWN ON DRAWINGS ARE IN MILLIMETERS (mm)

APPROVED:

A/E DESIGNER OF RECORD

SEAL:

GEORGIA REGISTERED 1-29-10 No. 27141 PROFESSIONAL ENGINEER CHRISTOPHER W. WHITMORE

US ARMY CORPS OF ENGINEERS
AFGHANISTAN ENGINEER DISTRICT

Mark	Description	Date	Appr.	Mark	Description	Date	Appr.

Date: 2/23/10 Rev: 0
Design file no.
Drawing code:
File name: ANATOPS-401FFP
Plot date: 2/23/2010
Plot scale: X:X

Designed by: KMP/MMY
Dwn by: RCG Ckd by: CWW
Reviewed by: LHM
Submitted by: BAKER

U.S. ARMY CORPS OF ENGINEERS
AFGHANISTAN ENGINEER DISTRICT
APO AE 96338

Michael Baker Jr., Inc
A unit of Michael Baker Corporation
Airside Business Park
100 Airside Drive
Moon Township, PA 15108
www.mbakercorp.com

AFGHAN NATIONAL ARMY
REGIONAL MILITARY TRAINING CENTER
STANDARD DESIGN

TRASH COLLECTION POINT

BUILDING SECTIONS

Sheet reference number:
S-401

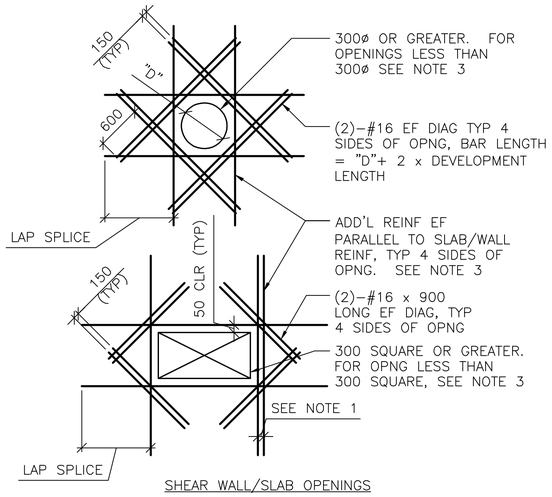

SHEAR WALL/SLAB OPENINGS

DETAIL NOTES:
1. WHERE MORE THAN ONE ADDITIONAL BAR IS REQUIRED PARALLEL TO THE EXISTING SLAB/WALL REINFORCING THE ADDITIONAL REINFORCING BARS SHALL BE SPACED AT 100 ON CENTER.
2. ADDITIONAL REINFORCING PARALLEL TO THE SLAB/WALL REINFORCING SHALL BE #16 BARS THAT PROVIDE A STEEL AREA ON EACH SIDE OF THE OPENING EQUAL TO 1/2 THE AREA OF THE REINFORCING CUT BY THE OPENING.
3. FOR OPENINGS WITH SIDES OR DIAMETERS LESS THAN 300 SPREAD THE SLAB/WALL REINFORCING TO CLEAR THE OPENING.

1 / S-701 ADD'L CONCRETE REINFORCEMENT DETAILS

SCALE: NTS

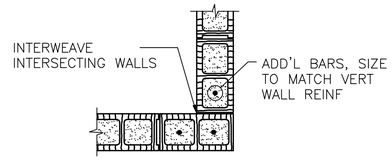

WALL CORNER

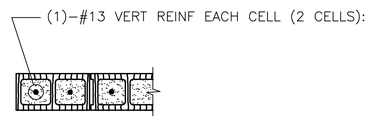

END OF WALL

NOTES:
1. ALL CELLS FULLY GROUTED.

2 / S-701 TYP CMU DETAILS

SCALE: NTS

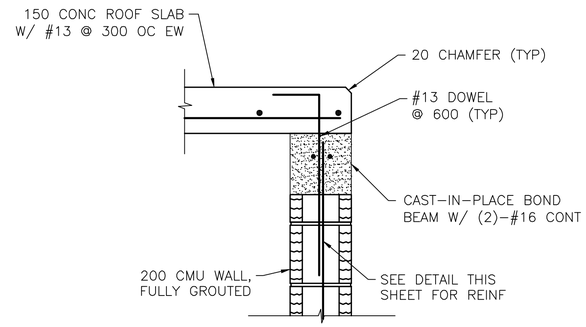

EXTERIOR WALL

NOTES:
1. THIS DETAIL IS AN ALTERNATE TOP OF WALL ANCHORAGE DETAIL TO BE USED AT THE CONTRACTOR'S OPTION IN LIEU OF CMU BOND BEAM SHOWN IN DETAIL ON DRAWING S–401.
2. CAST–IN–PLACE BOND BEAM SHOWN AT TOP OF WALL IS ALSO APPLICABLE FOR INTERMEDIATE AND STARTER COURSE BOND BEAMS WITHIN WALL.

7 / S-701 ALTERNATE TOP OF CMU WALL DETAIL

SCALE: NTS

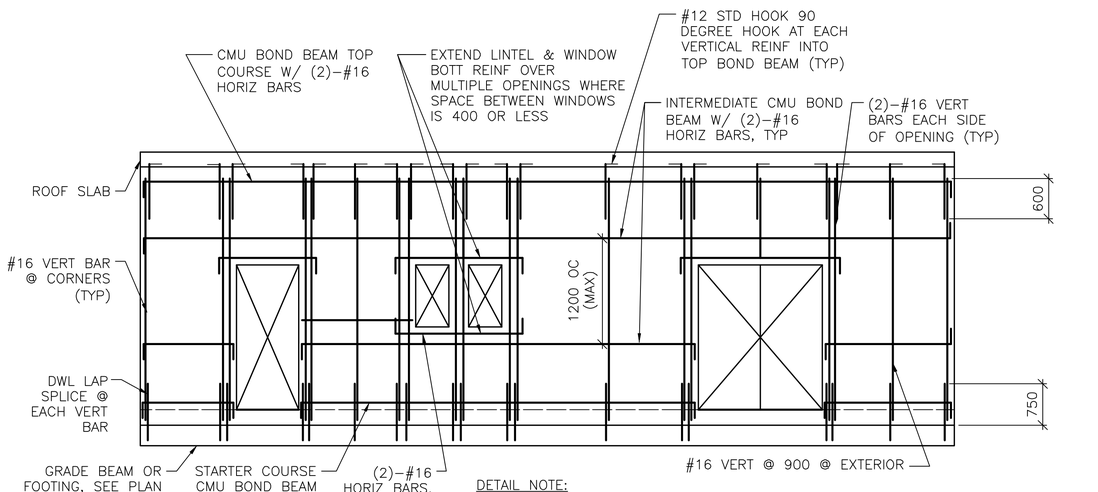

DETAIL NOTE:
1. CENTER VERT REINF IN WALL.
2. GROUT ALL CMU CELLS.
3. REFERENCE ARCH DWGS FOR JOINT INFORMATION.
4. FOR INFORMATION ON ALTERNATE CAST–IN–PLACE WALL BOND BEAMS, REFERENCE ALTERNATE TOP OF CMU WALL DETAIL THIS SHEET.

3 / S-701 TYP EXTERIOR CMU WALL REINF DETAIL

SCALE: NTS

MASONRY LAP SPLICE SCHEDULE	
BAR SIZE	MINIMUM LAP SPLICE (Ld) FOR CMU REINFORCING
#10	450
#13	600
#16	750
#19	900
#22	1050
#25	1200

UNLESS OTHERWISE NOTED, LINEAR DIMENSIONS SHOWN ON DRAWINGS ARE IN MILLIMETERS (mm)

APPROVED:

A/E DESIGNER OF RECORD

SEAL:

GEORGIA REGISTERED 2-23-10 No. 27141 PROFESSIONAL ENGINEER CHRISTOPHER W. WHITMORE

US ARMY CORPS OF ENGINEERS
AFGHANISTAN ENGINEER DISTRICT

Mark	Description	Date	Appr.	Mark	Description	Date	Appr.

Rev: 0
Date: 2/23/10
Design file no.
Drawing code:
File name: AMATCPS-701FFP
Plot date: 2/23/2010
Plot scale: X:X

Designed by: KMP/MMY
Dwn by: RCG
Ckd by: CWW
Reviewed by: LHM
Submitted by: BAKER

U.S. ARMY CORPS OF ENGINEERS
AFGHANISTAN ENGINEER DISTRICT
APO AE 96338

Michael Baker Jr., Inc
A unit of Michael Baker Corporation
Airside Business Park
100 Airside Drive
Moon Township, PA 15108
www.mbakercorp.com

AFGHAN NATIONAL ARMY
REGIONAL MILITARY TRAINING CENTER
STANDARD DESIGN

TRASH COLLECTION POINT

TYPICAL DETAILS

Sheet reference number:
S–701

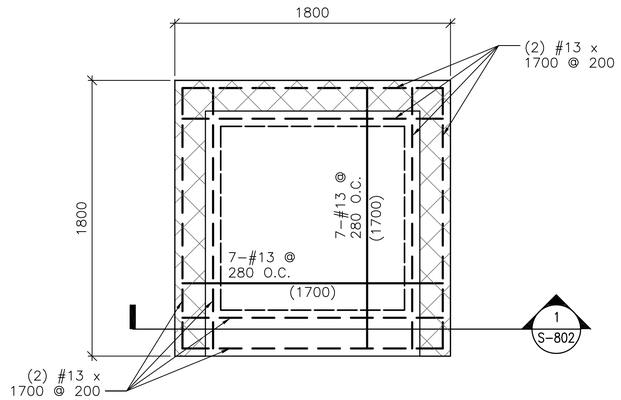

1 S-801 FOUNDATION/SLAB PLAN
SCALE: 1:20

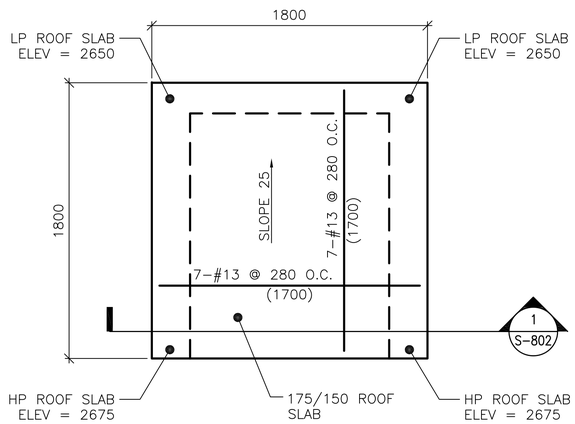

2 S-801 ROOF PLAN
SCALE: 1:20

FOUNDATION/SLAB PLAN NOTES:

1. REFER TO SHEET S-001 FOR STRUCTURAL NOTES AND DESIGN CRITERIA.
2. FINISH FLOOR ELEVATION SHALL BE (DATUM 0.00) ALL PLUS OR MINUS DIMENSIONS INDICATED ON PLAN OR REFERRED TO IN NOTES RELATE TO FINISH FLOOR ELEVATION.
3. SLAB-ON-GRADE IS 150 WITH #13 @ 280 OC EW LOCATED 38 FROM T/SLAB UON.
4. SEE TYP EXTERIOR CMU WALL REINFORCING DETAIL ON SHEET S-701.

FOUNDATION/SLAB PLAN LEGEND:

REINF CMU WALL

ROOF PLAN NOTES:

1. REFER TO SHEETS S-001 FOR STRUCTURAL NOTES AND DESIGN CRITERIA.
2. TOP OF SLAB ELEVATION = 2600 UNLESS NOTED OTHERWISE.
3. ROOF SLAB IS 175/150 WITH #13 @ 280 OC EW.

0 400 800
SCALE: 1:20

UNLESS OTHERWISE NOTED, LINEAR DIMENSIONS SHOWN ON DRAWINGS ARE IN MILLIMETERS (mm)

US ARMY CORPS OF ENGINEERS
AFGHANISTAN ENGINEER DISTRICT

Mark	Description	Date	Appr.	Mark	Description	Date	Appr.

U.S. ARMY CORPS OF ENGINEERS
AFGHANISTAN ENGINEER DISTRICT
APO AE 96338

Michael Baker Jr., Inc
A unit of Michael Baker Corporation
Airside Business Park
100 Airside Drive
Moon Township, PA 15108
www.mbakercorp.com

Designed by: KMP/MMY
Dwn by: JDS
Ckd by: WCA
Reviewed by: RTD
Submitted by: BAKER
Date: 3/07/2010
Rev: 0
Design file no.
Drawing code:
File name: ANATCPS-801
Plot date: 3/4/2010
Plot scale: 1:20

AFGHAN NATIONAL ARMY
REGIONAL MILITARY TRAINING CENTER
STANDARD DESIGN

TRASH COLLECTION POINT

REBAR PLACEMENT DRAWINGS
FDN/SOG & ROOF FRAMING PLAN

Sheet reference number:
S-801

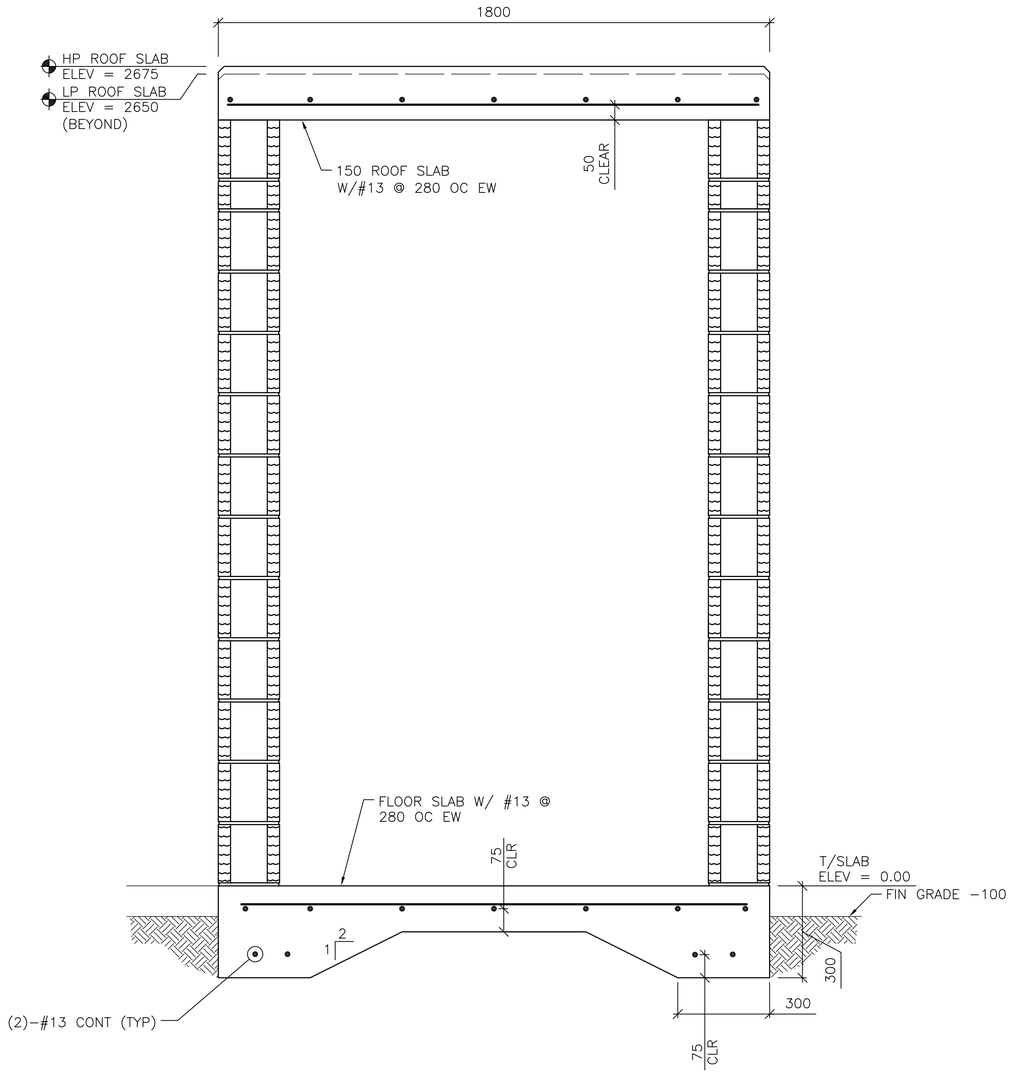

1 / S-801 **SECTION**

SCALE: 1:10

0 200 400

SCALE: 1:10

UNLESS OTHERWISE NOTED, LINEAR DIMENSIONS SHOWN ON DRAWINGS ARE IN MILLIMETERS (mm)

US ARMY CORPS OF ENGINEERS
AFGHANISTAN ENGINEER DISTRICT

Mark	Description	Date	Appr.	Mark	Description	Date	Appr.

U.S. ARMY CORPS OF ENGINEERS
AFGHANISTAN ENGINEER DISTRICT
APO AE 96338

Michael Baker Jr., Inc
A unit of Michael Baker Corporation
Airside Business Park
100 Airside Drive
Moon Township, PA 15108
www.mbakercorp.com

Designed by: KMP/MMY
Dwn by: JDS
Ckd by: WCA
Reviewed by: RTD
Submitted by: BAKER
Date: 3/07/2010
Rev: 0
Design file no.
Drawing code:
File name: ANATCPS-802
Plot date: 3/3/2010
Plot scale: 1:20

AFGHAN NATIONAL ARMY
REGIONAL MILITARY TRAINING CENTER
STANDARD DESIGN

TRASH COLLECTION POINT

REBAR PLACEMENT DRAWINGS
BUILDING SECTIONS

Sheet reference number:
S-802

AFGHANISTAN NATIONAL ARMY
SITE ADAPT DESIGN
KANDAKS

CENTCOM AOR

FITNESS CENTER

US Army Corps
of Engineers
AFGHANISTAN ENGINEER DISTRICT

DRAWING INDEX

SHT REF NO	FILE NO.	REVISIONS LATEST SUBMITTAL	REVISIONS AM/COP NO.	TITLE
G-001	AF1024$-GI01GN	10-MAY-2010		COVER SHEET
G-002	AF1024$-GI02GN	10-MAY-2010		DRAWING INDEX
STRUCTURAL				
S-001	AF1024E-SS001GN	10-MAY-2010		GENERAL NOTES
S-101	AF1024E-SB101PN	10-MAY-2010		FOUNDATION AND SLAB PLAN
S-102	AF1024E-SF102PN	10-MAY-2010		ROOF FRAMING PLAN
S-401	AF1024E-SS401SE	10-MAY-2010		BUILDING SECTIONS - SHEET 1
S-402	AF1024E-SS402SE	10-MAY-2010		BUILDING SECTIONS - SHEET 2
S-403	AF1024E-SS403PN	10-MAY-2010		ENLARGED LATRINE SLAB PLAN
S-501	AF1024E-SB501SE	10-MAY-2010		FOUNDATION SECTIONS
S-502	AF1024E-SS502SE	10-MAY-2010		FOUNDATION AND FRAMING SECTIONS
S-503	AF1024E-SS503DT	10-MAY-2010		BEAM AND COLUMN DETAILS - SHEET 1
S-504	AF1024E-SS504DT	10-MAY-2010		BEAM AND COLUMN DETAILS - SHEET 2
S-505	AF1024E-SS505SE	10-MAY-2010		MISCELLANEOUS SECTIONS
S-601	AF1024E-SS601SC	10-MAY-2010		SCHEDULES
S-701	AF1024E-SS701DT	10-MAY-2010		TYPICAL DETAILS - SHEET 1
S-702	AF1024E-SS702DT	10-MAY-2010		TYPICAL DETAILS - SHEET 2
STRUCTURAL: REBAR REINFORCEMENT DRAWINGS				
S-801	AF1024E-SB801PN	10-MAY-2010		FOUNDATION AND SLAB PLAN
S-802	AF1024E-SF802PN	10-MAY-2010		ROOF FRAMING PLAN
S-803	AF1024E-SS803DT	10-MAY-2010		COLUMN DETAILS - SHEET 1
S-804	AF1024E-SS804DT	10-MAY-2010		COLUMN DETAILS - SHEET 2
S-805	AF1024E-SS805DT	10-MAY-2010		BEAM ELEVATIONS - SHEET 1
S-806	AF1024E-SS806DT	10-MAY-2010		BEAM ELEVATIONS - SHEET 2
S-807	AF1024E-SS807DT	10-MAY-2010		BEAM ELEVATIONS - SHEET 3
S-808	AF1024E-SS808DT	10-MAY-2010		BEAM ELEVATIONS - SHEET 4
S-809	AF1024E-SS809DT	10-MAY-2010		BEAM ELEVATIONS - SHEET 5
S-810	AF1024E-SS810DT	10-MAY-2010		BEAM ELEVATIONS - SHEET 6
S-811	AF1024E-SS811DT	10-MAY-2010		BEAM ELEVATIONS - SHEET 7
S-812	AF1024E-SS812DT	10-MAY-2010		SHEAR WALL ELEVATIONS - SHEET 1
S-813	AF1024E-SS813DT	10-MAY-2010		SHEAR WALL ELEVATIONS - SHEET 2
S-814	AF1024E-SS814DT	10-MAY-2010		SHEAR WALL ELEVATIONS - SHEET 3
S-815	AF1024E-SS815DT	10-MAY-2010		SHEAR WALL ELEVATIONS - SHEET 4
S-816	AF1024E-SS816DT	10-MAY-2010		ENLARGED SLAB PLAN AND BAR DETAILS
ARCHITECTURAL				
A-001	AF1024E-AR001PN	10-MAY-2010		LIFE SAFETY PLAN
A-101	AF1024E-AR101PN	10-MAY-2010		OVERALL FLOOR PLAN
A-102	AF1024E-AR102PN	10-MAY-2010		ROOF PLAN
A-201	AF1024E-AR201EL	10-MAY-2010		EXTERIOR ELEVATIONS
A-301	AF1024E-AR301SC	10-MAY-2010		BUILDING SECTIONS
A-401	AF1024E-AR401SC	10-MAY-2010		WALL SECTIONS
A-402	AF1024E-AR402LS	10-MAY-2010		ENLARGED PLAN
A-501	AF1024E-AR501DT	10-MAY-2010		EXTERIOR DETAILS
A-502	AF1024E-AR502DT	10-MAY-2010		HEAD, JAMB, AND SILL DETAILS
A-503	AF1024E-AR503DT	10-MAY-2010		STOOP DETAILS
A-504	AF1024E-AR504DT	10-MAY-2010		CANOPY DETAILS
A-505	AF1024E-AR505DT	10-MAY-2010		TOILET, LAVATORY, AND ABLUTION DETAILS
A-601	AF1024E-AR601DT	10-MAY-2010		WINDOW AND DOOR SCHEDULES
PLUMBING				
P-101	AF1024E-MP101PN	10-MAY-2010		PLUMBING PLANS
P-501	AF1024E-MP501DT	10-MAY-2010		PLUMBING DETAILS - SHEET 1
P-502	AF1024E-MP502DT	10-MAY-2010		PLUMBING DETAILS - SHEET 2
P-601	AF1024E-MP601SC	10-MAY-2010		PLUMBING SCHEDULES
P-901	AF1024E-MP901IS	10-MAY-2010		PLUMBING ISOMETRICS
MECHANICAL				
M-101	AF1024E-MH101PN	10-MAY-2010		HVAC PLAN
M-501	AF1024E-MH501DT	10-MAY-2010		MECHANICAL DETAILS
M-601	AF1024E-MH601SC	10-MAY-2010		MECHANICAL SCHEDULES
ELECTRICAL				
E-001	AF1024E-SE001GN	10-MAY-2010		ELECTRICAL LEGEND
E-101	AF1024E-EL101PN	10-MAY-2010		ELECTRICAL LIGHTING PLAN
E-102	AF1024E-EP102PN	10-MAY-2010		ELECTRICAL POWER AND SYSTEMS PLAN
E-103	AF1024E-EP103PN	10-MAY-2010		ELECTRICAL LIGHTNING PROTECTION PLAN
E-501	AF1024E-SE501DT	10-MAY-2010		ELECTRICAL DETAILS - SHEET 1
E-502	AF1024E-SE502DT	10-MAY-2010		ELECTRICAL DETAILS - SHEET 2
E-601	AF1024E-SE601SC	10-MAY-2010		ELECTRICAL LIGHT FIXTURE SCHEDULE
E-602	AF1024E-SE602SC	10-MAY-2010		ELECTRICAL PANEL SCHEDULES - SHEET 1
E-603	AF1024E-SE603SC	10-MAY-2010		ELECTRICAL PANEL SCHEDULES - SHEET 2

US ARMY CORPS OF ENGINEERS
AFGHANISTAN ENGINEER DISTRICT

Mark	Description	Date	Appr.	Mark	Description	Date	Appr.

Designed by: Date: 5/19/10 Rev: 0
Dwn by: Ckd by: Design file no.
Reviewed by: MRH Drawing code:
Submitted by: STANLEY File name: AF1024E-GI002GN
Plot date: 2010/05/19
Plot scale:

U.S. ARMY ENGINEER DISTRICT, AFGHANISTAN
CORPS OF ENGINEERS
APO AE 96338

Stanley Consultants INC.

AFGHAN NATIONAL ARMY
KANDAKS
SITE ADAPT DESIGN

FITNESS CENTER

DRAWING INDEX

SHEET REFERENCE NUMBER:
E
G-002

STRUCTURAL ABBREVIATIONS:

ACI	AMERICAN CONCRETE INSTITUTE
ADD'L	ADDITIONAL
AISC	AMERICAN INSTITUTE OF STEEL CONSTRUCTION
AISI	AMERICAN IRON AND STEEL INSTITUTE
ASTM	AMERICAN SOCIETY FOR TESTING AND MATERIALS
ARCH	ARCHITECTURAL
B	BOTTOM
BLDG	BUILDING
BOTT	BOTTOM
℄	CENTER LINE
CFMRF	COLD FORM METAL ROOF FRAME
CFMF	COLD FORM METAL FRAME
CFS	COLD FORMED STEEL
CIP	CAST-IN-PLACE
CIPL	CAST-IN-PLACE LINTEL
CJ	CONTROL JOINT
CLR	CLEAR
CMU	CONCRETE MASONRY UNIT
COEFF	COEFFICIENT
COL	COLUMN
CONC	CONCRETE
CONT	CONTINUOUS
COORD	COORDINATE
CRSI	CONCRETE REINFORCING STEEL INSTITUTE
CSJ	CONSTRUCTION JOINT
DIA	DIAMETER
DIAG	DIAGONAL
DIM	DIMENSION
DWG	DRAWING
DWL	DOWEL
EA	EACH
EF	EACH FACE
ELEC	ELECTRICAL
ELEV	ELEVATION
EMBED	EMBEDMENT
EQUIV	EQUIVALENT
ETC	ET CETERA
EW	EACH WAY
EXP	EXPANSION
EXT	EXTERIOR
FTG	FOOTING
GA	GAUGE
GB	GRADE BEAM
HORIZ	HORIZONTAL
h	HOUR
HRS	HOURS
IBC	INTERNATIONAL BUILDING CODE
INFO	INFORMATION
INT	INTERIOR
kg	KILOGRAM
km	KILOMETER
kN	KILONEWTON
kPa	KILOPASCAL
L#	ANGLE (# INDICATES SIZE)
LONG	LONGITUDINAL
LLV	LONG LEG VERTICAL
m	METER
MAX	MAXIMUM
MECH	MECHANICAL
MFG	MANUFACTURER
MID	MIDDLE
MIN	MINIMUM
MISC	MISCELLANEOUS
mm	MILLIMETER
MPa	MEGAPASCAL
MTL	METAL
MWFRS	MAIN WIND FORCE RESISTING SYSTEM
N	NEWTON
N	NORTH
N/A	NOT APPLICABLE
#	NUMBER SYMBOL FOR REBAR SIZE
NTS	NOT TO SCALE
OC	ON CENTER
OPNG	OPENING
ℙ or PL	PLATE
PRE-ENG	PRE-ENGINEERED
RB	ROOF BEAM
REINF	REINFORCED
REQ'D	REQUIRED
SIM	SIMILAR
SPECS	SPECIFICATIONS
STD	STANDARD
STRUCT	STRUCTURAL
SW	SHEAR WALL
T	TOP
T/	TOP OF
T/ELEV	TOP ELEVATION
T/SLAB	TOP OF SLAB
T&B	TOP AND BOTTOM
THK	THICK
TYP	TYPICAL
UFC	UNIFIED FACILITIES CRITERIA
UON	UNLESS OTHERWISE NOTED
VERT	VERTICAL
W	WIDTH
W/	WITH

1.0 GENERAL NOTES:

1.1 THIS PROJECT HAS BEEN DESIGNED FOR THE WEIGHTS AND MATERIALS INDICATED ON THE SHEETS AND FOR THE LIVE LOADS INDICATED IN THE DESIGN DATA. IT IS THE CONTRACTOR'S RESPONSIBILITY TO DETERMINE ALLOWABLE CONSTRUCTION LOADS AND TO PROVIDE PROPER DESIGN AND CONSTRUCTION OF FALSEWORK, FORMWORK, STAGING, BRACING, SHEETING AND SHORING, ETC.

1.1 COORDINATE THESE SHEETS WITH THE ARCHITECTURAL, MECHANICAL, ELECTRICAL, PLUMBING, AND CIVIL SHEETS. ALL DIMENSIONS SHOWN ON THE SHEETS ARE MILLIMETERS UNLESS NOTED OTHERWISE.

1.2 THE CONTRACTOR SHALL VERIFY AND COORDINATE ALL FLOOR AND ROOF OPENING SIZES AND LOCATIONS, EQUIPMENT PAD SIZES AND LOCATIONS, ANCHOR BOLT LAYOUTS, ETC WITH EQUIPMENT SELECTED. THE CONTRACTOR SHALL MAKE ANY REQUIRED MODIFICATIONS AT NO ADDITIONAL COST.

1.3 THE CONTRACTOR SHALL REFER TO THE ARCHITECTURAL, MECHANICAL, ELECTRICAL AND PLUMBING SHEETS FOR SLEEVES, CURBS, INSERTS OR OPENINGS, ETC. NOT HEREIN INDICATED.

1.4 WORK NOT INCLUDED ON THE SHEETS BUT IMPLIED TO BE SIMILAR TO THAT SHOWN AT CORRESPONDING PLACES ELSEWHERE ON THE SHEETS SHALL BE REPEATED.

1.5 IN CASE OF CONFLICT BETWEEN THE NOTES, DETAILS AND SPECIFICATIONS THE MOST RIGID REQUIREMENTS SHALL GOVERN.

1.6 SEE ARCHITECTURAL SHEETS FOR LOCATIONS OF MASONRY AND NON-LOAD BEARING PARTITIONS. PROVIDE COMPRESSIBLE FIRESAFING AT TOP OF WALL AS REQUIRED BY ARCHITECTURAL SHEETS.

1.7 COORDINATE FINISHED FLOOR DATUM ELEVATION 0.0m WITH THE CIVIL SHEETS.

2.0 FOUNDATION NOTES

2.1 THE GEOTECHNICAL ANALYSIS FOR THIS PROJECT IS THE RESPONSIBILITY OF THE CONTRACTOR AWARDED THE WORK. AN ASSUMED ALLOWABLE SOIL BEARING VALUE OF 72 kPa HAS BEEN USED IN THE STRUCTURAL ANALYSIS OF THE BUILDING HEREIN AND SHALL BE CONFIRMED AND VERIFIED AS PART OF THE GEOTECHNICAL INVESTIGATION. VALUES WHICH DO NOT MEET THE REQUIREMENTS INDICATED ON THE BASIS OF DESIGN SHEET SHALL BE IMMEDIATELY BROUGHT TO THE ATTENTION OF THE CONTRACTING OFFICER FOR CONSIDERATION AND DETERMINATION ON THE NEXT APPROPRIATE COURSE OF ACTION.

2.2 SEE THE SPECIFICATION FOR ADDITIONAL REQUIREMENTS TO THOSE OUTLINED IN THE GEOTECHNICAL INVESTIGATION FOR EXCAVATION AND PREPARATION OF THE FOUNDATION AND THE SLAB ON GRADE SUBGRADE INCLUDING COMPACTION PROCEDURES.

2.3 EXCAVATIONS FOR FOOTINGS SHALL HAVE THE SIDES AND BOTTOMS TEMPORARILY LINED WITH 0.25mm POLYETHYLENE IF PLACEMENT OF CONCRETE DOES NOT OCCUR WITHIN 24 HRS OF THE EXCAVATION OF THE FOOTING.

2.4 FOUNDATION CONDITIONS NOTED DURING CONSTRUCTION WHICH DIFFER FROM THOSE DESCRIBED IN THE GEOTECHNICAL REPORT SHALL BE REPORTED TO THE GENERAL CONTRACTOR BEFORE FURTHER CONSTRUCTION IS ATTEMPTED. SEE PROJECT SPECIFICATIONS.

2.5 NO FOOTINGS OR SLABS SHALL BE POURED INTO OR AGAINST SUBGRADE CONTAINING FREE WATER, FROST, ICE OR LOOSE MATERIAL. FROST DEPTH ASSUMED TO BE 800mm.

2.6 ALL SLAB-ON-GRADE, TRENCH BOTTOMS AND OTHER ON-GRADE INTERIOR HORIZONTAL SURFACES SHALL BE PLACED OVER A 0.25mm POLYETHYLENE VAPOR RETARDER OVER A 100mm CAPILLARY WATER BARRIER PLACED ON SUBGRADE PROPERLY PREPARED IN ACCORDANCE WITH THE CONTRACT SPECIFICATIONS. (UON)

2.7 PRIOR TO START OF FOUNDATION OR SLAB-ON-GRADE CONSTRUCTION, EXISTING SUBGRADES SHALL BE COMPACTED TO MINIMUM OF 95% MAXIMUM DRY DENSITY OBTAINED THRU ASTM D 1557 MODIFIED PROCTOR TESTING.

2.8 SEE PLUMBING, ELECTRICAL & CIVIL SHEETS FOR REQUIRED UNDERSLAB UTILITIES.

2.9 SEE ARCHITECTURAL SHEETS FOR ALL WATERPROOFING DETAILS AND MATERIALS.

2.10 IF UNDERMINING OF FOOTINGS OCCURS, FILL VOIDS WITH 18 MPa CONCRETE. DO NOT ATTEMPT TO REPLACE AND RE-COMPACT SOIL.

3.0 CONCRETE

3.1 CONCRETE SHALL BE NORMAL WEIGHT CONCRETE WITH A MINIMUM COMPRESSIVE STRENGTH (f'c) OF 28 MPa AT 28 DAYS. ALL CONCRETE SHALL HAVE A WATER-CEMENT RATIO OF 0.45. SEE SPECIFICATIONS FOR ADDITIONAL INFORMATION. ENTRAIN AIR TO PRODUCE TOTAL AIR CONTENT ACCORDING TO THE SPECIFICATIONS FOR CONCRETE EXPOSED TO FREEZING TEMPERATURES (EXTERIOR FOOTINGS, SLAB TURNDOWNS, EXTERIOR SLABS AND SLABS-ON-GRADE, EXTERIOR RETAINING WALLS, AND EXTERIOR GRADE BEAMS.)

3.2 NO CALCIUM CHLORIDE SHALL BE USED IN ANY CONCRETE.

3.3 MIXING, TRANSPORTING AND PLACING OF CONCRETE SHALL CONFORM TO ACI 301M-05.

3.4 ALL CONCRETE WORK SHALL CONFORM TO THE REQUIREMENTS OF THE AMERICAN CONCRETE INSTITUTE (ACI) 318M MANUAL (metric), "BUILDING CODE REQUIREMENTS FOR REINFORCED CONCRETE", AND REQUIREMENTS OUTLINED IN THE CONTRACT SPECIFICATIONS. WHEN THERE IS A CONFLICT BETWEEN ACI AND THE SPECIFICATIONS, THE MORE STRINGENT SHALL GOVERN.

3.5 CHAMFER ALL EXPOSED EXTERNAL CORNERS OF CONCRETE WITH 20mm x45 DEGREE CHAMFER UON.

3.6 CONCRETE REINFORCEMENT BARS SHALL CONFORM TO ASTM A615M-96a, GRADE 420 MPa, REINFORCING BARS SHALL NOT BE TACK WELDED, WELDED, HEATED OR CUT, UNLESS INDICATED ON THE CONTRACT DOCUMENTS. ALL LAP SPLICES SHALL BE CLASS "B" UON.

3.7 HORIZONTAL FOOTING AND HORIZONTAL WALL REINFORCEMENT SHALL BE CONTINUOUS AND SHALL HAVE 90 DEGREE BENDS AND EXTENSIONS, OR CORNER BARS OF EQUIVALENT SIZE LAPPED WITH A CLASS B TENSION SPLICE AT CORNERS AND INTERSECTIONS. TOP BAR CRITERIA SHALL APPLY IF 300mm OR MORE OF FRESH CONCRETE IS PLACED BELOW BAR.

3.8 SLABS-ON-GRADE SHALL HAVE CONSTRUCTION JOINTS OR CRACK CONTROL JOINTS AS SHOWN ON THE DRAWINGS. CONSTRUCTION JOINTS CAN BE USED AT CONTROL JOINT LOCATIONS AT CONTRACTORS OPTION. SEE SLAB PLANS & JOINT DETAILS FOR ADDITIONAL INFORMATION. FOR AREAS NOT SHOWN ON DWGS, THE MAXIMUM SPACING OF CONSTRUCTION/ CRACK CONTROL JOINTS SHALL BE 4800mm

3.9 ALL CONCRETE REINFORCEMENT SHALL BE DETAILED, FABRICATED, LABELED, SUPPORTED, AND SPACED IN FORMS AND SECURED IN PLACE IN ACCORDANCE WITH THE PROCEDURES AND REQUIREMENTS OUTLINED IN THE LATEST EDITION OF THE "BUILDING CODE REQUIREMENTS FOR REINFORCED CONCRETE", ACI 318M, AND THE "MANUAL OF STANDARD PRACTICE FOR DETAILING REINFORCED CONCRETE STRUCTURES", ACI 315M, LATEST EDITION. BASED ON IN COUNTRY REINFORCEMENT AVAILABILITY, IT IS THE CONTRACTOR'S OPTION TO ROUND DESIGNATED ODD NUMBERED REINFORCEMENT SIZES UP (1) ONE BAR SIZE.

3.10 ALL DOWELS SHALL MATCH SIZE AND NUMBER OF MAIN REINFORCING, UNLESS NOTED OTHERWISE ON THE SHEETS.

3.11 ADDITIONAL BARS SHALL BE PROVIDED AROUND ALL FLOOR AND WALL OPENINGS AS SHOWN ON THE SHEETS.

3.12 SEE ARCHITECTURAL SHEETS FOR TYPE AND LOCATION OF ALL FLOOR FINISHES.

3.13 THE CONTRACTOR SHALL COORDINATE ADDITIONAL WALL/SLAB OPENINGS NOT SHOWN ON STRUCTURAL SHEETS. SEE MECHANICAL, ELECTRICAL, PLUMBING AND CIVIL SHEETS.

3.14 UNLESS NOTED OTHERWISE, ALL CURBS SHALL BE REINFORCED WITH AT LEAST (1)-#13 CONTINUOUS AND #13 AT 300mm O.C. DOWELS TO STRUCTURE BELOW.

3.15 THE CONTRACTOR SHALL VERIFY ALL OPENINGS, PAD SIZES, AND ANCHOR BOLTS WITH EQUIPMENT SELECTED.

3.16 FOR ALL WALLS & PIERS, PROVIDE DOWELS INTO FOOTING AT EACH VERT REINF BAR, UON DOWEL SIZE SHALL BE SAME AS VERT REINF.

3.17 PROVIDE CONCRETE POUR STOPS OR FORMED AS REQUIRED FOR INSTALLATION OF ALL CONCRETE WORK.

3.18 PROVIDE ADDITIONAL (2)-#13 x 600mm REINFORCING BARS IN SLAB-ON GRADE AT ALL RE-ENTRANT CORNERS. PLACE BARS AT MID-DEPTH OF SLAB WITH A CLEARANCE OF 50mm FROM CORNER UON.

3.19 COLD-WEATHER PLACEMENT: COMPLY WITH ACI 306.1 AND AS FOLLOWS. PROTECT CONCRETE WORK FROM PHYSICAL DAMAGE OR REDUCED STRENGTH THAT COULD BE CAUSED BY FROST, FREEZING ACTIONS, OR LOW TEMPERATURES. SUBMIT A COLD WEATHER CONCRETING PLAN FOR APPROVAL.

3.20 PROVIDE BONDING COMPOUND PER ASTM C 1059-99: SPECIFICATION FOR LATEX AGENTS FOR BONDING FRESH CONCRETE (GROUT) TO HARDENED CONCRETE.

3.21 THE FORMED SURFACES FOR REINFORCED CONCRETE SHALL ACHIEVE A "CLASS A" FINISH WHEN RECEIVING PAINT OR A "CLASS B" FINISH WHEN RECEIVING PLASTER OR TILE AS PER SPECIFICATION SECTION 03 31 00 CAST-IN-PLACE STRUCTURAL CONCRETE.

3.22 AT INTERSECTING GRADE BEAMS AND SHEAR WALLS, PROVIDE CORNER BARS AT INTERSECTIONS WITH SAME QUANTITY, SIZE AND SPACING AS HORIZONTAL BARS WITH LEG LENGTH = 50db.

3.23 REFER TO S-800 SERIES REINFORCING BAR PLACEMENT DRAWINGS DEFINING LENGTHS, BENDS, AND SPACINGS FOR ALL STRUCTURAL CONCRETE. THE S-800 SERIES DRAWING ARE BASED ON THE S-400, S-500, S-600, AND S-700 SERIES DRAWING SCHEDULES, DETAILS, AND DIAGRAMS.

4.0 CONCRETE MASONRY

4.1 MASONRY CONSTRUCTION SHALL CONFORM TO SPECIFICATION FOR MASONRY STRUCTURES (ACI 530.1) UON.

4.2 STRENGTH OF MASONRY MATERIALS SHALL BE AS FOLLOWS:

a. CONCRETE MASONRY UNITS SHALL BE NORMAL WEIGHT, GRADE N, TYPE 1, CONFORMING TO ASTM C-90 AND HAVE A MINIMUM COMPRESSIVE STRENGTH OF 10.4 MPa ON THE NET AREA.

b. MORTAR SHALL CONFORM TO ASTM C-270 TYPE S.

c. GROUT FOR MASONRY SHALL BE NORMAL WEIGHT AND HAVE A MINIMUM COMPRESSIVE STRENGTH OF 14 MPa AT 28 DAYS. GROUT SHALL CONFORM TO ASTM C476M. GROUT LIFTS SHALL NOT EXCEED 1,400mm.

d. REINFORCED MASONRY SHALL HAVE A STRENGTH F'm = 10 MPa. (F'm IS THE COMPRESSIVE STRENGTH OF THE MASONRY AT 28 DAYS AS DETERMINED BY PRISM TESTS).

4.3 ALL VERTICAL REINFORCEMENT FOR CONCRETE MASONRY SHALL BE ASTM A615M, GRADE 420 MPa. ALL SPLICES SHALL BE LAPPED 48 BAR DIAMETERS MINIMUM.

4.4 BOND BEAMS SHALL BE SPACED AT 1200mm OC VERTICALLY. BOND BEAM REINFORCING SHALL BE CONTINUOUS AND PROVIDED AT WALL INTERSECTIONS AND WALL CORNERS (REFERENCE CONCRETE MASONRY NOTE 4.11). ALL BOND BEAM REINFORCING SHALL BE CONTINUOUS AND HAVE STANDARD ACI HOOKS AT EACH END. PROVIDE STANDARD BAR SPLICES AS SPECIFIED. PROVIDE CAST-IN-PLACE CONCRETE BOND BEAMS WITH (2)-#16.

4.5 SEE TYPICAL DETAILS FOR MINIMUM REINFORCEMENT REQUIREMENTS FOR CMU WALLS. PROVIDE STANDARD BAR SPLICES AS SPECIFIED. ALL VERTICAL REINFORCEMENT EXTENDS FULL HEIGHT OF WALL.

4.6 CMU CELLS THAT REQUIRE VERTICAL REINFORCING BARS AS INDICATED ON THE CONTRACT DRAWINGS AND/OR SPECS SHALL HAVE REINF BARS PLACED IN CENTERS OF CMU CELLS AND CONTINUOUSLY GROUTED UON.

4.7 ALL CMU CELLS, OPEN CAVITIES, AND AIR SPACES OF ALL EXTERIOR WALLS SHALL BE GROUTED TO STOP FRAGMENTS FROM MORTAR BLAST.

4.8 CONTRACTOR SHALL COORDINATE LOCATION OF ALL OPENINGS SEE ARCH, MECH, ELEC, AND PLUMBING SHEETS FOR SIZE AND LOCATION OF OPENINGS.

4.9 MASONRY WALLS SHALL NOT BE BACK FILLED PRIOR TO THE MORTAR AND GROUT ATTAINING THEIR RESPECTIVE MAXIMUM DESIGN STRENGTHS PER SPECIFICATIONS.

4.10 PROVIDE GALVANIZED MORTAR/GROUT SCREEN W/ 3mm MESH WHERE CELLS BELOW ARE NOT GROUTED.

4.11 AT INTERSECTING BOND BEAMS, PROVIDE CORNER BAR FOR EACH HORIZONTAL BAR IN BOND BEAMS AT INTERSECTING WALLS. USE SAME SIZE AND SPACING AS HORIZONTAL BARS WITH LEG LENGTH = 50db.

5.0 COLD-FORMED METAL FRAMING

5.1 ALL COLD-FORMED METAL FRAMING MEMBERS SHALL CONFORM TO ASTM A1003M, STRUCTURAL GRADE ST340 (MPa), WITH A GALVANIZED COATING OF Z275 OR BETTER IN ACCORDANCE WITH ASTM A653M.

5.2 ALL COLD-FORMED METAL FRAMING MEMBERS SHALL HAVE THE FOLLOWING MINIMUM PROPERTIES:

a. MINIMUM METAL THICKNESS:
TRACK = 1.37mm;
STUD/OTHER = 1.09mm

b. MINIMUM FLANGE WIDTH:
TRACK = 38mm;
STUD/OTHER = 35mm

c. MINIMUM MEMBER DEPTH:
ALL SECTIONS = 152.2mm

d. PURLIN (HAT CHANNEL)
DEPTHxWIDTH(FLAT TOP)xTHICK = 25mmx42mmx1.59mm

5.3 ALL CONNECTIONS SHALL BE MADE WITH CORROSION RESISTANT (ASTM A153M), SELF-DRILLING, SELF-TAPPING STEEL DRILL SCREWS IN ACCORDANCE WITH ASTM C1513. SCREWS SHALL HAVE A LOW PROFILE HEAD BENEATH ROOF DECK, AND STANDARD HEAD ALL OTHER LOCATIONS.

5.4 FABRICATE COLD FORMED METAL FRAMING AND ACCESSORIES PLUMB, SQUARE AND TRUE TO LINE, WITH CONNECTIONS SECURELY FASTENED ACCORDING TO AISI STANDARD FOR COLD FORMED STEEL FRAMING.

5.5 CUT FRAMING MEMBERS BY SAWING OR SHEATHING, DO NOT TORCH CUT.

5.6 INSTALL FRAMING MEMBERS IN ONE-PIECE LENGTHS UNLESS SPLICE CONNECTIONS ARE INDICATED FOR TRACK OR TENSION MEMBERS

5.7 INSTALL TEMPORARY BRACING AND SUPPORTS TO SECURE FRAMING DURING CONSTRUCTION. MAINTAIN BRACING AND SUPPORTS IN PLACE UNTIL THE STRUCTURE HAS BEEN COMPLETED WITH ALL CONNECTIONS AND PERMANENT BRACING SECURED.

6.0 STRUCTURAL DESIGN CRITERIA

6.1 ALL DESIGNS SHALL CONFORM TO THE PROVISIONS OF THE IBC 2006 AND UFC AS APPLICABLE.

6.2 DESIGN LOADS

6.2.1 DEAD LOADS (PER IBC 2006 & UFC 3-310-01)

MECH/ELEC/PLUMBING	0.20 kPa
MISCELLANEOUS	0.15 kPa
COLD-FORMED FRAMING	0.20 kPa
INSULATION	0.10 kPa
METAL ROOF PANEL	0.14 kPa
	0.79 kPa
FLOOR PARTITION ALLOWANCE	0.96 kPa

6.2.2 LIVE LOADS (PER IBC 2006 & UFC 3-310-01)

ROOF	1.00 kPa
CORRIDOR (2-STORY BLDG ONLY)	4.80 kPa
ALL OTHERS (2-STORY BLDG ONLY)	2.40 kPa
SLAB ON GRADE	4.80 kPa

6.2.3 SNOW LOADS (PER IBC 2006 & UFC 3-310-01)

GROUND SNOW LOAD (Pg)	1.2 kPa
SNOW IMPORTANCE FACTOR (I)	1.0
SNOW EXPOSURE FACTOR (Ce)	1.0
THERMAL FACTOR (Ct)	1.0

6.2.4 WIND LOADS (PER IBC 2006)

BASIC WIND SPEED	137 km/h
WIND IMPORTANCE FACTOR	1.0
WIND EXPOSURE CATEGORY	D
DIRECTIONALITY COEFFICIENT (Kd)	0.85
TOPOGRAPHIC FACTOR (Kzt)	1.0

6.2.5 SEISMIC LOADS (PER IBC 2006 & UFC 3-310-04)

OCCUPANCY USE CATEGORY	II
SEISMIC IMPORTANCE FACTOR (Ie)	1.0
SEISMIC SITE CLASS	D

S_s = 2.40 (FOR IRREGULAR BUILDING)
S_1 = 1.20
S_{DS} = 1.60 WHEN S_s = 2.4
S_{D1} = 1.20

SEISMIC DESIGN CATEGORY E
SEISMIC RESISTING SYSTEM:
-SPECIAL REINFORCED CONCRETE SHEAR WALL
RESPONSE MODIFICATION FACTOR (R) 6
RESPONSE COEFFICIENT (Cs) - 0.267
SEISMIC ANALYTICAL PROCEDURE = EQUIV LATERAL FORCE
SEISMIC BASE SHEAR = 2650 KN

UNLESS NOTED OTHERWISE, LINEAR DIMENSIONS SHOWN ARE IN MILLIMETERS.

APPROVED:
A/E DESIGNER OF RECORD

SEAL:
LICENSED PROFESSIONAL ENGINEER
RONALD J. SCHULTE
07624
IOWA

US ARMY CORPS OF ENGINEERS
AFGHANISTAN ENGINEER DISTRICT

Designed by: RJS | Date: 5/19/10 | Rev: 0
Dwn by: DAS | Ckd by: CSP | Design file no.
Reviewed by: MRH | Drawing code:
Submitted by: STANLEY

U.S. ARMY ENGINEER DISTRICT, AFGHANISTAN
CORPS OF ENGINEERS
APO AE 96338

Stanley Consultants INC.

AFGHAN NATIONAL ARMY KANDAKS
SITE ADAPT DESIGN
FITNESS CENTER
GENERAL NOTES

SHEET REFERENCE NUMBER:
E
S-001

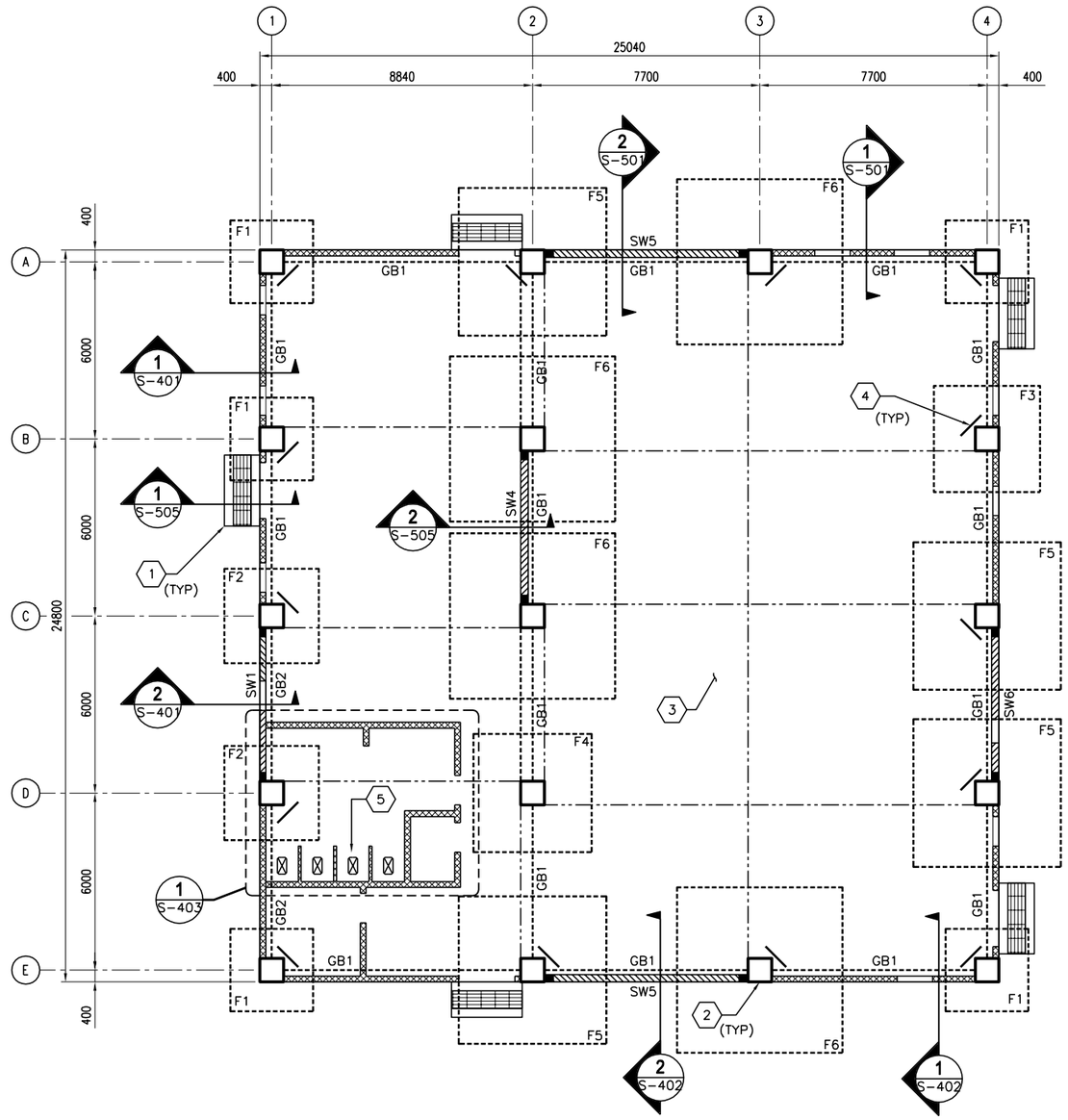

FOUNDATION AND SLAB PLAN

SCALE: 1:100

FOUNDATION/SLAB PLAN NOTES:

1. REFER TO SHEET S-001 FOR STRUCTURAL NOTES AND DESIGN CRITERIA.
2. FINISH FIRST FLOOR ELEVATION SHALL BE (DATUM 0.00) ALL PLUS OR MINUS DIMENSIONS INDICATED ON PLAN OR REFERRED TO IN NOTES RELATE TO FINISH FIRST FLOOR ELEVATION.
3. SLAB-ON-GRADE IS 150 WITH #16 @ 300 OC EW LOCATED 40 FROM T/SLAB OUN. WHERE NOTED, 300 SLAB-ON-GRADE SHALL BE REINFORCED W/ #16 @ 300 OC EW T&B
4. TOP OF EXTERIOR FOOTINGS SHALL BE -950 UNLESS OTHERWISE INDICATED.
5. COLUMN FOOTINGS INDICATED BY F# ON PLAN. REFER TO COLUMN FOOTING SCHEDULE ON SHEET S-601.
6. REFER TO COLUMN SCHEDULE ON SHEET S-601.
7. GRADE BEAM INDICATED BY GB# ON PLAN, REFER TO BEAM SCHEDULE ON SHEET S-601.
8. SHEARWALL INDICATED BY SW# ON PLAN, REFER TO SHEARWALL SCHEDULE ON SHEET S-601.
9. SEE TYP EXTERIOR & INTERIOR CMU WALL REINF DETAILS ON SHEET S-701.
10. SEE MECHANICAL AND ELECTRICAL SHEETS FOR CONCRETE PAD LOCATIONS, SIZES, AND THICKNESS NOT SHOWN. SEE SHEET S-701 FOR DETAILS.
11. THICKENED SLAB UNDER CMU PERIMETER/PARTITION WALLS NOT SHOWN FOR CLARITY.

FOUNDATION/SLAB PLAN KEY NOTES: (X)

1. CONC PAD (ENTRANCE) - SEE ARCH DWGS FOR INFORMATION
2. REINF CONC COLUMN
3. REINF CONC SLAB-ON-GRADE
4. (2)-#13 @ RE-ENTRANT CORNERS - SEE S-701 FOR INFORMATION
5. SLAB OPENING - COORD W/ ARCH AND PLUMBING DWGS

FOUNDATION/SLAB PLAN LEGEND:

- REINF CONC SHEAR WALL
- REINF CMU WALL
- CONTROL JOINT
- INDICATES DROP SLAB 65 BELOW FINISH FLOOR
- INDICATES DROP SLAB 200 BELOW FINISH FLOOR
- SLAB OPENING

1 0 1 2 3 4 5 6 7 8 9
1:100

UNLESS NOTED OTHERWISE, LINEAR DIMENSIONS SHOWN ARE IN MILLIMETERS.

APPROVED:

A/E DESIGNER OF RECORD

SEAL:

LICENSED PROFESSIONAL ENGINEER
RONALD J. SCHULTE
07624
IOWA

US ARMY CORPS OF ENGINEERS
AFGHANISTAN ENGINEER DISTRICT

Mark	Description	Date	Appr.	Mark	Description	Date	Appr.

Designed by: RJS
Dwn by: DAS
Ckd by: CSP
Reviewed by: MRH
Submitted by: STANLEY
Date: 5/19/10
Rev: 0
Design file no.
Drawing code:
File name: 07420SE-S0103.DWN
Plot date: 20100120 09:53
Plot scale:

U.S. ARMY ENGINEER DISTRICT, AFGHANISTAN
CORPS OF ENGINEERS
APO AE 96338

Stanley Consultants INC.

AFGHAN NATIONAL ARMY
KANDAHAR
SITE ADAPT DESIGN

FITNESS CENTER

FOUNDATION AND SLAB PLAN

SHEET REFERENCE NUMBER:
E
S-101

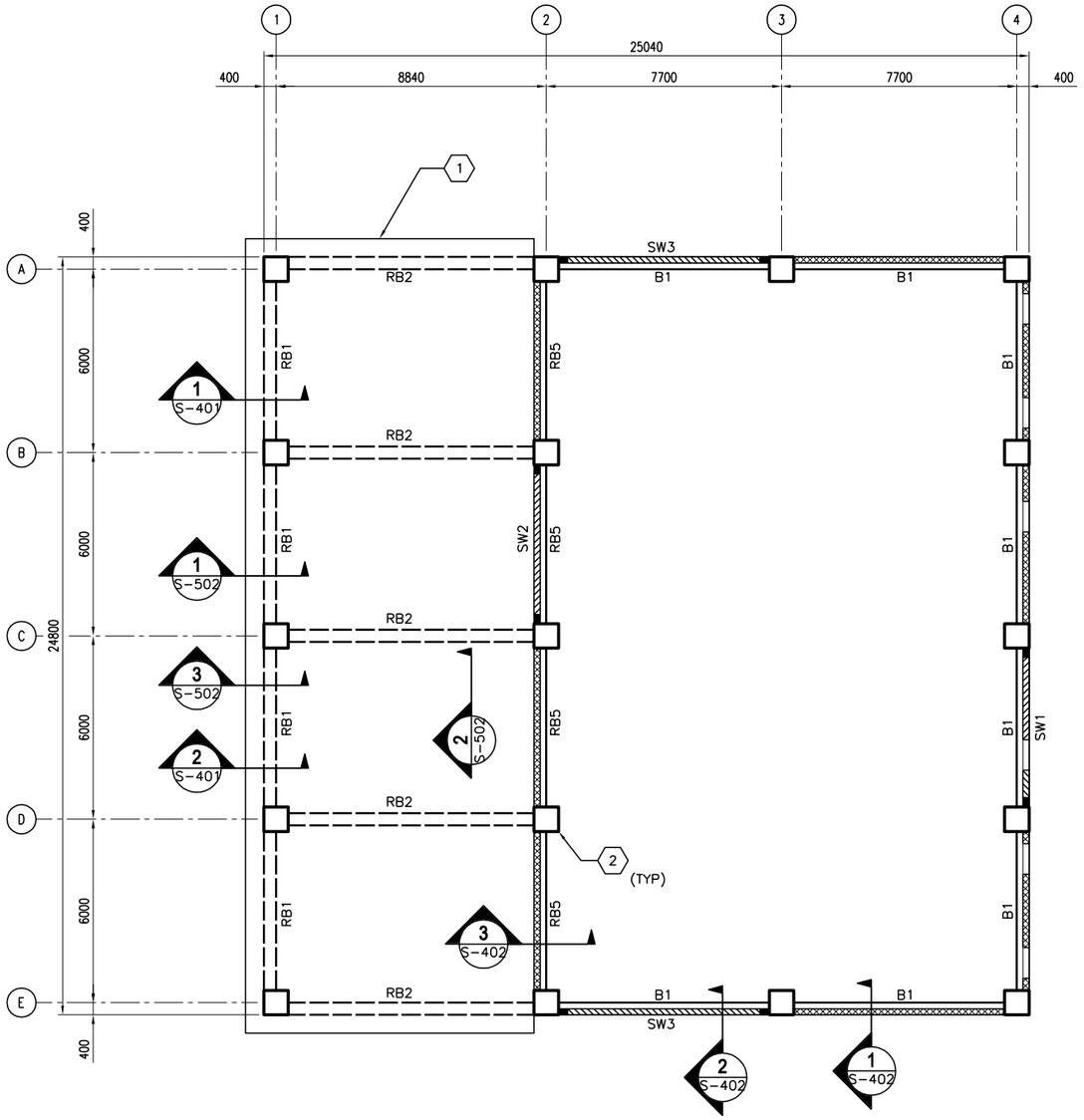

ROOF FRAMING PLAN @ T/SLAB EL 3800

SCALE: 1:100

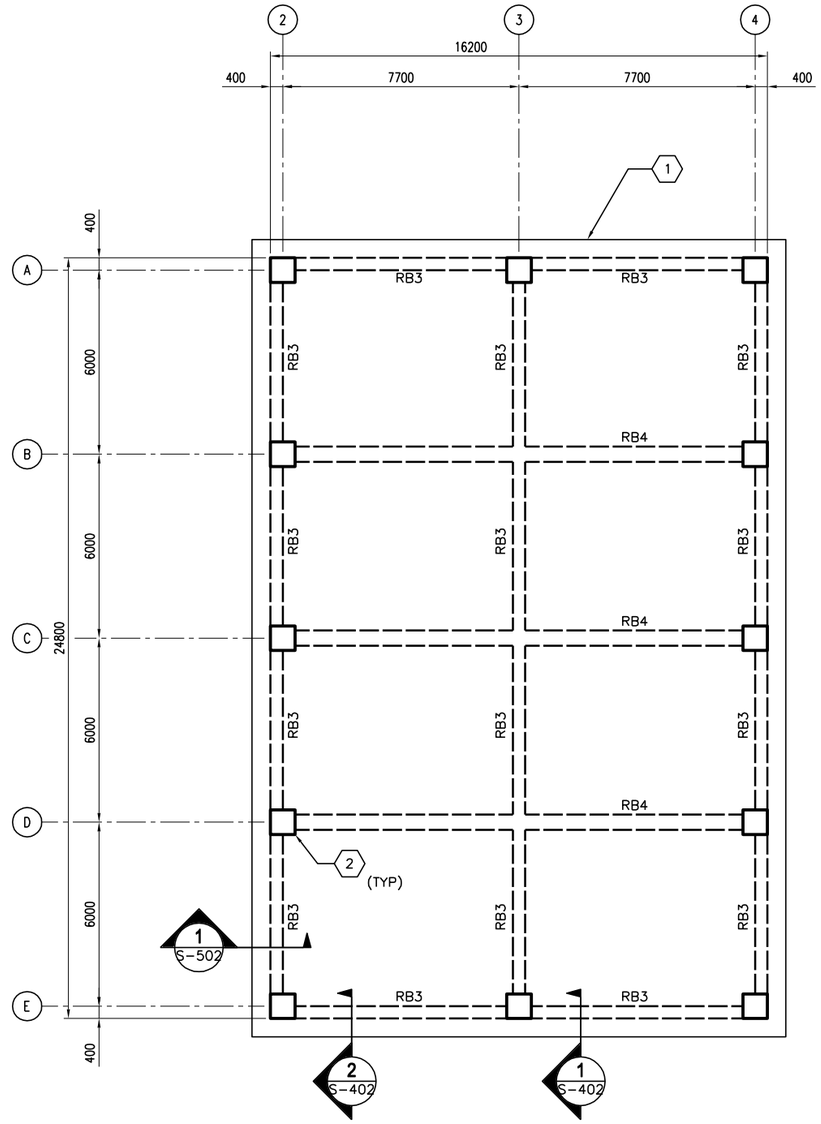

ROOF FRAMING PLAN @ T/SLAB EL 8200

SCALE: 1:100

ROOF FRAMING PLAN NOTES:

1. REFER TO SHEETS S-001 FOR STRUCTURAL NOTES AND DESIGN CRITERIA.
2. TOP OF SLAB ELEVATION AS NOTED.
3. ROOF SLAB IS 200 WITH #16@200 OC EW T&B.
4. ROOF BEAM INDICATED BY RB# ON PLAN. REFER TO BEAM SCHEDULE ON SHEET S-601
5. COORDINATE WITH ARCHITECTURAL SHEETS FOR COLD-FORMED STEEL OVERBUILD FRAMING ABOVE ROOF SLAB.
6. COLD-FORMED METAL OVERBUILD ROOF FRAMING NOT SHOWN FOR CLARITY. SEE OVERBUILD ROOF FRAMING DETAILS AND SECTIONS ON SHEET S-702.
7. CMU PARTITION WALLS (BELOW ROOF SLAB) NOT SHOWN FOR CLARITY.
8. OVERHANG AREAS OF ROOF SLAB CONTAIN ROOF VENT PENETRATIONS. REFERENCE ARCHITECTURAL DRAWINGS FOR INFORMATION.

ROOF FRAMING PLAN KEY NOTES: (X)

1. CONC ROOF SLAB (BELOW ROOF OVERBUILD)
2. REINF CONC COLUMN (BELOW CONC ROOF SLAB)

1 0 1 2 3 4 5 6 7 8 9
1:100

UNLESS NOTED OTHERWISE, LINEAR DIMENSIONS SHOWN ARE IN MILLIMETERS.

APPROVED:

A/E DESIGNER OF RECORD

SEAL:

LICENSED PROFESSIONAL ENGINEER
RONALD J. SCHULTE
07624
IOWA

US ARMY CORPS OF ENGINEERS
AFGHANISTAN ENGINEER DISTRICT

Mark	Description	Date	Appr.	Mark	Description	Date	Appr.

Designed by: RJS
Dwn by: DAS
Ckd by: CSP
Reviewed by: MRH
Submitted by: STANLEY
Date: 5/19/10
Design file no.
Drawing code:
File name: 0-FOUNDATION-SHEETS.DWG
Plot date: 2010/05/19
Plot scale:
Rev: 0

U.S. ARMY ENGINEER DISTRICT, AFGHANISTAN
CORPS OF ENGINEERS
APO AE 96338

Stanley Consultants INC.

AFGHAN NATIONAL ARMY
KANDAKS
SITE ADAPT DESIGN

FITNESS CENTER

ROOF FRAMING PLAN

SHEET REFERENCE NUMBER:
E
S-102

GENERAL NOTES:

1. FORM BEAM/COLUMN INTERSECTION TO MATCH WIDTH OF COLUMN.

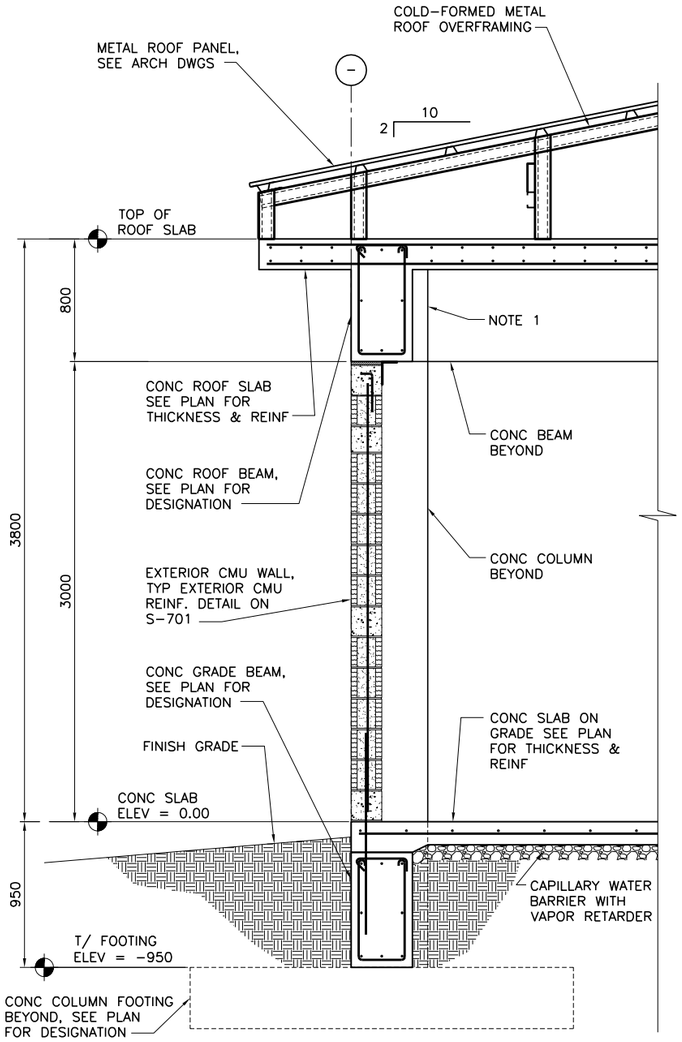

TYPICAL WALL SECTION AT EXTERIOR MASONRY WALL

SECTION 1 S-101,S-102
SCALE: 1:20

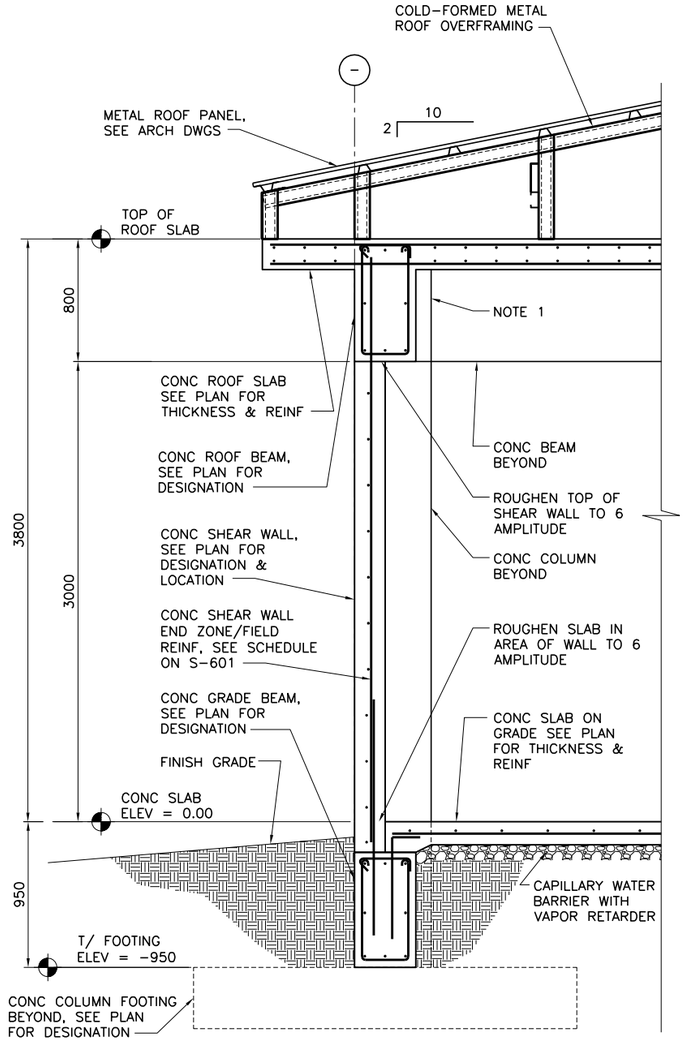

TYPICAL WALL SECTION AT CONCRETE SHEAR WALL

SECTION 2 S-101,S-102
SCALE: 1:20

1 .50 0 1
1:20

UNLESS NOTED OTHERWISE, LINEAR DIMENSIONS SHOWN ARE IN MILLIMETERS.

APPROVED:
A/E DESIGNER OF RECORD

SEAL:
LICENSED PROFESSIONAL ENGINEER
RONALD J. SCHULTE
07624
IOWA

US ARMY CORPS OF ENGINEERS
AFGHANISTAN ENGINEER DISTRICT

Mark	Description	Date	Appr.	Mark	Description	Date	Appr.

Designed by: RJS
Dwn by: DAS
Ckd by: CSP
Reviewed by: MRH
Submitted by: STANLEY
Date: 5/19/10
Rev: 0
Design file no.
Drawing code:
File name: 141206E-S401E
Plot date: 2010/05/19
Plot scale:

U.S. ARMY ENGINEER DISTRICT, AFGHANISTAN
CORPS OF ENGINEERS
APO AE 96338

Stanley Consultants INC.

AFGHAN NATIONAL ARMY
KANDAHAR
SITE ADAPT DESIGN

FITNESS CENTER

BUILDING SECTIONS - SHEET 1

SHEET REFERENCE NUMBER:
E
S-401

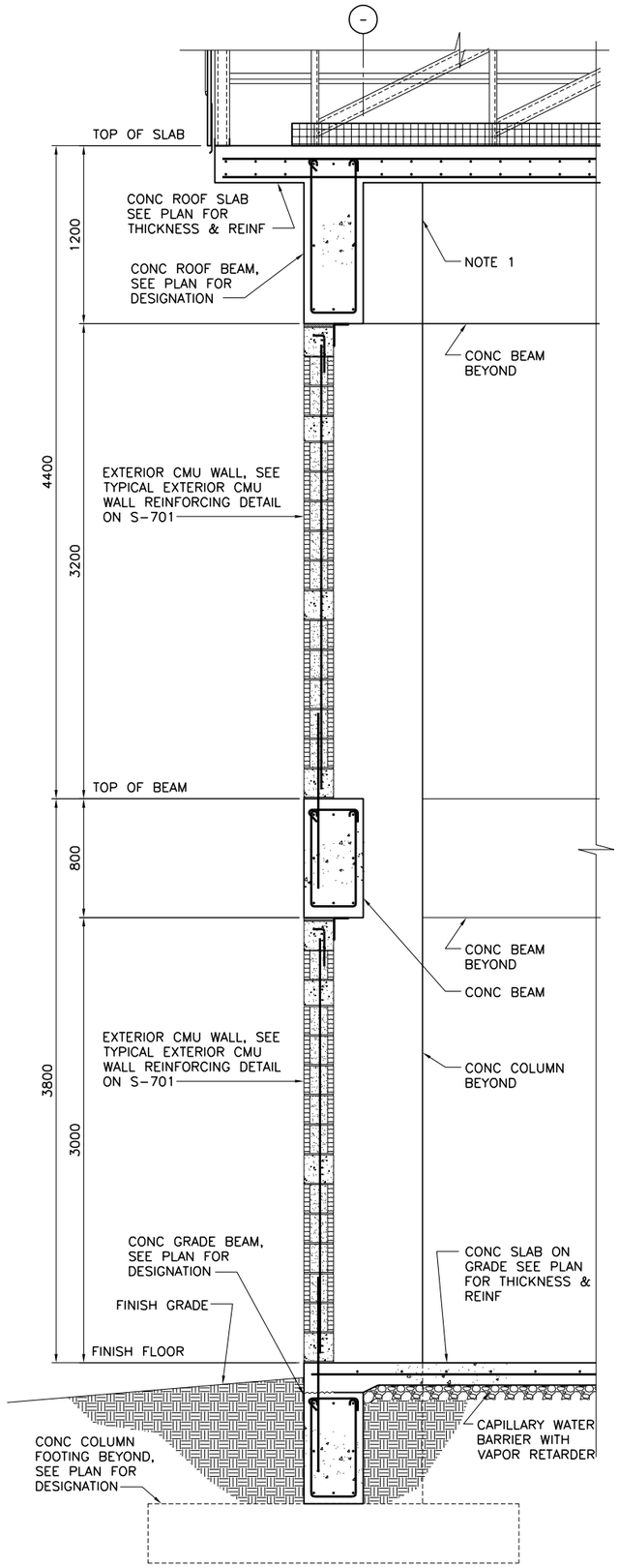

TYPICAL WALL SECTION AT EXTERIOR MASONRY WALL

SECTION 1 / S-102

SCALE: 1:20

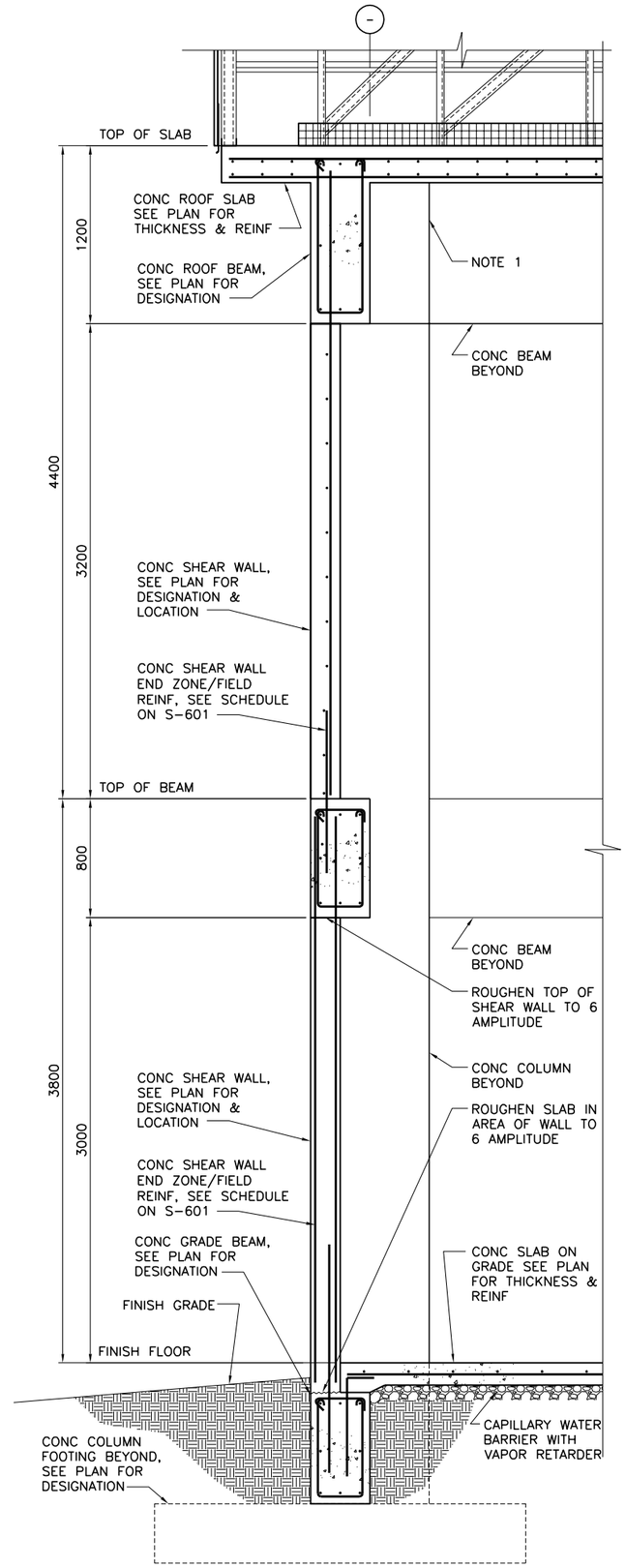

TYPICAL WALL SECTION AT CONCRETE SHEAR WALL

SECTION 2 / S-102

SCALE: 1:20

GENERAL NOTES:

1. FORM BEAM/COLUMN INTERSECTION TO MATCH WIDTH OF COLUMN.

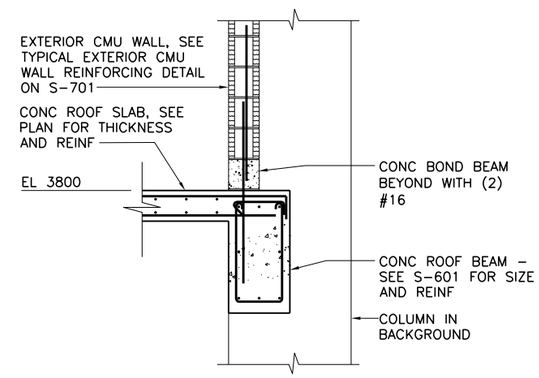

SECTION 3 / S-102

SCALE: 1:20

1 .50 0 1

1:20

UNLESS NOTED OTHERWISE, LINEAR DIMENSIONS SHOWN ARE IN MILLIMETERS.

APPROVED:

A/E DESIGNER OF RECORD

SEAL:

LICENSED PROFESSIONAL ENGINEER RONALD J. SCHULTE 07624 IOWA

US ARMY CORPS OF ENGINEERS
AFGHANISTAN ENGINEER DISTRICT

Mark	Description	Date	Appr.	Mark	Description	Date	Appr.

Designed by: RJS
Dwn by: DAS
Cxd by: CSP
Reviewed by: MRH
Submitted by: STANLEY
Date: 5/19/10
Rev: 0
Design file no.
Drawing code:
File name: FATOSHE-SBARSE
Plot date: 2010/05/19
Plot scale:

U.S. ARMY ENGINEER DISTRICT, AFGHANISTAN
CORPS OF ENGINEERS
APO AE 96338

Stanley Consultants INC.

AFGHAN NATIONAL ARMY
KANDAHAR
SITE ADAPT DESIGN

FITNESS CENTER

BUILDING SECTIONS – SHEET 2

SHEET REFERENCE NUMBER:
E
S-402

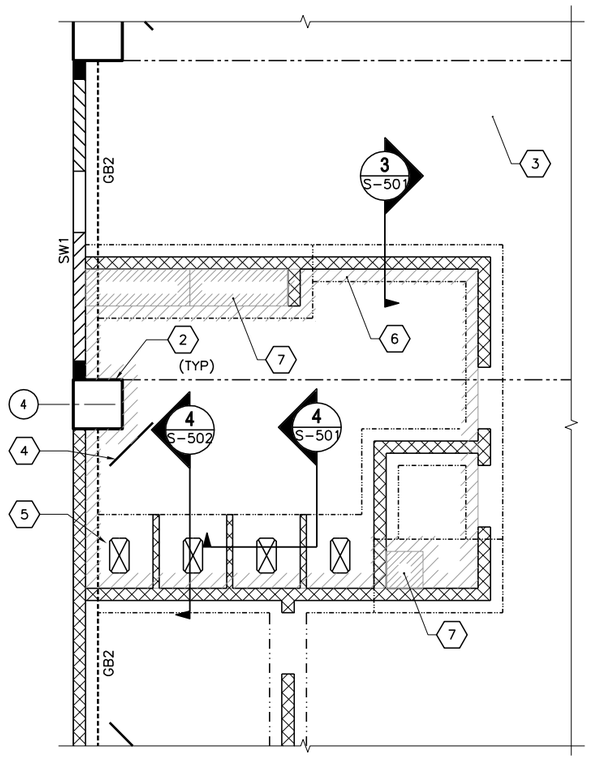

ENLARGED LATRINE SLAB PLAN (1 / S-101)

SCALE: 1:50

ENLARGED PLAN NOTES:

1. REFER TO SHEET S-001 FOR STRUCTURAL NOTES AND DESIGN CRITERIA.
2. FINISH FIRST FLOOR ELEVATION SHALL BE (DATUM 0.00MM) ALL PLUS OR MINUS DIMENSIONS INDICATED ON PLAN OR REFERRED TO IN NOTES RELATE TO FINISH FIRST FLOOR ELEVATION.
3. SLAB-ON-GRADE IS 150 WITH #16 @ 300 OC EW LOCATED 40 FROM T/SLAB UON. WHERE NOTED, 300 SLAB-ON-GRADE SHALL BE REINFORCED W/ #16 @300 OC EW T&B.
4. REFER TO FOUNDATION/SLAB PLAN ON SHEET S-101 FOR COLUMN DESIGNATION AND COLUMN SCHEDULE ON SHEET S-601.
5. REFER TO FOUNDATION/SLAB PLAN ON SHEET S-101 FOR SHEARWALL DESIGNATION AND SHEARWALL SCHEDULE ON SHEET S-601.
6. REFER TO FOUNDATION/SLAB PLAN ON SHEET S-101 FOR GRADE BEAM DESIGNATION AND GRADE BEAM SCHEDULE ON SHEET S-601.
7. SEE TYP EXTERIOR AND INTERIOR CMU WALL REINFORCING DETAILS ON SHEET S-701.

ENLARGED PLAN KEYNOTES: (X)

1. CONC PAD (ENTRANCE) – SEE ARCH DWGS FOR INFORMATION
2. REINF CONC COLUMN
3. REINF CONC SLAB-ON-GRADE
4. (2)-#13 RE-ENTRANT CORNER BARS – SEE S-701 FOR INFORMATION
5. SLAB OPENING – COORDINATE W/ ARCH AND PLUMBING DWGS.
6. 300 SLAB-ON-GRADE
7. 335 SLAB-ON-GRADE

PLAN LEGEND:

- REINF CONC SHEAR WALL
- REINF CMU WALL
- CONTROL JOINT
- INDICATES DROP SLAB 65 BELOW FINISH FLOOR
- INDICATES DROP SLAB 200 BELOW FINISH FLOOR
- SLAB OPENING
- OUTLINE OF THICKENED SLAB AREAS
- GRADE BEAM

1 0 1 2 3 4
1:50

UNLESS NOTED OTHERWISE, LINEAR DIMENSIONS SHOWN ARE IN MILLIMETERS.

APPROVED:

A/E DESIGNER OF RECORD

SEAL:

LICENSED PROFESSIONAL ENGINEER
RONALD J. SCHULTE
07824
IOWA

US ARMY CORPS OF ENGINEERS
AFGHANISTAN ENGINEER DISTRICT

Mark	Description	Date	Appr.	Mark	Description	Date	Appr.

Designed by: RJS
Dwn by: DAS
Cxd by: CSP
Reviewed by: MRH
Submitted by: STANLEY
Date: 5/19/10
Design file no.
Rev: 0
Drawing code:
File name: 147CORE-S5A03PN
Plot date: 2010/07/20/15:13
Plot scale:

U.S. ARMY ENGINEER DISTRICT, AFGHANISTAN
CORPS OF ENGINEERS
APO AE 96338

Stanley Consultants INC.

AFGHAN NATIONAL ARMY
KANDAHAR
SITE ADAPT DESIGN

FITNESS CENTER

ENLARGED LATRINE SLAB PLAN

SHEET REFERENCE NUMBER:
E
S-403

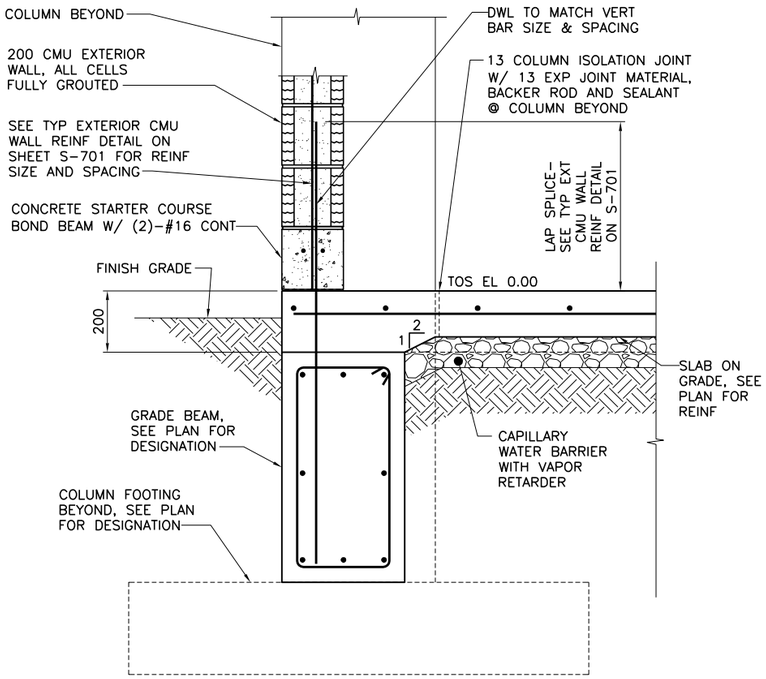

NOTE:
1. SECTION IS SIMILAR FOR INTERIOR CMU PARTITIONS OVER GRADE BEAMS SHOWING THICKENED CONC SLAB AREA.

SECTION 1 / S-101
SCALE: 1:10

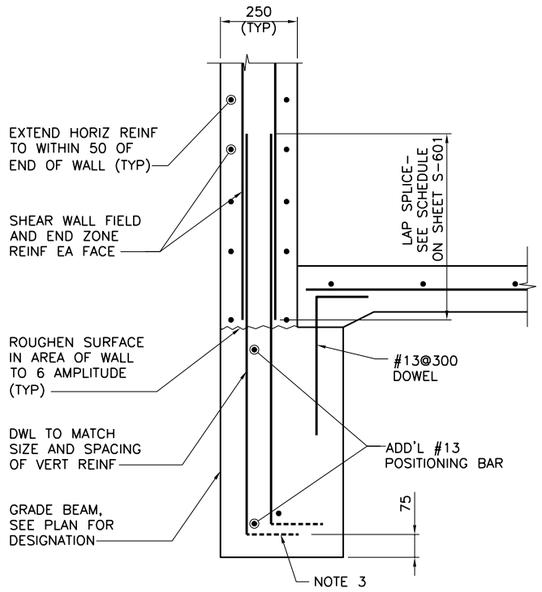

NOTE:
1. SECTION DEPICTS SHEAR WALL TERMINATION ONLY. GRADE BEAM REINFORCING NOT SHOWN FOR CLARITY.
2. SEE SHEET S-601 AND SHEET S-702 FOR SCHEDULED FIELD AND END ZONE REINF.
3. PROVIDE STANDARD HOOK WHERE REQUIRED TO DEVELOP DOWEL.

SECTION 2 / S-101
SCALE: 1:10

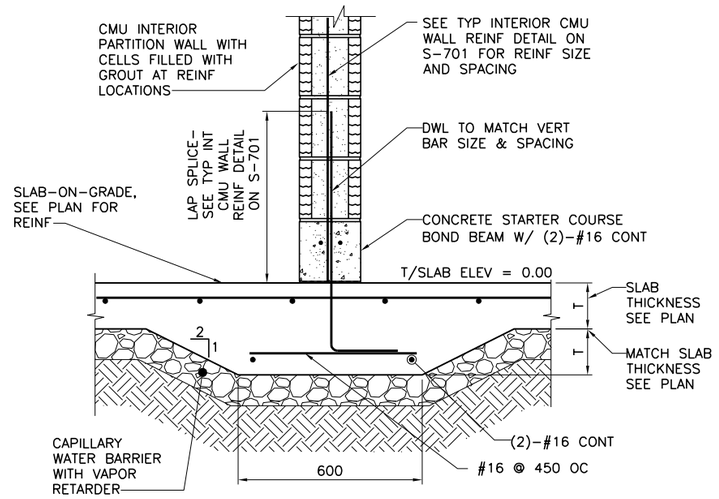

SECTION 3 / S-403
SCALE: 1:10

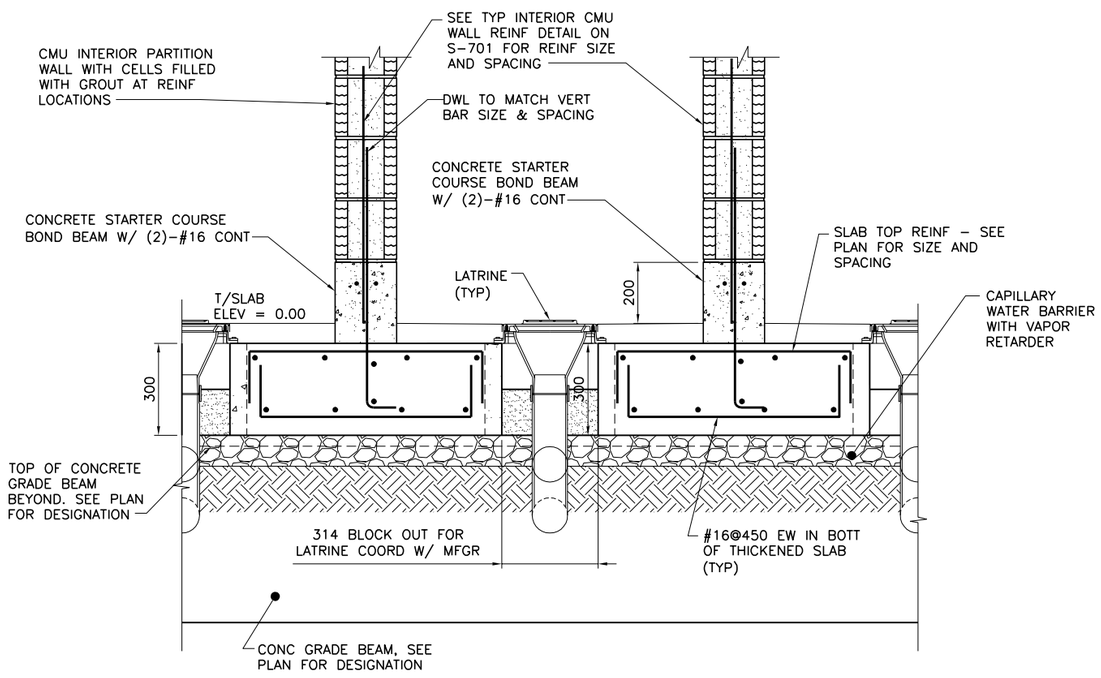

SECTION 4 / S-403
SCALE: 1:10

0 .50 1.00
1:10

UNLESS NOTED OTHERWISE, LINEAR DIMENSIONS SHOWN ARE IN MILLIMETERS.

APPROVED:
A/E DESIGNER OF RECORD

SEAL:
LICENSED PROFESSIONAL ENGINEER
RONALD J SCHULTE
07624
IOWA

US ARMY CORPS OF ENGINEERS
AFGHANISTAN ENGINEER DISTRICT

Mark	Description	Date	Appr.	Mark	Description	Date	Appr.

Rev: 0
Date: 5/19/10
Design file no.
Drawing code:
File name: 07-0046E-S604E5E
Plot date: 20100120153
Plot scale:

Designed by: RJS
Dwn by: DAS
Ckd by: CSP
Reviewed by: MRH
Submitted by: STANLEY

U.S. ARMY ENGINEER DISTRICT, AFGHANISTAN
CORPS OF ENGINEERS
APO AE 96338

Stanley Consultants INC.

AFGHAN NATIONAL ARMY
KANDAKS
SITE ADAPT DESIGN

FITNESS CENTER

FOUNDATION SECTIONS

SHEET REFERENCE NUMBER:
E
S-501

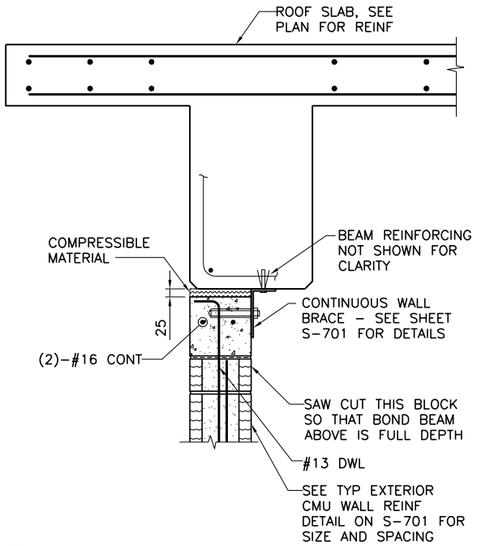

NOTES:
1. EXTEND DOWEL REINF TO 25 CLEAR FROM TOP OF WALL.

SECTION 1 / S-102
SCALE: 1:10

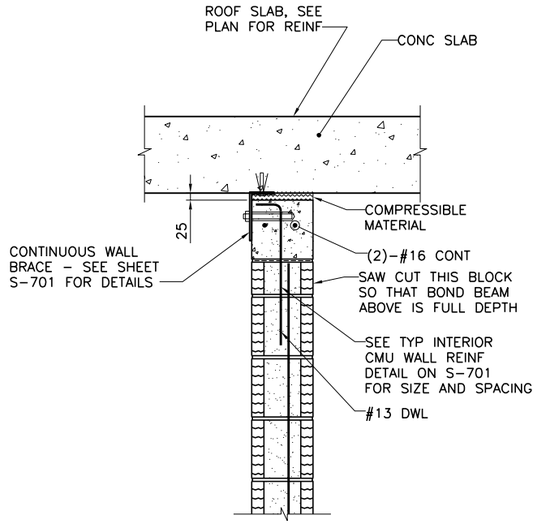

NOTES:
1. EXTEND DOWEL REINF TO 25 CLEAR FROM TOP OF WALL.
2. SLAB REINF NOT SHOWN FOR CLARITY.

SECTION 2 / S-102
SCALE: 1:10

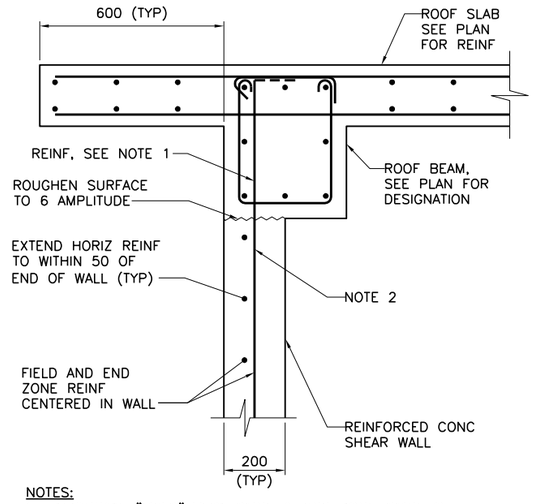

NOTES:
1. TERMINATE "FIELD" VERT REINF & END ZONE REINF @ 50 CLEAR FROM TOP OF ROOF SLAB.
2. WHERE VERTICAL REINFORCING CANNOT BE DEVELOPED IN BEAM DEPTH, PROVIDE STANDARD HOOK.
3. SEE SHEET S-601 AND SHEET S-702 FOR SCHEDULED FIELD AND END ZONE REINF.

SECTION 3 / S-102
SCALE: 1:10

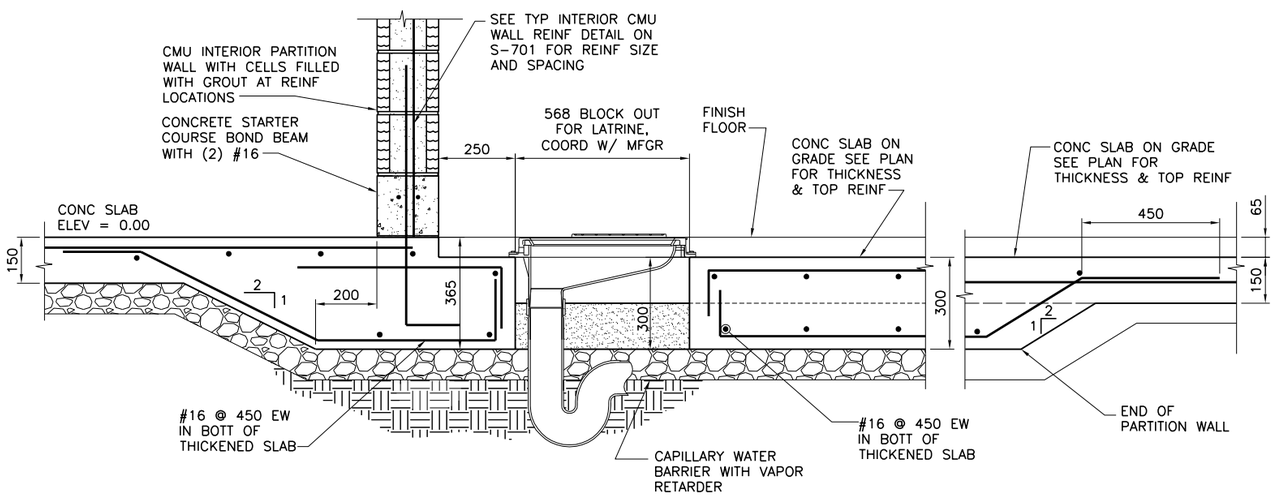

SECTION 4 / S-403
SCALE: 1:10

0 .50 1.00
1:10

UNLESS NOTED OTHERWISE, LINEAR DIMENSIONS SHOWN ARE IN MILLIMETERS.

APPROVED:
A/E DESIGNER OF RECORD

SEAL:
LICENSED PROFESSIONAL ENGINEER
RONALD J SCHULTE
07624
IOWA

US ARMY CORPS OF ENGINEERS
AFGHANISTAN ENGINEER DISTRICT

Mark	Description	Date	Appr.	Mark	Description	Date	Appr.

Designed by: RJS
Dwn by: DAS
Ckd by: CSP
Reviewed by: MRH
Submitted by: STANLEY
Date: 5/19/10
Design file no.
Rev: 0
Drawing code:
File name: 07420SE-S502SE
Plot date: 20100519
Plot scale:

U.S. ARMY ENGINEER DISTRICT, AFGHANISTAN
CORPS OF ENGINEERS
APO AE 96338

Stanley Consultants INC.

AFGHAN NATIONAL ARMY
KANDAKS
SITE ADAPT DESIGN

FITNESS CENTER

FOUNDATION AND FRAMING SECTIONS

SHEET REFERENCE NUMBER:
E
S-502

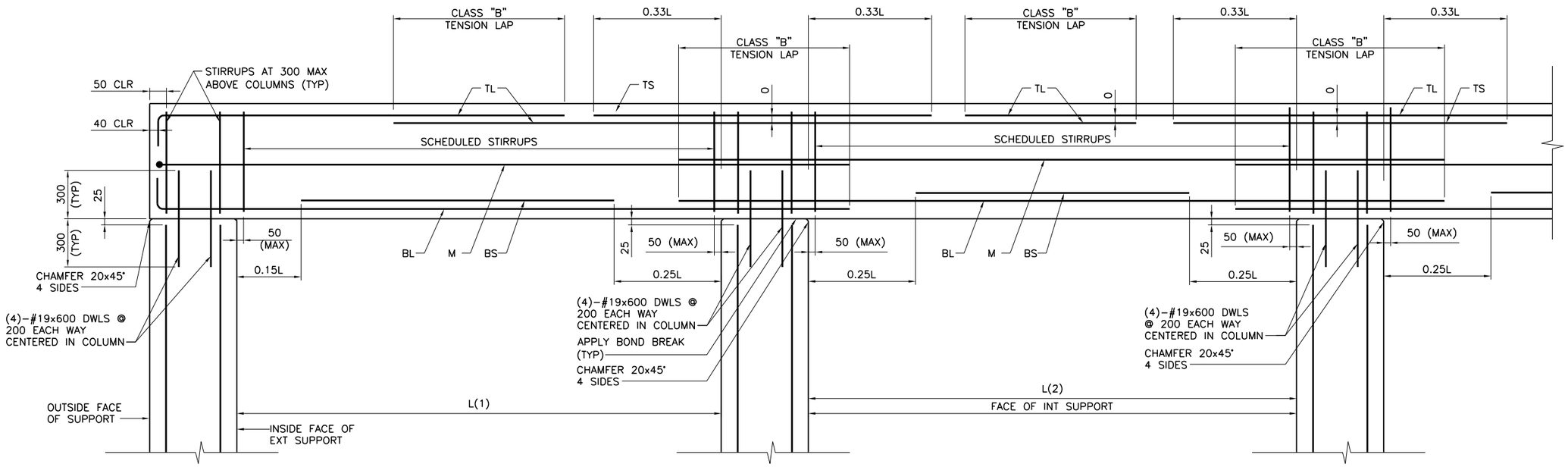

DETAIL NOTE:
1. WORK THIS DETAIL WITH BEAM SCHEDULE ON SHEET S-601.
2. L=GREATEST OF ADJACENT SPANS L(1) OR L(2)
3. ONLY COLUMN CORNER BARS ARE SHOWN

ROOF BEAM REINFORCING DETAIL 1 / S-503

SCALE: NONE

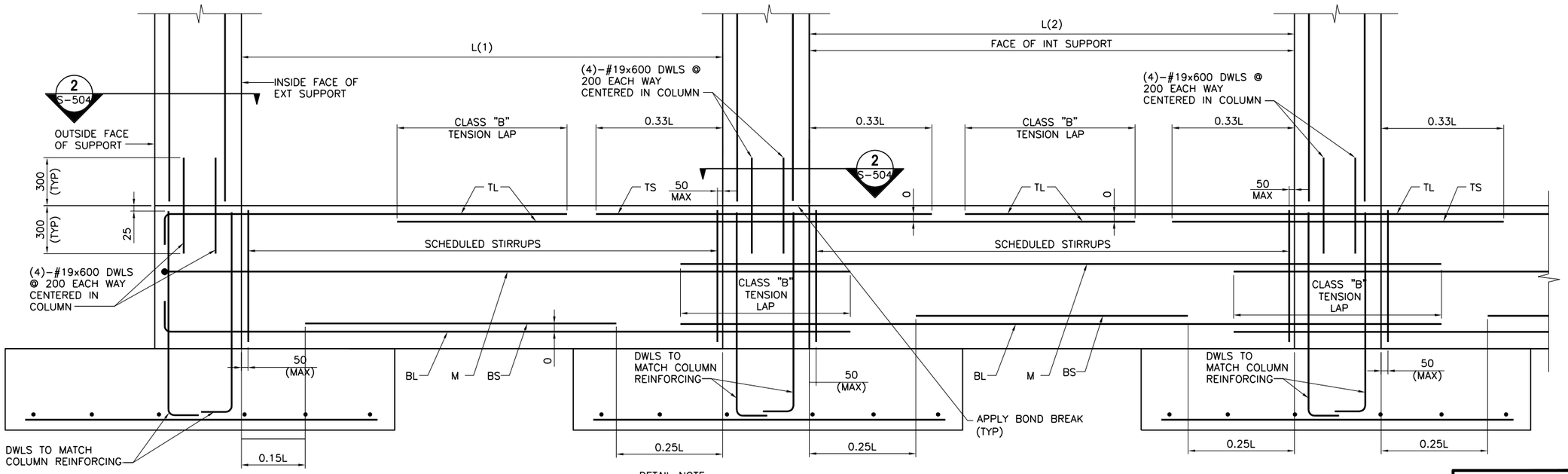

DETAIL NOTE:
1. WORK THIS DETAIL WITH BEAM SCHEDULE ON SHEET S-601.
2. L=GREATEST OF ADJACENT SPANS L(1) OR L(2)
3. ONLY COLUMN CORNER BARS ARE SHOWN.

GRADE BEAM REINFORCING DETAIL 2 / S-503

SCALE: NONE

UNLESS NOTED OTHERWISE, LINEAR DIMENSIONS SHOWN ARE IN MILLIMETERS.

APPROVED:

A/E DESIGNER OF RECORD

SEAL:

LICENSED PROFESSIONAL ENGINEER RONALD J. SCHULTE 07624 IOWA

US ARMY CORPS OF ENGINEERS
AFGHANISTAN ENGINEER DISTRICT

Mark	Description	Date	Appr.	Mark	Description	Date	Appr.

Rev: 0
Date: 5/19/10
Design file no.
Drawing code:
File name: 210206E-S5S0D01
Plot date: 2010/05/19
Plot scale:

Designed by: RJS
Dwn by: DAS
Ckd by: CSP
Reviewed by: MRH
Submitted by: STANLEY

U.S. ARMY ENGINEER DISTRICT, AFGHANISTAN
CORPS OF ENGINEERS
APO AE 96338

Stanley Consultants INC.

AFGHAN NATIONAL ARMY
KANDAKS
SITE ADAPT DESIGN

FITNESS CENTER

BEAM AND COLUMN DETAILS
SHEET 1

SHEET REFERENCE NUMBER:
E
S-503

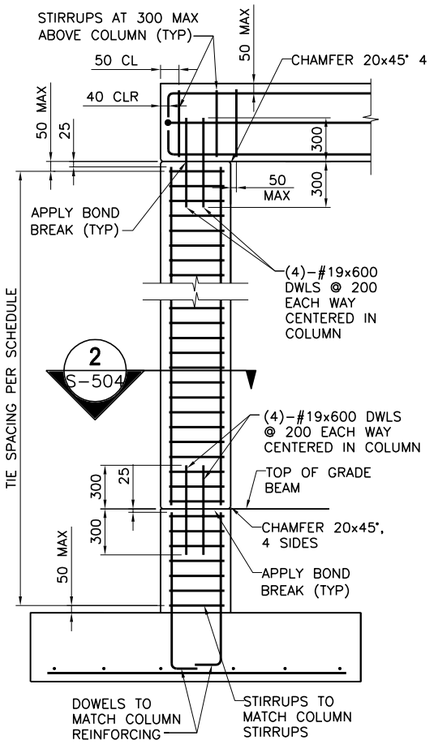

NOTE:
1. ONLY COLUMN CORNER BARS ARE SHOWN

1-STORY COLUMN REINFORCING DETAILS (1 / S-504)

SCALE: NONE

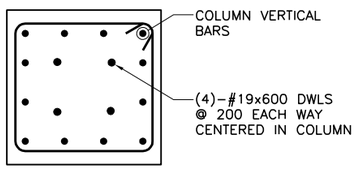

NOTE:
1. INTERIOR TIES NOT SHOWN FOR CLARITY. REFER TO 12 BAR COLUMN DETAIL THIS SHEET FOR INTERIOR TIE CONFIGURATION.

SECTION (2 / S-503,S-504)

SCALE: NONE

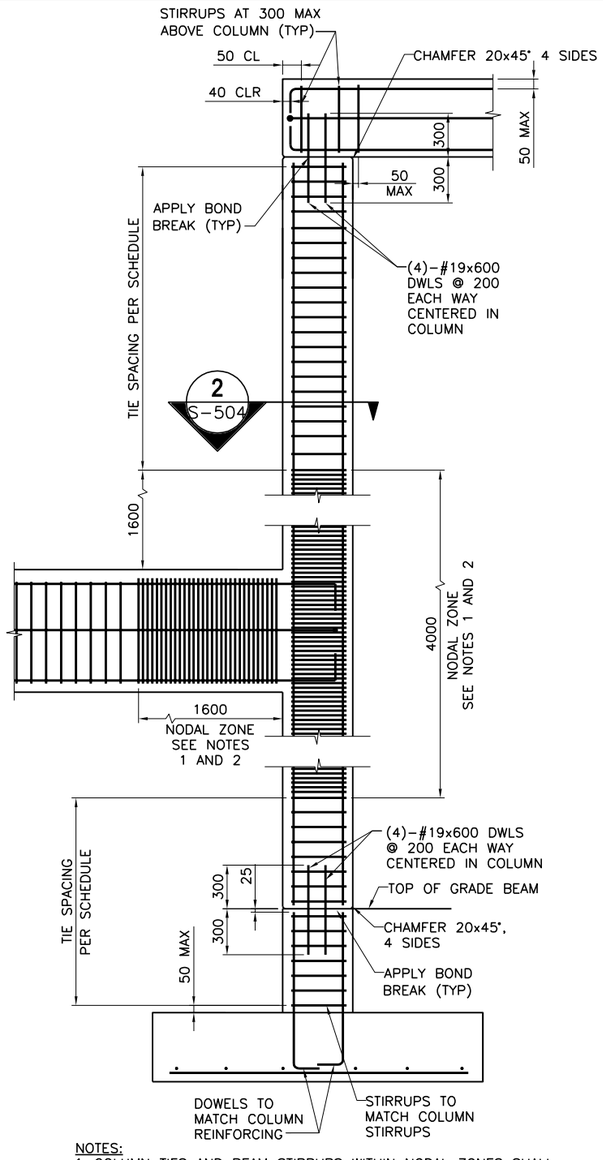

NOTES:
1. COLUMN TIES AND BEAM STIRRUPS WITHIN NODAL ZONES SHALL BE SPACED AT 100 MAXIMUM.
2. NODAL ZONES OCCUR AT ELEV 3800 AT GRIDS 2, 3 AND 4.

2-STORY COLUMN REINFORCING DETAILS (3 / S-504)

SCALE: NONE

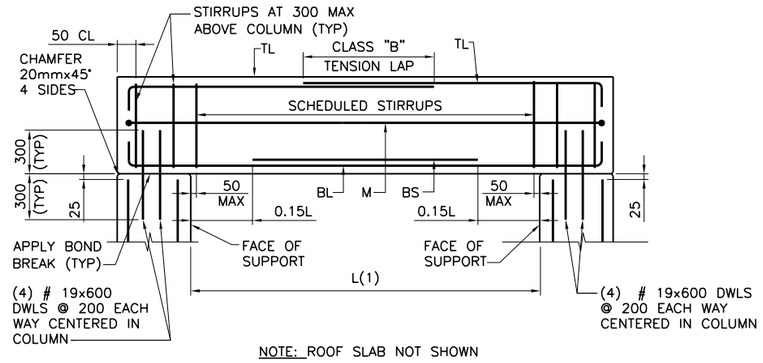

NOTE: ROOF SLAB NOT SHOWN

SINGLE SPAN ROOF BEAM REINFORCING DETAIL (5 / S-504)

SCALE: NONE

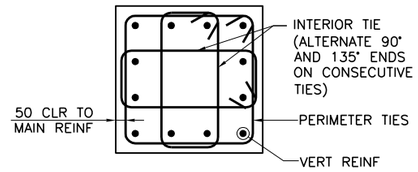

12 BAR COLUMN DETAIL (A / S-504)

SCALE: NONE

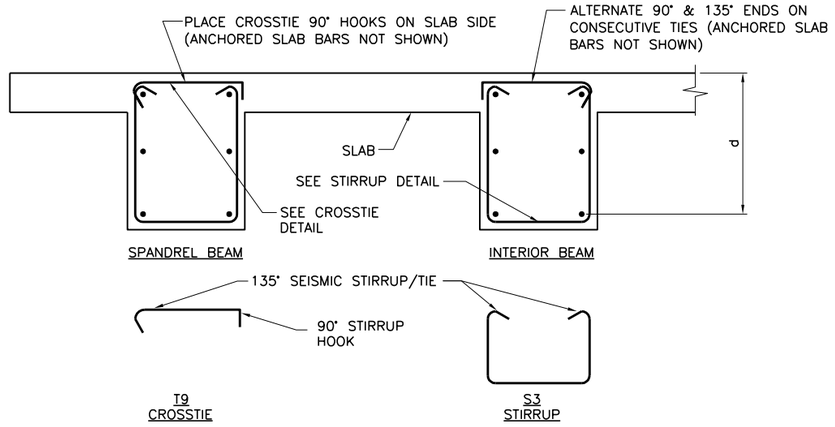

BEAM REINFORCEMENT DETAILS (B / S-504)

SCALE: NONE

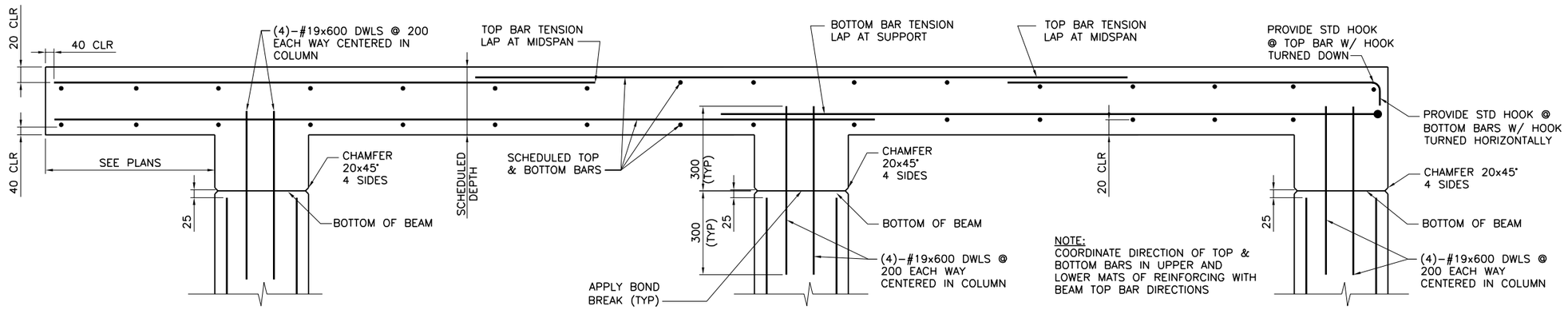

NOTE:
COORDINATE DIRECTION OF TOP & BOTTOM BARS IN UPPER AND LOWER MATS OF REINFORCING WITH BEAM TOP BAR DIRECTIONS

FRAMED SLAB REINFORCING DETAIL (4 / S-504)

SCALE: NONE

UNLESS NOTED OTHERWISE, LINEAR DIMENSIONS SHOWN ARE IN MILLIMETERS.

APPROVED:

A/E DESIGNER OF RECORD

SEAL:

LICENSED PROFESSIONAL ENGINEER
RONALD J. SCHULTE
07624
IOWA

US ARMY CORPS OF ENGINEERS
AFGHANISTAN ENGINEER DISTRICT

Mark	Description	Date	Appr.	Mark	Description	Date	Appr.

Date: 5/19/10
Design file no.
Rev: 0
Drawing code:
File name: 5120SE-SSS04DT
Plot date: 2010/05/19
Plot scale:

Designed by: RJS
Dwn by: DAS
Cxd by: CSP
Reviewed by: MRH
Submitted by: STANLEY

U.S. ARMY ENGINEER DISTRICT, AFGHANISTAN
CORPS OF ENGINEERS
APO AE 96338

Stanley Consultants INC.

AFGHAN NATIONAL ARMY
KANDAKS
SITE ADAPT DESIGN

FITNESS CENTER

BEAM AND COLUMN DETAILS
SHEET 2

SHEET REFERENCE NUMBER:
E
S-504

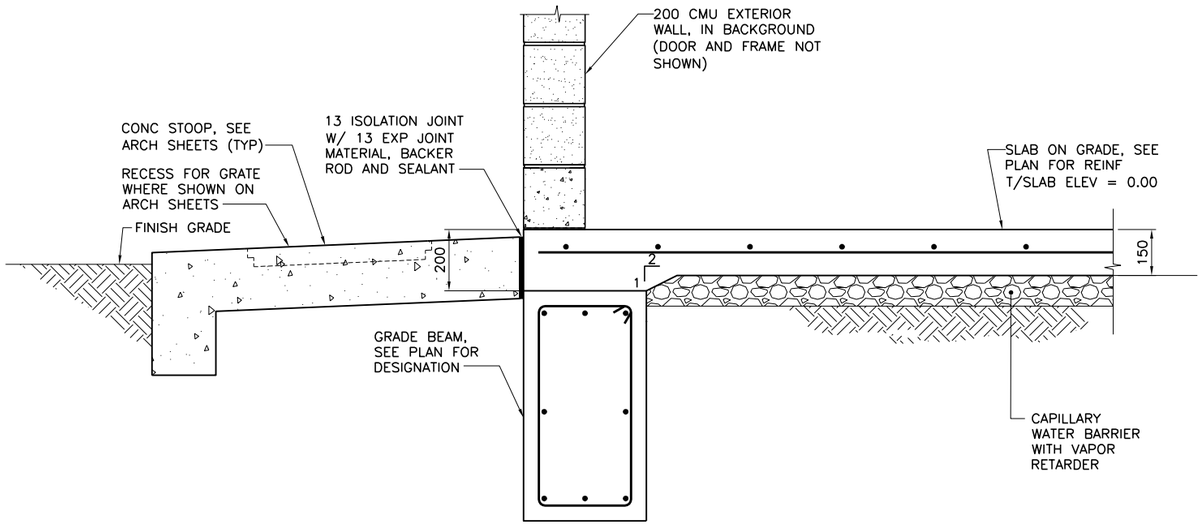

SECTION 1 / S-101
SCALE: 1:10

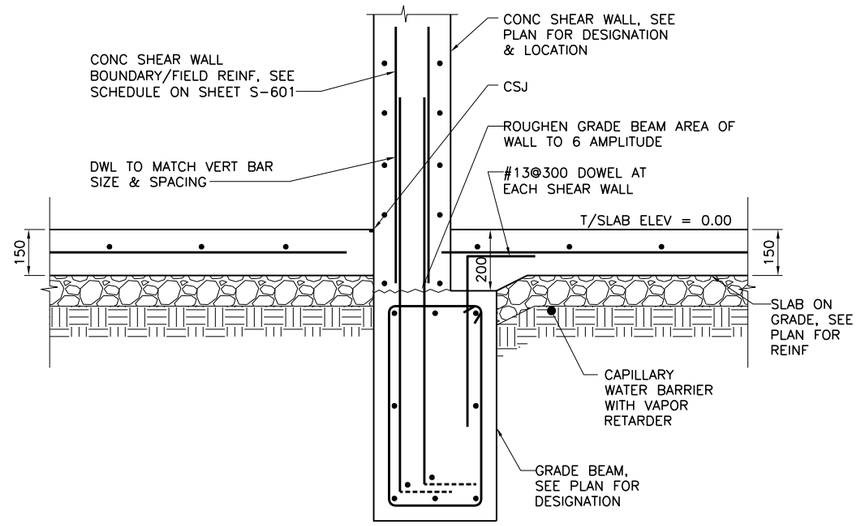

SECTION 2 / S-101
SCALE: 1:10

0 .50 1.00
1:10

UNLESS NOTED OTHERWISE, LINEAR DIMENSIONS SHOWN ARE IN MILLIMETERS.

APPROVED:
A/E DESIGNER OF RECORD

SEAL:
LICENSED PROFESSIONAL ENGINEER
RONALD J SCHULTE
07624
IOWA

US ARMY CORPS OF ENGINEERS
AFGHANISTAN ENGINEER DISTRICT

Mark	Description	Date	Appr.	Mark	Description	Date	Appr.

Designed by: RJS
Dwn by: DAS
Ckd by: CSP
Reviewed by: MRH
Submitted by: STANLEY
Date: 5/19/10
Rev: 0
Design file no.
Drawing code:
File name: 121010_SS505SE
Plot date: 2010/10/05/13
Plot scale:

U.S. ARMY ENGINEER DISTRICT, AFGHANISTAN
CORPS OF ENGINEERS
APO AE 96338

Stanley Consultants INC.

AFGHAN NATIONAL ARMY
KANDAKS
SITE ADAPT DESIGN

FITNESS CENTER

MISCELLANEOUS SECTIONS

SHEET REFERENCE NUMBER:
E
S-505

CONCRETE REINFORCEMENT TENSION DEVELOPMENT/LAP SPLICE SCHEDULE

f'c = 28 MPa	LAP CLASS	UNCOATED BARS			
		TOP BARS		OTHER BARS	
BAR SIZES		CASE 1	CASE 2	CASE 1	CASE 2
#10 TO #19	A	50 BAR DIA	74 BAR DIA	38 BAR DIA	57 BAR DIA
	B	64 BAR DIA	96 BAR DIA	50 BAR DIA	74 BAR DIA
#22 TO #57	A	62 BAR DIA	93 BAR DIA	48 BAR DIA	71 BAR DIA
	B	80 BAR DIA	121 BAR DIA	62 BAR DIA	93 BAR DIA

NOTES:
1. TABULATED TENSION DEVELOPMENT LENGTH VALUES ARE TAKEN FROM CRSI DESIGN HANDBOOK 2008 10TH ED.
2. TENSION DEVELOPMENT & TENSION LAP SPLICE LENGTHS ARE EXPRESSED AS MULTIPLES OF BAR DIAMETERS.
3. TABULATED VALUES ARE BASED ON MINIMUM YIELD STRENGTH OF REINFORCEMENT, fy, OF 420MPa.
4. CONCRETE IS NORMAL WEIGHT (2400Kg/m^3) AND 28 DAY COMPRESSIVE STRENGTH = 28MPa.
5. TABULATED VALUES FOR BEAMS & COLUMNS ARE BASED ON TRANSVERSE REINFORCEMENT AND CONCRETE COVER MEETING MINIMUM CODE REQUIREMENTS.
6. CASES 1 & 2, WHICH DEPEND ON THE TYPE OF STRUCTURAL MEMBER, CONCRETE COVER, AND CENTER-TO-CENTER SPACING OF THE BARS ARE DEFINED IN THE TABLE BELOW.
7. LAP SPLICE LENGTHS (MINIMUM 300mm) ARE MULTIPLES OF TENSION DEVELOPMENT LENGTHS: CLASS A = 1.0(TENSION DEVELOPMENT LENGTH) & CLASS B = 1.3(TENSION DEVELOPMENT LENGTH)
8. TOP BARS ARE HORIZONTAL REINFORCEMENT WITH MORE THAN 300mm OF CONCRETE CAST BELOW THE BARS.
9. IT SHALL BE PERMISSIBLE TO CALCULATE WALL AND SLAB REINFORCEMENT TENSION DEVELOPMENT/SPLICE LENGTHS IN ACCORDANCE WITH ACI 12.2.3 OR TABLE 5.3(b) OF CRSI 2008 IN LIEU OF VALUES TABULATED ABOVE.

BEAMS, COLUMNS	CASE 1	CONCRETE COVER AT LEAST 1 BAR DIA AND CENTER-TO-CENTER SPACING AT LEAST 2 BAR DIA
	CASE 2	CONCRETE COVER LESS THAN 1 BAR DIA OR CENTER-TO-CENTER SPACING LESS THAN 2 BAR DIA
ALL OTHERS	CASE 1	CONCRETE COVER AT LEAST 1 BAR DIA AND CENTER-TO-CENTER SPACING AT LEAST 3 BAR DIA
	CASE 2	CONCRETE COVER LESS THAN 1 BAR DIA OR CENTER-TO-CENTER SPACING LESS THAN 3 BAR DIA

CONCRETE COVER SCHEDULE

MINIMUM CONCRETE COVER PROTECTION FOR REINFORCEMENT BARS SHALL BE AS LISTED BELOW: (SEE ACI 318M-05, SECTION 7.7 FOR CONDITIONS NOT NOTED). DIMENSIONS FOR BAR PLACEMENT GIVEN IN SECTIONS AND DETAILS SHALL SUPERSEDE MINIMUM COVER REQUIREMENTS GIVEN HERE. DIMENSIONS ARE IN mm. PROVIDE STANDARD BAR CHAIRS AND SUPPORT BARS @1200mm MAXIMUM AS REQUIRED TO MAINTAIN CONCRETE PROTECTION SPECIFIED.

FOOTINGS (EARTH FORMED):	70
COLUMNS / PIERS (TO TIES)	40
GRADE BEAMS OR SLAB TURNED DOWN EDGES:	
TOP	40
BOTTOM (EARTH FORMED)	70
SIDES (EARTH FORMED)	70
SIDES (BOARD FORMED) #16 BAR & SMALLER	40
#19 THRU #36 BAR	50
ELEVATED BEAMS & SLABS:	
BEAM TIES & STIRRUPS (NOT EXPOSED TO WEATHER)	40
BEAM TIES & STIRRUPS (EXPOSED TO WEATHER)	50
FLOOR SLABS (NOT EXPOSED TO WEATHER)	20
FLOOR SLABS (EXPOSED TO WEATHER)	
#19 & LARGER	50
#13 & SMALLER	40
ROOF SLAB BARS	25
SLABS ON GRADE	
NOT EXPOSED TO WEATHER (FROM TOP)	20
EXPOSED TO WEATHER (FROM TOP)	40
UTILITY TUNNEL WALLS, RETAINING WALLS AND SHEAR WALLS. (NO SURFACES SHALL BE EARTH FORMED)	
EARTH SIDE AND FRONT SIDE (EXPOSED TO WEATHER)	
#16 BAR AND SMALLER	40
#19 THRU #36 BAR	50

COLUMN FOOTING SCHEDULE

MARK	FOOTING SIZE (mm)			FOOTING REINFORCING	REMARKS
	LENGTH	WIDTH	THICKNESS		
F1	2800	2800	340	(8)-#19 EW BOTT	-----
F2	3200	3200	380	(11)-#19 EW BOTT	-----
F3	3600	3600	420	(11)-#22 EW BOTT	-----
F4	4000	4000	450	(13)-#22 EW BOTT	-----
F5	5000	5000	550	(16)-#13 EW TOP (16)-#25 EW BOTT	-----
F6	5600	5600	630	(20)-#13 EW TOP (20)-#25 EW BOTT	-----

CONCRETE SHEAR WALL SCHEDULE

MARK	TYPE	WALL LENGTH (L) (mm)	WALL REINFORCEMENT		REMARKS
			END ZONE	FIELD	
SW1 (7)	C	5200	(3)-#16 @ 150mm OC	#13 @ 250mm OC	1 WINDOW OPENING
SW2 (7)	C	5200	(3)-#16 @ 150mm OC	#13 @ 250mm OC	-----
SW3 (7)	C	6900	(3)-#16 @ 150mm OC	#13 @ 250mm OC	-----
SW4 (8)	C	5200	(3)-#16 @ 150mm OC	#13 @ 250mm HORIZ #16 @ 250mm VERT OC	-----
SW5 (8)	C	6900	(3)-#16 @ 150mm OC	#13 @ 250mm HORIZ #16 @ 250mm VERT OC	-----
SW6 (8)	C	5200	(3)-#16 @ 150mm OC	#13 @ 250mm HORIZ #16 @ 250mm VERT OC	1 OPENING

NOTES:
1. WORK THIS SCHEDULE WITH SHEAR WALL DETAILS ON SHEETS S-702
2. SEE PLAN FOR LOCATION OF SHEAR WALL(S).
3. VERTICAL "FIELD" BARS MAY BE OMITTED IN LOCATION OF "END ZONE" REINFORCEMENT.
4. WALL FIELD REINF LISTED APPLIES TO VERT & HORIZ BARS.
5. WALL FIELD REINFORCEMENT CENTERED IN WALL.
6. END ZONE REINF IS VERTICAL REINF EACH END ZONE.
7. WALL IS 200 THICK WITH 1 LAYER REINF.
8. WALL IS 250 THICK WITH 2 LAYERS REINF.
9. SEE SHEET S-702 FOR ADDITIONAL REINF AT OPENINGS.
10. ONLY LARGE OPENINGS ARE LISTED IN REMARKS COLUMN, FOR ADDITIONAL SMALLER OPENINGS SEE ARCHITECTURAL, MECHANICAL, AND ELECTRICAL SHEETS.

STANDARD HOOKS IN TENSION PER (ACI 318M-05)

HOOK DEVELOPMENT LENGTH (mm)	
BAR SIZE	f'c 28 MPa
#10	180
#13	250
#16	300
#19	380
#22	430
#25	480
#29	560

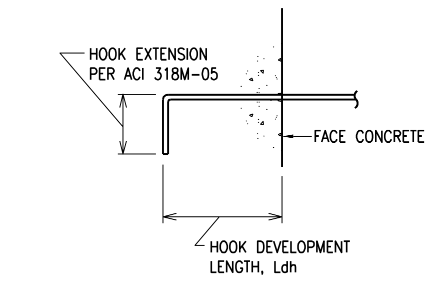

NOTES:
1. CONCRETE IS NORMAL WEIGHT CONCRETE.
2. BAR YIELD STRENGTH, fy = 420 MPa
3. SIDE COVER REQUIREMENTS OF ACI SECT. 12.5.3 ARE ASSUMED TO NOT BE MET.
4. TIE OR STIRRUP REQUIREMENTS OF ACI SECT. 12.5.3 ARE ASSUMED TO NOT BE MET.
5. REDUCTION FOR EXCESS REINFORCEMENT IS NOT TAKEN.
6. HOOK DEVELOPMENT LENGTH IS VALID FOR 180° HOOKS ALSO.

CAST-IN-PLACE CONC LINTEL SCHEDULE (TYP)

OPENING TYPE OR SIZE, BEAM LOCATION OR TYPE	MAX SPAN (mm)	LINTEL DEPTH (mm)	REINFORCING BOTTOM
WALL OPENING	4000	600	(2)-#16 T&B
WALL OPENING	1900	400	(2)-#16 T&B
WALL OPENING	1000	200	(2)-#16 B

1. STRUCTURAL SHEETS DO NOT INDICATE ALL OPENINGS IN MASONRY WALLS. VERIFY NUMBER, SIZE AND LOCATION OF ALL OPENINGS IN MASONRY WALLS FROM ARCHITECTURAL SHEETS AND APPROVED PLUMBING, MECHANICAL, AND ELECTRICAL SHOP DRAWINGS.
2. PROVIDE 200mm BEARING EA END.
3. FOR HEAD DETAILS REFER TO ARCHITECTURAL SHEETS.
4. REINFORCING SHALL BE ASTM A615M, GRADE 420.
5. CONTRACTOR SHALL SUBMIT FOR APPROVAL SHOP DRAWINGS AND SCHEDULES SHOWING SIZE, SPAN, REINFORCEMENT, DETAILS, LOCATIONS, ETC.

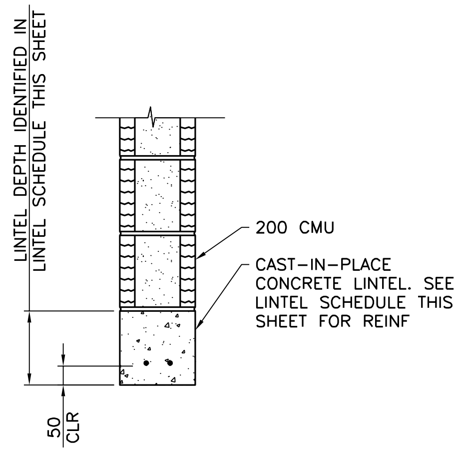

LINTEL DETAIL
SCALE: NONE

BEAM SCHEDULE

MARK	BEAM SIZE (mm)		BEAM REINFORCING						STIRRUPS			REMARKS
	DEPTH	WIDTH	BL	BS	TL	TS	TC	M	SIZE	TYPE	SPACING	-----
GRADE BEAMS												
GB1	750	400	(3)-#22	---	(3)-#22	---	---	(2)-#16	#13	S3 + T9	300	-----
GB2	550	400	(3)-#22	(2)-#22	(3)-#22	---	---	(1)-#16	#13	S3 + T9	220	-----
ROOF BEAMS												
RB1	800	400	(3)-#22	---	(3)-#22	---	---	(2)-#16	#13	S3 + T9	300	-----
RB2	800	400	(3)-#25	---	(3)-#25	---	---	(2)-#16	#13	S3 + T9	300(4)	
RB3	1200	400	(3)-#25	---	(3)-#25	---	---	(3)-#16	#13	S3 + T9	300	
RB4	1200	500	(5)-#25	(5)-#25	(3)-#25	---	---	(3)-#16	#13	S3 + T9	300	
RB5	800	400	(3)-#22	---	(3)-#22	---	---	(2)-#16	#13	S3 + T9	300(4)	
B1	800	400	(3)-#22	---	(3)-#22	---	---	(2)-#16	#13	S3 + T9	300(4)	

NOTES:
1. WORK THIS SCHEDULE WITH BEAM REINFORCING DETAILS ON SHEETS S-503 AND S-504.
2. HOOKS SHOWN ON SECTIONS AND DETAILS SHALL BE 90° STD UON.
3. M BARS ARE SIDE BARS EACH FACE.
4. TIE SPACING AT 100 IN NODAL ZONES. SEE 2-STORY COLUMN REINFORCEMENT DETAIL ON S-504.

COLUMN SCHEDULE

COLUMN MARK / DESCRIPTION	GRID 1	GRIDS 2, 3, 4	---	---
TYPE	12-BAR	12-BAR	---	---
DIMENSION	800mm SQ.	800mm SQ.	---	---
VERTICAL REINFORCEMENT	(12)-#29	(12)-#29	---	---
TIES	#13 @ 300	#13 @ 300(5)	---	---
TOP OF ROOF ELEVATION	3800mm	8200mm	---	---
TOP OF GRADE BEAM ELEVATION	-200mm	-200mm	---	---
TOP OF FOOTING ELEVATION	-950mm	-950mm	---	---

NOTES:
1. WORK THIS SCHEDULE WITH COLUMN DETAILS ON SHEET S-504.
2. SEE FOOTING SCHEDULE ON THIS SHEET FOR FOOTING INFORMATION.
3. COLUMN TIES: INTERIOR TIES TO MATCH SIZE & SPACING OF PERIMETER TIES.
4. HOOKS SHOWN ON SECTIONS & DETAILS SHALL BE 90° STD UNO.
5. TIE SPACING AT 100 IN NODAL ZONES. SEE 2-STORY COLUMN REINFORCEMENT DETAIL ON S-504.

APPROVED:
A/E DESIGNER OF RECORD
SEAL:

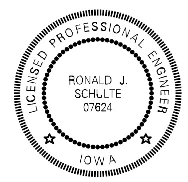

UNLESS NOTED OTHERWISE, LINEAR DIMENSIONS SHOWN ARE IN MILLIMETERS.

US ARMY CORPS OF ENGINEERS
AFGHANISTAN ENGINEER DISTRICT

Designed by: RJS | Dwn by: DAS | Ckd by: CSP | Reviewed by: MRH | Submitted by: STANLEY | Date: 5/19/10 | Rev: 0

U.S. ARMY ENGINEER DISTRICT, AFGHANISTAN
CORPS OF ENGINEERS
APO AE 96338

Stanley Consultants INC.

AFGHAN NATIONAL ARMY KANDAKS SITE ADAPT DESIGN
FITNESS CENTER
SCHEDULES

SHEET REFERENCE NUMBER:
E
S-601

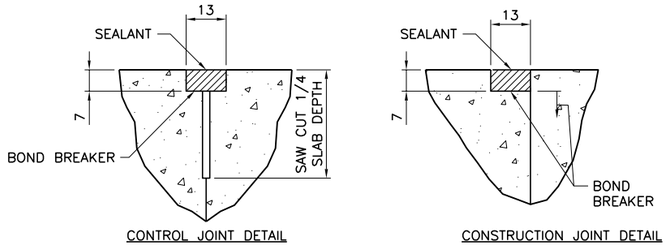

TYPICAL CONCRETE SLAB JOINT FINISH DETAIL (1 / S-701)

SCALE: NONE

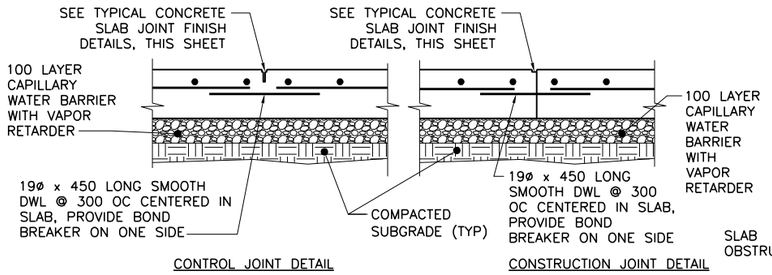

TYPICAL SLAB ON GRADE JOINT DETAIL (2 / S-701)

SCALE: NONE

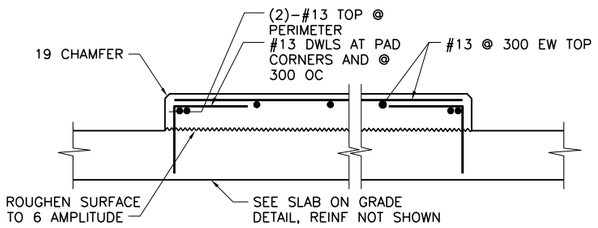

INTERIOR EQUIPMENT PAD DETAIL (3 / S-701)

SCALE: NONE

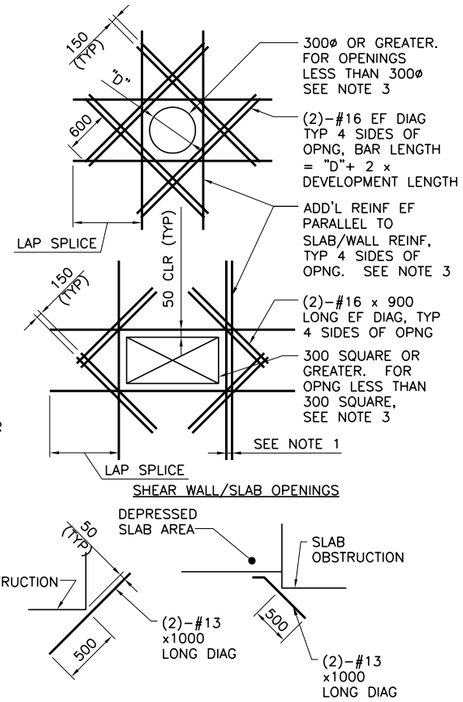

DETAIL NOTES:

1. WHERE MORE THAN ONE ADDITIONAL BAR IS REQUIRED PARALLEL TO THE EXISTING SLAB/WALL REINFORCING THE ADDITIONAL REINFORCING BARS SHALL BE SPACED AT 100 ON CENTER.
2. ADDITIONAL REINFORCING PARALLEL TO THE SLAB/WALL REINFORCING SHALL BE #16 BARS THAT PROVIDE A STEEL AREA ON EACH SIDE OF THE OPENING EQUAL TO 1/2 THE AREA OF THE REINFORCING CUT BY THE OPENING.
3. FOR OPENINGS WITH SIDES OR DIAMETERS LESS THAN 300 SPREAD THE SLAB/WALL REINFORCING TO CLEAR THE OPENING.

ADD'L CONCRETE REINFORCEMENT DETAILS (4 / S-701)

SCALE: NONE

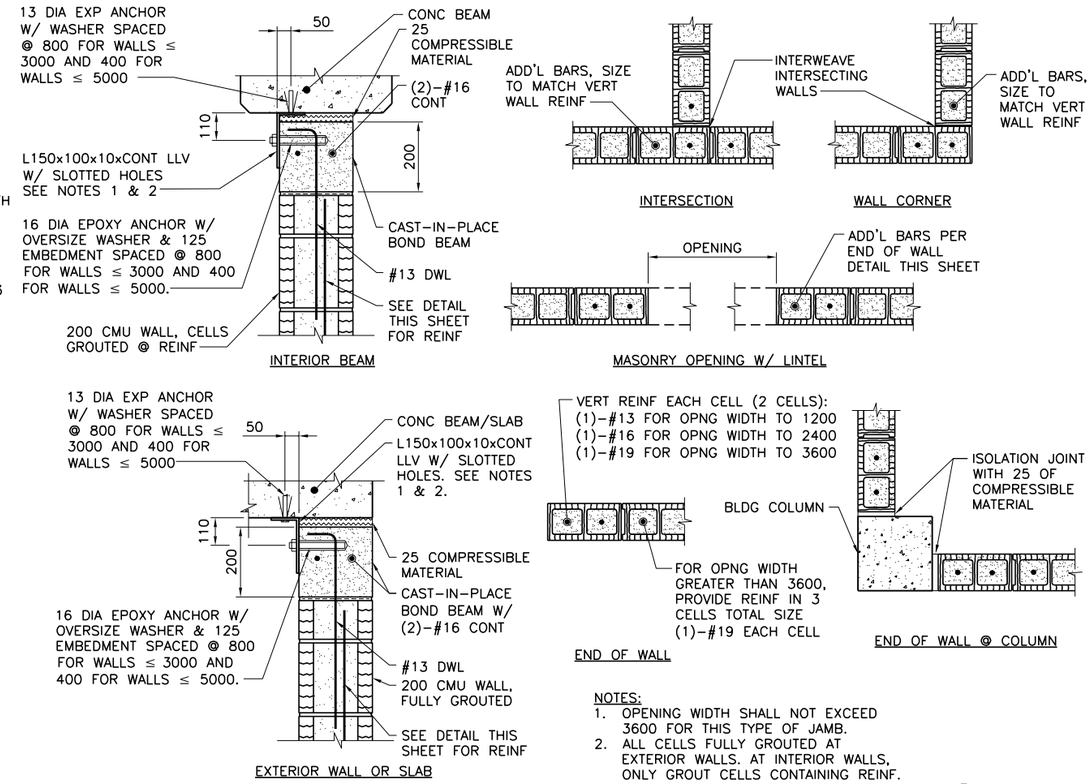

NOTES:

1. PROVIDE 40X20 VERTICAL SLOTTED HOLES IN VERTICAL LEG OF L150X100 CENTERED ON ALL 16 DIA EPOXY ANCHORS.
2. PROVIDE 25X14 SLOTTED HOLES (WITH SLOTS PARALLEL TO WALL) IN HORIZONTAL LEG ON L150X100 CENTERED ON ALL 13 DIA EXPANSION ANCHORS.
3. CAST-IN-PLACE BOND BEAM SHOWN AT TOP OF WALL IS ALSO APPLICABLE FOR INTERMEDIATE AND STARTER COURSE BOND BEAMS WITHIN WALL.

TOP OF CMU WALL BRACING DETAILS (5 / S-701)

SCALE: NONE

NOTES:

1. OPENING WIDTH SHALL NOT EXCEED 3600 FOR THIS TYPE OF JAMB.
2. ALL CELLS FULLY GROUTED AT EXTERIOR WALLS. AT INTERIOR WALLS, ONLY GROUT CELLS CONTAINING REINF.

TYP CMU DETAILS (6 / S-701)

SCALE: NONE

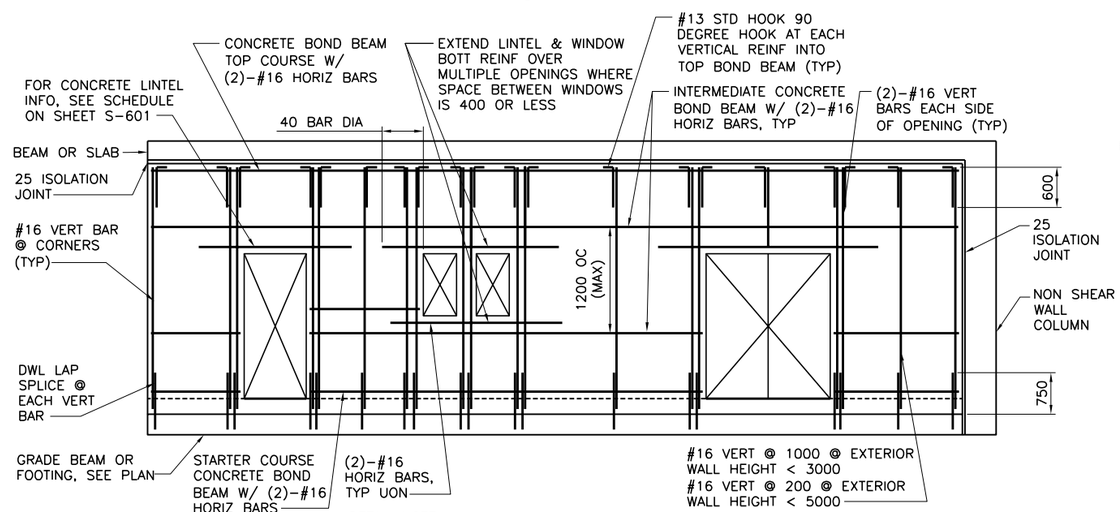

DETAIL NOTE:

1. CENTER VERT REINF IN WALL.
2. GROUT ALL CMU CELLS.
3. REFERENCE ARCH DWGS FOR JOINT INFORMATION
4. DOWELS BETWEEN TOP BOND BEAM AND BEAM/SLAB ABOVE (INCLUDING EMBEDDED PIPE SLEEVE) NOT SHOWN FOR CLARITY. SEE SPECIFIC S-500 SERIES DWGS FOR INFO.

TYPICAL EXTERIOR CMU WALL REINFORCING DETAIL (7 / S-701)

SCALE: NONE

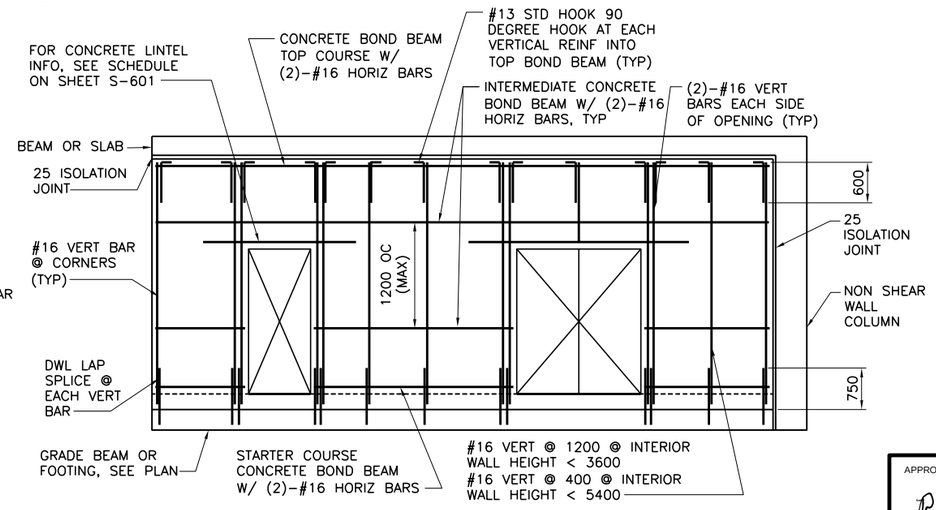

DETAIL NOTE:

1. CENTER VERT REINF IN WALL.
2. GROUT CMU CELLS THAT CONTAIN REINFORCING.
3. REFERENCE ARCH DWGS FOR JOINT INFORMATION
4. DOWELS BETWEEN TOP BOND BEAM AND BEAM/SLAB ABOVE (INCLUDING EMBEDDED PIPE SLEEVE) NOT SHOWN FOR CLARITY. SEE SPECIFIC S-500 SERIES DWGS FOR INFO.

TYPICAL INTERIOR CMU WALL REINFORCING DETAIL (8 / S-701)

SCALE: NONE

UNLESS NOTED OTHERWISE, LINEAR DIMENSIONS SHOWN ARE IN MILLIMETERS.

APPROVED:

A/E DESIGNER OF RECORD

SEAL:

LICENSED PROFESSIONAL ENGINEER RONALD J. SCHULTE 07624 IOWA

US ARMY CORPS OF ENGINEERS
AFGHANISTAN ENGINEER DISTRICT

Mark	Description	Date	Appr.	Mark	Description	Date	Appr.

Designed by: RJS | Date: 5/19/10 | Rev: 0
Dwn by: DAS | Ckd by: CSP | Design file no.
Reviewed by: MRH | Drawing code:
Submitted by: STANLEY | File name: 07200SE-S570101 | Plot date: 20100520153 | Plot scale:

U.S. ARMY ENGINEER DISTRICT, AFGHANISTAN
CORPS OF ENGINEERS
APO AE 96338

Stanley Consultants INC.

AFGHAN NATIONAL ARMY
KANDAHAR
SITE ADAPT DESIGN

FITNESS CENTER

TYPICAL DETAILS
SHEET 1

SHEET REFERENCE NUMBER:
E
S-701

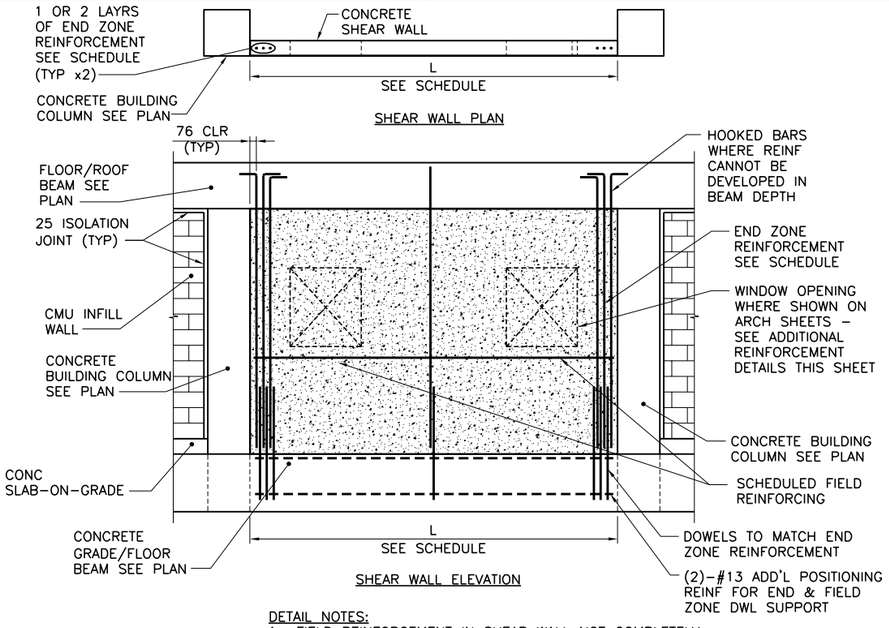

DETAIL NOTES:
1. FIELD REINFORCEMENT IN SHEAR WALL NOT COMPLETELY SHOWN FOR CLARITY.
2. SINGLE LAYER REINF CENTERED IN WALL.
3. 2 LAYERS REINF 25mm CLEAR FROM EACH FACE.
4. MINIMUM CONC CLEAR DISTANCE FOR END ZONE REINF = 76
5. SEE CONC SHEAR WALL SCHEDULE ON SHEET S-601
6. SEE ARCH DWGS FOR ISOLATION JOINT INFORMATION

TYPE "C" SHEAR WALL DETAIL (1 / S-702)
SCALE: NONE

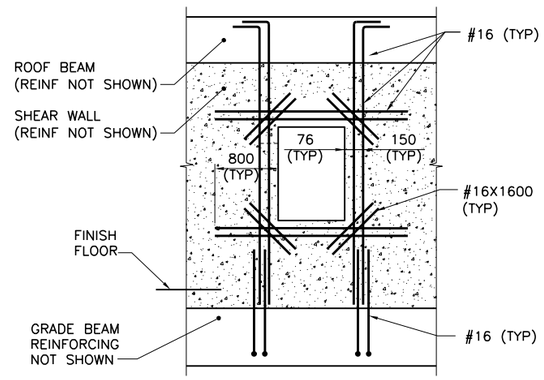

NOTES:
1. OPENINGS NOT ALLOWED IN END ZONES.
2. DISCONTINUE FIELD REINFORCEMENT 50 FROM OPENING.
3. WALLS WITH 2 LAYERS REINF WILL HAVE ADDITIONAL REINF EACH FACE.

ADDITIONAL REINFORCING AT OPENINGS IN SHEAR WALLS (2 / S-702)
SCALE: NONE

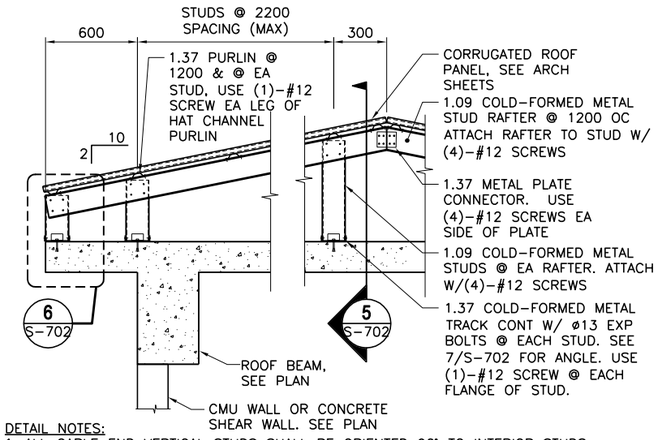

DETAIL NOTES:
1. ALL GABLE END VERTICAL STUDS SHALL BE ORIENTED 90° TO INTERIOR STUDS & SPACED @ 600 OC. GABLE END RAFTER SHALL BE 1.37 METAL TRACK SPANNING CONTINUOUSLY OVER GABLE END STUDS. INSET GIRTS AT GABLE END SHALL BE 1.09 COLD-FORMED METAL STUDS @ 1200 OC ATTACHED VIA 1.37 THICKNESS CLIP ANGLE W/ (2) #12 SCREWS EA LEG.
2. ALL INTERIOR, NON-GABLE END VERTICAL STUDS GREATER THAN 2400 IN LENGTH SHALL BE BACK-TO-BACK W/ #12 SCREWS @ 200 OC STAGGERED.

TYPICAL OVERBUILT ROOF FRAMING DETAIL (3 / S-702)
SCALE: NONE

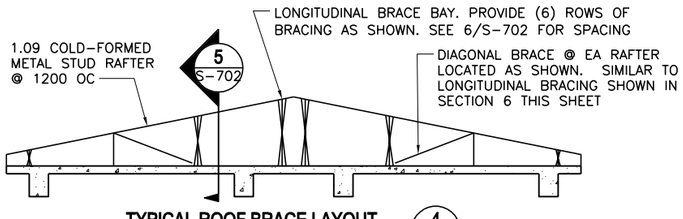

TYPICAL ROOF BRACE LAYOUT (4 / S-702)
SCALE: NONE

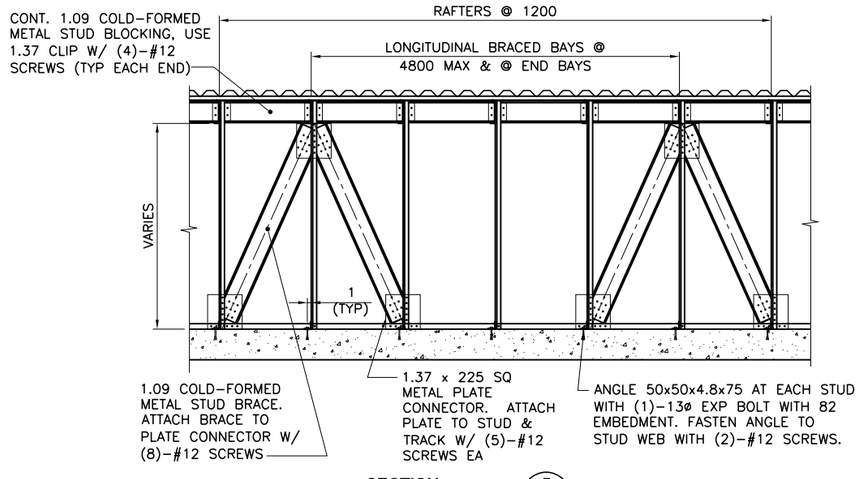

SECTION (5 / S-702)
SCALE: NONE

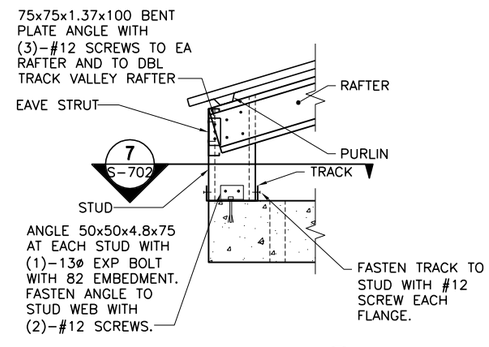

DETAIL (6 / S-702)
SCALE: NONE

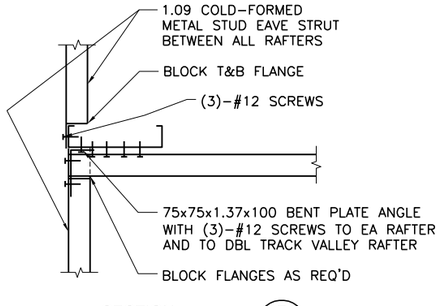

SECTION (7 / S-702)
SCALE: NONE

UNLESS NOTED OTHERWISE, LINEAR DIMENSIONS SHOWN ARE IN MILLIMETERS.

APPROVED:
A/E DESIGNER OF RECORD
SEAL:
LICENSED PROFESSIONAL ENGINEER RONALD J SCHULTE 07624 IOWA

US ARMY CORPS OF ENGINEERS
AFGHANISTAN ENGINEER DISTRICT

Mark	Description	Date	Appr.	Mark	Description	Date	Appr.

Rev: 0
Date: 5/19/10
Design file no.
Drawing code:
File name: AFGNDE-S570207
Plot date: 20100505
Plot scale:
Designed by: RJS
Dwn by: DAS
Ckd by: CSP
Reviewed by: MRH
Submitted by: STANLEY

U.S. ARMY ENGINEER DISTRICT, AFGHANISTAN
CORPS OF ENGINEERS
APO AE 96338

Stanley Consultants INC.

AFGHAN NATIONAL ARMY
KANDAKS
SITE ADAPT DESIGN

FITNESS CENTER

TYPICAL DETAILS
SHEET 2

SHEET REFERENCE NUMBER:
E
S-702

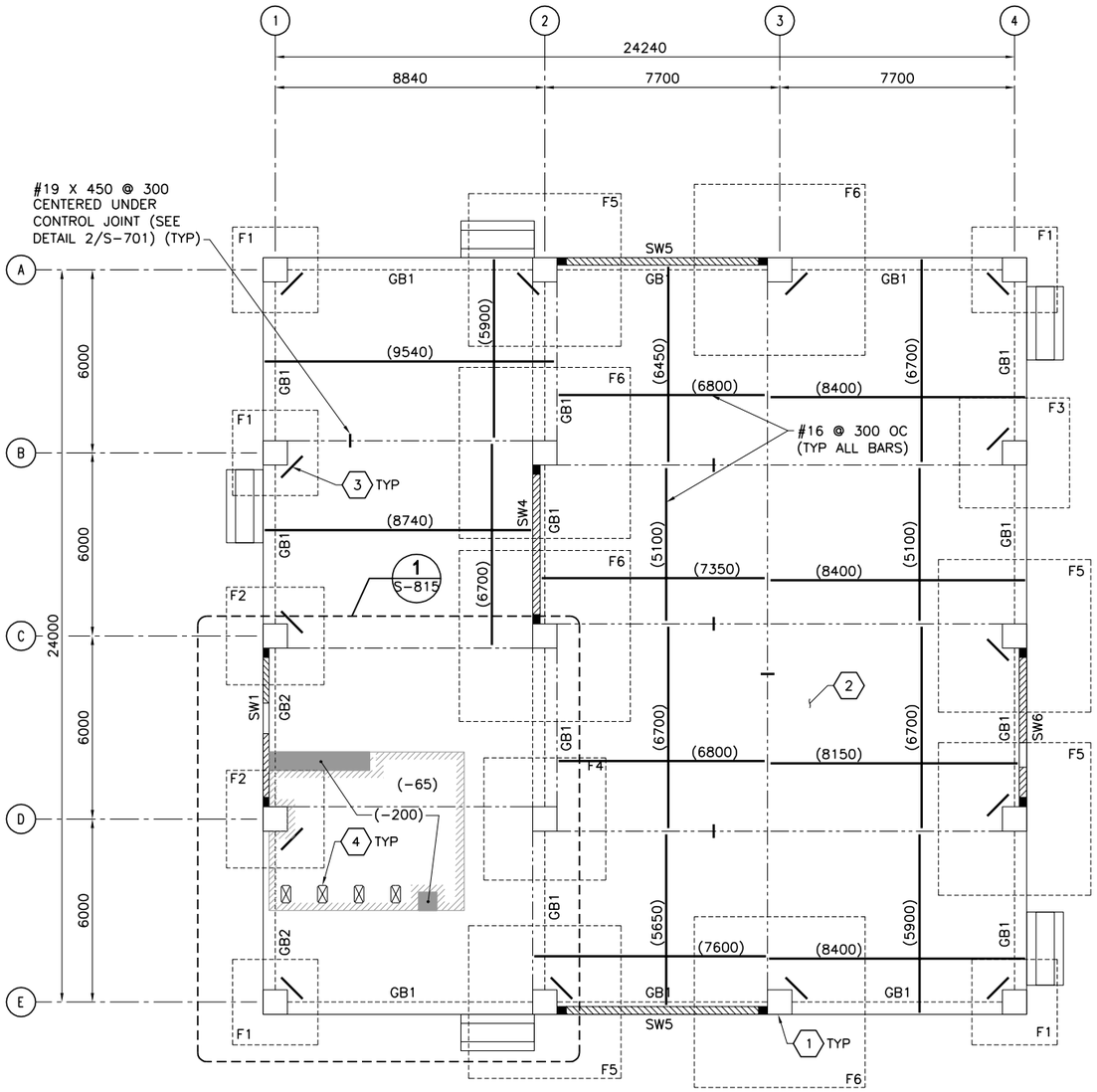

FOUNDATION/SLAB PLAN

SCALE: 1:100

FOUNDATION/SLAB PLAN NOTES:

1. REBAR DETAIL AND PLACEMENT DRAWINGS (800 SERIES) ARE PROVIDED FOR INFORMATION ONLY. REBAR PLACEMENT AND DETAIL DRAWINGS SHALL BE CHECKED AND VALIDATED BY CONSTRUCTION CONTRACTOR.
2. SLAB-ON-GRADE REINFORCING ARE LOCATED 40mm FROM T/SLAB, 50mm FROM EDGES AND CONTROL JOINT. LENGTH NOTED AS THUS (6600)
3. COLUMN FOOTINGS INDICATED BY F# ON PLAN, REFER TO DETAILS ON SHEET S-803.
4. COLUMNS, REFER TO DETAILS ON SHEET S-803.
5. GRADE BEAM INDICATED BY GB# ON PLAN, REFER TO BEAM ELEVATIONS ON SHEET S-804, S-805, S-806, S-807 & S-808.
6. SHEAR WALL INDICATED BY SW# ON PLAN, REFER TO SHEAR WALL DETAILS ON SHEET S-809, S-810, S-811, S-812 & S-813.
7. PROVIDE #16 DOWELS EMBEDDED IN THICKENED FLOOR SLAB TO MATCH MASONRY WALL VERTICAL REINFORCING. DOWELS SHALL HAVE 800 LAP LENGTH AND 250 HOOKS ON BOTTOM. SEE SHEET S-501 FOR DETAILS.

FOUNDATION/SLAB PLAN KEY NOTES: (X)

1. REINFORCING CONCRETE COLUMN (SEE SHEET S-803)
2. REINFORCING CONCRETE SLAB-ON-GRADE.
3. (2) – #13 RE-ENTRANT CORNER BARS (SEE DETAIL 5/S-803)
4. SLAB OPENING – COORDINATE W/ ARCH AND PLUMB DRAWINGS.

FOUNDATION/SLAB PLAN LEGEND:

- SLAB REINFORCING TOP BARS
- REINFORCING CONCRETE SHEAR WALL
- CONTROL JOINT (SEE DETAIL 2/S-701)
- INDICATES DROP SLAB 65mm BELOW FINISH FLOOR
- INDICATES DROP SLAB 200mm BELOW FINISH FLOOR
- SLAB OPENING
- THICKENED SLAB REINFORCING BENEATH CMU WALLS:

  SHORT DIRECTION – #16 X 540 @ 450

  LONG DIRECTION – (2) #16 X (LENGTH OF CMU WALL OR DISTANCE BETWEEN CONTROL JOINTS)

  LOCATE 70 ABOVE BOTTOM OF THICKENED SLAB (SEE 3/S-501 AND 4/S-501)

1 0 1 2 3 4 5 6 7 8 9
1:100

UNLESS NOTED OTHERWISE, LINEAR DIMENSIONS SHOWN ARE IN MILLIMETERS.

US ARMY CORPS OF ENGINEERS
AFGHANISTAN ENGINEER DISTRICT

Mark	Description	Date	Appr.	Mark	Description	Date	Appr.

Designed by: RJS
Dwn by: DAS
Ckd by: CSP
Reviewed by: MRH
Submitted by: STANLEY
Date: 5/19/10
Rev: 0
Design file no.
Drawing code:
File name: FATCONE-S803.DWG
Plot date: 5/20/2010
Plot scale:

U.S. ARMY ENGINEER DISTRICT, AFGHANISTAN
CORPS OF ENGINEERS
APO AE 96338

Stanley Consultants INC.

AFGHAN NATIONAL ARMY
KANDAKS
SITE ADAPT DESIGN

FITNESS CENTER

REBAR REINFORCEMENT DRAWINGS
FOUNDATION AND SLAB PLAN

SHEET REFERENCE NUMBER:
E
S-801

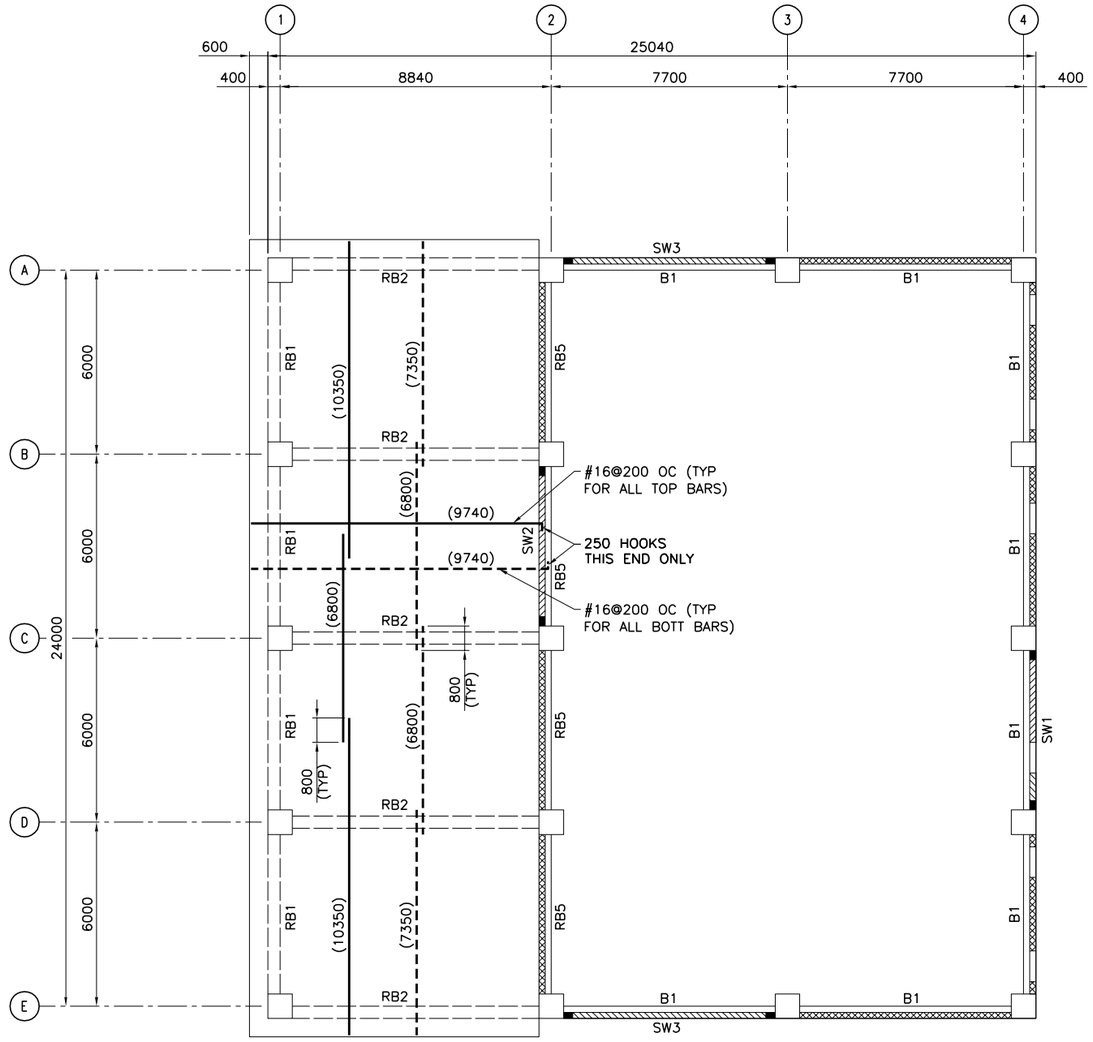

ROOF FRAMING PLAN @ T/SLAB EL 3800

SCALE: 1:100

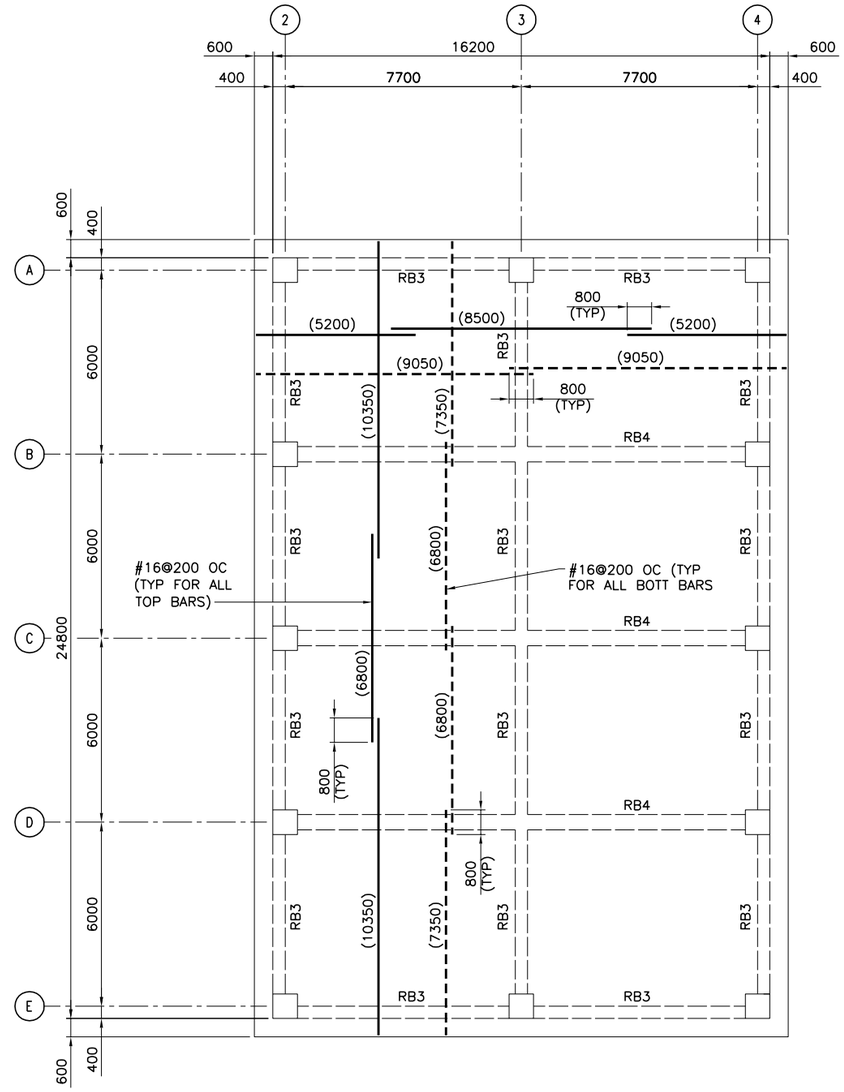

ROOF FRAMING PLAN @ T/SLAB EL 8200

SCALE: 1:100

ROOF FRAMING PLAN NOTES:

1. REBAR DETAIL AND PLACEMENT DRAWINGS (800 SERIES) ARE PROVIDED FOR INFORMATION ONLY. REBAR PLACEMENT AND DETAIL DRAWINGS SHALL BE CHECKED AND VALIDATED BY CONSTRUCTION CONTRACTOR.
2. ROOF SLAB REINFORCING BAR LENGTH IS NOTED THUS (6600).
3. SLAB REBAR COVER AT T&B IS 25mm, 50mm AT EDGES. REFER TO DETAIL 7/S-803.
4. OMIT SLAB REINFORCING PARALLEL TO BEAMS WITHIN BEAM LIMITS.
5. ROOF BEAM INDICATED BY RB# ON PLAN. REFER TO BEAM ELEVATIONS ON SHEET S-804, S-805, S-806, S-807 & S-808.

ROOF FRAMING PLAN KEY NOTES: (X)

1. CONC ROOF SLAB.
2. REINF CONC COLUMN (BELOW CONC ROOF SLAB) (SEE SHEET S-803)

ROOF FRAMING PLAN LEGEND:

- - - - - - - - SLAB REINFORCING BOTTOM BARS
———— SLAB REINFORCING TOP BARS

1 0 1 2 3 4 5 6 7 8 9
1:100

UNLESS NOTED OTHERWISE, LINEAR DIMENSIONS SHOWN ARE IN MILLIMETERS.

US ARMY CORPS OF ENGINEERS
AFGHANISTAN ENGINEER DISTRICT

Mark	Description	Date	Appr.	Mark	Description	Date	Appr.

Designed by: RJS
Date: 5/19/10
Rev: 0
Dwn by: DAS
Ckd by: CSP
Design file no.
Drawing code:
Reviewed by: MRH
Submitted by: STANLEY
File name: 07200SE.SF802.RN
Plot date: 20100520153
Plot scale:

U.S. ARMY ENGINEER DISTRICT, AFGHANISTAN
CORPS OF ENGINEERS
APO AE 96338

Stanley Consultants INC.

AFGHAN NATIONAL ARMY
KANDAKS
SITE ADAPT DESIGN

FITNESS CENTER

REBAR REINFORCEMENT DRAWINGS
ROOF FRAMING PLAN

SHEET REFERENCE NUMBER:
E
S-802

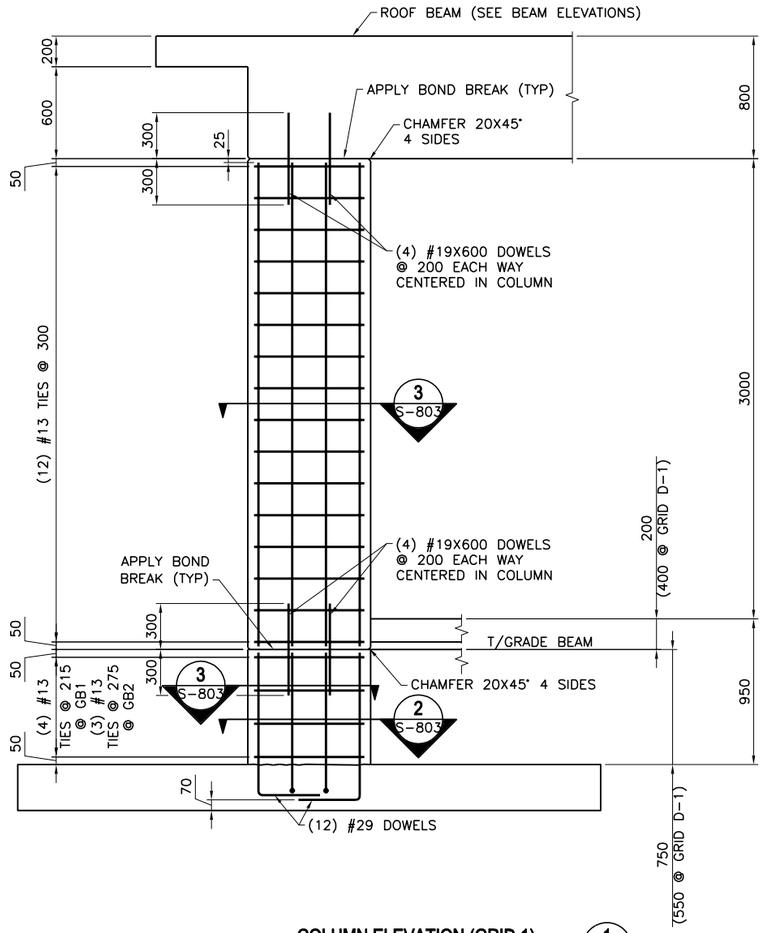

COLUMN ELEVATION (GRID 1) 1/S-803

SCALE: 1:20

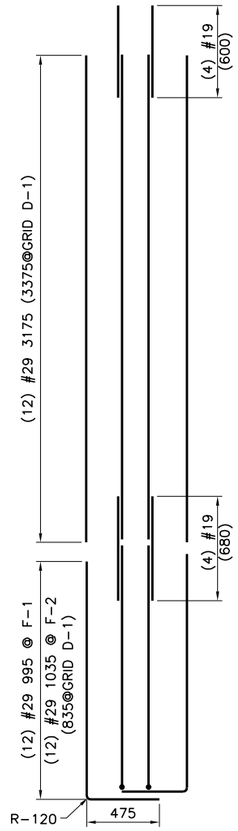

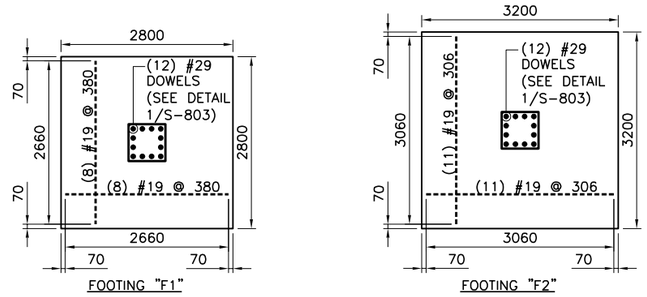

FOOTING PLAN DETAILS 2/S-803

SCALE: 1:50

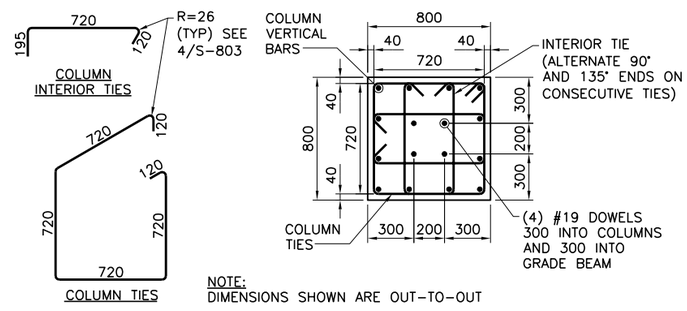

NOTE:
DIMENSIONS SHOWN ARE OUT-TO-OUT

COLUMN SECTIONS 3/S-803

SCALE: 1:20

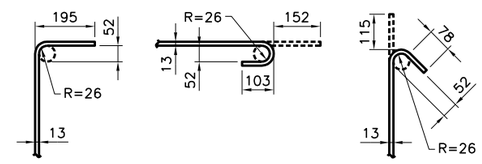

STIRRUP / TIE HOOK DIMENSIONS FOR #13 BAR 4/S-803

SCALE: NONE

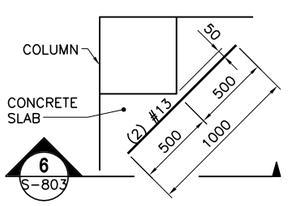

RE-ENTRANT CORNER BAR DETAIL 5/S-803

SCALE: 1:20

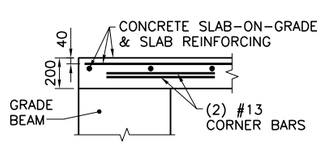

SECTION 6/S-803

SCALE: 1:20

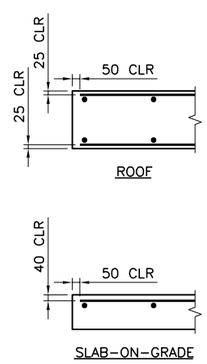

TYPICAL SLAB REBAR CLEARANCES 7/S-803

SCALE: 1:20

FOOTING REINFORCING LEGEND:

- - - - - - - - REINFORCING BOTTOM BARS
———————— REINFORCING TOP BARS

NOTE:

1. REBAR DETAIL AND PLACEMENT DRAWINGS (800 SERIES) ARE PROVIDED FOR INFORMATION ONLY. REBAR PLACEMENT AND DETAIL DRAWINGS SHALL BE CHECKED AND VALIDATED BY CONSTRUCTION CONTRACTOR.

1 .50 0 1
1:20
1 0 1 2 3 4
1:50

UNLESS NOTED OTHERWISE, LINEAR DIMENSIONS SHOWN ARE IN MILLIMETERS.

US ARMY CORPS OF ENGINEERS
AFGHANISTAN ENGINEER DISTRICT

Mark	Description	Date	Appr.	Mark	Description	Date	Appr.

Designed by: RJS
Dwn by: DAS
Ckd by: CSP
Reviewed by: MRH
Submitted by: STANLEY
Date: 5/19/10
Rev: 0
Design file no.
Drawing code:
File name: 07200SE.S800001
Plot date: 2010/05/19
Plot scale:

U.S. ARMY ENGINEER DISTRICT, AFGHANISTAN
CORPS OF ENGINEERS
APO AE 96338

Stanley Consultants INC.

AFGHAN NATIONAL ARMY
KANDAHAR
SITE ADAPT DESIGN

FITNESS CENTER

REBAR REINFORCEMENT DRAWINGS
COLUMN DETAILS – SHEET 1

SHEET REFERENCE NUMBER:
E
S-803

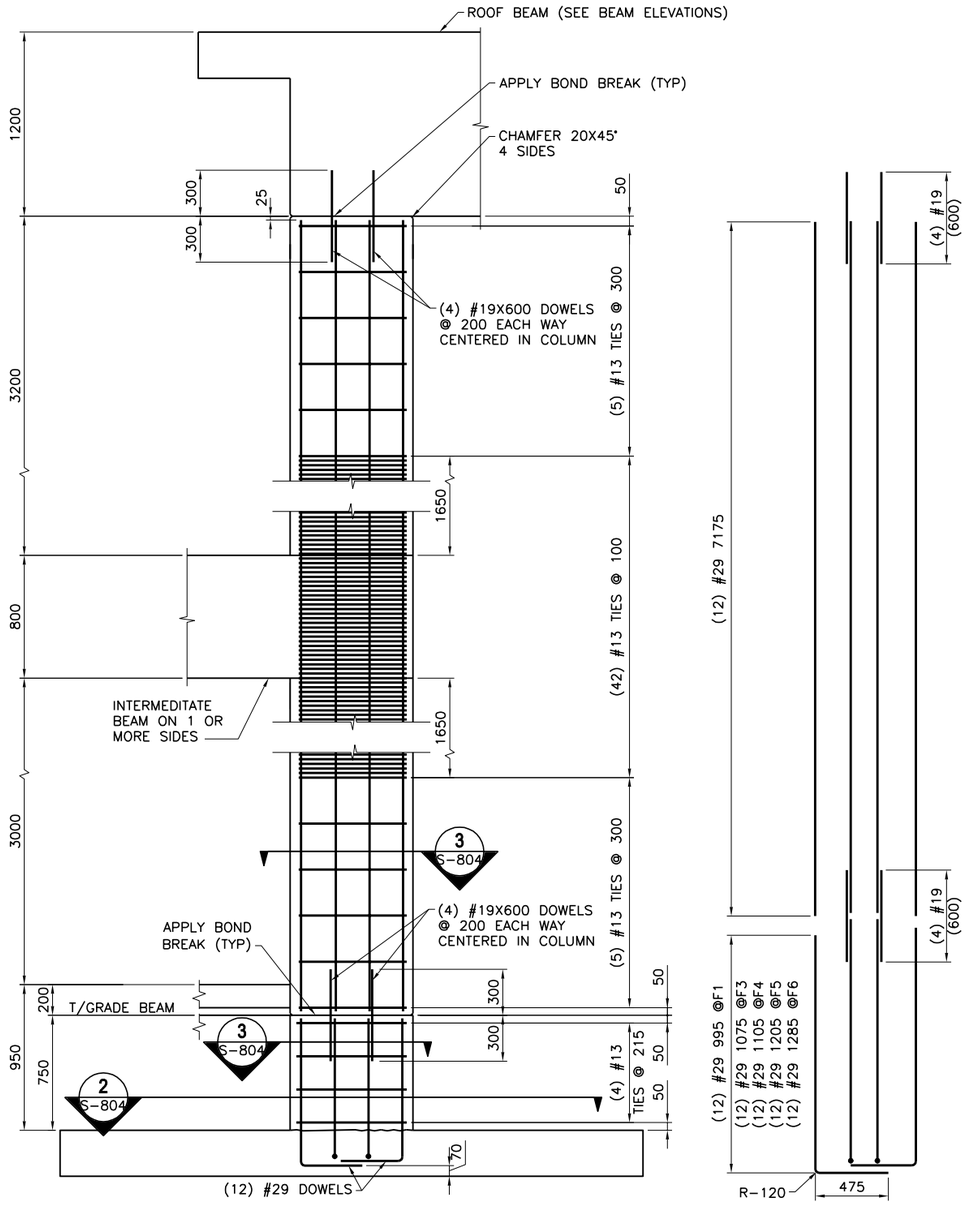

COLUMN ELEVATION (GRID 2, 3 AND 4) 1 / S-804

SCALE: NONE

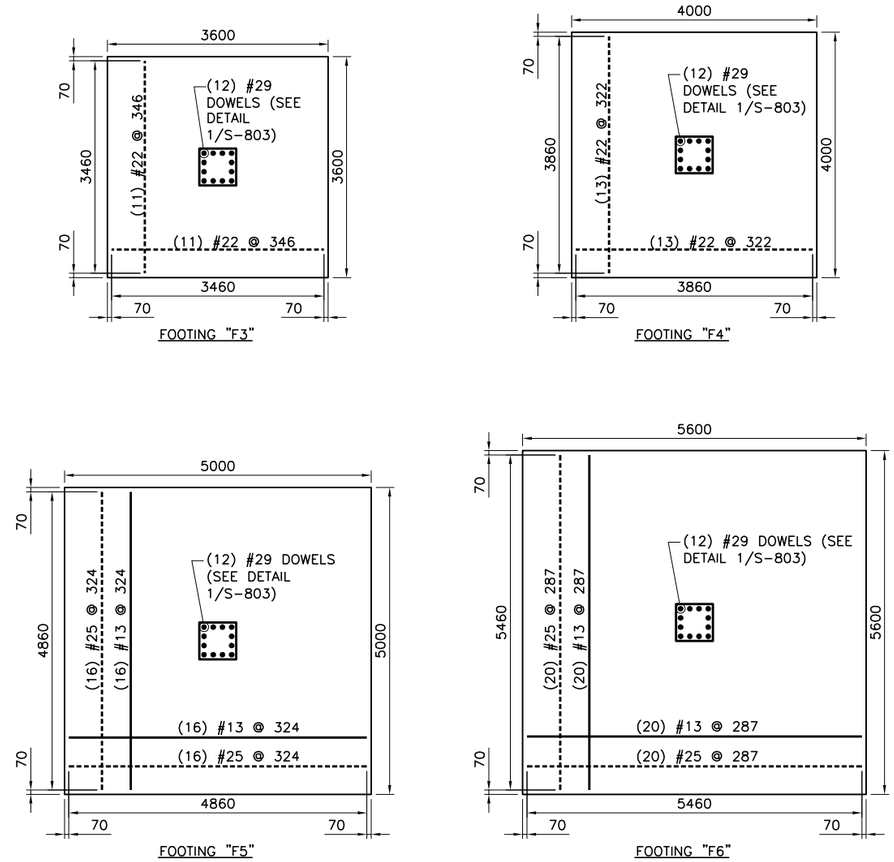

FOOTING PLAN DETAILS 2 / S-804

SCALE: 1:50

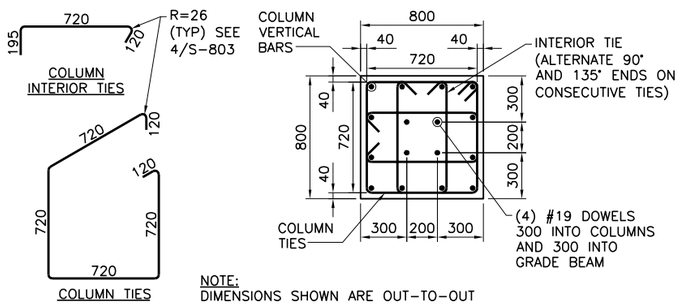

NOTE:
DIMENSIONS SHOWN ARE OUT-TO-OUT

COLUMN SECTIONS 3 / S-804

SCALE: 1:20

FOOTING REINFORCING LEGEND:

- REINFORCING BOTTOM BARS
- REINFORCING TOP BARS

NOTE:

1. REBAR DETAIL AND PLACEMENT DRAWINGS (800 SERIES) ARE PROVIDED FOR INFORMATION ONLY. REBAR PLACEMENT AND DETAIL DRAWINGS SHALL BE CHECKED AND VALIDATED BY CONSTRUCTION CONTRACTOR.

1:20

1:50

UNLESS NOTED OTHERWISE, LINEAR DIMENSIONS SHOWN ARE IN MILLIMETERS.

US ARMY CORPS OF ENGINEERS
AFGHANISTAN ENGINEER DISTRICT

Mark	Description	Date	Appr.	Mark	Description	Date	Appr.

Rev: 0
Date: 5/19/10
Design file no.
Drawing code:
File name: H:\0\0\0\0\E-S804.dgn
Plot date: 2010/10/05/13
Plot scale:

Designed by: RJS
Dwn by: DAS
Ckd by: CSP
Reviewed by: MRH
Submitted by: STANLEY

U.S. ARMY ENGINEER DISTRICT, AFGHANISTAN
CORPS OF ENGINEERS
APO AE 96338

Stanley Consultants INC.

AFGHAN NATIONAL ARMY
KANDAHAR
SITE ADAPT DESIGN

FITNESS CENTER

REBAR REINFORCEMENT DRAWINGS
COLUMN DETAILS – SHEET 2

SHEET REFERENCE NUMBER:
E
S-804

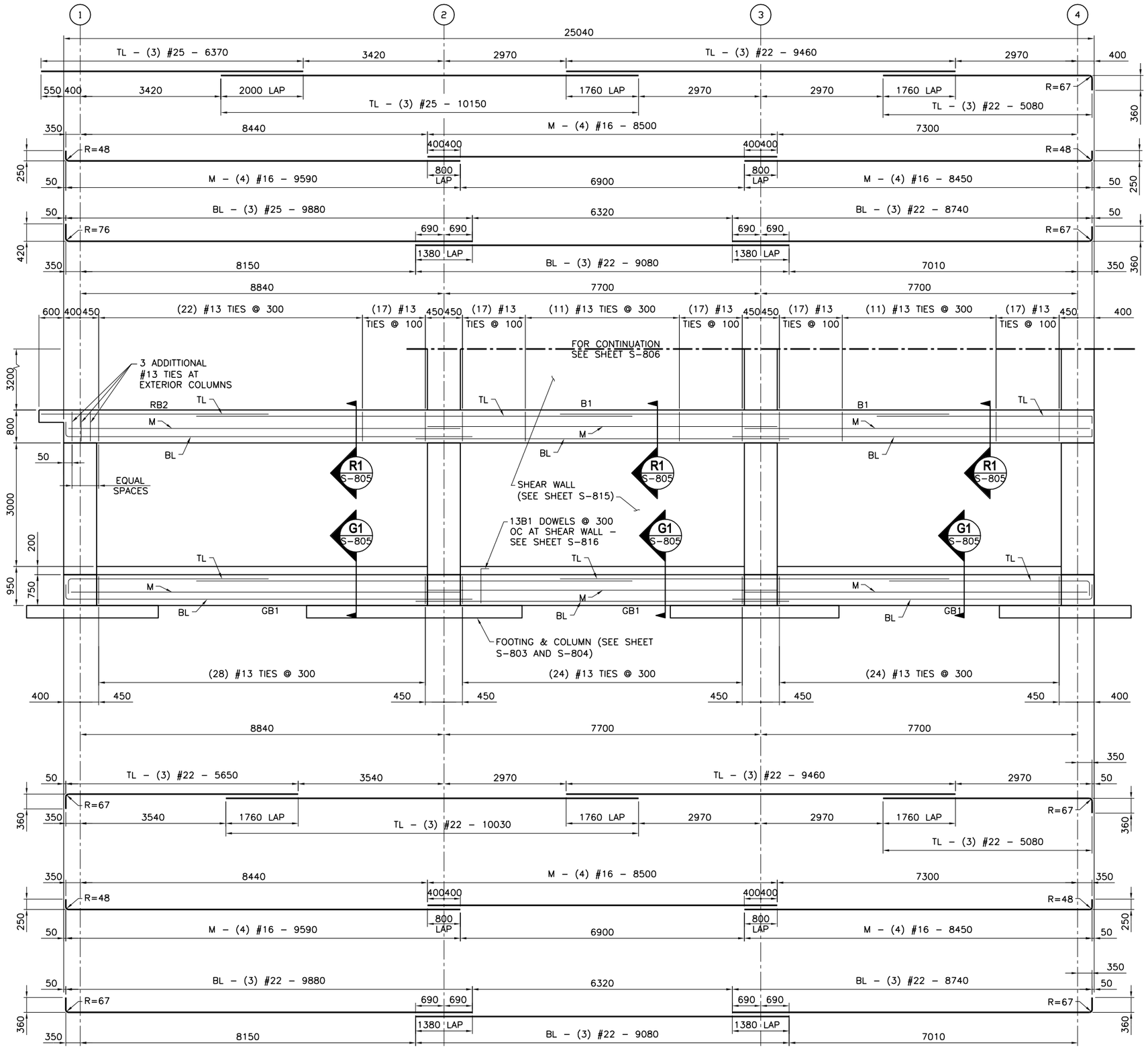

BEAM ELEVATION ALONG GRID LINES A AND E

SCALE: NONE

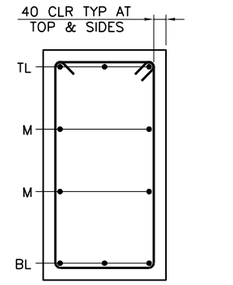

SECTION R1 / S-805

SCALE: 1:10

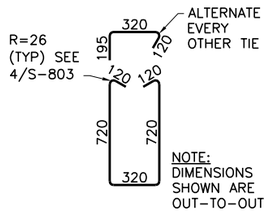

ROOF BEAM TIE DIMENSIONS

SCALE: 1:20

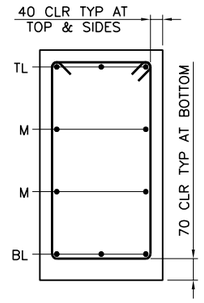

SECTION G1 / S-805

SCALE: 1:10

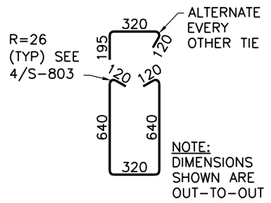

GRADE BEAM TIE DIMENSIONS

SCALE: 1:20

ABBREVIATION LEGEND

RB = ROOF BEAM
GB = GRADE BEAM
TL = BEAM TOP REINFORCEMENT BARS
BL = BEAM BOTTOM REINFORCEMENT BARS
BS = BEAM ADDITIONAL BOTTOM REINFORCEMENT BARS
M = BEAM MIDDLE REINFORCEMENT BARS

NOTES:

1. REBAR DETAIL AND PLACEMENT DRAWINGS (800 SERIES) ARE PROVIDED FOR INFORMATION ONLY. REBAR PLACEMENT AND DETAIL DRAWINGS SHALL BE CHECKED AND VALIDATED BY CONSTRUCTION CONTRACTOR.
2. PROVIDE #16 X 1600 DOWELS CAST INTO GRADE BEAMS SPACED TO MATCH MASONRY WALL VERTICAL REINFORCING. TOP OF DOWEL ELEV +800.

0 .50 1.00
1:10
1 .50 0 1
1:20

UNLESS NOTED OTHERWISE, LINEAR DIMENSIONS SHOWN ARE IN MILLIMETERS.

US ARMY CORPS OF ENGINEERS
AFGHANISTAN ENGINEER DISTRICT

Mark	Description	Date	Appr.	Mark	Description	Date	Appr.

Designed by: RJS
Dwn by: DAS
Ckd by: CSP
Reviewed by: MRH
Submitted by: STANLEY
Date: 5/19/10
Rev: 0
Design file no.
Drawing code:
File name: 07200SE.S805001
Plot date: 2010/05/19
Plot scale:

U.S. ARMY ENGINEER DISTRICT, AFGHANISTAN
CORPS OF ENGINEERS
APO AE 96338

Stanley Consultants INC.

AFGHAN NATIONAL ARMY
KANDAKS
SITE ADAPT DESIGN

FITNESS CENTER

REBAR REINFORCEMENT DRAWINGS
BEAM ELEVATIONS – SHEET 1

SHEET REFERENCE NUMBER:
E
S-805

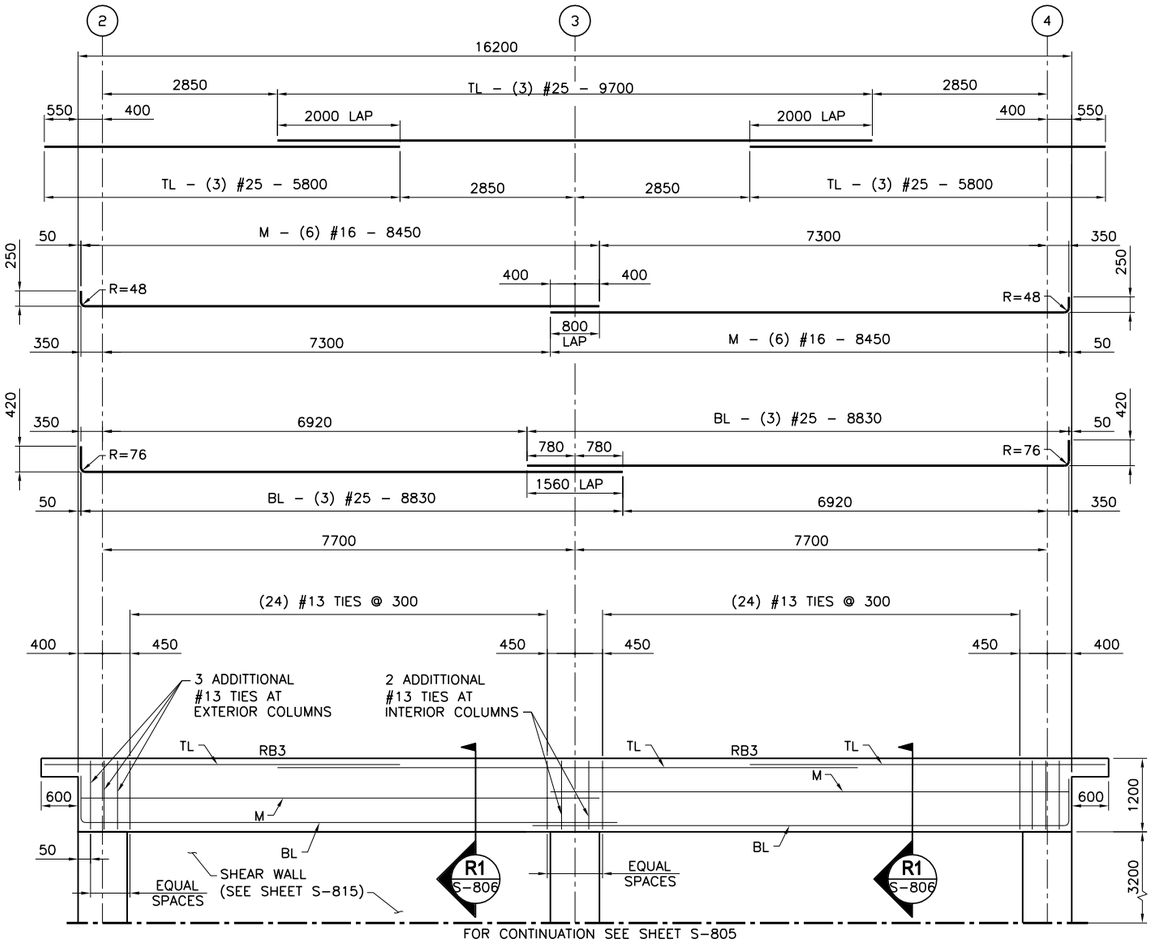

BEAM ELEVATION ALONG GRID LINES A AND E
SCALE: NONE

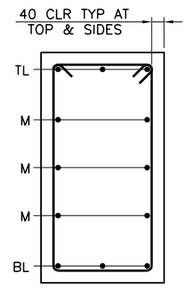

SECTION R1 S-806
SCALE: 1:10

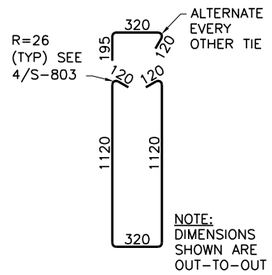

ROOF BEAM TIE DIMENSIONS
SCALE: 1:20

ABBREVIATION LEGEND

RB = ROOF BEAM
GB = GRADE BEAM
TL = BEAM TOP REINFORCEMENT BARS
BL = BEAM BOTTOM REINFORCEMENT BARS
BS = BEAM ADDITIONAL BOTTOM REINFORCEMENT BARS
M = BEAM MIDDLE REINFORCEMENT BARS

NOTES:

1. REBAR DETAIL AND PLACEMENT DRAWINGS (800 SERIES) ARE PROVIDED FOR INFORMATION ONLY. REBAR PLACEMENT AND DETAIL DRAWINGS SHALL BE CHECKED AND VALIDATED BY CONSTRUCTION CONTRACTOR.
2. PROVIDE #16 X 1600 DOWELS CAST INTO GRADE BEAMS SPACED TO MATCH MASONRY WALL VERTICAL REINF TOP OF DOWEL ELEV +800.

0 1 .20 3 1.00
1:40

1 0 1 2 3 4
1:50

UNLESS NOTED OTHERWISE, LINEAR DIMENSIONS SHOWN ARE IN MILLIMETERS.

US ARMY CORPS OF ENGINEERS
AFGHANISTAN ENGINEER DISTRICT

Mark	Description	Date	Appr.	Mark	Description	Date	Appr.

Designed by: RJS
Dwn by: DAS
Ckd by: CSP
Reviewed by: MRH
Submitted by: STANLEY
Date: 5/19/10
Rev: 0
Design file no.
Drawing code:
File name: 07200SE_S806001
Plot date: 20100519
Plot scale:

U.S. ARMY ENGINEER DISTRICT, AFGHANISTAN
CORPS OF ENGINEERS
APO AE 96338

Stanley Consultants INC.

AFGHAN NATIONAL ARMY
KANDAKS
SITE ADAPT DESIGN

FITNESS CENTER

REBAR REINFORCEMENT DRAWINGS
BEAM ELEVATIONS – SHEET 2

SHEET REFERENCE NUMBER:
E
S-806

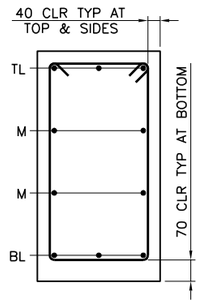

SECTION R1 S-807
SCALE: 1:10

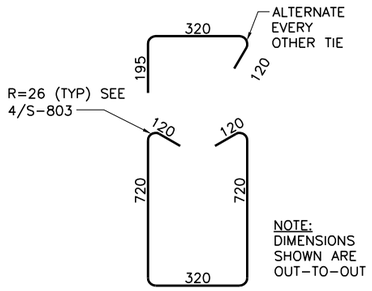

ROOF BEAM RB1 TIE DIMENSIONS
SCALE: 1:10

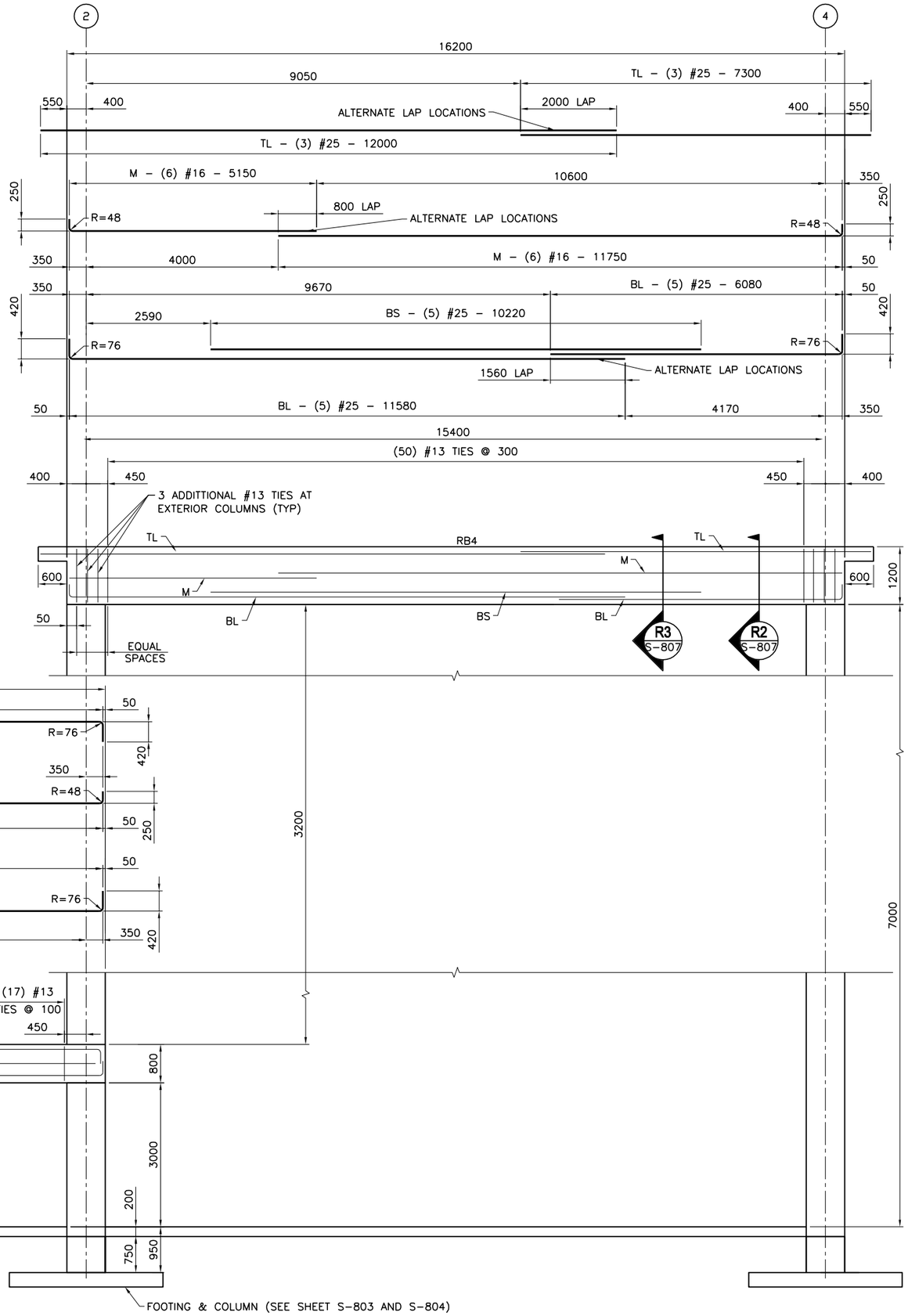

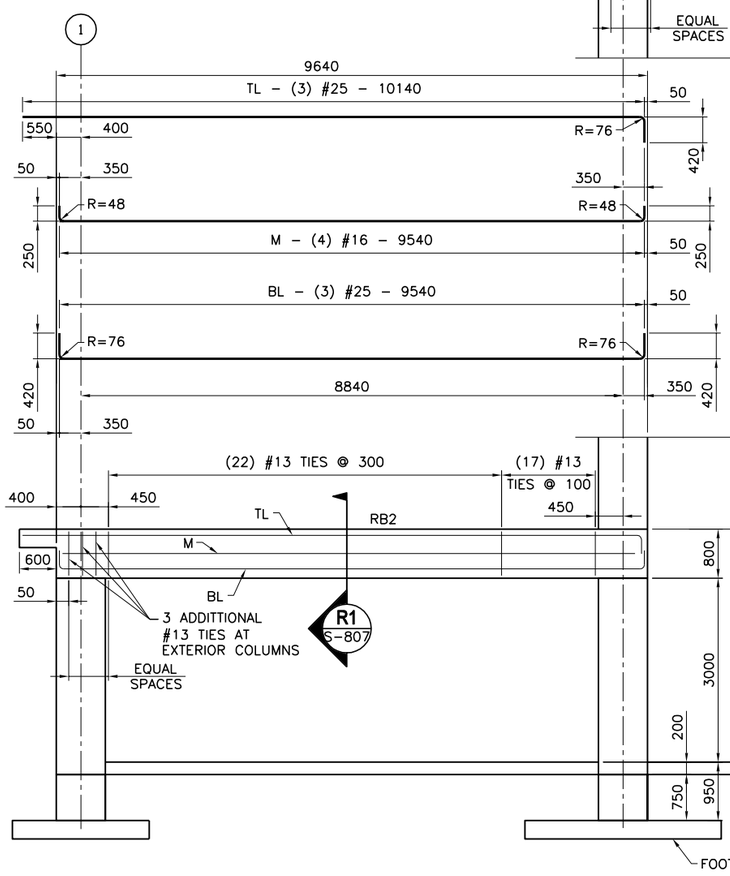

BEAM ELEVATION ALONG GRID LINES B, C AND D
SCALE: NONE

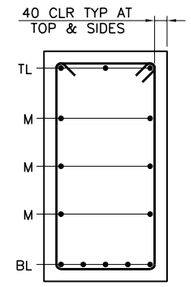

SECTION R2 S-807
SCALE: 1:10

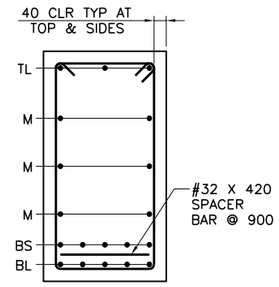

SECTION R3 S-807
SCALE: 1:10

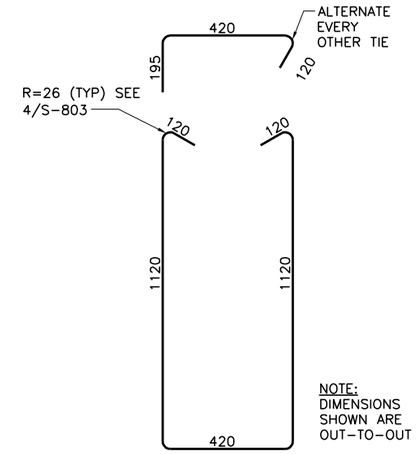

ROOF BEAM RB4 TIE DIMENSIONS
SCALE: 1:10

ABBREVIATION LEGEND

RB = ROOF BEAM
GB = GRADE BEAM
TL = BEAM TOP REINFORCEMENT BARS
BL = BEAM BOTTOM REINFORCEMENT BARS
BS = BEAM ADDITIONAL BOTTOM REINFORCEMENT BARS
M = BEAM MIDDLE REINFORCEMENT BARS

NOTES:

1. REBAR DETAIL AND PLACEMENT DRAWINGS (800 SERIES) ARE PROVIDED FOR INFORMATION ONLY. REBAR PLACEMENT AND DETAIL DRAWINGS SHALL BE CHECKED AND VALIDATED BY CONSTRUCTION CONTRACTOR.
2. PROVIDE #16 X 1600 DOWELS CAST INTO GRADE BEAMS SPACED TO MATCH MASONRY WALL VERTICAL REINF. TOP OF DOWEL ELEV +800.

0 .50 1.00
1:10
UNLESS NOTED OTHERWISE, LINEAR DIMENSIONS SHOWN ARE IN MILLIMETERS.

US ARMY CORPS OF ENGINEERS
AFGHANISTAN ENGINEER DISTRICT

Mark	Description	Date	Appr.	Mark	Description	Date	Appr.

Designed by: RJS
Dwn by: DAS
Ckd by: CSP
Reviewed by: MRH
Submitted by: STANLEY
Date: 5/19/10
Rev: 0
Design file no.
Drawing code:
File name: 07220SE_S800T07
Plot date: 20100520153
Plot scale:

U.S. ARMY ENGINEER DISTRICT, AFGHANISTAN
CORPS OF ENGINEERS
APO AE 96338

Stanley Consultants INC.

AFGHAN NATIONAL ARMY
KANDAKS
SITE ADAPT DESIGN

FITNESS CENTER

REBAR REINFORCEMENT DRAWINGS
BEAM ELEVATIONS – SHEET 3

SHEET REFERENCE NUMBER:
E
S-807

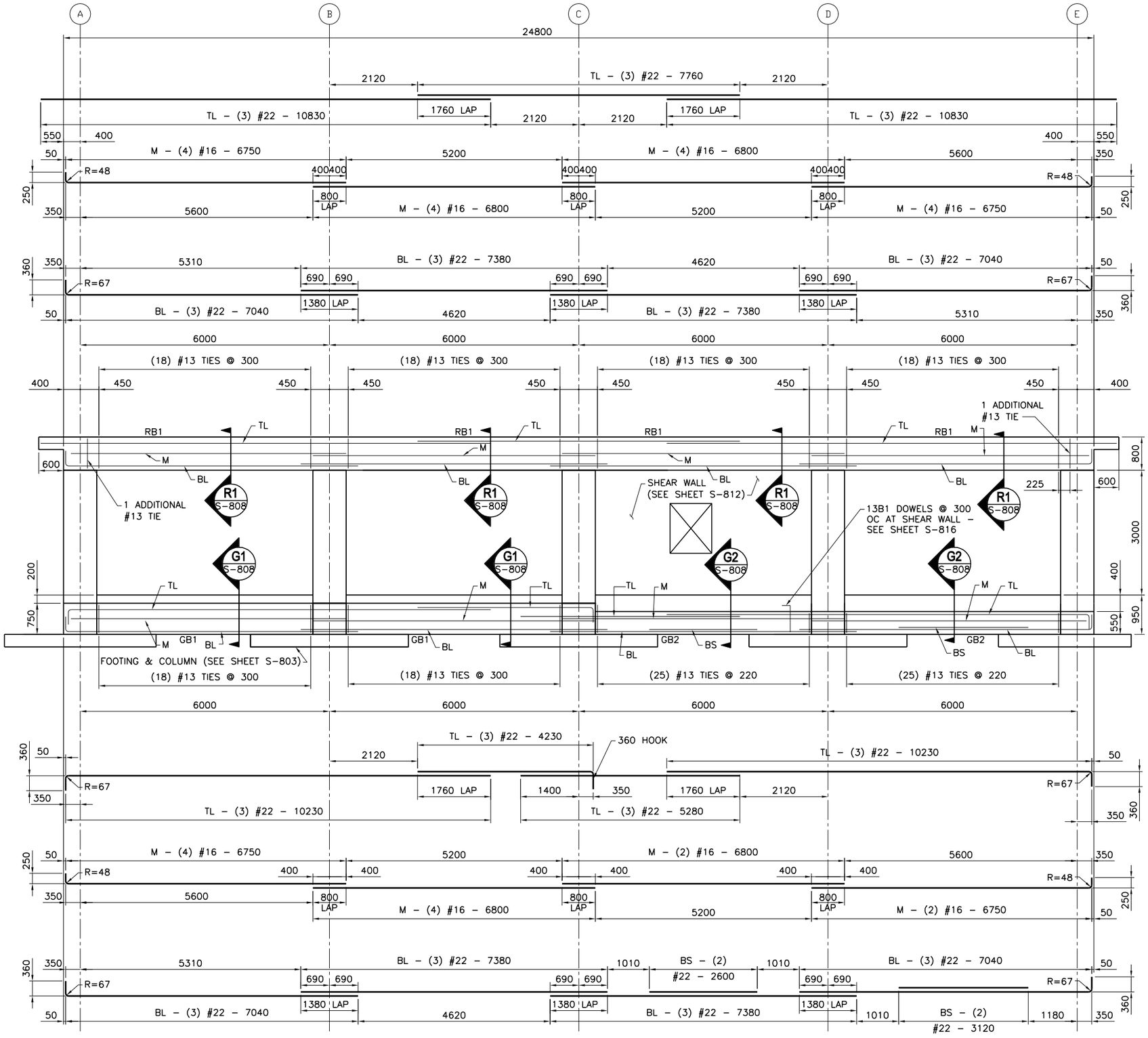

BEAM ELEVATION ALONG GRID LINE 1
SCALE: NONE

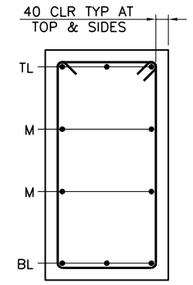

SECTION R1 / S-808
SCALE: 1:10

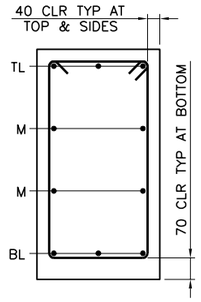

SECTION G1 / S-808
SCALE: 1:10

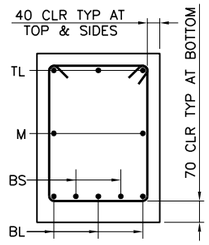

SECTION G2 / S-808
SCALE: 1:10

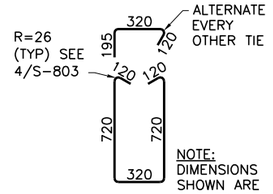

ROOF BEAM TIE DIMENSIONS
SCALE: 1:20

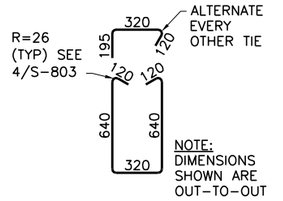

GRADE BEAM GB1 TIE DIMENSIONS
SCALE: 1:20

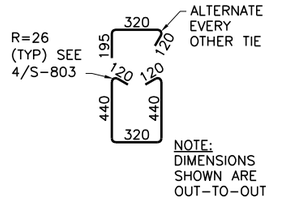

GRADE BEAM GB2 TIE DIMENSIONS
SCALE: 1:20

ABBREVIATION LEGEND

RB = ROOF BEAM
GB = GRADE BEAM
TL = BEAM TOP REINFORCEMENT BARS
BL = BEAM BOTTOM REINFORCEMENT BARS
M = BEAM MIDDLE REINFORCEMENT BARS

NOTES:

1. REBAR DETAIL AND PLACEMENT DRAWINGS (800 SERIES) ARE PROVIDED FOR INFORMATION ONLY. REBAR PLACEMENT AND DETAIL DRAWINGS SHALL BE CHECKED AND VALIDATED BY CONSTRUCTION CONTRACTOR.
2. PROVIDE #16 X 1600 DOWELS CAST INTO GRADE BEAMS SPACED TO MATCH MASONRY WALL VERTICAL REINFORCING. TOP OF DOWEL ELEV +800.

0 .50 1.00
1:10
1 .50 0 1
1:20

UNLESS NOTED OTHERWISE, LINEAR DIMENSIONS SHOWN ARE IN MILLIMETERS.

US ARMY CORPS OF ENGINEERS
AFGHANISTAN ENGINEER DISTRICT

Mark	Description	Date	Appr.	Mark	Description	Date	Appr.

Rev: 0
Date: 5/19/10
Designed by: RJS
Cxd by: CSP
Dwn by: DAS
Reviewed by: MRH
Submitted by: STANLEY
Design file no.
Drawing code:
File name: 5720SAE_S808807
Plot date: 2010/05/19
Plot scale:

U.S. ARMY ENGINEER DISTRICT, AFGHANISTAN
CORPS OF ENGINEERS
APO AE 96338

Stanley Consultants INC.

AFGHAN NATIONAL ARMY
KANDAHAR
SITE ADAPT DESIGN

FITNESS CENTER

REBAR REINFORCEMENT DRAWINGS
BEAM ELEVATIONS – SHEET 4

SHEET REFERENCE NUMBER:
E
S-808

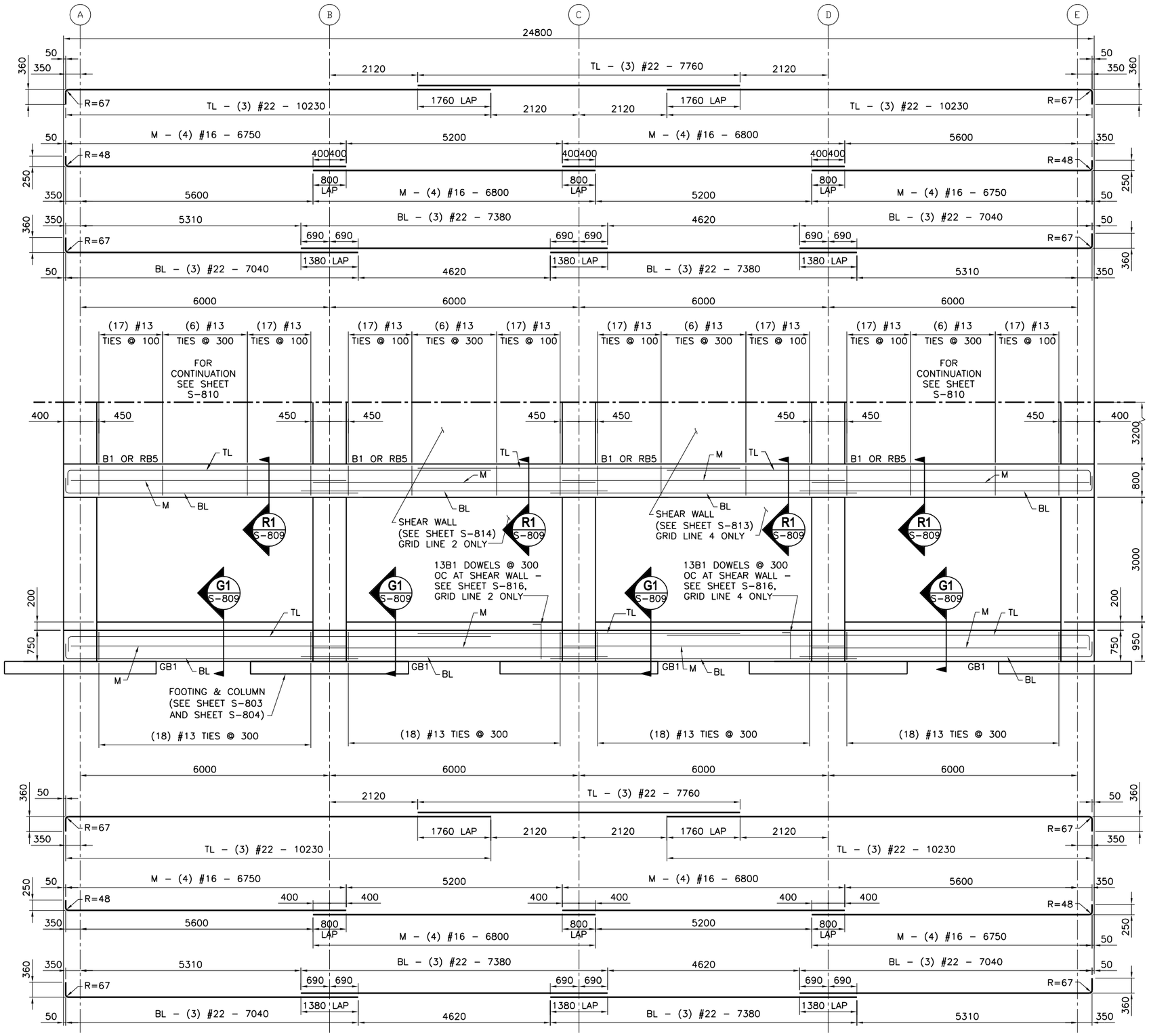

BEAM ELEVATION ALONG GRID LINES 2 AND 4

SCALE: NONE

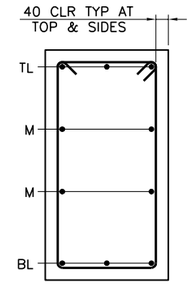

SECTION R1 S-809

SCALE: 1:10

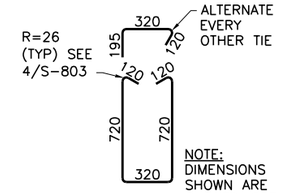

ROOF BEAM TIE DIMENSIONS

SCALE: 1:20

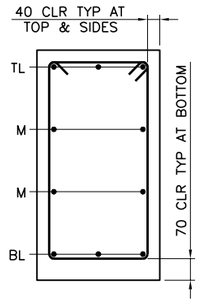

SECTION G1 S-809

SCALE: 1:10

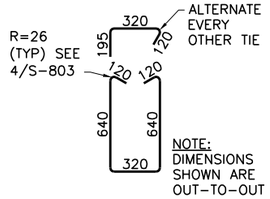

GRADE BEAM TIE DIMENSIONS

SCALE: 1:20

ABBREVIATION LEGEND

RB = ROOF BEAM
GB = GRADE BEAM
TL = BEAM TOP REINFORCEMENT BARS
BL = BEAM BOTTOM REINFORCEMENT BARS
M = BEAM MIDDLE REINFORCEMENT BARS

NOTES:

1. REBAR DETAIL AND PLACEMENT DRAWINGS (800 SERIES) ARE PROVIDED FOR INFORMATION ONLY. REBAR PLACEMENT AND DETAIL DRAWINGS SHALL BE CHECKED AND VALIDATED BY CONSTRUCTION CONTRACTOR.
2. PROVIDE #16 X 1600 DOWELS CAST INTO GRADE BEAMS SPACED TO MATCH MASONRY WALL VERTICAL REINFORCING. TOP OF DOWEL ELEV +800.

0 .50 1.00
1:10
1 .50 0 1
1:20

UNLESS NOTED OTHERWISE, LINEAR DIMENSIONS SHOWN ARE IN MILLIMETERS.

US ARMY CORPS OF ENGINEERS
AFGHANISTAN ENGINEER DISTRICT

Mark	Description	Date	Appr.	Mark	Description	Date	Appr.

Rev: 0
Date: 5/19/10
Design file no.
Drawing code:
File name: 5120SE-S800R07
Plot date: 2010/05/19
Plot scale:

Designed by: RJS
Dwn by: DAS
Ckd by: CSP
Reviewed by: MRH
Submitted by: STANLEY

U.S. ARMY ENGINEER DISTRICT, AFGHANISTAN
CORPS OF ENGINEERS
APO AE 96338

Stanley Consultants INC.

AFGHAN NATIONAL ARMY
KANDAHAR
SITE ADAPT DESIGN

FITNESS CENTER

REBAR REINFORCEMENT DRAWINGS
BEAM ELEVATIONS – SHEET 5

SHEET REFERENCE NUMBER:
E
S-809

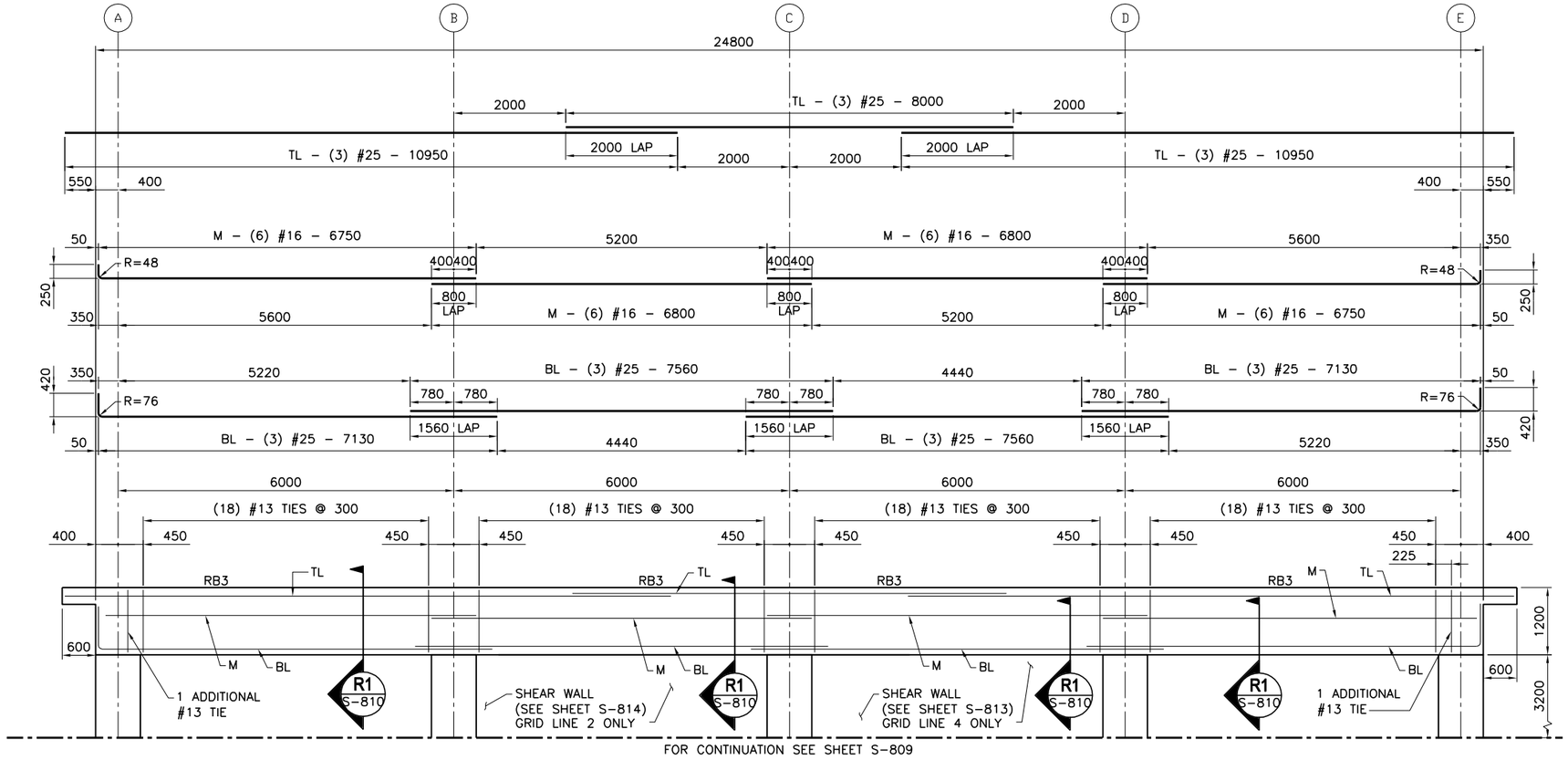

BEAM ELEVATION ALONG GRID LINES 2 AND 4
SCALE: NONE

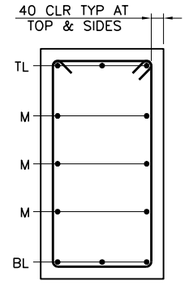

SECTION R1 S-810
SCALE: 1:10

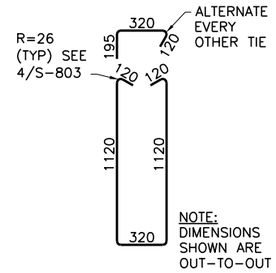

ROOF BEAM TIE DIMENSIONS
SCALE: 1:20

ABBREVIATION LEGEND

RB = ROOF BEAM
GB = GRADE BEAM
TL = BEAM TOP REINFORCEMENT BARS
BL = BEAM BOTTOM REINFORCEMENT BARS
M = BEAM MIDDLE REINFORCEMENT BARS

NOTE:

1. REBAR DETAIL AND PLACEMENT DRAWINGS (800 SERIES) ARE PROVIDED FOR INFORMATION ONLY. REBAR PLACEMENT AND DETAIL DRAWINGS SHALL BE CHECKED AND VALIDATED BY CONSTRUCTION CONTRACTOR.

0 .50 1.00
1:10
1 .50 0 1
1:20

UNLESS NOTED OTHERWISE, LINEAR DIMENSIONS SHOWN ARE IN MILLIMETERS.

US ARMY CORPS OF ENGINEERS
AFGHANISTAN ENGINEER DISTRICT

Mark	Description	Date	Appr.	Mark	Description	Date	Appr.

Rev: 0
Date: 5/19/10
Design file no.
Drawing code:
File name: S-810-RBE-S08-810-01
Plot date: 2010/05/19
Plot scale:

Designed by: RJS
Dwn by: DAS
Ckd by: CSP
Reviewed by: MRH
Submitted by: STANLEY

U.S. ARMY ENGINEER DISTRICT, AFGHANISTAN
CORPS OF ENGINEERS
APO AE 96338

Stanley Consultants INC.

AFGHAN NATIONAL ARMY
KANDAKS
SITE ADAPT DESIGN

FITNESS CENTER

REBAR REINFORCEMENT DRAWINGS
BEAM ELEVATIONS – SHEET 6

SHEET REFERENCE NUMBER:
E
S–810

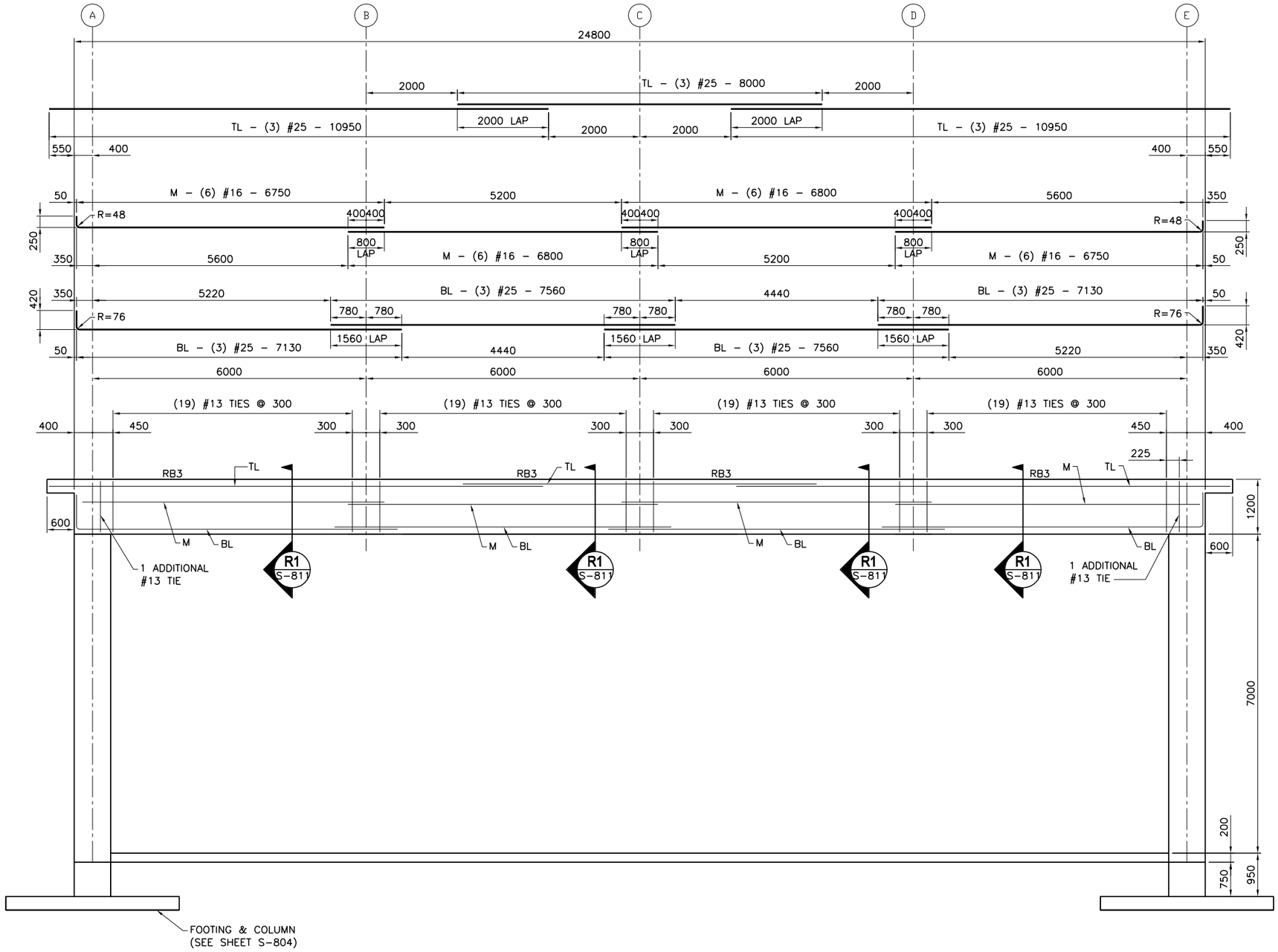

BEAM ELEVATION ALONG GRID LINE 3

SCALE: NONE

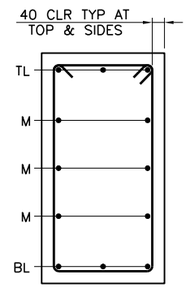

SECTION R1 S-811

SCALE: 1:10

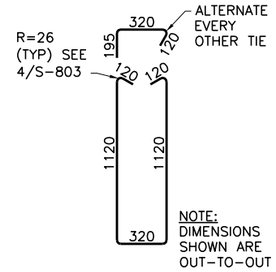

ROOF BEAM TIE DIMENSIONS

SCALE: 1:20

ABBREVIATION LEGEND

RB = ROOF BEAM
GB = GRADE BEAM
TL = BEAM TOP REINFORCEMENT BARS
BL = BEAM BOTTOM REINFORCEMENT BARS
M = BEAM MIDDLE REINFORCEMENT BARS

NOTE:

1. REBAR DETAIL AND PLACEMENT DRAWINGS (800 SERIES) ARE PROVIDED FOR INFORMATION ONLY. REBAR PLACEMENT AND DETAIL DRAWINGS SHALL BE CHECKED AND VALIDATED BY CONSTRUCTION CONTRACTOR.

0 .50 1.00
1:10
1 .50 0 1
1:20

UNLESS NOTED OTHERWISE, LINEAR DIMENSIONS SHOWN ARE IN MILLIMETERS.

US ARMY CORPS OF ENGINEERS
AFGHANISTAN ENGINEER DISTRICT

Mark	Description	Date	Appr.	Mark	Description	Date	Appr.

Rev: 0
Date: 5/19/10
Design file no.
Drawing code:
File name: 0700SE-S811D7
Plot date: 20100505
Plot scale:

Designed by: RJS
Dwn by: DAS
Ckd by: CSP
Reviewed by: MRH
Submitted by: STANLEY

U.S. ARMY ENGINEER DISTRICT, AFGHANISTAN
CORPS OF ENGINEERS
APO AE 96338

Stanley Consultants INC.

AFGHAN NATIONAL ARMY
KANDAKS
SITE ADAPT DESIGN

FITNESS CENTER

REBAR REINFORCEMENT DRAWINGS
BEAM ELEVATIONS – SHEET 7

SHEET REFERENCE NUMBER:
E
S-811

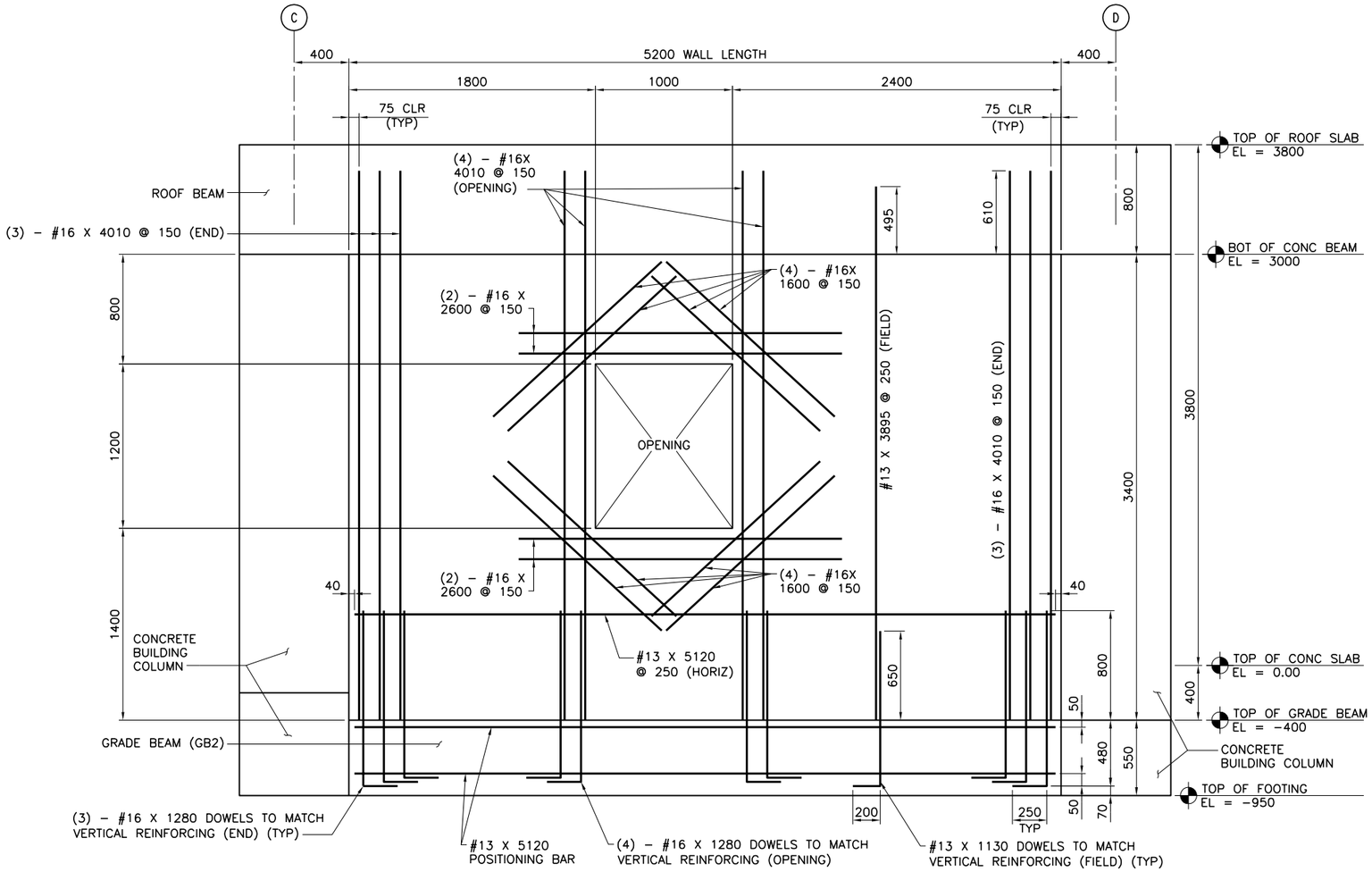

SHEAR WALL "SW1" ON GRID LINE 1

SCALE: 1:20

NOTES:

1. REBAR DETAIL AND PLACEMENT DRAWINGS (800 SERIES) ARE PROVIDED FOR INFORMATION ONLY. REBAR PLACEMENT AND DETAIL DRAWINGS SHALL BE CHECKED AND VALIDATED BY CONSTRUCTION CONTRACTOR.
2. CUT FIELD HORIZONTAL BARS AS REQUIRED TO FIT EACH SIDE OPENINGS.
3. CUT FIELD VERTICAL BARS AS REQUIRED TO FIT ABOVE AND BELOW OPENINGS.

1 .50 0 1
1:20

UNLESS NOTED OTHERWISE, LINEAR DIMENSIONS SHOWN ARE IN MILLIMETERS.

US ARMY CORPS OF ENGINEERS
AFGHANISTAN ENGINEER DISTRICT

Mark	Description	Date	Appr.	Mark	Description	Date	Appr.

Date: 5/19/10 | Rev: 0
Design file no.
Drawing code:
File name: H10026E-S0812D01
Plot date: 20100505
Plot scale:

Designed by: RJS
Cad by: CSP
Dwn by: DAS
Reviewed by: MRH
Submitted by: STANLEY

U.S. ARMY ENGINEER DISTRICT, AFGHANISTAN
CORPS OF ENGINEERS
APO AE 96338

Stanley Consultants INC.

AFGHAN NATIONAL ARMY
KANDAHAR
SITE ADAPT DESIGN

FITNESS CENTER

REBAR REINFORCEMENT DRAWINGS
SHEAR WALL ELEVATIONS – SHEET 1

SHEET REFERENCE NUMBER:
E
S–812

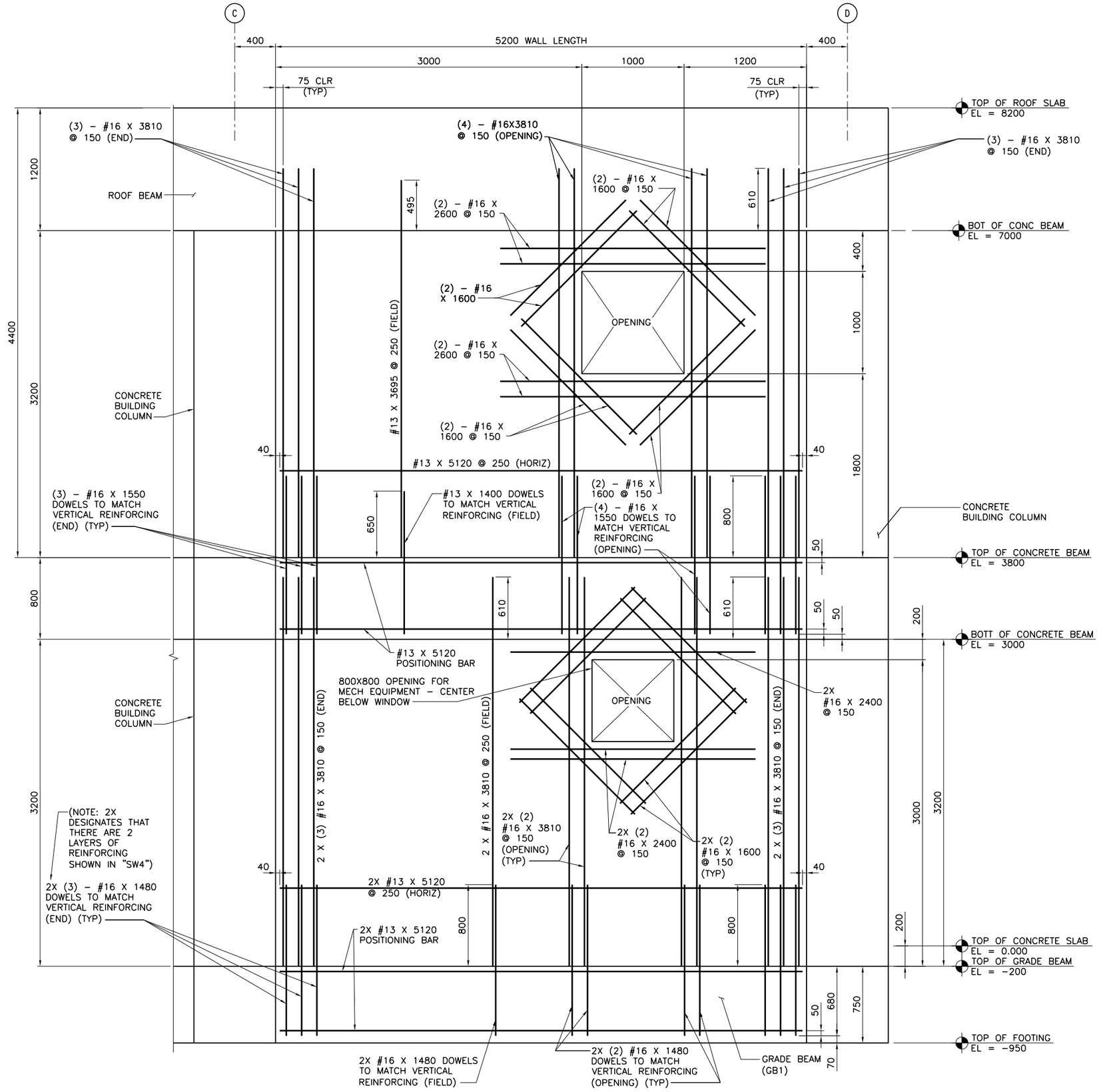

SHEAR WALL "SW1" AND "SW6" ON GRID LINE 4

SCALE: 1:20

NOTES:

1. REBAR DETAIL AND PLACEMENT DRAWINGS (800 SERIES) ARE PROVIDED FOR INFORMATION ONLY. REBAR PLACEMENT AND DETAIL DRAWINGS SHALL BE CHECKED AND VALIDATED BY CONSTRUCTION CONTRACTOR.
2. CUT FIELD HORIZONTAL BARS AS REQUIRED TO FIT EACH SIDE OPENINGS.
3. CUT FIELD VERTICAL BARS AS REQUIRED TO FIT ABOVE AND BELOW OPENINGS.

1 .50 0 1
1:20

UNLESS NOTED OTHERWISE, LINEAR DIMENSIONS SHOWN ARE IN MILLIMETERS.

US ARMY CORPS OF ENGINEERS
AFGHANISTAN ENGINEER DISTRICT

Mark	Description	Date	Appr.	Mark	Description	Date	Appr.

Designed by: RJS
Date: 5/19/10
Rev: 0
Dwn by: DAS
Ckd by: CSP
Reviewed by: MRH
Design file no.
Drawing code:
File name: 472D08E-S0813D01
Plot date: 20100705/13
Plot scale:
Submitted by: STANLEY

U.S. ARMY ENGINEER DISTRICT, AFGHANISTAN
CORPS OF ENGINEERS
APO AE 96338

Stanley Consultants INC.

AFGHAN NATIONAL ARMY
KANDAKS
SITE ADAPT DESIGN

FITNESS CENTER

REBAR REINFORCEMENT DRAWINGS
SHEAR WALL ELEVATIONS – SHEET 2

SHEET REFERENCE NUMBER:
E
S–813

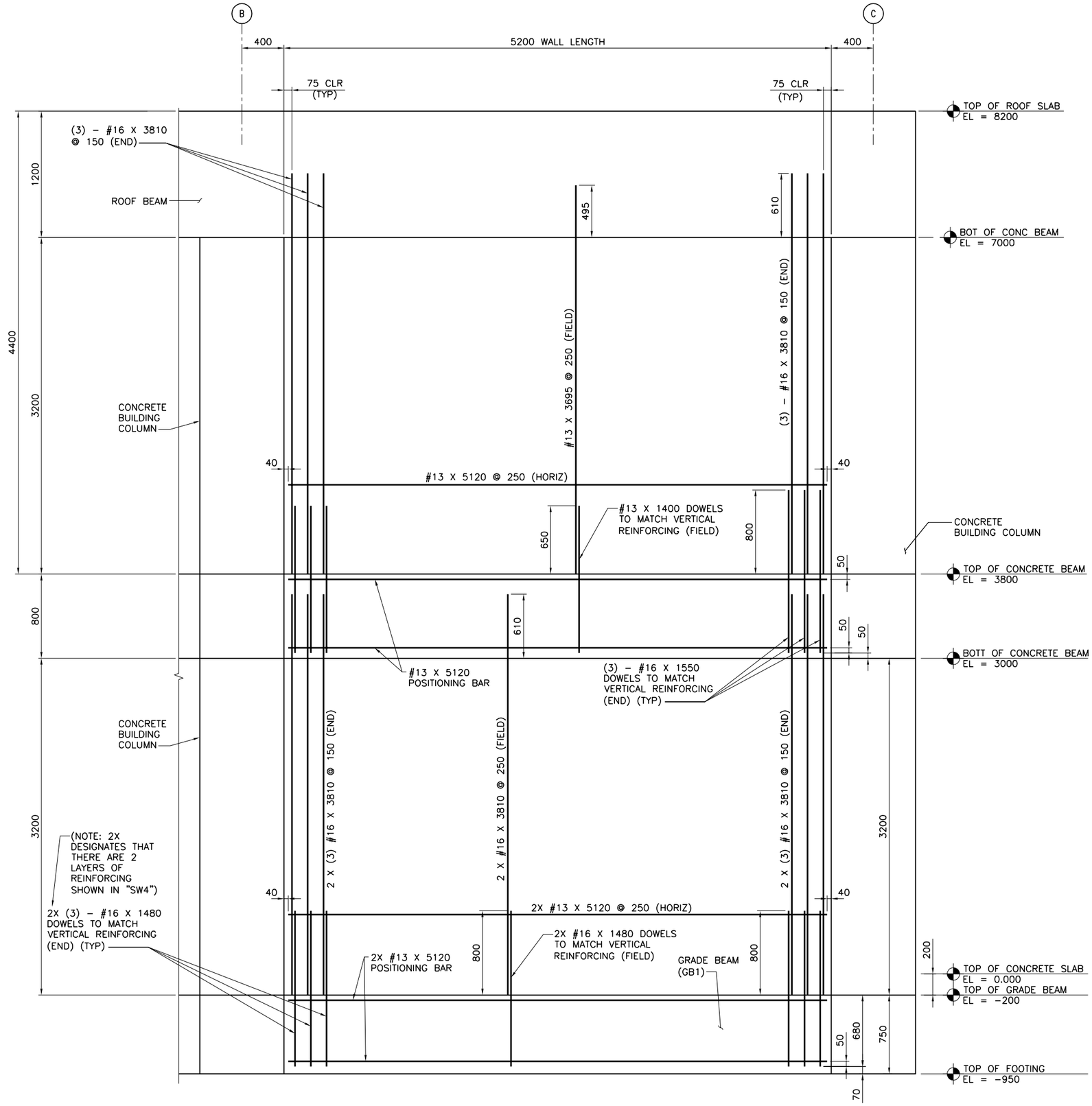

SHEAR WALL "SW2" AND "SW4" ON GRID LINE 2

SCALE: 1:20

NOTES:

1. REBAR DETAIL AND PLACEMENT DRAWINGS (800 SERIES) ARE PROVIDED FOR INFORMATION ONLY. REBAR PLACEMENT AND DETAIL DRAWINGS SHALL BE CHECKED AND VALIDATED BY CONSTRUCTION CONTRACTOR.
2. CUT FIELD HORIZONTAL BARS AS REQUIRED TO FIT EACH SIDE OPENINGS.
3. CUT FIELD VERTICAL BARS AS REQUIRED TO FIT ABOVE AND BELOW OPENINGS.

1 .50 0 1
1:20

UNLESS NOTED OTHERWISE, LINEAR DIMENSIONS SHOWN ARE IN MILLIMETERS.

US ARMY CORPS OF ENGINEERS
AFGHANISTAN ENGINEER DISTRICT

Mark	Description	Date	Appr.	Mark	Description	Date	Appr.

U.S. ARMY ENGINEER DISTRICT, AFGHANISTAN
CORPS OF ENGINEERS
APO AE 96338

Designed by: RJS
Dwn by: DAS
Ckd by: CSP
Reviewed by: MRH
Submitted by: STANLEY
Date: 5/19/10
Rev: 0
Design file no.
Drawing code:
File name: M120SHE-S814.DGN
Plot date: 20100519
Plot scale:

Stanley Consultants INC.

AFGHAN NATIONAL ARMY
KANDAKS
SITE ADAPT DESIGN

FITNESS CENTER

REBAR REINFORCEMENT DRAWINGS
SHEAR WALL ELEVATIONS – SHEET 3

SHEET REFERENCE NUMBER:
E
S–814

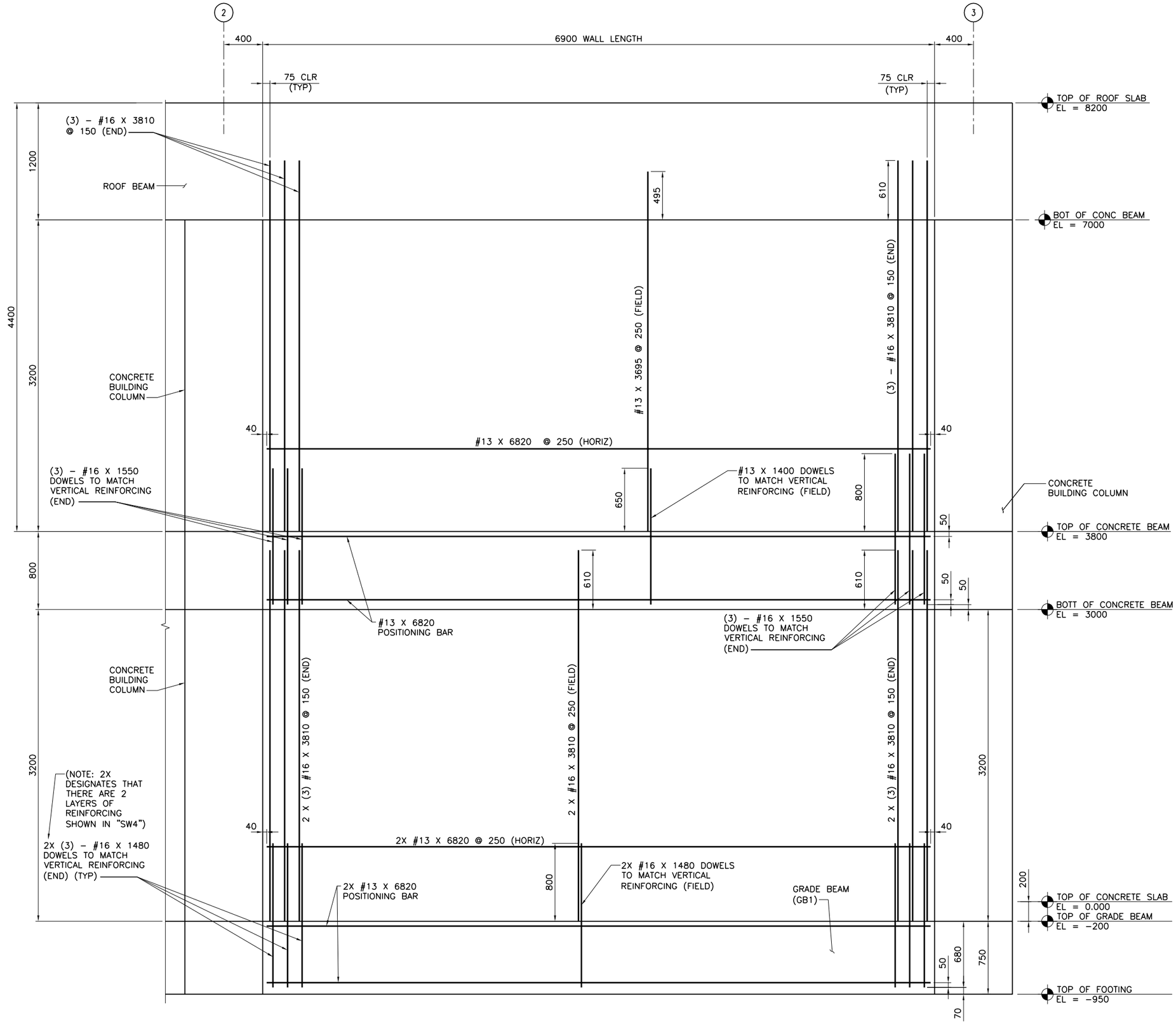

SHEAR WALL "SW3" AND "SW5" ON GRID LINE A AND E

SCALE: 1:20

NOTES:

1. REBAR DETAIL AND PLACEMENT DRAWINGS (800 SERIES) ARE PROVIDED FOR INFORMATION ONLY. REBAR PLACEMENT AND DETAIL DRAWINGS SHALL BE CHECKED AND VALIDATED BY CONSTRUCTION CONTRACTOR.
2. CUT FIELD HORIZONTAL BARS AS REQUIRED TO FIT EACH SIDE OPENINGS.
3. CUT FIELD VERTICAL BARS AS REQUIRED TO FIT ABOVE AND BELOW OPENINGS.

1 .50 0 1
1:20

UNLESS NOTED OTHERWISE, LINEAR DIMENSIONS SHOWN ARE IN MILLIMETERS.

US ARMY CORPS OF ENGINEERS
AFGHANISTAN ENGINEER DISTRICT

Mark	Description	Date	Appr.	Mark	Description	Date	Appr.

Designed by: RJS
Dwn by: DAS
Ckd by: CSP
Reviewed by: MRH
Submitted by: STANLEY
Date: 5/19/10
Rev: 0
Design file no.
Drawing code:
File name: M20080E-S0815S01
Plot date: 20100519
Plot scale:

U.S. ARMY ENGINEER DISTRICT, AFGHANISTAN
CORPS OF ENGINEERS
APO AE 96338

Stanley Consultants INC.

AFGHAN NATIONAL ARMY
KANDAKS
SITE ADAPT DESIGN

FITNESS CENTER

REBAR REINFORCEMENT DRAWINGS
SHEAR WALL ELEVATIONS – SHEET 4

SHEET REFERENCE NUMBER:
E
S–815

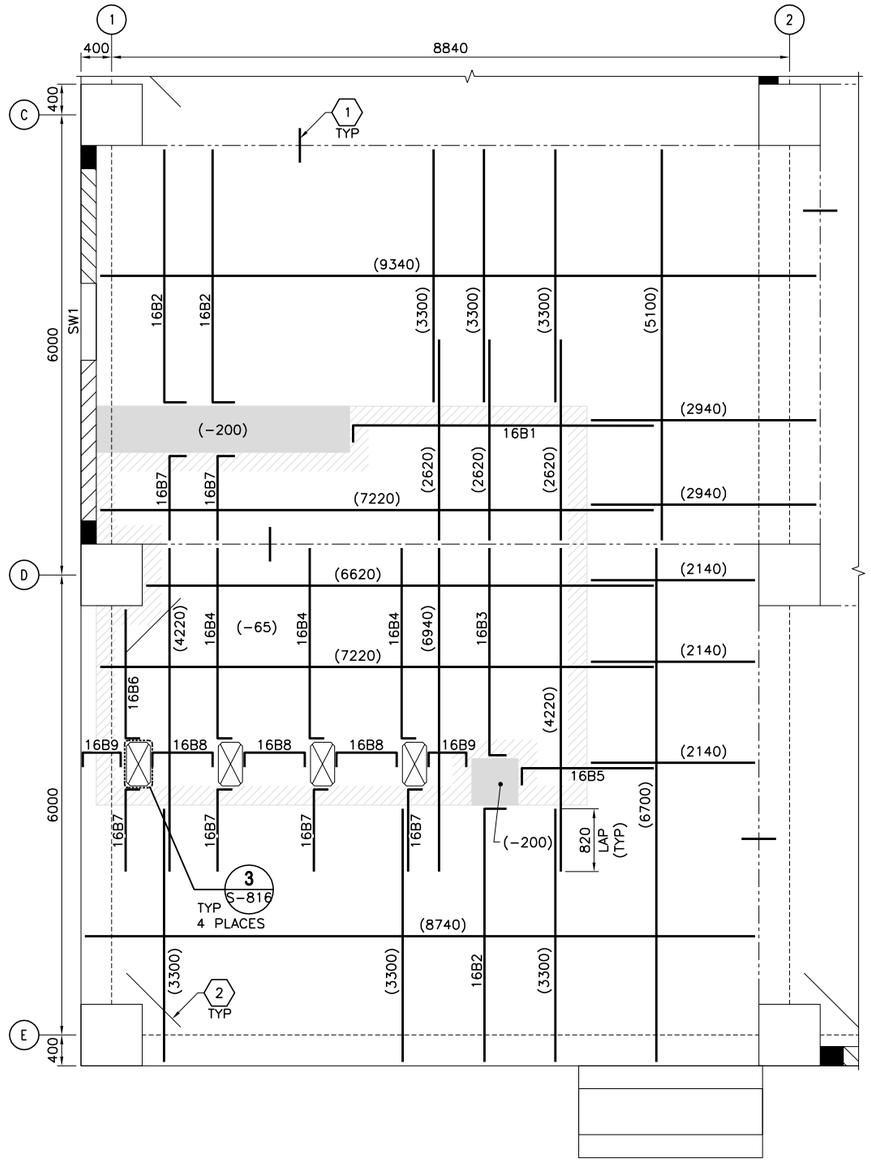

ENLARGED SLAB REINFORCING PLAN - TOP BARS (1 / S-816)

SCALE: 1:40

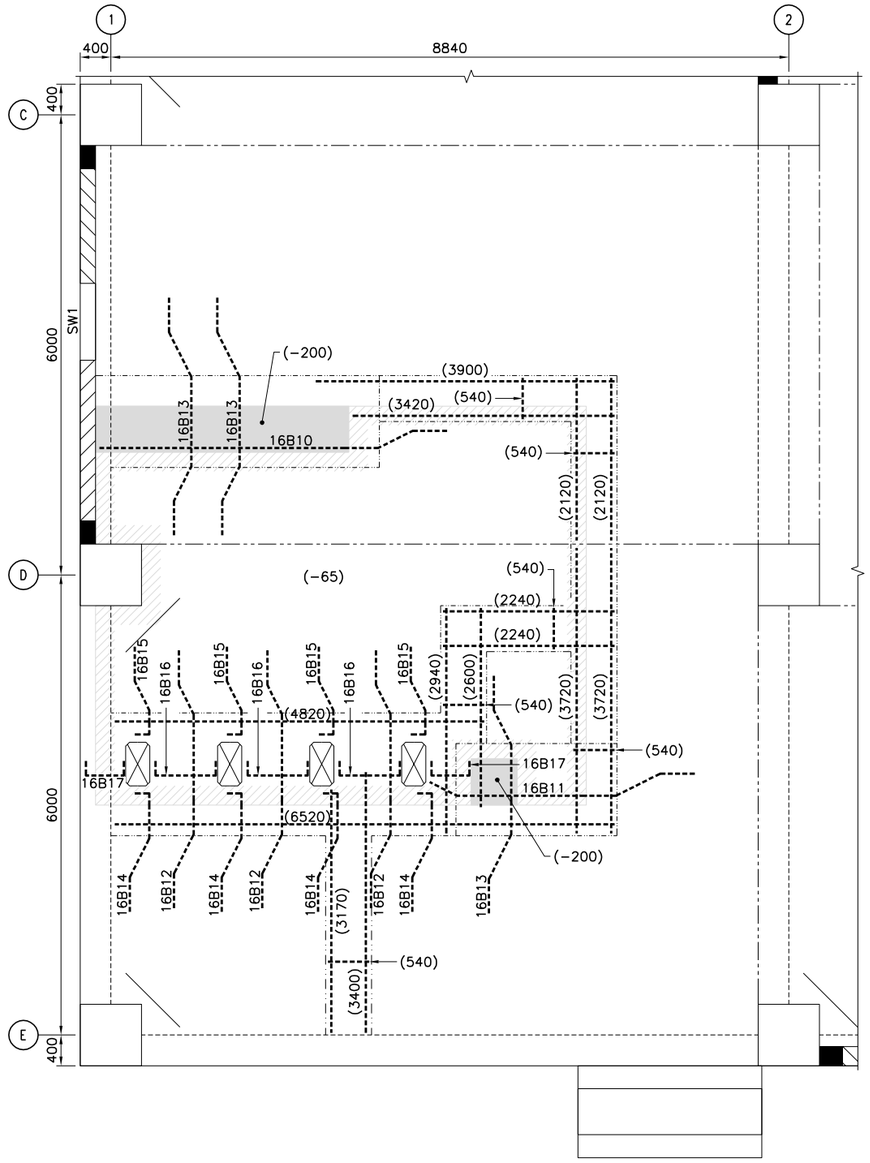

ENLARGED SLAB REINFORCING PLAN - BOTTOM BARS (2 / S-816)

SCALE: 1:40

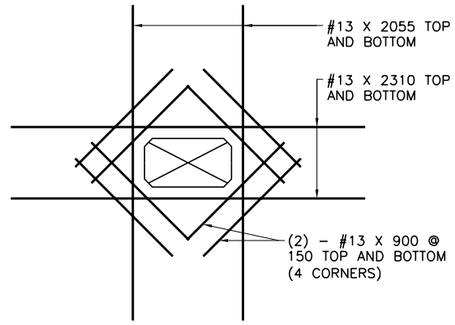

LATRINE OPENING REINFORCING DETAIL (3 / S-816)

SCALE: 1:20

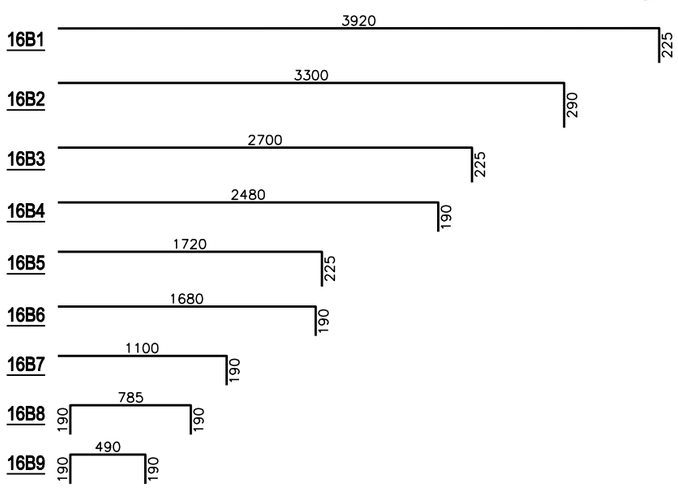

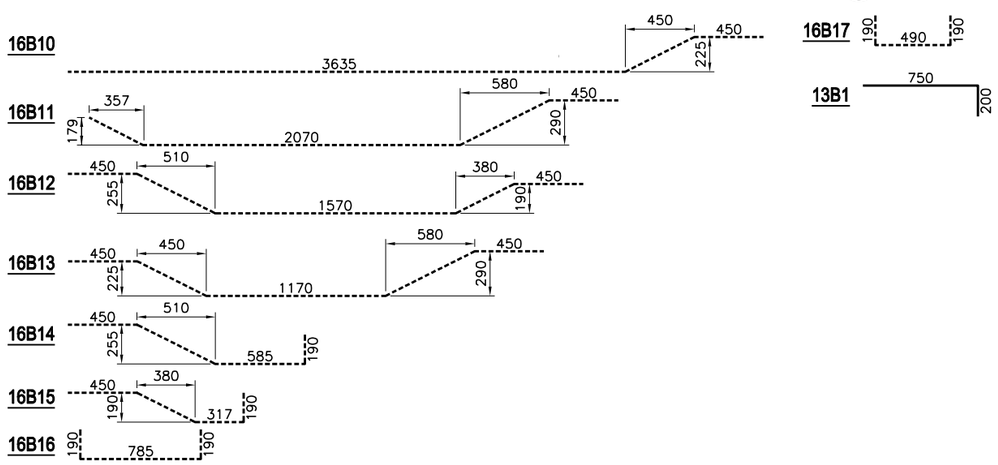

NOTE:

1. REBAR DETAIL AND PLACEMENT DRAWINGS (800 SERIES) ARE PROVIDED FOR INFORMATION ONLY. REBAR PLACEMENT AND DETAIL DRAWINGS SHALL BE CHECKED AND VALIDATED BY CONSTRUCTION CONTRACTOR.
2. PROVIDE #16 DOWELS EMBEDDED IN THICKENED FLOOR SLAB TO MATCH MASONRY WALL VERTICAL REINFORCING. DOWELS SHALL HAVE 800 LAP LENGTH AND 250 HOOKS ON BOTTOM. SEE SHEET S-501 FOR DETAILS.

FOUNDATION/SLAB PLAN KEY NOTES: (X)

1. #19 X 450 SMOOTH BAR @ 300 OC CENTERED @ CONSTRUCTION JOINT (SEE DETAIL 2/S-701)
2. (2) – #13 RE-ENTRANT CORNER BARS (SEE DETAIL 5/S-802)

FOUNDATION/SLAB PLAN LEGEND:

- SLAB REINFORCING TOP BARS #16 @ 300 UON
- SLAB REINFORCING BOTTOM BARS #16 @ 450 UON
- REINFORCING CONCRETE SHEAR WALL
- THICKENED SLAB
- CONTROL JOINT (SEE DETAIL 2/S-701)
- INDICATES DROP SLAB 65mm BELOW FINISH FLOOR
- INDICATES DROP SLAB 200mm BELOW FINISH FLOOR
- SLAB OPENING

1 .50 0 1
1:20
0 1 2 3 4
1:40

UNLESS NOTED OTHERWISE, LINEAR DIMENSIONS SHOWN ARE IN MILLIMETERS.

US ARMY CORPS OF ENGINEERS
AFGHANISTAN ENGINEER DISTRICT

Mark	Description	Date	Appr.	Mark	Description	Date	Appr.

Rev: 0
Date: 5/19/10
Designed by: RJS
Cad by: CSP
Dwn by: DAS
Reviewed by: MRH
Submitted by: STANLEY
Design file no.
Drawing code:
File name: 07200SE-S08B07
Plot date: 20100705 13
Plot scale:

U.S. ARMY ENGINEER DISTRICT, AFGHANISTAN
CORPS OF ENGINEERS
APO AE 96338

Stanley Consultants INC.

AFGHAN NATIONAL ARMY
KANDAHAR
SITE ADAPT DESIGN

FITNESS CENTER

REBAR REINFORCEMENT DRAWINGS
ENLARGED SLAB PLAN AND BAR DETAILS

SHEET REFERENCE NUMBER:
E
S-816

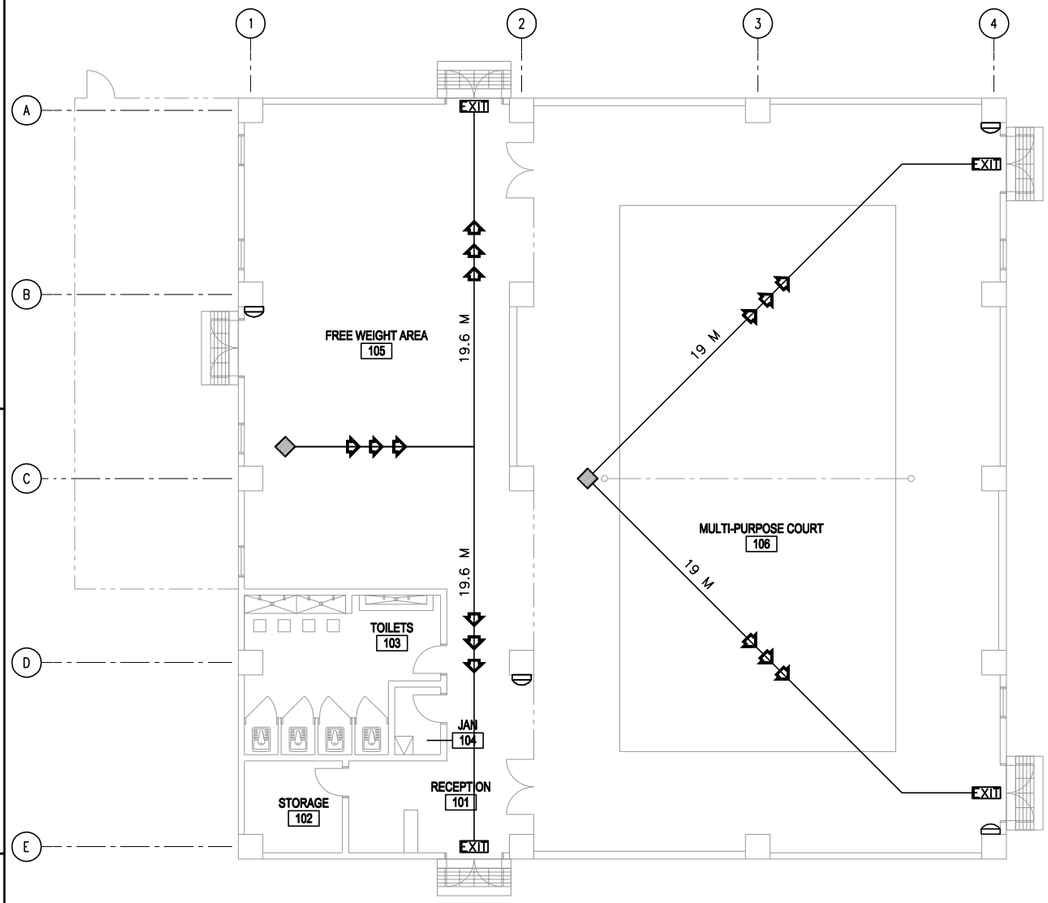

LIFE SAFETY PLAN
SCALE: 1:100

LEGEND:

- DENOTES PATHS OF EXIT TRAVEL
- EXIT — DENOTES DOOR AS AN EMERGENCY EXIT
- DENOTES STARTING POINT FOR TRAVEL DISTANCE
- DENOTES FIRE EXTINGUISHER LOCATIONS
- 1-HOUR RATED WALL

CODE ANALYSIS:

1. REFERENCES:
   2006 INTERNATIONAL BUILDING CODE (2006 IBC)
   2006 LIFE SAFETY CODE (2006 NFPA 101)

2. IBC OCCUPANCY CLASSIFICATION:
   GROUP A-3 (ASSEMBLY) NFPA 101 6.1.2 AND CHAPTER 12)

3. TYPE OF CONSTRUCTION (IBC): TYPE II-B (NONSPRINKLERED)

4. IBC TABLE 503: ALLOWABLE HEIGHT AND BUILDING AREAS:
   GROUP A-3
   ALLOWABLE AREA: 1545 (883 X 0.75 FRONTAGE INCREASE)
   FRONTAGE INCREASE FOR 9M (30') FRONTAGE: 0.5 = [199.6 M/199.6 M -0.25] 9 M/9 M

   ALLOWABLE HEIGHT: 2 STORIES (16.8 M)

   GROUP A-3
   PROPOSED AREA: 621 SM

   PROPOSED HEIGHT: 1 STORY (<16.8 M)

5. IBC TABLE 601 & 602: FIRE RESISTANCE RATING REQUIREMENTS FOR BUILDING ELEMENTS FOR TYPE II-B

BUILDING ELEMENT	RATING (HOUR)	REFERENCE
STRUCTURAL FRAME (COLUMNS, GIRDERS & TRUSSES)	0	TABLE 601
BEARING WALLS		
EXTERIOR	0	TABLE 601
INTERIOR	0	TABLE 601
NONBEARING WALLS & PARTITIONS		
INTERIOR	0	TABLE 601
FLOOR CONSTRUCTION	0	TABLE 601
ROOF CONSTRUCTION	0	TABLE 601
EXTERIOR WALL	0	TABLE 602 (9M SEPARATION)

6. IBC TABLE 803.5 - INTERIOR WALL AND CEILING FINISH REQUIREMENTS FOR A-3 OCCUPANCY/NONSPRINKLERED

GROUP	EXIT ENCLOSURES AND EXIT PASSAGEWAY	CORRIDORS	ROOMS AND ENCLOSED SPACES
A-2	A	A	C

7. NFPA 101 TABLE 7.3.1.2 - OCCUPANT LOAD
   ASSEMBLY = 1.4 NET SM/PERSON CALCULATED = 444 OCCUPANTS

8. NFPA 101 TABLE 7.3.3.1 - EGRESS CAPACITY
   ASSEMBLY = 5 MM PER OCCUPANT

   REQUIRED: 2220 MM (444 OCCUPANTS x 5 MM PER OCCUPANT)
   PROPOSED EGRESS CAPACITY: 7200 MM: 8 - 900 MM DOORS

9. NFPA 101 PARAGRAPH 12.2.6 - EXIT ACCESS TRAVEL DISTANCE
   REQUIRED: 61 METERS
   PROPOSED: 20 METERS

10. NFPA 101 PARAGRAPH 12.3.6 (1) - CORRIDOR FIRE-RESISTANCE RATING (HOUR)
    CORRIDORS ARE NOT REQUIRED AS DOORS EXIT DIRECTLY TO OUTSIDE

11. NFPA 101 PARAGRAPH 12.2.4.1 AND 7.4.1.1 AND 7.4.1.2 -
    MINIMUM NUMBER OF EXITS
    REQUIRED: 2 MINIMUM
    PROPOSED: 4

1 0 1 2 3 4 5 6 7 8 9
1:100

UNLESS NOTED OTHERWISE, LINEAR DIMENSIONS SHOWN ARE IN MILLIMETERS.

APPROVED:
A/E DESIGNER OF RECORD
SEAL:
REGISTERED PROFESSIONAL ARCHITECT
JAMES F. KEMPER
02469
IOWA

US ARMY CORPS OF ENGINEERS
AFGHANISTAN ENGINEER DISTRICT

Mark	Description	Date	Appr.	Mark	Description	Date	Appr.

Designed by: JFK
Dwn by: JLB
Cxd by: MAW
Reviewed by: MRH
Submitted by: STANLEY
Date: 5/19/10
Rev: 0
Design file no.
Drawing code:
File name: M20060E-A001.PN
Plot date: 20100505:9
Plot scale:

U.S. ARMY ENGINEER DISTRICT, AFGHANISTAN
CORPS OF ENGINEERS
APO AE 96338

Stanley Consultants INC.

AFGHAN NATIONAL ARMY
KANDAKS
SITE ADAPT DESIGN

FITNESS CENTER

LIFE SAFETY PLAN

SHEET REFERENCE NUMBER:
E
A-001

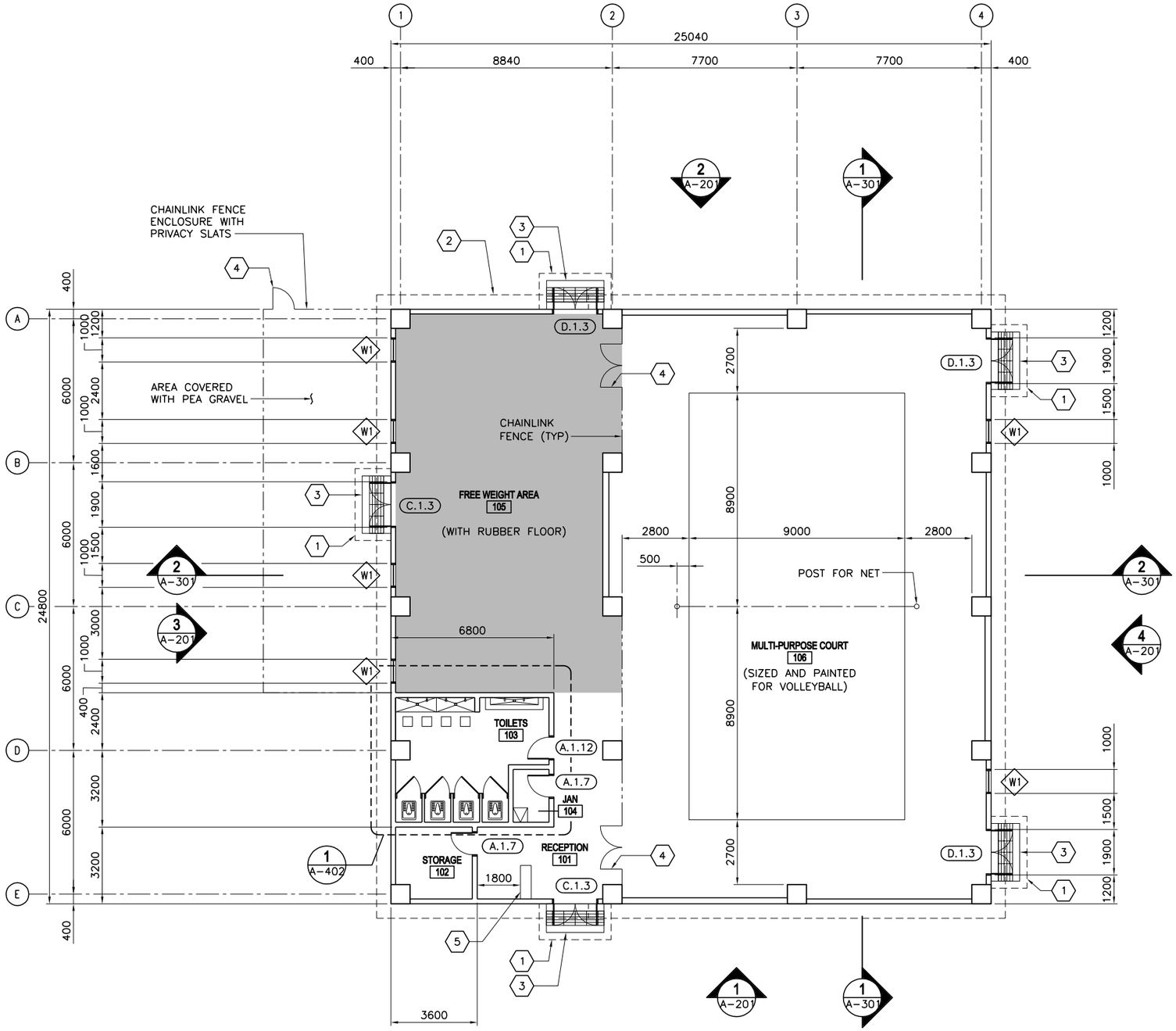

FLOOR PLAN

SCALE: 1:100

GENERAL NOTES:

A. DIMENSIONS ARE SHOWN TO OUTER EDGE OF EXTERIOR STRUCTURAL COLUMNS, STRUCTURAL COLUMN GRID, EDGE OF INTERIOR PARTITIONS, EDGE OF WINDOW OPENINGS, AND TO HINGE SIDE OF DOOR FRAME OPENINGS.

B. HINGE SIDE OF OPENINGS FOR DOORS AND FRAMES SHALL BE LOCATED 200 MM FROM THE ADJACENT WALL OR COLUMN, UNLESS NOTED OTHERWISE.

C. INTERIOR PARTITIONS SHALL BE 200 MM CMU. SEE STRUCTURAL DRAWINGS FOR LOCATION OF CONCRETE SHEAR WALLS.

D. COSMETIC REPAIR OF MINOR DEFECTS: REPAIR OR FILL MORTAR JOINTS AND MINOR DEFECTS, INCLUDING BUT NOT LIMITED TO SPALLS, IN ACCORDANCE WITH MANUFACTURER'S RECOMMENDATIONS AND PRIOR TO COATING APPLICATION. SURFACES TO BE PAINTED SHALL BE CLEAN AND FREE OF FOREIGN MATTER BEFORE APPLICATION OF PAINT. CLEANING SHALL BE SCHEDULED SO THAT DUST AND OTHER CONTAMINANTS WILL NOT FALL ON NEWLY PAINTED SURFACES.

E. CONCRETE, PLASTER AND MASONRY SURFACES SHALL BE ALLOWED TO CURE FOR AT LEAST 30 DAYS BEFORE PAINTING. CONCRETE SLABS-ON-GRADE SHALL BE ALLOWED TO CURE 90 DAYS BEFORE STAINING OR SEALING.

F. DO NOT USE PAINT MATERIALS CONTAINING LEAD CONTENT IN EXCESS OF 0.006 PERCENT BY WEIGHT OF THE TOTAL NONVOLATILE CONTENT OF THE PAINT OR THE WEIGHT OF THE DRIED PAINT FILM.

G. DO NOT USE ANY ASBESTOS CONTAINING MATERIALS (ACM) IN PROJECT. ACM IS DEFINED AS 1% OR MORE BY VOLUME.

H. DO NOT USE PAINT MATERIALS CONTAINING MERCURIAL FUNGICIDES.

I. FACTORY PRIMED METAL DOORS AND FRAMES SHALL RECEIVE TWO COATS OF PAINT.

J. FILL REMAINING SPACE AT PENETRATIONS IN FIRE-RATED FLOORS, PARTITIONS AND CEILINGS WITH APPROPRIATE FIRESTOPPING MATERIALS.

K. ALL CEILING FINISHES SHALL BE PAINTED PLASTER APPLIED TO STRUCTURE.

L. ALL WALL FINISHES SHALL BE PAINTED PLASTER APPLIED TO STRUCTURE, UNLESS NOTED OTHERWISE.

M. ALL FLOOR FINISHES SHALL BE EPOXY SEALED CONCRETE, UNLESS NOTED OTHERWISE.

N. PROVIDE TILE FINISHES AS INDICATED IN DETAILS

O. ALL TOILET STALL DOOR FRAMES AND HARDWARE SHALL BE F.2.12.

P. HEIGHT OF ALL TOILET PARTITIONS SHALL BE 2000 MM ABOVE FINISHED FLOOR.

Q. ALL INTERIOR PARTITIONS SHALL BE FULL HEIGHT TO UNDERSIDE OF STRUCTURE EXCEPT AS NOTED.

R. FREE WEIGHT AREA SHALL RECEIVE RUBBER MAT FLOORING.

KEY NOTES:

1. LINE OF METAL ENTRANCE CANOPY ABOVE.
2. LINE OF ROOF OVERHANG ABOVE.
3. CONCRETE STOOP WITH GRATE – SEE DETAIL 1/A-503.
4. CHAINLINK FENCE GATE WITH LATCH
5. RECEPTION COUNTER – SEE DETAIL 2/A-402.

LEGEND:

- (XXX) DOOR FRAME AND HARDWARE TYPE, SEE SHEET A-601
- (A) WINDOW TYPE, SEE SHEET A-601
- (X) KEY NOTE

ABBREVIATIONS:

COMM	COMMUNICATIONS
ELEC	ELECTRICAL
MECH	MECHANICAL
JAN	JANITOR
CLOS	CLOSET

1 0 1 2 3 4 5 6 7 8 9
1:100

UNLESS NOTED OTHERWISE, LINEAR DIMENSIONS SHOWN ARE IN MILLIMETERS.

APPROVED:
A/E DESIGNER OF RECORD

SEAL:
REGISTERED PROFESSIONAL ARCHITECT
JAMES F. KEMPER
02469
IOWA

US ARMY CORPS OF ENGINEERS
AFGHANISTAN ENGINEER DISTRICT

Mark	Description	Date	Appr.	Mark	Description	Date	Appr.

Designed by: JFK
Dwn by: JLB
Ckd by: MAW
Reviewed by: MRH
Submitted by: STANLEY
Date: 5/19/10
Rev: 0
Design file no.
Drawing code:
File name: 5120SOE-AR103.fm
Plot date: 20100505103
Plot scale:

U.S. ARMY ENGINEER DISTRICT, AFGHANISTAN
CORPS OF ENGINEERS
APO AE 96338

Stanley Consultants INC.

AFGHAN NATIONAL ARMY
KANDAKS
SITE ADAPT DESIGN

FITNESS CENTER

OVERALL FLOOR PLAN

SHEET REFERENCE NUMBER:
E
A-101

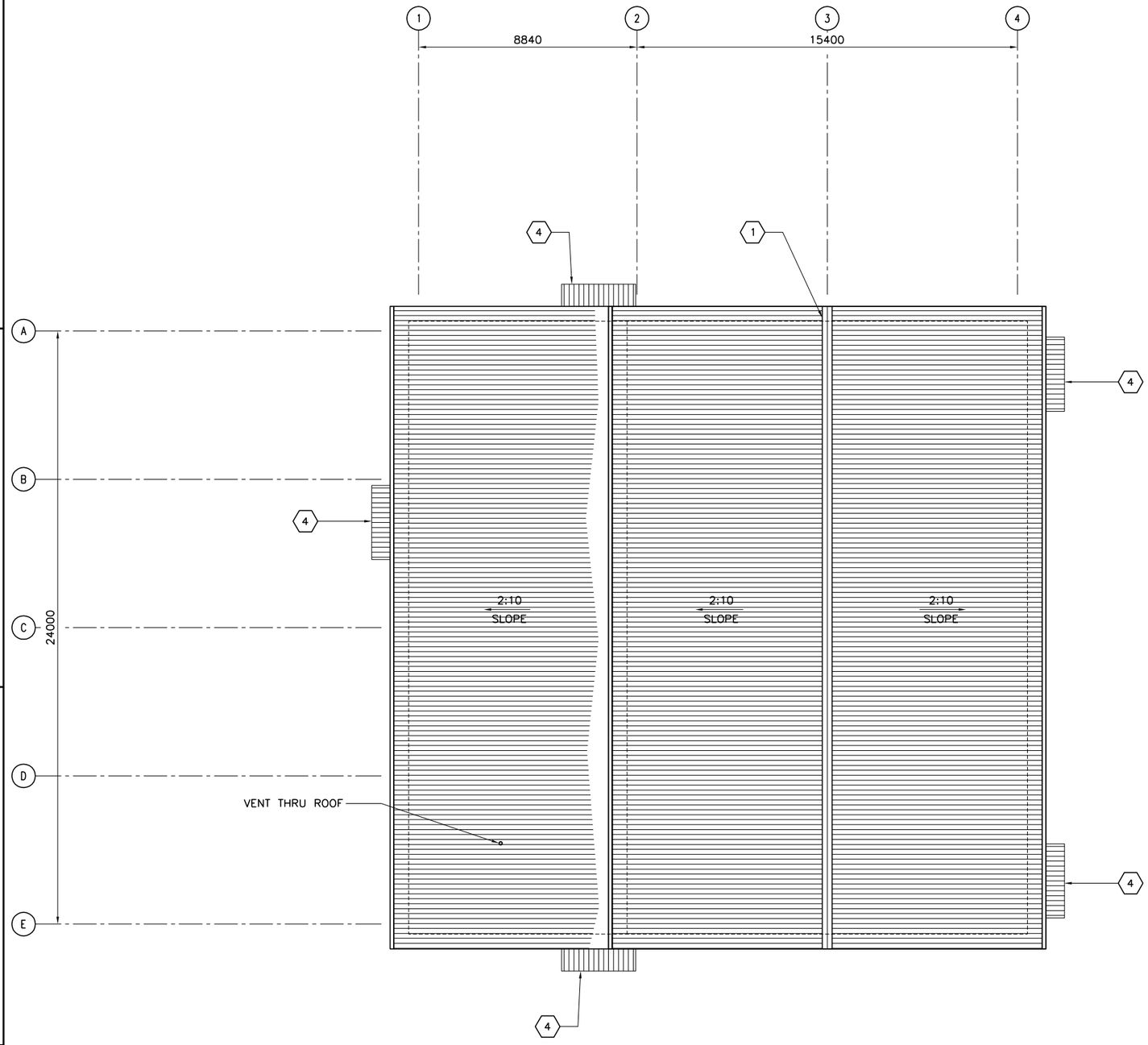

ROOF PLAN
SCALE: 1:100

GENERAL NOTES:

A. THE APPROXIMATE LOCATION OF ROOF DEVICES AND PENETRATIONS ARE SHOWN ON THE ROOF PLAN FOR INFORMATION ONLY. THE CONTRACTOR SHALL BE RESPONSIBLE FOR UNDERSTANDING THE ACTUAL LOCATION OF THESE AND ALL OTHER ITEMS PRIOR TO BEGINNING CONSTRUCTION. COORDINATE ALL ROOF PENETRATIONS WITH STRUCTURAL, MECHANICAL AND PLUMBING WORK.

B. PLUMBING VENT PENETRATIONS SHALL TERMINATE 300 MM MINIMUM ABOVE THE ROOF.

C. UNLESS OTHERWISE NOTED, NOTES, DETAILS OR FEATURES INDICATED FOR ONE CONDITION SHALL BE APPLICABLE FOR ALL ALIKE AND SIMILAR CONDITIONS.

D. STOCKPILING OF MATERIALS, EQUIPMENT AND ANY OTHER ITEMS ON THE ROOF IS PROHIBITED.

E. ROOFS SHALL BE CORRUGATED METAL ROOF PANELS ON COLD-FORMED METAL FRAMING ON CONCRETE SLAB.

KEY NOTES: (X)

1. CONTINUOUS METAL RIDGE VENT SEE DETAIL 4/A-501.
2. NOT USED.
3. PLUMBING VENT - SEE DETAIL 5/A-501.
4. CANOPY - SEE SHEET A-504.

1 0 1 2 3 4 5 6 7 8 9
1:100

UNLESS NOTED OTHERWISE, LINEAR DIMENSIONS SHOWN ARE IN MILLIMETERS.

APPROVED:
A/E DESIGNER OF RECORD

SEAL:
REGISTERED PROFESSIONAL ARCHITECT
JAMES F. KEMPER
02469
IOWA

US ARMY CORPS OF ENGINEERS
AFGHANISTAN ENGINEER DISTRICT

Mark	Description	Date	Appr.	Mark	Description	Date	Appr.

Designed by: JFK
Dwn by: JLB
Ckd by: MAW
Reviewed by: MRH
Submitted by: STANLEY
Date: 5/19/10
Design file no.
Drawing code:
File name: 4A102REF-4A102RN
Plot date: 20100520153
Plot scale:
Rev: 0

U.S. ARMY ENGINEER DISTRICT, AFGHANISTAN
CORPS OF ENGINEERS
APO AE 96338

Stanley Consultants INC.

AFGHAN NATIONAL ARMY
KANDAKS
SITE ADAPT DESIGN

FITNESS CENTER

ROOF PLAN

SHEET REFERENCE NUMBER:
E
A-102

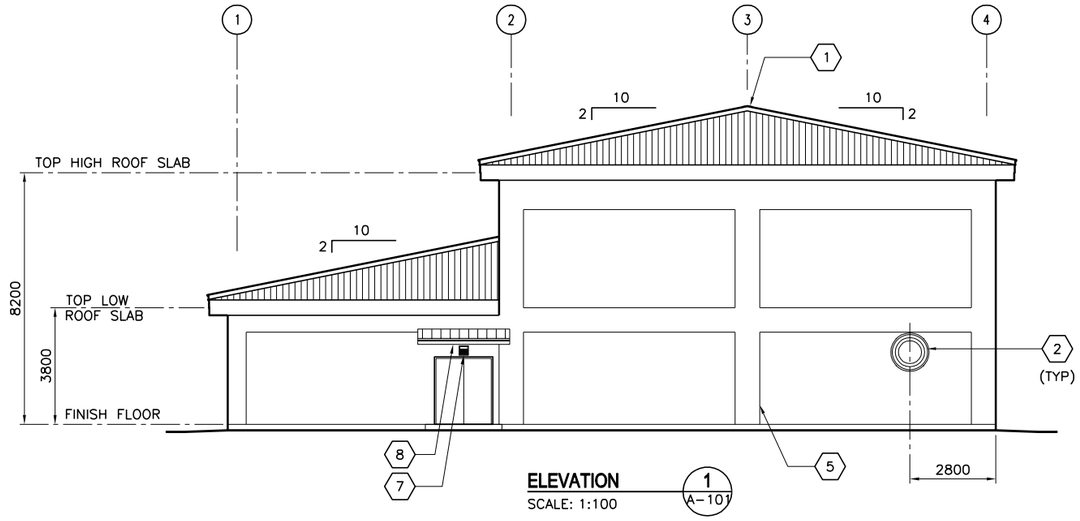

ELEVATION 1 / A-101
SCALE: 1:100

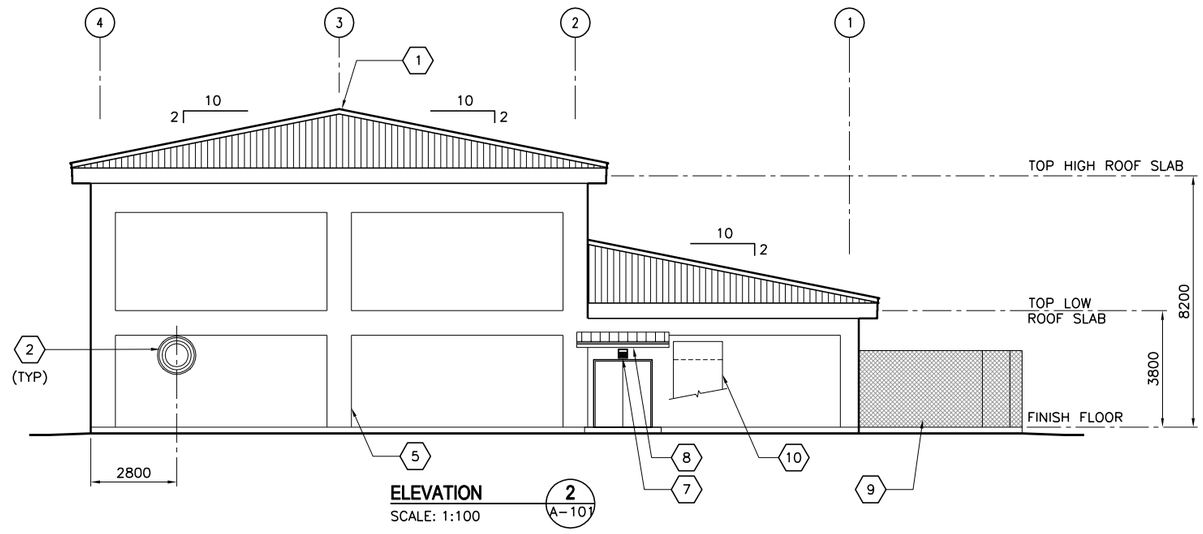

ELEVATION 2 / A-101
SCALE: 1:100

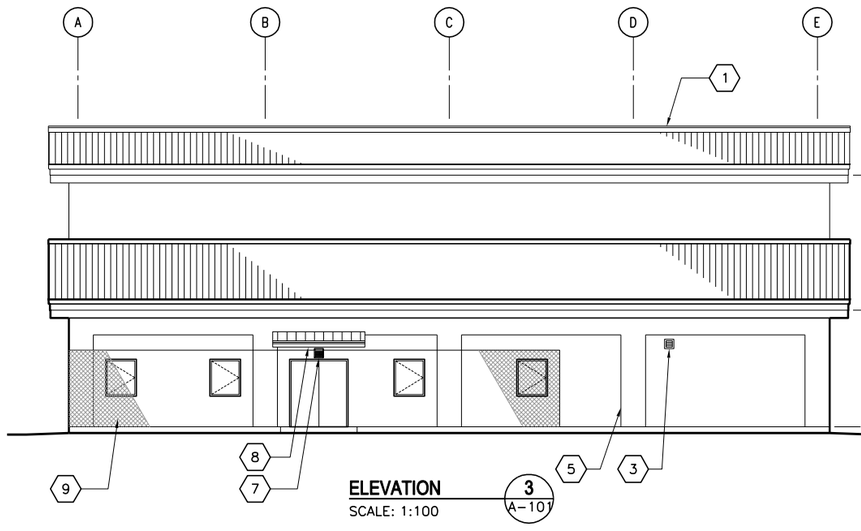

ELEVATION 3 / A-101
SCALE: 1:100

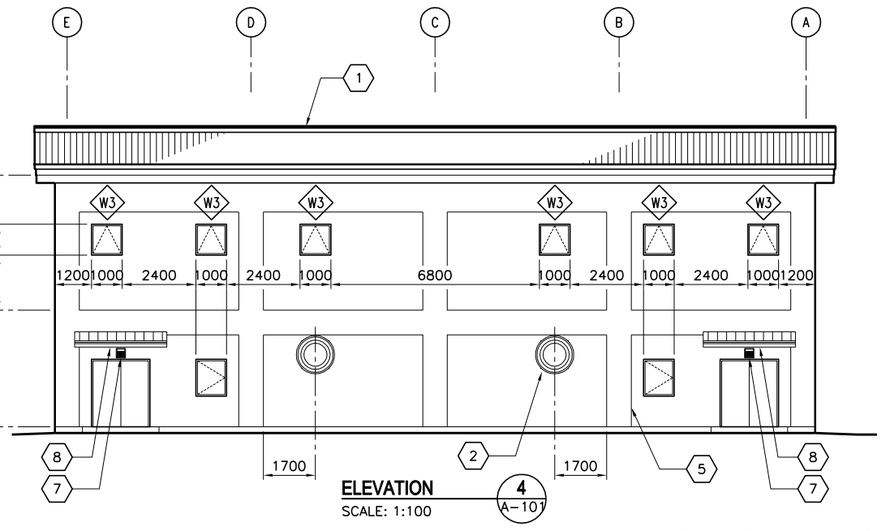

ELEVATION 4 / A-101
SCALE: 1:100

1:100

UNLESS NOTED OTHERWISE, LINEAR DIMENSIONS SHOWN ARE IN MILLIMETERS.

GENERAL NOTES:

A. COORDINATE SIZE AND LOCATION OF OPENINGS FOR MECHANICAL ITEMS WITH MECHANICAL DRAWINGS.

B. PROVIDE STRUCTURAL LINTELS AS REQUIRED – SEE STRUCTURAL DRAWINGS

C. ALL EXTERIOR WALL FINISHES SHALL BE STUCCO OVER CMU AND CONCRETE SUBSTRATES. PROVIDE CONTROL JOINTS IN STUCCO WALL FINISH AS NOTED.

D. ROOF SHALL BE CORRUGATED METAL ROOF PANELS ON COLD-FORMED METAL FRAMING ON CONCRETE SLAB.

KEY NOTES:

1. CONTINUOUS METAL RIDGE VENT – SEE DETAIL 4/A-501.
2. EXHAUST FAN, LOCATE TOP OF FAN 2800 MM ABOVE FINISHED FLOOR – SEE MECHANICAL DRAWINGS.
3. EXHAUST FAN TO WALL CAP, LOCATE TOP OF WALL PENETRATION 2800 MM ABOVE FINISHED FLOOR – SEE MECHANICAL DRAWINGS.
4. NOT USED.
5. STUCCO CONTROL JOINT – SEE DETAIL 2A/A-501.
6. NOT USED.
7. EXTERIOR LIGHT FIXTURE – SEE ELECTRICAL.
8. CANOPY – SEE SHEET A-504.
9. CHAIN LINK FENCE WITH PRIVACY SLATS – SEE PLAN.
10. DUCT THRU WALL – SEE MECHANICAL DRAWINGS.

APPROVED:
A/E DESIGNER OF RECORD
SEAL:
REGISTERED PROFESSIONAL ARCHITECT JAMES F. KEMPER 02469 IOWA

US ARMY CORPS OF ENGINEERS
AFGHANISTAN ENGINEER DISTRICT

Mark	Description	Date	Appr.	Mark	Description	Date	Appr.

Designed by: JFK
Dwn by: JLB
Ckd by: MAW
Reviewed by: MRH
Submitted by: STANLEY
Date: 5/19/10
Design file no.
Drawing code:
File name: 47420GE-ARCHITECT
Plot date: 20100520
Plot scale:
Rev: 0

U.S. ARMY ENGINEER DISTRICT, AFGHANISTAN
CORPS OF ENGINEERS
APO AE 96338

Stanley Consultants INC.

AFGHAN NATIONAL ARMY
KANDAKS
SITE ADAPT DESIGN

FITNESS CENTER

EXTERIOR ELEVATIONS

SHEET REFERENCE NUMBER:
E
A-201

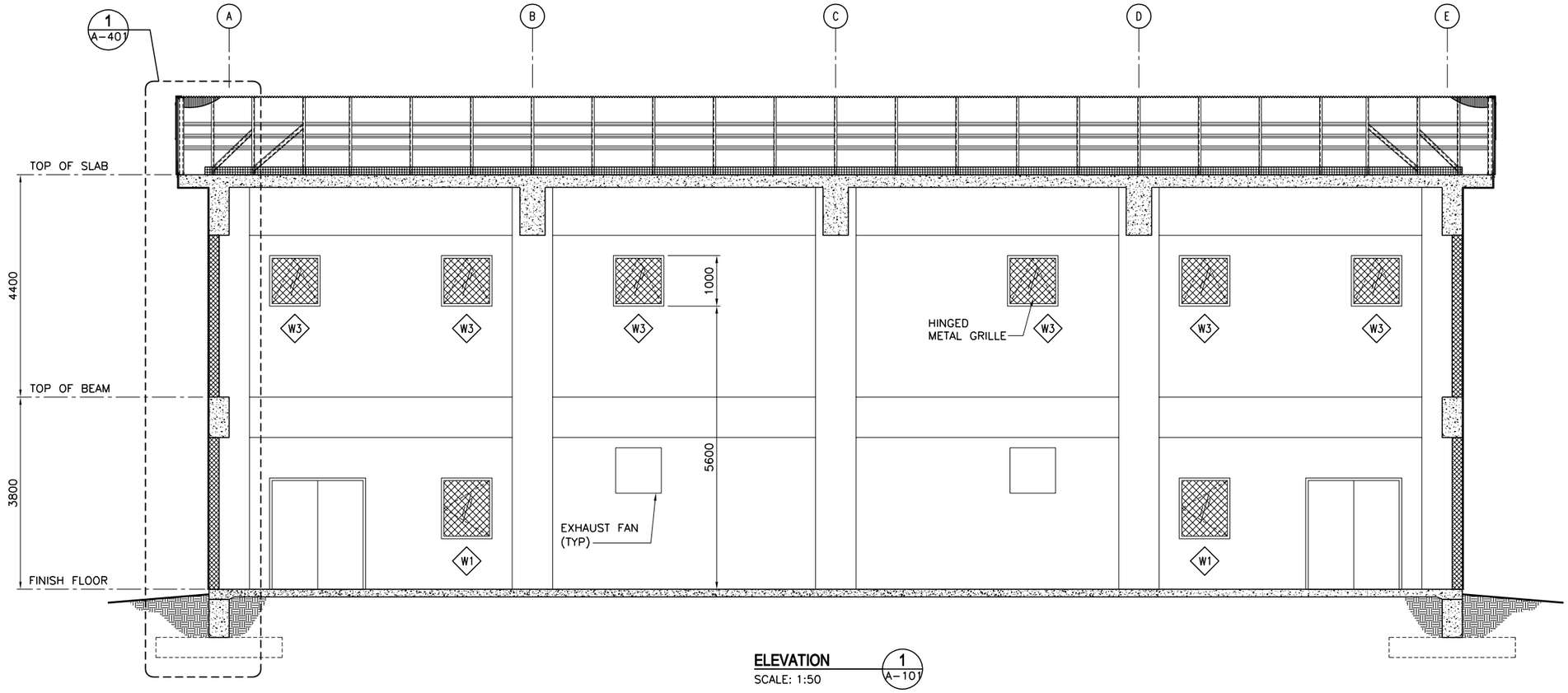

ELEVATION 1/A-101
SCALE: 1:50

W3 PROJECT OUT AWNING WINDOWS OPERATING MECHANISM WITH MANUAL CRANK. MODIFY METAL GRILLE SO THAT WINDOW OPERATING MECHANISM CAN FUNCTION WITH GRILLE IN CLOSED POSITION.

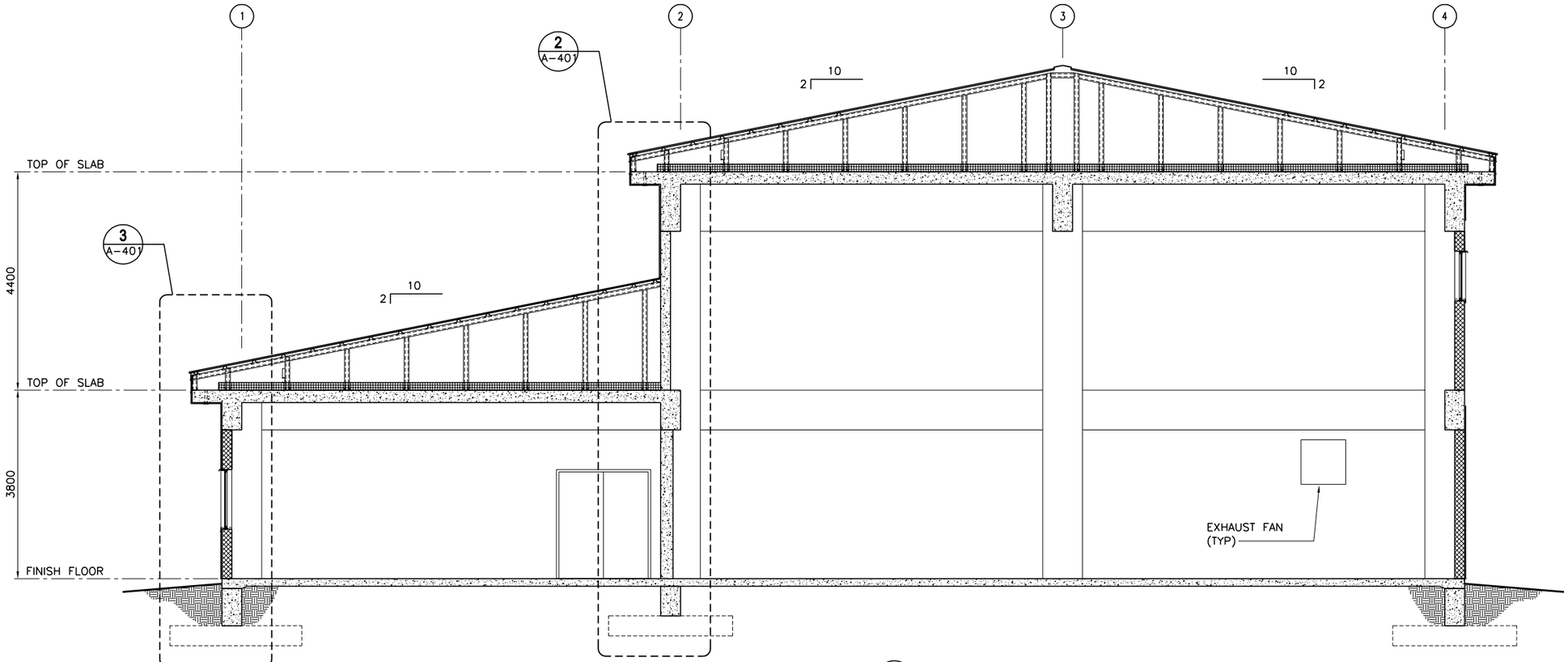

ELEVATION 2/A-101
SCALE: 1:50

1 0 1 2 3 4
1:50

UNLESS NOTED OTHERWISE, LINEAR DIMENSIONS SHOWN ARE IN MILLIMETERS.

APPROVED:
A/E DESIGNER OF RECORD

SEAL:
REGISTERED PROFESSIONAL ARCHITECT
JAMES F. KEMPER
02469
IOWA

US ARMY CORPS OF ENGINEERS
AFGHANISTAN ENGINEER DISTRICT

Mark	Description	Date	Appr.	Mark	Description	Date	Appr.

Rev: 0
Date: 5/19/10
Design file no.
Drawing code:
File name: 5120SDE-AR2E3C
Plot date: 20100505
Plot scale:

Designed by: JFK
Dwn by: JLB
Ckd by: MAW
Reviewed by: MRH
Submitted by: STANLEY

U.S. ARMY ENGINEER DISTRICT, AFGHANISTAN
CORPS OF ENGINEERS
APO AE 96338

Stanley Consultants INC.

AFGHAN NATIONAL ARMY
KANDAKL
SITE ADAPT DESIGN

FITNESS CENTER

BUILDING SECTIONS

SHEET REFERENCE NUMBER:
E
A-301

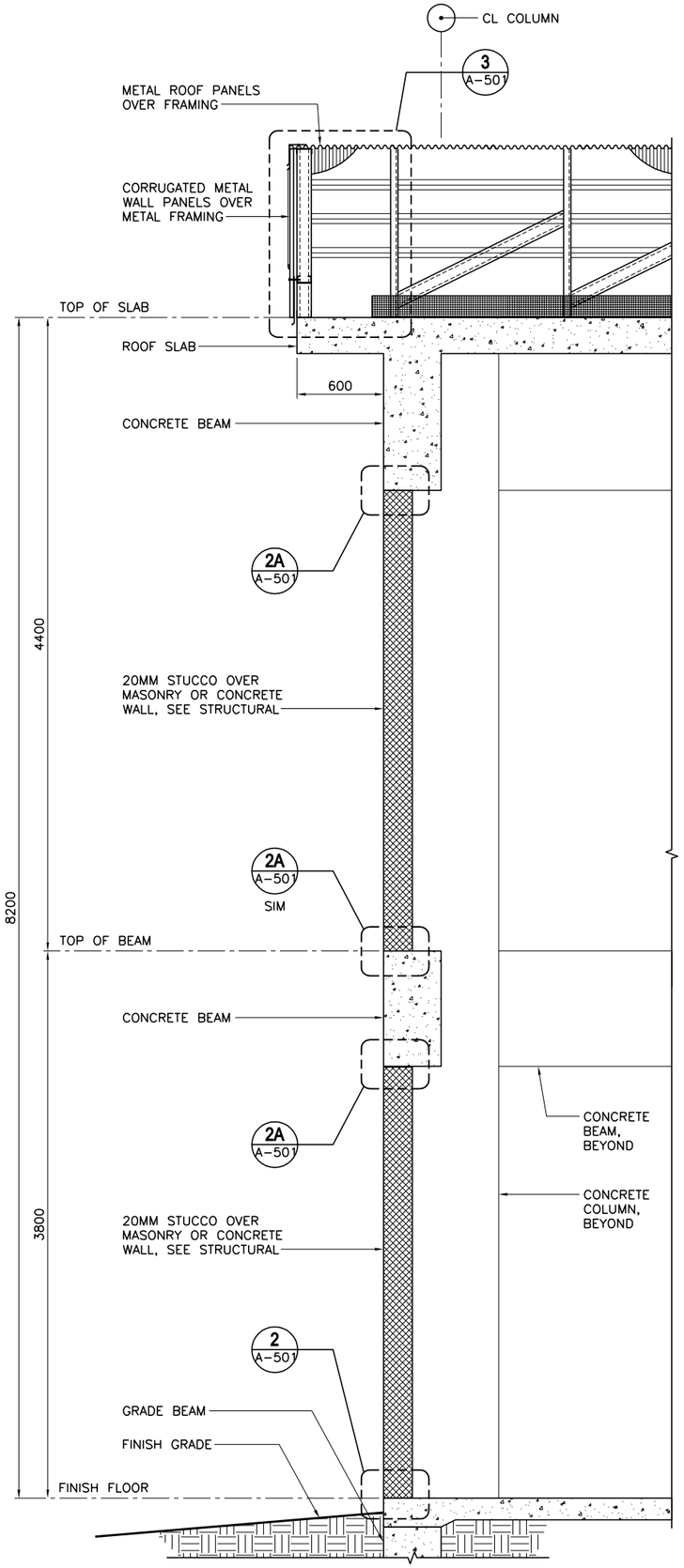

TYPICAL WALL SECTION 1 A-301
SCALE: 1:20

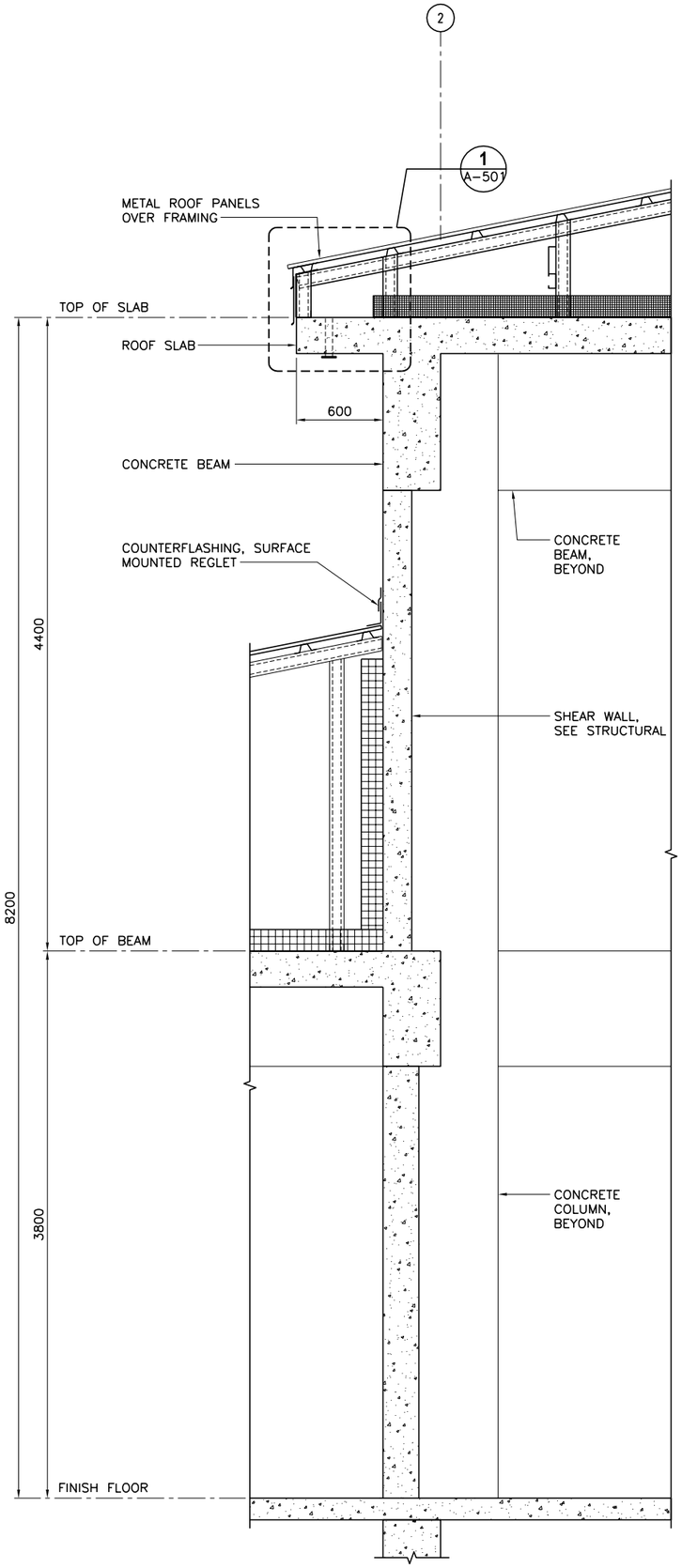

TYPICAL WALL SECTION 2 A-301
SCALE: 1:20

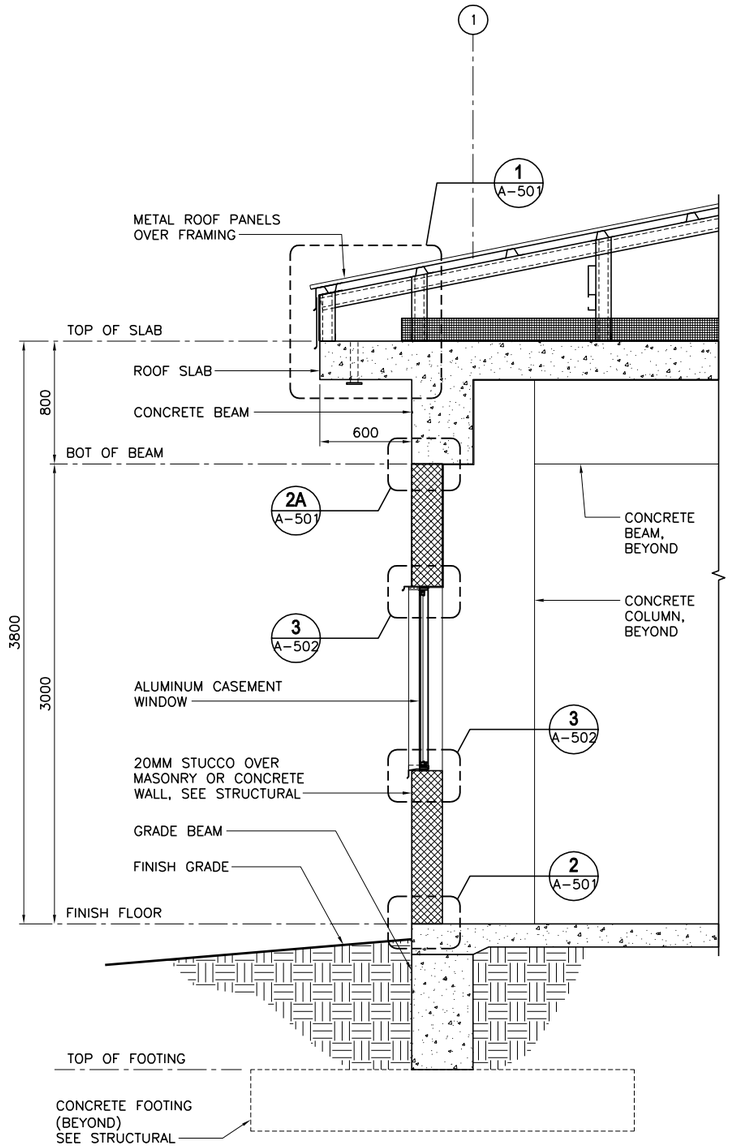

TYPICAL WALL SECTION 3 A-301
SCALE: 1:20

1 .50 0 1
1:20

UNLESS NOTED OTHERWISE, LINEAR DIMENSIONS SHOWN ARE IN MILLIMETERS.

APPROVED:
A/E DESIGNER OF RECORD
SEAL:
REGISTERED PROFESSIONAL ENGINEER
JAMES F. KEMPER
02469
IOWA

US ARMY CORPS OF ENGINEERS
AFGHANISTAN ENGINEER DISTRICT

Mark	Description	Date	Appr.	Mark	Description	Date	Appr.

Designed by: JFK
Dwn by: JLB
Ckd by: MAW
Reviewed by: MRH
Submitted by: STANLEY
Date: 5/19/10
Rev: 0
Design file no.
Drawing code:
File name: AFG08E-A4A03C
Plot date: 2010/05/19
Plot scale:

U.S. ARMY ENGINEER DISTRICT, AFGHANISTAN
CORPS OF ENGINEERS
APO AE 96338

Stanley Consultants INC.

AFGHAN NATIONAL ARMY
KANDAKS
SITE ADAPT DESIGN

FITNESS CENTER

WALL SECTIONS

SHEET REFERENCE NUMBER:
E
A-401

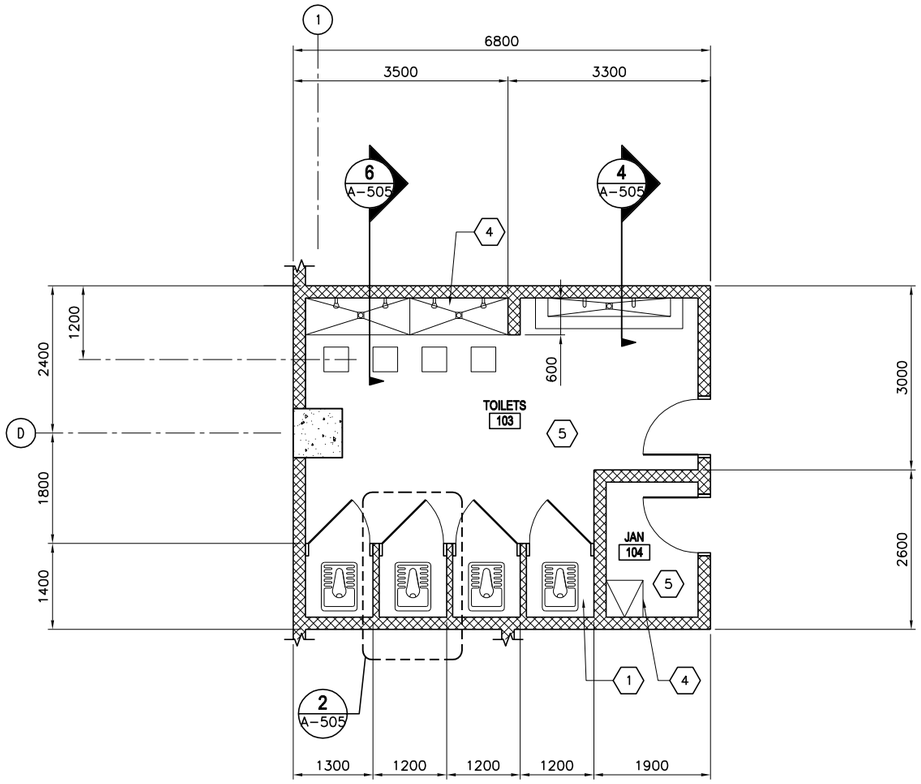

ENLARGED PLAN (1 / A-101)
SCALE: 1:50

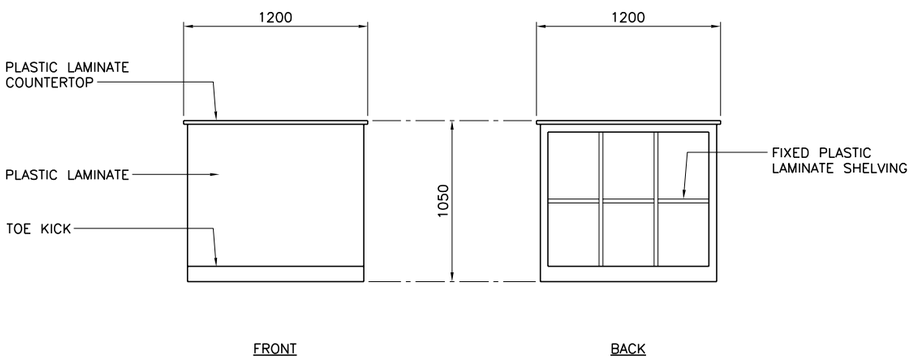

RECEPTION COUNTER (2 / A-101)
SCALE: 1:20

KEY NOTES: (X)

1. TYPICAL TOILET STALL LAYOUT – SEE DETAIL 2/A-504.
2. NOT USED.
3. NOT USED.
4. 600 X 600 RECESSED TROUGH – SEE DETAIL 7/A-504.
5. TERRAZZO FLOOR TILE AND CERAMIC WALL TILE TO 2000 MM ABOVE FINISHED FLOOR UNLESS OTHERWISE NOTED.

1 .50 0 1
1:20
1 0 1 2 3 4
1:50

UNLESS NOTED OTHERWISE, LINEAR DIMENSIONS SHOWN ARE IN MILLIMETERS.

APPROVED:
A/E DESIGNER OF RECORD
SEAL:
REGISTERED PROFESSIONAL ARCHITECT
JAMES F. KEMPER
02469
IOWA

US ARMY CORPS OF ENGINEERS
AFGHANISTAN ENGINEER DISTRICT

Mark	Description	Date	Appr.	Mark	Description	Date	Appr.

Designed by: JFK
Dwn by: JLB
Cxd by: MAW
Reviewed by: MRH
Submitted by: STANLEY
Date: 5/19/10
Rev: 0
Design file no.
Drawing code:
File name: 472G09E-A402E.DLS
Plot date: 2010/05/19
Plot scale:

U.S. ARMY ENGINEER DISTRICT, AFGHANISTAN
CORPS OF ENGINEERS
APO AE 96338

Stanley Consultants INC.

AFGHAN NATIONAL ARMY
KANDAKS
SITE ADAPT. DESIGN

FITNESS CENTER

ENLARGED PLAN

SHEET REFERENCE NUMBER:
E
A-402

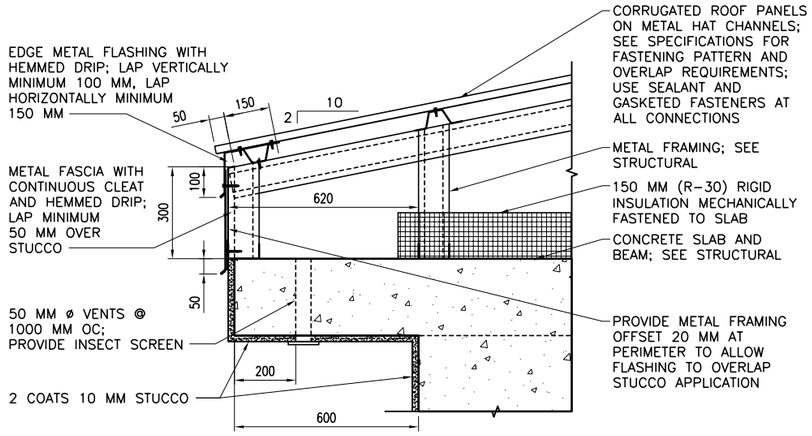

EAVE DETAIL (1 / A-401)
SCALE: 1:10

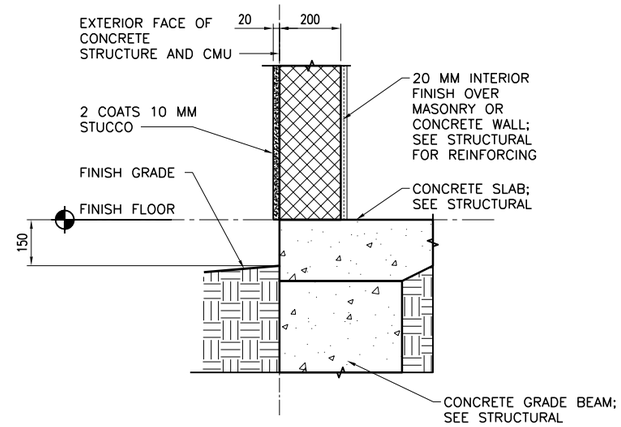

STUCCO BASE DETAIL (2 / A-401)
SCALE: 1:10

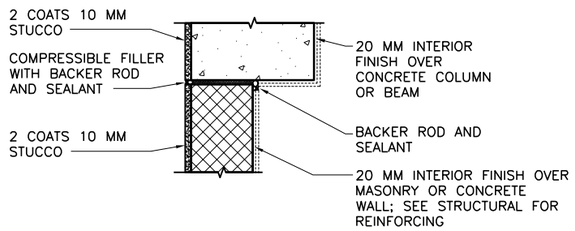

NOTE: DETAIL TYPICAL AT ALL WALL/COLUMN AND WALL/BEAM LOCATIONS.

STUCCO JOINT DETAIL (2A / A-201,A-401)
SCALE: 1:10

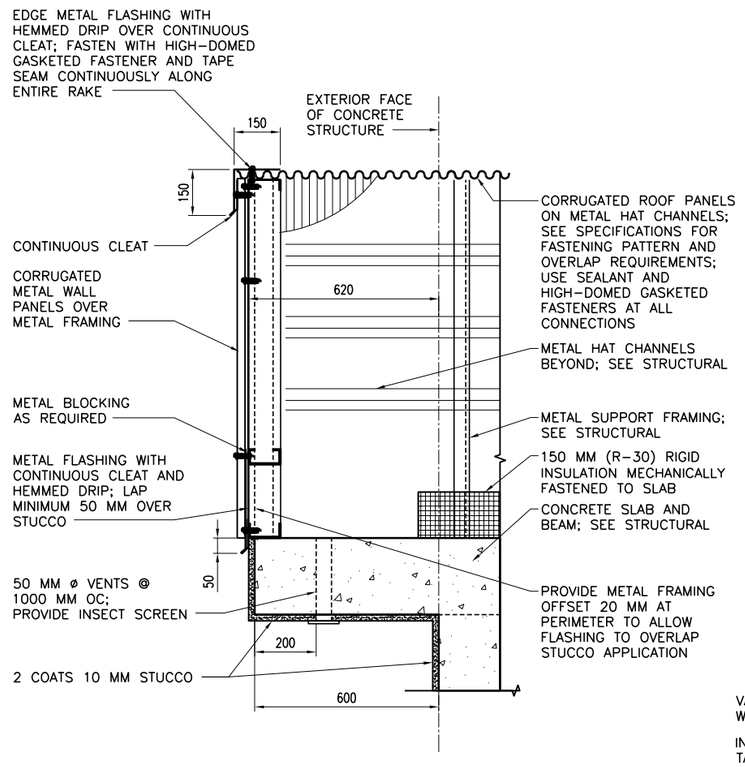

RAKE EAVE DETAIL (3 / A-401)
SCALE: 1:10

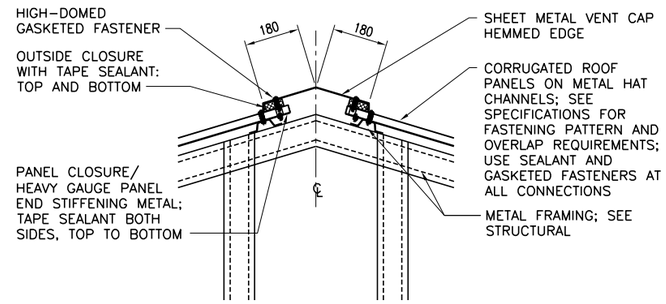

RIDGE VENT DETAIL (4 / A-102,A-201)
SCALE: 1:10

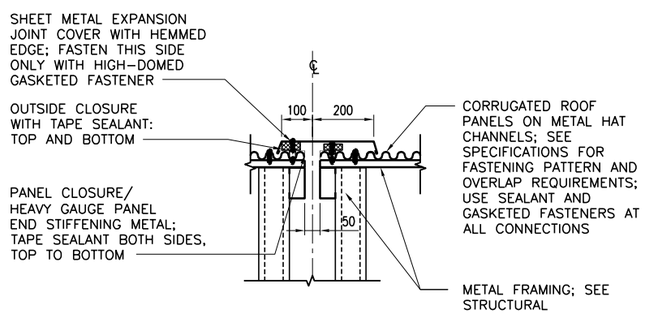

ROOF EXPANSION JOINT DETAIL (4A / A-501)
SCALE: 1:10

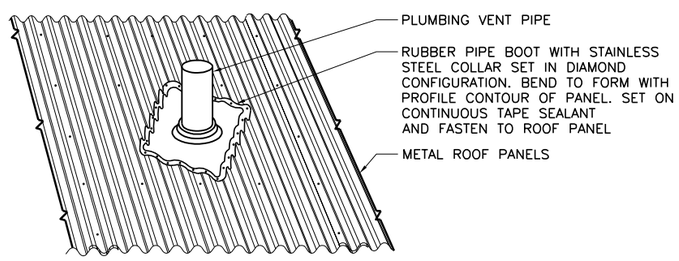

PLUMBING VENT DETAIL (5 / A-102)
SCALE: NONE

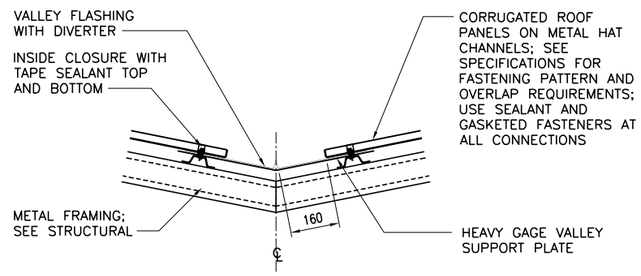

VALLEY DETAIL (6 / A-501)
SCALE: 1:10

0 .50 1.00
1:10

UNLESS NOTED OTHERWISE, LINEAR DIMENSIONS SHOWN ARE IN MILLIMETERS.

APPROVED:
A/E DESIGNER OF RECORD
SEAL:
REGISTERED PROFESSIONAL ARCHITECT JAMES F. KEMPER 02469 IOWA

US ARMY CORPS OF ENGINEERS
AFGHANISTAN ENGINEER DISTRICT

Mark	Description	Date	Appr.	Mark	Description	Date	Appr.

Rev: 0
Date: 5/19/10
Design file no.
Drawing code:
File name: 07200GE-AF02E101
Revit model: 07200100519
Plot scale:
Designed by: JFK
Dwn by: JLB
Ckd by: MAW
Reviewed by: MRH
Submitted by: STANLEY

U.S. ARMY ENGINEER DISTRICT, AFGHANISTAN
CORPS OF ENGINEERS
APO AE 96338

Stanley Consultants INC.

AFGHAN NATIONAL ARMY
KANDAHAR
SITE ADAPT DESIGN

FITNESS CENTER

EXTERIOR DETAILS

SHEET REFERENCE NUMBER:
E
A-501

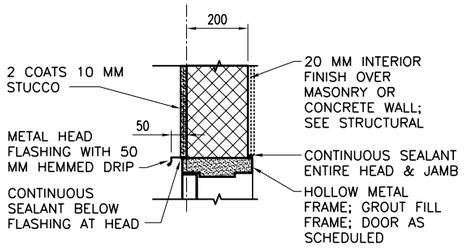

HEAD

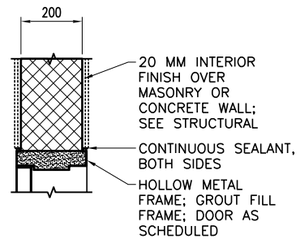

HEAD

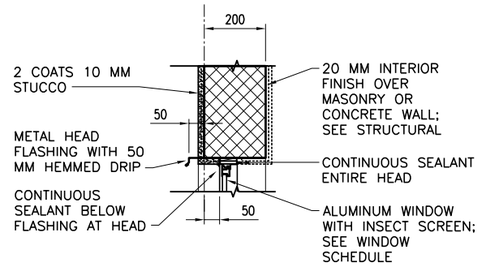

HEAD

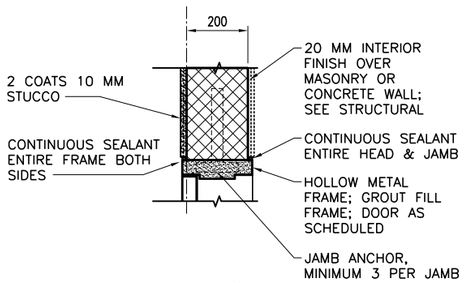

JAMB

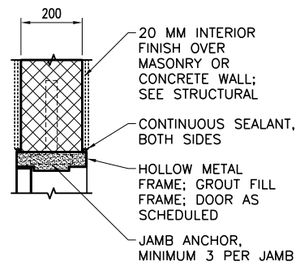

JAMB

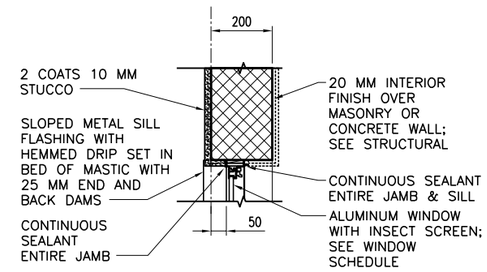

JAMB

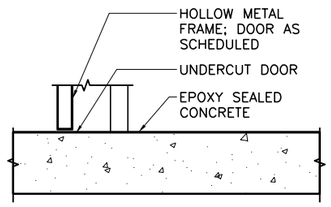

THRESHOLD

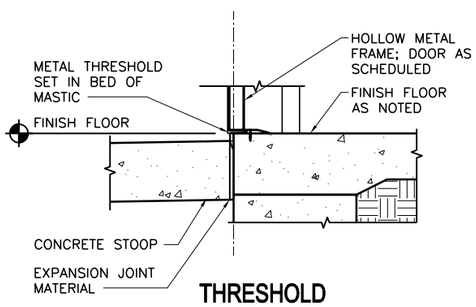

THRESHOLD

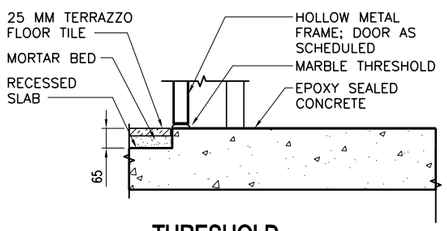

THRESHOLD

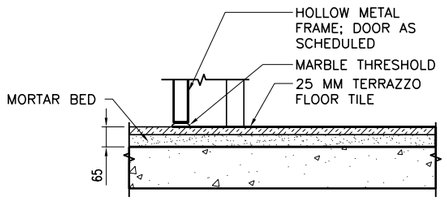

THRESHOLD

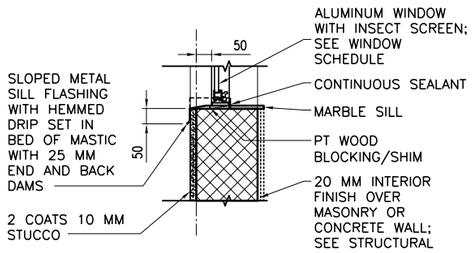

SILL

EXTERIOR DOOR DETAILS 1 / A-502
SCALE: 1:10

INTERIOR DOOR DETAILS 2 / A-502
SCALE: 1:10

EXTERIOR WINDOW DETAILS 3 / A-401
SCALE: 1:10

0 .50 1.00
1:10

UNLESS NOTED OTHERWISE, LINEAR DIMENSIONS SHOWN ARE IN MILLIMETERS.

APPROVED:
A/E DESIGNER OF RECORD
SEAL:
REGISTERED PROFESSIONAL ARCHITECT
JAMES F. KEMPER
02469
IOWA

US ARMY CORPS OF ENGINEERS
AFGHANISTAN ENGINEER DISTRICT

Mark	Description	Date	Appr.	Mark	Description	Date	Appr.

Designed by: JFK
Dwn by: JLB
Ckd by: MAW
Reviewed by: MRH
Submitted by: STANLEY
Date: 5/19/10
Rev: 0
Design file no.
Drawing code:
File name: H:\02GRE-AF\02GT01\02GT01\02GT01\02GT01\02GT01
Plot date: 2010/05/19
Plot scale:

U.S. ARMY ENGINEER DISTRICT, AFGHANISTAN
CORPS OF ENGINEERS
APO AE 96338

Stanley Consultants INC.

AFGHAN NATIONAL ARMY
KANDAHAR
SITE ADAPT DESIGN

FITNESS CENTER

HEAD, JAMB, AND SILL DETAILS

SHEET REFERENCE NUMBER:
E
A-502

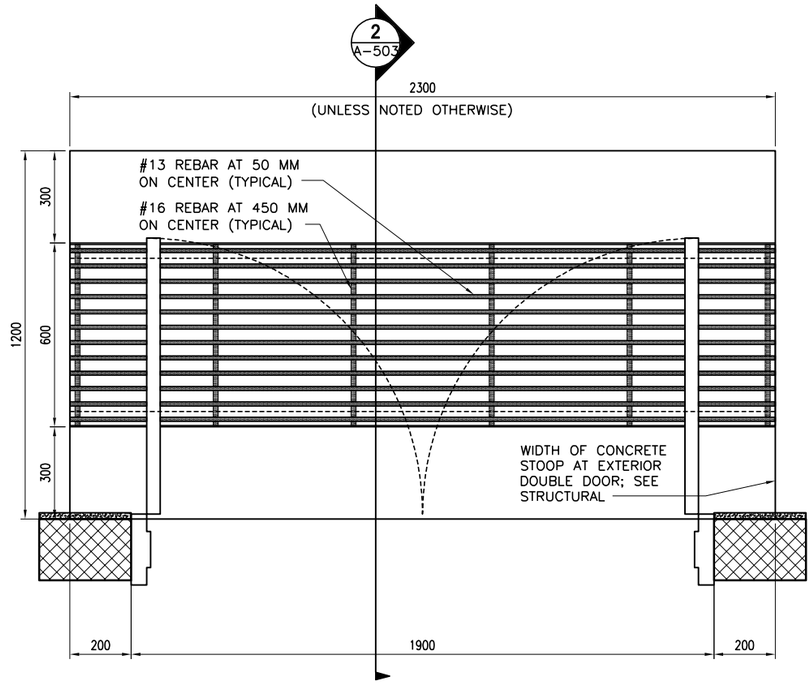

DOOR STOP PLAN (WITH GRATE) 1 / A-101

SCALE: 1:10

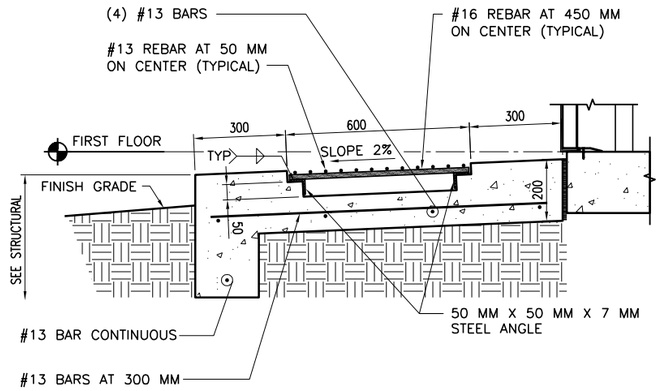

DOOR STOOP DETAIL 2 / A-503

SCALE: 1:10

0 .50 1.00

1:10

UNLESS NOTED OTHERWISE, LINEAR DIMENSIONS SHOWN ARE IN MILLIMETERS.

APPROVED:

A/E DESIGNER OF RECORD

SEAL:

REGISTERED PROFESSIONAL ARCHITECT
JAMES F. KEMPER
02469
IOWA

US ARMY CORPS OF ENGINEERS
AFGHANISTAN ENGINEER DISTRICT

Mark	Description	Date	Appr.	Mark	Description	Date	Appr.

U.S. ARMY ENGINEER DISTRICT, AFGHANISTAN
CORPS OF ENGINEERS
APO AE 96338

Stanley Consultants INC.

Designed by: JFK
Dwn by: JLB
Ckd by: MAW
Reviewed by: MRH
Submitted by: STANLEY
Date: 5/19/10
Rev: 0
Design file no.
Drawing code:
File name: 121200GE-AF030201
Plot date: 2010/05/19
Plot scale:

AFGHAN NATIONAL ARMY
KANDAKS
SITE ADAPT DESIGN

FITNESS CENTER

STOOP DETAILS

SHEET REFERENCE NUMBER:
E
A-503

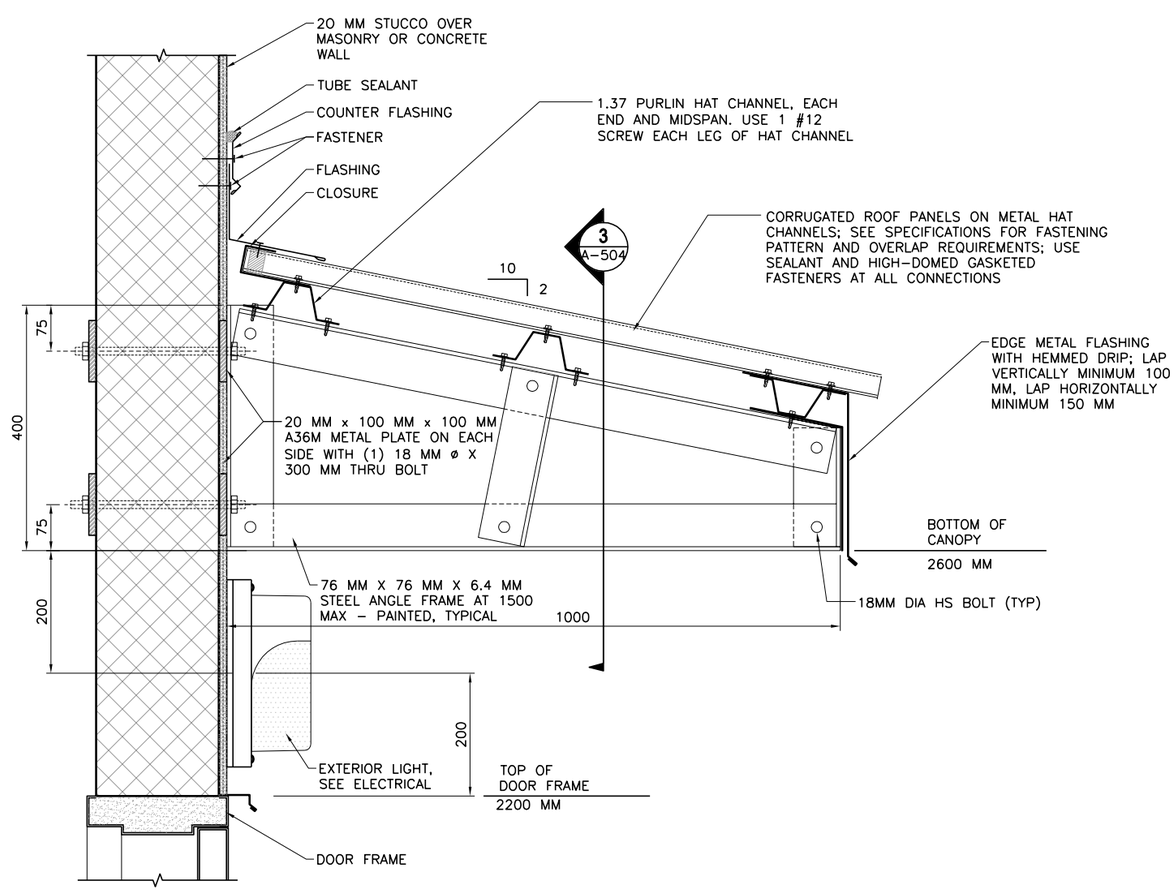

CANOPY CONNECTION DETAIL (1 / A-201,A-504)
SCALE: 1:5

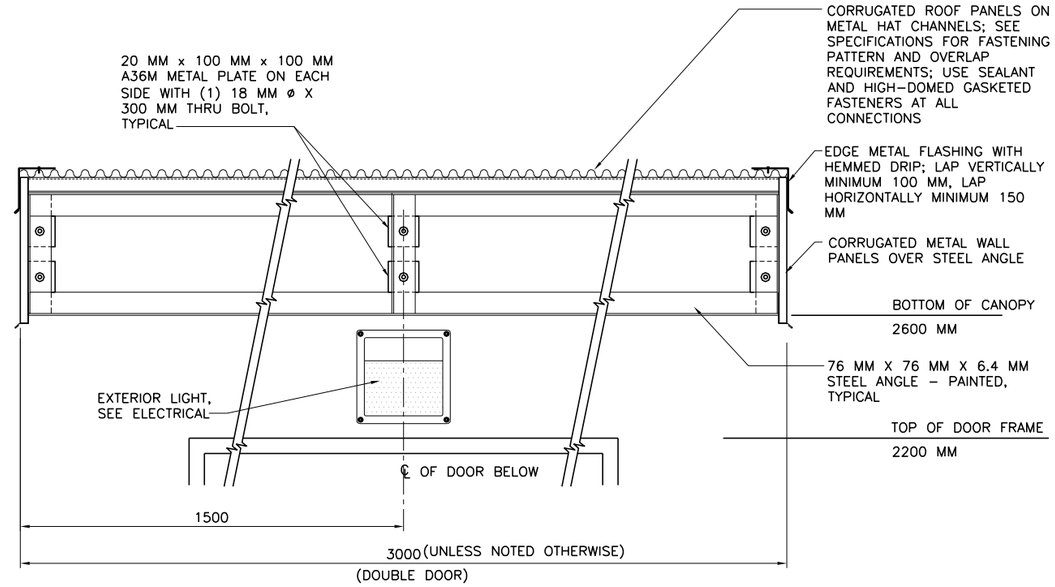

CANOPY CONNECTION DETAIL (3 / A-504)
SCALE: 1:10

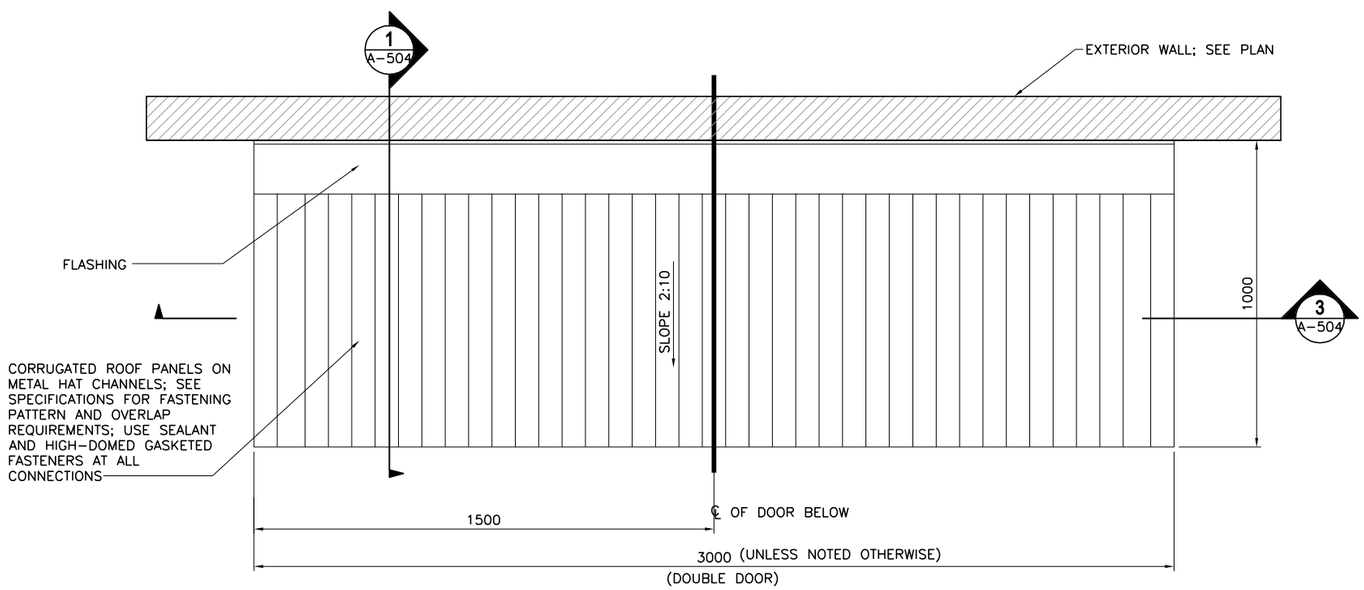

CANOPY PLAN (2 / A-102)
SCALE: 1:10

NOTES:
1. SEE A-101 FOR FLOOR PLAN AND CANOPY LOCATIONS.

0 .10 .20 .30 .40 1
1:5
0 .50 1.00
1:10

UNLESS NOTED OTHERWISE, LINEAR DIMENSIONS SHOWN ARE IN MILLIMETERS.

APPROVED:
A/E DESIGNER OF RECORD
SEAL:
REGISTERED PROFESSIONAL ARCHITECT
JAMES F. KEMPER
02469
IOWA

US ARMY CORPS OF ENGINEERS
AFGHANISTAN ENGINEER DISTRICT

Mark	Description	Date	Appr.	Mark	Description	Date	Appr.

Designed by: JFK
Dwn by: JLB
Ckd by: MAW
Reviewed by: MRH
Submitted by: STANLEY
Date: 5/19/10
Rev: 0
Design file no.
Drawing code:
File name: 121020SE-AE504.DGT
Plot date: 2010/10/20 15:53
Plot scale:

U.S. ARMY ENGINEER DISTRICT, AFGHANISTAN
CORPS OF ENGINEERS
APO AE 96338

Stanley Consultants INC.

AFGHAN NATIONAL ARMY
KANDAHAR
SITE ADAPT. DESIGN

FITNESS CENTER

CANOPY DETAILS

SHEET REFERENCE NUMBER:
E
A-504

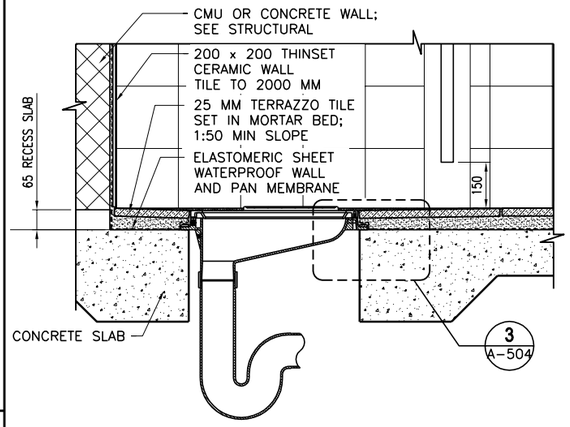

LATRINE DETAIL 1 A-505
SCALE: 1:10

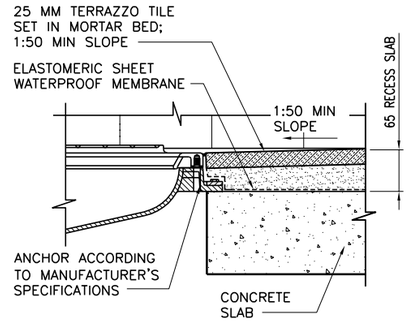

MOUNTING DETAIL 3 A-505
SCALE: 1:5

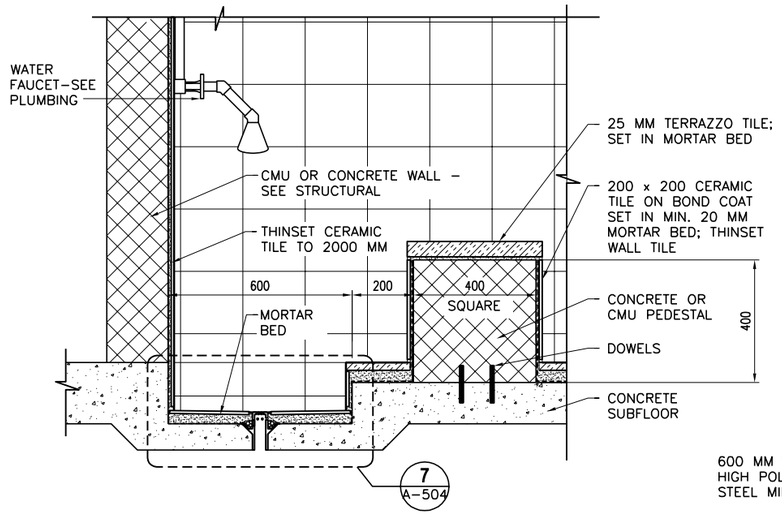

ABLUTION DETAIL 6 A-402
SCALE: 1:10

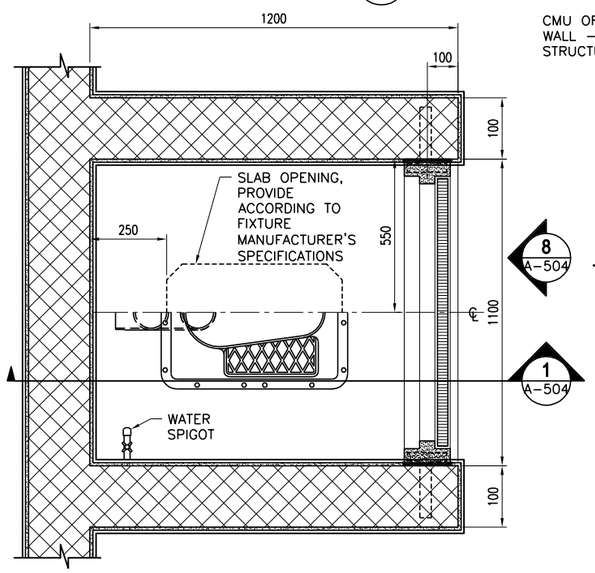

TOILET DETAIL 2 A-402
SCALE: 1:10

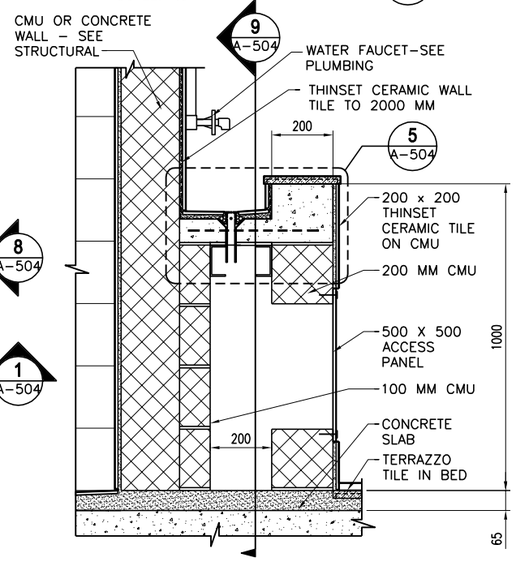

LAVATORY SECTION 4 A-402
SCALE: 1:10

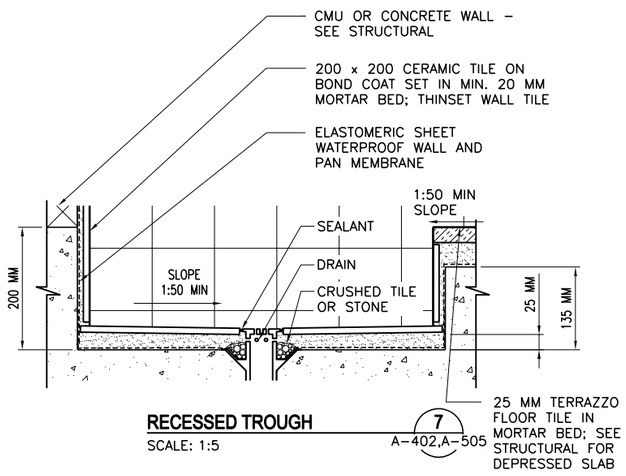

RECESSED TROUGH 7 A-402,A-505
SCALE: 1:5

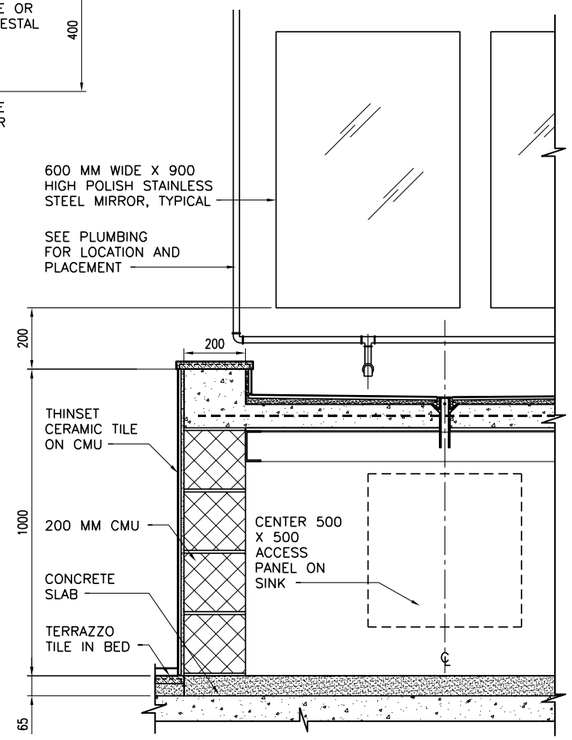

LAVATORY SECTION 9 A-505
SCALE: 1:10

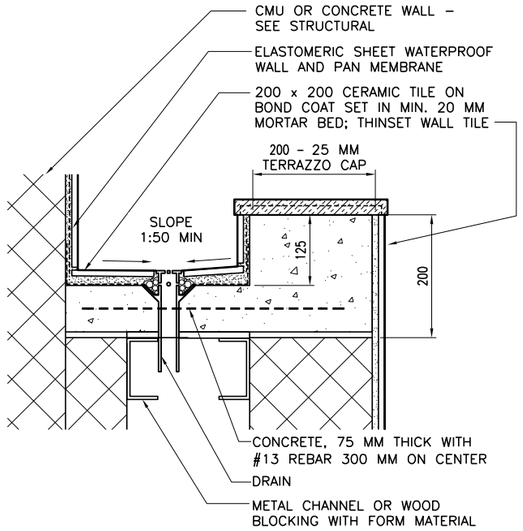

LAVATORY DETAIL 5 A-505
SCALE: 1:5

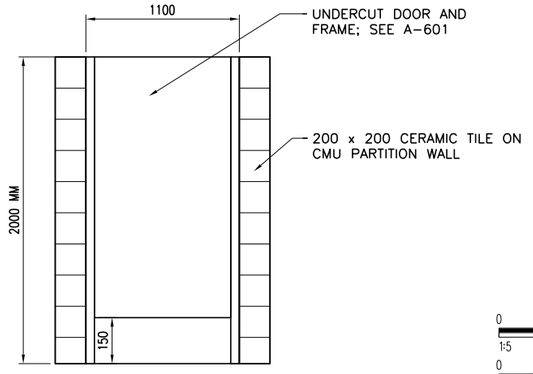

TOILET PARTITION DOOR ELEVATION 8 A-505
SCALE: 1:20

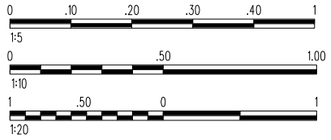

UNLESS NOTED OTHERWISE, LINEAR DIMENSIONS SHOWN ARE IN MILLIMETERS.

APPROVED:
A/E DESIGNER OF RECORD
SEAL:
REGISTERED PROFESSIONAL ARCHITECT JAMES F. KEMPER 02469 IOWA

US ARMY CORPS OF ENGINEERS
AFGHANISTAN ENGINEER DISTRICT

Mark	Description	Date	Appr.	Mark	Description	Date	Appr.

Rev: 0
Date: 5/19/10
Design file no.
Drawing code:
File name: 4410GE-AR06501
Plot date: 5/21/2010
Plot scale:

Designed by: JFK
Dwn by: JLB
Ckd by: MAW
Reviewed by: MRH
Submitted by: STANLEY

U.S. ARMY ENGINEER DISTRICT, AFGHANISTAN
CORPS OF ENGINEERS
APO AE 96338

Stanley Consultants INC.

AFGHAN NATIONAL ARMY
KANDAKS
SITE ADAPT DESIGN
FITNESS CENTER
TOILET, LAVATORY, AND ABLUTION DETAILS

SHEET REFERENCE NUMBER:
E
A-505

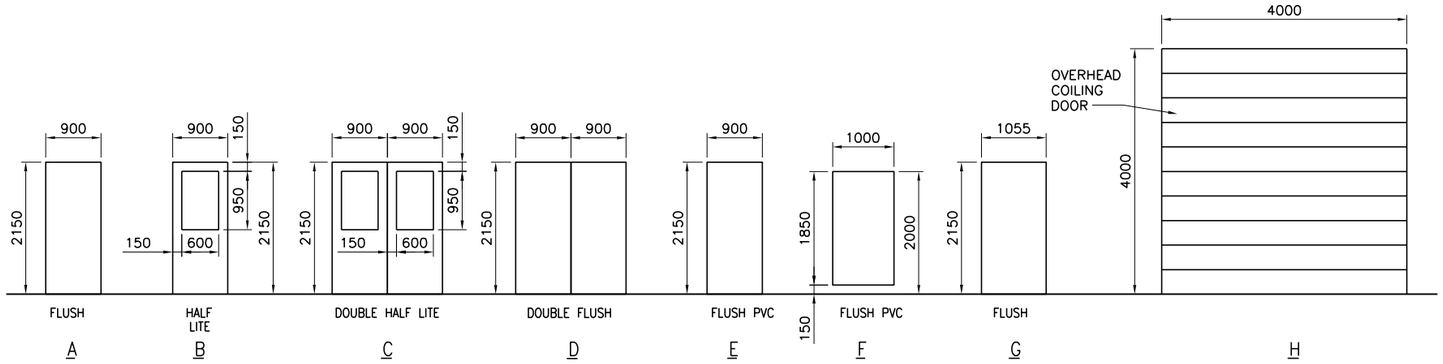

DOOR TYPES (1 / A-601)
SCALE: 1:50

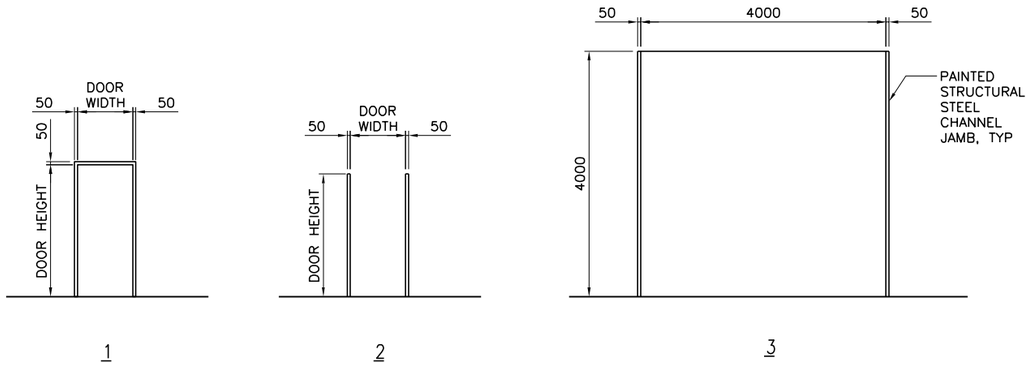

FRAME TYPES (2 / A-601)
SCALE: 1:50

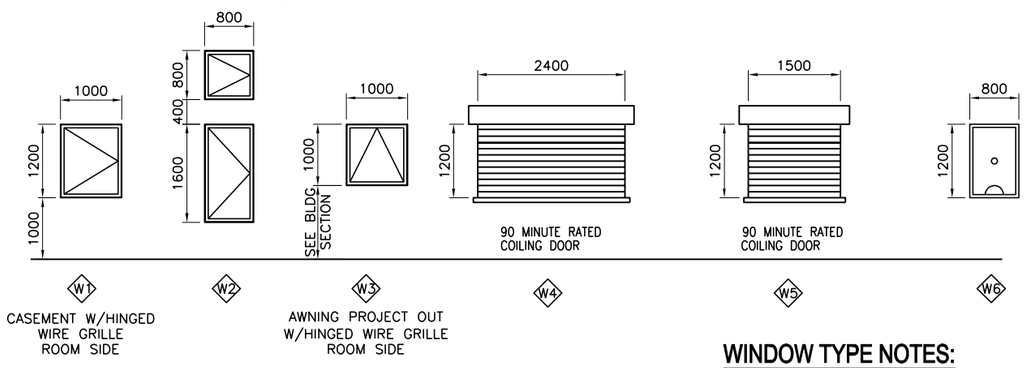

WINDOW TYPES (3 / A-601)
SCALE: 1:50

WINDOW TYPE NOTES:

1. ALL EXTERIOR WINDOWS SHALL BE ALUMINUM WITH INSECT SCREENS. WINDOWS SHALL BE COMMERCIAL GRADE.
2. ALL EXTERIOR WINDOWS SHALL BE OPERABLE.

DOOR TAG (4 / A-601)
SCALE: NONE

RATED DOOR TAG (5 / A-601)
SCALE: NONE

DOOR TAG NOTES:

1. THE DOOR TAG INDICATES THE DOOR TYPE, FRAME TYPE AND HARDWARE SET FOR EACH DOOR.
2. THE DOOR TAG FOR RATED DOORS INCLUDES THE RATING OF THE DOOR IN MINUTES.

EXTERIOR DOOR HARDWARE TYPES:

HW-1
1-1/2 PR HINGES, A5112 114 X 114
1 EA RIM EXIT DEVICE, TYPE 1
1 EA CYLINDER. E09221A, GRADE 1
1 EA OVERHEAD CLOSER, C02061, LOW RESISTANCE
1 EA THRESHOLD, J32130
3 EA DOOR SILENCERS, L03011

HW-2
1-1/2 PR HINGES, A5112 114 X 114
1 EA LOCKSET, F13 ENTRY LOCK W/LEVER HANDLES, GRADE 1
1 EA OVERHEAD CLOSER, C02061, LOW RESISTANCE
1 EA THRESHOLD, J32130
3 EA DOOR SILENCERS, L03011

HW-3
3 PR HINGES, A5112 114 X 114
2 EA RIM EXIT DEVICE, TYPE 1
2 EA CYLINDER. GRADE 1
2 EA OVERHEAD CLOSER, C02061, LOW RESISTANCE
1 EA DOOR COORDINATOR, TYPE 21
1 EA ASTRAGAL
1 EA THRESHOLD, J32130
2 EA DOOR SILENCERS, L03011

HW-4
3 PR HINGES, A5112 114 X 114
1 EA LOCKSET W/LEVER HANDLES. GRADE 1, F13
1 EA OVERHEAD CLOSER, C02061, LOW RESISTANCE
2 EA MAGNETIC HOLDER PIN, ATTACHED TO DOOR LEAF
2 EA MAGNETIC HOLDER RECEIVER, ATTACHED TO STOOP
2 EA LEVER EXTENSION FLUSH BOLTS, L04081
1 EA ASTRAGAL
1 EA THRESHOLD, J32130
2 EA DOOR SILENCERS, L03011

DOOR AND HARDWARE NOTES:

1. INTERIOR AND EXTERIOR METAL DOORS AND FRAME COLORS SHALL MATCH ADJACENT WALL COLORS AS SELECTED BY THE CONTRACTING OFFICER.
2. FRAMES, EXCEPT FIRE-RATED FRAMES, SHALL BE MOUNTED AND ADJUSTED IN ACCORDANCE WITH MANUFACTURER'S INSTRUCTIONS. FRAMES SHALL BE FASTENED WITH MINIMUM OF THREE ANCHORS PER JAMB AT EQUAL INTERVALS.
3. DIMENSIONS SHOWN ON DOOR TYPES DETAIL ARE BASED UPON MODULAR MASONRY (OR ROUGH OPENING), HEIGHT OF 2200 MM FOR STANDARD PERSONNEL DOORS. CONTRACTOR SHALL COORDINATE WITH DOOR SUPPLIER TO ENSURE THAT DIMENSIONS OF DOORS AND FRAMES PROVIDED ARE COMPATIBLE WITH DOOR OPENING DIMENSIONS.
4. HARDWARE SHALL BE HEAVY DUTY, COMMERCIAL GRADE, STAINLESS STEEL WITH A SATIN OR BRUSHED FINISH.
5. HARDWARE TYPES INCLUDE BUILDERS HARDWARE MANUFACTURERS ASSOCIATION (BMHA) NUMBER.
6. DOORS IN 2 HOUR RATED PARTITIONS SHALL BE 1.5 HOUR (90 MINUTE) RATED DOORS IN ACCORDANCE WITH NFPA 101, TABLE 8.3.4.2.
7. DOORS AT STAIR ENCLOSURES SHALL BE 1 HOUR (60 MINUTE) RATED AT 1 HOUR WALL IN ACCORDANCE WITH NFPA 101, TABLE 8.3.4.2.
8. DOORS IN 1 HOUR RATED WALLS SHALL BE 3/4 HOUR (45 MINUTE) RATED DOORS IN ACCORDANCE WITH NFPA 101, TABLE 8.3.4.2.
9. DOORS IN 1 HOUR RATED CORRIDOR WALLS SHALL BE 1/3 HOUR (20 MINUTE) IN ACCORDANCE WITH NFPA 101, TABLE 8.3.4.2.
10. PROVIDE DOOR STOPS TO PROTECT WALLS ON LOCATIONS WHERE DOOR SWING WILL STRIKE WALL.

THIS SHEET IS A STANDARD DOOR/ WINDOW/ HARDWARE DRAWING. CONTRACTOR SHALL REFER TO THE FLOOR PLANS FOR THE TYPES BEING USED.

INTERIOR DOOR HARDWARE TYPES:

HW-5
1-1/2 PR HINGES, A8133 114 X 114
1 EA LOCKSET W/LEVER HANDLES, F08, GRADE 1
1 EA WALL STOP, L02101 OR L02161
3 EA DOOR SILENCERS, L03011

HW-6
1-1/2 PR HINGES, A8112 114 X 114
1 EA LOCKSET W/LEVER HANDLES, F08, GRADE 1
1 EA WALL STOP, L02101 OR L02161
1 EA OVERHEAD CLOSER, C02061, LOW RESISTANCE
3 EA DOOR SILENCERS, L03011

HW-7
1-1/2 PR HINGES, A8133
1 EA LOCKSET W/LEVER HANDLES, F13 GRADE 1
1 EA WALL STOP, L02101 OR L02161
2 EA MOP PLATE, J103
3 EA DOOR SILENCERS, L03011

HW-8
1-1/2 PR HINGES, A8112
1 EA LOCKSET W/LEVER HANDLES, F13 GRADE 1
1 EA WALL STOP, L02101 OR L02161
2 EA MOP PLATE, J103
1 EA OVERHEAD CLOSER, C02061, LOW RESISTANCE
3 EA DOOR SILENCERS, L03011

HW-9
1-1/2 PR HINGES, A5112 114 X 114
1 EA RIM EXIT DEVICE, TYPE 1
1 EA CYLINDER. E09221A, GRADE 1
1 EA OVERHEAD CLOSER, C02061, LOW RESISTANCE
3 EA DOOR SILENCERS, L03011

HW-10
3 PR HINGES, A5112 114 X 114
1 EA LOCKSET W/LEVER HANDLES. GRADE 1, F13
2 EA LEVER EXTENSION FLUSH BOLTS, L04081
1 EA ASTRAGAL
2 EA DOOR SILENCERS, L03011

HW-11
1-1/2 PR HINGES, A8112 114 X 114
1 EA LOCKSET W/LEVER HANDLES, F13, GRADE 1
1 EA WALL STOP, L02101 OR L02161
1 EA OVERHEAD CLOSER, C02061, LOW RESISTANCE
3 EA DOOR SILENCERS, L03011
1 EA ROBE HOOK

HW-12
1-1/2 PR HINGES, A8133
1 EA LATCHSET W/LEVER HANDLES, F76 GRADE 1
1 EA WALL STOP, L02101 OR L02161
2 EA MOP PLATE, J103
3 EA DOOR SILENCERS, L03011
1 EA ROBE HOOK

HW-13
3 PR HINGES, A5112 114 X 114
1 EA LOCKSET W/LEVER HANDLES. GRADE 1, F13
1 EA OVERHEAD CLOSER, C02061, LOW RESISTANCE
2 EA LEVER EXTENSION FLUSH BOLTS, L04081
1 EA ASTRAGAL
2 EA DOOR SILENCERS, L03011

HW-14
3 PR HINGES, A5112 114 X 114
2 EA RIM EXIT DEVICE, TYPE 1
2 EA CYLINDER. GRADE 1
2 EA OVERHEAD CLOSER, C02061, LOW RESISTANCE
1 EA DOOR COORDINATOR, TYPE 21
1 EA ASTRAGAL
2 EA DOOR SILENCERS, L03011

1 0 1 2 3 4
1:50

UNLESS NOTED OTHERWISE, LINEAR DIMENSIONS SHOWN ARE IN MILLIMETERS.

APPROVED:
A/E DESIGNER OF RECORD
SEAL:
REGISTERED PROFESSIONAL ARCHITECT
JAMES F. KEMPER
02469
IOWA

US ARMY CORPS OF ENGINEERS
AFGHANISTAN ENGINEER DISTRICT

Mark	Description	Date	Appr.	Mark	Description	Date	Appr.

Designed by: JFK
Dwn by: JLB
Ckd by: MAW
Reviewed by: MRH
Submitted by: STANLEY
Date: 5/19/10
Rev: 0
Design file no.
Drawing code:
File name: 100026E-AR06201
Plot date: 2010/05/19
Plot scale:

U.S. ARMY ENGINEER DISTRICT, AFGHANISTAN
CORPS OF ENGINEERS
APO AE 96338

Stanley Consultants INC.

AFGHAN NATIONAL ARMY
KANDAKS
SITE ADAPT. DESIGN

FITNESS CENTER

WINDOW AND DOOR SCHEDULES

SHEET REFERENCE NUMBER:
E
A-601

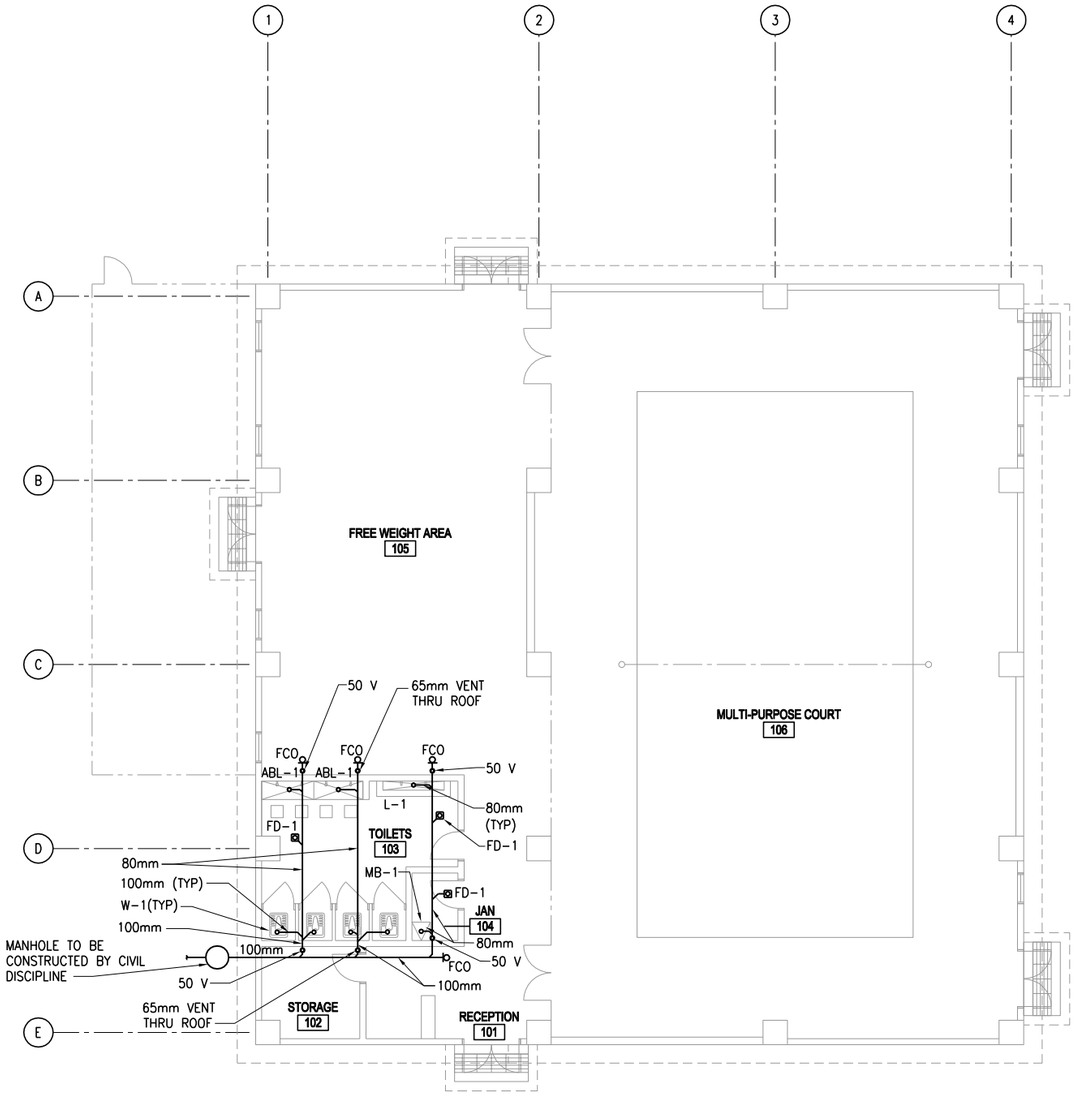

SANITARY PLUMBING PLAN

SCALE: 1:100

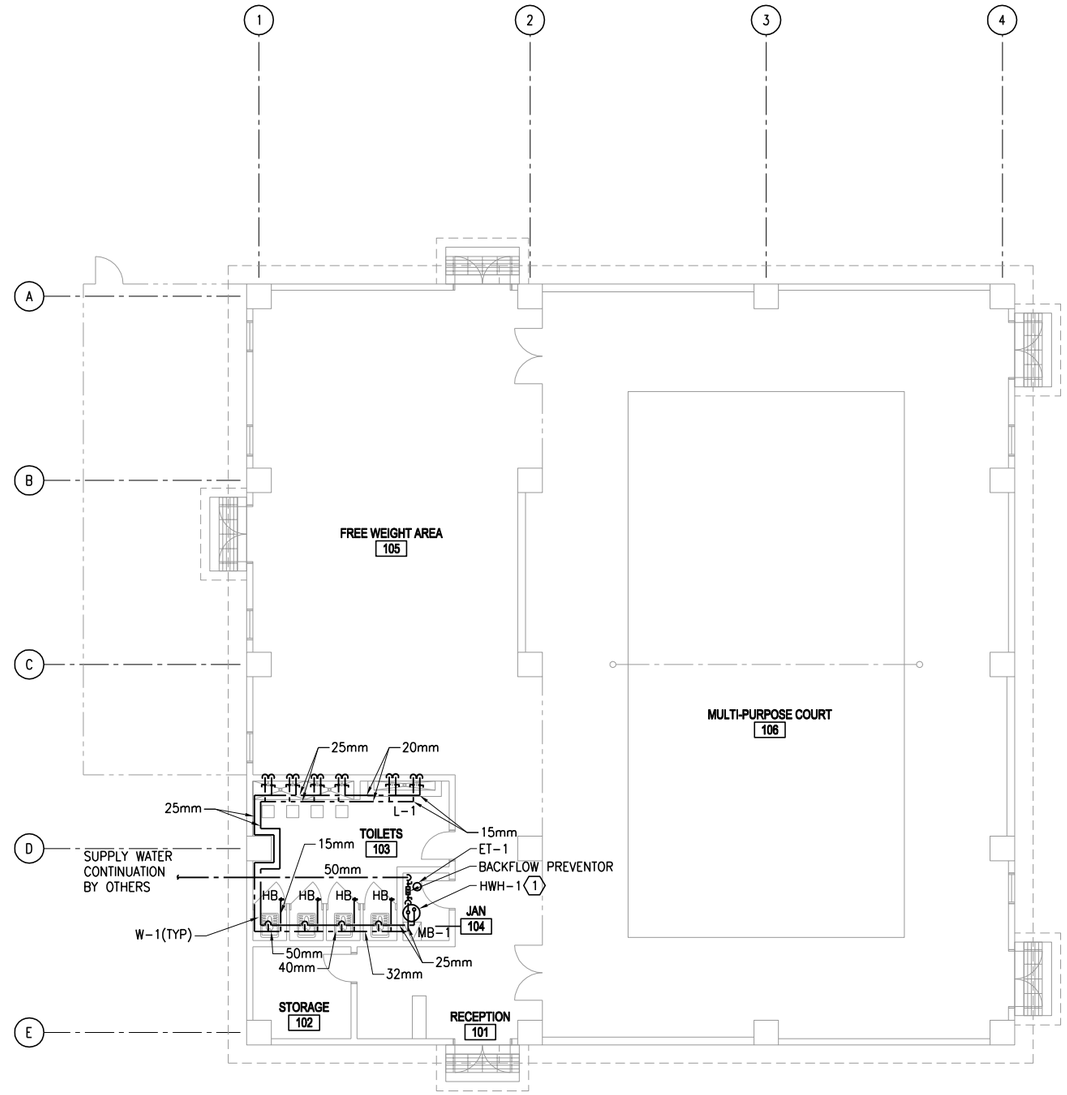

HOT AND COLD WATER PLUMBING PLAN

SCALE: 1:100

GENERAL PLUMBING NOTES:

1. ALL VENTS THRU ROOF SHALL EXTEND MINIMUM OF 600mm ABOVE FINISHED ROOF.

2. ALL SANITARY PIPING SHALL BE BELOW FLOOR, AND ALL WATER, AND VENT PIPING SHALL BE TIGHT TO CEILING, UNLESS OTHERWISE NOTED.

3. CONTRACTOR SHALL COORDINATE PLUMBING WORK WITH THE WORK OF ALL OTHER TRADES. VERIFY THE LOCATIONS OF ALL UTILITIES AT THE SITE PRIOR TO THE START OF ANY PLUMBING WORK.

4. COORDINATE ALL ACCESS PANEL LOCATIONS WITH THE ARCHITECT AND GENERAL CONTRACTOR.

5. ALL SANITARY PIPING BELOW SLAB SHALL BE A MINIMUM OF 50mm, UNLESS OTHERWISE NOTED OR AS REQUIRED BY THE LOCAL AUTHORITY HAVING JURISDICTION.

6. ALL HORIZONTAL SANITARY LINES SHALL BE SLOPED AT 6mm PER 300mm, UNLESS OTHERWISE NOTED OR AS REQUIRED BY THE LOCAL AUTHORITY HAVING JURISDICTION.

7. THE CONTRACTOR SHALL BE RESPONSIBLE FOR COORDINATION WITH ALL UTILITY AUTHORITIES FOR INSTALLATION REQUIREMENTS, REGULATIONS, FEES, PERMITS, AND APPROVALS BEFORE THE START OF CONSTRUCTION.

8. THE CONTRACTOR SHALL ROUGH-IN AND CONNECT ALL EQUIPMENT REQUIRING WATER, WASTE, AND/OR VENT WHETHER OR NOT FURNISHED UNDER THIS CONTRACT. THE CONTRACTOR SHALL ALSO FURNISH AND INSTALL ALL NECESSARY PIPE, FITTINGS, VALVES, TRAPS, ETC., REQUIRED FOR A COMPLETE INSTALLATION, LEAVING SAME READY FOR SERVICE.

PLUMBING SYMBOLS:

- SANITARY SEWER PIPING
- VENT PIPING (V)
- COLD WATER PIPING (CW)
- HOT WATER PIPING (HW)
- HOT WATER RECIRCULATION
- BALL VALVE
- BACKFLOW PREVENTER
- OR — CLEANOUT (CO.)

KEY NOTE:

1. MINIMUM 120 LITER HOT WATER HEATER WITH 5KW ELECTRIC HEATING ELEMENTS.

1 0 1 2 3 4 5 6 7 8 9
1:100

UNLESS NOTED OTHERWISE, LINEAR DIMENSIONS SHOWN ARE IN MILLIMETERS.

APPROVED:

LIVE DESIGNER OF RECORD

SEAL:

LICENSED PROFESSIONAL ENGINEER
JON J. BOVENKAMP
16661
IOWA

US ARMY CORPS OF ENGINEERS
AFGHANISTAN ENGINEER DISTRICT

Mark	Description	Date	Appr.	Mark	Description	Date	Appr.

Designed by: ADA
Dwn by: DLG
Ckd by: JJB
Reviewed by: MRH
Submitted by: STANLEY
Date: 5/19/10
Rev: 0
Design file no.
Drawing code:
File name: AFG08E-MPF02-PM
Plot date: 2010/05/19
Plot scale:

U.S. ARMY ENGINEER DISTRICT, AFGHANISTAN
CORPS OF ENGINEERS
APO AE 96338

Stanley Consultants INC.

AFGHAN NATIONAL ARMY
KANDAKS
SITE ADAPT DESIGN

FITNESS CENTER

PLUMBING PLANS

SHEET REFERENCE NUMBER:
E
P-101

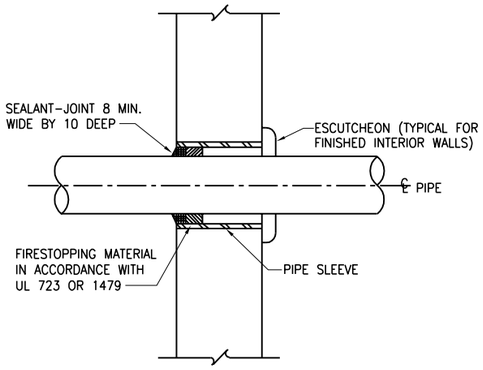

TYPICAL WALL PENETRATION DETAIL 1 / P-501
SCALE: NONE

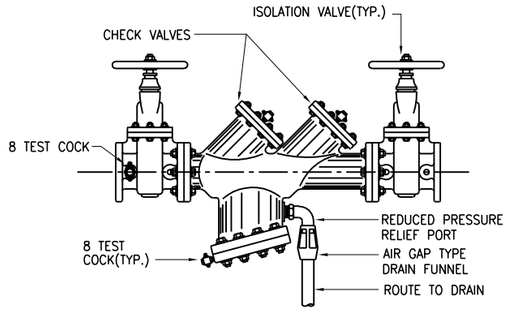

TYPICAL BACKFLOW PREVENTER DETAIL 2 / P-501
SCALE: NONE

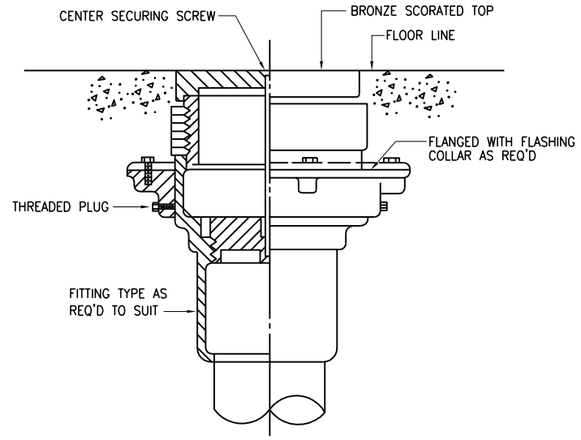

TYPICAL FLOOR CLEANOUT DETAIL 3 / P-501
SCALE: NONE

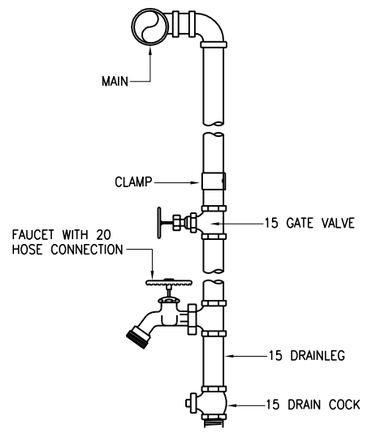

TYPICAL WATER DROP DETAIL 4 / P-501
SCALE: NONE

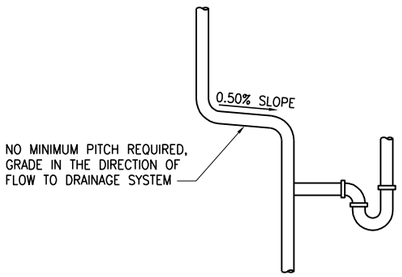

TYPICAL VENT GRADE DETAILS 5 / P-501
SCALE: NONE

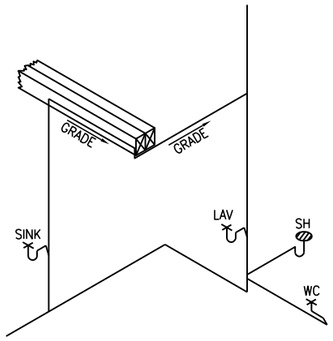

TYPICAL VENT GRADE DETAILS 6 / P-501
SCALE: NONE

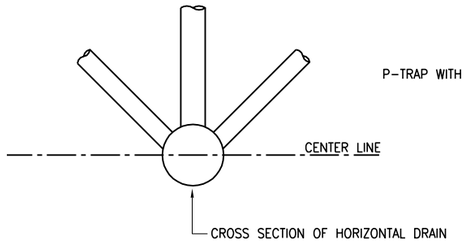

ACCEPTABLE VENT CONNECTIONS TO HORIZONTAL DRAIN - DETAIL 7 / P-501
SCALE: NONE

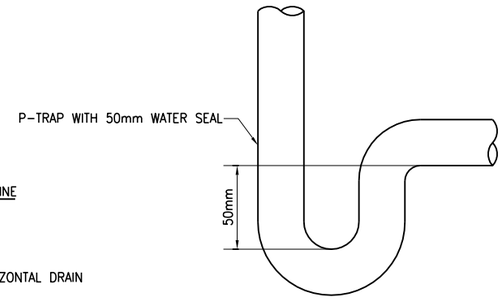

P-TRAP WITH 50mm WATER SEAL DETAIL 8 / P-501
SCALE: NONE

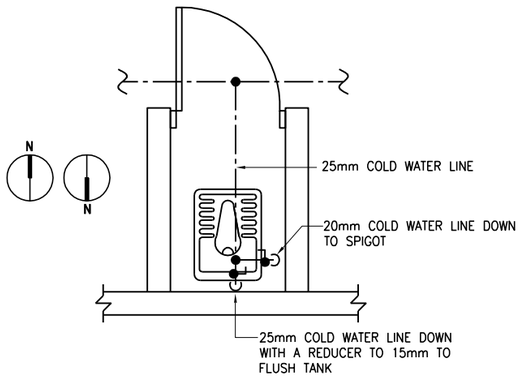

TYPICAL EASTERN STYLE WATER CLOSET WITH SPIGOT WATER PIPING DETAIL 9 / P-501
SCALE: NONE

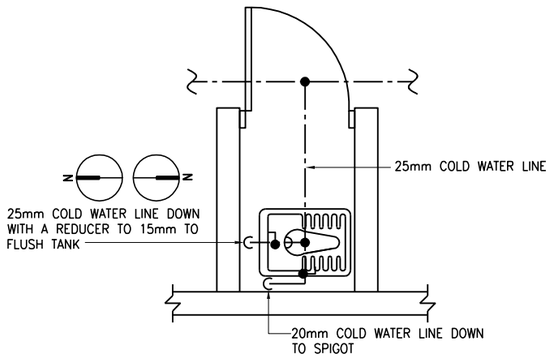

TYPICAL EASTERN STYLE WATER CLOSET WITH SPIGOT WATER PIPING DETAIL 10 / P-501
SCALE: NONE

US ARMY CORPS OF ENGINEERS
AFGHANISTAN ENGINEER DISTRICT

Mark	Description	Date	Appr.	Mark	Description	Date	Appr.

Designed by: ADA
Dwn by: DLC
Ckd by: JJB
Reviewed by: MRH
Submitted by: STANLEY
Date: 5/19/10
Rev: 0
Design file no.
Drawing code:
File name: 1420SE-MP02A.DGN
Plot date: 20100520 09:53
Plot scale:

U.S. ARMY ENGINEER DISTRICT, AFGHANISTAN
CORPS OF ENGINEERS
APO AE 96338

Stanley Consultants INC.

AFGHAN NATIONAL ARMY
KANDAKS
SITE ADAPT. DESIGN

FITNESS CENTER

PLUMBING DETAILS
SHEET 1

APPROVED:
A/E DESIGNER OF RECORD

SEAL:
LICENSED PROFESSIONAL ENGINEER
JON J. BOVENKAMP
16661
IOWA

SHEET REFERENCE NUMBER:
E
P-501

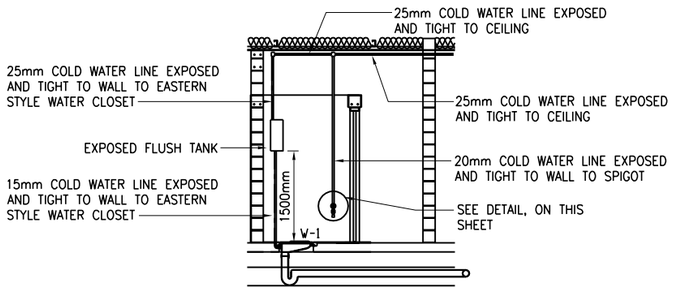

TYPICAL EASTERN STYLE WATER CLOSET SANITARY AND WATER INSTALLATION SCHEMATIC (1 / P-502)

SCALE: NONE

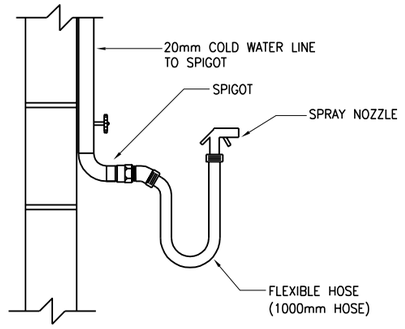

TYPICAL DETAIL - SPIGOT, FLEXIBLE HOSE, AND SPRAY NOZZLE (2 / P-502)

SCALE: NONE

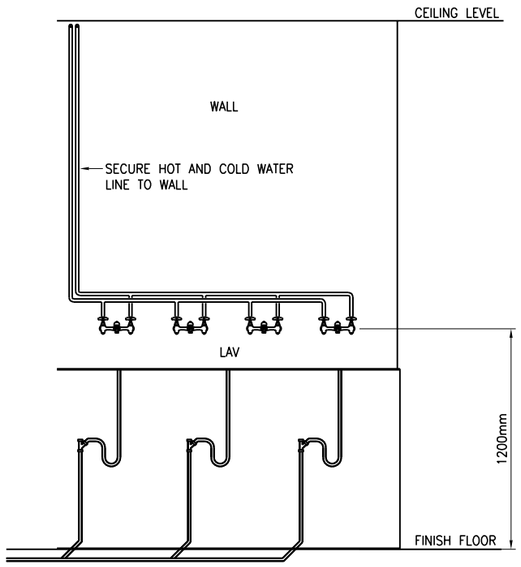

LAVATORY ELEVATION PLAN - PLUMBING (3 / P-502)

SCALE: NONE

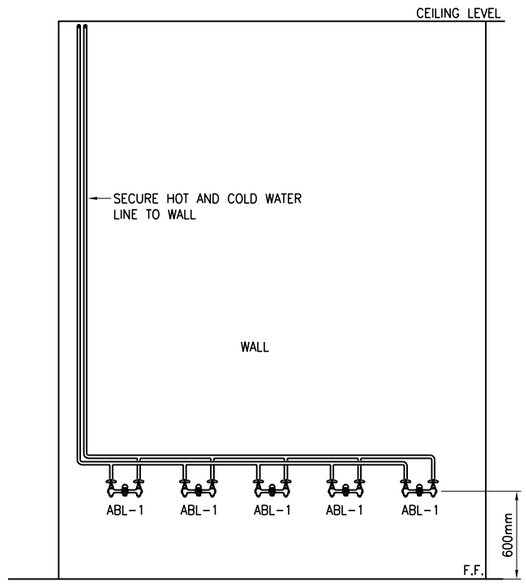

TYPICAL ABLUTION ELEVATION PLUMBING PLAN - WATER INSTALLATION SCHEMATIC (4 / P-502)

SCALE: NONE

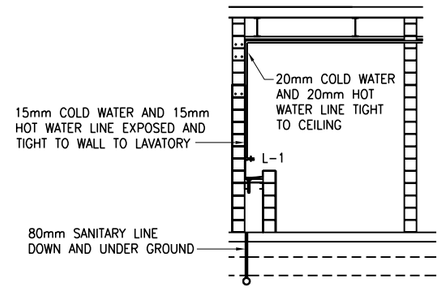

TYPICAL LAVATORY SANITARY AND WATER INSTALLATION SCHEMATIC (5 / P-502)

SCALE: NONE

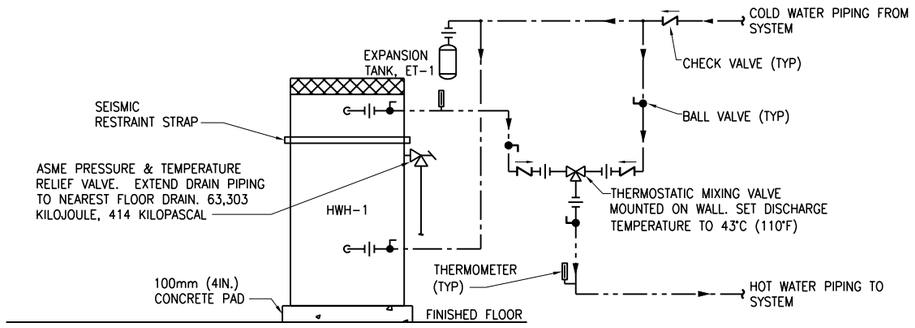

ELECTRIC WATER HEATER PIPING SCHEMATIC (6 / P-502)

SCALE: NONE

US ARMY CORPS OF ENGINEERS
AFGHANISTAN ENGINEER DISTRICT

Mark	Description	Date	Appr.	Mark	Description	Date	Appr.

Designed by: ADA
Dwn by: DLC
Ckd by: JJB
Reviewed by: MRH
Submitted by: STANLEY
Date: 5/19/10
Rev: 0
Design file no.
Drawing code:
File name: 12320SE-MP02.DWG
Plot date: 2010/05/19
Plot scale:

U.S. ARMY ENGINEER DISTRICT, AFGHANISTAN
CORPS OF ENGINEERS
APO AE 96338

Stanley Consultants INC.

AFGHAN NATIONAL ARMY
KANDAKS
SITE ADAPT DESIGN

FITNESS CENTER

PLUMBING DETAILS
SHEET 2

APPROVED:
AVE DESIGNER OF RECORD

SEAL:
LICENSED PROFESSIONAL ENGINEER
JON J. BOVENKAMP
16661
IOWA

SHEET REFERENCE NUMBER:
E
P-502

PLUMBING FIXTURE SCHEDULE

PLAN DESIGNATION	FIXTURE NAME	SANITARY CONNECTION SIZE (MM)	VENT CONNECTION SIZE (MM)	COLD WATER CONNECTION SIZE (MM)	HOT WATER CONNECTION SIZE (MM)	NOTES
W-1	EASTERN STYLE WATER CLOSET WITH FLUSH TANK	100	50	15	---	(1)
L-1	TROUGH TYPE LAVATORY	32	32	15	15	(1) (2)
ABL-1	ABLUTION	---	---	15	15	---
FD-1	FLOOR DRAIN	80	40	---	---	---
MB-1	MOP BASIN	80	50	20	20	(1)

NOTES:
(1) LOW FLOW EFFICIENT TYPE
(2) FABRICATEED IN FIELD
(3) DRAIN AND SHOWER CONTROLS

EXPANSION TANK (ET) SCHEDULE

PLAN DESIGNATION	SERVICE	TYPE	TANK VOLUME (L)	ACCEPTANCE VOLUME (L)	TANK RATED PRESSURE (kPa)	MAX SYSTEM PRESSURE (kPa)	MIN SYSTEM PRESSURE (kPa)	SET PRESSURE (kPa)	NOTES
ET-1	HWH-1	BLADDER	10	5	1,034	552	0	0	

NOTES:
1) ROUTE DRAINS TO NEAREST FLOOR DRAIN

ELECTRIC WATER HEATER (HWH) SCHEDULE

PLAN DESIGNATION	LOCATION	STORAGE CAPACITY (L)	UPPER ELEMENT (kW)	LOWER ELEMENT (kW)	ELECTRICAL (V/Hz/PHASE)	RECOVERY 56°C RISE (L/hr)	QTY	NOTES
HWH-1	MECH 108	115	5	5	380/50/3	72	1	1, 2, 3

NOTES:
(1) PROVIDE TWO (2) FULL SIZE RELIEF VALVES (RV), SECOND RV SHALL BE INSTALLED IN DHW LINE BETWEEN HWH AND ISOLATION VALVE
(2) ROUTE DRAINS TO NEAREST FLOOR DRAIN
(3) NON-SIMULTANEOUS HEATING ELEMENTS

APPROVED:
VE DESIGNER OF RECORD
SEAL:
LICENSED PROFESSIONAL ENGINEER
JON J. BOVENKAMP
16661
IOWA

US ARMY CORPS OF ENGINEERS
AFGHANISTAN ENGINEER DISTRICT

Mark	Description	Date	Appr.	Mark	Description	Date	Appr.

Date: 5/19/10
Rev: 0
Designed by: ADA
Cxd by: JJB
Dwn by: DLG
Reviewed by: MRH
Submitted by: STANLEY
Design file no.
Drawing code:
File name: M20G02_AFNG_SC
Plot date: 2010/05/19
Plot scale:

U.S. ARMY ENGINEER DISTRICT, AFGHANISTAN
CORPS OF ENGINEERS
APO AE 96338

Stanley Consultants INC.

AFGHAN NATIONAL ARMY
KANDAKS
SITE ADAPT DESIGN

FITNESS CENTER

PLUMBING SCHEDULES

SHEET REFERENCE NUMBER:
E
P-601

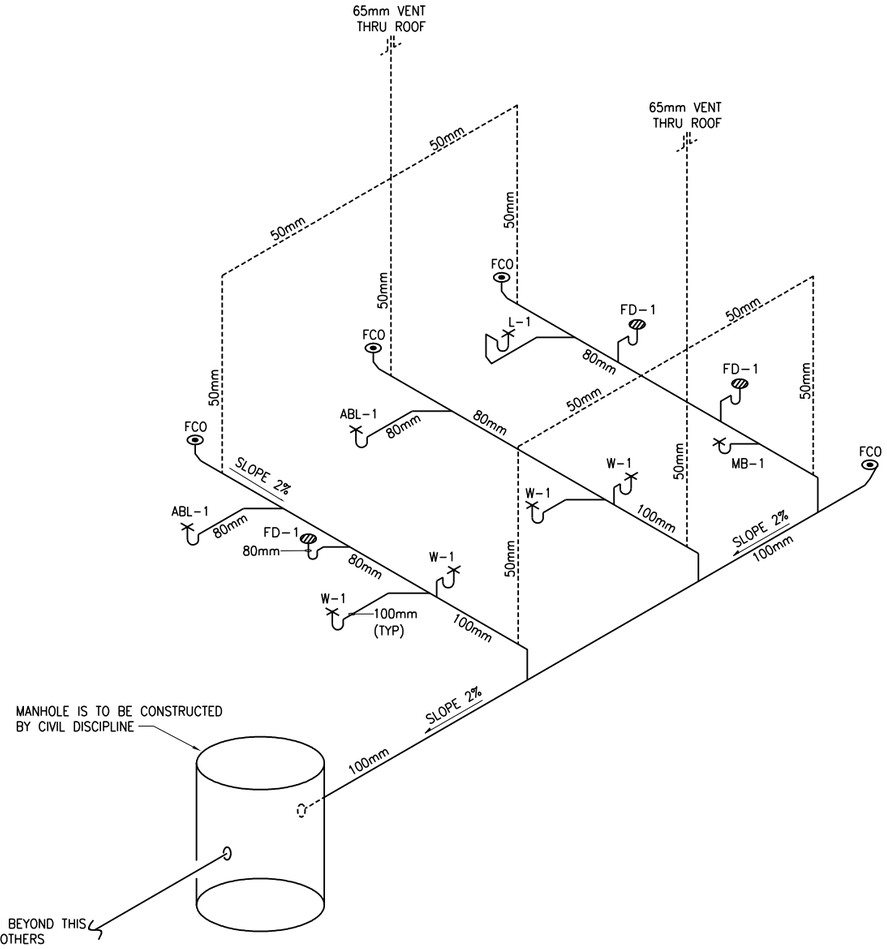

SANITARY PLUMBING ISOMETRIC

SCALE: NONE

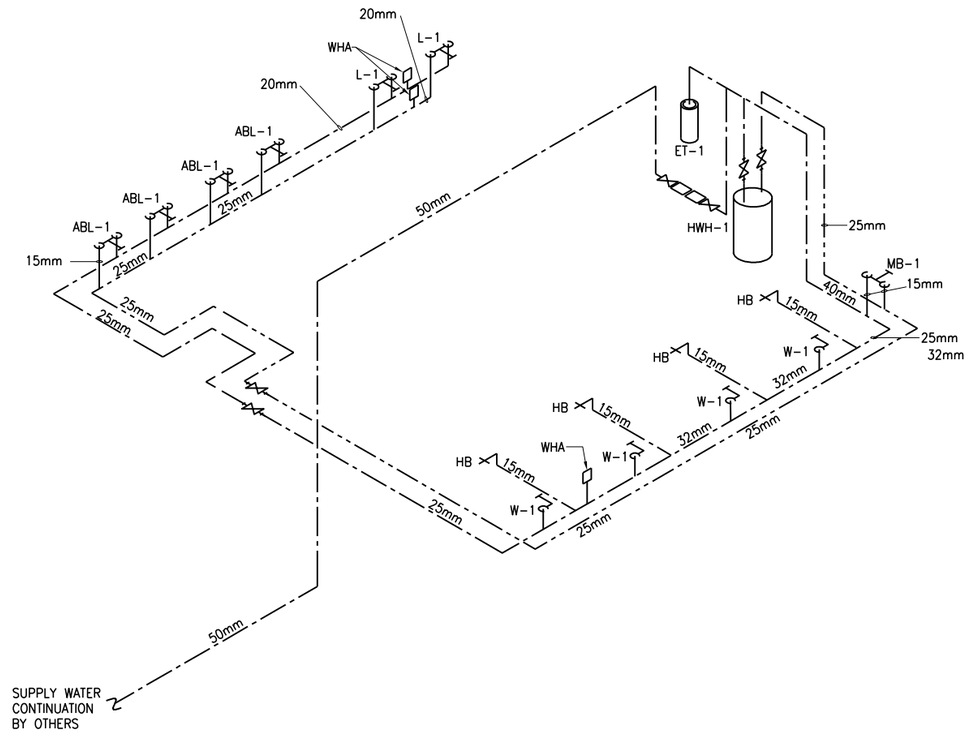

HOT AND COLD WATER PLUMBING ISOMETRIC

SCALE: NONE

PLUMBING SYMBOLS:

- SANITARY SEWER PIPING (BELOW GROUND)
- SANITARY SEWER PIPING (ABOVE GROUND)
- VENT PIPING (V)
- COLD WATER PIPING (CW)
- HOT WATER PIPING (HW)

APPROVED:

LIC. DESIGNER OF RECORD

SEAL:

LICENSED PROFESSIONAL ENGINEER
JON J. BOVENKAMP
16661
IOWA

UNLESS NOTED OTHERWISE, LINEAR DIMENSIONS SHOWN ARE IN MILLIMETERS.

US ARMY CORPS OF ENGINEERS
AFGHANISTAN ENGINEER DISTRICT

Mark	Description	Date	Appr.	Mark	Description	Date	Appr.

Designed by: ADA
Dwn by: DLG
Ckd by: JJB
Reviewed by: MRH
Submitted by: STANLEY
Date: 5/19/10
Rev: 0
Design file no.
Drawing code:
File name: 14-FOOSE-MPW015
Plot date: 2010/07/20 09:53
Plot scale:

U.S. ARMY ENGINEER DISTRICT, AFGHANISTAN
CORPS OF ENGINEERS
APO AE 96338

Stanley Consultants INC.

AFGHAN NATIONAL ARMY
KANDAKS
SITE ADAPT DESIGN

FITNESS CENTER

PLUMBING ISOMETRICS

SHEET REFERENCE NUMBER:
E
P-901

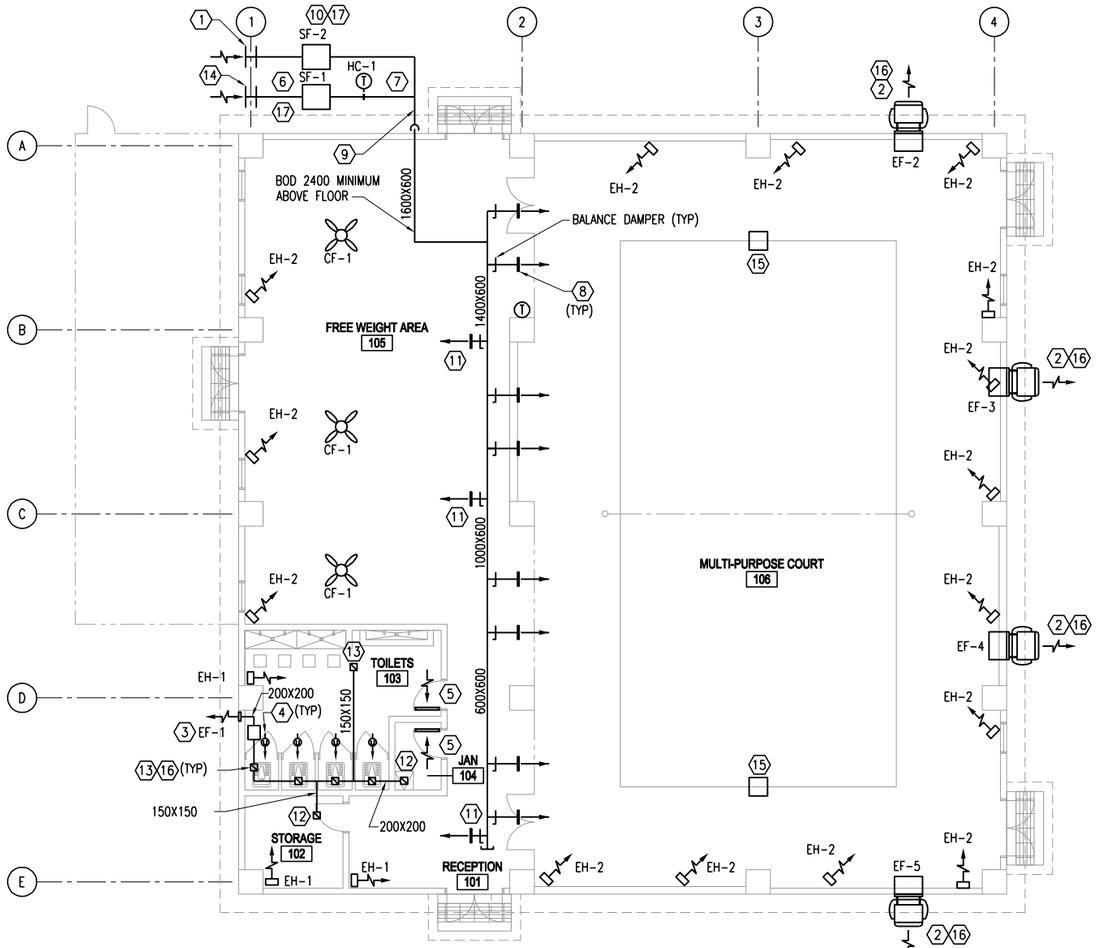

HVAC PLAN

SCALE: 1:100

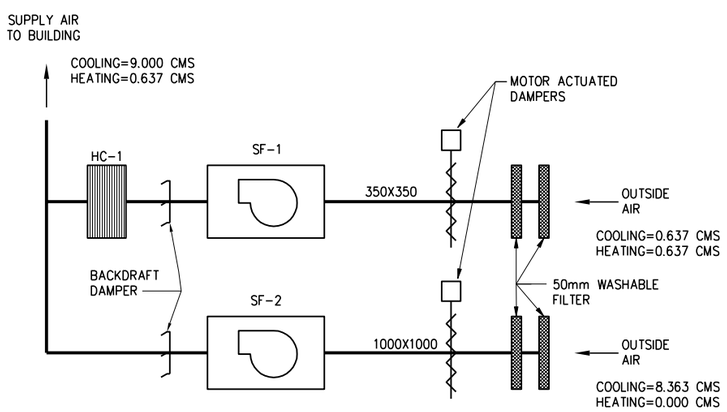

SUPPLY FAN ARRANGEMENT

SCALE: NONE

LEGEND:

(X) KEY NOTE

-(U)→ UNDER CUT

KEY NOTE:

1. 1000X1000 REMOVABLE, WASHABLE 50mm THICK FILTER. PROVIDE 2 ROWS OF FILTERS.
2. WALL MOUNTED EXHAUST FAN.
3. INLINE EXHAUST FAN DUCTED TO WALL CAP WITH LOW LINKAGE GRAVITY BACK-DRAFT DAMPER. SECURE FAN TO STRUCTURE ABOVE.
4. DOOR UNDERCUT AT LEAST 50mm FOR MAKEUP AIR.
5. 600X400 LOUVER FOR MAKEUP AIR LOCATED ON THE DOOR.
6. SUPPLY FAN, SF-1, LOCATED ON GRADE.
7. HEATING COIL, HC-1, LOCATED ON GRADE, MINIMUM 1000mm AWAY FROM FAN OUTLET.
8. 600X500 (24X20) ALUMINUM DUCT MOUNTED SUPPLY GRILLE. BALANCE EACH GRILLE TO 1.025 CMS.
9. 1000X1000 (40X40) SUPPLY DUCT WITH 80mm INSULATION.
10. SUPPLY FAN SF-2, LOCATED ON GRADE.
11. 450X250 (18X10) ALUMINUM DUCT MOUNTED SUPPLY GRILLE BALANCE EACH GRILLE TO 0.265 CMS.
12. 150X150 (6X6) ALUMINUM DUCT MOUNTED RETURN GRILLE WITH ADJUSTABLE OPPOSED BLADE DAMPERS. BALANCE EACH GRILLE TO 0.025 CMS.
13. 150X150 (6X6) ALUMINUM DUCT MOUNTED RETURN GRILLE WITH ADJUSTABLE OPPOSED BLADE DAMPERS. BALANCE EACH GRILLE TO 0.035 CMS.
14. 350X350 (6X6) REMOVABLE, WASHABLE, 50mm THICK FILTER. PROVIDE 2 ROWS OF FILTERS.
15. 600X600 SPUN ALUMINUM GRAVITY VENTILATOR WITH BACK DRAFT DAMPER.
16. EXHAUST FAN, EF-1, SHALL OPERATE CONTINUOUSLY. EF-2 AND EF-5 SHALL BE CONTROLLED BY THERMOSTAT TO OPERATE WHEN SPACES ARE ABOVE 27°C (80°F). EF-3 AND EF-4 SHALL BE CONTROLLED BY THE SAME THERMOSTAT TO OPERATE WHEN SPACES ARE ABOVE 30°C (86°F).
17. SUPPLY FAN, SF-1, SHALL OPERATE CONTINUOUSLY. SF-2 SHALL BE CONTROLLED BY INDOOR THERMOSTAT. AT SPACE TEMPERATURE OF 27°C (80°F) OR HIGHER, SF-2 SHALL OPERATE AT HALF SPEED. AT SPACE TEMPERATURE OF 30°C (86°F) OR HIGHER SF-2 SHALL OPERATE AT FULL SPEED.

ABBREVIATIONS:

AFF	ABOVE FINISH FLOOR	EH	ELECTRIC UNIT HEATER
CF	CEILING FANS	EF	EXHAUST FAN
CMS	CUBIC METERS PER SECOND	SF	SUPPLY FAN
EC	ELECTRICAL CONTRACTOR	HC	ELECTRICAL HEATING COIL
STATS	THERMOSTATS	BOD	BOTTOM OF DUCT

GENERAL NOTES:

1. DO NOT SCALE DRAWINGS – ALL DIMENSIONS AND CONDITIONS SHALL BE CHECKED AND VERIFIED BY THE CONTRACTOR AT THE SITE.
2. ALL WORK PERFORMED ON THIS BUILDING SHALL BE IN COMPLIANCE WITH ALL PERTINENT CODES, RULES, ORDINANCES AND REGULATIONS OF THE GOVERNING AUTHORITIES.
3. ALL WORK PERFORMED UNDER AND IN CONNECTION WITH THESE DRAWINGS AND SPECIFICATIONS SHALL BE IN STRICT COMPLIANCE WITH THE LATEST SAFETY AND HEALTH STANDARDS.
4. UNIT HEATERS SHALL BE CONTROLLED BY UNIT MOUNTED THERMOSTAT.
5. DESIGN CONDITIONS:
   OUTDOORS:
   SUMMER: 35°C (95°F) DRY BULB AND 20.6°C (69°F) WET BULB
   WINTER: –12.8°C (9°F)
   INDOORS:
   SUMMER: 24°C (75°F) AND 50% RH
   WINTER: 20°C (68°F)

1 0 1 2 3 4 5 6 7 8 9
1:100

UNLESS NOTED OTHERWISE, LINEAR DIMENSIONS SHOWN ARE IN MILLIMETERS.

APPROVED:

AVE DESIGNER OF RECORD

SEAL:

LICENSED PROFESSIONAL ENGINEER
JON J. BOVENKAMP
15661
IOWA

US ARMY CORPS OF ENGINEERS
AFGHANISTAN ENGINEER DISTRICT

Mark	Description	Date	Appr.	Mark	Description	Date	Appr.

Designed by: ADA
Dwn by: DLG
Ckd by: JJB
Reviewed by: MRH
Submitted by: STANLEY
Date: 5/19/10
Rev: 0
Design file no.
Drawing code:
File name: 07200E-MM02.DWG
Plot date: 20100503
Plot scale:

U.S. ARMY ENGINEER DISTRICT, AFGHANISTAN
CORPS OF ENGINEERS
APO AE 96338

Stanley Consultants INC.

AFGHAN NATIONAL ARMY
KANDAKS
SITE ADAPT DESIGN

FITNESS CENTER

HVAC PLAN

SHEET REFERENCE NUMBER:
E
M–101

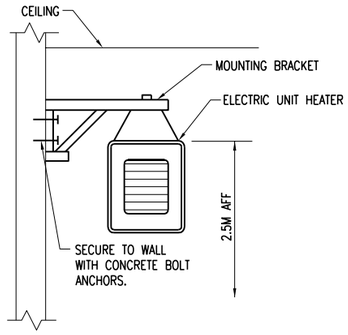

ELECTRIC UNIT HEATER MOUNTING DETAIL (1 / M-501)
SCALE: NONE

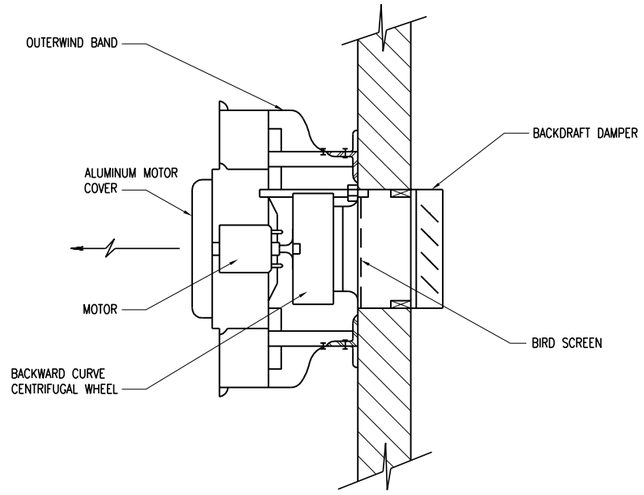

CENTRIFUGAL WALL EXHAUST FAN DETAIL (2 / M-501)
SCALE: NONE

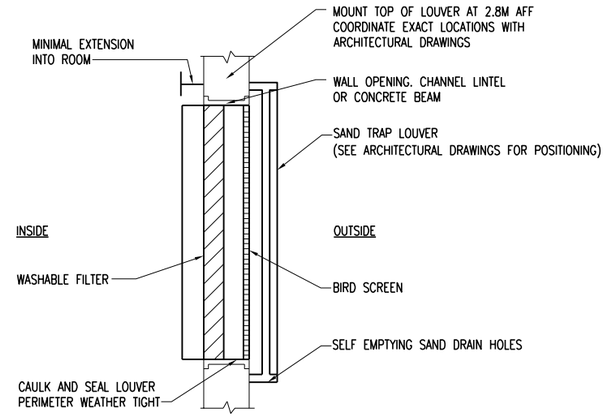

FILTERED SAND TRAP DETAIL (3 / M-501)
SCALE: NONE

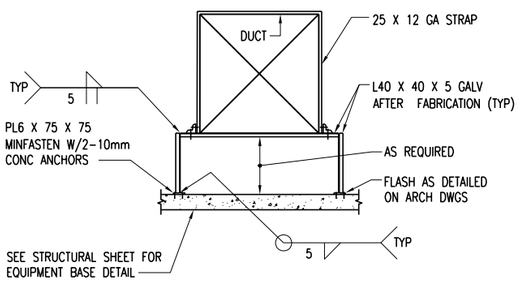

NOTES:
1. SUPPORTS AT 3000 MAXIMUM SPACING.

EXTERIOR DUCT SUPPORT DETAIL (4 / M-501)
SCALE: NONE

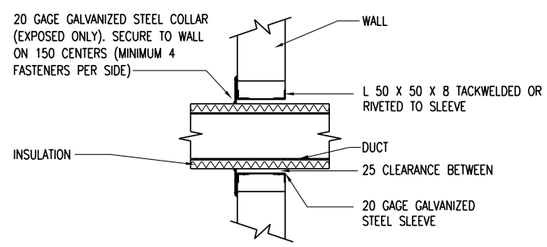

TYPICAL DUCT PENETRATION THRU WALLS (5 / M-501)
(NOT APPLICABLE TO FIRE-RATED WALLS)
SCALE: NONE

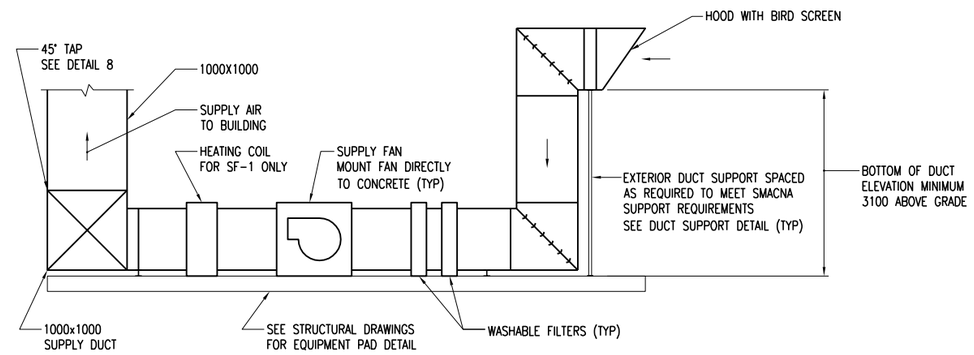

TYPICAL SUPPLY DUCT DETAIL (6 / M-501)
SCALE: NONE

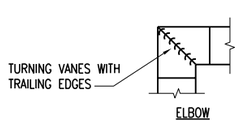

NOTES:
1. ALL VANED ELBOWS SHALL BE CONSTRUCTED AND INSTALLED AS DETAILED BY SMACNA.
2. ALL SINGLE VANES SHALL HAVE A 15mm RADIUS, 25mm MAXIMUM SPACE BETWEEN VANES AND A 20mm TRAILING EDGE.

LOW PRESSURE DUCT DETAIL (7 / M-501)
SCALE: NONE

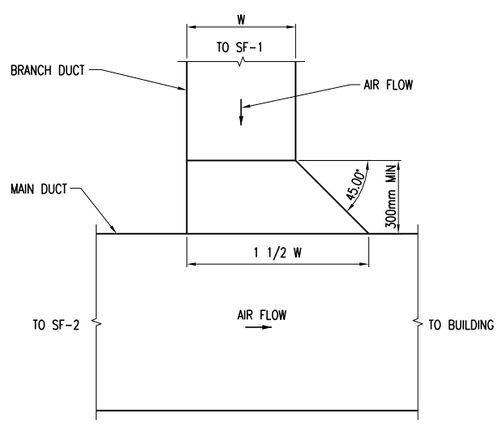

RECTANGULAR DUCT CONNECTION TO RECTANGULAR BRANCH DUCT (8 / M-501)
SCALE: NONE

APPROVED:
WE DESIGNER OF RECORD
SEAL:
LICENSED PROFESSIONAL ENGINEER JON J. BOVENKAMP 19551 IOWA

US ARMY CORPS OF ENGINEERS
AFGHANISTAN ENGINEER DISTRICT

Mark	Description	Date	Appr.	Mark	Description	Date	Appr.

Rev: 0
Date: 5/19/10
Design file no.
Drawing code:
File name: 0410SMC-MH00L01
Plot date: 2010/05/19
Plot scale:
Designed by: ADA
Dwn by: DLC
Ckd by: JJB
Reviewed by: MRH
Submitted by: STANLEY

U.S. ARMY ENGINEER DISTRICT, AFGHANISTAN
CORPS OF ENGINEERS
APO AE 96338

Stanley Consultants INC.

AFGHAN NATIONAL ARMY
KANDAKS
SITE ADAPT DESIGN

FITNESS CENTER

MECHANICAL DETAILS

SHEET REFERENCE NUMBER:
E
M-501

CEILING FAN (CF) SCHEDULE						
NO.	BLADE SIZE		ELECTRICAL DATA	SWITCH	REMARKS	NOTES
	mm	IN				
CF-1	1320	52	220/1/50	WALL	3 SPEED REVERSIBLE MOTOR	1, 2, 3

NOTES:
1) PROVIDE WITHOUT LIGHT FIXTURE.
2) BOTTOM OF FAN MOUNTING HEIGHT: 3000 MM MIN ABOVE FINISHED FLOOR
3) PROVIDE WITH REMOTE WALL-MOUNTED ON-OFF SWITCH SHOWN ON ELECTRICAL DRAWINGS

ELECTRIC HEATING COIL (HC) SCHEDULE

PLAN DESIGNATION	SERVICE	FLOW RATE (CMS)	MINIMUM COIL AREA (m^2)	MAXIMUM FACE VELOCITY (m/s)	MAXIMUM PRESSURE DROP (MM H2O)	EAT (°C)	LAT (°C)	kW	MINIMUM STAGES	ELECTRICAL (V/Hz/PHASE)	NOTES
HC-1	SF-1	0.64	0.13	5.1	5	-12.8	12.8	22.0	2	380/50/3	1, 2, 3, 4, 5

NOTES:
(1) COIL SHALL BE SUITABLE FOR MOUNTING IN DUCT
(2) PROVIDE OPEN TYPE COIL
(3) PROVIDE UNIT MOUNTED DISCONNECT SWITCH
(4) PROVIDE NEMA 4X RATED ENCLOSURE

ELECTRIC UNIT HEATER (EH) SCHEDULE

PLAN DESIGNATION	SUPPLY FAN		ELECTRICAL		NOTES
	FLOW RATE (CMS)	MOTOR POWER (kW)	CAPACITY (kW)	V/Hz/PHASE	
EH-1	0.200	0.02	2.6	380/50/1	1, 2, 3
EH-2	0.200	0.02	5.0	380/50/1	1, 2, 3

NOTES:
(1) PROVIDE UNIT MOUNTED DISCONNECT SWITCH
(2) PROVIDE TAMPER RESITANT UNIT MOUNTED THERMOSTAT
(3) UNIT SHALL BE WALL HUNG AND MOUNTED AT 2.5M AFF

FAN (EF, SF) SCHEDULE

PLAN DESIGNATION	TYPE	SERVICE	FLOW RATE (CMS)	EXTERNAL STATIC PRESSURE (MM H2O)	RPM	DRIVE	BRAKE POWER (kW)	MOTOR POWER (kW)	ELECTRICAL (V/Hz/PHASE)	SOUND LEVEL (SONES)	ACCESSORIES	NOTES
EF-1	INLINE CENTRIFUGAL	TOILETS	0.224	15	1865	DIRECT	0.2	0.186	220/50/1	11.6	A, B, C, D, E, F, G, I	(1)
EF-2	UPBLAST CENTRIFUGAL WALL	COURT	2.186	10	456	BELT	0.3	0.37	220/50/1	6.8	A, B, G	-
EF-3	UPBLAST CENTRIFUGAL WALL	COURT	2.186	10	456	BELT	0.3	0.37	220/50/1	6.8	A, B, G	-
EF-4	UPBLAST CENTRIFUGAL WALL	COURT	2.186	10	456	BELT	0.3	0.37	220/50/1	6.8	A, B, G	-
EF-5	UPBLAST CENTRIFUGAL WALL	COURT	2.186	10	456	BELT	0.3	0.37	220/50/1	6.8	A, B, G	-
SF-1	INLINE CENTRIFUGAL	COURT/WEIGHTS	0.637	30	1978	BELT	0.4	0.55	220/50/1	16.4	A, C, D, E, G, H	(2)
SF-2	INLINE CENTRIFUGAL	COURT/WEIGHTS	8.330	30	672	BELT	4.8	5.5	380/50/3	23	A, C, D, E, G, H	(2)

ACCESSORIES:
A PROVIDE UNIT MOUNTED DISCONNECT SWITCH
B PROVIDE GRAVITY BACK DRAFT DAMPER
C PROVIDE BELT GUARD
D PROVIDE HANGING VIBRATION ISOLATORS
E PROVIDE SUPPORT LEGS
F PROVIDE WALL CAP
G PROVIDE BIRD SCREEN
H PROVIDE MOTOR OPERATED DAMPERS
I PROVIDE UNIT-MOUNTED FAN SPEED CONTROLLER FOR SYSTEM BALANCING

NOTES:
1) FAN SHALL BE OPERATED BY WALL SWITCH
2) PROVIDE WEATHER-PROOF ENCLOSURE

APPROVED:
VE DESIGNER OF RECORD
SEAL:
LICENSED PROFESSIONAL ENGINEER JON J. BOVENKAMP 16661 IOWA

US ARMY CORPS OF ENGINEERS
AFGHANISTAN ENGINEER DISTRICT

Mark	Description	Date	Appr.	Mark	Description	Date	Appr.

Designed by: ADA
Dwn by: DLC
Ckd by: JJB
Reviewed by: MRH
Submitted by: STANLEY
Date: 5/19/10
Rev: 0
Design file no.
Drawing code:
File name: 121010SE-MH601SC
Plot date: 20121010153
Plot scale:

U.S. ARMY ENGINEER DISTRICT, AFGHANISTAN
CORPS OF ENGINEERS
APO AE 96338

Stanley Consultants INC.

AFGHAN NATIONAL ARMY
KANDAKS
SITE ADAPT DESIGN
FITNESS CENTER
MECHANICAL SCHEDULES

SHEET REFERENCE NUMBER:
E
M-601

POWER

- DISTRIBUTION PANELBOARD
- NEW PANELBOARD – SURFACE
- NEW PANELBOARD – RECESSED
- GENERATOR
- TRANSFORMER (DRAWN TO SIZE)
- JUNCTION BOX
- JUNCTION BOX – CEILING
- FUSIBLE SAFETY SWITCH
- UNIT HEATER
- MOTOR
- MOTOR STARTING SWITCH – 220V, 20A RATED UNLESS OTHERWISE NOTED
- ELECTRIC WATER HEATER
- CEILING FAN
- REMOTE BATTERY PACK

RECEPTACLES

- DUPLEX 20A TYPE CEE 7/7 "SCHUKO STYLE" UNSWITCHED RECEPTACLE
- DUPLEX 20A TYPE CEE 7/7 "SCHUKO STYLE" UNSWITCHED RECEPTACLES – 10mA GROUND FAULT INTERRUPTER TYPE
- DUPLEX 20A TYPE CEE 7/7 "SCHUKO STYLE" UNSWITCHED TYPE WITH WEATHERPROOF COVER – 10mA GROUND FAULT INTERRUPTER TYPE
- DUPLEX 20A TYPE CEE 7/7 "SCHUKO STYLE" UNSWITCHED RECEPTACLES – EXPLOSION PROOF
- * INDICATES MOUNT DEVICE ABOVE COUNTERTOP OR AT 1070mm ABOVE FINISHED FLOOR WHERE NO COUNTER IS TO BE INSTALLED.

LIGHTNING PROTECTION

- AIR TERMINAL 20mm O.D. X 450mm SOLID COPPER, NICKEL PLATED ON ADHESIVE BASE
- EQUIPMENT AIR TERMINAL
- TEST WELL WITH GROUND ROD(S)
- GROUND ROD
- GROUND PLATE
- MAIN GROUND CONDUCTER CONCEALED WITHIN CONSTRUCTION
- MAIN GROUND CONDUCTOR EXPOSED ON EXPOSED ON BUILDING EXTERIOR SURFACE
- GROUND CONDUCTOR CAD WELDED TO GROUND CABLE OR EQUIPMENT
- GROUND ROD TRIODE, SPACED 3 METERS APART.
- LEVEL TO LEVEL CABLE
- UNDERGROUND GROUND CONDUCTOR
- LIGHTING PROTECTION CONDUCTOR

LIGHTING

- LIGHTING FIXTURE – SEE FIXTURE SCHEDULE FOR MORE INFORMATION DWG E-601
- EMERGENCY LIGHTING FIXTURE – SEE FIXTURE SCHEDULE FOR MORE INFORMATION DWG E-601
- DOWNLIGHT
- HIGH BAY FIXTURE
- LIGHTING FIXTURE ON NORMAL/EMERGENCY
- WALL MOUNTED LIGHT FIXTURE
- EXIT SIGN – DIRECTIONAL ARROWS AS INDICATED ON DRAWINGS
- REMOTE HEAD FOR BATTERY PACK
- SINGLE POLE SWITCH – 20A RATED
- 3-WAY SWITCH – 20A RATED
- 4-WAY SWITCH – 20A RATED
- LIGHTING CONTACTOR
- POLE MOUNTED SITE LIGHTING FIXTURE– NUMBER OF FIXTURES PER POLE AS INDICATED ON DRAWINGS
- EXTERIOR DIRECTIONAL LIGHTING FIXTURE
- SMALL CASE LETTERS REPRESENTS LAMP(S) / SWITCHES.

TELECOMMUNICATIONS

- TELEPHONE OUTLET(S) @ 45cm AFF. U.N.O. WITH 20mm RACEWAY TERMINATED TO TELEDATA TERMINAL BOARD.
- DATA OUTLET(S) @ 45cm AFF. U.N.O. WITH 20mm RACEWAY TERMINATED TO TELEDATA TERMINAL BOARD.

TELECOMMUNICATIONS (CONTINUED)

- COMBINATION TELEPHONE/DATA OUTLET(S) @ 45cm AFF. U.N.O. WITH 27mm RACEWAY TERMINATED TO TELEDATA TERMINAL AREA.
- *W WALL MTD. TELEPHONE OUTLET WITH 20mm RACEWAY TO TELEDATA TERMINAL BOARD. W = 1300 AFF
- (x)T INDICATES NUMBER OF TELEPHONE OUTLET(S) AND ASSOCIATED CABLING
- (x)D INDICATES NUMBER OF DATA OUTLET(S) AND ASSOCIATED CABLING
- (x)TF INDICATES NUMBER OF TELEPHONE OUTLETS AND ASSOCIATED CABLING WITH 1 OUTLET AND CABLE DEDICATED FOR FAX

SINGLE LINE SYMBOLS

- SWITCH
- BREAKER
- FUSE
- TRANSFORMER
- GROUND
- CONTACT (NORMALLY OPEN)
- CONTACT (NORMALLY CLOSED)
- TRANSFER SWITCH
- CURRENT TRANSFORMER
- INDICATES NEW ELECTRICAL EQUIPMENT
- C INDICATES NEW CONTROL WIRING AND CONDUIT
- EQUIPMENT OUTLINE

MISCELLANEOUS

- BRANCH CIRCUIT WIRING, SURFACE MOUNTED ON WALLS
- BRANCH CIRCUIT WIRING – 6mm²
- BRANCH CIRCUIT WIRING – UNDER FLOOR
- HOME RUN BACK TO PANEL
- CONDUIT TURNED DOWN
- CONDUIT TURNED UP
- LV LOW VOLTAGE WIRING AND CONDUIT
- ~ INDICATES CONTINUATION OF LINE

FIRE ALARM

- FACP FIRE ALARM CONTROL PANEL WITH BATTERY BACKUP
- F FIRE ALARM PULL STATION

FIRE ALARM (CONTINUED)

- F FIRE ALARM STROBE – WALL MOUNTED
- F FIRE ALARM AUDIBLE/STROBE – WALL MOUNTED
- F FIRE ALARM HORN/STROBE – WALL MOUNTED
- S SMOKE DETECTOR
- H HEAT DETECTOR CEILING MOUNTED
- D DUCT DETECTOR

DENOTATIONS & ABBREVIATIONS

AFF	ABOVE FINISHED FLOOR
C	CEILING MOUNTED
E	EMERGENCY
EC	ELECTRICAL CONTRACTOR
EPO	EMERGENCY POWER OFF
EXP	EXPLOSION PROOF
F	FIRE ALARM
FF	FLUSH FLOOR MOUNTED
FL	FLUORESCENT
FO	FIBER OPTIC
FSS	FUSED SAFETY SWITCH
GF	GROUND FAULT INTERRUPTER
GC	GENERAL CONTRACTOR
IG	ISOLATED GROUND
K	KEY
LV	LOW VOLTAGE
M	MOTOR
MC	MECHANICAL CONTRACTOR
NE	NORMAL/EMERGENCY
NFSS	NON-FUSED SAFETY SWITCH
PA	PAGING SYSTEM
PLC	PLUMBING CONTRACTOR
SL	SINGLE LINE
T	TELEPHONE

DENOTATIONS & ABBREVIATIONS (CONT.)

TP	TAMPER PROOF
UE	UNDERGROUND ELECTRIC
W	WALL MOUNTED
WP	WEATHERPROOF WITH GROUND FAULT INTERRUPTION
WT	WATER TIGHT

GENERAL PROJECT NOTES:

G1. UNLESS OTHERWISE NOTED, PROVIDE ALL EQUIPMENT SHOWN ON THE PLANS. THE ELECTRICAL CONTRACTOR SHALL COORDINATE ALL SYMBOLS SHOWN ON THE PLANS WITH THE SYMBOL LIST. IT SHALL BE THE RESPONSIBILITY OF THE CONTRACTOR TO VERIFY THE INTENT OF ANY SYMBOL THAT IS SHOWN ON THE PLANS AND NOT INDICATED ON THE SYMBOL LIST WITH THE ENGINEER PRIOR TO BID.

G2. THE CONTRACTOR SHALL VERIFY THE LOCATION OF ALL UNDERGROUND UTILITIES WITHIN THE CONSTRUCTION AREA THREE (3) WORKING DAYS NOTICE BEFORE COMMENCING DIGGING. NOTIFY THE LOCAL AUTHORITY HAVING JURISDICTION AND WAIT THE REQUIRED TIME BEFORE COMMENCING TO DIG.

G3. THE CONTRACTOR SHALL COORDINATE CONDUIT RUNS, LIGHTING FIXTURES AND OTHER EQUIPMENT LOCATIONS WITH THE OTHER TRADE CONTRACTORS TO AVOID CONFLICTS.

G4. WHERE VOLTAGES AND FREQUENCIES ON THE DRAWINGS AND IN THE SPECIFICATIONS DIFFER FROM THE LOCAL ONES, ALL WORK SHALL BE PERFORMED USING THE LOCAL VOLTAGES AND FREQUENCIES.

G5. THE MINIMUM WIRE SIZE ON THE PROJECT SHALL BE 4mm². THE MINIMUM CONDUIT SIZE SHALL BE 20mm. THE MINIMUM BREAKER SIZE SHALL BE 20 AMPS.

G6. THE CONTRACTOR SHALL PUT A MAXIMUM OF 10 RECEPTACLES ON A 20A SINGLE POLE CIRCUIT.

G7. WHERE THE 1010 SCOPE REVIEW, 1015 TECHNICAL REVIEW, DRAWINGS, AND SPECIFICATIONS DIFFER FROM AMERICAN CODES OR STANDARDS, THE 1010, 1015, DRAWINGS, AND SPECIFICATIONS SHALL RULE.

G8. ALL CONDUIT AND DEVICES SHALL BE SURFACE MOUNTED UNLESS OTHERWISE INDICATED.

G9. CONTRACTOR SHALL COORDINATE ALL WORK WITH ALL OTHER TRADES TO ENSURE ALL WORK IS COMPLETED IN A PROFESSIONAL, WORKMAN-LIKE MANNER.

APPROVED:

A/E DESIGNER OF RECORD

SEAL:

LICENSED PROFESSIONAL ENGINEER
VERNON L. McALLISTER
8333
IOWA

US ARMY CORPS OF ENGINEERS
AFGHANISTAN ENGINEER DISTRICT

Mark	Description	Date	Appr.	Mark	Description	Date	Appr.

Rev: 0
Date: 5/19/10
Design file no.
Drawing code:
File name: 07-FITNESS CENTER
Plot date: 2010/05/19
Plot scale:

Designed by: ACR
Dwn by: DLG
Ckd by: VLM
Reviewed by: MRH
Submitted by: STANLEY

U.S. ARMY ENGINEER DISTRICT, AFGHANISTAN
CORPS OF ENGINEERS
APO AE 96338

Stanley Consultants INC.

AFGHAN NATIONAL ARMY
KANDAKS
SITE ADAPT DESIGN

FITNESS CENTER

ELECTRICAL LEGEND

SHEET REFERENCE NUMBER:
E
E-001

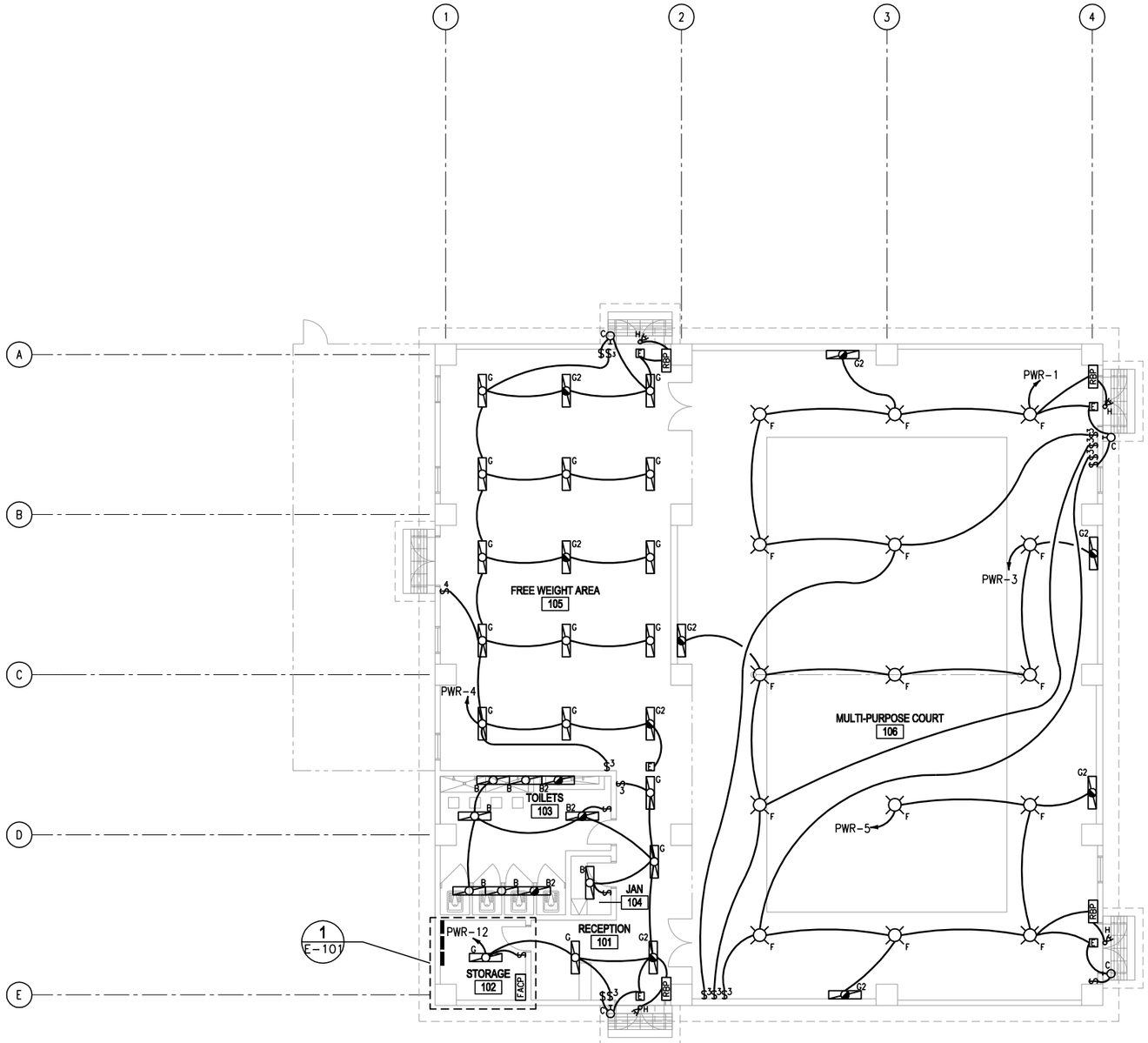

LIGHTING PLAN

SCALE: 1:100

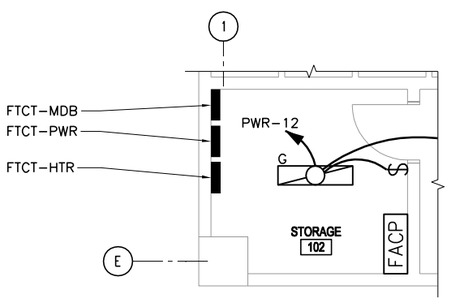

STORAGE ROOM PANELS ENLARGED PLAN

SCALE: NONE

1
E-101

GENERAL NOTES:

1. REFER TO DRAWING E-001 FOR THE ELECTRICAL SYMBOLS LIST.
2. REFER TO DRAWING E-601 FOR THE LIGHTING FIXTURE SCHEDULE.
3. REFER TO DRAWING E-501 FOR THE POWER RISER.
4. REFER TO DRAWING E-602 AND E-603 FOR PANEL SCHEDULES.
5. LIGHT FIXTURES INDICATED AS EMERGENCY SHALL BE PROVIDED WITH A BATTERY BACKUP BALLAST. SEE WIRING DIAGRAM DETAIL 6, DRAWING E-501.
6. COORDINATE LIGHT FIXTURE LOCATIONS WITH CEILING FAN LOCATIONS PRIOR TO INSTALLATION. LIGHT FIXTURES SHALL HAVE PRIORITY OVER CEILING FANS.
7. PROVIDE GUARDS FOR ALL LIGHT FIXTURES IN MULTI-PURPOSE COURT.

1 0 1 2 3 4 5 6 7 8 9
1:100

UNLESS NOTED OTHERWISE, LINEAR DIMENSIONS SHOWN ARE IN MILLIMETERS.

APPROVED:

A/E DESIGNER OF RECORD

SEAL:

LICENSED PROFESSIONAL ENGINEER
VERNON L. McALLISTER
8333
IOWA

US ARMY CORPS OF ENGINEERS
AFGHANISTAN ENGINEER DISTRICT

Mark	Description	Date	Appr.	Mark	Description	Date	Appr.

Date: 5/19/10 Rev: 0
Design file no.
Drawing code:
File name: 4410GHE-ELLIDFIN
Plot date: 5/19/2010 09:53
Plot scale:

Designed by: ACR
Dwn by: DLC
Ckd by: VLM
Reviewed by: MRH
Submitted by: STANLEY

U.S. ARMY ENGINEER DISTRICT, AFGHANISTAN
CORPS OF ENGINEERS
APO AE 96338

Stanley Consultants INC.

AFGHAN NATIONAL ARMY
KANDAKS
SITE ADAPT DESIGN

FITNESS CENTER

ELECTRICAL LIGHTING PLAN

SHEET REFERENCE NUMBER:
E
E-101

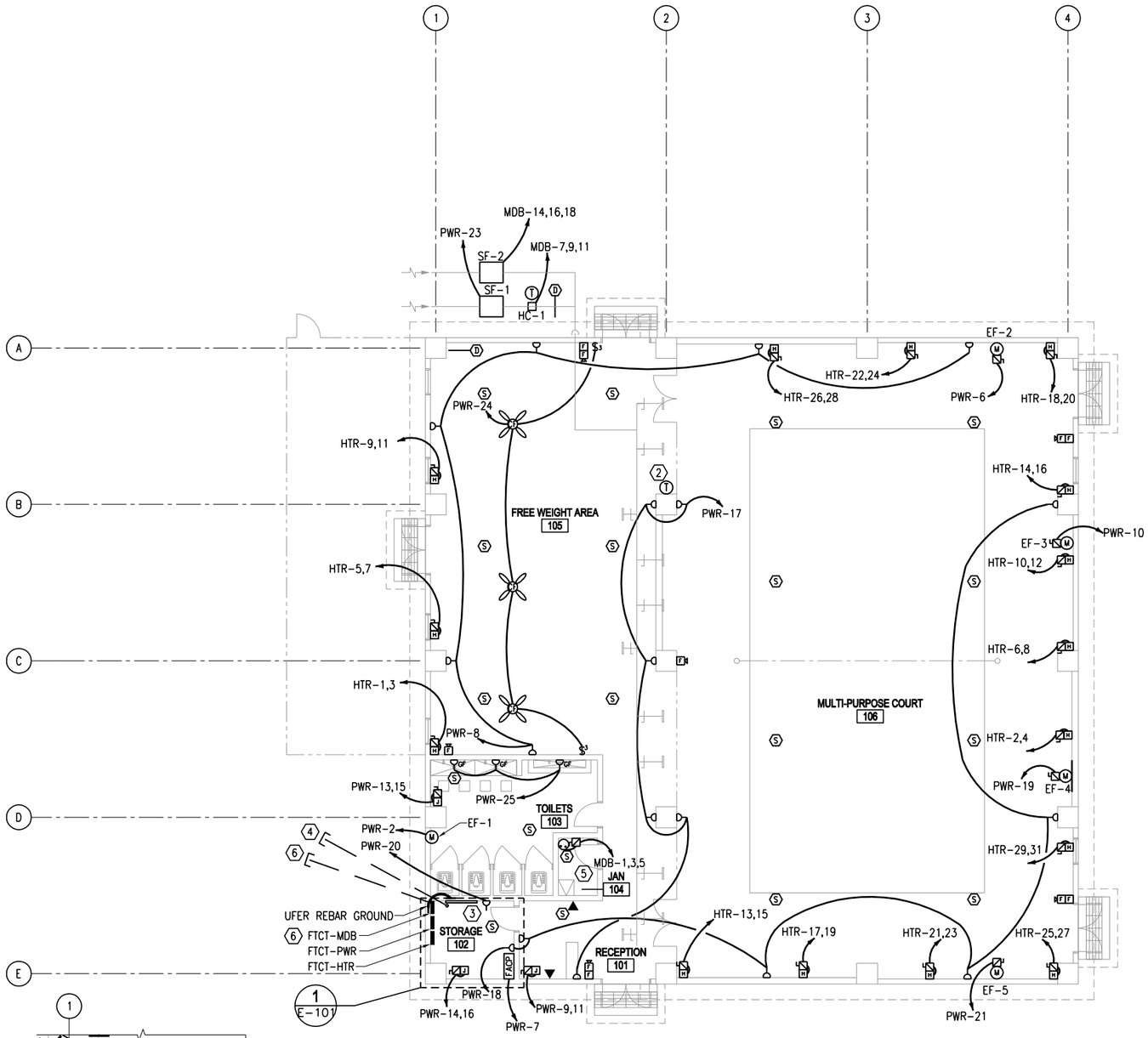

POWER AND SYSTEMS PLAN

SCALE: 1:100

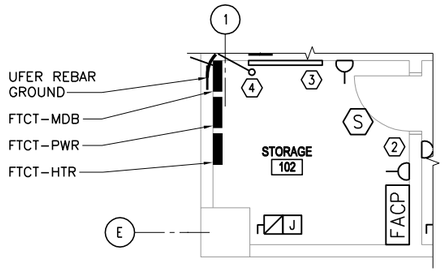

STORAGE ROOM PANELS ENLARGED PLAN

SCALE: NONE

1
E-101

NUMBERED NOTES:

1. PROVIDE 60 AMPS NON-FUSED DISCONNECT FOR HEAT COIL #1 (HC-1). REFER TO M-101.
2. FOR THERMOSTAT LOCATION, REFER TO DRAWING M-101. PROVIDE 3-4mm² AND 20mm CONDUIT.
3. PROVIDE A 1200mmX2400mm SHEET OF PLYWOOD PAINTED WITH FIRE RESISTANT PAINT FOR MOUNTING TELECOMMUNICATIONS EQUIPMENT. EQUIPMENT TO BE BONDED TO UFER REBAR GROUND. FOR BONDING DETAILS SEE DRAWING E-502.
4. PROVIDE CONDUIT STUB UP IN THE ROOM FOR INCOMING TELECOMMUNICATIONS SERVICES FROM THE CENTRAL COMMUNICATIONS SYSTEM. PROVIDE 100mm PVC FROM COMM BACKBOARD TO 2M OUTSIDE BUILDING.
5. 1P 21R, 380V, 3P, 60A FUSED DISCONNECT FUSED AT 40A. SEE PLUMBING DRAWINGS FOR EXACT LOCATION OF WATER HEATER.
6. CONNECT TO POINT OF SERVICE WITH TWO 100mm CONDUITS, ONE FOR FEEDER, ONE SPARE. PROVIDE 300 AMPERE FEEDER FROM SITE POWER DISTRIBUTION SOURCE WITH MINIMUM FOUR 185mm² (ABCN), ONE 25mm² (G). INCREASE CONDUCTOR SIZE AS NECESSARY TO PROVIDE MAXIMUM THREE PERCENT VOLTAGE DROP.

GENERAL NOTES:

1. REFER TO DRAWING E-001 FOR THE ELECTRICAL SYMBOLS LIST.
2. REFER TO DRAWING E-501 FOR THE POWER RISER.
3. REFER TO DRAWING E-602 AND E-603 FOR PANEL SCHEDULES.
4. COORDINATE EXACT MOUNTING LOCATION OF DISCONNECTING MEANS FOR MECHANICAL AND PLUMBING EQUIPMENT IN THE FIELD.
5. FUSIBLE SAFETY SWITCHES THAT ARE NOT OTHERWISE IDENTIFIED SHALL BE 380V, 2P, 30A FUSED SAFETY SWITCHES WITH 20A FUSES.
6. CONTRACTOR SHALL COORDINATE FINAL LOCATIONS OF ALL MECHANICAL EQUIPMENT WITH MECHANICAL PLANS PER THIS PACKAGE.
7. FOR WIRE AND CONDUIT SIZE, SEE DRAWINGS E-602.
8. UNIT HEATERS ARE SHOWN WHERE A JUNCTION BOX IS NEXT TO A DISCONNECT SWITCH. SEE HEATER TYPE ON MECHANICAL PLANS.
9. LOCATED SMOKE DETECTOR CLOSE TO CENTER OF CEILING, BUT AT LEAST 1000mm FROM CEILING FAN BLADE TIPS.
10. SEE E-502 FOR GROUNDING REQUIREMENTS.

1 0 1 2 3 4 5 6 7 8 9
1:100

UNLESS NOTED OTHERWISE, LINEAR DIMENSIONS SHOWN ARE IN MILLIMETERS.

APPROVED:
A/E DESIGNER OF RECORD

SEAL:
LICENSED PROFESSIONAL ENGINEER
VERNON L. McALLISTER
8333
IOWA

US ARMY CORPS OF ENGINEERS
AFGHANISTAN ENGINEER DISTRICT

Mark	Description	Date	Appr.	Mark	Description	Date	Appr.

Rev: 0
Date: 5/19/10
Design file no.
Drawing code:
File name: 5-FITCORE EPT-ELEC-PWR
Plot scale: 1=100/1=100/1=50/1=25
Plot date:

Designed by: ACR
Dwn by: DLG
Ckd by: VLM
Reviewed by: MRH
Submitted by: STANLEY

U.S. ARMY ENGINEER DISTRICT, AFGHANISTAN
CORPS OF ENGINEERS
APO AE 96338

Stanley Consultants INC.

AFGHAN NATIONAL ARMY
KANDAKS
SITE ADAPT DESIGN

FITNESS CENTER

ELECTRICAL POWER AND SYSTEMS PLAN

SHEET REFERENCE NUMBER:
E
E-102

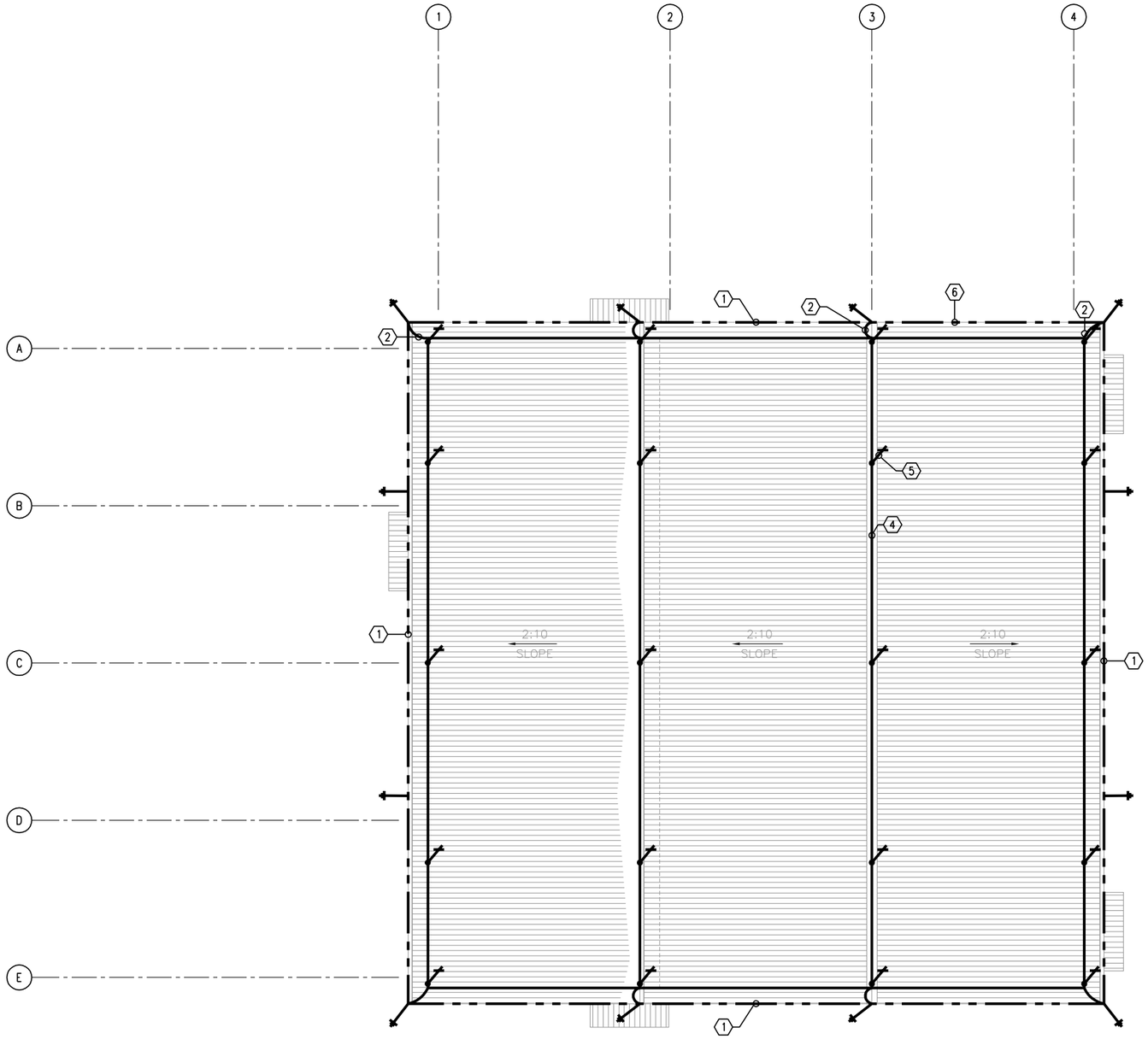

NUMBERED NOTES:

1. (1) 120.0mm² BARE, TINNED, COPPER COUNTERPOISE GROUND 700mm BELOW GRADE.
2. INSTALL DOWN CONDUCTOR IN 25mm SCHEDULE 80 PVC CONDUIT TO 20mm DIAMETER X 3 METERS SOLID COPPER TINNED GROUND ROD. (TYPICAL)
3. NOT USED.
4. SEE DETAIL 3, DRAWING E-501. (TYPICAL)
5. AIR TERMINAL. TERMINALS SHALL BE PLACED AT A MAXIMUM OF 6M ON CENTER PER NFPA 780 PARA. 4.8.2.1, AND WITHIN 0.6M OF RIDGE ENDS PER NFPA 780 PARA. 4.8 (TYPICAL)
6. 700mm MIN. (TYPICAL) BETWEEN FOUNDATION AND GROUND LOOP.

GENERAL NOTES:

1. REFER TO DRAWING E-001 FOR THE ELECTRICAL SYMBOLS LIST.

LIGHTNING PROTECTION PLAN

SCALE: 1:100

1 0 1 2 3 4 5 6 7 8 9
1:100

UNLESS NOTED OTHERWISE, LINEAR DIMENSIONS SHOWN ARE IN MILLIMETERS.

APPROVED:

A/E DESIGNER OF RECORD

SEAL:

LICENSED PROFESSIONAL ENGINEER
VERNON L. McALLISTER
8333
IOWA

US ARMY CORPS OF ENGINEERS
AFGHANISTAN ENGINEER DISTRICT

Mark	Description	Date	Appr.	Mark	Description	Date	Appr.

Designed by: ACR
Date: 5/19/10
Rev: 0
Dwn by: DLG
Ckd by: VLM
Reviewed by: MRH
Design file no.
Drawing code:
Submitted by: STANLEY
File name: FATCONE EPT-E001.DWG
Plot date: 2010/10/05 09:53
Plot scale:

U.S. ARMY ENGINEER DISTRICT, AFGHANISTAN
CORPS OF ENGINEERS
APO AE 96338

Stanley Consultants INC.

AFGHAN NATIONAL ARMY
KANDAKS
SITE ADAPT DESIGN

FITNESS CENTER

ELECTRICAL LIGHTNING PROTECTION PLAN

SHEET REFERENCE NUMBER:
E
E-103

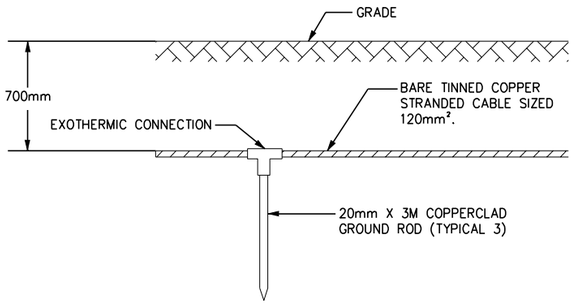

GROUND TRIODE SYSTEM DETAIL - ELEVATION (1 / E-501)

SCALE: NONE

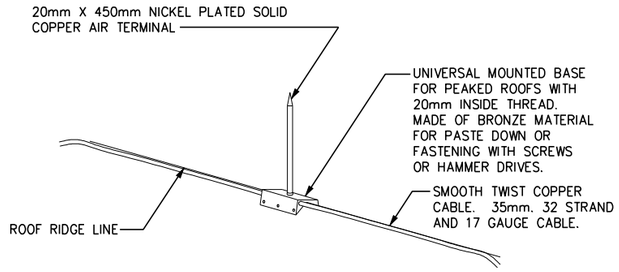

LIGHTNING PROTECTION AIR TERMINAL DETAIL (2 / E-501)

SCALE: NONE

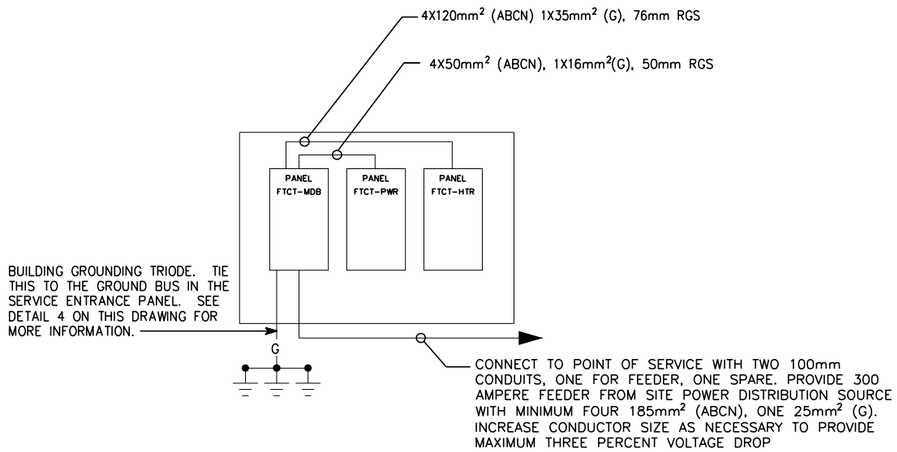

FTCT PANELS RISER DIAGRAM (3 / E-501)

SCALE: NONE

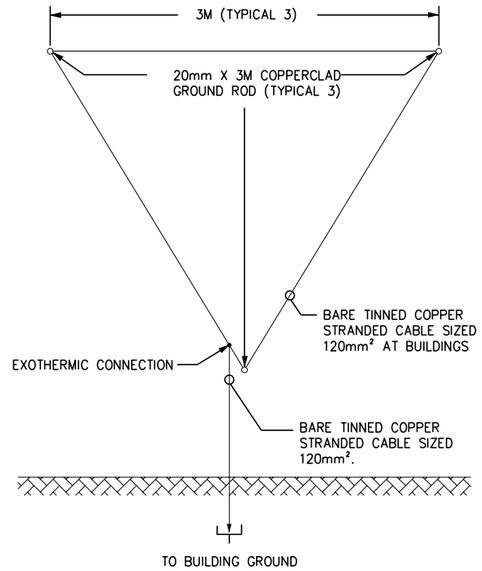

GROUND TRIODE SYSTEM DETAIL - PLAN (4 / E-501)

SCALE: NONE

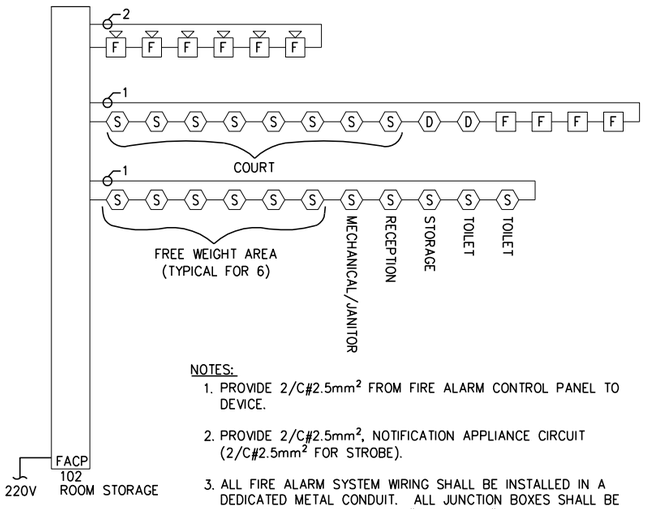

NOTES:

1. PROVIDE 2/C#2.5mm² FROM FIRE ALARM CONTROL PANEL TO DEVICE.
2. PROVIDE 2/C#2.5mm², NOTIFICATION APPLIANCE CIRCUIT (2/C#2.5mm² FOR STROBE).
3. ALL FIRE ALARM SYSTEM WIRING SHALL BE INSTALLED IN A DEDICATED METAL CONDUIT. ALL JUNCTION BOXES SHALL BE PAINTED RED AND MARKED "FIRE ALARM".
4. CONDUIT AND WIRING HAS NOT BEEN SHOWN ON THE DRAWINGS. THE ARRANGEMENT AND ROUTING OF CIRCUITS SHALL BE AT THE CONTRACTORS DISCRETION IN ACCORDANCE WITH NEC REQUIREMENTS.
5. FIRE ALARM CONTROL PANEL SHALL BE GROUNDED IN ACCORDANCE WITH NEC REQUIREMENTS.
6. FIELD VERIFY EXACT LOCATION AND QUANITIES OF ALL DEVICES.
7. ON ALL HVAC EQUIPMENT THAT SUPPLIES AIR INTO THE BUILDING, (SUPPLY FANS, AIR HANDLING EQUIPMENT) PROVIDE SHUTDOWN FUNCTION FROM FIRE ALARM PANEL HARDWIRED TO STARTER TO SHUTDOWN EQUIPMENT ON ALARM STATUS FROM PANEL.

TYPICAL FIRE ALARM RISER (5 / E-501)

SCALE: NONE

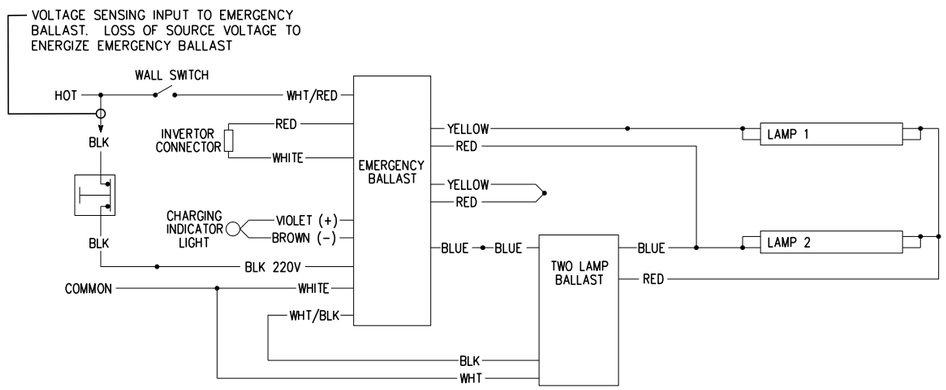

EMERGENCY FIXTURE WIRING DIAGRAM (6 / E-501)

SCALE: NONE

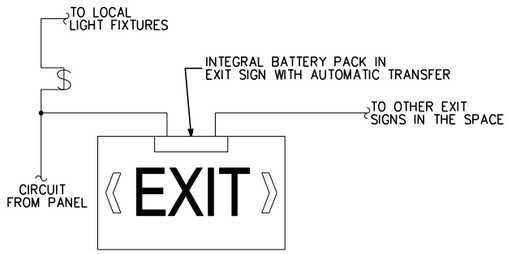

EXIT SIGN WIRING DIAGRAM (7 / E-501)

SCALE: NONE

US ARMY CORPS OF ENGINEERS
AFGHANISTAN ENGINEER DISTRICT

Mark	Description	Date	Appr.	Mark	Description	Date	Appr.

Rev: 0
Date: 5/19/10
Design file no.
Drawing code:
File name: 07-0000E_SEE0101
Plot scale: 1:0.0100/0.0833
Plot style:

Designed by: ACR
Dwn by: DLG
Ckd by: VLM
Reviewed by: MRH
Submitted by: STANLEY

U.S. ARMY ENGINEER DISTRICT, AFGHANISTAN
CORPS OF ENGINEERS
APO AE 96338

Stanley Consultants INC.

AFGHAN NATIONAL ARMY
KANDAHAR
SITE ADAPT DESIGN

FITNESS CENTER

ELECTRICAL DETAILS
SHEET 1

APPROVED:
A/E DESIGNER OF RECORD

SEAL:
LICENSED PROFESSIONAL ENGINEER
VERNON L. McALLISTER
8333
IOWA

SHEET REFERENCE NUMBER:
E
E-501

(A) LARGER OF THE TWO SIZES GIVEN IN THE TABLES BELOW	
GROUNDING ELECTRODE CONDUCTOR (BASED ON AIC RATING)	
AIC RATING OF SERVICE EQUIPMENT	NECESSARY GROUNDING ELECTRODE CONDUCTOR SIZE
10K	(1) 35mm²
14K	(1) 50mm²
18K	(1) 70mm²
22K	(1) 70mm²
25K	(1) 70mm²
30K	(1) 95mm²
35K	(1) 120mm²
42K	(1) 150mm²
65K	(1) 185mm²
100K	(1) 300mm²
125K	(2) 185mm²
200K	(2) 300mm²
GROUNDING ELECTRODE CONDUCTOR (BASED ON NEC TABLE 250.66)	
SIZE OF LARGEST UNGROUNDED SERVICE CONDUCTOR OR EQUIVALENT AREA FOR PARALLEL CONDUCTORS	NECESSARY GROUNDING ELECTRODE CONDUCTOR SIZE
350 kcmil OR SMALLER	35mm²
OVER 350 kcmil TO 600 kcmil	70mm²
OVER 600 kcmil TO 1100 kcmil	70mm²
OVER 1100 kcmil	95mm²
NOTE: ALL SIZES ARE BASED ON COPPER CONDUCTORS.	

(B) EQUIPMENT GROUNDING CONDUCTOR	
RATING OR SETTING OF AUTOMATIC OVERCURRENT DEVICE IN CIRCUIT AHEAD OF EQUIPMENT, CONDUIT, ETC, NOT EXCEEDING (AMPERES)	NECESSARY EQUIPMENT GROUNDING CONDUCTOR SIZE
15	2.5mm²
20	4.0mm²
30	6.0mm²
40	6.0mm²
60	6.0mm²
100	10mm²
200	16mm²
300	25mm²
400	25mm²
500	35mm²
600	50mm²
800	70mm²
1000	70mm²
1200	95mm²
1600	120mm²
2000	150mm²
2500	185mm²
3000	240mm²
4000	300mm²
5000	400mm²
6000	400mm²
NOTE: ALL SIZES ARE BASED ON COPPER CONDUCTORS.	

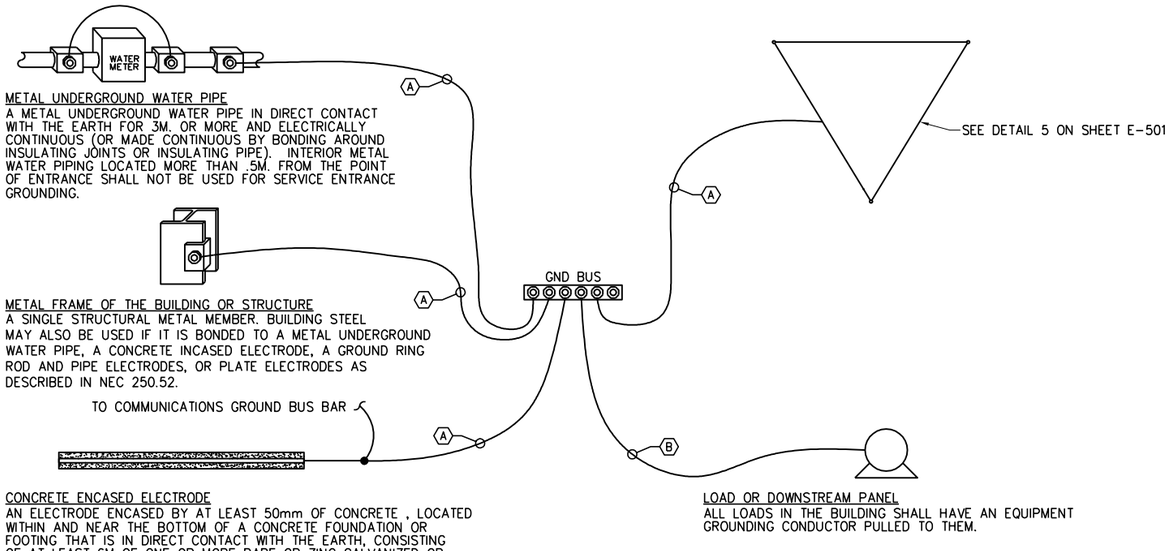

SERVICE ENTRANCE GROUNDING DETAIL (1 / E-502)
SCALE: NONE

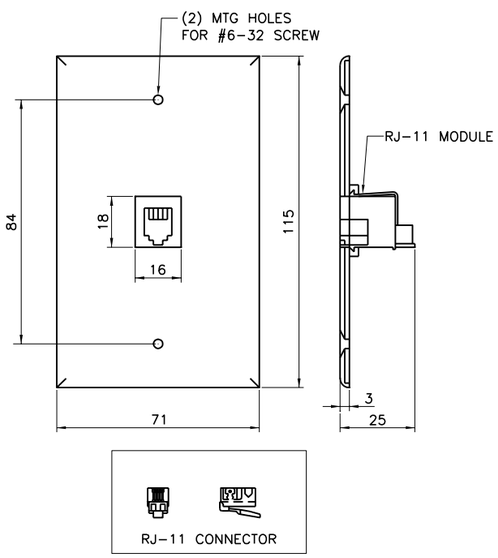

RJ-11 WALL PLATE JACK AND CONNECTOR DETAIL (2 / E-502)
SCALE: NONE

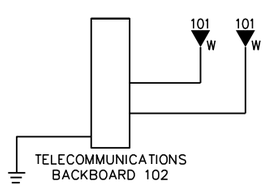

NOTE:
W = 1300 AFF

TELECOMMUNICATIONS RISER (3 / E-502)
SCALE: NONE

UNLESS NOTED OTHERWISE, LINEAR DIMENSIONS SHOWN ARE IN MILLIMETERS.

APPROVED:
A/E DESIGNER OF RECORD

SEAL:
LICENSED PROFESSIONAL ENGINEER
VERNON L. McALLISTER
8333
IOWA

US ARMY CORPS OF ENGINEERS
AFGHANISTAN ENGINEER DISTRICT

Mark	Description	Date	Appr.	Mark	Description	Date	Appr.

Designed by: ACR
Dwn by: DLG
Ckd by: VLM
Reviewed by: MRH
Submitted by: STANLEY
Date: 5/19/10
Rev: 0
Design file no.
Drawing code:
File name: 141000E-SES6020T
Plot date: 2010/05/19
Plot scale:

U.S. ARMY ENGINEER DISTRICT, AFGHANISTAN
CORPS OF ENGINEERS
APO AE 96338

Stanley Consultants INC.

AFGHAN NATIONAL ARMY
KANDAKS
SITE ADAPT DESIGN

FITNESS CENTER

ELECTRICAL DETAILS
SHEET 2

SHEET REFERENCE NUMBER:
E
E-502

FIXTURE MARK 'B'

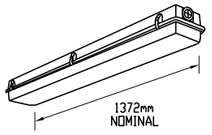

FIXTURE MARK 'C'

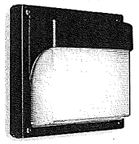

FIXTURE MARK 'G'

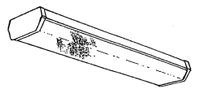

FIXTURE MARK 'H'

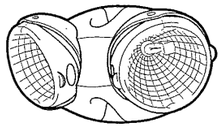

FIXTURE MARK 'E'

FIXTURE MARK 'F'

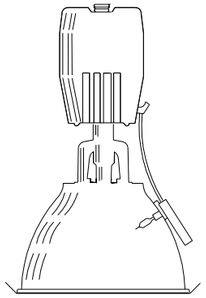

400W METAL HALIDE

LUMINAIRE REQUIREMENTS

1 STEEL OR ALUMINUM BALLAST HOUSING. SPUM ALUMINUM REFLECTOR PROVIDE VENTILATION OPENINGS AT TOP OF REFLECTOR. PROVIDE INTERNAL GROUNDING PROVISIONS.

2 PROVIDE CUSHIONED, SHOCK ABSORBING FIXTURE HANGER. PROVIDE CUSHIONED POWER HOOK WHEN INDICATED.

3 PROVIDE WIRE GUARD

4 PROVIDE QUARTZ AUXILIARY LAMP AND ARC SENSING RELAY WHEN INDICATED.

5 PROVIDE HIGH POWER FACTOR ENCAPSULATED (0.9) BALLAST

6 PROVIDE LAMP AS INDICATED.

REMOTE BATTERY PACK

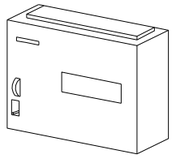

HIGH BAY INDUSTRIAL H.I.D.

SCALE: NONE

LIGHT FIXTURE SCHEDULE

FIXTURE MARK	STYLE NUMBER AND TYPE	NUMBER AND TYPE OF LAMPS	VOLTAGE	MOUNTING	NOTES
B	WET LOCATION VAPOR TIGHT SURFACE/PENDANT MOUNTED FLUORESCENT FIXTURE WITH PRISMATIC ACRYLIC LENS AND ELECTRONIC BALLAST	(2) 36W 3500K, T8 3600 LUMINS PER LAMP	220V – 1ø 50HZ	SURFACE MOUNTED	FURNISHED WITH ELECTRONIC BALLAST, VIRGIN ACRYLIC LENS.
B2	SAME AS FIXTURE 'B' WITH EMERGENCY BALLAST	(2) 36W 3500K, T8 3600 LUMINS PER LAMP	220V – 1ø 50HZ	SURFACE MOUNTED	FURNISHED WITH ELECTRONIC BALLAST, VIRGIN ACRYLIC LENS. EMERGENCY BALLAST WITH SELF TEST SWITCH.
C	INCANDESCENT ONE PIECE W/ APPROVED LENS STABILIZED HIGH IMPACT POLY CARBONATE.	(1) A19 – 100W INCANDESCENT	220V – 1ø 50HZ	WALL MOUNTED NEAR EXTERIOR DOORS AT 2M AFF	
G	WRAP AROUND SURFACE/PENDANT MOUNTED FLUORESCENT FIXTURE WITH PRISMATIC ACRYLIC LENS AND ELECTRONIC BALLAST	(2) 36W 3500K, T8 3600 LUMINS PER LAMP	220V – 1ø 50HZ	SURFACE MOUNTED	FURNISHED WITH ELECTRONIC BALLAST, VIRGIN ACRYLIC WRAP AROUND LENS.
G2	SAME AS FIXTURE 'G' WITH EMERGENCY BALLAST	(2) 36W 3500K, T8 3600 LUMINS PER LAMP	220V – 1ø 50HZ	SURFACE MOUNTED	FURNISHED WITH ELECTRONIC BALLAST, VIRGIN ACRYLIC WRAP AROUND LENS. EMERGENCY BALLAST WITH SELF TEST SWITCH.
H	REMOTE HEAD EXTERIOR LIGHT HEAD POWERED FROM REMOTE BATTERY PACK – 12V DOUBLE HEAD CORROSION RESISTANT WITH UL34 WEATHERPROOF CONSTRUCTION	(2) 12W/12V HALOGEN LAMP	12VDC	EXTERIOR WALL MOUNTED AT TOP OF DOOR HEIGHT	
E	UNIVERSAL MOUNT ENGINEER GRADE THERMOPLASTIC HOUSING EXIT SIGN WITH LED LAMPS, RED LETTERS 6" IN HEIGHT WITH ARROWS AS INDICATED, WITH 12V CADMIUM BATTERY WITH REMOTE HEAD CAPABILITY	LED LAMPS	220V – 1ø 50HZ	UNIVERSAL MOUNTING	
F	HIGH BAY INDUSTRIAL HID – 400W METAL HALIDE, STEEL BALLAST HOUSING	(1) 400W/220V METAL HALIDE	220 – 1ø 50HZ	SURFACE MOUNTED	AUTO REGULATOR LAMP BALLAST
RBP	REMOTE BATTERY PACK	N/A	220V – 1ø 50HZ 12VDC	SURFACE MOUNTED	SEALED LEAD CADMIUM 3 YEAR FIRE RETARDANT THERMOPLASTIC HOUSING 220V PRIMARY / 12VDC SECONDARY

APPROVED:

A/E DESIGNER OF RECORD

SEAL:

LICENSED PROFESSIONAL ENGINEER
VERNON L. McALLISTER
8333
IOWA

US ARMY CORPS OF ENGINEERS
AFGHANISTAN ENGINEER DISTRICT

Mark	Description	Date	Appr.	Mark	Description	Date	Appr.

Rev: 0
Date: 5/19/10
Design file no.
Drawing code:
File name: 410-0245-E601.dwg
Plot date: 2010/05/19
Plot scale:

Designed by: ACR
Dwn by: DLG
Ckd by: VLM
Reviewed by: MRH
Submitted by: STANLEY

U.S. ARMY ENGINEER DISTRICT, AFGHANISTAN
CORPS OF ENGINEERS
APO AE 96338

Stanley Consultants INC.

AFGHAN NATIONAL ARMY
KANDAKS
SITE ADAPT DESIGN

FITNESS CENTER

ELECTRICAL LIGHT FIXTURE SCHEDULE

SHEET REFERENCE NUMBER:
E
E-601

MOUNTING:	SURFACE	PANEL NAME:	FTCT - MDB
ENCLOSURE RATING:	IP21	LOCATION:	STOR ROOM
MAINS:	400A MCCB	SERVED FROM:	
BUS AMPACITY:	400A		
RCD mA / DELAY mS	100 / 400		
BRANCH BREAKER TYPE:	BOLT-ON		

SERVICE VOLTAGE:	380Y/220+10/-6%	
PHASE, FREQ.:	3P/4W, 50HZ	
MINIMUM AIC:	65,000	
7 MODE TVSS, LEVEL:	YES, 120 KA	
GND. BUS ISOLATED:	NO	
NEUTRAL BUS:	100%	

#	LOAD DESCRIPTION (NO. POINTS- SKT,LTG)	CB PH, G, CND		VA PH-A	VA PH-B	VA PH-C		LOAD DESCRIPTION (NO. POINTS- SKT,LTG)	CB PH, G, CND	#
1	HWH-1- MECHANICAL ROOM	3P30A 10,6,25MM	>	3333				PANEL FTCT-PWR	3P100A 50, 16, 50 MM	2
				7970	<<<	<<<	<			
3			>	>>>	3333					4
					8340	<<<	<			
5			>	>>>	>>>	3333				6
						8730	<			
7	HEATING COIL HC-1	3P50A 16,6,32 MM	>	7333				PANEL FTCT-HTR	3P200A 120, 35, 76 MM	8
				27500	<<<	<<<	<			
9			>	>>>	7333					10
					27500	<<<	<			
11			>	>>>	>>>	7333				12
						25000	<			
13	SPARE	3P20A	>	0				SUPPLY FAN SF2-COURT	3P20A 4,4,20MM	14
				2500	<<<	<<<	<			
15			>	>>>	0					16
					2500	<<<	<			
17			>	>>>	>>>	0				18
						2500	<			
19	SPARE	3P20A	>	0.0				SPARE	3P20A	20
				0.0	<<<	<<<	<			
21			>	>>>	0.0					22
					0.0	<<<	<			
23			>	>>>	>>>	0.0				24
						0.0	<			
25	SPACE		>					SPACE		26
				0.0	<<<	<<<	<			
27			>	>>>						28
					0.0	<<<	<			
29			>	>>>	>>>					30
						0.0	<			
31	SPACE		>	0.0				SPACE		32
				0.0	<<<	<<<	<			
33			>	>>>	0.0					34
					0.0	<<<	<			
35			>	>>>	>>>	0.0				36
						0.0	<			
37	SPACE		>					SPACE		38
				0.0	<<<	<<<	<			
39			>	>>>						40
					0.0	<<<	<			
41			>	>>>	>>>					42
							<			

CONNECTED LOAD--WATTS	48,636	49,006	46,896	ELCB, 15mA, 50 mS = ±
DIVERSIFIED LOAD--kVA @ A.D.F.		145		Applied Diversity Factor = 100%
GROWTH ALLOWANCE (25 %)--VA		36		(LTG=100%; AIRCON=90%; KITCHEN=50%
MIN. DESIGN AMPS, @ 380V		275		SOCKETS=50%; MISC. POWER=50%)

MOUNTING:	SURFACE	PANEL NAME:	FTCT_PWR
ENCLOSURE RATING:	IP21	LOCATION:	SUPPLY INTAKE RM
MAINS:	100A MCCB	SERVED FROM:	MDB
BUS AMPACITY:	100 A		
RCD mA / DELAY mS	100or30 / 400		
BRANCH BREAKER TYPE:	BOLT-ON		

SERVICE VOLTAGE:	380Y/220 +10/-6%	
PHASE, FREQ.:	3P/4W, 50HZ	
MINIMUM AIC:	65,000	
7 MODE TVSS, LEVEL:	NO	
GND. BUS ISOLATED:	NO	
NEUTRAL BUS:	100%	

#	LOAD DESCRIPTION (NO. POINTS- SKT,LTG)	CB PH, G, CND		VOLTS AMPERES PH-A	VOLTS AMPERES PH-B	VOLTS AMPERES PH-C		LOAD DESCRIPTION (NO. POINTS- SKT,LTG)	CB PH, G, CND	#
1	LIGHTING-GYM (5)	1P20A 4, 4, 20 MM	>	2320				EF-1-BATHROOM(1)	1P20A 4, 4, 20 MM	2
				250	<<<	<<<	<			
3	LIGHTING-GYM (5)	1P20A 4, 4, 20 MM	>	>>>	2390			LIGHTING-ROOMS FREE WEIGHTS, RST RM, STOR (21)	1P20A 4, 4, 20 MM	4
					1050	<<<	<			
5	LIGHTING-GYM (5)	1P20A 4, 4, 20 MM	>	>>>	>>>	2390		EF-2 COURT	1P20A 4, 4, 20 MM	6
						500	<			
7	FACP- COMM ROOM	1P20A 4, 4, 20 MM	>	500				RECEPTACLES-MULTI, FREE WEIGHTS (6)	1P20A 4, 4, 20 MM	8
				1080	<<<	<<<	<			
9	EH-1-RECEPTION	2P20A 4, 4, 20 MM	>	>>>	1300			EF-3 COURT	1P20A	10
					500	<<<	<			
11			>	>>>	>>>	1300		LIGHTING-TOILET, STOR, RECEP (15)	1P20A 4, 4, 20MM	12
						980	<			
13	EH-1-TOILETS	2P20A 4, 4, 20 MM	>	1300				EH-1-STORAGE	2P20A 4, 4, 20 MM	14
				1300	<<<	<<<	<			
15			>	>>>	1300					16
					1300	<<<	<			
17	RECEPTACLES-MULTI, FREE WEIGHTS (6)	1P20A 4, 4, 20 MM	>	>>>	>>>	1080		RECEPTACLES-MULTI, STOR, RECEPTION (6)	1P20A 4, 4, 20 MM	18
						1080	<			
19	EF-4 COURT	1P20A 4, 4, 20 MM	>	500				COMM EQUIP	1P20A 4, 4, 20 MM	20
				180	<<<	<<<	<			
21	EF-5 COURT	1P20A 4, 4, 20 MM	>	>>>	500			SPARE	1P20A	22
					0	<<<	<			
23	SUPPLY FAN SF-1	1P20A 4, 4, 20 MM	>	>>>	>>>	500		CEILING FANS (3)	1P20A 4, 4, 20 MM	24
						900	<			
25	RECEPTACLES-103	1P20A 4, 4, 20 MM	>	540				SPARE	1P20A	26
				0	<<<	<<<	<			
27	SPARE	1P20A	>	>>>	0			SPARE	1P20A	28
					0	<<<	<			
29	SPACE		>	>>>	>>>	0		SPACE		30
						0	<			
31	SPACE		>	0				SPACE		32
				0	<<<	<<<	<			
33	SPACE		>	>>>	0			SPACE		34
					0	<<<	<			
35	SPACE		>	>>>	>>>	0		SPACE		36
						0	<			
37	SPACE		>	0				SPACE		38
				0	<<<	<<<	<			
39	SPACE		>	>>>	0			SPACE		40
					0	<<<	<			
41	SPACE		>	>>>	>>>	0		SPACE		42
						0	<			

CONNECTED LOAD--WATTS	7,970	8,340	8,730	ELCB, 15mA, 50 mS = ±
DIVERSIFIED LOAD--VA @ A.D.F.		25		Applied Diversity Factor = 100%
GROWTH ALLOWANCE (25 %)--VA		6		(LTG=100%; AIRCON=90%; KITCHEN=50%
MIN. DESIGN AMPS, @ 380V		48		SOCKETS=50%; MISC. POWER=50%)

US ARMY CORPS OF ENGINEERS
AFGHANISTAN ENGINEER DISTRICT

Mark	Description	Date	Appr.

Designed by: ACR
Dwn by: DLC
Cxd by: VLM
Reviewed by: MRH
Submitted by: STANLEY
Date: 5/19/10
Rev: 0
Design file no.
Drawing code:
File name: 0470ENE_SE06E05C
Plot date: 2010/10/05/10
Plot scale:

U.S. ARMY ENGINEER DISTRICT, AFGHANISTAN
CORPS OF ENGINEERS
APO AE 96338

Stanley Consultants INC.

AFGHAN NATIONAL ARMY
KANDAKS
SITE ADAPT DESIGN

FITNESS CENTER

ELECTRICAL PANEL SCHEDULES
SHEET 1

APPROVED:
A/E DESIGNER OF RECORD

SEAL:
LICENSED PROFESSIONAL ENGINEER
VERNON L. McALLISTER
8333
IOWA

SHEET REFERENCE NUMBER:
E
E-602

MOUNTING:	**SURFACE**	PANEL NAME:	SERVICE VOLTAGE: **380Y/220** +10/-6%
ENCLOSURE RATING:	**IP21**	**FTCT_HTR**	PHASE, FREQ.: **3P/4W, 50HZ**
MAINS:	**200A MCCB**	LOCATION:	MINIMUM AIC: **65,000**
BUS AMPACITY:	**200 A**	**SUPPLY INTAKE RM**	7 MODE TVSS, LEVEL: **NO**
RCD mA / DELAY mS	**100or30 / 400**	SERVED FROM:	GND. BUS ISOLATED: **NO**
BRANCH BREAKER TYPE:	**BOLT-ON**	**MDB**	NEUTRAL BUS: **100%**

#	LOAD DESCRIPTION (NO. POINTS- SKT,LTG)	CB PH, G, CND		VOLTS AMPERES PH-A	PH-B	PH-C		LOAD DESCRIPTION (NO. POINTS- SKT,LTG)	CB PH, G, CND	#
1	EH-2 ROOM 105	2P20A	>	2500				EH-2 ROOM 106	2P20A	2
		4, 4, 20 MM		2500	<<<	<<<	<		4, 4, 20 MM	
3			>	>>>	2500					4
					2500	<<<	<			
5	EH-2 ROOM 105	2P20A	>	>>>	>>>	2500		EH-2 ROOM 106	2P20A	6
		4, 4, 20 MM				2500	<		4, 4, 20 MM	
7			>	2500						8
				2500	<<<	<<<	<			
9	EH-2 ROOM 105	2P20A	>	>>>	2500			EH-2 ROOM 106	2P20A	10
		4, 4, 20 MM			2500	<<<	<		4, 4, 20 MM	
11			>	>>>	>>>	2500				12
						2500	<			
13	EH-2 ROOM 106	2P20A	>	2500				EH-2 ROOM 106	2P20A	14
		4, 4, 20 MM		2500	<<<	<<<	<		4, 4, 20 MM	
15			>	>>>	2500					16
					2500	<<<	<			
17	EH-2 ROOM 106	2P20A	>	>>>	>>>	2500		EH-2 ROOM 106	2P20A	18
		4, 4, 20 MM				2500	<		4, 4, 20 MM	
19			>	2500						20
				2500	<<<	<<<	<			
21	EH-2 ROOM 106	2P20A	>	>>>	2500			EH-2 ROOM 106	2P20A	22
		4, 4, 20 MM			2500	<<<	<		4, 4, 20 MM	
23			>	>>>	>>>	2500				24
						2500	<			
25	EH-2 ROOM 106	2P20A	>	2500				EH-2 ROOM 106	2P20A	26
		4, 4, 20 MM		2500	<<<	<<<	<		4, 4, 20 MM	
27			>	>>>	2500					28
					2500	<<<	<			
29	EH-2 ROOM 106	2P20A	>	>>>	>>>	2500		SPARE	2P20A	30
		4, 4, 20 MM				0	<			
31			>	2500						32
				0	<<<	<<<	<			
33	EH-2 ROOM 106	2P20A	>	>>>	2500			SPARE	2P20A	34
		4, 4, 20 MM			0	<<<	<			
35			>	>>>	>>>	2500				36
						0	<			
37	SPARE	2P20A	>	0				SPARE	2P20A	38
				0	<<<	<<<	<			
39			>	>>>	0					40
					0	<<<	<			
41	SPACE		>	>>>	>>>	0		SPACE		42
						0	<			
	CONNECTED LOAD--WATTS			27,500	27,500	25,000		**ELCB**, 15mA, 50 mS = ±		
	DIVERSIFIED LOAD--VA @ A.D.F.				72			Applied Diversity Factor = 90%		
	GROWTH ALLOWANCE (25 %)--VA				18			(LTG=100%; AIRCON=90%; KITCHEN=50%		
	MIN. DESIGN AMPS, @ 380V				137			SOCKETS=50%; MISC. POWER=50%)		

APPROVED:

A/E DESIGNER OF RECORD

SEAL:

LICENSED PROFESSIONAL ENGINEER
VERNON L. McALLISTER
8333
IOWA

US ARMY CORPS OF ENGINEERS
AFGHANISTAN ENGINEER DISTRICT

Mark	Description	Date	Appr.	Mark	Description	Date	Appr.

Designed by: ACR
Date: 5/19/10
Rev: 0
Dwn by: DLC
Cad by: VLM
Design file no.
Reviewed by: MRH
Drawing code:
Submitted by: STANLEY
File name: 0470GNE_SE0605C
Plot date: 2010/10/05
Plot scale:

U.S. ARMY ENGINEER DISTRICT, AFGHANISTAN
CORPS OF ENGINEERS
APO AE 96338

Stanley Consultants INC.

AFGHAN NATIONAL ARMY
KANDAKS
SITE ADAPT DESIGN

FITNESS CENTER

ELECTRICAL PANEL SCHEDULES
SHEET 2

SHEET REFERENCE NUMBER:
E
E-603

AFGHAN NATIONAL ARMY

STANDARD BUILDING DESIGN

FUEL OPERATORS BUILDING

100% FINAL DESIGN SUBMITTAL

SHEET INDEX

G–001 COVER SHEET

STRUCTURAL

S–001 GENERAL NOTES & DESIGN CRITERIA
S–101 FOUNDATION/SLAB & ROOF FRAMING PLANS
S–401 BUILDING SECTIONS
S–501 SECTIONS
S–601 SCHEDULES
S–701 TYPICAL DETAILS
S–801 PLANS & DETAILS & SHEAR WALL ELEVATIONS

ARCHITECTURAL

A–001 LIFE SAFETY PLAN
A–101 FLOOR PLAN, ROOF PLAN & ELEVATIONS
A–401 WALL SECTIONS
A–501 EXTERIOR DETAILS
A–502 HEAD, JAMB, & SILL DETAILS
A–503 STOOP DETAILS
A–601 WINDOW & DOOR SCHEDULES

MECHANICAL

M–101 FLOOR PLAN–HVAC SCHEDULES & DETAILS

ELECTRICAL

E–001 ELECTRICAL SYMBOLS & ABBREVIATIONS
E–101 ELECTRICAL LIGHTING, POWER & SYSTEMS PLAN
E–501 ELECTRICAL DETAILS
E–502 ELECTRICAL DETAILS
E–601 ELECTRICAL LIGHT FIXTURE SCHEDULE
E–602 ELECTRICAL PANEL SCHEDULES

US ARMY CORPS OF ENGINEERS
AFGHANISTAN ENGINEER DISTRICT

Mark	Description	Date	Appr.	Mark	Description	Date	Appr.

Designed by: KMP/MMY
Dwn by: RCG
Ckd by: CWW
Reviewed by: LHM
Submitted by: BAKER
Date: 3/07/2010
Rev: 0
Design file no.
Drawing code:
File name: ANAFOBG-001
Plot date: 3/5/2010
Plot scale: X:X

U.S. ARMY CORPS OF ENGINEERS
AFGHANISTAN ENGINEER DISTRICT
APO AE 96338

Michael Baker Jr., Inc
A unit of Michael Baker Corporation
Airside Business Park
100 Airside Drive
Moon Township, PA 15108
www.mbakercorp.com

AFGHAN NATIONAL ARMY
REGIONAL MILITARY TRAINING CENTER
STANDARD DESIGN

FUEL OPERATORS BUILDING

COVER SHEET

Sheet reference number:
G–001

STRUCTURAL ABBREVIATIONS:

ACI	AMERICAN CONCRETE INSTITUTE
ADD'L	ADDITIONAL
AISC	AMERICAN INSTITUTE OF STEEL CONSTRUCTION
AISI	AMERICAN IRON AND STEEL INSTITUTE
ASTM	AMERICAN SOCIETY FOR TESTING AND MATERIALS
ARCH	ARCHITECTURAL
B	BOTTOM
BLDG	BUILDING
BOTT	BOTTOM
℄	CENTER LINE
CFMRF	COLD FORM METAL ROOF FRAME
CFMF	COLD FORM METAL FRAME
CFS	COLD FORMED STEEL
CIP	CAST-IN-PLACE
CIPL	CAST-IN-PLACE LINTEL
CJ	CONTROL JOINT
CLR	CLEAR
CMU	CONCRETE MASONRY UNIT
COEFF	COEFFICIENT
COL	COLUMN
CONC	CONCRETE
CONT	CONTINUOUS
COORD	COORDINATE
CRSI	CONCRETE REINFORCING STEEL INSTITUTE
CSJ	CONSTRUCTION JOINT
DIA	DIAMETER
DIAG	DIAGONAL
DIM	DIMENSION
DWG	DRAWING
DWL	DOWEL
EA	EACH
EF	EACH FACE
ELEC	ELECTRICAL
ELEV	ELEVATION
EMBED	EMBEDMENT
EQUIV	EQUIVALENT
ETC	ET CETERA
EW	EACH WAY
EXP	EXPANSION
EXT	EXTERIOR
FTG	FOOTING
GA	GAUGE
GB	GRADE BEAM
HORIZ	HORIZONTAL
h	HOUR
HRS	HOURS
IBC	INTERNATIONAL BUILDING CODE
INFO	INFORMATION
INT	INTERIOR
kg	KILOGRAM
km	KILOMETER
kN	KILONEWTON
kPa	KILOPASCAL
L#	ANGLE (# INDICATES SIZE)
LONG	LONGITUDINAL
LLV	LONG LEG VERTICAL
m	METER
MAX	MAXIMUM
MECH	MECHANICAL
MFG	MANUFACTURER
MID	MIDDLE
MIN	MINIMUM
MISC	MISCELLANEOUS
mm	MILLIMETER
MPa	MEGAPASCAL
MTL	METAL
MWFRS	MAIN WIND FORCE RESISTING SYSTEM
N	NEWTON
N	NORTH
N/A	NOT APPLICABLE
#	NUMBER SYMBOL FOR REBAR SIZE
NTS	NOT TO SCALE
OC	ON CENTER
OPNG	OPENING
ℙL or PL	PLATE
PRE-ENG	PRE-ENGINEERED
RB	ROOF BEAM
REINF	REINFORCED
REQ'D	REQUIRED
SIM	SIMILAR
SPECS	SPECIFICATIONS
STD	STANDARD
STRUCT	STRUCTURAL
SW	SHEAR WALL
T	TOP
T/	TOP OF
T/ELEV	TOP ELEVATION
T/SLAB	TOP OF SLAB
T&B	TOP AND BOTTOM
THK	THICK
TYP	TYPICAL
UFC	UNIFIED FACILITIES CRITERIA
UON	UNLESS OTHERWISE NOTED
VERT	VERTICAL
W	WIDTH
W/	WITH

1.0 GENERAL NOTES:

1.1 THIS PROJECT HAS BEEN DESIGNED FOR THE WEIGHTS AND MATERIALS INDICATED ON THE SHEETS AND FOR THE LIVE LOADS INDICATED IN THE DESIGN DATA. IT IS THE CONTRACTOR'S RESPONSIBILITY TO DETERMINE ALLOWABLE CONSTRUCTION LOADS AND TO PROVIDE PROPER DESIGN AND CONSTRUCTION OF FALSEWORK, FORMWORK, STAGING, BRACING, SHEETING AND SHORING, ETC.

1.1 COORDINATE THESE SHEETS WITH THE ARCHITECTURAL, MECHANICAL, ELECTRICAL, PLUMBING, AND CIVIL SHEETS. ALL DIMENSIONS SHOWN ON THE SHEETS ARE MILLIMETERS UNLESS NOTED OTHERWISE.

1.2 THE CONTRACTOR SHALL VERIFY AND COORDINATE ALL FLOOR AND ROOF OPENING SIZES AND LOCATIONS, EQUIPMENT PAD SIZES AND LOCATIONS, ANCHOR BOLT LAYOUTS, ETC WITH EQUIPMENT SELECTED. THE CONTRACTOR SHALL MAKE ANY REQUIRED MODIFICATIONS AT NO ADDITIONAL COST.

1.3 THE CONTRACTOR SHALL REFER TO THE ARCHITECTURAL, MECHANICAL, ELECTRICAL AND PLUMBING SHEETS FOR SLEEVES, CURBS, INSERTS OR OPENINGS, ETC. NOT HEREIN INDICATED.

1.4 WORK NOT INCLUDED ON THE SHEETS BUT IMPLIED TO BE SIMILAR TO THAT SHOWN AT CORRESPONDING PLACES ELSEWHERE ON THE SHEETS SHALL BE REPEATED.

1.5 IN CASE OF CONFLICT BETWEEN THE NOTES, DETAILS AND SPECIFICATIONS THE MOST RIGID REQUIREMENTS SHALL GOVERN.

1.6 SEE ARCHITECTURAL SHEETS FOR LOCATIONS OF MASONRY AND NON-LOAD BEARING PARTITIONS. PROVIDE COMPRESSIBLE FIRESAFING AT TOP OF WALL AS REQUIRED BY ARCHITECTURAL SHEETS.

1.7 COORDINATE FINISHED FLOOR DATUM ELEVATION 0.0m WITH THE CIVIL SHEETS.

2.0 FOUNDATION NOTES

2.1 THE GEOTECHNICAL ANALYSIS FOR THIS PROJECT IS THE RESPONSIBILITY OF THE CONTRACTOR AWARDED THE WORK. AN ASSUMED ALLOWABLE SOIL BEARING VALUE OF 72 kPa HAS BEEN USED IN THE STRUCTURAL ANALYSIS OF THE BUILDING HEREIN AND SHALL BE CONFIRMED AND VERIFIED AS PART OF THE GEOTECHNICAL INVESTIGATION. VALUES WHICH DO NOT MEET THE REQUIREMENTS INDICATED ON THE BASIS OF DESIGN SHEET SHALL BE IMMEDIATELY BROUGHT TO THE ATTENTION OF THE CONTRACTING OFFICER FOR CONSIDERATION AND DETERMINATION ON THE NEXT APPROPRIATE COURSE OF ACTION.

2.2 SEE THE SPECIFICATION FOR ADDITIONAL REQUIREMENTS TO THOSE OUTLINED IN THE GEOTECHNICAL INVESTIGATION FOR EXCAVATION AND PREPARATION OF THE FOUNDATION AND THE SLAB ON GRADE SUBGRADE INCLUDING COMPACTION PROCEDURES.

2.3 EXCAVATIONS FOR FOOTINGS SHALL HAVE THE SIDES AND BOTTOMS TEMPORARILY LINED WITH 0.25mm POLYETHYLENE IF PLACEMENT OF CONCRETE DOES NOT OCCUR WITHIN 24 HRS OF THE EXCAVATION OF THE FOOTING.

2.4 FOUNDATION CONDITIONS NOTED DURING CONSTRUCTION WHICH DIFFER FROM THOSE DESCRIBED IN THE GEOTECHNICAL REPORT SHALL BE REPORTED TO THE GENERAL CONTRACTOR BEFORE FURTHER CONSTRUCTION IS ATTEMPTED. SEE PROJECT SPECIFICATIONS.

2.5 NO FOOTINGS OR SLABS SHALL BE POURED INTO OR AGAINST SUBGRADE CONTAINING FREE WATER, FROST, ICE OR LOOSE MATERIAL. FROST DEPTH ASSUMED TO BE 800mm.

2.6 ALL SLAB-ON-GRADE, TRENCH BOTTOMS AND OTHER ON-GRADE INTERIOR HORIZONTAL SURFACES SHALL BE PLACED OVER A 0.25mm POLYETHYLENE VAPOR RETARDER OVER A 100mm #57 STONE WATER CAPILLARY BARRIER PLACED ON SUBGRADE PROPERLY PREPARED IN ACCORDANCE WITH THE CONTRACT SPECIFICATIONS. (UON)

2.7 PRIOR TO START OF FOUNDATION OR SLAB-ON-GRADE CONSTRUCTION, EXISTING SUBGRADES SHALL BE COMPACTED TO MINIMUM OF 95% MAXIMUM DRY DENSITY OBTAINED THRU ASTM D 1557 MODIFIED PROCTOR TESTING.

2.8 SEE PLUMBING, ELECTRICAL & CIVIL SHEETS FOR REQUIRED UNDERSLAB UTILITIES.

2.9 SEE ARCHITECTURAL SHEETS FOR ALL WATERPROOFING DETAILS AND MATERIALS.

2.10 IF UNDERMINING OF FOOTINGS OCCURS, FILL VOIDS WITH 18 MPa CONCRETE. DO NOT ATTEMPT TO REPLACE AND RE-COMPACT SOIL.

3.0 CONCRETE

3.1 CONCRETE SHALL HAVE THE UNIT WEIGHT OF 2400 kg/m^3 AND A MINIMUM COMPRESSIVE STRENGTH (f'c) OF 28 MPa AT 28 DAYS. ALL CONCRETE SHALL HAVE A WATER-CEMENT RATIO OF 0.45. SEE SPECIFICATIONS FOR ADDITIONAL INFORMATION. ENTRAIN AIR TO PRODUCE TOTAL AIR CONTENT ACCORDING TO THE SPECIFICATIONS FOR CONCRETE EXPOSED TO FREEZING TEMPERATURES (EXTERIOR FOOTINGS, SLAB TURNDOWNS, EXTERIOR SLABS AND SLABS-ON-GRADE, EXTERIOR RETAINING WALLS, AND EXTERIOR GRADE BEAMS.)

3.2 NO CALCIUM CHLORIDE SHALL BE USED IN ANY CONCRETE.

3.3 MIXING, TRANSPORTING AND PLACING OF CONCRETE SHALL CONFORM TO ACI 301M-05.

3.4 ALL CONCRETE WORK SHALL CONFORM TO THE REQUIREMENTS OF THE AMERICAN CONCRETE INSTITUTE (ACI) 318M MANUAL (metric), "BUILDING CODE REQUIREMENTS FOR REINFORCED CONCRETE", AND REQUIREMENTS OUTLINED IN THE CONTRACT SPECIFICATIONS. WHEN THERE IS A CONFLICT BETWEEN ACI AND THE SPECIFICATIONS, THE MORE STRINGENT SHALL GOVERN.

3.5 CHAMFER ALL EXPOSED EXTERNAL CORNERS OF CONCRETE WITH 20mm x45 DEGREE CHAMFER UON.

3.6 CONCRETE REINFORCEMENT BARS SHALL CONFORM TO ASTM A615M-96a, GRADE 420 MPa, REINFORCING BARS SHALL NOT BE TACK WELDED, WELDED, HEATED OR CUT, UNLESS INDICATED ON THE CONTRACT DOCUMENTS. ALL LAP SPLICES SHALL BE CLASS "B" UON.

3.7 HORIZONTAL FOOTING AND HORIZONTAL WALL REINFORCEMENT SHALL BE CONTINUOUS AND SHALL HAVE 90 DEGREE BENDS AND EXTENSIONS, OR CORNER BARS OF EQUIVALENT SIZE LAPPED WITH A CLASS B TENSION SPLICE AT CORNERS AND INTERSECTIONS. TOP BAR CRITERIA SHALL APPLY IF 300mm OR MORE OF FRESH CONCRETE IS PLACED BELOW BAR.

3.8 SLABS-ON-GRADE SHALL HAVE CONSTRUCTION JOINTS OR CRACK CONTROL JOINTS AS SHOWN ON THE DRAWINGS. CONSTRUCTION JOINTS CAN BE USED AT CONTROL JOINT LOCATIONS AT CONTRACTORS OPTION. SEE SLAB PLANS & JOINT DETAILS FOR ADDITIONAL INFORMATION. FOR AREAS NOT SHOWN ON DWGS, THE MAXIMUM SPACING OF CONSTRUCTION/ CRACK CONTROL JOINTS SHALL BE 4800mm

3.9 ALL CONCRETE REINFORCEMENT SHALL BE DETAILED, FABRICATED, LABELED, SUPPORTED, AND SPACED IN FORMS AND SECURED IN PLACE IN ACCORDANCE WITH THE PROCEDURES AND REQUIREMENTS OUTLINED IN THE LATEST EDITION OF THE "BUILDING CODE REQUIREMENTS FOR REINFORCED CONCRETE", ACI 318M, AND THE "MANUAL OF STANDARD PRACTICE FOR DETAILING REINFORCED CONCRETE STRUCTURES", ACI 315M, LATEST EDITION. BASED ON IN COUNTRY REINFORCEMENT AVAILABILITY, IT IS THE CONTRACTOR'S OPTION TO ROUND DESIGNATED ODD NUMBERED REINFORCEMENT SIZES UP (1) ONE BAR SIZE.

3.10 ALL DOWELS SHALL MATCH SIZE AND NUMBER OF MAIN REINFORCING, UNLESS NOTED OTHERWISE ON THE SHEETS.

3.11 ADDITIONAL BARS SHALL BE PROVIDED AROUND ALL FLOOR AND WALL OPENINGS AS SHOWN ON THE SHEETS.

3.12 SEE ARCHITECTURAL SHEETS FOR TYPE AND LOCATION OF ALL FLOOR FINISHES.

3.13 THE CONTRACTOR SHALL COORDINATE ADDITIONAL WALL/SLAB OPENINGS NOT SHOWN ON STRUCTURAL SHEETS. SEE MECHANICAL, ELECTRICAL, PLUMBING AND CIVIL SHEETS.

3.14 UNLESS NOTED OTHERWISE, ALL CURBS SHALL BE REINFORCED WITH AT LEAST (1)-#13 CONTINUOUS AND #13 AT 300mm O.C. DOWELS TO STRUCTURE BELOW.

3.15 THE CONTRACTOR SHALL VERIFY ALL OPENINGS, PAD SIZES, AND ANCHOR BOLTS WITH EQUIPMENT SELECTED.

3.16 FOR ALL WALLS & PIERS, PROVIDE DOWELS INTO FOOTING AT EACH VERT REINF BAR, UON DOWEL SIZE SHALL BE SAME AS VERT REINF.

3.17 PROVIDE CONCRETE POUR STOPS OR FORMED AS REQUIRED FOR INSTALLATION OF ALL CONCRETE WORK.

3.18 PROVIDE ADDITIONAL (2)-#13 x 600mm REINFORCING BARS IN SLAB-ON GRADE AT ALL RE-ENTRANT CORNERS. PLACE BARS AT MID-DEPTH OF SLAB WITH A CLEARANCE OF 50mm FROM CORNER UON.

3.19 COLD-WEATHER PLACEMENT: COMPLY WITH ACI 306.1 AND AS FOLLOWS. PROTECT CONCRETE WORK FROM PHYSICAL DAMAGE OR REDUCED STRENGTH THAT COULD BE CAUSED BY FROST, FREEZING ACTIONS, OR LOW TEMPERATURES. SUBMIT A COLD WEATHER CONCRETING PLAN FOR APPROVAL.

3.20 PROVIDE BONDING COMPOUND PER ASTM C 1059-99: SPECIFICATION FOR LATEX AGENTS FOR BONDING FRESH CONCRETE (GROUT) TO HARDENED CONCRETE.

3.21 THE FORMED SURFACES FOR REINFORCED CONCRETE SHALL ACHIEVE A "CLASS A" FINISH WHEN RECEIVING PAINT OR A "CLASS B" FINISH WHEN RECEIVING PLASTER OR TILE AS PER SPECIFICATION SECTION 03 31 00 CAST-IN-PLACE STRUCTURAL CONCRETE.

3.22 AT INTERSECTING GRADE BEAMS AND SHEAR WALLS, PROVIDE CORNER BARS AT INTERSECTIONS WITH SAME QUANTITY, SIZE AND SPACING AS HORIZONTAL BARS WITH LEG LENGTH = 50db.

3.23 REFER TO S-800 SERIES REINFORCING BAR PLACEMENT DRAWINGS DEFINING LENGTHS, BENDS, AND SPACINGS FOR ALL STRUCTURAL CONCRETE. THE S-800 SERIES DRAWING ARE BASED ON THE S-400, S-500, S-600, AND S-700 SERIES DRAWING SCHEDULES, DETAILS, AND DIAGRAMS.

4.0 CONCRETE MASONRY (NOT USED)

5.0 COLD-FORMED METAL FRAMING

5.1 ALL COLD-FORMED METAL FRAMING MEMBERS SHALL CONFORM TO ASTM A1003M, STRUCTURAL GRADE ST340 (MPa), WITH A GALVANIZED COATING OF Z275 OR BETTER IN ACCORDANCE WITH ASTM A653M.

5.2 ALL COLD-FORMED METAL FRAMING MEMBERS SHALL HAVE THE FOLLOWING MINIMUM PROPERTIES:

a. MINIMUM METAL THICKNESS:
TRACK = 1.37mm;
STUD/OTHER = 1.09mm

b. MINIMUM FLANGE WIDTH:
TRACK = 38mm;
STUD/OTHER = 35mm

c. MINIMUM MEMBER DEPTH:
ALL SECTIONS = 152.2mm

d. PURLIN (HAT CHANNEL)
DEPTHxWIDTH(FLAT TOP)xTHICK = 25mmx42mmx1.59mm

5.3 ALL CONNECTIONS SHALL BE MADE WITH CORROSION RESISTANT (ASTM A153M), SELF-DRILLING, SELF-TAPPING STEEL DRILL SCREWS IN ACCORDANCE WITH ASTM C1513. SCREWS SHALL HAVE A LOW PROFILE HEAD BENEATH ROOF DECK, AND STANDARD HEAD ALL OTHER LOCATIONS.

5.4 FABRICATE COLD FORMED METAL FRAMING AND ACCESSORIES PLUMB, SQUARE AND TRUE TO LINE, WITH CONNECTIONS SECURELY FASTENED ACCORDING TO AISI STANDARD FOR COLD FORMED STEEL FRAMING.

5.5 CUT FRAMING MEMBERS BY SAWING OR SHEATHING, DO NOT TORCH CUT.

5.6 INSTALL FRAMING MEMBERS IN ONE-PIECE LENGTHS UNLESS SPLICE CONNECTIONS ARE INDICATED FOR TRACK OR TENSION MEMBERS

5.7 INSTALL TEMPORARY BRACING AND SUPPORTS TO SECURE FRAMING DURING CONSTRUCTION. MAINTAIN BRACING AND SUPPORTS IN PLACE UNTIL THE STRUCTURE HAS BEEN COMPLETED WITH ALL CONNECTIONS AND PERMANENT BRACING SECURED.

6.0 STRUCTURAL DESIGN CRITERIA

6.1 ALL DESIGNS SHALL CONFORM TO THE PROVISIONS OF THE IBC 2006 AND UFC AS APPLICABLE.

6.2 DESIGN LOADS

6.2.1 DEAD LOADS (PER IBC 2006 & UFC 3-310-01)

MECH/ELEC/PLUMBING	0.20 kPa
MISCELLANEOUS	0.15 kPa
COLD-FORMED FRAMING	0.20 kPa
INSULATION	0.10 kPa
METAL ROOF PANEL	0.14 kPa
	0.79 kPa
FLOOR PARTITION ALLOWANCE	0.96 kPa

6.2.2 LIVE LOADS (PER IBC 2006 & UFC 3-310-01)

ROOF	1.00 kPa
SLAB ON GRADE	4.80 kPa

6.2.3 SNOW LOADS (PER IBC 2006 & UFC 3-310-01)

GROUND SNOW LOAD (Pg)	1.2 kPa
SNOW IMPORTANCE FACTOR (I)	1.0
SNOW EXPOSURE FACTOR (Ce)	1.0
THERMAL FACTOR (Ct)	1.0

6.2.4 WIND LOADS (PER IBC 2006)

BASIC WIND SPEED	137 km/h
WIND IMPORTANCE FACTOR	1.0
WIND EXPOSURE CATEGORY	D
DIRECTIONALITY COEFFICIENT (Kd)	0.85
TOPOGRAPHIC FACTOR (Kzt)	1.0

6.2.5 SEISMIC LOADS (PER IBC 2006 & UFC 3-310-04)

OCCUPANCY USE CATEGORY	II
SEISMIC IMPORTANCE FACTOR (Ie)	1.0
SEISMIC SITE CLASS	D
S_s = 1.5 (REDUCED FROM 2.4 PER ASCE 7-05 CH 12.8.1.13)	
S_1 = 1.20	
S_{DS} = 1.0	
S_{D1} = 1.20	
SEISMIC DESIGN CATEGORY	E
SEISMIC RESISTING SYSTEM: -BEARING WALL SYSTEM: SPECIAL REINFORCED CONCRETE SHEAR WALLS	
RESPONSE MODIFICATION FACTOR (R)	6
RESPONSE COEFFICIENT (Cs)	0.167
SEISMIC ANALYTICAL PROCEDURE =	EQUIV LATERAL FORCE
SEISMIC BASE SHEAR	40 kN

APPROVED:

A/E DESIGNER OF RECORD

SEAL:

GEORGIA REGISTERED No. 27141 PROFESSIONAL ENGINEER CHRISTOPHER W. WHITMORE 1-29-10

US ARMY CORPS OF ENGINEERS
AFGHANISTAN ENGINEER DISTRICT

Mark	Description	Date	Appr.	Mark	Description	Date	Appr.

Date: 2/23/10 | Rev: 0
Design file no.
Drawing code:
File name: ANAFOBS-001GN
Plot date: 2/23/2010
Plot scale: X:X

Designed by: KMF/MMY
Dwn by: RCG | Ckd by: CWW
Reviewed by: LHM
Submitted by:
BAKER

U.S. ARMY CORPS OF ENGINEERS
AFGHANISTAN ENGINEER DISTRICT
APO AE 96338

Michael Baker Jr., Inc
A unit of Michael Baker Corporation
Airside Business Park
100 Airside Drive
Moon Township, PA 15108
www.mbakercorp.com

AFGHAN NATIONAL ARMY
REGIONAL MILITARY TRAINING CENTER
STANDARD DESIGN

FUEL OPERATORS BUILDING

GENERAL NOTES & DESIGN CRITERIA

Sheet reference number:
S-001

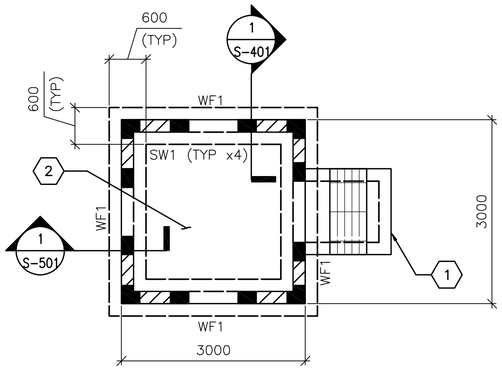

1 S-101 **FOUNDATION/SLAB PLAN**

SCALE: 1:50

FOUNDATION/SLAB PLAN NOTES:

1. REFER TO SHEET S-001 FOR STRUCTURAL NOTES AND DESIGN CRITERIA.
2. FINISH FIRST FLOOR ELEVATION SHALL BE (DATUM 0.00) ALL PLUS OR MINUS DIMENSIONS INDICATED ON PLAN OR REFERRED TO IN NOTES RELATE TO FINISH FLOOR ELEVATION.
3. SLAB-ON-GRADE IS 150 WITH #13 @ 300 OC EW LOCATED 38 FROM T/SLAB.
4. BOTTOM OF WALL FOOTINGS SHALL BE -950 UNLESS OTHERWISE INDICATED.
5. WALL FOOTING INDICATED BY WF# ON PLAN. REFER TO FOOTING SCHEDULE ON S-601.
6. CONCRETE SHEAR WALL INDICATED BY SW#. REFER TO CONCRETE SHEAR WALL SCHEDULE ON S-601.
7. SEE MECHANICAL AND ELECTRICAL SHEETS FOR CONCRETE PAD LOCATIONS, SIZES, AND THICKNESS NOT SHOWN. SEE SHEET S-701 FOR DETAILS.

FOUNDATION/SLAB PLAN KEY NOTES: (X)

1. CONC PAD (ENTRANCE)-SEE ARCH DWGS FOR INFORMATION
2. REINF CONC SLAB-ON-GRADE

FOUNDATION/SLAB PLAN LEGEND:

REINF CONC SHEAR WALL

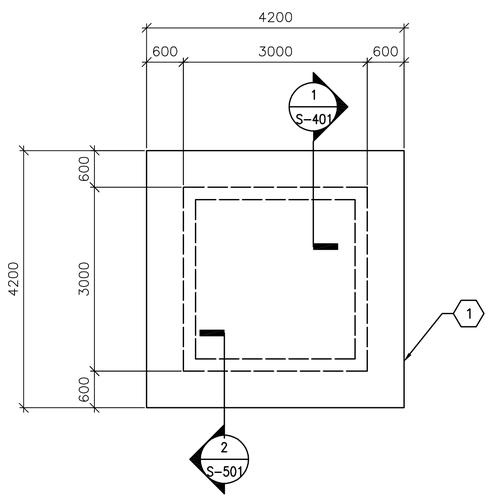

2 S-101 **ROOF FRAMING PLAN**

SCALE: 1:50

ROOF FRAMING PLAN NOTES:

1. REFER TO SHEETS S-001 FOR STRUCTURAL NOTES AND DESIGN CRITERIA.
2. TOP OF SLAB ELEVATION = 2800 UNLESS NOTED OTHERWISE.
3. ROOF SLAB IS 200 WITH #13 @ 300 OC EW T&B.
4. COORDINATE WITH ARCHITECTURAL SHEETS FOR COLD-FORMED STEEL OVERBUILD FRAMING ABOVE ROOF SLAB.
5. COLD-FORMED METAL OVERBUILD ROOF FRAMING NOT SHOWN FOR CLARITY. SEE OVERBUILD ROOF FRAMING DETAILS AND SECTIONS ON SHEET S-701.
6. OVERHANG AREAS OF ROOF SLAB CONTAIN ROOF VENT PENETRATIONS. REFERENCE ARCHITECTURAL DRAWINGS FOR INFORMATION.

ROOF FRAMING PLAN KEY NOTES: (X)

1. CONC ROOF SLAB (BELOW ROOF OVERBUILD)

0 1000 2000
SCALE: 1:50

UNLESS OTHERWISE NOTED, LINEAR DIMENSIONS SHOWN ON DRAWINGS ARE IN MILLIMETERS (mm)

APPROVED:

A/E DESIGNER OF RECORD

SEAL:

GEORGIA REGISTERED 1-29-10 No. 27141 PROFESSIONAL ENGINEER CHRISTOPHER W. WHITMORE

US ARMY CORPS OF ENGINEERS
AFGHANISTAN ENGINEER DISTRICT

Mark	Description	Date	Appr.	Mark	Description	Date	Appr.

U.S. ARMY CORPS OF ENGINEERS
AFGHANISTAN ENGINEER DISTRICT
APO AE 96338

Michael Baker Jr., Inc.
A unit of Michael Baker Corporation
Airside Business Park
100 Airside Drive
Moon Township, PA 15108
www.mbakercorp.com

Designed by: KMF/MMY
Dwn by: RCG
Ckd by: CWW
Reviewed by: LHM
Submitted by: BAKER
Date: 2/23/10
Rev: 0
Design file no.
Drawing code:
File name: ANAFOBS-101FFP
Plot date: 2/23/2010
Plot scale: x:X

AFGHAN NATIONAL ARMY
REGIONAL MILITARY TRAINING CENTER
STANDARD DESIGN

FUEL OPERATORS BUILDING

FOUNDATION/SLAB & ROOF FRAMING PLANS

Sheet reference number:
S-101

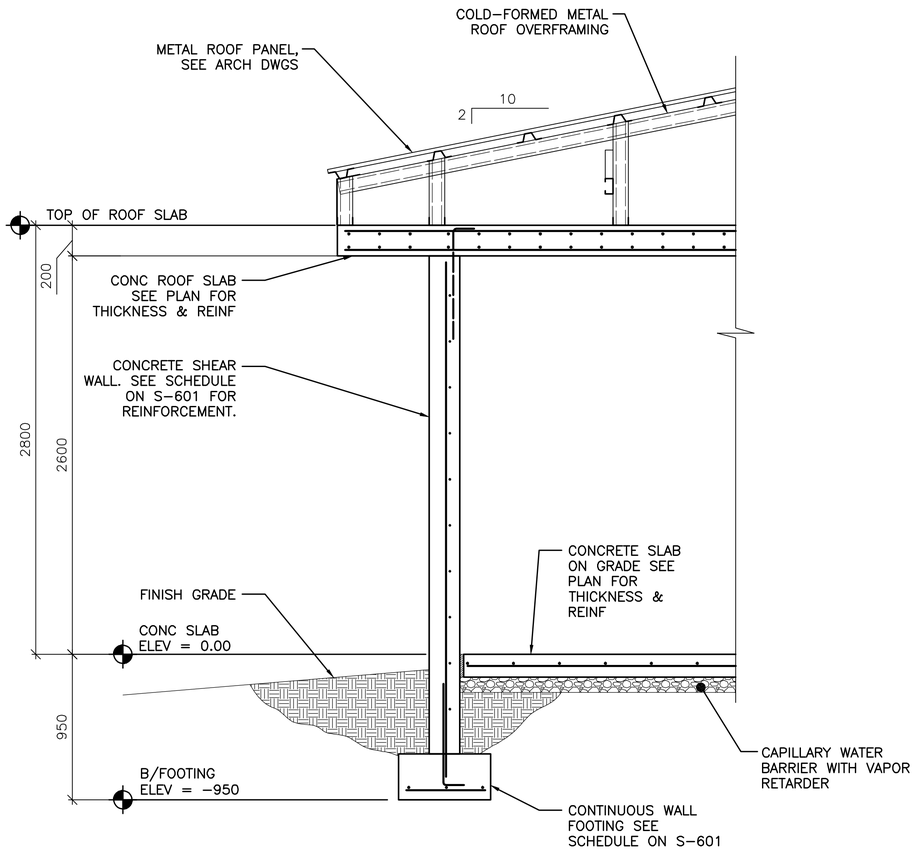

1
S-101

TYPICAL WALL SECTION AT EXTERIOR WALL

SCALE: 1:20

0 400 800
SCALE: 1:20

UNLESS OTHERWISE NOTED, LINEAR DIMENSIONS SHOWN ON DRAWINGS ARE IN MILLIMETERS (mm)

APPROVED:

A/E DESIGNER OF RECORD

SEAL:

GEORGIA REGISTERED 1-29-10 No. 27141 PROFESSIONAL ENGINEER CHRISTOPHER W. WHITMORE

US ARMY CORPS OF ENGINEERS
AFGHANISTAN ENGINEER DISTRICT

Mark	Description	Date	Appr.	Mark	Description	Date	Appr.

Date: 2/23/10
Design file no.
Rev: 0
Drawing code:
File name: AANFOBS-401BS
Plot date: 2/23/2010
Plot scale: x:X

Designed by: KMP/MMY
Dwn by: RCG
Ckd by: CWW
Reviewed by: LHM
Submitted by: BAKER

U.S. ARMY CORPS OF ENGINEERS
AFGHANISTAN ENGINEER DISTRICT
APO AE 96338

Michael Baker Jr., Inc
A unit of Michael Baker Corporation
Airside Business Park
100 Airside Drive
Moon Township, PA 15108
www.mbakercorp.com

AFGHAN NATIONAL ARMY
REGIONAL MILITARY TRAINING CENTER
STANDARD DESIGN

FUEL OPERATORS BUILDING

BUILDING SECTIONS

Sheet reference number:
S-401

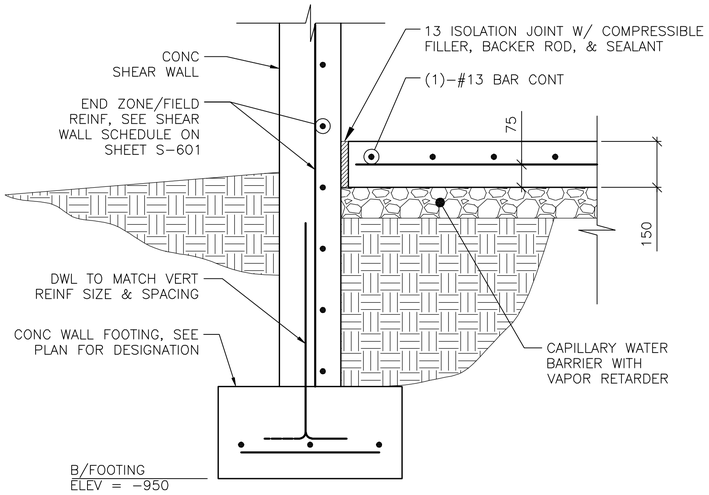

1 S-101 **SECTION**
SCALE: 1:10

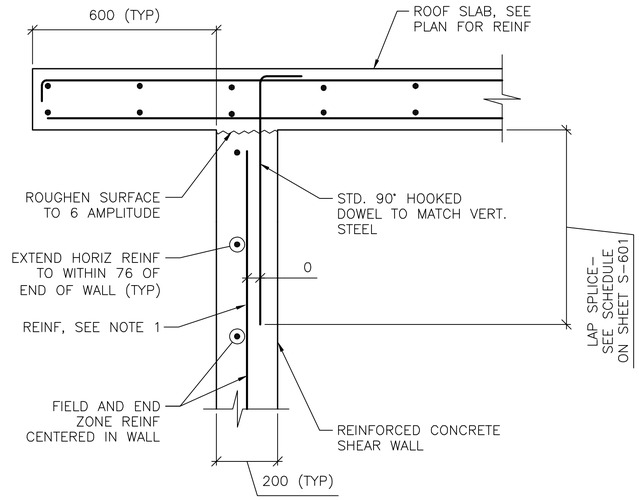

NOTES:
1. TERMINATE "FIELD" VERT REINF & END ZONE REINF @ 50 CLEAR FROM TOP OF ROOF SLAB.
2. SEE SHEET S-601 FOR SCHEDULED FIELD AND END ZONE REINF.

2 S-101 **SECTION**
SCALE: 1:10

0 200 400
SCALE: 1:10

UNLESS OTHERWISE NOTED, LINEAR DIMENSIONS SHOWN ON DRAWINGS ARE IN MILLIMETERS (mm)

APPROVED:

A/E DESIGNER OF RECORD

SEAL:

GEORGIA REGISTERED 2-23-10 No. 27141 PROFESSIONAL ENGINEER CHRISTOPHER W. WHITMORE

US ARMY CORPS OF ENGINEERS
AFGHANISTAN ENGINEER DISTRICT

Mark	Description	Date	Appr.	Mark	Description	Date	Appr.

U.S. ARMY CORPS OF ENGINEERS
AFGHANISTAN ENGINEER DISTRICT
APO AE 96338

Michael Baker Jr., Inc.
A unit of Michael Baker Corporation
Airside Business Park
100 Airside Drive
Moon Township, PA 15108
www.mbakercorp.com

Designed by: KMF/MMY
Dwn by: RCG
Ckd by: CWW
Reviewed by: LHM
Submitted by: BAKER
Date: 2/23/10
Rev: 0
Design file no.
Drawing code:
File name: AMAFOBS-501SC
Plot date: 2/23/2010
Plot scale: x:X

AFGHAN NATIONAL ARMY
REGIONAL MILITARY TRAINING CENTER
STANDARD DESIGN

FUEL OPERATORS BUILDING

SECTIONS

Sheet reference number:
S-501

CONCRETE REINFORCEMENT TENSION DEVELOPMENT/LAP SPLICE SCHEDULE

f'c = 28 MPa	LAP CLASS	UNCOATED BARS			
		TOP BARS		OTHER BARS	
BAR SIZES		CASE 1	CASE 2	CASE 1	CASE 2
#10 TO #19	A	50 BAR DIA	74 BAR DIA	38 BAR DIA	57 BAR DIA
	B	64 BAR DIA	96 BAR DIA	50 BAR DIA	74 BAR DIA
#22 TO #57	A	62 BAR DIA	93 BAR DIA	48 BAR DIA	71 BAR DIA
	B	80 BAR DIA	121 BAR DIA	62 BAR DIA	93 BAR DIA

NOTES:
1. TABULATED TENSION DEVELOPMENT LENGTH VALUES ARE TAKEN FROM CRSI DESIGN HANDBOOK 2008 10TH ED.
2. TENSION DEVELOPMENT & TENSION LAP SPLICE LENGTHS ARE EXPRESSED AS MULTIPLES OF BAR DIAMETERS.
3. TABULATED VALUES ARE BASED ON MINIMUM YIELD STRENGTH OF REINFORCEMENT, fy, OF 420MPa.
4. CONCRETE IS NORMAL WEIGHT (2400Kg/m^3) AND 28 DAY COMPRESSIVE STRENGTH = 28MPa.
5. TABULATED VALUES FOR BEAMS & COLUMNS ARE BASED ON TRANSVERSE REINFORCEMENT AND CONCRETE COVER MEETING MINIMUM CODE REQUIREMENTS.
6. CASES 1 & 2, WHICH DEPEND ON THE TYPE OF STRUCTURAL MEMBER, CONCRETE COVER, AND CENTER-TO-CENTER SPACING OF THE BARS ARE DEFINED IN THE TABLE BELOW.
7. LAP SPLICE LENGTHS (MINIMUM 300mm) ARE MULTIPLES OF TENSION DEVELOPMENT LENGTHS: CLASS A = 1.0(TENSION DEVELOPMENT LENGTH) & CLASS B = 1.3(TENSION DEVELOPMENT LENGTH)
8. TOP BARS ARE HORIZONTAL REINFORCEMENT WITH MORE THAN 300mm OF CONCRETE CAST BELOW THE BARS.
9. IT SHALL BE PERMISSIBLE TO CALCULATE WALL AND SLAB REINFORCEMENT TENSION DEVELOPMENT/SPLICE LENGTHS IN ACCORDANCE WITH ACI 12.2.3 OR TABLE 5.3(b) OF CRSI 2008 IN LIEU OF VALUES TABULATED ABOVE.

BEAMS, COLUMNS	CASE 1	CONCRETE COVER AT LEAST 1 BAR DIA AND CENTER-TO-CENTER SPACING AT LEAST 2 BAR DIA
	CASE 2	CONCRETE COVER LESS THAN 1 BAR DIA OR CENTER-TO-CENTER SPACING LESS THAN 2 BAR DIA
ALL OTHERS	CASE 1	CONCRETE COVER AT LEAST 1 BAR DIA AND CENTER-TO-CENTER SPACING AT LEAST 3 BAR DIA
	CASE 2	CONCRETE COVER LESS THAN 1 BAR DIA OR CENTER-TO-CENTER SPACING LESS THAN 3 BAR DIA

CONCRETE COVER SCHEDULE

MINIMUM CONCRETE COVER PROTECTION FOR REINFORCEMENT BARS SHALL BE AS LISTED BELOW: (SEE ACI 318M-05, SECTION 7.7 FOR CONDITIONS NOT NOTED). DIMENSIONS FOR BAR PLACEMENT GIVEN IN SECTIONS AND DETAILS SHALL SUPERSEDE MINIMUM COVER REQUIREMENTS GIVEN HERE. DIMENSIONS ARE IN mm. PROVIDE STANDARD BAR CHAIRS AND SUPPORT BARS @1200mm MAXIMUM AS REQUIRED TO MAINTAIN CONCRETE PROTECTION SPECIFIED.

FOOTINGS (EARTH FORMED):		70
COLUMNS / PIERS (TO TIES)		40
GRADE BEAMS OR SLAB TURNED DOWN EDGES:		
TOP		40
BOTTOM (EARTH FORMED)		70
SIDES (EARTH FORMED)		70
SIDES (BOARD FORMED)	#16 BAR & SMALLER	40
	#19 THRU #36 BAR	50
ELEVATED BEAMS & SLABS:		
BEAM TIES & STIRRUPS (NOT EXPOSED TO WEATHER)		40
BEAM TIES & STIRRUPS (EXPOSED TO WEATHER)		50
FLOOR SLABS (NOT EXPOSED TO WEATHER)		20
FLOOR SLABS (EXPOSED TO WEATHER)		
#19 & LARGER		50
#13 & SMALLER		40
ROOF SLAB BARS		25
SLABS ON GRADE		
NOT EXPOSED TO WEATHER (FROM TOP)		20
EXPOSED TO WEATHER (FROM TOP)		40
UTILITY TUNNEL WALLS, RETAINING WALLS AND SHEAR WALLS. (NO SURFACES SHALL BE EARTH FORMED)		
EARTH SIDE AND FRONT SIDE (EXPOSED TO WEATHER)		
#16 BAR AND SMALLER		40
#19 THRU #36 BAR		50

CONCRETE SHEAR WALL SCHEDULE

MARK	TYPE	WALL LENGTH (L) (mm)	WALL REINFORCEMENT		REMARKS
			END ZONE (EACH END)	FIELD	
SW1	E	1100	(2)-#13 @ 100mm OC	#13 @ 300mm OC	(2) SHEAR WALL SECTIONS OF 1100mm IN LENGTH PER (1) TYPE E SHEAR WALL DETAIL

NOTES:
1. WORK THIS SCHEDULE WITH SHEAR WALL DETAILS ON SHEETS S-701
2. SEE PLAN FOR LOCATION OF SHEAR WALL(S).
3. WALL "FIELD" REINFORCEMENT LISTED APPLIES TO VERTICAL & HORIZONTAL BARS.
4. WALL "FIELD" REINFORCEMENT SHOULD BE CENTERED IN WALL.
5. VERTICAL "FIELD" BARS MAY BE OMITTED IN LOCATION OF "END ZONE" REINFORCEMENT.

STANDARD HOOKS IN TENSION PER (ACI 318M-05)

HOOK DEVELOPMENT LENGTH (mm)

BAR SIZE	f'c 28 MPa
#10	180
#13	250
#16	300
#19	380
#22	430
#25	480
#29	560
#32	610
#36	690

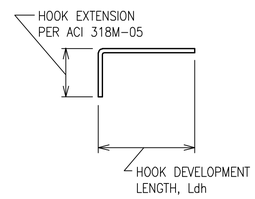

NOTES:
1. CONCRETE IS NORMAL WEIGHT CONCRETE.
2. BAR YIELD STRENGTH, fy = 420 MPa
3. SIDE COVER REQUIREMENTS OF ACI SECT. 12.5.3 ARE ASSUMED TO NOT BE MET.
4. TIE OR STIRRUP REQUIREMENTS OF ACI SECT. 12.5.3 ARE ASSUMED TO NOT BE MET.
5. REDUCTION FOR EXCESS REINFORCEMENT IS NOT TAKEN.
6. HOOK DEVELOPMENT LENGTH IS VALID FOR 180° HOOKS ALSO.

WALL FOOTING SCHEDULE

MARK	FOOTING SIZE (mm)			FOOTING REINFORCING		REMARKS
	LENGTH	WIDTH	THICKNESS	LONGITUDINAL	TRANSVERSE	
WF1	---	600	300	(4)-#19	#13 @ 450mm	-----

UNLESS OTHERWISE NOTED, LINEAR DIMENSIONS SHOWN ARE IN MILLIMETERS (mm)

APPROVED:

A/E DESIGNER OF RECORD

SEAL:

GEORGIA REGISTERED 7-29-10 No. 27141 PROFESSIONAL ENGINEER CHRISTOPHER W. WHITMORE

US ARMY CORPS OF ENGINEERS
AFGHANISTAN ENGINEER DISTRICT

Mark	Description	Date	Appr.	Mark	Description	Date	Appr.

Date: 2/23/10 | Rev: 0
Design file no.
Drawing code:
File name: ANMCBS-601SCH
Plot date: 2/23/2010
Plot scale: X:X

Designed by: KMP/MMY
Dwn by: RCG | Ckd by: CWW
Reviewed by: LHM
Submitted by: BAKER

U.S. ARMY CORPS OF ENGINEERS
AFGHANISTAN ENGINEER DISTRICT
APO AE 96338

Michael Baker Jr., Inc
A unit of Michael Baker Corporation
Airside Business Park
100 Airside Drive
Moon Township, PA 15108
www.mbakercorp.com

AFGHAN NATIONAL ARMY
REGIONAL MILITARY TRAINING CENTER
STANDARD DESIGN

FUEL OPERATORS BUILDING

SCHEDULES

Sheet reference number:
S-601

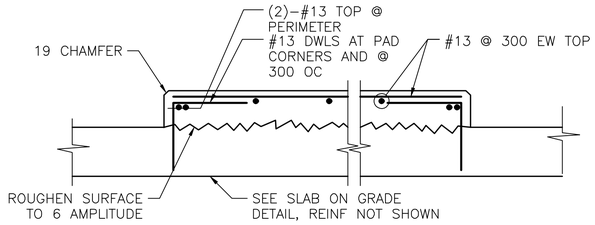

1 S–701 **INTERIOR EQUIPMENT PAD DETAIL**
SCALE: NTS

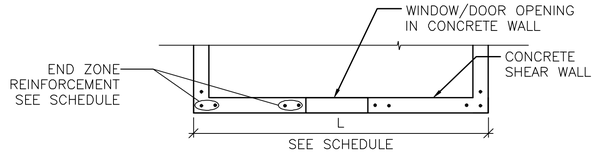

SHEAR WALL PLAN

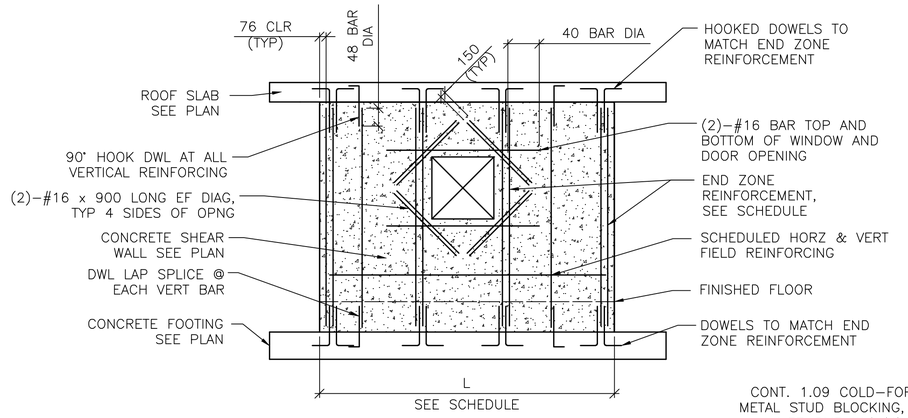

SHEAR WALL ELEVATION

2 S–701 **TYPE "E" SHEAR WALL DETAIL**
SCALE: NTS

DETAIL NOTES:
1. FIELD REINFORCEMENT IN SHEAR WALL NOT COMPLETELY SHOWN FOR CLARITY.
2. MINIMUM CONC CLEAR DISTANCE FOR END ZONE REINF = 76
3. SEE CONC SHEAR WALL SCHEDULE ON SHEET S–601
4. CENTER FIELD REINF IN WALL
5. WINDOW OPENING SHOWN. DOOR OPENING REINFORCEMENT SIMILAR

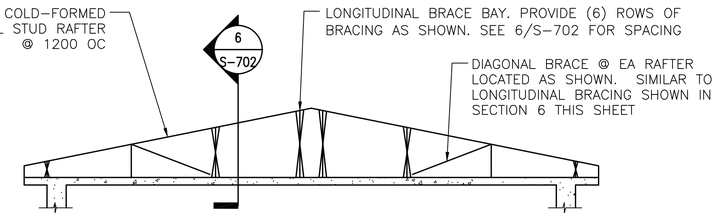

3 S–701 **TYPICAL ROOF BRACE LAYOUT**
SCALE: NTS

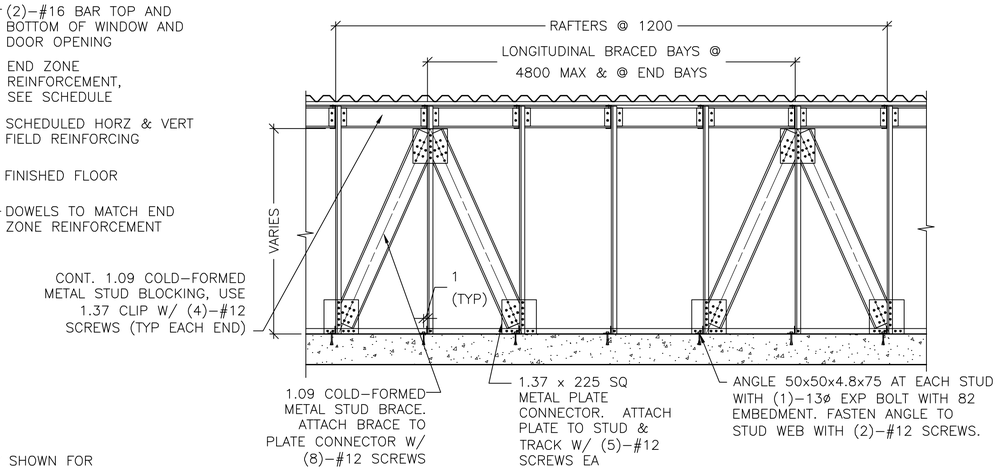

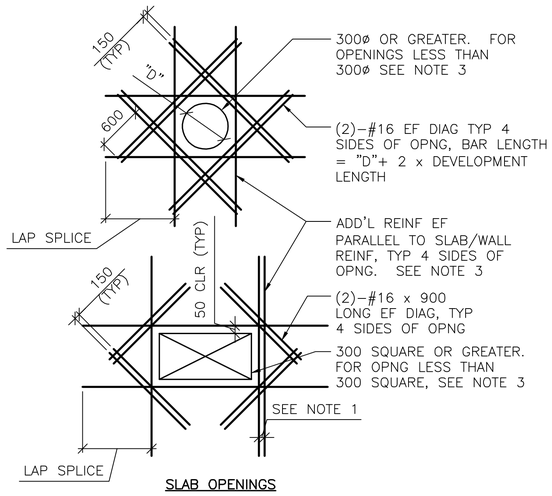

SLAB OPENINGS

DETAIL NOTES:
1. WHERE MORE THAN ONE ADDITIONAL BAR IS REQUIRED PARALLEL TO THE EXISTING SLAB/WALL REINFORCING THE ADDITIONAL REINFORCING BARS SHALL BE SPACED AT 100 ON CENTER.
2. ADDITIONAL REINFORCING PARALLEL TO THE SLAB/WALL REINFORCING SHALL BE #16 BARS THAT PROVIDE A STEEL AREA ON EACH SIDE OF THE OPENING EQUAL TO 1/2 THE AREA OF THE REINFORCING CUT BY THE OPENING.
3. FOR OPENINGS WITH SIDES OR DIAMETERS LESS THAN 300 SPREAD THE SLAB/WALL REINFORCING TO CLEAR THE OPENING.

4 S–701 **ADD'L CONCRETE REINFORCEMENT DETAILS**
SCALE: NTS

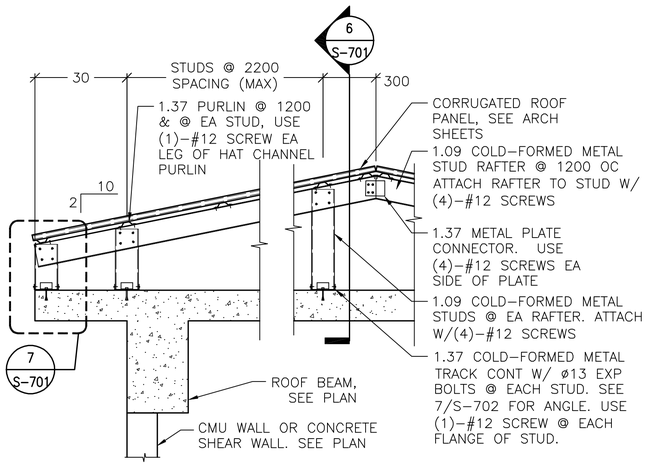

DETAIL NOTES:
1. ALL GABLE END VERTICAL STUDS SHALL BE ORIENTED 90° TO INTERIOR STUDS & SPACED @ 600 OC. GABLE END RAFTER SHALL BE 1.37 METAL TRACK SPANNING CONTINUOUSLY OVER GABLE END STUDS. INSET GIRTS AT GABLE END SHALL BE 1.09 COLD–FORMED METAL STUDS @ 1200 OC ATTACHED VIA 1.37 THICKNESS CLIP ANGLE W/ (2) #12 SCREWS EA LEG.
2. ALL INTERIOR, NON–GABLE END VERTICAL STUDS GREATER THAN 2400 IN LENGTH SHALL BE BACK–TO–BACK W/ #12 SCREWS @ 200 OC STAGGERED.

5 S–701 **TYPICAL OVERBUILT ROOF FRAMING DETAIL**
SCALE: NTS

6 S–701 **SECTION**
SCALE: NTS

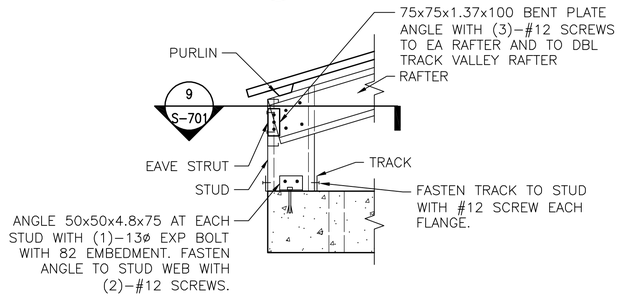

7 S–701 **DETAIL**
SCALE: NTS

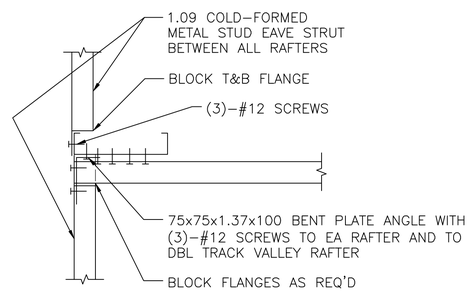

8 S–701 **SECTION**
SCALE: NTS

UNLESS OTHERWISE NOTED, LINEAR DIMENSIONS SHOWN ON DRAWINGS ARE IN MILLIMETERS (mm)

APPROVED:

A/E DESIGNER OF RECORD

SEAL:

GEORGIA REGISTERED No. 27141 PROFESSIONAL ENGINEER CHRISTOPHER W. WHITMORE

US ARMY CORPS OF ENGINEERS
AFGHANISTAN ENGINEER DISTRICT

Mark	Description	Date	Appr.	Mark	Description	Date	Appr.

U.S. ARMY CORPS OF ENGINEERS
AFGHANISTAN ENGINEER DISTRICT
APO AE 96338

Michael Baker Jr., Inc
A unit of Michael Baker Corporation
Airside Business Park
100 Airside Drive
Moon Township, PA 15108
www.mbakercorp.com

Designed by: KMP/MMY
Dwn by: RCG
Ckd by: CWW
Reviewed by: LHM
Submitted by: BAKER
Date: 2/23/10
Rev: 0
Design file no.
Drawing code:
File name: AMAFDBS701TDT
Plot date: 2/23/2010
Plot scale: X:X

AFGHAN NATIONAL ARMY
REGIONAL MILITARY TRAINING CENTER
STANDARD DESIGN

FUEL OPERATORS BUILDING

TYPICAL DETAILS

Sheet reference number:
S–701

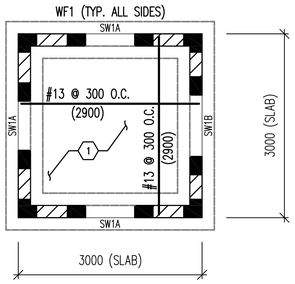

1 S-801 FOUNDATION/SLAB PLAN

SCALE: 1:50

FOUNDATION/SLAB PLAN NOTES:

1. SLAB-ON-GRADE REINFORCING ARE LOCATED 40mm FROM T/SLAB & B/SLAB, 50mm FROM EDGES & AND CONTROL JOINT. LENGTH NOTED AS THUS (6600). REFER TO DETAIL 4/S-801.
2. WALL FOOTINGS INDICATED BY WF1 ON PLAN, REFER TO DETAIL 2/S-801.

FOUNDATION/SLAB PLAN KEY NOTES: (X)

1. REINF. CONC. SLAB-ON-GRADE.

FOUNDATION/SLAB PLAN LEGEND:

REINF CONC SHEAR WALL REFER TO DETAIL 1/S-801 & 2/S-801

SLAB REINFORCING TOP BARS

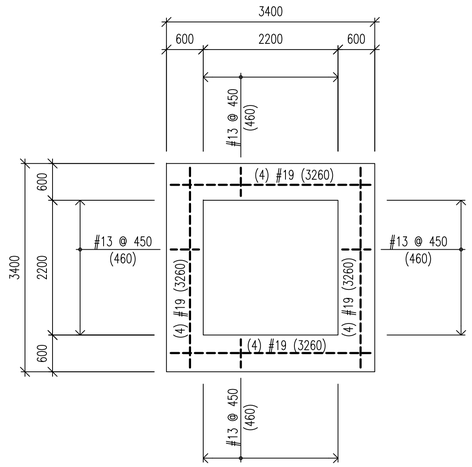

2 S-801 WALL FOOTING "WF1"

SCALE: 1:50

WALL FOOTING PLAN NOTES:

1. FOOTING REINFORCING ARE LOCATED 70mm FROM BOTTOM OF FOOTING & 70mm FROM ALL EDGES

WALL FOOTING PLAN LEGEND:

SLAB REINFORCING BOTTOM BARS

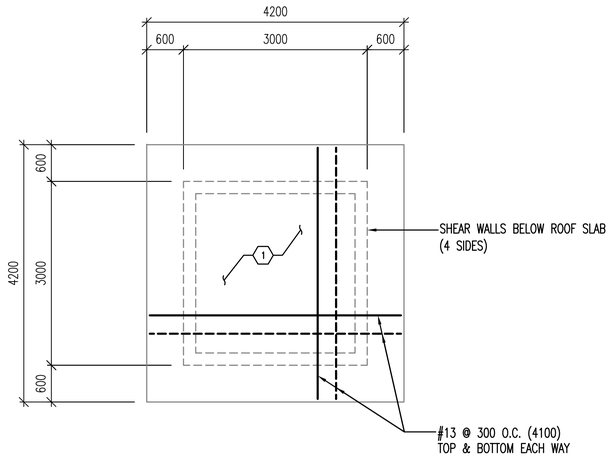

3 S-801 ROOF FRAMING PLAN

SCALE: 1:50

ROOF FRAMING PLAN NOTES:

1. ROOF SLAB REINFORCING BAR LENGTH IS NOTED THUS (6600).
2. SLAB REBAR COVER AT T&B IS 20mm, 50mm AT EDGES. REFER TO DETAIL 4/S-801.

ROOF FRAMING PLAN KEY NOTES: (X)

1. CONC ROOF SLAB.

ROOF FRAMING PLAN LEGEND:

SLAB REINFORCING BOTTOM BARS

SLAB REINFORCING TOP BARS

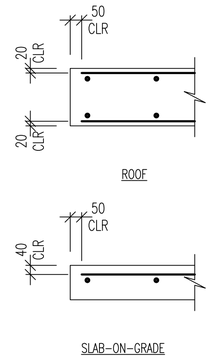

4 S-801 TYPICAL SLAB REBAR CLEARANCES

SCALE: 1:20

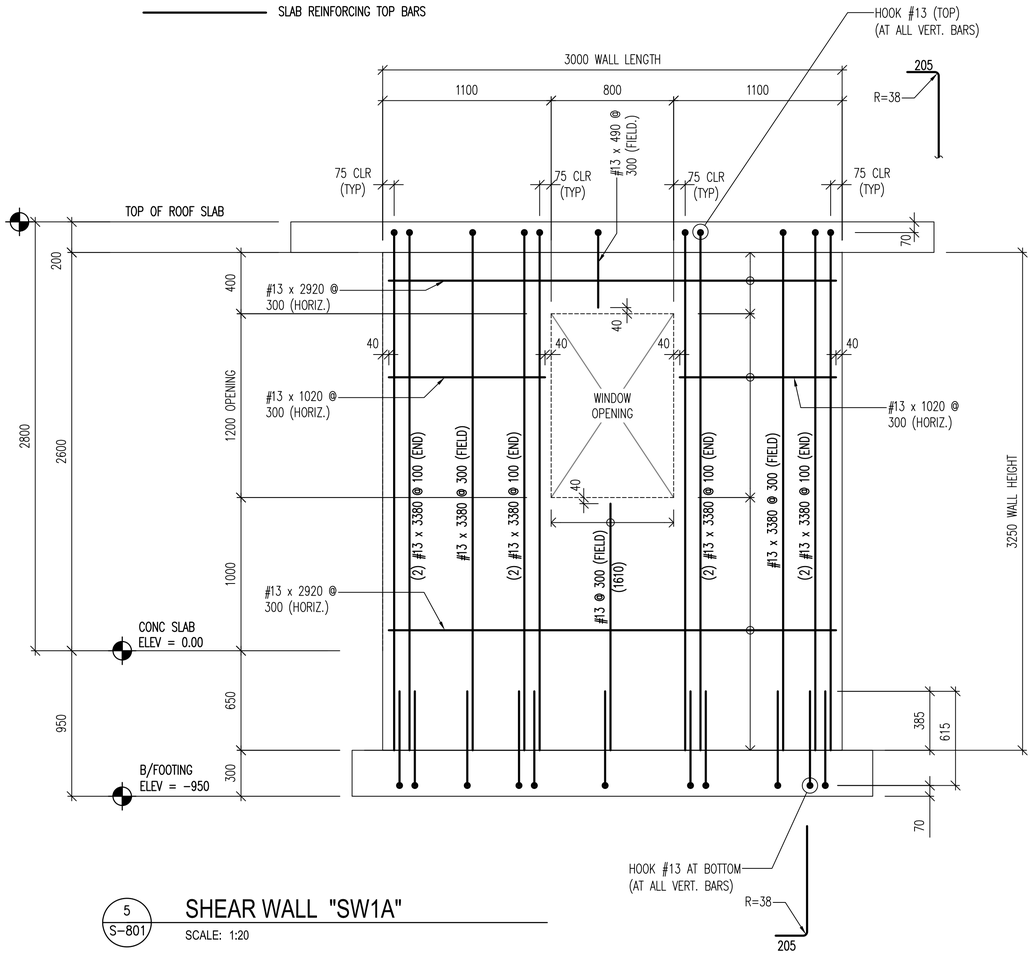

5 S-801 SHEAR WALL "SW1A"

SCALE: 1:20

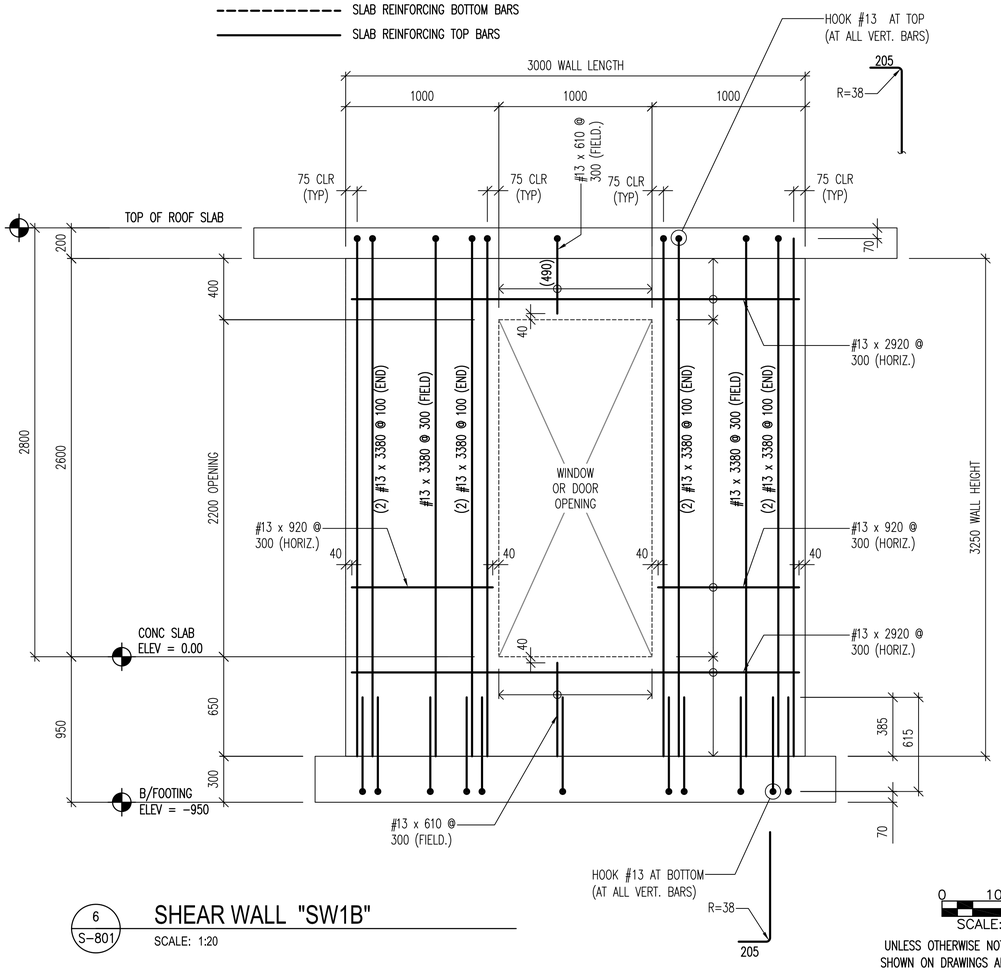

6 S-801 SHEAR WALL "SW1B"

SCALE: 1:20

0 1000 2000

SCALE: 1:50

UNLESS OTHERWISE NOTED, LINEAR DIMENSIONS SHOWN ON DRAWINGS ARE IN MILLIMETERS (mm)

US ARMY CORPS OF ENGINEERS
AFGHANISTAN ENGINEER DISTRICT

Mark	Description	Date	Appr.	Mark	Description	Date	Appr.

Designed by: KMP/MMY
Dwn by: JLM
Ckd by: SCL
Reviewed by: RTD
Submitted by: BAKER
Date: 3/07/2010
Rev: 0
Design file no.
Drawing code:
File name: ANAFOBS-801
Plot date: 3/5/2010
Plot scale: 1:50

U.S. ARMY CORPS OF ENGINEERS
AFGHANISTAN ENGINEER DISTRICT
APO AE 96338

Michael Baker Jr., Inc.
A unit of Michael Baker Corporation
Airside Business Park
100 Airside Drive
Moon Township, PA 15108
www.mbakercorp.com

AFGHAN NATIONAL ARMY
REGIONAL MILITARY TRAINING CENTER
STANDARD DESIGN

FUEL OPERATORS BUILDING
REBAR PLACEMENT DRAWINGS
PLANS & DETAILS
& SHEAR WALL REBAR ELEVATIONS

Sheet reference number:
S-801

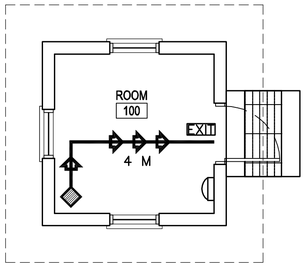

1 / A-001 **FLOOR PLAN**
SCALE: 1:50

CODE ANALYSIS:

1. REFERENCES:
   2006 INTERNATIONAL BUILDING CODE (2006 IBC)
   2006 LIFE SAFETY CODE (2006 NFPA 101)

2. IBC OCCUPANCY CLASSIFICATION:
   GROUP B (BUSINESS NFPA 101 6.1.11 AND CHAPTER 38)

3. TYPE OF CONSTRUCTION (IBC): TYPE II–B (UNPROTECTED/NONSPRINKLERED)

4. IBC TABLE 503: ALLOWABLE HEIGHT AND BUILDING AREAS:
   GROUP B
   ALLOWABLE AREA: 2,137 SM
   ALLOWABLE HEIGHT: 3 STORIES (16 M)

   GROUP B
   PROPOSED AREA: 12 SM
   PROPOSED HEIGHT: 1 STORY (<16 M)

5. IBC TABLE 601 & 602: FIRE RESISTANCE RATING REQUIREMENTS FOR BUILDING ELEMENTS FOR TYPE II–B

BUILDING ELEMENT	RATING (HOUR)	REFERENCE
STRUCTURAL FRAME (COLUMNS, GIRDERS & TRUSSES)	0	TABLE 601
BEARING WALLS		
EXTERIOR	0	TABLE 601
INTERIOR	0	TABLE 601
NONBEARING WALLS & PARTITIONS		
INTERIOR	0	TABLE 601
FLOOR CONSTRUCTION	0	TABLE 601
ROOF CONSTRUCTION	0	TABLE 601
EXTERIOR WALL	0	TABLE 602

6. IBC TABLE 803.5 – INTERIOR WALL AND CEILING FINISH REQUIREMENTS FOR B OCCUPANCY/NONSPRINKLERED

GROUP	EXIT ENCLOSURES AND EXIT PASSAGEWAY	CORRIDORS	ROOMS AND ENCLOSED SPACES
B	A	B	C

7. NFPA 101 TABLE 7.3.1.2 – OCCUPANT LOAD
   BUSINESS = 9.3 SM/PERSON BUSINESS PROPOSED = 2 OCCUPANTS

8. NFPA 101 TABLE 7.3.3.1 – EGRESS CAPACITY
   BUSINESS = 5 MM PER OCCUPANT

   REQUIRED: 10 MM (2 OCCUPANTS x 5 MM PER OCCUPANT)
   PROPOSED EGRESS CAPACITY: (1) 900 MM DOORS

9. NFPA 101 PARAGRAPH 38.2.6.2 – EXIT ACCESS TRAVEL DISTANCE (NONSPRINKLERED)
   REQUIRED: 60 METERS
   PROPOSED: 4 METERS

10. NFPA 101 PARAGRAPH 38.3.6.1(1) & (2) – CORRIDORS
    NO RATED CORRIDOR REQUIRED (NONSPRINKLERED):
    (1) ALL EXITS ARE AVAILABLE FROM AN OPEN FLOOR AREA
    (2) SPACE IS OCCUPIED BY A SINGLE TENANT

11. NFPA 101 PARAGRAPH 38.2.4.1 – NUMBER OF EXITS
    BUSINESS REQUIRED: 1 MINIMUM
    BUSINESS PROPOSED: 1 EXIT

LEGEND:

- DENOTES PATHS OF EXIT TRAVEL
- EXIT — DENOTES DOOR AS AN EMERGENCY EXIT
- DENOTES STARTING POINT FOR TRAVEL DISTANCE
- DENOTES FIRE EXTINGUISHER LOCATIONS

LINEAR DIMENSIONS SHOWN ARE IN MILLIMETERS (MM), UNLESS OTHERWISE NOTED

0 1000 2000
SCALE: 1:50

APPROVED:

A/E DESIGNER OF RECORD

SEAL:

STATE OF SOUTH CAROLINA
KEVIN R. CHAFIN
N. Charleston, SC
6374
REGISTERED ARCHITECT

US ARMY CORPS OF ENGINEERS
AFGHANISTAN ENGINEER DISTRICT

Mark	Description	Date	Appr.

Mark	Description	Date	Appr.

U.S. ARMY CORPS OF ENGINEERS
AFGHANISTAN ENGINEER DISTRICT
APO AE 96338

Michael Baker Jr., Inc
A unit of Michael Baker Corporation
Airside Business Park
100 Airside Drive
Moon Township, PA 15108
www.mbakercorp.com

Designed by: KRC
Dwn by: AAR
Ckd by: NLJ
Reviewed by: LHM
Submitted by: BAKER
Date: 2/23/10
Rev: 0
Design file no.
Drawing code:
File name: ANAFOBA-001.SP
Plot date: 2/23/2010
Plot scale: x:X

AFGHAN NATIONAL ARMY
REGIONAL MILITARY TRAINING CENTER
STANDARD DESIGN

FUEL OPERATORS BUILDING

LIFE SAFETY PLAN

Sheet reference number:
A–001

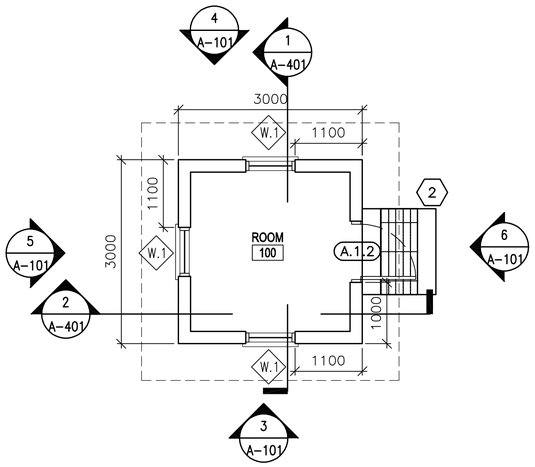

1 A-101 FLOOR PLAN
SCALE: 1:50

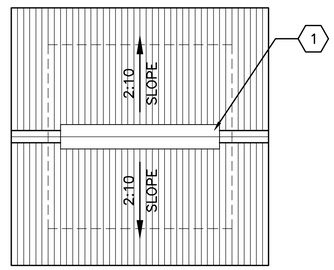

2 A-101 ROOF PLAN
SCALE: 1:50

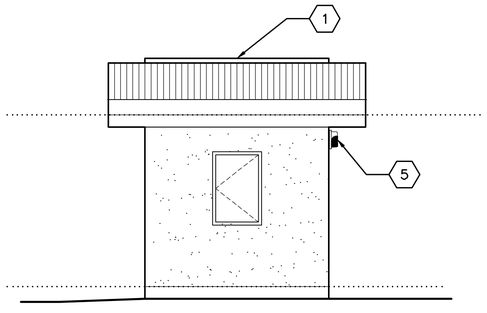

3 A-101 ELEVATION
SCALE: 1:50

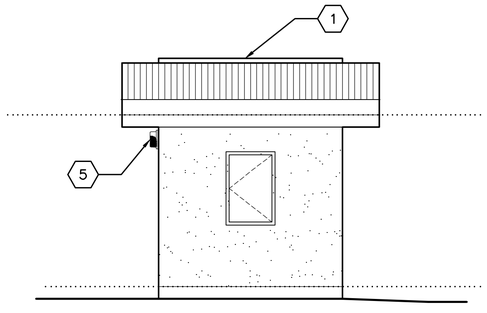

4 A-101 ELEVATION
SCALE: 1:50

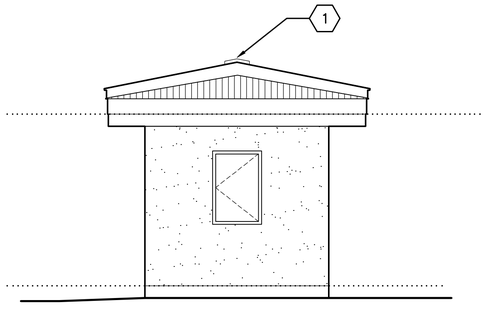

5 A-101 ELEVATION
SCALE: 1:50

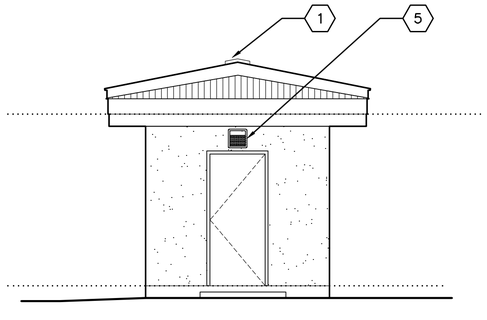

6 A-101 ELEVATION
SCALE: 1:50

ROOF PLAN GENERAL NOTES:

A. THE APPROXIMATE LOCATION OF ROOF DEVICES AND PENETRATIONS ARE SHOWN ON THE ROOF PLAN FOR INFORMATION ONLY. THE CONTRACTOR SHALL BE RESPONSIBLE FOR UNDERSTANDING THE ACTUAL LOCATION OF THESE AND ALL OTHER ITEMS PRIOR TO BEGINNING CONSTRUCTION. COORDINATE ALL ROOF PENETRATIONS WITH STRUCTURAL, MECHANICAL AND PLUMBING WORK.

B. UNLESS OTHERWISE NOTED, NOTES, DETAILS OR FEATURES INDICATED FOR ONE CONDITION SHALL BE APPLICABLE FOR ALL ALIKE AND SIMILAR CONDITIONS.

C. STOCKPILING OF MATERIALS, EQUIPMENT AND ANY OTHER ITEMS ON THE ROOF IS PROHIBITED.

D. ROOFS SHALL BE CORRUGATED METAL ROOF PANELS ON COLD-FORMED METAL FRAMING ON CONCRETE SLAB.

ROOF PLAN KEY NOTES:

1. CONTINUOUS METAL RIDGE VENT SEE DETAIL 4/A-501.

ELEVATION GENERAL NOTES:

A. COORDINATE SIZE AND LOCATION OF OPENINGS FOR MECHANICAL ITEMS WITH MECHANICAL DRAWINGS.

B. PROVIDE STRUCTURAL LINTELS AS REQUIRED – SEE STRUCTURAL DRAWINGS

C. ALL EXTERIOR WALL FINISHES SHALL BE STUCCO OVER CMU AND CONCRETE SUBSTRATES.

D. ROOF SHALL BE CORRUGATED METAL ROOF PANELS ON COLD-FORMED METAL FRAMING ON CONCRETE SLAB.

ELEVATION KEY NOTES: (X)

1. CONTINUOUS METAL RIDGE VENT – SEE DETAIL 4/A-501.
2. NOT USED
3. NOT USED
4. NOT USED
5. EXTERIOR LIGHT FIXTURE – SEE ELECTRICAL.

FLOOR PLAN GENERAL NOTES:

A. DIMENSIONS ARE SHOWN TO OUTER EDGE OF EXTERIOR STRUCTURAL COLUMNS, STRUCTURAL COLUMN GRID, EDGE OF INTERIOR PARTITIONS, EDGE OF WINDOW OPENINGS, AND TO HINGE SIDE OF DOOR FRAME OPENINGS.

B. HINGE SIDE OF OPENINGS FOR DOORS AND FRAMES SHALL BE LOCATED 200 MM FROM THE ADJACENT WALL, UNLESS NOTED OTHERWISE.

C. COSMETIC REPAIR OF MINOR DEFECTS: REPAIR OR FILL MORTAR JOINTS AND MINOR DEFECTS, INCLUDING BUT NOT LIMITED TO SPALLS, IN ACCORDANCE WITH MANUFACTURER'S RECOMMENDATIONS AND PRIOR TO COATING APPLICATION. SURFACES TO BE PAINTED SHALL BE CLEAN AND FREE OF FOREIGN MATTER BEFORE APPLICATION OF PAINT. CLEANING SHALL BE SCHEDULED SO THAT DUST AND OTHER CONTAMINANTS WILL NOT FALL ON NEWLY PAINTED SURFACES.

D. CONCRETE, PLASTER AND MASONRY SURFACES SHALL BE ALLOWED TO CURE FOR AT LEAST 30 DAYS BEFORE PAINTING. CONCRETE SLABS-ON-GRADE SHALL BE ALLOWED TO CURE 90 DAYS BEFORE STAINING OR SEALING.

E. DO NOT USE PAINT MATERIALS CONTAINING LEAD CONTENT IN EXCESS OF 0.009 PERCENT OF THE WEIGHT OF THE TOTAL NONVOLATILE CONTENT OF THE PAINT OR THE WEIGHT OF THE DRIED PAINT FILM.

F. DO NOT USE ANY ASBESTOS CONTAINING MATERIALS (ACM) IN PROJECT. ACM IS DEFINED AS 1% OR MORE BY VOLUME.

G. DO NOT USE PAINT MATERIALS CONTAINING MERCURIAL FUNGICIDES.

H. FACTORY PRIMED METAL DOORS AND FRAMES SHALL RECEIVE TWO COATS OF PAINT.

I. FILL REMAINING SPACE AT PENETRATIONS IN FIRE-RATED FLOORS, PARTITIONS AND CEILINGS WITH APPROPRIATE FIRESTOPPING MATERIALS.

J. ALL CEILING FINISHES SHALL BE PAINTED PLASTER APPLIED TO STRUCTURE.

K. ALL WALL FINISHES SHALL BE PAINTED PLASTER APPLIED TO STRUCTURE.

L. ALL FLOOR FINISHES SHALL BE SEALED CONCRETE.

FLOOR PLAN KEY NOTES: (X)

1. LINE OF ROOF OVERHANG ABOVE.
2. CONCRETE STOOP WITH GRATE – SEE DETAIL 1/A-503.

LEGEND:

(XXX) DOOR FRAME AND HARDWARE TYPE, SEE SHEET A-601

(A) WINDOW TYPE, SEE SHEET A-601

(X) KEY NOTE

ABBREVIATIONS:

ELEC	ELECTRICAL
MECH	MECHANICAL
JAN	JANITOR
CLOS	CLOSET
COMM	COMMUNICATIONS

LINEAR DIMENSIONS SHOWN ARE IN MILLIMETERS (MM), UNLESS OTHERWISE NOTED

0 1000 2000
SCALE: 1:50

APPROVED:

A/E DESIGNER OF RECORD

SEAL:

STATE OF SOUTH CAROLINA
KEVIN R. CHAFIN
N. Charleston, SC
6374
REGISTERED ARCHITECT

US ARMY CORPS OF ENGINEERS
AFGHANISTAN ENGINEER DISTRICT

Mark	Description	Date	Appr.	Mark	Description	Date	Appr.

U.S. ARMY CORPS OF ENGINEERS
AFGHANISTAN ENGINEER DISTRICT
APO AE 96338

Michael Baker Jr., Inc
A unit of Michael Baker Corporation
Airside Business Park
100 Airside Drive
Moon Township, PA 15108
www.mbakercorp.com

Designed by: KRC
Dwn by: AAR
Ckd by: NLJ
Reviewed by: LHM
Submitted by: BAKER

Date: 2/23/10
Design file no.
Drawing code:
File name: ANAFOBA-101FRP
Plot date: 2/23/2010
Plot scale: X:X
Rev: 0

AFGHAN NATIONAL ARMY
REGIONAL MILITARY TRAINING CENTER
STANDARD DESIGN

FUEL OPERATORS BUILDING

FLOOR PLAN, ROOF PLAN & ELEVATIONS

Sheet reference number:
A-101

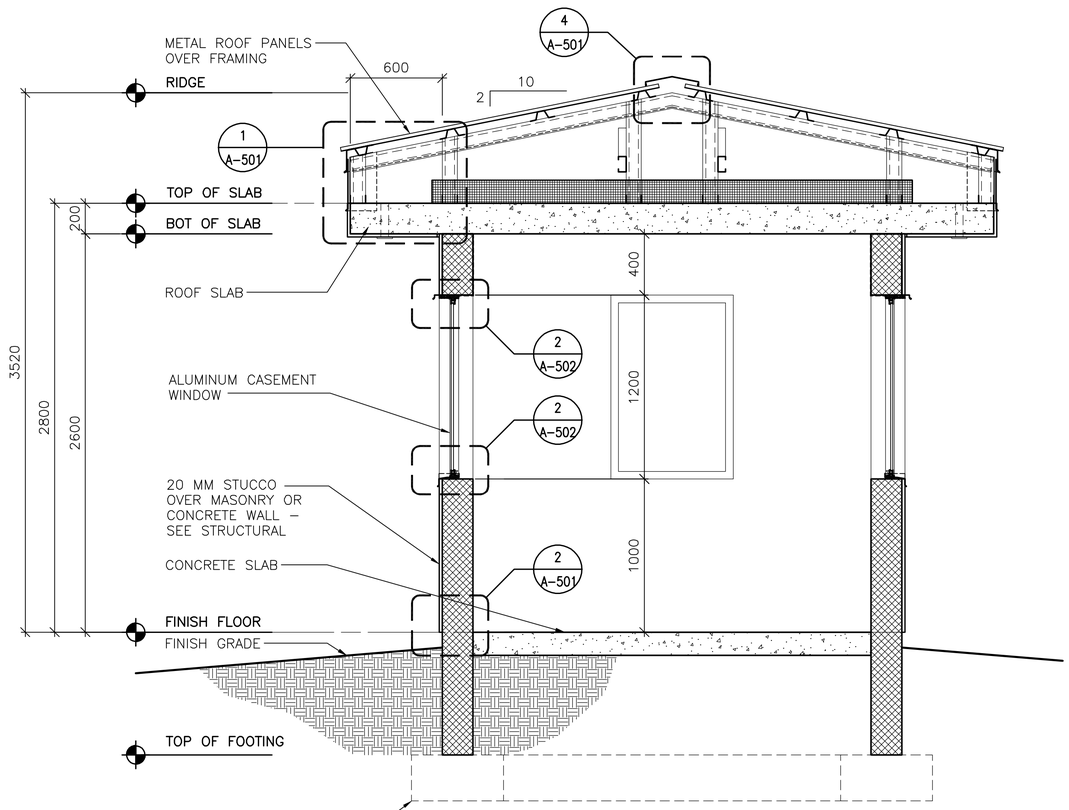

1
A-401

BUILDING/ WALL SECTION

SCALE: 1:20

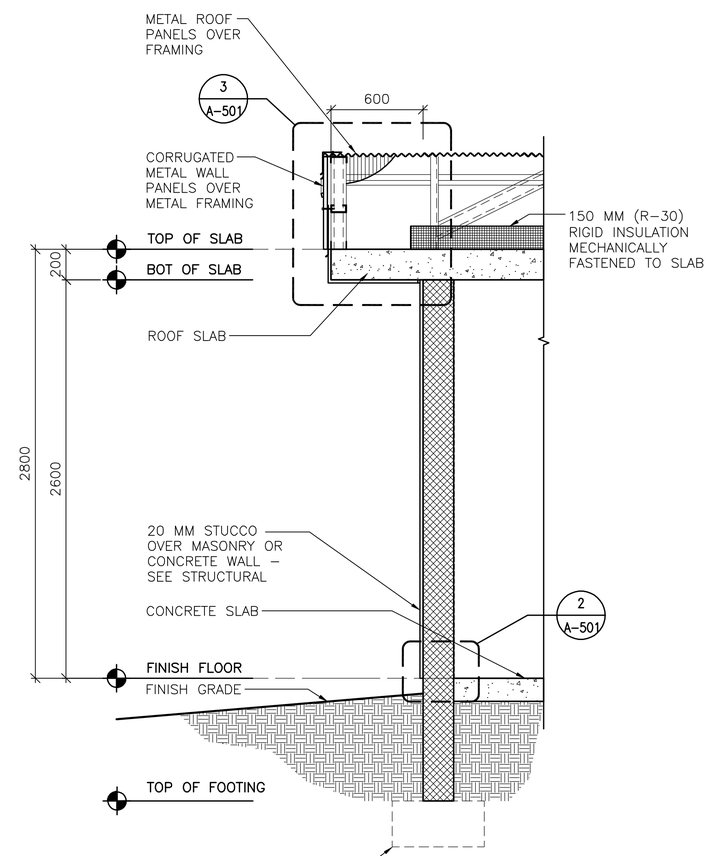

2
A-401

TYPICAL (GABLE) WALL SECTION

SCALE: 1:20

0 400 800
SCALE: 1:20

LINEAR DIMENSIONS SHOWN ARE IN MILLIMETERS (MM), UNLESS OTHERWISE NOTED

APPROVED:

A/E DESIGNER OF RECORD

SEAL:

STATE OF SOUTH CAROLINA
KEVIN R. CHAFIN
N. Charleston, SC
6374
REGISTERED ARCHITECT

US ARMY CORPS OF ENGINEERS
AFGHANISTAN ENGINEER DISTRICT

Mark	Description	Date	Appr.	Mark	Description	Date	Appr.

U.S. ARMY CORPS OF ENGINEERS
AFGHANISTAN ENGINEER DISTRICT
APO AE 96338

Michael Baker Jr., Inc
A unit of Michael Baker Corporation
Airside Business Park
100 Airside Drive
Moon Township, PA 15108
www.mbakercorp.com

Designed by: KRC
Dwn by: AAR
Ckd by: NLJ
Reviewed by: LHM
Submitted by: BAKER
Date: 2/23/10
Rev: 0
Design file no.
Drawing code:
File name: ANAFOBA-401WS
Plot date: 2/23/2010
Plot scale: X:X

AFGHAN NATIONAL ARMY
REGIONAL MILITARY TRAINING CENTER
STANDARD DESIGN

FUEL OPERATORS BUILDING

WALL SECTIONS

Sheet reference number:
A-401

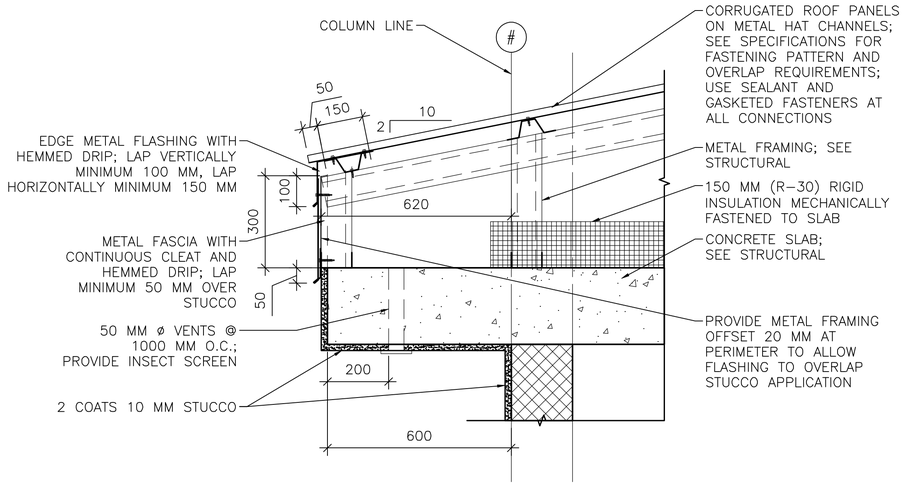

1 A–501 **EAVE DETAIL**

SCALE: 1:10

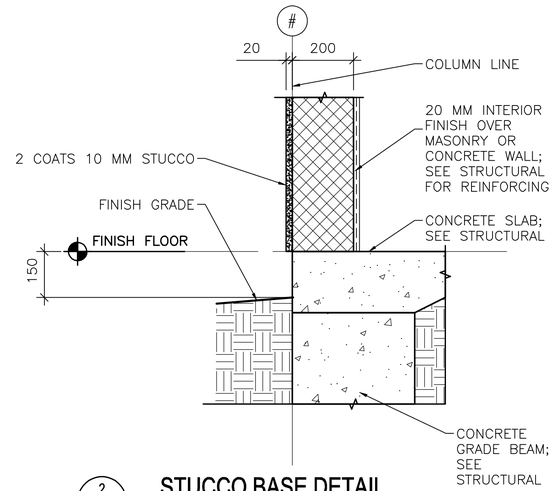

2 A–501 **STUCCO BASE DETAIL**

SCALE: 1:10

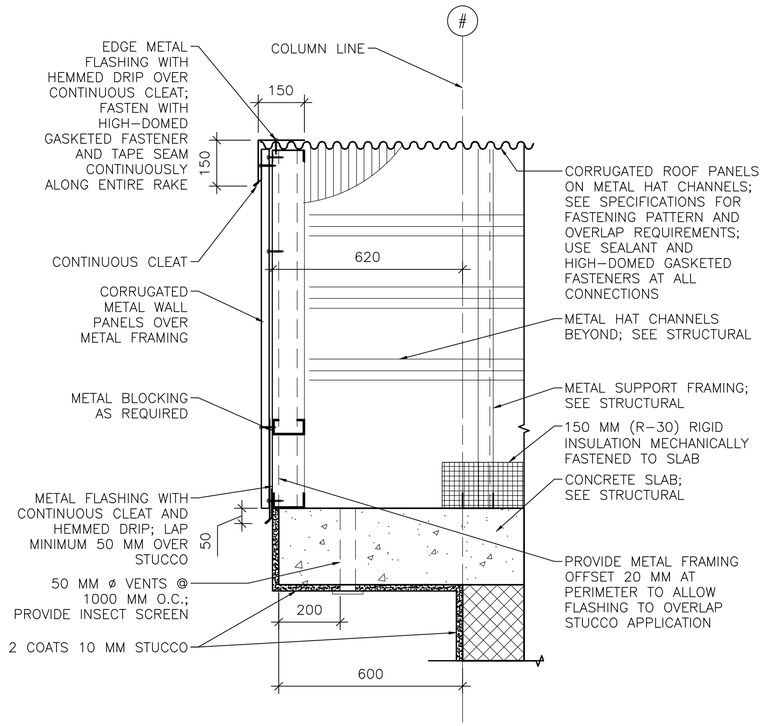

3 A–501 **RAKE/EAVE DETAIL**

SCALE: 1:10

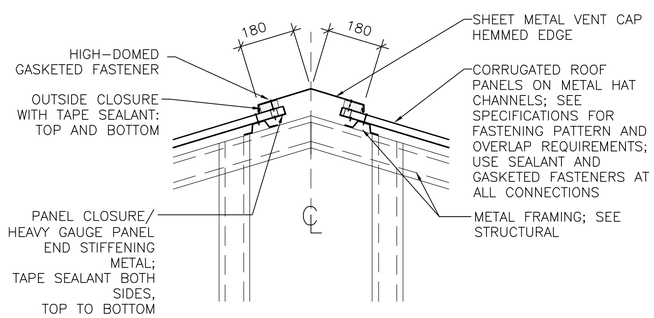

4 A–501 **RIDGE VENT DETAIL**

SCALE: 1:10

LINEAR DIMENSIONS SHOWN ARE IN MILLIMETERS (MM), UNLESS OTHERWISE NOTED

0 200 400
SCALE: 1:10

APPROVED:

A/E DESIGNER OF RECORD

SEAL:

STATE OF SOUTH CAROLINA
KEVIN R. CHAFIN
N. Charleston, SC
6374
REGISTERED ARCHITECT

US ARMY CORPS OF ENGINEERS
AFGHANISTAN ENGINEER DISTRICT

Mark	Description	Date	Appr.	Mark	Description	Date	Appr.

Date: 2/23/10 Rev: 0
Design file no.
Drawing code:
File name: ANAFOBA-50107
Plot date: 2/23/2010
Plot scale: x:X

Designed by: KRC
Dwn by: AAR
Ckd by: NLJ
Reviewed by: LHM
Submitted by: BAKER

U.S. ARMY CORPS OF ENGINEERS
AFGHANISTAN ENGINEER DISTRICT
APO AE 96338

Michael Baker Jr., Inc
A unit of Michael Baker Corporation
Airside Business Park
100 Airside Drive
Moon Township, PA 15108
www.mbakercorp.com

AFGHAN NATIONAL ARMY
REGIONAL MILITARY TRAINING CENTER
STANDARD DESIGN

FUEL OPERATORS BUILDING

EXTERIOR DETAILS

Sheet reference number:
A–501

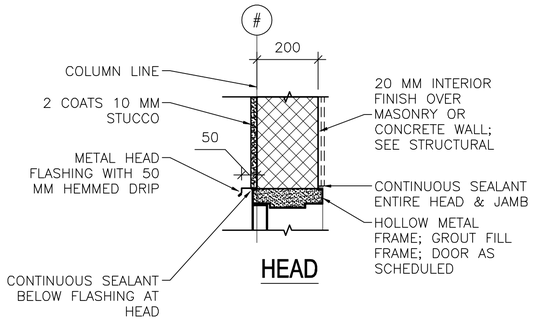

HEAD

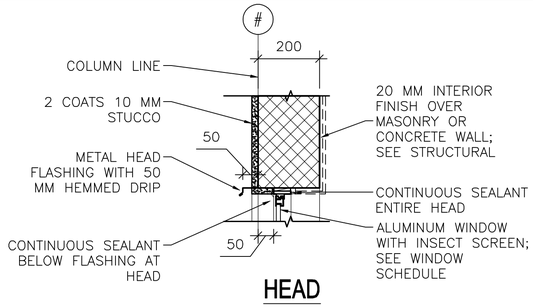

HEAD

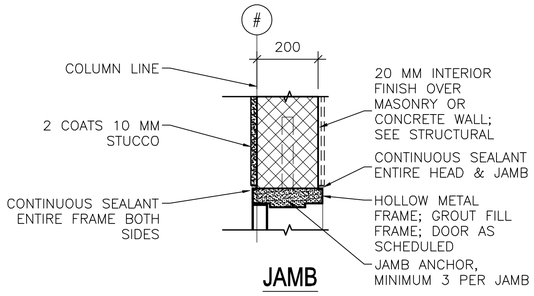

JAMB

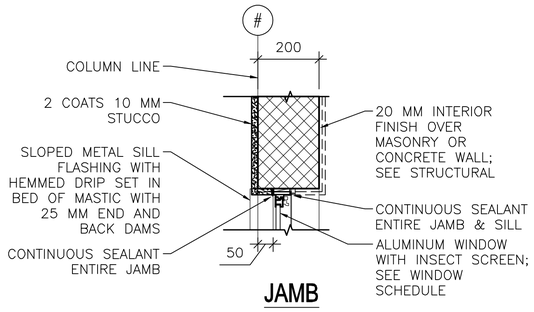

JAMB

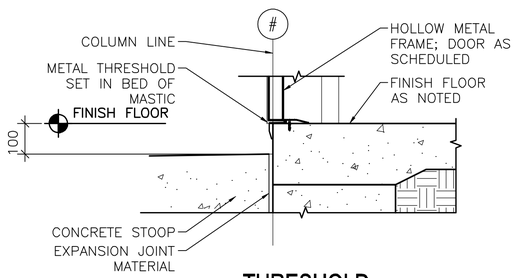

THRESHOLD

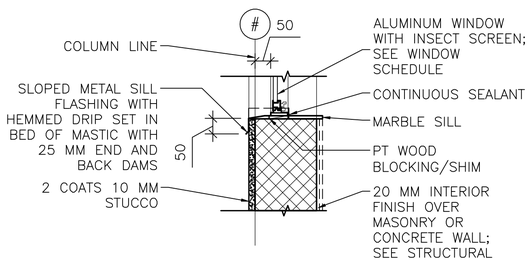

SILL

1 / A-502 **EXTERIOR DOOR DETAILS**

SCALE: 1:10

2 / A-502 **EXTERIOR WINDOW DETAILS**

SCALE: 1:10

LINEAR DIMENSIONS SHOWN ARE IN MILLIMETERS (MM), UNLESS OTHERWISE NOTED

0 200 400

SCALE: 1:10

APPROVED:

A/E DESIGNER OF RECORD

SEAL:

STATE OF SOUTH CAROLINA
KEVIN R. CHAFIN
N. Charleston, SC
6374
REGISTERED ARCHITECT

US ARMY CORPS OF ENGINEERS
AFGHANISTAN ENGINEER DISTRICT

Mark	Description	Date	Appr.	Mark	Description	Date	Appr.

U.S. ARMY CORPS OF ENGINEERS
AFGHANISTAN ENGINEER DISTRICT
APO AE 96338

Michael Baker Jr., Inc.
A unit of Michael Baker Corporation
Airside Business Park
100 Airside Drive
Moon Township, PA 15108
www.mbakercorp.com

Designed by: KRC	Date: 2/23/10
Dwn by: AAR	Ckd by: NLJ
Reviewed by: LHM	Drawing code:
Submitted by: BAKER	File name: ANAFOBA-502HJS
	Plot date: 2/23/2010
	Plot scale: x:X
	Design file no.
	Rev: 0

AFGHAN NATIONAL ARMY
REGIONAL MILITARY TRAINING CENTER
STANDARD DESIGN

FUEL OPERATORS BUILDING

HEAD, JAMB & SILL DETAILS

Sheet reference number:
A-502

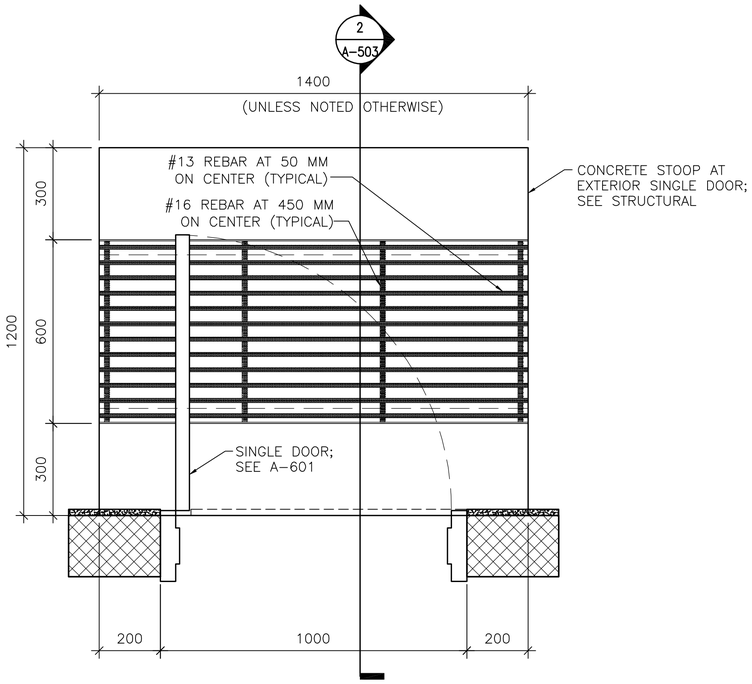

1 A-503 **DOOR STOOP PLAN (WITH GRATE)**

SCALE: 1:10

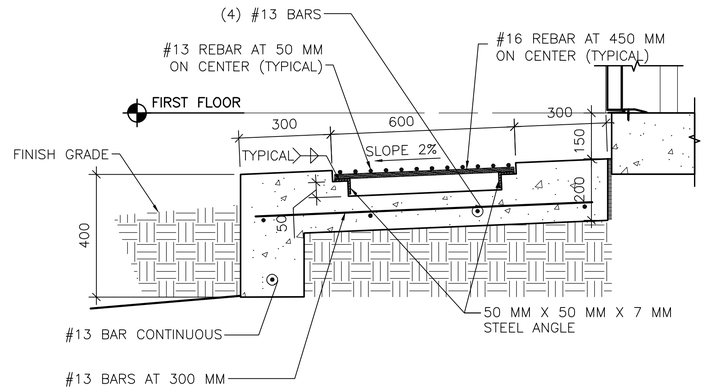

2 A-503 **DOOR STOOP DETAIL**

SCALE: 1:10

LINEAR DIMENSIONS SHOWN ARE IN MILLIMETERS (MM), UNLESS OTHERWISE NOTED

0 200 400
SCALE: 1:10

APPROVED:

A/E DESIGNER OF RECORD

SEAL:

STATE OF SOUTH CAROLINA
KEVIN R. CHAFIN
N. Charleston, SC
6374
REGISTERED ARCHITECT

US ARMY CORPS OF ENGINEERS
AFGHANISTAN ENGINEER DISTRICT

Mark	Description	Date	Appr.	Mark	Description	Date	Appr.

U.S. ARMY CORPS OF ENGINEERS
AFGHANISTAN ENGINEER DISTRICT
APO AE 96338

Michael Baker Jr., Inc.
A unit of Michael Baker Corporation
Airside Business Park
100 Airside Drive
Moon Township, PA 15108
www.mbakercorp.com

Designed by: KRC	Date: 3/05/10
Dwn by: AAR	Ckd by: NLJ
Reviewed by: LHM	Design file no.
Submitted by: BAKER	Drawing code:
	File name: ANAFOBA-503DT
	Plot date: 2/26/2010
	Plot scale: x:X
	Rev: 0

AFGHAN NATIONAL ARMY
REGIONAL MILITARY TRAINING CENTER
STANDARD DESIGN

FUEL OPERATORS BUILDING

STOOP DETAILS

Sheet reference number:
A-503

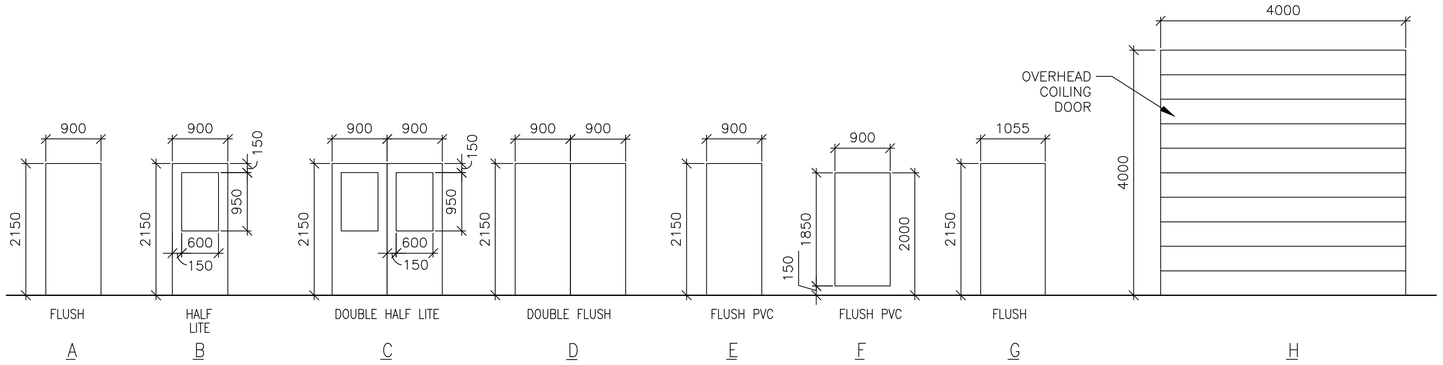

1 A-601 DOOR TYPES

SCALE: 1:50

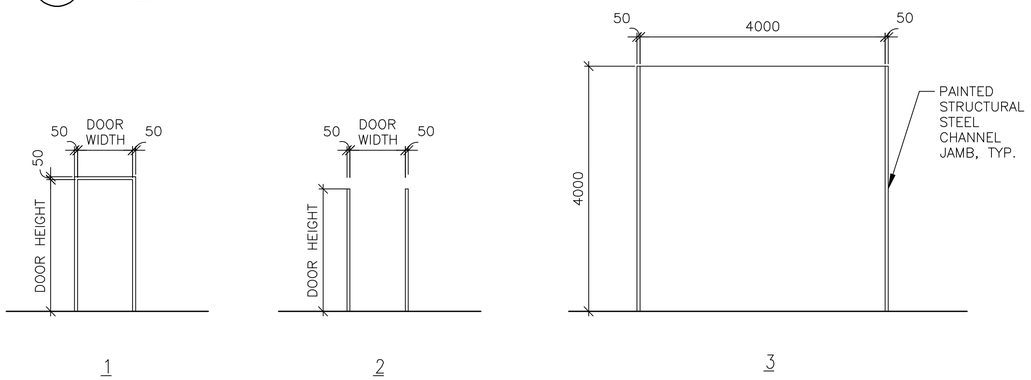

2 A-601 FRAME TYPES

SCALE: 1:50

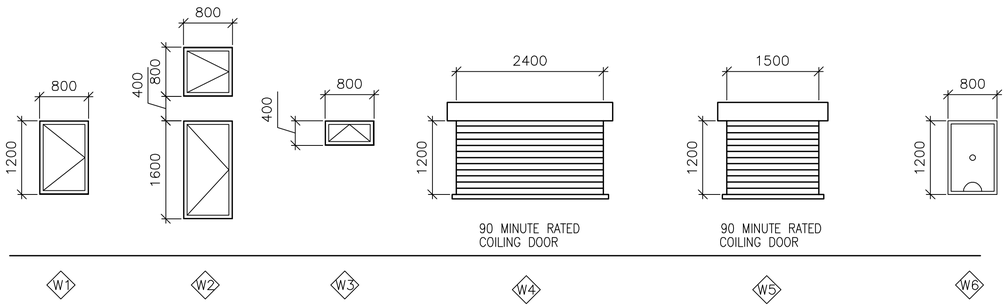

3 A-601 WINDOW TYPES

SCALE: 1:50

4 A-601 DOOR TAG

SCALE: NTS

5 A-601 RATED DOOR TAG

SCALE: NTS

WINDOW TYPE NOTES:

1. ALL EXTERIOR WINDOWS SHALL BE ALUMINUM WITH INSECT SCREENS. WINDOWS SHALL BE COMMERCIAL GRADE.
2. ALL EXTERIOR WINDOWS SHALL BE OPERABLE.

DOOR TAG NOTES:

1. THE DOOR TAG INDICATES THE DOOR TYPE, FRAME TYPE AND HARDWARE SET FOR EACH DOOR.
2. THE DOOR TAG FOR RATED DOORS INCLUDES THE RATING OF THE DOOR IN MINUTES.

EXTERIOR DOOR HARDWARE TYPES:

HW-1
1-1/2 PR HINGES, A5112 114 X 114
1 EA RIM EXIT DEVICE, TYPE 1
1 EA CYLINDER. E09221A, GRADE 1
1 EA OVERHEAD CLOSER, C02061, LOW RESISTANCE
1 EA THRESHOLD, J32130
3 EA DOOR SILENCERS, L03011

HW-2
1-1/2 PR HINGES, A5112 114 X 114
1 EA LOCKSET, F13 ENTRY LOCK W/LEVER HANDLES, GRADE 1
1 EA OVERHEAD CLOSER, C02061, LOW RESISTANCE
1 EA THRESHOLD, J32130
3 EA DOOR SILENCERS, L03011

HW-3
3 PR HINGES, A5112 114 X 114
2 EA RIM EXIT DEVICE, TYPE 1
2 EA CYLINDER. GRADE 1
2 EA OVERHEAD CLOSER, C02061, LOW RESISTANCE
1 EA DOOR COORDINATOR, TYPE 21
1 EA ASTRAGAL
1 EA THRESHOLD, J32130
2 EA DOOR SILENCERS, L03011

HW-4
3 PR HINGES, A5112 114 X 114
1 EA LOCKSET W/LEVER HANDLES. GRADE 1, F13
1 EA OVERHEAD CLOSER, C02061, LOW RESISTANCE
2 EA MAGNETIC HOLDER PIN, ATTACHED TO DOOR LEAF
2 EA MAGNETIC HOLDER RECEIVER, ATTACHED TO STOOP
2 EA LEVER EXTENSION FLUSH BOLTS, L04081
1 EA ASTRAGAL
1 EA THRESHOLD, J32130
2 EA DOOR SILENCERS, L03011

DOOR AND HARDWARE NOTES:

1. INTERIOR AND EXTERIOR METAL DOORS AND FRAME COLORS SHALL MATCH ADJACENT WALL COLORS AS SELECTED BY THE CONTRACTING OFFICER.
2. FRAMES, EXCEPT FIRE-RATED FRAMES, SHALL BE MOUNTED AND ADJUSTED IN ACCORDANCE WITH MANUFACTURER'S INSTRUCTIONS. FRAMES SHALL BE FASTENED WITH MINIMUM OF THREE ANCHORS PER JAMB AT EQUAL INTERVALS.
3. DIMENSIONS SHOWN ON DOOR TYPES DETAIL ARE BASED UPON MODULAR MASONRY (OR ROUGH OPENING), HEIGHT OF 2200 MM FOR STANDARD PERSONNEL DOORS. CONTRACTOR SHALL COORDINATE WITH DOOR SUPPLIER TO ENSURE THAT DIMENSIONS OF DOORS AND FRAMES PROVIDED ARE COMPATIBLE WITH DOOR OPENING DIMENSIONS.
4. HARDWARE SHALL BE HEAVY DUTY, COMMERCIAL GRADE, STAINLESS STEEL WITH A SATIN OR BRUSHED FINISH.
5. HARDWARE TYPES INCLUDE BUILDERS HARDWARE MANUFACTURERS ASSOCIATION (BMHA) NUMBER.
6. DOORS IN 2 HOUR RATED PARTITIONS SHALL BE 1.5 HOUR (90 MINUTE) RATED DOORS IN ACCORDANCE WITH NFPA 101, TABLE 8.3.4.2.
7. DOORS AT STAIR ENCLOSURES SHALL BE 1 HOUR (60 MINUTE) RATED AT 1 HOUR WALL IN ACCORDANCE WITH NFPA 101, TABLE 8.3.4.2.
8. DOORS IN 1 HOUR RATED WALLS SHALL BE 3/4 HOUR (45 MINUTE) RATED DOORS IN ACCORDANCE WITH NFPA 101, TABLE 8.3.4.2.
9. DOORS IN 1 HOUR RATED CORRIDOR WALLS SHALL BE 1/3 HOUR (20 MINUTE) IN ACCORDANCE WITH NFPA 101, TABLE 8.3.4.2.
10. PROVIDE DOOR STOPS TO PROTECT WALLS ON LOCATIONS WHERE DOOR SWING WILL STRIKE WALL.

THIS SHEET IS STANDARD AND IS INCLUSIVE OF ALL THE DOOR/ WINDOW/ HARDWARE TYPES FOR THE ENTIRE RMTC CONTRACT. NOT ALL DOOR/ WINDOW/ HARDWARE TYPES ARE USED FOR ANY PARTICULAR BUILDING DESIGN. CONTRACTOR SHALL REFER TO THE FLOOR PLAN FOR THE TYPES BEING USED.

INTERIOR DOOR HARDWARE TYPES:

HW-5
1-1/2 PR HINGES, A8133 114 X 114
1 EA LOCKSET W/LEVER HANDLES, F08, GRADE 1
1 EA WALL STOP, L02101 OR L02161
3 EA DOOR SILENCERS, L03011

HW-6
1-1/2 PR HINGES, A8112 114 X 114
1 EA LOCKSET W/LEVER HANDLES, F08, GRADE 1
1 EA WALL STOP, L02101 OR L02161
1 EA OVERHEAD CLOSER, C02061, LOW RESISTANCE
3 EA DOOR SILENCERS, L03011

HW-7
1-1/2 PR HINGES, A8133
1 EA LOCKSET W/LEVER HANDLES, F13 GRADE 1
1 EA WALL STOP, L02101 OR L02161
2 EA MOP PLATE, J103
3 EA DOOR SILENCERS, L03011

HW-8
1-1/2 PR HINGES, A8112
1 EA LOCKSET W/LEVER HANDLES, F13 GRADE 1
1 EA WALL STOP, L02101 OR L02161
2 EA MOP PLATE, J103
1 EA OVERHEAD CLOSER, C02061, LOW RESISTANCE
3 EA DOOR SILENCERS, L03011

HW-9
1-1/2 PR HINGES, A5112 114 X 114
1 EA RIM EXIT DEVICE, TYPE 1
1 EA CYLINDER. E09221A, GRADE 1
1 EA OVERHEAD CLOSER, C02061, LOW RESISTANCE
3 EA DOOR SILENCERS, L03011

HW-10
3 PR HINGES, A5112 114 X 114
1 EA LOCKSET W/LEVER HANDLES. GRADE 1, F13
2 EA LEVER EXTENSION FLUSH BOLTS, L04081
1 EA ASTRAGAL
2 EA DOOR SILENCERS, L03011

HW-11
1-1/2 PR HINGES, A8112 114 X 114
1 EA LOCKSET W/LEVER HANDLES, F13, GRADE 1
1 EA WALL STOP, L02101 OR L02161
1 EA OVERHEAD CLOSER, C02061, LOW RESISTANCE
3 EA DOOR SILENCERS, L03011
1 EA ROBE HOOK

HW-12
1-1/2 PR HINGES, A8133
1 EA LATCHSET W/LEVER HANDLES, F76 GRADE 1
1 EA WALL STOP, L02101 OR L02161
2 EA MOP PLATE, J103
3 EA DOOR SILENCERS, L03011
1 EA ROBE HOOK

HW-13
3 PR HINGES, A5112 114 X 114
1 EA LOCKSET W/LEVER HANDLES. GRADE 1, F13
1 EA OVERHEAD CLOSER, C02061, LOW RESISTANCE
2 EA LEVER EXTENSION FLUSH BOLTS, L04081
1 EA ASTRAGAL
2 EA DOOR SILENCERS, L03011

HW-14
3 PR HINGES, A5112 114 X 114
2 EA RIM EXIT DEVICE, TYPE 1
2 EA CYLINDER. GRADE 1
2 EA OVERHEAD CLOSER, C02061, LOW RESISTANCE
1 EA DOOR COORDINATOR, TYPE 21
1 EA ASTRAGAL
2 EA DOOR SILENCERS, L03011

APPROVED:

A/E DESIGNER OF RECORD

SEAL:

STATE OF SOUTH CAROLINA
KEVIN R. CHAFIN
N. Charleston, SC
6374
REGISTERED ARCHITECT

US ARMY CORPS OF ENGINEERS
AFGHANISTAN ENGINEER DISTRICT

Mark	Description	Date	Appr.	Mark	Description	Date	Appr.

Date: 2/23/10 Rev: 0
Design file no.
Drawing code:
File name: ANAFOBA-601SCH
Plot date: 2/23/2010
Plot scale: x:X

Designed by: KRC
Dwn by: AAR
Ckd by: NLJ
Reviewed by: LHM
Submitted by:
BAKER

U.S. ARMY CORPS OF ENGINEERS
AFGHANISTAN ENGINEER DISTRICT
APO AE 96338

Michael Baker Jr., Inc.
A unit of Michael Baker Corporation
Airside Business Park
100 Airside Drive
Moon Township, PA 15108
www.mbakercorp.com

AFGHAN NATIONAL ARMY
REGIONAL MILITARY TRAINING CENTER
STANDARD DESIGN

FUEL OPERATORS BUILDING

WINDOW AND DOOR SCHEDULES

Sheet reference number:
A-601

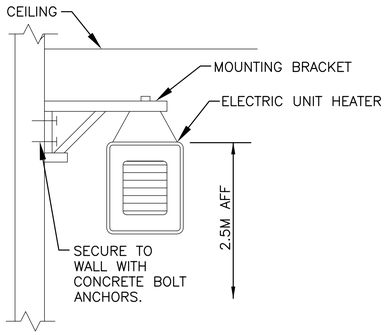

2 / M-101 ELECTRIC UNIT HEATER MOUNTING DETAIL
N.T.S.

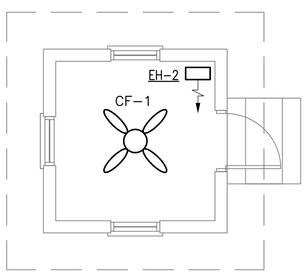

1 / M-101 FLOOR PLAN - HVAC
SCALE: 1:50

GENERAL NOTES:

1. DO NOT SCALE DRAWINGS – ALL DIMENSIONS AND CONDITIONS SHALL BE CHECKED AND VERIFIED BY THE CONTRACTOR AT THE SITE.
2. ALL WORK PERFORMED ON THIS BUILDING SHALL BE IN COMPLIANCE WITH ALL PERTINENT CODES, RULES, ORDINANCES AND REGULATIONS OF THE GOVERNING AUTHORITIES.
3. ALL WORK PERFORMED UNDER AND IN CONNECTION WITH THESE DRAWINGS AND SPECIFICATIONS SHALL BE IN STRICT COMPLIANCE WITH THE LATEST SAFETY AND HEALTH STANDARDS.

SYMBOLS:

(X) KEY NOTE

(0.050) AIR VOLUME IN CUBIC METERS PER SECOND (CMS)

UC DOOR UNDERCUT

TG 200x400 (8x16) TRANSFER GRILLE

ABBREVIATIONS:

AFF	ABOVE FINISH FLOOR
CF	CEILING FANS
CMS	CUBIC METERS PER SECOND
STATS	THERMOSTATS

ELECTRIC UNIT HEATER SCHEDULE

NO.	CMS	KW	F.A.T. °C	ELECT. CHAR.	MOUNTING
EH-2	.200	2.6	38	380/1/50	WALL HUNG

NOTES:
1. TOP OF UNIT HEATER SHALL BE MOUNTED 2.2M AFF.
2. UNIT HEATERS SHALL HAVE TAMPER PROOF INTEGRAL STATS.
3. COORDINATE LOCATION AND ORIENTATION IN FIELD.

CEILING FAN

NO.	BLADE SIZE		VOLTAGE	SWITCH	REMARKS
	mm	IN			
CF-1	1320	52	220/1/50	@ WALL	3 SPEED REVERSIBLE MOTOR

NOTES:
1. INSTALL FANS 2.5M AFF.
2. PROVIDE WITH OUT LIGHT FIXTURE.
3. PROVIDE WITH REMOTE MOUNTED ON-OFF SWITCH SHOWN ON ELECTRICAL DRAWINGS.

LINEAR DIMENSIONS SHOWN ARE IN MILLIMETERS (MM), UNLESS OTHERWISE NOTED

0 1000 2000
SCALE: 1:50

APPROVED:

A/E DESIGNER OF RECORD

SEAL:

COMMONWEALTH OF PENNSYLVANIA
REGISTERED PROFESSIONAL
MATTHEW R. SOTOSKY
ENGINEER
046576-E

US ARMY CORPS OF ENGINEERS
AFGHANISTAN ENGINEER DISTRICT

Mark	Description	Date	Appr.

Mark	Description	Date	Appr.

Date: 02/23/10
Design file no.
Rev: 0
Designed by: RML
Dwn by: JJN
Ckd by: CJM
Reviewed by: MRS
Submitted by: BAKER
Drawing code:
File name: ANAFOBMH-1101XXX
Plot date: 02/26/2010
Plot scale: 1:50

U.S. ARMY CORPS OF ENGINEERS
AFGHANISTAN ENGINEER DISTRICT
APO AE 96338

Michael Baker Jr., Inc.
A unit of Michael Baker Corporation
Airside Business Park
100 Airside Drive
Moon Township, PA 15108
www.mbakercorp.com

AFGHAN NATIONAL ARMY
REGIONAL MILITARY TRAINING CENTER
STANDARD DESIGN

FUEL OPERATORS BUILDING
HVAC – FLOOR PLAN,
SCHEDULES AND DETAILS

Sheet reference number:
M-101

POWER

- DISTRIBUTION PANELBOARD
- NEW PANELBOARD – SURFACE
- NEW PANELBOARD – RECESSED
- GENERATOR
- TRANSFORMER (DRAWN TO SIZE)
- JUNCTION BOX
- JUNCTION BOX – CEILING
- FUSIBLE SAFETY SWITCH
- MOTOR
- MOTOR STARTING SWITCH – 220V, 20A RATED UNLESS OTHERWISE NOTED
- EPO EMERGENCY POWER OFF BUTTON
- ELECTRIC WATER HEATER
- CF CEILING FAN – REFER TO SPECIFICATION SECTION 26 20 00

RECEPTACLES

- DUPLEX 20A TYPE CEE 7/7 "SCHUKO STYLE" UNSWITCHED RECEPTACLE
- GF DUPLEX 20A TYPE CEE 7/7 "SCHUKO STYLE" UNSWITCHED RECEPTACLES – 10mA GROUND FAULT INTERRUPTER TYPE
- WP DUPLEX 20A TYPE CEE 7/7 "SCHUKO STYLE" UNSWITCHED TYPE WITH WEATHERPROOF COVER – 10mA GROUND FAULT INTERRUPTER TYPE
- EXP DUPLEX 20A TYPE CEE 7/7 "SCHUKO STYLE" UNSWITCHED RECEPTACLES – EXPLOSION PROOF
- * INDICATES MOUNT DEVICE ABOVE COUNTERTOP OR AT 1070mm ABOVE FINISHED FLOOR WHERE NO COUNTER IS TO BE INSTALLED.

LIGHTING

- LIGHTING FIXTURE – SEE FIXTURE SCHEDULE FOR MORE INFORMATION
- EMERGENCY LIGHTING FIXTURE – SEE FIXTURE SCHEDULE FOR MORE INFORMATION
- DOWNLIGHT
- LIGHTING FIXTURE ON NORMAL/EMERGENCY
- WALL MOUNTED LIGHT FIXTURE
- E EXIT SIGN – DIRECTIONAL ARROWS AS INDICATED ON DRAWINGS
- REMOTE HEAD FOR BATTERY PACK
- $ SINGLE POLE SWITCH – 20A RATED
- $3 3–WAY SWITCH – 20A RATED
- $4 4–WAY SWITCH – 20A RATED
- LC LIGHTING CONTACTOR
- POLE MOUNTED SITE LIGHTING FIXTURE– NUMBER OF FIXTURES PER POLE AS INDICATED ON DRAWINGS
- EXTERIOR DIRECTIONAL LIGHTING FIXTURE
- a SMALL CASE LETTERS REPRESENTS LAMP(S) / SWITCHES.

TELECOMMUNICATIONS

- TELEPHONE OUTLET(S) @ 45cm AFF. U.N.O. WITH 20mm RACEWAY TERMINATED TO TELEDATA TERMINAL BOARD.
- DATA OUTLET(S) @ 45cm AFF. U.N.O. WITH 20mm RACEWAY TERMINATED TO TELEDATA TERMINAL BOARD.

TELECOMMUNICATIONS (CONTINUED)

- COMBINATION TELEPHONE/DATA OUTLET(S) @ 45cm AFF. U.N.O. WITH 27mm RACEWAY TERMINATED TO TELEDATA TERMINAL BOARD.
- W WALL MTD. TELEPHONE OUTLET WITH 20mm RACEWAY TO TELEDATA TERMINAL BOARD.
- (x)T INDICATES NUMBER OF TELEPHONE OUTLET(S) AND ASSOCIATED CABLING
- (x)D INDICATES NUMBER OF DATA OUTLET(S) AND ASSOCIATED CABLING
- (x)TF INDICATES NUMBER OF TELEPHONE OUTLETS AND ASSOCIATED CABLING WITH 1 OUTLET AND CABLE DEDICATED FOR FAX

SINGLE LINE SYMBOLS

- SWITCH
- BREAKER
- FUSE
- TRANSFORMER
- GROUND
- CONTACT (NORMALLY OPEN)
- CONTACT (NORMALLY CLOSED)
- TRANSFER SWITCH
- CURRENT TRANSFORMER
- INDICATES NEW ELECTRICAL EQUIPMENT
- C INDICATES NEW CONTROL WIRING AND CONDUIT
- EQUIPMENT OUTLINE

MISCELLANEOUS

- BRANCH CIRCUIT WIRING, SURFACE MOUNTED ON WALLS
- BRANCH CIRCUIT WIRING – 6mm²
- BRANCH CIRCUIT WIRING – UNDER FLOOR
- HOME RUN BACK TO PANEL
- CONDUIT TURNED DOWN
- CONDUIT TURNED UP
- LV LOW VOLTAGE WIRING AND CONDUIT
- INDICATES CONTINUATION OF LINE

FIRE ALARM

- FACP FIRE ALARM CONTROL PANEL WITH BATTERY BACKUP
- F FIRE ALARM PULL STATION

FIRE ALARM (CONTINUED)

- F FIRE ALARM STROBE – WALL MOUNTED
- F FIRE ALARM AUDIBLE/STROBE – WALL MOUNTED
- F FIRE ALARM HORN/STROBE – WALL MOUNTED
- S SMOKE DETECTOR
- H HEAT DETECTOR CEILING MOUNTED
- D DUCT DETECTOR – PROVIDED BY EC, INSTALLED BY MC AND CONNECTED BY EC

DENOTATIONS & ABBREVIATIONS

AFF	ABOVE FINISHED FLOOR
C	CEILING MOUNTED
E	EMERGENCY
EC	ELECTRICAL CONTRACTOR
EPO	EMERGENCY POWER OFF
EXP	EXPLOSION PROOF
F	FIRE ALARM
FF	FLUSH FLOOR MOUNTED
FL	FLUORESCENT
FO	FIBER OPTIC
FSS	FUSED SAFETY SWITCH
GF	GROUND FAULT INTERRUPTER
GC	GENERAL CONTRACTOR
IG	ISOLATED GROUND
K	KEY
LV	LOW VOLTAGE
M	MOTOR
MC	MECHANICAL CONTRACTOR
NE	NORMAL/EMERGENCY
NFSS	NON–FUSED SAFETY SWITCH
PA	PAGING SYSTEM
PLC	PLUMBING CONTRACTOR
SL	SINGLE LINE
T	TELEPHONE

DENOTATIONS & ABBREVIATIONS (CONT.)

TP	TAMPER PROOF
UE	UNDERGROUND ELECTRIC
W	WALL MOUNTED
WP	WEATHERPROOF WITH GROUND FAULT INTERRUPTION
WT	WATER TIGHT

GENERAL PROJECT NOTES:

G1. UNLESS OTHERWISE NOTED, PROVIDE ALL EQUIPMENT SHOWN ON THE PLANS. THE ELECTRICAL CONTRACTOR SHALL COORDINATE ALL SYMBOLS SHOWN ON THE PLANS WITH THE SYMBOL LIST. IT SHALL BE THE RESPONSIBILITY OF THE CONTRACTOR TO VERIFY THE INTENT OF ANY SYMBOL THAT IS SHOWN ON THE PLANS AND NOT INDICATED ON THE SYMBOL LIST WITH THE ENGINEER PRIOR TO BID.

G2. THE CONTRACTOR SHALL VERIFY THE LOCATION OF ALL UNDERGROUND UTILITIES WITHIN THE CONSTRUCTION AREA THREE (3) WORKING DAYS NOTICE BEFORE COMMENCING DIGGING. NOTIFY THE LOCAL AUTHORITY HAVING JURISDICTION AND WAIT THE REQUIRED TIME BEFORE COMMENCING TO DIG.

G3. THE CONTRACTOR SHALL COORDINATE CONDUIT RUNS, LIGHTING FIXTURES AND OTHER EQUIPMENT LOCATIONS WITH THE OTHER TRADE CONTRACTORS TO AVOID CONFLICTS.

G4. WHERE VOLTAGES AND FREQUENCIES ON THE DRAWINGS AND IN THE SPECIFICATIONS DIFFER FROM THE LOCAL ONES, ALL WORK SHALL BE PERFORMED USING THE LOCAL VOLTAGES AND FREQUENCIES.

G5. THE MINIMUM WIRE SIZE ON THE PROJECT SHALL BE 4mm². THE MINIMUM CONDUIT SIZE SHALL BE 20mm. THE MINIMUM BREAKER SIZE SHALL BE 20 AMPS.

G6. THE CONTRACTOR SHALL PUT A MAXIMUM OF 6 DUPLEX RECEPTACLES ON A 20A SINGLE POLE CIRCUIT.

G7. WHERE THE 1010 SCOPE REVIEW, 1015 TECHNICAL REVIEW, DRAWINGS, AND SPECIFICATIONS DIFFER FROM AMERICAN CODES OR STANDARDS, THE 1010, 1015, DRAWINGS, AND SPECIFICATIONS SHALL RULE.

G8. ALL CONDUIT AND DEVICES SHALL BE SURFACE MOUNTED UNLESS OTHERWISE INDICATED.

G9. CONTRACTOR SHALL COORDINATE ALL WORK WITH ALL OTHER TRADES TO ENSURE ALL WORK IS COMPLETED IN A PROFESSIONAL, WORKMAN–LIKE MANNER.

APPROVED:

A/E DESIGNER OF RECORD

SEAL:

COMMONWEALTH OF PENNSYLVANIA
REGISTERED PROFESSIONAL
JOSEPH R. GAUS
ENGINEER
PE-074251
1/29/10

US ARMY CORPS OF ENGINEERS
AFGHANISTAN ENGINEER DISTRICT

Mark	Description	Date	Appr.	Mark	Description	Date	Appr.

Rev: 0
Date: 2/23/10
Design file no.
Drawing code:
File name:
Plot date:
Plot scale:

Designed by: JRG
Ckd by: JRG
Dwn by: BJB
Reviewed by: JRG
Submitted by: BAKER

U.S. ARMY CORPS OF ENGINEERS
AFGHANISTAN ENGINEER DISTRICT
APO AE 96338

Michael Baker Jr., Inc.
A unit of Michael Baker Corporation
Airside Business Park
100 Airside Drive
Moon Township, PA 15108
www.mbakercorp.com

AFGHAN NATIONAL ARMY
REGIONAL MILITARY TRAINING CENTER
STANDARD DESIGN

FUEL OPERATORS BUILDING
ELECTRICAL SYMBOLS & ABBREVIATIONS

Sheet reference number:
E–001

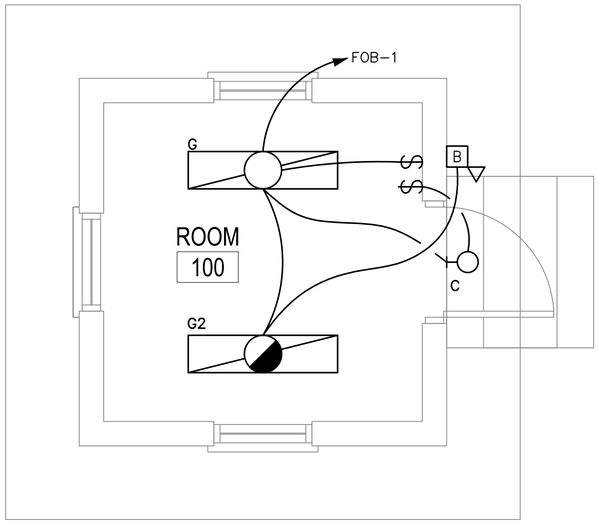

1
E-101

FUELING OBSERVATION BUILDING FLOOR PLAN - LIGHTING

SCALE: 1:25

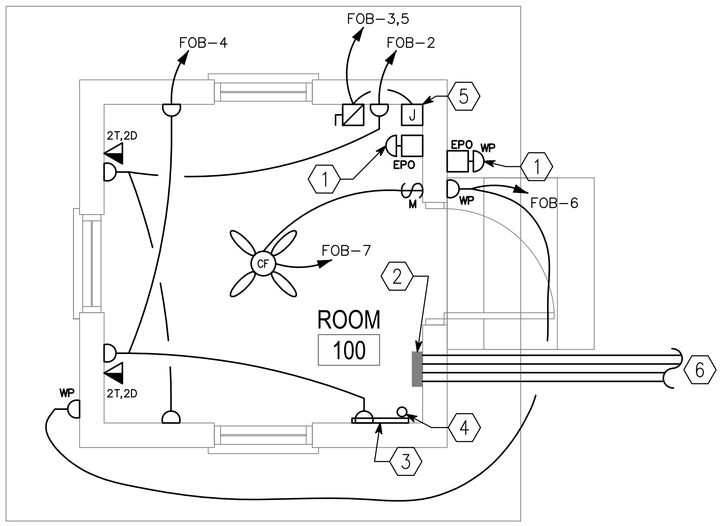

2
E-101

FUELING OBSERVATION BUILDING FLOOR PLAN - POWER AND SYSTEMS

SCALE: 1:25

GENERAL NOTES:

1. REFER TO DRAWING #E-001 FOR THE ELECTRICAL SYMBOLS LIST.
2. EXIT SIGNS SHALL BE WIRED AHEAD OF ANY LOCAL SWITCHING ON CIRCUITS.
3. REFER TO DRAWING #E-601 FOR THE LIGHTING FIXTURE SCHEDULE.
4. REFER TO DRAWING #E-501 FOR THE POWER RISER.
5. REFER TO DRAWING #E-602 FOR PANEL SCHEDULES.
6. LIGHT FIXTURES INDICATED AS EMERGENCY SHALL BE PROVIDED WITH A BATTERY BACKUP BALLAST. SEE WIRING DIAGRAM DETAIL 5, DRAWING #E-501.
7. COORDINATE EXACT MOUNTING LOCATION OF DISCONNECTING MEANS FOR MECHANICAL AND PLUMBING EQUIPMENT IN THE FIELD.
8. FUSIBLE SAFETY SWITCHES THAT ARE NOT OTHERWISE IDENTIFIED SHALL BE 380V, 1P, 30A FUSED SAFETY SWITCHES WITH 20A FUSES.

NUMBERED NOTES:

1. EMERGENCY POWER OFF SWITCH TO DISABLE FUEL DISPENSING EQUIPMENT.
2. PANEL FOB.
3. PROVIDE 1200mm X 2400mm SHEET OF PLYWOOD PAINTED WITH FIRE RESISTANT PAINT FOR MOUNTING TELECOMMUNICATIONS EQUIPMENT.
4. PROVIDE CONDUIT STUB UP IN THE ROOM FOR INCOMING TELECOMMUNICATIONS SERVICES FROM THE CENTRAL COMMUNICATIONS SYSTEM IN THE GARRISON.
5. PROVIDE POWER CONNECTION TO ELECTRIC UNIT HEATER #2. SEE DRAWINGS #M-101 AND #E-602 FOR MORE INFORMATION.
6. 4 20mm CONDUIT RUNS TO CIRCUITS FEEDING POWER AND LIGHTING AT VEHICLE REFUELING POINT AND FUEL STORAGE. CONDUIT SHALL BE RMC/IMC WITH LISTED SEALS AND INSTALLED IN ACCORDANCE WITH NEC ART. 514.

0 500 1000
SCALE: 1:25

APPROVED:

A/E DESIGNER OF RECORD

SEAL:

COMMONWEALTH OF PENNSYLVANIA
REGISTERED PROFESSIONAL
JOSEPH R. GAUS
ENGINEER
PE-074251
1/29/10

US ARMY CORPS OF ENGINEERS
AFGHANISTAN ENGINEER DISTRICT

Mark	Description	Date	Appr.

Mark	Description	Date	Appr.

Rev: 0
Date: 2/23/10
Designed by: JRG
Dwn by: BJB
Ckd by: JRG
Reviewed by: JRG
Submitted by: BAKER
Design file no.
Drawing code:
File name:
Plot date:
Plot scale:

U.S. ARMY CORPS OF ENGINEERS
AFGHANISTAN ENGINEER DISTRICT
APO AE 96338

Michael Baker Jr., Inc.
A unit of Michael Baker Corporation
Airside Business Park
100 Airside Drive
Moon Township, PA 15108
www.mbakercorp.com

AFGHAN NATIONAL ARMY
REGIONAL MILITARY TRAINING CENTER
STANDARD DESIGN

FUEL OPERATORS BUILDING
ELECTRICAL

Sheet reference number:
E-101

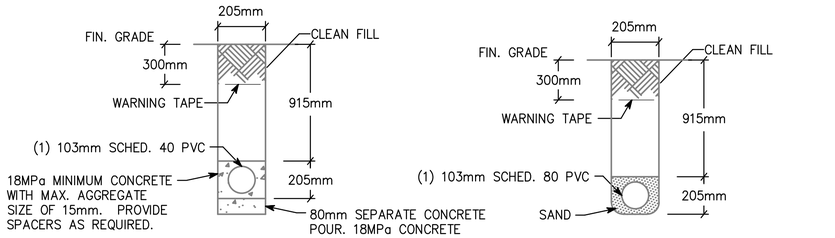

NOTE: PVC CONDUIT SHALL BE DIRECT BURIED SCHEDULE 80 FOR NO TRAFFIC AREAS AND CONCRETE-ENCASED SCHEDULE 40 FOR UNDER ROADWAYS OR TRAFFIC AREAS.

1 / E-501 TYPICAL DUCT BANK DETAILS FOR CONDUIT IN SAND OR CONCRETE

SCALE: N.T.S.

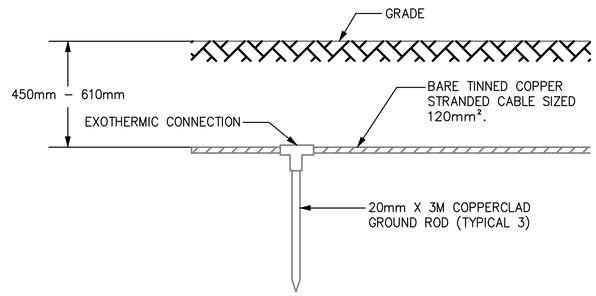

2 / E-501 GROUND TRIPOD SYSTEM DETAIL - ELEVATION

SCALE: N.T.S.

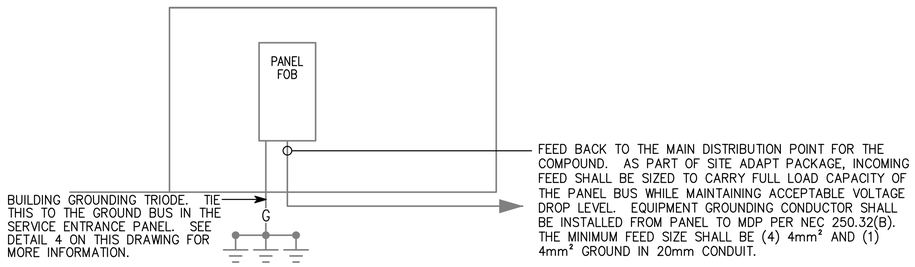

3 / E-501 FOB RISER DIAGRAM

SCALE: N.T.S.

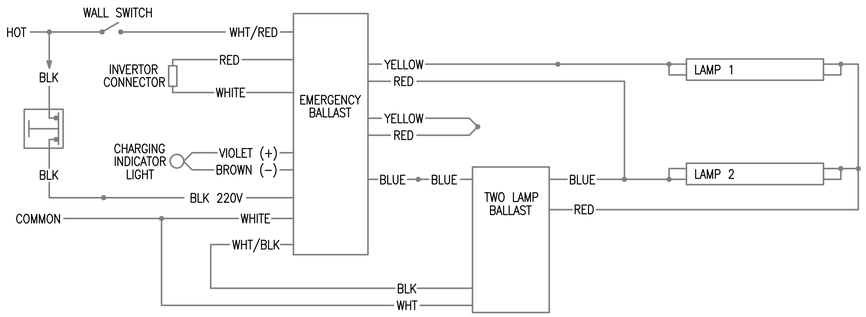

5 / E-501 EMERGENCY FIXTURE WIRING DIAGRAM

SCALE: N.T.S.

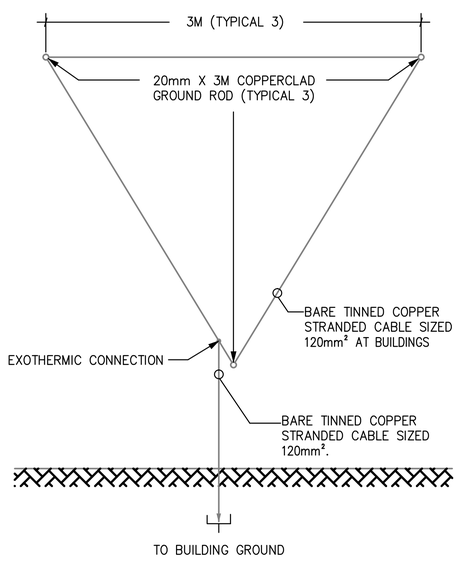

4 / E-501 GROUND TRIPOD SYSTEM DETAIL - PLAN

SCALE: N.T.S.

US ARMY CORPS OF ENGINEERS
AFGHANISTAN ENGINEER DISTRICT

Mark	Description	Date	Appr.	Mark	Description	Date	Appr.

Rev: 0
Date: 2/23/10
Design file no.
Drawing code:
File name:
Plot date:
Plot scale:

Designed by: JRG
Dwn by: BJB
Ckd by: JRG
Reviewed by: JRG
Submitted by:
BAKER

U.S. ARMY CORPS OF ENGINEERS
AFGHANISTAN ENGINEER DISTRICT
APO AE 96338

Michael Baker Jr., Inc.
A unit of Michael Baker Corporation
Airside Business Park
100 Airside Drive
Moon Township, PA 15108
www.mbakercorp.com

AFGHAN NATIONAL ARMY
REGIONAL MILITARY TRAINING CENTER
STANDARD DESIGN

FUEL OPERATORS BUILDING
ELECTRICAL DETAILS

APPROVED:

A/E DESIGNER OF RECORD

SEAL:

COMMONWEALTH OF PENNSYLVANIA
REGISTERED PROFESSIONAL
JOSEPH R. GAUS
ENGINEER
PE-074251

Sheet reference number:
E-501

(A) LARGER OF THE TWO SIZES GIVEN IN THE TABLES BELOW	
GROUNDING ELECTRODE CONDUCTOR (BASED ON AIC RATING)	
AIC RATING OF SERVICE EQUIPMENT	NECESSARY GROUNDING ELECTRODE CONDUCTOR SIZE
10K	(1) 35mm²
14K	(1) 50mm²
18K	(1) 70mm²
22K	(1) 70mm²
25K	(1) 70mm²
30K	(1) 95mm²
35K	(1) 120mm²
42K	(1) 150mm²
65K	(1) 185mm²
100K	(1) 300mm²
125K	(2) 185mm²
200K	(2) 300mm²
GROUNDING ELECTRODE CONDUCTOR (BASED ON NEC TABLE 250.66)	
SIZE OF LARGEST UNGROUNDED SERVICE CONDUCTOR OR EQUIVALENT AREA FOR PARALLEL CONDUCTORS	NECESSARY GROUNDING ELECTRODE CONDUCTOR SIZE
350 kcmil OR SMALLER	35mm²
OVER 350 kcmil TO 600 kcmil	70mm²
OVER 600 kcmil TO 1100 kcmil	70mm²
OVER 1100 kcmil	95mm²
NOTE: ALL SIZES ARE BASED ON COPPER CONDUCTORS.	

(B) EQUIPMENT GROUNDING CONDUCTOR	
RATING OR SETTING OF AUTOMATIC OVERCURRENT DEVICE IN CIRCUIT AHEAD OF EQUIPMENT, CONDUIT, ETC, NOT EXCEEDING (AMPERES)	NECESSARY EQUIPMENT GROUNDING CONDUCTOR SIZE
15	2.5mm²
20	4.0mm²
30	6.0mm²
40	6.0mm²
60	6.0mm²
100	10mm²
200	16mm²
300	25mm²
400	25mm²
500	35mm²
600	50mm²
800	70mm²
1000	70mm²
1200	95mm²
1600	120mm²
2000	150mm²
2500	185mm²
3000	240mm²
4000	300mm²
5000	400mm²
6000	400mm²
NOTE: ALL SIZES ARE BASED ON COPPER CONDUCTORS.	

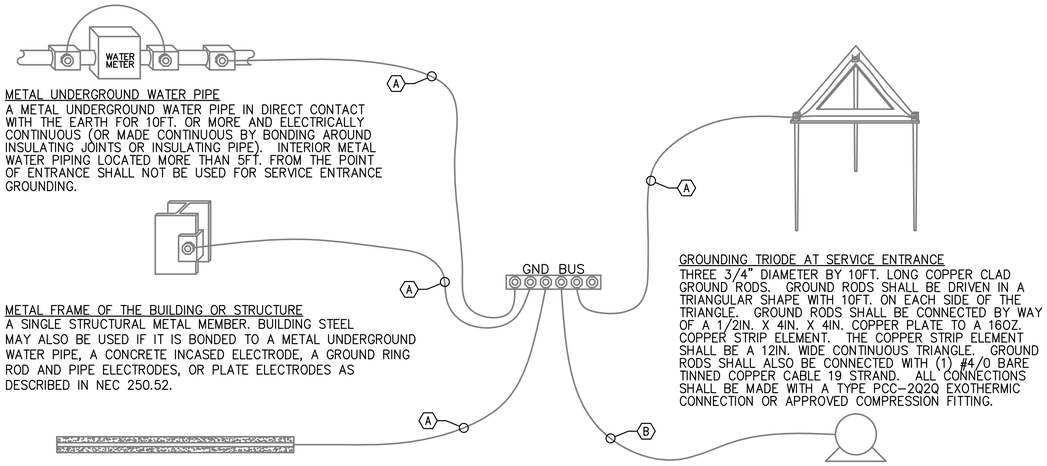

METAL UNDERGROUND WATER PIPE
A METAL UNDERGROUND WATER PIPE IN DIRECT CONTACT WITH THE EARTH FOR 10FT. OR MORE AND ELECTRICALLY CONTINUOUS (OR MADE CONTINUOUS BY BONDING AROUND INSULATING JOINTS OR INSULATING PIPE). INTERIOR METAL WATER PIPING LOCATED MORE THAN 5FT. FROM THE POINT OF ENTRANCE SHALL NOT BE USED FOR SERVICE ENTRANCE GROUNDING.

METAL FRAME OF THE BUILDING OR STRUCTURE
A SINGLE STRUCTURAL METAL MEMBER. BUILDING STEEL MAY ALSO BE USED IF IT IS BONDED TO A METAL UNDERGROUND WATER PIPE, A CONCRETE INCASED ELECTRODE, A GROUND RING ROD AND PIPE ELECTRODES, OR PLATE ELECTRODES AS DESCRIBED IN NEC 250.52.

CONCRETE ENCASED ELECTRODE
AN ELECTRODE ENCASED BY AT LEAST 2IN. OF CONCRETE , LOCATED WITHIN AND NEAR THE BOTTOM OF A CONCRETE FOUNDATION OR FOOTING THAT IS IN DIRECT CONTACT WITH THE EARTH, CONSISTING OF AT LEAST 20FT. OF ONE OR MORE BARE OR ZINC GALVANIZED OR OTHER ELECTRICALLY CONDUCTIVE COATED STEEL REINFORCING BARS OR RODS OF NOT LESS THAN 1/2" DIAMETER OR BARE COPPER CONDUCTOR NOT SMALLER THAN 4AWG.

GROUNDING TRIODE AT SERVICE ENTRANCE
THREE 3/4" DIAMETER BY 10FT. LONG COPPER CLAD GROUND RODS. GROUND RODS SHALL BE DRIVEN IN A TRIANGULAR SHAPE WITH 10FT. ON EACH SIDE OF THE TRIANGLE. GROUND RODS SHALL BE CONNECTED BY WAY OF A 1/2IN. X 4IN. X 4IN. COPPER PLATE TO A 16OZ. COPPER STRIP ELEMENT. THE COPPER STRIP ELEMENT SHALL BE A 12IN. WIDE CONTINUOUS TRIANGLE. GROUND RODS SHALL ALSO BE CONNECTED WITH (1) #4/0 BARE TINNED COPPER CABLE 19 STRAND. ALL CONNECTIONS SHALL BE MADE WITH A TYPE PCC-2Q2Q EXOTHERMIC CONNECTION OR APPROVED COMPRESSION FITTING.

LOAD OR DOWNSTREAM PANEL
ALL LOADS IN THE BUILDING SHALL HAVE AN EQUIPMENT GROUNDING CONDUCTOR PULLED TO THEM.

1
E-502

SERVICE ENTRANCE GROUNDING DETAIL

SCALE: N.T.S.

APPROVED:

A/E DESIGNER OF RECORD

SEAL:

COMMONWEALTH OF PENNSYLVANIA
REGISTERED PROFESSIONAL
JOSEPH R. GAUS
ENGINEER
PE-074251
1/29/10

US ARMY CORPS OF ENGINEERS
AFGHANISTAN ENGINEER DISTRICT

Mark	Description	Date	Appr.	Mark	Description	Date	Appr.

Rev: 0
Date: 2/23/10
Design file no.
Drawing code:
File name:
Plot date:
Plot scale:

Designed by: JRG
Dwn by: BJB
Ckd by: JRG
Reviewed by: JRG
Submitted by: BAKER

U.S. ARMY CORPS OF ENGINEERS
AFGHANISTAN ENGINEER DISTRICT
APO AE 96338

Michael Baker Jr., Inc.
A unit of Michael Baker Corporation
Airside Business Park
100 Airside Drive
Moon Township, PA 15108
www.mbakercorp.com

AFGHAN NATIONAL ARMY
REGIONAL MILITARY TRAINING CENTER
STANDARD DESIGN

FUEL OPERATORS BUILDING
ELECTRICAL DETAILS

Sheet reference number:
E-502

FIXTURE MARK 'C'

FIXTURE MARK 'G'

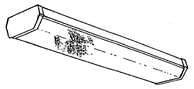

LIGHT FIXTURE SCHEDULE

FIXTURE MARK	STYLE NUMBER AND TYPE	NUMBER AND TYPE OF LAMPS	VOLTAGE	MOUNTING	NOTES
C	INCANDESCENT ONE PIECE W/ APPROVED LENS STABILIZED HIGH IMPACT POLY CARBONATE.	(1) A19 – 100W INCANDESCENT	220V – 1ø 50HZ	WALL MOUNTED ABOVE EXTERIOR DOORS	
G	WRAP AROUND SURFACE/PENDANT MOUNTED FLUORESCENT FIXTURE WITH PRISMATIC ACRYLIC LENS AND ELECTRONIC BALLAST	(2) 32W 3500K	220V – 1ø 50HZ	SURFACE MOUNTED	FURNISHED WITH ELECTRONIC BALLAST, VIRGIN ACRYLIC WRAP AROUND LENS.
G2	SAME AS FIXTURE 'G' WITH EMERGENCY BALLAST	(2) 32W 3500K	220V – 1ø 50HZ	SURFACE MOUNTED	FURNISHED WITH ELECTRONIC BALLAST, VIRGIN ACRYLIC WRAP AROUND LENS. EMERGENCY BALLAST WITH SELF TEST SWITCH.
B	WEATHERPROOF BATTERY POWERED EMERGENCY LIGHT WITH 90 MINUTE MINIMUM RUN TIME.	(1) 12W/12V HALOGEN LAMP	220V – 1ø 50HZ	EXTERIOR WALL MOUNTED AT TOP OF DOOR HEIGHT	

APPROVED:

A/E DESIGNER OF RECORD

SEAL:

COMMONWEALTH OF PENNSYLVANIA
REGISTERED PROFESSIONAL
JOSEPH R. GAUS
ENGINEER
PE-074251
1/29/10

US ARMY CORPS OF ENGINEERS
AFGHANISTAN ENGINEER DISTRICT

Mark	Description	Date	Appr.

Mark	Description	Date	Appr.

Designed by: JRG
Dwn by: BJB
Ckd by: JRG
Reviewed by: JRG
Submitted by: BAKER
Date: 2/23/10
Rev: 0
Design file no.
Drawing code:
File name:
Plot date:
Plot scale:

U.S. ARMY CORPS OF ENGINEERS
AFGHANISTAN ENGINEER DISTRICT
APO AE 96338

Michael Baker Jr., Inc.
A unit of Michael Baker Corporation
Airside Business Park
100 Airside Drive
Moon Township, PA 15108
www.mbakercorp.com

AFGHAN NATIONAL ARMY
REGIONAL MILITARY TRAINING CENTER
STANDARD DESIGN

FUEL OPERATORS BUILDING
ELECTRICAL LIGHT FIXTURE SCHEDULE

Sheet reference number:
E–601

PANELBOARD FOB SURFACE MOUNTED

AMP. MAIN LUGS (OR) 20 AMP. MAIN BREAKER W/ 20 AMP. TRIP

CIRCUIT BREAKER TYPE 380/220 VOLTS 3 PHASE 4 WIRE 50 HZ 100 AMP. BUS

CKT. NO.	TRIP AMPS	NO. POLES	WIRE MM²	GND MM²	CONDUIT MM	LOAD SERVED	LOAD-KVA A0	LOAD-KVA B0	LOAD-KVA C0	LOAD-KVA A0	LOAD-KVA B0	LOAD-KVA C0	LOAD SERVED	CONDUIT MM	GND MM²	WIRE MM²	NO. POLES	TRIP AMPS	CKT. NO.
1	20	1	4.0	4.0	20	LIGHTING	0.2			0.6			RECEPTS – FOB	20	4.0	4.0	1	20	2
3	20	2	4.0	4.0	20	ELECTRIC HEAT #2 – FOB		1.3			0.6		RECEPTS – FOB	20	4.0	4.0	1	20	4
5									1.3			0.4	EXTERIOR RECEPTS – FOB	20	4.0	4.0	1	20	6
7	20	1	4.0	4.0	20	CEILING FAN – FOB	0.2			0.4			VRP LIGHTING**	20	4.0	4.0	1	20	8
9	20	1				SPARE					0.5		VRP PUMP**	20	4.0	4.0	1	20	10
11	20	1				SPARE						0.5	VRP PUMP**	20	4.0	4.0	1	20	12
13	20	1				SPARE				0.8			VRP FS LIGHTING**	20	4.0	4.0	1	20	14
15	20	1				SPARE							SPARE				1	20	16
17	20	1				SPARE							SPARE				1	20	18
							0.4	1.3	1.3	1.8	1.1	0.9							

TOTAL CONN. LOAD PER PHASE (KVA): A0 2.2 B0 2.4 C0 2.2

TOTAL CONN. LOAD 6.8 KVA. 70 % DEMAND = ESTIMATED DEMAND LOAD 4.8

* MAIN BREAKER SHALL BE 3P EARTH GROUND TYPE

** SEE THE VEHICLE REFUELING POINT PACKAGE FOR CONNECTION TO THE VEHICLE REFUELING POINT (VRP) AND THE VEHICLE REFUELING POINT FUEL STORAGE AREA (VRP FS).

APPROVED:

A/E DESIGNER OF RECORD

SEAL:

COMMONWEALTH OF PENNSYLVANIA
REGISTERED PROFESSIONAL ENGINEER
JOSEPH R. GAUS
PE-074251
1/29/10

US ARMY CORPS OF ENGINEERS
AFGHANISTAN ENGINEER DISTRICT

Mark	Description	Date	Appr.

Mark	Description	Date	Appr.

Designed by: JRG
Dwn by: BJB
Ckd by: JRG
Reviewed by: JRG
Submitted by: BAKER
Date: 2/23/10
Rev: 0
Design file no.
Drawing code:
File name:
Plot date:
Plot scale:

U.S. ARMY CORPS OF ENGINEERS
AFGHANISTAN ENGINEER DISTRICT
APO AE 96338

Michael Baker Jr., Inc.
A unit of Michael Baker Corporation
Airside Business Park
100 Airside Drive
Moon Township, PA 15108
www.mbakercorp.com

AFGHAN NATIONAL ARMY
REGIONAL MILITARY TRAINING CENTER
STANDARD DESIGN

FUEL OPERATORS BUILDING
ELECTRICAL PANEL SCHEDULES

Sheet reference number:
E-602

AFGHAN NATIONAL POLICE

STANDARD BUILDING DESIGNS

GUARD TOWER

SHEET INDEX

G1 COVER SHEET

S1 GENERAL NOTES
S2 DESIGN CRITERIA & SCHEDULES
S3 FOUNDATION, FLOOR, FRAMING AND ROOF PLANS
S4 SECTIONS AND DETAILS
S5 TYPICAL DETAILS

A1 FLOOR PLANS
A2 ROOF PLAN AND DETAILS
A3 EXTERIOR ELEVATIONS
A4 BUILDING AND WALL SECTIONS
A5 DOOR, WINDOW & FINISH TYPES & DETAILS
A6 SECTION DETAILS

E0 ELECTRICAL SYMBOLS AND ABBREVIATIONS
E1 TOWER LIGHTING, POWER, AND SYSTEMS PLANS
E2 DETAILS
E3 LIGHT FIXTURE SCHEDULE
E4 PANEL SCHEDULES AND RISER DIAGRAM

US Army Corps of Engineers
Afghanistan Engineer District

SYMBOL	DESCRIPTION	DATE	APR

DESIGNED BY: JDS
DWN BY: JDS
CHK BY: JDS
DATE: 09-30-09
SUBMITTED BY: BAKER
FILE NO.: ANPSDG-001XXX

Michael Baker Jr., Inc
A unit of Michael Baker Corporation
Airside Business Park
100 Airside Drive
Moon Township, PA 15108
www.mbakercorp.com

AFGHAN NATIONAL POLICE
STANDARD DESIGN
GUARD TOWER

COVER SHEET

SHEET REFERENCE NUMBER:
G1

100% SUBMISSION

STRUCTURAL ABBREVIATIONS:

ACI	AMERICAN CONCRETE INSTITUTE
AISC	AMERICAN INSTITUTE OF STEEL CONSTRUCTION
ALT	ALTERNATE
ASTM	AMERICAN SOCIETY FOR TESTING AND MATERIALS
AWS	AMERICAN WELDING SOCIETY
ARCH	ARCHITECTURAL
B	BOTTOM
BLDG	BUILDING
BOTT	BOTTOM
℄	CENTER LINE
CFMF	COLD FORM METAL FRAME
CFS	COLD FORMED STEEL
CIP	CAST IN PLACE
CIPL	CAST-IN-PLACE LINTEL
CJ	CONTROL JOINT
CLR	CLEAR
CMU	CONCRETE MASONRY UNIT
COEFF	COEFFICIENT
COL	COLUMN
CONC	CONCRETE
CONT	CONTINUOUS
COORD	COORDINATE
CSJ	CONSTRUCTION JOINT
CTJ	CONTROL JOINT
DIA	DIAMETER
DIAG	DIAGONAL
DIM	DIMENSION
DWG	DRAWING
DWL	DOWEL
EA	EACH
ELEC	ELECTRICAL
ELEV	ELEVATION
EMBED	EMBEDMENT
EQUIV	EQUIVALENT
ETC	ET CETERA
EW	EACH WAY
EXT	EXTERIOR
FTG	FOOTING
GA	GAUGE
HORIZ	HORIZONTAL
HRS	HOURS
IBC	INTERNATIONAL BUILDING CODE
INT	INTERIOR
Kg	KILOGRAM
KIP	KIPS (1 KIP = 1,000 POUNDS)
kN	KILONEWTON
kPa	KILOPASCAL
L#	ANGLE (# INDICATES SIZE)
LLV	LONG LEG VERTICAL
M	METER
MAX	MAXIMUM
MBM	METAL BUILDING MANUFACTURER
MECH	MECHANICAL
MFG	MANUFACTURER
MID	MIDDLE
MIN	MINIMUM
MISC	MISCELLANEOUS
MM	MILLIMETER
MPa	MEGAPASCAL
MTL	METAL
MWFRS	MAIN WIND FORCE RESISTING SYSTEM
N	NEWTON
N	NORTH
N/A	NOT APPLICABLE
#	NUMBER SYMBOL FOR REBAR SIZE
NTS	NOT TO SCALE
OC	ON CENTER
OPNG	OPENING
ℙ or PL	PLATE
PRE-ENG	PRE-ENGINEERED
REINF	REINFORCED
REQ'D	REQUIRED
SIM	SIMILAR
SPECS	SPECIFICATIONS
STD	STANDARD
STRUCT	STRUCTURAL
T	TOP
T/	TOP OF
T/ELEV	TOP ELEVATION
T&B	TOP AND BOTTOM
THK	THICK
TM	TRADE MARK
TYP	TYPICAL
UON	UNLESS OTHERWISE NOTED
VERT	VERTICAL
W	WIDTH
W/	WITH

GENERAL NOTES

1.0 THIS PROJECT HAS BEEN DESIGNED FOR THE WEIGHTS AND MATERIALS INDICATED ON THE SHEETS AND FOR THE LIVE LOADS INDICATED IN THE DESIGN DATA. IT IS THE CONTRACTOR'S RESPONSIBILITY TO DETERMINE ALLOWABLE CONSTRUCTION LOADS AND TO PROVIDE PROPER DESIGN AND CONSTRUCTION OF FALSEWORK, FORMWORK, STAGING, BRACING, SHEETING AND SHORING, ETC.

1.1 COORDINATE THESE SHEETS WITH THE ARCHITECTURAL, MECHANICAL, ELECTRICAL, PLUMBING, AND CIVIL SHEETS. ALL DIMENSIONS SHOWN ON THE SHEETS ARE MILLIMETERS UNLESS NOTED OTHERWISE.

1.2 THE CONTRACTOR SHALL VERIFY AND COORDINATE ALL FLOOR AND ROOF OPENING SIZES AND LOCATIONS, EQUIPMENT PAD SIZES AND LOCATIONS, ANCHOR BOLT LAYOUTS, ETC WITH EQUIPMENT SELECTED. THE CONTRACTOR SHALL MAKE ANY REQUIRED MODIFICATIONS AT NO ADDITIONAL COST.

1.3 THE CONTRACTOR SHALL REFER TO THE ARCHITECTURAL, MECHANICAL, ELECTRICAL AND PLUMBING SHEETS FOR SLEEVES, CURBS, INSERTS OR OPENINGS, ETC. NOT HEREIN INDICATED.

1.4 SLAB OPENINGS SMALLER THAN 250mm DIA TO BE CORE DRILLED IN FIELD UON. SEE MECHANICAL, ELECTRICAL AND PLUMBING SHEETS FOR LOCATIONS OF THESE OPENINGS.

1.5 WORK NOT INCLUDED ON THE SHEETS BUT IMPLIED TO BE SIMILAR TO THAT SHOWN AT CORRESPONDING PLACES ELSEWHERE ON THE SHEETS SHALL BE REPEATED.

1.6 IN CASE OF CONFLICT BETWEEN THE NOTES, DETAILS AND SPECIFICATIONS THE MOST RIGID REQUIREMENTS SHALL GOVERN.

1.7 SEE ARCHITECTURAL SHEETS FOR LOCATIONS OF MASONRY AND DRYWALL NON-LOAD BEARING PARTITIONS. PROVIDE COMPRESSIBLE FIRESAFING AT TOP OF WALL AS REQUIRED BY ARCHITECTURAL SHEETS.

1.8 COORDINATE FINISHED FLOOR DATUM ELEVATION 0.0m WITH THE CIVIL SHEETS.

2.0 FOUNDATION NOTES

2.1 THE GEOTECHNICAL ANALYSIS FOR THIS PROJECT IS THE RESPONSIBILITY OF THE CONTRACTOR AWARDED THE WORK. DESIGN VALUES USED IN THE STRUCTURAL ANALYSIS OF THE BUILDINGS HEREIN INDICATED HAVE BEEN ASSUMED AND SHALL BE CONFIRMED AND VERIFIED AS PART OF THE GEOTECHNICAL INVESTIGATION. VALUES WHICH DO NOT MEET THE REQUIREMENTS INDICATED ON SHEET S2 SHALL BE IMMEDIATELY BROUGHT TO THE ATTENTION OF THE CONTRACTING OFFICER FOR CONSIDERATION AND DETERMINATION ON THE NEXT APPROPRIATE COURSE OF ACTION.

2.2 SEE THE SPECIFICATION FOR ADDITIONAL REQUIREMENTS TO THOSE OUTLINED IN THE GEOTECHNICAL INVESTIGATION FOR EXCAVATION AND PREPARATION OF THE FOUNDATION AND THE SLAB ON GRADE SUBGRADE INCLUDING COMPACTION PROCEDURES.

2.3 EXCAVATIONS FOR FOOTINGS SHALL HAVE THE SIDES AND BOTTOMS TEMPORARILY LINED WITH 0.25mm POLYETHYLENE IF PLACEMENT OF CONCRETE DOES NOT OCCUR WITHIN 24 HRS OF THE EXCAVATION OF THE FOOTING.

2.4 FOUNDATION CONDITIONS NOTED DURING CONSTRUCTION WHICH DIFFER FROM THOSE DESCRIBED IN THE GEOTECHNICAL REPORT SHALL BE REPORTED TO THE GENERAL CONTRACTOR BEFORE FURTHER CONSTRUCTION IS ATTEMPTED. SEE PROJECT SPECIFICATIONS.

2.5 NO FOOTINGS OR SLABS SHALL BE POURED INTO OR AGAINST SUBGRADE CONTAINING FREE WATER, FROST, ICE OR LOOSE MATERIAL. FROST DEPTH ASSUMED TO BE 800MM

2.6 ALL SLAB-ON-GRADE, TRENCH BOTTOMS AND OTHER ON-GRADE INTERIOR HORIZONTAL SURFACES SHALL BE PLACED OVER A 0.25mm VAPOR RETARDER OVER A 100mm #57 STONE WATER BARRIER PLACED ON SUBGRADE PROPERLY PREPARED IN ACCORDANCE WITH THE CONTRACT SPECIFICATIONS. (UON)

2.7 SEE PLUMBING, ELECTRICAL & CIVIL SHEETS FOR REQUIRED UNDERSLAB UTILITIES.

2.8 SEE ARCHITECTURAL SHEETS FOR ALL WATERPROOFING DETAILS AND MATERIALS.

2.9 IF UNDERMINING OF FOOTINGS OCCURS, FILL VOIDS WITH 15MPa CONCRETE. DO NOT ATTEMPT TO REPLACE AND RECOMPACT SOIL.

3.0 CONCRETE

3.1 CONCRETE SHALL HAVE THE UNIT WEIGHT AND THE MINIMUM COMPRESSIVE STRENGTHS (f'c) AT 28 DAYS AS SHOWN IN THE CONCRETE MATERIALS SCHEDULE ON THIS SHEET. SEE SPECIFICATIONS FOR ADDITIONAL INFORMATION. ENTRAIN AIR TO PRODUCE TOTAL AIR CONTENT ACCORDING TO THE SPECIFICATIONS FOR CONCRETE EXPOSED TO FREEZING TEMPERATURES (EXTERIOR FOOTINGS, SLAB TURNDOWNS, EXTERIOR SLABS AND SLABS-ON-GRADE, EXTERIOR RETAINING WALLS, AND EXTERIOR GRADE BEAMS.)

3.2 GROUT FOR BASE PLATES SHALL BE NON-SHRINKABLE GROUT AND SHALL HAVE A MINIMUM SPECIFIED COMPRESSIVE STRENGTH AT 28 DAYS OF 35MPa, UNLESS NOTED OTHERWISE.

3.3 NO CALCIUM CHLORIDE SHALL BE USED IN ANY CONCRETE.

3.4 MIXING, TRANSPORTING AND PLACING OF CONCRETE SHALL CONFORM TO ACI 301M-05.

3.5 ALL CONCRETE WORK SHALL CONFORM TO THE REQUIREMENTS OF THE AMERICAN CONCRETE INSTITUTE (ACI) 318M MANUAL (metric), "BUILDING CODE REQUIREMENTS FOR REINFORCED CONCRETE", AND REQUIREMENTS OUTLINED IN THE CONTRACT SPECIFICATIONS. WHEN THERE IS A CONFLICT BETWEEN ACI AND THE SPECIFICATIONS, THE MORE STRINGENT SHALL GOVERN.

3.6 CHAMFER ALL EXPOSED EXTERNAL CORNERS OF CONCRETE WITH 20mm x45 DEGREE CHAMFER UON.

3.7 CONCRETE REINFORCEMENT BARS SHALL CONFORM TO ASTM A615M, GRADE 420, REINFORCING BARS SHALL NOT BE TACK WELDED, WELDED, HEATED OR CUT, UNLESS INDICATED ON THE CONTRACT DOCUMENTS. ALL LAP SPLICES SHALL BE CLASS "B" UON.

3.8 HORIZONTAL FOOTING AND HORIZONTAL WALL REINFORCEMENT SHALL BE CONTINUOUS AND SHALL HAVE 90 DEGREE BENDS AND EXTENSIONS, OR CORNER BARS OF EQUIVALENT SIZE LAPPED WITH A CLASS B TENSION SPLICE AT CORNERS AND INTERSECTIONS. TOP BAR CRITERIA SHALL APPLY IF 300mm OR MORE OF FRESH CONCRETE IS PLACED BELOW BAR.

3.9 SLABS-ON-GRADE SHALL HAVE CONSTRUCTION JOINTS OR CRACK CONTROL JOINTS AS SHOWN ON THE SHEETS. CONSTRUCTION JOINTS CAN BE USED AT CONTROL JOINT LOCATIONS AT CONTRACTORS OPTION. SEE SLAB PLANS & JOINT DETAILS FOR ADDITIONAL INFORMATION. FOR AREAS NOT SHOWN ON THE SHEETS, THE MAXIMUM SPACING OF CONSTRUCTION/ CRACK CONTROL JOINTS SHALL BE 4800 mm.

3.10 SEE SPECIFICATIONS FOR ALL WATERPROOFING/DAMPPROOFING REQUIREMENT.

3.11 ALL CONCRETE REINFORCEMENT SHALL BE DETAILED, FABRICATED, LABELED, SUPPORTED, AND SPACED IN FORMS AND SECURED IN PLACE IN ACCORDANCE WITH THE PROCEDURES AND REQUIREMENTS OUTLINED IN THE LATEST EDITION OF THE "BUILDING CODE REQUIREMENTS FOR REINFORCED CONCRETE", ACI 318M, AND THE "MANUAL OF STANDARD PRACTICE FOR DETAILING REINFORCED CONCRETE STRUCTURES", ACI 315M, LATEST EDITION.

3.12 SHOP DRAWINGS SHOWING REINFORCING DETAILS, INCLUDING STEEL SIZES, SPACING AND PLACEMENT, SHALL BE SUBMITTED FOR REVIEW PRIOR TO FABRICATION.

3.13 ALL DOWELS SHALL MATCH SIZE AND NUMBER OF MAIN REINFORCING, UNLESS NOTED OTHERWISE ON THE SHEETS.

3.14 ADDITIONAL BARS SHALL BE PROVIDED AROUND ALL FLOOR AND WALL OPENINGS AS SHOWN ON THE SHEETS.

3.15 SEE ARCHITECTURAL SHEETS FOR TYPE AND LOCATION OF ALL FLOOR FINISHES.

3.16 THE CONTRACTOR SHALL COORDINATE ADDITIONAL WALL/SLAB OPENINGS NOT SHOWN ON STRUCTURAL SHEETS. SEE MECHANICAL, ELECTRICAL, PLUMBING AND CIVIL SHEETS.

3.17 THE SUB-CONTRACTOR SHALL VERIFY ALL OPENINGS, PAD SIZES, AND ANCHOR BOLTS WITH EQUIPMENT SELECTED.

3.18 FOR ALL WALLS & PIERS, PROVIDE DOWELS INTO FOOTING AT EACH VERT REINF BAR, UON DOWEL SIZE SHALL BE SAME AS VERT REINF.

3.19 ALL REINFORCING INDICATED TO BE WELDED SHALL BE IN ACCORDANCE WITH ASTM A706M. "LOW ALLOY STEEL DEFORMED BARS FOR CONCRETE REINFORCEMENT". ANY INSTALLATIONS USING MANUFACTURER'S EQUIPMENT SHALL BE PER MANUFACTURER'S RECOMMENDATIONS.

3.20 PROVIDE CONCRETE POUR STOPS OR FORMED AS REQUIRED FOR INSTALLATION OF ALL CONCRETE WORK.

3.21 PROVIDE ADDITIONAL (2)-#13 x 600mm REINFORCING BARS IN SLAB-ON GRADE AT ALL RE-ENTRANT CORNERS. PLACE BARS AT MID-DEPTH OF SLAB WITH A CLEARANCE OF 50mm FROM CORNER UON.

4.0 CONCRETE MASONRY

4.1 MASONRY CONSTRUCTION AND MATERIALS SHALL CONFORM TO ALL REQUIREMENTS OF THESE CONTRACT DOCUMENTS AND THE PROJECT SPECIFICATIONS.

4.2 THE SPECIFIED ULTIMATE COMPRESSIVE STRENGTH OF CONCRETE MASONRY (f'm) ON THE NET AREA IS A MINIMUM OF 10.4 MPa.

4.3 PROVIDE TWO #16 BARS CONTINUOUS IN ALL CMU AND CAST-IN-PLACE BOND BEAMS UON ON THE SHEETS. BOND BEAMS SHALL BE CONTINUOUS AND SPACED AT A MAXIMUM OF 1200mm OC VERTICALLY. PROVIDE BOND BEAM STARTER COURSE AT BOTTOM OR FIRST COURSE ON ALL MASONRY WALLS AND PARTITIONS. ALL BOND BEAMS SHALL BE A MINIMUM OF 200mm IN DEPTH WITH REINFORCING BEING CONTINUOUS AND HAVING STANDARD ACI 180° HOOKS AT EACH END. PROVIDE STANDARD BAR SPLICES AS SPECIFIED.

4.4 FOR WALL REINFORCING, SEE DETAIL 7 ON SHEET S5

4.5 CMU CELLS THAT REQUIRE VERTICAL REINFORCING BARS AS INDICATED ON THE CONTRACT DRAWINGS AND/OR SPECS SHALL HAVE REINF BARS PLACED IN CENTERS OF CMU CELLS AND CONTINUOUSLY GROUTED UON.

4.6 PROVIDE LADDER TYPE JOINT REINFORCEMENT AT (200mm EXTERIOR & 400mm INTERIOR) ON CENTER MAXIMUM UON MINIMUM ROD SIZE USED SHALL BE 9 GA. DEFORMED WIRE AND CONFORM TO ASTM A82M, UON.

4.7 PROVIDE CONTROL JOINTS AS INDICATED ON THE ARCHITECTURAL SHEETS.

4.8 GROUT FOR MASONRY SHALL BE NORMAL WEIGHT AND HAVE A MINIMUM COMPRESSIVE STRENGTH OF 25 MPa AT 28 DAYS. GROUT SHALL CONFORM TO ASTM C476M. GROUT LIFTS SHALL NOT EXCEED 1400mm.

4.9 USE MORTAR TYPE S CONFORMING TO ASTM C270M, SEE SPECIFICATIONS.

4.10 CONCRETE MASONRY UNITS SHALL BE NORMAL WEIGHT AND CONFORM TO ASTM C90M.

4.11 ALL CMU CELLS, OPEN CAVITIES, AND AIR SPACES SHALL BE GROUTED TO STOP FRAGMENTS FROM MORTAR BLAST

4.12 BOND BEAM REINFORCING SHALL BE DISCONTINUOUS AT CONTROL JOINTS (UON). MAXIMUM CONTROL JOINT SPACING SHALL BE AS INDICATED ON THE ARCHITECTURAL SHEETS.

4.13 CONTRACTOR SHALL COORDINATE LOCATION OF ALL OPENINGS SEE ARCH, MECH, ELEC, AND PLUMBING SHEETS. FOR SIZE AND LOCATION OF OPENINGS.

4.14 MASONRY WALLS SHALL NOT BE BACK FILLED PRIOR TO THE MORTAR AND GROUT ATTAINING THEIR RESPECTIVE MAXIMUM DESIGN STRENGTHS PER SPECIFICATIONS.

5.0 CFMRF - COLD FORM METAL ROOF FRAMING SYSTEM

5.1 CFMF SHALL BE DESIGNED BY CFMF MANUFACTURER'S ENGINEER FOR ALL LOADING PER CODE AND AS INDICATED ON THE SHEETS.

5.2 FOR WIND LOADS, SEE THE DESIGN CRITERIA ON SHEET S2.

5.3 SUBMIT VENDOR'S PUBLISHED LITERATURE, TEST DATA AND INSTALLATION INSTRUCTIONS FOR METAL STUD ASSEMBLY AND ACCESSORIES INCLUDING OTHER DATA AS MAY BE REQUIRED TO CERTIFY COMPLIANCE WITH PERFORMANCE REQUIREMENTS SPECIFIED HEREIN.

5.4 SHOP DRAWINGS AND DESIGN ANALYSIS SHALL BE STAMPED AND APPROVED BY A LICENSED PROFESSIONAL ENGINEER.

5.5 CONNECTIONS AND GAUGE SIZES ARE MINIMUM AND SHALL BE INCREASED AS NECESSARY TO PROVIDE A STRUCTURALLY ADEQUATE SYSTEM. KICKERS MAY BE ADDED TO REDUCE THE STUD HEIGHTS WHERE ACCEPTABLE AND COORDINATED WITH THE ARCHITECTURAL DRAWINGS.

5.6 CRMRF SHALL HAVE THE FOLLOWING MINIMUM PROPERTIES:

STUD/RAFTER/EAVE STRUT/BRACE/BLOCKING:
Fy = 344 MPa
GAUGE = 18
DEPTH = 152.3 mm
WIDTH = 34.8 mm
MOMENT OF INERTIA, Ix = 847×10^3 mm^4
SECTION MODULUS, Sx = 11.2×10^3 mm^3

TRACK:
Fy = 344 MPa
GAUGE = 16
DEPTH = 152.3 mm
WIDTH = 38 mm
MOMENT OF INERTIA, Ix = 1083×10^3 mm^4
SECTION MODULUS, Sx = 13.8×10^3 mm^3

PURLIN/SUBGIRT:
Fy = 393 MPa
GAUGE = 16
MOMENT OF INERTIA (TOP COMPRESSION), Ixt = 23.7×10^3 mm^4
MOMENT OF INERTIA (BOTT COMPRESSION), Ixb = 22.7×10^3 mm^4
SECTION MODULUS (TOP COMPRESSION), Sxt = 1.8×10^3 mm^3
SECTION MODULUS (BOTT COMPRESSION), Sxb = 1.7×10^3 mm^3

MINIMUM LAP SPLICES OF REINFORCING BARS IN TENSION (PER ACI 318M-05)

f'c = 28 MPa CONCRETE

BAR SIZE \ CENTER TO CENTER BAR SPACING	(---TOP BARS--) LESS THAN 4db	(---TOP BARS--) 4db OR MORE	(--OTHER BARS--) LESS THAN 4db	(--OTHER BARS--) 4db OR MORE	4db
#10	460	460	410	410	40
#13	660	610	510	480	50
#16	1020	760	790	580	60

NOTES:

1. LAP SPLICES ABOVE ARE IN MILLIMETERS UON.
2. YIELD STRENGTH OF REINFORCEMENT, fy, IS 420MPa (LAP SPLICE LENGTH IS IN MILLIMETERS).
3. CONCRETE IS NORMAL WEIGHT (2400Kg/m^3).
4. TOP BAR INDICATES HORIZONTAL REINFORCEMENT WHICH IS PLACED ABOVE 300mm OR MORE OF FRESH CONCRETE.
5. SEE COLUMN SCHEDULE FOR COLUMN AND SHEAR WALL VERTICAL LAP SPLICE.
6. STRAIGHT DEVELOPMENT LENGTH OF AN UNLAPPED BAR IS EQUAL TO VALUE FROM TABLE DIVIDED BY 1.3.
7. CATEGORY FOR BARS SPACED LESS THAN 4d, OR ON CENTER CORRESPONDS TO CATEGORY 1 IN THE CRSI HANDBOOK WHEREAS FOR BARS SPACED 4d, OR MORE ON CENTER CORRESPOND TO CRSI CATEGORY 5.

CONCRETE MATERIALS SCHEDULE

STRUCTURAL ELEMENT	f'c CONCRETE COMPRESSIVE STRENGTH @ 28 DAYS (MPa)
SLAB-ON-GRADE/TURN-DOWN SLABS	28
ROOF AND FLOOR SLABS	28
ALL FOOTINGS (UON)	28
MISC. CURBS, WALLS AND PADS UON	28
CAST-IN-PLACE LINTEL	28

NOTES:
1. ALL CONCRETE SHALL BE NORMAL WEIGHT CONCRETE. (2400 Kg/m^3 UON)
2. ALL CONCRETE SHALL HAVE A WATER-CEMENT RATIO OF 0.45.

MASONRY REINFORCING MINIMUM LAP SPLICES

BAR SIZE	BASIC LAP SPLICE Ld FOR CMU REINFORCING(mm)
#10	450
#13	600
#16	750

STANDARD HOOKS IN TENSION PER (ACI 318M-05)

HOOK DEVELOPMENT LENGTH Ldh (mm)	
BAR SIZE	f'c 28 MPa
#10	180
#13	250
#16	300
#19	380
#22	430
#25	480
#29	560
#32	610
#36	690

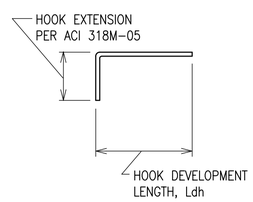

NOTES:

1. CONCRETE IS NORMAL WEIGHT CONCRETE.
2. BAR YIELD STRENGTH, fy = 420 MPa
3. SIDE COVER REQUIREMENTS OF ACI SECT. 12.5.3 ARE ASSUMED TO NOT BE MET.
4. TIE OR STIRRUP REQUIREMENTS OF ACI SECT. 12.5.3 ARE ASSUMED TO NOT BE MET.
5. REDUCTION FOR EXCESS REINFORCEMENT IS NOT TAKEN.
6. HOOK DEVELOPMENT LENGTH IS VALID FOR 180° HOOKS ALSO.

US Army Corps of Engineers
Afghanistan Engineer District

SYMBOL	DESCRIPTION	DATE	APR

DESIGNED BY: GDH | DATE: 09-30-09
DWN BY: MDB | SUBMITTED BY: BAKER
CHK BY: CWW | FILE NO.: ANPSDS-001XXX

Michael Baker Jr., Inc.
A unit of Michael Baker Corporation
Airside Business Park
100 Airside Drive
Moon Township, PA 15108
www.mbakercorp.com

AFGHAN NATIONAL POLICE
STANDARD DESIGN
GUARD TOWER

GENERAL NOTES

SHEET REFERENCE NUMBER:
S1

100% SUBMISSION

STRUCTURAL DESIGN CRITERIA

ALL DESIGNS SHALL CONFORM TO THE PROVISIONS OF THE IBC 2006 AS APPLICABLE

1.0 DESIGN LOADS

1.1 DEAD LOADS

1.1.1 ROOF DEAD LOADS – CONVENTIONAL FRAMING

	MAXIMUM GRAVITY LOAD	MINIMUM GRAVITY LOAD
LIGHT GAUAGE FRAMING	0.20 KPa	0.15 KPa
METAL ROOFING	0.14 KPa	0.05 KPa
INSULATION (batt)	0.10 KPa	0.05 KPa
MISC	0.05 KPa	0.00 KPa
	0.49 KPa	0.25 KPa

1.1.2 ROOF DEAD LOADS – CONCRETE FRAMING

	MAXIMUM GRAVITY LOAD
CONC FLAT SLAB	4.80 KPa
MECH/ELEC/PLUMBING	0.15 KPa
MISC	0.05 KPa
	5.00 KPa

1.2 LIVE LOADS (PER IBC 2006)

1.2.1 ROOF LIVE LOADS: ALL BUILDINGS

GREATER OF 1.0 KPa MINIMUM OR SNOW LOAD

1.2.2 ELEVATED FLOOR UNIFORM LIVE LOADS

GUARD TOWER 4.80 KPa

1.2.3 SLAB–ON–GRADE LIVE LOADS

ALL BUILDINGS 4.80 KPa

1.3 SNOW LOADS (PER IBC 2006)

1.3.1 DESIGN PARAMETERS

GROUND SNOW LOAD (per UFC 3–310–01)	PER LOCAL CONDITION
SNOW IMPORTANCE FACTOR	1.0 KPa
SNOW EXPOSURE FACTOR	1.0 KPa

1.4 SEISMIC LOADS (PER IBC 2006 & UFC 3–310–04)

1.4.1 SEISMIC PARAMETERS – LOAD BEARING MASONRY

SEISMIC OCCUPANCY CATEGORY	II
SEISMIC IMPORTANCE FACTOR (I)	1.0
SEISMIC SITE CLASS	D
Ss	1.280
S1	0.510
Sds	0.853
Sd1	0.510
SEISMIC DESIGN CATEGORY	D
SEISMIC RESISTING SYSTEM	MOMENT RESISTING FRAME SYSTEM SPECIAL REINF CONC MOMENT FRAME
RESPONSE MODIFICATION FACTOR (R)	8.0
RESPONSE COEFFICIENT (Cs)	0.133
SEISMIC ANALYTICAL PROCEDURE	EQUIV LATERAL FORCE
SEISMIC BASE SHEAR	75.6 kN

1.5 WIND LOADS (PER IBC 2006)

1.5.1 DESIGN PARAMETERS

BASIC WIND SPEED	137 Km/h
WIND IMPORTANCE FACTOR	1.0
WIND EXPOSURE CATEGORY	D
DIRECTIONALITY COEFFICIENT (Kd)	0.85
TOPOGRAPHIC FACTOR (Kzt)	1.0

1.5.2 DESIGN WIND PRESSURE – MAIN WINDFORCE RESISTING SYSTEM

LOCATION	CORNER ZONE WIDTH "a"	MEAN ROOF HEIGHT "h"	WINDWARD WALL (@ MEAN ROOF HEIGHT)	LEEWARD WALL (@ MEAN ROOF HEIGHT)	ROOF
FIELD ZONE	N/A	6025mm	528 N/m^2	298 N/m^2	803 N/m^2
CORNER ZONE	900mm	6025mm	800 N/m^2	515 N/m^2	–1244 N/m^2

a = 10% OF LEAST HORIZONTAL DIMENSION OR 0.4h, WHICHEVER IS SMALLER, BUT NOT LESS THAN EITHER 4% OF LEAST HORIZONTAL DIMENSION OR 0.9M.
h = MEAN ROOF HIEGHT, IN METERS, EXCEPT THAT EAVE HIEGHT SHALL BE USED FOR ANGLE GREATER THAN 10°.

1.5.3 DESIGN WIND PRESSURE – WALL COMPONENTS AND CLADDING

EXTERIOR WALL SYSTEMS & THEIR ATTACHMENTS TO THE PRIMARY STRUCTURE SHALL BE DESIGNED FOR THE PRESSURES SHOWN IN THE DIAGRAM BELOW:

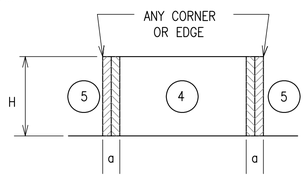

LOCATION	WINDWARD PRESSURE N/m^2 (inward)		LEEWARD PRESSURE N/m^2 (outward)		a
	4	5	4	5	
MAIN BUILDING					(mm)
AREA = 1 m^2	943	943	–1020	–1264	900
AREA = 2 m^2	900	900	–982	–1173	900
AREA = 5 m^2	804	804	–886	–981	900
AREA = 10 m^2	804	804	–886	–981	900

NOTES:
1. DESIGN WIND PRESSURES ABOVE REPRESENT THE NET PRESSURE (SUM OF INTERNAL AND EXTERNAL PRESSURE) APPLIED NORMAL TO ALL SURFACES.
2. LINEAR INTERPOLATION BETWEEN VALUES OF TRIBUTARY AREA IS PERMISSIBLE.
3. PLUS AND MINUS SIGNS SIGNIFY PRESSURE TOWARD AND AWAY FROM THE EXTERIOR SURFACE, RESPECTIVELY.

1.5 WIND LOADS (CONT)

1.5.4 DESIGN WIND PRESSURE – ROOF COMPONENTS AND CLADDING

ROOF COMPONENTS & THEIR ATTACHMENTS SHALL BE DESIGNED FOR THE PRESSURES SHOWN IN THE ADJACENT DIAGRAM & TABLE BELOW:

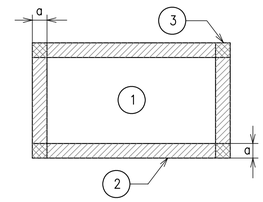

ROOF MEAN HEIGHT

LOCATION	GROSS UPLIFT PRESSURE N/m^2 (upward)			a
	1	2	3	
MAIN BUILDING				(mm)
AREA = 1 m^2	–866	–1513	–1513	900
AREA = 2 m^2	–866	–1513	–1513	900
AREA = 5 m^2	–866	–1513	–1513	900
AREA = 10 m^2	–866	–1513	–1513	900

NOTES:
1. DESIGN WIND PRESSURES ABOVE REPRESENT THE NET PRESSURE (SUM OF INTERNAL AND EXTERNAL PRESSURE) APPLIED NORMAL TO ALL SURFACES.
2. LINEAR INTERPOLATION BETWEEN VALUES OF TRIBUTARY AREA IS PERMISSIBLE.
3. PLUS AND MINUS SIGNS SIGNIFY PRESSURE TOWARD AND AWAY FROM THE EXTERIOR SURFACE, RESPECTIVELY.

2.0 FOUNDATION DESIGN CRITERIA (TO BE CONFIRMED BY THE CONTRACTOR)

THE GEOTECHNICAL ANALYSIS FOR THIS PROJECT IS THE RESPONSIBILITY OF THE CONTRACTOR AWARDED THE WORK. DESIGN VALUES USED IN THE STRUCTURAL ANALYSIS OF THE BUILDINGS HEREIN INDICATED HAVE BEEN ASSUMED AND SHALL BE CONFIRMED AND VERIFIED AS PART OF THE GEOTECHNICAL INVESTIGATION. VALUES WHICH DO NOT MEET THE REQUIREMENTS INDICATED BELOW SHALL BE IMMEDIATELY BROUGHT TO THE ATTENTION OF THE CONTRACTING OFFICER FOR CONSIDERATION AND DETERMINATION ON THE NEXT APPROPRIATE COURSE OF ACTION.

2.1.1 SOIL DESIGN PARAMETERS

NET ALLOWABLE SOIL BEARING CAPACITY	96.0 KPa
UNIT WEIGHT OF SOIL (moist)	1800 Kg/m^3
COEFF ACTIVE EARTH PRESSURE (Kpa)	0.30
COEFF PASSIVE EARTH PRESSURE (Kpp)	3.33
COEFF AT–REST EARTH PRESSURE (Kpr)	.55
COEFF OF SOIL FRICTION	.35
SUBGRADE MODULUS	4120 g/m^3
MINIMUM BEARING DEPTH BELOW GRADE	800mm
SEISMIC SITE CLASS (based on in–situ soil)	D

CONCRETE COVER SCHEDULE

MINIMUM CONCRETE COVER PROTECTION FOR REINFORCEMENT BARS SHALL BE AS FOLLOWS: (SEE ACI 318M–05, SECTION 7.7 FOR CONDITIONS NOT NOTED). DIMENSIONS FOR BAR PLACEMENT GIVEN IN SECTIONS AND DETAILS SHALL SUPERSEDE MINIMUM COVER REQUIREMENTS GIVEN HERE. DIMENSIONS ARE IN mm.

FOOTINGS (EARTH FORMED)		70
COLUMNS / PIERS (TO TIES)		40
GRADE BEAMS OR SLAB TURNED DOWN EDGES:		
TOP		40
BOTTOM (EARTH FORMED)		70
SIDES (EARTH FORMED)		70
SIDES (BOARD FORMED)	#16 BAR & SMALLER	40
	#19 THRU #36 BAR	50
ELEVATED BEAMS & SLABS:		
BEAM TIES & STIRRUPS (NOT EXPOSED TO WEATHER)		40
BEAM TIES & STIRRUPS (EXPOSED TO WEATHER)		50
FLOOR SLABS (NOT EXPOSED TO WEATHER)		20
FLOOR SLABS (EXPOSED TO WEATHER)		
#19 & LARGER		50
#13 & SMALLER		40
ROOF SLAB BARS		25
SLABS–ON–GRADE (NO EXPOSURE TO WEATHER) FROM TOP		20
SLABS–ON–GRADE (EXPOSURE TO WEATHER) FROM TOP		40
UTILITY TUNNEL WALLS, RETAINING WALLS AND SHEAR WALLS, (NO SURFACES SHALL BE EARTH FORMED) EARTH SIDE AND FRONT SIDE (EXPOSED TO WEATHER):		
#16 BAR AND SMALLER		40
#19 THRU #36 BAR		50

PROVIDE STANDARD BAR CHAIRS AND SPACERS AS REQUIRED TO MAINTAIN CONCRETE PROTECTION SPECIFIED.

CONCRETE COLUMN SCHEDULE

MARK	SIZE (LxW)	REINFORCING: VERT BARS	REINFORCING: TIES
C1	400x400	(8)–#25	#16 @ 100 (CORE OF EXT & CORNER COLUMNS) #13 @ 150 (CORE OF INTERIOR COLUMNS) #13 @ 200 (OTHER)

NOTE:
1. DIMENSIONS NOTED ARE MILLIMETERS (mm) UON.
2. SECOND STORY COLUMNS ARE SAME AS FIRST STORY COLUMNS.
3. CORE INDICATES THE AREA OF COLUMN & BEAM INTERSECTION
4. TIE INDICATES PERIMETER & CROSS TIE COMBINED

CONCRETE BEAM SCHEDULE

MARK	SIZE (mm) (BxH)	REINFORCING: TOP	REINFORCING: BOTTOM	REINFORCING: STIRRUPS	REINFORCING: MIDBAR	REMARKS
FLOOR BEAM						
FB1	400x400	(2)–#25	(2)–#25	#13 @ 250	N/A	TOP BAR LAP AT CENTER BOTT BAR LAP PAST COL
ROOF BEAM						
RB1	400x400	(2)–#16	(2)–#16	#13 @ 250	N/A	TOP BAR LAP AT CENTER BOTT BAR LAP PAST COL

MASONRY CONCRETE LINTEL SCHEDULE

OPENING TYPE OR SIZE, BEAM LOCATION OR TYPE	MAX SPAN (mm)	BEAM DEPTH (mm)	MAIN REINFORCING: TOP	MAIN REINFORCING: BOTTOM	MAIN REINFORCING: OTHER	SHEAR REINF STIRRUPS
INT WALL OPENING, NON–BEARING	1800	400		(2)–#13		----
INT WALL OPENING, NON–BEARING	900	200		(2)–#13		----

1. STRUCTURAL DRAWINGS DO NOT INDICATE ALL OPENINGS IN MASONRY WALLS. VERIFY NUMBER, SIZE AND LOCATION OF ALL OPENINGS IN MASONRY WALLS FROM ARCHITECTURAL SHEETS AND APPROVED PLUMBING, MECHANICAL, AND ELECTRICAL SHOP DRAWINGS.
2. PROVIDE 200mm BEARING EA END FOR 200mm DEEP MASONRY LINTEL PROVIDE 400mm BEARING EA END FOR 400mm DEEP CIPL.
3. FOR HEAD DETAILS REFER TO ARCHITECTURAL SHEETS.
4. REINFORCING SHALL BE ASTM A615M, GRADE 420. CONCRETE FOR CAST–IN–PLACE BEAMS SHALL HAVE A MINIMUM COMPRESSIVE STRENGTH OF 28 MPa AT 28 DAYS.
5. CONTRACTOR SHALL SUBMIT FOR APPROVAL SHOP DRAWINGS AND SCHEDULES SHOWING SIZE, DETAILS, LOCATIONS, ETC FOR ALL CAST–IN–PLACE BEAMS IN CMU WALLS.

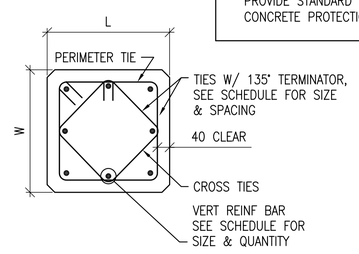

1 / S2 S2 COLUMN DETAIL
SCALE: 1:10

US Army Corps of Engineers
Afghanistan Engineer District

SYMBOL	DESCRIPTION	DATE	APR

DESIGNED BY: GDH | DWN BY: MDB | CHK BY: CWW | DATE: 09–30–09 | SUBMITTED BY: BAKER | FILE NO.: ANPSDS–002XXX

Michael Baker Jr., Inc
A unit of Michael Baker Corporation
Airside Business Park
100 Airside Drive
Moon Township, PA 15108
www.mbakercorp.com

AFGHAN NATIONAL POLICE
STANDARD DESIGN
GUARD TOWER

DESIGN CRITERIA & SCHEDULES

SHEET REFERENCE NUMBER:
S2

100% SUBMISSION

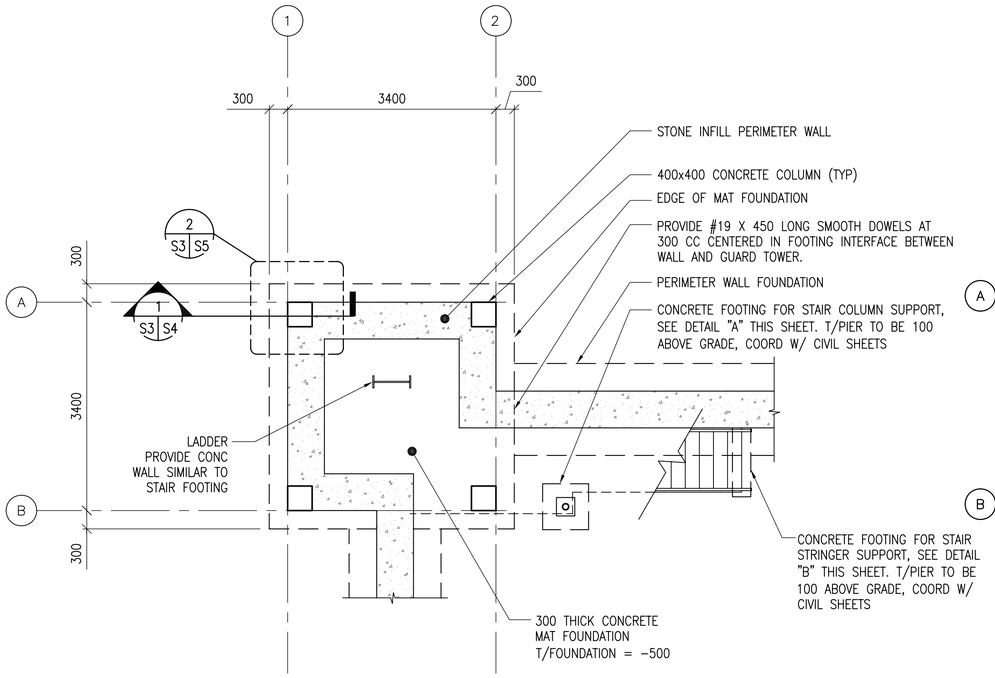

1 S3 S3 GUARD TOWER FOUNDATION PLAN
SCALE: 1:50

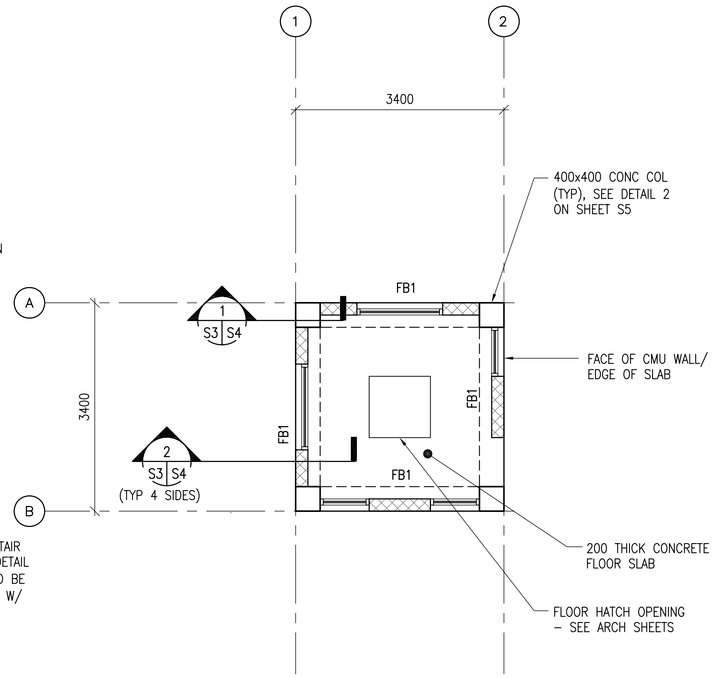

2 S3 S3 GUARD TOWER ELEVATED FLOOR FRAMING PLAN
SCALE: 1:50

NOTES:
1. FINISH GRADE ELEVATION SHALL BE (DATUM 0.0) ALL PLUS OR MINUS DIMENSIONS INDICATED ON PLAN OR REFERRED TO IN NOTES RELATE TO FINISH GRADE ELEVATION.
2. TOP OF FOOTINGS: SEE PLAN
3. REFER TO SHEETS S1 AND S2 FOR STRUCTURAL NOTES, BASIS OF DESIGN, SYMBOLS AND ABBREVIATIONS.
4. REFER TO ARCHITECTURAL SHEETS FOR MASONRY PARTITION TYPES
5. ALL CMU CELLS TO BE FULLY GROUTED. SEE SHEET S5 FOR REINF SIZE, SPACING & DETAILS.
6. CONCRETE ROOF AND FLOOR STRUCTURE SHALL BE POURED-IN-PLACE IN ONE CONTINUOUS OPERATION AND SHORED AS REQUIRED UNTIL THE CONCRETE REACHES 75% OF ITS STRENGTH AS A MINIMUM.
7. COORD W/ ARCHITECTURAL SHEETS FOR COLD-FORMED STEEL OVERBUILT FRAMING ABOVE ROOF SLAB.
8. COLD-FORMED METAL OVERBUILT ROOF FRAMING NOT SHOWN FOR CLARITY. SEE OVERBUILT ROOF FRAMING DETAILS AND SECTIONS ON SHEET S4.

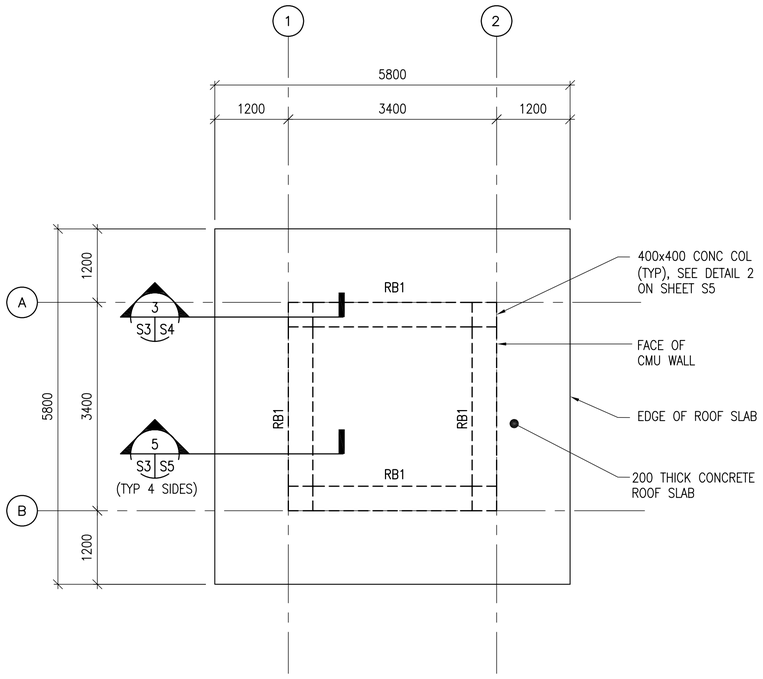

3 S3 S3 GUARD TOWER ROOF FRAMING PLAN
SCALE: 1:50

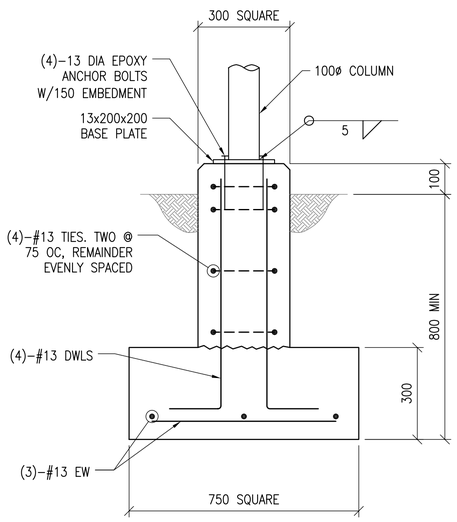

NOTE: AT WEST STAIR COLUMN FOUNDATION OMIT FOOTER & DOWEL INTO PERIMETER WALL FOUNDATION

A S3 S3 DETAIL
SCALE: 1:10

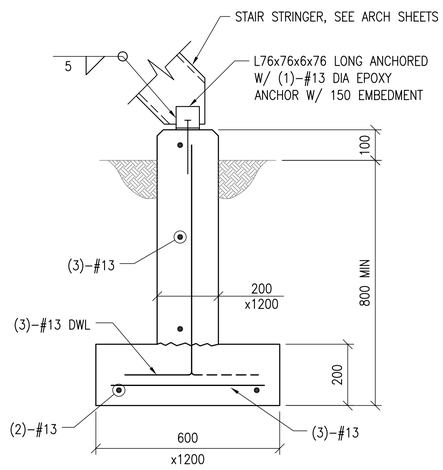

NOTE:
1. USE SIMILAR DETAIL FOR LADDER.

B S3 S3 DETAIL
SCALE: 1:10

UNLESS OTHERWISE NOTED, LINEAR DIMENSIONS SHOWN ARE IN MILLIMETERS (MM)

0 200 400 800
SCALE: 1: 10

0 1000 2000 4000
SCALE: 1: 50

US Army Corps of Engineers
Afghanistan Engineer District

SYMBOL	DESCRIPTION	DATE	APR

DESIGNED BY: GDH
DATE: 09-30-09
DWN BY: MDB
SUBMITTED BY: BAKER
CHK BY: CWW
FILE NO.: ANPSDS-103XXX

Michael Baker Jr., Inc
A unit of Michael Baker Corporation
Airside Business Park
100 Airside Drive
Moon Township, PA 15108
www.mbakercorp.com

AFGHAN NATIONAL POLICE
STANDARD DESIGN
GUARD TOWER

FOUNDATION, FLOOR FRAMING AND ROOF PLANS

SHEET REFERENCE NUMBER:
S3

100% SUBMISSION

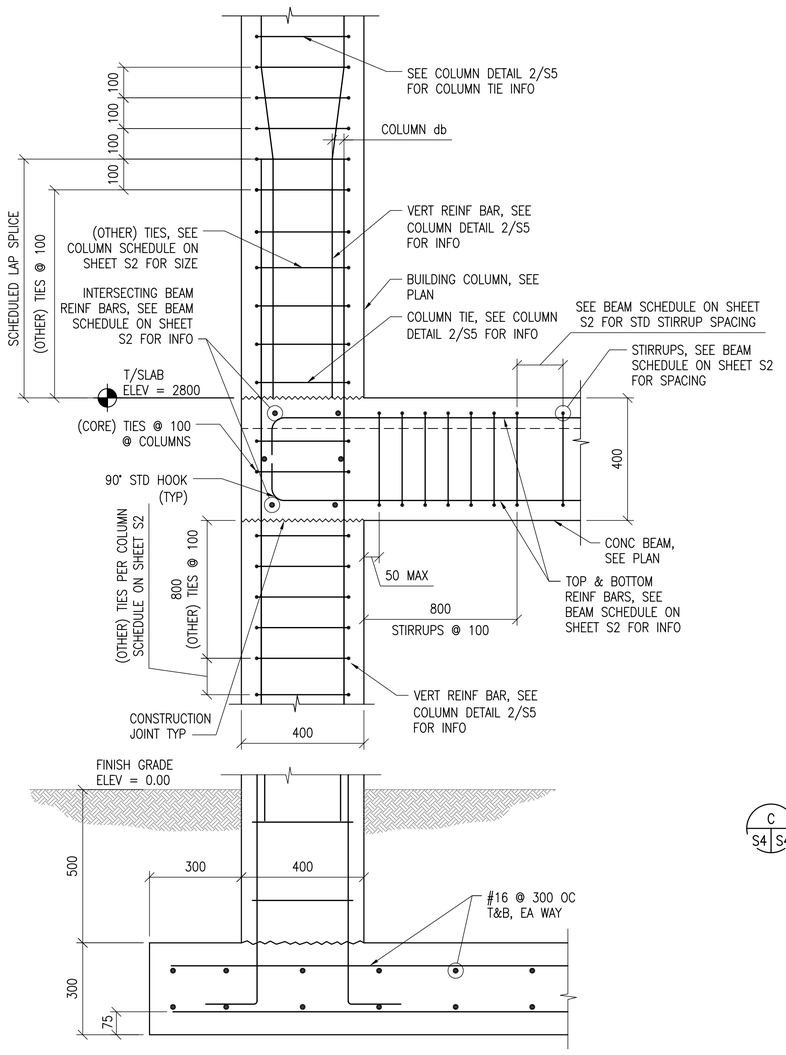

NOTE: RPG STANDOFF ENCLOSURE & OVER BUILT ROOF FRAMING OMITTED FROM SECTION FOR CLARITY

1 S3 S4 SECTION
SCALE: NTS

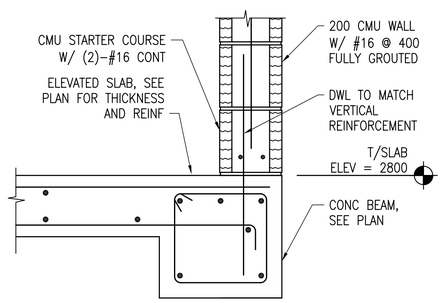

2 S3 S4 SECTION
SCALE: 1:10

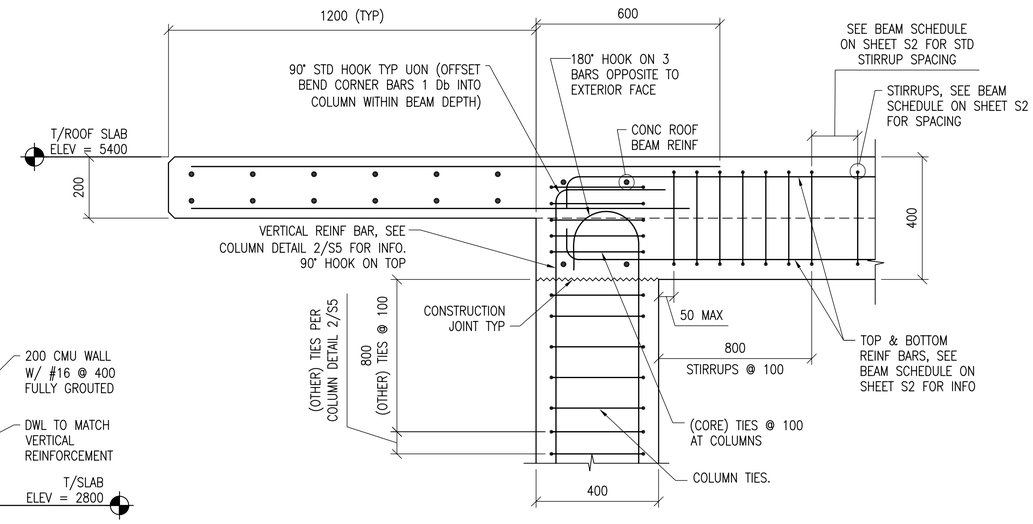

3 S3 S4 SECTION
SCALE: 1:10

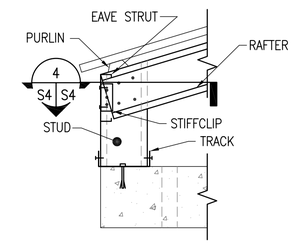

C S4 S4 DETAIL
SCALE: 1:10

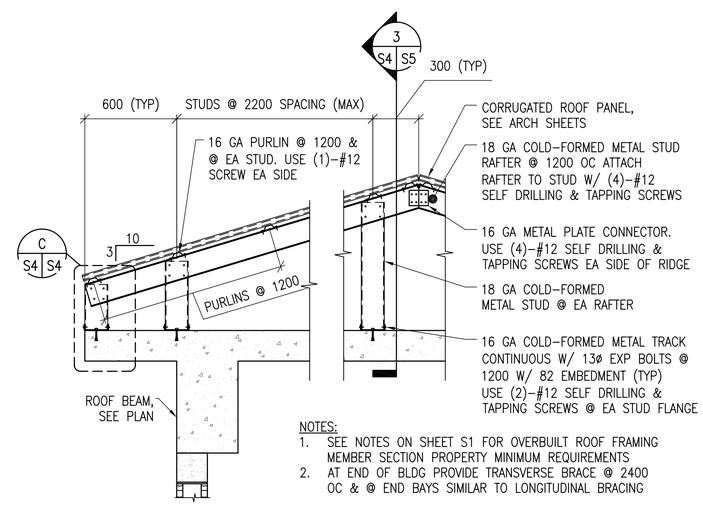

NOTES:
1. SEE NOTES ON SHEET S1 FOR OVERBUILT ROOF FRAMING MEMBER SECTION PROPERTY MINIMUM REQUIREMENTS
2. AT END OF BLDG PROVIDE TRANSVERSE BRACE @ 2400 OC & @ END BAYS SIMILAR TO LONGITUDINAL BRACING

A S4 S4 TYPICAL OVERBUILT ROOF FRAMING DETAIL
SCALE: 1:20

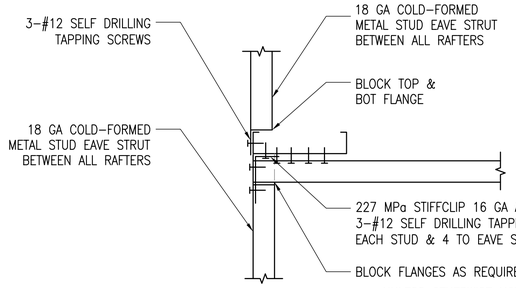

4 S4 S4 SECTION
SCALE: 1:5

UNLESS OTHERWISE NOTED, LINEAR DIMENSIONS SHOWN ARE IN MILLIMETERS (MM)

0 100 200 400
SCALE: 1: 5

0 200 400 800
SCALE: 1: 10

0 400 800 1600
SCALE: 1: 20

US Army Corps of Engineers
Afghanistan Engineer District

SYMBOL	DESCRIPTION	DATE	APR

DESIGNED BY: GDH | DATE: 09-30-09
DWN BY: MDB | SUBMITTED BY: BAKER
CHK BY: CWW | FILE NO.: ANPSDS-304XXX

Michael Baker Jr., Inc
A unit of Michael Baker Corporation
Airside Business Park
100 Airside Drive
Moon Township, PA 15108
www.mbakercorp.com

AFGHAN NATIONAL POLICE
STANDARD DESIGN
GUARD TOWER

SECTIONS AND DETAILS

SHEET REFERENCE NUMBER:
S4

100% SUBMISSION

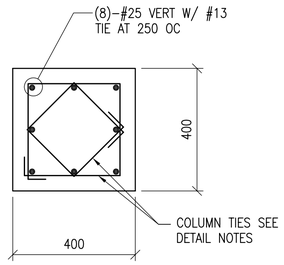

TYPICAL COLUMN REINFORCING DETAIL

1 S3 S5 SCALE: 1:10

DETAIL NOTES:
1. PROVIDE #16 CLUMN TIES @ 100 WITHIN COLUMN CORE, OTHERWISE PROVIDE #13 TIES @ 200.
2. COLUMN CORE INDICATES AREA OF COLUMN BETWEEN THE TOP AND BOTTOM OF AN INTERSECTING BEAM.

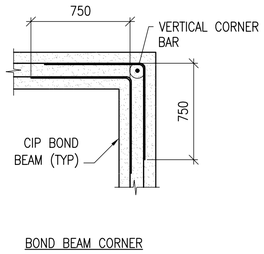

BOND BEAM CORNER

CIP BOND BEAM DETAILS

2 S5 SCALE: NTS

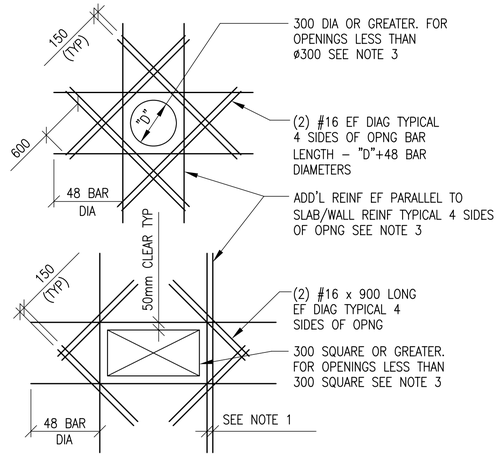

SLAB OPENINGS

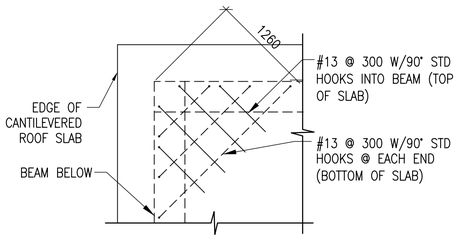

ELEVATED SLAB CORNERS

ADD'L REINFORCEMENT DETAILS

4 S5 SCALE: NTS

DETAIL NOTES:
1. WHERE MORE THAN ONE ADDITIONAL BAR IS REQUIRED PARALLEL TO THE EXISTING SLAB/WALL REINFORCING THE ADDITIONAL REINFORCING BARS SHALL BE SPACED AT 100 ON CENTER.
2. ADDITIONAL REINFORCING PARALLEL TO THE SLAB/WALL REINFORCING SHALL BE #15 BARS THAT PROVIDE A STEEL AREA ON EACH SIDE OF THE OPENING EQUAL TO 1/2 THE AREA OF THE REINFORCING CUT BY THE OPENING.
3. FOR OPENINGS WITH SIDES OR DIAMETERS LESS THAN 300 SPREAD THE SLAB/WALL REINFORCING TO CLEAR THE OPENING.

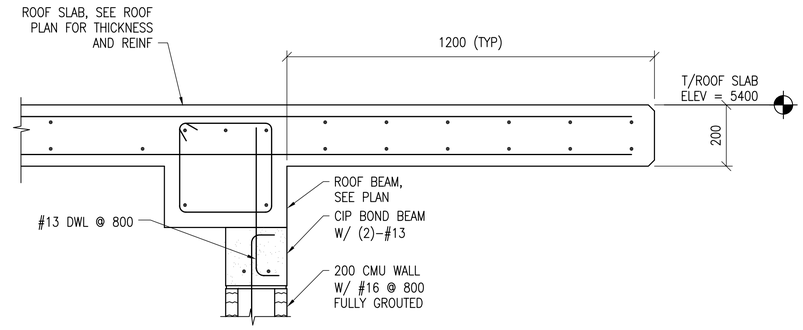

SECTION

5 S3 S5 SCALE: NTS

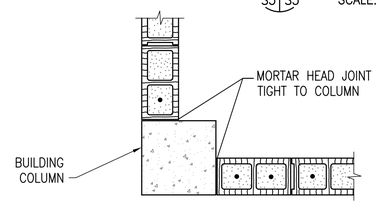

WALL END AT COLUMN

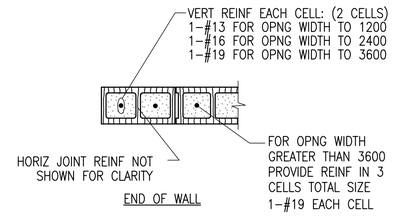

END OF WALL

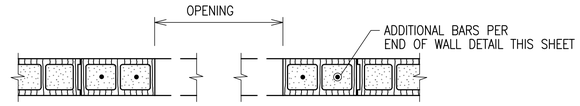

MASONRY OPENING W/ LINTEL

NOTE:
1. ALL CMU CELLS FULLY GROUTED.

TYPICAL CMU DETAILS

6 S5 SCALE: NTS

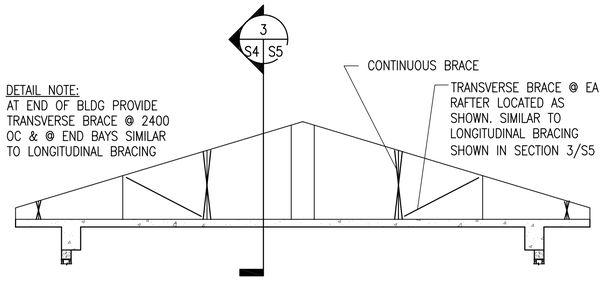

DETAIL NOTE:
AT END OF BLDG PROVIDE TRANSVERSE BRACE @ 2400 OC & @ END BAYS SIMILAR TO LONGITUDINAL BRACING

TYPICAL ROOF BRACE LAYOUT DETAIL

B S4 S4 SCALE: NTS

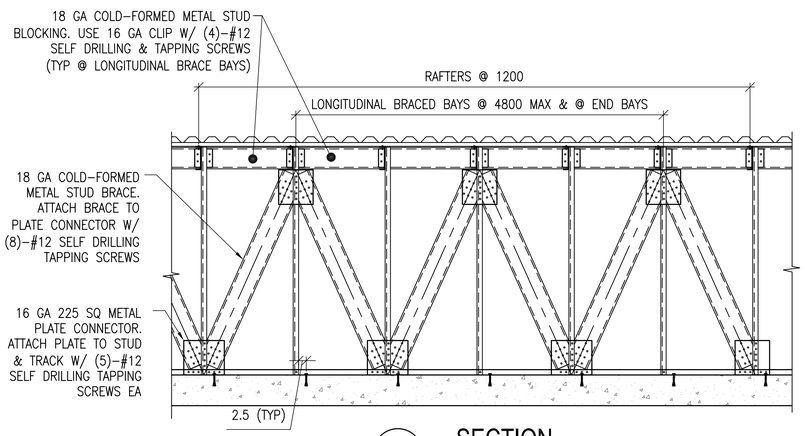

SECTION

3 S4 S4 SCALE: NTS

TYPICAL HIP FRAMING DETAIL

SCALE: 1:5

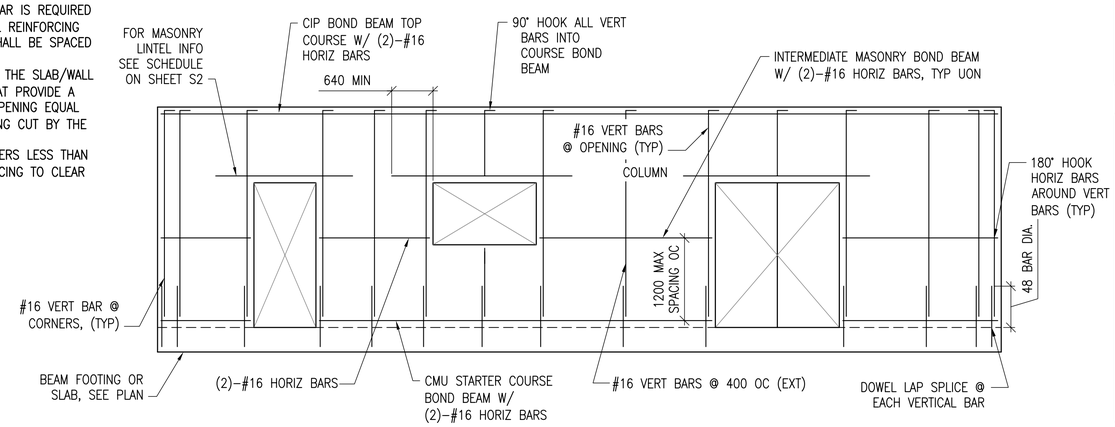

MIN CMU WALL REINFORCING

7 S5 SCALE: NTS

UNLESS OTHERWISE NOTED, LINEAR DIMENSIONS SHOWN ARE IN MILLIMETERS (MM)

0 200 400 800

SCALE: 1: 10

US Army Corps of Engineers
Afghanistan Engineer District

SYMBOL	DESCRIPTION	DATE	APR

DESIGNED BY: GDH
DWN BY: RCG
CHK BY: CWW
DATE: 09-30-09
SUBMITTED BY: BAKER
FILE NO.: ANPSDS-505XXX

Michael Baker Jr., Inc.
A unit of Michael Baker Corporation
Airside Business Park
100 Airside Drive
Moon Township, PA 15108
www.mbakercorp.com

AFGHAN NATIONAL POLICE
STANDARD DESIGN
GUARD TOWER

TYPICAL DETAILS

SHEET REFERENCE NUMBER:
S5

100% SUBMISSION

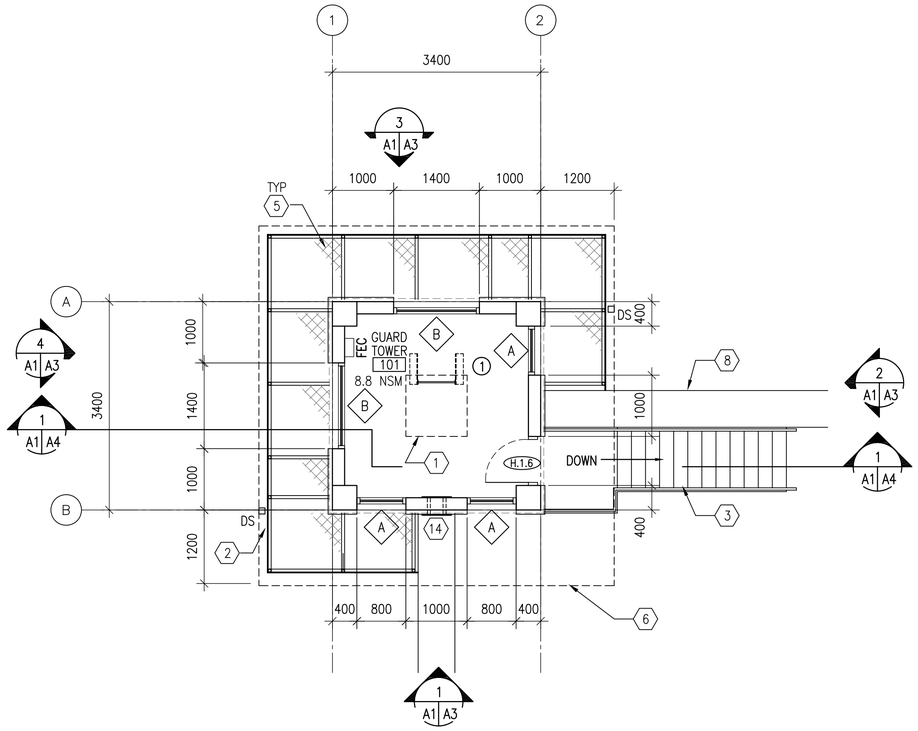

1 A1 A1 FIRST FLOOR PLAN

SCALE: 1:50

11.6 GSM

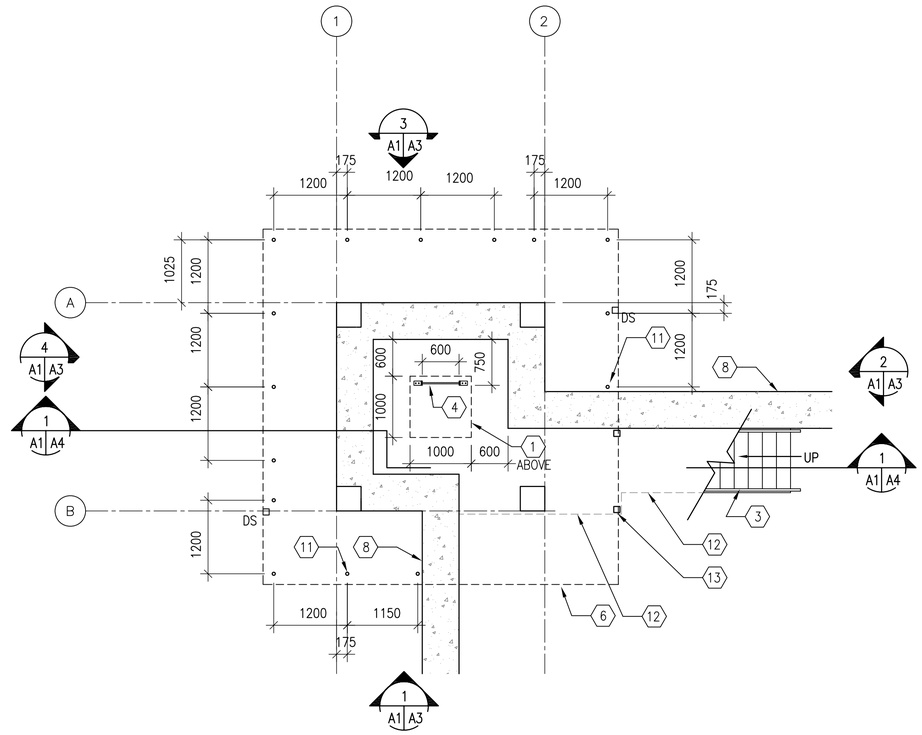

2 A1 A1 GROUND FLOOR PLAN

SCALE: 1:50

GENERAL NOTES:

A. OPENINGS FOR DOORS SHALL BE LOCATED 200 MM FROM THE ADJACENT WALL UNLESS NOTED OTHERWISE.

B. SURFACES TO BE PAINTED SHALL BE CLEAN AND FREE OF FOREIGN MATTER BEFORE APPLICATION OF PAINT. CLEANING SHALL BE SCHEDULED SO THAT DUST AND OTHER CONTAMINANTS WILL NOT FALL ON WET, NEWLY PAINTED SURFACES.

C. CONCRETE AND INTERIOR MASONRY SURFACES GROUTED SOLID SHALL BE ALLOWED TO DRY AT LEAST 30 DAYS BEFORE PAINTING EXCEPT CONCRETE SLAB ON GRADE WHICH SHALL BE ALLOWED TO CURE 90 DAYS BEFORE PAINTING.

D. PAINTS CONTAINING LEAD IN EXCESS OF 0.06 PERCENT BY WEIGHT OF THE TOTAL NONVOLATILE CONTENT SHALL NOT BE USED.

E. MERCURIAL FUNGICIDES SHALL NOT BE USED IN OIL–BASE PAINT.

F. REMOVE LOOSE DIRT AND CLEAN SURFACES BEFORE PAINTING. APPLY PAINT TO INTERIOR STRUCTURAL RIGID FRAMINGS AND CEILINGS AND TEST FOR ADHESION. PRIMER COAT FOR MASONRY. INITIAL FIRST COAT WITH AN ACRYLIC LATEX PAINT FOR EXTERIOR SURFACES AND A SECOND COAT WITH A WATER REPELLENT ACRYLIC LATEX PAINT.

G. METAL DOORS AND FRAMES SHALL RECEIVE A PRIMER COAT PLUS TWO COATS OF PAINT.

H. DIMENSIONS ARE TO STRUCTURAL COLUMN GRID, EDGE OF WINDOW OPENINGS, AND TO HINGE SIDE OF DOOR OPENINGS.

KEY NOTES: (X)

1. 900 MM x 900 MM FLOOR HATCH – RE: DETAIL 1/A6.
2. RPG STANDOFF SCREEN
3. EXTERIOR STEEL STAIR.
4. LADDER – RE: DETAIL 3/A6.
5. RETURN FENCE HORIZONTALLY TO FACE OF WALL.
6. LINE OF ROOF OVERHANG, ABOVE.
7. NOT USED
8. STONE FORCE PROTECTION WALL.
9. NOT USED
10. NOT USED
11. 50 MM DIAMETER GALVANIZED STEEL PIPE SUPPORT.
12. LINE OF STEEL STAIR AND PLATFORM ABOVE.
13. STEEL STAIR COLUMN.
14. TWO–PIECE WALL THIMBLE AND TRIM PLATE FOR OPTIONAL WOOD BURNING STOVE CHIMNEY PIPE. STOVE AND PIPE BY OTHERS.

ROOM FINISHES: (X)

1. WALLS: PAINTED PLASTER,
   FLOOR: SEALED CONCRETE
   CEILING: PAINTED PLASTER APPLIED TO STRUCTURE

LEGEND:

- (F.1.4) DOOR TYPE, SEE SHEET A5
- (A) WINDOW TYPE, SEE SHEET A5
- (X) KEY NOTE
- FEC FIRE EXTINGUISHER CABINET
- (1) ROOM FINISH TYPE DESIGNATION

UNLESS OTHERWISE NOTED, LINEAR DIMENSIONS SHOWN ARE IN MILLIMETERS (MM)

0 1000 2000 4000

SCALE: 1: 50

US Army Corps of Engineers

Afghanistan Engineer District

SYMBOL	DESCRIPTION	DATE	APR

DESIGNED BY: PFF | DATE: 09–30–09
DWN BY: PFF | SUBMITTED BY: BAKER
CHK BY: NLJ | FILE NO.: ANPSDA–101XXX

Michael Baker Jr, Inc
A unit of Michael Baker Corporation
Airside Business Park
1500 Airside Drive
Moon Township, PA 15108
www.mbakercorp.com

AFGHAN NATIONAL POLICE
STANDARD DESIGN
GUARD TOWER

FLOOR PLANS

SHEET REFERENCE NUMBER:

A1

100% SUBMISSION

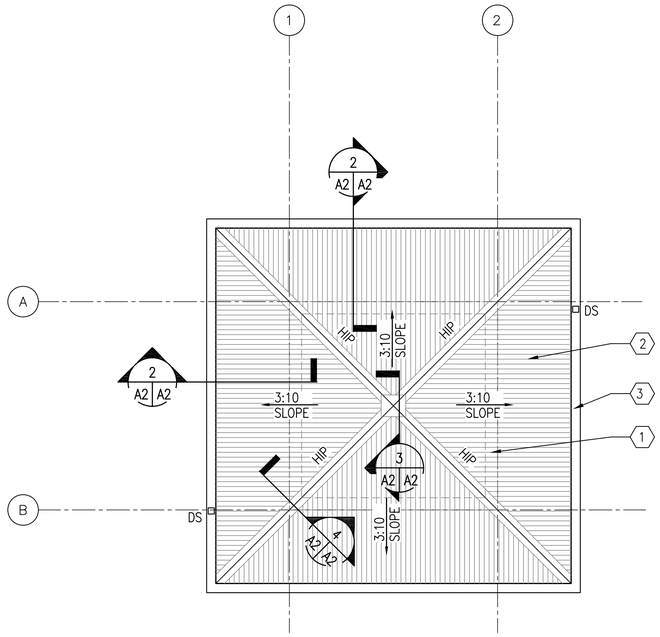

1 A2 A2 ROOF PLAN
SCALE: 1:50

N

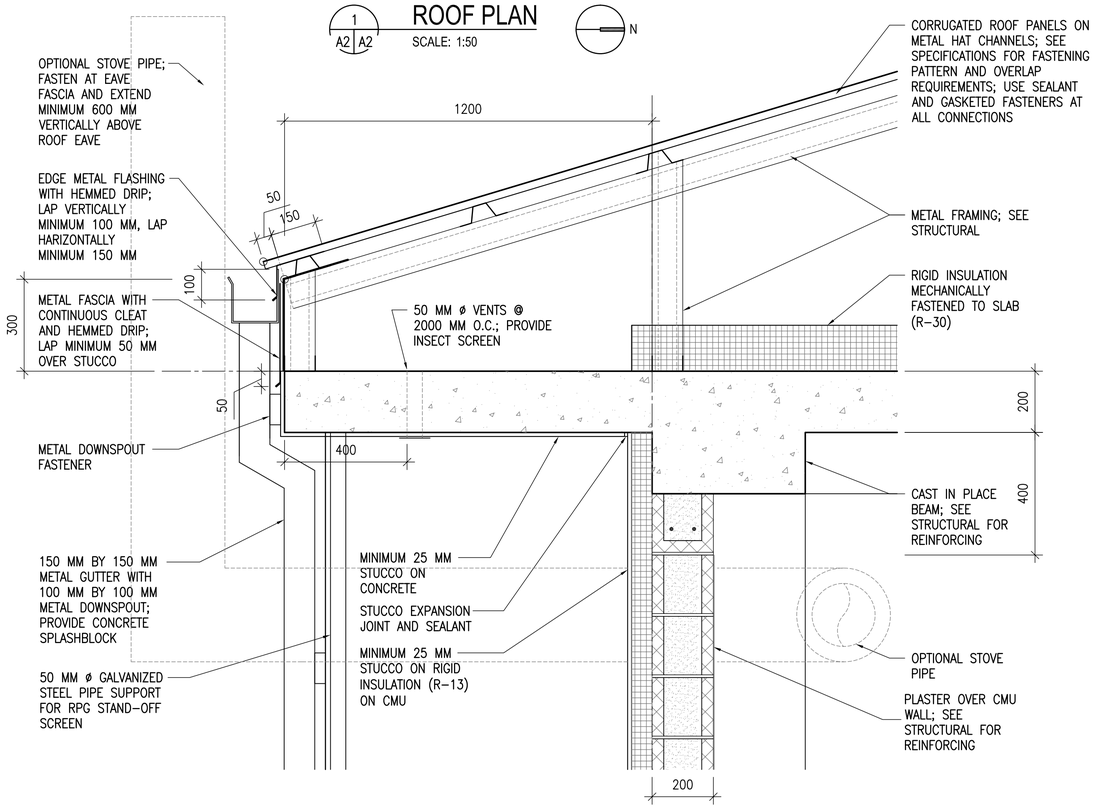

2 A2 A2 EAVE DETAIL
SCALE: 1:10

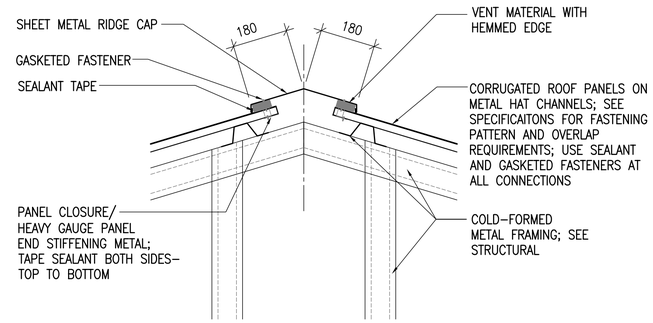

3 A2 A2 RIDGE VENT DETAIL
SCALE: 1:10

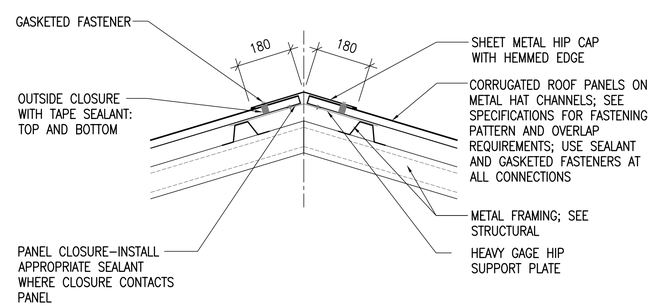

4 A2 A2 HIP DETAIL
SCALE: 1:10

KEY NOTES: (X)

1. LINE OF BUILDING WALL, BELOW
2. CORRUGATED METAL ROOF PANELS ON COLD-FORMED METAL FRAMING
3. METAL GUTTER

LEGEND:

(X) KEY NOTE

UNLESS OTHERWISE NOTED, LINEAR DIMENSIONS SHOWN ARE IN MILLIMETERS (MM)

0 200 400 800
SCALE: 1: 10

0 1000 2000 4000
SCALE: 1: 50

US Army Corps of Engineers
Afghanistan Engineer District

SYMBOL	DESCRIPTION	DATE	APR

DESIGNED BY: PFF	DATE: 09-30-09
DWN BY: PFF	SUBMITTED BY: BAKER
CHK BY: NLJ	FILE NO.: ANPSDA-102XXX

Michael Baker Jr., Inc
A unit of Michael Baker Corporation
Airside Business Park
100 Airside Drive
Moon Township, PA 15108
www.mbakercorp.com

AFGHAN NATIONAL POLICE
STANDARD DESIGN
GUARD TOWER

ROOF PLAN AND DETAILS

SHEET REFERENCE NUMBER:
A2

100% SUBMISSION

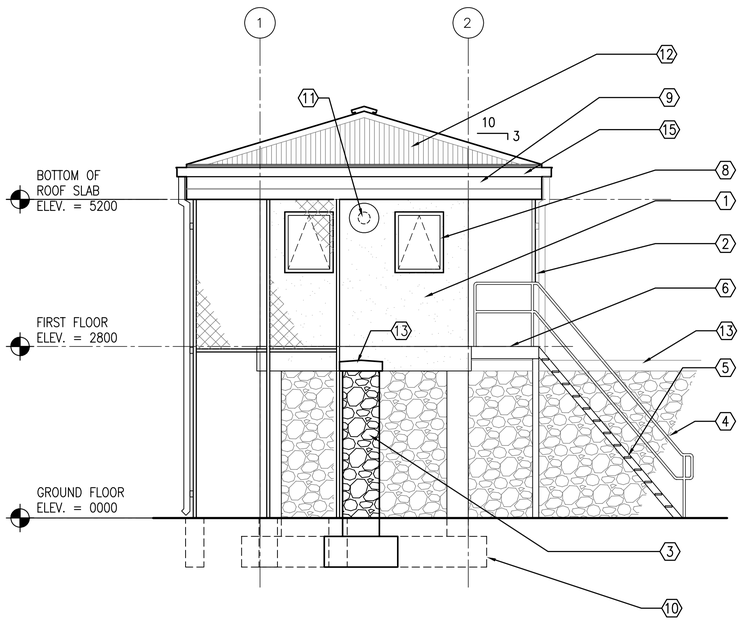

1 A1 A3 EAST ELEVATION
SCALE: 1:50

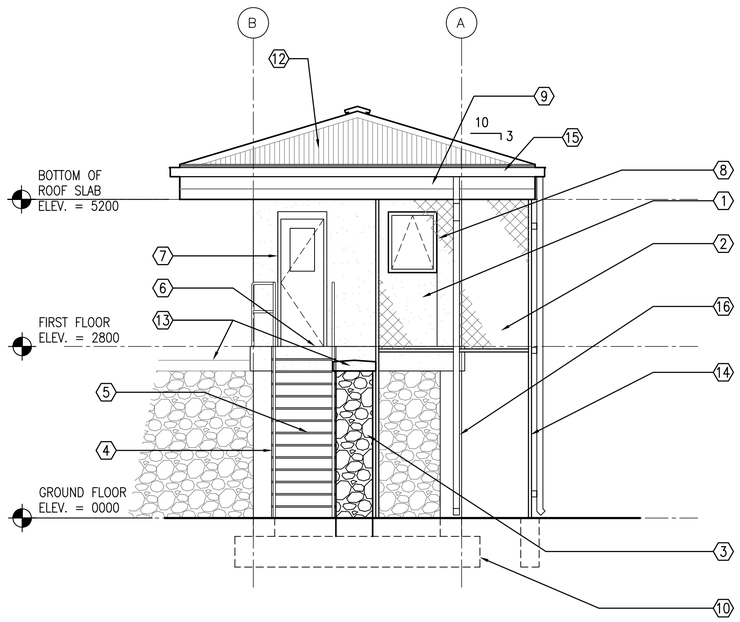

2 A1 A3 NORTH ELEVATION
SCALE: 1:50

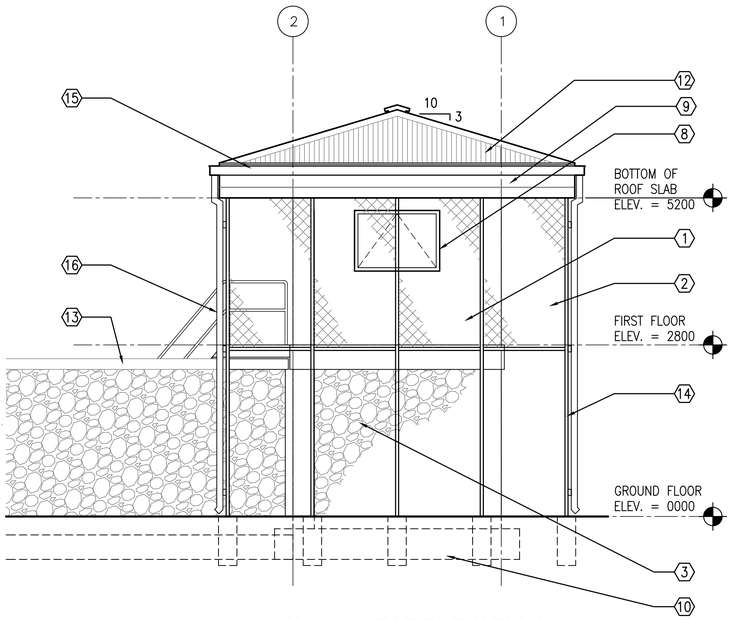

3 A1 A3 WEST ELEVATION
SCALE: 1:50

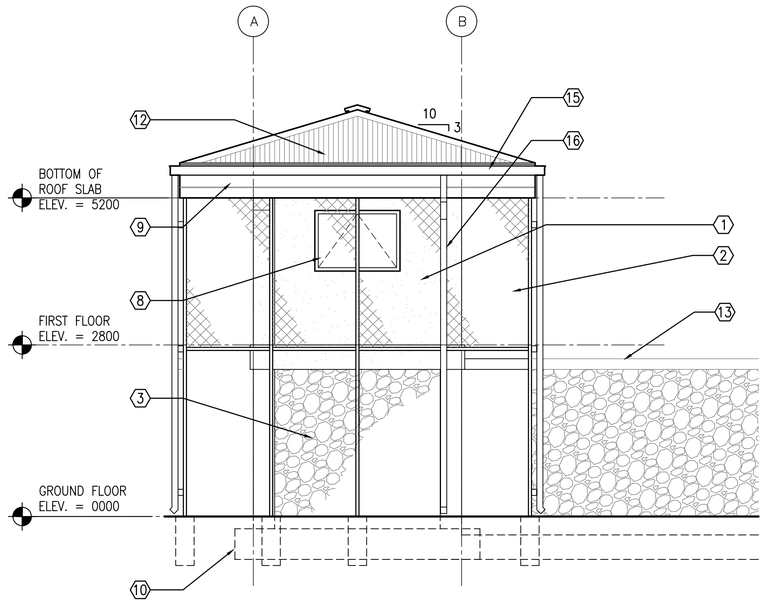

4 A1 A3 SOUTH ELEVATION
SCALE: 1:50

KEY NOTES: (X)

1. STUCCO AND RIGID INSULATION SYSTEM ON CMU AND CONCRETE
2. RPG STANDOFF SCREEN
3. STONE FORCE PROTECTION WALL, BEYOND
4. STEEL PIPE RAILING
5. STEEL STAIR TREADS
6. STEEL DIAMOND PLATE PLATFORM
7. STEEL FRAME AND DOOR WITH PLEXI GLASS LITE
8. ~~WOOD AWNING~~ WINDOW SLIDERS
9. STEEL FASCIA
10. SEE STRUCTURAL DRAWINGS FOR CONCRETE FOOTING
11. TWO-PIECE WALL THIMBLE AND TRIM PLATE FOR OPTIONAL WOOD BURNING STOVE CHIMNEY PIPE. STOVE AND PIPE BY OTHERS.
12. CORRUGATED METAL ROOF PANELS ON COLD-FORMED METAL FRAMING
13. CAST CONCRETE WALL CAP
14. 50 DIAMETER GALVANIZED STEEL PIPE SUPPORTS
15. METAL GUTTER
16. METAL DOWNSPOUT WITH SPLASH BLOCK

UNLESS OTHERWISE NOTED, LINEAR DIMENSIONS SHOWN ARE IN MILLIMETERS (MM)

0 1000 2000 4000
SCALE: 1: 50

US Army Corps of Engineers
Afghanistan Engineer District

SYMBOL	DESCRIPTION	DATE	APR

DESIGNED BY: PFF
DATE: 09-30-09
DWN BY: PFF
SUBMITTED BY: BAKER
CHK BY: NLJ
FILE NO.: ANPSDA-203XXX

Michael Baker Jr., Inc
A unit of Michael Baker Corporation
Airside Business Park
100 Airside Drive
Moon Township, PA 15108
www.mbakercorp.com

AFGHAN NATIONAL POLICE
STANDARD DESIGN
GUARD TOWER

EXTERIOR ELEVATIONS

SHEET REFERENCE NUMBER:
A3

100% SUBMISSION

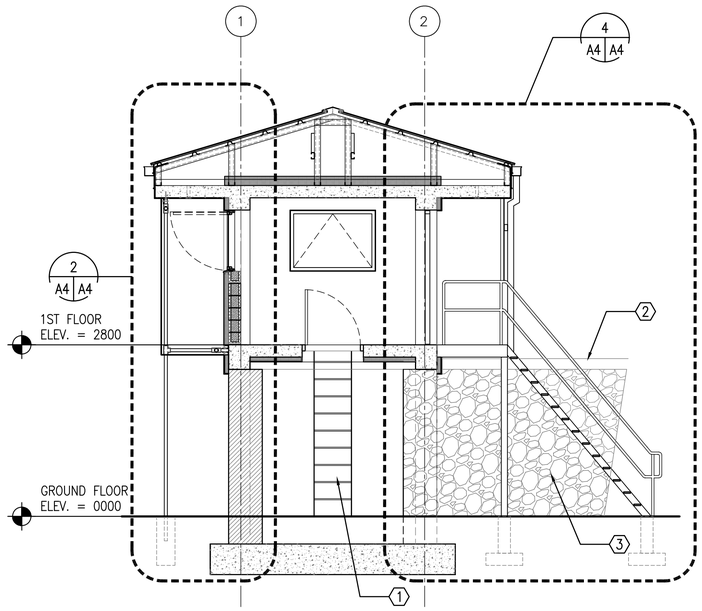

1 A1 A4 BUILDING SECTION
SCALE: 1:50

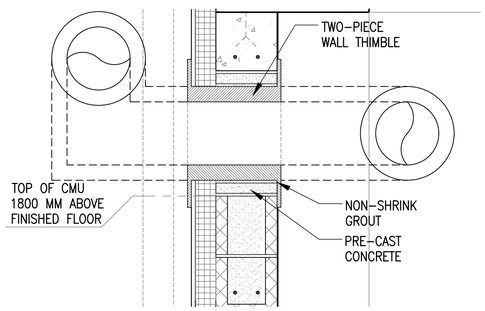

4 A4 A4 THIMBLE DETAIL, TYPICAL
SCALE: 1:10

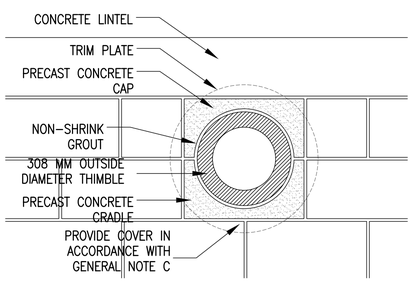

5 A4 A4 THIMBLE DETAIL, TYPICAL
SCALE: 1:10

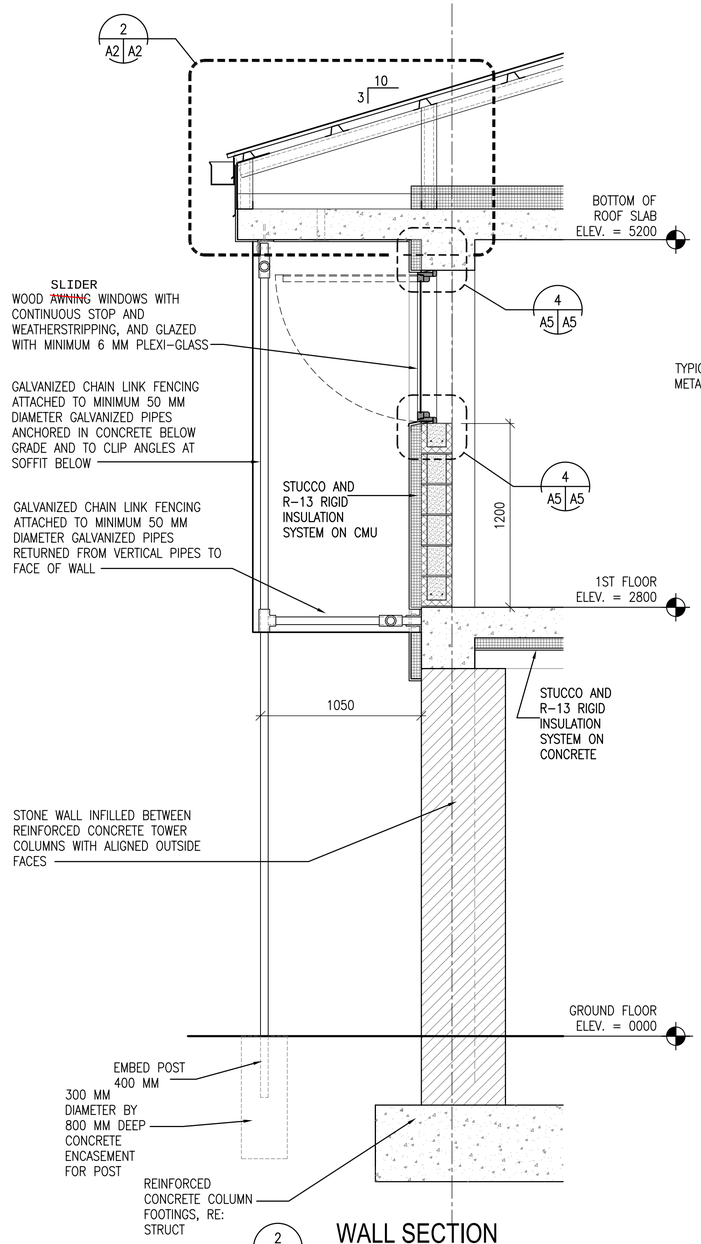

2 A4 A4 WALL SECTION
SCALE: 1:20

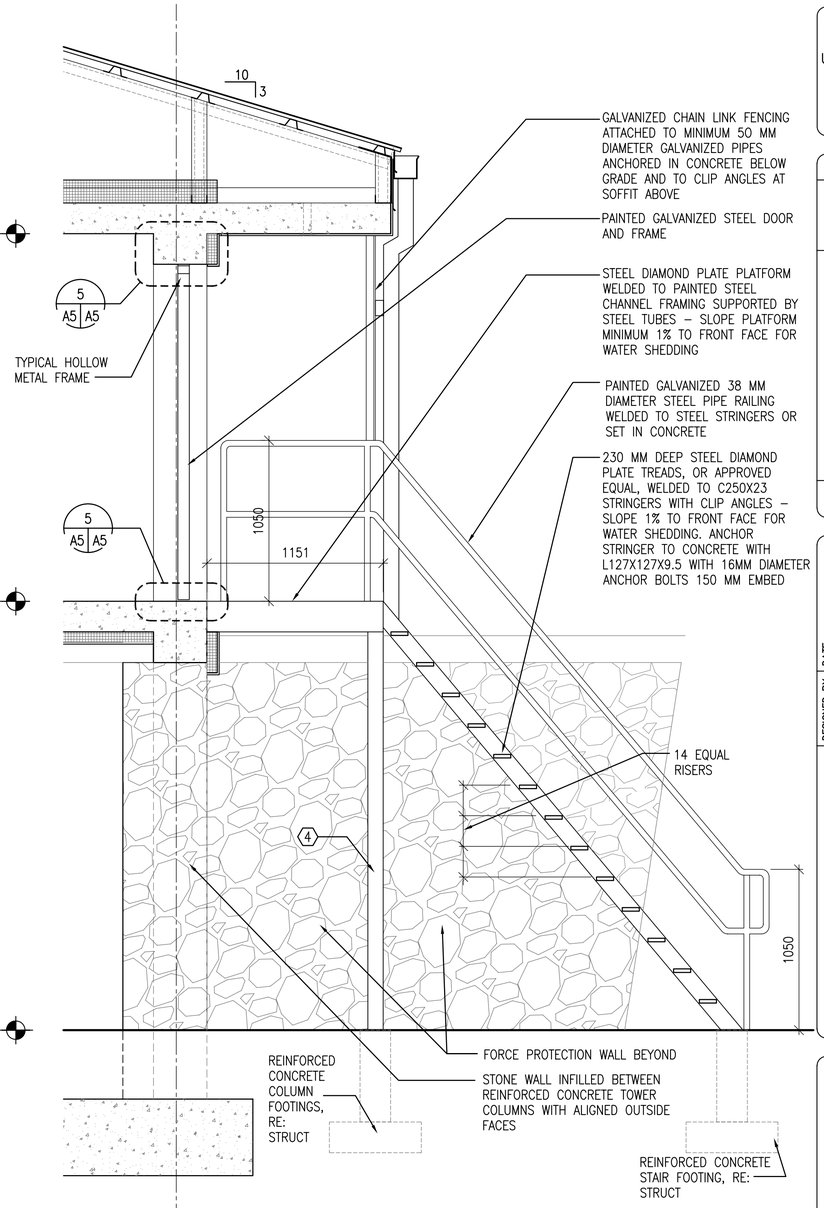

4 A4 A4 WALL SECTION
SCALE: 1:20

GENERAL NOTES:

A. COORDINATE SIZE AND LOCATION OF OPENINGS FOR MECHANICAL ITEMS WITH MECHANICAL DRAWINGS.
B. PROVIDE STRUCTURAL LINTELS AS REQUIRED – RE: STRUCT
C. PROVIDE 480 MM SQUARE, 1.5 MM THICK GALVANIZED SHEET METAL COVER WITH 13 MM HEMMED EDGE FOR WALL THIMBLE UNTIL STOVE PIPE IS PROVIDED. INSTALL COVER ON EXTERIOR FACE OF THIMBLE TRIM PLATE. COVER SHALL BE BE SET IN SILICONE SEALANT AND FASTENED WITH 4 STAINLESS STEEL SCREWS. ALIGN FASTENER LOCATIONS WITH COVER PLATE FASTENER OPENINGS SO ADDITIONAL FASTENER PENETRATIONS ARE NOT CREATED IN EXTERIOR FINISH.

KEY NOTES: (X)

1. STEEL LADDER; REFER TO 3/A6
2. CAST CONCRETE WALL CAP
3. STONE FORCE PROTECTION WALL
4. STEEL STAIR COLUMN.

UNLESS OTHERWISE NOTED, LINEAR DIMENSIONS SHOWN ARE IN MILLIMETERS (MM)

0 400 800 1600
SCALE: 1: 20

0 1000 2000 4000
SCALE: 1: 50

US Army Corps of Engineers
Afghanistan Engineer District

SYMBOL	DESCRIPTION	DATE	APR

DESIGNED BY: PFF
DWN BY: PFF
CHK BY: NLJ
DATE: 09-30-09
SUBMITTED BY: BAKER
FILE NO.: ANPSDA-304XXX

Michael Baker Jr., Inc
A unit of Michael Baker Corporation
Airside Business Park
100 Airside Drive
Moon Township, PA 15108
www.mbakercorp.com

AFGHAN NATIONAL POLICE
STANDARD DESIGN
GUARD TOWER

BUILDING AND WALL SECTIONS

SHEET REFERENCE NUMBER:
A4

100% SUBMISSION

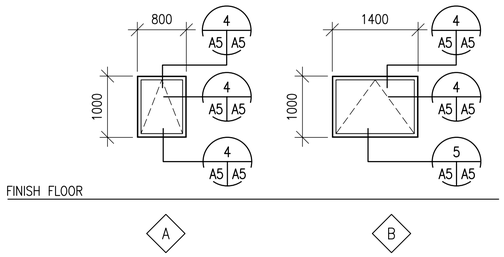

1 A5 A5 WINDOW TYPES
SCALE: 1:50

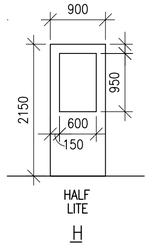

2 A5 A5 DOOR TYPE
SCALE: 1:50

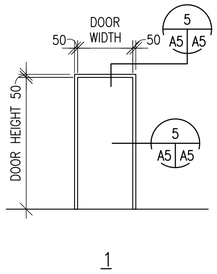

3 A5 A5 FRAME TYPE
SCALE: 1:50

WINDOW TYPES NOTES:

1. ALL EXTERIOR WINDOWS SHALL BE WOOD WITH INSECT SCREENS. WINDOWS SHALL BE COMMERCIAL GRADE.
2. GLAZING SHALL BE ACRYLIC SHEET.

DOOR TYPES NOTES:

1. EXTERIOR METAL DOORS AND FRAME COLORS SHALL MATCH ADJACENT WALL COLORS AS SELECTED BY THE CONTRACTING OFFICER.
2. HARDWARE SHALL BE HEAVY DUTY, COMMERCIAL GRADE, STAINLESS STEEL WITH A MATTE FINISH.
3. FRAMES, EXCEPT FIRE-RATED FRAMES, SHALL BE MOUNTED AND ADJUSTED IN ACCORDANCE WITH MANUFACTURER'S INSTRUCTIONS. FRAMES SHALL BE FASTENED WITH MINIMUM OF THREE FASTENING POINTS PER SIDE AT REGULAR INTERVALS.
4. DIMENSIONS SHOWN ON DOOR SCHEDULE ARE BASED UPON MODULAR MASONRY (OR ROUGH OPENING), HEIGHT OF 2200mm FOR STANDARD PERSONNEL DOORS. CONTRACTOR SHALL COORDINATE WITH DOOR SUPPLIER TO ENSURE THAT DIMENSIONS OF DOORS AND FRAMES PROVIDED ARE COMPATIBLE WITH DOOR OPENING DIMENSIONS.

HARDWARE TYPES:

HW-6 1-1/2 PR HINGES
1 EA LOCKSET,F04 ENTRY LOCK W/LEVERS. GRADE 1
1 EA DOOR CLOSER, C02061,LOW RESISTANCE
1 EA THRESHOLD J32130

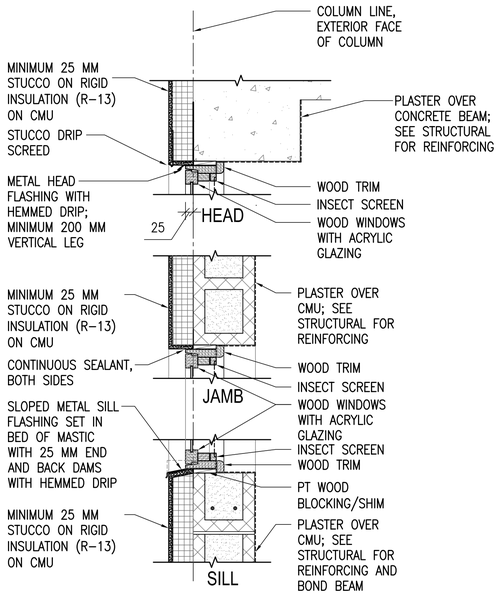

4 A5 A5 WINDOW DETAILS
SCALE: 1:10

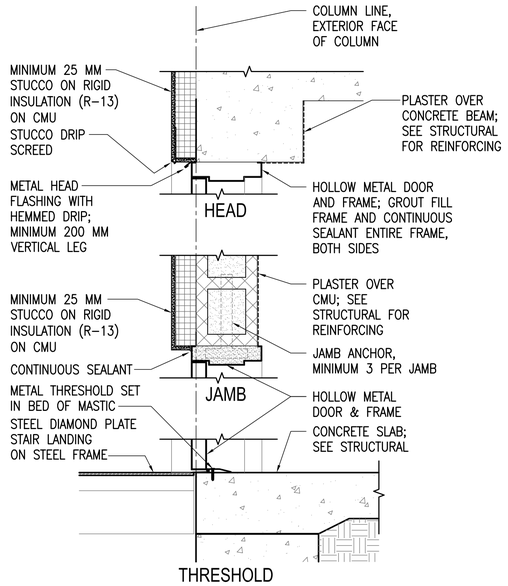

5 A5 A5 EXTERIOR DOOR DETAILS
SCALE: 1:10

UNLESS OTHERWISE NOTED, LINEAR DIMENSIONS SHOWN ARE IN MILLIMETERS (MM)

0 200 400 800
SCALE: 1: 10

0 1000 2000 4000
SCALE: 1: 50

US Army Corps of Engineers
Afghanistan Engineer District

SYMBOL	DESCRIPTION	DATE	APR

DESIGNED BY: PFF	DWN BY: PFF	CHK BY: NLJ	DATE: 09-30-09
SUBMITTED BY: BAKER	FILE NO.: ANPSDA-505XXX		

Michael Baker Jr., Inc
A unit of Michael Baker Corporation
Airside Business Park
100 Airside Drive
Moon Township, PA 15108
www.mbakercorp.com

AFGHAN NATIONAL POLICE
STANDARD DESIGN
GUARD TOWER

DOOR, WINDOW & FINISH TYPES & DETAILS

SHEET REFERENCE NUMBER:
A5

100% SUBMISSION

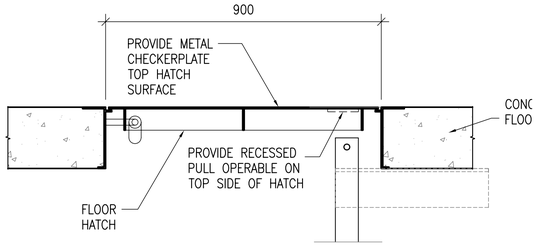

1 A4 A6 FLOOR HATCH DETAIL
SCALE: 1:10

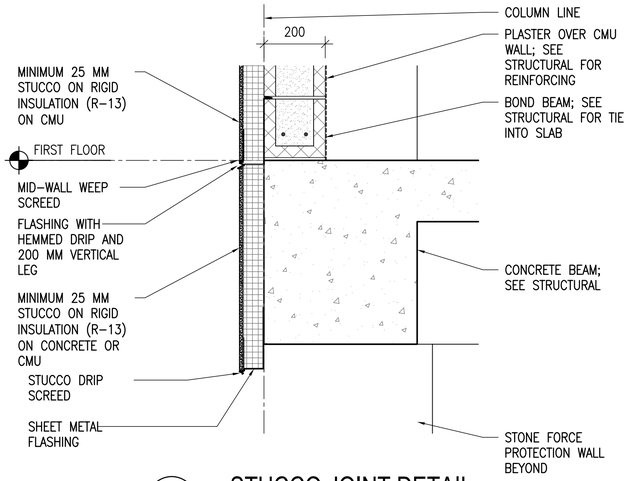

2 A6 A6 STUCCO JOINT DETAIL
SCALE: 1:10

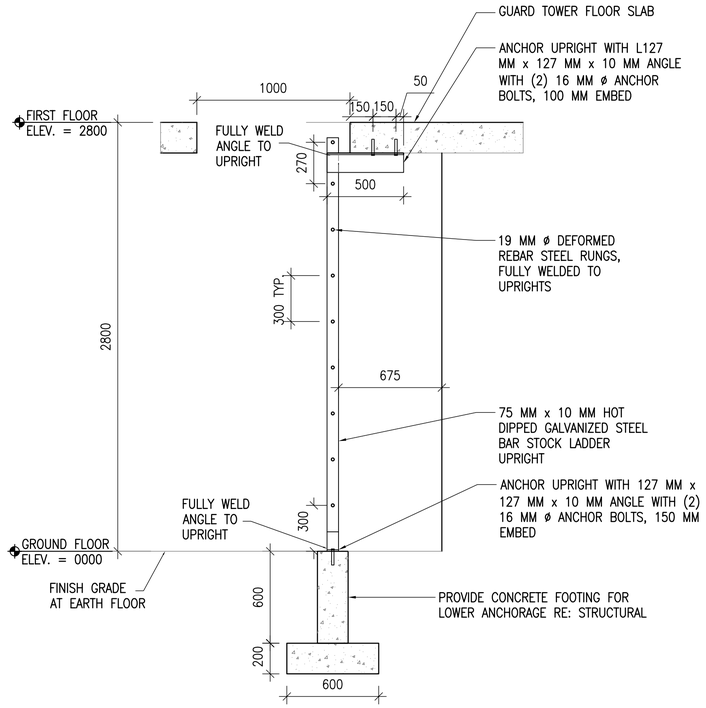

3 A6 A6 LADDER DETAIL
SCALE: 1:20

UNLESS OTHERWISE NOTED, LINEAR DIMENSIONS SHOWN ARE IN MILLIMETERS (MM)

0 200 40 800
SCALE: 1: 10

0 400 800 1600
SCALE: 1: 20

US Army Corps of Engineers
Afghanistan Engineer District

SYMBOL	DESCRIPTION	DATE	APR

DESIGNED BY: PFF
DATE: 09-30-09
DWN BY: PFF
SUBMITTED BY: BAKER
CHK BY: NLJ
FILE NO.: ANPSDA-506XXX

Michael Baker Jr., Inc
A unit of Michael Baker Corporation
Airside Business Park
100 Airside Drive
Moon Township, PA 15108
www.mbakercorp.com

AFGHAN NATIONAL POLICE
STANDARD DESIGN
GUARD TOWER

SECTION DETAILS

SHEET REFERENCE NUMBER:
A6

100% SUBMISSION

POWER

- DISTRIBUTION PANELBOARD
- NEW PANELBOARD – SURFACE
- NEW PANELBOARD – RECESSED
- EXISTING PANELBOARD
- GENERATOR
- TVSS — TRANSIENT VOLTAGE SURGE SURPRESSOR
- TRANSFORMER (DRAWN TO SIZE)
- PS — POWER SUPPLY
- CP — CONTROL PANEL
- TC — TIME CLOCK
- TIM — ASTRONOMICAL TIME CLOCK– "SEE SPEC."
- R — RELAY WITH RATING AND NUMBER OF POLES AS NOTED ON DRAWINGS– "SEE SPEC."
- J — JUNCTION BOX
- J — JUNCTION BOX – CEILING
- PB — PULL BOX
- BD — BUS DUCT HORIZONTAL
- BUS DUCT VERTICAL
- EMERGENCY POWER OFF PUSH BUTTON
- NON–FUSIBLE SAFETY SWITCH
- FUSIBLE SAFETY SWITCH
- M — MOTOR
- $M — MOTOR STARTING SWITCH – 20A RATED
- $K — KEY SWITCH – 20A RATED
- FC — FAN COIL – FURNISHED BY MECHANICAL CONTRACTOR, ELECTRICAL CONTRACTOR SHALL INSTALL AND PROVIDE POWER CONNECTION
- UH — UNIT HEATER – FURNISHED BY MECHANICAL CONTRACTOR, ELECTRICAL CONTRACTOR SHALL INSTALL AND PROVIDE POWER CONNECTION
- D — JUNCTION BOX FOR CONNECTION TO GARBAGE DISPOSAL
- CF — LIGHT/HEATER/FAN – FURNISHED BY MECHANICAL CONTRACTOR, ELECTRICAL CONTRACTOR SHALL INSTALL AND PROVIDE POWER CONNECTION
- ELECTRIC WATER HEATER
- EPO — WEATHERPROOF / EXPLOSION PROOF EMERGENCY POWER OFF PUSH–BUTTON TO BE INTERCONNECTED WITH GENERATOR SHUT DOWN CONTROL
- CF — CEILING FAN – REFER TO SPECIFICATION SECTION 26 20 00

RECEPTACLES

- DUPLEX 20A BRITISH STANDARD UNSWITCHED SOCKETS
- GF — DUPLEX 20A BRITISH STANDARD UNSWITCHED SOCKETS – 10mA GROUND FAULT INTERRUPTER TYPE
- WP — DUPLEX 20A BRITISH STANDARD UNSWITCHED SOCKETS – 10mA GROUND FAULT INTERRUPTER TYPE WITH WEATHERPROOF COVER
- EXP — DUPLEX 20A BRITISH STANDARD UNSWITCHED SOCKETS – EXPLOSION PROOF
- * — INDICATES MOUNT DEVICE ABOVE COUNTER TOP

LIGHTNING PROTECTION

- AIR TERMINAL 20mm O.D. X 4m SOLID COPPER, NICKEL PLATED ON ADHESIVE BASE.
- EQ — EQUIPMENT AIR TERMINAL
- TEST WELL WITH GROUND ROD(S)
- GROUND ROD
- G — GROUND PLATE
- G — MAIN GROUND CONDUCTER CONCEALED WITHIN CONSTRUCTION
- G — MAIN GROUND CONDUCTOR EXPOSED ON EXPOSED ON BUILDING EXTERIOR SURFACE
- G — GROUND CONDUCTOR CAD WELDED TO GROUND CABLE OR EQUIPMENT
- G — GROUND CONDUCTOR CAD WELDED TO BUILDING STEEL COLUMN
- GROUND ROD TRIPOD, SPACED 10 FEET APART.
- LEVEL TO LEVEL CABLE

LIGHTING

- LIGHTING FIXTURE – SEE FIXTURE SCHEDULE FOR MORE INFORMATION
- LIGHTING FIXTURE – SEE FIXTURE SCHEDULE FOR MORE INFORMATION
- DOWNLIGHT
- LIGHTING FIXTURE ON NORMAL/EMERGENCY
- WALL MOUNTED LIGHT FIXTURE
- E — EXIT SIGN – DIRECTIONAL ARROWS AS INDICATED ON DRAWINGS
- B — BATTERY PACK WITH HEADS AS INDICATED ON DRAWINGS
- REMOTE HEAD FOR BATTERY PACK
- $ — SINGLE POLE SWITCH – 20A RATED
- $3 — 3–WAY SWITCH – 20A RATED
- $4 — 4–WAY SWITCH – 20A RATED
- PC — PHOTOCELL VOLTAGE TO MATCH CIRCUITRY
- LC — LIGHTING CONTACTOR
- POLE MOUNTED SITE LIGHTING FIXTURE– NUMBER OF FIXTURES PER POLE AS INDICATED ON DRAWINGS
- EXTERIOR DIRECTIONAL LIGHTING FIXTURE
- a — SMALL CASE LETTERS REPRESENTS LAMP(S) / SWITCHES. WHEN USED WITH AN OCCUPANCY SENSOR THIS INDICATES SENSOR WITH MANUAL OVERRIDE SWITCH

TELECOMMUNICATIONS

- TELEPHONE OUTLET(S) @ 18" AFF. U.N.O. WITH 3/4" RACEWAY TERMINATED ABOVE NEAREST ACCESSIBLE CEILING OR TO TELEPHONE TERMINAL BOARD IF NO ACCESSIBLE CEILING AVAILABLE. SEE TELE/DATA RISER DIAGRAM FOR OUTLET AND CABLE DESCRIPTION
- DATA OUTLET(S) @ 18" AFF. U.N.O. WITH 3/4" RACEWAY TERMINATED ABOVE NEAREST ACCESSIBLE CEILING OR TO DATA EQUIPMENT RACK IF NO ACCESSIBLE CEILING AVAILABLE. SEE TELE/DATA RISER DIAGRAM FOR OUTLET AND CABLE DESCRIPTION

TELECOMMUNICATIONS (CONTINUED)

- COMBINATION TELEPHONE/DATA OUTLET(S) @ 18" AFF. U.N.O. WITH 1" RACEWAY TERMINATED ABOVE NEAREST ACCESSIBLE CEILING OR TO TELE/DATA TERMINAL AREA IF NO ACCESSIBLE CEILING AVAILABLE. SEE TELE/DATA RISER DIAGRAM FOR OUTLET AND CABLE DESCRIPTION
- W — WALL MTD. TELEPHONE OUTLET WITH 3/4" RACEWAY TERMINATED ABOVE NEAREST ACCESSIBLE CEILING OR TO TELEPHONE TERMINAL BOARD IF NO ACCESSIBLE CEILING AVAILABLE. SEE TELE/DATA RISER DIAGRAM FOR OUTLET AND CABLE DESCRIPTION
- (x)T — INDICATES NUMBER OF TELEPHONE OUTLET(S) AND ASSOCIATED CABLING
- (x)D — INDICATES NUMBER OF DATA OUTLET(S) AND ASSOCIATED CABLING
- (x)TF — INDICATES NUMBER OF TELEPHONE OUTLETS AND ASSOCIATED CABLING WITH 1 OUTLET AND CABLE DEDICATED FOR FAX

SINGLE LINE SYMBOLS

- SWITCH
- BREAKER
- FUSE
- TRANSFORMER
- CAPACITOR
- GROUND
- CONTACT (NORMALLY OPEN)
- CONTACT (NORMALLY CLOSED)
- AUTOMATIC TRANSFER SWITCH
- MANUAL DOUBLE THROW SWITCH
- CURRENT TRANSFORMER
- INDICATES NEW ELECTRICAL EQUIPMENT
- C — INDICATES NEW CONTROL WIRING AND CONDUIT
- EQUIPMENT OUTLINE

MISCELLANEOUS

- BRANCH CIRCUIT WIRING CONCEALED ABOVE CEILINGS, SURFACE MOUNTED ON WALLS
- BRANCH CIRCUIT WIRING – #10 AWG
- BRANCH CIRCUIT WIRING – UNDER FLOOR
- HOME RUN BACK TO PANEL
- CONDUIT TURNED DOWN
- CONDUIT TURNED UP
- LV — LOW VOLTAGE WIRING AND CONDUIT
- CT–X — CABLE TRAY ("X" DENOTES WIDTH)
- INDICATES CONTINUATION OF LINE

FIRE ALARM

- FACP — FIRE ALARM CONTROL PANEL WITH BATTERY BACKUP
- F — FIRE ALARM PULL STATION

FIRE ALARM (CONTINUED)

- F — FIRE ALARM STROBE – WALL MOUNTED
- F — FIRE ALARM AUDIBLE/STROBE – WM
- F — FIRE ALARM HORN/STROBE – WM
- S — SMOKE DETECTOR
- H — HEAT DETECTOR CEILING MOUNTED
- D — DUCT DETECTOR – PROVIDED BY EC, INSTALLED BY MC AND CONNECTED BY EC

DENOTATIONS & ABBREVIATIONS

AFF	ABOVE FINISHED FLOOR
C	CEILING MOUNTED
E	EMERGENCY
EC	ELECTRICAL CONTRACTOR
EPO	EMERGENCY POWER OFF
EXP	EXPLOSION PROOF
F	FIRE ALARM
FF	FLUSH FLOOR MOUNTED
FL	FLUORESCENT
FO	FIBER OPTIC
FSS	FUSED SAFETY SWITCH
G	GROUND FAULT INTERRUPTER
GC	GENERAL CONTRACTOR
HOA	HAND–OFF AUTO
I	INFRARED
ICD	INCANDESCENT
IG	ISOLATED GROUND
K	KEY
LV	LOW VOLTAGE
M	MOTOR
MC	MECHANICAL CONTRACTOR
NE	NORMAL/EMERGENCY
NFSS	NON–FUSED SAFETY SWITCH
PA	PAGING SYSTEM
PLC	PLUMBING CONTRACTOR
REL	RELOCATE
RED	RELOCATED
SL	SINGLE LINE
SS	SURGE SUPPRESSION
T	TELEPHONE
TL	TWIST LOCK

DENOTATIONS & ABBREVIATIONS (CONT.)

TP	TAMPER PROOF
UE	UNDERGROUND ELECTRIC
UF	UNDERGROUND FIBER
UT	UNDERGROUND TELEPHONE
W	WALL MOUNTED
WG	WIRE GUARD
WP	WEATHERPROOF
WPG	WEATHERPROOF/GROUND FAULT INTERRUPTER
WT	WATER TIGHT

GENERAL PROJECT NOTES:

G1. UNLESS OTHERWISE NOTED, PROVIDE ALL EQUIPMENT SHOWN ON THE PLANS. THE ELECTRICAL CONTRACTOR SHALL COORDINATE ALL SYMBOLS SHOWN ON THE PLANS WITH THE SYMBOL LIST. IT SHALL BE THE RESPONSIBILITY OF THE CONTRACTOR TO VERIFY THE INTENT OF ANY SYMBOL THAT IS SHOWN ON THE PLANS AND NOT INDICATED ON THE SYMBOL LIST WITH THE ENGINEER PRIOR TO BID.

G2. COORDINATE THE FINAL LOCATIONS OF ALL LIGHT FIXTURES WITH THE ARCHITECT'S REFLECTED CEILING PLANS. REPORT ANY DISCREPANCIES TO THE ARCHITECT PRIOR TO INSTALLATION.

G3. THE CONTRACTOR SHALL VERIFY THE LOCATION OF ALL UNDERGROUND UTILITIES WITHIN THE CONSTRUCTION AREA THREE (3) WORKING DAYS NOTICE BEFORE COMMENCE DIGGING. NOTIFY THE LOCAL OR STATE AUTHORITY HAVING JURISDICTION AND WAIT THE REQUIRED TIME BEFORE COMMENCING TO DIG.

G4. THE CONTRACTOR SHALL COORDINATE CONDUIT RUNS, CABLE TRAY, LIGHTING FIXTURES AND OTHER EQUIPMENT LOCATIONS WITH THE OTHER TRADE CONTRACTORS TO AVOID CONFLICTS.

G5. WHERE VOLTAGES AND FREQUENCIES ON THE DRAWINGS AND IN THE SPECIFICATIONS DIFFER FROM THE LOCAL ONES, ALL WORK SHALL BE PERFORMED USING THE LOCAL VOLTAGES AND FREQUENCIES.

G6. THE MINIMUM WIRE SIZE ON THE PROJECT SHALL BE 4mm2. THE MINIMUM CONDUIT SIZE SHALL BE 20mm. THE MINIMUM BREAKER SIZE SHALL BE 20 AMPS.

G7. THE CONTRACTOR SHALL PUT A MAXIMUM OF 6 DUPLEX SOCKETS ON A 20A SINGLE POLE CIRCUIT.

G8. WHERE THE 1010 SCOPE REVIEW, 1015 TECHNICAL REVIEW, DRAWINGS, AND SPECIFICATIONS DIFFER FROM AMERICAN CODES OR STANDARDS THE 1010, 1015, DRAWINGS, AND SPECIFICATIONS SHALL RULE.

G9. WORK FOR THE AMMUNITION SUPPLY POINT SHALL BE DONE IN ACCORDANCE WITH DEPARTMENT OF DEFENSE STANDARD DOD 6055.9–STD.

G10. ALL CONDUIT AND DEVICES SHALL BE SURFACE MOUNTED UNLESS OTHERWISE INDICATED.

US Army Corps of Engineers
Afghanistan Engineer District

SYMBOL	DESCRIPTION	DATE	APR

DESIGNED BY: JRG
DWN BY: JRG
CHK BY: JRG
DATE: 09–30–09
SUBMITTED BY: BAKER
FILE NO.: ANPSDE–000XXX

Michael Baker Jr., Inc.
A unit of Michael Baker Corporation
Airside Business Park
100 Airside Drive
Moon Township, PA 15108
www.mbakercorp.com

AFGHAN NATIONAL POLICE
STANDARD DESIGN
GUARD TOWER

ELECTRICAL SYMBOLS AND ABBREVIATIONS

SHEET REFERENCE NUMBER:
E0

100% SUBMISSION

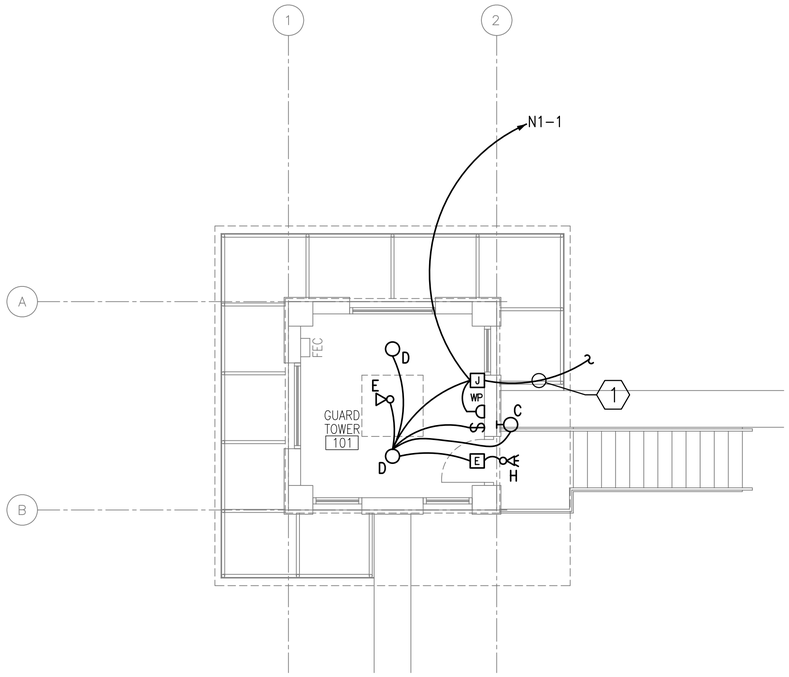

1 / E1 E1 UPPER LEVEL LIGHTING, POWER, AND SYSTEMS PLAN

SCALE: 1:50

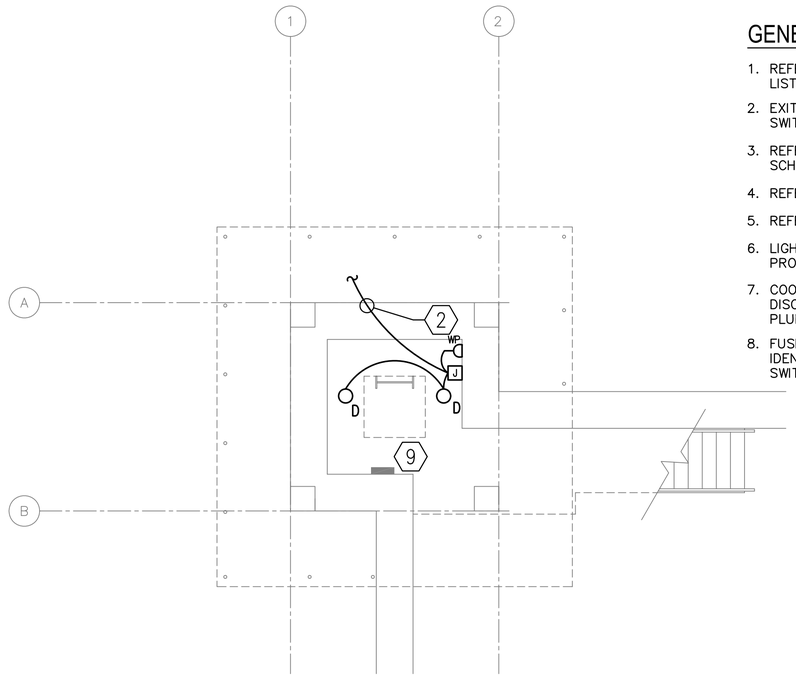

2 / E1 E1 LOWER LEVEL LIGHTING, POWER, AND SYSTEMS PLAN

SCALE: 1:50

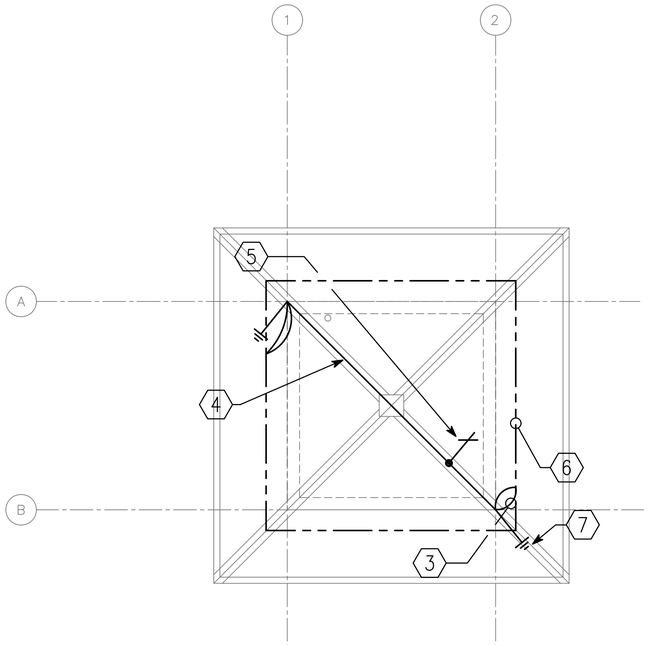

3 / E1 E1 ROOF LIGHTNING PROTECTION PLAN

SCALE: 1:50

GENERAL NOTES:

1. REFER TO DRAWING #E0 FOR THE ELECTRICAL SYMBOLS LIST.
2. EXIT SIGNS SHALL BE WIRED AHEAD OF ANY LOCAL SWITCHING ON CIRCUITS.
3. REFER TO DRAWING #E3 FOR THE LIGHTING FIXTURE SCHEDULE.
4. REFER TO DRAWING #E2 FOR THE POWER RISER.
5. REFER TO DRAWING #E4 FOR PANEL SCHEDULES.
6. LIGHT FIXTURES INDICATED AS EMERGENCY SHALL BE PROVIDED WITH A BATTERY BACKUP BALLAST.
7. COORDINATE EXACT MOUNTING LOCATION OF DISCONNECTING MEANS FOR MECHANICAL AND PLUMBING EQUIPMENT IN THE FIELD.
8. FUSIBLE SAFETY SWITCHES THAT ARE NOT OTHERWISE IDENTIFIED SHALL BE 380V, 1P, 30A FUSED SAFETY SWITCHES WITH 20A FUSES.

NUMBERED NOTE:

1. TO LEVEL BELOW.
2. TO LEVEL ABOVE.
3. CADWELD TO BUILDING STRUCTURE AT 18 METERS O.C. AROUND ENTIRE PERIMETER OF BUILDING. (TYPICAL).
4. 120mm2 LIGHTNING PROTECTION CABLE.
5. AIR TERMINAL (TYPICAL). THE AIR TERMINAL SHALL BE OFFSET TO THE RIDGE ON THE SIDE OF THE ROOF LOCATED TOWARDS THE INTERIOR OF THE COMPOUND. THE AIR TERMINAL SHALL BE 0.5 METERS MINIMUM HIGHER THAN THE TOP OF THE SEARCH LIGHT.
6. 1 120.0mm2 BARE, TINNED COPPER COUNTERPOISE GROUND 700mm BELOW GRADE.
7. INSTALL DOWN CONDUCTOR IN 25mm SCHEDULE 80 PVC CONDUIT TO 20mm DIAMETER x 3 METERS SOLID COPPER TINNED GROUND ROD. (TYPICAL).
8. CONTRACTOR SHALL ENSURE THAT THE MOUNTING HARDWARE FOR THE SEARCHLIGHT CREATES A WEATHERPROOF SEAL WITH THE ROOF. CONTRACTOR SHALL PROVIDE ANY NECESSARY GASKETING TO ENSURE THERE IS

UNLESS OTHERWISE NOTED, LINEAR DIMENSIONS SHOWN ARE IN MILLIMETERS (MM)

1 0 1 2 3 4

1:50

US Army Corps of Engineers

Afghanistan Engineer District

SYMBOL	DESCRIPTION	DATE	APR

DESIGNED BY: JRG	DATE: 09-30-09
DWN BY: JRG	SUBMITTED BY: BAKER
CHK BY: JRG	FILE NO.: ANPSDE-101XXX

Michael Baker Jr., Inc.
A unit of Michael Baker Corporation
Airside Business Park
100 Airside Drive
Moon Township, PA 15108
www.mbakercorp.com

AFGHAN NATIONAL POLICE
STANDARD DESIGN
GUARD TOWER

TOWER LIGHTING, POWER, AND SYSTEMS PLANS

SHEET REFERENCE NUMBER:

E1

100% SUBMISSION

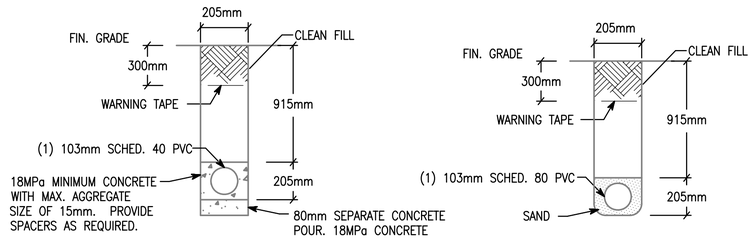

NOTE: PVC CONDUIT SHALL BE DIRECT BURIED SCHEDULE 80 FOR NO TRAFFIC AREAS AND CONCRETE-ENCASED SCHEDULE 40 FOR UNDER ROADWAYS OR TRAFFIC AREAS.

1 / E2 | E2 TYPICAL DUCT BANK DETAILS FOR CONDUIT IN SAND OR CONCRETE

SCALE: N.T.S.

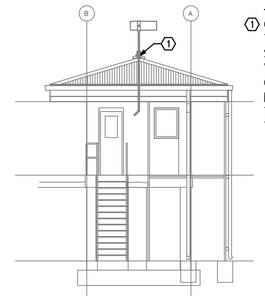

TOWER NUMBERED NOTE

1. CONTRACTOR SHALL ENSURE THAT THE MOUNTING HARDWARE FOR THE SEARCHLIGHT CREATES A WEATHERPROOF SEAL WITH THE ROOF. CONTRACTOR SHALL PROVIDE ANY NECESSARY GASKETING TO ENSURE THERE IS NO WATER LEAKAGE INTO THE GUARD TOWER.

2 / E2 | E2 GUARD TOWER ELEVATION

SCALE: N.T.S.

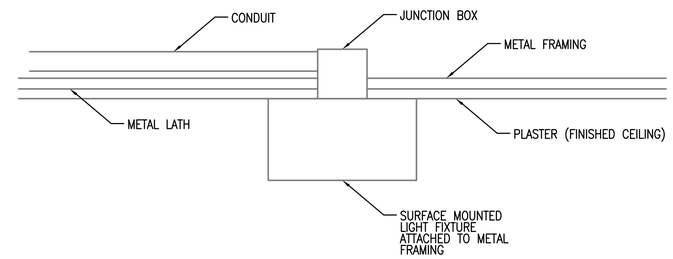

3 / E2 | E2 TYPICAL DETAIL FOR SURFACE MOUNTED LIGHT FIXTURES

SCALE: N.T.S.

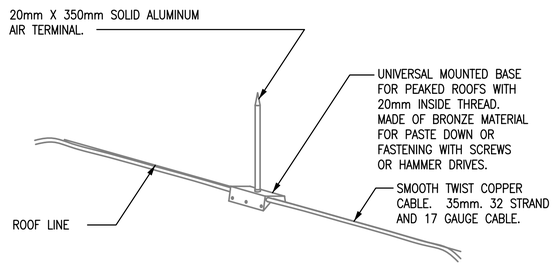

4 / E2 | E2 LIGHTNING PROTECTION AIR TERMINAL DETAIL

SCALE: N.T.S.

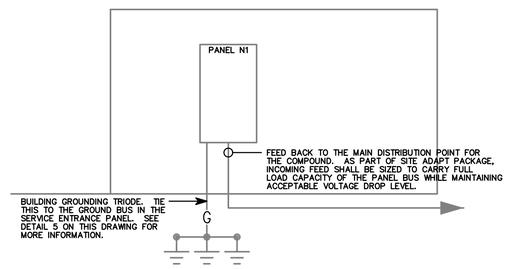

5 / E2 | E2 N.1 RISER DIAGRAM

SCALE: N.T.S.

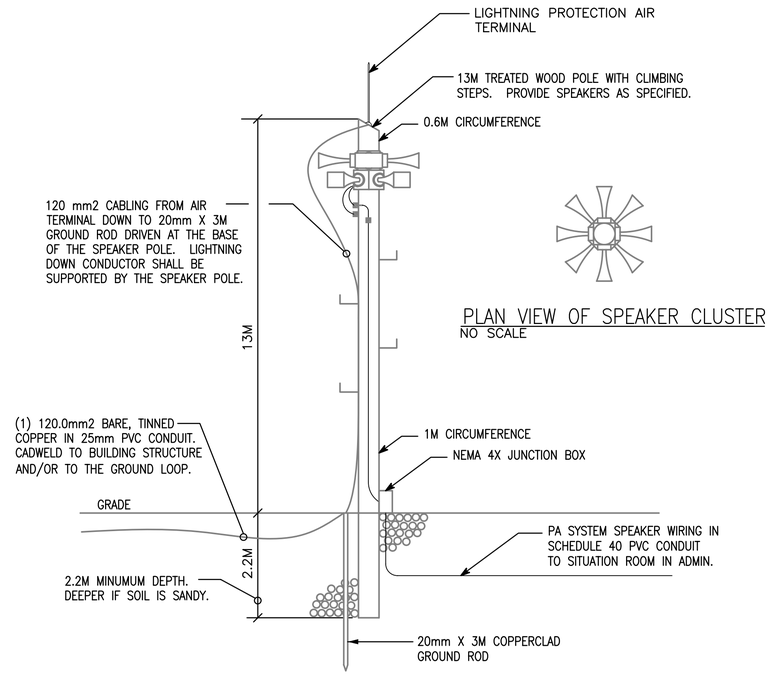

PLAN VIEW OF SPEAKER CLUSTER

NO SCALE

NOTE: FLAG POLES SHALL BE PROVIDED WITH THE SAME LIGHTNING PROTECTION SYSTEM CONSISTING OF AN AIR TERMINAL, DOWN CONDUCTOR, GROUND ROD, AND ALL NECESSARY CONNECTIONS FOR A COMPLETE LIGHTNING PROTECTION SYSTEM.

8 / E2 | E2 POLE DETAIL - PA SYSTEM

SCALE: N.T.S.

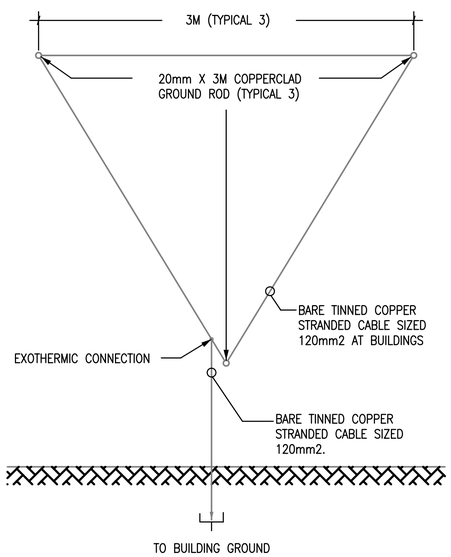

6 / E2 | E2 GROUND TRIPOD SYSTEM DETAIL - PLAN

SCALE: N.T.S.

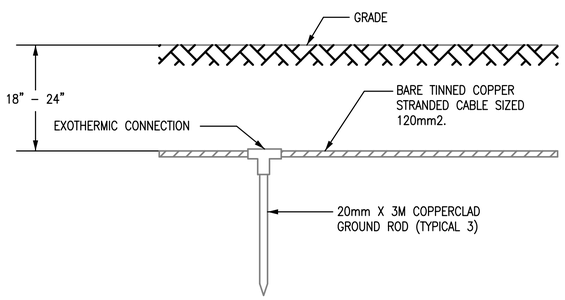

7 / E2 | E2 GROUND TRIPOD SYSTEM DETAIL - ELEVATION

SCALE: N.T.S.

US Army Corps of Engineers

Afghanistan Engineer District

SYMBOL	DESCRIPTION	DATE	APR

DESIGNED BY:	DATE:
JRG	09-30-09
DWN BY:	SUBMITTED BY:
JRG	BAKER
CHK BY:	FILE NO.:
JRG	ANPSDE-502XXX

Michael Baker Jr, Inc
A unit of Michael Baker Corporation
Airside Business Park
1500 Airside Drive
Moon Township, PA 15108
www.mbakercorp.com

AFGHAN NATIONAL POLICE
STANDARD DESIGN
GUARD TOWER

DETAILS

SHEET REFERENCE NUMBER:

E2

100% SUBMISSION

FIXTURE MARK 'C'

INCANDESCENT ONE PIECE WITH APPROVED LENS, STABILIZED HIGH IMPACT POLY CARBONATE

FIXTURE MARK 'D'

SURFACE MOUNTED, SINGLE LAMP 220–240V INCANDESCENT FIXTURE RATED FOR 100W LAMPS. GLASS GLOBE SHALL BE VAPOR TIGHT JELLY JAR TYPE WITH WIRE GUARD. NOMINAL DIMENSIONS ARE 111MMx251MM

FIXTURE MARK 'E'

SEALED BEAM SPOTLIGHT MOUNTED TO GUARD TOWER ROOF WITH 1000W HALOGEN NARROW SPOT PAR 56 LAMP. FIXTURE SHALL BE PROVIDED WITH TWIST LEVER CONTROL, MIN. 254MM DIAMETER LIGHT HEAD WORKING RANGE OF ½ MILE, RATED FOR OUTDOOR ROUGH SERVICE WITH ANTI–SHOCK LAMP HOLDER

FIXTURE MARK 'H'

REMOTE HEAD EXTERIOR LIGHT HEAD POWERED FROM EXIT SIGN BATTERY– 12V DOUBLE HEAD CORROSION RESISTANT WITH UL34 WEATHERPROOF CONSTRUCTION

FIXTURE MARK 'E'

UNIVERSAL MOUNT ENGINEER GRADE THERMOPLASTIC HOUSING EXIT SIGN WITH LED LAMPS, RED LETTERS 6" IN HEIGHT WITH ARROWS AS INDICATED, WITH 12V CADMIUM BATTERY

LIGHTING FIXTURE SCHEDULE

FIXTURE MARK	STYLE NUMBER AND TYPE	NUMBER AND TYPE OF LAMPS	VOLTAGE	MOUNTING	NOTES
C	INCANDESCENT ONE PIECE W/ APPROVED LENS STABILIZED HIGH IMPACT POLY CARBONATE.	(1) A19 – 100W INCANDESCENT	220V – 1ø 50HZ	WALL MOUNTED ABOVE EXTERIOR DOORS	
D	SURFACE MOUNTED SINGLE LAMP 220–240V INCANDESCENT FIXTURE RATED FOR 100W LAMPS. GLASS GLOBE SHALL BE VAPOR TIGHT JELLY JAR WITH WIRE GUARD. 111MM–251MM	(1) A21 – 100W COATED INCANDESCENT	220V – 1ø 50HZ	SURFACE MOUNTED FROM ROOF STRUCTURE	MEETS INTERNATIONAL STANDARDS WITH ENCLOSED AND GASKETED RED LENS.
E	SEALED BEAM SPOTLIGHT MOUNTED TO GUARD TOWER ROOF WITH 1000W HALOGEN NARROW SPOT LAMP	(1) PAR 56 1000W HALOGEN NARROW SPOT LAMP	220V – 1ø 50HZ	MOUNTED TO GUARD TOWER ROOF	SEE FIXTURE/TOWER DETAIL FOR SPOTLIGHT MOUNTING.
H	REMOTE HEAD EXTERIOR LIGHT HEAD POWERED FROM EXIT SIGN BATTERY– 12V DOUBLE HEAD CORROSION RESISTANT WITH UL34 WEATHERPROOF CONSTRUCTION	(2) 12W/12V HALOGEN LAMP	12V – 1ø 50HZ	EXTERIOR WALL MOUNTED AT TOP OF DOOR HEIGHT	
E	UNIVERSAL MOUNT ENGINEER GRADE THERMOPLASTIC HOUSING EXIT SIGN WITH LED LAMPS, RED LETTERS 6" IN HEIGHT WITH ARROWS AS INDICATED, WITH 12V CADMIUM BATTERY WITH REMOTE HEAD CAPABILITY	LED LAMPS	220V – 1ø 50HZ	UNIVERSAL MOUNTING	

US Army Corps of Engineers

Afghanistan Engineer District

SYMBOL	DESCRIPTION	DATE	APR

DESIGNED BY: JRG
DATE: 09–30–09
DWN BY: JRG
SUBMITTED BY: BAKER
CHK BY: JRG
FILE NO.: ANPSDE–603XXX

Michael Baker Jr., Inc
A unit of Michael Baker Corporation
Airside Business Park
100 Airside Drive
Moon Township, PA 15108
www.mbakercorp.com

AFGHAN NATIONAL POLICE
STANDARD DESIGN
GUARD TOWER

LIGHT FIXTURE SCHEDULE

SHEET REFERENCE NUMBER:
E3

100% SUBMISSION

PANELBOARD N1 SURFACE MOUNTED ASYM. A.I.C. MIN.

AMP. MAIN LUGS (OR) 100 AMP. MAIN BREAKER W/ 100 AMP. TRIP

CIRCUIT BREAKER TYPE 380/220 VOLTS 3 PHASE 4 WIRE 50 HZ 100 AMP. BUS

CKT. NO.	TRIP AMPS	NO. POLES	WIRE MM²	GND MM²	CONDUIT MM	LOAD SERVED	LOAD-V.A.			LOAD-V.A.			LOAD SERVED	CONDUIT MM	GND MM²	WIRE MM²	NO. POLES	TRIP AMPS	CKT. NO.
							AØ	BØ	CØ	AØ	BØ	CØ							
1	20	1	4.0	4.0	20	LIGHTING AND RECEPTACLES	2.0						SPARE				1	20	2
3	20	1				SPARE							SPARE				1	20	4
5	20	1				SPARE							SPARE				1	20	6
7	20	1				SPARE							SPARE				1	20	8
9	20	1				SPARE							SPARE				1	20	10
11	20	1				SPARE							SPARE				1	20	12
							2.0	0.0	0.0	0.0	0.0	0.0							

TOTAL CONN. LOAD PER PHASE (KVA): AØ 2.0 BØ 0.0 CØ 0.0

TOTAL CONN. LOAD 2.0 KVA. 70 % DEMAND = ESTIMATED DEMAND LOAD 1.4 SUPPLIED FROM MAIN SWITCHGEAR DISTRIBUTION

• MAIN BREAKER SHALL BE 3P EARTH GROUND TYPE

US Army Corps of Engineers

Afghanistan Engineer District

SYMBOL	DESCRIPTION	DATE	APR

DESIGNED BY: JRG
DWN BY: JRG
CHK BY: JRG
DATE: 09-30-09
SUBMITTED BY: BAKER
FILE NO.: ANPSDE-604XXX

Michael Baker Jr., Inc
A unit of Michael Baker Corporation
Airside Business Park
100 Airside Drive
Moon Township, PA 15108
www.mbakercorp.com

AFGHAN NATIONAL POLICE
STANDARD DESIGN
GUARD TOWER

PANEL SCHEDULES AND RISER DIAGRAM

SHEET REFERENCE NUMBER:

E4

100% SUBMISSION

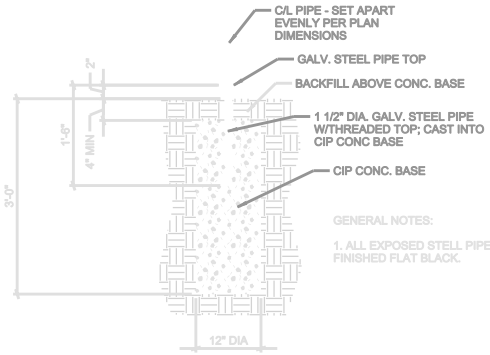

GENERAL NOTES:

1. ALL EXPOSED STELL PIPE & PIPE TOPS TO BE FINISHED FLAT BLACK.

SECTION - COLOR GUARD & STATE/TERRITORY FLAGSTAND

3 / L-101

NOT TO SCALE

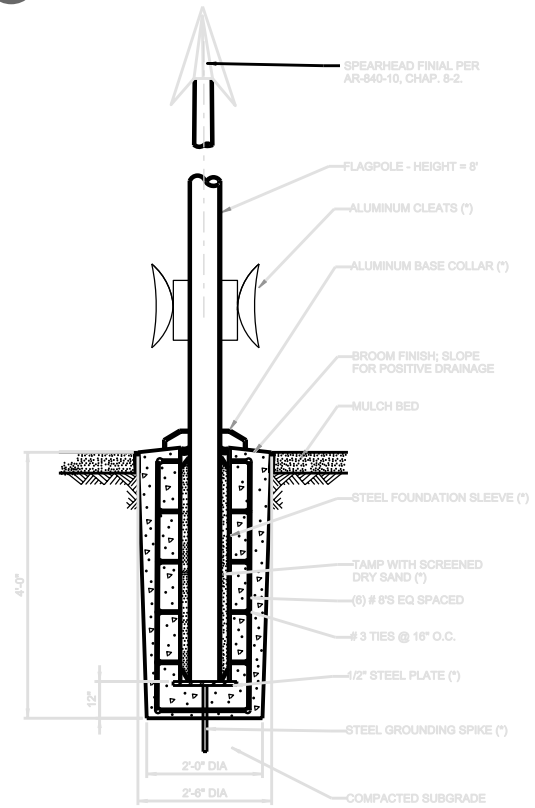

SECTION - GENERAL FLAG POLES

2 / L-101

NOT TO SCALE

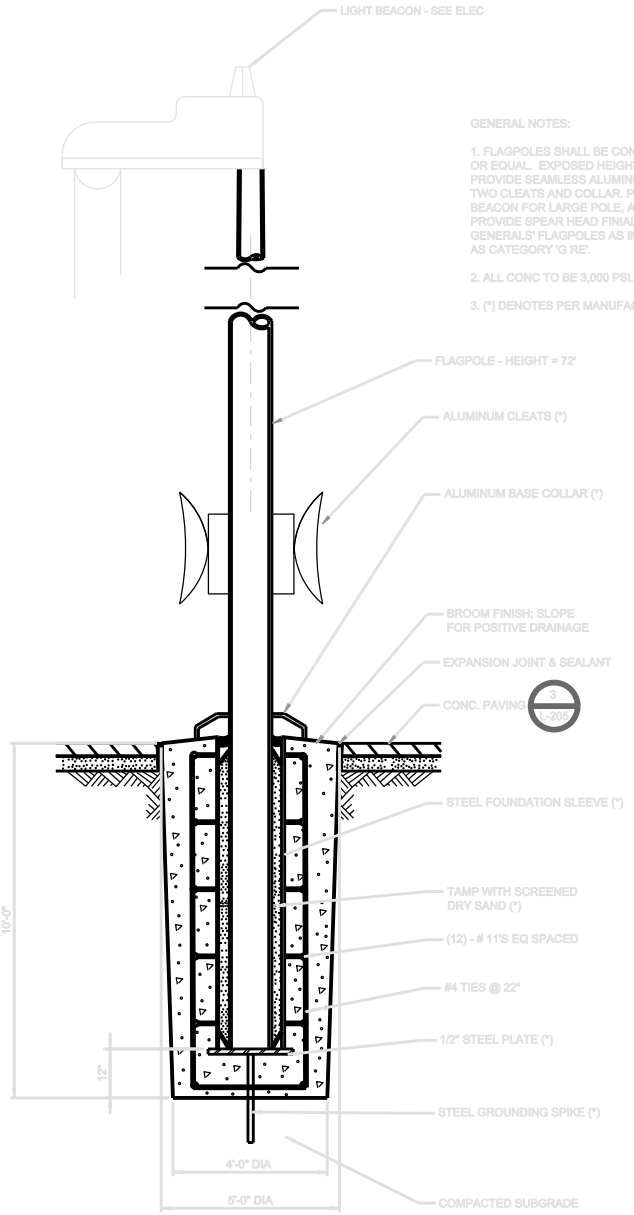

GENERAL NOTES:

1. FLAGPOLES SHALL BE CONTINENTAL EXTERNAL ROPE FLAGPOLES, OR EQUAL. EXPOSED HEIGHT AS INDICATED ON THE DRAWINGS. PROVIDE SEAMLESS ALUMINUM POLE WITH TRUCK, HALYARD, TWO CLEATS AND COLLAR. PROVIDE OBSTRUCTION LIGHT BEACON FOR LARGE POLE, AS INDICATED ON THE DRAWINGS. PROVIDE SPEAR HEAD FINIAL FOR EACH OF THE FOUR (4) GENERALS' FLAGPOLES AS INDICATED ON THE DRAWINGS. SUBMIT AS CATEGORY 'G RE'.

2. ALL CONC TO BE 3,000 PSI.

3. (*) DENOTES PER MANUFACTURER.

SECTION - MAIN FLAG POLE

1 / L-101

NOT TO SCALE

FLAG POLE DETAIL

U.S. Army Corps of Engineers
Kansas City District

U.S. ARMY ENGINEER DISTRICT
CORPS OF ENGINEERS
KANSAS CITY, MISSOURI

APPROVED FOR CONSTRUCTION

FORT RILEY, KANSAS
1ST INFANTRY DIVISION
COMMAND HEADQUARTERS
PH 0.3883, FY05

MISC. SITE DETAILS
FLAGPOLES

Sheet Reference Number
XXX

PROJECT LOCATION MAP

NOT TO SCALE

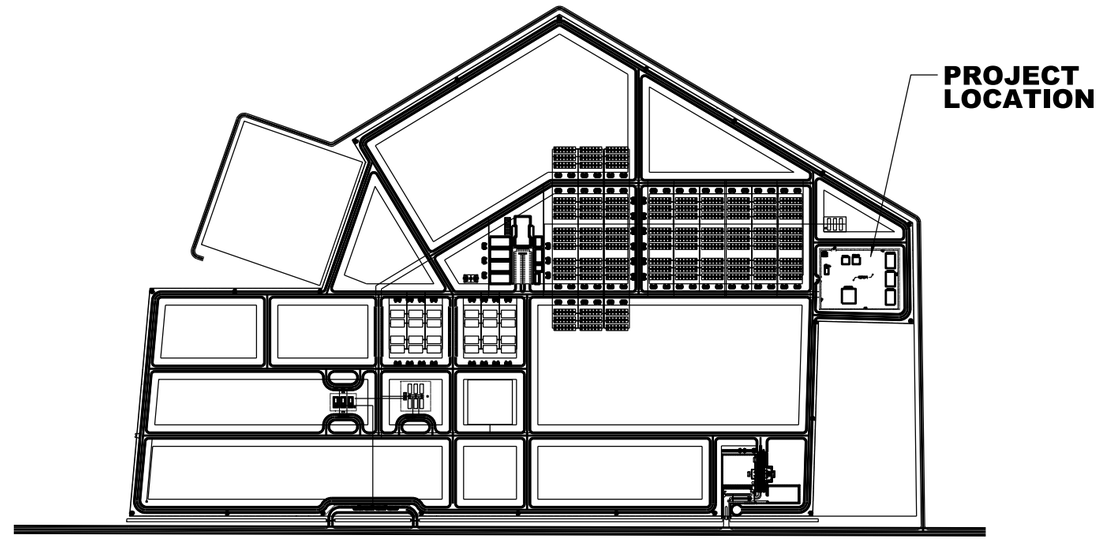

VICINITY PLAN

NOT TO SCALE

UNLESS OTHERWISE NOTED, LINEAR DIMENSIONS SHOWN ARE IN MILLIMETERS.

SYMBOL	DESCRIPTION	DATE	APP.

DESIGNED BY: DATE: 06-22-10
DWN BY: SUBMITTED BY:
CHK BY: FILE NO.: AF0964-CI01LS

US Army Corps of Engineers
Middle East District

FOB HURT
WASTE MANAGEMENT COMPLEX
HERAT, AFGHANISTAN

SITE DESIGN
PROJECT LOCATION AND VICINITY PLAN

SHEET REFERENCE NUMBER:
C-1

$DATE$ $TIME$ $USER$
$FILE$

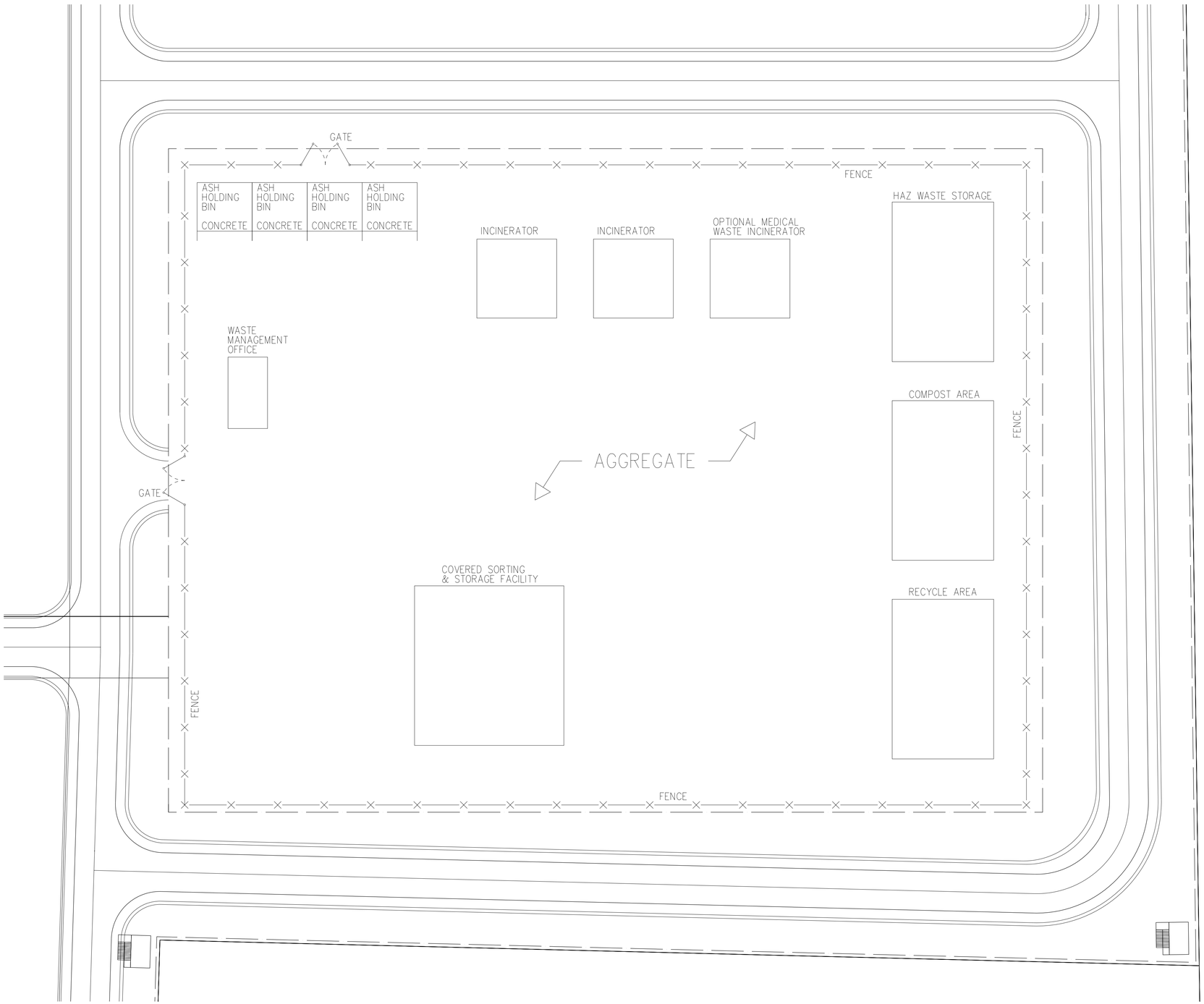

N

SYMBOL	DESCRIPTION	DATE	APR

DESIGNED BY: DATE: 06-22-10
DWN BY: SUBMITTED BY:
CHK BY: FILE NO.: AF0964-C102PN

US Army Corps of Engineers
Middle East District

WASTE MANAGEMENT COMPLEX
HERAT, AFGHANISTAN
SITE DESIGN
SITE PLAN

SHEET REFERENCE NUMBER:
C-2

$DATE$
$FILE$

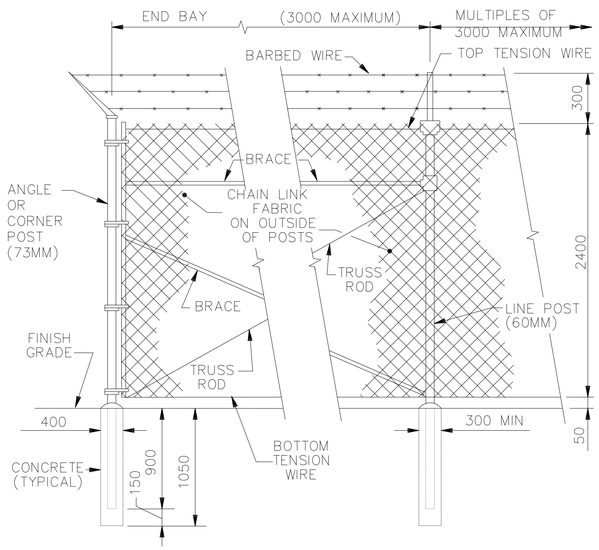

SECURITY FENCE DETAILS

NOT TO SCALE

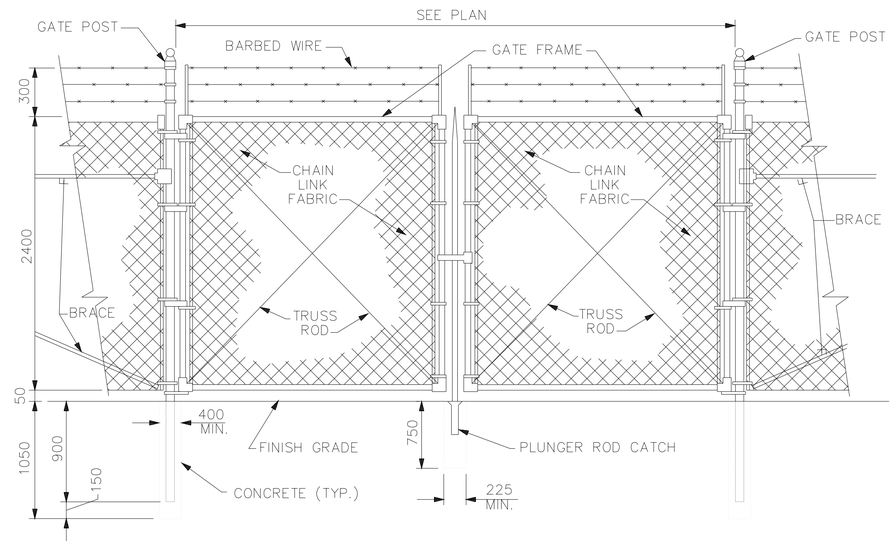

DOUBLE SWING VEHICLE GATE

NOT TO SCALE

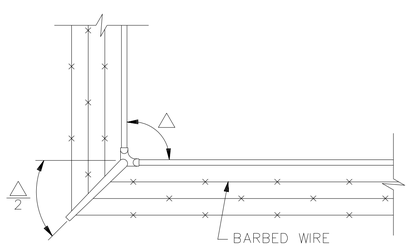

FENCE CORNER PLAN

NOT TO SCALE

UNLESS OTHERWISE NOTED, LINEAR DIMENSIONS SHOWN ARE IN MILLIMETERS.

SYMBOL	DESCRIPTION	DATE	APR

DESIGNED BY: DATE: 06-22-10
DWN BY: SUBMITTED BY:
CHK BY: FILE NO.: AF0964--CI03DT

US Army Corps of Engineers
Middle East District

WASTE MANAGEMENT COMPLEX
HERAT, AFGHANISTAN
SITE DESIGN
FENCE DETAILS

SHEET REFERENCE NUMBER:
C-3

$DATE$
$FILE$

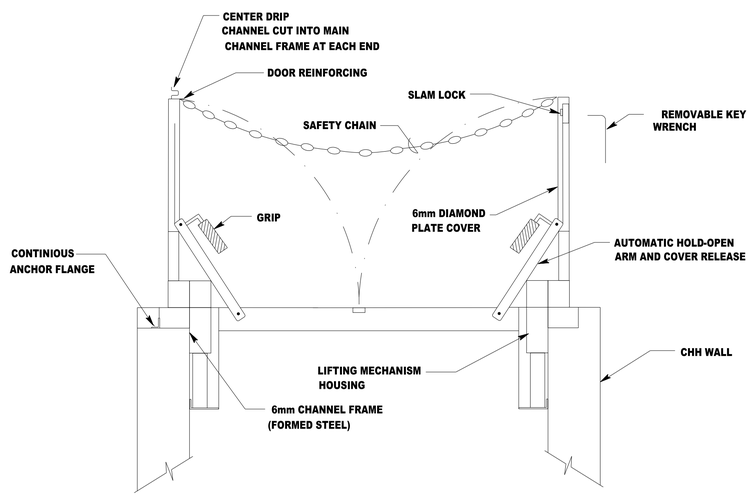

COVER DESIGNED TO WITHSTAND H20 WHEEL LOADING SUITABLE FOR USE IN OFF STREET LOCATIONS WHERE NOT SUBJECTED TO HIGH DENSITY TRAFFIC. COVER TO HAVE DOCUMENTED VERIFICATION TO THE AASHTO H20 LOAD RATING.

COMMUNICATION HANDHOLE COVER

NOT TO SCALE

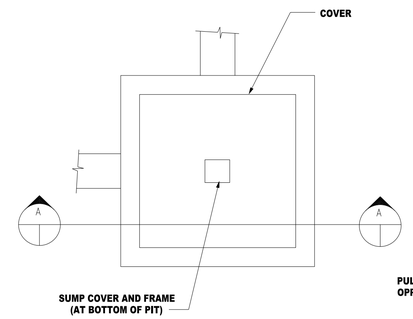

PLAN

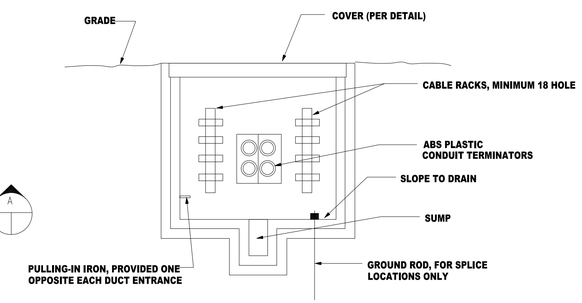

SECTION "A-A"

BONDING RIBBON TO BE INSTALLED AROUND THE PERIMETER OF THE HANDHOLE.

MINIMUM CONCRETE THICKNESS	
HANDHOLE WALLS TOP AND FLOOR	205mm

CONSTRUCTION REQUIREMENTS				
MINIMUM REQUIREMENTS				
TYPE	HEIGHT	LENGTH	WIDTH	SUMP DEPTH
THH	NOTE 1	1.2m	1.2m	.25m

NOTE:

1. HEIGHT REQUIORED FOR MINIMUM CONDUIT DEPTHS INDICATED

MINIMUM REINFORCING
1. BARS WILL BE A MINIMUM OF 13 0 ROUND DEFORMED.
2. WALLS AND FLOOR WILL HAVE BARS AT 200mm MAXIMUM ON CENTERS WITH A MINIMUM 300 mm HOOK AT CORNERS AND INTERSECTIONS.
3. THE TOP SHALL HAVE BARS INSTALLED AS SHOWN AT A MINIMUM OF 50mm FROM THE OPENING AND WITH A MINIMUM 100mm SPACING BETWEEN BARS.

COMMUNICATION HANDHOLE DETAIL

NOT TO SCALE

UNLESS OTHERWISE NOTED, LINEAR DIMENSIONS SHOWN ARE IN MILLIMETERS.

SYMBOL	DESCRIPTION	DATE	APR

DESIGNED BY: DATE: 06-22-10
DWN BY: SUBMITTED BY:
CHK BY: FILE NO.: AF0964-XT01DT

US Army Corps of Engineers
Middle East District

WASTE MANAGEMENT COMPLEX
HERAT, AFGHANISTAN
SITE DESIGN
COMMUNICATIONS DETAILS

SHEET REFERENCE NUMBER:
XT-1

$DATE$ $TIME$ $USER$
$FILE$

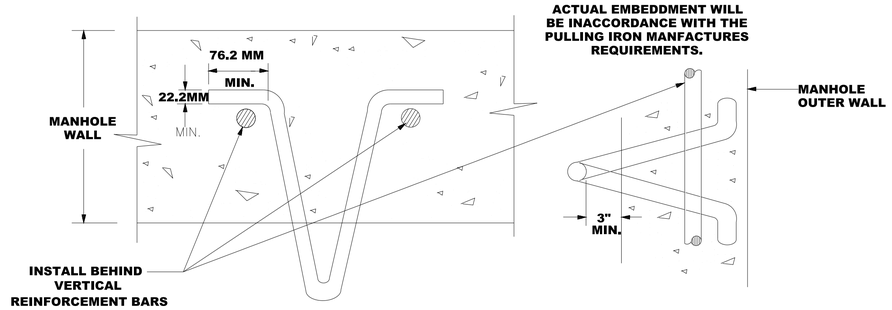

PLAN VIEW

SIDE VIEW

TYPICAL PULLING-IN IRON DETAIL "A"

NOT TO SCALE

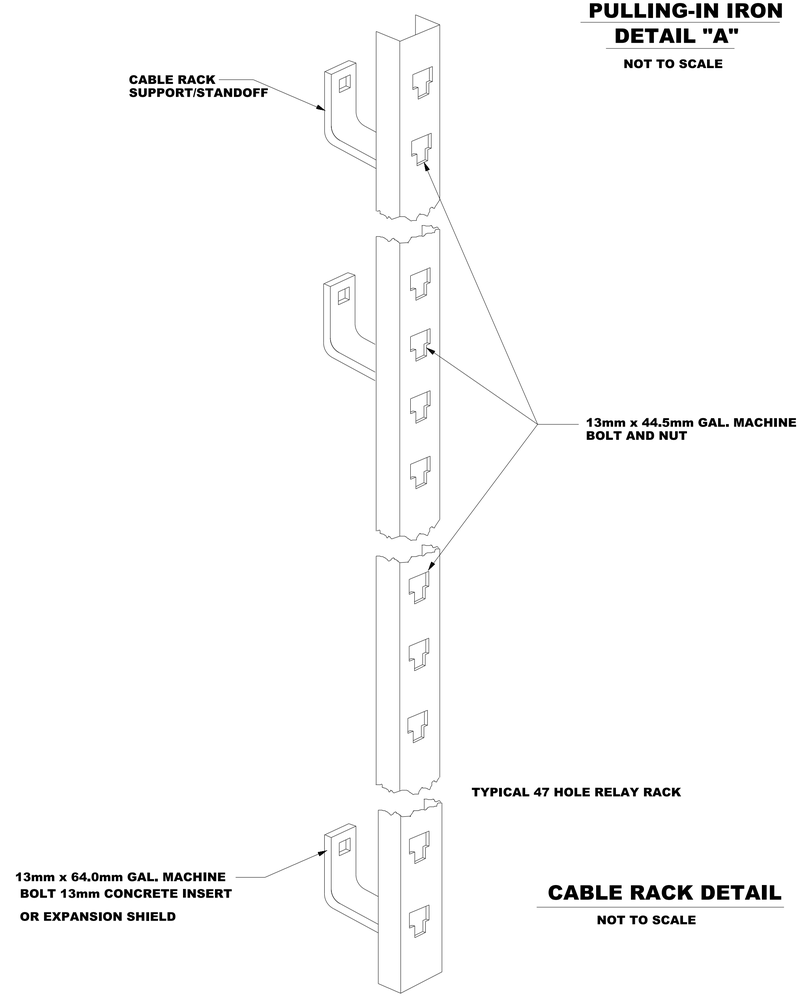

CABLE RACK DETAIL

NOT TO SCALE

UNLESS OTHERWISE NOTED, LINEAR DIMENSIONS SHOWN ARE IN MILLIMETERS.

SYMBOL	DESCRIPTION	DATE	APR

DESIGNED BY: DATE: 06-22-10
DWN BY: SUBMITTED BY:
CHK BY: FILE NO.: AF0964-XT02DT

US Army Corps of Engineers
Middle East District

WASTE MANAGEMENT COMPLEX
HERAT, AFGHANISTAN
SITE DESIGN
COMMUNICATIONS DETAILS

SHEET REFERENCE NUMBER:
XT-2

$DATE$ $TIME$ $USER$
$$FILE$

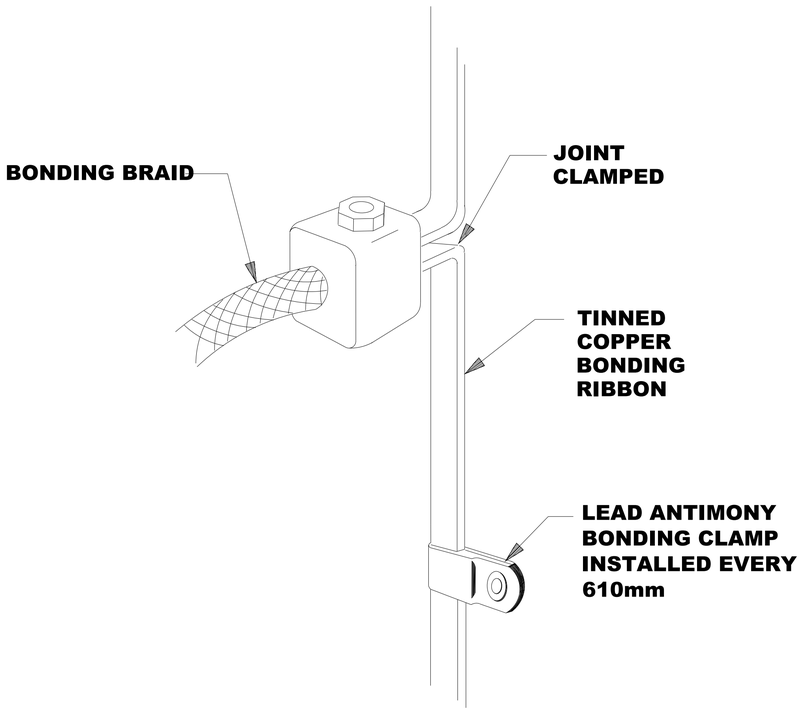

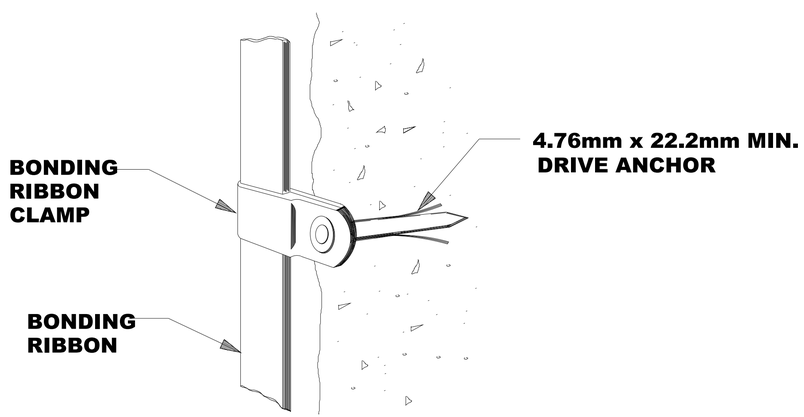

BONDING RIBBON ATTACHMENT

NOT TO SCALE

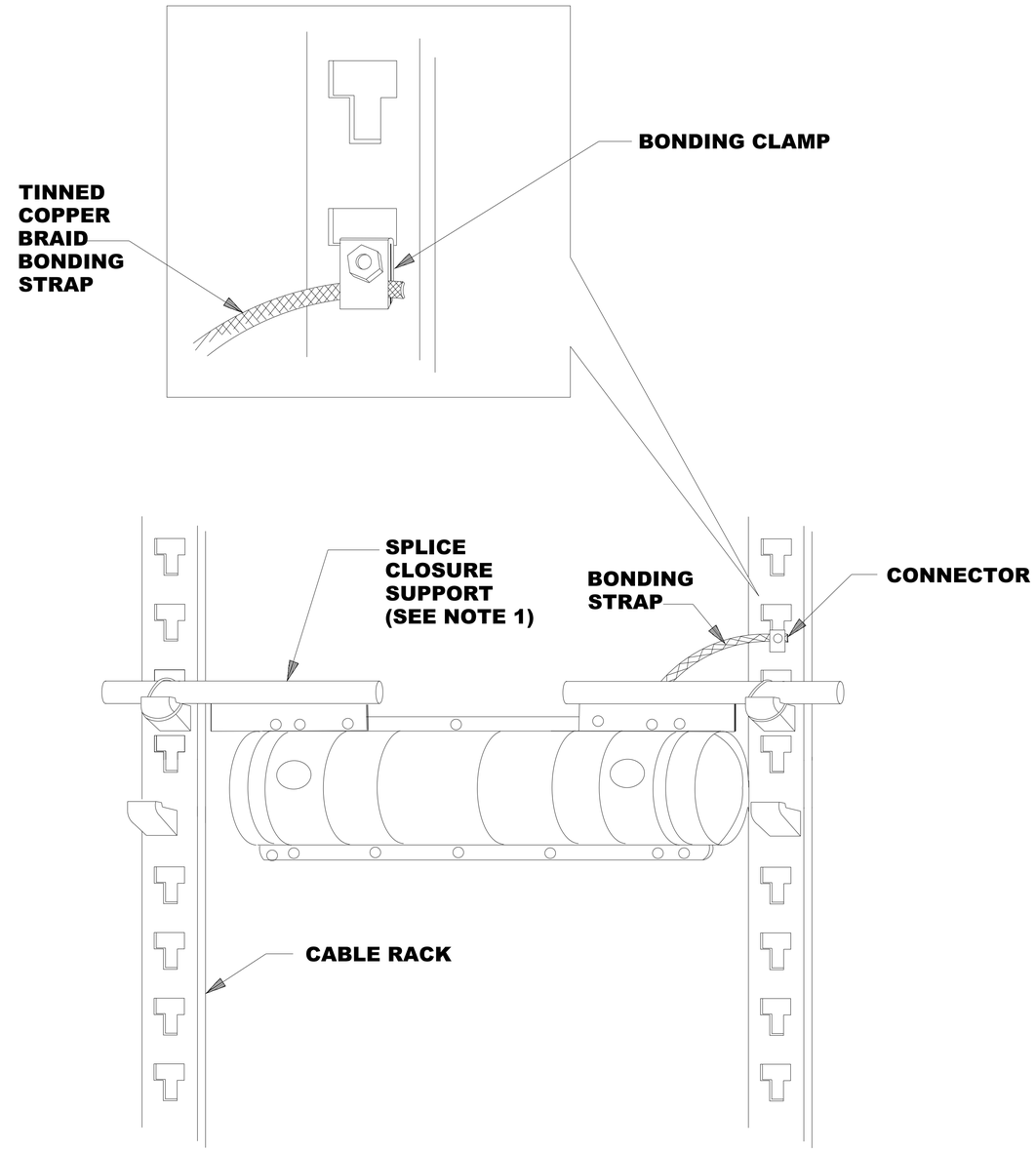

SPLICE CLOSURE GROUNDING

NOT TO SCALE

NOTE 1: IF CLOSURE SUPPORTS ARE NOT USED, THE CLOSURE WILL BE SUPPORTED BY THE CABLES IN THE END PLATES WHICH WILL BE SUPPORTED BY THE HOOKS.

UNLESS OTHERWISE NOTED, LINEAR DIMENSIONS SHOWN ARE IN MILLIMETERS.

SYMBOL	DESCRIPTION	DATE	APR

DESIGNED BY: DATE: 06-22-10
DWN BY: SUBMITTED BY:
CHK BY: FILE NO.: AF0964-XT03DT

US Army Corps of Engineers
Middle East District

WASTE MANAGEMENT COMPLEX
HERAT, AFGHANISTAN
SITE DESIGN
COMMUNICATIONS DETAILS

SHEET REFERENCE NUMBER:
XT-3

$DATE$ $TIME$ $USER$
$FILE$

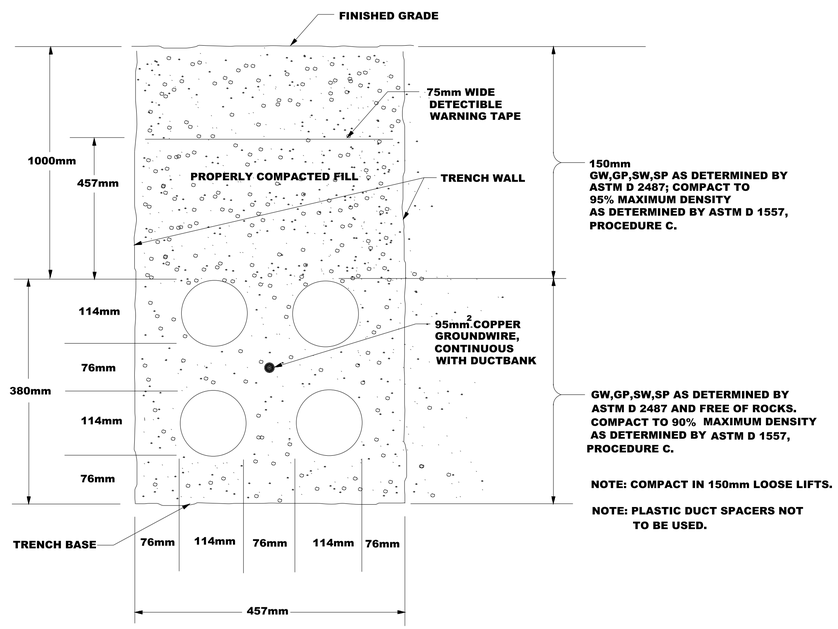

NOTE: COMPACT IN 150mm LOOSE LIFTS.

NOTE: PLASTIC DUCT SPACERS NOT TO BE USED.

COMMUNICATIONS DIRECT BURIED DUCTBANK

NOT TO SCALE

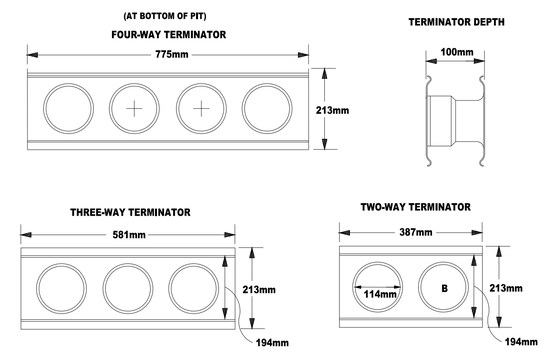

GENERAL NOTES:

1. TERMINATORS SHALL BE CONNECTED ("INTERLOCKED") TO FORM PANELS AS REQUIRED BY DUCT CONFIGURATION.
2. REINFORCING BARS WILL BE INSTALLED BETWEEN THE TERMINATORS.
3. DUCT TERMINATORS WILL BE SIZED FOR 114mm OUTER DIAMETER (4.5 INCH OD).

DUCT TERMINATORS

NOT TO SCALE

UNLESS OTHERWISE NOTED, LINEAR DIMENSIONS SHOWN ARE IN MILLIMETERS.

SYMBOL	DESCRIPTION	DATE	APR

DESIGNED BY: DATE: 06-22-10
DWN BY: SUBMITTED BY:
CHK BY: FILE NO.: AF0964-XT04DT

US Army Corps of Engineers
Middle East District

WASTE MANAGEMENT COMPLEX
HERAT, AFGHANISTAN
SITE DESIGN
COMMUNICATIONS DETAILS

SHEET REFERENCE NUMBER:
XT-4

$DATE$ $TIME$ $USER$
$$FILE$

ELEVATION

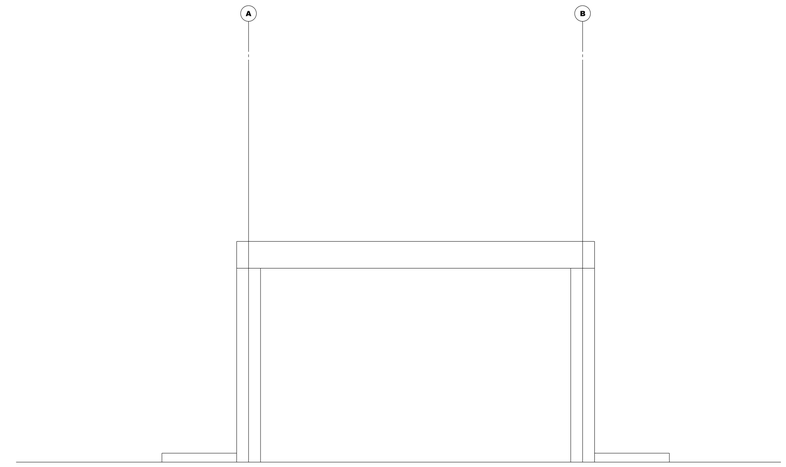

ELEVATION

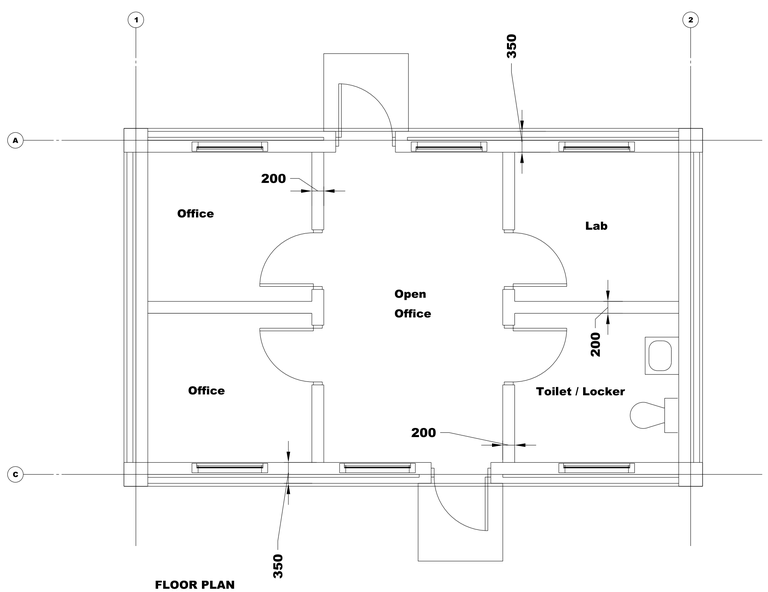

FLOOR PLAN

BUILDING GROSS AREA = 58.2 SQM

UNLESS OTHERWISE NOTED, LINEAR DIMENSIONS SHOWN ARE IN MILLIMETERS.

SYMBOL	DESCRIPTION	DATE	APR

DESIGNED BY: DATE: 06-22-10
DWN BY: SUBMITTED BY:
CHK BY: FILE NO.: AF0964A-AR01PN

US Army Corps of Engineers
Middle East District

WASTE MANAGEMENT COMPLEX
HERAT, AFGHANISTAN
WASTE MANAGEMENT OFFICE
FLOOR PLANS

SHEET REFERENCE NUMBER:
A
A-1

$DATE$ $TIME$ $USER$
$FILE$

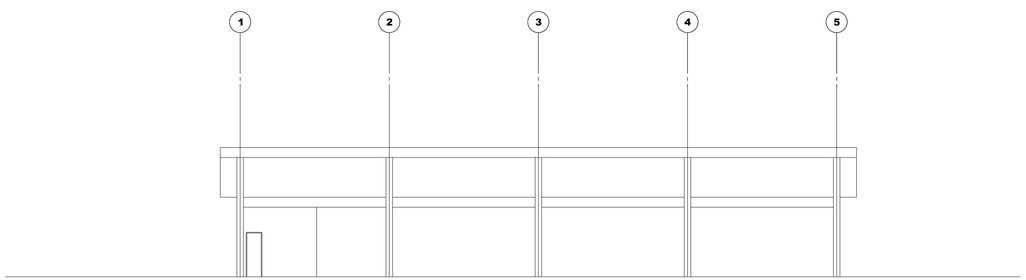

ELEVATION

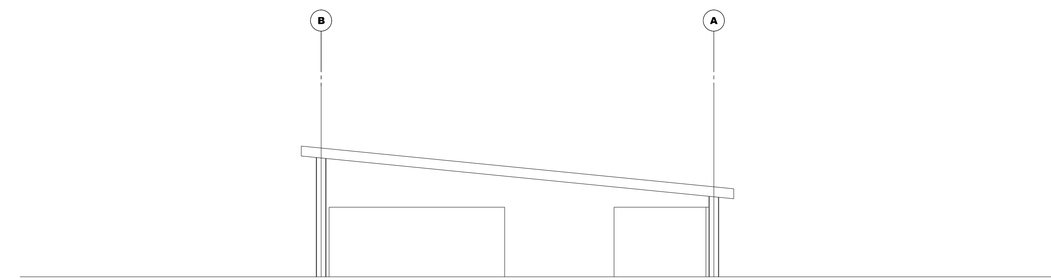

ELEVATION

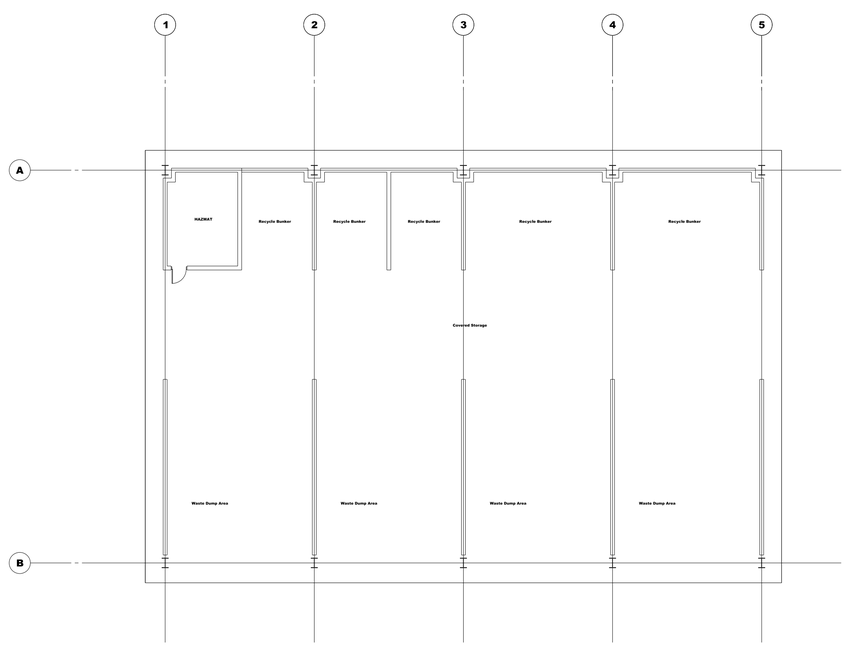

BUILDING GROSS AREA = 696 SQM

UNLESS OTHERWISE NOTED, LINEAR DIMENSIONS SHOWN ARE IN MILLIMETERS.

SYMBOL	DESCRIPTION	DATE	APR

DESIGNED BY: DATE: 06-22-10

DWN BY: SUBMITTED BY:

CHK BY: FILE NO.: AF0964B-AR01PN

US Army Corps of Engineers
Middle East District

WASTE MANAGEMENT COMPLEX
HERAT, AFGHANISTAN
COVERED STOR. & SORTING FAC.
FLOOR PLANS

SHEET REFERENCE NUMBER:
B
A-1

$DATE$ $TIME$ $USER$
$FILE$

SITE ADAPT DESIGN
B18 - VIP BARRACKS - ARCH SPAN

CONTRACT NUMBER:
W912ER-09-D-0002 TO:0027

A1 Size 594mm x 841mm

3/28/2011 1:59 PM

US ARMY CORPS
OF ENGINEERS
AFGHANISTAN NORTH
DISTRICT

SYMBOL	DESCRIPTION	DATE	APPR.	SYMBOL	DESCRIPTION	DATE	APPR.

U.S. ARMY ENGINEER DISTRICT, AFGHANISTAN
CORPS OF ENGINEERS
APO AE 09356

DESIGNED BY: JDS
DWN BY: JDS
CKD BY: JDS
REVIEWED BY: JH
SUBMITTED BY:
DATE: 3/28/2011
REV: 0
CONTRACT NO. W912ER-09-D-0002
DRAWING CODE:
FILE NAME: wecc-gh-cover-sht-b-v1.dwg
PLOT SCALE: NONE
PLOT DATE: 3/28/2011

BAKER

SITE ADAPT DESIGN
B18 - VIP BARRACKS - ARCH SPAN
COVER SHEET

SHEET REFERENCE NUMBER:
G-001

ENGINEERING AND CONSTRUCTION DIVISION
US ARMY ENGINEER DISTRICT, AFGHANISTAN
APO AE, 09356

B18 VIP BARRACKS

PROJECT COORDINATION

U.S. ARMY ENGINEER DISTRICT, AFGHANISTAN

PROJECT MANAGER _____ DATE

CHIEF, DESIGN BRANCH _____ DATE

THIS PROJECT WAS DESIGNED BY AFGHANASTAN ENGINEER DISTRICT OF THE U.S ARMY CORPS OF ENGINEERS. THE INITIALS OR SIGNATURES AND REGISTRATION DESIGNATIONS OF INDIVIDUALS APPEAR ON THESE DOCUMENTS WITHIN THE SCOPE OF THEIR EMPLOYMENT AS REQUIRED BY ER 1110-1-8152.

SECTION/DETAIL CROSS REFERENCING CONVENTIONS

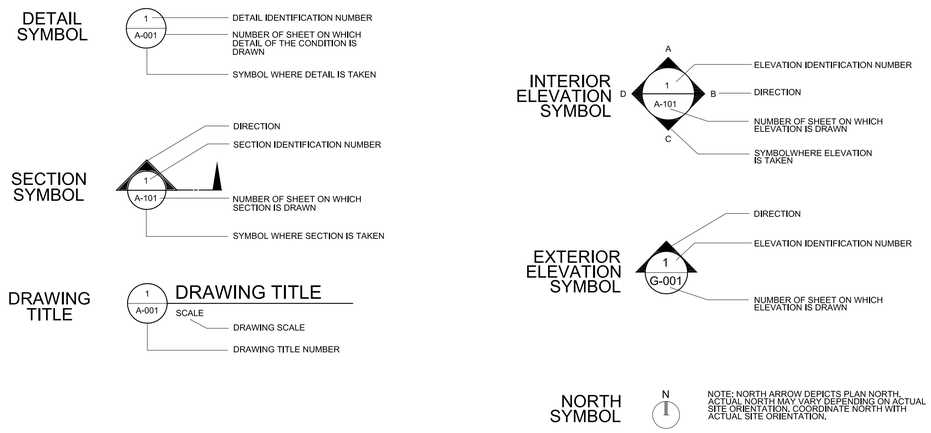

APPENDIX A

AFGHANISTAN

SCHEDULE OF DRAWINGS

SHEET NO	DWG CODE	SHEET REFERENCE NO	DESCRIPTION	REV STATUS
			GENERAL	
1	ARCHSPANVIP-B18-G-001	G-001	COVER SHEET	
2	ARCHSPANVIP-B18-G-002	G-002	INDEX	
3	ARCHSPANVIP-B18-G-003	G-003	LIFE SAFETY AND CODE ANALYSIS	
			STRUCTURAL	
4	ARCHSPANVIP-B18-S-001	S-001	ABBREVIATIONS AND GENERAL NOTES	
5	ARCHSPANVIP-B18-S-002	S-002	GENERAL NOTES AND DESIGN CRITERIA	
6	ARCHSPANVIP-B18-S-101	S-101	FOUNDATION PLAN	
7	ARCHSPANVIP-B18-S-201	S-201	BUILDING ELEVATION AND DETAILS	
8	ARCHSPANVIP-B18-S-202	S-202	BUILDING SECTION AND DETAILS	
9	ARCHSPANVIP-B18-S-301	S-301	FOUNDATION SECTIONS	
10	ARCHSPANVIP-B18-S-302	S-302	SECTIONS	
11	ARCHSPANVIP-B18-S-303	S-303	LATRINE SECTIONS	
12	ARCHSPANVIP-B18-S-501	S-501	TYPICAL DETAILS	
13	ARCHSPANVIP-B18-S-502	S-502	DOOR/WINDOW/MECHANICAL OPENING FRAME DETAILS	
14	ARCHSPANVIP-B18-S-601	S-601	SCHEDULES	
			ARCHITECTURAL	
15	ARCHSPANVIP-B18-A-001	A-001	ABBREVIATIONS, SYMBOLS AND GENERAL NOTES	
16	ARCHSPANVIP-B18-A-101	A-101	FLOOR PLAN	
17	ARCHSPANVIP-B18-A-102	A-102	REFLECTED CEILING PLAN	
18	ARCHSPANVIP-B18-A-103	A-103	ROOF PLAN	
19	ARCHSPANVIP-B18-A-201	A-201	ELEVATIONS	
20	ARCHSPANVIP-B18-A-301	A-301	BUILDING SECTION	
21	ARCHSPANVIP-B18-A-302	A-302	WALL SECTIONS	
22	ARCHSPANVIP-B18-A-303	A-303	WALL SECTIONS	
23	ARCHSPANVIP-B18-A-401	A-401	ENLARGED PLAN	
24	ARCHSPANVIP-B18-A-501	A-501	EXTERIOR DETAILS	
25	ARCHSPANVIP-B18-A-502	A-502	HEAD, JAMB & SILL DETAILS	
26	ARCHSPANVIP-B18-A-503	A-503	STOOP DETAILS	
27	ARCHSPANVIP-B18-A-504	A-504	TOILET, LAVATORY & ABLUTION DETAILS	
28	ARCHSPANVIP-B18-A-505	A-505	SHOWER DETAILS	
29	ARCHSPANVIP-B18-A-601	A-601	WINDOW AND DOOR SCHEDULE	
30	ARCHSPANVIP-B18-A-602	A-602	PARTITION TYPES	
31	ARCHSPANVIP-B18-A-603	A-603	FINISH SCHEDULE	

SHEET NO	DWG CODE	SHEET REFERENCE NO	DESCRIPTION	REV STATUS
			PLUMBING	
32	ARCHSPANVIP-B18-P-001	P-001	PLUMBING SYMBOLS AND LEGEND AND GENERAL NOTES	
33	ARCHSPANVIP-B18-P-101	P-101	FLOOR PLAN - PLUMBING (SANITARY & WATER) ENLARGED FLOOR PLAN - PLUMBING (SANITARY & WATER)	
34	ARCHSPANVIP-B18-P-501	P-501	PLUMBING SCHEDULES, DETAILS, AND NOTES	
35	ARCHSPANVIP-B18-P-502	P-502	PLUMBING DETAILS	
36	ARCHSPANVIP-B18-P-901	P-901	DRAINAGE AND VENT ISOMETRIC AND HOT AND COLD WATER PIPING ISOMETRIC	
			MECHANICAL	
37	ARCHSPANVIP-B18-M-101	M-101	FLOOR PLAN AND SCHEDULES AND DETAILS	
			ELECTRICAL	
38	ARCHSPANVIP-B18-E-001	E-001	ABBREVIATIONS, SYMBOLS AND GENERAL NOTES	
39	ARCHSPANVIP-B18-E-101	E-101	ELECTRICAL LIGHTING PLAN	
40	ARCHSPANVIP-B18-E-102	E-102	ELECTRICAL POWER AND SYSTEMS PLAN	
41	ARCHSPANVIP-B18-E-501	E-501	ELECTRICAL DETAILS	
42	ARCHSPANVIP-B18-E-601	E-601	ELECTRICAL SCHEDULES	
43	ARCHSPANVIP-B18-E-602	E-602	ELECTRICAL PANEL SCHEDULES	

US ARMY CORPS OF ENGINEERS AFGHANISTAN NORTH DISTRICT

SYMBOL	DESCRIPTION	DATE	APPR.	SYMBOL	DESCRIPTION	DATE	APPR.

DATE: 3/28/2011
CONTRACT NO. W912ER-09-D-0002
DRAWING CODE:
REV: 0
FILE NAME: ARCHSPANVIP-B18-G-002.DWG
PLOT SCALE: NONE
PLOT DATE: 3/28/2011

DESIGNED BY: JDS
DWN BY: JDS
CKD BY: JDS
REVIEWED BY: JH
SUBMITTED BY:

BAKER

U.S. ARMY ENGINEER DISTRICT, AFGHANISTAN
CORPS OF ENGINEERS
APO AE 09356

SITE ADAPT DESIGN
B18 - VIP BARRACKS - ARCH SPAN
INDEX

SHEET REFERENCE NUMBER:
G-002

A1 Size 594mm x 841mm

3/28/2011 1:59 PM

LEGEND:

- DENOTES PATHS OF EXIT TRAVEL
- EXIT — DENOTES DOOR AS AN EMERGENCY EXIT
- DENOTES STARTING POINT FOR TRAVEL DISTANCE
- FE — DENOTES FIRE EXTINGUISHER LOCATIONS
- (1) HOUR RATED WALL
- (2) HOUR RATED WALL
- FIRE RESISTANT CEILING
- NON-FIRE RESISTANT CEILING SYSTEM OR EXPOSED FIRE RESISTANT SPRAY-ON INSULATION SYSTEM AT ARCH-SPAN STRUCTURE

REFER TO REFLECTED CEILING PLANS FOR CEILING MATERIALS AND CONFIGURATION

PER MEMORANDUM FOR RECORD DATED 03 FEBRUARY 2011
ANSF CONSTRUCTION STANDARDS DIVISION 09 FINISHES:
CEILING **DO NOT** NEED TO MEET FIRE BOUNDARY CODE REQUIREMENTS.

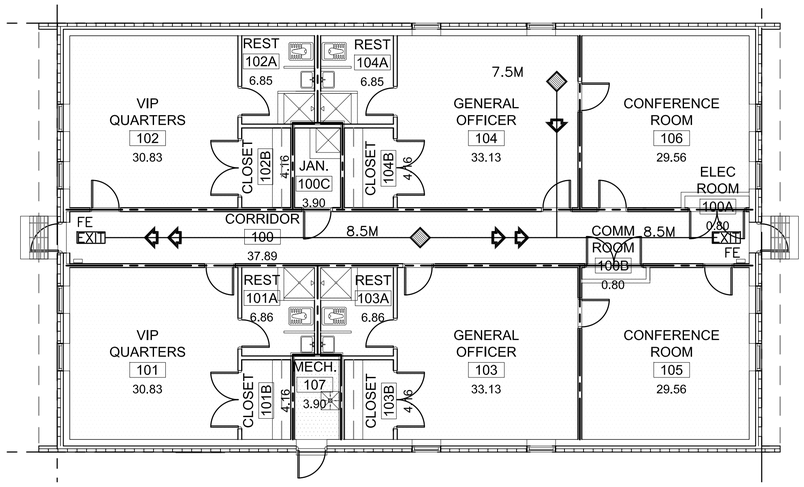

1 / G-003 LIFE SAFETY PLAN
SCALE: 1:100

CODE ANALYSIS:

1. REFERENCES:
2009 INTERNATIONAL BUILDING CODE (2009 IBC)
2009 LIFE SAFETY CODE (2006 NFPA 101)
2009 NFPA 10 - STANDARD FOR PORTABLE FIRE EXTINGUISHERS.

2. IBC OCCUPANCY CLASSIFICATION:
GROUP R-2 (NEW HOTELS AND DORMITORIES NFPA 101 6.1.8 AND CHAPTER 28)

3. TYPE OF CONSTRUCTION (IBC): TYPE II-B (UNPROTECTED/NONSPRINKLERED)

4. IBC TABLE 503: ALLOWABLE HEIGHT AND BUILDING AREAS:
GROUP R-2
ALLOWABLE AREA: 1486 SM
ALLOWABLE HEIGHT: 4 STORIES (16 M)

GROUP R-2
PROPOSED AREA: 322 SM
PROPOSED HEIGHT: 1 STORY (<16 M)

5. IBC TABLE 601 & 602: FIRE RESISTANCE RATING REQUIREMENTS FOR BUILDING ELEMENTS FOR TYPE II-B

BUILDING ELEMENT	RATING (HOUR)	REFERENCE
STRUCTURAL FRAME (COLUMNS, GIRDERS & TRUSSES)	0	TABLE 601
BEARING WALLS		
EXTERIOR	0	TABLE 601
INTERIOR	0	TABLE 601
NONBEARING WALLS & PARTITIONS		
INTERIOR	0	TABLE 601
FLOOR CONSTRUCTION	0	TABLE 601
ROOF CONSTRUCTION	0	TABLE 601
EXTERIOR WALL	0	TABLE 602

6. IBC TABLE 803.9 - INTERIOR WALL AND CEILING FINISH REQUIREMENTS FOR R-2 OCCUPANCY/NONSPRINKLERED

GROUP	EXIT ENCLOSURES AND EXIT PASSAGEWAY	CORRIDORS	ROOMS AND ENCLOSED SPACES
R-2	B	B	C

7. NFPA 101 TABLE 7.3.1.2 - OCCUPANT LOAD
HOTELS AND DORMITORIES = 18.6 SM/PERSON CALCULATED = 18 OCCUPANTS
ACTUAL = 4 OCCUPANTS

BUSINESS = 9.3 SM/PERSON CALCULATED = 8 OCCUPANTS

8. NFPA 101 TABLE 7.3.3.1 - EGRESS CAPACITY
HOTELS AND DORMITORIES = 5 MM PER OCCUPANT

MINIMUM REQUIRED: 130 MM (26 OCCUPANTS x 5 MM PER OCCUPANT)
PROPOSED EGRESS CAPACITY: 1800 MM: (2) 900 MM DOORS

9. NFPA 101 PARAGRAPH 28.2.6 - EXIT ACCESS TRAVEL DISTANCE
MAXIMUM ALLOWED WITHIN ROOM OR SUITE TO CORRIDOR: 23 METERS
MAXIMUM ALLOWED CORRIDOR DOOR OF ANY ROOM OR SUITE TO NEAREST EXIT: 30 METERS

PROPOSED WITHIN ROOM OR SUITE TO CORRIDOR: 8 METERS
PROPOSED CORRIDOR DOOR OF ANY ROOM OR SUITE TO NEAREST EXIT: 25 METERS

10. NFPA 101 PARAGRAPH 28.3.6.1.2 - CORRIDOR FIRE-RESISTANCE RATING (HOUR)
REQUIRED: WALLS NOT LESS THAN ONE HOUR FIRE RESISTANCE RATING
PROPOSED: 1 HOUR RATING

11. NFPA 101 PARAGRAPH 28.3.6.2 & TABLE 8.3.4.2 - DOORS INTO EXIT ACCESS CORRIDORS
REQUIRED MINIMUM: 20 MINUTE FIRE PROTECTION RATING
PROPOSED: 20 MINUTE DOORS

12. NFPA 101 PARAGRAPH 28.2.3.3 - CORRIDOR WIDTH
REQUIRED: SUFFICIENT FOR OCCUPANT LOAD, BUT NOT LESS THAN 1120 MM
CALCULATED WIDTH REQUIRED PER OCCUPANT LOAD: 130 MM (26 OCCUPANTS X 5 MM)
PROPOSED: 1700 MM

13. NFPA 101 PARAGRAPH 28.2.5.3 - COMMON PATH OF TRAVEL
MAXIMUM ALLOWED: 10.7 METERS
PROPOSED: 10.7 M

14. NFPA 101 PARAGRAPH 28.2.5.5 - DEAD END CORRIDORS
PERMITTED: 10.7 METERS
PROPOSED: NO DEAD END CORRIDORS

15. NFPA 101 PARAGRAPH 28.2.4.1 AND 7.4.1.1 - MINIMUM NUMBER OF EXITS
REQUIRED: 2 MINIMUM
PROPOSED: 2 EXITS

16. NFPA 101 PARAGRAPH 28.2.1.2 & 24.2 - SECONDARY MEANS OF ESCAPE
ONE OF THE FOLLOWING REQUIRED:
1) DOOR, SIMILAR TO PRIMARY, BUT REMOTE FROM PRIMARY
2) OPERABLE WINDOW, 0.53 SM, NOT LESS THAN 510 MM WIDE, 610 MM HIGH, NOT MORE THAN 1120 MM AFF, WITHIN 610O MM OF GRADE
PROPOSED: OPERABLE WINDOWS, 0.75 SM EACH PER SLEEPING ROOM

17. NFPA 101 PARAGRAPH 24.2.2.4 - TWO PRIMARY MEANS OF ESCAPE
AREA WITH DWELLING UNIT EXCEEDS 185 SM PER STORY
ALLOWED AREA PER STORY WITHIN DWELLING UNIT: 185 SM
PROPOSED AREA WITHIN DWELLING UNIT: 16 SM
REQUIRED PRIMARY EXITS: 1
PROPOSED PRIMARY EXITS: 1

18. NFPA 101 PARAGRAPH 28.3.7.1 - SUBDIVISION OF BUILDING SPACES - NONSPRINKLERED
REQUIRED: EACH GUEST ROOM OR DORMITORY ROOM SHALL BE SEPARATED FROM OTHER GUEST OR DORMITORY ROOMS BY FIRE BARRIERS HAVING FIRE RESISTANCE RATED OF NOT LESS THAN 1 HOUR
PROPOSED: 1 HOUR SEPARATION

19. HAZARDOUS AREA PROTECTION TABLE 28.3.2.2.2
STORAGE ROOMS: 1 HOUR SEPARATION REQUIRED
PROPOSED: NOT APPLICABLE

20. NFPA 101 A.3.3.59 DORMITORY: ROOMS WITHIN DORMITORIES INTENDED FOR THE USE OF INDIVIDUALS FOR COMBINED LIVING AND SLEEPING PURPOSES ARE GUEST ROOMS OR GUEST SUITES. EXAMPLES OF DORMITORIES ARE COLLEGE DORMITORIES, FRATERNITY AND SORORITY HOUSES AND MILITARY BARRACKS.

20.1. NFPA 101 28.3.5.2 EXTINGUISHMENT REQUIREMENTS: AUTOMATIC SPRINKLER PROTECTION REQUIRED UNLESS SLEEPING ROOMS HAVE DOORS DIRECTLY TO OUTSIDE.
DUE TO AUSTERE DESIGN CRITERIA, THE GOVERNMENT WILL WAIVE THIS REQUIREMENT.

NATURAL VENTILATION CALCULATIONS

ROOMNUMBER	ROOM NAME	ROOM NSM	REQ'D WINDOW AREA @ 4%	WINDOWS TYPE #2	WINDOWS TYPE #3	CRITERIA MET
100	CORRIDOR	37.89	1.51	NA	NA	NA
100A	ELECTRICAL ROOM	0.80	0.03	NA	NA	NA
100B	COMMUNICATIONS ROOM	0.80	0.03	NA	NA	NA
100C	JANITOR CLOSET	3.90	0.16	NA	NA	NA
101	VIP QUARTERS	30.83	1.23	2	NA	YES
101A	RESTROOM	6.85	0.27	NA	NA	NA
101B	CLOSET	4.16	0.17	NA	NA	NA
102	VIP QUARTERS	30.83	1.23	2	NA	YES
102A	RESTROOM	6.85	0.27	NA	NA	NA
102B	CLOSET	4.16	0.17	NA	NA	NA
103	GENERAL OFFICER	33.13	1.32	NA	2	YES
103A	RESTROOM	6.86	0.27	NA	NA	NA
103B	CLOSET	4.16	0.17	NA	NA	NA
104	GENERAL OFFICER	33.13	1.89	NA	2	YES
104A	RESTROOM	6.85	0.27	NA	NA	NA
104B	CLOSET	4.16	0.17	NA	NA	NA
105	CONFERENCE ROOM	29.56	1.18	2	NA	YES
106	CONFERENCE ROOM	29.56	1.18	2	NA	YES
107	MECHANICAL ROOM	3.90	0.15	NA	NA	NA
	TOTAL NET SM	282.54				
	TOTAL GROSS SM	322.00				

0 2000 4000
SCALE: 1:100

UNLESS OTHERWISE NOTED, LINEAR DIMENSIONS SHOWN ARE IN MILLIMETERS.

COMMONWEALTH OF VIRGINIA
PETER GARRETT SCHMIDT
No. 013167
ARCHITECT

US ARMY CORPS OF ENGINEERS
AFGHANISTAN NORTH DISTRICT

SYMBOL	DESCRIPTION	DATE	APPR.	SYMBOL	DESCRIPTION	DATE	APPR.

U.S. ARMY ENGINEER DISTRICT, AFGHANISTAN
CORPS OF ENGINEERS
APO AE 09356

DESIGNED BY: PGS, SE, MR
DWN BY: SE, MDH, AH
CKD BY: PGS, SE, MR
REVIEWED BY: JH
SUBMITTED BY:
DATE: 3/28/2011
CONTRACT NO. W912ER-09-D-0002
DRAWING CODE:
REV: 0
FILE NAME: ##c:\projects\af-ansf-c-b-b-b1.dwg
PLOT SCALE: 1:100
PLOT DATE: 3/28/2011

BAKER

SITE ADAPT DESIGN
B18 - VIP BARRACKS - ARCH SPAN
LIFE SAFETY AND CODE ANALYSIS

SHEET REFERENCE NUMBER:
G-003

A1 Size 594mm x 841mm

3/28/2011 1:59 PM

STRUCTURAL ABBREVIATIONS:

ACI	AMERICAN CONCRETE INSTITUTE
ADD'L	ADDITIONAL
AISC	AMERICAN INSTITUTE OF STEEL CONSTRUCTION
AISI	AMERICAN IRON AND STEEL INSTITUTE
ASTM	AMERICAN SOCIETY FOR TESTING AND MATERIALS
ARCH	ARCHITECTURAL
B	BOTTOM
BLDG	BUILDING
BOTT	BOTTOM
℄	CENTER LINE
CFMRF	COLD FORM METAL ROOF FRAME
CFMF	COLD FORM METAL FRAME
CFS	COLD FORMED STEEL
CIP	CAST-IN-PLACE
CIPL	CAST-IN-PLACE LINTEL
CJ	CONTROL JOINT
CLR	CLEAR
CMU	CONCRETE MASONRY UNIT
COEFF	COEFFICIENT
COL	COLUMN
CONC	CONCRETE
CONT	CONTINUOUS
COORD	COORDINATE
CRSI	CONCRETE REINFORCING STEEL INSTITUTE
CSJ	CONSTRUCTION JOINT
DIA	DIAMETER
DIAG	DIAGONAL
DIM	DIMENSION
DWG	DRAWING
DWL	DOWEL
EA	EACH
EF	EACH FACE
ELEC	ELECTRICAL
ELEV	ELEVATION
EMBED	EMBEDMENT
EQUIV	EQUIVALENT
ETC	ET CETERA
EW	EACH WAY
EXP	EXPANSION
EXT	EXTERIOR
FND	FOUNDATION
FTG	FOOTING
GA	GAUGE
GB	GRADE BEAM
HORIZ	HORIZONTAL
h	HOUR
HRS	HOURS
IBC	INTERNATIONAL BUILDING CODE
INFO	INFORMATION
INT	INTERIOR
kg	KILOGRAM
km	KILOMETER
kN	KILONEWTON
kPa	KILOPASCAL
L#	ANGLE (# INDICATES SIZE)
LONG	LONGITUDINAL
LLV	LONG LEG VERTICAL
m	METER
MAX	MAXIMUM
MECH	MECHANICAL
MFG	MANUFACTURER
MID	MIDDLE
MIN	MINIMUM
MISC	MISCELLANEOUS
mm	MILLIMETER
MPa	MEGAPASCAL
MTL	METAL
MWFRS	MAIN WIND FORCE RESISTING SYSTEM
N	NEWTON
N	NORTH
N/A	NOT APPLICABLE
#	NUMBER SYMBOL FOR REBAR SIZE
NTS	NOT TO SCALE
OC	ON CENTER
OPNG	OPENING
℄ or PL	PLATE
PRE-ENG	PRE-ENGINEERED
RB	ROOF BEAM
REINF	REINFORCED
REQ'D	REQUIRED
SIM	SIMILAR
SOG	SLAB-ON-GRADE
SPECS	SPECIFICATIONS
STD	STANDARD
STRUCT	STRUCTURAL
SW	SHEAR WALL
T	TOP
T/	TOP OF
T/ELEV	TOP ELEVATION
T/SLAB	TOP OF SLAB
T&B	TOP AND BOTTOM
THK	THICK
TYP	TYPICAL
UFC	UNIFIED FACILITIES CRITERIA
UON	UNLESS OTHERWISE NOTED
VERT	VERTICAL
W	WIDTH
W/	WITH

1.0 GENERAL NOTES:

1.1 THIS PROJECT HAS BEEN DESIGNED FOR THE WEIGHTS AND MATERIALS INDICATED ON THE DRAWINGS AND FOR THE SUPERIMPOSED DEAD AND LIVE LOADS INDICATED IN THE STRUCTURAL DESIGN CRITERIA. IT IS THE CONTRACTOR'S RESPONSIBILITY TO DETERMINE ALLOWABLE CONSTRUCTION LOADS AND TO PROVIDE PROPER DESIGN AND CONSTRUCTION OF FALSEWORK, FORMWORK, STAGING, BRACING, SHEETING AND SHORING, ETC.

1.2 METHODS, PROCEDURES AND SEQUENCES OF CONSTRUCTION ARE THE RESPONSIBILITY OF THE CONTRACTOR. THE CONTRACTOR IS RESPONSIBLE FOR IDENTIFYING AND IMPLEMENTING THE NECESSARY PRECAUTIONS TO MAINTAIN AND ENSURE THE INTEGRITY OF THE STRUCTURE AT ALL STAGES OF CONSTRUCTION.

1.3 COORDINATE THESE DRAWINGS WITH THE ARCHITECTURAL, MECHANICAL, ELECTRICAL, PLUMBING, AND CIVIL DRAWINGS. ALL DIMENSIONS SHOWN ON THE DRAWINGS ARE MILLIMETERS UNLESS NOTED OTHERWISE.

1.4 SLEEVES OR BLOCK-OUTS REQUIRED FOR PASSAGE OF DUCTWORK, PIPING, DRAINS, CONDUIT, ETC, IN ADDITION TO ANCHORS, CURBS AND HANGERS REQUIRED FOR EQUIPMENT AND PIPING AND UNDER-SLAB UTILITIES ARE NOT SPECIFICALLY, NOR GENERALLY, INDICATED ON THE STRUCTURAL DRAWINGS. THE CONTRACTOR IS RESPONSIBLE FOR COORDINATING WORK SHOWN ON OTHER DISCIPLINE'S DRAWINGS AND DETERMINING SUCH REQUIREMENTS PRIOR TO FABRICATION OR ERECTION OF THE STRUCTURE. PENETRATIONS OF STRUCTURAL MEMBERS ARE SUBJECT TO APPROVAL BY THE CONTRACTING OFFICER. REFER TO GENERAL NOTE 8.9 FOR OPENINGS IN ARCH SPAN STRUCTURE.

1.5 DIMENSIONS AND INSTALLATION DETAILS OF PURCHASED EQUIPMENT MUST BE VERIFIED AND COORDINATED WITH THE SUPPORTING STRUCTURE. THE CONTRACTOR IS RESPONSIBLE FOR DETERMINING SUCH REQUIREMENTS FROM SUBCONTRACTORS AND EQUIPMENT SUPPLIERS ALONG WITH COORDINATING THE LOCATIONS AND DETAILS FOR THESE ITEMS PRIOR TO CONSTRUCTION OF EQUIPMENT PADS OR FABRICATION AND ERECTION OF FRAMING INTENDED TO SUPPORT SUCH EQUIPMENT. ANY CONFLICTS BETWEEN THESE ITEMS AND THE BUILDING STRUCTURE IS TO BE BROUGHT TO THE ATTENTION OF THE CONTRACTING OFFICER FOR RESOLUTION. REFER TO GENERAL NOTE 8.11 FOR HANGING LOADS ON ARCH SPAN STRUCTURE.

1.6 WORK NOT INCLUDED ON THE DRAWINGS BUT IMPLIED TO BE SIMILAR TO THAT SHOWN AT CORRESPONDING PLACES ELSEWHERE ON THE DRAWINGS SHALL BE REPEATED.

1.7 IN CASE OF CONFLICT BETWEEN THE NOTES, DETAILS AND SPECIFICATIONS THE MOST RIGID REQUIREMENTS SHALL GOVERN.

1.8 SEE ARCHITECTURAL DRAWINGS FOR LOCATIONS OF NON-LOAD BEARING PARTITIONS. PROVIDE COMPRESSIBLE FIRESAFING AT TOP OF WALL AS REQUIRED BY ARCHITECTURAL DRAWINGS.

1.9 COORDINATE FINISHED FLOOR DATUM ELEVATION 0.0m WITH THE CIVIL DRAWINGS.

2.0 FOUNDATION NOTES

2.1 THE GEOTECHNICAL ANALYSIS FOR THIS PROJECT IS THE RESPONSIBILITY OF THE CONTRACTOR AWARDED THE WORK. AN ASSUMED ALLOWABLE SOIL BEARING VALUE OF 72 kPa HAS BEEN USED IN THE STRUCTURAL ANALYSIS OF THE BUILDING AND SHALL BE CONFIRMED AND VERIFIED AS PART OF THE GEOTECHNICAL INVESTIGATION. VALUES WHICH DO NOT MEET THE REQUIREMENTS INDICATED IN THE STRUCTURAL DESIGN CRITERIA, FOUNDATION LOADS SECTION SHALL BE IMMEDIATELY BROUGHT TO THE ATTENTION OF THE CONTRACTING OFFICER FOR CONSIDERATION AND DETERMINATION ON THE NEXT APPROPRIATE COURSE OF ACTION.

2.2 ELEVATIONS SHOWN ON THE DRAWINGS AT WHICH FOUNDATIONS BEAR ARE APPROXIMATE AND MAY VARY TO SUIT SUBSURFACE SOIL CONDITIONS AND PROJECT GEOTECHNICAL ENGINEER'S RECOMMENDATIONS. ALL EXTERIOR FOOTINGS ARE TO BEAR A MINIMUM OF 800mm BELOW FINISHED GRADE.

2.3 SEE THE SPECIFICATION FOR ADDITIONAL REQUIREMENTS TO THOSE OUTLINED IN THE GEOTECHNICAL INVESTIGATION FOR EXCAVATION AND PREPARATION OF THE FOUNDATION AND THE SLAB ON GRADE SUBGRADE INCLUDING COMPACTION PROCEDURES.

2.4 EXCAVATIONS FOR FOOTINGS SHALL HAVE THE SIDES AND BOTTOMS TEMPORARILY LINED WITH 0.25mm POLYETHYLENE IF PLACEMENT OF CONCRETE DOES NOT OCCUR WITHIN 24 HRS OF THE EXCAVATION OF THE FOOTING.

2.5 FOUNDATION CONDITIONS NOTED DURING CONSTRUCTION WHICH DIFFER FROM THOSE DESCRIBED IN THE GEOTECHNICAL REPORT SHALL BE REPORTED TO THE GENERAL CONTRACTOR AND CONTRACTING OFFICER BEFORE FURTHER CONSTRUCTION IS ATTEMPTED.

2.6 NO FOOTINGS SHALL BE POURED INTO OR AGAINST SUBGRADE CONTAINING FREE WATER, FROST, ICE OR LOOSE MATERIAL.

2.7 CONCRETE SLABS ON GRADE HAVE BEEN DESIGNED TO BEAR ON PROPERLY COMPACTED SUB-BASE STONE AND SUB-GRADE SOILS. THE SUB-BASE MATERIAL BENEATH THE SLAB-ON-GRADE SHALL BE A WELL GRADED CRUSHED STONE (AASHTO #57 OR SIMILAR) AND BE COMPACTED IN ACCORDANCE WITH 95% MODIFIED DENSITY PER ASTM D 1557.

2.8 PRIOR TO START OF FOUNDATION OR SLAB-ON-GRADE CONSTRUCTION, EXISTING SUBGRADES SHALL BE COMPACTED TO MINIMUM OF 95% MAXIMUM DRY DENSITY OBTAINED THRU ASTM D 1557 MODIFIED PROCTOR TESTING.

2.9 SEE PLUMBING, ELECTRICAL & CIVIL DRAWINGS FOR REQUIRED UNDERSLAB UTILITIES.

2.10 SEE ARCHITECTURAL DRAWINGS FOR ALL WATERPROOFING DETAILS AND MATERIALS.

2.11 IF UNDERMINING OF FOOTINGS OCCURS, FILL VOIDS WITH 15 MPa CONCRETE. DO NOT ATTEMPT TO REPLACE AND RE-COMPACT SOIL.

3.0 CONCRETE

3.1 CONCRETE SHALL HAVE THE UNIT WEIGHT OF 2350 kg/m^3 AND A MINIMUM COMPRESSIVE STRENGTH (f'c) OF 28 MPa AT 28 DAYS. ALL CONCRETE SHALL HAVE A MAXIMUM WATER-CEMENT RATIO OF 0.45. SEE SPECIFICATIONS FOR ADDITIONAL INFORMATION. ENTRAIN AIR TO PRODUCE TOTAL AIR CONTENT ACCORDING TO THE SPECIFICATIONS FOR CONCRETE EXPOSED TO FREEZING TEMPERATURES (EXTERIOR FOOTINGS AND STEM WALLS, SLAB TURNDOWNS, EXTERIOR SLABS AND SLABS-ON-GRADE, EXTERIOR RETAINING WALLS.)

3.2 PRIOR TO CONCRETE PLACEMENT, THE CONTRACTOR MUST SUBMIT CONCRETE MIX DESIGNS FOR EACH TYPE OF CONCRETE TO BE USED, PREPARED IN ACCORDANCE WITH THE SPECIFICATIONS TO THE CONTRACTING OFFICER FOR REVIEW.

3.3 NO CALCIUM CHLORIDE SHALL BE USED IN ANY CONCRETE.

3.4 MIXING, TRANSPORTING AND PLACING OF CONCRETE SHALL CONFORM TO ACI 301M-05.

3.5 ALL CONCRETE WORK SHALL CONFORM TO THE REQUIREMENTS OF THE AMERICAN CONCRETE INSTITUTE (ACI) 318M-05 MANUAL (metric), "BUILDING CODE REQUIREMENTS FOR REINFORCED CONCRETE", ACI-301M-05 "SPECIFICATIONS FOR STRUCTURAL CONCRETE FOR BUILDINGS" AND REQUIREMENTS OUTLINED IN THE CONTRACT SPECIFICATIONS.

3.6 CHAMFER ALL EXPOSED EXTERNAL CORNERS OF CONCRETE WITH 20mm x45 DEGREE CHAMFER UON.

3.7 CONCRETE REINFORCEMENT BARS SHALL BE METRIC SIZE BARS AND SHALL CONFORM TO ASTM A615M-07, GRADE 420 MPa, REINFORCING BARS SHALL NOT BE TACK WELDED, WELDED, HEATED OR CUT, UNLESS INDICATED ON THE CONTRACT DOCUMENTS. ALL LAP SPLICES SHALL BE CLASS "B" UON.

3.8 HORIZONTAL FOOTING AND HORIZONTAL WALL REINFORCEMENT SHALL BE CONTINUOUS AND SHALL HAVE 90 DEGREE BENDS AND EXTENSIONS, OR CORNER BARS OF EQUIVALENT SIZE LAPPED WITH A CLASS B TENSION SPLICE AT CORNERS AND INTERSECTIONS. TOP BAR CRITERIA SHALL APPLY IF 300mm OR MORE OF FRESH CONCRETE IS PLACED BELOW BAR.

3.9 SLABS-ON-GRADE SHALL HAVE CONSTRUCTION JOINTS OR CRACK CONTROL JOINTS AS SHOWN ON THE DRAWINGS. CONSTRUCTION JOINTS CAN BE USED AT CONTROL JOINT LOCATIONS AT CONTRACTORS OPTION. SEE SLAB PLANS & JOINT DETAILS FOR ADDITIONAL INFORMATION. FOR AREAS NOT SHOWN ON DWGS, THE MAXIMUM SPACING OF CONSTRUCTION/ CRACK CONTROL JOINTS SHALL BE 3600mm.

3.10 ALL CONCRETE REINFORCEMENT SHALL BE DETAILED, FABRICATED, LABELED, SUPPORTED, AND SPACED IN FORMS AND SECURED IN PLACE IN ACCORDANCE WITH THE PROCEDURES AND REQUIREMENTS OUTLINED IN ACI 318M, AND THE "MANUAL OF STANDARD PRACTICE FOR DETAILING REINFORCED CONCRETE STRUCTURES", ACI 315M, LATEST EDITION.

3.11 ALL DOWELS SHALL MATCH SIZE AND NUMBER OF MAIN REINFORCING, UNLESS NOTED OTHERWISE ON THE DRAWINGS.

3.12 ADDITIONAL BARS SHALL BE PROVIDED AROUND ALL FLOOR AND WALL OPENINGS AS SHOWN ON THE DRAWINGS.

3.13 SEE ARCHITECTURAL DRAWINGS FOR TYPE AND LOCATION OF ALL FLOOR FINISHES.

3.14 SPLICES (LAPS) OF REINFORCING BARS SHALL BE CLASS 'B' TENSION LAPS PER ACI 318M-05 UNLESS NOTED OTHERWISE. SEE SCHEDULE ON S-601.

3.15 PROVIDE ADEQUATE CONCRETE COVER IN ACCORDANCE WITH THE REQUIREMENTS AS SET FORTH BY ACI 318M-05.

3.16 REINFORCEMENT IS TO BE SECURELY HELD IN PLACE WHILE PLACING CONCRETE. IF REQUIRED, ADDITIONAL BARS, STIRRUPS, OR CHAIRS WILL BE PROVIDED BY THE CONTRACTOR TO FURNISH SUPPORT FOR ALL BARS WHERE NECESSARY DURING CONSTRUCTION.

3.17 CONTINUOUS TOP BARS TO BE SPLICED AT MID-SPAN. CONTINUOUS BOTTOM BARS TO BE SPLICED AT CENTERLINE OF SUPPORTS (OR AS SHOWN ON DETAILS).

3.18 CONCRETE SLABS TO BE CURED BY METHOD COMPATIBLE WITH SPECIFIED FLOOR FINISH. WHERE ACCEPTABLE USE A LIQUID MEMBRANE-CURING COMPOUND AT THE MANUFACTURERS RECOMMENDED COVERAGE. SAW JOINTS TO BE CUT AS SOON AS POSSIBLE WITHOUT RAVELING THE SURFACE.

3.19 LEVELING GROUT TO BE NON-SHRINK, NON-METALLIC TYPE, FACTORY PREMIXED GROUT IN ACCORDANCE WITH ASTM C 1107, HAVING A MINIMUM COMPRESSIVE STRENGTH OF NOT LESS THAN 34.5 MPa.

3.20 SLEEVES, INSERTS, MECHANICAL OPENINGS, CONDUITS, PIPES, RECESSES. DEPRESSIONS, CURBS AND OTHER EMBEDDED ITEMS TO BE PROVIDED FOR AS SHOWN ON THE ARCHITECTURAL, MECHANICAL AND ELECTRICAL DRAWINGS AND AS REQUIRED BY EQUIPMENT MANUFACTURERS. INSTALLATION OF THESE ITEMS TO BE COORDINATED AND PROVIDED FOR PRIOR TO PLACING CONCRETE.

3.21 EPOXY ADHESIVE SUCH AS EUCO-#452 AS MANUFACTURED BY EUCLID CHEMICAL CO. OR HVA ADHESIVE SYSTEM AS MANUFACTURED BY HILTI, INC. SHALL BE USED WHERE REBAR DOWELS ARE TO BE INSTALLED INTO EXISTING CONCRETE.

3.0 CONCRETE CONT

3.22 ANCHOR RODS TO BE ASTM F 1554 FY=248 MPa MINIMUM, GALVANIZED, UNLESS NOTED OTHERWISE.

3.23 UNLESS NOTED OTHERWISE, ALL CURBS SHALL BE REINFORCED WITH AT LEAST (1)-#14 CONTINUOUS AND #14 AT 450mm O.C. DOWELS TO THE SLAB-ON-GRADE.

3.24 PROVIDE ADDITIONAL (2)-#14 x 600mm REINFORCING BARS IN SLAB-ON GRADE AT ALL RE-ENTRANT CORNERS. PLACE BARS AT MID-DEPTH OF SLAB WITH A CLEARANCE OF 50mm FROM CORNER UON.

3.25 COLD-WEATHER PLACEMENT: COMPLY WITH ACI 306.1 AND AS FOLLOWS. PROTECT CONCRETE WORK FROM PHYSICAL DAMAGE OR REDUCED STRENGTH THAT COULD BE CAUSED BY FROST, FREEZING ACTIONS, OR LOW TEMPERATURES. SUBMIT A COLD WEATHER CONCRETING PLAN FOR APPROVAL.

3.26 PROVIDE BONDING COMPOUND PER ASTM C 1059-99: SPECIFICATION FOR LATEX AGENTS FOR BONDING FRESH CONCRETE (GROUT) TO HARDENED CONCRETE.

3.27 THE FORMED SURFACES FOR REINFORCED CONCRETE SHALL ACHIEVE A "CLASS A" FINISH WHEN EXPOSED OR A "CLASS B" FINISH WHEN RECEIVING PLASTER OR TILE AS PER SPECIFICATION SECTION 03 31 00 CAST-IN-PLACE STRUCTURAL CONCRETE.

4.0 CONCRETE MASONRY

4.1 MASONRY CONSTRUCTION SHALL CONFORM TO SPECIFICATION FOR MASONRY STRUCTURES (ACI 530.1) UON.

4.2 STRENGTH OF MASONRY MATERIALS SHALL BE AS FOLLOWS:
- A. CONCRETE MASONRY UNITS SHALL BE NORMAL WEIGHT, GRADE N, TYPE 1, CONFORMING TO ASTM C-90 AND HAVE A MINIMUM COMPRESSIVE STRENGTH OF 13.1 MPa ON THE NET AREA.
- B. MORTAR SHALL CONFORM TO ASTM C-270 TYPE S.
- C. GROUT FOR MASONRY SHALL BE NORMAL WEIGHT AND HAVE A MINIMUM COMPRESSIVE STRENGTH OF 14 MPa AT 28 DAYS. GROUT SHALL CONFORM TO ASTM C476M. GROUT LIFTS SHALL NOT EXCEED 1500mm.
- D. REINFORCED MASONRY SHALL HAVE A STRENGTH F'm = 10.3 MPa. (F'm IS THE COMPRESSIVE STRENGTH OF THE MASONRY AT 28 DAYS AS DETERMINED BY PRISM TESTS).

4.3 ALL VERTICAL REINFORCEMENT FOR CONCRETE MASONRY SHALL BE ASTM A615M-07, GRADE 420 MPa. ALL SPLICES SHALL BE LAPPED 48 BAR DIAMETERS MINIMUM.

4.4 CMU CELLS THAT REQUIRE VERTICAL REINFORCING BARS AS INDICATED ON THE CONTRACT DRAWINGS AND/OR SPECS SHALL HAVE REINF BARS PLACED IN CENTERS OF CMU CELLS AND CONTINUOUSLY GROUTED UON.

4.5 CONTRACTOR SHALL COORDINATE LOCATION OF ALL OPENINGS SEE ARCH, MECH, ELEC, AND PLUMBING SHEETS FOR SIZE AND LOCATION OF OPENINGS. PROVIDE SINGLE COURSE SOLID GROUTED BOND BEAMS REINFORCED WITH 2 #14 OVER ALL OPENINGS IN CMU WALLS. BEAR BOND BEAMS AT LEAST 200mm ON SOLID GROUTED, VERTICALLY REINFORCED CMU AT EACH SIDE OF THE OPENING. PASS VERTICAL JAMB REINFORCING THROUGH THE BOND BEAM AND EXTEND TO TOP OF WALL. NO OPENING IN CMU WALLS SHALL EXCEED 800mm.

4.6 HORIZONTAL JOINT REINFORCING TO BE GALVANIZED, STANDARD CLASS, LADDER TYPE, CONFORMING TO ASTM A 82, SPACED AT EVERY OTHER COURSE UNO. SIDE RODS TO BE 5mm WITH 4mm CROSS RODS. PROVIDE ONE-PIECE PREFABRICATED REINFORCING UNITS AT EVERY COURSE AT ALL WALL CORNERS AND INTERSECTIONS AND IN THE FIRST TWO COURSES ABOVE AND BELOW MASONRY OPENINGS. PROVIDE LAP AS RECOMMENDED BY THE MANUFACTURER WITH A MINIMUM OF 300mm. DISCONTINUE HORIZONTAL JOINT REINFORCING AT CONTROL JOINTS.

4.7 ALL MASONRY TO BE CONSTRUCTED USING A RUNNING BOND PATTERN. FULL BED AND HEAD JOINTS MUST BE USED. ALL CORNERS TO BE TIED BY MASONRY BOND.

4.8 DOWEL REINFORCED MASONRY WALLS TO FOUNDATION. SIZE DOWELS TO MATCH WALL REINFORCEMENT. LOCATE DOWELS IN CELLS TO CONTAIN WALL REINFORCEMENT. LAP DOWELS AND WALL REINFORCEMENT A MINIMUM OF 48 BAR DIAMETERS UNO.

4.9 DURING CONSTRUCTION, COVER AND PROTECT THE TOPS OF MASONRY WALLS AT THE END OF EACH DAY.

UNLESS OTHERWISE NOTED, LINEAR DIMENSIONS SHOWN ARE IN MILLIMETERS.

COMMONWEALTH OF PENNSYLVANIA
REGISTERED PROFESSIONAL ENGINEER
JOSEPH D. MEIER

US ARMY CORPS OF ENGINEERS AFGHANISTAN NORTH DISTRICT

U.S. ARMY ENGINEER DISTRICT, AFGHANISTAN
CORPS OF ENGINEERS
APO AE 09356

DESIGNED BY: JDM
DWN BY: RMS
CKD BY: EPS
REVIEWED BY: JH
SUBMITTED BY: BAKER

DATE: 3-28-2011
REV. 0
CONTRACT NO. W912ER-09-D-0002
DRAWING CODE:
FILE NAME: ARCHSPAN\VIP-B18-S-001.DWG
PLOT SCALE: NONE
PLOT DATE: 3/28/2011

SITE ADAPT DESIGN
B18 - VIP BARRACKS - ARCH SPAN
ABBREVIATIONS AND GENERAL NOTES

SHEET REFERENCE NUMBER:
S-001

A1 Size 594mm x 841mm

3/28/2011 2:00 PM

5.0 STRUCTURAL STEEL

5.1 STRUCTURAL STEEL WORK IS TO BE DESIGNED AND CONSTRUCTED IN ACCORDANCE WITH THE AMERICAN INSTITUTE OF STEEL CONSTRUCTION (AISC) "SPECIFICATIONS FOR STRUCTURAL STEEL BUILDINGS" (THIRTEENTH EDITION) AND THE "CODE OF STANDARD PRACTICE FOR STEEL BUILDINGS AND BRIDGES".

5.2 STRUCTURAL STEEL, UNLESS NOTED OTHERWISE, SHALL CONFORM TO THE FOLLOWING:
- A. WIDE FLANGE SHAPES AND WT'S: ASTM A992.
- B. CHANNELS, ANGLES, PLATES AND MISC. CONNECTION MATERIAL: ASTM A-36.
- C. STEEL TUBING: ASTM A500, GRADE B, WITH FY = 290 MPa FOR ROUND AND FY = 315 MPa FOR RECTANGULAR.

5.3 PRIOR TO FABRICATION, THE STEEL FABRICATOR IS TO SUBMIT SHOP DRAWINGS SHOWING ERECTION PLANS, PIECE DRAWINGS, AND CONNECTION DETAILS TO THE CONTRACTING OFFICER FOR REVIEW.

5.4 STRUCTURAL STEEL FABRICATOR IS TO PROVIDE FOR VERTICAL AND HORIZONTAL FIELD ADJUSTMENT OF ALL SUPPORT ASSEMBLIES.

5.5 CUTS, HOLES, COPING, ETC REQUIRED FOR OTHER TRADES MUST BE SHOWN ON THE SHOP DRAWINGS AND MADE IN THE SHOP. CUTS OR BURNING OF HOLES IN THE FIELD WILL NOT BE PERMITTED.

5.6 FABRICATE FRAMING COMPONENTS IN THE SHOP TO THE GREATEST EXTENT POSSIBLE. IN GENERAL, STRUCTURAL STEEL CONNECTIONS TO BE SHOP AND FIELD WELDED. ALL WELDS SHALL BE 3/16" FILLET WELDS UNLESS NOTED OTHERWISE.

5.7 WELDING TO BE IN ACCORDANCE WITH THE AMERICAN WELDING SOCIETY (AWS) "STRUCTURAL WELDING CODE-ANSI/AWS D1.1/D1.1M" (LATEST EDITION). USE E70XX ELECTRODES UNLESS OTHERWISE INDICATED ON THE DRAWINGS.

5.8 POST INSTALLED BOLTS TO BE ADHESIVE TYPE ANCHORS. BOLTS SHALL BE CARBON STEEL THREADED RODS OF THE DIAMETER INDICATED ON THE DRAWINGS WITH APPROPRIATE NUT, WASHER AND INJECTABLE ADHESIVE MATERIAL. BASIS OF DESIGN ARE HILTI HVA ADHESIVE ANCHORS WITH STANDARD EMBEDMENT, MANUFACTURED BY HILTI FASTENING SYSTEMS. ANY ANCHOR MEETING PUBLISHED LOAD VALUES OF HILTI ANCHORS MAY BE USED WITH APPROPRIATE EMBEDMENT. INSTALL ANCHORS PER MANUFACTURERS RECOMMENDATIONS.

5.9 HEADED SHEAR STUDS CONNECTORS TO CONFORM TO ASTM A 108, GRADE 1015 OR 1020, COLD-FINISHED CARBON STEEL.

5.10 PAINT AND PROTECTION:
- A. STRUCTURAL STEEL, UNLESS INDICATED OTHERWISE, TO BE SHOP CLEANED PER SSPC SP3 AND PAINTED ONE SHOP COAT OF FABRICATOR'S STANDARD RUST INHIBITING PRIMER. TOUCH UP AFTER ERECTION.
- B. DO NOT PAINT STEEL WHERE ENCASED WITH CONCRETE, OR AT FIELD WELD AREAS.
- C. EXPOSED STRUCTURAL STEEL FOR BREEZEWAY ROOFS, EQUIPMENT PLATFORMS, ETC, TO BE HOT DIPPED GALVANIZED PER ASTM A-123
- D. GALVANIZED FASTENERS AND ACCESSORIES TO BE HOT DIPPED GALVANIZED PER ASTM A153/A153M.
- E. REPAIR DAMAGE TO GALVANIZED COATINGS USING ASTM A780 ZINC RICH PAINT.
- F. PROVIDE MINIMUM 75mm CONCRETE COVER FOR ALL STEEL BELOW GRADE.

6.0 METAL DECK

6.1 METAL DECK MUST BE DESIGNED AND DETAILED IN ACCORDANCE WITH THE STEEL DECK INSTITUTE (SDI) "DESIGN MANUAL FOR COMPOSITE DECKS, FORM DECKS AND ROOF DECKS" (LATEST EDITION).

6.2 ROOF DECK: 38mm, 0.88mm THICK, TYPE B, GALVANIZED, UNO.

6.3 ROOF DECK TO BE FASTENED TO THE SUPPORTING STEEL AT THE ENDS OF UNITS AND AT ALL INTERMEDIATE SUPPORTS WITH 16mm DIAMETER PUDDLE WELDS AT 300mm OC ACROSS THE WIDTH OF THE DECK IN A 36/4 PATTERN. DECK SIDE LAPS SHALL BE FASTENED WITH #10 TEK SCREWS AT TWO (2) EQUAL SPACES BETWEEN THE SUPPORTS. ANY SPLIT OR PARTIAL PANELS TO BE FASTENED TO THE SUPPORTING STRUCTURE IN EVERY VALLEY REGARDLESS OF ADJACENT FASTENER PATTERNS.

6.4 METAL DECK SUPPLIER TO PROVIDE LIGHT GAGE METAL DECK CLOSURE PIECES AND SHALL REINFORCE OR SUPPORT DECK AT OPENINGS AS REQUIRED, IN ACCORDANCE WITH THE SDI.

7.0 COLD-FORMED METAL FRAMING

7.1 SEE ARCHITECTURAL DRAWINGS FOR EXTENT OF COLD-FORMED METAL FRAMING, INCLUDING PARTITION WALLS AND CEILINGS. ALSO REFERENCE ARCHITECTURAL DRAWINGS FOR ADDITIONAL INFORMATION INCLUDING SHEATHING TYPE, FINISHES AND OPENINGS.

7.2 ALL COLD-FORMED METAL FRAMING MEMBERS SHALL CONFORM TO ASTM A1003M, STRUCTURAL GRADE ST230 (MPa), WITH A GALVANIZED COATING OF Z275 OR BETTER IN ACCORDANCE WITH ASTM A653M.

7.3 ALL COLD-FORMED METAL FRAMING MEMBERS SHALL HAVE THE FOLLOWING MINIMUM PROPERTIES:
- A. MINIMUM METAL THICKNESS:
  - TRACK = 1.37mm
  - CEILING JOIST = 1.09mm
  - WALL STUD/OTHER = 1.09mm
- B. MINIMUM FLANGE WIDTH:
  - TRACK = 38mm
  - CEILING JOIST = 35mm
  - WALL STUD/OTHER = 35mm
- C. MINIMUM MEMBER DEPTH:
  - CEILING JOIST = 152mm
  - WALL STUD/OTHER = 92mm

7.4 CEILING JOISTS HAVE BEEN DESIGNED TO CARRY 0.47KPA, INCLUDING SELF WEIGHT OF METAL FRAMING, TWO LAYERS OF GYPSUM WALL BOARD AND NOMINAL MEP LOADING. NO LIVE LOAD HAS BEEN INCLUDED. THE SPACE ABOVE THE CEILING IS NOT INTENDED FOR STORAGE OR TO BE USED AS A WALKWAY. PROVIDE CEILING JOIST FRAMING OF SIZE INDICATED IN NOTE 7.3 AS FOLLOWS:
- A. JOIST SPANS LESS THAN 4600: JOISTS SHALL BE SPACED AT 400 AND HAVE DIAGONAL OR SOLID BRIDGING AT EACH END AND AT THE MIDSPAN.
- B. JOIST SPANS BETWEEN 4600 AND 6400: JOISTS SHALL BE SPACED AT 400 AND HAVE DIAGONAL OR SOLID BRIDGING AT EACH END AND AT THE QUARTER POINTS.
- C. JOIST SPANS BETWEEN 6400 AND 7800: JOISTS SHALL BE SPACED AT 200 (OR DOUBLE JOISTS AT 400) AND HAVE DIAGONAL OR SOLID BRIDGING AT EACH END AND AT THE QUARTER POINTS.
- D. JOIST SPANS EQUAL TO OR OVER 7800: JOISTS SHALL HAVE DIAGONAL OR SOLID BRIDGING AT EACH END AND AT THE QUARTER POINTS AND SHALL BE SUSPENDED FROM THE ARCH-SPAN TABS ABOVE AT 1200 EACH WAY.
- E. HEADERS WITH SPANS LESS THAN OR EQUAL TO 3000 CARRYING CEILING JOISTS WITH UP TO 5400 IN TRIBUTARY WIDTH SHALL BE FULLY CONNECTED TO EACH JOIST AND SHALL BE DOUBLE MEMBERS. HEADERS WITH A LARGER SPAN OR MORE TRIBUTARY WIDTH SHALL BE SUSPENDED FROM THE ARCH-SPAN TABS AT 1200 OC. SEE GENERAL NOTE 8.1 FOR MAXIMUM LOADS ON TABS.

7.5 WALL STUDS HAVE BEEN DESIGNED TO CARRY CEILING LOADING NOTED IN NOTE 7.3, UP TO 7800 IN TRIBUTARY WIDTH. PROVIDE WALL STUD FRAMING OF SIZE INDICATED IN NOTE 7.3 AND AS FOLLOWS:
- A. WALL HEIGHTS LESS THAN 3000: STUDS SHALL BE SPACED AT 400 AND HAVE BLOCKING AT 1200 MAXIMUM.
- B. WALL HEIGHTS BETWEEN 3000 AND 4900: STUDS SHALL BE SPACED AT 300 AND HAVE BLOCKING AT 1200 MAXIMUM.
- C. WALL HEIGHTS OVER 4900 WHICH MUST ALSO SUPPORT CEILING WEIGHT SHALL BE DESIGNED BY THE METAL FRAMING CONTRACTOR'S ENGINEER.

7.6 WALL STUDS WITHOUT CEILING LOADS MUST BE BRACED BACK TO THE ARCH-SPAN TABS ABOVE AT 1200 MAXIMUM. SEE ARCHITECTURAL DRAWINGS FOR BRACING DETAILS. DO NOT SECURE TOPS OF STUD WALLS TO THE UNDERSIDE OF THE ARCH-SPAN BUILDING PANELS. THESE STUDS HAVE BEEN DESIGNED TO CARRY ONLY THEIR OWN SELF WEIGHT DURING A SEISMIC EVENT. PROVIDE WALL STUD FRAMING OF SIZE INDICATED IN NOTE 7.3 AND AS FOLLOWS:
- A. WALL HEIGHTS LESS THAN 5000: STUDS SHALL BE SPACED AT 400 AND HAVE BLOCKING AT 1200 MAXIMUM.
- B. WALL HEIGHTS BETWEEN 5000 AND 5500: STUDS SHALL BE SPACED AT 300 AND HAVE BLOCKING AT 1200 MAXIMUM.
- C. WALL HEIGHTS BETWEEN 5500 AND 6400: STUDS SHALL BE SPACED AT 200 AND HAVE BLOCKING AT 1200 MAXIMUM.
- D. CANTILEVERED HEIGHT PAST BRACE POINT IS NOT TO EXCEED 1/4 OF THE HEIGHTS NOTED IN NOTES A, B, AND C. IE, FOR STUDS SPACED AT 400 WITH BLOCKING AT 1200 MAXIMUM, HEIGHT ABOVE THE BRACE IS NOT TO EXCEED 1250.

7.7 FOR WALLS THAT CARRY CEILING LOAD AND EXTEND PAST THE CEILING, APPLY NOTES 7.4 AND 7.5 AS REQUIRED. USE THE MORE SEVERE WALL CONSTRUCTION FOR THE ENTIRE WALL CONSTRUCTION.

7.8 FOR PROVIDE DOUBLE MEMBER JOISTS OR WALL STUDS AT EACH SIDE OF OPENINGS.

7.9 ALL CONNECTIONS SHALL BE MADE WITH CORROSION RESISTANT (ASTM A153M), SELF-DRILLING, SELF-TAPPING STEEL DRILL SCREWS IN ACCORDANCE WITH ASTM C1513.

7.10 FABRICATE COLD FORMED METAL FRAMING AND ACCESSORIES PLUMB, SQUARE AND TRUE TO LINE, WITH CONNECTIONS SECURELY FASTENED ACCORDING TO AISI STANDARD FOR COLD FORMED STEEL FRAMING.

7.11 FRAMING COMPONENTS ARE TO BE CUT SQUARELY FOR ATTACHMENT TO PERPENDICULAR MEMBERS OR AS REQUIRED FOR AN ANGULAR FIT AGAINST ABUTTING MEMBERS.

7.12 CUT FRAMING MEMBERS BY SAWING OR SHEATHING, DO NOT TORCH CUT.

7.13 INSTALL FRAMING MEMBERS IN ONE-PIECE LENGTHS.

7.14 INSTALL TEMPORARY BRACING AND SUPPORTS AS REQUIRED TO SECURE FRAMING DURING CONSTRUCTION. MAINTAIN BRACING AND SUPPORTS IN PLACE UNTIL THE STRUCTURE HAS BEEN COMPLETED WITH ALL CONNECTIONS AND PERMANENT BRACING SECURED.

8.0 ARCH SPAN

8.1 USE UBM OR ABM MACHINES OR EQUIVALENT THAT WILL PRODUCE THE ARCH SPAN PANELS OF PROFILE AND THICKNESS NOTED ON THE DRAWINGS.

8.2 ARCH-SPAN BASIS OF DESIGN ARE THE 120 PROFILE PANELS PRODUCED BY MIC INDUSTRIES MACHINES WITH A STEEL THICKNESS OF 1.06mm (19GA). SUBSTITUTE PANELS MUST MEET THE NOMINAL STRENGTH CAPACITIES LISTED WITH THE PANEL PROFILE SHOWN IN DETAIL 2/S-202. SUBSTITUTE PANEL STRENGTH CAPACITIES SHALL ACCOUNT FOR THE REDUCTION TO NOMINAL NEGATIVE MOMENT AND AXIAL LOAD CAPACITIES DUE TO THE CURVING PROCESS. CONTRACTORS PROVIDING SUBSTITUTE PANELS MUST ALSO REVISE DETAILS/DIMENSIONS WORKED SPECIFICALLY FOR THE PANEL PROFILES USED AS THE BASIS OF DESIGN. THIS INCLUDES, BUT MAY NOT BE LIMITED TO, FOUNDATIONS, ENDWALL OPENINGS, SIDEWALL OPENINGS, OPENING FRAMES AND OUT-BUILDING ROOF PANELS.

8.3 ARCH SPAN PANELS WILL BE ROLLED ON-SITE USING GALVANIZED STEEL COILS CONFORMING TO ASTM A653M-06A, STRUCTURAL QUALITY (SS), GRADE 340, CLASS Z275 FOR GALVANIZED COATING.

8.4 ENDWALL PANELS SHALL BE THE SAME PROFILE AND THICKNESS AS THE ARCH SPAN PANELS USED FOR THE ROOF.

8.6 CONTRACTOR IS TO ENGAGE AN EXPERIENCED INSTALLER TO ERECT THE ARCH SPAN BUILDING. CONSTRUCTION CREWS SHALL BE TRAINED IN THE USE OF THE PANEL ROLLING MACHINES AND IN THE ERECTION OF THE PANELS.

8.7 EXERCISE CARE IN DELIVERING, UNLOADING, STORING AND ERECTING STEEL COILS AND BUILDING PANELS TO PREVENT BENDING, WARPING, TWISTING AND SURFACE DAMAGE.

8.8 ERECT PANELS TRUE TO LINE, LEVEL AND PLUMB. ROOF LINE SHALL BE STRAIGHT AND LEVEL, RADIUS SHALL BE CONSISTENT THROUGHOUT AND ENDWALLS SHALL BE STRAIGHT AND PLUMB.

8.9 WINDOW AND DOOR OPENINGS SHALL BE FRAMED PER DETAILS ON THE DRAWINGS.

8.10 INCIDENTAL OPENINGS (COORDINATE WITH ARCHITECTURAL AND MEP DRAWINGS) IN THE PANELS SHALL BE NO MORE THAN 200mm IN DIAMETER AND SHALL BE PLACED THROUGH A "FLAT" PORTION OF THE PANEL. OPENINGS SHALL NOT BE CUT THROUGH ANY VERTICAL OR DIAGONAL RIB.

8.11 HANGER TABS AS DETAILED ON THE DRAWINGS SHALL BE INSTALLED PER LAYOUT ON THE TYPICAL BUILDING SECTION. ALL SUSPENDED LOADS SHALL BE CONNECTED TO HANGER TABS. HANGER TABS AT LESS THAN 30 DEGREES FROM VERTICAL CAN CARRY NO MORE THAN 100 KG EACH. HANGER TABS AT MORE THAN 30 DEGREES FROM VERTICAL CAN CARRY NO MORE THAN 25 KG EACH.

9.0 STRUCTURAL DESIGN CRITERIA

9.1 ALL DESIGNS SHALL CONFORM TO THE PROVISIONS OF THE IBC 2009 AND ASCE 7-05. OCCUPANCY CATEGORY II.

9.2 DESIGN LOADS

9.2.1 DEAD LOADS (PER IBC 2009 & UFC 3-301-01)

MECH/ELEC/PLUMBING		0.10 kPa
SUSPENDED CEILING		0.24 kPa
INSULATION		0.07 kPa
ARCH SPAN STEEL: 120 PROFILE x 1.06mm		0.17 kPa
TOTAL DEAD LOAD		0.58 kPa
MINIMUM (FOR UPLIFT)		0.24 kPa

9.2.2 LIVE LOADS (PER IBC 2009 & UFC 3-301-01)

ROOF		0.57 kPa
SLAB ON GRADE:	TYPICAL	4.80 kPa
	STORAGE/LATRINE	7.18 kPa
	VEHICLE LOADS	11.97 kPa

9.2.3 SNOW LOADS (PER IBC 2009 & UFC 3-301-01)

GROUND SNOW LOAD (Pg)	1.2 kPa
SNOW IMPORTANCE FACTOR (I)	1.0
SNOW EXPOSURE FACTOR (Ce)	0.9
THERMAL FACTOR (Ct)	1.1

9.2.4 WIND LOADS (PER IBC 2009)

BASIC WIND SPEED	137 km/h
WIND IMPORTANCE FACTOR	1.0
WIND EXPOSURE CATEGORY	C
DIRECTIONALITY COEFFICIENT (Kd)	0.85
TOPOGRAPHIC FACTOR (Kzt)	1.0

9.2.5 SEISMIC LOADS (PER IBC 2009 & UFC 3-310-04)

SEISMIC IMPORTANCE FACTOR (Ie)	1.0
SEISMIC SITE CLASS	D
S_s =	2.40
S_1 =	1.20
S_{DS} =	1.6
S_{D1} =	1.2
SEISMIC DESIGN CATEGORY	E

SEISMIC RESISTING SYSTEM:
- -STRUCTURAL STEEL SYSTEMS NOT SPECIFICALLY DETAILED FOR SEISMIC RESISTANCE
- -RESPONSE MODIFICATION FACTOR (R) 2 (CONSERVATIVE)
- -RESPONSE COEFFICIENT (Cs) 0.5

SEISMIC ANALYTICAL PROCEDURE = EQUIV LATERAL FORCE

9.3 FOUNDATION DESIGN CRITERIA

9.3.1 FOUNDATION DESIGN IS BASED UPON THE FOLLOWING SOIL PARAMETERS:
ASSUMED NET ALLOWABLE SOIL BEARING PRESSURE FOR ALL SPREAD FOOTINGS: 72 kPa

9.3.2 ASSUMED LATERAL EARTH PRESSURE PARAMETERS:
- SOIL DENSITY = 1800 KG/M^3
- COEFFICIENT OF ACTIVE PRESSURE (KA) = 0.41
- COEFFICIENT OF AT-REST PRESSURE (KO) = 0.58
- COEFFICIENT OF PASSIVE EARTH PRESSURE (KP) = 2.44
- ANGLE OF INTERNAL FRICTION (PHI) = 25 DEGREES
- COEFFICIENT OF FRICTION (U) = 0.35
- MODULUS OF SUB-GRADE REACTION (KS) = 4150 G/CM^3

9.3.3 FROST DEPTH: ASSUMED TO BE 800mm

UNLESS OTHERWISE NOTED, LINEAR DIMENSIONS SHOWN ARE IN MILLIMETERS.

COMMONWEALTH OF PENNSYLVANIA
REGISTERED PROFESSIONAL ENGINEER
JOSEPH D. MEIER
PE-039925E

US ARMY CORPS OF ENGINEERS AFGHANISTAN NORTH DISTRICT

SYMBOL	DESCRIPTION	DATE	APPR.

SYMBOL	DESCRIPTION	DATE	APPR.

U.S. ARMY ENGINEER DISTRICT, AFGHANISTAN
CORPS OF ENGINEERS
APO AE 09356

DESIGNED BY: JDM		DATE: 3-28-2011
DWN BY: RMS	CKD BY: EPS	CONTRACT NO. W912ER-09-D-0002
REVIEWED BY: JH		DRAWING CODE:
SUBMITTED BY: BAKER		FILE NAME: ARCHSPANVIP-B18-S-002.DWG
		PLOT SCALE: NONE
		PLOT DATE: 3/28/2011

REV. 0

SITE ADAPT DESIGN

B18 - VIP BARRACKS - ARCH SPAN

GENERAL NOTES AND DESIGN CRITERIA

SHEET REFERENCE NUMBER:

S-002

A1 Size 594mm x 841mm

3/28/2011 2:00 PM

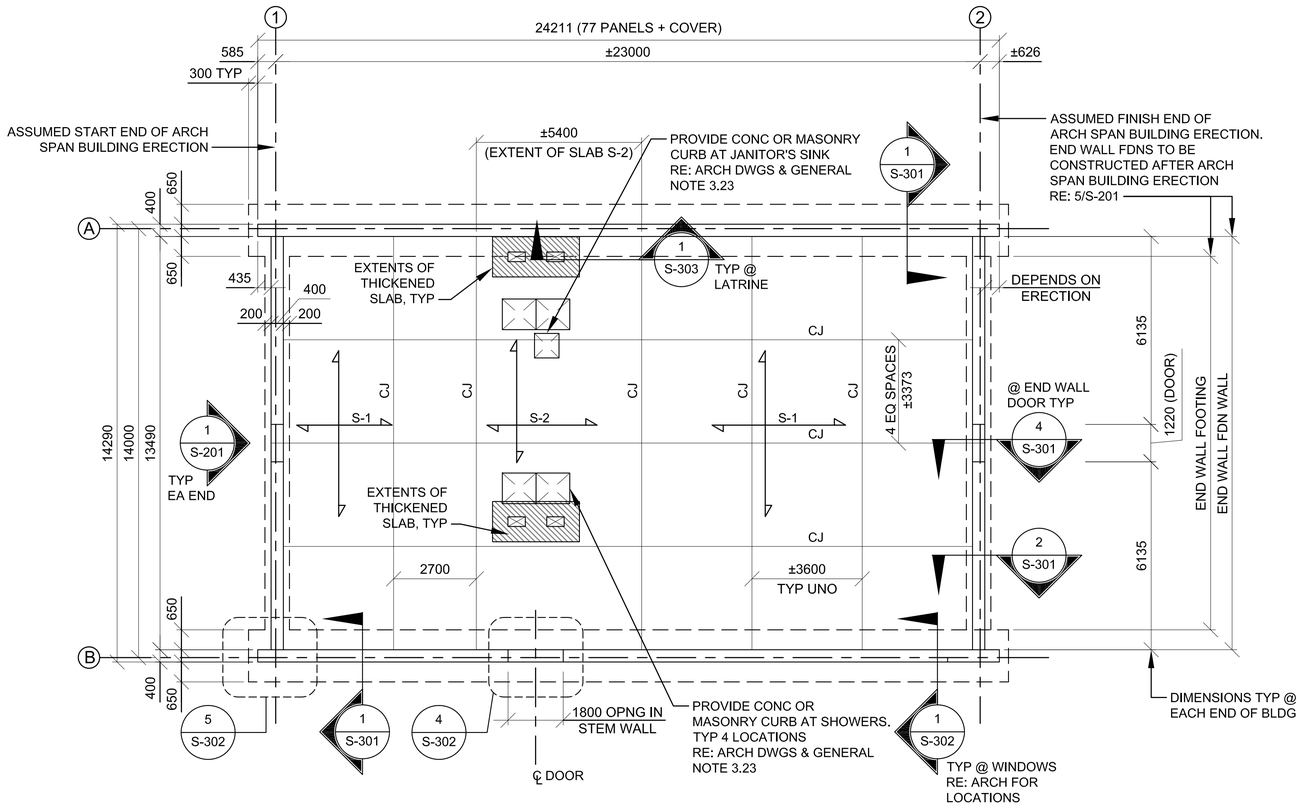

1 / S-101 FOUNDATION PLAN

SCALE: 1:100

FOUNDATION PLAN NOTES:

1. RE: DRAWINGS S-001 AND S-002 FOR GENERAL NOTES AND DESIGN CRITERIA.
2. COORDINATE DIMENSIONS, WALL OPENINGS, ELEVATIONS, SECTIONS, AND DETAILS WITH ARCHITECTURAL DRAWINGS.
3. TOP OF SLAB ELEVATION MUST BE COORDINATED WITH SITE ADAPT CIVIL DRAWINGS. TOP OF FLOOR SLAB IS AT THE DATUM ELEVATION = 0. ALL ELEVATIONS ARE REFERENCED FROM THIS ELEVATION.
4. BOTTOM OF CONCRETE FOOTING ELEVATIONS = -950 (BELOW TOP OF SLAB, TYP UNO).

5A. S-1 DENOTES A 100 CONCRETE SLAB-ON-GRADE REINFORCED WITH #10 @ 400. PLACE SLAB OVER 0.25 VAPOR RETARDER AND 100 COMPACTED GRANULAR SUB-BASE MATERIAL SUCH AS AASHTO #57 STONE.

5B. S-2 DENOTES A 150 CONCRETE SLAB-ON-GRADE REINFORCED WITH #14 @ 400. PLACE SLAB OVER 0.25 VAPOR RETARDER AND 100 COMPACTED GRANULAR SUB-BASE MATERIAL SUCH AS AASHTO #57 STONE. THIS NOTE ONLY APPLIES TO BUILDINGS WITH LATRINE FACILITIES.

6. SPACE SLAB CONTROL/CONSTRUCTION JOINTS AS SHOWN. CJ = CONTROL OR CONSTRUCTION JOINT, RE: 2/S-501.
7. PROVIDE ADDITIONAL SLAB REINFORCEMENT AT ALL RE-ENTRANT CORNERS, RE: 8/S-501.
8. RE: DRAWING S-501 FOR TYPICAL FOUNDATION AND SLAB DETAILS.
9. LOCATION OF FLOOR DRAINS ARE NOT SHOWN, COORDINATE LOCATIONS AND SLOPE OF SLAB WITH PLUMBING AND ARCHITECTURAL DRAWINGS.
10. COORDINATE MECHANICAL PENETRATIONS W/ M/E/P DRAWINGS.
11. PROVIDE REINFORCED CONCRETE WALK-OFF MATS AT ALL EXTERIOR DOORS RE: A-503 FOR DETAILS AND ARCHITECTURAL FLOOR PLAN FOR LOCATIONS.

N

0 2000 4000

SCALE: 1:100

UNLESS OTHERWISE NOTED, LINEAR DIMENSIONS SHOWN ARE IN MILLIMETERS.

COMMONWEALTH OF PENNSYLVANIA
REGISTERED PROFESSIONAL ENGINEER
JOSEPH D. MEIER
PE-039925E

US ARMY CORPS OF ENGINEERS
AFGHANISTAN NORTH DISTRICT

SYMBOL	DESCRIPTION	DATE	APPR.	SYMBOL	DESCRIPTION	DATE	APPR.

DESIGNED BY: JDM
DWN BY: RMS
CKD BY: EPS
REVIEWED BY: JH
SUBMITTED BY:
DATE: 3/28/2011
REV: 0
CONTRACT NO. W912ER-09-D-0002
DRAWING CODE:
FILE NAME: aecom\planning\d-s-s-101.dwg
PLOT SCALE: 1:100
PLOT DATE: 3/28/2011

BAKER

U.S. ARMY ENGINEER DISTRICT, AFGHANISTAN
CORPS OF ENGINEERS
APO AE 09356

SITE ADAPT DESIGN
B18 - VIP BARRACKS - ARCH SPAN
FOUNDATION PLAN

SHEET REFERENCE NUMBER:
S-101

3/28/2011 2:00 PM

A1 Size 594mm x 841mm

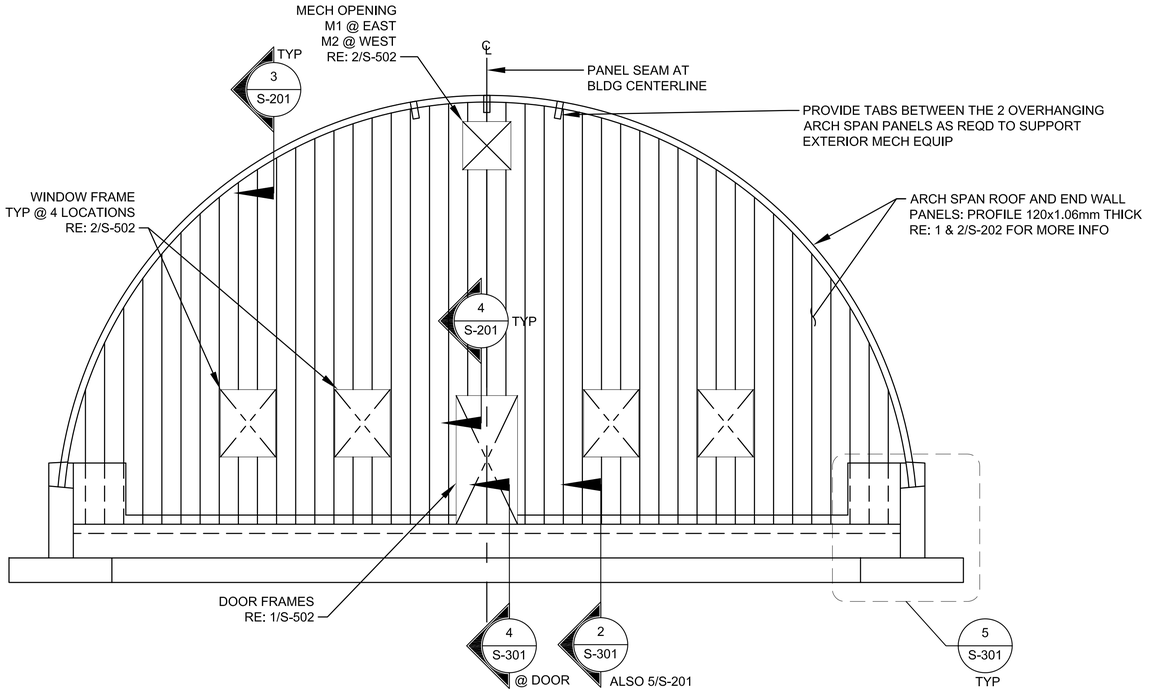

1 S-201 EAST AND WEST ELEVATION

SCALE: 1:50

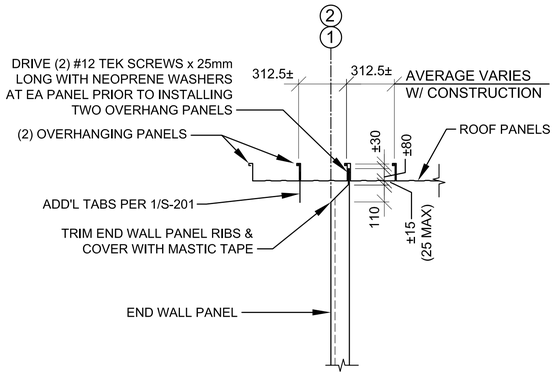

3 S-201 SECTION

SCALE: 1:20

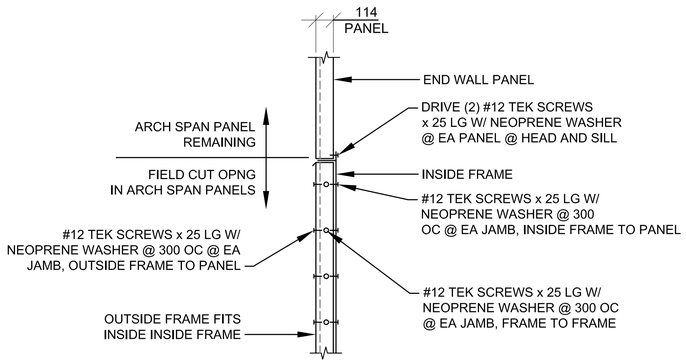

4 S-201 SECTION

SCALE: 1:20

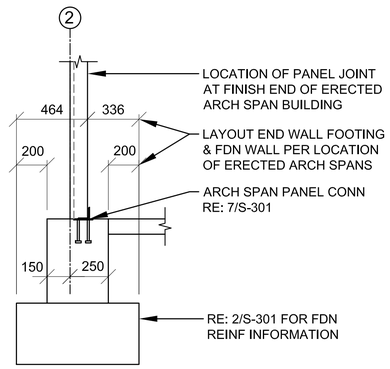

5 S-201 SECTION

SCALE: 1:20

2 S-201 NOT USED

SCALE: NTS

0 500 1000 2000

SCALE: 1:50

0 200 400 800

SCALE: 1:20

UNLESS OTHERWISE NOTED,
LINEAR DIMENSIONS
SHOWN ARE IN MILLIMETERS.

COMMONWEALTH OF PENNSYLVANIA
REGISTERED PROFESSIONAL
JOSEPH D. MEIER
ENGINEER
PE-039925E

US ARMY CORPS
OF ENGINEERS
AFGHANISTAN NORTH
DISTRICT

SYMBOL	DESCRIPTION	DATE	APPR.	SYMBOL	DESCRIPTION	DATE	APPR.

DESIGNED BY: JDM
DWN BY: RMS
CKD BY: EPS
REVIEWED BY: JH
SUBMITTED BY:
DATE: 3/28/2011
CONTRACT NO. W912ER-09-D-0002
DRAWING CODE:
REV: 0
FILE NAME: wecc-phase-a-b-c-bcr.dwg
PLOT SCALE: VARIES
PLOT DATE: 3/28/2011

BAKER

U.S. ARMY ENGINEER DISTRICT, AFGHANISTAN
CORPS OF ENGINEERS
APO AE 09356

SITE ADAPT DESIGN

B18 - VIP BARRACKS - ARCH SPAN

BUILDING ELEVATION AND DETAILS

SHEET
REFERENCE
NUMBER:

S-201

A1 Size 594mm x 841mm

3/28/2011 2:00 PM

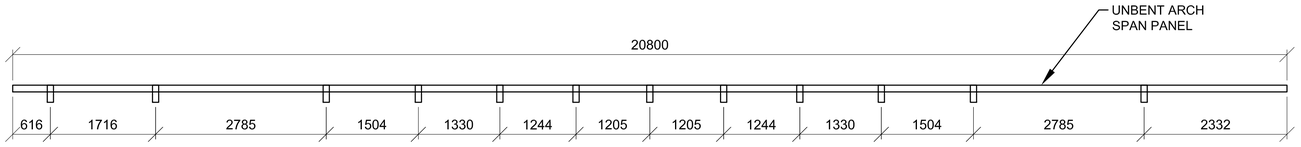

TAB LAYOUT ON PRE-BENT PANEL

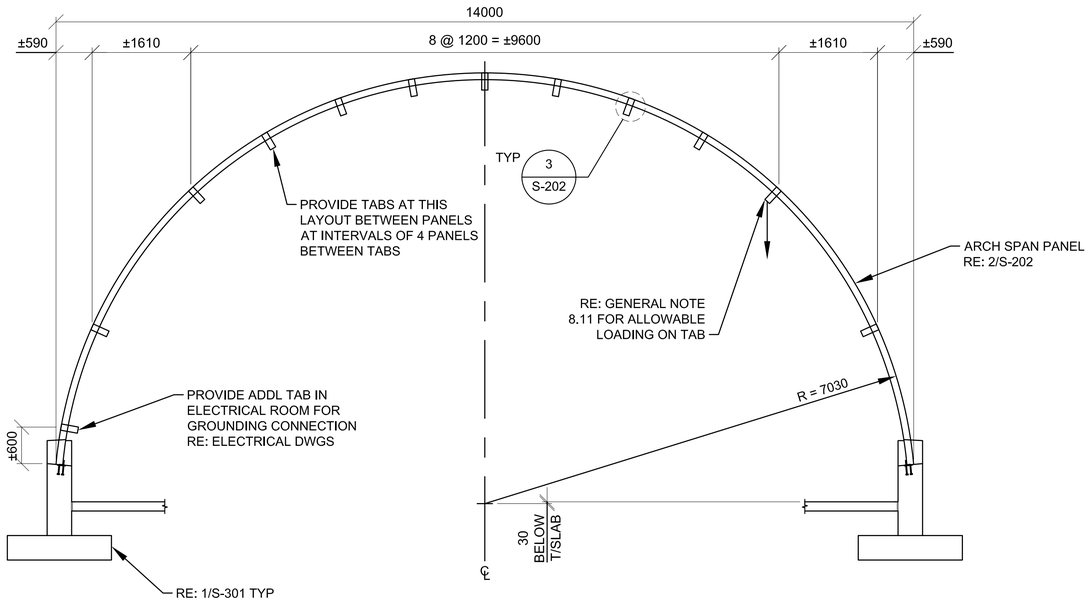

1 S-202 BUILDING SECTION

SCALE: 1:50

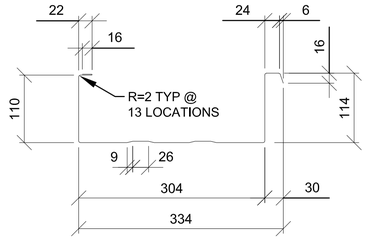

NOMINAL STRENGTH VALUES PER PANEL
(WITHOUT FACTOR OF SAFETY)

SHEAR : Vn = 1093.16 kg
AXIAL COMPRESSION : Pn = 5542.9 kg*
POSTITIVE MOMENT : +Mn = 494.6 kg-m
NEGATIVE MOMENT : -Mn = 264.75 kg-m*

* THE CURVING PROCESS REDUCES THE NOMINAL STRENGTH OF ARCH-SPAN PANELS IN NEGATIVE FLEXURE AND COMPRESSION. THESE VALUES ARE BASED ON TESTING OF PANELS.

NOTE:
ALL DIMENSIONS ARE APPROXIMATE (±3mm)

2 S-202 120 PROFILE - PROVIDE 1.06mm (19GA) THICKNESS

SCALE: NTS

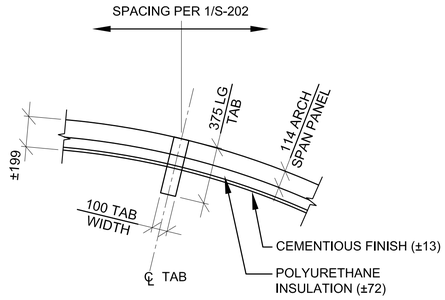

3 S-202 STEEL TAB DETAIL

SCALE: 1:20

0 500 1000 2000
SCALE: 1:50

0 200 400 800
SCALE: 1:20

UNLESS OTHERWISE NOTED,
LINEAR DIMENSIONS
SHOWN ARE IN MILLIMETERS.

COMMONWEALTH OF PENNSYLVANIA
REGISTERED PROFESSIONAL
JOSEPH D. MEIER
RE-039925E

US ARMY CORPS
OF ENGINEERS
AFGHANISTAN NORTH
DISTRICT

SYMBOL	DESCRIPTION	DATE	APPR.	SYMBOL	DESCRIPTION	DATE	APPR.

DESIGNED BY: JDM
DWN BY: RMS
CKD BY: EPS
REVIEWED BY: JH
SUBMITTED BY:
DATE: 4-21-2011
REV: 0
CONTRACT NO. W912ER-09-D-0002
DRAWING CODE:
FILE NAME: secondpass-ab-s-202.dwg
PLOT SCALE: VARIES
PLOT DATE: 4/21/2011

BAKER

U.S. ARMY ENGINEER DISTRICT, AFGHANISTAN
CORPS OF ENGINEERS
APO AE 09356

SITE ADAPT DESIGN
B18 - VIP BARRACKS - ARCH SPAN
BUILDING SECTION AND DETAILS

SHEET
REFERENCE
NUMBER:
S-202

A1 Size 594mm x 841mm

4/21/2011 10:03 AM

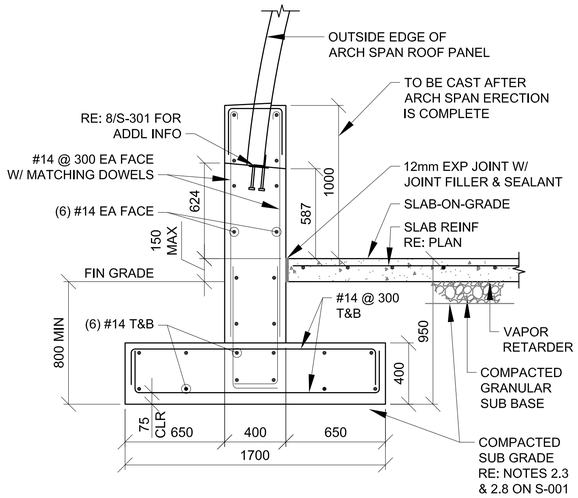

1 S-301 FOUNDATION WALL SECTION

SCALE: 1:20

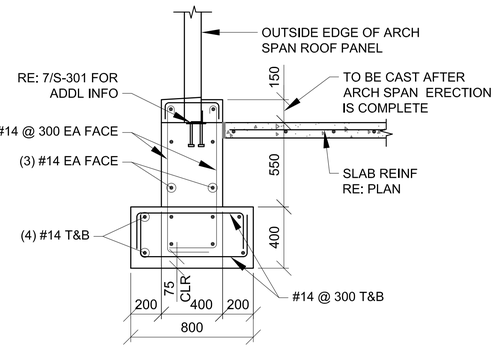

2 S-301 END WALL FOUNDATION SECTION

SCALE: 1:20

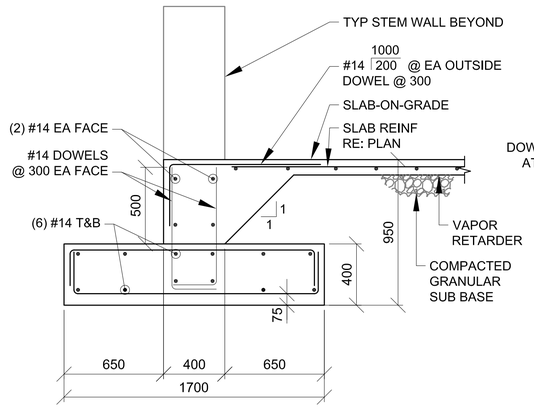

3 S-301 FDN WALL SECTION TYP @ DOOR

SCALE: 1:20

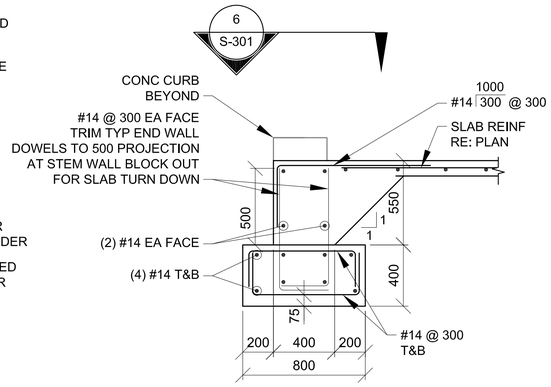

4 S-301 END WALL FDN SECTION TYP @ DOOR

SCALE: 1:20

NOTE:
PROVIDE 1220mm OPENING IN STEM WALL PER
PLAN (200mm WIDER THAN DOOR, 100mm EA SIDE)

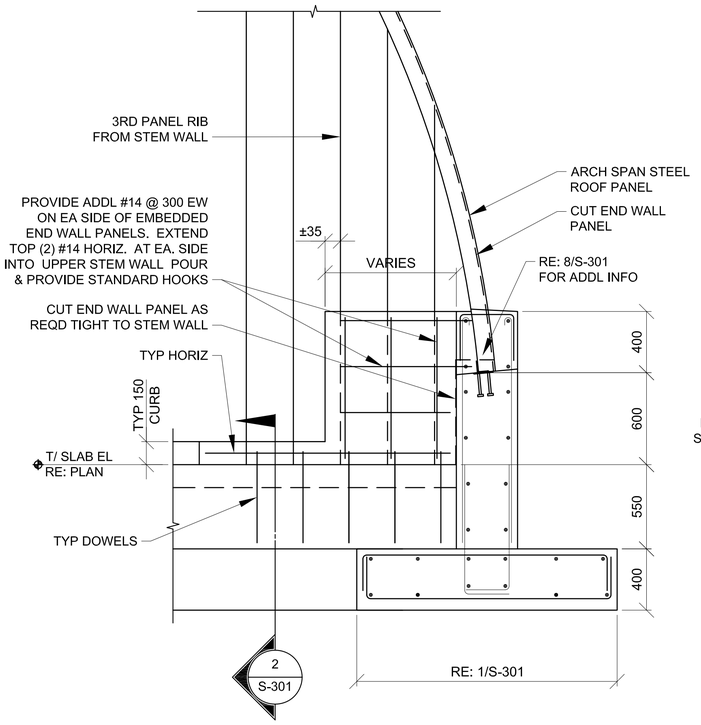

5 S-301 FOUNDATION END WALL SECTION

SCALE: 1:20

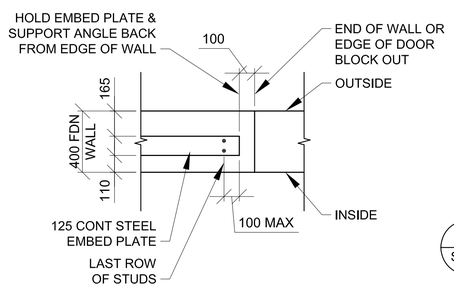

6 S-301 PLAN VIEW TYP AT END OF FDN WALL OR AT DOOR BLOCKOUT

SCALE: 1:20

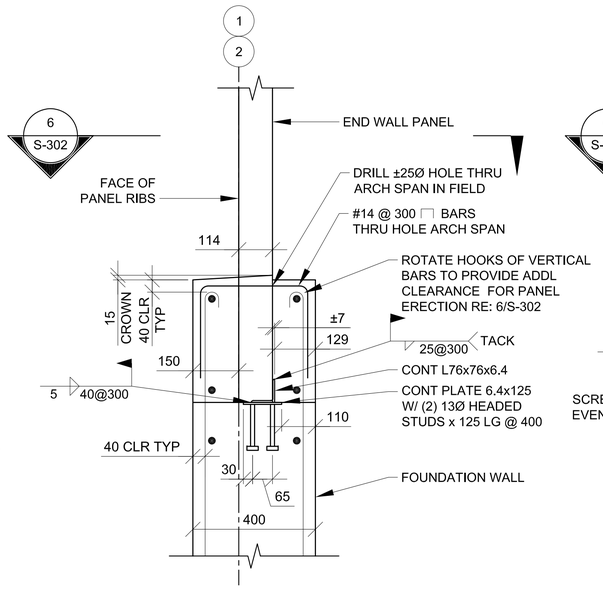

7 S-301 TYP ARCH SPAN END WALL CONN TO FDN WALL

SCALE: 1:10

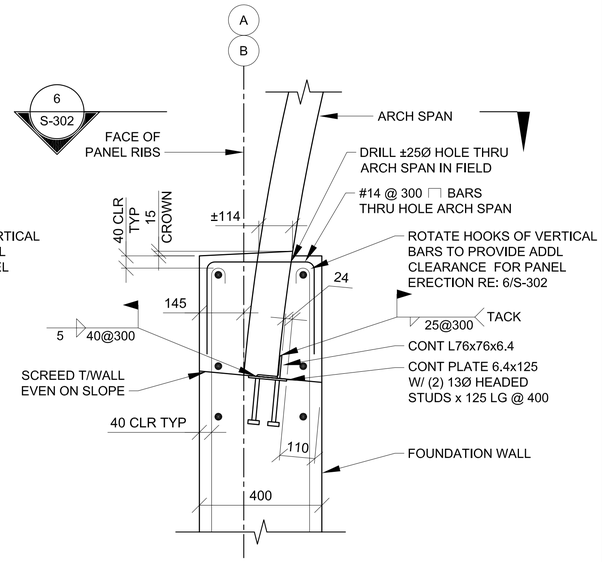

8 S-301 TYP ARCH SPAN SIDE WALL CONN TO FDN WALL

SCALE: 1:10

0 200 400 800
SCALE: 1:20

0 100 200 400
SCALE: 1:10

UNLESS OTHERWISE NOTED,
LINEAR DIMENSIONS
SHOWN ARE IN MILLIMETERS.

COMMONWEALTH OF PENNSYLVANIA
REGISTERED PROFESSIONAL
JOSEPH D. MEIER
ENGINEER
PE-039925E

US ARMY CORPS
OF ENGINEERS
AFGHANISTAN NORTH
DISTRICT

SYMBOL	DESCRIPTION	DATE	APPR.	SYMBOL	DESCRIPTION	DATE	APPR.

DESIGNED BY: JDM
DWN BY: RMS
CKD BY: EPS
REVIEWED BY: JH
SUBMITTED BY:
DATE: 3/28/2011
CONTRACT NO. W912ER-09-D-0002
DRAWING CODE:
FILE NAME: secondpass-dd-s-301.DWG
PLOT SCALE: VARIES
PLOT DATE: 3/28/2011
REV: 0

BAKER

U.S. ARMY ENGINEER DISTRICT, AFGHANISTAN
CORPS OF ENGINEERS
APO AE 09356

SITE ADAPT DESIGN
B18 - VIP BARRACKS - ARCH SPAN
FOUNDATION SECTIONS

SHEET
REFERENCE
NUMBER:
S-301

3/28/2011 2:00 PM

A1 Size 594mm x 841mm

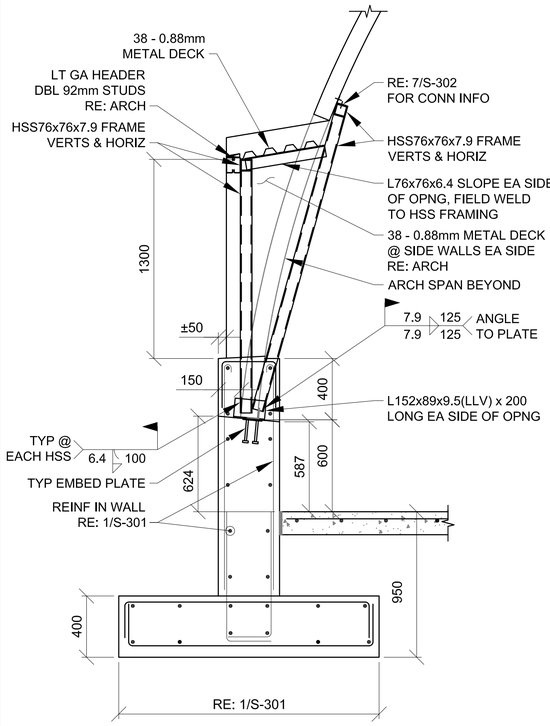

1 S-302 WINDOW DORMER SECTION

SCALE: 1:20

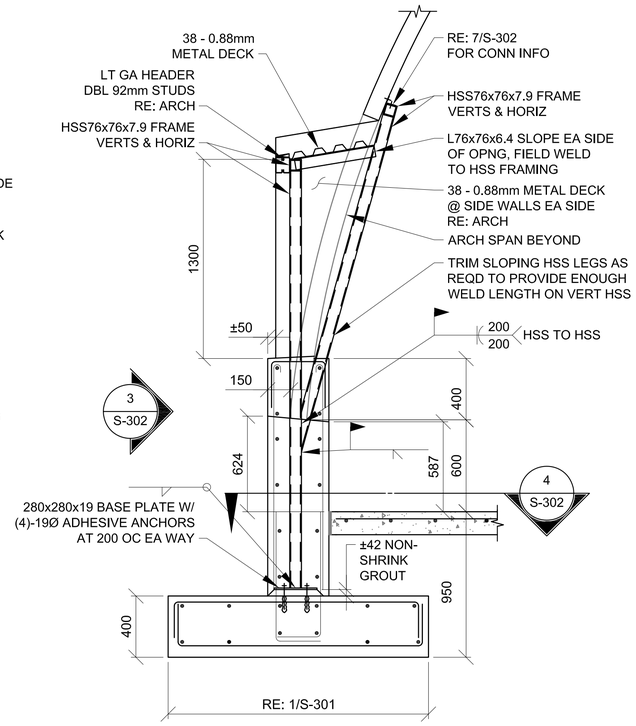

2 S-302 DOOR DORMER SECTION

SCALE: 1:20

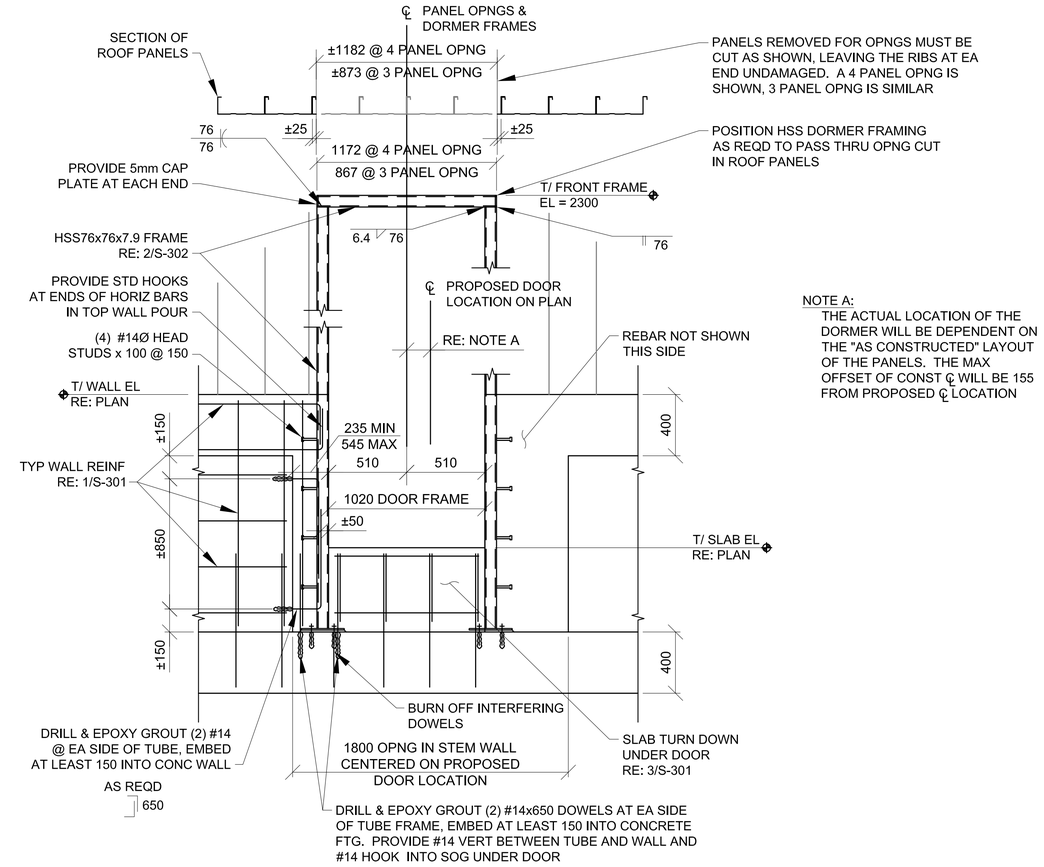

NOTE A:
THE ACTUAL LOCATION OF THE DORMER WILL BE DEPENDENT ON THE "AS CONSTRUCTED" LAYOUT OF THE PANELS. THE MAX OFFSET OF CONST ℄ WILL BE 155 FROM PROPOSED ℄ LOCATION

3 S-302 DOOR DORMER WALL SECTION

SCALE: 1:20

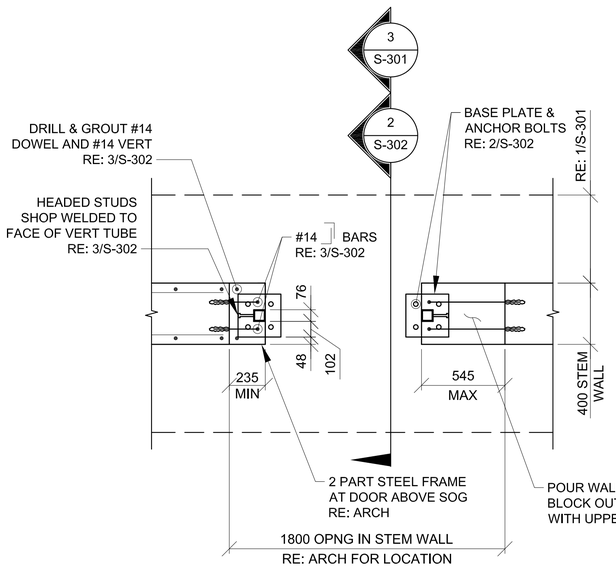

4 S-302 PLAN VIEW TYP @ DOOR DORMER

SCALE: 1:20

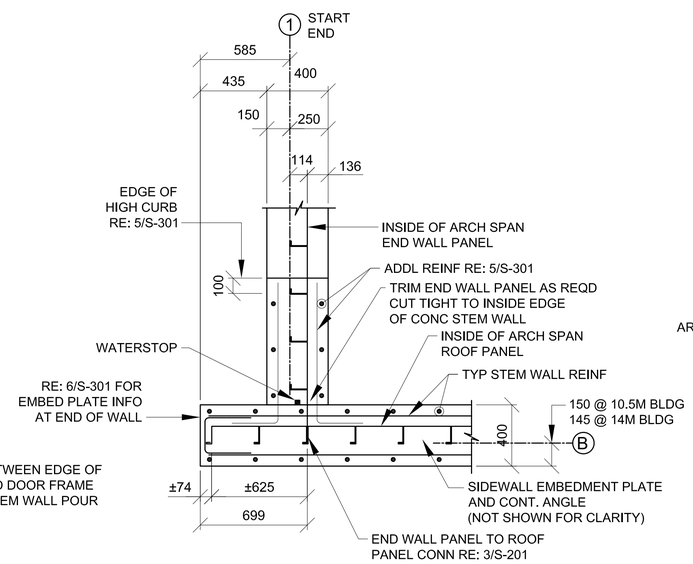

5 S-302 PLAN DETAIL @ BLDG CORNER

SCALE: 1:20

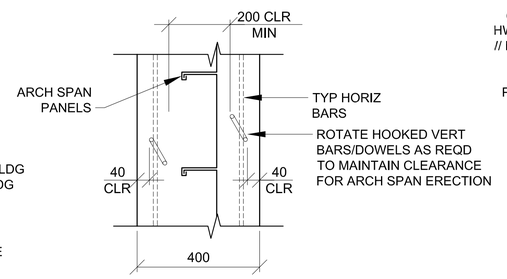

6 S-302 TYP FDN WALL PLAN DETAIL

SCALE: 1:10

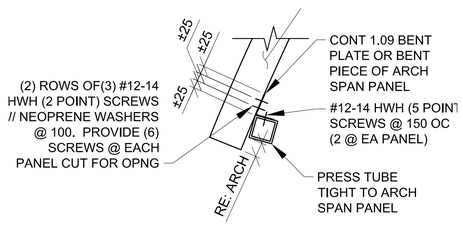

7 S-302 PANEL TO TUBE CONN DETAIL

SCALE: 1:10

0 200 400 800
SCALE: 1:20

0 100 200 400
SCALE: 1:10

UNLESS OTHERWISE NOTED, LINEAR DIMENSIONS SHOWN ARE IN MILLIMETERS.

COMMONWEALTH OF PENNSYLVANIA
REGISTERED PROFESSIONAL
JOSEPH D. MEIER
ENGINEER
PE-039992-E

US ARMY CORPS OF ENGINEERS AFGHANISTAN NORTH DISTRICT

SYMBOL	DESCRIPTION	DATE	APPR.	SYMBOL	DESCRIPTION	DATE	APPR.

DATE: 3/28/2011 | REV: 0
CONTRACT NO. W912ER-09-D-0002
DRAWING CODE:
FILE NAME: wecomp\marcel-dra-s-302.dwg
PLOT SCALE: 1:20
PLOT DATE: 3/28/2011

DESIGNED BY: JDM | CKD BY: EPS
DWN BY: RMS | CKD BY: EPS
REVIEWED BY: JH
SUBMITTED BY:
BAKER

U.S. ARMY ENGINEER DISTRICT, AFGHANISTAN
CORPS OF ENGINEERS
APO AE 09356

SITE ADAPT DESIGN
B18 - VIP BARRACKS - ARCH SPAN
SECTIONS

SHEET REFERENCE NUMBER:
S-302

A1 Size 594mm x 841mm

3/28/2011 2:00 PM

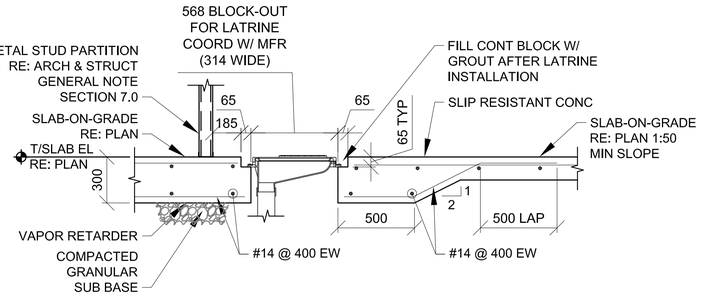

1 / S-303 LATRINE SECTION

SCALE: 1:20

NOT USED

2 / S-303 ABLUTION SECTION

SCALE: 1:20

NOT USED

3 / S-303 SHOWER SECTION

SCALE: 1:20

NOT USED

4 / S-303 NOT USED

SCALE: NTS

NOT USED

5 / S-303 LAVATORY SINK SECTION

SCALE: 1:20

NOT USED

6 / S-303 LAUNDRY SINK SECTION

SCALE: 1:20

0 200 400 800

SCALE: 1:20

UNLESS OTHERWISE NOTED,
LINEAR DIMENSIONS
SHOWN ARE IN MILLIMETERS.

COMMONWEALTH OF PENNSYLVANIA
REGISTERED PROFESSIONAL
JOSEPH D. MEIER
ENGINEER
PE-039920E

US ARMY CORPS
OF ENGINEERS
AFGHANISTAN NORTH
DISTRICT

SYMBOL	DESCRIPTION	DATE	APPR.	SYMBOL	DESCRIPTION	DATE	APPR.

DESIGNED BY: JDM
DWN BY: RMS
CKD BY: EPS
REVIEWED BY: JH
SUBMITTED BY:
DATE: 3/28/2011
CONTRACT NO. W912ER-09-D-0002
DRAWING CODE:
REV: 0
FILE NAME: 09356S303-Latrine-Arch-Sections.DWG
PLOT SCALE: 1:20
PLOT DATE: 3/28/2011

BAKER

U.S. ARMY ENGINEER DISTRICT, AFGHANISTAN
CORPS OF ENGINEERS
APO AE 09356

SITE ADAPT DESIGN

B18 - VIP BARRACKS - ARCH SPAN

LATRINE SECTIONS

SHEET
REFERENCE
NUMBER:

S-303

3/28/2011 2:00 PM

A1 Size 594mm x 841mm

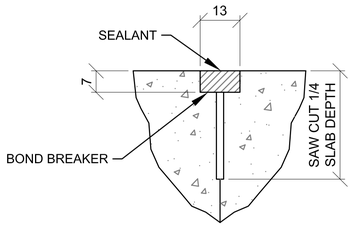

CONTROL JOINT DETAIL

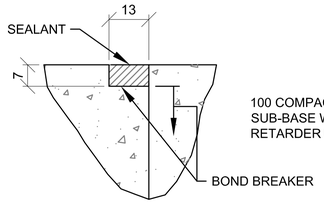

CONSTRUCTION JOINT DETAIL

1 / S-501 TYP CONCRETE SLAB JOINT FINISH DETAILS

SCALE: NTS

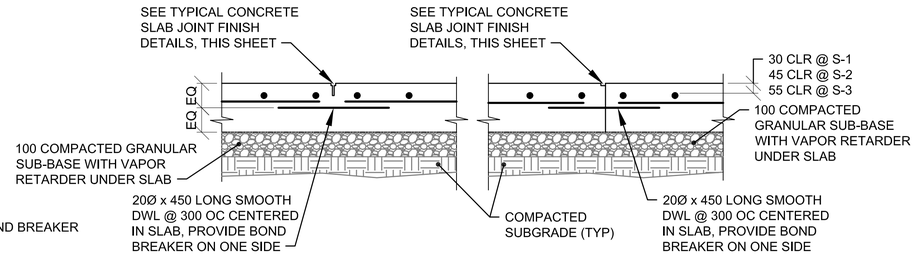

CONTROL JOINT DETAIL

CONSTRUCTION JOINT DETAIL

2 / S-501 TYP SLAB ON GRADE JOINT DETAILS

SCALE: NTS

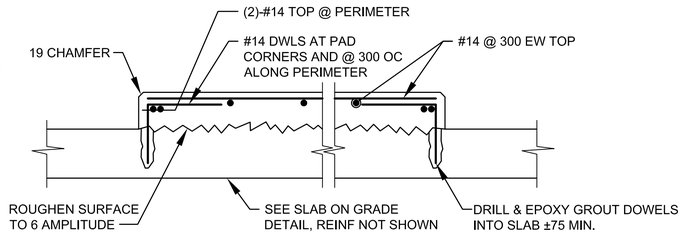

3 / S-501 INTERIOR EQUIPMENT PAD DETAIL

SCALE: NTS

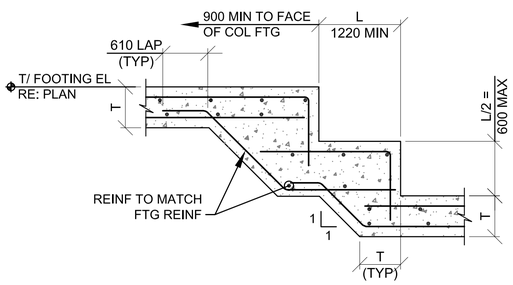

4 / S-501 STEPPED FOOTING (2 LAYERS REINF)

SCALE: NTS

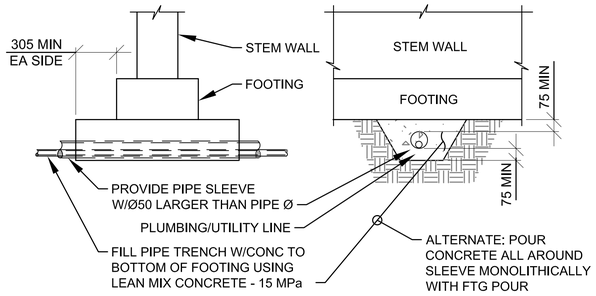

5 / S-501 UTILITY PIPE UNDER WALL FTG

SCALE: NTS

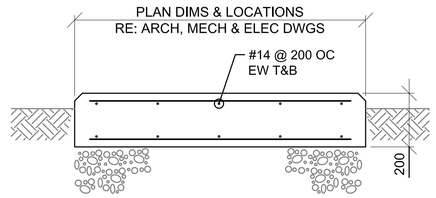

NOTES:
1. COORDINATE SIZE & LOCATION WITH EQUIPMENT REQUIREMENTS.
2. CHAMFER ALL EDGES 25 TYPICAL.

6 / S-501 EQUIPMENT PAD (EXTERIOR)

SCALE: NTS

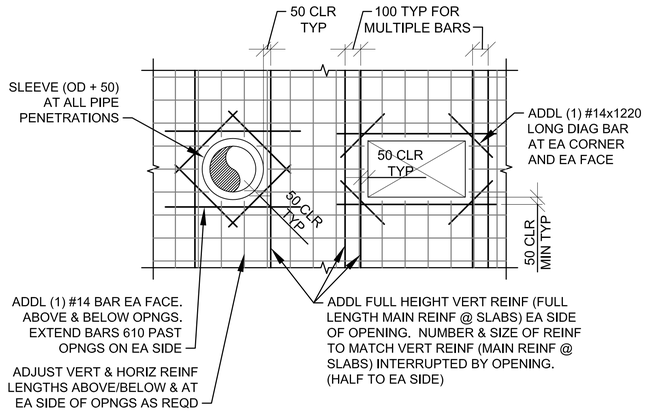

7 / S-501 OPENING THRU CONC WALL

SCALE: NTS

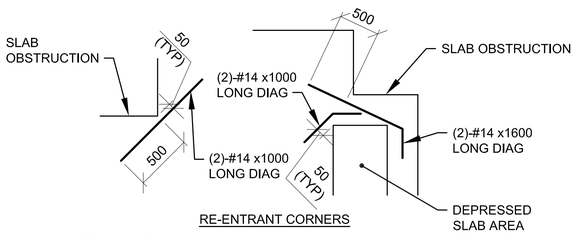

RE-ENTRANT CORNERS

DETAIL NOTES:
1. WHERE MORE THAN ONE ADDITIONAL BAR IS REQUIRED PARALLEL TO THE EXISTING SLAB/WALL REINFORCING THE ADDITIONAL REINFORCING BARS SHALL BE SPACED AT 100 ON CENTER.
2. ADDITIONAL REINFORCING PARALLEL TO THE SLAB/WALL REINFORCING SHALL BE #16 BARS THAT PROVIDE A STEEL AREA ON EACH SIDE OF THE OPENING EQUAL TO 1/2 THE AREA OF THE REINFORCING CUT BY THE OPENING.
3. FOR OPENINGS WITH SIDES OR DIAMETERS LESS THAN 300 SPREAD THE SLAB/WALL REINFORCING TO CLEAR THE OPENING.

8 / S-501 CONCRETE REINF DETAILS

SCALE: NTS

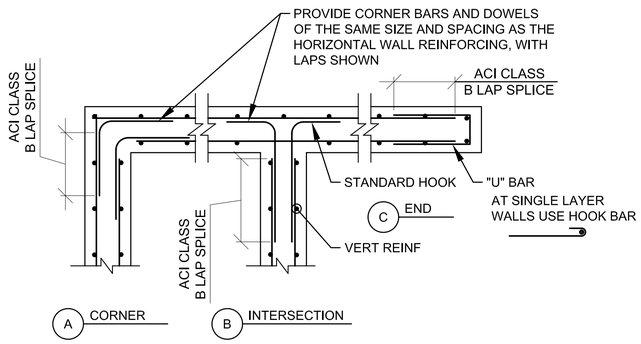

9 / S-501 CONCRETE WALL CORNER REINFORCING

SCALE: NTS

NOTE:
WALLS WITH SINGLE LAYER OF REINFORCING SIMILAR

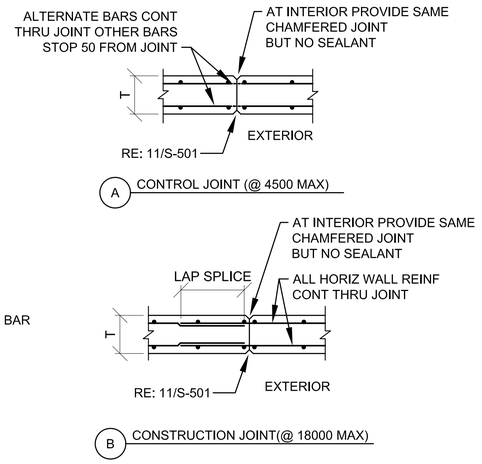

10 / S-501 CONCRETE WALL JOINTS

SCALE: NTS

NOTE:
WALLS WITH SINGLE LAYER OF REINFORCING SIMILAR

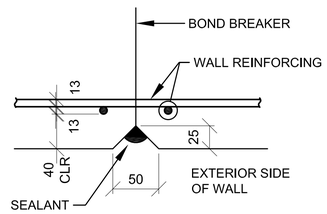

11 / S-501 TYP CONCRETE WALL JOINT FINISH DETAIL

SCALE: NTS

UNLESS OTHERWISE NOTED, LINEAR DIMENSIONS SHOWN ARE IN MILLIMETERS.

COMMONWEALTH OF PENNSYLVANIA REGISTERED PROFESSIONAL JOSEPH D. MEIER ENGINEER PE-039920E

US ARMY CORPS OF ENGINEERS AFGHANISTAN NORTH DISTRICT

SYMBOL	DESCRIPTION	DATE	APPR.	SYMBOL	DESCRIPTION	DATE	APPR.

U.S. ARMY ENGINEER DISTRICT, AFGHANISTAN
CORPS OF ENGINEERS
APO AE 09356

DESIGNED BY: JDM | DWN BY: RMS | CKD BY: EPS | REVIEWED BY: JH | SUBMITTED BY: BAKER

DATE: 3/28/2011 | REV: 0
CONTRACT NO. W912ER-09-D-0002
DRAWING CODE:
FILE NAME: ARCH/Project-B18-S-501.DWG
PLOT SCALE: NONE
PLOT DATE: 3/28/2011

SITE ADAPT DESIGN
B18 - VIP BARRACKS - ARCH SPAN
TYPICAL DETAILS

SHEET REFERENCE NUMBER:
S-501

A1 Size 594mm x 841mm

3/28/2011 2:01 PM

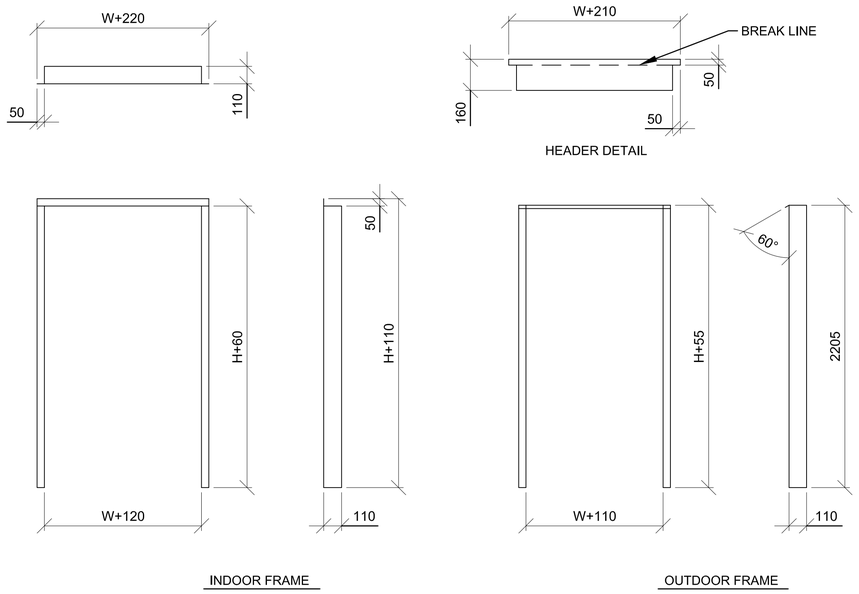

1 / S-502 **120 DOOR DETAIL**

SCALE: NTS

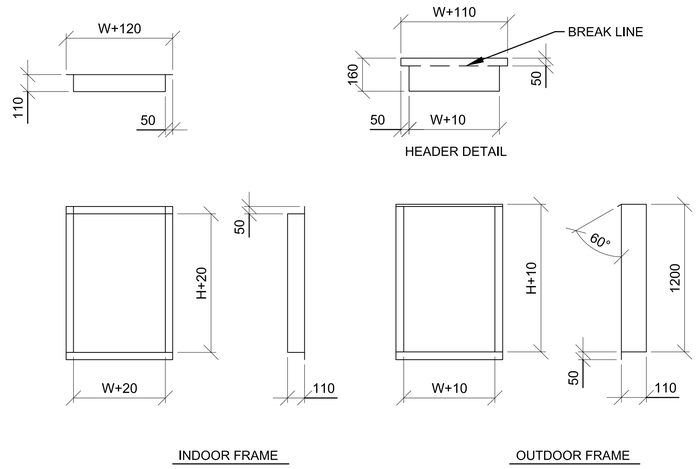

2 / S-502 **120 WINDOW/MECH OPENING DETAIL**

SCALE: NTS

DOOR & WINDOW FRAME NOTES:

1. ALL DIMENSIONS ARE INSIDE DIMENSIONS.
2. WELD AND GRIND SMOOTH ALL CORNERS.
3. FRAME THICKNESS = 2.5mm.
4. ALL FRAMES, INTERIOR AND EXTERIOR, TO BE GALVANIZED.
5. RE: 1/A-601 FOR DOOR WIDTHS (W) AND HEIGHTS (H).
6. RE: 3/A-601 FOR WINDOW WIDTHS (W) AND HEIGHTS (H).
7. RE: SCHEDULE BELOW FOR LOUVER DIMENSIONS.
8. CUT OPENING DIMENSIONS:
   - WINDOW/LOUVER - W+130
   - DOOR - W+130
   - WINDOW/LOUVER - H+30
   - DOOR - H+65
9. RE: 3/S-502 FOR TYP JAMB DETAIL

MECH OPENING FRAME SCHEDULE

TYPE	W	H
M1	787	787
M2	1050	1350

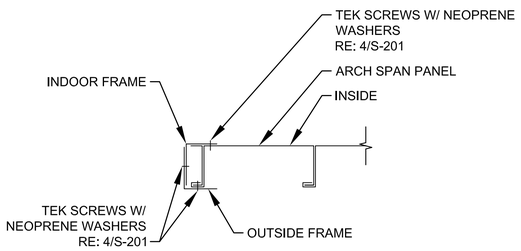

3 / S-502 **TYP JAMB SECTION**

SCALE: NTS

UNLESS OTHERWISE NOTED, LINEAR DIMENSIONS SHOWN ARE IN MILLIMETERS.

COMMONWEALTH OF PENNSYLVANIA
REGISTERED PROFESSIONAL
JOSEPH D. MEIER
ENGINEER
PE-039920E

US ARMY CORPS OF ENGINEERS
AFGHANISTAN NORTH DISTRICT

SYMBOL	DESCRIPTION	DATE	APPR.	SYMBOL	DESCRIPTION	DATE	APPR.

DESIGNED BY: JDM
DWN BY: RMS
CKD BY: EPS
REVIEWED BY: JH
SUBMITTED BY:
DATE: 3/28/2011
CONTRACT NO. W912ER-09-D-0002
DRAWING CODE:
FILE NAME: secondpass-dd-s-502.dwg
PLOT SCALE: NONE
PLOT DATE: 3/28/2011
REV: 0

BAKER

U.S. ARMY ENGINEER DISTRICT, AFGHANIST'AN
CORPS OF ENGINEERS
APO AE 09356

SITE ADAPT DESIGN

B18 - VIP BARRACKS - ARCH SPAN

DOOR/WINDOW/MECHANICAL OPENING FRAME DETAILS

SHEET REFERENCE NUMBER:

S-502

A1 Size 594mm x 841mm

3/28/2011 2:01 PM

CONCRETE REINFORCEMENT TENSION DEVELOPMENT/LAP SPLICE SCHEDULE

f'c = 28 MPa	LAP CLASS	UNCOATED BARS			
		TOP BARS		OTHER BARS	
METRIC BAR SIZES		CASE 1	CASE 2	CASE 1	CASE 2
#10 TO #20	A	50 BAR DIA	74 BAR DIA	38 BAR DIA	57 BAR DIA
	B	64 BAR DIA	96 BAR DIA	50 BAR DIA	74 BAR DIA
#25 TO #50	A	62 BAR DIA	93 BAR DIA	48 BAR DIA	71 BAR DIA
	B	80 BAR DIA	121 BAR DIA	62 BAR DIA	93 BAR DIA

NOTES:
1. TABULATED TENSION DEVELOPMENT LENGTH VALUES ARE TAKEN FROM CRSI DESIGN HANDBOOK 2008 10TH ED.
2. TENSION DEVELOPMENT & TENSION LAP SPLICE LENGTHS ARE EXPRESSED AS MULTIPLES OF BAR DIAMETERS.
3. TABULATED VALUES ARE BASED ON MINIMUM YIELD STRENGTH OF REINFORCEMENT, fy, OF 420MPa.
4. CONCRETE IS NORMAL WEIGHT (2400Kg/m^3) AND 28 DAY COMPRESSIVE STRENGTH = 28MPa.
5. TABULATED VALUES FOR BEAMS & COLUMNS ARE BASED ON TRANSVERSE REINFORCEMENT AND CONCRETE COVER MEETING MINIMUM CODE REQUIREMENTS.
6. CASES 1 & 2, WHICH DEPEND ON THE TYPE OF STRUCTURAL MEMBER, CONCRETE COVER, AND CENTER-TO-CENTER SPACING OF THE BARS ARE DEFINED IN THE TABLE BELOW.
7. LAP SPLICE LENGTHS (MINIMUM 300mm) ARE MULTIPLES OF TENSION DEVELOPMENT LENGTHS: CLASS A = 1.0(TENSION DEVELOPMENT LENGTH) & CLASS B = 1.3(TENSION DEVELOPMENT LENGTH)
8. TOP BARS ARE HORIZONTAL REINFORCEMENT WITH MORE THAN 300mm OF CONCRETE CAST BELOW THE BARS.
9. IT SHALL BE PERMISSIBLE TO CALCULATE WALL AND SLAB REINFORCEMENT TENSION DEVELOPMENT/SPLICE LENGTHS IN ACCORDANCE WITH ACI 12.2.3 OR TABLE 5.3(b) OF CRSI 2008 IN LIEU OF VALUES TABULATED ABOVE.

BEAMS, COLUMNS	CASE 1	CONCRETE COVER AT LEAST 1 BAR DIA AND CENTER-TO-CENTER SPACING AT LEAST 2 BAR DIA
	CASE 2	CONCRETE COVER LESS THAN 1 BAR DIA OR CENTER-TO-CENTER SPACING LESS THAN 2 BAR DIA
ALL OTHERS	CASE 1	CONCRETE COVER AT LEAST 1 BAR DIA AND CENTER-TO-CENTER SPACING AT LEAST 3 BAR DIA
	CASE 2	CONCRETE COVER LESS THAN 1 BAR DIA OR CENTER-TO-CENTER SPACING LESS THAN 3 BAR DIA

STANDARD HOOKS IN TENSION PER (ACI 318M-05) f'c = 28 MPa

METRIC BAR SIZE	HOOK DEVELOPMENT LENGTH (mm) ldh
#10	190
#12	229
#14	267
#16	305
#20	381
#25	476
#28	533
#32	610
#40	762
#50	953

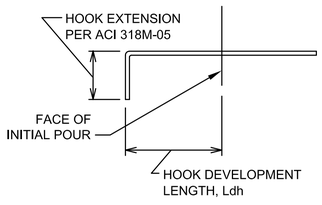

NOTES:
1. CONCRETE IS NORMAL WEIGHT CONCRETE.
2. BAR YIELD STRENGTH, fy = 420 MPa
3. SIDE COVER REQUIREMENTS OF ACI SECT. 12.5.3 ARE ASSUMED TO NOT BE MET.
4. TIE OR STIRRUP REQUIREMENTS OF ACI SECT. 12.5.3 ARE ASSUMED TO NOT BE MET.
5. REDUCTION FOR EXCESS REINFORCEMENT IS NOT TAKEN.
6. HOOK DEVELOPMENT LENGTH IS VALID FOR 180° HOOKS ALSO.

CONCRETE COVER SCHEDULE

MINIMUM CONCRETE COVER PROTECTION FOR REINFORCEMENT BARS SHALL BE AS LISTED BELOW: (SEE ACI 318M-05, SECTION 7.7 FOR CONDITIONS NOT NOTED). DIMENSIONS FOR BAR PLACEMENT GIVEN IN SECTIONS AND DETAILS SHALL SUPERSEDE MINIMUM COVER REQUIREMENTS GIVEN HERE. DIMENSIONS ARE IN mm. PROVIDE STANDARD BAR CHAIRS AND SUPPORT BARS @1200mm MAXIMUM AS REQUIRED TO MAINTAIN CONCRETE PROTECTION SPECIFIED.

FOOTINGS (EARTH FORMED):	70
COLUMNS / PIERS (TO TIES)	40
ELEVATED BEAMS & SLABS:	
BEAM TIES & STIRRUPS (NOT EXPOSED TO WEATHER)	40
BEAM TIES & STIRRUPS (EXPOSED TO WEATHER)	50
SLABS (NOT EXPOSED TO WEATHER)	20
SLABS (EXPOSED TO WEATHER)	
#19 & LARGER	50
#16 & SMALLER	40
SLABS ON GRADE	
NOT EXPOSED TO WEATHER (FROM TOP)	20
EXPOSED TO WEATHER (FROM TOP)	40
UTILITY TUNNEL WALLS, RETAINING WALLS AND SHEAR WALLS. (NO SURFACES SHALL BE EARTH FORMED)	
EARTH SIDE AND FRONT SIDE (EXPOSED TO WEATHER)	
#16 BAR AND SMALLER	40
#19 THRU #36 BAR	50

UNLESS OTHERWISE NOTED, LINEAR DIMENSIONS SHOWN ARE IN MILLIMETERS.

COMMONWEALTH OF PENNSYLVANIA
REGISTERED PROFESSIONAL
JOSEPH D. MEIER
ENGINEER
PE-039920E

US ARMY CORPS OF ENGINEERS
AFGHANISTAN NORTH DISTRICT

SYMBOL	DESCRIPTION	DATE	APPR.	SYMBOL	DESCRIPTION	DATE	APPR.

DESIGNED BY: JDM
DWN BY: RMS
CKD BY: EPS
REVIEWED BY: JH
SUBMITTED BY:
DATE: 3/28/2011
CONTRACT NO. W912ER-09-D-0002
DRAWING CODE:
REV: 0
FILE NAME: W912ER-09-D-0002 (B18-S-601).DWG
PLOT SCALE: NONE
PLOT DATE: 3/28/2011

BAKER

U.S. ARMY ENGINEER DISTRICT, AFGHANISTAN
CORPS OF ENGINEERS
APO AE 09356

SITE ADAPT DESIGN
B18 - VIP BARRACKS - ARCH SPAN
SCHEDULES

SHEET REFERENCE NUMBER:
S-601

A1 Size 594mm x 841mm

3/28/2011 2:01 PM

SCOPE RESPONSIBILITIES SCHEDULE

ITEM	FURNISHED BY	INSTALLED BY	FINAL CONNECTION BY
FREESTANDING FURNITURE	GOVT	GOVT	--
SYSTEMS FURNITURE	GOVT	GOVT	CONTR
OFFICE EQUIPMENT, PERMANENTLY INSTALLED	GOVT	GOVT	GOVT
WORKBENCHES	GOVT	GOVT	CONTR
METAL UTILITY STORAGE SHELVING	CONTR	CONTR	--
EQUIPMENT, PORTABLE	GOVT	GOVT	--
EQUIPMENT, PERMANENTLY INSTALLED	CONTR	CONTR	CONTR
EQUIPMENT RACKS IN IT ROOMS	CONTR	CONTR	--
FIRE EXTINGUISHERS AND CABINETS	CONTR	CONTR	--
TELEPHONE SWITCH AND HANDSETS	GOVT	GOVT	GOVT
SECURE TELEPHONE INSTRUMENTS (STEs)	GOVT	GOVT	GOVT

ABBREVIATIONS

ACP	ACOUSTIC CEILING PANEL
AFF	ABOVE FINISH FLOOR
ALUM	ALUMINUM
AUTO	AUTOMATIC
ABV	ABOVE
AT/FP	ANTI-TERRORISM FORCE PROTECTION
BC	BOTTOM OF CURB
B.O.	BOTTOM OF
BLK	BLOCK
BRG	BEARING
BLKG	BLOCKING
BD	BOARD
BLDG	BUILDING
CLG	CEILING
CONC	CONCRETE
CONT	CONTINUOUS
CONTR	CONTRACTOR
CMU	CONCRETE MASONRY UNIT
CT	CERAMIC TILE
C.J.	CONTROL JOINT
CRS	COURSE
DIAM	DIAMETER
DN	DOWN
DTL	DETAIL
DWG	DRAWING
EA	EACH
EIFS	EXTERIOR INSULATION AND FINISH SYSTEM
EWC	ELECTRIC WATER COOLER
EXP	EXPANSION
EXT	EXTERIOR
EQUIP	EQUIPMENT
ELEC	ELECTRIC
EL	ELEVATION
EMER	EMERGENCY
EQ	EQUAL
F/	FACE OF
FE	FIRE EXTINGUISHER
FEC	FIRE EXTINGUISHER CABINET
FIBERBD	FIBER BOARD
FL	FLOOR
FD	FLOOR DRAIN
FTG	FOOTING
GA	GAUGE
GALV	GALVANIZED
GC	GENERAL CONTRACTOR
GL	GLASS
GOVT	GOVERNMENT
GYP	GYPSUM
GWB	GYPSUM WALLBOARD
HT	HEIGHT
HC	HANDICAPPED
HDW	HARDWARE
HTG	HEATING
HVAC	HEATING/VENTILATING/ AIR CONDITIONING
HM	HOLLOW METAL
INSUL	INSULATION
INT	INTERIOR
JT	JOINT
JAN	JANITOR
LAM	LAMINATE
LAV	LAVATORY
LH	LEFT HAND
LT	LIGHT
LVR	LOUVER
MAS	MASONRY
MAX	MAXIMUM
MECH	MECHANICAL
MFR	MANUFACTURER
MIN	MINIMUM
MIR	MIRROR
MISC	MISCELLANEOUS
MO	MASONRY OPENING
MR	MOISTURE RESISTANT
MS	METAL STUD
MTL	METAL
NA	NOT APPLICABLE
NO	NUMBER
NOM	NOMINAL
NTS	NOT TO SCALE
NIC	NOT IN CONTRACT
OPG	OPENING
OC	ON CENTER
OH	OVERHEAD
OPP	OPPOSITE
PL	PLATE
PLAM	PLASTIC LAMINATE
PLYWD	PLYWOOD
PNL	PANEL
PREF	PREFABRICATED
PERF	PERFORATED
PR	PAIR
PT	PAINT
QT	QUARRY TILE
R	RISER
RAD	RADIUS
RD	ROOF DRAIN
REF	REFERENCE
REINF	REINFORCED
RH	RIGHT HAND
ROW	RIGHT OF WAY
RM	ROOM
RO	ROUGH OPENING
RWC	RAINWATER CONDUCTOR
SIM	SIMILAR
STL	STEEL
STR	STRUCTURE
ST0	STORAGE
SPEC	SPECIFICATION
SS	STAINLESS STEEL
STN	STAIN
STD	STANDARD
SUSP	SUSPENDED
TC	TOP OF CURB
TH	THICK
TYP	TYPICAL
TR	TREAD
T.O.	TOP OF
TELE	TELEPHONE
TEMP	TEMPERED/TEMPORARY
UNF	UNFINISHED
UNO	UNLESS NOTED OTHERWISE
USAR	UNITED STATES ARMY RESERVE
VERT	VERTICAL
VIF	VERIFY IN FIELD
VTR	VENT THROUGH ROOF
WD	WOOD
WH	WATER HEATER
WWF	WELDED WIRE FABRIC
W/O	WITHOUT

PROJECT NOTES

STANDARDS AND REGULATIONS:

1) CONTRACTOR SHALL PERFORM ALL WORK IN CONFORMANCE WITH APPLICABLE BUILDING CODES, REGULATIONS, ORDINANCES, UTILITY PROVIDER REQUIREMENTS, AND SIMILAR STANDARDS.

2) CONTRACTOR SHALL OBTAIN ALL REQUIRED INSPECTIONS OF THE WORK. CONTRACTOR SHALL REGULARLY UPDATE OWNER AND ARCHITECT REGARDING THE STATUS OF INSPECTIONS.

3) CONTRACTOR SHALL COORDINATE WORK WITH APPLICABLE UTILITY PROVIDERS.

4) CONTRACTOR SHALL BE FAMILIAR WITH REQUIREMENTS AND CONSTRUCTION SHALL BE IN COMPLIANCE WITH REFERENCED FIRE-RATED ASSEMBLY TESTS AND STANDARDS.

ADMINISTRATION OF THE WORK:

1) CONTRACTOR SHALL BE SOLELY RESPONSIBLE FOR THE MEANS, METHODS, AND SEQUENCES OF CONSTRUCTION AND DIMENSIONS.

2) CONTRACTOR SHALL BE SOLELY RESPONSIBLE FOR THE SAFETY OF ALL CONSTRUCTION PERSONNEL AND AUTHORIZED VISITORS AT THE SITE.

3) CONTRACTOR SHALL BECOME FULLY ACQUAINTED WITH CONDITIONS RELATED TO THE WORK. ANY KNOWN DISCREPANCIES BETWEEN THE DOCUMENTS AND THE ACTUAL CONDITIONS SHALL BE REPORTED TO THE OWNER FOR RESOLUTION PRIOR TO PROCEEDING WITH WORK RELATED TO THE DISCREPANCY.

4) CONTRACTOR SHALL REMOVE AND PROPERLY DISPOSE OF ALL CONSTRUCTION AND DEMOLITION DEBRIS. CONTRACTOR SHALL OBTAIN APPROVAL OF OWNER FOR DETAILS RELATING TO THE REMOVAL OF TRASH, INCLUDING SUCH ISSUES AS PATH OF TRAVEL, USE OF STAIRS AND ELEVATORS, REMOVAL OF WINDOWS, LOCATION OF CHUTES AND DUMPSTERS, ETC., PRIOR TO REMOVAL OF DEBRIS. CONTRACTOR SHALL CLEAN AND REPAIR ANY DAMAGES TO EXISTING ITEMS SOILED OR DAMAGED BY THE DEBRIS REMOVAL PROCESS. IF CLEANING AND/OR REPAIR DOES NOT RETURN ITEMS TO ORIGINAL CONDITION CONTRACTOR SHALL INSTALL NEW ITEMS.

5) CONTRACTOR SHALL BECOME FAMILIAR WITH AND COMPLY WITH OWNER'S PROCEDURES FOR MAINTAINING A SECURE SITE AND BUILDING.

6) EACH INSTALLER SHALL EXAMINE ALL SUBSTRATE CONDITIONS AND/OR SITE CONDITIONS WHICH AFFECT THE QUALITY OF EACH PRODUCT TO BE INSTALLED. IF ANY CONDITIONS EXIST WHICH WILL HAVE A DETRIMENTAL EFFECT ON THE QUALITY OF THE INSTALLATION, THE INSTALLER SHALL IMMEDIATELY NOTIFY THE CONTRACTOR. INSTALLATION SHALL NOT PROCEED UNTIL THE UNSATISFACTORY CONDITIONS ARE CORRECTED. INSTALLATION SHALL SIGNIFY ACCEPTANCE OF THE CONDITIONS.

7) CONTRACTOR SHALL MAINTAIN RECORD DRAWINGS ON THE SITE AT ALL TIMES.

8) CONTRACTOR SHALL BE RESPONSIBLE FOR ENSURING COORDINATION EFFORTS OF ALL SUBCONTRACTORS.

9) CONTRACTOR SHALL LAY OUT ALL WORK AS SOON AS POSSIBLE. ANY DISCREPANCIES SHALL BE REPORTED TO THE OWNER FOR RESOLUTION PRIOR TO PROCEEDING WITH THE WORK IN QUESTION.

10) DO NOT ATTACH OR HANG ANY ITEMS DIRECTLY FROM ARCH-SPAN PANELS. ATTACH ONLY TO BUILDING TABS LOCATED WITHIN PANEL JOINTS

11) CONTRACTOR TO PROVIDE ALL NECESSARY BLOCKING TO SUPPORT WALL & CEILING MOUNTED EQUIPMENT, FIXTURES AND ACCESSORIES.

USE OF CONSTRUCTION DOCUMENTS:

1) DO NOT SCALE DRAWINGS. ONLY WRITTEN DIMENSIONS OR KEYED NOTES SHALL BE USED. CONTACT ARCHITECT IF CLARIFICATION OR ADDITIONAL INFORMATION IS REQUIRED.

2) THE DRAWINGS ARE SCHEMATIC IN NATURE. MODIFICATIONS IN DUCTS, PIPING, CONDUIT AND WIRING MAY BE REQUIRED TO ACCOMMODATE ACTUAL FIELD CONDITIONS.

3) DRAWINGS SHALL NOT BE REPRODUCED FOR SUBMITTALS.

4) DIMENSIONS ARE AS FOLLOWS UNLESS NOTED OTHERWISE:
   A) TO CENTER LINE OF INTERIOR PARTITIONS
   B) TO CENTERLINE OF COLUMNS.
   C) TO TOP OF FLOOR SLAB.
   D) TO BOTTOM OF FINISHED CEILING.
   E) TO EXTERIOR FACE OF ARCH SPAN PANEL OR TO FACE OF MASONRY OR CONCRETE.

5) VERIFY IN FIELD DIMENSIONS OF ALL DOOR, WINDOW AND LOUVER OPENINGS.

DEFINITIONS:

1) "ALIGN" AS USED IN THESE DOCUMENTS SHALL MEAN TO ACCURATELY LOCATE FINISH FACES IN THE SAME PLANE AND/OR TO INSTALL NEW CONSTRUCTION ADJACENT TO EXISTING CONSTRUCTION WITHOUT ANY VISIBLE JOINTS OR SURFACE IRREGULARITIES.

2) "CLEAR" AS USED IN THESE DOCUMENTS SHALL MEAN THAT THE CONDITION IS NOT ADJUSTABLE WITHOUT APPROVAL OF THE ARCHITECT. CLEAR DIMENSIONS ARE TYPICALLY TO FINISH FACE.

3) "MAXIMUM" OR "MAX" AS USED IN THESE DOCUMENTS SHALL MEAN THAT THE CONDITION IS SLIGHTLY ADJUSTABLE BUT MAY NOT VARY TO A DIMENSION OR QUANTITY GREATER THAN THAT SHOWN WITHOUT APPROVAL OF THE ARCHITECT.

4) "MINIMUM" OR "MIN" AS USED IN THESE DOCUMENTS SHALL MEAN THAT THE CONDITION IS SLIGHTLY ADJUSTABLE BUT MAY NOT VARY TO A DIMENSION OR QUANTITY LESS THAN THAT SHOWN WITHOUT APPROVAL OF THE ARCHITECT.

5) "TYPICAL" AS USED IN THESE DOCUMENTS SHALL MEAN THAT THE CONDITION OR DIMENSION IS THE SAME OR REPRESENTATIVE FOR SIMILAR CONDITIONS THROUGHOUT.

6) "*" AS USED IN THESE DOCUMENTS SHALL MEAN THAT THE DIMENSION OR QUALITY IS SLIGHTLY ADJUSTABLE TO ACCOMMODATE ACTUAL CONDITIONS. FIELD VERIFICATION AND COORDINATION WITH OTHER ELEMENTS MIGHT BE NECESSARY.

SYMBOLS LEGEND

ROOM NAME XXXX — ROOM NAME / ROOM NUMBER

X — PARTITION TYPE

150 UNO — DOOR NUMBER; PROVIDE 150 HINGE SIDE WALL RETURN ON DOORS, U.N.O. OR CENTER IN WALL

1 / A-101 — SECTION CALL-OUT

1 / A-101 — DETAIL CALL-OUT

A / B / C / D — 1 / A-101 — INTERIOR ELEVATION CALL-OUT

XX — KEYNOTE

X — WINDOW TYPE

1 / A-101 — ELEVATION CALL-OUT

/ A-### — DETAIL REFERENCE NUMBER; SHEET NUMBER DETAIL IS DRAWN ON

ELEVATION MARK

METAL STUD AND GWB PARTITION

CONCRETE

BRICK

CONCRETE BLOCK

FIBERGLASS BATT INSULATION

RIGID BOARD INSULATION

CONCRETE OR GROUT (DRAWN IN SECTION)

CONCRETE PAVING (DRAWN IN PLAN)

UNLESS OTHERWISE NOTED, LINEAR DIMENSIONS SHOWN ARE IN MILLIMETERS.

COMMONWEALTH OF VIRGINIA — PETER GARRETT SCHMIDT — No. 013167 — REGISTERED ARCHITECT

US ARMY CORPS OF ENGINEERS AFGHANISTAN NORTH DISTRICT

SYMBOL	DESCRIPTION	DATE	APPR.	SYMBOL	DESCRIPTION	DATE	APPR.

DESIGNED BY: PGS, SE, MR
DWN BY: CKD BY: PGS, SE, MR
SE, MDH, AH
REVIEWED BY:
SUBMITTED BY:
DATE: 3/28/2011
CONTRACT NO. W912ER-09-D-0002
DRAWING CODE:
FILE NAME: abcd1234-a1-a-001.DWG
PLOT SCALE: NONE
PLOT DATE: 3/28/2011
REV: 0

BAKER

U.S. ARMY ENGINEER DISTRICT, AFGHANISTAN
CORPS OF ENGINEERS
APO AE 09356

SITE ADAPT DESIGN
B18 - VIP BARRACKS - ARCH SPAN
ABBREVIATIONS, SYMBOLS AND GENERAL NOTES

SHEET REFERENCE NUMBER:
A-001

3/28/2011 2:01 PM

A1 Size 594mm x 841mm

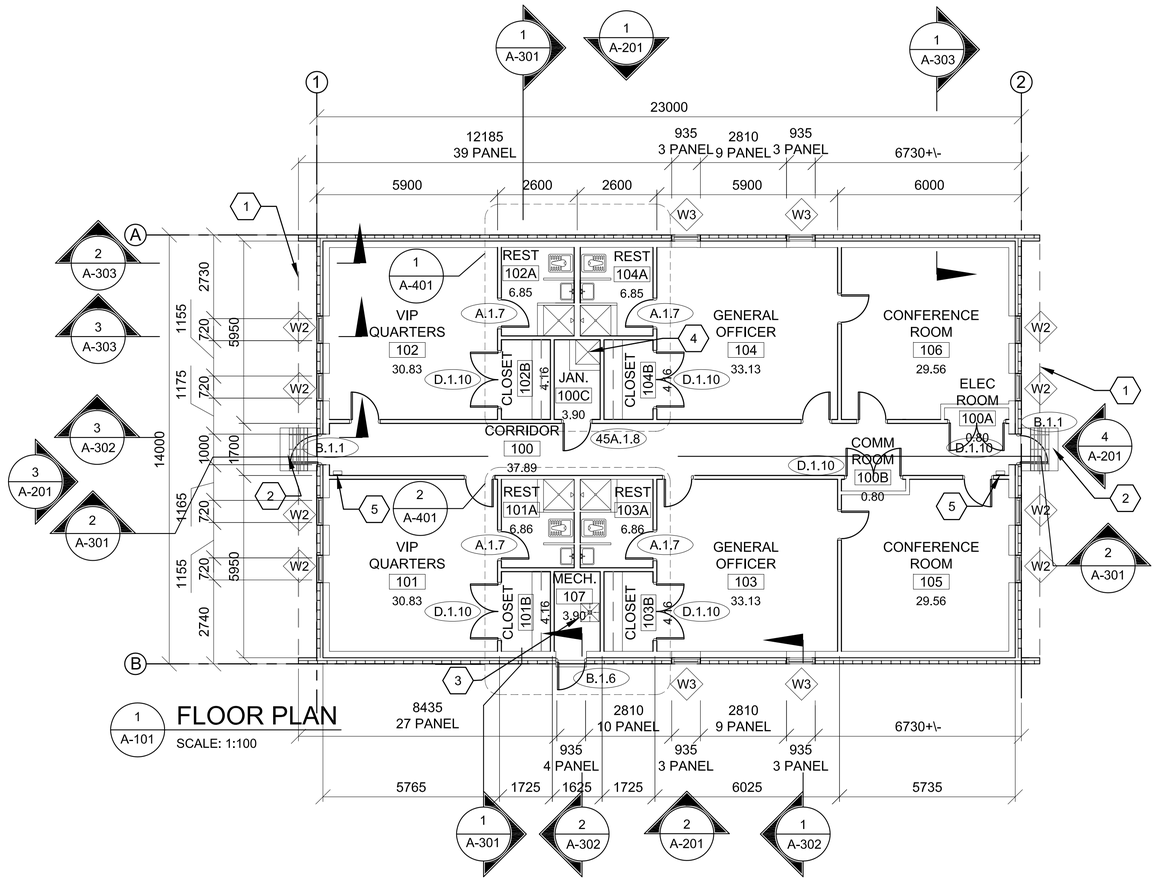

1 A-101 FLOOR PLAN
SCALE: 1:100

GENERAL NOTES:

A. DIMENSIONS ARE SHOWN TO OUTER EDGE OF EXTERIOR STRUCTURAL FACE OF ARCH SPAN PANEL(GRID LINES), CENTER LINE OF INTERIOR PARTITIONS, EDGE OF WINDOW OPENINGS, AND TO HINGE SIDE OF DOOR FRAME OPENING, UNLESS NOTED OTHERWISE.

B. HINGE SIDE OF OPENINGS FOR DOORS AND FRAMES SHALL BE LOCATED 200 MM FROM THE ADJACENT WALL OR COLUMN, UNLESS NOTED OTHERWISE.

C. INTERIOR PARTITIONS SHALL BE PARTITION TYPE 1, UNLESS NOTED OTHERWISE. REFER TO A-602 FOR PARTITION TYPES SCHEDULE

D. COSMETIC REPAIR OF MINOR DEFECTS: REPAIR OR FILL MORTAR JOINTS AND MINOR DEFECTS, INCLUDING BUT NOT LIMITED TO SPALLS, IN ACCORDANCE WITH MANUFACTURER'S RECOMMENDATIONS AND PRIOR TO COATING APPLICATION. SURFACES TO BE PAINTED SHALL BE CLEAN AND FREE OF FOREIGN MATTER BEFORE APPLICATION OF PAINT. CLEANING SHALL BE SCHEDULED SO THAT DUST AND OTHER CONTAMINANTS WILL NOT FALL ON NEWLY PAINTED SURFACES.

E. CONCRETE, PLASTER AND MASONRY SURFACES SHALL BE ALLOWED TO CURE FOR AT LEAST 30 DAYS BEFORE PAINTING. CONCRETE SLABS-ON-GRADE SHALL BE ALLOWED TO CURE 90 DAYS BEFORE STAINING OR SEALING.

F. DO NOT USE PAINT MATERIALS CONTAINING LEAD CONTENT IN EXCESS OF 0.009 PERCENT OF THE WEIGHT OF THE TOTAL NONVOLATILE CONTENT OF THE PAINT OR THE WEIGHT OF THE DRIED PAINT FILM.

G. DO NOT USE ANY ASBESTOS CONTAINING MATERIALS (ACM) IN PROJECT. ACM IS DEFINED AS 1% OR MORE BY VOLUME.

H. DO NOT USE PAINT MATERIALS CONTAINING MERCURIAL FUNGICIDES.

I. FACTORY PRIMED METAL DOORS AND FRAMES SHALL RECEIVE TWO COATS OF PAINT.

J. FILL REMAINING SPACE AT PENETRATIONS IN FIRE-RATED FLOORS, PARTITIONS AND CEILINGS WITH APPROPRIATE FIRESTOPPING MATERIALS.

K. ALL CEILING FINISHES SHALL AS NOTED ON REFLECTED CEILING PLANS OR FINISH SCHEDULE.

L. ALL WALL FINISHES SHALL AS NOTED ON FINISH SCHEDULE. REFER TO A-603

M. ALL FLOOR FINISHES SHALL BE SEALED CONCRETE, UNLESS NOTED OTHERWISE.

N. PROVIDE TILE FINISHES AS INDICATED IN DETAILS & KEY NOTES.

O. ALL DOOR, FRAME AND HARDWARE TYPES SHALL BE 20A.1.11 UNLESS NOTED OTHERWISE. REFER TO A-601 FOR DOOR INFORMATION.

P. TOILET STALL DOORS SHALL BE G.2.12

Q. SHOWER STALL DOOR, FRAME AND HARDWARE TYPE SHALL BE E.1.12.

R. PROVIDE POLISHED STAINLESS STEEL MIRROR 600 X 900 ABOVE EVERY LAVATORY FAUCET.

S. PLASTER MAY BE SUBSTITUTED FOR DRYWALL WALLS AND CEILINGS. MAINTAIN FIRE RATINGS AS NOTED

T. LOCATION OF EXTERIOR DOORS AND WINDOWS MUST BE COORDINATED WITH ARCH SPAN MODULE. PLAN DIMENSIONS OF THESE IS APPROXIMATE AND MAY BE SLIGHTLY ADJUSTED TO SUIT PANEL FABRICATION TOLERANCES.

KEY NOTES:

1. LINE OF ROOF OVERHANG ABOVE.
2. CONCRETE STOOP WITH GRATE - SEE DETAIL 1/A-503.
3. FLOOR DRAIN - SEE PLUMBING AND DETAIL 5/A-505
4. REFER TO 4/A505 FOR MOP SINK
5. FIRE EXTINGUISHER

N

0 2000 4000
SCALE: 1:100

UNLESS OTHERWISE NOTED,
LINEAR DIMENSIONS
SHOWN ARE IN MILLIMETERS.

COMMONWEALTH OF VIRGINIA
PETER GARRETT SCHMIDT
No. 013167
ARCHITECT

US ARMY CORPS OF ENGINEERS
AFGHANISTAN NORTH DISTRICT

SYMBOL	DESCRIPTION	DATE	APPR.	SYMBOL	DESCRIPTION	DATE	APPR.

DESIGNED BY: PGS, SE, MR
DWN BY: SE, MDH, AH
CKD BY: PGS, SE, MR
REVIEWED BY:
SUBMITTED BY:
DATE: 3-28-2011
CONTRACT NO. W912ER-09-D-0002
DRAWING CODE:
FILE NAME: wb12ER-B18-A-101.DWG
PLOT SCALE: 1:100
PLOT DATE: 3/28/2011
REV: 0

U.S. ARMY ENGINEER DISTRICT, AFGHANISTAN
CORPS OF ENGINEERS
APO AE 09356

BAKER

SITE ADAPT DESIGN
B18 - VIP BARRACKS - ARCH SPAN
FLOOR PLAN

SHEET REFERENCE NUMBER:
A-101

A1 Size 594mm x 841mm

3/28/2011 2:01 PM

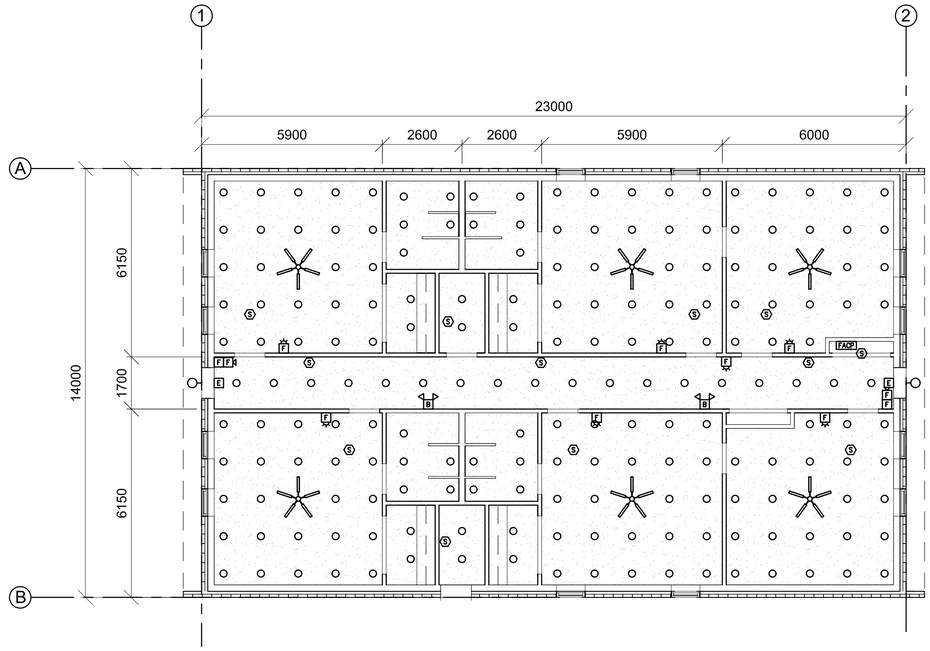

1 / A-102 REFLECTED CEILING PLAN

SCALE: 1:100

CEILING LEGEND:

- 600mm X 1200mm METAL PANEL SUSPENDED CEILING SYSTEM
- NO FINISHED CEILING, EXPOSED STRUCTURE (SEE FINISH SCHEDULE)
- GYPSUM WALLBOARD CEILING (SEE FINISH SCHEDULE)
- 300mm X 1200mm FLUORESCENT LIGHT FIXTURE
- 600mm X 1200mm FLUORESCENT LIGHT FIXTURE
- 300mm X 1200mm FLUORESCENT LIGHT FIXTURE NORMAL/EMERGENCY
- 600mm X 1200mm FLUORESCENT LIGHT FIXTURE NORMAL/EMERGENCY
- SUSPENDED LIGHT FIXTURE
- WALL MOUNTED LIGHT FIXTURE
- DOWNLIGHT
- EXIT SIGN
- SMOKE DETECTOR
- BATTERY PACK
- RELIEF RETURN DIFFUSER
- SUPPLY DIFFUSER
- EXHAUST DIFFUSER
- ACCESS PANEL
- CEILING FAN

GENERAL NOTES:

A. CEILING SHALL BE 2.65M A.F.F. UNLESS NOTED OTHERWISE OR EXPOSED STRUCTURE.
B. REFER TO SHEET A603 FOR FINISH SCHEDULE
C. DRYWALL CEILING TYPICALLY WALL BEAR ON ADJACENT PARTITIONS. SPAN CRITERIA & ALTERNATIVE SUPPORTING METHODS ARE DEFINED ON STRUCTURAL NOTES RE: COLD-FORMED METAL FRAMING ON DWG. S-002.
D. LOCATION OF LIGHT FIXTURES AND FANS AS INDICATED ON THIS REFLECTED CEILING PLAN TAKES PRECEDENCE OVER ALL RELATIVE POSITIONS AS SHOWN ON ELECTRIC AND MECHANICAL DRAWINGS. U.N.O. INSTALL FIXTURES WITH EQUAL SPACING BETWEEN EACH OTHER TO THE GREATEST EXTENT POSSIBLE AND AS GRAPHICALLY SHOWN IN THIS LAYOUT. SEE ELECTRICAL DRAWINGS FOR SUPPORT AND WIRING INFORMATION. IN AREA WHERE SUSPENDED CEILING SUPPORTS OVERLAP LIGHTING LOCATIONS SHIFT LIGHTING 25MM OFF OF GRID TO RESOLVE CONFLICT.

KEY NOTES:

1. ACCESS PANEL - 1 HR RATED 600X400

0 2000 4000
SCALE: 1:100

UNLESS OTHERWISE NOTED, LINEAR DIMENSIONS SHOWN ARE IN MILLIMETERS.

COMMONWEALTH OF VIRGINIA
PETER GARRETT SCHMIDT
No. 013167
ARCHITECT

US ARMY CORPS OF ENGINEERS
AFGHANISTAN NORTH DISTRICT

SYMBOL	DESCRIPTION	DATE	APPR.	SYMBOL	DESCRIPTION	DATE	APPR.

DESIGNED BY: PGS, SE, MR
DWN BY: SE, MDH, AH
REVIEWED BY:
SUBMITTED BY:
DATE: 3-28-2011
CONTRACT NO. W912ER-09-D-0002
DRAWING CODE:
CKD BY: PGS, SE, MR
REV: 0
FILE NAME: aec(cmpwr)-a18-a-102.dwg
PLOT SCALE: 1:100
PLOT DATE: 4/25/2011

BAKER

U.S. ARMY ENGINEER DISTRICT, AFGHANIST'AN
CORPS OF ENGINEERS
APO AE 09356

SITE ADAPT DESIGN
B18 - VIP BARRACKS - ARCH SPAN
REFLECTED CEILING PLAN

SHEET REFERENCE NUMBER:
A-102

A1 Size 594mm x 841mm

4/25/2011 2:33 PM

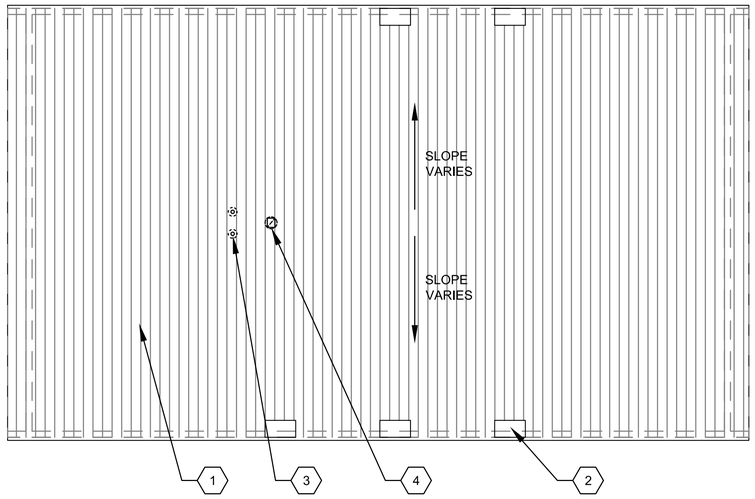

1 / A-103 ROOF PLAN

SCALE: 1:100

GENERAL NOTES:

A. THE APPROXIMATE LOCATION OF ROOF DEVICES AND PENETRATIONS ARE SHOWN ON THE ROOF PLAN FOR INFORMATION ONLY. THE CONTRACTOR SHALL BE RESPONSIBLE FOR UNDERSTANDING THE ACTUAL LOCATION OF THESE AND ALL OTHER ITEMS PRIOR TO BEGINNING CONSTRUCTION. COORDINATE ALL ROOF PENETRATIONS WITH STRUCTURAL, MECHANICAL AND PLUMBING WORK.

B. PLUMBING VENT PENETRATIONS SHALL TERMINATE 300 MM MINIMUM ABOVE THE ROOF.

C. UNLESS OTHERWISE NOTED, NOTES, DETAILS OR FEATURES INDICATED FOR ONE CONDITION SHALL BE APPLICABLE FOR ALL ALIKE AND SIMILAR CONDITIONS.

D. STOCKPILING OF MATERIALS, EQUIPMENT AND ANY OTHER ITEMS ON THE ROOF IS PROHIBITED.

E. ROOFS SHALL BE PRE-FINISHED METAL ARCH SPAN.

KEY NOTES:

1. PRE-FINISHED METAL ARCH SPAN CONSTRUCTION
2. DOOR OR WINDOW DORMER
3. VTR SEE PLUMBING
4. EXHAUST FAN ROOF CAP REFER TO M-101

0 2000 4000

SCALE: 1:100

UNLESS OTHERWISE NOTED, LINEAR DIMENSIONS SHOWN ARE IN MILLIMETERS.

COMMONWEALTH OF VIRGINIA
PETER GARRETT SCHMIDT
No. 013167
ARCHITECT

US ARMY CORPS OF ENGINEERS
AFGHANISTAN NORTH DISTRICT

SYMBOL	DESCRIPTION	DATE	APPR.

SYMBOL	DESCRIPTION	DATE	APPR.

U.S. ARMY ENGINEER DISTRICT, AFGHANISTAN
CORPS OF ENGINEERS
APO AE 09356

DESIGNED BY: PGS, SE, MR
DWN BY: SE, MDH, AH
CKD BY: PGS, SE, MR
REVIEWED BY:
SUBMITTED BY:

DATE: 3/28/2011
CONTRACT NO. W912ER-09-D-0002
DRAWING CODE:
FILE NAME: ARCH2Floor01-B18-A-103.DWG
PLOT SCALE: 1:100
PLOT DATE: 3/28/2011
REV: 0

BAKER

SITE ADAPT DESIGN

B18 - VIP BARRACKS - ARCH SPAN

ROOF PLAN

SHEET REFERENCE NUMBER:

A-103

3/28/2011 5:46 PM

A1 Size 594mm x 841mm

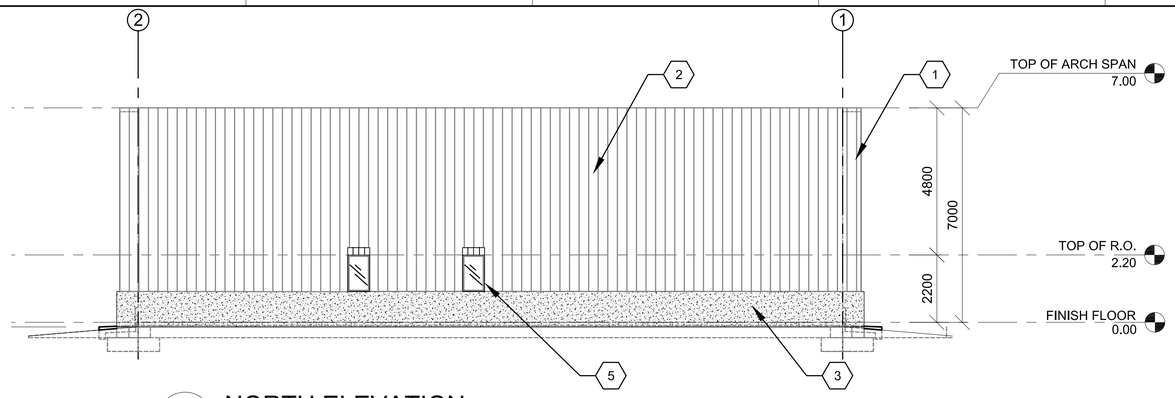

1 A-201 NORTH ELEVATION
SCALE: 1:100

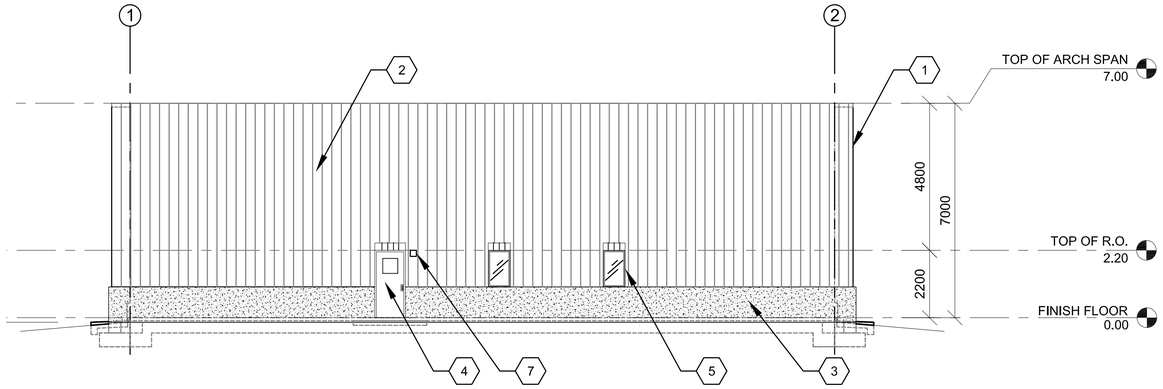

2 A-201 SOUTH ELEVATION
SCALE: 1:100

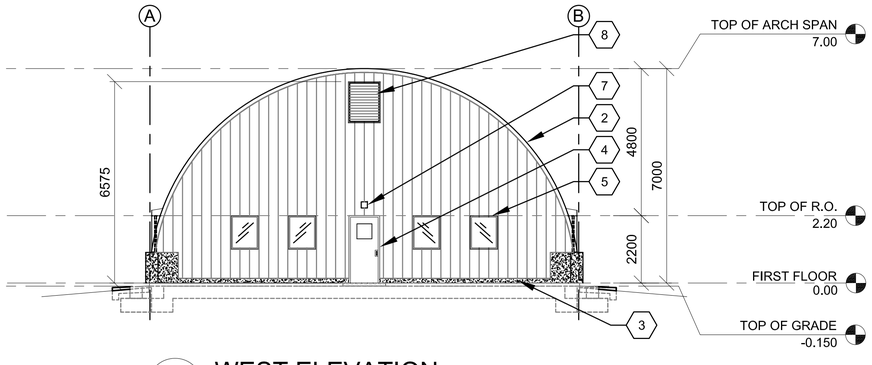

3 A-201 WEST ELEVATION
SCALE: 1:100

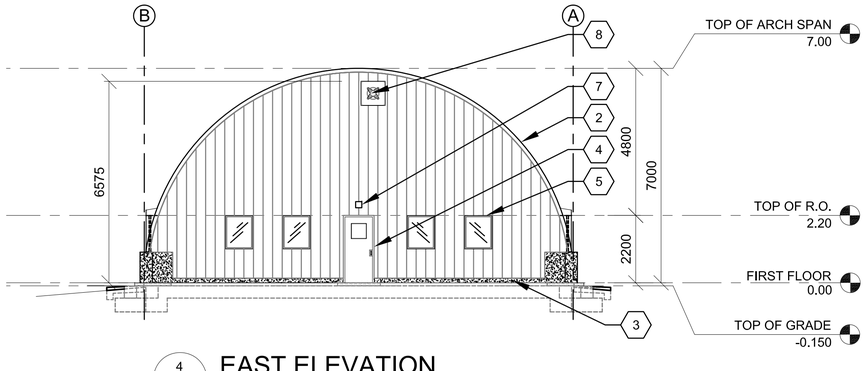

4 A-201 EAST ELEVATION
SCALE: 1:100

GENERAL NOTES:

A. FACTORY PRIMED METAL DOORS AND FRAMES SHALL RECEIVE TWO COATS OF PAINT.
B. LOCATION OF EXTERIOR DOORS AND WINDOWS MUST BE COORDINATED WITH ARCH SPAN MODULE. PLAN DIMENSIONS OF THESE IS APPROXIMATE AND MAY BE SLIGHTLY ADJUSTED TO SUIT PANEL FABRICATION TOLERANCES.
C. EXTERIOR CONCRETE BUILDING SURFACES TO RECEIVE PENETRATING CONCRETE SEALER
D. COORDINATE ALL HVAC OPENING SIZES AND LOCATIONS WITH HVAC CONTRACTOR PRIOR TO INSTALLATION.

KEY NOTES: (X)

1. EXTENSION OF ARCH SPAN
2. PRE-FINISHED METAL ARCH SPAN CONSTRUCTION WALL AND CEILING.
3. CONCRETE WALL.
4. PAINTED HOLLOW METAL DOOR & FRAME.
5. STEEL WINDOW PAINTED.
6. PRE-FINISHED STEEL LOUVER - SEE DETAIL 3/A501
7. LIGHTING - SEE ELECTRICAL
8. ATTIC VENTILATION LOUVER OR FAN SEE MECHANICAL FOR SIZE AND TYPE

0 2000 4000
SCALE: 1:100

UNLESS OTHERWISE NOTED, LINEAR DIMENSIONS SHOWN ARE IN MILLIMETERS.

COMMONWEALTH OF VIRGINIA
PETER GARRETT SCHMIDT
No. 013167
ARCHITECT

US ARMY CORPS OF ENGINEERS
AFGHANISTAN NORTH DISTRICT

SYMBOL	DESCRIPTION	DATE	APPR.	SYMBOL	DESCRIPTION	DATE	APPR.

DESIGNED BY: PGS, SE, MR
DWN BY: SE, MDH, AH
CKD BY: PGS, SE, MR
REVIEWED BY:
SUBMITTED BY:
DATE: 3/28/2011
CONTRACT NO. W912ER-09-D-0002
DRAWING CODE:
FILE NAME: wecc\projects\f-818-a-201.dwg
PLOT SCALE: 1:100
PLOT DATE: 3/28/2011
REV: 0

BAKER

U.S. ARMY ENGINEER DISTRICT, AFGHANISTAN
CORPS OF ENGINEERS
APO AE 09356

SITE ADAPT DESIGN
B18 - VIP BARRACKS - ARCH SPAN
ELEVATIONS

SHEET REFERENCE NUMBER:
A-201

3/28/2011 2:01 PM

A1 Size 594mm x 841mm

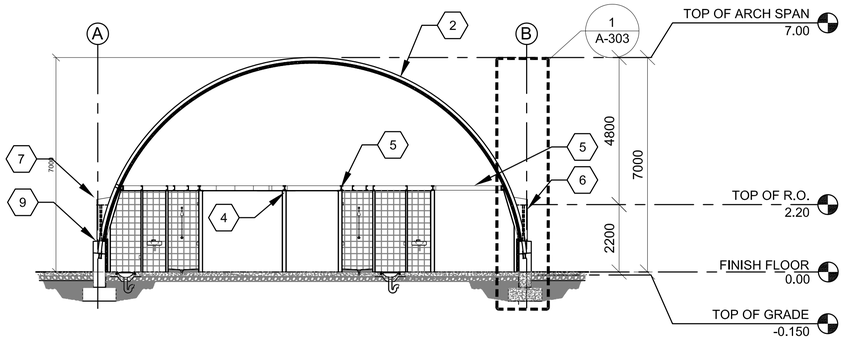

1 A-301 BUILDING SECTION

SCALE: 1:100

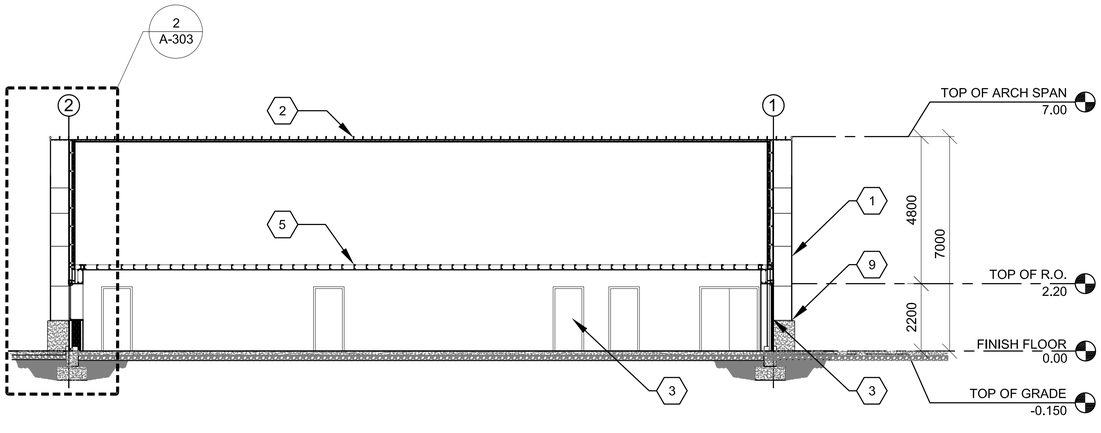

2 A-301 BUILDING SECTION

SCALE: 1:100

KEY NOTES:

1. EXTENSION OF ARCH SPAN
2. K-SPAN ROOF/WALL PANEL WITH POLYURETHANE/CEMENTITIOUS SPRAY - ON FIRE BARRIER
3. HOLLOW METAL FRAME WITH DOOR AS SCHEDULED
4. PARTITION AS SCHEDULED
5. CEILING SYSTEM AS SCHEDULED
6. SIDEWALL DOOR AND DORMER FRAMING
7. SIDE WALL WINDOW AND DORMER FRAMING
8. NOT USED
9. CONCRETE STEM WALL

0 2000 4000

SCALE: 1:100

UNLESS OTHERWISE NOTED, LINEAR DIMENSIONS SHOWN ARE IN MILLIMETERS.

COMMONWEALTH OF VIRGINIA
PETER GARRETT SCHMIDT
No. 013167
ARCHITECT

US ARMY CORPS OF ENGINEERS
AFGHANISTAN NORTH DISTRICT

SYMBOL	DESCRIPTION	DATE	APPR.	SYMBOL	DESCRIPTION	DATE	APPR.

DESIGNED BY: PGS, SE, MR
DWN BY: SE, MDH, AH
CKD BY: PGS, SE, MR
REVIEWED BY:
SUBMITTED BY:
DATE: 3/28/2011
REV: 0
CONTRACT NO. W912ER-09-D-0002
DRAWING CODE:
FILE NAME: ARCH2Planset-B18-A-301.DWG
PLOT SCALE: 1:100
PLOT DATE: 3/28/2011

BAKER

U.S. ARMY ENGINEER DISTRICT, AFGHANISTAN
CORPS OF ENGINEERS
APO AE 09356

SITE ADAPT DESIGN

B18 - VIP BARRACKS - ARCH SPAN

BUILDING SECTIONS

SHEET REFERENCE NUMBER:

A-301

3/28/2011 2:01 PM

A1 Size 594mm x 841mm

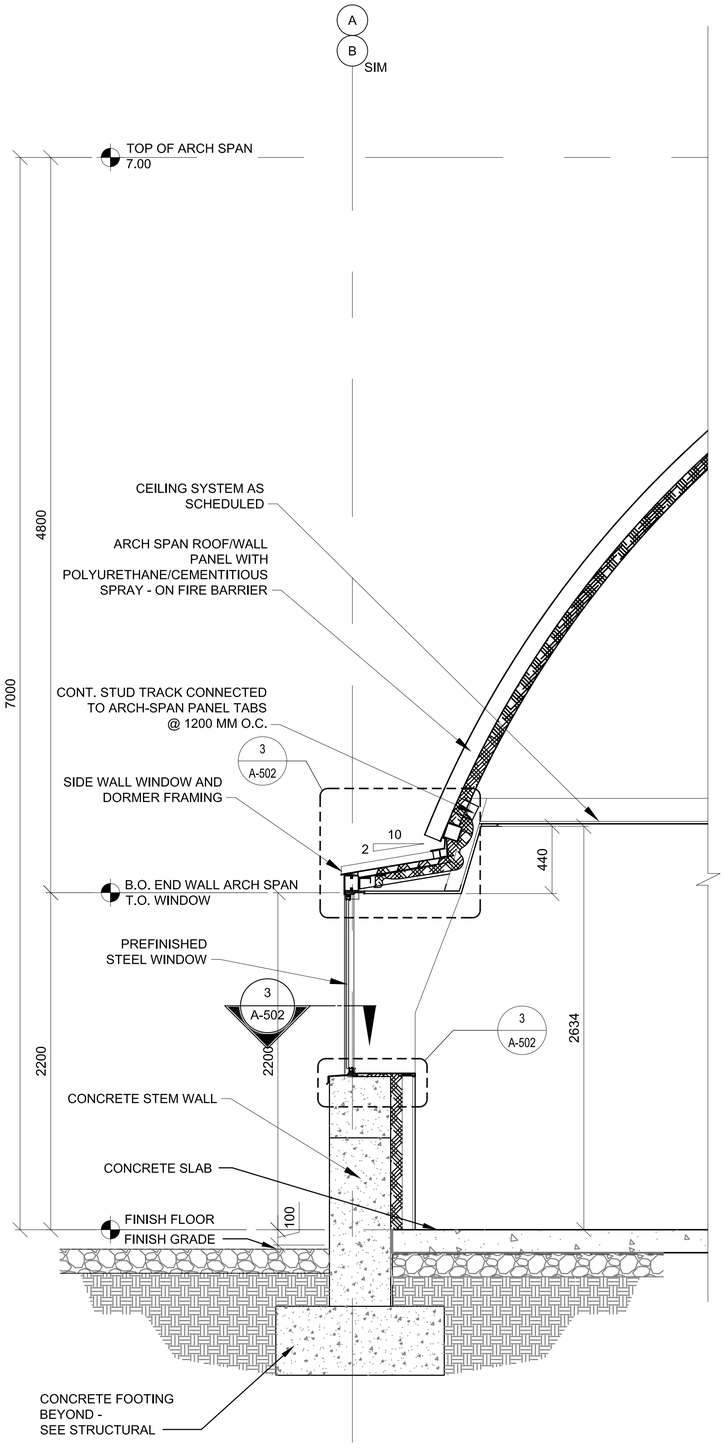

WALL SECTION - SIDE WALL THRU WINDOW

1 A-302 SCALE: 1:20

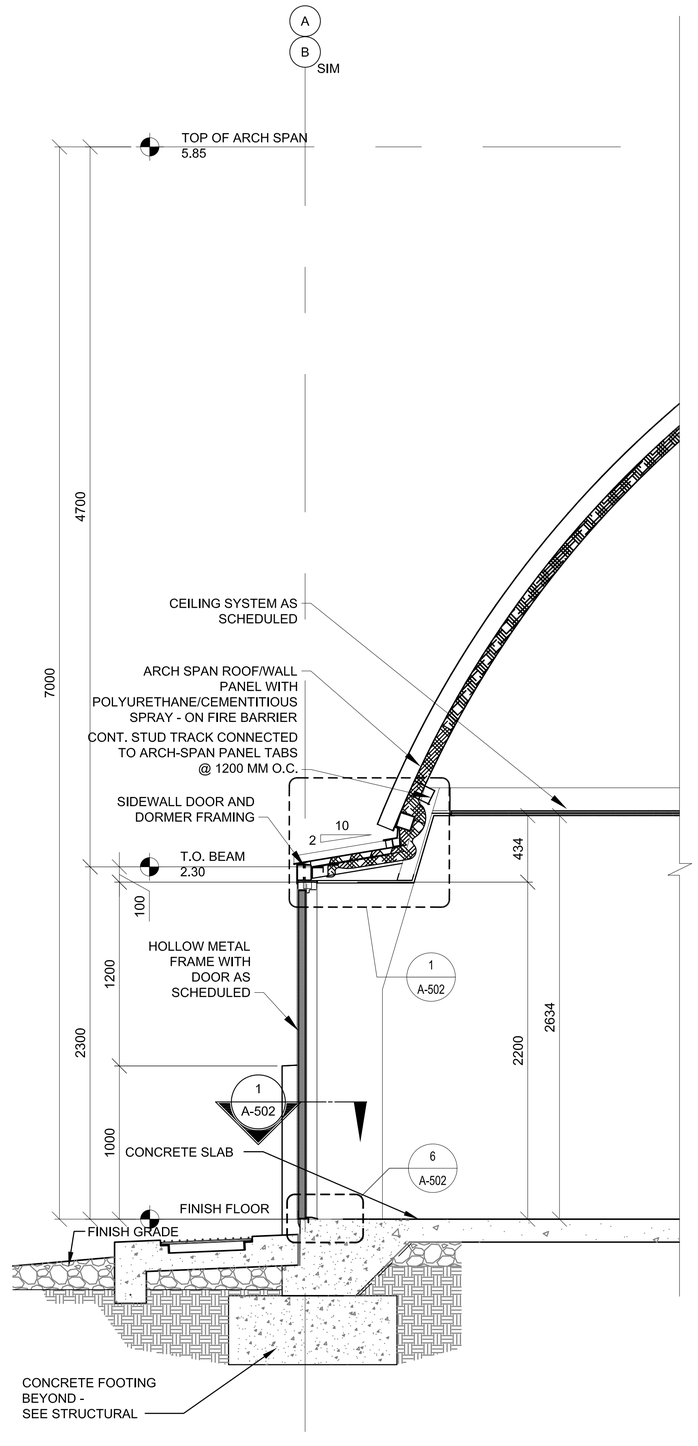

WALL SECTION - SIDE WALL THRU H.M. DOOR

2 A-302 SCALE: 1:20

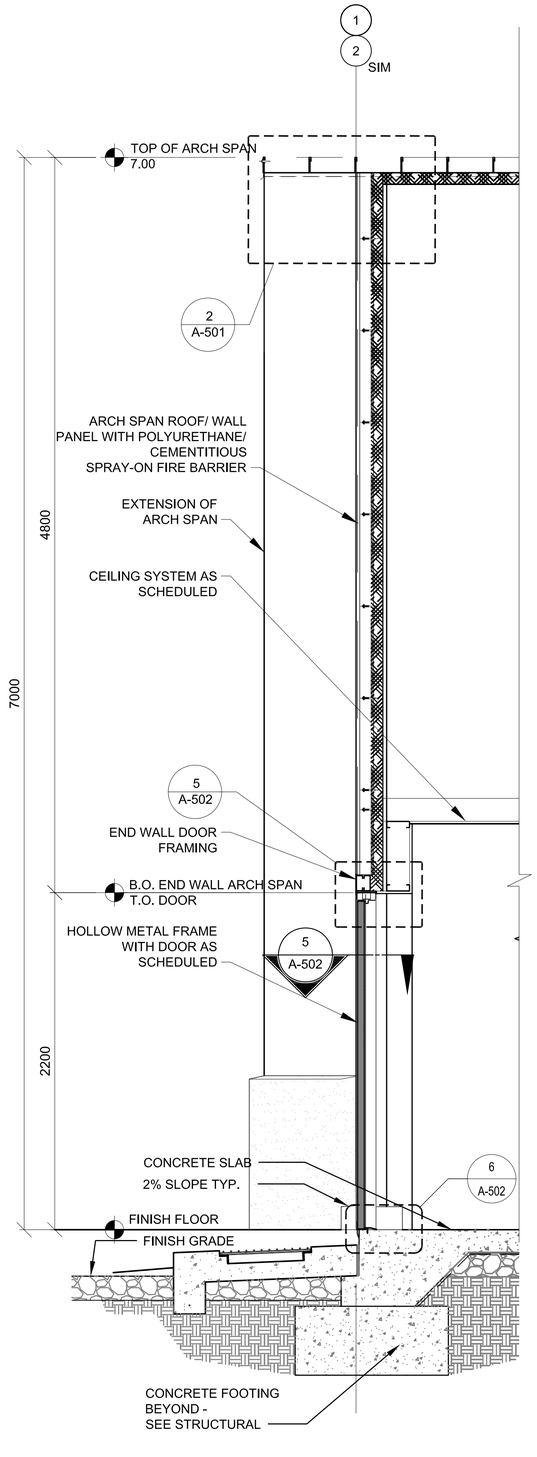

WALL SECTION - THRU END WALL H.M. DOOR

3 A-302 SCALE: 1:20

0 500 1000 2000
SCALE: 1:50

UNLESS OTHERWISE NOTED, LINEAR DIMENSIONS SHOWN ARE IN MILLIMETERS.

COMMONWEALTH OF VIRGINIA
PETER GARRETT SCHMIDT
No. 013167
ARCHITECT

US ARMY CORPS OF ENGINEERS
AFGHANISTAN NORTH DISTRICT

SYMBOL	DESCRIPTION	DATE	APPR.	SYMBOL	DESCRIPTION	DATE	APPR.

DESIGNED BY: PGS, SE, MR
DWN BY: SE, MDH, AH
REVIEWED BY:
SUBMITTED BY:
DATE: 3/28/2011
CONTRACT NO. W912ER-09-D-0002
CKD BY: PGS, SE, MR
DRAWING CODE:
FILE NAME:
PLOT SCALE: 1:50
PLOT DATE: 3/28/2011
REV: 0

BAKER

U.S. ARMY ENGINEER DISTRICT, AFGHANISTAN
CORPS OF ENGINEERS
APO AE 09356

SITE ADAPT DESIGN
B18 - VIP BARRACKS - ARCH SPAN
WALL SECTIONS

SHEET REFERENCE NUMBER:
A-302

3/28/2011 2:01 PM

A1 Size 594mm x 841mm

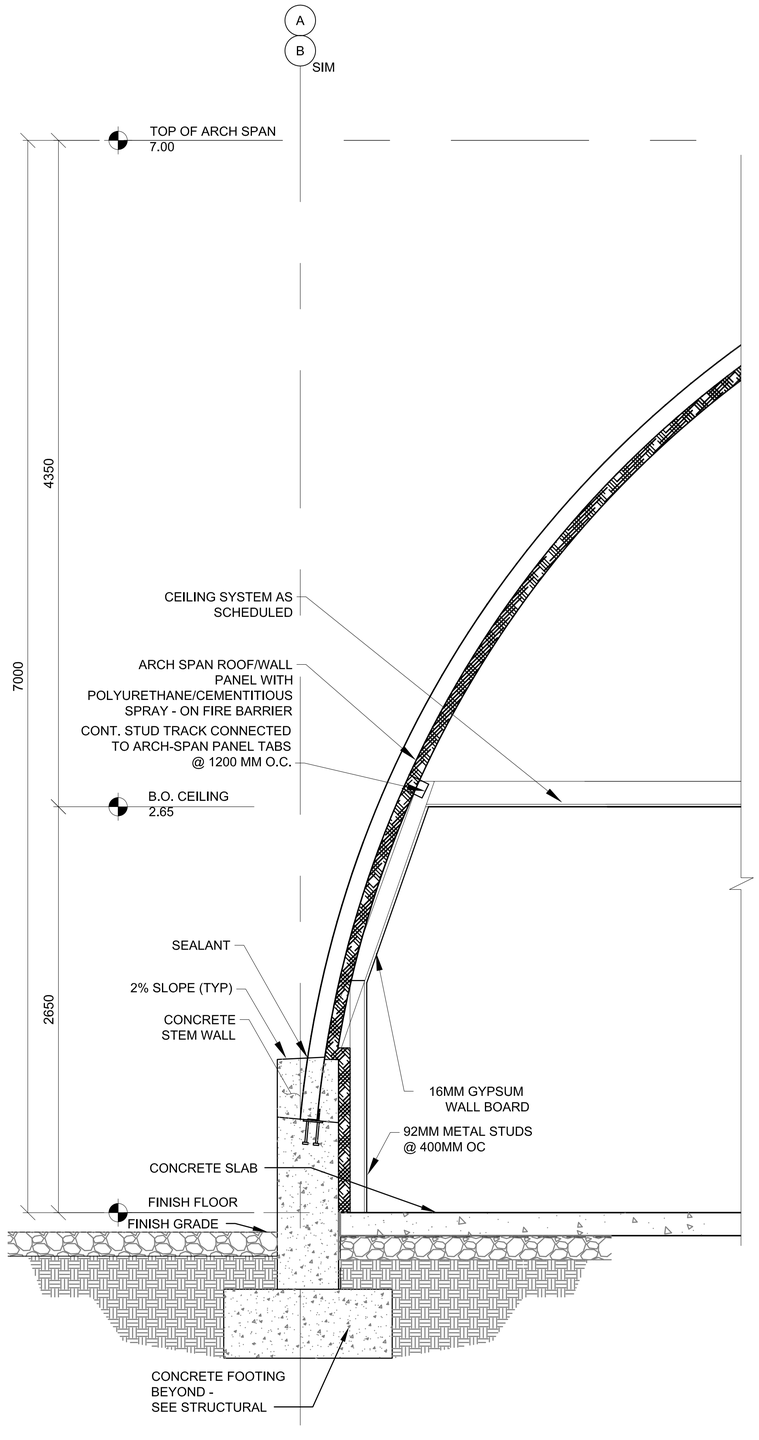

1 / A-303

WALL SECTION - SIDE WALL THRU 1M STEM WALL

SCALE: 1:20

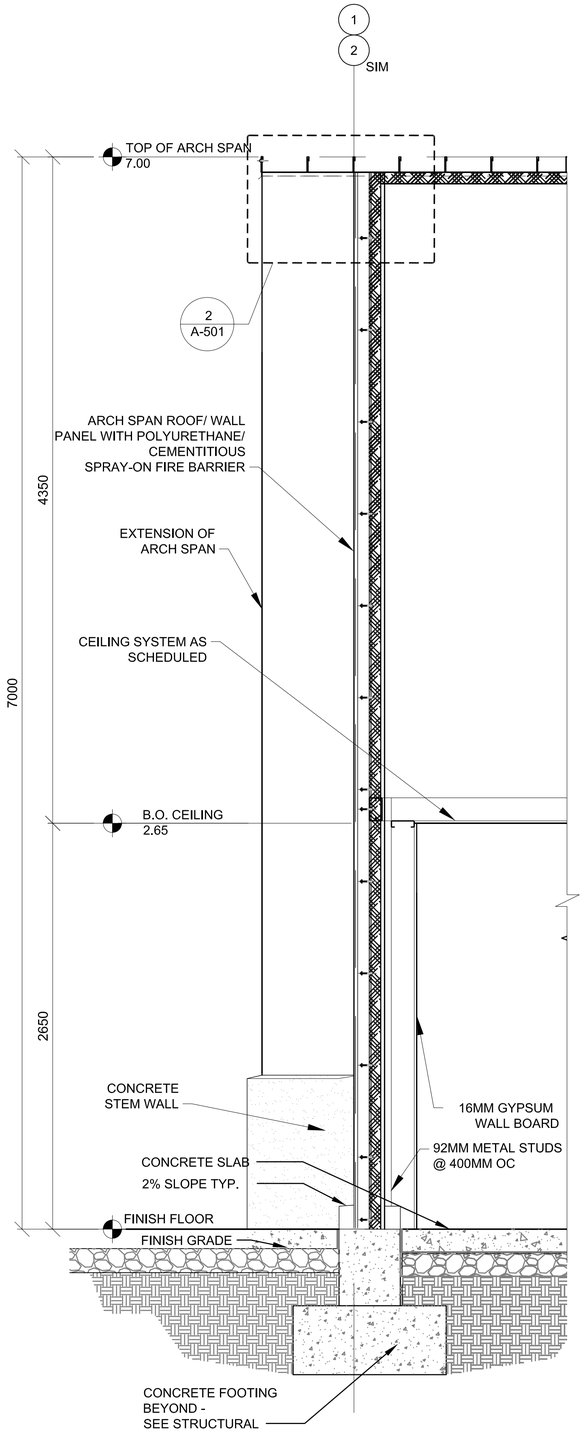

2 / A-303

WALL SECTION - THRU END WALL

SCALE: 1:20

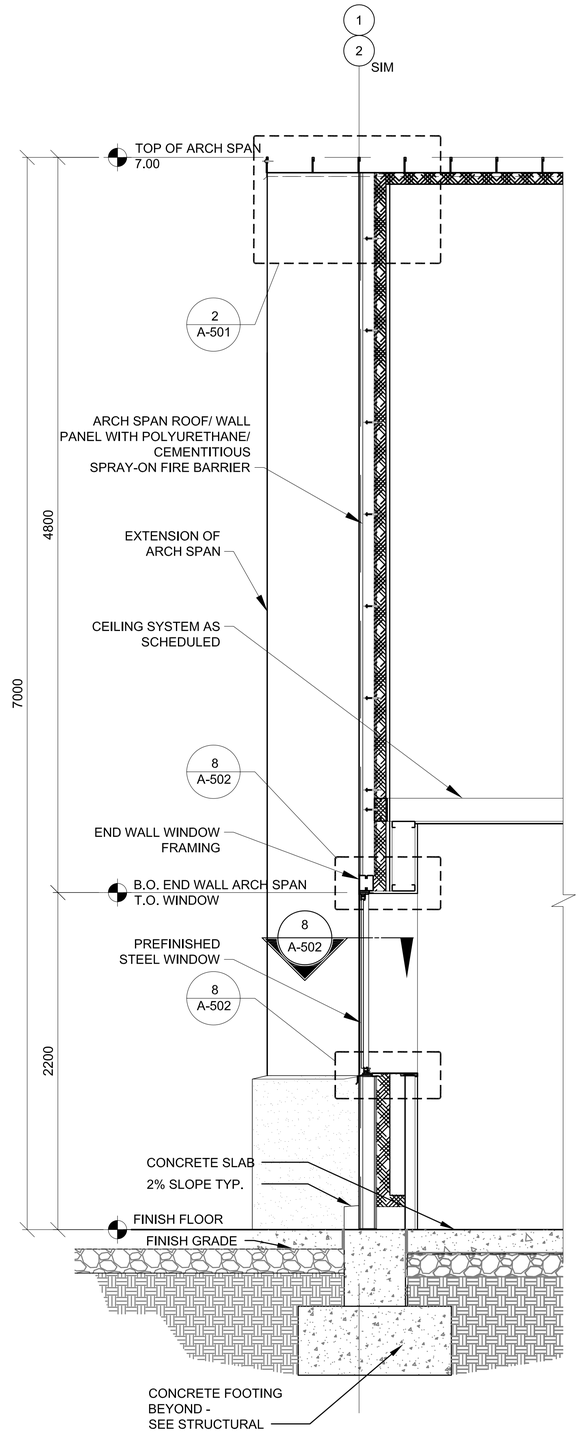

3 / A-303

WALL SECTION - END WALL THRU WINDOW

SCALE: 1:20

0 500 1000 2000

SCALE: 1:50

UNLESS OTHERWISE NOTED, LINEAR DIMENSIONS SHOWN ARE IN MILLIMETERS.

COMMONWEALTH OF VIRGINIA
PETER GARRETT SCHMIDT
No. 013167
ARCHITECT

US ARMY CORPS OF ENGINEERS
AFGHANISTAN NORTH DISTRICT

SYMBOL	DESCRIPTION	DATE	APPR.	SYMBOL	DESCRIPTION	DATE	APPR.

DESIGNED BY: PGS, SE, MR
DWN BY: SE, MDH, AH
REVIEWED BY:
SUBMITTED BY:
DATE: 3/28/2011
CONTRACT NO. W912ER-09-D-0002
DRAWING CODE:
REV: 0
CKD BY: PGS, SE, MR
FILE NAME: wall section-arch span-a-303.dwg
PLOT SCALE: 1:50
PLOT DATE: 3/28/2011

BAKER

U.S. ARMY ENGINEER DISTRICT, AFGHANISTAN
CORPS OF ENGINEERS
APO AE 09356

SITE ADAPT DESIGN

B18 - VIP BARRACKS - ARCH SPAN

WALL SECTIONS

SHEET REFERENCE NUMBER:

A-303

3/28/2011 2:02 PM

A1 Size 594mm x 841mm

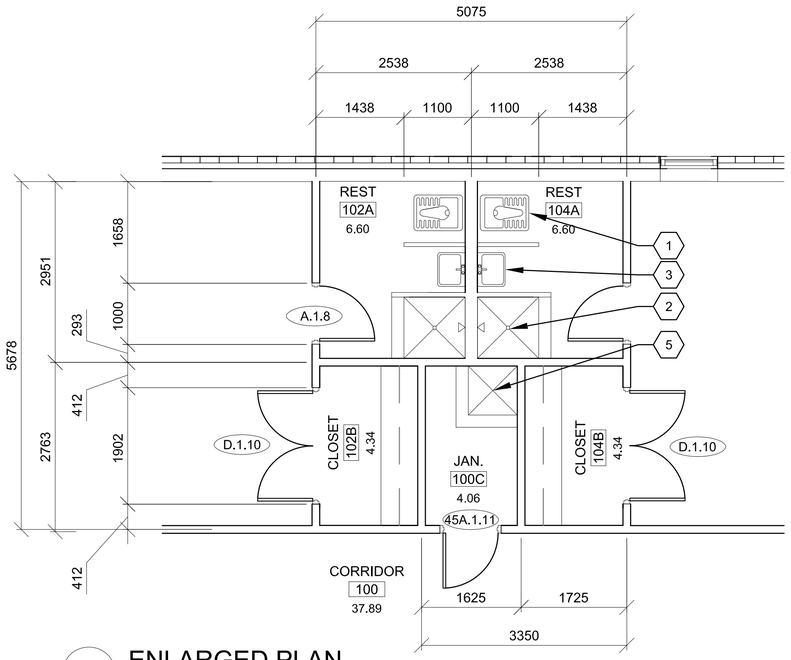

1 A-401 ENLARGED PLAN

SCALE: 1:50

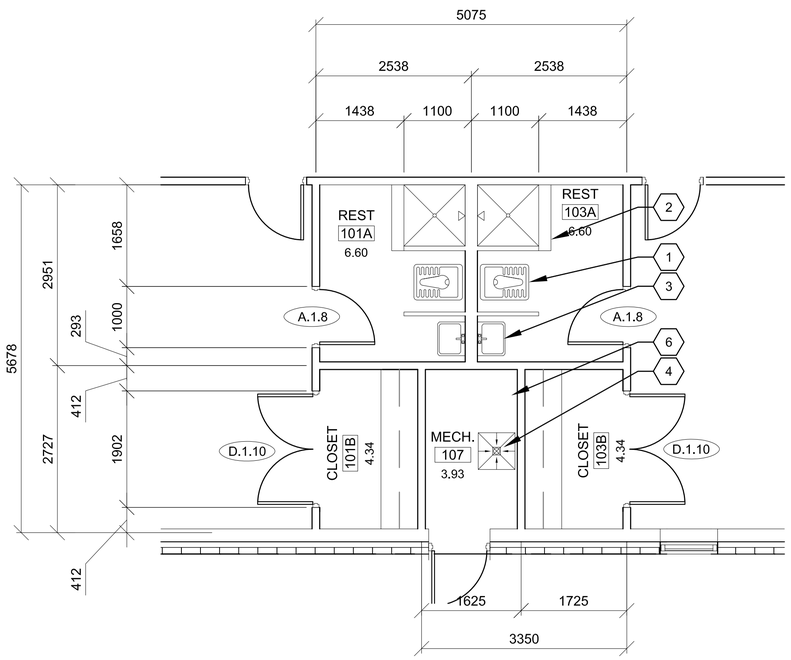

2 A-401 ENLARGED PLAN

SCALE: 1:50

GENERAL NOTES:

A. DIMENSIONS ARE SHOWN TO OUTER EDGE OF EXTERIOR STRUCTURAL FACE OF ARCH-SPAN PANEL(GRID LINES), CENTER LINE OF INTERIOR PARTITIONS, EDGE OF WINDOW OPENINGS, AND TO HINGE SIDE OF DOOR FRAME OPENING, UNLESS NOTED OTHERWISE.

B. HINGE SIDE OF OPENINGS FOR DOORS AND FRAMES SHALL BE LOCATED 200 MM FROM THE ADJACENT WALL OR COLUMN, UNLESS NOTED OTHERWISE.

C. INTERIOR PARTITIONS SHALL BE PARTITION TYPE 1, UNLESS NOTED OTHERWISE. REFER TO A-602 FOR PARTITION TYPES SCHEDULE

D. COSMETIC REPAIR OF MINOR DEFECTS: REPAIR OR FILL MORTAR JOINTS AND MINOR DEFECTS, INCLUDING BUT NOT LIMITED TO SPALLS, IN ACCORDANCE WITH MANUFACTURER'S RECOMMENDATIONS AND PRIOR TO COATING APPLICATION. SURFACES TO BE PAINTED SHALL BE CLEAN AND FREE OF FOREIGN MATTER BEFORE APPLICATION OF PAINT. CLEANING SHALL BE SCHEDULED SO THAT DUST AND OTHER CONTAMINANTS WILL NOT FALL ON NEWLY PAINTED SURFACES.

E. CONCRETE, PLASTER AND MASONRY SURFACES SHALL BE ALLOWED TO CURE FOR AT LEAST 30 DAYS BEFORE PAINTING. CONCRETE SLABS-ON-GRADE SHALL BE ALLOWED TO CURE 90 DAYS BEFORE STAINING OR SEALING.

F. DO NOT USE PAINT MATERIALS CONTAINING LEAD CONTENT IN EXCESS OF 0.009 PERCENT OF THE WEIGHT OF THE TOTAL NONVOLATILE CONTENT OF THE PAINT OR THE WEIGHT OF THE DRIED PAINT FILM.

G. DO NOT USE ANY ASBESTOS CONTAINING MATERIALS (ACM) IN PROJECT. ACM IS DEFINED AS 1% OR MORE BY VOLUME.

H. DO NOT USE PAINT MATERIALS CONTAINING MERCURIAL FUNGICIDES.

I. FACTORY PRIMED METAL DOORS AND FRAMES SHALL RECEIVE TWO COATS OF PAINT.

J. FILL REMAINING SPACE AT PENETRATIONS IN FIRE-RATED FLOORS, PARTITIONS AND CEILINGS WITH APPROPRIATE FIRESTOPPING MATERIALS.

K. ALL CEILING FINISHES SHALL AS NOTED ON REFLECTED CEILING PLANS OR FINISH SCHEDULE.

L. ALL WALL FINISHES SHALL AS NOTED ON FINISH SCHEDULE. REFER TO A-603

M. ALL FLOOR FINISHES SHALL BE SEALED CONCRETE, UNLESS NOTED OTHERWISE.

N. PROVIDE TILE FINISHES AS INDICATED IN DETAILS & KEY NOTES.

O. ALL DOOR, FRAME AND HARDWARE TYPES SHALL BE 20A.1.11 UNLESS NOTED OTHERWISE. REFER TO A-601 FOR DOOR INFORMATION.

P. TOILET STALL DOORS SHALL BE G.2.12

Q. SHOWER STALL DOOR, FRAME AND HARDWARE TYPE SHALL BE E.1.12.

R. PROVIDE POLISHED STAINLESS STEEL MIRROR 600 X 900 ABOVE EVERY LAVATORY FAUCET.

S. PLASTER MAY BE SUBSTITUTED FOR DRYWALL WALLS AND CEILINGS. MAINTAIN FIRE RATINGS AS NOTED

T. LOCATION OF EXTERIOR DOORS AND WINDOWS MUST BE COORDINATED WITH ARCH-SPAN MODULE. PLAN DIMENSIONS OF THESE IS APPROXIMATE AND MAY BE SLIGHTLY ADJUSTED TO SUIT PANEL FABRICATION TOLERANCES.

KEY NOTES:

1. TYPICAL TOILET STALL LAYOUT - SEE DETAIL 2/A-504
2. TYPICAL SHOWER STALL LAYOUT - SEE DETAIL 2/A-505
3. LAVATORY - SEE DETAIL 4/A-504
4. FLOOR DRAIN - SEE PLUMBING AND DETAIL 5/A-505
5. REFER TO 5/A-505 FOR MOP SINK
6. WATER HEATER SEE PLUMBING

0 500 1000 2000

SCALE: 1:50

UNLESS OTHERWISE NOTED, LINEAR DIMENSIONS SHOWN ARE IN MILLIMETERS.

COMMONWEALTH OF VIRGINIA
PETER GARRETT SCHMIDT
No. 013167
ARCHITECT

US ARMY CORPS OF ENGINEERS
AFGHANISTAN NORTH DISTRICT

SYMBOL	DESCRIPTION	DATE	APPR.	SYMBOL	DESCRIPTION	DATE	APPR.

DESIGNED BY: PGS, SE, MR
DWN BY: SE, MDH, AH
CKD BY: PGS, SE, MR
REVIEWED BY:
SUBMITTED BY:

DATE: 3/28/2011
CONTRACT NO. W912ER-09-D-0002
DRAWING CODE:
FILE NAME: ARCH SPAN-B18-A-401.DWG
PLOT SCALE: 1:50
PLOT DATE: 3/28/2011
REV: 0

BAKER

U.S. ARMY ENGINEER DISTRICT, AFGHANISTAN
CORPS OF ENGINEERS
APO AE 09356

SITE ADAPT DESIGN

B18 - VIP BARRACKS - ARCH SPAN

ENLARGED PLAN

SHEET REFERENCE NUMBER:

A-401

3/28/2011 2:02 PM

A1 Size 594mm x 841mm

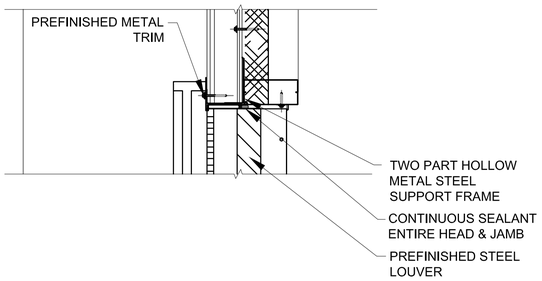

HEAD

1 A-501 NOT USED

SCALE: NTS

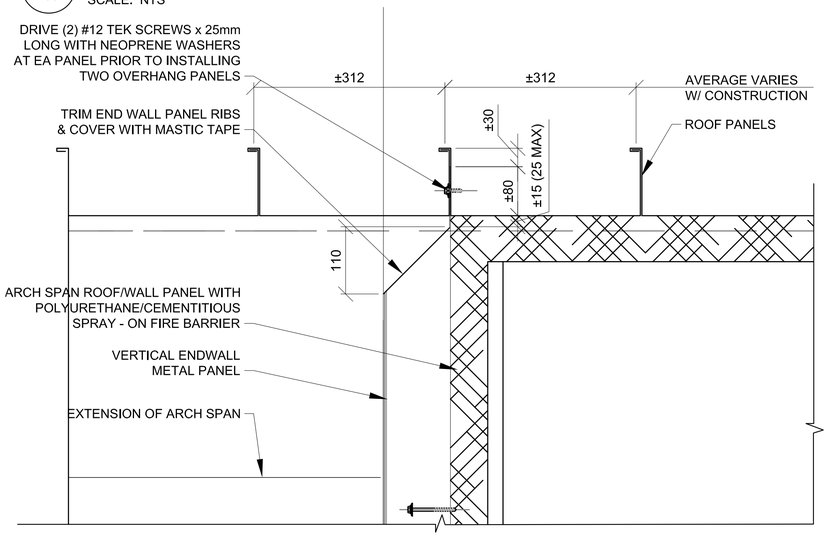

2 A-501 END WALL ROOF DETAIL

SCALE: 1:5

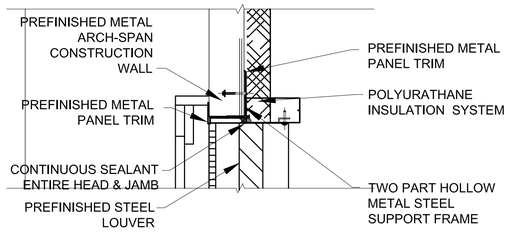

JAMB

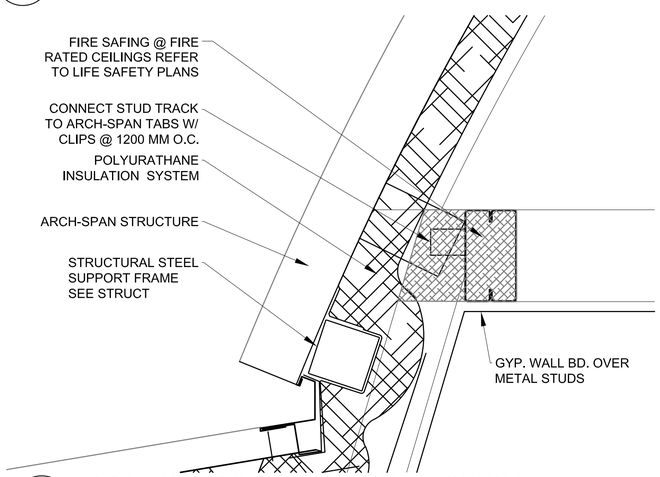

4 A-501 CEILING ARCH-SPAN CONNECTION

SCALE 1:10

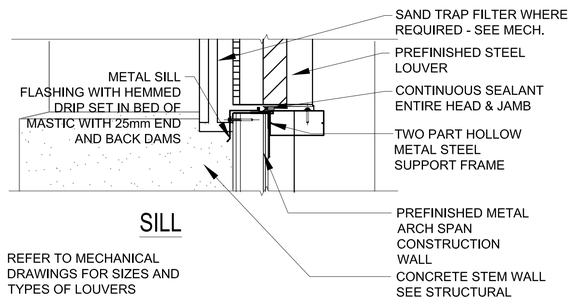

SILL

REFER TO MECHANICAL DRAWINGS FOR SIZES AND TYPES OF LOUVERS

3 A-501 LOUVER EXTERIOR DETAIL

SCALE: 1:5

0 2000 4000

SCALE: 1:100

UNLESS OTHERWISE NOTED, LINEAR DIMENSIONS SHOWN ARE IN MILLIMETERS.

COMMONWEALTH OF VIRGINIA
PETER GARRETT SCHMIDT
No. 013167
ARCHITECT

US ARMY CORPS OF ENGINEERS AFGHANISTAN NORTH DISTRICT

SYMBOL	DESCRIPTION	DATE	APPR.	SYMBOL	DESCRIPTION	DATE	APPR.

U.S. ARMY ENGINEER DISTRICT, AFGHANISTAN
CORPS OF ENGINEERS
APO AE 09356

DESIGNED BY: PGS, SE, MR
DWN BY: SE, MDH, AH
CKD BY: PGS, SE, MR
REVIEWED BY:
SUBMITTED BY:
DATE: 3/28/2011
REV: 0
CONTRACT NO. W912ER-09-D-0002
DRAWING CODE:
FILE NAME: ARCH-SPAN-DETAILS-A-501.DWG
PLOT SCALE: NONE
PLOT DATE: 3/28/2011

BAKER

SITE ADAPT DESIGN
B18 - VIP BARRACKS - ARCH SPAN
EXTERIOR DETAILS

SHEET REFERENCE NUMBER:
A-501

A1 Size 594mm x 841mm

3/28/2011 5:45 PM

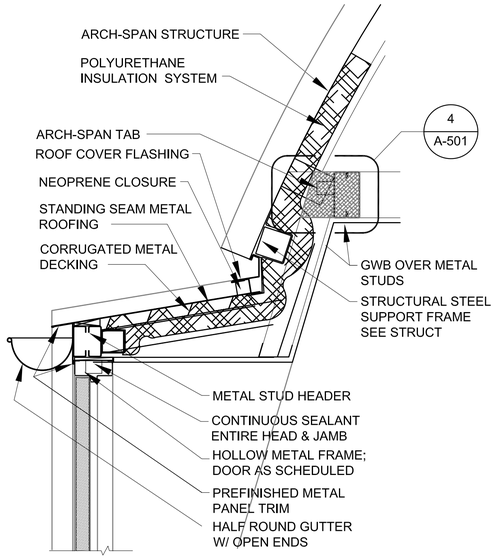

HEAD

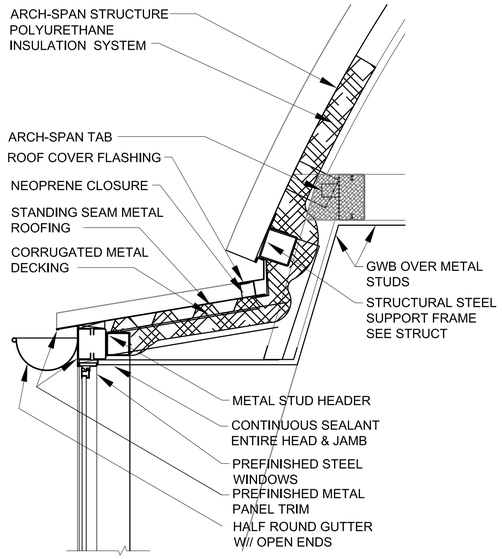

HEAD

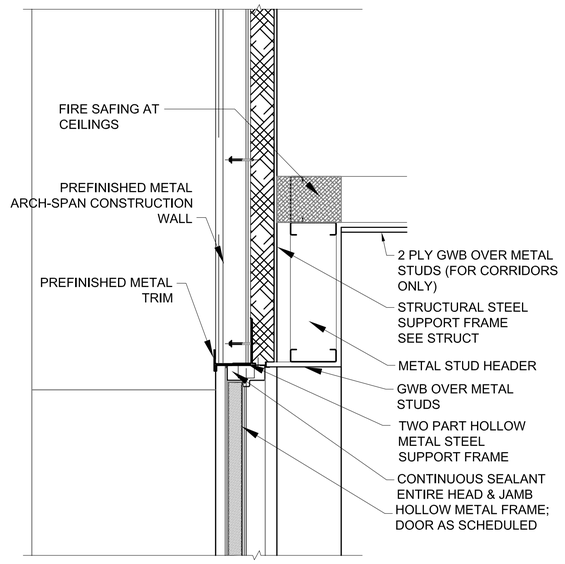

HEAD

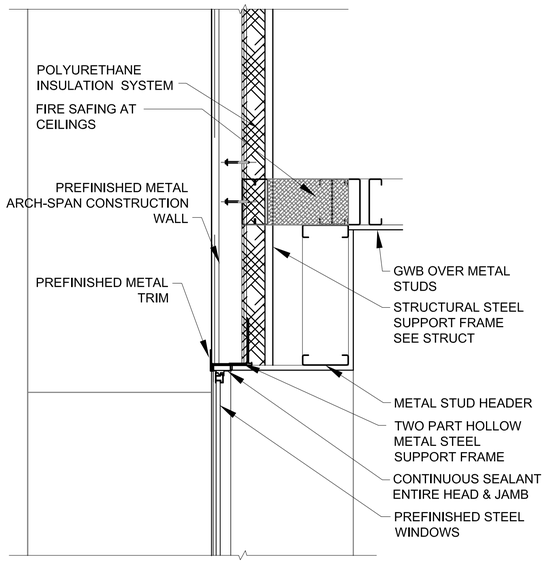

HEAD

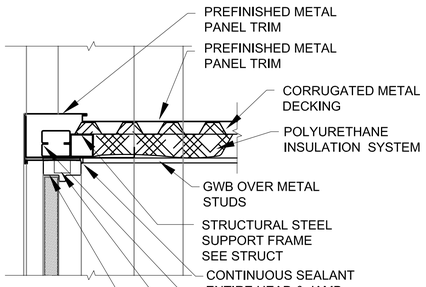

JAMB

1 A-502 EXTERIOR DOOR DETAILS
SCALE: 1:10

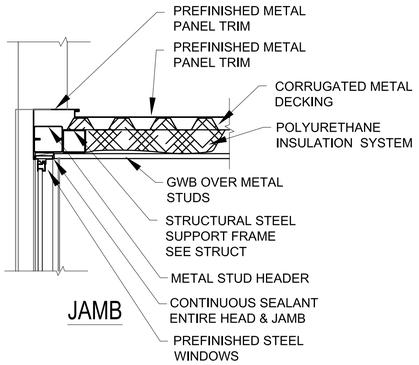

JAMB

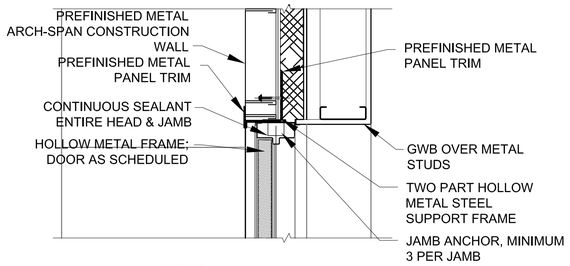

JAMB

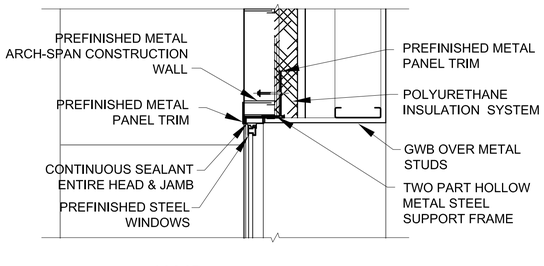

JAMB

5 A-502 END WALL EXTERIOR DOOR DETAILS
SCALE: 1:10

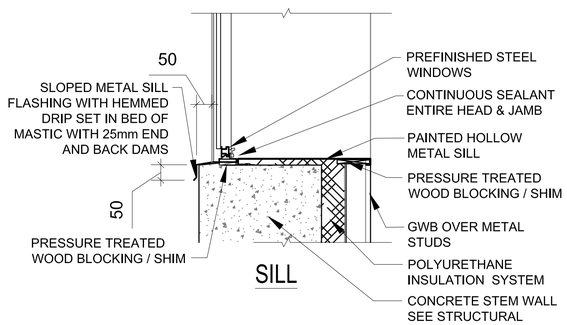

SILL

3 A-502 EXTERIOR WINDOW DETAILS
SCALE: 1:10

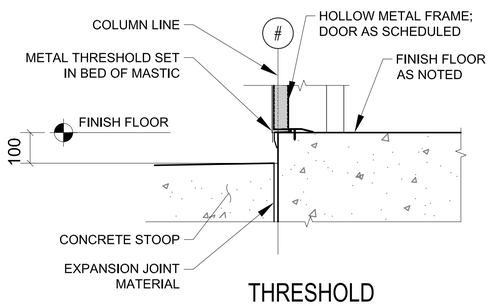

THRESHOLD

6 A-502 EXTERIOR DOOR DETAILS
SCALE: 1:10

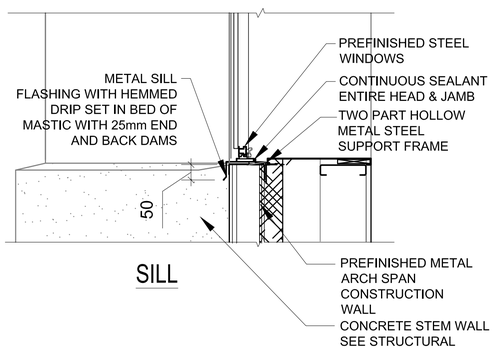

SILL

8 A-502 EXTERIOR WINDOWS DETAILS
SCALE: 1:10

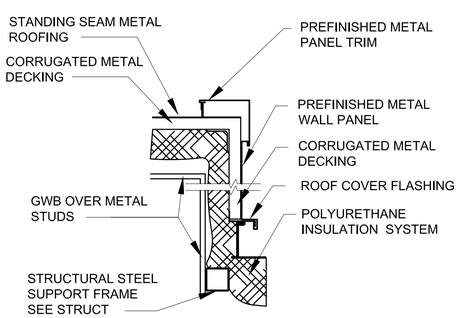

2 A-502 DORMER DETAILS
SCALE: 1:10

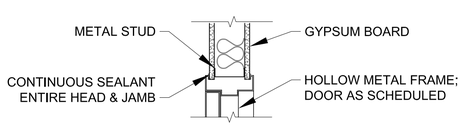

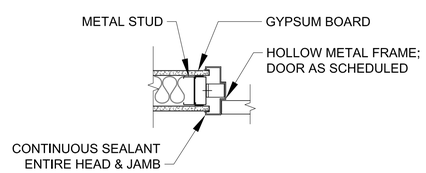

4 A-502 INTERIOR WALL DETAILS
SCALE: 1:10

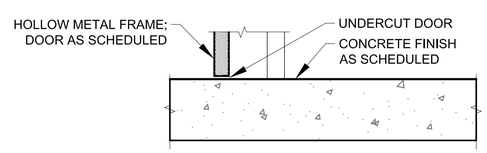

THRESHOLD

7 A-502 INTERIOR DOOR DETAILS
SCALE: 1:10

0 100 200 400
SCALE: 1:10

UNLESS OTHERWISE NOTED, LINEAR DIMENSIONS SHOWN ARE IN MILLIMETERS.

COMMONWEALTH OF VIRGINIA
PETER GARRETT SCHMIDT
No. 013167
ARCHITECT

US ARMY CORPS OF ENGINEERS
AFGHANISTAN NORTH DISTRICT

SYMBOL	DESCRIPTION	DATE	APPR.	SYMBOL	DESCRIPTION	DATE	APPR.

DESIGNED BY: PGS, SE, MR
DWN BY: SE, MDH, AH
CKD BY: PGS, SE, MR
REVIEWED BY:
SUBMITTED BY:
DATE: 3/28/2011
CONTRACT NO. W912ER-09-D-0002
DRAWING CODE:
FILE NAME: ...\A502-DETAILS.DWG
PLOT SCALE: 1:10
PLOT DATE: 3/28/2011
REV: 0

BAKER

U.S. ARMY ENGINEER DISTRICT, AFGHANISTAN
CORPS OF ENGINEERS
APO AE 09356

SITE ADAPT DESIGN
B18 - VIP BARRACKS - ARCH SPAN
HEAD, JAMB, AND SILL DETAILS

SHEET REFERENCE NUMBER:
A-502

A1 Size 594mm x 841mm

3/28/2011 2:02 PM

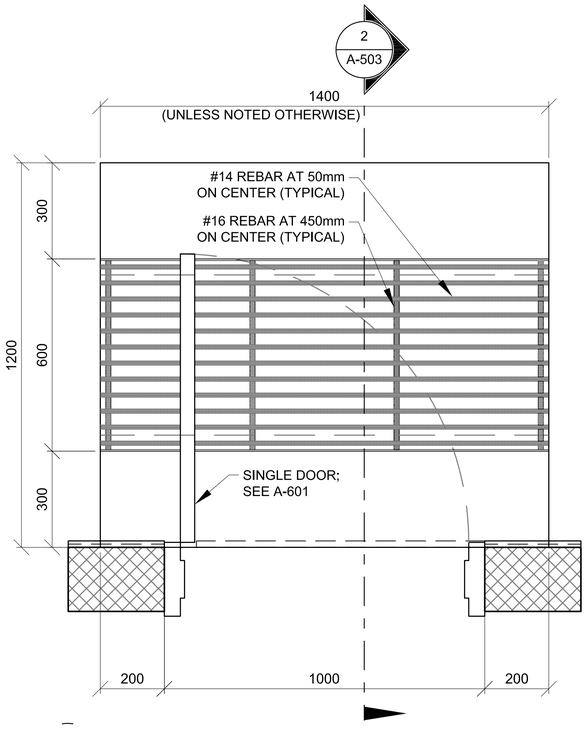

3 A-503 **900mm DOOR STOOP PLAN (WITH GRATE)**
SCALE: 1:10

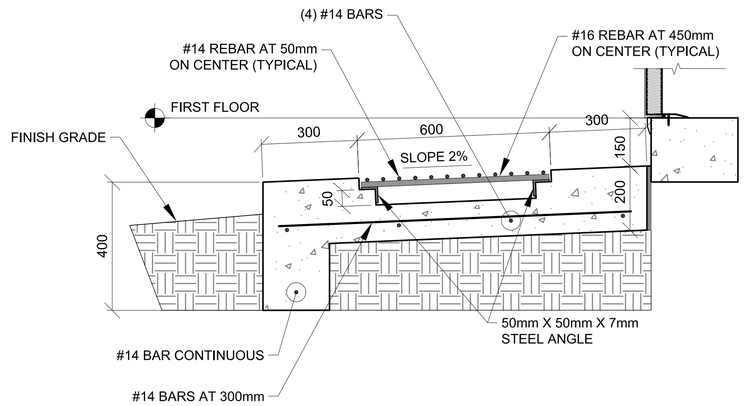

2 A-503 **DOOR STOOP DETAIL**
SCALE: 1:10

UNLESS OTHERWISE NOTED,
LINEAR DIMENSIONS
SHOWN ARE IN MILLIMETERS.

COMMONWEALTH OF VIRGINIA
PETER GARRETT SCHMIDT
No. 013167
ARCHITECT

US ARMY CORPS
OF ENGINEERS
AFGHANISTAN NORTH
DISTRICT

SYMBOL	DESCRIPTION	DATE	APPR.	SYMBOL	DESCRIPTION	DATE	APPR.

U.S. ARMY ENGINEER DISTRICT, AFGHANISTAN
CORPS OF ENGINEERS
APO AE 09356

DESIGNED BY: PGS, SE, MR
DWN BY: SE, MDH, AH
CKD BY: PGS, SE, MR
REVIEWED BY:
SUBMITTED BY:
DATE: 3/28/2011
REV: 0
CONTRACT NO. W912ER-09-D-0002
DRAWING CODE:
FILE NAME: W912ER-09-D-0002 - A-503.DWG
PLOT SCALE: 1:10
PLOT DATE: 3/28/2011

BAKER

SITE ADAPT DESIGN
B18 - VIP BARRACKS - ARCH SPAN
STOOP DETAILS

SHEET
REFERENCE
NUMBER:
A-503

3/28/2011 2:02 PM

A1 Size 594mm x 841mm

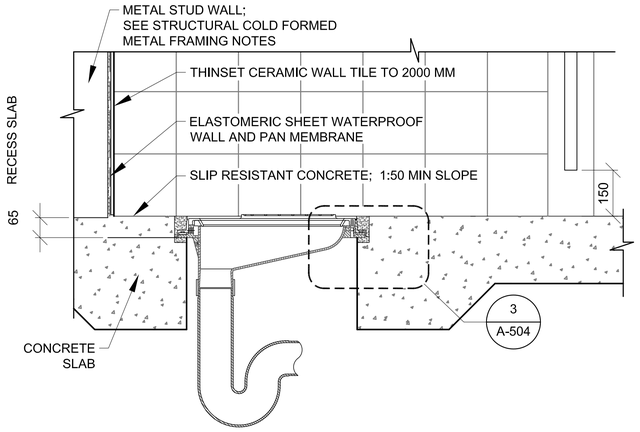

1 A-504 LATRINE DETAIL

SCALE: 1:10

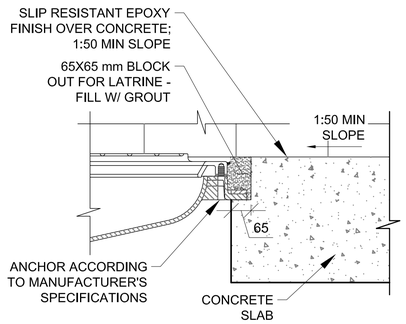

3 A-504 MOUNTING DETAIL

SCALE: 1:10

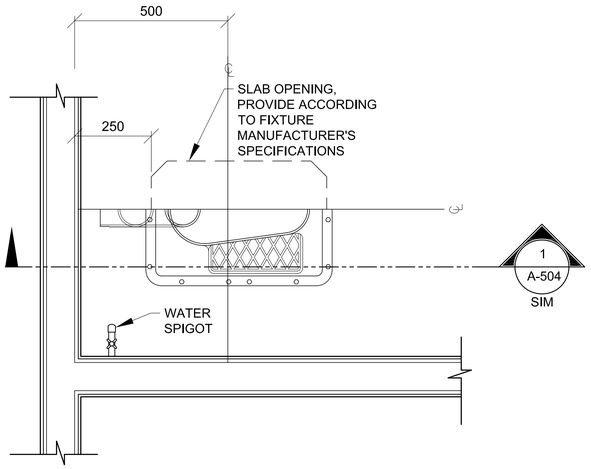

2 A-504 TOILET DETAIL

SCALE: 1:10

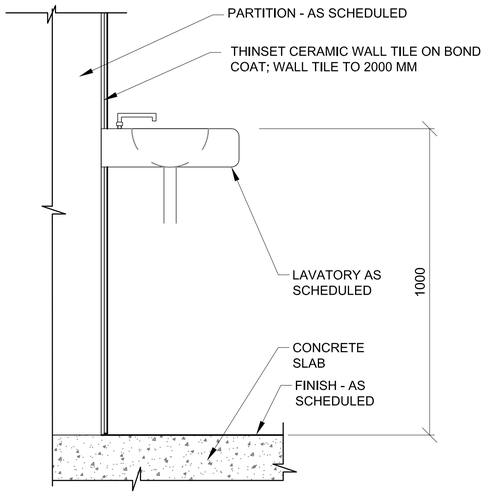

4 A-504 WALL MOUNTED LAVATORY

SCALE: 1:5

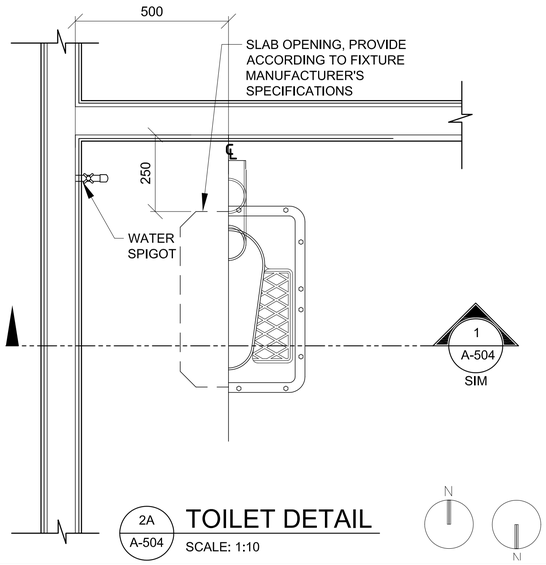

2A A-504 TOILET DETAIL

SCALE: 1:10

0 50 100 200
SCALE: 1:5
0 100 200 400
SCALE: 1:10

UNLESS OTHERWISE NOTED,
LINEAR DIMENSIONS
SHOWN ARE IN MILLIMETERS.

COMMONWEALTH OF PENNSYLVANIA
PETER GARRETT SCHMIDT
NO. 013167
REGISTERED ARCHITECT

US ARMY CORPS
OF ENGINEERS
AFGHANISTAN NORTH
DISTRICT

SYMBOL	DESCRIPTION	DATE	APPR.	SYMBOL	DESCRIPTION	DATE	APPR.

DESIGNED BY: PGS, SE, MR
DWN BY: SE, MDH, AH
CKD BY: PGS, SE, MR
REVIEWED BY:
SUBMITTED BY:
DATE: 3/28/2011
CONTRACT NO. W912ER-09-D-0002
DRAWING CODE:
FILE NAME: ARCH\Planset\A-504.dwg
PLOT SCALE: VARIES
PLOT DATE: 3/28/2011
REV: 0

BAKER

U.S. ARMY ENGINEER DISTRICT, AFGHANISTAN
CORPS OF ENGINEERS
APO AE 09356

SITE ADAPT DESIGN
B18 - VIP BARRACKS - ARCH SPAN
TOILET, LAVATORY & ABLUTION DETAILS

SHEET
REFERENCE
NUMBER:
A-504

A1 Size 594mm x 841mm

3/28/2011 2:02 PM

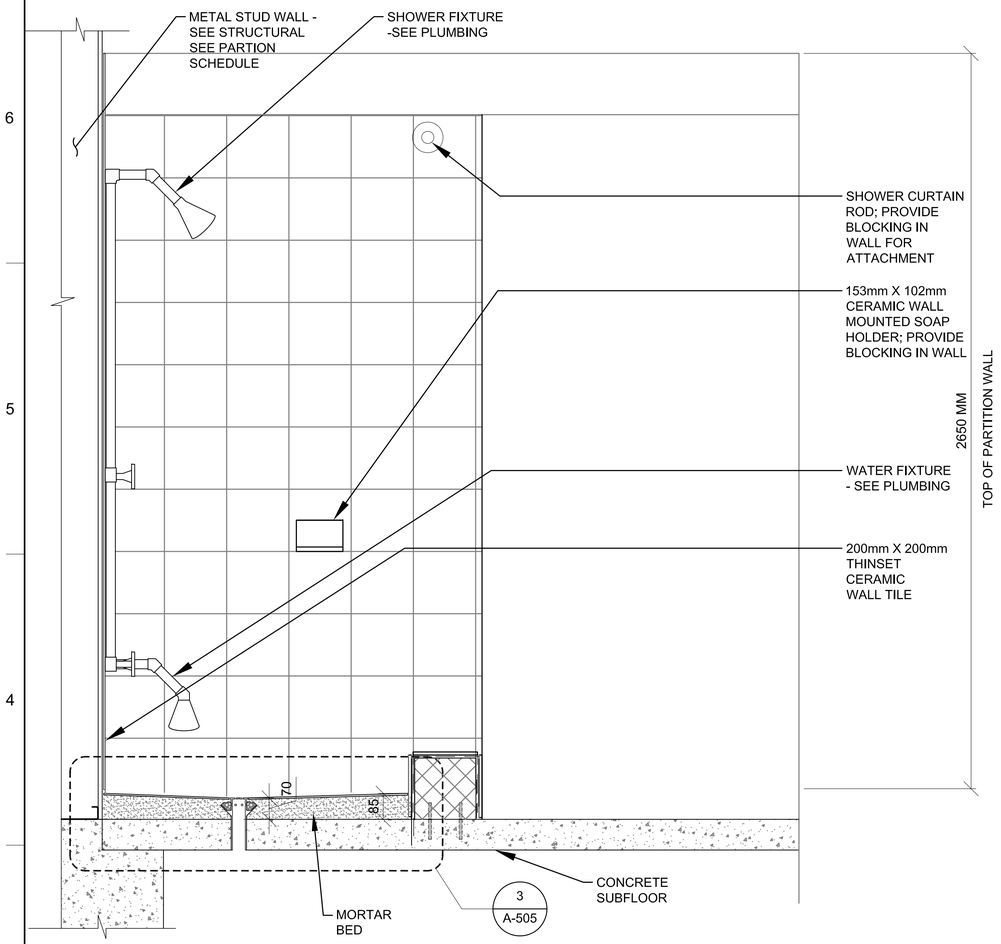

1 A-505 SHOWER DETAILS
SCALE: 1:10

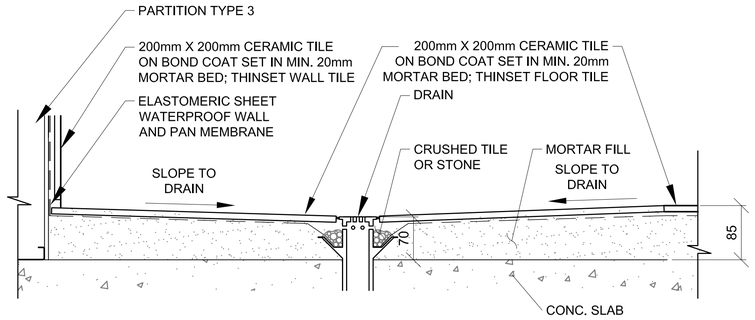

3 A-505 SHOWER DETAIL
SCALE: 1:5

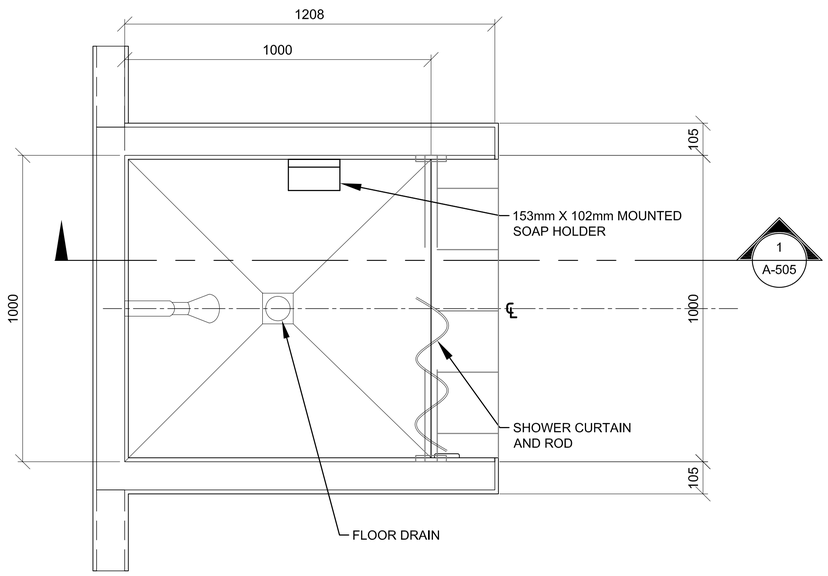

2 A-505 SHOWER PLAN
SCALE: 1:10

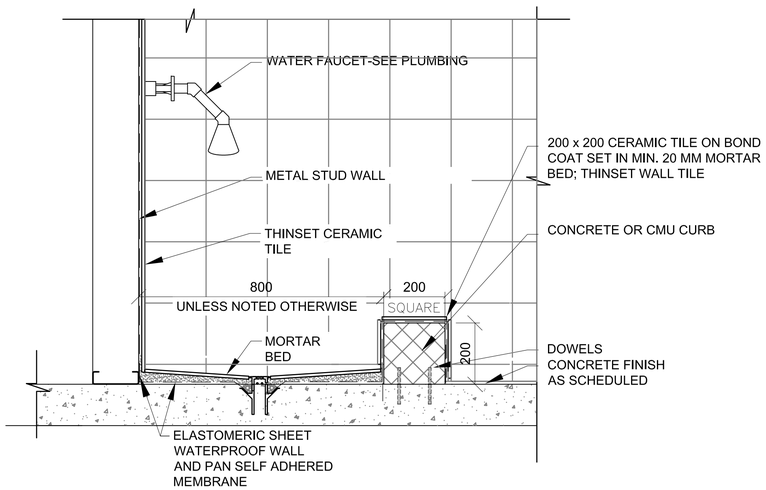

4 A-505 MOP SINK DETAIL
SCALE: 1:10

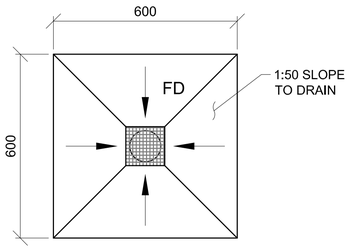

5 A-505 FLOOR DRAIN DETAIL
SCALE: 1:10

0 200 400 800
SCALE: 1:20
0 100 200 400
SCALE: 1:10
0 50 100 200
SCALE: 1:5

UNLESS OTHERWISE NOTED, LINEAR DIMENSIONS SHOWN ARE IN MILLIMETERS.

COMMONWEALTH OF VIRGINIA
PETER GARRETT SCHMIDT
No. 013167
ARCHITECT

US ARMY CORPS OF ENGINEERS AFGHANISTAN NORTH DISTRICT

SYMBOL	DESCRIPTION	DATE	APPR.	SYMBOL	DESCRIPTION	DATE	APPR.

DESIGNED BY: PGS, SE, MR
DWN BY: SE, MDH, AH
CKD BY: PGS, SE, MR
REVIEWED BY:
SUBMITTED BY:
DATE: 3/28/2011
CONTRACT NO. W912ER-09-D-0002
DRAWING CODE:
REV: 0
FILE NAME: ARCH2Floor01-B18-A-505.DWG
PLOT SCALE: VARIES
PLOT DATE: 3/28/2011

BAKER

U.S. ARMY ENGINEER DISTRICT, AFGHANISTAN
CORPS OF ENGINEERS
APO AE 09356

SITE ADAPT DESIGN
B18 - VIP BARRACKS - ARCH SPAN
SHOWER DETAILS

SHEET REFERENCE NUMBER:
A-505

3/28/2011 2:02 PM

A1 Size 594mm x 841mm

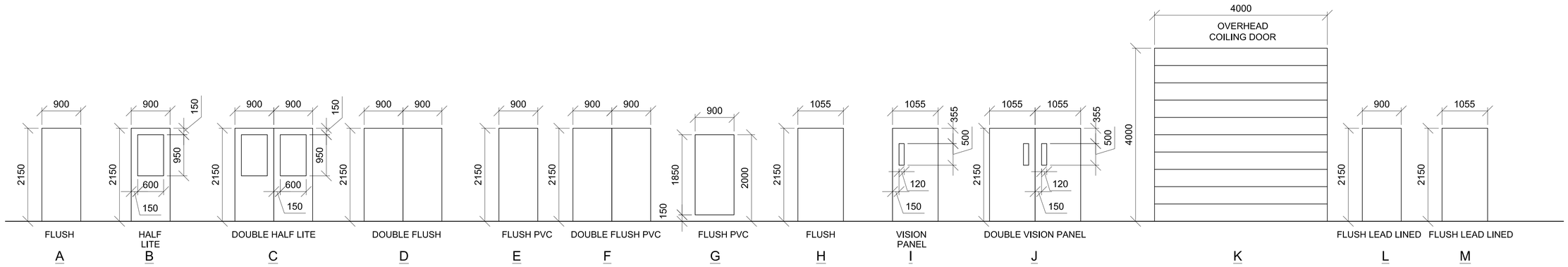

1 A-601 DOOR TYPES

SCALE: 1:50

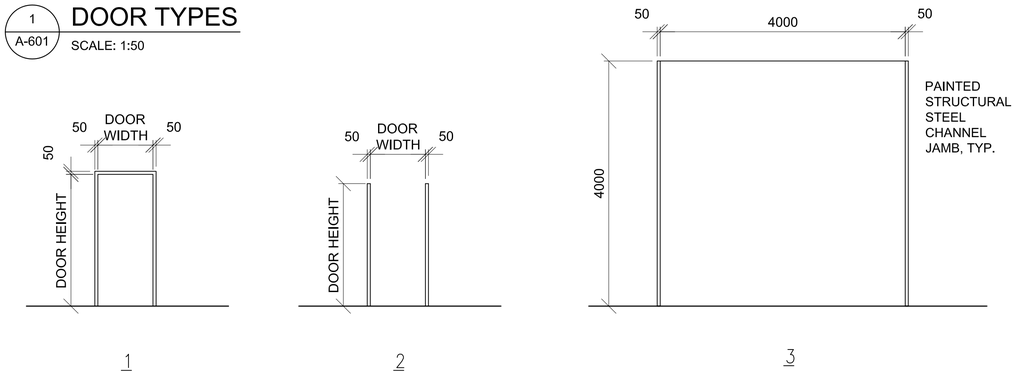

2 A-601 FRAME TYPES

SCALE: 1:50

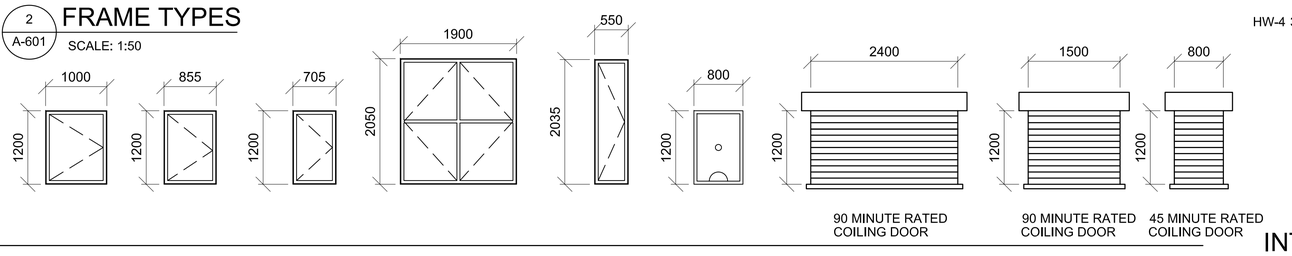

3 A-601 WINDOW TYPES

SCALE: 1:50

WINDOW TYPE NOTES:

1. ALL EXTERIOR WINDOWS SHALL BE STEEL. PROVIDE INSECT SCREENS ONLY AT DFAC FACILITIES. WINDOWS SHALL BE COMMERCIAL GRADE.
2. ALL EXTERIOR WINDOWS SHALL BE OPERABLE.
3. WINDOWS IN LATRINES OR RESTROOM AREAS SHALL HAVE OBSCURE GLASS.
4. WINDOW TYPES ARE NOT APPLICABLE AT ALL BUILDINGS. SEE FLOOR PLAN FOR REQUIREMENTS

DOOR TYPE — A.1.5 — HARDWARE TYPE
FRAME TYPE

4 A-601 DOOR TAG

SCALE: 1:50

DOOR TAG NOTES:

1. THE DOOR TAG INDICATES THE DOOR TYPE, FRAME TYPE AND HARDWARE SET FOR EACH DOOR.
2. THE DOOR TAG FOR RATED DOORS INCLUDES THE RATING OF THE DOOR IN MINUTES.
3. REFER TO FLOOR PLANS FOR DOOR TAG INFORMATION APPLICABLE TO EACH DOOR.

DOOR TYPE
RATING IN MINUTES — 45A.1.5 — HARDWARE TYPE
FRAME TYPE

5 A-601 RATED DOOR TAGS

SCALE: NTS

DOOR AND HARDWARE NOTES:

1. INTERIOR AND EXTERIOR METAL DOORS AND FRAME COLORS SHALL MATCH ADJACENT WALL COLORS AS SELECTED BY THE CONTRACTING OFFICER.
2. FRAMES, EXCEPT FIRE-RATED FRAMES, SHALL BE MOUNTED AND ADJUSTED IN ACCORDANCE WITH MANUFACTURER'S INSTRUCTIONS. FRAMES SHALL BE FASTENED WITH MINIMUM OF THREE ANCHORS PER JAMB AT EQUAL INTERVALS.
3. DIMENSIONS SHOWN ON DOOR TYPES DETAIL ARE BASED UPON MODULAR MASONRY (OR ROUGH OPENING), HEIGHT OF 2150 MM FOR STANDARD PERSONNEL DOORS. CONTRACTOR SHALL COORDINATE WITH DOOR SUPPLIER TO ENSURE THAT DIMENSIONS OF DOORS AND FRAMES PROVIDED ARE COMPATIBLE WITH DOOR OPENING DIMENSIONS.
4. HARDWARE SHALL BE HEAVY DUTY, COMMERCIAL GRADE, STAINLESS STEEL WITH A SATIN OR BRUSHED FINISH.
5. HARDWARE TYPES INCLUDE BUILDERS HARDWARE MANUFACTURERS ASSOCIATION (BMHA) NUMBER.
6. DOORS IN 2 HOUR RATED PARTITIONS SHALL BE 1.5 HOUR (90 MINUTE) RATED DOORS IN ACCORDANCE WITH NFPA 101, TABLE 8.3.4.2.
7. DOORS IN 1 HOUR RATED WALLS SHALL BE 3/4 HOUR (45 MINUTE) RATED DOORS IN ACCORDANCE WITH NFPA 101, TABLE 8.3.4.2.
8. DOORS IN 1 HOUR RATED CORRIDOR WALLS SHALL BE 1/3 HOUR (20 MINUTE) IN ACCORDANCE WITH NFPA 101, TABLE 8.3.4.2.
10. PROVIDE DOOR STOPS TO PROTECT WALLS ON LOCATIONS WHERE DOOR SWING WILL STRIKE WALL.
11. FIRE RATED DOORS SHALL HAVE RATED GLASS NOT EXCEEDING ALLOWABLE SIZE PER NFPA 80. (836,125MM2 FOR MIN. DOORS & 64,500MM2 FOR 45 MIN OR GREATER DOORS
12. DOOR TYPES ARE NOT APPLICABLE AT ALL BUILDINGS. SEE FLOOR PLAN FOR REQUIREMENTS
13. REFER TO MECHANICAL DRAWINGS FOR LOCATIONS OF UNDERCUT DOORS

EXTERIOR DOOR HARDWARE TYPES:

HW-1 1-1/2 PR HINGES, A5112 114 X 114 (SINGLE EXIT DOOR)
1 EA RIM EXIT DEVICE, TYPE 1
1 EA CYLINDER. E09221A, GRADE 1
1 EA OVERHEAD CLOSER, C02061, LOW RESISTANCE
1 EA THRESHOLD, J32130
3 EA DOOR SILENCERS, L03011

HW-2 1-1/2 PR HINGES, A5112 114 X 114 (SINGLE ENTRY DOOR)
1 EA LOCKSET, F13 ENTRY LOCK W/LEVER HANDLES, GRADE 1
1 EA OVERHEAD CLOSER, C02061, LOW RESISTANCE
1 EA THRESHOLD, J32130
3 EA DOOR SILENCERS, L03011

HW-3 3 PR HINGES, A5112 114 X 114 (DOUBLE EXIT DOOR)
2 EA RIM EXIT DEVICE, TYPE 1
2 EA CYLINDER. GRADE 1
2 EA OVERHEAD CLOSER, C02061, LOW RESISTANCE
1 EA DOOR COORDINATOR, TYPE 21
1 EA ASTRAGAL
1 EA THRESHOLD, J32130
2 EA DOOR SILENCERS, L03011

HW-4 3 PR HINGES, A5112 114 X 114 (DOUBLE DOOR DORMITORY FUNCTION)
1 EA LOCKSET W/LEVER HANDLES. GRADE 1, F13
1 EA OVERHEAD CLOSER, C02061, LOW RESISTANCE
2 EA MAGNETIC HOLDER PIN, ATTACHED TO DOOR LEAF
2 EA MAGNETIC HOLDER RECEIVER, ATTACHED TO STOOP
2 EA LEVER EXTENSION FLUSH BOLTS, L04081
1 EA ASTRAGAL
1 EA THRESHOLD, J32130
2 EA DOOR SILENCERS, L03011

INTERIOR DOOR HARDWARE TYPES:

HW-5 1-1/2 PR HINGES, A8133 114 X 114 (SINGLE FRONT DOOR FUNCTION)
1 EA LOCKSET W/LEVER HANDLES, F08, GRADE 1
1 EA WALL STOP, L02101 OR L02161
3 EA DOOR SILENCERS, L03011

HW-5A 1-1/2 PR HINGES, A8133 114 X 114 (SINGLE OFFICE FUNCTION)
1 CLOSER
1 EA LOCKSET W/LEVER HANDLES, F05, GRADE 1
1 EA WALL STOP, L02101 OR L02161
3 EA DOOR SILENCERS, L03011

HW-6 1-1/2 PR HINGES, A8112 114 X 114 (SINGLE STOREROOM FUNCTION)
1 CLOSER
1 EA LOCKSET W/LEVER HANDLES, F07, GRADE 1
1 EA WALL STOP, L02101 OR L02161
3 EA DOOR SILENCERS, L03011

HW-7 1-1/2 PR HINGES, A8133 (SINGLE PASSAGE FUNCTION)
1 CLOSER
1 EA LOCKSET W/LEVER HANDLES, F01 GRADE 1
1 EA WALL STOP, L02101 OR L02161
2 EA MOP PLATE, J103
3 EA DOOR SILENCERS, L03011

HW-7A 1-1/2 PR HINGES, A8133 (SINGLE PASSAGE FUNCTION)
1 CLOSER
1 EA LOCKSET W/LEVER HANDLES, F01 GRADE 1
1 EA WALL STOP, L02101 OR L02161
3 EA DOOR SILENCERS, L03011

INTERIOR DOOR HARDWARE TYPES:

HW-8 1-1/2 PR HINGES, A8112 (SINGLE JAN/STOREROOM FUNCTION)
1 CLOSER
1 EA LOCKSET W/LEVER HANDLES, F07 GRADE 1
1 EA WALL STOP, L02101 OR L02161
2 EA MOP PLATE, J103
3 EA DOOR SILENCERS, L03011

HW-9 1-1/2 PR HINGES, A5112 114 X 114 (SINGLE EXIT DOOR)
1 EA RIM EXIT DEVICE, TYPE 1
1 EA CYLINDER. E09221A, GRADE 1
1 EA OVERHEAD CLOSER, C02061, LOW RESISTANCE
3 EA DOOR SILENCERS, L03011

HW-10 3 PR HINGES, A5112 114 X 114 (DOUBLE STOREROOM FUNCTION
1 EA LOCKSET W/LEVER HANDLES. GRADE 1, F7
2 EA LEVER EXTENSION FLUSH BOLTS, L04081
1 EA ASTRAGAL
2 EA DOOR SILENCERS, L03011

HW-11 1-1/2 PR HINGES, A8112 114 X 114 (SINGLE DORMITORY FUNCTIO
1 EA LOCKSET W/LEVER HANDLES, F13, GRADE 1
1 EA WALL STOP, L02101 OR L02161
1 EA OVERHEAD CLOSER, CO2061, LOW RESISTANCE
3 EA DOOR SILENCERS, L03011
1 EA ROBE HOOK

HW-12 1-1/2 PR HINGES, A8133 (SINGLE PRIVACY-BATH FUNCTION)
1 EA LATCH SET W/LEVER HANDLES, F22 GRADE 1
1 EA WALL STOP, L02101 OR L02161
3 EA DOOR SILENCERS, L03011
1 EA ROBE HOOK

HW-13 3 PR HINGES, A5112 114 X 114 (DOUBLE DORMITORY FUNCTION)
1 EA LOCKSET W/LEVER HANDLES. GRADE 1, F13
1 EA OVERHEAD CLOSER, C02061, LOW RESISTANCE
2 EA LEVER EXTENSION FLUSH BOLTS, L04081
1 EA ASTRAGAL
2 EA DOOR SILENCERS, L03011

HW-14 3 PR HINGES, A5112 114 X 114 (DOUBLE EGRESS EXIT DOOR)
2 EA VERTICAL ROD EXIT DEVICE, TYPE 1
2 EA CYLINDER. GRADE 1
2 EA OVERHEAD CLOSER, C02061, LOW RESISTANCE
1 EA DOOR COORDINATOR, TYPE 21
1 EA ASTRAGAL
2 EA DOOR SILENCERS, L03011

HW-15 3 PR HINGES, A5112 114 X 114 (DOUBLE STOREROOM FUNCTION
2 CLOSERS
1 COORDINATOR
1 EA LOCKSET W/LEVER HANDLES. GRADE 1, F7
2 EA LEVER EXTENSION FLUSH BOLTS, L04081
1 EA ASTRAGAL
2 EA DOOR SILENCERS, L03011

THIS SHEET IS STANDARD AND IS INCLUSIVE OF ALL THE DOOR/ WINDOW/ HARDWARE TYPES FOR THE ENTIRE CONTRACT. NOT ALL DOOR/ WINDOW/ HARDWARE TYPES ARE USED FOR ANY PARTICULAR BUILDING DESIGN. CONTRACTOR SHALL REFER TO THE FLOOR PLAN FOR THE TYPES BEING USED.

0 500 1000 2000
SCALE: 1:50

UNLESS OTHERWISE NOTED, LINEAR DIMENSIONS SHOWN ARE IN MILLIMETERS.

COMMONWEALTH OF VIRGINIA
PETER GARRETT SCHMIDT
No. 013167
ARCHITECT

US ARMY CORPS OF ENGINEERS
AFGHANISTAN NORTH DISTRICT

SYMBOL	DESCRIPTION	DATE	APPR.	SYMBOL	DESCRIPTION	DATE	APPR.

U.S. ARMY ENGINEER DISTRICT, AFGHANISTAN
CORPS OF ENGINEERS
APO AE 09356

DESIGNED BY: PGS, SE, MR
DWN BY: SE, MDH, AH
REVIEWED BY:
SUBMITTED BY:
DATE: 3/28/2011
CONTRACT NO. W912ER-09-D-0002
DRAWING CODE:
FILE NAME: 09a_wind+door+sch.dwg
PLOT SCALE: 1:50
PLOT DATE: 3/28/2011
REV: 0

BAKER

SITE ADAPT DESIGN
B18 - VIP BARRACKS - ARCH SPAN
WINDOW AND DOOR SCHEDULE

SHEET REFERENCE NUMBER:
A-601

A1 Size 594mm x 841mm

3/28/2011 2:02 PM

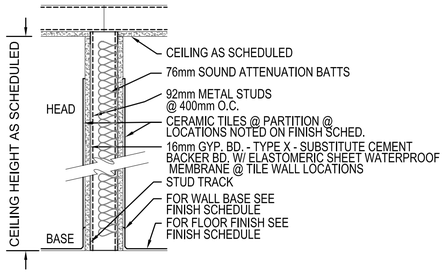

1 TYPE #1 - 1 HOUR FIRE RATED & NON-RATED
DESIGN NO. U419 OR U442
DESIGN NO. WHI 694-0300.1 (SIM)

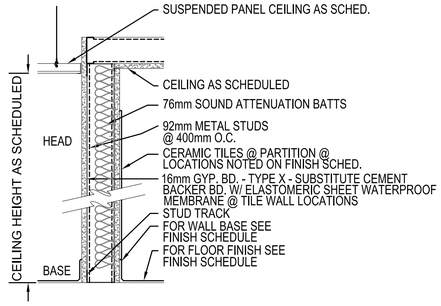

2 TYPE #2 - 1 HOUR FIRE RATED & NON-RATED
DESIGN NO. U419 OR U442/WALL
DESIGN NO. WHI 694-0300.1 (SIM)

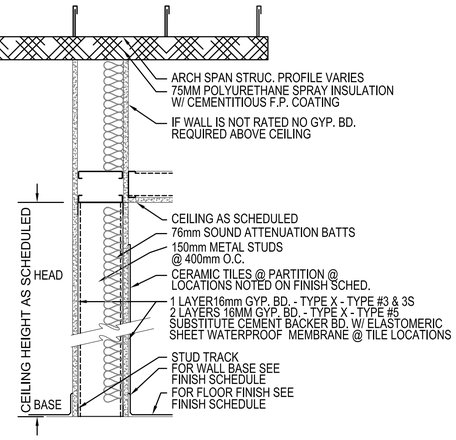

3 TYPE #3 - 1 HOUR FIRE RATED
DESIGN NO. U419
DESIGN NO. WHI 694-0300.1 (SIM)

3S TYPE #3S - 1 HOUR FIRE & SMOKE RATED
DESIGN NO. U419
DESIGN NO. WHI 694-0300.1 (SIM)

5 TYPE #5 - 2 HOUR FIRE RATED - PROVIDE 150 MM
METAL STUDS @ PARTITION TYPES 5 IN LIU OF 92 MM STUDS
DESIGN NO. U443
DESIGN NO. WHI 694-0300.1 (SIM)

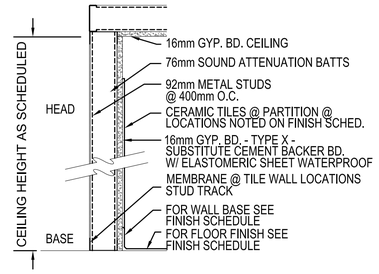

4 TYPE #4 - CHASE PARTITION

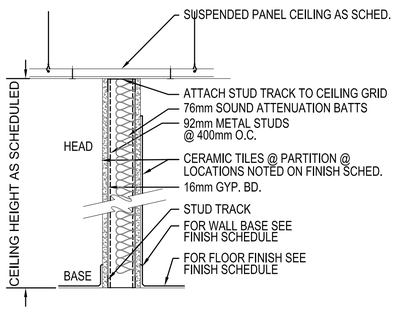

6 TYPE #6 - KITCHEN PARTITION

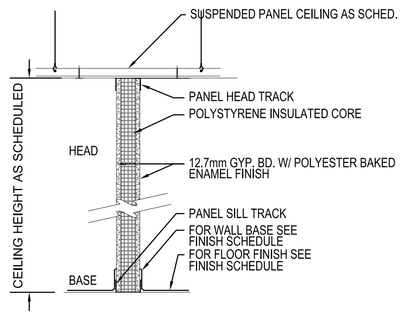

7 TYPE #7 - PANELIZED PARTITION

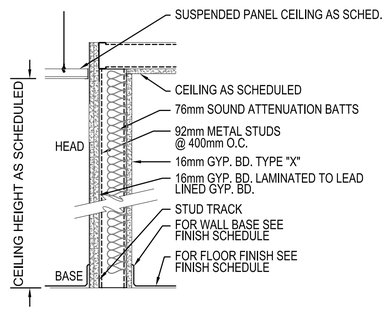

8 TYPE #8 - LEAD LINED PARTITION

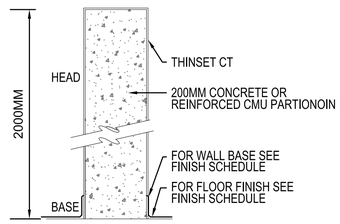

9 TYPE #9 - LOW WALL

1 A-602 PARTITION TYPES
SCALE: 1:10

~~GENERAL NOTES:~~

1. REFER TO DRAWING G-003 FOR LOCATION OF FIRE RATED WALLS & FIRE RESISTANT CEILINGS.
2. REFER TO FINISH SCHEDULE FOR LOCATION OF CERAMIC TILE WALL FINISH. AT THESE LOCATION SUBSTITUTE CEMENT BACKER BOARD AND ELASTOMERIC SHEET WATER PROOF MEMBRANE WITH THINSET CERAMIC TILE FOR GYPSUM BOARD AND PAINT FINISH TO C.T. HEIGHT.
3. REFER TO 6/A-501 FOR TYPE 3, 3S, & 5 BRACING DETAIL. INTERMEDIATE HT. BRACING DETAIL FOR FULL HT. WALLS WHERE APPLICABLE.
4. PARTITION TYPES ARE NOT APPLICABLE AT ALL BUILDINGS. SEE FLOOR PLAN & NOTES FOR REQUIRED TYPES
5. SEE COLD FORMED FRAMING NOTES PORTION OF STRUCTURAL DRAWINGS FOR ADDITIONAL INFORMATION
6. AT PHARMACY LOCATIONS PROVIDE EXPANDED METAL LATH BETWEEN STUDS AND DRYWALL FINISH

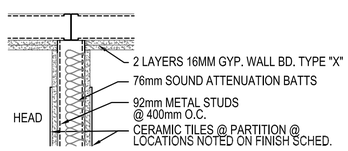

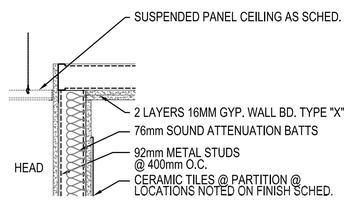

2 A-602 FIRE RESISTANT CEILING CONDITIONS
SCALE: 1:10

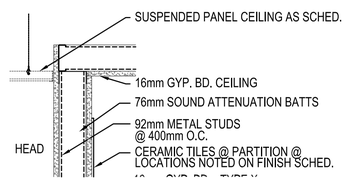

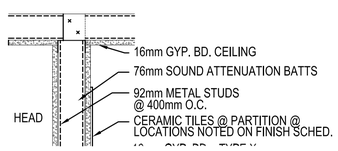

3 A-602 NON-RATED CEILING CONDITIONS
SCALE: 1:10

0 100 200 400
SCALE: 1:10
UNLESS OTHERWISE NOTED,
LINEAR DIMENSIONS
SHOWN ARE IN MILLIMETERS.

COMMONWEALTH OF VIRGINIA
PETER GARRETT SCHMIDT
No. 013167
ARCHITECT

US ARMY CORPS
OF ENGINEERS
AFGHANISTAN NORTH
DISTRICT

SYMBOL	DESCRIPTION	DATE	APPR.	SYMBOL	DESCRIPTION	DATE	APPR.

DESIGNED BY: PGS, SE, MR
DWN BY: SE, MDH, AH
CKD BY: PGS, SE, MR
REVIEWED BY:
SUBMITTED BY:
DATE: 3/28/2011
CONTRACT NO. W912ER-09-D-0002
DRAWING CODE:
FILE NAME: 00-01-00-00-00-A-602.DWG
PLOT SCALE: 1:10
PLOT DATE: 3/28/2011
REV: 0

BAKER

U.S. ARMY ENGINEER DISTRICT, AFGHANISTAN
CORPS OF ENGINEERS
APO AE 09356

SITE ADAPT DESIGN
B18 - VIP BARRACKS - ARCH SPAN
PARTITION TYPES

SHEET REFERENCE NUMBER:
A-602

3/28/2011 2:03 PM

A1 Size 594mm x 841mm

FINISHING SCHEDULE

FLOOR FINISHES

- A) TROWEL FINISHED CONCRETE - BROOM FINISH @ TILE
- B) NON-SLIP EPOXY FINISH
- C) CERAMIC TILE
- D) CONC. SEALER

WALL FINISHES

- A) METAL STUD WALL WITH GYPSUM BOARD OR CEMENT PLASTER
- B) SEMI-GLOSS PAINT
- C) EPOXY PAINT
- D) CERAMIC TILE UP TO 2.2M
- E) CEMENTITIOUS FIREPROOFING - SPRAY ON
- F) POLYURETHANE - SPRAY ON
- G) 5cm SANDWICH PANEL
- H) CONCRETE/CMU

CEILING FINISHES

- A) GYPSUM BOARD
- B) SEMI-GLOSS PAINT
- C) EPOXY PAINT
- D) POLYURETHANE - SPRAY ON
- E) CEMENTITIOUS FIREPROOFING - SPRAY ON
- F) 600mm x 1200mm METAL PANEL CEILING SYSTEM
- G) OPEN "T" GRID CEILING SUSPENSION SYSTEM
- H) EXPOSED ARCH SPAN PANELS

NOTES:

1. PROVIDE CEMENT BACKER BOARD & W.P. MEMBRANE @ ALL CERAMIC TILE WALLS. IN LIEU OF GYPSUM BOARD - MAINTAIN REQUIRED FIRE RATINGS.
2. SPRAY - ON POLYURETHANE AND SPRAY ON CEMENTITIOUS FIRE PROOFING SHALL BE APPLIED TO INTERIOR SURFACES OF ARCH SPAN PANELS, WINDOW, & DOOR ENCLOSURES & CONCRETE CURB/WALLS ONLY.
3. INSTALL 100MM PAINTED WOOD COVE BASE ON ALL PAINTED GYPSUM BOARD/ PLASTER WALLS EXCEPT WHERE CERAMIC TILE IS INDICATED.
4. PAINT WALL SURFACES ABOVE CERAMIC WALL TILE REFER TO REFLECTED CEILING PLAN FOR CEILING HEIGHTS.
5. POLYURETHANE INSULATION SHALL PROVIDE K=600.
6. REFER TO G-003 FOR FIRE RATED WALL & FIRE RESISTANT CEILING LOCATIONS & A-602 FOR DRYWALL CEILING CONSTRUCTION.

ITEM NO.	SPACE NO.	FLOOR FINISHING	WALL FINISHING	Ceiling Finishing	REMARKS
1	100	A D	A B	A B	
2	100A	A D	A B	A B	
3	100B	A D	A B	A B	
4	101	A D	A B	A B	
5	101A	A B	A D C	A C	CERAMIC TILE FLOOR IN SHOWER
6	101B	A D	A B	A B	
7	102	A D	A B	A B	
8	102A	A B	A D C	A C	CERAMIC TILE FLOOR IN SHOWER
9	102B	A D	A B	A B	
10	103	A D	A B	A B	
11	103A	A B	A D C	A C	CERAMIC TILE FLOOR IN SHOWER
12	103B	A D	A B	A B	
13	104	A D	A B	A B	
14	104A	A B	A D C	A C	CERAMIC TILE FLOOR IN SHOWER
15	104B	A D	A B	A B	
16	105	A D	A B	A B	
17	106	A D	A B	A B	
18					
19					
20					
21					
22					
23					
24					
25					
26					
27					
28					
29					
30					
31					
32					
33					
34					
35					
36					
37					
38					
39					
40					
41					
42					
43					
44					
45					
46					
47					
48					
49					
50					

UNLESS OTHERWISE NOTED, LINEAR DIMENSIONS SHOWN ARE IN MILLIMETERS.

COMMONWEALTH OF PENNSYLVANIA
PETER GARRETT SCHMIDT
No. 013167
REGISTERED ARCHITECT

US ARMY CORPS OF ENGINEERS AFGHANISTAN NORTH DISTRICT

SYMBOL	DESCRIPTION	DATE	APPR.	SYMBOL	DESCRIPTION	DATE	APPR.

DATE: 3/28/2011 | REV: 0
CONTRACT NO. W9128F-09-D-0002
DRAWING CODE:
FILE NAME: ARCHDWG#A-603.DWG
PLOT SCALE: NONE
PLOT DATE: 3/28/2011

DESIGNED BY: PGS, SE, MR
DWN BY: SE, MDH, AH
CKD BY: PGS, SE, MR
REVIEWED BY:
SUBMITTED BY:
BAKER

U.S. ARMY ENGINEER DISTRICT, AFGHANISTAN
CORPS OF ENGINEERS
APO AE 09356

SITE ADAPT DESIGN
B18 - VIP BARRACKS - ARCH SPAN
FINISH SCHEDULE

SHEET REFERENCE NUMBER:
A-603

A1 Size 594mm x 841mm

3/28/2011 2:03 PM

PLUMBING SYMBOLS AND LEGEND

SYMBOL	ABBREV	DESCRIPTION	SYMBOL	ABBREV	DESCRIPTION	SYMBOL	ABBREV	DESCRIPTION	SYMBOL	ABBREV	DESCRIPTION	SYMBOL	ABBREV	DESCRIPTION
	ABL	ABLUTION		CONT	CONTINUATION		FTG	FOOTING			PRESSURE GAGE W/PET COCK			TEE OUTLET DOWN
	ABV	ABOVE		DFU	DRAINAGE FIXTURE UNIT			GATE VALVE		PRV	PRESSURE REDUCING VALVE		THERM	THERMOMETER W/PET COCK
	AFF	ABOVE FINISHED FLOOR			DIRECTION OF FLOW		GC	GENERAL CONTRACTOR			PRESSURE REGULATING VALVE		TOF	TOP OF FOOTING
	AFR	ABOVE FINISHED ROOF		DN	DOWN			GLOBE VALVE		P&T	PRESSURE & TEMPERATURE		TOP	TOP OF PIPE
	AFG	ABOVE FINISHED GRADE		DWG	DRAWING		HB	HOSE BIBB		PSI	PRESSURE PER SQUARE INCH			TRAP - ELEVATION
		ANGLE GATE - ELEV.			DRAIN VALVE		H OR HW	HOT WATER PIPING			PRESSURE REGULATOR WITH PRESSURE GAUGE			TRAP - PLAN
		ANGLE GATE - PLAN			ELBOW DOWN		HWR	HOT WATER RETURN			PRESSURE & TEMPERATURE RELIEF VALVE		TP	TRAP PRIMER
	BP (ASSE 1013)	BACKFLOW PREVENTER WITH TEST VALVES			ELBOW UP		IE	INVERT ELEVATION			QUICK DISCONNECT		TYP	TYPICAL
		BALL VALVE		EWC	ELECTRIC WATER COOLER		L OR LAV	LAVATORY OR TROUGH		RCP	RECIRCULATING PUMP			UNION
	BLW	BELOW		EWH OR HWH	ELECTRIC WATER HEATER		MAX	MAXIMUM		RH	RELATIVE HUMIDITY			VALVE IN RISE
		BRANCH - BOTTOM CONNECTION		ELEV	ELEVATION		MC				ROOF PENETRATION		V	VENT PIPING
		BRANCH - TOP CONNECTION		ET	EXPANSION TANK		M	METER			SAFETY RELIEF VALVE		VTR	VENT THRU ROOF
		CAP		EX	EXISTING		MM	MINIMUM		S	SINK		VU	VENT UP
		CHECK VALVE		FIN	FINISHED		MIN	MILLIMETER		SS	SANITARY PIPING		W	WATER CLOSET
CO	CO	CLEAN-OUT IN VERTICAL		FC	FIRE PROTECTION CONTRACTOR		MR	MOP RECEPTOR		SH OR SHR	SHOWER		WC	WATER COLUMN
CO	CO	CLEAN-OUT	FD	FD	FLOOR DRAIN W/TRAP		MV	MIXING VALVE		SFU	SUPPLY FIXTURE UNIT		W	WASTE
CO	CO	CLEAN-OUT IN HORIZONTAL			FLEXIBLE PIPING CONNECTION		NC	NORMALLY CLOSED		SQ FT	SQUARE FEET		W/	WITH
	CW	COLD WATER PIPING		FFE	FINISHED FLOOR ELEVATION		NO	NORMALLY OPEN			STRAINER		W/O	WITHOUT
	CONC	CONCRETE		FLR	FLOOR		PC	PLUMBING CONTRACTOR		TE	TOP ELEVATION			
	CONN	CONNECTION		FT	FOOT OR FEET			PLUG VALVE			TEE OUTLET UP			

GENERAL NOTES:

1. DO NOT SCALE DRAWINGS - ALL DIMENSIONS AND CONDITIONS SHALL BE CHECKED AND VERIFIED BY THE CONTRACTOR AT THE SITE.
2. ALL WORK PERFORMED ON THIS BUILDING SHALL BE IN COMPLIANCE WITH ALL PERTINENT CODES, RULES, ORDINANCES AND REGULATIONS OF THE GOVERNING AUTHORITIES.
3. ALL WORK PERFORMED UNDER AND IN CONNECTION WITH THESE DRAWINGS AND SPECIFICATIONS SHALL BE IN STRICT COMPLIANCE WITH THE LATEST SAFETY AND HEALTH STANDARDS.
4. REPORT ANY DISCREPANCIES FOUND IN THE PLUMBING DRAWINGS AND/OR IN THE SPECIFICATIONS DURING THE BIDDING PROCESS FOR CLARIFICATION BY THE ENGINEER.
5. ALL EASTERN STYLE WATER CLOSETS IN THIS FACILITY ARE TO HAVE THE FIXTURE DESIGNATION OF W-1. EACH FIXTURE SHALL HAVE A 25mm COLD WATER MAIN LINE EXTENDED INTO THE STALL AND THEN TEE OFF TO THE 20mm SPIGOT CONNECTION. ALSO PROVIDE A 100mm SANITARY CONNECTION. SEE DETAILS ON DRAWING P502.
6. ALL LAV OR TROUGH FIXTURES IN THIS FACILITY ARE TO HAVE THE FIXTURE DESIGNATION OF L-1. L-1 DESIGNATION REPRESENTS THE NUMBER OF FAUCETS FOR THE TROUGH FIXTURE. EACH FIXTURE SHALL HAVE A 15mm COLD WATER, 15mm HOT WATER CONNECTION AND A 80mm SANITARY CONNECTION.
7. REFER TO SHEET P501 AND P502 FOR DETAILS.
8. ALL WATER, SANITARY AND VENT LINES TO BE EXPOSED. RUN LINES TIGHT TO CEILING AND WALL. ALL EXPOSED WATER, WASTE, AND VENT PIPING, LOCATED IN USER OCCUPIED AREAS, SHALL BE SCHEDULE 40 GALVANIZED STEEL WITH WALL MOUNTING BRACKETS SPACED A MAXIMUM OF 400mm (16") APART TO MINIMIZE VANDALISM.
9. PROVIDE ISOLATION VALVES FOR HOT AND COLD WATER PIPES TO EACH INDIVIDUAL FIXTURE.
10. ALL VENTS THROUGH ROOF SHALL EXTEND A MINIMUM OF 600mm ABOVE FINISHED ROOF. VENT SHALL ALSO EXTEND THRU ROOF AT PEAK OF SPAN.
11. CONTRACTOR TO COORDINATE WATER PIPING MOUNTING LOCATION WITH BOTH MECHANICAL & ELECTRICAL DRAWINGS.
12. PLUMBING CONTRACTOR SHALL COORDINATE PLUMBING WORK WITH THE LOCATIONS OF ALL UTILITIES AT THE SITE PRIOR TO THE START OF ANY PLUMBING WORK.
13. COORDINATE ALL ACCESS PANEL LOCATIONS WITH THE ARCHITECT AND GENERAL CONTRACTOR.
14. ALL SANITARY PIPING BELOW SLAB SHALL BE A MINIMUM OF 50mm, UNLESS OTHERWISE NOTED OR AS REQUIRED BY THE LOCAL AUTHORITY HAVING JURISDICTION.
15. ALL HORIZONTAL SANITARY LINES SHALL BE SLOPED AT 8mm PER 300mm, UNLESS OTHERWISE NOTED OR AS REQUIRED BY THE LOCAL AUTHORITY HAVING JURISDICTION.

UNLESS OTHERWISE NOTED,
LINEAR DIMENSIONS
SHOWN ARE IN MILLIMETERS.

COMMONWEALTH OF PENNSYLVANIA
REGISTERED PROFESSIONAL
MATTHEW R. SOTOSKY
ENGINEER
045576-E

US ARMY CORPS OF ENGINEERS
AFGHANISTAN NORTH DISTRICT

SYMBOL	DESCRIPTION	DATE	APPR.	SYMBOL	DESCRIPTION	DATE	APPR.

DESIGNED BY: RMH
DWN BY: RMH
CKD BY: CJM III
REVIEWED BY: JH
SUBMITTED BY:
DATE: 3/28/2011
CONTRACT NO. W912ER-09-D-0002
DRAWING CODE:
REV: 0
FILE NAME: secondpass-as-built.dwg
PLOT SCALE: NONE
PLOT DATE: 3/28/2011

BAKER

U.S. ARMY ENGINEER DISTRICT, AFGHANISTAN
CORPS OF ENGINEERS
APO AE 09356

SITE ADAPT DESIGN
B18 - VIP BARRACKS - ARCH SPAN
PLUMBING SYMBOLS AND LEGEND AND GENERAL NOTES

SHEET REFERENCE NUMBER:
P-001

A1 Size 594mm x 841mm

3/28/2011 2:03 PM

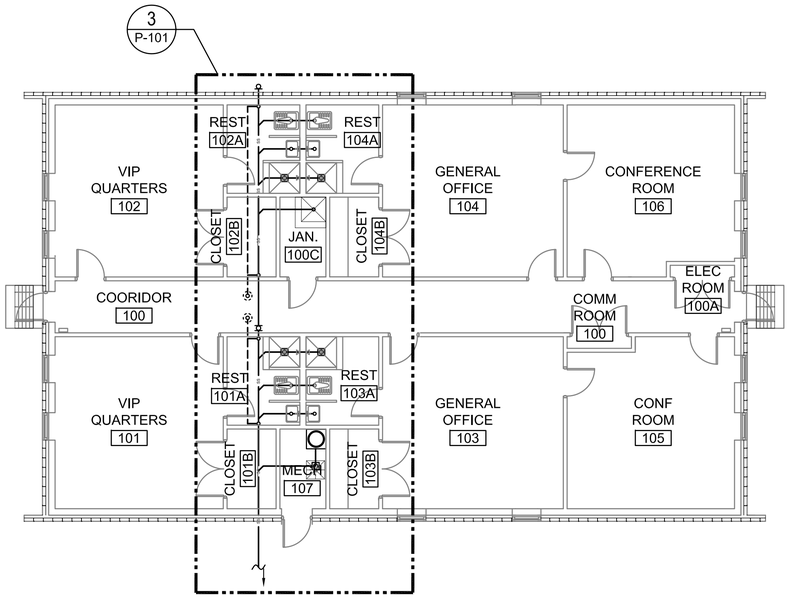

1 P-101 FLOOR PLAN - PLUMBING (SANITARY)
1:100

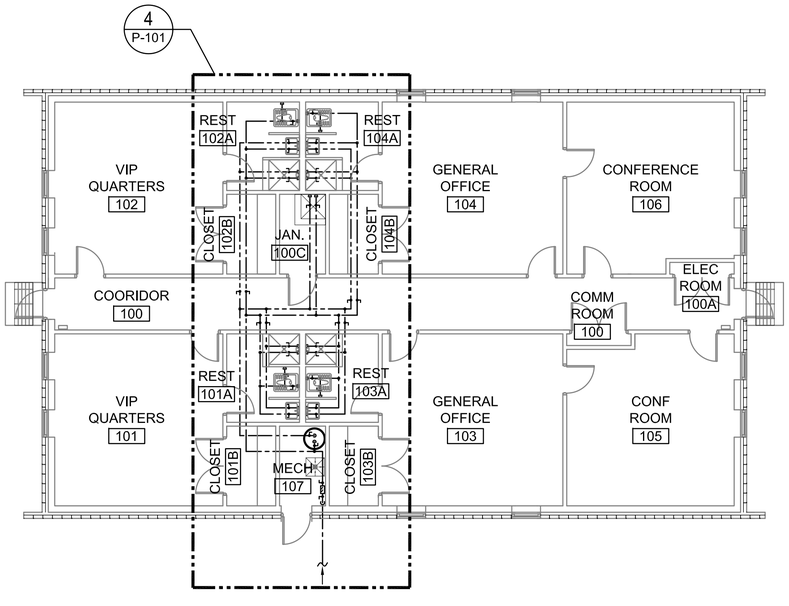

2 P-101 FLOOR PLAN - PLUMBING (WATER)
1:100

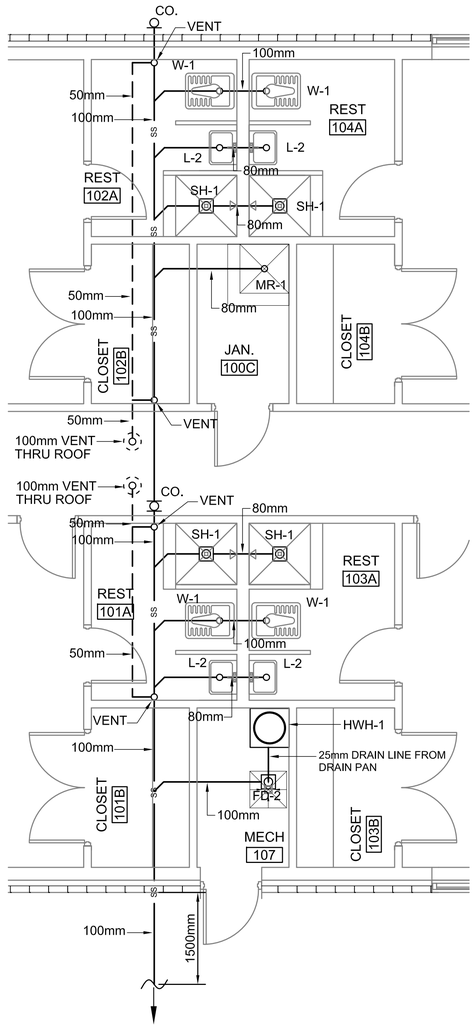

3 P-101 ENLARGED FLOOR PLAN - PLUMBING (SANITARY)
1:50

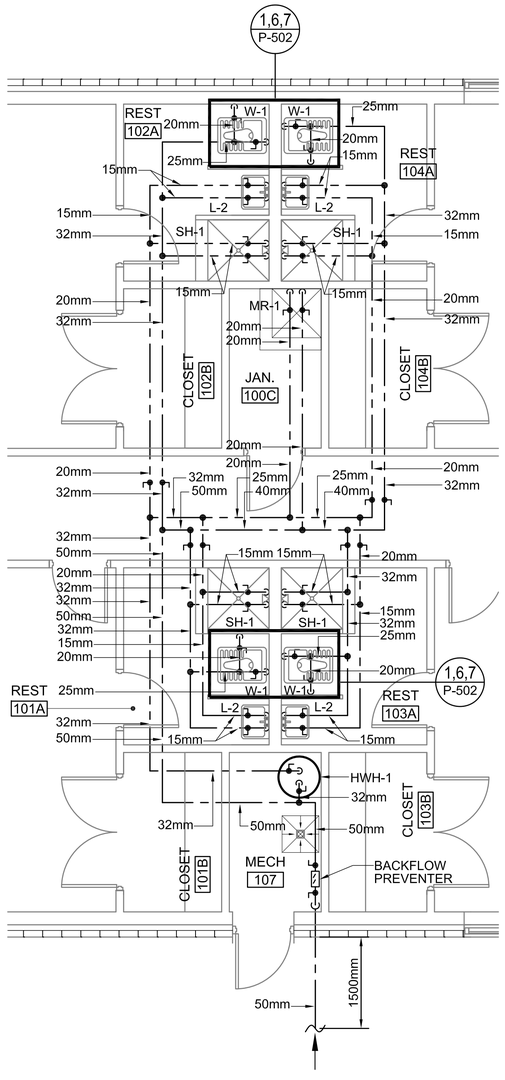

4 P-101 ENLARGED FLOOR PLAN - PLUMBING (WATER)
1:50

N

SCALE: 1:100

SCALE: 1:50

UNLESS OTHERWISE NOTED, LINEAR DIMENSIONS SHOWN ARE IN MILLIMETERS.

COMMONWEALTH OF PENNSYLVANIA
REGISTERED PROFESSIONAL
MATTHEW R. SOTOSKY
ENGINEER
045576-E

US ARMY CORPS OF ENGINEERS
AFGHANISTAN NORTH DISTRICT

SYMBOL	DESCRIPTION	DATE	APPR.	SYMBOL	DESCRIPTION	DATE	APPR.

U.S. ARMY ENGINEER DISTRICT, AFGHANISTAN
CORPS OF ENGINEERS
APO AE 09356

DESIGNED BY: RMH
DWN BY: RMH
CKD BY: CJM III
REVIEWED BY: JH
SUBMITTED BY: BAKER
DATE: 3/28/2011
CONTRACT NO. W912ER-09-D-0002
DRAWING CODE:
FILE NAME: ...\P101-PLUMBING-SITE-B18-V01.DWG
PLOT SCALE: VARIES
PLOT DATE: 3/28/2011
REV: 0

SITE ADAPT DESIGN
B18 - VIP BARRACKS - ARCH SPAN
FLOOR PLAN - PLUMBING (SANITARY & WATER)
ENLARGED FLOOR PLAN - PLUMBING (SANITARY & WATER)

SHEET REFERENCE NUMBER:
P-101

3/28/2011 2:03 PM

A1 Size 594mm x 841mm

PLUMBING FIXTURE LIST SCHEDULE							
TYPE	ITEM	SOIL & WASTE	VENT	COLD WATER	HOT WATER	REMARKS	REMARKS 2
W-1	EASTERN STYLE WATER CLOSET	100mm	50mm	15mm	------	FLUSH TANK	----------
L-2	WALL HUNG LAVATORY	40mm	40mm	15mm	15mm	CAST IRON WITH BAKED ENAMEL FINISH	----------
SH-1	SHOWER	80mm	---	15mm	15mm	FABRICATED IN FIELD	DRAIN AND SHOWER CONTROLS
MR-1	MOP RECEPTOR	80mm	---	20mm	20mm	FABRICATED IN FIELD	DRAIN AND CONTROLS
FD-1/FD-2	FLOOR DRAIN	100mm	---	---	---	SLOPE FLOOR TO DRAIN	----------

ELECTRIC WATER HEATER SCHEDULE											
MARK	MANUF	LOCATION	STORAGE (Ltr)	PHYSICAL SIZE	RECOVERY Ltr/H	TEMP RISE °C	SET POINT °C	HOT & COLD CONN	TOTAL KW	VOLTS/ PHASE/ HERTZ	REMARKS
HWH-1	A.O. SMITH	MECH 107	450	1664mm x 762mmØ	398	21	49	32mm HW 32mm CW	18	380/3/50	EXTEND DRAIN LINE FROM T&P VALVE TO NEAREST FLOOR DRAIN

EXPANSION TANK SCHEDULE						
MARK	MANUF	MODEL NO.	LOCATION	STORAGE (Ltr)	OPERATING TEMP. °C	REMARKS
ET-1	AMTROL	ST-12-C	MECH 107	8	49°	

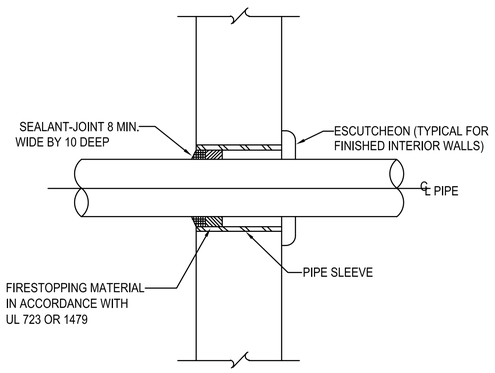

TYPICAL WALL PENETRATION DETAIL 1 P-501
SCALE: NONE

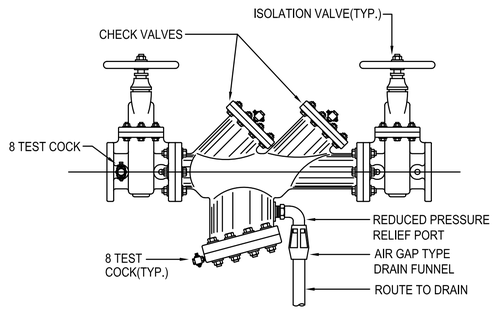

TYPICAL BACKFLOW PREVENTER DETAIL 2 P-501
SCALE: NONE

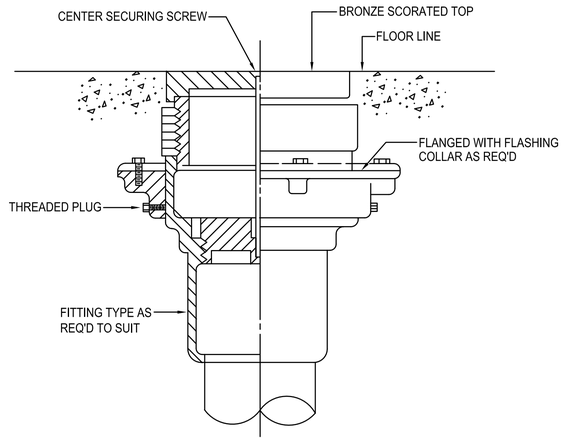

TYPICAL FLOOR CLEANOUT DETAIL 3 P-501
SCALE: NONE

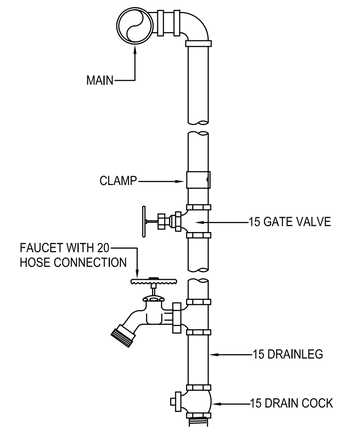

TYPICAL WATER DROP DETAIL 4 P-501
SCALE: NONE

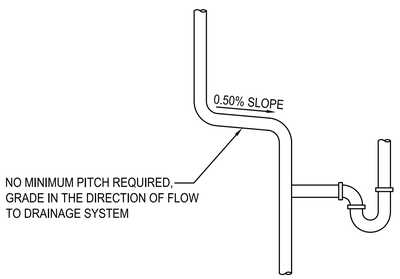

TYPICAL VENT GRADE DETAILS 5 P-501
SCALE: NONE

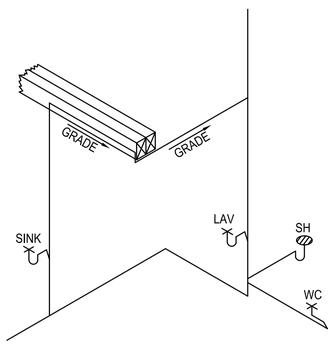

TYPICAL VENT GRADE DETAILS 6 P-501
SCALE: NONE

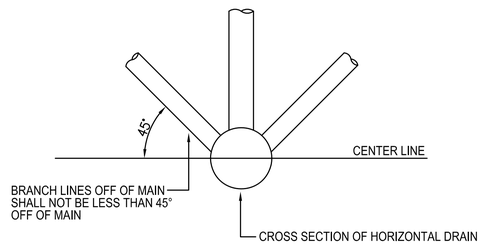

ACCEPTABLE VENT CONNECTIONS TO HORIZONTAL DRAIN - DETAIL 7 P-501
SCALE: NONE

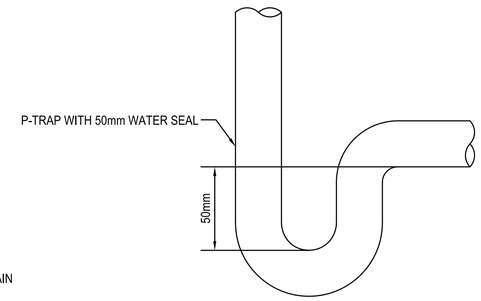

P-TRAP WITH 50mm WATER SEAL DETAIL 8 P-501
SCALE: NONE

0 2000 4000
SCALE: 1:100

UNLESS OTHERWISE NOTED, LINEAR DIMENSIONS SHOWN ARE IN MILLIMETERS.

COMMONWEALTH OF PENNSYLVANIA
REGISTERED PROFESSIONAL
MATTHEW R. SOTOSKY
ENGINEER
045576-E

US ARMY CORPS OF ENGINEERS AFGHANISTAN NORTH DISTRICT

SYMBOL	DESCRIPTION	DATE	APPR.	SYMBOL	DESCRIPTION	DATE	APPR.

DESIGNED BY: RMH
DWN BY: RMH
CKD BY: CJM III
REVIEWED BY: JH
SUBMITTED BY: BAKER
DATE: 3/28/2011
REV.: 0
CONTRACT NO. W912ER-09-D-0002
DRAWING CODE:
FILE NAME: wecc2ppl-sheet-plot.dwg
PLOT SCALE: NONE
PLOT DATE: 3/28/2011

U.S. ARMY ENGINEER DISTRICT, AFGHANISTAN CORPS OF ENGINEERS APO AE 09356

SITE ADAPT DESIGN
B18 - VIP BARRACKS - ARCH SPAN
PLUMBING SCHEDULES, DETAILS, AND NOTES

SHEET REFERENCE NUMBER:
P-501

A1 Size 594mm x 841mm

3/28/2011 2:03 PM

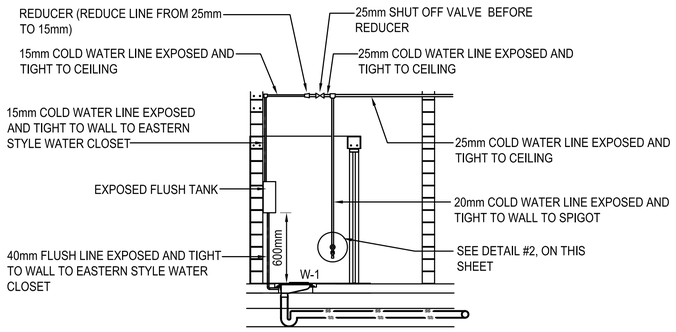

TYPICAL EASTERN STYLE WATER CLOSET SANITARY AND WATER INSTALLATION SCHEMATIC (1 / P-502)

SCALE: NONE

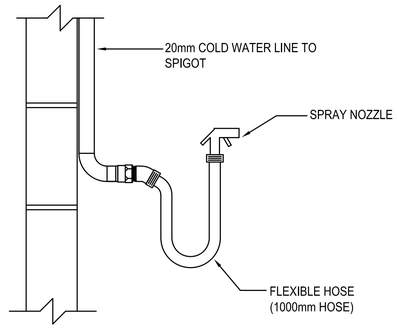

TYPICAL DETAIL - SPIGOT, FLEXIBLE HOSE, AND SPRAY NOZZLE (2 / P-502)

SCALE: NONE

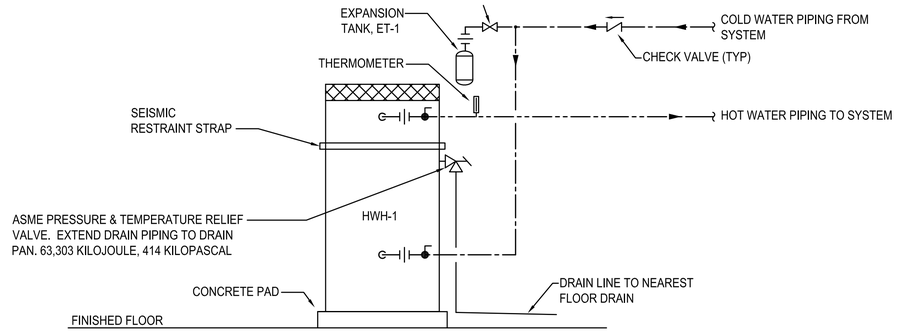

ELECTRIC WATER HEATER PIPING SCHEMATIC (3 / P-502)

SCALE: NONE

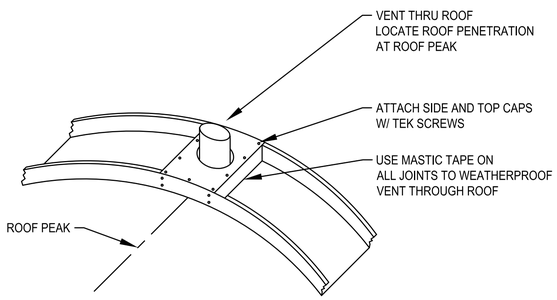

TYPICAL VENT THRU ROOF DETAIL (4 / P-502)

SCALE: NONE

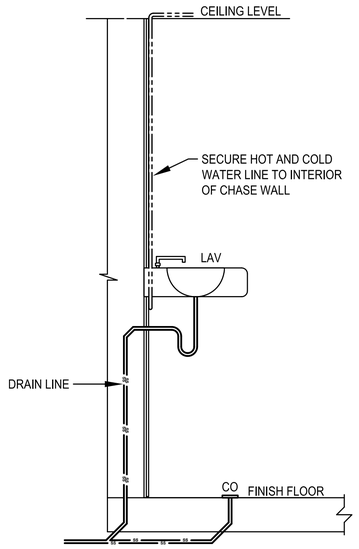

LAVATORY ELEVATION PLAN - PLUMBING (5 / P-502)

SCALE: NONE

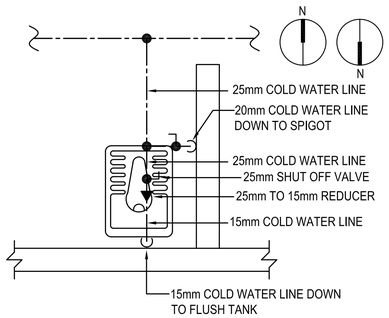

TYPICAL EASTERN STYLE WATER CLOSET WITH SPIGOT WATER PIPING DETAIL (6 / P-502)

SCALE: NONE

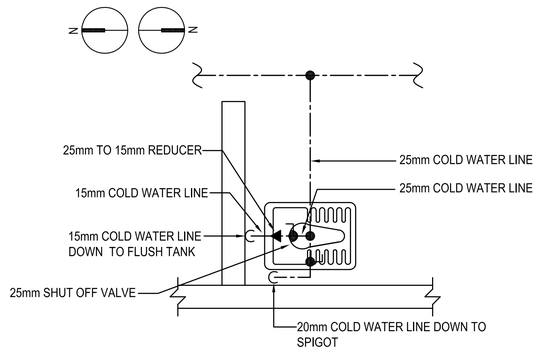

TYPICAL EASTERN STYLE WATER CLOSET WITH SPIGOT WATER PIPING DETAIL (7 / P-502)

SCALE: NONE

0 2000 4000

SCALE: 1:100

UNLESS OTHERWISE NOTED, LINEAR DIMENSIONS SHOWN ARE IN MILLIMETERS.

COMMONWEALTH OF PENNSYLVANIA
REGISTERED PROFESSIONAL ENGINEER
MATTHEW R. SOTOSKY
045576-E

US ARMY CORPS OF ENGINEERS AFGHANISTAN NORTH DISTRICT

SYMBOL	DESCRIPTION	DATE	APPR.	SYMBOL	DESCRIPTION	DATE	APPR.

DESIGNED BY: RMH
DWN BY: RMH
CKD BY: CJM III
REVIEWED BY: JH
SUBMITTED BY:
DATE: 3/28/2011
CONTRACT NO. W912ER-09-D-0002
DRAWING CODE:
FILE NAME: aec(phase)-p-p-502.(dwg)
PLOT SCALE: NONE
PLOT DATE: 3/28/2011
REV: 0

BAKER

U.S. ARMY ENGINEER DISTRICT, AFGHANISTAN
CORPS OF ENGINEERS
APO AE 09356

SITE ADAPT DESIGN

B18 - VIP BARRACKS - ARCH SPAN

PLUMBING DETAILS

SHEET REFERENCE NUMBER:

P-502

A1 Size 594mm x 841mm

3/28/2011 2:03 PM

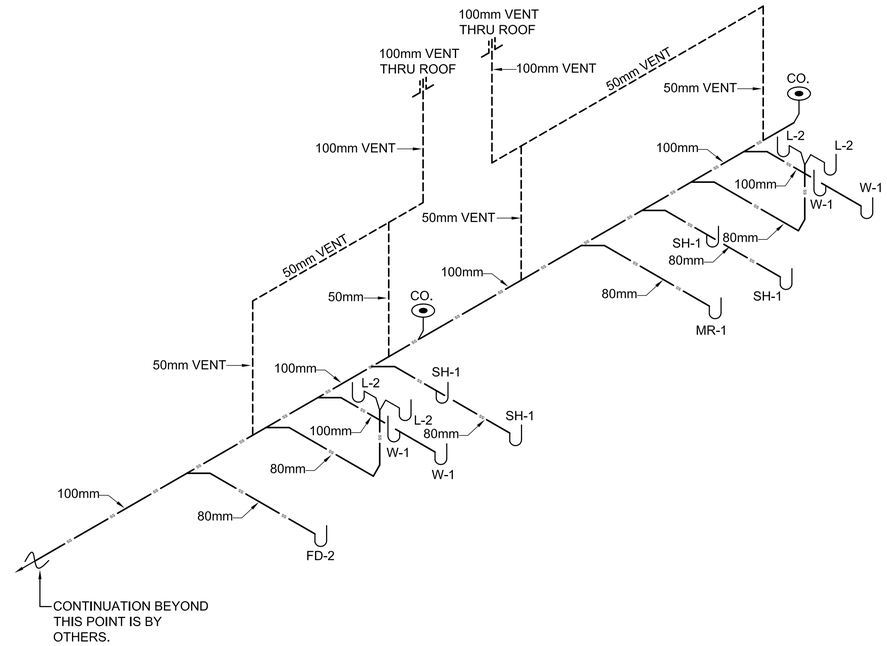

1
P-901

DRAINAGE & VENTING ISOMETRIC

NOT TO SCALE

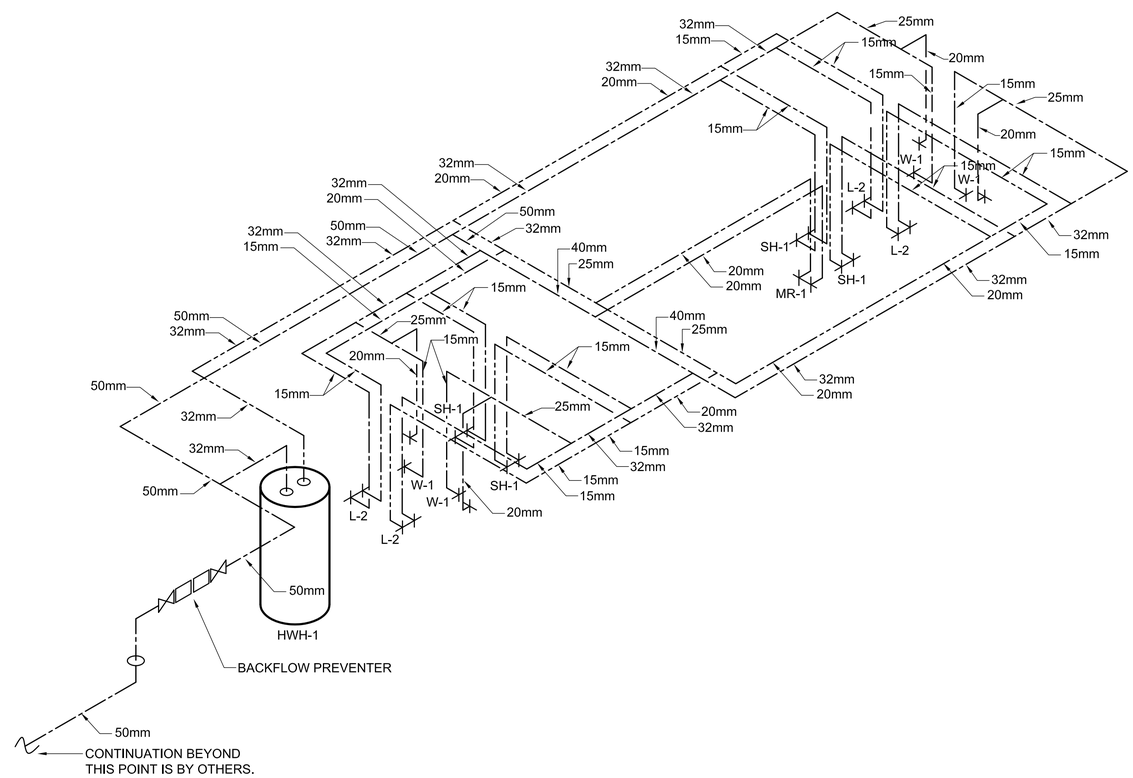

2
P-901

HOT AND COLD WATER PIPING ISOMETRIC

SCALE

UNLESS OTHERWISE NOTED,
LINEAR DIMENSIONS
SHOWN ARE IN MILLIMETERS.

COMMONWEALTH OF PENNSYLVANIA
REGISTERED PROFESSIONAL
MATTHEW R. SOTOSKY
ENGINEER
045576-E

US ARMY CORPS
OF ENGINEERS
AFGHANISTAN NORTH
DISTRICT

SYMBOL	DESCRIPTION	DATE	APPR.	SYMBOL	DESCRIPTION	DATE	APPR.

DESIGNED BY: RMH
DWN BY: RMH
CKD BY: CJM III
REVIEWED BY: JH
SUBMITTED BY:
DATE: 3/28/2011
CONTRACT NO. W912ER-09-D-0002
DRAWING CODE:
FILE NAME: wecompanyd-ds-p-sp1.dwg
PLOT SCALE: NONE
PLOT DATE: 3/28/2011
REV: 0

BAKER

U.S. ARMY ENGINEER DISTRICT, AFGHANISTAN
CORPS OF ENGINEERS
APO AE 09356

SITE ADAPT DESIGN

B18 - VIP BARRACKS - ARCH SPAN

DRAINAGE AND VENT ISOMETRIC AND
HOT AND COLD WATER PIPING ISOMETRIC

SHEET
REFERENCE
NUMBER:

P-901

3/28/2011 2:03 PM

A1 Size 594mm x 841mm

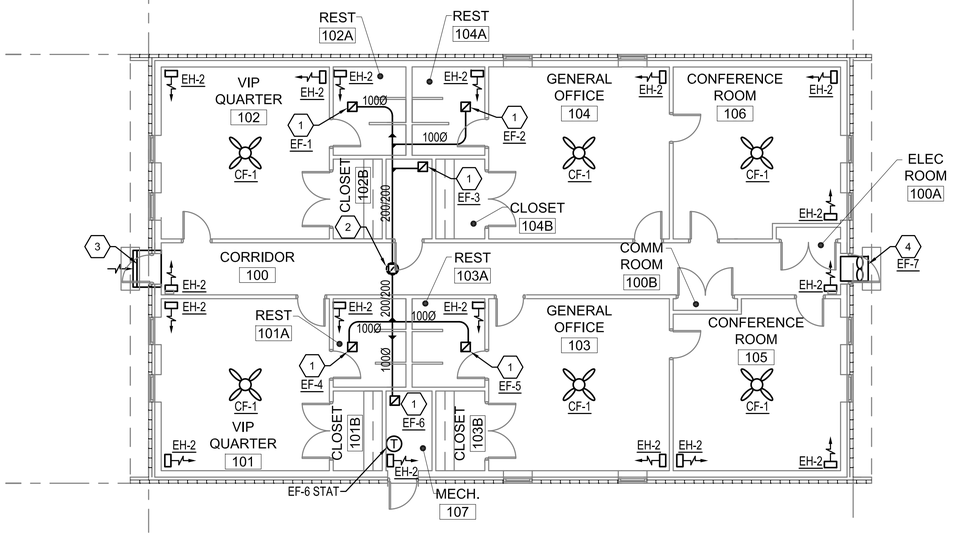

1 M-101 HVAC - FLOOR PLAN

SCALE: 1:100

GENERAL NOTES:

1. DO NOT SCALE DRAWINGS - ALL DIMENSIONS AND CONDITIONS SHALL BE CHECKED AND VERIFIED BY THE CONTRACTOR AT THE SITE.
2. ALL WORK PERFORMED ON THIS BUILDING SHALL BE IN COMPLIANCE WITH ALL PERTINENT CODES, RULES, ORDINANCES AND REGULATIONS OF THE GOVERNING AUTHORITIES.
3. ALL WORK PERFORMED UNDER AND IN CONNECTION WITH THESE DRAWINGS AND SPECIFICATIONS SHALL BE IN STRICT COMPLIANCE WITH THE LATEST SAFETY AND HEALTH STANDARDS.
4. COORDINATE ALL EQUIPMENT LOCATIONS WITH EQUIPMENT SHOWN ON OTHER DRAWINGS. VERIFY FINAL LOCATIONS IN FIELD.

SYMBOLS:

- (X) KEY NOTE
- (000) AIR VOLUME IN LITERS PER SECOND (LPS)
- UC DOOR UNDERCUT 25mm
- $ SINGLE POLE SWITCH FOR EXHAUST FAN - 20A RATED
- $3 THREE POLE SWITCH FOR EXHAUST FAN - 20A RATED
- ELECTRIC HEATER
- CEILING FAN
- DIRECTION OF AIR FLOW

ABBREVIATIONS:

AFF	ABOVE FINISH FLOOR
CF	CEILING FANS
LPS	LITERS PER SECOND
EF	EXHAUST FAN
EH	ELECTRIC HEATER
STATS	THERMOSTATS
TYP	TYPICAL

KEY NOTES:

1. CEILING MOUNTED EXHAUST FAN WITH DUCT EXTENDED TO ROOF PENETRATION. PREPARE ROOF PENETRATION AND FLASH AS RECOMMENDED BY BUILDING MANUFACTURER.
2. 500x350 (20x14) DUCT UP TO UNDERSIDE OF ROOF WITH 4 150Ø (6") VENT HOLES AT RIDGE TO ROOF CAP. PREPARE ROOF PENETRATION AND FLASH AS RECOMMENDED BY BUILDING MANUFACTURER. CONNECT EXHAUST DUCTS AS INDICATED. SEE DETAIL THIS SHEET.
3. 1050x1350 (41x53) INTAKE LOUVER WITH MOTOR OPERATED DAMPER INTERLOCKED WITH ATTIC FAN. LOUVER LOCATED AS HIGH AS POSSIBLE IN ATTIC SPACE. SEE DETAIL THIS SHEET.
4. 787mm (31"sq) WALL MOUNTED ATTIC EXHAUST FAN INTERLOCKED WITH FAN BOX MOUNTED STAT. MOUNT FAN AS HIGH AS POSSIBLE IN ATTIC. SEE DETAIL THIS SHEET.

EXHAUST FAN SCHEDULE

NO.	TYPE	FLOW RATE (LPS)	DRIVE	HP	SP mmH20	ELECTRICAL DATA	SWITCH
EF-1	CEILING	35	DIRECT	FRACTIONAL	13	220/1/50	W/ LIGHTS
EF-2	CEILING	35	DIRECT	FRACTIONAL	13	220/1/50	W/ LIGHTS
EF-3	CEILING	35	DIRECT	FRACTIONAL	13	220/1/50	@ WALL
EF-4	CEILING	35	DIRECT	FRACTIONAL	13	220/1/50	W/ LIGHTS
EF-5	CEILING	35	DIRECT	FRACTIONAL	13	220/1/50	W/ LIGHTS
EF-6	CEILING	35	DIRECT	FRACTIONAL	13	220/1/50	W/ STAT
EF-7	PROP	900	DIRECT	3/4	13	220/1/50	W/ STAT

NOTES:
1. PROVIDE BACK DRAFT DAMPER AT EACH FAN.

ELECTRIC UNIT HEATER SCHEDULE

NO.	FLOW RATE (LPS)	CAPACITY (KW)	F.A.T. (°C)	ELECT. CHAR.	MOUNTING
EH-2	200	2	38	220/1/50	WALL HUNG

NOTES:
1. PROVIDE UNIT MOUNTED DISCONNECT SWITCH.
2. PROVIDE TAMPER RESISTANT UNIT MOUNTED THERMOSTAT.
3. UNIT SHALL BE HUNG AND MOUNTED 2.5M AFF.

CEILING FAN

NO.	BLADE SIZE		VOLTAGE	SWITCH	REMARKS
	mm	IN			
CF-1	1320	52	220/1/50	@ WALL	3 SPEED REVERSIBLE MOTOR

NOTES:
1. IF FANS ARE TO BE INSTALLED IN AN AREA WITHOUT A CEILING, PROVIDE EXTENSION DOWN RODS FROM ARCH-SPAN TABS, BRACE / GUY FAN AS REQUIRED AND INSTALL FANS 2.5M AFF. IF FANS ARE TO BE MOUNTED IN AREA WITH A CEILING GRID OR HARD CEILING, MOUNT PER MANUFACTURERS RECOMMENDATIONS. SEE ELECTRICAL DRAWINGS FOR MOUNTING OPTIONS.
2. PROVIDE WITHOUT LIGHT FIXTURE.
3. PROVIDE WITH REMOTE MOUNTED ON-OFF SWITCH. SWITCHES ARE SHOWN ON ELECTRICAL DRAWINGS.
4. COORDINATE CEILING FANS WITH LIGHTS, IN GENERAL FANS SHALL BE CENTERED BETWEEN LIGHTS WHEN POSSIBLE.

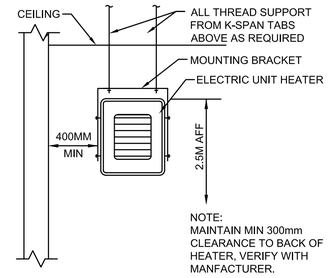

2 M-101 ELECTRIC UNIT HEATER MOUNTING DETAIL

SCALE: N.T.S.

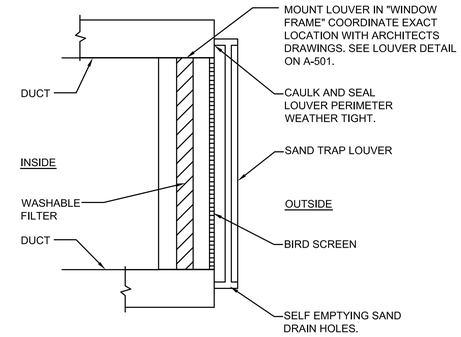

3 M-101 FILTERED SAND TRAP LOUVER

SCALE: N.T.S.

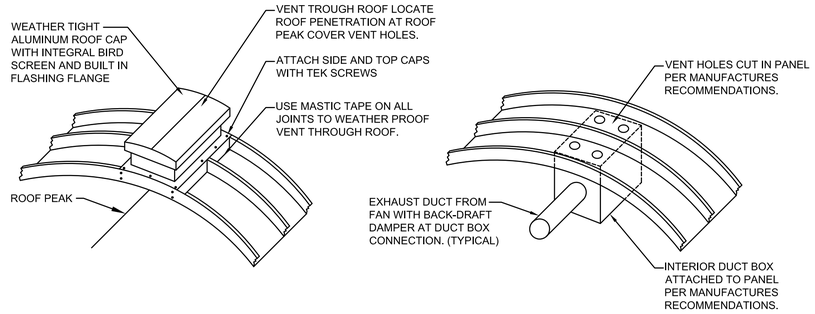

4 M-101 EXHAUST FAN ROOF CAP DETAIL

SCALE: N.T.S.

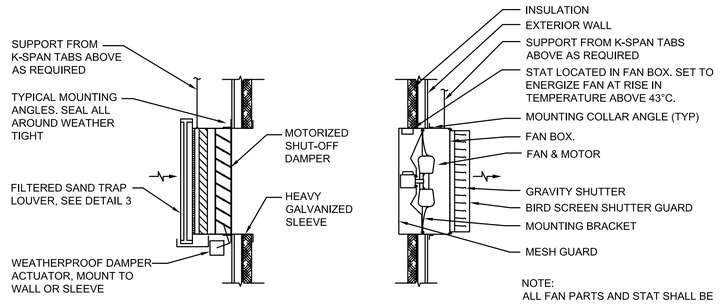

5 M-101 ATTIC VENTILATION SYSTEM DETAIL

SCALE: N.T.S.

N

0 2000 4000

SCALE: 1:100

UNLESS OTHERWISE NOTED, LINEAR DIMENSIONS SHOWN ARE IN MILLIMETERS.

COMMONWEALTH OF PENNSYLVANIA
REGISTERED PROFESSIONAL
MATTHEW R. SOTOSKY
ENGINEER
045576-E

US ARMY CORPS OF ENGINEERS
AFGHANISTAN NORTH DISTRICT

SYMBOL	DESCRIPTION	DATE	APPR.	SYMBOL	DESCRIPTION	DATE	APPR.

DATE: 3/28/2011 | REV: 0
CONTRACT NO. W912ER-09-D-0002
DRAWING CODE:
FILE NAME: M101HVACFloorPlan-B18-VIP-100.DWG
PLOT SCALE:
PLOT DATE: 3/28/2011

DESIGNED BY: RML | CKD BY: CJM
DWN BY: JJN | REVIEWED BY: JH
SUBMITTED BY:

BAKER

U.S. ARMY ENGINEER DISTRICT, AFGHANIST'AN
CORPS OF ENGINEERS
APO AE 09356

SITE ADAPT DESIGN
B18 - VIP BARRACKS - ARCH SPAN
HVAC - FLOOR PLAN SCHEDULES AND DETAILS

SHEET REFERENCE NUMBER:
M-101

A1 Size 594mm x 841mm

3/28/2011 2:03 PM

POWER

- DISTRIBUTION PANELBOARD
- NEW PANELBOARD - SURFACE
- NEW PANELBOARD - RECESSED
- GENERATOR
- TRANSFORMER (DRAWN TO SIZE)
- JUNCTION BOX
- JUNCTION BOX - CEILING
- FUSIBLE SAFETY SWITCH
- MOTOR
- MOTOR STARTING SWITCH - 220V, 20A RATED UNLESS OTHERWISE NOTED
- ELECTRIC WATER HEATER
- CEILING FAN - REFER TO SPECIFICATION SECTION 26 20 00

RECEPTACLES

- DUPLEX 20A TYPE CEE 7/7 "SCHUKO STYLE" UNSWITCHED RECEPTACLE
- GF — DUPLEX 20A TYPE CEE 7/7 "SCHUKO STYLE" UNSWITCHED RECEPTACLES - 10mA GROUND FAULT INTERRUPTER TYPE
- WP — DUPLEX 20A TYPE CEE 7/7 "SCHUKO STYLE" UNSWITCHED TYPE WITH WEATHERPROOF COVER - 10mA GROUND FAULT INTERRUPTER TYPE
- EXP — DUPLEX 20A TYPE CEE 7/7 "SCHUKO STYLE" UNSWITCHED RECEPTACLES - EXPLOSION PROOF
- * INDICATES MOUNT DEVICE ABOVE COUNTERTOP OR AT 1070mm ABOVE FINISHED FLOOR WHERE NO COUNTER IS TO BE INSTALLED.

SOME OF THESE SYMBOLS MAY NOT BE USED UNDER THIS PROJECT. SEE THE GENERAL PROJECT NOTES FOR ADDITIONAL REQUIREMENTS.

LIGHTNING PROTECTION

- AIR TERMINAL 20mm O.D. X 450mm SOLID COPPER, NICKEL PLATED ON ADHESIVE BASE
- EQ — EQUIPMENT AIR TERMINAL
- TEST WELL WITH GROUND ROD(S)
- GROUND ROD
- G — GROUND PLATE
- G — MAIN GROUND CONDUCTER CONCEALED WITHIN CONSTRUCTION
- G — MAIN GROUND CONDUCTOR EXPOSED ON EXPOSED ON BUILDING EXTERIOR SURFACE
- G — GROUND CONDUCTOR CAD WELDED TO GROUND CABLE OR EQUIPMENT
- G — GROUND ROD TRIPOD, SPACED 3 METERS APART.
- LEVEL TO LEVEL CABLE

LIGHTING

- LIGHTING FIXTURE - SEE FIXTURE SCHEDULE FOR MORE INFORMATION
- EMERGENCY LIGHTING FIXTURE - SEE FIXTURE SCHEDULE FOR MORE INFORMATION
- DOWNLIGHT
- LIGHTING FIXTURE ON NORMAL/EMERGENCY
- WALL MOUNTED LIGHT FIXTURE
- E — EXIT SIGN - DIRECTIONAL ARROWS AS INDICATED ON DRAWINGS
- REMOTE HEAD FOR BATTERY PACK
- $ — SINGLE POLE SWITCH - 20A RATED
- $3 — 3-WAY SWITCH - 20A RATED
- $4 — 4-WAY SWITCH - 20A RATED
- J — LIGHTING CONTACTOR
- POLE MOUNTED SITE LIGHTING FIXTURE- NUMBER OF FIXTURES PER POLE AS INDICATED ON DRAWINGS
- EXTERIOR DIRECTIONAL LIGHTING FIXTURE
- a — SMALL CASE LETTERS REPRESENTS LAMP(S) / SWITCHES.

TELECOMMUNICATIONS

- ▼ TELEPHONE OUTLET(S) @ 45cm AFF. U.N.O. WITH 20mm RACEWAY TERMINATED TO TELEDATA TERMINAL BOARD.
- ▽ DATA OUTLET(S) @ 45cm AFF. U.N.O. WITH 20mm RACEWAY TERMINATED TO TELEDATA TERMINAL BOARD.

TELECOMMUNICATIONS (CONTINUED)

- 21.26 ▽ — COMBINATION TELEPHONE/DATA OUTLET(S) @ 45cm AFF. U.N.O. WITH 27mm RACEWAY TERMINATED TO TELEDATA TERMINAL BOARD.
- " ▼ — WALL MTD. TELEPHONE OUTLET WITH 20mm RACEWAY TO TELEDATA TERMINAL BOARD.
- (x)T — INDICATES NUMBER OF TELEPHONE OUTLET(S) AND ASSOCIATED CABLING
- (x)D — INDICATES NUMBER OF DATA OUTLET(S) AND ASSOCIATED CABLING
- (x)TF — INDICATES NUMBER OF TELEPHONE OUTLETS AND ASSOCIATED CABLING WITH 1 OUTLET AND CABLE DEDICATED FOR FAX

SINGLE LINE SYMBOLS

- SWITCH
- BREAKER
- FUSE
- TRANSFORMER
- GROUND
- CONTACT (NORMALLY OPEN)
- CONTACT (NORMALLY CLOSED)
- TRANSFER SWITCH
- CURRENT TRANSFORMER
- INDICATES NEW ELECTRICAL EQUIPMENT
- C — INDICATES NEW CONTROL WIRING AND CONDUIT
- EQUIPMENT OUTLINE

MISCELLANEOUS

- BRANCH CIRCUIT WIRING, SURFACE MOUNTED ON WALLS
- BRANCH CIRCUIT WIRING - 6mm²
- BRANCH CIRCUIT WIRING - UNDER FLOOR
- HOME RUN BACK TO PANEL
- CONDUIT TURNED DOWN
- CONDUIT TURNED UP
- LV — LOW VOLTAGE WIRING AND CONDUIT
- ~ — INDICATES CONTINUATION OF LINE

FIRE ALARM

- FACP — FIRE ALARM CONTROL PANEL WITH BATTERY BACKUP
- F — FIRE ALARM PULL STATION
- FA — FIRE FIGHTER ALERT SYSTEM STROBE STROBE SHALL BE AMBER

FIRE ALARM (CONTINUED)

- F — FIRE ALARM STROBE - WALL MOUNTED
- F — FIRE ALARM AUDIBLE/STROBE - WALL MOUNTED
- F — FIRE ALARM HORN/STROBE - WALL MOUNTED
- S — SMOKE DETECTOR
- H — HEAT DETECTOR CEILING MOUNTED
- D — DUCT DETECTOR - PROVIDED BY EC, INSTALLED BY MC AND CONNECTED BY EC
- FS — FIRE ALARM SPEAKER AND VISIBLE CEILING MOUNTED

DENOTATIONS & ABBREVIATIONS

AFF	ABOVE FINISHED FLOOR
C	CEILING MOUNTED
E	EMERGENCY
EC	ELECTRICAL CONTRACTOR
EPO	EMERGENCY POWER OFF
EXP	EXPLOSION PROOF
F	FIRE ALARM
FF	FLUSH FLOOR MOUNTED
FL	FLUORESCENT
FO	FIBER OPTIC
FSS	FUSED SAFETY SWITCH
GF	GROUND FAULT INTERRUPTER
GC	GENERAL CONTRACTOR
IG	ISOLATED GROUND
K	KEY
LV	LOW VOLTAGE
M	MOTOR
MC	MECHANICAL CONTRACTOR
NE	NORMAL/EMERGENCY
NFSS	NON-FUSED SAFETY SWITCH
PA	PAGING SYSTEM
PLC	PLUMBING CONTRACTOR
SL	SINGLE LINE
T	TELEPHONE

DENOTATIONS & ABBREVIATIONS (CONT.)

TP	TAMPER PROOF
UE	UNDERGROUND ELECTRIC
W	WALL MOUNTED
WP	WEATHERPROOF WITH GROUND FAULT INTERRUPTION
WT	WATER TIGHT

GENERAL PROJECT NOTES:

G1. UNLESS OTHERWISE NOTED, PROVIDE ALL EQUIPMENT SHOWN ON THE PLANS. THE ELECTRICAL CONTRACTOR SHALL COORDINATE ALL SYMBOLS SHOWN ON THE PLANS WITH THE SYMBOL LIST. IT SHALL BE THE RESPONSIBILITY OF THE CONTRACTOR TO VERIFY THE INTENT OF ANY SYMBOL THAT IS SHOWN ON THE PLANS AND NOT INDICATED ON THE SYMBOL LIST WITH THE ENGINEER PRIOR TO BID.

G2. THE CONTRACTOR SHALL VERIFY THE LOCATION OF ALL UNDERGROUND UTILITIES WITHIN THE CONSTRUCTION AREA THREE (3) WORKING DAYS NOTICE BEFORE COMMENCING DIGGING. NOTIFY THE LOCAL AUTHORITY HAVING JURISDICTION AND WAIT THE REQUIRED TIME BEFORE COMMENCING TO DIG.

G3. THE CONTRACTOR SHALL COORDINATE CONDUIT RUNS, LIGHTING FIXTURES AND OTHER EQUIPMENT LOCATIONS WITH THE OTHER TRADE CONTRACTORS TO AVOID CONFLICTS.

G4. WHERE VOLTAGES AND FREQUENCIES ON THE DRAWINGS AND IN THE SPECIFICATIONS DIFFER FROM THE LOCAL ONES, ALL WORK SHALL BE PERFORMED USING THE LOCAL VOLTAGES AND FREQUENCIES.

G5. THE MINIMUM WIRE SIZE ON THE PROJECT SHALL BE 2.5mm². THE MINIMUM CONDUIT SIZE SHALL BE 20mm. THE MINIMUM BREAKER SIZE SHALL BE 15 AMPS.

G6. THE CONTRACTOR SHALL PUT A MAXIMUM OF 6 DUPLEX RECEPTACLES ON A 20A SINGLE POLE CIRCUIT.

G7. WHERE THE 1010 SCOPE REVIEW, 1015 TECHNICAL REVIEW, DRAWINGS, AND SPECIFICATIONS DIFFER FROM AMERICAN CODES OR STANDARDS, THE 1010, 1015, DRAWINGS, AND SPECIFICATIONS SHALL RULE.

G8. ALL CONDUIT AND DEVICES SHALL BE SURFACE MOUNTED UNLESS OTHERWISE INDICATED.

G9. CONTRACTOR SHALL COORDINATE ALL WORK WITH ALL OTHER TRADES TO ENSURE ALL WORK IS COMPLETED IN A PROFESSIONAL, WORKMAN-LIKE MANNER.

UNLESS OTHERWISE NOTED, LINEAR DIMENSIONS SHOWN ARE IN MILLIMETERS.

COMMONWEALTH OF PENNSYLVANIA — REGISTERED PROFESSIONAL ENGINEER — JOSEPH R. GAUS — PE-074251

US ARMY CORPS OF ENGINEERS AFGHANISTAN NORTH DISTRICT

SYMBOL	DESCRIPTION	DATE	APPR.	SYMBOL	DESCRIPTION	DATE	APPR.

DESIGNED BY: JG | DWN BY: BB | CKD BY: JG | REVIEWED BY: JH | SUBMITTED BY: BAKER

DATE: 3/28/2011 | REV: 0
CONTRACT NO. W912ER-09-D-0002
DRAWING CODE:
FILE NAME: abbreviations-and-gen-notes
PLOT SCALE: NONE
PLOT DATE: 3/28/2011

U.S. ARMY ENGINEER DISTRICT, AFGHANISTAN
CORPS OF ENGINEERS
APO AE 09356

SITE ADAPT DESIGN

B18 - VIP BARRACKS - ARCH SPAN

ABBREVIATIONS, SYMBOLS AND GENERAL NOTES

SHEET REFERENCE NUMBER:

E-001

3/28/2011 2:03 PM

A1 Size 594mm x 841mm

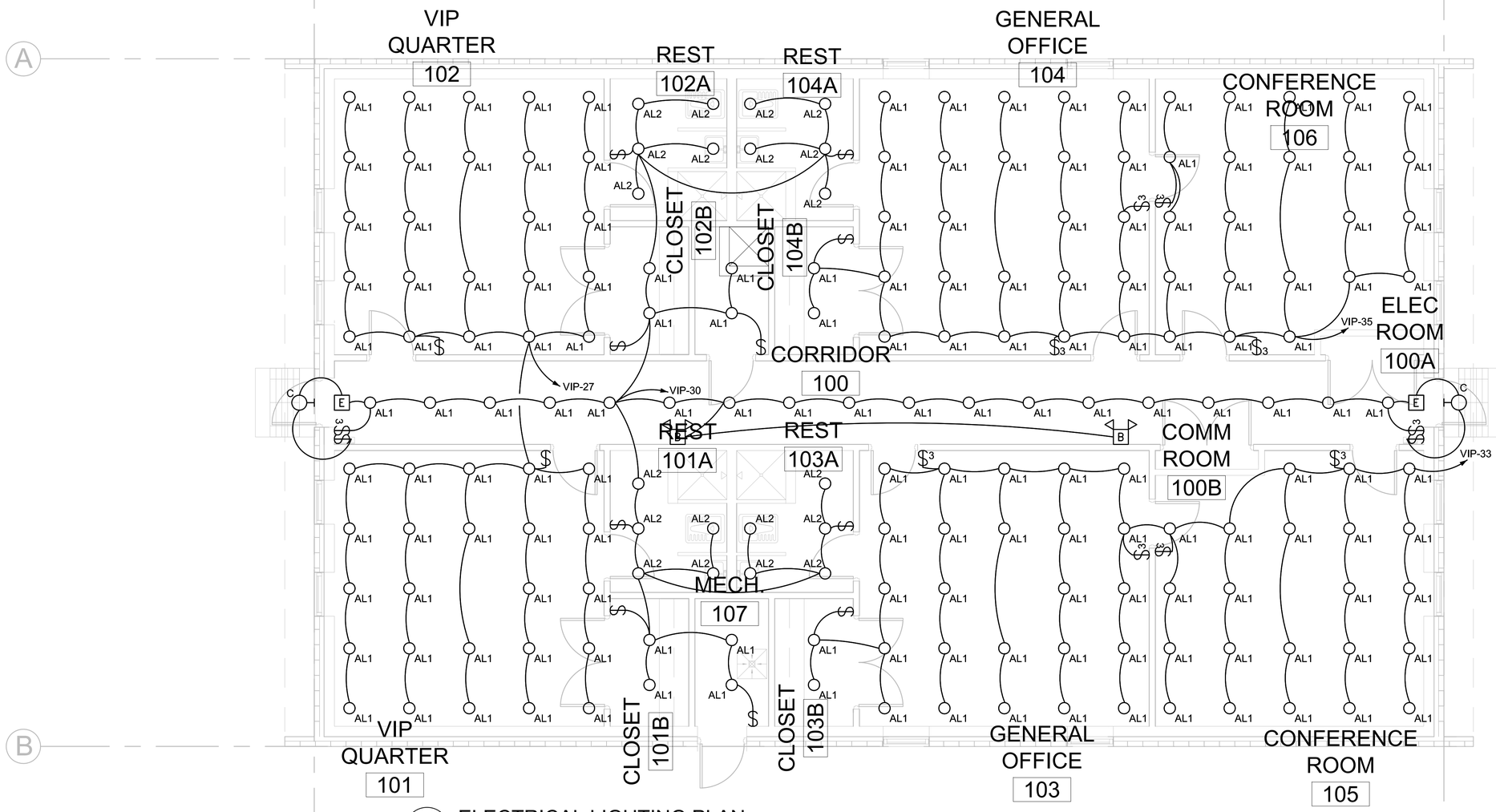

1 E-101 ELECTRICAL LIGHTING PLAN

SCALE: 1:50

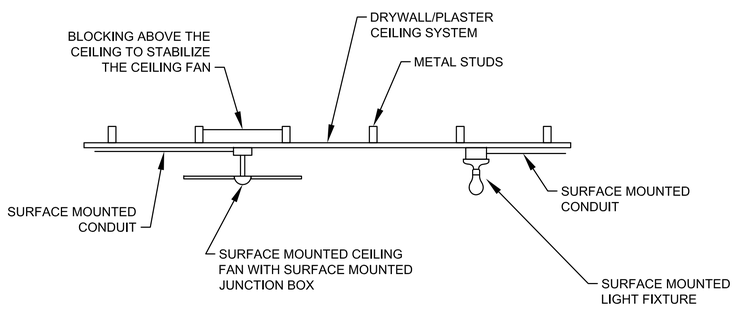

2 E-101 NON-OPEN BAY MOUNTING DETAIL

NOT TO SCALE

GENERAL NOTES:

1. REFER TO DRAWING #E-001 FOR THE ELECTRICAL SYMBOLS LIST.
2. REFER TO DRAWING #E-601 FOR THE LIGHTING FIXTURE SCHEDULE.
3. REFER TO DRAWING #E-602 FOR PANEL SCHEDULES.
4. LIGHT FIXTURES INDICATED AS EMERGENCY SHALL BE PROVIDED WITH A BATTERY BACKUP BALLAST.
5. MOUNT BATHROOM LIGHT FIXTURES 600mm AWAY FROM THE SHOWER PAN AREA (BS7671 ZONE 1).
6. LIGHT SWITCHES AND CEILING FAN SWITCHES SHALL BE GANGED IN THE SAME FACEPLATE AT ROOM ENTRANCES.
7. CIRCUITS SHOWN INCLUDE ONE PHASE CONDUCTOR, ONE NEUTRAL, AND ONE EQUIPMENT GROUND CONDUCTOR UNLESS OTHERWISE SHOWN. THE CONDUCTOR SIZE SHALL BE 2.5mm² UNLESS INDICATED OTHERWISE ON THE PANEL SCHEDULE.

N

0 500 1000 2000

SCALE: 1:50

UNLESS OTHERWISE NOTED, LINEAR DIMENSIONS SHOWN ARE IN MILLIMETERS.

COMMONWEALTH OF PENNSYLVANIA
REGISTERED PROFESSIONAL
JOSEPH R. GAUS
ENGINEER
PE-074261

US ARMY CORPS OF ENGINEERS
AFGHANISTAN NORTH DISTRICT

SYMBOL	DESCRIPTION	DATE	APPR.	SYMBOL	DESCRIPTION	DATE	APPR.

DESIGNED BY: JG
DWN BY: BB
CKD BY: JG
REVIEWED BY: JH
SUBMITTED BY:
DATE: 4-25-2011
REV: 0
CONTRACT NO. W912ER-09-D-0002
DRAWING CODE:
FILE NAME: wecomprepared-ea-sf-no-data
PLOT SCALE: 1:50
PLOT DATE: 4/25/2011

BAKER

U.S. ARMY ENGINEER DISTRICT, AFGHANISTAN
CORPS OF ENGINEERS
APO AE 09356

SITE ADAPT DESIGN

B18 - VIP BARRACKS - ARCH SPAN

ELECTRICAL LIGHTING PLAN

SHEET REFERENCE NUMBER:

E-101

A1 Size 594mm x 841mm

4/25/2011 5:03 PM

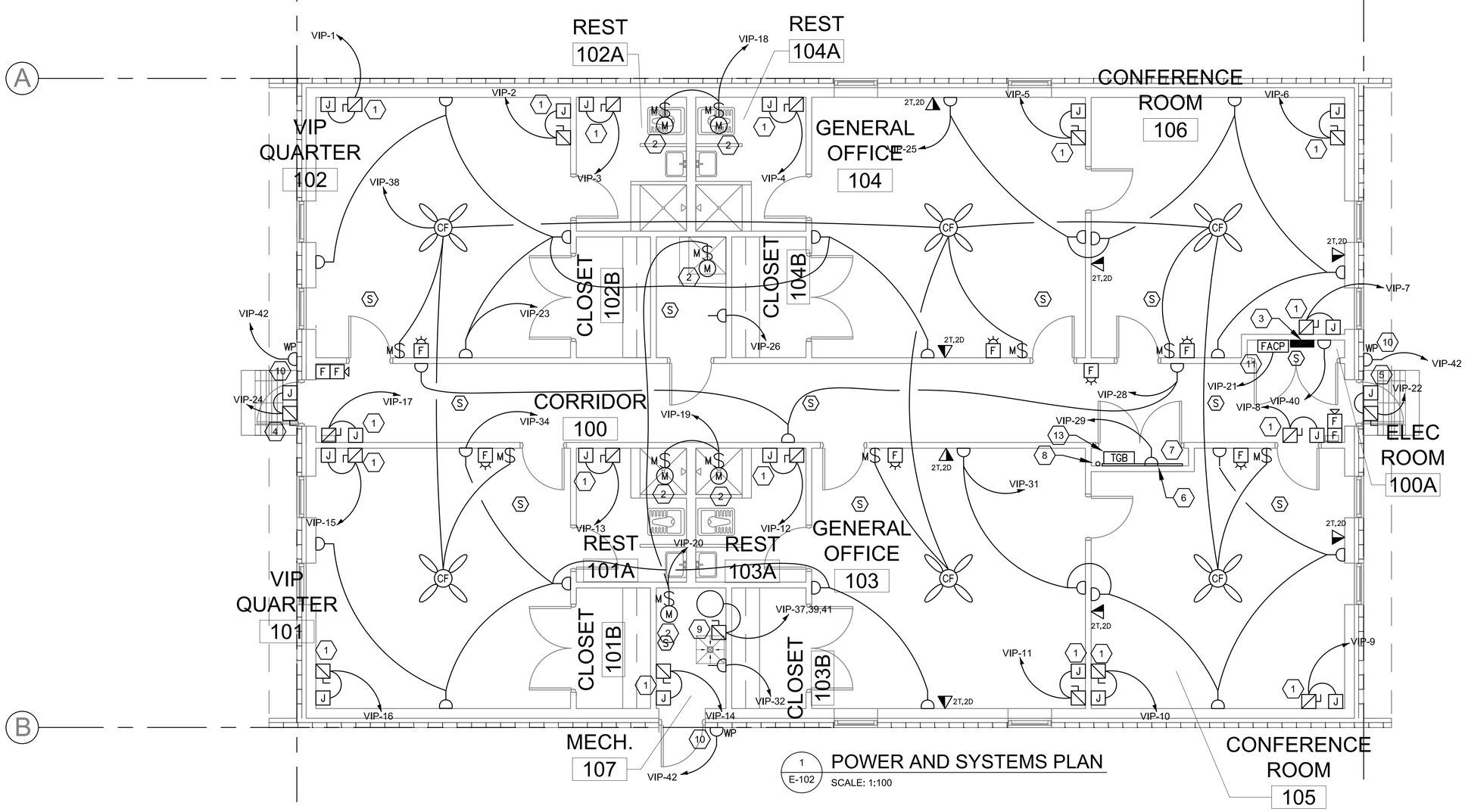

1 E-102 POWER AND SYSTEMS PLAN

SCALE: 1:100

GENERAL NOTES:

1. REFER TO DRAWING #E-001 FOR THE ELECTRICAL SYMBOLS LIST.
2. REFER TO DRAWING #E-501 FOR THE POWER RISER DIAGRAM.
3. REFER TO DRAWING #E602 FOR ELECTRICAL PANEL SCHEDULES.
4. COORDINATE EXACT MOUNTING LOCATION OF DISCONNECTING MEANS FOR MECHANICAL AND PLUMBING EQUIPMENT IN THE FIELD.
5. FUSIBLE SAFETY SWITCHES THAT ARE NOT OTHERWISE IDENTIFIED SHALL BE 380V, IP, 30A FUSED SAFETY SWITCHES WITH 20A FUSES.
6. LIGHT SWITCHES AND CEILING FAN SWITCHES SHALL BE GANGED IN THE SAME FACEPLATE AT ROOM ENTRANCES.
7. CIRCUITS SHOWN INCLUDE ONE PHASE CONDUCTOR, ONE NEUTRAL, AND ONE EQUIPMENT GROUND CONDUCTOR UNLESS OTHERWISE SHOWN. THE CONDUCTOR SIZE SHALL BE 2.5mm² UNLESS INDICATED OTHERWISE ON THE PANEL SCHEDULE.
8. ALL SMOKE DETECTORS SHOWN SHALL BE CONNECTED TO THE FIRE ALARM CONTROL PANEL AS SYSTEM SMOKE DETECTORS.
9. ALL SLEEPING QUARTER RECEPTACLES SHALL BE AFCI TYPE.

KEY NOTES:

1. PROVIDE POWER CONNECTION TO ELECTRIC UNIT HEATER. REFER TO MECHANICAL PLANS AND PANEL SCHEDULES FOR MORE INFORMATION.
2. PROVIDE POWER CONNECTION TO EXHAUST FAN. REFER TO MECHANICAL PLANS AND PANEL SCHEDULES FOR MORE INFORMATION.
3. PANEL 'VIP' 380/220V, 3Ø, 4W.
4. PROVIDE POWER CONNECTION TO MOTOR OPERATED DAMPER MOUNTED IN THE ATTIC.
5. PROVIDE POWER CONNECTION TO EXHAUST FAN MOUNTED IN THE ATTIC.
6. PROVIDE A 1200mm X 2400mm SHEET OF FIRE RESISTANT PLYWOOD FOR MOUNTING OF TELECOMMUNICATIONS EQUIPMENTS.
7. INSTALL (4) 50mm CONDUITS PASSING FROM THE COMMUNICATIONS ROOM TO THE ROOF OF THE BUILDING. THE ROOF PENETRATION SHALL HAVE A WEATHERPROOF BOX ON TOP AND SHALL BE FLASHED OR PATCHED AS NECESSARY TO PREVENT WATER LEAKAGE. THE (4) 50mm OR LARGER COMMUNICATIONS CONDUITS SHALL BE TYPICAL WITH THE FOLLOWING INSTALLATION CRITERIA: MANHOLE OR HANDHOLE SYSTEMS SHALL HAVE NO MORE THAN 150M BETWEEN ACCESS POINTS. PER NEC CODE, THERE SHALL NOT BE MORE THAN 3 BENDS PER RUN OF CONDUITS. THE RADIUS BENDS SHALL BE BETWEEN 609mm TO 914mm RADIUS BENDS.
8. PROVIDE CONDUIT STUB UP IN THE ROOM FOR INCOMING TELECOM SERVICES FROM THE CENTRAL SYSTEM IN THE GARRISON.
9. PROVIDE POWER CONNECTION TO HOT WATER HEATER. CIRCUIT SHALL INCLUDE 3 PHASE CONDUCTORS, ONE NEUTRAL AND ONE EQUIPMENT GROUND CONDUCTOR. SEE PLUMBING PLANS AND ELECTRICAL PANEL SCHEDULES FOR MORE INFORMATION.
10. REFER TO DETAIL #7, SHEET E501 FOR MORE INFORMATION
11. FIRE ALARM CONTROL PANEL.
12. CIRCUIT SHOWN INCLUDES THREE PHASE CONDUCTORS, ONE NEUTRAL, AND ONE EQUIPMENT GROUND CONDUCTOR. SEE PANEL SCHEDULE ON DRAWING E602 FOR SIZING.
13. TELECOMMUNICATIONS SERVICE ENTRANCE GROUND BUS.

N

0 500 1000 2000

SCALE: 1:50

UNLESS OTHERWISE NOTED, LINEAR DIMENSIONS SHOWN ARE IN MILLIMETERS.

COMMONWEALTH OF PENNSYLVANIA
REGISTERED PROFESSIONAL ENGINEER
JOSEPH R. GAUS
03/28/2011
PE-074251

US ARMY CORPS OF ENGINEERS
AFGHANISTAN NORTH DISTRICT

SYMBOL	DESCRIPTION	DATE	APPR.	SYMBOL	DESCRIPTION	DATE	APPR.

U.S. ARMY ENGINEER DISTRICT, AFGHANISTAN
CORPS OF ENGINEERS
APO AE 09356

DESIGNED BY: JG
DWN BY: BB
CKD BY: JG
REVIEWED BY: JH
SUBMITTED BY:
DATE: 3-28-2011
CONTRACT NO. W912ER-09-D-0002
DRAWING CODE:
FILE NAME: aecomjacobs-dcs-p-02.dwg
PLOT SCALE: 1:50
PLOT DATE: 3/28/2011
REV: 0

BAKER

SITE ADAPT DESIGN

B18 - VIP BARRACKS - ARCH SPAN

ELECTRICAL POWER AND SYSTEMS PLAN

SHEET REFERENCE NUMBER:

E-102

A1 Size 594mm x 841mm

3/28/2011 2:04 PM

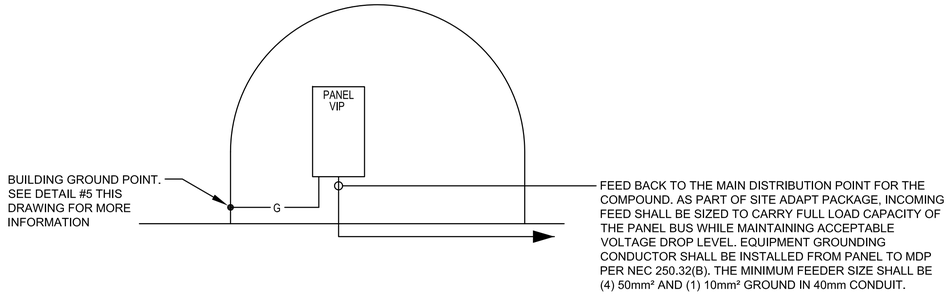

1 / E-501 VIP RISER DIAGRAM

SCALE: N.T.S.

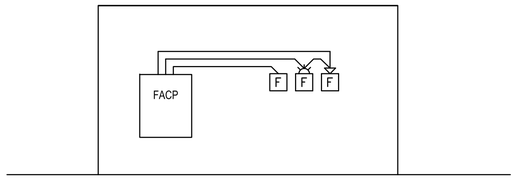

2 / E-501 TYPICAL ONE STORY FIRE ALARM RISER

SCALE: N.T.S.

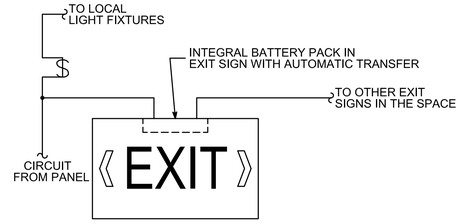

3 / E-501 EXIT SIGN WIRING DIAGRAM

SCALE: N.T.S.

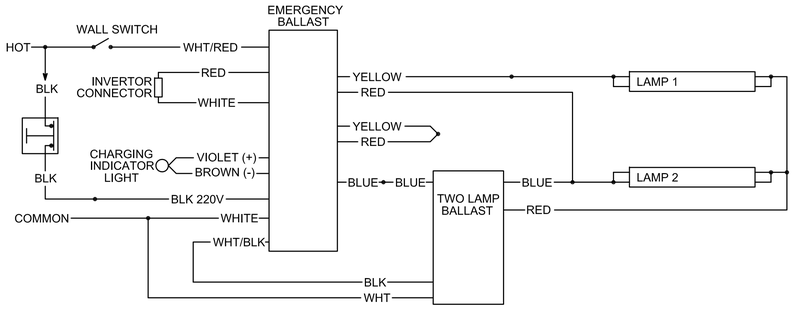

4 / E-501 EMERGENCY FIXTURE WIRING DIAGRAM

SCALE: N.T.S.

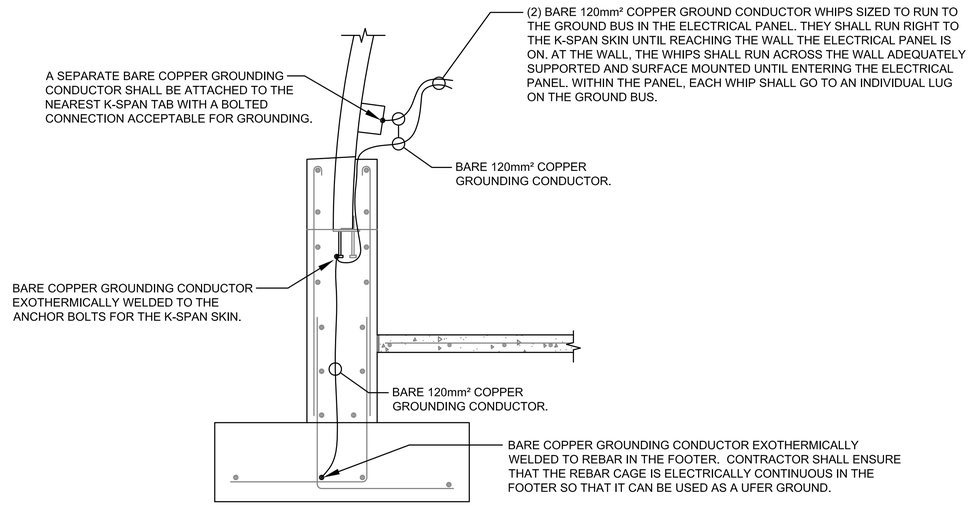

5 / E-501 BUILDING GROUNDING DETAIL

SCALE: N.T.S.

Ⓐ LARGER OF THE TWO SIZES GIVEN IN THE TABLES BELOW	
GROUNDING ELECTRODE CONDUCTOR (BASED ON AIC RATING)	
AIC RATING OF SERVICE EQUIPMENT	NECESSARY GROUNDING ELECTRODE CONDUCTOR SIZE
10K	(1) 35mm²
14K	(1) 50mm²
18K	(1) 70mm²
22K	(1) 70mm²
25K	(1) 70mm²
30K	(1) 95mm²
35K	(1) 120mm²
42K	(1) 150mm²
65K	(1) 185mm²
100K	(1) 300mm²
125K	(2) 185mm²
200K	(2) 300mm²
GROUNDING ELECTRODE CONDUCTOR (BASED ON NEC TABLE 250.66)	
SIZE OF LARGEST UNGROUNDED SERVICE CONDUCTOR OR EQUIVALENT AREA FOR PARALLEL CONDUCTORS	NECESSARY GROUNDING ELECTRODE CONDUCTOR SIZE
350 kcmil OR SMALLER	35mm²
OVER 350 kcmil TO 600 kcmil	70mm²
OVER 600 kcmil TO 1100 kcmil	70mm²
OVER 1100 kcmil	95mm²
NOTE: ALL SIZES ARE BASED ON COPPER CONDUCTORS.	

Ⓑ EQUIPMENT GROUNDING CONDUCTOR	
RATING OR SETTING OF AUTOMATIC OVERCURRENT DEVICE IN CIRCUIT AHEAD OF EQUIPMENT, CONDUIT, ETC, NOT EXCEEDING (AMPERES)	NECESSARY EQUIPMENT GROUNDING CONDUCTOR SIZE
15	2.5mm²
20	4.0mm²
30	6.0mm²
40	6.0mm²
60	6.0mm²
100	10mm²
200	16mm²
300	25mm²
400	25mm²
500	35mm²
600	50mm²
800	70mm²
1000	70mm²
1200	95mm²
1600	120mm²
2000	150mm²
2500	185mm²
3000	240mm²
4000	300mm²
5000	400mm²
6000	400mm²
NOTE: ALL SIZES ARE BASED ON COPPER CONDUCTORS.	

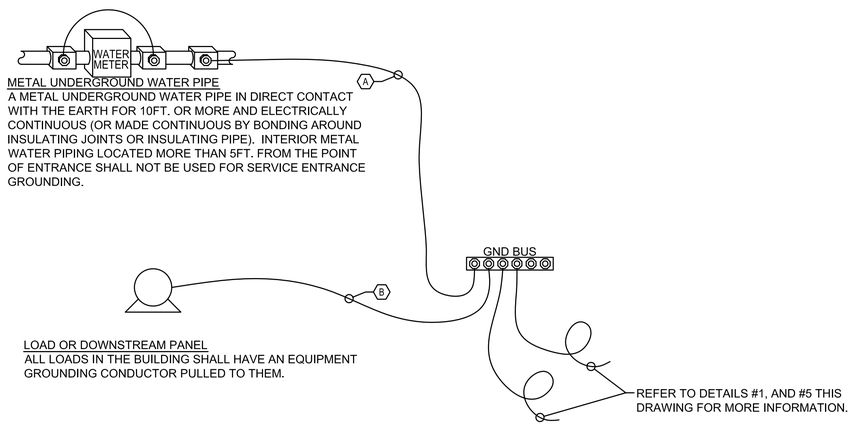

6 / E-501 SERVICE ENTRANCE GROUNDING DETAIL

SCALE: N.T.S.

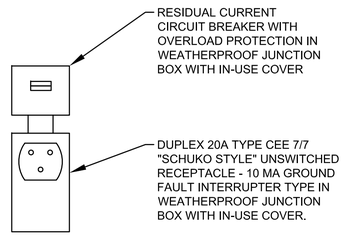

7 / E-501 RECEPTACLE DETAIL

SCALE: N.T.S.

UNLESS OTHERWISE NOTED,
LINEAR DIMENSIONS
SHOWN ARE IN MILLIMETERS.

COMMONWEALTH OF PENNSYLVANIA
REGISTERED PROFESSIONAL ENGINEER
JOSEPH R. GAUS
PE-074251
03/28/2011

US ARMY CORPS OF ENGINEERS
AFGHANISTAN NORTH DISTRICT

SYMBOL	DESCRIPTION	DATE	APPR.	SYMBOL	DESCRIPTION	DATE	APPR.

DESIGNED BY: JG
DWN BY: BB
CKD BY: JG
REVIEWED BY: JH
SUBMITTED BY:
DATE: 3/28/2011
CONTRACT NO. W912ER-09-D-0002
DRAWING CODE:
REV: 0
FILE NAME: e501-details.dwg
PLOT SCALE: NONE
PLOT DATE: 3/28/2011

BAKER

U.S. ARMY ENGINEER DISTRICT, AFGHANISTAN
CORPS OF ENGINEERS
APO AE 09356

SITE ADAPT DESIGN
B18 - VIP BARRACKS - ARCH SPAN
ELECTRICAL DETAILS

SHEET REFERENCE NUMBER:
E-501

A1 Size 594mm x 841mm

3/28/2011 2:04 PM

LIGHT FIXTURE SCHEDULE

FIXTURE MARK	STYLE NUMBER AND TYPE	NUMBER AND TYPE OF LAMPS	VOLTAGE	MOUNTING	NOTES
AL1	PORCELAIN SOCKET WITH MEDIUM SCREW IN BASE	(1) 42W SELF BALLASTED COMPACT FLUORESCENT "TWISTER" LAMP	220V - 1Ø 50HZ	SURFACE MOUNTED	
AL2	VAPORPROOF WET LOCATION JELLY JAR FIXTURE WITH MEDIUM SCREW IN BASE.	(1) 42W SELF BALLASTED COMPACT FLUORESCENT "TWISTER" LAMP	220V - 1Ø 50HZ	SURFACE MOUNTED	
C	INCANDESCENT ONE PIECE W/ APPROVED LENS STABILIZED HIGH IMPACT POLY CARBONATE. FIXTURE SHALL BE IP-44 RATED.	(1) 100W INCANDESCENT	220V - 1Ø 50HZ	WALL MOUNTED ABOVE EXTERIOR DOORS	FURNISHED WITH INTEGRAL PHOTOCELL.
E	UNIVERSAL MOUNT ENGINEER GRADE THERMOPLASTIC HOUSING EXIT SIGN WITH LED LAMPS, RED LETTERS 6" IN HEIGHT WITH ARROWS AS INDICATED, WITH 12V CADMIUM BATTERY WITH REMOTE HEAD CAPABILITY	LED LAMPS	220V - 1Ø 50HZ	UNIVERSAL MOUNTING	
B	EMERGENCY BATTERY PACK LIGHTING WITH TWO LOW VOLTAGE HEADS.	(2) 12W HALOGEN HEADS	220V - 1Ø 50HZ	SURFACE MOUNTING	

UNLESS OTHERWISE NOTED,
LINEAR DIMENSIONS
SHOWN ARE IN MILLIMETERS.

COMMONWEALTH OF PENNSYLVANIA
REGISTERED PROFESSIONAL
JOSEPH R. GAUS
04/25/2011
ENGINEER
PE-074261

US ARMY CORPS
OF ENGINEERS
AFGHANISTAN NORTH
DISTRICT

SYMBOL	DESCRIPTION	DATE	APPR.	SYMBOL	DESCRIPTION	DATE	APPR.

DESIGNED BY: JG
DWN BY: BB
REVIEWED BY: JH
SUBMITTED BY:
DATE: 4-25-2011
CONTRACT NO. W912ER-09-D-0002
DRAWING CODE:
CKD BY: JG
REV: 0
FILE NAME: e601lightfixtureschedule.dwg
PLOT SCALE: NONE
PLOT DATE: 4/25/2011

BAKER

U.S. ARMY ENGINEER DISTRICT, AFGHANISTAN
CORPS OF ENGINEERS
APO AE 09356

SITE ADAPT DESIGN

B18 - VIP BARRACKS - ARCH SPAN

LIGHT FIXTURE SCHEDULE

SHEET
REFERENCE
NUMBER:

E-601

A1 Size 594mm x 841mm

4/25/2011 5:03 PM

PANELBOARD: VIP SURFACE MOUNTED

AMP MAIN LUGS (OR) 100 AMP MAIN BREAKER W/ 100 AMP TRIP

CIRCUIT BREAKER TYPE: 380/220 VOLTS 3 PHASE 4 WIRE 50 HZ 100 AMP BUS

CCT #	TRIP AMPS	PH	WIRE MM²	GND MM²	CONDUIT MM	LOAD SERVED	LOAD-KVA A	LOAD-KVA B	LOAD-KVA C	LOAD-KVA A	LOAD-KVA B	LOAD-KVA C	LOAD SERVED	CONDUIT MM	GND MM²	WIRE MM²	PH	TRIP AMPS	CCT #
1	20	1	4	4	20	ELECTRIC HEATER - 102	2.0			2.0			ELECTRIC HEATER - 102	20	4	4	1	20	2
3	20	1	4	4	20	ELECTRIC HEATER - 102A		2.0			2.0		ELECTRIC HEATER - 104A	20	4	4	1	20	4
5	20	1	4	4	20	ELECTRIC HEATER - 104			2.0			2.0	ELECTRIC H HEATER - 106	20	4	4	1	20	6
7	20	1	4	4	20	ELECTRIC HEATER - 106	2.0			2.0			ELECTRIC HEATER - 100	20	4	4	1	20	8
9	20	1	4	4	20	ELECTRIC HEATER - 105		2.0			2.0		ELECTRIC HEATER - 105	20	4	4	1	20	10
11	20	1	4	4	20	ELECTRIC HEATER - 103			2.0			2.0	ELECTRIC HEATER - 103A	20	4	4	1	20	12
13	20	1	4	4	20	ELECTRIC HEATER - 101A	2.0			2.0			ELECTRIC HEATER - 107	20	4	4	1	20	14
15	20	1	4	4	20	ELECTRIC HEATER - 101		2.0			2.0		ELECTRIC HEATER - 101	20	4	4	1	20	16
17	20	1	4	4	20	ELECTRIC HEATER - 100			2.0			0.6	EXHAUST FANS - 102A,104A	20	2.5	2.5	1	15	18
19	15	1	2.5	2.5	20	EXHAUST FANS - 101A,103A	0.6			0.6			EXHAUST FAN - 100C,107	20	2.5	2.5	1	15	20
21	15	1	2.5	2.5	20	FACP		0.5			0.5		ATTIC MOTORIZED DAMPER	20	4	4	1	15	22
23	15	1	2.5	2.5	20	REC - 102			1.2			1.1	ATTIC EXHAUST FAN	20	4	4	1	15	24
25	15	1	2.5	2.5	20	REC - 104	1.2			0.2			REC - 100C	20	2.5	2.5	1	15	26
27	15	1	2.5	2.5	20	LIGHTING		2.5			0.6		REC - 100	20	2.5	2.5	1	15	28
29	15	1	2.5	2.5	20	REC - 100B			0.2			2.5	LIGHTING	20	2.5	2.5	1	15	30
31	15	1	2.5	2.5	20	REC - 103	1.2			0.2			REC - 107	20	2.5	2.5	1	15	32
33	15	1	2.5	2.5	20	LIGHTING		2.5			1.2		REC - 101	20	2.5	2.5	1	15	34
35	15	1	2.5	2.5	20	LIGHTING			2.5			0.0	SPARE				1	15	36
37	30	3	6	6	20	HOT WATER HEATER	6.0			1.2			CEILING FANS	20	2.5	2.5	1	15	38
39								6.0			0.2		RECEPT - ELECTRIC ROOM	20	2.5	2.5	1	15	40
41									6.0			0.6	RECEPTS - EXTERIOR	20	2.5	2.5	1	15	42
							15.0	17.5	15.9	8.2	8.5	8.8							

DIVERSIFIED LOADS:

LIGHTING: 10.0 X 0.7 = 7.0 HEATERS: 52.0 X 0.8 = 41.6

RECEPTACLES: 7.3 X 0.5 = 3.7 MOTORS: 4.6 X 0.6 = 2.7

TOTAL CONNECTED LOAD (PER PHASE) A: 23.2 B: 26.0 C: 24.7

TOTAL CONNECTED LOAD: 73.9

TOTAL DIVERSIFIED LOAD: 55.0

GENERAL NOTES:

1. CONTRACTOR SHALL PROVIDE TYPED PANEL SCHEDULES FOR EACH PANEL. IT SHALL BE THE RESPONSIBILITY OF THE CONTRACTOR TO VERIFY ROOM NUMBERS FOR EACH CIRCUIT IN THE FIELD WITH THE FINAL ROOM NUMBER PLAN. ROOM NUMBERS SHALL BE PROVIDED IN THE CIRCUIT DESCRIPTION FIELD FOR EACH CIRCUIT.
2. SITE ADAPT CONTRACTOR SHALL DETERMINE THE AVAILABLE SHORT CIRCUIT FAULT CURRENT FOR THE ELECTRICAL PANELS BASED ON THE SITE CONDITIONS.
3. CIRCUITS SHOWN AS 1 PH SHALL INCLUDE ONE PHASE CONDUCTOR, ONE NEUTRAL, AND ONE EQUIPMENT GROUND CONDUCTOR. CIRCUITS SHOWN AS 3 PH SHALL INCLUDE THREE PHASE CONDUCTORS, ONE NEUTRAL CONDUCTOR, AND ONE EQUIPMENT GROUND CONDUCTOR.

UNLESS OTHERWISE NOTED, LINEAR DIMENSIONS SHOWN ARE IN MILLIMETERS.

COMMONWEALTH OF PENNSYLVANIA
REGISTERED PROFESSIONAL ENGINEER
JOSEPH R. GAUS
PE-074261

US ARMY CORPS OF ENGINEERS
AFGHANISTAN NORTH DISTRICT

SYMBOL	DESCRIPTION	DATE	APPR.

SYMBOL	DESCRIPTION	DATE	APPR.

U.S. ARMY ENGINEER DISTRICT, AFGHANISTAN
CORPS OF ENGINEERS
APO AE 09356

DESIGNED BY: JG
DWN BY: BB
REVIEWED BY: JH
SUBMITTED BY:
CKD BY: JG
DATE: 4-25-2011
REV: 0
CONTRACT NO. W912ER-09-D-0002
DRAWING CODE:
FILE NAME: electrical-sht-e-602.dwg
PLOT SCALE: NONE
PLOT DATE: 4/25/2011

BAKER

SITE ADAPT DESIGN

B18 - VIP BARRACKS - ARCH SPAN

ELECTRICAL PANEL SCHEDULES

SHEET REFERENCE NUMBER:

E-602

A1 Size 594mm x 841mm

4/25/2011 5:04 PM

SITE ADAPT DESIGN
AD22 - HEADQUARTERS BUILDING - ARCH SPAN

CONTRACT NUMBER:
W912ER-09-D-0002 TO:0027

US ARMY CORPS
OF ENGINEERS
AFGHANISTAN NORTH
DISTRICT

SYMBOL	DESCRIPTION	DATE	APPR.	SYMBOL	DESCRIPTION	DATE	APPR.

U.S. ARMY ENGINEER DISTRICT, AFGHANISTAN
CORPS OF ENGINEERS
APO AE 09356

DESIGNED BY: JDS
DWN BY: JDS
CKD BY: JDS
REVIEWED BY: JH
SUBMITTED BY:
BAKER

DATE: 3/24/2011
REV: 0
CONTRACT NO. W912ER-09-D-0002
DRAWING CODE:
FILE NAME:
PLOT SCALE: NONE
PLOT DATE: 3/24/2011

SITE ADAPT DESIGN
AD22 - HEADQUARTERS BUILDING - ARCH SPAN
COVER SHEET

SHEET REFERENCE NUMBER:
G-001

3/24/2011 12:25 PM

A1 Size 594mm x 841mm

ENGINEERING AND CONSTRUCTION DIVISION
US ARMY ENGINEER DISTRICT, AFGHANISTAN
APO AE, 09356

AD22 HEADQUARTERS BUILDING

PROJECT COORDINATION

U.S. ARMY ENGINEER DISTRICT, AFGHANISTAN

PROJECT MANAGER _____ DATE _____

CHIEF, DESIGN BRANCH _____ DATE _____

THIS PROJECT WAS DESIGNED BY AFGHANASTAN ENGINEER DISTRICT OF THE U.S ARMY CORPS OF ENGINEERS. THE INITIALS OR SIGNATURES AND REGISTRATION DESIGNATIONS OF INDIVIDUALS APPEAR ON THESE DOCUMENTS WITHIN THE SCOPE OF THEIR EMPLOYMENT AS REQUIRED BY ER 1110-1-8152.

SECTION/DETAIL CROSS REFERENCING CONVENTIONS

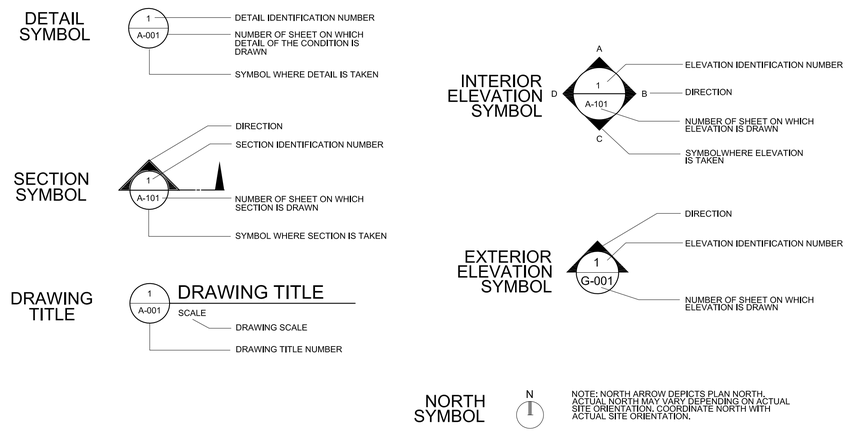

APPENDIX A

AFGHANISTAN

SCHEDULE OF DRAWINGS

SHEET NO	DWG CODE	SHEET REFERENCE NO	DESCRIPTION	REV STATUS
			GENERAL	
1	ARCHSPANBATTHQ-AD22-G-001	G-001	COVER SHEET	
2	ARCHSPANBATTHQ-AD22-G-002	G-002	INDEX OF DRAWINGS	
3	ARCHSPANBATTHQ-AD22-G-003	G-003	LIFE SAFETY PLAN AND CODE ANALYSIS	
			STRUCTURAL	
4	ARCHSPANBATTHQ-AD22-S-001	S-001	ABBREVIATIONS AND GENERAL NOTES	
5	ARCHSPANBATTHQ-AD22-S-002	S-002	GENERAL NOTES AND DESIGN CRITERIA	
6	ARCHSPANBATTHQ-AD22-S-101	S-101	FOUNDATION PLAN	
7	ARCHSPANBATTHQ-AD22-S-201	S-201	BUILDING ELEVATION AND DETAILS	
8	ARCHSPANBATTHQ-AD22-S-202	S-202	BUILDING SECTION AND DETAILS	
9	ARCHSPANBATTHQ-AD22-S-301	S-301	FOUNDATION SECTIONS	
10	ARCHSPANBATTHQ-AD22-S-302	S-302	SECTIONS	
11	ARCHSPANBATTHQ-AD22-S-303	S-303	LATRINE SECTIONS	
12	ARCHSPANBATTHQ-AD22-S-501	S-501	TYPICAL DETAILS	
13	ARCHSPANBATTHQ-AD22-S-502	S-502	DOOR/WINDOW/MECHANICAL OPENING FRAME DETAILS	
14	ARCHSPANBATTHQ-AD22-S-601	S-601	SCHEDULES	
			ARCHITECTURAL	
15	ARCHSPANBATTHQ-AD22-A-001	A-001	ABBREVIATIONS, SYMBOLS AND GENERAL NOTES	
16	ARCHSPANBATTHQ-AD22-A-101	A-101	FLOOR PLAN	
17	ARCHSPANBATTHQ-AD22-A-102	A-102	REFLECTED CEILING PLAN	
18	ARCHSPANBATTHQ-AD22-A-103	A-103	ROOF PLAN	
19	ARCHSPANBATTHQ-AD22-A-201	A-201	BUILDING ELEVATIONS	
20	ARCHSPANBATTHQ-AD22-A-301	A-301	BUILDING SECTIONS	
21	ARCHSPANBATTHQ-AD22-A-302	A-302	WALL SECTIONS	
22	ARCHSPANBATTHQ-AD22-A-303	A-303	WALL SECTIONS	
23	ARCHSPANBATTHQ-AD22-A-401	A-401	ENLARGED PLAN	
24	ARCHSPANBATTHQ-AD22-A-501	A-501	EXTERIOR DETAILS	
25	ARCHSPANBATTHQ-AD22-A-502	A-502	HEAD, JAMB & SILL DETAILS	
26	ARCHSPANBATTHQ-AD22-A-503	A-503	STOOP DETAILS	
27	ARCHSPANBATTHQ-AD22-A-504	A-504	TOILET, LAVATORY & ABLUTION DETAILS	
28	ARCHSPANBATTHQ-AD22-A-505	A-505	DETAILS	
29	ARCHSPANBATTHQ-AD22-A-601	A-601	WINDOW AND DOOR SCHEDULE	
30	ARCHSPANBATTHQ-AD22-A-602	A-602	PARTITION TYPES	
31	ARCHSPANBATTHQ-AD22-A-603	A-603	FINISH SCHEDULE	
			PLUMBING	
32	ARCHSPANBATTHQ-AD22-P-001	P-001	PLUMBING SYMBOLS AND LEGEND AND GENERAL NOTES	
33	ARCHSPANBATTHQ-AD22-P-101	P-101	FLOOR PLAN - PLUMBING (SANITARY & WATER) ENLARGED FLOOR PLAN - PLUMBING (SANITARY & WATER)	
34	ARCHSPANBATTHQ-AD22-P-501	P-501	PLUMBING SCHEDULES, NOTES AND DETAILS	
35	ARCHSPANBATTHQ-AD22-P-502	P-502	PLUMBING DETAILS	
36	ARCHSPANBATTHQ-AD22-P-901	P-901	DRAINAGE VENT ISOMETRIC AND HOT AND COLD WATER PIPING ISOMETRICS	

SHEET NO	DWG CODE	SHEET REFERENCE NO	DESCRIPTION	REV STATUS
			MECHANICAL	
37	ARCHSPANBATTHQ-AD22-M-101	M-101	HVAC FLOOR PLAN AND SCHEDULES	
38	ARCHSPANBATTHQ-AD22-M-501	M-501	HVAC DETAILS	
			ELECTRICAL	
39	ARCHSPANBATTHQ-AD22-E-001	E-001	ABBREVIATIONS, SYMBOLS AND GENERAL NOTES	
40	ARCHSPANBATTHQ-AD22-E-101	E-101	LIGHTING PLAN	
41	ARCHSPANBATTHQ-AD22-E-102	E-102	POWER AND SYSTEMS PLAN	
42	ARCHSPANBATTHQ-AD22-E-501	E-501	ELECTRICAL DETAILS	
43	ARCHSPANBATTHQ-AD22-E-601	E-601	LIGHTING FIXTURE SCHEDULES	
44	ARCHSPANBATTHQ-AD22-E-602	E-602	ELECTRICAL PANEL SCHEDULES	

US ARMY CORPS OF ENGINEERS AFGHANISTAN NORTH DISTRICT

SYMBOL	DESCRIPTION	DATE	APPR.	SYMBOL	DESCRIPTION	DATE	APPR.

U.S. ARMY ENGINEER DISTRICT, AFGHANISTAN
CORPS OF ENGINEERS
APO AE 09356

DESIGNED BY: JDS
DWN BY: JDS
CKD BY: JDS
REVIEWED BY: JH
SUBMITTED BY:
DATE: 3/24/2011
CONTRACT NO. W912ER-09-D-0002
DRAWING CODE:
REV: 0
FILE NAME:
PLOT SCALE: NONE
PLOT DATE: 3/24/2011
BAKER

SITE ADAPT DESIGN
AD22 - HEADQUARTERS BUILDING - ARCH SPAN
INDEX SHEET

SHEET REFERENCE NUMBER:
G-002

A1 Size 594mm x 841mm

3/24/2011 12:25 PM

LEGEND:

- DENOTES PATHS OF EXIT TRAVEL
- EXIT — DENOTES DOOR AS AN EMERGENCY EXIT
- DENOTES STARTING POINT FOR TRAVEL DISTANCE
- FE — DENOTES FIRE EXTINGUISHER LOCATIONS
- (1) HOUR RATED WALL
- (2) HOUR RATED WALL
- FIRE RESISTANT CEILING
- NON-FIRE RESISTANT CEILING SYSTEM OR EXPOSED FIRE RESISTANT SPRAY-ON INSULATION SYSTEM AT ARCH-SPAN STRUCTURE

REFER TO REFLECTED CEILING PLANS FOR CEILING MATERIALS AND CONFIGURATION

PER MEMORANDUM FOR RECORD DATED 03 FEBRUARY 2011
ANSF CONSTRUCTION STANDARDS DIVISION 09 FINISHES:
CEILING **DO NOT** NEED TO MEET FIRE BOUNDARY CODE REQUIREMENTS.

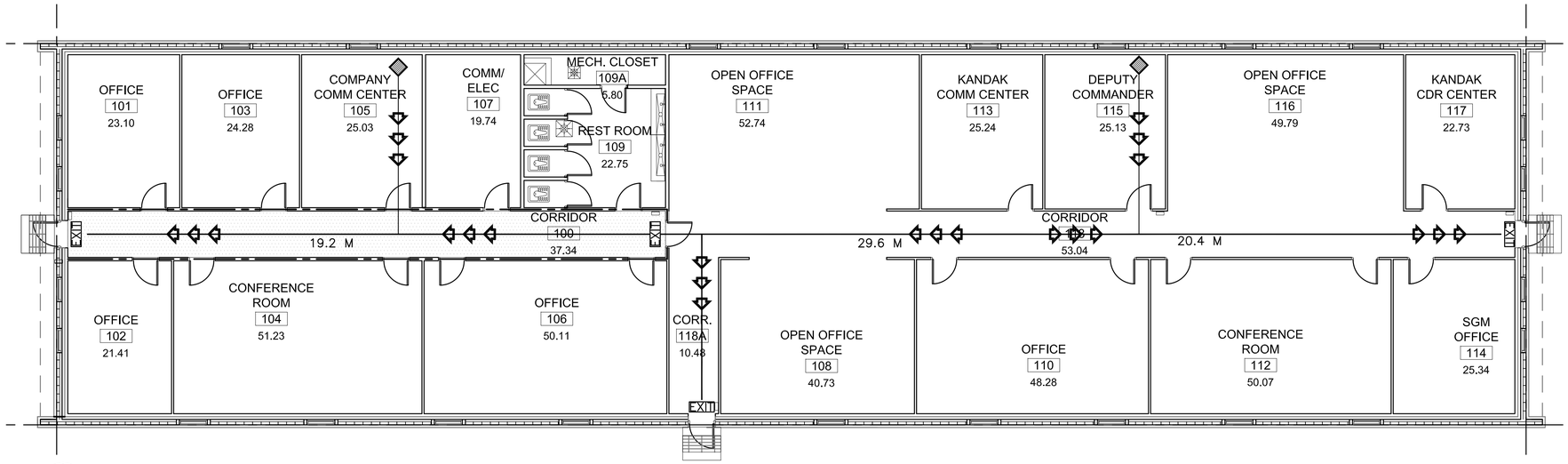

1 / G-003 LIFE SAFETY PLAN

SCALE: 1:100

CODE ANALYSIS:

1. REFERENCES:
   2009 INTERNATIONAL BUILDING CODE (2009 IBC)
   2009 LIFE SAFETY CODE (2009 NFPA 101)
   2009 NFPA 10 - STANDARD FOR PORTABLE FIRE EXTINGUISHERS.

2. IBC OCCUPANCY CLASSIFICATION:
   GROUP B (BUSINESS NFPA 101 6.1.11 AND CHAPTER 38)

3. TYPE OF CONSTRUCTION (IBC): TYPE II-B (UNPROTECTED/NONSPRINKLERED)

4. IBC TABLE 503: ALLOWABLE HEIGHT AND BUILDING AREAS:
   GROUP B
   ALLOWABLE AREA: 2,137 SM
   ALLOWABLE HEIGHT: 3 STORIES (18 M)

   GROUP B
   PROPOSED AREA: 756 SM
   PROPOSED HEIGHT: 1 STORY (<18 M) p

5. IBC TABLE 601 & 602: FIRE RESISTANCE RATING REQUIREMENTS FOR BUILDING ELEMENTS FOR TYPE II-B

BUILDING ELEMENT	RATING (HOUR)	REFERENCE
STRUCTURAL FRAME (COLUMNS, GIRDERS & TRUSSES)	0	TABLE 601
BEARING WALLS		
EXTERIOR	0	TABLE 601
INTERIOR	0	TABLE 601
NONBEARING WALLS & PARTITIONS		
INTERIOR	0	TABLE 601
FLOOR CONSTRUCTION	0	TABLE 601
ROOF CONSTRUCTION	0	TABLE 601
EXTERIOR WALL	0	TABLE 602

IBC TABLE 803.5 - INTERIOR WALL AND CEILING FINISH REQUIREMENTS FOR B OCCUPANCY/NONSPRINKLERED

ROOMS AND GROUP	EXIT ENCLOSURES AND EXIT PASSAGEWAY	CORRIDORS	ENCLOSED SPACES
B	A	B	C

7. NFPA 101 TABLE 7.3.1.2 - OCCUPANT LOAD
   BUSINESS = 646 SM @ 9.3 SM/PERSON BUSINESS PROPOSED = 70 OCCUPANTS
   ASSEMBLY = 110 SM @ 1.4 NSM/PERSON ASSEMBLY PROPOSED = 78 OCCUPANTS
   TOTAL OCCUPANCY IS 148 PERSONS.

8. NFPA 101 TABLE 7.3.3.1 - EGRESS CAPACITY
   BUSINESS = 5 MM PER OCCUPANT

   REQUIRED: 740 MM (148 OCCUPANTS x 5 MM PER OCCUPANT)
   PROPOSED EGRESS CAPACITY: 1700 MM: (2) 900 MM DOORS

9. NFPA 101 PARAGRAPH 38.2.6.2 - EXIT ACCESS TRAVEL DISTANCE (NONSPRINKLERED)
   REQUIRED: 60 METERS
   PROPOSED: 29 METERS

10. NFPA 101 PARAGRAPH 38.3.6.1(2) - CORRIDORS
    RATED CORRIDOR NOT REQUIRED WITHIN A SPACE OCCUPIED BY A SINGLE TENANT

11. NFPA 101 PARAGRAPH 38.2.3.2 - CORRIDOR WIDTH NOT LESS THAN 1120"
    PROVIDED: (1800) MM

12. NFPA 101 PARAGRAPH 38.2.5.2.1 - DEAD END CORRIDOR
    BUSINESS: PERMITTED: 6 METERS
    PROPOSED: NO DEAD END CORRIDOR

13. NFPA 101 PARAGRAPH 38.2.4.1 - NUMBER OF EXITS
    BUSINESS REQUIRED: 2 MINIMUM
    BUSINESS PROPOSED: 2 EXITS

14. NFPA 101 PARAGRAPH 38.3.2.1 & 8.7.1.1 (1) - PROTECTION FROM HAZARDS
    REQUIRED SEPARATION AT GENERAL STORAGE: 1 HOUR WALL AND 45 MINUTE DOOR
    PROVIDED: 1 HOUR WALL AND 45 MINUTE DOOR

NATURAL VENTILATION CALCULATIONS

ROOMNUMBER	ROOM NAME	ROOM NSM	REQ'D WINDOW AREA @4%	WINDOWS TYPE #1	WINDOWS TYPE #2	CRITERIA MET
100	CORRIDOR	42.27	1.69	NA	NA	NA
100A	MECH. CLOSET	5.80	0.23	NA	NA	NA
100B	CORR.	9.76	0.39	NA	NA	NA
101	OFFICE	22.97	0.92	NA	2	YES
102	OFFICE	19.03	0.76	NA	2	YES
103	OFFICE	24.00	0.96	1	NA	YES
104	CONFERENCE ROOM	54.89	2.20	2	NA	YES
105	COMPANY COMM CENTER	28.50	1.14	1	NA	YES
106	OFFICE	48.01	1.92	2	NA	YES
107	COMM/ELEC	15.86	0.63	NA	NA	NA
108	OPEN OFFICE SPACE	40.93	1.64	1	NA	YES
109	REST ROOM	22.75	0.91	NA	NA	NA
110	OFFICE	47.59	1.90	2	NA	YES
111	OPEN OFFICE SPACE	51.54	2.06	2	NA	YES
112	CONFERENCE ROOM	54.89	2.20	2	NA	YES
113	KANDAK COMM CENTER	28.50	1.14	1	NA	YES
114	SGM OFFICE	19.46	0.78	NA	2	YES
115	DEPUTY COMMANDER	21.76	0.87	1	NA	YES
116	OPEN OFFICE SPACE	49.79	1.99	2	NA	YES
117	KANDAK CDR CENTER	22.26	0.89	NA	2	YES
118	CORRIDOR	48.32	1.93	NA	NA	NA
	TOTAL NET SM	678.88				
	TOTAL GROSS SM	756.00				

0 2000 4000
SCALE: 1:100

UNLESS OTHERWISE NOTED, LINEAR DIMENSIONS SHOWN ARE IN MILLIMETERS.

COMMONWEALTH OF VIRGINIA
PETER GARRETT SCHMIDT
No. 013167
ARCHITECT

US ARMY CORPS OF ENGINEERS
AFGHANISTAN NORTH DISTRICT

SYMBOL	DESCRIPTION	DATE	APPR.	SYMBOL	DESCRIPTION	DATE	APPR.

DESIGNED BY: DWN BY: CKD BY: REVIEWED BY: SUBMITTED BY:
DATE: 3-24-2011
CONTRACT NO. W912ER-09-D-0002
DRAWING CODE:
FILE NAME:
PLOT SCALE:
PLOT DATE: 3/24/2011
REV.
BAKER

U.S. ARMY ENGINEER DISTRICT, AFGHANISTAN
CORPS OF ENGINEERS
APO AE 09356

SITE ADAPT DESIGN
AD22 - HEADQUARTERS BUILDING - ARCH SPAN
LIFE SAFETY PLAN AND CODE ANALYSIS

SHEET REFERENCE NUMBER:
G-003

3/24/2011 12:25 PM

A1 Size 594mm x 841mm

A B C D E F G H

6 5 4 3 2 1

STRUCTURAL ABBREVIATIONS:

ACI	AMERICAN CONCRETE INSTITUTE
ADD'L	ADDITIONAL
AISC	AMERICAN INSTITUTE OF STEEL CONSTRUCTION
AISI	AMERICAN IRON AND STEEL INSTITUTE
ASTM	AMERICAN SOCIETY FOR TESTING AND MATERIALS
ARCH	ARCHITECTURAL
B	BOTTOM
BLDG	BUILDING
BOTT	BOTTOM
℄	CENTER LINE
CFMRF	COLD FORM METAL ROOF FRAME
CFMF	COLD FORM METAL FRAME
CFS	COLD FORMED STEEL
CIP	CAST-IN-PLACE
CIPL	CAST-IN-PLACE LINTEL
CJ	CONTROL JOINT
CLR	CLEAR
CMU	CONCRETE MASONRY UNIT
COEFF	COEFFICIENT
COL	COLUMN
CONC	CONCRETE
CONT	CONTINUOUS
COORD	COORDINATE
CRSI	CONCRETE REINFORCING STEEL INSTITUTE
CSJ	CONSTRUCTION JOINT
DIA	DIAMETER
DIAG	DIAGONAL
DIM	DIMENSION
DWG	DRAWING
DWL	DOWEL
EA	EACH
EF	EACH FACE
ELEC	ELECTRICAL
ELEV	ELEVATION
EMBED	EMBEDMENT
EQUIV	EQUIVALENT
ETC	ET CETERA
EW	EACH WAY
EXP	EXPANSION
EXT	EXTERIOR
FND	FOUNDATION
FTG	FOOTING
GA	GAUGE
GB	GRADE BEAM
HORIZ	HORIZONTAL
h	HOUR
HRS	HOURS
IBC	INTERNATIONAL BUILDING CODE
INFO	INFORMATION
INT	INTERIOR
kg	KILOGRAM
km	KILOMETER
kN	KILONEWTON
kPa	KILOPASCAL
L#	ANGLE (# INDICATES SIZE)
LONG	LONGITUDINAL
LLV	LONG LEG VERTICAL
m	METER
MAX	MAXIMUM
MECH	MECHANICAL
MFG	MANUFACTURER
MID	MIDDLE
MIN	MINIMUM
MISC	MISCELLANEOUS
mm	MILLIMETER
MPa	MEGAPASCAL
MTL	METAL
MWFRS	MAIN WIND FORCE RESISTING SYSTEM
N	NEWTON
N	NORTH
N/A	NOT APPLICABLE
#	NUMBER SYMBOL FOR REBAR SIZE
NTS	NOT TO SCALE
OC	ON CENTER
OPNG	OPENING
⅊ or PL	PLATE
PRE-ENG	PRE-ENGINEERED
RB	ROOF BEAM
REINF	REINFORCED
REQ'D	REQUIRED
SIM	SIMILAR
SOG	SLAB-ON-GRADE
SPECS	SPECIFICATIONS
STD	STANDARD
STRUCT	STRUCTURAL
SW	SHEAR WALL
T	TOP
T/	TOP OF
T/ELEV	TOP ELEVATION
T/SLAB	TOP OF SLAB
T&B	TOP AND BOTTOM
THK	THICK
TYP	TYPICAL
UFC	UNIFIED FACILITIES CRITERIA
UON	UNLESS OTHERWISE NOTED
VERT	VERTICAL
W	WIDTH
W/	WITH

1.0 GENERAL NOTES:

1.1 THIS PROJECT HAS BEEN DESIGNED FOR THE WEIGHTS AND MATERIALS INDICATED ON THE DRAWINGS AND FOR THE SUPERIMPOSED DEAD AND LIVE LOADS INDICATED IN THE STRUCTURAL DESIGN CRITERIA. IT IS THE CONTRACTOR'S RESPONSIBILITY TO DETERMINE ALLOWABLE CONSTRUCTION LOADS AND TO PROVIDE PROPER DESIGN AND CONSTRUCTION OF FALSEWORK, FORMWORK, STAGING, BRACING, SHEETING AND SHORING, ETC.

1.2 METHODS, PROCEDURES AND SEQUENCES OF CONSTRUCTION ARE THE RESPONSIBILITY OF THE CONTRACTOR. THE CONTRACTOR IS RESPONSIBLE FOR IDENTIFYING AND IMPLEMENTING THE NECESSARY PRECAUTIONS TO MAINTAIN AND ENSURE THE INTEGRITY OF THE STRUCTURE AT ALL STAGES OF CONSTRUCTION.

1.3 COORDINATE THESE DRAWINGS WITH THE ARCHITECTURAL, MECHANICAL, ELECTRICAL, PLUMBING, AND CIVIL DRAWINGS. ALL DIMENSIONS SHOWN ON THE DRAWINGS ARE MILLIMETERS UNLESS NOTED OTHERWISE.

1.4 SLEEVES OR BLOCK-OUTS REQUIRED FOR PASSAGE OF DUCTWORK, PIPING, DRAINS, CONDUIT, ETC, IN ADDITION TO ANCHORS, CURBS AND HANGERS REQUIRED FOR EQUIPMENT AND PIPING AND UNDER-SLAB UTILITIES ARE NOT SPECIFICALLY, NOR GENERALLY, INDICATED ON THE STRUCTURAL DRAWINGS. THE CONTRACTOR IS RESPONSIBLE FOR COORDINATING WORK SHOWN ON OTHER DISCIPLINE'S DRAWINGS AND DETERMINING SUCH REQUIREMENTS PRIOR TO FABRICATION OR ERECTION OF THE STRUCTURE. PENETRATIONS OF STRUCTURAL MEMBERS ARE SUBJECT TO APPROVAL BY THE CONTRACTING OFFICER. REFER TO GENERAL NOTE 8.9 FOR OPENINGS IN ARCH SPAN STRUCTURE.

1.5 DIMENSIONS AND INSTALLATION DETAILS OF PURCHASED EQUIPMENT MUST BE VERIFIED AND COORDINATED WITH THE SUPPORTING STRUCTURE. THE CONTRACTOR IS RESPONSIBLE FOR DETERMINING SUCH REQUIREMENTS FROM SUBCONTRACTORS AND EQUIPMENT SUPPLIERS ALONG WITH COORDINATING THE LOCATIONS AND DETAILS FOR THESE ITEMS PRIOR TO CONSTRUCTION OF EQUIPMENT PADS OR FABRICATION AND ERECTION OF FRAMING INTENDED TO SUPPORT SUCH EQUIPMENT. ANY CONFLICTS BETWEEN THESE ITEMS AND THE BUILDING STRUCTURE IS TO BE BROUGHT TO THE ATTENTION OF THE CONTRACTING OFFICER FOR RESOLUTION. REFER TO GENERAL NOTE 8.11 FOR HANGING LOADS ON ARCH SPAN STRUCTURE.

1.6 WORK NOT INCLUDED ON THE DRAWINGS BUT IMPLIED TO BE SIMILAR TO THAT SHOWN AT CORRESPONDING PLACES ELSEWHERE ON THE DRAWINGS SHALL BE REPEATED.

1.7 IN CASE OF CONFLICT BETWEEN THE NOTES, DETAILS AND SPECIFICATIONS THE MOST RIGID REQUIREMENTS SHALL GOVERN.

1.8 SEE ARCHITECTURAL DRAWINGS FOR LOCATIONS OF NON-LOAD BEARING PARTITIONS. PROVIDE COMPRESSIBLE FIRESAFING AT TOP OF WALL AS REQUIRED BY ARCHITECTURAL DRAWINGS.

1.9 COORDINATE FINISHED FLOOR DATUM ELEVATION 0.0m WITH THE CIVIL DRAWINGS.

2.0 FOUNDATION NOTES

2.1 THE GEOTECHNICAL ANALYSIS FOR THIS PROJECT IS THE RESPONSIBILITY OF THE CONTRACTOR AWARDED THE WORK. AN ASSUMED ALLOWABLE SOIL BEARING VALUE OF 72 kPa HAS BEEN USED IN THE STRUCTURAL ANALYSIS OF THE BUILDING AND SHALL BE CONFIRMED AND VERIFIED AS PART OF THE GEOTECHNICAL INVESTIGATION. VALUES WHICH DO NOT MEET THE REQUIREMENTS INDICATED IN THE STRUCTURAL DESIGN CRITERIA, FOUNDATION LOADS SECTION SHALL BE IMMEDIATELY BROUGHT TO THE ATTENTION OF THE CONTRACTING OFFICER FOR CONSIDERATION AND DETERMINATION ON THE NEXT APPROPRIATE COURSE OF ACTION.

2.2 ELEVATIONS SHOWN ON THE DRAWINGS AT WHICH FOUNDATIONS BEAR ARE APPROXIMATE AND MAY VARY TO SUIT SUBSURFACE SOIL CONDITIONS AND PROJECT GEOTECHNICAL ENGINEER'S RECOMMENDATIONS. ALL EXTERIOR FOOTINGS ARE TO BEAR A MINIMUM OF 800mm BELOW FINISHED GRADE.

2.3 SEE THE SPECIFICATION FOR ADDITIONAL REQUIREMENTS TO THOSE OUTLINED IN THE GEOTECHNICAL INVESTIGATION FOR EXCAVATION AND PREPARATION OF THE FOUNDATION AND THE SLAB ON GRADE SUBGRADE INCLUDING COMPACTION PROCEDURES.

2.4 EXCAVATIONS FOR FOOTINGS SHALL HAVE THE SIDES AND BOTTOMS TEMPORARILY LINED WITH 0.25mm POLYETHYLENE IF PLACEMENT OF CONCRETE DOES NOT OCCUR WITHIN 24 HRS OF THE EXCAVATION OF THE FOOTING.

2.5 FOUNDATION CONDITIONS NOTED DURING CONSTRUCTION WHICH DIFFER FROM THOSE DESCRIBED IN THE GEOTECHNICAL REPORT SHALL BE REPORTED TO THE GENERAL CONTRACTOR AND CONTRACTING OFFICER BEFORE FURTHER CONSTRUCTION IS ATTEMPTED.

2.6 NO FOOTINGS SHALL BE POURED INTO OR AGAINST SUBGRADE CONTAINING FREE WATER, FROST, ICE OR LOOSE MATERIAL.

2.7 CONCRETE SLABS ON GRADE HAVE BEEN DESIGNED TO BEAR ON PROPERLY COMPACTED SUB-BASE STONE AND SUB-GRADE SOILS. THE SUB-BASE MATERIAL BENEATH THE SLAB-ON-GRADE SHALL BE A WELL GRADED CRUSHED STONE (AASHTO #57 OR SIMILAR) AND BE COMPACTED IN ACCORDANCE WITH 95% MODIFIED DENSITY PER ASTM D 1557.

2.8 PRIOR TO START OF FOUNDATION OR SLAB-ON-GRADE CONSTRUCTION, EXISTING SUBGRADES SHALL BE COMPACTED TO MINIMUM OF 95% MAXIMUM DRY DENSITY OBTAINED THRU ASTM D 1557 MODIFIED PROCTOR TESTING.

2.9 SEE PLUMBING, ELECTRICAL & CIVIL DRAWINGS FOR REQUIRED UNDERSLAB UTILITIES.

2.10 SEE ARCHITECTURAL DRAWINGS FOR ALL WATERPROOFING DETAILS AND MATERIALS.

2.11 IF UNDERMINING OF FOOTINGS OCCURS, FILL VOIDS WITH 15 MPa CONCRETE. DO NOT ATTEMPT TO REPLACE AND RE-COMPACT SOIL.

3.0 CONCRETE

3.1 CONCRETE SHALL HAVE THE UNIT WEIGHT OF 2350 kg/m^3 AND A MINIMUM COMPRESSIVE STRENGTH (f'c) OF 28 MPa AT 28 DAYS. ALL CONCRETE SHALL HAVE A MAXIMUM WATER-CEMENT RATIO OF 0.45. SEE SPECIFICATIONS FOR ADDITIONAL INFORMATION. ENTRAIN AIR TO PRODUCE TOTAL AIR CONTENT ACCORDING TO THE SPECIFICATIONS FOR CONCRETE EXPOSED TO FREEZING TEMPERATURES (EXTERIOR FOOTINGS AND SHEAR WALLS, SLAB TURNDOWNS, EXTERIOR SLABS AND SLABS-ON-GRADE, EXTERIOR RETAINING WALLS.)

3.2 PRIOR TO CONCRETE PLACEMENT, THE CONTRACTOR MUST SUBMIT CONCRETE MIX DESIGNS FOR EACH TYPE OF CONCRETE TO BE USED, PREPARED IN ACCORDANCE WITH THE SPECIFICATIONS TO THE CONTRACTING OFFICER FOR REVIEW.

3.3 NO CALCIUM CHLORIDE SHALL BE USED IN ANY CONCRETE.

3.4 MIXING, TRANSPORTING AND PLACING OF CONCRETE SHALL CONFORM TO ACI 301M-05.

3.5 ALL CONCRETE WORK SHALL CONFORM TO THE REQUIREMENTS OF THE AMERICAN CONCRETE INSTITUTE (ACI) 318M-05 MANUAL (metric), "BUILDING CODE REQUIREMENTS FOR REINFORCED CONCRETE", ACI-301M-05 "SPECIFICATIONS FOR STRUCTURAL CONCRETE FOR BUILDINGS" AND REQUIREMENTS OUTLINED IN THE CONTRACT SPECIFICATIONS.

3.6 CHAMFER ALL EXPOSED EXTERNAL CORNERS OF CONCRETE WITH 20mm x45 DEGREE CHAMFER UON.

3.7 CONCRETE REINFORCEMENT BARS SHALL BE METRIC SIZE BARS AND SHALL CONFORM TO ASTM A615M-07, GRADE 420 MPa, REINFORCING BARS SHALL NOT BE TACK WELDED, WELDED, HEATED OR CUT, UNLESS INDICATED ON THE CONTRACT DOCUMENTS. ALL LAP SPLICES SHALL BE CLASS "B" UON.

3.8 HORIZONTAL FOOTING AND HORIZONTAL WALL REINFORCEMENT SHALL BE CONTINUOUS AND SHALL HAVE 90 DEGREE BENDS AND EXTENSIONS, OR CORNER BARS OF EQUIVALENT SIZE LAPPED WITH A CLASS B TENSION SPLICE AT CORNERS AND INTERSECTIONS. TOP BAR CRITERIA SHALL APPLY IF 300mm OR MORE OF FRESH CONCRETE IS PLACED BELOW BAR.

3.9 SLABS-ON-GRADE SHALL HAVE CONSTRUCTION JOINTS OR CRACK CONTROL JOINTS AS SHOWN ON THE DRAWINGS. CONSTRUCTION JOINTS CAN BE USED AT CONTROL JOINT LOCATIONS AT CONTRACTORS OPTION. SEE SLAB PLANS & JOINT DETAILS FOR ADDITIONAL INFORMATION. FOR AREAS NOT SHOWN ON DWGS, THE MAXIMUM SPACING OF CONSTRUCTION/ CRACK CONTROL JOINTS SHALL BE 3600mm.

3.10 ALL CONCRETE REINFORCEMENT SHALL BE DETAILED, FABRICATED, LABELED, SUPPORTED, AND SPACED IN FORMS AND SECURED IN PLACE IN ACCORDANCE WITH THE PROCEDURES AND REQUIREMENTS OUTLINED IN ACI 318M, AND THE "MANUAL OF STANDARD PRACTICE FOR DETAILING REINFORCED CONCRETE STRUCTURES", ACI 315M, LATEST EDITION.

3.11 ALL DOWELS SHALL MATCH SIZE AND NUMBER OF MAIN REINFORCING, UNLESS NOTED OTHERWISE ON THE DRAWINGS.

3.12 ADDITIONAL BARS SHALL BE PROVIDED AROUND ALL FLOOR AND WALL OPENINGS AS SHOWN ON THE DRAWINGS.

3.13 SEE ARCHITECTURAL DRAWINGS FOR TYPE AND LOCATION OF ALL FLOOR FINISHES.

3.14 SPLICES (LAPS) OF REINFORCING BARS SHALL BE CLASS 'B' TENSION LAPS PER ACI 318M-05 UNLESS NOTED OTHERWISE. SEE SCHEDULE ON S-601.

3.15 PROVIDE ADEQUATE CONCRETE COVER IN ACCORDANCE WITH THE REQUIREMENTS AS SET FORTH BY ACI 318M-05.

3.16 REINFORCEMENT IS TO BE SECURELY HELD IN PLACE WHILE PLACING CONCRETE. IF REQUIRED, ADDITIONAL BARS, STIRRUPS, OR CHAIRS WILL BE PROVIDED BY THE CONTRACTOR TO FURNISH SUPPORT FOR ALL BARS WHERE NECESSARY DURING CONSTRUCTION.

3.17 CONTINUOUS TOP BARS TO BE SPLICED AT MID-SPAN. CONTINUOUS BOTTOM BARS TO BE SPLICED AT CENTERLINE OF SUPPORTS (OR AS SHOWN ON DETAILS).

3.18 CONCRETE SLABS TO BE CURED BY METHOD COMPATIBLE WITH SPECIFIED FLOOR FINISH. WHERE ACCEPTABLE USE A LIQUID MEMBRANE-CURING COMPOUND AT THE MANUFACTURERS RECOMMENDED COVERAGE. SAW JOINTS TO BE CUT AS SOON AS POSSIBLE WITHOUT RAVELING THE SURFACE.

3.19 LEVELING GROUT TO BE NON-SHRINK, NON-METALLIC TYPE, FACTORY PREMIXED GROUT IN ACCORDANCE WITH ASTM C 1107, HAVING A MINIMUM COMPRESSIVE STRENGTH OF NOT LESS THAN 34.5 MPa.

3.20 SLEEVES, INSERTS, MECHANICAL OPENINGS, CONDUITS, PIPES, RECESSES. DEPRESSIONS, CURBS AND OTHER EMBEDDED ITEMS TO BE PROVIDED FOR AS SHOWN ON THE ARCHITECTURAL, MECHANICAL AND ELECTRICAL DRAWINGS AND AS REQUIRED BY EQUIPMENT MANUFACTURERS. INSTALLATION OF THESE ITEMS TO BE COORDINATED AND PROVIDED FOR PRIOR TO PLACING CONCRETE.

3.21 EPOXY ADHESIVE SUCH AS EUCO-#452 AS MANUFACTURED BY EUCLID CHEMICAL CO. OR HVA ADHESIVE SYSTEM AS MANUFACTURED BY HILTI, INC. SHALL BE USED WHERE REBAR DOWELS ARE TO BE INSTALLED INTO EXISTING CONCRETE.

3.0 CONCRETE CONT

3.22 ANCHOR RODS TO BE ASTM F 1554 FY=248 MPa MINIMUM, GALVANIZED, UNLESS NOTED OTHERWISE.

3.23 UNLESS NOTED OTHERWISE, ALL CURBS SHALL BE REINFORCED WITH AT LEAST (1)-#14 CONTINUOUS AND #14 AT 450mm O.C. DOWELS TO THE SLAB-ON-GRADE.

3.24 PROVIDE ADDITIONAL (2)-#14 x 600mm REINFORCING BARS IN SLAB-ON GRADE AT ALL RE-ENTRANT CORNERS. PLACE BARS AT MID-DEPTH OF SLAB WITH A CLEARANCE OF 50mm FROM CORNER UON.

3.25 COLD-WEATHER PLACEMENT: COMPLY WITH ACI 306.1 AND AS FOLLOWS. PROTECT CONCRETE WORK FROM PHYSICAL DAMAGE OR REDUCED STRENGTH THAT COULD BE CAUSED BY FROST, FREEZING ACTIONS, OR LOW TEMPERATURES. SUBMIT A COLD WEATHER CONCRETING PLAN FOR APPROVAL.

3.26 PROVIDE BONDING COMPOUND PER ASTM C 1059-99: SPECIFICATION FOR LATEX AGENTS FOR BONDING FRESH CONCRETE (GROUT) TO HARDENED CONCRETE.

3.27 THE FORMED SURFACES FOR REINFORCED CONCRETE SHALL ACHIEVE A "CLASS A" FINISH WHEN EXPOSED OR A "CLASS B" FINISH WHEN RECEIVING PLASTER OR TILE AS PER SPECIFICATION SECTION 03 31 00 CAST-IN-PLACE STRUCTURAL CONCRETE.

4.0 CONCRETE MASONRY

4.1 MASONRY CONSTRUCTION SHALL CONFORM TO SPECIFICATION FOR MASONRY STRUCTURES (ACI 530.1) UON.

4.2 STRENGTH OF MASONRY MATERIALS SHALL BE AS FOLLOWS:

A. CONCRETE MASONRY UNITS SHALL BE NORMAL WEIGHT, GRADE N, TYPE 1, CONFORMING TO ASTM C-90 AND HAVE A MINIMUM COMPRESSIVE STRENGTH OF 13.1 MPa ON THE NET AREA.

B. MORTAR SHALL CONFORM TO ASTM C-270 TYPE S.

C. GROUT FOR MASONRY SHALL BE NORMAL WEIGHT AND HAVE A MINIMUM COMPRESSIVE STRENGTH OF 14 MPa AT 28 DAYS. GROUT SHALL CONFORM TO ASTM C476M. GROUT LIFTS SHALL NOT EXCEED 1500mm.

D. REINFORCED MASONRY SHALL HAVE A STRENGTH F'm = 10.3 MPa. (F'm IS THE COMPRESSIVE STRENGTH OF THE MASONRY AT 28 DAYS AS DETERMINED BY PRISM TESTS).

4.3 ALL VERTICAL REINFORCEMENT FOR CONCRETE MASONRY SHALL BE ASTM A615M-07, GRADE 420 MPa. ALL SPLICES SHALL BE LAPPED 48 BAR DIAMETERS MINIMUM.

4.4 CMU CELLS THAT REQUIRE VERTICAL REINFORCING BARS AS INDICATED ON THE CONTRACT DRAWINGS AND/OR SPECS SHALL HAVE REINF BARS PLACED IN CENTERS OF CMU CELLS AND CONTINUOUSLY GROUTED UON.

4.5 CONTRACTOR SHALL COORDINATE LOCATION OF ALL OPENINGS SEE ARCH, MECH, ELEC, AND PLUMBING SHEETS FOR SIZE AND LOCATION OF OPENINGS. PROVIDE SINGLE COURSE SOLID GROUTED BOND BEAMS REINFORCED WITH 2 #14 OVER ALL OPENINGS IN CMU WALLS. BEAR BOND BEAMS AT LEAST 200mm ON SOLID GROUTED, VERTICALLY REINFORCED CMU AT EACH SIDE OF THE OPENING. PASS VERTICAL JAMB REINFORCING THROUGH THE BOND BEAM AND EXTEND TO TOP OF WALL. NO OPENING IN CMU WALLS SHALL EXCEED 800mm.

4.6 HORIZONTAL JOINT REINFORCING TO BE GALVANIZED, STANDARD CLASS, LADDER TYPE, CONFORMING TO ASTM A 82, SPACED AT EVERY OTHER COURSE UNO. SIDE RODS TO BE 5mm WITH 4mm CROSS RODS. PROVIDE ONE-PIECE PREFABRICATED REINFORCING UNITS AT EVERY COURSE AT ALL WALL CORNERS AND INTERSECTIONS AND IN THE FIRST TWO COURSES ABOVE AND BELOW MASONRY OPENINGS. PROVIDE LAP AS RECOMMENDED BY THE MANUFACTURER WITH A MINIMUM OF 300mm. DISCONTINUE HORIZONTAL JOINT REINFORCING AT CONTROL JOINTS.

4.7 ALL MASONRY TO BE CONSTRUCTED USING A RUNNING BOND PATTERN. FULL BED AND HEAD JOINTS MUST BE USED. ALL CORNERS TO BE TIED BY MASONRY BOND.

4.8 DOWEL REINFORCED MASONRY WALLS TO FOUNDATION. SIZE DOWELS TO MATCH WALL REINFORCEMENT. LOCATE DOWELS IN CELLS TO CONTAIN WALL REINFORCEMENT. LAP DOWELS AND WALL REINFORCEMENT A MINIMUM OF 48 BAR DIAMETERS UNO.

4.9 DURING CONSTRUCTION, COVER AND PROTECT THE TOPS OF MASONRY WALLS AT THE END OF EACH DAY.

UNLESS OTHERWISE NOTED, LINEAR DIMENSIONS SHOWN ARE IN MILLIMETERS.

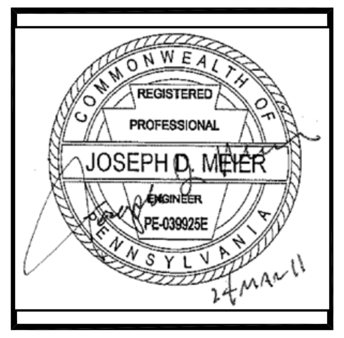

US ARMY CORPS OF ENGINEERS AFGHANISTAN NORTH DISTRICT

SYMBOL	DESCRIPTION	DATE	APPR.

SYMBOL	DESCRIPTION	DATE	APPR.

U.S. ARMY ENGINEER DISTRICT, AFGHANISTAN
CORPS OF ENGINEERS
APO AE 09356

DESIGNED BY: JDM
DWN BY: RMS | CKD BY: EPS
REVIEWED BY: JH
SUBMITTED BY: BAKER

DATE: 3-24-2011 | REV. 0
CONTRACT NO. W912ER-09-D-0002
DRAWING CODE:
FILE NAME: ARCHSPANBATTHQ-AD22-S-001.DWG
PLOT SCALE: 1:100
PLOT DATE: 3/24/2011

SITE ADAPT DESIGN
AD22 - HEADQUARTERS BUILDING - ARCH SPAN
ABBREVIATIONS AND GENERAL NOTES

SHEET REFERENCE NUMBER:
S-001

3/24/2011 12:25 PM

A1 Size 594mm x 841mm

5.0 STRUCTURAL STEEL

5.1 STRUCTURAL STEEL WORK IS TO BE DESIGNED AND CONSTRUCTED IN ACCORDANCE WITH THE AMERICAN INSTITUTE OF STEEL CONSTRUCTION (AISC) "SPECIFICATIONS FOR STRUCTURAL STEEL BUILDINGS" (THIRTEENTH EDITION) AND THE "CODE OF STANDARD PRACTICE FOR STEEL BUILDINGS AND BRIDGES".

5.2 STRUCTURAL STEEL, UNLESS NOTED OTHERWISE, SHALL CONFORM TO THE FOLLOWING:
- A. WIDE FLANGE SHAPES AND WT'S: ASTM A992.
- B. CHANNELS, ANGLES, PLATES AND MISC. CONNECTION MATERIAL: ASTM A-36.
- C. STEEL TUBING: ASTM A500, GRADE B, WITH FY = 290 MPa FOR ROUND AND FY = 315 MPa FOR RECTANGULAR.

5.3 PRIOR TO FABRICATION, THE STEEL FABRICATOR IS TO SUBMIT SHOP DRAWINGS SHOWING ERECTION PLANS, PIECE DRAWINGS, AND CONNECTION DETAILS TO THE CONTRACTING OFFICER FOR REVIEW.

5.4 STRUCTURAL STEEL FABRICATOR IS TO PROVIDE FOR VERTICAL AND HORIZONTAL FIELD ADJUSTMENT OF ALL SUPPORT ASSEMBLIES.

5.5 CUTS, HOLES, COPING, ETC REQUIRED FOR OTHER TRADES MUST BE SHOWN ON THE SHOP DRAWINGS AND MADE IN THE SHOP. CUTS OR BURNING OF HOLES IN THE FIELD WILL NOT BE PERMITTED.

5.6 FABRICATE FRAMING COMPONENTS IN THE SHOP TO THE GREATEST EXTENT POSSIBLE. IN GENERAL, STRUCTURAL STEEL CONNECTIONS TO BE SHOP AND FIELD WELDED. ALL WELDS SHALL BE 3/16" FILLET WELDS UNLESS NOTED OTHERWISE.

5.7 WELDING TO BE IN ACCORDANCE WITH THE AMERICAN WELDING SOCIETY (AWS) "STRUCTURAL WELDING CODE-ANSI/AWS D1.1/D1.1M" (LATEST EDITION). USE E70XX ELECTRODES UNLESS OTHERWISE INDICATED ON THE DRAWINGS.

5.8 POST INSTALLED BOLTS TO BE ADHESIVE TYPE ANCHORS. BOLTS SHALL BE CARBON STEEL THREADED RODS OF THE DIAMETER INDICATED ON THE DRAWINGS WITH APPROPRIATE NUT, WASHER AND INJECTABLE ADHESIVE MATERIAL. BASIS OF DESIGN ARE HILTI HVA ADHESIVE ANCHORS WITH STANDARD EMBEDMENT, MANUFACTURED BY HILTI FASTENING SYSTEMS. ANY ANCHOR MEETING PUBLISHED LOAD VALUES OF HILTI ANCHORS MAY BE USED WITH APPROPRIATE EMBEDMENT. INSTALL ANCHORS PER MANUFACTURERS RECOMMENDATIONS.

5.9 HEADED SHEAR STUDS CONNECTORS TO CONFORM TO ASTM A 108, GRADE 1015 OR 1020, COLD-FINISHED CARBON STEEL.

5.10 PAINT AND PROTECTION:
- A. STRUCTURAL STEEL, UNLESS INDICATED OTHERWISE, TO BE SHOP CLEANED PER SSPC SP3 AND PAINTED ONE SHOP COAT OF FABRICATOR'S STANDARD RUST INHIBITING PRIMER. TOUCH UP AFTER ERECTION.
- B. DO NOT PAINT STEEL WHERE ENCASED WITH CONCRETE, OR AT FIELD WELD AREAS.
- C. EXPOSED STRUCTURAL STEEL FOR BREEZEWAY ROOFS, EQUIPMENT PLATFORMS, ETC, TO BE HOT DIPPED GALVANIZED PER ASTM A-123
- D. GALVANIZED FASTENERS AND ACCESSORIES TO BE HOT DIPPED GALVANIZED PER ASTM A153/A153M.
- E. REPAIR DAMAGE TO GALVANIZED COATINGS USING ASTM A780 ZINC RICH PAINT.
- F. PROVIDE MINIMUM 75mm CONCRETE COVER FOR ALL STEEL BELOW GRADE.

6.0 METAL DECK

6.1 METAL DECK MUST BE DESIGNED AND DETAILED IN ACCORDANCE WITH THE STEEL DECK INSTITUTE (SDI) "DESIGN MANUAL FOR COMPOSITE DECKS, FORM DECKS AND ROOF DECKS" (LATEST EDITION).

6.2 ROOF DECK: 38mm, 0.88mm THICK, TYPE B, GALVANIZED, UNO.

6.3 ROOF DECK TO BE FASTENED TO THE SUPPORTING STEEL AT THE ENDS OF UNITS AND AT ALL INTERMEDIATE SUPPORTS WITH 16mm DIAMETER PUDDLE WELDS AT 300mm OC ACROSS THE WIDTH OF THE DECK IN A 36/4 PATTERN. DECK SIDE LAPS SHALL BE FASTENED WITH #10 TEK SCREWS AT TWO (2) EQUAL SPACES BETWEEN THE SUPPORTS. ANY SPLIT OR PARTIAL PANELS TO BE FASTENED TO THE SUPPORTING STRUCTURE IN EVERY VALLEY REGARDLESS OF ADJACENT FASTENER PATTERNS.

6.4 METAL DECK SUPPLIER TO PROVIDE LIGHT GAGE METAL DECK CLOSURE PIECES AND SHALL REINFORCE OR SUPPORT DECK AT OPENINGS AS REQUIRED, IN ACCORDANCE WITH THE SDI.

7.0 COLD-FORMED METAL FRAMING

7.1 SEE ARCHITECTURAL DRAWINGS FOR EXTENT OF COLD-FORMED METAL FRAMING, INCLUDING PARTITION WALLS AND CEILINGS. ALSO REFERENCE ARCHITECTURAL DRAWINGS FOR ADDITIONAL INFORMATION INCLUDING SHEATHING TYPE, FINISHES AND OPENINGS.

7.2 ALL COLD-FORMED METAL FRAMING MEMBERS SHALL CONFORM TO ASTM A1003M, STRUCTURAL GRADE ST230 (MPa), WITH A GALVANIZED COATING OF Z275 OR BETTER IN ACCORDANCE WITH ASTM A653M.

7.3 ALL COLD-FORMED METAL FRAMING MEMBERS SHALL HAVE THE FOLLOWING MINIMUM PROPERTIES:
- A. MINIMUM METAL THICKNESS:
  TRACK = 1.37mm
  CEILING JOIST = 1.09mm
  WALL STUD/OTHER = 1.09mm
- B. MINIMUM FLANGE WIDTH:
  TRACK = 38mm
  CEILING JOIST = 35mm
  WALL STUD/OTHER = 35mm
- C. MINIMUM MEMBER DEPTH:
  CEILING JOIST = 152mm
  WALL STUD/OTHER = 92mm

7.4 CEILING JOISTS HAVE BEEN DESIGNED TO CARRY 0.47KPA, INCLUDING SELF WEIGHT OF METAL FRAMING, TWO LAYERS OF GYPSUM WALL BOARD AND NOMINAL MEP LOADING. NO LIVE LOAD HAS BEEN INCLUDED. THE SPACE ABOVE THE CEILING IS NOT INTENDED FOR STORAGE OR TO BE USED AS A WALKWAY. PROVIDE CEILING JOIST FRAMING OF SIZE INDICATED IN NOTE 7.3 AND AS FOLLOWS:
- A. JOIST SPANS LESS THAN 4600: JOISTS SHALL BE SPACED AT 400 AND HAVE DIAGONAL OR SOLID BRIDGING AT EACH END AND AT THE MIDSPAN.
- B. JOIST SPANS BETWEEN 4600 AND 6400: JOISTS SHALL BE SPACED AT 400 AND HAVE DIAGONAL OR SOLID BRIDGING AT EACH END AND AT THE QUARTER POINTS.
- C. JOIST SPANS BETWEEN 6400 AND 7800: JOISTS SHALL BE SPACED AT 200 (OR DOUBLE JOISTS AT 400) AND HAVE DIAGONAL OR SOLID BRIDGING AT EACH END AND AT THE QUARTER POINTS.
- D. JOIST SPANS EQUAL TO OR OVER 7800: JOISTS SHALL HAVE DIAGONAL OR SOLID BRIDGING AT EACH END AND AT THE QUARTER POINTS AND SHALL BE SUSPENDED FROM THE ARCH-SPAN TABS ABOVE AT 1200 EACH WAY.
- E. HEADERS WITH SPANS LESS THAN OR EQUAL TO 3000 CARRYING CEILING JOISTS WITH UP TO 5400 IN TRIBUTARY WIDTH SHALL BE FULLY CONNECTED TO EACH JOIST AND SHALL BE DOUBLE MEMBERS. HEADERS WITH A LARGER SPAN OR MORE TRIBUTARY WIDTH SHALL BE SUSPENDED FROM THE ARCH-SPAN TABS AT 1200 OC. SEE GENERAL NOTE 8.1 FOR MAXIMUM LOADS ON TABS.

7.5 WALL STUDS HAVE BEEN DESIGNED TO CARRY CEILING LOADING NOTED IN NOTE 7.3, UP TO 7800 IN TRIBUTARY WIDTH. PROVIDE WALL STUD FRAMING OF SIZE INDICATED IN NOTE 7.3 AND AS FOLLOWS:
- A. WALL HEIGHTS LESS THAN 3000: STUDS SHALL BE SPACED AT 400 AND HAVE BLOCKING AT 1200 MAXIMUM.
- B. WALL HEIGHTS BETWEEN 3000 AND 4900: STUDS SHALL BE SPACED AT 300 AND HAVE BLOCKING AT 1200 MAXIMUM.
- C. WALL HEIGHTS OVER 4900 WHICH MUST ALSO SUPPORT CEILING WEIGHT SHALL BE DESIGNED BY THE METAL FRAMING CONTRACTOR'S ENGINEER.

7.6 WALL STUDS WITHOUT CEILING LOADS MUST BE BRACED BACK TO THE ARCH-SPAN TABS ABOVE AT 1200 MAXIMUM. SEE ARCHITECTURAL DRAWINGS FOR BRACING DETAILS. DO NOT SECURE TOPS OF STUD WALLS TO THE UNDERSIDE OF THE ARCH-SPAN BUILDING PANELS. THESE STUDS HAVE BEEN DESIGNED TO CARRY ONLY THEIR OWN SELF WEIGHT DURING A SEISMIC EVENT. PROVIDE WALL STUD FRAMING OF SIZE INDICATED IN NOTE 7.3 AND AS FOLLOWS:
- A. WALL HEIGHTS LESS THAN 5000: STUDS SHALL BE SPACED AT 400 AND HAVE BLOCKING AT 1200 MAXIMUM.
- B. WALL HEIGHTS BETWEEN 5000 AND 5500: STUDS SHALL BE SPACED AT 300 AND HAVE BLOCKING AT 1200 MAXIMUM.
- C. WALL HEIGHTS BETWEEN 5500 AND 6400: STUDS SHALL BE SPACED AT 200 AND HAVE BLOCKING AT 1200 MAXIMUM.
- D. CANTILEVERED HEIGHT PAST BRACE POINT IS NOT TO EXCEED 1/4 OF THE HEIGHTS NOTED IN NOTES A, B, AND C. IE, FOR STUDS SPACED AT 400 WITH BLOCKING AT 1200 MAXIMUM, HEIGHT ABOVE THE BRACE IS NOT TO EXCEED 1250.

7.7 FOR WALLS THAT CARRY CEILING LOAD AND EXTEND PAST THE CEILING, APPLY NOTES 7.4 AND 7.5 AS REQUIRED. USE THE MORE SEVERE WALL CONSTRUCTION FOR THE ENTIRE WALL CONSTRUCTION.

7.8 FOR PROVIDE DOUBLE MEMBER JOISTS OR WALL STUDS AT EACH SIDE OF OPENINGS.

7.9 ALL CONNECTIONS SHALL BE MADE WITH CORROSION RESISTANT (ASTM A153M), SELF-DRILLING, SELF-TAPPING STEEL DRILL SCREWS IN ACCORDANCE WITH ASTM C1513.

7.10 FABRICATE COLD FORMED METAL FRAMING AND ACCESSORIES PLUMB, SQUARE AND TRUE TO LINE, WITH CONNECTIONS SECURELY FASTENED ACCORDING TO AISI STANDARD FOR COLD FORMED STEEL FRAMING.

7.11 FRAMING COMPONENTS ARE TO BE CUT SQUARELY FOR ATTACHMENT TO PERPENDICULAR MEMBERS OR AS REQUIRED FOR AN ANGULAR FIT AGAINST ABUTTING MEMBERS.

7.12 CUT FRAMING MEMBERS BY SAWING OR SHEATHING, DO NOT TORCH CUT.

7.13 INSTALL FRAMING MEMBERS IN ONE-PIECE LENGTHS.

7.14 INSTALL TEMPORARY BRACING AND SUPPORTS AS REQUIRED TO SECURE FRAMING DURING CONSTRUCTION. MAINTAIN BRACING AND SUPPORTS IN PLACE UNTIL THE STRUCTURE HAS BEEN COMPLETED WITH ALL CONNECTIONS AND PERMANENT BRACING SECURED.

8.0 ARCH SPAN

8.1 USE UBM OR ABM MACHINES OR EQUIVALENT THAT WILL PRODUCE THE ARCH SPAN PANELS OF PROFILE AND THICKNESS NOTED ON THE DRAWINGS.

8.2 ARCH-SPAN BASIS OF DESIGN ARE THE 120 PROFILE PANELS PRODUCED BY MIC INDUSTRIES MACHINES WITH A STEEL THICKNESS OF 1.06mm (19GA). SUBSTITUTE PANELS MUST MEET THE NOMINAL STRENGTH CAPACITIES LISTED WITH THE PANEL PROFILE SHOWN IN DETAIL 2/S-202. SUBSTITUTE PANEL STRENGTH CAPACITIES SHALL ACCOUNT FOR THE REDUCTION TO NOMINAL NEGATIVE MOMENT AND AXIAL LOAD CAPACITIES DUE TO THE CURVING PROCESS. CONTRACTORS PROVIDING SUBSTITUTE PANELS MUST ALSO REVISE DETAILS/DIMENSIONS WORKED SPECIFICALLY FOR THE PANEL PROFILES USED AS THE BASIS OF DESIGN. THIS INCLUDES, BUT MAY NOT BE LIMITED TO, FOUNDATIONS, ENDWALL OPENINGS, SIDEWALL OPENINGS, OPENING FRAMES AND OUT-BUILDING ROOF PANELS.

8.3 ARCH SPAN PANELS WILL BE ROLLED ON-SITE USING GALVANIZED STEEL COILS CONFORMING TO ASTM A653M-06A, STRUCTURAL QUALITY (SS), GRADE 340, CLASS Z275 FOR GALVANIZED COATING.

8.4 ENDWALL PANELS SHALL BE THE SAME PROFILE AND THICKNESS AS THE ARCH SPAN PANELS USED FOR THE ROOF.

8.6 CONTRACTOR IS TO ENGAGE AN EXPERIENCED INSTALLER TO ERECT THE ARCH SPAN BUILDING. CONSTRUCTION CREWS SHALL BE TRAINED IN THE USE OF THE PANEL ROLLING MACHINES AND IN THE ERECTION OF THE PANELS.

8.7 EXERCISE CARE IN DELIVERING, UNLOADING, STORING AND ERECTING STEEL COILS AND BUILDING PANELS TO PREVENT BENDING, WARPING, TWISTING AND SURFACE DAMAGE.

8.8 ERECT PANELS TRUE TO LINE, LEVEL AND PLUMB. ROOF LINE SHALL BE STRAIGHT AND LEVEL, RADIUS SHALL BE CONSISTENT THROUGHOUT AND ENDWALLS SHALL BE STRAIGHT AND PLUMB.

8.9 WINDOW AND DOOR OPENINGS SHALL BE FRAMED PER DETAILS ON THE DRAWINGS.

8.10 INCIDENTAL OPENINGS (COORDINATE WITH ARCHITECTURAL AND MEP DRAWINGS) IN THE PANELS SHALL BE NO MORE THAN 200mm IN DIAMETER AND SHALL BE PLACED THROUGH A "FLAT" PORTION OF THE PANEL. OPENINGS SHALL NOT BE CUT THROUGH ANY VERTICAL OR DIAGONAL RIB.

8.11 HANGER TABS AS DETAILED ON THE DRAWINGS SHALL BE INSTALLED PER LAYOUT ON THE TYPICAL BUILDING SECTION. ALL SUSPENDED LOADS SHALL BE CONNECTED TO HANGER TABS. HANGER TABS AT LESS THAN 30 DEGREES FROM VERTICAL CAN CARRY NO MORE THAN 100 KG EACH. HANGER TABS AT MORE THAN 30 DEGREES FROM VERTICAL CAN CARRY NO MORE THAN 25 KG EACH.

9.0 STRUCTURAL DESIGN CRITERIA

9.1 ALL DESIGNS SHALL CONFORM TO THE PROVISIONS OF THE IBC 2009 AND ASCE 7-05. OCCUPANCY CATEGORY II.

9.2 DESIGN LOADS

9.2.1 DEAD LOADS (PER IBC 2009 & UFC 3-301-01)

MECH/ELEC/PLUMBING	0.10 kPa
SUSPENDED CEILING	0.24 kPa
INSULATION	0.07 kPa
ARCH SPAN STEEL: 120 PROFILE x 1.06mm	0.17 kPa
TOTAL DEAD LOAD	0.58 kPa
MINIMUM (FOR UPLIFT)	0.24 kPa

9.2.2 LIVE LOADS (PER IBC 2009 & UFC 3-301-01)

ROOF		0.57 kPa
SLAB ON GRADE:	TYPICAL	4.80 kPa
	STORAGE/LATRINE	7.18 kPa
	VEHICLE LOADS	11.97 kPa

9.2.3 SNOW LOADS (PER IBC 2009 & UFC 3-301-01)

GROUND SNOW LOAD (Pg)	1.2 kPa
SNOW IMPORTANCE FACTOR (I)	1.0
SNOW EXPOSURE FACTOR (Ce)	0.9
THERMAL FACTOR (Ct)	1.1

9.2.4 WIND LOADS (PER IBC 2009)

BASIC WIND SPEED	137 km/h
WIND IMPORTANCE FACTOR	1.0
WIND EXPOSURE CATEGORY	C
DIRECTIONALITY COEFFICIENT (Kd)	0.85
TOPOGRAPHIC FACTOR (Kzt)	1.0

9.2.5 SEISMIC LOADS (PER IBC 2009 & UFC 3-310-04)

SEISMIC IMPORTANCE FACTOR (Ie)	1.0
SEISMIC SITE CLASS	D
S_s =	2.40
S_1 =	1.20
S_{DS} =	1.6
S_{D1} =	1.2
SEISMIC DESIGN CATEGORY	E

SEISMIC RESISTING SYSTEM:
- -STRUCTURAL STEEL SYSTEMS NOT SPECIFICALLY DETAILED FOR SEISMIC RESISTANCE
- -RESPONSE MODIFICATION FACTOR (R) 2 (CONSERVATIVE)
- -RESPONSE COEFFICIENT (Cs) 0.5

SEISMIC ANALYTICAL PROCEDURE = EQUIV LATERAL FORCE

9.3 FOUNDATION DESIGN CRITERIA

9.3.1 FOUNDATION DESIGN IS BASED UPON THE FOLLOWING SOIL PARAMETERS:
ASSUMED NET ALLOWABLE SOIL BEARING PRESSURE FOR ALL SPREAD FOOTINGS: 72 kPa

9.3.2 ASSUMED LATERAL EARTH PRESSURE PARAMETERS:
SOIL DENSITY = 1800 KG/M^3
COEFFICIENT OF ACTIVE PRESSURE (KA) = 0.41
COEFFICIENT OF AT-REST PRESSURE (KO) = 0.58
COEFFICIENT OF PASSIVE EARTH PRESSURE (KP) = 2.44
ANGLE OF INTERNAL FRICTION (PHI) = 25 DEGREES
COEFFICIENT OF FRICTION (U) = 0.35
MODULUS OF SUB-GRADE REACTION (KS) = 4150 G/CM^3

9.3.3 FROST DEPTH: ASSUMED TO BE 800mm

UNLESS OTHERWISE NOTED, LINEAR DIMENSIONS SHOWN ARE IN MILLIMETERS.

COMMONWEALTH OF PENNSYLVANIA
REGISTERED PROFESSIONAL
JOSEPH D. MEIER
PE-039925E
12-MAR-11

US ARMY CORPS OF ENGINEERS
AFGHANISTAN NORTH DISTRICT

SYMBOL	DESCRIPTION	DATE	APPR.	SYMBOL	DESCRIPTION	DATE	APPR.

DESIGNED BY: JDM
DWN BY: RMS
CKD BY: EPS
REVIEWED BY: JH
SUBMITTED BY:
DATE: 3-24-2011
REV: 0
CONTRACT NO. W912ER-09-D-0002
DRAWING CODE:
FILE NAME:
PLOT SCALE: 1:100
PLOT DATE: 3/24/2011

BAKER

U.S. ARMY ENGINEER DISTRICT, AFGHANISTAN
CORPS OF ENGINEERS
APO AE 09356

SITE ADAPT DESIGN
AD22 - HEADQUARTERS BUILDING - ARCH SPAN
GENERAL NOTES AND DESIGN CRITERIA

SHEET REFERENCE NUMBER:
S-002

A1 Size 594mm x 841mm

3/24/2011 12:26 PM

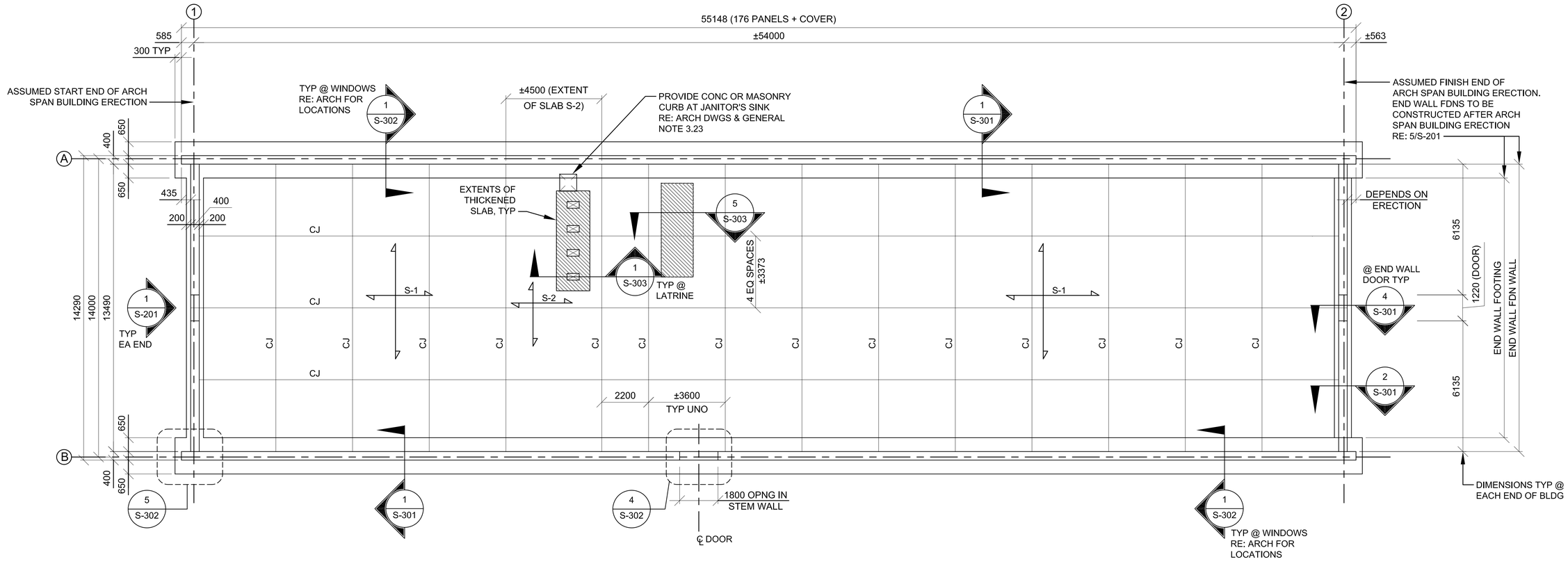

1 S-101 FOUNDATION PLAN

SCALE: 1:100

FOUNDATION PLAN NOTES:

1. RE: DRAWINGS S-001 AND S-002 FOR GENERAL NOTES AND DESIGN CRITERIA.
2. COORDINATE DIMENSIONS, WALL OPENINGS, ELEVATIONS, SECTIONS, AND DETAILS WITH ARCHITECTURAL DRAWINGS.
3. TOP OF SLAB ELEVATION MUST BE COORDINATED WITH SITE ADAPT CIVIL DRAWINGS. TOP OF FLOOR SLAB IS AT THE DATUM ELEVATION = 0. ALL ELEVATIONS ARE REFERENCED FROM THIS ELEVATION.
4. BOTTOM OF CONCRETE FOOTING ELEVATIONS = -950 (BELOW TOP OF SLAB, TYP UNO).

5A. S-1 DENOTES A 100 CONCRETE SLAB-ON-GRADE REINFORCED WITH #10 @ 400. PLACE SLAB OVER 0.25 VAPOR RETARDER AND 100 COMPACTED GRANULAR SUB-BASE MATERIAL SUCH AS AASHTO #57 STONE.

5B. S-2 DENOTES A 150 CONCRETE SLAB-ON-GRADE REINFORCED WITH #14 @ 400. PLACE SLAB OVER 0.25 VAPOR RETARDER AND 100 COMPACTED GRANULAR SUB-BASE MATERIAL SUCH AS AASHTO #57 STONE. THIS NOTE ONLY APPLIES TO BUILDINGS WITH LATRINE FACILITIES.

6. SPACE SLAB CONTROL/CONSTRUCTION JOINTS AS SHOWN. CJ = CONTROL OR CONSTRUCTION JOINT, RE: 2/S-501.
7. PROVIDE ADDITIONAL SLAB REINFORCEMENT AT ALL RE-ENTRANT CORNERS, RE: 8/S-501.
8. RE: DRAWING S-501 FOR TYPICAL FOUNDATION AND SLAB DETAILS.
9. LOCATION OF FLOOR DRAINS ARE NOT SHOWN, COORDINATE LOCATIONS AND SLOPE OF SLAB WITH PLUMBING AND ARCHITECTURAL DRAWINGS.
10. COORDINATE MECHANICAL PENETRATIONS W/ M/E/P DRAWINGS.
11. PROVIDE REINFORCED CONCRETE WALK-OFF MATS AT ALL EXTERIOR DOORS RE: A-503 FOR DETAILS AND ARCHITECTURAL FLOOR PLAN FOR LOCATIONS.

N

0 2000 4000

SCALE: 1:100

UNLESS OTHERWISE NOTED, LINEAR DIMENSIONS SHOWN ARE IN MILLIMETERS.

COMMONWEALTH OF PENNSYLVANIA
REGISTERED PROFESSIONAL
JOSEPH D. MEIER
PE-039525E
3-24-11

US ARMY CORPS OF ENGINEERS
AFGHANISTAN NORTH DISTRICT

SYMBOL	DESCRIPTION	DATE	APPR.	SYMBOL	DESCRIPTION	DATE	APPR.

DESIGNED BY: JDM
DWN BY: RMS
CKD BY: EPS
REVIEWED BY: JH
SUBMITTED BY:
DATE: 3-24-2011
CONTRACT NO. W912ER-09-D-0002
DRAWING CODE:
FILE NAME:
PLOT SCALE: 1:100
PLOT DATE: 3/24/2011
REV: 0

BAKER

U.S. ARMY ENGINEER DISTRICT, AFGHANISTAN
CORPS OF ENGINEERS
APO AE 09356

SITE ADAPT DESIGN

AD22 - HEADQUARTERS BUILDING - ARCH SPAN

FOUNDATION PLAN

SHEET REFERENCE NUMBER:

S-101

A1 Size 594mm x 841mm

3/24/2011 12:26 PM

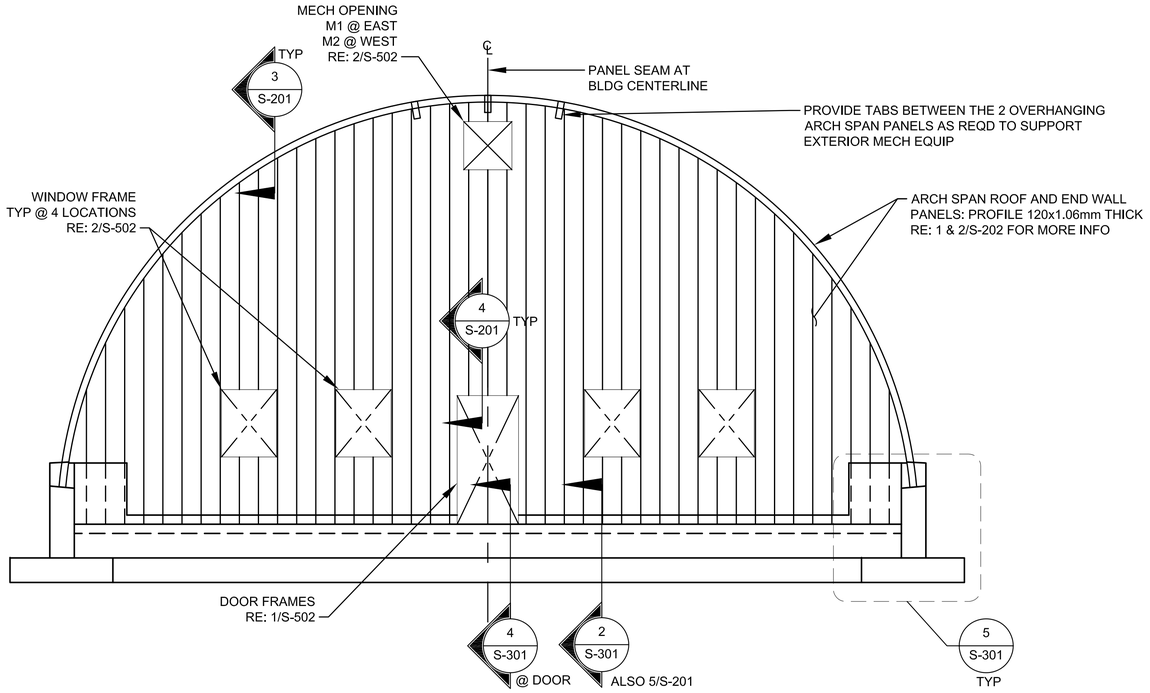

1 S-201 EAST AND WEST ELEVATION

SCALE: 1:50

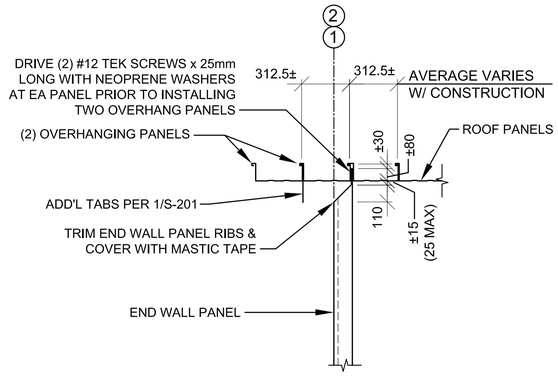

3 S-201 SECTION

SCALE: 1:20

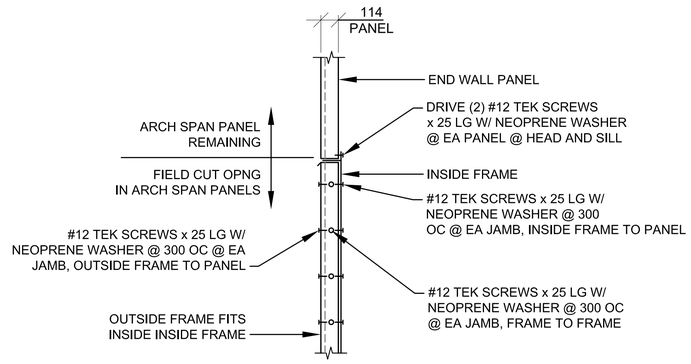

4 S-201 SECTION

SCALE: 1:20

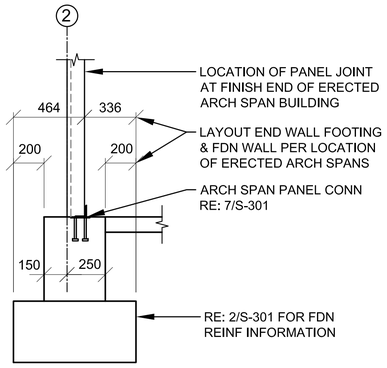

5 S-201 SECTION

SCALE: 1:20

2 S-201 NOT USED

SCALE: NTS

0 500 1000 2000

SCALE: 1:50

0 200 400 800

SCALE: 1:20

UNLESS OTHERWISE NOTED,
LINEAR DIMENSIONS
SHOWN ARE IN MILLIMETERS.

COMMONWEALTH OF PENNSYLVANIA
REGISTERED PROFESSIONAL
JOSEPH D. MEIER
PE-039929E

US ARMY CORPS
OF ENGINEERS
AFGHANISTAN NORTH
DISTRICT

SYMBOL	DESCRIPTION	DATE	APPR.	SYMBOL	DESCRIPTION	DATE	APPR.

DESIGNED BY: JDM
DWN BY: RMS
CKD BY: EPS
REVIEWED BY: JH
SUBMITTED BY:
DATE: 3-24-2011
CONTRACT NO. W912ER-09-D-0002
DRAWING CODE:
REV: 0
FILE NAME:
PLOT SCALE: 1:100
PLOT DATE: 3/24/2011

BAKER

U.S. ARMY ENGINEER DISTRICT, AFGHANISTAN
CORPS OF ENGINEERS
APO AE 09356

SITE ADAPT DESIGN

AD22 - HEADQUARTERS BUILDING - ARCH SPAN

BUILDING ELEVATION AND DETAILS

SHEET
REFERENCE
NUMBER:

S-201

3/24/2011 12:26 PM

A1 Size 594mm x 841mm

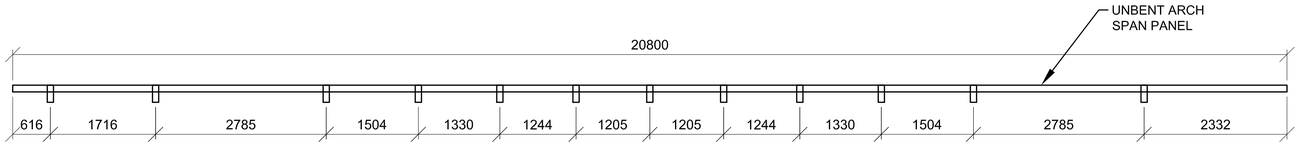

TAB LAYOUT ON PRE-BENT PANEL

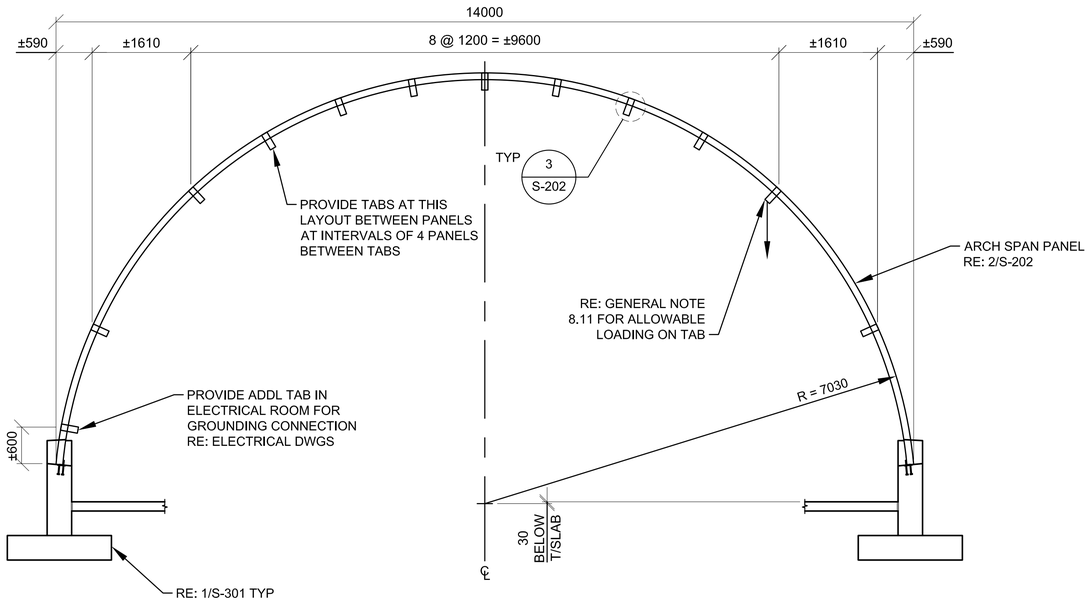

1 S-202 BUILDING SECTION

SCALE: 1:50

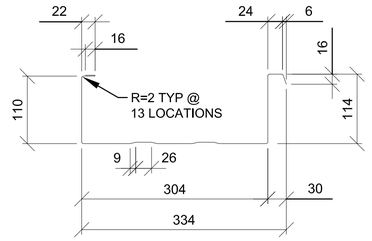

NOMINAL STRENGTH VALUES PER PANEL
(WITHOUT FACTOR OF SAFETY)

SHEAR : Vn = 1093.16 kg
AXIAL COMPRESSION : Pn = 5542.9 kg*
POSTITIVE MOMENT : +Mn = 494.6 kg-m
NEGATIVE MOMENT : -Mn = 264.75 kg-m*

* THE CURVING PROCESS REDUCES THE NOMINAL STRENGTH OF ARCH-SPAN PANELS IN NEGATIVE FLEXURE AND COMPRESSION. THESE VALUES ARE BASED ON TESTING OF PANELS.

NOTE:
ALL DIMENSIONS ARE APPROXIMATE (±3mm)

2 S-202 120 PROFILE - PROVIDE 1.06mm (19GA) THICKNESS

SCALE: NTS

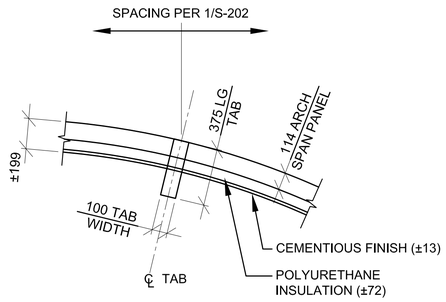

3 S-202 STEEL TAB DETAIL

SCALE: 1:20

0 500 1000 2000
SCALE: 1:50

0 200 400 800
SCALE: 1:20

UNLESS OTHERWISE NOTED,
LINEAR DIMENSIONS
SHOWN ARE IN MILLIMETERS.

COMMONWEALTH OF PENNSYLVANIA
REGISTERED PROFESSIONAL
JOSEPH D. MEIER
RE-039925E

US ARMY CORPS
OF ENGINEERS
AFGHANISTAN NORTH
DISTRICT

SYMBOL	DESCRIPTION	DATE	APPR.	SYMBOL	DESCRIPTION	DATE	APPR.

DESIGNED BY: JDM
DWN BY: RMS
CKD BY: EPS
REVIEWED BY: JH
SUBMITTED BY:
DATE: 4-21-2011
REV: 0
CONTRACT NO. W912ER-09-D-0002
DRAWING CODE:
FILE NAME:
PLOT SCALE: 1:100
PLOT DATE: 4/21/2011

BAKER

U.S. ARMY ENGINEER DISTRICT, AFGHANISTAN
CORPS OF ENGINEERS
APO AE 09356

SITE ADAPT DESIGN

AD22 - HEADQUARTERS BUILDING - ARCH SPAN

BUILDING SECTION AND DETAILS

SHEET
REFERENCE
NUMBER:

S-202

4/21/2011 9:53 AM

A1 Size 594mm x 841mm

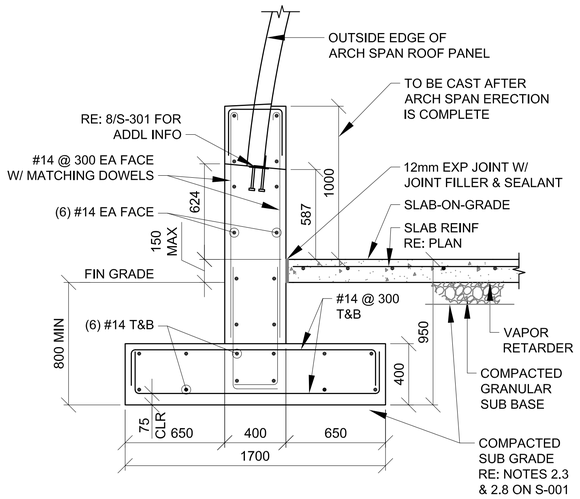

1 S-301 FOUNDATION WALL SECTION

SCALE: 1:20

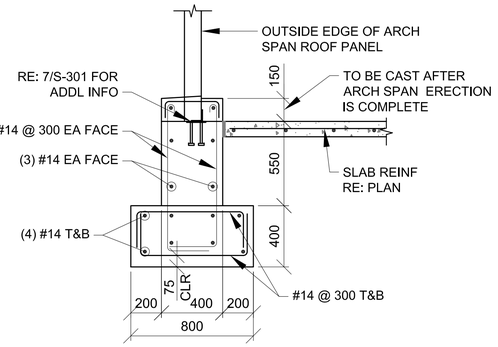

2 S-301 END WALL FOUNDATION SECTION

SCALE: 1:20

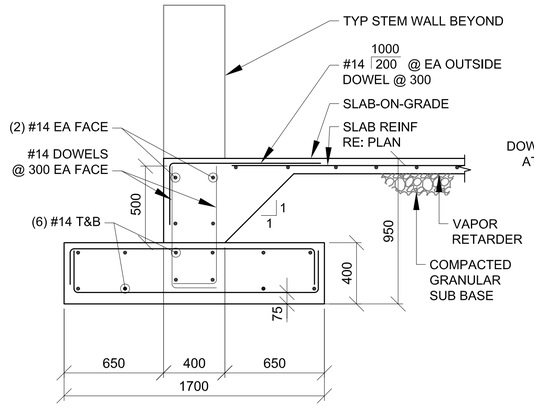

3 S-301 FDN WALL SECTION TYP @ DOOR

SCALE: 1:20

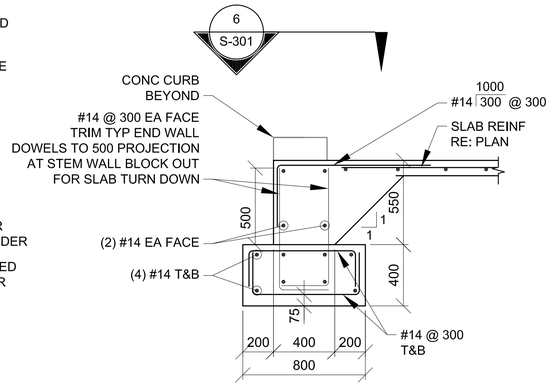

4 S-301 END WALL FDN SECTION TYP @ DOOR

SCALE: 1:20

NOTE:
PROVIDE 1220mm OPENING IN STEM WALL PER
PLAN (200mm WIDER THAN DOOR, 100mm EA SIDE)

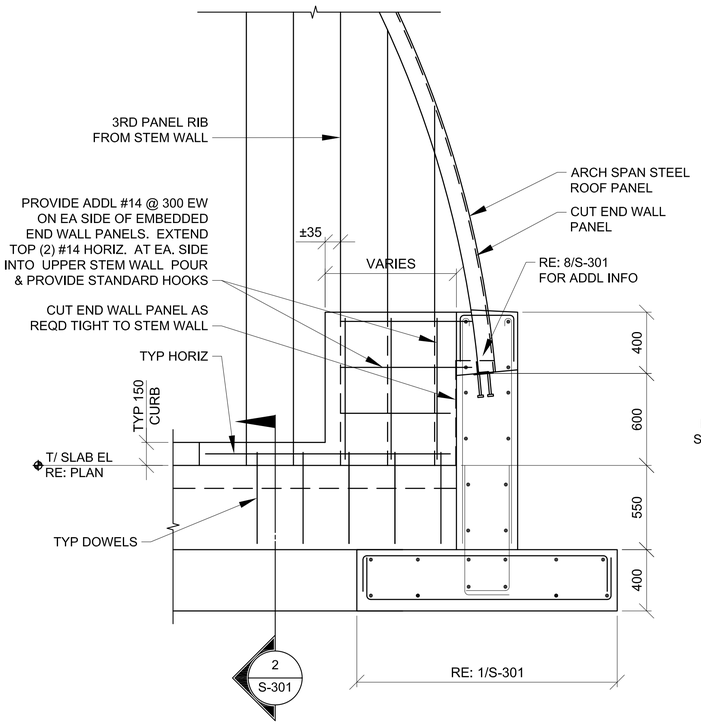

5 S-301 FOUNDATION END WALL SECTION

SCALE: 1:20

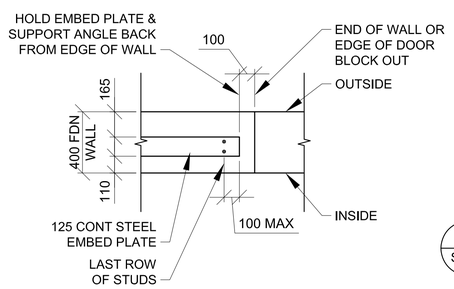

6 S-301 PLAN VIEW TYP AT END OF FDN WALL OR AT DOOR BLOCKOUT

SCALE: 1:20

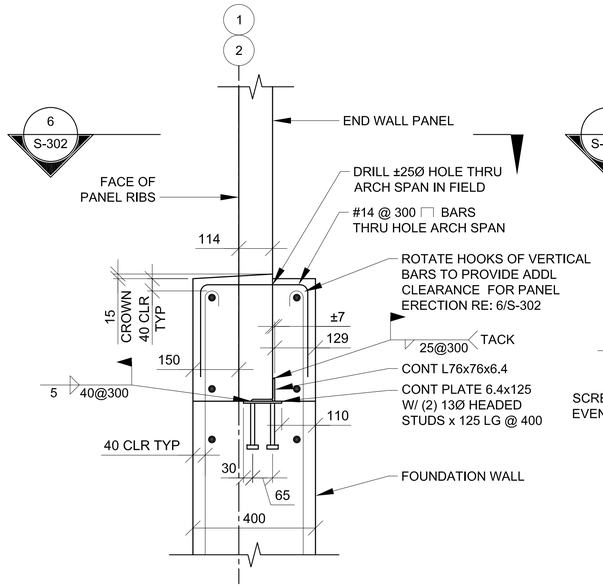

7 S-301 TYP ARCH SPAN END WALL CONN TO FDN WALL

SCALE: 1:10

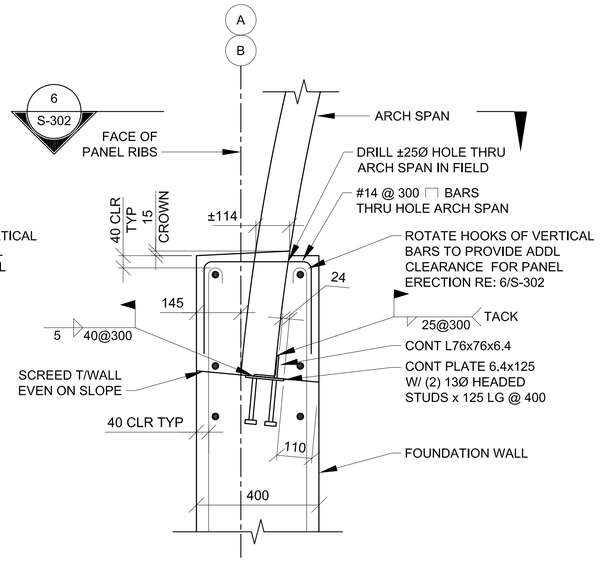

8 S-301 TYP ARCH SPAN SIDE WALL CONN TO FDN WALL

SCALE: 1:10

0 200 400 800
SCALE: 1:20

0 100 200 400
SCALE: 1:10

UNLESS OTHERWISE NOTED,
LINEAR DIMENSIONS
SHOWN ARE IN MILLIMETERS.

COMMONWEALTH OF PENNSYLVANIA
REGISTERED PROFESSIONAL
JOSEPH D. MEIER
PE-036925E

US ARMY CORPS
OF ENGINEERS
AFGHANISTAN NORTH
DISTRICT

SYMBOL	DESCRIPTION	DATE	APPR.	SYMBOL	DESCRIPTION	DATE	APPR.

DESIGNED BY: JDM
DWN BY: RMS
CKD BY: EPS
REVIEWED BY: JH
SUBMITTED BY:
DATE: 3-24-2011
CONTRACT NO. W912ER-09-D-0002
DRAWING CODE:
FILE NAME:
PLOT SCALE: 1:100
PLOT DATE: 3/24/2011
REV: 0

BAKER

U.S. ARMY ENGINEER DISTRICT, AFGHANISTAN
CORPS OF ENGINEERS
APO AE 09356

SITE ADAPT DESIGN
AD22 - HEADQUARTERS BUILDING - ARCH SPAN
FOUNDATION SECTIONS

SHEET
REFERENCE
NUMBER:
S-301

3/24/2011 12:26 PM

A1 Size 594mm x 841mm

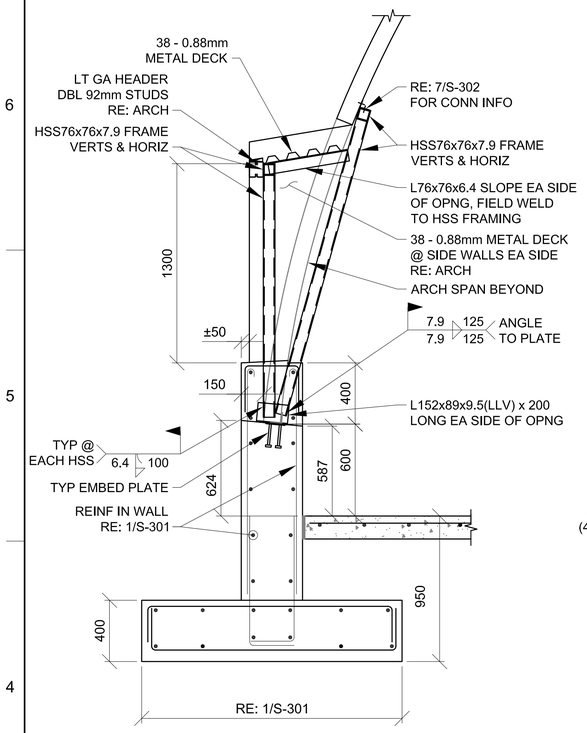

1 S-302 WINDOW DORMER SECTION

SCALE: 1:20

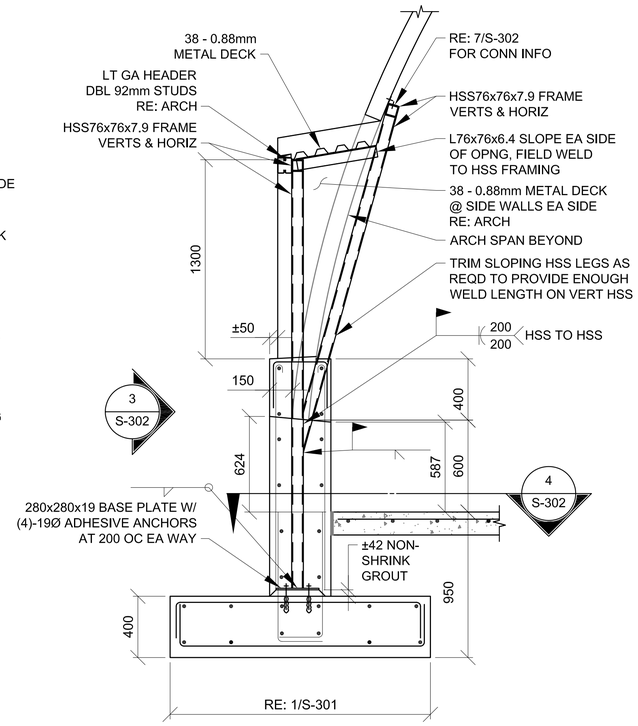

2 S-302 DOOR DORMER SECTION

SCALE: 1:20

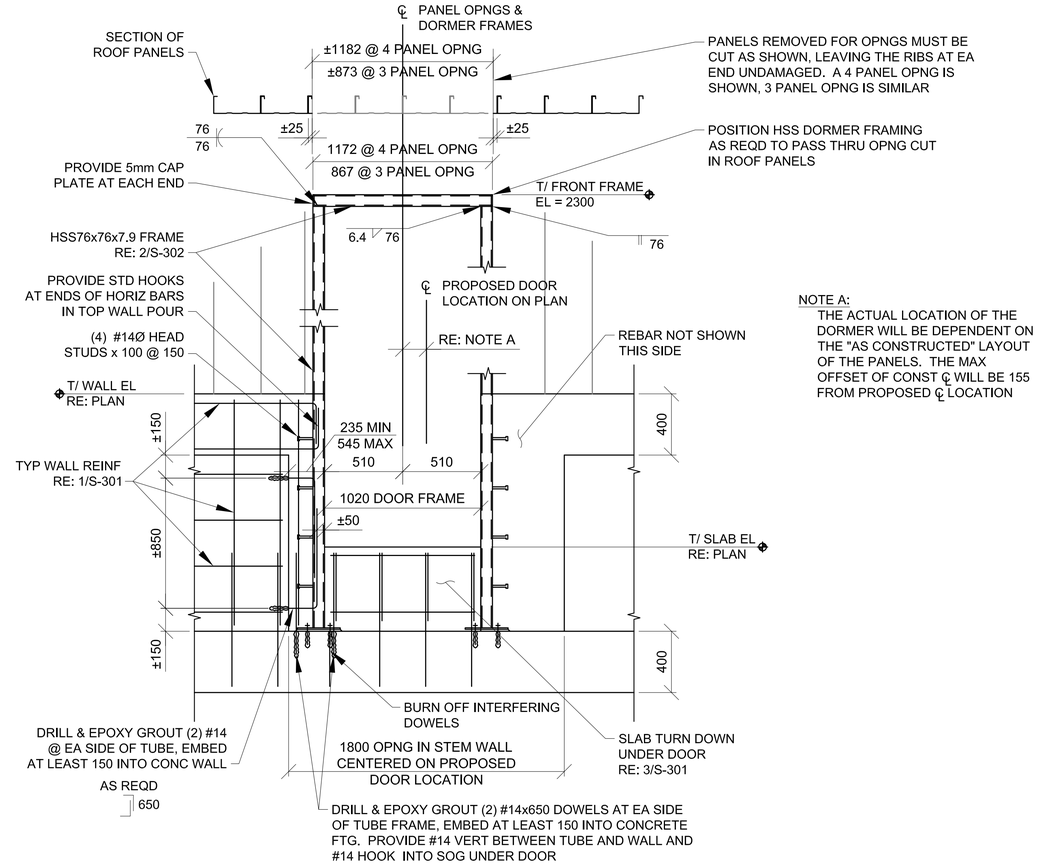

NOTE A:
THE ACTUAL LOCATION OF THE DORMER WILL BE DEPENDENT ON THE "AS CONSTRUCTED" LAYOUT OF THE PANELS. THE MAX OFFSET OF CONST ℄ WILL BE 155 FROM PROPOSED ℄ LOCATION

3 S-302 DOOR DORMER WALL SECTION

SCALE: 1:20

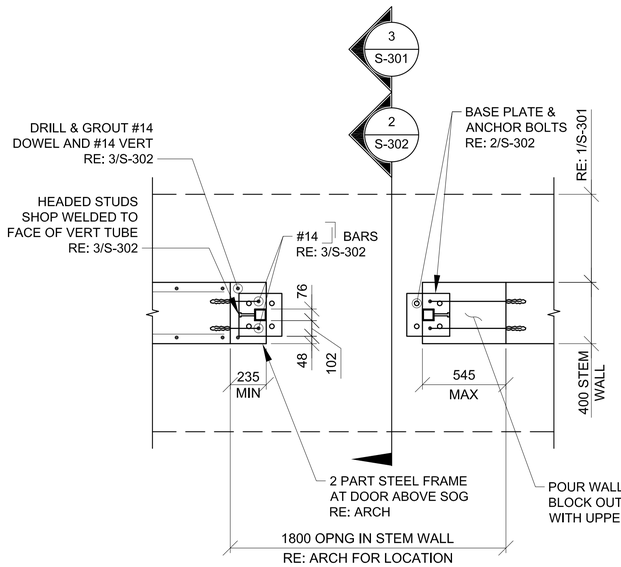

4 S-302 PLAN VIEW TYP @ DOOR DORMER

SCALE: 1:20

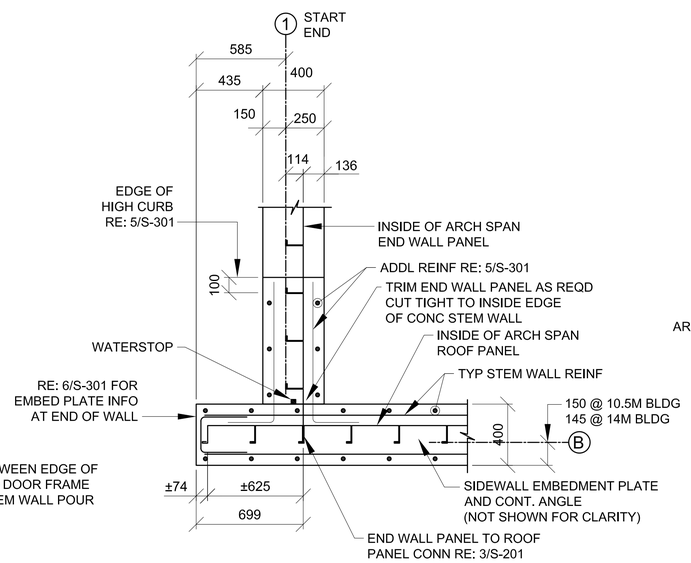

5 S-302 PLAN DETAIL @ BLDG CORNER

SCALE: 1:20

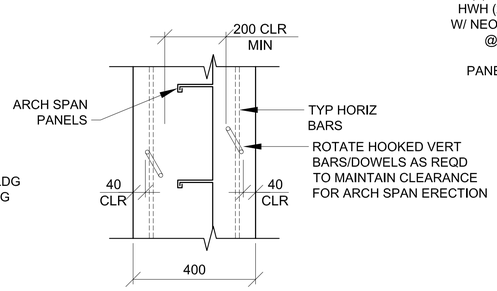

6 S-302 TYP FDN WALL PLAN DETAIL

SCALE: 1:10

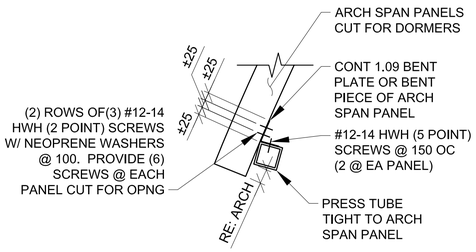

7 S-302 PANEL TO TUBE CONN DETAIL

SCALE: 1:10

0 200 400 800
SCALE: 1:20

0 100 200 400
SCALE: 1:10

UNLESS OTHERWISE NOTED, LINEAR DIMENSIONS SHOWN ARE IN MILLIMETERS.

COMMONWEALTH OF PENNSYLVANIA REGISTERED PROFESSIONAL JOSEPH D. MEIER PE-039025E 14 MAR 11

US ARMY CORPS OF ENGINEERS AFGHANISTAN NORTH DISTRICT

SYMBOL	DESCRIPTION	DATE	APPR.	SYMBOL	DESCRIPTION	DATE	APPR.

DESIGNED BY: JDM
DWN BY: RMS
CKD BY: EPS
REVIEWED BY: JH
SUBMITTED BY: BAKER
DATE: 3/24/2011
REV: 0
CONTRACT NO. W912ER-09-D-0002
DRAWING CODE:
FILE NAME:
PLOT SCALE: 1:100
PLOT DATE: 3/24/2011

U.S. ARMY ENGINEER DISTRICT, AFGHANISTAN CORPS OF ENGINEERS APO AE 09356

SITE ADAPT DESIGN
AD22 - HEADQUARTERS BUILDING - ARCH SPAN
SECTIONS

SHEET REFERENCE NUMBER:
S-302

A1 Size 594mm x 841mm

3/24/2011 12:26 PM

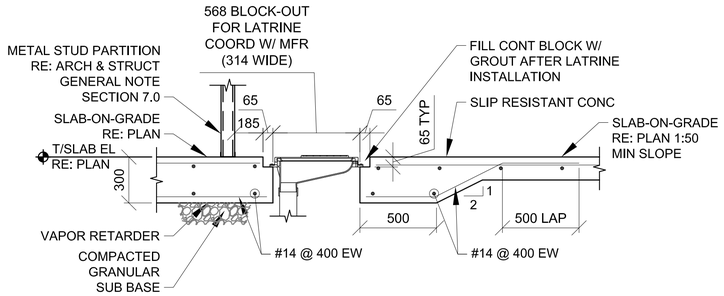

1 / S-303 LATRINE SECTION
SCALE: 1:20

NOT USED

2 / S-303 ABLUTION SECTION
SCALE: 1:20

NOT USED

3 / S-303 SHOWER SECTION
SCALE: 1:20

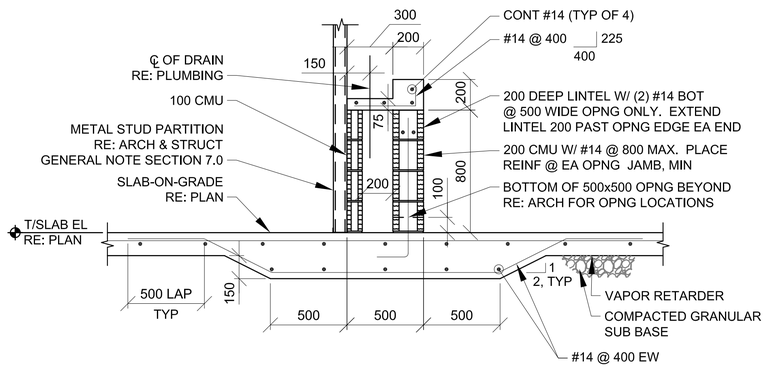

4 / S-303 NOT USED
SCALE: NTS

5 / S-303 LAVATORY SINK SECTION
SCALE: 1:20

NOT USED

6 / S-303 LAUNDRY SINK SECTION
SCALE: 1:20

0 200 400 800
SCALE: 1:20

UNLESS OTHERWISE NOTED,
LINEAR DIMENSIONS
SHOWN ARE IN MILLIMETERS.

COMMONWEALTH OF PENNSYLVANIA
REGISTERED PROFESSIONAL
JOSEPH D. MEIER
PE-039025E
24-MAR-11

US ARMY CORPS
OF ENGINEERS
AFGHANISTAN NORTH
DISTRICT

SYMBOL	DESCRIPTION	DATE	APPR.	SYMBOL	DESCRIPTION	DATE	APPR.

DESIGNED BY: JDM
DWN BY: RMS
CKD BY: EPS
REVIEWED BY: JH
SUBMITTED BY: BAKER
DATE: 3/24/2011
REV: 0
CONTRACT NO. W912ER-09-D-0002
DRAWING CODE:
FILE NAME: C:\Users\jdm\Desktop\AD22-S-303.DWG
PLOT SCALE: 1:100
PLOT DATE: 3/24/2011

U.S. ARMY ENGINEER DISTRICT, AFGHANISTAN
CORPS OF ENGINEERS
APO AE 09356

SITE ADAPT DESIGN
AD22 - HEADQUARTERS BUILDING - ARCH SPAN
LATRINE SECTIONS

SHEET REFERENCE NUMBER:
S-303

A1 Size 594mm x 841mm

3/24/2011 12:26 PM

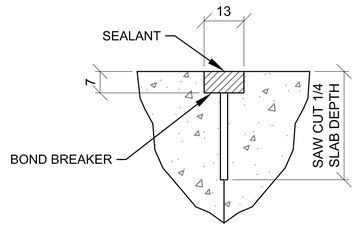

CONTROL JOINT DETAIL

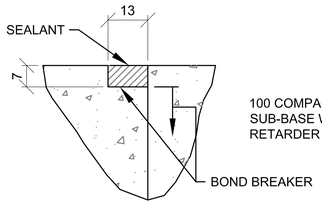

CONSTRUCTION JOINT DETAIL

TYP CONCRETE SLAB JOINT FINISH DETAILS

1 / S-501 SCALE: NTS

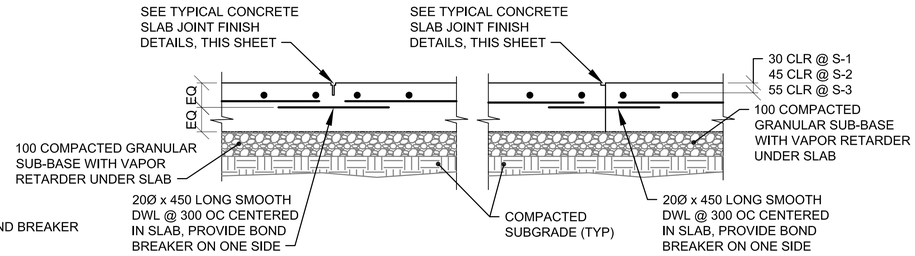

CONTROL JOINT DETAIL

CONSTRUCTION JOINT DETAIL

TYP SLAB ON GRADE JOINT DETAILS

2 / S-501 SCALE: NTS

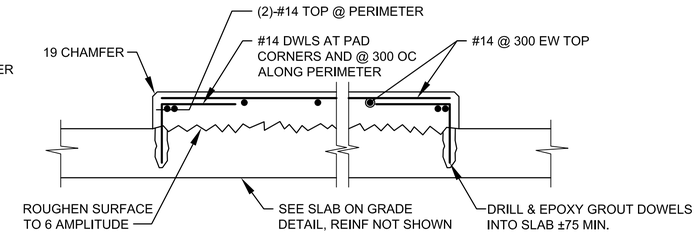

INTERIOR EQUIPMENT PAD DETAIL

3 / S-501 SCALE: NTS

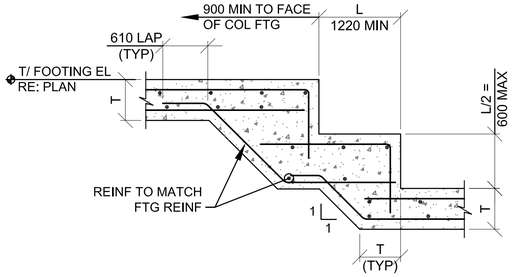

STEPPED FOOTING (2 LAYERS REINF)

4 / S-501 SCALE: NTS

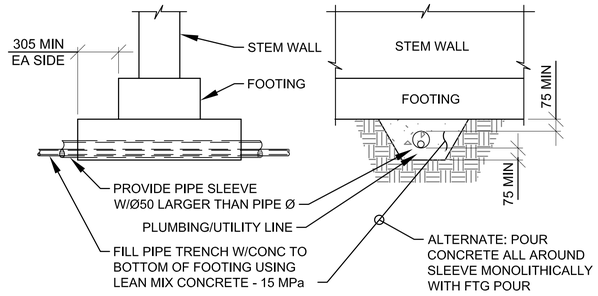

UTILITY PIPE UNDER WALL FTG

5 / S-501 SCALE: NTS

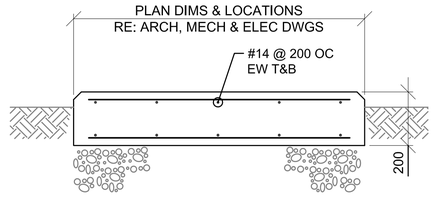

NOTES:
1. COORDINATE SIZE & LOCATION WITH EQUIPMENT REQUIREMENTS.
2. CHAMFER ALL EDGES 25 TYPICAL.

EQUIPMENT PAD (EXTERIOR)

6 / S-501 SCALE: NTS

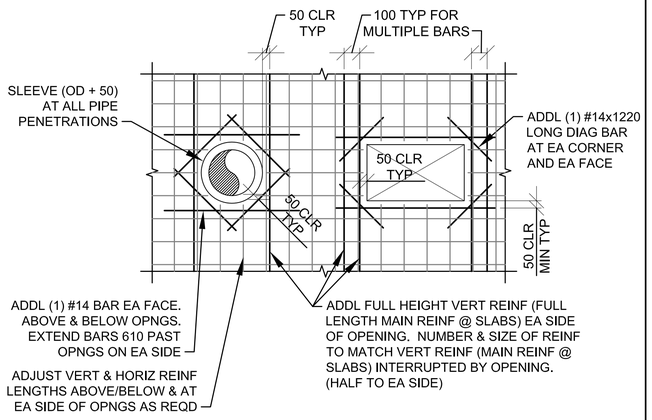

OPENING THRU CONC WALL

7 / S-501 SCALE: NTS

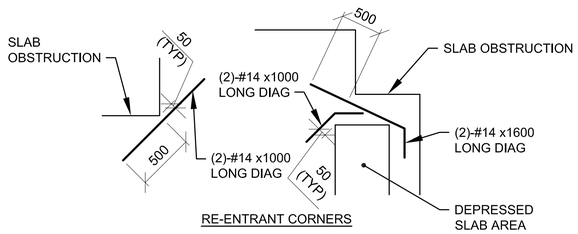

RE-ENTRANT CORNERS

DETAIL NOTES:
1. WHERE MORE THAN ONE ADDITIONAL BAR IS REQUIRED PARALLEL TO THE EXISTING SLAB/WALL REINFORCING THE ADDITIONAL REINFORCING BARS SHALL BE SPACED AT 100 ON CENTER.
2. ADDITIONAL REINFORCING PARALLEL TO THE SLAB/WALL REINFORCING SHALL BE #16 BARS THAT PROVIDE A STEEL AREA ON EACH SIDE OF THE OPENING EQUAL TO 1/2 THE AREA OF THE REINFORCING CUT BY THE OPENING.
3. FOR OPENINGS WITH SIDES OR DIAMETERS LESS THAN 300 SPREAD THE SLAB/WALL REINFORCING TO CLEAR THE OPENING.

CONCRETE REINF DETAILS

8 / S-501 SCALE: NTS

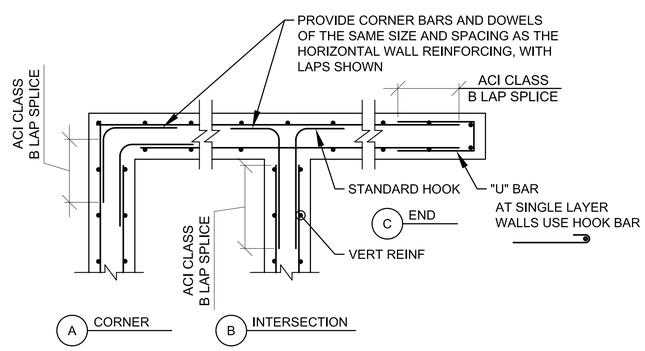

A CORNER

B INTERSECTION

CONCRETE WALL CORNER REINFORCING

9 / S-501 SCALE: NTS

NOTE:
WALLS WITH SINGLE LAYER OF REINFORCING SIMILAR

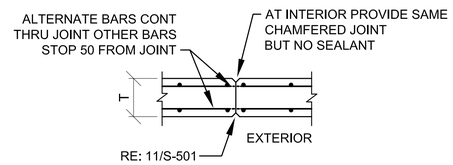

A CONTROL JOINT (@ 4500 MAX)

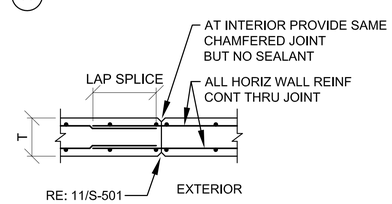

B CONSTRUCTION JOINT(@ 18000 MAX)

CONCRETE WALL JOINTS

10 / S-501 SCALE: NTS

NOTE:
WALLS WITH SINGLE LAYER OF REINFORCING SIMILAR

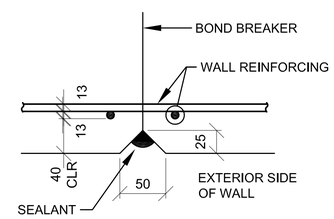

TYP CONCRETE WALL JOINT FINISH DETAIL

11 / S-501 SCALE: NTS

UNLESS OTHERWISE NOTED, LINEAR DIMENSIONS SHOWN ARE IN MILLIMETERS.

COMMONWEALTH OF PENNSYLVANIA REGISTERED PROFESSIONAL JOSEPH D. MEIER PE-036925E

US ARMY CORPS OF ENGINEERS AFGHANISTAN NORTH DISTRICT

SYMBOL	DESCRIPTION	DATE	APPR.	SYMBOL	DESCRIPTION	DATE	APPR.

U.S. ARMY ENGINEER DISTRICT, AFGHANISTAN CORPS OF ENGINEERS APO AE 09356

DESIGNED BY: JDM | DWN BY: RMS | CKD BY: EPS | REVIEWED BY: JH | SUBMITTED BY: BAKER

DATE: 3/24/2011 | REV: 0
CONTRACT NO. W912ER-09-D-0002
DRAWING CODE:
FILE NAME:
PLOT SCALE: NONE
PLOT DATE: 3/24/2011

SITE ADAPT DESIGN
AD22 - HEADQUARTERS BUILDING - ARCH SPAN
TYPICAL DETAILS

SHEET REFERENCE NUMBER:
S-501

3/24/2011 12:26 PM

A1 Size 594mm x 841mm

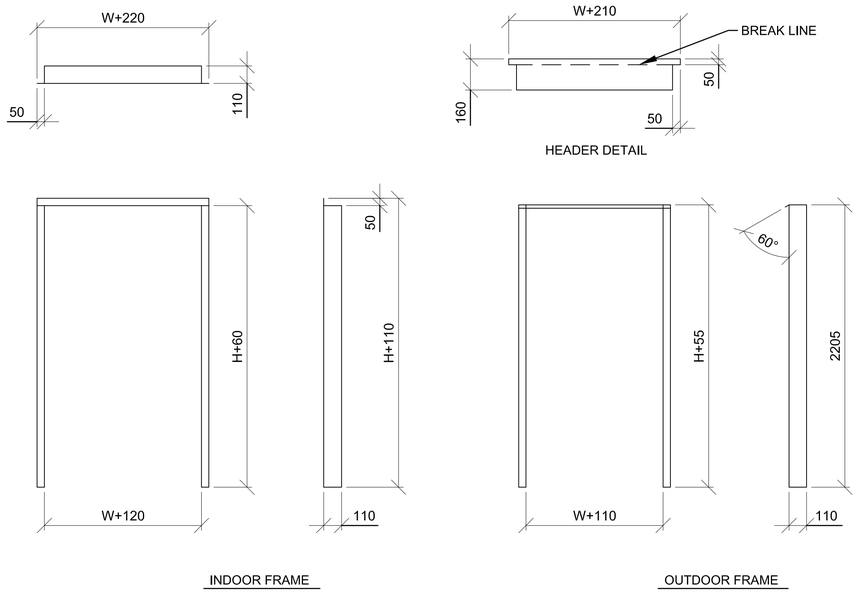

1 / S-502 **120 DOOR DETAIL**

SCALE: NTS

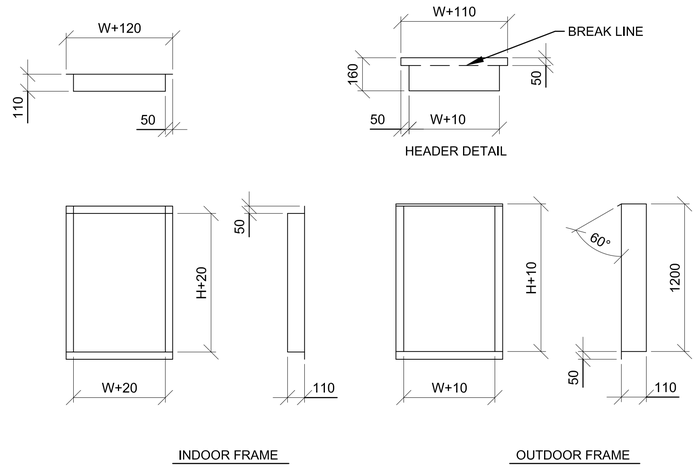

2 / S-502 **120 WINDOW/MECH OPENING DETAIL**

SCALE: NTS

DOOR & WINDOW FRAME NOTES:

1. ALL DIMENSIONS ARE INSIDE DIMENSIONS.
2. WELD AND GRIND SMOOTH ALL CORNERS.
3. FRAME THICKNESS = 2.5mm.
4. ALL FRAMES, INTERIOR AND EXTERIOR, TO BE GALVANIZED.
5. RE: 1/A-601 FOR DOOR WIDTHS (W) AND HEIGHTS (H).
6. RE: 3/A-601 FOR WINDOW WIDTHS (W) AND HEIGHTS (H).
7. RE: SCHEDULE BELOW FOR LOUVER DIMENSIONS.
8. CUT OPENING DIMENSIONS:
   - WINDOW/LOUVER - W+130
   - DOOR - W+130
   - WINDOW/LOUVER - H+30
   - DOOR - H+65
9. RE: 3/S-502 FOR TYP JAMB DETAIL

MECH OPENING FRAME SCHEDULE

TYPE	W	H
M1	787	787
M2	1050	1350

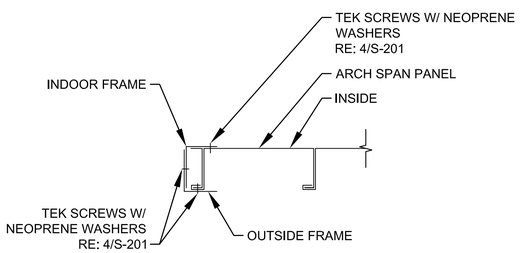

3 / S-502 **TYP JAMB SECTION**

SCALE: NTS

UNLESS OTHERWISE NOTED, LINEAR DIMENSIONS SHOWN ARE IN MILLIMETERS.

COMMONWEALTH OF PENNSYLVANIA
REGISTERED PROFESSIONAL
JOSEPH D. MEIER
PE-036925E

US ARMY CORPS OF ENGINEERS
AFGHANISTAN NORTH DISTRICT

SYMBOL	DESCRIPTION	DATE	APPR.	SYMBOL	DESCRIPTION	DATE	APPR.

U.S. ARMY ENGINEER DISTRICT, AFGHANISTAN
CORPS OF ENGINEERS
APO AE 09356

DESIGNED BY: JDM
DWN BY: RMS
CKD BY: EPS
REVIEWED BY: JH
SUBMITTED BY:
DATE: 3-24-2011
CONTRACT NO. W912ER-09-D-0002
DRAWING CODE:
REV: 0
FILE NAME:
PLOT SCALE: NONE
PLOT DATE: 3/24/2011

BAKER

SITE ADAPT DESIGN

AD22 - HEADQUARTERS BUILDING - ARCH SPAN

DOOR/WINDOW/MECHANICAL OPENING FRAME DETAILS

SHEET REFERENCE NUMBER:

S-502

A1 Size 594mm x 841mm

3/24/2011 12:26 PM

CONCRETE REINFORCEMENT TENSION DEVELOPMENT/LAP SPLICE SCHEDULE

f'c = 28 MPa	LAP CLASS	UNCOATED BARS			
		TOP BARS		OTHER BARS	
METRIC BAR SIZES		CASE 1	CASE 2	CASE 1	CASE 2
#10 TO #20	A	50 BAR DIA	74 BAR DIA	38 BAR DIA	57 BAR DIA
	B	64 BAR DIA	96 BAR DIA	50 BAR DIA	74 BAR DIA
#25 TO #50	A	62 BAR DIA	93 BAR DIA	48 BAR DIA	71 BAR DIA
	B	80 BAR DIA	121 BAR DIA	62 BAR DIA	93 BAR DIA

NOTES:
1. TABULATED TENSION DEVELOPMENT LENGTH VALUES ARE TAKEN FROM CRSI DESIGN HANDBOOK 2008 10TH ED.
2. TENSION DEVELOPMENT & TENSION LAP SPLICE LENGTHS ARE EXPRESSED AS MULTIPLES OF BAR DIAMETERS.
3. TABULATED VALUES ARE BASED ON MINIMUM YIELD STRENGTH OF REINFORCEMENT, fy, OF 420MPa.
4. CONCRETE IS NORMAL WEIGHT (2400Kg/m^3) AND 28 DAY COMPRESSIVE STRENGTH = 28MPa.
5. TABULATED VALUES FOR BEAMS & COLUMNS ARE BASED ON TRANSVERSE REINFORCEMENT AND CONCRETE COVER MEETING MINIMUM CODE REQUIREMENTS.
6. CASES 1 & 2, WHICH DEPEND ON THE TYPE OF STRUCTURAL MEMBER, CONCRETE COVER, AND CENTER-TO-CENTER SPACING OF THE BARS ARE DEFINED IN THE TABLE BELOW.
7. LAP SPLICE LENGTHS (MINIMUM 300mm) ARE MULTIPLES OF TENSION DEVELOPMENT LENGTHS: CLASS A = 1.0(TENSION DEVELOPMENT LENGTH) & CLASS B = 1.3(TENSION DEVELOPMENT LENGTH)
8. TOP BARS ARE HORIZONTAL REINFORCEMENT WITH MORE THAN 300mm OF CONCRETE CAST BELOW THE BARS.
9. IT SHALL BE PERMISSIBLE TO CALCULATE WALL AND SLAB REINFORCEMENT TENSION DEVELOPMENT/SPLICE LENGTHS IN ACCORDANCE WITH ACI 12.2.3 OR TABLE 5.3(b) OF CRSI 2008 IN LIEU OF VALUES TABULATED ABOVE.

BEAMS, COLUMNS	CASE 1	CONCRETE COVER AT LEAST 1 BAR DIA AND CENTER-TO-CENTER SPACING AT LEAST 2 BAR DIA
	CASE 2	CONCRETE COVER LESS THAN 1 BAR DIA OR CENTER-TO-CENTER SPACING LESS THAN 2 BAR DIA
ALL OTHERS	CASE 1	CONCRETE COVER AT LEAST 1 BAR DIA AND CENTER-TO-CENTER SPACING AT LEAST 3 BAR DIA
	CASE 2	CONCRETE COVER LESS THAN 1 BAR DIA OR CENTER-TO-CENTER SPACING LESS THAN 3 BAR DIA

STANDARD HOOKS IN TENSION PER (ACI 318M-05) f'c = 28 MPa

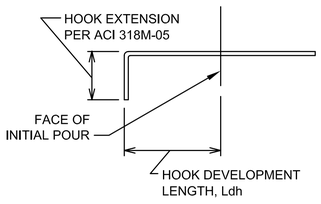

METRIC BAR SIZE	HOOK DEVELOPMENT LENGTH (mm) ldh
#10	190
#12	229
#14	267
#16	305
#20	381
#25	476
#28	533
#32	610
#40	762
#50	953

NOTES:
1. CONCRETE IS NORMAL WEIGHT CONCRETE.
2. BAR YIELD STRENGTH, fy = 420 MPa
3. SIDE COVER REQUIREMENTS OF ACI SECT. 12.5.3 ARE ASSUMED TO NOT BE MET.
4. TIE OR STIRRUP REQUIREMENTS OF ACI SECT. 12.5.3 ARE ASSUMED TO NOT BE MET.
5. REDUCTION FOR EXCESS REINFORCEMENT IS NOT TAKEN.
6. HOOK DEVELOPMENT LENGTH IS VALID FOR 180° HOOKS ALSO.

CONCRETE COVER SCHEDULE

MINIMUM CONCRETE COVER PROTECTION FOR REINFORCEMENT BARS SHALL BE AS LISTED BELOW: (SEE ACI 318M-05, SECTION 7.7 FOR CONDITIONS NOT NOTED). DIMENSIONS FOR BAR PLACEMENT GIVEN IN SECTIONS AND DETAILS SHALL SUPERSEDE MINIMUM COVER REQUIREMENTS GIVEN HERE. DIMENSIONS ARE IN mm. PROVIDE STANDARD BAR CHAIRS AND SUPPORT BARS @1200mm MAXIMUM AS REQUIRED TO MAINTAIN CONCRETE PROTECTION SPECIFIED.

FOOTINGS (EARTH FORMED):	70
COLUMNS / PIERS (TO TIES)	40
ELEVATED BEAMS & SLABS:	
BEAM TIES & STIRRUPS (NOT EXPOSED TO WEATHER)	40
BEAM TIES & STIRRUPS (EXPOSED TO WEATHER)	50
SLABS (NOT EXPOSED TO WEATHER)	20
SLABS (EXPOSED TO WEATHER)	
#19 & LARGER	50
#16 & SMALLER	40
SLABS ON GRADE	
NOT EXPOSED TO WEATHER (FROM TOP)	20
EXPOSED TO WEATHER (FROM TOP)	40
UTILITY TUNNEL WALLS, RETAINING WALLS AND SHEAR WALLS. (NO SURFACES SHALL BE EARTH FORMED)	
EARTH SIDE AND FRONT SIDE (EXPOSED TO WEATHER)	
#16 BAR AND SMALLER	40
#19 THRU #36 BAR	50

UNLESS OTHERWISE NOTED, LINEAR DIMENSIONS SHOWN ARE IN MILLIMETERS.

COMMONWEALTH OF PENNSYLVANIA
REGISTERED PROFESSIONAL
JOSEPH D. MEIER
No. PE-036925E
14 Mar 11

US ARMY CORPS OF ENGINEERS
AFGHANISTAN NORTH DISTRICT

SYMBOL	DESCRIPTION	DATE	APPR.	SYMBOL	DESCRIPTION	DATE	APPR.

DESIGNED BY: JDM
DWN BY: RMS
CKD BY: EPS
REVIEWED BY: JH
SUBMITTED BY:
DATE: 3-24-2011
REV: 0
CONTRACT NO. W912ER-09-D-0002
DRAWING CODE:
FILE NAME:
PLOT SCALE: NONE
PLOT DATE: 3/24/2011

BAKER

U.S. ARMY ENGINEER DISTRICT, AFGHANISTAN
CORPS OF ENGINEERS
APO AE 09356

SITE ADAPT DESIGN
AD22 - HEADQUARTERS BUILDING - ARCH SPAN
SCHEDULES

SHEET REFERENCE NUMBER:
S-601

A1 Size 594mm x 841mm

3/24/2011 12:26 PM

SCOPE RESPONSIBILITIES SCHEDULE

ITEM	FURNISHED BY	INSTALLED BY	FINAL CONNECTION BY
FREESTANDING FURNITURE	GOVT	GOVT	--
SYSTEMS FURNITURE	GOVT	GOVT	CONTR
OFFICE EQUIPMENT, PERMANENTLY INSTALLED	GOVT	GOVT	GOVT
WORKBENCHES	GOVT	GOVT	CONTR
METAL UTILITY STORAGE SHELVING	CONTR	CONTR	--
EQUIPMENT, PORTABLE	GOVT	GOVT	--
EQUIPMENT, PERMANENTLY INSTALLED	CONTR	CONTR	CONTR
EQUIPMENT RACKS IN IT ROOMS	CONTR	CONTR	--
FIRE EXTINGUISHERS AND CABINETS	CONTR	CONTR	--
TELEPHONE SWITCH AND HANDSETS	GOVT	GOVT	GOVT
SECURE TELEPHONE INSTRUMENTS (STEs)	GOVT	GOVT	GOVT

ABBREVIATIONS

ACP	ACOUSTIC CEILING PANEL
AFF	ABOVE FINISH FLOOR
ALUM	ALUMINUM
AUTO	AUTOMATIC
ABV	ABOVE
AT/FP	ANTI-TERRORISM FORCE PROTECTION
BC	BOTTOM OF CURB
B.O.	BOTTOM OF
BLK	BLOCK
BRG	BEARING
BLKG	BLOCKING
BD	BOARD
BLDG	BUILDING
CLG	CEILING
CONC	CONCRETE
CONT	CONTINUOUS
CONTR	CONTRACTOR
CMU	CONCRETE MASONRY UNIT
CT	CERAMIC TILE
C.J.	CONTROL JOINT
CRS	COURSE
DIAM	DIAMETER
DN	DOWN
DTL	DETAIL
DWG	DRAWING
EA	EACH
EIFS	EXTERIOR INSULATION AND FINISH SYSTEM
EWC	ELECTRIC WATER COOLER
EXP	EXPANSION
EXT	EXTERIOR
EQUIP	EQUIPMENT
ELEC	ELECTRIC
EL	ELEVATION
EMER	EMERGENCY
EQ	EQUAL
F/	FACE OF
FE	FIRE EXTINGUISHER
FEC	FIRE EXTINGUISHER CABINET
FIBERBD	FIBER BOARD
FL	FLOOR
FD	FLOOR DRAIN
FTG	FOOTING
GA	GAUGE
GALV	GALVANIZED
GC	GENERAL CONTRACTOR
GL	GLASS
GOVT	GOVERNMENT
GYP	GYPSUM
GWB	GYPSUM WALLBOARD
HT	HEIGHT
HC	HANDICAPPED
HDW	HARDWARE
HTG	HEATING
HVAC	HEATING/VENTILATING/ AIR CONDITIONING
HM	HOLLOW METAL
INSUL	INSULATION
INT	INTERIOR
JT	JOINT
JAN	JANITOR
LAM	LAMINATE
LAV	LAVATORY
LH	LEFT HAND
LT	LIGHT
LVR	LOUVER
MAS	MASONRY
MAX	MAXIMUM
MECH	MECHANICAL
MFR	MANUFACTURER
MIN	MINIMUM
MIR	MIRROR
MISC	MISCELLANEOUS
MO	MASONRY OPENING
MR	MOISTURE RESISTANT
MS	METAL STUD
MTL	METAL
NA	NOT APPLICABLE
NO	NUMBER
NOM	NOMINAL
NTS	NOT TO SCALE
NIC	NOT IN CONTRACT
OPG	OPENING
OC	ON CENTER
OH	OVERHEAD
OPP	OPPOSITE
PL	PLATE
PLAM	PLASTIC LAMINATE
PLYWD	PLYWOOD
PNL	PANEL
PREF	PREFABRICATED
PERF	PERFORATED
PR	PAIR
PT	PAINT
QT	QUARRY TILE
R	RISER
RAD	RADIUS
RD	ROOF DRAIN
REF	REFERENCE
REINF	REINFORCED
RH	RIGHT HAND
ROW	RIGHT OF WAY
RM	ROOM
RO	ROUGH OPENING
RWC	RAINWATER CONDUCTOR
SIM	SIMILAR
STL	STEEL
STR	STRUCTURE
ST0	STORAGE
SPEC	SPECIFICATION
SS	STAINLESS STEEL
STN	STAIN
STD	STANDARD
SUSP	SUSPENDED
TC	TOP OF CURB
TH	THICK
TYP	TYPICAL
TR	TREAD
T.O.	TOP OF
TELE	TELEPHONE
TEMP	TEMPERED/TEMPORARY
UNF	UNFINISHED
UNO	UNLESS NOTED OTHERWISE
USAR	UNITED STATES ARMY RESERVE
VERT	VERTICAL
VIF	VERIFY IN FIELD
VTR	VENT THROUGH ROOF
WD	WOOD
WH	WATER HEATER
WWF	WELDED WIRE FABRIC
W/O	WITHOUT

PROJECT NOTES

STANDARDS AND REGULATIONS:

1) CONTRACTOR SHALL PERFORM ALL WORK IN CONFORMANCE WITH APPLICABLE BUILDING CODES, REGULATIONS, ORDINANCES, UTILITY PROVIDER REQUIREMENTS, AND SIMILAR STANDARDS.

2) CONTRACTOR SHALL OBTAIN ALL REQUIRED INSPECTIONS OF THE WORK. CONTRACTOR SHALL REGULARLY UPDATE OWNER AND ARCHITECT REGARDING THE STATUS OF INSPECTIONS.

3) CONTRACTOR SHALL COORDINATE WORK WITH APPLICABLE UTILITY PROVIDERS.

4) CONTRACTOR SHALL BE FAMILIAR WITH REQUIREMENTS AND CONSTRUCTION SHALL BE IN COMPLIANCE WITH REFERENCED FIRE-RATED ASSEMBLY TESTS AND STANDARDS.

ADMINISTRATION OF THE WORK:

1) CONTRACTOR SHALL BE SOLELY RESPONSIBLE FOR THE MEANS, METHODS, AND SEQUENCES OF CONSTRUCTION AND DIMENSIONS.

2) CONTRACTOR SHALL BE SOLELY RESPONSIBLE FOR THE SAFETY OF ALL CONSTRUCTION PERSONNEL AND AUTHORIZED VISITORS AT THE SITE.

3) CONTRACTOR SHALL BECOME FULLY ACQUAINTED WITH CONDITIONS RELATED TO THE WORK. ANY KNOWN DISCREPANCIES BETWEEN THE DOCUMENTS AND THE ACTUAL CONDITIONS SHALL BE REPORTED TO THE OWNER FOR RESOLUTION PRIOR TO PROCEEDING WITH WORK RELATED TO THE DISCREPANCY.

4) CONTRACTOR SHALL REMOVE AND PROPERLY DISPOSE OF ALL CONSTRUCTION AND DEMOLITION DEBRIS. CONTRACTOR SHALL OBTAIN APPROVAL OF OWNER FOR DETAILS RELATING TO THE REMOVAL OF TRASH, INCLUDING SUCH ISSUES AS PATH OF TRAVEL, USE OF STAIRS AND ELEVATORS, REMOVAL OF WINDOWS, LOCATION OF CHUTES AND DUMPSTERS, ETC., PRIOR TO REMOVAL OF DEBRIS. CONTRACTOR SHALL CLEAN AND REPAIR ANY DAMAGES TO EXISTING ITEMS SOILED OR DAMAGED BY THE DEBRIS REMOVAL PROCESS. IF CLEANING AND/OR REPAIR DOES NOT RETURN ITEMS TO ORIGINAL CONDITION CONTRACTOR SHALL INSTALL NEW ITEMS.

5) CONTRACTOR SHALL BECOME FAMILIAR WITH AND COMPLY WITH OWNER'S PROCEDURES FOR MAINTAINING A SECURE SITE AND BUILDING.

6) EACH INSTALLER SHALL EXAMINE ALL SUBSTRATE CONDITIONS AND/OR SITE CONDITIONS WHICH AFFECT THE QUALITY OF EACH PRODUCT TO BE INSTALLED. IF ANY CONDITIONS EXIST WHICH WILL HAVE A DETRIMENTAL EFFECT ON THE QUALITY OF THE INSTALLATION, THE INSTALLER SHALL IMMEDIATELY NOTIFY THE CONTRACTOR. INSTALLATION SHALL NOT PROCEED UNTIL THE UNSATISFACTORY CONDITIONS ARE CORRECTED. INSTALLATION SHALL SIGNIFY ACCEPTANCE OF THE CONDITIONS.

7) CONTRACTOR SHALL MAINTAIN RECORD DRAWINGS ON THE SITE AT ALL TIMES.

8) CONTRACTOR SHALL BE RESPONSIBLE FOR ENSURING COORDINATION EFFORTS OF ALL SUBCONTRACTORS.

9) CONTRACTOR SHALL LAY OUT ALL WORK AS SOON AS POSSIBLE. ANY DISCREPANCIES SHALL BE REPORTED TO THE OWNER FOR RESOLUTION PRIOR TO PROCEEDING WITH THE WORK IN QUESTION.

10) DO NOT ATTACH OR HANG ANY ITEMS DIRECTLY FROM ARCH-SPAN PANELS. ATTACH ONLY TO BUILDING TABS LOCATED WITHIN PANEL JOINTS

11) CONTRACTOR TO PROVIDE ALL NECESSARY BLOCKING TO SUPPORT WALL & CEILING MOUNTED EQUIPMENT, FIXTURES AND ACCESSORIES.

USE OF CONSTRUCTION DOCUMENTS:

1) DO NOT SCALE DRAWINGS. ONLY WRITTEN DIMENSIONS OR KEYED NOTES SHALL BE USED. CONTACT ARCHITECT IF CLARIFICATION OR ADDITIONAL INFORMATION IS REQUIRED.

2) THE DRAWINGS ARE SCHEMATIC IN NATURE. MODIFICATIONS IN DUCTS, PIPING, CONDUIT AND WIRING MAY BE REQUIRED TO ACCOMMODATE ACTUAL FIELD CONDITIONS.

3) DRAWINGS SHALL NOT BE REPRODUCED FOR SUBMITTALS.

4) DIMENSIONS ARE AS FOLLOWS UNLESS NOTED OTHERWISE:
- A) TO CENTER LINE OF INTERIOR PARTITIONS
- B) TO CENTERLINE OF COLUMNS.
- C) TO TOP OF FLOOR SLAB.
- D) TO BOTTOM OF FINISHED CEILING.
- E) TO EXTERIOR FACE OF ARCH SPAN PANEL OR TO FACE OF MASONRY OR CONCRETE.

5) VERIFY IN FIELD DIMENSIONS OF ALL DOOR, WINDOW AND LOUVER OPENINGS.

DEFINITIONS:

1) "ALIGN" AS USED IN THESE DOCUMENTS SHALL MEAN TO ACCURATELY LOCATE FINISH FACES IN THE SAME PLANE AND/OR TO INSTALL NEW CONSTRUCTION ADJACENT TO EXISTING CONSTRUCTION WITHOUT ANY VISIBLE JOINTS OR SURFACE IRREGULARITIES.

2) "CLEAR" AS USED IN THESE DOCUMENTS SHALL MEAN THAT THE CONDITION IS NOT ADJUSTABLE WITHOUT APPROVAL OF THE ARCHITECT. CLEAR DIMENSIONS ARE TYPICALLY TO FINISH FACE.

3) "MAXIMUM" OR "MAX" AS USED IN THESE DOCUMENTS SHALL MEAN THAT THE CONDITION IS SLIGHTLY ADJUSTABLE BUT MAY NOT VARY TO A DIMENSION OR QUANTITY GREATER THAN THAT SHOWN WITHOUT APPROVAL OF THE ARCHITECT.

4) "MINIMUM" OR "MIN" AS USED IN THESE DOCUMENTS SHALL MEAN THAT THE CONDITION IS SLIGHTLY ADJUSTABLE BUT MAY NOT VARY TO A DIMENSION OR QUANTITY LESS THAN THAT SHOWN WITHOUT APPROVAL OF THE ARCHITECT.

5) "TYPICAL" AS USED IN THESE DOCUMENTS SHALL MEAN THAT THE CONDITION OR DIMENSION IS THE SAME OR REPRESENTATIVE FOR SIMILAR CONDITIONS THROUGHOUT.

6) "*" AS USED IN THESE DOCUMENTS SHALL MEAN THAT THE DIMENSION OR QUALITY IS SLIGHTLY ADJUSTABLE TO ACCOMMODATE ACTUAL CONDITIONS. FIELD VERIFICATION AND COORDINATION WITH OTHER ELEMENTS MIGHT BE NECESSARY.

SYMBOLS LEGEND

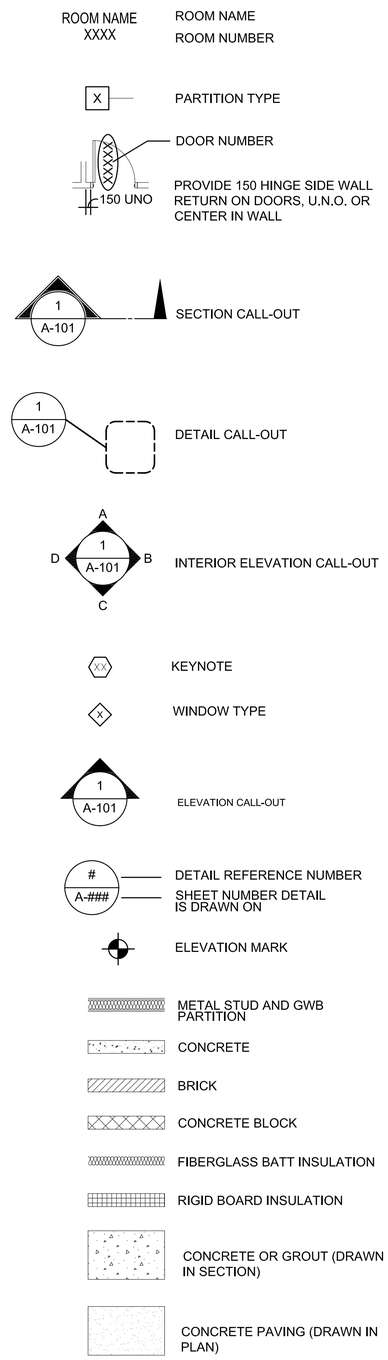

UNLESS OTHERWISE NOTED, LINEAR DIMENSIONS SHOWN ARE IN MILLIMETERS.

COMMONWEALTH OF VIRGINIA
PETER GARRETT SCHMIDT
NO. 013167
REGISTERED ARCHITECT

US ARMY CORPS OF ENGINEERS
AFGHANISTAN NORTH DISTRICT

SYMBOL	DESCRIPTION	DATE	APPR.	SYMBOL	DESCRIPTION	DATE	APPR.

DESIGNED BY: PGS, SE, MR
DWN BY: SE, MDH, AH
CKD BY: PGS, SE, MR
REVIEWED BY:
SUBMITTED BY:
DATE: 3/24/2011
CONTRACT NO. W912ER-09-D-0002
DRAWING CODE:
FILE NAME:
PLOT SCALE: NONE
PLOT DATE: 3/24/2011
REV: 0

BAKER

U.S. ARMY ENGINEER DISTRICT, AFGHANISTAN
CORPS OF ENGINEERS
APO AE 09356

SITE ADAPT DESIGN
AD22 - HEADQUARTERS BUILDING - ARCH SPAN
ABBREVIATIONS, SYMBOLS, AND GENERAL NOTES

SHEET REFERENCE NUMBER:
A-001

3/24/2011 12:27 PM

A1 Size 594mm x 841mm

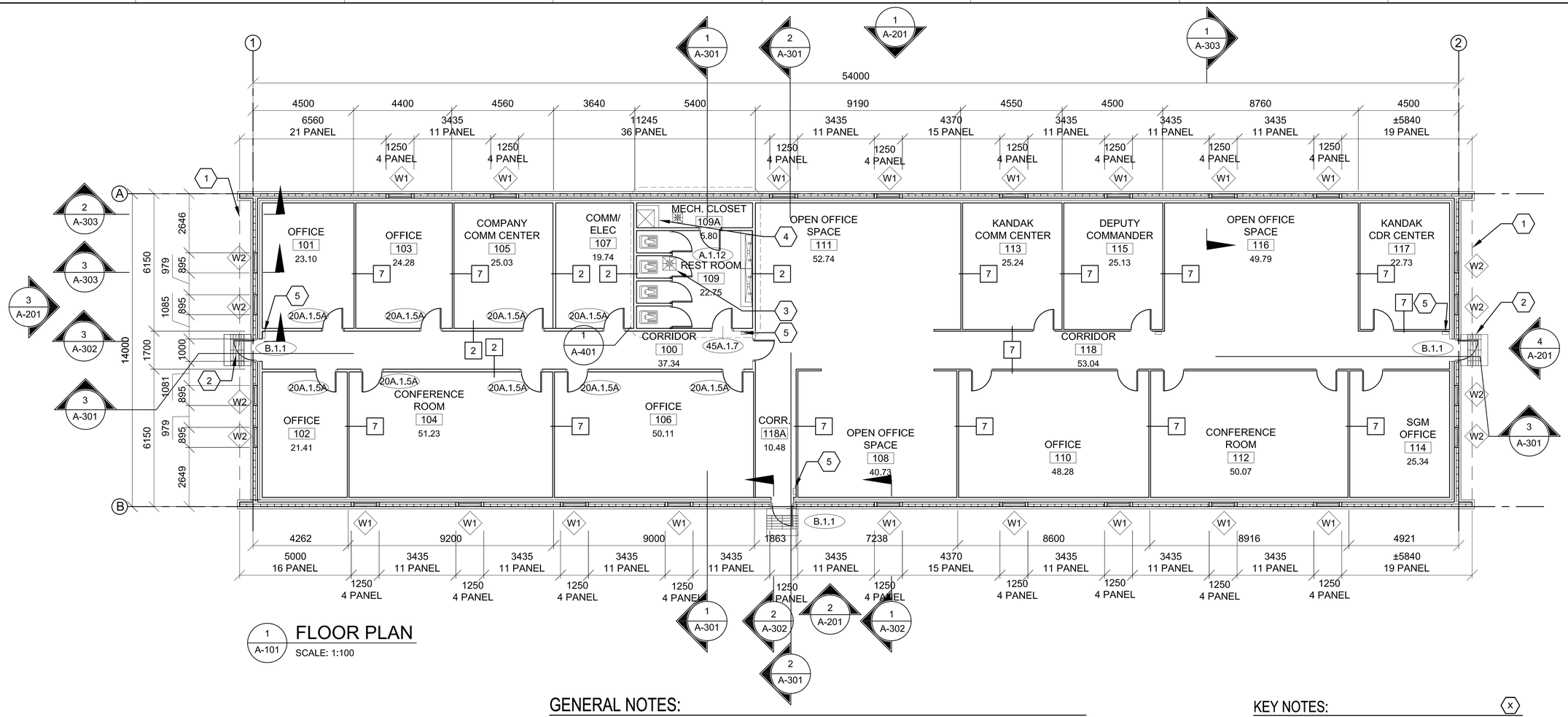

1 A-101 FLOOR PLAN

SCALE: 1:100

GENERAL NOTES:

A. DIMENSIONS ARE SHOWN TO OUTER EDGE OF EXTERIOR STRUCTURAL FACE OF ARCH SPAN PANEL(GRID LINES), CENTER LINE OF INTERIOR PARTITIONS, EDGE OF WINDOW OPENINGS, AND TO HINGE SIDE OF DOOR FRAME OPENING, UNLESS NOTED OTHERWISE.

B. HINGE SIDE OF OPENINGS FOR DOORS AND FRAMES SHALL BE LOCATED 200 MM FROM THE ADJACENT WALL OR COLUMN, UNLESS NOTED OTHERWISE.

C. INTERIOR PARTITIONS SHALL BE PARTITION TYPE 1, UNLESS NOTED OTHERWISE. REFER TO A-602 FOR PARTITION TYPES SCHEDULE

D. COSMETIC REPAIR OF MINOR DEFECTS: REPAIR OR FILL MORTAR JOINTS AND MINOR DEFECTS, INCLUDING BUT NOT LIMITED TO SPALLS, IN ACCORDANCE WITH MANUFACTURER'S RECOMMENDATIONS AND PRIOR TO COATING APPLICATION. SURFACES TO BE PAINTED SHALL BE CLEAN AND FREE OF FOREIGN MATTER BEFORE APPLICATION OF PAINT. CLEANING SHALL BE SCHEDULED SO THAT DUST AND OTHER CONTAMINANTS WILL NOT FALL ON NEWLY PAINTED SURFACES.

E. CONCRETE, PLASTER AND MASONRY SURFACES SHALL BE ALLOWED TO CURE FOR AT LEAST 30 DAYS BEFORE PAINTING. CONCRETE SLABS-ON-GRADE SHALL BE ALLOWED TO CURE 90 DAYS BEFORE STAINING OR SEALING.

F. DO NOT USE PAINT MATERIALS CONTAINING LEAD CONTENT IN EXCESS OF 0.009 PERCENT OF THE WEIGHT OF THE TOTAL NONVOLATILE CONTENT OF THE PAINT OR THE WEIGHT OF THE DRIED PAINT FILM.

G. DO NOT USE ANY ASBESTOS CONTAINING MATERIALS (ACM) IN PROJECT. ACM IS DEFINED AS 1% OR MORE BY VOLUME.

H. DO NOT USE PAINT MATERIALS CONTAINING MERCURIAL FUNGICIDES.

I. FACTORY PRIMED METAL DOORS AND FRAMES SHALL RECEIVE TWO COATS OF PAINT.

J. FILL REMAINING SPACE AT PENETRATIONS IN FIRE-RATED FLOORS, PARTITIONS AND CEILINGS WITH APPROPRIATE FIRESTOPPING MATERIALS.

K. ALL CEILING FINISHES SHALL AS NOTED ON REFLECTED CEILING PLANS OR FINISH SCHEDULE.

L. ALL WALL FINISHES SHALL AS NOTED ON FINISH SCHEDULE. REFER TO A-603

M. ALL FLOOR FINISHES SHALL BE SEALED CONCRETE, UNLESS NOTED OTHERWISE.

N. PROVIDE TILE FINISHES AS INDICATED IN DETAILS & KEY NOTES.

O. ALL DOOR, FRAME AND HARDWARE TYPES SHALL BE A.1.5A UNLESS NOTED OTHERWISE. REFER TO A-601 FOR DOOR INFORMATION.

P. TOILET STALL DOORS SHALL BE G.2.12

Q. SHOWER STALL DOOR, FRAME AND HARDWARE TYPE SHALL BE E.1.12.

R. PROVIDE POLISHED STAINLESS STEEL MIRROR 600 X 900 ABOVE EVERY LAVATORY FAUCET.

S. PLASTER MAY BE SUBSTITUTED FOR DRYWALL WALLS AND CEILINGS. MAINTAIN FIRE RATINGS AS NOTED

T. LOCATION OF EXTERIOR DOORS AND WINDOWS MUST BE COORDINATED WITH ARCH SPAN MODULE. PLAN DIMENSIONS OF THESE IS APPROXIMATE AND MAY BE SLIGHTLY ADJUSTED TO SUIT PANEL FABRICATION TOLERANCES.

KEY NOTES:

1. LINE OF ROOF OVERHANG ABOVE.
2. CONCRETE STOOP WITH GRATE - SEE DETAIL 1/A-503.
3. FLOOR DRAIN - SEE PLUMBING AND DETAIL 6/A-505
4. REFER TO 5/A505 FOR MOP SINK
5. FIRE EXTINGUISHERS

N

0 2000 4000

SCALE: 1:100

UNLESS OTHERWISE NOTED, LINEAR DIMENSIONS SHOWN ARE IN MILLIMETERS.

COMMONWEALTH OF VIRGINIA
PETER GARRETT SCHMIDT
No. 013167
ARCHITECT

US ARMY CORPS OF ENGINEERS AFGHANISTAN NORTH DISTRICT

SYMBOL	DESCRIPTION	DATE	APPR.	SYMBOL	DESCRIPTION	DATE	APPR.

DATE: 3/24/2011 | REV: 0
CONTRACT NO. W912ER-09-D-0002
DRAWING CODE:
FILE NAME:
PLOT SCALE: 1:100
PLOT DATE: 3/24/2011

DESIGNED BY: PGS, SE, MR
DWN BY: SE, MDH, AH
CKD BY: PGS, SE, MR
REVIEWED BY:
SUBMITTED BY:

BAKER

U.S. ARMY ENGINEER DISTRICT, AFGHANISTAN
CORPS OF ENGINEERS
APO AE 09356

SITE ADAPT DESIGN
AD22 - HEADQUARTERS BUILDING - ARCH SPAN
FLOOR PLAN

SHEET REFERENCE NUMBER:
A-101

A1 Size 594mm x 841mm

3/24/2011 5:09 PM

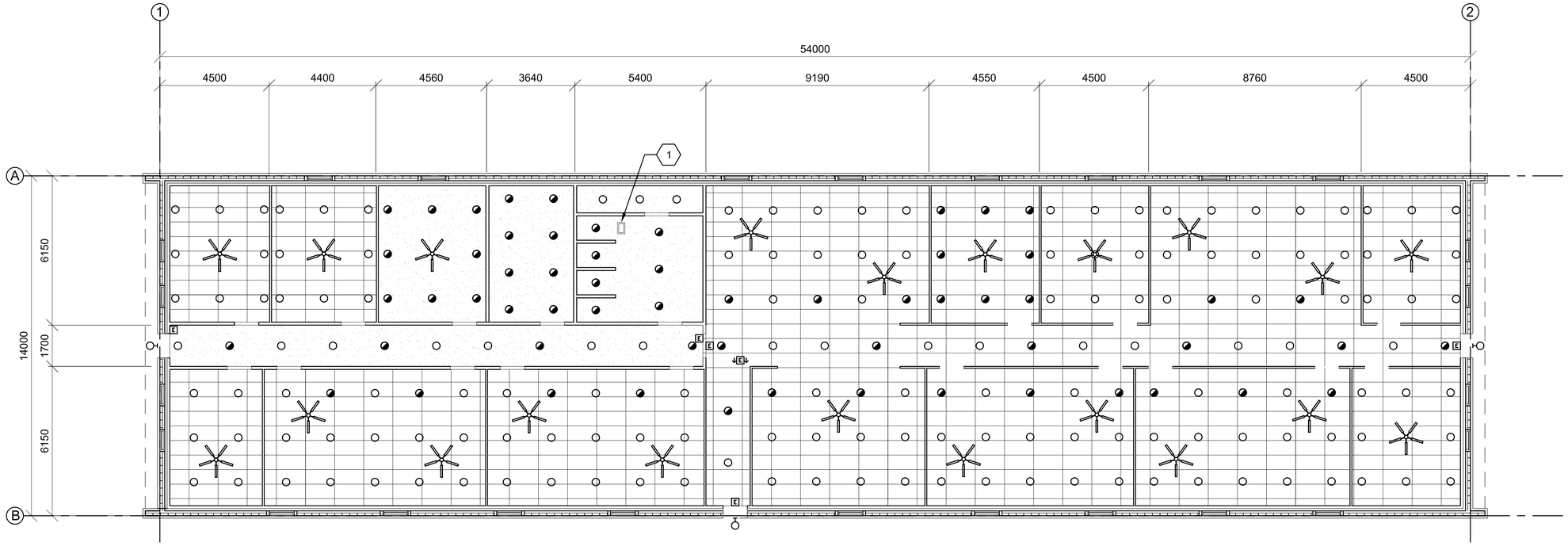

1 / A-102 REFLECTED CEILING PLAN

SCALE: 1:100

CEILING LEGEND:

- 600mm X 1200mm METAL PANEL SUSPENDED CEILING SYSTEM
- NO FINISHED CEILING, EXPOSED STRUCTURE (SEE FINISH SCHEDULE)
- GYPSUM WALLBOARD CEILING (SEE FINISH SCHEDULE)
- 300mm X 1200mm FLUORESCENT LIGHT FIXTURE
- 600mm X 1200mm FLUORESCENT LIGHT FIXTURE
- 300mm X 1200mm FLUORESCENT LIGHT FIXTURE NORMAL/EMERGENCY
- 600mm X 1200mm FLUORESCENT LIGHT FIXTURE NORMAL/EMERGENCY
- SUSPENDED LIGHT FIXTURE
- WALL MOUNTED LIGHT FIXTURE
- DOWNLIGHT
- EXIT SIGN
- SMOKE DETECTOR
- BATTERY PACK
- RELIEF RETURN DIFFUSER
- SUPPLY DIFFUSER
- EXHAUST DIFFUSER
- ACCESS PANEL
- CEILING FAN

GENERAL NOTES:

A. CEILING SHALL BE 2.65M A.F.F. UNLESS NOTED OTHERWISE OR EXPOSED STRUCTURE.
B. REFER TO SHEET A-603 FOR FINISH SCHEDULE
C. DRYWALL CEILING TYPICALLY WALL BEAR ON ADJACENT PARTITIONS. SPAN CRITERIA & ALTERNATIVE SUPPORTING METHODS ARE DEFINED ON STRUCTURAL NOTES RE: COLD-FORMED METAL FRAMING ON DWG. S-002.
D. REFER TO STRUCTURAL DRAWINGS FOR LIGHT GAUGE FRAMING CRITERIA
E. LOCATION OF LIGHT FIXTURES AND FANS AS INDICATED ON THIS REFLECTED CEILING PLAN TAKES PRECEDENCE OVER ALL RELATIVE POSITIONS AS SHOWN ON ELECTRIC AND MECHANICAL DRAWINGS. U.N.O. INSTALL FIXTURES WITH EQUAL SPACING BETWEEN EACH OTHER TO THE GREATEST EXTENT POSSIBLE AND AS GRAPHICALLY SHOWN IN THIS LAYOUT. SEE ELECTRICAL DRAWINGS FOR SUPPORT AND WIRING INFORMATION. IN AREA WHERE SUSPENDED CEILING SUPPORTS OVERLAP LIGHTING LOCATIONS SHIFT LIGHTING 25MM OFF OF GRID TO RESOLVE CONFLICT.

KEY NOTES:

1. ACCESS PANEL

0 2000 4000
SCALE: 1:100

UNLESS OTHERWISE NOTED, LINEAR DIMENSIONS SHOWN ARE IN MILLIMETERS.

COMMONWEALTH OF VIRGINIA
PETER GARRETT SCHMIDT
No. 013167
ARCHITECT

US ARMY CORPS OF ENGINEERS
AFGHANISTAN NORTH DISTRICT

SYMBOL	DESCRIPTION	DATE	APPR.	SYMBOL	DESCRIPTION	DATE	APPR.

U.S. ARMY ENGINEER DISTRICT, AFGHANIST'AN
CORPS OF ENGINEERS
APO AE 09356

DESIGNED BY: PGS, SE, MR
DWN BY: SE, MDH, AH
CKD BY: PGS, SE, MR
REVIEWED BY:
SUBMITTED BY:
DATE: 4-25-2011
CONTRACT NO. W912ER-09-D-0002
DRAWING CODE:
FILE NAME: \\bakercorp\mpw\Projects\Jobs-32\365
PLOT SCALE: 1:100
PLOT DATE: 4/25/2011
REV: 0
BAKER

SITE ADAPT DESIGN
AD22 - HEADQUARTERS BUILDING - ARCH SPAN
REFLECTED CEILING PLAN

SHEET REFERENCE NUMBER:
A-102

A1 Size 594mm x 841mm

4/25/2011 2:21 PM

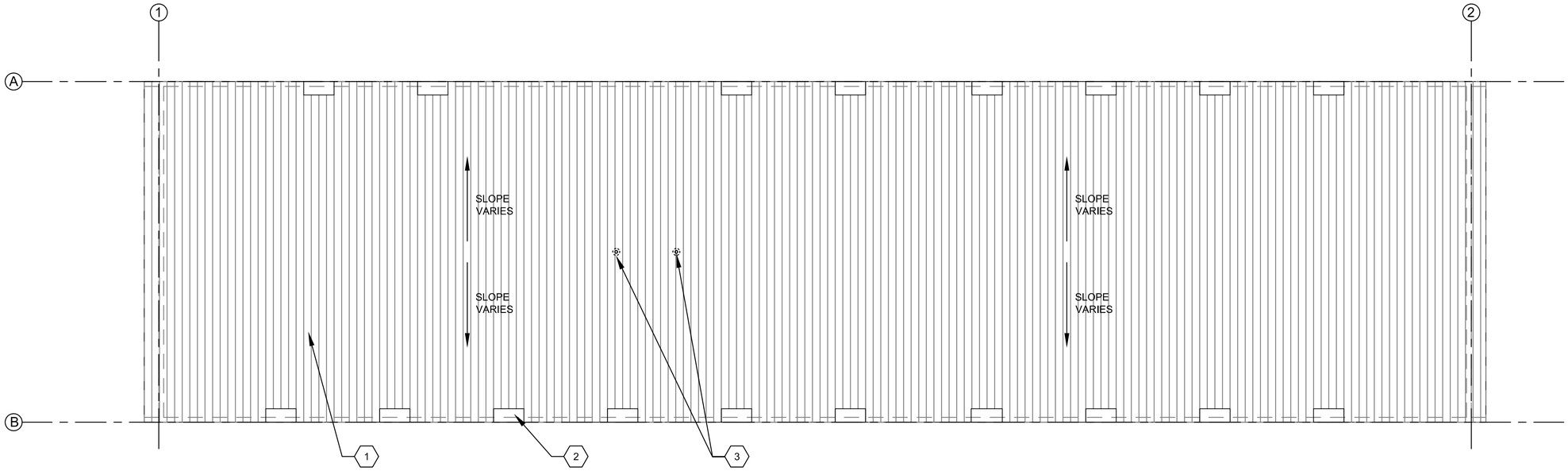

1
A-103

ROOF PLAN

SCALE: 1:100

GENERAL NOTES:

A. THE APPROXIMATE LOCATION OF ROOF DEVICES AND PENETRATIONS ARE SHOWN ON THE ROOF PLAN FOR INFORMATION ONLY. THE CONTRACTOR SHALL BE RESPONSIBLE FOR UNDERSTANDING THE ACTUAL LOCATION OF THESE AND ALL OTHER ITEMS PRIOR TO BEGINNING CONSTRUCTION. COORDINATE ALL ROOF PENETRATIONS WITH STRUCTURAL, MECHANICAL AND PLUMBING WORK.

B. PLUMBING VENT PENETRATIONS SHALL TERMINATE 300 MM MINIMUM ABOVE THE ROOF.

C. UNLESS OTHERWISE NOTED, NOTES, DETAILS OR FEATURES INDICATED FOR ONE CONDITION SHALL BE APPLICABLE FOR ALL ALIKE AND SIMILAR CONDITIONS.

D. STOCKPILING OF MATERIALS, EQUIPMENT AND ANY OTHER ITEMS ON THE ROOF IS PROHIBITED.

E. ROOFS SHALL BE PRE-FINISHED METAL ARCH SPAN.

KEY NOTES:

1. PRE-FINISHED METAL ARCH SPAN CONSTRUCTION
2. DOOR OR WINDOW DORMER
3. VTR SEE PLUMBING

0 2000 4000
SCALE: 1:100

UNLESS OTHERWISE NOTED, LINEAR DIMENSIONS SHOWN ARE IN MILLIMETERS.

COMMONWEALTH OF VIRGINIA
PETER GARRETT SCHMIDT
No. 013167
ARCHITECT

US ARMY CORPS OF ENGINEERS
AFGHANISTAN NORTH DISTRICT

SYMBOL	DESCRIPTION	DATE	APPR.	SYMBOL	DESCRIPTION	DATE	APPR.

U.S. ARMY ENGINEER DISTRICT, AFGHANISTAN
CORPS OF ENGINEERS
APO AE 09356

DESIGNED BY: PGS, SE, MR
DWN BY: SE, MDH, AH
REVIEWED BY:
SUBMITTED BY:
DATE: 3-24-2011
CONTRACT NO. W912ER-09-D-0002
DRAWING CODE:
CKD BY: PGS, SE, MR
FILE NAME: \\bakercorp\apps\Projects\ca-ccb\245\
PLOT SCALE: 1:100
PLOT DATE: 3/24/2011
REV: 0

BAKER

SITE ADAPT DESIGN
AD22 - HEADQUARTERS BUILDING - ARCH SPAN
ROOF PLAN

SHEET REFERENCE NUMBER:
A-103

A1 Size 594mm x 841mm

3/24/2011 5:10 PM

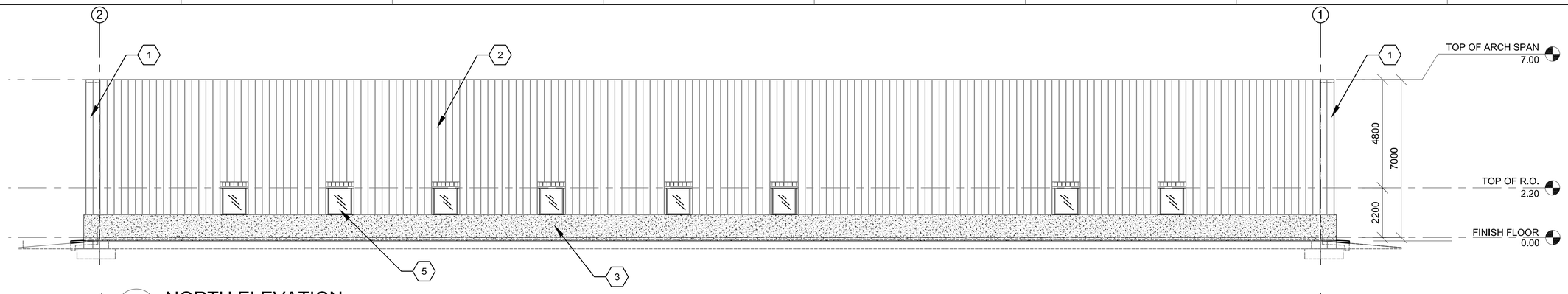

1 A-201 NORTH ELEVATION
SCALE: 1:100

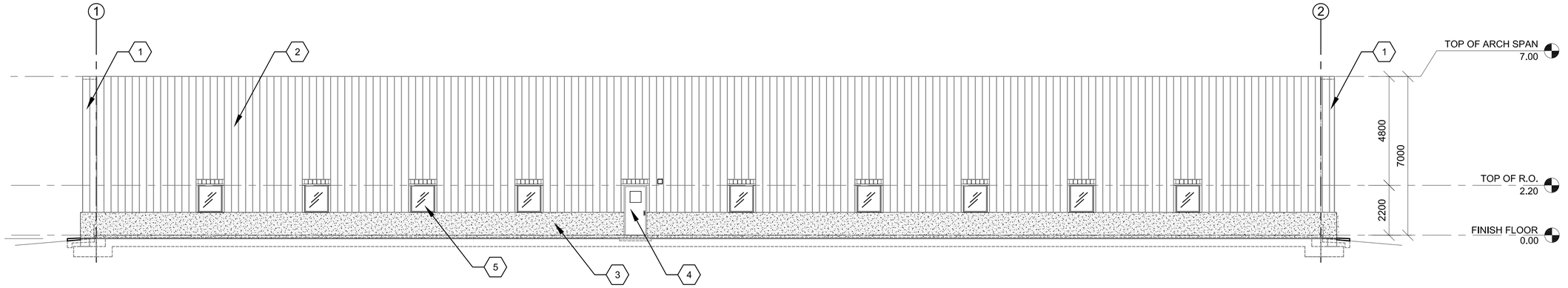

2 A-201 SOUTH ELEVATION
SCALE: 1:100

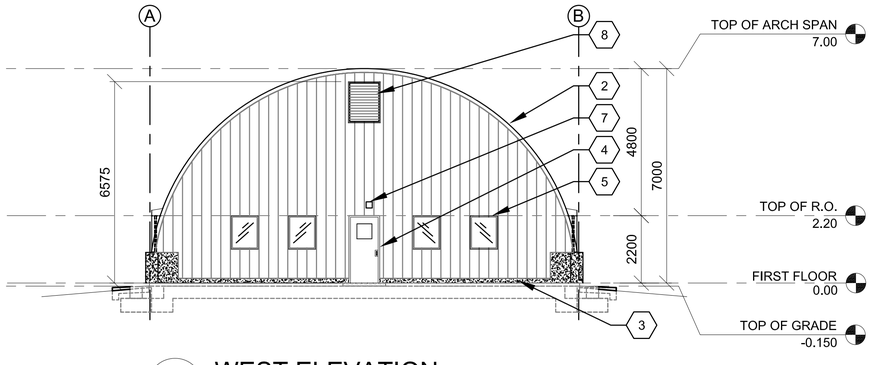

3 A-201 WEST ELEVATION
SCALE: 1:100

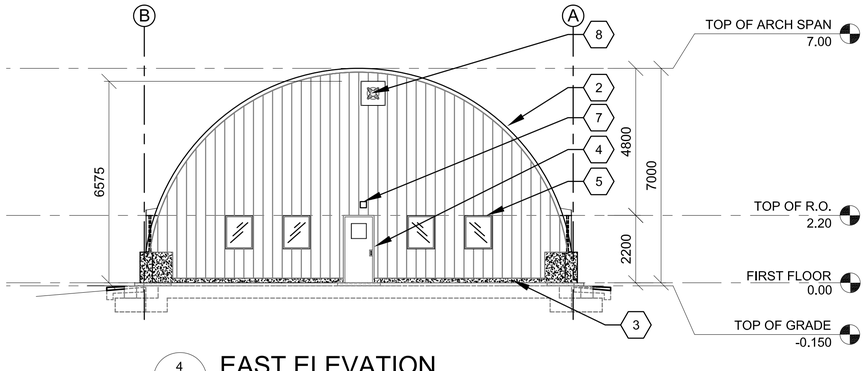

4 A-201 EAST ELEVATION
SCALE: 1:100

GENERAL NOTES:

A. FACTORY PRIMED METAL DOORS AND FRAMES SHALL RECEIVE TWO COATS OF PAINT.
B. LOCATION OF EXTERIOR DOORS AND WINDOWS MUST BE COORDINATED WITH ARCH SPAN MODULE. PLAN DIMENSIONS OF THESE IS APPROXIMATE AND MAY BE SLIGHTLY ADJUSTED TO SUIT PANEL FABRICATION TOLERANCES.
C. EXTERIOR CONCRETE BUILDING SURFACES TO RECEIVE PENETRATING CONCRETE SEALER
D. COORDINATE ALL HVAC OPENING SIZES AND LOCATIONS WITH HVAC CONTRACTOR PRIOR TO INSTALLATION.

KEY NOTES:

1. EXTENSION OF ARCH SPAN
2. PRE-FINISHED METAL ARCH SPAN CONSTRUCTION WALL AND CEILING.
3. CONCRETE WALL.
4. PAINTED HOLLOW METAL DOOR & FRAME.
5. STEEL WINDOW PAINTED.
6. PRE-FINISHED STEEL LOUVER - SEE DETAIL 3/A501
7. LIGHTING - SEE ELECTRICAL
8. ATTIC VENTILATION LOUVER OR FAN SEE MECHANICAL FOR SIZE AND TYPE

0 2000 4000
SCALE: 1:100

UNLESS OTHERWISE NOTED, LINEAR DIMENSIONS SHOWN ARE IN MILLIMETERS.

COMMONWEALTH OF VIRGINIA
PETER GARRETT SCHMIDT
No. 013167
ARCHITECT

US ARMY CORPS OF ENGINEERS
AFGHANISTAN NORTH DISTRICT

SYMBOL	DESCRIPTION	DATE	APPR.	SYMBOL	DESCRIPTION	DATE	APPR.

DESIGNED BY: PGS, SE, MR
DWN BY: SE, MDH, AH
CKD BY: PGS, SE, MR
REVIEWED BY:
SUBMITTED BY:
DATE: 3/24/2011
CONTRACT NO. W912ER-09-D-0002
DRAWING CODE:
REV. 0
FILE NAME:
PLOT SCALE: 1:100
PLOT DATE: 3/24/2011

BAKER

U.S. ARMY ENGINEER DISTRICT, AFGHANISTAN
CORPS OF ENGINEERS
APO AE 09356

SITE ADAPT DESIGN
AD22 - HEADQUARTERS BUILDING - ARCH SPAN
ELEVATIONS

SHEET REFERENCE NUMBER:
A-201

3/24/2011 5:43 PM

A1 Size 594mm x 841mm

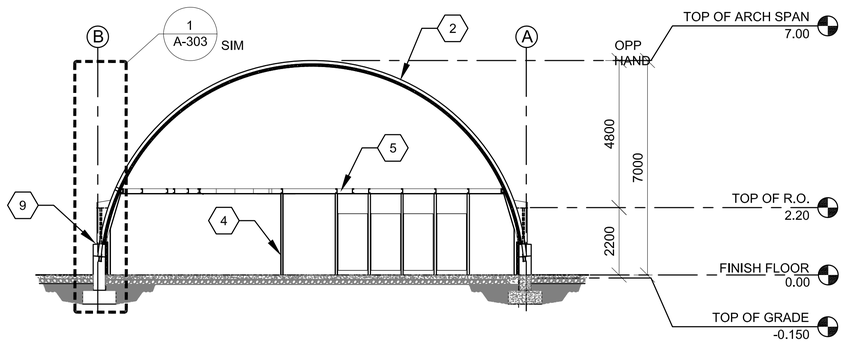

1 A-301 BUILDING SECTION
SCALE: 1:100

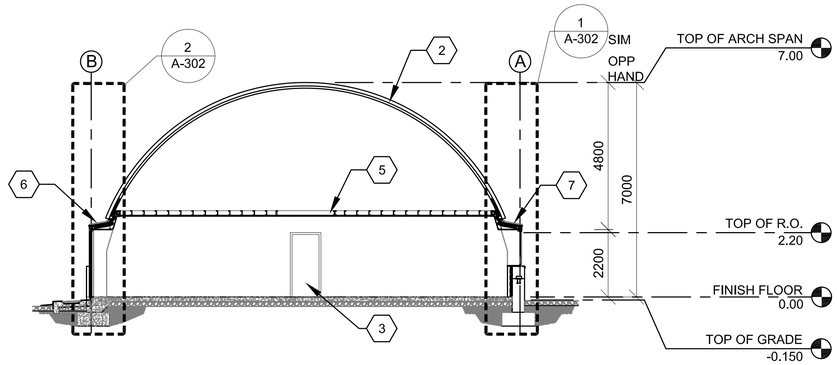

2 A-301 BUILDING SECTION
SCALE: 1:100

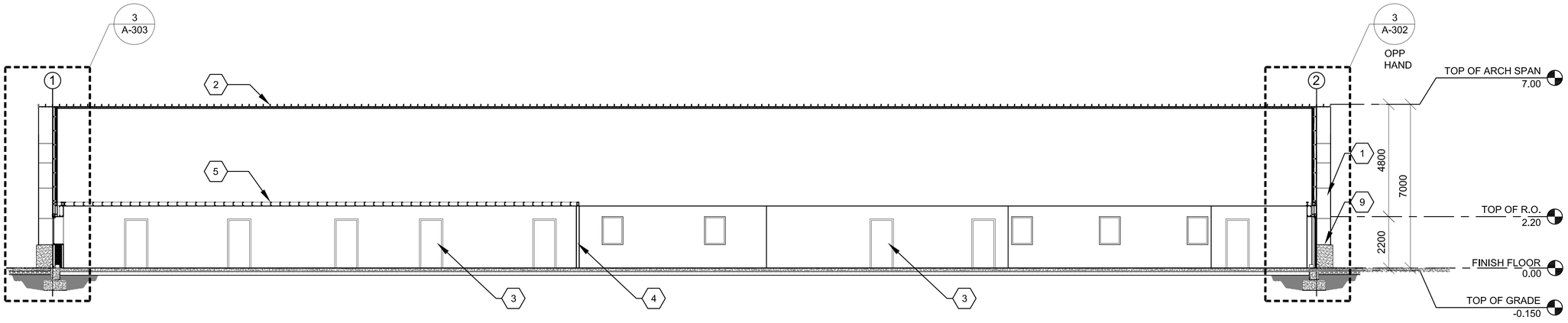

3 A-301 BUILDING SECTION
SCALE: 1:100

KEY NOTES:

1. EXTENSION OF ARCH SPAN
2. ARCH SPAN ROOF/WALL PANEL WITH POLYURETHANE/CEMENTITIOUS SPRAY - ON FIRE BARRIER
3. HOLLOW METAL FRAME WITH DOOR AS SCHEDULED
4. PARTITION AS SCHEDULED
5. CEILING SYSTEM AS SCHEDULED
6. SIDEWALL DOOR AND DORMER FRAMING
7. SIDE WALL WINDOW AND DORMER FRAMING
8. NOT USED
9. CONCRETE STEM WALL

0 2000 4000
SCALE: 1:100

UNLESS OTHERWISE NOTED, LINEAR DIMENSIONS SHOWN ARE IN MILLIMETERS.

COMMONWEALTH OF VIRGINIA
PETER GARRETT SCHMIDT
No. 013167
ARCHITECT

US ARMY CORPS OF ENGINEERS
AFGHANISTAN NORTH DISTRICT

SYMBOL	DESCRIPTION	DATE	APPR.	SYMBOL	DESCRIPTION	DATE	APPR.

DESIGNED BY: PGS, SE, MR
DWN BY: SE, MDH, AH
CKD BY: PGS, SE, MR
REVIEWED BY:
SUBMITTED BY:
DATE: 3/24/2011
REV: 0
CONTRACT NO.
W912ER-09-D-0002
DRAWING CODE:
FILE NAME:
PLOT SCALE: 1:100
PLOT DATE: 3/24/2011

BAKER

U.S. ARMY ENGINEER DISTRICT, AFGHANISTAN
CORPS OF ENGINEERS
APO AE 09356

SITE ADAPT DESIGN
AD22 - HEADQUARTERS BUILDING - ARCH SPAN
BUILDING SECTIONS

SHEET REFERENCE NUMBER:
A-301

A1 Size 594mm x 841mm

3/24/2011 12:27 PM

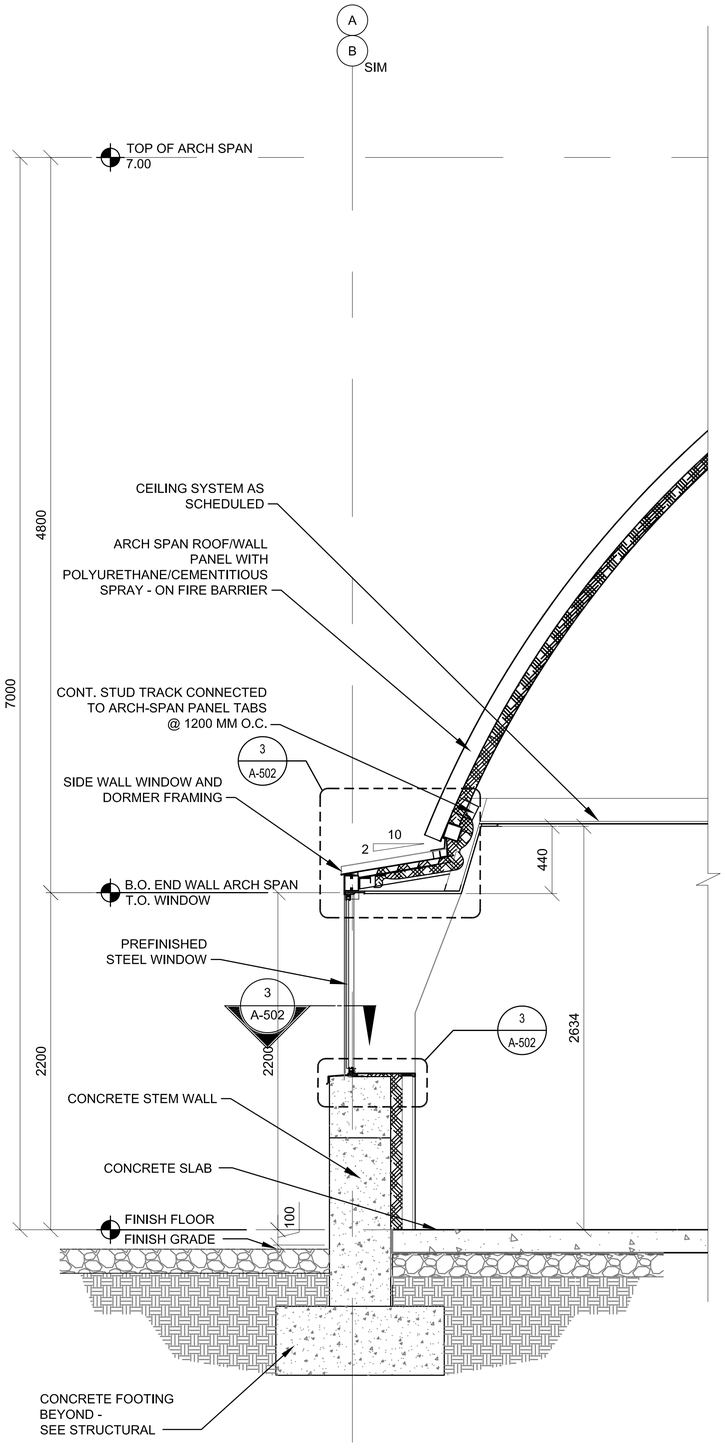

WALL SECTION - SIDE WALL THRU WINDOW

1 A-302 SCALE: 1:20

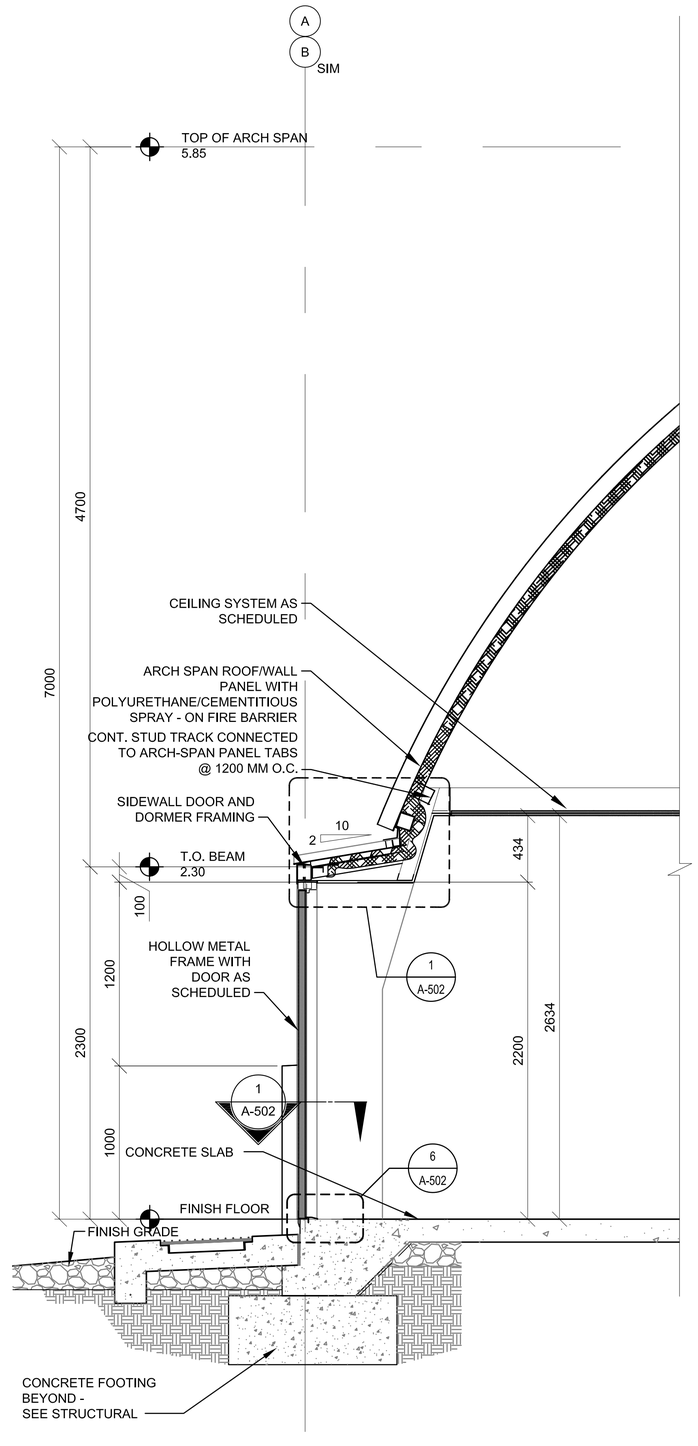

WALL SECTION - SIDE WALL THRU H.M. DOOR

2 A-302 SCALE: 1:20

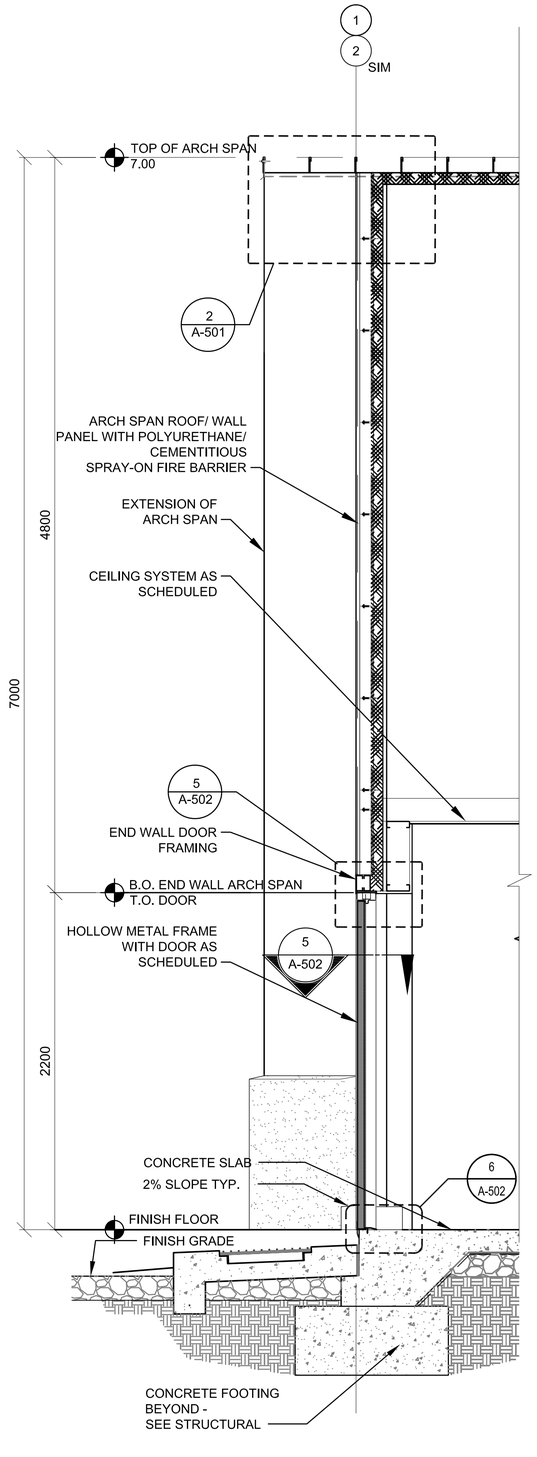

WALL SECTION - THRU END WALL H.M. DOOR

3 A-302 SCALE: 1:20

0 200 400 800
SCALE: 1:20

UNLESS OTHERWISE NOTED, LINEAR DIMENSIONS SHOWN ARE IN MILLIMETERS.

COMMONWEALTH OF VIRGINIA
PETER GARRETT SCHMIDT
No. 013167
ARCHITECT

US ARMY CORPS OF ENGINEERS
AFGHANISTAN NORTH DISTRICT

SYMBOL	DESCRIPTION	DATE	APPR.	SYMBOL	DESCRIPTION	DATE	APPR.

DESIGNED BY: PGS, SE, MR
DWN BY: SE, MDH, AH
REVIEWED BY:
SUBMITTED BY:
DATE: 3/24/2011
CONTRACT NO. W912ER-09-D-0002
DRAWING CODE:
FILE NAME:
PLOT SCALE: 1:50
PLOT DATE: 3/24/2011
REV: 0
CKD BY: PGS, SE, MR

BAKER

U.S. ARMY ENGINEER DISTRICT, AFGHANISTAN
CORPS OF ENGINEERS
APO AE 09356

SITE ADAPT DESIGN
AD22 - HEADQUARTERS BUILDING - ARCH SPAN
WALL SECTIONS

SHEET REFERENCE NUMBER:
A-302

3/24/2011 12:27 PM

A1 Size 594mm x 841mm

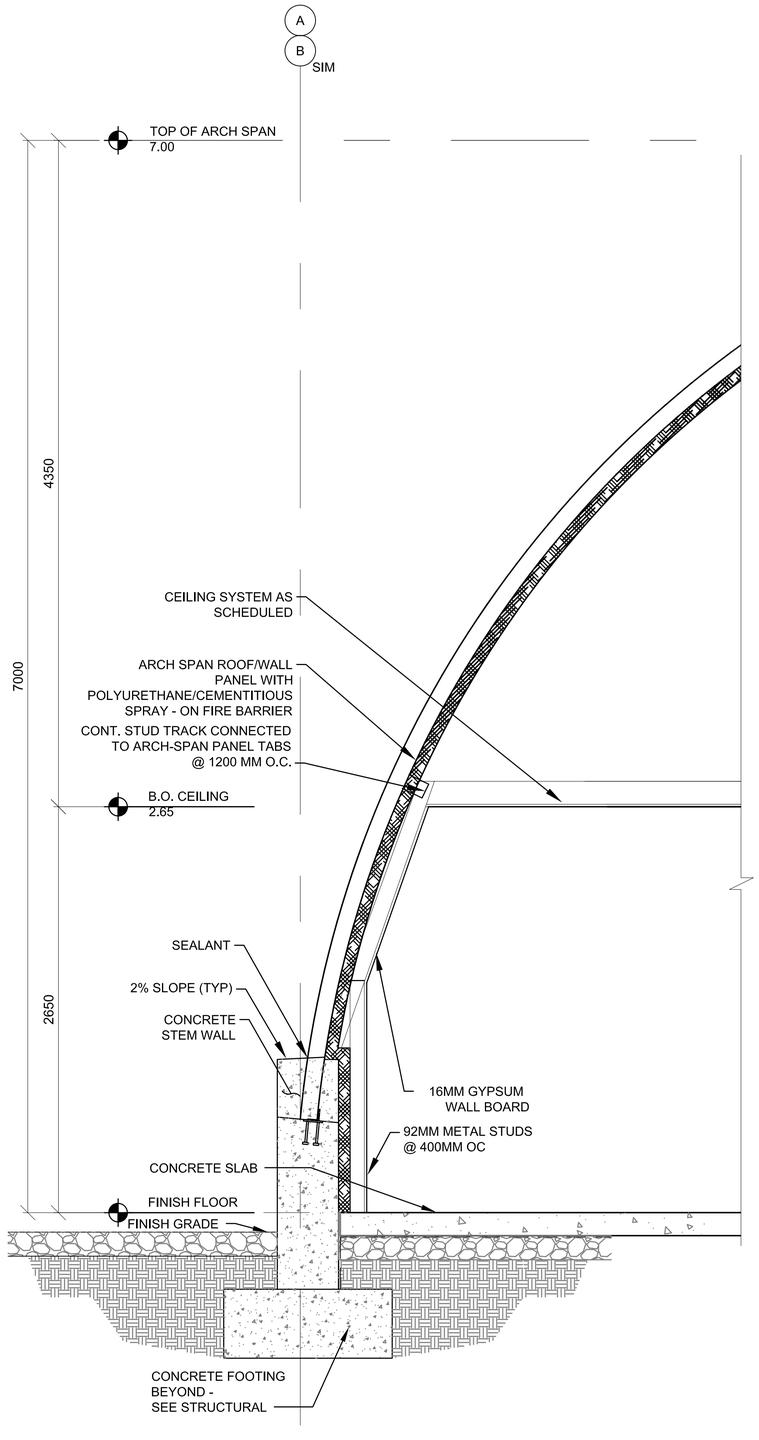

1 A-303

WALL SECTION - SIDE WALL THRU 1M STEM WALL

SCALE: 1:20

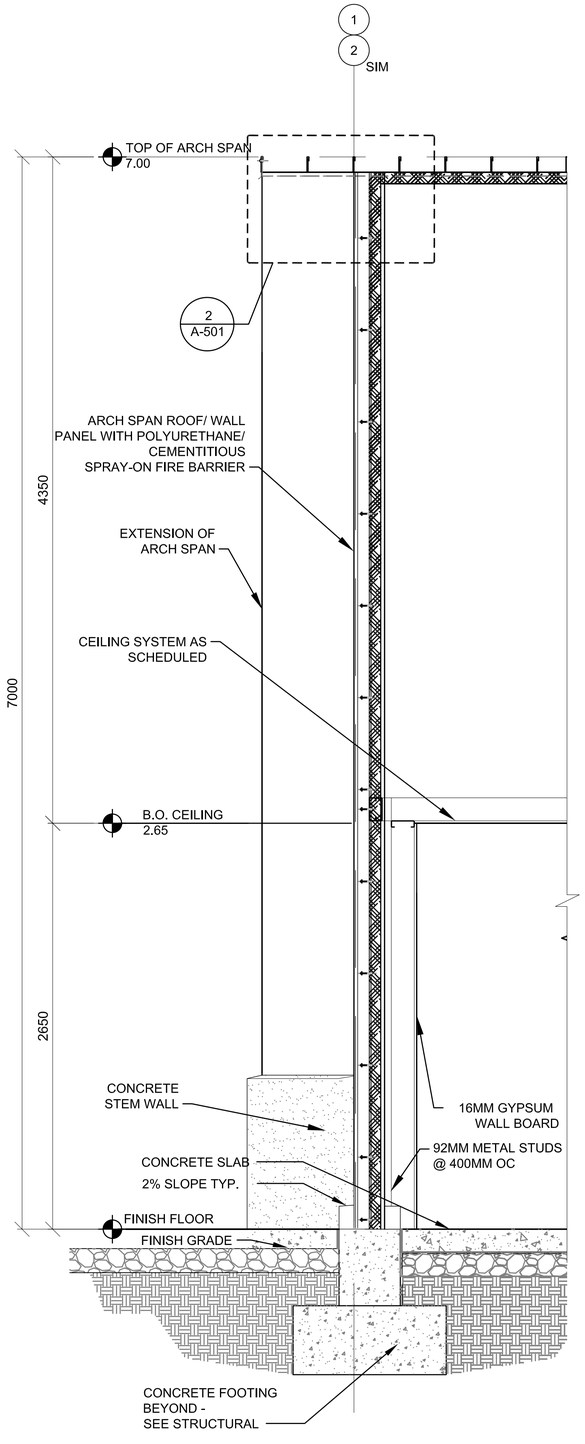

2 A-303

WALL SECTION - THRU END WALL

SCALE: 1:20

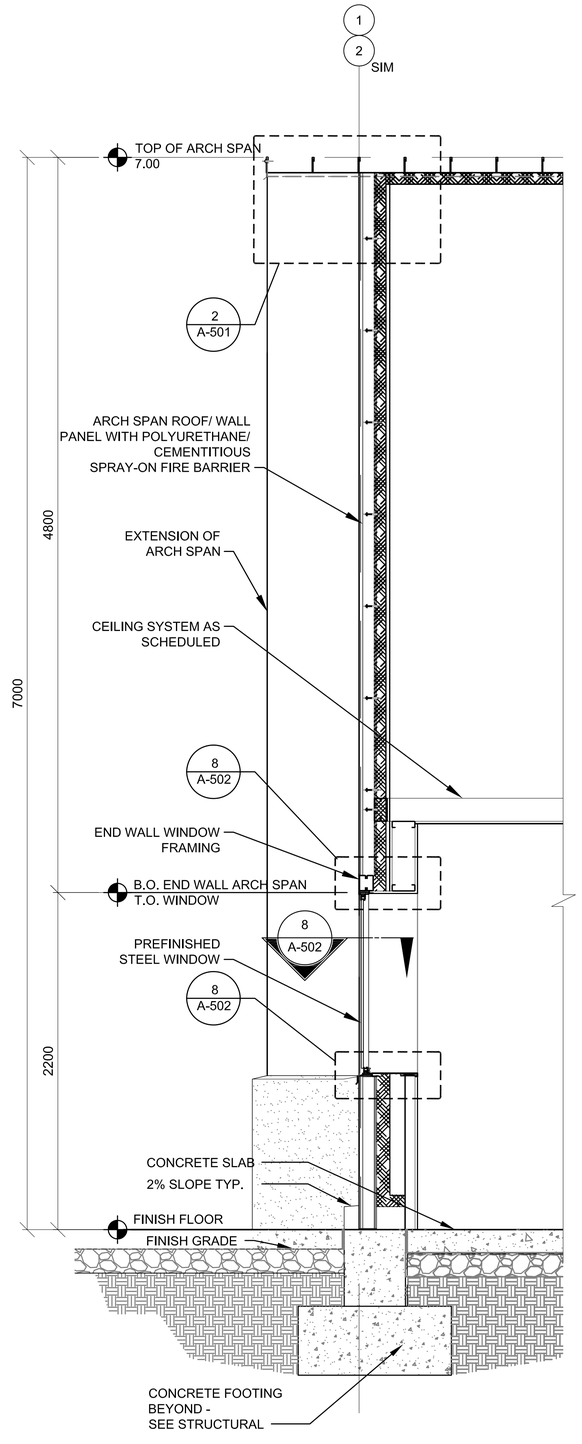

3 A-303

WALL SECTION - END WALL THRU WINDOW

SCALE: 1:20

0 200 400 800
SCALE: 1:20

UNLESS OTHERWISE NOTED, LINEAR DIMENSIONS SHOWN ARE IN MILLIMETERS.

COMMONWEALTH OF VIRGINIA
PETER GARRETT SCHMIDT
No. 013167
ARCHITECT

US ARMY CORPS OF ENGINEERS
AFGHANISTAN NORTH DISTRICT

SYMBOL	DESCRIPTION	DATE	APPR.	SYMBOL	DESCRIPTION	DATE	APPR.

DESIGNED BY: PGS, SE, MR
DWN BY: SE, MDH, AH
CKD BY: PGS, SE, MR
REVIEWED BY:
SUBMITTED BY:
DATE: 3/24/2011
CONTRACT NO. W912ER-09-D-0002
DRAWING CODE:
FILE NAME:
PLOT SCALE: 1:50
PLOT DATE: 3/24/2011
REV: 0

BAKER

U.S. ARMY ENGINEER DISTRICT, AFGHANISTAN
CORPS OF ENGINEERS
APO AE 09356

SITE ADAPT DESIGN

AD22 - HEADQUARTERS BUILDING - ARCH SPAN

WALL SECTIONS

SHEET REFERENCE NUMBER:

A-303

3/24/2011 12:27 PM

A1 Size 594mm x 841mm

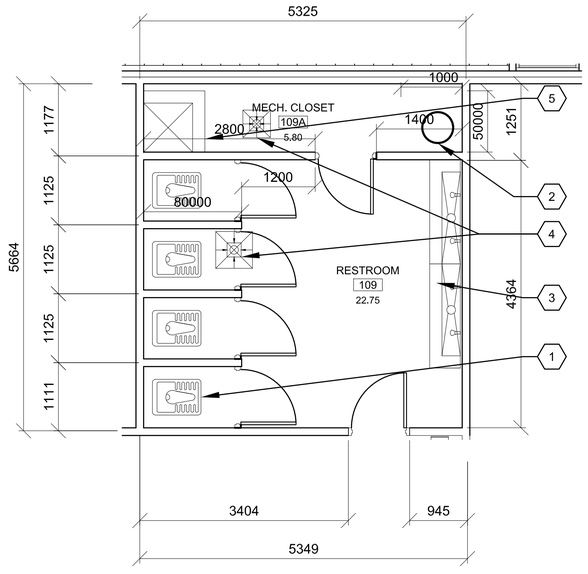

1
A-401

ENLARGED PLAN

SCALE: 1:50

GENERAL NOTES:

A. DIMENSIONS ARE SHOWN TO OUTER EDGE OF EXTERIOR STRUCTURAL FACE OF ARCH-SPAN PANEL(GRID LINES), CENTER LINE OF INTERIOR PARTITIONS, EDGE OF WINDOW OPENINGS, AND TO HINGE SIDE OF DOOR FRAME OPENING, UNLESS NOTED OTHERWISE.

B. HINGE SIDE OF OPENINGS FOR DOORS AND FRAMES SHALL BE LOCATED 200 MM FROM THE ADJACENT WALL OR COLUMN, UNLESS NOTED OTHERWISE.

C. INTERIOR PARTITIONS SHALL BE PARTITION TYPE 1, UNLESS NOTED OTHERWISE. REFER TO A-602 FOR PARTITION TYPES SCHEDULE

D. COSMETIC REPAIR OF MINOR DEFECTS: REPAIR OR FILL MORTAR JOINTS AND MINOR DEFECTS, INCLUDING BUT NOT LIMITED TO SPALLS, IN ACCORDANCE WITH MANUFACTURER'S RECOMMENDATIONS AND PRIOR TO COATING APPLICATION. SURFACES TO BE PAINTED SHALL BE CLEAN AND FREE OF FOREIGN MATTER BEFORE APPLICATION OF PAINT. CLEANING SHALL BE SCHEDULED SO THAT DUST AND OTHER CONTAMINANTS WILL NOT FALL ON NEWLY PAINTED SURFACES.

E. CONCRETE, PLASTER AND MASONRY SURFACES SHALL BE ALLOWED TO CURE FOR AT LEAST 30 DAYS BEFORE PAINTING. CONCRETE SLABS-ON-GRADE SHALL BE ALLOWED TO CURE 90 DAYS BEFORE STAINING OR SEALING.

F. DO NOT USE PAINT MATERIALS CONTAINING LEAD CONTENT IN EXCESS OF 0.009 PERCENT OF THE WEIGHT OF THE TOTAL NONVOLATILE CONTENT OF THE PAINT OR THE WEIGHT OF THE DRIED PAINT FILM.

G. DO NOT USE ANY ASBESTOS CONTAINING MATERIALS (ACM) IN PROJECT. ACM IS DEFINED AS 1% OR MORE BY VOLUME.

H. DO NOT USE PAINT MATERIALS CONTAINING MERCURIAL FUNGICIDES.

I. FACTORY PRIMED METAL DOORS AND FRAMES SHALL RECEIVE TWO COATS OF PAINT.

J. FILL REMAINING SPACE AT PENETRATIONS IN FIRE-RATED FLOORS, PARTITIONS AND CEILINGS WITH APPROPRIATE FIRESTOPPING MATERIALS.

K. ALL CEILING FINISHES SHALL AS NOTED ON REFLECTED CEILING PLANS OR FINISH SCHEDULE.

L. ALL WALL FINISHES SHALL AS NOTED ON FINISH SCHEDULE. REFER TO A-603

M. ALL FLOOR FINISHES SHALL BE SEALED CONCRETE, UNLESS NOTED OTHERWISE.

N. PROVIDE TILE FINISHES AS INDICATED IN DETAILS & KEY NOTES.

O. ALL DOOR, FRAME AND HARDWARE TYPES SHALL BE A.1.5A UNLESS NOTED OTHERWISE. REFER TO A-601 FOR DOOR INFORMATION.

P. TOILET STALL DOORS SHALL BE G.2.12

Q. SHOWER STALL DOOR, FRAME AND HARDWARE TYPE SHALL BE E.1.12.

R. PROVIDE POLISHED STAINLESS STEEL MIRROR 600 X 900 ABOVE EVERY LAVATORY FAUCET.

S. PLASTER MAY BE SUBSTITUTED FOR DRYWALL WALLS AND CEILINGS. MAINTAIN FIRE RATINGS AS NOTED

T. LOCATION OF EXTERIOR DOORS AND WINDOWS MUST BE COORDINATED WITH ARCH-SPAN MODULE. PLAN DIMENSIONS OF THESE IS APPROXIMATE AND MAY BE SLIGHTLY ADJUSTED TO SUIT PANEL FABRICATION TOLERANCES.

KEY NOTES:

X

1. TYPICAL TOILET STALL LAYOUT - SEE DETAIL 2/A-504
2. HWH - SEE PLUMBING
3. LAVATORY - SEE DETAIL 4/A-504
4. FLOOR DRAIN - SEE PLUMBING AND DETAIL 2/A-505
5. REFER TO 1/A-505 FOR MOP SINK

0 500 1000 2000

SCALE: 1:50

UNLESS OTHERWISE NOTED, LINEAR DIMENSIONS SHOWN ARE IN MILLIMETERS.

COMMONWEALTH OF VIRGINIA
PETER GARRETT SCHMIDT
No. 013167
ARCHITECT

US ARMY CORPS OF ENGINEERS
AFGHANISTAN NORTH DISTRICT

SYMBOL	DESCRIPTION	DATE	APPR.	SYMBOL	DESCRIPTION	DATE	APPR.

DESIGNED BY: PGS, SE, MR
DWN BY: SE, MDH, AH
CKD BY: PGS, SE, MR
REVIEWED BY:
SUBMITTED BY:
DATE: 3/24/2011
CONTRACT NO. W912ER-09-D-0002
DRAWING CODE:
FILE NAME:
PLOT SCALE: 1:50
PLOT DATE: 3/24/2011
REV: 0

BAKER

U.S. ARMY ENGINEER DISTRICT, AFGHANISTAN
CORPS OF ENGINEERS
APO AE 09356

SITE ADAPT DESIGN

AD22 - HEADQUARTERS BUILDING - ARCH SPAN
ENLARGED PLAN

SHEET REFERENCE NUMBER:

A-401

A1 Size 594mm x 841mm

3/24/2011 5:10 PM

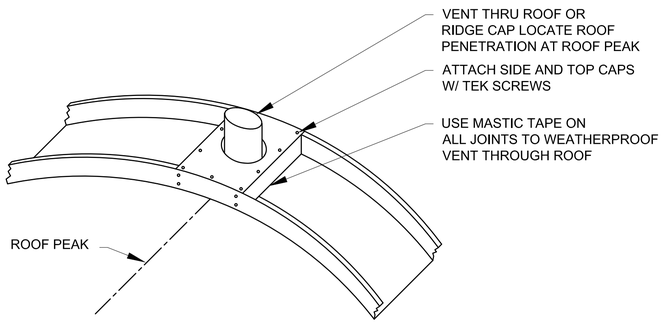

1 A-501 PLUMBING VENT DETAIL

SCALE: NTS

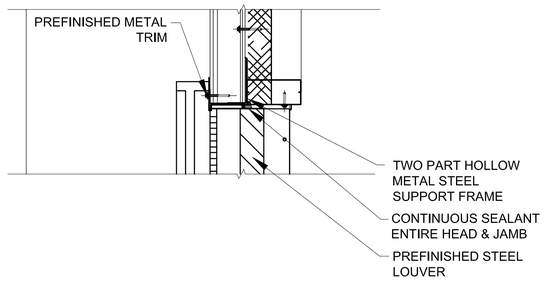

HEAD

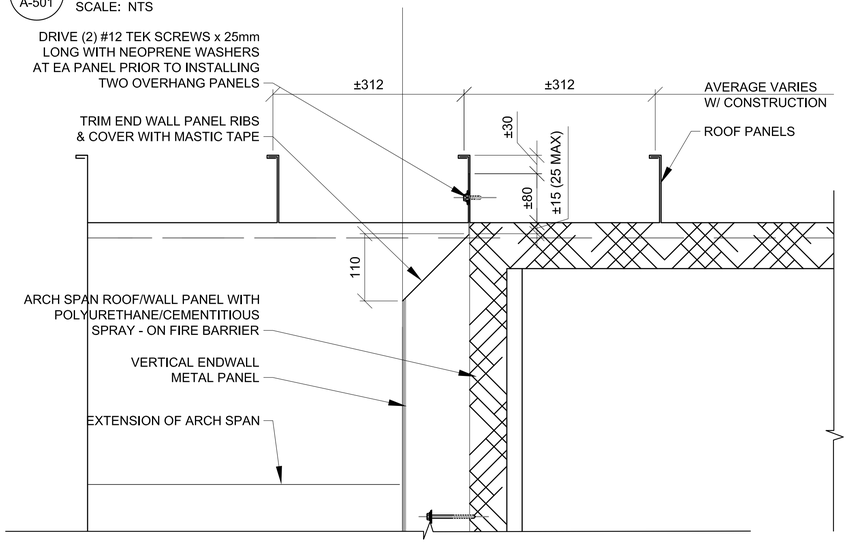

2 A-501 END WALL ROOF DETAIL

SCALE: 1:5

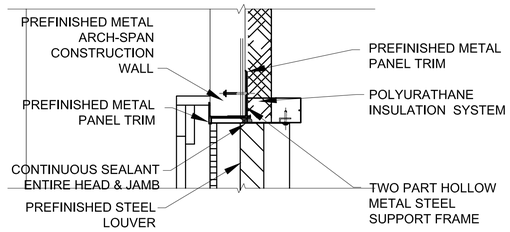

JAMB

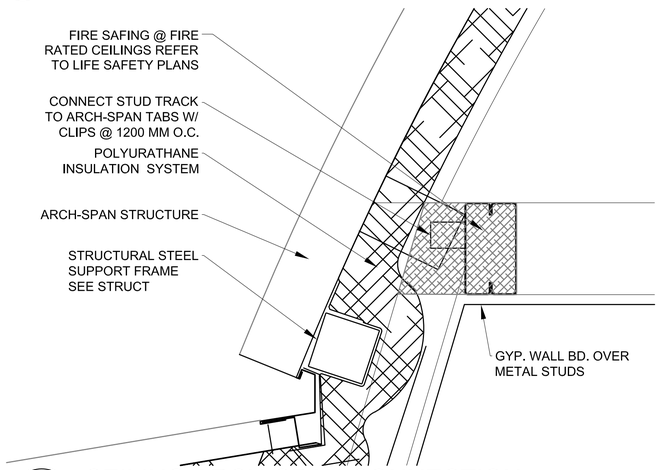

4 A-501 CEILING ARCH-SPAN CONNECTION

SCALE 1:10

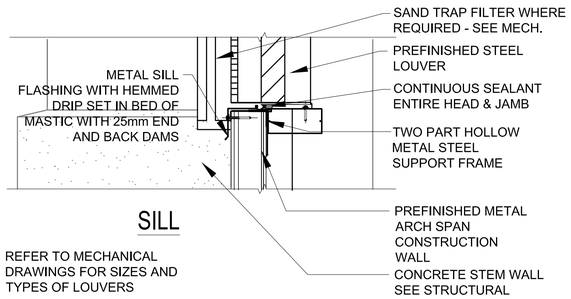

SILL

REFER TO MECHANICAL
DRAWINGS FOR SIZES AND
TYPES OF LOUVERS

3 A-501 LOUVER EXTERIOR DETAIL

SCALE: 1:5

0 100 200 400
SCALE: 1:10
100 200
SCALE: 1:5

UNLESS OTHERWISE NOTED,
LINEAR DIMENSIONS
SHOWN ARE IN MILLIMETERS.

COMMONWEALTH OF VIRGINIA
PETER GARRETT SCHMIDT
No. 013167
ARCHITECT

US ARMY CORPS
OF ENGINEERS
AFGHANISTAN NORTH
DISTRICT

SYMBOL	DESCRIPTION	DATE	APPR.	SYMBOL	DESCRIPTION	DATE	APPR.

DATE: 3/24/2011 REV: 0
CONTRACT NO. W912ER-09-D-0002
DRAWING CODE:
FILE NAME:
PLOT SCALE: NONE
PLOT DATE: 3/24/2011

DESIGNED BY: PGS, SE, MR
DWN BY: SE, MDH, AH
CKD BY: PGS, SE, MR
REVIEWED BY:
SUBMITTED BY:

BAKER

U.S. ARMY ENGINEER DISTRICT, AFGHANISTAN
CORPS OF ENGINEERS
APO AE 09356

SITE ADAPT DESIGN
AD22 - HEADQUARTERS BUILDING - ARCH SPAN
EXTERIOR DETAILS

SHEET
REFERENCE
NUMBER:
A-501

3/24/2011 12:28 PM

A1 Size 594mm x 841mm

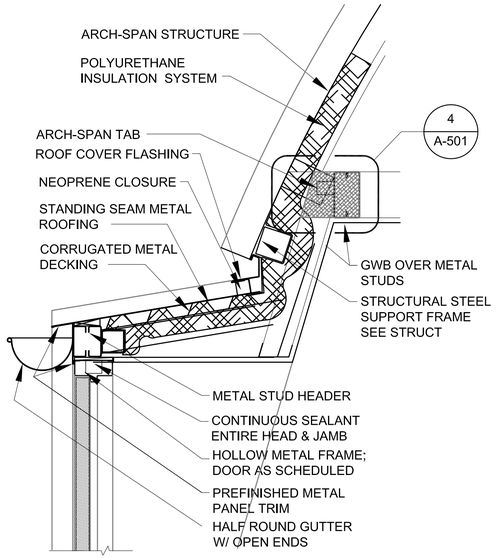

HEAD

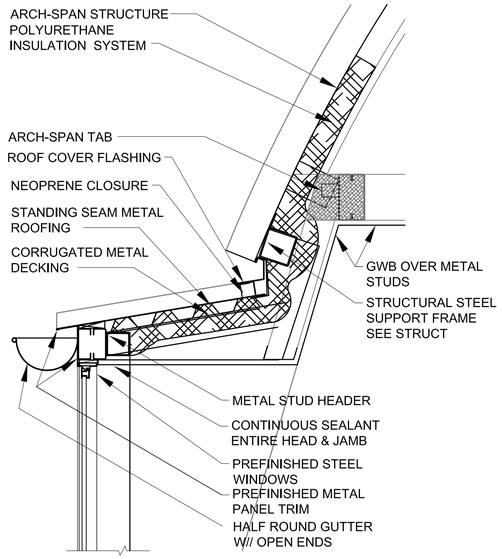

HEAD

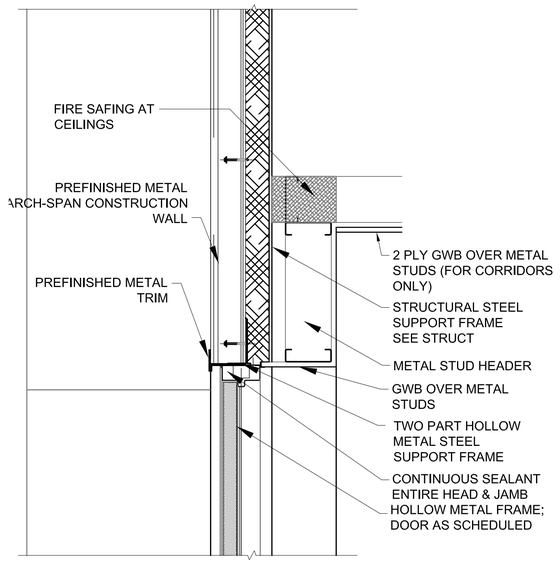

HEAD

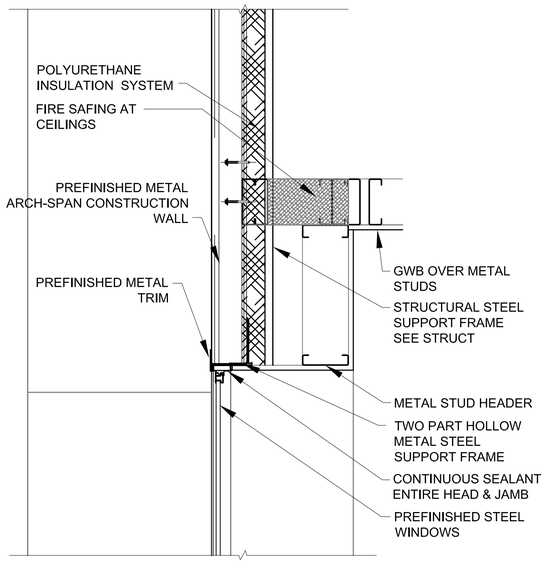

HEAD

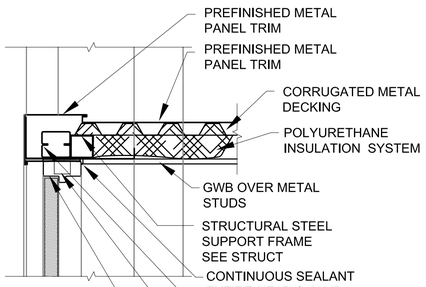

JAMB

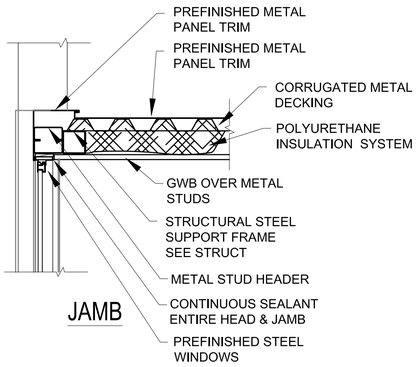

JAMB

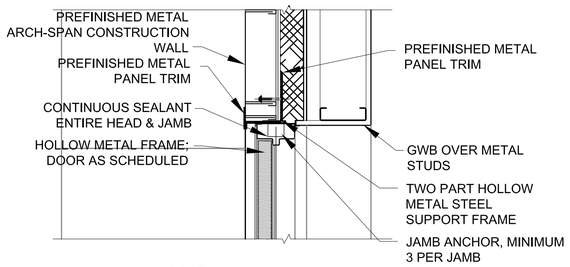

JAMB

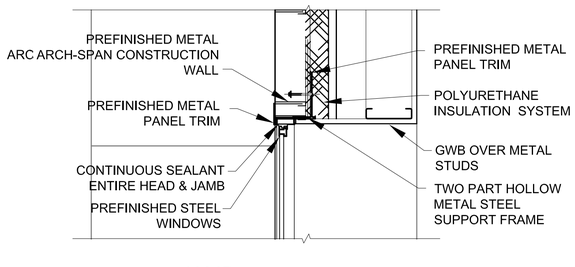

JAMB

1 A-502 EXTERIOR DOOR DETAILS
SCALE: 1:10

5 A-502 END WALL EXTERIOR DOOR DETAILS
SCALE: 1:10

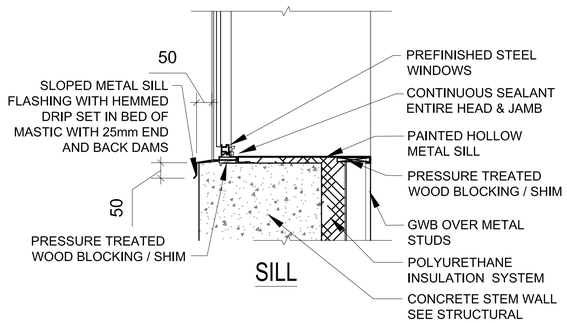

SILL

3 A-502 EXTERIOR WINDOW DETAILS
SCALE: 1:10

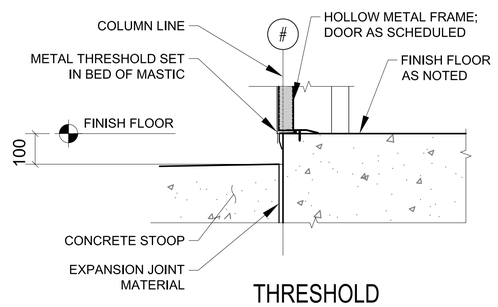

THRESHOLD

6 A-502 EXTERIOR DOOR DETAILS
SCALE: 1:10

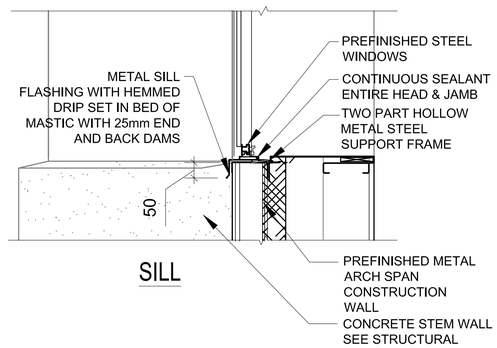

SILL

8 A-502 EXTERIOR WINDOWS DETAILS
SCALE: 1:10

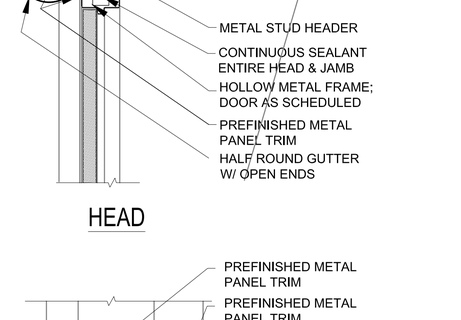

2 A-502 DORMER DETAILS
SCALE: 1:10

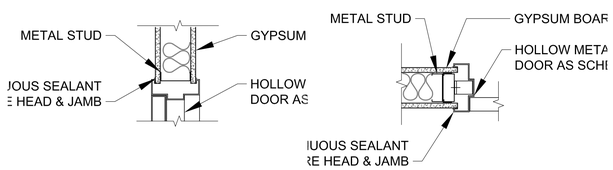

4 A-502 INTERIOR WALL DETAILS
SCALE: 1:10

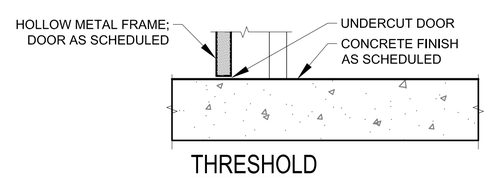

THRESHOLD

7 A-502 INTERIOR DOOR DETAILS
SCALE: 1:10

0 100 200 400
SCALE: 1:10

UNLESS OTHERWISE NOTED, LINEAR DIMENSIONS SHOWN ARE IN MILLIMETERS.

COMMONWEALTH OF VIRGINIA
PETER GARRETT SCHMIDT
No. 013167
ARCHITECT

US ARMY CORPS OF ENGINEERS
AFGHANISTAN NORTH DISTRICT

SYMBOL	DESCRIPTION	DATE	APPR.	SYMBOL	DESCRIPTION	DATE	APPR.

DESIGNED BY: PGS, SE, MR
DWN BY: SE, MDH, AH
CKD BY: PGS, SE, MR
REVIEWED BY:
SUBMITTED BY:
DATE: 3/24/2011
REV: 0
CONTRACT NO. W912ER-09-D-0002
DRAWING CODE:
FILE NAME:
PLOT SCALE: 1:10
PLOT DATE: 3/24/2011

BAKER

U.S. ARMY ENGINEER DISTRICT, AFGHANISTAN
CORPS OF ENGINEERS
APO AE 09356

SITE ADAPT DESIGN
AD22 - HEADQUARTERS BUILDING - ARCH SPAN
HEAD, JAMB, AND SILL DETAILS

SHEET REFERENCE NUMBER:
A-502

A1 Size 594mm x 841mm

3/24/2011 12:28 PM

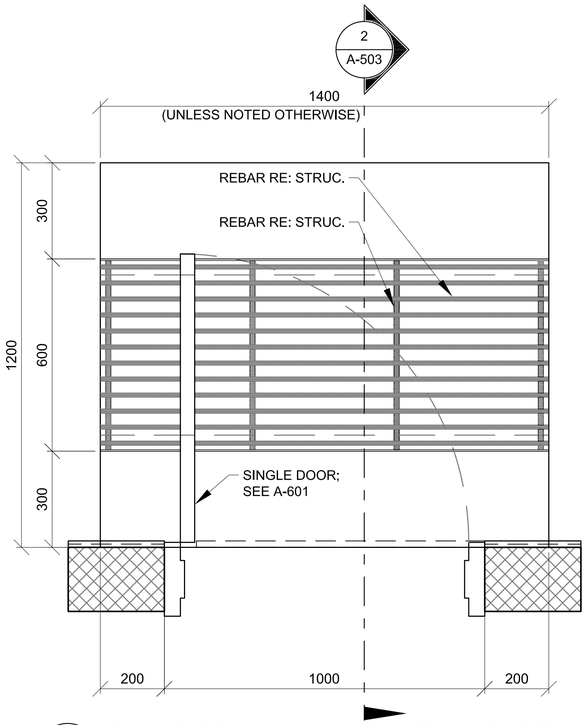

1 A-503 DOOR STOOP PLAN (WITH GRATE)

SCALE: 1:10

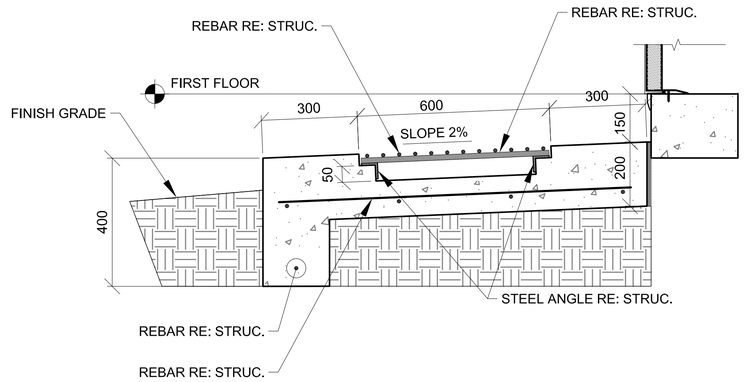

2 A-503 DOOR STOOP DETAIL

SCALE: 1:10

0 100 200 400

SCALE: 1:10

UNLESS OTHERWISE NOTED,
LINEAR DIMENSIONS
SHOWN ARE IN MILLIMETERS.

COMMONWEALTH OF VIRGINIA
PETER GARRETT SCHMIDT
No. 013167
ARCHITECT

US ARMY CORPS
OF ENGINEERS
AFGHANISTAN NORTH
DISTRICT

SYMBOL	DESCRIPTION	DATE	APPR.	SYMBOL	DESCRIPTION	DATE	APPR.

U.S. ARMY ENGINEER DISTRICT, AFGHANIST'AN
CORPS OF ENGINEERS
APO AE 09356

DESIGNED BY: PGS, SE, MR
DWN BY: SE, MDH, AH
CKD BY: PGS, SE, MR
REVIEWED BY:
SUBMITTED BY:
DATE: 3-24-2011
CONTRACT NO. W912ER-09-D-0002
DRAWING CODE:
FILE NAME:
PLOT SCALE: 1:10
PLOT DATE: 3/24/2011
REV: 0

BAKER

SITE ADAPT DESIGN

AD22 - HEADQUARTERS BUILDING - ARCH SPAN

STOOP DETAILS

SHEET
REFERENCE
NUMBER:

A-503

3/24/2011 12:28 PM

A1 Size 594mm x 841mm

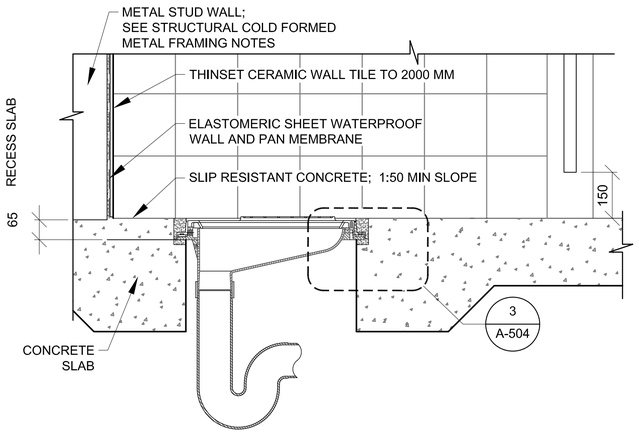

1 A-504 LATRINE DETAIL
SCALE: 1:10

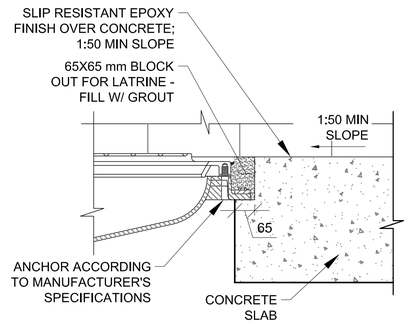

3 A-504 MOUNTING DETAIL
SCALE: 1:10

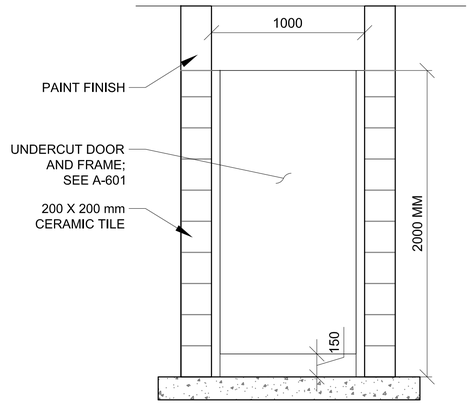

6 A-504 TOILET PARTITION DOOR ELEVATION
SCALE: 1:20

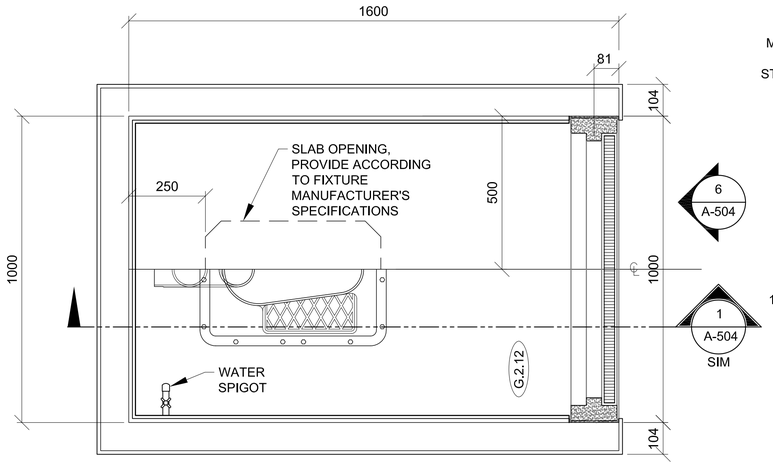

2 A-504 TOILET DETAIL
SCALE: 1:10

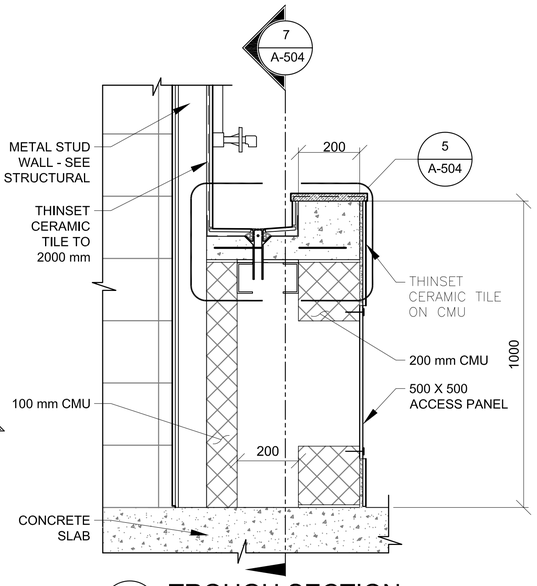

4 A-504 TROUGH SECTION
SCALE: 1:10

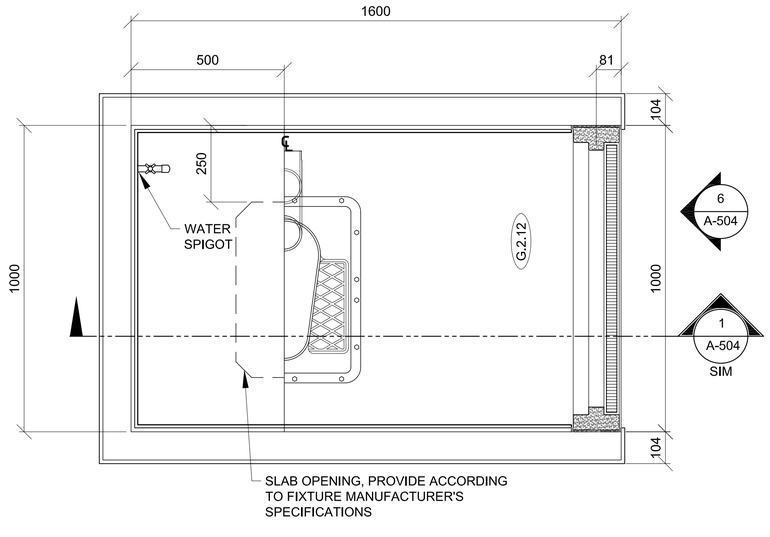

2A A-504 TOILET DETAIL
SCALE: 1:10

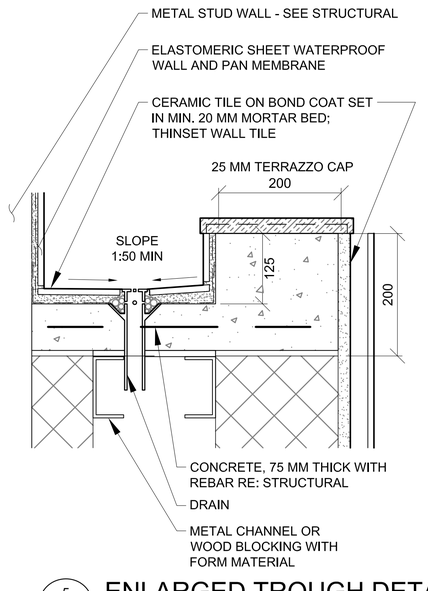

5 A-504 ENLARGED TROUGH DETAIL
SCALE: 1:5

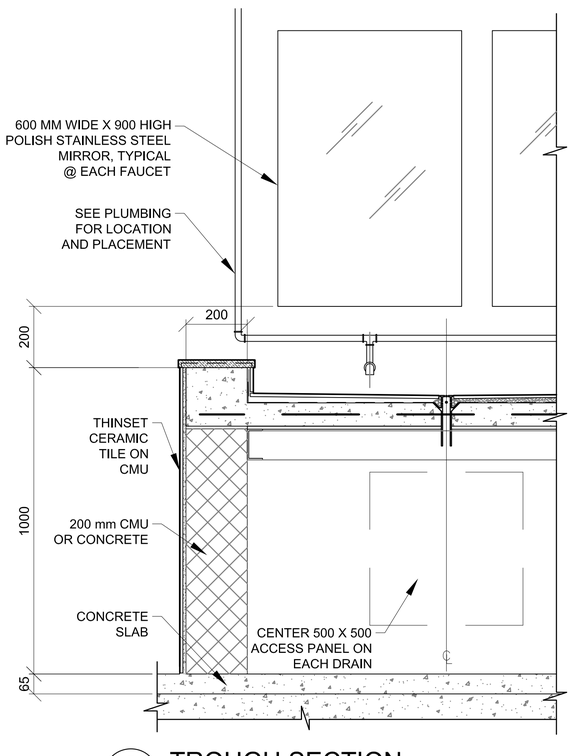

7 A-504 TROUGH SECTION
SCALE: 1:10

0 50 100 200
SCALE: 1:5
0 100 200 400
SCALE: 1:10

UNLESS OTHERWISE NOTED,
LINEAR DIMENSIONS
SHOWN ARE IN MILLIMETERS.

COMMONWEALTH OF VIRGINIA
PETER GARRETT SCHMIDT
No. 013167
ARCHITECT

US ARMY CORPS
OF ENGINEERS
AFGHANISTAN NORTH
DISTRICT

SYMBOL	DESCRIPTION	DATE	APPR.	SYMBOL	DESCRIPTION	DATE	APPR.

DESIGNED BY: PGS, SE, MR
DWN BY: SE, MDH, AH
CKD BY: PGS, SE, MR
REVIEWED BY:
SUBMITTED BY:
DATE: 3/24/2011
REV: 0
CONTRACT NO. W912ER-09-D-0002
DRAWING CODE:
FILE NAME:
PLOT SCALE: VARIES
PLOT DATE: 3/24/2011

BAKER

U.S. ARMY ENGINEER DISTRICT, AFGHANISTAN
CORPS OF ENGINEERS
APO AE 09356

SITE ADAPT DESIGN
AD22 - HEADQUARTERS BUILDING - ARCH SPAN
TOILET & LAVATORY DETAILS

SHEET
REFERENCE
NUMBER:
A-504

A1 Size 594mm x 841mm

3/24/2011 12:28 PM

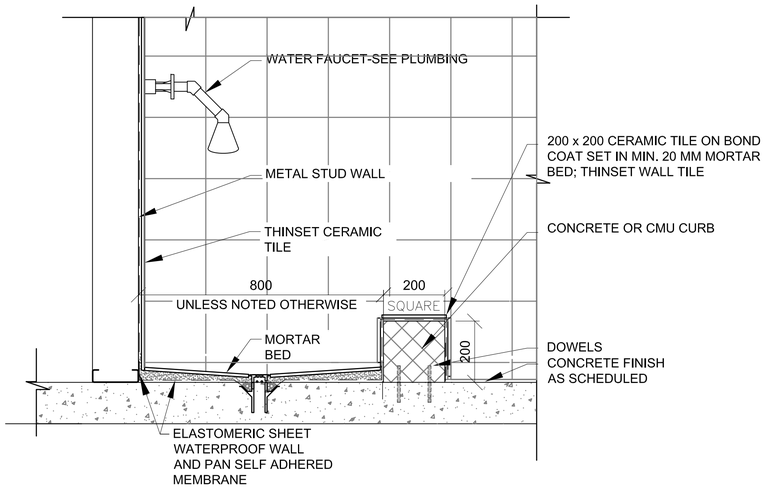

1 / A-505 MOP SINK DETAIL

SCALE: 1:5

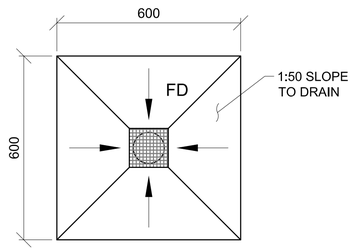

2 / A-505 FLOOR DRAIN DETAIL

SCALE: 1:5

0 50 100 200

SCALE: 1:5

UNLESS OTHERWISE NOTED, LINEAR DIMENSIONS SHOWN ARE IN MILLIMETERS.

COMMONWEALTH OF VIRGINIA
PETER GARRETT SCHMIDT
No. 013167
ARCHITECT

US ARMY CORPS OF ENGINEERS
AFGHANISTAN NORTH DISTRICT

SYMBOL	DESCRIPTION	DATE	APPR.	SYMBOL	DESCRIPTION	DATE	APPR.

U.S. ARMY ENGINEER DISTRICT, AFGHANISTAN
CORPS OF ENGINEERS
APO AE 09356

DESIGNED BY: PGS, SE, MR
DWN BY: SE, MDH, AH
CKD BY: PGS, SE, MR
REVIEWED BY:
SUBMITTED BY:
DATE: 3/24/2011
CONTRACT NO. W912ER-09-D-0002
DRAWING CODE:
FILE NAME:
PLOT SCALE: VARIES
PLOT DATE: 3/24/2011
REV. 0

BAKER

SITE ADAPT DESIGN

AD22 - HEADQUARTERS BUILDING - ARCH SPAN

DETAILS

SHEET REFERENCE NUMBER:

A-505

A1 Size 594mm x 841mm

3/24/2011 12:28 PM

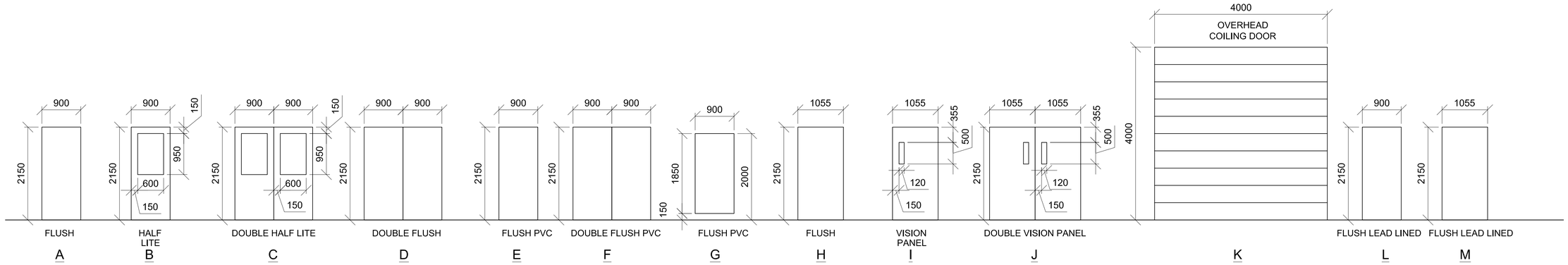

1 A-601 DOOR TYPES

SCALE: 1:50

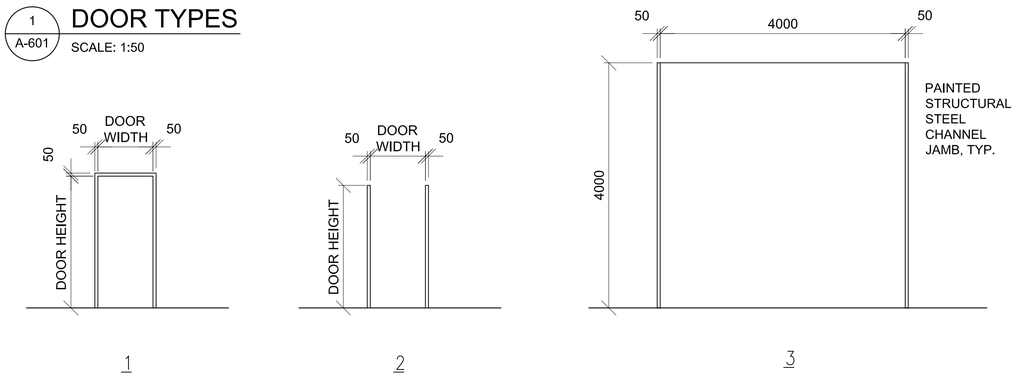

2 A-601 FRAME TYPES

SCALE: 1:50

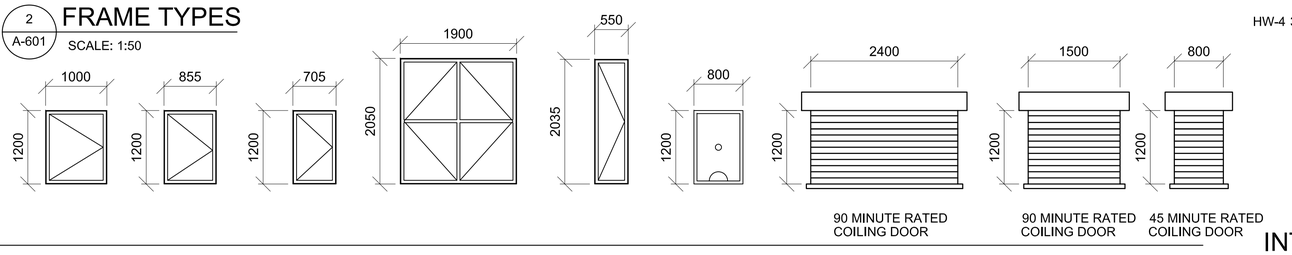

3 A-601 WINDOW TYPES

SCALE: 1:50

WINDOW TYPE NOTES:

1. ALL EXTERIOR WINDOWS SHALL BE STEEL. PROVIDE INSECT SCREENS ONLY AT DFAC FACILITIES. WINDOWS SHALL BE COMMERCIAL GRADE.
2. ALL EXTERIOR WINDOWS SHALL BE OPERABLE.
3. WINDOWS IN LATRINES OR RESTROOM AREAS SHALL HAVE OBSCURE GLASS.
4. WINDOW TYPES ARE NOT APPLICABLE AT ALL BUILDINGS. SEE FLOOR PLAN FOR REQUIREMENTS

DOOR TYPE — A.1.5 — HARDWARE TYPE
FRAME TYPE

4 A-601 DOOR TAG

SCALE: 1:50

DOOR TAG NOTES:

1. THE DOOR TAG INDICATES THE DOOR TYPE, FRAME TYPE AND HARDWARE SET FOR EACH DOOR.
2. THE DOOR TAG FOR RATED DOORS INCLUDES THE RATING OF THE DOOR IN MINUTES.
3. REFER TO FLOOR PLANS FOR DOOR TAG INFORMATION APPLICABLE TO EACH DOOR.

DOOR TYPE
RATING IN MINUTES — 45A.1.5 — HARDWARE TYPE
FRAME TYPE

5 A-601 RATED DOOR TAGS

SCALE: NTS

DOOR AND HARDWARE NOTES:

1. INTERIOR AND EXTERIOR METAL DOORS AND FRAME COLORS SHALL MATCH ADJACENT WALL COLORS AS SELECTED BY THE CONTRACTING OFFICER.
2. FRAMES, EXCEPT FIRE-RATED FRAMES, SHALL BE MOUNTED AND ADJUSTED IN ACCORDANCE WITH MANUFACTURER'S INSTRUCTIONS. FRAMES SHALL BE FASTENED WITH MINIMUM OF THREE ANCHORS PER JAMB AT EQUAL INTERVALS.
3. DIMENSIONS SHOWN ON DOOR TYPES DETAIL ARE BASED UPON MODULAR MASONRY (OR ROUGH OPENING), HEIGHT OF 2150 MM FOR STANDARD PERSONNEL DOORS. CONTRACTOR SHALL COORDINATE WITH DOOR SUPPLIER TO ENSURE THAT DIMENSIONS OF DOORS AND FRAMES PROVIDED ARE COMPATIBLE WITH DOOR OPENING DIMENSIONS.
4. HARDWARE SHALL BE HEAVY DUTY, COMMERCIAL GRADE, STAINLESS STEEL WITH A SATIN OR BRUSHED FINISH.
5. HARDWARE TYPES INCLUDE BUILDERS HARDWARE MANUFACTURERS ASSOCIATION (BMHA) NUMBER.
6. DOORS IN 2 HOUR RATED PARTITIONS SHALL BE 1.5 HOUR (90 MINUTE) RATED DOORS IN ACCORDANCE WITH NFPA 101, TABLE 8.3.4.2.
7. DOORS IN 1 HOUR RATED WALLS SHALL BE 3/4 HOUR (45 MINUTE) RATED DOORS IN ACCORDANCE WITH NFPA 101, TABLE 8.3.4.2.
8. DOORS IN 1 HOUR RATED CORRIDOR WALLS SHALL BE 1/3 HOUR (20 MINUTE) IN ACCORDANCE WITH NFPA 101, TABLE 8.3.4.2.
10. PROVIDE DOOR STOPS TO PROTECT WALLS ON LOCATIONS WHERE DOOR SWING WILL STRIKE WALL.
11. FIRE RATED DOORS SHALL HAVE RATED GLASS NOT EXCEEDING ALLOWABLE SIZE PER NFPA 80. (836,125MM2 FOR MIN. DOORS & 64,500MM2 FOR 45 MIN OR GREATER DOORS
12. DOOR TYPES ARE NOT APPLICABLE AT ALL BUILDINGS. SEE FLOOR PLAN FOR REQUIREMENTS

EXTERIOR DOOR HARDWARE TYPES:

HW-1 1-1/2 PR HINGES, A5112 114 X 114 (SINGLE EXIT DOOR)
1 EA RIM EXIT DEVICE, TYPE 1
1 EA CYLINDER. E09221A, GRADE 1
1 EA OVERHEAD CLOSER, C02061, LOW RESISTANCE
1 EA THRESHOLD, J32130
3 EA DOOR SILENCERS, L03011

HW-2 1-1/2 PR HINGES, A5112 114 X 114 (SINGLE ENTRY DOOR)
1 EA LOCKSET, F13 ENTRY LOCK W/LEVER HANDLES, GRADE 1
1 EA OVERHEAD CLOSER, C02061, LOW RESISTANCE
1 EA THRESHOLD, J32130
3 EA DOOR SILENCERS, L03011

HW-3 3 PR HINGES, A5112 114 X 114 (DOUBLE EXIT DOOR)
2 EA RIM EXIT DEVICE, TYPE 1
2 EA CYLINDER. GRADE 1
2 EA OVERHEAD CLOSER, C02061, LOW RESISTANCE
1 EA DOOR COORDINATOR, TYPE 21
1 EA ASTRAGAL
1 EA THRESHOLD, J32130
2 EA DOOR SILENCERS, L03011

HW-4 3 PR HINGES, A5112 114 X 114 (DOUBLE DOOR DORMITORY FUNCTION)
1 EA LOCKSET W/LEVER HANDLES. GRADE 1, F13
1 EA OVERHEAD CLOSER, C02061, LOW RESISTANCE
2 EA MAGNETIC HOLDER PIN, ATTACHED TO DOOR LEAF
2 EA MAGNETIC HOLDER RECEIVER, ATTACHED TO STOOP
2 EA LEVER EXTENSION FLUSH BOLTS, L04081
1 EA ASTRAGAL
1 EA THRESHOLD, J32130
2 EA DOOR SILENCERS, L03011

INTERIOR DOOR HARDWARE TYPES:

HW-5 1-1/2 PR HINGES, A8133 114 X 114 (SINGLE FRONT DOOR FUNCTION)
1 EA LOCKSET W/LEVER HANDLES, F08, GRADE 1
1 EA WALL STOP, L02101 OR L02161
3 EA DOOR SILENCERS, L03011

HW-5A 1-1/2 PR HINGES, A8133 114 X 114 (SINGLE OFFICE FUNCTION)
1 CLOSER
1 EA LOCKSET W/LEVER HANDLES, F05, GRADE 1
1 EA WALL STOP, L02101 OR L02161
3 EA DOOR SILENCERS, L03011

HW-6 1-1/2 PR HINGES, A8112 114 X 114 (SINGLE STOREROOM FUNCTION)
1 CLOSER
1 EA LOCKSET W/LEVER HANDLES, F07, GRADE 1
1 EA WALL STOP, L02101 OR L02161
3 EA DOOR SILENCERS, L03011

HW-7 1-1/2 PR HINGES, A8133 (SINGLE PASSAGE FUNCTION)
1 CLOSER
1 EA LOCKSET W/LEVER HANDLES, F01 GRADE 1
1 EA WALL STOP, L02101 OR L02161
2 EA MOP PLATE, J103
3 EA DOOR SILENCERS, L03011

HW-7A 1-1/2 PR HINGES, A8133 (SINGLE PASSAGE FUNCTION)
1 CLOSER
1 EA LOCKSET W/LEVER HANDLES, F01 GRADE 1
1 EA WALL STOP, L02101 OR L02161
3 EA DOOR SILENCERS, L03011

INTERIOR DOOR HARDWARE TYPES:

HW-8 1-1/2 PR HINGES, A8112 (SINGLE JAN/STOREROOM FUNCTION)
1 CLOSER
1 EA LOCKSET W/LEVER HANDLES, F07 GRADE 1
1 EA WALL STOP, L02101 OR L02161
2 EA MOP PLATE, J103
3 EA DOOR SILENCERS, L03011

HW-9 1-1/2 PR HINGES, A5112 114 X 114 (SINGLE EXIT DOOR)
1 EA RIM EXIT DEVICE, TYPE 1
1 EA CYLINDER. E09221A, GRADE 1
1 EA OVERHEAD CLOSER, C02061, LOW RESISTANCE
3 EA DOOR SILENCERS, L03011

HW-10 3 PR HINGES, A5112 114 X 114 (DOUBLE STOREROOM FUNCTION)
1 EA LOCKSET W/LEVER HANDLES. GRADE 1, F7
2 EA LEVER EXTENSION FLUSH BOLTS, L04081
1 EA ASTRAGAL
2 EA DOOR SILENCERS, L03011

HW-11 1-1/2 PR HINGES, A8112 114 X 114 (SINGLE DORMITORY FUNCTION
1 EA LOCKSET W/LEVER HANDLES, F13, GRADE 1
1 EA WALL STOP, L02101 OR L02161
1 EA OVERHEAD CLOSER, CO2061, LOW RESISTANCE
3 EA DOOR SILENCERS, L03011
1 EA ROBE HOOK

HW-12 1-1/2 PR HINGES, A8133 (SINGLE PRIVACY-BATH FUNCTION)
1 EA LATCH SET W/LEVER HANDLES, F22 GRADE 1
1 EA WALL STOP, L02101 OR L02161
3 EA DOOR SILENCERS, L03011
1 EA ROBE HOOK

HW-13 3 PR HINGES, A5112 114 X 114 (DOUBLE DORMITORY FUNCTION)
1 EA LOCKSET W/LEVER HANDLES. GRADE 1, F13
1 EA OVERHEAD CLOSER, C02061, LOW RESISTANCE
2 EA LEVER EXTENSION FLUSH BOLTS, L04081
1 EA ASTRAGAL
2 EA DOOR SILENCERS, L03011

HW-14 3 PR HINGES, A5112 114 X 114 (DOUBLE EGRESS EXIT DOOR)
2 EA VERTICAL ROD EXIT DEVICE, TYPE 1
2 EA CYLINDER. GRADE 1
2 EA OVERHEAD CLOSER, C02061, LOW RESISTANCE
1 EA DOOR COORDINATOR, TYPE 21
1 EA ASTRAGAL
2 EA DOOR SILENCERS, L03011

HW-15 3 PR HINGES, A5112 114 X 114 (DOUBLE STOREROOM FUNCTION)
2 CLOSERS
1 COORDINATOR
1 EA LOCKSET W/LEVER HANDLES. GRADE 1, F7
2 EA LEVER EXTENSION FLUSH BOLTS, L04081
1 EA ASTRAGAL
2 EA DOOR SILENCERS, L03011

THIS SHEET IS STANDARD AND IS INCLUSIVE OF ALL THE DOOR/ WINDOW/ HARDWARE TYPES FOR THE ENTIRE CONTRACT. NOT ALL DOOR/ WINDOW/ HARDWARE TYPES ARE USED FOR ANY PARTICULAR BUILDING DESIGN. CONTRACTOR SHALL REFER TO THE FLOOR PLAN FOR THE TYPES BEING USED.

0 500 1000 2000
SCALE: 1:50

UNLESS OTHERWISE NOTED, LINEAR DIMENSIONS SHOWN ARE IN MILLIMETERS.

COMMONWEALTH OF VIRGINIA
PETER GARRETT SCHMIDT
No. 013167
REGISTERED ARCHITECT

US ARMY CORPS OF ENGINEERS
AFGHANISTAN NORTH DISTRICT

SYMBOL	DESCRIPTION	DATE	APPR.	SYMBOL	DESCRIPTION	DATE	APPR.

U.S. ARMY ENGINEER DISTRICT, AFGHANISTAN
CORPS OF ENGINEERS
APO AE 09356

DESIGNED BY: PGS, SE, MR
DWN BY: SE, MDH, AH
CKD BY: PGS, SE, MR
REVIEWED BY:
SUBMITTED BY:
DATE: 3/24/2011
CONTRACT NO. W912ER-09-D-0002
DRAWING CODE:
FILE NAME:
PLOT SCALE: 1:50
PLOT DATE: 3/24/2011
REV: 0

BAKER

SITE ADAPT DESIGN
AD22 - HEADQUARTERS BUILDING - ARCH SPAN
WINDOW AND DOOR SCHEDULES

SHEET REFERENCE NUMBER:
A-601

A1 Size 594mm x 841mm

3/24/2011 12:28 PM

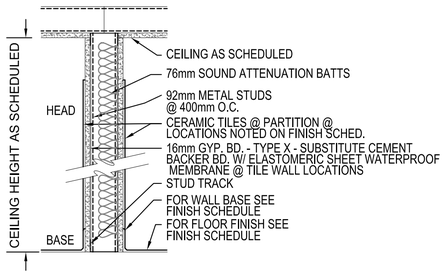

1 TYPE #1 - 1 HOUR FIRE RATED & NON-RATED
DESIGN NO. U419 OR U442
DESIGN NO. WHI 694-0300.1 (SIM)

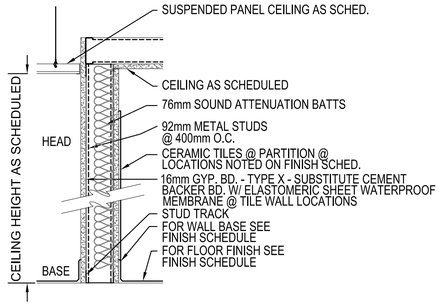

2 TYPE #2 - 1 HOUR FIRE RATED & NON-RATED
DESIGN NO. U419 OR U442/WALL
DESIGN NO. WHI 694-0300.1 (SIM)

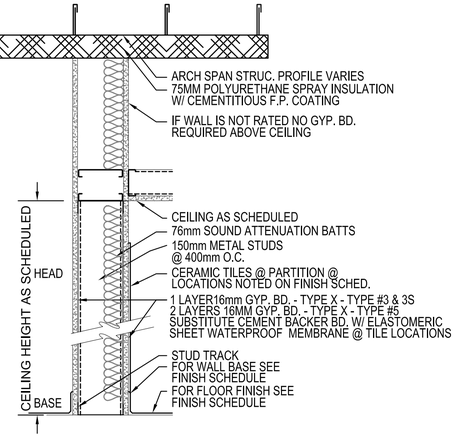

3 TYPE #3 - 1 HOUR FIRE RATED
DESIGN NO. U419
DESIGN NO. WHI 694-0300.1 (SIM)

3S TYPE #3S - 1 HOUR FIRE & SMOKE RATED
DESIGN NO. U419
DESIGN NO. WHI 694-0300.1 (SIM)

5 TYPE #5 - 2 HOUR FIRE RATED - PROVIDE 150 MM
METAL STUDS @ PARTITION TYPES 5 IN LIU OF 92 MM STUDS
DESIGN NO. U443
DESIGN NO. WHI 694-0300.1 (SIM)

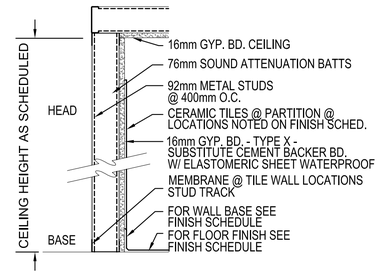

4 TYPE #4 - CHASE PARTITION

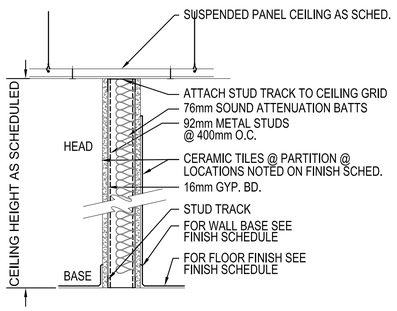

6 TYPE #6 - KITCHEN PARTITION

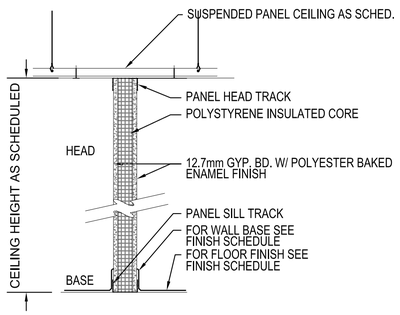

7 TYPE #7 - PANELIZED PARTITION

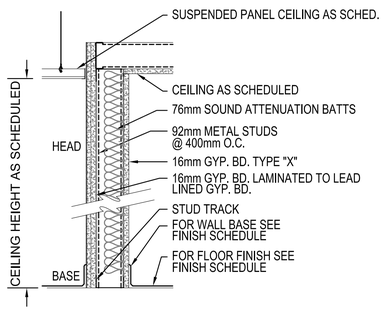

8 TYPE #8 - LEAD LINED PARTITION

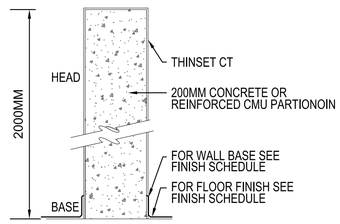

9 TYPE #9 - LOW WALL

1 A-602 PARTITION TYPES
SCALE: 1:10

GENERAL NOTES:

1. REFER TO DRAWING G-003 FOR LOCATION OF FIRE RATED WALLS & FIRE RESISTANT CEILINGS.
2. REFER TO FINISH SCHEDULE FOR LOCATION OF CERAMIC TILE WALL FINISH. AT THESE LOCATION SUBSTITUTE CEMENT BACKER BOARD AND ELASTOMERIC SHEET WATER PROOF MEMBRANE WITH THINSET CERAMIC TILE FOR GYPSUM BOARD AND PAINT FINISH TO C.T. HEIGHT.
3. REFER TO 6/A-501 FOR TYPE 3, 3S, & 5 BRACING DETAIL. INTERMEDIATE HT. BRACING DETAIL FOR FULL HT. WALLS WHERE APPLICABLE.
4. PARTITION TYPES ARE NOT APPLICABLE AT ALL BUILDINGS. SEE FLOOR PLAN & NOTES FOR REQUIRED TYPES
5. SEE COLD FORMED FRAMING NOTES PORTION OF STRUCTURAL DRAWINGS FOR ADDITIONAL INFORMATION

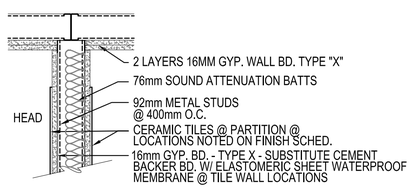

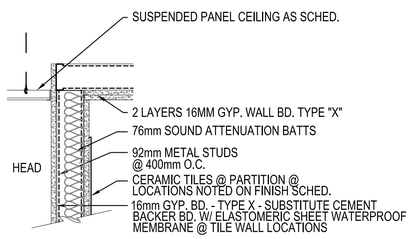

2 A-602 FIRE RESISTANT CEILING CONDITIONS
SCALE: 1:10

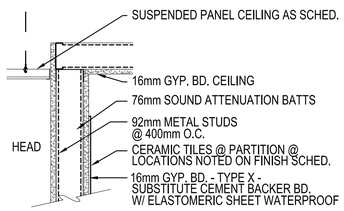

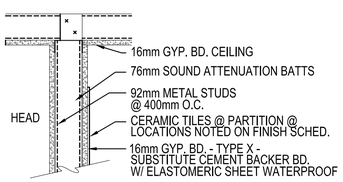

3 A-602 NON-RATED CEILING CONDITIONS
SCALE: 1:10

0 100 200 400
SCALE: 1:10
UNLESS OTHERWISE NOTED,
LINEAR DIMENSIONS
SHOWN ARE IN MILLIMETERS.

COMMONWEALTH OF VIRGINIA
PETER GARRETT SCHMIDT
No. 013167
ARCHITECT

US ARMY CORPS
OF ENGINEERS
AFGHANISTAN NORTH
DISTRICT

SYMBOL	DESCRIPTION	DATE	APPR.	SYMBOL	DESCRIPTION	DATE	APPR.

U.S. ARMY ENGINEER DISTRICT, AFGHANISTAN
CORPS OF ENGINEERS
APO AE 09356

DESIGNED BY: PGS, SE, MR
DWN BY: SE, MDH, AH
CKD BY: PGS, SE, MR
REVIEWED BY:
SUBMITTED BY:
DATE: 3/24/2011
CONTRACT NO. W912ER-09-D-0002
DRAWING CODE:
FILE NAME:
PLOT SCALE: 1:10
PLOT DATE: 3/24/2011
REV: 0

BAKER

SITE ADAPT DESIGN
AD22 - HEADQUARTERS BUILDING - ARCH SPAN
PARTITION TYPES

SHEET REFERENCE NUMBER:
A-602

A1 Size 594mm x 841mm

3/24/2011 12:28 PM

FINISHING SCHEDULE

FLOOR FINISHES

- A) TROWEL FINISHED CONCRETE - BROOM FINISH @ TILE
- B) NON-SLIP EPOXY FINISH
- C) CERAMIC TILE
- D) CONC. SEALER

WALL FINISHES

- A) METAL STUD WALL WITH GYPSUM BOARD OR CEMENT PLASTER
- B) SEMI-GLOSS PAINT
- C) EPOXY PAINT
- D) CERAMIC TILE UP TO 2.2M
- E) CEMENTITIOUS FIREPROOFING - SPRAY ON
- F) POLYURETHANE - SPRAY ON
- G) 5cm SANDWICH PANEL
- H) CONCRETE/CMU

CEILING FINISHES

- A) GYPSUM BOARD
- B) SEMI-GLOSS PAINT
- C) EPOXY PAINT
- D) POLYURETHANE - SPRAY ON
- E) CEMENTITIOUS FIREPROOFING - SPRAY ON
- F) 600mm x 1200mm METAL PANEL CEILING SYSTEM
- G) OPEN "T" GRID CEILING SUSPENSION SYSTEM
- H) EXPOSED ARCH SPAN PANELS

NOTES:

1. PROVIDE CEMENT BACKER BOARD & W.P. MEMBRANE @ ALL CERAMIC TILE WALLS. IN LIEU OF GYPSUM BOARD - MAINTAIN REQUIRED FIRE RATINGS.
2. SPRAY - ON POLYURETHANE AND SPRAY ON CEMENTITIOUS FIRE PROOFING SHALL BE APPLIED TO INTERIOR SURFACES OF ARCH SPAN PANELS, WINDOW, & DOOR ENCLOSURES & CONCRETE CURB/WALLS ONLY.
3. INSTALL 100MM PAINTED WOOD COVE BASE ON ALL PAINTED GYPSUM BOARD/ PLASTER WALLS EXCEPT WHERE CERAMIC TILE IS INDICATED.
4. PAINT WALL SURFACES ABOVE CERAMIC WALL TILE REFER TO REFLECTED CEILING PLAN FOR CEILING HEIGHTS.
5. POLYURETHANE INSULATION SHALL PROVIDE K=600.
6. REFER TO G-003 FOR FIRE RATED WALL & FIRE RESISTANT CEILING LOCATIONS & A-602 FOR DRYWALL CEILING CONSTRUCTION.

ITEM NO.	SPACE NO.	FLOOR FINISHING					WALL FINISHING					Ceiling Finishing					REMARKS
1	100	A	D				A	B				A	B				
2	101	A	D				A	B				F					
3	102	A	D				A	B				F					
4	103	A	D				A	B				F					
5	104	A	D				A	B				F					
6	105	A	D				A	B				F					
7	106	A	D				A	B				F					
8	107	A	D				A	B				F					
9	108	A	D				A	B				A	C				
10	109	A	B				A	D	E			F					PAINT WALL ABOVE TILE
11	109A	A	B				A	B				D	E				
12	110	A	D				A	B				F					
13	111	A	D				A	B				F					
14	112	A	D				A	B				F					
15	113	A	D				A	B				F					
16	114	A	D				A	B				F					
17	115	A	D				A	B				F					
18	116	A	D				A	B				F					
19	117	A	D				A	B				F					
20	118	A	D				A	B				F					
21	118A	A	D				A	B				F					
22																	
23																	
24																	
25																	
26																	
27																	
28																	
29																	
30																	
31																	
32																	
33																	
34																	
35																	
36																	
37																	
38																	
39																	
40																	
41																	
42																	
43																	
44																	
45																	
46																	
47																	
48																	
49																	
50																	

UNLESS OTHERWISE NOTED, LINEAR DIMENSIONS SHOWN ARE IN MILLIMETERS.

COMMONWEALTH OF PENNSYLVANIA
PETER GARRETT SCHMIDT
No. 013167
REGISTERED ARCHITECT

US ARMY CORPS OF ENGINEERS
AFGHANISTAN NORTH DISTRICT

SYMBOL	DESCRIPTION	DATE	APPR.	SYMBOL	DESCRIPTION	DATE	APPR.

DATE: 3/24/2011
REV: 0
CONTRACT NO. W91128-09-D-0002
DRAWING CODE:
FILE NAME:
PLOT SCALE: NONE
PLOT DATE: 3/24/2011

DESIGNED BY: PGS, SE, MR
CKD BY: PGS, SE, MR
DWN BY: SE, MDH, AH
REVIEWED BY:
SUBMITTED BY:
BAKER

U.S. ARMY ENGINEER DISTRICT, AFGHANISTAN
CORPS OF ENGINEERS
APO AE 09356

SITE ADAPT DESIGN
AD22 - HEADQUARTERS BUILDING - ARCH SPAN
FINISH SCHEDULE

SHEET REFERENCE NUMBER:
A-603

A1 Size 594mm x 841mm

3/24/2011 12:28 PM

PLUMBING SYMBOLS AND LEGEND

SYMBOL	ABBREV	DESCRIPTION	SYMBOL	ABBREV	DESCRIPTION	SYMBOL	ABBREV	DESCRIPTION	SYMBOL	ABBREV	DESCRIPTION	SYMBOL	ABBREV	DESCRIPTION
	ABL	ABLUTION		CONT	CONTINUATION		FTG	FOOTING			PRESSURE GAGE W/PET COCK			TEE OUTLET DOWN
	ABV	ABOVE		DFU	DRAINAGE FIXTURE UNIT			GATE VALVE		PRV	PRESSURE REDUCING VALVE		THERM	THERMOMETER W/PET COCK
	AFF	ABOVE FINISHED FLOOR			DIRECTION OF FLOW		GC	GENERAL CONTRACTOR			PRESSURE REGULATING VALVE		TOF	TOP OF FOOTING
	AFR	ABOVE FINISHED ROOF		DN	DOWN			GLOBE VALVE		P&T	PRESSURE & TEMPERATURE		TOP	TOP OF PIPE
	AFG	ABOVE FINISHED GRADE		DWG	DRAWING		HB	HOSE BIBB		PSI	PRESSURE PER SQUARE INCH			TRAP - ELEVATION
		ANGLE GATE - ELEV.			DRAIN VALVE		H OR HW	HOT WATER PIPING			PRESSURE REGULATOR WITH PRESSURE GAUGE			TRAP - PLAN
		ANGLE GATE - PLAN			ELBOW DOWN		HWR	HOT WATER RETURN			PRESSURE & TEMPERATURE RELIEF VALVE		TP	TRAP PRIMER
	BP (ASSE 1013)	BACKFLOW PREVENTER WITH TEST VALVES			ELBOW UP		IE	INVERT ELEVATION			QUICK DISCONNECT		TYP	TYPICAL
		BALL VALVE		EWC	ELECTRIC WATER COOLER		L OR LAV	LAVATORY OR TROUGH		RCP	RECIRCULATING PUMP			UNION
	BLW	BELOW		EWH OR HWH	ELECTRIC WATER HEATER		MAX	MAXIMUM		RH	RELATIVE HUMIDITY			VALVE IN RISE
		BRANCH - BOTTOM CONNECTION		ELEV	ELEVATION		MC				ROOF PENETRATION		V	VENT PIPING
		BRANCH - TOP CONNECTION		ET	EXPANSION TANK		M	METER			SAFETY RELIEF VALVE		VTR	VENT THRU ROOF
		CAP		EX	EXISTING		MM	MINIMUM		S	SINK		VU	VENT UP
		CHECK VALVE		FIN	FINISHED		MIN	MILLIMETER		SS	SANITARY PIPING		W	WATER CLOSET
CO	CO	CLEAN-OUT IN VERTICAL		FC	FIRE PROTECTION CONTRACTOR		MR	MOP RECEPTOR		SH OR SHR	SHOWER		WC	WATER COLUMN
CO	CO	CLEAN-OUT	FD	FD	FLOOR DRAIN W/TRAP		MV	MIXING VALVE		SFU	SUPPLY FIXTURE UNIT		W	WASTE
CO	CO	CLEAN-OUT IN HORIZONTAL			FLEXIBLE PIPING CONNECTION		NC	NORMALLY CLOSED		SQ FT	SQUARE FEET		W/	WITH
	CW	COLD WATER PIPING		FFE	FINISHED FLOOR ELEVATION		NO	NORMALLY OPEN			STRAINER		W/O	WITHOUT
	CONC	CONCRETE		FLR	FLOOR		PC	PLUMBING CONTRACTOR		TE	TOP ELEVATION			
	CONN	CONNECTION		FT	FOOT OR FEET			PLUG VALVE			TEE OUTLET UP			

GENERAL NOTES:

1. DO NOT SCALE DRAWINGS - ALL DIMENSIONS AND CONDITIONS SHALL BE CHECKED AND VERIFIED BY THE CONTRACTOR AT THE SITE.
2. ALL WORK PERFORMED ON THIS BUILDING SHALL BE IN COMPLIANCE WITH ALL PERTINENT CODES, RULES, ORDINANCES AND REGULATIONS OF THE GOVERNING AUTHORITIES.
3. ALL WORK PERFORMED UNDER AND IN CONNECTION WITH THESE DRAWINGS AND SPECIFICATIONS SHALL BE IN STRICT COMPLIANCE WITH THE LATEST SAFETY AND HEALTH STANDARDS.
4. REPORT ANY DISCREPANCIES FOUND IN THE PLUMBING DRAWINGS AND/OR IN THE SPECIFICATIONS DURING THE BIDDING PROCESS FOR CLARIFICATION BY THE ENGINEER.
5. ALL EASTERN STYLE WATER CLOSETS IN THIS FACILITY ARE TO HAVE THE FIXTURE DESIGNATION OF W-1. EACH FIXTURE SHALL HAVE A 25mm COLD WATER MAIN LINE EXTENDED INTO THE STALL AND THEN TEE OFF TO THE 20mm SPIGOT CONNECTION. ALSO PROVIDE A 100mm SANITARY CONNECTION. SEE DETAILS ON DRAWING P502.
6. ALL LAV OR TROUGH FIXTURES IN THIS FACILITY ARE TO HAVE THE FIXTURE DESIGNATION OF L-1. L-1 DESIGNATION REPRESENTS THE NUMBER OF FAUCETS FOR THE TROUGH FIXTURE. EACH FIXTURE SHALL HAVE A 15mm COLD WATER, 15mm HOT WATER CONNECTION AND A 80mm SANITARY CONNECTION.
7. REFER TO SHEET P501 AND P502 FOR DETAILS.
8. ALL WATER, SANITARY AND VENT LINES TO BE EXPOSED. RUN LINES TIGHT TO CEILING AND WALL. ALL EXPOSED WATER, WASTE, AND VENT PIPING, LOCATED IN USER OCCUPIED AREAS, SHALL BE SCHEDULE 40 GALVANIZED STEEL WITH WALL MOUNTING BRACKETS SPACED A MAXIMUM OF 400mm (16") APART TO MINIMIZE VANDALISM.
9. PROVIDE ISOLATION VALVES FOR HOT AND COLD WATER PIPES TO EACH INDIVIDUAL FIXTURE.
10. ALL VENTS THROUGH ROOF SHALL EXTEND A MINIMUM OF 600mm ABOVE FINISHED ROOF. VENT SHALL ALSO EXTEND THRU ROOF AT PEAK OF SPAN.
11. CONTRACTOR TO COORDINATE WATER PIPING MOUNTING LOCATION WITH BOTH MECHANICAL & ELECTRICAL DRAWINGS.
12. PLUMBING CONTRACTOR SHALL COORDINATE PLUMBING WORK WITH THE LOCATIONS OF ALL UTILITIES AT THE SITE PRIOR TO THE START OF ANY PLUMBING WORK.
13. COORDINATE ALL ACCESS PANEL LOCATIONS WITH THE ARCHITECT AND GENERAL CONTRACTOR.
14. ALL SANITARY PIPING BELOW SLAB SHALL BE A MINIMUM OF 50mm, UNLESS OTHERWISE NOTED OR AS REQUIRED BY THE LOCAL AUTHORITY HAVING JURISDICTION.
15. ALL HORIZONTAL SANITARY LINES SHALL BE SLOPED AT 8mm PER 300mm, UNLESS OTHERWISE NOTED OR AS REQUIRED BY THE LOCAL AUTHORITY HAVING JURISDICTION.

UNLESS OTHERWISE NOTED,
LINEAR DIMENSIONS
SHOWN ARE IN MILLIMETERS.

COMMONWEALTH OF PENNSYLVANIA
REGISTERED PROFESSIONAL
MATTHEW R. SOTOSKY
ENGINEER
045576-E

US ARMY CORPS OF ENGINEERS
AFGHANISTAN NORTH DISTRICT

SYMBOL	DESCRIPTION	DATE	APPR.	SYMBOL	DESCRIPTION	DATE	APPR.

DESIGNED BY: RMH
DWN BY: RMH
CKD BY: CJM III
REVIEWED BY:
SUBMITTED BY:
DATE: 3/24/2011
CONTRACT NO. W912ER-09-D-0002
DRAWING CODE:
FILE NAME: (specs\maps\drawings\cad-files)
PLOT SCALE:
PLOT DATE: 3/24/2011
REV. —

BAKER

U.S. ARMY ENGINEER DISTRICT, AFGHANISTAN
CORPS OF ENGINEERS
APO AE 09356

SITE ADAPT DESIGN
AD22 - HEADQUARTERS BUILDING - ARCH SPAN
PLUMBING SYMBOLS AND LEGEND AND GENERAL NOTES

SHEET REFERENCE NUMBER:
P-001

A1 Size 594mm x 841mm

3/24/2011 12:28 PM

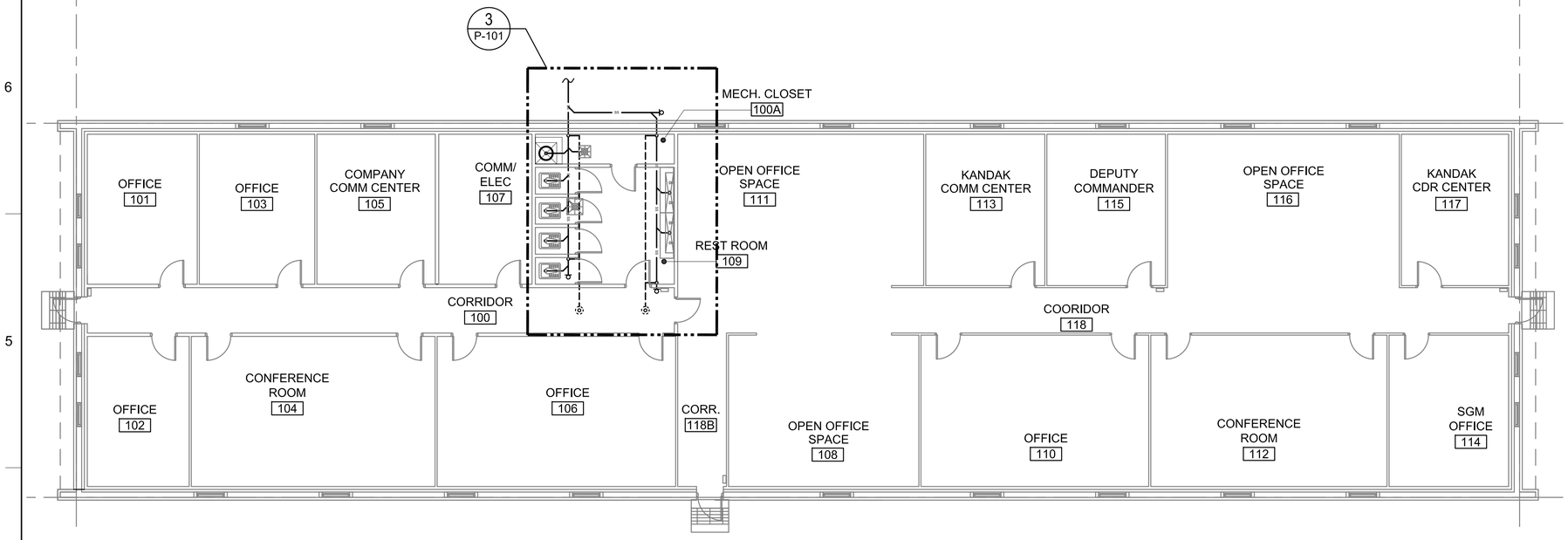

1 P-101 FLOOR PLAN - PLUMBING (SANITARY)
1:100

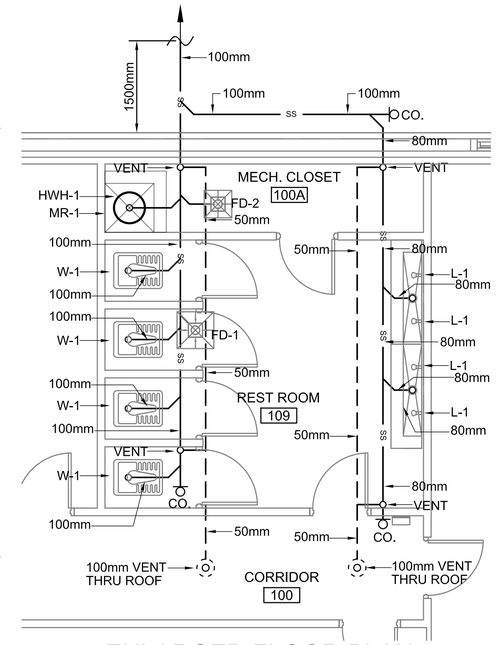

3 P-101 ENLARGED FLOOR PLAN - PLUMBING (SANITARY)
1:50

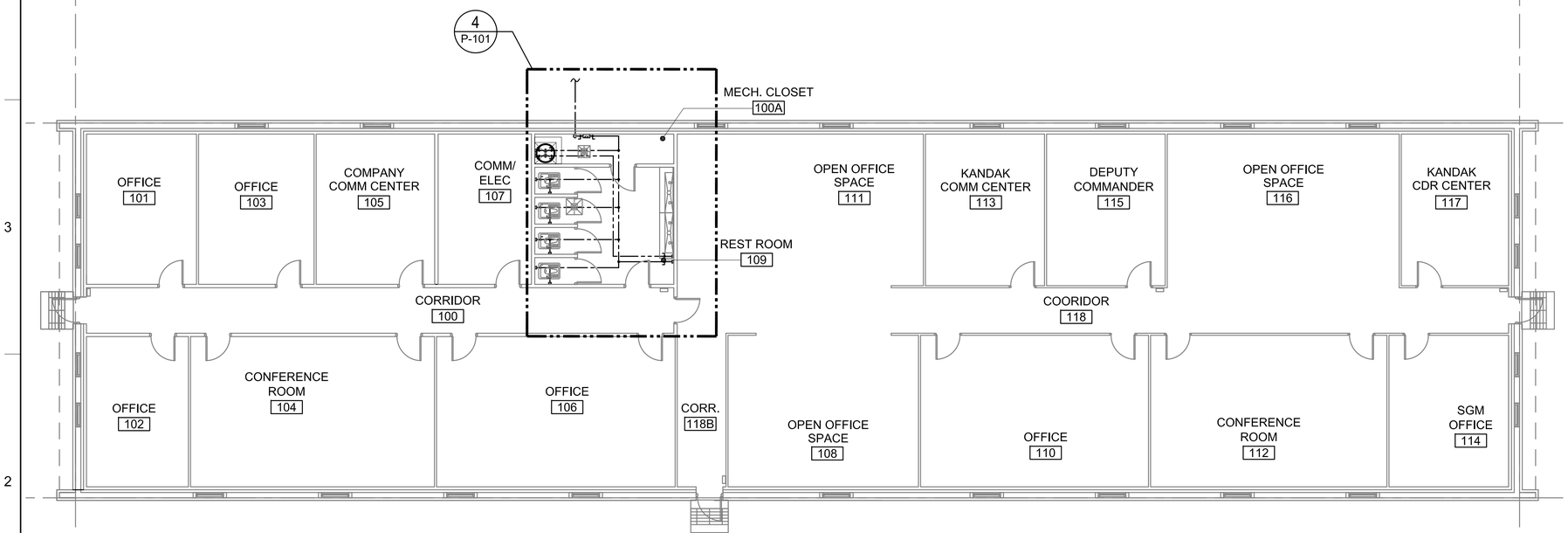

2 P-101 FLOOR PLAN - PLUMBING (WATER)
1:100

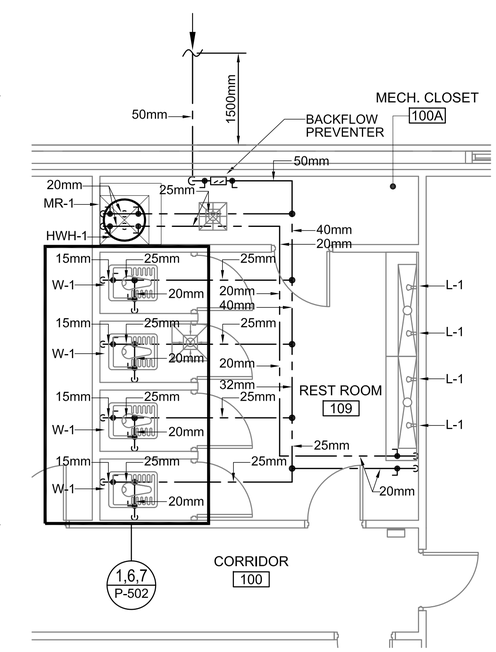

4 P-101 ENLARGED FLOOR PLAN - PLUMBING (WATER)
1:50

N

0 2000 4000
SCALE: 1:100

0 500 1000 2000
SCALE: 1:50

UNLESS OTHERWISE NOTED,
LINEAR DIMENSIONS
SHOWN ARE IN MILLIMETERS.

COMMONWEALTH OF PENNSYLVANIA
REGISTERED PROFESSIONAL
MATTHEW R. SOTOSKY
ENGINEER
045576-E

US ARMY CORPS
OF ENGINEERS
AFGHANISTAN NORTH
DISTRICT

SYMBOL	DESCRIPTION	DATE	APPR.	SYMBOL	DESCRIPTION	DATE	APPR.

DESIGNED BY: RMH
DWN BY: RMH
CKD BY: CJM III
REVIEWED BY:
SUBMITTED BY:
DATE: 3-24-2011
CONTRACT NO. W912ER-09-D-0002
DRAWING CODE:
FILE NAME:
PLOT SCALE:
PLOT DATE: 3/24/2011
REV.

BAKER

U.S. ARMY ENGINEER DISTRICT, AFGHANISTAN
CORPS OF ENGINEERS
APO AE 09356

SITE ADAPT DESIGN

AD22 - HEADQUARTERS BUILDING - ARCH SPAN

FLOOR PLAN - PLUMBING (SANITARY & WATER)
ENLARGED FLOOR PLAN - PLUMBING (SANITARY & WATER)

SHEET
REFERENCE
NUMBER:

P-101

3/24/2011 12:29 PM

A1 Size 594mm x 841mm

PLUMBING FIXTURE LIST SCHEDULE							
TYPE	ITEM	SOIL & WASTE	VENT	COLD WATER	HOT WATER	REMARKS	REMARKS 2
W-1	EASTERN STYLE WATER CLOSET	100mm	50mm	15mm	------	FLUSH TANK	----------
L-1	TROUGH	80mm	40mm	15mm	15mm	FABRICATED IN FIELD	----------
MR-1	MOP RECEPTOR	80mm	---	20mm	20mm	FABRICATED IN FIELD	DRAIN AND CONTROLS
FD-1/FD-2	FLOOR DRAIN	100mm	---	---	---	SLOPE FLOOR TO DRAIN	----------

ELECTRIC WATER HEATER SCHEDULE											
MARK	MANUF	LOCATION	STORAGE (Ltr)	PHYSICAL SIZE	RECOVERY Ltr/H	TEMP RISE °C	SET POINT °C	HOT & COLD CONN	TOTAL KW	VOLTS/ PHASE/ HERTZ	REMARKS
HWH-1	A.O. SMITH	MECH 107	40	1162mm x 521mmØ	132	10	49	25mm HW 25mm CW	6	380/3/50	EXTEND DRAIN LINE FROM T&P VALVE TO NEAREST FLOOR DRAIN

EXPANSION TANK SCHEDULE						
MARK	MANUF	MODEL NO.	LOCATION	STORAGE (Ltr)	OPERATING TEMP. °C	REMARKS
ET-1	AMTROL	ST-5-C	MECH 107	8	49°	

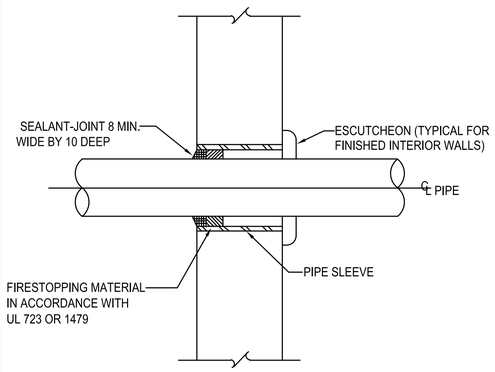

TYPICAL WALL PENETRATION DETAIL 1 P-501
SCALE: NONE

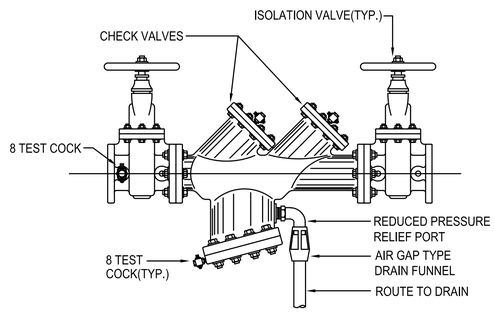

TYPICAL BACKFLOW PREVENTER DETAIL 2 P-501
SCALE: NONE

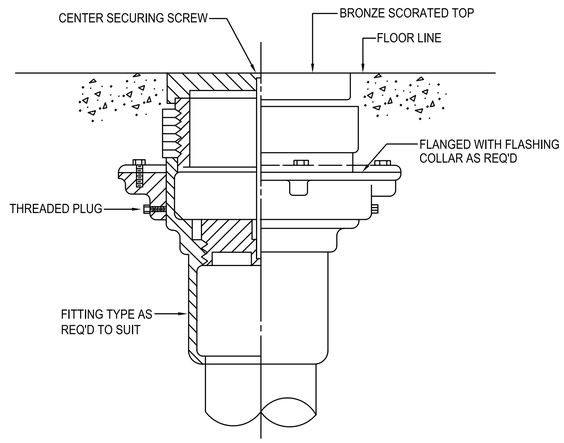

TYPICAL FLOOR CLEANOUT DETAIL 3 P-501
SCALE: NONE

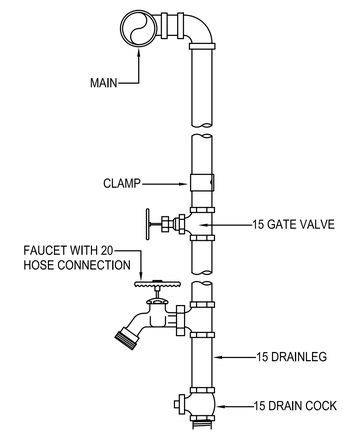

TYPICAL WATER DROP DETAIL 4 P-501
SCALE: NONE

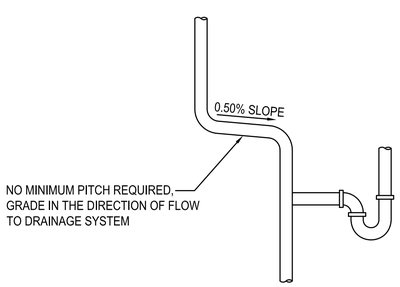

TYPICAL VENT GRADE DETAILS 5 P-501
SCALE: NONE

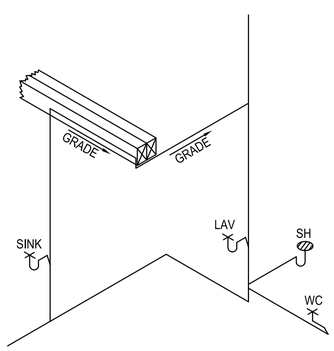

TYPICAL VENT GRADE DETAILS 6 P-501
SCALE: NONE

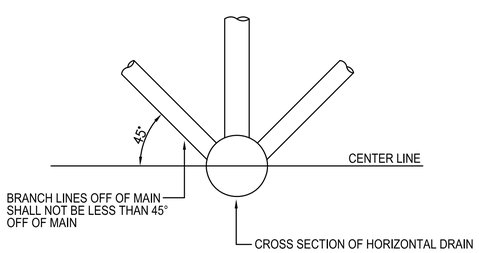

ACCEPTABLE VENT CONNECTIONS TO HORIZONTAL DRAIN - DETAIL 7 P-501
SCALE: NONE

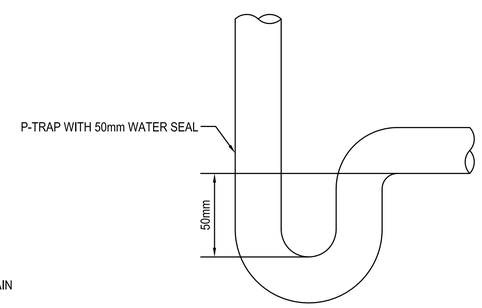

P-TRAP WITH 50mm WATER SEAL DETAIL 8 P-501
SCALE: NONE

UNLESS OTHERWISE NOTED, LINEAR DIMENSIONS SHOWN ARE IN MILLIMETERS.

COMMONWEALTH OF PENNSYLVANIA REGISTERED PROFESSIONAL MATTHEW R. SOTOSKY ENGINEER 045576-E

US ARMY CORPS OF ENGINEERS AFGHANISTAN NORTH DISTRICT

SYMBOL	DESCRIPTION	DATE	APPR.	SYMBOL	DESCRIPTION	DATE	APPR.

DESIGNED BY: RMH
DWN BY: RMH
CKD BY: CJM III
REVIEWED BY:
SUBMITTED BY:
DATE: 3/24/2011
CONTRACT NO. W912ER-09-D-0002
DRAWING CODE:
FILE NAME:
PLOT SCALE:
PLOT DATE: 3/24/2011
REV.

BAKER

U.S. ARMY ENGINEER DISTRICT, AFGHANISTAN CORPS OF ENGINEERS APO AE 09356

SITE ADAPT DESIGN
AD22 - HEADQUARTERS BUILDING - ARCH SPAN
PLUMBING SCHEDULES, NOTES AND DETAILS

SHEET REFERENCE NUMBER:
P-501

3/24/2011 12:29 PM

A1 Size 594mm x 841mm

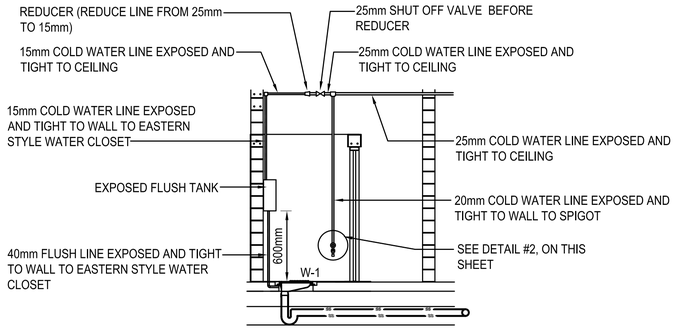

TYPICAL EASTERN STYLE WATER CLOSET SANITARY AND WATER INSTALLATION SCHEMATIC (1 / P-502)

SCALE: NONE

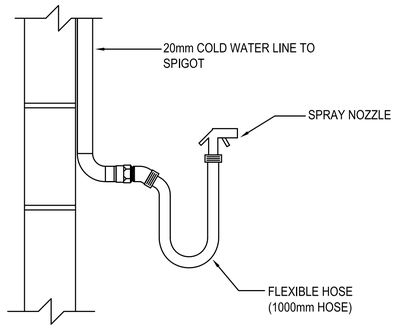

TYPICAL DETAIL - SPIGOT, FLEXIBLE HOSE, AND SPRAY NOZZLE (2 / P-502)

SCALE: NONE

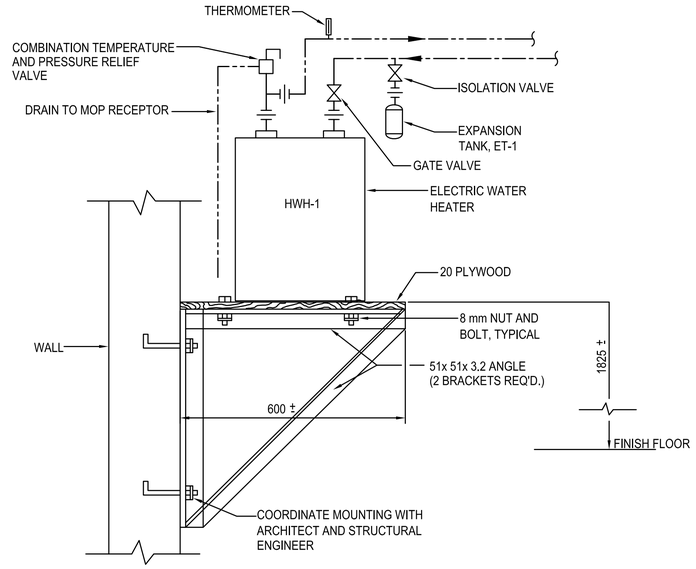

WALL MOUNTED ELECTRIC WATER HEATER SCHEMATIC (3 / P-502)

SCALE: NONE

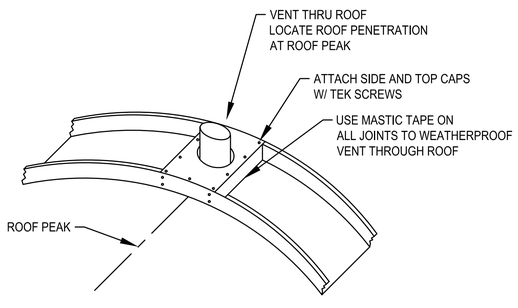

TYPICAL VENT THRU ROOF DETAIL (4 / P-502)

SCALE: NONE

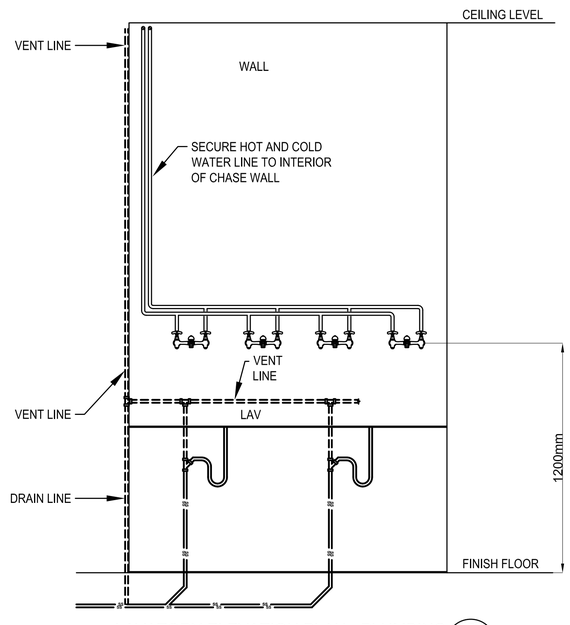

LAVATORY ELEVATION PLAN - PLUMBING (5 / P-502)

SCALE: NONE

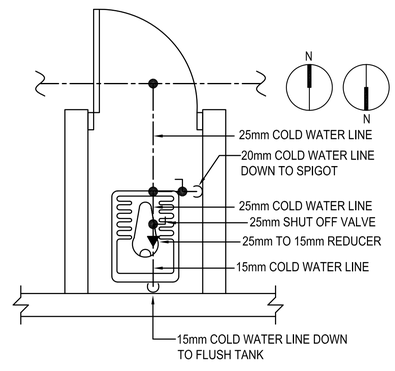

TYPICAL EASTERN STYLE WATER CLOSET WITH SPIGOT WATER PIPING DETAIL (6 / P-502)

SCALE: NONE

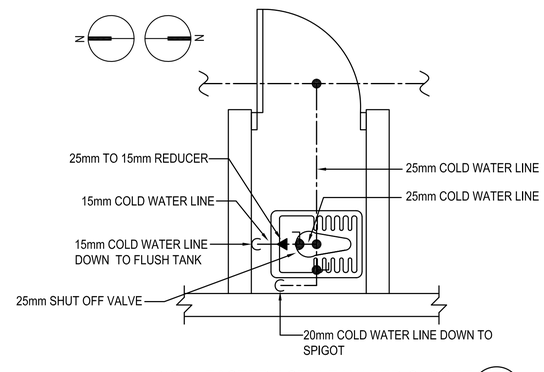

TYPICAL EASTERN STYLE WATER CLOSET WITH SPIGOT WATER PIPING DETAIL (7 / P-502)

SCALE: NONE

UNLESS OTHERWISE NOTED, LINEAR DIMENSIONS SHOWN ARE IN MILLIMETERS.

COMMONWEALTH OF PENNSYLVANIA REGISTERED PROFESSIONAL ENGINEER MATTHEW R. SOTOSKY 045576-E

US ARMY CORPS OF ENGINEERS AFGHANISTAN NORTH DISTRICT

SYMBOL	DESCRIPTION	DATE	APPR.	SYMBOL	DESCRIPTION	DATE	APPR.

DESIGNED BY: RMH
DWN BY: RMH
REVIEWED BY:
SUBMITTED BY:
DATE: 3-24-2011
CONTRACT NO. W912ER-09-D-0002
DRAWING CODE:
FILE NAME:
PLOT SCALE:
PLOT DATE: 3/24/2011
REV.
CKD BY: CJM III

BAKER

U.S. ARMY ENGINEER DISTRICT, AFGHANISTAN CORPS OF ENGINEERS APO AE 09356

SITE ADAPT DESIGN

AD22 - HEADQUARTERS BUILDING - ARCH SPAN

PLUMBING DETAILS

SHEET REFERENCE NUMBER:

P-502

A1 Size 594mm x 841mm

3/24/2011 12:29 PM

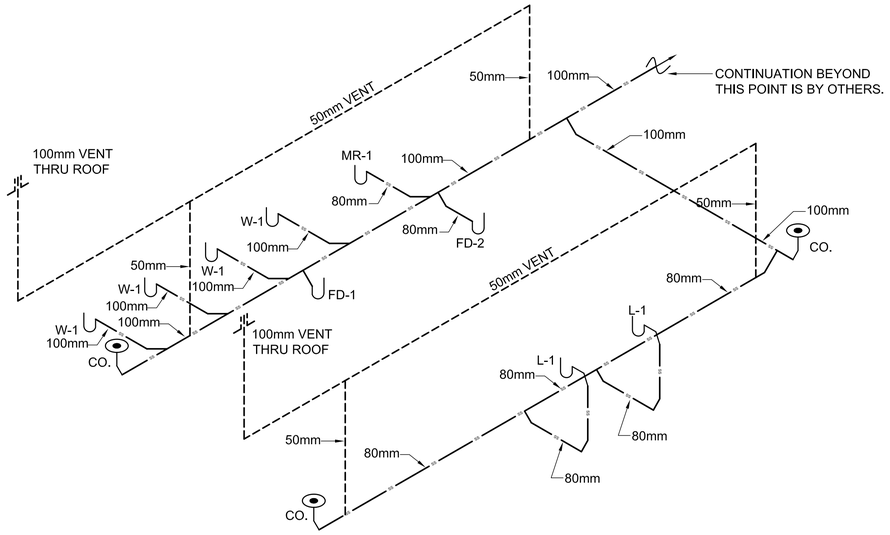

1 P-901 DRAINAGE & VENTING ISOMETRIC

NOT TO SCALE

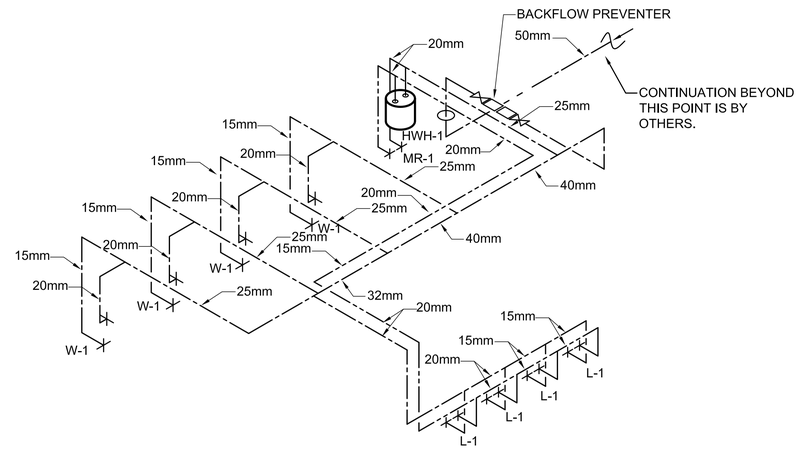

2 P-901 HOT AND COLD WATER PIPING ISOMETRIC

SCALE

UNLESS OTHERWISE NOTED,
LINEAR DIMENSIONS
SHOWN ARE IN MILLIMETERS.

COMMONWEALTH OF PENNSYLVANIA
REGISTERED PROFESSIONAL
MATTHEW R. SOTOSKY
ENGINEER
045576-E

US ARMY CORPS
OF ENGINEERS
AFGHANISTAN NORTH
DISTRICT

SYMBOL	DESCRIPTION	DATE	APPR.	SYMBOL	DESCRIPTION	DATE	APPR.

DESIGNED BY: RMH
DWN BY: RMH
CKD BY: CJM III
REVIEWED BY:
SUBMITTED BY:
DATE: 3/24/2011
REV: ___
CONTRACT NO. W9128F-09-D-0002
DRAWING CODE:
FILE NAME: ___
PLOT SCALE: ___
PLOT DATE: 3/24/2011

BAKER

U.S. ARMY ENGINEER DISTRICT, AFGHANISTAN
CORPS OF ENGINEERS
APO AE 09356

SITE ADAPT DESIGN

AD22 - HEADQUARTERS BUILDING - ARCH SPAN

DRAINAGE AND VENT ISOMETRIC AND
HOT AND COLD WATER PIPING ISOMETRIC

SHEET
REFERENCE
NUMBER:

P-901

3/24/2011 12:29 PM

A1 Size 594mm x 841mm

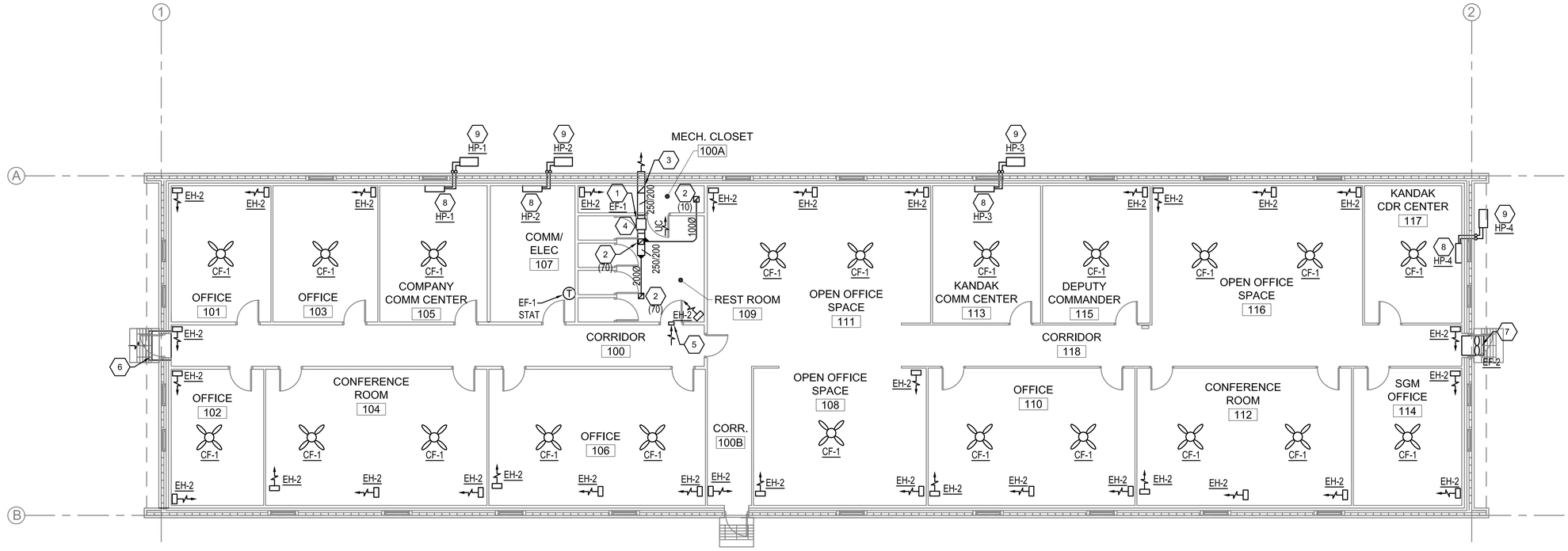

1 M-101 HVAC - FLOOR PLAN

SCALE 1:100

GENERAL NOTES:

1. DO NOT SCALE DRAWINGS - ALL DIMENSIONS AND CONDITIONS SHALL BE CHECKED AND VERIFIED BY THE CONTRACTOR AT THE SITE.
2. ALL WORK PERFORMED ON THIS BUILDING SHALL BE IN COMPLIANCE WITH ALL PERTINENT CODES, RULES, ORDINANCES AND REGULATIONS OF THE GOVERNING AUTHORITIES.
3. ALL WORK PERFORMED UNDER AND IN CONNECTION WITH THESE DRAWINGS AND SPECIFICATIONS SHALL BE IN STRICT COMPLIANCE WITH THE LATEST SAFETY AND HEALTH STANDARDS.
4. COORDINATE ALL EQUIPMENT LOCATIONS WITH EQUIPMENT SHOWN ON OTHER DRAWINGS. VERIFY FINAL LOCATIONS IN FIELD.

SYMBOLS:

- (X) KEY NOTE
- (000) AIR VOLUME IN LITERS PER SECOND (LPS)
- UC DOOR UNDERCUT 25mm
- $ SINGLE POLE SWITCH FOR EXHAUST FAN - 20A RATED
- $3 THREE POLE SWITCH FOR EXHAUST FAN - 20A RATED
- ELECTRIC HEATER
- CEILING FAN
- DIRECTION OF AIR FLOW

ABBREVIATIONS:

AFF	ABOVE FINISH FLOOR
CF	CEILING FANS
LPS	LITERS PER SECOND
EF	EXHAUST FAN
EH	ELECTRIC HEATER
DH	DUCT HEATER
STATS	THERMOSTATS
TYP	TYPICAL

KEY NOTES:

1. INLINE EXHAUST FAN DUCTED TO WALL CAP WITH LOW LEAKAGE GRAVITY BACK-DRAFT DAMPER. SECURE FAN TO CEILING STRUCTURE, LOCATE WALL CAP IN "WINDOW FRAME." BLANK OFF UNUSED FRAME AREA WITH INSULATED SHEET METAL. VERIFY LOCATION WITH ARCHITECTS DRAWINGS.
2. 200x150 (8x6) ALUMINUM CEILING MOUNTED EXHAUST GRILLE WITH ADJUSTABLE OPPOSED BLADE DAMPERS. BALANCE TO LPS IN PARENTHESIS.
3. DROP DUCT DOWN FROM ABOVE CEILING DOWN AND OUT THROUGH WALL. CONNECT TO LOUVER / WALL CAP AS REQUIRED.
4. PROVIDE 600x400 (24x16) CEILING ACCESS PANEL AT EQUIPMENT LOCATED ABOVE CEILING. VERIFY EXACT LOCATIONS IN FIELD.
5. 300x200 (12x8) TRANSFER GRILLE MOUNTED ABOVE DOOR OR HIGH ON WALL WITH WASHABLE FILTER. MOUNT GRILLE 150mm BELOW CEILING.
6. 1050x1350 (41x53) INTAKE LOUVER WITH MOTOR OPERATED DAMPER INTERLOCKED WITH ATTIC FAN. LOUVER LOCATED AS HIGH AS POSSIBLE IN ATTIC SPACE. SEE DETAIL ON SHEET M-501.
7. 787mm (31"sq) WALL MOUNTED ATTIC EXHAUST FAN INTERLOCKED WITH FAN BOX MOUNTED STAT. MOUNT FAN AS HIGH AS POSSIBLE IN ATTIC. SEE DETAIL ON SHEET M-501.
8. HEAT PUMP INDOOR UNIT MOUNTED ON WALL 100mm BELOW CEILING. SEE DETAIL ON SHEET M-501.
9. HEAT PUMP OUTDOOR UNIT MOUNTED ON CONCRETE PAD. SEE DETAIL ON SHEET M-501.

EXHAUST FAN SCHEDULE

NO.	TYPE	FLOW RATE (LPS)	DRIVE	HP	SP mmH20	ELECTRICAL DATA	SWITCH
EF-1	INLINE	150	DIRECT	1/4	10	220/1/50	W/ LIGHTS
EF-2	PROP	1390	DIRECT	3/4	13	220/1/50	W/ STAT

NOTES:
1. FAN OUTLETS SHALL HAVE LOW LEAKAGE GRAVITY LOUVER.
2. PROVIDE FANS WITH UNIT MOUNTED DISCONNECT SWITCH.

ELECTRIC UNIT HEATER SCHEDULE

NO.	FLOW RATE (LPS)	CAPACITY (KW)	F.A.T. (°C)	ELECT. CHAR.	MOUNTING
EH-2	200	2	38	220/1/50	SEE DETAIL

NOTES:
1. PROVIDE UNIT MOUNTED DISCONNECT SWITCH.
2. PROVIDE TAMPER RESISTANT UNIT MOUNTED THERMOSTAT.

CEILING FAN

NO.	BLADE SIZE mm	BLADE SIZE IN	VOLTAGE	SWITCH	REMARKS
CF-1	1320	52	220/1/50	@ WALL	3 SPEED REVERSIBLE MOTOR

NOTES:
1. IF FANS ARE TO BE INSTALLED IN AN AREA WITHOUT A CEILING, PROVIDE EXTENSION DOWN RODS FROM ARCH-SPAN TABS, BRACE / GUY FAN AS REQUIRED AND INSTALL FANS 2.5M AFF. IF FANS ARE TO BE MOUNTED IN AREA WITH A CEILING GRID OR HARD CEILING, MOUNT PER MANUFACTURERS RECOMMENDATIONS. SEE ELECTRICAL DRAWINGS FOR MOUNTING OPTIONS.
2. PROVIDE WITHOUT LIGHT FIXTURE.
3. PROVIDE WITH REMOTE MOUNTED ON-OFF SWITCH. SWITCHES ARE SHOWN ON ELECTRICAL DRAWINGS.
4. COORDINATE CEILING FANS WITH LIGHTS, IN GENERAL FANS SHALL BE CENTERED BETWEEN LIGHTS WHEN POSSIBLE.

SPLIT SYSTEM HEAT PUMP UNIT SCHEDULE

INDOOR UNIT

	CMS	COOLING COIL DATA E.A.T. °C DB	WB	kW	EER	HEATING kW	ELECT. CHAR.	FLA AMP.	FUSE RATING	WEIGHT (kg)
HP-1	0.213	35	21	4.95	2.81	4.30	220/1/50	0.30	6	16
HP-2	0.175	35	21	2.5	3.25	2.62	220/1/50	0.22	6	9
HP-3	0.175	35	21	3.35	3.01	3.00	220/1/50	0.22	6	9
HP-4	0.213	35	21	4.95	2.81	4.30	220/1/50	0.30	6	16

OUTDOOR UNIT

	ELECTRICAL CHAR.	STARTING CURRENT (AMP)	RUNNING CURRENT HEAT/COOL	FUSE RATING	SYSTEM POWER INPUT (kW) HEAT/COOL	WEIGHT (kg)
HP-1	220/1/50	37	7.23/7.93	16	0.905/0.904	47
HP-2	220/1/50	4.2	4.2/3.7	16	0.801/0.616	25
HP-3	220/1/50	5.3	4.8/5.3	16	0.801/0.616	25
HP-4	220/1/50	37	7.23/7.93	16	0.905/0.904	47

NOTES:
1. HEAT PUMP INDOOR UNITS SHALL HAVE INTEGRAL T-STATS.
2. PROVIDE HEAT PUMPS WITH LOW AMBIENT KITS.
3. HEAT PUMP SHALL BE CAPABLE OF PROVIDING HEAT DOWN TO -18°C (0°F)

N

0 2000 4000

SCALE: 1:100

UNLESS OTHERWISE NOTED, LINEAR DIMENSIONS SHOWN ARE IN MILLIMETERS.

COMMONWEALTH OF PENNSYLVANIA
REGISTERED PROFESSIONAL ENGINEER
MATTHEW R. SOTOSKY
045576-E

US ARMY CORPS OF ENGINEERS
AFGHANISTAN NORTH DISTRICT

SYMBOL	DESCRIPTION	DATE	APPR.	SYMBOL	DESCRIPTION	DATE	APPR.

U.S. ARMY ENGINEER DISTRICT, AFGHANISTAN
CORPS OF ENGINEERS
APO AE 09356

DESIGNED BY: RML
DWN BY: JJN
CKD BY: CJM
REVIEWED BY: JH
SUBMITTED BY:
DATE: 3/24/2011
CONTRACT NO. W912ER-09-D-0002
DRAWING CODE:
REV: 0
FILE NAME:
PLOT SCALE: 1:100
PLOT DATE: 3/24/2011

BAKER

SITE ADAPT DESIGN

AD22 - HEADQUARTERS BUILDING - ARCH SPAN

HVAC - FLOOR PLAN AND SCHEDULES

SHEET REFERENCE NUMBER:

M-101

A1 Size 594mm x 841mm

3/24/2011 12:29 PM

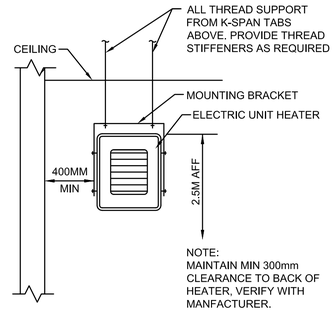

ELECTRIC UNIT HEATER MOUNTING DETAIL

1 / M-501

SCALE: N.T.S.

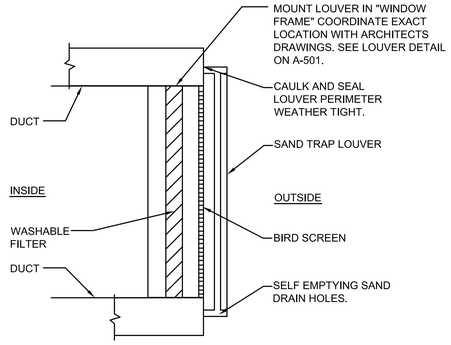

FILTERED SAND TRAP LOUVER

2 / M-501

SCALE: N.T.S.

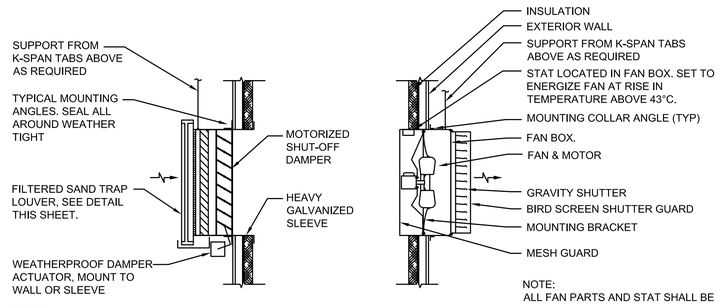

NOTE:
ALL COMPONENTS SHALL BE REMOVABLE & ACCESSIBLE THROUGH REMOVABLE SAND LOUVER

NOTE:
ALL FAN PARTS AND STAT SHALL BE REMOVABLE & ACCESSIBLE FROM OUTSIDE THROUGH FAN BOX.

ATTIC VENTILATION SYSTEM DETAIL

3 / M-501

SCALE: N.T.S.

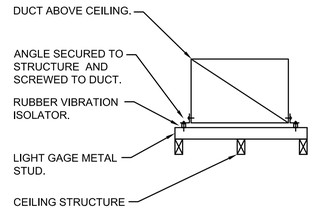

DUCT SUPPORT DETAIL

4 / M-501

SCALE: N.T.S.

INLINE FAN SUPPORT DETAIL

5 / M-501

SCALE: N.T.S.

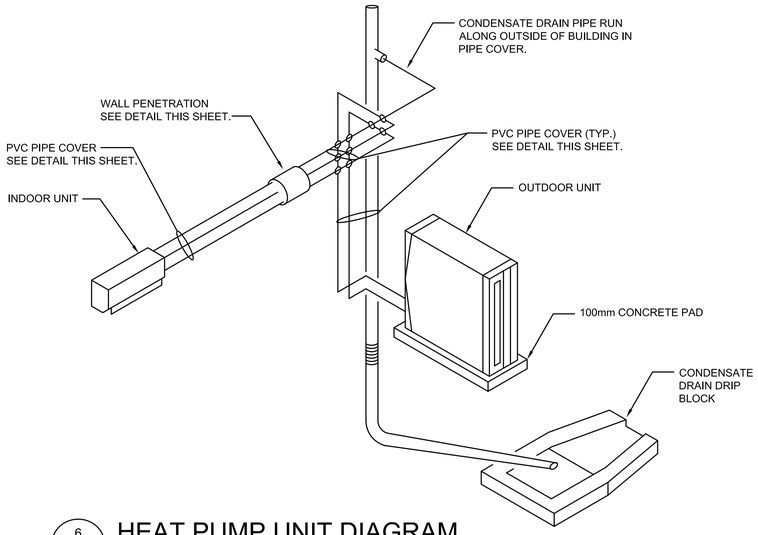

HEAT PUMP UNIT DIAGRAM

6 / M-501

SCALE: N.T.S.

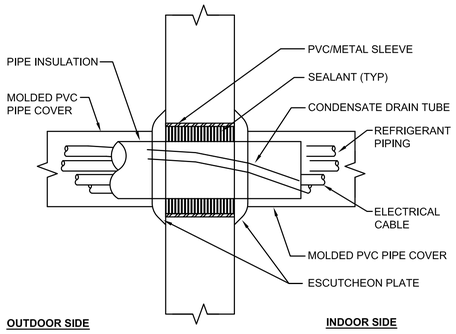

NOTE:
DRILL HOLE AT WALL SO THAT THE OUTER EDGE IS LOWER TO ALLOW CONDENSATE TO FLOW OUTWARD.

WALL PENETRATION DETAIL

7 / M-501

SCALE: N.T.S.

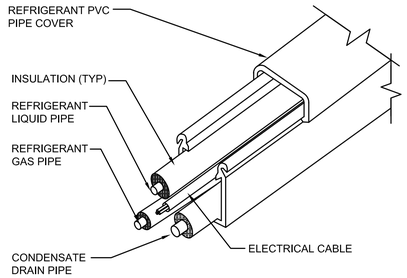

PVC PIPE COVER DETAIL

8 / M-501

SCALE: N.T.S.

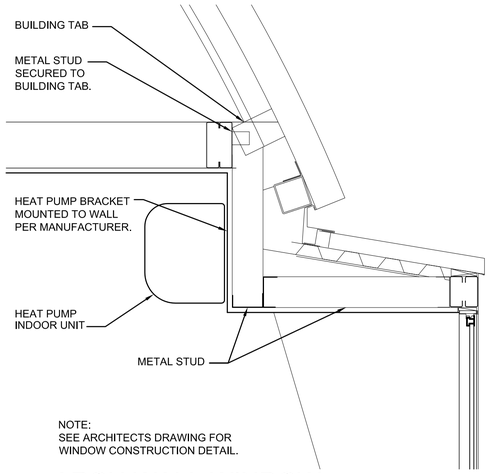

NOTE:
SEE ARCHITECTS DRAWING FOR WINDOW CONSTRUCTION DETAIL.

ARCH WALL WINDOW HEAT PUMP MOUNTING DETAIL

9 / M-501

SCALE: N.T.S.

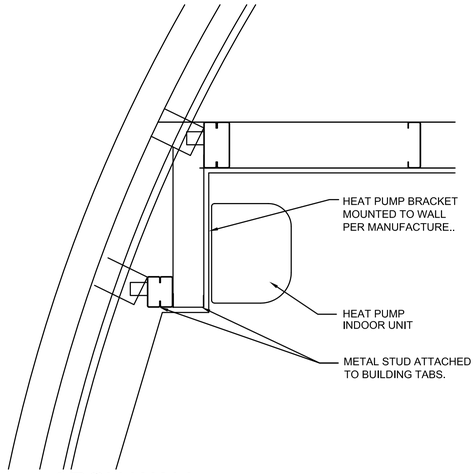

ARCH WALL HEAT PUMP MOUNTING DETAIL

10 / M-501

SCALE: N.T.S.

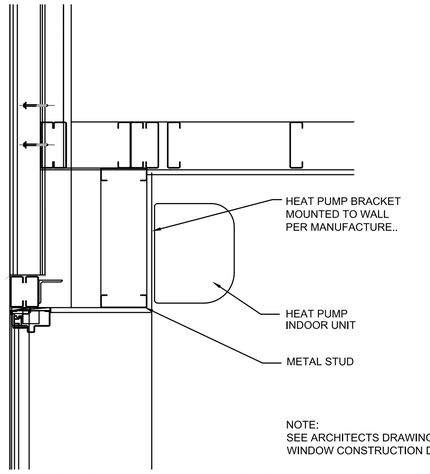

NOTE:
SEE ARCHITECTS DRAWING FOR WINDOW CONSTRUCTION DETAIL.

END WALL WINDOW HEAT PUMP MOUNTING DETAIL

11 / M-501

SCALE: N.T.S.

UNLESS OTHERWISE NOTED, LINEAR DIMENSIONS SHOWN ARE IN MILLIMETERS.

COMMONWEALTH OF PENNSYLVANIA
REGISTERED PROFESSIONAL
MATTHEW R. SOTOSKY
ENGINEER
045576-E

US ARMY CORPS OF ENGINEERS
AFGHANISTAN NORTH DISTRICT

SYMBOL	DESCRIPTION	DATE	APPR.	SYMBOL	DESCRIPTION	DATE	APPR.

DESIGNED BY: RML
DWN BY: JJN
CKD BY: CJM
REVIEWED BY: JH
SUBMITTED BY:
DATE: 3/24/2011
CONTRACT NO. W912ER-09-D-0002
DRAWING CODE:
FILE NAME:
PLOT SCALE: 1:100
PLOT DATE: 3/24/2011
REV: 0

BAKER

U.S. ARMY ENGINEER DISTRICT, AFGHANISTAN
CORPS OF ENGINEERS
APO AE 09356

SITE ADAPT DESIGN
AD22 - HEADQUARTERS BUILDING - ARCH SPAN
HVAC - DETAILS

SHEET REFERENCE NUMBER:
M-501

3/24/2011 12:29 PM

A1 Size 594mm x 841mm

POWER

- DISTRIBUTION PANELBOARD
- NEW PANELBOARD - SURFACE
- NEW PANELBOARD - RECESSED
- GENERATOR
- TRANSFORMER (DRAWN TO SIZE)
- JUNCTION BOX
- JUNCTION BOX - CEILING
- FUSIBLE SAFETY SWITCH
- MOTOR
- MOTOR STARTING SWITCH - 220V, 20A RATED UNLESS OTHERWISE NOTED
- ELECTRIC WATER HEATER
- CEILING FAN - REFER TO SPECIFICATION SECTION 26 20 00

RECEPTACLES

- DUPLEX 20A TYPE CEE 7/7 "SCHUKO STYLE" UNSWITCHED RECEPTACLE
- GF — DUPLEX 20A TYPE CEE 7/7 "SCHUKO STYLE" UNSWITCHED RECEPTACLES - 10mA GROUND FAULT INTERRUPTER TYPE
- WP — DUPLEX 20A TYPE CEE 7/7 "SCHUKO STYLE" UNSWITCHED TYPE WITH WEATHERPROOF COVER - 10mA GROUND FAULT INTERRUPTER TYPE
- EXP — DUPLEX 20A TYPE CEE 7/7 "SCHUKO STYLE" UNSWITCHED RECEPTACLES - EXPLOSION PROOF
- * INDICATES MOUNT DEVICE ABOVE COUNTERTOP OR AT 1070mm ABOVE FINISHED FLOOR WHERE NO COUNTER IS TO BE INSTALLED.

SOME OF THESE SYMBOLS MAY NOT BE USED UNDER THIS PROJECT. SEE THE GENERAL PROJECT NOTES FOR ADDITIONAL REQUIREMENTS.

LIGHTNING PROTECTION

- AIR TERMINAL 20mm O.D. X 450mm SOLID COPPER, NICKEL PLATED ON ADHESIVE BASE
- EQ — EQUIPMENT AIR TERMINAL
- TEST WELL WITH GROUND ROD(S)
- GROUND ROD
- G — GROUND PLATE
- G — MAIN GROUND CONDUCTER CONCEALED WITHIN CONSTRUCTION
- G — MAIN GROUND CONDUCTOR EXPOSED ON EXPOSED ON BUILDING EXTERIOR SURFACE
- G — GROUND CONDUCTOR CAD WELDED TO GROUND CABLE OR EQUIPMENT
- G — GROUND ROD TRIPOD, SPACED 3 METERS APART.
- LEVEL TO LEVEL CABLE

LIGHTING

- LIGHTING FIXTURE - SEE FIXTURE SCHEDULE FOR MORE INFORMATION
- EMERGENCY LIGHTING FIXTURE - SEE FIXTURE SCHEDULE FOR MORE INFORMATION
- DOWNLIGHT
- LIGHTING FIXTURE ON NORMAL/EMERGENCY
- WALL MOUNTED LIGHT FIXTURE
- E — EXIT SIGN - DIRECTIONAL ARROWS AS INDICATED ON DRAWINGS
- REMOTE HEAD FOR BATTERY PACK
- $ — SINGLE POLE SWITCH - 20A RATED
- $3 — 3-WAY SWITCH - 20A RATED
- $4 — 4-WAY SWITCH - 20A RATED
- J — LIGHTING CONTACTOR
- POLE MOUNTED SITE LIGHTING FIXTURE- NUMBER OF FIXTURES PER POLE AS INDICATED ON DRAWINGS
- EXTERIOR DIRECTIONAL LIGHTING FIXTURE
- a — SMALL CASE LETTERS REPRESENTS LAMP(S) / SWITCHES.

TELECOMMUNICATIONS

- ▼ TELEPHONE OUTLET(S) @ 45cm AFF. U.N.O. WITH 20mm RACEWAY TERMINATED TO TELEDATA TERMINAL BOARD.
- ▽ DATA OUTLET(S) @ 45cm AFF. U.N.O. WITH 20mm RACEWAY TERMINATED TO TELEDATA TERMINAL BOARD.

TELECOMMUNICATIONS (CONTINUED)

- 21.25 ▼ COMBINATION TELEPHONE/DATA OUTLET(S) @ 45cm AFF. U.N.O. WITH 27mm RACEWAY TERMINATED TO TELEDATA TERMINAL BOARD.
- " ▼ WALL MTD. TELEPHONE OUTLET WITH 20mm RACEWAY TO TELEDATA TERMINAL BOARD.
- (x)T — INDICATES NUMBER OF TELEPHONE OUTLET(S) AND ASSOCIATED CABLING
- (x)D — INDICATES NUMBER OF DATA OUTLET(S) AND ASSOCIATED CABLING
- (x)TF — INDICATES NUMBER OF TELEPHONE OUTLETS AND ASSOCIATED CABLING WITH 1 OUTLET AND CABLE DEDICATED FOR FAX

SINGLE LINE SYMBOLS

- SWITCH
- BREAKER
- FUSE
- TRANSFORMER
- GROUND
- CONTACT (NORMALLY OPEN)
- CONTACT (NORMALLY CLOSED)
- TRANSFER SWITCH
- CURRENT TRANSFORMER
- INDICATES NEW ELECTRICAL EQUIPMENT
- INDICATES NEW CONTROL WIRING AND CONDUIT
- EQUIPMENT OUTLINE

MISCELLANEOUS

- BRANCH CIRCUIT WIRING, SURFACE MOUNTED ON WALLS
- BRANCH CIRCUIT WIRING - 6mm²
- BRANCH CIRCUIT WIRING - UNDER FLOOR
- HOME RUN BACK TO PANEL
- CONDUIT TURNED DOWN
- CONDUIT TURNED UP
- LV — LOW VOLTAGE WIRING AND CONDUIT
- ~ INDICATES CONTINUATION OF LINE

FIRE ALARM

- FACP — FIRE ALARM CONTROL PANEL WITH BATTERY BACKUP
- F — FIRE ALARM PULL STATION

FIRE ALARM (CONTINUED)

- F — FIRE ALARM STROBE - WALL MOUNTED
- F — FIRE ALARM AUDIBLE/STROBE - WALL MOUNTED
- F — FIRE ALARM HORN/STROBE - WALL MOUNTED
- S — SMOKE DETECTOR
- H — HEAT DETECTOR CEILING MOUNTED
- D — DUCT DETECTOR - PROVIDED BY EC, INSTALLED BY MC AND CONNECTED BY EC
- FS — FIRE ALARM SPEAKER AND VISIBLE CEILING MOUNTED

DENOTATIONS & ABBREVIATIONS

AFF	ABOVE FINISHED FLOOR
C	CEILING MOUNTED
E	EMERGENCY
EC	ELECTRICAL CONTRACTOR
EPO	EMERGENCY POWER OFF
EXP	EXPLOSION PROOF
F	FIRE ALARM
FF	FLUSH FLOOR MOUNTED
FL	FLUORESCENT
FO	FIBER OPTIC
FSS	FUSED SAFETY SWITCH
GF	GROUND FAULT INTERRUPTER
GC	GENERAL CONTRACTOR
IG	ISOLATED GROUND
K	KEY
LV	LOW VOLTAGE
M	MOTOR
MC	MECHANICAL CONTRACTOR
NE	NORMAL/EMERGENCY
NFSS	NON-FUSED SAFETY SWITCH
PA	PAGING SYSTEM
PLC	PLUMBING CONTRACTOR
SL	SINGLE LINE
T	TELEPHONE

DENOTATIONS & ABBREVIATIONS (CONT.)

TP	TAMPER PROOF
UE	UNDERGROUND ELECTRIC
W	WALL MOUNTED
WP	WEATHERPROOF WITH GROUND FAULT INTERRUPTION
WT	WATER TIGHT

GENERAL PROJECT NOTES:

G1. UNLESS OTHERWISE NOTED, PROVIDE ALL EQUIPMENT SHOWN ON THE PLANS. THE ELECTRICAL CONTRACTOR SHALL COORDINATE ALL SYMBOLS SHOWN ON THE PLANS WITH THE SYMBOL LIST. IT SHALL BE THE RESPONSIBILITY OF THE CONTRACTOR TO VERIFY THE INTENT OF ANY SYMBOL THAT IS SHOWN ON THE PLANS AND NOT INDICATED ON THE SYMBOL LIST WITH THE ENGINEER PRIOR TO BID.

G2. THE CONTRACTOR SHALL VERIFY THE LOCATION OF ALL UNDERGROUND UTILITIES WITHIN THE CONSTRUCTION AREA THREE (3) WORKING DAYS NOTICE BEFORE COMMENCING DIGGING. NOTIFY THE LOCAL AUTHORITY HAVING JURISDICTION AND WAIT THE REQUIRED TIME BEFORE COMMENCING TO DIG.

G3. THE CONTRACTOR SHALL COORDINATE CONDUIT RUNS, LIGHTING FIXTURES AND OTHER EQUIPMENT LOCATIONS WITH THE OTHER TRADE CONTRACTORS TO AVOID CONFLICTS.

G4. WHERE VOLTAGES AND FREQUENCIES ON THE DRAWINGS AND IN THE SPECIFICATIONS DIFFER FROM THE LOCAL ONES, ALL WORK SHALL BE PERFORMED USING THE LOCAL VOLTAGES AND FREQUENCIES.

G5. THE MINIMUM WIRE SIZE ON THE PROJECT SHALL BE 2.5mm². THE MINIMUM CONDUIT SIZE SHALL BE 20mm. THE MINIMUM BREAKER SIZE SHALL BE 15 AMPS.

G6. THE CONTRACTOR SHALL PUT A MAXIMUM OF 6 DUPLEX RECEPTACLES ON A 20A SINGLE POLE CIRCUIT.

G7. WHERE THE 1010 SCOPE REVIEW, 1015 TECHNICAL REVIEW, DRAWINGS, AND SPECIFICATIONS DIFFER FROM AMERICAN CODES OR STANDARDS, THE 1010, 1015, DRAWINGS, AND SPECIFICATIONS SHALL RULE.

G8. ALL CONDUIT AND DEVICES SHALL BE SURFACE MOUNTED UNLESS OTHERWISE INDICATED.

G9. CONTRACTOR SHALL COORDINATE ALL WORK WITH ALL OTHER TRADES TO ENSURE ALL WORK IS COMPLETED IN A PROFESSIONAL, WORKMAN-LIKE MANNER.

UNLESS OTHERWISE NOTED, LINEAR DIMENSIONS SHOWN ARE IN MILLIMETERS.

COMMONWEALTH OF PENNSYLVANIA REGISTERED PROFESSIONAL ENGINEER JOSEPH R. GAUS PE-074281

US ARMY CORPS OF ENGINEERS AFGHANISTAN NORTH DISTRICT

SYMBOL	DESCRIPTION	DATE	APPR.	SYMBOL	DESCRIPTION	DATE	APPR.

DESIGNED BY: DWN BY: CKD BY: REVIEWED BY: SUBMITTED BY:

DATE: 3/24/2011 REV: ___
CONTRACT NO. W912ER-09-D-0002
DRAWING CODE: ___
FILE NAME: ___
PLOT SCALE: ___
PLOT DATE: 3/24/2011

BAKER

U.S. ARMY ENGINEER DISTRICT, AFGHANISTAN
CORPS OF ENGINEERS
APO AE 09356

SITE ADAPT DESIGN
AD22 - HEADQUARTERS BUILDING - ARCH SPAN
ABBREVIATIONS, SYMBOLS AND GENERAL NOTES

SHEET REFERENCE NUMBER:
E-001

3/24/2011 4:17 PM

A1 Size 594mm x 841mm

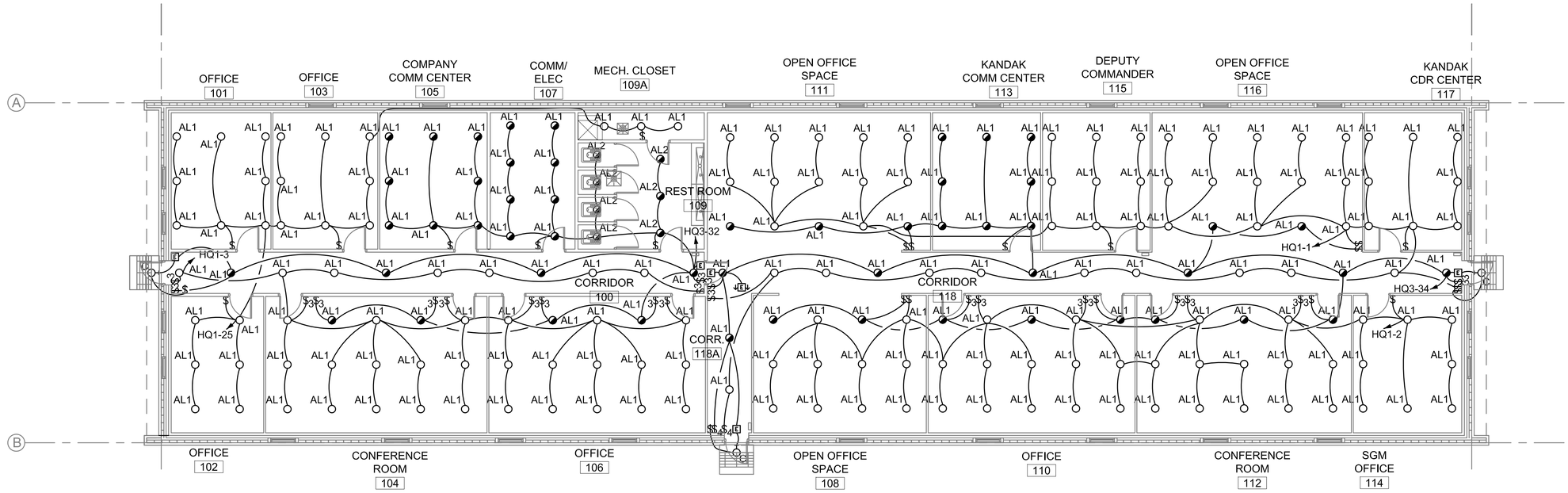

1 / E-101 ELECTRICAL LIGHTING PLAN

SCALE 1:100

GENERAL NOTES:

1. REFER TO DRAWING #E-001 FOR THE ELECTRICAL SYMBOLS LIST.
2. REFER TO DRAWING #E-601 FOR THE LIGHTING FIXTURE SCHEDULE.
3. REFER TO DRAWING #E-602 FOR PANEL SCHEDULES.
4. LIGHT FIXTURES INDICATED AS EMERGENCY SHALL BE PROVIDED WITH A BATTERY BACKUP BALLAST.
5. LIGHT SWITCHES AND CEILING FAN SWITCHES SHALL BE GANGED IN THE SAME FACEPLATE AT ROOM ENTRANCES.
6. CIRCUITS SHOWN INCLUDE ONE PHASE CONDUCTOR, ONE NEUTRAL, AND ONE EQUIPMENT GROUND CONDUCTOR UNLESS OTHERWISE SHOWN. THE CONDUCTOR SIZE SHALL BE 2.5mm² UNLESS INDICATED OTHERWISE ON THE PANEL SCHEDULE.

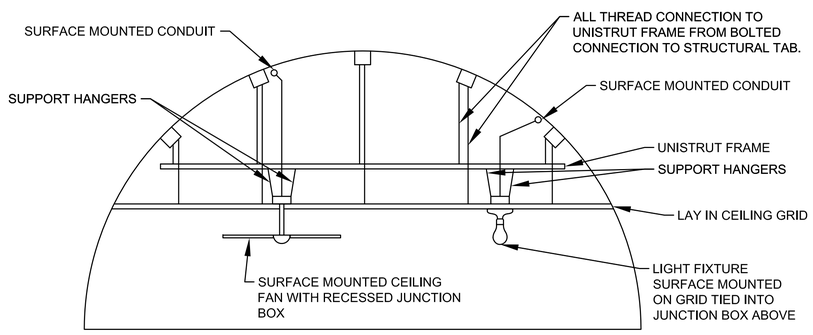

2 / E-101 CEILING GRID MOUNTING DETAIL

NOT TO SCALE

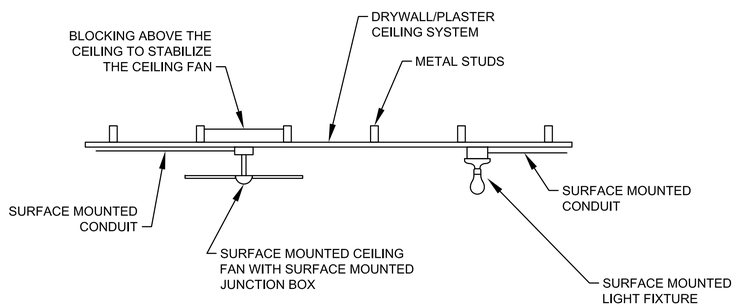

3 / E-101 NON-OPEN BAY MOUNTING DETAIL

NOT TO SCALE

N

0 2000 4000

SCALE: 1:100

UNLESS OTHERWISE NOTED, LINEAR DIMENSIONS SHOWN ARE IN MILLIMETERS.

COMMONWEALTH OF PENNSYLVANIA REGISTERED PROFESSIONAL ENGINEER JOSEPH R. GAUS PE-074261

US ARMY CORPS OF ENGINEERS AFGHANISTAN NORTH DISTRICT

SYMBOL	DESCRIPTION	DATE	APPR.	SYMBOL	DESCRIPTION	DATE	APPR.

U.S. ARMY ENGINEER DISTRICT, AFGHANISTAN
CORPS OF ENGINEERS
APO AE 09356

DESIGNED BY: DWN BY: CKD BY: REVIEWED BY: SUBMITTED BY:

DATE: 4-25-2011 REV: —
CONTRACT NO. W912ER-09-D-0002
DRAWING CODE:
FILE NAME:
PLOT SCALE:
PLOT DATE: 4/25/2011

BAKER

SITE ADAPT DESIGN

AD22 - HEADQUARTERS BUILDING - ARCH SPAN

ELECTRICAL LIGHTING PLAN

SHEET REFERENCE NUMBER:

E-101

A1 Size 594mm x 841mm

4/25/2011 4:33 PM

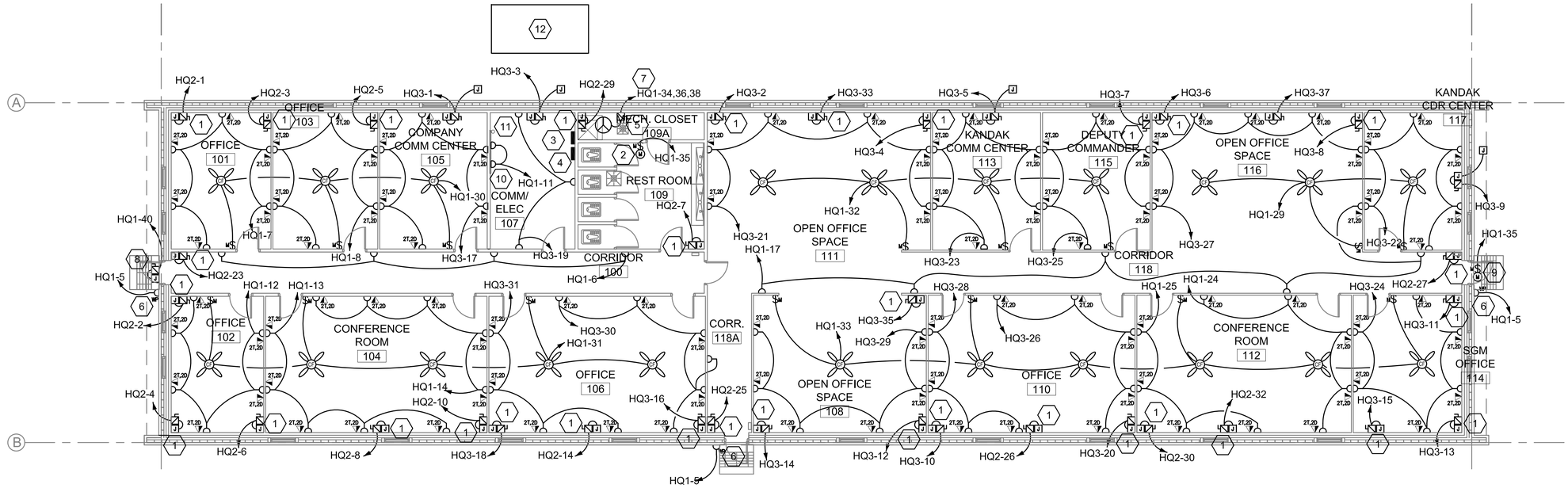

1 / E-101

ELECTRICAL POWER AND SYSTEMS PLAN

SCALE 1:100

GENERAL NOTES:

1. REFER TO DRAWING #E-001 FOR THE ELECTRICAL SYMBOLS LIST.
2. REFER TO DRAWING #E-501 FOR THE POWER RISER DIAGRAM.
3. REFER TO DRAWING #E602 FOR ELECTRICAL PANEL SCHEDULES.
4. COORDINATE EXACT MOUNTING LOCATION OF DISCONNECTING MEANS FOR MECHANICAL AND PLUMBING EQUIPMENT IN THE FIELD.
5. FUSIBLE SAFETY SWITCHES THAT ARE NOT OTHERWISE IDENTIFIED SHALL BE 380V, IP, 30A FUSED SAFETY SWITCHES WITH 20A FUSES.
6. LIGHT SWITCHES AND CEILING FAN SWITCHES SHALL BE GANGED IN THE SAME FACEPLATE AT ROOM ENTRANCES.
7. CIRCUITS SHOWN INCLUDE ONE PHASE CONDUCTOR, ONE NEUTRAL, AND ONE EQUIPMENT GROUND CONDUCTOR UNLESS OTHERWISE SHOWN. THE CONDUCTOR SIZE SHALL BE 2.5mm² UNLESS INDICATED OTHERWISE ON THE PANEL SCHEDULE.
8. ALL SMOKE DETECTORS SHOWN SHALL BE CONNECTED TO THE FIRE ALARM CONTROL PANEL AS SYSTEM SMOKE DETECTORS.

KEY NOTES:

1. PROVIDE POWER CONNECTION TO ELECTRIC UNIT HEATER. REFER TO MECHANICAL PLANS AND PANEL SCHEDULES FOR MORE INFORMATION.
2. PROVIDE POWER CONNECTION TO EXHAUST FAN. REFER TO MECHANICAL PLANS AND PANEL SCHEDULES FOR MORE INFORMATION.
3. PANEL 'HQ1' 380/220V, 3Ø, 4W.
4. PANEL 'HQ2' 380/220V, 3Ø, 4W.
5. PROVIDE POWER CONNECTION TO HOT WATER HEATER. CIRCUIT SHALL INCLUDE 3 PHASE CONDUCTORS, ONE NEUTRAL AND ONE EQUIPMENT GROUND CONDUCTOR. REFER TO PLUMBING PLANS AND PANEL SCHEDULES FOR MORE INFORMATION.
6. SEE DETAIL #2 ON DRAWING E501 FOR MORE INFORMATION.
7. CIRCUIT SHOWN INCLUDES THREE PHASE CONDUCTORS, ONE NEUTRAL, AND ONE EQUIPMENT GROUND CONDUCTOR. SEE PANEL SCHEDULE ON DRAWING E602 FOR SIZING.
8. PROVIDE POWER CONNECTION TO MOTOR OPERATED DAMPER MOUNTED IN THE ATTIC.
9. PROVIDE POWER CONNECTION TO EXHAUST FAN MOUNTED IN THE ATTIC.
10. PROVIDE A 1200mm X 2400mm SHEET OF PLYWOOD PAINTED WITH FIRE RESISTANT PAINT FOR MOUNTING OF TELECOMMUNICATIONS EQUIPMENTS.
11. PROVIDE CONDUIT STUB UP IN THE ROOM FOR INCOMING TELECOM SERVICES FROM THE CENTRAL SYSTEM IN THE GARRISON.
12. EMERGENCY GENERATOR. SEE DETAIL #1 ON DRAWING E501 FOR MORE INFORMATION.

N

0 2000 4000

SCALE: 1:100

UNLESS OTHERWISE NOTED, LINEAR DIMENSIONS SHOWN ARE IN MILLIMETERS.

COMMONWEALTH OF PENNSYLVANIA REGISTERED PROFESSIONAL JOSEPH R. GAUS CIVIL ENGINEER PE-074261

US ARMY CORPS OF ENGINEERS AFGHANISTAN NORTH DISTRICT

SYMBOL	DESCRIPTION	DATE	APPR.	SYMBOL	DESCRIPTION	DATE	APPR.

DATE: 3-24-2011 | REV: ___
CONTRACT NO. W912ER-09-D-0002
DRAWING CODE:
FILE NAME: C:\Users\Joseph\Desktop\E-102.DWG
PLOT SCALE: ___
PLOT DATE: 3/24/2011

DESIGNED BY: DWN BY: CKD BY: REVIEWED BY: SUBMITTED BY:

BAKER

U.S. ARMY ENGINEER DISTRICT, AFGHANISTAN
CORPS OF ENGINEERS
APO AE 09356

SITE ADAPT DESIGN

AD22 - HEADQUARTERS BUILDING - ARCH SPAN

ELECTRICAL POWER AND SYSTEMS PLAN

SHEET REFERENCE NUMBER:

E-102

3/24/2011 4:17 PM

A1 Size 594mm x 841mm

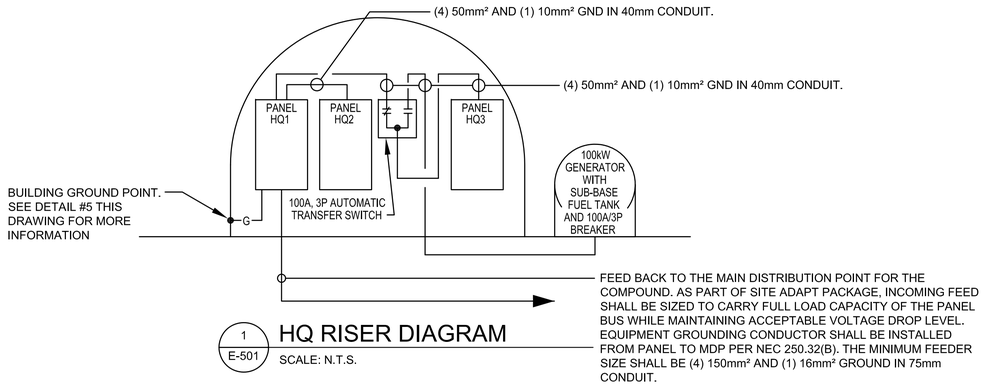

1 / E-501 HQ RISER DIAGRAM

SCALE: N.T.S.

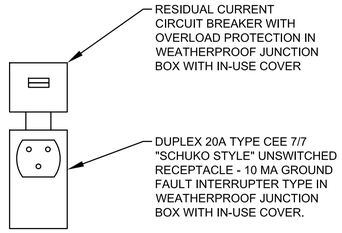

2 / E-501 RECEPTACLE DETAIL

SCALE: N.T.S.

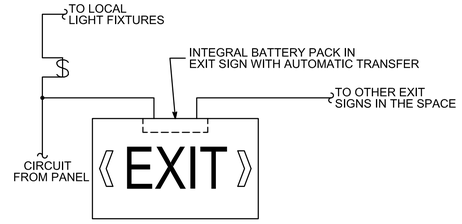

3 / E-501 EXIT SIGN WIRING DIAGRAM

SCALE: N.T.S.

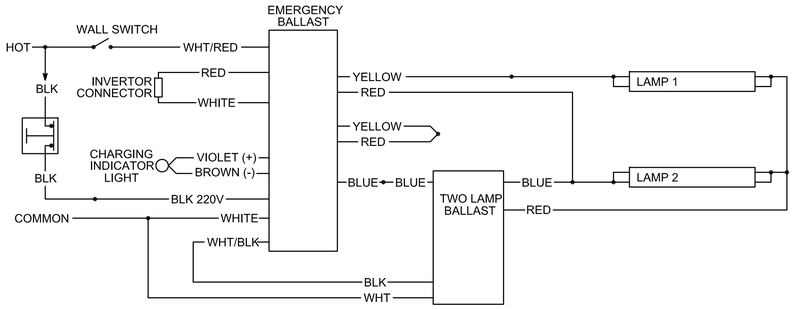

4 / E-501 EMERGENCY FIXTURE WIRING DIAGRAM

SCALE: N.T.S.

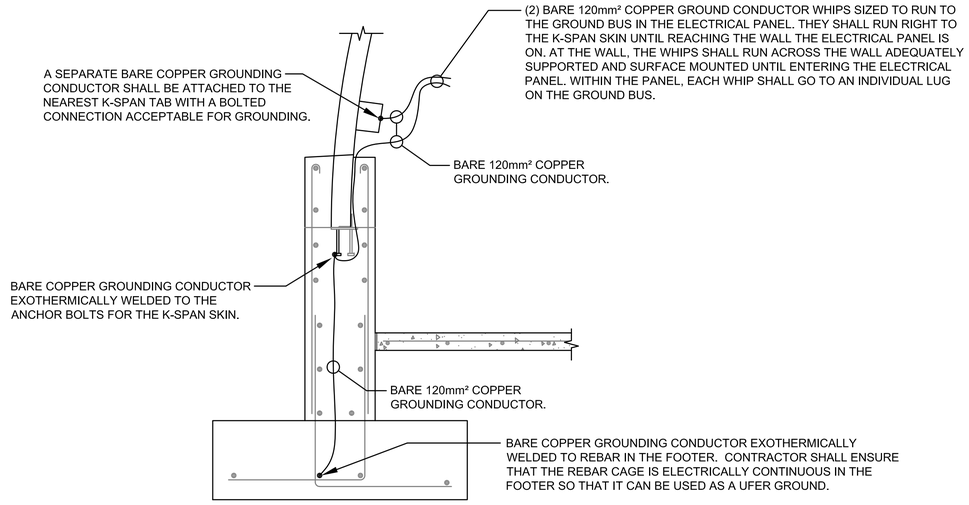

5 / E-501 BUILDING GROUNDING DETAIL

SCALE: N.T.S.

(A) LARGER OF THE TWO SIZES GIVEN IN THE TABLES BELOW	
GROUNDING ELECTRODE CONDUCTOR (BASED ON AIC RATING)	
AIC RATING OF SERVICE EQUIPMENT	NECESSARY GROUNDING ELECTRODE CONDUCTOR SIZE
10K	(1) 35mm²
14K	(1) 50mm²
18K	(1) 70mm²
22K	(1) 70mm²
25K	(1) 70mm²
30K	(1) 95mm²
35K	(1) 120mm²
42K	(1) 150mm²
65K	(1) 185mm²
100K	(1) 300mm²
125K	(2) 185mm²
200K	(2) 300mm²
GROUNDING ELECTRODE CONDUCTOR (BASED ON NEC TABLE 250.66)	
SIZE OF LARGEST UNGROUNDED SERVICE CONDUCTOR OR EQUIVALENT AREA FOR PARALLEL CONDUCTORS	NECESSARY GROUNDING ELECTRODE CONDUCTOR SIZE
350 kcmil OR SMALLER	35mm²
OVER 350 kcmil TO 600 kcmil	70mm²
OVER 600 kcmil TO 1100 kcmil	70mm²
OVER 1100 kcmil	95mm²
NOTE: ALL SIZES ARE BASED ON COPPER CONDUCTORS.	

(B) EQUIPMENT GROUNDING CONDUCTOR	
RATING OR SETTING OF AUTOMATIC OVERCURRENT DEVICE IN CIRCUIT AHEAD OF EQUIPMENT, CONDUIT, ETC, NOT EXCEEDING (AMPERES)	NECESSARY EQUIPMENT GROUNDING CONDUCTOR SIZE
15	2.5mm²
20	4.0mm²
30	6.0mm²
40	6.0mm²
60	6.0mm²
100	10mm²
200	16mm²
300	25mm²
400	25mm²
500	35mm²
600	50mm²
800	70mm²
1000	70mm²
1200	95mm²
1600	120mm²
2000	150mm²
2500	185mm²
3000	240mm²
4000	300mm²
5000	400mm²
6000	400mm²
NOTE: ALL SIZES ARE BASED ON COPPER CONDUCTORS.	

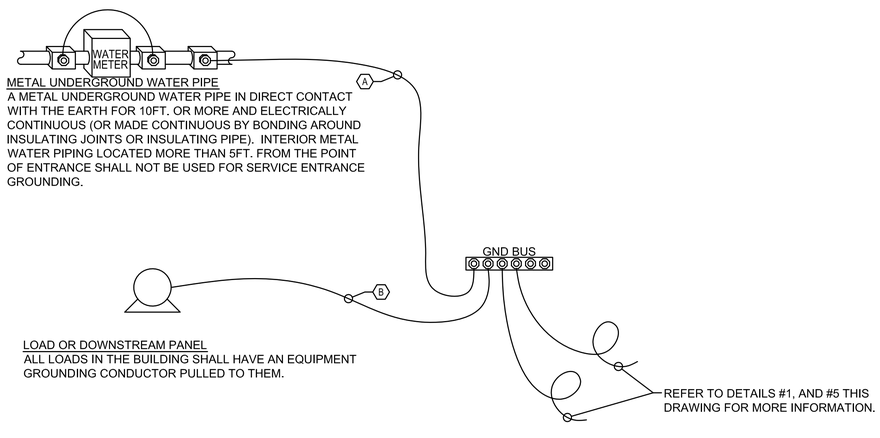

6 / E-501 SERVICE ENTRANCE GROUNDING DETAIL

SCALE: N.T.S.

UNLESS OTHERWISE NOTED, LINEAR DIMENSIONS SHOWN ARE IN MILLIMETERS.

US ARMY CORPS OF ENGINEERS AFGHANISTAN NORTH DISTRICT

SYMBOL	DESCRIPTION	DATE	APPR.	SYMBOL	DESCRIPTION	DATE	APPR.

DESIGNED BY: DWN BY: CKD BY: REVIEWED BY: SUBMITTED BY: DATE: 3/24/2011 CONTRACT NO. W912ER-09-D-0002 DRAWING CODE: FILE NAME: PLOT SCALE: PLOT DATE: 3/24/2011 REV: 0

BAKER

U.S. ARMY ENGINEER DISTRICT, AFGHANISTAN CORPS OF ENGINEERS APO AE 09356

SITE ADAPT DESIGN

AD22 - HEADQUARTERS BUILDING - ARCH SPAN

ELECTRICAL DETAILS

SHEET REFERENCE NUMBER:

E-501

3/24/2011 4:17 PM

A1 Size 594mm x 841mm

LIGHT FIXTURE SCHEDULE

FIXTURE MARK	STYLE NUMBER AND TYPE	NUMBER AND TYPE OF LAMPS	VOLTAGE	MOUNTING	NOTES
AL1	PORCELAIN SOCKET WITH MEDIUM SCREW IN BASE	(1) 42W SELF BALLASTED COMPACT FLUORESCENT "TWISTER" LAMP	220V - 1Ø 50HZ	SURFACE MOUNTED	
AL2	VAPORPROOF WET LOCATION JELLY JAR FIXTURE WITH MEDIUM SCREW IN BASE.	(1) 42W SELF BALLASTED COMPACT FLUORESCENT "TWISTER" LAMP	220V - 1Ø 50HZ	SURFACE MOUNTED	
C	INCANDESCENT ONE PIECE W/ APPROVED LENS STABILIZED HIGH IMPACT POLY CARBONATE. FIXTURE SHALL BE IP-44 RATED.	(1) 100W INCANDESCENT	220V - 1Ø 50HZ	WALL MOUNTED ABOVE EXTERIOR DOORS	FURNISHED WITH INTEGRAL PHOTOCELL.
E	UNIVERSAL MOUNT ENGINEER GRADE THERMOPLASTIC HOUSING EXIT SIGN WITH LED LAMPS, RED LETTERS 6" IN HEIGHT WITH ARROWS AS INDICATED, WITH 12V CADMIUM BATTERY WITH REMOTE HEAD CAPABILITY	LED LAMPS	220V - 1Ø 50HZ	UNIVERSAL MOUNTING	

UNLESS OTHERWISE NOTED,
LINEAR DIMENSIONS
SHOWN ARE IN MILLIMETERS.

COMMONWEALTH OF PENNSYLVANIA
REGISTERED PROFESSIONAL
JOSEPH R. GAUS
ENGINEER
PE-074261

US ARMY CORPS
OF ENGINEERS
AFGHANISTAN NORTH
DISTRICT

SYMBOL	DESCRIPTION	DATE	APPR.	SYMBOL	DESCRIPTION	DATE	APPR.

U.S. ARMY ENGINEER DISTRICT, AFGHANISTAN
CORPS OF ENGINEERS
APO AE 09356

DESIGNED BY: DWN BY: CKD BY: REVIEWED BY: SUBMITTED BY:

DATE: 4-25-2011
REV: 0
CONTRACT NO. W912ER-09-D-0002
DRAWING CODE:
FILE NAME:
PLOT SCALE:
PLOT DATE: 4/25/2011

BAKER

SITE ADAPT DESIGN

AD22 - HEADQUARTERS BUILDING - ARCH SPAN

LIGHTING FIXTURE SCHEDULE

SHEET REFERENCE NUMBER:

E-601

A1 Size 594mm x 841mm

4/25/2011 4:40 PM

PANELBOARD: HQ1 SURFACE MOUNTED
AMP MAIN LUGS (OR) 400 AMP MAIN BREAKER W/ 400 AMP TRIP
CIRCUIT BREAKER TYPE: 380/220 VOLTS 3 PHASE 4 WIRE 50 HZ 400 AMP BUS

CCT #	TRIP AMPS	PH	WIRE MM^2	GND MM^2	CONDUIT MM	LOAD SERVED	LOAD-KVA A	LOAD-KVA B	LOAD-KVA C	LOAD-KVA A	LOAD-KVA B	LOAD-KVA C	LOAD SERVED	CONDUIT MM	GND MM^2	WIRE MM^2	PH	TRIP AMPS	CCT #
1	15	1	2.5	2.5	20	LIGHTING	2.6			2.2			LIGHTING	20	2.5	2.5	1	15	2
3	15	1	2.5	2.5	20	LIGHTING		1.7			1.0		REC - 112	20	2.5	2.5	1	15	4
5	15	1	2.5	2.5	20	REC - EXT			0.6			0.8	REC - 100	20	2.5	2.5	1	15	6
7	15	1	2.5	2.5	20	REC -101	1.2			1.2			REC - 103	20	2.5	2.5	1	15	8
9	15	1	2.5	2.5	20	REC -118		1.2			1.0		REC - 104	20	2.5	2.5	1	15	10
11	15	1	2.5	2.5	20	REC -107			0.8			1.2	REC - 102	20	2.5	2.5	1	15	12
13	15	1	2.5	2.5	20	REC -104	1.0			0.5			ATTIC MOTORIZED DAMPER	20	2.5	2.5	1	15	14
15	15	1	2.5	2.5	20	REC -112		0.8			0.3		CEILING FANS	20	2.5	2.5	1	15	16
17	15	1	2.5	2.5	20	CEILING FANS			0.3			0.4	CEILING FANS	20	2.5	2.5	1	15	18
19	15	1	2.5	2.5	20	CEILING FANS	0.5			3.0									20
21	15	1	2.5	2.5	20	CEILING FANS		0.6			3.0		ELECTRIC WATER HEATER	20	4	4	1	20	22
23	15	1	2.5	2.5	20	EF-1 & EF-2			1.5			3.0							24
25	15	1	2.5	2.5	20	LIGHTING	1.4			0.0			SPARE				1	15	26
27	15	1				SPARE		0.0			0.0		SPARE				1	15	28
29	15	1				SPARE			0.0			0.0	SPARE				1	15	30
31	15	1				SPARE	0.0			0.0			SPARE				1	15	32
33	15	1				SPARE		0.0			0.0		SPARE				1	15	34
35	15	1				SPARE			0.0			0.0	SPARE				1	15	36
37							12.0			24.4									38
39	100	3	50	10	40	PANEL 'HQ2'		12.0			23.7		PANEL 'HQ3' VIA AUTOMATIC TRANSFER SW.	40	10	50	3	100	40
41									10.0			19.4							42
							18.7	16.3	13.2	31.3	29.0	24.8							

DIVERSIFIED LOADS:
LIGHTING: 11.4 X 0.7 = 8.0 HEATERS: 91.8 X 0.8 = 73.4
RECEPTACLES: 26.0 X 0.5 = 13.0 MOTORS: 4.1 X 0.6 = 2.5

TOTAL CONNECTED LOAD (PER PHASE) A: 50.0 B: 45.3 C: 38.0
TOTAL CONNECTED LOAD: 133.3
TOTAL DIVERSIFIED LOAD: 96.9

PANELBOARD: HQ2 SURFACE MOUNTED
AMP MAIN LUGS (OR) 100 AMP MAIN BREAKER W/ 100 AMP TRIP
CIRCUIT BREAKER TYPE: 380/220 VOLTS 3 PHASE 4 WIRE 50 HZ 100 AMP BUS

CCT #	TRIP AMPS	PH	WIRE MM^2	GND MM^2	CONDUIT MM	LOAD SERVED	LOAD-KVA A	LOAD-KVA B	LOAD-KVA C	LOAD-KVA A	LOAD-KVA B	LOAD-KVA C	LOAD SERVED	CONDUIT MM	GND MM^2	WIRE MM^2	PH	TRIP AMPS	CCT #
1	20	1	4	4	20	ELECTRIC HEATER - 101	2.0			2.0			ELECTRIC HEATER - 102	20	4	4	1	20	2
3	20	1	4	4	20	ELECTRIC HEATER - 101		2.0			2.0		ELECTRIC HEATER - 102	20	4	4	1	20	4
5	20	1	4	4	20	ELECTRIC HEATER - 103			2.0			2.0	ELECTRIC HEATER - 102	20	4	4	1	20	6
7	20	1	4	4	20	ELECTRIC HEATER - 109	2.0			2.0			ELECTRIC HEATER - 104	20	4	4	1	20	8
9	20	1	4	4	20	ELECTRIC HEATER - 100A		2.0			2.0		ELECTRIC HEATER - 104	20	4	4	1	20	10
11	20	1				SPARE			0.0			2.0	ELECTRIC HEATER - 110	20	4	4	1	20	12
13	20	1	4	4	20	ELECTRIC HEATER - 100	2.0			2.0			ELECTRIC HEATER - 106	20	4	4	1	20	14
15	20	1	4	4	20	ELECTRIC HEATER - 100B		2.0			2.0		ELECTRIC HEATER - 112	20	4	4	1	20	16
17	20	1	4	4	20	ELECTRIC HEATER - 118			2.0			2.0	ELECTRIC HEATER - 112	20	4	4	1	20	18
19	20	1				SPARE	0.0			0.0			SPARE				1	20	20
21	15	1				SPARE		0.0			0.0		SPARE				1	15	22
23	15	1				SPARE			0.0			0.0	SPARE				1	15	24
25	15	1				SPARE	0.0			0.0			SPARE				1	15	26
27	15	1				SPARE		0.0			0.0		SPARE				1	15	28
29	15	1				SPARE			0.0			0.0	SPARE				1	15	30
31	15	1				SPARE	0.0			0.0			SPARE				1	15	32
33	15	1				SPARE		0.0			0.0		SPARE				1	15	34
35	15	1				SPARE			0.0			0.0	SPARE				1	15	36
37	15	1				SPARE	0.0			0.0			SPARE				1	15	38
39	15	1				SPARE		0.0			0.0		SPARE				1	15	40
41	15	1				SPARE			0.0			0.0	SPARE				1	15	42
							6.0	6.0	4.0	6.0	6.0	6.0							

DIVERSIFIED LOADS:
LIGHTING: 0.0 X 0.7 = 0.0 HEATERS: 34.0 X 0.8 = 27.2
RECEPTACLES: 0.0 X 0.5 = 0.0 MOTORS: 0.0 X 0.6 = 0.0

TOTAL CONNECTED LOAD (PER PHASE) A: 12.0 B: 12.0 C: 10.0
TOTAL CONNECTED LOAD: 34.0
TOTAL DIVERSIFIED LOAD: 27.2

GENERAL NOTES:

1. CONTRACTOR SHALL PROVIDE TYPED PANEL SCHEDULES FOR EACH PANEL. IT SHALL BE THE RESPONSIBILITY OF THE CONTRACTOR TO VERIFY ROOM NUMBERS FOR EACH CIRCUIT IN THE FIELD WITH THE FINAL ROOM NUMBER PLAN. ROOM NUMBERS SHALL BE PROVIDED IN THE CIRCUIT DESCRIPTION FIELD FOR EACH CIRCUIT.
2. SITE ADAPT CONTRACTOR SHALL DETERMINE THE AVAILABLE SHORT CIRCUIT FAULT CURRENT FOR THE ELECTRICAL PANELS BASED ON THE SITE CONDITIONS.
3. CIRCUITS SHOWN AS 1 PH SHALL INCLUDE ONE PHASE CONDUCTOR, ONE NEUTRAL, AND ONE EQUIPMENT GROUND CONDUCTOR. CIRCUITS SHOWN AS 3 PH SHALL INCLUDE THREE PHASE CONDUCTORS, ONE NEUTRAL CONDUCTOR, AND ONE EQUIPMENT GROUND CONDUCTOR.

PANELBOARD: HQ3 SURFACE MOUNTED
AMP MAIN LUGS (OR) 100 AMP MAIN BREAKER W/ 100 AMP TRIP
CIRCUIT BREAKER TYPE: 380/220 VOLTS 3 PHASE 4 WIRE 50 HZ 100 AMP BUS

CCT #	TRIP AMPS	PH	WIRE MM^2	GND MM^2	CONDUIT MM	LOAD SERVED	LOAD-KVA A	LOAD-KVA B	LOAD-KVA C	LOAD-KVA A	LOAD-KVA B	LOAD-KVA C	LOAD SERVED	CONDUIT MM	GND MM^2	WIRE MM^2	PH	TRIP AMPS	CCT #
1	30	1	6	6	20	HP-1	5.0			2.0			ELECTRIC HEATER - 111	20	4	4	1	20	2
3	20	1	4	4	20	HP-2		2.6			2.0		ELECTRIC HEATER - 111	20	4	4	1	20	4
5	20	1	4	4	20	HP-3			3.4			2.0	ELECTRIC HEATER - 116	20	4	4	1	20	6
7	20	1	4	4	20	ELECTRIC HEATER - 115	2.0			2.0			ELECTRIC HEATER - 116	20	4	4	1	20	8
9	30	1	6	6	20	HP-4		5.0			2.0		ELECTRIC HEATER - 110	20	4	4	1	20	10
11	20	1	4	4	20	ELECTRIC HEATER - 114			2.0			2.0	ELECTRIC HEATER - 108	20	4	4	1	20	12
13	20	1	4	4	20	ELECTRIC HEATER - 114	2.0			2.0			ELECTRIC HEATER - 108	20	4	4	1	20	14
15	20	1	4	4	20	ELECTRIC HEATER - 114		2.0			2.0		ELECTRIC HEATER - 106	20	4	4	1	20	16
17	15	1	2.5	2.5	20	REC -105			1.2			2.0	ELECTRIC HEATER - 106	20	4	4	1	20	18
19	15	1	2.5	2.5	20	REC - 107	0.6			2.0			ELECTRIC HEATER - 110	20	4	4	1	20	20
21	15	1	2.5	2.5	20	REC - 111		1.2			1.2		REC - 117	20	2.5	2.5	1	15	22
23	15	1	2.5	2.5	20	REC -113			1.2			1.2	REC -114	20	2.5	2.5	1	15	24
25	15	1	2.5	2.5	20	REC - 115	1.2			1.0			REC - 110	20	2.5	2.5	1	15	26
27	15	1	2.5	2.5	20	REC -116		1.2			0.8		REC -110	20	2.5	2.5	1	15	28
29	15	1	2.5	2.5	20	REC - 108			1.2			1.2	REC - 106	20	2.5	2.5	1	15	30
31	15	1	2.5	2.5	20	REC -106	0.8			1.8			LIGHTING	20	2.5	2.5	1	15	32
33	20	1	4	4	20	ELECTRIC HEATER - 108		2.0			1.7		LIGHTING	20	2.5	2.5	1	15	34
35	20	1	4	4	20	ELECTRIC HEATER - 116			2.0			0.0	SPARE				1	15	36
37	20	1	4	4	20	ELECTRIC HEATER - 111	2.0			0.0			SPARE				1	15	38
39	15	1				SPARE		0.0			0.0		SPARE				1	15	40
41	15	1				SPARE			0.0			0.0	SPARE				1	15	42
							13.6	14.0	11.0	10.8	9.7	8.4							

DIVERSIFIED LOADS:
LIGHTING: 3.5 X 0.7 = 2.5 HEATERS: 48.8 X 0.8 = 39.1
RECEPTACLES: 15.2 X 0.5 = 7.6 MOTORS: 0.0 X 0.6 = 0.0

TOTAL CONNECTED LOAD (PER PHASE) A: 24.4 B: 23.7 C: 19.4
TOTAL CONNECTED LOAD: 67.5
TOTAL DIVERSIFIED LOAD: 49.2

UNLESS OTHERWISE NOTED, LINEAR DIMENSIONS SHOWN ARE IN MILLIMETERS.

COMMONWEALTH OF PENNSYLVANIA REGISTERED PROFESSIONAL JOSEPH R. GAUS ENGINEER PE-074251

US ARMY CORPS OF ENGINEERS AFGHANISTAN NORTH DISTRICT

SYMBOL DESCRIPTION DATE APPR.

DATE: 4-25-2011 REV. 0
CONTRACT NO. W912ER-09-D-0002
DRAWING CODE:
FILE NAME: ARCHSPANBATTHQ-AD22-E-602.DWG
PLOT SCALE: NONE
PLOT DATE: 4/25/2011
DESIGNED BY:
DWN BY: CKD BY:
REVIEWED BY:
SUBMITTED BY:
BAKER

U.S. ARMY ENGINEER DISTRICT, AFGHANISTAN
CORPS OF ENGINEERS
APO AE 09356

SITE ADAPT DESIGN
AD22 - HEADQUARTERS BUILDING - ARCH SPAN
ELECTRICAL PANEL SCHEDULES

SHEET REFERENCE NUMBER:
E-602

4/25/2011 4:40 PM

A1 Size 594mm x 841mm

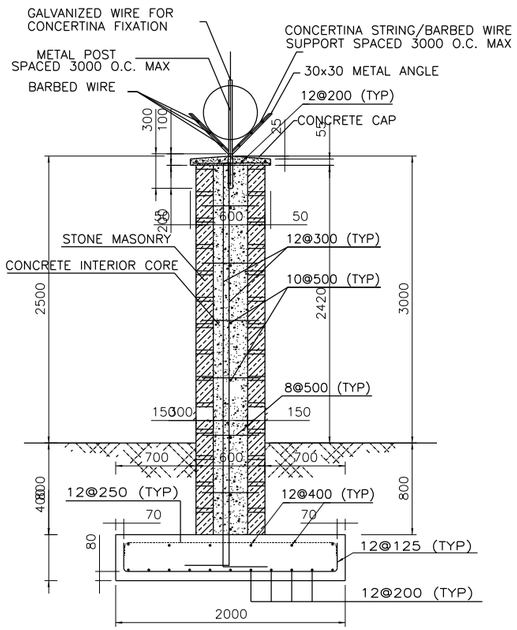

SECTION (A – A)
STEEL DETAILS

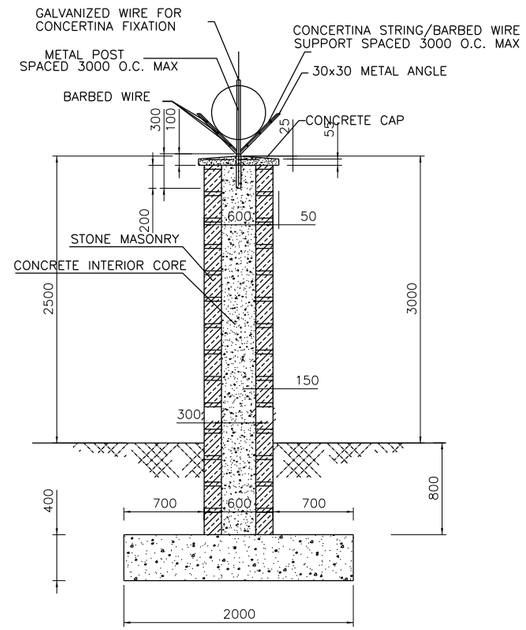

SECTION (A – A)
CONCRETE DIMENSIONS

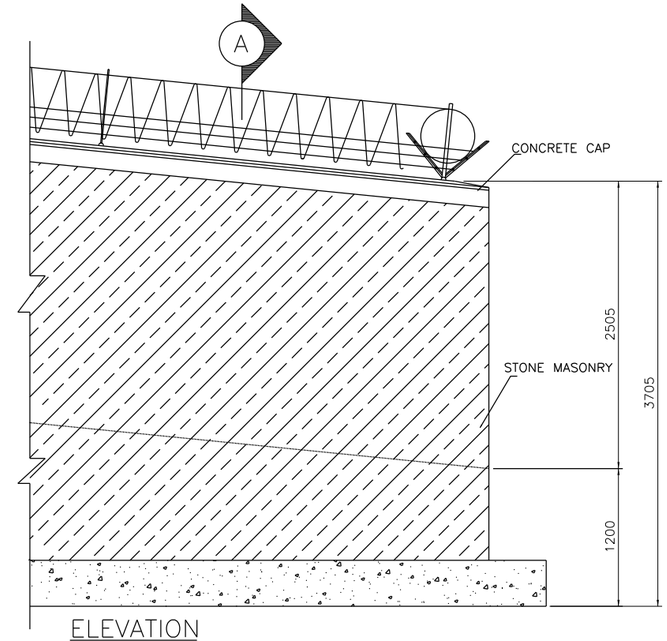

ELEVATION

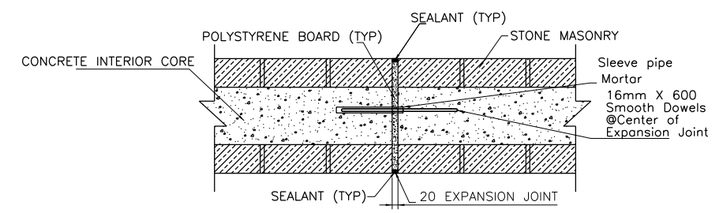

NOTE:–
EXPANSION JOINT SHALL BE SPACED A MAXIMUM OF 40.000

STONE WALL
EXPANSION JOINT DETAIL

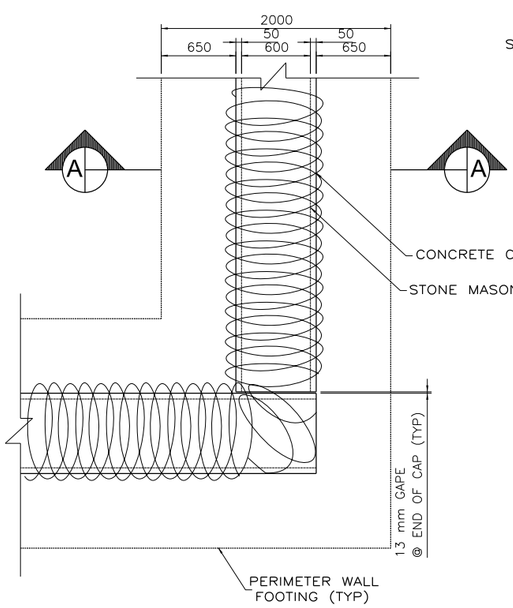

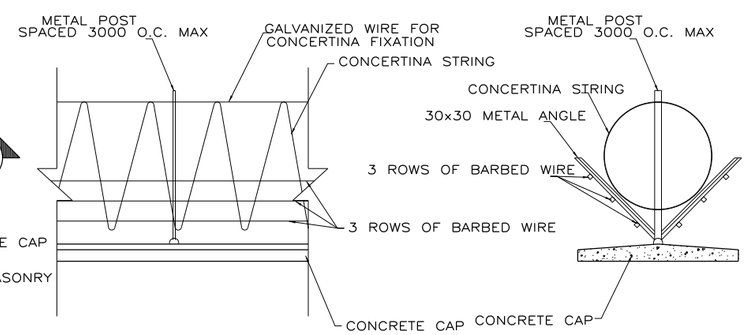

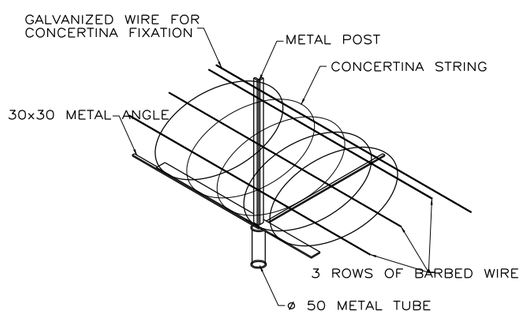

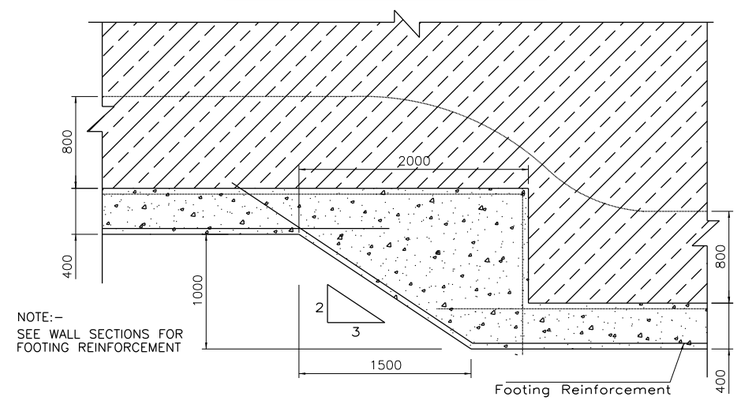

NOTE:–
SEE WALL SECTIONS FOR FOOTING REINFORCEMENT

STEPPED FOOTING DETAIL FOR GRADE CHANGE GREATER THAN 15 DEGREES

US Army Corps of Engineers®
AFGHANISTAN ENGINEER DISTRICT SOUTH

MARK	DESCRIPTION	DATE	APPR.	MARK	DESCRIPTION	DATE	APPR.

U.S. ARMY CORPS OF ENGINEERS
AFGHANISTAN ENGINEER DISTRICT SOUTH

DESIGNED BY: BRIAN JOHNSON PE
DWN BY: BRJ
CKD BY: BRJ
SUBMITTED BY: BRIAN JOHNSON PE
PLOT SCALE: NTS
PLOT DATE: 03 NOV 2010
SIZE: 11"X17"
FILE NAME:
DATE: 03 NOV 2010
SOLICITATION NO.:
CONTRACT NO.:
H-##-#####

PERIMETER WALL DETAIL

SHEET IDENTIFICATION
CD-05

AFGHAN NATIONAL ARMY

STANDARD BUILDING DESIGN

PERSONNEL BUNKER

100% FINAL DESIGN SUBMITTAL

SHEET INDEX

G–001 COVER SHEET

CIVIL

C–101 PLAN, ELEVATIONS, AND SECTION

US ARMY CORPS OF ENGINEERS
AFGHANISTAN ENGINEER DISTRICT

Mark	Description	Date	Appr.	Mark	Description	Date	Appr.

Designed by:
Dwn by: JDS
Ckd by: JDS
Reviewed by: LHM
Submitted by: BAKER
Date: 2/23/2010
Rev: 0
Design file no. G–001
Drawing code:
File name: ANAPNBK-G-001XXX
Plot date: 2/23/2010
Plot scale: 1:1

U.S. ARMY ENGINEER DISTRICT, AFGHANISTAN
CORPS OF ENGINEERS
APO AE 96338

Michael Baker Jr., Inc
A unit of Michael Baker Corporation
Airside Business Park
100 Airside Drive
Moon Township, PA 15108
www.mbakercorp.com

AFGHAN NATIONAL ARMY
REGIONAL MILITARY TRAINING CENTER
STANDARD DESIGN

PERSONNEL BUNKER

COVER SHEET

Sheet reference number:
G–001

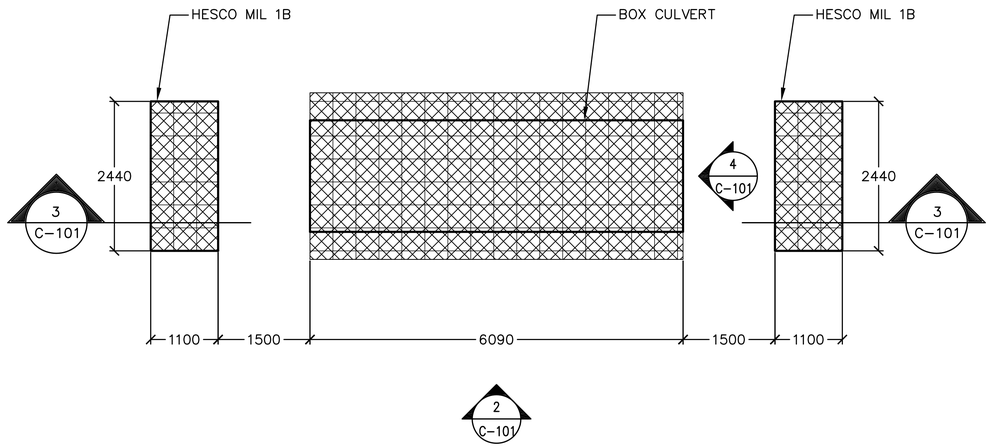

1 C-101 PLAN VIEW
SCALE: 1:50

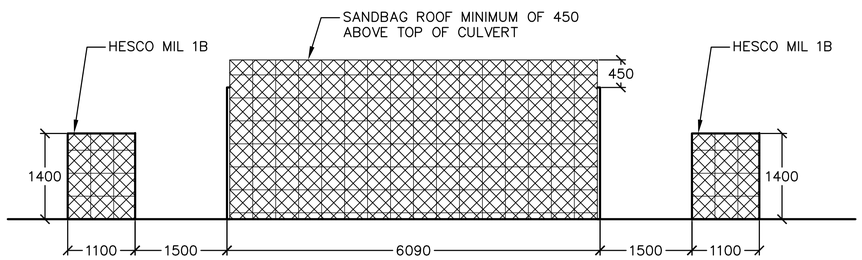

2 C-101 SIDE ELEVATION
SCALE: 1:50

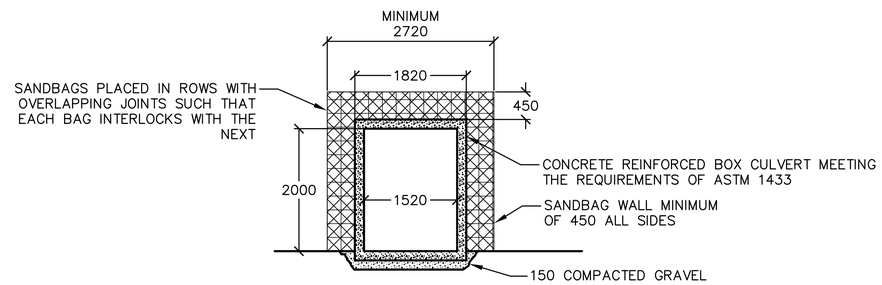

4 C-101 FRONT ELEVATION
SCALE: 1:50

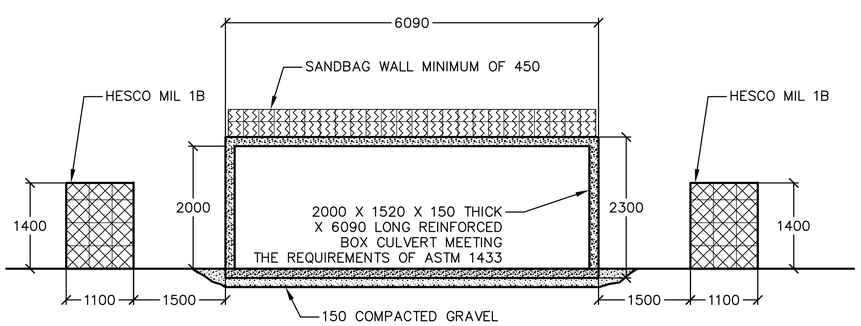

3 C-101 SECTION
SCALE: 1:50

NOTES:
1. PROVIDE CEMENTITIOUS COATING TO SANDBAG EXTERIOR CONSISTING OF A PORTLAND CEMENT SLURRY OR OTHER APPROVED COATING.
2. REINFORCED CONCRETE BOX CULVERT SHALL MEET THE REQUIREMENTS OF ASTM 1433.

NOTE: ALL DIMENSIONS ARE IN MILLIMETERS UNLESS OTHERWISE NOTED

0 500 1000 2000
SCALE: 1:50

APPROVED:
A/E DESIGNER OF RECORD

SEAL:
COMMONWEALTH OF PENNSYLVANIA
REGISTERED PROFESSIONAL
GREGORY P. HYNES
ENGINEER
044310-E

US ARMY CORPS OF ENGINEERS
AFGHANISTAN ENGINEER DISTRICT

Mark	Description	Date	Appr.	Mark	Description	Date	Appr.

Rev: 0
Date: 2/23/2010
Designed by: GPH
Dwn by: JDS
Ckd by: JMB
Reviewed by: LHM
Submitted by: BAKER
Design file no. C-101
Drawing code:
File name: ANAPNBK-C-101XXX
Plot date: 2/23/2010
Plot scale: 1:50

U.S. ARMY ENGINEER DISTRICT, AFGHANISTAN
CORPS OF ENGINEERS
APO AE 96338

Michael Baker Jr., Inc
A unit of Michael Baker Corporation
Airside Business Park
100 Airside Drive
Moon Township, PA 15108
www.mbakercorp.com

AFGHAN NATIONAL ARMY
REGIONAL MILITARY TRAINING CENTER
STANDARD DESIGN

PERSONNEL BUNKER
PLAN, ELEVATIONS, AND SECTION

Sheet reference number:
C-101

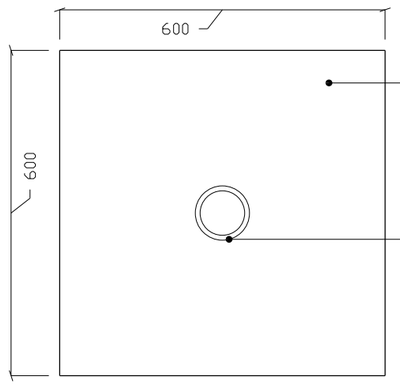

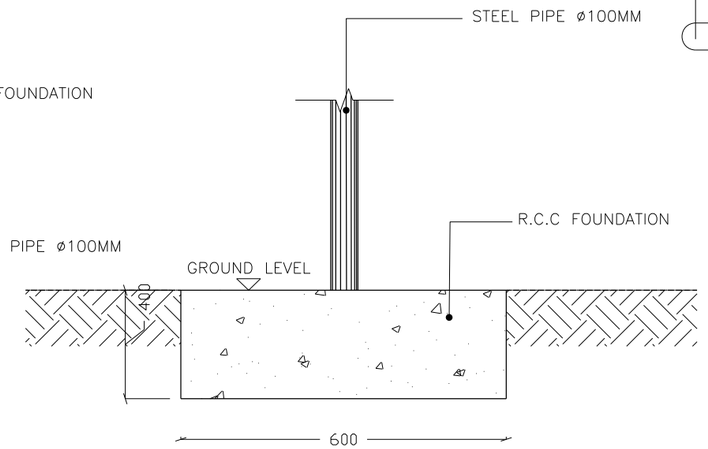

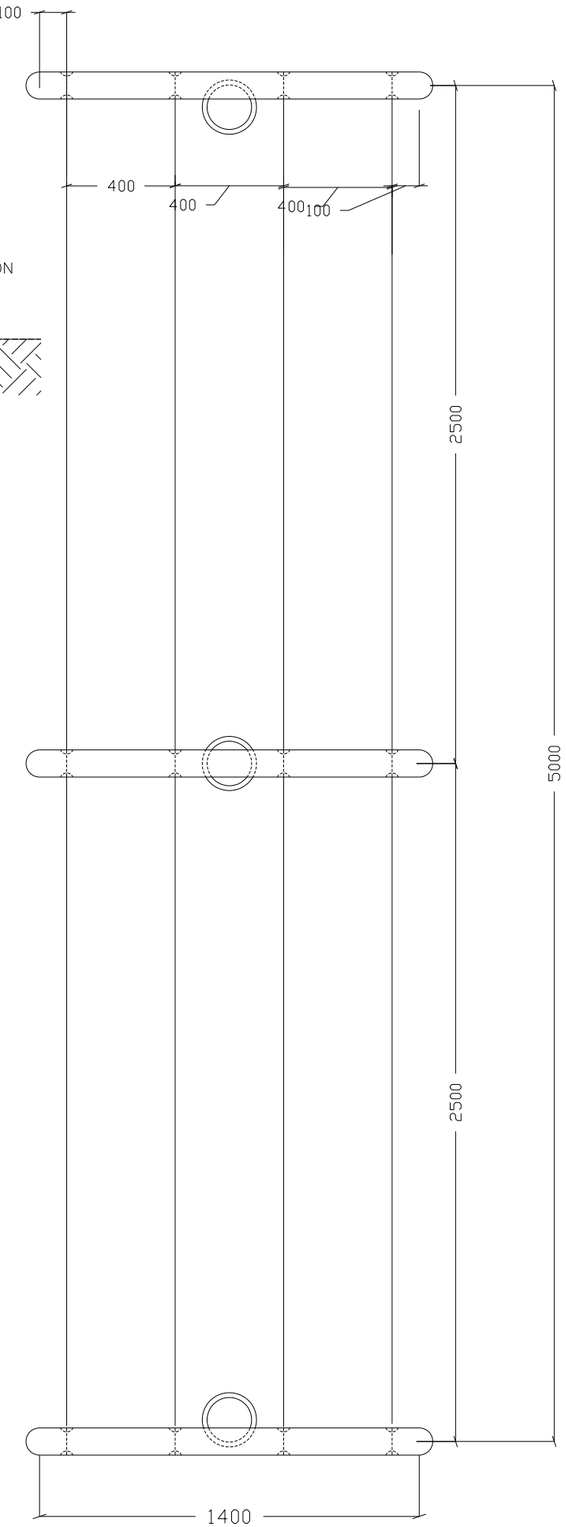

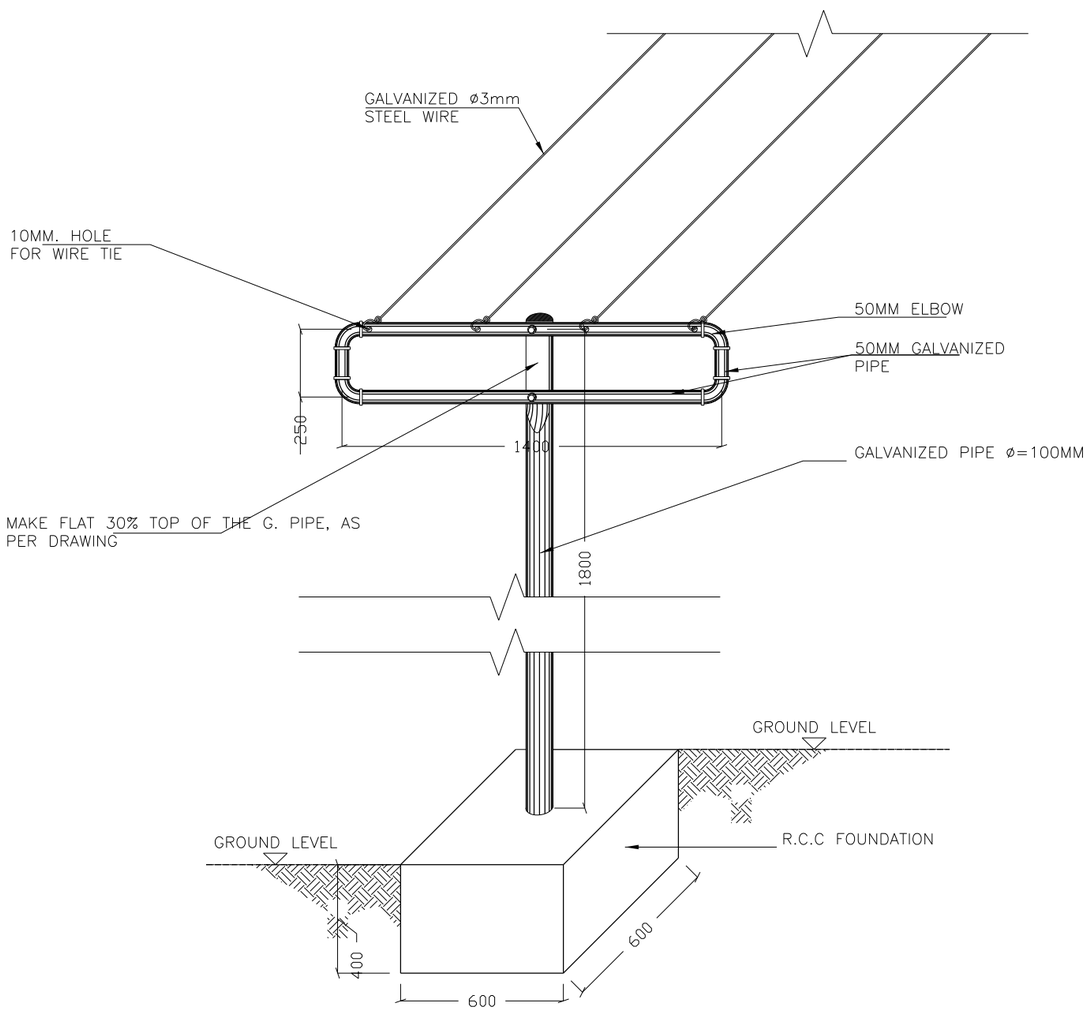

US Army Corps of Engineers®
AFGHANISTAN ENGINEER DISTRICT SOUTH

MARK	DESCRIPTION	DATE	APPR.

MARK	DESCRIPTION	DATE	APPR.

U.S. ARMY CORPS OF ENGINEERS
AFGHANISTAN ENGINEER DISTRICT SOUTH

DESIGNED BY: BRIAN JOHNSON PE
DWN BY: BRJ
CKD BY: BRJ
SUBMITTED BY: BRIAN JOHNSON PE
PLOT SCALE: 2:000:1
PLOT DATE: 03 NOV 2010
SIZE: ANSI D
FILE NAME: XXXXXXXX.dgn
DATE: 03 NOV 2010
SOLICITATION NO.: W912P8-##-X-####
CONTRACT NO.: W912P8-##-X-####
FILE NUMBER: 1-##-####

CLOTHESLINE DETAIL

SHEET IDENTIFICATION
CD-02

SITE ADAPT DESIGN
B19 - OFFICER BARRACKS - LARGE - ARCH SPAN

CONTRACT NUMBER:
W912ER-09-D-0002 TO:0027

US ARMY CORPS
OF ENGINEERS
AFGHANISTAN NORTH
DISTRICT

SYMBOL	DESCRIPTION	DATE	APPR.	SYMBOL	DESCRIPTION	DATE	APPR.

U.S. ARMY ENGINEER DISTRICT, AFGHANISTAN
CORPS OF ENGINEERS
APO AE 09356

DESIGNED BY: JDS
DWN BY: JDS
CKD BY: JDS
REVIEWED BY: JH
SUBMITTED BY:
DATE: 3/22/2011
CONTRACT NO. W912ER-09-D-0002
DRAWING CODE:
REV. 0
FILE NAME: ARCOFFICER-B19-G-001.DWG
PLOT SCALE: NONE
PLOT DATE: 3/22/2011

BAKER

SITE ADAPT DESIGN
B19 - OFFICER BARRACKS - LARGE - ARCH SPAN
COVER SHEET

SHEET REFERENCE NUMBER:
G-001

3/22/2011 5:31 PM

A1 Size 594mm x 841mm

ENGINEERING AND CONSTRUCTION DIVISION
US ARMY ENGINEER DISTRICT, AFGHANISTAN
APO AE, 09356

B19 LARGE OFFICER BARRACKS

PROJECT COORDINATION

U.S. ARMY ENGINEER DISTRICT, AFGHANISTAN

PROJECT MANAGER — DATE

CHIEF, DESIGN BRANCH — DATE

THIS PROJECT WAS DESIGNED BY AFGHANASTAN ENGINEER DISTRICT OF THE U.S ARMY CORPS OF ENGINEERS. THE INITIALS OR SIGNATURES AND REGISTRATION DESIGNATIONS OF INDIVIDUALS APPEAR ON THESE DOCUMENTS WITHIN THE SCOPE OF THEIR EMPLOYMENT AS REQUIRED BY ER 1110-1-8152.

SECTION/DETAIL CROSS REFERENCING CONVENTIONS

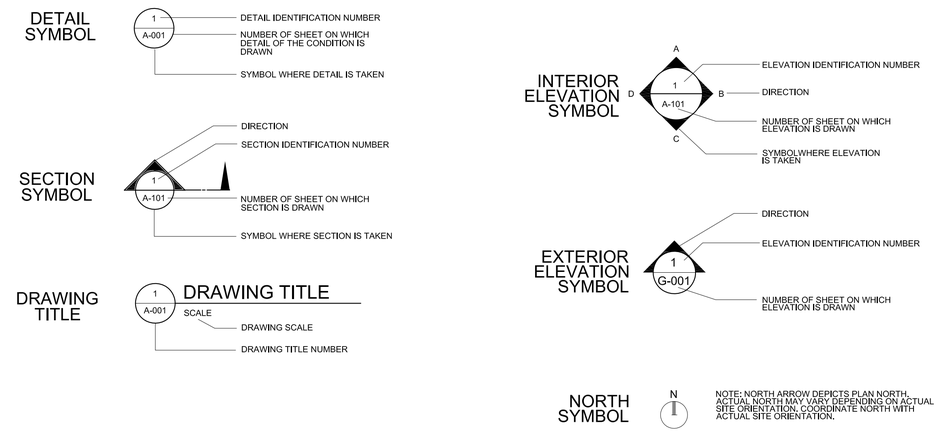

APPENDIX A

AFGHANISTAN

SCHEDULE OF DRAWINGS

SHEET NO	DWG CODE	SHEET REFERENCE NO	DESCRIPTION	REV STATUS	SHEET NO	DWG CODE	SHEET REFERENCE NO	DESCRIPTION	REV STATUS
			GENERAL					MECHANICAL	
1	ARCHSPANOB-B19-G-001	G-001	COVER SHEET						
2	ARCHSPANOB-B19-G-002	G-002	INDEX OF DRAWINGS		38	ARCHSPANOB-B19-M-101	M-101	HVAC FLOOR PLAN	
3	ARCHSPANOB-B19-G-003	G-003	LIFE SAFETY PLAN AND CODE ANALYSIS		39	ARCHSPANOB-B19-M-501	M-501	HVAC DETAILS AND SCHEDULES	
			STRUCTURAL					ELECTRICAL	
4	ARCHSPANOB-B19-S-001	S-001	ABBREVIATIONS AND GENERAL NOTES		40	ARCHSPANOB-B19-E-001	E-001	ELECTRICAL SYMBOLS, NOTES, AND ABBREVIATIONS	
5	ARCHSPANOB-B19-S-002	S-002	GENERAL NOTES AND DESIGN CRITERIA		41	ARCHSPANOB-B19-E-101	E-101	ELECTRICAL LIGHTING PLAN	
6	ARCHSPANOB-B19-S-101	S-101	FOUNDATION PLAN		42	ARCHSPANOB-B19-E-102	E-102	ELECTRICAL POWER & SYSTEMS PLAN	
7	ARCHSPANOB-B19-S-201	S-201	BUILDING ELEVATIONS AND DETAILS		43	ARCHSPANOB-B19-E-501	E-501	ELECTRICAL DETAILS	
8	ARCHSPANOB-B19-S-202	S-202	BUILDING SECTIONS AND DETAILS		44	ARCHSPANOB-B19-E-601	E-601	ELECTRICAL SCHEDULES	
9	ARCHSPANOB-B19-S-301	S-301	FOUNDATION SECTIONS		45	ARCHSPANOB-B19-E-602	E-602	ELECTRICAL PANEL SCHEDULES	
10	ARCHSPANOB-B19-S-302	S-302	SECTIONS						
11	ARCHSPANOB-B19-S-303	S-303	LATRINE SECTIONS						
12	ARCHSPANOB-B19-S-501	S-501	TYPICAL DETAILS						
13	ARCHSPANOB-B19-S-502	S-502	DOOR/WINDOW/MECHANICAL OPENING DETAILS						
14	ARCHSPANOB-B19-S-601	S-601	SCHEDULES						
			ARCHITECTURAL						
15	ARCHSPANOB-B19-A-001	A-001	ABBREVIATIONS, SYMBOLS AND GENERAL NOTES						
16	ARCHSPANOB-B19-A-101	A-101	FLOOR PLAN						
17	ARCHSPANOB-B19-A-102	A-102	REFLECTED CEILING PLAN						
18	ARCHSPANOB-B19-A-103	A-103	ROOF PLAN						
19	ARCHSPANOB-B19-A-201	A-201	ELEVATIONS						
20	ARCHSPANOB-B19-A-301	A-301	BUILDING SECTION						
21	ARCHSPANOB-B19-A-302	A-302	WALL SECTIONS						
22	ARCHSPANOB-B19-A-303	A-303	WALL SECTIONS						
23	ARCHSPANOB-B19-A-401	A-401	ENLARGED PLANS						
24	ARCHSPANOB-B19-A-501	A-501	EXTERIOR DETAILS						
25	ARCHSPANOB-B19-A-502	A-502	HEAD, JAMB & SILL DETAILS						
26	ARCHSPANOB-B19-A-503	A-503	STOOP DETAILS						
27	ARCHSPANOB-B19-A-504	A-504	TOILET, LAVATORY & ABLUTION DETAILS						
28	ARCHSPANOB-B19-A-505	A-505	SHOWER DETAILS						
29	ARCHSPANOB-B19-A-601	A-601	WINDOW AND DOOR SCHEDULE						
30	ARCHSPANOB-B19-A-601	A-601	PARTITION TYPES						
31	ARCHSPANOB-B19-A-601	A-601	FINISH SCHEDULE						
			PLUMBING						
32	ARCHSPANOB-B19-P-001	P-001	PLUMBING SYMBOLS, LEGEND AND GENERAL NOTES						
33	ARCHSPANOB-B19-P-101	P-101	FLOOR PLAN -PLUMBING (SANITARY) ENLARGED FLOOR PLAN - PLUMBING (SANITARY)						
34	ARCHSPANOB-B19-P-102	P-102	FLOOR PLAN -PLUMBING (WATER) ENLARGED FLOOR PLAN - PLUMBING (WATER)						
35	ARCHSPANOB-B19-P-501	P-501	PLUMBING SCHEDULES, DETAILS AND NOTES						
36	ARCHSPANOB-B19-P-502	P-502	PLUMBING DETAILS						
37	ARCHSPANOB-B19-P-901	P-901	DRAINAGE AND VENTING ISOMETRIC HOT AND COLD WATER PIPING ISOMETRIC						

US ARMY CORPS OF ENGINEERS
AFGHANISTAN NORTH DISTRICT

SYMBOL	DESCRIPTION	DATE	APPR.	SYMBOL	DESCRIPTION	DATE	APPR.

U.S. ARMY ENGINEER DISTRICT, AFGHANISTAN
CORPS OF ENGINEERS
APO AE 09356

DESIGNED BY: JDS
DWN BY: JDS
CKD BY: JDS
REVIEWED BY: JH
SUBMITTED BY:
DATE: 3/22/2011
CONTRACT NO. W912ER-09-D-0002
DRAWING CODE:
REV: 0
FILE NAME: ARCHSPANOB-B19-G-002.DWG
PLOT SCALE: NONE
PLOT DATE: 3/22/2011

BAKER

SITE ADAPT DESIGN
B19 - OFFICER BARRACKS - LARGE - ARCH SPAN
INDEX

SHEET REFERENCE NUMBER:
G-002

A1 Size 594mm x 841mm

3/22/2011 5:31 PM

LEGEND:

DENOTES PATHS OF EXIT TRAVEL

EXIT — DENOTES DOOR AS AN EMERGENCY EXIT

DENOTES STARTING POINT FOR TRAVEL DISTANCE

FE — DENOTES FIRE EXTINGUISHER LOCATIONS

(1) HOUR RATED WALL

(2) HOUR RATED WALL

FIRE RESISTANT CEILING

NON-FIRE RESISTANT CEILING SYSTEM OR EXPOSED FIRE RESISTANT SPRAY-ON INSULATION SYSTEM AT ARCH-SPAN STRUCTURE

REFER TO REFLECTED CEILING PLANS FOR CEILING MATERIALS AND CONFIGURATION

PER MEMORANDUM FOR RECORD DATED 03 FEBRUARY 2011
ANSF CONSTRUCTION STANDARDS DIVISION 09 FINISHES:
CEILING **DO NOT** NEED TO MEET FIRE BOUNDARY CODE REQUIREMENTS.

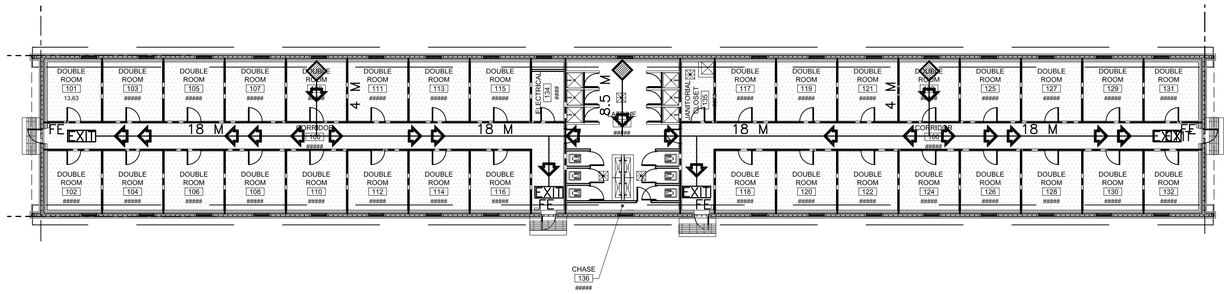

1 / G-003 LIFE SAFETY PLAN

SCALE: 1:200

CODE ANALYSIS:

1. REFERENCES:
   2009 INTERNATIONAL BUILDING CODE (2009 IBC)
   2009 LIFE SAFETY CODE (2009 NFPA 101)
   2009 NFPA 10 - STANDARD FOR PORTABLE FIRE EXTINGUISHERS.

2. IBC OCCUPANCY CLASSIFICATION:
   GROUP R-2 (NEW HOTELS AND DORMITORIES NFPA 101 6.1.8 AND CHAPTER 28)

3. TYPE OF CONSTRUCTION (IBC): TYPE II-B (UNPROTECTED/NONSPRINKLERED)

4. IBC TABLE 503: ALLOWABLE HEIGHT AND BUILDING AREAS:
   GROUP R-2
   ALLOWABLE AREA: 1486 SM
   ALLOWABLE HEIGHT: 4 STORIES (16 M)

   GROUP R-2
   PROPOSED AREA: 798 SM
   PROPOSED HEIGHT: 1 STORY (<16 M)

5. IBC TABLE 601 & 602: FIRE RESISTANCE RATING REQUIREMENTS FOR BUILDING ELEMENTS FOR TYPE II-B

BUILDING ELEMENT	RATING (HOUR)	REFERENCE
STRUCTURAL FRAME (COLUMNS, GIRDERS & TRUSSES)	0	TABLE 601
BEARING WALLS		
EXTERIOR	0	TABLE 601
INTERIOR	0	TABLE 601
NONBEARING WALLS & PARTITIONS		
INTERIOR	0	TABLE 601
FLOOR CONSTRUCTION	0	TABLE 601
ROOF CONSTRUCTION	0	TABLE 601
EXTERIOR WALL	0	TABLE 602

6. IBC TABLE 803.9 - INTERIOR WALL AND CEILING FINISH REQUIREMENTS FOR R-2 OCCUPANCY/NONSPRINKLERED

GROUP	EXIT ENCLOSURES AND EXIT PASSAGEWAY	CORRIDORS	ROOMS AND ENCLOSED SPACES
R-2	B	B	C

7. NFPA 101 TABLE 7.3.1.2 - OCCUPANT LOAD
   HOTELS AND DORMITORIES = 18.6 SM/PERSON — CALCULATED = 43 OCCUPANTS
   ACTUAL= 64 OCCUPANTS

8. NFPA 101 TABLE 7.3.3.1 - EGRESS CAPACITY
   HOTELS AND DORMITORIES = 5 MM PER OCCUPANT

   MINIMUM REQUIRED: 320 MM (64 OCCUPANTS x 5 MM PER OCCUPANT)
   PROPOSED EGRESS CAPACITY: 3600 MM: (4) 900 MM DOORS

9. NFPA 101 PARAGRAPH 28.2.6 - EXIT ACCESS TRAVEL DISTANCE
   MAXIMUM ALLOWED WITHIN ROOM OR SUITE TO CORRIDOR: 23 METERS
   MAXIMUM ALLOWED CORRIDOR DOOR OF ANY ROOM OR SUITE TO NEAREST EXIT: 30 METERS

   PROPOSED WITHIN ROOM OR SUITE TO CORRIDOR: 4 METERS
   PROPOSED CORRIDOR DOOR OF ANY ROOM OR SUITE TO NEAREST EXIT: 21 METERS

10. NFPA 101 PARAGRAPH 28.3.6.1.2 - CORRIDOR FIRE-RESISTANCE RATING (HOUR)
    REQUIRED: WALLS NOT LESS THAN ONE HOUR FIRE RESISTANCE RATING
    PROPOSED: 1 HOUR RATING

11. NFPA 101 PARAGRAPH 28.3.6.2 & TABLE 8.3.4.2 - DOORS INTO EXIT ACCESS CORRIDORS
    REQUIRED MINIMUM: 20 MINUTE FIRE PROTECTION RATING
    PROPOSED: 20 MINUTE DOORS

12. NFPA 101 PARAGRAPH 28.2.3.3 - CORRIDOR WIDTH
    REQUIRED: SUFFICIENT FOR OCCUPANT LOAD, BUT NOT LESS THAN 1120 MM
    CALCULATED WIDTH REQUIRED PER OCCUPANT LOAD: 320 MM (64 OCCUPANTS X 5 MM)
    PROPOSED: 1700 MM

13. NFPA 101 PARAGRAPH 28.2.5.3 - COMMON PATH OF TRAVEL
    MAXIMUM ALLOWED: 10.7 METERS
    PROPOSED: 10.7 M

14. NFPA 101 PARAGRAPH 28.2.5.5 - DEAD END CORRIDORS
    PERMITTED: 10.7 METERS
    PROPOSED: NO DEAD END CORRIDORS

15. NFPA 101 PARAGRAPH 28.2.4.1 AND 7.4.1.1 - MINIMUM NUMBER OF EXITS
    REQUIRED: 2 MINIMUM
    PROPOSED: 4 EXITS

16. NFPA 101 PARAGRAPH 28.2.1.2 & 24.2 - SECONDARY MEANS OF ESCAPE
    ONE OF THE FOLLOWING REQUIRED:
    1) DOOR, SIMILAR TO PRIMARY, BUT REMOTE FROM PRIMARY
    2) OPERABLE WINDOW, 0.53 SM, NOT LESS THAN 510 MM WIDE, 610 MM HIGH,NOT MORETHAN 1120 MM AFF, WITHIN 610O MM OF GRADE
    PROPOSED: OPERABLE WINDOWS, 0.72 SM EACH PER SLEEPING ROOM

17. NFPA 101 PARAGRAPH 24.2.2.4 - TWO PRIMARY MEANS OF ESCAPE
    AREA WITH DWELLING UNIT EXCEEDS 185 SM PER STORY
    ALLOWED AREA PER STORY WITHIN DWELLING UNIT: 185 SM
    PROPOSED AREA WITHIN DWELLING UNIT: 16 SM
    REQUIRED PRIMARY EXITS: 1
    PROPOSED PRIMARY EXITS: 1

18. NFPA 101 PARAGRAPH 28.3.7.1 - SUBDIVISION OF BUILDING SPACES - NONSPRINKLERED
    REQUIRED: EACH GUEST ROOM OR DORMITORY ROOM SHALL BE SEPARATED FROM OTHER GUEST OR DORMITORY ROOMS BY FIRE BARRIERS HAVING FIRE RESISTANCE RATED OF NOT LESS THAN 1 HOUR
    PROPOSED: 1 HOUR SEPARATION

19. HAZARDOUS AREA PROTECTION TABLE 28.3.2.2
    STORAGE ROOMS: 1 HOUR SEPARATION REQUIRED
    PROPOSED: NOT APPLICABLE

20. NFPA 101 A.3.3.59 DORMITORY: ROOMS WITHIN DORMITORIES INTENDED FOR THE USE OF INDIVIDUALS FOR COMBINED LIVING AND SLEEPING PURPOSES ARE GUEST ROOMS OR GUEST SUITES. EXAMPLES OF DORMITORIES ARE COLLEGE DORMITORIES, FRATERNITY AND SORORITY HOUSES AND MILITARY BARRACKS.

21. NFPA 101 28.3.5.2 EXTINGUISHMENT REQUIREMENTS: AUTOMATIC SPRINKLER PROTECTION REQUIRED UNLESS SLEEPING ROOMS HAVE DOORS DIRECTLY TO OUTSIDE.
    DUE TO AUSTERE DESIGN CRITERIA, THE GOVERNMENT WILL WAIVE THIS REQUIREMENT.

NATURAL VENTILATION CALCULATIONS

ROOMNUMBER	ROOM NAME	ROOM NSM	REQ'D WINDOW AREA @4%	WINDOWS TYPE #1	CRITERIA MET
100	CORRIDOR	66.04	2.64	NA	NA
100	CORRIDOR	66.04	2.64	NA	NA
101	ROOM	13.63	0.54	1	YES
102	ROOM	13.63	0.54	1	YES
103	ROOM	14.98	0.60	1	YES
104	ROOM	14.98	0.60	1	YES
105	ROOM	14.98	0.60	1	YES
106	ROOM	14.98	0.60	1	YES
107	ROOM	14.98	0.60	1	YES
108	ROOM	14.98	0.60	1	YES
109	ROOM	14.98	0.60	1	YES
110	ROOM	14.98	0.60	1	YES
111	ROOM	14.98	0.60	1	YES
112	ROOM	14.98	0.60	1	YES
113	ROOM	14.98	0.60	1	YES
114	ROOM	14.98	0.60	1	YES
115	ROOM	14.98	0.60	1	YES
116	ROOM	14.98	0.60	1	YES
117	ROOM	14.98	0.60	1	YES
118	ROOM	14.98	0.60	1	YES
119	ROOM	14.98	0.60	1	YES
120	ROOM	14.98	0.60	1	YES
121	ROOM	14.98	0.60	1	YES
122	ROOM	14.98	0.60	1	YES
123	ROOM	14.98	0.60	1	YES
124	ROOM	14.98	0.60	1	YES
125	ROOM	14.98	0.60	1	YES
126	ROOM	14.98	0.60	1	YES
127	ROOM	14.98	0.60	1	YES
128	ROOM	14.98	0.60	1	YES
129	ROOM	14.98	0.60	1	YES
130	ROOM	14.98	0.60	1	YES
131	ROOM	13.63	0.54	1	YES
132	ROOM	13.63	0.54	1	YES
133	LATRINE	66.15	2.65	MV	MECH. VENTILATED
134	ELECTRICAL	8.07	0.32	NA	NA
135	JANITORIAL CLOSET	8.07	0.32	NA	NA
136	CHASE	4.22	0.17	NA	NA
	TOTAL NET SM	677.86			
	TOTAL GROSS SM	798.00			

UNLESS OTHERWISE NOTED, LINEAR DIMENSIONS SHOWN ARE IN MILLIMETERS.

0 4000 8000
SCALE: 1:200

COMMONWEALTH OF VIRGINIA
PETER GARRETT SCHMIDT
No. 013167
ARCHITECT

US ARMY CORPS OF ENGINEERS
AFGHANISTAN NORTH DISTRICT

SYMBOL	DESCRIPTION	DATE	APPR.	SYMBOL	DESCRIPTION	DATE	APPR.

DATE: 3/22/2011
CONTRACT NO. W912ER-09-D-0002
DRAWING CODE:
REV: 0
FILE NAME: ARCHIPAC\PROJECTS\CELEBS
PLOT SCALE: 1:100
PLOT DATE: 3/23/2011

DESIGNED BY: PGS, SE, MR
DWN BY: SE, MDH, AH
CKD BY: PGS, SE, MR
REVIEWED BY: JH
SUBMITTED BY:

BAKER

U.S. ARMY ENGINEER DISTRICT, AFGHANISTAN
CORPS OF ENGINEERS
APO AE 09356

SITE ADAPT DESIGN
B19 - OFFICER BARRACKS - LARGE - ARCH SPAN
LIFE SAFETY AND CODE ANALYSIS

SHEET REFERENCE NUMBER:
G-003

A1 Size 594mm x 841mm

3/23/2011 1:18 PM

STRUCTURAL ABBREVIATIONS:

ACI	AMERICAN CONCRETE INSTITUTE
ADD'L	ADDITIONAL
AISC	AMERICAN INSTITUTE OF STEEL CONSTRUCTION
AISI	AMERICAN IRON AND STEEL INSTITUTE
ASTM	AMERICAN SOCIETY FOR TESTING AND MATERIALS
ARCH	ARCHITECTURAL
B	BOTTOM
BLDG	BUILDING
BOTT	BOTTOM
℄	CENTER LINE
CFMRF	COLD FORM METAL ROOF FRAME
CFMF	COLD FORM METAL FRAME
CFS	COLD FORMED STEEL
CIP	CAST-IN-PLACE
CIPL	CAST-IN-PLACE LINTEL
CJ	CONTROL JOINT
CLR	CLEAR
CMU	CONCRETE MASONRY UNIT
COEFF	COEFFICIENT
COL	COLUMN
CONC	CONCRETE
CONT	CONTINUOUS
COORD	COORDINATE
CRSI	CONCRETE REINFORCING STEEL INSTITUTE
CSJ	CONSTRUCTION JOINT
DIA	DIAMETER
DIAG	DIAGONAL
DIM	DIMENSION
DWG	DRAWING
DWL	DOWEL
EA	EACH
EF	EACH FACE
ELEC	ELECTRICAL
ELEV	ELEVATION
EMBED	EMBEDMENT
EQUIV	EQUIVALENT
ETC	ET CETERA
EW	EACH WAY
EXP	EXPANSION
EXT	EXTERIOR
FND	FOUNDATION
FTG	FOOTING
GA	GAUGE
GB	GRADE BEAM
HORIZ	HORIZONTAL
h	HOUR
HRS	HOURS
IBC	INTERNATIONAL BUILDING CODE
INFO	INFORMATION
INT	INTERIOR
kg	KILOGRAM
km	KILOMETER
kN	KILONEWTON
kPa	KILOPASCAL
L#	ANGLE (# INDICATES SIZE)
LONG	LONGITUDINAL
LLV	LONG LEG VERTICAL
m	METER
MAX	MAXIMUM
MECH	MECHANICAL
MFG	MANUFACTURER
MID	MIDDLE
MIN	MINIMUM
MISC	MISCELLANEOUS
mm	MILLIMETER
MPa	MEGAPASCAL
MTL	METAL
MWFRS	MAIN WIND FORCE RESISTING SYSTEM
N	NEWTON
N	NORTH
N/A	NOT APPLICABLE
#	NUMBER SYMBOL FOR REBAR SIZE
NTS	NOT TO SCALE
OC	ON CENTER
OPNG	OPENING
⅊ or PL	PLATE
PRE-ENG	PRE-ENGINEERED
RB	ROOF BEAM
REINF	REINFORCED
REQ'D	REQUIRED
SIM	SIMILAR
SOG	SLAB-ON-GRADE
SPECS	SPECIFICATIONS
STD	STANDARD
STRUCT	STRUCTURAL
SW	SHEAR WALL
T	TOP
T/	TOP OF
T/ELEV	TOP ELEVATION
T/SLAB	TOP OF SLAB
T&B	TOP AND BOTTOM
THK	THICK
TYP	TYPICAL
UFC	UNIFIED FACILITIES CRITERIA
UON	UNLESS OTHERWISE NOTED
VERT	VERTICAL
W	WIDTH
W/	WITH

1.0 GENERAL NOTES:

1.1 THIS PROJECT HAS BEEN DESIGNED FOR THE WEIGHTS AND MATERIALS INDICATED ON THE DRAWINGS AND FOR THE SUPERIMPOSED DEAD AND LIVE LOADS INDICATED IN THE STRUCTURAL DESIGN CRITERIA. IT IS THE CONTRACTOR'S RESPONSIBILITY TO DETERMINE ALLOWABLE CONSTRUCTION LOADS AND TO PROVIDE PROPER DESIGN AND CONSTRUCTION OF FALSEWORK, FORMWORK, STAGING, BRACING, SHEETING AND SHORING, ETC.

1.2 METHODS, PROCEDURES AND SEQUENCES OF CONSTRUCTION ARE THE RESPONSIBILITY OF THE CONTRACTOR. THE CONTRACTOR IS RESPONSIBLE FOR IDENTIFYING AND IMPLEMENTING THE NECESSARY PRECAUTIONS TO MAINTAIN AND ENSURE THE INTEGRITY OF THE STRUCTURE AT ALL STAGES OF CONSTRUCTION.

1.3 COORDINATE THESE DRAWINGS WITH THE ARCHITECTURAL, MECHANICAL, ELECTRICAL, PLUMBING, AND CIVIL DRAWINGS. ALL DIMENSIONS SHOWN ON THE DRAWINGS ARE MILLIMETERS UNLESS NOTED OTHERWISE.

1.4 SLEEVES OR BLOCK-OUTS REQUIRED FOR PASSAGE OF DUCTWORK, PIPING, DRAINS, CONDUIT, ETC, IN ADDITION TO ANCHORS, CURBS AND HANGERS REQUIRED FOR EQUIPMENT AND PIPING AND UNDER-SLAB UTILITIES ARE NOT SPECIFICALLY, NOR GENERALLY, INDICATED ON THE STRUCTURAL DRAWINGS. THE CONTRACTOR IS RESPONSIBLE FOR COORDINATING WORK SHOWN ON OTHER DISCIPLINE'S DRAWINGS AND DETERMINING SUCH REQUIREMENTS PRIOR TO FABRICATION OR ERECTION OF THE STRUCTURE. PENETRATIONS OF STRUCTURAL MEMBERS ARE SUBJECT TO APPROVAL BY THE CONTRACTING OFFICER. REFER TO GENERAL NOTE 8.9 FOR OPENINGS IN ARCH SPAN STRUCTURE.

1.5 DIMENSIONS AND INSTALLATION DETAILS OF PURCHASED EQUIPMENT MUST BE VERIFIED AND COORDINATED WITH THE SUPPORTING STRUCTURE. THE CONTRACTOR IS RESPONSIBLE FOR DETERMINING SUCH REQUIREMENTS FROM SUBCONTRACTORS AND EQUIPMENT SUPPLIERS ALONG WITH COORDINATING THE LOCATIONS AND DETAILS FOR THESE ITEMS PRIOR TO CONSTRUCTION OF EQUIPMENT PADS OR FABRICATION AND ERECTION OF FRAMING INTENDED TO SUPPORT SUCH EQUIPMENT. ANY CONFLICTS BETWEEN THESE ITEMS AND THE BUILDING STRUCTURE IS TO BE BROUGHT TO THE ATTENTION OF THE CONTRACTING OFFICER FOR RESOLUTION. REFER TO GENERAL NOTE 8.11 FOR HANGING LOADS ON ARCH SPAN STRUCTURE.

1.6 WORK NOT INCLUDED ON THE DRAWINGS BUT IMPLIED TO BE SIMILAR TO THAT SHOWN AT CORRESPONDING PLACES ELSEWHERE ON THE DRAWINGS SHALL BE REPEATED.

1.7 IN CASE OF CONFLICT BETWEEN THE NOTES, DETAILS AND SPECIFICATIONS THE MOST RIGID REQUIREMENTS SHALL GOVERN.

1.8 SEE ARCHITECTURAL DRAWINGS FOR LOCATIONS OF NON-LOAD BEARING PARTITIONS. PROVIDE COMPRESSIBLE FIRESAFING AT TOP OF WALL AS REQUIRED BY ARCHITECTURAL DRAWINGS.

1.9 COORDINATE FINISHED FLOOR DATUM ELEVATION 0.0m WITH THE CIVIL DRAWINGS.

2.0 FOUNDATION NOTES

2.1 THE GEOTECHNICAL ANALYSIS FOR THIS PROJECT IS THE RESPONSIBILITY OF THE CONTRACTOR AWARDED THE WORK. AN ASSUMED ALLOWABLE SOIL BEARING VALUE OF 72 kPa HAS BEEN USED IN THE STRUCTURAL ANALYSIS OF THE BUILDING AND SHALL BE CONFIRMED AND VERIFIED AS PART OF THE GEOTECHNICAL INVESTIGATION. VALUES WHICH DO NOT MEET THE REQUIREMENTS INDICATED IN THE STRUCTURAL DESIGN CRITERIA, FOUNDATION LOADS SECTION SHALL BE IMMEDIATELY BROUGHT TO THE ATTENTION OF THE CONTRACTING OFFICER FOR CONSIDERATION AND DETERMINATION ON THE NEXT APPROPRIATE COURSE OF ACTION.

2.2 ELEVATIONS SHOWN ON THE DRAWINGS AT WHICH FOUNDATIONS BEAR ARE APPROXIMATE AND MAY VARY TO SUIT SUBSURFACE SOIL CONDITIONS AND PROJECT GEOTECHNICAL ENGINEER'S RECOMMENDATIONS. ALL EXTERIOR FOOTINGS ARE TO BEAR A MINIMUM OF 800mm BELOW FINISHED GRADE.

2.3 SEE THE SPECIFICATION FOR ADDITIONAL REQUIREMENTS TO THOSE OUTLINED IN THE GEOTECHNICAL INVESTIGATION FOR EXCAVATION AND PREPARATION OF THE FOUNDATION AND THE SLAB ON GRADE SUBGRADE INCLUDING COMPACTION PROCEDURES.

2.4 EXCAVATIONS FOR FOOTINGS SHALL HAVE THE SIDES AND BOTTOMS TEMPORARILY LINED WITH 0.25mm POLYETHYLENE IF PLACEMENT OF CONCRETE DOES NOT OCCUR WITHIN 24 HRS OF THE EXCAVATION OF THE FOOTING.

2.5 FOUNDATION CONDITIONS NOTED DURING CONSTRUCTION WHICH DIFFER FROM THOSE DESCRIBED IN THE GEOTECHNICAL REPORT SHALL BE REPORTED TO THE GENERAL CONTRACTOR AND CONTRACTING OFFICER BEFORE FURTHER CONSTRUCTION IS ATTEMPTED.

2.6 NO FOOTINGS SHALL BE POURED INTO OR AGAINST SUBGRADE CONTAINING FREE WATER, FROST, ICE OR LOOSE MATERIAL.

2.7 CONCRETE SLABS ON GRADE HAVE BEEN DESIGNED TO BEAR ON PROPERLY COMPACTED SUB-BASE STONE AND SUB-GRADE SOILS. THE SUB-BASE MATERIAL BENEATH THE SLAB-ON-GRADE SHALL BE A WELL GRADED CRUSHED STONE (AASHTO #57 OR SIMILAR) AND BE COMPACTED IN ACCORDANCE WITH 95% MODIFIED DENSITY PER ASTM D 1557.

2.8 PRIOR TO START OF FOUNDATION OR SLAB-ON-GRADE CONSTRUCTION, EXISTING SUBGRADES SHALL BE COMPACTED TO MINIMUM OF 95% MAXIMUM DRY DENSITY OBTAINED THRU ASTM D 1557 MODIFIED PROCTOR TESTING.

2.9 SEE PLUMBING, ELECTRICAL & CIVIL DRAWINGS FOR REQUIRED UNDERSLAB UTILITIES.

2.10 SEE ARCHITECTURAL DRAWINGS FOR ALL WATERPROOFING DETAILS AND MATERIALS.

2.11 IF UNDERMINING OF FOOTINGS OCCURS, FILL VOIDS WITH 15 MPa CONCRETE. DO NOT ATTEMPT TO REPLACE AND RE-COMPACT SOIL.

3.0 CONCRETE

3.1 CONCRETE SHALL HAVE THE UNIT WEIGHT OF 2350 kg/m^3 AND A MINIMUM COMPRESSIVE STRENGTH (f'c) OF 28 MPa AT 28 DAYS. ALL CONCRETE SHALL HAVE A MAXIMUM WATER-CEMENT RATIO OF 0.45. SEE SPECIFICATIONS FOR ADDITIONAL INFORMATION. ENTRAIN AIR TO PRODUCE TOTAL AIR CONTENT ACCORDING TO THE SPECIFICATIONS FOR CONCRETE EXPOSED TO FREEZING TEMPERATURES (EXTERIOR FOOTINGS AND STEM WALLS, SLAB TURNDOWNS, EXTERIOR SLABS AND SLABS-ON-GRADE, EXTERIOR RETAINING WALLS.)

3.2 PRIOR TO CONCRETE PLACEMENT, ALL CONTRACTOR MUST SUBMIT CONCRETE MIX DESIGNS FOR EACH TYPE OF CONCRETE TO BE USED, PREPARED IN ACCORDANCE WITH THE SPECIFICATIONS TO THE CONTRACTING OFFICER FOR REVIEW.

3.3 NO CALCIUM CHLORIDE SHALL BE USED IN ANY CONCRETE.

3.4 MIXING, TRANSPORTING AND PLACING OF CONCRETE SHALL CONFORM TO ACI 301M-05.

3.5 ALL CONCRETE WORK SHALL CONFORM TO THE REQUIREMENTS OF THE AMERICAN CONCRETE INSTITUTE (ACI) 318M-05 MANUAL (metric), "BUILDING CODE REQUIREMENTS FOR REINFORCED CONCRETE", ACI-301M-05 "SPECIFICATIONS FOR STRUCTURAL CONCRETE FOR BUILDINGS" AND REQUIREMENTS OUTLINED IN THE CONTRACT SPECIFICATIONS.

3.6 CHAMFER ALL EXPOSED EXTERNAL CORNERS OF CONCRETE WITH 20mm x45 DEGREE CHAMFER UON.

3.7 CONCRETE REINFORCEMENT BARS SHALL BE METRIC SIZE BARS AND SHALL CONFORM TO ASTM A615M-07, GRADE 420 MPa, REINFORCING BARS SHALL NOT BE TACK WELDED, WELDED, HEATED OR CUT, UNLESS INDICATED ON THE CONTRACT DOCUMENTS. ALL LAP SPLICES SHALL BE CLASS "B" UON.

3.8 HORIZONTAL FOOTING AND HORIZONTAL WALL REINFORCEMENT SHALL BE CONTINUOUS AND SHALL HAVE 90 DEGREE BENDS AND EXTENSIONS, OR CORNER BARS OF EQUIVALENT SIZE LAPPED WITH A CLASS B TENSION SPLICE AT CORNERS AND INTERSECTIONS. TOP BAR CRITERIA SHALL APPLY IF 300mm OR MORE OF FRESH CONCRETE IS PLACED BELOW BAR.

3.9 SLABS-ON-GRADE SHALL HAVE CONSTRUCTION JOINTS OR CRACK CONTROL JOINTS AS SHOWN ON THE DRAWINGS. CONSTRUCTION JOINTS CAN BE USED AT CONTROL JOINT LOCATIONS AT CONTRACTORS OPTION. SEE SLAB PLANS & JOINT DETAILS FOR ADDITIONAL INFORMATION. FOR AREAS NOT SHOWN ON DWGS, THE MAXIMUM SPACING OF CONSTRUCTION/ CRACK CONTROL JOINTS SHALL BE 3600mm.

3.10 ALL CONCRETE REINFORCEMENT SHALL BE DETAILED, FABRICATED, LABELED, SUPPORTED, AND SPACED IN FORMS AND SECURED IN PLACE IN ACCORDANCE WITH THE PROCEDURES AND REQUIREMENTS OUTLINED IN ACI 318M, AND THE "MANUAL OF STANDARD PRACTICE FOR DETAILING REINFORCED CONCRETE STRUCTURES", ACI 315M, LATEST EDITION.

3.11 ALL DOWELS SHALL MATCH SIZE AND NUMBER OF MAIN REINFORCING, UNLESS NOTED OTHERWISE ON THE DRAWINGS.

3.12 ADDITIONAL BARS SHALL BE PROVIDED AROUND ALL FLOOR AND WALL OPENINGS AS SHOWN ON THE DRAWINGS.

3.13 SEE ARCHITECTURAL DRAWINGS FOR TYPE AND LOCATION OF ALL FLOOR FINISHES.

3.14 SPLICES (LAPS) OF REINFORCING BARS SHALL BE CLASS 'B' TENSION LAPS PER ACI 318M-05 UNLESS NOTED OTHERWISE. SEE SCHEDULE ON S-601.

3.15 PROVIDE ADEQUATE CONCRETE COVER IN ACCORDANCE WITH THE REQUIREMENTS AS SET FORTH BY ACI 318M-05.

3.16 REINFORCEMENT IS TO BE SECURELY HELD IN PLACE WHILE PLACING CONCRETE. IF REQUIRED, ADDITIONAL BARS, STIRRUPS, OR CHAIRS WILL BE PROVIDED BY THE CONTRACTOR TO FURNISH SUPPORT FOR ALL BARS WHERE NECESSARY DURING CONSTRUCTION.

3.17 CONTINUOUS TOP BARS TO BE SPLICED AT MID-SPAN. CONTINUOUS BOTTOM BARS TO BE SPLICED AT CENTERLINE OF SUPPORTS (OR AS SHOWN ON DETAILS).

3.18 CONCRETE SLABS TO BE CURED BY METHOD COMPATIBLE WITH SPECIFIED FLOOR FINISH. WHERE ACCEPTABLE USE A LIQUID MEMBRANE-CURING COMPOUND AT THE MANUFACTURERS RECOMMENDED COVERAGE. SAW JOINTS TO BE CUT AS SOON AS POSSIBLE WITHOUT RAVELING THE SURFACE.

3.19 LEVELING GROUT TO BE NON-SHRINK, NON-METALLIC TYPE, FACTORY PREMIXED GROUT IN ACCORDANCE WITH ASTM C 1107, HAVING A MINIMUM COMPRESSIVE STRENGTH OF NOT LESS THAN 34.5 MPa.

3.20 SLEEVES, INSERTS, MECHANICAL OPENINGS, CONDUITS, PIPES, RECESSES. DEPRESSIONS, CURBS AND OTHER EMBEDDED ITEMS TO BE PROVIDED FOR AS SHOWN ON THE ARCHITECTURAL, MECHANICAL AND ELECTRICAL DRAWINGS AND AS REQUIRED BY EQUIPMENT MANUFACTURERS. INSTALLATION OF THESE ITEMS TO BE COORDINATED AND PROVIDED FOR PRIOR TO PLACING CONCRETE.

3.21 EPOXY ADHESIVE SUCH AS EUCO-#452 AS MANUFACTURED BY EUCLID CHEMICAL CO. OR HVA ADHESIVE SYSTEM AS MANUFACTURED BY HILTI, INC. SHALL BE USED WHERE REBAR DOWELS ARE TO BE INSTALLED INTO EXISTING CONCRETE.

3.0 CONCRETE CONT

3.22 ANCHOR RODS TO BE ASTM F 1554 FY=248 MPa MINIMUM, GALVANIZED, UNLESS NOTED OTHERWISE.

3.23 UNLESS NOTED OTHERWISE, ALL CURBS SHALL BE REINFORCED WITH AT LEAST (1)-#14 CONTINUOUS AND #14 AT 450mm O.C. DOWELS TO THE SLAB-ON-GRADE.

3.24 PROVIDE ADDITIONAL (2)-#14 x 600mm REINFORCING BARS IN SLAB-ON GRADE AT ALL RE-ENTRANT CORNERS. PLACE BARS AT MID-DEPTH OF SLAB WITH A CLEARANCE OF 50mm FROM CORNER UON.

3.25 COLD-WEATHER PLACEMENT: COMPLY WITH ACI 306.1 AND AS FOLLOWS. PROTECT CONCRETE WORK FROM PHYSICAL DAMAGE OR REDUCED STRENGTH THAT COULD BE CAUSED BY FROST, FREEZING ACTIONS, OR LOW TEMPERATURES. SUBMIT A COLD WEATHER CONCRETING PLAN FOR APPROVAL.

3.26 PROVIDE BONDING COMPOUND PER ASTM C 1059-99: SPECIFICATION FOR LATEX AGENTS FOR BONDING FRESH CONCRETE (GROUT) TO HARDENED CONCRETE.

3.27 THE FORMED SURFACES FOR REINFORCED CONCRETE SHALL ACHIEVE A "CLASS A" FINISH WHEN EXPOSED OR A "CLASS B" FINISH WHEN RECEIVING PLASTER OR TILE AS PER SPECIFICATION SECTION 03 31 00 CAST-IN-PLACE STRUCTURAL CONCRETE.

4.0 CONCRETE MASONRY

4.1 MASONRY CONSTRUCTION SHALL CONFORM TO SPECIFICATION FOR MASONRY STRUCTURES (ACI 530.1) UON.

4.2 STRENGTH OF MASONRY MATERIALS SHALL BE AS FOLLOWS:

A. CONCRETE MASONRY UNITS SHALL BE NORMAL WEIGHT, GRADE N, TYPE 1, CONFORMING TO ASTM C-90 AND HAVE A MINIMUM COMPRESSIVE STRENGTH OF 13.1 MPa ON THE NET AREA.

B. MORTAR SHALL CONFORM TO ASTM C-270 TYPE S.

C. GROUT FOR MASONRY SHALL BE NORMAL WEIGHT AND HAVE A MINIMUM COMPRESSIVE STRENGTH OF 14 MPa AT 28 DAYS. GROUT SHALL CONFORM TO ASTM C476M. GROUT LIFTS SHALL NOT EXCEED 1500mm.

D. REINFORCED MASONRY SHALL HAVE A STRENGTH F'm = 10.3 MPa. (F'm IS THE COMPRESSIVE STRENGTH OF THE MASONRY AT 28 DAYS AS DETERMINED BY PRISM TESTS).

4.3 ALL VERTICAL REINFORCEMENT FOR CONCRETE MASONRY SHALL BE ASTM A615M-07, GRADE 420 MPa. ALL SPLICES SHALL BE LAPPED 48 BAR DIAMETERS MINIMUM.

4.4 CMU CELLS THAT REQUIRE VERTICAL REINFORCING BARS AS INDICATED ON THE CONTRACT DRAWINGS AND/OR SPECS SHALL HAVE REINF BARS PLACED IN CENTERS OF CMU CELLS AND CONTINUOUSLY GROUTED UON.

4.5 CONTRACTOR SHALL COORDINATE LOCATION OF ALL OPENINGS SEE ARCH, MECH, ELEC, AND PLUMBING SHEETS FOR SIZE AND LOCATION OF OPENINGS. PROVIDE SINGLE COURSE SOLID GROUTED BOND BEAMS REINFORCED WITH 2 #14 OVER ALL OPENINGS IN CMU WALLS. BEAR BOND BEAMS AT LEAST 200mm ON SOLID GROUTED, VERTICALLY REINFORCED CMU AT EACH SIDE OF THE OPENING. PASS VERTICAL JAMB REINFORCING THROUGH THE BOND BEAM AND EXTEND TO TOP OF WALL. NO OPENING IN CMU WALLS SHALL EXCEED 800mm.

4.6 HORIZONTAL JOINT REINFORCING TO BE GALVANIZED, STANDARD CLASS, LADDER TYPE, CONFORMING TO ASTM A 82, SPACED AT EVERY OTHER COURSE UNO. SIDE RODS TO BE 5mm WITH 4mm CROSS RODS. PROVIDE ONE-PIECE PREFABRICATED REINFORCING UNITS AT EVERY COURSE AT ALL WALL CORNERS AND INTERSECTIONS AND IN THE FIRST TWO COURSES ABOVE AND BELOW MASONRY OPENINGS. PROVIDE LAP AS RECOMMENDED BY THE MANUFACTURER WITH A MINIMUM OF 300mm. DISCONTINUE HORIZONTAL JOINT REINFORCING AT CONTROL JOINTS.

4.7 ALL MASONRY TO BE CONSTRUCTED USING A RUNNING BOND PATTERN. FULL BED AND HEAD JOINTS MUST BE USED. ALL CORNERS TO BE TIED BY MASONRY BOND.

4.8 DOWEL REINFORCED MASONRY WALLS TO FOUNDATION. SIZE DOWELS TO MATCH WALL REINFORCEMENT. LOCATE DOWELS IN CELLS TO CONTAIN WALL REINFORCEMENT. LAP DOWELS AND WALL REINFORCEMENT A MINIMUM OF 48 BAR DIAMETERS UNO.

4.9 DURING CONSTRUCTION, COVER AND PROTECT THE TOPS OF MASONRY WALLS AT THE END OF EACH DAY.

UNLESS OTHERWISE NOTED, LINEAR DIMENSIONS SHOWN ARE IN MILLIMETERS.

COMMONWEALTH OF PENNSYLVANIA
REGISTERED PROFESSIONAL ENGINEER
JOSEPH D. MEIER

US ARMY CORPS OF ENGINEERS AFGHANISTAN NORTH DISTRICT

U.S. ARMY ENGINEER DISTRICT, AFGHANISTAN
CORPS OF ENGINEERS
APO AE 09356

DESIGNED BY: JDM
DWN BY: RMS
CKD BY: EPS
REVIEWED BY: JH
SUBMITTED BY: BAKER

DATE: 3-22-2011
CONTRACT NO.: W912ER-09-D-0002
DRAWING CODE:
FILE NAME:
PLOT SCALE: NONE
PLOT DATE: 3/22/2011
REV. 0

SITE ADAPT DESIGN

B19 - OFFICER BARRACKS - LARGE - ARCH SPAN
ABBREVIATIONS AND GENERAL NOTES

SHEET REFERENCE NUMBER: S-001

3/22/2011 3:35 PM

A1 Size 594mm x 841mm

5.0 STRUCTURAL STEEL

5.1 STRUCTURAL STEEL WORK IS TO BE DESIGNED AND CONSTRUCTED IN ACCORDANCE WITH THE AMERICAN INSTITUTE OF STEEL CONSTRUCTION (AISC) "SPECIFICATIONS FOR STRUCTURAL STEEL BUILDINGS" (THIRTEENTH EDITION) AND THE "CODE OF STANDARD PRACTICE FOR STEEL BUILDINGS AND BRIDGES".

5.2 STRUCTURAL STEEL, UNLESS NOTED OTHERWISE, SHALL CONFORM TO THE FOLLOWING:
- A. WIDE FLANGE SHAPES AND WT'S: ASTM A992.
- B. CHANNELS, ANGLES, PLATES AND MISC. CONNECTION MATERIAL: ASTM A-36.
- C. STEEL TUBING: ASTM A500, GRADE B, WITH FY = 290 MPa FOR ROUND AND FY = 315 MPa FOR RECTANGULAR.

5.3 PRIOR TO FABRICATION, THE STEEL FABRICATOR IS TO SUBMIT SHOP DRAWINGS SHOWING ERECTION PLANS, PIECE DRAWINGS, AND CONNECTION DETAILS TO THE CONTRACTING OFFICER FOR REVIEW.

5.4 STRUCTURAL STEEL FABRICATOR IS TO PROVIDE FOR VERTICAL AND HORIZONTAL FIELD ADJUSTMENT OF ALL SUPPORT ASSEMBLIES.

5.5 CUTS, HOLES, COPING, ETC REQUIRED FOR OTHER TRADES MUST BE SHOWN ON THE SHOP DRAWINGS AND MADE IN THE SHOP. CUTS OR BURNING OF HOLES IN THE FIELD WILL NOT BE PERMITTED.

5.6 FABRICATE FRAMING COMPONENTS IN THE SHOP TO THE GREATEST EXTENT POSSIBLE. IN GENERAL, STRUCTURAL STEEL CONNECTIONS TO BE SHOP AND FIELD WELDED. ALL WELDS SHALL BE 3/16" FILLET WELDS UNLESS NOTED OTHERWISE.

5.7 WELDING TO BE IN ACCORDANCE WITH THE AMERICAN WELDING SOCIETY (AWS) "STRUCTURAL WELDING CODE-ANSI/AWS D1.1/D1.1M" (LATEST EDITION). USE E70XX ELECTRODES UNLESS OTHERWISE INDICATED ON THE DRAWINGS.

5.8 POST INSTALLED BOLTS TO BE ADHESIVE TYPE ANCHORS. BOLTS SHALL BE CARBON STEEL THREADED RODS OF THE DIAMETER INDICATED ON THE DRAWINGS WITH APPROPRIATE NUT, WASHER AND INJECTABLE ADHESIVE MATERIAL. BASIS OF DESIGN ARE HILTI HVA ADHESIVE ANCHORS WITH STANDARD EMBEDMENT, MANUFACTURED BY HILTI FASTENING SYSTEMS. ANY ANCHOR MEETING PUBLISHED LOAD VALUES OF HILTI ANCHORS MAY BE USED WITH APPROPRIATE EMBEDMENT. INSTALL ANCHORS PER MANUFACTURERS RECOMMENDATIONS.

5.9 HEADED SHEAR STUDS CONNECTORS TO CONFORM TO ASTM A 108, GRADE 1015 OR 1020, COLD-FINISHED CARBON STEEL.

5.10 PAINT AND PROTECTION:
- A. STRUCTURAL STEEL, UNLESS INDICATED OTHERWISE, TO BE SHOP CLEANED PER SSPC SP3 AND PAINTED ONE SHOP COAT OF FABRICATOR'S STANDARD RUST INHIBITING PRIMER. TOUCH UP AFTER ERECTION.
- B. DO NOT PAINT STEEL WHERE ENCASED WITH CONCRETE, OR AT FIELD WELD AREAS.
- C. EXPOSED STRUCTURAL STEEL FOR BREEZEWAY ROOFS, EQUIPMENT PLATFORMS, ETC, TO BE HOT DIPPED GALVANIZED PER ASTM A-123
- D. GALVANIZED FASTENERS AND ACCESSORIES TO BE HOT DIPPED GALVANIZED PER ASTM A153/A153M.
- E. REPAIR DAMAGE TO GALVANIZED COATINGS USING ASTM A780 ZINC RICH PAINT.
- F. PROVIDE MINIMUM 75mm CONCRETE COVER FOR ALL STEEL BELOW GRADE.

6.0 METAL DECK

6.1 METAL DECK MUST BE DESIGNED AND DETAILED IN ACCORDANCE WITH THE STEEL DECK INSTITUTE (SDI) "DESIGN MANUAL FOR COMPOSITE DECKS, FORM DECKS AND ROOF DECKS" (LATEST EDITION).

6.2 ROOF DECK: 38mm, 0.88mm THICK, TYPE B, GALVANIZED, UNO.

6.3 ROOF DECK TO BE FASTENED TO THE SUPPORTING STEEL AT THE ENDS OF UNITS AND AT ALL INTERMEDIATE SUPPORTS WITH 16mm DIAMETER PUDDLE WELDS AT 300mm OC ACROSS THE WIDTH OF THE DECK IN A 36/4 PATTERN. DECK SIDE LAPS SHALL BE FASTENED WITH #10 TEK SCREWS AT TWO (2) EQUAL SPACES BETWEEN THE SUPPORTS. ANY SPLIT OR PARTIAL PANELS TO BE FASTENED TO THE SUPPORTING STRUCTURE IN EVERY VALLEY REGARDLESS OF ADJACENT FASTENER PATTERNS.

6.4 METAL DECK SUPPLIER TO PROVIDE LIGHT GAGE METAL DECK CLOSURE PIECES AND SHALL REINFORCE OR SUPPORT DECK AT OPENINGS AS REQUIRED, IN ACCORDANCE WITH THE SDI.

7.0 COLD-FORMED METAL FRAMING

7.1 SEE ARCHITECTURAL DRAWINGS FOR EXTENT OF COLD-FORMED METAL FRAMING, INCLUDING PARTITION WALLS AND CEILINGS. ALSO REFERENCE ARCHITECTURAL DRAWINGS FOR ADDITIONAL INFORMATION INCLUDING SHEATHING TYPE, FINISHES AND OPENINGS.

7.2 ALL COLD-FORMED METAL FRAMING MEMBERS SHALL CONFORM TO ASTM A1003M, STRUCTURAL GRADE ST230 (MPa), WITH A GALVANIZED COATING OF Z275 OR BETTER IN ACCORDANCE WITH ASTM A653M.

7.3 ALL COLD-FORMED METAL FRAMING MEMBERS SHALL HAVE THE FOLLOWING MINIMUM PROPERTIES:
- A. MINIMUM METAL THICKNESS:
  TRACK = 1.37mm
  CEILING JOIST = 1.09mm
  WALL STUD/OTHER = 1.09mm
- B. MINIMUM FLANGE WIDTH:
  TRACK = 38mm
  CEILING JOIST = 35mm
  WALL STUD/OTHER = 35mm
- C. MINIMUM MEMBER DEPTH:
  CEILING JOIST = 152mm
  WALL STUD/OTHER = 92mm

7.4 CEILING JOISTS HAVE BEEN DESIGNED TO CARRY 0.47KPA, INCLUDING SELF WEIGHT OF METAL FRAMING, TWO LAYERS OF GYPSUM WALL BOARD AND NOMINAL MEP LOADING. NO LIVE LOAD HAS BEEN INCLUDED. THE SPACE ABOVE THE CEILING IS NOT INTENDED FOR STORAGE OR TO BE USED AS A WALKWAY. PROVIDE CEILING JOIST FRAMING OF SIZE INDICATED IN NOTE 7.3 AND AS FOLLOWS:
- A. JOIST SPANS LESS THAN 4600: JOISTS SHALL BE SPACED AT 400 AND HAVE DIAGONAL OR SOLID BRIDGING AT EACH END AND AT THE MIDSPAN.
- B. JOIST SPANS BETWEEN 4600 AND 6400: JOISTS SHALL BE SPACED AT 400 AND HAVE DIAGONAL OR SOLID BRIDGING AT EACH END AND AT THE QUARTER POINTS.
- C. JOIST SPANS BETWEEN 6400 AND 7800: JOISTS SHALL BE SPACED AT 200 (OR DOUBLE JOISTS AT 400) AND HAVE DIAGONAL OR SOLID BRIDGING AT EACH END AND AT THE QUARTER POINTS.
- D. JOIST SPANS EQUAL TO OR OVER 7800: JOISTS SHALL HAVE DIAGONAL OR SOLID BRIDGING AT EACH END AND AT THE QUARTER POINTS AND SHALL BE SUSPENDED FROM THE ARCH-SPAN TABS ABOVE AT 1200 EACH WAY.
- E. HEADERS WITH SPANS LESS THAN OR EQUAL TO 3000 CARRYING CEILING JOISTS WITH UP TO 5400 IN TRIBUTARY WIDTH SHALL BE FULLY CONNECTED TO EACH JOIST AND SHALL BE DOUBLE MEMBERS. HEADERS WITH A LARGER SPAN OR MORE TRIBUTARY WIDTH SHALL BE SUSPENDED FROM THE ARCH-SPAN TABS AT 1200 OC. SEE GENERAL NOTE 8.1 FOR MAXIMUM LOADS ON TABS.

7.5 WALL STUDS HAVE BEEN DESIGNED TO CARRY CEILING LOADING NOTED IN NOTE 7.3, UP TO 7800 IN TRIBUTARY WIDTH. PROVIDE WALL STUD FRAMING OF SIZE INDICATED IN NOTE 7.3 AND AS FOLLOWS:
- A. WALL HEIGHTS LESS THAN 3000: STUDS SHALL BE SPACED AT 400 AND HAVE BLOCKING AT 1200 MAXIMUM.
- B. WALL HEIGHTS BETWEEN 3000 AND 4900: STUDS SHALL BE SPACED AT 300 AND HAVE BLOCKING AT 1200 MAXIMUM.
- C. WALL HEIGHTS OVER 4900 WHICH MUST ALSO SUPPORT CEILING WEIGHT SHALL BE DESIGNED BY THE METAL FRAMING CONTRACTOR'S ENGINEER.

7.6 WALL STUDS WITHOUT CEILING LOADS MUST BE BRACED BACK TO THE ARCH-SPAN TABS ABOVE AT 1200 MAXIMUM. SEE ARCHITECTURAL DRAWINGS FOR BRACING DETAILS. DO NOT SECURE TOPS OF STUD WALLS TO THE UNDERSIDE OF THE ARCH-SPAN BUILDING PANELS. THESE STUDS HAVE BEEN DESIGNED TO CARRY ONLY THEIR OWN SELF WEIGHT DURING A SEISMIC EVENT. PROVIDE WALL STUD FRAMING OF SIZE INDICATED IN NOTE 7.3 AND AS FOLLOWS:
- A. WALL HEIGHTS LESS THAN 5000: STUDS SHALL BE SPACED AT 400 AND HAVE BLOCKING AT 1200 MAXIMUM.
- B. WALL HEIGHTS BETWEEN 5000 AND 5500: STUDS SHALL BE SPACED AT 300 AND HAVE BLOCKING AT 1200 MAXIMUM.
- C. WALL HEIGHTS BETWEEN 5500 AND 6400: STUDS SHALL BE SPACED AT 200 AND HAVE BLOCKING AT 1200 MAXIMUM.
- D. CANTILEVERED HEIGHT PAST BRACE POINT IS NOT TO EXCEED 1/4 OF THE HEIGHTS NOTED IN NOTES A, B, AND C. IE, FOR STUDS SPACED AT 400 WITH BLOCKING AT 1200 MAXIMUM, HEIGHT ABOVE THE BRACE IS NOT TO EXCEED 1250.

7.7 FOR WALLS THAT CARRY CEILING LOAD AND EXTEND PAST THE CEILING, APPLY NOTES 7.4 AND 7.5 AS REQUIRED. USE THE MORE SEVERE WALL CONSTRUCTION FOR THE ENTIRE WALL CONSTRUCTION.

7.8 FOR PROVIDE DOUBLE MEMBER JOISTS OR WALL STUDS AT EACH SIDE OF OPENINGS.

7.9 ALL CONNECTIONS SHALL BE MADE WITH CORROSION RESISTANT (ASTM A153M), SELF-DRILLING, SELF-TAPPING STEEL DRILL SCREWS IN ACCORDANCE WITH ASTM C1513.

7.10 FABRICATE COLD FORMED METAL FRAMING AND ACCESSORIES PLUMB, SQUARE AND TRUE TO LINE, WITH CONNECTIONS SECURELY FASTENED ACCORDING TO AISI STANDARD FOR COLD FORMED STEEL FRAMING.

7.11 FRAMING COMPONENTS ARE TO BE CUT SQUARELY FOR ATTACHMENT TO PERPENDICULAR MEMBERS OR AS REQUIRED FOR AN ANGULAR FIT AGAINST ABUTTING MEMBERS.

7.12 CUT FRAMING MEMBERS BY SAWING OR SHEATHING, DO NOT TORCH CUT.

7.13 INSTALL FRAMING MEMBERS IN ONE-PIECE LENGTHS.

7.14 INSTALL TEMPORARY BRACING AND SUPPORTS AS REQUIRED TO SECURE FRAMING DURING CONSTRUCTION. MAINTAIN BRACING AND SUPPORTS IN PLACE UNTIL THE STRUCTURE HAS BEEN COMPLETED WITH ALL CONNECTIONS AND PERMANENT BRACING SECURED.

8.0 ARCH SPAN

8.1 USE UBM OR ABM MACHINES OR EQUIVALENT THAT WILL PRODUCE THE ARCH SPAN PANELS OF PROFILE AND THICKNESS NOTED ON THE DRAWINGS.

8.2 ARCH-SPAN BASIS OF DESIGN ARE THE 120 PROFILE PANELS PRODUCED BY MIC INDUSTRIES MACHINES WITH A STEEL THICKNESS OF 1.06mm (19GA). SUBSTITUTE PANELS MUST MEET THE NOMINAL STRENGTH CAPACITIES LISTED WITH THE PANEL PROFILE SHOWN IN DETAIL 2/S-202. SUBSTITUTE PANEL STRENGTH CAPACITIES SHALL ACCOUNT FOR THE REDUCTION TO NOMINAL NEGATIVE MOMENT AND AXIAL LOAD CAPACITIES DUE TO THE CURVING PROCESS. CONTRACTORS PROVIDING SUBSTITUTE PANELS MUST ALSO REVISE DETAILS/DIMENSIONS WORKED SPECIFICALLY FOR THE PANEL PROFILES USED AS THE BASIS OF DESIGN. THIS INCLUDES, BUT MAY NOT BE LIMITED TO, FOUNDATIONS, ENDWALL OPENINGS, SIDEWALL OPENINGS, OPENING FRAMES AND OUT-BUILDING ROOF PANELS.

8.3 ARCH SPAN PANELS WILL BE ROLLED ON-SITE USING GALVANIZED STEEL COILS CONFORMING TO ASTM A653M-06A, STRUCTURAL QUALITY (SS), GRADE 340, CLASS Z275 FOR GALVANIZED COATING.

8.4 ENDWALL PANELS SHALL BE THE SAME PROFILE AND THICKNESS AS THE ARCH SPAN PANELS USED FOR THE ROOF.

8.6 CONTRACTOR IS TO ENGAGE AN EXPERIENCED INSTALLER TO ERECT THE ARCH SPAN BUILDING. CONSTRUCTION CREWS SHALL BE TRAINED IN THE USE OF THE PANEL ROLLING MACHINES AND IN THE ERECTION OF THE PANELS.

8.7 EXERCISE CARE IN DELIVERING, UNLOADING, STORING AND ERECTING STEEL COILS AND BUILDING PANELS TO PREVENT BENDING, WARPING, TWISTING AND SURFACE DAMAGE.

8.8 ERECT PANELS TRUE TO LINE, LEVEL AND PLUMB. ROOF LINE SHALL BE STRAIGHT AND LEVEL, RADIUS SHALL BE CONSISTENT THROUGHOUT AND ENDWALLS SHALL BE STRAIGHT AND PLUMB.

8.9 WINDOW AND DOOR OPENINGS SHALL BE FRAMED PER DETAILS ON THE DRAWINGS.

8.10 INCIDENTAL OPENINGS (COORDINATE WITH ARCHITECTURAL AND MEP DRAWINGS) IN THE PANELS SHALL BE NO MORE THAN 200mm IN DIAMETER AND SHALL BE PLACED THROUGH A "FLAT" PORTION OF THE PANEL. OPENINGS SHALL NOT BE CUT THROUGH ANY VERTICAL OR DIAGONAL RIB.

8.11 HANGER TABS AS DETAILED ON THE DRAWINGS SHALL BE INSTALLED PER LAYOUT ON THE TYPICAL BUILDING SECTION. ALL SUSPENDED LOADS SHALL BE CONNECTED TO HANGER TABS. HANGER TABS AT LESS THAN 30 DEGREES FROM VERTICAL CAN CARRY NO MORE THAN 100 KG EACH. HANGER TABS AT MORE THAN 30 DEGREES FROM VERTICAL CAN CARRY NO MORE THAN 25 KG EACH.

9.0 STRUCTURAL DESIGN CRITERIA

9.1 ALL DESIGNS SHALL CONFORM TO THE PROVISIONS OF THE IBC 2009 AND ASCE 7-05. OCCUPANCY CATEGORY II.

9.2 DESIGN LOADS

9.2.1 DEAD LOADS (PER IBC 2009 & UFC 3-301-01)		
MECH/ELEC/PLUMBING		0.10 kPa
SUSPENDED CEILING		0.24 kPa
INSULATION		0.07 kPa
ARCH SPAN STEEL: 120 PROFILE x 1.06mm		0.17 kPa
TOTAL DEAD LOAD		0.58 kPa
MINIMUM (FOR UPLIFT)		0.24 kPa
9.2.2 LIVE LOADS (PER IBC 2009 & UFC 3-301-01)		
ROOF		0.57 kPa
SLAB ON GRADE:	TYPICAL	4.80 kPa
	STORAGE/LATRINE	7.18 kPa
9.2.3 SNOW LOADS (PER IBC 2009 & UFC 3-301-01)		
GROUND SNOW LOAD (Pg)		1.2 kPa
SNOW IMPORTANCE FACTOR (I)		1.0
SNOW EXPOSURE FACTOR (Ce)		0.9
THERMAL FACTOR (Ct)		1.1
9.2.4 WIND LOADS (PER IBC 2009)		
BASIC WIND SPEED		137 km/h
WIND IMPORTANCE FACTOR		1.0
WIND EXPOSURE CATEGORY		C
DIRECTIONALITY COEFFICIENT (Kd)		0.85
TOPOGRAPHIC FACTOR (Kzt)		1.0
9.2.5 SEISMIC LOADS (PER IBC 2009 & UFC 3-310-04)		
SEISMIC IMPORTANCE FACTOR (Ie)		1.0
SEISMIC SITE CLASS		D
S_s =		2.40
S_1 =		1.20
S_{DS} =		1.6
S_{D1} =		1.2
SEISMIC DESIGN CATEGORY		E

SEISMIC RESISTING SYSTEM:
- -STRUCTURAL STEEL SYSTEMS NOT SPECIFICALLY DETAILED FOR SEISMIC RESISTANCE
- -RESPONSE MODIFICATION FACTOR (R) 2 (CONSERVATIVE)
- -RESPONSE COEFFICIENT (Cs) 0.5

SEISMIC ANALYTICAL PROCEDURE = EQUIV LATERAL FORCE

9.3 FOUNDATION DESIGN CRITERIA

9.3.1 FOUNDATION DESIGN IS BASED UPON THE FOLLOWING SOIL PARAMETERS:
ASSUMED NET ALLOWABLE SOIL BEARING PRESSURE FOR ALL SPREAD FOOTINGS: 72 kPa

9.3.2 ASSUMED LATERAL EARTH PRESSURE PARAMETERS:
- SOIL DENSITY = 1800 KG/M^3
- COEFFICIENT OF ACTIVE PRESSURE (KA) = 0.41
- COEFFICIENT OF AT-REST PRESSURE (KO) = 0.58
- COEFFICIENT OF PASSIVE EARTH PRESSURE (KP) = 2.44
- ANGLE OF INTERNAL FRICTION (PHI) = 25 DEGREES
- COEFFICIENT OF FRICTION (U) = 0.35
- MODULUS OF SUB-GRADE REACTION (KS) = 4150 G/CM^3

9.3.3 FROST DEPTH: ASSUMED TO BE 800mm

UNLESS OTHERWISE NOTED, LINEAR DIMENSIONS SHOWN ARE IN MILLIMETERS.

JOSEPH D. MEIER

US ARMY CORPS OF ENGINEERS AFGHANISTAN NORTH DISTRICT

U.S. ARMY ENGINEER DISTRICT, AFGHANISTAN CORPS OF ENGINEERS APO AE 09356

DESIGNED BY: JDM | DWN BY: RMS | CKD BY: EPS | REVIEWED BY: JH | SUBMITTED BY: BAKER

DATE: 3-22-2011 | REV. 0 | CONTRACT NO. W912ER-09-D-0002 | DRAWING CODE: | FILE NAME: | PLOT SCALE: NONE | PLOT DATE: 3/22/2011

SITE ADAPT DESIGN

B19 - OFFICER BARRACKS - LARGE - ARCH SPAN GENERAL NOTES AND DESIGN CRITERIA

SHEET REFERENCE NUMBER: S-002

3/22/2011 3:35 PM

A1 Size 594mm x 841mm

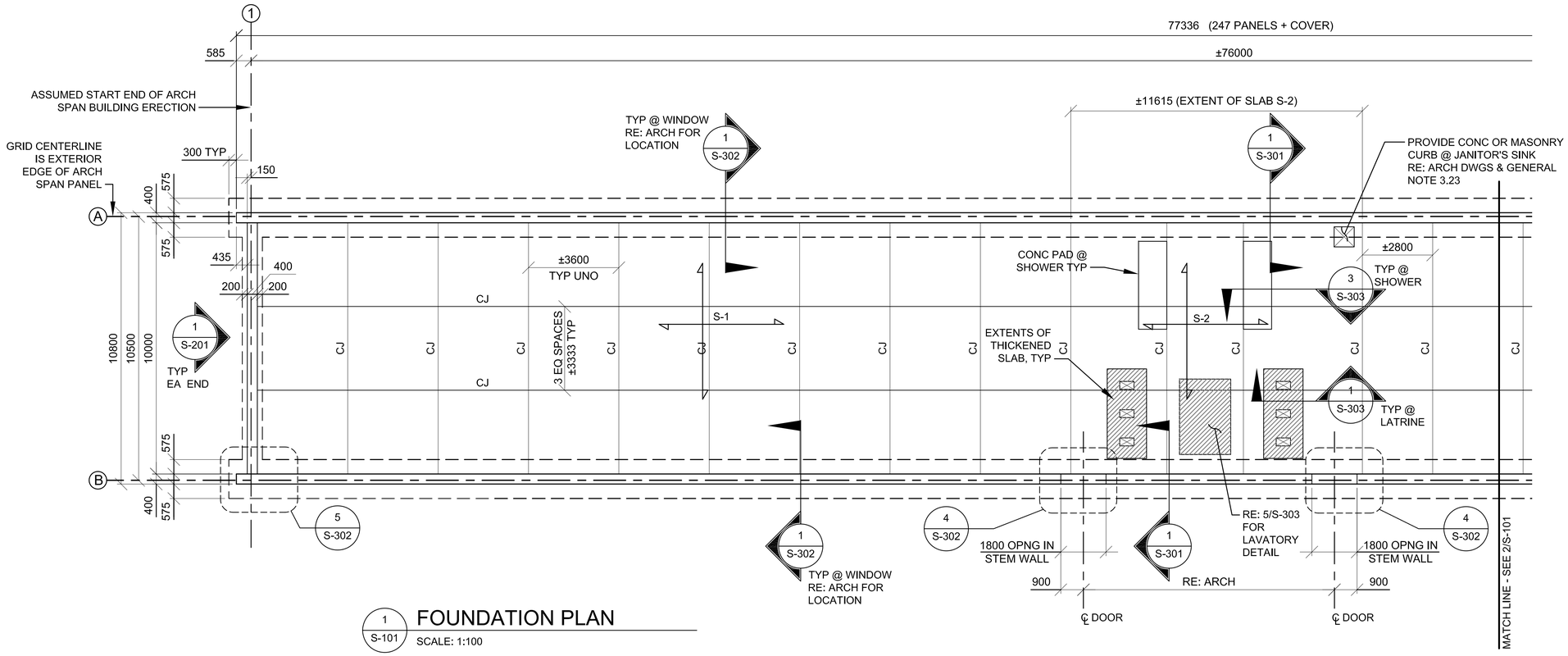

FOUNDATION PLAN

SCALE: 1:100

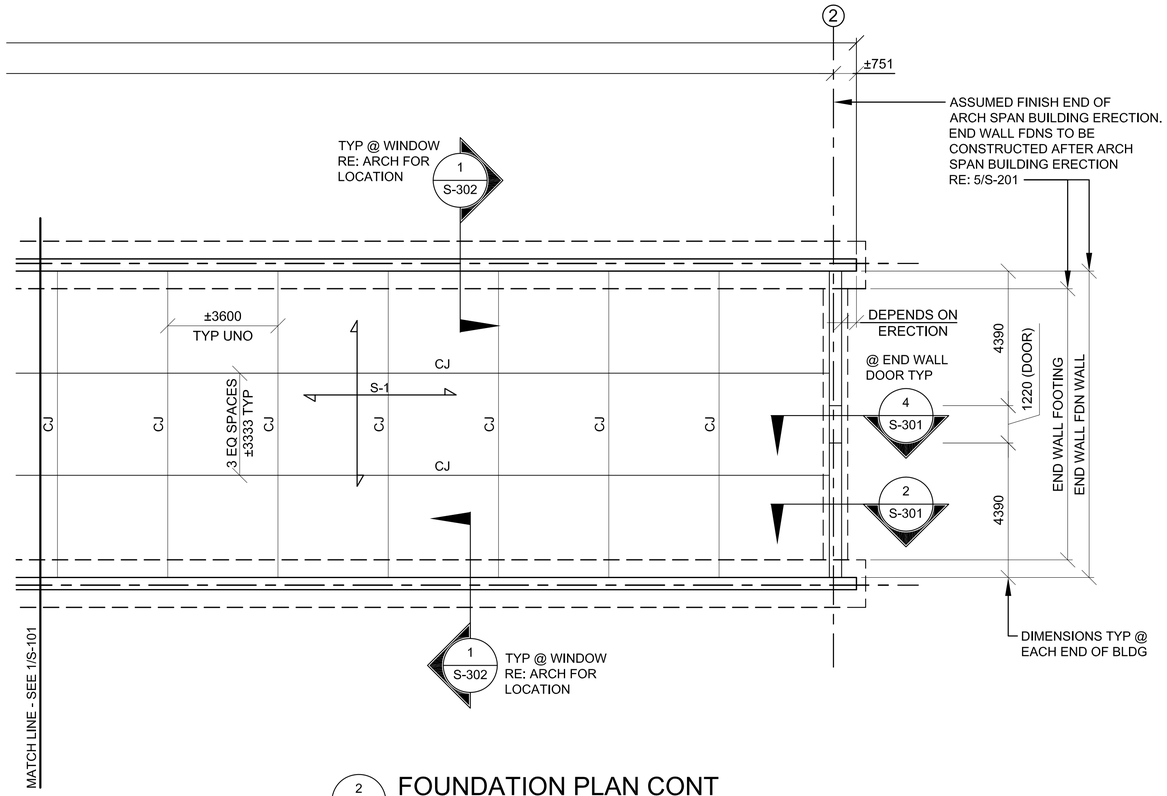

FOUNDATION PLAN CONT

SCALE: 1:100

FOUNDATION PLAN NOTES:

1. RE: DRAWINGS S-001 AND S-002 FOR GENERAL NOTES AND DESIGN CRITERIA.
2. COORDINATE DIMENSIONS, WALL OPENINGS, ELEVATIONS, SECTIONS, AND DETAILS WITH ARCHITECTURAL DRAWINGS.
3. TOP OF SLAB ELEVATION MUST BE COORDINATED WITH SITE ADAPT CIVIL DRAWINGS. TOP OF FLOOR SLAB IS AT THE DATUM ELEVATION = 0. ALL ELEVATIONS ARE REFERENCED FROM THIS ELEVATION.
4. BOTTOM OF CONCRETE FOOTING ELEVATIONS = -950 (BELOW TOP OF SLAB, TYP UNO).

5A. S-1 DENOTES A 100 CONCRETE SLAB-ON-GRADE REINFORCED WITH #10 @ 400. PLACE SLAB OVER 0.25 VAPOR RETARDER AND 100 COMPACTED GRANULAR SUB-BASE MATERIAL SUCH AS AASHTO #57 STONE.

5B. S-2 DENOTES A 150 CONCRETE SLAB-ON-GRADE REINFORCED WITH #14 @ 400. PLACE SLAB OVER 0.25 VAPOR RETARDER AND 100 COMPACTED GRANULAR SUB-BASE MATERIAL SUCH AS AASHTO #57 STONE. THIS NOTE ONLY APPLIES TO BUILDINGS WITH LATRINE FACILITIES.

6. SPACE SLAB CONTROL/CONSTRUCTION JOINTS AS SHOWN. CJ = CONTROL OR CONSTRUCTION JOINT, RE: 2/S-501.
7. PROVIDE ADDITIONAL SLAB REINFORCEMENT AT ALL RE-ENTRANT CORNERS, RE: 8/S-501.
8. RE: DRAWING S-501 FOR TYPICAL FOUNDATION AND SLAB DETAILS.
9. LOCATION OF FLOOR DRAINS ARE NOT SHOWN, COORDINATE LOCATIONS AND SLOPE OF SLAB WITH PLUMBING AND ARCHITECTURAL DRAWINGS.
10. COORDINATE MECHANICAL PENETRATIONS W/ M/E/P DRAWINGS.
11. PROVIDE REINFORCED CONCRETE WALK-OFF MATS AT ALL EXTERIOR DOORS RE: A-503 FOR DETAILS AND ARCHITECTURAL FLOOR PLAN FOR LOCATIONS.

N

0 2000 4000

SCALE: 1:100

UNLESS OTHERWISE NOTED, LINEAR DIMENSIONS SHOWN ARE IN MILLIMETERS.

COMMONWEALTH OF PENNSYLVANIA REGISTERED PROFESSIONAL JOSEPH D. MEIER PE-036626E 22-MAR-11

US ARMY CORPS OF ENGINEERS AFGHANISTAN NORTH DISTRICT

SYMBOL	DESCRIPTION	DATE	APPR.	SYMBOL	DESCRIPTION	DATE	APPR.

DESIGNED BY: JDM
DWN BY: RMS
CKD BY: EPS
REVIEWED BY: JH
SUBMITTED BY:
DATE: 3/22/2011
CONTRACT NO. W912ER-09-D-0002
DRAWING CODE:
REV: 0
FILE NAME: B19CONFIGNOR-S-101.DWG
PLOT SCALE: 1:100
PLOT DATE: 3/22/2011

BAKER

U.S. ARMY ENGINEER DISTRICT, AFGHANISTAN
CORPS OF ENGINEERS
APO AE 09356

SITE ADAPT DESIGN

B19 - OFFICER BARRACKS - LARGE - ARCH SPAN

FOUNDATION PLAN

SHEET REFERENCE NUMBER:

S-101

A1 Size 594mm x 841mm

3/22/2011 3:35 PM

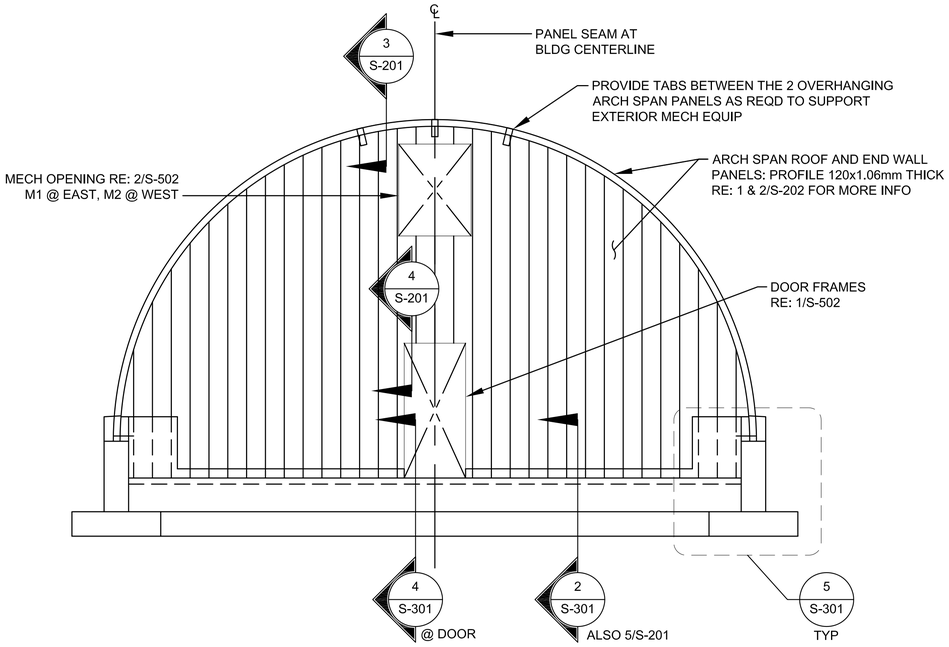

1 S-201 EAST & WEST ELEVATION

SCALE: 1:50

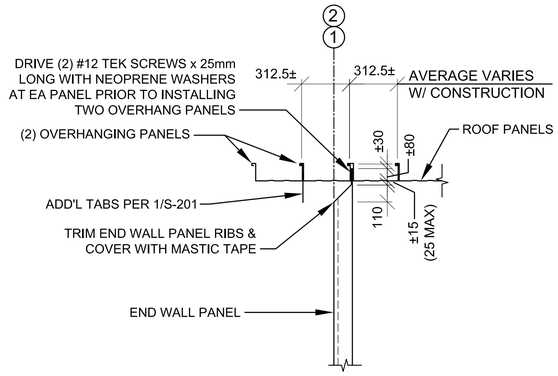

3 S-201 SECTION

SCALE: 1:20

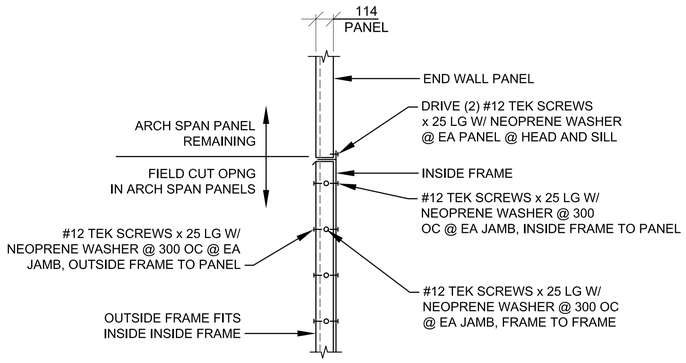

4 S-201 SECTION

SCALE: 1:20

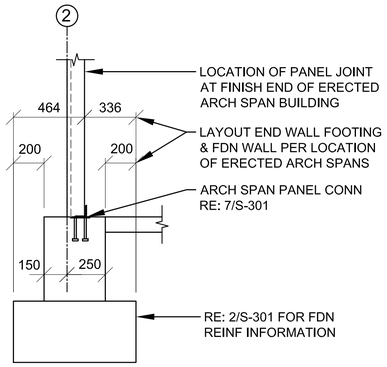

5 S-201 SECTION

SCALE: 1:20

2 S-201 NOT USED

SCALE: NTS

0 500 1000 2000

SCALE: 1:50

0 200 400 800

SCALE: 1:20

UNLESS OTHERWISE NOTED,
LINEAR DIMENSIONS
SHOWN ARE IN MILLIMETERS.

COMMONWEALTH OF PENNSYLVANIA
REGISTERED PROFESSIONAL
JOSEPH D. MEIER
PE-036052E

US ARMY CORPS
OF ENGINEERS
AFGHANISTAN NORTH
DISTRICT

SYMBOL	DESCRIPTION	DATE	APPR.	SYMBOL	DESCRIPTION	DATE	APPR.

U.S. ARMY ENGINEER DISTRICT, AFGHANISTAN
CORPS OF ENGINEERS
APO AE 09356

DESIGNED BY: JDM
DWN BY: RMS
REVIEWED BY: JH
SUBMITTED BY:
CKD BY: EPS
DATE: 3/22/2011
CONTRACT NO. W912ER-09-D-0002
DRAWING CODE:
FILE NAME: ARCOREPMOD-B19-S-201.DWG
PLOT SCALE: 1:50
PLOT DATE: 3/22/2011
REV: 0

BAKER

SITE ADAPT DESIGN

B19 - OFFICER BARRACKS - LARGE - ARCH SPAN

BUILDING ELEVATIONS AND DETAILS

SHEET
REFERENCE
NUMBER:

S-201

A1 Size 594mm x 841mm

3/22/2011 3:35 PM

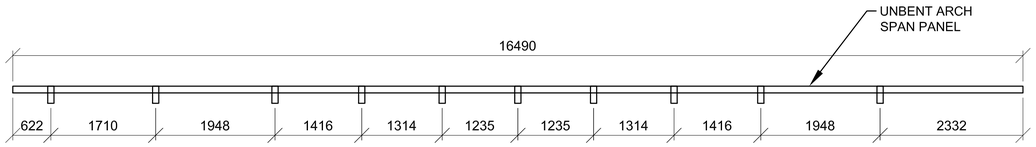

TAB LAYOUT ON PRE-BENT PANEL

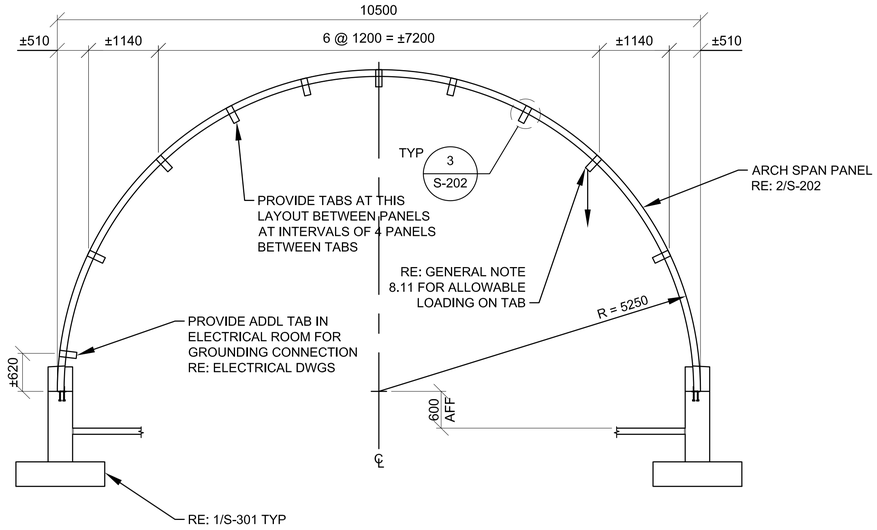

1 S-202 BUILDING SECTION

SCALE: 1:50

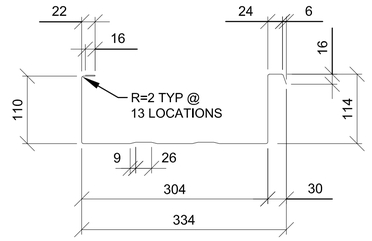

NOMINAL STRENGTH VALUES PER PANEL
(WITHOUT FACTOR OF SAFETY)

SHEAR : Vn = 1093.16 kg
AXIAL COMPRESSION : Pn = 5542.9 kg*
POSTITIVE MOMENT : +Mn = 494.6 kg-m
NEGATIVE MOMENT : -Mn = 264.75 kg-m*

* THE CURVING PROCESS REDUCES THE NOMINAL STRENGTH OF ARCH-SPAN PANELS IN NEGATIVE FLEXURE AND COMPRESSION. THESE VALUES ARE BASED ON TESTING OF PANELS.

NOTE:
ALL DIMENSIONS ARE APPROXIMATE (±3mm)

2 S-202 120 PROFILE - PROVIDE 1.06mm (19GA) THICKNESS

SCALE: NTS

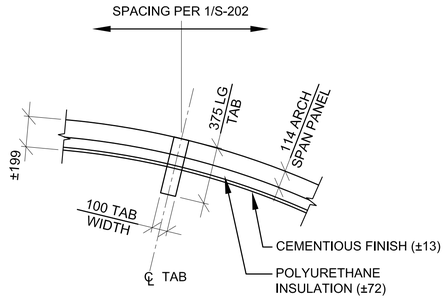

3 S-202 STEEL TAB DETAIL

SCALE: 1:20

0 500 1000 2000
SCALE: 1:50

0 200 400 800
SCALE: 1:20

UNLESS OTHERWISE NOTED,
LINEAR DIMENSIONS
SHOWN ARE IN MILLIMETERS.

COMMONWEALTH OF PENNSYLVANIA
REGISTERED PROFESSIONAL
JOSEPH D. MEIER
PE-039025E

US ARMY CORPS
OF ENGINEERS
AFGHANISTAN NORTH
DISTRICT

SYMBOL	DESCRIPTION	DATE	APPR.

SYMBOL	DESCRIPTION	DATE	APPR.

DESIGNED BY: JDM
DWN BY: RMS
CKD BY: EPS
REVIEWED BY: JH
SUBMITTED BY:
DATE: 4-21-2011
REV: 0
CONTRACT NO. W912ER-09-D-0002
DRAWING CODE:
FILE NAME: B19-OFFICER-BARRACKS-S-202.DWG
PLOT SCALE: VARIES
PLOT DATE: 4-21-2011

BAKER

U.S. ARMY ENGINEER DISTRICT, AFGHANISTAN
CORPS OF ENGINEERS
APO AE 09356

SITE ADAPT DESIGN

B19 - OFFICER BARRACKS - LARGE - ARCH SPAN

BUILDING SECTION AND DETAILS

SHEET
REFERENCE
NUMBER:

S-202

4/21/2011 10:07 AM

A1 Size 594mm x 841mm

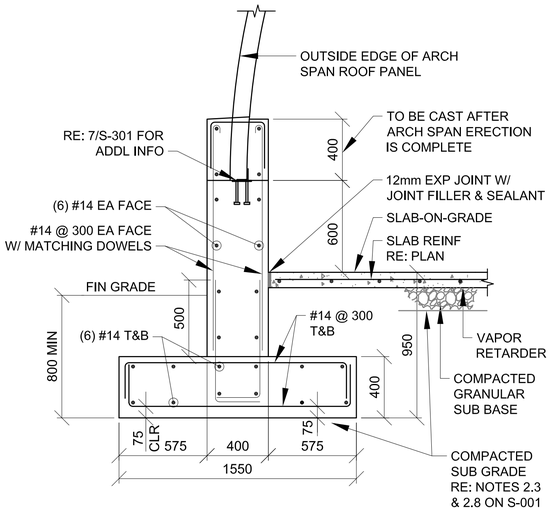

1 S-301 FOUNDATION WALL SECTION

SCALE: 1:20

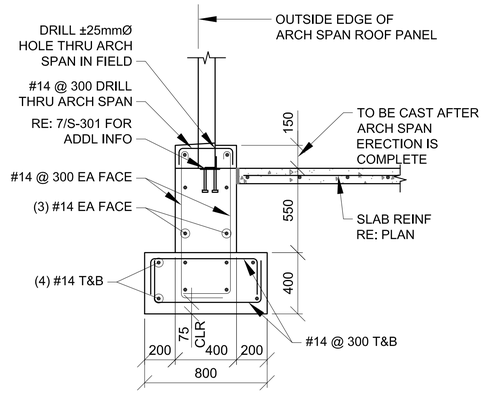

2 S-301 END WALL FOUNDATION SECTION

SCALE: 1:20

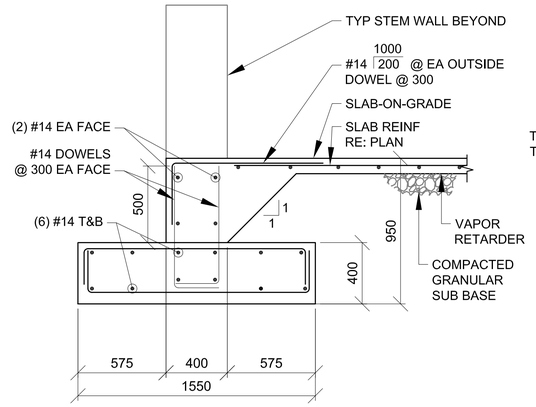

3 S-301 FDN WALL SECTION TYP @ DOOR

SCALE: 1:20

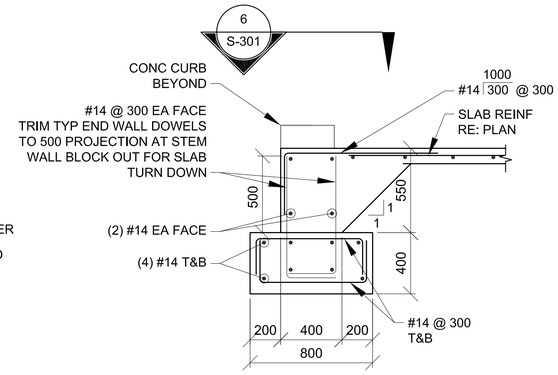

4 S-301 END WALL FDN SECTION TYP @ DOOR

SCALE: 1:20

NOTE:
PROVIDE 1220mm OPENING IN STEM WALL PER PLAN (200mm WIDER THAN DOOR, 100mm EA SIDE)

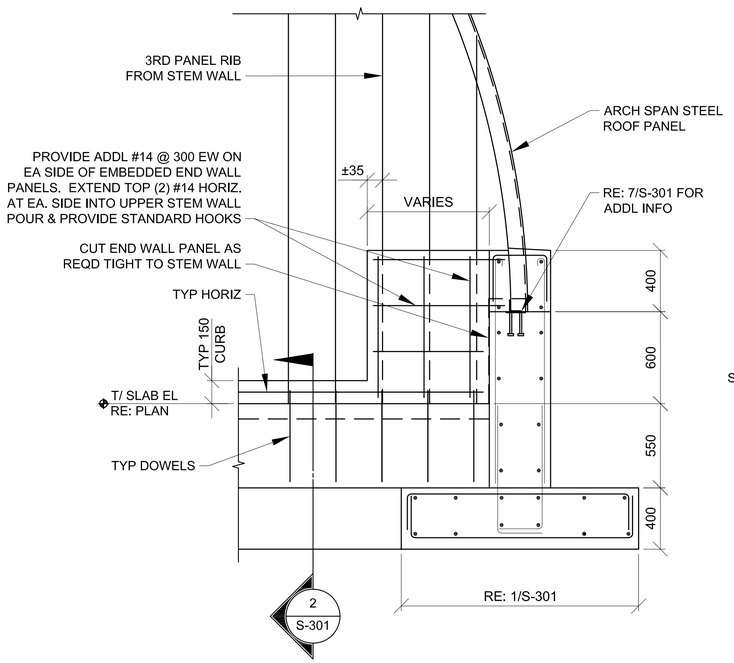

5 S-301 FOUNDATION END WALL SECTION

SCALE: 1:20

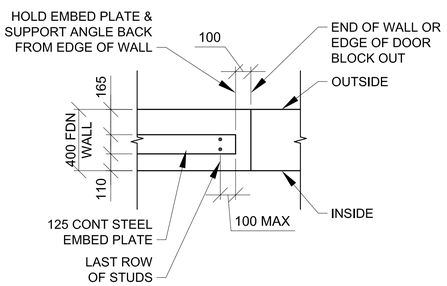

6 S-301 PLAN VIEW TYP AT END OF FDN WALL OR AT DOOR BLOCKOUT

SCALE: 1:20

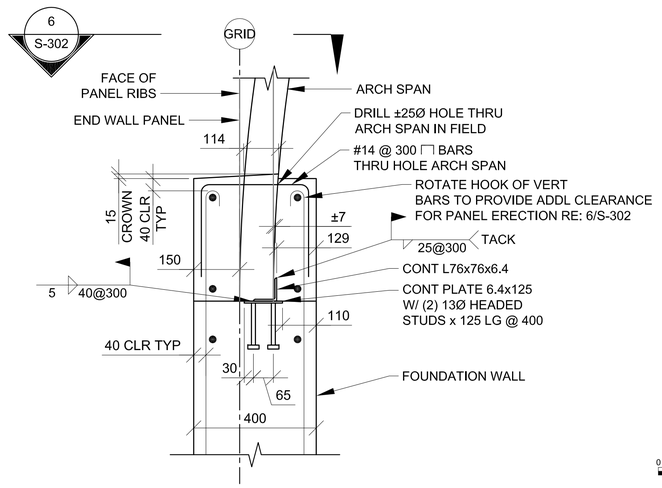

7 S-301 TYP ARCH SPAN CONN TO FDN WALL

SCALE: 1:10

0 200 400 800
SCALE: 1:20

0 100 200 400
SCALE: 1:10

UNLESS OTHERWISE NOTED, LINEAR DIMENSIONS SHOWN ARE IN MILLIMETERS.

US ARMY CORPS OF ENGINEERS AFGHANISTAN NORTH DISTRICT

SYMBOL	DESCRIPTION	DATE	APPR.	SYMBOL	DESCRIPTION	DATE	APPR.

DESIGNED BY: JDM
DWN BY: RMS
CKD BY: EPS
REVIEWED BY: JH
SUBMITTED BY:
DATE: 3/22/2011
REV: 0
CONTRACT NO. W912ER-09-D-0002
DRAWING CODE:
FILE NAME: (AECOM)FNA-B19-S-301.DWG
PLOT SCALE: VARIES
PLOT DATE: 3/22/2011

BAKER

U.S. ARMY ENGINEER DISTRICT, AFGHANISTAN
CORPS OF ENGINEERS
APO AE 09356

SITE ADAPT DESIGN
B19 - OFFICER BARRACKS - LARGE - ARCH SPAN
FOUNDATION SECTIONS

SHEET REFERENCE NUMBER:
S-301

A1 Size 594mm x 841mm

3/22/2011 3:35 PM

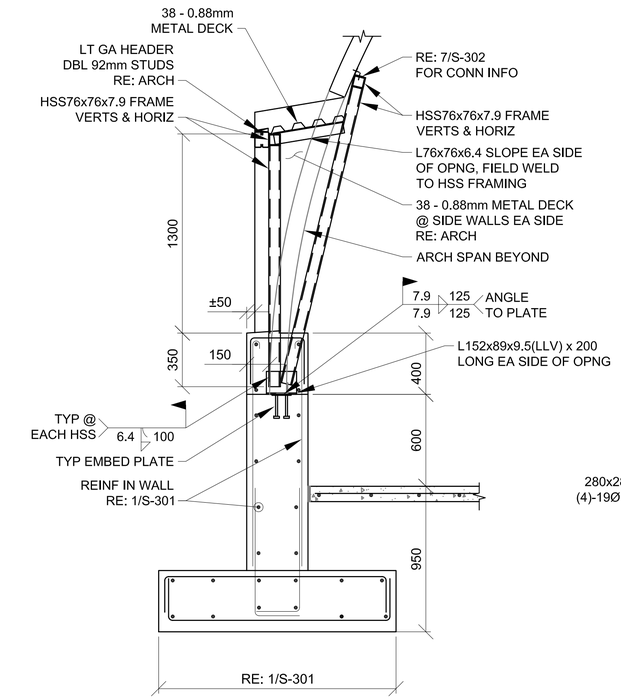

1 S-302 WINDOW DORMER SECTION

SCALE: 1:20

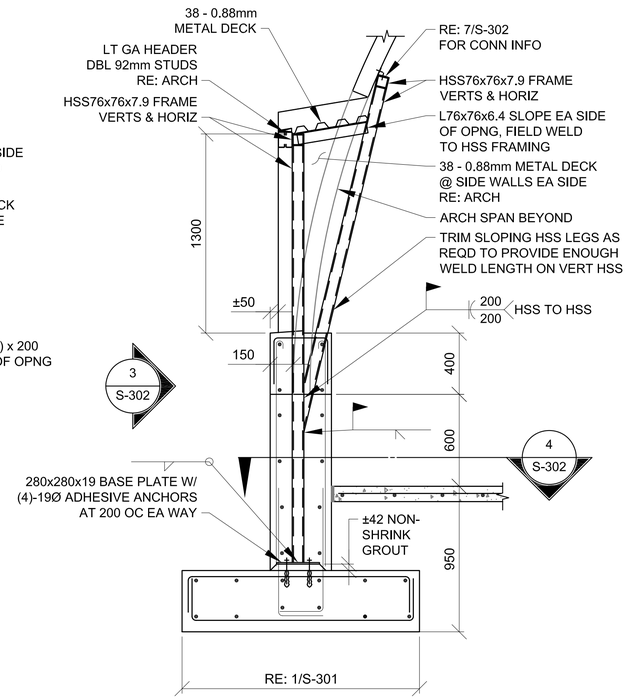

2 S-302 DOOR DORMER SECTION

SCALE: 1:20

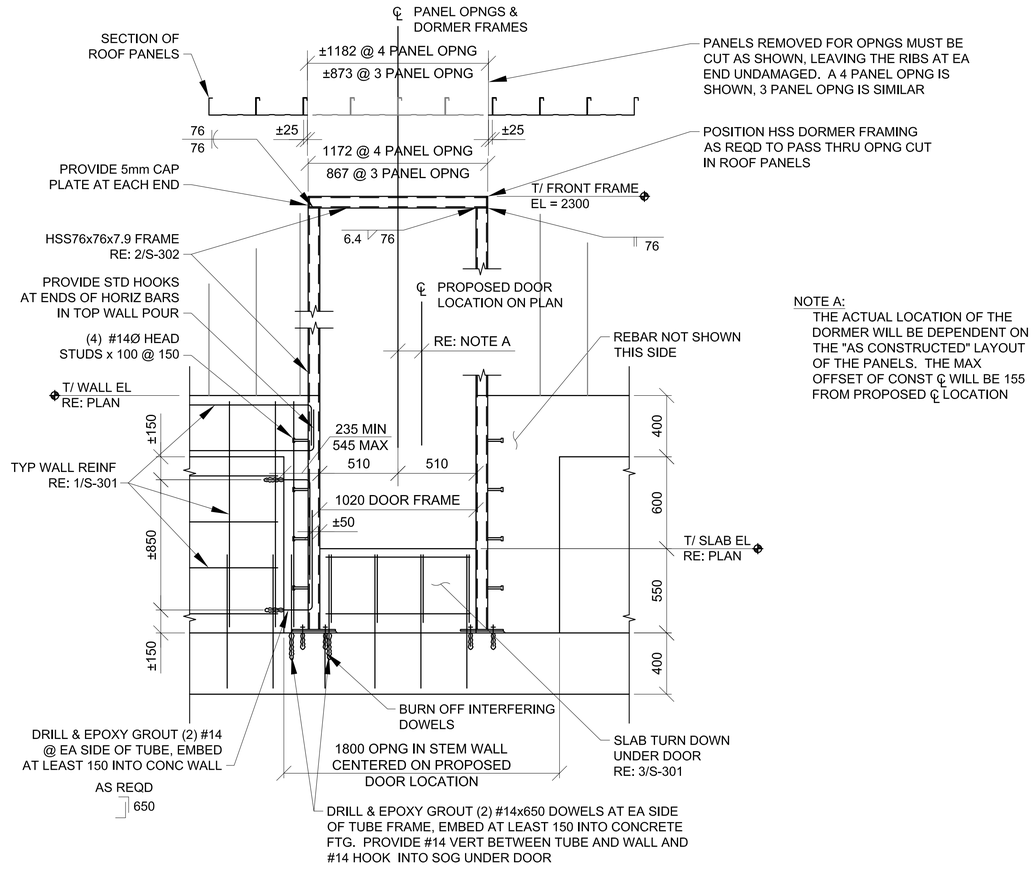

NOTE A:
THE ACTUAL LOCATION OF THE DORMER WILL BE DEPENDENT ON THE "AS CONSTRUCTED" LAYOUT OF THE PANELS. THE MAX OFFSET OF CONST ℄ WILL BE 155 FROM PROPOSED ℄ LOCATION

3 S-302 DOOR DORMER WALL SECTION

SCALE: 1:20

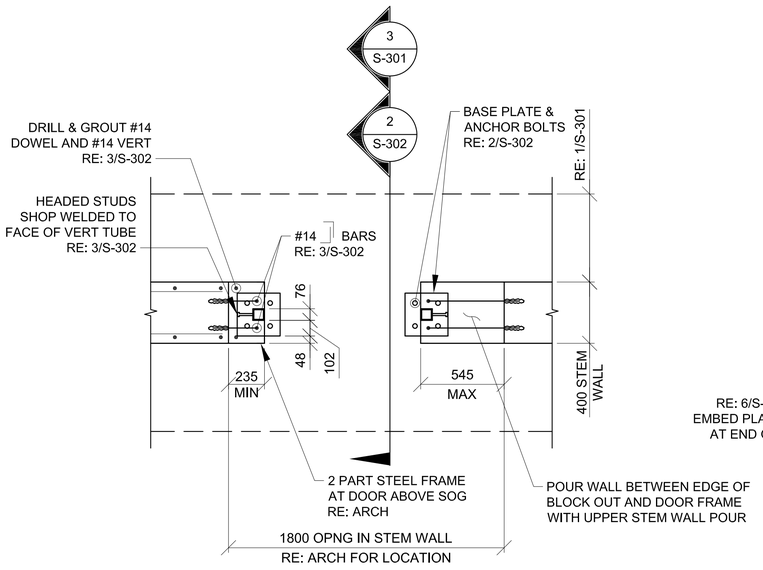

4 S-302 PLAN VIEW TYP @ DOOR DORMER

SCALE: 1:20

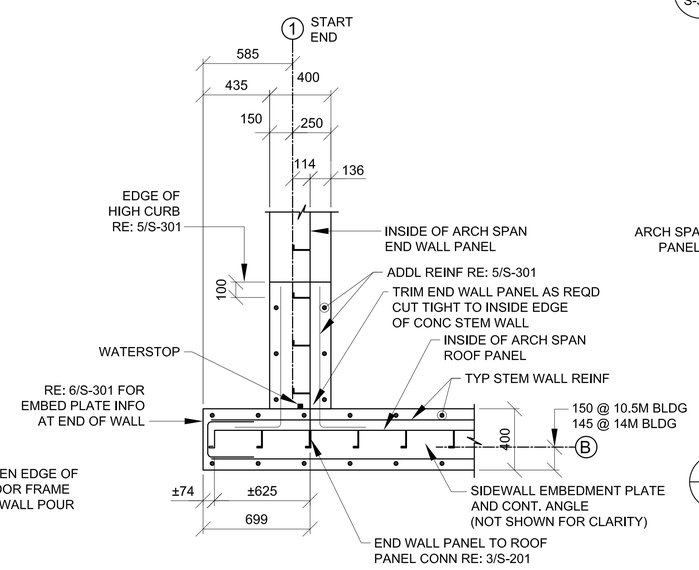

5 S-302 PLAN DETAIL @ BUILDING CORNER

SCALE: 1:20

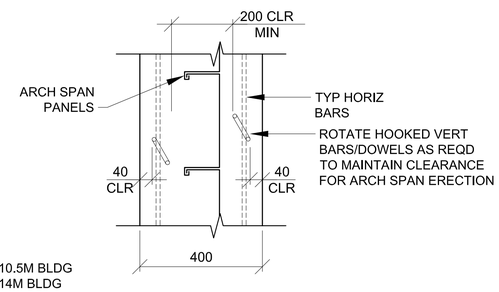

6 S-302 TYP FDN WALL PLAN DETAIL

SCALE: 1:10

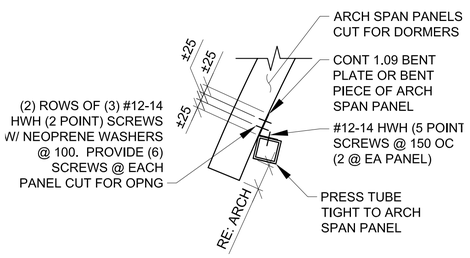

7 S-302 PANEL TO TUBE CONN DETAIL

SCALE: 1:10

0 200 400 800
SCALE: 1:20

0 100 200 400
SCALE: 1:10

UNLESS OTHERWISE NOTED, LINEAR DIMENSIONS SHOWN ARE IN MILLIMETERS.

COMMONWEALTH OF PENNSYLVANIA
REGISTERED PROFESSIONAL
JOSEPH D. MEIER
PE-059026E
22-MAR-11

US ARMY CORPS OF ENGINEERS
AFGHANISTAN NORTH DISTRICT

SYMBOL	DESCRIPTION	DATE	APPR.	SYMBOL	DESCRIPTION	DATE	APPR.

DESIGNED BY: JDM
DWN BY: RMS
CKD BY: EPS
REVIEWED BY: JH
SUBMITTED BY: BAKER
DATE: 3/22/2011
CONTRACT NO. W912ER-09-D-0002
DRAWING CODE:
FILE NAME: 09W912ER-S-302.DWG
PLOT SCALE: 1:20
PLOT DATE: 3/22/2011
REV: 0

U.S. ARMY ENGINEER DISTRICT, AFGHANISTAN
CORPS OF ENGINEERS
APO AE 09356

SITE ADAPT DESIGN
B19 - OFFICER BARRACKS - LARGE - ARCH SPAN
SECTIONS

SHEET REFERENCE NUMBER:
S-302

A1 Size 594mm x 841mm

3/22/2011 3:35 PM

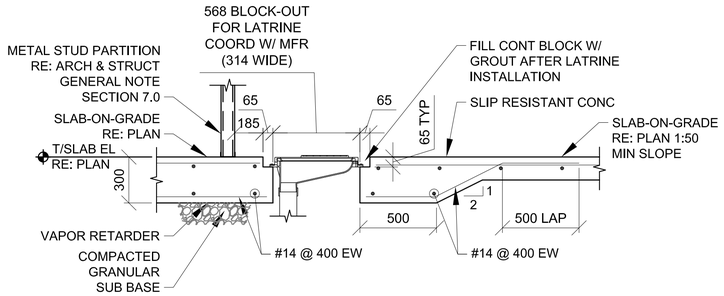

1 S-303 LATRINE SECTION

SCALE: 1:20

NOT USED

2 S-303 ABLUTION SECTION

SCALE: 1:20

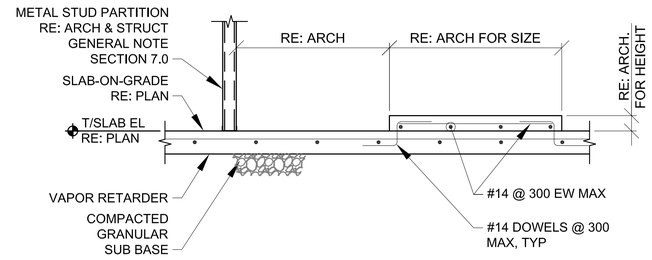

3 S-303 SHOWER SECTION

SCALE: 1:20

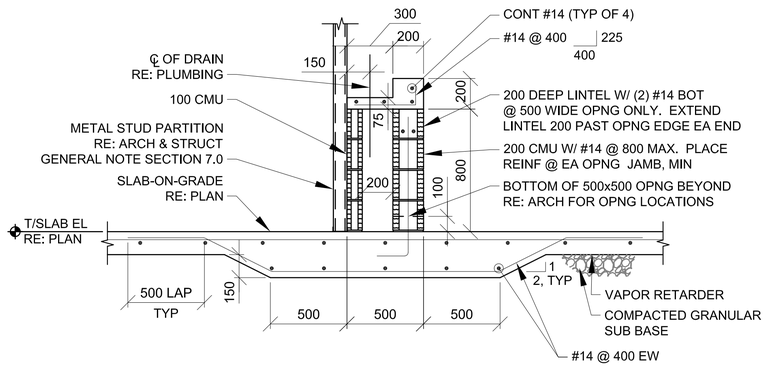

4 S-303 NOT USED

SCALE: NTS

5 S-303 LAVATORY SINK SECTION

SCALE: 1:20

NOT USED

6 S-303 LAUNDRY SINK SECTION

SCALE: 1:20

0 200 400 800

SCALE: 1:20

UNLESS OTHERWISE NOTED,
LINEAR DIMENSIONS
SHOWN ARE IN MILLIMETERS.

COMMONWEALTH OF PENNSYLVANIA
REGISTERED
PROFESSIONAL
JOSEPH D. MEIER
PE-036635E

US ARMY CORPS
OF ENGINEERS
AFGHANISTAN NORTH
DISTRICT

SYMBOL	DESCRIPTION	DATE	APPR.	SYMBOL	DESCRIPTION	DATE	APPR.

DESIGNED BY: JDM
DWN BY: RMS
CKD BY: EPS
REVIEWED BY: JH
SUBMITTED BY:
DATE: 3/22/2011
REV: 0
CONTRACT NO. W912ER-09-D-0002
DRAWING CODE:
FILE NAME: AFG07PNO-B19-S-S303.DWG
PLOT SCALE: 1:20
PLOT DATE: 3/22/2011

BAKER

U.S. ARMY ENGINEER DISTRICT, AFGHANISTAN
CORPS OF ENGINEERS
APO AE 09356

SITE ADAPT DESIGN

B19 - OFFICER BARRACKS - LARGE - ARCH SPAN

LATRINE SECTIONS

SHEET
REFERENCE
NUMBER:

S-303

3/22/2011 3:35 PM

A1 Size 594mm x 841mm

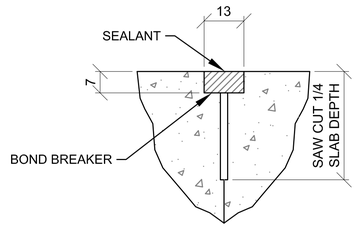

CONTROL JOINT DETAIL

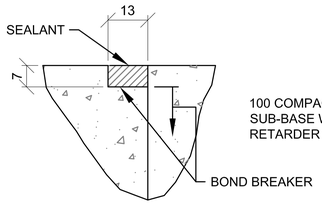

CONSTRUCTION JOINT DETAIL

TYP CONCRETE SLAB JOINT FINISH DETAILS

1 / S-501 SCALE: NTS

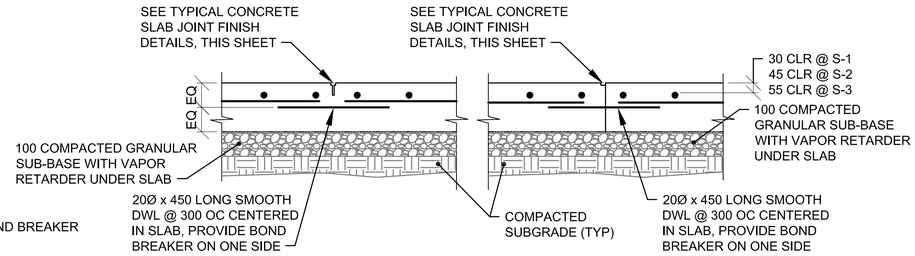

CONTROL JOINT DETAIL

CONSTRUCTION JOINT DETAIL

TYP SLAB ON GRADE JOINT DETAILS

2 / S-501 SCALE: NTS

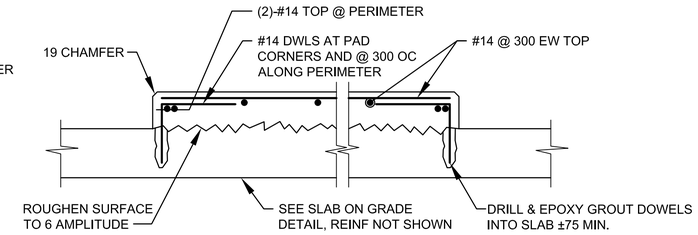

INTERIOR EQUIPMENT PAD DETAIL

3 / S-501 SCALE: NTS

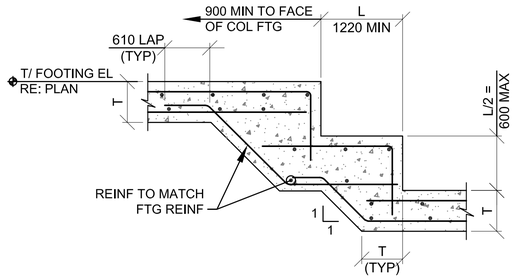

STEPPED FOOTING (2 LAYERS REINF)

4 / S-501 SCALE: NTS

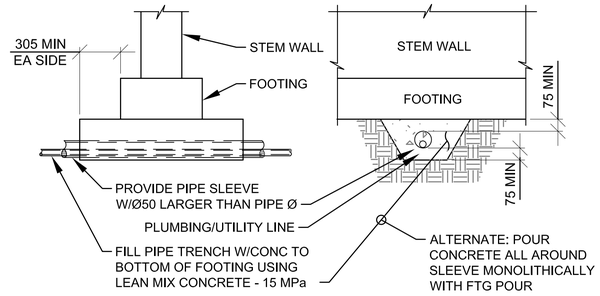

UTILITY PIPE UNDER WALL FTG

5 / S-501 SCALE: NTS

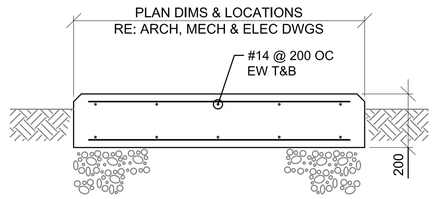

NOTES:
1. COORDINATE SIZE & LOCATION WITH EQUIPMENT REQUIREMENTS.
2. CHAMFER ALL EDGES 25 TYPICAL.

EQUIPMENT PAD (EXTERIOR)

6 / S-501 SCALE: NTS

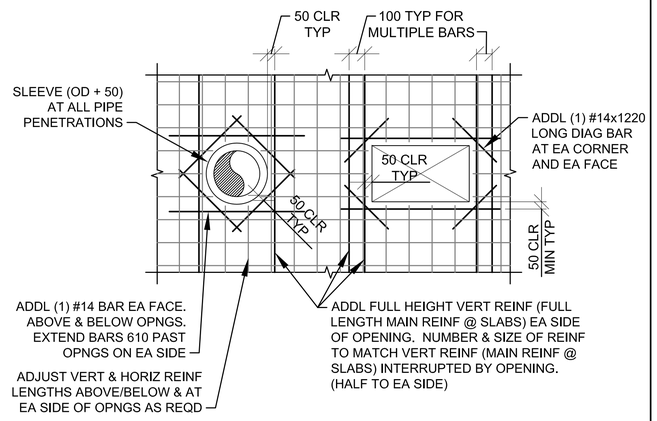

OPENING THRU CONC WALL

7 / S-501 SCALE: NTS

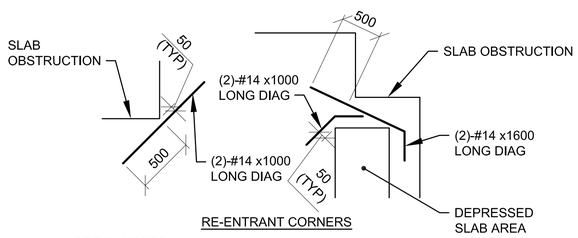

RE-ENTRANT CORNERS

DETAIL NOTES:
1. WHERE MORE THAN ONE ADDITIONAL BAR IS REQUIRED PARALLEL TO THE EXISTING SLAB/WALL REINFORCING THE ADDITIONAL REINFORCING BARS SHALL BE SPACED AT 100 ON CENTER.
2. ADDITIONAL REINFORCING PARALLEL TO THE SLAB/WALL REINFORCING SHALL BE #16 BARS THAT PROVIDE A STEEL AREA ON EACH SIDE OF THE OPENING EQUAL TO 1/2 THE AREA OF THE REINFORCING CUT BY THE OPENING.
3. FOR OPENINGS WITH SIDES OR DIAMETERS LESS THAN 300 SPREAD THE SLAB/WALL REINFORCING TO CLEAR THE OPENING.

CONCRETE REINF DETAILS

8 / S-501 SCALE: NTS

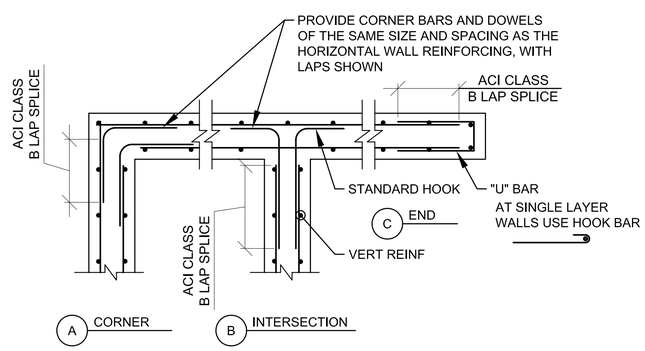

CONCRETE WALL CORNER REINFORCING

9 / S-501 SCALE: NTS

NOTE:
WALLS WITH SINGLE LAYER OF REINFORCING SIMILAR

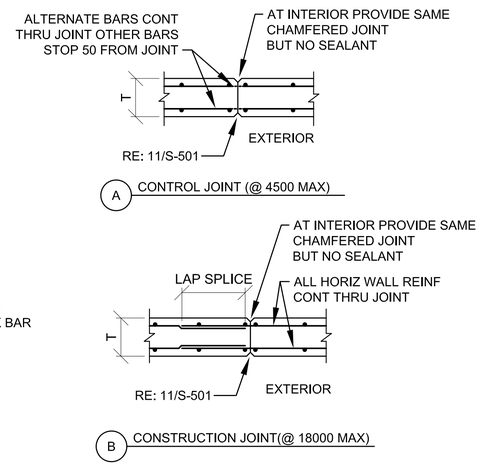

CONCRETE WALL JOINTS

10 / S-501 SCALE: NTS

NOTE:
WALLS WITH SINGLE LAYER OF REINFORCING SIMILAR

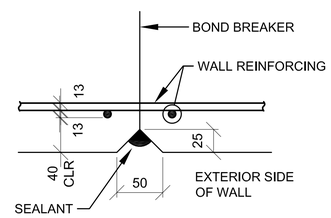

TYP CONCRETE WALL JOINT FINISH DETAIL

11 / S-501 SCALE: NTS

UNLESS OTHERWISE NOTED, LINEAR DIMENSIONS SHOWN ARE IN MILLIMETERS.

COMMONWEALTH OF PENNSYLVANIA REGISTERED PROFESSIONAL JOSEPH D. MEIER PE-059056E 22 Mar 11

US ARMY CORPS OF ENGINEERS AFGHANISTAN NORTH DISTRICT

SYMBOL	DESCRIPTION	DATE	APPR.	SYMBOL	DESCRIPTION	DATE	APPR.

U.S. ARMY ENGINEER DISTRICT, AFGHANISTAN
CORPS OF ENGINEERS
APO AE 09356

DESIGNED BY: JDM | DWN BY: RMS | CKD BY: EPS | REVIEWED BY: JH | SUBMITTED BY: BAKER

DATE: 3/22/2011 | REV: 0
CONTRACT NO. W912ER-09-D-0002
DRAWING CODE:
FILE NAME: 09356TYPICAL DETAILS S-501.DWG
PLOT SCALE: NONE
PLOT DATE: 3/22/2011

SITE ADAPT DESIGN
B19 - OFFICER BARRACKS - LARGE - ARCH SPAN
TYPICAL DETAILS

SHEET REFERENCE NUMBER:
S-501

A1 Size 594mm x 841mm

3/22/2011 3:36 PM

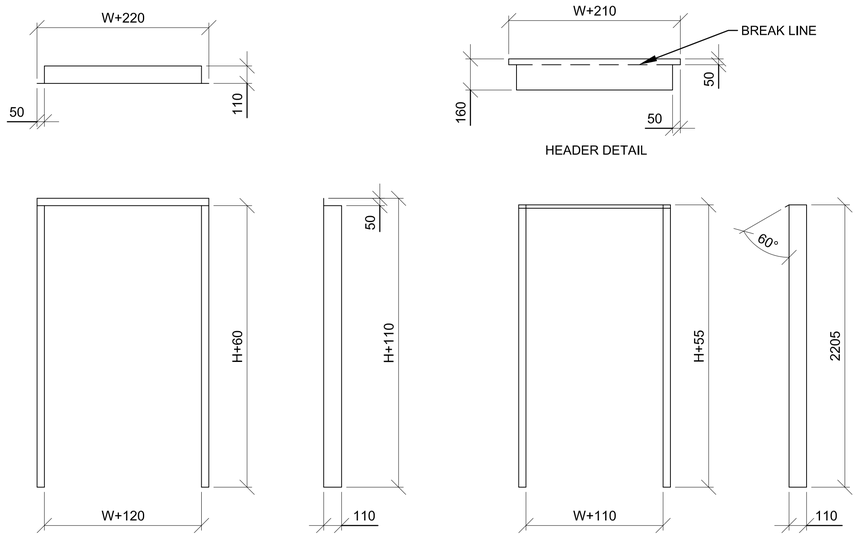

1 / S-502 **120 DOOR DETAIL**

SCALE: NTS

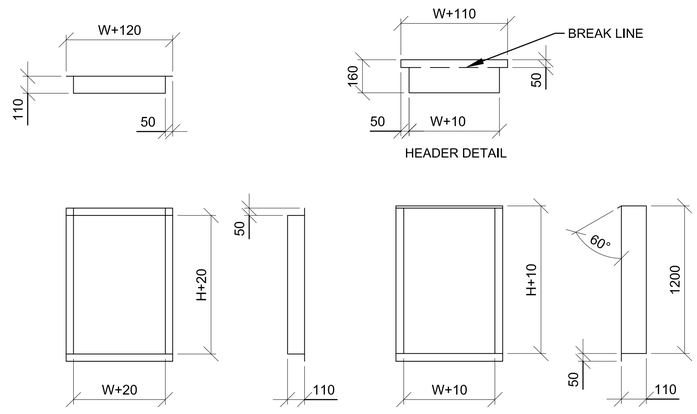

2 / S-502 **120 WINDOW/MECH OPENING DETAIL**

SCALE: NTS

DOOR & WINDOW FRAME NOTES:

1. ALL DIMENSIONS ARE INSIDE DIMENSIONS.
2. WELD AND GRIND SMOOTH ALL CORNERS.
3. FRAME THICKNESS = 2.5mm.
4. ALL FRAMES, INTERIOR AND EXTERIOR, TO BE GALVANIZED.
5. RE: 1/A-601 FOR DOOR WIDTHS (W) AND HEIGHTS (H).
6. RE: 3/A-601 FOR WINDOW WIDTHS (W) AND HEIGHTS (H).
7. RE: SCHEDULE BELOW FOR LOUVER DIMENSIONS.
8. CUT OPENING DIMENSIONS:
   - WINDOW/LOUVER - W+130
   - DOOR - W+130
   - WINDOW/LOUVER - H+30
   - DOOR - H+65
9. RE: 3/S-502 FOR TYP JAMB DETAIL

MECH OPENING FRAME SCHEDULE

TYPE	W	H
M1	787	787
M2	1050	1500

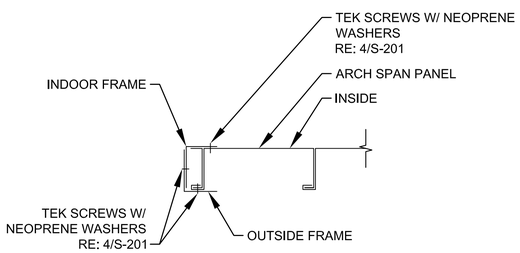

3 / S-502 **TYP JAMB SECTION**

SCALE: NTS

UNLESS OTHERWISE NOTED, LINEAR DIMENSIONS SHOWN ARE IN MILLIMETERS.

US ARMY CORPS OF ENGINEERS AFGHANISTAN NORTH DISTRICT

SYMBOL	DESCRIPTION	DATE	APPR.	SYMBOL	DESCRIPTION	DATE	APPR.

U.S. ARMY ENGINEER DISTRICT, AFGHANIST'AN
CORPS OF ENGINEERS
APO AE 09356

DESIGNED BY: JDM
DWN BY: RMS
CKD BY: EPS
REVIEWED BY: JH
SUBMITTED BY:
DATE: 3/22/2011
CONTRACT NO. W912ER-09-D-0002
DRAWING CODE:
FILE NAME: 120-DOOR-WINDOW-MECH-DETAILS-S-502.DWG
PLOT SCALE: NONE
PLOT DATE: 3/22/2011
REV: 0

BAKER

SITE ADAPT DESIGN

B19 - OFFICER BARRACKS - LARGE - ARCH SPAN

DOOR/WINDOW/MECHANICAL OPENING FRAME DETAILS

SHEET REFERENCE NUMBER:

S-502

A1 Size 594mm x 841mm

3/22/2011 3:36 PM

CONCRETE REINFORCEMENT TENSION DEVELOPMENT/LAP SPLICE SCHEDULE

f'c = 28 MPa	LAP CLASS	UNCOATED BARS			
		TOP BARS		OTHER BARS	
METRIC BAR SIZES		CASE 1	CASE 2	CASE 1	CASE 2
#10 TO #20	A	50 BAR DIA	74 BAR DIA	38 BAR DIA	57 BAR DIA
	B	64 BAR DIA	96 BAR DIA	50 BAR DIA	74 BAR DIA
#25 TO #50	A	62 BAR DIA	93 BAR DIA	48 BAR DIA	71 BAR DIA
	B	80 BAR DIA	121 BAR DIA	62 BAR DIA	93 BAR DIA

NOTES:
1. TABULATED TENSION DEVELOPMENT LENGTH VALUES ARE TAKEN FROM CRSI DESIGN HANDBOOK 2008 10TH ED.
2. TENSION DEVELOPMENT & TENSION LAP SPLICE LENGTHS ARE EXPRESSED AS MULTIPLES OF BAR DIAMETERS.
3. TABULATED VALUES ARE BASED ON MINIMUM YIELD STRENGTH OF REINFORCEMENT, fy, OF 420MPa.
4. CONCRETE IS NORMAL WEIGHT (2400Kg/m^3) AND 28 DAY COMPRESSIVE STRENGTH = 28MPa.
5. TABULATED VALUES FOR BEAMS & COLUMNS ARE BASED ON TRANSVERSE REINFORCEMENT AND CONCRETE COVER MEETING MINIMUM CODE REQUIREMENTS.
6. CASES 1 & 2, WHICH DEPEND ON THE TYPE OF STRUCTURAL MEMBER, CONCRETE COVER, AND CENTER-TO-CENTER SPACING OF THE BARS ARE DEFINED IN THE TABLE BELOW.
7. LAP SPLICE LENGTHS (MINIMUM 300mm) ARE MULTIPLES OF TENSION DEVELOPMENT LENGTHS: CLASS A = 1.0(TENSION DEVELOPMENT LENGTH) & CLASS B = 1.3(TENSION DEVELOPMENT LENGTH)
8. TOP BARS ARE HORIZONTAL REINFORCEMENT WITH MORE THAN 300mm OF CONCRETE CAST BELOW THE BARS.
9. IT SHALL BE PERMISSIBLE TO CALCULATE WALL AND SLAB REINFORCEMENT TENSION DEVELOPMENT/SPLICE LENGTHS IN ACCORDANCE WITH ACI 12.2.3 OR TABLE 5.3(b) OF CRSI 2008 IN LIEU OF VALUES TABULATED ABOVE.

BEAMS, COLUMNS	CASE 1	CONCRETE COVER AT LEAST 1 BAR DIA AND CENTER-TO-CENTER SPACING AT LEAST 2 BAR DIA
	CASE 2	CONCRETE COVER LESS THAN 1 BAR DIA OR CENTER-TO-CENTER SPACING LESS THAN 2 BAR DIA
ALL OTHERS	CASE 1	CONCRETE COVER AT LEAST 1 BAR DIA AND CENTER-TO-CENTER SPACING AT LEAST 3 BAR DIA
	CASE 2	CONCRETE COVER LESS THAN 1 BAR DIA OR CENTER-TO-CENTER SPACING LESS THAN 3 BAR DIA

STANDARD HOOKS IN TENSION PER (ACI 318M-05) f'c = 28 MPa

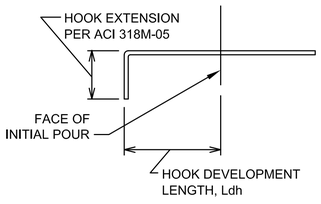

METRIC BAR SIZE	HOOK DEVELOPMENT LENGTH (mm) ldh
#10	190
#12	229
#14	267
#16	305
#20	381
#25	476
#28	533
#32	610
#40	762
#50	953

NOTES:
1. CONCRETE IS NORMAL WEIGHT CONCRETE.
2. BAR YIELD STRENGTH, fy = 420 MPa
3. SIDE COVER REQUIREMENTS OF ACI SECT. 12.5.3 ARE ASSUMED TO NOT BE MET.
4. TIE OR STIRRUP REQUIREMENTS OF ACI SECT. 12.5.3 ARE ASSUMED TO NOT BE MET.
5. REDUCTION FOR EXCESS REINFORCEMENT IS NOT TAKEN.
6. HOOK DEVELOPMENT LENGTH IS VALID FOR 180° HOOKS ALSO.

CONCRETE COVER SCHEDULE

MINIMUM CONCRETE COVER PROTECTION FOR REINFORCEMENT BARS SHALL BE AS LISTED BELOW: (SEE ACI 318M-05, SECTION 7.7 FOR CONDITIONS NOT NOTED). DIMENSIONS FOR BAR PLACEMENT GIVEN IN SECTIONS AND DETAILS SHALL SUPERSEDE MINIMUM COVER REQUIREMENTS GIVEN HERE. DIMENSIONS ARE IN mm. PROVIDE STANDARD BAR CHAIRS AND SUPPORT BARS @1200mm MAXIMUM AS REQUIRED TO MAINTAIN CONCRETE PROTECTION SPECIFIED.

FOOTINGS (EARTH FORMED):	70
COLUMNS / PIERS (TO TIES)	40
ELEVATED BEAMS & SLABS:	
BEAM TIES & STIRRUPS (NOT EXPOSED TO WEATHER)	40
BEAM TIES & STIRRUPS (EXPOSED TO WEATHER)	50
SLABS (NOT EXPOSED TO WEATHER)	20
SLABS (EXPOSED TO WEATHER)	
#19 & LARGER	50
#16 & SMALLER	40
SLABS ON GRADE	
NOT EXPOSED TO WEATHER (FROM TOP)	20
EXPOSED TO WEATHER (FROM TOP)	40
UTILITY TUNNEL WALLS, RETAINING WALLS AND SHEAR WALLS. (NO SURFACES SHALL BE EARTH FORMED)	
EARTH SIDE AND FRONT SIDE (EXPOSED TO WEATHER)	
#16 BAR AND SMALLER	40
#19 THRU #36 BAR	50

UNLESS OTHERWISE NOTED, LINEAR DIMENSIONS SHOWN ARE IN MILLIMETERS.

COMMONWEALTH OF PENNSYLVANIA
REGISTERED PROFESSIONAL
JOSEPH D. MEIER
PE-036505E
22 MAR 11

US ARMY CORPS OF ENGINEERS
AFGHANISTAN NORTH DISTRICT

SYMBOL	DESCRIPTION	DATE	APPR.	SYMBOL	DESCRIPTION	DATE	APPR.

DESIGNED BY: JDM
DWN BY: RMS
CKD BY: EPS
REVIEWED BY: JH
SUBMITTED BY:
DATE: 3/22/2011
CONTRACT NO. W912ER-09-D-0002
DRAWING CODE:
FILE NAME: ARCOFFNCSD-B19-S-601.DWG
PLOT SCALE: NONE
PLOT DATE: 3/22/2011
REV: 0

BAKER

U.S. ARMY ENGINEER DISTRICT, AFGHANISTAN
CORPS OF ENGINEERS
APO AE 09356

SITE ADAPT DESIGN
B19 - OFFICER BARRACKS - LARGE - ARCH SPAN
SCHEDULES

SHEET REFERENCE NUMBER:
S-601

3/22/2011 3:36 PM

A1 Size 594mm x 841mm

SCOPE RESPONSIBILITIES SCHEDULE

ITEM	FURNISHED BY	INSTALLED BY	FINAL CONNECTION BY
FREESTANDING FURNITURE	GOVT	GOVT	--
SYSTEMS FURNITURE	GOVT	GOVT	CONTR
OFFICE EQUIPMENT, PERMANENTLY INSTALLED	GOVT	GOVT	GOVT
WORKBENCHES	GOVT	GOVT	CONTR
METAL UTILITY STORAGE SHELVING	CONTR	CONTR	--
EQUIPMENT, PORTABLE	GOVT	GOVT	--
EQUIPMENT, PERMANENTLY INSTALLED	CONTR	CONTR	CONTR
EQUIPMENT RACKS IN IT ROOMS	CONTR	CONTR	--
FIRE EXTINGUISHERS AND CABINETS	CONTR	CONTR	--
TELEPHONE SWITCH AND HANDSETS	GOVT	GOVT	GOVT
SECURE TELEPHONE INSTRUMENTS (STEs)	GOVT	GOVT	GOVT

ABBREVIATIONS

ACP	ACOUSTIC CEILING PANEL
AFF	ABOVE FINISH FLOOR
ALUM	ALUMINUM
AUTO	AUTOMATIC
ABV	ABOVE
AT/FP	ANTI-TERRORISM FORCE PROTECTION
BC	BOTTOM OF CURB
B.O.	BOTTOM OF
BLK	BLOCK
BRG	BEARING
BLKG	BLOCKING
BD	BOARD
BLDG	BUILDING
CLG	CEILING
CONC	CONCRETE
CONT	CONTINUOUS
CONTR	CONTRACTOR
CMU	CONCRETE MASONRY UNIT
CT	CERAMIC TILE
C.J.	CONTROL JOINT
CRS	COURSE
DIAM	DIAMETER
DN	DOWN
DTL	DETAIL
DWG	DRAWING
EA	EACH
EIFS	EXTERIOR INSULATION AND FINISH SYSTEM
EWC	ELECTRIC WATER COOLER
EXP	EXPANSION
EXT	EXTERIOR
EQUIP	EQUIPMENT
ELEC	ELECTRIC
EL	ELEVATION
EMER	EMERGENCY
EQ	EQUAL
F/	FACE OF
FE	FIRE EXTINGUISHER
FEC	FIRE EXTINGUISHER CABINET
FIBERBD	FIBER BOARD
FL	FLOOR
FD	FLOOR DRAIN
FTG	FOOTING
GA	GAUGE
GALV	GALVANIZED
GC	GENERAL CONTRACTOR
GL	GLASS
GOVT	GOVERNMENT
GYP	GYPSUM
GWB	GYPSUM WALLBOARD
HT	HEIGHT
HC	HANDICAPPED
HDW	HARDWARE
HTG	HEATING
HVAC	HEATING/VENTILATING/ AIR CONDITIONING
HM	HOLLOW METAL
INSUL	INSULATION
INT	INTERIOR
JT	JOINT
JAN	JANITOR
LAM	LAMINATE
LAV	LAVATORY
LH	LEFT HAND
LT	LIGHT
LVR	LOUVER
MAS	MASONRY
MAX	MAXIMUM
MECH	MECHANICAL
MFR	MANUFACTURER
MIN	MINIMUM
MIR	MIRROR
MISC	MISCELLANEOUS
MO	MASONRY OPENING
MR	MOISTURE RESISTANT
MS	METAL STUD
MTL	METAL
NA	NOT APPLICABLE
NO	NUMBER
NOM	NOMINAL
NTS	NOT TO SCALE
NIC	NOT IN CONTRACT
OPG	OPENING
OC	ON CENTER
OH	OVERHEAD
OPP	OPPOSITE
PL	PLATE
PLAM	PLASTIC LAMINATE
PLYWD	PLYWOOD
PNL	PANEL
PREF	PREFABRICATED
PERF	PERFORATED
PR	PAIR
PT	PAINT
QT	QUARRY TILE
R	RISER
RAD	RADIUS
RD	ROOF DRAIN
REF	REFERENCE
REINF	REINFORCED
RH	RIGHT HAND
ROW	RIGHT OF WAY
RM	ROOM
RO	ROUGH OPENING
RWC	RAINWATER CONDUCTOR
SIM	SIMILAR
STL	STEEL
STR	STRUCTURE
ST0	STORAGE
SPEC	SPECIFICATION
SS	STAINLESS STEEL
STN	STAIN
STD	STANDARD
SUSP	SUSPENDED
TC	TOP OF CURB
TH	THICK
TYP	TYPICAL
TR	TREAD
T.O.	TOP OF
TELE	TELEPHONE
TEMP	TEMPERED/TEMPORARY
UNF	UNFINISHED
UNO	UNLESS NOTED OTHERWISE
USAR	UNITED STATES ARMY RESERVE
VERT	VERTICAL
VIF	VERIFY IN FIELD
VTR	VENT THROUGH ROOF
WD	WOOD
WH	WATER HEATER
WWF	WELDED WIRE FABRIC
W/O	WITHOUT

PROJECT NOTES

STANDARDS AND REGULATIONS:

1) CONTRACTOR SHALL PERFORM ALL WORK IN CONFORMANCE WITH APPLICABLE BUILDING CODES, REGULATIONS, ORDINANCES, UTILITY PROVIDER REQUIREMENTS, AND SIMILAR STANDARDS.

2) CONTRACTOR SHALL OBTAIN ALL REQUIRED INSPECTIONS OF THE WORK. CONTRACTOR SHALL REGULARLY UPDATE OWNER AND ARCHITECT REGARDING THE STATUS OF INSPECTIONS.

3) CONTRACTOR SHALL COORDINATE WORK WITH APPLICABLE UTILITY PROVIDERS.

4) CONTRACTOR SHALL BE FAMILIAR WITH REQUIREMENTS AND CONSTRUCTION SHALL BE IN COMPLIANCE WITH REFERENCED FIRE-RATED ASSEMBLY TESTS AND STANDARDS.

ADMINISTRATION OF THE WORK:

1) CONTRACTOR SHALL BE SOLELY RESPONSIBLE FOR THE MEANS, METHODS, AND SEQUENCES OF CONSTRUCTION AND DIMENSIONS.

2) CONTRACTOR SHALL BE SOLELY RESPONSIBLE FOR THE SAFETY OF ALL CONSTRUCTION PERSONNEL AND AUTHORIZED VISITORS AT THE SITE.

3) CONTRACTOR SHALL BECOME FULLY ACQUAINTED WITH CONDITIONS RELATED TO THE WORK. ANY KNOWN DISCREPANCIES BETWEEN THE DOCUMENTS AND THE ACTUAL CONDITIONS SHALL BE REPORTED TO THE OWNER FOR RESOLUTION PRIOR TO PROCEEDING WITH WORK RELATED TO THE DISCREPANCY.

4) CONTRACTOR SHALL REMOVE AND PROPERLY DISPOSE OF ALL CONSTRUCTION AND DEMOLITION DEBRIS. CONTRACTOR SHALL OBTAIN APPROVAL OF OWNER FOR DETAILS RELATING TO THE REMOVAL OF TRASH, INCLUDING SUCH ISSUES AS PATH OF TRAVEL, USE OF STAIRS AND ELEVATORS, REMOVAL OF WINDOWS, LOCATION OF CHUTES AND DUMPSTERS, ETC., PRIOR TO REMOVAL OF DEBRIS. CONTRACTOR SHALL CLEAN AND REPAIR ANY DAMAGES TO EXISTING ITEMS SOILED OR DAMAGED BY THE DEBRIS REMOVAL PROCESS. IF CLEANING AND/OR REPAIR DOES NOT RETURN ITEMS TO ORIGINAL CONDITION CONTRACTOR SHALL INSTALL NEW ITEMS.

5) CONTRACTOR SHALL BECOME FAMILIAR WITH AND COMPLY WITH OWNER'S PROCEDURES FOR MAINTAINING A SECURE SITE AND BUILDING.

6) EACH INSTALLER SHALL EXAMINE ALL SUBSTRATE CONDITIONS AND/OR SITE CONDITIONS WHICH AFFECT THE QUALITY OF EACH PRODUCT TO BE INSTALLED. IF ANY CONDITIONS EXIST WHICH WILL HAVE A DETRIMENTAL EFFECT ON THE QUALITY OF THE INSTALLATION, THE INSTALLER SHALL IMMEDIATELY NOTIFY THE CONTRACTOR. INSTALLATION SHALL NOT PROCEED UNTIL THE UNSATISFACTORY CONDITIONS ARE CORRECTED. INSTALLATION SHALL SIGNIFY ACCEPTANCE OF THE CONDITIONS.

7) CONTRACTOR SHALL MAINTAIN RECORD DRAWINGS ON THE SITE AT ALL TIMES.

8) CONTRACTOR SHALL BE RESPONSIBLE FOR ENSURING COORDINATION EFFORTS OF ALL SUBCONTRACTORS.

9) CONTRACTOR SHALL LAY OUT ALL WORK AS SOON AS POSSIBLE. ANY DISCREPANCIES SHALL BE REPORTED TO THE OWNER FOR RESOLUTION PRIOR TO PROCEEDING WITH THE WORK IN QUESTION.

10) DO NOT ATTACH OR HANG ANY ITEMS DIRECTLY FROM ARCH-SPAN PANELS. ATTACH ONLY TO BUILDING TABS LOCATED WITHIN PANEL JOINTS

11) CONTRACTOR TO PROVIDE ALL NECESSARY BLOCKING TO SUPPORT WALL & CEILING MOUNTED EQUIPMENT, FIXTURES AND ACCESSORIES.

USE OF CONSTRUCTION DOCUMENTS:

1) DO NOT SCALE DRAWINGS. ONLY WRITTEN DIMENSIONS OR KEYED NOTES SHALL BE USED. CONTACT ARCHITECT IF CLARIFICATION OR ADDITIONAL INFORMATION IS REQUIRED.

2) THE DRAWINGS ARE SCHEMATIC IN NATURE. MODIFICATIONS IN DUCTS, PIPING, CONDUIT AND WIRING MAY BE REQUIRED TO ACCOMMODATE ACTUAL FIELD CONDITIONS.

3) DRAWINGS SHALL NOT BE REPRODUCED FOR SUBMITTALS.

4) DIMENSIONS ARE AS FOLLOWS UNLESS NOTED OTHERWISE:
   A) TO CENTER LINE OF INTERIOR PARTITIONS
   B) TO CENTERLINE OF COLUMNS.
   C) TO TOP OF FLOOR SLAB.
   D) TO BOTTOM OF FINISHED CEILING.
   E) TO EXTERIOR FACE OF ARCH SPAN PANEL OR TO FACE OF MASONRY OR CONCRETE.

5) VERIFY IN FIELD DIMENSIONS OF ALL DOOR, WINDOW AND LOUVER OPENINGS.

DEFINITIONS:

1) "ALIGN" AS USED IN THESE DOCUMENTS SHALL MEAN TO ACCURATELY LOCATE FINISH FACES IN THE SAME PLANE AND/OR TO INSTALL NEW CONSTRUCTION ADJACENT TO EXISTING CONSTRUCTION WITHOUT ANY VISIBLE JOINTS OR SURFACE IRREGULARITIES.

2) "CLEAR" AS USED IN THESE DOCUMENTS SHALL MEAN THAT THE CONDITION IS NOT ADJUSTABLE WITHOUT APPROVAL OF THE ARCHITECT. CLEAR DIMENSIONS ARE TYPICALLY TO FINISH FACE.

3) "MAXIMUM" OR "MAX" AS USED IN THESE DOCUMENTS SHALL MEAN THAT THE CONDITION IS SLIGHTLY ADJUSTABLE BUT MAY NOT VARY TO A DIMENSION OR QUANTITY GREATER THAN THAT SHOWN WITHOUT APPROVAL OF THE ARCHITECT.

4) "MINIMUM" OR "MIN" AS USED IN THESE DOCUMENTS SHALL MEAN THAT THE CONDITION IS SLIGHTLY ADJUSTABLE BUT MAY NOT VARY TO A DIMENSION OR QUANTITY LESS THAN THAT SHOWN WITHOUT APPROVAL OF THE ARCHITECT.

5) "TYPICAL" AS USED IN THESE DOCUMENTS SHALL MEAN THAT THE CONDITION OR DIMENSION IS THE SAME OR REPRESENTATIVE FOR SIMILAR CONDITIONS THROUGHOUT.

6) "*" AS USED IN THESE DOCUMENTS SHALL MEAN THAT THE DIMENSION OR QUALITY IS SLIGHTLY ADJUSTABLE TO ACCOMMODATE ACTUAL CONDITIONS. FIELD VERIFICATION AND COORDINATION WITH OTHER ELEMENTS MIGHT BE NECESSARY.

SYMBOLS LEGEND

ROOM NAME XXXX — ROOM NAME / ROOM NUMBER

X — PARTITION TYPE

150 UNO — DOOR NUMBER; PROVIDE 150 HINGE SIDE WALL RETURN ON DOORS, U.N.O. OR CENTER IN WALL

1 / A-101 — SECTION CALL-OUT

1 / A-101 — DETAIL CALL-OUT

A / B / C / D — 1 / A-101 — INTERIOR ELEVATION CALL-OUT

XX — KEYNOTE

X — WINDOW TYPE

1 / A-101 — ELEVATION CALL-OUT

/ A-### — DETAIL REFERENCE NUMBER; SHEET NUMBER DETAIL IS DRAWN ON

ELEVATION MARK

METAL STUD AND GWB PARTITION

CONCRETE

BRICK

CONCRETE BLOCK

FIBERGLASS BATT INSULATION

RIGID BOARD INSULATION

CONCRETE OR GROUT (DRAWN IN SECTION)

CONCRETE PAVING (DRAWN IN PLAN)

UNLESS OTHERWISE NOTED, LINEAR DIMENSIONS SHOWN ARE IN MILLIMETERS.

COMMONWEALTH OF VIRGINIA — PETER GARRETT SCHMIDT — No. 013167 — REGISTERED ARCHITECT

US ARMY CORPS OF ENGINEERS AFGHANISTAN NORTH DISTRICT

SYMBOL	DESCRIPTION	DATE	APPR.	SYMBOL	DESCRIPTION	DATE	APPR.

DESIGNED BY: PGS, SE, MR
DWN BY: SE, MDH, AH
REVIEWED BY: JH
SUBMITTED BY:
DATE: 3/22/2011
CONTRACT NO. W912ER-09-D-0002
CKD BY: PGS, SE, MR
DRAWING CODE:
FILE NAME: abbreviations-symbols-and-notes.dwg
PLOT SCALE: NONE
PLOT DATE: 3/22/2011
REV: 0

BAKER

U.S. ARMY ENGINEER DISTRICT, AFGHANISTAN CORPS OF ENGINEERS APO AE 09356

SITE ADAPT DESIGN

B19 - OFFICER BARRACKS - LARGE - ARCH SPAN

ABBREVIATIONS, SYMBOLS AND GENERAL NOTES

SHEET REFERENCE NUMBER:

A-001

3/22/2011 4:45 PM

A1 Size 594mm x 841mm

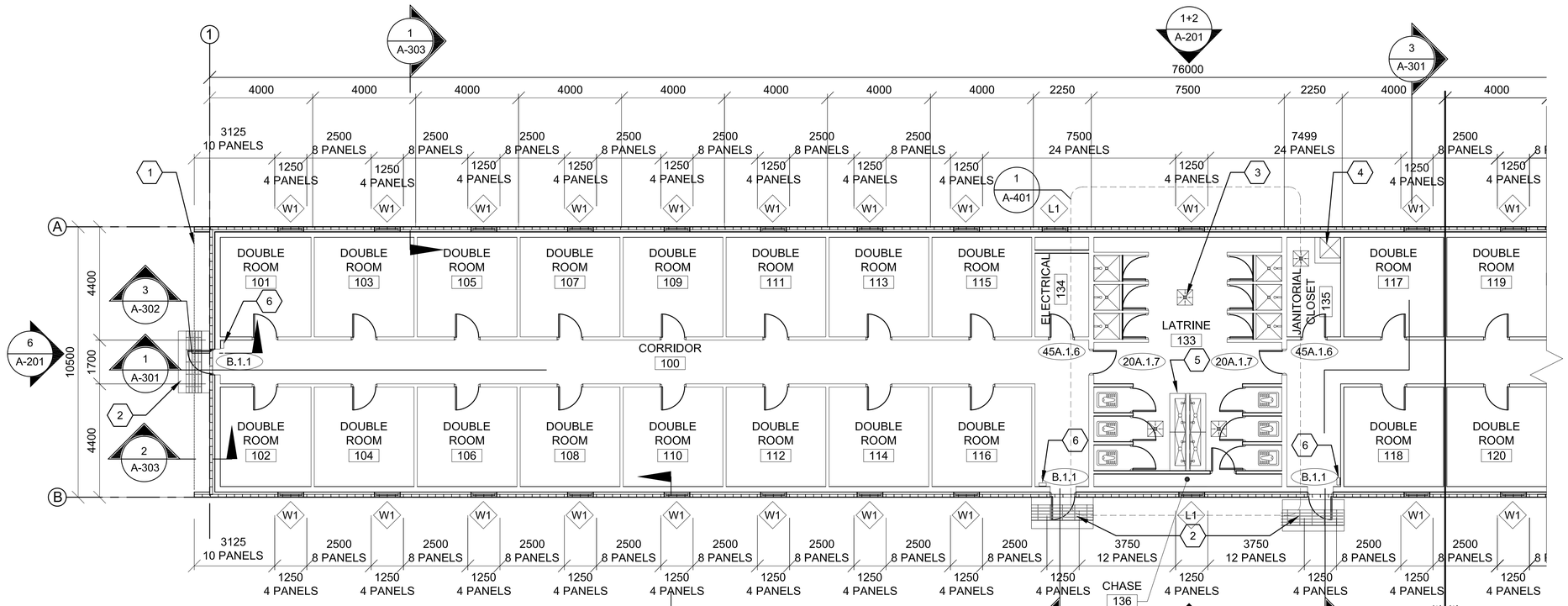

1 A-101 FLOOR PLAN - PART A

SCALE 1:100

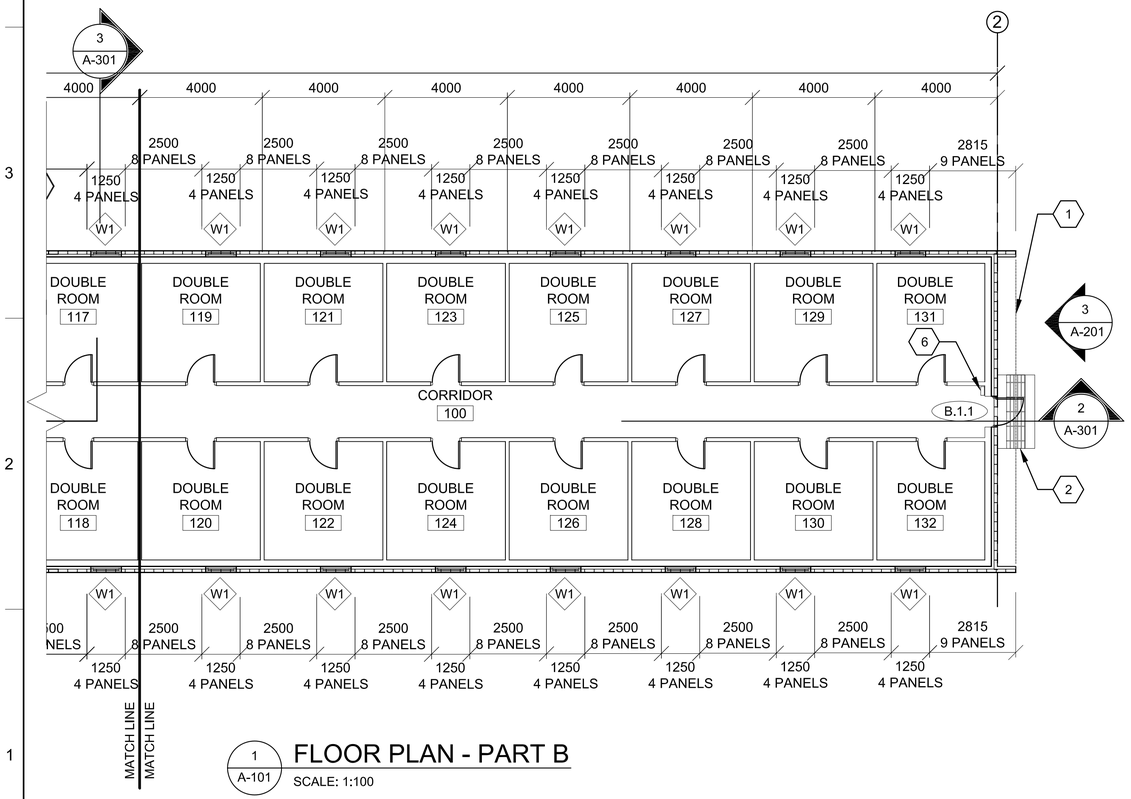

1 A-101 FLOOR PLAN - PART B

SCALE: 1:100

GENERAL NOTES:

A. DIMENSIONS ARE SHOWN TO OUTER EDGE OF EXTERIOR STRUCTURAL FACE OF ARCH SPAN PANEL(GRID LINES), CENTER LINE OF INTERIOR PARTITIONS, EDGE OF WINDOW OPENINGS, AND TO HINGE SIDE OF DOOR FRAME OPENING, UNLESS NOTED OTHERWISE.

B. HINGE SIDE OF OPENINGS FOR DOORS AND FRAMES SHALL BE LOCATED 200 MM FROM THE ADJACENT WALL OR COLUMN, UNLESS NOTED OTHERWISE.

C. INTERIOR PARTITIONS SHALL BE PARTITION TYPE 1, UNLESS NOTED OTHERWISE. REFER TO A-602 FOR PARTITION TYPES SCHEDULE

D. COSMETIC REPAIR OF MINOR DEFECTS: REPAIR OR FILL MORTAR JOINTS AND MINOR DEFECTS, INCLUDING BUT NOT LIMITED TO SPALLS, IN ACCORDANCE WITH MANUFACTURER'S RECOMMENDATIONS AND PRIOR TO COATING APPLICATION. SURFACES TO BE PAINTED SHALL BE CLEAN AND FREE OF FOREIGN MATTER BEFORE APPLICATION OF PAINT. CLEANING SHALL BE SCHEDULED SO THAT DUST AND OTHER CONTAMINANTS WILL NOT FALL ON NEWLY PAINTED SURFACES.

E. CONCRETE, PLASTER AND MASONRY SURFACES SHALL BE ALLOWED TO CURE FOR AT LEAST 30 DAYS BEFORE PAINTING. CONCRETE SLABS-ON-GRADE SHALL BE ALLOWED TO CURE 90 DAYS BEFORE STAINING OR SEALING.

F. DO NOT USE PAINT MATERIALS CONTAINING LEAD CONTENT IN EXCESS OF 0.009 PERCENT OF THE WEIGHT OF THE TOTAL NONVOLATILE CONTENT OF THE PAINT OR THE WEIGHT OF THE DRIED PAINT FILM.

G. DO NOT USE ANY ASBESTOS CONTAINING MATERIALS (ACM) IN PROJECT. ACM IS DEFINED AS 1% OR MORE BY VOLUME.

H. DO NOT USE PAINT MATERIALS CONTAINING MERCURIAL FUNGICIDES.

I. FACTORY PRIMED METAL DOORS AND FRAMES SHALL RECEIVE TWO COATS OF PAINT.

J. FILL REMAINING SPACE AT PENETRATIONS IN FIRE-RATED FLOORS, PARTITIONS AND CEILINGS WITH APPROPRIATE FIRESTOPPING MATERIALS.

K. ALL CEILING FINISHES SHALL AS NOTED ON REFLECTED CEILING PLANS OR FINISH SCHEDULE.

L. ALL WALL FINISHES SHALL AS NOTED ON FINISH SCHEDULE. REFER TO A-603

M. ALL FLOOR FINISHES SHALL BE SEALED CONCRETE, UNLESS NOTED OTHERWISE.

N. PROVIDE TILE FINISHES AS INDICATED IN DETAILS & KEY NOTES.

O. ALL DOOR, FRAME AND HARDWARE TYPES SHALL BE 20A.1.11 UNLESS NOTED OTHERWISE. REFER TO A-601 FOR DOOR INFORMATION.

P. TOILET STALL DOORS SHALL BE G.2.12

Q. SHOWER STALL DOOR, FRAME AND HARDWARE TYPE SHALL BE E.1.12.

R. PROVIDE POLISHED STAINLESS STEEL MIRROR 600 X 900 ABOVE EVERY LAVATORY FAUCET.

S. PLASTER MAY BE SUBSTITUTED FOR DRYWALL WALLS AND CEILINGS. MAINTAIN FIRE RATINGS AS NOTED

T. LOCATION OF EXTERIOR DOORS AND WINDOWS MUST BE COORDINATED WITH ARCH SPAN MODULE. PLAN DIMENSIONS OF THESE IS APPROXIMATE AND MAY BE SLIGHTLY ADJUSTED TO SUIT PANEL FABRICATION TOLERANCES.

KEY NOTES:

1. LINE OF ROOF OVERHANG ABOVE.
2. CONCRETE STOOP WITH GRATE - SEE DETAIL 1/A-503.
3. FLOOR DRAIN - SEE PLUMBING AND DETAIL 6/A-505
4. REFER TO 5/A505 FOR MOP SINK
5. TROUGH, SEE 4/A-504
6. FIRE EXTINGUISHER

N

0 2000 4000

SCALE: 1:100

UNLESS OTHERWISE NOTED, LINEAR DIMENSIONS SHOWN ARE IN MILLIMETERS.

COMMONWEALTH OF VIRGINIA
PETER GARRETT SCHMIDT
No. 013167
ARCHITECT

US ARMY CORPS OF ENGINEERS
AFGHANISTAN NORTH DISTRICT

SYMBOL	DESCRIPTION	DATE	APPR.	SYMBOL	DESCRIPTION	DATE	APPR.

DATE: 3/22/2011
CONTRACT NO. W912ER-09-D-0002
DRAWING CODE:
DWN BY:
CKD BY:
REVIEWED BY:
SUBMITTED BY:
FILE NAME: ARCOFFICEB19-FL-101.DWG
PLOT SCALE: 1:100
PLOT DATE: 3/22/2011
REV: 0

DESIGNED BY:

BAKER

U.S. ARMY ENGINEER DISTRICT, AFGHANISTAN
CORPS OF ENGINEERS
APO AE 09356

SITE ADAPT DESIGN

B19 - OFFICER BARRACKS - LARGE - ARCH SPAN

FLOOR PLAN

SHEET REFERENCE NUMBER:

A-101

A1 Size 594mm x 841mm

3/22/2011 4:46 PM

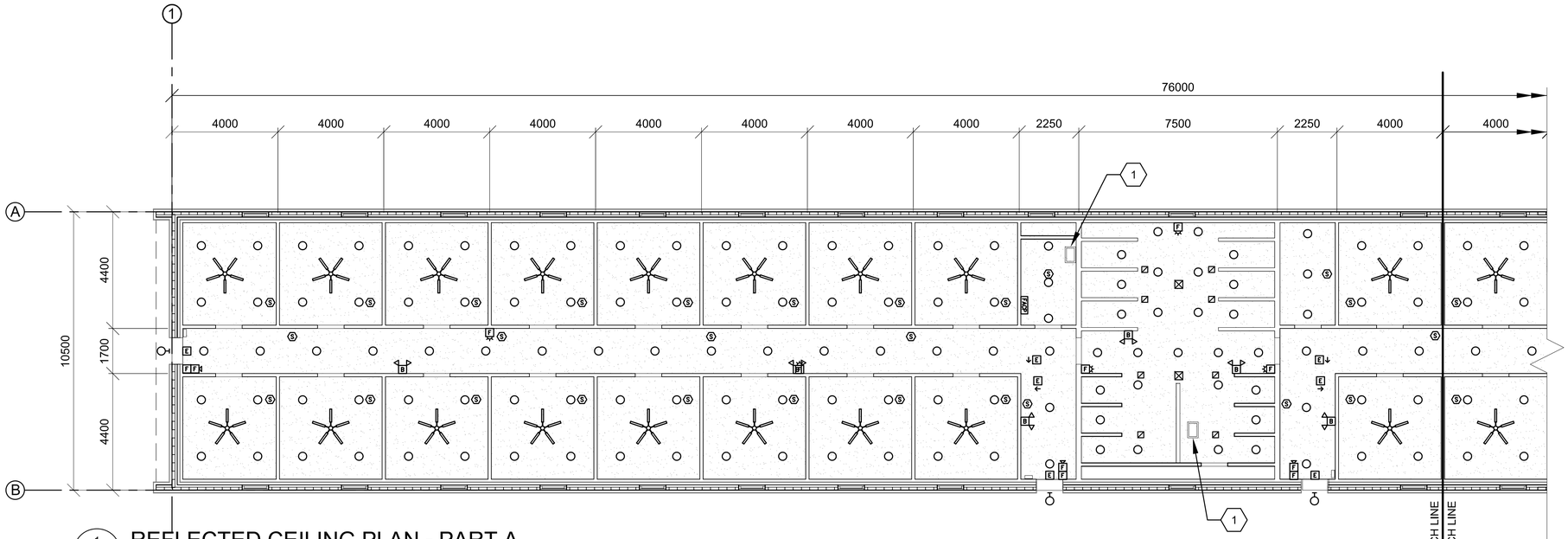

1 / A-102 REFLECTED CEILING PLAN - PART A

SCALE 1:100

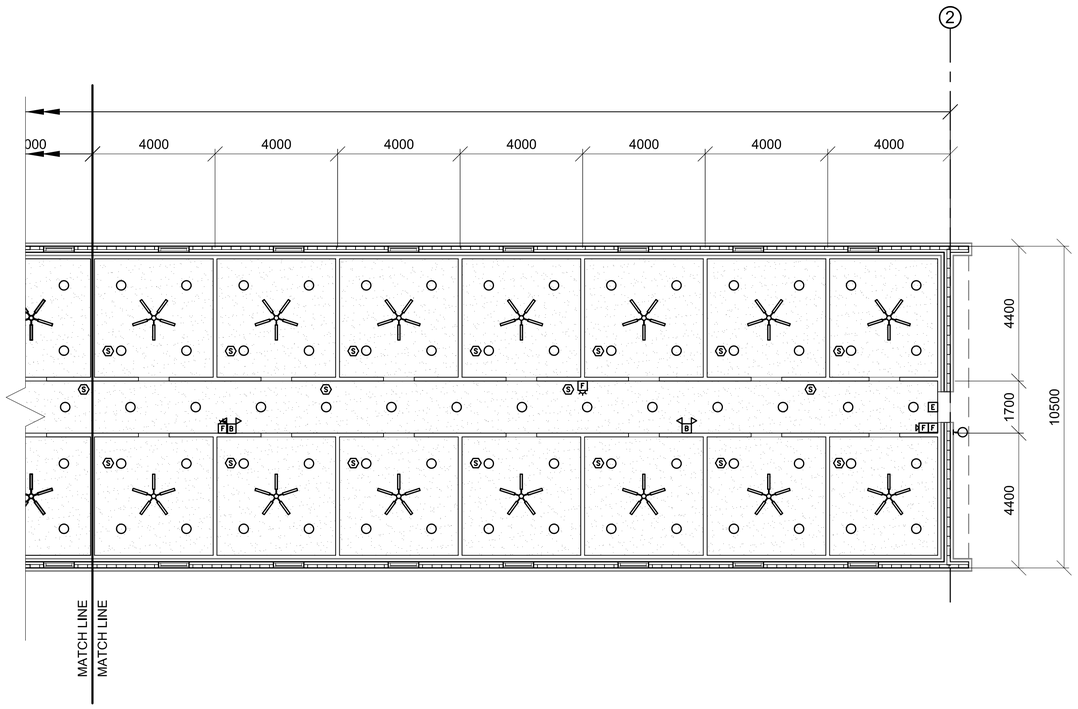

2 / A-102 REFLECTED CEILING PLAN - PART B

SCALE: 1:100

CEILING LEGEND:

- 600mm X 1200mm METAL PANEL SUSPENDED CEILING SYSTEM
- NO FINISHED CEILING, EXPOSED STRUCTURE (SEE FINISH SCHEDULE)
- GYPSUM WALLBOARD CEILING (SEE FINISH SCHEDULE)
- 300mm X 1200mm FLUORESCENT LIGHT FIXTURE
- 600mm X 1200mm FLUORESCENT LIGHT FIXTURE
- 300mm X 1200mm FLUORESCENT LIGHT FIXTURE NORMAL/EMERGENCY
- 600mm X 1200mm FLUORESCENT LIGHT FIXTURE NORMAL/EMERGENCY
- SUSPENDED LIGHT FIXTURE
- WALL MOUNTED LIGHT FIXTURE
- DOWNLIGHT
- EXIT SIGN
- SMOKE DETECTOR
- BATTERY PACK
- RELIEF RETURN DIFFUSER
- SUPPLY DIFFUSER
- EXHAUST DIFFUSER
- ACCESS PANEL
- CEILING FAN

GENERAL NOTES:

A. CEILING SHALL BE 2.65M A.F.F. UNLESS NOTED OTHERWISE OR EXPOSED STRUCTURE.
B. REFER TO SHEET A-603 FOR FINISH SCHEDULE
C. DRYWALL CEILING TYPICALLY WALL BEAR ON ADJACENT PARTITIONS. SPAN CRITERIA & ALTERNATIVE SUPPORTING METHODS ARE DEFINED ON STRUCTURAL NOTES RE: COLD-FORMED METAL FRAMING ON DWG. S-002.
D. LOCATION OF LIGHT FIXTURES AND FANS AS INDICATED ON THIS REFLECTED CEILING PLAN TAKES PRECEDENCE OVER ALL RELATIVE POSITIONS AS SHOWN ON ELECTRIC AND MECHANICAL DRAWINGS. U.N.O. INSTALL FIXTURES WITH EQUAL SPACING BETWEEN EACH OTHER TO THE GREATEST EXTENT POSSIBLE AND AS GRAPHICALLY SHOWN IN THIS LAYOUT. SEE ELECTRICAL DRAWINGS FOR SUPPORT AND WIRING INFORMATION. IN AREA WHERE SUSPENDED CEILING SUPPORTS OVERLAP LIGHTING LOCATIONS SHIFT LIGHTING 25MM OFF OF GRID TO RESOLVE CONFLICT.

KEY NOTES:

1. ACCESS PANEL - 1 HR RATED 600X400 COORDINATE LOCATION WITH MECHANICAL REQUIREMENTS

0 2000 4000
SCALE: 1:100

UNLESS OTHERWISE NOTED, LINEAR DIMENSIONS SHOWN ARE IN MILLIMETERS.

COMMONWEALTH OF VIRGINIA
PETER GARRETT SCHMIDT
No. 013167
ARCHITECT

US ARMY CORPS OF ENGINEERS
AFGHANISTAN NORTH DISTRICT

SYMBOL	DESCRIPTION	DATE	APPR.	SYMBOL	DESCRIPTION	DATE	APPR.

DESIGNED BY:
DWN BY: CKD BY:
REVIEWED BY:
SUBMITTED BY:
DATE: 4-25-2011
CONTRACT NO. W912ER-09-D-0002
DRAWING CODE:
FILE NAME: ARCCORNICE-B19-A-102.DWG
PLOT SCALE: 1:100
PLOT DATE: 4/25/2011
REV: 0

BAKER

U.S. ARMY ENGINEER DISTRICT, AFGHANISTAN
CORPS OF ENGINEERS
APO AE 09356

SITE ADAPT DESIGN

B19 - OFFICER BARRACKS - LARGE - ARCH SPAN

REFLECTED CEILING PLAN

SHEET REFERENCE NUMBER:

A-102

4/25/2011 2:38 PM

A1 Size 594mm x 841mm

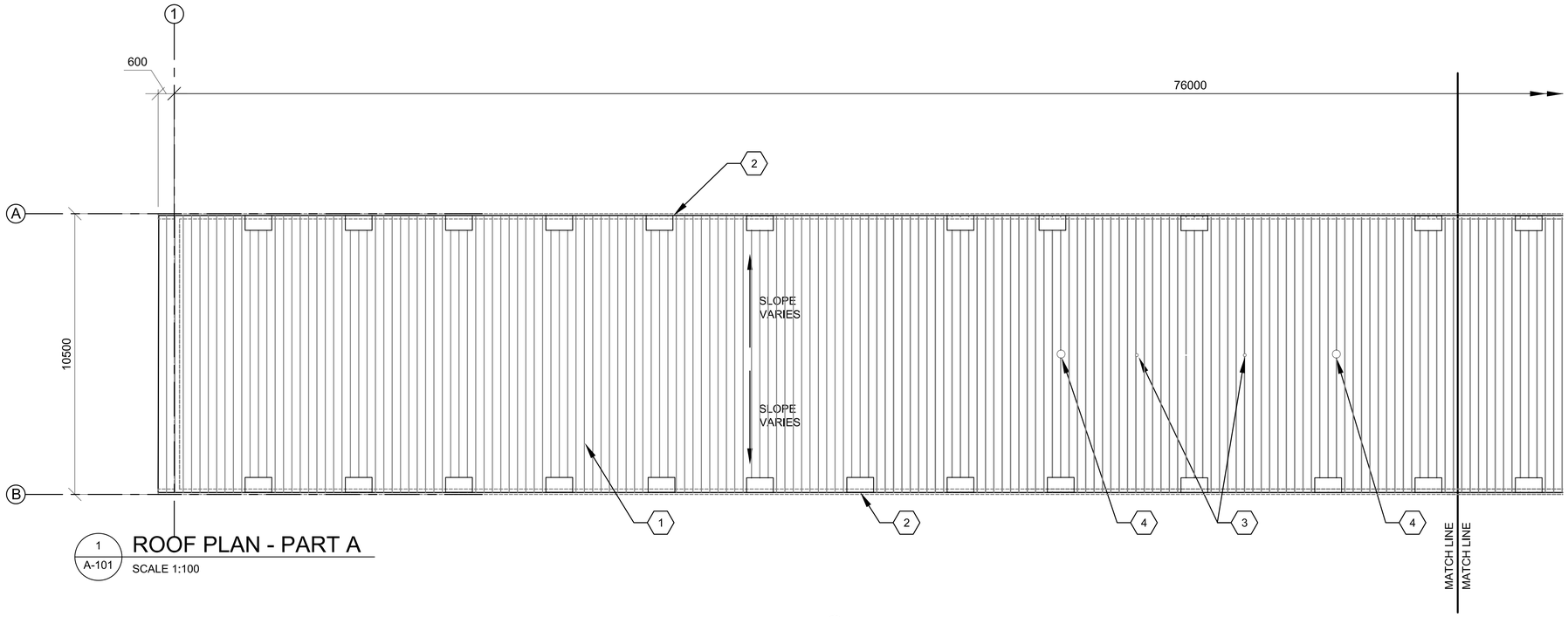

1 / A-101 ROOF PLAN - PART A

SCALE 1:100

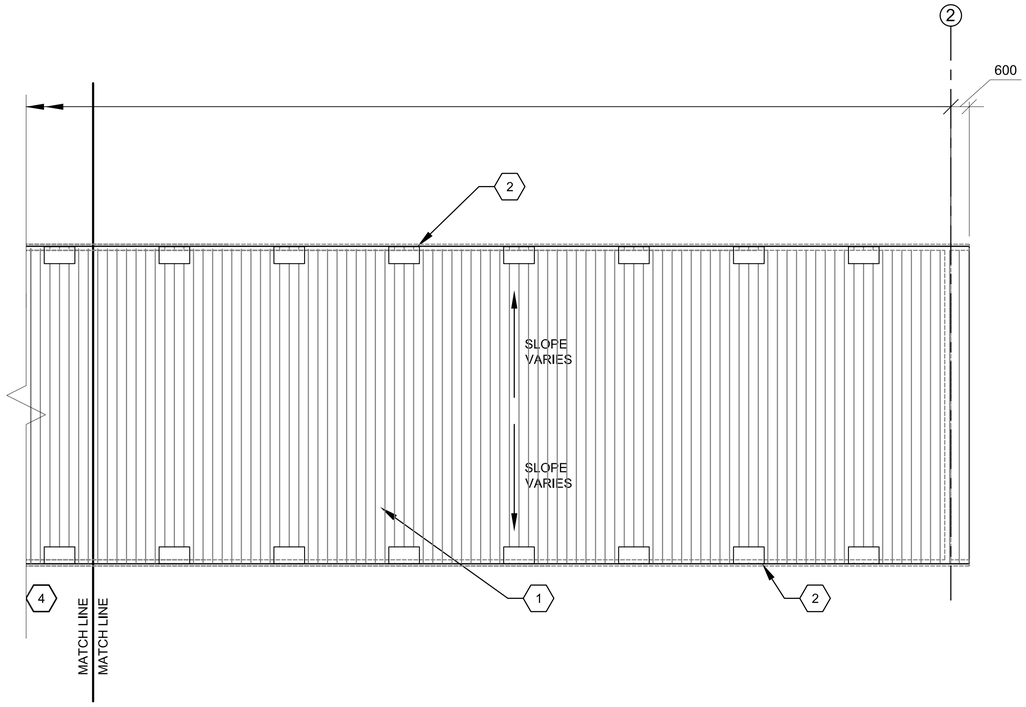

1 / A-101 ROOF PLAN - PART B

SCALE: 1:100

GENERAL NOTES:

A. THE APPROXIMATE LOCATION OF ROOF DEVICES AND PENETRATIONS ARE SHOWN ON THE ROOF PLAN FOR INFORMATION ONLY. THE CONTRACTOR SHALL BE RESPONSIBLE FOR UNDERSTANDING THE ACTUAL LOCATION OF THESE AND ALL OTHER ITEMS PRIOR TO BEGINNING CONSTRUCTION. COORDINATE ALL ROOF PENETRATIONS WITH STRUCTURAL, MECHANICAL AND PLUMBING WORK.

B. PLUMBING VENT PENETRATIONS SHALL TERMINATE 300 MM MINIMUM ABOVE THE ROOF.

C. UNLESS OTHERWISE NOTED, NOTES, DETAILS OR FEATURES INDICATED FOR ONE CONDITION SHALL BE APPLICABLE FOR ALL ALIKE AND SIMILAR CONDITIONS.

D. STOCKPILING OF MATERIALS, EQUIPMENT AND ANY OTHER ITEMS ON THE ROOF IS PROHIBITED.

E. ROOFS SHALL BE PRE-FINISHED METAL ARCH SPAN.

KEY NOTES:

1. PRE-FINISHED METAL ARCH SPAN CONSTRUCTION
2. DOOR OR WINDOW DORMER
3. VTR SEE PLUMBING / 1/A-501
4. EXHAUST FAN ROOF CAP REFER TO M-101

0 2000 4000

SCALE: 1:100

UNLESS OTHERWISE NOTED, LINEAR DIMENSIONS SHOWN ARE IN MILLIMETERS.

COMMONWEALTH OF VIRGINIA
PETER GARRETT SCHMIDT
No. 013167
ARCHITECT

US ARMY CORPS OF ENGINEERS
AFGHANISTAN NORTH DISTRICT

SYMBOL	DESCRIPTION	DATE	APPR.	SYMBOL	DESCRIPTION	DATE	APPR.

DESIGNED BY:
DWN BY:
CKD BY:
REVIEWED BY:
SUBMITTED BY:

DATE: 3/22/2011
CONTRACT NO. W912ER-09-D-0002
DRAWING CODE:
FILE NAME: ARCOFFNCSB-B19-A-101.DWG
PLOT SCALE: 1:100
PLOT DATE: 3/22/2011
REV: 0

BAKER

U.S. ARMY ENGINEER DISTRICT, AFGHANISTAN
CORPS OF ENGINEERS
APO AE 09356

SITE ADAPT DESIGN

B19 - OFFICER BARRACKS - LARGE - ARCH SPAN

ROOF PLAN

SHEET REFERENCE NUMBER:

A-103

A1 Size 594mm x 841mm

3/22/2011 4:46 PM

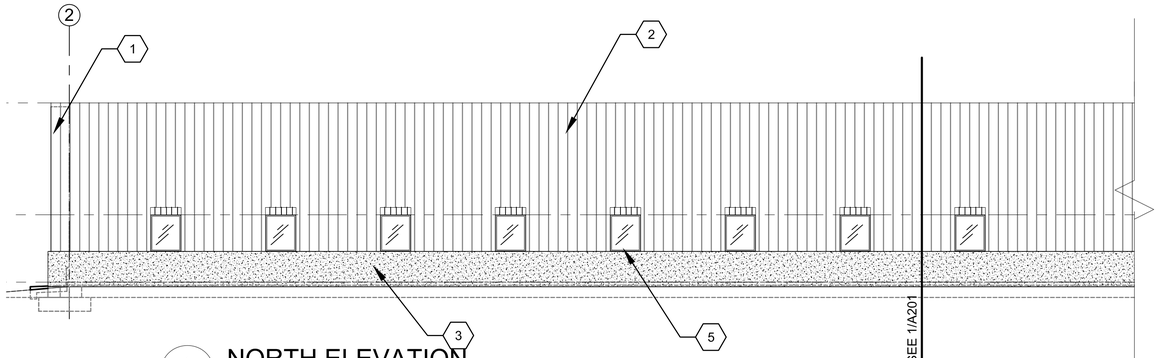

1 A-201 NORTH ELEVATION
SCALE: 1:100

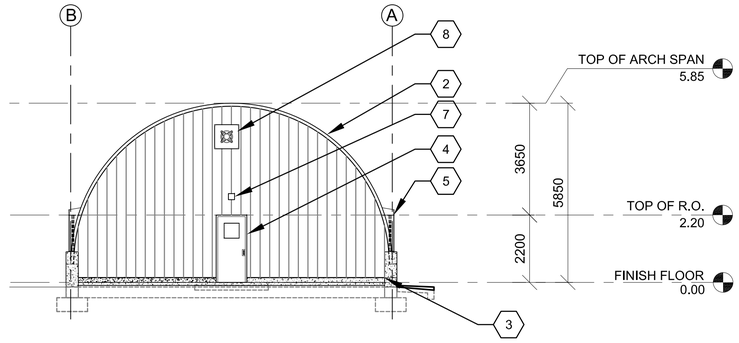

3 A-201 EAST ELEVATION
SCALE: 1:100

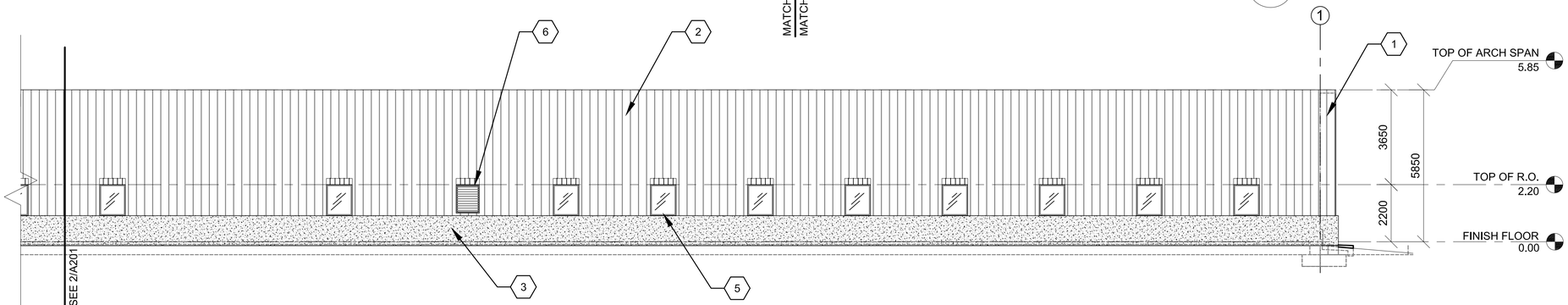

2 A-201 NORTH ELEVATION
SCALE: 1:100

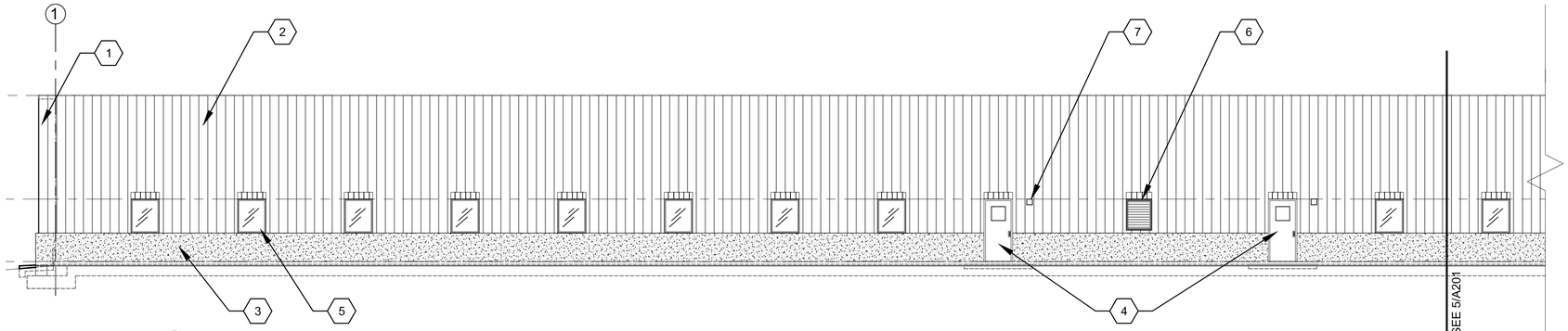

4 A-201 SOUTH ELEVATION
SCALE: 1:100

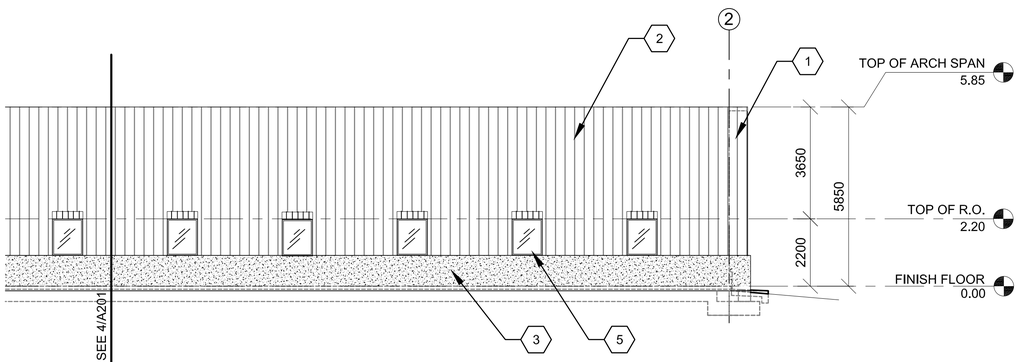

5 A-201 SOUTH ELEVATION
SCALE: 1:100

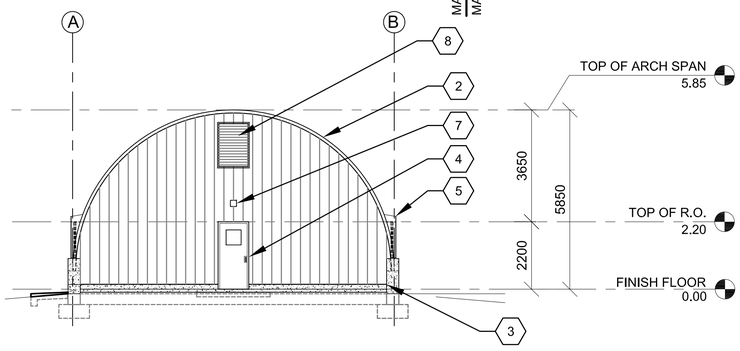

6 A-201 WEST ELEVATION
SCALE: 1:100

GENERAL NOTES:

A. FACTORY PRIMED METAL DOORS AND FRAMES SHALL RECEIVE TWO COATS OF PAINT.
B. LOCATION OF EXTERIOR DOORS AND WINDOWS MUST BE COORDINATED WITH ARCH SPAN MODULE. PLAN DIMENSIONS OF THESE IS APPROXIMATE AND MAY BE SLIGHTLY ADJUSTED TO SUIT PANEL FABRICATION TOLERANCES.
C. EXTERIOR CONCRETE BUILDING SURFACES TO RECEIVE PENETRATING CONCRETE SEALER
D. COORDINATE ALL HVAC OPENING SIZES AND LOCATIONS WITH HVAC CONTRACTOR PRIOR TO INSTALLATION.

KEY NOTES:

1. EXTENSION OF ARCH SPAN
2. PRE-FINISHED METAL ARCH SPAN CONSTRUCTION WALL AND CEILING.
3. CONCRETE WALL.
4. PAINTED HOLLOW METAL DOOR & FRAME.
5. STEEL WINDOW PAINTED.
6. PRE-FINISHED STEEL LOUVER - SEE DETAIL 3/A501
7. LIGHTING - SEE ELECTRICAL
8. ATTIC VENTILATION LOUVER OR FAN SEE MECHANICAL FOR SIZE AND TYPE

0 2000 4000
SCALE: 1:100

UNLESS OTHERWISE NOTED, LINEAR DIMENSIONS SHOWN ARE IN MILLIMETERS.

COMMONWEALTH OF VIRGINIA
PETER GARRETT SCHMIDT
No. 013167
ARCHITECT

US ARMY CORPS OF ENGINEERS
AFGHANISTAN NORTH DISTRICT

SYMBOL	DESCRIPTION	DATE	APPR.	SYMBOL	DESCRIPTION	DATE	APPR.

DESIGNED BY:
DWN BY: CKD BY:
REVIEWED BY:
SUBMITTED BY:
DATE: 3/22/2011
CONTRACT NO. W912ER-09-D-0002
DRAWING CODE:
FILE NAME: ARCOFFICER-B19-A-201.DWG
PLOT SCALE: 1:100
PLOT DATE: 3/23/2011
REV: 0

U.S. ARMY ENGINEER DISTRICT, AFGHANISTAN
CORPS OF ENGINEERS
APO AE 09356

BAKER

SITE ADAPT DESIGN
B19 - OFFICER BARRACKS - LARGE - ARCH SPAN
ELEVATIONS

SHEET REFERENCE NUMBER:
A-201

A1 Size 594mm x 841mm

3/23/2011 1:16 PM

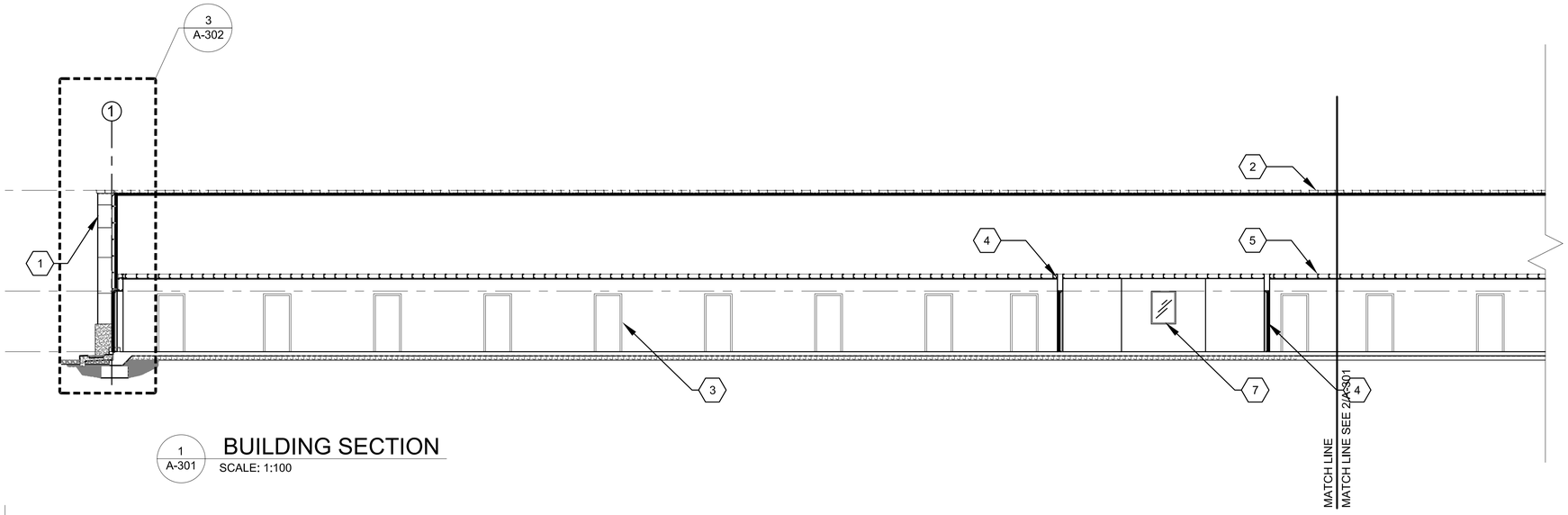

1 A-301 BUILDING SECTION
SCALE: 1:100

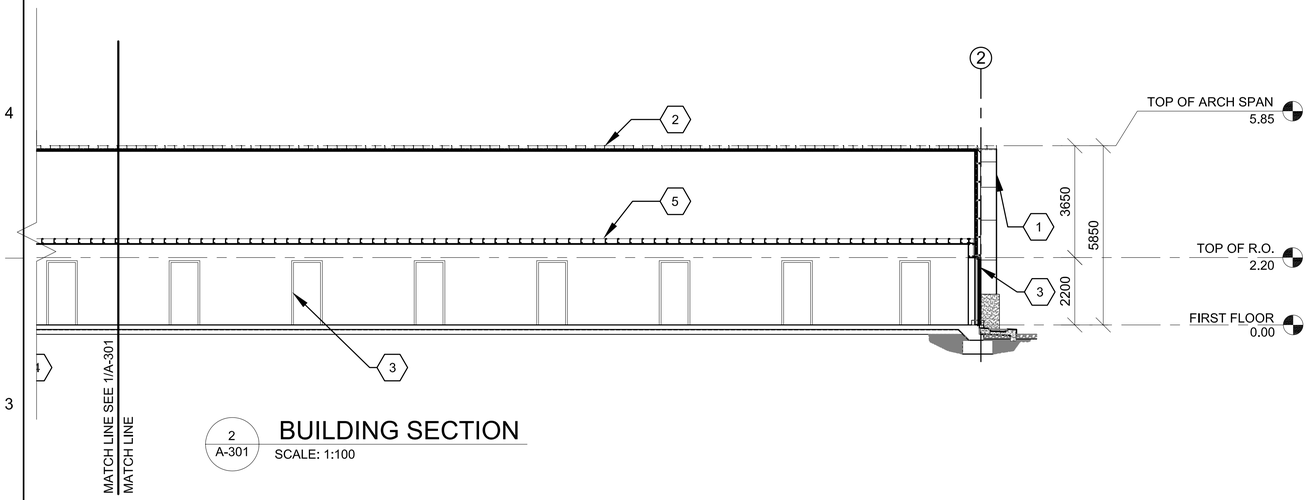

2 A-301 BUILDING SECTION
SCALE: 1:100

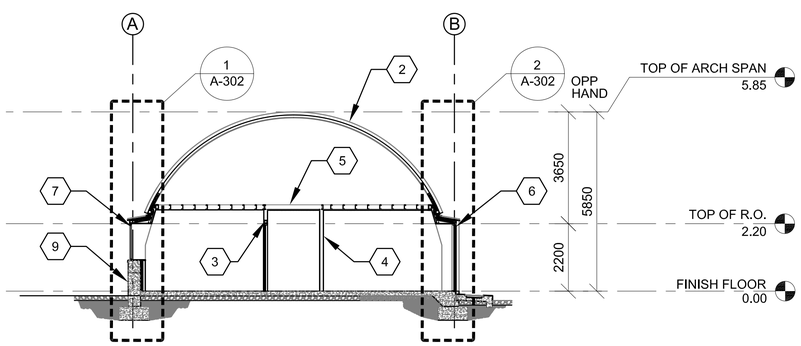

3 A-301 BUILDING SECTION
SCALE: 1:100

KEY NOTES:

1. EXTENSION OF ARCH SPAN
2. K-SPAN ROOF/WALL PANEL WITH POLYURETHANE/CEMENTITIOUS SPRAY - ON FIRE BARRIER
3. HOLLOW METAL FRAME WITH DOOR AS SCHEDULED
4. PARTITION AS SCHEDULED
5. CEILING SYSTEM AS SCHEDULED
6. SIDEWALL DOOR AND DORMER FRAMING
7. SIDE WALL WINDOW AND DORMER FRAMING
8. NOT USED
9. CONCRETE STEM WALL

0 2000 4000
SCALE: 1:100

UNLESS OTHERWISE NOTED, LINEAR DIMENSIONS SHOWN ARE IN MILLIMETERS.

COMMONWEALTH OF VIRGINIA
PETER GARRETT SCHMIDT
No. 013167
ARCHITECT

US ARMY CORPS OF ENGINEERS
AFGHANISTAN NORTH DISTRICT

SYMBOL	DESCRIPTION	DATE	APPR.	SYMBOL	DESCRIPTION	DATE	APPR.

DESIGNED BY:
DWN BY:
CKD BY:
REVIEWED BY:
SUBMITTED BY:
DATE: 3/22/2011
CONTRACT NO. W912ER-09-D-0002
DRAWING CODE:
REV: 0
FILE NAME:
PLOT SCALE: 1:100
PLOT DATE: 3/22/2011

BAKER

U.S. ARMY ENGINEER DISTRICT, AFGHANISTAN
CORPS OF ENGINEERS
APO AE 09356

SITE ADAPT DESIGN
B19 - OFFICER BARRACKS - LARGE - ARCH SPAN
BUILDING SECTIONS

SHEET REFERENCE NUMBER:
A-301

3/22/2011 4:46 PM

A1 Size 594mm x 841mm

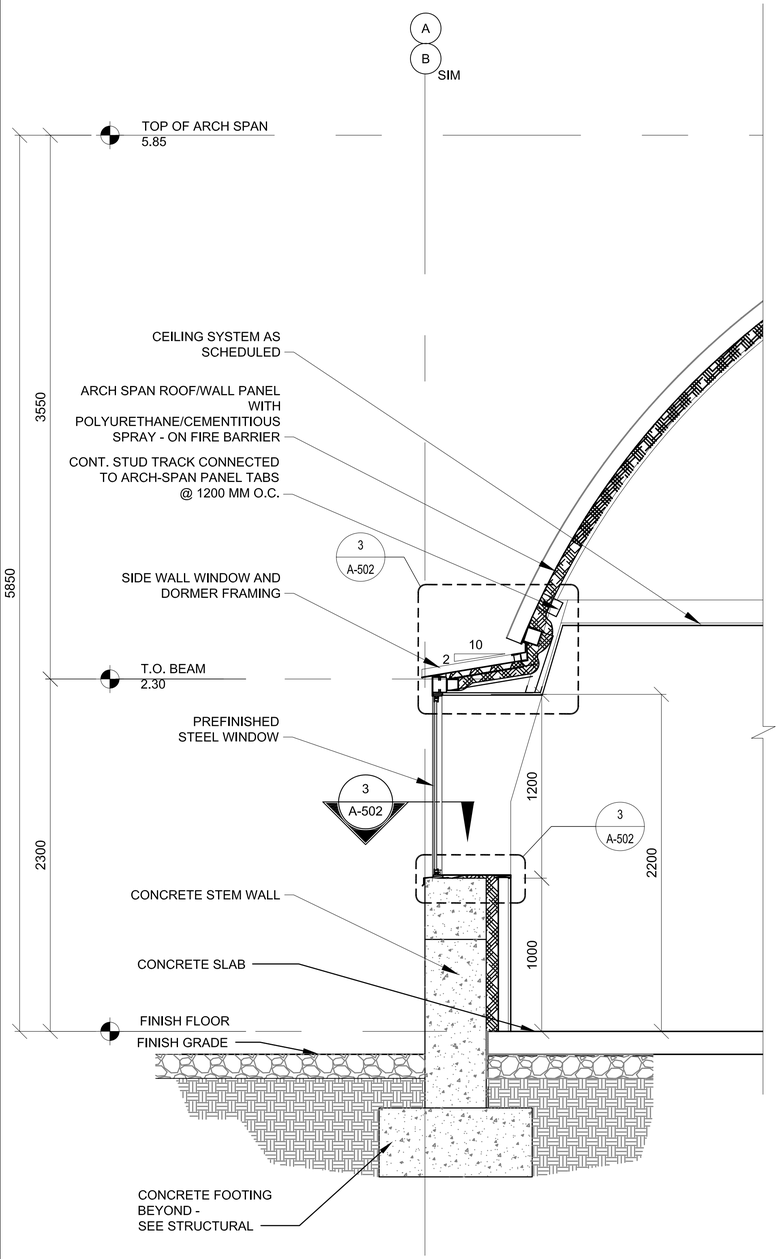

WALL SECTION - SIDE WALL THRU WINDOW

1 / A-302

SCALE: 1:20

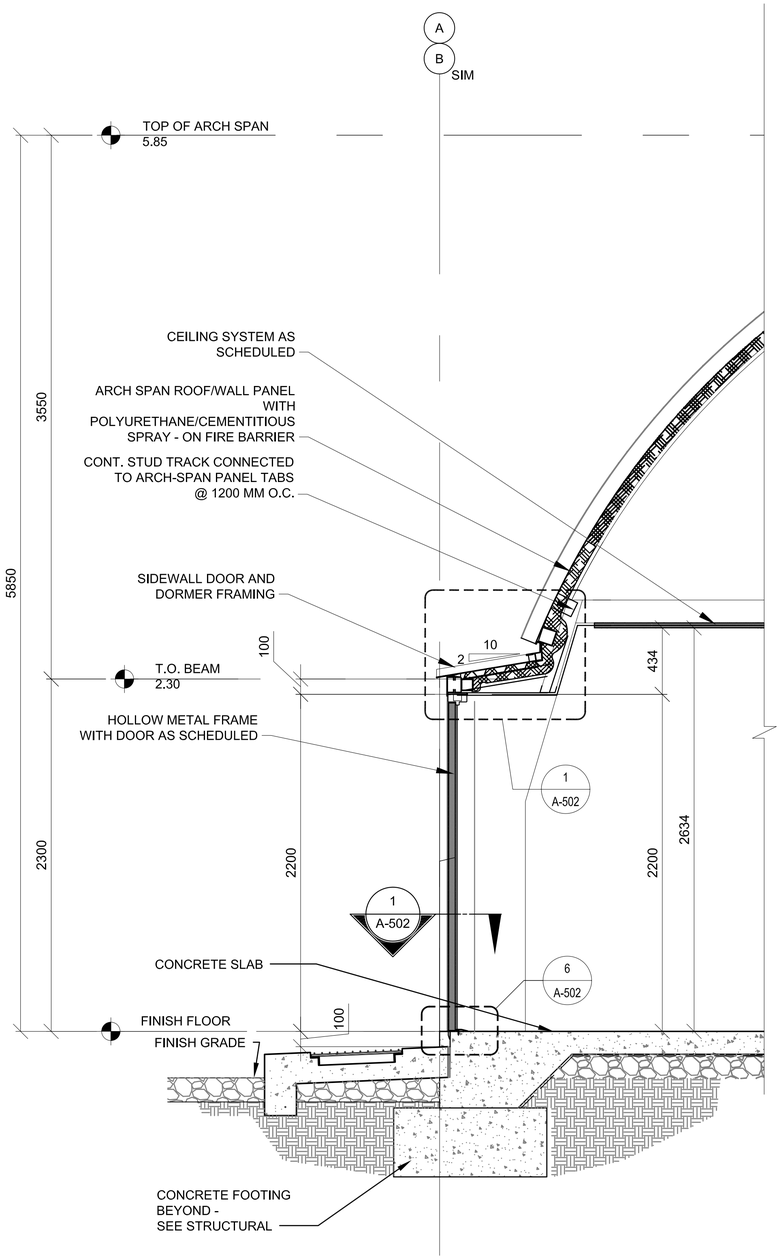

WALL SECTION - SIDE WALL THRU H.M. DOOR

2 / A-302

SCALE: 1:20

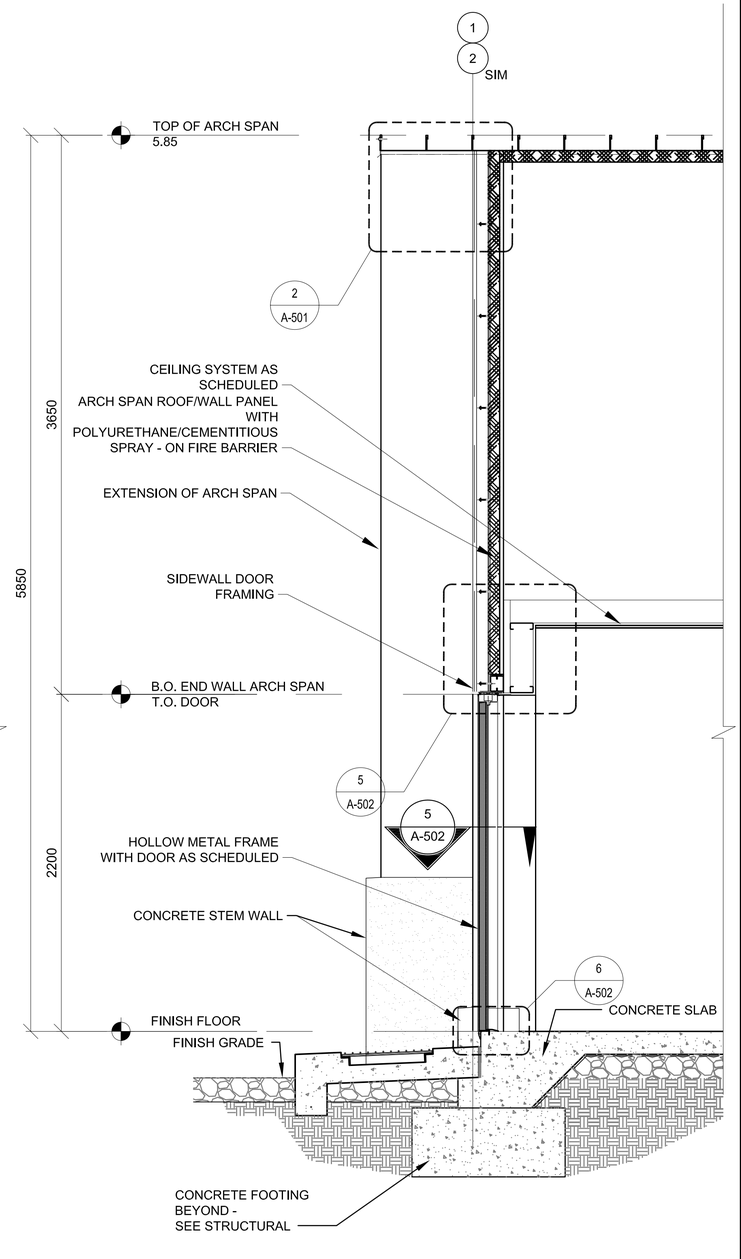

WALL SECTION - THRU END WALL H.M. DOOR

3 / A-302

SCALE: 1:20

0 200 400 800

SCALE: 1:20

UNLESS OTHERWISE NOTED, LINEAR DIMENSIONS SHOWN ARE IN MILLIMETERS.

COMMONWEALTH OF VIRGINIA
PETER GARRETT SCHMIDT
NO. 013167
ARCHITECT

US ARMY CORPS OF ENGINEERS
AFGHANISTAN NORTH DISTRICT

SYMBOL	DESCRIPTION	DATE	APPR.	SYMBOL	DESCRIPTION	DATE	APPR.

DESIGNED BY:
DWN BY: CKD BY:
REVIEWED BY:
SUBMITTED BY:

DATE: 3/22/2011
CONTRACT NO. W912ER-09-D-0002
DRAWING CODE:
FILE NAME: ARCOFFICEB19-A-302.DWG
PLOT SCALE: 1:20
PLOT DATE: 3/22/2011
REV: 0

BAKER

U.S. ARMY ENGINEER DISTRICT, AFGHANISTAN
CORPS OF ENGINEERS
APO AE 09356

SITE ADAPT DESIGN

B19 - OFFICER BARRACKS - LARGE - ARCH SPAN

WALL SECTIONS

SHEET REFERENCE NUMBER:

A-302

3/22/2011 4:46 PM

A1 Size 594mm x 841mm

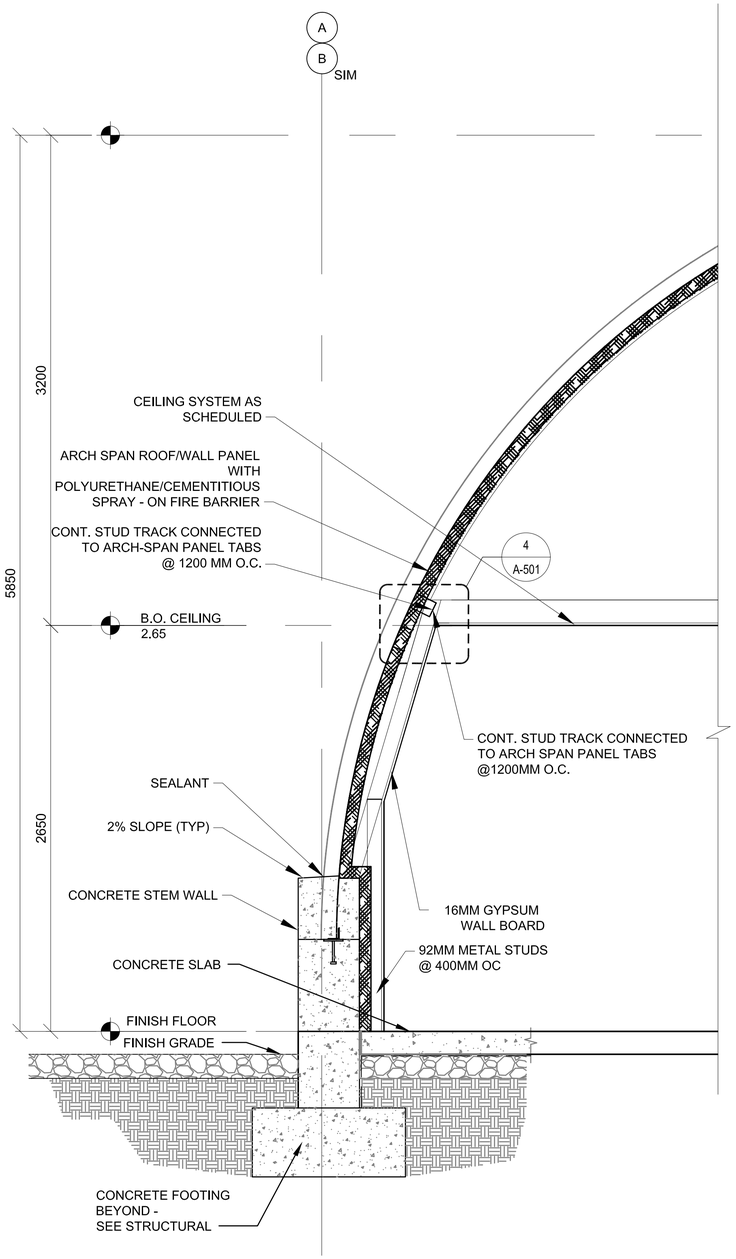

1
A-303

WALL SECTION - SIDE WALL THRU 1M STEM WALL

SCALE: 1:50

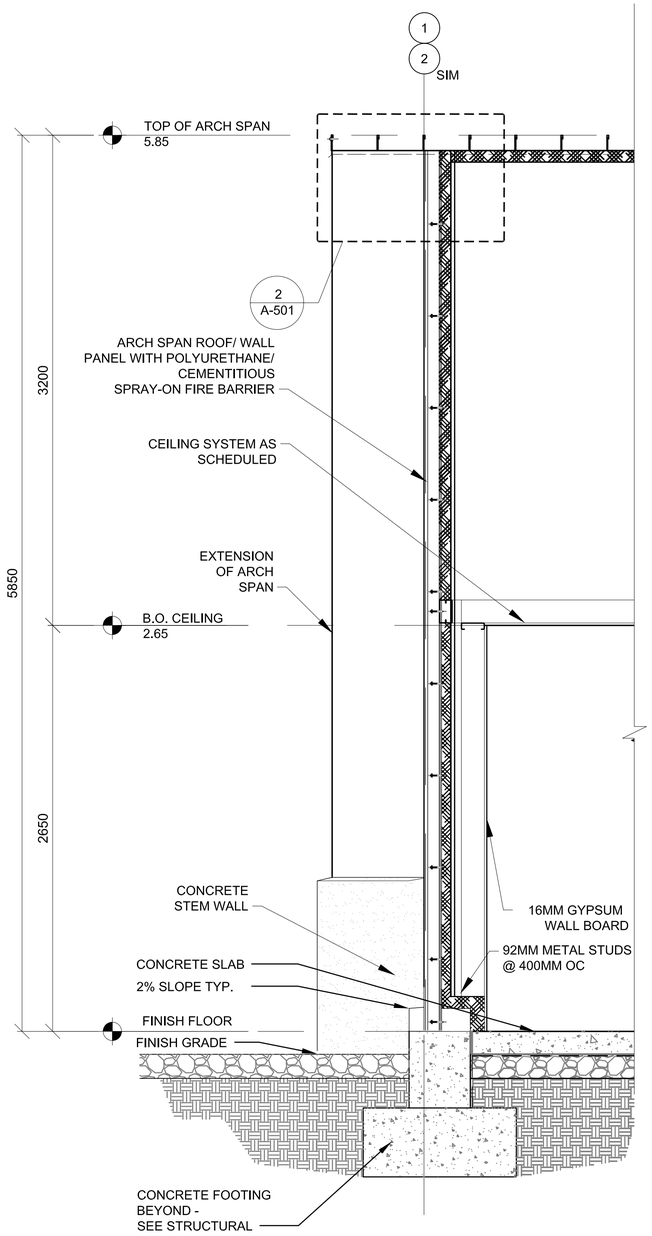

2
A-303

WALL SECTION - THRU END WALL

0 500 1000 2000
SCALE: 1:50

UNLESS OTHERWISE NOTED, LINEAR DIMENSIONS SHOWN ARE IN MILLIMETERS.

COMMONWEALTH OF PENNSYLVANIA
PETER GARRETT SCHMIDT
No. 013167
REGISTERED ARCHITECT

US ARMY CORPS OF ENGINEERS
AFGHANISTAN NORTH DISTRICT

SYMBOL	DESCRIPTION	DATE	APPR.	SYMBOL	DESCRIPTION	DATE	APPR.

U.S. ARMY ENGINEER DISTRICT, AFGHANISTAN
CORPS OF ENGINEERS
APO AE 09356

DESIGNED BY:
DWN BY: CKD BY:
REVIEWED BY:
SUBMITTED BY:
DATE: 3/22/2011
CONTRACT NO. W912ER-09-D-0002
DRAWING CODE:
FILE NAME: ARCOFFBAR2B-B19-A-303.DWG
PLOT SCALE: 1:20
PLOT DATE: 3/22/2011
REV: 0

BAKER

SITE ADAPT DESIGN
B19 - OFFICER BARRACKS - LARGE - ARCH SPAN
WALL SECTIONS

SHEET REFERENCE NUMBER:
A-303

A1 Size 594mm x 841mm

3/22/2011 4:46 PM

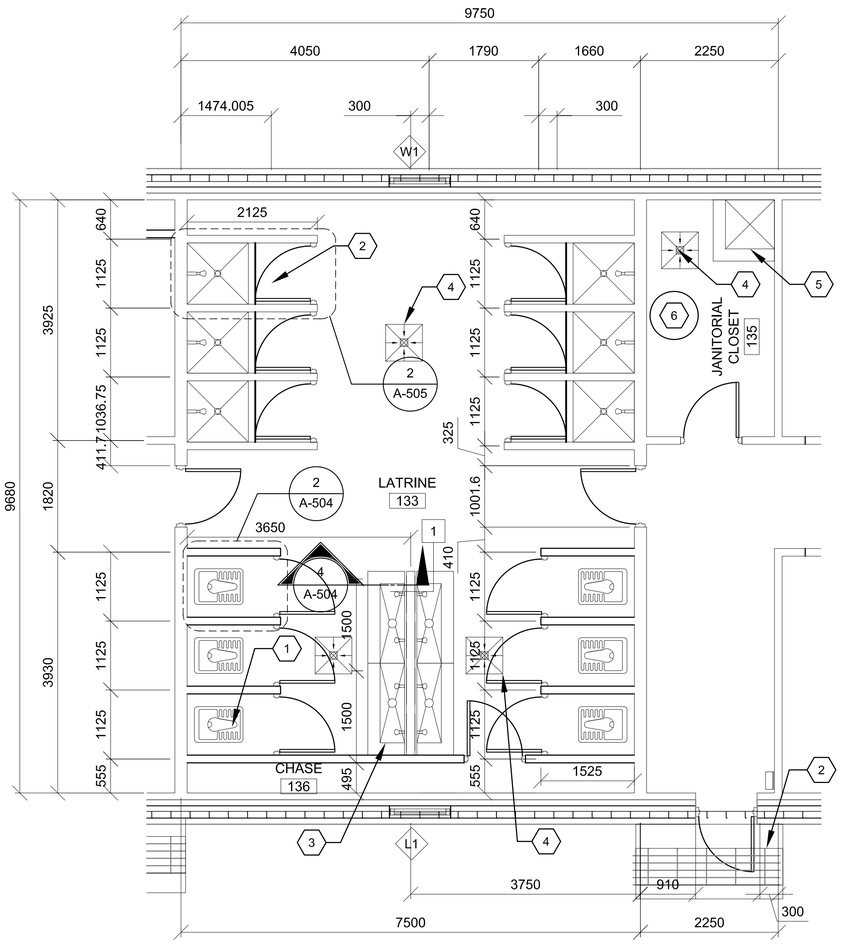

1 A-401

ENLARGED PLAN

SCALE: 1:50

GENERAL NOTES:

A. DIMENSIONS ARE SHOWN TO OUTER EDGE OF EXTERIOR STRUCTURAL FACE OF ARCH SPAN PANEL(GRID LINES), CENTER LINE OF INTERIOR PARTITIONS, EDGE OF WINDOW OPENINGS, AND TO HINGE SIDE OF DOOR FRAME OPENING, UNLESS NOTED OTHERWISE.

B. HINGE SIDE OF OPENINGS FOR DOORS AND FRAMES SHALL BE LOCATED 200 MM FROM THE ADJACENT WALL OR COLUMN, UNLESS NOTED OTHERWISE.

C. INTERIOR PARTITIONS SHALL BE PARTITION TYPE 1, UNLESS NOTED OTHERWISE. REFER TO A-602 FOR PARTITION TYPES SCHEDULE

D. COSMETIC REPAIR OF MINOR DEFECTS: REPAIR OR FILL MORTAR JOINTS AND MINOR DEFECTS, INCLUDING BUT NOT LIMITED TO SPALLS, IN ACCORDANCE WITH MANUFACTURER'S RECOMMENDATIONS AND PRIOR TO COATING APPLICATION. SURFACES TO BE PAINTED SHALL BE CLEAN AND FREE OF FOREIGN MATTER BEFORE APPLICATION OF PAINT. CLEANING SHALL BE SCHEDULED SO THAT DUST AND OTHER CONTAMINANTS WILL NOT FALL ON NEWLY PAINTED SURFACES.

E. CONCRETE, PLASTER AND MASONRY SURFACES SHALL BE ALLOWED TO CURE FOR AT LEAST 30 DAYS BEFORE PAINTING. CONCRETE SLABS-ON-GRADE SHALL BE ALLOWED TO CURE 90 DAYS BEFORE STAINING OR SEALING.

F. DO NOT USE PAINT MATERIALS CONTAINING LEAD CONTENT IN EXCESS OF 0.009 PERCENT OF THE WEIGHT OF THE TOTAL NONVOLATILE CONTENT OF THE PAINT OR THE WEIGHT OF THE DRIED PAINT FILM. XXX

G. DO NOT USE ANY ASBESTOS CONTAINING MATERIALS (ACM) IN PROJECT. ACM IS DEFINED AS 1% OR MORE BY VOLUME.

H. DO NOT USE PAINT MATERIALS CONTAINING MERCURIAL FUNGICIDES.

I. FACTORY PRIMED METAL DOORS AND FRAMES SHALL RECEIVE TWO COATS OF PAINT.

J. FILL REMAINING SPACE AT PENETRATIONS IN FIRE-RATED FLOORS, PARTITIONS AND CEILINGS WITH APPROPRIATE FIRESTOPPING MATERIALS.

K. ALL CEILING FINISHES SHALL AS NOTED ON REFLECTED CEILING PLANS OR FINISH SCHEDULE.

L. ALL WALL FINISHES SHALL AS NOTED ON FINISH SCHEDULE. REFER TO A-603

M. ALL FLOOR FINISHES SHALL BE SEALED CONCRETE, UNLESS NOTED OTHERWISE.

N. PROVIDE TILE FINISHES AS INDICATED IN DETAILS & KEY NOTES.

O. ALL DOOR, FRAME AND HARDWARE TYPES SHALL BE 20A.1.11 UNLESS NOTED OTHERWISE. REFER TO A-601 FOR DOOR INFORMATION.

P. TOILET STALL DOORS SHALL BE G.2.12

Q. SHOWER STALL DOOR, FRAME AND HARDWARE TYPE SHALL BE E.1.12.

R. PROVIDE POLISHED STAINLESS STEEL MIRROR 600 X 900 ABOVE EVERY LAVATORY FAUCET.

S. PLASTER MAY BE SUBSTITUTED FOR DRYWALL WALLS AND CEILINGS. MAINTAIN FIRE RATINGS AS NOTED

T. LOCATION OF EXTERIOR DOORS AND WINDOWS MUST BE COORDINATED WITH ARCH SPAN MODULE. PLAN DIMENSIONS OF THESE IS APPROXIMATE AND MAY BE SLIGHTLY ADJUSTED TO SUIT PANEL FABRICATION TOLERANCES.

KEY NOTES: X

1. TYPICAL TOILET STALL LAYOUT - SEE DETAIL 2/504
2. TYPICAL SHOWER STALL LAYOUT - SEE DETAIL 2/505
3. LAVATORY - SEE DETAIL 4/A-504
4. FLOOR DRAIN - SEE PLUMBING AND DETAIL 6/A-505
5. REFER TO 5/A-505 FOR MOP SING
6. WATER HEATER SEE PLUMBING

0 500 1000 2000

SCALE: 1:50

UNLESS OTHERWISE NOTED, LINEAR DIMENSIONS SHOWN ARE IN MILLIMETERS.

COMMONWEALTH OF VIRGINIA
PETER GARRETT SCHMIDT
No. 013167
ARCHITECT

US ARMY CORPS OF ENGINEERS AFGHANISTAN NORTH DISTRICT

SYMBOL	DESCRIPTION	DATE	APPR.	SYMBOL	DESCRIPTION	DATE	APPR.

DESIGNED BY:
DWN BY:
CKD BY:
REVIEWED BY:
SUBMITTED BY:
DATE: 3/22/2011
CONTRACT NO. W912ER-09-D-0002
DRAWING CODE:
REV: 0
FILE NAME:
PLOT SCALE: 1:50
PLOT DATE: 3/22/2011

BAKER

U.S. ARMY ENGINEER DISTRICT, AFGHANISTAN
CORPS OF ENGINEERS
APO AE 09356

SITE ADAPT DESIGN
B19 - OFFICER BARRACKS - LARGE - ARCH SPAN
ENLARGED PLAN

SHEET REFERENCE NUMBER:
A-401

3/22/2011 4:46 PM

A1 Size 594mm x 841mm

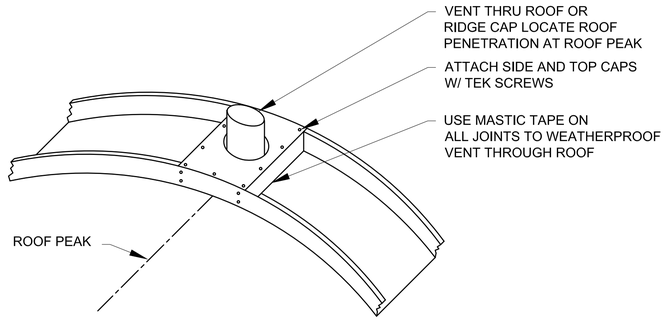

1 A-501 PLUMBING VENT DETAIL

SCALE: NTS

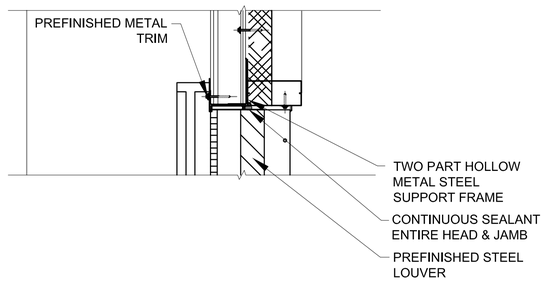

HEAD

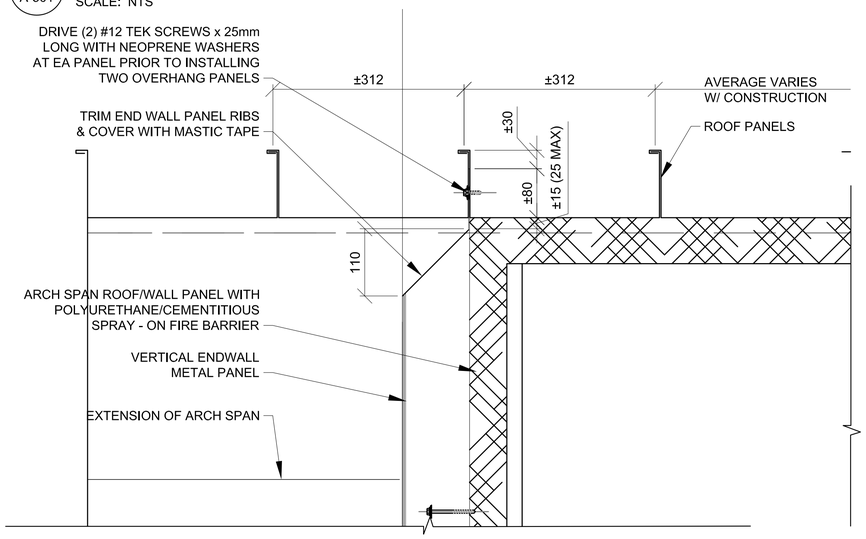

2 A-501 END WALL ROOF DETAIL

SCALE: 1:5

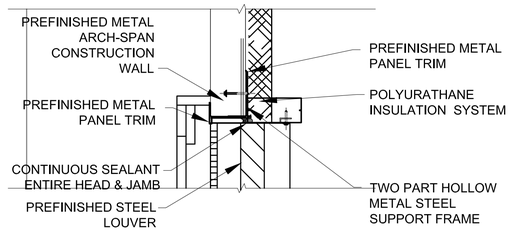

JAMB

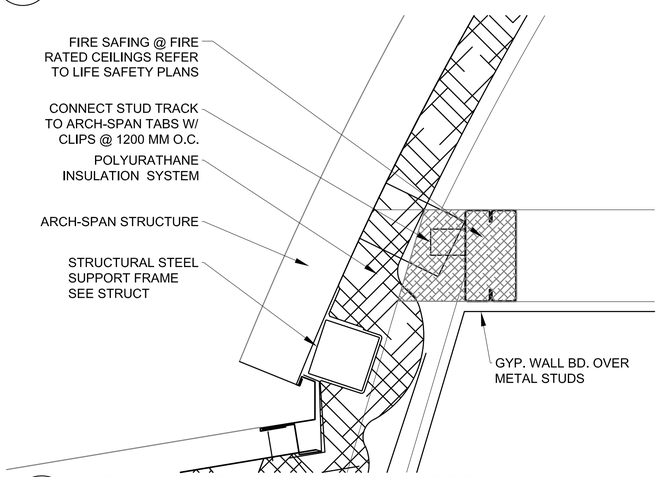

4 A-501 CEILING ARCH-SPAN CONNECTION

SCALE 1:10

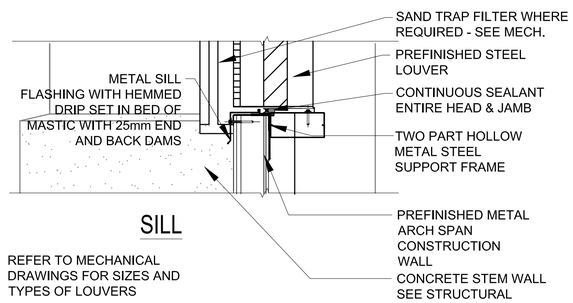

SILL

REFER TO MECHANICAL
DRAWINGS FOR SIZES AND
TYPES OF LOUVERS

3 A-501 LOUVER EXTERIOR DETAIL

SCALE: 1:5

0 100 200 400

SCALE: 1:10

UNLESS OTHERWISE NOTED,
LINEAR DIMENSIONS
SHOWN ARE IN MILLIMETERS.

COMMONWEALTH OF VIRGINIA
PETER GARRETT SCHMIDT
NO. 013167
ARCHITECT

US ARMY CORPS
OF ENGINEERS
AFGHANISTAN NORTH
DISTRICT

SYMBOL	DESCRIPTION	DATE	APPR.	SYMBOL	DESCRIPTION	DATE	APPR.

DESIGNED BY: DATE: 3/22/2011 REV: 0
DWN BY: CKD BY: CONTRACT NO. W912ER-09-D-0002
REVIEWED BY: DRAWING CODE:
SUBMITTED BY: FILE NAME: ARCH SPAN BLDG B19 A-501.DWG
PLOT SCALE: 1:5
PLOT DATE: 3/22/2011

BAKER

U.S. ARMY ENGINEER DISTRICT, AFGHANISTAN
CORPS OF ENGINEERS
APO AE 09356

SITE ADAPT DESIGN

B19 - OFFICER BARRACKS - LARGE - ARCH SPAN

EXTERIOR DETAILS

SHEET
REFERENCE
NUMBER:

A-501

A1 Size 594mm x 841mm

3/22/2011 4:47 PM

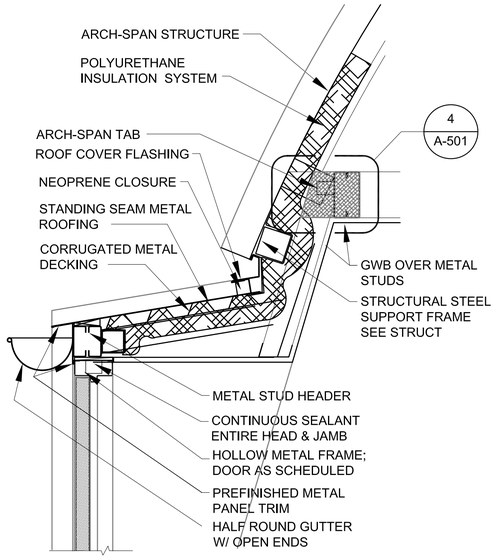

HEAD

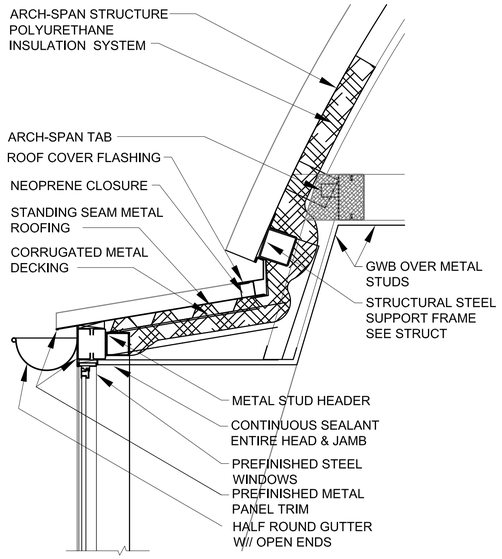

HEAD

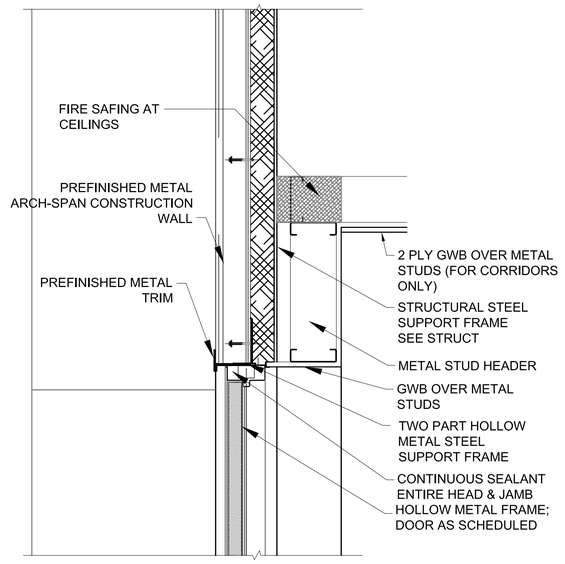

HEAD

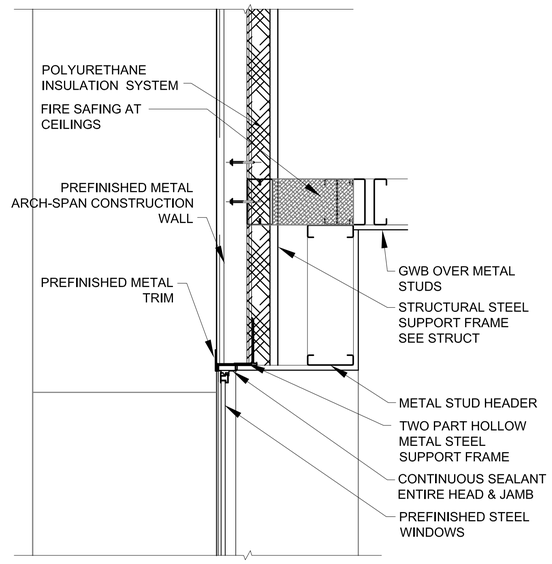

HEAD

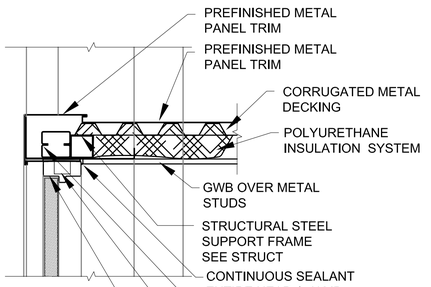

JAMB

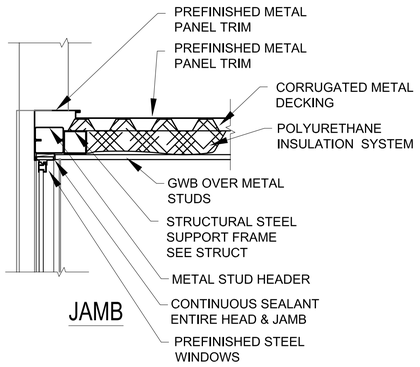

JAMB

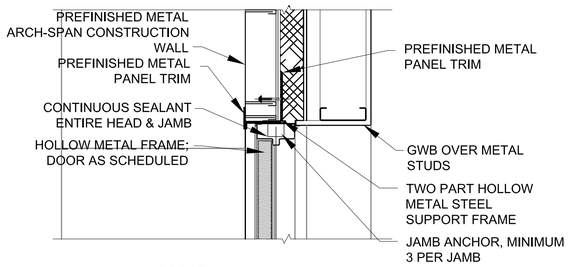

JAMB

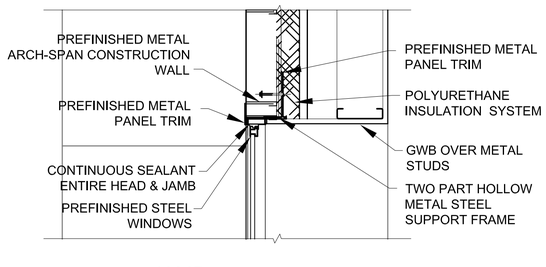

JAMB

1 A-502 EXTERIOR DOOR DETAILS
SCALE: 1:10

5 A-502 END WALL EXTERIOR DOOR DETAILS
SCALE: 1:10

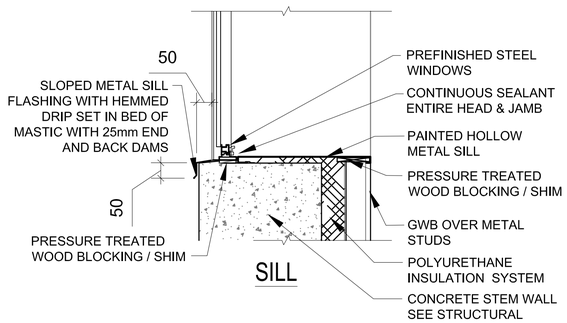

SILL

3 A-502 EXTERIOR WINDOW DETAILS
SCALE: 1:10

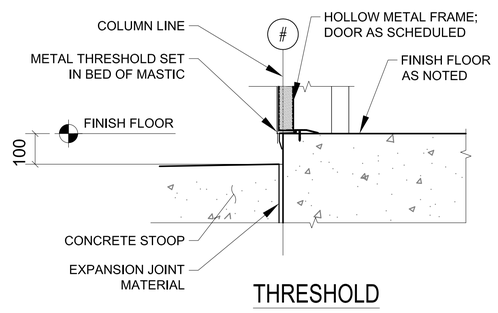

THRESHOLD

6 A-502 EXTERIOR DOOR DETAILS
SCALE: 1:10

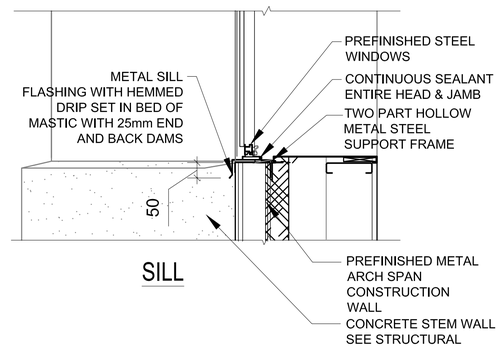

SILL

8 A-502 EXTERIOR WINDOWS DETAILS
SCALE: 1:10

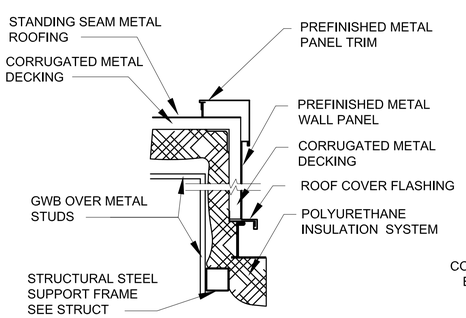

2 A-502 DORMER DETAILS
SCALE: 1:10

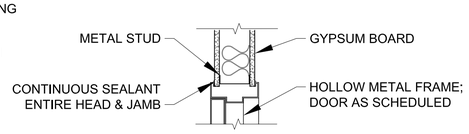

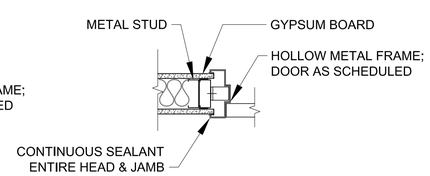

4 A-502 INTERIOR WALL DETAILS
SCALE: 1:10

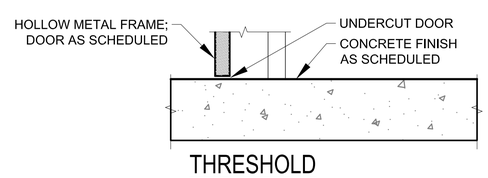

THRESHOLD

7 A-502 INTERIOR DOOR DETAILS
SCALE: 1:10

0 100 200 400
SCALE: 1:10

UNLESS OTHERWISE NOTED, LINEAR DIMENSIONS SHOWN ARE IN MILLIMETERS.

COMMONWEALTH OF VIRGINIA
PETER GARRETT SCHMIDT
No. 013167
ARCHITECT

US ARMY CORPS OF ENGINEERS
AFGHANISTAN NORTH DISTRICT

SYMBOL	DESCRIPTION	DATE	APPR.	SYMBOL	DESCRIPTION	DATE	APPR.

DESIGNED BY:
DWN BY: CKD BY:
REVIEWED BY:
SUBMITTED BY:
DATE: 3/22/2011
REV: 0
CONTRACT NO. W912ER-09-D-0002
DRAWING CODE:
FILE NAME: ARCH SPAN HEAD & SILL DETAILS.DWG
PLOT SCALE: 1:10
PLOT DATE: 3/22/2011

BAKER

U.S. ARMY ENGINEER DISTRICT, AFGHANISTAN
CORPS OF ENGINEERS
APO AE 09356

SITE ADAPT DESIGN
B19 - OFFICER BARRACKS - LARGE - ARCH SPAN
HEAD, JAMB, & SILL DETAILS

SHEET REFERENCE NUMBER:
A-502

3/22/2011 4:47 PM

A1 Size 594mm x 841mm

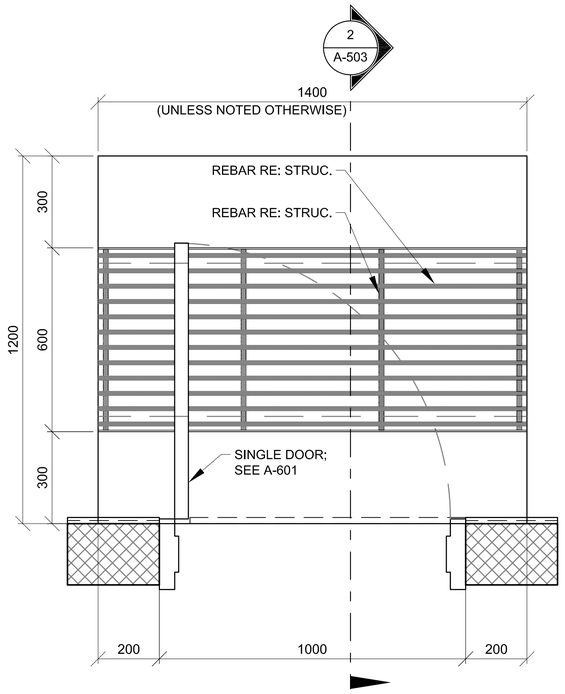

1 A-503 900mm DOOR/ STOOP PLAN (WITH GRATE)
SCALE: 1:10

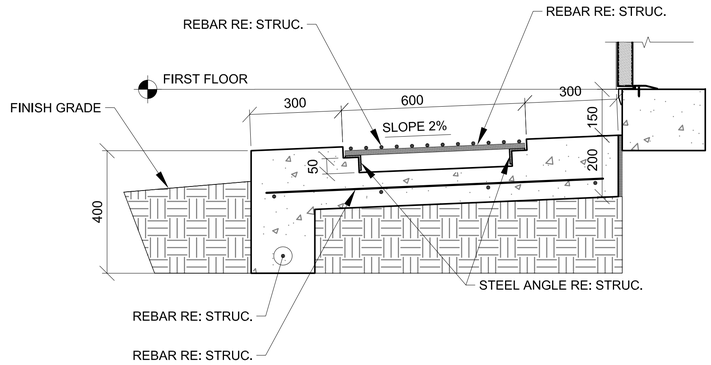

2 A-503 DOOR STOOP DETAIL
SCALE: 1:10

0 100 200 400
SCALE: 1:10

UNLESS OTHERWISE NOTED,
LINEAR DIMENSIONS
SHOWN ARE IN MILLIMETERS.

COMMONWEALTH OF VIRGINIA
PETER GARRETT SCHMIDT
No. 013167
ARCHITECT

US ARMY CORPS
OF ENGINEERS
AFGHANISTAN NORTH
DISTRICT

SYMBOL	DESCRIPTION	DATE	APPR.	SYMBOL	DESCRIPTION	DATE	APPR.

U.S. ARMY ENGINEER DISTRICT, AFGHANIST'AN
CORPS OF ENGINEERS
APO AE 09356

DESIGNED BY:
DWN BY: CKD BY:
REVIEWED BY:
SUBMITTED BY:

DATE: 3/22/2011
CONTRACT NO. W912ER-09-D-0002
DRAWING CODE:
FILE NAME: ARCDIFNAGB-B19-A-503.DWG
PLOT SCALE: 1:10
PLOT DATE: 3/22/2011
REV: 0

BAKER

SITE ADAPT DESIGN
B19 - OFFICER BARRACKS - LARGE - ARCH SPAN
STOOP DETAILS

SHEET
REFERENCE
NUMBER:
A-503

A1 Size 594mm x 841mm

3/22/2011 4:47 PM

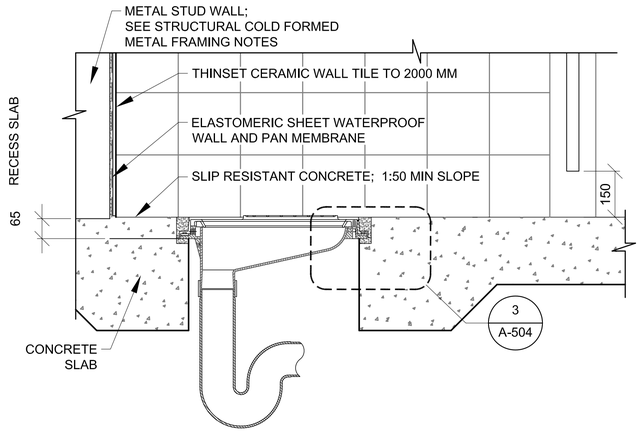

1 A-504 LATRINE DETAIL
SCALE: 1:10

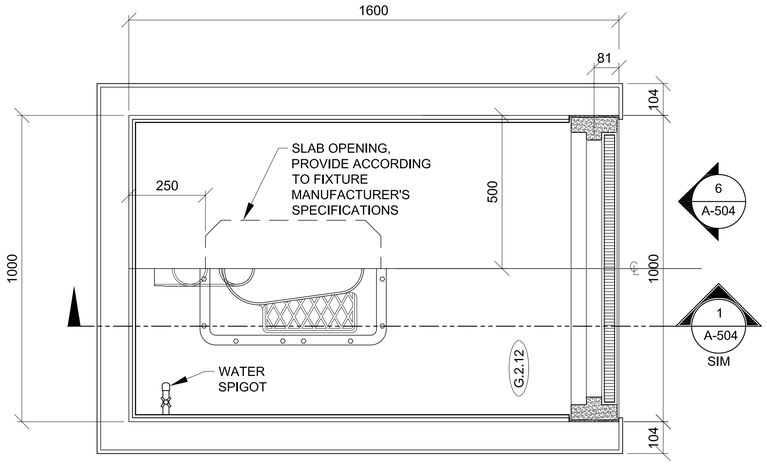

2 A-504 TOILET DETAIL
SCALE: 1:10

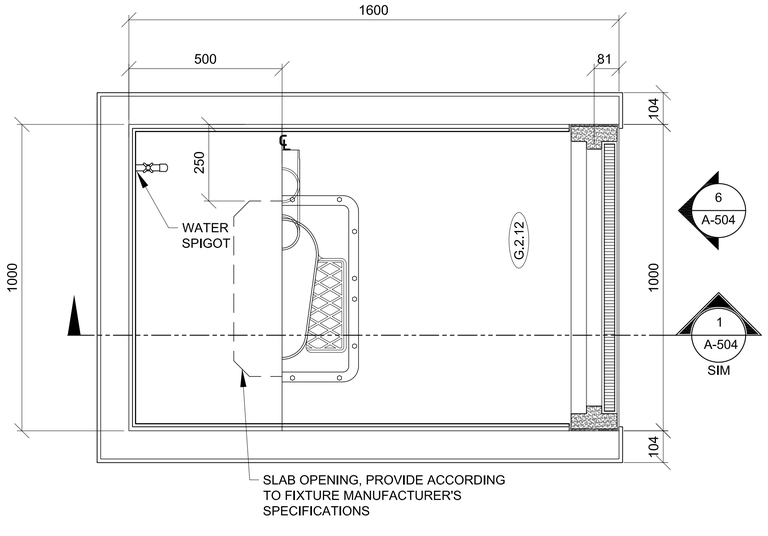

2A A-504 TOILET DETAIL
SCALE: 1:10

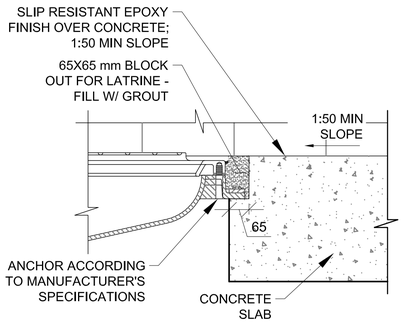

3 A-504 MOUNTING DETAIL
SCALE: 1:10

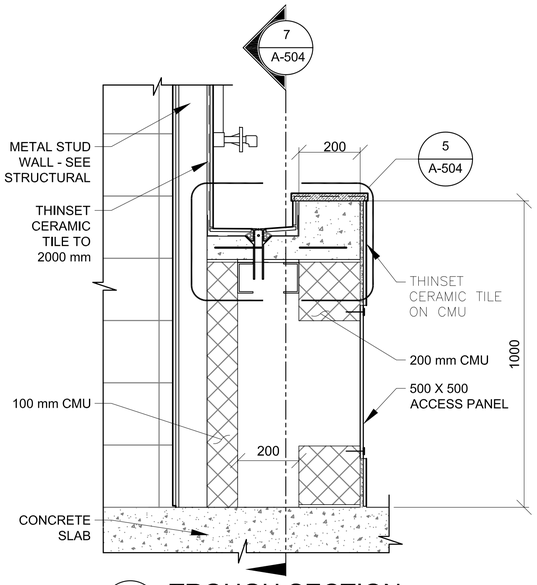

4 A-504 TROUGH SECTION
SCALE: 1:10

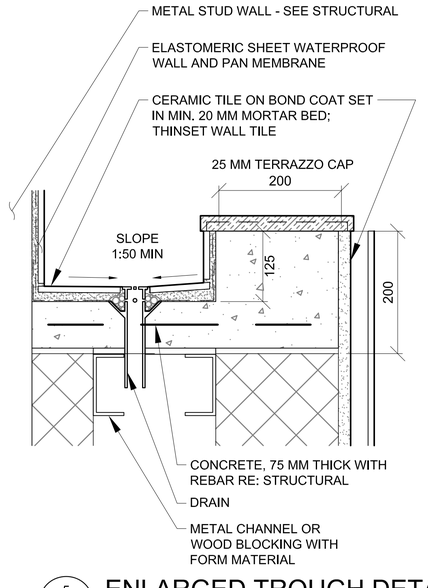

5 A-504 ENLARGED TROUGH DETAIL
SCALE: 1:5

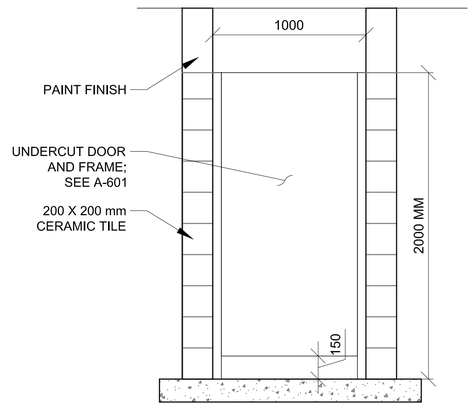

6 A-504 TOILET PARTITION DOOR ELEVATION
SCALE: 1:20

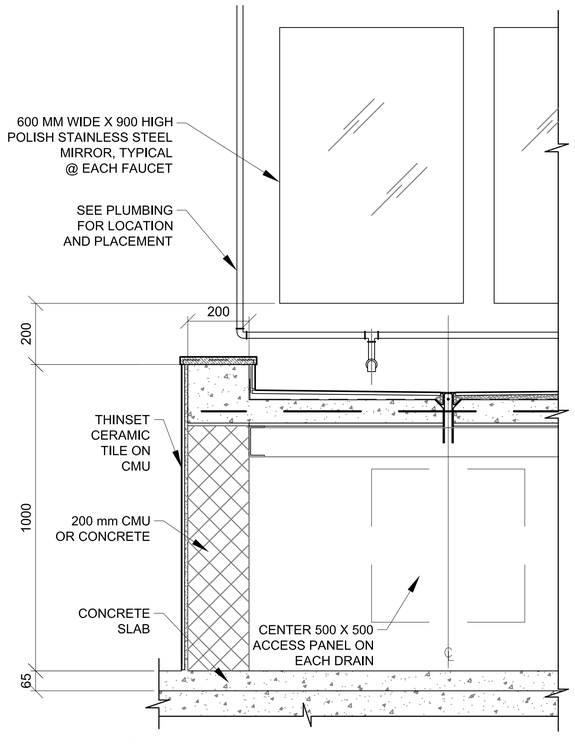

7 A-504 TROUGH SECTION
SCALE: 1:10

0 100 200 400
SCALE: 1:10

0 50 100 200
SCALE: 1:5

UNLESS OTHERWISE NOTED,
LINEAR DIMENSIONS
SHOWN ARE IN MILLIMETERS.

COMMONWEALTH OF PENNSYLVANIA
PETER GARRETT SCHMIDT
NO. 013167
REGISTERED ARCHITECT

US ARMY CORPS
OF ENGINEERS
AFGHANISTAN NORTH
DISTRICT

SYMBOL	DESCRIPTION	DATE	APPR.	SYMBOL	DESCRIPTION	DATE	APPR.

DESIGNED BY:
DWN BY: CKD BY:
REVIEWED BY:
SUBMITTED BY:
DATE: 3/22/2011
CONTRACT NO. W912ER-09-D-0002
DRAWING CODE:
FILE NAME: (ARCHITECTURAL-A-504.DWG)
PLOT SCALE: VARIES
PLOT DATE: 3/22/2011
REV: 0

BAKER

U.S. ARMY ENGINEER DISTRICT, AFGHANISTAN
CORPS OF ENGINEERS
APO AE 09356

SITE ADAPT DESIGN
B19 - OFFICER BARRACKS - LARGE - ARCH SPAN
TOILET, LAVATORY, & ABLUTION DETAILS

SHEET
REFERENCE
NUMBER:
A-504

3/22/2011 4:47 PM

A1 Size 594mm x 841mm

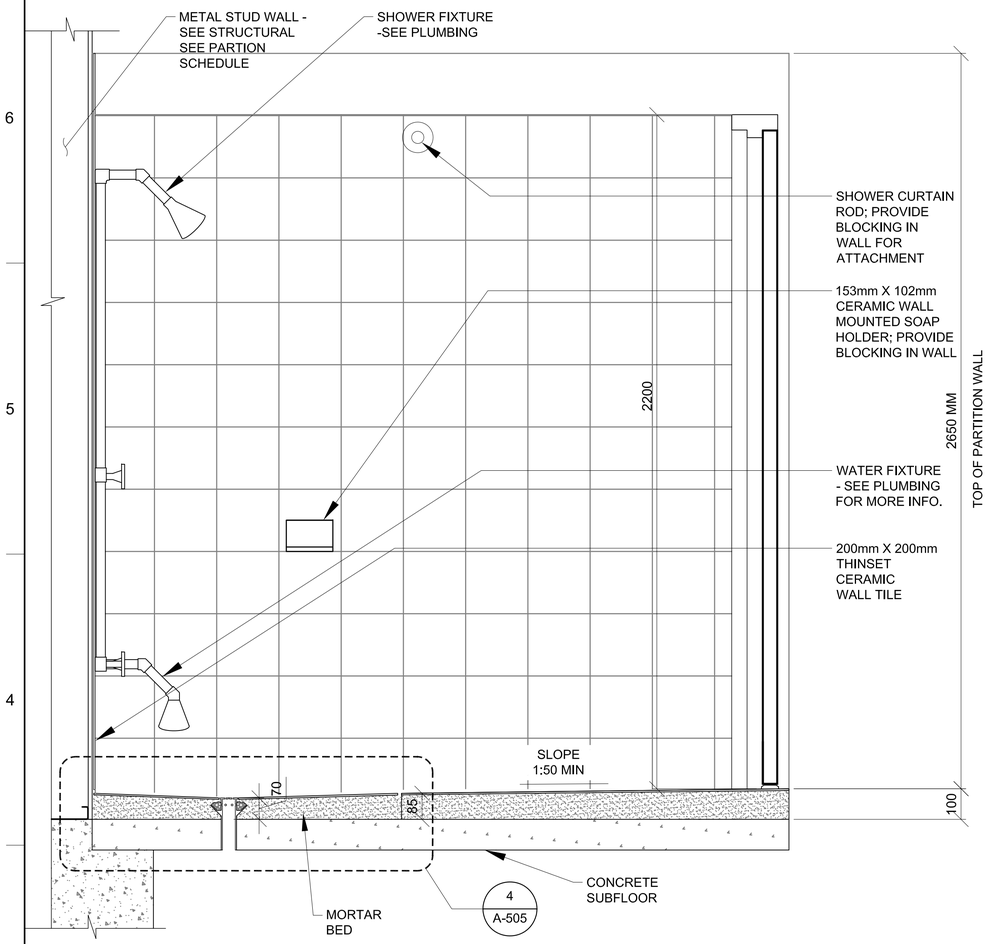

1 A-505 SHOWER DETAILS
SCALE: 1:10

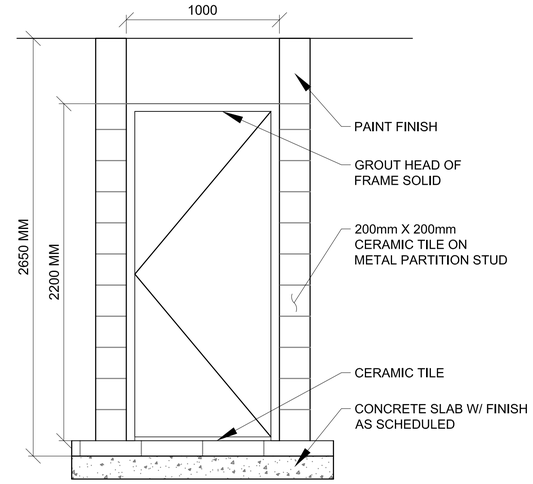

3 A-505 SHOWER PARTITION DOOR ELEVATION
SCALE: 1:20

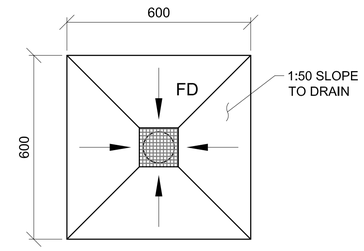

6 A-505 FLOOR DRAIN DETAIL
SCALE: 1:10

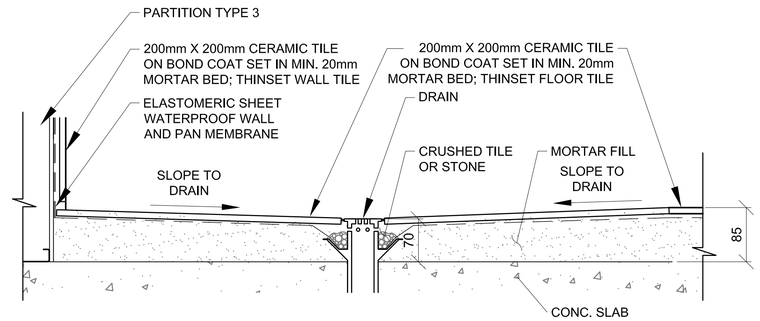

4 A-505 SHOWER RECESS
SCALE: 1:5

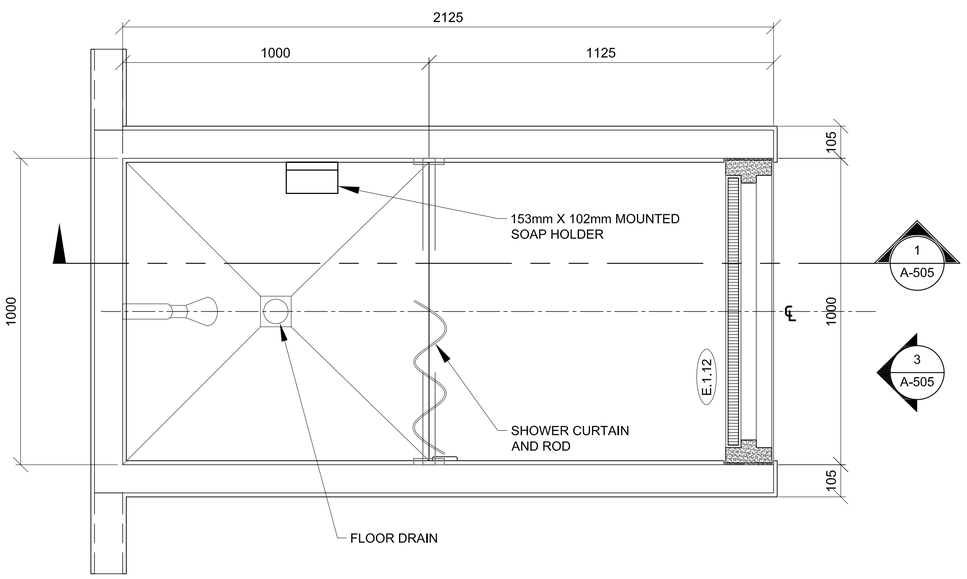

2 A-505 SHOWER PLAN
SCALE: 1:10

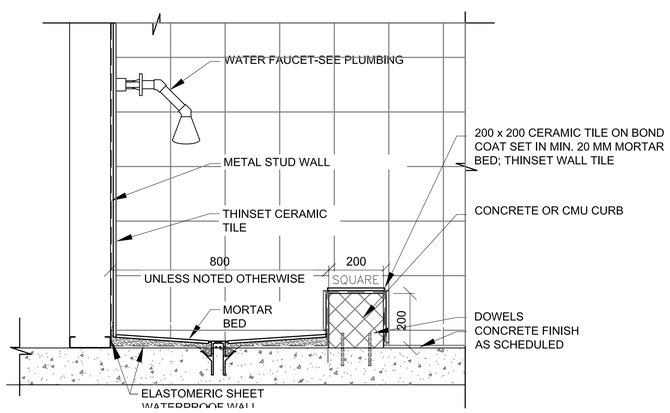

5 A-505 MOP SINK DETAIL
SCALE: 1:10

SCALE: 1:20
SCALE: 1:10
SCALE: 1:5

UNLESS OTHERWISE NOTED, LINEAR DIMENSIONS SHOWN ARE IN MILLIMETERS.

COMMONWEALTH OF VIRGINIA
PETER GARRETT SCHMIDT
No. 013167
ARCHITECT

US ARMY CORPS OF ENGINEERS
AFGHANISTAN NORTH DISTRICT

SYMBOL	DESCRIPTION	DATE	APPR.	SYMBOL	DESCRIPTION	DATE	APPR.

DESIGNED BY:
DWN BY: CKD BY:
REVIEWED BY:
SUBMITTED BY:
DATE: 3/22/2011 REV: 0
CONTRACT NO. W912ER-09-D-0002
DRAWING CODE:
FILE NAME: ARCOTHER(B19-A-505.DWG)
PLOT SCALE: 1:10
PLOT DATE: 3/22/2011

BAKER

U.S. ARMY ENGINEER DISTRICT, AFGHANISTAN
CORPS OF ENGINEERS
APO AE 09356

SITE ADAPT DESIGN
B19 - OFFICER BARRACKS - LARGE - ARCH SPAN
SHOWER DETAILS

SHEET REFERENCE NUMBER:
A-505

A1 Size 594mm x 841mm

3/22/2011 4:47 PM

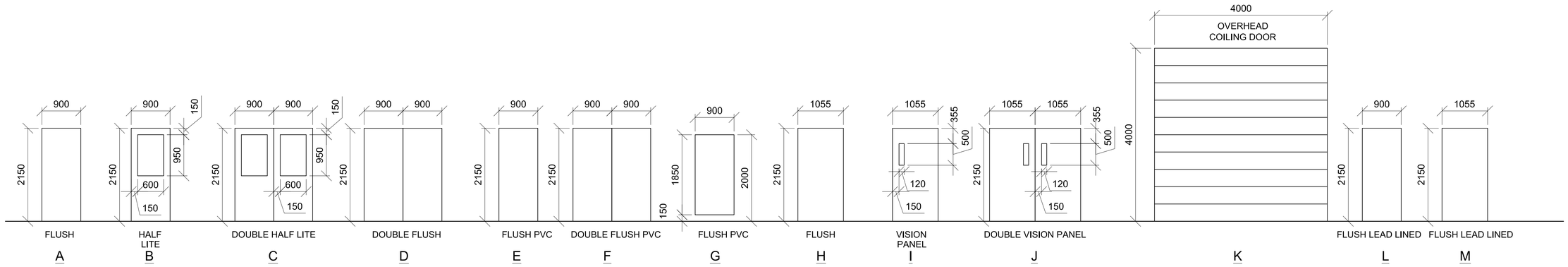

1 A-601 DOOR TYPES

SCALE: 1:50

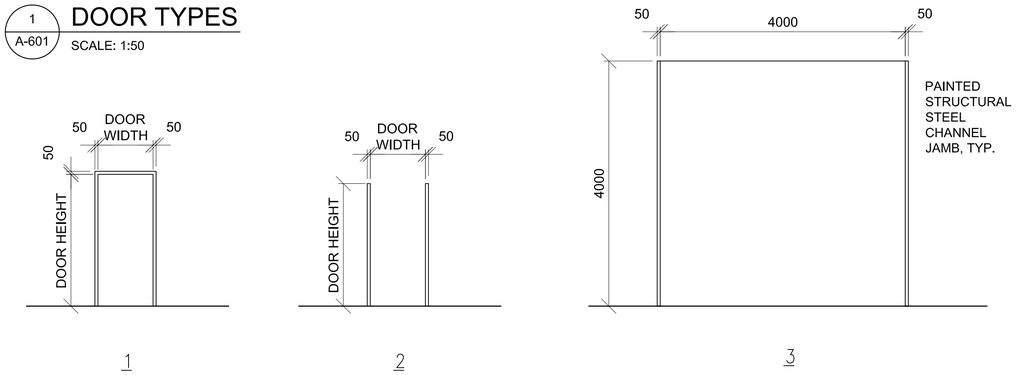

2 A-601 FRAME TYPES

SCALE: 1:50

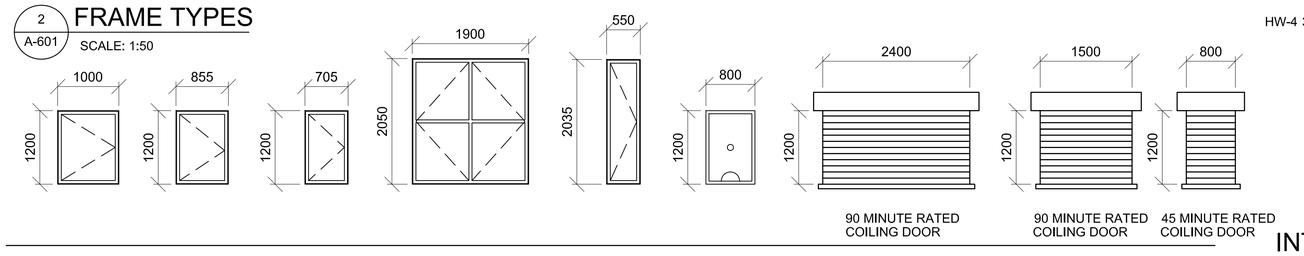

3 A-601 WINDOW TYPES

SCALE: 1:50

WINDOW TYPE NOTES:

1. ALL EXTERIOR WINDOWS SHALL BE STEEL. PROVIDE INSECT SCREENS ONLY AT DFAC FACILITIES. WINDOWS SHALL BE COMMERCIAL GRADE.
2. ALL EXTERIOR WINDOWS SHALL BE OPERABLE.
3. WINDOWS IN LATRINES OR RESTROOM AREAS SHALL HAVE OBSCURE GLASS.
4. WINDOW TYPES ARE NOT APPLICABLE AT ALL BUILDINGS. SEE FLOOR PLAN FOR REQUIREMENTS

DOOR AND HARDWARE NOTES:

1. INTERIOR AND EXTERIOR METAL DOORS AND FRAME COLORS SHALL MATCH ADJACENT WALL COLORS AS SELECTED BY THE CONTRACTING OFFICER.
2. FRAMES, EXCEPT FIRE-RATED FRAMES, SHALL BE MOUNTED AND ADJUSTED IN ACCORDANCE WITH MANUFACTURER'S INSTRUCTIONS. FRAMES SHALL BE FASTENED WITH MINIMUM OF THREE ANCHORS PER JAMB AT EQUAL INTERVALS.
3. DIMENSIONS SHOWN ON DOOR TYPES DETAIL ARE BASED UPON MODULAR MASONRY (OR ROUGH OPENING), HEIGHT OF 2150 MM FOR STANDARD PERSONNEL DOORS. CONTRACTOR SHALL COORDINATE WITH DOOR SUPPLIER TO ENSURE THAT DIMENSIONS OF DOORS AND FRAMES PROVIDED ARE COMPATIBLE WITH DOOR OPENING DIMENSIONS.
4. HARDWARE SHALL BE HEAVY DUTY, COMMERCIAL GRADE, STAINLESS STEEL WITH A SATIN OR BRUSHED FINISH.
5. HARDWARE TYPES INCLUDE BUILDERS HARDWARE MANUFACTURERS ASSOCIATION (BMHA) NUMBER.
6. DOORS IN 2 HOUR RATED PARTITIONS SHALL BE 1.5 HOUR (90 MINUTE) RATED DOORS IN ACCORDANCE WITH NFPA 101, TABLE 8.3.4.2.
7. DOORS IN 1 HOUR RATED WALLS SHALL BE 3/4 HOUR (45 MINUTE) RATED DOORS IN ACCORDANCE WITH NFPA 101, TABLE 8.3.4.2.
8. DOORS IN 1 HOUR RATED CORRIDOR WALLS SHALL BE 1/3 HOUR (20 MINUTE) IN ACCORDANCE WITH NFPA 101, TABLE 8.3.4.2.
10. PROVIDE DOOR STOPS TO PROTECT WALLS ON LOCATIONS WHERE DOOR SWING WILL STRIKE WALL.
11. FIRE RATED DOORS SHALL HAVE RATED GLASS NOT EXCEEDING ALLOWABLE SIZE PER NFPA 80. (836,125MM2 FOR MIN. DOORS & 64,500MM2 FOR 45 MIN OR GREATER DOORS
12. DOOR TYPES ARE NOT APPLICABLE AT ALL BUILDINGS. SEE FLOOR PLAN FOR REQUIREMENTS
13. REFER TO MECHANICAL DRAWINGS FOR LOCATIONS OF UNDERCUT DOORS

DOOR TYPE — A.1.5 — HARDWARE TYPE
FRAME TYPE

4 A-601 DOOR TAG

SCALE: 1:50

DOOR TAG NOTES:

1. THE DOOR TAG INDICATES THE DOOR TYPE, FRAME TYPE AND HARDWARE SET FOR EACH DOOR.
2. THE DOOR TAG FOR RATED DOORS INCLUDES THE RATING OF THE DOOR IN MINUTES.
3. REFER TO FLOOR PLANS FOR DOOR TAG INFORMATION APPLICABLE TO EACH DOOR.

DOOR TYPE
RATING IN MINUTES — 45A.1.5 — HARDWARE TYPE
FRAME TYPE

5 A-601 RATED DOOR TAGS

SCALE: NTS

EXTERIOR DOOR HARDWARE TYPES:

HW-1 1-1/2 PR HINGES, A5112 114 X 114 (SINGLE EXIT DOOR)
1 EA RIM EXIT DEVICE, TYPE 1
1 EA CYLINDER. E09221A, GRADE 1
1 EA OVERHEAD CLOSER, C02061, LOW RESISTANCE
1 EA THRESHOLD, J32130
3 EA DOOR SILENCERS, L03011

HW-2 1-1/2 PR HINGES, A5112 114 X 114 (SINGLE ENTRY DOOR)
1 EA LOCKSET, F13 ENTRY LOCK W/LEVER HANDLES, GRADE 1
1 EA OVERHEAD CLOSER, C02061, LOW RESISTANCE
1 EA THRESHOLD, J32130
3 EA DOOR SILENCERS, L03011

HW-3 3 PR HINGES, A5112 114 X 114 (DOUBLE EXIT DOOR)
2 EA RIM EXIT DEVICE, TYPE 1
2 EA CYLINDER. GRADE 1
2 EA OVERHEAD CLOSER, C02061, LOW RESISTANCE
1 EA DOOR COORDINATOR, TYPE 21
1 EA ASTRAGAL
1 EA THRESHOLD, J32130
2 EA DOOR SILENCERS, L03011

HW-4 3 PR HINGES, A5112 114 X 114 (DOUBLE DOOR DORMITORY FUNCTION)
1 EA LOCKSET W/LEVER HANDLES. GRADE 1, F13
1 EA OVERHEAD CLOSER, C02061, LOW RESISTANCE
2 EA MAGNETIC HOLDER PIN, ATTACHED TO DOOR LEAF
2 EA MAGNETIC HOLDER RECEIVER, ATTACHED TO STOOP
2 EA LEVER EXTENSION FLUSH BOLTS, L04081
1 EA ASTRAGAL
1 EA THRESHOLD, J32130
2 EA DOOR SILENCERS, L03011

INTERIOR DOOR HARDWARE TYPES:

HW-5 1-1/2 PR HINGES, A8133 114 X 114 (SINGLE FRONT DOOR FUNCTION)
1 EA LOCKSET W/LEVER HANDLES, F08, GRADE 1
1 EA WALL STOP, L02101 OR L02161
3 EA DOOR SILENCERS, L03011

HW-5A 1-1/2 PR HINGES, A8133 114 X 114 (SINGLE OFFICE FUNCTION)
1 CLOSER
1 EA LOCKSET W/LEVER HANDLES, F05, GRADE 1
1 EA WALL STOP, L02101 OR L02161
3 EA DOOR SILENCERS, L03011

HW-6 1-1/2 PR HINGES, A8112 114 X 114 (SINGLE STOREROOM FUNCTION)
1 CLOSER
1 EA LOCKSET W/LEVER HANDLES, F07, GRADE 1
1 EA WALL STOP, L02101 OR L02161
3 EA DOOR SILENCERS, L03011

HW-7 1-1/2 PR HINGES, A8133 (SINGLE PASSAGE FUNCTION)
1 CLOSER
1 EA LOCKSET W/LEVER HANDLES, F01 GRADE 1
1 EA WALL STOP, L02101 OR L02161
2 EA MOP PLATE, J103
3 EA DOOR SILENCERS, L03011

HW-7A 1-1/2 PR HINGES, A8133 (SINGLE PASSAGE FUNCTION)
1 CLOSER
1 EA LOCKSET W/LEVER HANDLES, F01 GRADE 1
1 EA WALL STOP, L02101 OR L02161
3 EA DOOR SILENCERS, L03011

INTERIOR DOOR HARDWARE TYPES:

HW-8 1-1/2 PR HINGES, A8112 (SINGLE JAN/STOREROOM FUNCTION)
1 CLOSER
1 EA LOCKSET W/LEVER HANDLES, F07 GRADE 1
1 EA WALL STOP, L02101 OR L02161
2 EA MOP PLATE, J103
3 EA DOOR SILENCERS, L03011

HW-9 1-1/2 PR HINGES, A5112 114 X 114 (SINGLE EXIT DOOR)
1 EA RIM EXIT DEVICE, TYPE 1
1 EA CYLINDER. E09221A, GRADE 1
1 EA OVERHEAD CLOSER, C02061, LOW RESISTANCE
3 EA DOOR SILENCERS, L03011

HW-10 3 PR HINGES, A5112 114 X 114 (DOUBLE STOREROOM FUNCTION
1 EA LOCKSET W/LEVER HANDLES. GRADE 1, F7
2 EA LEVER EXTENSION FLUSH BOLTS, L04081
1 EA ASTRAGAL
2 EA DOOR SILENCERS, L03011

HW-11 1-1/2 PR HINGES, A8112 114 X 114 (SINGLE DORMITORY FUNCTIC
1 EA LOCKSET W/LEVER HANDLES, F13, GRADE 1
1 EA WALL STOP, L02101 OR L02161
1 EA OVERHEAD CLOSER, CO2061, LOW RESISTANCE
3 EA DOOR SILENCERS, L03011
1 EA ROBE HOOK

HW-12 1-1/2 PR HINGES, A8133 (SINGLE PRIVACY-BATH FUNCTION)
1 EA LATCH SET W/LEVER HANDLES, F22 GRADE 1
1 EA WALL STOP, L02101 OR L02161
3 EA DOOR SILENCERS, L03011
1 EA ROBE HOOK

HW-13 3 PR HINGES, A5112 114 X 114 (DOUBLE DORMITORY FUNCTION)
1 EA LOCKSET W/LEVER HANDLES. GRADE 1, F13
1 EA OVERHEAD CLOSER, C02061, LOW RESISTANCE
2 EA LEVER EXTENSION FLUSH BOLTS, L04081
1 EA ASTRAGAL
2 EA DOOR SILENCERS, L03011

HW-14 3 PR HINGES, A5112 114 X 114 (DOUBLE EGRESS EXIT DOOR)
2 EA VERTICAL ROD EXIT DEVICE, TYPE 1
2 EA CYLINDER. GRADE 1
2 EA OVERHEAD CLOSER, C02061, LOW RESISTANCE
1 EA DOOR COORDINATOR, TYPE 21
1 EA ASTRAGAL
2 EA DOOR SILENCERS, L03011

HW-15 3 PR HINGES, A5112 114 X 114 (DOUBLE STOREROOM FUNCTION
2 CLOSERS
1 COORDINATOR
1 EA LOCKSET W/LEVER HANDLES. GRADE 1, F7
2 EA LEVER EXTENSION FLUSH BOLTS, L04081
1 EA ASTRAGAL
2 EA DOOR SILENCERS, L03011

THIS SHEET IS STANDARD AND IS INCLUSIVE OF ALL THE DOOR/ WINDOW/ HARDWARE TYPES FOR THE ENTIRE CONTRACT. NOT ALL DOOR/ WINDOW/ HARDWARE TYPES ARE USED FOR ANY PARTICULAR BUILDING DESIGN. CONTRACTOR SHALL REFER TO THE FLOOR PLAN FOR THE TYPES BEING USED.

0 500 1000 2000
SCALE: 1:50

UNLESS OTHERWISE NOTED, LINEAR DIMENSIONS SHOWN ARE IN MILLIMETERS.

COMMONWEALTH OF VIRGINIA
PETER GARRETT SCHMIDT
No. 013167
ARCHITECT

US ARMY CORPS OF ENGINEERS AFGHANISTAN NORTH DISTRICT

SYMBOL	DESCRIPTION	DATE	APPR.	SYMBOL	DESCRIPTION	DATE	APPR.

U.S. ARMY ENGINEER DISTRICT, AFGHANISTAN
CORPS OF ENGINEERS
APO AE 09356

DESIGNED BY: DATE: 3/22/2011 REV: 0
DWN BY: CKD BY: CONTRACT NO. W912ER-09-D-0002
REVIEWED BY: DRAWING CODE:
SUBMITTED BY: FILE NAME:
PLOT SCALE: 1:50
PLOT DATE: 3/22/2011

BAKER

SITE ADAPT DESIGN
B19 - OFFICER BARRACKS - LARGE - ARCH SPAN
WINDOW AND DOOR SCHEDULES

SHEET REFERENCE NUMBER:
A-601

A1 Size 594mm x 841mm

3/22/2011 4:47 PM

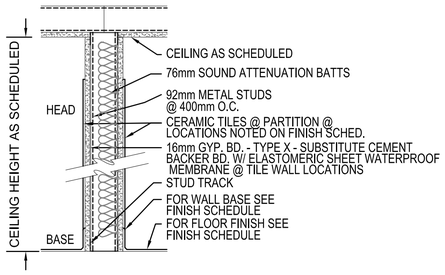

1 TYPE #1 - 1 HOUR FIRE RATED & NON-RATED
DESIGN NO. U419 OR U442
DESIGN NO. WHI 694-0300.1 (SIM)

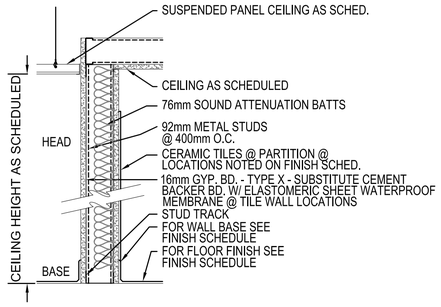

2 TYPE #2 - 1 HOUR FIRE RATED & NON-RATED
DESIGN NO. U419 OR U442/WALL
DESIGN NO. WHI 694-0300.1 (SIM)

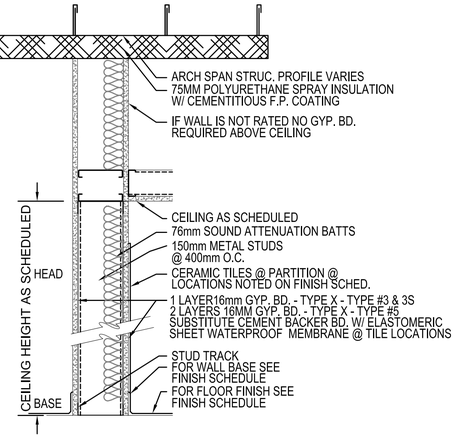

3 TYPE #3 - 1 HOUR FIRE RATED
DESIGN NO. U419
DESIGN NO. WHI 694-0300.1 (SIM)

3S TYPE #3S - 1 HOUR FIRE & SMOKE RATED
DESIGN NO. U419
DESIGN NO. WHI 694-0300.1 (SIM)

5 TYPE #5 - 2 HOUR FIRE RATED - PROVIDE 150 MM
METAL STUDS @ PARTITION TYPES 5 IN LIU OF 92 MM STUDS
DESIGN NO. U443
DESIGN NO. WHI 694-0300.1 (SIM)

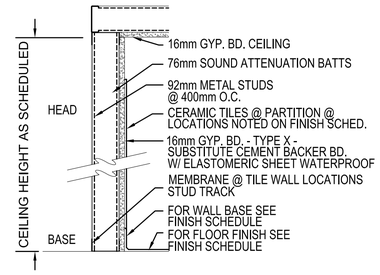

4 TYPE #4 - CHASE PARTITION

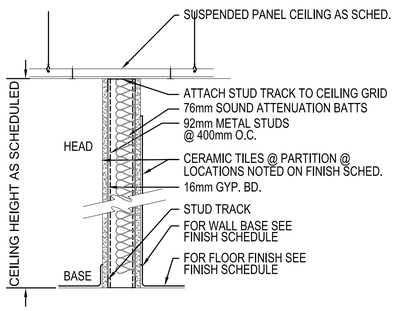

6 TYPE #6 - KITCHEN PARTITION

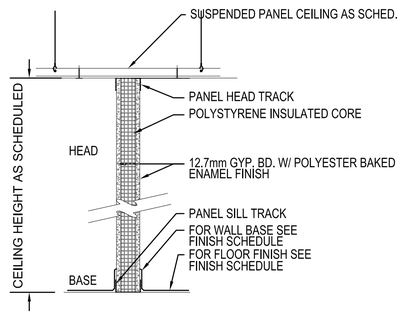

7 TYPE #7 - PANELIZED PARTITION

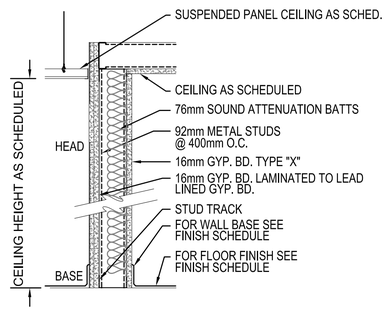

8 TYPE #8 - LEAD LINED PARTITION

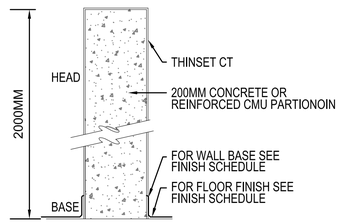

9 TYPE #9 - LOW WALL

1 A-602 PARTITION TYPES

SCALE: 1:10

GENERAL NOTES:

1. REFER TO DRAWING G-003 FOR LOCATION OF FIRE RATED WALLS & FIRE RESISTANT CEILINGS.
2. REFER TO FINISH SCHEDULE FOR LOCATION OF CERAMIC TILE WALL FINISH. AT THESE LOCATION SUBSTITUTE CEMENT BACKER BOARD AND ELASTOMERIC SHEET WATER PROOF MEMBRANE WITH THINSET CERAMIC TILE FOR GYPSUM BOARD AND PAINT FINISH TO C.T. HEIGHT.
3. REFER TO 6/A-501 FOR TYPE 3, 3S, & 5 BRACING DETAIL. INTERMEDIATE HT. BRACING DETAIL FOR FULL HT. WALLS WHERE APPLICABLE.
4. PARTITION TYPES ARE NOT APPLICABLE AT ALL BUILDINGS. SEE FLOOR PLAN & NOTES FOR REQUIRED TYPES
5. SEE COLD FORMED FRAMING NOTES PORTION OF STRUCTURAL DRAWINGS FOR ADDITIONAL INFORMATION

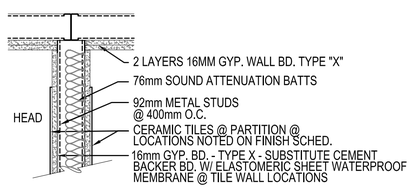

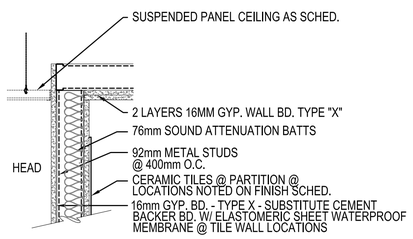

2 A-602 FIRE RESISTANT CEILING CONDITIONS

SCALE: 1:10

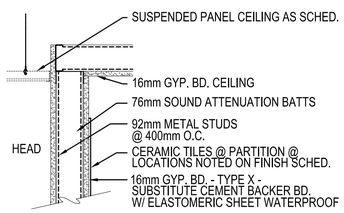

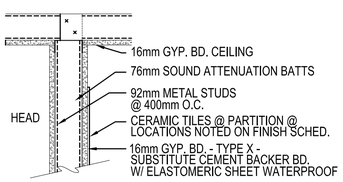

3 A-602 NON-RATED CEILING CONDITIONS

SCALE: 1:10

0 100 200 400

SCALE: 1:10
UNLESS OTHERWISE NOTED,
LINEAR DIMENSIONS
SHOWN ARE IN MILLIMETERS.

COMMONWEALTH OF VIRGINIA
PETER GARRETT SCHMIDT
No. 013167
ARCHITECT

US ARMY CORPS
OF ENGINEERS
AFGHANISTAN NORTH
DISTRICT

SYMBOL	DESCRIPTION	DATE	APPR.	SYMBOL	DESCRIPTION	DATE	APPR.

DESIGNED BY:
DWN BY: CKD BY:
REVIEWED BY:
SUBMITTED BY:
DATE: 3/22/2011
CONTRACT NO. W912ER-09-D-0002
DRAWING CODE:
REV: 0
FILE NAME: arch span large - officer barracks - site adapt
PLOT SCALE: NONE
PLOT DATE: 3/22/2011

BAKER

U.S. ARMY ENGINEER DISTRICT, AFGHANISTAN
CORPS OF ENGINEERS
APO AE 09356

SITE ADAPT DESIGN
B19 - OFFICER BARRACKS - LARGE - ARCH SPAN
PARTITION TYPES

SHEET REFERENCE NUMBER:
A-602

3/22/2011 4:47 PM

A1 Size 594mm x 841mm

FINISHING SCHEDULE

FLOOR FINISHES

- A) TROWEL FINISHED CONCRETE - BROOM FINISH @ TILE
- B) NON-SLIP EPOXY FINISH
- C) CERAMIC TILE
- D) CONC. SEALER

WALL FINISHES

- A) METAL STUD WALL WITH GYPSUM BOARD OR CEMENT PLASTER
- B) SEMI-GLOSS PAINT
- C) EPOXY PAINT
- D) CERAMIC TILE UP TO 2.2M
- E) CEMENTITIOUS FIREPROOFING - SPRAY ON
- F) POLYURETHANE - SPRAY ON
- G) 5cm SANDWICH PANEL
- H) CONCRETE/CMU

CEILING FINISHES

- A) GYPSUM BOARD
- B) SEMI-GLOSS PAINT
- C) EPOXY PAINT
- D) POLYURETHANE - SPRAY ON
- E) CEMENTITIOUS FIREPROOFING - SPRAY ON
- F) 600mm x 1200mm METAL PANEL CEILING SYSTEM
- G) OPEN "T" GRID CEILING SUSPENSION SYSTEM
- H) EXPOSED ARCH SPAN PANELS

NOTES:

1. PROVIDE CEMENT BACKER BOARD & W.P. MEMBRANE @ ALL CERAMIC TILE WALLS. IN LIEU OF GYPSUM BOARD - MAINTAIN REQUIRED FIRE RATINGS.
2. SPRAY - ON POLYURETHANE AND SPRAY ON CEMENTITIOUS FIRE PROOFING SHALL BE APPLIED TO INTERIOR SURFACES OF ARCH SPAN PANELS, WINDOW, & DOOR ENCLOSURES & CONCRETE CURB/WALLS ONLY.
3. INSTALL 100MM PAINTED WOOD COVE BASE ON ALL PAINTED GYPSUM BOARD/ PLASTER WALLS EXCEPT WHERE CERAMIC TILE IS INDICATED.
4. PAINT WALL SURFACES ABOVE CERAMIC WALL TILE REFER TO REFLECTED CEILING PLAN FOR CEILING HEIGHTS.
5. POLYURETHANE INSULATION SHALL PROVIDE K=600.
6. REFER TO G-003 FOR FIRE RATED WALL & FIRE RESISTANT CEILING LOCATIONS & A-602 FOR DRYWALL CEILING CONSTRUCTION.

ITEM NO.	SPACE NO.	FLOOR FINISHING	WALL FINISHING	Ceiling Finishing	REMARKS
1	100	A B	A B	A B	
2	101	A B	A B	A B	
3	102	A B	A B	A B	
4	103	A B	A B	A B	
5	104	A B	A B	A B	
6	105	A B	A B	A B	
7	106	A B	A B	A B	
8	107	A B	A B	A B	
9	108	A B	A B	A B	
10	109	A B	A B	A B	
11	110	A B	A B	A B	
12	111	A B	A B	A B	
13	112	A B	A B	A B	
14	113	A B	A B	A B	
15	114	A B	A B	A B	
16	115	A B	A B	A B	
17	116	A B	A B	A B	
18	117	A B	A B	A B	
19	118	A B	A B	A B	
20	119	A B	A B	A B	
21	120	A B	A B	A B	
22	121	A B	A B	A B	
23	122	A B	A B	A B	
24	123	A B	A B	A B	
25	124	A B	A B	A B	
26	125	A B	A B	A B	
27	126	A B	A B	A B	
28	127	A B	A B	A B	
29	128	A B	A B	A B	
30	129	A B	A B	A B	
31	130	A B	A B	A B	
32	131	A B	A B	A B	
33	132	A B	A B	A B	
34	133	A B	A D C	A C	GENERAL AREAS EXCEPT SHOWERS
35	133	A B	A D C	A C	SHOWERS
36	134	A B	A B	A B	
37	135	A B	A B	A B	
38	136	A	A B	E	NO GYP. BD. ON NORTH & SOUTH WALLS
39					
40					
41					
42					
43					
44					
45					
46					
47					
48					
49					
50					

UNLESS OTHERWISE NOTED, LINEAR DIMENSIONS SHOWN ARE IN MILLIMETERS.

COMMONWEALTH OF PENNSYLVANIA
PETER GARRETT SCHMIDT
No. 013167
REGISTERED ARCHITECT

US ARMY CORPS OF ENGINEERS AFGHANISTAN NORTH DISTRICT

SYMBOL	DESCRIPTION	DATE	APPR.	SYMBOL	DESCRIPTION	DATE	APPR.

DATE: 3/22/2011 REV: 0
CONTRACT NO. W912ER-09-D-0002
DRAWING CODE:
FILE NAME: ARCOFFICER-B19-A-603.DWG
PLOT SCALE: NONE
PLOT DATE: 3/22/2011

DESIGNED BY: DWN BY: CKD BY: REVIEWED BY: SUBMITTED BY:

BAKER

U.S. ARMY ENGINEER DISTRICT, AFGHANISTAN
CORPS OF ENGINEERS
APO AE 09356

SITE ADAPT DESIGN
B19 - OFFICER BARRACKS - LARGE - ARCH SPAN
FINISH SCHEDULE

SHEET REFERENCE NUMBER:
A-603

3/22/2011 4:47 PM

A1 Size 594mm x 841mm

PLUMBING SYMBOLS AND LEGEND

SYMBOL	ABBREV	DESCRIPTION	SYMBOL	ABBREV	DESCRIPTION	SYMBOL	ABBREV	DESCRIPTION	SYMBOL	ABBREV	DESCRIPTION	SYMBOL	ABBREV	DESCRIPTION
	ABL	ABLUTION		CONT	CONTINUATION		FTG	FOOTING			PRESSURE GAGE W/PET COCK			TEE OUTLET DOWN
	ABV	ABOVE		DFU	DRAINAGE FIXTURE UNIT			GATE VALVE		PRV	PRESSURE REDUCING VALVE		THERM	THERMOMETER W/PET COCK
	AFF	ABOVE FINISHED FLOOR			DIRECTION OF FLOW		GC	GENERAL CONTRACTOR			PRESSURE REGULATING VALVE		TOF	TOP OF FOOTING
	AFR	ABOVE FINISHED ROOF		DN	DOWN			GLOBE VALVE		P&T	PRESSURE & TEMPERATURE		TOP	TOP OF PIPE
	AFG	ABOVE FINISHED GRADE		DWG	DRAWING		HB	HOSE BIBB		PSI	PRESSURE PER SQUARE INCH			TRAP - ELEVATION
		ANGLE GATE - ELEV.			DRAIN VALVE		H OR HW	HOT WATER PIPING			PRESSURE REGULATOR WITH PRESSURE GAUGE			TRAP - PLAN
		ANGLE GATE - PLAN			ELBOW DOWN		HWR	HOT WATER RETURN			PRESSURE & TEMPERATURE RELIEF VALVE		TP	TRAP PRIMER
	BP (ASSE 1013)	BACKFLOW PREVENTER WITH TEST VALVES			ELBOW UP		IE	INVERT ELEVATION			QUICK DISCONNECT		TYP	TYPICAL
		BALL VALVE		EWC	ELECTRIC WATER COOLER		L OR LAV	LAVATORY OR TROUGH		RCP	RECIRCULATING PUMP			UNION
	BLW	BELOW		EWH OR HWH	ELECTRIC WATER HEATER		MAX	MAXIMUM		RH	RELATIVE HUMIDITY			VALVE IN RISE
		BRANCH - BOTTOM CONNECTION		ELEV	ELEVATION		MC				ROOF PENETRATION		V	VENT PIPING
		BRANCH - TOP CONNECTION		ET	EXPANSION TANK		M	METER			SAFETY RELIEF VALVE		VTR	VENT THRU ROOF
		CAP		EX	EXISTING		MM	MINIMUM		S	SINK		VU	VENT UP
		CHECK VALVE		FIN	FINISHED		MIN	MILLIMETER		SS	SANITARY PIPING		W	WATER CLOSET
CO	CO	CLEAN-OUT IN VERTICAL		FC	FIRE PROTECTION CONTRACTOR		MR	MOP RECEPTOR		SH OR SHR	SHOWER		WC	WATER COLUMN
CO	CO	CLEAN-OUT	FD	FD	FLOOR DRAIN W/TRAP		MV	MIXING VALVE		SFU	SUPPLY FIXTURE UNIT		W	WASTE
CO	CO	CLEAN-OUT IN HORIZONTAL			FLEXIBLE PIPING CONNECTION		NC	NORMALLY CLOSED		SQ FT	SQUARE FEET		W/	WITH
	CW	COLD WATER PIPING		FFE	FINISHED FLOOR ELEVATION		NO	NORMALLY OPEN			STRAINER		W/O	WITHOUT
	CONC	CONCRETE		FLR	FLOOR		PC	PLUMBING CONTRACTOR		TE	TOP ELEVATION			
	CONN	CONNECTION		FT	FOOT OR FEET			PLUG VALVE			TEE OUTLET UP			

GENERAL NOTES:

1. DO NOT SCALE DRAWINGS - ALL DIMENSIONS AND CONDITIONS SHALL BE CHECKED AND VERIFIED BY THE CONTRACTOR AT THE SITE.
2. ALL WORK PERFORMED ON THIS BUILDING SHALL BE IN COMPLIANCE WITH ALL PERTINENT CODES, RULES, ORDINANCES AND REGULATIONS OF THE GOVERNING AUTHORITIES.
3. ALL WORK PERFORMED UNDER AND IN CONNECTION WITH THESE DRAWINGS AND SPECIFICATIONS SHALL BE IN STRICT COMPLIANCE WITH THE LATEST SAFETY AND HEALTH STANDARDS.
4. REPORT ANY DISCREPANCIES FOUND IN THE PLUMBING DRAWINGS AND/OR IN THE SPECIFICATIONS DURING THE BIDDING PROCESS FOR CLARIFICATION BY THE ENGINEER.
5. ALL EASTERN STYLE WATER CLOSETS IN THIS FACILITY ARE TO HAVE THE FIXTURE DESIGNATION OF W-1. EACH FIXTURE SHALL HAVE A 25mm COLD WATER MAIN LINE EXTENDED INTO THE STALL AND THEN TEE OFF TO THE 20mm SPIGOT CONNECTION. ALSO PROVIDE A 100mm SANITARY CONNECTION. SEE DETAILS ON DRAWING P502.
6. ALL LAV OR TROUGH FIXTURES IN THIS FACILITY ARE TO HAVE THE FIXTURE DESIGNATION OF L-1. L-1 DESIGNATION REPRESENTS THE NUMBER OF FAUCETS FOR THE TROUGH FIXTURE. EACH FIXTURE SHALL HAVE A 15mm COLD WATER, 15mm HOT WATER CONNECTION AND A 80mm SANITARY CONNECTION.
7. REFER TO SHEET P501 AND P502 FOR DETAILS.
8. ALL WATER, SANITARY AND VENT LINES TO BE EXPOSED. RUN LINES TIGHT TO CEILING AND WALL. ALL EXPOSED WATER, WASTE, AND VENT PIPING, LOCATED IN USER OCCUPIED AREAS, SHALL BE SCHEDULE 40 GALVANIZED STEEL WITH WALL MOUNTING BRACKETS SPACED A MAXIMUM OF 400mm (16") APART TO MINIMIZE VANDALISM.
9. PROVIDE ISOLATION VALVES FOR HOT AND COLD WATER PIPES TO EACH INDIVIDUAL FIXTURE.
10. ALL VENTS THROUGH ROOF SHALL EXTEND A MINIMUM OF 600mm ABOVE FINISHED ROOF. VENT SHALL ALSO EXTEND THRU ROOF AT PEAK OF SPAN.
11. CONTRACTOR TO COORDINATE WATER PIPING MOUNTING LOCATION WITH BOTH MECHANICAL & ELECTRICAL DRAWINGS.
12. PLUMBING CONTRACTOR SHALL COORDINATE PLUMBING WORK WITH THE LOCATIONS OF ALL UTILITIES AT THE SITE PRIOR TO THE START OF ANY PLUMBING WORK.
13. COORDINATE ALL ACCESS PANEL LOCATIONS WITH THE ARCHITECT AND GENERAL CONTRACTOR.
14. ALL SANITARY PIPING BELOW SLAB SHALL BE A MINIMUM OF 50mm, UNLESS OTHERWISE NOTED OR AS REQUIRED BY THE LOCAL AUTHORITY HAVING JURISDICTION.
15. ALL HORIZONTAL SANITARY LINES SHALL BE SLOPED AT 8mm PER 300mm, UNLESS OTHERWISE NOTED OR AS REQUIRED BY THE LOCAL AUTHORITY HAVING JURISDICTION.

UNLESS OTHERWISE NOTED,
LINEAR DIMENSIONS
SHOWN ARE IN MILLIMETERS.

COMMONWEALTH OF PENNSYLVANIA
REGISTERED PROFESSIONAL
MATTHEW R. SOTOSKY
ENGINEER
045576-E

US ARMY CORPS OF ENGINEERS
AFGHANISTAN NORTH DISTRICT

SYMBOL	DESCRIPTION	DATE	APPR.	SYMBOL	DESCRIPTION	DATE	APPR.

DESIGNED BY: RMH
DWN BY: RMH
REVIEWED BY: JH
SUBMITTED BY:
CKD BY: CJM III
DATE: 3/22/2011
CONTRACT NO. W912ER-09-D-0002
DRAWING CODE:
FILE NAME: ARCHIP\PACKS\B19-FINAL.DWG
PLOT SCALE: NONE
PLOT DATE: 3/22/2011
REV: 0

BAKER

U.S. ARMY ENGINEER DISTRICT, AFGHANISTAN
CORPS OF ENGINEERS
APO AE 09356

SITE ADAPT DESIGN

B19 - OFFICER BARRACKS - LARGE - ARCH SPAN

PLUMBING SYMBOLS, LEGEND AND GENERAL NOTES

SHEET REFERENCE NUMBER:

P-001

A1 Size 594mm x 841mm

3/22/2011 2:53 PM

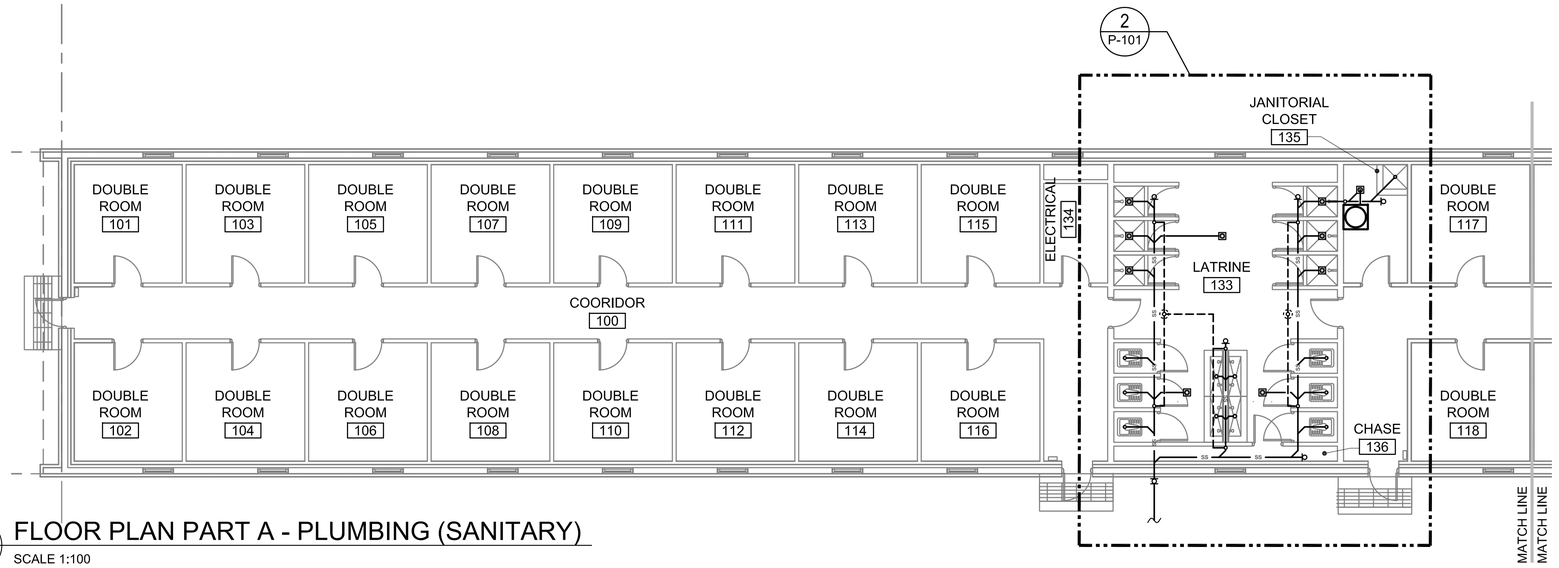

1 P-101 FLOOR PLAN PART A - PLUMBING (SANITARY)

SCALE 1:100

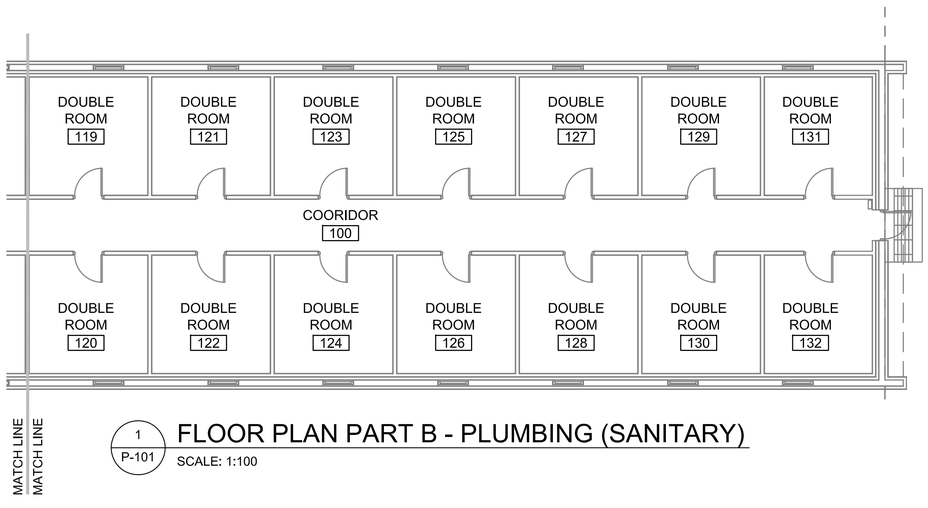

1 P-101 FLOOR PLAN PART B - PLUMBING (SANITARY)

SCALE: 1:100

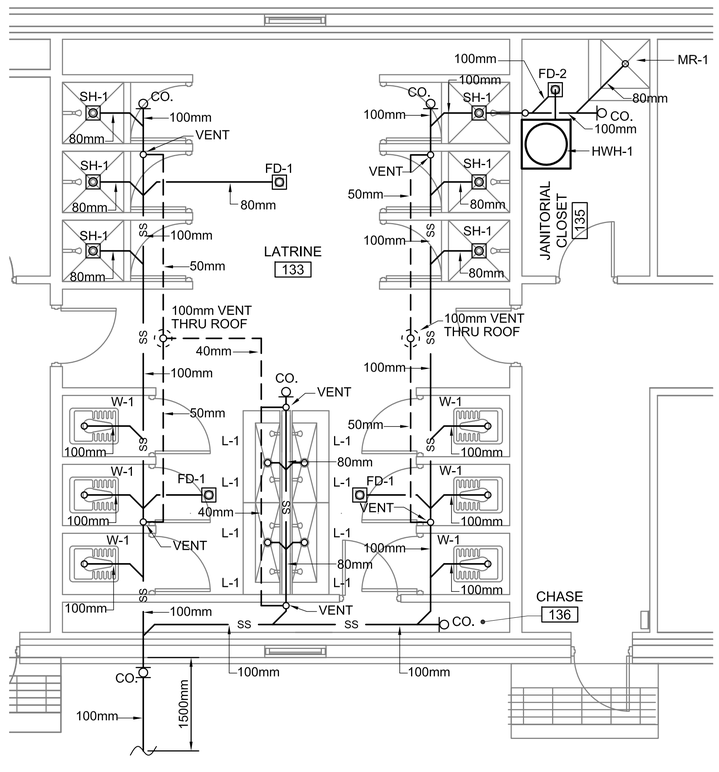

2 P-101 ENLARGED FLOOR PLAN - PLUMBING (SANITARY)

SCALE: 1:50

SCALE: 1:100

SCALE: 1:50

UNLESS OTHERWISE NOTED, LINEAR DIMENSIONS SHOWN ARE IN MILLIMETERS.

COMMONWEALTH OF PENNSYLVANIA
REGISTERED PROFESSIONAL
MATTHEW R. SOTOSKY
ENGINEER
045576-E

US ARMY CORPS OF ENGINEERS
AFGHANISTAN NORTH DISTRICT

SYMBOL	DESCRIPTION	DATE	APPR.	SYMBOL	DESCRIPTION	DATE	APPR.

DESIGNED BY: RMH
DWN BY: RMH
CKD BY: CJM III
REVIEWED BY: JH
SUBMITTED BY:
DATE: 3/22/2011
REV: 0
CONTRACT NO. W912ER-09-D-0002
DRAWING CODE:
FILE NAME: 09W0256-B19-P-101.DWG
PLOT SCALE: VARIES
PLOT DATE: 3/22/2011

BAKER

U.S. ARMY ENGINEER DISTRICT, AFGHANISTAN
CORPS OF ENGINEERS
APO AE 09356

SITE ADAPT DESIGN

B19 - OFFICER BARRACKS - LARGE - ARCH SPAN

FLOOR PLAN - PLUMBING (SANITARY)
ENLARGED FLOOR PLAN - PLUMBING (SANITARY)

SHEET REFERENCE NUMBER:

P-101

3/22/2011 2:53 PM

A1 Size 594mm x 841mm

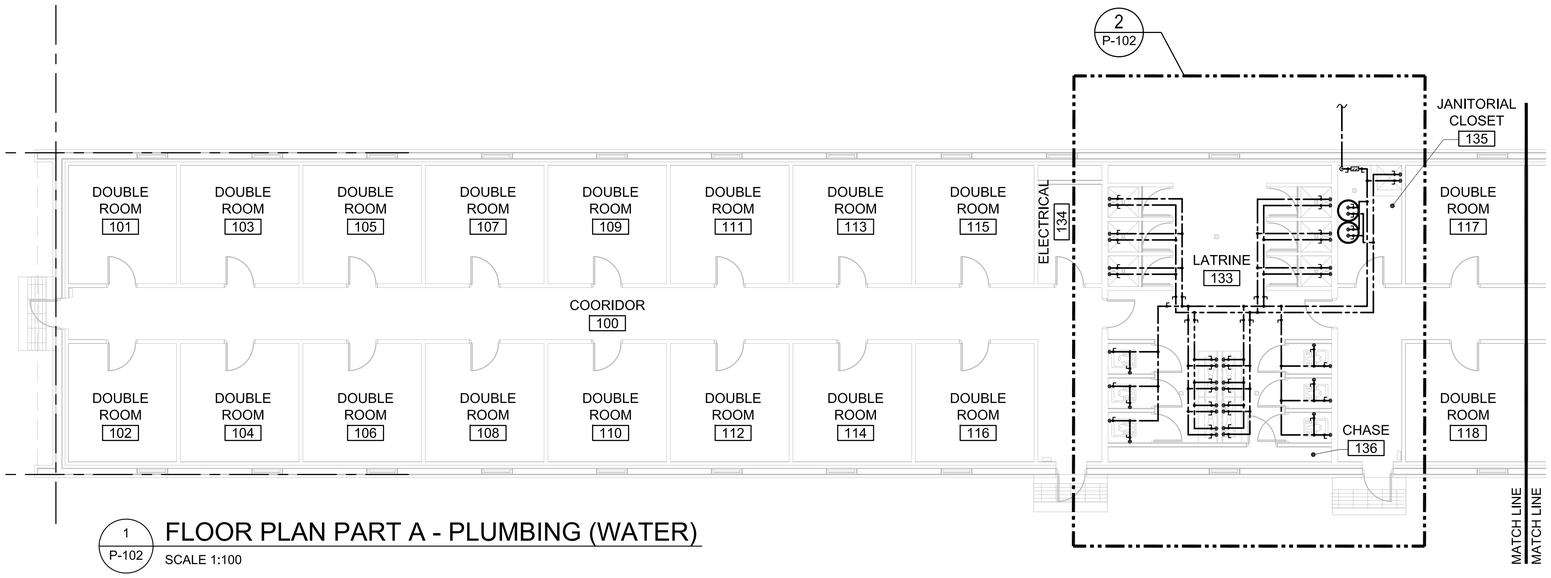

1 P-102 FLOOR PLAN PART A - PLUMBING (WATER)
SCALE 1:100

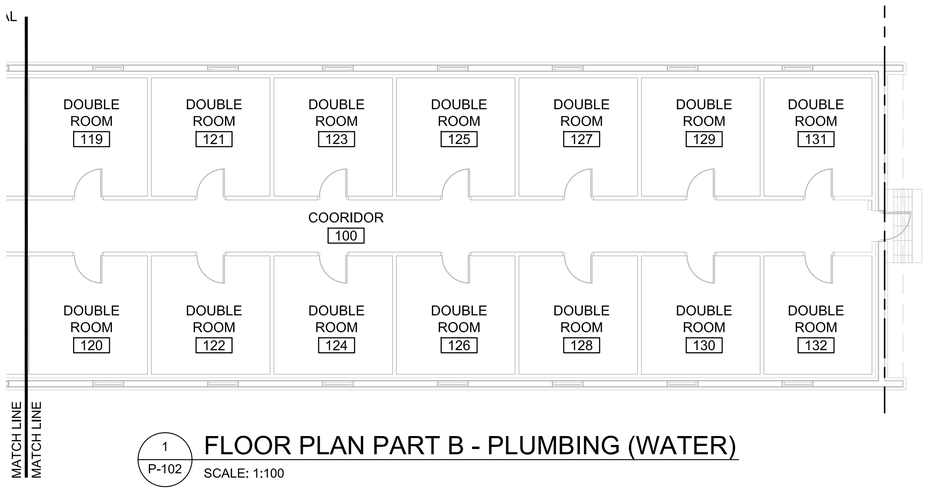

1 P-102 FLOOR PLAN PART B - PLUMBING (WATER)
SCALE: 1:100

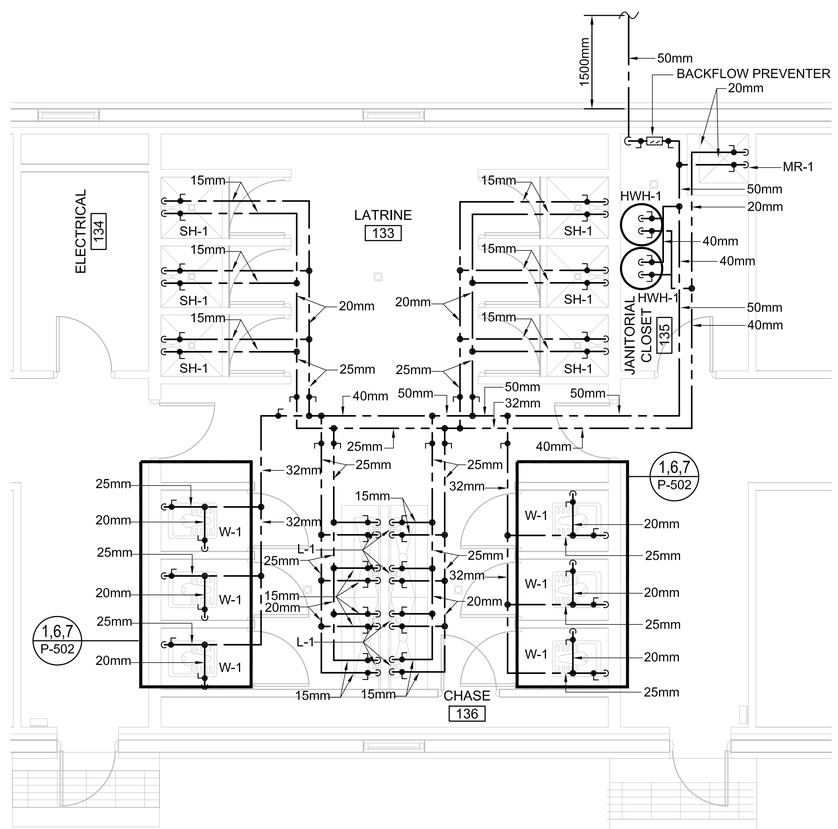

2 P-102 ENLARGED FLOOR PLAN - PLUMBING (WATER)
SCALE: 1:50

N

0 2000 4000
SCALE: 1:100

0 500 1000 2000
SCALE: 1:50

UNLESS OTHERWISE NOTED, LINEAR DIMENSIONS SHOWN ARE IN MILLIMETERS.

COMMONWEALTH OF PENNSYLVANIA
REGISTERED PROFESSIONAL
MATTHEW R. SOTOSKY
ENGINEER
045576-E

US ARMY CORPS OF ENGINEERS
AFGHANISTAN NORTH DISTRICT

SYMBOL	DESCRIPTION	DATE	APPR.	SYMBOL	DESCRIPTION	DATE	APPR.

U.S. ARMY ENGINEER DISTRICT, AFGHANISTAN
CORPS OF ENGINEERS
APO AE 09356

DESIGNED BY: RMH
DWN BY: RMH
CKD BY: CJM III
REVIEWED BY: JH
SUBMITTED BY:
DATE: 3/22/2011
CONTRACT NO. W912ER-09-D-0002
DRAWING CODE:
REV. 0
FILE NAME: sitecomplexbrack-B19-P102.dwg
PLOT SCALE: VARIES
PLOT DATE: 3/22/2011

BAKER

SITE ADAPT DESIGN
B19 - OFFICER BARRACKS - LARGE - ARCH SPAN
FLOOR PLAN - PLUMBING (WATER)
ENLARGED FLOOR PLAN - PLUMBING (WATER)

SHEET REFERENCE NUMBER:
P-102

3/22/2011 2:53 PM

A1 Size 594mm x 841mm

PLUMBING FIXTURE LIST SCHEDULE							
TYPE	ITEM	SOIL & WASTE	VENT	COLD WATER	HOT WATER	REMARKS	REMARKS 2
W-1	EASTERN STYLE WATER CLOSET	100mm	50mm	15mm	------	FLUSH TANK	----------
L-1	TROUGH FIXTURE	40mm	40mm	15mm	15mm	FABRICATED IN FIELD	----------
SH-1	SHOWER	80mm	---	15mm	15mm	FABRICATED IN FIELD	DRAIN AND SHOWER CONTROLS
MR-1	MOP RECEPTOR	80mm	---	20mm	20mm	FABRICATED IN FIELD	DRAIN AND CONTROLS
FD-1/FD-2	FLOOR DRAIN	100mm	---	---	---	SLOPE FLOOR TO DRAIN	----------

ELECTRIC WATER HEATER SCHEDULE												
MARK	MANUF	LOCATION	STORAGE (Ltr)	PHYSICAL SIZE	RECOVERY Ltr/H	TEMP RISE °C	SET POINT °C	HOT & COLD CONN	TOTAL KW	VOLTS/ PHASE/ HERTZ	REMARKS	REMARKS 2
HWH-1	A.O. SMITH	JAN. 119	450	1664mm x 762mmØ	397	21	49	40mm HW 40mm CW	18	380/3/50	EXTEND DRAIN LINE FROM T&P VALVE TO NEAREST FLOOR DRAIN	PROVIDE (2) TWO WATER HEATERS IN A MANIFOLD SYSTEM

EXPANSION TANK SCHEDULE						
MARK	MANUF	MODEL NO.	LOCATION	STORAGE (Ltr)	OPERATING TEMP. °C	REMARKS
ET-1	AMTROL	ST-12-C	JAN. 119	12	49°	

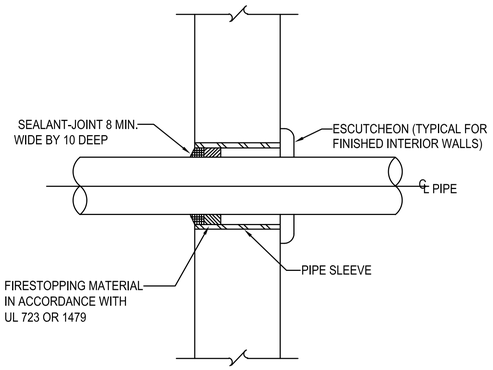

TYPICAL WALL PENETRATION DETAIL 1 P–501
SCALE: NONE

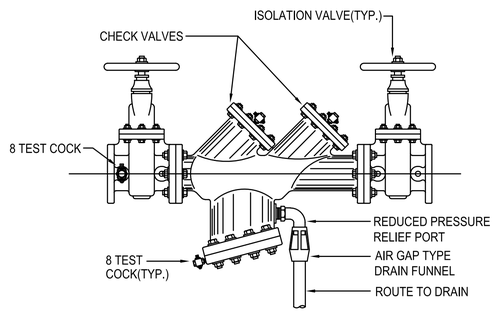

TYPICAL BACKFLOW PREVENTER DETAIL 2 P–501
SCALE: NONE

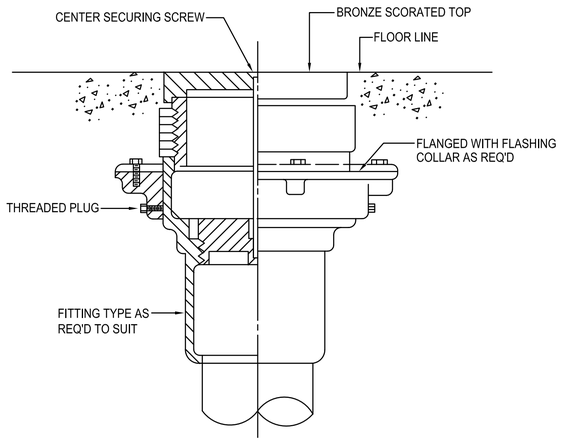

TYPICAL FLOOR CLEANOUT DETAIL 3 P–501
SCALE: NONE

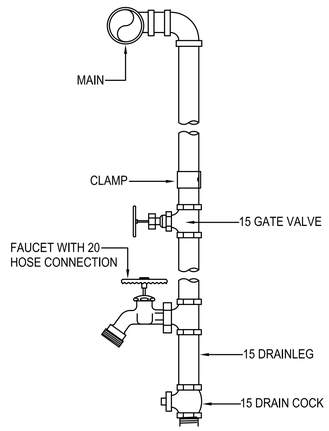

TYPICAL WATER DROP DETAIL 4 P–501
SCALE: NONE

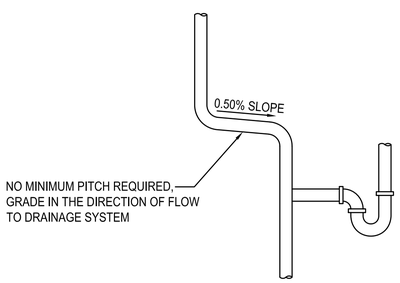

TYPICAL VENT GRADE DETAILS 5 P–501
SCALE: NONE

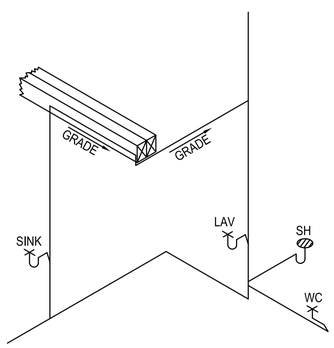

TYPICAL VENT GRADE DETAILS 6 P–501
SCALE: NONE

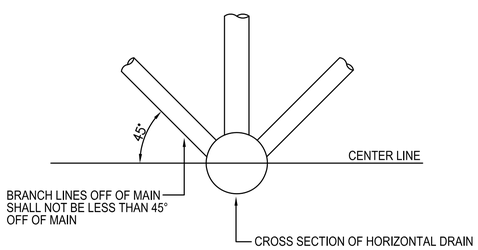

ACCEPTABLE VENT CONNECTIONS TO HORIZONTAL DRAIN - DETAIL 7 P–501
SCALE: NONE

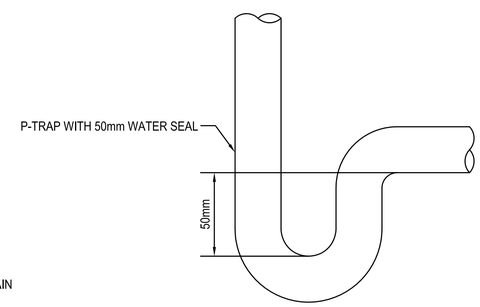

P-TRAP WITH 50mm WATER SEAL DETAIL 8 P–501
SCALE: NONE

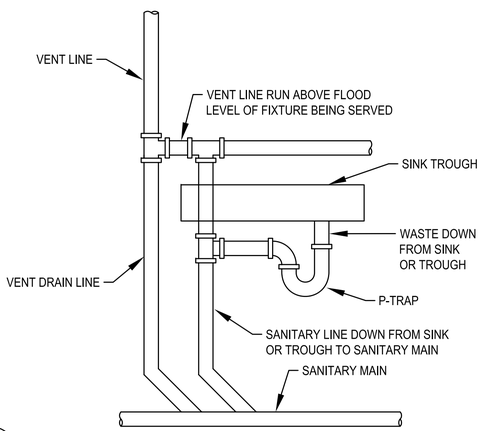

TYPICAL LAVATORY VENT DETAIL 9 P–501
SCALE: NONE

UNLESS OTHERWISE NOTED, LINEAR DIMENSIONS SHOWN ARE IN MILLIMETERS.

COMMONWEALTH OF PENNSYLVANIA
REGISTERED PROFESSIONAL
MATTHEW R. SOTOSKY
ENGINEER
045576-E

US ARMY CORPS OF ENGINEERS AFGHANISTAN NORTH DISTRICT

SYMBOL	DESCRIPTION	DATE	APPR.	SYMBOL	DESCRIPTION	DATE	APPR.

DESIGNED BY: RMH
DWN BY: RMH
CKD BY: CJM III
REVIEWED BY:
SUBMITTED BY:
DATE: 3/22/2011
CONTRACT NO. W912ER-09-D-0002
DRAWING CODE:
REV: 0
FILE NAME: ARCD1PMC0-P-501.DWG
PLOT SCALE: NONE
PLOT DATE: 3/22/2011

BAKER

U.S. ARMY ENGINEER DISTRICT, AFGHANISTAN
CORPS OF ENGINEERS
APO AE 09356

SITE ADAPT DESIGN
B19 - OFFICER BARRACKS - LARGE - ARCH SPAN
PLUMBING SCHEDULES, DETAILS AND NOTES

SHEET REFERENCE NUMBER:
P-501

3/22/2011 2:53 PM

A1 Size 594mm x 841mm

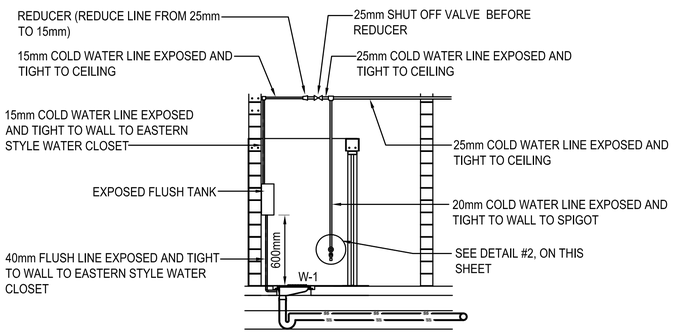

TYPICAL EASTERN STYLE WATER CLOSET SANITARY AND WATER INSTALLATION SCHEMATIC (1 / P–502)

SCALE: NONE

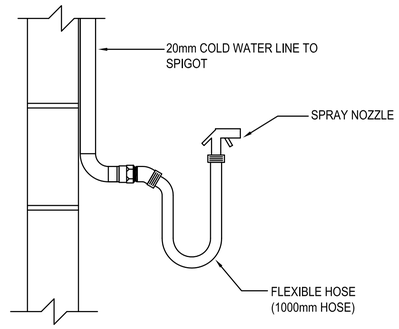

TYPICAL DETAIL - SPIGOT, FLEXIBLE HOSE, AND SPRAY NOZZLE (2 / P–502)

SCALE: NONE

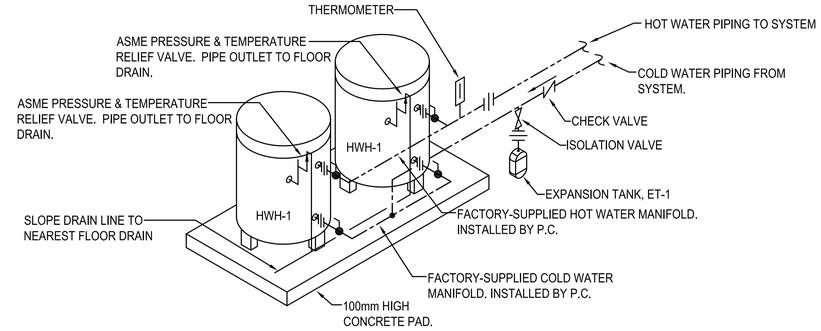

DUPLEX ELECTRIC WATER HEATER PIPING SCHEMATIC (3 / P–502)

SCALE: NONE

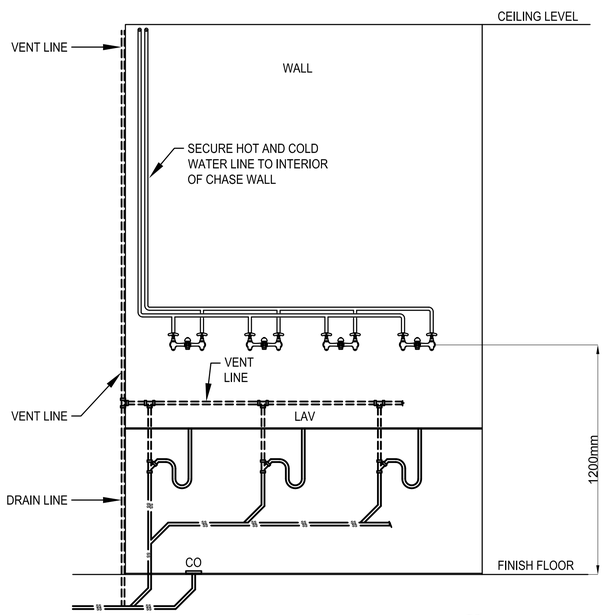

LAVATORY ELEVATION PLAN - PLUMBING (4 / P–502)

SCALE: NONE

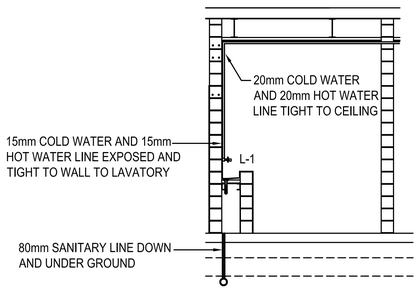

TYPICAL LAVATORY SANITARY AND WATER INSTALLATION SCHEMATIC (5 / P–502)

SCALE: NONE

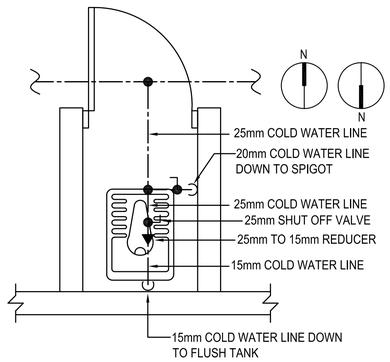

TYPICAL EASTERN STYLE WATER CLOSET WITH SPIGOT WATER PIPING DETAIL (6 / P–502)

SCALE: NONE

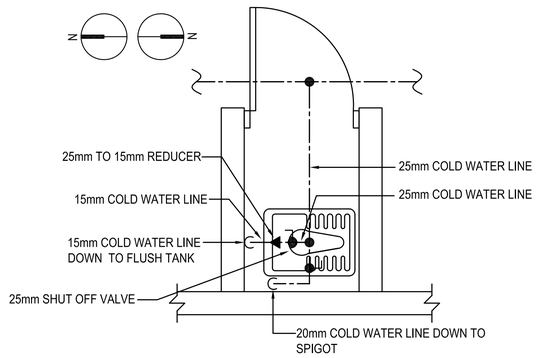

TYPICAL EASTERN STYLE WATER CLOSET WITH SPIGOT WATER PIPING DETAIL (7 / P–502)

SCALE: NONE

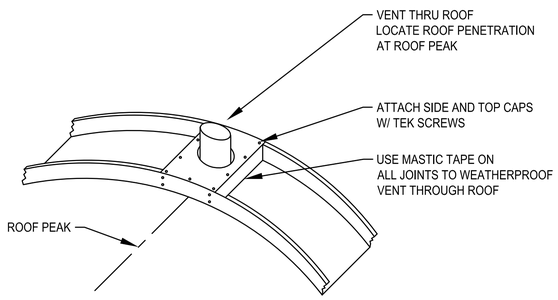

TYPICAL VENT THRU ROOF DETAIL (8 / P–502)

SCALE: NONE

UNLESS OTHERWISE NOTED, LINEAR DIMENSIONS SHOWN ARE IN MILLIMETERS.

COMMONWEALTH OF PENNSYLVANIA
REGISTERED PROFESSIONAL ENGINEER
MATTHEW R. SOTOSKY
045576-E

US ARMY CORPS OF ENGINEERS AFGHANISTAN NORTH DISTRICT

SYMBOL	DESCRIPTION	DATE	APPR.	SYMBOL	DESCRIPTION	DATE	APPR.

DESIGNED BY: RMH
DWN BY: RMH
CKD BY: CJM III
REVIEWED BY: JH
SUBMITTED BY:
DATE: 3/22/2011
CONTRACT NO. W912ER-09-D-0002
DRAWING CODE:
REV: 0
FILE NAME: BAKER
PLOT SCALE: NONE
PLOT DATE: 3/22/2011

U.S. ARMY ENGINEER DISTRICT, AFGHANISTAN
CORPS OF ENGINEERS
APO AE 09356

BAKER

SITE ADAPT DESIGN

B19 - OFFICER BARRACKS - LARGE - ARCH SPAN

PLUMBING DETAILS

SHEET REFERENCE NUMBER:

P-502

A1 Size 594mm x 841mm

3/22/2011 2:53 PM

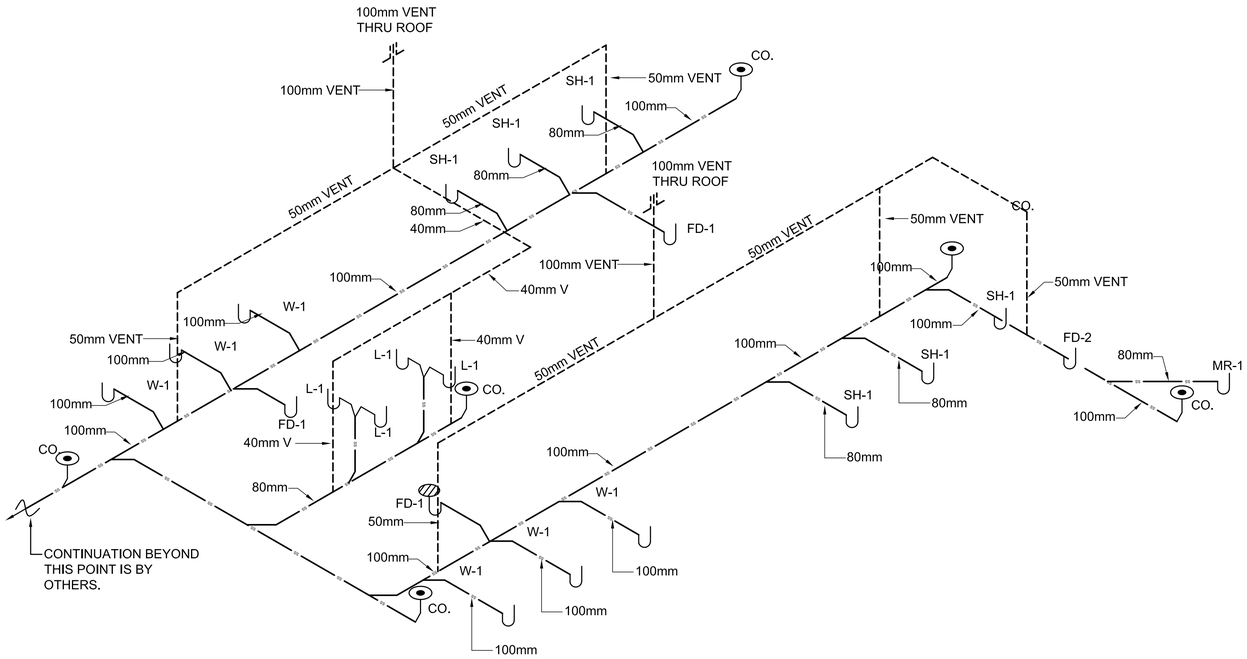

1 / P-901 DRAINAGE & VENTING ISOMETRIC

NOT TO SCALE

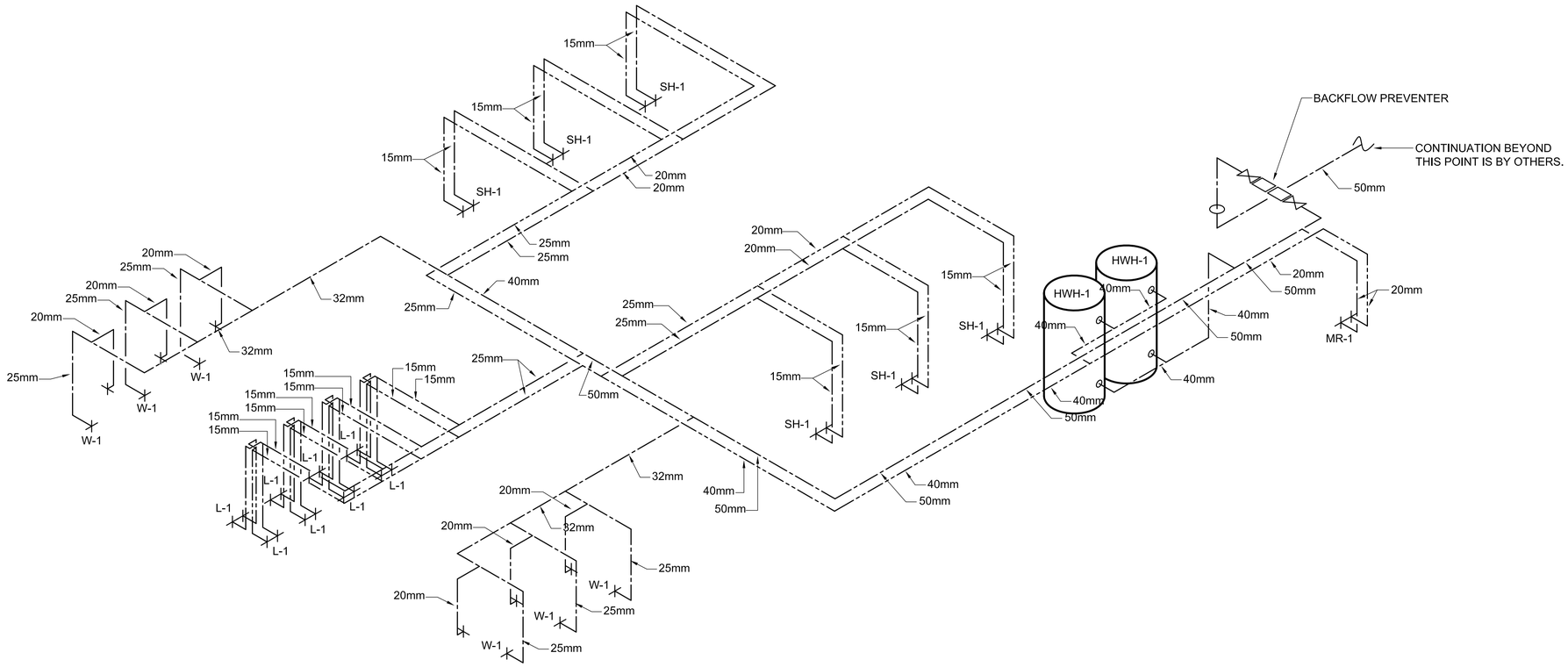

2 / P-901 HOT AND COLD WATER PIPING ISOMETRIC

SCALE

UNLESS OTHERWISE NOTED,
LINEAR DIMENSIONS
SHOWN ARE IN MILLIMETERS.

COMMONWEALTH OF PENNSYLVANIA
REGISTERED PROFESSIONAL ENGINEER
MATTHEW R. SOTOSKY
045576-E

US ARMY CORPS
OF ENGINEERS
AFGHANISTAN NORTH
DISTRICT

SYMBOL	DESCRIPTION	DATE	APPR.	SYMBOL	DESCRIPTION	DATE	APPR.

U.S. ARMY ENGINEER DISTRICT, AFGHANISTAN
CORPS OF ENGINEERS
APO AE 09356

DESIGNED BY: RMH
DWN BY: RMH
CKD BY: CJM III
REVIEWED BY:
SUBMITTED BY:

DATE: 3/22/2011
CONTRACT NO. W912ER-09-D-0002
DRAWING CODE:
FILE NAME: (MECHPNID-B19-P-901.DWG)
PLOT SCALE: NONE
PLOT DATE: 3/22/2011
REV: 0

BAKER

SITE ADAPT DESIGN

B19 - OFFICER BARRACKS - LARGE - ARCH SPAN

DRAINAGE AND VENTING ISOMETRIC
HOT AND COLD WATER PIPING ISOMETRIC

SHEET
REFERENCE
NUMBER:

P-901

A1 Size 594mm x 841mm

3/22/2011 2:53 PM

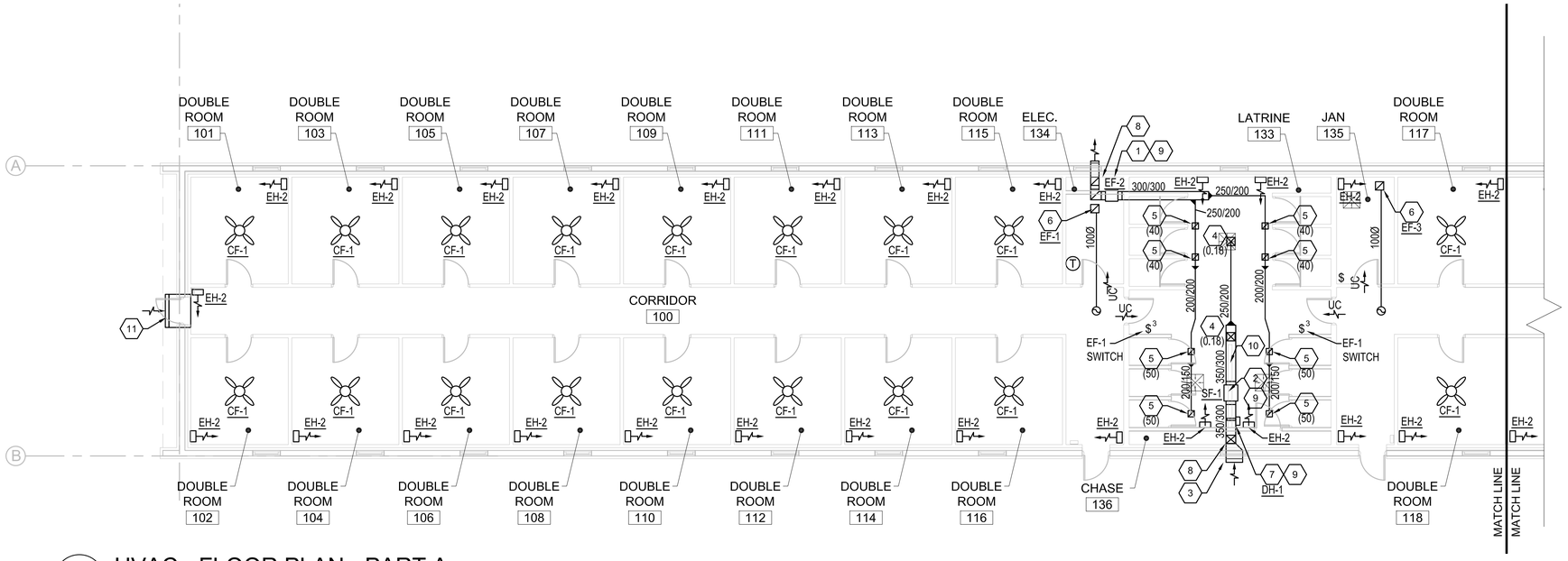

1 M-101 HVAC - FLOOR PLAN - PART A

SCALE 1:100

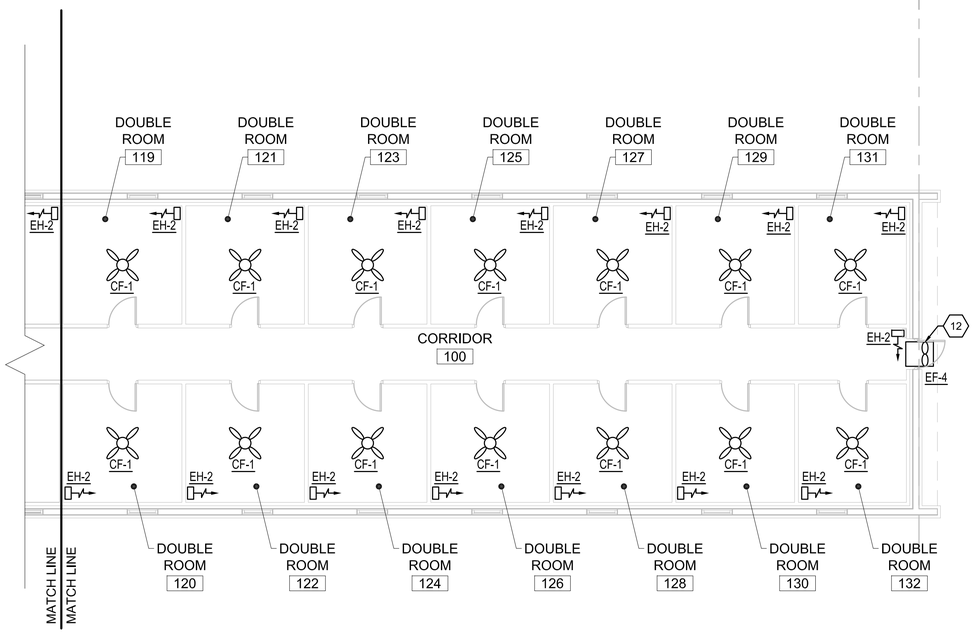

2 M-101 HVAC - FLOOR PLAN - PART B

SCALE: 1:100

GENERAL NOTES:

1. DO NOT SCALE DRAWINGS - ALL DIMENSIONS AND CONDITIONS SHALL BE CHECKED AND VERIFIED BY THE CONTRACTOR AT THE SITE.
2. ALL WORK PERFORMED ON THIS BUILDING SHALL BE IN COMPLIANCE WITH ALL PERTINENT CODES, RULES, ORDINANCES AND REGULATIONS OF THE GOVERNING AUTHORITIES.
3. ALL WORK PERFORMED UNDER AND IN CONNECTION WITH THESE DRAWINGS AND SPECIFICATIONS SHALL BE IN STRICT COMPLIANCE WITH THE LATEST SAFETY AND HEALTH STANDARDS.
4. COORDINATE ALL EQUIPMENT LOCATIONS WITH EQUIPMENT SHOWN ON OTHER DRAWINGS. VERIFY FINAL LOCATIONS IN FIELD.

SYMBOLS:

- (X) KEY NOTE
- (000) AIR VOLUME IN LITERS PER SECOND (LPS)
- UC DOOR UNDERCUT 25mm
- $ SINGLE POLE SWITCH FOR EXHAUST FAN - 20A RATED
- $3 THREE POLE SWITCH FOR EXHAUST FAN - 20A RATED
- ELECTRIC HEATER
- CEILING FAN
- DIRECTION OF AIR FLOW

ABBREVIATIONS:

AFF	ABOVE FINISH FLOOR
CF	CEILING FANS
LPS	LITERS PER SECOND
EF	EXHAUST FAN
EH	ELECTRIC HEATER
DH	DUCT HEATER
STATS	THERMOSTATS
TYP	TYPICAL

KEY NOTES:

1. INLINE EXHAUST FAN DUCTED TO WALL CAP WITH LOW LEAKAGE GRAVITY BACK-DRAFT DAMPER. SECURE FAN TO CEILING STRUCTURE AND INTERLOCK WITH SUPPLY FAN. LOCATE WALL CAP IN "WINDOW FRAME," BLANK OFF UNUSED FRAME AREA WITH INSULATED SHEET METAL. VERIFY LOCATION WITH ARCHITECTS DRAWINGS.
2. INLINE SUPPLY FAN SECURED TO CEILING STRUCTURE FAN SHALL BE SET TO ENERGIZE WITH EXHAUST FAN EF-2.
3. 600X900 (24X36) INTAKE LOUVER FOR SUPPLY FAN. PROVIDE WEATHER PROOF LOUVER WITH 50mm (2") WASHABLE FILTER AND SAND TRAP. LOCATE LOUVER IN "WINDOW FRAME," BLANK OFF UNUSED FRAME AREA WITH INSULATED SHEET METAL. VERIFY LOCATION WITH ARCHITECTS DRAWINGS.
4. 300x300 (12x12) ALUMINUM CEILING MOUNTED SUPPLY GRILLE WITH ADJUSTABLE OPPOSED BLADE DAMPERS. BALANCE TO LPS IN PARENTHESIS.
5. 300x300 (12x12) ALUMINUM CEILING MOUNTED EXHAUST GRILLE WITH ADJUSTABLE OPPOSED BLADE DAMPERS. BALANCE TO LPS IN PARENTHESIS.
6. CEILING MOUNTED EXHAUST FAN WITH DUCT EXTENDED UP TO RIDGE AND OUT THROUGH ROOF TO ROOF CAP. PREPARE ROOF PENETRATION AND FLASH AS RECOMMENDED BY BUILDING MANUFACTURER. SEE ROOF CAP DETAIL ON SHEET M-501.
7. DUCT MOUNTED OPEN COIL HEATER.
8. DROP DUCT DOWN FROM ABOVE CEILING DOWN AND OUT THROUGH WALL. CONNECT TO LOUVER / WALL CAP AS REQUIRED.
9. PROVIDE 600x400 (24x16) CEILING ACCESS PANEL AT EQUIPMENT LOCATED ABOVE CEILING. VERIFY EXACT LOCATIONS IN FIELD.
10. PROVIDE DUCT MOUNTED THERMOSTAT TO OPERATE DUCT HEATER
11. 1050x1500 (41x59) INTAKE LOUVER WITH MOTOR OPERATED DAMPER INTERLOCKED WITH ATTIC FAN. LOUVER LOCATED AS HIGH AS POSSIBLE IN ATTIC SPACE. SEE DETAIL ON SHEET M-501.
12. 787mm (31"sq) WALL MOUNTED ATTIC EXHAUST FAN INTERLOCKED WITH FAN BOX MOUNTED STAT. MOUNT FAN AS HIGH AS POSSIBLE IN ATTIC. SEE DETAIL ON SHEET M-501.

N

0 2000 4000

SCALE: 1:100

UNLESS OTHERWISE NOTED, LINEAR DIMENSIONS SHOWN ARE IN MILLIMETERS.

COMMONWEALTH OF PENNSYLVANIA REGISTERED PROFESSIONAL ENGINEER MATTHEW R. SOTOSKY 045576-E

US ARMY CORPS OF ENGINEERS AFGHANISTAN NORTH DISTRICT

SYMBOL	DESCRIPTION	DATE	APPR.	SYMBOL	DESCRIPTION	DATE	APPR.

DESIGNED BY: RML
DWN BY: JJN
CKD BY: CJM
REVIEWED BY: JH
SUBMITTED BY:
DATE: 3/22/2011
CONTRACT NO. W912ER-09-D-0002
DRAWING CODE:
FILE NAME: M-501CHP-HVAC-B-01-02.DWG
PLOT SCALE: 1:100
PLOT DATE: 3/22/2011
REV: 0

BAKER

U.S. ARMY ENGINEER DISTRICT, AFGHANISTAN
CORPS OF ENGINEERS
APO AE 09356

SITE ADAPT DESIGN

B19 - OFFICER BARRACKS - LARGE - ARCH SPAN

HVAC - FLOOR PLAN

SHEET REFERENCE NUMBER:

M-101

3/22/2011 2:53 PM

A1 Size 594mm x 841mm

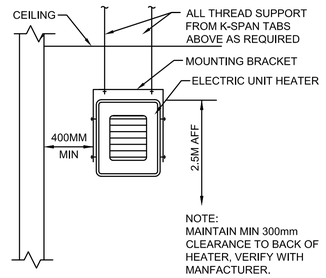

ELECTRIC UNIT HEATER MOUNTING DETAIL

1 / M-501

SCALE: N.T.S.

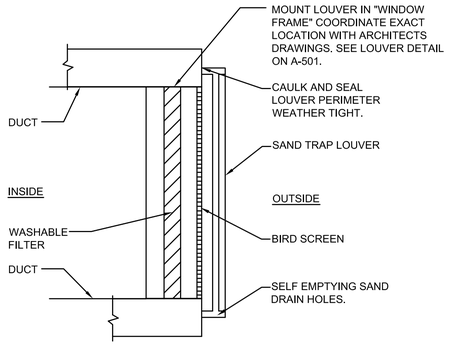

FILTERED SAND TRAP LOUVER

2 / M-501

SCALE: N.T.S.

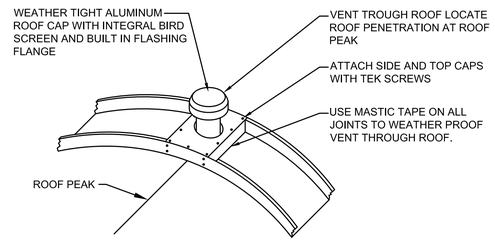

EXHAUST FAN ROOF CAP DETAIL

3 / M-501

SCALE: N.T.S.

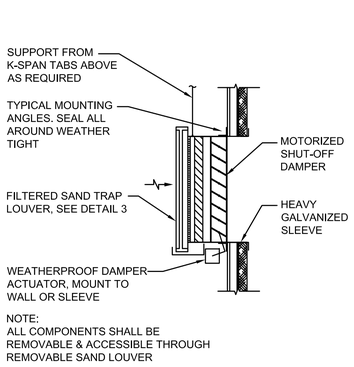

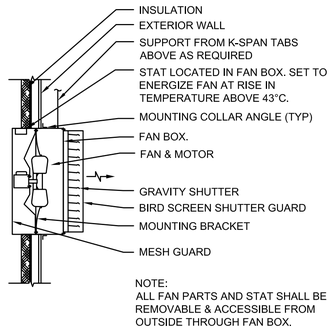

ATTIC VENTILATION SYSTEM DETAIL

4 / M-501

SCALE: N.T.S.

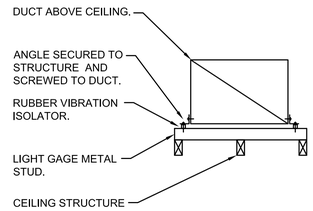

DUCT SUPPORT DETAIL

5 / M-501

SCALE: N.T.S.

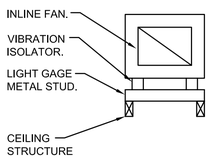

INLINE FAN SUPPORT DETAIL

6 / M-501

SCALE: N.T.S.

EXHAUST FAN SCHEDULE

NO.	TYPE	FLOW RATE (LPS)	DRIVE	HP	SP mmH20	ELECTRICAL DATA	SWITCH
EF-1	CEILING	35	DIRECT	FRACTIONAL	7	220/1/50	W/ STAT
EF-2	INLINE	360	DIRECT	1/3	19	220/1/50	W/ LIGHTS
EF-3	CEILING	35	DIRECT	FRACTIONAL	7	220/1/50	@ WALL
EF-4	PROP	1390	DIRECT	3/4	13	220/1/50	W/ STAT
SF-1	INLINE	360	DIRECT	1/3	19	220/1/50	W/ EF-2

NOTES:
1. FAN OUTLETS SHALL HAVE LOW LEAKAGE GRAVITY LOUVER.
2. INTERLOCK SF-1 OPERATION WITH EXHAUST FAN EF-4.
3. PROVIDE INLINE FANS WITH UNIT MOUNTED DISCONNECT SWITCH.

ELECTRIC DUCT HEATER

NO.	SERVES	FLOW RATE (LPS)	KW	EAT (°C)	LAT (°C)	SP (mm H2O)	ELECTRICAL DATA	STAGES
DH-1	SF-1	360	10	-12.8	13	7	380/3/50	2

NOTES:
1. PROVIDE REMOTE MOUNTED THERMOSTAT WITH LOCKING COVER.
2. PROVIDE AIR SENSING SWITCH FOR HEATING OPERATION.
3. PROVIDE OPEN TYPE COIL SUITABLE FOR MOUNTING IN DUCT.
4. PROVIDE UNIT MOUNTED DISCONNECT SWITCH.

ELECTRIC UNIT HEATER SCHEDULE

NO.	FLOW RATE (LPS)	CAPACITY (KW)	F.A.T. (°C)	ELECT. CHAR.	MOUNTING
EH-2	200	2	38	220/1/50	WALL HUNG

NOTES:
1. PROVIDE UNIT MOUNTED DISCONNECT SWITCH.
2. PROVIDE TAMPER RESISTANT UNIT MOUNTED THERMOSTAT.
3. UNIT SHALL BE HUNG AND MOUNTED 2.5M AFF.

CEILING FAN

NO.	BLADE SIZE mm	BLADE SIZE IN	VOLTAGE	SWITCH	REMARKS
CF-1	1320	52	220/1/50	@ WALL	3 SPEED REVERSIBLE MOTOR

NOTES:
1. IF FANS ARE TO BE INSTALLED IN AN AREA WITHOUT A CEILING, PROVIDE EXTENSION DOWN RODS FROM ARCH-SPAN TABS, BRACE / GUY FAN AS REQUIRED AND INSTALL FANS 2.5M AFF. IF FANS ARE TO BE MOUNTED IN AREA WITH A CEILING GRID OR HARD CEILING, MOUNT PER MANUFACTURERS RECOMMENDATIONS. SEE ELECTRICAL DRAWINGS FOR MOUNTING OPTIONS.
2. PROVIDE WITHOUT LIGHT FIXTURE.
3. PROVIDE WITH REMOTE MOUNTED ON-OFF SWITCH. SWITCHES ARE SHOWN ON ELECTRICAL DRAWINGS.
4. COORDINATE CEILING FANS WITH LIGHTS, IN GENERAL FANS SHALL BE CENTERED BETWEEN LIGHTS WHEN POSSIBLE.

UNLESS OTHERWISE NOTED, LINEAR DIMENSIONS SHOWN ARE IN MILLIMETERS.

COMMONWEALTH OF PENNSYLVANIA
REGISTERED PROFESSIONAL
MATTHEW R. SOTOSKY
ENGINEER
045576-E

US ARMY CORPS OF ENGINEERS
AFGHANISTAN NORTH DISTRICT

SYMBOL	DESCRIPTION	DATE	APPR.	SYMBOL	DESCRIPTION	DATE	APPR.

DESIGNED BY: RML
DWN BY: JJN
REVIEWED BY: JH
SUBMITTED BY:
DATE: 3/22/2011
CONTRACT NO. W912ER-09-D-0002
DRAWING CODE:
FILE NAME:
PLOT SCALE: NONE
PLOT DATE: 3/22/2011
REV: 0
CKD BY: CJM

BAKER

U.S. ARMY ENGINEER DISTRICT, AFGHANISTAN
CORPS OF ENGINEERS
APO AE 09356

SITE ADAPT DESIGN
B19 - OFFICER BARRACKS - LARGE - ARCH SPAN
HVAC DETAILS AND SCHEDULES

SHEET REFERENCE NUMBER:
M-501

3/22/2011 2:54 PM

A1 Size 594mm x 841mm

POWER

- DISTRIBUTION PANELBOARD
- NEW PANELBOARD - SURFACE
- NEW PANELBOARD - RECESSED
- GENERATOR
- TRANSFORMER (DRAWN TO SIZE)
- JUNCTION BOX
- JUNCTION BOX - CEILING
- FUSIBLE SAFETY SWITCH
- MOTOR
- MOTOR STARTING SWITCH - 220V, 20A RATED UNLESS OTHERWISE NOTED
- ELECTRIC WATER HEATER
- CEILING FAN - REFER TO SPECIFICATION SECTION 26 20 00

RECEPTACLES

- DUPLEX 20A TYPE CEE 7/7 "SCHUKO STYLE" UNSWITCHED RECEPTACLE
- GF — DUPLEX 20A TYPE CEE 7/7 "SCHUKO STYLE" UNSWITCHED RECEPTACLES - 10mA GROUND FAULT INTERRUPTER TYPE
- WP — DUPLEX 20A TYPE CEE 7/7 "SCHUKO STYLE" UNSWITCHED TYPE WITH WEATHERPROOF COVER - 10mA GROUND FAULT INTERRUPTER TYPE
- EXP — DUPLEX 20A TYPE CEE 7/7 "SCHUKO STYLE" UNSWITCHED RECEPTACLES - EXPLOSION PROOF
- * — INDICATES MOUNT DEVICE ABOVE COUNTERTOP OR AT 1070mm ABOVE FINISHED FLOOR WHERE NO COUNTER IS TO BE INSTALLED.

SOME OF THESE SYMBOLS MAY NOT BE USED UNDER THIS PROJECT. SEE THE GENERAL PROJECT NOTES FOR ADDITIONAL REQUIREMENTS.

LIGHTNING PROTECTION

- AIR TERMINAL 20mm O.D. X 450mm SOLID COPPER, NICKEL PLATED ON ADHESIVE BASE
- EQ — EQUIPMENT AIR TERMINAL
- TEST WELL WITH GROUND ROD(S)
- GROUND ROD
- G — GROUND PLATE
- G — MAIN GROUND CONDUCTER CONCEALED WITHIN CONSTRUCTION
- G — MAIN GROUND CONDUCTOR EXPOSED ON EXPOSED ON BUILDING EXTERIOR SURFACE
- G — GROUND CONDUCTOR CAD WELDED TO GROUND CABLE OR EQUIPMENT
- G — GROUND ROD TRIPOD, SPACED 3 METERS APART.
- LEVEL TO LEVEL CABLE

LIGHTING

- LIGHTING FIXTURE - SEE FIXTURE SCHEDULE FOR MORE INFORMATION
- EMERGENCY LIGHTING FIXTURE - SEE FIXTURE SCHEDULE FOR MORE INFORMATION
- DOWNLIGHT
- LIGHTING FIXTURE ON NORMAL/EMERGENCY
- WALL MOUNTED LIGHT FIXTURE
- E — EXIT SIGN - DIRECTIONAL ARROWS AS INDICATED ON DRAWINGS
- REMOTE HEAD FOR BATTERY PACK
- $ — SINGLE POLE SWITCH - 20A RATED
- $3 — 3-WAY SWITCH - 20A RATED
- $4 — 4-WAY SWITCH - 20A RATED
- J — LIGHTING CONTACTOR
- POLE MOUNTED SITE LIGHTING FIXTURE- NUMBER OF FIXTURES PER POLE AS INDICATED ON DRAWINGS
- EXTERIOR DIRECTIONAL LIGHTING FIXTURE
- a — SMALL CASE LETTERS REPRESENTS LAMP(S) / SWITCHES.

TELECOMMUNICATIONS

- ▼ — TELEPHONE OUTLET(S) @ 45cm AFF. U.N.O. WITH 20mm RACEWAY TERMINATED TO TELEDATA TERMINAL BOARD.
- ▽ — DATA OUTLET(S) @ 45cm AFF. U.N.O. WITH 20mm RACEWAY TERMINATED TO TELEDATA TERMINAL BOARD.

TELECOMMUNICATIONS (CONTINUED)

- 21.25 ▼ — COMBINATION TELEPHONE/DATA OUTLET(S) @ 45cm AFF. U.N.O. WITH 27mm RACEWAY TERMINATED TO TELEDATA TERMINAL BOARD.
- " ▼ — WALL MTD. TELEPHONE OUTLET WITH 20mm RACEWAY TO TELEDATA TERMINAL BOARD.
- (x)T — INDICATES NUMBER OF TELEPHONE OUTLET(S) AND ASSOCIATED CABLING
- (x)D — INDICATES NUMBER OF DATA OUTLET(S) AND ASSOCIATED CABLING
- (x)TF — INDICATES NUMBER OF TELEPHONE OUTLETS AND ASSOCIATED CABLING WITH 1 OUTLET AND CABLE DEDICATED FOR FAX

SINGLE LINE SYMBOLS

- SWITCH
- BREAKER
- FUSE
- TRANSFORMER
- GROUND
- CONTACT (NORMALLY OPEN)
- CONTACT (NORMALLY CLOSED)
- TRANSFER SWITCH
- CURRENT TRANSFORMER
- INDICATES NEW ELECTRICAL EQUIPMENT
- C — INDICATES NEW CONTROL WIRING AND CONDUIT
- EQUIPMENT OUTLINE

MISCELLANEOUS

- BRANCH CIRCUIT WIRING, SURFACE MOUNTED ON WALLS
- BRANCH CIRCUIT WIRING - 6mm²
- BRANCH CIRCUIT WIRING - UNDER FLOOR
- HOME RUN BACK TO PANEL
- CONDUIT TURNED DOWN
- CONDUIT TURNED UP
- LV — LOW VOLTAGE WIRING AND CONDUIT
- ~ — INDICATES CONTINUATION OF LINE

FIRE ALARM

- FACP — FIRE ALARM CONTROL PANEL WITH BATTERY BACKUP
- F — FIRE ALARM PULL STATION

FIRE ALARM (CONTINUED)

- F — FIRE ALARM STROBE - WALL MOUNTED
- F — FIRE ALARM AUDIBLE/STROBE - WALL MOUNTED
- F — FIRE ALARM HORN/STROBE - WALL MOUNTED
- S — SMOKE DETECTOR
- H — HEAT DETECTOR CEILING MOUNTED
- D — DUCT DETECTOR - PROVIDED BY EC, INSTALLED BY MC AND CONNECTED BY EC
- S — FIRE ALARM SPEAKER AND VISIBLE CEILING MOUNTED

DENOTATIONS & ABBREVIATIONS

AFF	ABOVE FINISHED FLOOR
C	CEILING MOUNTED
E	EMERGENCY
EC	ELECTRICAL CONTRACTOR
EPO	EMERGENCY POWER OFF
EXP	EXPLOSION PROOF
F	FIRE ALARM
FF	FLUSH FLOOR MOUNTED
FL	FLUORESCENT
FO	FIBER OPTIC
FSS	FUSED SAFETY SWITCH
GF	GROUND FAULT INTERRUPTER
GC	GENERAL CONTRACTOR
IG	ISOLATED GROUND
K	KEY
LV	LOW VOLTAGE
M	MOTOR
MC	MECHANICAL CONTRACTOR
NE	NORMAL/EMERGENCY
NFSS	NON-FUSED SAFETY SWITCH
PA	PAGING SYSTEM
PLC	PLUMBING CONTRACTOR
SL	SINGLE LINE
T	TELEPHONE

DENOTATIONS & ABBREVIATIONS (CONT.)

TP	TAMPER PROOF
UE	UNDERGROUND ELECTRIC
W	WALL MOUNTED
WP	WEATHERPROOF WITH GROUND FAULT INTERRUPTION
WT	WATER TIGHT

GENERAL PROJECT NOTES:

G1. UNLESS OTHERWISE NOTED, PROVIDE ALL EQUIPMENT SHOWN ON THE PLANS. THE ELECTRICAL CONTRACTOR SHALL COORDINATE ALL SYMBOLS SHOWN ON THE PLANS WITH THE SYMBOL LIST. IT SHALL BE THE RESPONSIBILITY OF THE CONTRACTOR TO VERIFY THE INTENT OF ANY SYMBOL THAT IS SHOWN ON THE PLANS AND NOT INDICATED ON THE SYMBOL LIST WITH THE ENGINEER PRIOR TO BID.

G2. THE CONTRACTOR SHALL VERIFY THE LOCATION OF ALL UNDERGROUND UTILITIES WITHIN THE CONSTRUCTION AREA THREE (3) WORKING DAYS NOTICE BEFORE COMMENCING DIGGING. NOTIFY THE LOCAL AUTHORITY HAVING JURISDICTION AND WAIT THE REQUIRED TIME BEFORE COMMENCING TO DIG.

G3. THE CONTRACTOR SHALL COORDINATE CONDUIT RUNS, LIGHTING FIXTURES AND OTHER EQUIPMENT LOCATIONS WITH THE OTHER TRADE CONTRACTORS TO AVOID CONFLICTS.

G4. WHERE VOLTAGES AND FREQUENCIES ON THE DRAWINGS AND IN THE SPECIFICATIONS DIFFER FROM THE LOCAL ONES, ALL WORK SHALL BE PERFORMED USING THE LOCAL VOLTAGES AND FREQUENCIES.

G5. THE MINIMUM WIRE SIZE ON THE PROJECT SHALL BE 2.5mm². THE MINIMUM CONDUIT SIZE SHALL BE 20mm. THE MINIMUM BREAKER SIZE SHALL BE 15 AMPS.

G6. THE CONTRACTOR SHALL PUT A MAXIMUM OF 6 DUPLEX RECEPTACLES ON A 20A SINGLE POLE CIRCUIT.

G7. WHERE THE 1010 SCOPE REVIEW, 1015 TECHNICAL REVIEW, DRAWINGS, AND SPECIFICATIONS DIFFER FROM AMERICAN CODES OR STANDARDS, THE 1010, 1015, DRAWINGS, AND SPECIFICATIONS SHALL RULE.

G8. ALL CONDUIT AND DEVICES SHALL BE SURFACE MOUNTED UNLESS OTHERWISE INDICATED.

G9. CONTRACTOR SHALL COORDINATE ALL WORK WITH ALL OTHER TRADES TO ENSURE ALL WORK IS COMPLETED IN A PROFESSIONAL, WORKMAN-LIKE MANNER.

UNLESS OTHERWISE NOTED, LINEAR DIMENSIONS SHOWN ARE IN MILLIMETERS.

COMMONWEALTH OF PENNSYLVANIA — REGISTERED PROFESSIONAL ENGINEER — JOSEPH R. GAUS — PE-074251

US ARMY CORPS OF ENGINEERS AFGHANISTAN NORTH DISTRICT

SYMBOL	DESCRIPTION	DATE	APPR.	SYMBOL	DESCRIPTION	DATE	APPR.

DESIGNED BY: JG | DWN BY: BB | CKD BY: JG | REVIEWED BY: JH | SUBMITTED BY: BAKER

DATE: 3/22/2011 | REV: 0
CONTRACT NO. W912ER-09-D-0002
DRAWING CODE:
FILE NAME: ARCOMP\MCA\B19-E-001.DWG
PLOT SCALE: NONE
PLOT DATE: 3/22/2011

U.S. ARMY ENGINEER DISTRICT, AFGHANISTAN
CORPS OF ENGINEERS
APO AE 09356

SITE ADAPT DESIGN
B19 - OFFICER BARRACKS - LARGE - ARCH SPAN
ELECTRICAL SYMBOLS, NOTES, AND ABBREVIATIONS

SHEET REFERENCE NUMBER:
E-001

A1 Size 594mm x 841mm

3/22/2011 5:13 PM

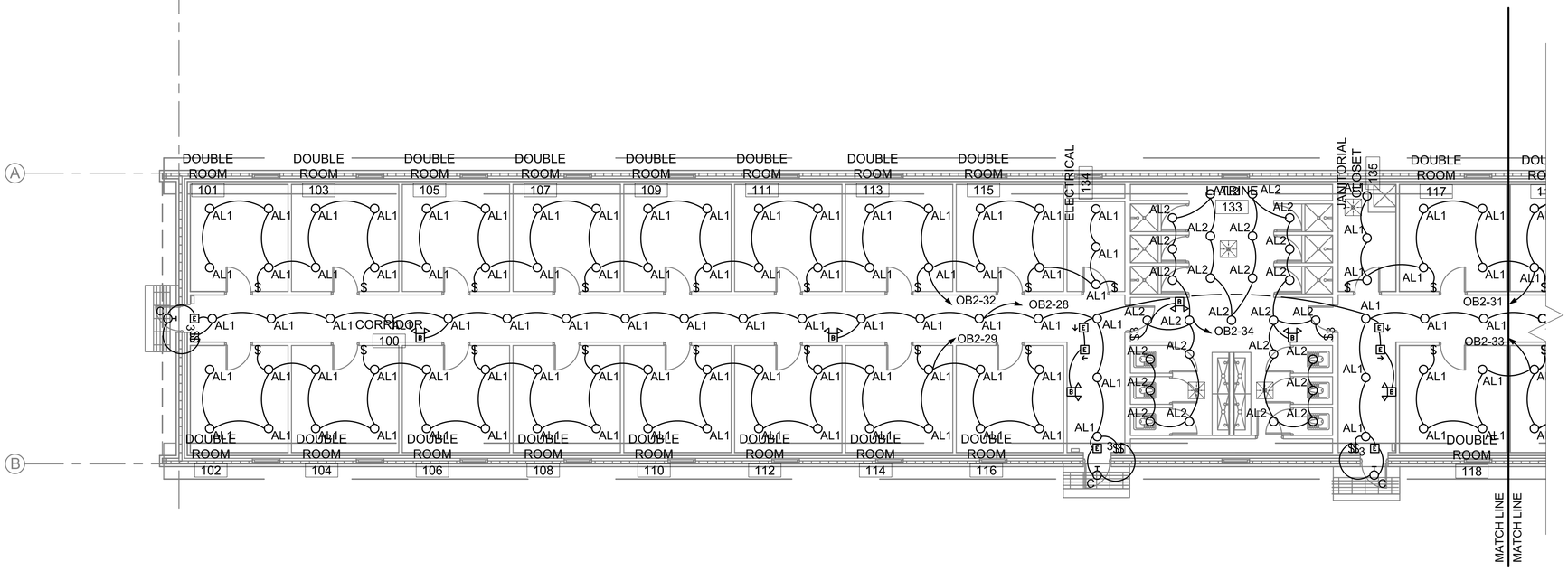

1 / E-101 LIGHTING PLAN - PART A

SCALE 1:100

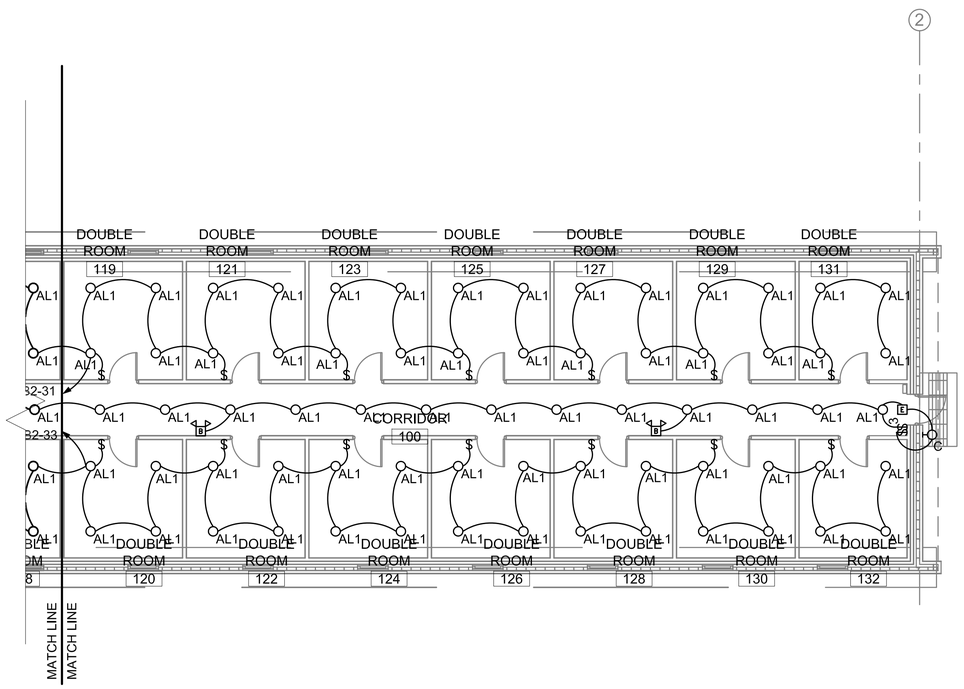

2 / E-101 LIGHTING PLAN - PART B

SCALE: 1:100

GENERAL NOTES:

1. REFER TO DRAWING #E-001 FOR THE ELECTRICAL SYMBOLS LIST.
2. REFER TO DRAWING #E-601 FOR THE LIGHTING FIXTURE SCHEDULE.
3. REFER TO DRAWING #E-602 FOR PANEL SCHEDULES.
4. LIGHT FIXTURES INDICATED AS EMERGENCY SHALL BE PROVIDED WITH A BATTERY BACKUP BALLAST.
5. MOUNT BATHROOM LIGHT FIXTURES 600mm AWAY FROM THE SHOWER PAN AREA (BS7671 ZONE 1).
6. LIGHT SWITCHES AND CEILING FAN SWITCHES SHALL BE GANGED IN THE SAME FACEPLATE AT ROOM ENTRANCES.
7. CIRCUITS SHOWN INCLUDE ONE PHASE CONDUCTOR, ONE NEUTRAL, AND ONE EQUIPMENT GROUND CONDUCTOR UNLESS OTHERWISE SHOWN. THE CONDUCTOR SIZE SHALL BE 2.5mm² UNLESS INDICATED OTHERWISE ON THE PANEL SCHEDULE.

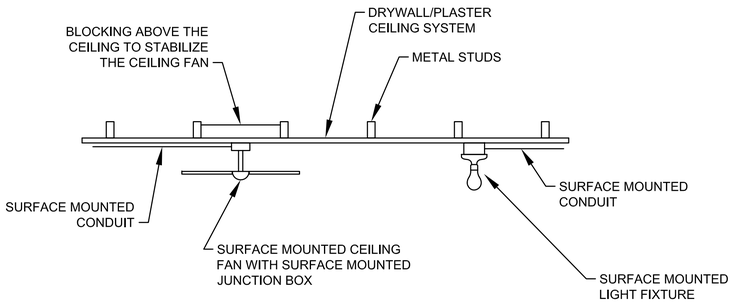

3 / E-101 NON-OPEN BAY MOUNTING DETAIL

NOT TO SCALE

N

0 2000 4000

SCALE: 1:100

UNLESS OTHERWISE NOTED, LINEAR DIMENSIONS SHOWN ARE IN MILLIMETERS.

COMMONWEALTH OF PENNSYLVANIA
REGISTERED PROFESSIONAL
JOSEPH R. GAUS
ENGINEER
PE-074261

US ARMY CORPS OF ENGINEERS
AFGHANISTAN NORTH DISTRICT

SYMBOL	DESCRIPTION	DATE	APPR.	SYMBOL	DESCRIPTION	DATE	APPR.

DATE: 4-25-2011
CONTRACT NO. W912ER-09-D-0002
DRAWING CODE:
FILE NAME: ARCGFNAC0-E-E-101.DWG
PLOT SCALE: 1:100
PLOT DATE: 4/25/2011
REV: 0

DESIGNED BY: JG
DWN BY: BB
CKD BY: JG
REVIEWED BY: JH
SUBMITTED BY:

BAKER

U.S. ARMY ENGINEER DISTRICT, AFGHANISTAN
CORPS OF ENGINEERS
APO AE 09356

SITE ADAPT DESIGN
B19 - OFFICER BARRACKS - LARGE - ARCH SPAN
ELECTRICAL LIGHTING PLANS

SHEET REFERENCE NUMBER:
E-101

A1 Size 594mm x 841mm

4/25/2011 5:12 PM

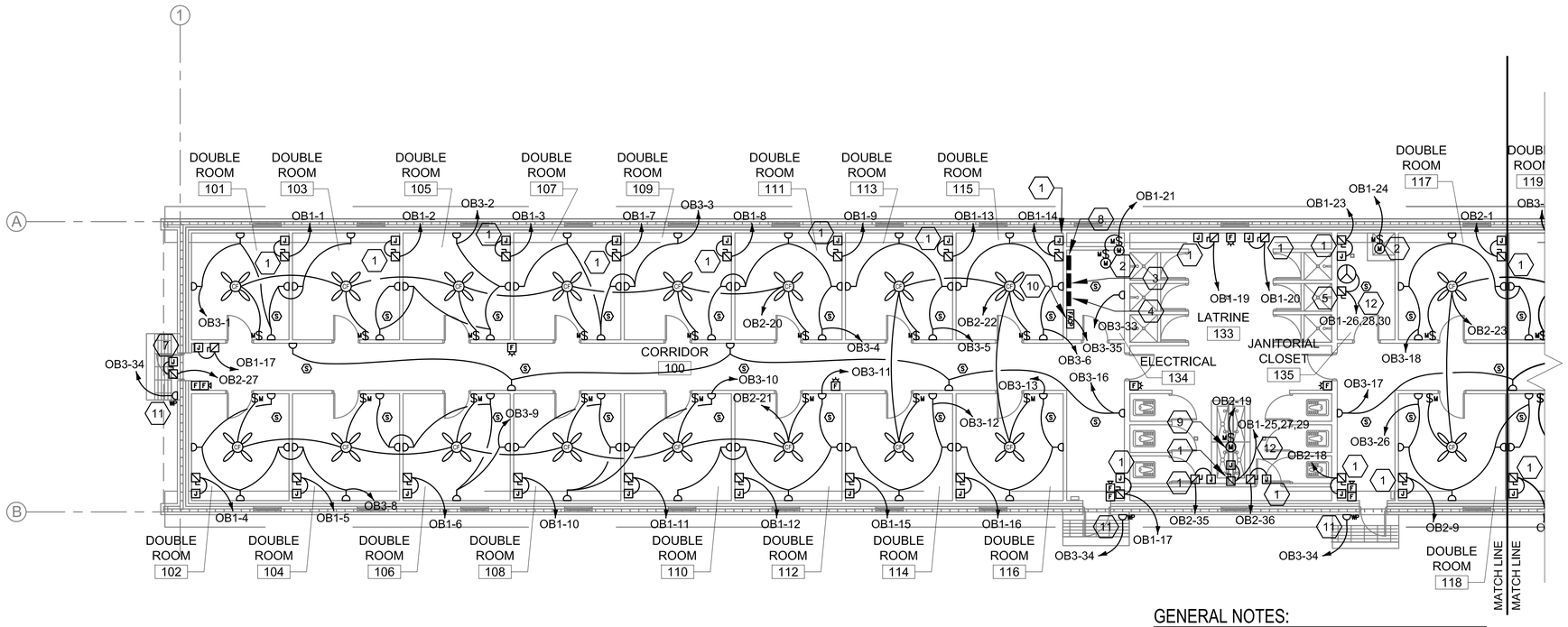

1 A-101 FLOOR PLAN - PART A

SCALE 1:100

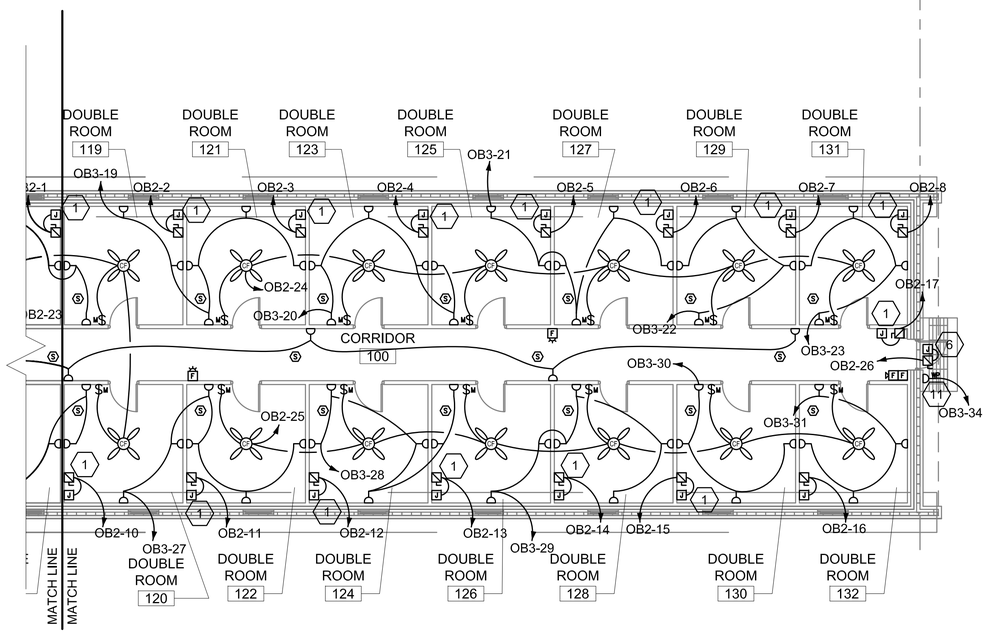

1 A-101 FLOOR PLAN - PART B

SCALE: 1:100

GENERAL NOTES:

1. REFER TO DRAWING #E-001 FOR THE ELECTRICAL SYMBOLS LIST.
2. REFER TO DRAWING #E-501 FOR THE POWER RISER DIAGRAM.
3. REFER TO DRAWING #E602 FOR ELECTRICAL PANEL SCHEDULES.
4. COORDINATE EXACT MOUNTING LOCATION OF DISCONNECTING MEANS FOR MECHANICAL AND PLUMBING EQUIPMENT IN THE FIELD.
5. FUSIBLE SAFETY SWITCHES THAT ARE NOT OTHERWISE IDENTIFIED SHALL BE 380V, IP, 30A FUSED SAFETY SWITCHES WITH 20A FUSES.
6. LIGHT SWITCHES AND CEILING FAN SWITCHES SHALL BE GANGED IN THE SAME FACEPLATE AT ROOM ENTRANCES.
7. CIRCUITS SHOWN INCLUDE ONE PHASE CONDUCTOR, ONE NEUTRAL, AND ONE EQUIPMENT GROUND CONDUCTOR UNLESS OTHERWISE SHOWN. THE CONDUCTOR SIZE SHALL BE 2.5mm² UNLESS INDICATED OTHERWISE ON THE PANEL SCHEDULE.
8. ALL SMOKE DETECTORS SHOWN SHALL BE CONNECTED TO THE FIRE ALARM CONTROL PANEL AS SYSTEM SMOKE DETECTORS.
9. ALL SLEEPING QUARTER RECEPTACLES SHALL BE AFCI TYPE.

KEY NOTES:

1. PROVIDE POWER CONNECTION TO ELECTRIC UNIT HEATER. REFER TO MECHANICAL PLANS AND PANEL SCHEDULES FOR MORE INFORMATION.
2. PROVIDE POWER CONNECTION TO EXHAUST FAN. REFER TO MECHANICAL PLANS AND PANEL SCHEDULES FOR MORE INFORMATION.
3. PANEL 'OB1' 380/220V, 3Ø, 4W.
4. PANEL 'OB2' 380/220V, 3Ø, 4W.
5. PROVIDE POWER CONNECTION TO HOT WATER HEATER. CIRCUIT SHALL INCLUDE 3 PHASE CONDUCTORS, ONE NEUTRAL AND ONE EQUIPMENT GROUND CONDUCTOR. REFER TO PLUMBING PLANS AND PANEL SCHEDULES FOR MORE INFORMATION.
6. PROVIDE POWER CONNECTION TO MOTOR OPERATED DAMPER MOUNTED IN THE ATTIC.
7. PROVIDE POWER CONNECTION TO EXHAUST FAN MOUNTED IN THE ATTIC.
8. PANEL 'OB3 380/220V, 3Ø, 4W.
9. PROVIDE POWER CONNECTION TO SUPPLY FAN.
10. FIRE ALARM CONTROL PANEL.
11. SEE DETAIL #7 ON DRAWING E501 FOR MORE INFORMATION.
12. CIRCUIT SHOWN INCLUDES THREE PHASE CONDUCTORS, ONE NEUTRAL, AND ONE EQUIPMENT GROUND CONDUCTOR. SEE PANEL SCHEDULE ON DRAWING E602 FOR SIZING..

N

0 2000 4000

SCALE: 1:100

UNLESS OTHERWISE NOTED, LINEAR DIMENSIONS SHOWN ARE IN MILLIMETERS.

COMMONWEALTH OF PENNSYLVANIA
REGISTERED PROFESSIONAL
JOSEPH R. GAUS
ENGINEER
PE-074251

US ARMY CORPS OF ENGINEERS
AFGHANISTAN NORTH DISTRICT

SYMBOL	DESCRIPTION	DATE	APPR.	SYMBOL	DESCRIPTION	DATE	APPR.

DESIGNED BY: JG
DWN BY: BB
CKD BY: JG
REVIEWED BY: JH
SUBMITTED BY:
DATE: 3/22/2011
CONTRACT NO. W912ER-09-D-0002
DRAWING CODE:
FILE NAME: ARCORPSNAD-B19-E-102.DWG
PLOT SCALE: 1:100
PLOT DATE: 3/22/2011
REV: 0

BAKER

U.S. ARMY ENGINEER DISTRICT, AFGHANISTAN
CORPS OF ENGINEERS
APO AE 09356

SITE ADAPT DESIGN

B19 - OFFICER BARRACKS - LARGE - ARCH SPAN

ELECTRICAL POWER AND SYSTEMS PLANS

SHEET REFERENCE NUMBER:

E-102

A1 Size 594mm x 841mm

3/22/2011 5:14 PM

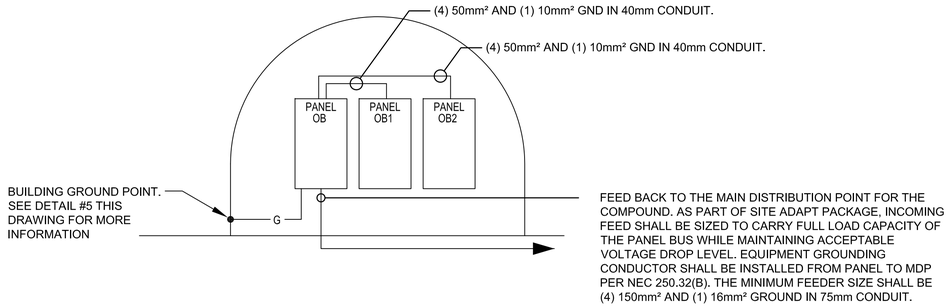

1 / E-501 OB RISER DIAGRAM

SCALE: N.T.S.

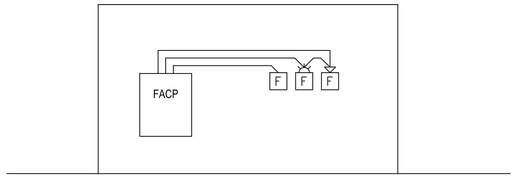

2 / E-501 TYPICAL ONE STORY FIRE ALARM RISER

SCALE: N.T.S.

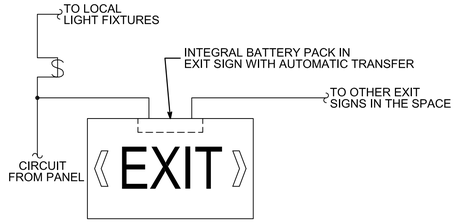

3 / E-501 EXIT SIGN WIRING DIAGRAM

SCALE: N.T.S.

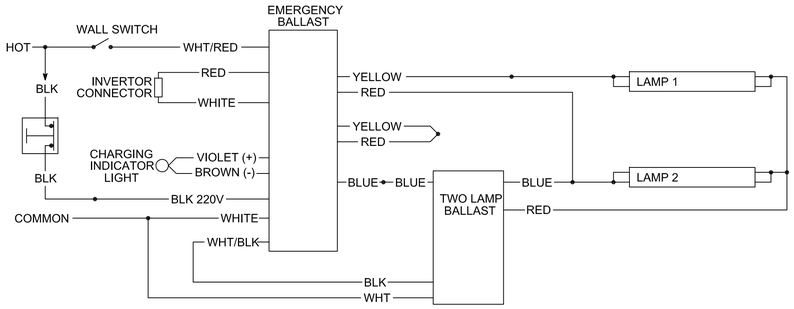

4 / E-501 EMERGENCY FIXTURE WIRING DIAGRAM

SCALE: N.T.S.

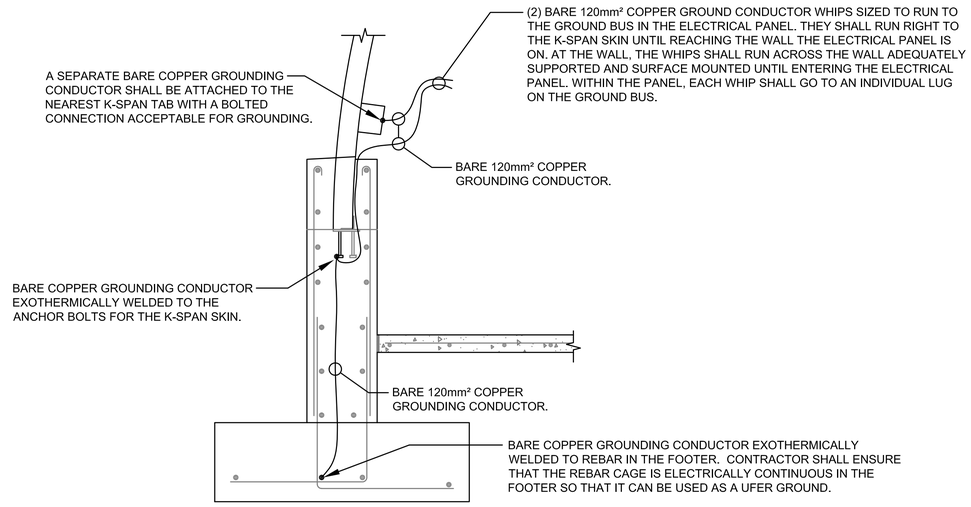

5 / E-501 BUILDING GROUNDING DETAIL

SCALE: N.T.S.

Ⓐ LARGER OF THE TWO SIZES GIVEN IN THE TABLES BELOW	
GROUNDING ELECTRODE CONDUCTOR (BASED ON AIC RATING)	
AIC RATING OF SERVICE EQUIPMENT	NECESSARY GROUNDING ELECTRODE CONDUCTOR SIZE
10K	(1) 35mm²
14K	(1) 50mm²
18K	(1) 70mm²
22K	(1) 70mm²
25K	(1) 70mm²
30K	(1) 95mm²
35K	(1) 120mm²
42K	(1) 150mm²
65K	(1) 185mm²
100K	(1) 300mm²
125K	(2) 185mm²
200K	(2) 300mm²
GROUNDING ELECTRODE CONDUCTOR (BASED ON NEC TABLE 250.66)	
SIZE OF LARGEST UNGROUNDED SERVICE CONDUCTOR OR EQUIVALENT AREA FOR PARALLEL CONDUCTORS	NECESSARY GROUNDING ELECTRODE CONDUCTOR SIZE
350 kcmil OR SMALLER	35mm²
OVER 350 kcmil TO 600 kcmil	70mm²
OVER 600 kcmil TO 1100 kcmil	70mm²
OVER 1100 kcmil	95mm²
NOTE: ALL SIZES ARE BASED ON COPPER CONDUCTORS.	

Ⓑ EQUIPMENT GROUNDING CONDUCTOR	
RATING OR SETTING OF AUTOMATIC OVERCURRENT DEVICE IN CIRCUIT AHEAD OF EQUIPMENT, CONDUIT, ETC, NOT EXCEEDING (AMPERES)	NECESSARY EQUIPMENT GROUNDING CONDUCTOR SIZE
15	2.5mm²
20	4.0mm²
30	6.0mm²
40	6.0mm²
60	6.0mm²
100	10mm²
200	16mm²
300	25mm²
400	25mm²
500	35mm²
600	50mm²
800	70mm²
1000	70mm²
1200	95mm²
1600	120mm²
2000	150mm²
2500	185mm²
3000	240mm²
4000	300mm²
5000	400mm²
6000	400mm²
NOTE: ALL SIZES ARE BASED ON COPPER CONDUCTORS.	

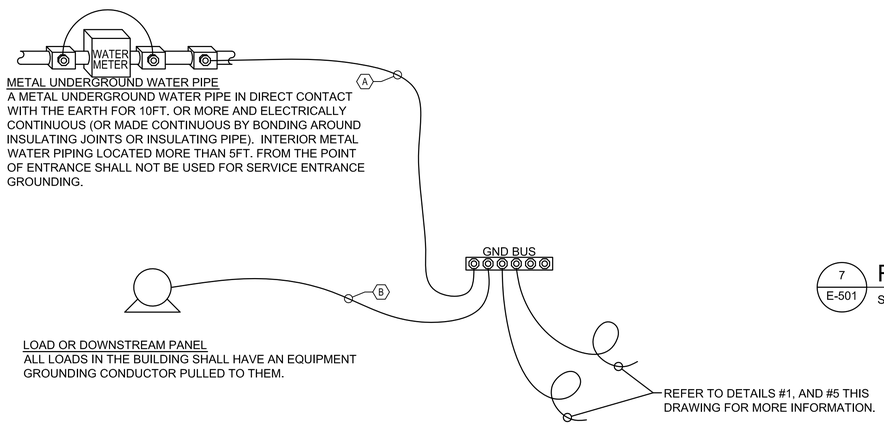

6 / E-501 SERVICE ENTRANCE GROUNDING DETAIL

SCALE: N.T.S.

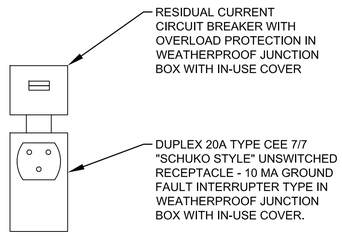

7 / E-501 RECEPTACLE DETAIL

SCALE: N.T.S.

UNLESS OTHERWISE NOTED, LINEAR DIMENSIONS SHOWN ARE IN MILLIMETERS.

COMMONWEALTH OF PENNSYLVANIA REGISTERED PROFESSIONAL ENGINEER JOSEPH R. GAUS PE-074251

US ARMY CORPS OF ENGINEERS AFGHANISTAN NORTH DISTRICT

SYMBOL	DESCRIPTION	DATE	APPR.	SYMBOL	DESCRIPTION	DATE	APPR.

DESIGNED BY: JG | DATE: 3/22/2011 | REV: 0
DWN BY: BB | CKD BY: JG | CONTRACT NO. W912ER-09-D-0002
REVIEWED BY: JH | DRAWING CODE:
SUBMITTED BY: | FILE NAME: J:\W912ER-09-D-0002\E-501.DWG
PLOT SCALE: NONE
PLOT DATE: 3/22/2011

BAKER

U.S. ARMY ENGINEER DISTRICT, AFGHANISTAN CORPS OF ENGINEERS APO AE 09356

SITE ADAPT DESIGN
B19 - OFFICER BARRACKS - LARGE - ARCH SPAN
ELECTRICAL DETAILS

SHEET REFERENCE NUMBER:
E-501

3/22/2011 5:14 PM

A1 Size 594mm x 841mm

LIGHT FIXTURE SCHEDULE

FIXTURE MARK	STYLE NUMBER AND TYPE	NUMBER AND TYPE OF LAMPS	VOLTAGE	MOUNTING	NOTES
AL1	PORCELAIN SOCKET WITH MEDIUM SCREW IN BASE	(1) 42W SELF BALLASTED COMPACT FLUORESCENT "TWISTER" LAMP	220V - 1Ø 50HZ	SURFACE MOUNTED	
AL2	VAPORPROOF WET LOCATION JELLY JAR FIXTURE WITH MEDIUM SCREW IN BASE.	(1) 42W SELF BALLASTED COMPACT FLUORESCENT "TWISTER" LAMP	220V - 1Ø 50HZ	SURFACE MOUNTED	
C	INCANDESCENT ONE PIECE W/ APPROVED LENS STABILIZED HIGH IMPACT POLY CARBONATE. FIXTURE SHALL BE IP-44 RATED.	(1) 100W INCANDESCENT	220V - 1Ø 50HZ	WALL MOUNTED ABOVE EXTERIOR DOORS	FURNISHED WITH INTEGRAL PHOTOCELL.
E	UNIVERSAL MOUNT ENGINEER GRADE THERMOPLASTIC HOUSING EXIT SIGN WITH LED LAMPS, RED LETTERS 6" IN HEIGHT WITH ARROWS AS INDICATED, WITH 12V CADMIUM BATTERY WITH REMOTE HEAD CAPABILITY	LED LAMPS	220V - 1Ø 50HZ	UNIVERSAL MOUNTING	
B	EMERGENCY BATTERY PACK LIGHTING WITH TWO LOW VOLTAGE HEADS.	(2) 12W HALOGEN HEADS	220V - 1Ø 50HZ	SURFACE MOUNTING	

UNLESS OTHERWISE NOTED,
LINEAR DIMENSIONS
SHOWN ARE IN MILLIMETERS.

COMMONWEALTH OF PENNSYLVANIA
REGISTERED PROFESSIONAL
JOSEPH R. GAUS
04/25/2011
ENGINEER
PE-074261

US ARMY CORPS
OF ENGINEERS
AFGHANISTAN NORTH
DISTRICT

SYMBOL	DESCRIPTION	DATE	APPR.	SYMBOL	DESCRIPTION	DATE	APPR.

U.S. ARMY ENGINEER DISTRICT, AFGHANIST'AN
CORPS OF ENGINEERS
APO AE 09356

DESIGNED BY: JG
DWN BY: BB
CKD BY: JG
REVIEWED BY: JH
SUBMITTED BY:
DATE: 4-25-2011
REV: 0
CONTRACT NO. W912ER-09-D-0002
DRAWING CODE:
FILE NAME: (AECOM)(Project)(B-019-E-601.DWG)
PLOT SCALE: NONE
PLOT DATE: 4/25/2011

BAKER

SITE ADAPT DESIGN

B19 - OFFICER BARRACKS - LARGE - ARCH SPAN

LIGHTING FIXTURE SCHEDULE

SHEET
REFERENCE
NUMBER:

E-601

A1 Size 594mm x 841mm

4/25/2011 5:13 PM

PANELBOARD: OB1 SURFACE MOUNTED
AMP MAIN LUGS (OR) 200 AMP MAIN BREAKER W/ 200 AMP TRIP
CIRCUIT BREAKER TYPE: 380/220 VOLTS 3 PHASE 4 WIRE 50 HZ 200 AMP BUS

CCT #	TRIP AMPS	PH	WIRE MM²	GND MM²	CONDUIT MM	LOAD SERVED	LOAD-KVA A	LOAD-KVA B	LOAD-KVA C	LOAD-KVA A	LOAD-KVA B	LOAD-KVA C	LOAD SERVED	CONDUIT MM	GND MM²	WIRE MM²	PH	TRIP AMPS	CCT #
1	20	1	4	4	20	ELECTRIC HEATER - 101	2.0			2.0			ELECTRIC HEATER - 103	20	4	4	1	20	2
3	20	1	4	4	20	ELECTRIC HEATER - 105		2.0			2.0		ELECTRIC HEATER - 102	20	4	4	1	20	4
5	20	1	4	4	20	ELECTRIC HEATER - 104			2.0			2.0	ELECTRIC HEATER - 106	20	4	4	1	20	6
7	20	1	4	4	20	ELECTRIC HEATER - 107	2.0			2.0			ELECTRIC HEATER - 109	20	4	4	1	20	8
9	20	1	4	4	20	ELECTRIC HEATER - 111		2.0			2.0		ELECTRIC HEATER - 108	20	4	4	1	20	10
11	20	1	4	4	20	ELECTRIC HEATER - 110			2.0			2.0	ELECTRIC HEATER - 112	20	4	4	1	20	12
13	20	1	4	4	20	ELECTRIC HEATER - 113	2.0			2.0			ELECTRIC HEATER - 115	20	4	4	1	20	14
15	20	1	4	4	20	ELECTRIC HEATER - 114		2.0			2.0		ELECTRIC HEATER - 116	20	4	4	1	20	16
17	20	1	4	4	20	ELECTRIC HEATER - 100			2.0			2.0	ELECTRIC HEATER - 100	20	4	4	1	20	18
19	20	1	4	4	20	ELECTRIC HEATER - 133	2.0			2.0			ELECTRIC HEATER - 133	20	4	4	1	20	20
21	20	1				SPARE		0.0			0.6		EXHAUST FANS - 134	20	2.5	2.5	1	15	22
23	20	1	4	4	20	ELECTRIC HEATER - 135			2.0			0.3	EXHAUST FANS - 135	20	2.5	2.5	1	15	24
25							3.3			6.0									26
27	20	3	4	4	20	ELECTRIC DUCT HEATER		3.4			6.0		ELECTRIC WATER HEATER	20	6	6	3	30	28
29									3.3			6.0							30
31	20	1				SPARE	0.0			18.8									32
33	20	1				SPARE		0.0			19.8		PANEL 'OB2'	40	10	50	3	100	34
35	20	1				SPARE			0.0			21.6							36
37	20	1				SPARE	0.0			8.8									38
39	20	1				SPARE		0.0			11.0		PANEL 'OB3'	40	10	50	3	100	40
41	20	1				SPARE			0.0			9.1							42
							11.3	9.4	11.3	41.6	43.4	43							

DIVERSIFIED LOADS:
LIGHTING: 0.0 X 0.7 = 0.0 HEATERS: 64.0 X 0.8 = 51.2
RECEPTACLES: 0.0 X 0.5 = 0.0 MOTORS: 0.9 X 0.6 = 0.6

TOTAL CONNECTED LOAD (PER PHASE) A: 52.9 B: 52.8 C: 54.3
TOTAL CONNECTED LOAD: 160.0
TOTAL DIVERSIFIED LOAD: 110.2

PANELBOARD: OB2 SURFACE MOUNTED
AMP MAIN LUGS (OR) 100 AMP MAIN BREAKER W/ 100 AMP TRIP
CIRCUIT BREAKER TYPE: 380/220 VOLTS 3 PHASE 4 WIRE 50 HZ 100 AMP BUS

CCT #	TRIP AMPS	PH	WIRE MM²	GND MM²	CONDUIT MM	LOAD SERVED	LOAD-KVA A	LOAD-KVA B	LOAD-KVA C	LOAD-KVA A	LOAD-KVA B	LOAD-KVA C	LOAD SERVED	CONDUIT MM	GND MM²	WIRE MM²	PH	TRIP AMPS	CCT #
1	20	1	4	4	20	ELECTRIC HEATER - 117	2.0			2.0			ELECTRIC HEATER - 119	20	4	4	1	20	2
3	20	1	4	4	20	ELECTRIC HEATER - 121		2.0			2.0		ELECTRIC HEATER - 123	20	4	4	1	20	4
5	20	1	4	4	20	ELECTRIC HEATER - 125			2.0			2.0	ELECTRIC HEATER - 127	20	4	4	1	20	6
7	20	1	4	4	20	ELECTRIC HEATER - 129	2.0			2.0			ELECTRIC HEATER - 131	20	4	4	1	20	8
9	20	1	4	4	20	ELECTRIC HEATER - 118		2.0			2.0		ELECTRIC HEATER - 120	20	4	4	1	20	10
11	20	1	4	4	20	ELECTRIC HEATER - 122			2.0			2.0	ELECTRIC HEATER - 124	20	4	4	1	20	12
13	20	1	4	4	20	ELECTRIC HEATER - 126	2.0			2.0			ELECTRIC HEATER - 128	20	4	4	1	20	14
15	20	1	4	4	20	ELECTRIC HEATER - 130		2.0			2.0		ELECTRIC HEATER - 132	20	4	4	1	20	16
17	20	1	4	4	20	ELECTRIC HEATER - 100			2.0			2.0	ELECTRIC HEATER - 100	20	4	4	1	20	18
19	15	1	2.5	2.5	20	EXHAUST FAN - 133	0.3			1.2			CEILING FANS	20	2.5	2.5	1	15	20
21	15	1	2.5	2.5	20	CEILING FANS		1.2			0.8		CEILING FANS	20	2.5	2.5	1	15	22
23	15	1	2.5	2.5	20	CEILING FANS			0.8			1.2	CEILING FANS	20	2.5	2.5	1	15	24
25	15	1	2.5	2.5	20	CEILING FANS	1.2			0.5			ATTIC MOTORIZED DAMPER	20	2.5	2.5	1	15	26
27	15	1	2.5	2.5	20	ATTIC EXHAUST FAN		1.1			1.6		LIGHTING	20	2.5	2.5	1	15	28
29	15	1	2.5	2.5	20	LIGHTING			1.6			2.0	SPARE				1	15	30
31	15	1	2.5	2.5	20	LIGHTING	1.8			1.8			LIGHTING	20	2.5	2.5	1	15	32
33	15	1	2.5	2.5	20	LIGHTING		1.6			1.5		LIGHTING	20	2.5	2.5	1	15	34
35	20	1	4	4	20	ELECTRIC HEATER - 133			2.0			2.0	ELECTRIC HEATER - 113	20	4	4	1	20	36
37	15	1				SPARE	0.0			0.0			SPARE				1	15	38
39	15	1				SPARE		0.0			0.0		SPARE				1	15	40
41	15	1				SPARE			0.0			0.0	SPARE				1	15	42
							9.3	9.9	10.4	9.5	9.9	11.2							

DIVERSIFIED LOADS:
LIGHTING: 9.9 X 0.7 = 6.9 HEATERS: 40.0 X 0.8 = 32.0
RECEPTACLES: 0.0 X 0.5 = 0.0 MOTORS: 8.3 X 0.6 = 5.0

TOTAL CONNECTED LOAD (PER PHASE) A: 18.8 B: 19.8 C: 21.6
TOTAL CONNECTED LOAD: 60.2
TOTAL DIVERSIFIED LOAD: 43.9

PANELBOARD: OB3 SURFACE MOUNTED
AMP MAIN LUGS (OR) 100 AMP MAIN BREAKER W/ 100 AMP TRIP
CIRCUIT BREAKER TYPE: 380/220 VOLTS 3 PHASE 4 WIRE 50 HZ 100 AMP BUS

CCT #	TRIP AMPS	PH	WIRE MM²	GND MM²	CONDUIT MM	LOAD SERVED	LOAD-KVA A	LOAD-KVA B	LOAD-KVA C	LOAD-KVA A	LOAD-KVA B	LOAD-KVA C	LOAD SERVED	CONDUIT MM	GND MM²	WIRE MM²	PH	TRIP AMPS	CCT #
1	15	1	2.5	2.5	20	REC - 101,103	1.2			1.2			REC - 103,105	20	2.5	2.5	1	15	2
3	15	1	2.5	2.5	20	REC - 105,107		1.2			1.2		REC - 107,109	20	2.5	2.5	1	15	4
5	15	1	2.5	2.5	20	REC - 111,113			0.8			0.8	REC - 113,115	20	2.5	2.5	1	15	6
7	15	1				SPARE	0.0			1.2			REC - 102	20	2.5	2.5	1	15	8
9	15	1	2.5	2.5	20	REC - 102,104		1.2			1.2		REC - 104,106	20	2.5	2.5	1	15	10
11	15	1	2.5	2.5	20	REC - 106,108			1.2			0.8	REC - 110,112	20	2.5	2.5	1	15	12
13	15	1	2.5	2.5	20	REC - 112,114	0.8			0.0			SPARE				1	15	14
15	15	1				SPARE		0.0			1.0		REC - 100	20	2.5	2.5	1	15	16
17	15	1	2.5	2.5	20	REC - 100			1.0			1.2	REC - 117	20	2.5	2.5	1	15	18
19	15	1	2.5	2.5	20	REC - 117,119	1.2			1.2			REC - 119,121	20	2.5	2.5	1	15	20
21	15	1	2.5	2.5	20	REC - 121,123		1.0			0.8		REC - 125,127	20	2.5	2.5	1	15	22
23	15	1	2.5	2.5	20	REC - 127,129			0.8			0.0	SPARE				1	15	24
25	15	1				SPARE	0.0			1.2			REC - 118	20	2.5	2.5	1	15	26
27	15	1	2.5	2.5	20	REC - 120,122		1.2			1.2		REC - 122,124	20	2.5	2.5	1	15	28
29	15	1	2.5	2.5	20	REC - 124,126			1.2			0.8	REC - 126,128	20	2.5	2.5	1	15	30
31	15	1	2.5	2.5	20	REC - 128,130	0.8			0.0			SPARE				1	15	32
33	15	1	2.5	2.5	20	REC - ELECTRICAL ROOM		0.2			0.8		RECS - EXTERIOR	20	2.5	2.5	1	15	34
35	15	1	2.5	2.5	20	FIRE ALARM PANEL			0.5			0.0	SPARE				1	15	36
37	15	1				SPARE	0.0			0.0			SPARE				1	15	38
39	15	1				SPARE		0.0			0.0		SPARE				1	15	40
41	15	1				SPARE			0.0			0.0	SPARE				1	15	42
							4.0	4.8	5.5	4.8	6.2	3.6							

DIVERSIFIED LOADS:
LIGHTING: 0.0 X 0.7 = 0.0 HEATERS: 0.0 X 0.8 = 0.0
RECEPTACLES: 28.9 X 0.5 = 14.5 MOTORS: 0.0 X 0.6 = 0.0

TOTAL CONNECTED LOAD (PER PHASE) A: 8.8 B: 11.0 C: 9.1
TOTAL CONNECTED LOAD: 28.9
TOTAL DIVERSIFIED LOAD: 14.5

GENERAL NOTES:

1. CONTRACTOR SHALL PROVIDE TYPED PANEL SCHEDULES FOR EACH PANEL. IT SHALL BE THE RESPONSIBILITY OF THE CONTRACTOR TO VERIFY ROOM NUMBERS FOR EACH CIRCUIT IN THE FIELD WITH THE FINAL ROOM NUMBER PLAN. ROOM NUMBERS SHALL BE PROVIDED IN THE CIRCUIT DESCRIPTION FIELD FOR EACH CIRCUIT.
2. SITE ADAPT CONTRACTOR SHALL DETERMINE THE AVAILABLE SHORT CIRCUIT FAULT CURRENT FOR THE ELECTRICAL PANELS BASED ON THE SITE CONDITIONS.
3. CIRCUITS SHOWN AS 1 PH SHALL INCLUDE ONE PHASE CONDUCTOR, ONE NEUTRAL, AND ONE EQUIPMENT GROUND CONDUCTOR. CIRCUITS SHOWN AS 3 PH SHALL INCLUDE THREE PHASE CONDUCTORS, ONE NEUTRAL, AND ONE EQUIPMENT GROUND CONDUCTOR.

UNLESS OTHERWISE NOTED, LINEAR DIMENSIONS SHOWN ARE IN MILLIMETERS.

COMMONWEALTH OF PENNSYLVANIA REGISTERED PROFESSIONAL ENGINEER JOSEPH R. GAUS PE-074251

US ARMY CORPS OF ENGINEERS AFGHANISTAN NORTH DISTRICT

SYMBOL DESCRIPTION DATE APPR.

DATE: 4-25-2011
CONTRACT NO. W912ER-09-D-0002
DRAWING CODE:
FILE NAME:
PLOT SCALE: NONE
PLOT DATE: 4/25/2011
REV. 0

DESIGNED BY: JG
DWN BY: BB
CKD BY: JG
REVIEWED BY: JH
SUBMITTED BY: BAKER

U.S. ARMY ENGINEER DISTRICT, AFGHANISTAN CORPS OF ENGINEERS APO AE 09356

SITE ADAPT DESIGN
B19 - OFFICER BARRACKS - LARGE - ARCH SPAN
ELECTRICAL PANEL SCHEDULES

SHEET REFERENCE NUMBER: E-602

A1 Size 594mm x 841mm

4/25/2011 5:14 PM

AFGHAN NATIONAL POLICE

STANDARD BUILDING DESIGNS

GUARD SHACK

SHEET INDEX

G1 COVER SHEET

S1 GENERAL NOTES
S2 DESIGN CRITERIA & SCHEDULES
S3 FOUNDATION & ROOF FRAMING PLANS
S4 SECTIONS AND DETAILS
S5 TYPICAL DETAILS

A1 FLOOR AND ROOF PLANS AND DETAILS
A2 EXTERIOR ELEVATIONS, BUILDING AND WALL SECTIONS
A3 DOOR, WINDOW & FINISH TYPES & DETAILS

E0 ELECTRICAL SYMBOLS AND ABBREVIATIONS
E1 LIGHTING AND POWER PLAN
E2 DETAILS
E3 LIGHT FIXTURE SCHEDULE
E4 PANEL SCHEDULES AND RISER DIAGRAM

US Army Corps of Engineers
Afghanistan Engineer District

SYMBOL	DESCRIPTION	DATE	APR

DESIGNED BY: JDS
DWN BY: JDS
CHK BY: JDS
DATE: 09-30-09
SUBMITTED BY: BAKER
FILE NO.: ANPSDG-001XXX

Michael Baker Jr., Inc
A unit of Michael Baker Corporation
Airside Business Park
100 Airside Drive
Moon Township, PA 15108
www.mbakercorp.com

AFGHAN NATIONAL POLICE
STANDARD DESIGN
GUARD SHACK

COVER SHEET

SHEET REFERENCE NUMBER:
G1

100% SUBMISSION

STRUCTURAL ABBREVIATIONS:

ACI	AMERICAN CONCRETE INSTITUTE
AISC	AMERICAN INSTITUTE OF STEEL CONSTRUCTION
ALT	ALTERNATE
ASTM	AMERICAN SOCIETY FOR TESTING AND MATERIALS
AWS	AMERICAN WELDING SOCIETY
ARCH	ARCHITECTURAL
B	BOTTOM
BLDG	BUILDING
BOTT	BOTTOM
℄	CENTER LINE
CFMF	COLD FORM METAL FRAME
CFS	COLD FORMED STEEL
CIP	CAST IN PLACE
CIPL	CAST-IN-PLACE LINTEL
CJ	CONTROL JOINT
CLR	CLEAR
CMU	CONCRETE MASONRY UNIT
COEFF	COEFFICIENT
COL	COLUMN
CONC	CONCRETE
CONT	CONTINUOUS
COORD	COORDINATE
CSJ	CONSTRUCTION JOINT
CTJ	CONTROL JOINT
DIA	DIAMETER
DIAG	DIAGONAL
DIM	DIMENSION
DWG	DRAWING
DWL	DOWEL
EA	EACH
ELEC	ELECTRICAL
ELEV	ELEVATION
EMBED	EMBEDMENT
EQUIV	EQUIVALENT
ETC	ET CETERA
EW	EACH WAY
EXT	EXTERIOR
FTG	FOOTING
GA	GAUGE
HORIZ	HORIZONTAL
HRS	HOURS
IBC	INTERNATIONAL BUILDING CODE
INT	INTERIOR
Kg	KILOGRAM
KIP	KIPS (1 KIP = 1,000 POUNDS)
kN	KILONEWTON
kPa	KILOPASCAL
L#	ANGLE (# INDICATES SIZE)
LLV	LONG LEG VERTICAL
M	METER
MAX	MAXIMUM
MBM	METAL BUILDING MANUFACTURER
MECH	MECHANICAL
MFG	MANUFACTURER
MID	MIDDLE
MIN	MINIMUM
MISC	MISCELLANEOUS
MM	MILLIMETER
MPa	MEGAPASCAL
MTL	METAL
MWFRS	MAIN WIND FORCE RESISTING SYSTEM
N	NEWTON
N	NORTH
N/A	NOT APPLICABLE
#	NUMBER SYMBOL FOR REBAR SIZE
NTS	NOT TO SCALE
OC	ON CENTER
OPNG	OPENING
ℙ or PL	PLATE
PRE-ENG	PRE-ENGINEERED
REINF	REINFORCED
REQ'D	REQUIRED
SW	SHEAR WALL
SIM	SIMILAR
SPECS	SPECIFICATIONS
STD	STANDARD
STRUCT	STRUCTURAL
T	TOP
T/	TOP OF
T/ELEV	TOP ELEVATION
T&B	TOP AND BOTTOM
THK	THICK
TM	TRADE MARK
TYP	TYPICAL
UON	UNLESS OTHERWISE NOTED
VERT	VERTICAL
W	WIDTH
W/	WITH

GENERAL NOTES

1.0 THIS PROJECT HAS BEEN DESIGNED FOR THE WEIGHTS AND MATERIALS INDICATED ON THE SHEETS AND FOR THE LIVE LOADS INDICATED IN THE DESIGN DATA. IT IS THE CONTRACTOR'S RESPONSIBILITY TO DETERMINE ALLOWABLE CONSTRUCTION LOADS AND TO PROVIDE PROPER DESIGN AND CONSTRUCTION OF FALSEWORK, FORMWORK, STAGING, BRACING, SHEETING AND SHORING, ETC.

1.1 COORDINATE THESE SHEETS WITH THE ARCHITECTURAL, MECHANICAL, ELECTRICAL, PLUMBING, AND CIVIL SHEETS. ALL DIMENSIONS SHOWN ON THE SHEETS ARE MILLIMETERS UNLESS NOTED OTHERWISE.

1.2 THE CONTRACTOR SHALL VERIFY AND COORDINATE ALL FLOOR AND ROOF OPENING SIZES AND LOCATIONS, EQUIPMENT PAD SIZES AND LOCATIONS, ANCHOR BOLT LAYOUTS, ETC WITH EQUIPMENT SELECTED. THE CONTRACTOR SHALL MAKE ANY REQUIRED MODIFICATIONS AT NO ADDITIONAL COST.

1.3 THE CONTRACTOR SHALL REFER TO THE ARCHITECTURAL, MECHANICAL, ELECTRICAL AND PLUMBING SHEETS FOR SLEEVES, CURBS, INSERTS OR OPENINGS, ETC. NOT HEREIN INDICATED.

1.4 SLAB OPENINGS SMALLER THAN 250mm DIA TO BE CORE DRILLED IN FIELD UON. SEE MECHANICAL, ELECTRICAL AND PLUMBING SHEETS FOR LOCATIONS OF THESE OPENINGS.

1.5 WORK NOT INCLUDED ON THE SHEETS BUT IMPLIED TO BE SIMILAR TO THAT SHOWN AT CORRESPONDING PLACES ELSEWHERE ON THE SHEETS SHALL BE REPEATED.

1.6 IN CASE OF CONFLICT BETWEEN THE NOTES, DETAILS AND SPECIFICATIONS THE MOST RIGID REQUIREMENTS SHALL GOVERN.

1.7 SEE ARCHITECTURAL SHEETS FOR LOCATIONS OF MASONRY AND DRYWALL NON-LOAD BEARING PARTITIONS. PROVIDE COMPRESSIBLE FIRESAFING AT TOP OF WALL AS REQUIRED BY ARCHITECTURAL SHEETS.

1.8 COORDINATE FINISHED FLOOR DATUM ELEVATION 0.0m WITH THE CIVIL SHEETS.

2.0 FOUNDATION NOTES

2.1 THE GEOTECHNICAL ANALYSIS FOR THIS PROJECT IS THE RESPONSIBILITY OF THE CONTRACTOR AWARDED THE WORK. DESIGN VALUES USED IN THE STRUCTURAL ANALYSIS OF THE BUILDINGS HEREIN INDICATED HAVE BEEN ASSUMED AND SHALL BE CONFIRMED AND VERIFIED AS PART OF THE GEOTECHNICAL INVESTIGATION. VALUES WHICH DO NOT MEET THE REQUIREMENTS INDICATED ON SHEET S2 SHALL BE IMMEDIATELY BROUGHT TO THE ATTENTION OF THE CONTRACTING OFFICER FOR CONSIDERATION AND DETERMINATION ON THE NEXT APPROPRIATE COURSE OF ACTION.

2.2 SEE THE SPECIFICATION FOR ADDITIONAL REQUIREMENTS TO THOSE OUTLINED IN THE GEOTECHNICAL INVESTIGATION FOR EXCAVATION AND PREPARATION OF THE FOUNDATION AND THE SLAB ON GRADE SUBGRADE INCLUDING COMPACTION PROCEDURES.

2.3 EXCAVATIONS FOR FOOTINGS SHALL HAVE THE SIDES AND BOTTOMS TEMPORARILY LINED WITH 0.25mm POLYETHYLENE IF PLACEMENT OF CONCRETE DOES NOT OCCUR WITHIN 24 HRS OF THE EXCAVATION OF THE FOOTING.

2.4 FOUNDATION CONDITIONS NOTED DURING CONSTRUCTION WHICH DIFFER FROM THOSE DESCRIBED IN THE GEOTECHNICAL REPORT SHALL BE REPORTED TO THE GENERAL CONTRACTOR BEFORE FURTHER CONSTRUCTION IS ATTEMPTED. SEE PROJECT SPECIFICATIONS.

2.5 NO FOOTINGS OR SLABS SHALL BE POURED INTO OR AGAINST SUBGRADE CONTAINING FREE WATER, FROST, ICE OR LOOSE MATERIAL. FROST DEPTH ASSUMED TO BE 800MM

2.6 ALL SLAB-ON-GRADE, TRENCH BOTTOMS AND OTHER ON-GRADE INTERIOR HORIZONTAL SURFACES SHALL BE PLACED OVER A 0.25mm VAPOR RETARDER OVER A 100mm #57 STONE WATER BARRIER PLACED ON SUBGRADE PROPERLY PREPARED IN ACCORDANCE WITH THE CONTRACT SPECIFICATIONS. (UON)

2.7 SEE PLUMBING, ELECTRICAL & CIVIL SHEETS FOR REQUIRED UNDERSLAB UTILITIES.

2.8 SEE ARCHITECTURAL SHEETS FOR ALL WATERPROOFING DETAILS AND MATERIALS.

2.9 IF UNDERMINING OF FOOTINGS OCCURS, FILL VOIDS WITH 15MPa CONCRETE. DO NOT ATTEMPT TO REPLACE AND RECOMPACT SOIL.

3.0 CONCRETE

3.1 CONCRETE SHALL HAVE THE UNIT WEIGHT AND THE MINIMUM COMPRESSIVE STRENGTHS (f'c) AT 28 DAYS AS SHOWN IN THE CONCRETE MATERIALS SCHEDULE ON THIS SHEET. SEE SPECIFICATIONS FOR ADDITIONAL INFORMATION. ENTRAIN AIR TO PRODUCE TOTAL AIR CONTENT ACCORDING TO THE SPECIFICATIONS FOR CONCRETE EXPOSED TO FREEZING TEMPERATURES (EXTERIOR FOOTINGS, SLAB TURNDOWNS, EXTERIOR SLABS AND SLABS-ON-GRADE, EXTERIOR RETAINING WALLS, AND EXTERIOR GRADE BEAMS.)

3.2 GROUT FOR BASE PLATES SHALL BE NON-SHRINKABLE GROUT AND SHALL HAVE A MINIMUM SPECIFIED COMPRESSIVE STRENGTH AT 28 DAYS OF 35MPa, UNLESS NOTED OTHERWISE.

3.3 NO CALCIUM CHLORIDE SHALL BE USED IN ANY CONCRETE.

3.4 MIXING, TRANSPORTING AND PLACING OF CONCRETE SHALL CONFORM TO ACI 301M-05.

3.5 ALL CONCRETE WORK SHALL CONFORM TO THE REQUIREMENTS OF THE AMERICAN CONCRETE INSTITUTE (ACI) 318M MANUAL (metric), "BUILDING CODE REQUIREMENTS FOR REINFORCED CONCRETE", AND REQUIREMENTS OUTLINED IN THE CONTRACT SPECIFICATIONS. WHEN THERE IS A CONFLICT BETWEEN ACI AND THE SPECIFICATIONS, THE MORE STRINGENT SHALL GOVERN.

3.6 CHAMFER ALL EXPOSED EXTERNAL CORNERS OF CONCRETE WITH 20mm x45 DEGREE CHAMFER UON.

3.7 CONCRETE REINFORCEMENT BARS SHALL CONFORM TO ASTM A615M, GRADE 420, REINFORCING BARS SHALL NOT BE TACK WELDED, WELDED, HEATED OR CUT, UNLESS INDICATED ON THE CONTRACT DOCUMENTS. ALL LAP SPLICES SHALL BE CLASS "B" UON.

3.8 HORIZONTAL FOOTING AND HORIZONTAL WALL REINFORCEMENT SHALL BE CONTINUOUS AND SHALL HAVE 90 DEGREE BENDS AND EXTENSIONS, OR CORNER BARS OF EQUIVALENT SIZE LAPPED WITH A CLASS B TENSION SPLICE AT CORNERS AND INTERSECTIONS. TOP BAR CRITERIA SHALL APPLY IF 300mm OR MORE OF FRESH CONCRETE IS PLACED BELOW BAR.

3.9 SLABS-ON-GRADE SHALL HAVE CONSTRUCTION JOINTS OR CRACK CONTROL JOINTS AS SHOWN ON THE SHEETS. CONSTRUCTION JOINTS CAN BE USED AT CONTROL JOINT LOCATIONS AT CONTRACTORS OPTION. SEE SLAB PLANS & JOINT DETAILS FOR ADDITIONAL INFORMATION. FOR AREAS NOT SHOWN ON THE SHEETS, THE MAXIMUM SPACING OF CONSTRUCTION/ CRACK CONTROL JOINTS SHALL BE 4800 mm.

3.10 SEE SPECIFICATIONS FOR ALL WATERPROOFING/DAMPPROOFING REQUIREMENT.

3.11 ALL CONCRETE REINFORCEMENT SHALL BE DETAILED, FABRICATED, LABELED, SUPPORTED, AND SPACED IN FORMS AND SECURED IN PLACE IN ACCORDANCE WITH THE PROCEDURES AND REQUIREMENTS OUTLINED IN THE LATEST EDITION OF THE "BUILDING CODE REQUIREMENTS FOR REINFORCED CONCRETE", ACI 318M, AND THE "MANUAL OF STANDARD PRACTICE FOR DETAILING REINFORCED CONCRETE STRUCTURES", ACI 315M, LATEST EDITION.

3.12 SHOP DRAWINGS SHOWING REINFORCING DETAILS, INCLUDING STEEL SIZES, SPACING AND PLACEMENT, SHALL BE SUBMITTED FOR REVIEW PRIOR TO FABRICATION.

3.13 ALL DOWELS SHALL MATCH SIZE AND NUMBER OF MAIN REINFORCING, UNLESS NOTED OTHERWISE ON THE SHEETS.

3.14 ADDITIONAL BARS SHALL BE PROVIDED AROUND ALL FLOOR AND WALL OPENINGS AS SHOWN ON THE SHEETS.

3.15 SEE ARCHITECTURAL SHEETS FOR TYPE AND LOCATION OF ALL FLOOR FINISHES.

3.16 THE CONTRACTOR SHALL COORDINATE ADDITIONAL WALL/SLAB OPENINGS NOT SHOWN ON STRUCTURAL SHEETS. SEE MECHANICAL, ELECTRICAL, PLUMBING AND CIVIL SHEETS.

3.17 THE SUB-CONTRACTOR SHALL VERIFY ALL OPENINGS, PAD SIZES, AND ANCHOR BOLTS WITH EQUIPMENT SELECTED.

3.18 FOR ALL WALLS & PIERS, PROVIDE DOWELS INTO FOOTING AT EACH VERT REINF BAR, UON DOWEL SIZE SHALL BE SAME AS VERT REINF.

3.19 ALL REINFORCING INDICATED TO BE WELDED SHALL BE IN ACCORDANCE WITH ASTM A706M. "LOW ALLOY STEEL DEFORMED BARS FOR CONCRETE REINFORCEMENT". ANY INSTALLATIONS USING MANUFACTURER'S EQUIPMENT SHALL BE PER MANUFACTURER'S RECOMMENDATIONS.

3.20 PROVIDE CONCRETE POUR STOPS OR FORMED AS REQUIRED FOR INSTALLATION OF ALL CONCRETE WORK.

3.21 PROVIDE ADDITIONAL (2)-#13 x 600mm REINFORCING BARS IN SLAB-ON GRADE AT ALL RE-ENTRANT CORNERS. PLACE BARS AT MID-DEPTH OF SLAB WITH A CLEARANCE OF 50mm FROM CORNER UON.

4.0 CONCRETE MASONRY

4.1 MASONRY CONSTRUCTION AND MATERIALS SHALL CONFORM TO ALL REQUIREMENTS OF THESE CONTRACT DOCUMENTS AND THE PROJECT SPECIFICATIONS.

4.2 THE SPECIFIED ULTIMATE COMPRESSIVE STRENGTH OF CONCRETE MASONRY (f'm) ON THE NET AREA IS A MINIMUM OF 10.4 MPa.

4.3 PROVIDE TWO #16 BARS CONTINUOUS IN ALL CMU AND CAST-IN-PLACE BOND BEAMS UON ON THE SHEETS. BOND BEAMS SHALL BE CONTINUOUS AND SPACED AT A MAXIMUM OF 1200mm OC VERTICALLY. PROVIDE BOND BEAM STARTER COURSE AT BOTTOM OR FIRST COURSE ON ALL MASONRY WALLS AND PARTITIONS. ALL BOND BEAMS SHALL BE A MINIMUM OF 200mm IN DEPTH WITH REINFORCING BEING CONTINUOUS AND HAVING STANDARD ACI 180° HOOKS AT EACH END. PROVIDE STANDARD BAR SPLICES AS SPECIFIED.

4.4 FOR WALL REINFORCING, SEE DETAIL 7 ON SHEET S5

4.5 CMU CELLS THAT REQUIRE VERTICAL REINFORCING BARS AS INDICATED ON THE CONTRACT DRAWINGS AND/OR SPECS SHALL HAVE REINF BARS PLACED IN CENTERS OF CMU CELLS AND CONTINUOUSLY GROUTED UON.

4.6 PROVIDE LADDER TYPE JOINT REINFORCEMENT AT (200mm EXTERIOR & 400mm INTERIOR) ON CENTER MAXIMUM UON MINIMUM ROD SIZE USED SHALL BE 9 GA. DEFORMED WIRE AND CONFORM TO ASTM A82M, UON.

4.7 PROVIDE CONTROL JOINTS AS INDICATED ON THE ARCHITECTURAL SHEETS.

4.8 GROUT FOR MASONRY SHALL BE NORMAL WEIGHT AND HAVE A MINIMUM COMPRESSIVE STRENGTH OF 25 MPa AT 28 DAYS. GROUT SHALL CONFORM TO ASTM C476M. GROUT LIFTS SHALL NOT EXCEED 1400mm.

4.9 USE MORTAR TYPE S CONFORMING TO ASTM C270M, SEE SPECIFICATIONS.

4.10 CONCRETE MASONRY UNITS SHALL BE NORMAL WEIGHT AND CONFORM TO ASTM C90M.

4.11 ALL CMU CELLS, OPEN CAVITIES, AND AIR SPACES SHALL BE GROUTED TO STOP FRAGMENTS FROM MORTAR BLAST

4.12 BOND BEAM REINFORCING SHALL BE DISCONTINUOUS AT CONTROL JOINTS (UON). MAXIMUM CONTROL JOINT SPACING SHALL BE AS INDICATED ON THE ARCHITECTURAL SHEETS.

4.13 CONTRACTOR SHALL COORDINATE LOCATION OF ALL OPENINGS SEE ARCH, MECH, ELEC, AND PLUMBING SHEETS. FOR SIZE AND LOCATION OF OPENINGS.

4.14 MASONRY WALLS SHALL NOT BE BACK FILLED PRIOR TO THE MORTAR AND GROUT ATTAINING THEIR RESPECTIVE MAXIMUM DESIGN STRENGTHS PER SPECIFICATIONS.

5.0 CFMRF – COLD FORM METAL ROOF FRAMING SYSTEM

5.1 CFMF SHALL BE DESIGNED BY CFMF MANUFACTURER'S ENGINEER FOR ALL LOADING PER CODE AND AS INDICATED ON THE SHEETS.

5.2 FOR WIND LOADS, SEE THE DESIGN CRITERIA ON SHEET S2.

5.3 SUBMIT VENDOR'S PUBLISHED LITERATURE, TEST DATA AND INSTALLATION INSTRUCTIONS FOR METAL STUD ASSEMBLY AND ACCESSORIES INCLUDING OTHER DATA AS MAY BE REQUIRED TO CERTIFY COMPLIANCE WITH PERFORMANCE REQUIREMENTS SPECIFIED HEREIN.

5.4 SHOP DRAWINGS AND DESIGN ANALYSIS SHALL BE STAMPED AND APPROVED BY A LICENSED PROFESSIONAL ENGINEER.

5.5 CONNECTIONS AND GAUGE SIZES ARE MINIMUM AND SHALL BE INCREASED AS NECESSARY TO PROVIDE A STRUCTURALLY ADEQUATE SYSTEM. KICKERS MAY BE ADDED TO REDUCE THE STUD HEIGHTS WHERE ACCEPTABLE AND COORDINATED WITH THE ARCHITECTURAL DRAWINGS.

5.6 CRMRF SHALL HAVE THE FOLLOWING MINIMUM PROPERTIES:

STUD/RAFTER/EAVE STRUT/BRACE/BLOCKING:
Fy = 344 MPa
GAUGE = 18
DEPTH = 152.3 mm
WIDTH = 34.8 mm
MOMENT OF INERTIA, Ix = 847×10^3 mm^4
SECTION MODULUS, Sx = 11.2×10^3 mm^3

TRACK:
Fy = 344 MPa
GAUGE = 16
DEPTH = 152.3 mm
WIDTH = 38 mm
MOMENT OF INERTIA, Ix = 1083×10^3 mm^4
SECTION MODULUS, Sx = 13.8×10^3 mm^3

PURLIN/SUBGIRT:
Fy = 393 MPa
GAUGE = 16
MOMENT OF INERTIA (TOP COMPRESSION), Ixt = 23.7×10^3 mm^4
MOMENT OF INERTIA (BOTT COMPRESSION), Ixb = 22.7×10^3 mm^4
SECTION MODULUS (TOP COMPRESSION), Sxt = 1.8×10^3 mm^3
SECTION MODULUS (BOTT COMPRESSION), Sxb = 1.7×10^3 mm^3

MINIMUM LAP SPLICES OF REINFORCING BARS IN TENSION (PER ACI 318M-05)

f'c = 28 MPa CONCRETE

BAR SIZE \ CENTER TO CENTER BAR SPACING	(---TOP BARS--) LESS THAN 4db	(---TOP BARS--) 4db OR MORE	(--OTHER BARS--) LESS THAN 4db	(--OTHER BARS--) 4db OR MORE	4db
#10	460	460	410	410	40
#13	660	610	510	480	50
#16	1020	760	790	580	60

NOTES:

1. LAP SPLICES ABOVE ARE IN MILLIMETERS UON.
2. YIELD STRENGTH OF REINFORCEMENT, fy, IS 420MPa (LAP SPLICE LENGTH IS IN MILLIMETERS).
3. CONCRETE IS NORMAL WEIGHT (2400Kg/m^3).
4. TOP BAR INDICATES HORIZONTAL REINFORCEMENT WHICH IS PLACED ABOVE 300mm OR MORE OF FRESH CONCRETE.
5. SEE COLUMN SCHEDULE FOR COLUMN AND SHEAR WALL VERTICAL LAP SPLICE.
6. STRAIGHT DEVELOPMENT LENGTH OF AN UNLAPPED BAR IS EQUAL TO VALUE FROM TABLE DIVIDED BY 1.3.
7. CATEGORY FOR BARS SPACED LESS THAN 4d, OR ON CENTER CORRESPONDS TO CATEGORY 1 IN THE CRSI HANDBOOK WHEREAS FOR BARS SPACED 4d, OR MORE ON CENTER CORRESPOND TO CRSI CATEGORY 5.

CONCRETE MATERIALS SCHEDULE

STRUCTURAL ELEMENT	f'c CONCRETE COMPRESSIVE STRENGTH @ 28 DAYS (MPa)
SLAB-ON-GRADE/TURN-DOWN SLABS	28
ROOF AND FLOOR SLABS	28
ALL FOOTINGS (UON)	28
MISC. CURBS, WALLS AND PADS UON	28
CAST-IN-PLACE LINTEL	28

NOTES:
1. ALL CONCRETE SHALL BE NORMAL WEIGHT CONCRETE. (2400 Kg/m^3 UON)
2. ALL CONCRETE SHALL HAVE A WATER-CEMENT RATIO OF 0.45.

MASONRY REINFORCING MINIMUM LAP SPLICES

BAR SIZE	BASIC LAP SPLICE Ld FOR CMU REINFORCING(mm)
#10	450
#13	600
#16	750

STANDARD HOOKS IN TENSION PER (ACI 318M-05)

HOOK DEVELOPMENT LENGTH Ldh (mm)	
BAR SIZE	f'c 28 MPa
#10	180
#13	250
#16	300
#19	380
#22	430
#25	480
#29	560
#32	610
#36	690

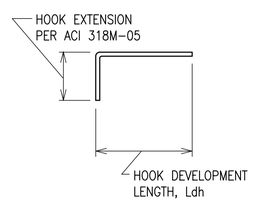

NOTES:

1. CONCRETE IS NORMAL WEIGHT CONCRETE.
2. BAR YIELD STRENGTH, fy = 420 MPa
3. SIDE COVER REQUIREMENTS OF ACI SECT. 12.5.3 ARE ASSUMED TO NOT BE MET.
4. TIE OR STIRRUP REQUIREMENTS OF ACI SECT. 12.5.3 ARE ASSUMED TO NOT BE MET.
5. REDUCTION FOR EXCESS REINFORCEMENT IS NOT TAKEN.
6. HOOK DEVELOPMENT LENGTH IS VALID FOR 180° HOOKS ALSO.

US Army Corps of Engineers
Afghanistan Engineer District

SYMBOL	DESCRIPTION	DATE	APR

DESIGNED BY: GDH | DATE: 09-30-09
DWN BY: MDB | SUBMITTED BY: BAKER
CHK BY: CWW | FILE NO.: ANPSDS-001XXX

Michael Baker Jr., Inc.
A unit of Michael Baker Corporation
Airside Business Park
100 Airside Drive
Moon Township, PA 15108
www.mbakercorp.com

AFGHAN NATIONAL POLICE
STANDARD DESIGN
GUARD SHACK

GENERAL NOTES

SHEET REFERENCE NUMBER:
S1

100% SUBMISSION

STRUCTURAL DESIGN CRITERIA

ALL DESIGNS SHALL CONFORM TO THE PROVISIONS OF THE IBC 2006 AS APPLICABLE

1.0 DESIGN LOADS

1.1 DEAD LOADS

1.1.1 ROOF DEAD LOADS – CONVENTIONAL FRAMING

	MAXIMUM GRAVITY LOAD	MINIMUM GRAVITY LOAD
LIGHT GAUGE FRAMING	0.20 KPa	0.15 KPa
METAL ROOFING	0.14 KPa	0.05 KPa
INSULATION	0.10 KPa	0.05 KPa
MISC	0.05 KPa	0.00 KPa
	0.49 KPa	0.25 KPa

1.1.2 ROOF DEAD LOADS – CONCRETE FRAMING

	MAXIMUM GRAVITY LOAD
CONC FLAT SLAB	4.80 KPa
MECH/ELEC/PLUMBING	0.15 KPa
MISC	0.05 KPa
	5.00 KPa

1.2 LIVE LOADS (PER IBC 2006)

1.2.1 ROOF LIVE LOADS: ALL BUILDINGS

GREATER OF 1.0 KPa MINIMUM OR SNOW LOAD

1.2.2 SLAB-ON-GRADE LIVE LOADS

ALL BUILDINGS 4.80 KPa

1.3 SNOW LOADS (PER IBC 2006)

1.3.1 DESIGN PARAMETERS

GROUND SNOW LOAD (per UFC 3-310-01)	PER LOCAL CONDITION
SNOW IMPORTANCE FACTOR	1.0 KPa
SNOW EXPOSURE FACTOR	1.0 KPa

1.4 SEISMIC LOADS (PER IBC 2006 & UFC 3-310-04)

1.4.1 SEISMIC PARAMETERS – LOAD BEARING MASONRY

SEISMIC OCCUPANCY CATEGORY	II
SEISMIC IMPORTANCE FACTOR (I)	1.0
SEISMIC SITE CLASS	D
Ss	1.280
S1	0.510
Sds	0.853
Sd1	0.510
SEISMIC DESIGN CATEGORY	D
SEISMIC RESISTING SYSTEM	BEARING WALL SYSTEM SPECIAL REINF MASONRY SHEAR WALLS
RESPONSE MODIFICATION FACTOR (R)	5.0
RESPONSE COEFFICIENT (Cs)	0.120
SEISMIC ANALYTICAL PROCEDURE	EQUIV LATERAL FORCE
SEISMIC BASE SHEAR	44.5kN

1.6 WIND LOADS (PER IBC 2006)

1.6.1 DESIGN PARAMETERS

BASIC WIND SPEED	137 Km/h
WIND IMPORTANCE FACTOR	1.0
WIND EXPOSURE CATEGORY	D
DIRECTIONALITY COEFFICIENT (Kd)	0.85
TOPOGRAPHIC FACTOR (Kzt)	1.0

1.6.2 DESIGN WIND PRESSURE – MAIN WINDFORCE RESISTING SYSTEM

LOCATION	CORNER ZONE WIDTH "a"	MEAN ROOF HEIGHT "h"	WINDWARD WALL (@ MEAN ROOF HEIGHT)	LEEWARD WALL (@ MEAN ROOF HEIGHT)	ROOF
FIELD ZONE	N/A	3405mm	582 N/m^2	−463 N/m^2	−803 N/m^2
CORNER ZONE	1440mm	3405mm	883 N/m^2	−689 N/m^2	−1244 N/m^2

a = 10% OF LEAST HORIZONTAL DIMENSION OR 0.4h, WHICHEVER IS SMALLER, BUT NOT LESS THAN EITHER 4% OF LEAST HORIZONTAL DIMENSION OR 0.9M.
h = MEAN ROOF HIEGHT, IN METERS, EXCEPT THAT EAVE HIEGHT SHALL BE USED FOR ANGLE GREATER THAN 10°.

1.6.3 DESIGN WIND PRESSURE – WALL COMPONENTS AND CLADDING

EXTERIOR WALL SYSTEMS & THEIR ATTACHMENTS TO THE PRIMARY STRUCTURE SHALL BE DESIGNED FOR THE PRESSURES SHOWN IN THE DIAGRAM BELOW:

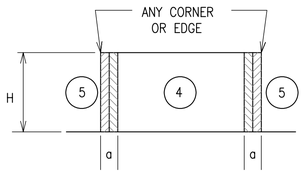

LOCATION	WINDWARD PRESSURE N/m^2 (inward)		LEEWARD PRESSURE N/m^2 (outward)		a
	4	5	4	5	
MAIN BUILDING					(mm)
AREA = 1 m^2	627	627	−986	−1216	900
AREA = 2 m^2	589	589	−948	−1134.8	900
AREA = 5 m^2	565	565	−910	−1086.9	900
AREA = 10 m^2	565	565	−910	−1086.9	900

NOTES:
1. DESIGN WIND PRESSURES ABOVE REPRESENT THE NET PRESSURE (SUM OF INTERNAL AND EXTERNAL PRESSURE) APPLIED NORMAL TO ALL SURFACES.
2. LINEAR INTERPOLATION BETWEEN VALUES OF TRIBUTARY AREA IS PERMISSIBLE.
3. PLUS AND MINUS SIGNS SIGNIFY PRESSURE TOWARD AND AWAY FROM THE EXTERIOR SURFACE, RESPECTIVELY.

1.6.4 DESIGN WIND PRESSURE – ROOF COMPONENTS AND CLADDING

ROOF COMPONENTS & THEIR ATTACHMENTS SHALL BE DESIGNED FOR THE PRESSURES SHOWN IN THE ADJACENT DIAGRAM & TABLE BELOW:

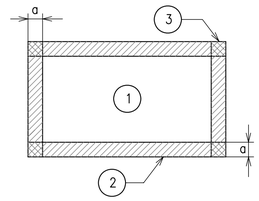

ROOF MEAN HEIGHT

1.6 WIND LOADS (CON'T)

LOCATION	GROSS UPLIFT PRESSURE N/m^2 (upward)			a
	1	2	3	
MAIN BUILDING				(mm)
AREA = 1 m^2	−838	−1460	−1460	900
AREA = 2 m^2	−838	−1460	−1460	900
AREA = 5 m^2	−838	−1460	−1460	900
AREA = 10 m^2	−838	−1460	−1460	900

NOTES:
1. DESIGN WIND PRESSURES ABOVE REPRESENT THE NET PRESSURE (SUM OF INTERNAL AND EXTERNAL PRESSURE) APPLIED NORMAL TO ALL SURFACES.
2. LINEAR INTERPOLATION BETWEEN VALUES OF TRIBUTARY AREA IS PERMISSIBLE.
3. PLUS AND MINUS SIGNS SIGNIFY PRESSURE TOWARD AND AWAY FROM THE EXTERIOR SURFACE, RESPECTIVELY.

2.0 FOUNDATION DESIGN CRITERIA (TO BE CONFIRMED BY THE CONTRACTOR)

THE GEOTECHNICAL ANALYSIS FOR THIS PROJECT IS THE RESPONSIBILITY OF THE CONTRACTOR AWARDED THE WORK. DESIGN VALUES USED IN THE STRUCTURAL ANALYSIS OF THE BUILDINGS HEREIN INDICATED HAVE BEEN ASSUMED AND SHALL BE CONFIRMED AND VERIFIED AS PART OF THE GEOTECHNICAL INVESTIGATION. VALUES WHICH DO NOT MEET THE REQUIREMENTS INDICATED BELOW SHALL BE IMMEDIATELY BROUGHT TO THE ATTENTION OF THE CONTRACTING OFFICER FOR CONSIDERATION AND DETERMINATION ON THE NEXT APPROPRIATE COURSE OF ACTION.

2.1.1 SOIL DESIGN PARAMETERS

NET ALLOWABLE SOIL BEARING CAPACITY	96.0 KPa
UNIT WEIGHT OF SOIL (moist)	1800 Kg/m^3
COEFF ACTIVE EARTH PRESSURE (Kpa)	0.30
COEFF PASSIVE EARTH PRESSURE (Kpp)	3.33
COEFF AT-REST EARTH PRESSURE (Kpr)	.55
COEFF OF SOIL FRICTION	.35
SUBGRADE MODULUS	4120 g/m^3
MINIMUM BEARING DEPTH BELOW GRADE	800mm
SEISMIC SITE CLASS (based on in-situ soil)	D

CMU LINTEL SCHEDULE

OPENING TYPE OR SIZE, BEAM LOCATION OR TYPE	MAX SPAN (mm)	BEAM DEPTH (mm)	MAIN REINFORCING			SHEAR REINF STIRRUPS
			TOP	BOTTOM	OTHER	
EXT WINDOW OR DOOR	900	400	(2)-#13	(2)-#13		----
INT WALL OPENING, NON-BEARING	1800	400		(2)-#13		----
INT WALL OPENING, NON-BEARING	900	200		(2)-#13		----

1. STRUCTURAL DRAWINGS DO NOT INDICATE ALL OPENINGS IN MASONRY WALLS. VERIFY NUMBER, SIZE AND LOCATION OF ALL OPENINGS IN MASONRY WALLS FROM ARCHITECTURAL SHEETS AND APPROVED PLUMBING, MECHANICAL, AND ELECTRICAL SHOP DRAWINGS.
2. PROVIDE 200mm BEARING EA END FOR 200mm DEEP CMU LINTEL. PROVIDE 400mm BEARING EA END FOR 400mm DEEP CMU LINTEL.
3. FOR HEAD DETAILS REFER TO ARCHITECTURAL SHEETS.
4. REINFORCING SHALL BE ASTM A615M, GRADE 420. CONCRETE FOR CAST-IN-PLACE BOND BEAMS SHALL HAVE A MINIMUM COMPRESSIVE STRENGTH OF 28 MPa AT 28 DAYS.
5. CONTRACTOR SHALL SUBMIT FOR APPROVAL SHOP DRAWINGS AND SCHEDULES SHOWING SIZE, DETAILS, LOCATIONS, ETC FOR ALL CAST-IN-PLACE BEAMS IN CMU WALLS.

CONCRETE COVER SCHEDULE

MINIMUM CONCRETE COVER PROTECTION FOR REINFORCEMENT BARS SHALL BE AS FOLLOWS: (SEE ACI 318M-05, SECTION 7.7 FOR CONDITIONS NOT NOTED). DIMENSIONS FOR BAR PLACEMENT GIVEN IN SECTIONS AND DETAILS SHALL SUPERSEDE MINIMUM COVER REQUIREMENTS GIVEN HERE. DIMENSIONS ARE IN mm.

FOOTINGS (EARTH FORMED)		70
COLUMNS / PIERS (TO TIES)		40
GRADE BEAMS OR SLAB TURNED DOWN EDGES:		
TOP		40
BOTTOM (EARTH FORMED)		70
SIDES (EARTH FORMED)		70
SIDES (BOARD FORMED)	#16 BAR & SMALLER	40
	#19 THRU #36 BAR	50
ELEVATED BEAMS & SLABS:		
BEAM TIES & STIRRUPS (NOT EXPOSED TO WEATHER)		40
BEAM TIES & STIRRUPS (EXPOSED TO WEATHER)		50
FLOOR SLABS (NOT EXPOSED TO WEATHER)		20
FLOOR SLABS (EXPOSED TO WEATHER)		
#19 & LARGER		50
#13 & SMALLER		40
ROOF SLAB BARS		25
SLABS-ON-GRADE (NO EXPOSURE TO WEATHER) FROM TOP		20
SLABS-ON-GRADE (EXPOSURE TO WEATHER) FROM TOP		40
UTILITY TUNNEL WALLS, RETAINING WALLS AND SHEAR WALLS, (NO SURFACES SHALL BE EARTH FORMED) EARTH SIDE AND FRONT SIDE (EXPOSED TO WEATHER):		
#16 BAR AND SMALLER		40
#19 THRU #36 BAR		50

PROVIDE STANDARD BAR CHAIRS AND SPACERS AS REQUIRED TO MAINTAIN CONCRETE PROTECTION SPECIFIED.

US Army Corps of Engineers
Afghanistan Engineer District

SYMBOL	DESCRIPTION	DATE	APR

DESIGNED BY: GDH
DWN BY: MDB
CHK BY: CWW
DATE: 09-30-09
SUBMITTED BY: BAKER
FILE NO.: ANPSDS-002XXX

Michael Baker Jr., Inc
A unit of Michael Baker Corporation
Airside Business Park
100 Airside Drive
Moon Township, PA 15108
www.mbakercorp.com

AFGHAN NATIONAL POLICE
STANDARD DESIGN
GUARD SHACK

DESIGN CRITERIA & SCHEDULES

SHEET REFERENCE NUMBER:
S2

100% SUBMISSION

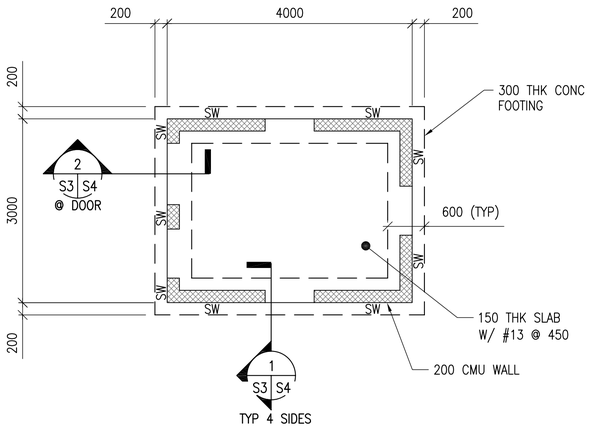

1 S3 S3 FOUNDATION/SLAB PLAN

SCALE: 1:50

N

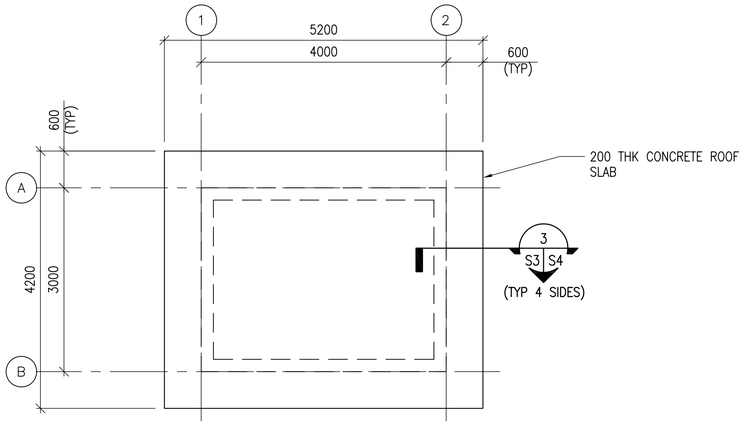

2 S3 S3 ROOF FRAMING PLAN

SCALE: 1:50

N

NOTES:

1. FINISH FIRST FLOOR ELEVATION SHALL BE (DATUM 0.0) ALL PLUS OR MINUS DIMENSIONS INDICATED ON PLAN OR REFERRED TO IN NOTES RELATE TO FINISH FIRST FLOOR ELEVATION.
2. TOP OF EXTERIOR FOOTINGS SHALL BE –600 UNLESS OTHERWISE INDICATED.
3. UNLESS OTHERWISE INDICATED, FLOORS SHALL BE 150 THICK CONCRETE SLAB–ON–GRADE W/ 13 DIA REBAR @ 450 OC EW (38 CLR TOP) OVER 100 COMPACTED POROUS FILL (#57 STONE)
4. REFER TO SHEETS S1 & S2 FOR STRUCTURAL NOTES, ABBREVIATIONS AND SYMBOLS.
5. REFER TO ARCHITECTURAL SHEETS FOR MASONRY PARTITION TYPES AND SHEET S5 FOR REINFORCEMENT.
6. SEE MECHANICAL AND ELECTRICAL SHEETS FOR CONCRETE PAD LOCATIONS, SIZES, AND THICKNESS NOT SHOWN. SEE SHEET S5 FOR DETAILS.
7. REFER TO SHEET S5 FOR TYPICAL MASONRY WALL DETAILS.
8. COORD W/ ARCHITECTURAL SHEETS FOR COLD–FORMED STEEL OVERBUILT FRAMING ABOVE ROOF SLAB.
9. COLD–FORMED METAL OVERBUILT ROOF FRAMING NOT SHOWN FOR CLARITY. SEE FRAMING DETAILS AND SECTIONS ON SHEET S4.
10. "SW#" DENOTES MASONRY SHEAR WALL LOCATIONS. SEE "SPECIAL REINFORCED MASONRY SHEAR WALL ELEVATION ON SHEET S5 FOR REINFORCEMENT INFORMATION.

UNLESS OTHERWISE NOTED, LINEAR DIMENSIONS SHOWN ARE IN MILLIMETERS (MM)

0 1000 2000 4000

SCALE: 1: 50

US Army Corps of Engineers

Afghanistan Engineer District

SYMBOL	DESCRIPTION	DATE	APR

DESIGNED BY: GDH	DATE: 09–30–09
DWN BY: MDB	SUBMITTED BY: BAKER
CHK BY: CWW	FILE NO.: ANPSDS–103XXX

Michael Baker Jr., Inc
A unit of Michael Baker Corporation
Airside Business Park
100 Airside Drive
Moon Township, PA 15108
www.mbakercorp.com

AFGHAN NATIONAL POLICE
STANDARD DESIGN
GUARD SHACK

FOUNDATION & ROOF FRAMING PLANS

SHEET REFERENCE NUMBER:

S3

100% SUBMISSION

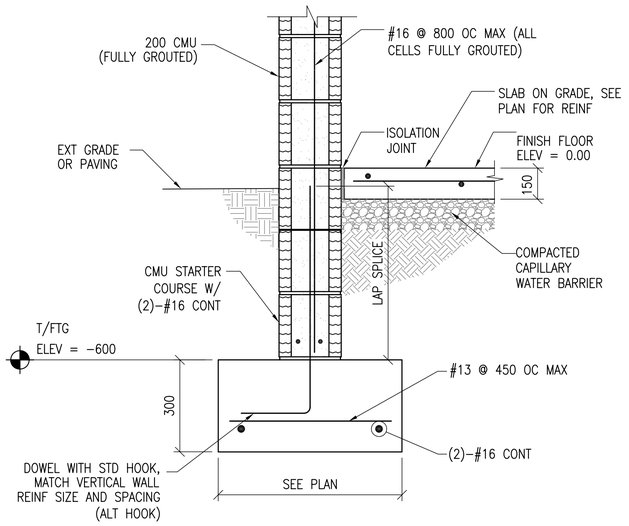

1 S3 S4 SECTION
SCALE: 1:10

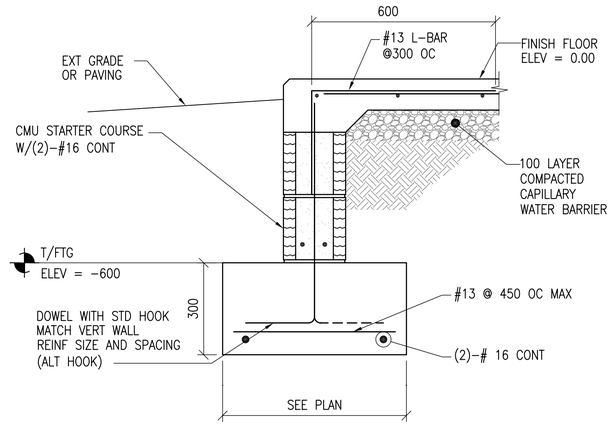

2 S3 S4 SECTION
SCALE: 1:10

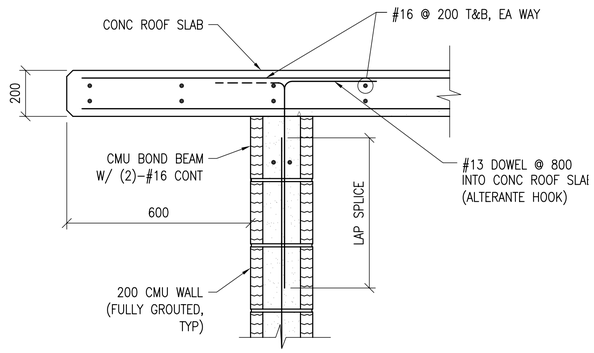

3 S3 S4 SECTION
SCALE: 1:10

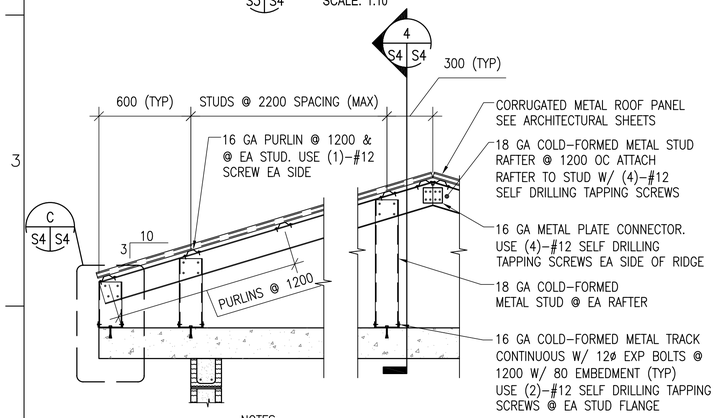

NOTES:
1. SEE NOTES ON SHEET S1 FOR OVERBUILT ROOF FRAMING MEMBER SECTION PROPERTY MINIMUM REQUIREMENTS
2. AT END OF BLDG PROVIDE TRANSVERSE BRACE @ 2400 OC & @ END BAYS SIMILAR TO LONGITUDINAL BRACING
3. SECTION THROUGH END OF BLDG IS SIMILAR EXCEPT HIP

A S4 S4 TYPICAL OVERBUILT ROOF FRAMING DETAIL
SCALE: 1:20

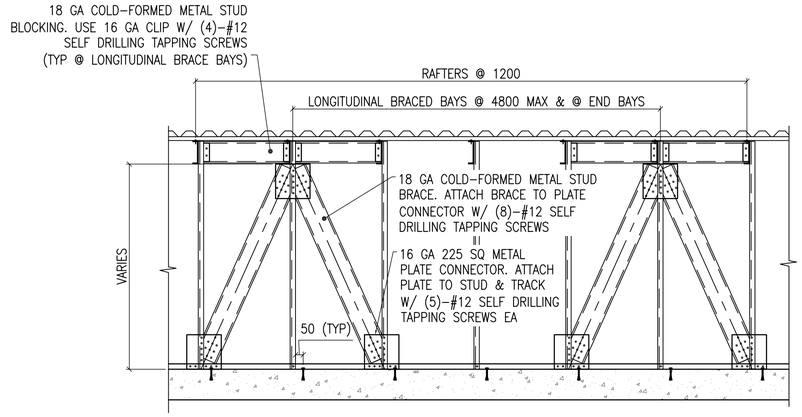

4 S4 S4 SECTION
SCALE: NTS

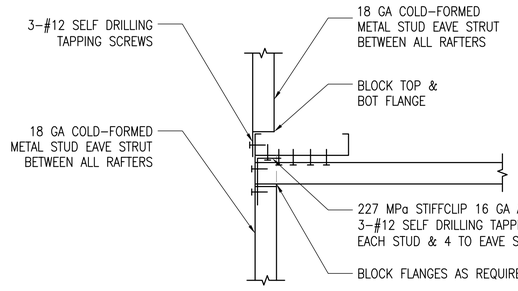

5 S4 S4 SECTION
SCALE: 1:5

DETAIL NOTE:
AT END OF BLDG PROVIDE TRANSVERSE BRACE @ 2400 OC & @ END BAYS SIMILAR TO LONGITUDINAL BRACING

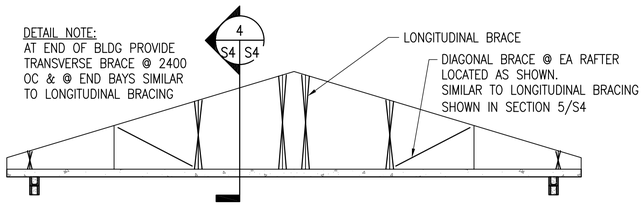

B S4 S4 TYPICAL ROOF BRACE LAYOUT DETAIL
SCALE: NTS

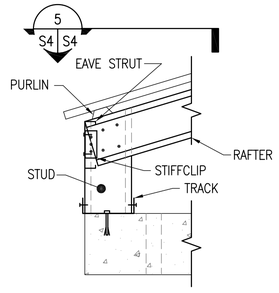

C S4 S4 DETAIL
SCALE: 1:10

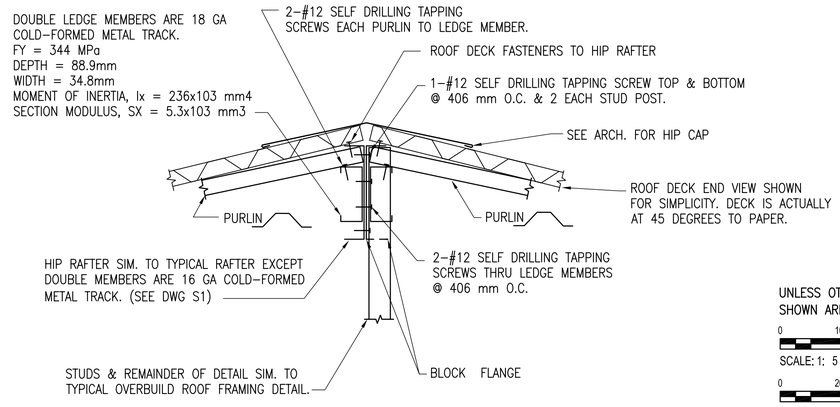

TYPICAL HIP FRAMING DETAIL
SCALE: 1:5

UNLESS OTHERWISE NOTED, LINEAR DIMENSIONS SHOWN ARE IN MILLIMETERS (MM)

0 100 200 400
SCALE: 1: 5

0 200 400 800
SCALE: 1: 10

0 400 800 1600
SCALE: 1: 20

US Army Corps of Engineers
Afghanistan Engineer District

SYMBOL	DESCRIPTION	DATE	APR

DESIGNED BY: GDH
DATE: 09-30-09
DWN BY: MDB
SUBMITTED BY: BAKER
CHK BY: CWW
FILE NO.: ANPSDS-304XXX

Michael Baker Jr., Inc
A unit of Michael Baker Corporation
Airside Business Park
100 Airside Drive
Moon Township, PA 15108
www.mbakercorp.com

AFGHAN NATIONAL POLICE
STANDARD DESIGN
GUARD SHACK

SECTIONS AND DETAILS

SHEET REFERENCE NUMBER:
S4

100% SUBMISSION

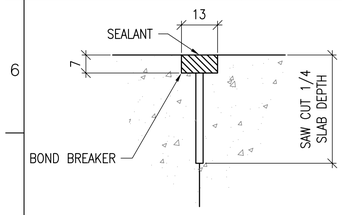

CONTROL JOINT DETAIL

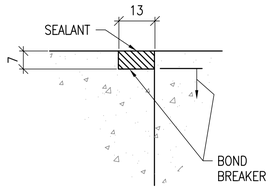

CONSTRUCTION JOINT DETAIL

TYPICAL CONCRETE SLAB JOINT FINISH DETAIL

1 / S5

SCALE: NTS

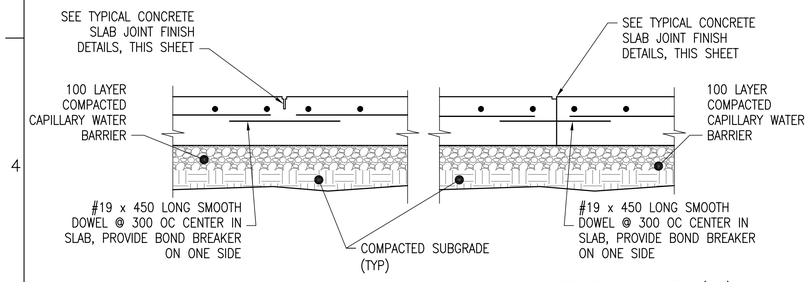

CONTROL JOINT DETAIL (CTJ)

CONSTRUCTION JOINT DETAIL (CSJ)

TYPICAL SLAB ON GRADE JOINT DETAILS

2 / S5

SCALE: NTS

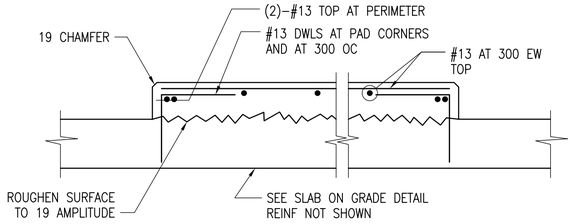

INTERIOR EQUIPMENT PAD DETAIL

3 / S5

SCALE: NTS

DETAIL NOTE:

1. COORDINATE EQUIPMENT PAD SIZE AND LOCATIONS W/ ELECTRICAL/MECHANICAL SHEETS AND EQUIPMENT MANUFACTURER.

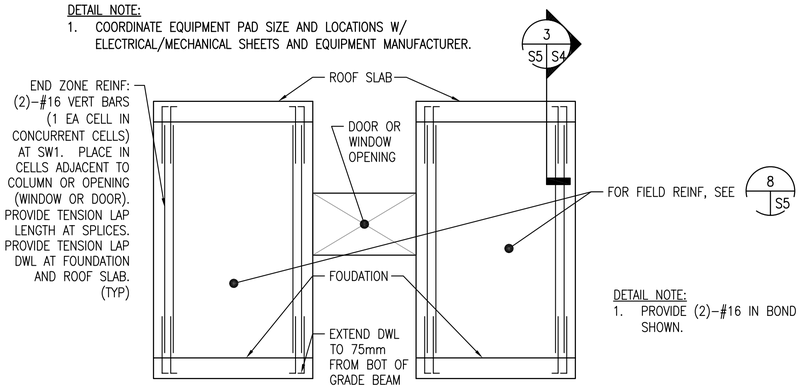

DETAIL NOTE:

1. PROVIDE (2)–#16 IN BOND BEAMS AT 1200 OC, NOT SHOWN.

SPECIAL REINFORCED MASONRY SHEAR WALL ELEVATION

4 / S5

SCALE: NTS

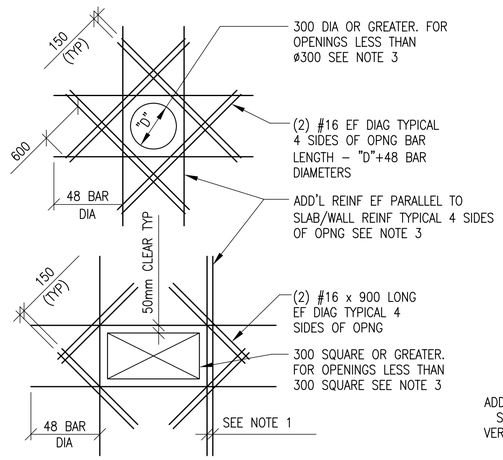

SLAB OPENINGS

ADD'L REINFORCEMENT DETAILS

5 / S5

SCALE: NTS

DETAIL NOTES:

1. WHERE MORE THAN ONE ADDITIONAL BAR IS REQUIRED PARALLEL TO THE EXISTING SLAB/WALL REINFORCING THE ADDITIONAL REINFORCING BARS SHALL BE SPACED AT 100 ON CENTER.
2. ADDITIONAL REINFORCING PARALLEL TO THE SLAB/WALL REINFORCING SHALL BE #15 BARS THAT PROVIDE A STEEL AREA ON EACH SIDE OF THE OPENING EQUAL TO 1/2 THE AREA OF THE REINFORCING CUT BY THE OPENING.
3. FOR OPENINGS WITH SIDES OR DIAMETERS LESS THAN 300 SPREAD THE SLAB/WALL REINFORCING TO CLEAR THE OPENING.

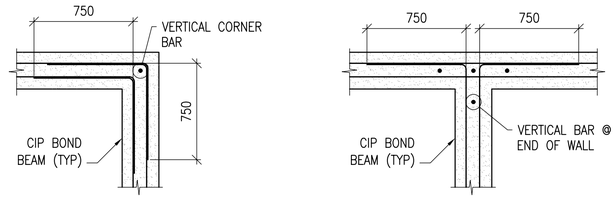

BOND BEAM CORNER

BOND BEAM INTERSECTION

CIP BOND BEAM DETAILS

6 / S5

SCALE: NTS

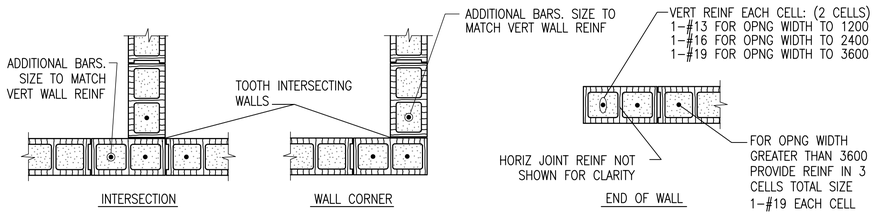

INTERSECTION

WALL CORNER

END OF WALL

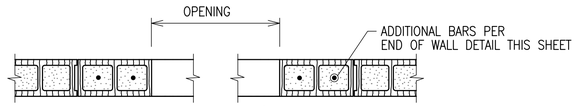

MASONRY OPENING W/ LINTEL

NOTES:

1. OPENING WIDTH SHALL NOT EXCEED 3600 FOR THIS TYPE OF JAMB
2. ALL CELLS FULLY GROUTED

TYPICAL CMU DETAILS

7 / S5

SCALE: NTS

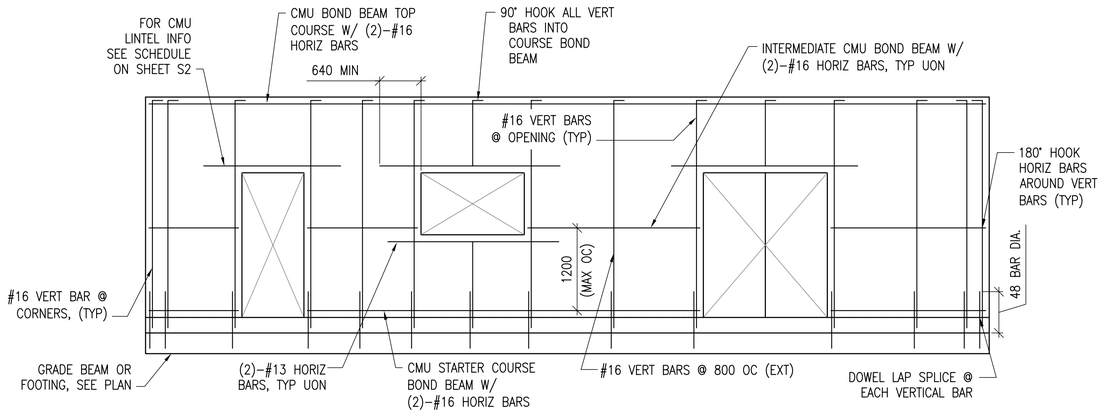

MIN CMU WALL REINFORCING

8 / S5

SCALE: NTS

UNLESS OTHERWISE NOTED, LINEAR DIMENSIONS SHOWN ARE IN MILLIMETERS (MM)

US Army Corps of Engineers

Afghanistan Engineer District

SYMBOL	DESCRIPTION	DATE	APR

DESIGNED BY: GDH
DWN BY: RCG
CHK BY: CWW
DATE: 09-30-09
SUBMITTED BY: BAKER
FILE NO.: ANPSDS-505XXX

Michael Baker Jr., Inc
A unit of Michael Baker Corporation
Airside Business Park
100 Airside Drive
Moon Township, PA 15108
www.mbakercorp.com

AFGHAN NATIONAL POLICE
STANDARD DESIGN
GUARD SHACK

TYPICAL DETAILS

SHEET REFERENCE NUMBER:

S5

100% SUBMISSION

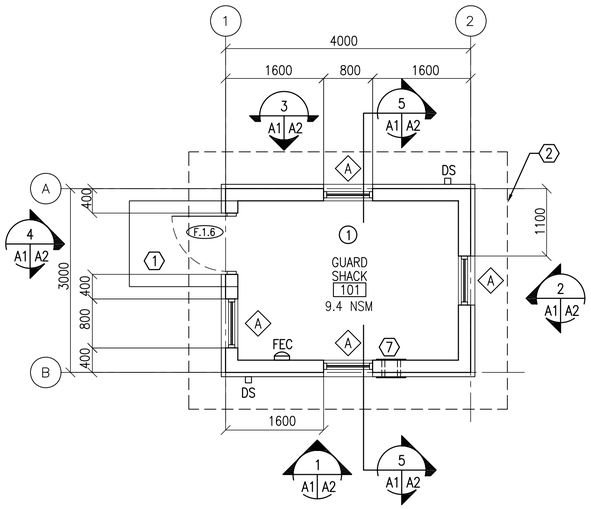

FLOOR PLAN

1 | A1 A1

SCALE: 1:50
12.0 GSM

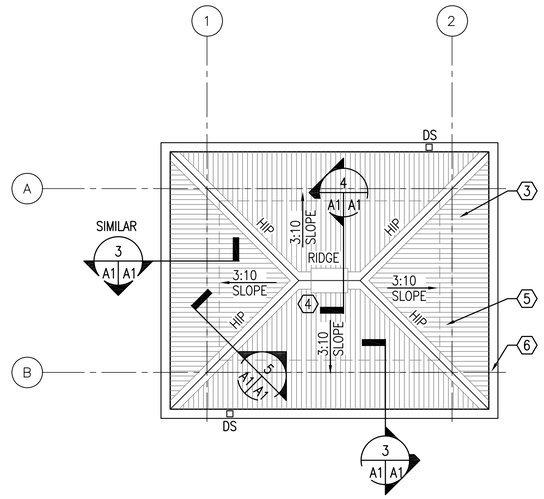

ROOF PLAN

2 | A1 A1

SCALE: 1:50

GENERAL NOTES:

A. OPENINGS FOR DOORS SHALL BE LOCATED 200 MM FROM THE ADJACENT WALL UNLESS NOTED OTHERWISE

B. SURFACES TO BE PAINTED SHALL BE CLEAN AND FREE OF FOREIGN MATTER BEFORE APPLICATION OF PAINT. CLEANING SHALL BE SCHEDULED SO THAT DUST AND OTHER CONTAMINANTS WILL NOT FALL ON WET, NEWLY PAINTED SURFACES.

C. CONCRETE AND INTERIOR MASONRY SURFACES GROUTED SOLID SHALL BE ALLOWED TO DRY AT LEAST 30 DAYS BEFORE PAINTING EXCEPT CONCRETE SLAB ON GRADE WHICH SHALL BE ALLOWED TO CURE 90 DAYS BEFORE PAINTING.

D. PAINTS CONTAINING LEAD IN EXCESS OF 0.06 PERCENT BY WEIGHT OF THE TOTAL NONVOLATILE CONTENT SHALL NOT BE USED.

E. MERCURIAL FUNGICIDES SHALL NOT BE USED IN OIL–BASE PAINT.

F. REMOVE LOOSE DIRT AND CLEAN SURFACES BEFORE PAINTING. APPLY PAINT TO INTERIOR STRUCTURAL RIGID FRAMINGS AND CEILINGS AND TEST FOR ADHESION. PRIMER COAT FOR MASONRY. INITIAL FIRST COAT WITH AN ACRYLIC LATEX PAINT FOR EXTERIOR SURFACES AND A SECOND COAT WITH A WATER REPELLENT ACRYLIC LATEX PAINT.

G. METAL DOORS AND FRAMES SHALL RECEIVE A PRIMER COAT PLUS TWO COATS OF PAINT.

H. DIMENSIONS ARE TO STRUCTURAL COLUMN GRID, EDGE OF WINDOW OPENINGS, AND TO HINGE SIDE OF DOOR OPENINGS.

KEY NOTES: (X)

1. CONCRETE STOOP – RE: DETAIL 7/A3
2. LINE OF ROOF OVERHANG ABOVE
3. CORRUGATED METAL ROOF PANELS ON COLD–FORMED METAL FRAMING.
4. RIDGE VENT
5. LINE OF BUILDING WALL, BELOW
6. METAL GUTTER
7. TWO–PIECE WALL THIMBLE AND TRIM PLATE FOR OPTIONAL WOOD BURNING STOVE CHIMNEY PIPE. STOVE AND PIPE BY OTHERS.

ROOM FINISHES: (X)

1. WALLS: PAINTED PLASTER,
   FLOOR: SEALED CONCRETE
   CEILING: PAINTED PLASTER APPLIED TO STRUCTURE

LEGEND:

- (F.1.4) DOOR TYPE, SEE SHEET A3
- (A) WINDOW TYPE, SEE SHEET A3
- (X) KEY NOTE
- FEC FIRE EXTINGUISHER CABINET
- (1) ROOM FINISH TYPE DESIGNATION

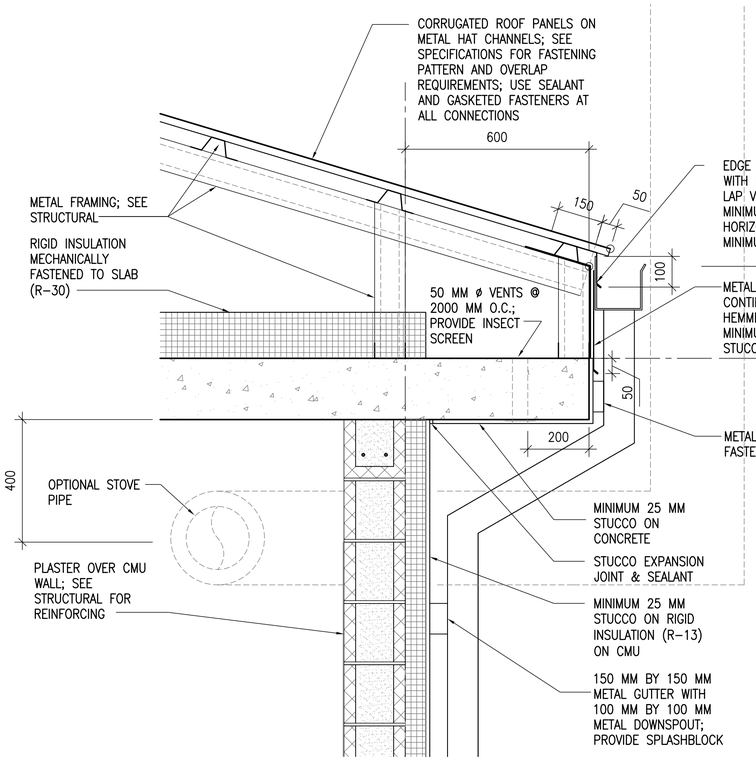

EAVE DETAIL

3 | A1 A1

SCALE: 1:10

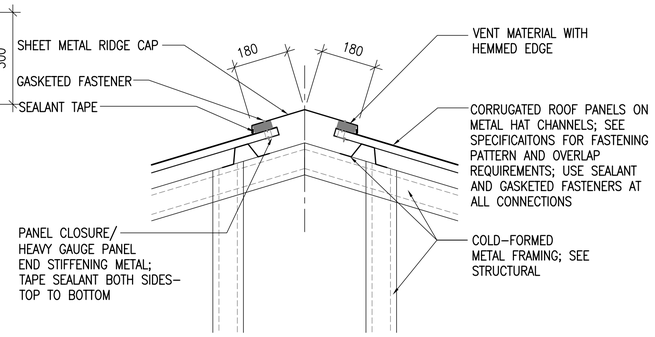

RIDGE VENT DETAIL

4 | A1 A1

SCALE: 1:10

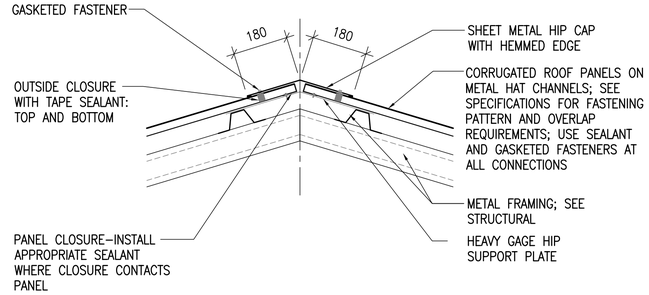

HIP DETAIL

5 | A1 A1

SCALE: 1:10

UNLESS OTHERWISE NOTED, LINEAR DIMENSIONS SHOWN ARE IN MILLIMETERS (MM)

0 200 400 800
SCALE: 1: 10

0 1000 2000 4000
SCALE: 1: 50

US Army Corps of Engineers
Afghanistan Engineer District

SYMBOL	DESCRIPTION	DATE	APR

DESIGNED BY: PFF
DWN BY: ECN
CHK BY: NLJ
DATE: 09–30–09
SUBMITTED BY: BAKER
FILE NO.: ANPSDA–101XXX

Michael Baker Jr., Inc
A unit of Michael Baker Corporation
Airside Business Park
100 Airside Drive
Moon Township, PA 15108
www.mbakercorp.com

AFGHAN NATIONAL POLICE
STANDARD DESIGN
GUARD SHACK

FLOOR AND ROOF PLANS AND DETAILS

SHEET REFERENCE NUMBER:
A1

100% SUBMISSION

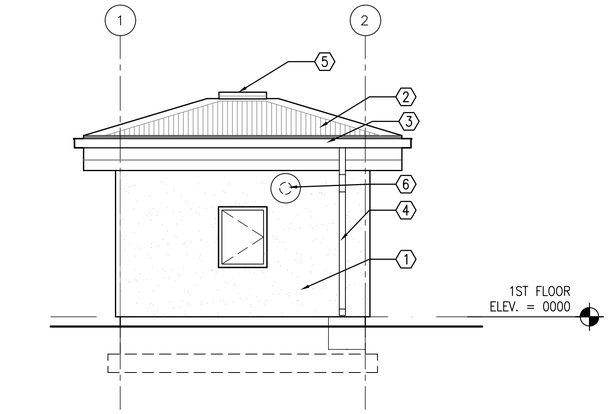

1 A1 A2 EAST ELEVATION
SCALE: 1:50

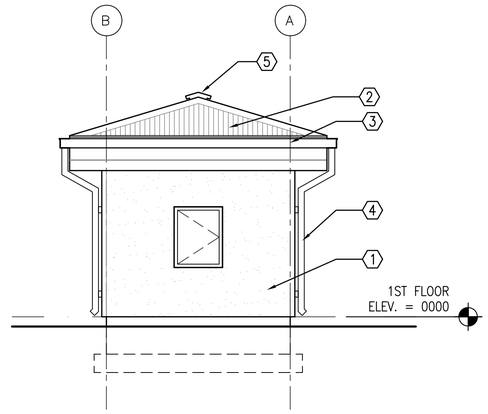

2 A1 A2 NORTH ELEVATION
SCALE: 1:50

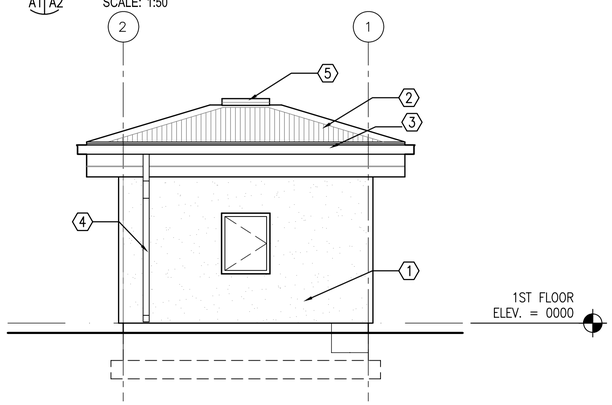

3 A1 A2 WEST ELEVATION
SCALE: 1:50

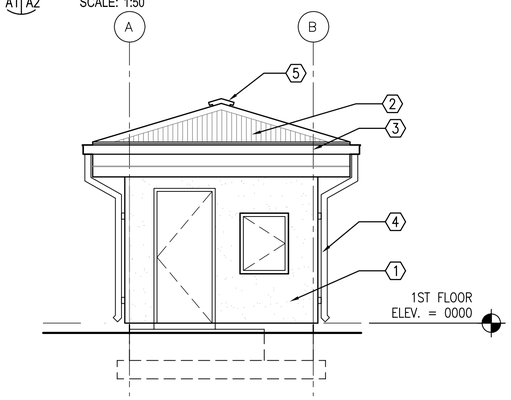

4 A1 A2 SOUTH ELEVATION
SCALE: 1:50

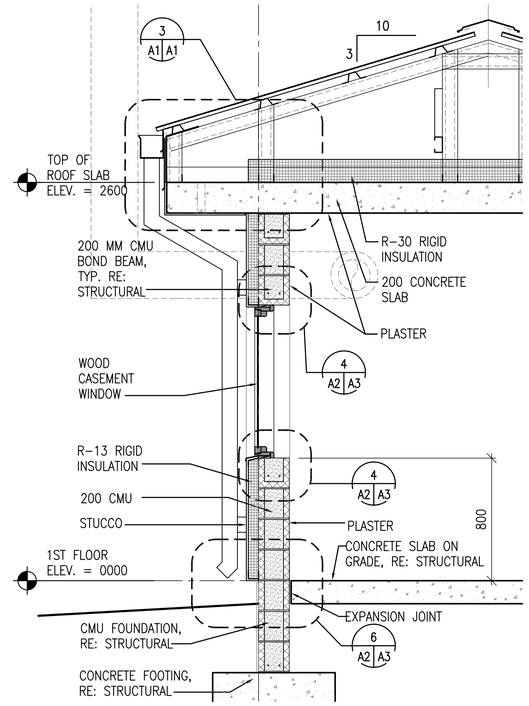

6 A2 A2 WALL SECTION
SCALE: 1:20

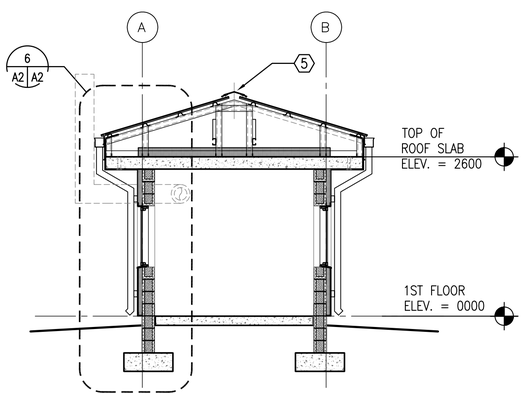

5 A1 A2 BUILDING SECTION
SCALE: 1:50

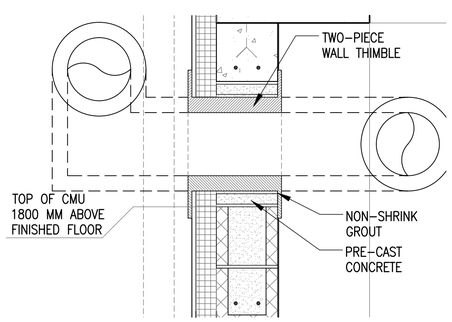

7 A2 A2 THIMBLE DETAIL, TYPICAL
SCALE: 1:10

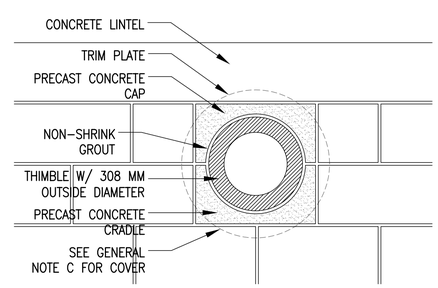

8 A2 A2 THIMBLE DETAIL, TYPICAL
SCALE: 1:10

GENERAL NOTES:

A. COORDINATE SIZE AND LOCATION OF OPENINGS FOR MECHANICAL ITEMS WITH MECHANICAL DRAWINGS.
B. PROVIDE STRUCTURAL LINTELS AS REQUIRED – RE: STRUCT
C. PROVIDE 480 MM SQUARE, 1.5 MM THICK GALVANIZED SHEET METAL COVER WITH 13 MM HEMMED EDGE FOR WALL THIMBLE UNTIL STOVE PIPE IS PROVIDED. INSTALL COVER ON EXTERIOR FACE OF THIMBLE TRIM PLATE. COVER SHALL BE BE SET IN SILICONE SEALANT AND FASTENED WITH 4 STAINLESS STEEL SCREWS. ALIGN FASTENER LOCATIONS WITH COVER PLATE FASTENER OPENINGS SO ADDITIONAL FASTENER PENETRATIONS ARE NOT CREATED IN EXTERIOR FINISH.

KEY NOTES: (X)

1. STUCCO AND RIGID INSULATION SYSTEM ON CMU
2. CORRUGATED METAL ROOF PANELS ON COLD-FORMED METAL FRAMING
3. METAL GUTTER
4. METAL DOWNSPOUT WITH SPLASH BLOCK
5. RIDGE VENT
6. TWO-PIECE WALL THIMBLE AND TRIM PLATE FOR OPTIONAL WOOD BURNING STOVE CHIMNEY PIPE. STOVE AND PIPE BY OTHER

UNLESS OTHERWISE NOTED, LINEAR DIMENSIONS SHOWN ARE IN MILLIMETERS (MM)

0 200 400 800
SCALE: 1: 10

0 400 800 1600
SCALE: 1: 20

0 1000 2000 4000
SCALE: 1: 50

US Army Corps of Engineers
Afghanistan Engineer District

SYMBOL	DESCRIPTION	DATE	APR

DESIGNED BY: PFF	DATE: 09-30-09
DWN BY: ECN	SUBMITTED BY: BAKER
CHK BY: NLJ	FILE NO.: ANPSDA-202XXX

Michael Baker Jr., Inc
A unit of Michael Baker Corporation
Airside Business Park
100 Airside Drive
Moon Township, PA 15108
www.mbakercorp.com

AFGHAN NATIONAL POLICE
STANDARD DESIGN
GUARD SHACK

EXTERIOR ELEVATIONS,
BUILDING AND WALL SECTIONS

SHEET REFERENCE NUMBER:
A2

100% SUBMISSION

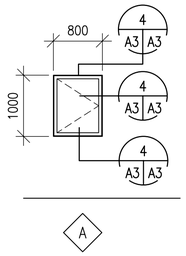

1 A3 A3 WINDOW TYPES
SCALE: 1:50

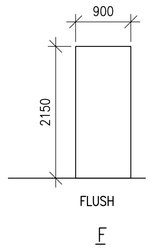

2 A3 A3 DOOR TYPES
SCALE: 1:50

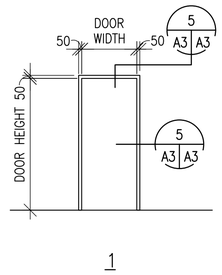

3 A3 A3 FRAME TYPES
SCALE: 1:50

WINDOW TYPES NOTES:

1. ALL EXTERIOR WINDOWS SHALL BE WOOD WITH INSECT SCREENS. WINDOWS SHALL BE COMMERCIAL GRADE.
2. GLAZING SHALL BE ACRYLIC SHEET.

DOOR TYPES NOTES:

1. INTERIOR AND EXTERIOR METAL DOORS AND FRAME COLORS SHALL MATCH ADJACENT WALL COLORS AS SELECTED BY THE CONTRACTING OFFICER.
2. HARDWARE SHALL BE HEAVY DUTY, COMMERCIAL GRADE, STAINLESS STEEL WITH A MATTE FINISH.
3. FRAMES, EXCEPT FIRE-RATED FRAMES, SHALL BE MOUNTED AND ADJUSTED IN ACCORDANCE WITH MANUFACTURER'S INSTRUCTIONS. FRAMES SHALL BE FASTENED WITH MINIMUM OF THREE FASTENING POINTS PER SIDE AT REGULAR INTERVALS.
4. DIMENSIONS SHOWN ON DOOR SCHEDULE ARE BASED UPON MODULAR MASONRY (OR ROUGH OPENING), HEIGHT OF 2200mm FOR STANDARD PERSONNEL DOORS. CONTRACTOR SHALL COORDINATE WITH DOOR SUPPLIER TO ENSURE THAT DIMENSIONS OF DOORS AND FRAMES PROVIDED ARE COMPATIBLE WITH DOOR OPENING DIMENSIONS.

HARDWARE TYPES:

HW-6 1-1/2 PR HINGES
1 EA LOCKSET,F04 ENTRY LOCK W/LEVERS. GRADE 1
1 EA DOOR CLOSER, C02061,LOW RESISTANCE
1 EA THRESHOLD J32130

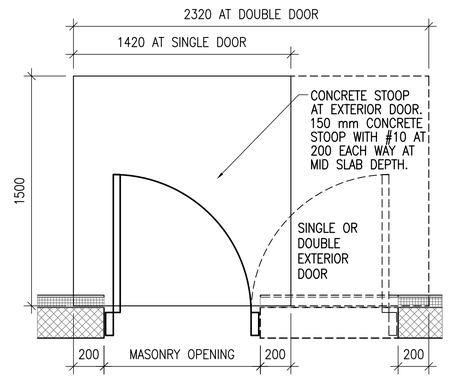

7 A3 A3 CONCRETE STOOP PLAN DETAIL
SCALE: 1:20

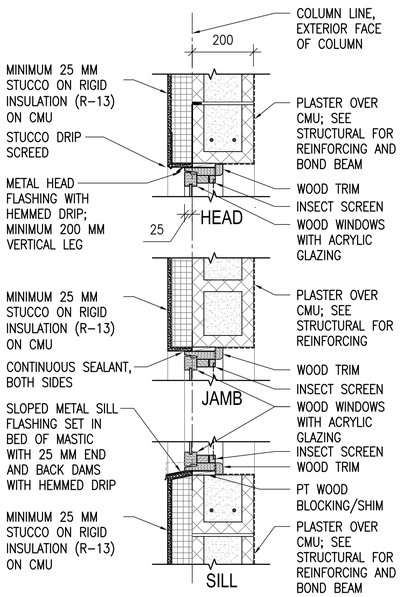

4 A2 A3 WINDOW DETAILS
SCALE: 1:10

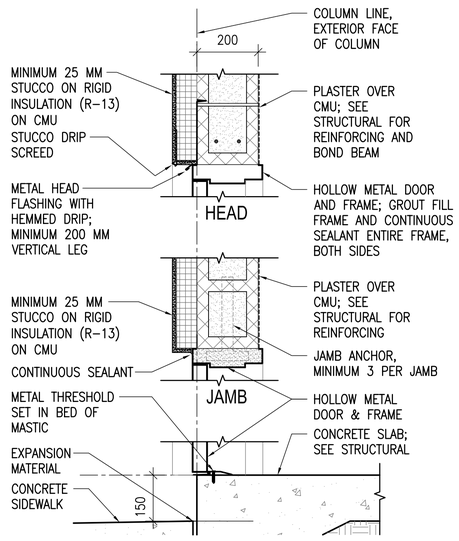

5 A3 A3 EXTERIOR DOOR DETAILS
SCALE: 1:10

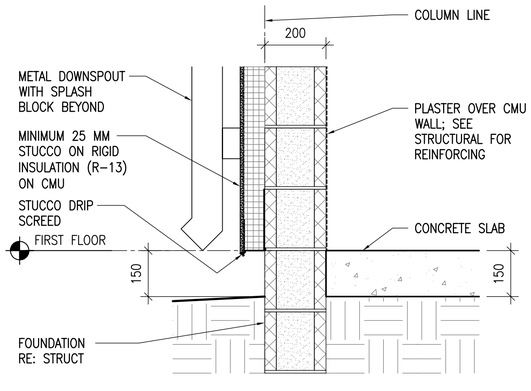

6 A2 A3 STUCCO BASE DETAIL
SCALE: 1:10

UNLESS OTHERWISE NOTED, LINEAR DIMENSIONS SHOWN ARE IN MILLIMETERS (MM)

0 200 400 800
SCALE: 1: 10

0 1000 2000 4000
SCALE: 1: 50

US Army Corps of Engineers
Afghanistan Engineer District

SYMBOL	DESCRIPTION	DATE	APR

DESIGNED BY: PFF
DATE: 09-30-09
DWN BY: ECN
SUBMITTED BY: BAKER
CHK BY: NLJ
FILE NO.: ANPSDA-503XXX

Michael Baker Jr., Inc
A unit of Michael Baker Corporation
Airside Business Park
100 Airside Drive
Moon Township, PA 15108
www.mbakercorp.com

AFGHAN NATIONAL POLICE
STANDARD DESIGN
GUARD SHACK

DOOR, WINDOW & FINISH TYPES & DETAILS

SHEET REFERENCE NUMBER:
A3

100% SUBMISSION

POWER

- DISTRIBUTION PANELBOARD
- NEW PANELBOARD – SURFACE
- NEW PANELBOARD – RECESSED
- EXISTING PANELBOARD
- GENERATOR
- TVSS — TRANSIENT VOLTAGE SURGE SURPRESSOR
- TRANSFORMER (DRAWN TO SIZE)
- PS — POWER SUPPLY
- CP — CONTROL PANEL
- TC — TIME CLOCK
- TIM — ASTRONOMICAL TIME CLOCK– "SEE SPEC."
- R — RELAY WITH RATING AND NUMBER OF POLES AS NOTED ON DRAWINGS– "SEE SPEC."
- J — JUNCTION BOX
- J — JUNCTION BOX – CEILING
- PB — PULL BOX
- BD — BUS DUCT HORIZONTAL
- BUS DUCT VERTICAL
- EMERGENCY POWER OFF PUSH BUTTON
- NON–FUSIBLE SAFETY SWITCH
- FUSIBLE SAFETY SWITCH
- M — MOTOR
- $M — MOTOR STARTING SWITCH – 20A RATED
- $K — KEY SWITCH – 20A RATED
- FC — FAN COIL – FURNISHED BY MECHANICAL CONTRACTOR, ELECTRICAL CONTRACTOR SHALL INSTALL AND PROVIDE POWER CONNECTION
- UH — UNIT HEATER – FURNISHED BY MECHANICAL CONTRACTOR, ELECTRICAL CONTRACTOR SHALL INSTALL AND PROVIDE POWER CONNECTION
- D — JUNCTION BOX FOR CONNECTION TO GARBAGE DISPOSAL
- CF — LIGHT/HEATER/FAN – FURNISHED BY MECHANICAL CONTRACTOR, ELECTRICAL CONTRACTOR SHALL INSTALL AND PROVIDE POWER CONNECTION
- ELECTRIC WATER HEATER
- EPO — WEATHERPROOF / EXPLOSION PROOF EMERGENCY POWER OFF PUSH–BUTTON TO BE INTERCONNECTED WITH GENERATOR SHUT DOWN CONTROL
- CF — CEILING FAN – REFER TO SPECIFICATION SECTION 26 20 00

RECEPTACLES

- DUPLEX 20A BRITISH STANDARD UNSWITCHED SOCKETS
- GF — DUPLEX 20A BRITISH STANDARD UNSWITCHED SOCKETS – 10mA GROUND FAULT INTERRUPTER TYPE
- WP — DUPLEX 20A BRITISH STANDARD UNSWITCHED SOCKETS – 10mA GROUND FAULT INTERRUPTER TYPE WITH WEATHERPROOF COVER
- EXP — DUPLEX 20A BRITISH STANDARD UNSWITCHED SOCKETS – EXPLOSION PROOF
- * — INDICATES MOUNT DEVICE ABOVE COUNTER TOP

LIGHTNING PROTECTION

- AIR TERMINAL 20mm O.D. X 4m SOLID COPPER, NICKEL PLATED ON ADHESIVE BASE.
- EQ — EQUIPMENT AIR TERMINAL
- TEST WELL WITH GROUND ROD(S)
- GROUND ROD
- G — GROUND PLATE
- G — MAIN GROUND CONDUCTER CONCEALED WITHIN CONSTRUCTION
- G — MAIN GROUND CONDUCTOR EXPOSED ON EXPOSED ON BUILDING EXTERIOR SURFACE
- G — GROUND CONDUCTOR CAD WELDED TO GROUND CABLE OR EQUIPMENT
- G — GROUND CONDUCTOR CAD WELDED TO BUILDING STEEL COLUMN
- GROUND ROD TRIPOD, SPACED 10 FEET APART.
- LEVEL TO LEVEL CABLE

LIGHTING

- LIGHTING FIXTURE – SEE FIXTURE SCHEDULE FOR MORE INFORMATION
- LIGHTING FIXTURE – SEE FIXTURE SCHEDULE FOR MORE INFORMATION
- DOWNLIGHT
- LIGHTING FIXTURE ON NORMAL/EMERGENCY
- WALL MOUNTED LIGHT FIXTURE
- E — EXIT SIGN – DIRECTIONAL ARROWS AS INDICATED ON DRAWINGS
- B — BATTERY PACK WITH HEADS AS INDICATED ON DRAWINGS
- REMOTE HEAD FOR BATTERY PACK
- $ — SINGLE POLE SWITCH – 20A RATED
- $3 — 3–WAY SWITCH – 20A RATED
- $4 — 4–WAY SWITCH – 20A RATED
- PC — PHOTOCELL VOLTAGE TO MATCH CIRCUITRY
- LC — LIGHTING CONTACTOR
- POLE MOUNTED SITE LIGHTING FIXTURE– NUMBER OF FIXTURES PER POLE AS INDICATED ON DRAWINGS
- EXTERIOR DIRECTIONAL LIGHTING FIXTURE
- a — SMALL CASE LETTERS REPRESENTS LAMP(S) / SWITCHES. WHEN USED WITH AN OCCUPANCY SENSOR THIS INDICATES SENSOR WITH MANUAL OVERRIDE SWITCH

TELECOMMUNICATIONS

- TELEPHONE OUTLET(S) @ 18" AFF. U.N.O. WITH 3/4" RACEWAY TERMINATED ABOVE NEAREST ACCESSIBLE CEILING OR TO TELEPHONE TERMINAL BOARD IF NO ACCESSIBLE CEILING AVAILABLE. SEE TELE/DATA RISER DIAGRAM FOR OUTLET AND CABLE DESCRIPTION
- DATA OUTLET(S) @ 18" AFF. U.N.O. WITH 3/4" RACEWAY TERMINATED ABOVE NEAREST ACCESSIBLE CEILING OR TO DATA EQUIPMENT RACK IF NO ACCESSIBLE CEILING AVAILABLE. SEE TELE/DATA RISER DIAGRAM FOR OUTLET AND CABLE DESCRIPTION

TELECOMMUNICATIONS (CONTINUED)

- COMBINATION TELEPHONE/DATA OUTLET(S) @ 18" AFF. U.N.O. WITH 1" RACEWAY TERMINATED ABOVE NEAREST ACCESSIBLE CEILING OR TO TELE/DATA TERMINAL AREA IF NO ACCESSIBLE CEILING AVAILABLE. SEE TELE/DATA RISER DIAGRAM FOR OUTLET AND CABLE DESCRIPTION
- W — WALL MTD. TELEPHONE OUTLET WITH 3/4" RACEWAY TERMINATED ABOVE NEAREST ACCESSIBLE CEILING OR TO TELEPHONE TERMINAL BOARD IF NO ACCESSIBLE CEILING AVAILABLE. SEE TELE/DATA RISER DIAGRAM FOR OUTLET AND CABLE DESCRIPTION
- (x)T — INDICATES NUMBER OF TELEPHONE OUTLET(S) AND ASSOCIATED CABLING
- (x)D — INDICATES NUMBER OF DATA OUTLET(S) AND ASSOCIATED CABLING
- (x)TF — INDICATES NUMBER OF TELEPHONE OUTLETS AND ASSOCIATED CABLING WITH 1 OUTLET AND CABLE DEDICATED FOR FAX

SINGLE LINE SYMBOLS

- SWITCH
- BREAKER
- FUSE
- TRANSFORMER
- CAPACITOR
- GROUND
- CONTACT (NORMALLY OPEN)
- CONTACT (NORMALLY CLOSED)
- AUTOMATIC TRANSFER SWITCH
- MANUAL DOUBLE THROW SWITCH
- CURRENT TRANSFORMER
- INDICATES NEW ELECTRICAL EQUIPMENT
- C — INDICATES NEW CONTROL WIRING AND CONDUIT
- EQUIPMENT OUTLINE

MISCELLANEOUS

- BRANCH CIRCUIT WIRING CONCEALED ABOVE CEILINGS, SURFACE MOUNTED ON WALLS
- BRANCH CIRCUIT WIRING – #10 AWG
- BRANCH CIRCUIT WIRING – UNDER FLOOR
- HOME RUN BACK TO PANEL
- CONDUIT TURNED DOWN
- CONDUIT TURNED UP
- LV — LOW VOLTAGE WIRING AND CONDUIT
- CT–X — CABLE TRAY ("X" DENOTES WIDTH)
- INDICATES CONTINUATION OF LINE

FIRE ALARM

- FACP — FIRE ALARM CONTROL PANEL WITH BATTERY BACKUP
- F — FIRE ALARM PULL STATION

FIRE ALARM (CONTINUED)

- F — FIRE ALARM STROBE – WALL MOUNTED
- F — FIRE ALARM AUDIBLE/STROBE – WM
- F — FIRE ALARM HORN/STROBE – WM
- S — SMOKE DETECTOR
- H — HEAT DETECTOR CEILING MOUNTED
- D — DUCT DETECTOR – PROVIDED BY EC, INSTALLED BY MC AND CONNECTED BY EC

DENOTATIONS & ABBREVIATIONS

AFF	ABOVE FINISHED FLOOR
C	CEILING MOUNTED
E	EMERGENCY
EC	ELECTRICAL CONTRACTOR
EPO	EMERGENCY POWER OFF
EXP	EXPLOSION PROOF
F	FIRE ALARM
FF	FLUSH FLOOR MOUNTED
FL	FLUORESCENT
FO	FIBER OPTIC
FSS	FUSED SAFETY SWITCH
G	GROUND FAULT INTERRUPTER
GC	GENERAL CONTRACTOR
HOA	HAND–OFF AUTO
I	INFRARED
ICD	INCANDESCENT
IG	ISOLATED GROUND
K	KEY
LV	LOW VOLTAGE
M	MOTOR
MC	MECHANICAL CONTRACTOR
NE	NORMAL/EMERGENCY
NFSS	NON–FUSED SAFETY SWITCH
PA	PAGING SYSTEM
PLC	PLUMBING CONTRACTOR
REL	RELOCATE
RED	RELOCATED
SL	SINGLE LINE
SS	SURGE SUPPRESSION
T	TELEPHONE
TL	TWIST LOCK

DENOTATIONS & ABBREVIATIONS (CONT.)

TP	TAMPER PROOF
UE	UNDERGROUND ELECTRIC
UF	UNDERGROUND FIBER
UT	UNDERGROUND TELEPHONE
W	WALL MOUNTED
WG	WIRE GUARD
WP	WEATHERPROOF
WPG	WEATHERPROOF/GROUND FAULT INTERRUPTER
WT	WATER TIGHT

GENERAL PROJECT NOTES:

G1. UNLESS OTHERWISE NOTED, PROVIDE ALL EQUIPMENT SHOWN ON THE PLANS. THE ELECTRICAL CONTRACTOR SHALL COORDINATE ALL SYMBOLS SHOWN ON THE PLANS WITH THE SYMBOL LIST. IT SHALL BE THE RESPONSIBILITY OF THE CONTRACTOR TO VERIFY THE INTENT OF ANY SYMBOL THAT IS SHOWN ON THE PLANS AND NOT INDICATED ON THE SYMBOL LIST WITH THE ENGINEER PRIOR TO BID.

G2. COORDINATE THE FINAL LOCATIONS OF ALL LIGHT FIXTURES WITH THE ARCHITECT'S REFLECTED CEILING PLANS. REPORT ANY DISCREPANCIES TO THE ARCHITECT PRIOR TO INSTALLATION.

G3. THE CONTRACTOR SHALL VERIFY THE LOCATION OF ALL UNDERGROUND UTILITIES WITHIN THE CONSTRUCTION AREA THREE (3) WORKING DAYS NOTICE BEFORE COMMENCE DIGGING. NOTIFY THE LOCAL OR STATE AUTHORITY HAVING JURISDICTION AND WAIT THE REQUIRED TIME BEFORE COMMENCING TO DIG.

G4. THE CONTRACTOR SHALL COORDINATE CONDUIT RUNS, CABLE TRAY, LIGHTING FIXTURES AND OTHER EQUIPMENT LOCATIONS WITH THE OTHER TRADE CONTRACTORS TO AVOID CONFLICTS.

G5. WHERE VOLTAGES AND FREQUENCIES ON THE DRAWINGS AND IN THE SPECIFICATIONS DIFFER FROM THE LOCAL ONES, ALL WORK SHALL BE PERFORMED USING THE LOCAL VOLTAGES AND FREQUENCIES.

G6. THE MINIMUM WIRE SIZE ON THE PROJECT SHALL BE 4mm2. THE MINIMUM CONDUIT SIZE SHALL BE 20mm. THE MINIMUM BREAKER SIZE SHALL BE 20 AMPS.

G7. THE CONTRACTOR SHALL PUT A MAXIMUM OF 6 DUPLEX SOCKETS ON A 20A SINGLE POLE CIRCUIT.

G8. WHERE THE 1010 SCOPE REVIEW, 1015 TECHNICAL REVIEW, DRAWINGS, AND SPECIFICATIONS DIFFER FROM AMERICAN CODES OR STANDARDS THE 1010, 1015, DRAWINGS, AND SPECIFICATIONS SHALL RULE.

G9. WORK FOR THE AMMUNITION SUPPLY POINT SHALL BE DONE IN ACCORDANCE WITH DEPARTMENT OF DEFENSE STANDARD DOD 6055.9–STD.

G10. ALL CONDUIT AND DEVICES SHALL BE SURFACE MOUNTED UNLESS OTHERWISE INDICATED.

US Army Corps of Engineers
Afghanistan Engineer District

SYMBOL	DESCRIPTION	DATE	APR

DESIGNED BY: JRG
DWN BY: JRG
CHK BY: JRG
DATE: 09–30–09
SUBMITTED BY: BAKER
FILE NO.: ANPSDE–000XXX

Michael Baker Jr., Inc
A unit of Michael Baker Corporation
Airside Business Park
100 Airside Drive
Moon Township, PA 15108
www.mbakercorp.com

AFGHAN NATIONAL POLICE
STANDARD DESIGN
GUARD SHACK

ELECTRICAL SYMBOLS AND ABBREVIATIONS

SHEET REFERENCE NUMBER:
E0

100% SUBMISSION

GENERAL NOTES:

1. REFER TO DRAWING #E0 FOR THE ELECTRICAL SYMBOLS LIST.
2. EXIT SIGNS SHALL BE WIRED AHEAD OF ANY LOCAL SWITCHING ON CIRCUITS.
3. REFER TO DRAWING #E3 FOR THE LIGHTING FIXTURE SCHEDULE.
4. REFER TO DRAWING #E2 FOR THE POWER RISER.
5. REFER TO DRAWING #E4 FOR PANEL SCHEDULES.
6. LIGHT FIXTURES INDICATED AS EMERGENCY SHALL BE PROVIDED WITH A BATTERY BACKUP BALLAST.
7. COORDINATE EXACT MOUNTING LOCATION OF DISCONNECTING MEANS FOR MECHANICAL AND PLUMBING EQUIPMENT IN THE FIELD.
8. FUSIBLE SAFETY SWITCHES THAT ARE NOT OTHERWISE IDENTIFIED SHALL BE 380V, 1P, 30A FUSED SAFETY SWITCHES WITH 20A FUSES.

NUMBERED NOTES:

(1) PANEL L.

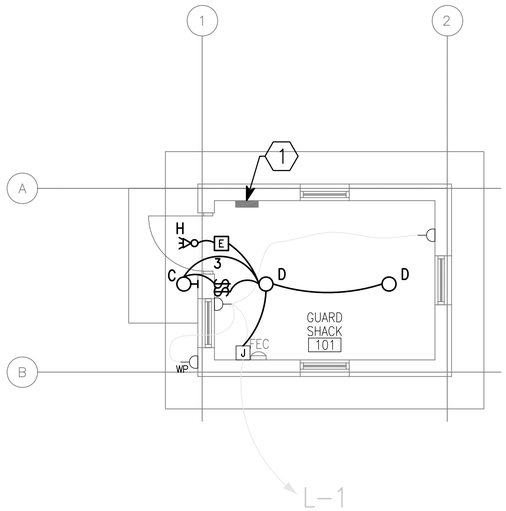

1 / E1 E1 LIGHTING AND POWER PLAN

SCALE: 1:50

N

UNLESS OTHERWISE NOTED, LINEAR DIMENSIONS SHOWN ARE IN MILLIMETERS (MM)

1 0 1 2 3 4

1:50

US Army Corps of Engineers

Afghanistan Engineer District

SYMBOL	DESCRIPTION	DATE	APR

DESIGNED BY: JRG
DWN BY: JRG
CHK BY: JRG
DATE: 09-30-09
SUBMITTED BY: BAKER
FILE NO.: ANPSDE-101XXX

Michael Baker Jr., Inc
A unit of Michael Baker Corporation
Airside Business Park
100 Airside Drive
Moon Township, PA 15108
www.mbakercorp.com

AFGHAN NATIONAL POLICE
STANDARD DESIGN
GUARD SHACK

LIGHTING AND POWER PLAN

SHEET REFERENCE NUMBER:

E1

100% SUBMISSION

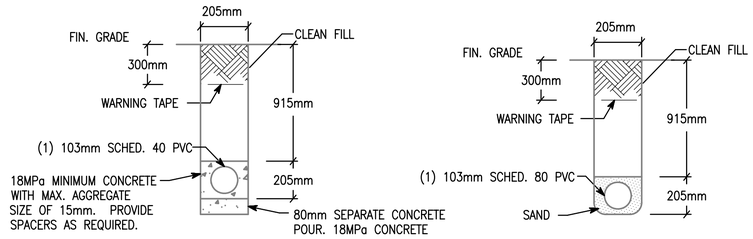

NOTE: PVC CONDUIT SHALL BE DIRECT BURIED SCHEDULE 80 FOR NO TRAFFIC AREAS AND CONCRETE-ENCASED SCHEDULE 40 FOR UNDER ROADWAYS OR TRAFFIC AREAS.

1 TYPICAL DUCT BANK DETAILS FOR CONDUIT IN SAND OR CONCRETE

E2 | E2

SCALE: N.T.S.

N

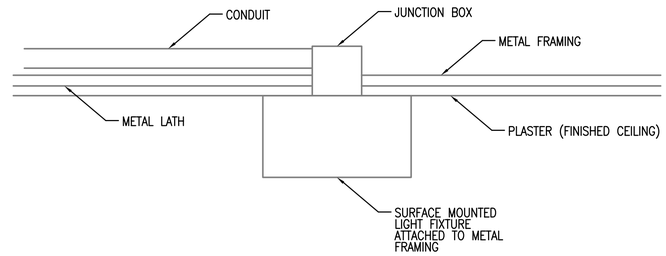

2 TYPICAL DETAIL FOR SURFACE MOUNTED LIGHT FIXTURES

E2 | E2

SCALE: N.T.S.

N

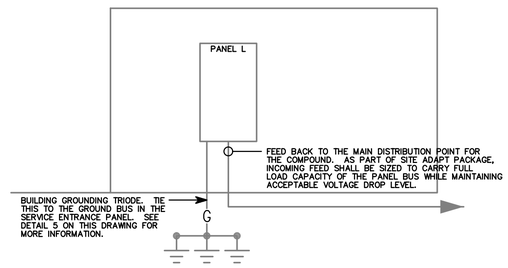

3 L RISER DIAGRAM

E2 | E2

SCALE: N.T.S.

N

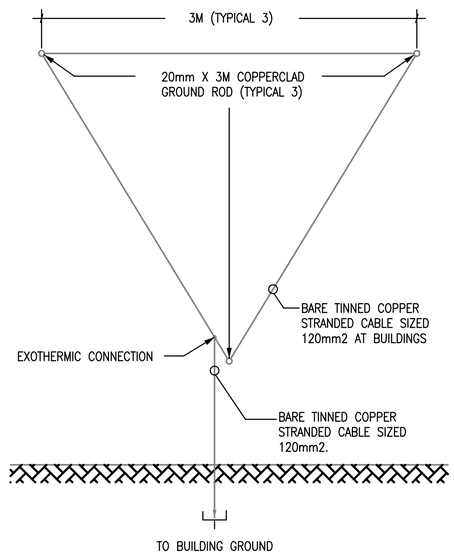

4 GROUND TRIPOD SYSTEM DETAIL - PLAN

E2 | E2

SCALE: N.T.S.

N

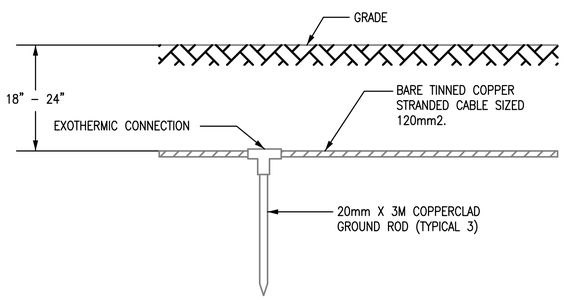

5 GROUND TRIPOD SYSTEM DETAIL - ELEVATION

E2 | E2

SCALE: N.T.S.

N

US Army Corps of Engineers

Afghanistan Engineer District

SYMBOL	DESCRIPTION	DATE	APR

DESIGNED BY: JRG	DATE: 09-30-09		
DWN BY: JRG	SUBMITTED BY: BAKER		
CHK BY: JRG	FILE NO.: ANPSDE-502XXX		

Michael Baker Jr., Inc.
A unit of Michael Baker Corporation
Airside Business Park
100 Airside Drive
Moon Township, PA 15108
www.mbakercorp.com

AFGHAN NATIONAL POLICE
STANDARD DESIGN
GUARD SHACK

DETAILS

SHEET REFERENCE NUMBER:

E2

100% SUBMISSION

FIXTURE MARK 'C'

INCANDESCENT ONE PIECE WITH APPROVED LENS, STABILIZED HIGH IMPACT POLY CARBONATE

FIXTURE MARK 'D'

SURFACE MOUNTED, SINGLE LAMP 220–240V INCANDESCENT FIXTURE RATED FOR 100W LAMPS. GLASS GLOBE SHALL BE VAPOR TIGHT JELLY JAR TYPE WITH WIRE GUARD. NOMINAL DIMENSIONS ARE 111MMx251MM

FIXTURE MARK 'H'

REMOTE HEAD EXTERIOR LIGHT HEAD POWERED FROM EXIT SIGN BATTERY– 12V DOUBLE HEAD CORROSION RESISTANT WITH UL34 WEATHERPROOF CONSTRUCTION

FIXTURE MARK 'E'

UNIVERSAL MOUNT ENGINEER GRADE THERMOPLASTIC HOUSING EXIT SIGN WITH LED LAMPS, RED LETTERS 6" IN HEIGHT WITH ARROWS AS INDICATED, WITH 12V CADMIUM BATTERY

LIGHTING FIXTURE SCHEDULE

FIXTURE MARK	STYLE NUMBER AND TYPE	NUMBER AND TYPE OF LAMPS	VOLTAGE	MOUNTING	NOTES
C	INCANDESCENT ONE PIECE W/ APPROVED LENS STABILIZED HIGH IMPACT POLY CARBONATE.	(1) A19 – 100W INCANDESCENT	220V – 1ø 50HZ	WALL MOUNTED ABOVE EXTERIOR DOORS	
D	SURFACE MOUNTED SINGLE LAMP 220–240V INCANDESCENT FIXTURE RATED FOR 100W LAMPS. GLASS GLOBE SHALL BE VAPOR TIGHT JELLY JAR WITH WIRE GUARD. 111MM–251MM	(1) A21 – 100W COATED INCANDESCENT	220V – 1ø 50HZ	SURFACE MOUNTED FROM ROOF STRUCTURE	MEETS INTERNATIONAL STANDARDS WITH ENCLOSED AND GASKETED RED LENS.
H	REMOTE HEAD EXTERIOR LIGHT HEAD POWERED FROM EXIT SIGN BATTERY– 12V DOUBLE HEAD CORROSION RESISTANT WITH UL34 WEATHERPROOF CONSTRUCTION	(2) 12W/12V HALOGEN LAMP	12V – 1ø 50HZ	EXTERIOR WALL MOUNTED AT TOP OF DOOR HEIGHT	
E	UNIVERSAL MOUNT ENGINEER GRADE THERMOPLASTIC HOUSING EXIT SIGN WITH LED LAMPS, RED LETTERS 6" IN HEIGHT WITH ARROWS AS INDICATED, WITH 12V CADMIUM BATTERY WITH REMOTE HEAD CAPABILITY	LED LAMPS	220V – 1ø 50HZ	UNIVERSAL MOUNTING	

US Army Corps of Engineers

Afghanistan Engineer District

SYMBOL	DESCRIPTION	DATE	APR

DESIGNED BY: JRG
DATE: 09–30–09
DWN BY: JRG
SUBMITTED BY: BAKER
CHK BY: JRG
FILE NO.: ANPSDE–603XXX

Michael Baker Jr., Inc
A unit of Michael Baker Corporation
Airside Business Park
100 Airside Drive
Moon Township, PA 15108
www.mbakercorp.com

AFGHAN NATIONAL POLICE
STANDARD DESIGN
GUARD SHACK

LIGHT FIXTURE SCHEDULE

SHEET REFERENCE NUMBER:
E3

100% SUBMISSION

PANELBOARD L SURFACE MOUNTED ASYM. A.I.C. MIN.

AMP. MAIN LUGS (OR) 100 AMP. MAIN BREAKER W/ 100 AMP. TRIP

CIRCUIT BREAKER TYPE 380/220 VOLTS 3 PHASE 4 WIRE 50 HZ 100 AMP. BUS

CKT. NO.	TRIP AMPS	NO. POLES	WIRE MM 2	GND MM²	CONDUIT MM	LOAD SERVED	LOAD-V.A. AØ	LOAD-V.A. BØ	LOAD-V.A. CØ	LOAD-V.A. AØ	LOAD-V.A. BØ	LOAD-V.A. CØ	LOAD SERVED	CONDUIT MM	GND MM²	WIRE MM²	NO. POLES	TRIP AMPS	CKT. NO.
1	20	1	4.0	4.0	20	LIGHTING AND RECEPTACLES- 101	1.0						SPARE				1	20	2
3	20	1				SPARE							SPARE				1	20	4
5	20	1				SPARE							SPARE				1	20	6
7	20	1				SPARE							SPARE				1	20	8
9	20	1				SPARE							SPARE				1	20	10
11	20	1				SPARE							SPARE				1	20	12
							0.6	0.5	0.0	0.6	0.0	0.0							

TOTAL CONN. LOAD PER PHASE (KVA): AØ 1.0 BØ 0.0 CØ 0.0

TOTAL CONN. LOAD 1.0 KVA. 70 % DEMAND = ESTIMATED DEMAND LOAD 0.7 SUPPLIED FROM MAIN SWITCHGEAR DISTRIBUTION

• MAIN BREAKER SHALL BE 3P EARTH GROUND TYPE

US Army Corps of Engineers

Afghanistan Engineer District

SYMBOL	DESCRIPTION	DATE	APR

DESIGNED BY: JRG
DWN BY: JRG
CHK BY: JRG
DATE: 09-30-09
SUBMITTED BY: BAKER
FILE NO.: ANPSDE-604XXX

Michael Baker Jr., Inc
A unit of Michael Baker Corporation
Airside Business Park
100 Airside Drive
Moon Township, PA 15108
www.mbakercorp.com

AFGHAN NATIONAL POLICE
STANDARD DESIGN
GUARD SHACK

PANEL SCHEDULES AND RISER DIAGRAM

SHEET REFERENCE NUMBER:
E4

100% SUBMISSION

SITE ADAPT DESIGN
L04 - LATRINE - LARGE - ARCH SPAN

CONTRACT NUMBER:
W912ER-09-D-0002 TO:27

US ARMY CORPS
OF ENGINEERS
AFGHANISTAN NORTH
DISTRICT

SYMBOL	DESCRIPTION	DATE	APPR.	SYMBOL	DESCRIPTION	DATE	APPR.

U.S. ARMY ENGINEER DISTRICT, AFGHANISTAN
CORPS OF ENGINEERS
APO AE 09356

DESIGNED BY: JDS
DWN BY: JDS
CKD BY: JDS
REVIEWED BY: JH
SUBMITTED BY:
DATE: 3/23/2011
CONTRACT NO. W912ER-09-D-0002
DRAWING CODE:
REV. 0
FILE NAME: ARCDIRNo.01-C1-01-001.DWG
PLOT SCALE: NONE
PLOT DATE: 3/23/2011

BAKER

SITE ADAPT DESIGN
L04 - LATRINE - LARGE - ARCH SPAN
COVER SHEET

SHEET REFERENCE NUMBER:
G-001

3/23/2011 10:59 AM

A1 Size 594mm x 841mm

ENGINEERING AND CONSTRUCTION DIVISION
US ARMY ENGINEER DISTRICT, AFGHANISTAN
APO AE, 09356

L04 LARGE LATRINE

PROJECT COORDINATION	
U.S. ARMY ENGINEER DISTRICT, AFGHANISTAN	
PROJECT MANAGER	DATE
CHIEF, DESIGN BRANCH	DATE

THIS PROJECT WAS DESIGNED BY AFGHANASTAN ENGINEER DISTRICT OF THE U.S ARMY CORPS OF ENGINEERS. THE INITIALS OR SIGNATURES AND REGISTRATION DESIGNATIONS OF INDIVIDUALS APPEAR ON THESE DOCUMENTS WITHIN THE SCOPE OF THEIR EMPLOYMENT AS REQUIRED BY ER 1110-1-8152.

APPENDIX A

AFGHANISTAN

SECTION/DETAIL CROSS REFERENCING CONVENTIONS

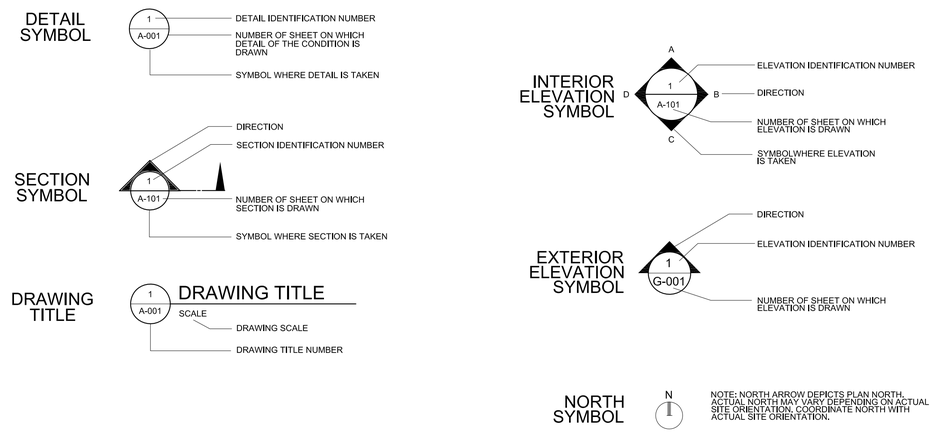

SCHEDULE OF DRAWINGS

SHEET NO	DWG CODE	SHEET REFERENCE NO	DESCRIPTION	REV STATUS
			GENERAL	
1	ARCHSPANLAT-L04-G-001	G-001	COVER SHEET	
2	ARCHSPANLAT-L04-G-002	G-002	INDEX SHEET	
3	ARCHSPANLAT-L04-G-003	G-003	LIFE SAFETY AND CODE ANALYSIS	
			STRUCTURAL	
4	ARCHSPANLAT-L04-S-001	S-001	ABBREVIATIONS AND GENERAL NOTES	
5	ARCHSPANLAT-L04-S-002	S-002	GENERAL NOTES AND DESIGN CRITERIA	
6	ARCHSPANLAT-L04-S-101	S-101	FOUNDATION PLAN	
7	ARCHSPANLAT-L04-S-201	S-201	BUILDING ELEVATION AND DETAIL	
8	ARCHSPANLAT-L04-S-202	S-202	BUILDING SECTION AND DETAILS	
9	ARCHSPANLAT-L04-S-301	S-301	FOUNDATION SECTIONS	
10	ARCHSPANLAT-L04-S-302	S-302	SECTIONS	
11	ARCHSPANLAT-L04-S-303	S-303	LATRINE SECTIONS	
12	ARCHSPANLAT-L04-S-501	S-501	TYPICAL DETAILS	
13	ARCHSPANLAT-L04-S-502	S-502	DOOR/WINDOW/MECHANICAL OPENING FRAME DETAILS	
14	ARCHSPANLAT-L04-S-601	S-601	SCHEDULES	
			ARCHITECTURAL	
15	ARCHSPANLAT-L04-A-001	A-001	ABBREVIATIONS, SYMBOLS AND GENERAL NOTES	
16	ARCHSPANLAT-L04-A-101	A-101	FLOOR PLAN	
17	ARCHSPANLAT-L04-A-102	A-102	REFLECTED CEILING PLAN	
18	ARCHSPANLAT-L04-A-103	A-103	ROOF PLAN	
19	ARCHSPANLAT-L04-A-201	A-201	ELEVATIONS	
20	ARCHSPANLAT-L04-A-301	A-301	BUILDING SECTIONS	
21	ARCHSPANLAT-L04-A-302	A-302	WALL SECTIONS	
22	ARCHSPANLAT-L04-A-501	A-501	EXTERIOR DETAILS	
23	ARCHSPANLAT-L04-A-502	A-502	HEAD, JAMB & SILL DETAILS	
24	ARCHSPANLAT-L04-A-503	A-503	STOOP DETAILS	
25	ARCHSPANLAT-L04-A-504	A-504	TOILET, LAVATORY & ABLUTION DETAILS	
26	ARCHSPANLAT-L04-A-505	A-505	SHOWER AND LAUNDRY DETAILS	
27	ARCHSPANLAT-L04-A-601	A-601	WINDOW AND DOOR SCHEDULE	
28	ARCHSPANLAT-L04-A-602	A-602	PARTITION TYPES	
29	ARCHSPANLAT-L04-A-603	A-603	FINISH SCHEDULE	
			PLUMBING	
30	ARCHSPANLAT-L04-P-001	P-001	PLUMBING SYMBOLS AND LEGEND	
31	ARCHSPANLAT-L04-P-101	P-101	PLUMBING PLAN	
32	ARCHSPANLAT-L04-P-102	P-102	PLUMBING PLAN	
33	ARCHSPANLAT-L04-P-501	P-501	PLUMBING DETAILS	
34	ARCHSPANLAT-L04-P-502	P-502	PLUMBING DETAILS	
35	ARCHSPANLAT-L04-P-503	P-503	PLUMBING DETAILS	
36	ARCHSPANLAT-L04-P-701	P-901	PLUMBING SANITARY RISER DIAGRAM	
37	ARCHSPANLAT-L04-P-702	P-902	PLUMBING DOMESTIC WATER DIAGRAM	

SHEET NO	DWG CODE	SHEET REFERENCE NO	DESCRIPTION	REV STATUS
			MECHANICAL	
38	ARCHSPANLAT-L04-M-101	M-101	MECHANICAL FLOOR PLAN	
39	ARCHSPANLAT-L04-M-501	M-501	MECHANICAL DETAILS AND SCHEDULES	
			ELECTRICAL	
40	ARCHSPANLAT-L04-E-001	E-001	ELECTRICAL SYMBOLS & ABBREVIATIONS	
41	ARCHSPANLAT-L04-E-101	E-101	ELECTRICAL LIGHTING PLAN	
42	ARCHSPANLAT-L04-E-102	E-102	ELECTRICAL POWER AND SYSTEMS PLAN PLAN	
43	ARCHSPANLAT-L04-E-501	E-501	ELECTRICAL DETAILS	
44	ARCHSPANLAT-L04-E-502	E-502	ELECTRICAL DETAILS	
45	ARCHSPANLAT-L04-E-601	E-601	ELECTRICAL LIGHT FIXTURE SCHEDULES	
46	ARCHSPANLAT-L04-E-602	E-602	ELECTRICAL PANEL SCHEDULES	

US ARMY CORPS OF ENGINEERS AFGHANISTAN NORTH DISTRICT

SYMBOL	DESCRIPTION	DATE	APPR.	SYMBOL	DESCRIPTION	DATE	APPR.

DATE: 3/23/2011
REV: 0
CONTRACT NO. W912ER-09-D-0002
DRAWING CODE:
FILE NAME: ARCHSPANLAT-L04-G-002.DWG
PLOT SCALE: NONE
PLOT DATE: 3/23/2011

DESIGNED BY: JDS
DWN BY: JDS
CKD BY: JDS
REVIEWED BY: JH
SUBMITTED BY:

U.S. ARMY ENGINEER DISTRICT, AFGHANISTAN
CORPS OF ENGINEERS
APO AE 09356

BAKER

SITE ADAPT DESIGN
L04 - LATRINE - LARGE - ARCH SPAN
INDEX SHEET

SHEET REFERENCE NUMBER:
G-002

3/23/2011 10:59 AM

A1 Size 594mm x 841mm

LEGEND:

- DENOTES PATHS OF EXIT TRAVEL
- EXIT — DENOTES DOOR AS AN EMERGENCY EXIT
- DENOTES STARTING POINT FOR TRAVEL DISTANCE
- FE — DENOTES FIRE EXTINGUISHER LOCATIONS
- (1) HOUR RATED WALL
- (2) HOUR RATED WALL
- FIRE RESISTANT CEILING
- NON-FIRE RESISTANT CEILING SYSTEM OR EXPOSED FIRE RESISTANT SPRAY-ON INSULATION SYSTEM AT ARCH-SPAN STRUCTURE

REFER TO REFLECTED CEILING PLANS FOR CEILING MATERIALS AND CONFIGURATION

PER MEMORANDUM FOR RECORD DATED 03 FEBRUARY 2011
ANSF CONSTRUCTION STANDARDS DIVISION 09 FINISHES:
CEILING **DO NOT** NEED TO MEET FIRE BOUNDARY CODE REQUIREMENTS.

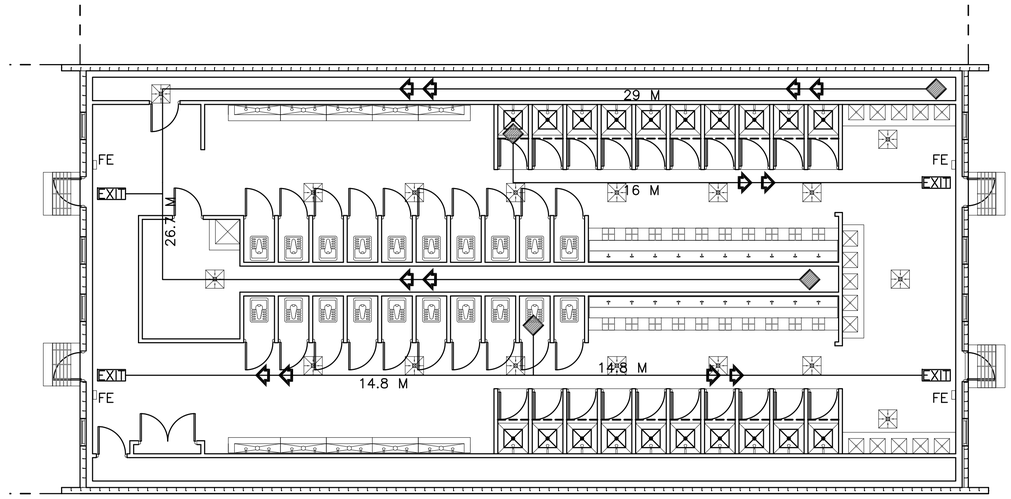

1 G-003 LIFE SAFETY PLAN
SCALE: 1:100

CODE ANALYSIS:

1. REFERENCES:
2009 INTERNATIONAL BUILDING CODE (2009 IBC)
2009 LIFE SAFETY CODE (2009 NFPA 101)

2. IBC OCCUPANCY CLASSIFICATION:
GROUP U - UTILITY AND MISCELLANEOUS (ASSEMBLY ≤300 NFPA 101 6.1.2 AND (CHAPTER 12)

3. TYPE OF CONSTRUCTION (IBC): TYPE II-B (UNPROTECTED/NONSPRINKLERED)

4. IBC TABLE 503: ALLOWABLE HEIGHT AND BUILDING AREAS:
GROUP U
ALLOWABLE AREA: 789 SM
ALLOWABLE HEIGHT: 2 STORIES (<16 M)

GROUP U
PROPOSED AREA: 406 SM
PROPOSED HEIGHT: 1 STORY (<16 M)

5. IBC TABLE 601 & 602: FIRE RESISTANCE RATING REQUIREMENTS FOR BUILDING ELEMENTS FOR TYPE II-B

BUILDING ELEMENT	RATING (HOUR)	REFERENCE
STRUCTURAL FRAME (COLUMNS, GIRDERS & TRUSSES)	0	TABLE 601
BEARING WALLS		
EXTERIOR*	0	TABLE 601&602
INTERIOR	0	TABLE 601
*3.01M OR GREATER FIRE SEPARATION (TABLE 602)		
NONBEARING WALLS & PARTITIONS		
INTERIOR	0	TABLE 601
FLOOR CONSTRUCTION	0	TABLE 601
ROOF CONSTRUCTION	0	TABLE 601
EXTERIOR WALL	0	TABLE 602

6. IBC TABLE 803.9 - INTERIOR WALL AND CEILING FINISH

REQUIREMENTS FOR U OCCUPANCY/NONSPRINKLERED

GROUP	EXIT ENCLOSURES AND EXIT PASSAGEWAY	CORRIDORS	ROOMS AND ENCLOSED SPACES
U	NO RESTRICTIONS	NO RESTRICTIONS	NO RESTRICTIONS

7. NFPA 101 TABLE 7.3.1.2 - OCCUPANT LOAD
ASSEMBLY ≤ 300 = 1.4 NET SM/PERSON CALCULATED = 290 OCCUPANTS
ACTUAL = 99 OCCUPANTS

8. NFPA 101 TABLE 7.3.3.1 - EGRESS CAPACITY
ASSEMBLY = 5 MM PER OCCUPANT

REQUIRED: 1,450 MM (290 OCCUPANTS x 5 MM PER OCCUPANT)
PROPOSED EGRESS CAPACITY: 3600 MM: (4) 900 MM DOORS

9. NFPA 101 PARAGRAPH 12.2.6 - EXIT ACCESS TRAVEL DISTANCE
REQUIRED: 61 METERS
PROPOSED: 26.7 METERS

10. NFPA 101 PARAGRAPH 12.3.6 (1) - CORRIDOR FIRE-RESISTANCE RATING (HOUR)
CORRIDORS ARE NOT REQUIRED AS DOORS EXIT DIRECTLY TO OUTSIDE

11. NFPA 101 PARAGRAPH 12.2.4.1 AND 7.4.1.1 - MINIMUM NUMBER OF EXITS
REQUIRED: 2 MINIMUM
PROPOSED: 4 EXITS

12. NFPA 101 PARAGRAPH 12.3.2.1.2 - PROTECTION FROM HAZARDS
SEPARATION AT STORAGE NOT REQUIRED. STORAGE ROOMS WILL NOT CONTAIN QUANTITIES OR MATERIALS DEEMED HAZARDOUS.

INCIDENTAL USE AREAS: IBC TABLES 508.2
1 HOUR SEPARATION FOR STORAGE ROOMS OVER 9.3 SM

0 2000 4000
SCALE: 1:100

UNLESS OTHERWISE NOTED, LINEAR DIMENSIONS SHOWN ARE IN MILLIMETERS.

COMMONWEALTH OF VIRGINIA
PETER GARRETT SCHMIDT
No. 013167
ARCHITECT

US ARMY CORPS OF ENGINEERS
AFGHANISTAN NORTH DISTRICT

SYMBOL	DESCRIPTION	DATE	APPR.	SYMBOL	DESCRIPTION	DATE	APPR.

DESIGNED BY: PGS, SE, MR
DWN BY: SE, MDH, AH
REVIEWED BY: JH
SUBMITTED BY:
DATE: 3/23/2011
CONTRACT NO. W912ER-09-D-0002
DRAWING CODE:
FILE NAME: ARCGIS\Baker\L04-LATRINE\G003.DWG
PLOT SCALE: 1:100
PLOT DATE: 3/23/2011
REV: 0

U.S. ARMY ENGINEER DISTRICT, AFGHANISTAN
CORPS OF ENGINEERS
APO AE 09356

BAKER

SITE ADAPT DESIGN
L04 - LATRINE - LARGE - ARCH SPAN
LIFE SAFETY AND CODE ANALYSIS

SHEET REFERENCE NUMBER:
G-003

3/23/2011 10:59 AM

A1 Size 594mm x 841mm

STRUCTURAL ABBREVIATIONS:

ACI	AMERICAN CONCRETE INSTITUTE
ADD'L	ADDITIONAL
AISC	AMERICAN INSTITUTE OF STEEL CONSTRUCTION
AISI	AMERICAN IRON AND STEEL INSTITUTE
ASTM	AMERICAN SOCIETY FOR TESTING AND MATERIALS
ARCH	ARCHITECTURAL
B	BOTTOM
BLDG	BUILDING
BOTT	BOTTOM
℄	CENTER LINE
CFMRF	COLD FORM METAL ROOF FRAME
CFMF	COLD FORM METAL FRAME
CFS	COLD FORMED STEEL
CIP	CAST-IN-PLACE
CIPL	CAST-IN-PLACE LINTEL
CJ	CONTROL JOINT
CLR	CLEAR
CMU	CONCRETE MASONRY UNIT
COEFF	COEFFICIENT
COL	COLUMN
CONC	CONCRETE
CONT	CONTINUOUS
COORD	COORDINATE
CRSI	CONCRETE REINFORCING STEEL INSTITUTE
CSJ	CONSTRUCTION JOINT
DIA	DIAMETER
DIAG	DIAGONAL
DIM	DIMENSION
DWG	DRAWING
DWL	DOWEL
EA	EACH
EF	EACH FACE
ELEC	ELECTRICAL
ELEV	ELEVATION
EMBED	EMBEDMENT
EQUIV	EQUIVALENT
ETC	ET CETERA
EW	EACH WAY
EXP	EXPANSION
EXT	EXTERIOR
FND	FOUNDATION
FTG	FOOTING
GA	GAUGE
GB	GRADE BEAM
HORIZ	HORIZONTAL
h	HOUR
HRS	HOURS
IBC	INTERNATIONAL BUILDING CODE
INFO	INFORMATION
INT	INTERIOR
kg	KILOGRAM
km	KILOMETER
kN	KILONEWTON
kPa	KILOPASCAL
L#	ANGLE (# INDICATES SIZE)
LONG	LONGITUDINAL
LLV	LONG LEG VERTICAL
m	METER
MAX	MAXIMUM
MECH	MECHANICAL
MFG	MANUFACTURER
MID	MIDDLE
MIN	MINIMUM
MISC	MISCELLANEOUS
mm	MILLIMETER
MPa	MEGAPASCAL
MTL	METAL
MWFRS	MAIN WIND FORCE RESISTING SYSTEM
N	NEWTON
N	NORTH
N/A	NOT APPLICABLE
#	NUMBER SYMBOL FOR REBAR SIZE
NTS	NOT TO SCALE
OC	ON CENTER
OPNG	OPENING
℄ or PL	PLATE
PRE-ENG	PRE-ENGINEERED
RB	ROOF BEAM
REINF	REINFORCED
REQ'D	REQUIRED
SIM	SIMILAR
SOG	SLAB-ON-GRADE
SPECS	SPECIFICATIONS
STD	STANDARD
STRUCT	STRUCTURAL
SW	SHEAR WALL
T	TOP
T/	TOP OF
T/ELEV	TOP ELEVATION
T/SLAB	TOP OF SLAB
T&B	TOP AND BOTTOM
THK	THICK
TYP	TYPICAL
UFC	UNIFIED FACILITIES CRITERIA
UON	UNLESS OTHERWISE NOTED
VERT	VERTICAL
W	WIDTH
W/	WITH

1.0 GENERAL NOTES:

1.1 THIS PROJECT HAS BEEN DESIGNED FOR THE WEIGHTS AND MATERIALS INDICATED ON THE DRAWINGS AND FOR THE SUPERIMPOSED DEAD AND LIVE LOADS INDICATED IN THE STRUCTURAL DESIGN CRITERIA. IT IS THE CONTRACTOR'S RESPONSIBILITY TO DETERMINE ALLOWABLE CONSTRUCTION LOADS AND TO PROVIDE PROPER DESIGN AND CONSTRUCTION OF FALSEWORK, FORMWORK, STAGING, BRACING, SHEETING AND SHORING, ETC.

1.2 METHODS, PROCEDURES AND SEQUENCES OF CONSTRUCTION ARE THE RESPONSIBILITY OF THE CONTRACTOR. THE CONTRACTOR IS RESPONSIBLE FOR IDENTIFYING AND IMPLEMENTING THE NECESSARY PRECAUTIONS TO MAINTAIN AND ENSURE THE INTEGRITY OF THE STRUCTURE AT ALL STAGES OF CONSTRUCTION.

1.3 COORDINATE THESE DRAWINGS WITH THE ARCHITECTURAL, MECHANICAL, ELECTRICAL, PLUMBING, AND CIVIL DRAWINGS. ALL DIMENSIONS SHOWN ON THE DRAWINGS ARE MILLIMETERS UNLESS NOTED OTHERWISE.

1.4 SLEEVES OR BLOCK-OUTS REQUIRED FOR PASSAGE OF DUCTWORK, PIPING, DRAINS, CONDUIT, ETC, IN ADDITION TO ANCHORS, CURBS AND HANGERS REQUIRED FOR EQUIPMENT AND PIPING AND UNDER-SLAB UTILITIES ARE NOT SPECIFICALLY, NOR GENERALLY, INDICATED ON THE STRUCTURAL DRAWINGS. THE CONTRACTOR IS RESPONSIBLE FOR COORDINATING WORK SHOWN ON OTHER DISCIPLINE'S DRAWINGS AND DETERMINING SUCH REQUIREMENTS PRIOR TO FABRICATION OR ERECTION OF THE STRUCTURE. PENETRATIONS OF STRUCTURAL MEMBERS ARE SUBJECT TO APPROVAL BY THE CONTRACTING OFFICER. REFER TO GENERAL NOTE 8.9 FOR OPENINGS IN ARCH SPAN STRUCTURE.

1.5 DIMENSIONS AND INSTALLATION DETAILS OF PURCHASED EQUIPMENT MUST BE VERIFIED AND COORDINATED WITH THE SUPPORTING STRUCTURE. THE CONTRACTOR IS RESPONSIBLE FOR DETERMINING SUCH REQUIREMENTS FROM SUBCONTRACTORS AND EQUIPMENT SUPPLIERS ALONG WITH COORDINATING THE LOCATIONS AND DETAILS FOR THESE ITEMS PRIOR TO CONSTRUCTION OF EQUIPMENT PADS OR FABRICATION AND ERECTION OF FRAMING INTENDED TO SUPPORT SUCH EQUIPMENT. ANY CONFLICTS BETWEEN THESE ITEMS AND THE BUILDING STRUCTURE IS TO BE BROUGHT TO THE ATTENTION OF THE CONTRACTING OFFICER FOR RESOLUTION. REFER TO GENERAL NOTE 8.11 FOR HANGING LOADS ON ARCH SPAN STRUCTURE.

1.6 WORK NOT INCLUDED ON THE DRAWINGS BUT IMPLIED TO BE SIMILAR TO THAT SHOWN AT CORRESPONDING PLACES ELSEWHERE ON THE DRAWINGS SHALL BE REPEATED.

1.7 IN CASE OF CONFLICT BETWEEN THE NOTES, DETAILS AND SPECIFICATIONS THE MOST RIGID REQUIREMENTS SHALL GOVERN.

1.8 SEE ARCHITECTURAL DRAWINGS FOR LOCATIONS OF NON-LOAD BEARING PARTITIONS. PROVIDE COMPRESSIBLE FIRESAFING AT TOP OF WALL AS REQUIRED BY ARCHITECTURAL DRAWINGS.

1.9 COORDINATE FINISHED FLOOR DATUM ELEVATION 0.0m WITH THE CIVIL DRAWINGS.

2.0 FOUNDATION NOTES

2.1 THE GEOTECHNICAL ANALYSIS FOR THIS PROJECT IS THE RESPONSIBILITY OF THE CONTRACTOR AWARDED THE WORK. AN ASSUMED ALLOWABLE SOIL BEARING VALUE OF 72 kPa HAS BEEN USED IN THE STRUCTURAL ANALYSIS OF THE BUILDING AND SHALL BE CONFIRMED AND VERIFIED AS PART OF THE GEOTECHNICAL INVESTIGATION. VALUES WHICH DO NOT MEET THE REQUIREMENTS INDICATED IN THE STRUCTURAL DESIGN CRITERIA, FOUNDATION LOADS SECTION SHALL BE IMMEDIATELY BROUGHT TO THE ATTENTION OF THE CONTRACTING OFFICER FOR CONSIDERATION AND DETERMINATION ON THE NEXT APPROPRIATE COURSE OF ACTION.

2.2 ELEVATIONS SHOWN ON THE DRAWINGS AT WHICH FOUNDATIONS BEAR ARE APPROXIMATE AND MAY VARY TO SUIT SUBSURFACE SOIL CONDITIONS AND PROJECT GEOTECHNICAL ENGINEER'S RECOMMENDATIONS. ALL EXTERIOR FOOTINGS ARE TO BEAR A MINIMUM OF 800mm BELOW FINISHED GRADE.

2.3 SEE THE SPECIFICATION FOR ADDITIONAL REQUIREMENTS TO THOSE OUTLINED IN THE GEOTECHNICAL INVESTIGATION FOR EXCAVATION AND PREPARATION OF THE FOUNDATION AND THE SLAB ON GRADE SUBGRADE INCLUDING COMPACTION PROCEDURES.

2.4 EXCAVATIONS FOR FOOTINGS SHALL HAVE THE SIDES AND BOTTOMS TEMPORARILY LINED WITH 0.25mm POLYETHYLENE IF PLACEMENT OF CONCRETE DOES NOT OCCUR WITHIN 24 HRS OF THE EXCAVATION OF THE FOOTING.

2.5 FOUNDATION CONDITIONS NOTED DURING CONSTRUCTION WHICH DIFFER FROM THOSE DESCRIBED IN THE GEOTECHNICAL REPORT SHALL BE REPORTED TO THE GENERAL CONTRACTOR AND CONTRACTING OFFICER BEFORE FURTHER CONSTRUCTION IS ATTEMPTED.

2.6 NO FOOTINGS SHALL BE POURED INTO OR AGAINST SUBGRADE CONTAINING FREE WATER, FROST, ICE OR LOOSE MATERIAL.

2.7 CONCRETE SLABS ON GRADE HAVE BEEN DESIGNED TO BEAR ON PROPERLY COMPACTED SUB-BASE STONE AND SUB-GRADE SOILS. THE SUB-BASE MATERIAL BENEATH THE SLAB-ON-GRADE SHALL BE A WELL GRADED CRUSHED STONE (AASHTO #57 OR SIMILAR) AND BE COMPACTED IN ACCORDANCE WITH 95% MODIFIED DENSITY PER ASTM D 1557.

2.8 PRIOR TO START OF FOUNDATION OR SLAB-ON-GRADE CONSTRUCTION, EXISTING SUBGRADES SHALL BE COMPACTED TO MINIMUM OF 95% MAXIMUM DRY DENSITY OBTAINED THRU ASTM D 1557 MODIFIED PROCTOR TESTING.

2.9 SEE PLUMBING, ELECTRICAL & CIVIL DRAWINGS FOR REQUIRED UNDERSLAB UTILITIES.

2.10 SEE ARCHITECTURAL DRAWINGS FOR ALL WATERPROOFING DETAILS AND MATERIALS.

2.11 IF UNDERMINING OF FOOTINGS OCCURS, FILL VOIDS WITH 15 MPa CONCRETE. DO NOT ATTEMPT TO REPLACE AND RE-COMPACT SOIL.

3.0 CONCRETE

3.1 CONCRETE SHALL HAVE THE UNIT WEIGHT OF 2350 kg/m^3 AND A MINIMUM COMPRESSIVE STRENGTH (f'c) OF 28 MPa AT 28 DAYS. ALL CONCRETE SHALL HAVE A MAXIMUM WATER-CEMENT RATIO OF 0.45. SEE SPECIFICATIONS FOR ADDITIONAL INFORMATION. ENTRAIN AIR TO PRODUCE TOTAL AIR CONTENT ACCORDING TO THE SPECIFICATIONS FOR CONCRETE EXPOSED TO FREEZING TEMPERATURES (EXTERIOR FOOTINGS AND STEM WALLS, SLAB TURNDOWNS, EXTERIOR SLABS AND SLABS-ON-GRADE, EXTERIOR RETAINING WALLS.)

3.2 PRIOR TO CONCRETE PLACEMENT, THE CONTRACTOR MUST SUBMIT CONCRETE MIX DESIGNS FOR EACH TYPE OF CONCRETE TO BE USED, PREPARED IN ACCORDANCE WITH THE SPECIFICATIONS TO THE CONTRACTING OFFICER FOR REVIEW.

3.3 NO CALCIUM CHLORIDE SHALL BE USED IN ANY CONCRETE.

3.4 MIXING, TRANSPORTING AND PLACING OF CONCRETE SHALL CONFORM TO ACI 301M-05.

3.5 ALL CONCRETE WORK SHALL CONFORM TO THE REQUIREMENTS OF THE AMERICAN CONCRETE INSTITUTE (ACI) 318M-05 MANUAL (metric), "BUILDING CODE REQUIREMENTS FOR REINFORCED CONCRETE", ACI-301M-05 "SPECIFICATIONS FOR STRUCTURAL CONCRETE FOR BUILDINGS" AND REQUIREMENTS OUTLINED IN THE CONTRACT SPECIFICATIONS.

3.6 CHAMFER ALL EXPOSED EXTERNAL CORNERS OF CONCRETE WITH 20mm x45 DEGREE CHAMFER UON.

3.7 CONCRETE REINFORCEMENT BARS SHALL BE METRIC SIZE BARS AND SHALL CONFORM TO ASTM A615M-07, GRADE 420 MPa, REINFORCING BARS SHALL NOT BE TACK WELDED, WELDED, HEATED OR CUT, UNLESS INDICATED ON THE CONTRACT DOCUMENTS. ALL LAP SPLICES SHALL BE CLASS "B" UON.

3.8 HORIZONTAL FOOTING AND HORIZONTAL WALL REINFORCEMENT SHALL BE CONTINUOUS AND SHALL HAVE 90 DEGREE BENDS AND EXTENSIONS, OR CORNER BARS OF EQUIVALENT SIZE LAPPED WITH A CLASS B TENSION SPLICE AT CORNERS AND INTERSECTIONS. TOP BAR CRITERIA SHALL APPLY IF 300mm OR MORE OF FRESH CONCRETE IS PLACED BELOW BAR.

3.9 SLABS-ON-GRADE SHALL HAVE CONSTRUCTION JOINTS OR CRACK CONTROL JOINTS AS SHOWN ON THE DRAWINGS. CONSTRUCTION JOINTS CAN BE USED AT CONTROL JOINT LOCATIONS AT CONTRACTORS OPTION. SEE SLAB PLANS & JOINT DETAILS FOR ADDITIONAL INFORMATION. FOR AREAS NOT SHOWN ON DWGS, THE MAXIMUM SPACING OF CONSTRUCTION/ CRACK CONTROL JOINTS SHALL BE 3600mm.

3.10 ALL CONCRETE REINFORCEMENT SHALL BE DETAILED, FABRICATED, LABELED, SUPPORTED, AND SPACED IN FORMS AND SECURED IN PLACE IN ACCORDANCE WITH THE PROCEDURES AND REQUIREMENTS OUTLINED IN ACI 318M, AND THE "MANUAL OF STANDARD PRACTICE FOR DETAILING REINFORCED CONCRETE STRUCTURES", ACI 315M, LATEST EDITION.

3.11 ALL DOWELS SHALL MATCH SIZE AND NUMBER OF MAIN REINFORCING, UNLESS NOTED OTHERWISE ON THE DRAWINGS.

3.12 ADDITIONAL BARS SHALL BE PROVIDED AROUND ALL FLOOR AND WALL OPENINGS AS SHOWN ON THE DRAWINGS.

3.13 SEE ARCHITECTURAL DRAWINGS FOR TYPE AND LOCATION OF ALL FLOOR FINISHES.

3.14 SPLICES (LAPS) OF REINFORCING BARS SHALL BE CLASS 'B' TENSION LAPS PER ACI 318M-05 UNLESS NOTED OTHERWISE. SEE SCHEDULE ON S-601.

3.15 PROVIDE ADEQUATE CONCRETE COVER IN ACCORDANCE WITH THE REQUIREMENTS AS SET FORTH BY ACI 318M-05.

3.16 REINFORCEMENT IS TO BE SECURELY HELD IN PLACE WHILE PLACING CONCRETE. IF REQUIRED, ADDITIONAL BARS, STIRRUPS, OR CHAIRS WILL BE PROVIDED BY THE CONTRACTOR TO FURNISH SUPPORT FOR ALL BARS WHERE NECESSARY DURING CONSTRUCTION.

3.17 CONTINUOUS TOP BARS TO BE SPLICED AT MID-SPAN. CONTINUOUS BOTTOM BARS TO BE SPLICED AT CENTERLINE OF SUPPORTS (OR AS SHOWN ON DETAILS).

3.18 CONCRETE SLABS TO BE CURED BY METHOD COMPATIBLE WITH SPECIFIED FLOOR FINISH. WHERE ACCEPTABLE USE A LIQUID MEMBRANE-CURING COMPOUND AT THE MANUFACTURERS RECOMMENDED COVERAGE. SAW JOINTS TO BE CUT AS SOON AS POSSIBLE WITHOUT RAVELING THE SURFACE.

3.19 LEVELING GROUT TO BE NON-SHRINK, NON-METALLIC TYPE, FACTORY PREMIXED GROUT IN ACCORDANCE WITH ASTM C 1107, HAVING A MINIMUM COMPRESSIVE STRENGTH OF NOT LESS THAN 34.5 MPa.

3.20 SLEEVES, INSERTS, MECHANICAL OPENINGS, CONDUITS, PIPES, RECESSES. DEPRESSIONS, CURBS AND OTHER EMBEDDED ITEMS TO BE PROVIDED FOR AS SHOWN ON THE ARCHITECTURAL, MECHANICAL AND ELECTRICAL DRAWINGS AND AS REQUIRED BY EQUIPMENT MANUFACTURERS. INSTALLATION OF THESE ITEMS TO BE COORDINATED AND PROVIDED FOR PRIOR TO PLACING CONCRETE.

3.21 EPOXY ADHESIVE SUCH AS EUCO-#452 AS MANUFACTURED BY EUCLID CHEMICAL CO. OR HVA ADHESIVE SYSTEM AS MANUFACTURED BY HILTI, INC. SHALL BE USED WHERE REBAR DOWELS ARE TO BE INSTALLED INTO EXISTING CONCRETE.

3.0 CONCRETE CONT

3.22 ANCHOR RODS TO BE ASTM F 1554 FY=248 MPa MINIMUM, GALVANIZED, UNLESS NOTED OTHERWISE.

3.23 UNLESS NOTED OTHERWISE, ALL CURBS SHALL BE REINFORCED WITH AT LEAST (1)-#14 CONTINUOUS AND #14 AT 450mm O.C. DOWELS TO THE SLAB-ON-GRADE.

3.24 PROVIDE ADDITIONAL (2)-#14 x 600mm REINFORCING BARS IN SLAB-ON GRADE AT ALL RE-ENTRANT CORNERS. PLACE BARS AT MID-DEPTH OF SLAB WITH A CLEARANCE OF 50mm FROM CORNER UON.

3.25 COLD-WEATHER PLACEMENT: COMPLY WITH ACI 306.1 AND AS FOLLOWS. PROTECT CONCRETE WORK FROM PHYSICAL DAMAGE OR REDUCED STRENGTH THAT COULD BE CAUSED BY FROST, FREEZING ACTIONS, OR LOW TEMPERATURES. SUBMIT A COLD WEATHER CONCRETING PLAN FOR APPROVAL.

3.26 PROVIDE BONDING COMPOUND PER ASTM C 1059-99: SPECIFICATION FOR LATEX AGENTS FOR BONDING FRESH CONCRETE (GROUT) TO HARDENED CONCRETE.

3.27 THE FORMED SURFACES FOR REINFORCED CONCRETE SHALL ACHIEVE A "CLASS A" FINISH WHEN EXPOSED OR A "CLASS B" FINISH WHEN RECEIVING PLASTER OR TILE AS PER SPECIFICATION SECTION 03 31 00 CAST-IN-PLACE STRUCTURAL CONCRETE.

4.0 CONCRETE MASONRY

4.1 MASONRY CONSTRUCTION SHALL CONFORM TO SPECIFICATION FOR MASONRY STRUCTURES (ACI 530.1) UON.

4.2 STRENGTH OF MASONRY MATERIALS SHALL BE AS FOLLOWS:

A. CONCRETE MASONRY UNITS SHALL BE NORMAL WEIGHT, GRADE N, TYPE 1, CONFORMING TO ASTM C-90 AND HAVE A MINIMUM COMPRESSIVE STRENGTH OF 13.1 MPa ON THE NET AREA.

B. MORTAR SHALL CONFORM TO ASTM C-270 TYPE S.

C. GROUT FOR MASONRY SHALL BE NORMAL WEIGHT AND HAVE A MINIMUM COMPRESSIVE STRENGTH OF 14 MPa AT 28 DAYS. GROUT SHALL CONFORM TO ASTM C476M. GROUT LIFTS SHALL NOT EXCEED 1500mm.

D. REINFORCED MASONRY SHALL HAVE A STRENGTH F'm = 10.3 MPa. (F'm IS THE COMPRESSIVE STRENGTH OF THE MASONRY AT 28 DAYS AS DETERMINED BY PRISM TESTS).

4.3 ALL VERTICAL REINFORCEMENT FOR CONCRETE MASONRY SHALL BE ASTM A615M-07, GRADE 420 MPa. ALL SPLICES SHALL BE LAPPED 48 BAR DIAMETERS MINIMUM.

4.4 CMU CELLS THAT REQUIRE VERTICAL REINFORCING BARS AS INDICATED ON THE CONTRACT DRAWINGS AND/OR SPECS SHALL HAVE REINF BARS PLACED IN CENTERS OF CMU CELLS AND CONTINUOUSLY GROUTED UON.

4.5 CONTRACTOR SHALL COORDINATE LOCATION OF ALL OPENINGS SEE ARCH, MECH, ELEC, AND PLUMBING SHEETS FOR SIZE AND LOCATION OF OPENINGS. PROVIDE SINGLE COURSE SOLID GROUTED BOND BEAMS REINFORCED WITH 2 #14 OVER ALL OPENINGS IN CMU WALLS. BEAR BOND BEAMS AT LEAST 200mm ON SOLID GROUTED, VERTICALLY REINFORCED CMU AT EACH SIDE OF THE OPENING. PASS VERTICAL JAMB REINFORCING THROUGH THE BOND BEAM AND EXTEND TO TOP OF WALL. NO OPENING IN CMU WALLS SHALL EXCEED 800mm.

4.6 HORIZONTAL JOINT REINFORCING TO BE GALVANIZED, STANDARD CLASS, LADDER TYPE, CONFORMING TO ASTM A 82, SPACED AT EVERY OTHER COURSE UNO. SIDE RODS TO BE 5mm WITH 4mm CROSS RODS. PROVIDE ONE-PIECE PREFABRICATED REINFORCING UNITS AT EVERY COURSE AT ALL WALL CORNERS AND INTERSECTIONS AND IN THE FIRST TWO COURSES ABOVE AND BELOW MASONRY OPENINGS. PROVIDE LAP AS RECOMMENDED BY THE MANUFACTURER WITH A MINIMUM OF 300mm. DISCONTINUE HORIZONTAL JOINT REINFORCING AT CONTROL JOINTS.

4.7 ALL MASONRY TO BE CONSTRUCTED USING A RUNNING BOND PATTERN. FULL BED AND HEAD JOINTS MUST BE USED. ALL CORNERS TO BE TIED BY MASONRY BOND.

4.8 DOWEL REINFORCED MASONRY WALLS TO FOUNDATION. SIZE DOWELS TO MATCH WALL REINFORCEMENT. LOCATE DOWELS IN CELLS TO CONTAIN WALL REINFORCEMENT. LAP DOWELS AND WALL REINFORCEMENT A MINIMUM OF 48 BAR DIAMETERS UNO.

4.9 DURING CONSTRUCTION, COVER AND PROTECT THE TOPS OF MASONRY WALLS AT THE END OF EACH DAY.

UNLESS OTHERWISE NOTED, LINEAR DIMENSIONS SHOWN ARE IN MILLIMETERS.

JOSEPH D. MEIER

US ARMY CORPS OF ENGINEERS AFGHANISTAN NORTH DISTRICT

SYMBOL	DESCRIPTION	DATE	APPR.

U.S. ARMY ENGINEER DISTRICT, AFGHANISTAN CORPS OF ENGINEERS APO AE 09356

DESIGNED BY: JDM
DWN BY: RMS
CKD BY: EPS
REVIEWED BY: JH
SUBMITTED BY: BAKER

DATE: 3-23-2011
CONTRACT NO. W912ER-09-D-0002
DRAWING CODE:
FILE NAME:
PLOT SCALE: NONE
PLOT DATE: 3/23/2011
REV. 0

SITE ADAPT DESIGN

L04 - LATRINE - LARGE - ARCH SPAN
ABBREVIATIONS AND GENERAL NOTES

SHEET REFERENCE NUMBER:

S-001

3/23/2011 11:00 AM

5.0 STRUCTURAL STEEL

5.1 STRUCTURAL STEEL WORK IS TO BE DESIGNED AND CONSTRUCTED IN ACCORDANCE WITH THE AMERICAN INSTITUTE OF STEEL CONSTRUCTION (AISC) "SPECIFICATIONS FOR STRUCTURAL STEEL BUILDINGS" (THIRTEENTH EDITION) AND THE "CODE OF STANDARD PRACTICE FOR STEEL BUILDINGS AND BRIDGES".

5.2 STRUCTURAL STEEL, UNLESS NOTED OTHERWISE, SHALL CONFORM TO THE FOLLOWING:
- A. WIDE FLANGE SHAPES AND WT'S: ASTM A992.
- B. CHANNELS, ANGLES, PLATES AND MISC. CONNECTION MATERIAL: ASTM A-36.
- C. STEEL TUBING: ASTM A500, GRADE B, WITH FY = 290 MPa FOR ROUND AND FY = 315 MPa FOR RECTANGULAR.

5.3 PRIOR TO FABRICATION, THE STEEL FABRICATOR IS TO SUBMIT SHOP DRAWINGS SHOWING ERECTION PLANS, PIECE DRAWINGS, AND CONNECTION DETAILS TO THE CONTRACTING OFFICER FOR REVIEW.

5.4 STRUCTURAL STEEL FABRICATOR IS TO PROVIDE FOR VERTICAL AND HORIZONTAL FIELD ADJUSTMENT OF ALL SUPPORT ASSEMBLIES.

5.5 CUTS, HOLES, COPING, ETC REQUIRED FOR OTHER TRADES MUST BE SHOWN ON THE SHOP DRAWINGS AND MADE IN THE SHOP. CUTS OR BURNING OF HOLES IN THE FIELD WILL NOT BE PERMITTED.

5.6 FABRICATE FRAMING COMPONENTS IN THE SHOP TO THE GREATEST EXTENT POSSIBLE. IN GENERAL, STRUCTURAL STEEL CONNECTIONS TO BE SHOP AND FIELD WELDED. ALL WELDS SHALL BE 3/16" FILLET WELDS UNLESS NOTED OTHERWISE.

5.7 WELDING TO BE IN ACCORDANCE WITH THE AMERICAN WELDING SOCIETY (AWS) "STRUCTURAL WELDING CODE-ANSI/AWS D1.1/D1.1M" (LATEST EDITION). USE E70XX ELECTRODES UNLESS OTHERWISE INDICATED ON THE DRAWINGS.

5.8 POST INSTALLED BOLTS TO BE ADHESIVE TYPE ANCHORS. BOLTS SHALL BE CARBON STEEL THREADED RODS OF THE DIAMETER INDICATED ON THE DRAWINGS WITH APPROPRIATE NUT, WASHER AND INJECTABLE ADHESIVE MATERIAL. BASIS OF DESIGN ARE HILTI HVA ADHESIVE ANCHORS WITH STANDARD EMBEDMENT, MANUFACTURED BY HILTI FASTENING SYSTEMS. ANY ANCHOR MEETING PUBLISHED LOAD VALUES OF HILTI ANCHORS MAY BE USED WITH APPROPRIATE EMBEDMENT. INSTALL ANCHORS PER MANUFACTURERS RECOMMENDATIONS.

5.9 HEADED SHEAR STUDS CONNECTORS TO CONFORM TO ASTM A 108, GRADE 1015 OR 1020, COLD-FINISHED CARBON STEEL.

5.10 PAINT AND PROTECTION:
- A. STRUCTURAL STEEL, UNLESS INDICATED OTHERWISE, TO BE SHOP CLEANED PER SSPC SP3 AND PAINTED ONE SHOP COAT OF FABRICATOR'S STANDARD RUST INHIBITING PRIMER. TOUCH UP AFTER ERECTION.
- B. DO NOT PAINT STEEL WHERE ENCASED WITH CONCRETE, OR AT FIELD WELD AREAS.
- C. EXPOSED STRUCTURAL STEEL FOR BREEZEWAY ROOFS, EQUIPMENT PLATFORMS, ETC, TO BE HOT DIPPED GALVANIZED PER ASTM A-123
- D. GALVANIZED FASTENERS AND ACCESSORIES TO BE HOT DIPPED GALVANIZED PER ASTM A153/A153M.
- E. REPAIR DAMAGE TO GALVANIZED COATINGS USING ASTM A780 ZINC RICH PAINT.
- F. PROVIDE MINIMUM 75mm CONCRETE COVER FOR ALL STEEL BELOW GRADE.

6.0 METAL DECK - NOT USED

7.0 COLD-FORMED METAL FRAMING

7.1 SEE ARCHITECTURAL DRAWINGS FOR EXTENT OF COLD-FORMED METAL FRAMING, INCLUDING PARTITION WALLS AND CEILINGS. ALSO REFERENCE ARCHITECTURAL DRAWINGS FOR ADDITIONAL INFORMATION INCLUDING SHEATHING TYPE, FINISHES AND OPENINGS.

7.2 ALL COLD-FORMED METAL FRAMING MEMBERS SHALL CONFORM TO ASTM A1003M, STRUCTURAL GRADE ST230 (MPa), WITH A GALVANIZED COATING OF Z275 OR BETTER IN ACCORDANCE WITH ASTM A653M.

7.3 ALL COLD-FORMED METAL FRAMING MEMBERS SHALL HAVE THE FOLLOWING MINIMUM PROPERTIES:
- A. MINIMUM METAL THICKNESS:
  - TRACK = 1.37mm
  - CEILING JOIST = 1.09mm
  - WALL STUD/OTHER = 1.09mm
- B. MINIMUM FLANGE WIDTH:
  - TRACK = 38mm
  - CEILING JOIST = 35mm
  - WALL STUD/OTHER = 35mm
- C. MINIMUM MEMBER DEPTH:
  - CEILING JOIST = 152mm
  - WALL STUD/OTHER = 92mm

7.4 CEILING JOISTS HAVE BEEN DESIGNED TO CARRY 0.47KPA, INCLUDING SELF WEIGHT OF METAL FRAMING, TWO LAYERS OF GYPSUM WALL BOARD AND NOMINAL MEP LOADING. NO LIVE LOAD HAS BEEN INCLUDED. THE SPACE ABOVE THE CEILING IS NOT INTENDED FOR STORAGE OR TO BE USED AS A WALKWAY. PROVIDE CEILING JOIST FRAMING OF SIZE INDICATED IN NOTE 7.3 AND AS FOLLOWS:
- A. JOIST SPANS LESS THAN 4600: JOISTS SHALL BE SPACED AT 400 AND HAVE DIAGONAL OR SOLID BRIDGING AT EACH END AND AT THE MIDSPAN.
- B. JOIST SPANS BETWEEN 4600 AND 6400: JOISTS SHALL BE SPACED AT 400 AND HAVE DIAGONAL OR SOLID BRIDGING AT EACH END AND AT THE QUARTER POINTS.
- C. JOIST SPANS BETWEEN 6400 AND 7800: JOISTS SHALL BE SPACED AT 200 (OR DOUBLE JOISTS AT 400) AND HAVE DIAGONAL OR SOLID BRIDGING AT EACH END AND AT THE QUARTER POINTS.
- D. JOIST SPANS EQUAL TO OR OVER 7800: JOISTS SHALL HAVE DIAGONAL OR SOLID BRIDGING AT EACH END AND AT THE QUARTER POINTS AND SHALL BE SUSPENDED FROM THE ARCH-SPAN TABS ABOVE AT 1200 EACH WAY.
- E. HEADERS WITH SPANS LESS THAN OR EQUAL TO 3000 CARRYING CEILING JOISTS WITH UP TO 5400 IN TRIBUTARY WIDTH SHALL BE FULLY CONNECTED TO EACH JOIST AND SHALL BE DOUBLE MEMBERS. HEADERS WITH A LARGER SPAN OR MORE TRIBUTARY WIDTH SHALL BE SUSPENDED FROM THE ARCH-SPAN TABS AT 1200 OC. SEE GENERAL NOTE 8.1 FOR MAXIMUM LOADS ON TABS.

7.5 WALL STUDS HAVE BEEN DESIGNED TO CARRY CEILING LOADING NOTED IN NOTE 7.3, UP TO 7800 IN TRIBUTARY WIDTH. PROVIDE WALL STUD FRAMING OF SIZE INDICATED IN NOTE 7.3 AND AS FOLLOWS:
- A. WALL HEIGHTS LESS THAN 3000: STUDS SHALL BE SPACED AT 400 AND HAVE BLOCKING AT 1200 MAXIMUM.
- B. WALL HEIGHTS BETWEEN 3000 AND 4900: STUDS SHALL BE SPACED AT 300 AND HAVE BLOCKING AT 1200 MAXIMUM.
- C. WALL HEIGHTS OVER 4900 WHICH MUST ALSO SUPPORT CEILING WEIGHT SHALL BE DESIGNED BY THE METAL FRAMING CONTRACTOR'S ENGINEER.

7.6 WALL STUDS WITHOUT CEILING LOADS MUST BE BRACED BACK TO THE ARCH-SPAN TABS ABOVE AT 1200 MAXIMUM. SEE ARCHITECTURAL DRAWINGS FOR BRACING DETAILS. DO NOT SECURE TOPS OF STUD WALLS TO THE UNDERSIDE OF THE ARCH-SPAN BUILDING PANELS. THESE STUDS HAVE BEEN DESIGNED TO CARRY ONLY THEIR OWN SELF WEIGHT DURING A SEISMIC EVENT. PROVIDE WALL STUD FRAMING OF SIZE INDICATED IN NOTE 7.3 AND AS FOLLOWS:
- A. WALL HEIGHTS LESS THAN 5000: STUDS SHALL BE SPACED AT 400 AND HAVE BLOCKING AT 1200 MAXIMUM.
- B. WALL HEIGHTS BETWEEN 5000 AND 5500: STUDS SHALL BE SPACED AT 300 AND HAVE BLOCKING AT 1200 MAXIMUM.
- C. WALL HEIGHTS BETWEEN 5500 AND 6400: STUDS SHALL BE SPACED AT 200 AND HAVE BLOCKING AT 1200 MAXIMUM.
- D. CANTILEVERED HEIGHT PAST BRACE POINT IS NOT TO EXCEED 1/4 OF THE HEIGHTS NOTED IN NOTES A, B, AND C. IE, FOR STUDS SPACED AT 400 WITH BLOCKING AT 1200 MAXIMUM, HEIGHT ABOVE THE BRACE IS NOT TO EXCEED 1250.

7.7 FOR WALLS THAT CARRY CEILING LOAD AND EXTEND PAST THE CEILING, APPLY NOTES 7.4 AND 7.5 AS REQUIRED. USE THE MORE SEVERE WALL CONSTRUCTION FOR THE ENTIRE WALL CONSTRUCTION.

7.8 FOR PROVIDE DOUBLE MEMBER JOISTS OR WALL STUDS AT EACH SIDE OF OPENINGS.

7.9 ALL CONNECTIONS SHALL BE MADE WITH CORROSION RESISTANT (ASTM A153M), SELF-DRILLING, SELF-TAPPING STEEL DRILL SCREWS IN ACCORDANCE WITH ASTM C1513.

7.10 FABRICATE COLD FORMED METAL FRAMING AND ACCESSORIES PLUMB, SQUARE AND TRUE TO LINE, WITH CONNECTIONS SECURELY FASTENED ACCORDING TO AISI STANDARD FOR COLD FORMED STEEL FRAMING.

7.11 FRAMING COMPONENTS ARE TO BE CUT SQUARELY FOR ATTACHMENT TO PERPENDICULAR MEMBERS OR AS REQUIRED FOR AN ANGULAR FIT AGAINST ABUTTING MEMBERS.

7.12 CUT FRAMING MEMBERS BY SAWING OR SHEATHING, DO NOT TORCH CUT.

7.13 INSTALL FRAMING MEMBERS IN ONE-PIECE LENGTHS.

7.14 INSTALL TEMPORARY BRACING AND SUPPORTS AS REQUIRED TO SECURE FRAMING DURING CONSTRUCTION. MAINTAIN BRACING AND SUPPORTS IN PLACE UNTIL THE STRUCTURE HAS BEEN COMPLETED WITH ALL CONNECTIONS AND PERMANENT BRACING SECURED.

8.0 ARCH SPAN

8.1 USE UBM OR ABM MACHINES OR EQUIVALENT THAT WILL PRODUCE THE ARCH SPAN PANELS OF PROFILE AND THICKNESS NOTED ON THE DRAWINGS.

8.2 ARCH-SPAN BASIS OF DESIGN ARE THE 120 PROFILE PANELS PRODUCED BY MIC INDUSTRIES MACHINES WITH A STEEL THICKNESS OF 1.06mm (19GA). SUBSTITUTE PANELS MUST MEET THE NOMINAL STRENGTH CAPACITIES LISTED WITH THE PANEL PROFILE SHOWN IN DETAIL 2/S-202. SUBSTITUTE PANEL STRENGTH CAPACITIES SHALL ACCOUNT FOR THE REDUCTION TO NOMINAL NEGATIVE MOMENT AND AXIAL LOAD CAPACITIES DUE TO THE CURVING PROCESS. CONTRACTORS PROVIDING SUBSTITUTE PANELS MUST ALSO REVISE DETAILS/DIMENSIONS WORKED SPECIFICALLY FOR THE PANEL PROFILES USED AS THE BASIS OF DESIGN. THIS INCLUDES, BUT MAY NOT BE LIMITED TO, FOUNDATIONS, ENDWALL OPENINGS, SIDEWALL OPENINGS, OPENING FRAMES AND OUT-BUILDING ROOF PANELS.

8.3 ARCH SPAN PANELS WILL BE ROLLED ON-SITE USING GALVANIZED STEEL COILS CONFORMING TO ASTM A653M-06A, STRUCTURAL QUALITY (SS), GRADE 340, CLASS Z275 FOR GALVANIZED COATING.

8.4 ENDWALL PANELS SHALL BE THE SAME PROFILE AND THICKNESS AS THE ARCH SPAN PANELS USED FOR THE ROOF.

8.6 CONTRACTOR IS TO ENGAGE AN EXPERIENCED INSTALLER TO ERECT THE ARCH SPAN BUILDING. CONSTRUCTION CREWS SHALL BE TRAINED IN THE USE OF THE PANEL ROLLING MACHINES AND IN THE ERECTION OF THE PANELS.

8.7 EXERCISE CARE IN DELIVERING, UNLOADING, STORING AND ERECTING STEEL COILS AND BUILDING PANELS TO PREVENT BENDING, WARPING, TWISTING AND SURFACE DAMAGE.

8.8 ERECT PANELS TRUE TO LINE, LEVEL AND PLUMB. ROOF LINE SHALL BE STRAIGHT AND LEVEL, RADIUS SHALL BE CONSISTENT THROUGHOUT AND ENDWALLS SHALL BE STRAIGHT AND PLUMB.

8.9 WINDOW AND DOOR OPENINGS SHALL BE FRAMED PER DETAILS ON THE DRAWINGS.

8.10 INCIDENTAL OPENINGS (COORDINATE WITH ARCHITECTURAL AND MEP DRAWINGS) IN THE PANELS SHALL BE NO MORE THAN 200mm IN DIAMETER AND SHALL BE PLACED THROUGH A "FLAT" PORTION OF THE PANEL. OPENINGS SHALL NOT BE CUT THROUGH ANY VERTICAL OR DIAGONAL RIB.

8.11 HANGER TABS AS DETAILED ON THE DRAWINGS SHALL BE INSTALLED PER LAYOUT ON THE TYPICAL BUILDING SECTION. ALL SUSPENDED LOADS SHALL BE CONNECTED TO HANGER TABS. HANGER TABS AT LESS THAN 30 DEGREES FROM VERTICAL CAN CARRY NO MORE THAN 100 KG EACH. HANGER TABS AT MORE THAN 30 DEGREES FROM VERTICAL CAN CARRY NO MORE THAN 25 KG EACH.

9.0 STRUCTURAL DESIGN CRITERIA

9.1 ALL DESIGNS SHALL CONFORM TO THE PROVISIONS OF THE IBC 2009 AND ASCE 7-05. OCCUPANCY CATEGORY II.

9.2 DESIGN LOADS

9.2.1 DEAD LOADS (PER IBC 2009 & UFC 3-301-01)

MECH/ELEC/PLUMBING	0.10 kPa
SUSPENDED CEILING	0.24 kPa
INSULATION	0.07 kPa
ARCH SPAN STEEL: 120 PROFILE x 1.06mm	0.17 kPa
TOTAL DEAD LOAD	0.58 kPa
MINIMUM (FOR UPLIFT)	0.24 kPa

9.2.2 LIVE LOADS (PER IBC 2009 & UFC 3-301-01)

ROOF	0.57 kPa
SLAB ON GRADE	7.18 kPa

9.2.3 SNOW LOADS (PER IBC 2009 & UFC 3-301-01)

GROUND SNOW LOAD (Pg)	1.2 kPa
SNOW IMPORTANCE FACTOR (I)	1.0
SNOW EXPOSURE FACTOR (Ce)	0.9
THERMAL FACTOR (Ct)	1.1

9.2.4 WIND LOADS (PER IBC 2009)

BASIC WIND SPEED	137 km/h
WIND IMPORTANCE FACTOR	1.0
WIND EXPOSURE CATEGORY	C
DIRECTIONALITY COEFFICIENT (Kd)	0.85
TOPOGRAPHIC FACTOR (Kzt)	1.0

9.2.5 SEISMIC LOADS (PER IBC 2009 & UFC 3-310-04)

SEISMIC IMPORTANCE FACTOR (Ie)	1.0
SEISMIC SITE CLASS	D
S_s =	2.40
S_1 =	1.20
S_{DS} =	1.6
S_{D1} =	1.2
SEISMIC DESIGN CATEGORY	E

SEISMIC RESISTING SYSTEM:
- -STRUCTURAL STEEL SYSTEMS NOT SPECIFICALLY DETAILED FOR SEISMIC RESISTANCE
- -RESPONSE MODIFICATION FACTOR (R) 2 (CONSERVATIVE)
- -RESPONSE COEFFICIENT (Cs) 0.5

SEISMIC ANALYTICAL PROCEDURE = EQUIV LATERAL FORCE

9.3 FOUNDATION DESIGN CRITERIA

9.3.1 FOUNDATION DESIGN IS BASED UPON THE FOLLOWING SOIL PARAMETERS:
ASSUMED NET ALLOWABLE SOIL BEARING PRESSURE FOR ALL SPREAD FOOTINGS: 72 kPa

9.3.2 ASSUMED LATERAL EARTH PRESSURE PARAMETERS:
- SOIL DENSITY = 1800 KG/M^3
- COEFFICIENT OF ACTIVE PRESSURE (KA) = 0.41
- COEFFICIENT OF AT-REST PRESSURE (KO) = 0.58
- COEFFICIENT OF PASSIVE EARTH PRESSURE (KP) = 2.44
- ANGLE OF INTERNAL FRICTION (PHI) = 25 DEGREES
- COEFFICIENT OF FRICTION (U) = 0.35
- MODULUS OF SUB-GRADE REACTION (KS) = 4150 G/CM^3

9.3.3 FROST DEPTH: ASSUMED TO BE 800mm

UNLESS OTHERWISE NOTED, LINEAR DIMENSIONS SHOWN ARE IN MILLIMETERS.

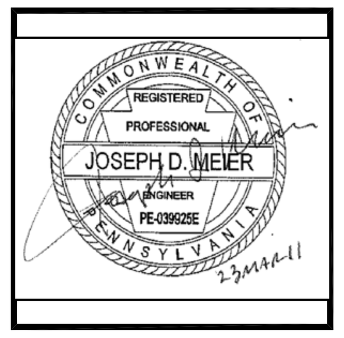

US ARMY CORPS OF ENGINEERS AFGHANISTAN NORTH DISTRICT

SYMBOL	DESCRIPTION	DATE	APPR.

U.S. ARMY ENGINEER DISTRICT, AFGHANISTAN
CORPS OF ENGINEERS
APO AE 09356

DESIGNED BY: JDM
DWN BY: RMS
CKD BY: EPS
REVIEWED BY: JH
SUBMITTED BY: BAKER

DATE: 3-23-2011
REV. 0
CONTRACT NO. W912ER-09-D-0002
DRAWING CODE:
FILE NAME: ARCHSPANLAT-L04-S-002.DWG
PLOT SCALE: NONE
PLOT DATE: 3/23/2011

SITE ADAPT DESIGN

L04 - LATRINE - LARGE - ARCH SPAN
GENERAL NOTES AND DESIGN CRITERIA

SHEET REFERENCE NUMBER:
S-002

A1 Size 594mm x 841mm

3/23/2011 11:00 AM

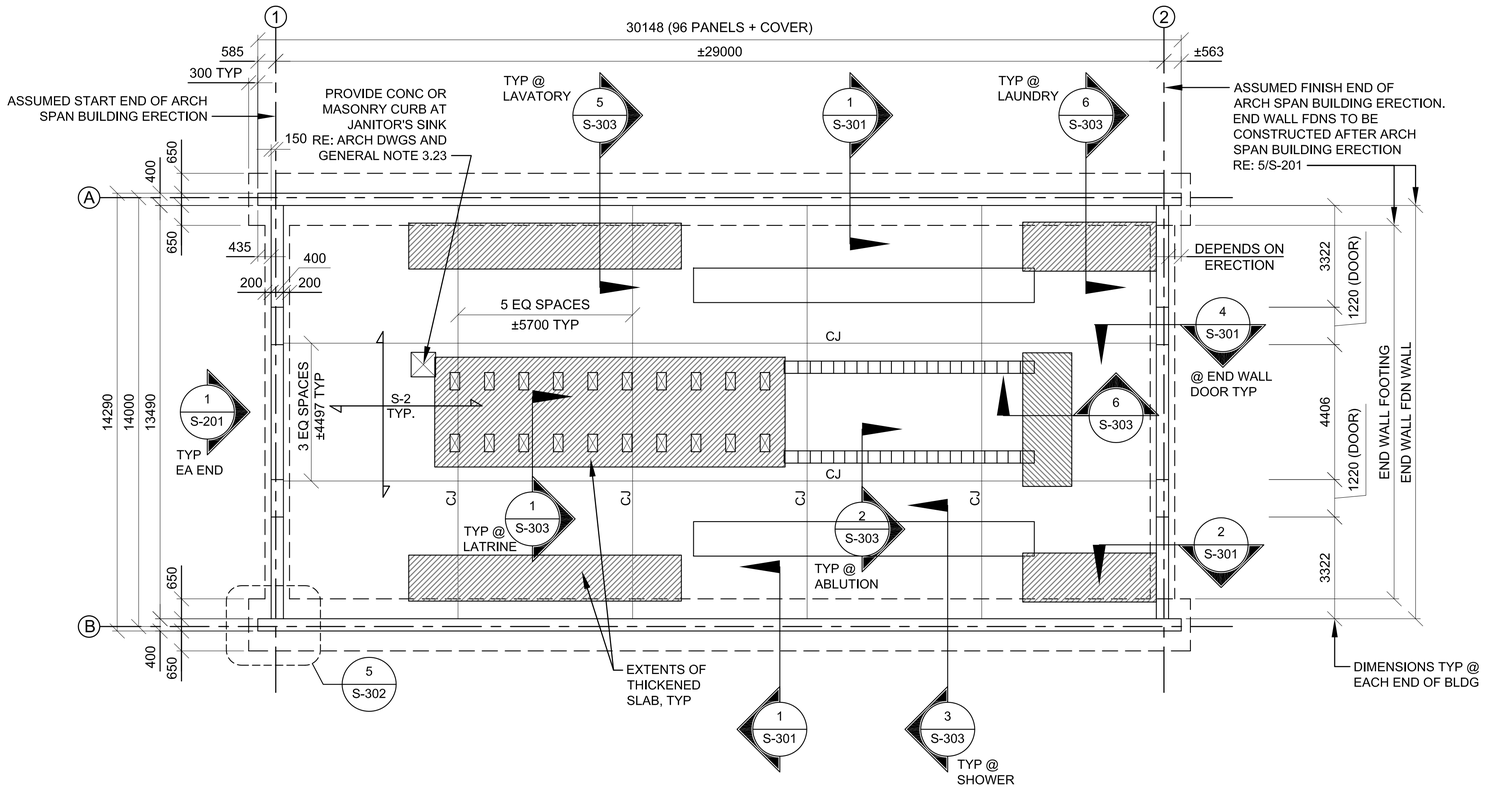

FOUNDATION PLAN

SCALE: 1:100

FOUNDATION PLAN NOTES:

1. RE: DRAWINGS S-001 AND S-002 FOR GENERAL NOTES AND DESIGN CRITERIA.
2. COORDINATE DIMENSIONS, WALL OPENINGS, ELEVATIONS, SECTIONS, AND DETAILS WITH ARCHITECTURAL DRAWINGS.
3. TOP OF SLAB ELEVATION MUST BE COORDINATED WITH SITE ADAPT CIVIL DRAWINGS. TOP OF FLOOR SLAB IS AT THE DATUM ELEVATION = 0. ALL ELEVATIONS ARE REFERENCED FROM THIS ELEVATION.
4. BOTTOM OF CONCRETE FOOTING ELEVATIONS = -950 (BELOW TOP OF SLAB, TYP UNO).
5. S-2 DENOTES A 150 CONCRETE SLAB-ON-GRADE REINFORCED WITH #14 @ 400. PLACE SLAB OVER 0.25 VAPOR RETARDER AND 100 COMPACTED GRANULAR SUB-BASE MATERIAL SUCH AS AASHTO #57 STONE.
6. SPACE SLAB CONTROL/CONSTRUCTION JOINTS AS SHOWN. CJ = CONTROL OR CONSTRUCTION JOINT, RE: 2/S-501.
7. PROVIDE ADDITIONAL SLAB REINFORCEMENT AT ALL RE-ENTRANT CORNERS, RE: 8/S-501.
8. RE: DRAWING S-501 FOR TYPICAL FOUNDATION AND SLAB DETAILS.
9. LOCATION OF FLOOR DRAINS ARE NOT SHOWN, COORDINATE LOCATIONS AND SLOPE OF SLAB WITH PLUMBING AND ARCHITECTURAL DRAWINGS.
10. COORDINATE MECHANICAL PENETRATIONS W/ M/E/P DRAWINGS.
11. PROVIDE REINFORCED CONCRETE WALK-OFF MATS AT ALL EXTERIOR DOORS RE: A-503 FOR DETAILS AND ARCHITECTURAL FLOOR PLAN FOR LOCATIONS.

N

0 2000 4000

SCALE: 1:100

UNLESS OTHERWISE NOTED, LINEAR DIMENSIONS SHOWN ARE IN MILLIMETERS.

COMMONWEALTH OF PENNSYLVANIA
REGISTERED PROFESSIONAL
JOSEPH D. MEIER
ENGINEER
PE-039235E
23 Mar 2011

US ARMY CORPS OF ENGINEERS
AFGHANISTAN NORTH DISTRICT

SYMBOL	DESCRIPTION	DATE	APPR.	SYMBOL	DESCRIPTION	DATE	APPR.

DESIGNED BY: JDM
DWN BY: RMS
CKD BY: EPS
REVIEWED BY: JH
SUBMITTED BY:
DATE: 3/23/2011
REV: 0
CONTRACT NO. W912ER-09-D-0002
DRAWING CODE:
FILE NAME: ARCH(Latrine)-L04-S-101.DWG
PLOT SCALE: 1:100
PLOT DATE: 3/23/2011

BAKER

U.S. ARMY ENGINEER DISTRICT, AFGHANISTAN
CORPS OF ENGINEERS
APO AE 09356

SITE ADAPT DESIGN
L04 - LATRINE - LARGE - ARCH SPAN
FOUNDATION PLAN

SHEET REFERENCE NUMBER:
S-101

3/23/2011 11:00 AM

A1 Size 594mm x 841mm

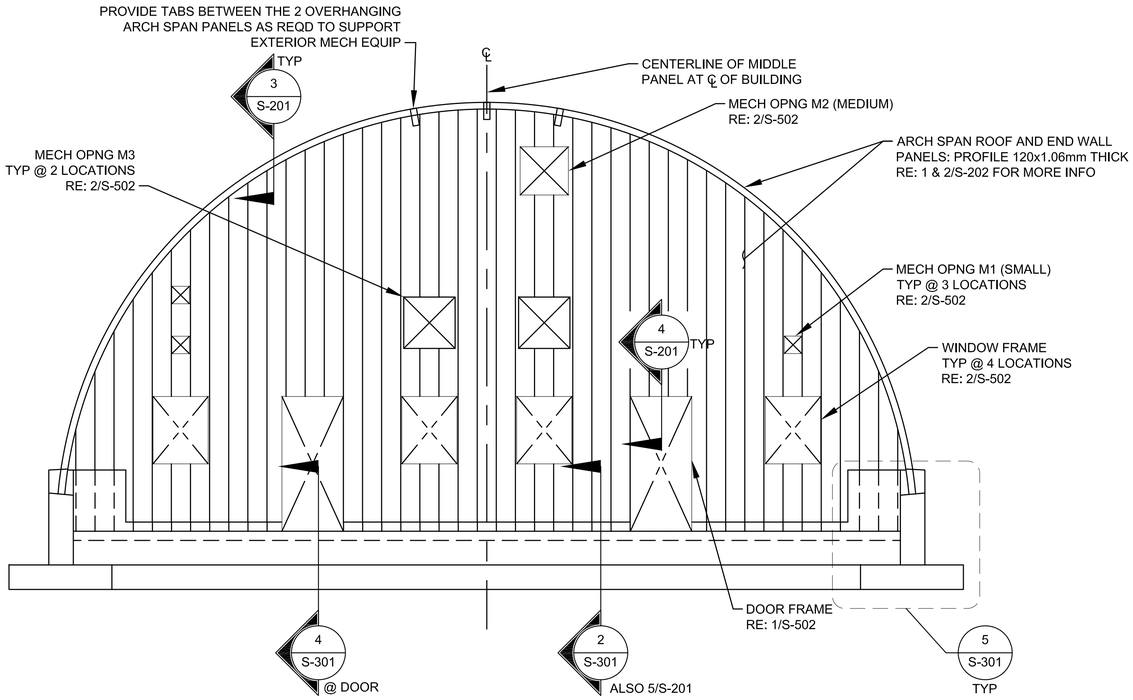

1 S-201 EAST ELEVATION

SCALE: 1:50

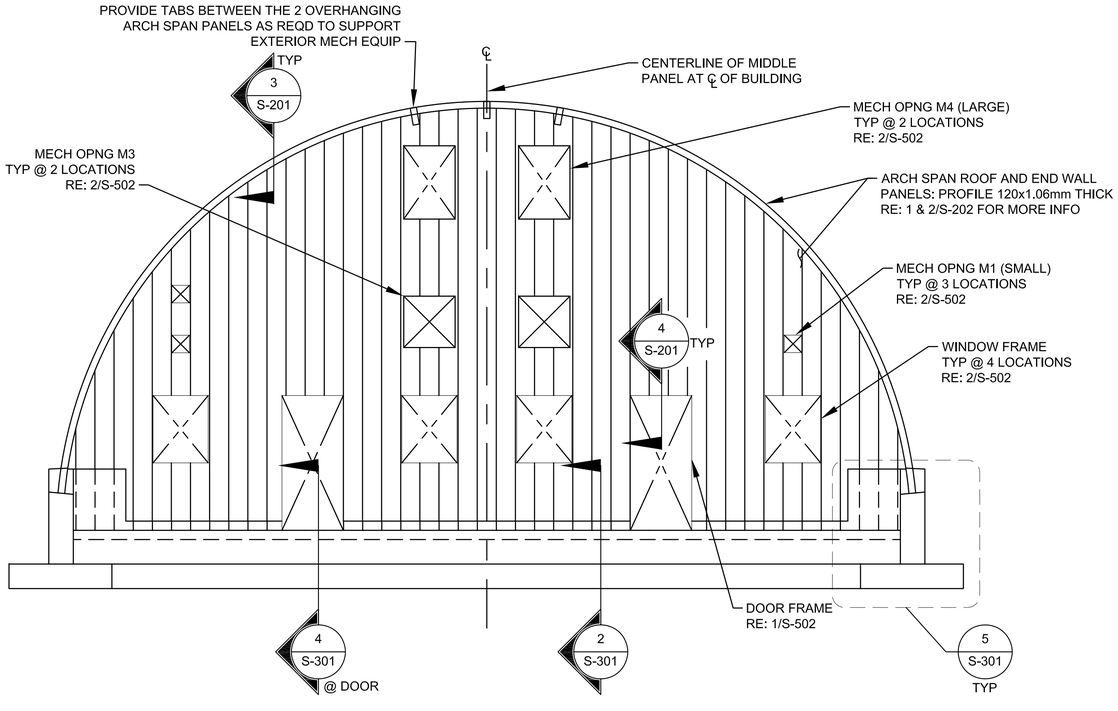

2 S-201 WEST ELEVATION

SCALE: NTS

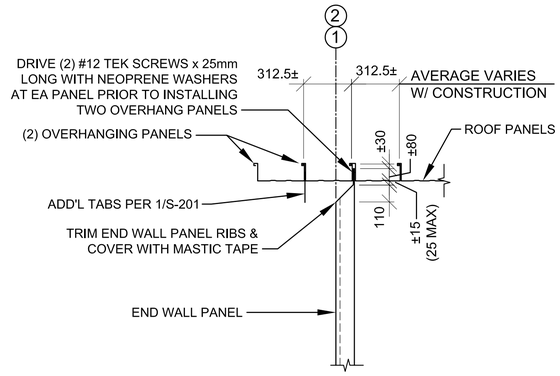

3 S-201 SECTION

SCALE: 1:20

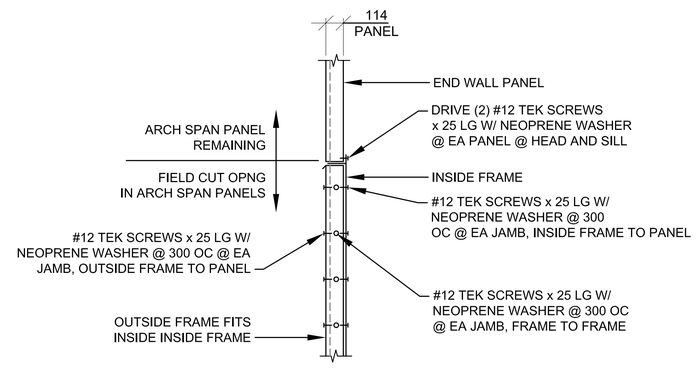

4 S-201 SECTION

SCALE: 1:20

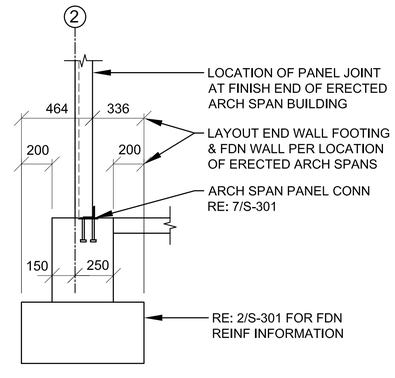

5 S-201 SECTION

SCALE: 1:20

0 500 1000 2000

SCALE: 1:50

0 200 400 800

SCALE: 1:20

UNLESS OTHERWISE NOTED, LINEAR DIMENSIONS SHOWN ARE IN MILLIMETERS.

COMMONWEALTH OF PENNSYLVANIA REGISTERED PROFESSIONAL JOSEPH D. MEIER ENGINEER PE-039025E

US ARMY CORPS OF ENGINEERS AFGHANISTAN NORTH DISTRICT

SYMBOL	DESCRIPTION	DATE	APPR.	SYMBOL	DESCRIPTION	DATE	APPR.

DESIGNED BY: JDM
DWN BY: RMS
CKD BY: EPS
REVIEWED BY: JH
SUBMITTED BY: BAKER
DATE: 3/23/2011
CONTRACT NO. W912ER-09-D-0002
DRAWING CODE:
FILE NAME: ARCHSPAN-LATRINE-S201.DWG
PLOT SCALE: VARIES
PLOT DATE: 3/23/2011
REV: 0

U.S. ARMY ENGINEER DISTRICT, AFGHANISTAN CORPS OF ENGINEERS APO AE 09356

SITE ADAPT DESIGN

L04 - LATRINE - LARGE - ARCH SPAN

BUILDING ELEVATION AND DETAILs

SHEET REFERENCE NUMBER:

S-201

3/23/2011 11:00 AM

A1 Size 594mm x 841mm

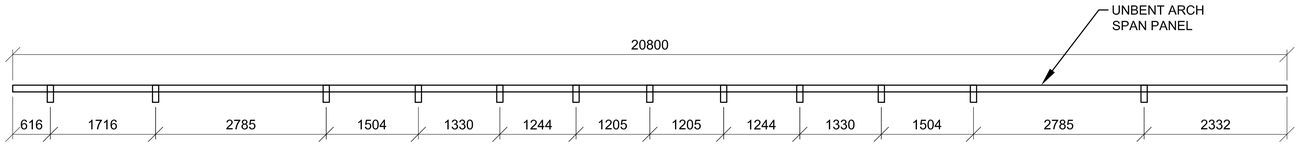

TAB LAYOUT ON PRE-BENT PANEL

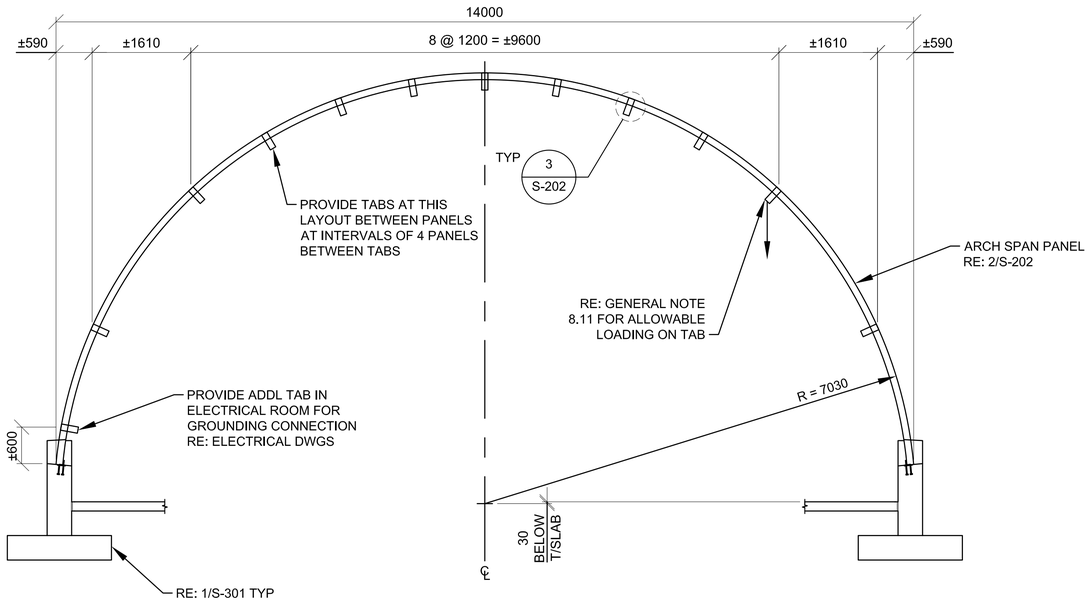

1 S-202 BUILDING SECTION

SCALE: 1:50

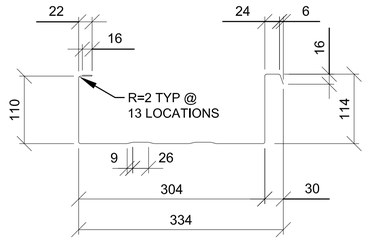

NOMINAL STRENGTH VALUES PER PANEL
(WITHOUT FACTOR OF SAFETY)

SHEAR : Vn = 1093.16 kg
AXIAL COMPRESSION : Pn = 5542.9 kg*
POSTITIVE MOMENT : +Mn = 494.6 kg-m
NEGATIVE MOMENT : -Mn = 264.75 kg-m*

* THE CURVING PROCESS REDUCES THE NOMINAL STRENGTH OF ARCH-SPAN PANELS IN NEGATIVE FLEXURE AND COMPRESSION. THESE VALUES ARE BASED ON TESTING OF PANELS.

NOTE:
ALL DIMENSIONS ARE APPROXIMATE (±3mm)

2 S-202 120 PROFILE - PROVIDE 1.06mm (19GA) THICKNESS

SCALE: NTS

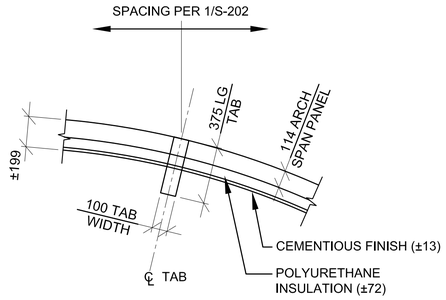

3 S-202 STEEL TAB DETAIL

SCALE: 1:20

0 500 1000 2000
SCALE: 1:50

0 200 400 800
SCALE: 1:20

UNLESS OTHERWISE NOTED,
LINEAR DIMENSIONS
SHOWN ARE IN MILLIMETERS.

COMMONWEALTH OF PENNSYLVANIA
REGISTERED PROFESSIONAL
JOSEPH D. MEIER
RE-039925E

US ARMY CORPS
OF ENGINEERS
AFGHANISTAN NORTH
DISTRICT

SYMBOL	DESCRIPTION	DATE	APPR.	SYMBOL	DESCRIPTION	DATE	APPR.

DESIGNED BY: JDM
DWN BY: RMS
CKD BY: EPS
REVIEWED BY: JH
SUBMITTED BY: BAKER
DATE: 4-21-2011
REV: 0
CONTRACT NO. W912ER-09-D-0002
DRAWING CODE:
FILE NAME: ARCHSPAN-S-C-L04-S-202.DWG
PLOT SCALE: VARIES
PLOT DATE: 4/21/2011

U.S. ARMY ENGINEER DISTRICT, AFGHANISTAN
CORPS OF ENGINEERS
APO AE 09356

SITE ADAPT DESIGN
L04 - LATRINE - LARGE - ARCH SPAN
BUILDING SECTION AND DETAILS

SHEET
REFERENCE
NUMBER:
S-202

A1 Size 594mm x 841mm

4/21/2011 10:27 AM

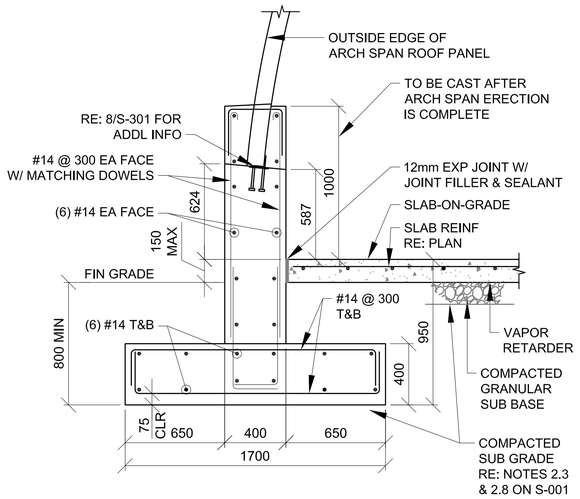

1 S-301 FOUNDATION WALL SECTION

SCALE: 1:20

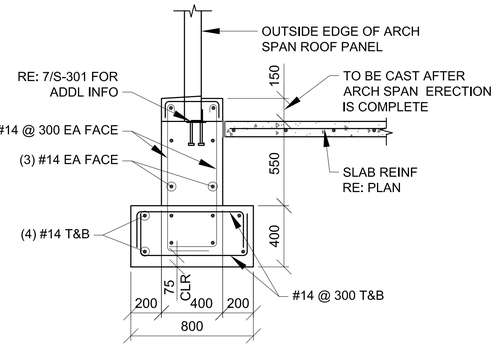

2 S-301 END WALL FOUNDATION SECTION

SCALE: 1:20

NOT USED

3 S-301 FDN WALL SECTION TYP @ DOOR

SCALE: 1:20

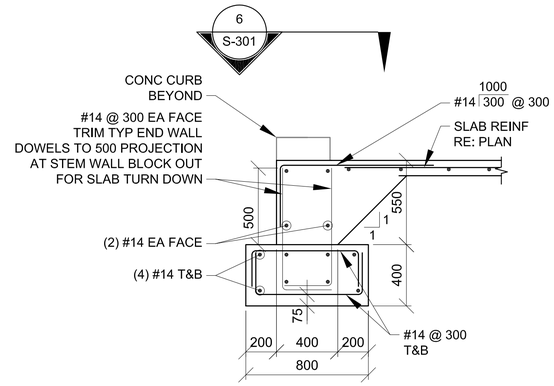

4 S-301 END WALL FDN SECTION TYP @ DOOR

SCALE: 1:20

NOTE:
PROVIDE 1220mm OPENING IN STEM WALL PER
PLAN (200mm WIDER THAN DOOR, 100mm EA SIDE)

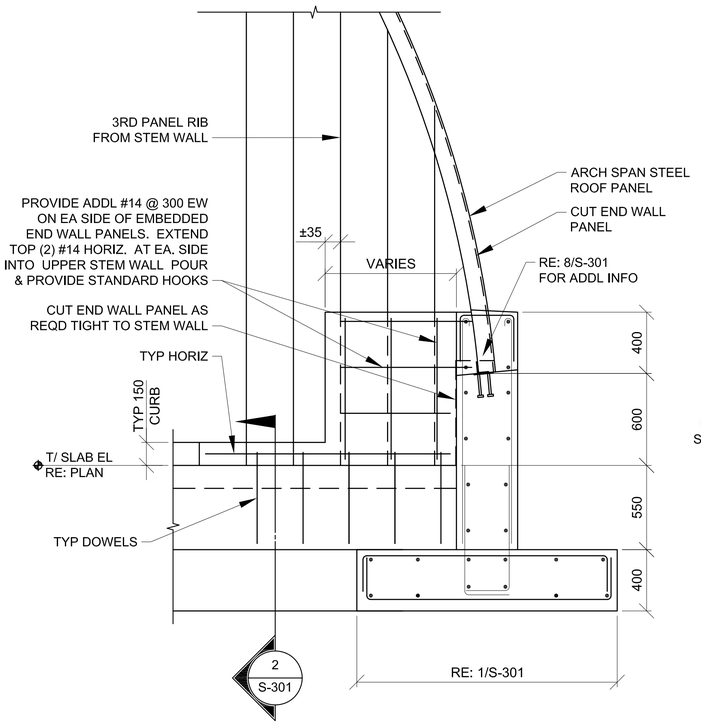

5 S-301 FOUNDATION END WALL SECTION

SCALE: 1:20

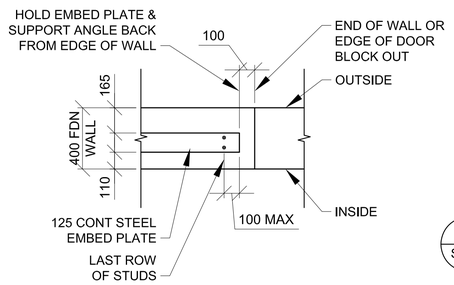

6 S-301 PLAN VIEW TYP AT END OF FDN WALL OR AT DOOR BLOCKOUT

SCALE: 1:20

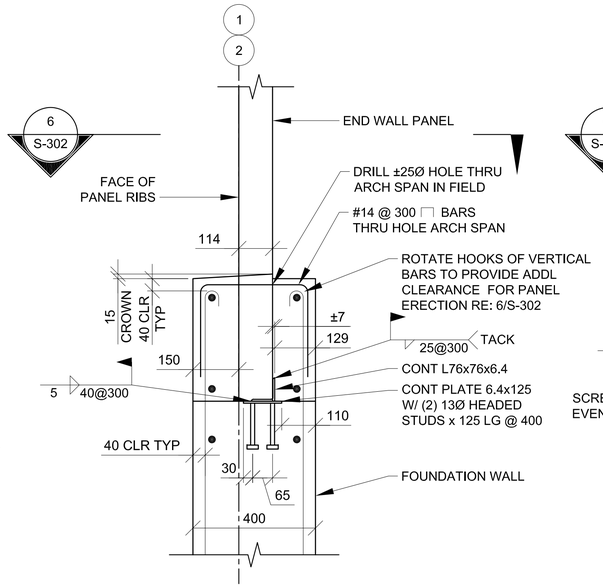

7 S-301 TYP ARCH SPAN END WALL CONN TO FDN WALL

SCALE: 1:10

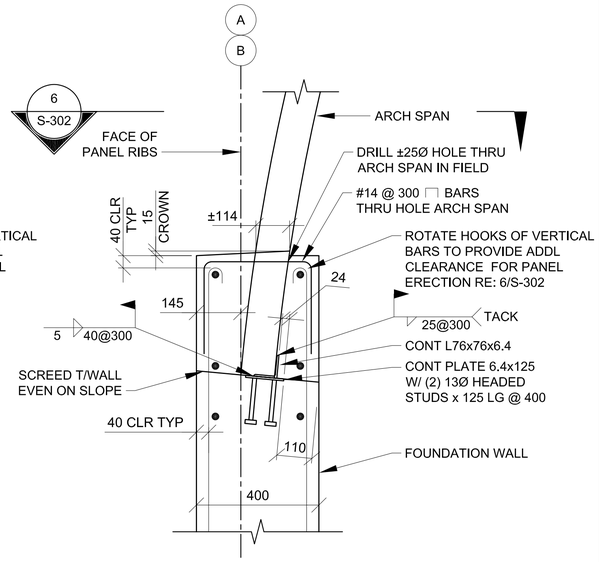

8 S-301 TYP ARCH SPAN SIDE WALL CONN TO FDN WALL

SCALE: 1:10

0 200 400 800
SCALE: 1:20

0 100 200 400
SCALE: 1:10

UNLESS OTHERWISE NOTED,
LINEAR DIMENSIONS
SHOWN ARE IN MILLIMETERS.

COMMONWEALTH OF PENNSYLVANIA
REGISTERED PROFESSIONAL ENGINEER
JOSEPH D. WEIER
PE-076225E
2-24-11

US ARMY CORPS
OF ENGINEERS
AFGHANISTAN NORTH
DISTRICT

SYMBOL	DESCRIPTION	DATE	APPR.	SYMBOL	DESCRIPTION	DATE	APPR.

DESIGNED BY: JDM
DWN BY: RMS
CKD BY: EPS
REVIEWED BY: JH
SUBMITTED BY:
DATE: 3/23/2011
CONTRACT NO. W912ER-09-D-0002
DRAWING CODE:
FILE NAME: 09W912ER-A-C-L04-S-301.DWG
PLOT SCALE: VARIES
PLOT DATE: 3/23/2011
REV: 0

U.S. ARMY ENGINEER DISTRICT, AFGHANISTAN
CORPS OF ENGINEERS
APO AE 09356

BAKER

SITE ADAPT DESIGN

L04 - LATRINE - LARGE - ARCH SPAN

FOUNDATION SECTIONS

SHEET
REFERENCE
NUMBER:

S-301

3/23/2011 11:12 AM

A1 Size 594mm x 841mm

NOT USED

1 S-302 WINDOW DORMER SECTION
SCALE: 1:20

NOT USED

2 S-302 DOOR DORMER SECTION
SCALE: 1:20

NOT USED

3 S-302 DOOR DORMER WALL SECTION
SCALE: 1:20

NOT USED

4 S-302 PLAN VIEW TYP @ DOOR DORMER
SCALE: 1:20

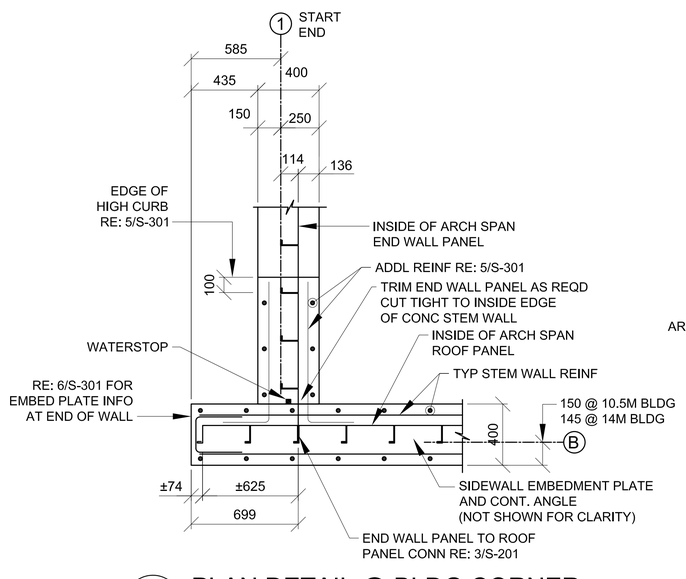

5 S-302 PLAN DETAIL @ BLDG CORNER
SCALE: 1:20

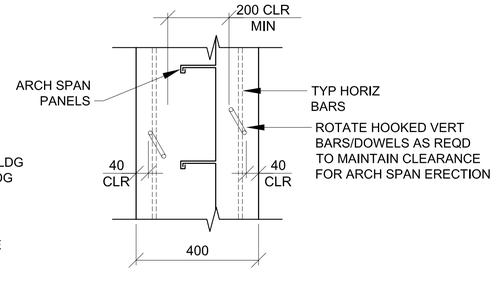

6 S-302 TYP FDN WALL PLAN DETAIL
SCALE: 1:10

NOT USED

7 S-302 PANEL TO TUBE CONN DETAIL
SCALE: 1:10

0 200 400 800
SCALE: 1:20

UNLESS OTHERWISE NOTED, LINEAR DIMENSIONS SHOWN ARE IN MILLIMETERS.

COMMONWEALTH OF PENNSYLVANIA
REGISTERED PROFESSIONAL
JOSEPH D. WEIER
ENGINEER
PE-076525E
2-24-11

US ARMY CORPS OF ENGINEERS
AFGHANISTAN NORTH DISTRICT

SYMBOL	DESCRIPTION	DATE	APPR.	SYMBOL	DESCRIPTION	DATE	APPR.

DESIGNED BY: JDM
DWN BY: RMS
CKD BY: EPS
REVIEWED BY: JH
SUBMITTED BY:
DATE: 3/23/2011
REV: 0
CONTRACT NO. W912ER-09-D-0002
DRAWING CODE:
FILE NAME: AFG10Bmp-S-L04-S-302.DWG
PLOT SCALE: 1:20
PLOT DATE: 3/23/2011

BAKER

U.S. ARMY ENGINEER DISTRICT, AFGHANISTAN
CORPS OF ENGINEERS
APO AE 09356

SITE ADAPT DESIGN
L04 - LATRINE - LARGE - ARCH SPAN
SECTIONS

SHEET REFERENCE NUMBER:
S-302

3/23/2011 11:13 AM

A1 Size 594mm x 841mm

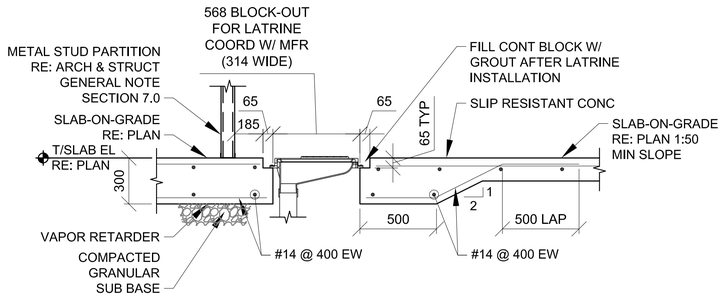

1 S-303 LATRINE SECTION

SCALE: 1:20

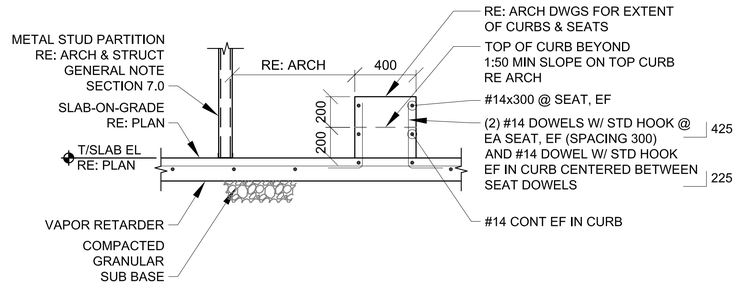

2 S-303 ABLUTION SECTION

SCALE: 1:20

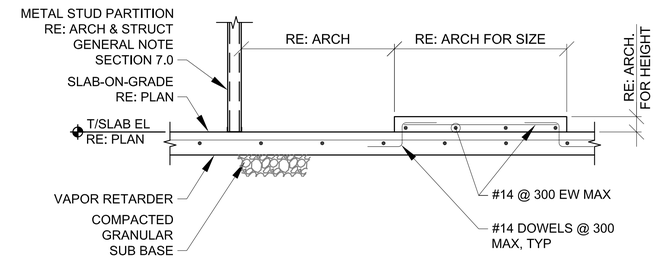

3 S-303 SHOWER SECTION

SCALE: 1:20

4 S-303 NOT USED

SCALE: NTS

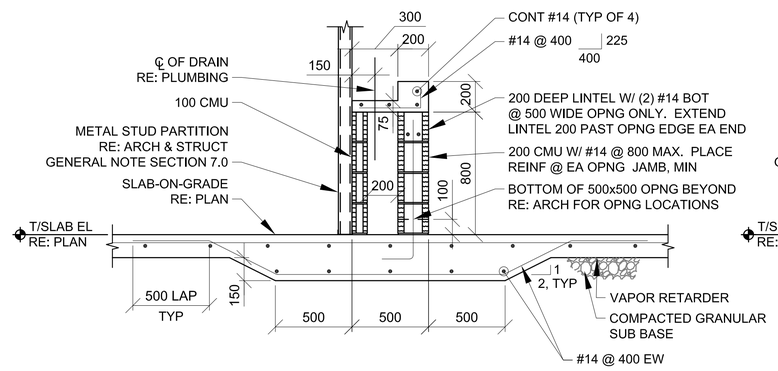

5 S-303 LAVATORY SINK SECTION

SCALE: 1:20

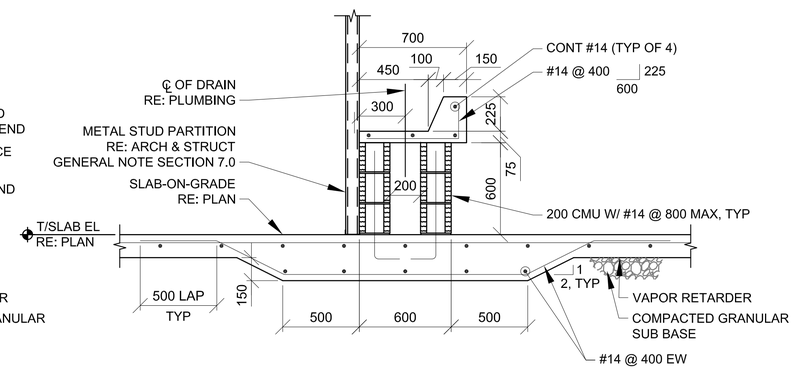

6 S-303 LAUNDRY SINK SECTION

SCALE: 1:20

0 200 400 800

SCALE: 1:20

UNLESS OTHERWISE NOTED,
LINEAR DIMENSIONS
SHOWN ARE IN MILLIMETERS.

COMMONWEALTH OF PENNSYLVANIA
REGISTERED
PROFESSIONAL
JOSEPH D. MEIER
CIVIL ENGINEER
PE-039028E
2-24-11

US ARMY CORPS
OF ENGINEERS
AFGHANISTAN NORTH
DISTRICT

SYMBOL	DESCRIPTION	DATE	APPR.	SYMBOL	DESCRIPTION	DATE	APPR.

DATE: 3/23/2011
REV: 0
CONTRACT NO. W912ER-09-D-0002
DRAWING CODE:
FILE NAME: ARCOSPRING-FC-C-S-S-S1.DWG
PLOT SCALE: 1:20
PLOT DATE: 3/23/2011

DESIGNED BY: JDM
DWN BY: RMS
CKD BY: EPS
REVIEWED BY: JH
SUBMITTED BY:
BAKER

U.S. ARMY ENGINEER DISTRICT, AFGHANISTAN
CORPS OF ENGINEERS
APO AE 09356

SITE ADAPT DESIGN

L04 - LATRINE - LARGE - ARCH SPAN

LATRINE SECTIONS

SHEET
REFERENCE
NUMBER:

S-303

A1 Size 594mm x 841mm

3/23/2011 11:00 AM

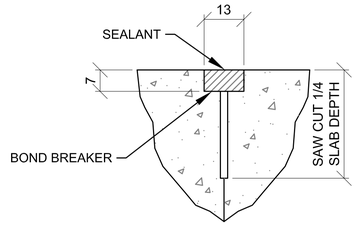

CONTROL JOINT DETAIL

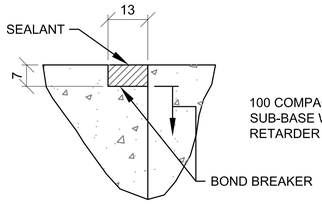

CONSTRUCTION JOINT DETAIL

TYP CONCRETE SLAB JOINT FINISH DETAILS

1 / S-501 SCALE: NTS

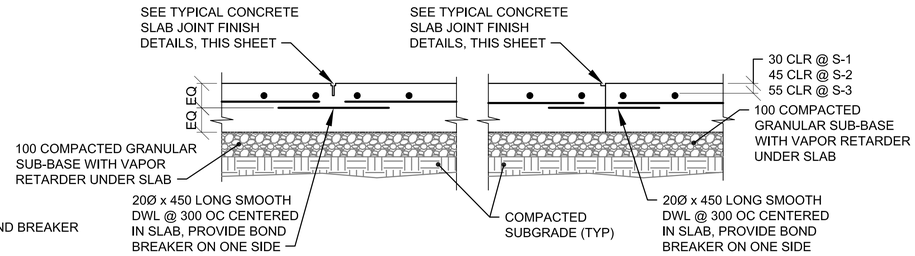

CONTROL JOINT DETAIL

CONSTRUCTION JOINT DETAIL

TYP SLAB ON GRADE JOINT DETAILS

2 / S-501 SCALE: NTS

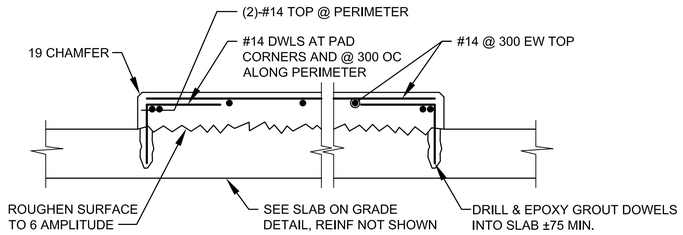

INTERIOR EQUIPMENT PAD DETAIL

3 / S-501 SCALE: NTS

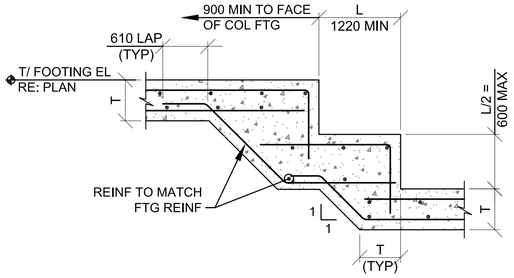

STEPPED FOOTING (2 LAYERS REINF)

4 / S-501 SCALE: NTS

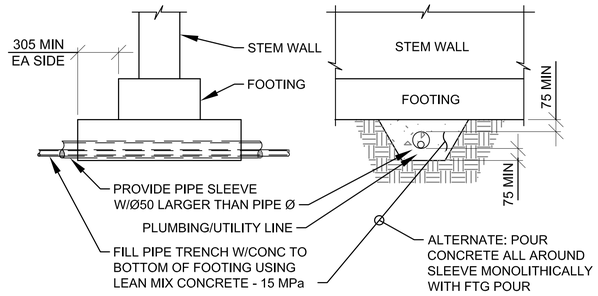

UTILITY PIPE UNDER WALL FTG

5 / S-501 SCALE: NTS

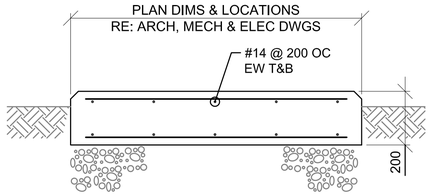

NOTES:
1. COORDINATE SIZE & LOCATION WITH EQUIPMENT REQUIREMENTS.
2. CHAMFER ALL EDGES 25 TYPICAL.

EQUIPMENT PAD (EXTERIOR)

6 / S-501 SCALE: NTS

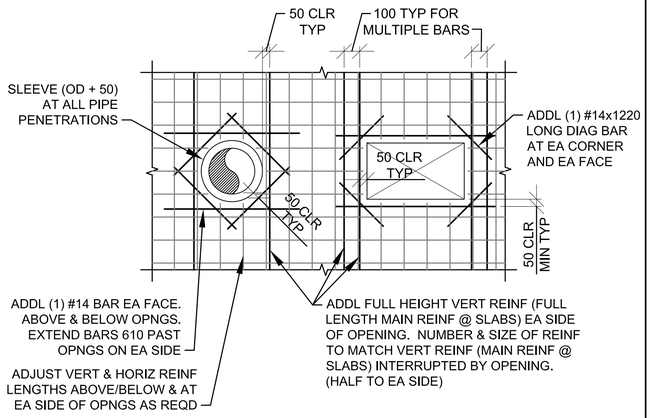

OPENING THRU CONC WALL

7 / S-501 SCALE: NTS

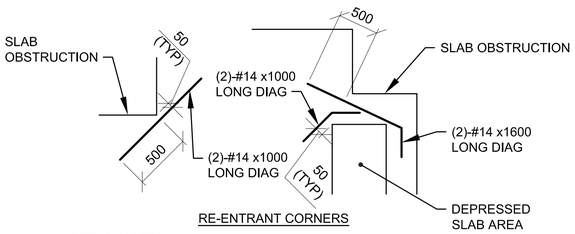

RE-ENTRANT CORNERS

DETAIL NOTES:
1. WHERE MORE THAN ONE ADDITIONAL BAR IS REQUIRED PARALLEL TO THE EXISTING SLAB/WALL REINFORCING THE ADDITIONAL REINFORCING BARS SHALL BE SPACED AT 100 ON CENTER.
2. ADDITIONAL REINFORCING PARALLEL TO THE SLAB/WALL REINFORCING SHALL BE #16 BARS THAT PROVIDE A STEEL AREA ON EACH SIDE OF THE OPENING EQUAL TO 1/2 THE AREA OF THE REINFORCING CUT BY THE OPENING.
3. FOR OPENINGS WITH SIDES OR DIAMETERS LESS THAN 300 SPREAD THE SLAB/WALL REINFORCING TO CLEAR THE OPENING.

CONCRETE REINF DETAILS

8 / S-501 SCALE: NTS

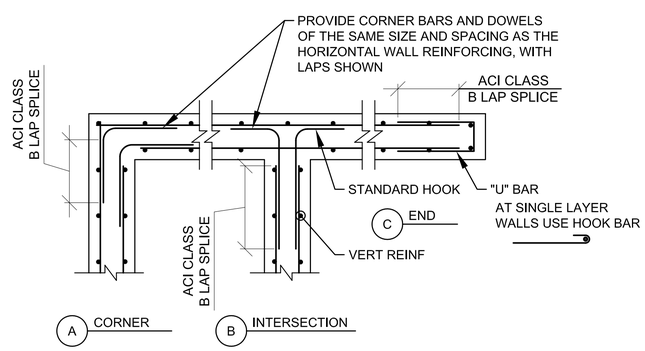

CONCRETE WALL CORNER REINFORCING

9 / S-501 SCALE: NTS

NOTE:
WALLS WITH SINGLE LAYER OF REINFORCING SIMILAR

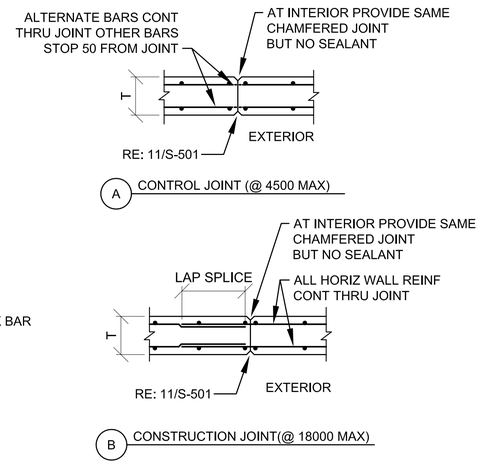

CONCRETE WALL JOINTS

10 / S-501 SCALE: NTS

NOTE:
WALLS WITH SINGLE LAYER OF REINFORCING SIMILAR

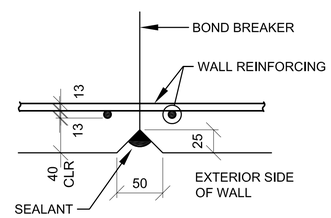

TYP CONCRETE WALL JOINT FINISH DETAIL

11 / S-501 SCALE: NTS

UNLESS OTHERWISE NOTED, LINEAR DIMENSIONS SHOWN ARE IN MILLIMETERS.

COMMONWEALTH OF PENNSYLVANIA REGISTERED PROFESSIONAL ENGINEER JOSEPH D. WEIER PE-076525E 2-24-11

US ARMY CORPS OF ENGINEERS AFGHANISTAN NORTH DISTRICT

SYMBOL	DESCRIPTION	DATE	APPR.	SYMBOL	DESCRIPTION	DATE	APPR.

DESIGNED BY: JDM
DWN BY: RMS
CKD BY: EPS
REVIEWED BY: JH
SUBMITTED BY:
DATE: 3/23/2011
CONTRACT NO. W912ER-09-D-0002
DRAWING CODE:
REV: 0
FILE NAME: ARCD2Prime_A1-C1-S-501.DWG
PLOT SCALE: NONE
PLOT DATE: 3/23/2011

BAKER

U.S. ARMY ENGINEER DISTRICT, AFGHANISTAN CORPS OF ENGINEERS APO AE 09356

SITE ADAPT DESIGN
L04 - LATRINE - LARGE - ARCH SPAN
TYPICAL DETAILS

SHEET REFERENCE NUMBER:
S-501

A1 Size 594mm x 841mm

3/23/2011 11:01 AM

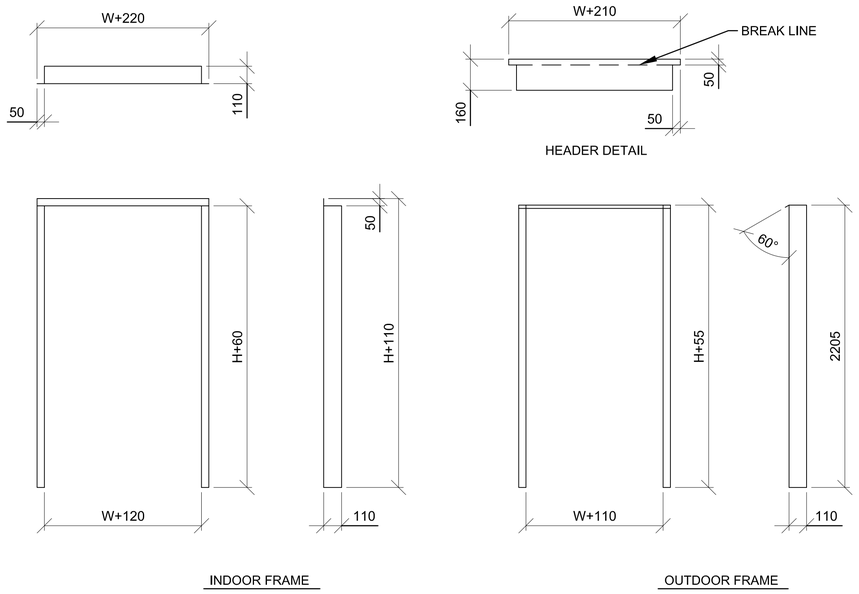

1 / S-502 **120 DOOR DETAIL**

SCALE: NTS

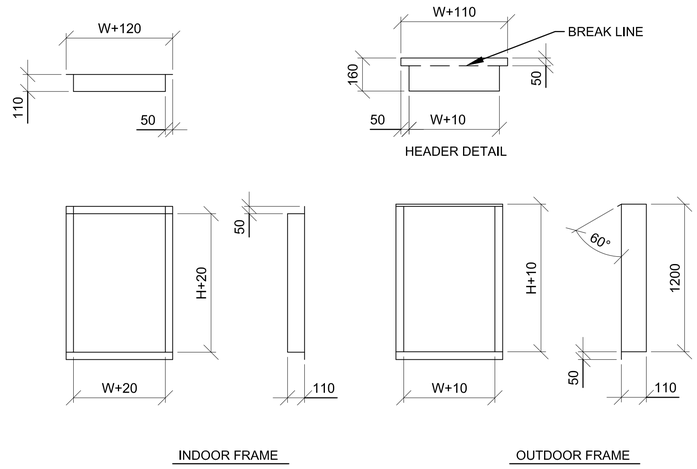

2 / S-502 **120 WINDOW/MECH OPENING DETAIL**

SCALE: NTS

DOOR & WINDOW FRAME NOTES:

1. ALL DIMENSIONS ARE INSIDE DIMENSIONS.
2. WELD AND GRIND SMOOTH ALL CORNERS.
3. FRAME THICKNESS = 2.5mm.
4. ALL FRAMES, INTERIOR AND EXTERIOR, TO BE GALVANIZED.
5. RE: 1/A-601 FOR DOOR WIDTHS (W) AND HEIGHTS (H).
6. RE: 3/A-601 FOR WINDOW WIDTHS (W) AND HEIGHTS (H).
7. RE: SCHEDULE BELOW FOR LOUVER DIMENSIONS.
8. CUT OPENING DIMENSIONS:
   - WINDOW/LOUVER - W+130
   - DOOR - W+130
   - WINDOW/LOUVER - H+30
   - DOOR - H+65
9. RE: 3/S-502 FOR TYP JAMB DETAIL

MECH OPENING FRAME SCHEDULE

TYPE	W	H
M1	255	255
M2	787	787
M3	838	838
M4	838	1195

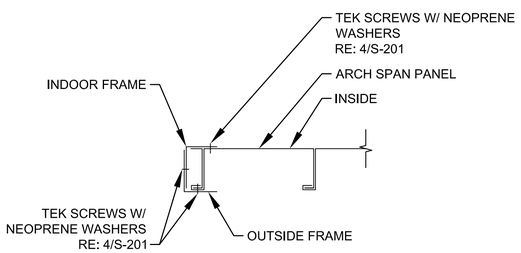

3 / S-502 **TYP JAMB SECTION**

SCALE: NTS

UNLESS OTHERWISE NOTED, LINEAR DIMENSIONS SHOWN ARE IN MILLIMETERS.

COMMONWEALTH OF PENNSYLVANIA
REGISTERED PROFESSIONAL
JOSEPH D. WEIER
ENGINEER
PE-039225E
2-24-11

US ARMY CORPS OF ENGINEERS
AFGHANISTAN NORTH DISTRICT

SYMBOL	DESCRIPTION	DATE	APPR.	SYMBOL	DESCRIPTION	DATE	APPR.

U.S. ARMY ENGINEER DISTRICT, AFGHANIST'AN
CORPS OF ENGINEERS
APO AE 09356

DESIGNED BY: JDM
DWN BY: RMS
CKD BY: EPS
REVIEWED BY: JH
SUBMITTED BY:
DATE: 3-23-2011
REV: 0
CONTRACT NO. W912ER-09-D-0002
DRAWING CODE:
FILE NAME: ARCHSPAN-S-C-L04-S-502.DWG
PLOT SCALE: NONE
PLOT DATE: 3/23/2011

BAKER

SITE ADAPT DESIGN

L04 - LATRINE - LARGE - ARCH SPAN

DOOR/WINDOW/MECHANICAL OPENING FRAME DETAILS

SHEET REFERENCE NUMBER:

S-502

A1 Size 594mm x 841mm

3/23/2011 11:01 AM

CONCRETE REINFORCEMENT TENSION DEVELOPMENT/LAP SPLICE SCHEDULE

f'c = 28 MPa	LAP CLASS	UNCOATED BARS			
		TOP BARS		OTHER BARS	
METRIC BAR SIZES		CASE 1	CASE 2	CASE 1	CASE 2
#10 TO #20	A	50 BAR DIA	74 BAR DIA	38 BAR DIA	57 BAR DIA
	B	64 BAR DIA	96 BAR DIA	50 BAR DIA	74 BAR DIA
#25 TO #50	A	62 BAR DIA	93 BAR DIA	48 BAR DIA	71 BAR DIA
	B	80 BAR DIA	121 BAR DIA	62 BAR DIA	93 BAR DIA

NOTES:
1. TABULATED TENSION DEVELOPMENT LENGTH VALUES ARE TAKEN FROM CRSI DESIGN HANDBOOK 2008 10TH ED.
2. TENSION DEVELOPMENT & TENSION LAP SPLICE LENGTHS ARE EXPRESSED AS MULTIPLES OF BAR DIAMETERS.
3. TABULATED VALUES ARE BASED ON MINIMUM YIELD STRENGTH OF REINFORCEMENT, fy, OF 420MPa.
4. CONCRETE IS NORMAL WEIGHT (2400Kg/m^3) AND 28 DAY COMPRESSIVE STRENGTH = 28MPa.
5. TABULATED VALUES FOR BEAMS & COLUMNS ARE BASED ON TRANSVERSE REINFORCEMENT AND CONCRETE COVER MEETING MINIMUM CODE REQUIREMENTS.
6. CASES 1 & 2, WHICH DEPEND ON THE TYPE OF STRUCTURAL MEMBER, CONCRETE COVER, AND CENTER-TO-CENTER SPACING OF THE BARS ARE DEFINED IN THE TABLE BELOW.
7. LAP SPLICE LENGTHS (MINIMUM 300mm) ARE MULTIPLES OF TENSION DEVELOPMENT LENGTHS: CLASS A = 1.0(TENSION DEVELOPMENT LENGTH) & CLASS B = 1.3(TENSION DEVELOPMENT LENGTH)
8. TOP BARS ARE HORIZONTAL REINFORCEMENT WITH MORE THAN 300mm OF CONCRETE CAST BELOW THE BARS.
9. IT SHALL BE PERMISSIBLE TO CALCULATE WALL AND SLAB REINFORCEMENT TENSION DEVELOPMENT/SPLICE LENGTHS IN ACCORDANCE WITH ACI 12.2.3 OR TABLE 5.3(b) OF CRSI 2008 IN LIEU OF VALUES TABULATED ABOVE.

BEAMS, COLUMNS	CASE 1	CONCRETE COVER AT LEAST 1 BAR DIA AND CENTER-TO-CENTER SPACING AT LEAST 2 BAR DIA
	CASE 2	CONCRETE COVER LESS THAN 1 BAR DIA OR CENTER-TO-CENTER SPACING LESS THAN 2 BAR DIA
ALL OTHERS	CASE 1	CONCRETE COVER AT LEAST 1 BAR DIA AND CENTER-TO-CENTER SPACING AT LEAST 3 BAR DIA
	CASE 2	CONCRETE COVER LESS THAN 1 BAR DIA OR CENTER-TO-CENTER SPACING LESS THAN 3 BAR DIA

CONCRETE COVER SCHEDULE

MINIMUM CONCRETE COVER PROTECTION FOR REINFORCEMENT BARS SHALL BE AS LISTED BELOW: (SEE ACI 318M-05, SECTION 7.7 FOR CONDITIONS NOT NOTED). DIMENSIONS FOR BAR PLACEMENT GIVEN IN SECTIONS AND DETAILS SHALL SUPERSEDE MINIMUM COVER REQUIREMENTS GIVEN HERE. DIMENSIONS ARE IN mm. PROVIDE STANDARD BAR CHAIRS AND SUPPORT BARS @1200mm MAXIMUM AS REQUIRED TO MAINTAIN CONCRETE PROTECTION SPECIFIED.

FOOTINGS (EARTH FORMED):	70
COLUMNS / PIERS (TO TIES)	40
ELEVATED BEAMS & SLABS:	
BEAM TIES & STIRRUPS (NOT EXPOSED TO WEATHER)	40
BEAM TIES & STIRRUPS (EXPOSED TO WEATHER)	50
SLABS (NOT EXPOSED TO WEATHER)	20
SLABS (EXPOSED TO WEATHER)	
#19 & LARGER	50
#16 & SMALLER	40
SLABS ON GRADE	
NOT EXPOSED TO WEATHER (FROM TOP)	20
EXPOSED TO WEATHER (FROM TOP)	40
UTILITY TUNNEL WALLS, RETAINING WALLS AND SHEAR WALLS. (NO SURFACES SHALL BE EARTH FORMED)	
EARTH SIDE AND FRONT SIDE (EXPOSED TO WEATHER)	
#16 BAR AND SMALLER	40
#19 THRU #36 BAR	50

STANDARD HOOKS IN TENSION PER (ACI 318M-05) f'c = 28 MPa

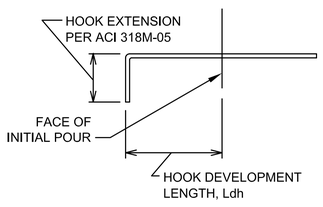

METRIC BAR SIZE	HOOK DEVELOPMENT LENGTH (mm) ldh
#10	190
#12	229
#14	267
#16	305
#20	381
#25	476
#28	533
#32	610
#40	762
#50	953

NOTES:
1. CONCRETE IS NORMAL WEIGHT CONCRETE.
2. BAR YIELD STRENGTH, fy = 420 MPa
3. SIDE COVER REQUIREMENTS OF ACI SECT. 12.5.3 ARE ASSUMED TO NOT BE MET.
4. TIE OR STIRRUP REQUIREMENTS OF ACI SECT. 12.5.3 ARE ASSUMED TO NOT BE MET.
5. REDUCTION FOR EXCESS REINFORCEMENT IS NOT TAKEN.
6. HOOK DEVELOPMENT LENGTH IS VALID FOR 180° HOOKS ALSO.

UNLESS OTHERWISE NOTED, LINEAR DIMENSIONS SHOWN ARE IN MILLIMETERS.

COMMONWEALTH OF PENNSYLVANIA
REGISTERED PROFESSIONAL
JOSEPH D. WEIER
PROJECT ENGINEER
PE-036026
2-24-11

US ARMY CORPS OF ENGINEERS
AFGHANISTAN NORTH DISTRICT

SYMBOL	DESCRIPTION	DATE	APPR.	SYMBOL	DESCRIPTION	DATE	APPR.

DESIGNED BY: JDM
DWN BY: RMS
CKD BY: EPS
REVIEWED BY: JH
SUBMITTED BY:
DATE: 3-23-2011
REV: 0
CONTRACT NO. W912ER-09-D-0002
DRAWING CODE:
FILE NAME: ARCDSPW4.CT-1.S-601.DWG
PLOT SCALE: NONE
PLOT DATE: 3/23/2011

BAKER

U.S. ARMY ENGINEER DISTRICT, AFGHANISTAN
CORPS OF ENGINEERS
APO AE 09356

SITE ADAPT DESIGN
L04 - LATRINE - LARGE - ARCH SPAN
SCHEDULES

SHEET REFERENCE NUMBER:
S-601

3/23/2011 11:01 AM

A1 Size 594mm x 841mm

SCOPE RESPONSIBILITIES SCHEDULE

ITEM	FURNISHED BY	INSTALLED BY	FINAL CONNECTION BY
FREESTANDING FURNITURE	GOVT	GOVT	--
SYSTEMS FURNITURE	GOVT	GOVT	CONTR
OFFICE EQUIPMENT, PERMANENTLY INSTALLED	GOVT	GOVT	GOVT
WORKBENCHES	GOVT	GOVT	CONTR
METAL UTILITY STORAGE SHELVING	CONTR	CONTR	--
EQUIPMENT, PORTABLE	GOVT	GOVT	--
EQUIPMENT, PERMANENTLY INSTALLED	CONTR	CONTR	CONTR
EQUIPMENT RACKS IN IT ROOMS	CONTR	CONTR	--
FIRE EXTINGUISHERS AND CABINETS	CONTR	CONTR	--
TELEPHONE SWITCH AND HANDSETS	GOVT	GOVT	GOVT
SECURE TELEPHONE INSTRUMENTS (STEs)	GOVT	GOVT	GOVT

ABBREVIATIONS

ACP	ACOUSTIC CEILING PANEL
AFF	ABOVE FINISH FLOOR
ALUM	ALUMINUM
AUTO	AUTOMATIC
ABV	ABOVE
AT/FP	ANTI-TERRORISM FORCE PROTECTION
BC	BOTTOM OF CURB
B.O.	BOTTOM OF
BLK	BLOCK
BRG	BEARING
BLKG	BLOCKING
BD	BOARD
BLDG	BUILDING
CLG	CEILING
CONC	CONCRETE
CONT	CONTINUOUS
CONTR	CONTRACTOR
CMU	CONCRETE MASONRY UNIT
CT	CERAMIC TILE
C.J.	CONTROL JOINT
CRS	COURSE
DIAM	DIAMETER
DN	DOWN
DTL	DETAIL
DWG	DRAWING
EA	EACH
EIFS	EXTERIOR INSULATION AND FINISH SYSTEM
EWC	ELECTRIC WATER COOLER
EXP	EXPANSION
EXT	EXTERIOR
EQUIP	EQUIPMENT
ELEC	ELECTRIC
EL	ELEVATION
EMER	EMERGENCY
EQ	EQUAL
F/	FACE OF
FE	FIRE EXTINGUISHER
FEC	FIRE EXTINGUISHER CABINET
FIBERBD	FIBER BOARD
FL	FLOOR
FD	FLOOR DRAIN
FTG	FOOTING
GA	GAUGE
GALV	GALVANIZED
GC	GENERAL CONTRACTOR
GL	GLASS
GOVT	GOVERNMENT
GYP	GYPSUM
GWB	GYPSUM WALLBOARD
HT	HEIGHT
HC	HANDICAPPED
HDW	HARDWARE
HTG	HEATING
HVAC	HEATING/VENTILATING/ AIR CONDITIONING
HM	HOLLOW METAL
INSUL	INSULATION
INT	INTERIOR
JT	JOINT
JAN	JANITOR
LAM	LAMINATE
LAV	LAVATORY
LH	LEFT HAND
LT	LIGHT
LVR	LOUVER
MAS	MASONRY
MAX	MAXIMUM
MECH	MECHANICAL
MFR	MANUFACTURER
MIN	MINIMUM
MIR	MIRROR
MISC	MISCELLANEOUS
MO	MASONRY OPENING
MR	MOISTURE RESISTANT
MS	METAL STUD
MTL	METAL
NA	NOT APPLICABLE
NO	NUMBER
NOM	NOMINAL
NTS	NOT TO SCALE
NIC	NOT IN CONTRACT
OPG	OPENING
OC	ON CENTER
OH	OVERHEAD
OPP	OPPOSITE
PL	PLATE
PLAM	PLASTIC LAMINATE
PLYWD	PLYWOOD
PNL	PANEL
PREF	PREFABRICATED
PERF	PERFORATED
PR	PAIR
PT	PAINT
QT	QUARRY TILE
R	RISER
RAD	RADIUS
RD	ROOF DRAIN
REF	REFERENCE
REINF	REINFORCED
RH	RIGHT HAND
ROW	RIGHT OF WAY
RM	ROOM
RO	ROUGH OPENING
RWC	RAINWATER CONDUCTOR
SIM	SIMILAR
STL	STEEL
STR	STRUCTURE
ST0	STORAGE
SPEC	SPECIFICATION
SS	STAINLESS STEEL
STN	STAIN
STD	STANDARD
SUSP	SUSPENDED
TC	TOP OF CURB
TH	THICK
TYP	TYPICAL
TR	TREAD
T.O.	TOP OF
TELE	TELEPHONE
TEMP	TEMPERED/TEMPORARY
UNF	UNFINISHED
UNO	UNLESS NOTED OTHERWISE
USAR	UNITED STATES ARMY RESERVE
VERT	VERTICAL
VIF	VERIFY IN FIELD
VTR	VENT THROUGH ROOF
WD	WOOD
WH	WATER HEATER
WWF	WELDED WIRE FABRIC
W/O	WITHOUT

PROJECT NOTES

STANDARDS AND REGULATIONS:

1) CONTRACTOR SHALL PERFORM ALL WORK IN CONFORMANCE WITH APPLICABLE BUILDING CODES, REGULATIONS, ORDINANCES, UTILITY PROVIDER REQUIREMENTS, AND SIMILAR STANDARDS.

2) CONTRACTOR SHALL OBTAIN ALL REQUIRED INSPECTIONS OF THE WORK. CONTRACTOR SHALL REGULARLY UPDATE OWNER AND ARCHITECT REGARDING THE STATUS OF INSPECTIONS.

3) CONTRACTOR SHALL COORDINATE WORK WITH APPLICABLE UTILITY PROVIDERS.

4) CONTRACTOR SHALL BE FAMILIAR WITH REQUIREMENTS AND CONSTRUCTION SHALL BE IN COMPLIANCE WITH REFERENCED FIRE-RATED ASSEMBLY TESTS AND STANDARDS.

ADMINISTRATION OF THE WORK:

1) CONTRACTOR SHALL BE SOLELY RESPONSIBLE FOR THE MEANS, METHODS, AND SEQUENCES OF CONSTRUCTION AND DIMENSIONS.

2) CONTRACTOR SHALL BE SOLELY RESPONSIBLE FOR THE SAFETY OF ALL CONSTRUCTION PERSONNEL AND AUTHORIZED VISITORS AT THE SITE.

3) CONTRACTOR SHALL BECOME FULLY ACQUAINTED WITH CONDITIONS RELATED TO THE WORK. ANY KNOWN DISCREPANCIES BETWEEN THE DOCUMENTS AND THE ACTUAL CONDITIONS SHALL BE REPORTED TO THE OWNER FOR RESOLUTION PRIOR TO PROCEEDING WITH WORK RELATED TO THE DISCREPANCY.

4) CONTRACTOR SHALL REMOVE AND PROPERLY DISPOSE OF ALL CONSTRUCTION AND DEMOLITION DEBRIS. CONTRACTOR SHALL OBTAIN APPROVAL OF OWNER FOR DETAILS RELATING TO THE REMOVAL OF TRASH, INCLUDING SUCH ISSUES AS PATH OF TRAVEL, USE OF STAIRS AND ELEVATORS, REMOVAL OF WINDOWS, LOCATION OF CHUTES AND DUMPSTERS, ETC., PRIOR TO REMOVAL OF DEBRIS. CONTRACTOR SHALL CLEAN AND REPAIR ANY DAMAGES TO EXISTING ITEMS SOILED OR DAMAGED BY THE DEBRIS REMOVAL PROCESS. IF CLEANING AND/OR REPAIR DOES NOT RETURN ITEMS TO ORIGINAL CONDITION CONTRACTOR SHALL INSTALL NEW ITEMS.

5) CONTRACTOR SHALL BECOME FAMILIAR WITH AND COMPLY WITH OWNER'S PROCEDURES FOR MAINTAINING A SECURE SITE AND BUILDING.

6) EACH INSTALLER SHALL EXAMINE ALL SUBSTRATE CONDITIONS AND/OR SITE CONDITIONS WHICH AFFECT THE QUALITY OF EACH PRODUCT TO BE INSTALLED. IF ANY CONDITIONS EXIST WHICH WILL HAVE A DETRIMENTAL EFFECT ON THE QUALITY OF THE INSTALLATION, THE INSTALLER SHALL IMMEDIATELY NOTIFY THE CONTRACTOR. INSTALLATION SHALL NOT PROCEED UNTIL THE UNSATISFACTORY CONDITIONS ARE CORRECTED. INSTALLATION SHALL SIGNIFY ACCEPTANCE OF THE CONDITIONS.

7) CONTRACTOR SHALL MAINTAIN RECORD DRAWINGS ON THE SITE AT ALL TIMES.

8) CONTRACTOR SHALL BE RESPONSIBLE FOR ENSURING COORDINATION EFFORTS OF ALL SUBCONTRACTORS.

9) CONTRACTOR SHALL LAY OUT ALL WORK AS SOON AS POSSIBLE. ANY DISCREPANCIES SHALL BE REPORTED TO THE OWNER FOR RESOLUTION PRIOR TO PROCEEDING WITH THE WORK IN QUESTION.

10) DO NOT ATTACH OR HANG ANY ITEMS DIRECTLY FROM ARCH-SPAN PANELS. ATTACH ONLY TO BUILDING TABS LOCATED WITHIN PANEL JOINTS

11) CONTRACTOR TO PROVIDE ALL NECESSARY BLOCKING TO SUPPORT WALL & CEILING MOUNTED EQUIPMENT, FIXTURES AND ACCESSORIES.

USE OF CONSTRUCTION DOCUMENTS:

1) DO NOT SCALE DRAWINGS. ONLY WRITTEN DIMENSIONS OR KEYED NOTES SHALL BE USED. CONTACT ARCHITECT IF CLARIFICATION OR ADDITIONAL INFORMATION IS REQUIRED.

2) THE DRAWINGS ARE SCHEMATIC IN NATURE. MODIFICATIONS IN DUCTS, PIPING, CONDUIT AND WIRING MAY BE REQUIRED TO ACCOMMODATE ACTUAL FIELD CONDITIONS.

3) DRAWINGS SHALL NOT BE REPRODUCED FOR SUBMITTALS.

4) DIMENSIONS ARE AS FOLLOWS UNLESS NOTED OTHERWISE:
   A) TO CENTER LINE OF INTERIOR PARTITIONS
   B) TO CENTERLINE OF COLUMNS.
   C) TO TOP OF FLOOR SLAB.
   D) TO BOTTOM OF FINISHED CEILING.
   E) TO EXTERIOR FACE OF ARCH SPAN PANEL OR TO FACE OF MASONRY OR CONCRETE.

5) VERIFY IN FIELD DIMENSIONS OF ALL DOOR, WINDOW AND LOUVER OPENINGS.

DEFINITIONS:

1) "ALIGN" AS USED IN THESE DOCUMENTS SHALL MEAN TO ACCURATELY LOCATE FINISH FACES IN THE SAME PLANE AND/OR TO INSTALL NEW CONSTRUCTION ADJACENT TO EXISTING CONSTRUCTION WITHOUT ANY VISIBLE JOINTS OR SURFACE IRREGULARITIES.

2) "CLEAR" AS USED IN THESE DOCUMENTS SHALL MEAN THAT THE CONDITION IS NOT ADJUSTABLE WITHOUT APPROVAL OF THE ARCHITECT. CLEAR DIMENSIONS ARE TYPICALLY TO FINISH FACE.

3) "MAXIMUM" OR "MAX" AS USED IN THESE DOCUMENTS SHALL MEAN THAT THE CONDITION IS SLIGHTLY ADJUSTABLE BUT MAY NOT VARY TO A DIMENSION OR QUANTITY GREATER THAN THAT SHOWN WITHOUT APPROVAL OF THE ARCHITECT.

4) "MINIMUM" OR "MIN" AS USED IN THESE DOCUMENTS SHALL MEAN THAT THE CONDITION IS SLIGHTLY ADJUSTABLE BUT MAY NOT VARY TO A DIMENSION OR QUANTITY LESS THAN THAT SHOWN WITHOUT APPROVAL OF THE ARCHITECT.

5) "TYPICAL" AS USED IN THESE DOCUMENTS SHALL MEAN THAT THE CONDITION OR DIMENSION IS THE SAME OR REPRESENTATIVE FOR SIMILAR CONDITIONS THROUGHOUT.

6) "*" AS USED IN THESE DOCUMENTS SHALL MEAN THAT THE DIMENSION OR QUALITY IS SLIGHTLY ADJUSTABLE TO ACCOMMODATE ACTUAL CONDITIONS. FIELD VERIFICATION AND COORDINATION WITH OTHER ELEMENTS MIGHT BE NECESSARY.

SYMBOLS LEGEND

ROOM NAME XXXX — ROOM NAME / ROOM NUMBER

X — PARTITION TYPE

XXX — DOOR NUMBER

150 UNO — PROVIDE 150 HINGE SIDE WALL RETURN ON DOORS, U.N.O. OR CENTER IN WALL

1 / A-101 — SECTION CALL-OUT

1 / A-101 — DETAIL CALL-OUT

A / B / C / D — 1 / A-101 — INTERIOR ELEVATION CALL-OUT

XX — KEYNOTE

X — WINDOW TYPE

1 / A-101 — ELEVATION CALL-OUT

/ A-### — DETAIL REFERENCE NUMBER / SHEET NUMBER DETAIL IS DRAWN ON

ELEVATION MARK

METAL STUD AND GWB PARTITION

CONCRETE

BRICK

CONCRETE BLOCK

FIBERGLASS BATT INSULATION

RIGID BOARD INSULATION

CONCRETE OR GROUT (DRAWN IN SECTION)

CONCRETE PAVING (DRAWN IN PLAN)

UNLESS OTHERWISE NOTED, LINEAR DIMENSIONS SHOWN ARE IN MILLIMETERS.

COMMONWEALTH OF VIRGINIA
PETER GARRETT SCHMIDT
No. 013167
ARCHITECT

US ARMY CORPS OF ENGINEERS AFGHANISTAN NORTH DISTRICT

SYMBOL	DESCRIPTION	DATE	APPR.	SYMBOL	DESCRIPTION	DATE	APPR.

DESIGNED BY: PGS
DWN BY: AMH
CKD BY: PGS
REVIEWED BY: JH
SUBMITTED BY:
DATE: 3/23/2011
CONTRACT NO. W912ER-09-D-0002
DRAWING CODE:
REV: 0
FILE NAME: ARCH SPAN AS-CLA-001.DWG
PLOT SCALE: NONE
PLOT DATE: 3/23/2011

BAKER

U.S. ARMY ENGINEER DISTRICT, AFGHANISTAN
CORPS OF ENGINEERS
APO AE 09356

SITE ADAPT DESIGN
L04 - LATRINE - LARGE - ARCH SPAN
ABBREVIATIONS, SYMBOLS, AND GENERAL NOTES

SHEET REFERENCE NUMBER:
A-001

3/23/2011 11:01 AM

A1 Size 594mm x 841mm

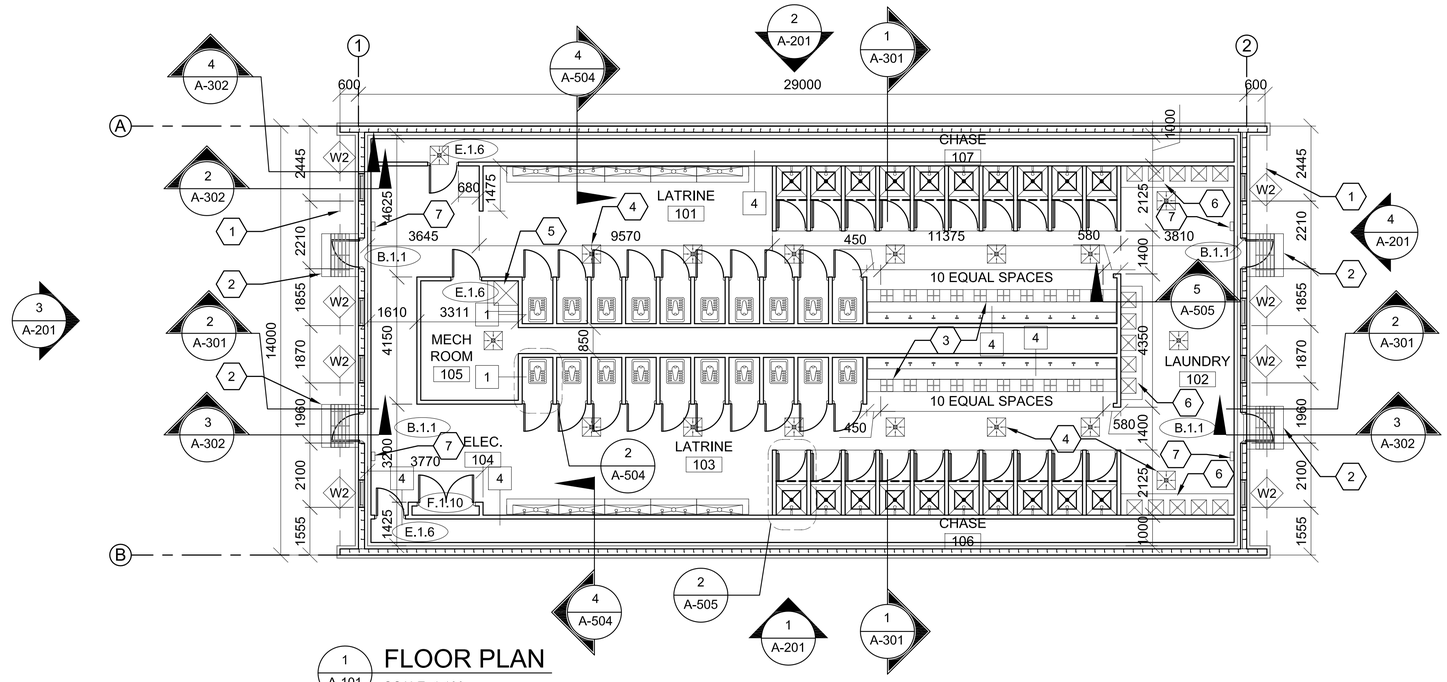

FLOOR PLAN

1 / A-101

SCALE: 1:100

GENERAL NOTES:

A. DIMENSIONS ARE SHOWN TO OUTER EDGE OF EXTERIOR STRUCTURAL FACE OF ARCH SPAN PANEL(GRID LINES), CENTER LINE OF INTERIOR PARTITIONS, EDGE OF WINDOW OPENINGS, AND TO HINGE SIDE OF DOOR FRAME OPENING, UNLESS NOTED OTHERWISE.

B. HINGE SIDE OF OPENINGS FOR DOORS AND FRAMES SHALL BE LOCATED 200 MM FROM THE ADJACENT WALL OR COLUMN, UNLESS NOTED OTHERWISE.

C. INTERIOR PARTITIONS SHALL BE PARTITION TYPE 1, UNLESS NOTED OTHERWISE. REFER TO A-602 FOR PARTITION TYPES SCHEDULE

D. COSMETIC REPAIR OF MINOR DEFECTS: REPAIR OR FILL MORTAR JOINTS AND MINOR DEFECTS, INCLUDING BUT NOT LIMITED TO SPALLS, IN ACCORDANCE WITH MANUFACTURER'S RECOMMENDATIONS AND PRIOR TO COATING APPLICATION. SURFACES TO BE PAINTED SHALL BE CLEAN AND FREE OF FOREIGN MATTER BEFORE APPLICATION OF PAINT. CLEANING SHALL BE SCHEDULED SO THAT DUST AND OTHER CONTAMINANTS WILL NOT FALL ON NEWLY PAINTED SURFACES.

E. CONCRETE, PLASTER AND MASONRY SURFACES SHALL BE ALLOWED TO CURE FOR AT LEAST 30 DAYS BEFORE PAINTING. CONCRETE SLABS-ON-GRADE SHALL BE ALLOWED TO CURE 90 DAYS BEFORE STAINING OR SEALING.

F. DO NOT USE PAINT MATERIALS CONTAINING LEAD CONTENT IN EXCESS OF 0.009 PERCENT OF THE WEIGHT OF THE TOTAL NONVOLATILE CONTENT OF THE PAINT OR THE WEIGHT OF THE DRIED PAINT FILM.

G. DO NOT USE ANY ASBESTOS CONTAINING MATERIALS (ACM) IN PROJECT. ACM IS DEFINED AS 1% OR MORE BY VOLUME.

H. DO NOT USE PAINT MATERIALS CONTAINING MERCURIAL FUNGICIDES.

I. FACTORY PRIMED METAL DOORS AND FRAMES SHALL RECEIVE TWO COATS OF PAINT.

J. FILL REMAINING SPACE AT PENETRATIONS IN FIRE-RATED FLOORS, PARTITIONS AND CEILINGS WITH APPROPRIATE FIRESTOPPING MATERIALS.

K. ALL CEILING FINISHES SHALL AS NOTED ON REFLECTED CEILING PLANS OR FINISH SCHEDULE.

L. ALL WALL FINISHES SHALL AS NOTED ON FINISH SCHEDULE. REFER TO A-603

M. ALL FLOOR FINISHES SHALL BE SEALED CONCRETE, UNLESS NOTED OTHERWISE.

N. PROVIDE TILE FINISHES AS INDICATED IN DETAILS & KEY NOTES.

O. ALL DOOR, FRAME AND HARDWARE TYPES SHALL BE 20 MINUTE A.1.5 UNLESS NOTED OTHERWISE. REFER TO A-601 FOR DOOR INFORMATION.

P. TOILET STALL DOORS SHALL BE G.2.12

Q. SHOWER STALL DOOR, FRAME AND HARDWARE TYPE SHALL BE E.1.12.

R. PROVIDE POLISHED STAINLESS STEEL MIRROR 600 X 900 ABOVE EVERY LAVATORY FAUCET.

S. PLASTER MAY BE SUBSTITUTED FOR DRYWALL WALLS AND CEILINGS. MAINTAIN FIRE RATINGS AS NOTED

T. LOCATION OF EXTERIOR DOORS AND WINDOWS MUST BE COORDINATED WITH ARCH SPAN MODULE. PLAN DIMENSIONS OF THESE IS APPROXIMATE AND MAY BE SLIGHTLY ADJUSTED TO SUIT PANEL FABRICATION TOLERANCES.

KEY NOTES:

1. LINE OF ROOF OVERHANG ABOVE
2. CONCRETE STOOP WITH GRATE - SEE DETAIL 1/A-503
3. ABLUTION DETAILS - REFER TO 8, 9, AND 10/A-504
4. FLOOR DRAIN - SEE PLUMBING DETAIL 8/A-505
5. REFER TO 7/A505 FOR MOP SINK
6. LAUNDRY DETAILS - REFER TO 5 & 6/A-505
7. FIRE EXTINGUISHER

N

0 2000 4000

SCALE: 1:100

UNLESS OTHERWISE NOTED, LINEAR DIMENSIONS SHOWN ARE IN MILLIMETERS.

COMMONWEALTH OF VIRGINIA
PETER GARRETT SCHMIDT
No. 013167
REGISTERED ARCHITECT

US ARMY CORPS OF ENGINEERS
AFGHANISTAN NORTH DISTRICT

SYMBOL	DESCRIPTION	DATE	APPR.	SYMBOL	DESCRIPTION	DATE	APPR.

DESIGNED BY: PGS
DWN BY: AMH
CKD BY: PGS
REVIEWED BY: JH
SUBMITTED BY:
DATE: 3-23-2011
CONTRACT NO. W912ER-09-D-0002
DRAWING CODE:
FILE NAME: ARCH SPAN-L04-L-A1.DWG
PLOT SCALE: 1:100
PLOT DATE: 3/23/2011
REV: 0

U.S. ARMY ENGINEER DISTRICT, AFGHANISTAN
CORPS OF ENGINEERS
APO AE 09356

BAKER

SITE ADAPT DESIGN
L04 - LATRINE - LARGE - ARCH SPAN
FLOOR PLAN

SHEET REFERENCE NUMBER:
A-101

3/23/2011 11:10 AM

A1 Size 594mm x 841mm

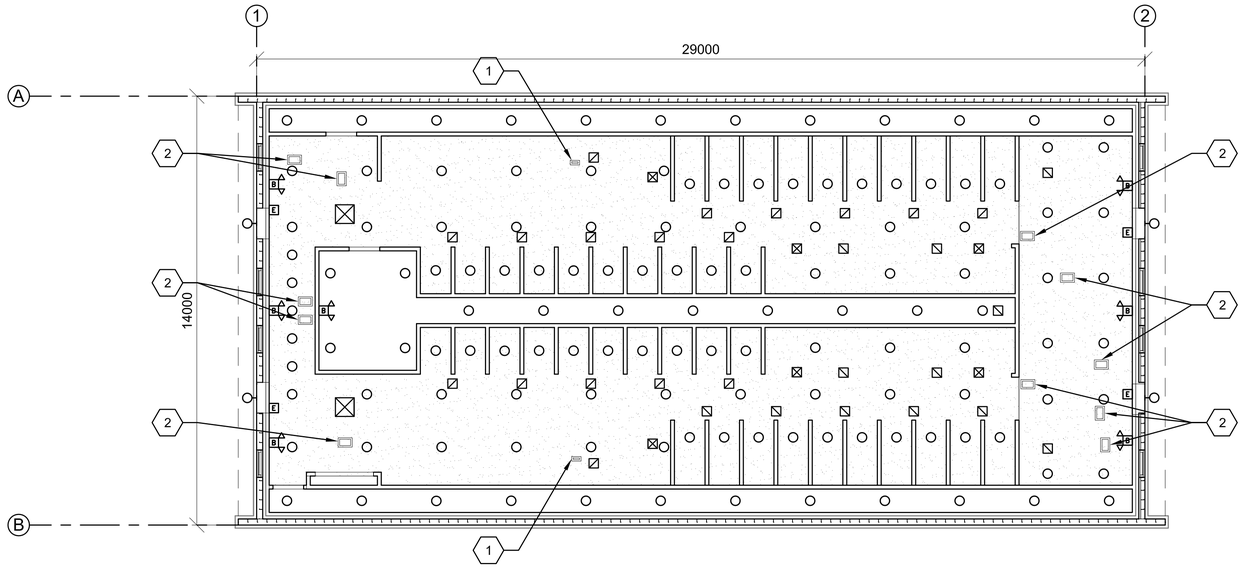

1 / A-102 REFLECTED CEILING PLAN

SCALE: 1:100

CEILING LEGEND:

- 600mm X 1200mm METAL PANEL SUSPENDED CEILING SYSTEM
- NO FINISHED CEILING, EXPOSED STRUCTURE (SEE FINISH SCHEDULE)
- GYPSUM WALLBOARD CEILING (SEE FINISH SCHEDULE)
- 300mm X 1200mm FLUORESCENT LIGHT FIXTURE
- 600mm X 1200mm FLUORESCENT LIGHT FIXTURE
- 300mm X 1200mm FLUORESCENT LIGHT FIXTURE NORMAL/EMERGENCY
- 600mm X 1200mm FLUORESCENT LIGHT FIXTURE NORMAL/EMERGENCY
- SUSPENDED LIGHT FIXTURE
- WALL MOUNTED LIGHT FIXTURE
- DOWNLIGHT
- EXIT SIGN
- SMOKE DETECTOR
- BATTERY PACK
- RELIEF RETURN DIFFUSER
- SUPPLY DIFFUSER
- EXHAUST DIFFUSER
- ACCESS PANEL
- CEILING FAN

GENERAL NOTES:

A. CEILING SHALL BE 2.65M A.F.F. UNLESS NOTED OTHERWISE OR EXPOSED STRUCTURE.
B. REFER TO SHEET A-603 FOR FINISH SCHEDULE
C. DRYWALL CEILING TYPICALLY WALL BEAR ON ADJACENT PARTITIONS. SPAN CRITERIA & ALTERNATIVE SUPPORTING METHODS ARE DEFINED ON STRUCTURAL NOTES RE: COLD-FORMED METAL FRAMING ON DWG. S-002.
D. LOCATION OF LIGHT FIXTURES AND FANS AS INDICATED ON THIS REFLECTED CEILING PLAN TAKES PRECEDENCE OVER ALL RELATIVE POSITIONS AS SHOWN ON ELECTRIC AND MECHANICAL DRAWINGS. U.N.O. INSTALL FIXTURES WITH EQUAL SPACING BETWEEN EACH OTHER TO THE GREATEST EXTENT POSSIBLE AND AS GRAPHICALLY SHOWN IN THIS LAYOUT. SEE ELECTRICAL DRAWINGS FOR SUPPORT AND WIRING INFORMATION. IN AREA WHERE SUSPENDED CEILING SUPPORTS OVERLAP LIGHTING LOCATIONS SHIFT LIGHTING 25MM OFF OF GRID TO RESOLVE CONFLICT.

KEY NOTES:

1. ACCESS PANEL - 305X150 COORDINATE LOCATION WITH MECHANICAL REQUIREMENTS

2. ACCESS PANEL - 305X460 COORDINATE LOCATION WITH MECHANICAL REQUIREMENTS

0 2000 4000
SCALE: 1:100

UNLESS OTHERWISE NOTED, LINEAR DIMENSIONS SHOWN ARE IN MILLIMETERS.

COMMONWEALTH OF VIRGINIA
PETER GARRETT SCHMIDT
No. 013167
ARCHITECT

US ARMY CORPS OF ENGINEERS
AFGHANISTAN NORTH DISTRICT

SYMBOL	DESCRIPTION	DATE	APPR.	SYMBOL	DESCRIPTION	DATE	APPR.

DESIGNED BY: PGS
DWN BY: AMH
REVIEWED BY: JH
SUBMITTED BY:
DATE: 4-25-2011
CONTRACT NO. W912ER-09-D-0002
DRAWING CODE:
FILE NAME: ARCHDWG-A1-L04-A-102.DWG
PLOT SCALE: 1:100
PLOT DATE: 4/25/2011
REV: 0
CKD BY: PGS
BAKER

U.S. ARMY ENGINEER DISTRICT, AFGHANISTAN
CORPS OF ENGINEERS
APO AE 09356

SITE ADAPT DESIGN
L04 - LATRINE - LARGE - ARCH SPAN
REFLECTED CEILING PLAN

SHEET REFERENCE NUMBER:
A-102

A1 Size 594mm x 841mm

4/25/2011 5:43 PM

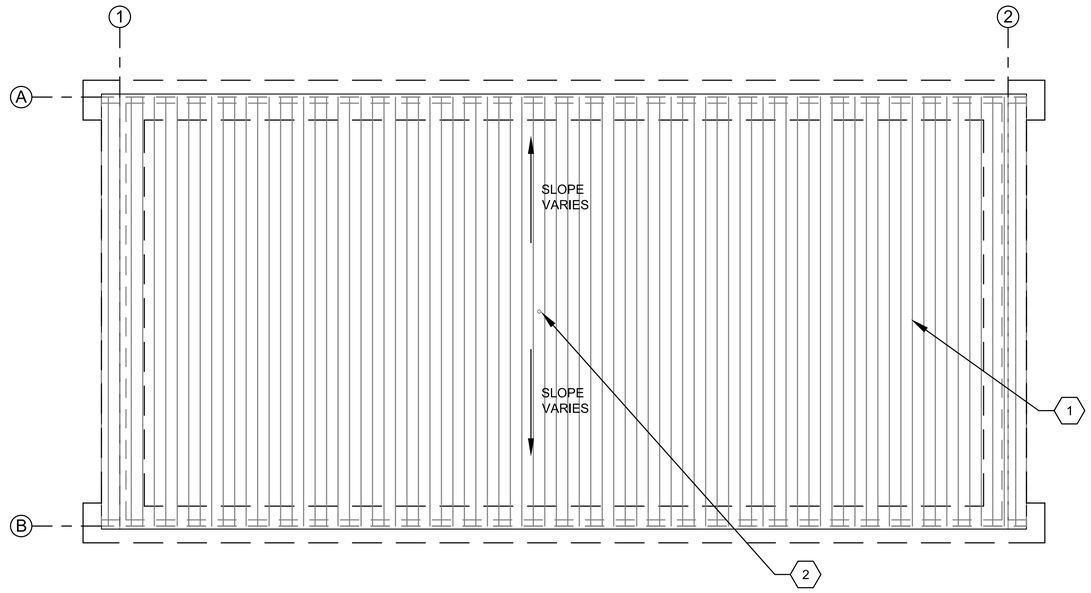

1
A-103
ROOF PLAN
SCALE: 1:100

GENERAL NOTES:

A. THE APPROXIMATE LOCATION OF ROOF DEVICES AND PENETRATIONS ARE SHOWN ON THE ROOF PLAN FOR INFORMATION ONLY. THE CONTRACTOR SHALL BE RESPONSIBLE FOR UNDERSTANDING THE ACTUAL LOCATION OF THESE AND ALL OTHER ITEMS PRIOR TO BEGINNING CONSTRUCTION. COORDINATE ALL ROOF PENETRATIONS WITH STRUCTURAL, MECHANICAL AND PLUMBING WORK.

B. PLUMBING VENT PENETRATIONS SHALL TERMINATE 300 MM MINIMUM ABOVE THE ROOF.

C. UNLESS OTHERWISE NOTED, NOTES, DETAILS OR FEATURES INDICATED FOR ONE CONDITION SHALL BE APPLICABLE FOR ALL ALIKE AND SIMILAR CONDITIONS.

D. STOCKPILING OF MATERIALS, EQUIPMENT AND ANY OTHER ITEMS ON THE ROOF IS PROHIBITED.

E. ROOFS SHALL BE PRE-FINISHED METAL ARCH SPAN

KEY NOTES:

1. PRE-FINISHED METAL ARCH SPAN CONSTRUCTION
2. VTR - SEE PLUMBING

0 2000 4000
SCALE: 1:100

UNLESS OTHERWISE NOTED,
LINEAR DIMENSIONS
SHOWN ARE IN MILLIMETERS.

COMMONWEALTH OF VIRGINIA
PETER GARRETT SCHMIDT
No. 013167
ARCHITECT

US ARMY CORPS
OF ENGINEERS
AFGHANISTAN NORTH
DISTRICT

SYMBOL	DESCRIPTION	DATE	APPR.	SYMBOL	DESCRIPTION	DATE	APPR.

DESIGNED BY: PGS
DWN BY: AMH
REVIEWED BY: JH
SUBMITTED BY:
DATE: 3-23-2011
CONTRACT NO. W912ER-09-D-0002
DRAWING CODE:
FILE NAME: ARCDWG-A1-C-L04-A-103.DWG
PLOT SCALE: 1:100
PLOT DATE: 3/23/2011
REV: 0
CKD BY: PGS

BAKER

U.S. ARMY ENGINEER DISTRICT, AFGHANISTAN
CORPS OF ENGINEERS
APO AE 09356

SITE ADAPT DESIGN
L04 - LATRINE - LARGE - ARCH SPAN
ROOF PLAN

SHEET
REFERENCE
NUMBER:
A-103

A1 Size 594mm x 841mm

3/23/2011 11:01 AM

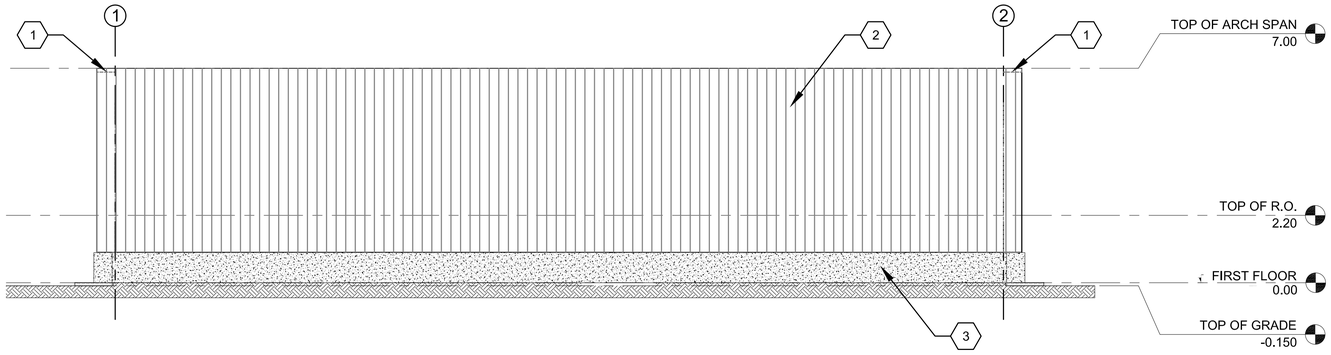

1 A-201 SOUTH ELEVATION
SCALE: 1:100

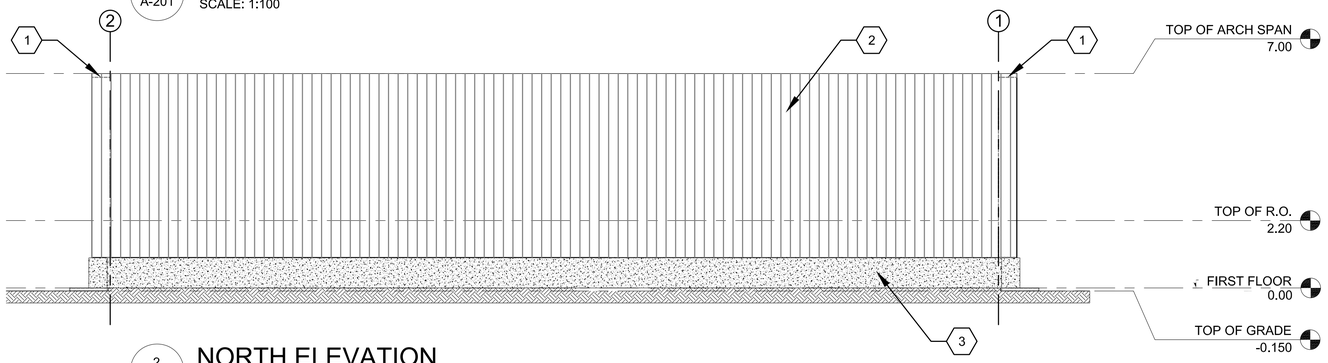

2 A-201 NORTH ELEVATION
SCALE: 1:100

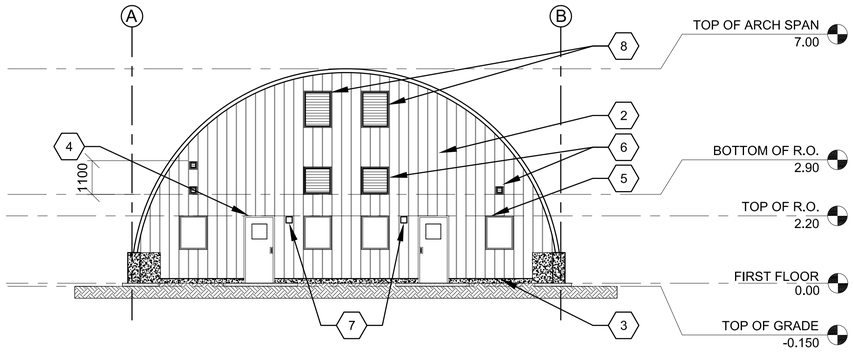

3 A-201 WEST ELEVATION
SCALE: 1:100

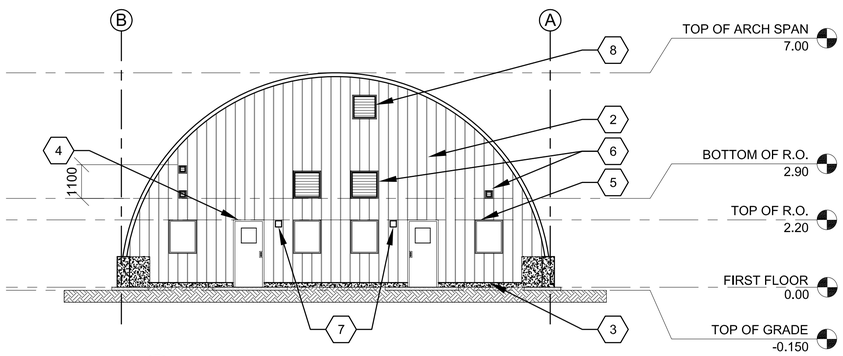

4 A-201 EAST ELEVATION
SCALE: 1:100

GENERAL NOTES:

A. FACTORY PRIMED METAL DOORS AND FRAMES SHALL RECEIVE TWO COATS OF PAINT.
B. LOCATION OF EXTERIOR DOORS AND WINDOWS MUST BE COORDINATED WITH ARCH SPAN MODULE. PLAN DIMENSIONS OF THESE IS APPROXIMATE AND MAY BE SLIGHTLY ADJUSTED TO SUIT PANEL FABRICATION TOLERANCES.
C. EXTERIOR CONCRETE BUILDING SURFACES TO RECEIVE PENETRATING CONCRETE SEALER
D. COORDINATE ALL HVAC OPENING SIZES AND LOCATIONS WITH HVAC CONTRACTOR PRIOR TO INSTALLATION.

KEY NOTES:

1. EXTENSION OF ARCH SPAN
2. PRE-FINISHED METAL ARCH SPAN CONSTRUCTION WALL AND CEILING.
3. CONCRETE WALL.
4. PAINTED HOLLOW METAL DOOR & FRAME.
5. STEEL WINDOW PAINTED.
6. PRE-FINISHED STEEL LOUVER - SEE DETAIL 3/A501
7. LIGHTING - SEE ELECTRICAL
8. ATTIC VENTILATION LOUVER OR FAN SEE MECHANICAL FOR SIZE AND TYPE

0 2000 4000
SCALE: 1:100

UNLESS OTHERWISE NOTED, LINEAR DIMENSIONS SHOWN ARE IN MILLIMETERS.

COMMONWEALTH OF VIRGINIA
PETER GARRETT SCHMIDT
No. 013167
ARCHITECT

US ARMY CORPS OF ENGINEERS
AFGHANISTAN NORTH DISTRICT

SYMBOL	DESCRIPTION	DATE	APPR.	SYMBOL	DESCRIPTION	DATE	APPR.

DESIGNED BY: PGS
DWN BY: AMH
REVIEWED BY: JH
SUBMITTED BY:
DATE: 3/23/2011
CONTRACT NO. W912ER-09-D-0002
DRAWING CODE:
FILE NAME: ARCH SPAN-A1-L04-A201.DWG
PLOT SCALE: 1:100
PLOT DATE: 3/23/2011
REV: 0
CKD BY: PGS

BAKER

U.S. ARMY ENGINEER DISTRICT, AFGHANIST'AN
CORPS OF ENGINEERS
APO AE 09356

SITE ADAPT DESIGN
L04 - LATRINE - LARGE - ARCH SPAN
ELEVATIONS

SHEET REFERENCE NUMBER:
A-201

3/23/2011 11:01 AM

A1 Size 594mm x 841mm

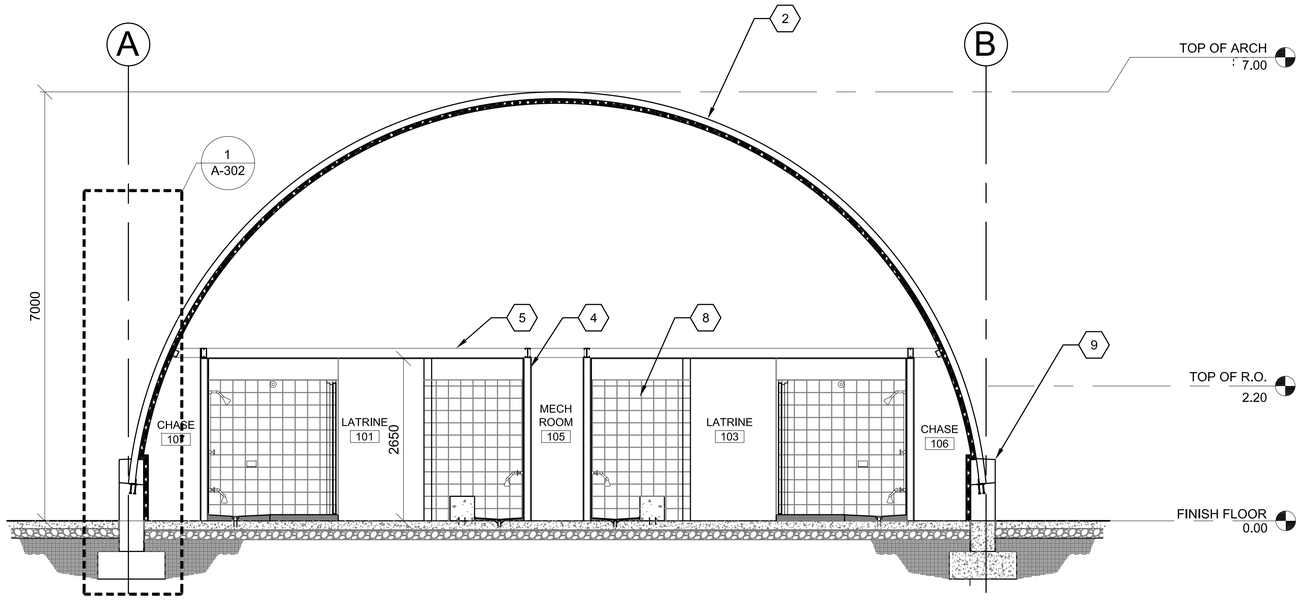

1 A-301 BUILDING SECTION
SCALE: 1:50

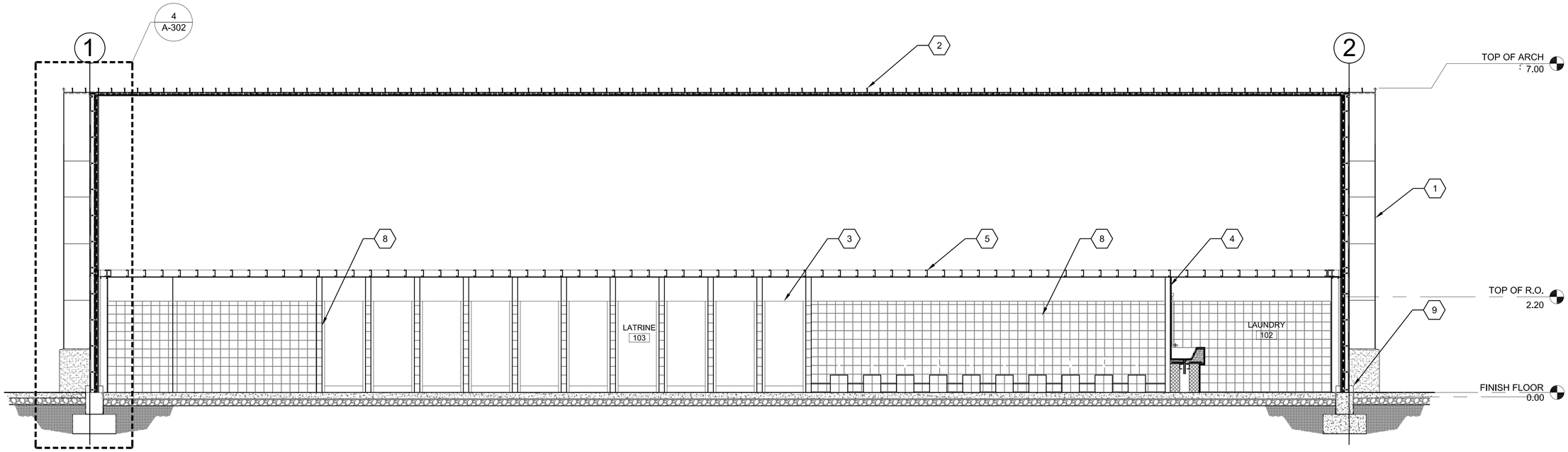

2 A-301 BUILDING SECTION
SCALE: 1:50

GENERAL NOTES:

A. FACTORY PRIMED METAL DOORS AND FRAMES SHALL RECEIVE TWO COATS OF PAINT.

KEY NOTES:

1. EXTENSION OF ARCH SPAN
2. ARCH SPAN ROOF/WALL PANEL WITH POLYURETHANE/CEMENTITIOUS SPRAY - ON FIRE BARRIER
3. HOLLOW METAL FRAME WITH DOOR AS SCHEDULED
4. PARTITION AS SCHEDULED
5. CEILING SYSTEM AS SCHEDULED
6. NOT USED
7. NOT USED
8. 200mm X 200mm CERAMIC TILE
9. CONCRETE STEM WALL

0 2000 4000
SCALE: 1:100

UNLESS OTHERWISE NOTED, LINEAR DIMENSIONS SHOWN ARE IN MILLIMETERS.

COMMONWEALTH OF VIRGINIA
PETER GARRETT SCHMIDT
No. 013167
ARCHITECT

US ARMY CORPS OF ENGINEERS
AFGHANISTAN NORTH DISTRICT

SYMBOL	DESCRIPTION	DATE	APPR.	SYMBOL	DESCRIPTION	DATE	APPR.

DESIGNED BY: PGS
DWN BY: AMH
CKD BY: PGS
REVIEWED BY: JH
SUBMITTED BY:
DATE: 3/23/2011
CONTRACT NO. W912ER-09-D-0002
DRAWING CODE:
FILE NAME: ARCH2Prototype_Ext-Int-Alt1.DWG
PLOT SCALE: 1:50
PLOT DATE: 3/23/2011
REV: 0

BAKER

U.S. ARMY ENGINEER DISTRICT, AFGHANISTAN
CORPS OF ENGINEERS
APO AE 09356

SITE ADAPT DESIGN
L04 - LATRINE - LARGE - ARCH SPAN
BUILDING SECTIONS

SHEET REFERENCE NUMBER:
A-301

3/23/2011 11:01 AM

A1 Size 594mm x 841mm

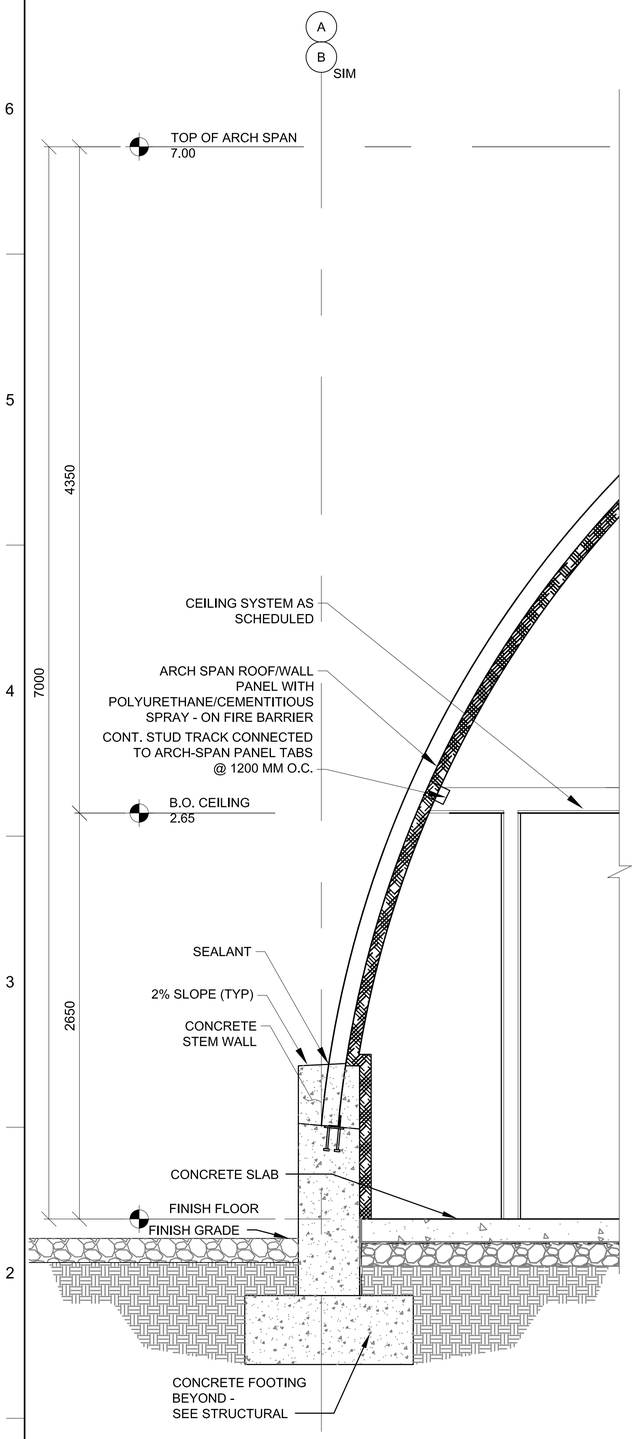

WALL SECTION - THRU ARCH SPAN STEM WALL

1 / A-302 SCALE: 1:50

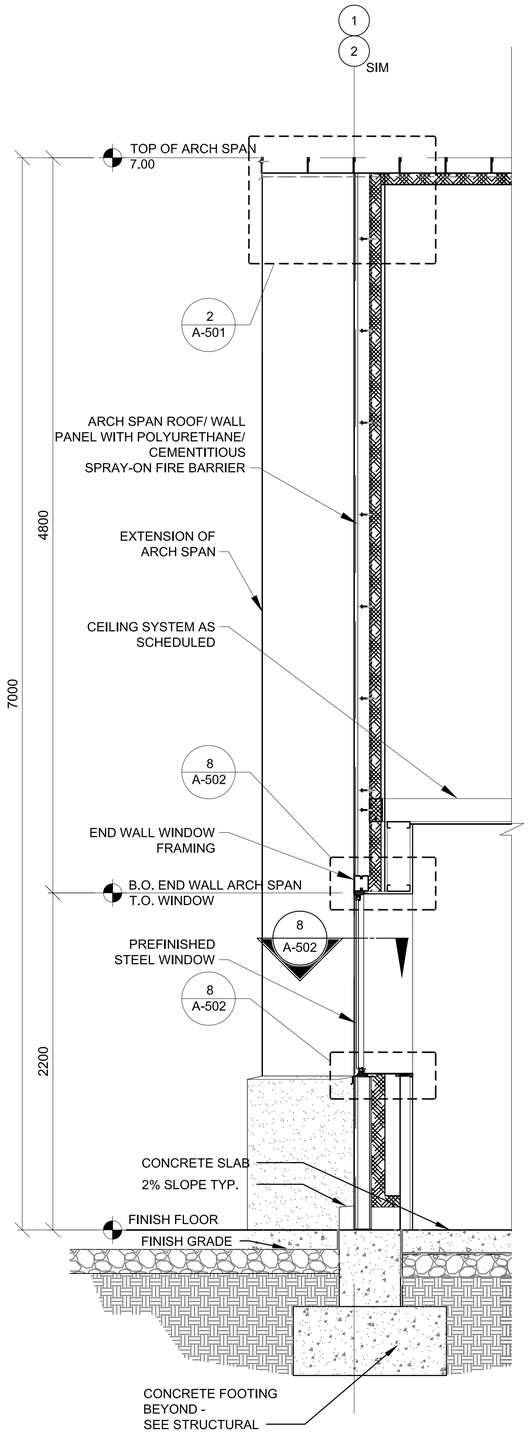

WALL SECTION - THRU END WALL WINDOW

2 / A-302 SCALE: 1:50

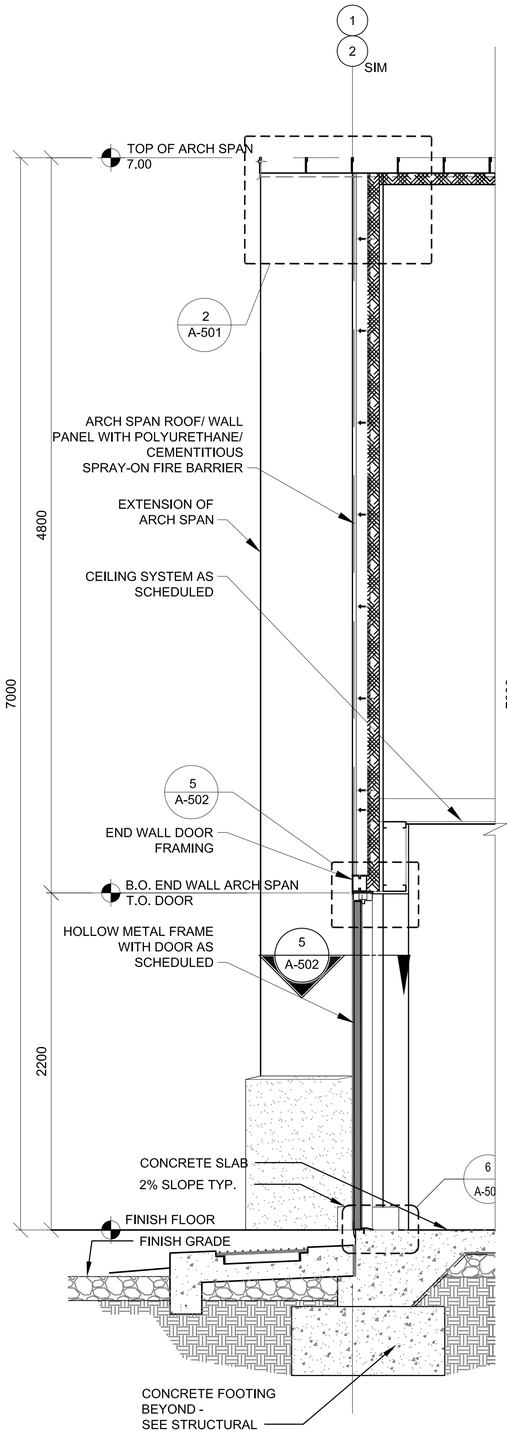

WALL SECTION - THRU END WALL DOOR

3 / A-302 SCALE: 1:50

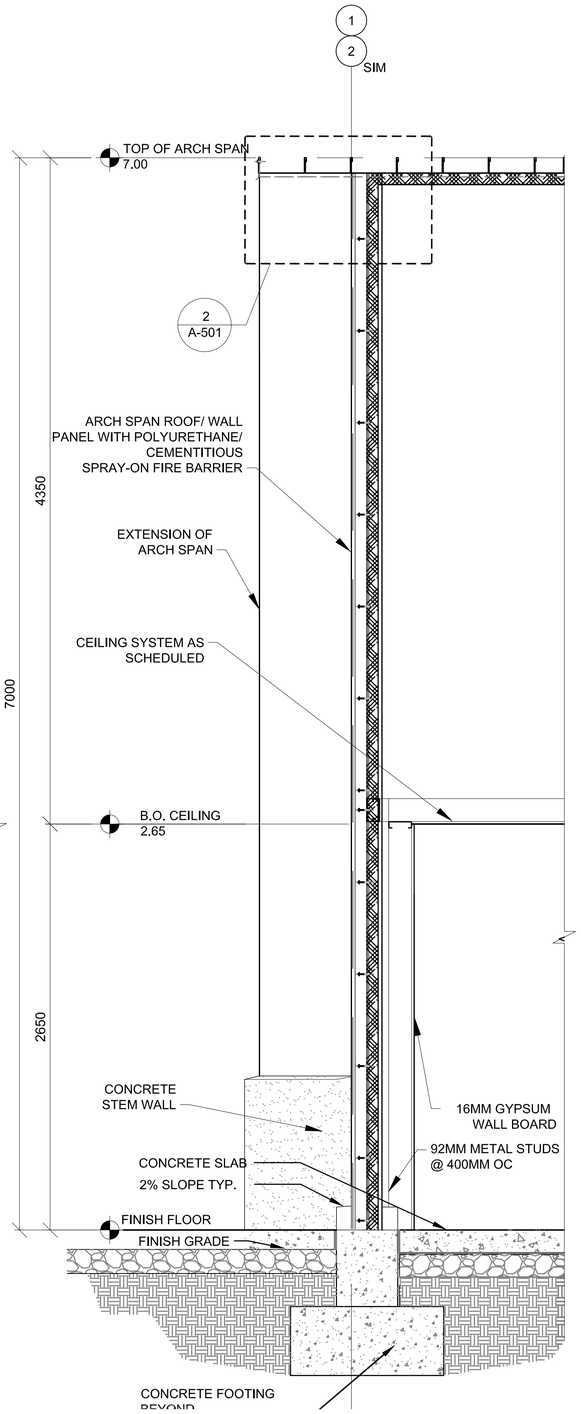

WALL SECTION - THRU END WALL

4 / A-302 SCALE: 1:50

0 500 1000 2000
SCALE: 1:50

UNLESS OTHERWISE NOTED, LINEAR DIMENSIONS SHOWN ARE IN MILLIMETERS.

COMMONWEALTH OF PENNSYLVANIA
PETER GARRETT SCHMIDT
No. 013167
REGISTERED ARCHITECT

US ARMY CORPS OF ENGINEERS
AFGHANISTAN NORTH DISTRICT

SYMBOL	DESCRIPTION	DATE	APPR.	SYMBOL	DESCRIPTION	DATE	APPR.

DESIGNED BY: PGS
DWN BY: AMH
CKD BY: PGS
REVIEWED BY:
JH
SUBMITTED BY:
DATE: 3/23/2011
REV: 0
CONTRACT NO. W912ER-09-D-0002
DRAWING CODE:
FILE NAME: ARCHSPAN-C-L04-A-302.DWG
PLOT SCALE: 1:20
PLOT DATE: 3/23/2011

BAKER

U.S. ARMY ENGINEER DISTRICT, AFGHANISTAN
CORPS OF ENGINEERS
APO AE 09356

SITE ADAPT DESIGN
L04 - LATRINE - LARGE - ARCH SPAN
WALL SECTIONS

SHEET REFERENCE NUMBER:
A-302

3/23/2011 11:01 AM

A1 Size 594mm x 841mm

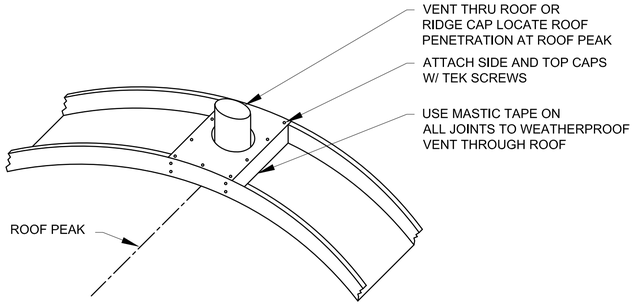

1 / A-501 PLUMBING VENT DETAIL

SCALE: NTS

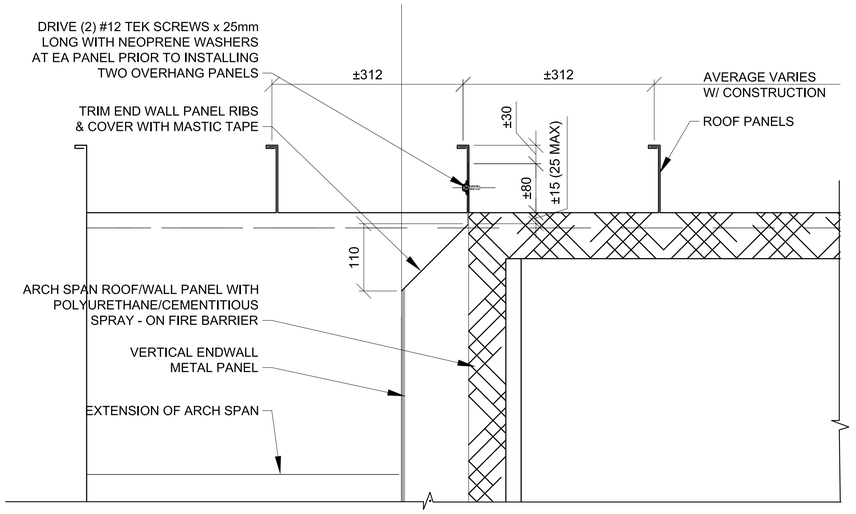

2 / A-501 END WALL ROOF DETAIL

SCALE: 1:5

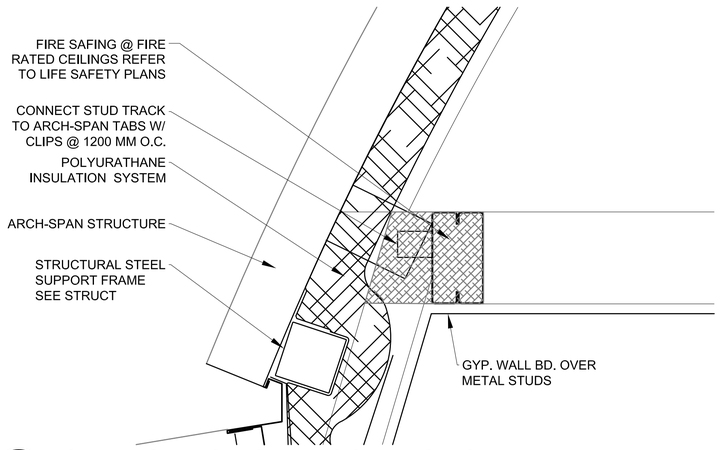

7 / A-501 CEILING ARCH-SPAN CONNECTION

SCALE 1:5

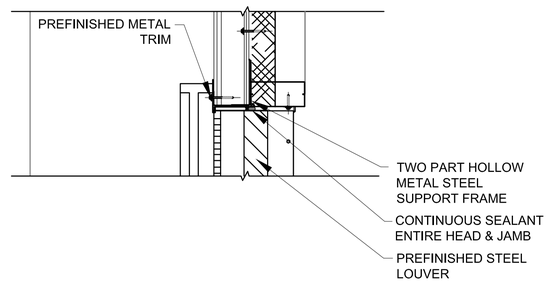

HEAD

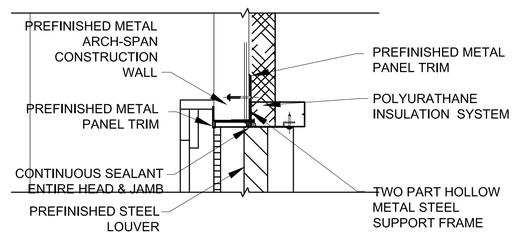

JAMB

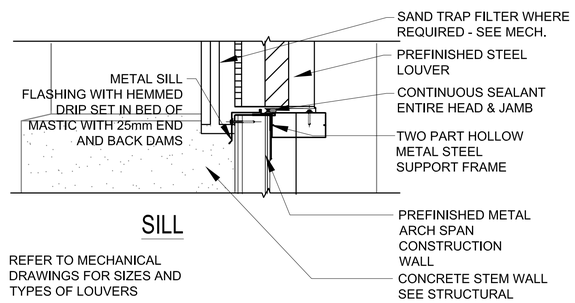

SILL

REFER TO MECHANICAL
DRAWINGS FOR SIZES AND
TYPES OF LOUVERS

3 / A-501 LOUVER EXTERIOR DETAIL

SCALE: 1:5

0 50 100 200

SCALE: 1:5

UNLESS OTHERWISE NOTED,
LINEAR DIMENSIONS
SHOWN ARE IN MILLIMETERS.

COMMONWEALTH OF VIRGINIA
PETER GARRETT SCHMIDT
No. 013167
ARCHITECT

US ARMY CORPS
OF ENGINEERS
AFGHANISTAN NORTH
DISTRICT

SYMBOL	DESCRIPTION	DATE	APPR.	SYMBOL	DESCRIPTION	DATE	APPR.

DATE: 3/23/2011
REV: 0
CONTRACT NO. W912ER-09-D-0002
DRAWING CODE:
FILE NAME: ARCHSPAN-A-501-A-501.DWG
PLOT SCALE: VARIES
PLOT DATE: 3/23/2011

DESIGNED BY: PGS
DWN BY: MDH
CKD BY: pgs
REVIEWED BY: JH
SUBMITTED BY:

BAKER

U.S. ARMY ENGINEER DISTRICT, AFGHANISTAN
CORPS OF ENGINEERS
APO AE 09356

SITE ADAPT DESIGN

L04 - LATRINE - LARGE - ARCH SPAN
EXTERIOR DETAILS

SHEET
REFERENCE
NUMBER:

A-501

3/23/2011 11:02 AM

A1 Size 594mm x 841mm

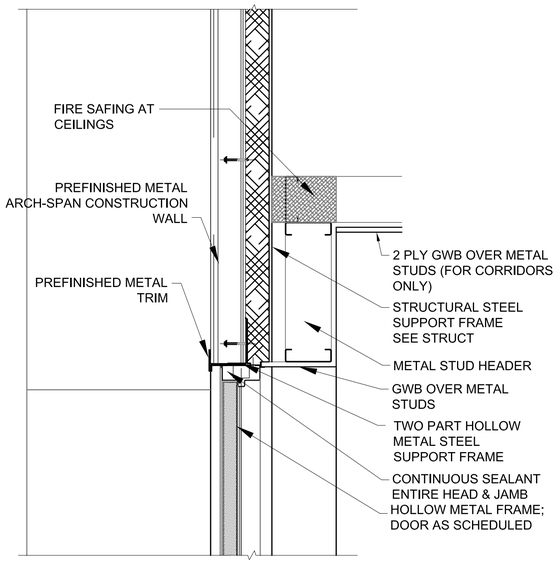

HEAD

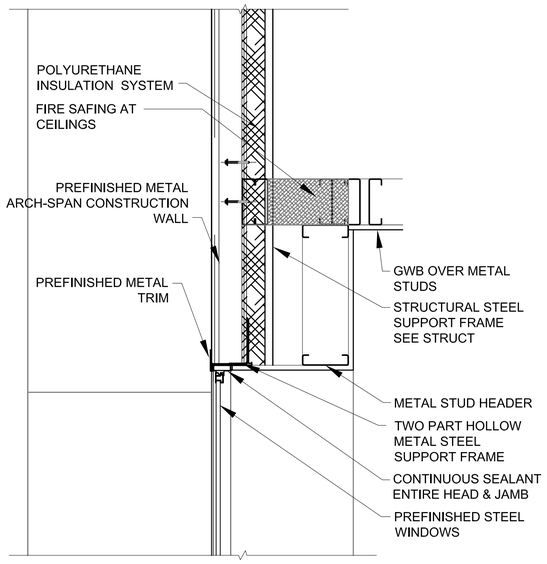

HEAD

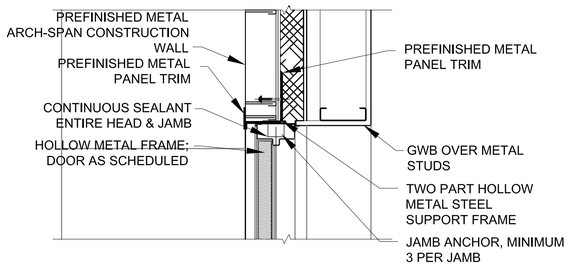

JAMB

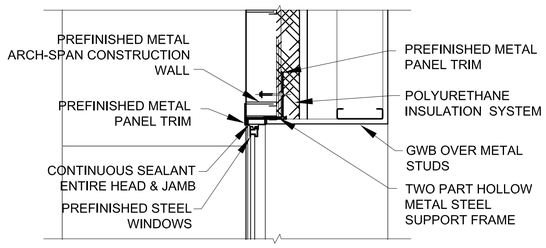

JAMB

5 A-502 END WALL EXTERIOR DOOR DETAILS

SCALE: 1:10

1 A-502 NOT USED

SCALE: 1:10

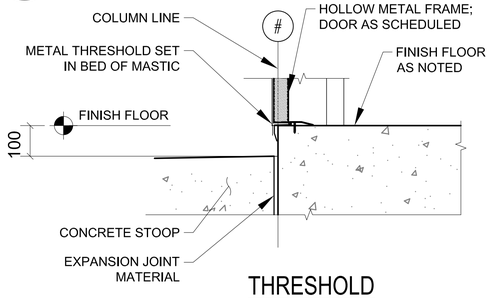

THRESHOLD

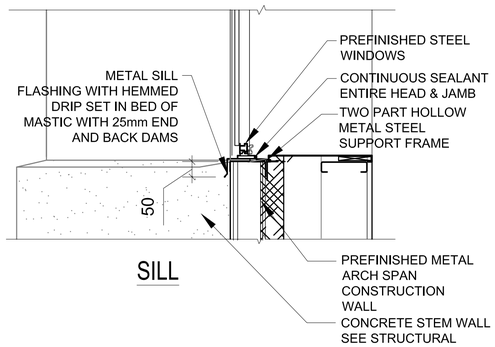

SILL

3 A-502 NOT USED

SCALE: 1:10

6 A-502 EXTERIOR DOOR DETAILS

SCALE: 1:10

8 A-502 EXTERIOR WINDOWS DETAILS

SCALE: 1:10

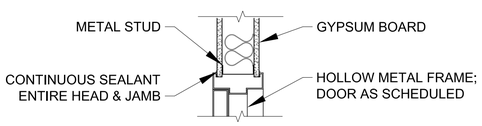

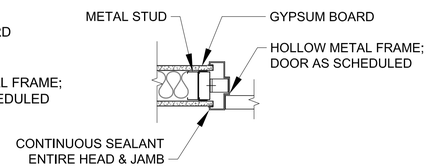

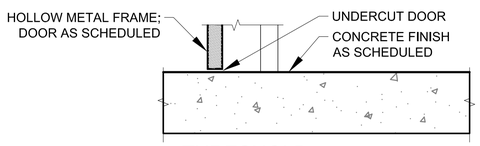

THRESHOLD

0 100 200 400

SCALE: 1:10

UNLESS OTHERWISE NOTED, LINEAR DIMENSIONS SHOWN ARE IN MILLIMETERS.

2 A-502 NOT USED

SCALE: 1:10

4 A-502 INTERIOR WALL DETAILS

SCALE: 1:10

7 A-502 INTERIOR DOOR DETAILS

SCALE: 1:10

COMMONWEALTH OF VIRGINIA
PETER GARRETT SCHMIDT
NO. 013167
ARCHITECT

US ARMY CORPS OF ENGINEERS AFGHANISTAN NORTH DISTRICT

SYMBOL	DESCRIPTION	DATE	APPR.	SYMBOL	DESCRIPTION	DATE	APPR.

DESIGNED BY: PGS
DWN BY: AMH
CKD BY: PGS
REVIEWED BY: JH
SUBMITTED BY:
DATE: 3/23/2011
CONTRACT NO. W912ER-09-D-0002
DRAWING CODE:
FILE NAME: ARCHSPAN-A1-L04-A-502.DWG
PLOT SCALE: 1:10
PLOT DATE: 3/23/2011
REV: 0

BAKER

U.S. ARMY ENGINEER DISTRICT, AFGHANISTAN
CORPS OF ENGINEERS
APO AE 09356

SITE ADAPT DESIGN

L04 - LATRINE - LARGE - ARCH SPAN

HEAD, JAMB, & SILL DETAILS

SHEET REFERENCE NUMBER:

A-502

A1 Size 594mm x 841mm

3/23/2011 11:02 AM

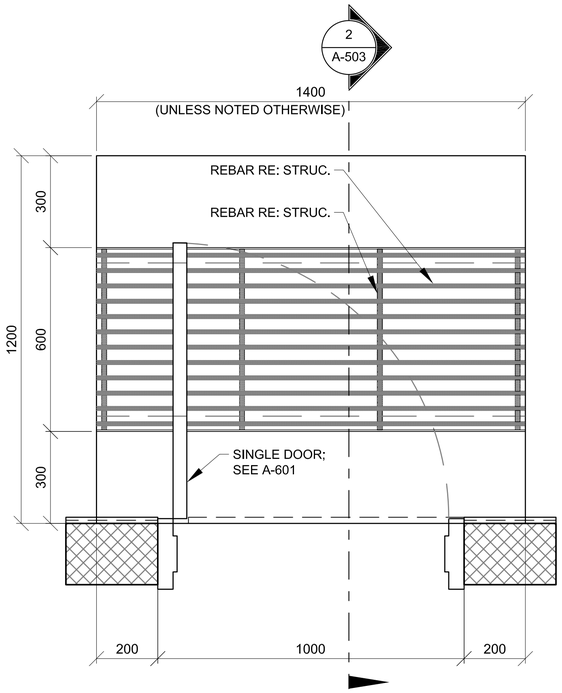

1 A-503 900mm DOOR/ STOOP PLAN (WITH GRATE)
SCALE: 1:10

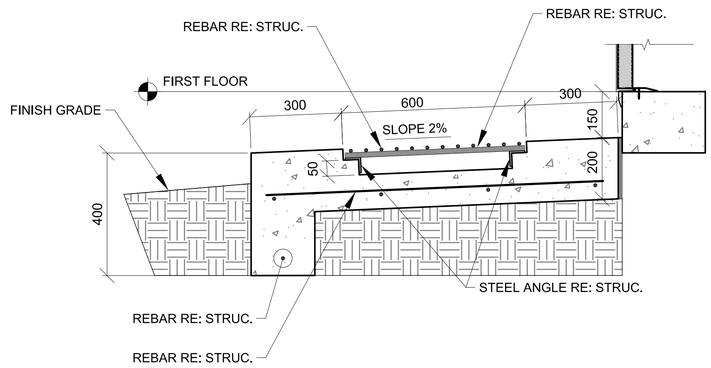

2 A-503 DOOR STOOP DETAIL
SCALE: 1:10

0 100 200 400
SCALE: 1:10

UNLESS OTHERWISE NOTED,
LINEAR DIMENSIONS
SHOWN ARE IN MILLIMETERS.

COMMONWEALTH OF PENNSYLVANIA
PETER GARRETT SCHMIDT
NO. 013167
REGISTERED ARCHITECT

US ARMY CORPS
OF ENGINEERS
AFGHANISTAN NORTH
DISTRICT

SYMBOL	DESCRIPTION	DATE	APPR.	SYMBOL	DESCRIPTION	DATE	APPR.

U.S. ARMY ENGINEER DISTRICT, AFGHANISTAN
CORPS OF ENGINEERS
APO AE 09356

DESIGNED BY: PGS
DWN BY: AMH
CKD BY: PGS
REVIEWED BY: JH
SUBMITTED BY:
DATE: 3-23-2011
REV: 0
CONTRACT NO. W912ER-09-D-0002
DRAWING CODE:
FILE NAME: ARCD2Prime-A1-Cat-A-B1.DWG
PLOT SCALE: 1:10
PLOT DATE: 3/23/2011

BAKER

SITE ADAPT DESIGN
L04 - LATRINE - LARGE - ARCH SPAN
STOOP DETAILS

SHEET REFERENCE NUMBER:
A-503

A1 Size 594mm x 841mm

3/23/2011 11:02 AM

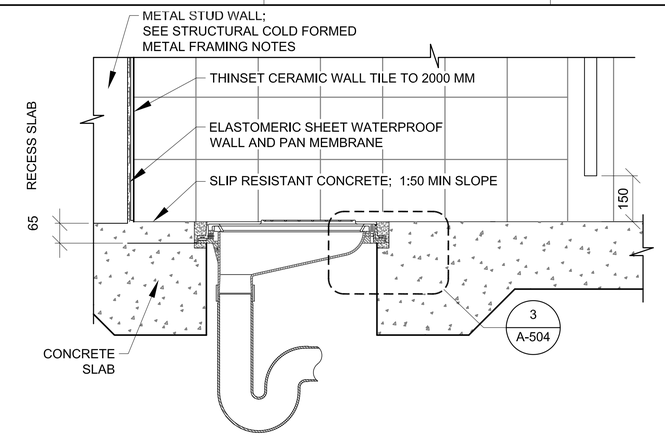

1 A-504 LATRINE DETAIL
SCALE: 1:10

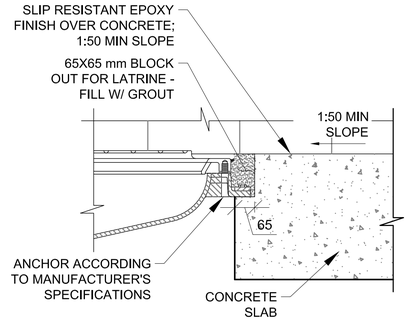

3 A-504 MOUNTING DETAIL
SCALE: 1:10

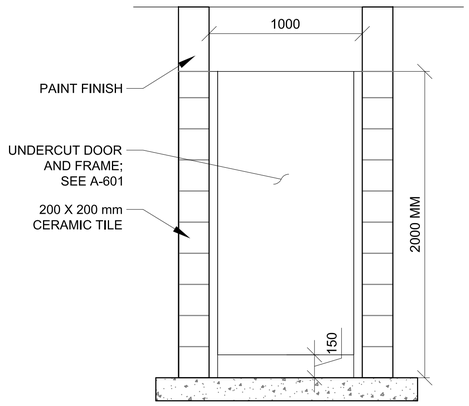

6 A-504 TOILET PARTITION DOOR ELEVATION
SCALE: 1:20

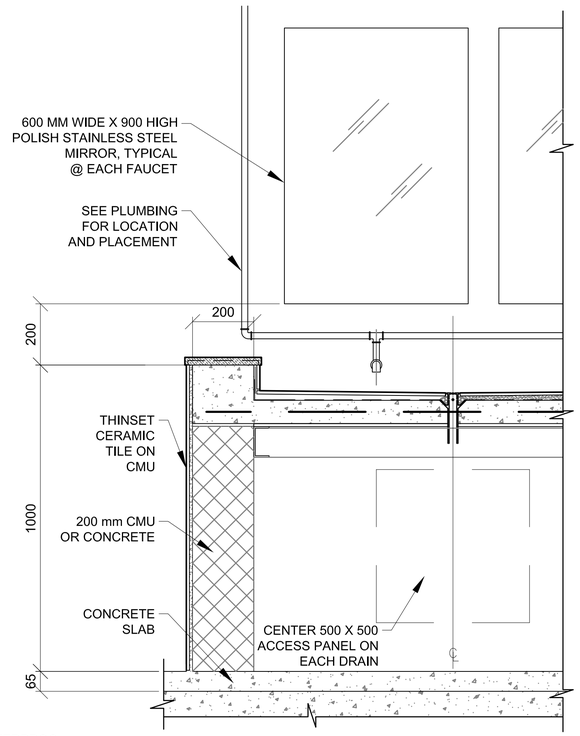

7 A-504 TROUGH SECTION
SCALE: 1:10

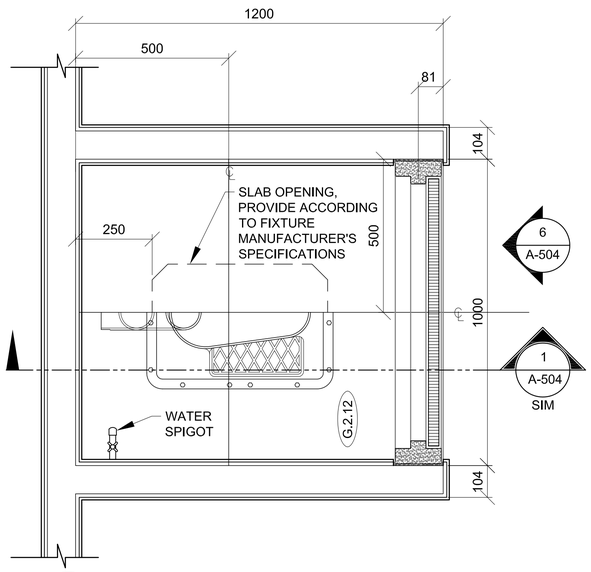

2 A-504 TOILET DETAIL
SCALE: 1:10

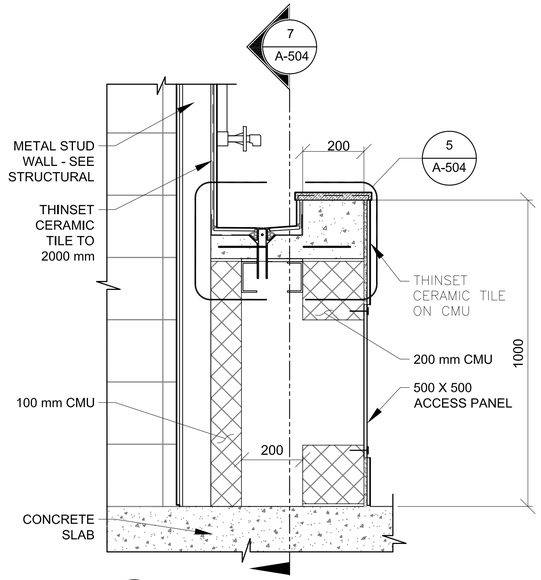

4 A-504 TROUGH SECTION
SCALE: 1:10

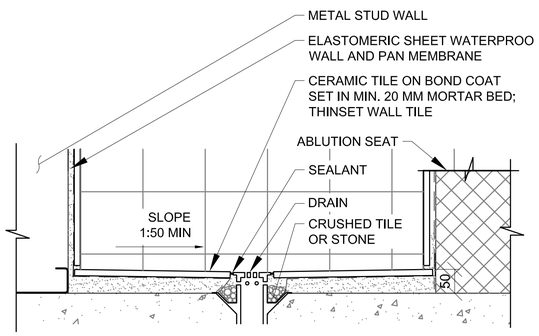

8 A-504 RECESSED TROUGH
SCALE: 1:5

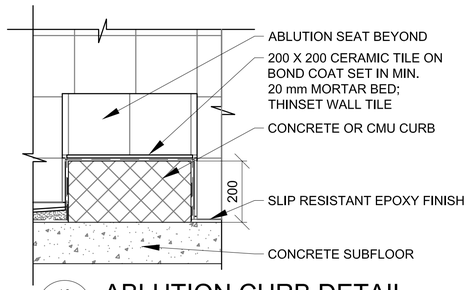

10 A-504 ABLUTION CURB DETAIL
SCALE: 1:10

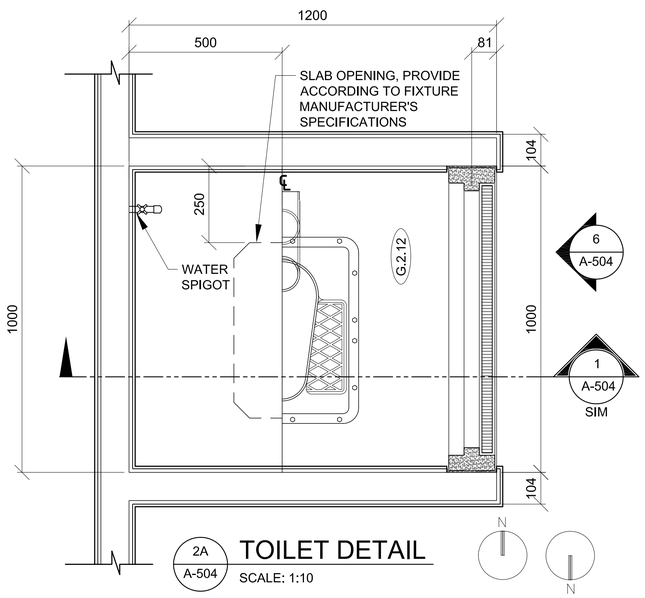

2A A-504 TOILET DETAIL
SCALE: 1:10

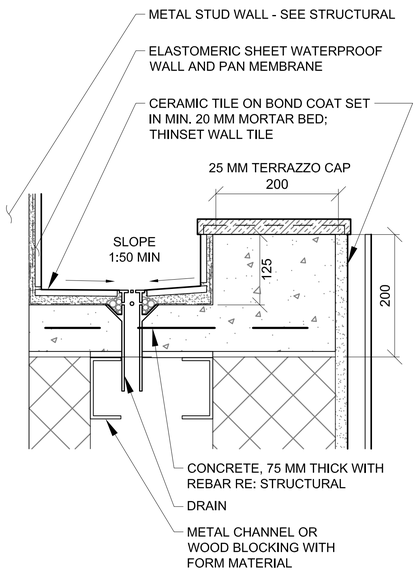

5 A-504 ENLARGED TROUGH DETAIL
SCALE: 1:5

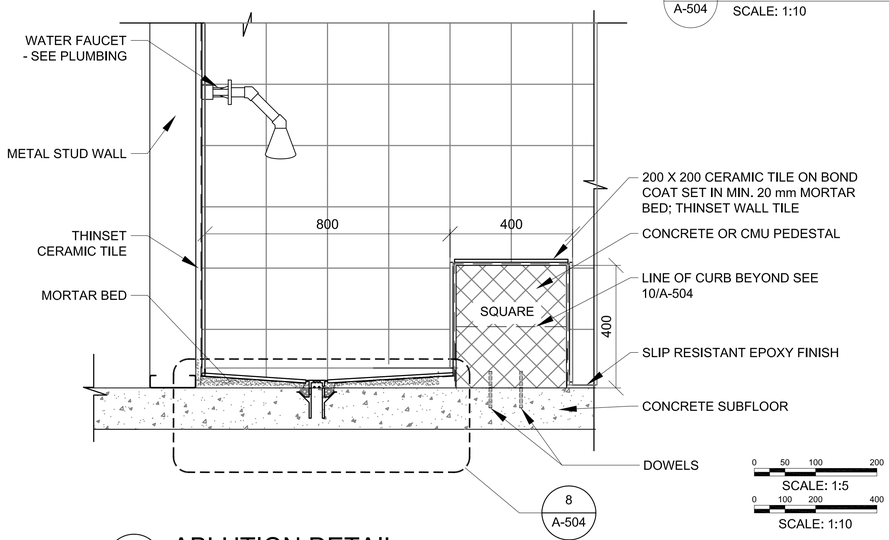

9 A-504 ABLUTION DETAIL
SCALE: 1:10

0 50 100 200
SCALE: 1:5
0 100 200 400
SCALE: 1:10

UNLESS OTHERWISE NOTED, LINEAR DIMENSIONS SHOWN ARE IN MILLIMETERS.

COMMONWEALTH OF VIRGINIA
PETER GARRETT SCHMIDT
No. 013167
ARCHITECT

US ARMY CORPS OF ENGINEERS AFGHANISTAN NORTH DISTRICT

SYMBOL	DESCRIPTION	DATE	APPR.	SYMBOL	DESCRIPTION	DATE	APPR.

DESIGNED BY: PGS
DWN BY: AMH
CKD BY: PGS
REVIEWED BY: JH
SUBMITTED BY:
DATE: 3/23/2011
CONTRACT NO. W912ER-09-D-0002
DRAWING CODE:
FILE NAME: ARCHITECTURAL-C-L04-A-504.DWG
PLOT SCALE: VARIES
PLOT DATE: 3/23/2011
REV: 0

BAKER

U.S. ARMY ENGINEER DISTRICT, AFGHANISTAN
CORPS OF ENGINEERS
APO AE 09356

SITE ADAPT DESIGN
L04 - LATRINE - LARGE - ARCH SPAN
TOILET, LAVATORY & ABLUTION DETAILS

SHEET REFERENCE NUMBER:
A-504

A1 Size 594mm x 841mm

3/23/2011 11:02 AM

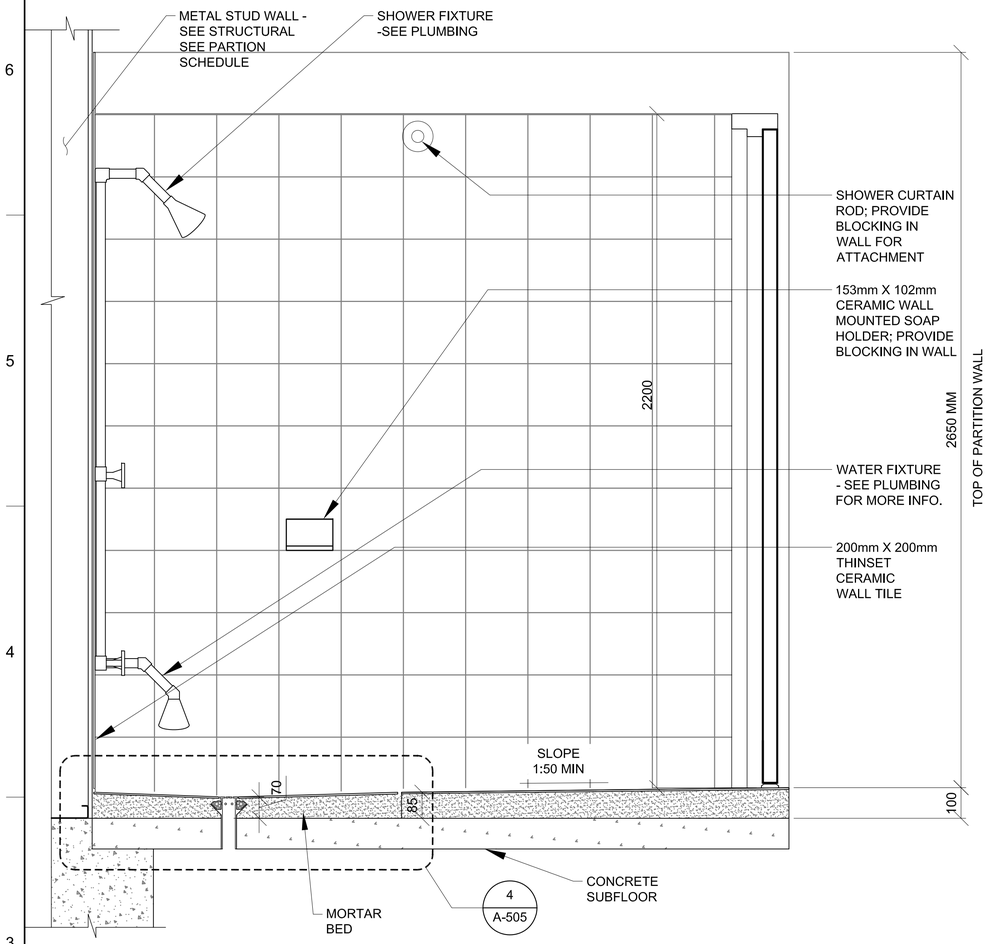

1 A-505 SHOWER DETAILS
SCALE: 1:10

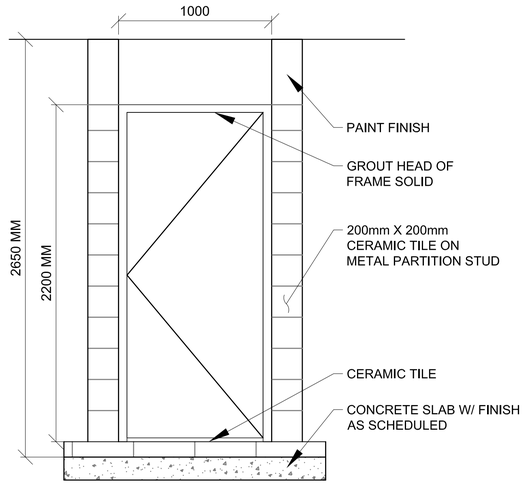

3 A-505 SHOWER PARTITION DOOR ELEVATION
SCALE: 1:20

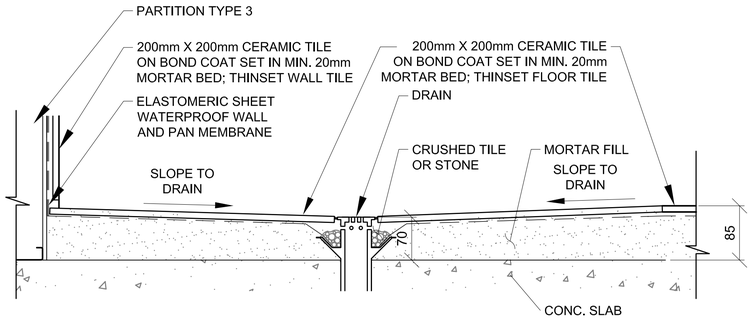

4 A-505 SHOWER RECESS
SCALE: 1:5

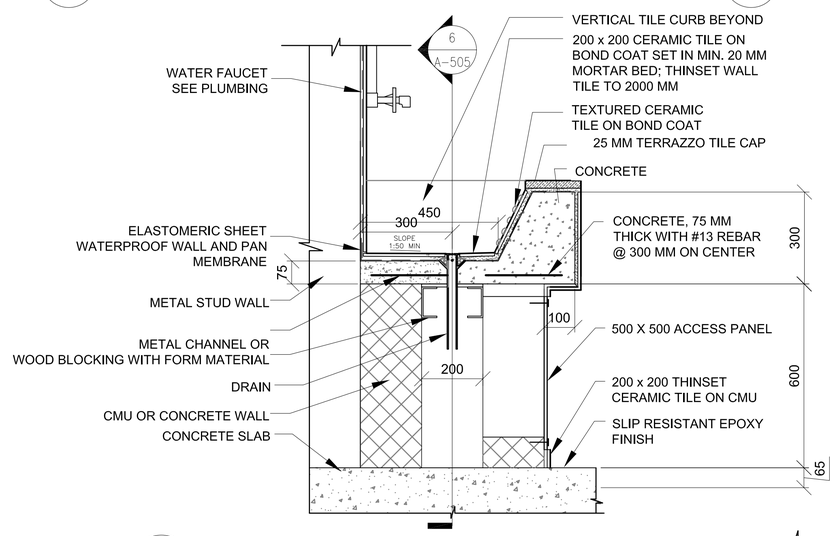

5 A-505 LAUNDRY SINK SECTION
SCALE: 1:10

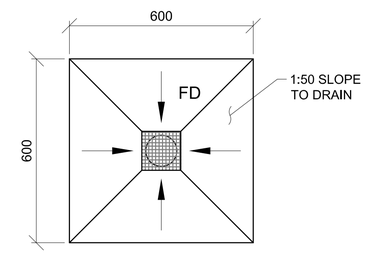

8 A-505 FLOOR DRAIN DETAIL
SCALE: 1:10

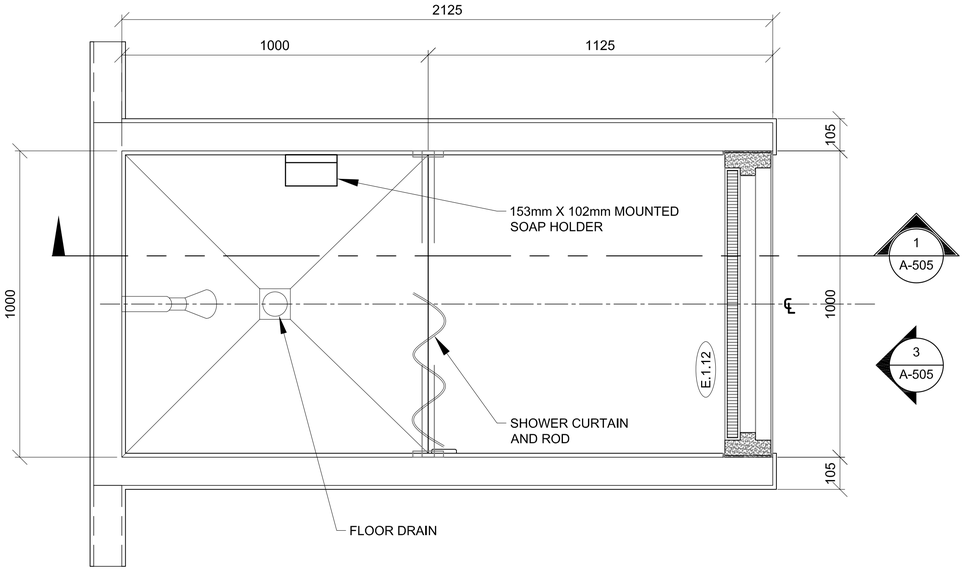

2 A-505 SHOWER PLAN
SCALE: 1:10

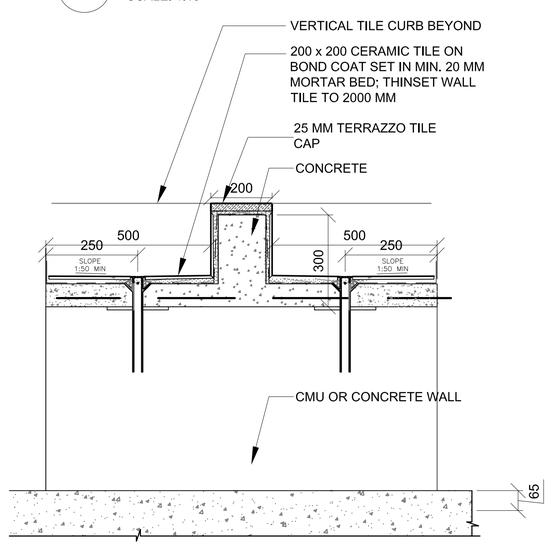

6 A-505 LAUNDRY DIVIDER SECTION
SCALE: 1:10

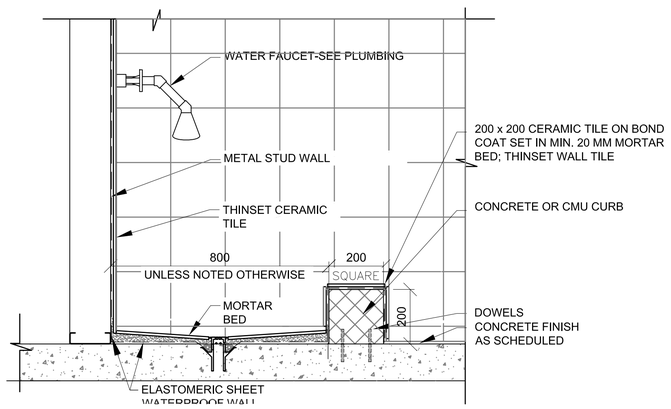

7 A-505 MOP SINK DETAIL
SCALE: 1:10

0 50 100 200
SCALE: 1:5

0 200 400 800
SCALE: 1:20

0 100 200 400
SCALE: 1:10

UNLESS OTHERWISE NOTED, LINEAR DIMENSIONS SHOWN ARE IN MILLIMETERS.

COMMONWEALTH OF VIRGINIA
PETER GARRETT SCHMIDT
No. 013167
ARCHITECT

US ARMY CORPS OF ENGINEERS
AFGHANISTAN NORTH DISTRICT

SYMBOL	DESCRIPTION	DATE	APPR.	SYMBOL	DESCRIPTION	DATE	APPR.

DATE: 3/23/2011
REV: 0
CONTRACT NO. W912ER-09-D-0002
DRAWING CODE:
FILE NAME: ARCDWG-A-C-1-A-505.DWG
PLOT SCALE: VARIES
PLOT DATE: 3/23/2011

DESIGNED BY: PGS
DWN BY: AMH
CKD BY: PGS
REVIEWED BY: JH
SUBMITTED BY:
BAKER

U.S. ARMY ENGINEER DISTRICT, AFGHANISTAN
CORPS OF ENGINEERS
APO AE 09356

SITE ADAPT DESIGN
L04 - LATRINE - LARGE - ARCH SPAN
SHOWER & LAUNDRY DETAILS

SHEET REFERENCE NUMBER:
A-505

3/23/2011 11:02 AM

A1 Size 594mm x 841mm

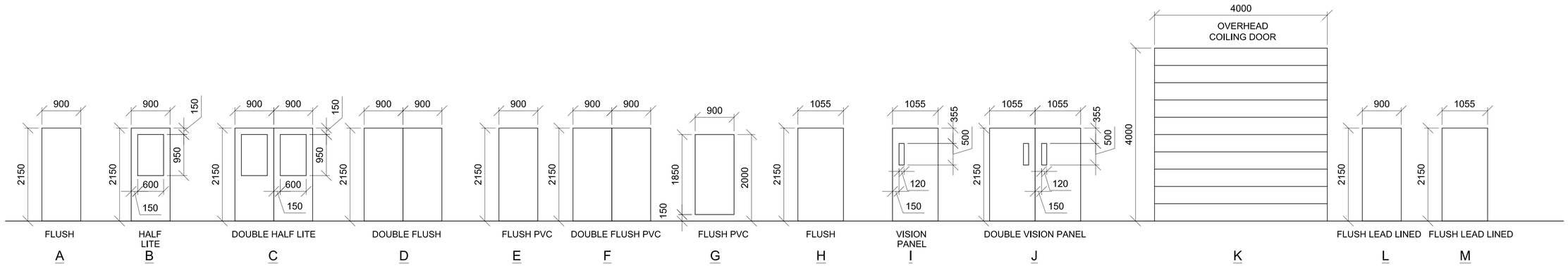

1 A-601 DOOR TYPES

SCALE: 1:50

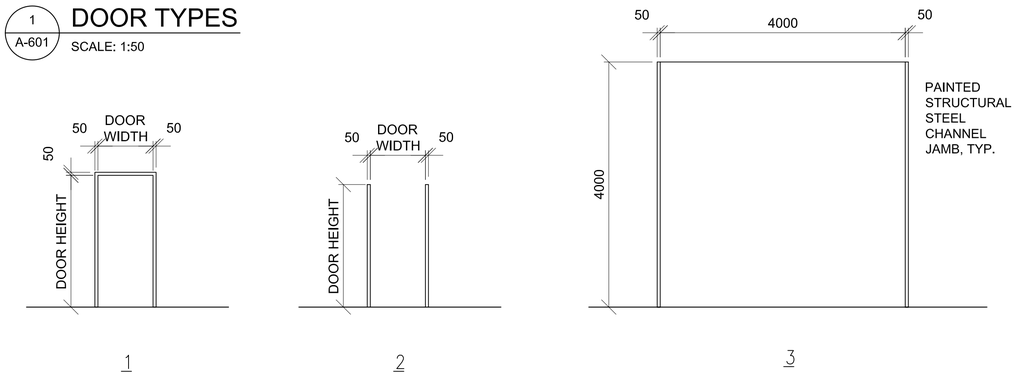

2 A-601 FRAME TYPES

SCALE: 1:50

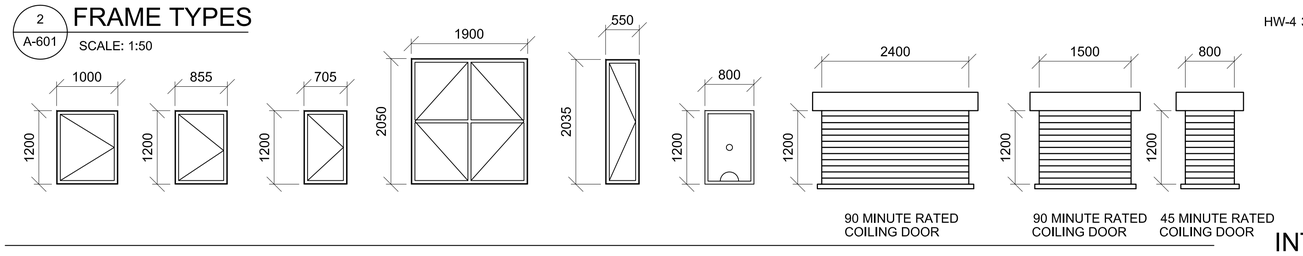

3 A-601 WINDOW TYPES

SCALE: 1:50

4 A-601 DOOR TAG

SCALE: 1:50

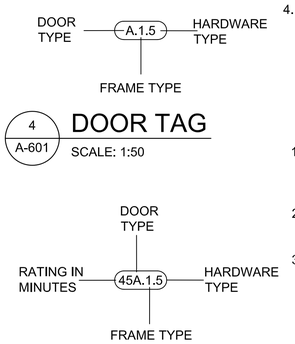

5 A-601 RATED DOOR TAGS

SCALE: NTS

WINDOW TYPE NOTES:

1. ALL EXTERIOR WINDOWS SHALL BE STEEL. PROVIDE INSECT SCREENS ONLY AT DFAC FACILITIES. WINDOWS SHALL BE COMMERCIAL GRADE.
2. ALL EXTERIOR WINDOWS SHALL BE OPERABLE.
3. WINDOWS IN LATRINES OR RESTROOM AREAS SHALL HAVE OBSCURE GLASS.
4. WINDOW TYPES ARE NOT APPLICABLE AT ALL BUILDINGS. SEE FLOOR PLAN FOR REQUIREMENTS

DOOR TAG NOTES:

1. THE DOOR TAG INDICATES THE DOOR TYPE, FRAME TYPE AND HARDWARE SET FOR EACH DOOR.
2. THE DOOR TAG FOR RATED DOORS INCLUDES THE RATING OF THE DOOR IN MINUTES.
3. REFER TO FLOOR PLANS FOR DOOR TAG INFORMATION APPLICABLE TO EACH DOOR.

DOOR AND HARDWARE NOTES:

1. INTERIOR AND EXTERIOR METAL DOORS AND FRAME COLORS SHALL MATCH ADJACENT WALL COLORS AS SELECTED BY THE CONTRACTING OFFICER.
2. FRAMES, EXCEPT FIRE-RATED FRAMES, SHALL BE MOUNTED AND ADJUSTED IN ACCORDANCE WITH MANUFACTURER'S INSTRUCTIONS. FRAMES SHALL BE FASTENED WITH MINIMUM OF THREE ANCHORS PER JAMB AT EQUAL INTERVALS.
3. DIMENSIONS SHOWN ON DOOR TYPES DETAIL ARE BASED UPON MODULAR MASONRY (OR ROUGH OPENING), HEIGHT OF 2150 MM FOR STANDARD PERSONNEL DOORS. CONTRACTOR SHALL COORDINATE WITH DOOR SUPPLIER TO ENSURE THAT DIMENSIONS OF DOORS AND FRAMES PROVIDED ARE COMPATIBLE WITH DOOR OPENING DIMENSIONS.
4. HARDWARE SHALL BE HEAVY DUTY, COMMERCIAL GRADE, STAINLESS STEEL WITH A SATIN OR BRUSHED FINISH.
5. HARDWARE TYPES INCLUDE BUILDERS HARDWARE MANUFACTURERS ASSOCIATION (BMHA) NUMBER.
6. DOORS IN 2 HOUR RATED PARTITIONS SHALL BE 1.5 HOUR (90 MINUTE) RATED DOORS IN ACCORDANCE WITH NFPA 101, TABLE 8.3.4.2.
7. DOORS IN 1 HOUR RATED WALLS SHALL BE 3/4 HOUR (45 MINUTE) RATED DOORS IN ACCORDANCE WITH NFPA 101, TABLE 8.3.4.2.
8. DOORS IN 1 HOUR RATED CORRIDOR WALLS SHALL BE 1/3 HOUR (20 MINUTE) IN ACCORDANCE WITH NFPA 101, TABLE 8.3.4.2.
10. PROVIDE DOOR STOPS TO PROTECT WALLS ON LOCATIONS WHERE DOOR SWING WILL STRIKE WALL.
11. FIRE RATED DOORS SHALL HAVE RATED GLASS NOT EXCEEDING ALLOWABLE SIZE PER NFPA 80. (836,125MM2 FOR MIN. DOORS & 64,500MM2 FOR 45 MIN OR GREATER DOORS
12. DOOR TYPES ARE NOT APPLICABLE AT ALL BUILDINGS. SEE FLOOR PLAN FOR REQUIREMENTS
13. REFER TO MECHANICAL DRAWINGS FOR LOCATIONS OF UNDERCUT DOORS

EXTERIOR DOOR HARDWARE TYPES:

HW-1 1-1/2 PR HINGES, A5112 114 X 114 (SINGLE EXIT DOOR)
1 EA RIM EXIT DEVICE, TYPE 1
1 EA CYLINDER. E09221A, GRADE 1
1 EA OVERHEAD CLOSER, C02061, LOW RESISTANCE
1 EA THRESHOLD, J32130
3 EA DOOR SILENCERS, L03011

HW-2 1-1/2 PR HINGES, A5112 114 X 114 (SINGLE ENTRY DOOR)
1 EA LOCKSET, F13 ENTRY LOCK W/LEVER HANDLES, GRADE 1
1 EA OVERHEAD CLOSER, C02061, LOW RESISTANCE
1 EA THRESHOLD, J32130
3 EA DOOR SILENCERS, L03011

HW-3 3 PR HINGES, A5112 114 X 114 (DOUBLE EXIT DOOR)
2 EA RIM EXIT DEVICE, TYPE 1
2 EA CYLINDER. GRADE 1
2 EA OVERHEAD CLOSER, C02061, LOW RESISTANCE
1 EA DOOR COORDINATOR, TYPE 21
1 EA ASTRAGAL
1 EA THRESHOLD, J32130
2 EA DOOR SILENCERS, L03011

HW-4 3 PR HINGES, A5112 114 X 114 (DOUBLE DOOR DORMITORY FUNCTION)
1 EA LOCKSET W/LEVER HANDLES. GRADE 1, F13
1 EA OVERHEAD CLOSER, C02061, LOW RESISTANCE
2 EA MAGNETIC HOLDER PIN, ATTACHED TO DOOR LEAF
2 EA MAGNETIC HOLDER RECEIVER, ATTACHED TO STOOP
2 EA LEVER EXTENSION FLUSH BOLTS, L04081
1 EA ASTRAGAL
1 EA THRESHOLD, J32130
2 EA DOOR SILENCERS, L03011

INTERIOR DOOR HARDWARE TYPES:

HW-5 1-1/2 PR HINGES, A8133 114 X 114 (SINGLE FRONT DOOR FUNCTION)
1 EA LOCKSET W/LEVER HANDLES, F08, GRADE 1
1 EA WALL STOP, L02101 OR L02161
3 EA DOOR SILENCERS, L03011

HW-5A 1-1/2 PR HINGES, A8133 114 X 114 (SINGLE OFFICE FUNCTION)
1 CLOSER
1 EA LOCKSET W/LEVER HANDLES, F05, GRADE 1
1 EA WALL STOP, L02101 OR L02161
3 EA DOOR SILENCERS, L03011

HW-6 1-1/2 PR HINGES, A8112 114 X 114 (SINGLE STOREROOM FUNCTION)
1 CLOSER
1 EA LOCKSET W/LEVER HANDLES, F07, GRADE 1
1 EA WALL STOP, L02101 OR L02161
3 EA DOOR SILENCERS, L03011

HW-7 1-1/2 PR HINGES, A8133 (SINGLE PASSAGE FUNCTION)
1 CLOSER
1 EA LOCKSET W/LEVER HANDLES, F01 GRADE 1
1 EA WALL STOP, L02101 OR L02161
2 EA MOP PLATE, J103
3 EA DOOR SILENCERS, L03011

HW-7A 1-1/2 PR HINGES, A8133 (SINGLE PASSAGE FUNCTION)
1 CLOSER
1 EA LOCKSET W/LEVER HANDLES, F01 GRADE 1
1 EA WALL STOP, L02101 OR L02161
3 EA DOOR SILENCERS, L03011

INTERIOR DOOR HARDWARE TYPES:

HW-8 1-1/2 PR HINGES, A8112 (SINGLE JAN/STOREROOM FUNCTION)
1 CLOSER
1 EA LOCKSET W/LEVER HANDLES, F07 GRADE 1
1 EA WALL STOP, L02101 OR L02161
2 EA MOP PLATE, J103
3 EA DOOR SILENCERS, L03011

HW-9 1-1/2 PR HINGES, A5112 114 X 114 (SINGLE EXIT DOOR)
1 EA RIM EXIT DEVICE, TYPE 1
1 EA CYLINDER. E09221A, GRADE 1
1 EA OVERHEAD CLOSER, C02061, LOW RESISTANCE
3 EA DOOR SILENCERS, L03011

HW-10 3 PR HINGES, A5112 114 X 114 (DOUBLE STOREROOM FUNCTION
1 EA LOCKSET W/LEVER HANDLES. GRADE 1, F7
2 EA LEVER EXTENSION FLUSH BOLTS, L04081
1 EA ASTRAGAL
2 EA DOOR SILENCERS, L03011

HW-11 1-1/2 PR HINGES, A8112 114 X 114 (SINGLE DORMITORY FUNCTIC
1 EA LOCKSET W/LEVER HANDLES, F13, GRADE 1
1 EA WALL STOP, L02101 OR L02161
1 EA OVERHEAD CLOSER, CO2061, LOW RESISTANCE
3 EA DOOR SILENCERS, L03011
1 EA ROBE HOOK

HW-12 1-1/2 PR HINGES, A8133 (SINGLE PRIVACY-BATH FUNCTION)
1 EA LATCH SET W/LEVER HANDLES, F22 GRADE 1
1 EA WALL STOP, L02101 OR L02161
3 EA DOOR SILENCERS, L03011
1 EA ROBE HOOK

HW-13 3 PR HINGES, A5112 114 X 114 (DOUBLE DORMITORY FUNCTION)
1 EA LOCKSET W/LEVER HANDLES. GRADE 1, F13
1 EA OVERHEAD CLOSER, C02061, LOW RESISTANCE
2 EA LEVER EXTENSION FLUSH BOLTS, L04081
1 EA ASTRAGAL
2 EA DOOR SILENCERS, L03011

HW-14 3 PR HINGES, A5112 114 X 114 (DOUBLE EGRESS EXIT DOOR)
2 EA VERTICAL ROD EXIT DEVICE, TYPE 1
2 EA CYLINDER. GRADE 1
2 EA OVERHEAD CLOSER, C02061, LOW RESISTANCE
1 EA DOOR COORDINATOR, TYPE 21
1 EA ASTRAGAL
2 EA DOOR SILENCERS, L03011

HW-15 3 PR HINGES, A5112 114 X 114 (DOUBLE STOREROOM FUNCTION
2 CLOSERS
1 COORDINATOR
1 EA LOCKSET W/LEVER HANDLES. GRADE 1, F7
2 EA LEVER EXTENSION FLUSH BOLTS, L04081
1 EA ASTRAGAL
2 EA DOOR SILENCERS, L03011

THIS SHEET IS STANDARD AND IS INCLUSIVE OF ALL THE DOOR/ WINDOW/ HARDWARE TYPES FOR THE ENTIRE CONTRACT. NOT ALL DOOR/ WINDOW/ HARDWARE TYPES ARE USED FOR ANY PARTICULAR BUILDING DESIGN. CONTRACTOR SHALL REFER TO THE FLOOR PLAN FOR THE TYPES BEING USED.

0 500 1000 2000
SCALE: 1:50

UNLESS OTHERWISE NOTED, LINEAR DIMENSIONS SHOWN ARE IN MILLIMETERS.

COMMONWEALTH OF VIRGINIA
PETER GARRETT SCHMIDT
No. 013167
ARCHITECT

US ARMY CORPS OF ENGINEERS
AFGHANISTAN NORTH DISTRICT

SYMBOL	DESCRIPTION	DATE	APPR.	SYMBOL	DESCRIPTION	DATE	APPR.

U.S. ARMY ENGINEER DISTRICT, AFGHANISTAN
CORPS OF ENGINEERS
APO AE 09356

DESIGNED BY: PGS
DWN BY: AMH
REVIEWED BY: JH
SUBMITTED BY:
CKD BY: PGS
DATE: 3/23/2011
CONTRACT NO. W912ER-09-D-0002
DRAWING CODE:
FILE NAME: 40120Plot-A1-C-Ltr-v61.DWG
REV: 0
SCALE: 1:50
PLOT SCALE: 1:50
PLOT DATE: 3/23/2011

BAKER

SITE ADAPT DESIGN
L04 - LATRINE - LARGE - ARCH SPAN
WINDOW AND DOOR SCHEDULES

SHEET REFERENCE NUMBER:
A-601

3/23/2011 11:02 AM

A1 Size 594mm x 841mm

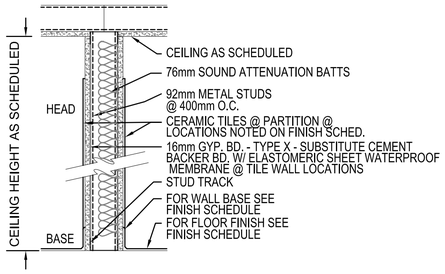

1 TYPE #1 - 1 HOUR FIRE RATED & NON-RATED
DESIGN NO. U419 OR U442
DESIGN NO. WHI 694-0300.1 (SIM)

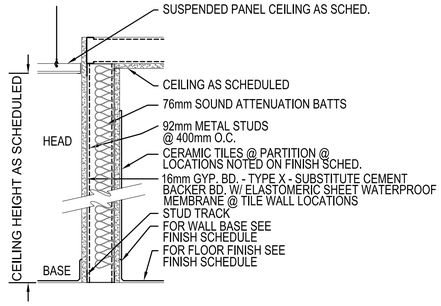

2 TYPE #2 - 1 HOUR FIRE RATED & NON-RATED
DESIGN NO. U419 OR U442/WALL
DESIGN NO. WHI 694-0300.1 (SIM)

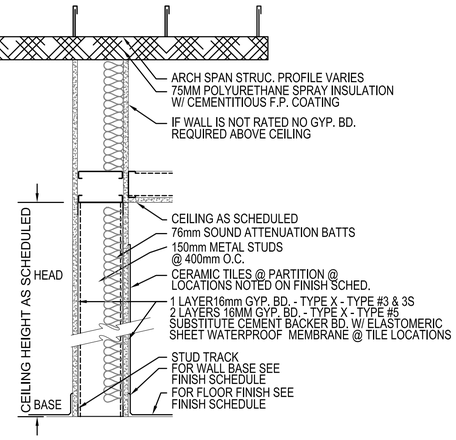

3 TYPE #3 - 1 HOUR FIRE RATED
DESIGN NO. U419
DESIGN NO. WHI 694-0300.1 (SIM)

3S TYPE #3S - 1 HOUR FIRE & SMOKE RATED
DESIGN NO. U419
DESIGN NO. WHI 694-0300.1 (SIM)

5 TYPE #5 - 2 HOUR FIRE RATED - PROVIDE 150 MM
METAL STUDS @ PARTITION TYPES 5 IN LIU OF 92 MM STUDS
DESIGN NO. U443
DESIGN NO. WHI 694-0300.1 (SIM)

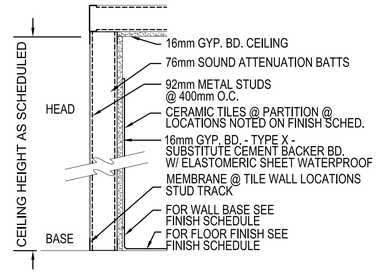

4 TYPE #4 - CHASE PARTITION

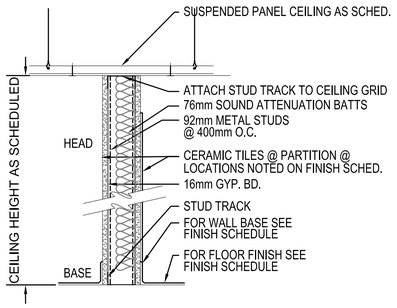

6 TYPE #6 - KITCHEN PARTITION

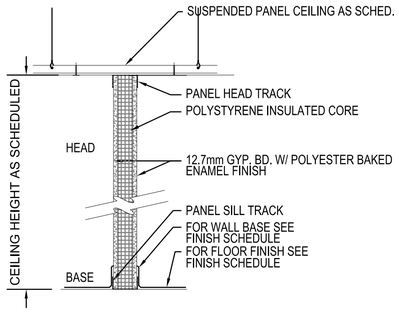

7 TYPE #7 - PANELIZED PARTITION

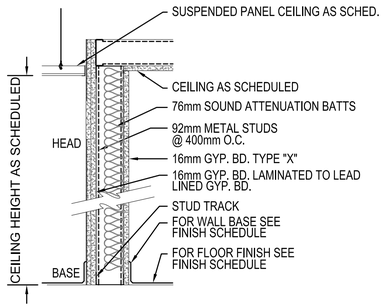

8 TYPE #8 - LEAD LINED PARTITION

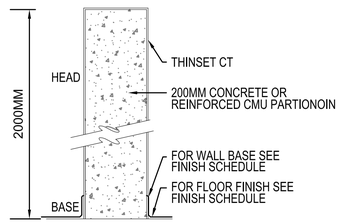

9 TYPE #9 - LOW WALL

1 A-602 PARTITION TYPES
SCALE: 1:10

GENERAL NOTES:

1. REFER TO DRAWING G-003 FOR LOCATION OF FIRE RATED WALLS & FIRE RESISTANT CEILINGS.
2. REFER TO FINISH SCHEDULE FOR LOCATION OF CERAMIC TILE WALL FINISH. AT THESE LOCATION SUBSTITUTE CEMENT BACKER BOARD AND ELASTOMERIC SHEET WATER PROOF MEMBRANE WITH THINSET CERAMIC TILE FOR GYPSUM BOARD AND PAINT FINISH TO C.T. HEIGHT.
3. REFER TO 6/A-501 FOR TYPE 3, 3S, & 5 BRACING DETAIL. INTERMEDIATE HT. BRACING DETAIL FOR FULL HT. WALLS WHERE APPLICABLE.
4. PARTITION TYPES ARE NOT APPLICABLE AT ALL BUILDINGS. SEE FLOOR PLAN & NOTES FOR REQUIRED TYPES
5. SEE COLD FORMED FRAMING NOTES PORTION OF STRUCTURAL DRAWINGS FOR ADDITIONAL INFORMATION

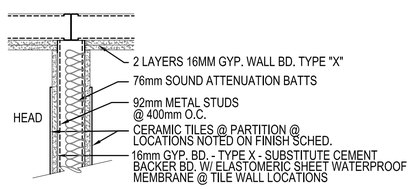

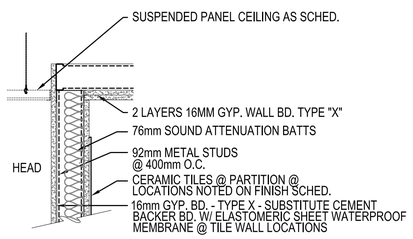

2 A-602 FIRE RESISTANT CEILING CONDITIONS
SCALE: 1:10

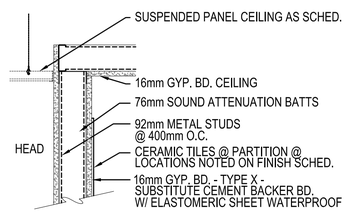

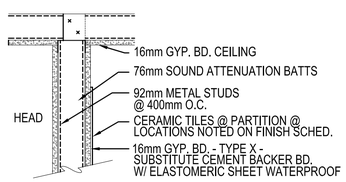

3 A-602 NON-RATED CEILING CONDITIONS
SCALE: 1:10

0 100 200 400
SCALE: 1:10
UNLESS OTHERWISE NOTED,
LINEAR DIMENSIONS
SHOWN ARE IN MILLIMETERS.

COMMONWEALTH OF VIRGINIA
PETER GARRETT SCHMIDT
No. 013167
ARCHITECT

US ARMY CORPS
OF ENGINEERS
AFGHANISTAN NORTH
DISTRICT

SYMBOL	DESCRIPTION	DATE	APPR.	SYMBOL	DESCRIPTION	DATE	APPR.

DESIGNED BY: PGS
DWN BY: AMH
CKD BY: PGS
REVIEWED BY: JH
SUBMITTED BY:
DATE: 3/23/2011
CONTRACT NO. W912ER-09-D-0002
DRAWING CODE:
REV: 0
FILE NAME: ARCHSPANLG-L04-A-602.DWG
PLOT SCALE: 1:20
PLOT DATE: 3/23/2011

BAKER

U.S. ARMY ENGINEER DISTRICT, AFGHANISTAN
CORPS OF ENGINEERS
APO AE 09356

SITE ADAPT DESIGN
L04 - LATRINE - LARGE - ARCH SPAN
PARTITION TYPES

SHEET REFERENCE NUMBER:
A-602

A1 Size 594mm x 841mm

3/23/2011 11:02 AM

FINISHING SCHEDULE

FLOOR FINISHES

- (A) TROWEL FINISHED CONCRETE - BROOM FINISH @ TILE
- (B) NON-SLIP EPOXY FINISH
- (C) CERAMIC TILE
- (D) CONC. SEALER

WALL FINISHES

- (A) METAL STUD WALL WITH GYPSUM BOARD OR CEMENT PLASTER
- (B) SEMI-GLOSS PAINT
- (C) EPOXY PAINT
- (D) CERAMIC TILE UP TO 2.2M
- (E) CEMENTITIOUS FIREPROOFING - SPRAY ON
- (F) POLYURETHANE - SPRAY ON
- (G) 5cm SANDWICH PANEL
- (H) CONCRETE/CMU

CEILING FINISHES

- (A) GYPSUM BOARD
- (B) SEMI-GLOSS PAINT
- (C) EPOXY PAINT
- (D) POLYURETHANE - SPRAY ON
- (E) CEMENTITIOUS FIREPROOFING - SPRAY ON
- (F) 600mm x 1200mm METAL PANEL CEILING SYSTEM
- (G) OPEN "T" GRID CEILING SUSPENSION SYSTEM
- (H) EXPOSED ARCH SPAN PANELS

NOTES:

1. PROVIDE CEMENT BACKER BOARD & W.P. MEMBRANE @ ALL CERAMIC TILE WALLS. IN LIEU OF GYPSUM BOARD - MAINTAIN REQUIRED FIRE RATINGS.
2. SPRAY - ON POLYURETHANE AND SPRAY ON CEMENTITIOUS FIRE PROOFING SHALL BE APPLIED TO INTERIOR SURFACES OF ARCH SPAN PANELS, WINDOW, & DOOR ENCLOSURES & CONCRETE CURB/WALLS ONLY.
3. INSTALL 100MM PAINTED WOOD COVE BASE ON ALL PAINTED GYPSUM BOARD/ PLASTER WALLS EXCEPT WHERE CERAMIC TILE IS INDICATED.
4. PAINT WALL SURFACES ABOVE CERAMIC WALL TILE REFER TO REFLECTED CEILING PLAN FOR CEILING HEIGHTS.
5. POLYURETHANE INSULATION SHALL PROVIDE K=600.
6. REFER TO G-003 FOR FIRE RATED WALL & FIRE RESISTANT CEILING LOCATIONS & A-602 FOR DRYWALL CEILING CONSTRUCTION.

ITEM NO.	SPACE NO.	FLOOR FINISHING					WALL FINISHING					Ceiling Finishing					REMARKS
1																	GENERAL AREAS EXCEPT SHOWERS
2	101	A	C				A	D	C			A	C				SHOWERS
3	102	A	B				A	D	C			A	C				
4	103	A	B				A	D	C			A	C				GENERAL AREAS EXCEPT SHOWERS
5	103	A	C				A	D	C			A	C				SHOWERS
6	104	A	B				A	C				A	C				
7	105	A	B				A	C				D	E				NO GYPSUM BOARD ON CHASE SIDE OF WALL
8	106	A	B				A					D	E				NO GYPSUM BOARD ON CHASE SIDE OF WALL
9	107	A	B				A					A	E				NO GYPSUM BOARD ON CHASE SIDE OF WALL
10																	
11																	
12																	
13																	
14																	
15																	
16																	
17																	
18																	
19																	
20																	
21																	
22																	
23																	
24																	
25																	
26																	
27																	
28																	
29																	
30																	
31																	
32																	
33																	
34																	
35																	
36																	
37																	
38																	
39																	
40																	
41																	
42																	
43																	
44																	
45																	
46																	
47																	
48																	
49																	
50																	

UNLESS OTHERWISE NOTED, LINEAR DIMENSIONS SHOWN ARE IN MILLIMETERS.

COMMONWEALTH OF PENNSYLVANIA
PETER GARRETT SCHMIDT
No. 013167
REGISTERED ARCHITECT

US ARMY CORPS OF ENGINEERS
AFGHANISTAN NORTH DISTRICT

SYMBOL	DESCRIPTION	DATE	APPR.	SYMBOL	DESCRIPTION	DATE	APPR.

DATE: 3/23/2011
REV: 0
CONTRACT NO. W912ER-09-D-0002
DRAWING CODE:
FILE NAME: ARCDWG-A-C-1-A-603.DWG
PLOT SCALE: NONE
PLOT DATE: 3/23/2011

DESIGNED BY: PGS
DWN BY: AMH
CKD BY: PGS
REVIEWED BY: JH
SUBMITTED BY:
BAKER

U.S. ARMY ENGINEER DISTRICT, AFGHANISTAN
CORPS OF ENGINEERS
APO AE 09356

SITE ADAPT DESIGN
L04 - LATRINE - LARGE - ARCH SPAN
FINISH SCHEDULE

SHEET REFERENCE NUMBER:
A-603

A1 Size 594mm x 841mm

3/23/2011 11:02 AM

PLUMBING SYMBOLS AND LEGEND

SYMBOL	ABBREV	DESCRIPTION	SYMBOL	ABBREV	DESCRIPTION	SYMBOL	ABBREV	DESCRIPTION	SYMBOL	ABBREV	DESCRIPTION	SYMBOL	ABBREV	DESCRIPTION
	ABL	ABLUTION		DFU	DRAINAGE FIXTURE UNIT			GATE VALVE		P&T	PRESSURE & TEMPERATURE		TOP	TOP OF PIPE
	ABV	ABOVE			DIRECTION OF FLOW		GC	GENERAL CONTRACTOR		PSI	PRESSURE PER SQUARE INCH			TRAP - ELEVATION
	AFF	ABOVE FINISHED FLOOR		DN	DOWN			GLOBE VALVE			PRESSURE REGULATOR WITH PRESSURE GAUGE			TRAP - PLAN
	AFR	ABOVE FINISHED ROOF		DWG	DRAWING		HB	HOSE BIBB			PRESSURE & TEMPERATURE RELIEF VALVE		TP	TRAP PRIMER
	AFG	ABOVE FINISHED GRADE			DRAIN VALVE		H OR HW	HOT WATER PIPING			QUICK DISCONNECT		TYP	TYPICAL
		ANGLE GATE - ELEV.			ELBOW DOWN		HWR	HOT WATER RETURN		RCP	RECIRCULATING PUMP			UNION
		ANGLE GATE - PLAN			ELBOW UP		IE	INVERT ELEVATION		RH	RELATIVE HUMIDITY			VALVE IN RISE
	BP (ASSE 1013)	BACKFLOW PREVENTER WITH TEST VALVES		EWC	ELECTRIC WATER COOLER		L OR LAV	LAVATORY		RPZ	REDUCE PRESSURE ZONE	V	V	VENT PIPING
		BALL VALVE		EWH	ELECTRIC WATER HEATER		LT	LAUNDRY TUB			ROOF PENETRATION		VTR	VENT THRU ROOF
	BLW	BELOW		ELEV	ELEVATION		MAX	MAXIMUM			SAFETY RELIEF VALVE		VU	VENT UP
		BRANCH - BOTTOM CONNECTION		ET	EXPANSION TANK		MC			S	SINK		WC	WATER COLUMN
		BRANCH - TOP CONNECTION		EX	EXISTING		MIN	MINIMUM	SS	SS	SANITARY PIPING		W	WATER CLOSET
		CAP		FIN	FINISHED		MR	MOP RECEPTOR		SH	SHOWER		W	WASTE
		CHECK VALVE		FC	FIRE PROTECTION CONTRACTOR		MV	MIXING VALVE		SFU	SUPPLY FIXTURE UNIT		W/	WITH
CO	CO	CLEAN-OUT IN VERTICAL	FD G	FD	FLOOR DRAIN W/TRAP		NC	NORMALLY CLOSED		SQ FT	SQUARE FEET		W/O	WITHOUT
CO	CO	CLEAN-OUT			FLEXIBLE PIPING CONNECTION		NO	NORMALLY OPEN			STRAINER			
CO	CO	CLEAN-OUT IN HORIZONTAL		FFE	FINISHED FLOOR ELEVATION		PC	PLUMBING CONTRACTOR		TE	TOP ELEVATION			
	CW	COLD WATER PIPING		FLR	FLOOR			PLUG VALVE			TEE OUTLET UP			
	CONC	CONCRETE		FT	FOOT OR FEET			PRESSURE GAGE W/PET COCK			TEE OUTLET DOWN			
	CONN	CONNECTION		FTG	FOOTING		PRV	PRESSURE REDUCING VALVE		THERM	THERMOMETER W/PET COCK			
	CONT	CONTINUATION						PRESSURE REGULATING VALVE		TOF	TOP OF FOOTING			

FLOOR PLAN NOTES:

1. DO NOT SCALE DRAWINGS - ALL DIMENSIONS AND CONDITIONS SHALL BE CHECKED AND VERIFIED BY THE CONTRACTOR AT THE SITE.
2. ALL WORK PERFORMED ON THIS BUILDING SHALL BE IN COMPLIANCE WITH ALL PERTINENT CODES, RULES, ORDINANCES AND REGULATIONS OF THE GOVERNING AUTHORITIES.
3. ALL WORK PERFORMED UNDER AND IN CONNECTION WITH THESE DRAWINGS AND SPECIFICATIONS SHALL BE IN STRICT COMPLIANCE WITH THE LATEST SAFETY AND HEALTH STANDARDS.
4. REPORT ANY DISCREPANCIES FOUND IN THE PLUMBING DRAWINGS AND/OR IN THE SPECIFICATIONS DURING THE BIDDING PROCESS FOR CLARIFICATION BY THE ENGINEER.
5. ALL EASTERN STYLE WATER CLOSETS IN THIS FACILITY ARE TO HAVE THE FIXTURE DESIGNATION OF W-1. EACH FIXTURE SHALL HAVE A 25mm COLD WATER MAIN LINE EXTENDED INTO THE STALL AND THEN TEE OFF TO THE 20mm SPIGOT CONNECTION. ALSO PROVIDE A 100mm SANITARY CONNECTION. SEE DETAILS ON DWGS P501.
6. ALL LAV OR TROUGH FIXTURES IN THIS FACILITY ARE TO HAVE THE FIXTURE DESIGNATION OF L-1. L-1 DESIGNATION REPRESENTS THE NUMBER OF FAUCETS FOR THE TROUGH FIXTURE. EACH FIXTURE SHALL HAVE A 15mm COLD WATER, 15mm HOT WATER CONNECTION AND A 80mm SANITARY CONNECTION.
7. REFER TO SHEET P501, P502, AND P503 FOR DETAILS.
8. ALL WATER, SANITARY AND VENT LINES TO BE EXPOSED. RUN LINES TIGHT TO CEILING AND WALL. ALL EXPOSED WATER, WASTE, AND VENT PIPING, LOCATED IN USER OCCUPIED AREAS, SHALL BE SCHEDULE 40 GALVANIZED STEEL WITH WALL MOUNTING BRACKETS SPACED A MAXIMUM OF 400mm APART TO MINIMIZE VANDALISM.
9. PROVIDE ISOLATION VALVES FOR HOT AND COLD WATER PIPES TO EACH INDIVIDUAL FIXTURE.
10. ALL VENTS THROUGH ROOF SHALL EXTEND A MINIMUM OF 600mm ABOVE FINISHED ROOF. VENT SHALL ALSO EXTEND THRU ROOF AT PEAK OF ARCH SPAN.
11. CONTRACTOR TO COORDINATE WATER PIPING MOUNTING LOCATION WITH BOTH MECHANICAL & ELECTRICAL DRAWINGS.
12. PLUMBING CONTRACTOR SHALL COORDINATE PLUMBING WORK WITH THE LOCATIONS OF ALL UTILITIES AT THE SITE PRIOR TO THE START OF ANY PLUMBING WORK.
13. COORDINATE ALL ACCESS PANEL LOCATIONS WITH THE ARCHITECT AND GENERAL CONTRACTOR.
14. ALL SANITARY PIPING BELOW SLAB SHALL BE A MINIMUM OF 50mm, UNLESS OTHERWISE NOTED OR AS REQUIRED BY THE LOCAL AUTHORITY HAVING JURISDICTION.
15. ALL HORIZONTAL SANITARY LINES SHALL BE SLOPED AT 8mm PER 300mm, UNLESS OTHERWISE NOTED OR AS REQUIRED BY THE LOCAL AUTHORITY HAVING JURISDICTION.
16. ALL ABLUTION FIXTURES IN THIS FACILITY ARE TO HAVE THE FIXTURE DESIGNATION OF ABL-1. EACH FIXTURE SHALL HAVE A 15mm COLD WATER, 15mm HOT WATER CONNECTION AND A 75mm SANITARY CONNECTION.

UNLESS OTHERWISE NOTED,
LINEAR DIMENSIONS
SHOWN ARE IN MILLIMETERS.

COMMONWEALTH OF PENNSYLVANIA
REGISTERED PROFESSIONAL
RALPH THOMAS DEFFENBAUGH
ENGINEER
NO. 041517

US ARMY CORPS OF ENGINEERS
AFGHANISTAN NORTH DISTRICT

SYMBOL	DESCRIPTION	DATE	APPR.	SYMBOL	DESCRIPTION	DATE	APPR.

U.S. ARMY ENGINEER DISTRICT, AFGHANISTAN
CORPS OF ENGINEERS
APO AE 09356

DESIGNED BY: RCP
DWN BY: JTP
CKD BY: RTD
REVIEWED BY: JH
SUBMITTED BY:
DATE: 3-23-2011
REV: 0
CONTRACT NO. W912ER-09-D-0002
DRAWING CODE:
FILE NAME: ABC123\Plumbing\L04-P-001.DWG
PLOT SCALE: NONE
PLOT DATE: 3/23/2011

BAKER

SITE ADAPT DESIGN
L04 - LATRINE - LARGE - ARCH SPAN
PLUMBING SYMBOLS AND LEGEND

SHEET REFERENCE NUMBER:
P-001

3/23/2011 11:02 AM

A1 Size 594mm x 841mm

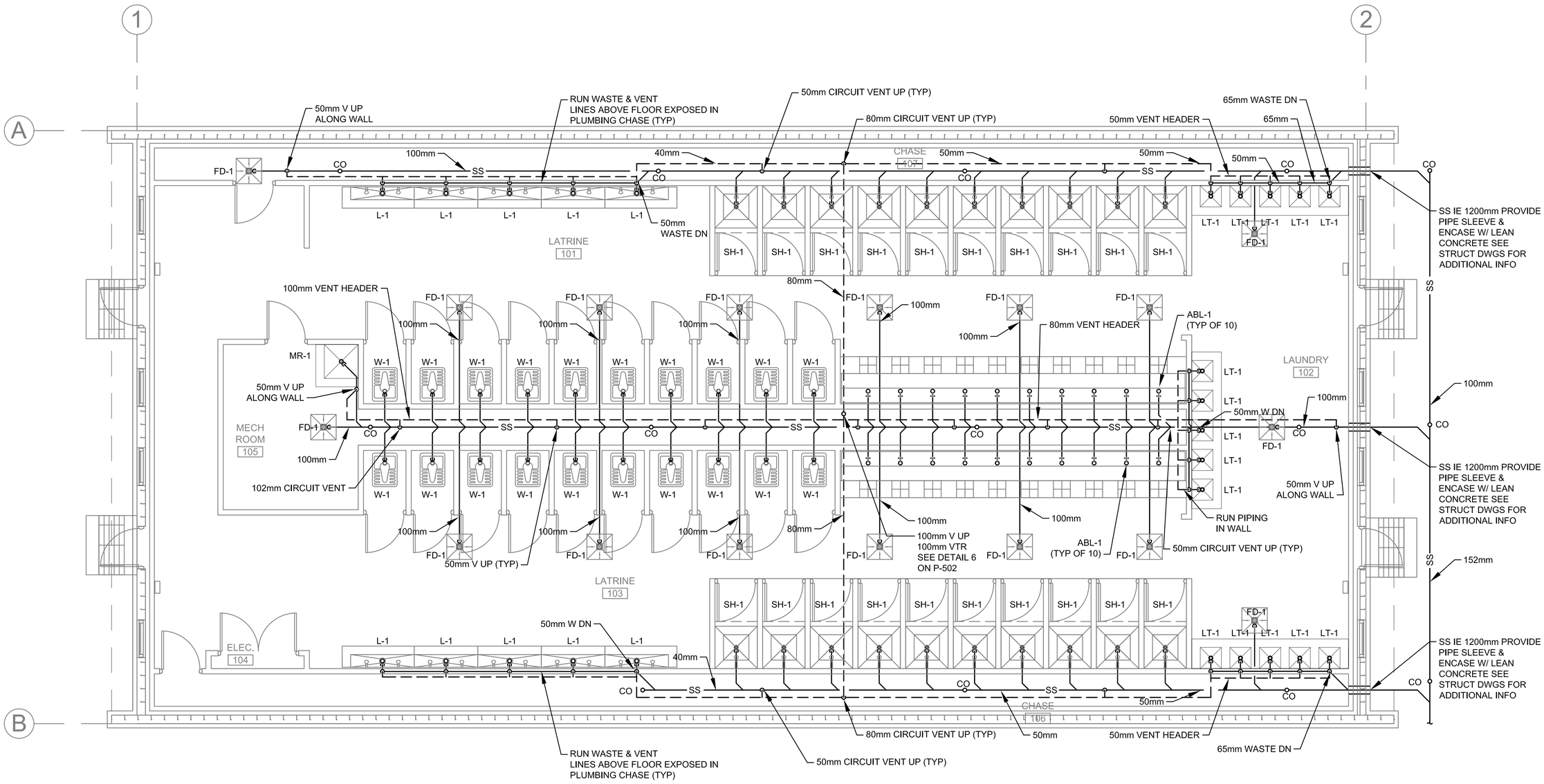

1 / P-101 PLUMBING SANITARY & VENT PLAN

SCALE: 1:50

NOTE: PROVIDE CLEANOUT EVERY 7.62M PER AED PLUMBING STANDARDS.

N

0 500 1000 2000

SCALE: 1:50

UNLESS OTHERWISE NOTED, LINEAR DIMENSIONS SHOWN ARE IN MILLIMETERS.

REGISTERED PROFESSIONAL ENGINEER RALPH THOMAS DEFFENBAUGH NO. 0415174

US ARMY CORPS OF ENGINEERS AFGHANISTAN NORTH DISTRICT

SYMBOL	DESCRIPTION	DATE	APPR.	SYMBOL	DESCRIPTION	DATE	APPR.

DATE: 3/23/2011
CONTRACT NO. W912ER-09-D-0002
DRAWING CODE:
REV: 0
FILE NAME: ARCDWG-AC-L04-P-101.DWG
PLOT SCALE: 1:50
PLOT DATE: 3/23/2011

DESIGNED BY: RCP
DWN BY: JTP
CKD BY: RTD
REVIEWED BY: JH
SUBMITTED BY:

U.S. ARMY ENGINEER DISTRICT, AFGHANISTAN
CORPS OF ENGINEERS
APO AE 09356

BAKER

SITE ADAPT DESIGN

L04 - LATRINE - LARGE - ARCH SPAN

PLUMBING PLAN

SHEET REFERENCE NUMBER:

P-101

A1 Size 594mm x 841mm

3/23/2011 11:02 AM

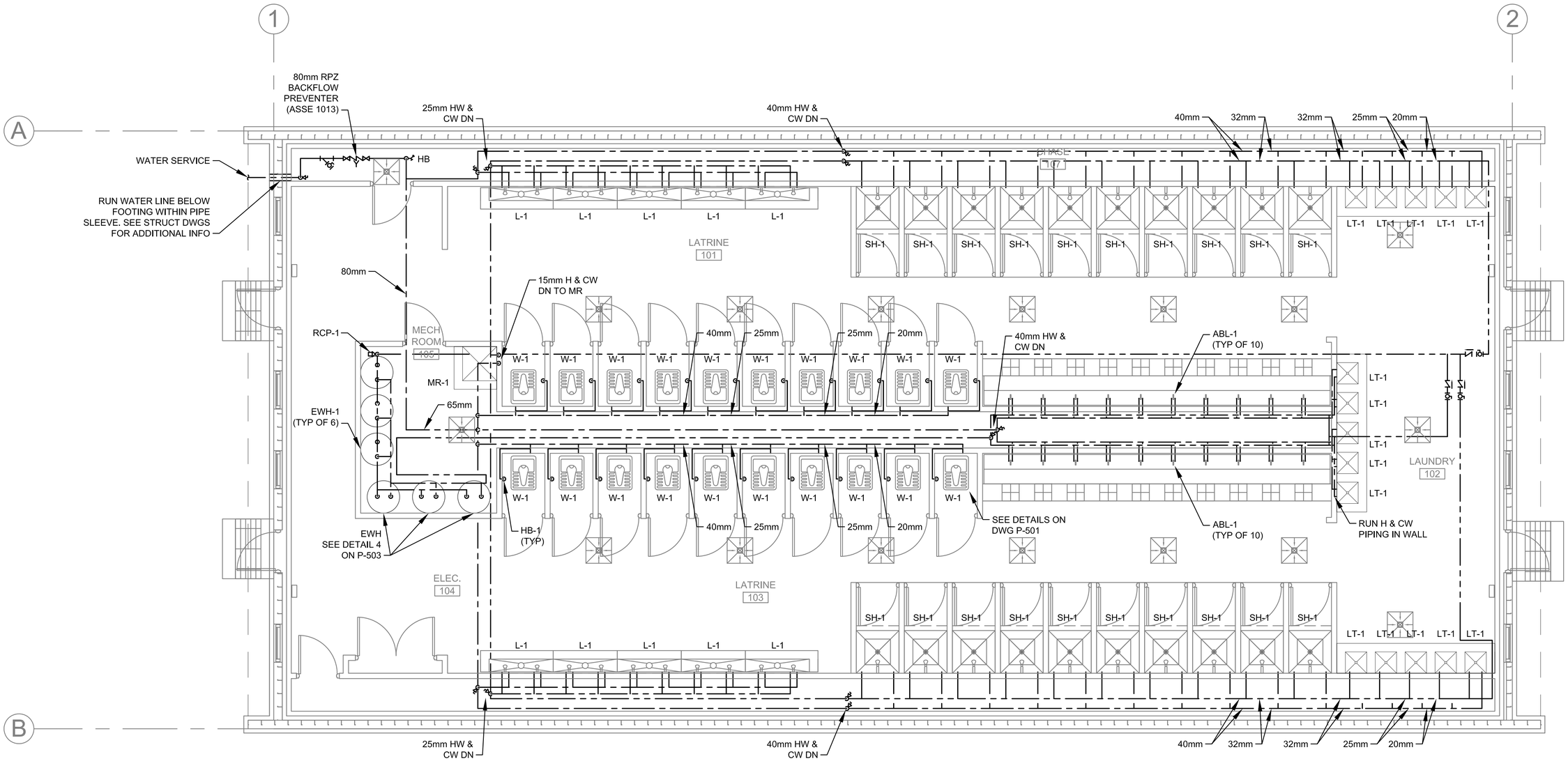

1 P-102 PLUMBING DOMESTIC WATER PLAN

SCALE: 1:50

N

0 500 1000 2000

SCALE: 1:50

UNLESS OTHERWISE NOTED, LINEAR DIMENSIONS SHOWN ARE IN MILLIMETERS.

COMMONWEALTH OF PENNSYLVANIA REGISTERED PROFESSIONAL RALPH THOMAS DEFFENBAUGH ENGINEER NO. 041517-E

US ARMY CORPS OF ENGINEERS AFGHANISTAN NORTH DISTRICT

SYMBOL	DESCRIPTION	DATE	APPR.	SYMBOL	DESCRIPTION	DATE	APPR.

DESIGNED BY: RCP
DWN BY: JTP
CKD BY: RTD
REVIEWED BY:
JH
SUBMITTED BY:
DATE: 3-23-2011
REV: 0
CONTRACT NO. W912ER-09-D-0002
DRAWING CODE:
FILE NAME: ARCHIVE\L04-C-LAT-102.DWG
PLOT SCALE: 1:50
PLOT DATE: 3/23/2011

BAKER

U.S. ARMY ENGINEER DISTRICT, AFGHANISTAN CORPS OF ENGINEERS APO AE 09356

SITE ADAPT DESIGN

L04 - LATRINE - LARGE - ARCH SPAN

PLUMBING PLAN

SHEET REFERENCE NUMBER:

P-102

3/23/2011 11:02 AM

A1 Size 594mm x 841mm

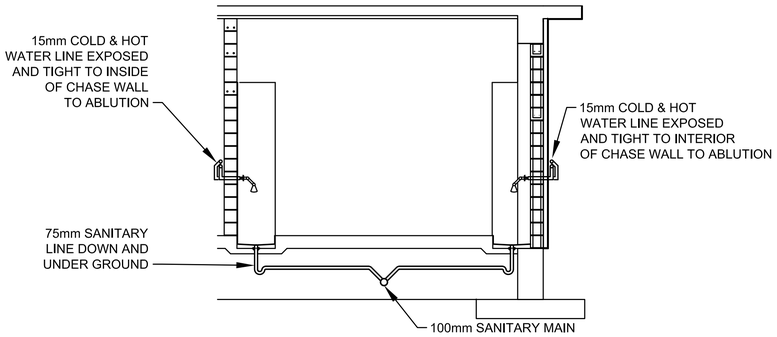

TYPICAL ABLUTION SANITARY & WATER INSTALLATION SCHEMATIC

1 / P-501 SCALE: NTS

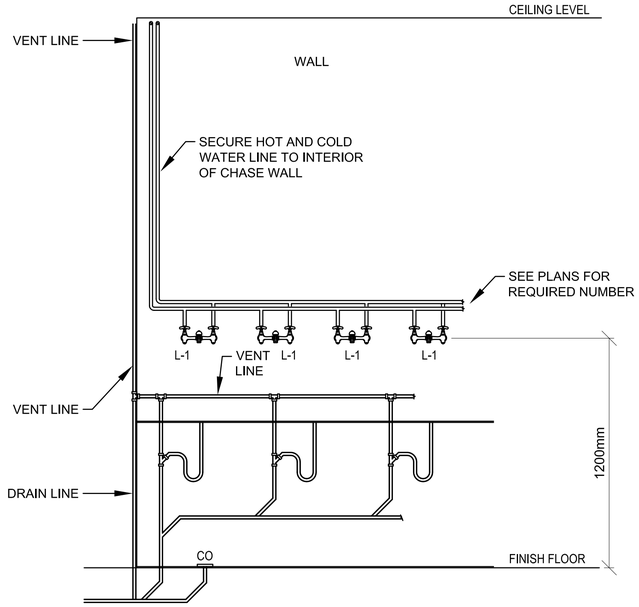

LAVATORY ELEVATION PLUMBING

2 / P-501 SCALE: NTS

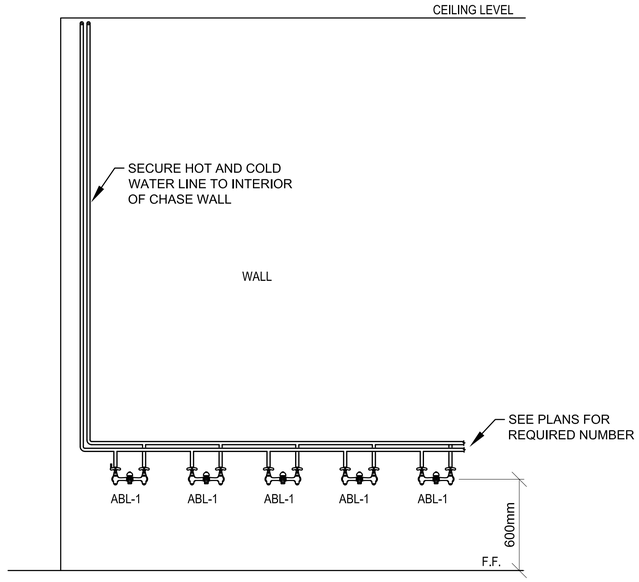

TYPICAL ABLUTION ELEVATION PLUMBING PLAN-WATER INSTALLATION SCHEMATIC

3 / P-501 SCALE: NTS

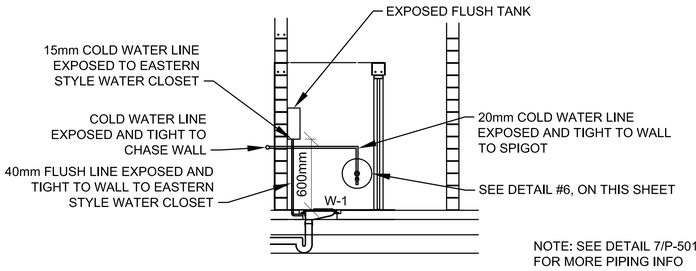

NOTE: SEE DETAIL 7/P-501 FOR MORE PIPING INFO

TYPICAL EASTERN STYLE WATER CLOSET SANITARY & WATER INSTALLATION SCHEMATIC

4 / P-501 SCALE: NTS

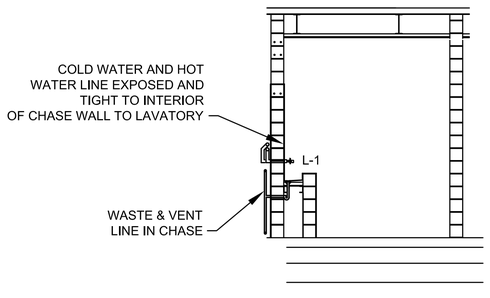

TYPICAL LAVATORY SANITARY & WATER INSTALLATION SCHEMATIC

5 / P-501 SCALE: NTS

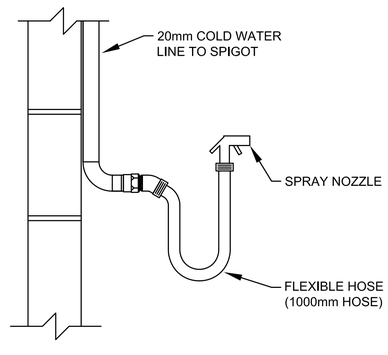

TYPICAL DETAIL-SPIGOT, FLEXIBLE HOSE, AND SPRAY NOZZLE

6 / P-501 SCALE: NTS

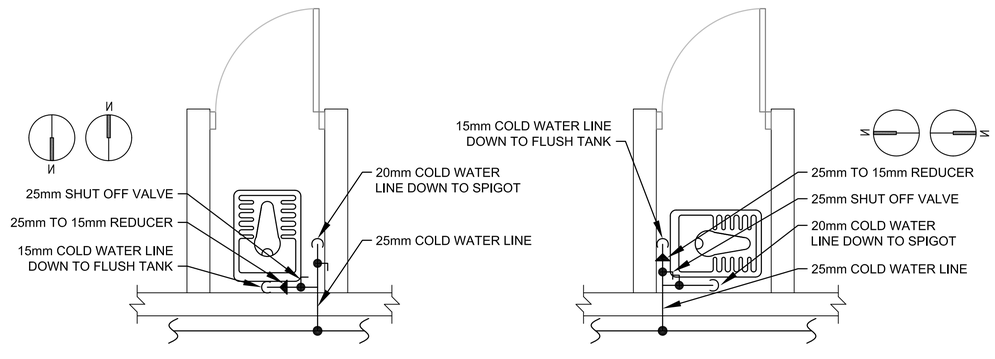

TYPICAL EASTER STYLE WATER CLOSET WITH SPIGOT WATER PIPING DETAIL

7 / P-501 SCALE: NTS

NOTE: ALWAYS INSTALL EASTERN STYLE WATER CLOSETS FACING NORTH OR SOUTH; NOT EAST OR WEST.

UNLESS OTHERWISE NOTED, LINEAR DIMENSIONS SHOWN ARE IN MILLIMETERS.

REGISTERED PROFESSIONAL ENGINEER RALPH THOMAS DEFFENBAUGH NO. 0415178

US ARMY CORPS OF ENGINEERS AFGHANISTAN NORTH DISTRICT

SYMBOL	DESCRIPTION	DATE	APPR.	SYMBOL	DESCRIPTION	DATE	APPR.

DESIGNED BY: RCP
DWN BY: JTP
CKD BY: RTD
REVIEWED BY: JH
SUBMITTED BY:
DATE: 3/23/2011
REV.: 0
CONTRACT NO. W912ER-09-D-0002
DRAWING CODE:
FILE NAME: 09C03Plmbg-Ablt-Lvtr-Wtr.DWG
PLOT SCALE: NONE
PLOT DATE: 3/23/2011

BAKER

U.S. ARMY ENGINEER DISTRICT, AFGHANISTAN
CORPS OF ENGINEERS
APO AE 09356

SITE ADAPT DESIGN
L04 - LATRINE - LARGE - ARCH SPAN
PLUMBING DETAILS

SHEET REFERENCE NUMBER:
P-501

3/23/2011 11:03 AM

A1 Size 594mm x 841mm

FIXTURE LIST						
TYPE	ITEM	SOIL & WASTE	VENT	COLD WATER	HOT WATER	REMARKS
W–1	EASTERN STYLE WATER CLOSET	100mm	40mm	15mm	------	FLUSH TANK
L–1	TROUGH FIXTURE	32mm	32mm	15mm	15mm	FABRICATED IN FIELD
ABL–1	ABLUTION	FLOOR DRAIN FD–1	------	15mm	15mm	FABRICATED IN FIELD
LT–1	CLOTHES WASHING STATION	32mm	32mm	15mm	15mm	FABRICATED IN FIELD
HB–1	WC SPIGOT W/ FLEX HOSE	---	---	15mm	---	---
MR–1	MOP RECEPTOR	100mm	40mm	15mm	15mm	FABRICATED IN FIELD
SH–1	SHOWER	80mm	---	15mm	15mm	FABRICATED IN FIELD
FD–1	FLOOR DRAIN	80mm	---	---	---	COORDINATE LOCATION WITH ARCHITECT

ELECTRIC WATER HEATER SCHEDULE											
MARK	MANUF	LOCATION	STORAGE (L)	PHYSICAL SIZE	RECOVERY LPH	TEMP RISE °C	SET POINT °C	HOT & COLD CONN	TOTAL KW	VOLTS/ PHASE/ HERTZ	REMARKS
EWH-1	A.O. SMITH	MECH	454	1651mm x 762mmØ	398.6	26.7	49	32mm	18	380/3/50	INCOMING WATER TEMP 10°C

DOMESTIC HOT WATER RECIRCULATING PUMP SCHEDULE										
TAG	PUMP TYPE	SERVICE	FLUID TYPE	GPM	FT/HD	MOTOR HP	FLANGE	VOLTS/ PHASE/ HERTZ	MANUF/MODEL	NOTES
RCP-1	IN-LINE	RECIRC	HOT WATER	0-36	0-12	1/20	20mm	220/1/50	B&G LR-20	-
NOTES:										

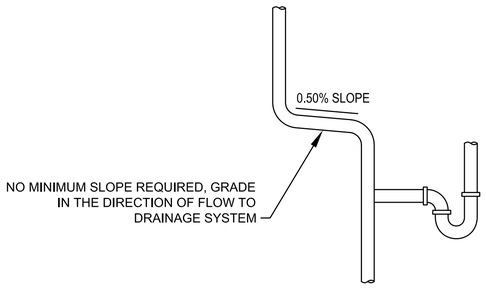

1 / P-502 TYPICAL VENT SLOPE DETAIL
SCALE: NTS

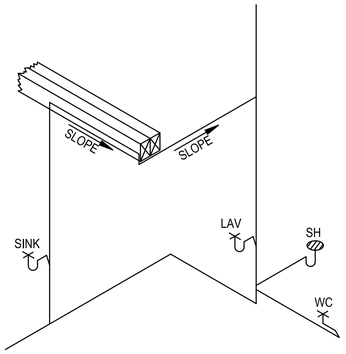

2 / P-502 TYPICAL VENT SLOPE DETAIL
SCALE: NTS

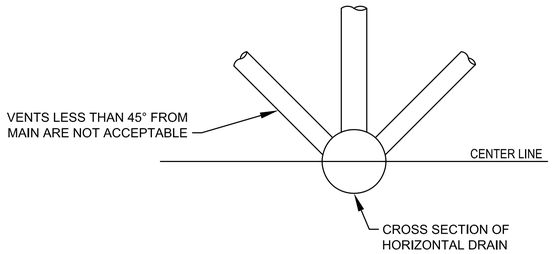

3 / P-502 ACCEPTABLE VENT CONNECTIONS TO HORIZONTAL DRAIN-DETAIL
SCALE: NTS

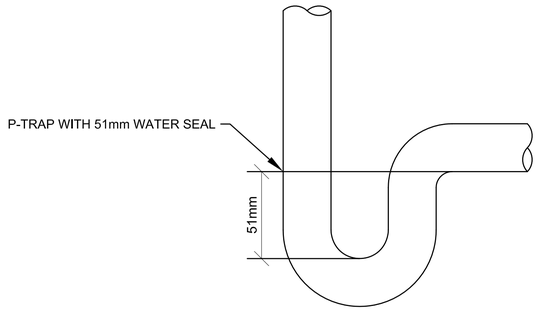

4 / P-502 P-TRAP WITH 51mm WATER SEAL DETAIL
SCALE: NTS

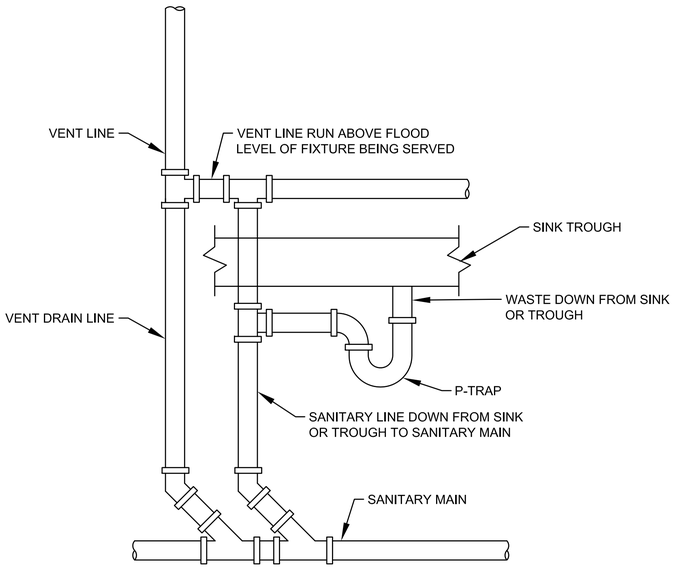

5 / P-502 TYPICAL LAVATORY/LAUNDRY VENT DETAIL
SCALE: NTS

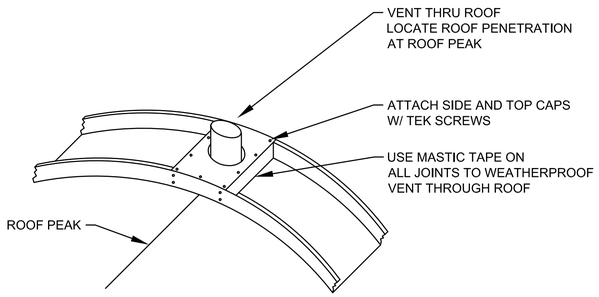

6 / P-502 PLUMBING VENT THRU ROOF DETAIL
SCALE: NTS

UNLESS OTHERWISE NOTED, LINEAR DIMENSIONS SHOWN ARE IN MILLIMETERS.

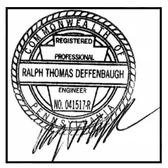

US ARMY CORPS OF ENGINEERS AFGHANISTAN NORTH DISTRICT

SYMBOL	DESCRIPTION	DATE	APPR.	SYMBOL	DESCRIPTION	DATE	APPR.

U.S. ARMY ENGINEER DISTRICT, AFGHANISTAN
CORPS OF ENGINEERS
APO AE 09356

DESIGNED BY: RCP
DWN BY: JTP
CKD BY: RTD
REVIEWED BY: JH
SUBMITTED BY:
DATE: 3/23/2011
CONTRACT NO. W912ER-09-D-0002
DRAWING CODE:
FILE NAME: ARCDSPBAS-R-C-L04-P-502.DWG
PLOT SCALE: NONE
PLOT DATE: 3/23/2011
REV: 0

BAKER

SITE ADAPT DESIGN
L04 - LATRINE - LARGE - ARCH SPAN
PLUMBING DETAILS

SHEET REFERENCE NUMBER:
P-502

A1 Size 594mm x 841mm

3/23/2011 11:03 AM

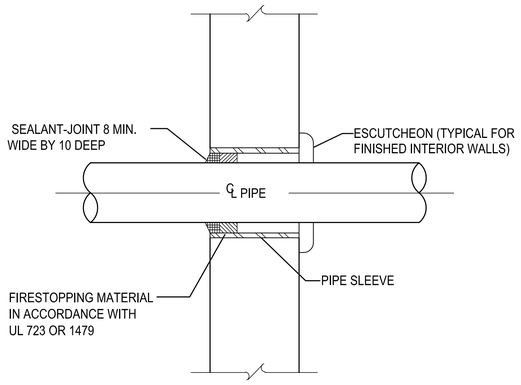

1 / P-503 TYPICAL WALL PENETRATION DETAIL

SCALE: NTS

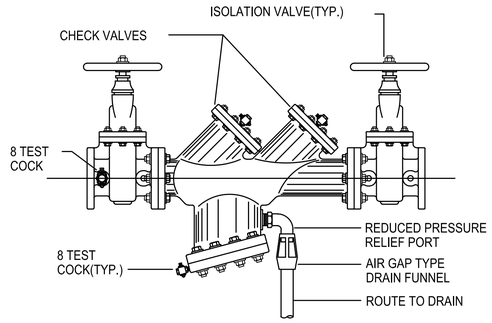

2 / P-503 TYPICAL BACKFLOW PREVENTER DETAIL

SCALE: NTS

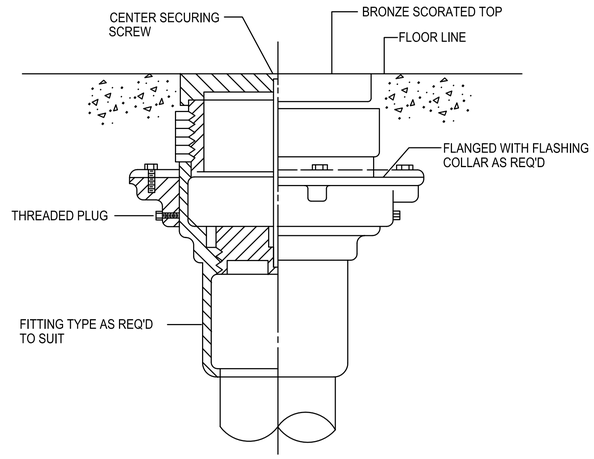

3 / P-503 TYPICAL FLOOR CLEANOUT DETAIL

SCALE: NTS

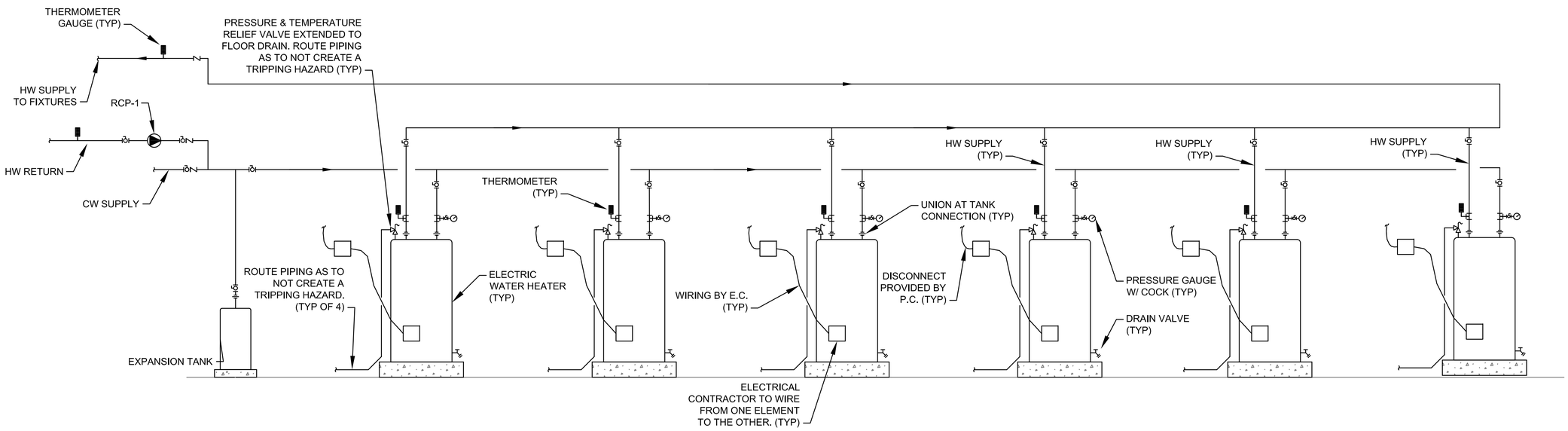

4 / P-503 ELECTRIC WATER HEATER DETAIL

SCALE: NTS

UNLESS OTHERWISE NOTED, LINEAR DIMENSIONS SHOWN ARE IN MILLIMETERS.

REGISTERED PROFESSIONAL ENGINEER RALPH THOMAS DEFFENBAUGH NO. 0415178

US ARMY CORPS OF ENGINEERS AFGHANISTAN NORTH DISTRICT

SYMBOL	DESCRIPTION	DATE	APPR.	SYMBOL	DESCRIPTION	DATE	APPR.

DESIGNED BY: RCP
DWN BY: JTP
CKD BY: RTD
REVIEWED BY: JH
SUBMITTED BY:
DATE: 3-23-2011
CONTRACT NO. W912ER-09-D-0002
DRAWING CODE:
REV: 0
FILE NAME: ARCDRFMA-C1-L04-P-503.DWG
PLOT SCALE: NONE
PLOT DATE: 3/23/2011

BAKER

U.S. ARMY ENGINEER DISTRICT, AFGHANISTAN CORPS OF ENGINEERS APO AE 09356

SITE ADAPT DESIGN

L04 - LATRINE - LARGE - ARCH SPAN

PLUMBING DETAILS

SHEET REFERENCE NUMBER:

P-503

3/23/2011 11:03 AM

A1 Size 594mm x 841mm

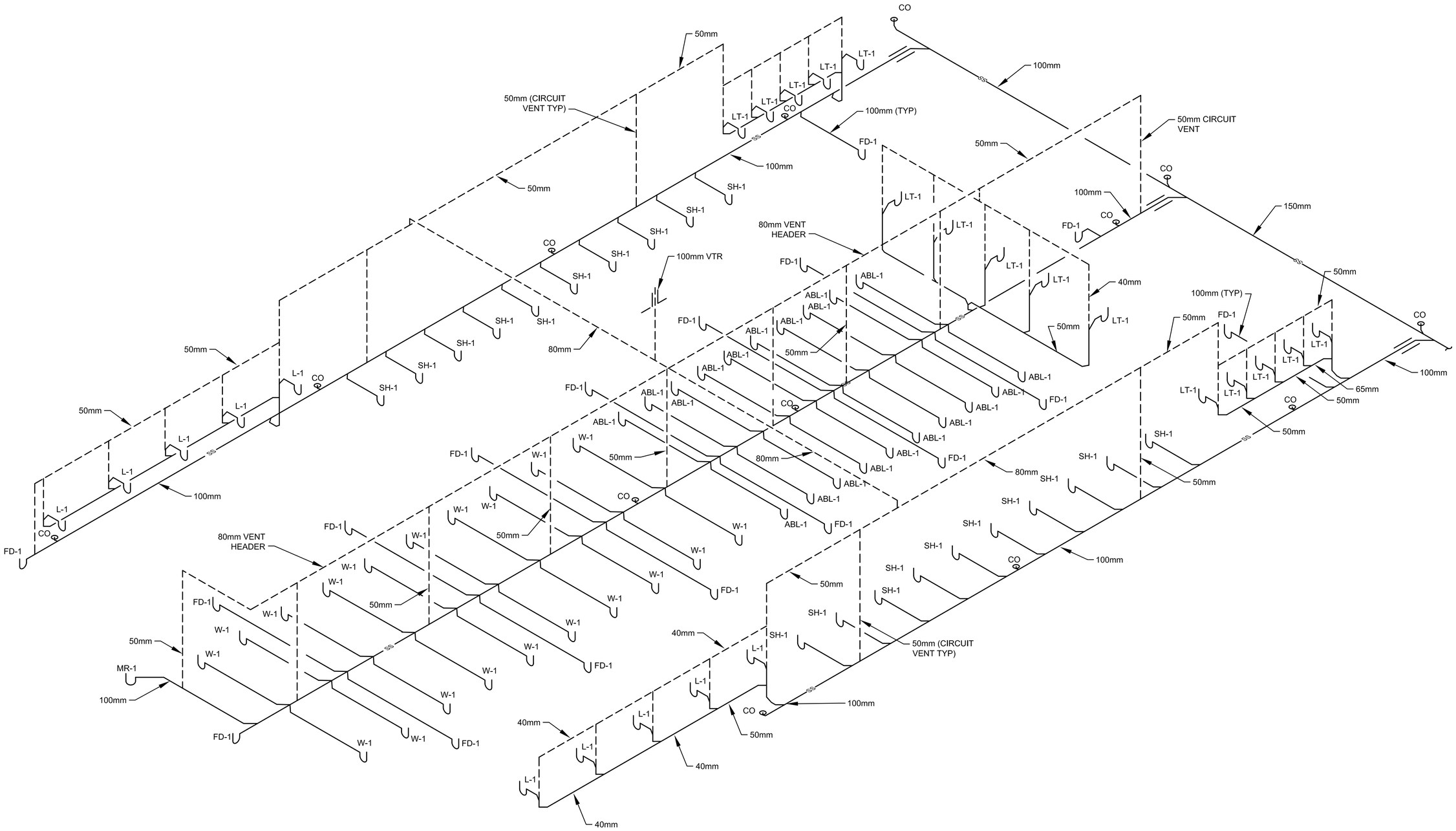

1 P-701

SANITARY AND VENT RISER DIAGRAM

SCALE: NTS

NOTE: PROVIDE CLEANOUTS EVERY 7.62 M PER AED PLUMBING STANDARD.

UNLESS OTHERWISE NOTED, LINEAR DIMENSIONS SHOWN ARE IN MILLIMETERS.

REGISTERED PROFESSIONAL ENGINEER RALPH THOMAS DEFFENBAUGH NO. 0415174

US ARMY CORPS OF ENGINEERS AFGHANISTAN NORTH DISTRICT

SYMBOL	DESCRIPTION	DATE	APPR.	SYMBOL	DESCRIPTION	DATE	APPR.

DATE: 3/23/2011 | REV: 0
CONTRACT NO. W912ER-09-D-0002
DRAWING CODE:
FILE NAME: wkcd2mep-p-l-l-04-r-sp1.dwg
PLOT SCALE: NONE
PLOT DATE: 3/23/2011

DESIGNED BY: RCP | CKD BY: RTD
DWN BY: JTP | REVIEWED BY: JH
SUBMITTED BY:

U.S. ARMY ENGINEER DISTRICT, AFGHANISTAN
CORPS OF ENGINEERS
APO AE 09356

BAKER

SITE ADAPT DESIGN

L04 - LATRINE - LARGE - ARCH SPAN

PLUMBING SANITARY RISER DIAGRAM

SHEET REFERENCE NUMBER:

P-901

3/23/2011 11:03 AM

A1 Size 594mm x 841mm

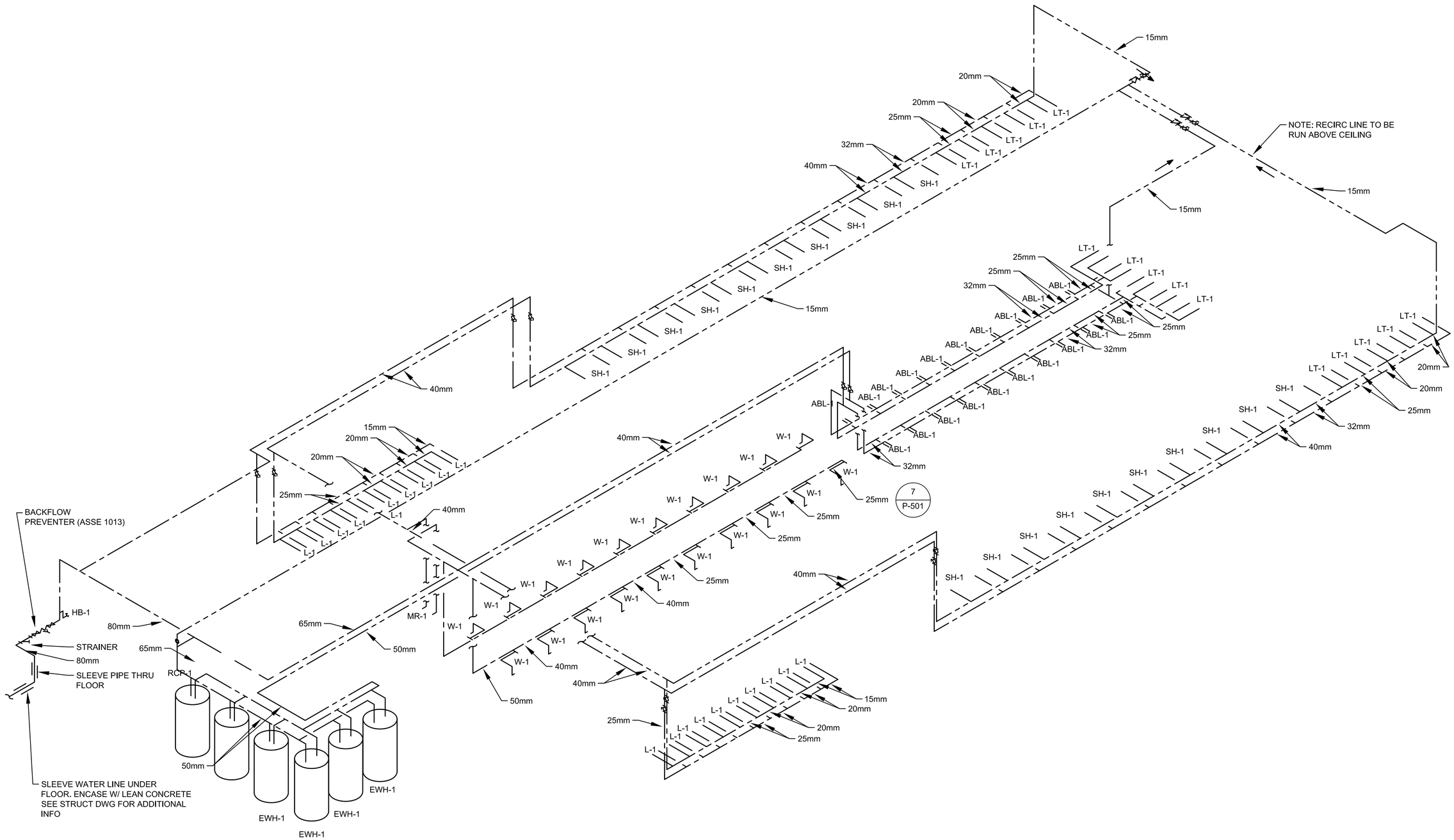

1
P-702

DOMESTIC WATER RISER DIAGRAM

SCALE: NTS

UNLESS OTHERWISE NOTED, LINEAR DIMENSIONS SHOWN ARE IN MILLIMETERS.

REGISTERED PROFESSIONAL ENGINEER
RALPH THOMAS DEFFENBAUGH
NO. 0415178

US ARMY CORPS OF ENGINEERS
AFGHANISTAN NORTH DISTRICT

SYMBOL	DESCRIPTION	DATE	APPR.	SYMBOL	DESCRIPTION	DATE	APPR.

U.S. ARMY ENGINEER DISTRICT, AFGHANISTAN
CORPS OF ENGINEERS
APO AE 09356

DESIGNED BY: RCP
DWN BY: JTP
CKD BY: RTD
REVIEWED BY: JH
SUBMITTED BY:
BAKER

DATE: 3/23/2011
CONTRACT NO. W912ER-09-D-0002
DRAWING CODE:
FILE NAME: 09C0200ALL01-L04-P-902.DWG
PLOT SCALE: NONE
PLOT DATE: 3/23/2011
REV: 0

SITE ADAPT DESIGN
L04 - LATRINE - LARGE - ARCH SPAN
PLUMBING DOMESTIC WATER DIAGRAM

SHEET REFERENCE NUMBER:
P-902

3/23/2011 11:03 AM

A1 Size 594mm x 841mm

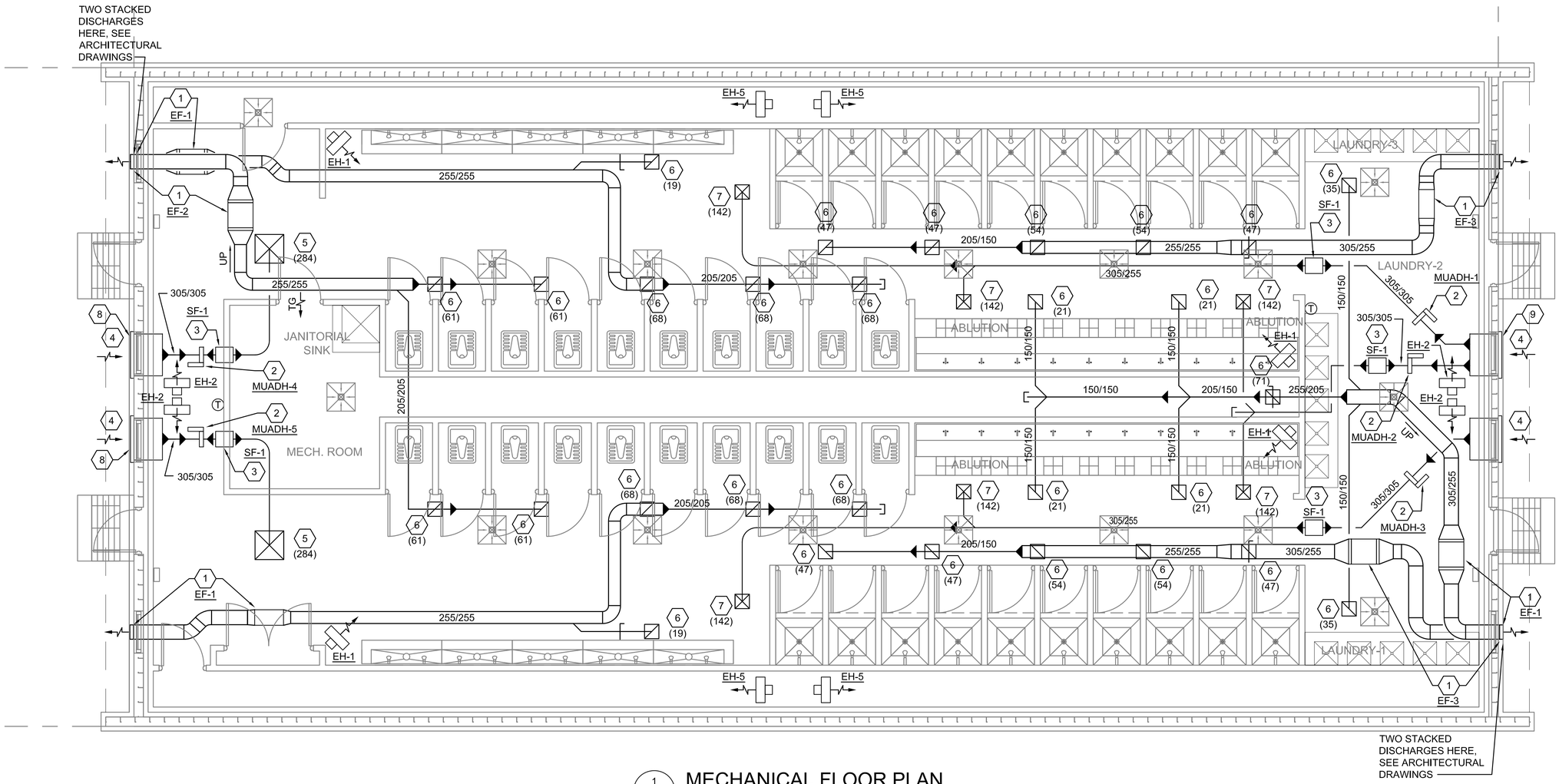

1 M-101 MECHANICAL FLOOR PLAN

SCALE 1:50

GENERAL NOTES:

1. DO NOT SCALE DRAWINGS - ALL DIMENSIONS AND CONDITIONS SHALL BE CHECKED AND VERIFIED BY THE CONTRACTOR AT THE SITE.
2. ALL WORK PERFORMED ON THIS BUILDING SHALL BE IN COMPLIANCE WITH ALL PERTINENT CODES, RULES, ORDINANCES AND REGULATIONS OF THE GOVERNING AUTHORITIES.
3. ALL WORK PERFORMED UNDER AND IN CONNECTION WITH THESE DRAWINGS AND SPECIFICATIONS SHALL BE IN STRICT COMPLIANCE WITH THE LATEST SAFETY AND HEALTH STANDARDS.
4. COORDINATE WORK WITH ALL OTHER TRADES.
5. DUCT/FAN/HEATER SYSTEMS ABOVE CEILINGS.
6. PROVIDE ACCESS DOORS IN ALL CEILINGS TO ACCESS ITEMS NEEDING SERVICE OR ADJUSTMENT SUCH AS DAMPERS, CONTROLS, FANS, HEATERS, ETC.
7. ALL EQUIPMENT AFFECTED BY ELEVATION SHALL BE SELECTED AND PROVIDED TO WORK FROM SEA LEVEL TO 1798M (5900 FT) ABOVE SEA LEVEL.
8. PROVIDE INSULATED, STRUCTURAL SAFING AROUND ITEMS MOUNTED THRU ENDWALLS IF OPENING LARGER THAN ITEM.

KEY NOTE:

1. INLINE EXHAUST FAN DUCTED TO WALL CAP WITH LOW LEAKAGE GRAVITY BACK-DRAFT DAMPER. SECURE FAN TO STRUCTURE ABOVE OR SUPPORT FROM CEILING SYSTEM AND INTERLOCK WITH MAKE UP AIR DUCT HEATERS. DUCT THROUGH ENDWALL AT 255x255 (10"x10").
2. ELECTRIC MAKE UP AIR DUCT HEATER SECURED TO STRUCTURE ABOVE OR SUPPORTED FROM CEILING SYSTEM. HEATER SHALL BE SET TO ENERGIZE WITH CORRESPONDING EXHAUST FAN AND OR THE THERMOSTAT, HEAT SHALL BE CONTROLLED BY THERMOSTAT. IF HEAT CALLED FOR AND ASSOCIATED VENTILATION SYSTEM NOT ON, ENERGIZE SYSTEM TEMPORARILY.
3. INLINE SUPPLY FAN. SECURE FAN TO STRUCTURE ABOVE OR SUPPORT FROM CEILING SYSTEM AND INTERLOCK WITH ASSOCIATED MUADH.
4. 838x838 (33x33) INTAKE LOUVER WITH LOW LEAK BACK-DRAFT DAMPER FOR MAKE UP AIR UNIT. PROVIDE WEATHER PROOF LOUVER WITH 50mm (2") WASHABLE FILTER AND SAND TRAP. SEE DETAIL 2 ON DRAWING M-501.
5. 600x600x305 (24x24x12) ALUMINUM SUPPLY DIFFUSER WITH ADJUSTABLE DAMPER. BALANCE TO LPS IN PARENTHESIS.
6. 150x150 (6x6) ALUMINUM DUCT MOUNTED EXHAUST GRILLE WITH ADJUSTABLE OPPOSED BLADE DAMPER. BALANCE TO LPS IN PARENTHESIS.
7. 305x305x205 (12x12x8) ALUMINUM SUPPLY DIFFUSER WITH ADJUSTABLE DAMPER. BALANCE TO LPS IN PARENTHESIS.
8. INSTALL 838x1195 (33"x47") ARCH-SPAN VOLUME (ATTIC) SUMMER HEAT CONTROL VENTILATION INTAKE ASSEMBLY HIGH ON ENDWALL CENTERED ABOVE WINDOW AND LATRINE INTAKE BELOW. SEE DETAIL 3 ON DRAWING M-501 AND ARCHITECTURAL AND STRUCTURAL DRAWINGS FOR MORE INFORMATION.
9. INSTALL 787x787 (31"x31") ARCH-SPAN VOLUME (ATTIC) SUMMER HEAT CONTROL VENTILATION EXHAUST ASSEMBLY HIGH ON ENDWALL CENTERED ABOVE WINDOW AND LATRINE INTAKE BELOW. SEE DETAIL 3 ON DRAWING M-501 AND ARCHITECTURAL AND STRUCTURAL DRAWINGS FOR MORE INFORMATION.

SYMBOLS / ABBREVIATIONS:

X	KEY NOTE
⊓	VOLUME DAMPER
T	THERMOSTAT WITH LOCKING COVER
UC	DOOR UNDERCUT
TG	TRANSFER GRILLE
Ø	DIAMETER
$	SWITCH
AFF	ABOVE FINISH FLOOR
LPS	LITERS PER SECOND
STATS	THERMOSTATS
SF	SUPPLY FAN
MAUDH	MAKE-UP AIR DUCT HEATER
150/150	DUCT SIZE (mm)
(XXX)	AIR DEVICE MARK WITH FLOW SHOWN IN LPS
EH	ELECTRIC HEATER
	EXHAUST AIR DEVICE
	DIRECTION OF AIRFLOW
	SUPPLY AIR DEVICE

0 500 1000 2000

SCALE: 1:50

UNLESS OTHERWISE NOTED, LINEAR DIMENSIONS SHOWN ARE IN MILLIMETERS.

COMMONWEALTH OF PENNSYLVANIA REGISTERED PROFESSIONAL ENGINEER CRAIG W. WEST ENGINEER PE-044163-R

US ARMY CORPS OF ENGINEERS AFGHANISTAN NORTH DISTRICT

SYMBOL	DESCRIPTION	DATE	APPR.	SYMBOL	DESCRIPTION	DATE	APPR.

DATE: 3/23/2011 | REV: 0
CONTRACT NO. W912ER-09-D-0002
DRAWING CODE:
FILE NAME: ARCHITRAC-LT-LARGE-10.DWG
PLOT SCALE: 1:50
PLOT DATE: 3/23/2011

DESIGNED BY: CWW | CKD BY: JY
DWN BY: DAM
REVIEWED BY: JH
SUBMITTED BY:

BAKER

U.S. ARMY ENGINEER DISTRICT, AFGHANISTAN
CORPS OF ENGINEERS
APO AE 09356

SITE ADAPT DESIGN
L04 - LATRINE - LARGE - ARCH SPAN
MECHANCIAL FLOOR PLAN

SHEET REFERENCE NUMBER:
M-101

A1 Size 594mm x 841mm

3/23/2011 11:03 AM

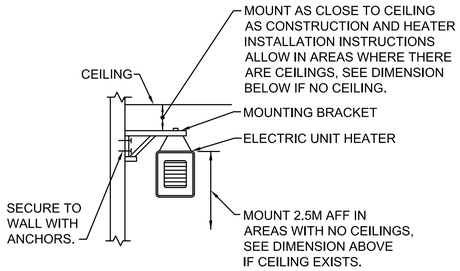

NOTE:
IF HEATERS NEED TO BE MOUNTED OFF OF ARCH-SPAN, ATTACH TO AND HANG FROM ARCH-SPAN TABS AS NECESSARY. REFER TO STRUCTURAL DRAWINGS FOR INFO ON TABS.

1 M-501 ELECTRIC UNIT HEATER MOUNTING DETAIL

SCALE NTS

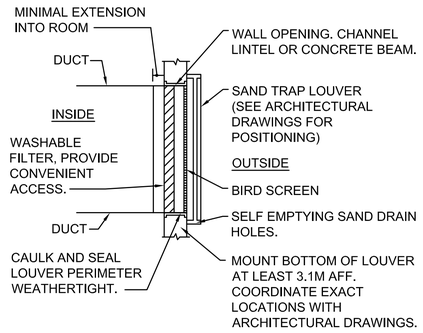

2 M-501 FILTERED SAND TRAP LOUVER

SCALE NTS

FAN SCHEDULE

NO.	TYPE	LPS	DRIVE	HP	SP mmH2O	ELECTRICAL DATA	SWITCH
EF-1	INLINE	224	DIRECT	1/4	13	220/1/50	W/LIGHTS
EF-2	INLINE	244	DIRECT	1/4	13	220/1/50	W/LIGHTS
EF-3	INLINE	250	DIRECT	1/4	13	220/1/50	W/LIGHTS
EF-4	PROP	1270	DIRECT	3/4	13	220/1/50	INTERLOCK WITH ADJACENT THERMOSTAT, AND WITH INTAKE ASSEMBLY MOTORIZED DAMPERS AT OTHER END OF BUILDING.
SF-1	INLINE	284	DIRECT	1/4	13	220/1/50	INTERLOCK WITH ASSOCIATED EF(S)

NOTES:
1. EXHAUST FANS SHALL BE CORROSION RESISTANT.
2. EXHAUST FANS SHALL HAVE SPRING OPERATED BACK DRAFT DAMPER.
3. SEE PLANS FOR ACTUAL QUANTITIES OF EACH FAN.
4. EF-4 TO HAVE MOTOR SUITABLE FOR ELEVATED TEMPERATURE ATTIC VENTILATION.

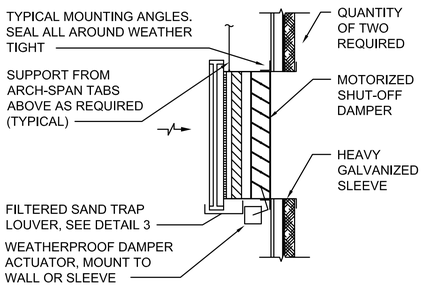

NOTE:
ALL COMPONENTS SHALL BE REMOVABLE & ACCESSIBLE THROUGH REMOVABLE SAND LOUVER.

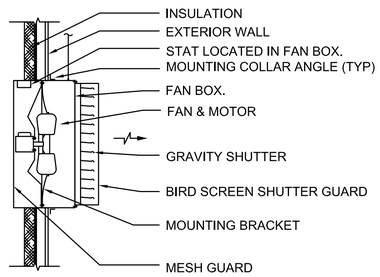

NOTES:
1. ALL FAN PARTS AND STAT SHALL BE REMOVABLE & ACCESSIBLE FROM OUTSIDE THROUGH FAN BOX.
2. STAT TO BE ADJUSTABLE BUT TO BE SET AT AND CAPABLE OF ENERGIZING ATTIC VENTILATION SYSTEM AT 43-46°C (110-115°F).

3 M-501 ATTIC VENTILATION SYSTEM DETAIL

SCALE NTS

MAKE UP AIR DUCT HEATERS

NO.	LPS	FUSE	KW	MIN. TEMP RISE °C	ELECTRICAL DATA	CONTROL
MUADH-1,2,3,4,5	284	60	10	20	380/3/50	REMOTE

NOTES:
1. PROVIDE REMOTE MOUNTED THERMOSTAT WITH LOCKING COVER.
2. AT LEFT END OF LATRINE, INTERLOCK (2) EF-1'S AND (1) EF-2 WITH BOTH LEFT END SF-1 SYSTEMS, AND INTERLOCK THE CENTER SF-1 SYSTEM AT THE RIGHT END OF THE LATRINE AS WELL. MUADH'S TO RUN OFF OF COMMON THERMOSTAT.
3. AT RIGHT END OF LATRINE, INTERLOCK (1) EF-1 AND (2) EF-3'S WITH TWO OTHER SF-1 SYSTEMS. MUADH'S TO RUN OFF OF COMMON THERMOSTAT.
4. PROVIDE AIRFLOW PROVING SWITCH FOR HEATING OPERATION.
5. SEE PLANS FOR ACTUAL QUANTITIES OF EACH HEATER.

ELECTRIC UNIT HEATER SCHEDULE

NO.	KW	ELECT. CHAR.	MOUNTING
EH-1	2	220/1/50	WALL HUNG
EH-2	3	220/1/50	WALL HUNG
EH-5	3	220/1/50	WALL HUNG

NOTES:
1. UNIT HEATERS SHALL HAVE TAMPER PROOF INTEGRAL STATS.
2. SEE PLANS FOR ACTUAL QUANTITIES OF EACH HEATER.

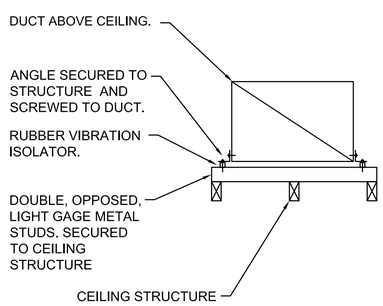

4 M-501 DUCT SUPPORT DETAIL

SCALE NTS

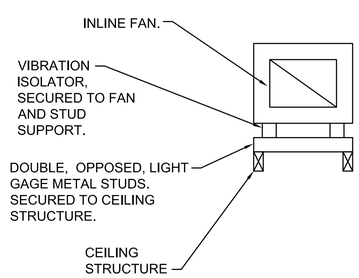

5 M-501 INLINE FAN SUPPORT DETAIL

SCALE NTS

UNLESS OTHERWISE NOTED, LINEAR DIMENSIONS SHOWN ARE IN MILLIMETERS.

COMMONWEALTH OF PENNSYLVANIA
REGISTERED PROFESSIONAL
CRAIG W. WEST
ENGINEER
PE-045653-E

US ARMY CORPS OF ENGINEERS AFGHANISTAN NORTH DISTRICT

SYMBOL	DESCRIPTION	DATE	APPR.	SYMBOL	DESCRIPTION	DATE	APPR.

DESIGNED BY: CWW
DWN BY: DAM
CKD BY: JY
REVIEWED BY: JH
SUBMITTED BY: BAKER
DATE: 3/23/2011
REV: 0
CONTRACT NO. W912ER-09-D-0002
DRAWING CODE:
FILE NAME: M501SFMAL-01-L04-MU01.DWG
PLOT SCALE: NONE
PLOT DATE: 3/23/2011

U.S. ARMY ENGINEER DISTRICT, AFGHANISTAN
CORPS OF ENGINEERS
APO AE 09356

SITE ADAPT DESIGN
L04 - LATRINE - LARGE - ARCH SPAN
MECHANCIAL DETAILS AND SCHEDULES

SHEET REFERENCE NUMBER:
M-501

3/23/2011 11:03 AM

A1 Size 594mm x 841mm

POWER

- DISTRIBUTION PANELBOARD
- NEW PANELBOARD - SURFACE
- NEW PANELBOARD - RECESSED
- GENERATOR
- TRANSFORMER (DRAWN TO SIZE)
- JUNCTION BOX
- JUNCTION BOX - CEILING
- FUSIBLE SAFETY SWITCH
- MOTOR
- ^{M} MOTOR STARTING SWITCH - 220V, 20A RATED UNLESS OTHERWISE NOTED
- ELECTRIC WATER HEATER
- CF CEILING FAN - REFER TO SPECIFICATION SECTION 26 20 00

RECEPTACLES

- DUPLEX 20A TYPE CEE 7/7 "SCHUKO STYLE" UNSWITCHED RECEPTACLE
- GF DUPLEX 20A TYPE CEE 7/7 "SCHUKO STYLE" UNSWITCHED RECEPTACLES - 10mA GROUND FAULT INTERRUPTER TYPE
- WP DUPLEX 20A TYPE CEE 7/7 "SCHUKO STYLE" UNSWITCHED TYPE WITH WEATHERPROOF COVER - 10mA GROUND FAULT INTERRUPTER TYPE
- EXP DUPLEX 20A TYPE CEE 7/7 "SCHUKO STYLE" UNSWITCHED RECEPTACLES - EXPLOSION PROOF
- * INDICATES MOUNT DEVICE ABOVE COUNTERTOP OR AT 1070mm ABOVE FINISHED FLOOR WHERE NO COUNTER IS TO BE INSTALLED.

LIGHTING

- LIGHTING FIXTURE - SEE FIXTURE SCHEDULE FOR MORE INFORMATION
- EMERGENCY LIGHTING FIXTURE - SEE FIXTURE SCHEDULE FOR MORE INFORMATION
- DOWNLIGHT
- LIGHTING FIXTURE ON NORMAL/EMERGENCY
- WALL MOUNTED LIGHT FIXTURE
- E EXIT SIGN - DIRECTIONAL ARROWS AS INDICATED ON DRAWINGS
- REMOTE HEAD FOR BATTERY PACK
- $ SINGLE POLE SWITCH - 20A RATED
- $^{3} 3-WAY SWITCH - 20A RATED
- $^{4} 4-WAY SWITCH - 20A RATED
- LC LIGHTING CONTACTOR
- POLE MOUNTED SITE LIGHTING FIXTURE- NUMBER OF FIXTURES PER POLE AS INDICATED ON DRAWINGS
- EXTERIOR DIRECTIONAL LIGHTING FIXTURE
- a SMALL CASE LETTERS REPRESENTS LAMP(S) / SWITCHES.

TELECOMMUNICATIONS

- ▼ TELEPHONE OUTLET(S) @ 45cm AFF. U.N.O. WITH 20mm RACEWAY TERMINATED TO TELEDATA TERMINAL BOARD.
- ▽ DATA OUTLET(S) @ 45cm AFF. U.N.O. WITH 20mm RACEWAY TERMINATED TO TELEDATA TERMINAL BOARD.

TELECOMMUNICATIONS (CONTINUED)

- ▼ COMBINATION TELEPHONE/DATA OUTLET(S) @ 45cm AFF. U.N.O. WITH 27mm RACEWAY TERMINATED TO TELEDATA TERMINAL BOARD.
- W▼ WALL MTD. TELEPHONE OUTLET WITH 20mm RACEWAY TO TELEDATA TERMINAL BOARD.
- (x)T INDICATES NUMBER OF TELEPHONE OUTLET(S) AND ASSOCIATED CABLING
- (x)D INDICATES NUMBER OF DATA OUTLET(S) AND ASSOCIATED CABLING
- (x)TF INDICATES NUMBER OF TELEPHONE OUTLETS AND ASSOCIATED CABLING WITH 1 OUTLET AND CABLE DEDICATED FOR FAX

SINGLE LINE SYMBOLS

- SWITCH
- BREAKER
- FUSE
- TRANSFORMER
- GROUND
- CONTACT (NORMALLY OPEN)
- CONTACT (NORMALLY CLOSED)
- TRANSFER SWITCH
- CURRENT TRANSFORMER
- INDICATES NEW ELECTRICAL EQUIPMENT
- C INDICATES NEW CONTROL WIRING AND CONDUIT
- EQUIPMENT OUTLINE

MISCELLANEOUS

- BRANCH CIRCUIT WIRING, SURFACE MOUNTED ON WALLS
- BRANCH CIRCUIT WIRING - 6mm²
- BRANCH CIRCUIT WIRING - UNDER FLOOR
- HOME RUN BACK TO PANEL
- CONDUIT TURNED DOWN
- CONDUIT TURNED UP
- LV LOW VOLTAGE WIRING AND CONDUIT
- ~ INDICATES CONTINUATION OF LINE

FIRE ALARM

- FACP FIRE ALARM CONTROL PANEL WITH BATTERY BACKUP
- FIRE ALARM PULL STATION

FIRE ALARM (CONTINUED)

- FIRE ALARM STROBE - WALL MOUNTED
- FIRE ALARM AUDIBLE/STROBE - WALL MOUNTED
- FIRE ALARM HORN/STROBE - WALL MOUNTED
- SMOKE DETECTOR
- H HEAT DETECTOR CEILING MOUNTED
- D DUCT DETECTOR - PROVIDED BY EC, INSTALLED BY MC AND CONNECTED BY EC

DENOTATIONS & ABBREVIATIONS

AFF	ABOVE FINISHED FLOOR
C	CEILING MOUNTED
E	EMERGENCY
EC	ELECTRICAL CONTRACTOR
EPO	EMERGENCY POWER OFF
EXP	EXPLOSION PROOF
F	FIRE ALARM
FF	FLUSH FLOOR MOUNTED
FL	FLUORESCENT
FO	FIBER OPTIC
FSS	FUSED SAFETY SWITCH
GF	GROUND FAULT INTERRUPTER
GC	GENERAL CONTRACTOR
IG	ISOLATED GROUND
K	KEY
LV	LOW VOLTAGE
M	MOTOR
MC	MECHANICAL CONTRACTOR
NE	NORMAL/EMERGENCY
NFSS	NON-FUSED SAFETY SWITCH
PA	PAGING SYSTEM
PLC	PLUMBING CONTRACTOR
SL	SINGLE LINE
T	TELEPHONE

DENOTATIONS & ABBREVIATIONS (CONT.)

TP	TAMPER PROOF
UE	UNDERGROUND ELECTRIC
W	WALL MOUNTED
WP	WEATHERPROOF WITH GROUND FAULT INTERRUPTION
WT	WATER TIGHT

GENERAL PROJECT NOTES:

G1. UNLESS OTHERWISE NOTED, PROVIDE ALL EQUIPMENT SHOWN ON THE PLANS. THE ELECTRICAL CONTRACTOR SHALL COORDINATE ALL SYMBOLS SHOWN ON THE PLANS WITH THE SYMBOL LIST. IT SHALL BE THE RESPONSIBILITY OF THE CONTRACTOR TO VERIFY THE INTENT OF ANY SYMBOL THAT IS SHOWN ON THE PLANS AND NOT INDICATED ON THE SYMBOL LIST WITH THE ENGINEER PRIOR TO BID.

G2. THE CONTRACTOR SHALL VERIFY THE LOCATION OF ALL UNDERGROUND UTILITIES WITHIN THE CONSTRUCTION AREA THREE (3) WORKING DAYS NOTICE BEFORE COMMENCING DIGGING. NOTIFY THE LOCAL AUTHORITY HAVING JURISDICTION AND WAIT THE REQUIRED TIME BEFORE COMMENCING TO DIG.

G3. THE CONTRACTOR SHALL COORDINATE CONDUIT RUNS, LIGHTING FIXTURES AND OTHER EQUIPMENT LOCATIONS WITH THE OTHER TRADE CONTRACTORS TO AVOID CONFLICTS.

G4. WHERE VOLTAGES AND FREQUENCIES ON THE DRAWINGS AND IN THE SPECIFICATIONS DIFFER FROM THE LOCAL ONES, ALL WORK SHALL BE PERFORMED USING THE LOCAL VOLTAGES AND FREQUENCIES.

G5. THE MINIMUM WIRE SIZE ON THE PROJECT SHALL BE 4mm². THE MINIMUM CONDUIT SIZE SHALL BE 20mm. THE MINIMUM BREAKER SIZE SHALL BE 20 AMPS.

G6. THE CONTRACTOR SHALL PUT A MAXIMUM OF 6 DUPLEX RECEPTACLES ON A 20A SINGLE POLE CIRCUIT.

G7. WHERE THE 1010 SCOPE REVIEW, 1015 TECHNICAL REVIEW, DRAWINGS, AND SPECIFICATIONS DIFFER FROM AMERICAN CODES OR STANDARDS, THE 1010, 1015, DRAWINGS, AND SPECIFICATIONS SHALL RULE.

G8. ALL CONDUIT AND DEVICES SHALL BE SURFACE MOUNTED UNLESS OTHERWISE INDICATED.

G9. CONTRACTOR SHALL COORDINATE ALL WORK WITH ALL OTHER TRADES TO ENSURE ALL WORK IS COMPLETED IN A PROFESSIONAL, WORKMAN-LIKE MANNER.

UNLESS OTHERWISE NOTED, LINEAR DIMENSIONS SHOWN ARE IN MILLIMETERS.

COMMONWEALTH OF PENNSYLVANIA
REGISTERED PROFESSIONAL ENGINEER
TRACY A. RAPP
ENGINEER
040712-E

US ARMY CORPS OF ENGINEERS AFGHANISTAN NORTH DISTRICT

SYMBOL	DESCRIPTION	DATE	APPR.	SYMBOL	DESCRIPTION	DATE	APPR.

U.S. ARMY ENGINEER DISTRICT, AFGHANISTAN
CORPS OF ENGINEERS
APO AE 09356

DESIGNED BY: KWL | DWN BY: JLG | CKD BY: TAB | REVIEWED BY: JH | SUBMITTED BY: BAKER

DATE: 3/23/2011 | REV: 0
CONTRACT NO. W912ER-09-D-0002
DRAWING CODE:
FILE NAME: ABC01Elec-E-L04-E-001.DWG
PLOT SCALE: NONE
PLOT DATE: 3/23/2011

SITE ADAPT DESIGN
L04 - LATRINE - LARGE - ARCH SPAN
ELECTRICAL SYMBOLS & ABBREVIATIONS

SHEET REFERENCE NUMBER:
E-001

A1 Size 594mm x 841mm

3/23/2011 11:26 AM

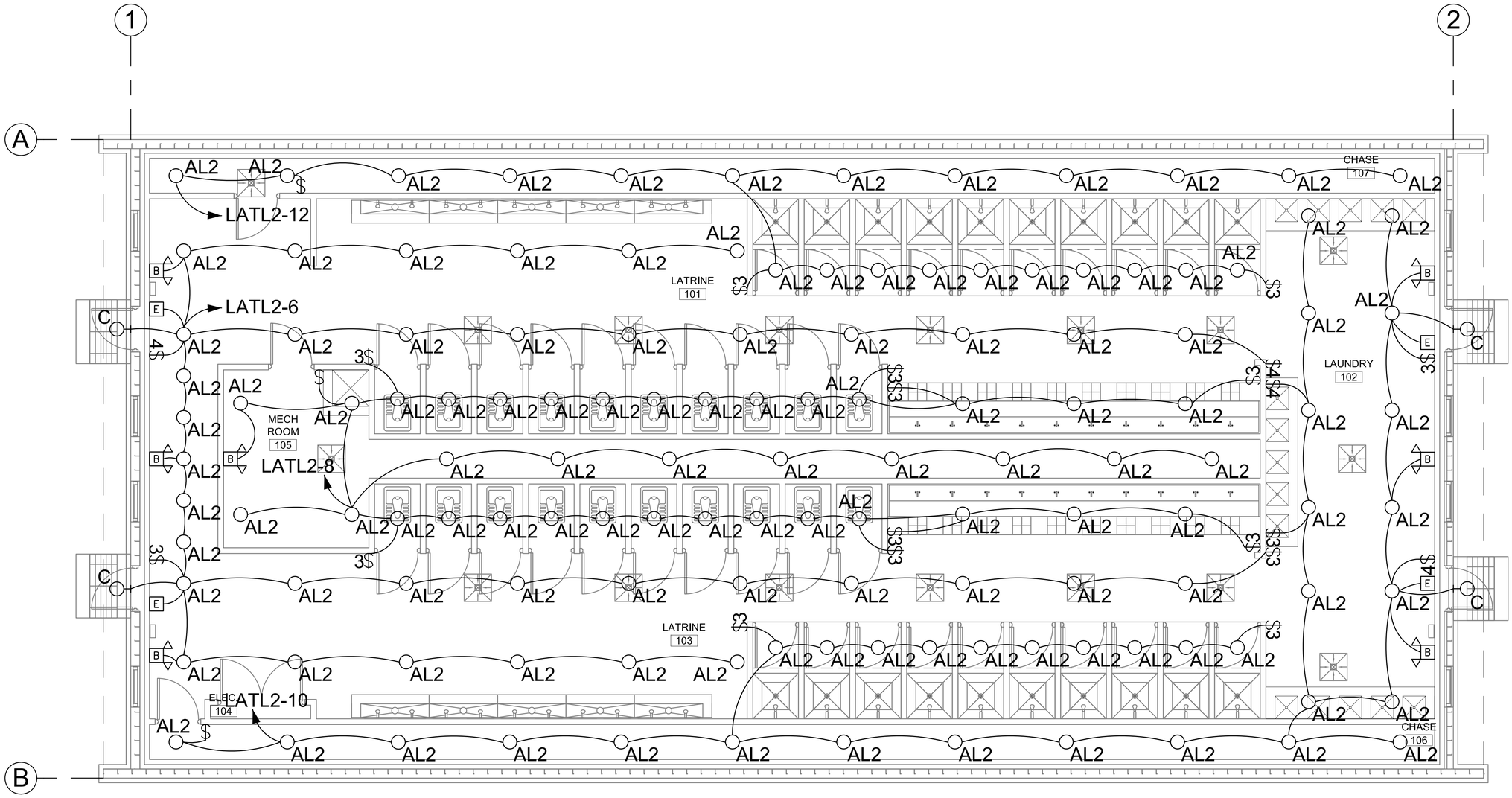

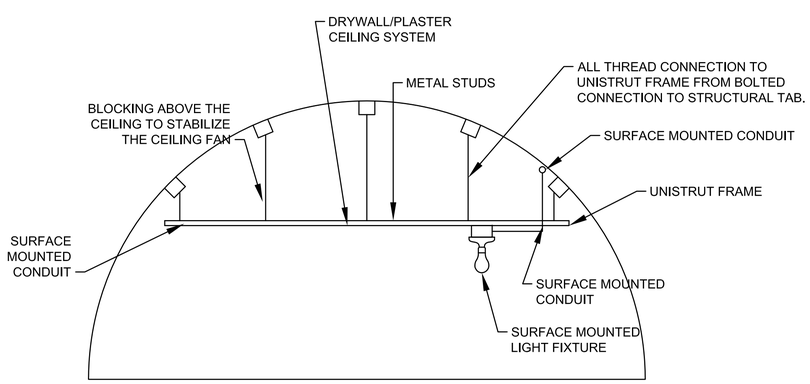

2 E-101 OPEN BAY MOUNTING DETAIL

SCALE

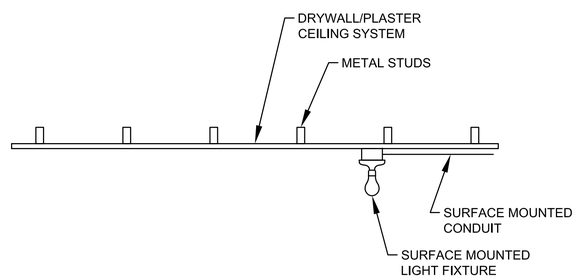

3 E-101 NON-OPEN BAY MOUNTING DETAIL

SCALE

GENERAL NOTES:

1. REFER TO DRAWING #E-001 FOR THE ELECTRICAL SYMBOLS LIST.
2. EXIT SIGNS SHALL BE WIRED AHEAD OF ANY LOCAL SWITCHING ON CIRCUITS. SEE WIRING DIAGRAM DETAIL 3, ON DRAWING #E-501.
3. REFER TO DRAWING #E-601 FOR THE LIGHTING FIXTURE SCHEDULE.
4. REFER TO DRAWING #E-501 FOR THE POWER RISER.
5. REFER TO DRAWING #E-602 FOR PANEL SCHEDULES.
6. LIGHT FIXTURES INDICATED AS EMERGENCY SHALL BE PROVIDED WITH A BATTERY BACKUP BALLAST. SEE WIRING DIAGRAM DETAIL 2, ON DRAWING #E-501.
7. COORDINATE THE LOCATIONS OF LIGHT FIXTURES WITH THE LOCATION OF DUCTWORK PRIOR TO INSTALLATION.
8. CIRCUITS SHOWN INCLUDE ONE PHASE CONDUCTOR, ONE NEUTRAL AND ONE EQUIPMENT GROUND CONDUCTOR UNLESS OTHERWISE SHOWN. THE CONDUCTOR SIZE SHALL BE 2.5 mm2 UNLESS OTHERWISE SHOWN.

0 500 1000 2000

SCALE: 1:50

UNLESS OTHERWISE NOTED, LINEAR DIMENSIONS SHOWN ARE IN MILLIMETERS.

COMMONWEALTH OF PENNSYLVANIA
REGISTERED PROFESSIONAL
JOSEPH R. GAUS
ENGINEER
PE-074261

US ARMY CORPS OF ENGINEERS
AFGHANISTAN NORTH DISTRICT

SYMBOL	DESCRIPTION	DATE	APPR.	SYMBOL	DESCRIPTION	DATE	APPR.

U.S. ARMY ENGINEER DISTRICT, AFGHANISTAN
CORPS OF ENGINEERS
APO AE 09356

DESIGNED BY: KWL
DWN BY: JLG
CKD BY: TAB
REVIEWED BY: JH
SUBMITTED BY:
DATE: 4-25-2011
CONTRACT NO. W912ER-09-D-0002
DRAWING CODE:
FILE NAME: ARCDSTRNG-CC-L04-E-101.DWG
PLOT SCALE: 1:50
PLOT DATE: 4/25/2011
REV: 0

BAKER

SITE ADAPT DESIGN

L04 - LATRINE - LARGE - ARCH SPAN

ELECTRICAL LIGHTING PLAN

SHEET REFERENCE NUMBER:

E-101

A1 Size 594mm x 841mm

4/25/2011 5:46 PM

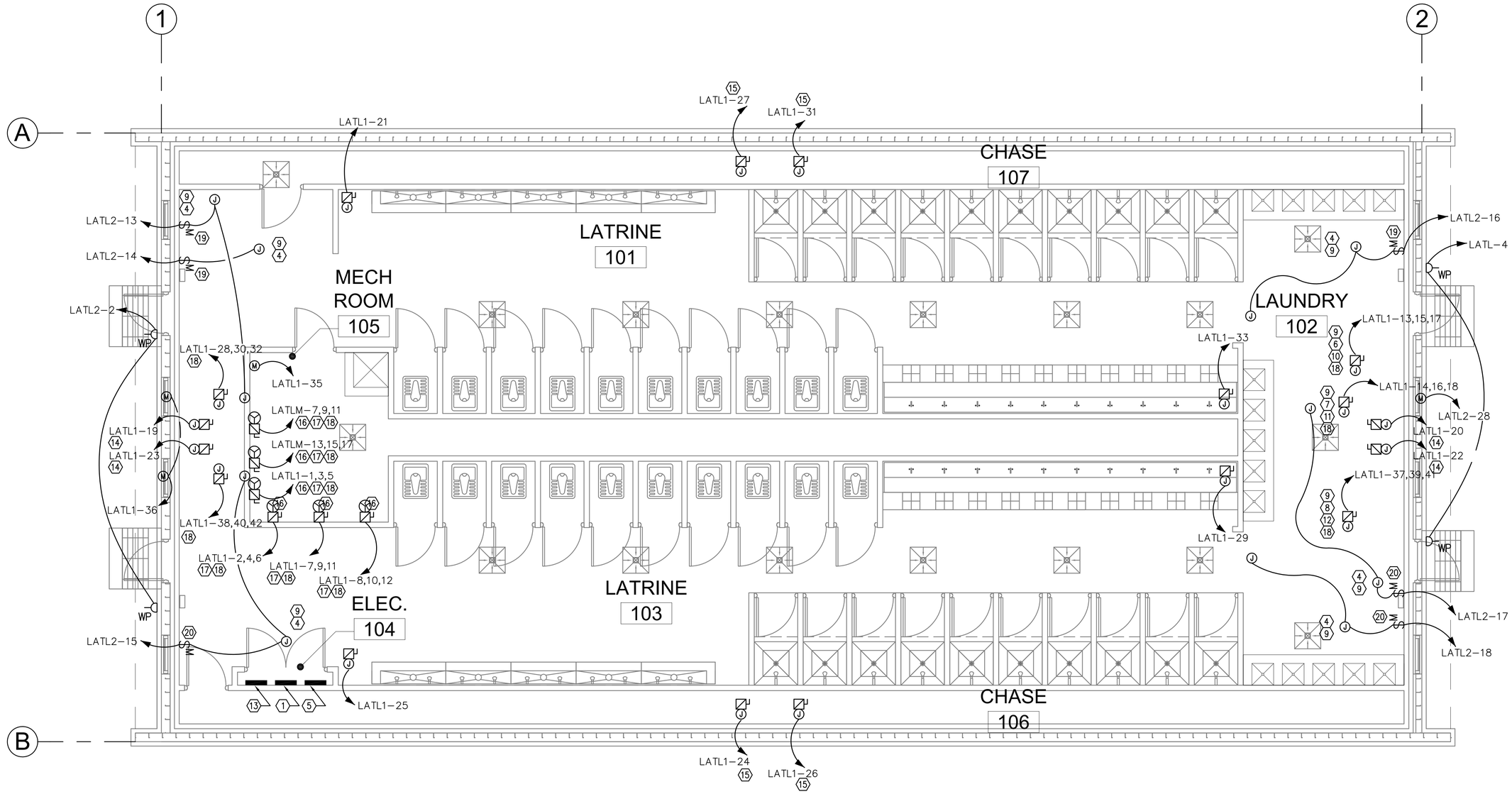

GENERAL NOTES:

1. REFER TO DRAWING #E-001 FOR THE ELECTRICAL SYMBOLS LIST.
2. REFER TO DRAWING #E-501 FOR THE POWER RISER.
3. REFER TO DRAWING #E-602 FOR PANEL SCHEDULES.
4. COORDINATE EXACT MOUNTING LOCATION OF DISCONNECTING MEANS FOR MECHANICAL AND PLUMBING EQUIPMENT IN THE FIELD.
5. FUSIBLE SAFETY SWITCHES THAT ARE NOT OTHERWISE IDENTIFIED SHALL BE 380V, 1P, 30A FUSED SAFETY SWITCHES WITH 20A FUSES.
6. CIRCUITS SHOWN INCLUDE ONE PHASE CONDUCTOR, ONE NEUTRAL AND ONE EQUIPMENT GROUND CONDUCTOR UNLESS OTHERWISE SHOWN. THE CONDUCTOR SIZE SHALL BE 2.5 mm2 UNLESS OTHERWISE SHOWN.

NUMBERED NOTES:

1. PANEL LATLM.
2. NEMA 3R, 380V, 3P, 30A FUSED DISCONNECT FUSED AT 30A. SEE PLUMBING DRAWINGS FOR EXACT LOCATION OF WATER HEATER.
3. SEE DRAWING #E-602 FOR WIRE AND CONDUIT SIZE.
4. PROVIDE POWER CONNECTION TO EXHAUST FANS. SEE DRAWINGS #M-101 AND #E-602 FOR MORE INFORMATION.
5. PANEL LATL1.
6. PROVIDE POWER CONNECTION TO MAKE UP AIR UNIT #1. SEE DRAWINGS #M-101 AND #E-602 FOR MORE INFORMATION.
7. PROVIDE POWER CONNECTION TO MAKE UP AIR UNIT #2. SEE DRAWINGS #M-101 AND #E-602 FOR MORE INFORMATION.
8. PROVIDE POWER CONNECTION TO MAKE UP AIR UNIT #3. SEE DRAWINGS #M-101 AND #E-602 FOR MORE INFORMATION.
9. THE DISCONNECTING MEANS FOR THIS PIECE OF EQUIPMENT SHALL BE IN A NEMA 3R ENCLOSURE.
10. NEMA 3R, 220V, 1P, 60A FUSED DISCONNECT FUSED AT 60A. SEE MECHANICAL DRAWINGS FOR EXACT LOCATION OF MUA-1.
11. NEMA 3R, 220V, 1P, 60A FUSED DISCONNECT FUSED AT 60A. SEE MECHANICAL DRAWINGS FOR EXACT LOCATION OF MUA-2.
12. NEMA 3R, 220V, 1P, 60A FUSED DISCONNECT FUSED AT 60A. SEE MECHANICAL DRAWINGS FOR EXACT LOCATION OF MUA-3.
13. PANEL LATL2.
14. PROVIDE POWER CONNECTION TO ELECTRIC UNIT HEATER #2. SEE DRAWINGS #M-101 AND #E-602 FOR MORE INFORMATION.
15. PROVIDE POWER CONNECTION TO ELECTRIC UNIT HEATER #5. SEE DRAWINGS #M-101 AND #E-602 FOR MORE INFORMATION.
16. NEMA 3R, 380V, 3P, 40A FUSED DISCONNECT FUSED AT 40A. SEE PLUMBING DRAWINGS FOR EXACT LOCATION OF WATER HEATER.
17. SEE DRAWING #E-602 FOR WIRE AND CONDUIT SIZE
18. PROVIDE (3) THREE PHASE (HOT) CONDUCTORS AND (1) ONE GROUND CONDUCTOR
19. INTERLOCK EXHAUST FANS WITH LATRINE 101 LIGHTING SUCH THAT EXHAUST FANS ONLY OPERATE WHEN LATRINE 101 LIGHTS ARE ON.
20. INTERLOCK EXHAUST FANS WITH LATRINE 103 LIGHTING SUCH THAT EXHAUST FANS ONLY OPERATE WHEN LATRINE 103 LIGHTS ARE ON.

1 / E-102

ELECTRICAL POWER AND SYSTEMS PLAN

SCALE: 1:50

0 500 1000 2000

SCALE: 1:50

UNLESS OTHERWISE NOTED, LINEAR DIMENSIONS SHOWN ARE IN MILLIMETERS.

COMMONWEALTH OF PENNSYLVANIA
REGISTERED PROFESSIONAL ENGINEER
TRACY A. HAPP
ENGINEER
040712-E
23 MAR 11

US ARMY CORPS OF ENGINEERS
AFGHANISTAN NORTH DISTRICT

SYMBOL	DESCRIPTION	DATE	APPR.	SYMBOL	DESCRIPTION	DATE	APPR.

DESIGNED BY: KWL
DWN BY: JLG
CKD BY: TAB
REVIEWED BY: JH
SUBMITTED BY: BAKER
DATE: 3/23/2011
CONTRACT NO. W912ER-09-D-0002
DRAWING CODE:
FILE NAME: ARCHITECT-E-L04-E-102.DWG
PLOT SCALE: 1:50
PLOT DATE: 3/23/2011
REV: 0

U.S. ARMY ENGINEER DISTRICT, AFGHANISTAN
CORPS OF ENGINEERS
APO AE 09356

SITE ADAPT DESIGN
L04 - LATRINE - LARGE - ARCH SPAN
ELECTRICAL POWER AND SYSTEMS PLAN

SHEET REFERENCE NUMBER:
E-102

3/23/2011 11:26 AM

A1 Size 594mm x 841mm

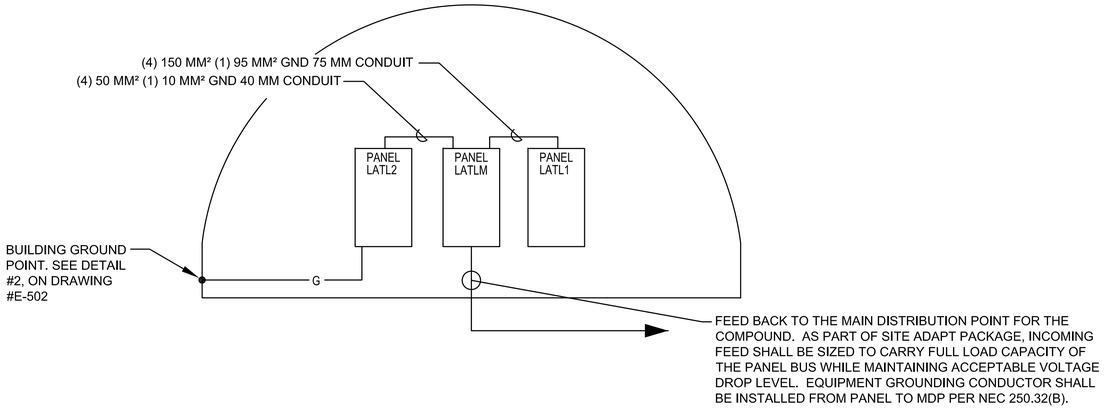

1 / E-501 LATL RISER DIAGRAM

SCALE: NTS

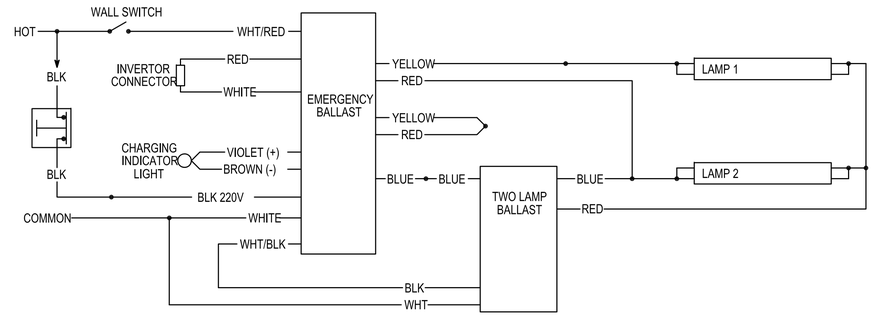

2 / E-501 EMERGENCY FIXTURE WIRING DIAGRAM

SCALE: NTS

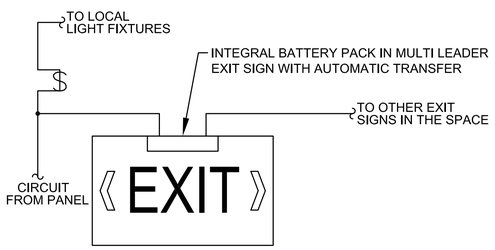

3 / E-501 EXIT SIGN WIRING DIAGRAM

SCALE: NTS

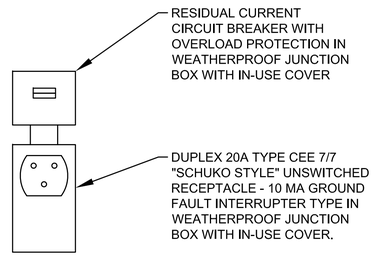

4 / E-501 RECEPTACLE DETAIL

SCALE: N.T.S.

UNLESS OTHERWISE NOTED, LINEAR DIMENSIONS SHOWN ARE IN MILLIMETERS.

COMMONWEALTH OF PENNSYLVANIA REGISTERED PROFESSIONAL ENGINEER TRACY A. RAPP 040712-E 23 MAY 11

US ARMY CORPS OF ENGINEERS AFGHANISTAN NORTH DISTRICT

SYMBOL	DESCRIPTION	DATE	APPR.	SYMBOL	DESCRIPTION	DATE	APPR.

DESIGNED BY: KWL | DATE: 3-23-2011 | REV: 0
DWN BY: JLG | CKD BY: TAB | CONTRACT NO. W912ER-09-D-0002
REVIEWED BY: JH | DRAWING CODE:
SUBMITTED BY: | FILE NAME: 09C02Eng-ELC-L04-E-501.DWG
PLOT SCALE: NONE
PLOT DATE: 3/23/2011

BAKER

U.S. ARMY ENGINEER DISTRICT, AFGHANISTAN
CORPS OF ENGINEERS
APO AE 09356

SITE ADAPT DESIGN
L04 - LATRINE - LARGE - ARCH SPAN
ELECTRICAL DETAILS

SHEET REFERENCE NUMBER:
E-501

A1 Size 594mm x 841mm

3/23/2011 11:26 AM

(A) LARGER OF THE TWO SIZES GIVEN IN THE TABLES BELOW	
GROUNDING ELECTRODE CONDUCTOR (BASED ON AIC RATING)	
AIC RATING OF SERVICE EQUIPMENT	NECESSARY GROUNDING ELECTRODE CONDUCTOR SIZE
10K	(1) 35mm²
14K	(1) 50mm²
18K	(1) 70mm²
22K	(1) 70mm²
25K	(1) 70mm²
30K	(1) 95mm²
35K	(1) 120mm²
42K	(1) 150mm²
65K	(1) 185mm²
100K	(1) 300mm²
125K	(2) 185mm²
200K	(2) 300mm²
GROUNDING ELECTRODE CONDUCTOR (BASED ON NEC TABLE 250.66)	
SIZE OF LARGEST UNGROUNDED SERVICE CONDUCTOR OR EQUIVALENT AREA FOR PARALLEL CONDUCTORS	NECESSARY GROUNDING ELECTRODE CONDUCTOR SIZE
350 kcmil OR SMALLER	35mm²
OVER 350 kcmil TO 600 kcmil	70mm²
OVER 600 kcmil TO 1100 kcmil	70mm²
OVER 1100 kcmil	95mm²
NOTE: ALL SIZES ARE BASED ON COPPER CONDUCTORS.	

(B) EQUIPMENT GROUNDING CONDUCTOR	
RATING OR SETTING OF AUTOMATIC OVERCURRENT DEVICE IN CIRCUIT AHEAD OF EQUIPMENT, CONDUIT, ETC. NOT EXCEEDING (AMPERES)	NECESSARY EQUIPMENT GROUNDING CONDUCTOR SIZE
15	2.5mm²
20	4.0mm²
30	6.0mm²
40	6.0mm²
60	6.0mm²
100	10mm²
200	16mm²
300	25mm²
400	25mm²
500	35mm²
600	50mm²
800	70mm²
1000	70mm²
1200	95mm²
1600	120mm²
2000	150mm²
2500	185mm²
3000	240mm²
4000	300mm²
5000	400mm²
6000	400mm²
NOTE: ALL SIZES ARE BASED ON COPPER CONDUCTORS.	

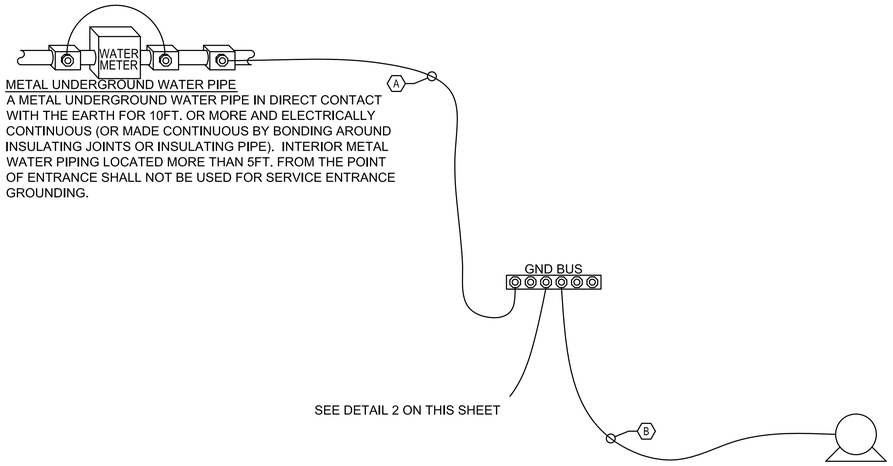

METAL UNDERGROUND WATER PIPE
A METAL UNDERGROUND WATER PIPE IN DIRECT CONTACT WITH THE EARTH FOR 10FT. OR MORE AND ELECTRICALLY CONTINUOUS (OR MADE CONTINUOUS BY BONDING AROUND INSULATING JOINTS OR INSULATING PIPE). INTERIOR METAL WATER PIPING LOCATED MORE THAN 5FT. FROM THE POINT OF ENTRANCE SHALL NOT BE USED FOR SERVICE ENTRANCE GROUNDING.

LOAD OR DOWNSTREAM PANEL
ALL LOADS IN THE BUILDING SHALL HAVE AN EQUIPMENT GROUNDING CONDUCTOR PULLED TO THEM.

1 / E-502 SERVICE ENTRANCE GROUNDING DETAIL

SCALE: N.T.S.

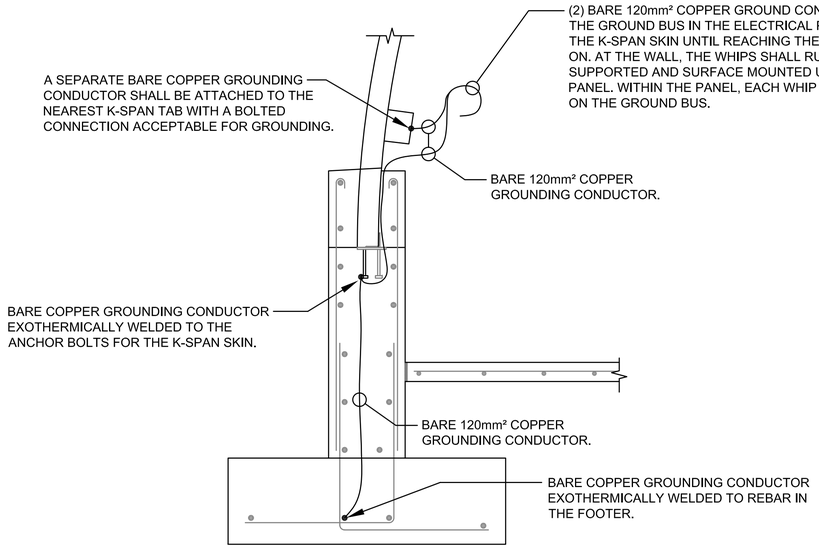

2 / E-502 BUILDING GROUNDING DETAIL

SCALE: N.T.S.

UNLESS OTHERWISE NOTED, LINEAR DIMENSIONS SHOWN ARE IN MILLIMETERS.

COMMONWEALTH OF PENNSYLVANIA REGISTERED PROFESSIONAL ENGINEER TRACY A. RAPP 040712-E 23 MAR 11

US ARMY CORPS OF ENGINEERS AFGHANISTAN NORTH DISTRICT

SYMBOL	DESCRIPTION	DATE	APPR.	SYMBOL	DESCRIPTION	DATE	APPR.

DESIGNED BY: KWL
DWN BY: JLG
CKD BY: TAB
REVIEWED BY: JH
SUBMITTED BY:
DATE: 3-23-2011
REV: 0
CONTRACT NO. W912ER-09-D-0002
DRAWING CODE:
FILE NAME: ARCGIS\Baker.prj\E-502.DWG
PLOT SCALE: NONE
PLOT DATE: 3/23/2011

BAKER

U.S. ARMY ENGINEER DISTRICT, AFGHANISTAN
CORPS OF ENGINEERS
APO AE 09356

SITE ADAPT DESIGN
L04 - LATRINE - LARGE - ARCH SPAN
ELECTRICAL DETAILS

SHEET REFERENCE NUMBER:
E-502

A1 Size 594mm x 841mm

3/23/2011 11:26 AM

LIGHT FIXTURE SCHEDULE

FIXTURE MARK	STYLE NUMBER AND TYPE	NUMBER AND TYPE OF LAMPS	VOLTAGE	MOUNTING	NOTES
AL2	VAPORPROOF WET LOCATION JELLY JAR FIXTURE WITH MEDIUM SCREW IN BASE.	(1) 42W SELF BALLASTED COMPACT FLUORESCENT "TWISTER" LAMP	220V - 1Ø 50HZ	SURFACE MOUNTED	
C	INCANDESCENT ONE PIECE W/ APPROVED LENS STABILIZED HIGH IMPACT POLY CARBONATE. FIXTURE SHALL BE IP-44 RATED.	(1) 100W INCANDESCENT	220V - 1Ø 50HZ	WALL MOUNTED ABOVE EXTERIOR DOORS	FURNISHED WITH INTEGRAL PHOTOCELL.
E	UNIVERSAL MOUNT ENGINEER GRADE THERMOPLASTIC HOUSING EXIT SIGN WITH LED LAMPS, RED LETTERS 6" IN HEIGHT WITH ARROWS AS INDICATED, WITH 12V CADMIUM BATTERY WITH REMOTE HEAD CAPABILITY	LED LAMPS	220V - 1Ø 50HZ	UNIVERSAL MOUNTING	
B	EMERGENCY BATTERY PACK LIGHTING WITH TWO LOW VOLTAGE HEADS.	(2) 12W HALOGEN HEADS	220V - 1Ø 50HZ	SURFACE MOUNTING	

UNLESS OTHERWISE NOTED,
LINEAR DIMENSIONS
SHOWN ARE IN MILLIMETERS.

COMMONWEALTH OF PENNSYLVANIA
REGISTERED PROFESSIONAL
JOSEPH R. GAUS
ENGINEER
PE-074261

US ARMY CORPS
OF ENGINEERS
AFGHANISTAN NORTH
DISTRICT

SYMBOL	DESCRIPTION	DATE	APPR.	SYMBOL	DESCRIPTION	DATE	APPR.

U.S. ARMY ENGINEER DISTRICT, AFGHANIST'AN
CORPS OF ENGINEERS
APO AE 09356

DESIGNED BY: KWL
DWN BY: JLG
CKD BY: TAB
REVIEWED BY: JH
SUBMITTED BY:
DATE: 4-25-2011
REV: 0
CONTRACT NO. W912ER-09-D-0002
DRAWING CODE:
FILE NAME: ARCDIR\ac-d-1.dwg (DWG)
PLOT SCALE: NONE
PLOT DATE: 4/25/2011

BAKER

SITE ADAPT DESIGN

L04 - LATRINE - LARGE - ARCH SPAN

ELECTRICAL LIGHT FIXTURE SCHEDULE

SHEET REFERENCE NUMBER:

E-601

A1 Size 594mm x 841mm

4/25/2011 5:47 PM

PANELBOARD: LATLM SURFACE MOUNTED
AMP MAIN LUGS (OR) 400 AMP MAIN BREAKER W/ 400 AMP TRIP
CIRCUIT BREAKER TYPE: 380/220 VOLTS 3 PHASE 4 WIRE 50 HZ 400 AMP BUS

CCT #	TRIP AMPS	PH	WIRE MM²	GND MM²	CONDUIT MM	LOAD SERVED	LOAD-KVA A	LOAD-KVA B	LOAD-KVA C	LOAD-KVA A	LOAD-KVA B	LOAD-KVA C	LOAD SERVED	CONDUIT MM	GND MM²	WIRE MM²	PH	TRIP AMPS	CCT #
1							50.5			4.6									2
3	200	1	150.0	95.0	75	LATL1		47.5			5.3		LATL2	40	10.0	50.0	3	100	4
5									47.5			6.1							6
7							6.0			0.0			SPARE				1	15	8
9	40	3	5.0	5.0	20	WATER HEATER		6.0			0.0		SPARE				1	15	10
11									6.0			0.0	SPARE				1	15	12
13							6.0			0.0			SPARE				1	15	14
15	40	3	5.0	5.0	20	WATER HEATER		6.0			0.0		SPARE				1	15	16
17									6.0			0.0	SPARE				1	15	18
19	15	1				SPARE	0.0			0.0			SPARE				1	15	20
21	15	1				SPARE		0.0			0.0		SPARE				1	15	22
23	15	1				SPARE			0.0			0.0	SPARE				1	15	24
25	15	1				SPARE	0.0			0.0			SPARE				1	15	26
27	15	1				SPARE		0.0			0.0		SPARE				1	15	28
29	15	1				SPARE			0.0			0.0	SPARE				1	15	30
31	15	1				SPARE	0.0			0.0			SPARE				1	15	32
33	15	1				SPARE		0.0			0.0		SPARE				1	15	34
35	15	1				SPARE			0.0			0.0	SPARE				1	15	36
37	15	1				SPARE	0.0			0.0			SPARE				1	15	38
39	15	1				SPARE		0.0			0.0		SPARE				1	15	40
41	15	1				SPARE			0.0			0.0	SPARE				1	15	42
							62.5	59.5	59.5	4.6	5.3	6.1							

DIVERSIFIED LOADS:
LIGHTING: 7.3 X 0.7 = 5.1 HEATERS: 132.0 X 0.8 = 105.6
RECEPTACLES: 3.2 X 0.5 = 1.6 MOTORS: 46.2 X 0.6 = 27.7

TOTAL CONNECTED LOAD (PER PHASE) A: 67.1 B: 64.8 C: 65.6
TOTAL CONNECTED LOAD: 21.9
TOTAL DIVERSIFIED LOAD: 140.0

• MAIN BREAKER SHALL BE 3P EARTH GROUND TYPE

PANELBOARD: LATL1 SURFACE MOUNTED
AMP MAIN LUGS (OR) 200 AMP MAIN BREAKER W/ 200 AMP TRIP
CIRCUIT BREAKER TYPE: 380/220 VOLTS 3 PHASE 4 WIRE 50 HZ 200 AMP BUS

CCT #	TRIP AMPS	PH	WIRE MM²	GND MM²	CONDUIT MM	LOAD SERVED	LOAD-KVA A	LOAD-KVA B	LOAD-KVA C	LOAD-KVA A	LOAD-KVA B	LOAD-KVA C	LOAD SERVED	CONDUIT MM	GND MM²	WIRE MM²	PH	TRIP AMPS	CCT #
1							6.0			6.0									2
3	40	3	6.0	6.0	20	WATER HEATER		6.0			6.0		WATER HEATER	20	6.0	6.0	3	40	4
5									6.0			6.0							6
7							6.0			6.0									8
9	40	3	6.0	6.0	20	WATER HEATER		6.0			6.0		WATER HEATER	20	6.0	6.0	3	40	10
11									6.0			6.0							12
13							3.3			3.3									14
15	20	3	4.0	4.0	20	MUADH-1		3.3			3.3		MUADH-2	20	4.0	4.0	3	20	16
17									3.3			3.3							18
19	20	1	4.0	4.0	20	EH-2	3.0			2.0			EH-2	20	4.0	4.0	1	20	20
21	20	1	4.0	4.0	20	EH-1		2.0			0.0		EH-2	20	4.0	4.0	1	15	22
23	20	1	4.0	4.0	20	EH-2			3.0			2.0	EH-5	20	4.0	4.0	1	15	24
25	20	1	4.0	4.0	20	EH-1	2.0			0.0			EH-5	20	4.0	4.0	1	15	26
27	20	1	4.0	4.0	20	EH-5		3.0			3.3								28
29	20	1	4.0	4.0	20	EH-1			2.0			3.3	MUADH-4	20	4.0	4.0	3	20	30
31	20	1	4.0	4.0	20	EH-5	3.0			3.3									32
33	20	1	4.0	4.0	20	EH-1		2.0			0.0		SPARE				1	15	34
35	20	1	4.0	4.0	20	RCP-1			0.0			0.0	DAMPERS	20	4.0	4.0	1	20	36
37							3.3			3.3									38
39	20	3	4.0	4.0	20	MUADH-3		3.3			3.3		MUADH-5	20	4.0	4.0	3	20	40
41									3.3			3.3							42
							26.6	25.6	23.6	23.9	21.9	23.9							

DIVERSIFIED LOADS:
LIGHTING: 0.0 X 0.7 = 0.0 HEATERS: 96.0 X 0.8 = 76.8
RECEPTACLES: 0.0 X 0.5 = 0.0 MOTORS: 39.6 X 0.6 = 23.8

TOTAL CONNECTED LOAD (PER PHASE) A: 50.5 B: 47.5 C: 47.5
TOTAL CONNECTED LOAD: 145.5
TOTAL DIVERSIFIED LOAD: 100.6

• MAIN BREAKER SHALL BE 3P EARTH GROUND TYPE

PANELBOARD: SOB1 SURFACE MOUNTED
AMP MAIN LUGS (OR) 100 AMP MAIN BREAKER W/ 100 AMP TRIP
CIRCUIT BREAKER TYPE: 380/220 VOLTS 3 PHASE 4 WIRE 50 HZ 100 AMP BUS

CCT #	TRIP AMPS	PH	WIRE MM²	GND MM²	CONDUIT MM	LOAD SERVED	LOAD-KVA A	LOAD-KVA B	LOAD-KVA C	LOAD-KVA A	LOAD-KVA B	LOAD-KVA C	LOAD SERVED	CONDUIT MM	GND MM²	WIRE MM²	PH	TRIP AMPS	CCT #
1							0.0			0.5			EXT. RECEPT	20	4.0	4.0	1	15	2
3	100	3	50.0	10.0	40	BACKFED MAIN BREAKER		0.0.			0.5		EXT. RECEPT	20	4.0	4.0	1	15	4
5									0.0			2.1	LIGHTING	20	4.0	4.0	1	15	6
7	15	1				SPARE	0.0			2.0			LIGHTING	20	4.0	4.0	1	15	8
9	15	1				SPARE		1.2			2.0		LIGHTING	20	4.0	4.0	1	15	10
11	15	1				SPARE			0.0			1.2	LIGHTING	20	4.0	4.0	1	15	12
13	15	1	4.0	4.0	20	EF-1/SF-1	1.4			0.7			EF-2	20	4.0	4.0	1	15	14
15	15	1	4.0	4.0	20	RECEPTACLES - 104,102		1.2			1.4		EF-3/SF-1	20	4.0	4.0	1	15	16
17	15	1	4.0	4.0	20	RECEPTACLES - 101,103			1.2			1.4	EF-3/SF-1	20	4.0	4.0	1	15	18
19	15	1				SPARE	0.0			0.0			SPARE				1	15	20
21	15	1				SPARE		0.0			0.0		SPARE				1	15	22
23	15	1				SPARE			0.0			0.0	SPARE				1	15	24
25	15	1				SPARE	0.0			0.0			SPARE				1	15	26
27	15	1				SPARE		0.0			0.0		SPARE				1	15	28
29	15	1				SPARE			0.0			0.0	SPARE				1	15	30
31	15	1				SPARE	0.0			0.0			SPARE				1	15	32
33	15	1				SPARE		0.0			0.0		SPARE				1	15	34
35	15	1				SPARE			0.0			0.0	SPARE				1	15	36
37	15	1				SPARE	0.0			0.0			SPARE				1	15	38
39	15	1				SPARE		0.0			0.0		SPARE				1	15	40
41	15	1				SPARE			0.0			0.0	SPARE				1	15	42
							1.4	1.4	1.4	3.2	3.9	4.7							

DIVERSIFIED LOADS:
LIGHTING: 7.3 X 0.7 = 5.1 HEATERS: 0.0 X 0.8 = 0.0
RECEPTACLES: 3.2 X 0.5 = 1.6 MOTORS: 6.6 X 0.6 = 4.0

TOTAL CONNECTED LOAD (PER PHASE) A: 4.6 B: 5.3 C: 6.1
TOTAL CONNECTED LOAD: 21.9
TOTAL DIVERSIFIED LOAD: 10.7

UNLESS OTHERWISE NOTED,
LINEAR DIMENSIONS
SHOWN ARE IN MILLIMETERS.

COMMONWEALTH OF PENNSYLVANIA
REGISTERED PROFESSIONAL
JOSEPH R. GAUS
ENGINEER
PE-074261

US ARMY CORPS OF ENGINEERS
AFGHANISTAN NORTH DISTRICT

SYMBOL	DESCRIPTION	DATE	APPR.	SYMBOL	DESCRIPTION	DATE	APPR.

DATE: 4-25-2011
CONTRACT NO. W912ER-09-D-0002
DRAWING CODE:
FILE NAME: ARCDFNAL-E-L04-E-602.DWG
PLOT SCALE: NONE
PLOT DATE: 4/25/2011
REV: 0

DESIGNED BY: KWL
DWN BY: JLG
CKD BY: TAB
REVIEWED BY: JH
SUBMITTED BY:
BAKER

U.S. ARMY ENGINEER DISTRICT, AFGHANISTAN
CORPS OF ENGINEERS
APO AE 09356

SITE ADAPT DESIGN
L04 - LATRINE - LARGE - ARCH SPAN
ELECTRICAL PANEL SCHEDULES

SHEET REFERENCE NUMBER:
E-602

4/25/2011 5:47 PM

A1 Size 594mm x 841mm

SITE ADAPT DESIGN
VM09 - VEHICLE MAINTENANCE BUILDING - ARCH SPAN

CONTRACT NUMBER:
W912ER-09-D-0002 TO:0027

US ARMY CORPS
OF ENGINEERS
AFGHANISTAN NORTH
DISTRICT

SYMBOL	DESCRIPTION	DATE	APPR.	SYMBOL	DESCRIPTION	DATE	APPR.

U.S. ARMY ENGINEER DISTRICT, AFGHANISTAN
CORPS OF ENGINEERS
APO AE 09356

DESIGNED BY: JDS
DWN BY: JDS
CKD BY: JDS
REVIEWED BY: JH
SUBMITTED BY:
DATE: 3/30/2011
CONTRACT NO. W912ER-09-D-0002
DRAWING CODE:
REV. 0
FILE NAME: wrc-cmp-maint-vehicle-arch.dwg
PLOT SCALE: NONE
PLOT DATE: 3/30/2011

BAKER

SITE ADAPT DESIGN
VM09 - VEHICLE MAINTENANCE BUILDING - ARCH SPAN
COVER SHEET

SHEET REFERENCE NUMBER:
G-001

3/30/2011 4:07 PM

A1 Size 594mm x 841mm

ENGINEERING AND CONSTRUCTION DIVISION
US ARMY ENGINEER DISTRICT, AFGHANISTAN
APO AE, 09356

VM09 VEHICLE MAINTENANCE BUILDING

PROJECT COORDINATION

U.S. ARMY ENGINEER DISTRICT, AFGHANISTAN

PROJECT MANAGER _____ DATE _____

CHIEF, DESIGN BRANCH _____ DATE _____

THIS PROJECT WAS DESIGNED BY AFGHANASTAN ENGINEER DISTRICT OF THE U.S ARMY CORPS OF ENGINEERS. THE INITIALS OR SIGNATURES AND REGISTRATION DESIGNATIONS OF INDIVIDUALS APPEAR ON THESE DOCUMENTS WITHIN THE SCOPE OF THEIR EMPLOYMENT AS REQUIRED BY ER 1110-1-8152.

SECTION/DETAIL CROSS REFERENCING CONVENTIONS

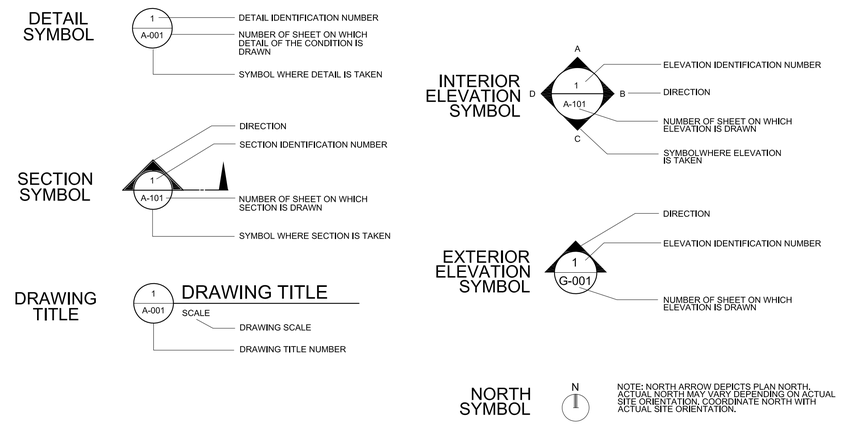

APPENDIX A

AFGHANISTAN

SCHEDULE OF DRAWINGS

SHEET NO	DWG CODE	SHEET REFERENCE NO	DESCRIPTION	REV STATUS
			GENERAL	
1	ARCHSPANVMF-G-001	G-001	COVER SHEET	
2	ARCHSPANVMF-G-002	G-002	INDEX SHEET	
3	ARCHSPANVMF-G-003	G-003	LIFE SAFETY PLAN	
			STRUCTURAL	
4	ARCHSPANVMF-S-001	S-001	ABBREVIATIONS, SYMBOLS AND GENERAL NOTES	
5	ARCHSPANVMF-S-001	S-001	GENERAL NOTES AND DESIGN CRITERIA	
6	ARCHSPANVMF-S-101	S-101	FOUNDATION PLAN	
7	ARCHSPANVMF-S-201	S-201	BUILDING ELEVATION AND DETAILS	
8	ARCHSPANVMF-S-202	S-202	BUILDING SECTION AND DETAILS	
9	ARCHSPANVMF-S-301	S-301	FOUNDATION SECTIONS	
10	ARCHSPANVMF-S-302	S-302	LATRINE SECTIONS AND DETAILS	
11	ARCHSPANVMF-S-303	S-303	VMF PIT SECTIONS	
12	ARCHSPANVMF-S-304	S-304	OVERHEAD GARAGE DOOR SECTIONS	
13	ARCHSPANVMF-S-501	S-501	TYPICAL DETAILS	
14	ARCHSPANVMF-S-502	S-502	DOOR/WINDOW/MECHANICAL OPENING FRAME DETAILS	
15	ARCHSPANVMF-S-601	S-601	SCHEDULES	
			ARCHITECTURAL	
16	ARCHSPANVMF-A-001	A-001	ABBREVIATIONS, SYMBOLS AND GENERAL NOTES	
17	ARCHSPANVMF-A-101	A-101	FLOOR PLAN	
18	ARCHSPANVMF-A-102	A-102	REFLECTED CEILING PLAN	
19	ARCHSPANVMF-A-103	A-103	ROOF PLAN	
20	ARCHSPANVMF-A-201	A-201	ELEVATIONS	
21	ARCHSPANVMF-A-301	A-301	BUILDING SECTIONS	
22	ARCHSPANVMF-A-302	A-302	WALL SECTIONS	
23	ARCHSPANVMF-A-303	A-303	WALL SECTIONS	
24	ARCHSPANVMF-A-401	A-401	ENLARGED PLANS	
25	ARCHSPANVMF-A-501	A-501	EXTERIOR DETAILS	
26	ARCHSPANVMF-A-502	A-502	HEAD, JAMB & SILL DETAILS	
27	ARCHSPANVMF-A-503	A-503	STOOP DETAILS	
28	ARCHSPANVMF-A-504	A-504	TOILET AND LAVATORY DETAILS	
29	ARCHSPANVMF-A-505	A-505	SHOWER DETAILS	
30	ARCHSPANVMF-A-601	A-601	WINDOW AND DOOR SCHEDULE	
31	ARCHSPANVMF-A-602	A-602	PARTITION TYPES	
32	ARCHSPANVMF-A-603	A-603	FINISH SCHEDULE	
			PLUMBING	
33	ARCHSPANVMF-P-001	P-001	PLUMBING SYMBOLS AND LEGEND AND GENERAL NOTES	
34	ARCHSPANVMF-P-101	P-101	FLOOR PLAN - PLUMBING (SANITARY, WATER & COMPRESSED AIR)	
35	ARCHSPANVMF-P-102	P-102	ENLARGED FLOOR PLAN - PLUMBING (SANITARY)	
36	ARCHSPANVMF-P-103	P-103	ENLARGED FLOOR PLAN - PLUMBING (WATER)	
37	ARCHSPANVMF-P-104	P-104	ENLARGED FLOOR PLAN - PLUMBING (COMPRESSED AIR)	
38	ARCHSPANVMF-P-501	P-501	PLUMBING SCHEDULES AND DETAILS	
39	ARCHSPANVMF-P-502	P-502	PLUMBING DETAILS	
40	ARCHSPANVMF-P-901	P-901	SANITARY AND VENTING ISOMETRIC, HOT AND COLD WATER PIPING ISOMETRIC	
41	ARCHSPANVMF-P-902	P-902	COMPRESSED AIR ISOMETRIC	

SHEET NO	DWG CODE	SHEET REFERENCE NO	DESCRIPTION	REV STATUS
			MECHANICAL	
42	ARCHSPANVMF-M-101	M-101	HVAC - FLOOR PLAN AND SCHEDULES	
43	ARCHSPANVMF-M-501	M-501	HVAC - DETAILS	
			ELECTRICAL	
44	ARCHSPANVMF-E-001	E-001	ELECTRICAL SYMBOLS, NOTES, AND ABBREVIATIONS	
45	ARCHSPANVMF-E-101	E-101	ELECTRICAL LIGHTING PLAN	
46	ARCHSPANVMF-E-102	E-102	ELECTRICAL POWER AND SYSTEMS PLAN	
47	ARCHSPANVMF-E-501	E-501	ELECTRICAL DETAILS	
48	ARCHSPANVMF-E-601	E-601	LIGHTING FIXTURE SCHEDULE	
49	ARCHSPANVMF-E-602	E-602	ELECTRICAL PANEL SCHEDULES	

US ARMY CORPS OF ENGINEERS AFGHANISTAN NORTH DISTRICT

SYMBOL	DESCRIPTION	DATE	APPR.	SYMBOL	DESCRIPTION	DATE	APPR.

U.S. ARMY ENGINEER DISTRICT, AFGHANISTAN
CORPS OF ENGINEERS
APO AE 09356

DESIGNED BY: JDS
DWN BY: JDS
CKD BY: JDS
REVIEWED BY: JH
SUBMITTED BY:
DATE: 3-30-2011
REV: 0
CONTRACT NO. W912ER-09-D-0002
DRAWING CODE:
FILE NAME: ARCHSPANVMF-G002.DWG
PLOT SCALE: NONE
PLOT DATE: 3/30/2011

BAKER

SITE ADAPT DESIGN
VM09 - VEHICLE MAINTENANCE BUILDING - ARCH SPAN
INDEX SHEET

SHEET REFERENCE NUMBER:
G-002

A1 Size 594mm x 841mm

3/30/2011 4:07 PM

LEGEND:

- DENOTES PATHS OF EXIT TRAVEL
- EXIT — DENOTES DOOR AS AN EMERGENCY EXIT
- DENOTES STARTING POINT FOR TRAVEL DISTANCE
- FE — DENOTES FIRE EXTINGUISHER LOCATIONS
- (1) HOUR RATED WALL
- (2) HOUR RATED WALL
- FIRE RESISTANT CEILING
- NON-FIRE RESISTANT CEILING SYSTEM OR EXPOSED FIRE RESISTANT SPRAY-ON INSULATION SYSTEM AT ARCH-SPAN STRUCTURE

REFER TO REFLECTED CEILING PLANS FOR CEILING MATERIALS AND CONFIGURATION

PER MEMORANDUM FOR RECORD DATED 03 FEBRUARY 2011
ANSF CONSTRUCTION STANDARDS DIVISION 09 FINISHES:
CEILING **DO NOT** NEED TO MEET FIRE BOUNDARY CODE REQUIREMENTS.

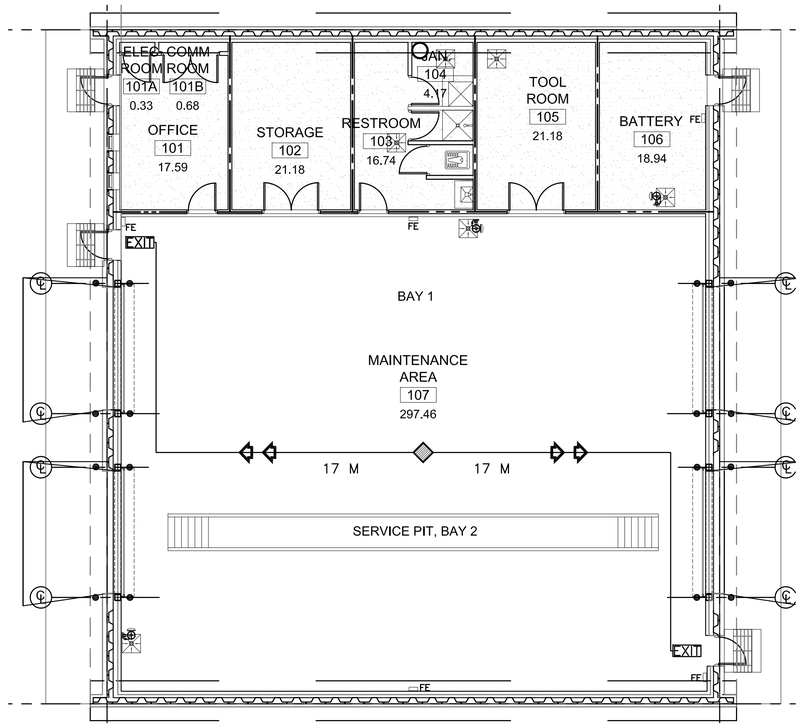

1 G-003 LIFE SAFETY PLAN

SCALE: 1:100

CODE ANALYSIS:

1. REFERENCES:
   2009 INTERNATIONAL BUILDING CODE (2009 IBC)
   2009 LIFE SAFETY CODE (2009 NFPA 101)

2. IBC OCCUPANCY CLASSIFICATION:
   GROUP S-1
   (INDUSTRIAL, SPECIAL PURPOSE NFPA 101 6.1.12 AND CHAPTER 40)
   (NFPA 30A MOTOR FUEL DISPENSING FACILITIES AND REPAIR GARAGES, PARAGRAPH 7.4)

3. TYPE OF CONSTRUCTION (IBC): TYPE II-B (UNPROTECTED/NONSPRINKLERED)

4. IBC TABLE 503: ALLOWABLE HEIGHT AND BUILDING AREAS:
   GROUP S-1
   ALLOWABLE AREA: 1625 SM
   ALLOWABLE HEIGHT: 2 STORIES (16 M)

   GROUP S-1
   PROPOSED AREA: 440 SM
   PROPOSED HEIGHT: 1 STORY (<16 M)

5. IBC TABLE 601 & 602: FIRE RESISTANCE RATING REQUIREMENTS FOR BUILDING ELEMENTS FOR TYPE II-B

BUILDING ELEMENT	RATING (HOUR)	REFERENCE
STRUCTURAL FRAME (COLUMNS, GIRDERS & TRUSSES)	0	TABLE 601
BEARING WALLS		
EXTERIOR*	0	TABLE 601&602
INTERIOR	0	TABLE 601
*3.01M OR GREAT FIRE SEPARATION (TABLE 602)		
NONBEARING WALLS & PARTITIONS		
INTERIOR	0	TABLE 601
FLOOR CONSTRUCTION	0	TABLE 601
ROOF CONSTRUCTION	0	TABLE 601
EXTERIOR WALL	0	TABLE 602

6. IBC TABLE 803.9 - INTERIOR WALL AND CEILING FINISH
   REQUIREMENTS FOR S-1 OCCUPANCY/NONSPRINKLERED

GROUP	EXIT ENCLOSURES AND EXIT PASSAGEWAY	CORRIDORS	ROOMS AND ENCLOSED SPACES
S	B	B	C

7. NFPA 101 TABLE 7.3.1.2 - OCCUPANT LOAD
   SPECIAL PURPOSE INDUSTRIAL = N/A
   NFPA 101 40.1.7: USE THE PROBABLE POPULATION: 8

8. NFPA 101 TABLE 7.3.3.1 - EGRESS CAPACITY
   STORAGE = 5 MM PER OCCUPANT

   REQUIRED: 40 MM (8 OCCUPANTS x 5 MM PER OCCUPANT)
   PROPOSED EGRESS CAPACITY: 1800 MM: (2) 900 MM DOORS

9. NFPA 101 PARAGRAPH 40.2.6 AND TABLE 40.2.6 - EXIT ACCESS TRAVEL DISTANCE
   ALLOWED: 91 METERS
   PROPOSED: 14 METERS

10. NFPA 101 PARAGRAPH 40.3.6 - CORRIDORS
    PROVISIONS OF 7.1.3.1 SHALL NOT APPLY
    CORRIDORS ARE NOT REQUIRED AS DOORS EXIT DIRECTLY TO OUTSIDE

11. NFPA 101 PARAGRAPH 40.2.4.1 - MINIMUM NUMBER OF EXITS
    REQUIRED: 1 MINIMUM
    PROPOSED: 2 EXIT

12. NFPA 101 PARAGRAPH 40.2.5.1 - ANCILLARY FACILITIES
    SEPARATION OF ANCILLARY FACILITIES FROM SPECIAL PURPOSE INDUSTRIAL OCCUPANCIES
    ANCILLARY FACILITY: OFFICE, PARTS STORAGE, TOOL ROOM, BATTERY ROOM
    REQUIRED: 2 HOUR MINIMUM
    PROVIDED: 2 HOUR

NATURAL VENTILATION CALCULATIONS

ROOMNUMBER	ROOM NAME	ROOM NSM	REQ'D WINDOW AREA @4%	WINDOWS TYPE #5	CRITERIA MET
101	OFFICE	17.84	0.71	2	YES
101A	ELECTRICAL ROOM	0.35	0.01	NA	NA
101B	COMMUNICATIONS ROOM	0.68	0.02	NA	NA
102	STORAGE	21.18	0.85	NA	NA
103	RESTROOM	16.74	0.67	NA	NA
104	JANITOR CLOSET	21.18	0.85	NA	NA
105	TOOL ROOM	4.17	0.17	NA	NA
106	BATTERY	19.21	0.77	NA	NA
107	MAINTENANCE AREA	299.01	11.96	MV	MECH VENTILATED
	TOTAL NET SM	400.36			
	TOTAL GROSS SM	440.00			

0 2000 4000
SCALE: 1:100

UNLESS OTHERWISE NOTED, LINEAR DIMENSIONS SHOWN ARE IN MILLIMETERS.

COMMONWEALTH OF VIRGINIA
PETER GARRETT SCHMIDT
No. 013167
ARCHITECT

US ARMY CORPS OF ENGINEERS
AFGHANISTAN NORTH DISTRICT

SYMBOL	DESCRIPTION	DATE	APPR.	SYMBOL	DESCRIPTION	DATE	APPR.

DESIGNED BY: DWN BY: CKD BY: REVIEWED BY: SUBMITTED BY:
DATE: 3/30/2011
CONTRACT NO. W912ER-09-D-0002
DRAWING CODE:
FILE NAME: w912er09d0002-vm09-arch-span-life-safety-code-analysis.dwg
PLOT SCALE:
PLOT DATE: 3/30/2011
REV: —

BAKER

U.S. ARMY ENGINEER DISTRICT, AFGHANIST'AN
CORPS OF ENGINEERS
APO AE 09356

SITE ADAPT DESIGN
VM09 - VEHICLE MAINTENANCE BUILDING - ARCH SPAN
LIFE SAFETY AND CODE ANALYSIS

SHEET REFERENCE NUMBER:
G-003

A1 Size 594mm x 841mm

3/30/2011 4:07 PM

STRUCTURAL ABBREVIATIONS:

ACI	AMERICAN CONCRETE INSTITUTE
ADD'L	ADDITIONAL
AISC	AMERICAN INSTITUTE OF STEEL CONSTRUCTION
AISI	AMERICAN IRON AND STEEL INSTITUTE
ASTM	AMERICAN SOCIETY FOR TESTING AND MATERIALS
ARCH	ARCHITECTURAL
B	BOTTOM
BLDG	BUILDING
BOTT	BOTTOM
℄	CENTER LINE
CFMRF	COLD FORM METAL ROOF FRAME
CFMF	COLD FORM METAL FRAME
CFS	COLD FORMED STEEL
CIP	CAST-IN-PLACE
CIPL	CAST-IN-PLACE LINTEL
CJ	CONTROL JOINT
CLR	CLEAR
CMU	CONCRETE MASONRY UNIT
COEFF	COEFFICIENT
COL	COLUMN
CONC	CONCRETE
CONT	CONTINUOUS
COORD	COORDINATE
CRSI	CONCRETE REINFORCING STEEL INSTITUTE
CSJ	CONSTRUCTION JOINT
DIA	DIAMETER
DIAG	DIAGONAL
DIM	DIMENSION
DWG	DRAWING
DWL	DOWEL
EA	EACH
EF	EACH FACE
ELEC	ELECTRICAL
ELEV	ELEVATION
EMBED	EMBEDMENT
EQUIV	EQUIVALENT
ETC	ET CETERA
EW	EACH WAY
EXP	EXPANSION
EXT	EXTERIOR
FND	FOUNDATION
FTG	FOOTING
GA	GAUGE
GB	GRADE BEAM
HORIZ	HORIZONTAL
h	HOUR
HRS	HOURS
IBC	INTERNATIONAL BUILDING CODE
INFO	INFORMATION
INT	INTERIOR
kg	KILOGRAM
km	KILOMETER
kN	KILONEWTON
kPa	KILOPASCAL
L#	ANGLE (# INDICATES SIZE)
LONG	LONGITUDINAL
LLV	LONG LEG VERTICAL
m	METER
MAX	MAXIMUM
MECH	MECHANICAL
MFG	MANUFACTURER
MID	MIDDLE
MIN	MINIMUM
MISC	MISCELLANEOUS
mm	MILLIMETER
MPa	MEGAPASCAL
MTL	METAL
MWFRS	MAIN WIND FORCE RESISTING SYSTEM
N	NEWTON
N	NORTH
N/A	NOT APPLICABLE
#	NUMBER SYMBOL FOR REBAR SIZE
NTS	NOT TO SCALE
OC	ON CENTER
OPNG	OPENING
℘ or PL	PLATE
PRE-ENG	PRE-ENGINEERED
RB	ROOF BEAM
REINF	REINFORCED
REQ'D	REQUIRED
SIM	SIMILAR
SOG	SLAB-ON-GRADE
SPECS	SPECIFICATIONS
STD	STANDARD
STRUCT	STRUCTURAL
SW	SHEAR WALL
T	TOP
T/	TOP OF
T/ELEV	TOP ELEVATION
T/SLAB	TOP OF SLAB
T&B	TOP AND BOTTOM
THK	THICK
TYP	TYPICAL
UFC	UNIFIED FACILITIES CRITERIA
UON	UNLESS OTHERWISE NOTED
VERT	VERTICAL
W	WIDTH
W/	WITH

1.0 GENERAL NOTES:

1.1 THIS PROJECT HAS BEEN DESIGNED FOR THE WEIGHTS AND MATERIALS INDICATED ON THE DRAWINGS AND FOR THE SUPERIMPOSED DEAD AND LIVE LOADS INDICATED IN THE STRUCTURAL DESIGN CRITERIA. IT IS THE CONTRACTOR'S RESPONSIBILITY TO DETERMINE ALLOWABLE CONSTRUCTION LOADS AND TO PROVIDE PROPER DESIGN AND CONSTRUCTION OF FALSEWORK, FORMWORK, STAGING, BRACING, SHEETING AND SHORING, ETC.

1.2 METHODS, PROCEDURES AND SEQUENCES OF CONSTRUCTION ARE THE RESPONSIBILITY OF THE CONTRACTOR. THE CONTRACTOR IS RESPONSIBLE FOR IDENTIFYING AND IMPLEMENTING THE NECESSARY PRECAUTIONS TO MAINTAIN AND ENSURE THE INTEGRITY OF THE STRUCTURE AT ALL STAGES OF CONSTRUCTION.

1.3 COORDINATE THESE DRAWINGS WITH THE ARCHITECTURAL, MECHANICAL, ELECTRICAL, PLUMBING, AND CIVIL DRAWINGS. ALL DIMENSIONS SHOWN ON THE DRAWINGS ARE MILLIMETERS UNLESS NOTED OTHERWISE.

1.4 SLEEVES OR BLOCK-OUTS REQUIRED FOR PASSAGE OF DUCTWORK, PIPING, DRAINS, CONDUIT, ETC, IN ADDITION TO ANCHORS, CURBS AND HANGERS REQUIRED FOR EQUIPMENT AND PIPING AND UNDER-SLAB UTILITIES ARE NOT SPECIFICALLY, NOR GENERALLY, INDICATED ON THE STRUCTURAL DRAWINGS. THE CONTRACTOR IS RESPONSIBLE FOR COORDINATING WORK SHOWN ON OTHER DISCIPLINE'S DRAWINGS AND DETERMINING SUCH REQUIREMENTS PRIOR TO FABRICATION OR ERECTION OF THE STRUCTURE. PENETRATIONS OF STRUCTURAL MEMBERS ARE SUBJECT TO APPROVAL BY THE CONTRACTING OFFICER. REFER TO GENERAL NOTE 8.9 FOR OPENINGS IN ARCH SPAN STRUCTURE.

1.5 DIMENSIONS AND INSTALLATION DETAILS OF PURCHASED EQUIPMENT MUST BE VERIFIED AND COORDINATED WITH THE SUPPORTING STRUCTURE. THE CONTRACTOR IS RESPONSIBLE FOR DETERMINING SUCH REQUIREMENTS FROM SUBCONTRACTORS AND EQUIPMENT SUPPLIERS ALONG WITH COORDINATING THE LOCATIONS AND DETAILS FOR THESE ITEMS PRIOR TO CONSTRUCTION OF EQUIPMENT PADS OR FABRICATION AND ERECTION OF FRAMING INTENDED TO SUPPORT SUCH EQUIPMENT. ANY CONFLICTS BETWEEN THESE ITEMS AND THE BUILDING STRUCTURE IS TO BE BROUGHT TO THE ATTENTION OF THE CONTRACTING OFFICER FOR RESOLUTION. REFER TO GENERAL NOTE 8.10 FOR HANGING LOADS ON ARCH SPAN STRUCTURE.

1.6 WORK NOT INCLUDED ON THE DRAWINGS BUT IMPLIED TO BE SIMILAR TO THAT SHOWN AT CORRESPONDING PLACES ELSEWHERE ON THE DRAWINGS SHALL BE REPEATED.

1.7 IN CASE OF CONFLICT BETWEEN THE NOTES, DETAILS AND SPECIFICATIONS THE MOST RIGID REQUIREMENTS SHALL GOVERN.

1.8 SEE ARCHITECTURAL DRAWINGS FOR LOCATIONS OF NON-LOAD BEARING PARTITIONS. PROVIDE COMPRESSIBLE FIRESAFING AT TOP OF WALL AS REQUIRED BY ARCHITECTURAL DRAWINGS.

1.9 COORDINATE FINISHED FLOOR DATUM ELEVATION 0.0m WITH THE CIVIL DRAWINGS.

2.0 FOUNDATION NOTES

2.1 THE GEOTECHNICAL ANALYSIS FOR THIS PROJECT IS THE RESPONSIBILITY OF THE CONTRACTOR AWARDED THE WORK. AN ASSUMED ALLOWABLE SOIL BEARING VALUE OF 72 kPa HAS BEEN USED IN THE STRUCTURAL ANALYSIS OF THE BUILDING AND SHALL BE CONFIRMED AND VERIFIED AS PART OF THE GEOTECHNICAL INVESTIGATION. VALUES WHICH DO NOT MEET THE REQUIREMENTS INDICATED IN THE STRUCTURAL DESIGN CRITERIA, FOUNDATION LOADS SECTION SHALL BE IMMEDIATELY BROUGHT TO THE ATTENTION OF THE CONTRACTING OFFICER FOR CONSIDERATION AND DETERMINATION ON THE NEXT APPROPRIATE COURSE OF ACTION.

2.2 ELEVATIONS SHOWN ON THE DRAWINGS AT WHICH FOUNDATIONS BEAR ARE APPROXIMATE AND MAY VARY TO SUIT SUBSURFACE SOIL CONDITIONS AND PROJECT GEOTECHNICAL ENGINEER'S RECOMMENDATIONS. ALL EXTERIOR FOOTINGS ARE TO BEAR A MINIMUM OF 800mm BELOW FINISHED GRADE.

2.3 SEE THE SPECIFICATION FOR ADDITIONAL REQUIREMENTS TO THOSE OUTLINED IN THE GEOTECHNICAL INVESTIGATION FOR EXCAVATION AND PREPARATION OF THE FOUNDATION AND THE SLAB ON GRADE SUBGRADE INCLUDING COMPACTION PROCEDURES.

2.4 EXCAVATIONS FOR FOOTINGS SHALL HAVE THE SIDES AND BOTTOMS TEMPORARILY LINED WITH 0.25mm POLYETHYLENE IF PLACEMENT OF CONCRETE DOES NOT OCCUR WITHIN 24 HRS OF THE EXCAVATION OF THE FOOTING.

2.5 FOUNDATION CONDITIONS NOTED DURING CONSTRUCTION WHICH DIFFER FROM THOSE DESCRIBED IN THE GEOTECHNICAL REPORT SHALL BE REPORTED TO THE GENERAL CONTRACTOR AND CONTRACTING OFFICER BEFORE FURTHER CONSTRUCTION IS ATTEMPTED.

2.6 NO FOOTINGS SHALL BE POURED INTO OR AGAINST SUBGRADE CONTAINING FREE WATER, FROST, ICE OR LOOSE MATERIAL.

2.7 CONCRETE SLABS ON GRADE HAVE BEEN DESIGNED TO BEAR ON PROPERLY COMPACTED SUB-BASE STONE AND SUB-GRADE SOILS. THE SUB-BASE MATERIAL BENEATH THE SLAB-ON-GRADE SHALL BE A WELL GRADED CRUSHED STONE (AASHTO #57 OR SIMILAR) AND BE COMPACTED IN ACCORDANCE WITH 95% MODIFIED DENSITY PER ASTM D 1557.

2.8 PRIOR TO START OF FOUNDATION OR SLAB-ON-GRADE CONSTRUCTION, EXISTING SUBGRADES SHALL BE COMPACTED TO MINIMUM OF 95% MAXIMUM DRY DENSITY OBTAINED THRU ASTM D 1557 MODIFIED PROCTOR TESTING.

2.9 SEE PLUMBING, ELECTRICAL & CIVIL DRAWINGS FOR REQUIRED UNDERSLAB UTILITIES.

2.10 SEE ARCHITECTURAL DRAWINGS FOR ALL WATERPROOFING DETAILS AND MATERIALS.

2.11 IF UNDERMINING OF FOOTINGS OCCURS, FILL VOIDS WITH 15 MPa CONCRETE. DO NOT ATTEMPT TO REPLACE AND RE-COMPACT SOIL.

3.0 CONCRETE

3.1 CONCRETE SHALL HAVE THE UNIT WEIGHT OF 2350 kg/m^3 AND A MINIMUM COMPRESSIVE STRENGTH (f'c) OF 28 MPa AT 28 DAYS. ALL CONCRETE SHALL HAVE A MAXIMUM WATER-CEMENT RATIO OF 0.45. SEE SPECIFICATIONS FOR ADDITIONAL INFORMATION. ENTRAIN AIR TO PRODUCE TOTAL AIR CONTENT ACCORDING TO THE SPECIFICATIONS FOR CONCRETE EXPOSED TO FREEZING TEMPERATURES (EXTERIOR FOOTINGS AND STEM WALLS, SLAB TURNDOWNS, EXTERIOR SLABS AND SLABS-ON-GRADE, EXTERIOR RETAINING WALLS.)

3.2 PRIOR TO CONCRETE PLACEMENT, THE CONTRACTOR MUST SUBMIT CONCRETE MIX DESIGNS FOR EACH TYPE OF CONCRETE TO BE USED, PREPARED IN ACCORDANCE WITH THE SPECIFICATIONS TO THE CONTRACTING OFFICER FOR REVIEW.

3.3 NO CALCIUM CHLORIDE SHALL BE USED IN ANY CONCRETE.

3.4 MIXING, TRANSPORTING AND PLACING OF CONCRETE SHALL CONFORM TO ACI 301M-05.

3.5 ALL CONCRETE WORK SHALL CONFORM TO THE REQUIREMENTS OF THE AMERICAN CONCRETE INSTITUTE (ACI) 318M-05 MANUAL (metric), "BUILDING CODE REQUIREMENTS FOR REINFORCED CONCRETE", ACI-301M-05 "SPECIFICATIONS FOR STRUCTURAL CONCRETE FOR BUILDINGS" AND REQUIREMENTS OUTLINED IN THE CONTRACT SPECIFICATIONS.

3.6 CHAMFER ALL EXPOSED EXTERNAL CORNERS OF CONCRETE WITH 20mm x45 DEGREE CHAMFER UON.

3.7 CONCRETE REINFORCEMENT BARS SHALL BE METRIC SIZE BARS AND SHALL CONFORM TO ASTM A615M-07, GRADE 420 MPa, REINFORCING BARS SHALL NOT BE TACK WELDED, WELDED, HEATED OR CUT, UNLESS INDICATED ON THE CONTRACT DOCUMENTS. ALL LAP SPLICES SHALL BE CLASS "B" UON.

3.8 HORIZONTAL FOOTING AND HORIZONTAL WALL REINFORCEMENT SHALL BE CONTINUOUS AND SHALL HAVE 90 DEGREE BENDS AND EXTENSIONS, OR CORNER BARS OF EQUIVALENT SIZE LAPPED WITH A CLASS B TENSION SPLICE AT CORNERS AND INTERSECTIONS. TOP BAR CRITERIA SHALL APPLY IF 300mm OR MORE OF FRESH CONCRETE IS PLACED BELOW BAR.

3.9 SLABS-ON-GRADE SHALL HAVE CONSTRUCTION JOINTS OR CRACK CONTROL JOINTS AS SHOWN ON THE DRAWINGS. CONSTRUCTION JOINTS CAN BE USED AT CONTROL JOINT LOCATIONS AT CONTRACTORS OPTION. SEE SLAB PLANS & JOINT DETAILS FOR ADDITIONAL INFORMATION. FOR AREAS NOT SHOWN ON DWGS, THE MAXIMUM SPACING OF CONSTRUCTION/ CRACK CONTROL JOINTS SHALL BE 3600mm.

3.10 ALL CONCRETE REINFORCEMENT SHALL BE DETAILED, FABRICATED, LABELED, SUPPORTED, AND SPACED IN FORMS AND SECURED IN PLACE IN ACCORDANCE WITH THE PROCEDURES AND REQUIREMENTS OUTLINED IN ACI 318M, AND THE "MANUAL OF STANDARD PRACTICE FOR DETAILING REINFORCED CONCRETE STRUCTURES", ACI 315M, LATEST EDITION.

3.11 ALL DOWELS SHALL MATCH SIZE AND NUMBER OF MAIN REINFORCING, UNLESS NOTED OTHERWISE ON THE DRAWINGS.

3.12 ADDITIONAL BARS SHALL BE PROVIDED AROUND ALL FLOOR AND WALL OPENINGS AS SHOWN ON THE DRAWINGS.

3.13 SEE ARCHITECTURAL DRAWINGS FOR TYPE AND LOCATION OF ALL FLOOR FINISHES.

3.14 SPLICES (LAPS) OF REINFORCING BARS SHALL BE CLASS 'B' TENSION LAPS PER ACI 318M-05 UNLESS NOTED OTHERWISE. SEE SCHEDULE ON S-601.

3.15 PROVIDE ADEQUATE CONCRETE COVER IN ACCORDANCE WITH THE REQUIREMENTS AS SET FORTH BY ACI 318M-05.

3.16 REINFORCEMENT IS TO BE SECURELY HELD IN PLACE WHILE PLACING CONCRETE. IF REQUIRED, ADDITIONAL BARS, STIRRUPS, OR CHAIRS WILL BE PROVIDED BY THE CONTRACTOR TO FURNISH SUPPORT FOR ALL BARS WHERE NECESSARY DURING CONSTRUCTION.

3.17 CONTINUOUS TOP BARS TO BE SPLICED AT MID-SPAN. CONTINUOUS BOTTOM BARS TO BE SPLICED AT CENTERLINE OF SUPPORTS (OR AS SHOWN ON DETAILS).

3.18 CONCRETE SLABS TO BE CURED BY METHOD COMPATIBLE WITH SPECIFIED FLOOR FINISH. WHERE ACCEPTABLE USE A LIQUID MEMBRANE-CURING COMPOUND AT THE MANUFACTURERS RECOMMENDED COVERAGE. SAW JOINTS TO BE CUT AS SOON AS POSSIBLE WITHOUT RAVELING THE SURFACE.

3.19 LEVELING GROUT TO BE NON-SHRINK, NON-METALLIC TYPE, FACTORY PREMIXED GROUT IN ACCORDANCE WITH ASTM C 1107, HAVING A MINIMUM COMPRESSIVE STRENGTH OF NOT LESS THAN 34.5 MPa.

3.20 SLEEVES, INSERTS, MECHANICAL OPENINGS, CONDUITS, PIPES, RECESSES. DEPRESSIONS, CURBS AND OTHER EMBEDDED ITEMS TO BE PROVIDED FOR AS SHOWN ON THE ARCHITECTURAL, MECHANICAL AND ELECTRICAL DRAWINGS AND AS REQUIRED BY EQUIPMENT MANUFACTURERS. INSTALLATION OF THESE ITEMS TO BE COORDINATED AND PROVIDED FOR PRIOR TO PLACING CONCRETE.

3.21 EPOXY ADHESIVE SUCH AS EUCO-#452 AS MANUFACTURED BY EUCLID CHEMICAL CO. OR HVA ADHESIVE SYSTEM AS MANUFACTURED BY HILTI, INC. SHALL BE USED WHERE REBAR DOWELS ARE TO BE INSTALLED INTO EXISTING CONCRETE.

3.0 CONCRETE CONT

3.22 ANCHOR RODS TO BE ASTM F 1554 FY=248 MPa MINIMUM, GALVANIZED, UNLESS NOTED OTHERWISE.

3.23 UNLESS NOTED OTHERWISE, ALL CURBS SHALL BE REINFORCED WITH AT LEAST (1)-#14 CONTINUOUS AND #14 AT 450mm O.C. DOWELS TO THE SLAB-ON-GRADE.

3.24 PROVIDE ADDITIONAL (2)-#14 x 600mm REINFORCING BARS IN SLAB-ON GRADE AT ALL RE-ENTRANT CORNERS. PLACE BARS AT MID-DEPTH OF SLAB WITH A CLEARANCE OF 50mm FROM CORNER UON.

3.25 COLD-WEATHER PLACEMENT: COMPLY WITH ACI 306.1 AND AS FOLLOWS. PROTECT CONCRETE WORK FROM PHYSICAL DAMAGE OR REDUCED STRENGTH THAT COULD BE CAUSED BY FROST, FREEZING ACTIONS, OR LOW TEMPERATURES. SUBMIT A COLD WEATHER CONCRETING PLAN FOR APPROVAL.

3.26 PROVIDE BONDING COMPOUND PER ASTM C 1059-99: SPECIFICATION FOR LATEX AGENTS FOR BONDING FRESH CONCRETE (GROUT) TO HARDENED CONCRETE.

3.27 THE FORMED SURFACES FOR REINFORCED CONCRETE SHALL ACHIEVE A "CLASS A" FINISH WHEN EXPOSED OR A "CLASS B" FINISH WHEN RECEIVING PLASTER OR TILE AS PER SPECIFICATION SECTION 03 31 00 CAST-IN-PLACE STRUCTURAL CONCRETE.

4.0 CONCRETE MASONRY

4.1 MASONRY CONSTRUCTION SHALL CONFORM TO SPECIFICATION FOR MASONRY STRUCTURES (ACI 530.1) UON.

4.2 STRENGTH OF MASONRY MATERIALS SHALL BE AS FOLLOWS:

A. CONCRETE MASONRY UNITS SHALL BE NORMAL WEIGHT, GRADE N, TYPE 1, CONFORMING TO ASTM C-90 AND HAVE A MINIMUM COMPRESSIVE STRENGTH OF 13.1 MPa ON THE NET AREA.

B. MORTAR SHALL CONFORM TO ASTM C-270 TYPE S.

C. GROUT FOR MASONRY SHALL BE NORMAL WEIGHT AND HAVE A MINIMUM COMPRESSIVE STRENGTH OF 14 MPa AT 28 DAYS. GROUT SHALL CONFORM TO ASTM C476M. GROUT LIFTS SHALL NOT EXCEED 1500mm.

D. REINFORCED MASONRY SHALL HAVE A STRENGTH F'm = 10.3 MPa. (F'm IS THE COMPRESSIVE STRENGTH OF THE MASONRY AT 28 DAYS AS DETERMINED BY PRISM TESTS).

4.3 ALL VERTICAL REINFORCEMENT FOR CONCRETE MASONRY SHALL BE ASTM A615M-07, GRADE 420 MPa. ALL SPLICES SHALL BE LAPPED 48 BAR DIAMETERS MINIMUM.

4.4 CMU CELLS THAT REQUIRE VERTICAL REINFORCING BARS AS INDICATED ON THE CONTRACT DRAWINGS AND/OR SPECS SHALL HAVE REINF BARS PLACED IN CENTERS OF CMU CELLS AND CONTINUOUSLY GROUTED UON.

4.5 CONTRACTOR SHALL COORDINATE LOCATION OF ALL OPENINGS SEE ARCH, MECH, ELEC, AND PLUMBING SHEETS FOR SIZE AND LOCATION OF OPENINGS. PROVIDE SINGLE COURSE SOLID GROUTED BOND BEAMS REINFORCED WITH 2 #14 OVER ALL OPENINGS IN CMU WALLS. BEAR BOND BEAMS AT LEAST 200mm ON SOLID GROUTED, VERTICALLY REINFORCED CMU AT EACH SIDE OF THE OPENING. PASS VERTICAL JAMB REINFORCING THROUGH THE BOND BEAM AND EXTEND TO TOP OF WALL. NO OPENING IN CMU WALLS SHALL EXCEED 800mm.

4.6 HORIZONTAL JOINT REINFORCING TO BE GALVANIZED, STANDARD CLASS, LADDER TYPE, CONFORMING TO ASTM A 82, SPACED AT EVERY OTHER COURSE UNO. SIDE RODS TO BE 5mm WITH 4mm CROSS RODS. PROVIDE ONE-PIECE PREFABRICATED REINFORCING UNITS AT EVERY COURSE AT ALL WALL CORNERS AND INTERSECTIONS AND IN THE FIRST TWO COURSES ABOVE AND BELOW MASONRY OPENINGS. PROVIDE LAP AS RECOMMENDED BY THE MANUFACTURER WITH A MINIMUM OF 300mm. DISCONTINUE HORIZONTAL JOINT REINFORCING AT CONTROL JOINTS.

4.7 ALL MASONRY TO BE CONSTRUCTED USING A RUNNING BOND PATTERN. FULL BED AND HEAD JOINTS MUST BE USED. ALL CORNERS TO BE TIED BY MASONRY BOND.

4.8 DOWEL REINFORCED MASONRY WALLS TO FOUNDATION. SIZE DOWELS TO MATCH WALL REINFORCEMENT. LOCATE DOWELS IN CELLS TO CONTAIN WALL REINFORCEMENT. LAP DOWELS AND WALL REINFORCEMENT A MINIMUM OF 48 BAR DIAMETERS UNO.

4.9 DURING CONSTRUCTION, COVER AND PROTECT THE TOPS OF MASONRY WALLS AT THE END OF EACH DAY.

UNLESS OTHERWISE NOTED, LINEAR DIMENSIONS SHOWN ARE IN MILLIMETERS.

COMMONWEALTH OF PENNSYLVANIA
REGISTERED PROFESSIONAL
JOSEPH D. MEIER
ENGINEER
PE-039925E
30MAR11

US ARMY CORPS OF ENGINEERS AFGHANISTAN NORTH DISTRICT

U.S. ARMY ENGINEER DISTRICT, AFGHANISTAN
CORPS OF ENGINEERS
APO AE 09356

DESIGNED BY: JDM
DWN BY: RMS
CKD BY: EPS
REVIEWED BY: JH
SUBMITTED BY: BAKER

DATE: 3-30-2011
CONTRACT NO. W912ER-09-D-0002
DRAWING CODE:
FILE NAME:
PLOT SCALE: NONE
PLOT DATE: 3/30/2011
REV. 0

SITE ADAPT DESIGN
VM09 - VEHICLE MAINTENANCE BUILDING - ARCH SPAN
ABBREVIATIONS AND GENERAL NOTES

SHEET REFERENCE NUMBER:

S-001

A1 Size 594mm x 841mm

3/30/2011 4:07 PM

5.0 STRUCTURAL STEEL

5.1 STRUCTURAL STEEL WORK IS TO BE DESIGNED AND CONSTRUCTED IN ACCORDANCE WITH THE AMERICAN INSTITUTE OF STEEL CONSTRUCTION (AISC) "SPECIFICATIONS FOR STRUCTURAL STEEL BUILDINGS" (THIRTEENTH EDITION) AND THE "CODE OF STANDARD PRACTICE FOR STEEL BUILDINGS AND BRIDGES".

5.2 STRUCTURAL STEEL, UNLESS NOTED OTHERWISE, SHALL CONFORM TO THE FOLLOWING:
- A. WIDE FLANGE SHAPES AND WT'S: ASTM A992.
- B. CHANNELS, ANGLES, PLATES AND MISC. CONNECTION MATERIAL: ASTM A-36.
- C. STEEL TUBING: ASTM A500, GRADE B, WITH FY = 290 MPa FOR ROUND AND FY = 315 MPa FOR RECTANGULAR.

5.3 PRIOR TO FABRICATION, THE STEEL FABRICATOR IS TO SUBMIT SHOP DRAWINGS SHOWING ERECTION PLANS, PIECE DRAWINGS, AND CONNECTION DETAILS TO THE CONTRACTING OFFICER FOR REVIEW.

5.4 STRUCTURAL STEEL FABRICATOR IS TO PROVIDE FOR VERTICAL AND HORIZONTAL FIELD ADJUSTMENT OF ALL SUPPORT ASSEMBLIES.

5.5 CUTS, HOLES, COPING, ETC REQUIRED FOR OTHER TRADES MUST BE SHOWN ON THE SHOP DRAWINGS AND MADE IN THE SHOP. CUTS OR BURNING OF HOLES IN THE FIELD WILL NOT BE PERMITTED.

5.6 FABRICATE FRAMING COMPONENTS IN THE SHOP TO THE GREATEST EXTENT POSSIBLE. IN GENERAL, STRUCTURAL STEEL CONNECTIONS TO BE SHOP AND FIELD WELDED. ALL WELDS SHALL BE 3/16" FILLET WELDS UNLESS NOTED OTHERWISE.

5.7 WELDING TO BE IN ACCORDANCE WITH THE AMERICAN WELDING SOCIETY (AWS) "STRUCTURAL WELDING CODE-ANSI/AWS D1.1/D1.1M" (LATEST EDITION). USE E70XX ELECTRODES UNLESS OTHERWISE INDICATED ON THE DRAWINGS.

5.8 POST INSTALLED BOLTS TO BE ADHESIVE TYPE ANCHORS. BOLTS SHALL BE CARBON STEEL THREADED RODS OF THE DIAMETER INDICATED ON THE DRAWINGS WITH APPROPRIATE NUT, WASHER AND INJECTABLE ADHESIVE MATERIAL. BASIS OF DESIGN ARE HILTI HVA ADHESIVE ANCHORS WITH STANDARD EMBEDMENT, MANUFACTURED BY HILTI FASTENING SYSTEMS. ANY ANCHOR MEETING PUBLISHED LOAD VALUES OF HILTI ANCHORS MAY BE USED WITH APPROPRIATE EMBEDMENT. INSTALL ANCHORS PER MANUFACTURERS RECOMMENDATIONS.

5.9 HEADED SHEAR STUDS CONNECTORS TO CONFORM TO ASTM A 108, GRADE 1015 OR 1020, COLD-FINISHED CARBON STEEL.

5.10 PAINT AND PROTECTION:
- A. STRUCTURAL STEEL, UNLESS INDICATED OTHERWISE, TO BE SHOP CLEANED PER SSPC SP3 AND PAINTED ONE SHOP COAT OF FABRICATOR'S STANDARD RUST INHIBITING PRIMER. TOUCH UP AFTER ERECTION.
- B. DO NOT PAINT STEEL WHERE ENCASED WITH CONCRETE, OR AT FIELD WELD AREAS.
- C. EXPOSED STRUCTURAL STEEL FOR BREEZEWAY ROOFS, EQUIPMENT PLATFORMS, ETC, TO BE HOT DIPPED GALVANIZED PER ASTM A-123
- D. GALVANIZED FASTENERS AND ACCESSORIES TO BE HOT DIPPED GALVANIZED PER ASTM A153/A153M.
- E. REPAIR DAMAGE TO GALVANIZED COATINGS USING ASTM A780 ZINC RICH PAINT.
- F. PROVIDE MINIMUM 75mm CONCRETE COVER FOR ALL STEEL BELOW GRADE.

6.0 METAL DECK - NOT USED

7.0 COLD-FORMED METAL FRAMING

7.1 SEE ARCHITECTURAL DRAWINGS FOR EXTENT OF COLD-FORMED METAL FRAMING, INCLUDING PARTITION WALLS AND CEILINGS. ALSO REFERENCE ARCHITECTURAL DRAWINGS FOR ADDITIONAL INFORMATION INCLUDING SHEATHING TYPE, FINISHES AND OPENINGS.

7.2 ALL COLD-FORMED METAL FRAMING MEMBERS SHALL CONFORM TO ASTM A1003M, STRUCTURAL GRADE ST230 (MPa), WITH A GALVANIZED COATING OF Z275 OR BETTER IN ACCORDANCE WITH ASTM A653M.

7.3 ALL COLD-FORMED METAL FRAMING MEMBERS SHALL HAVE THE FOLLOWING MINIMUM PROPERTIES:
- A. MINIMUM METAL THICKNESS:
  - TRACK = 1.37mm
  - CEILING JOIST = 1.09mm
  - WALL STUD/OTHER = 1.09mm
- B. MINIMUM FLANGE WIDTH:
  - TRACK = 38mm
  - CEILING JOIST = 35mm
  - WALL STUD/OTHER = 35mm
- C. MINIMUM MEMBER DEPTH:
  - CEILING JOIST = 152mm
  - WALL STUD/OTHER = 92mm

7.4 CEILING JOISTS HAVE BEEN DESIGNED TO CARRY 0.47KPA, INCLUDING SELF WEIGHT OF METAL FRAMING, TWO LAYERS OF GYPSUM WALL BOARD AND NOMINAL MEP LOADING. NO LIVE LOAD HAS BEEN INCLUDED. THE SPACE ABOVE THE CEILING IS NOT INTENDED FOR STORAGE OR TO BE USED AS A WALKWAY. PROVIDE CEILING JOIST FRAMING OF SIZE INDICATED IN NOTE 7.3 AND AS FOLLOWS:
- A. JOIST SPANS LESS THAN 4600: JOISTS SHALL BE SPACED AT 400 AND HAVE DIAGONAL OR SOLID BRIDGING AT EACH END AND AT THE MIDSPAN.
- B. JOIST SPANS BETWEEN 4600 AND 6400: JOISTS SHALL BE SPACED AT 400 AND HAVE DIAGONAL OR SOLID BRIDGING AT EACH END AND AT THE QUARTER POINTS.
- C. JOIST SPANS BETWEEN 6400 AND 7800: JOISTS SHALL BE SPACED AT 200 (OR DOUBLE JOISTS AT 400) AND HAVE DIAGONAL OR SOLID BRIDGING AT EACH END AND AT THE QUARTER POINTS.
- D. JOIST SPANS EQUAL TO OR OVER 7800: JOISTS SHALL HAVE DIAGONAL OR SOLID BRIDGING AT EACH END AND AT THE QUARTER POINTS AND SHALL BE SUSPENDED FROM THE ARCH-SPAN TABS ABOVE AT 1200 EACH WAY.
- E. HEADERS WITH SPANS LESS THAN OR EQUAL TO 3000 CARRYING CEILING JOISTS WITH UP TO 5400 IN TRIBUTARY WIDTH SHALL BE FULLY CONNECTED TO EACH JOIST AND SHALL BE DOUBLE MEMBERS. HEADERS WITH A LARGER SPAN OR MORE TRIBUTARY WIDTH SHALL BE SUSPENDED FROM THE ARCH-SPAN TABS AT 1200 OC. SEE GENERAL NOTE 8.1 FOR MAXIMUM LOADS ON TABS.

7.5 WALL STUDS HAVE BEEN DESIGNED TO CARRY CEILING LOADING NOTED IN NOTE 7.3, UP TO 7800 IN TRIBUTARY WIDTH. PROVIDE WALL STUD FRAMING OF SIZE INDICATED IN NOTE 7.3 AND AS FOLLOWS:
- A. WALL HEIGHTS LESS THAN 3000: STUDS SHALL BE SPACED AT 400 AND HAVE BLOCKING AT 1200 MAXIMUM.
- B. WALL HEIGHTS BETWEEN 3000 AND 4900: STUDS SHALL BE SPACED AT 300 AND HAVE BLOCKING AT 1200 MAXIMUM.
- C. WALL HEIGHTS OVER 4900 WHICH MUST ALSO SUPPORT CEILING WEIGHT SHALL BE DESIGNED BY THE METAL FRAMING CONTRACTOR'S ENGINEER.

7.6 WALL STUDS WITHOUT CEILING LOADS MUST BE BRACED BACK TO THE ARCH-SPAN TABS ABOVE AT 1200 MAXIMUM. SEE ARCHITECTURAL DRAWINGS FOR BRACING DETAILS. DO NOT SECURE TOPS OF STUD WALLS TO THE UNDERSIDE OF THE ARCH-SPAN BUILDING PANELS. THESE STUDS HAVE BEEN DESIGNED TO CARRY ONLY THEIR OWN SELF WEIGHT DURING A SEISMIC EVENT. PROVIDE WALL STUD FRAMING OF SIZE INDICATED IN NOTE 7.3 AND AS FOLLOWS:
- A. WALL HEIGHTS LESS THAN 5000: STUDS SHALL BE SPACED AT 400 AND HAVE BLOCKING AT 1200 MAXIMUM.
- B. WALL HEIGHTS BETWEEN 5000 AND 5500: STUDS SHALL BE SPACED AT 300 AND HAVE BLOCKING AT 1200 MAXIMUM.
- C. WALL HEIGHTS BETWEEN 5500 AND 6400: STUDS SHALL BE SPACED AT 200 AND HAVE BLOCKING AT 1200 MAXIMUM.
- D. WALL HEIGHTS BETWEEN 6400 AND 8700: STUDS SHALL BE THE SAME SIZE AS NOTED FOR JOISTS AND SPACED AT 300 AND HAVE BLOCKING AT 1200 MAXIMUM.
- E. CANTILEVERED HEIGHT PAST BRACE POINT IS NOT TO EXCEED 1/4 OF THE HEIGHTS NOTED IN NOTES A, B, AND C. IE, FOR STUDS SPACED AT 400 WITH BLOCKING AT 1200 MAXIMUM, HEIGHT ABOVE THE BRACE IS NOT TO EXCEED 1250.

7.7 FOR WALLS THAT CARRY CEILING LOAD AND EXTEND PAST THE CEILING, APPLY NOTES 7.4 AND 7.5 AS REQUIRED. USE THE MORE SEVERE WALL CONSTRUCTION FOR THE ENTIRE WALL CONSTRUCTION.

7.8 PROVIDE DOUBLE MEMBER JOISTS OR WALL STUDS AT EACH SIDE OF OPENINGS.

7.9 ALL CONNECTIONS SHALL BE MADE WITH CORROSION RESISTANT (ASTM A153M), SELF-DRILLING, SELF-TAPPING STEEL DRILL SCREWS IN ACCORDANCE WITH ASTM C1513.

7.10 FABRICATE COLD FORMED METAL FRAMING AND ACCESSORIES PLUMB, SQUARE AND TRUE TO LINE, WITH CONNECTIONS SECURELY FASTENED ACCORDING TO AISI STANDARD FOR COLD FORMED STEEL FRAMING.

7.11 FRAMING COMPONENTS ARE TO BE CUT SQUARELY FOR ATTACHMENT TO PERPENDICULAR MEMBERS OR AS REQUIRED FOR AN ANGULAR FIT AGAINST ABUTTING MEMBERS.

7.12 CUT FRAMING MEMBERS BY SAWING OR SHEATHING, DO NOT TORCH CUT.

7.13 INSTALL FRAMING MEMBERS IN ONE-PIECE LENGTHS.

7.14 INSTALL TEMPORARY BRACING AND SUPPORTS AS REQUIRED TO SECURE FRAMING DURING CONSTRUCTION. MAINTAIN BRACING AND SUPPORTS IN PLACE UNTIL THE STRUCTURE HAS BEEN COMPLETED WITH ALL CONNECTIONS AND PERMANENT BRACING SECURED.

8.0 ARCH SPAN

8.1 USE UBM OR ABM MACHINES OR EQUIVALENT THAT WILL PRODUCE THE ARCH SPAN PANELS OF PROFILE AND THICKNESS NOTED ON THE DRAWINGS.

8.2 ARCH-SPAN BASIS OF DESIGN ARE THE 240 PROFILE PANELS PRODUCED BY MIC INDUSTRIES MACHINES WITH A STEEL THICKNESS OF 1.52mm (16GA). SUBSTITUTE PANELS MUST MEET THE NOMINAL STRENGTH CAPACITIES LISTED WITH THE PANEL PROFILE SHOWN IN DETAIL 2/S-202. SUBSTITUTE PANEL STRENGTH CAPACITIES SHALL ACCOUNT FOR THE REDUCTION TO NOMINAL NEGATIVE MOMENT AND AXIAL LOAD CAPACITIES DUE TO THE CURVING PROCESS. CONTRACTORS PROVIDING SUBSTITUTE PANELS MUST ALSO REVISE DETAILS/DIMENSIONS WORKED SPECIFICALLY FOR THE PANEL PROFILES USED AS THE BASIS OF DESIGN. THIS INCLUDES, BUT MAY NOT BE LIMITED TO, FOUNDATIONS, ENDWALL OPENINGS, SIDEWALL OPENINGS, OPENING FRAMES AND OUT-BUILDING ROOF PANELS.

8.3 ARCH SPAN PANELS WILL BE ROLLED ON-SITE USING GALVANIZED STEEL COILS CONFORMING TO ASTM A653M-06A, STRUCTURAL QUALITY (SS), GRADE 340, CLASS Z275 FOR GALVANIZED COATING.

8.4 ENDWALL PANELS SHALL BE THE SAME PROFILE AND THICKNESS AS THE ARCH SPAN PANELS USED FOR THE ROOF.

8.6 CONTRACTOR IS TO ENGAGE AN EXPERIENCED INSTALLER TO ERECT THE ARCH SPAN BUILDING. CONSTRUCTION CREWS SHALL BE TRAINED IN THE USE OF THE PANEL ROLLING MACHINES AND IN THE ERECTION OF THE PANELS.

8.7 EXERCISE CARE IN DELIVERING, UNLOADING, STORING AND ERECTING STEEL COILS AND BUILDING PANELS TO PREVENT BENDING, WARPING, TWISTING AND SURFACE DAMAGE.

8.8 ERECT PANELS TRUE TO LINE, LEVEL AND PLUMB. ROOF LINE SHALL BE STRAIGHT AND LEVEL, RADIUS SHALL BE CONSISTENT THROUGHOUT AND ENDWALLS SHALL BE STRAIGHT AND PLUMB.

8.9 WINDOW AND DOOR OPENINGS SHALL BE FRAMED PER DETAILS ON THE DRAWINGS.

8.10 INCIDENTAL OPENINGS (COORDINATE WITH ARCHITECTURAL AND MEP DRAWINGS) IN THE PANELS SHALL BE NO MORE THAN 200mm IN DIAMETER AND SHALL BE PLACED THROUGH A "FLAT" PORTION OF THE PANEL. OPENINGS SHALL NOT BE CUT THROUGH ANY VERTICAL OR DIAGONAL RIB.

8.11 HANGER TABS AS DETAILED ON THE DRAWINGS SHALL BE INSTALLED PER LAYOUT ON THE TYPICAL BUILDING SECTION. ALL SUSPENDED LOADS SHALL BE CONNECTED TO HANGER TABS. HANGER TABS AT LESS THAN 30 DEGREES FROM VERTICAL CAN CARRY NO MORE THAN 100 KG EACH. HANGER TABS AT MORE THAN 30 DEGREES FROM VERTICAL CAN CARRY NO MORE THAN 25 KG EACH.

9.0 STRUCTURAL DESIGN CRITERIA

9.1 ALL DESIGNS SHALL CONFORM TO THE PROVISIONS OF THE IBC 2009 AND ASCE 7-05. OCCUPANCY CATEGORY II

9.2 DESIGN LOADS

9.2.1 DEAD LOADS (PER IBC 2009 & UFC 3-301-01)

MECH/ELEC/PLUMBING	0.10 kPa
SUSPENDED CEILING	0.24 kPa
INSULATION	0.10 kPa
ARCH SPAN STEEL: 240 PROFILE x 1.52mm	0.19 kPa
TOTAL DEAD LOAD	0.63 kPa
MINIMUM (FOR UPLIFT)	0.34 kPa

9.2.2 LIVE LOADS (PER IBC 2009 & UFC 3-301-01)

ROOF (CURVED)	0.57 kPa
ROOF (LOW SLOPE)	0.96 kPa
SLAB ON GRADE - DINING	4.80 kPa
SLAB ON GRADE - KITCHEN/WOOD STOVE/STORAGE	7.18 kPa
MECHANICAL PLATFORM	7.18 kPa

9.2.3 SNOW LOADS (PER IBC 2009 & UFC 3-301-01)

GROUND SNOW LOAD (Pg)	1.2 kPa
SNOW IMPORTANCE FACTOR (I)	1.0
SNOW EXPOSURE FACTOR (Ce)	0.9
THERMAL FACTOR (Ct)	1.1

9.2.4 WIND LOADS (PER IBC 2009)

BASIC WIND SPEED	137 km/h
WIND IMPORTANCE FACTOR	1.0
WIND EXPOSURE CATEGORY	C
DIRECTIONALITY COEFFICIENT (Kd)	0.85
TOPOGRAPHIC FACTOR (Kzt)	1.0

9.2.5 SEISMIC LOADS (PER IBC 2009 & UFC 3-310-04)

SEISMIC IMPORTANCE FACTOR (Ie)	1.0
SEISMIC SITE CLASS	D
S_s =	2.40
S_1 =	1.20
S_{DS} =	1.6
S_{D1} =	1.2
SEISMIC DESIGN CATEGORY	E

SEISMIC RESISTING SYSTEM: MAIN ARCH SPAN BUILDING
- -STRUCTURAL STEEL SYSTEMS NOT SPECIFICALLY DETAILED FOR SEISMIC RESISTANCE
- -RESPONSE MODIFICATION FACTOR (R) 2 (CONSERVATIVE)
- -RESPONSE COEFFICIENT (Cs) 0.5

SEISMIC RESISTING SYSTEM: WOOD STOVE BUILDING AND PROPANE ENCLOSURE
- -SPECIALLY REINFORCED CONCRETE SHEAR WALLS
- -RESPONSE MODIFICATION FACTOR (R) 5
- -RESPONSE COEFFICIENT (Cs) 0.2

SEISMIC RESISTING SYSTEM: BREEZEWAY CONNECTORS
- -CANTILEVERED COLUMN SYSTEM CONFORMING TO SPECIAL REINFORCED CONCRETE MOMENT FRAMES
- -RESPONSE MODIFICATION FACTOR (R) 2.5 (CONSERVATIVE)
- -RESPONSE COEFFICIENT (Cs) 0.4

SEISMIC RESISTING SYSTEM: PROPANE STORAGE BUILDING & MECHANICAL EQUIPMENT PLATFORM
- -ORDINARY STEEL MOMENT FRAMES [RE: ASCE 7-05 12.2.5.7]
- -RESPONSE MODIFICATION FACTOR (R) 3.5
- -RESPONSE COEFFICIENT (Cs) 0.286

SEISMIC ANALYTICAL PROCEDURE = EQUIV LATERAL FORCE

9.3 FOUNDATION DESIGN CRITERIA

9.3.1 FOUNDATION DESIGN IS BASED UPON THE FOLLOWING SOIL PARAMETERS:
ASSUMED NET ALLOWABLE SOIL BEARING PRESSURE FOR ALL SPREAD FOOTINGS: 72 kPa

9.3.2 ASSUMED LATERAL EARTH PRESSURE PARAMETERS:
- SOIL DENSITY = 1800 KG/M^3
- COEFFICIENT OF ACTIVE PRESSURE (KA) = 0.41
- COEFFICIENT OF AT-REST PRESSURE (KO) = 0.58
- COEFFICIENT OF PASSIVE EARTH PRESSURE (KP) = 2.44
- ANGLE OF INTERNAL FRICTION (PHI) = 25 DEGREES
- COEFFICIENT OF FRICTION (U) = 0.35
- MODULUS OF SUB-GRADE REACTION (KS) = 4150 G/CM^3

9.3.3 FROST DEPTH: ASSUMED TO BE 800mm

UNLESS OTHERWISE NOTED, LINEAR DIMENSIONS SHOWN ARE IN MILLIMETERS.

COMMONWEALTH OF PENNSYLVANIA REGISTERED PROFESSIONAL ENGINEER JOSEPH D. MEIER PE-039935E 30MAR11

US ARMY CORPS OF ENGINEERS AFGHANISTAN NORTH DISTRICT

DESIGNED BY: JDM | DWN BY: RMS | CKD BY: EPS | REVIEWED BY: JH | SUBMITTED BY: BAKER

DATE: 3-30-2011 | CONTRACT NO. W912ER-09-D-0002 | DRAWING CODE: | FILE NAME: | PLOT SCALE: NONE | PLOT DATE: 3/30/2011 | REV. 0

U.S. ARMY ENGINEER DISTRICT, AFGHANISTAN CORPS OF ENGINEERS APO AE 09356

SITE ADAPT DESIGN

VM09 - VEHICLE MAINTENANCE BUILDING - ARCH SPAN

GENERAL NOTES AND DESIGN CRITERIA

SHEET REFERENCE NUMBER: S-002

3/30/2011 4:07 PM

A1 Size 594mm x 841mm

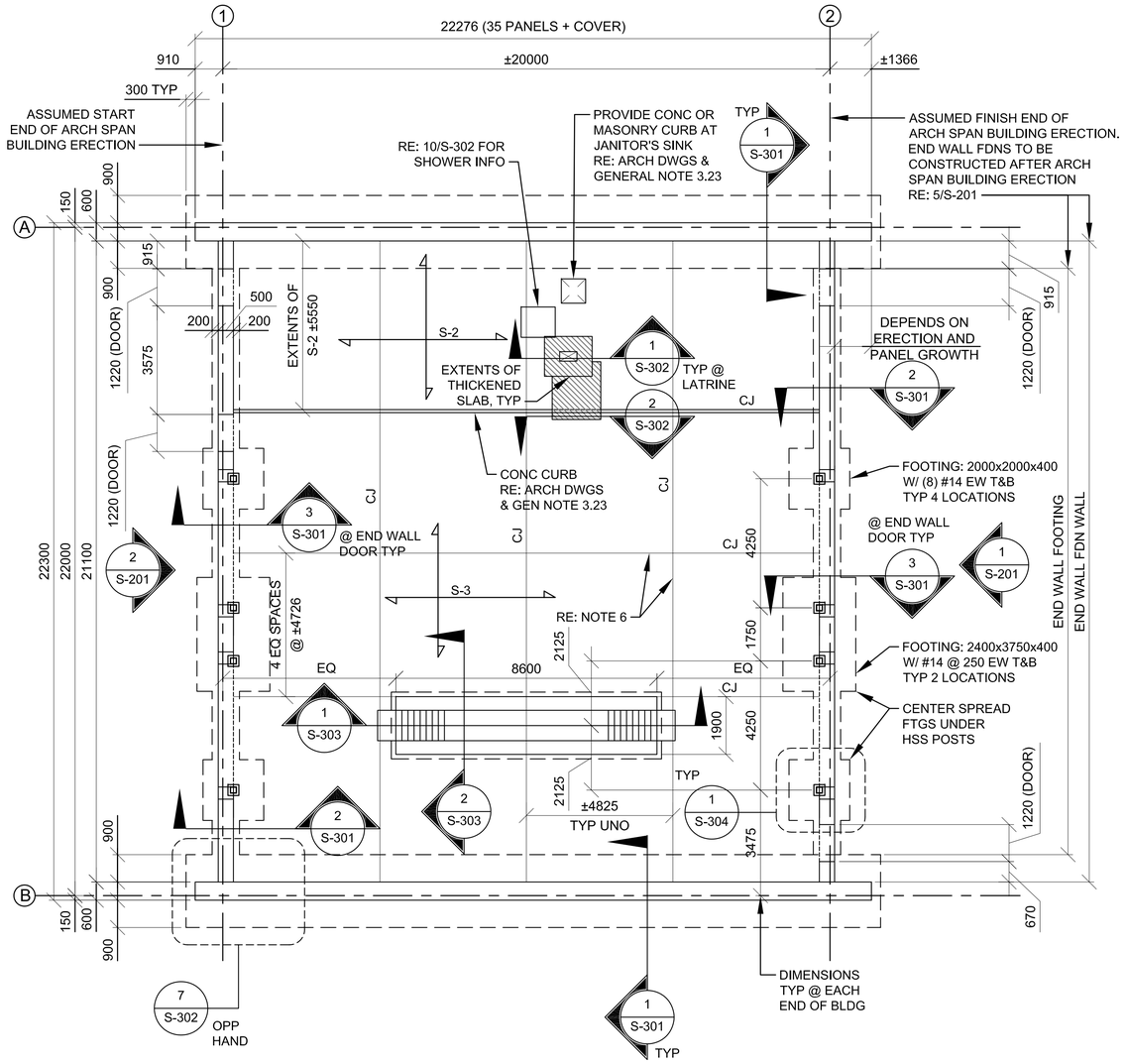

1 / S-101 FOUNDATION PLAN

SCALE: 1:100

FOUNDATION PLAN NOTES:

1. RE: DRAWINGS S-001 AND S-002 FOR GENERAL NOTES AND DESIGN CRITERIA.
2. COORDINATE DIMENSIONS, WALL OPENINGS, ELEVATIONS, SECTIONS, AND DETAILS WITH ARCHITECTURAL DRAWINGS.
3. TOP OF SLAB ELEVATION MUST BE COORDINATED WITH SITE ADAPT CIVIL DRAWINGS. TOP OF FLOOR SLAB IS AT THE DATUM ELEVATION = 0. ALL ELEVATIONS ARE REFERENCED FROM THIS ELEVATION.
4. BOTTOM OF CONCRETE FOOTING ELEVATIONS = -950 (BELOW TOP OF SLAB, TYP UNO).

5A. S-2 DENOTES A 150 CONCRETE SLAB-ON-GRADE REINFORCED WITH #14 @ 400. PLACE SLAB OVER 0.25 VAPOR RETARDER AND 100 COMPACTED GRANULAR SUB-BASE MATERIAL SUCH AS AASHTO #57 STONE.

5B. S-3 DENOTES A 200 CONCRETE SLAB-ON-GRADE REINFORCED WITH #14 @ 300. PLACE SLAB OVER 0.25 VAPOR RETARDER AND 100 COMPACTED GRANULAR SUB-BASE MATERIAL SUCH AS AASHTO #57 STONE.

6. SPACE SLAB CONTROL/CONSTRUCTION JOINTS AS SHOWN. CJ = CONTROL OR CONSTRUCTION JOINT, RE: 2/S-501.
7. PROVIDE ADDITIONAL SLAB REINFORCEMENT AT ALL RE-ENTRANT CORNERS, RE: 8/S-501.
8. RE: DRAWING S-501 FOR TYPICAL FOUNDATION AND SLAB DETAILS.
9. LOCATION OF FLOOR DRAINS ARE NOT SHOWN, COORDINATE LOCATIONS AND SLOPE OF SLAB WITH PLUMBING AND ARCHITECTURAL DRAWINGS.
10. COORDINATE MECHANICAL PENETRATIONS W/ M/E/P DRAWINGS.
11. PROVIDE REINFORCED CONCRETE WALK-OFF MATS AT ALL EXTERIOR DOORS RE: A-503 FOR DETAILS AND ARCHITECTURAL FLOOR PLAN FOR LOCATIONS.

N

0 2000 4000

SCALE: 1:100

UNLESS OTHERWISE NOTED, LINEAR DIMENSIONS SHOWN ARE IN MILLIMETERS.

COMMONWEALTH OF PENNSYLVANIA
REGISTERED PROFESSIONAL
JOSEPH D. MEIER
PE-039920E

30 Mar 11

US ARMY CORPS OF ENGINEERS
AFGHANISTAN NORTH DISTRICT

SYMBOL	DESCRIPTION	DATE	APPR.	SYMBOL	DESCRIPTION	DATE	APPR.

DESIGNED BY: JDM
DWN BY: RMS
CKD BY: EPS
REVIEWED BY: JH
SUBMITTED BY:
DATE: 3-30-2011
REV: 0
CONTRACT NO. W912ER-09-D-0002
DRAWING CODE:
FILE NAME: wm10maintenance-s-101.dwg
PLOT SCALE: 1:100
PLOT DATE: 3/30/2011

BAKER

U.S. ARMY ENGINEER DISTRICT, AFGHANISTAN
CORPS OF ENGINEERS
APO AE 09356

SITE ADAPT DESIGN

VM09 - VEHICLE MAINTENANCE BUILDING - ARCH SPAN
FOUNDATION PLAN

SHEET REFERENCE NUMBER:

S-101

A1 Size 594mm x 841mm

3/30/2011 4:08 PM

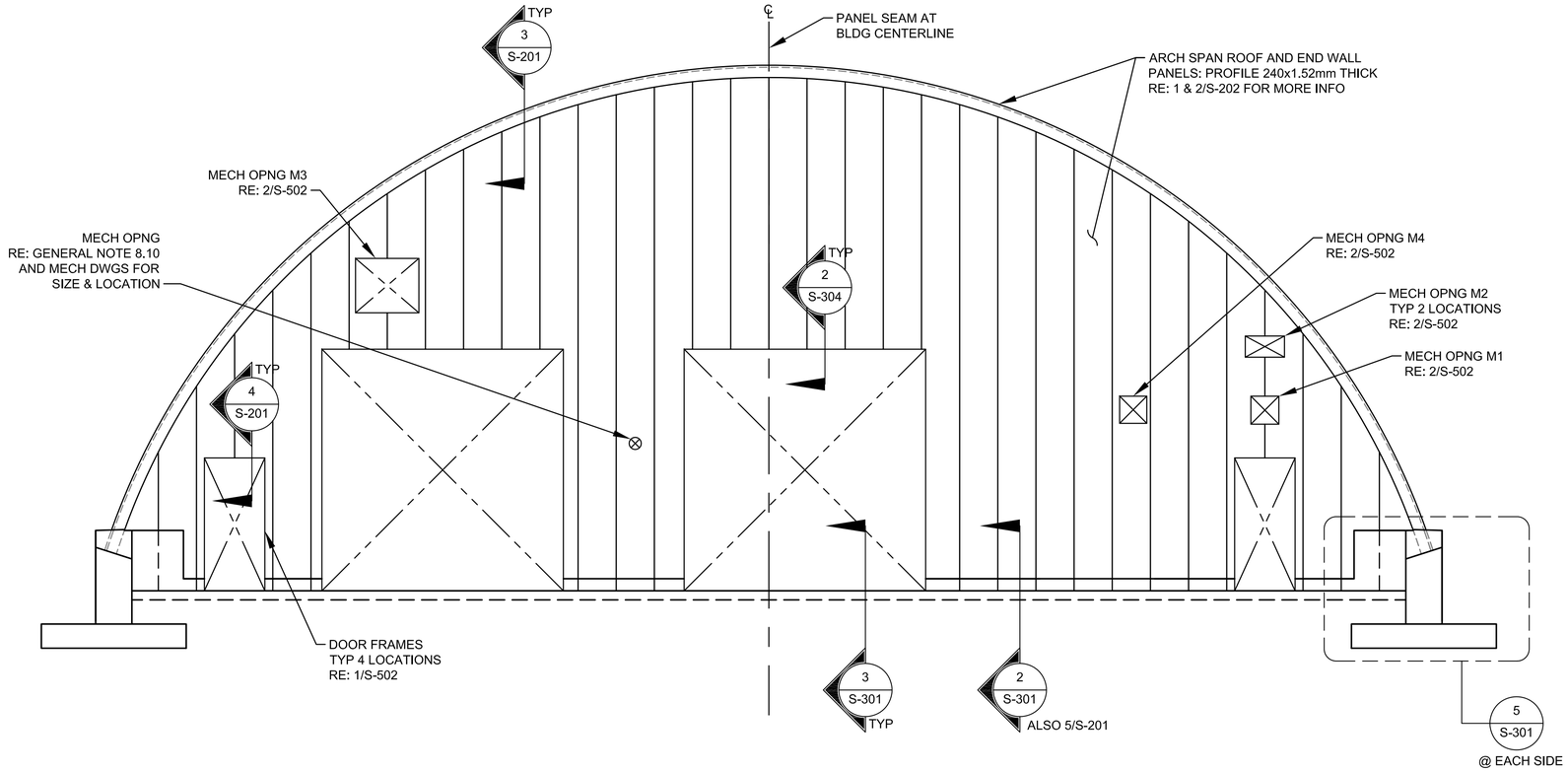

1 S-201 EAST ELEVATION

SCALE: 1:50

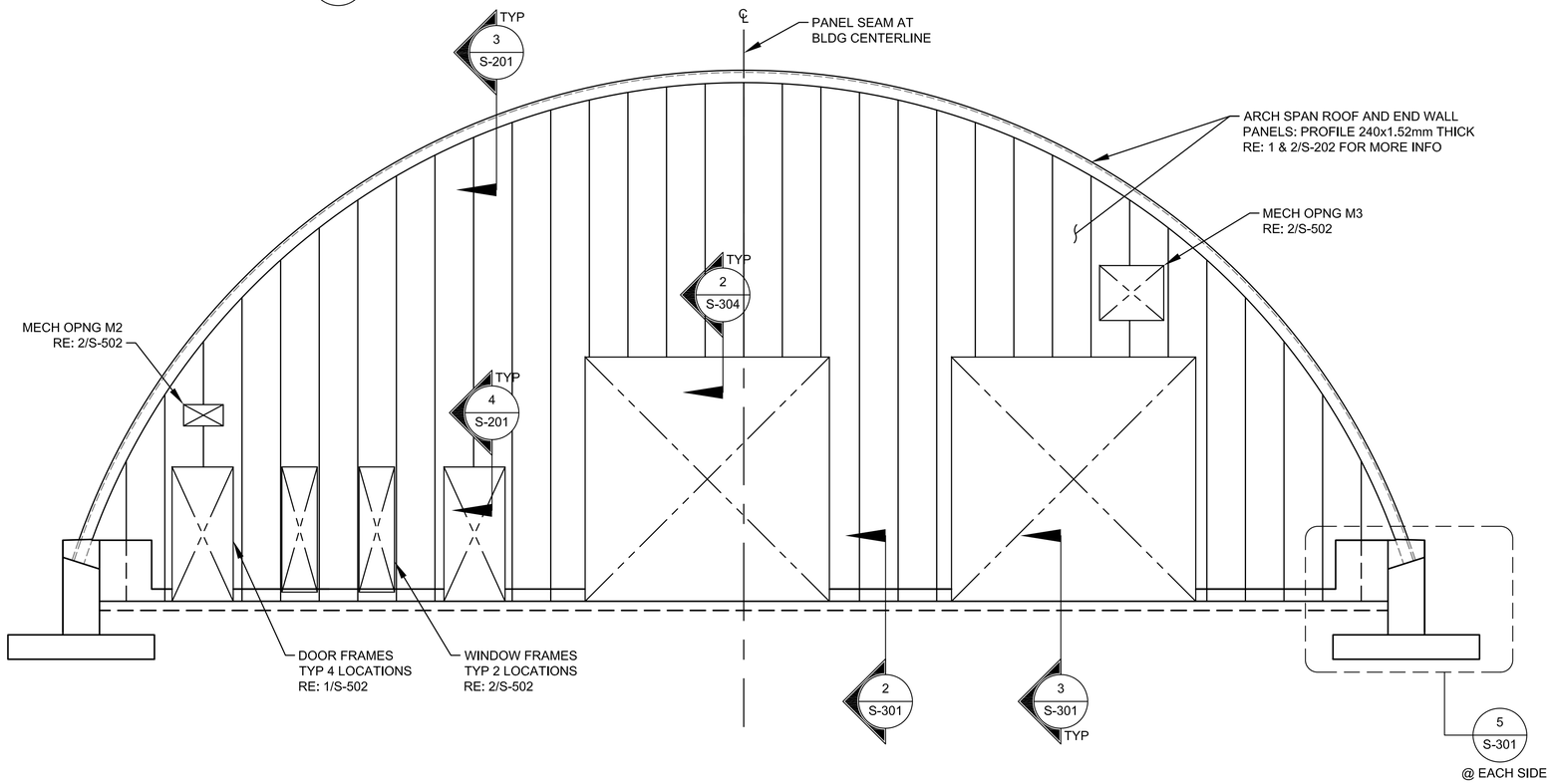

2 S-201 WEST ELEVATION

SCALE: 1:50

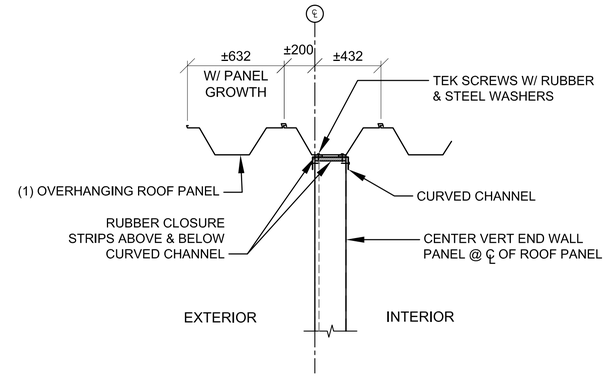

3 S-201 SECTION

SCALE: 1:20

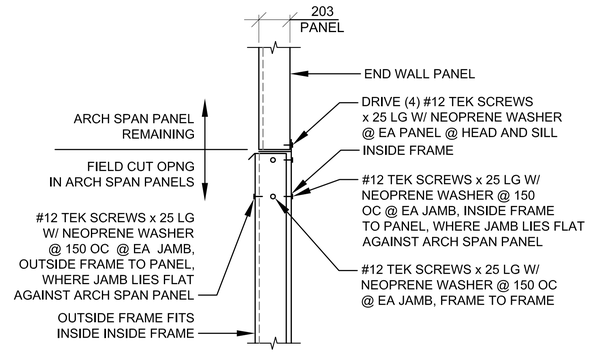

4 S-201 SECTION

SCALE: 1:20

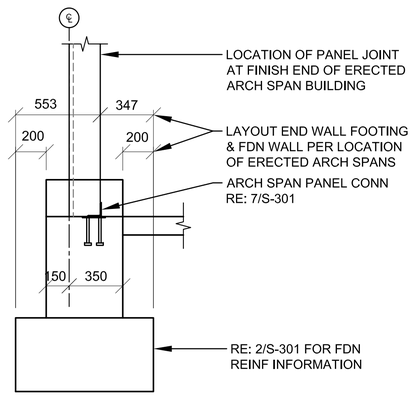

5 S-201 SECTION

SCALE: 1:20

0 500 1000 2000

SCALE: 1:50

0 200 400 800

SCALE: 1:20

UNLESS OTHERWISE NOTED,
LINEAR DIMENSIONS
SHOWN ARE IN MILLIMETERS.

COMMONWEALTH OF PENNSYLVANIA
REGISTERED PROFESSIONAL
JOSEPH D. MEIER
PE-0036265
31 MAR 11

US ARMY CORPS
OF ENGINEERS
AFGHANISTAN NORTH
DISTRICT

SYMBOL	DESCRIPTION	DATE	APPR.	SYMBOL	DESCRIPTION	DATE	APPR.

DESIGNED BY: JDM
DWN BY: RMS
CKD BY: EPS
REVIEWED BY: JH
SUBMITTED BY: BAKER
DATE: 3/30/2011
CONTRACT NO. W912ER-09-D-0002
DRAWING CODE:
FILE NAME: W912ER-09-D-0002 - VM09 - S-201.DWG
PLOT SCALE: 1:100
PLOT DATE: 3/31/2011
REV: 0

U.S. ARMY ENGINEER DISTRICT, AFGHANISTAN
CORPS OF ENGINEERS
APO AE 09356

SITE ADAPT DESIGN

VM09 - VEHICLE MAINTENANCE BUILDING - ARCH SPAN

BUILDING ELEVATIONS AND DETAILS

SHEET
REFERENCE
NUMBER:

S-201

A1 Size 594mm x 841mm

3/31/2011 12:17 PM

TAB LAYOUT ON PRE-BENT PANEL

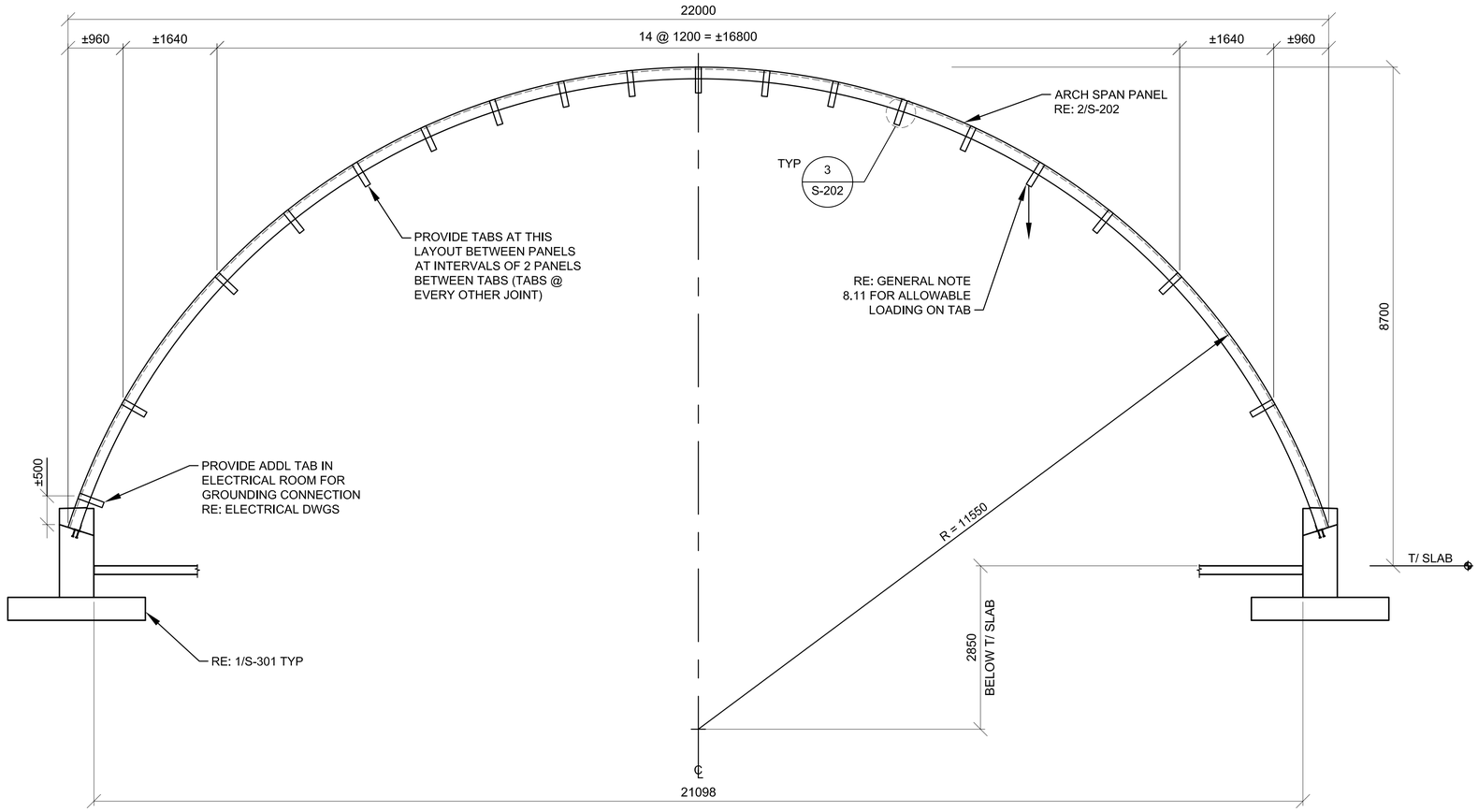

1 S-202 22m BUILDING SECTION

SCALE: 1:50

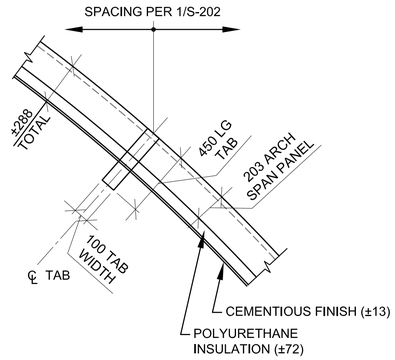

3 S-202 STEEL TAB DETAIL

SCALE: 1:20

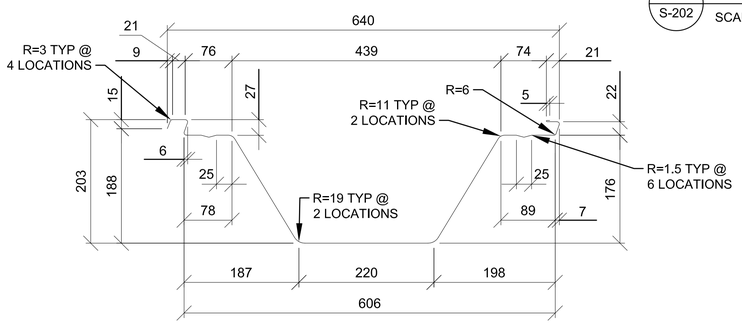

NOTE:
ALL DIMENSIONS ARE APPROXIMATE (±3mm)

2 S-202 240 PROFILE - PROVIDE 1.52mm (16 GA) THICKNESS

SCALE: NTS

NOMINAL STRENGTH VALUES PER PANEL
(WITHOUT FACTOR OF SAFETY)

SHEAR : Vn = 1655.6 kg
AXIAL COMPRESSION : Pn = 11589.3 kg*
POSTITIVE MOMENT : +Mn = 2638.08 kg-m
NEGATIVE MOMENT : -Mn = 767.64 kg-m*

* THE CURVING PROCESS REDUCES THE NOMINAL STRENGTH OF ARCH-SPAN PANELS IN NEGATIVE FLEXURE AND COMPRESSION. THESE VALUES ARE BASED ON TESTING OF PANELS.

0 500 1000 2000
SCALE: 1:50

0 200 400 800
SCALE: 1:20

UNLESS OTHERWISE NOTED, LINEAR DIMENSIONS SHOWN ARE IN MILLIMETERS.

COMMONWEALTH OF PENNSYLVANIA
REGISTERED PROFESSIONAL
JOSEPH D. MEIER
PE-039026

US ARMY CORPS OF ENGINEERS
AFGHANISTAN NORTH DISTRICT

SYMBOL	DESCRIPTION	DATE	APPR.	SYMBOL	DESCRIPTION	DATE	APPR.

U.S. ARMY ENGINEER DISTRICT, AFGHANISTAN
CORPS OF ENGINEERS
APO AE 09356

DESIGNED BY: JDM
DWN BY: RMS
CKD BY: EPS
REVIEWED BY: JH
SUBMITTED BY:
DATE: 4-21-2011
REV: 0
CONTRACT NO. W912ER-09-D-0002
DRAWING CODE:
FILE NAME: arch-panel-v-tab-tp.dwg
PLOT SCALE: 1:100
PLOT DATE: 4-21-2011

BAKER

SITE ADAPT DESIGN

VM09 - VEHICLE MAINTENANCE BUILDING - ARCH SPAN

BUILDING SECTION AND DETAILS

SHEET REFERENCE NUMBER:

S-202

4/21/2011 11:04 AM

A1 Size 594mm x 841mm

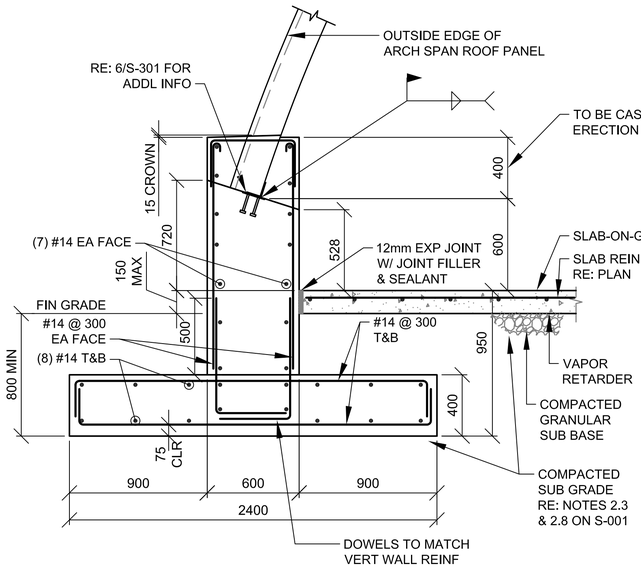

1 S-301 FOUNDATION WALL SECTION

SCALE: 1:20

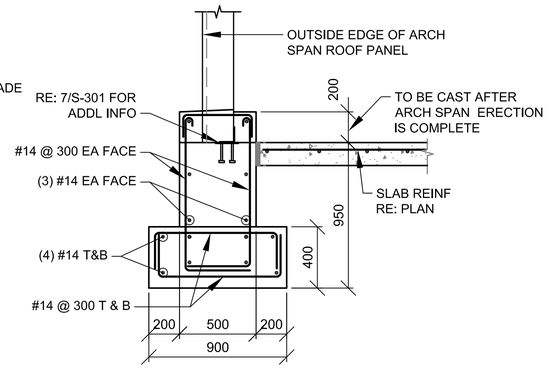

2 S-301 END WALL FOUNDATION SECTION

SCALE: 1:20

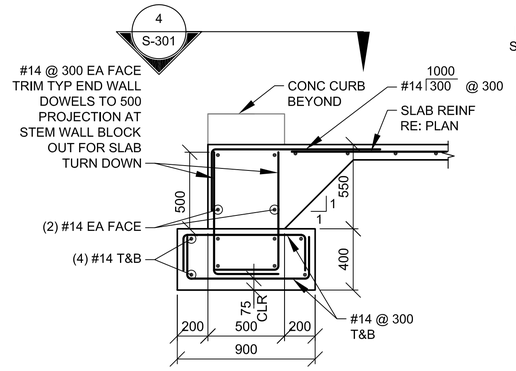

3 S-301 END WALL FDN SECTION TYP @ DOOR

SCALE: 1:20

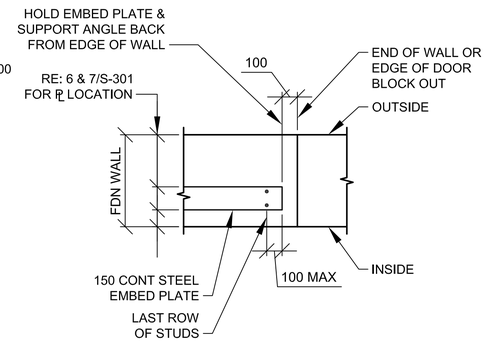

4 S-301 PLAN VIEW TYP AT END OF FDN WALL OR AT DOOR BLOCKOUT

SCALE: 1:20

NOTE:
PROVIDE OPENING IN STEM WALL PER PLAN (200mm WIDER THAN DOOR, 100mm EA SIDE)

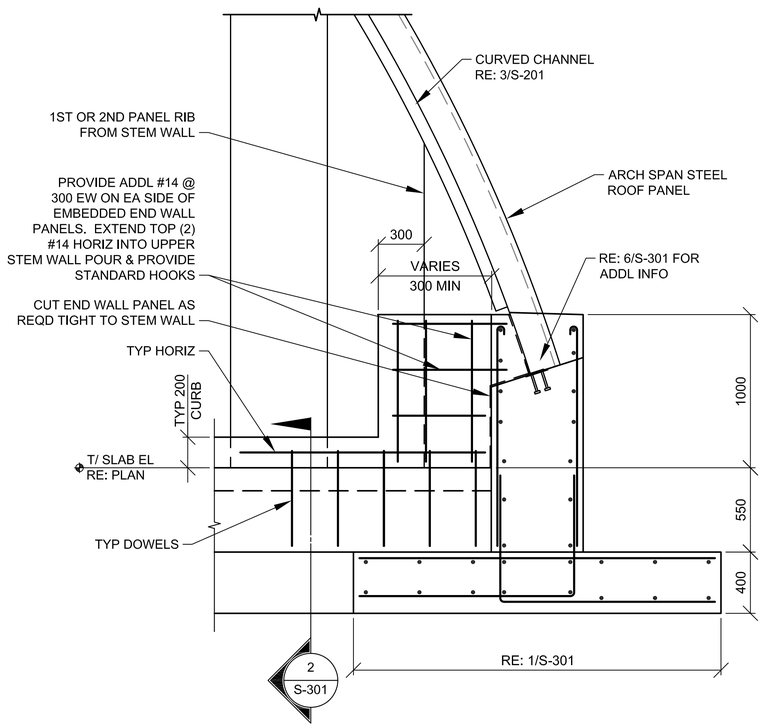

5 S-301 FOUNDATION END WALL SECTION

SCALE: 1:20

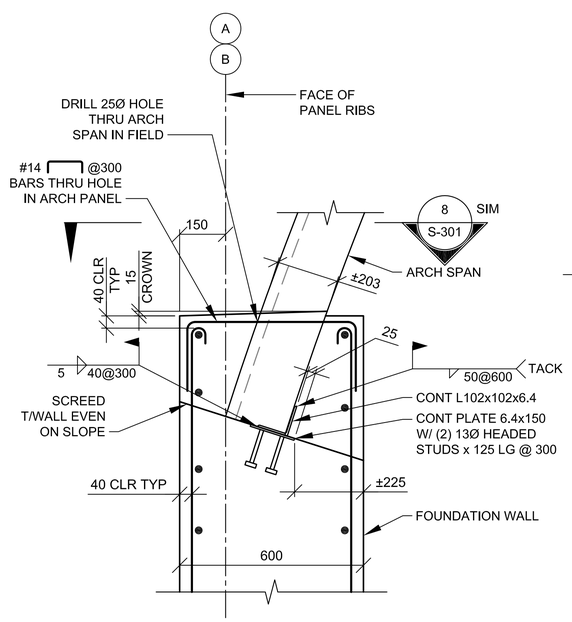

6 S-301 TYP ARCH SPAN CONN TO SIDE WALL FOUNDATION

SCALE: 1:10

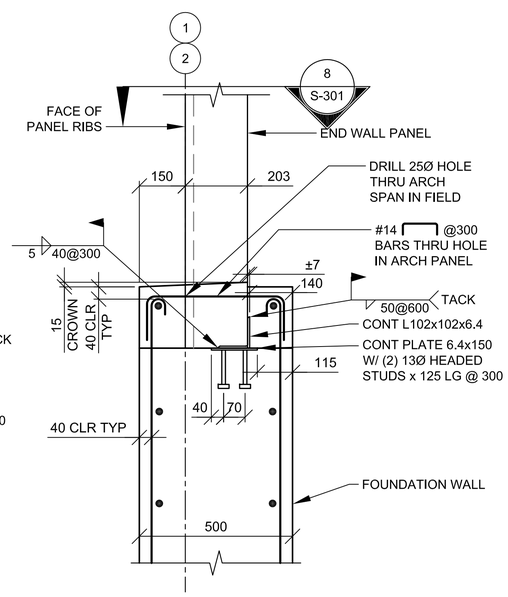

7 S-301 TYP ARCH SPAN CONN TO END WALL FOUNDATION

SCALE: 1:10

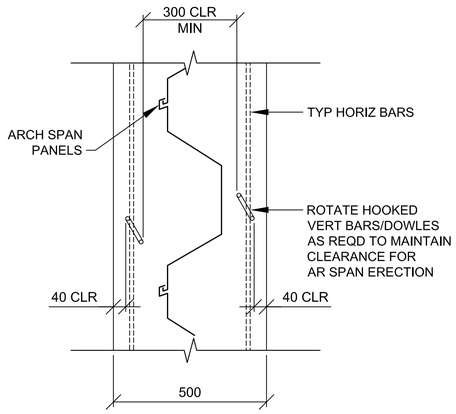

8 S-301 PLAN DETAIL

SCALE: 1:10

0 200 400 800
SCALE: 1:20

0 100 200 400
SCALE: 1:10

UNLESS OTHERWISE NOTED, LINEAR DIMENSIONS SHOWN ARE IN MILLIMETERS.

COMMONWEALTH OF PENNSYLVANIA REGISTERED PROFESSIONAL JOSEPH D. WEIER PE-039925E 30 MAR 11

US ARMY CORPS OF ENGINEERS AFGHANISTAN NORTH DISTRICT

SYMBOL	DESCRIPTION	DATE	APPR.	SYMBOL	DESCRIPTION	DATE	APPR.

DESIGNED BY: JDM
DWN BY: RMS
CKD BY: EPS
REVIEWED BY:
JH
SUBMITTED BY:
DATE: 3-30-2011
CONTRACT NO. W912ER-09-D-0002
DRAWING CODE:
FILE NAME: 40-Commercial-Vehicle-S-301.DWG
REV: 0
PLOT SCALE: VARIES
PLOT DATE: 3/30/2011

BAKER

U.S. ARMY ENGINEER DISTRICT, AFGHANISTAN CORPS OF ENGINEERS APO AE 09356

SITE ADAPT DESIGN
VM09 - VEHICLE MAINTENANCE BUILDING - ARCH SPAN
FOUNDATION SECTIONS

SHEET REFERENCE NUMBER:
S-301

3/30/2011 4:08 PM

A1 Size 594mm x 841mm

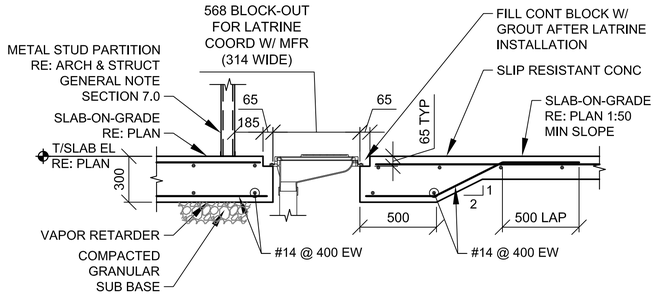

1 S-302 LATRINE SECTION
SCALE: 1:20

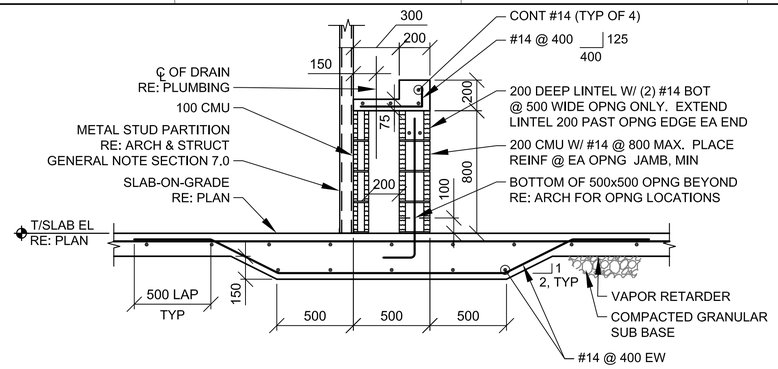

2 S-302 LAVATORY SINK SECTION
SCALE: 1:20

NOT USED

3 S-302 TRENCH DRAIN SECTION
SCALE: 1:10

NOT USED

4 S-302 SECTION
SCALE: 1:20

NOT USED

5 S-302 SECTION
SCALE: 1:20

NOT USED

6 S-302 CHAI BOILER SECTION
SCALE: 1:20

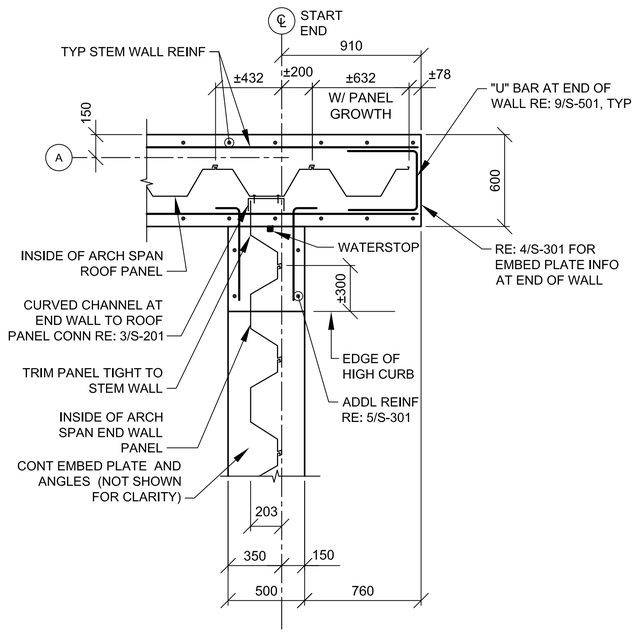

7 S-302 PLAN DETAIL
SCALE: 1:20

NOT USED

8 S-302 FIRE SHUTTER FDN SECTION
SCALE: 1:20

NOT USED

9 S-302 COLUMN/SLAB
INT ISOLATION JOINT
SCALE: NTS

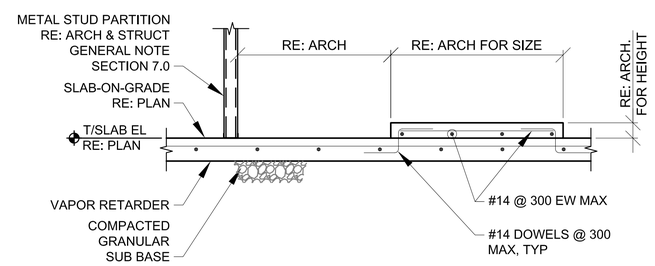

10 S-302 SHOWER SECTION
SCALE: 1:20

0 200 400 800
SCALE: 1:20

0 100 200 400
SCALE: 1:10

UNLESS OTHERWISE NOTED,
LINEAR DIMENSIONS
SHOWN ARE IN MILLIMETERS.

COMMONWEALTH OF PENNSYLVANIA
REGISTERED PROFESSIONAL
JOSEPH D. MEIER
PE-039925E

US ARMY CORPS
OF ENGINEERS
AFGHANISTAN NORTH
DISTRICT

SYMBOL	DESCRIPTION	DATE	APPR.	SYMBOL	DESCRIPTION	DATE	APPR.

DATE: 3/30/2011
REV: 0
CONTRACT NO. W912ER-09-D-0002
DRAWING CODE:
FILE NAME: vm09-phase4-sheet-s-302.dwg
PLOT SCALE: VARIES
PLOT DATE: 3/30/2011

DESIGNED BY: JDM
DWN BY: RMS
CKD BY: EPS
REVIEWED BY: JH
SUBMITTED BY:
BAKER

U.S. ARMY ENGINEER DISTRICT, AFGHANIST'AN
CORPS OF ENGINEERS
APO AE 09356

SITE ADAPT DESIGN
VM09 - VEHICLE MAINTENANCE BUILDING - ARCH SPAN
LATRINE SECTIONS AND DETAILS

SHEET
REFERENCE
NUMBER:
S-302

A1 Size 594mm x 841mm

3/30/2011 4:08 PM

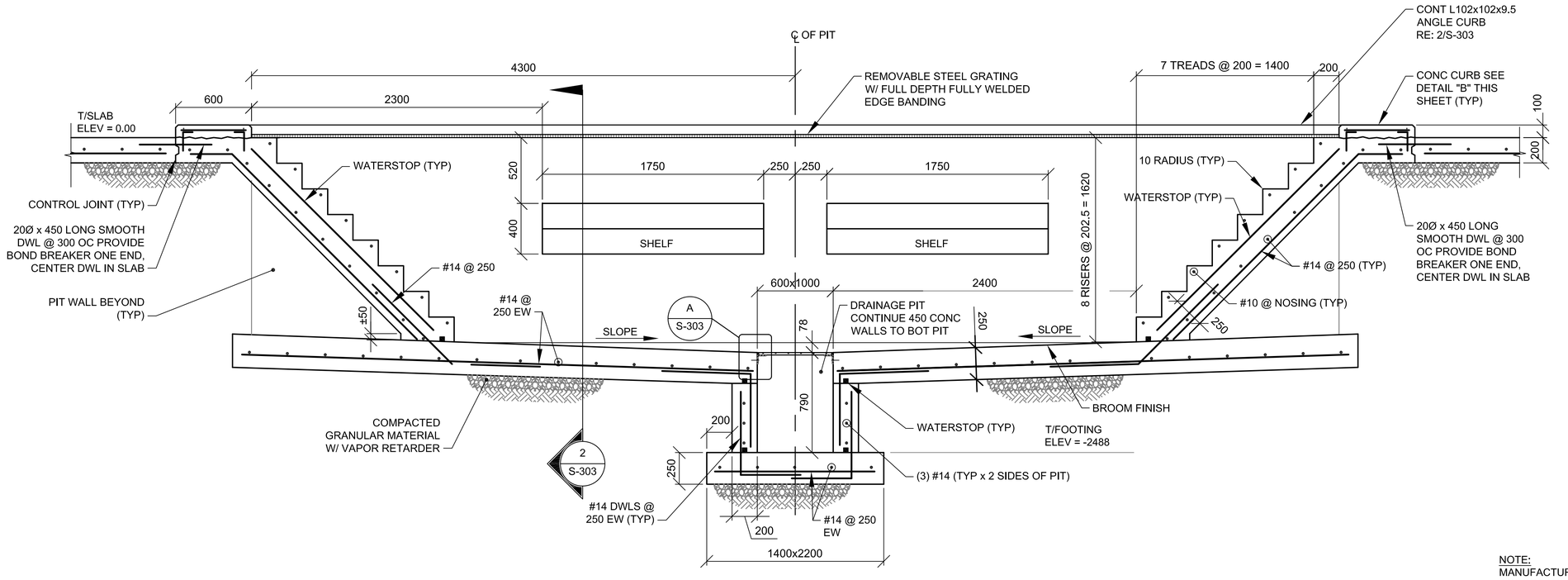

1 S-303 **SECTION**

SCALE: 1:20

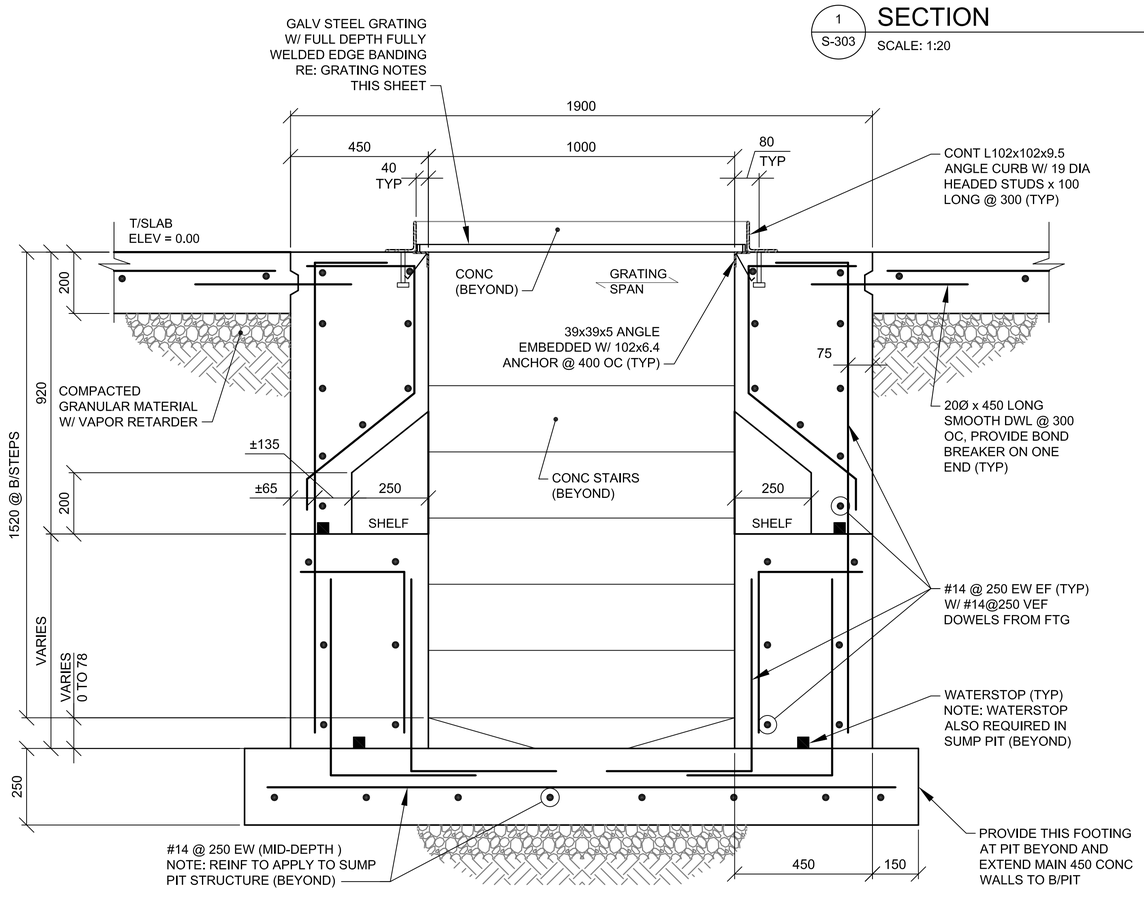

2 S-303 **SECTION**

SCALE: 1:10

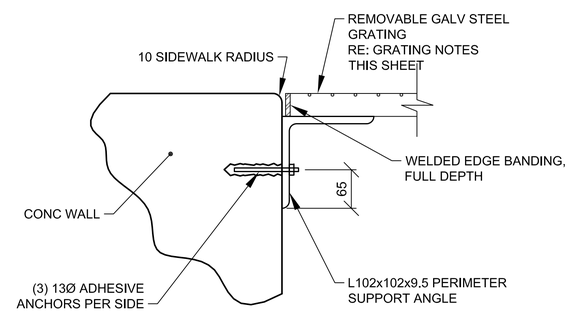

A S-303 **DETAIL**

SCALE: NTS

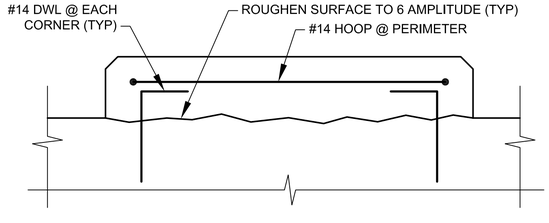

B S-303 **DETAIL**

SCALE: NTS

NOTE:
MANUFACTURE STEEL GRATING IN ACCORDANCE WITH THE "METAL BAR GRATING MANUAL" AS PUBLISHED BY THE NATIONAL ASSOCIATION OF ARCHITECTURAL METAL MANUFACTURERS, LATEST EDITION.

A. STEEL GRATING TO CONFORM TO ASTM A 1011M.
B. GRATING TO BE TYPE W-19-4 (25x4.8 BEARING BARS AT 30 WITH CROSS BARS AT 100) WITH GALVANIZED FINISH.

0 200 400 800
SCALE: 1:20

0 100 200 400
SCALE: 1:10

UNLESS OTHERWISE NOTED, LINEAR DIMENSIONS SHOWN ARE IN MILLIMETERS.

COMMONWEALTH OF PENNSYLVANIA
REGISTERED PROFESSIONAL
JOSEPH D. MEIER
PE-039926E
30 Mar 11

US ARMY CORPS OF ENGINEERS
AFGHANISTAN NORTH DISTRICT

SYMBOL	DESCRIPTION	DATE	APPR.	SYMBOL	DESCRIPTION	DATE	APPR.

DESIGNED BY: JDM
DWN BY: RMS
CKD BY: EPS
REVIEWED BY: JH
SUBMITTED BY:
DATE: 3-30-2011
CONTRACT NO. W912ER-09-D-0002
DRAWING CODE:
FILE NAME: ---
PLOT SCALE: VARIES
PLOT DATE: 3/30/2011
REV: 0

BAKER

U.S. ARMY ENGINEER DISTRICT, AFGHANISTAN
CORPS OF ENGINEERS
APO AE 09356

SITE ADAPT DESIGN
VM09 - VEHICLE MAINTENANCE BUILDING - ARCH SPAN
VMF PIT SECTIONS

SHEET REFERENCE NUMBER:
S-303

A1 Size 594mm x 841mm

3/30/2011 4:08 PM

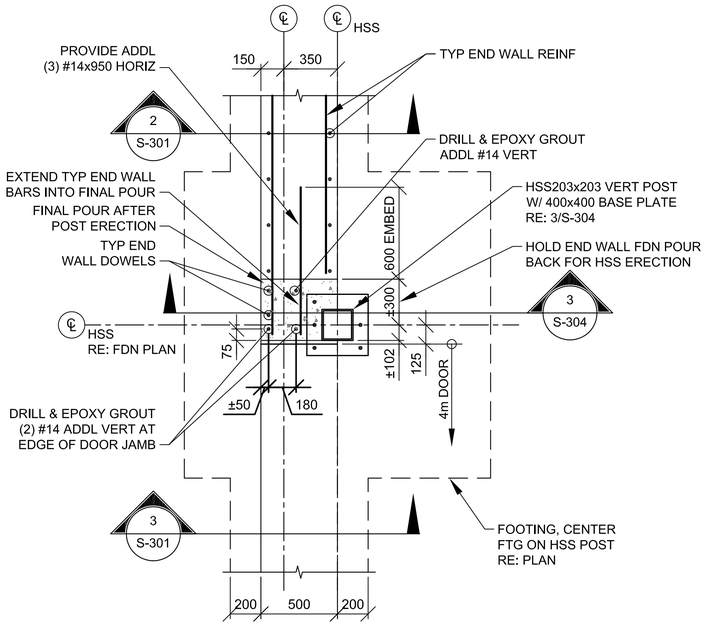

1 S-304 HSS POST AT OVER HEAD DOOR PLAN

SCALE: 1:20

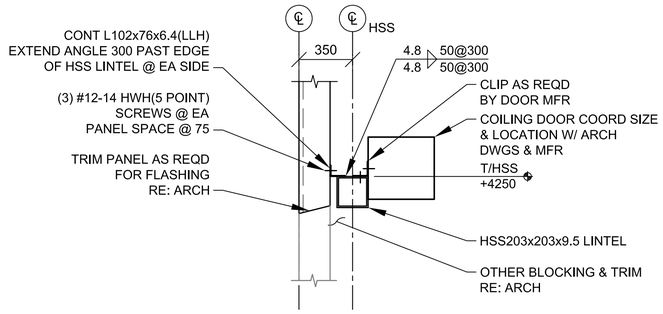

2 S-304 HSS LINTEL AT OVER HEAD DOOR

SCALE: 1:20

4 S-304 NOT USED

SCALE: 1:20

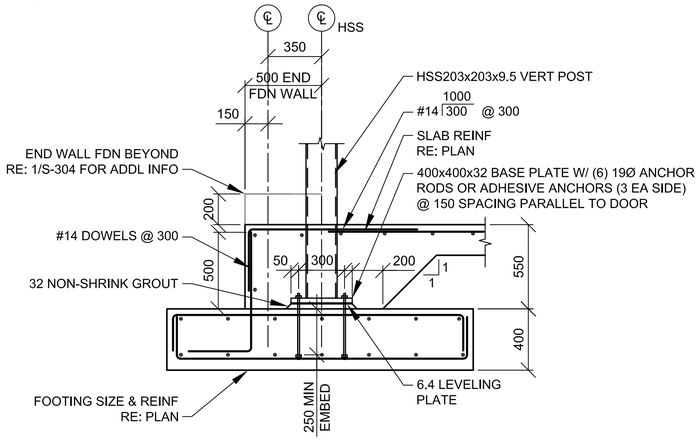

3 S-304 HSS POST AT OVER HEAD DOOR

SCALE: 1:20

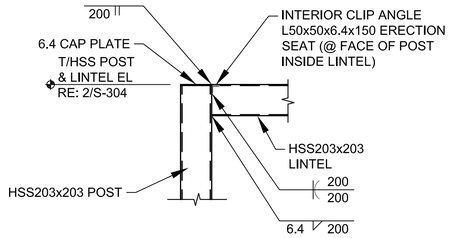

5 S-304 OVER HEAD DOOR POST TO LINTEL

SCALE: 1:20

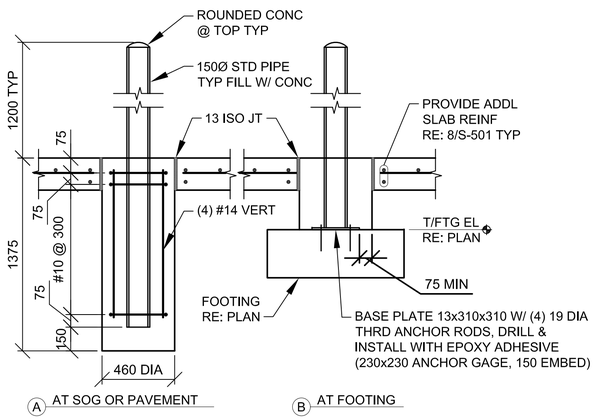

6 S-304 TYP BOLLARD DETAIL

SCALE: 1:20

0 200 400 800

SCALE: 1:20

UNLESS OTHERWISE NOTED,
LINEAR DIMENSIONS
SHOWN ARE IN MILLIMETERS.

COMMONWEALTH OF PENNSYLVANIA
REGISTERED PROFESSIONAL
JOSEPH D. MEIER
PE-039925E

US ARMY CORPS
OF ENGINEERS
AFGHANISTAN NORTH
DISTRICT

SYMBOL	DESCRIPTION	DATE	APPR.	SYMBOL	DESCRIPTION	DATE	APPR.

DESIGNED BY: JDM
DWN BY: RMS
CKD BY: EPS
REVIEWED BY: JH
SUBMITTED BY:
DATE: 3/30/2011
CONTRACT NO. W912ER-09-D-0002
DRAWING CODE:
REV: 0
FILE NAME: wed-jmeier-sheet-s-304.dwg
PLOT SCALE: VARIES
PLOT DATE: 3/30/2011

BAKER

U.S. ARMY ENGINEER DISTRICT, AFGHANIST'AN
CORPS OF ENGINEERS
APO AE 09356

SITE ADAPT DESIGN

VM09 - VEHICLE MAINTENANCE BUILDING - ARCH SPAN
OVER HEAD DOOR SECTIONS

SHEET
REFERENCE
NUMBER:

S-304

A1 Size 594mm x 841mm

3/30/2011 4:08 PM

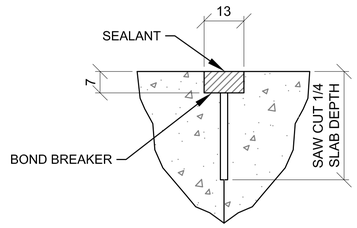

CONTROL JOINT DETAIL

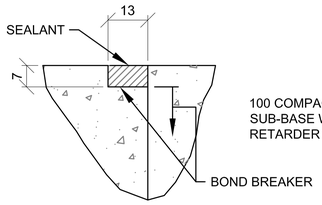

CONSTRUCTION JOINT DETAIL

1 / S-501 TYP CONCRETE SLAB JOINT FINISH DETAILS

SCALE: NTS

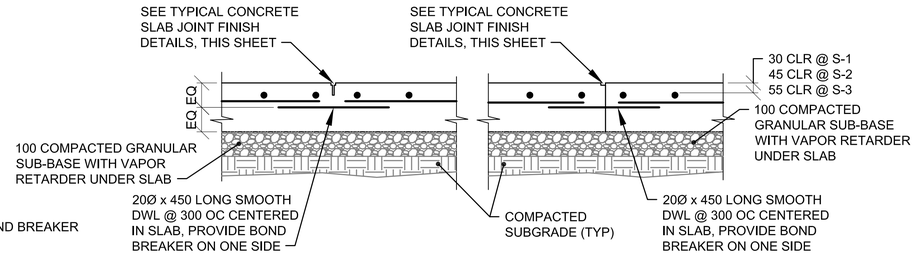

CONTROL JOINT DETAIL

CONSTRUCTION JOINT DETAIL

2 / S-501 TYP SLAB ON GRADE JOINT DETAILS

SCALE: NTS

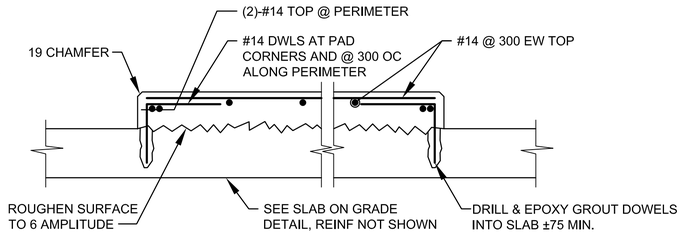

3 / S-501 INTERIOR EQUIPMENT PAD DETAIL

SCALE: NTS

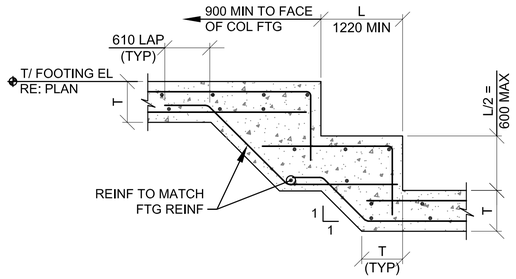

4 / S-501 STEPPED FOOTING (2 LAYERS REINF)

SCALE: NTS

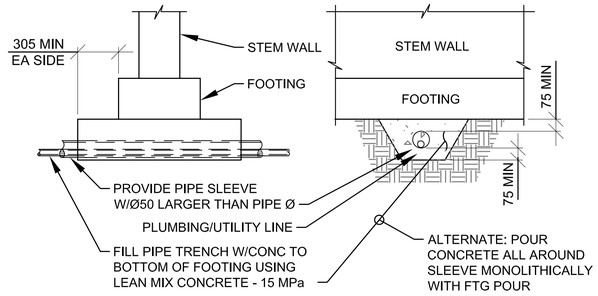

5 / S-501 UTILITY PIPE UNDER WALL FTG

SCALE: NTS

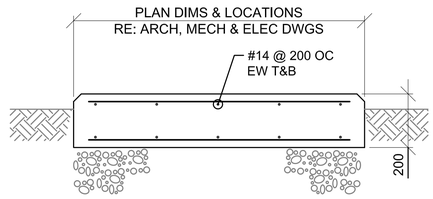

NOTES:
1. COORDINATE SIZE & LOCATION WITH EQUIPMENT REQUIREMENTS.
2. CHAMFER ALL EDGES 25 TYPICAL.

6 / S-501 EQUIPMENT PAD (EXTERIOR)

SCALE: NTS

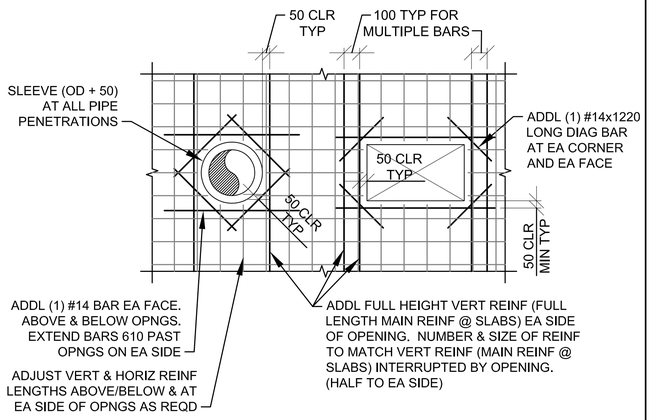

7 / S-501 OPENING THRU CONC WALL

SCALE: NTS

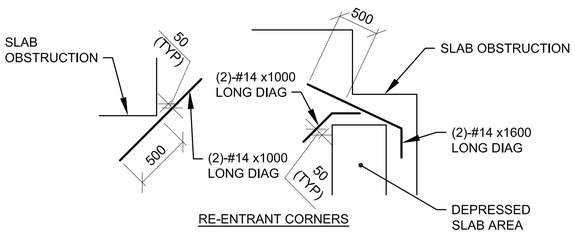

RE-ENTRANT CORNERS

DETAIL NOTES:
1. WHERE MORE THAN ONE ADDITIONAL BAR IS REQUIRED PARALLEL TO THE EXISTING SLAB/WALL REINFORCING THE ADDITIONAL REINFORCING BARS SHALL BE SPACED AT 100 ON CENTER.
2. ADDITIONAL REINFORCING PARALLEL TO THE SLAB/WALL REINFORCING SHALL BE #16 BARS THAT PROVIDE A STEEL AREA ON EACH SIDE OF THE OPENING EQUAL TO 1/2 THE AREA OF THE REINFORCING CUT BY THE OPENING.
3. FOR OPENINGS WITH SIDES OR DIAMETERS LESS THAN 300 SPREAD THE SLAB/WALL REINFORCING TO CLEAR THE OPENING.

8 / S-501 CONCRETE REINF DETAILS

SCALE: NTS

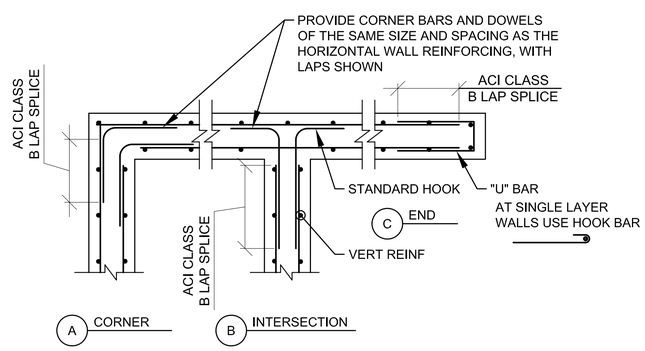

9 / S-501 CONCRETE WALL CORNER REINFORCING

SCALE: NTS

NOTE:
WALLS WITH SINGLE LAYER OF REINFORCING SIMILAR

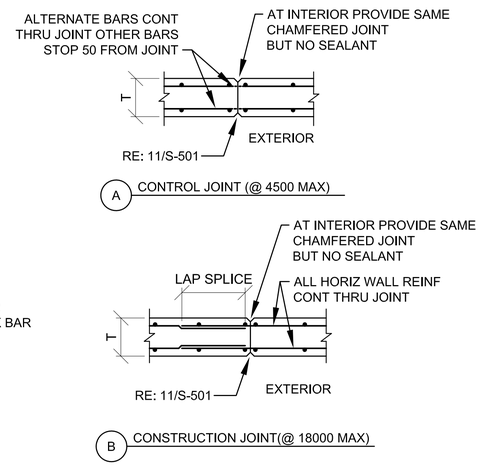

10 / S-501 CONCRETE WALL JOINTS

SCALE: NTS

NOTE:
WALLS WITH SINGLE LAYER OF REINFORCING SIMILAR

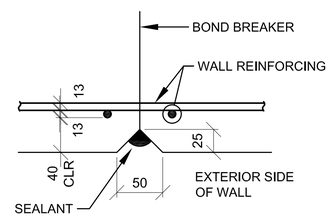

11 / S-501 TYP CONCRETE WALL JOINT FINISH DETAIL

SCALE: NTS

UNLESS OTHERWISE NOTED, LINEAR DIMENSIONS SHOWN ARE IN MILLIMETERS.

COMMONWEALTH OF PENNSYLVANIA
REGISTERED PROFESSIONAL
JOSEPH D. MEIER
PE-039925E
30 Mar 11

US ARMY CORPS OF ENGINEERS
AFGHANISTAN NORTH DISTRICT

SYMBOL	DESCRIPTION	DATE	APPR.	SYMBOL	DESCRIPTION	DATE	APPR.

U.S. ARMY ENGINEER DISTRICT, AFGHANISTAN
CORPS OF ENGINEERS
APO AE 09356

DESIGNED BY: JDM | DWN BY: RMS | CKD BY: EPS | REVIEWED BY: JH | SUBMITTED BY: BAKER

DATE: 3/30/2011 | REV: 0
CONTRACT NO. W912ER-09-D-0002
DRAWING CODE:
FILE NAME: W912ER-09-D-0002 - VM09 - S-501.DWG
PLOT SCALE: VARIES
PLOT DATE: 3/30/2011

SITE ADAPT DESIGN
VM09 - VEHICLE MAINTENANCE BUILDING - ARCH SPAN
TYPICAL DETAILS

SHEET REFERENCE NUMBER:
S-501

A1 Size 594mm x 841mm

3/30/2011 4:18 PM

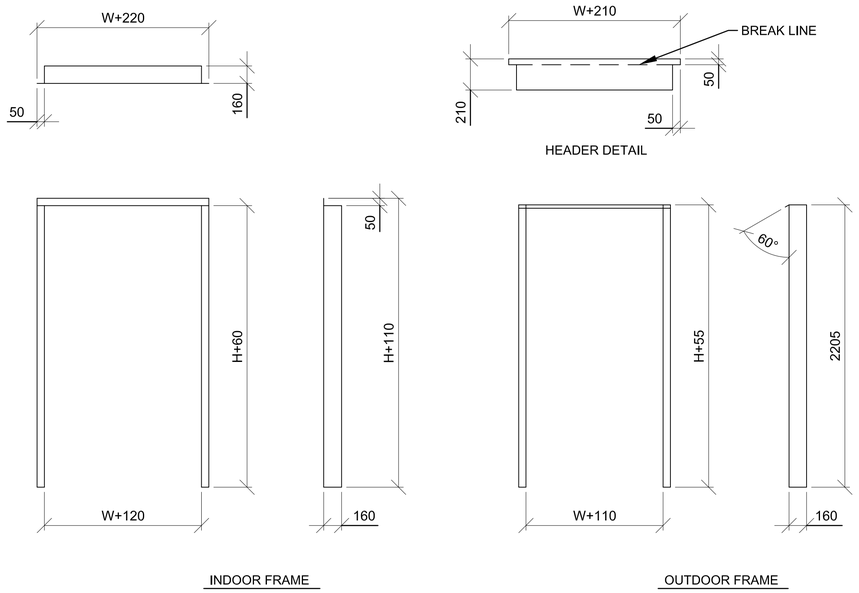

1 / S-502 240 DOOR DETAIL

SCALE: NTS

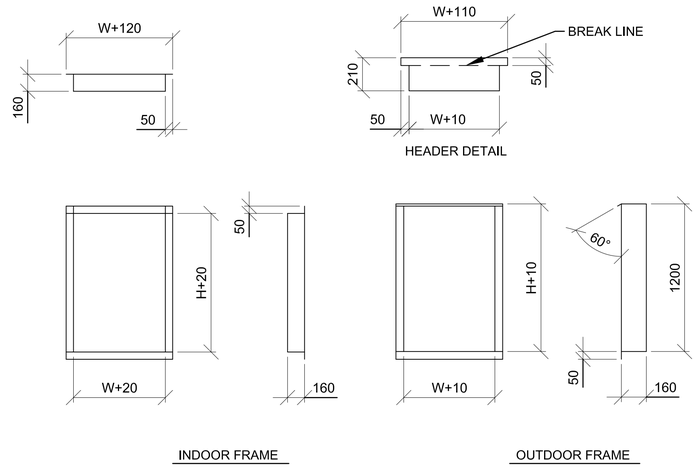

2 / S-502 240 WINDOW/MECHANICAL OPENING DETAIL

SCALE: NTS

DOOR & WINDOW FRAME NOTES:

1. ALL DIMENSIONS ARE INSIDE DIMENSIONS.
2. WELD AND GRIND SMOOTH ALL CORNERS.
3. FRAME THICKNESS = 2.5mm.
4. ALL FRAMES, INTERIOR AND EXTERIOR, TO BE GALVANIZED.
5. RE: 1/A-601 FOR DOOR WIDTHS (W) AND HEIGHTS (H).
6. RE: 3/A-601 FOR WINDOW WIDTHS (W) AND HEIGHTS (H).
7. RE: SCHEDULE BELOW FOR LOUVER DIMENSIONS.
8. CUT OPENING DIMENSIONS:
   - WINDOW/LOUVER - W+130
   - DOOR - W+130
   - WINDOW/LOUVER - H+30
   - DOOR - H+65
9. RE: 3/S-502 FOR TYP JAMB DETAIL

MECH OPENING FRAME SCHEDULE		
TYPE	W	H
M1	464	464
M2	650	350
M3	1050	900
M4	450	450

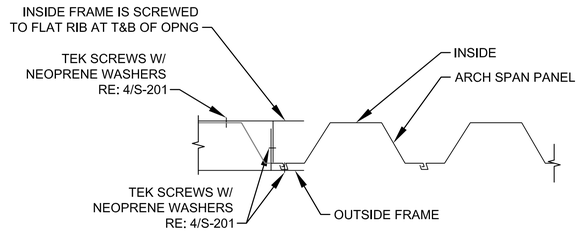

3 / S-502 TYP JAMB SECTION

SCALE: NTS

UNLESS OTHERWISE NOTED,
LINEAR DIMENSIONS
SHOWN ARE IN MILLIMETERS.

COMMONWEALTH OF PENNSYLVANIA
REGISTERED PROFESSIONAL
JOSEPH D. MEIER
PE-039925E

US ARMY CORPS
OF ENGINEERS
AFGHANISTAN NORTH
DISTRICT

SYMBOL	DESCRIPTION	DATE	APPR.	SYMBOL	DESCRIPTION	DATE	APPR.

DATE: 3/30/2011
REV: 0
CONTRACT NO. W912ER-09-D-0002
DRAWING CODE:
FILE NAME: wec-ccr-mar-vw09-s-502.dwg
PLOT SCALE: VARIES
PLOT DATE: 3/30/2011

DESIGNED BY: JDM
DWN BY: RMS
CKD BY: EPS
REVIEWED BY: JH
SUBMITTED BY:

BAKER

U.S. ARMY ENGINEER DISTRICT, AFGHANIST'AN
CORPS OF ENGINEERS
APO AE 09356

SITE ADAPT DESIGN

VM09 - VEHICLE MAINTENANCE BUILDING - ARCH SPAN

DOOR/WINDOW/MECHANICAL
OPENING FRAME DETAILS

SHEET
REFERENCE
NUMBER:

S-502

3/30/2011 4:17 PM

A1 Size 594mm x 841mm

CONCRETE REINFORCEMENT TENSION DEVELOPMENT/LAP SPLICE SCHEDULE

f'c = 28 MPa	LAP CLASS	UNCOATED BARS			
		TOP BARS		OTHER BARS	
METRIC BAR SIZES		CASE 1	CASE 2	CASE 1	CASE 2
#10 TO #20	A	50 BAR DIA	74 BAR DIA	38 BAR DIA	57 BAR DIA
	B	64 BAR DIA	96 BAR DIA	50 BAR DIA	74 BAR DIA
#25 TO #50	A	62 BAR DIA	93 BAR DIA	48 BAR DIA	71 BAR DIA
	B	80 BAR DIA	121 BAR DIA	62 BAR DIA	93 BAR DIA

NOTES:
1. TABULATED TENSION DEVELOPMENT LENGTH VALUES ARE TAKEN FROM CRSI DESIGN HANDBOOK 2008 10TH ED.
2. TENSION DEVELOPMENT & TENSION LAP SPLICE LENGTHS ARE EXPRESSED AS MULTIPLES OF BAR DIAMETERS.
3. TABULATED VALUES ARE BASED ON MINIMUM YIELD STRENGTH OF REINFORCEMENT, fy, OF 420MPa.
4. CONCRETE IS NORMAL WEIGHT (2400Kg/m^3) AND 28 DAY COMPRESSIVE STRENGTH = 28MPa.
5. TABULATED VALUES FOR BEAMS & COLUMNS ARE BASED ON TRANSVERSE REINFORCEMENT AND CONCRETE COVER MEETING MINIMUM CODE REQUIREMENTS.
6. CASES 1 & 2, WHICH DEPEND ON THE TYPE OF STRUCTURAL MEMBER, CONCRETE COVER, AND CENTER-TO-CENTER SPACING OF THE BARS ARE DEFINED IN THE TABLE BELOW.
7. LAP SPLICE LENGTHS (MINIMUM 300mm) ARE MULTIPLES OF TENSION DEVELOPMENT LENGTHS: CLASS A = 1.0(TENSION DEVELOPMENT LENGTH) & CLASS B = 1.3(TENSION DEVELOPMENT LENGTH)
8. TOP BARS ARE HORIZONTAL REINFORCEMENT WITH MORE THAN 300mm OF CONCRETE CAST BELOW THE BARS.
9. IT SHALL BE PERMISSIBLE TO CALCULATE WALL AND SLAB REINFORCEMENT TENSION DEVELOPMENT/SPLICE LENGTHS IN ACCORDANCE WITH ACI 12.2.3 OR TABLE 5.3(b) OF CRSI 2008 IN LIEU OF VALUES TABULATED ABOVE.

BEAMS, COLUMNS	CASE 1	CONCRETE COVER AT LEAST 1 BAR DIA AND CENTER-TO-CENTER SPACING AT LEAST 2 BAR DIA
	CASE 2	CONCRETE COVER LESS THAN 1 BAR DIA OR CENTER-TO-CENTER SPACING LESS THAN 2 BAR DIA
ALL OTHERS	CASE 1	CONCRETE COVER AT LEAST 1 BAR DIA AND CENTER-TO-CENTER SPACING AT LEAST 3 BAR DIA
	CASE 2	CONCRETE COVER LESS THAN 1 BAR DIA OR CENTER-TO-CENTER SPACING LESS THAN 3 BAR DIA

CONCRETE COVER SCHEDULE

MINIMUM CONCRETE COVER PROTECTION FOR REINFORCEMENT BARS SHALL BE AS LISTED BELOW: (SEE ACI 318M-05, SECTION 7.7 FOR CONDITIONS NOT NOTED). DIMENSIONS FOR BAR PLACEMENT GIVEN IN SECTIONS AND DETAILS SHALL SUPERSEDE MINIMUM COVER REQUIREMENTS GIVEN HERE. DIMENSIONS ARE IN mm. PROVIDE STANDARD BAR CHAIRS AND SUPPORT BARS @1200mm MAXIMUM AS REQUIRED TO MAINTAIN CONCRETE PROTECTION SPECIFIED.

FOOTINGS (EARTH FORMED):	70
COLUMNS / PIERS (TO TIES)	40
ELEVATED BEAMS & SLABS:	
BEAM TIES & STIRRUPS (NOT EXPOSED TO WEATHER)	40
BEAM TIES & STIRRUPS (EXPOSED TO WEATHER)	50
SLABS (NOT EXPOSED TO WEATHER)	20
SLABS (EXPOSED TO WEATHER)	
#19 & LARGER	50
#16 & SMALLER	40
SLABS ON GRADE	
NOT EXPOSED TO WEATHER (FROM TOP)	20
EXPOSED TO WEATHER (FROM TOP)	40
UTILITY TUNNEL WALLS, RETAINING WALLS AND SHEAR WALLS. (NO SURFACES SHALL BE EARTH FORMED)	
EARTH SIDE AND FRONT SIDE (EXPOSED TO WEATHER)	
#16 BAR AND SMALLER	40
#19 THRU #36 BAR	50

STANDARD HOOKS IN TENSION PER (ACI 318M-05) f'c = 28 MPa

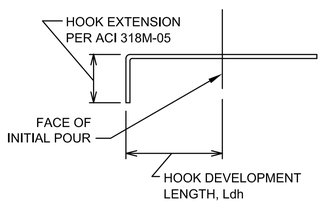

METRIC BAR SIZE	HOOK DEVELOPMENT LENGTH (mm) ldh
#10	190
#12	229
#14	267
#16	305
#20	381
#25	476
#28	533
#32	610
#40	762
#50	953

NOTES:
1. CONCRETE IS NORMAL WEIGHT CONCRETE.
2. BAR YIELD STRENGTH, fy = 420 MPa
3. SIDE COVER REQUIREMENTS OF ACI SECT. 12.5.3 ARE ASSUMED TO NOT BE MET.
4. TIE OR STIRRUP REQUIREMENTS OF ACI SECT. 12.5.3 ARE ASSUMED TO NOT BE MET.
5. REDUCTION FOR EXCESS REINFORCEMENT IS NOT TAKEN.
6. HOOK DEVELOPMENT LENGTH IS VALID FOR 180° HOOKS ALSO.

UNLESS OTHERWISE NOTED, LINEAR DIMENSIONS SHOWN ARE IN MILLIMETERS.

COMMONWEALTH OF PENNSYLVANIA
REGISTERED PROFESSIONAL
JOSEPH D. WEIER
PE-039935E
30 MAR 11

US ARMY CORPS OF ENGINEERS
AFGHANISTAN NORTH DISTRICT

SYMBOL	DESCRIPTION	DATE	APPR.	SYMBOL	DESCRIPTION	DATE	APPR.

DESIGNED BY: JDM
DWN BY: RMS
CKD BY: EPS
REVIEWED BY: JH
SUBMITTED BY: BAKER
DATE: 3/30/2011
REV. 0
CONTRACT NO. W912ER-09-D-0002
DRAWING CODE:
FILE NAME: W912ER-09-D-0002 - VM09 - SITE ADAPT - DESIGN - S-601.DWG
PLOT SCALE: VARIES
PLOT DATE: 3/30/2011

U.S. ARMY ENGINEER DISTRICT, AFGHANISTAN
CORPS OF ENGINEERS
APO AE 09356

SITE ADAPT DESIGN
VM09 - VEHICLE MAINTENANCE BUILDING - ARCH SPAN
DRAWING TITLE

SHEET REFERENCE NUMBER:
S-601

A1 Size 594mm x 841mm

3/30/2011 4:17 PM

SCOPE RESPONSIBILITIES SCHEDULE

ITEM	FURNISHED BY	INSTALLED BY	FINAL CONNECTION BY
FREESTANDING FURNITURE	GOVT	GOVT	--
SYSTEMS FURNITURE	GOVT	GOVT	CONTR
OFFICE EQUIPMENT, PERMANENTLY INSTALLED	GOVT	GOVT	GOVT
WORKBENCHES	GOVT	GOVT	CONTR
METAL UTILITY STORAGE SHELVING	CONTR	CONTR	--
EQUIPMENT, PORTABLE	GOVT	GOVT	--
EQUIPMENT, PERMANENTLY INSTALLED	CONTR	CONTR	CONTR
EQUIPMENT RACKS IN IT ROOMS	CONTR	CONTR	--
FIRE EXTINGUISHERS AND CABINETS	CONTR	CONTR	--
TELEPHONE SWITCH AND HANDSETS	GOVT	GOVT	GOVT
SECURE TELEPHONE INSTRUMENTS (STEs)	GOVT	GOVT	GOVT

ABBREVIATIONS

ACP	ACOUSTIC CEILING PANEL
AFF	ABOVE FINISH FLOOR
ALUM	ALUMINUM
AUTO	AUTOMATIC
ABV	ABOVE
AT/FP	ANTI-TERRORISM FORCE PROTECTION
BC	BOTTOM OF CURB
B.O.	BOTTOM OF
BLK	BLOCK
BRG	BEARING
BLKG	BLOCKING
BD	BOARD
BLDG	BUILDING
CLG	CEILING
CONC	CONCRETE
CONT	CONTINUOUS
CONTR	CONTRACTOR
CMU	CONCRETE MASONRY UNIT
CT	CERAMIC TILE
C.J.	CONTROL JOINT
CRS	COURSE
DIAM	DIAMETER
DN	DOWN
DTL	DETAIL
DWG	DRAWING
EA	EACH
EIFS	EXTERIOR INSULATION AND FINISH SYSTEM
EWC	ELECTRIC WATER COOLER
EXP	EXPANSION
EXT	EXTERIOR
EQUIP	EQUIPMENT
ELEC	ELECTRIC
EL	ELEVATION
EMER	EMERGENCY
EQ	EQUAL
F/	FACE OF
FE	FIRE EXTINGUISHER
FEC	FIRE EXTINGUISHER CABINET
FIBERBD	FIBER BOARD
FL	FLOOR
FD	FLOOR DRAIN
FTG	FOOTING
GA	GAUGE
GALV	GALVANIZED
GC	GENERAL CONTRACTOR
GL	GLASS
GOVT	GOVERNMENT
GYP	GYPSUM
GWB	GYPSUM WALLBOARD
HT	HEIGHT
HC	HANDICAPPED
HDW	HARDWARE
HTG	HEATING
HVAC	HEATING/VENTILATING/ AIR CONDITIONING
HM	HOLLOW METAL
INSUL	INSULATION
INT	INTERIOR
JT	JOINT
JAN	JANITOR
LAM	LAMINATE
LAV	LAVATORY
LH	LEFT HAND
LT	LIGHT
LVR	LOUVER
MAS	MASONRY
MAX	MAXIMUM
MECH	MECHANICAL
MFR	MANUFACTURER
MIN	MINIMUM
MIR	MIRROR
MISC	MISCELLANEOUS
MO	MASONRY OPENING
MR	MOISTURE RESISTANT
MS	METAL STUD
MTL	METAL
NA	NOT APPLICABLE
NO	NUMBER
NOM	NOMINAL
NTS	NOT TO SCALE
NIC	NOT IN CONTRACT
OPG	OPENING
OC	ON CENTER
OH	OVERHEAD
OPP	OPPOSITE
PL	PLATE
PLAM	PLASTIC LAMINATE
PLYWD	PLYWOOD
PNL	PANEL
PREF	PREFABRICATED
PERF	PERFORATED
PR	PAIR
PT	PAINT
QT	QUARRY TILE
R	RISER
RAD	RADIUS
RD	ROOF DRAIN
REF	REFERENCE
REINF	REINFORCED
RH	RIGHT HAND
ROW	RIGHT OF WAY
RM	ROOM
RO	ROUGH OPENING
RWC	RAINWATER CONDUCTOR
SIM	SIMILAR
STL	STEEL
STR	STRUCTURE
ST0	STORAGE
SPEC	SPECIFICATION
SS	STAINLESS STEEL
STN	STAIN
STD	STANDARD
SUSP	SUSPENDED
TC	TOP OF CURB
TH	THICK
TYP	TYPICAL
TR	TREAD
T.O.	TOP OF
TELE	TELEPHONE
TEMP	TEMPERED/TEMPORARY
UNF	UNFINISHED
UNO	UNLESS NOTED OTHERWISE
USAR	UNITED STATES ARMY RESERVE
VERT	VERTICAL
VIF	VERIFY IN FIELD
VTR	VENT THROUGH ROOF
WD	WOOD
WH	WATER HEATER
WWF	WELDED WIRE FABRIC
W/O	WITHOUT

PROJECT NOTES

STANDARDS AND REGULATIONS:

1) CONTRACTOR SHALL PERFORM ALL WORK IN CONFORMANCE WITH APPLICABLE BUILDING CODES, REGULATIONS, ORDINANCES, UTILITY PROVIDER REQUIREMENTS, AND SIMILAR STANDARDS.

2) CONTRACTOR SHALL OBTAIN ALL REQUIRED INSPECTIONS OF THE WORK. CONTRACTOR SHALL REGULARLY UPDATE OWNER AND ARCHITECT REGARDING THE STATUS OF INSPECTIONS.

3) CONTRACTOR SHALL COORDINATE WORK WITH APPLICABLE UTILITY PROVIDERS.

4) CONTRACTOR SHALL BE FAMILIAR WITH REQUIREMENTS AND CONSTRUCTION SHALL BE IN COMPLIANCE WITH REFERENCED FIRE-RATED ASSEMBLY TESTS AND STANDARDS.

ADMINISTRATION OF THE WORK:

1) CONTRACTOR SHALL BE SOLELY RESPONSIBLE FOR THE MEANS, METHODS, AND SEQUENCES OF CONSTRUCTION AND DIMENSIONS.

2) CONTRACTOR SHALL BE SOLELY RESPONSIBLE FOR THE SAFETY OF ALL CONSTRUCTION PERSONNEL AND AUTHORIZED VISITORS AT THE SITE.

3) CONTRACTOR SHALL BECOME FULLY ACQUAINTED WITH CONDITIONS RELATED TO THE WORK. ANY KNOWN DISCREPANCIES BETWEEN THE DOCUMENTS AND THE ACTUAL CONDITIONS SHALL BE REPORTED TO THE OWNER FOR RESOLUTION PRIOR TO PROCEEDING WITH WORK RELATED TO THE DISCREPANCY.

4) CONTRACTOR SHALL REMOVE AND PROPERLY DISPOSE OF ALL CONSTRUCTION AND DEMOLITION DEBRIS. CONTRACTOR SHALL OBTAIN APPROVAL OF OWNER FOR DETAILS RELATING TO THE REMOVAL OF TRASH, INCLUDING SUCH ISSUES AS PATH OF TRAVEL, USE OF STAIRS AND ELEVATORS, REMOVAL OF WINDOWS, LOCATION OF CHUTES AND DUMPSTERS, ETC., PRIOR TO REMOVAL OF DEBRIS. CONTRACTOR SHALL CLEAN AND REPAIR ANY DAMAGES TO EXISTING ITEMS SOILED OR DAMAGED BY THE DEBRIS REMOVAL PROCESS. IF CLEANING AND/OR REPAIR DOES NOT RETURN ITEMS TO ORIGINAL CONDITION CONTRACTOR SHALL INSTALL NEW ITEMS.

5) CONTRACTOR SHALL BECOME FAMILIAR WITH AND COMPLY WITH OWNER'S PROCEDURES FOR MAINTAINING A SECURE SITE AND BUILDING.

6) EACH INSTALLER SHALL EXAMINE ALL SUBSTRATE CONDITIONS AND/OR SITE CONDITIONS WHICH AFFECT THE QUALITY OF EACH PRODUCT TO BE INSTALLED. IF ANY CONDITIONS EXIST WHICH WILL HAVE A DETRIMENTAL EFFECT ON THE QUALITY OF THE INSTALLATION, THE INSTALLER SHALL IMMEDIATELY NOTIFY THE CONTRACTOR. INSTALLATION SHALL NOT PROCEED UNTIL THE UNSATISFACTORY CONDITIONS ARE CORRECTED. INSTALLATION SHALL SIGNIFY ACCEPTANCE OF THE CONDITIONS.

7) CONTRACTOR SHALL MAINTAIN RECORD DRAWINGS ON THE SITE AT ALL TIMES.

8) CONTRACTOR SHALL BE RESPONSIBLE FOR ENSURING COORDINATION EFFORTS OF ALL SUBCONTRACTORS.

9) CONTRACTOR SHALL LAY OUT ALL WORK AS SOON AS POSSIBLE. ANY DISCREPANCIES SHALL BE REPORTED TO THE OWNER FOR RESOLUTION PRIOR TO PROCEEDING WITH THE WORK IN QUESTION.

10) DO NOT ATTACH OR HANG ANY ITEMS DIRECTLY FROM ARCH-SPAN PANELS. ATTACH ONLY TO BUILDING TABS LOCATED WITHIN PANEL JOINTS

11) CONTRACTOR TO PROVIDE ALL NECESSARY BLOCKING TO SUPPORT WALL & CEILING MOUNTED EQUIPMENT, FIXTURES AND ACCESSORIES.

USE OF CONSTRUCTION DOCUMENTS:

1) DO NOT SCALE DRAWINGS. ONLY WRITTEN DIMENSIONS OR KEYED NOTES SHALL BE USED. CONTACT ARCHITECT IF CLARIFICATION OR ADDITIONAL INFORMATION IS REQUIRED.

2) THE DRAWINGS ARE SCHEMATIC IN NATURE. MODIFICATIONS IN DUCTS, PIPING, CONDUIT AND WIRING MAY BE REQUIRED TO ACCOMMODATE ACTUAL FIELD CONDITIONS.

3) DRAWINGS SHALL NOT BE REPRODUCED FOR SUBMITTALS.

4) DIMENSIONS ARE AS FOLLOWS UNLESS NOTED OTHERWISE:
   A) TO CENTER LINE OF INTERIOR PARTITIONS
   B) TO CENTERLINE OF COLUMNS.
   C) TO TOP OF FLOOR SLAB.
   D) TO BOTTOM OF FINISHED CEILING.
   E) TO EXTERIOR FACE OF ARCH SPAN PANEL OR TO FACE OF MASONRY OR CONCRETE.

5) VERIFY IN FIELD DIMENSIONS OF ALL DOOR, WINDOW AND LOUVER OPENINGS.

DEFINITIONS:

1) "ALIGN" AS USED IN THESE DOCUMENTS SHALL MEAN TO ACCURATELY LOCATE FINISH FACES IN THE SAME PLANE AND/OR TO INSTALL NEW CONSTRUCTION ADJACENT TO EXISTING CONSTRUCTION WITHOUT ANY VISIBLE JOINTS OR SURFACE IRREGULARITIES.

2) "CLEAR" AS USED IN THESE DOCUMENTS SHALL MEAN THAT THE CONDITION IS NOT ADJUSTABLE WITHOUT APPROVAL OF THE ARCHITECT. CLEAR DIMENSIONS ARE TYPICALLY TO FINISH FACE.

3) "MAXIMUM" OR "MAX" AS USED IN THESE DOCUMENTS SHALL MEAN THAT THE CONDITION IS SLIGHTLY ADJUSTABLE BUT MAY NOT VARY TO A DIMENSION OR QUANTITY GREATER THAN THAT SHOWN WITHOUT APPROVAL OF THE ARCHITECT.

4) "MINIMUM" OR "MIN" AS USED IN THESE DOCUMENTS SHALL MEAN THAT THE CONDITION IS SLIGHTLY ADJUSTABLE BUT MAY NOT VARY TO A DIMENSION OR QUANTITY LESS THAN THAT SHOWN WITHOUT APPROVAL OF THE ARCHITECT.

5) "TYPICAL" AS USED IN THESE DOCUMENTS SHALL MEAN THAT THE CONDITION OR DIMENSION IS THE SAME OR REPRESENTATIVE FOR SIMILAR CONDITIONS THROUGHOUT.

6) "*" AS USED IN THESE DOCUMENTS SHALL MEAN THAT THE DIMENSION OR QUALITY IS SLIGHTLY ADJUSTABLE TO ACCOMMODATE ACTUAL CONDITIONS. FIELD VERIFICATION AND COORDINATION WITH OTHER ELEMENTS MIGHT BE NECESSARY.

SYMBOLS LEGEND

ROOM NAME XXXX — ROOM NAME / ROOM NUMBER

X — PARTITION TYPE

XXX, 150 UNO — DOOR NUMBER; PROVIDE 150 HINGE SIDE WALL RETURN ON DOORS, U.N.O. OR CENTER IN WALL

1 / A-101 — SECTION CALL-OUT

1 / A-101 — DETAIL CALL-OUT

A / B / C / D, 1 / A-101 — INTERIOR ELEVATION CALL-OUT

XX — KEYNOTE

X — WINDOW TYPE

1 / A-101 — ELEVATION CALL-OUT

/ A-### — DETAIL REFERENCE NUMBER; SHEET NUMBER DETAIL IS DRAWN ON

ELEVATION MARK

METAL STUD AND GWB PARTITION

CONCRETE

BRICK

CONCRETE BLOCK

FIBERGLASS BATT INSULATION

RIGID BOARD INSULATION

CONCRETE OR GROUT (DRAWN IN SECTION)

CONCRETE PAVING (DRAWN IN PLAN)

UNLESS OTHERWISE NOTED, LINEAR DIMENSIONS SHOWN ARE IN MILLIMETERS.

COMMONWEALTH OF VIRGINIA
PETER GARRETT SCHMIDT
No. 013167
ARCHITECT

US ARMY CORPS OF ENGINEERS
AFGHANISTAN NORTH DISTRICT

SYMBOL	DESCRIPTION	DATE	APPR.	SYMBOL	DESCRIPTION	DATE	APPR.

U.S. ARMY ENGINEER DISTRICT, AFGHANISTAN
CORPS OF ENGINEERS
APO AE 09356

DESIGNED BY: PGS, SE, MR
DWN BY: SE, MDH, AH
CKD BY: PGS, SE, MR
REVIEWED BY:
SUBMITTED BY:
DATE: 3/30/2011
CONTRACT NO. W912ER-09-D-0002
DRAWING CODE:
FILE NAME: ARCHSPANAF-VM09A-A-001.DWG
PLOT SCALE: NONE
PLOT DATE: 3/30/2011
REV: 0

BAKER

SITE ADAPT DESIGN

VM09 - VEHICLE MAINTENANCE BUILDING - ARCH SPAN

ABBREVIATIONS, SYMBOLS, AND GENERAL NOTES

SHEET REFERENCE NUMBER:

A-001

A1 Size 594mm x 841mm

3/30/2011 4:09 PM

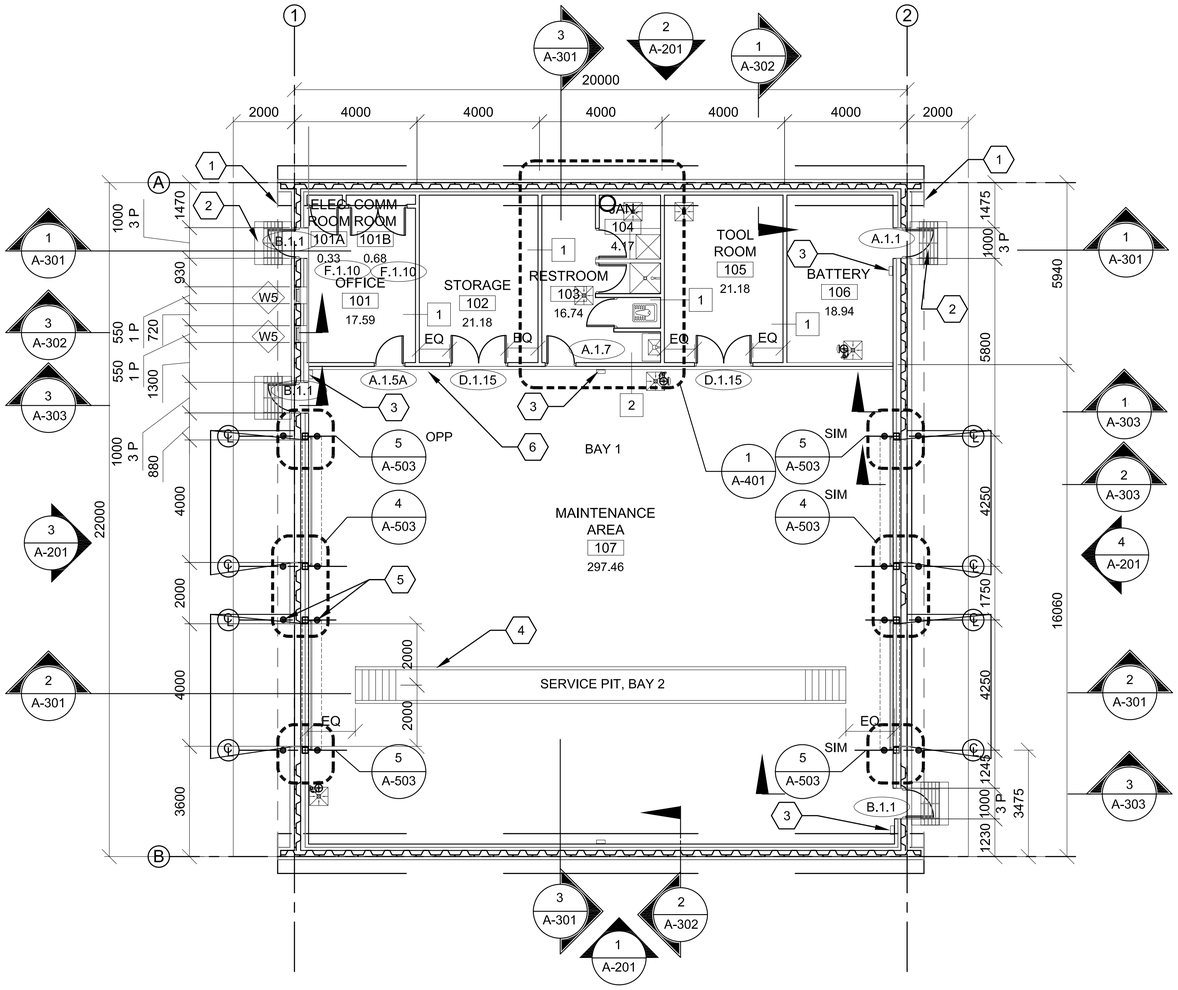

FLOOR PLAN

1 / A-101

SCALE: 1:100

GENERAL NOTES:

A. DIMENSIONS ARE SHOWN TO OUTER EDGE OF EXTERIOR STRUCTURAL FACE OF ARCH SPAN PANEL(GRID LINES), CENTER LINE OF INTERIOR PARTITIONS, EDGE OF WINDOW OPENINGS, AND TO HINGE SIDE OF DOOR FRAME OPENING, UNLESS NOTED OTHERWISE.

B. HINGE SIDE OF OPENINGS FOR DOORS AND FRAMES SHALL BE LOCATED 200 MM FROM THE ADJACENT WALL OR COLUMN, UNLESS NOTED OTHERWISE.

C. INTERIOR PARTITIONS SHALL BE PARTITION TYPE 1, UNLESS NOTED OTHERWISE. REFER TO A-602 FOR PARTITION TYPES SCHEDULE

D. COSMETIC REPAIR OF MINOR DEFECTS: REPAIR OR FILL MORTAR JOINTS AND MINOR DEFECTS, INCLUDING BUT NOT LIMITED TO SPALLS, IN ACCORDANCE WITH MANUFACTURER'S RECOMMENDATIONS AND PRIOR TO COATING APPLICATION. SURFACES TO BE PAINTED SHALL BE CLEAN AND FREE OF FOREIGN MATTER BEFORE APPLICATION OF PAINT. CLEANING SHALL BE SCHEDULED SO THAT DUST AND OTHER CONTAMINANTS WILL NOT FALL ON NEWLY PAINTED SURFACES.

E. CONCRETE, PLASTER AND MASONRY SURFACES SHALL BE ALLOWED TO CURE FOR AT LEAST 30 DAYS BEFORE PAINTING. CONCRETE SLABS-ON-GRADE SHALL BE ALLOWED TO CURE 90 DAYS BEFORE STAINING OR SEALING.

F. DO NOT USE PAINT MATERIALS CONTAINING LEAD CONTENT IN EXCESS OF 0.009 PERCENT OF THE WEIGHT OF THE TOTAL NONVOLATILE CONTENT OF THE PAINT OR THE WEIGHT OF THE DRIED PAINT FILM.

G. DO NOT USE ANY ASBESTOS CONTAINING MATERIALS (ACM) IN PROJECT. ACM IS DEFINED AS 1% OR MORE BY VOLUME.

H. DO NOT USE PAINT MATERIALS CONTAINING MERCURIAL FUNGICIDES.

I. FACTORY PRIMED METAL DOORS AND FRAMES SHALL RECEIVE TWO COATS OF PAINT.

J. FILL REMAINING SPACE AT PENETRATIONS IN FIRE-RATED FLOORS, PARTITIONS AND CEILINGS WITH APPROPRIATE FIRESTOPPING MATERIALS.

K. ALL CEILING FINISHES SHALL AS NOTED ON REFLECTED CEILING PLANS OR FINISH SCHEDULE.

L. ALL WALL FINISHES SHALL AS NOTED ON FINISH SCHEDULE. REFER TO A-603

M. ALL FLOOR FINISHES SHALL BE SEALED CONCRETE, UNLESS NOTED OTHERWISE.

N. PROVIDE TILE FINISHES AS INDICATED IN DETAILS & KEY NOTES.

O. ALL DOOR, FRAME AND HARDWARE TYPES SHALL BE 20 MINUTE A.1.5 UNLESS NOTED OTHERWISE. REFER TO A-601 FOR DOOR INFORMATION.

P. TOILET STALL DOORS SHALL BE G.2.12

Q. SHOWER STALL DOOR, FRAME AND HARDWARE TYPE SHALL BE E.1.12.

R. PROVIDE POLISHED STAINLESS STEEL MIRROR 600 X 900 ABOVE EVERY LAVATORY FAUCET.

S. PLASTER MAY BE SUBSTITUTED FOR DRYWALL WALLS AND CEILINGS. MAINTAIN FIRE RATINGS AS NOTED

T. LOCATION OF EXTERIOR DOORS AND WINDOWS MUST BE COORDINATED WITH ARCH SPAN MODULE. PLAN DIMENSIONS OF THESE IS APPROXIMATE AND MAY BE SLIGHTLY ADJUSTED TO SUIT PANEL FABRICATION TOLERANCES.

KEY NOTES:

1. LINE OF ROOF OVERHANG ABOVE.
2. CONCRETE STOOP WITH GRATE - SEE DETAIL 1/A-503.
3. FIRE EXTINGUISHER
4. SERVICE PIT SEE STRUCTURAL DRAWINGS FOR SIZE & DETAILS
5. BOLLARD - TYPICAL @ ROLL-UP DOORS
6. 100 HIGH X 150 WIDE CONCRETE CURB PAINTEDSAFETY YELL.

N

0 2000 4000

SCALE: 1:100

UNLESS OTHERWISE NOTED, LINEAR DIMENSIONS SHOWN ARE IN MILLIMETERS.

COMMONWEALTH OF VIRGINIA
PETER GARRETT SCHMIDT
No. 013167
ARCHITECT

US ARMY CORPS OF ENGINEERS
AFGHANISTAN NORTH DISTRICT

SYMBOL	DESCRIPTION	DATE	APPR.	SYMBOL	DESCRIPTION	DATE	APPR.

DESIGNED BY: PGS, SE, MR
DWN BY: SE, MDH, AH
REVIEWED BY: JH
SUBMITTED BY:
DATE: 5-02-2011
CONTRACT NO. W912ER-09-D-0002
DRAWING CODE:
CKD BY: PGS, SE, MR
FILE NAME: wm09vmaint-vehicle-1-1.dwg
PLOT SCALE: 1:100
PLOT DATE: 5/2/2011
REV: 0

BAKER

U.S. ARMY ENGINEER DISTRICT, AFGHANISTAN
CORPS OF ENGINEERS
APO AE 09356

SITE ADAPT DESIGN

VM09 - VEHICLE MAINTENANCE BUILDING - ARCH SPAN

FLOOR PLAN

SHEET REFERENCE NUMBER:

A-101

A1 Size 594mm x 841mm

5/2/2011 2:31 PM

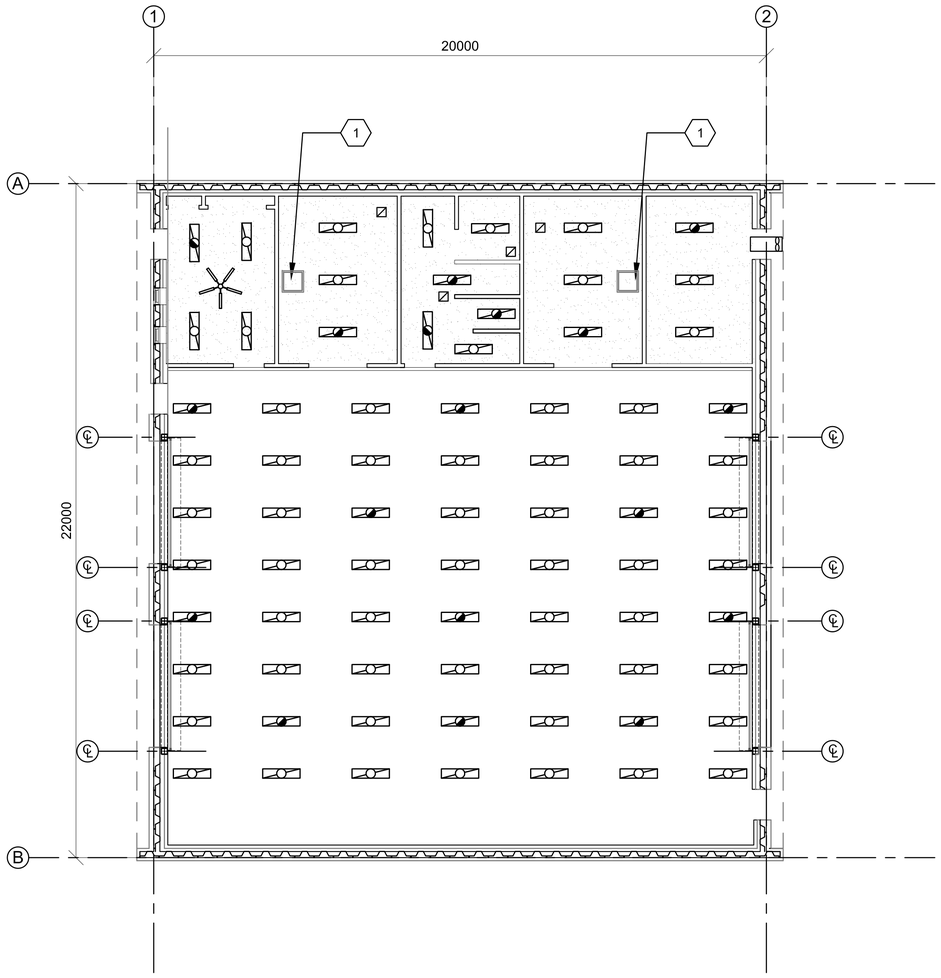

1 / A-101 REFLECTED CEILING PLAN

SCALE: 1:100

CEILING LEGEND:

- 600mm X 1200mm METAL PANEL SUSPENDED CEILING SYSTEM
- NO FINISHED CEILING, EXPOSED STRUCTURE (SEE FINISH SCHEDULE)
- GYPSUM WALLBOARD CEILING (SEE FINISH SCHEDULE)
- 300mm X 1200mm FLUORESCENT LIGHT FIXTURE
- 600mm X 1200mm FLUORESCENT LIGHT FIXTURE
- 300mm X 1200mm FLUORESCENT LIGHT FIXTURE NORMAL/EMERGENCY
- 600mm X 1200mm FLUORESCENT LIGHT FIXTURE NORMAL/EMERGENCY
- SUSPENDED LIGHT FIXTURE
- WALL MOUNTED LIGHT FIXTURE
- DOWNLIGHT
- EXIT SIGN
- SMOKE DETECTOR
- BATTERY PACK
- RELIEF RETURN DIFFUSER
- SUPPLY DIFFUSER
- EXHAUST DIFFUSER
- ACCESS PANEL
- CEILING FAN

KEY NOTES:

1. ACCESS PANEL

GENERAL NOTES:

A. CEILING SHALL BE 2.9M A.F.F. UNLESS NOTED OTHERWISE OR EXPOSED STRUCTURE.
B. REFER TO SHEET A603 FOR FINISH SCHEDULE
C. REFER TO STRUCTURAL DRAWINGS NOTES FOR LIGHT GAUGE CEILING FRAMING CRITERIA.
D. REFER TO ELECTRICAL DRAWINGS TO COORDINATE EQUIPMENT ABOVE CEILING GRID.
E. LOCATION OF LIGHT FIXTURES AND FANS AS INDICATED ON THIS REFLECTED CEILING PLAN TAKES PRECEDENCE OVER ALL RELATIVE POSITIONS AS SHOWN ON ELECTRIC AND MECHANICAL DRAWINGS. U.N.O. INSTALL FIXTURES WITH EQUAL SPACING BETWEEN EACH OTHER TO THE GREATEST EXTENT POSSIBLE AND AS GRAPHICALLY SHOWN IN THIS LAYOUT. SEE ELECTRICAL DRAWINGS FOR SUPPORT AND WIRING INFORMATION. IN AREA WHERE SUSPENDED CEILING SUPPORTS OVERLAP LIGHTING LOCATIONS SHIFT LIGHTING 25MM OFF OF GRID TO RESOLVE CONFLICT.

0 2000 4000

SCALE: 1:100

UNLESS OTHERWISE NOTED, LINEAR DIMENSIONS SHOWN ARE IN MILLIMETERS.

COMMONWEALTH OF VIRGINIA
PETER GARRETT SCHMIDT
No. 013167
ARCHITECT

US ARMY CORPS OF ENGINEERS
AFGHANISTAN NORTH DISTRICT

SYMBOL	DESCRIPTION	DATE	APPR.	SYMBOL	DESCRIPTION	DATE	APPR.

DESIGNED BY: PGS, SE, MR
DWN BY: SE, MDH, AH
CKD BY: PGS, SE, MR
REVIEWED BY:
SUBMITTED BY:
DATE: 4-25-2011
REV: 0
CONTRACT NO.
W912ER-09-D-0002
DRAWING CODE:
FILE NAME: ARCH\FINAL\A-102.DWG
PLOT SCALE: 1:100
PLOT DATE: 4/25/2011

BAKER

U.S. ARMY ENGINEER DISTRICT, AFGHANISTAN
CORPS OF ENGINEERS
APO AE 09356

SITE ADAPT DESIGN

VM09 - VEHICLE MAINTENANCE BUILDING - ARCH SPAN

REFLECTED CEILING PLAN

SHEET REFERENCE NUMBER:

A-102

4/25/2011 3:49 PM

A1 Size 594mm x 841mm

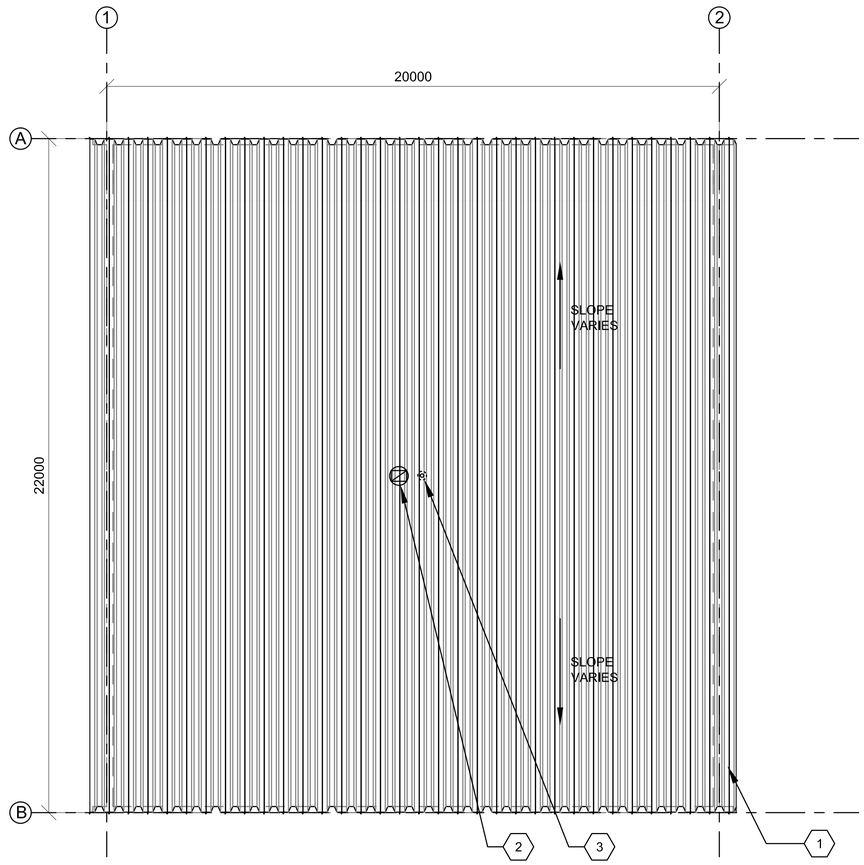

1 / A-101 FLOOR PLAN

SCALE: 1:100

KEY NOTES:

1. PRE-FINISHED METAL ARCH-SPAN CONSTRUCTION
2. MECHANICAL EXHAUST SEE M-501
3. VTR SEE PLUMBING P-501
4. NOT USED

GENERAL NOTES:

A. THE APPROXIMATE LOCATION OF ROOF DEVICES AND PENETRATIONS ARE SHOWN ON THE ROOF PLAN FOR INFORMATION ONLY. THE CONTRACTOR SHALL BE RESPONSIBLE FOR UNDERSTANDING THE ACTUAL LOCATION OF THESE AND ALL OTHER ITEMS PRIOR TO BEGINNING CONSTRUCTION. COORDINATE ALL ROOF PENETRATIONS WITH STRUCTURAL, MECHANICAL AND PLUMBING WORK.

B. PLUMBING VENT PENETRATIONS SHALL TERMINATE 300 MM MINIMUM ABOVE THE ROOF.

C. UNLESS OTHERWISE NOTED, NOTES, DETAILS OR FEATURES INDICATED FOR ONE CONDITION SHALL BE APPLICABLE FOR ALL ALIKE AND SIMILAR CONDITIONS.

D. STOCKPILING OF MATERIALS, EQUIPMENT AND ANY OTHER ITEMS ON THE ROOF IS PROHIBITED.

E. ROOFS SHALL BE PRE-FINISHED METAL ARCH-SPAN.

0 2000 4000

SCALE: 1:100

UNLESS OTHERWISE NOTED, LINEAR DIMENSIONS SHOWN ARE IN MILLIMETERS.

COMMONWEALTH OF VIRGINIA
PETER GARRETT SCHMIDT
NO. 013167
ARCHITECT

US ARMY CORPS OF ENGINEERS
AFGHANISTAN NORTH DISTRICT

SYMBOL	DESCRIPTION	DATE	APPR.	SYMBOL	DESCRIPTION	DATE	APPR.

DESIGNED BY: PGS, SE, MR
DWN BY: SE, MDH, AH
REVIEWED BY: JH
SUBMITTED BY:
DATE: 3-30-2011
REV: 0
CONTRACT NO.
W912ER-09-D-0002
DRAWING CODE:
CKD BY: PGS, SE, MR
FILE NAME: ARCH1FINAL#1 VM09A-TI-D.DWG
PLOT SCALE: 1:100
PLOT DATE: 3/30/2011

BAKER

U.S. ARMY ENGINEER DISTRICT, AFGHANISTAN
CORPS OF ENGINEERS
APO AE 09356

SITE ADAPT DESIGN

VM09 - VEHICLE MAINTENANCE BUILDING - ARCH SPAN

ROOF PLAN

SHEET REFERENCE NUMBER:

A-103

A1 Size 594mm x 841mm

3/30/2011 6:09 PM

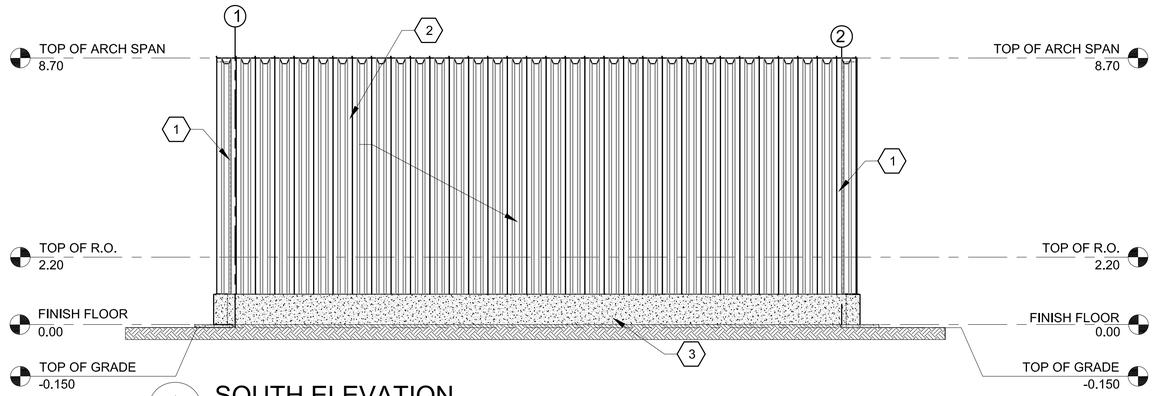

1 A-201 SOUTH ELEVATION
SCALE: 1:100

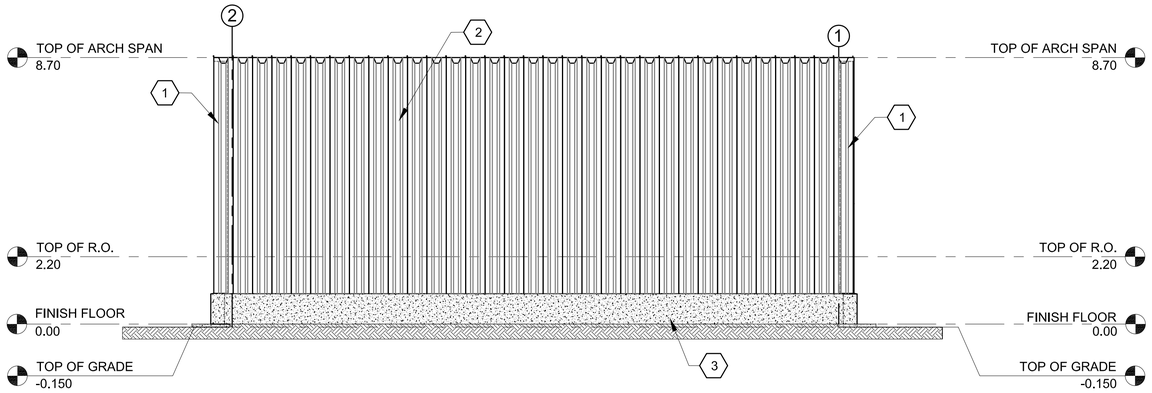

2 A-201 NORTH ELEVATION
SCALE: 1:100

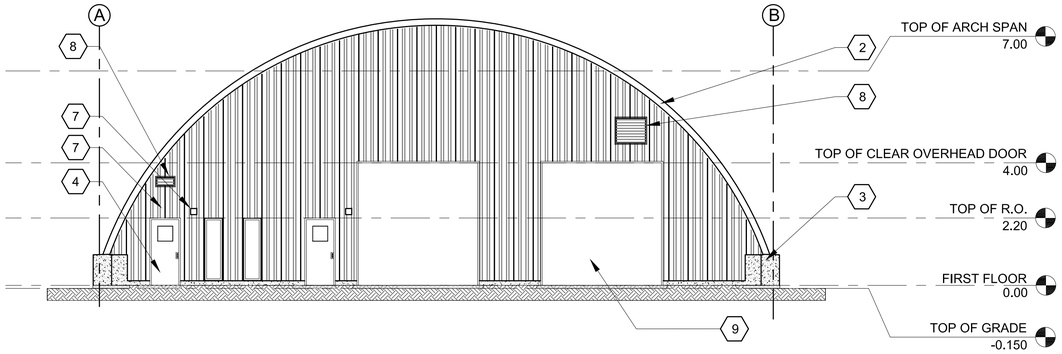

3 A-201 WEST ELEVATION
SCALE: 1:100

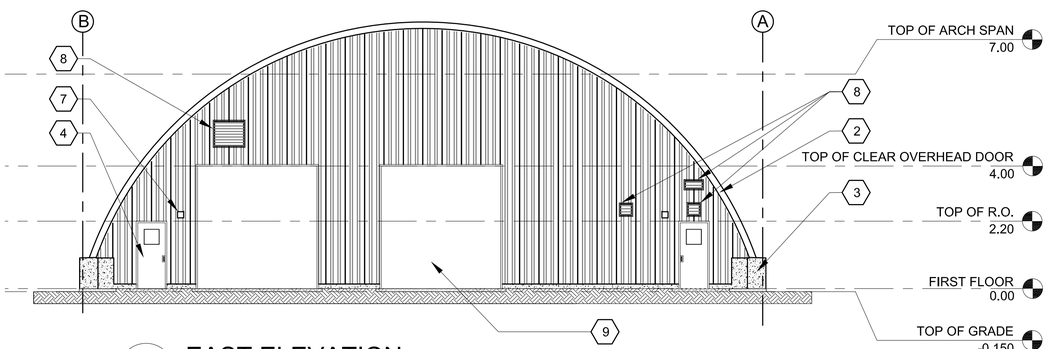

4 A-201 EAST ELEVATION
SCALE: 1:100

GENERAL NOTES:

A. FACTORY PRIMED METAL DOORS AND FRAMES SHALL RECEIVE TWO COATS OF PAINT.
B. LOCATION OF EXTERIOR DOORS AND WINDOWS MUST BE COORDINATED WITH ARCH SPAN MODULE. PLAN DIMENSIONS OF THESE IS APPROXIMATE AND MAY BE SLIGHTLY ADJUSTED TO SUIT PANEL FABRICATION TOLERANCES.
C. EXTERIOR CONCRETE BUILDING SURFACES TO RECEIVE PENETRATING CONCRETE SEALER
D. COORDINATE ALL HVAC OPENING SIZES AND LOCATIONS WITH HVAC CONTRACTOR PRIOR TO INSTALLATION.

KEY NOTES:

1. EXTENSION OF ARCH SPAN
2. PRE-FINISHED METAL ARCH SPAN CONSTRUCTION WALL AND CEILING.
3. CONCRETE WALL.
4. PAINTED HOLLOW METAL DOOR & FRAME.
5. STEEL WINDOW PAINTED.
6. PRE-FINISHED STEEL LOUVER - SEE DETAIL 3/A501
7. LIGHTING - SEE ELECTRICAL
8. MECHANICAL LOUVER - SEE MECHANICAL FOR SIZE AND TYPE
9. OVERHEAD DOOR

0 2000 4000
SCALE: 1:100

UNLESS OTHERWISE NOTED, LINEAR DIMENSIONS SHOWN ARE IN MILLIMETERS.

COMMONWEALTH OF VIRGINIA
PETER GARRETT SCHMIDT
No. 013167
ARCHITECT

US ARMY CORPS OF ENGINEERS
AFGHANISTAN NORTH DISTRICT

SYMBOL	DESCRIPTION	DATE	APPR.	SYMBOL	DESCRIPTION	DATE	APPR.

U.S. ARMY ENGINEER DISTRICT, AFGHANISTAN
CORPS OF ENGINEERS
APO AE 09356

DESIGNED BY: PGS, SE, MR
DWN BY: SE, MDH, AH
CKD BY: PGS, SE, MR
REVIEWED BY: JH
SUBMITTED BY:
DATE: 3-30-2011
CONTRACT NO. W912ER-09-D-0002
DRAWING CODE:
FILE NAME: W912ER-09-D-0002 - A-201.DWG
PLOT SCALE: 1:100
PLOT DATE: 3/31/2011
REV: 0

BAKER

SITE ADAPT DESIGN
VM09 - VEHICLE MAINTENANCE BUILDING - ARCH SPAN
ELEVATIONS

SHEET REFERENCE NUMBER:
A-201

A1 Size 594mm x 841mm

3/31/2011 2:30 PM

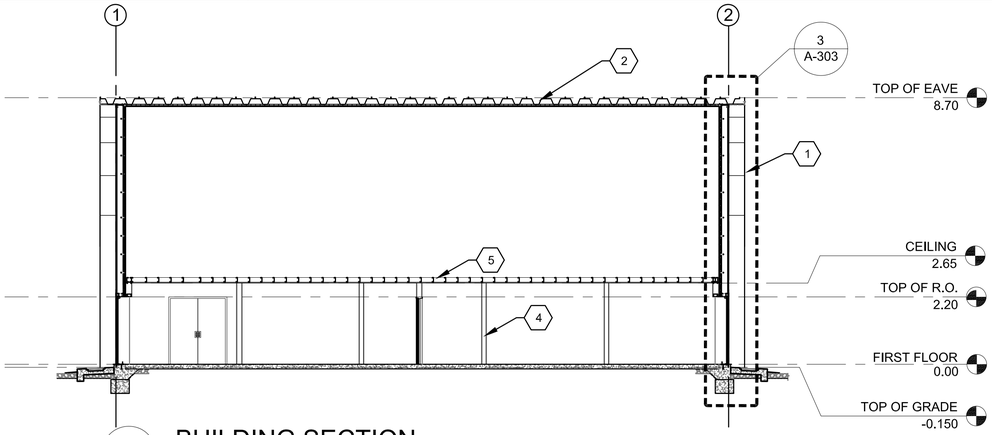

1 A-301 BUILDING SECTION
SCALE: 1:100

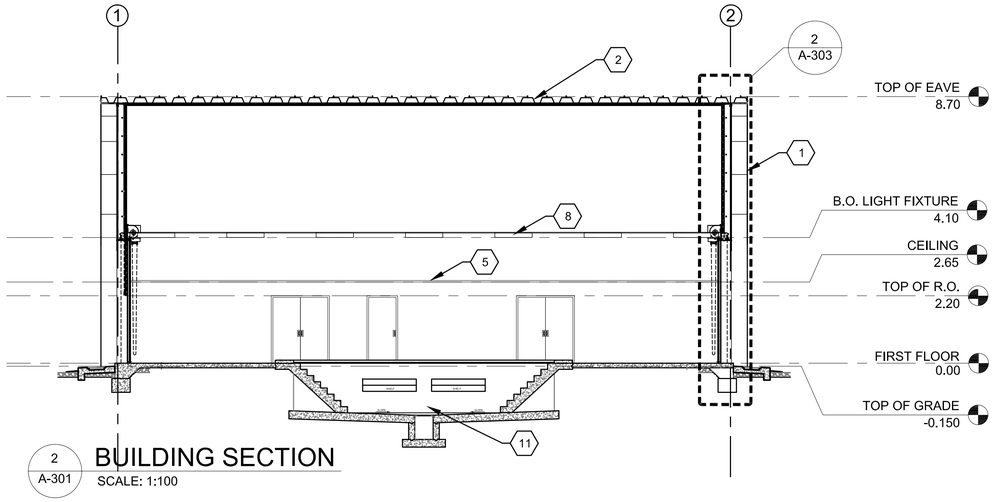

2 A-301 BUILDING SECTION
SCALE: 1:100

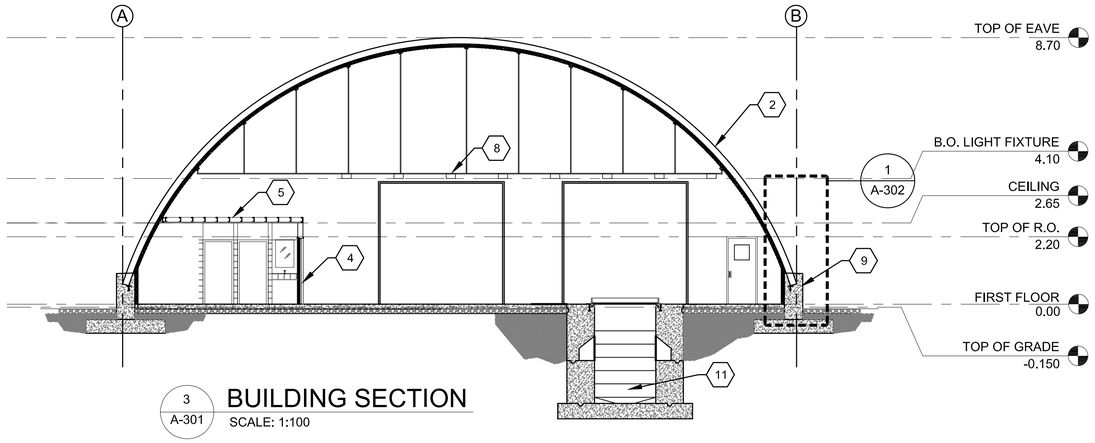

3 A-301 BUILDING SECTION
SCALE: 1:100

KEY NOTES:

1. EXTENSION OF ARCH SPAN
2. ARCH SPAN ROOF/WALL PANEL WITH POLYURETHANE/CEMENTITIOUS SPRAY - ON FIRE BARRIER
3. HOLLOW METAL FRAME WITH DOOR AS SCHEDULED
4. PARTITION AS SCHEDULED
5. CEILING SYSTEM AS SCHEDULED
6. SIDEWALL DOOR AND DORMER FRAMING
7. SIDE WALL WINDOW AND DORMER FRAMING
8. LIGHT FIXTURE ON UNI-STRUT
9. CONCRETE STEM WALL
10. 300MMX300MM VENTILATION HOLE
11. SERVICE PIT SEE STRUCTURAL DRAWINGS FOR SIZE & DETAILS

0 2000 4000
SCALE: 1:100

UNLESS OTHERWISE NOTED, LINEAR DIMENSIONS SHOWN ARE IN MILLIMETERS.

COMMONWEALTH OF VIRGINIA
PETER GARRETT SCHMIDT
No. 013167
ARCHITECT

US ARMY CORPS OF ENGINEERS
AFGHANISTAN NORTH DISTRICT

SYMBOL	DESCRIPTION	DATE	APPR.	SYMBOL	DESCRIPTION	DATE	APPR.

DESIGNED BY: SE, PGS
DWN BY: AH,SE
CKD BY: SE,PGS
REVIEWED BY: JH
SUBMITTED BY:
DATE: 3/30/2011
CONTRACT NO. W912ER-09-D-0002
DRAWING CODE:
REV. 0
FILE NAME: ARCH1PRAWAP-VM09-A-301.DWG
PLOT SCALE: 1:100
PLOT DATE: 3/30/2011

BAKER

U.S. ARMY ENGINEER DISTRICT, AFGHANISTAN
CORPS OF ENGINEERS
APO AE 09356

SITE ADAPT DESIGN
VM09 - VEHICLE MAINTENANCE BUILDING - ARCH SPAN
BUILDING SECTIONS

SHEET REFERENCE NUMBER:
A-301

3/30/2011 6:27 PM

A1 Size 594mm x 841mm

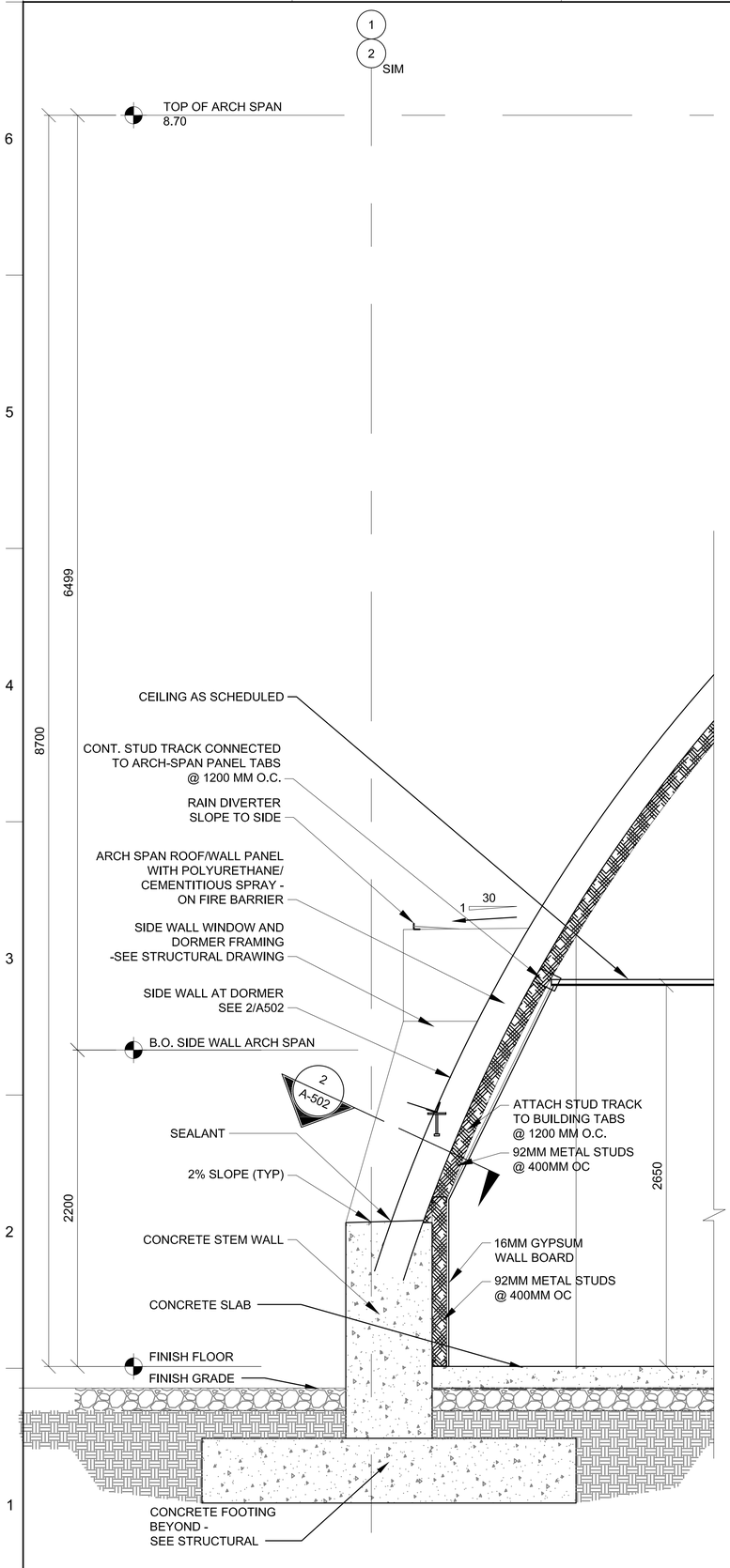

1 A-302 WALL SECTION - THRU SIDE WALL

SCALE: 1:50

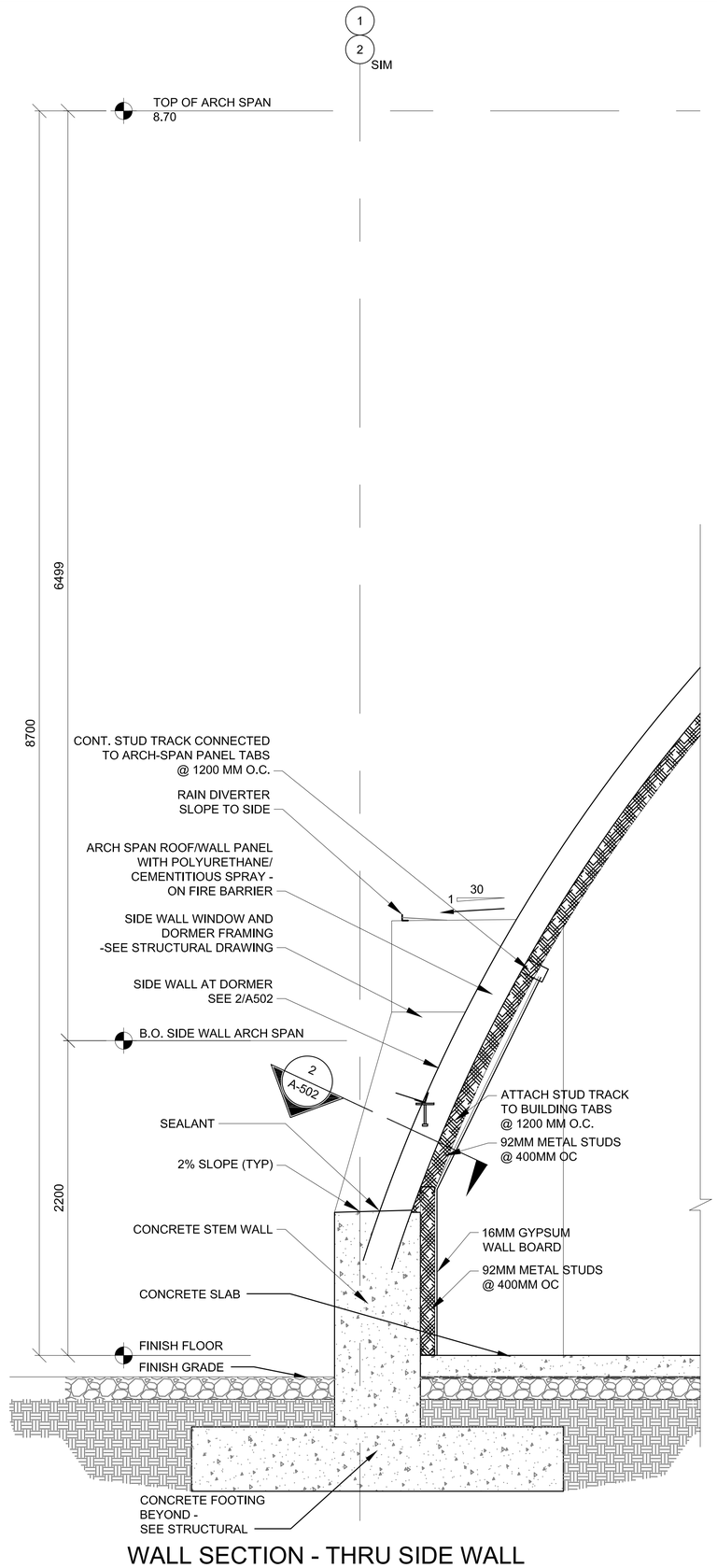

2 A-302 WALL SECTION - THRU SIDE WALL VEHICLE BAY

SCALE: 1:50

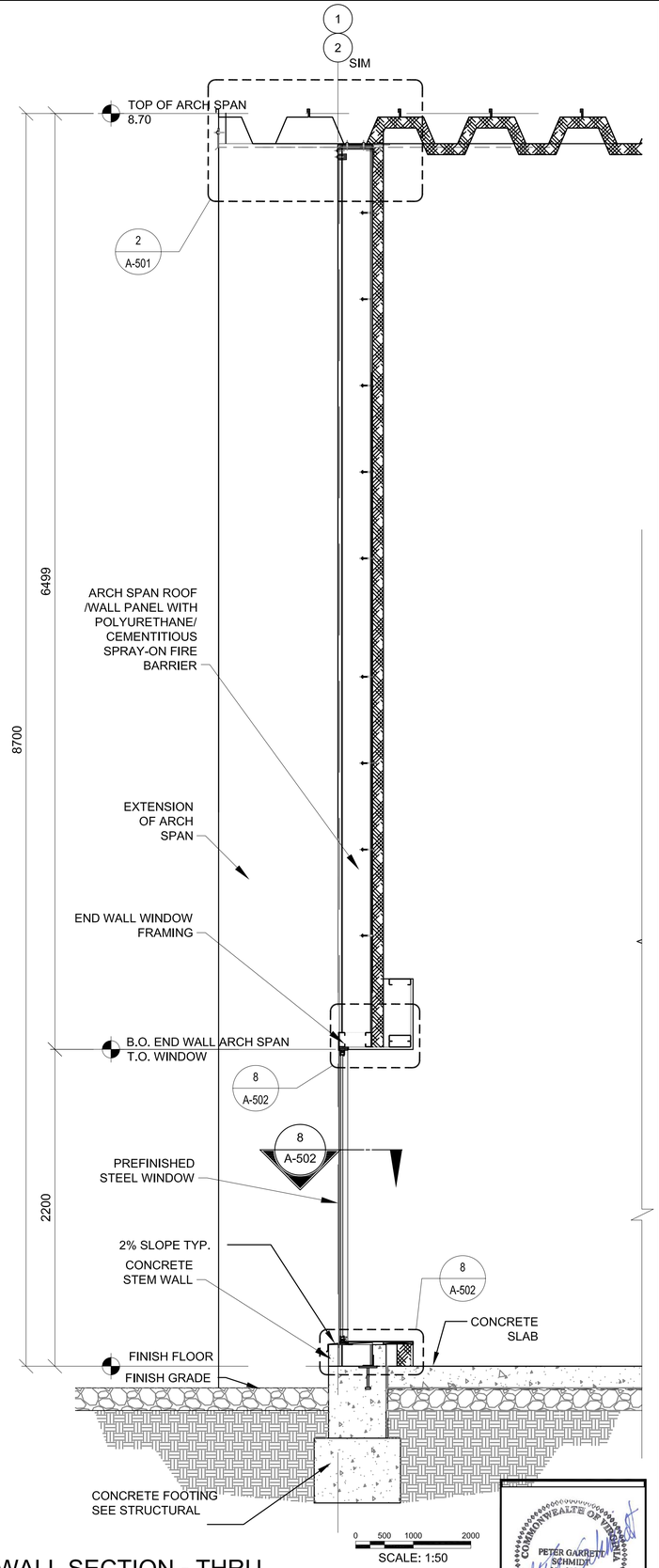

3 A-302 WALL SECTION - THRU END WALL WINDOW

SCALE: 1:50

0 500 1000 2000

SCALE: 1:50

UNLESS OTHERWISE NOTED, LINEAR DIMENSIONS SHOWN ARE IN MILLIMETERS.

COMMONWEALTH OF VIRGINIA
PETER GARRETT SCHMIDT
No. 013167
ARCHITECT

US ARMY CORPS OF ENGINEERS
AFGHANISTAN NORTH DISTRICT

SYMBOL	DESCRIPTION	DATE	APPR.	SYMBOL	DESCRIPTION	DATE	APPR.

DESIGNED BY:
DWN BY: CKD BY:
REVIEWED BY:
SUBMITTED BY:

DATE: 3/30/2011
CONTRACT NO. W912ER-09-D-0002
DRAWING CODE:
FILE NAME: wa\cmp\maint-vehicle-bld.dwg
PLOT SCALE: 1:50
PLOT DATE: 3/30/2011
REV: 0

BAKER

U.S. ARMY ENGINEER DISTRICT, AFGHANISTAN
CORPS OF ENGINEERS
APO AE 09356

SITE ADAPT DESIGN

VM09 - VEHICLE MAINTENANCE BUILDING - ARCH SPAN

WALL SECTIONS

SHEET REFERENCE NUMBER:

A-302

3/30/2011 4:09 PM

A1 Size 594mm x 841mm

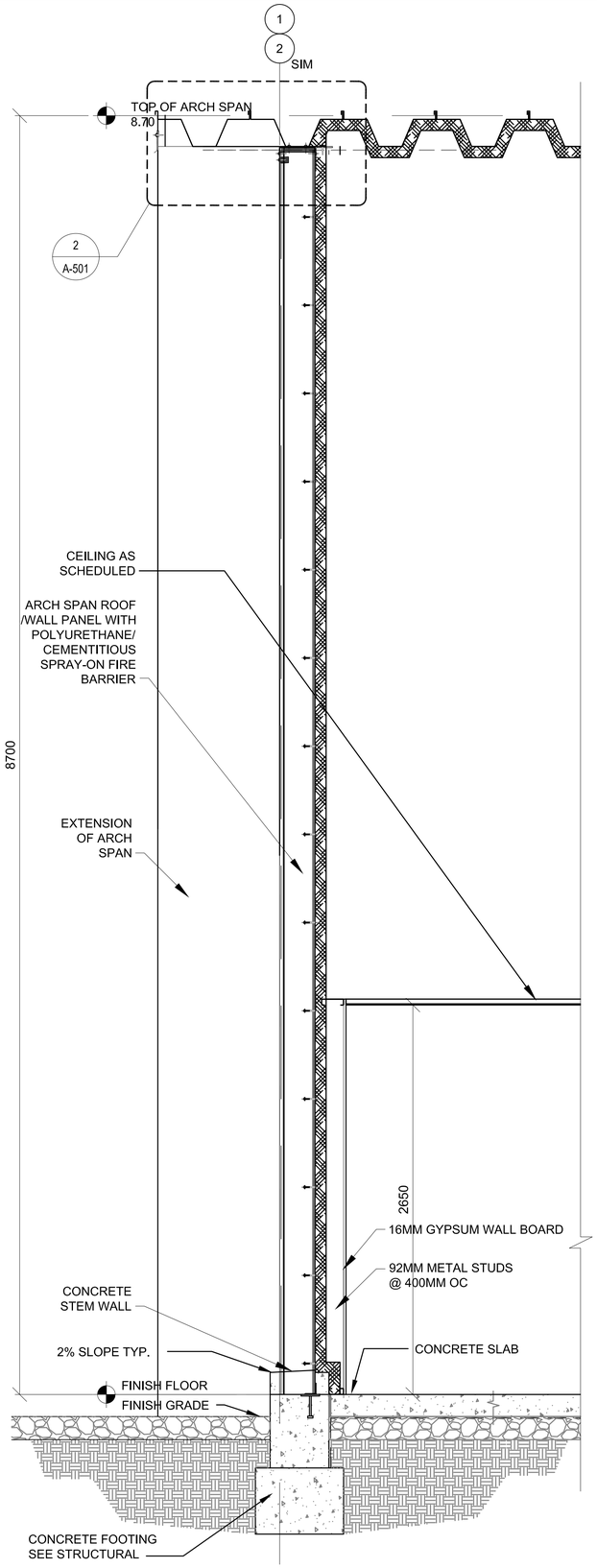

1 A-303 WALL SECTION - THRU END WALL

SCALE: 1:50

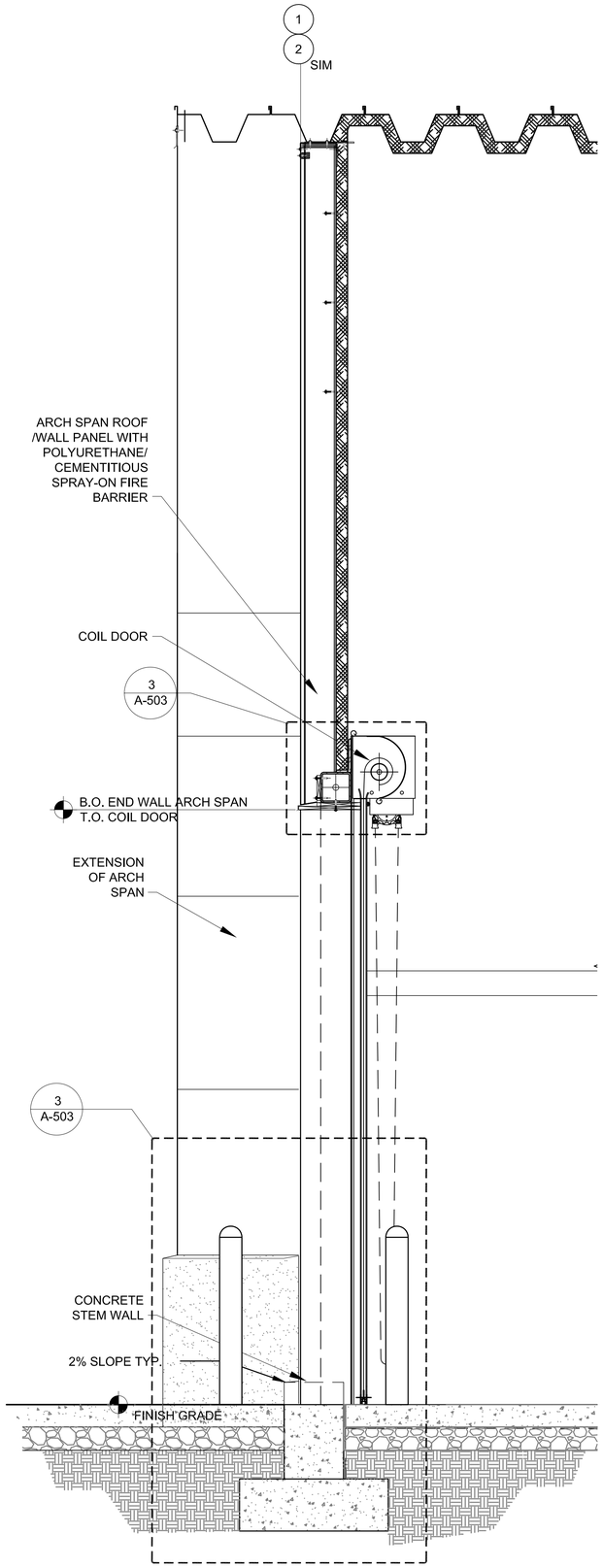

2 A-302 WALL SECTION - THRU ROLL-UP DOOR

SCALE: 1:50

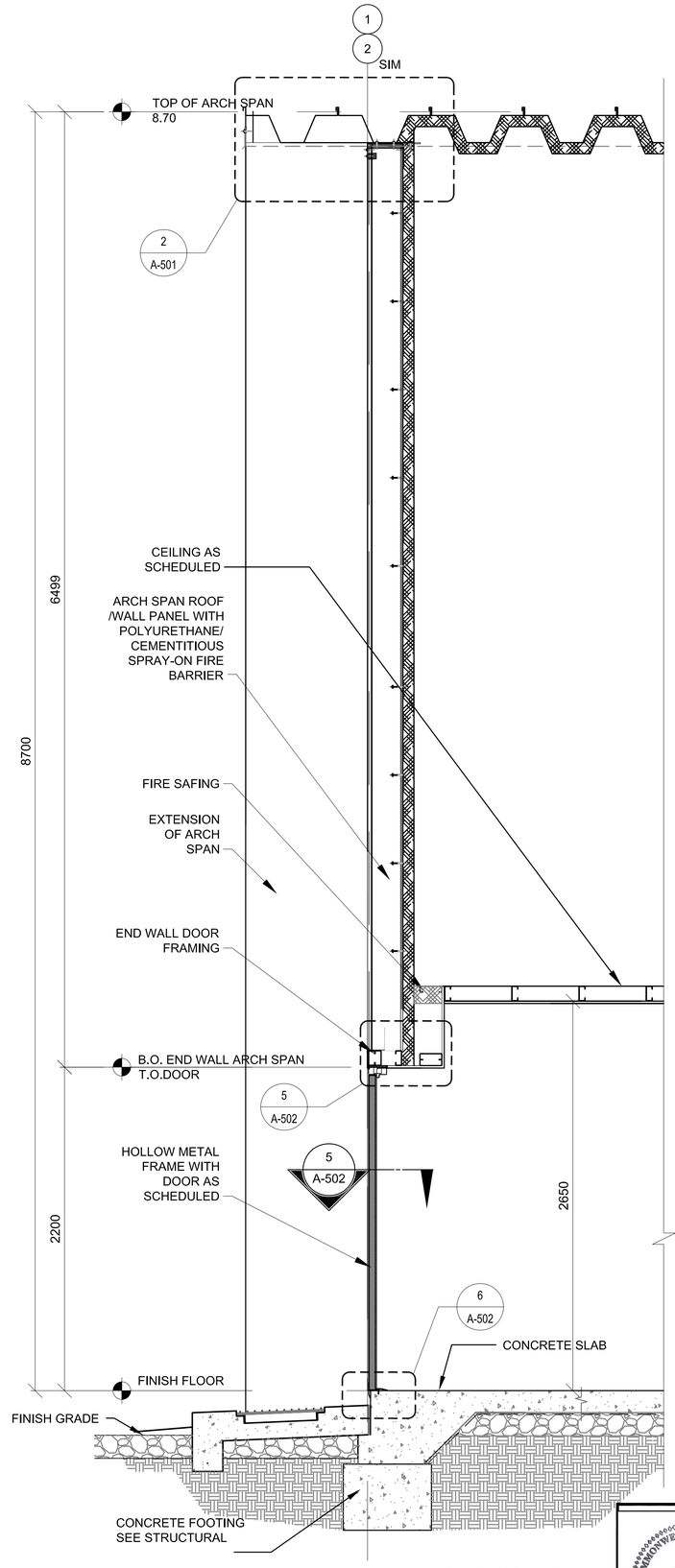

3 A-303 WALL SECTION - THRU END WALL DOOR

SCALE: 1:50

0 500 1000 2000

SCALE: 1:50

UNLESS OTHERWISE NOTED, LINEAR DIMENSIONS SHOWN ARE IN MILLIMETERS.

COMMONWEALTH OF VIRGINIA
PETER GARRETT SCHMIDT
No. 013167
ARCHITECT

US ARMY CORPS OF ENGINEERS
AFGHANISTAN NORTH DISTRICT

SYMBOL	DESCRIPTION	DATE	APPR.	SYMBOL	DESCRIPTION	DATE	APPR.

DESIGNED BY:
DWN BY: CKD BY:
REVIEWED BY:
SUBMITTED BY:

DATE: 3/30/2011
CONTRACT NO. W912ER-09-D-0002
DRAWING CODE:
FILE NAME: wall section.dwg
PLOT SCALE: 1:50
PLOT DATE: 3/30/2011
REV.

BAKER

U.S. ARMY ENGINEER DISTRICT, AFGHANISTAN
CORPS OF ENGINEERS
APO AE 09356

SITE ADAPT DESIGN

VM09 - VEHICLE MAINTENANCE BUILDING - ARCH SPAN

WALL SECTIONS

SHEET REFERENCE NUMBER:

A-303

3/30/2011 4:09 PM

A1 Size 594mm x 841mm

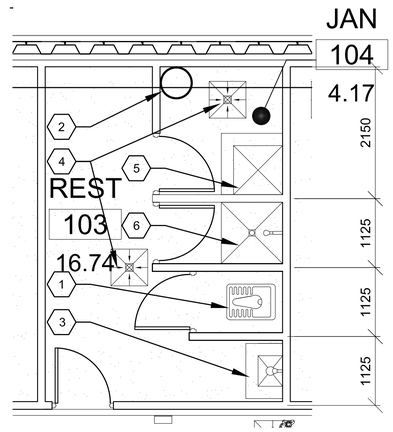

1 A-401 ENLARGED PLAN
SCALE: 1:50

GENERAL NOTES:

A. DIMENSIONS ARE SHOWN TO OUTER EDGE OF EXTERIOR STRUCTURAL FACE OF K-SPAN PANEL(GRID LINES), CENTER LINE OF INTERIOR PARTITIONS, EDGE OF WINDOW OPENINGS, AND TO HINGE SIDE OF DOOR FRAME OPENING, UNLESS NOTED OTHERWISE.

B. HINGE SIDE OF OPENINGS FOR DOORS AND FRAMES SHALL BE LOCATED 200 MM FROM THE ADJACENT WALL OR COLUMN, UNLESS NOTED OTHERWISE.

C. INTERIOR PARTITIONS SHALL BE PARTITION TYPE 1, UNLESS NOTED OTHERWISE. REFER TO A-602 FOR PARTITION TYPES SCHEDULE

D. COSMETIC REPAIR OF MINOR DEFECTS: REPAIR OR FILL MORTAR JOINTS AND MINOR DEFECTS, INCLUDING BUT NOT LIMITED TO SPALLS, IN ACCORDANCE WITH MANUFACTURER'S RECOMMENDATIONS AND PRIOR TO COATING APPLICATION. SURFACES TO BE PAINTED SHALL BE CLEAN AND FREE OF FOREIGN MATTER BEFORE APPLICATION OF PAINT. CLEANING SHALL BE SCHEDULED SO THAT DUST AND OTHER CONTAMINANTS WILL NOT FALL ON NEWLY PAINTED SURFACES.

E. CONCRETE, PLASTER AND MASONRY SURFACES SHALL BE ALLOWED TO CURE FOR AT LEAST 30 DAYS BEFORE PAINTING. CONCRETE SLABS-ON-GRADE SHALL BE ALLOWED TO CURE 90 DAYS BEFORE STAINING OR SEALING.

F. DO NOT USE PAINT MATERIALS CONTAINING LEAD CONTENT IN EXCESS OF 0.009 PERCENT OF THE WEIGHT OF THE TOTAL NONVOLATILE CONTENT OF THE PAINT OR THE WEIGHT OF THE DRIED PAINT FILM.

G. DO NOT USE ANY ASBESTOS CONTAINING MATERIALS (ACM) IN PROJECT. ACM IS DEFINED AS 1% OR MORE BY VOLUME.

H. DO NOT USE PAINT MATERIALS CONTAINING MERCURIAL FUNGICIDES.

I. FACTORY PRIMED METAL DOORS AND FRAMES SHALL RECEIVE TWO COATS OF PAINT.

J. FILL REMAINING SPACE AT PENETRATIONS IN FIRE-RATED FLOORS, PARTITIONS AND CEILINGS WITH APPROPRIATE FIRESTOPPING MATERIALS.

K. ALL CEILING FINISHES SHALL AS NOTED ON REFLECTED CEILING PLANS OR FINISH SCHEDULE.

L. ALL WALL FINISHES SHALL AS NOTED ON FINISH SCHEDULE. REFER TO A-603

M. ALL FLOOR FINISHES SHALL BE SEALED CONCRETE, UNLESS NOTED OTHERWISE.

N. PROVIDE TILE FINISHES AS INDICATED IN DETAILS & KEY NOTES.

O. ALL DOOR, FRAME AND HARDWARE TYPES SHALL BE 20A.1.11 UNLESS NOTED OTHERWISE. REFER TO A-601 FOR DOOR INFORMATION.

P. TOILET STALL DOORS SHALL BE G.2.12

Q. SHOWER STALL DOOR, FRAME AND HARDWARE TYPE SHALL BE E.1.12.

R. PROVIDE POLISHED STAINLESS STEEL MIRROR 600 X 900 ABOVE EVERY LAVATORY FAUCET.

S. PLASTER MAY BE SUBSTITUTED FOR DRYWALL WALLS AND CEILINGS. MAINTAIN FIRE RATINGS AS NOTED

T. LOCATION OF EXTERIOR DOORS AND WINDOWS MUST BE COORDINATED WITH K-SPAN MODULE. PLAN DIMENSIONS OF THESE IS APPROXIMATE AND MAY BE SLIGHTLY ADJUSTED TO SUIT PANEL FABRICATION TOLERANCES.

KEY NOTES:

1. TYPICAL TOILET STALL LAYOUT - SEE DETAIL 2/A-504
2. HWH - SEE PLUMBING
3. LAVATORY - SEE DETAIL 4/A-504
4. FLOOR DRAIN - SEE PLUMBING AND DETAIL 6/A-505
5. REFER TO 5/A-505 FOR MOP SINK
6. REFER TO 2/A-505 FOR SHOWER

0 500 1000 2000
SCALE: 1:50

UNLESS OTHERWISE NOTED, LINEAR DIMENSIONS SHOWN ARE IN MILLIMETERS.

COMMONWEALTH OF VIRGINIA
PETER GARRETT SCHMIDT
No. 013167
ARCHITECT

US ARMY CORPS OF ENGINEERS
AFGHANISTAN NORTH DISTRICT

SYMBOL	DESCRIPTION	DATE	APPR.	SYMBOL	DESCRIPTION	DATE	APPR.

U.S. ARMY ENGINEER DISTRICT, AFGHANISTAN
CORPS OF ENGINEERS
APO AE 09356

DESIGNED BY: PGS, SE, MR
DWN BY: SE, MDH, AH
CKD BY: PGS, SE, MR
REVIEWED BY:
SUBMITTED BY:
DATE: 3/30/2011
CONTRACT NO. W912ER-09-D-0002
DRAWING CODE:
FILE NAME: ARCH1FRAMEP-VM09-A-401.DWG
PLOT SCALE: 1:50
PLOT DATE: 3/30/2011
REV: 0

BAKER

SITE ADAPT DESIGN
VM09 - VEHICLE MAINTENANCE BUILDING - ARCH SPAN
ENLARGED PLANS

SHEET REFERENCE NUMBER:
A-401

3/30/2011 6:13 PM

A1 Size 594mm x 841mm

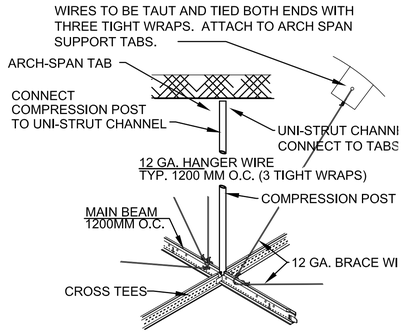

PROVIDE COMPRESSION POSTS PER MANUFACTURES INSTRUCTIONS FOR SEISMIC

7 / A-501 **CEILING GRID DETAIL**

SCALE NTS

1 / A-501 **NOT USED**

SCALE: NTS

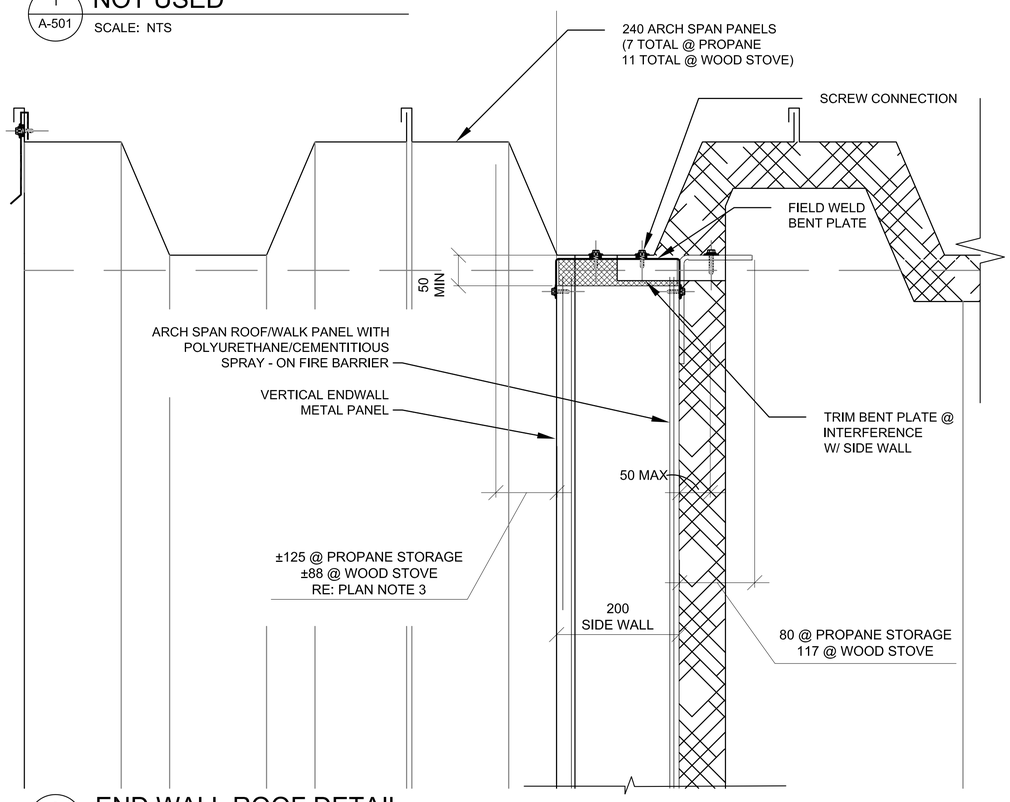

2 / A-501 **END WALL ROOF DETAIL**

SCALE: 1:5

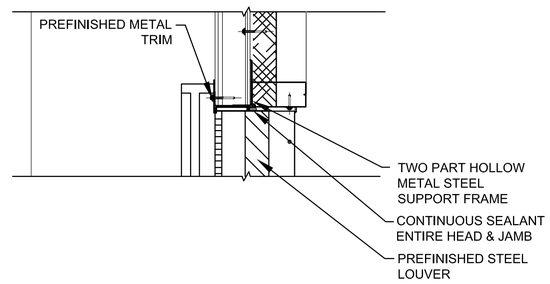

HEAD

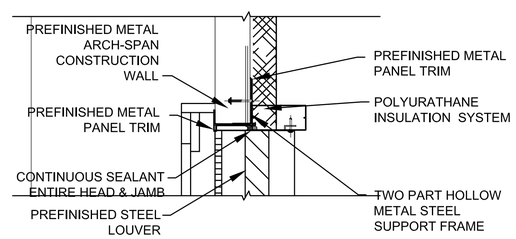

JAMB

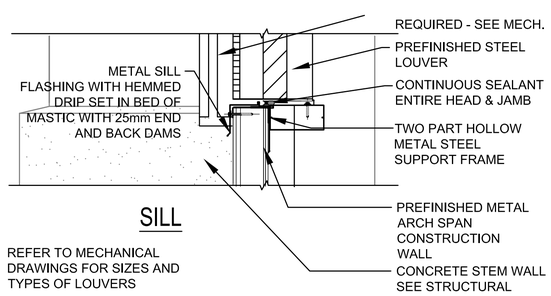

SILL

REFER TO MECHANICAL DRAWINGS FOR SIZES AND TYPES OF LOUVERS

3 / A-501 **LOUVER EXTERIOR DETAIL**

SCALE: 1:5

5 / A-501 **NOT USED**

SCALE 1:10

4 / A-501 **NOT USED**

SCALE 1:10

6 / A-501 **NOT USED**

SCALE 1:10

0 100 200 400

SCALE: 1:10

UNLESS OTHERWISE NOTED, LINEAR DIMENSIONS SHOWN ARE IN MILLIMETERS.

COMMONWEALTH OF PENNSYLVANIA
PETER GARRETT SCHMIDT
NO. 013167
REGISTERED ARCHITECT

US ARMY CORPS OF ENGINEERS AFGHANISTAN NORTH DISTRICT

SYMBOL	DESCRIPTION	DATE	APPR.	SYMBOL	DESCRIPTION	DATE	APPR.

DESIGNED BY: DWN BY: CKD BY: REVIEWED BY: SUBMITTED BY:

DATE: 3/30/2011 REV: 0
CONTRACT NO. W912ER-09-D-0002
DRAWING CODE:
FILE NAME: w912er09d0002-a-501.dwg
PLOT SCALE: VARIES
PLOT DATE: 3/30/2011

BAKER

U.S. ARMY ENGINEER DISTRICT, AFGHANISTAN CORPS OF ENGINEERS APO AE 09356

SITE ADAPT DESIGN

VM09 - VEHICLE MAINTENANCE BUILDING - ARCH SPAN

EXTERIOR DETAILS

SHEET REFERENCE NUMBER:

A-501

3/30/2011 4:10 PM

A1 Size 594mm x 841mm

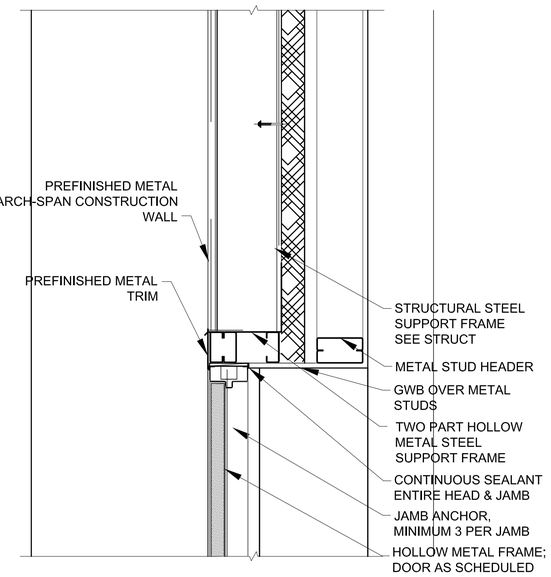

HEAD

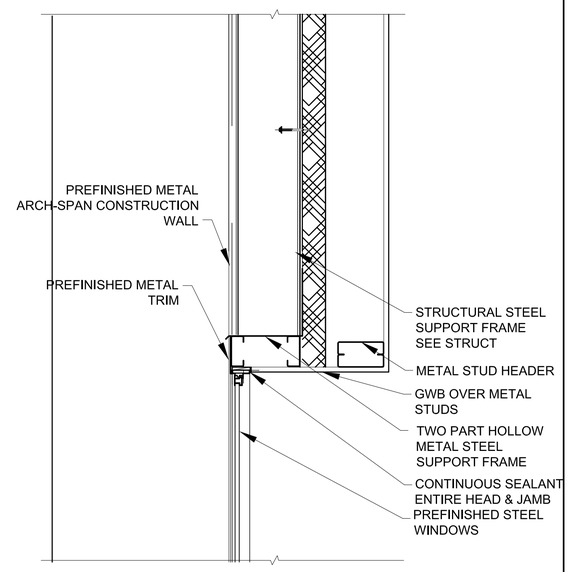

HEAD

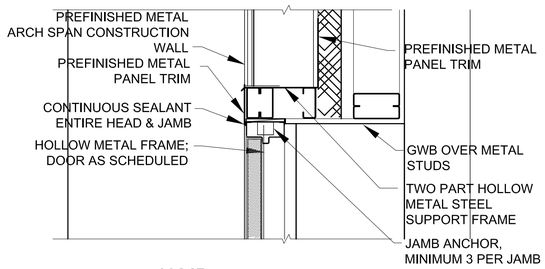

JAMB

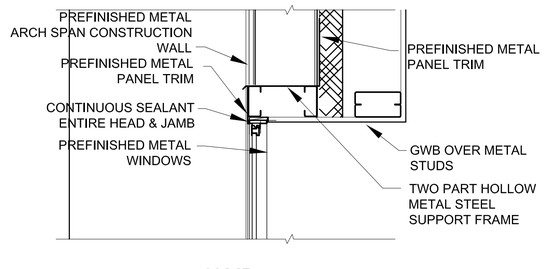

JAMB

5 A-502 END WALL EXTERIOR DOOR DETAILS
SCALE: 1:10

1 A-502 NOT USED
SCALE: 1:10

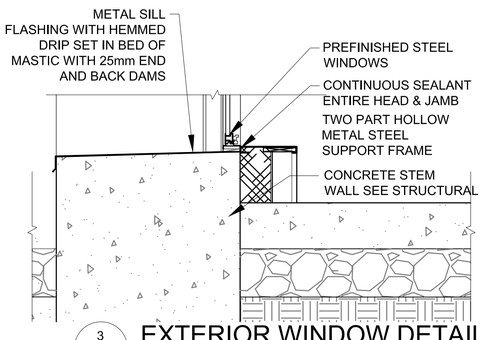

3 A-502 EXTERIOR WINDOW DETAILS
SCALE: 1:10

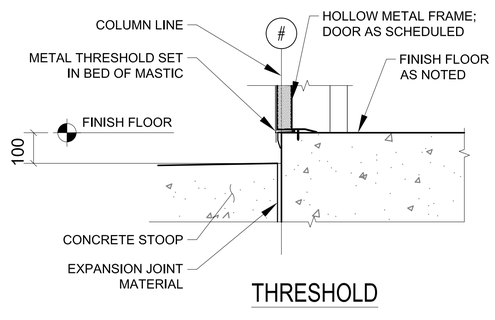

THRESHOLD

6 A-502 EXTERIOR DOOR DETAILS
SCALE: 1:10

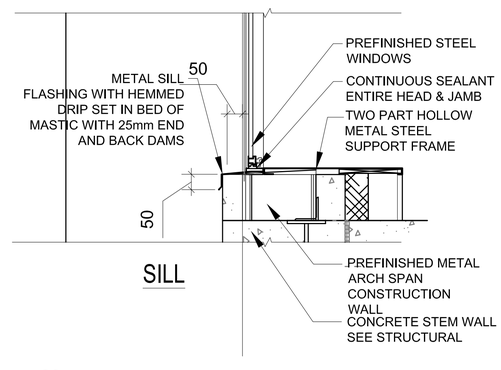

SILL

8 A-502 EXTERIOR WINDOWS DETAILS
SCALE: 1:10

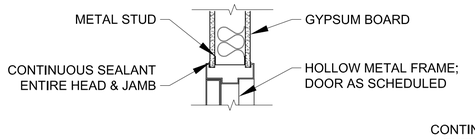

2 A-502 NOT USED
SCALE: 1:10

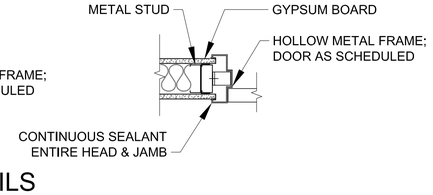

4 A-502 INTERIOR WALL DETAILS
SCALE: 1:10

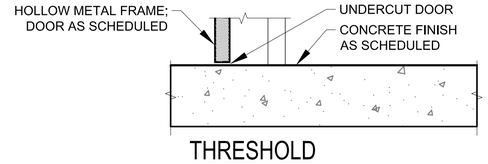

THRESHOLD

7 A-502 INTERIOR DOOR DETAILS
SCALE: 1:10

0 100 200 400
SCALE: 1:10

UNLESS OTHERWISE NOTED, LINEAR DIMENSIONS SHOWN ARE IN MILLIMETERS.

COMMONWEALTH OF VIRGINIA
PETER GARRETT SCHMIDT
No. 013167
ARCHITECT

US ARMY CORPS OF ENGINEERS
AFGHANISTAN NORTH DISTRICT

SYMBOL	DESCRIPTION	DATE	APPR.	SYMBOL	DESCRIPTION	DATE	APPR.

DESIGNED BY: | DWN BY: | CKD BY: | REVIEWED BY: | SUBMITTED BY: | DATE: 3/30/2011 | REV.: 0
CONTRACT NO. W912ER-09-D-0002
DRAWING CODE:
FILE NAME: W912ER09D0002-A502.DWG
PLOT SCALE: 1:10
PLOT DATE: 3/30/2011

BAKER

U.S. ARMY ENGINEER DISTRICT, AFGHANISTAN
CORPS OF ENGINEERS
APO AE 09356

SITE ADAPT DESIGN
VM09 - VEHICLE MAINTENANCE BUILDING - ARCH SPAN
HEAD, JAMB, AND SILL DETAILS

SHEET REFERENCE NUMBER:
A-502

3/30/2011 4:10 PM

A1 Size 594mm x 841mm

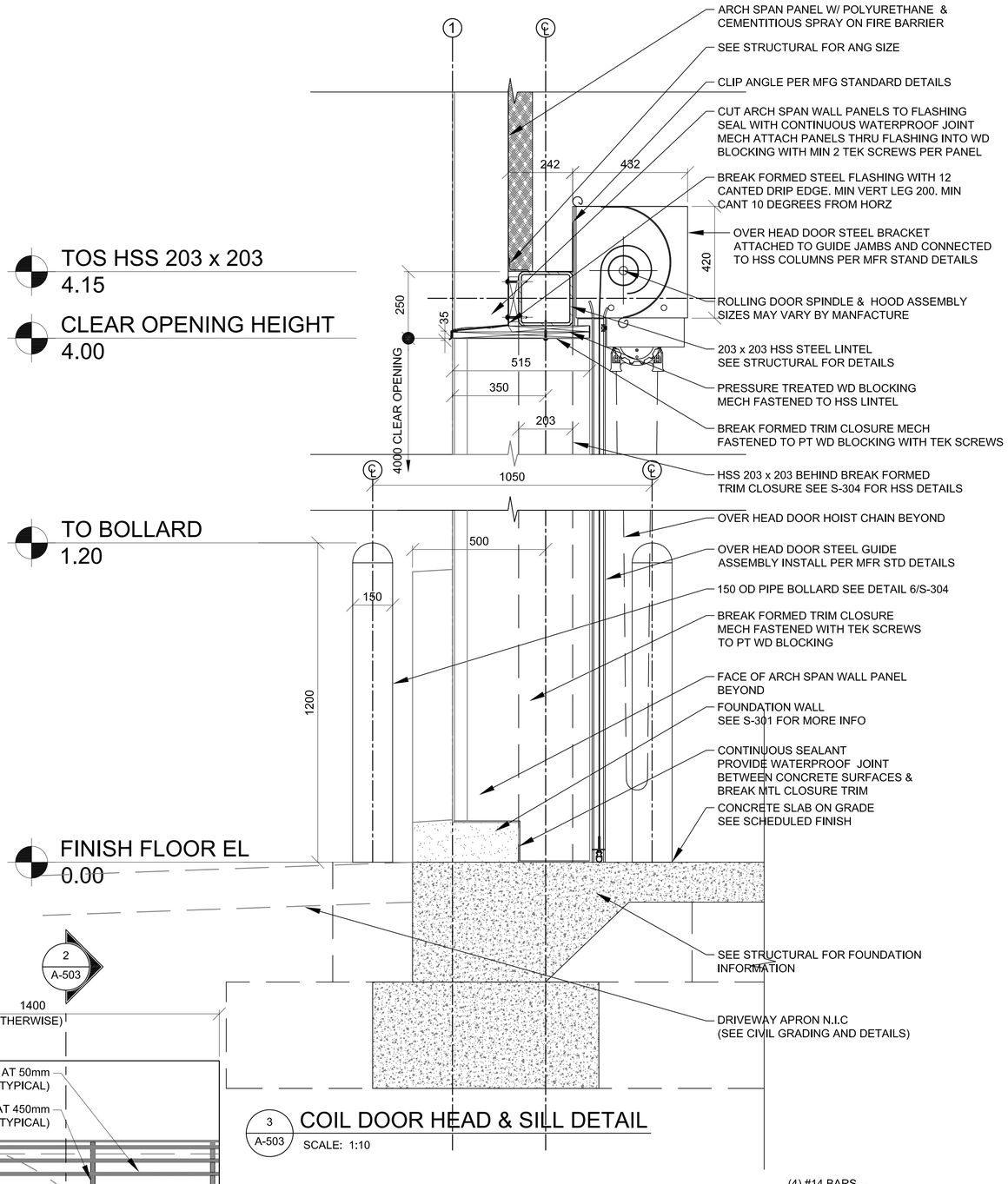

3 A-503 COIL DOOR HEAD & SILL DETAIL
SCALE: 1:10

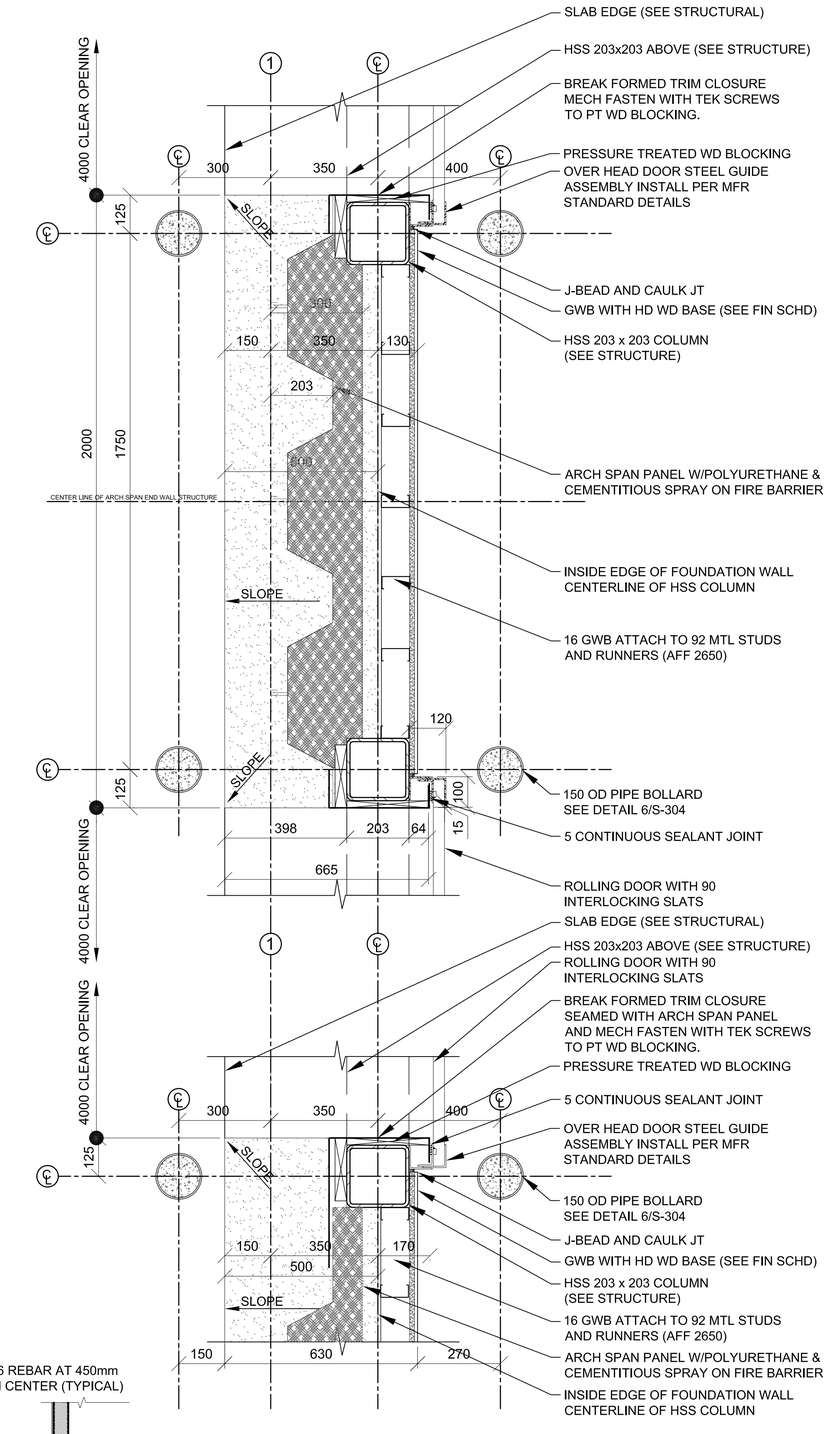

4&5 A-503 COIL DOOR JAMB DETAIL
SCALE: 1:10

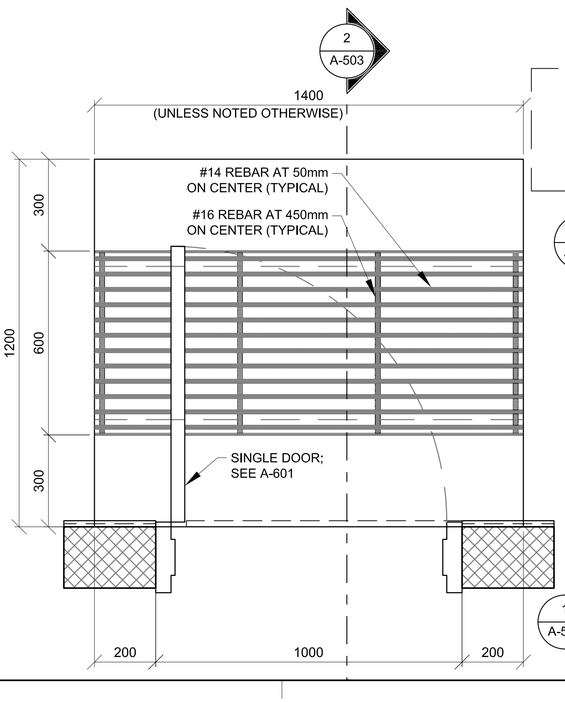

1 A-503 DOOR STOP PLAN (WITH GRATE)
SCALE: 1:10

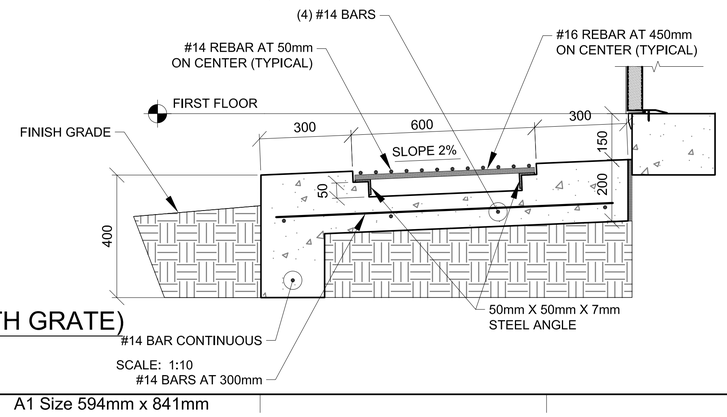

SCALE: 1:10

0 100 200 400
SCALE: 1:10

UNLESS OTHERWISE NOTED, LINEAR DIMENSIONS SHOWN ARE IN MILLIMETERS.

COMMONWEALTH OF PENNSYLVANIA
PETER GARRETT SCHMIDT
NO. 013167
REGISTERED ARCHITECT

US ARMY CORPS OF ENGINEERS
AFGHANISTAN NORTH DISTRICT

SYMBOL	DESCRIPTION	DATE	APPR.	SYMBOL	DESCRIPTION	DATE	APPR.

DESIGNED BY:
DWN BY:
CKD BY:
REVIEWED BY:
SUBMITTED BY:
BAKER

DATE: 3/30/2011
CONTRACT NO.
W912ER-09-D-0002
DRAWING CODE:
FILE NAME: arch-stoop-door-details-a-503.dwg
PLOT SCALE: 1:10
PLOT DATE: 3/30/2011
REV: 0

U.S. ARMY ENGINEER DISTRICT, AFGHANISTAN
CORPS OF ENGINEERS
APO AE 09356

SITE ADAPT DESIGN
VM09 - VEHICLE MAINTENANCE BUILDING - ARCH SPAN
STOOP DETAILS

SHEET REFERENCE NUMBER:
A-503

3/30/2011 4:10 PM

A1 Size 594mm x 841mm

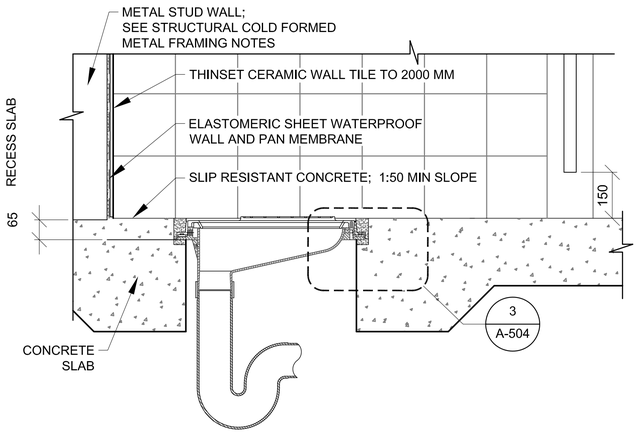

1 A-504 LATRINE DETAIL
SCALE: 1:10

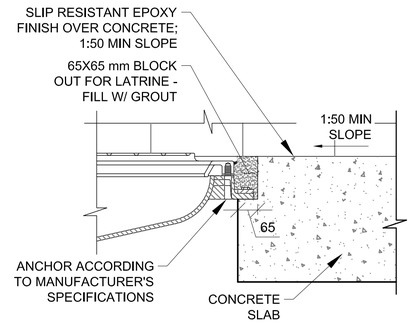

3 A-504 MOUNTING DETAIL
SCALE: 1:10

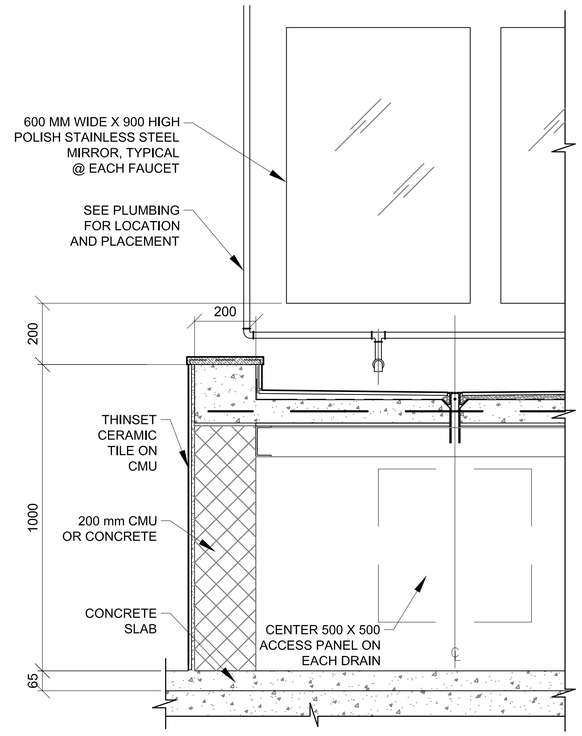

7 A-504 TROUGH SECTION
SCALE: 1:10

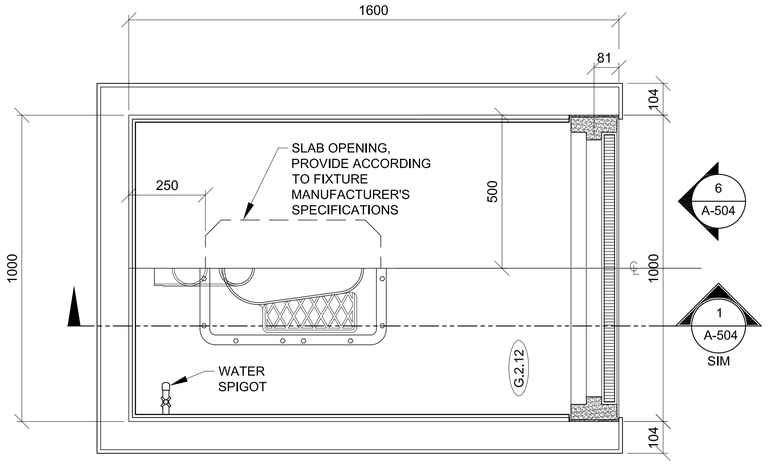

2 A-504 TOILET DETAIL
SCALE: 1:10

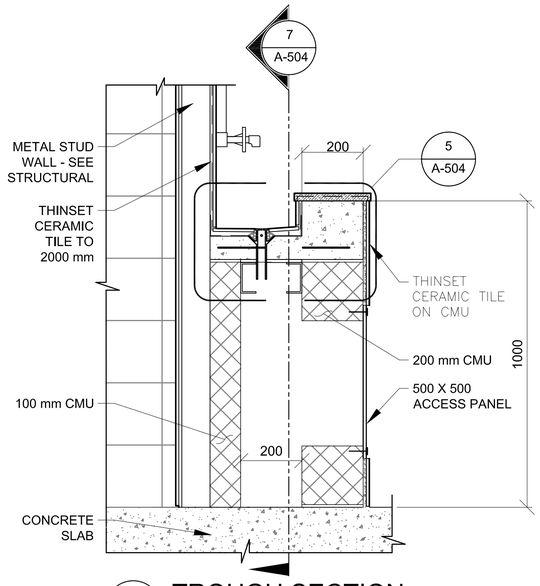

4 A-504 TROUGH SECTION
SCALE: 1:10

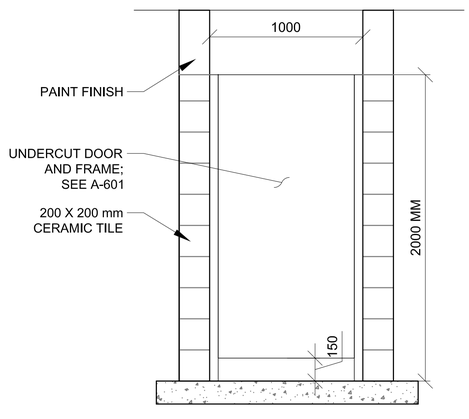

6 A-504 TOILET PARTITION DOOR ELEVATION
SCALE: 1:20

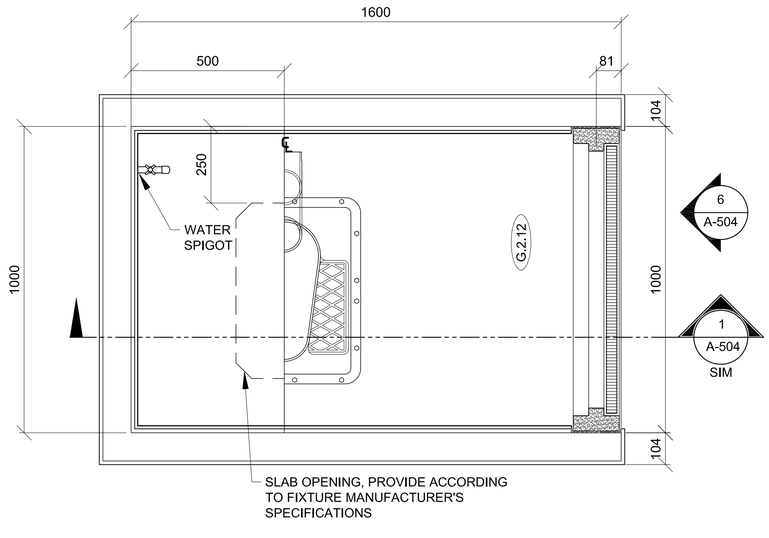

2A A-504 TOILET DETAIL
SCALE: 1:10

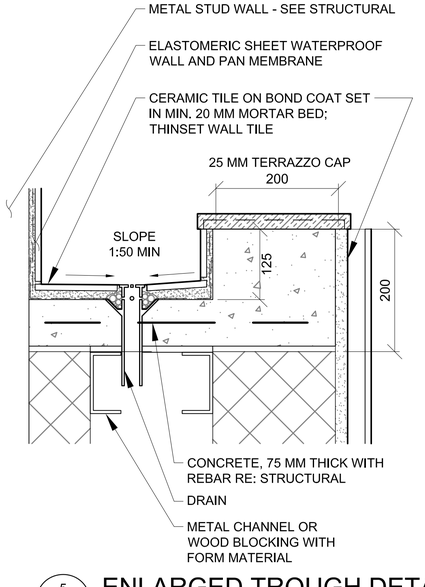

5 A-504 ENLARGED TROUGH DETAIL
SCALE: 1:5

SCALE: 1:5
SCALE: 1:10

UNLESS OTHERWISE NOTED,
LINEAR DIMENSIONS
SHOWN ARE IN MILLIMETERS.

COMMONWEALTH OF PENNSYLVANIA
PETER GARRETT SCHMIDT
NO. 013167
REGISTERED ARCHITECT

US ARMY CORPS
OF ENGINEERS
AFGHANISTAN NORTH
DISTRICT

SYMBOL	DESCRIPTION	DATE	APPR.	SYMBOL	DESCRIPTION	DATE	APPR.

DESIGNED BY: PGS, SE, MR
DWN BY: SE, MDH, AH
CKD BY: PGS, SE, MR
REVIEWED BY:
SUBMITTED BY:
DATE: 3/30/2011
CONTRACT NO. W912ER-09-D-0002
DRAWING CODE:
FILE NAME: ARCHITECTURAL-A-504.DWG
PLOT SCALE: VARIES
PLOT DATE: 3/30/2011
REV: 0
BAKER

U.S. ARMY ENGINEER DISTRICT, AFGHANISTAN
CORPS OF ENGINEERS
APO AE 09356

SITE ADAPT DESIGN
VM09 - VEHICLE MAINTENANCE BUILDING - ARCH SPAN
TOILET & LAVATORY DETAILS

SHEET REFERENCE NUMBER:
A-504

A1 Size 594mm x 841mm

3/30/2011 4:10 PM

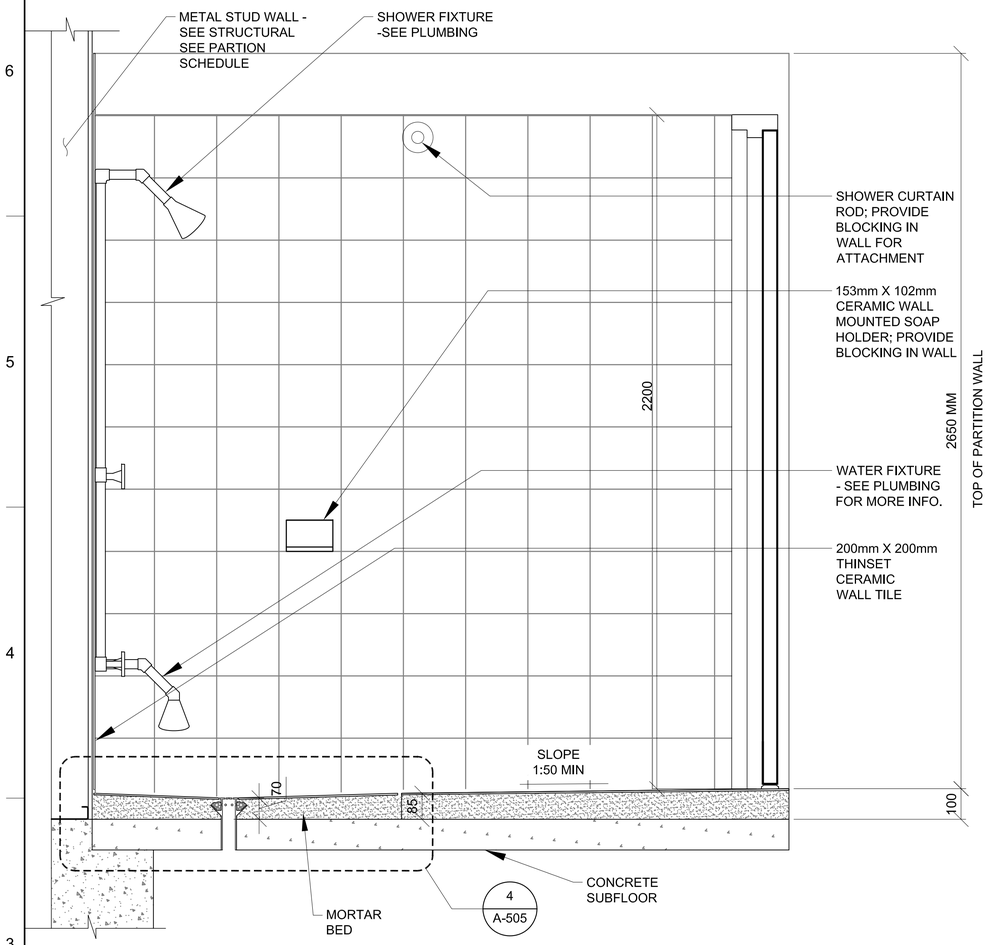

1 A-505 SHOWER DETAILS
SCALE: 1:10

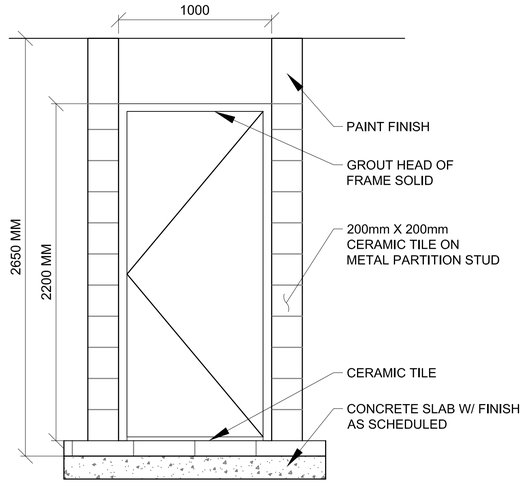

3 A-505 SHOWER PARTITION DOOR ELEVATION
SCALE: 1:20

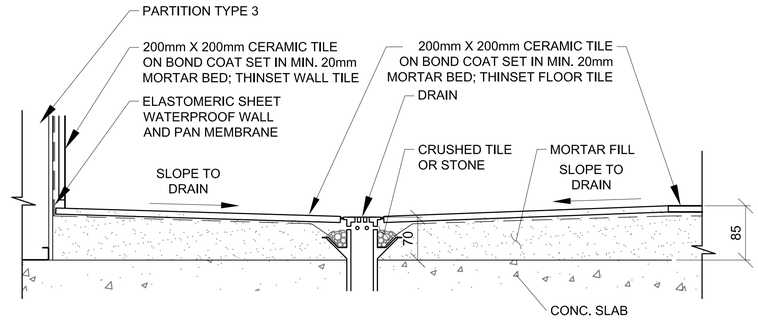

4 A-505 SHOWER RECESS
SCALE: 1:5

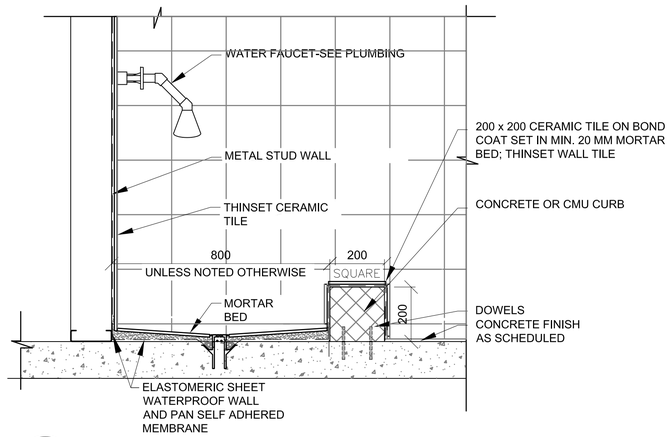

5 A-505 MOP SINK DETAIL
SCALE: 1:10

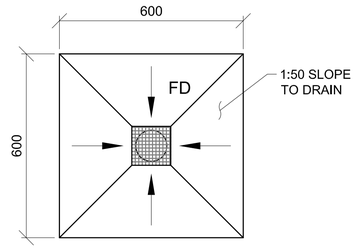

6 A-505 FLOOR DRAIN DETAIL
SCALE: 1:10

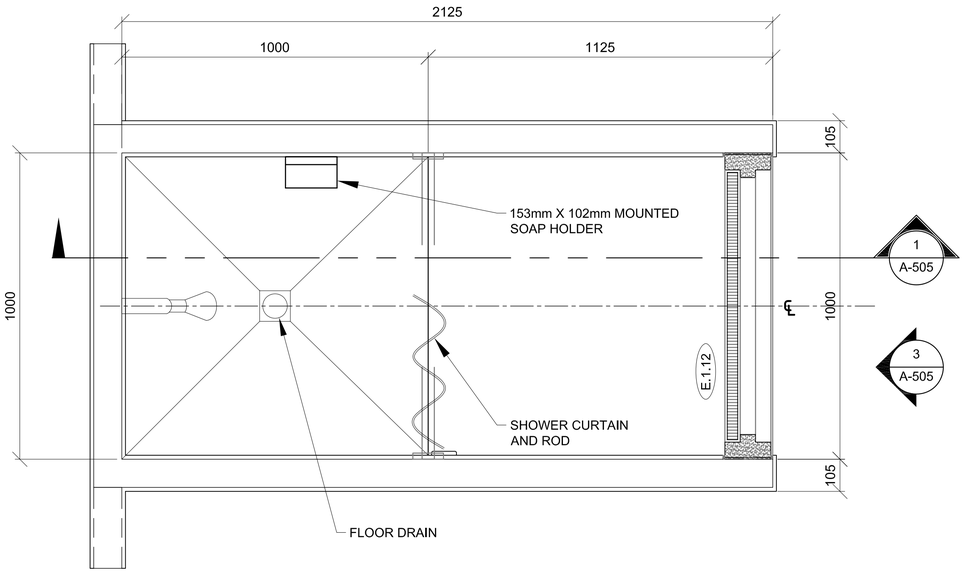

2 A-505 SHOWER PLAN
SCALE: 1:10

SCALE: 1:5
SCALE: 1:20
SCALE: 1:10

UNLESS OTHERWISE NOTED, LINEAR DIMENSIONS SHOWN ARE IN MILLIMETERS.

COMMONWEALTH OF VIRGINIA
PETER GARRETT SCHMIDT
NO. 013167
REGISTERED ARCHITECT

US ARMY CORPS OF ENGINEERS
AFGHANISTAN NORTH DISTRICT

SYMBOL	DESCRIPTION	DATE	APPR.	SYMBOL	DESCRIPTION	DATE	APPR.

U.S. ARMY ENGINEER DISTRICT, AFGHANISTAN
CORPS OF ENGINEERS
APO AE 09356

DESIGNED BY: PGS, SE, MR
DWN BY: SE, MDH, AH
REVIEWED BY: JH
SUBMITTED BY:
CKD BY: PGS, SE, MR
DATE: 3/30/2011
CONTRACT NO. W912ER-09-D-0002
DRAWING CODE:
REV: 0
FILE NAME: w912er-09-d-0002 - a-505 (2010).dwg
PLOT SCALE: VARIES
PLOT DATE: 3/30/2011

BAKER

SITE ADAPT DESIGN
VM09 - VEHICLE MAINTENANCE BUILDING - ARCH SPAN
SHOWER DETAILS

SHEET REFERENCE NUMBER:
A-505

3/30/2011 4:10 PM

A1 Size 594mm x 841mm

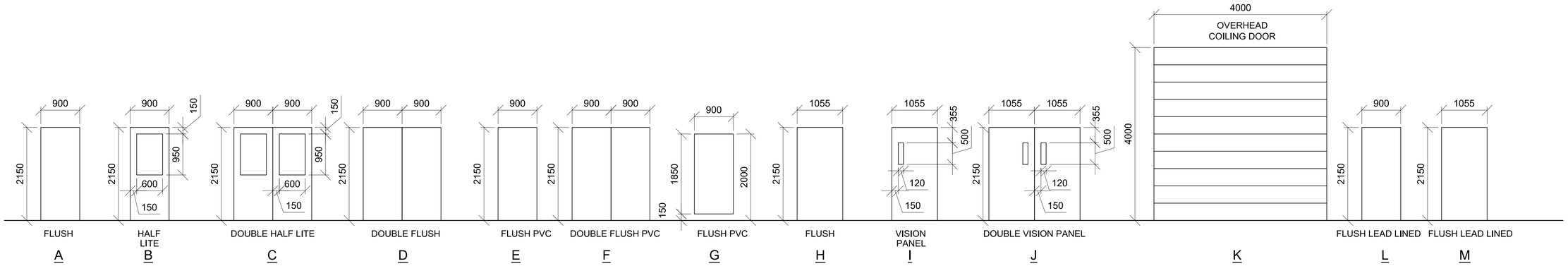

1 A-601 DOOR TYPES

SCALE: 1:50

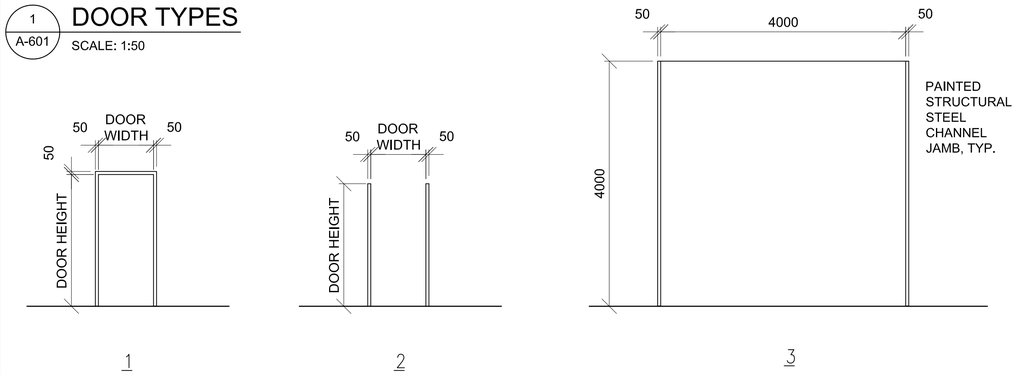

2 A-601 FRAME TYPES

SCALE: 1:50

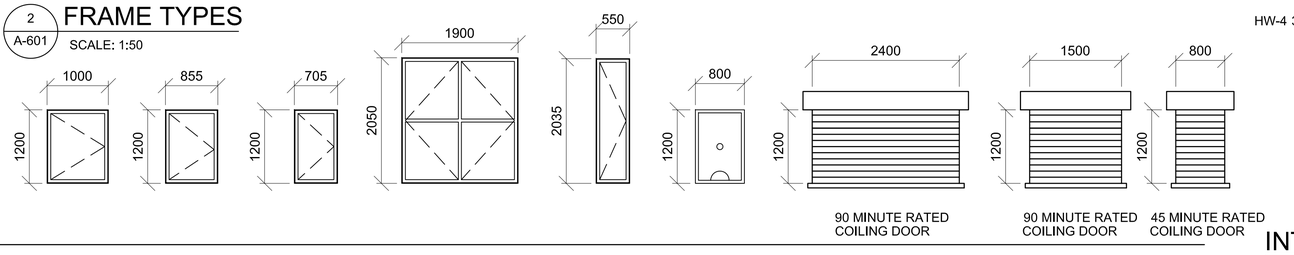

3 A-601 WINDOW TYPES

SCALE: 1:50

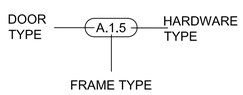

4 A-601 DOOR TAG

SCALE: 1:50

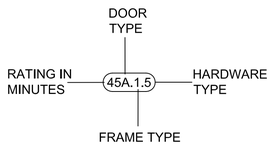

5 A-601 RATED DOOR TAGS

SCALE: NTS

WINDOW TYPE NOTES:

1. ALL EXTERIOR WINDOWS SHALL BE STEEL. PROVIDE INSECT SCREENS ONLY AT DFAC FACILITIES. WINDOWS SHALL BE COMMERCIAL GRADE.
2. ALL EXTERIOR WINDOWS SHALL BE OPERABLE.
3. WINDOWS IN LATRINES OR RESTROOM AREAS SHALL HAVE OBSCURE GLASS.
4. WINDOW TYPES ARE NOT APPLICABLE AT ALL BUILDINGS. SEE FLOOR PLAN FOR REQUIREMENTS

DOOR TAG NOTES:

1. THE DOOR TAG INDICATES THE DOOR TYPE, FRAME TYPE AND HARDWARE SET FOR EACH DOOR.
2. THE DOOR TAG FOR RATED DOORS INCLUDES THE RATING OF THE DOOR IN MINUTES.
3. REFER TO FLOOR PLANS FOR DOOR TAG INFORMATION APPLICABLE TO EACH DOOR.

DOOR AND HARDWARE NOTES:

1. INTERIOR AND EXTERIOR METAL DOORS AND FRAME COLORS SHALL MATCH ADJACENT WALL COLORS AS SELECTED BY THE CONTRACTING OFFICER.
2. FRAMES, EXCEPT FIRE-RATED FRAMES, SHALL BE MOUNTED AND ADJUSTED IN ACCORDANCE WITH MANUFACTURER'S INSTRUCTIONS. FRAMES SHALL BE FASTENED WITH MINIMUM OF THREE ANCHORS PER JAMB AT EQUAL INTERVALS.
3. DIMENSIONS SHOWN ON DOOR TYPES DETAIL ARE BASED UPON MODULAR MASONRY (OR ROUGH OPENING), HEIGHT OF 2150 MM FOR STANDARD PERSONNEL DOORS. CONTRACTOR SHALL COORDINATE WITH DOOR SUPPLIER TO ENSURE THAT DIMENSIONS OF DOORS AND FRAMES PROVIDED ARE COMPATIBLE WITH DOOR OPENING DIMENSIONS.
4. HARDWARE SHALL BE HEAVY DUTY, COMMERCIAL GRADE, STAINLESS STEEL WITH A SATIN OR BRUSHED FINISH.
5. HARDWARE TYPES INCLUDE BUILDERS HARDWARE MANUFACTURERS ASSOCIATION (BMHA) NUMBER.
6. DOORS IN 2 HOUR RATED PARTITIONS SHALL BE 1.5 HOUR (90 MINUTE) RATED DOORS IN ACCORDANCE WITH NFPA 101, TABLE 8.3.4.2.
7. DOORS IN 1 HOUR RATED WALLS SHALL BE 3/4 HOUR (45 MINUTE) RATED DOORS IN ACCORDANCE WITH NFPA 101, TABLE 8.3.4.2.
8. DOORS IN 1 HOUR RATED CORRIDOR WALLS SHALL BE 1/3 HOUR (20 MINUTE) IN ACCORDANCE WITH NFPA 101, TABLE 8.3.4.2.
10. PROVIDE DOOR STOPS TO PROTECT WALLS ON LOCATIONS WHERE DOOR SWING WILL STRIKE WALL.
11. FIRE RATED DOORS SHALL HAVE RATED GLASS NOT EXCEEDING ALLOWABLE SIZE PER NFPA 80. (836,125MM2 FOR MIN. DOORS & 64,500MM2 FOR 45 MIN OR GREATER DOORS
12. DOOR TYPES ARE NOT APPLICABLE AT ALL BUILDINGS. SEE FLOOR PLAN FOR REQUIREMENTS
13. REFER TO MECHANICAL DRAWINGS FOR LOCATIONS OF UNDERCUT DOORS

EXTERIOR DOOR HARDWARE TYPES:

HW-1 1-1/2 PR HINGES, A5112 114 X 114 (SINGLE EXIT DOOR)
1 EA RIM EXIT DEVICE, TYPE 1
1 EA CYLINDER. E09221A, GRADE 1
1 EA OVERHEAD CLOSER, C02061, LOW RESISTANCE
1 EA THRESHOLD, J32130
3 EA DOOR SILENCERS, L03011

HW-2 1-1/2 PR HINGES, A5112 114 X 114 (SINGLE ENTRY DOOR)
1 EA LOCKSET, F13 ENTRY LOCK W/LEVER HANDLES, GRADE 1
1 EA OVERHEAD CLOSER, C02061, LOW RESISTANCE
1 EA THRESHOLD, J32130
3 EA DOOR SILENCERS, L03011

HW-3 3 PR HINGES, A5112 114 X 114 (DOUBLE EXIT DOOR)
2 EA RIM EXIT DEVICE, TYPE 1
2 EA CYLINDER. GRADE 1
2 EA OVERHEAD CLOSER, C02061, LOW RESISTANCE
1 EA DOOR COORDINATOR, TYPE 21
1 EA ASTRAGAL
1 EA THRESHOLD, J32130
2 EA DOOR SILENCERS, L03011

HW-4 3 PR HINGES, A5112 114 X 114 (DOUBLE DOOR DORMITORY FUNCTION)
1 EA LOCKSET W/LEVER HANDLES. GRADE 1, F13
1 EA OVERHEAD CLOSER, C02061, LOW RESISTANCE
2 EA MAGNETIC HOLDER PIN, ATTACHED TO DOOR LEAF
2 EA MAGNETIC HOLDER RECEIVER, ATTACHED TO STOOP
2 EA LEVER EXTENSION FLUSH BOLTS, L04081
1 EA ASTRAGAL
1 EA THRESHOLD, J32130
2 EA DOOR SILENCERS, L03011

INTERIOR DOOR HARDWARE TYPES:

HW-5 1-1/2 PR HINGES, A8133 114 X 114 (SINGLE FRONT DOOR FUNCTION)
1 EA LOCKSET W/LEVER HANDLES, F08, GRADE 1
1 EA WALL STOP, L02101 OR L02161
3 EA DOOR SILENCERS, L03011

HW-5A 1-1/2 PR HINGES, A8133 114 X 114 (SINGLE OFFICE FUNCTION)
1 CLOSER
1 EA LOCKSET W/LEVER HANDLES, F05, GRADE 1
1 EA WALL STOP, L02101 OR L02161
3 EA DOOR SILENCERS, L03011

HW-6 1-1/2 PR HINGES, A8112 114 X 114 (SINGLE STOREROOM FUNCTION)
1 CLOSER
1 EA LOCKSET W/LEVER HANDLES, F07, GRADE 1
1 EA WALL STOP, L02101 OR L02161
3 EA DOOR SILENCERS, L03011

HW-7 1-1/2 PR HINGES, A8133 (SINGLE PASSAGE FUNCTION)
1 CLOSER
1 EA LOCKSET W/LEVER HANDLES, F01 GRADE 1
1 EA WALL STOP, L02101 OR L02161
2 EA MOP PLATE, J103
3 EA DOOR SILENCERS, L03011

HW-7A 1-1/2 PR HINGES, A8133 (SINGLE PASSAGE FUNCTION)
1 CLOSER
1 EA LOCKSET W/LEVER HANDLES, F01 GRADE 1
1 EA WALL STOP, L02101 OR L02161
3 EA DOOR SILENCERS, L03011

INTERIOR DOOR HARDWARE TYPES:

HW-8 1-1/2 PR HINGES, A8112 (SINGLE JAN/STOREROOM FUNCTION)
1 CLOSER
1 EA LOCKSET W/LEVER HANDLES, F07 GRADE 1
1 EA WALL STOP, L02101 OR L02161
2 EA MOP PLATE, J103
3 EA DOOR SILENCERS, L03011

HW-9 1-1/2 PR HINGES, A5112 114 X 114 (SINGLE EXIT DOOR)
1 EA RIM EXIT DEVICE, TYPE 1
1 EA CYLINDER. E09221A, GRADE 1
1 EA OVERHEAD CLOSER, C02061, LOW RESISTANCE
3 EA DOOR SILENCERS, L03011

HW-10 3 PR HINGES, A5112 114 X 114 (DOUBLE STOREROOM FUNCTION)
1 EA LOCKSET W/LEVER HANDLES. GRADE 1, F7
2 EA LEVER EXTENSION FLUSH BOLTS, L04081
1 EA ASTRAGAL
2 EA DOOR SILENCERS, L03011

HW-11 1-1/2 PR HINGES, A8112 114 X 114 (SINGLE DORMITORY FUNCTION)
1 EA LOCKSET W/LEVER HANDLES, F13, GRADE 1
1 EA WALL STOP, L02101 OR L02161
1 EA OVERHEAD CLOSER, CO2061, LOW RESISTANCE
3 EA DOOR SILENCERS, L03011
1 EA ROBE HOOK

HW-12 1-1/2 PR HINGES, A8133 (SINGLE PRIVACY-BATH FUNCTION)
1 EA LATCH SET W/LEVER HANDLES, F22 GRADE 1
1 EA WALL STOP, L02101 OR L02161
3 EA DOOR SILENCERS, L03011
1 EA ROBE HOOK

HW-13 3 PR HINGES, A5112 114 X 114 (DOUBLE DORMITORY FUNCTION)
1 EA LOCKSET W/LEVER HANDLES. GRADE 1, F13
1 EA OVERHEAD CLOSER, C02061, LOW RESISTANCE
2 EA LEVER EXTENSION FLUSH BOLTS, L04081
1 EA ASTRAGAL
2 EA DOOR SILENCERS, L03011

HW-14 3 PR HINGES, A5112 114 X 114 (DOUBLE EGRESS EXIT DOOR)
2 EA VERTICAL ROD EXIT DEVICE, TYPE 1
2 EA CYLINDER. GRADE 1
2 EA OVERHEAD CLOSER, C02061, LOW RESISTANCE
1 EA DOOR COORDINATOR, TYPE 21
1 EA ASTRAGAL
2 EA DOOR SILENCERS, L03011

HW-15 3 PR HINGES, A5112 114 X 114 (DOUBLE STOREROOM FUNCTION)
2 CLOSERS
1 COORDINATOR
1 EA LOCKSET W/LEVER HANDLES. GRADE 1, F7
2 EA LEVER EXTENSION FLUSH BOLTS, L04081
1 EA ASTRAGAL
2 EA DOOR SILENCERS, L03011

THIS SHEET IS STANDARD AND IS INCLUSIVE OF ALL THE DOOR/ WINDOW/ HARDWARE TYPES FOR THE ENTIRE CONTRACT. NOT ALL DOOR/ WINDOW/ HARDWARE TYPES ARE USED FOR ANY PARTICULAR BUILDING DESIGN. CONTRACTOR SHALL REFER TO THE FLOOR PLAN FOR THE TYPES BEING USED.

0 500 1000 2000
SCALE: 1:100

UNLESS OTHERWISE NOTED, LINEAR DIMENSIONS SHOWN ARE IN MILLIMETERS.

COMMONWEALTH OF VIRGINIA
PETER GARRETT SCHMIDT
No. 013167
ARCHITECT

US ARMY CORPS OF ENGINEERS
AFGHANISTAN NORTH DISTRICT

SYMBOL	DESCRIPTION	DATE	APPR.	SYMBOL	DESCRIPTION	DATE	APPR.

DESIGNED BY: PGS, SE, MR
DWN BY: SE, MDH, AH
CKD BY: PGS, SE, MR
REVIEWED BY: JH
SUBMITTED BY:
DATE: 3/30/2011
CONTRACT NO. W912ER-09-D-0002
DRAWING CODE:
REV. 0
FILE NAME: ##CONTRACT NO##-##-##.DWG
SCALE: 1:100
PLOT SCALE: 1:100
PLOT DATE: 3/30/2011

BAKER

U.S. ARMY ENGINEER DISTRICT, AFGHANISTAN
CORPS OF ENGINEERS
APO AE 09356

SITE ADAPT DESIGN
VM09 - VEHICLE MAINTENANCE BUILDING - ARCH SPAN
WINDOW AND DOOR SCHEDULE

SHEET REFERENCE NUMBER:
A-601

3/30/2011 4:10 PM

A1 Size 594mm x 841mm

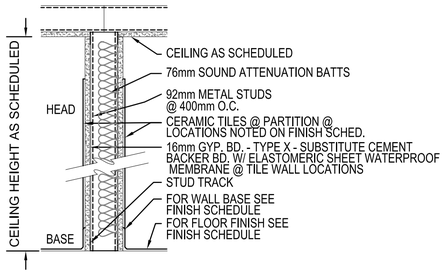

1 TYPE #1 - 1 HOUR FIRE RATED & NON-RATED
DESIGN NO. U419 OR U442
DESIGN NO. WHI 694-0300.1 (SIM)

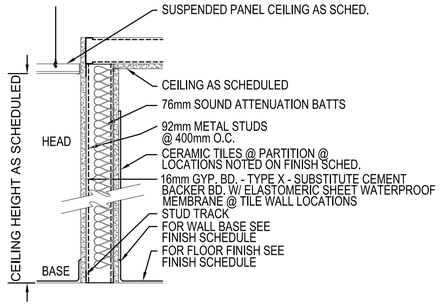

2 TYPE #2 - 1 HOUR FIRE RATED & NON-RATED
DESIGN NO. U419 OR U442/WALL
DESIGN NO. WHI 694-0300.1 (SIM)

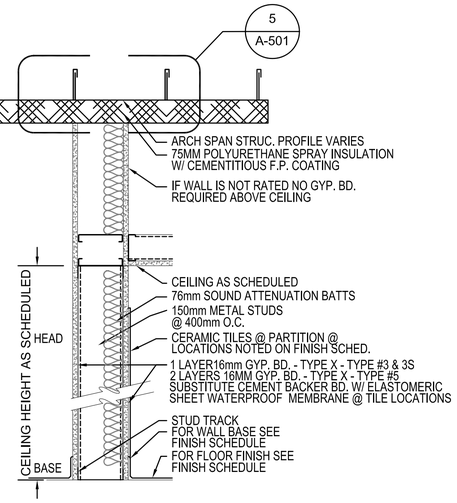

3 TYPE #3 - 1 HOUR FIRE RATED
DESIGN NO. U419
DESIGN NO. WHI 694-0300.1 (SIM)

3S TYPE #3S - 1 HOUR FIRE & SMOKE RATED
DESIGN NO. U419
DESIGN NO. WHI 694-0300.1 (SIM)

5 TYPE #5 - 2 HOUR FIRE RATED - PROVIDE 150 MM
METAL STUDS @ PARTITION TYPES 5 IN LIU OF 92 MM STUDS
DESIGN NO. U443
DESIGN NO. WHI 694-0300.1 (SIM)

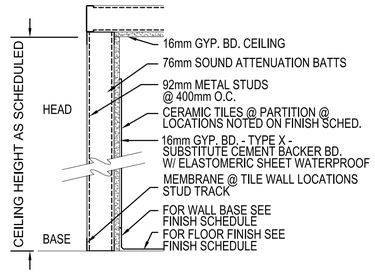

4 TYPE #4 - CHASE PARTITION

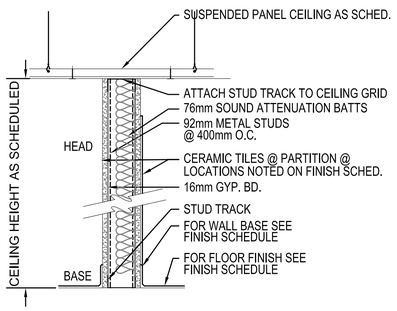

6 TYPE #6 - KITCHEN PARTITION

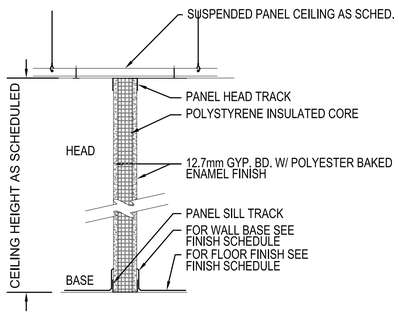

7 TYPE #7 - PANELIZED PARTITION

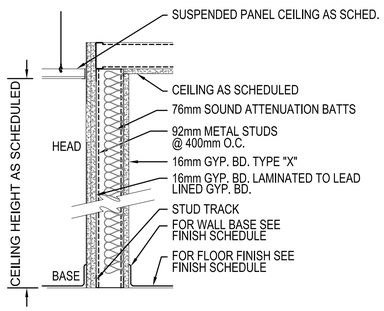

8 TYPE #8 - LEAD LINED PARTITION

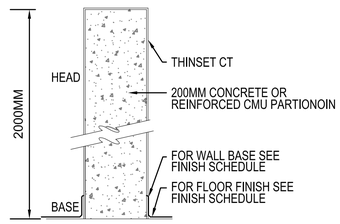

9 TYPE #9 - LOW WALL

1/A-602 PARTITION TYPES
SCALE: 1:10

GENERAL NOTES:

1. REFER TO DRAWING G-003 FOR LOCATION OF FIRE RATED WALLS & FIRE RESISTANT CEILINGS.
2. REFER TO FINISH SCHEDULE FOR LOCATION OF CERAMIC TILE WALL FINISH. AT THESE LOCATION SUBSTITUTE CEMENT BACKER BOARD AND ELASTOMERIC SHEET WATER PROOF MEMBRANE WITH THINSET CERAMIC TILE FOR GYPSUM BOARD AND PAINT FINISH TO C.T. HEIGHT.
3. REFER TO 6/A-501 FOR TYPE 3, 3S, & 5 BRACING DETAIL. INTERMEDIATE HT. BRACING DETAIL FOR FULL HT. WALLS WHERE APPLICABLE.
4. PARTITION TYPES ARE NOT APPLICABLE AT ALL BUILDINGS. SEE FLOOR PLAN & NOTES FOR REQUIRED TYPES
5. SEE COLD FORMED FRAMING NOTES PORTION OF STRUCTURAL DRAWINGS FOR ADDITIONAL INFORMATION
6. AT PHARMACY LOCATIONS PROVIDE EXPANDED METAL LATH BETWEEN STUDS AND DRYWALL FINISH

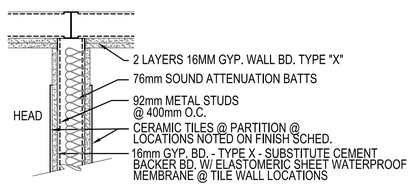

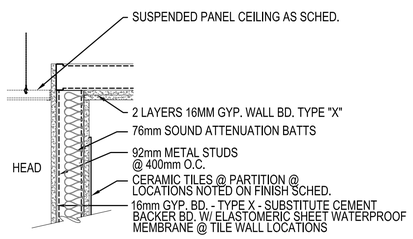

2/A-602 FIRE RESISTANT CEILING CONDITIONS
SCALE: 1:10

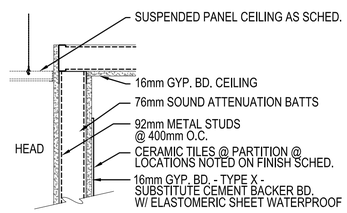

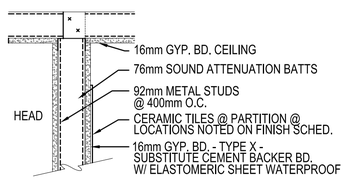

3/A-602 NON-RATED CEILING CONDITIONS
SCALE: 1:10

0 100 200 400
SCALE: 1:10
UNLESS OTHERWISE NOTED,
LINEAR DIMENSIONS
SHOWN ARE IN MILLIMETERS.

COMMONWEALTH OF VIRGINIA
PETER GARRETT SCHMIDT
No. 013167
ARCHITECT

US ARMY CORPS
OF ENGINEERS
AFGHANISTAN NORTH
DISTRICT

SYMBOL	DESCRIPTION	DATE	APPR.	SYMBOL	DESCRIPTION	DATE	APPR.

DESIGNED BY: PGS
DWN BY: AMH
CKD BY: PGS
REVIEWED BY: JH
SUBMITTED BY:
DATE: 3-30-2011
REV: 0
CONTRACT NO. W912ER-09-D-0002
DRAWING CODE:
FILE NAME: arch-partition types-a602.dwg
PLOT SCALE: 1:20
PLOT DATE: 3/30/2011

BAKER

U.S. ARMY ENGINEER DISTRICT, AFGHANISTAN
CORPS OF ENGINEERS
APO AE 09356

SITE ADAPT DESIGN
VM09 - VEHICLE MAINTENANCE BUILDING - ARCH SPAN
PARTITION TYPES

SHEET REFERENCE NUMBER:
A-602

A1 Size 594mm x 841mm

3/30/2011 4:10 PM

FINISHING SCHEDULE

FLOOR FINISHES

- (A) TROWEL FINISHED CONCRETE - BROOM FINISH @ TILE
- (B) NON-SLIP EPOXY FINISH
- (C) CERAMIC TILE
- (D) CONC. SEALER

WALL FINISHES

- (A) METAL STUD WALL WITH GYPSUM BOARD OR CEMENT PLASTER
- (B) SEMI-GLOSS PAINT
- (C) EPOXY PAINT
- (D) CERAMIC TILE UP TO 2.2M
- (E) CEMENTITIOUS FIREPROOFING - SPRAY ON
- (F) POLYURETHANE - SPRAY ON
- (G) 5cm SANDWICH PANEL
- (H) CONCRETE/CMU

CEILING FINISHES

- (A) GYPSUM BOARD
- (B) SEMI-GLOSS PAINT
- (C) EPOXY PAINT
- (D) POLYURETHANE - SPRAY ON
- (E) CEMENTITIOUS FIREPROOFING - SPRAY ON
- (F) 600mm x 1200mm METAL PANEL CEILING SYSTEM
- (G) OPEN "T" GRID CEILING SUSPENSION SYSTEM
- (H) EXPOSED ARCH SPAN PANELS

NOTES:

1. PROVIDE CEMENT BACKER BOARD & W.P. MEMBRANE @ ALL CERAMIC TILE WALLS. IN LIEU OF GYPSUM BOARD - MAINTAIN REQUIRED FIRE RATINGS.
2. SPRAY - ON POLYURETHANE AND SPRAY ON CEMENTITIOUS FIRE PROOFING SHALL BE APPLIED TO INTERIOR SURFACES OF ARCH SPAN PANELS, WINDOW, & DOOR ENCLOSURES & CONCRETE CURB/WALLS ONLY.
3. INSTALL 100MM PAINTED WOOD COVE BASE ON ALL PAINTED GYPSUM BOARD/ PLASTER WALLS EXCEPT WHERE CERAMIC TILE IS INDICATED.
4. PAINT WALL SURFACES ABOVE CERAMIC WALL TILE REFER TO REFLECTED CEILING PLAN FOR CEILING HEIGHTS.
5. POLYURETHANE INSULATION SHALL PROVIDE K=600.
6. REFER TO G-003 FOR FIRE RATED WALL & FIRE RESISTANT CEILING LOCATIONS & A-602 FOR DRYWALL CEILING CONSTRUCTION.

ITEM NO.	SPACE NO.	FLOOR FINISHING				WALL FINISHING				Ceiling Finishing				REMARKS
1	101	D				A	B			A				
2	101A	D				A	B			A				
3	101B	D				A	B			A				
4	102	D				A	B			A				
5	103	C				A	D	C		A				
6	104	C				A	D	C		A				
7	105	B				A	B			A				
8	106	B				A	B			A				
9	107	B				A	B			E				
10														
11														
12														
13														
14														
15														
16														
17														
18														
19														
20														
21														
22														
23														
24														
25														
26														
27														
28														
29														
30														
31														
32														
33														
34														
35														
36														
37														
38														
39														
40														
41														
42														
43														
44														
45														
46														
47														
48														
49														
50														

UNLESS OTHERWISE NOTED, LINEAR DIMENSIONS SHOWN ARE IN MILLIMETERS.

COMMONWEALTH OF VIRGINIA
PETER GARRETT SCHMIDT
No. 013167
REGISTERED ARCHITECT

US ARMY CORPS OF ENGINEERS
AFGHANISTAN NORTH DISTRICT

SYMBOL	DESCRIPTION	DATE	APPR.	SYMBOL	DESCRIPTION	DATE	APPR.

DATE: 3/30/2011
REV: 0
CONTRACT NO. W912ER-09-D-0002
DRAWING CODE:
FILE NAME: ARCHITECTURAL-FINISH-SCHEDULE.DWG
PLOT SCALE: NONE
PLOT DATE: 3/30/2011

DESIGNED BY: PGS
DWN BY: AMH
CKD BY: PGS
REVIEWED BY: JH
SUBMITTED BY:
BAKER

U.S. ARMY ENGINEER DISTRICT, AFGHANISTAN
CORPS OF ENGINEERS
APO AE 09356

SITE ADAPT DESIGN
VM09 - VEHICLE MAINTENANCE BUILDING - ARCH SPAN
FINISH SCHEDULE

SHEET REFERENCE NUMBER:
A-603

A1 Size 594mm x 841mm

3/30/2011 4:10 PM

PLUMBING SYMBOLS AND LEGEND

SYMBOL	ABBREV	DESCRIPTION	SYMBOL	ABBREV	DESCRIPTION	SYMBOL	ABBREV	DESCRIPTION	SYMBOL	ABBREV	DESCRIPTION	SYMBOL	ABBREV	DESCRIPTION
	ABL	ABLUTION		CONT	CONTINUATION		FTG	FOOTING			PRESSURE GAGE W/PET COCK			TEE OUTLET DOWN
	ABV	ABOVE		DFU	DRAINAGE FIXTURE UNIT			GATE VALVE		PRV	PRESSURE REDUCING VALVE		THERM	THERMOMETER W/PET COCK
	AFF	ABOVE FINISHED FLOOR			DIRECTION OF FLOW		GC	GENERAL CONTRACTOR			PRESSURE REGULATING VALVE		TOF	TOP OF FOOTING
	AFR	ABOVE FINISHED ROOF		DN	DOWN			GLOBE VALVE		P&T	PRESSURE & TEMPERATURE		TOP	TOP OF PIPE
	AFG	ABOVE FINISHED GRADE		DWG	DRAWING		HB	HOSE BIBB		PSI	PRESSURE PER SQUARE INCH			TRAP - ELEVATION
		ANGLE GATE - ELEV.			DRAIN VALVE		H OR HW	HOT WATER PIPING			PRESSURE REGULATOR WITH PRESSURE GAUGE			TRAP - PLAN
		ANGLE GATE - PLAN			ELBOW DOWN		HWR	HOT WATER RETURN			PRESSURE & TEMPERATURE RELIEF VALVE		TP	TRAP PRIMER
	BP (ASSE 1013)	BACKFLOW PREVENTER WITH TEST VALVES			ELBOW UP		IE	INVERT ELEVATION			QUICK DISCONNECT		TYP	TYPICAL
		BALL VALVE		EWC	ELECTRIC WATER COOLER		L OR LAV	LAVATORY OR TROUGH		RCP	RECIRCULATING PUMP			UNION
	BLW	BELOW		EWH OR HWH	ELECTRIC WATER HEATER		MAX	MAXIMUM		RH	RELATIVE HUMIDITY			VALVE IN RISE
		BRANCH - BOTTOM CONNECTION		ELEV	ELEVATION		MC				ROOF PENETRATION		V	VENT PIPING
		BRANCH - TOP CONNECTION		ET	EXPANSION TANK		M	METER			SAFETY RELIEF VALVE		VTR	VENT THRU ROOF
		CAP		EX	EXISTING		MM	MINIMUM		S	SINK		VU	VENT UP
		CHECK VALVE		FIN	FINISHED		MIN	MILLIMETER		SS	SANITARY PIPING		W	WATER CLOSET
CO	CO	CLEAN-OUT IN VERTICAL		FC	FIRE PROTECTION CONTRACTOR		MR	MOP RECEPTOR		SH OR SHR	SHOWER		WC	WATER COLUMN
CO	CO	CLEAN-OUT	FD	FD	FLOOR DRAIN W/TRAP		MV	MIXING VALVE		SFU	SUPPLY FIXTURE UNIT		W	WASTE
CO	CO	CLEAN-OUT IN HORIZONTAL			FLEXIBLE PIPING CONNECTION		NC	NORMALLY CLOSED		SQ FT	SQUARE FEET		W/	WITH
	CW	COLD WATER PIPING		FFE	FINISHED FLOOR ELEVATION		NO	NORMALLY OPEN			STRAINER		W/O	WITHOUT
	CONC	CONCRETE		FLR	FLOOR		PC	PLUMBING CONTRACTOR		TE	TOP ELEVATION			
	CONN	CONNECTION		FT	FOOT OR FEET			PLUG VALVE			TEE OUTLET UP			

GENERAL NOTES:

1. DO NOT SCALE DRAWINGS - ALL DIMENSIONS AND CONDITIONS SHALL BE CHECKED AND VERIFIED BY THE CONTRACTOR AT THE SITE.
2. ALL WORK PERFORMED ON THIS BUILDING SHALL BE IN COMPLIANCE WITH ALL PERTINENT CODES, RULES, ORDINANCES AND REGULATIONS OF THE GOVERNING AUTHORITIES.
3. ALL WORK PERFORMED UNDER AND IN CONNECTION WITH THESE DRAWINGS AND SPECIFICATIONS SHALL BE IN STRICT COMPLIANCE WITH THE LATEST SAFETY AND HEALTH STANDARDS.
4. REPORT ANY DISCREPANCIES FOUND IN THE PLUMBING DRAWINGS AND/OR IN THE SPECIFICATIONS DURING THE BIDDING PROCESS FOR CLARIFICATION BY THE ENGINEER.
5. ALL EASTERN STYLE WATER CLOSETS IN THIS FACILITY ARE TO HAVE THE FIXTURE DESIGNATION OF W-1. EACH FIXTURE SHALL HAVE A 25mm COLD WATER MAIN LINE EXTENDED INTO THE STALL AND THEN TEE OFF TO THE 20mm SPIGOT CONNECTION. ALSO PROVIDE A 100mm SANITARY CONNECTION. SEE DETAILS ON DRAWING P502.
6. ALL LAV OR TROUGH FIXTURES IN THIS FACILITY ARE TO HAVE THE FIXTURE DESIGNATION OF L-1. L-1 DESIGNATION REPRESENTS THE NUMBER OF FAUCETS FOR THE TROUGH FIXTURE. EACH FIXTURE SHALL HAVE A 15mm COLD WATER, 15mm HOT WATER CONNECTION AND A 80mm SANITARY CONNECTION.
7. REFER TO SHEET P501 AND P502 FOR DETAILS.
8. ALL WATER, SANITARY AND VENT LINES TO BE EXPOSED. RUN LINES TIGHT TO CEILING AND WALL. ALL EXPOSED WATER, WASTE, AND VENT PIPING, LOCATED IN USER OCCUPIED AREAS, SHALL BE SCHEDULE 40 GALVANIZED STEEL WITH WALL MOUNTING BRACKETS SPACED A MAXIMUM OF 400mm (16") APART TO MINIMIZE VANDALISM.
9. PROVIDE ISOLATION VALVES FOR HOT AND COLD WATER PIPES TO EACH INDIVIDUAL FIXTURE.
10. ALL VENTS THROUGH ROOF SHALL EXTEND A MINIMUM OF 600mm ABOVE FINISHED ROOF. VENT SHALL ALSO EXTEND THRU ROOF AT PEAK OF SPAN.
11. CONTRACTOR TO COORDINATE WATER PIPING MOUNTING LOCATION WITH BOTH MECHANICAL & ELECTRICAL DRAWINGS.
12. PLUMBING CONTRACTOR SHALL COORDINATE PLUMBING WORK WITH THE LOCATIONS OF ALL UTILITIES AT THE SITE PRIOR TO THE START OF ANY PLUMBING WORK.
13. COORDINATE ALL ACCESS PANEL LOCATIONS WITH THE ARCHITECT AND GENERAL CONTRACTOR.
14. ALL SANITARY PIPING BELOW SLAB SHALL BE A MINIMUM OF 50mm, UNLESS OTHERWISE NOTED OR AS REQUIRED BY THE LOCAL AUTHORITY HAVING JURISDICTION.
15. ALL HORIZONTAL SANITARY LINES SHALL BE SLOPED AT 8mm PER 300mm, UNLESS OTHERWISE NOTED OR AS REQUIRED BY THE LOCAL AUTHORITY HAVING JURISDICTION.
16. EMERGENCY EYE/FACE WASH FIXTURES IN THIS FACILITY ARE TO HAVE THE FIXTURE DESIGNATION OF EW-1. EACH FIXTURE SHALL HAVE A 15mm COLD WATER CONNECTION AND A 32mm SANITARY CONNECTION. SANITARY LINE TO BE AN INDIRECT WASTE LINE TO NEAREST FLOOR DRAIN. MINIMUM SUPPLY PRESSURE TO EYEWASH SHALL BE 207kpa (KILOPASCALS) AT 0.19L/s (LITERS/SECOND).

UNLESS OTHERWISE NOTED, LINEAR DIMENSIONS SHOWN ARE IN MILLIMETERS.

COMMONWEALTH OF PENNSYLVANIA
REGISTERED PROFESSIONAL
MATTHEW R. SOTOSKY
ENGINEER
045576-E

US ARMY CORPS OF ENGINEERS
AFGHANISTAN NORTH DISTRICT

SYMBOL	DESCRIPTION	DATE	APPR.	SYMBOL	DESCRIPTION	DATE	APPR.

DESIGNED BY: RMH
DWN BY: RMH
CKD BY: CJM III
REVIEWED BY:
SUBMITTED BY:
DATE: 3/30/2011
CONTRACT NO. W912ER-09-D-0002
DRAWING CODE:
FILE NAME: ARCHPlumbing1 Vertical-Arch.DWG
PLOT SCALE:
PLOT DATE: 3/30/2011
REV: —

BAKER

U.S. ARMY ENGINEER DISTRICT, AFGHANISTAN
CORPS OF ENGINEERS
APO AE 09356

SITE ADAPT DESIGN

VM09 - VEHICLE MAINTENANCE BUILDING - ARCH SPAN

PLUMBING SYMBOLS AND LEGEND AND GENERAL NOTES

SHEET REFERENCE NUMBER:

P-001

A1 Size 594mm x 841mm

3/30/2011 4:11 PM

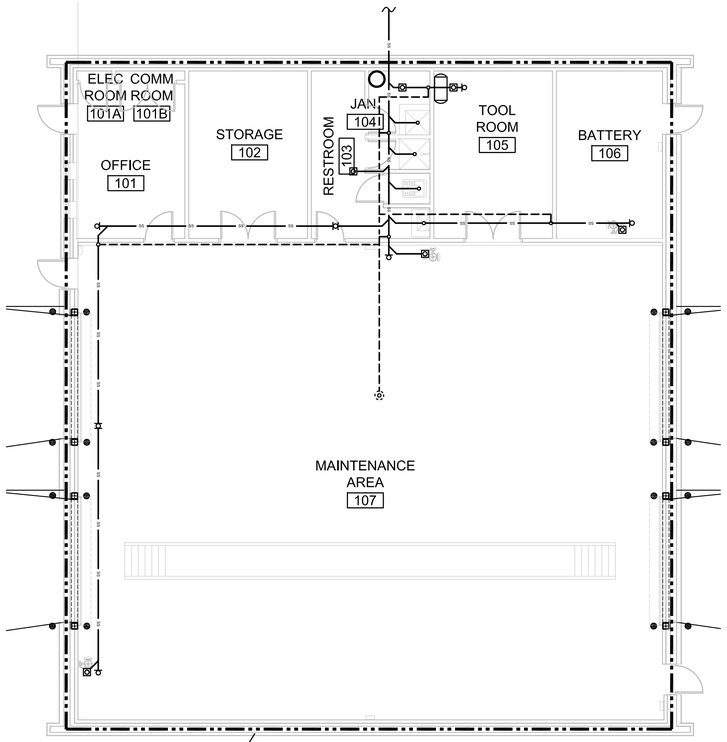

1 P-102

1 P-101 FLOOR PLAN - PLUMBING (SANITARY)

SCALE 1:100

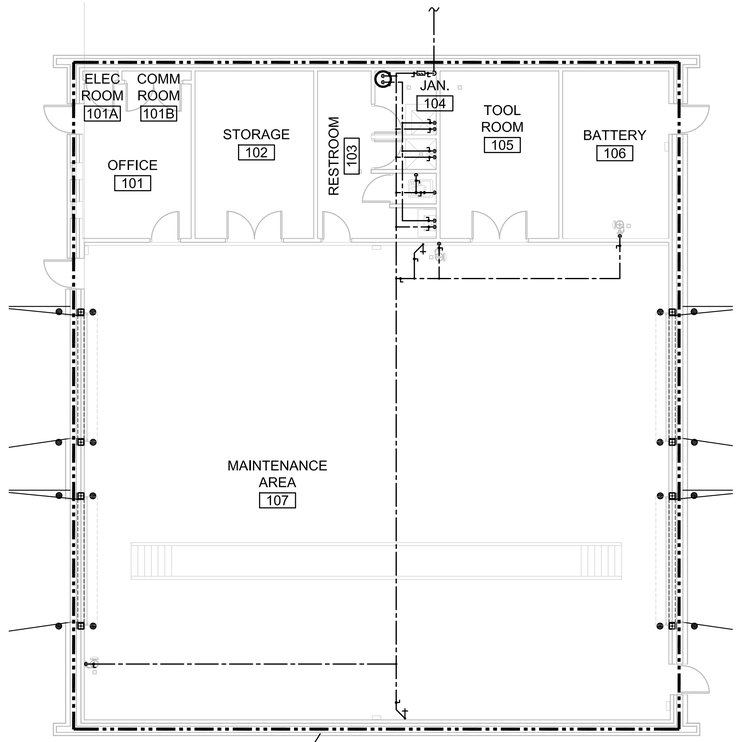

1 P-103

2 P-101 FLOOR PLAN - PLUMBING (WATER)

SCALE 1:100

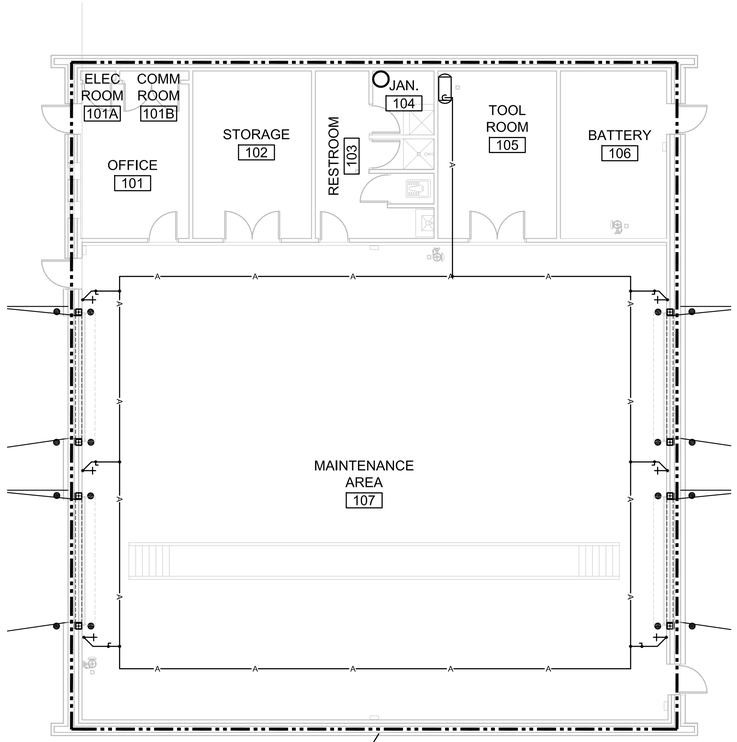

1 P-104

3 P-101 FLOOR PLAN - PLUMBING (COMPRESSED AIR)

SCALE 1:100

N

0 2000 4000

SCALE: 1:100

UNLESS OTHERWISE NOTED, LINEAR DIMENSIONS SHOWN ARE IN MILLIMETERS.

COMMONWEALTH OF PENNSYLVANIA
REGISTERED PROFESSIONAL
MATTHEW R. SOTOSKY
ENGINEER
045576-E

US ARMY CORPS OF ENGINEERS
AFGHANISTAN NORTH DISTRICT

SYMBOL	DESCRIPTION	DATE	APPR.	SYMBOL	DESCRIPTION	DATE	APPR.

DESIGNED BY: RMH
DWN BY: RMH
CKD BY: CJM III
REVIEWED BY:
SUBMITTED BY:
DATE: 3/30/2011
CONTRACT NO. W912ER-09-D-0002
DRAWING CODE:
FILE NAME: ARCHITECTURAL-PLUMBING-P-101.DWG
PLOT SCALE:
PLOT DATE: 3/30/2011
REV.

BAKER

U.S. ARMY ENGINEER DISTRICT, AFGHANISTAN
CORPS OF ENGINEERS
APO AE 09356

SITE ADAPT DESIGN

VM09 - VEHICLE MAINTENANCE BUILDING - ARCH SPAN

FLOOR PLAN - PLUMBING
(SANITARY, WATER & COMPRESSED AIR)

SHEET REFERENCE NUMBER:

P-101

A1 Size 594mm x 841mm

3/30/2011 4:11 PM

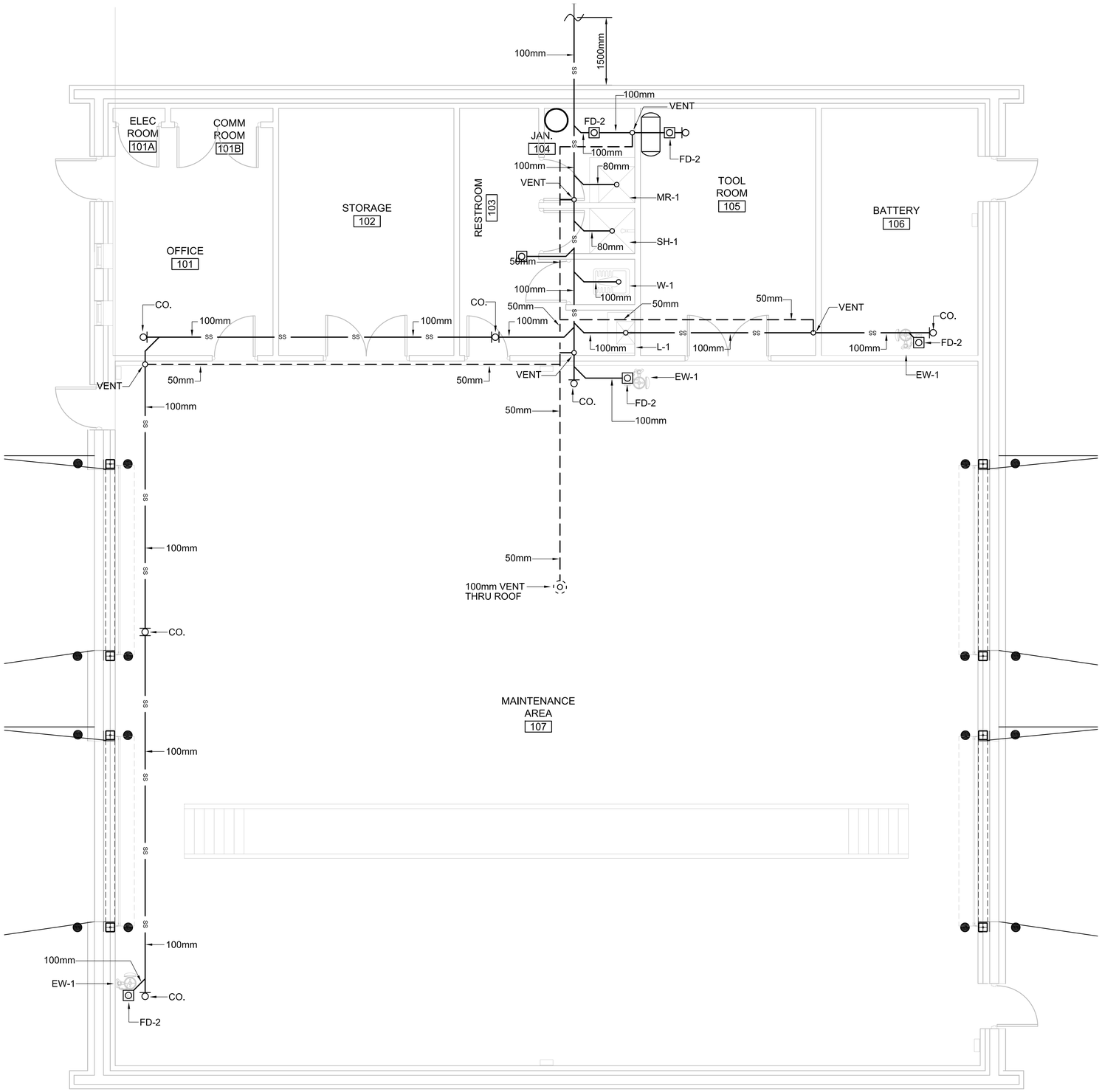

1 / P-102 ENLARGED FLOOR PLAN - PLUMBING (SANITARY)

SCALE 1:50

N

0 500 1000 2000

SCALE: 1:50

UNLESS OTHERWISE NOTED, LINEAR DIMENSIONS SHOWN ARE IN MILLIMETERS.

COMMONWEALTH OF PENNSYLVANIA
REGISTERED PROFESSIONAL
MATTHEW R. SOTOSKY
ENGINEER
045576-E

US ARMY CORPS OF ENGINEERS
AFGHANISTAN NORTH DISTRICT

SYMBOL	DESCRIPTION	DATE	APPR.	SYMBOL	DESCRIPTION	DATE	APPR.

DESIGNED BY: RMH
DWN BY: RMH
CKD BY: CJM III
REVIEWED BY:
SUBMITTED BY:
DATE: 3/30/2011
CONTRACT NO. W912ER-09-D-0002
DRAWING CODE:
FILE NAME: vm09-phase-plan-p-102.dwg
PLOT SCALE:
PLOT DATE: 3/30/2011
REV: —

BAKER

U.S. ARMY ENGINEER DISTRICT, AFGHANISTAN
CORPS OF ENGINEERS
APO AE 09356

SITE ADAPT DESIGN

VM09 - VEHICLE MAINTENANCE BUILDING - ARCH SPAN

ENLARGED FLOOR PLAN - PLUMBING (SANITARY)

SHEET REFERENCE NUMBER:

P-102

A1 Size 594mm x 841mm

3/30/2011 4:11 PM

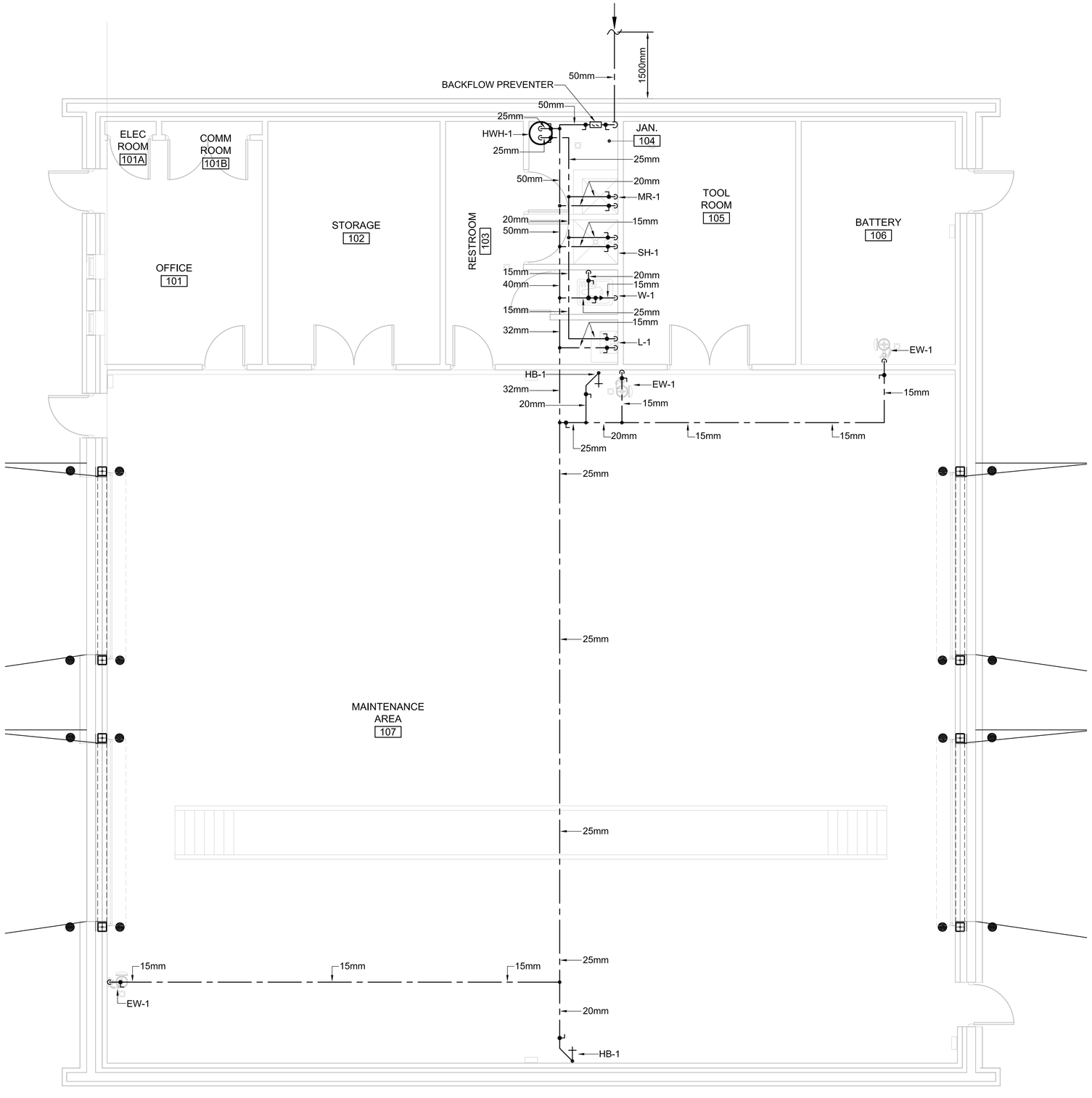

1 P-103 ENLARGED FLOOR PLAN - PLUMBING (WATER)

SCALE 1:50

N

0 500 1000 2000

SCALE: 1:50

UNLESS OTHERWISE NOTED, LINEAR DIMENSIONS SHOWN ARE IN MILLIMETERS.

COMMONWEALTH OF PENNSYLVANIA
REGISTERED PROFESSIONAL ENGINEER
MATTHEW R. SOTOSKY
045576-E

US ARMY CORPS OF ENGINEERS
AFGHANISTAN NORTH DISTRICT

SYMBOL	DESCRIPTION	DATE	APPR.	SYMBOL	DESCRIPTION	DATE	APPR.

DESIGNED BY: RMH
DWN BY: RMH
REVIEWED BY:
SUBMITTED BY:
DATE: 3/30/2011
CONTRACT NO. W91ZEF-09-D-0002
DRAWING CODE:
FILE NAME: wec-mpmar-wat-p-103.dwg
PLOT SCALE:
PLOT DATE: 3/30/2011
REV:
CKD BY: CJM III

BAKER

U.S. ARMY ENGINEER DISTRICT, AFGHANISTAN
CORPS OF ENGINEERS
APO AE 09356

SITE ADAPT DESIGN

VM09 - VEHICLE MAINTENANCE BUILDING - ARCH SPAN

ENLARGED FLOOR PLAN - PLUMBING (WATER)

SHEET REFERENCE NUMBER:

P-103

3/30/2011 4:11 PM

A1 Size 594mm x 841mm

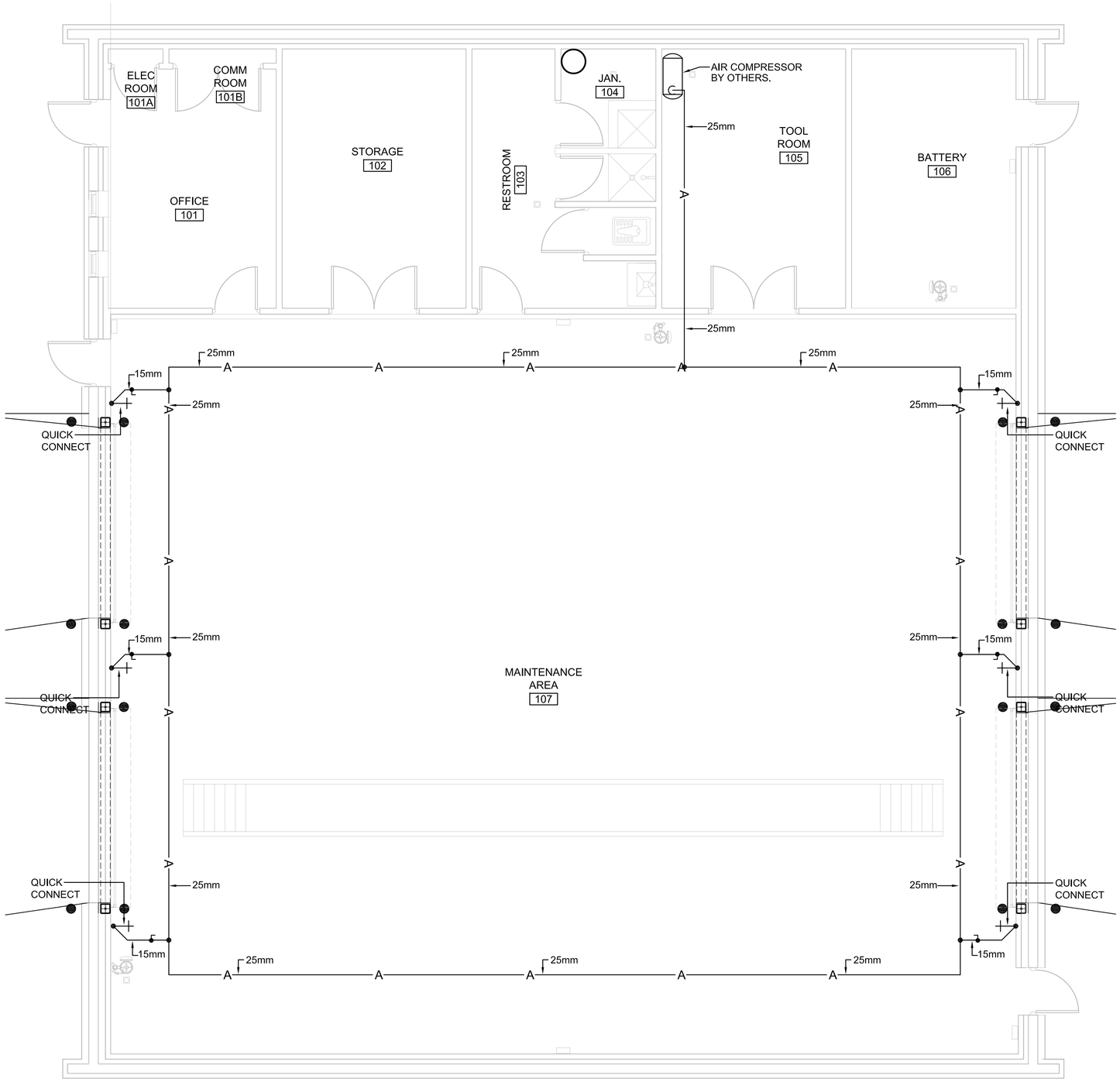

1 / P-104 ENLARGED FLOOR PLAN - PLUMBING (COMPRESSED AIR)

SCALE 1:50

N

0 500 1000 2000

SCALE: 1:50

UNLESS OTHERWISE NOTED, LINEAR DIMENSIONS SHOWN ARE IN MILLIMETERS.

COMMONWEALTH OF PENNSYLVANIA REGISTERED PROFESSIONAL MATTHEW R. SOTOSKY ENGINEER 045576-E

US ARMY CORPS OF ENGINEERS AFGHANISTAN NORTH DISTRICT

SYMBOL	DESCRIPTION	DATE	APPR.	SYMBOL	DESCRIPTION	DATE	APPR.

U.S. ARMY ENGINEER DISTRICT, AFGHANIST'AN
CORPS OF ENGINEERS
APO AE 09356

DESIGNED BY: RMH
DWN BY: RMH
CKD BY: CJM III
REVIEWED BY:
SUBMITTED BY:
DATE: 3/30/2011
CONTRACT NO. W912ER-09-D-0002
DRAWING CODE:
FILE NAME: arch(mechanical) vesqn-h-sq.dwg
PLOT SCALE:
PLOT DATE: 3/30/2011
REV: —

BAKER

SITE ADAPT DESIGN

VM09 - VEHICLE MAINTENANCE BUILDING - ARCH SPAN

ENLARGED LOOR PLAN - PLUMBING (COMPRESSED AIR)

SHEET REFERENCE NUMBER:

P-104

A1 Size 594mm x 841mm

3/30/2011 4:11 PM

PLUMBING FIXTURE LIST SCHEDULE							
TYPE	ITEM	SOIL & WASTE	VENT	COLD WATER	HOT WATER	REMARKS	REMARKS 2
W-1	EASTERN STYLE WATER CLOSET	100mm	50mm	15mm	------	FLUSH TANK	----------
L-1	TROUGH	40mm	40mm	15mm	15mm	FABRICATED IN FIELD	----------
MR-1	MOP RECEPTOR	80mm	---	20mm	20mm	FABRICATED IN FIELD	DRAIN AND CONTROLS
SH-1	SHOWER	80mm	---	15mm	15mm	FABRICATED IN FIELD	DRAIN AND SHOWER CONTROLS
EW-1	EMERGENCY EYE/FACE WASH	100mm	---	15mm	------	INDIRECT WASTE, DRAIN TO FLOOR DRAIN	AT REQUIRED PRESSURE AND GPM
FD-1/FD-2	FLOOR DRAIN	100mm	---	---	---	SLOPE FLOOR TO DRAIN	----------

ELECTRIC WATER HEATER SCHEDULE												
MARK	MANUF	LOCATION	STORAGE (Ltr)	PHYSICAL SIZE	RECOVERY Ltr/H	TEMP RISE °C	SET POINT °C	HOT & COLD CONN	TOTAL KW	VOLTS/ PHASE/ HERTZ	REMARKS	REMARKS 2
HWH-1	A.O. SMITH	JAN. 104	151	667mm x 476mmØ	201	10	49	20mm HW 20mm CW	9	380/3/50	EXTEND DRAIN LINE FROM T&P VALVE TO NEAREST FLOOR DRAIN	----------

EXPANSION TANK SCHEDULE						
MARK	MANUF	MODEL NO.	LOCATION	STORAGE (Ltr)	OPERATING TEMP. °C	REMARKS
ET-1	AMTROL	ST-5-C	JAN. 104	8	49°	

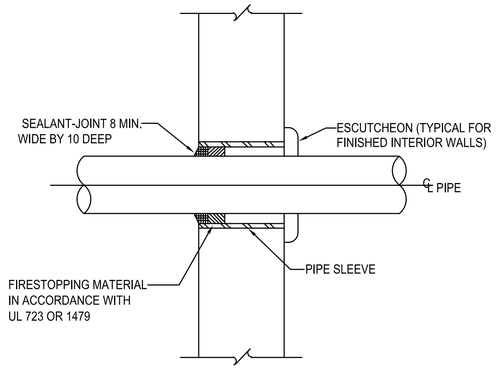

TYPICAL WALL PENETRATION DETAIL 1 / P-501
SCALE: NONE

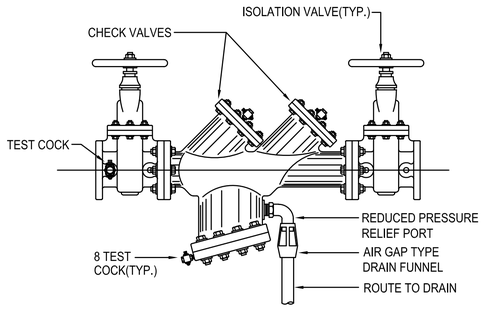

TYPICAL BACKFLOW PREVENTER DETAIL 2 / P-501
SCALE: NONE

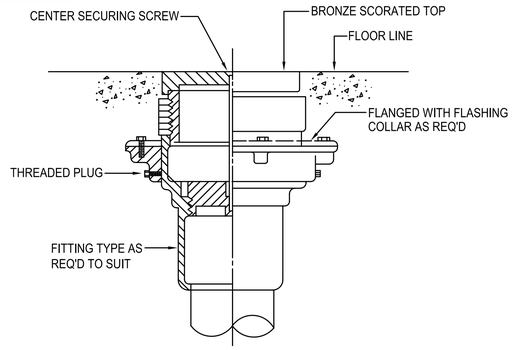

TYPICAL FLOOR CLEANOUT DETAIL 3 / P-501
SCALE: NONE

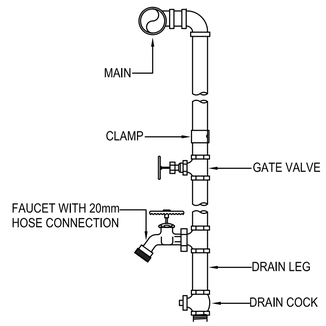

TYPICAL WATER DROP DETAIL 4 / P-501
SCALE: NONE

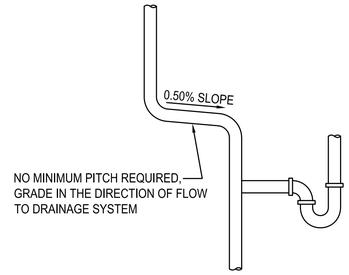

TYPICAL VENT GRADE DETAILS 5 / P-501
SCALE: NONE

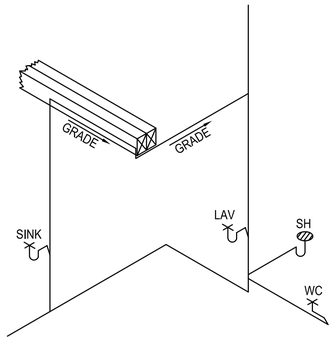

TYPICAL VENT GRADE DETAILS 6 / P-501
SCALE: NONE

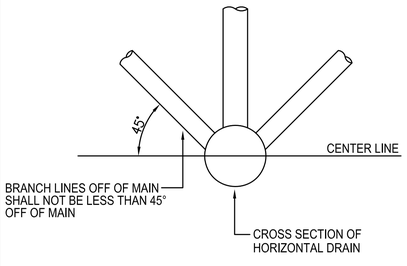

ACCEPTABLE VENT CONNECTIONS TO HORIZONTAL DRAIN - DETAIL 7 / P-501
SCALE: NONE

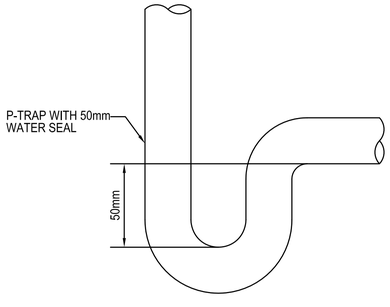

P-TRAP WITH 50mm WATER SEAL DETAIL 8 / P-501
SCALE: NONE

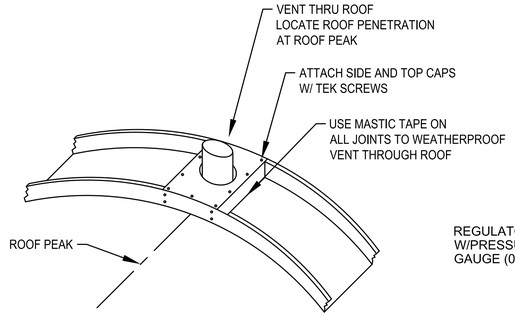

TYPICAL VENT THRU ROOF DETAIL 9 / P-501
SCALE: NONE

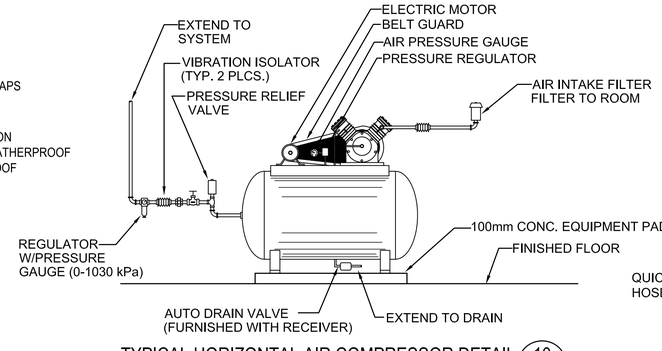

TYPICAL HORIZONTAL AIR COMPRESSOR DETAIL 10 / P-501
SCALE: NONE

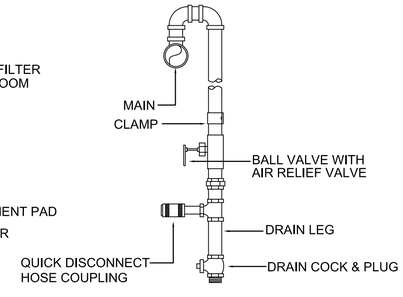

TYPICAL AIR DROP DETAIL 11 / P-501
SCALE: NONE

UNLESS OTHERWISE NOTED, LINEAR DIMENSIONS SHOWN ARE IN MILLIMETERS.

COMMONWEALTH OF PENNSYLVANIA
REGISTERED PROFESSIONAL
MATTHEW R. SOTOSKY
ENGINEER
045576-E

US ARMY CORPS OF ENGINEERS AFGHANISTAN NORTH DISTRICT

SYMBOL	DESCRIPTION	DATE	APPR.	SYMBOL	DESCRIPTION	DATE	APPR.

DESIGNED BY: RMH | DWN BY: RMH | CKD BY: CJM III | REVIEWED BY: | SUBMITTED BY: | DATE: 3/30/2011 | CONTRACT NO. W912ER-09-D-0002 | DRAWING CODE: | FILE NAME: | PLOT SCALE: NONE | PLOT DATE: 3/30/2011 | REV. 0

BAKER

U.S. ARMY ENGINEER DISTRICT, AFGHANISTAN CORPS OF ENGINEERS APO AE 09356

SITE ADAPT DESIGN

VM09 - VEHICLE MAINTENANCE BUILDING - ARCH SPAN

PLUMBING SCHEDULES AND DETAILS

SHEET REFERENCE NUMBER:

P-501

A1 Size 594mm x 841mm

3/30/2011 4:11 PM

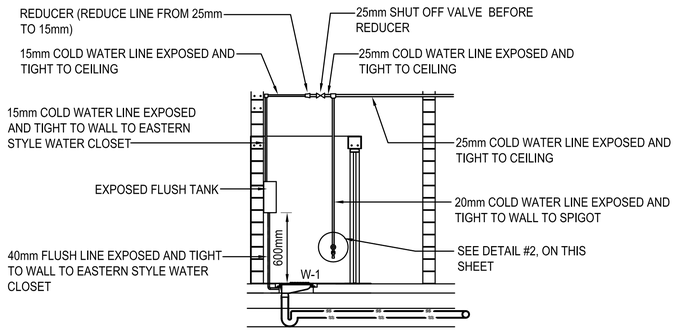

TYPICAL EASTERN STYLE WATER CLOSET SANITARY AND WATER INSTALLATION SCHEMATIC (1 / P-502)

SCALE: NONE

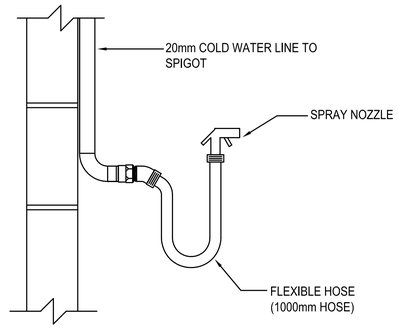

TYPICAL DETAIL - SPIGOT, FLEXIBLE HOSE, AND SPRAY NOZZLE (2 / P-502)

SCALE: NONE

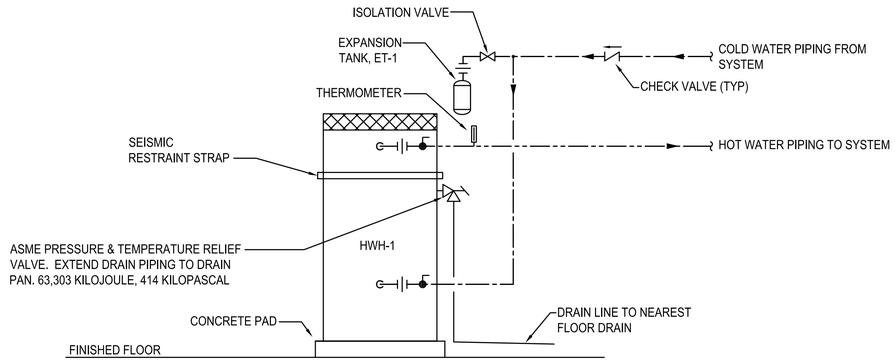

ELECTRIC WATER HEATER PIPING SCHEMATIC (3 / P-502)

SCALE: NONE

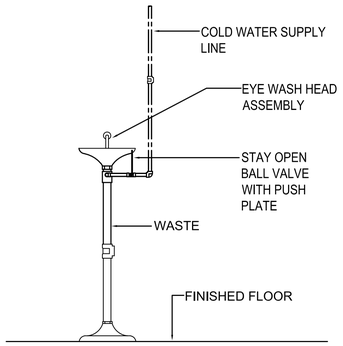

EMERGENCY EYE/FACE WASH INSTALLATION DETAIL (4 / P-502)

SCALE: NONE

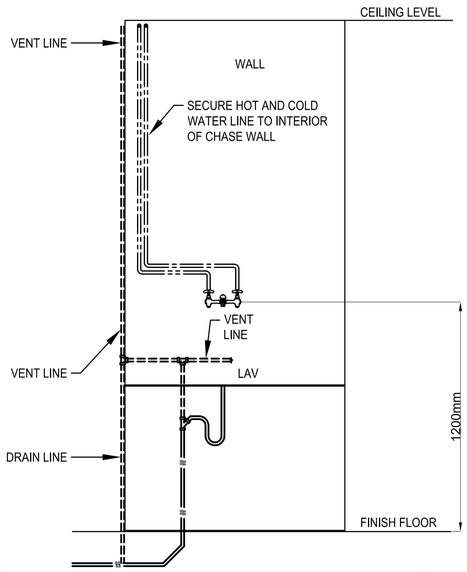

LAVATORY ELEVATION PLAN - PLUMBING (5 / P-502)

SCALE: NONE

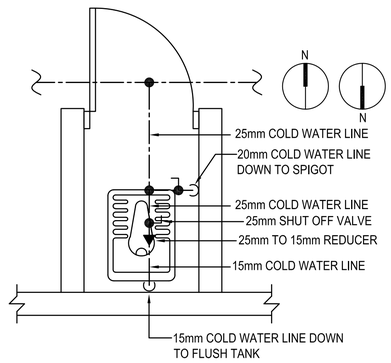

TYPICAL EASTERN STYLE WATER CLOSET WITH SPIGOT WATER PIPING DETAIL (6 / P-502)

SCALE: NONE

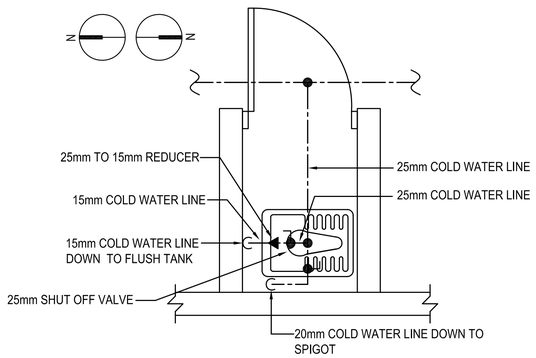

TYPICAL EASTERN STYLE WATER CLOSET WITH SPIGOT WATER PIPING DETAIL (7 / P-502)

SCALE: NONE

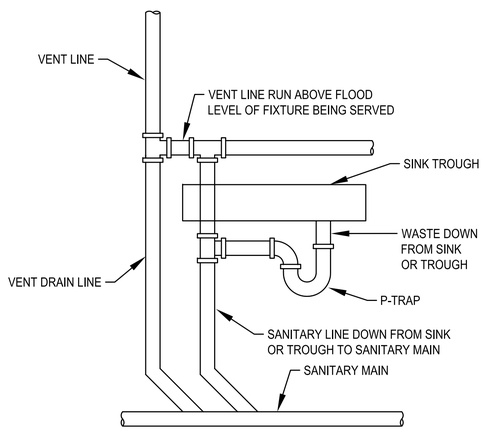

TYPICAL LAVATORY VENT DETAIL (10 / P-502)

SCALE: NONE

UNLESS OTHERWISE NOTED, LINEAR DIMENSIONS SHOWN ARE IN MILLIMETERS.

COMMONWEALTH OF PENNSYLVANIA
REGISTERED PROFESSIONAL
MATTHEW R. SOTOSKY
ENGINEER
045576-E

US ARMY CORPS OF ENGINEERS AFGHANISTAN NORTH DISTRICT

SYMBOL	DESCRIPTION	DATE	APPR.	SYMBOL	DESCRIPTION	DATE	APPR.

DESIGNED BY: RMH
DWN BY: RMH
CKD BY: CJM III
REVIEWED BY:
SUBMITTED BY:
DATE: 3/30/2011
CONTRACT NO. W912ER-09-D-0002
DRAWING CODE:
FILE NAME: wec-pmr-mar-vehicle-bldg.dwg
PLOT SCALE: NONE
PLOT DATE: 3/30/2011
REV: 0

BAKER

U.S. ARMY ENGINEER DISTRICT, AFGHANISTAN
CORPS OF ENGINEERS
APO AE 09356

SITE ADAPT DESIGN
VM09 - VEHICLE MAINTENANCE BUILDING - ARCH SPAN
PLUMBING DETAILS

SHEET REFERENCE NUMBER:
P-502

3/30/2011 4:15 PM

A1 Size 594mm x 841mm

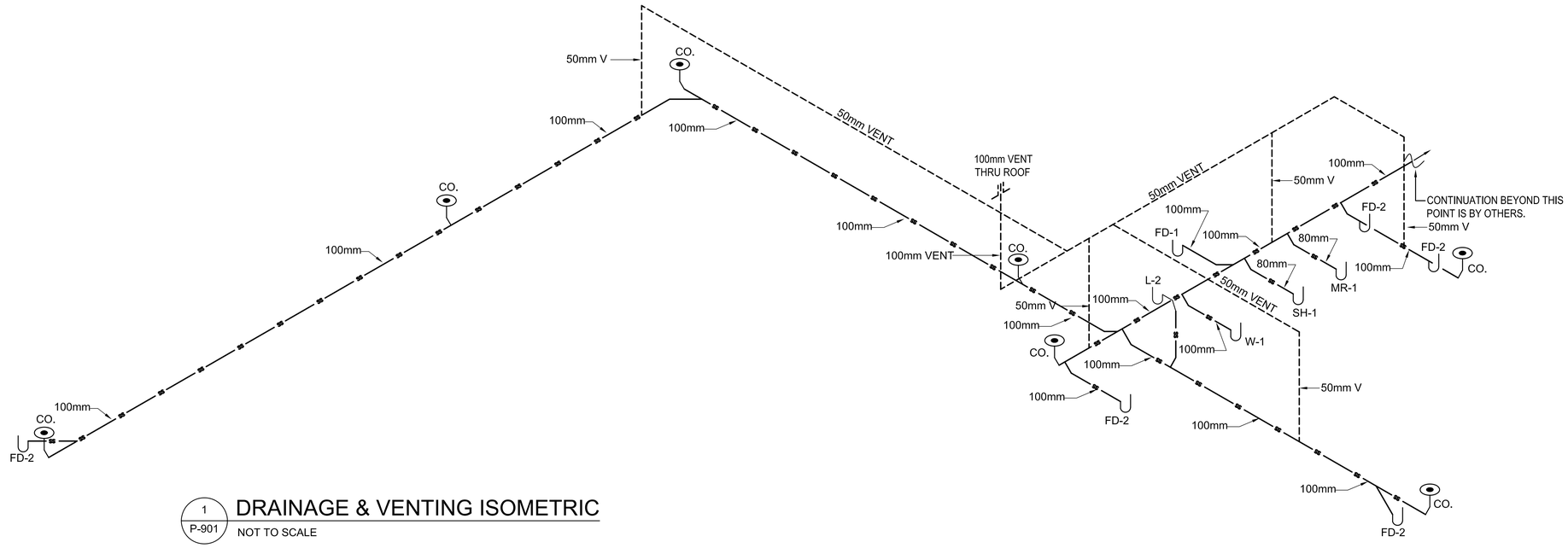

1 P-901 DRAINAGE & VENTING ISOMETRIC

NOT TO SCALE

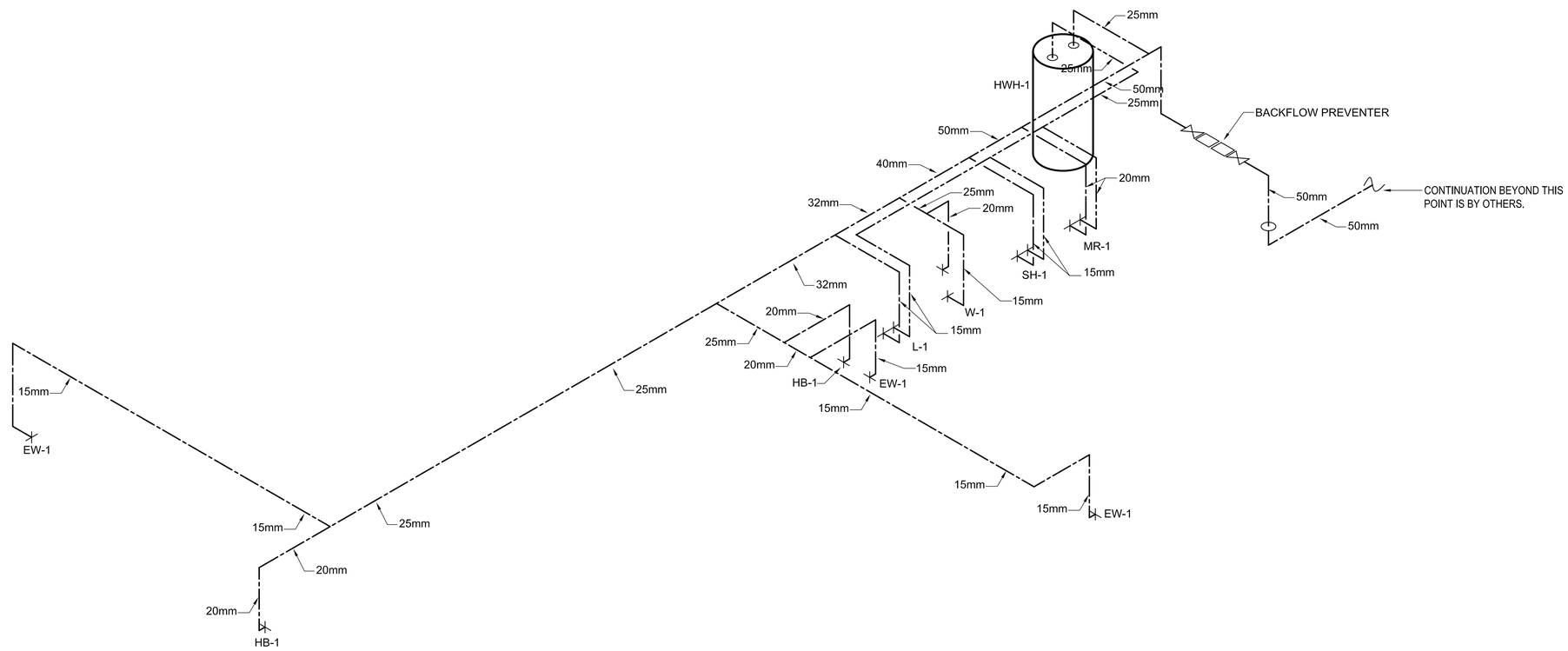

2 P-901 HOT AND COLD WATER PIPING ISOMETRIC

SCALE

UNLESS OTHERWISE NOTED,
LINEAR DIMENSIONS
SHOWN ARE IN MILLIMETERS.

COMMONWEALTH OF PENNSYLVANIA
REGISTERED PROFESSIONAL
MATTHEW R. SOTOSKY
ENGINEER
045576-E

US ARMY CORPS
OF ENGINEERS
AFGHANISTAN NORTH
DISTRICT

SYMBOL	DESCRIPTION	DATE	APPR.	SYMBOL	DESCRIPTION	DATE	APPR.

DESIGNED BY:
DWN BY:
CKD BY:
REVIEWED BY:
SUBMITTED BY:

DATE: 3-30-2011
CONTRACT NO. W912ER-09-D-0002
DRAWING CODE:
FILE NAME: wm09-p901-hot-cold-water-iso.dwg
PLOT SCALE: NONE
PLOT DATE: 3/30/2011
REV: 0

BAKER

U.S. ARMY ENGINEER DISTRICT, AFGHANISTAN
CORPS OF ENGINEERS
APO AE 09356

SITE ADAPT DESIGN

VM09 - VEHICLE MAINTENANCE BUILDING - ARCH SPAN

SANITARY AND VENTING ISOMETRIC,
HOT AND COLD WATER PIPING ISOMETRIC

SHEET
REFERENCE
NUMBER:

P-901

A1 Size 594mm x 841mm

3/30/2011 4:11 PM

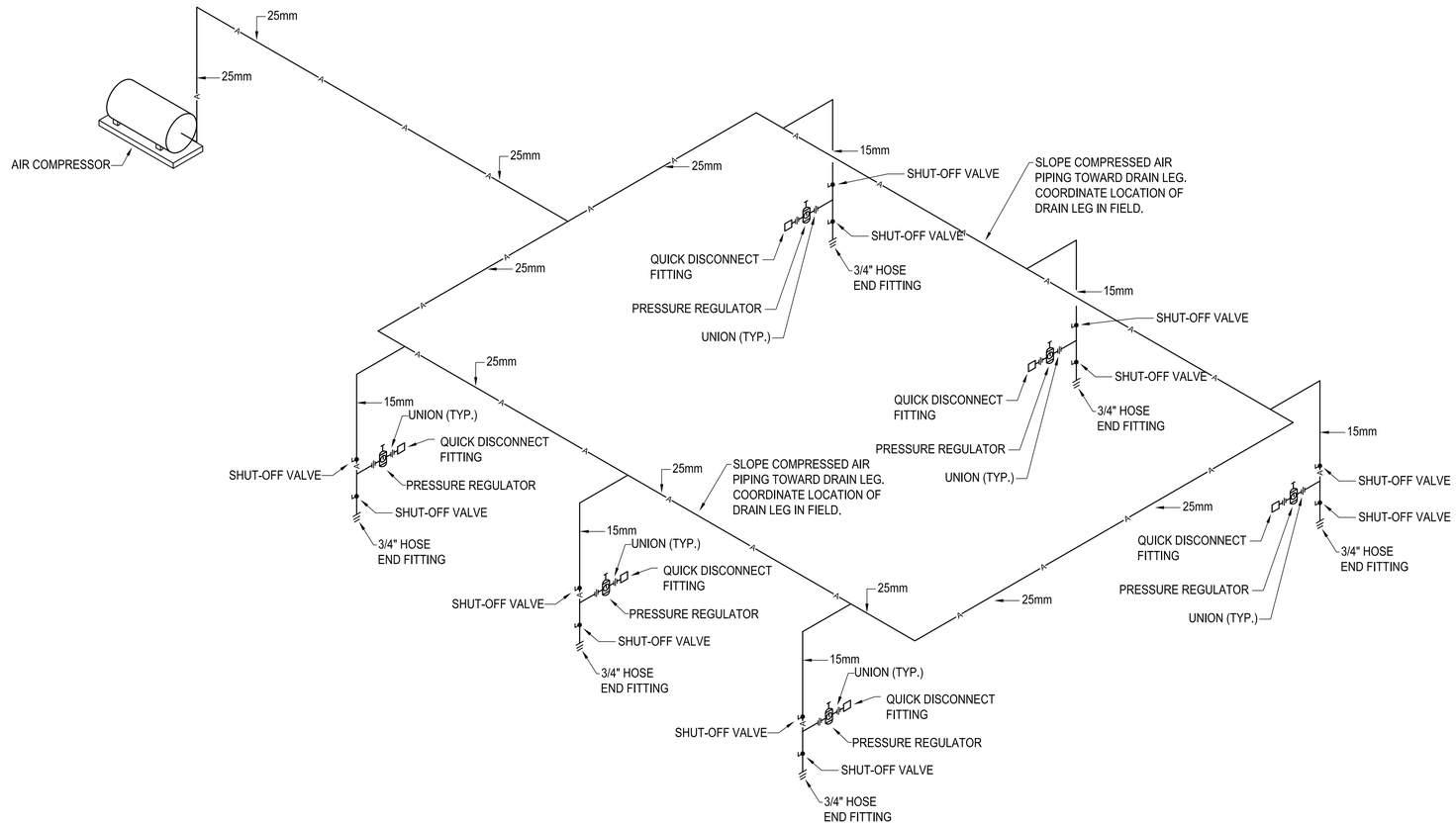

1
P-902

COMPRESSED AIR ISOMETRIC

NOT TO SCALE

UNLESS OTHERWISE NOTED, LINEAR DIMENSIONS SHOWN ARE IN MILLIMETERS.

COMMONWEALTH OF PENNSYLVANIA
REGISTERED PROFESSIONAL
MATTHEW R. SOTOSKY
ENGINEER
045576-E

US ARMY CORPS OF ENGINEERS
AFGHANISTAN NORTH DISTRICT

SYMBOL	DESCRIPTION	DATE	APPR.	SYMBOL	DESCRIPTION	DATE	APPR.

DESIGNED BY: DWN BY: CKD BY: REVIEWED BY: SUBMITTED BY:

DATE: 3/30/2011
CONTRACT NO. W912ER-09-D-0002
DRAWING CODE:
FILE NAME: wrc-mp-mar-vehicle-hc2.dwg
PLOT SCALE: NONE
PLOT DATE: 3/30/2011
REV: 0

BAKER

U.S. ARMY ENGINEER DISTRICT, AFGHANISTAN
CORPS OF ENGINEERS
APO AE 09356

SITE ADAPT DESIGN

VM09 - VEHICLE MAINTENANCE BUILDING - ARCH SPAN

COMPRESSED AIR ISOMETRIC

SHEET REFERENCE NUMBER:

P-902

A1 Size 594mm x 841mm

3/30/2011 4:11 PM

GENERAL NOTES:

1. DO NOT SCALE DRAWINGS - ALL DIMENSIONS AND CONDITIONS SHALL BE CHECKED AND VERIFIED BY THE CONTRACTOR AT THE SITE.
2. ALL WORK PERFORMED ON THIS BUILDING SHALL BE IN COMPLIANCE WITH ALL PERTINENT CODES, RULES, ORDINANCES AND REGULATIONS OF THE GOVERNING AUTHORITIES.
3. ALL WORK PERFORMED UNDER AND IN CONNECTION WITH THESE DRAWINGS AND SPECIFICATIONS SHALL BE IN STRICT COMPLIANCE WITH THE LATEST SAFETY AND HEALTH STANDARDS.
4. COORDINATE ALL EQUIPMENT LOCATIONS WITH EQUIPMENT SHOWN ON OTHER DRAWINGS. VERIFY FINAL LOCATIONS IN FIELD.

SYMBOLS:

- (X) KEY NOTE
- (000) AIR VOLUME IN LITERS PER SECOND (LPS)
- UC DOOR UNDERCUT 25mm
- $ SINGLE POLE SWITCH FOR EXHAUST FAN - 20A RATED
- $3 THREE POLE SWITCH FOR EXHAUST FAN - 20A RATED
- ELECTRIC HEATER
- CEILING FAN
- DIRECTION OF AIR FLOW
- (H) HYDROGEN SENSOR MOUNTED 1.5M AFF.

ABBREVIATIONS:

AFF	ABOVE FINISH FLOOR
CF	CEILING FANS
LPS	LITERS PER SECOND
EF	EXHAUST FAN
EH	ELECTRIC HEATER
DH	DUCT HEATER
STATS	THERMOSTATS
TYP	TYPICAL

BATTERY ROOM FAN OPERATION:

THE BATTERY ROOM EXHAUST FAN SHALL BE INTERLOCKED WITH A HYDROGEN SENSOR TO PROVE FAN IS OPERATING. AN ALARM SHALL SOUND WITH INCREASED HYDROGEN LEVELS AND THE CHARGERS SHALL BE SHUT DOWN. THE FAN SHALL BE INTERLOCKED WITH THE BATTERY CHARGER SO THAT THE CHARGER WILL NOT OPERATE WITHOUT VENTILATION. FAN MOTORS SHALL BE INSTALLED OUTSIDE THE BATTERY ROOM AND THE BLOWER SHALL BE NON-SPARKING.

KEY NOTES:

1. INLINE EXHAUST FAN DUCTED TO WALL CAP WITH LOW LEAKAGE GRAVITY BACK-DRAFT DAMPER. SECURE FAN TO CEILING STRUCTURE. LOCATE WALL CAP IN "WINDOW FRAME." BLANK OFF UNUSED FRAME AREA WITH INSULATED SHEET METAL. VERIFY LOCATION WITH ARCHITECTS DRAWINGS.
2. EXTEND DUCTS UP & DOWN TO 150mm ABOVE FLOOR AND BELOW CEILING. PROVIDE TWO (2) 600X350 (24X14) GRILLES ONE LOCATED 300 (12") AFF AND THE OTHER AT 300 (12") BELOW CEILING. SEE DETAIL ON SHEET M-501. INTERLOCK FANS WITH LIGHTS. LPS IN PARENTHESIS IS FOR EACH GRILLE.
3. PROVIDE 600x400 (24x16) CEILING ACCESS PANEL AT EQUIPMENT LOCATED ABOVE CEILING. VERIFY EXACT LOCATIONS IN FIELD.
4. 300x200 (12x8) TRANSFER GRILLE MOUNTED ABOVE DOOR OR HIGH ON WALL WITH WASHABLE FILTER. MOUNT GRILLE 150mm BELOW CEILING.
5. CEILING MOUNTED EXHAUST FAN WITH DUCT EXTENDED TO ROOF PENETRATION. PREPARE ROOF PENETRATION AND FLASH AS RECOMMENDED BY BUILDING MANUFACTURER. SEE DETAIL ON M-501.
6. 500x350 (20x14) DUCT UP TO UNDERSIDE OF ROOF WITH 4 150Ø (6") VENT HOLES AT RIDGE TO ROOF CAP. PREPARE ROOF PENETRATION AND FLASH AS RECOMMENDED BY BUILDING MANUFACTURER. CONNECT EXHAUST DUCTS AS INDICATED. SEE DETAIL ON SHEET M-501.
7. 450x450 (18x18) INTAKE LOUVER WITH MOTOR OPERATED DAMPER INTERLOCKED WITH BATTERY ROOM FAN. LOUVER LOCATED AS HIGH AS POSSIBLE IN SPACE. SEE LOUVER DETAIL ON SHEET M-501.
8. 464mm (18"sq) WALL MOUNTED EXHAUST FAN MOUNTED AS HIGH AS POSSIBLE WITH DUCT INTO ROOM. FAN SHALL BE SPARK RESISTANT / EXPLOSION PROOF.FAN SHALL BE CONTROLLED WITH A HYDROGEN SENSOR. VERIFY EXACT FAN LOCATION WITH ARCHITECTS DRAWINGS.
9. 1050x900 (41x35) INTAKE LOUVER WITH MOTOR OPERATED DAMPER INTERLOCKED WITH EF-5. LOUVER LOCATED AS HIGH AS POSSIBLE IN SPACE. SEE LOUVER DETAIL ON SHEET M-501.
10. 1050x900 (41x35) INTAKE LOUVER WITH MOTOR OPERATED DAMPER INTERLOCKED WITH EF-6. LOUVER LOCATED AS HIGH AS POSSIBLE IN SPACE. SEE LOUVER DETAIL ON SHEET M-501.
11. BATTERY ROOM ELECTRIC UNIT HEATER SHALL BE SPARK RESISTANT / EXPLOSION PROOF.
12. EXHAUST DUCT EXTENDED OUT THROUGH END WALL ABOVE EF-7, SEE ARCHITECTS ELEVATIONS FOR LOCATION.

EXHAUST FAN SCHEDULE

NO.	TYPE	FLOW RATE (LPS)	DRIVE	HP	SP mmH20	ELECTRICAL DATA	SWITCH
EF-1	CEILING	35	DIRECT	FRACTIONAL	13	220/1/50	@ WALL
EF-2	CEILING	70	DIRECT	FRACTIONAL	13	220/1/50	W/ LIGHTS
EF-3	CEILING	35	DIRECT	FRACTIONAL	13	220/1/50	@ WALL
EF-4	CEILING	35	DIRECT	FRACTIONAL	13	220/1/50	@ WALL
EF-5	INLINE	1150	DIRECT	1-1/2	20	220/1/50	W/ LIGHTS
EF-6	INLINE	1150	DIRECT	1-1/2	20	220/1/50	W/ LIGHTS
EF-7	PROP	200	DIRECT	1/4	13	220/1/50	W/ SENSOR

NOTES:
1. FAN OUTLETS SHALL HAVE LOW LEAKAGE GRAVITY LOUVER.
2. PROVIDE INLINE FANS WITH UNIT MOUNTED DISCONNECT SWITCH.
3. EF-7 SHALL BE SPARK RESISTANT

ELECTRIC UNIT HEATER SCHEDULE

NO.	FLOW RATE (LPS)	CAPACITY (KW)	F.A.T. (°C)	ELECT. CHAR.	MOUNTING
EH-3	200	3	38	220/1/50	WALL HUNG

NOTES:
1. PROVIDE UNIT MOUNTED DISCONNECT SWITCH.
2. PROVIDE TAMPER RESISTANT UNIT MOUNTED THERMOSTAT.
3. COORDINATE LOCATION AND ORIENTATION IN FIELD.

CEILING FAN

NO.	BLADE SIZE mm	BLADE SIZE IN	VOLTAGE	SWITCH	REMARKS
CF-1	1320	52	220/1/50	@ WALL	3 SPEED REVERSIBLE MOTOR

NOTES:
1. IF FANS ARE TO BE INSTALLED IN AN AREA WITHOUT A CEILING, PROVIDE EXTENSION DOWN RODS FROM ARCH-SPAN TABS, BRACE / GUY FAN AS REQUIRED AND INSTALL FANS 2.5M AFF. IF FANS ARE TO BE MOUNTED IN AREA WITH A CEILING GRID OR HARD CEILING, MOUNT PER MANUFACTURERS RECOMMENDATIONS.
2. PROVIDE WITHOUT LIGHT FIXTURE.
3. PROVIDE WITH REMOTE MOUNTED ON-OFF SWITCH. SWITCHES ARE SHOWN ON ELECTRICAL DRAWINGS.
4. COORDINATE CEILING FANS WITH LIGHTS, IN GENERAL FANS SHALL BE CENTERED BETWEEN LIGHTS WHEN POSSIBLE.

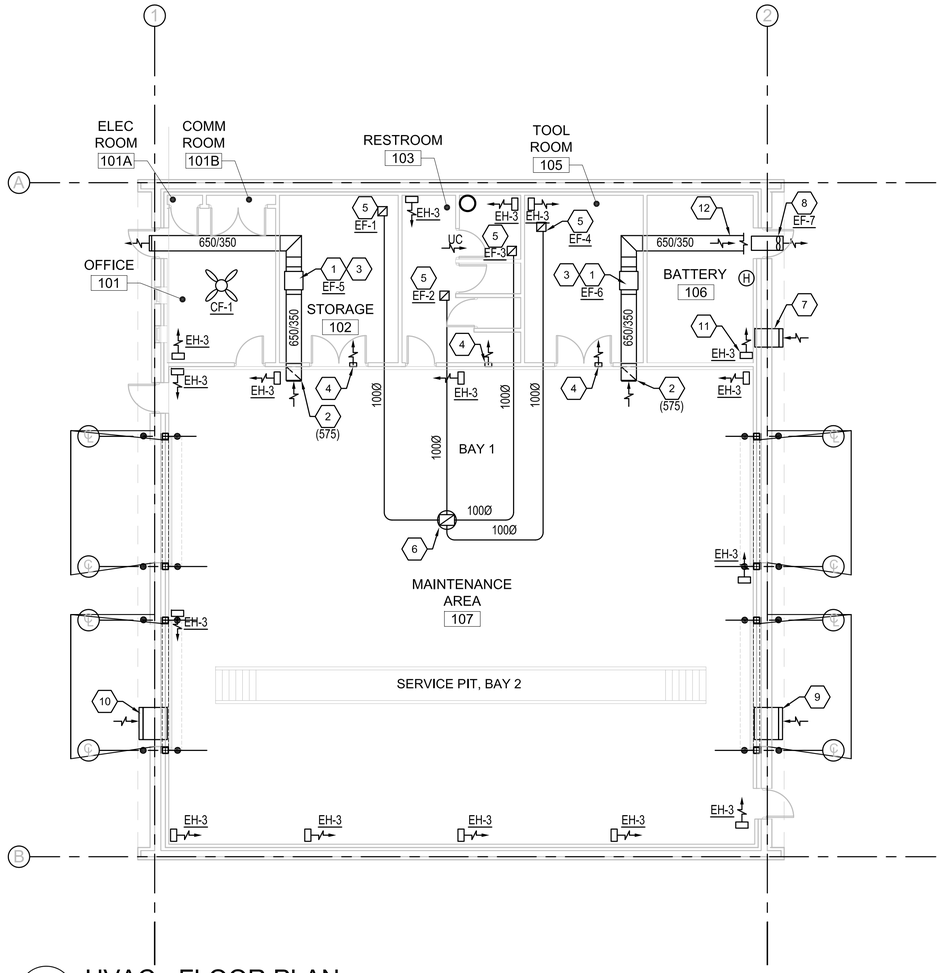

1 / M-101 HVAC - FLOOR PLAN

SCALE 1:100

N

0 2000 4000

SCALE: 1:100

UNLESS OTHERWISE NOTED, LINEAR DIMENSIONS SHOWN ARE IN MILLIMETERS.

COMMONWEALTH OF PENNSYLVANIA REGISTERED PROFESSIONAL MATTHEW R. SOTOSKY ENGINEER 045576-E

US ARMY CORPS OF ENGINEERS AFGHANISTAN NORTH DISTRICT

SYMBOL	DESCRIPTION	DATE	APPR.	SYMBOL	DESCRIPTION	DATE	APPR.

DESIGNED BY: RML
DWN BY: JJN
CKD BY: CJM
REVIEWED BY: JH
SUBMITTED BY:
DATE: 3-30-2011
CONTRACT NO. W912ER-09-D-0002
DRAWING CODE:
FILE NAME: M-101-HVAC-FLOOR-PLAN-SCHEDULES.DWG
PLOT SCALE: 1:100
PLOT DATE: 3/30/2011
REV: 0

BAKER

U.S. ARMY ENGINEER DISTRICT, AFGHANISTAN
CORPS OF ENGINEERS
APO AE 09356

SITE ADAPT DESIGN
VM09 - VEHICLE MAINTENANCE BUILDING - ARCH SPAN
HVAC - FLOOR PLAN AND SCHEDULES

SHEET REFERENCE NUMBER:
M-101

A1 Size 594mm x 841mm

3/30/2011 4:11 PM