AFGHAN NATIONAL POLICE

04

MISC

SITE DETAILS

US Army Corps of Engineers

Afghanistan Engineer District

SYMBOL	DESCRIPTION	DATE	APR

DESIGNED BY: JDS
DATE: 09-30-09
DWN BY: JDS
SUBMITTED BY: BAKER
CHK BY: JDS
FILE NO.: ANPSDG-001XXX

Michael Baker Jr., Inc
A unit of Michael Baker Corporation
Airside Business Park
100 Airside Drive
Moon Township, PA 15108
www.mbakercorp.com

AFGHAN NATIONAL POLICE
STANDARD DESIGN
SITE DETAILS

COVER SHEET

SHEET REFERENCE NUMBER:

100% SUBMISSION

GENERAL NOTES:

1. FLAGPOLES SHALL BE CONTINENTAL EXTERNAL ROPE FLAGPOLES, OR EQUAL. EXPOSED HEIGHT AS INDICATED ON THE DRAWINGS. PROVIDE SEAMLESS ALUMINUM POLE WITH TRUCK, HALYARD, TWO CLEATS AND COLLAR. PROVIDE OBSTRUCTION LIGHT BEACON FOR LARGE POLE, AS INDICATED ON THE DRAWINGS. PROVIDE SPEAR HEAD FINIAL FOR EACH OF THE FOUR (4) GENERALS' FLAGPOLES AS INDICATED ON THE DRAWINGS. SUBMIT AS CATEGORY 'G RE'.

2. ALL CONC TO BE 3,000 PSI.

3. (*) DENOTES PER MANUFACTURER.

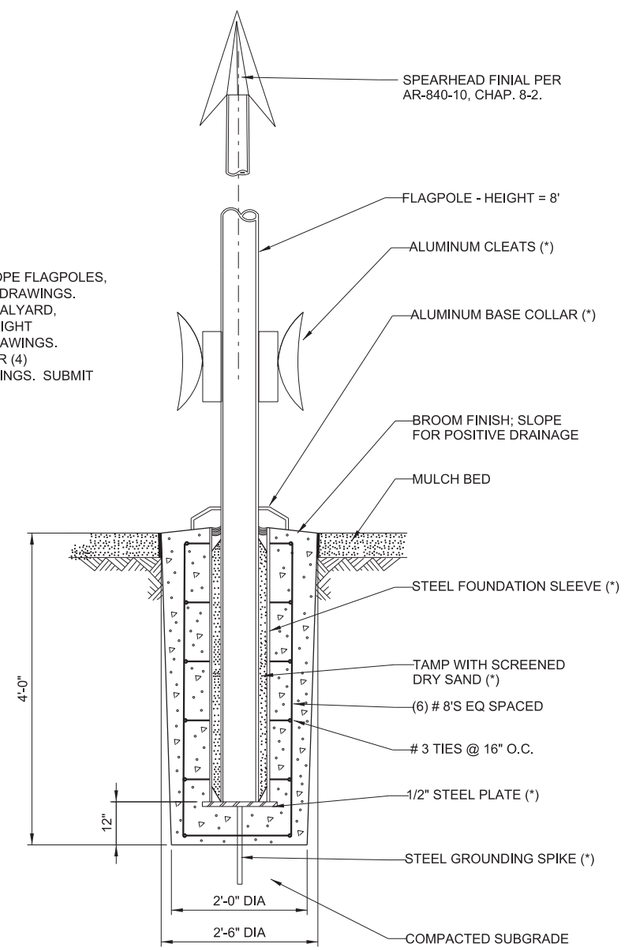

2
L-101

SECTION - GENERAL FLAG POLES

NOT TO SCALE

US Army Corps of Engineers
Kansas City District

Symbol	Description	Date	Appr.

Designed by: KvS
Date: SEPT 2006
Drawn by: KvS
Drawing code: F-178-59-01
Checked by: JVN
Plot scale:
Submitted by: HWM
CADD File Name: R49V2_L_-204.DGN

U.S. ARMY ENGINEER DISTRICT
CORPS OF ENGINEERS
KANSAS CITY, MISSOURI

APPROVED FOR CONSTRUCTION

FORT RILEY, KANSAS
1ST INFANTRY DIVISION
COMMAND HEADQUARTERS
PN 63983, FY06

MISC. SITE DETAILS
FLAGPOLES

Sheet Reference Number:
1

MiscDetails-Flagpoles.DGN 1/24/2011 9:08:36 AM

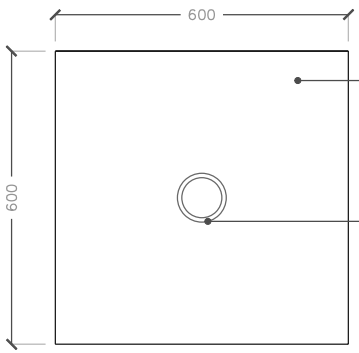

01 PLAN
100-CP-64 REF. 100-CP-01 SCALE: NTS

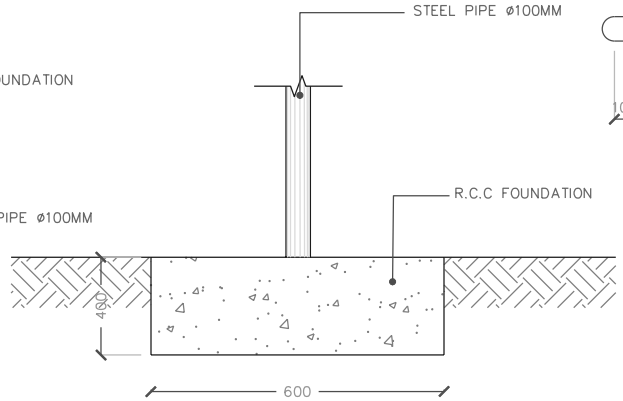

02 SECTION
100-CP-64 REF. SCALE: NTS

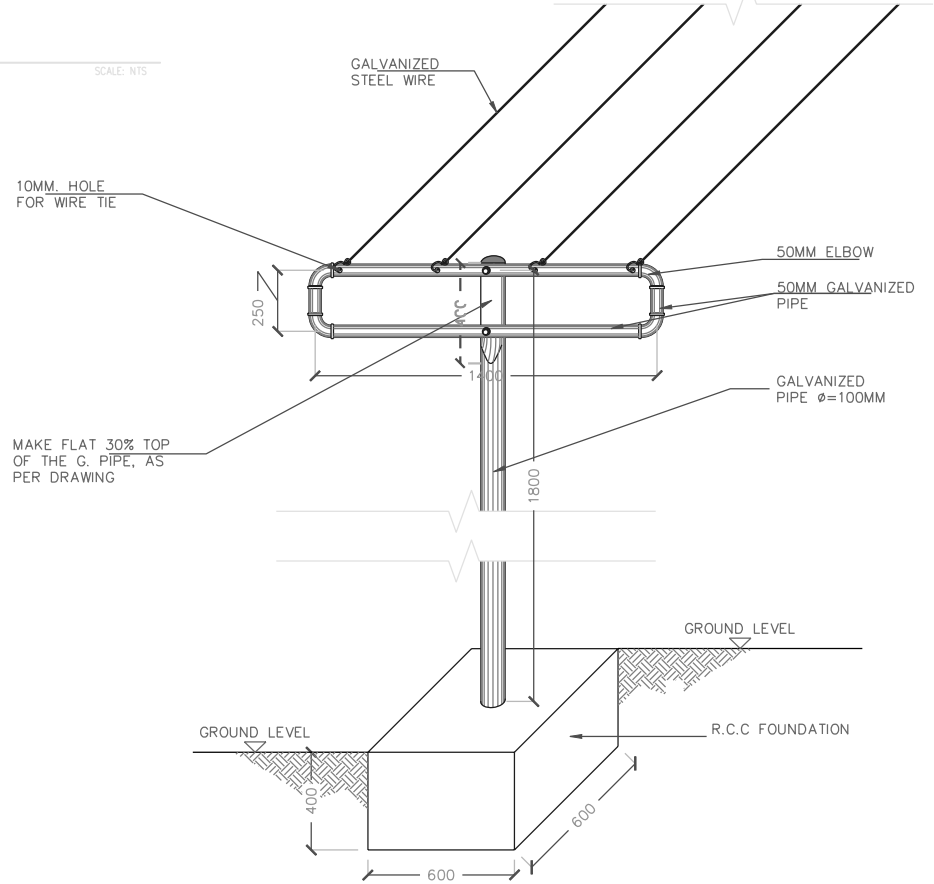

02 ISOMETRIC VIEW
100-CP-64 REF. SCALE: NTS

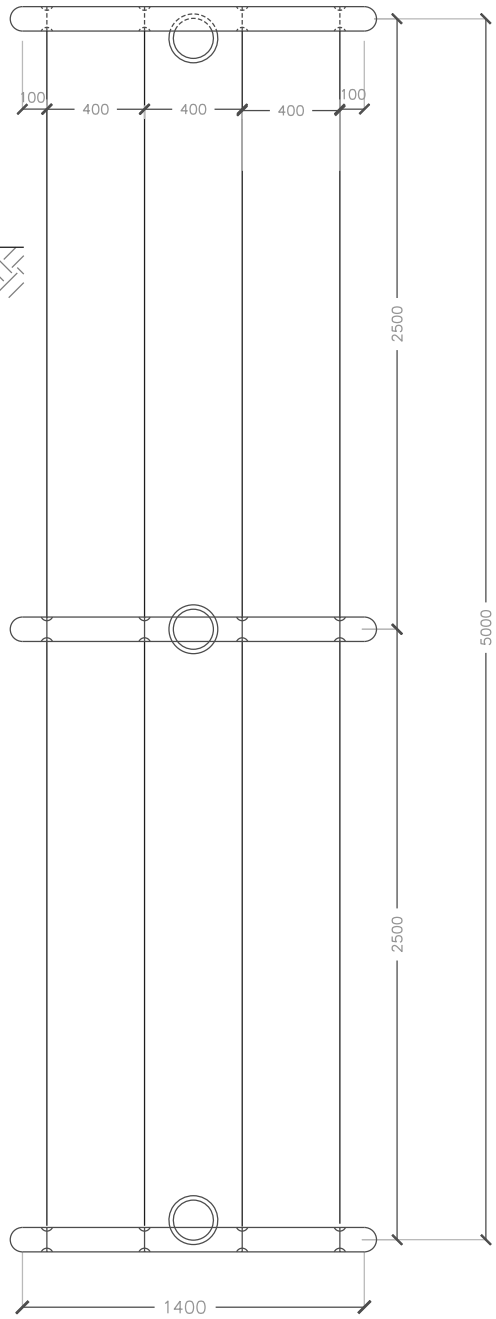

03 TOP VIEW
100-CP-64 REF. SCALE: NTS

STANDARD DETAIL-CLOTHESLINE

U.S. ARMY CORPS OF ENGINEERS
AFGHANISTAN ENGINEER DISTRICT

Symbol	Description	Date	Appr.	Symbol	Description	DATE	Appr.
A	35% DESIGN SUBMITTAL	27-05-10					

Designed By: A.FAREED
Drawn By: DAUD
Contract Date: 20-MAR-2010
Reviewed by: A. FARYAD
Draw Code: RMTC
FILE NAME: 100-CP-64
Submitted by: FAWAD OSMAN
Plot Date: 26-MAY-2010
Chf., E & C
Plot Scale: N1S
Solicitation No: W917PM-09-R-0111
Contract No: W5J9JE-10-C-0017

DEPARTMENT OF THE ARMY
U.S ARMY CORPS OF ENGINEERS
AFGHANISTAN ENGINEERS DISTRICT
KABUL, AFGHANISTAN

Contractor: Co-o-Kuhna Japanese
Designer: Kabul Infrastructure Projects

AFGHAN NATIONAL ARMY (ANA)
SHINDAND, AFGHANISTAN
PDC: RMTC FY-10
ANA REGIONAL MILITARY TRAINING CENTER

GENERAL DETAILS
CLOTHES LINES DETILES

Sheet Reference Number:
2

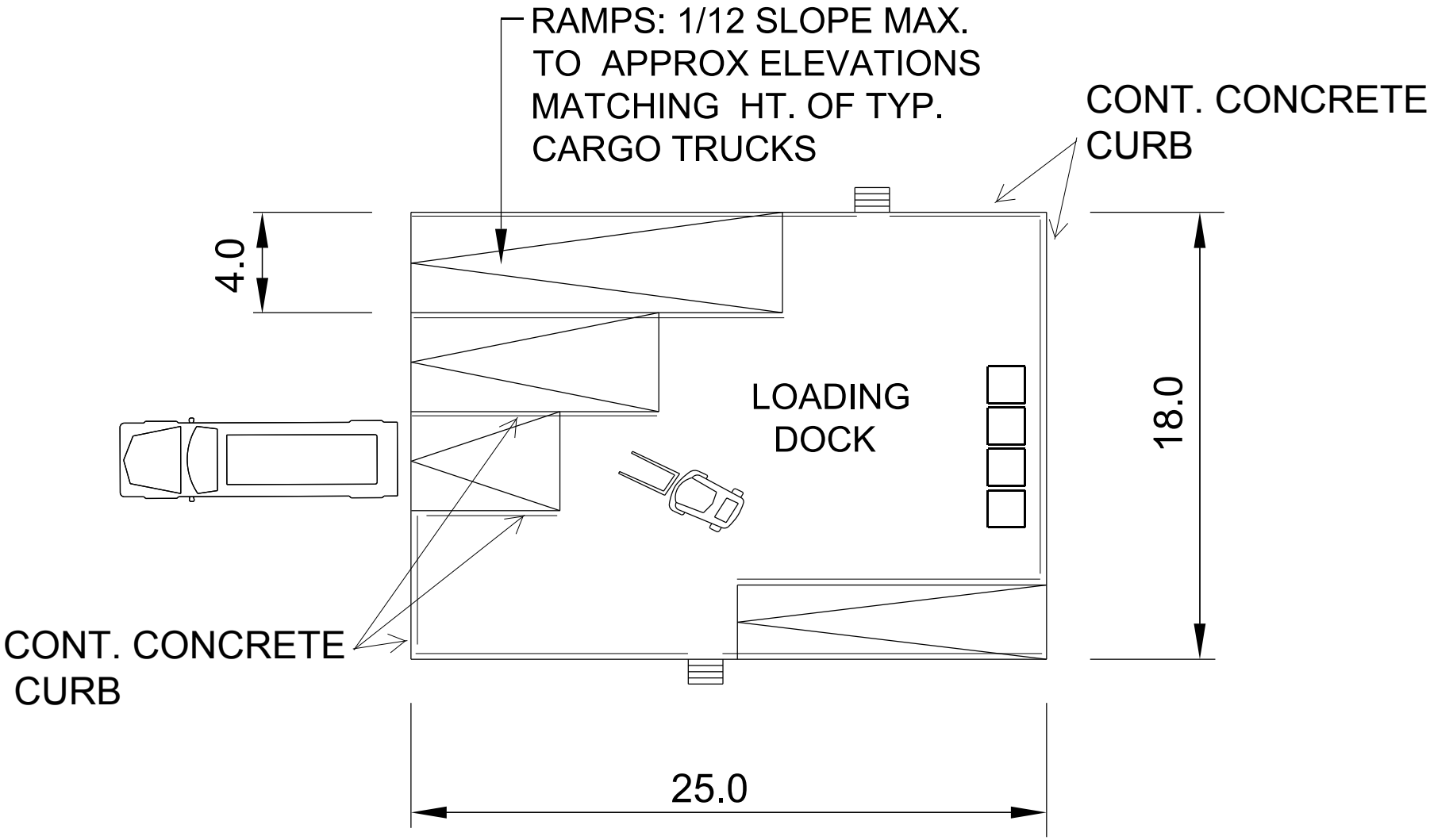

FIELD VERIFY ALL DIMS.

FOR REFERENCE ONLY

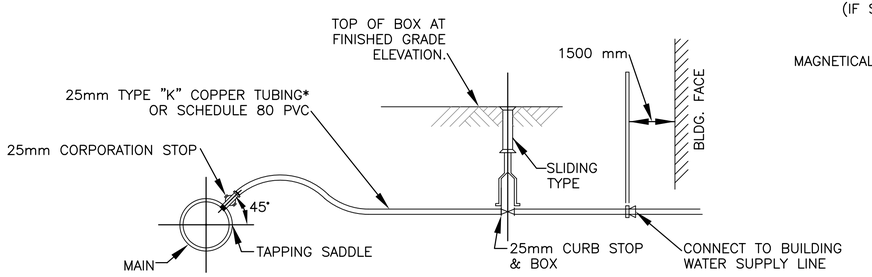

*DETAIL TYPICAL FOR 20mm THRU 50mm CONNECTIONS, SIZE OF COPORATION STOP, TUBING AND CURB STOP SHALL BE SIZED ACCORDINGLY. BLOWOFF VALVES LOCATED AT DEAD ENDS OF WATER MAINS SHALL CONSIST OF 50mm CONNECTION WITH TAP NEAR END OF PIPE, DISCHARGE TO SURFACE DRAINAGE. AND ANTI FREEZING PROVISIONS WHERE APPLICABLE.

WATER SERVICE CONNECTION DETAIL

N.T.S.

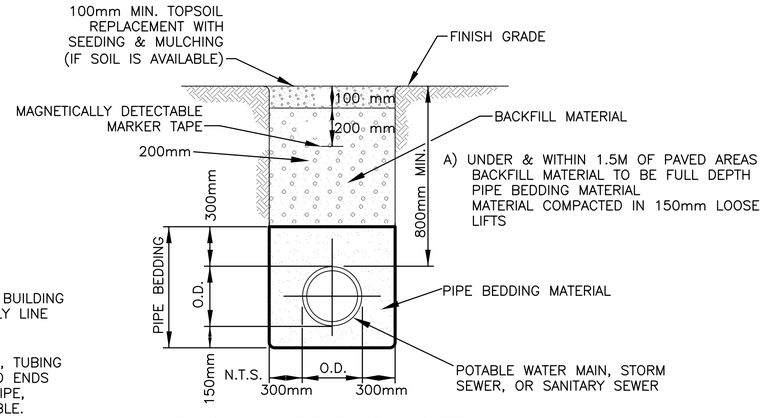

TYPICAL TRENCH DETAIL

N.T.S.

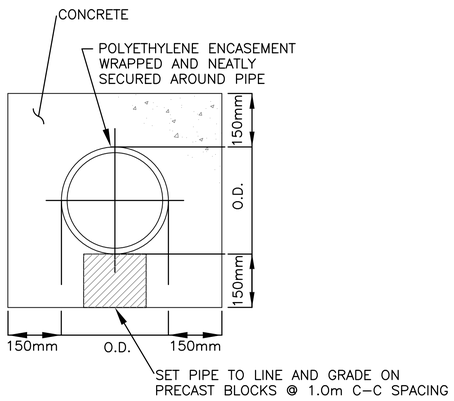

NOTE: REQUIRED FOR ROAD CROSSINGS WITH LESS THAN 1.2m COVER OR WHERE SANITARY AND WATER MAIN SEPARATION CANNOT BE MET.

PIPE CONCRETE ENCASEMENT DETAIL

N.T.S.

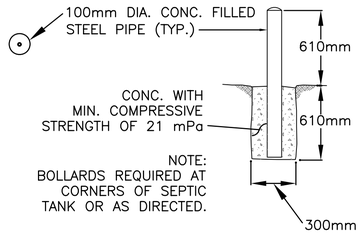

TYPICAL BOLLARDS

N.T.S.

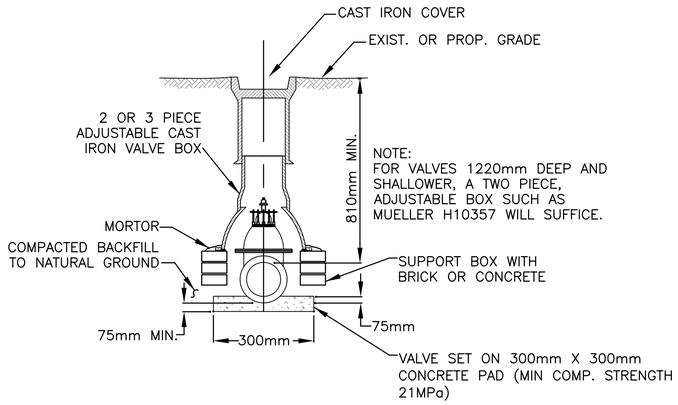

VALVE BOX INSTALLATION

N.T.S.

US Army Corps of Engineers
Afghanistan Engineer District

SYMBOL	DESCRIPTION	DATE	APR

DESIGNED BY: BAKER
DATE: 09-30-09
DWN BY: JDS
SUBMITTED BY: BAKER
CHK BY: GPH
FILE NO.: ANPSDC-501XXX

Michael Baker Jr., Inc
A unit of Michael Baker Corporation
Airside Business Park
100 Airside Drive
Moon Township, PA 15108
www.mbakercorp.com

AFGHAN NATIONAL POLICE
STANDARD DESIGN
SITE DETAILS

CIVIL DETAILS

SHEET REFERENCE NUMBER:
C1

100% SUBMISSION

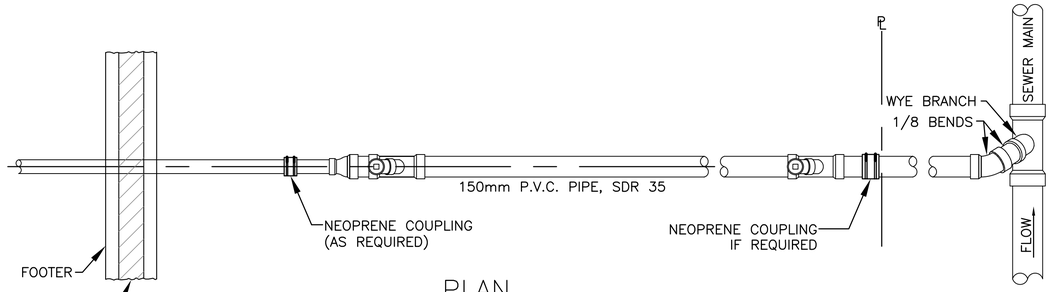

PLAN

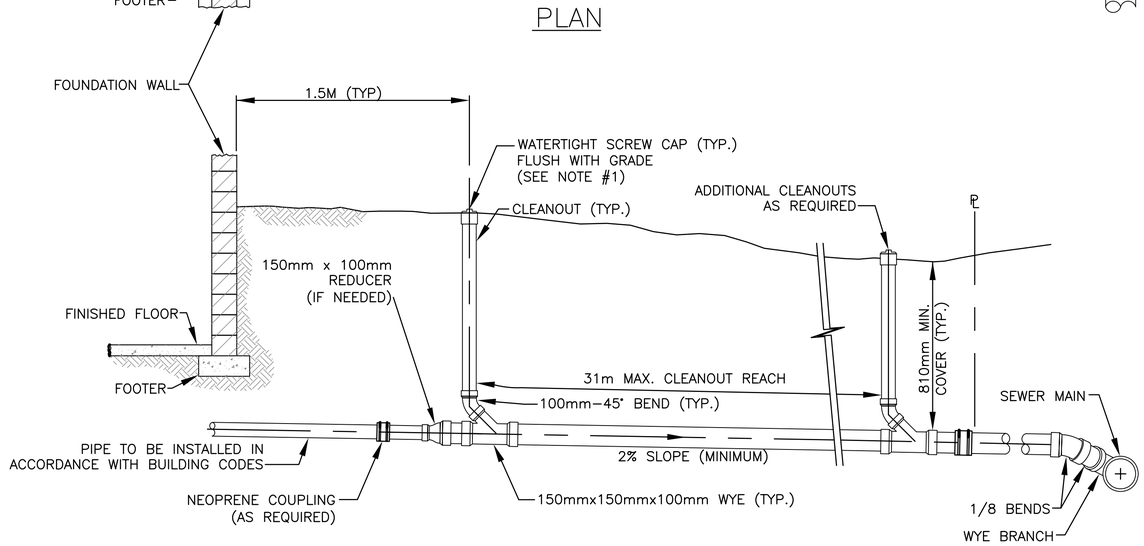

PROFILE

NOTES:

1. PLUGS AND CLEANOUT RISERS SHALL BE PVC IF LOCATED OUTSIDE OF PAVED AREAS, AND SHALL BE CAST IRON IF LOCATED WITHIN PAVED AREAS.
2. A TEE MUST BE PROVIDED FOR AIR TESTING OF THE LATERAL.
3. NO STORM WATER PIPING MAY BE CONNECTED TO THE LATERAL.

SANITARY SEWER – BUILDING SERVICE LATERAL

N.T.S.

US Army Corps of Engineers

Afghanistan Engineer District

SYMBOL	DESCRIPTION	DATE	APR

DESIGNED BY: BAKER
DATE: 09-30-09
DWN BY: JDS
SUBMITTED BY: BAKER
CHK BY: GPH
FILE NO.: ANPSDC-502XXX

Michael Baker Jr., Inc
A unit of Michael Baker Corporation
Airside Business Park
100 Airside Drive
Moon Township, PA 15108
www.mbakercorp.com

AFGHAN NATIONAL POLICE
STANDARD DESIGN
SITE DETAILS

CIVIL DETAILS

SHEET REFERENCE NUMBER:
C2

100% SUBMISSION

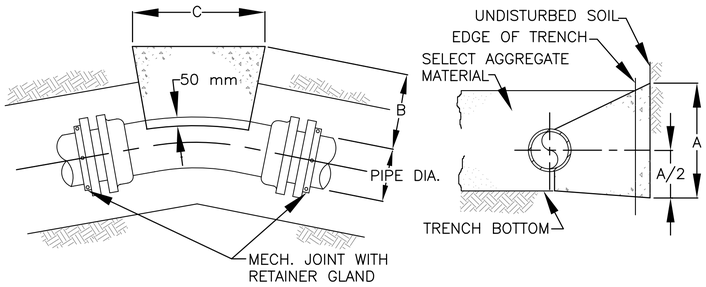

PLAN SECTION

	PIPE DIAMETER			
	100&150	200	250	300
A	510	560	610	660
B	300	300	355	380
C	300	400	480	530

WRAP FITTINGS & JOINT WITH TAR PAPER PRIOR TO POURING CONCRETE

CONCRETE ANCHORS FOR HORIZONTAL 22-1/2° & 11-1/4° BENDS

N.T.S.

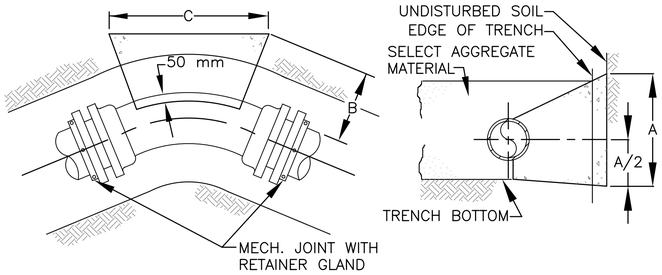

PLAN SECTION

	PIPE DIAMETER			
	100&150	200	250	300
A	460	530	610	710
B	300	300	355	380
C	380	510	640	710

WRAP FITTINGS & JOINT WITH TAR PAPER PRIOR TO POURING CONCRETE

CONCRETE ANCHORS FOR HORIZONTAL 45° BENDS

N.T.S.

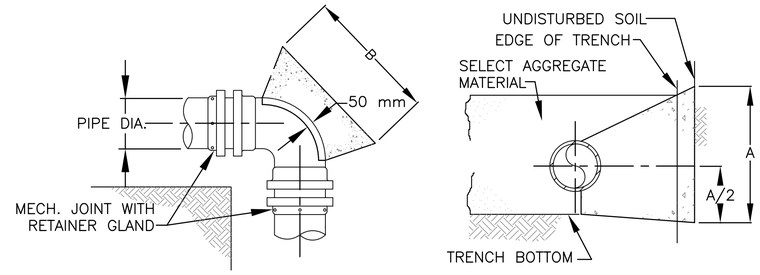

PLAN SECTION

	PIPE DIAMETER			
	100&150	200	250	300
A	460	610	710	920
B	610	710	710	920

WRAP FITTINGS & JOINT WITH TAR PAPER PRIOR TO POURING CONCRETE

CONCRETE ANCHORS FOR HORIZONTAL 90° BENDS

N.T.S.

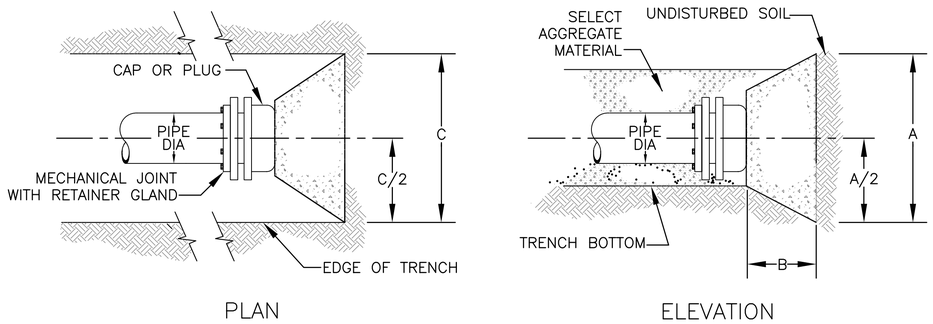

PLAN ELEVATION

	PIPE DIAMETER			
	100&150	200	250	300
A	460	610	760	760
B	300	380	460	460
C	460	610	1000	1000

WRAP FITTINGS & JOINT WITH TAR PAPER PRIOR TO POURING CONCRETE

CONCRETE ANCHORS FOR DEAD ENDS

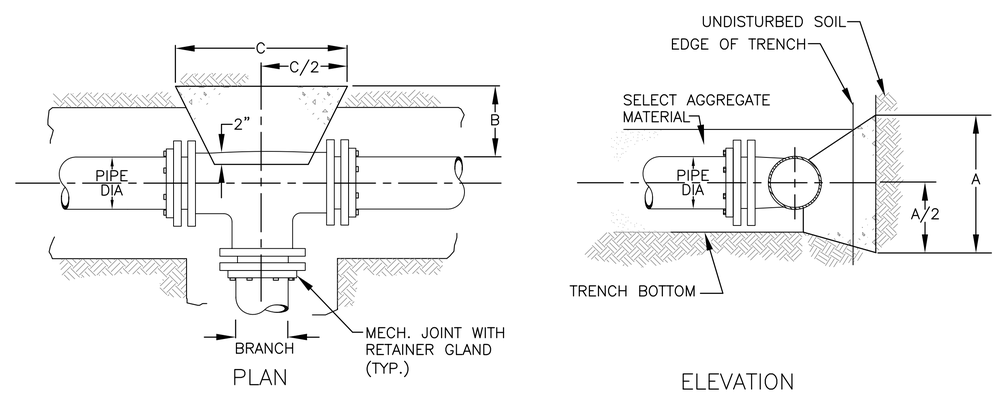

PLAN ELEVATION

	PIPE DIAMETER			
	100&150	200	250	300
A	460	610	760	920
B	300	380	380	380
C	460	610	760	920

WRAP FITTINGS & JOINT WITH TAR PAPER PRIOR TO POURING CONCRETE

D = APPROX. VOLUME OF CONC. IN C.Y.

CONCRETE ANCHORS FOR TEES

N.T.S.

NOTES:
1. ALL UNITS IN MILLIMETERS UNLESS OTHERWISE SPECIFIED.
2. THRUST BLOCK SIZES SHOWN ARE BASED ON 1034 KPa WATER PRESSURE AND 120 KPA UNDISTURBED SOIL BEARING.

US Army Corps of Engineers
Afghanistan Engineer District

SYMBOL	DESCRIPTION	DATE	APR

DESIGNED BY: BAKER
DATE: 09-30-09
DWN BY: JDS
SUBMITTED BY: BAKER
CHK BY: GPH
FILE NO.: ANPSDC-503XXX

Michael Baker Jr, Inc
A unit of Michael Baker Corporation
Airside Business Park
100 Airside Drive
Moon Township, PA 15108
www.mbakercorp.com

AFGHAN NATIONAL POLICE
STANDARD DESIGN
SITE DETAILS
CIVIL DETAILS

SHEET REFERENCE NUMBER:
C3

100% SUBMISSION

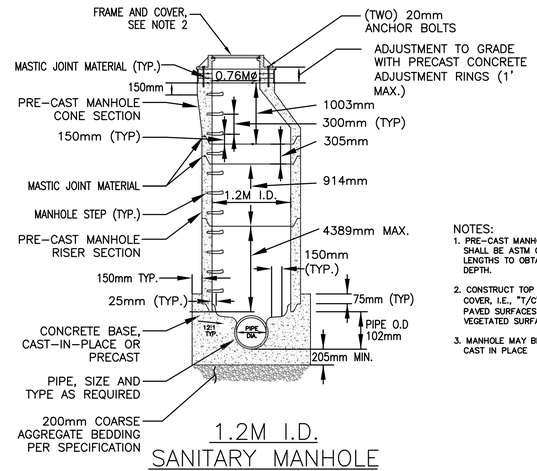

NOTES:
1. PRE-CAST MANHOLE SECTIONS SHALL BE ASTM C-478. VARY LENGTHS TO OBTAIN DESIRED DEPTH.
2. CONSTRUCT TOP OF MANHOLE COVER, I.E., "T/C" FLUSH WITH PAVED SURFACES AND 6" ABOVE VEGETATED SURFACES.
3. MANHOLE MAY BE PRECAST OR CAST IN PLACE

1.2M I.D. SANITARY MANHOLE
NTS

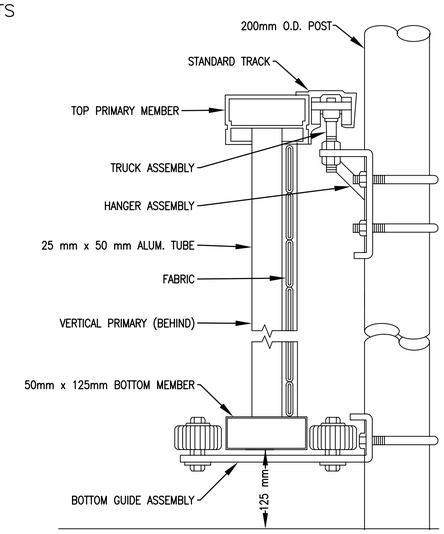

ASSEMBLY SECTION
N.T.S.

GATE NOTES:

DETAILS SHOWN ARE TO CLARIFY REQUIREMENTS AND ARE NOT INTENDED TO LIMIT OTHER TYPE OF FENCE SECTIONS AND METHODS OF INSTALLATION.

SWING GATES SHALL BE CONSTRUCTED WITH DROP RODS, PADLOCKS, LATCH ASSEMBLY AND GATE KEEPERS EXCEPT AS NOTED.

ALL GATE FRAMES SHALL BE A MINIMUM 50 mm NOMINAL (ROUND) OR 50 mm NOMINAL (SQUARE). GATE FRAMES SHALL BE OF WELDED CONSTRUCTION OR SHALL BE ASSEMBLED USING HEAVY FITTINGS. AT CONTRACTOR'S OPTION A WELDED HORIZONTAL BRACE MAY BE USED IN LIEU OF TRUSS RODS TO BRACE ALL WELDED GATE FRAMES. THE CONTRACTOR SHALL BE RESPONSIBLE FOR THE PROPER RIGID CONSTRUCTION OF ALL GATES SUPPLIED.

CONTRACTOR SHALL FOLLOW MANUFACTURER'S SPECIFICATIONS AND GUIDELINES FOR INSTALLATION.

NOTES:

1. BARB ARMS ARE OPTIONAL

2. GATE ELEVATION IS VIEWED FROM THE OUTSIDE OF THE SECURE AREA LOOKING IN.

CRITICAL DIMENSION CHART		
A	CLEAR OPENING	7.3 m
B	COUNTERBALANCE POST SPACING C/C	*
C	OVERALL GATE LENGTH	*
D	COUNTERBALANCE LENGTH	*
E	NOMINAL GATE HEIGHT	2.4m
F	POST HEIGHT	*
G	FABRIC HEIGHT	*

*CRITICAL DIMENSIONS TO BE DETERMINED BY MANUFACTURER. CONTRACTOR TO VERIFY AND COORDINATE MANUFACTURER'S SPECIFICATIONS PRIOR TO PURCHASE AND SHALL FOLLOW MANUFACTURER GUIDELINES DURING INSTALLATION.

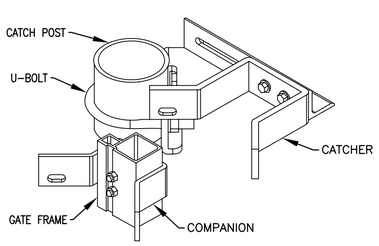

CATCH ASSEMBLY
N.T.S.

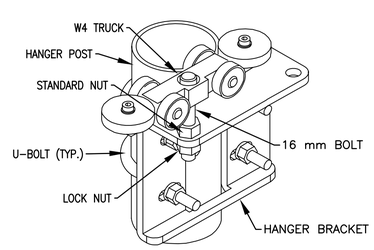

GATE HANGER ASSEMBLY
N.T.S.

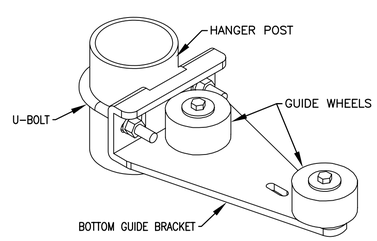

BOTTOM GUIDE ASSEMBLY
N.T.S.

US Army Corps of Engineers
Afghanistan Engineer District

SYMBOL	DESCRIPTION	DATE	APR

DESIGNED BY: BAKER
DWN BY: JDS
CHK BY: GPH
DATE: 09-30-09
SUBMITTED BY: BAKER
FILE NO.: ANPSDC-504XXX

Michael Baker Jr., Inc.
A unit of Michael Baker Corporation
Airside Business Park
100 Airside Drive
Moon Township, PA 15108
www.mbakercorp.com

AFGHAN NATIONAL POLICE
STANDARD DESIGN
SITE DETAILS
CIVIL DETAILS

SHEET REFERENCE NUMBER:
C4

100% SUBMISSION

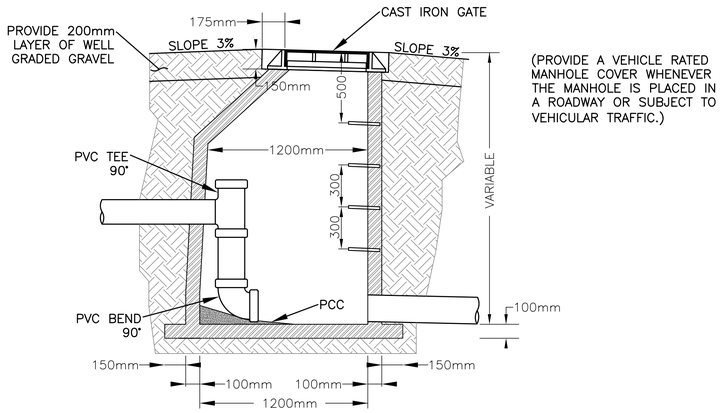

(PROVIDE A VEHICLE RATED MANHOLE COVER WHENEVER THE MANHOLE IS PLACED IN A ROADWAY OR SUBJECT TO VEHICULAR TRAFFIC.)

SEWER DROP MANHOLE
N.T.S.

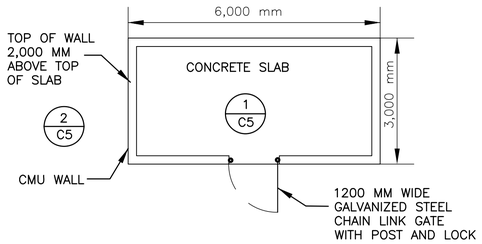

NOTES:
1) THE CMU WALLS SHALL RECEIVE STUCCO ON BOTH SIDES AND TOP.
2) PROPANE STORAGE AREA TO BE LOCATED NO LESS THAN 6.1 METERS FROM ANY STRUCTURE.

PROPANE STORAGE
N.T.S.

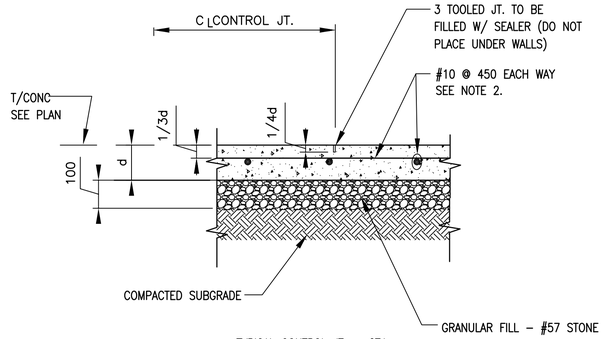

TYPICAL CONTROL JT. = CTJ

NOTE:
1. d = SLAB THICKNESS (SEE PLAN)
2. STOP 2/3 OF BARS 25MM BACK FROM EA. SIDE OF JOINT.
3. TOOL SLAB JOINTS AS SOON AS CONCRETE WILL SUPPORT EQUIPMENT AND NOT MORE THAN (4) HOURS AFTER PLACEMENT.

1 / C5 C5 **SECTION**
SCALE: NTS
CONTROL JOINT DETAIL

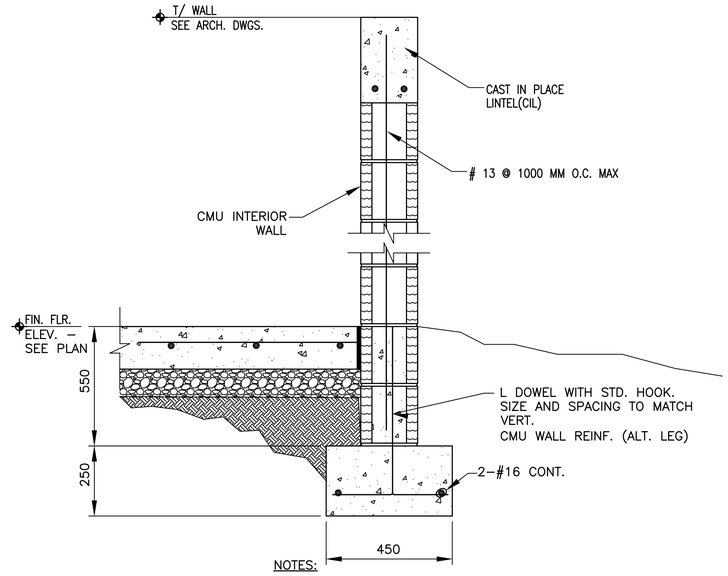

NOTES:
1. VERT. CMU WALL REINF. NOT SHOWN FOR CLARITY.
2. REQUIRED AT INTERIOR CMU WALL LENGTHS THAT EXCEED 3600mm BETWEEN OPPOSING CMU WALLS THAT ARE TIED.

2 / C5 C5 **SECTION**
SCALE: NTS

US Army Corps of Engineers
Afghanistan Engineer District

SYMBOL	DESCRIPTION	DATE	APR

DESIGNED BY: BAKER
DWN BY: JDS
CHK BY: GPH
DATE: 09-30-09
SUBMITTED BY: BAKER
FILE NO.: ANPSDC-505XXX

Michael Baker Jr., Inc
A unit of Michael Baker Corporation
Airside Business Park
100 Airside Drive
Moon Township, PA 15108
www.mbakercorp.com

AFGHAN NATIONAL POLICE
STANDARD DESIGN
SITE DETAILS
CIVIL DETAILS

SHEET REFERENCE NUMBER:
C5

100% SUBMISSION

05

AFGHAN NATIONAL POLICE

WALLS, FENCES, GATES AND BARRIERS

US Army Corps of Engineers

Afghanistan Engineer District

SYMBOL	DESCRIPTION	DATE	APR

DESIGNED BY: JDS	DATE: 09-30-09		
DWN BY: JDS	SUBMITTED BY: BAKER		
CHK BY: JDS	FILE NO.: ANPSDG-001XXX		

Michael Baker Jr., Inc
A unit of Michael Baker Corporation
Airside Business Park
100 Airside Drive
Moon Township, PA 15108
www.mbakercorp.com

AFGHAN NATIONAL POLICE
STANDARD DESIGN
SITE DETAILS

COVER SHEET

SHEET REFERENCE NUMBER:

100% SUBMISSION

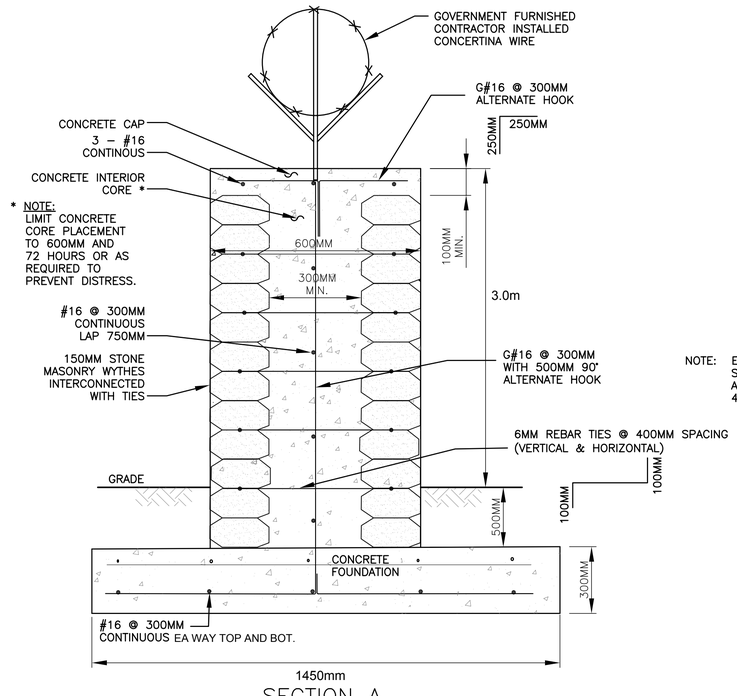

SECTION A
NOT TO SCALE

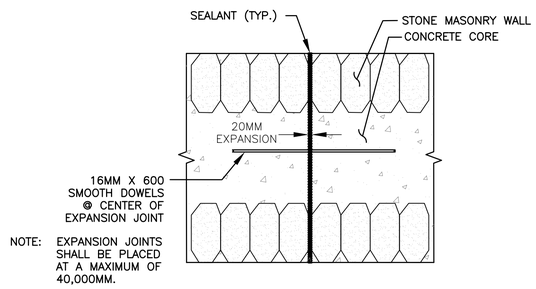

STONE WALL
EXPANSION JOINT DETAIL
NOT TO SCALE

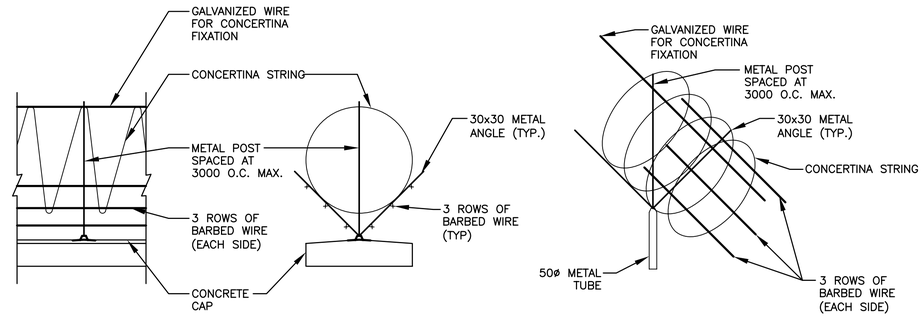

ELEVATION SECTION ISOMETRIC VIEW

CONCERTINA STRING & BARBED WIRE
DETAILS
NOT TO SCALE

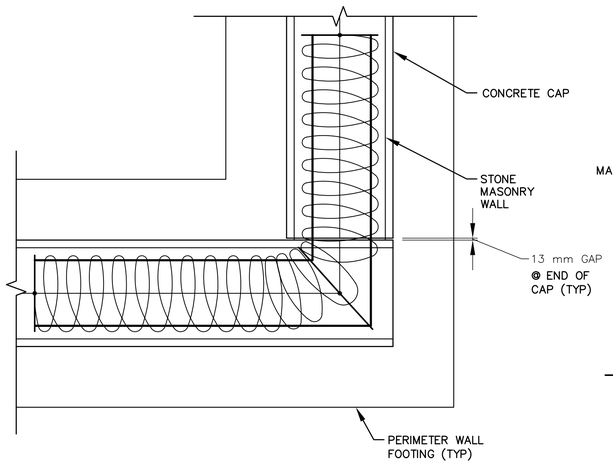

PERIMETER – STONE WALL CORNER – PLAN
(END CONDITION SIMILAR)
NOT TO SCALE

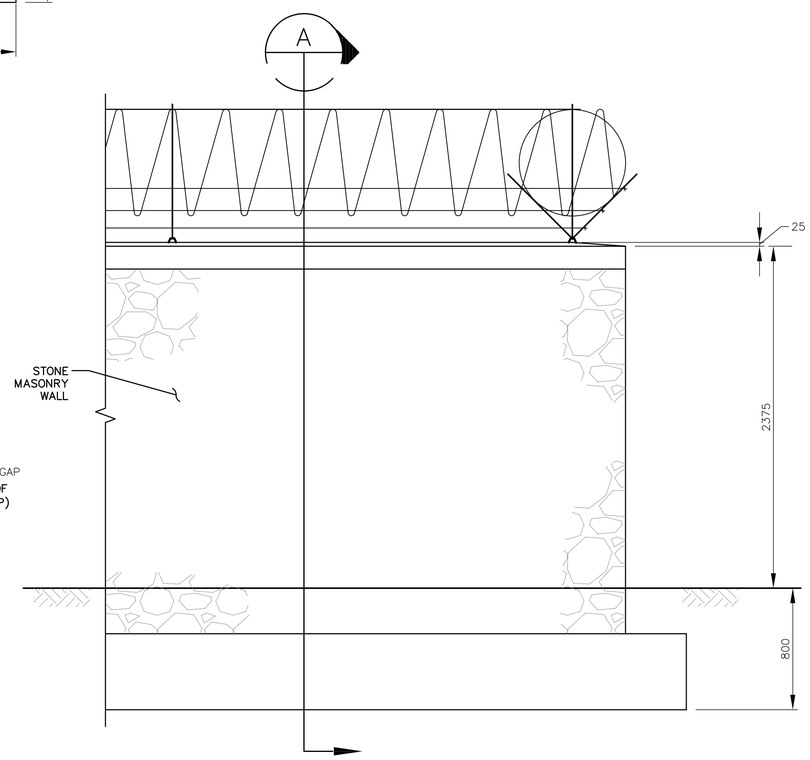

ELEVATION B
NOT TO SCALE

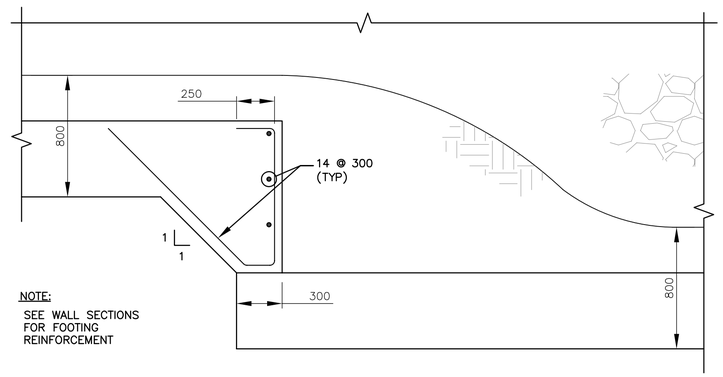

STEPPED FOOTING DETAIL FOR
GRADE CHANGE GREATER THAN 15 DEGREES
NOT TO SCALE

US Army Corps of Engineers
Afghanistan Engineer District

SYMBOL	DESCRIPTION	DATE	APR

DESIGNED BY: BAKER
DWN BY: JDS
CHK BY: GPH
DATE: 09–30–09
SUBMITTED BY: BAKER
FILE NO.: ANPSDC–507XXX

Michael Baker Jr, Inc
A unit of Michael Baker Corporation
Airside Business Park
100 Airside Drive
Moon Township, PA 15108
www.mbakercorp.com

AFGHAN NATIONAL POLICE
STANDARD DESIGN
SITE DETAILS

CIVIL DETAILS

SHEET REFERENCE NUMBER:
1

100% SUBMISSION

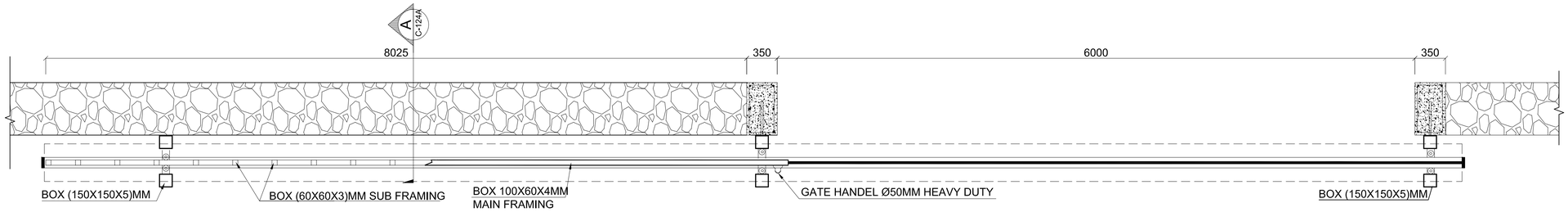

01 | GATE PLAN VIEW
C-124 REF. SCALE 1:60

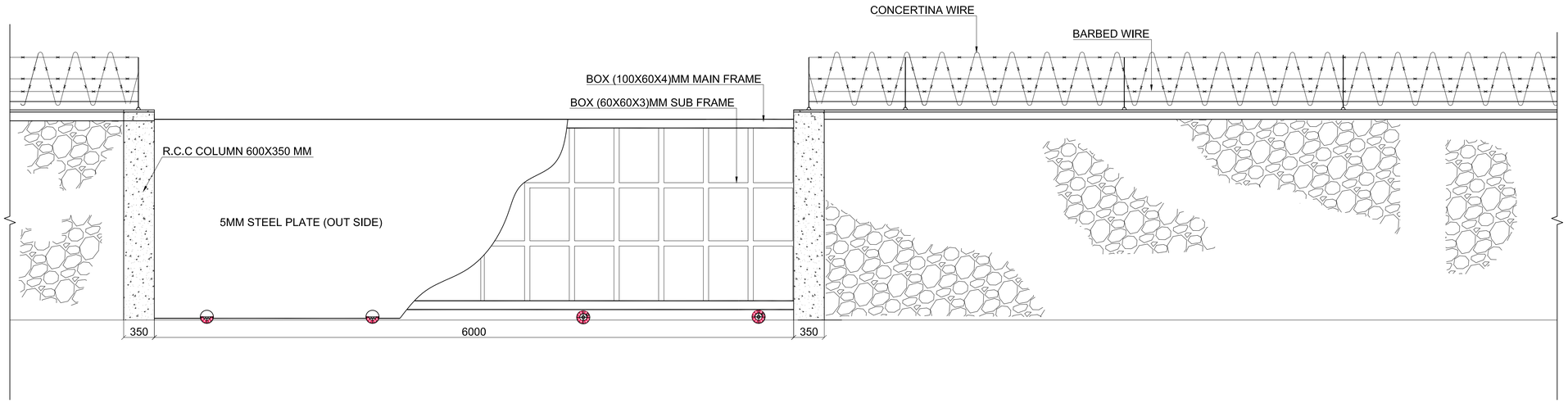

02 | GATE FRONT ELEVATION
C-124 REF. SCALE 1:60

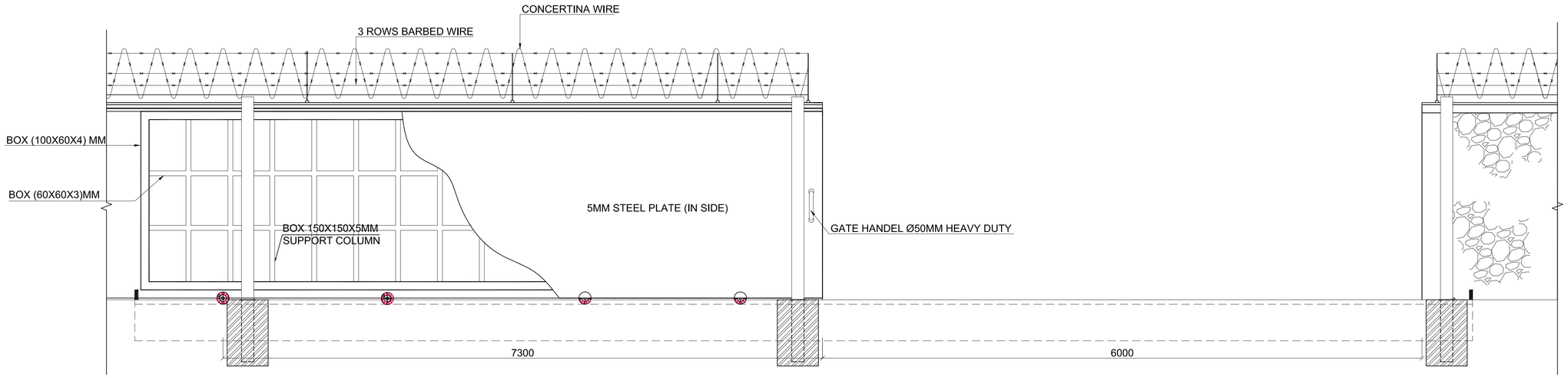

02 | GATE BACK ELEVATION
C-124 REF. SCALE 1:60

US Army Corps of Engineers
Afghanistan Engineer District

AFGHANISTAN NATIONAL POLICE

MAIN GATE PLAN & ELEVATION

SHEET REFERENCE NUMBER:

2

ENTRY CONTROL POINT VEHICLE GATE

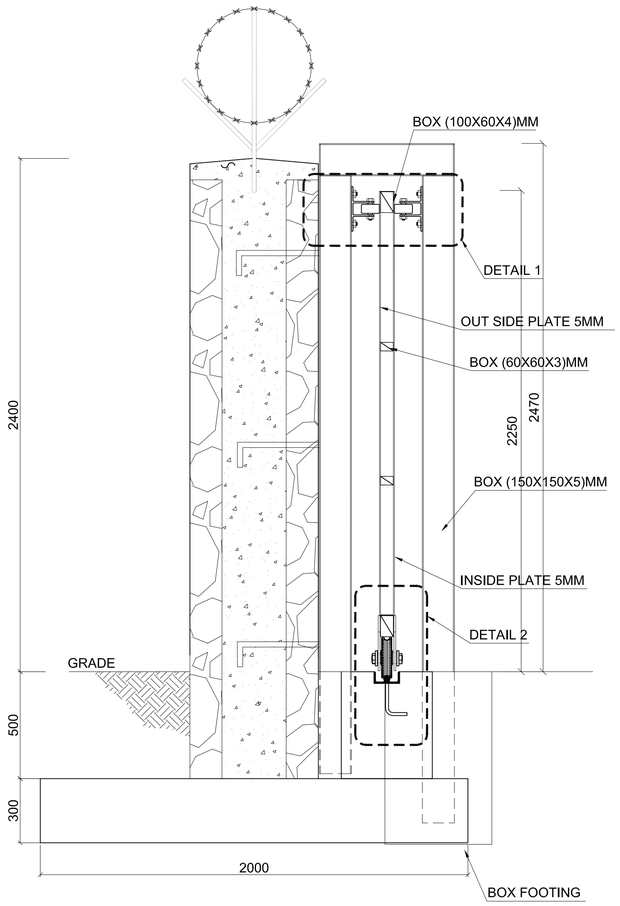

01 | SECTION A-A
C-124A REF. SCALE 1:30

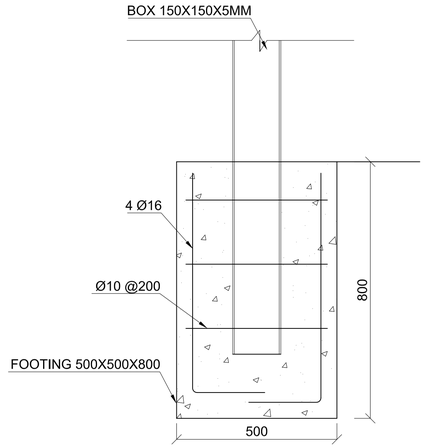

02 | SUPPORT COLUMN FOOTING DETAIL
C-124A REF. SCALE 1:20

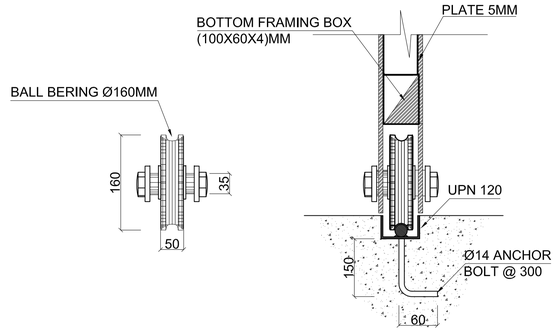

03 | DETAIL 2
C-124A REF. SCALE N.T.S

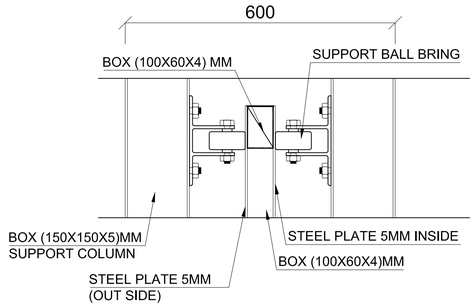

04 | DETAIL 1
C-124A REF. SCALE N.T.S

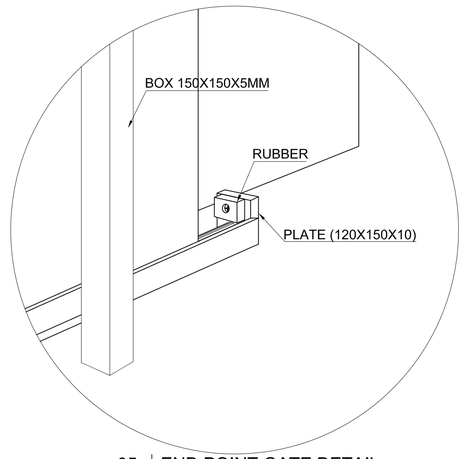

05 | END POINT GATE DETAIL
C-124A REF. SCALE N.T.S

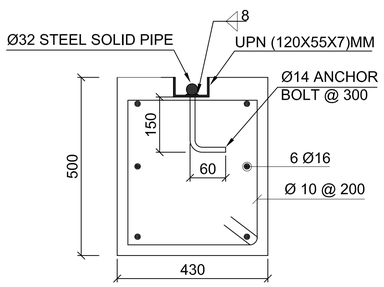

06 | SUPPORTING BEAM DETAIL
C-124A REF. SCALE N.T.S

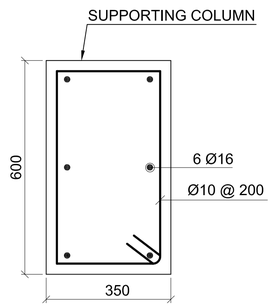

07 | SUPPORTING COLUMN DETAIL
C-124A REF. SCALE N.T.S

US Army Corps of Engineers
Afghanistan Engineer District

AFGHANISTAN NATIONAL POLICE

MAIN GATE DETAILS

SHEET REFERENCE NUMBER:
3

ENTRY CONTROL POINT VEHICLE GATE

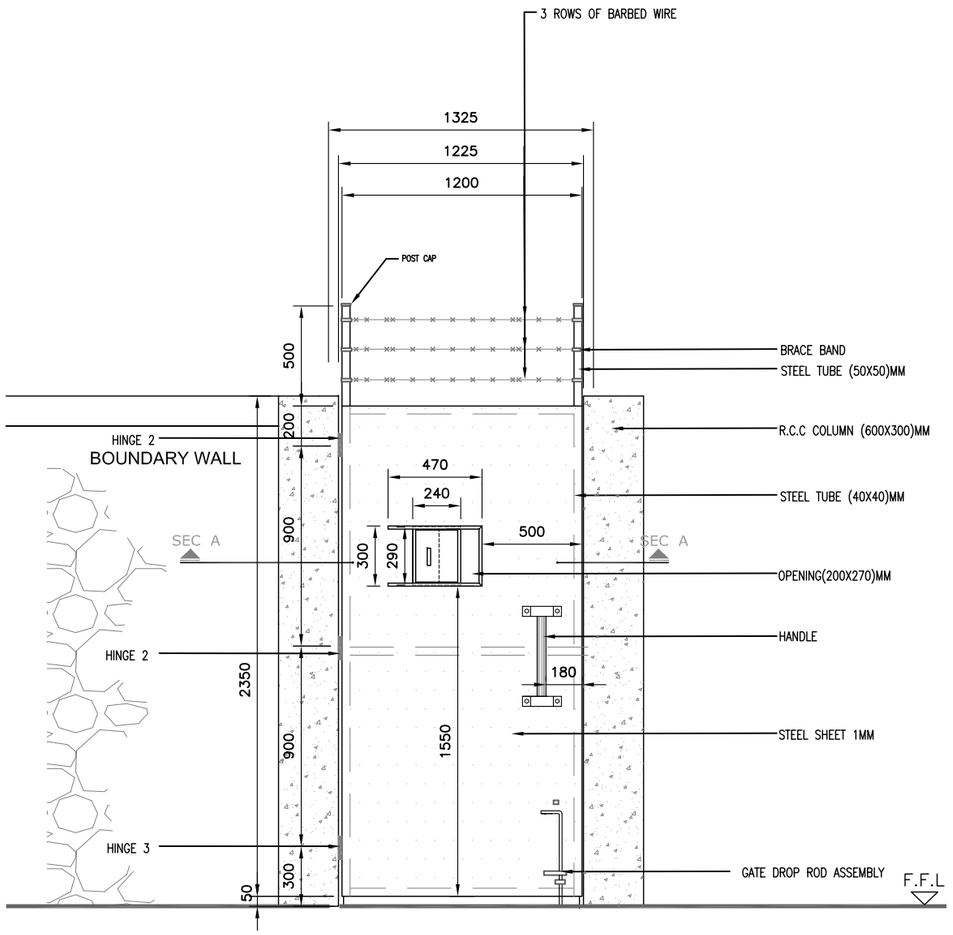

01 PERSONAL GATE DOOR

ANA-CP-42 REF. SCALE: 1:15

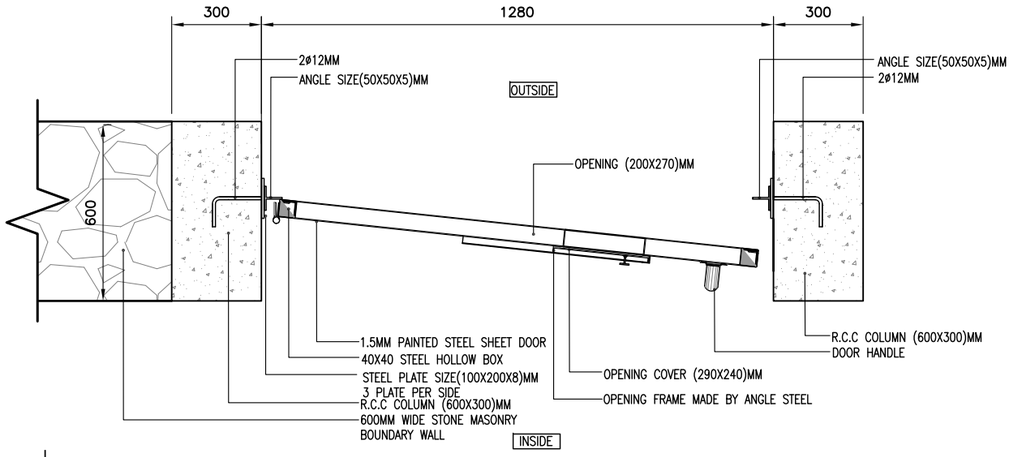

02 SECTION A:A

ANA-CP-42 REF. SCALE: 1:15

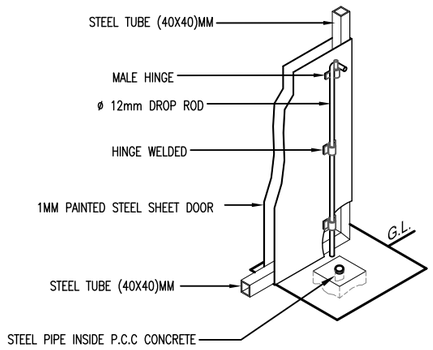

GATE DROP ROD ASSEMBLY

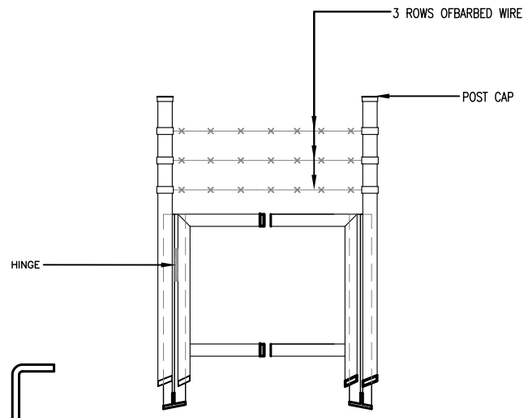

GATE FRAME DETAIL

GATE DROP ROD

03 DETAILS

ANA-CP-42 REF. SCALE: 1:15

U.S ARMY CORPS OF ENGINEERS
AFGHANISTAN ENGINEER
DISTRACT

Appr.	Symbol	Description	DATE	Appr.

GENERAL DETAIL
PERSONAL GATE DOOR DETAIL

Sheet Reference Number:

4

ENTRY CONTRL POINT PERSONNEL GATE

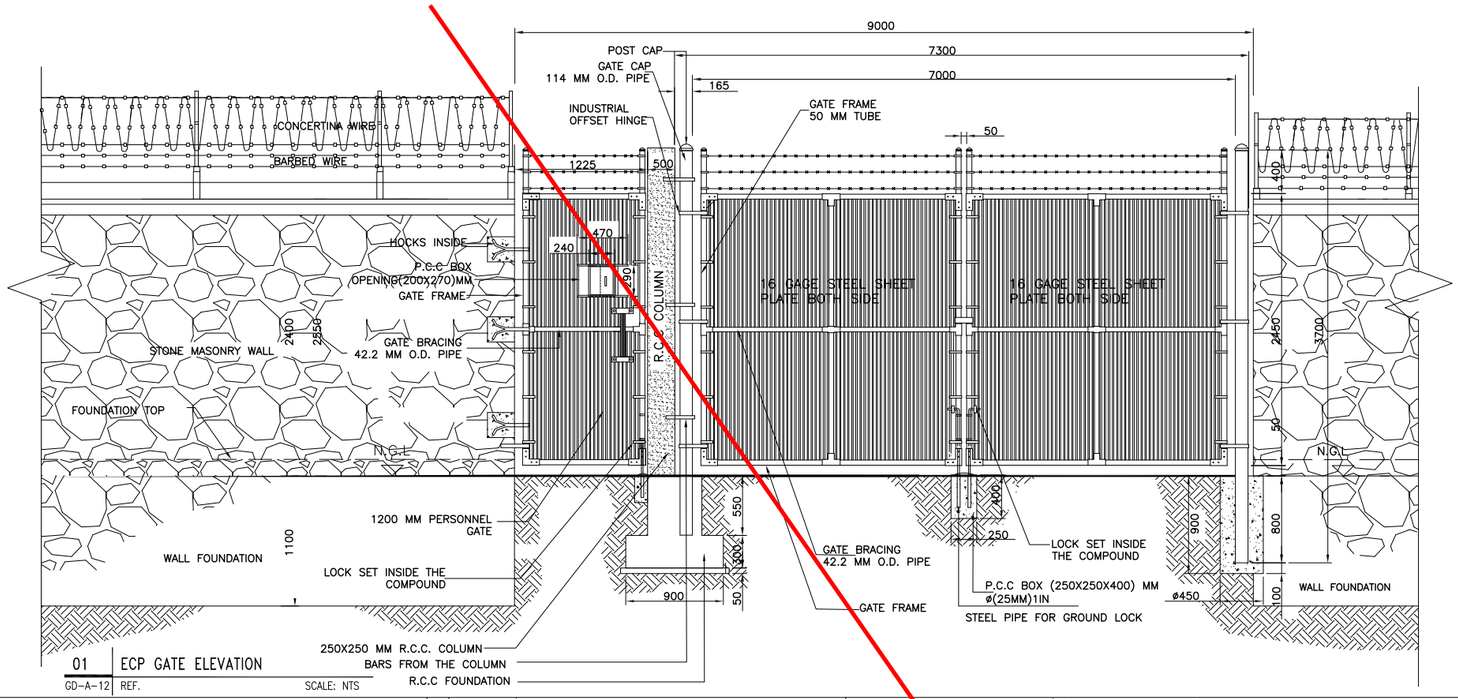

01 ECP GATE ELEVATION

GD-A-12 REF. SCALE: NTS

NOTES

GATE POST	115MMX115MM WALL THK.
GATE FRAME	50MMX50MM WALL THK.
GATE BRACING	40MMX50MM WALL THK.
INFILL-FABRIC	30MMX30MM GALVANIZED
BARBED WIRE	STANDARD-GALVANIZED
FITTINGS	GALVANIZED

1)FITTINGS:-GALVANIZED

2)STEEL TUBE:ALL PIPES ARE GALVANIZED, CONFORMS TO ASTM A 53, SCH-40

3)BARBED WIRE:GALVANIZED BARBED WIRE "IOWA" PATTERN, 2PLY, 4 POINT STRAND WIRE 2.5 MM DIA, BARBING WIRE 2.0 MM DIA GALV., SPACING BETWEEN BARBS 101 MM

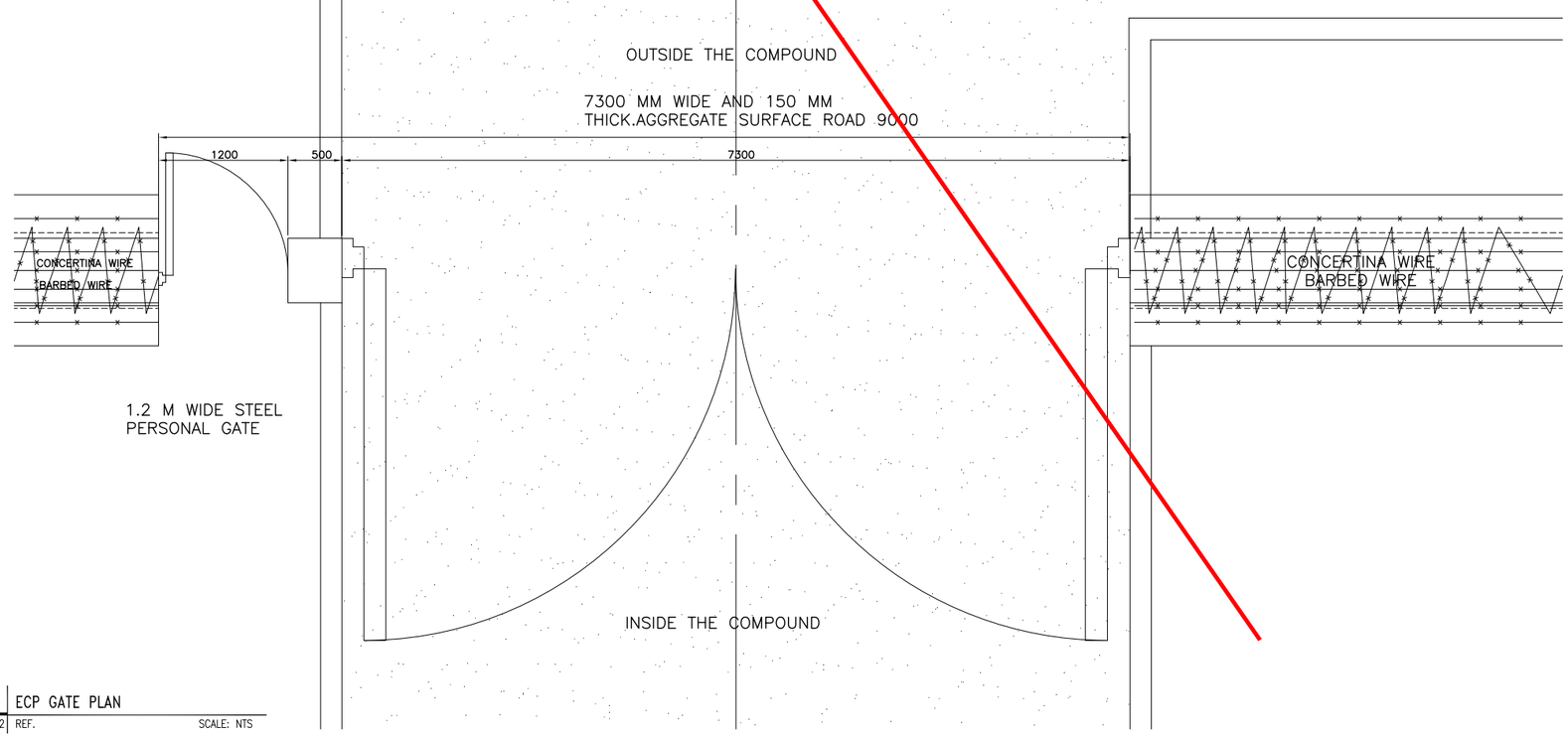

02 ECP GATE PLAN

GD-A-12 REF. SCALE: NTS

US Army Corps of Engineers
Afghanistan Engineer District

Symbol	Description	Date	Appr.	Symbol	Description	DATE	Appr.

Designed BY: --
Drawn BY: --
Contract Date: --
Reviewed by: --
Draw Code: CIVIL
FILE NAME: --
Submitted by: --
Plot Date: APR-10-2011
Plot Scale: 1:150
Solicitation No: --
Contract No: --

US ARMY CORPS OF ENGINEERS
AFGHANISTAN ENGINEER DISTRICT SOUTH
HERAT, AFGHANISTAN

Contractor:

Designer:

ANP (AFGHAN NATIONAL POLICE)

STANDARD DESIGN DRAWING
ENTRY CONTROL POINT (ECP) GATE

Sheet reference number:
5

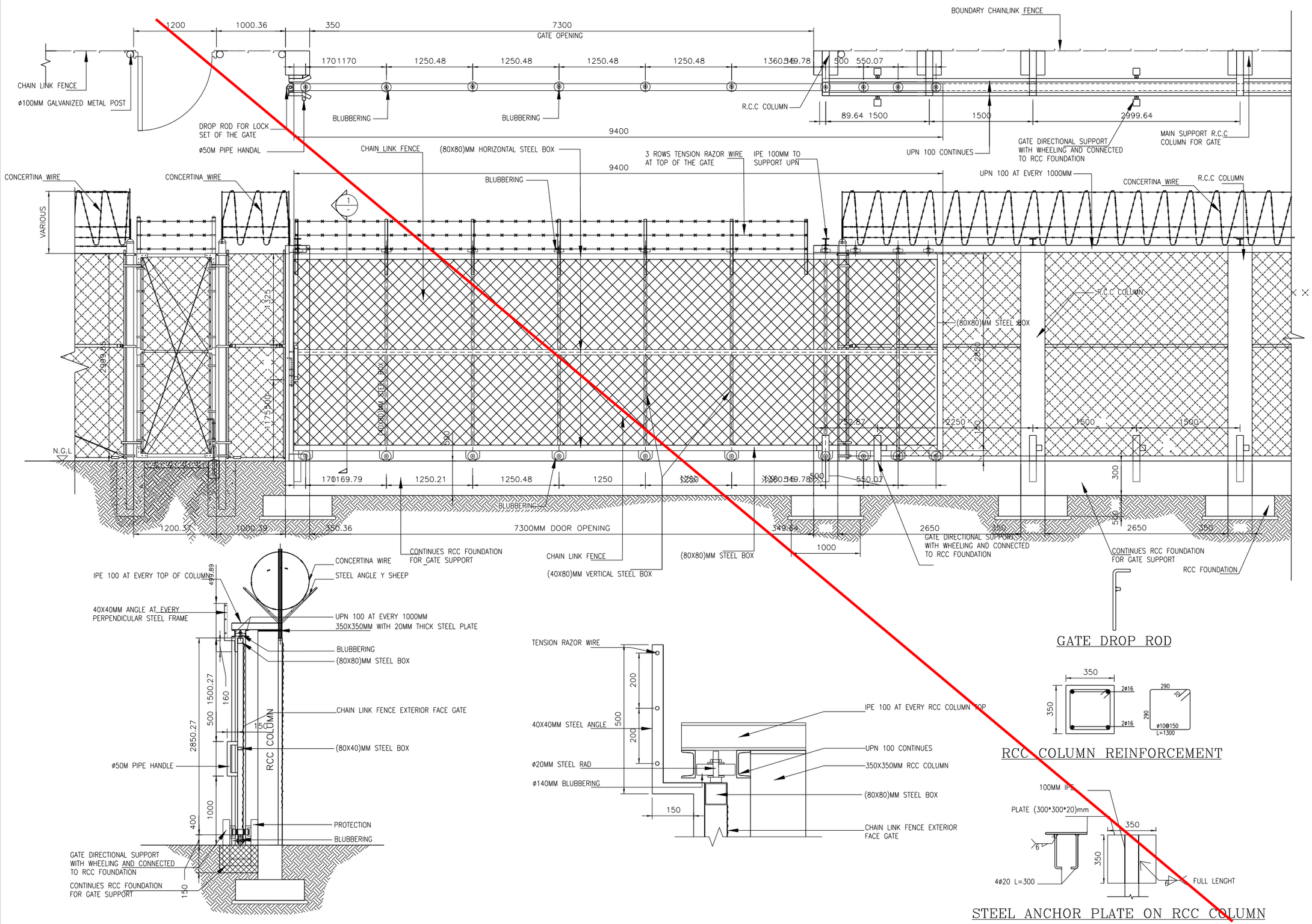

US Army Corps of Engineers®
AFGHANISTAN ENGINEER DISTRICT SOUTH

MARK	DESCRIPTION	DATE	APPR.	MARK	DESCRIPTION	DATE	APPR.

U.S. ARMY CORPS OF ENGINEERS
AFGHANISTAN ENGINEER DISTRICT SOUTH

DESIGNED BY: BRIAN JOHNSON PE
DWN BY: BRJ
CKD BY: BRJ
SUBMITTED BY: BRIAN JOHNSON PE
DATE: 03 NOV 2010
SOLICITATION NO.:
CONTRACT NO.:
PLOT SCALE: NTS
PLOT DATE: 03 NOV 2010
SIZE: 11"X17"
FILE NAME: H-##-#####

ECP STEEL SLIDING GATE DETAIL

SHEET IDENTIFICATION
6

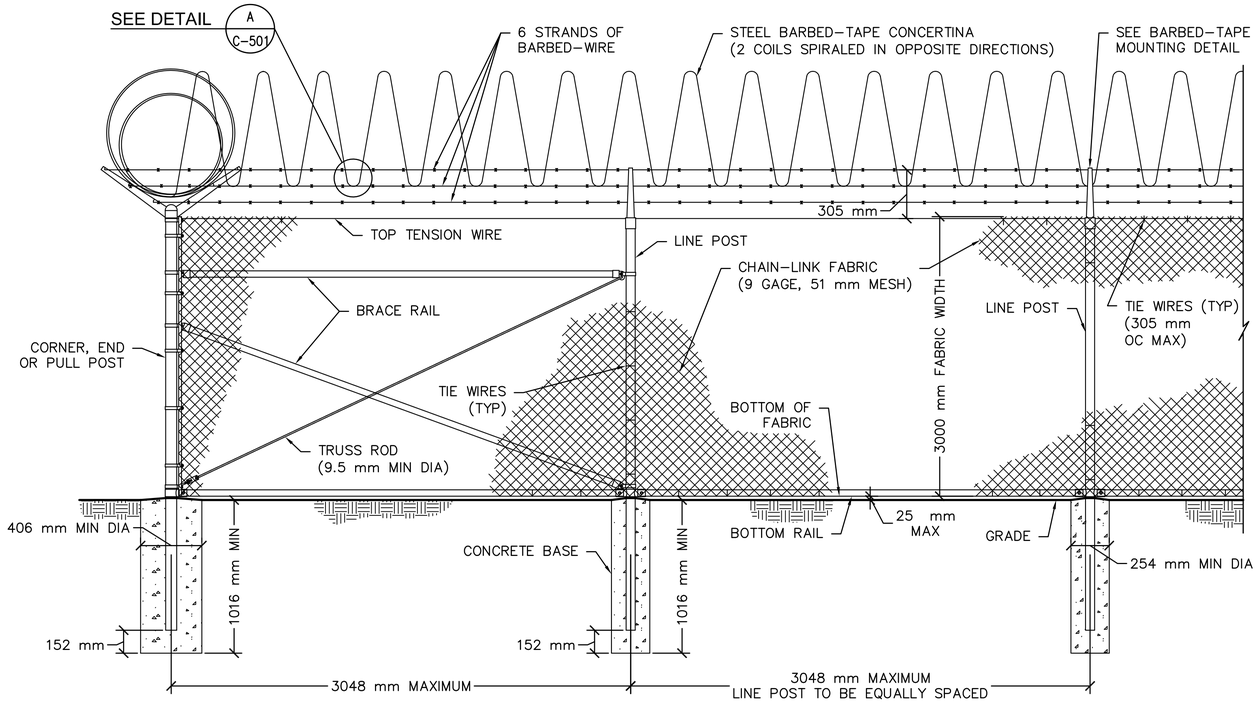

1 C-501 3000 mm CHAIN-LINK SECURITY FENCE DETAIL
SCALE: NTS

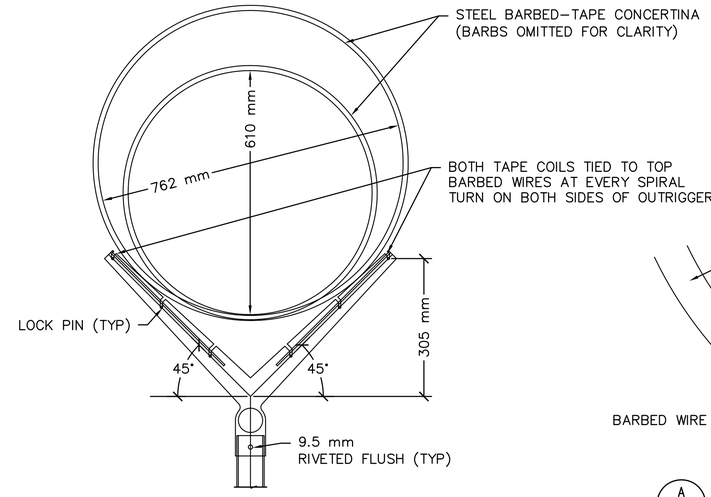

BARBED-TAPE MOUNTING DETAIL
NO SCALE

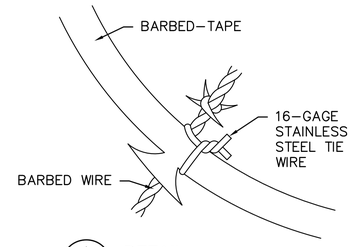

A C-501 DETAIL
NO SCALE

STEEL POST SCHEDULE	
USE AND SECTION	MINIMUM OUTSIDE DIMENSIONS (NOMINAL) FABRIC WIDTH 2440 mm AND OVER
CORNER, END & PULL POSTS	
TUBULAR – ROUND	102 mm O.D.
LINE POSTS	
TUBULAR – ROUND	73 mm O.D.
BOTTOM & BRACE RAILS	
TUBULAR – ROUND	42 mm O.D.
TUBULAR – SQUARE	38 mm SQ.
H–SECTION	41 mm x 38 mm
C–SECTION (ROLL–FORMED)	41 mm x 32 mm

NOTES:

1. WIRE TIES, RAILS, POSTS, AND BRACES SHALL BE CONSTRUCTED ON THE SECURE SIDE OF THE FENCE ALIGNMENT. CHAIN–LINK FABRIC SHALL BE PLACED ON THE SIDE OPPOSITE THE SECURE AREA.
2. ONLY 9–GAGE GALVANIZED STEEL TIE WIRES SHALL BE USED FOR FASTENING THE FENCE FABRIC TO FENCE POSTS AND RAILS. 16–GAGE, STAINLESS STEEL TIE WIRES SHALL BE USED FOR FASTENING FENCE FABRIC TO TENSION WIRES. HOG RINGS SHALL NOT BE ALLOWED ON SENSORED FENCES.
3. BOTTOM RAIL SHALL BE ATTACHED TO DOUBLE RAIL ENDS USING 9.5 mm CARRIAGE BOLTS AS SHOWN. ADDITIONAL HOLES SHALL BE DRILLED THROUGH THE BOTTOM RAIL ENDS TO INSURE THAT CARRIAGE BOLTS PASS THROUGH THE BOTTOM RAIL AS SHOWN.

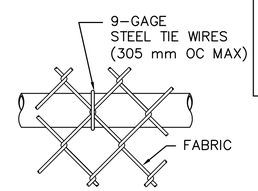

BRACE RAIL ATTACHMENT

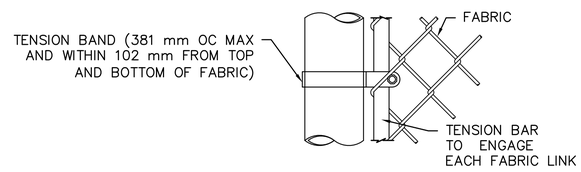

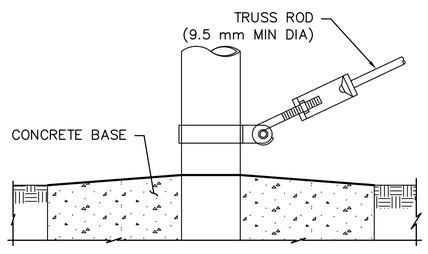

TRUSS ROD AND BAND

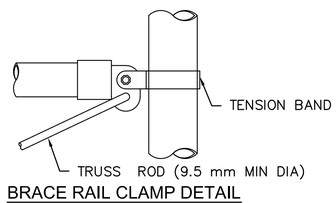

BRACE RAIL CLAMP DETAIL

END OR GATE POST DETAIL

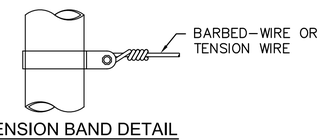

TENSION BAND DETAIL

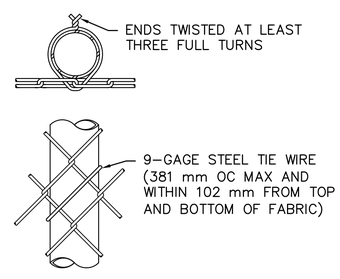

LINE POST ATTACHMENTS

FASTENING DETAILS
NO SCALE

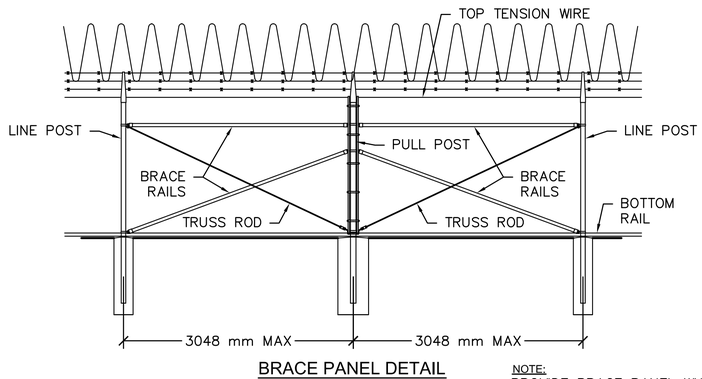

BRACE PANEL DETAIL
NO SCALE

NOTE:
PROVIDE BRACE PANEL WHENEVER STRAIGHT RUNS EXCEED 152 METERS.

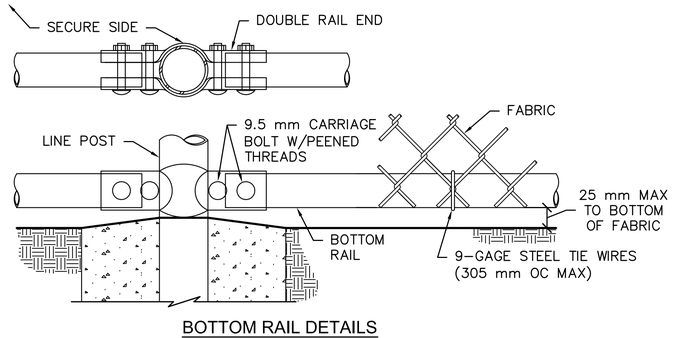

BOTTOM RAIL DETAILS
NO SCALE

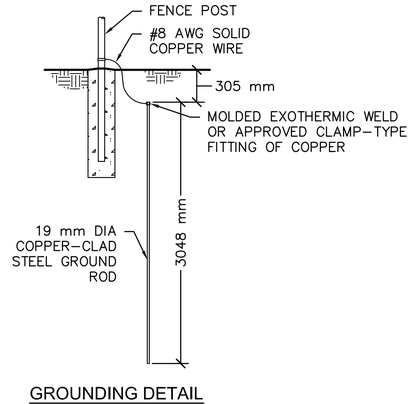

GROUNDING DETAIL
NO SCALE

US ARMY CORPS OF ENGINEERS
AFGHANISTAN ENGINEER DISTRICT

Mark	Description	Date	Appr.	Mark	Description	Date	Appr.

Date: 2/23/2010 | Rev: 0
Design file no. C–501
Drawing code:
File name: ANAMOTR-C-501XXX
Plot date: 2/23/2010
Plot scale:1:1

Designed by: GPH | Ckd by: JMB
Dwn by: JDS | Reviewed by: LHM
Submitted by: BAKER

U.S. ARMY ENGINEER DISTRICT, AFGHANISTAN
CORPS OF ENGINEERS
APO AE 96338

Michael Baker Jr., Inc.
A unit of Michael Baker Corporation
Airside Business Park
100 Airside Drive
Moon Township, PA 15108
www.mbakercorp.com

FENCING DETAILS

Sheet reference number:
7

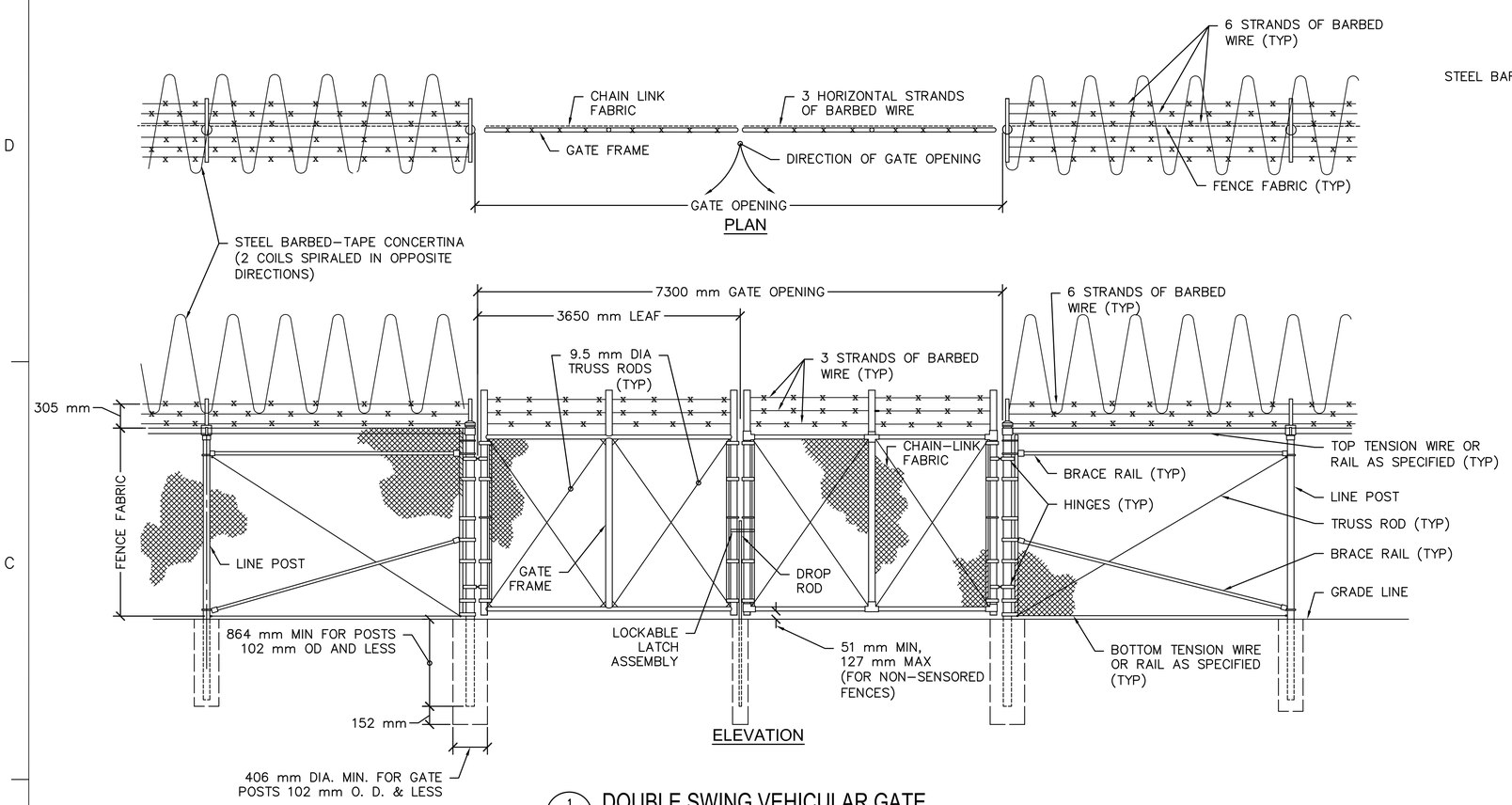

1 C–502 DOUBLE SWING VEHICULAR GATE
SCALE: NTS

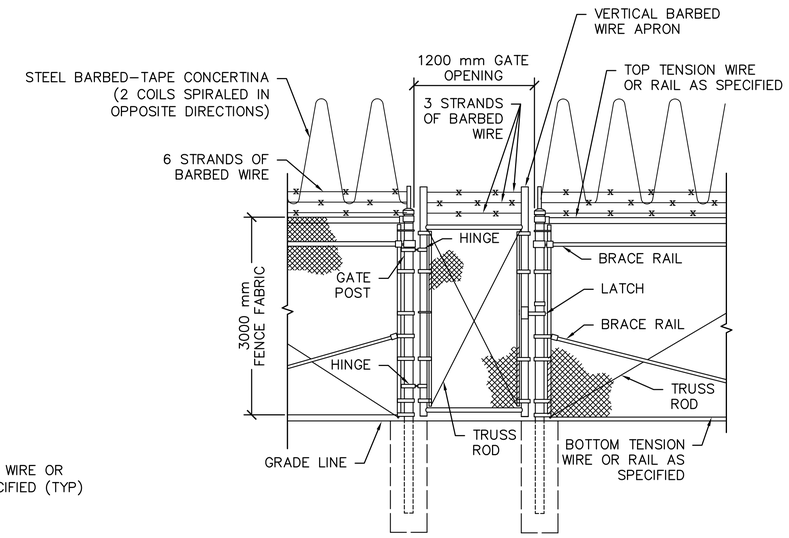

2 C–502 PERSONNEL GATE
NO SCALE

NOTES:

1. FOR NON–SENSORED FENCES, DETAILS SHOWN ARE TO CLARIFY REQUIREMENTS AND ARE NOT INTENDED TO LIMIT OTHER TYPE OF FENCE SECTIONS AND METHODS OF INSTALLATION THAT COMPLY WITH THE SPECIFICATIONS.
2. SWING GATES SHALL BE CONSTRUCTED WITH DROP RODS, PADLOCKS, LATCH ASSEMBLY AND GATE KEEPERS EXCEPT AS NOTED.
3. ALL GATE FRAMES SHALL MEET THE MINIMUM REQUIREMENTS OF ASTM F900 48 mm NOMINAL (ROUND) OR 51 mm NOMINAL (SQUARE). GATE FRAMES SHALL BE OF WELDED CONSTRUCTION OR SHALL BE ASSEMBLED USING HEAVY FITTINGS. AT CONTRACTOR'S OPTION A WELDED HORIZONTAL BRACE MAY BE USED IN LIEU OF TRUSS RODS TO BRACE ALL–WELDED GATE FRAMES. THE CONTRACTOR SHALL BE RESPONSIBLE FOR THE PROPER RIGID CONSTRUCTION OF ALL GATES SUPPLIED.

GATE POST SCHEDULE	
GATE LEAF WIDTH (NOMINAL)	OUTSIDE DIMENSION (NOMINAL)
1830 mm OR LESS	73 mm OD 64 mm SQ
GREATER THAN 1830 mm TO 3660 mm	102 mm OD

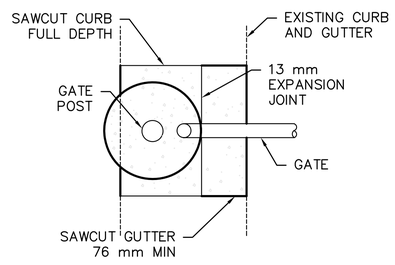

PLAN

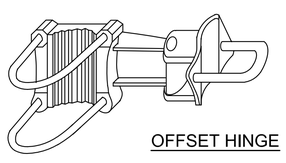

OFFSET HINGE

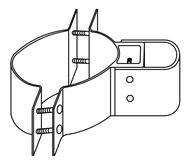

STANDARD HINGE

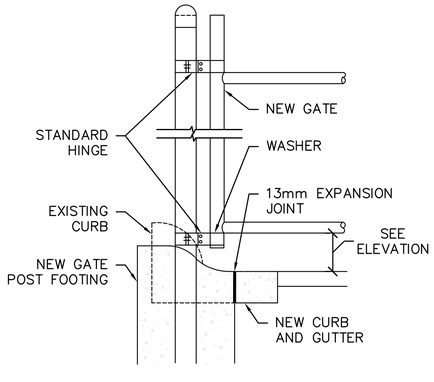

GATE POST SECTION AT CURB AND GUTTER
NO SCALE

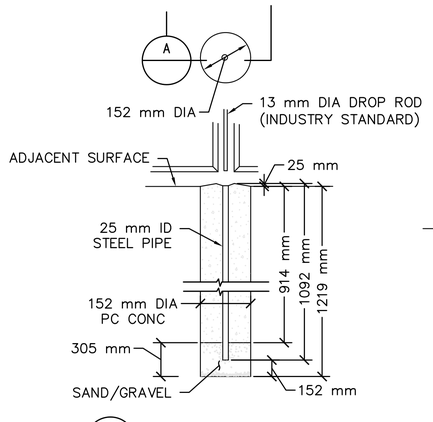

A DROP ROD FOUNDATION

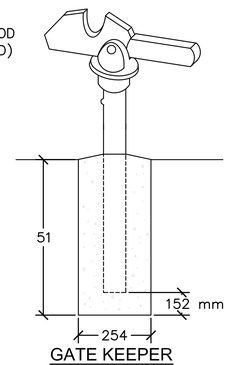

GATE KEEPER
(TO HOLD GATE OPEN)

SWING GATE DETAILS
NO SCALE

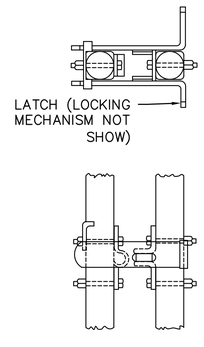

LOCKABLE LATCH ASSEMBLY

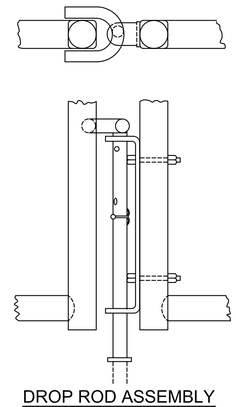

DROP ROD ASSEMBLY

APPROVED:

A/E DESIGNER OF RECORD

SEAL:

COMMONWEALTH OF PENNSYLVANIA
REGISTERED PROFESSIONAL
GREGORY P. HYNES
ENGINEER
044310–E

US ARMY CORPS OF ENGINEERS
AFGHANISTAN ENGINEER DISTRICT

Mark	Description	Date	Appr.	Mark	Description	Date	Appr.

Date: 2/23/2010 Rev: 0
Design file no. C–502
Drawing code:
File name: ANAM3TR-C-502XXX
Plot date: 2/23/2010
Plot scale: 1:1

Designed by: GPH
Dwn by: JDS
Ckd by: JMB
Reviewed by: LHM
Submitted by:
BAKER

U.S. ARMY ENGINEER DISTRICT, AFGHANISTAN
CORPS OF ENGINEERS
APO AE 96338

Michael Baker Jr., Inc.
A unit of Michael Baker Corporation
Airside Business Park
100 Airside Drive
Moon Township, PA 15108
www.mbakercorp.com

FENCING DETAILS

Sheet reference number:
8

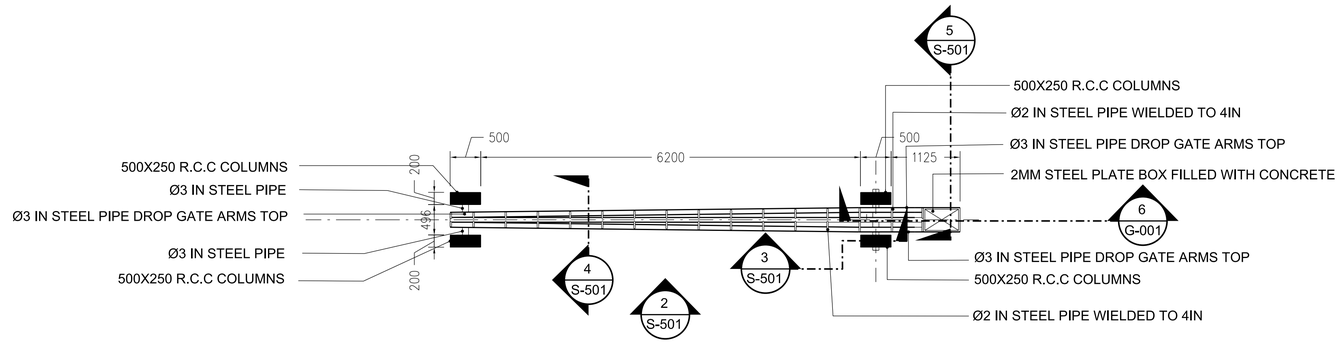

1 S-501 PLAN VIEW
SCALE = 1:50

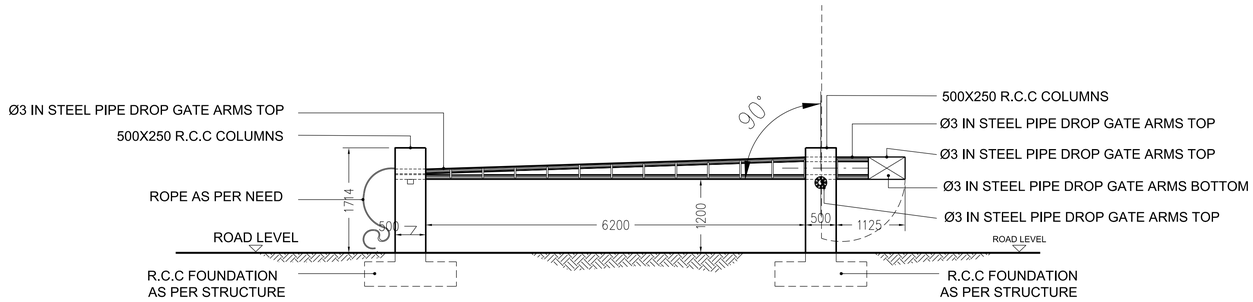

2 S-501 ELEVATION VIEW
SCALE = 1:50

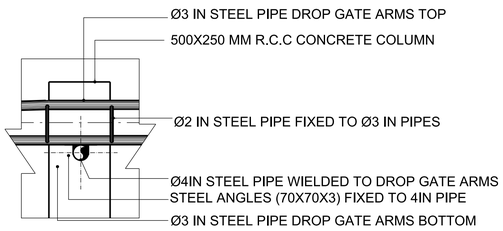

3 S-501 SECTION
SCALE = 1:50

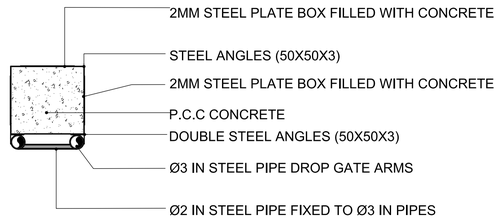

5 S-501 SECTION
SCALE = 1:50

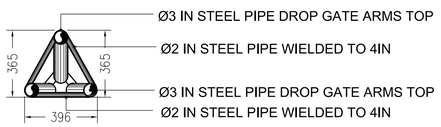

4 S-501 SECTION
SCALE = 1:50

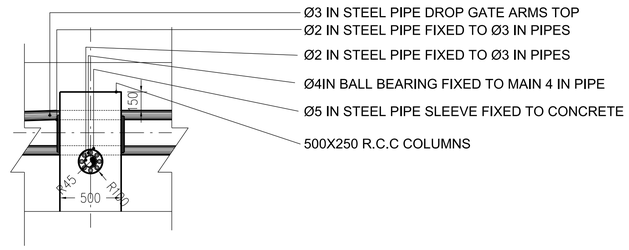

6 S-501 SECTION
SCALE = 1:50

GRAPHIC SCALE

US ARMY CORPS OF ENGINEERS AFGHANISTAN ENGINEER DISTRICT

SYMBOL	DESCRIPTION	DATE	APPR.

SYMBOL	DESCRIPTION	DATE	APPR.

DESIGNED BY: | DATE: XX-XX-XX | REV.: ___
DWN BY: | CKD BY: | DESIGN FILE NO.
REVIEWED BY: | DRAWING CODE:
SUBMITTED BY: | FILE NAME: | PLOT SCALE: | PLOT DATE: XX-XX-XX

U.S. ARMY ENGINEER DISTRICT, AFGHANISTAN
CORPS OF ENGINEERS
APO AE 96338

ENGINEERING AND CONSTRUCTION DIVISION

STANDARD DESIGN

MANUAL DROP ARM GATE
PLAN, ELEVATION & SECTIONS

SHEET REFERENCE NUMBER:
9
SHEET --- OF ---

A1 Size 594mm x 841mm

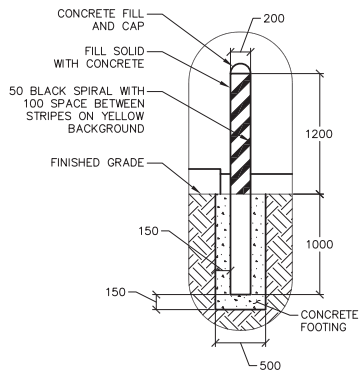

BOLLARD DETAIL

GENERAL NOTES:

1. ALL BOLLARDS ARE THE SAME SIZE FOR THIS PROJECT
2. PAINTING REQUIREMENTS, INCLUDING COLOR AND STRIPING SHOULD BE COORDINATED WITH THE USER

0 500 1000 2000
SCALE: 1:50

US ARMY CORPS OF ENGINEERS
AFGHANISTAN ENGINEER DISTRICT

Mark	Description	Date	Appr.	Mark	Description	Date	Appr.

U.S. ARMY ENGINEER DISTRICT, AFGHANISTAN
CORPS OF ENGINEERS
APO AE 96338

AFGHAN NATIONAL ARMY
REGIONAL MILITARY TRAINING CENTER
STANDARD DESIGN

Sheet reference number:
10

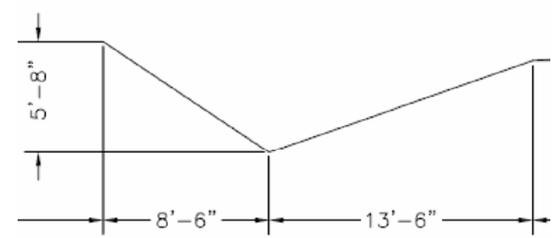

ANTI-VEHICULAR TRENCH PROFILE
SLOPE SHOWN IS MAXIMUM INCLINE NOT REQUIRING
STABLIZATION OR BERM

US Army Corps of Engineers®
AFGHANISTAN ENGINEER DISTRICT SOUTH

MARK	DESCRIPTION	DATE	APPR.

MARK	DESCRIPTION	DATE	APPR.

U.S. ARMY CORPS OF ENGINEERS
AFGHANISTAN ENGINEER DISTRICT SOUTH

DESIGNED BY: BRIAN JOHNSON PE
DWN BY: RDW
CKD BY: BRJ
SUBMITTED BY: BRIAN JOHNSON PE
PLOT SCALE: 5000:1
PLOT DATE: 14 JAN 2011
SIZE: 11x17
FILE NAME: XXXXXXXX.dgn
DATE: 14 JAN 2011
SOLICITATION NO.: W912P8-##-X-####
CONTRACT NO.: W912P8-##-X-####
FILE NUMBER: 1-##-####

ANTI-VEHICLE DITCH DETAIL

SHEET IDENTIFICATION
11

ENGINEERING AND CONSTRUCTION DIVISION
US ARMY ENGINEER DISTRICT, AFGHANISTAN
APO AE, 09356

06

FP04a - GUARD TOWER WITH CONCRETE WALK AND FENCE

DESIGN/BUILD REQUIREMENTS

1. ALL WINDOW FRAMES SHALL BE METAL IN ACCORDANCE WITH SECTION 01015
2. ALL WINDOW GLAZING SHALL BE BULLETPROOF AS NOTED HEREIN AND REQUIREMENTS OF SECTION 01015.
3. INTERIOR LIGHT FIXTURES SHALL BE PROVIDED WITH GASKETED RED LENSES.

SECTION/DETAIL CROSS REFERENCING CONVENTIONS

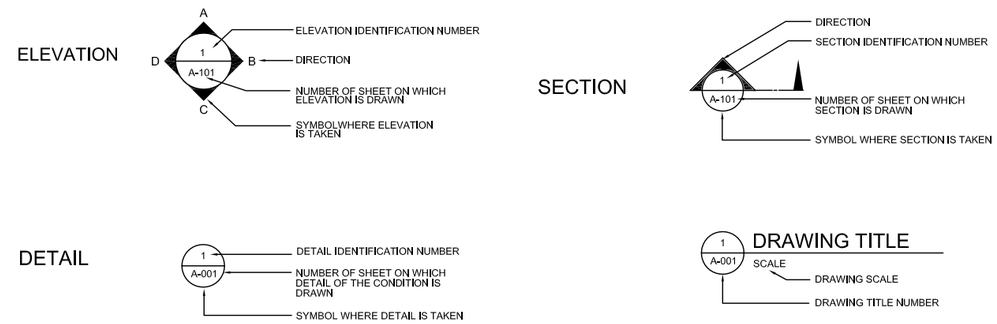

SCHEDULE OF DRAWINGS

SHEET NO	SHEET REFERENCE NO	DESCRIPTION	REV STATUS	SHEET NO	SHEET REFERENCE NO	DESCRIPTION	REV STATUS	SHEET NO	SHEET REFERENCE NO	DESCRIPTION	REV STATUS
		GENERAL									
1	G-001	TITLE SHEET & SCHEDULE OF DRAWINGS	01/31/2012								
		STRUCTURAL									
2	S-101	FOUNDATION PLAN & SECTION	01/31/2012								
3	S-102	SECTIONS & ELEVATIONS	01/31/2012								
4	S-103	STAIR DETAILS	01/31/2012								
		ARCHITECTURAL									
5	A-101	FOUNDATION, FLOOR, & ROOF PLANS	01/31/2012								
6	A-102	SECTIONS & ELEVATIONS	01/31/2012								
7	A-103	ROOF PLAN AND DETAILS (SHEET A-102 FROM CHAIN LINK)	01/31/2012								
8	A-104	DOOR, WINDOW & FINISH TYPES AND DETAILS	01/31/2012								
		ELECTRICAL									
9	E-101	RECEPTACLE, POWER GROUNDING & LIGHTING PLAN	01/31/2012								
10	E-102	LIGHT FIXTURE SCHEDULE AND DETAILS	01/31/2012								

US Army Corps of Engineers
AFGHANISTAN ENGINEER DISTRICT

MARK	DESCRIPTION	DATE	APPR.	MARK	DESCRIPTION	DATE	APPR.
1	ISSUED FOR CONSTRUCTION	01/31/2012					

U.S. ARMY CORPS OF ENGINEERS
AFGHANISTAN DISTRICT
APO AE 09356

DESIGNED BY: S.GERGES
DWN BY: CAD
CKD BY:
SUBMITTED BY: M. HOAGUE
DATE: 01/31/2012
SOLICITATION NO.:
CONTRACT NO.:
PLOT SCALE: 1:1
PLOT DATE:
FILE NUMBER:
SIZE: ANSI D
FILE NAME: FP04A_G001.dwg

SITE ADAPT DESIGN
FP04a - GUARD TOWER
WITH CONCRETE WALK & FENCE

TITLE SHEET AND SCHEDULE OF DRAWINGS

SHEET IDENTIFICATION
G-001
SHEET 1 OF 10

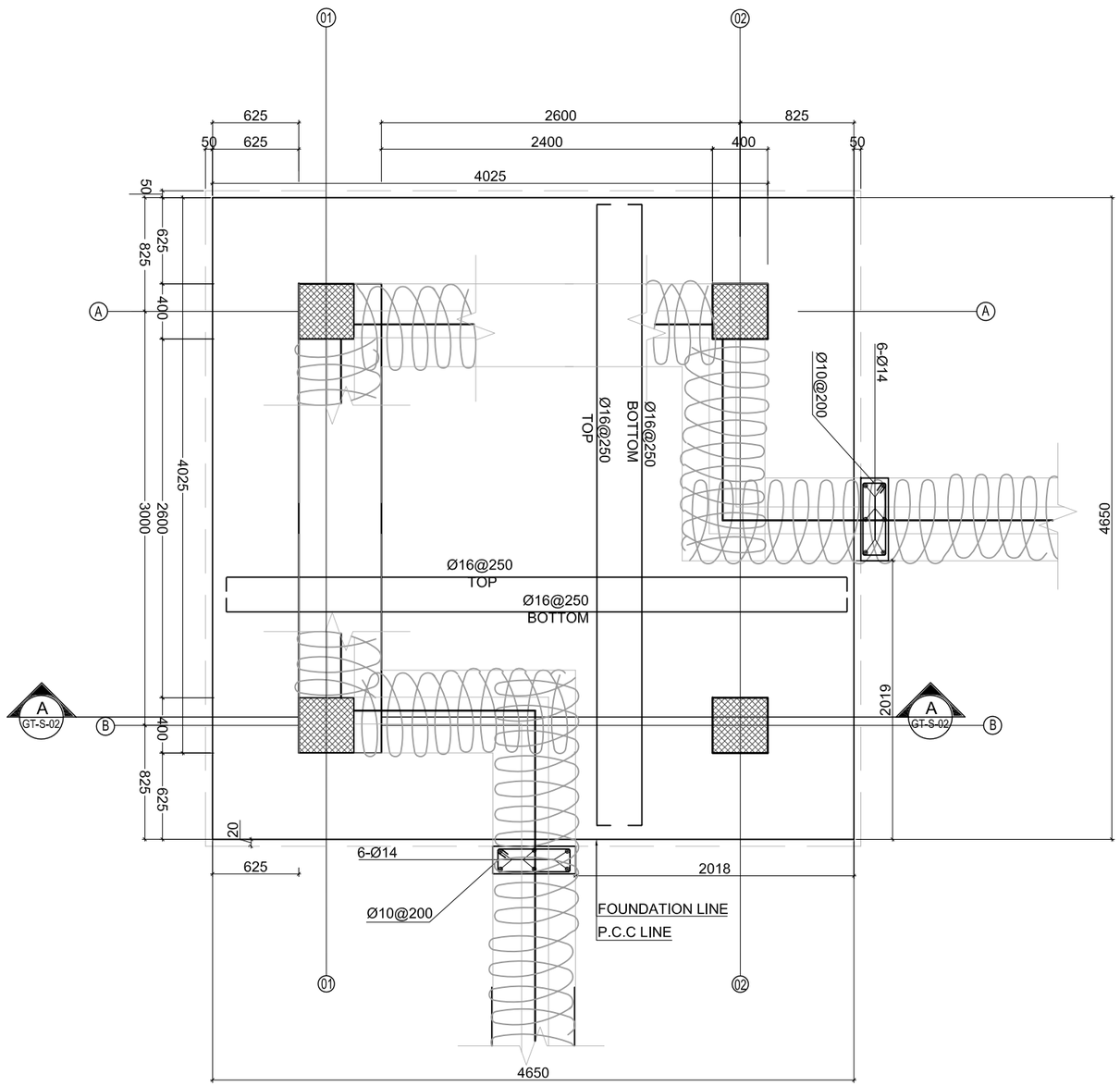

A S-101 FOUNDATION PLAN
SCALE 1:20

NOTES:

1- ALL DIMENSIONS ARE IN MM UNLESS OTHERWISE SPECIFIED.

2- THE FOUNDATION SHALL FOUNDED ON MINIMUM 95% COMPACTED SOIL .

3- THE COMPACTED SOIL SHALL MEET THE GEOTHECNICAL REQUIREMENTS.

4- THE STEEL GRADE SHALL BE Fy=60 KSI(4220 Kg/cm^2).

5- FOR CAST-IN-PLACE STRUCTURAL CONCRETE,MINIMUM 28 DAYS, CYLINDER Strength'c=4000PSI (280Kg/cm^2).

6- CONTROL JOINT FOR THE SLAB ON GRADE SHALL BE DONE EVERY MAXIMUM 4000 MM.

7- THE GEOTECHNICAL ANALYSIS FOR THIS PROJECT IS THE RESPONSIBILITY OF THE CONTRACTOR AWARDED THE WORK. AN ASSUMED ALLOWABLE SOIL BEARING CAPACITY OF 73.5 kPa (1500 psf) HAS BEEN ASSUMED IN THE STRUCTURAL ANALYSIS OF THE BUILDING HEREIN AND SHALL BE CONFIRMED AND VERIFIED AS PART OF THE GEOTECHNICAL INVESTIGATION. VALUES WHICH DO NOT MEET THE REQUIREMENTS INDICATED ON THE BASIS OF DESIGN SHEET SHALL BE IMMEDIATELY BROUGHT TO THE ATTENTION OF THE CONTRACTING OFFICER FOR CONSIDERATION AND DETERMINATION OF THE NEXT APPROPRIATE COURSE OF ACTION.

TABLE: COLUMN DOWELS SIZE

Ø A (MM)	B (MM)	L (A+B)	C (MM)
14 250	1650	1900	700
16 300	1750	2050	800
20 300	1950	2250	1000
22 350	2050	2400	1100

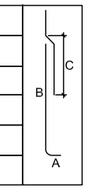

NOTE: DOWELS - SAME SIZE AND QUANTITY AS VERTICAL REINFORCING.

US Army Corps of Engineers
AFGHANISTAN ENGINEER DISTRICT

MARK	DESCRIPTION	DATE	APPR.
1	ISSUED FOR CONSTRUCTION	01/31/2012	

MARK	DESCRIPTION	DATE	APPR.

DESIGNED BY: S-ASCHAKS
DWN BY: CKD BY:
CKD BY:
SUBMITTED BY: M. HOAGUE
PLOT SCALE: 1:1
PLOT DATE:
DATE: 01/31/2012
SOLICITATION NO.:
CONTRACT NO.:
FILE NUMBER:
SIZE: ANSI D
FILE NAME: FP04A_S-101.dwg

U.S. ARMY CORPS OF ENGINEERS
AFGHANISTAN DISTRICT
APO AE 09356

SITE ADAPT DESIGN
FP04a - GUARD TOWER
WITH CONCRETE WALK & FENCE

FOUNDATION PLAN & SECTION

SHEET IDENTIFICATION
S-101
SHEET 2 OF 10

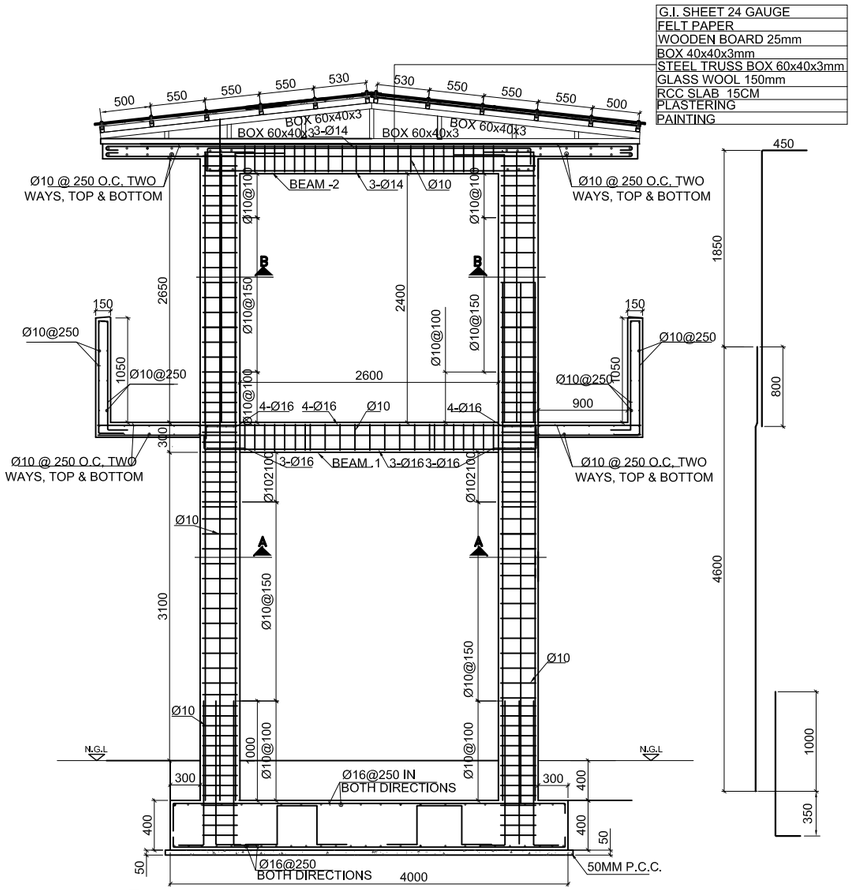

1 S-102 FRAME A-A
SCALE 1:30

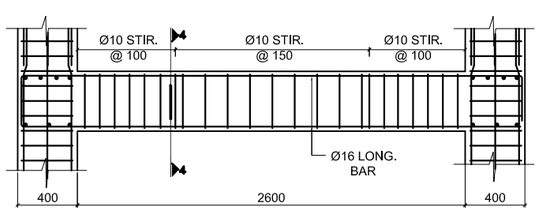

2 S-102 BEAM-1 TYPICAL FLOOR BEAM L-SECTION
SCALE 1:20

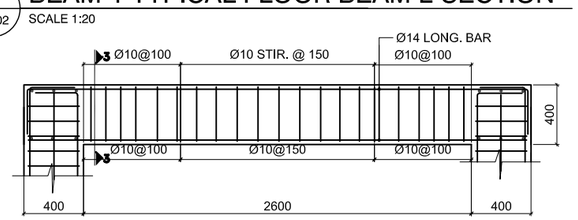

3 S-102 BEAM-2 TYPICAL ROOF BEAM L-SECTION
SCALE 1:20

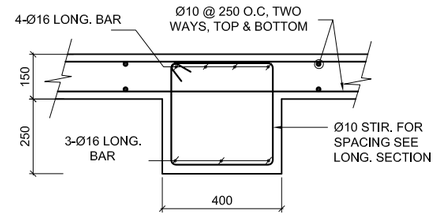

4 S-102 SECTION 4-4
SCALE 1:10

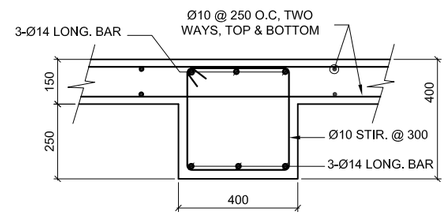

5 S-102 SECTION -3-3
SCALE 1:10

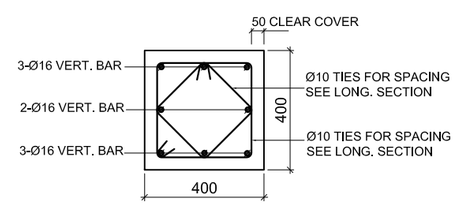

6 S-102 SECTION B-B
SCALE 1:10

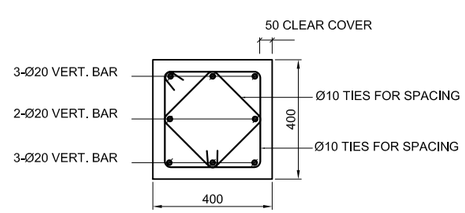

7 S-102 SECTION A-A
SCALE 1:10

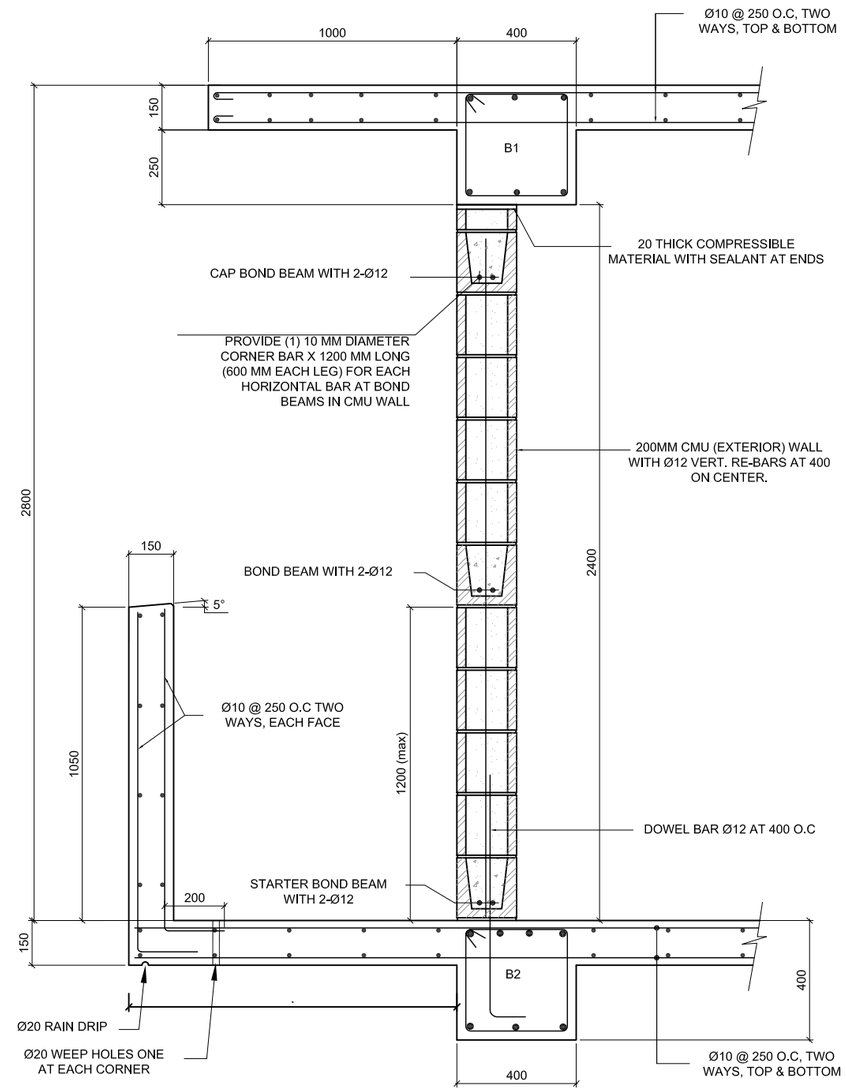

8 S-102 TYPICAL CMU WALL & PARAPET WALL SECTION
SCALE 1:10

NOTES:

1- ALL DIMENSIONS ARE IN MM UNLESS OTHERWISE SPECIFIED.
2-THE FOUNDATION SHALL FOUNDED ON MINIMUM 95% COMPACTED SOIL 3-THE COMPACTED SOIL SHALL MEET THE GEOMETRICAL REQUIREMENTS.
4-THE STEEL GRADE SHALL BE Fy=60 KSI(4220Kg/cm^2).
5-FOR CAST-IN-PLACE STRUCTURAL CONCRETE,MINIMUM 28 DAYS, CYLINDER STRENGTH f'c=4000PSI (280Kg/cm^2).
6-ALL CELLS OF CMU WALL ARE FULLY GROUTED WITH Ø12MM RE-BARS AT 40 CM ON CENTER.

US Army Corps of Engineers
AFGHANISTAN ENGINEER DISTRICT

MARK	DESCRIPTION	DATE	APPR.
1	ISSUED FOR CONSTRUCTION	01/31/2012	

MARK	DESCRIPTION	DATE	APPR.

DESIGNED BY: S.GROOMS
DWN BY: CAD
CKD BY:
SUBMITTED BY: M. HOAGUE
DATE: 01/31/2012
SOLICITATION NO.:
CONTRACT NO.:
FILE NUMBER:
PLOT SCALE:
PLOT DATE:
SIZE: ANSI D
FILE NAME: FP04A_S-102.dwg

U.S. ARMY CORPS OF ENGINEERS
AFGHANISTAN DISTRICT
APO AE 09356

SITE ADAPT DESIGN
FP04a - GUARD TOWER
WITH CONCRETE WALK & FENCE

SECTIONS & ELEVATIONS

SHEET IDENTIFICATION
S-102
SHEET 3 OF 10

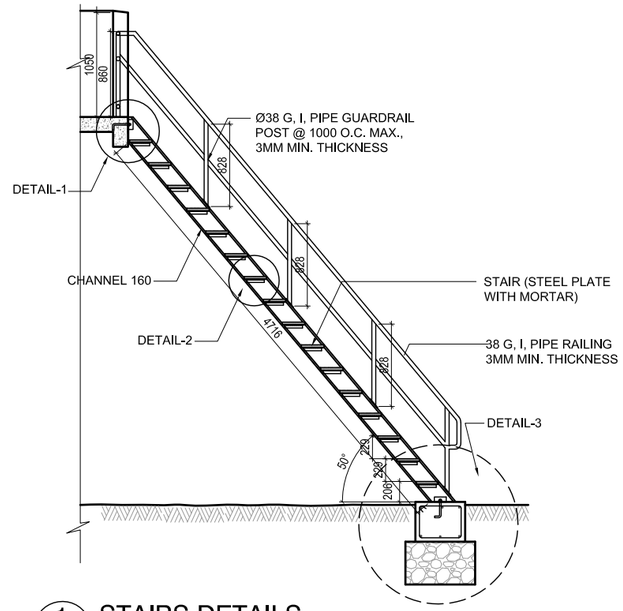

1 STAIRS DETAILS
S-103 SCALE 1:30

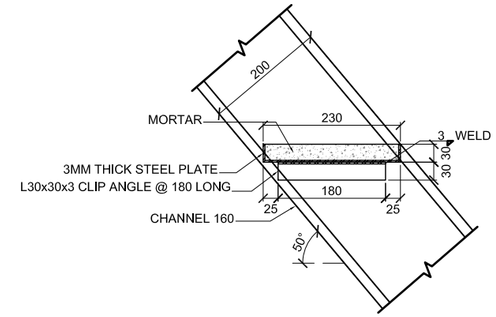

4 DETAILS - 2
S-103 SCALE 1:5

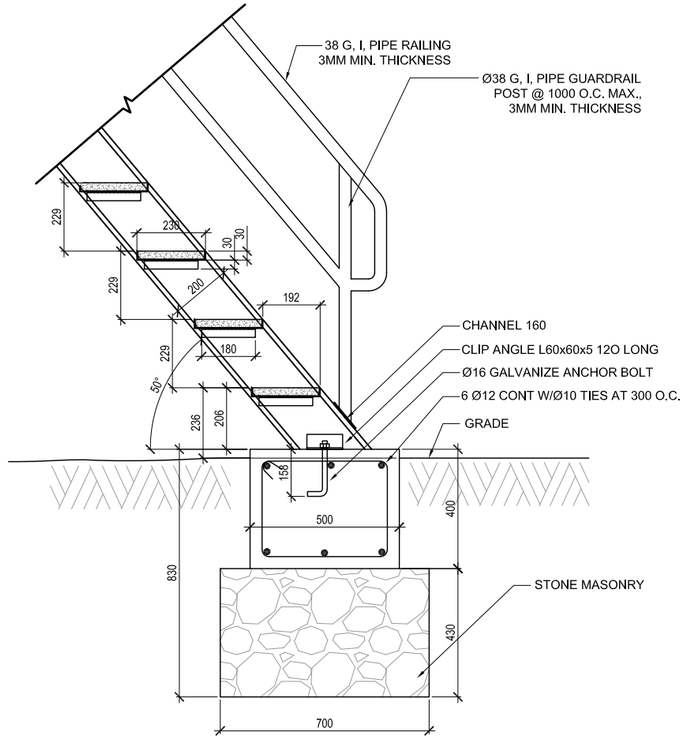

3 DETAIL - 3
S-103 SCALE 1:5

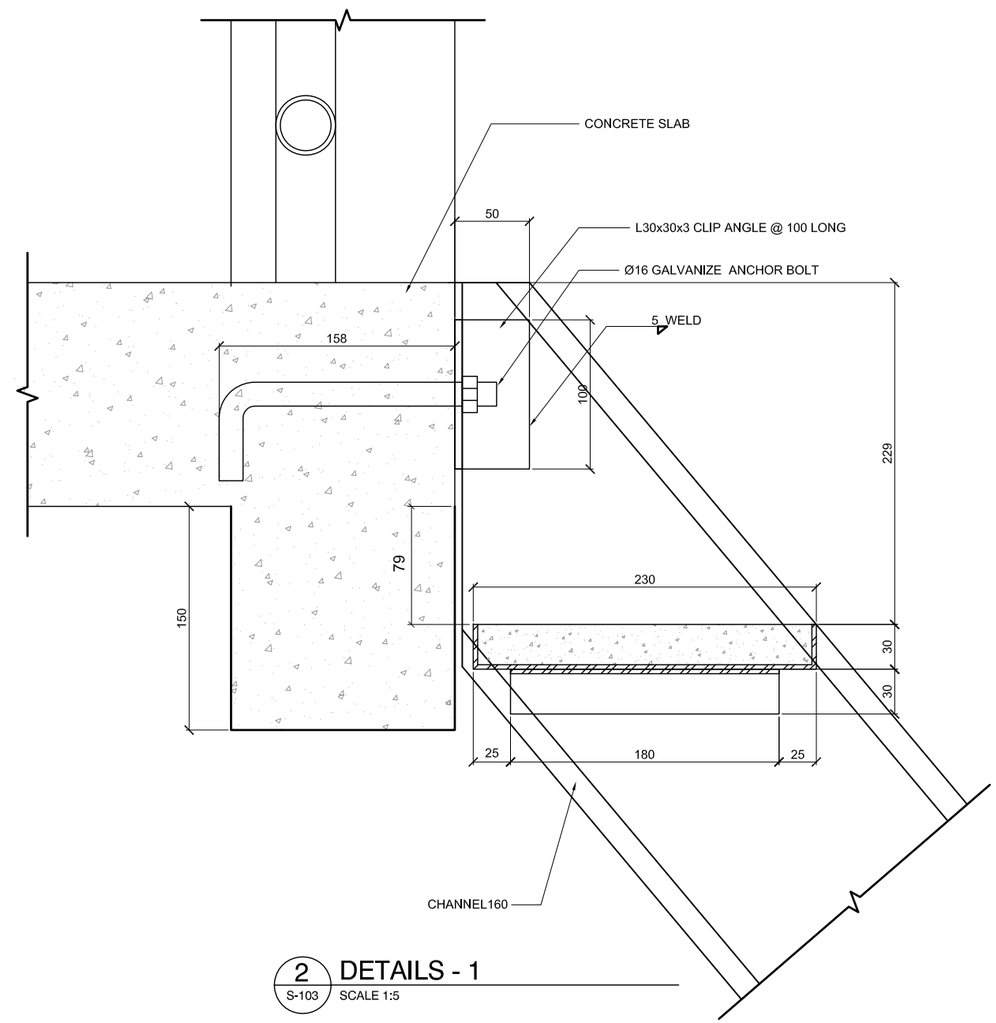

2 DETAILS - 1
S-103 SCALE 1:5

US Army Corps of Engineers
AFGHANISTAN ENGINEER DISTRICT

MARK	DESCRIPTION	DATE	APPR.	MARK	DESCRIPTION	DATE	APPR.
1	ISSUED FOR CONSTRUCTION	01/31/2012					

DESIGNED BY: S.GERGES
DWN BY: CAD
CKD BY:
SUBMITTED BY: M. HOAGUE
DATE: 01/31/2012
SOLICITATION NO.:
CONTRACT NO.:
PLOT SCALE: 1:1
PLOT DATE:
FILE NUMBER:
SIZE: ANSI D
FILE NAME: FP04a_S-103.dwg

U.S. ARMY CORPS OF ENGINEERS
AFGHANISTAN DISTRICT
APO AE 09356

SITE ADAPT DESIGN
FP04a - GUARD TOWER
WITH CONCRETE WALK & FENCE

STAIR DETAILS

SHEET IDENTIFICATION
S-103
SHEET 4 OF 10

GENERAL NOTES:

A. ALL DIMENSIONS ARE IN MM UNLESS OTHERWISE SPECIFIED.
B. ALL LEVELS ARE IN METER (M) UNLESS OTHERWISE SPECIFIED
C. ALL EXTERIOR WALLS ARE 200MM C.M.U.
D. EXTERIOR WALLS TO BE COLORED STUCCO.
E. ALL ROOFS ARE 24 GAUGE GALVANIZED STEEL CORRUGATED SHEET.
F. ALL WINDOWS ARE 16MM.LAMINATED GLASS GLAZING.
G. FOR WALL AND ROOF INSULATION SEE SHEET CO-A-02.

KEY NOTES:

1. TWO-PIECE WALL THIMBLE AND TRIM PLATE FOR WOOD BURNING STOVE CHIMNEY PIPE.

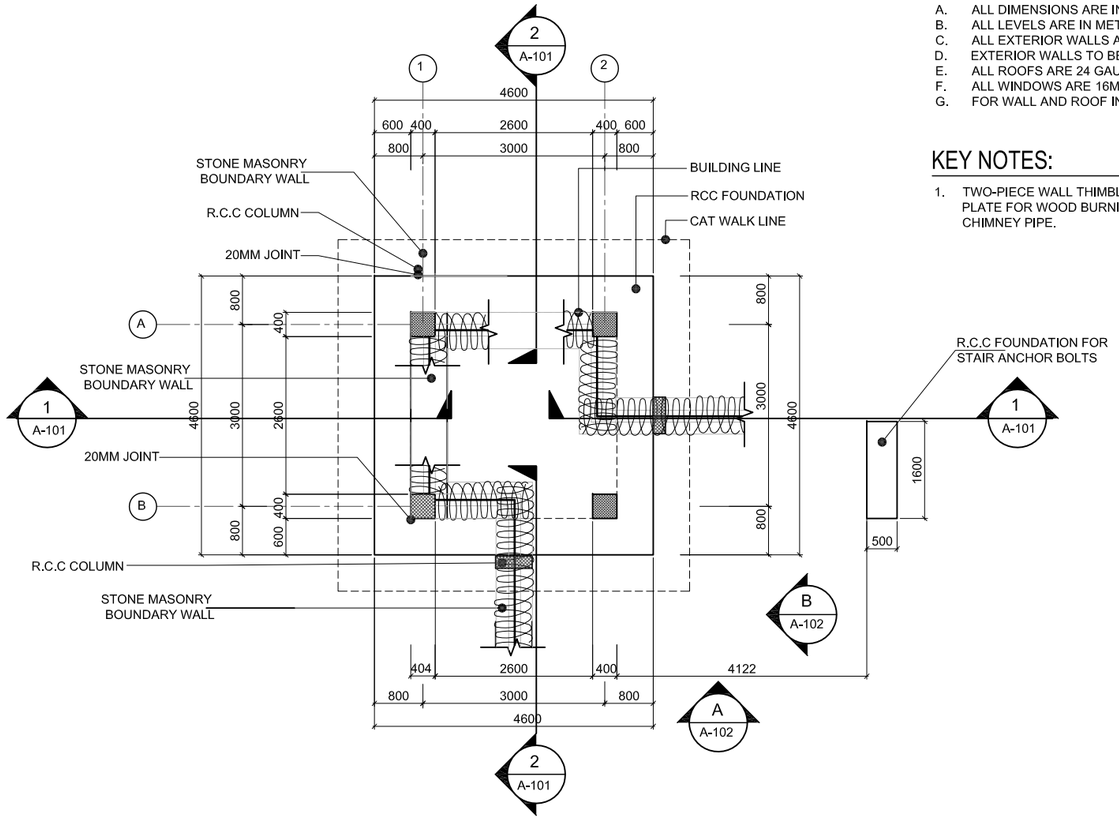

1 A-101 TYPICAL FOUNDATION PLAN WITH RELATION TO WALL
SCALE 1:50

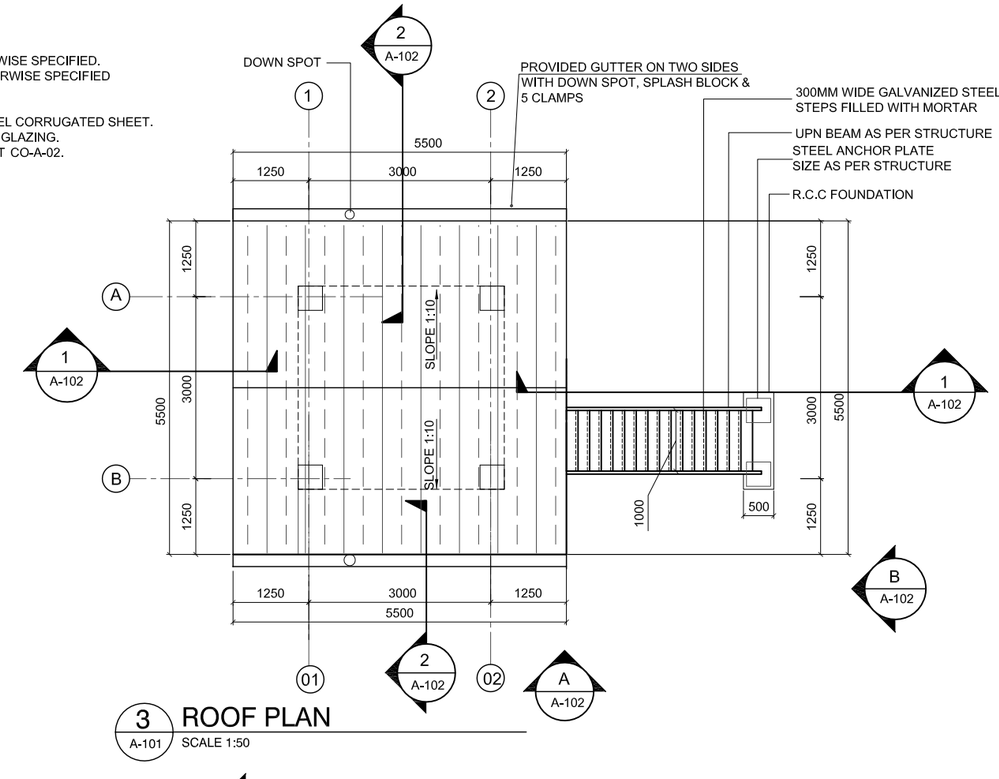

3 A-101 ROOF PLAN
SCALE 1:50

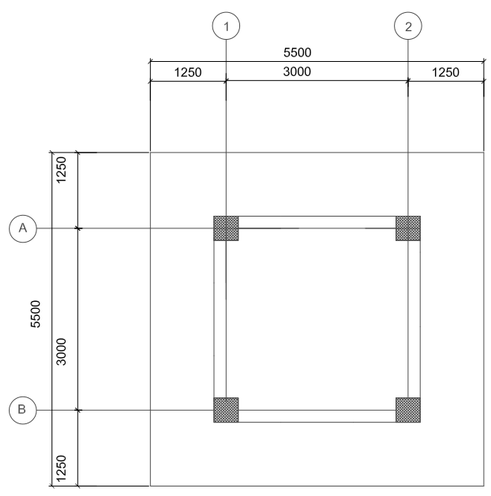

2 A-101 REFLECTED CEILING PLAN
SCALE 1:50

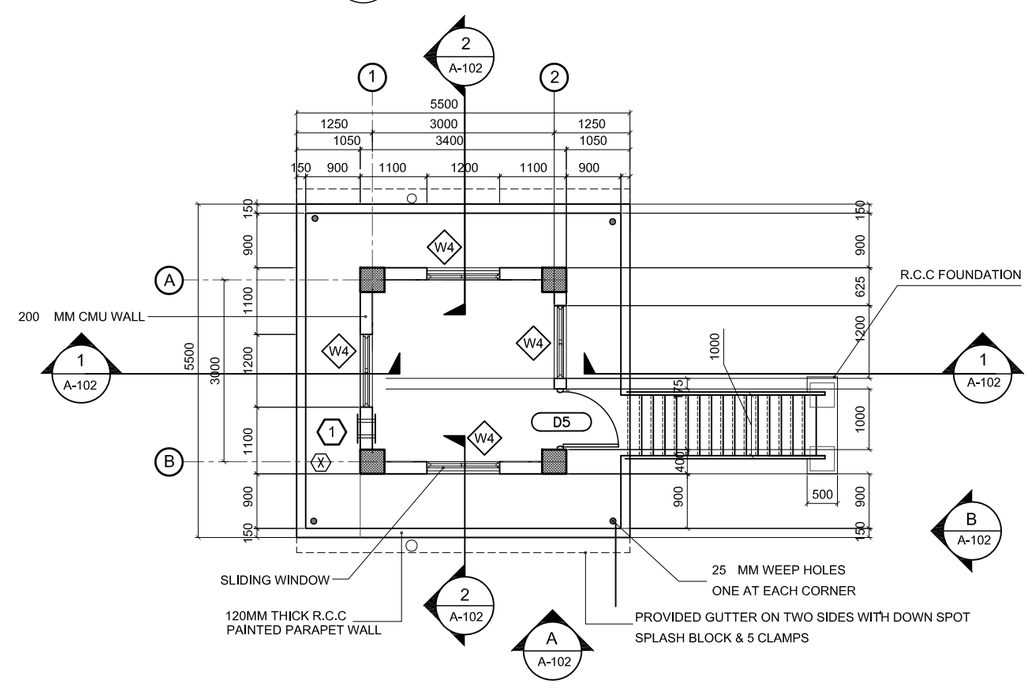

4 A-101 FIRST FLOOR PLAN
SCALE 1:50

US Army Corps of Engineers
AFGHANISTAN ENGINEER DISTRICT

MARK	DESCRIPTION	DATE	APPR.
1	ISSUED FOR CONSTRUCTION	01/31/2012	

DESIGNED BY: S. KOSKAS
DWN BY: -
CKD BY: -
SUBMITTED BY: M. HOAGUE
DATE: 01/31/2012
SOLICITATION NO.:
CONTRACT NO.:
PLOT SCALE: 1:1
PLOT DATE: -
FILE NUMBER:
SIZE: ANSI D
FILE NAME: FP04A_A-101.dwg

U.S. ARMY CORPS OF ENGINEERS
AFGHANISTAN DISTRICT
APO AE 09356

SITE ADAPT DESIGN
FP04a - GUARD TOWER
WITH CONCRETE WALK & FENCE

FOUNDATION, FLOOR & ROOF PLANS

SHEET IDENTIFICATION
A-101
SHEET 5 OF 10

C:\users\n2aenrad\documents\pwwork1\d0435247\FP04a_A-101. dwg, FP04a_A-101, 2/23/2012 10:52:50 AM, Adobe PDF.pc3

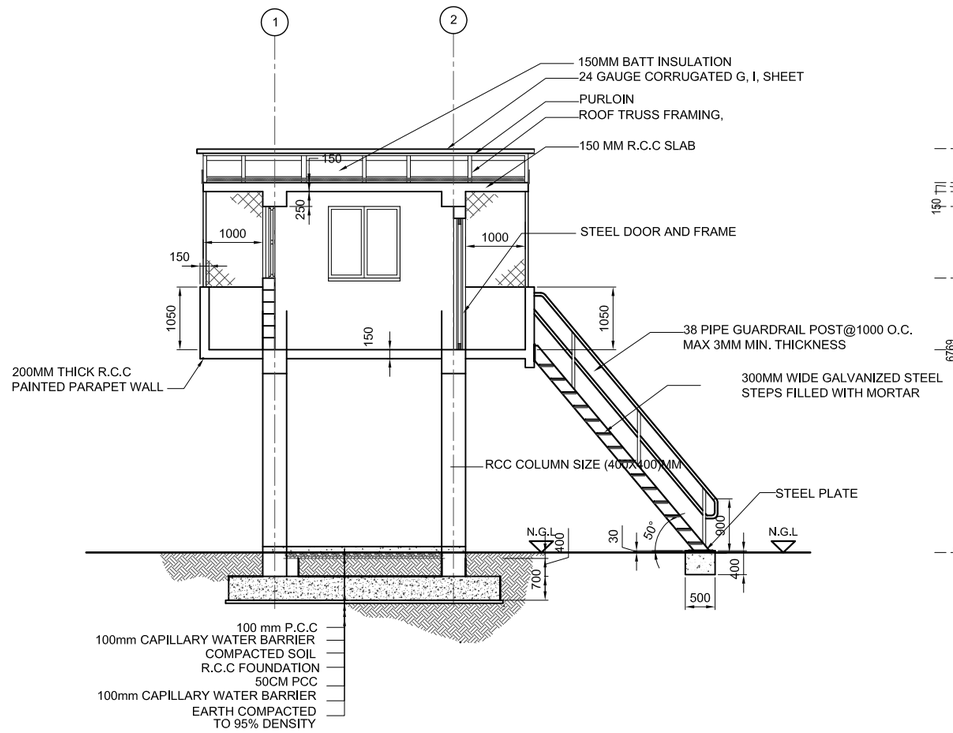

1 / A-102 SECTION 1-1
SCALE 1:50

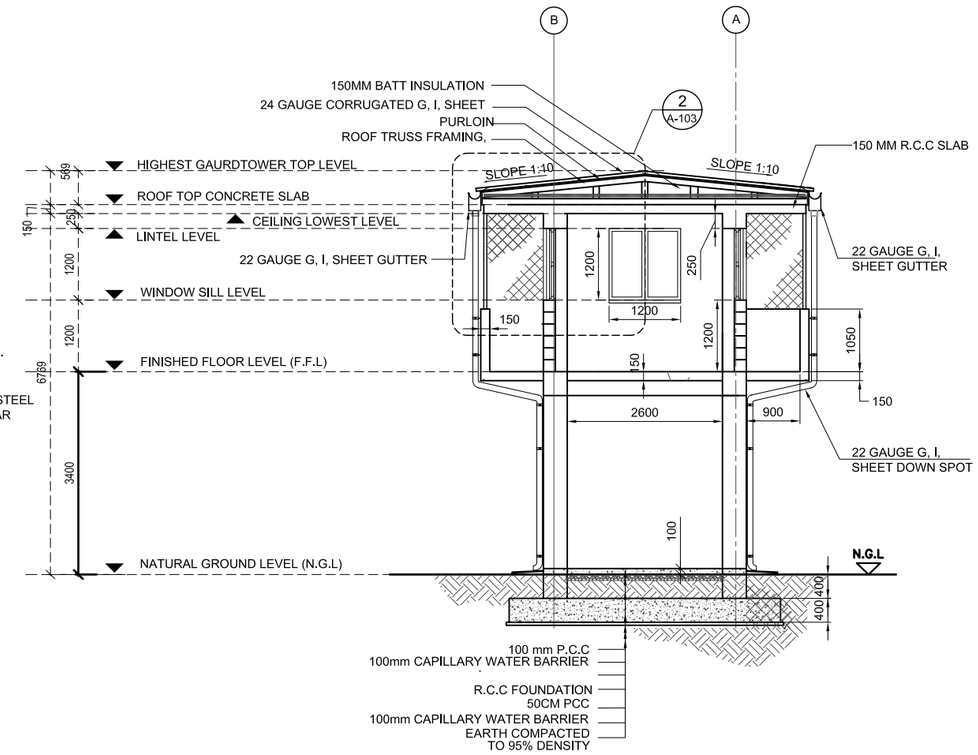

3 / A-102 SECTION 2-2
SCALE 1:50

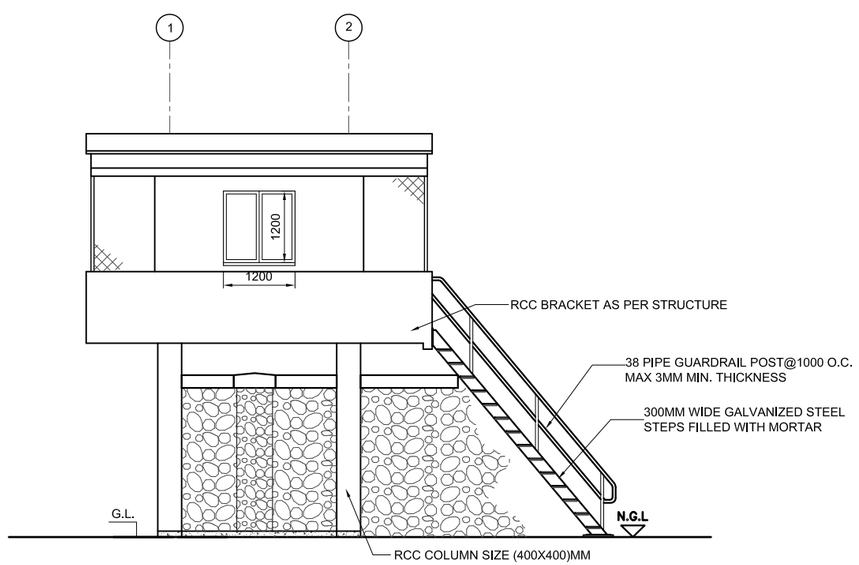

3 / A-102 ELEVATION-A
SCALE 1:50

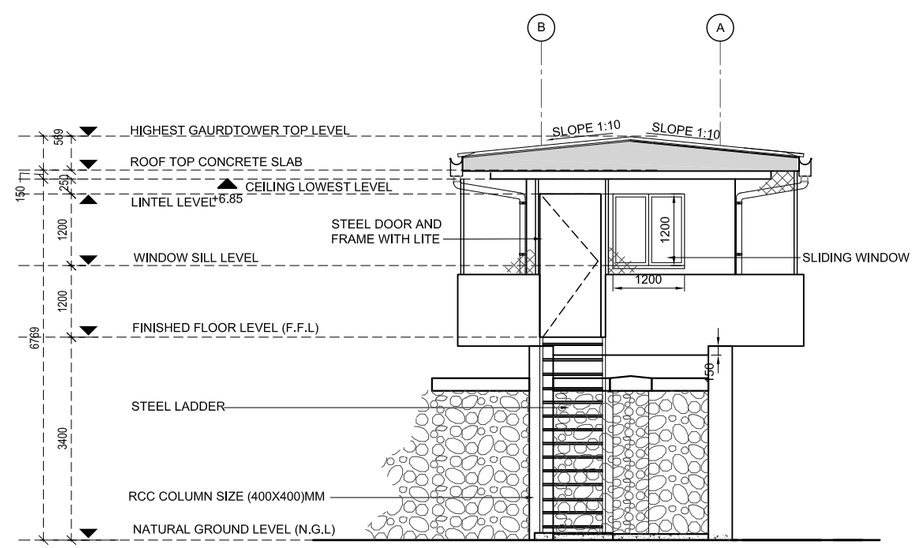

4 / A-102 ELEVATION-B
SCALE 1:50

US Army Corps of Engineers
AFGHANISTAN ENGINEER DISTRICT

MARK	DESCRIPTION	DATE	APPR.	MARK	DESCRIPTION	DATE	APPR.
1	ISSUED FOR CONSTRUCTION	01/31/2012					

DESIGNED BY: S.SOBOOS
DWN BY: CAD
CKD BY:
SUBMITTED BY: M. HOAGUE
DATE: 01/31/2012
SOLICITATION NO.:
CONTRACT NO.:
PLOT SCALE: 1:1
PLOT DATE:
FILE NUMBER:
SIZE: ANSI D
FILE NAME: FP04A_A-102.dwg

U.S. ARMY CORPS OF ENGINEERS
AFGHANISTAN DISTRICT
APO AE 09356

SITE ADAPT DESIGN
FP04a - GUARD TOWER
WITH CONCRETE WALK & FENCE

SECTIONS & ELEVATIONS

SHEET IDENTIFICATION
A-102
SHEET 6 OF 10

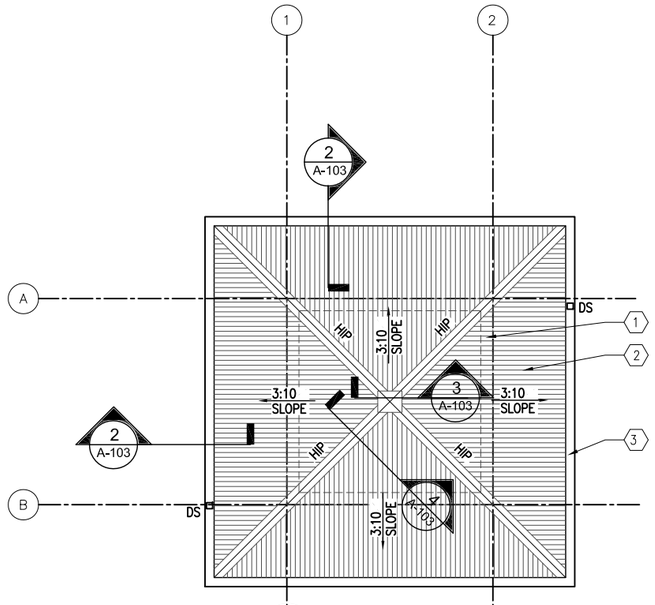

1 A-103 ROOF PLAN
SCALE 1:10

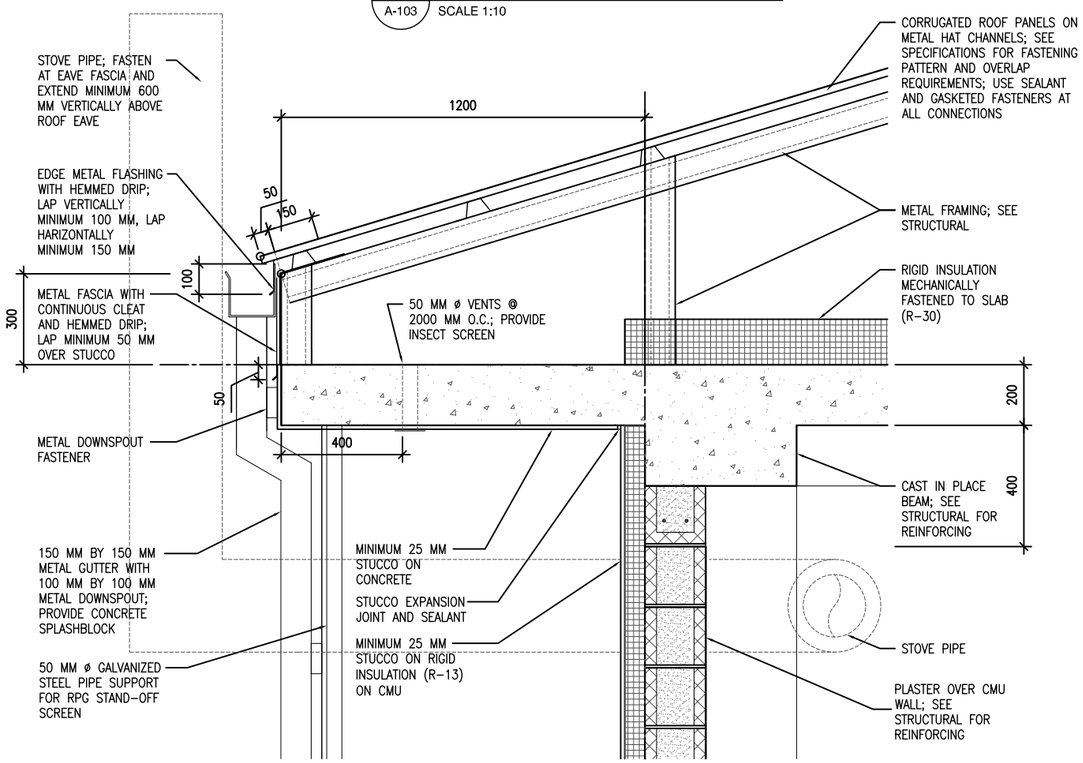

2 A-103 EAVE DETAIL
SCALE 1:10

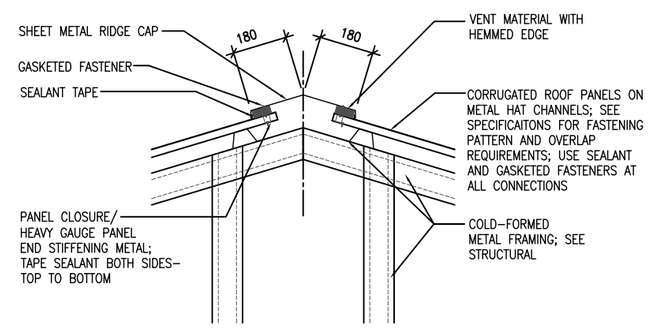

3 A-103 RIDGE VENT DETAIL
SCALE 1:10

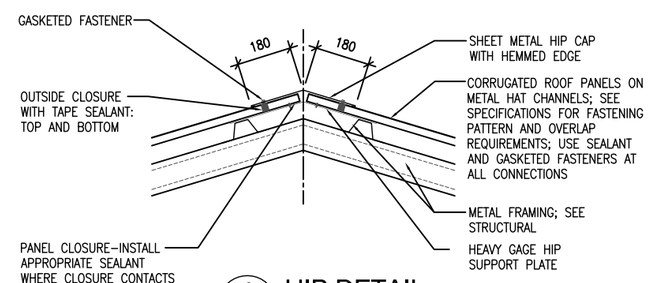

4 A-103 HIP DETAIL
SCALE 1:10

KEY NOTES:

1. LINE OF BUILDING WALL, BELOW
2. CORRUGATED METAL ROOF PANELS ON COLD-FORMED METAL FRAMING
3. METAL GUTTER

LEGEND:

(X) KEY NOTE

LINEAR DIMENSIONS SHOWN ARE IN MILLIMETERS (MM), UNLESS OTHERWISE NOTED

500 200 100 0 500 1000

SCALE: 1 : 10

US Army Corps of Engineers
AFGHANISTAN ENGINEER DISTRICT

MARK	DESCRIPTION	DATE	APPR.	MARK	DESCRIPTION	DATE	APPR.
1	ISSUED FOR CONSTRUCTION	01/31/2012					

DESIGNED BY: S.Sadowski
DWN BY: CKD BY:
SUBMITTED BY: M. HOAGUE
PLOT SCALE: 1:1
PLOT DATE:
DATE: 01/31/2012
SOLICITATION NO.:
CONTRACT NO.:
FILE NUMBER:
FILE NAME: FP04a_A103.dwg
SIZE: ANSI D

U.S. ARMY CORPS OF ENGINEERS
AFGHANISTAN DISTRICT
APO AE 09356

SITE ADAPT DESIGN
FP04a - GUARD TOWER
WITH CONCRETE WALK & FENCE

ROOF PLAN AND DETAILS

SHEET IDENTIFICATION
A-103
SHEET 7 OF 10

C:\users\n2aenrad\documents\pwworkl1\d0435247\FP04a_A-103 .dwg, FP04a_A-103, 2/23/2012 10:56:36 AM, Adobe PDF.pc3

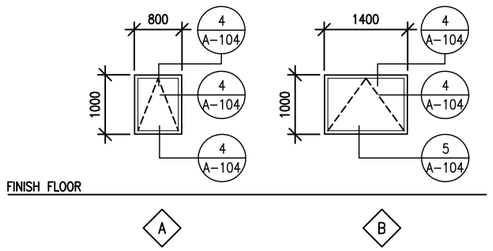

1 A-104 WINDOW TYPES
SCALE: 1:50

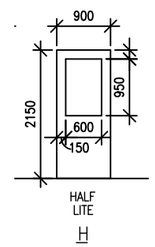

2 A-104 DOOR TYPE
SCALE: 1:50

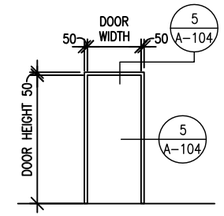

3 A-104 FRAME TYPE
SCALE: 1:50

WINDOW TYPES NOTES:

1. ALL EXTERIOR WINDOWS SHALL BE ~~WOOD~~ WITH INSECT SCREENS. WINDOWS SHALL BE COMMERCIAL GRADE.
2. GLAZING SHALL BE ACRYLIC SHEET.

NOTES:

1. PROVIDE WINDOW UNITES MEETING UL 752,LEVEL 5, BUT NOT LESS THAN 16MM LAMINATED SINGLE GLAZED. THIS STANDARD SHALL APPLY TO ALL WINDOW UNITES WITHIN GUARD SHACK, GUARD HOUSE , GUARD TOWER
2. THE WINDOWS SHOULD BE SLIDING .

ALL WINDOW FRAMES SHALL BE METAL
IN ACCORDANCE WITH SECTION 01015

DOOR TYPES NOTES:

1. EXTERIOR METAL DOORS AND FRAME COLORS SHALL MATCH ADJACENT WALL COLORS AS SELECTED BY THE CONTRACTING OFFICER.
2. HARDWARE SHALL BE HEAVY DUTY, COMMERCIAL GRADE, STAINLESS STEEL WITH A MATTE FINISH.
3. FRAMES, EXCEPT FIRE-RATED FRAMES, SHALL BE MOUNTED AND ADJUSTED IN ACCORDANCE WITH MANUFACTURER'S INSTRUCTIONS. FRAMES SHALL BE FASTENED WITH MINIMUM OF THREE FASTENING POINTS PER SIDE AT REGULAR INTERVALS.
4. DIMENSIONS SHOWN ON DOOR SCHEDULE ARE BASED UPON MODULAR MASONRY (OR ROUGH OPENING), HEIGHT OF 2200mm FOR STANDARD PERSONNEL DOORS. CONTRACTOR SHALL COORDINATE WITH DOOR SUPPLIER TO ENSURE THAT DIMENSIONS OF DOORS AND FRAMES PROVIDED ARE COMPATIBLE WITH DOOR OPENING DIMENSIONS.

HARDWARE TYPES:

HW-6
1-1/2 PR HINGES
1 EA LOCKSET,F04 ENTRY LOCK W/LEVERS, GRADE 1
1 EA DOOR CLOSER, C02061,LOW RESISTANCE
1 EA THRESHOLD J32130

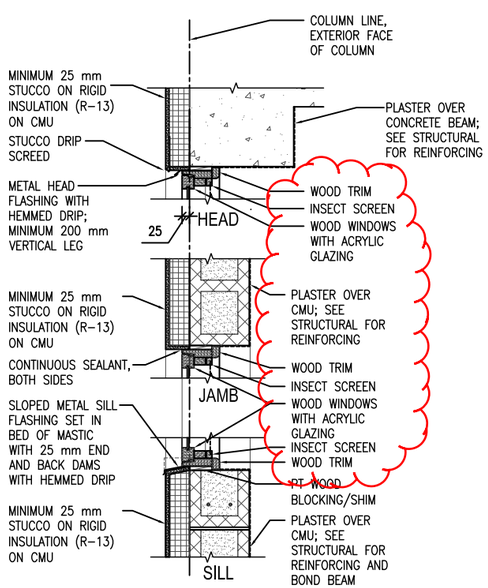

4 A-104 WINDOW DETAILS
SCALE: 1:10

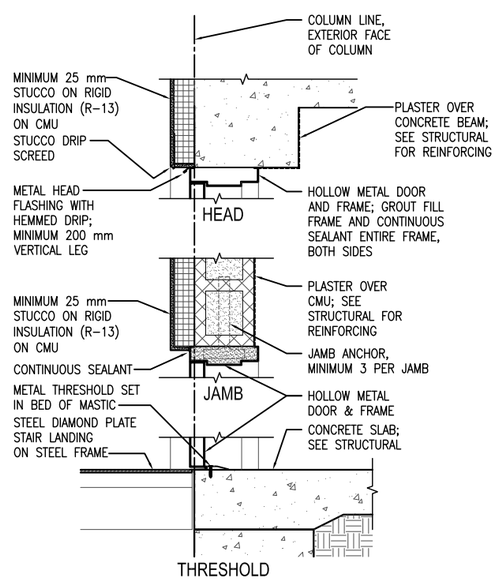

5 A-104 EXTERIOR DOOR DETAILS
SCALE: 1:10

500 200 100 0 500 1000
SCALE: 1 : 10

2500 1000 500 0 2500 5000
SCALE: 1 : 50

US Army Corps of Engineers
AFGHANISTAN ENGINEER DISTRICT

MARK	DESCRIPTION	DATE	APPR.	MARK	DESCRIPTION	DATE	APPR.
1	ISSUED FOR CONSTRUCTION	01/31/2012					

U.S. ARMY CORPS OF ENGINEERS
AFGHANISTAN DISTRICT
APO AE 09356

DESIGNED BY: S.CROOKS
DATE: 01/31/2012
DWN BY: CAD
CKD BY:
SOLICITATION NO.:
SUBMITTED BY: M. HOAGUE
CONTRACT NO.:
PLOT SCALE:
PLOT DATE:
FILE NUMBER:
SIZE: ANSI D
FILE NAME: FP04A_A-104.dwg

SITE ADAPT DESIGN
FP04a - GUARD TOWER
WITH CONCRETE WALK & FENCE

DOOR, WINDOW & FINISH TYPES AND DETAILS

SHEET IDENTIFICATION
A-104
SHEET 8 OF 10

PANEL NAME: LP#1

SUPPLY FROM: POWER PLANT (MDP) | SURFACE | MOUNTED | 12,000 | ASYM. A.I.C. MIN.

AMP. MAIN LUGS (OR): 32 | AMP. MAIN BREAKER: 32 | AMP. TRIP

CIRCUIT BREAKER ,WIRE,METAL CONDUIT: 380/220 | VOLTS: 3 | PHASE: 4 | WIRE: 50 | HZ: 32 | AMP. BUS | CIRCUIT BREAKER ,WIRE,METAL CONDUIT

CKT. NO.	TRIP AMPS	NO. POLES	WIRE MM²	GND MM²	CONDUIT MM	LOAD SERVED	LOAD-K.V.A. A0	LOAD-K.V.A. B0	LOAD-K.V.A. C0	LOAD-K.V.A. A0	LOAD-K.V.A. B0	LOAD-K.V.A. C0	LOAD SERVED	CONDUIT MM	GND MM²	WIRE MM²	NO. POLES	TRIP AMPS	CKT. NO.
1	20	1	4	4	20	SEARCH LIGHT	1.25						SPARE	20	4	4	1	20	2
3	20	1	4	4	20	SPARE							SPARE	20	4	4	1	20	4
5	20	1	4	4	20	SPARE							SPARE				1	20	6
7	20	1				SPARE													
							1.25			0			PER PHASE (KVA):	A0 1.25	B0 0	C0 0			

TOTAL CONN. LOAD: 1.25 KVA. | 100 % DEMAND = ESTIMATED DEMAND LOAD | 1.25 KVA.

* MAIN BREAKER SHALL BE EARTH GROUND TYPE

FIXTURE MARK 'A'

SEALED BEAM SPOTLIGHT MOUNTED TO GUARD TOWER ROOF WITH 1000W HALOGEN NARROW SPOT PAR 56 LAMP. FIXTURE SHALL BE PROVIDED WITH TWIST LEVER CONTROL, MIN. 254MM DIAMETER LIGHT HEAD WORKING RANGE OF ½ MILE, RATED FOR OUTDOOR ROUGH SERVICE WITH ANTI-SHOCK LAMP HOLDER

LIGHTING FIXTURE SCHEDULE

FIXTURE MARK	STYLE NUMBER AND TYPE	NUMBER AND TYPE OF LAMPS	VOLTAGE	MOUNTING	NOTES
A	SEALED BEAM SPOTLIGHT MOUNTED TO GUARD TOWER ROOF WITH 1000W HALOGEN NARROW SPOT LAMP	(1) PAR 56 1000W HALOGEN NARROW SPOT LAMP	220V - 1Ø 50HZ	MOUNTED TO GUARD TOWER ROOF	SEE FIXTURE/TOWER DETAIL FOR SPOTLIGHT MOUNTING.

INTERIOR LIGHTS SHALL BE PROVIDED WITH RED GASKETED LENSE

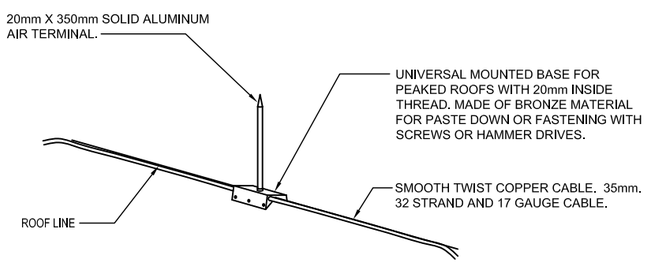

1 E-102 LIGHTNING PROTECTION AIR TERMINAL DETAIL
SCALE: N.T.S

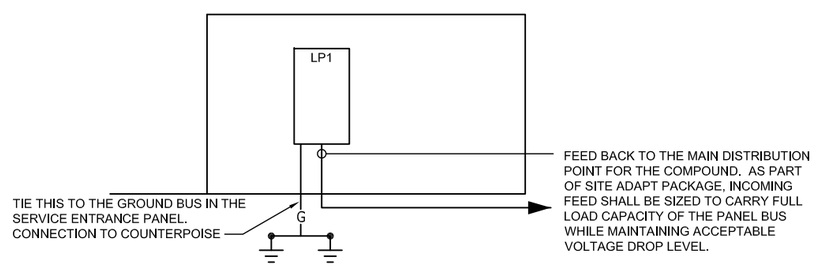

2 E-102 N.1 RISER DIAGRAM
SCALE: N.T.S

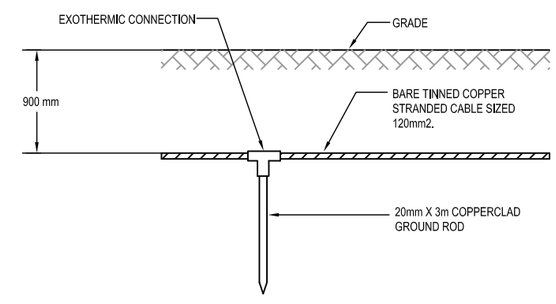

3 E-102 GROUND SYSTEM DETAIL - ELEVATION
SCALE: N.T.S

US Army Corps of Engineers
AFGHANISTAN ENGINEER DISTRICT

MARK	DESCRIPTION	DATE	APPR.
1	ISSUED FOR CONSTRUCTION	01/31/2012	

DESIGNED BY: S.CROOKS | DATE: 01/31/2012
DWN BY: CAD | CKD BY: | SOLICITATION NO.:
SUBMITTED BY: M. HOAGUE | CONTRACT NO.:
PLOT SCALE: N.T.S | PLOT DATE: | FILE NUMBER:
SIZE: ANSI D | FILE NAME: FP04A-E-102.dwg

U.S. ARMY CORPS OF ENGINEERS
AFGHANISTAN DISTRICT
APO AE 09356

SITE ADAPT DESIGN
FP04a - GUARD TOWER
WITH CONCRETE WALK & FENCE

LIGHT FIXTURE SCHEDULE AND DETAILS

SHEET IDENTIFICATION
E-102
SHEET 10 OF 10

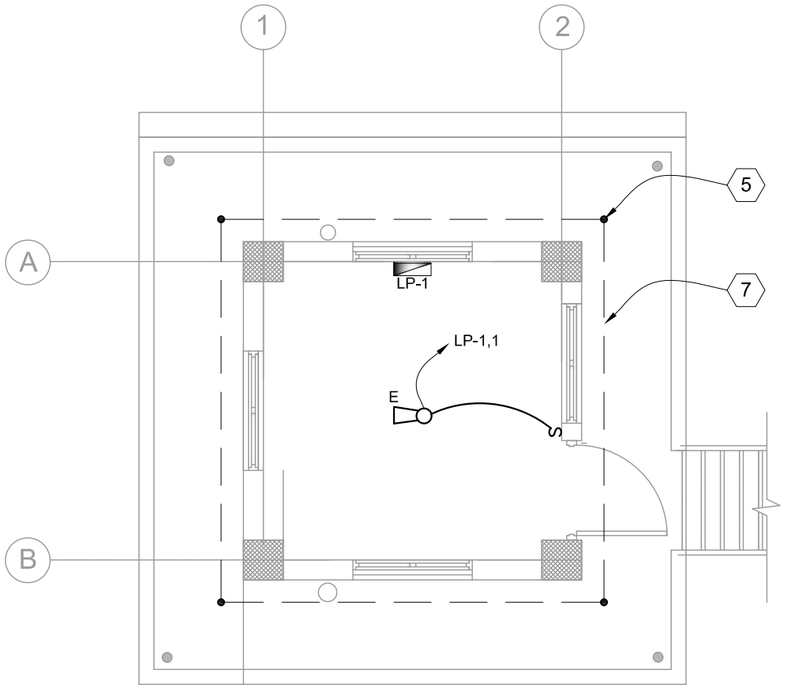

1 E-101 POWER & GROUNDING PLAN
SCALE 1:75

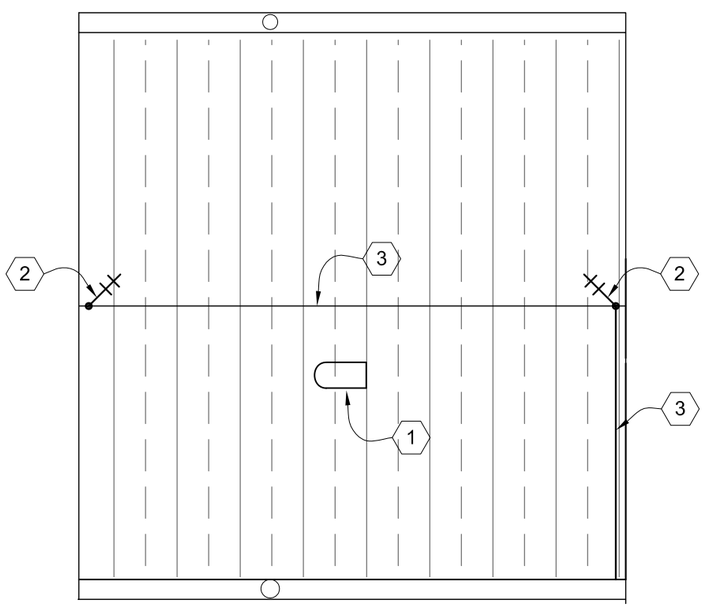

2 E-101 POWER & GROUNDING PLAN
SCALE 1:75

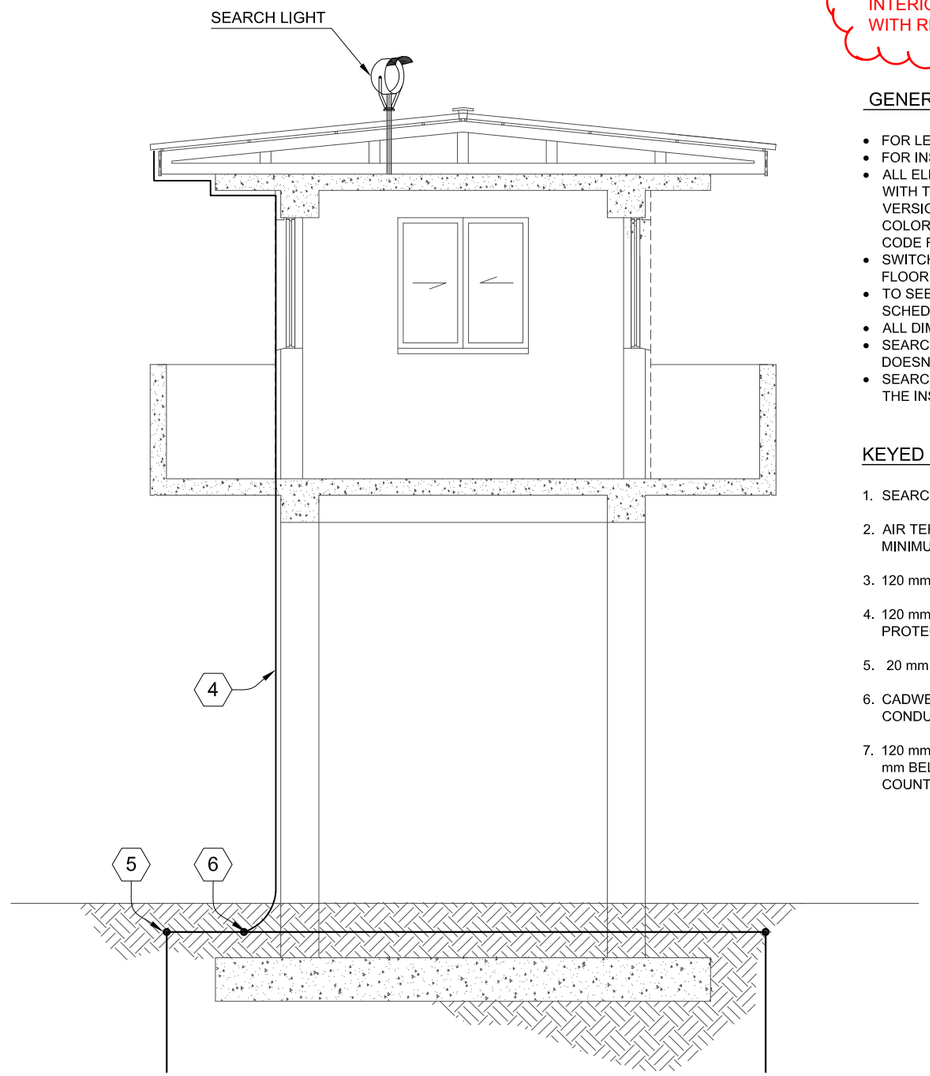

3 E-101 SEARCH LIGHT PLAN
SCALE 1:75

INTERIOR LIGHTS SHALL BE PROVIDED WITH RED GASKETED LENSE

GENERAL NOTES:

- FOR LEGEND AND ABBREVIATION SEE DWG CO-E-01.
- FOR INSTALLATION DETAIL SEE DWG CO-E-02.
- ALL ELECTRICAL INSTALLATION SHALL BE ACCORDANCE WITH THE 2011 VERSION OF NATIONAL ELECTRICAL CODE ,IBC, IEEE COLOR BOOK AND OTHER CODE REGULATION CONCERN.
- SWITCHES SHALL BE MOUNTED 1300MM FROM FINISH FLOOR LINE (FFL).
- TO SEE SIZE OF WIRE AND CONDUIT REFER TO PANEL SCHEDULE AND ON SHEET E2.
- ALL DIMENSIONS ARE IN (mm).
- SEARCH LIGHT PENETRATION SHALL BE SEALED SO IT DOESN'T LEAK.
- SEARCH LIGHT SHALL BE MANUALLY OPERATED FROM THE INSIDE OF THE GUARD TOWER.

KEYED NOTES: (X)

1. SEARCH LIGHT
2. AIR TERMINAL . THE AIR TERMINALS SHALL BE 0.5 METERS MINIMUM HIGHER THAN THE TOP OF THE SEARCH LIGHT.
3. 120 mm 2 BARE COPPER LIGHTNING PROTECTION CABLE.
4. 120 mm 2 BARE COPPER DOWN CONDUCTOR FOR LIGHTNING PROTECTION SYSTEM.
5. 20 mm x 3000 mm GROUNDROD.
6. CADWELD CONNECTION OF LIGHTNING PROTECTION DOWN CONDUCTOR TO COUNTERPOISE.
7. 120 mm 2 BARE COPPER COUNTERPOISE AROUND BUILDING 700 mm BELOW GRADE. CONNECT BUILDING STRUCTURES TO COUNTERPOISE.

LINEAR DIMENSIONS SHOWN ARE IN MILLIMETERS (MM), UNLESS OTHERWISE NOTED

7500 1500 750 0 3750 7500

SCALE: 1 : 75

US Army Corps of Engineers
AFGHANISTAN ENGINEER DISTRICT

MARK	DESCRIPTION	DATE	APPR.	MARK	DESCRIPTION	DATE	APPR.
1	ISSUED FOR CONSTRUCTION	01/31/2012					

U.S. ARMY CORPS OF ENGINEERS
AFGHANISTAN DISTRICT
APO AE 09356

DESIGNED BY: S.CROOKS
DWN BY: CAD
CKD BY:
SUBMITTED BY: M. HOAGUE
PLOT SCALE: 1:1
PLOT DATE:
SIZE: ANSI D
FILE NAME: FP04A-E-101.dwg
DATE: 01/31/2012
SOLICITATION NO.: .
CONTRACT NO.: .
FILE NUMBER: .

SITE ADAPT DESIGN
FP04a - GUARD TOWER
WITH CONCRETE WALK & FENCE

RECEPTACLE, POWER GROUNDING AND LIGHTING PLAN

SHEET IDENTIFICATION
E-101
SHEET 9 OF 10

ENGINEERING AND CONSTRUCTION DIVISION
US ARMY ENGINEER DISTRICT, AFGHANISTAN
APO AE, 09356

07

GUARD HOUSE

(FP07 - 54GSM)

ELECTRIC HEATER AS SHOWN ON SHT M-101 SHALL BE REPLACED WITH WOOD STOVE HEATER PER SECTION 01010, 01015

SECTION/DETAIL CROSS REFERENCING CONVENTIONS

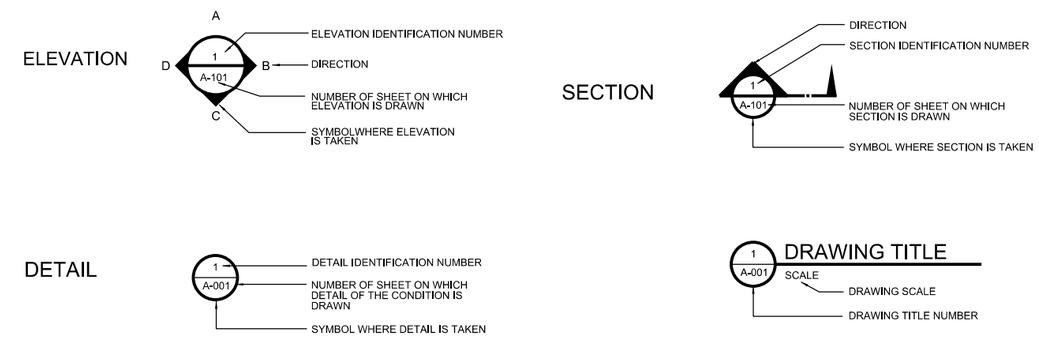

SCHEDULE OF DRAWINGS

SHEET NO	DWG CODE	SHEET REFERENCE NO	DESCRIPTION	REV STATUS
			GENERAL	
		G-001	TITLE SHEET & SCHEDULE OF DRAWINGS	
			STRUCTURAL	
		S-101	FOUNDATION AND ROOF FRAMING PLANS	
		S-501	STRUCTURAL DETAILS	
		S-502	STRUCTURAL DETAILS	
		S-601	STRUCTURAL SCHEDULES	
		S-602	STRUCTURAL METERIAL SCHEDULES	
			ARCHITECTURAL	
		A-101	FLOOR PLAN, ROOF PLAN, AND REFLECTED CEILING PLAN	
		A-201	ELEVATIONS, BUILDING SECTION, AND EAVE DETAIL	
		A-601	DOOR & FINISH SCHEDULES AND DETAILS	
			MECHANICAL	
		M-101	MECHANICAL PLAN	
			PLUMBING	
		P-101	FLOOR PLAN - PLUMBING	
		P-901	PLUMBING ISOMETRICS	
			ELECTRICAL	
		E-101	ELECTRICAL PLANS	

PROJECT COORDINATION

U.S. ARMY ENGINEER DISTRICT, AFGHANISTAN

PROJECT MANAGER — DATE

CHIEF, DESIGN BRANCH — DATE

THIS PROJECT WAS DESIGNED BY AFGHANASTAN ENGINEER DISTRICT OF THE U,S ARMY CORPS OF ENGINEERS, THE INITIALS OR SIGNATURES AND REGISTRATION DESIGNATIONS OF INDIVIDUALS APPEAR ON THESE DOCUMENTS WITHIN THE SCOPE OF THEIR EMPLOYMENT AS REQUIRED BY ER 1110-1-8152.

US Army Corps of Engineers
AFGHANISTAN ENGINEER DISTRICT

MARK	DESCRIPTION	DATE	APPR.	MARK	DESCRIPTION	DATE	APPR.

DESIGNED BY: | DATE: | SOLICITATION NO.:
DWN BY: | CKD BY: | CONTRACT NO.:
SUBMITTED BY: | FILE NUMBER:
PLOT SCALE: 1:1 | PLOT DATE:
SIZE: | FILE NAME: FP07_G-001.dgn

U.S. ARMY CORPS OF ENGINEERS
AFGHANISTAN DISTRICT
APO AE 09356

SITE ADAPT DESIGN
FP07 - GUARD HOUSE
TITLE SHEET
SCHEDULE OF DRAWINGS

SHEET IDENTIFICATION
G-001
SHEET 1 OF 13

$FILEL$ $TIME$
$DATE$

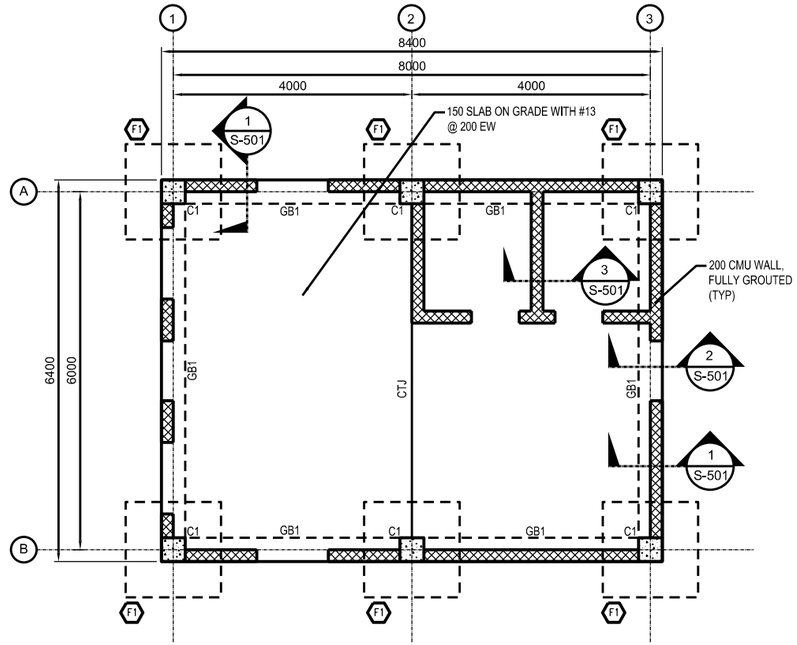

1 S-101 FOUNDATION PLAN
SCALE: 1:50

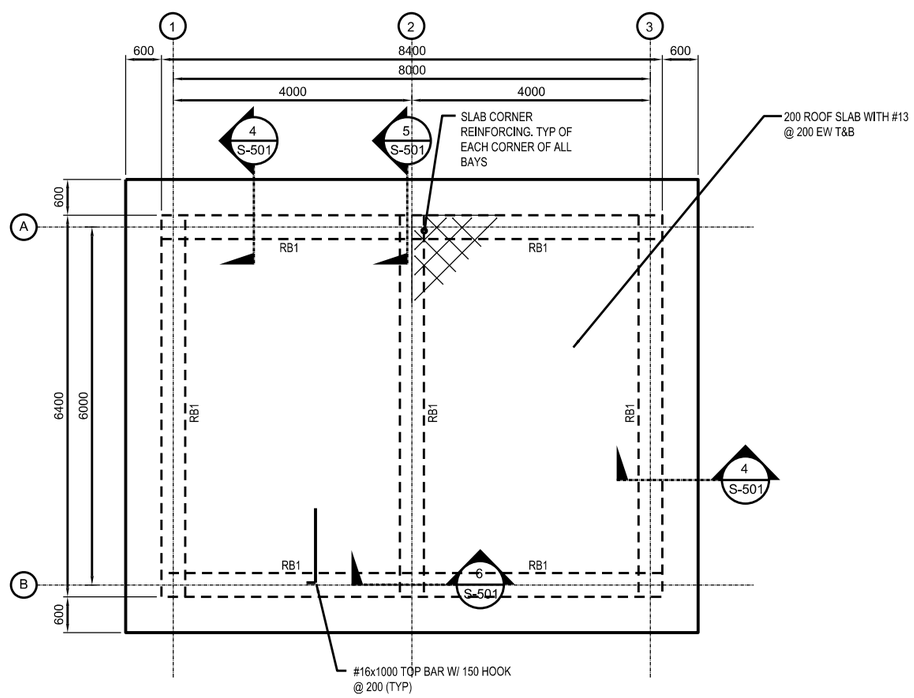

2 S-101 ROOF FRAMING PLAN
SCALE: 1:50

GENERAL NOTES

1. DESIGN LOADS (SERVICE)

LIVE LOADS:

ROOF: 1.0 KPA (20 PSF)
OTHERS: 4.8 KPA (100 PSF)
8.9 KN (2.0 K) CONCENTRATED LOAD

WIND LOADS PER IBC-2003

USING A "3-SECOND" WIND VELOCITY OF 125 KPH
EXPOSURE C AND IMPORTANCE FACTOR I=1.0

EARTHQUAKE LOADS PER IBC-2003:

USING A SEISMICITY: Ss=1.65g AND S_1=0.75g

2. MATERIALS:

CONCRETE: 28 MPa (4 KSI) - CYLINDER STRENGTH AT 28 DAYS

REINFORCING: ASTM A615 GRADE 60 (60 KSI)

CONCRETE MASONRY UNITS:
ASTM C90, TYPE I (NORMAL WEIGHT, MOISTURE CONTROLLED) MORTAR, ASTM C270, TYPE S GROUT, ASTM C 476

3. WORK THESE STRUCTURAL DRAWINGS WITH THE STANDARD-DETAILS DRAWINGS.

4. A RELATIVE (DATUM) FINISH FLOOR ELEVATION EQUAL TO 0.00 M. IS USED AS REFERENCE ELEVATION FOR ALL STRUCTURAL DRAWINGS. COORDINATE WITH SITE SPECIFIC GRADING PLAN TO BE PROVIDED BY CONTRACTOR.

5. FOUNDATIONS ARE DESIGNED USING AN ALLOWABLE BEARING PRESSURE OF 0.75 KG/SQ. CM (1500 PSF), AND BOTTOM OF FOOTINGS ARE PLACED AS SHOWN ON DRAWINGS. GEOTECHNICAL INVESTIGATION SHALL CONFIRM BEARING CAPACITY TO BE NO LESS THAN 0.75 KG/SQ CM. IF GEOTECHNICAL INVESTIGATION SHOWS LESS THAN 0.75 KG/SQ CM THE CONTRACTOR SHALL REDESIGN FOOTINGS BASED ON THE GEOTECHNICAL INVESTIGATION. SEE SPECIFICATION 01015 PARAGRAPH, GEOTECHNICAL, FOUNDATION AND SURVEY.

6. FOR BUILDING NORTH ORIENTATION SEE SHEET C-1.

NOTES

1. ALL CELLS OF CMU WALL SHALL BE FULLY GROUTED - SEE PLATE S-601 FOR REINFORCING REQUIREMENTS.
2. SEE PLATE S-601 FOR FOOTING, COLUMN, BEAM, AND CMU REINFORCING SCHEDULES.

GRAPHIC SCALE

2500 1000 500 0 2500 5000

SCALE: 1 : 50

US Army Corps of Engineers®
AFGHANISTAN ENGINEER DISTRICT

MARK	DESCRIPTION	DATE	APPR.	MARK	DESCRIPTION	DATE	APPR.

DESIGNED BY: DATE:
DWN BY: CKD BY: SOLICITATION NO.:
SUBMITTED BY: CONTRACT NO.:
PLOT SCALE: 1:50 PLOT DATE: FILE NUMBER:
SIZE: FILE NAME: FP07-S-101.dgn

U.S. ARMY CORPS OF ENGINEERS
AFGHANISTAN DISTRICT
APO AE 09356

SITE ADAPT DESIGN
FP07 - GUARD HOUSE
FOUNDATION AND ROOF FRAMING PLANS

SHEET IDENTIFICATION
S-101
SHEET 2 OF 13

$FILE$ $TIME$
$DATE$

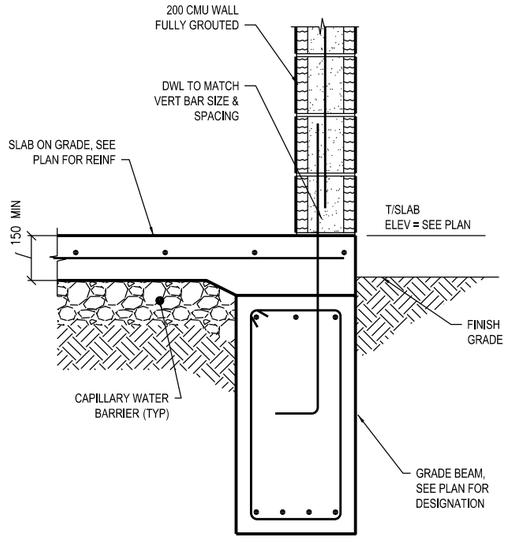

1 S-501 SECTION
SCALE = 1:10

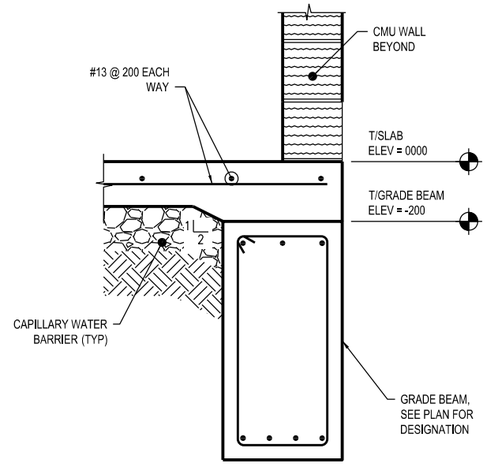

2 S-501 SECTION
SCALE = 1:10

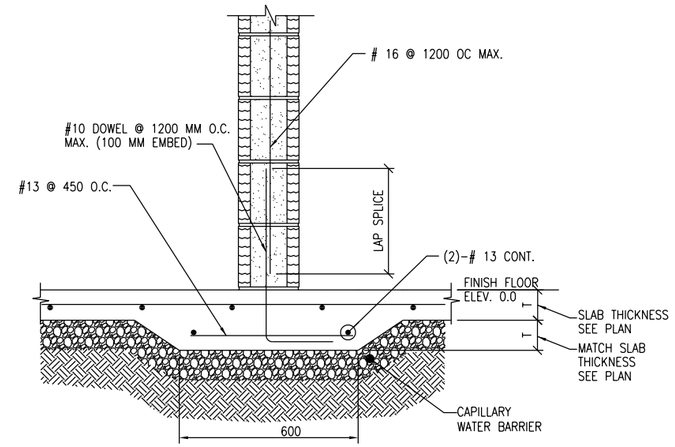

3 S-501 SECTION
SCALE = 1:10

NOTE: REFERENCE ARCHITECTURAL DRAWINGS FOR OVERFRAMING ABOVE ROOF SLAB

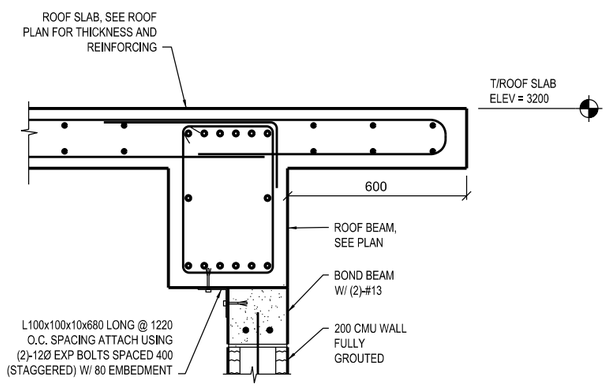

4 S-501 SECTION
SCALE = 1:10

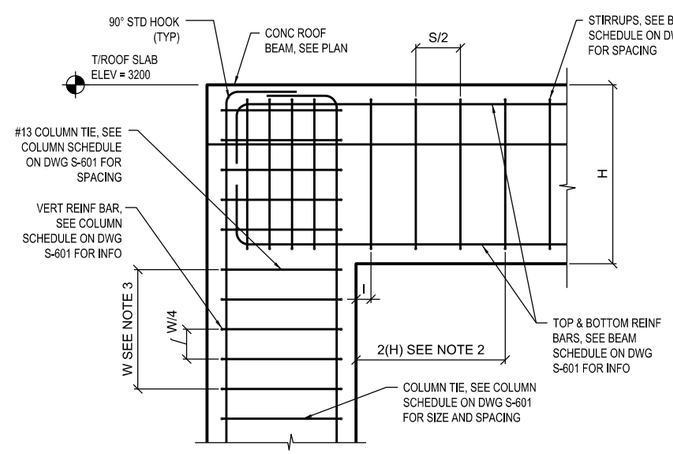

5 S-501 BEAM/COLUMN REINFORCING DETAIL
SCALE = 1:10

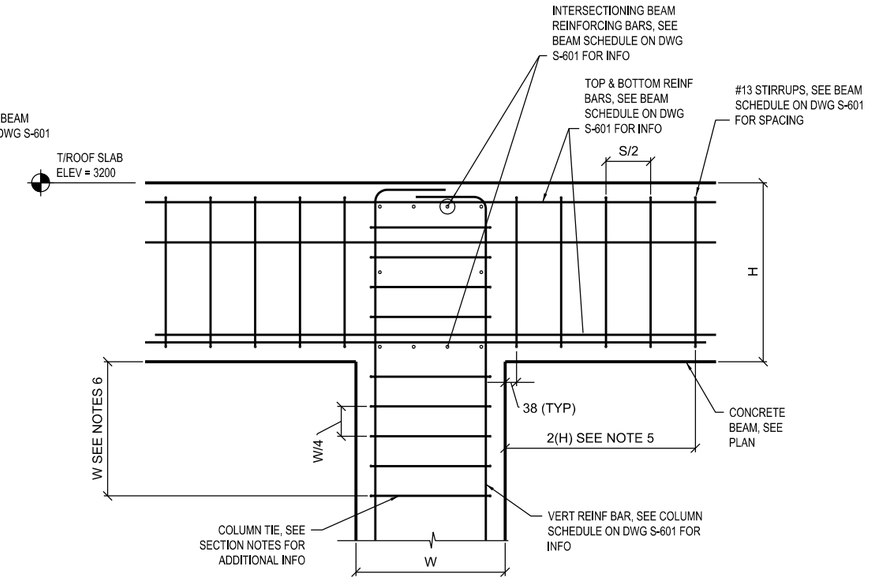

6 S-501 BEAM/COLUMN REINFORCING DETAIL
SCALE = 1:10

SECTION NOTES:

1. COLUMN/BEAM REINFORCEMENT AT OUTSIDE CORNERS AND BEAM ENDS.
2. PROVIDE STIRRUPS IN BEAM ENDS AT SPACING OF "S/2" FOR A DIATANCE OF "2(H)" MEASURE FROM FACE OF COLUMN. TYPICAL EACH END OF BEAM.
3. PROVIDE COLUMN TIES AT BEAM/COLUMN JOINTS AT A SPACING OF "W/4" FOR A DISTANCE OF "W" MEASURED FROM BOT OF BEAM.
4. "S" DENOTES TIE SPACING FOR BOTTOM BARS AT COLUMN, SEE SCHEDULE ON DWG S-601.
4. "W" DENOTES WIDTH OF COLUMN, SEE SCHEDULE ON S-601

GRAPHIC SCALE
500 200 100 0 500 1000
SCALE: 1 : 10

US Army Corps of Engineers®
AFGHANISTAN ENGINEER DISTRICT

MARK	DESCRIPTION	DATE	APPR.	MARK	DESCRIPTION	DATE	APPR.

DESIGNED BY: | DATE:
DWN BY: | CKD BY: | SOLICITATION NO.:
SUBMITTED BY: | CONTRACT NO.:
PLOT SCALE: 1:1 | PLOT DATE:
SIZE: | FILE NAME: FP07-S-501.dgn | FILE NUMBER:

U.S. ARMY CORPS OF ENGINEERS
AFGHANISTAN DISTRICT
APO AE 09356

SITE ADAPT DESIGN
FP07 - GUARD HOUSE
STRUCTURAL DETAILS

SHEET IDENTIFICATION
S-501
SHEET 3 OF 13

$FILEL$ $DATE$ $TIME$

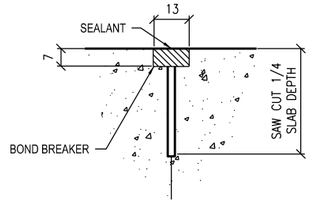

CONTROL JOINT DETAIL

1/S-502 TYPICAL CONCRETE SLAB JOINT FINISH DETAIL

NTS

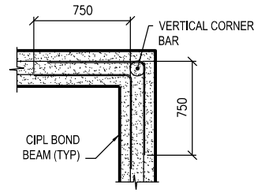

BOND BEAM CORNER

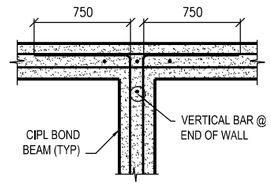

BOND BEAM INTERSECTION

4/S-502 CMU BOND DETAIL

NTS

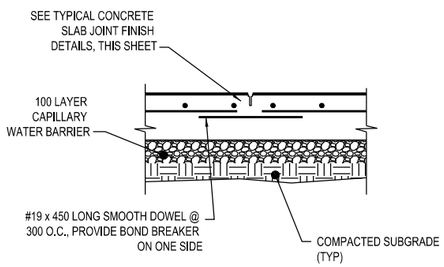

CONTROL JOINT DETAIL (CTJ)

2/S-502 TYPICAL SLAB ON GRADE JOINT DETAILS

NTS

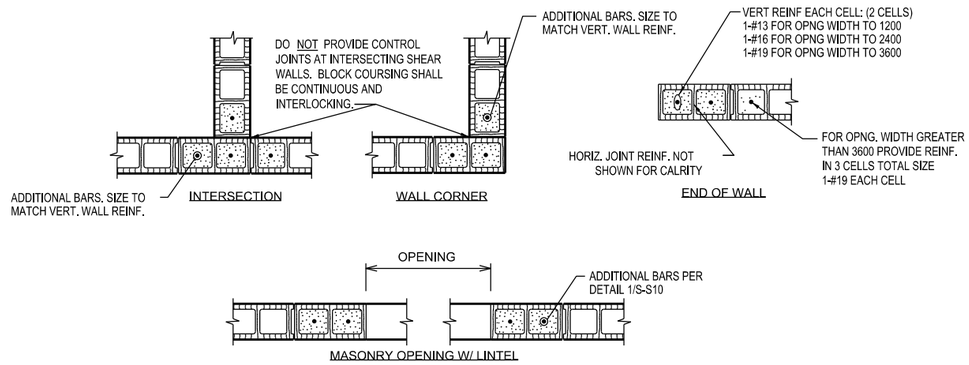

TYPICAL CONCRETE MASONRY UNIT DETAILS

NOTE:
OPNG WIDTH SHALL NOT EXCEED 3600 FOR THIS TYPE OF JAMB

5/S-502 TYPICAL CMU DETAILS

SCALE

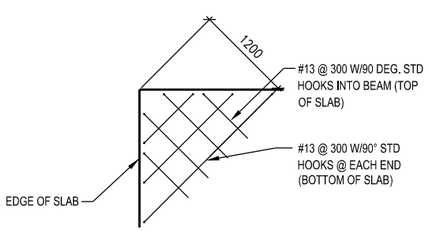

3/S-502 ELEVATED SLAB CORNERS

NTS

ADD'L REINFORCEMENT DETAILS

1. WHERE MORE THAN ONE ADDITIONAL BAR IS REQUIRED PARALLEL TO THE EXISTING SLAB/WALL REINFORCING THE ADDITIONAL REINFORCING BARS SHALL BE SPACED AT 100 ON CENTER.
2. ADDITIONAL REINFORCING PARALLEL TO THE SLAB/WALL REINFORCING SHALL BE #16 BARS THAT PROVIDE A STEEL AREA ON EACH SIDE OF THE OPENING EQUAL TO 1/2 THE AREA OF THE REINFORCING CUT BY THE OPENING.

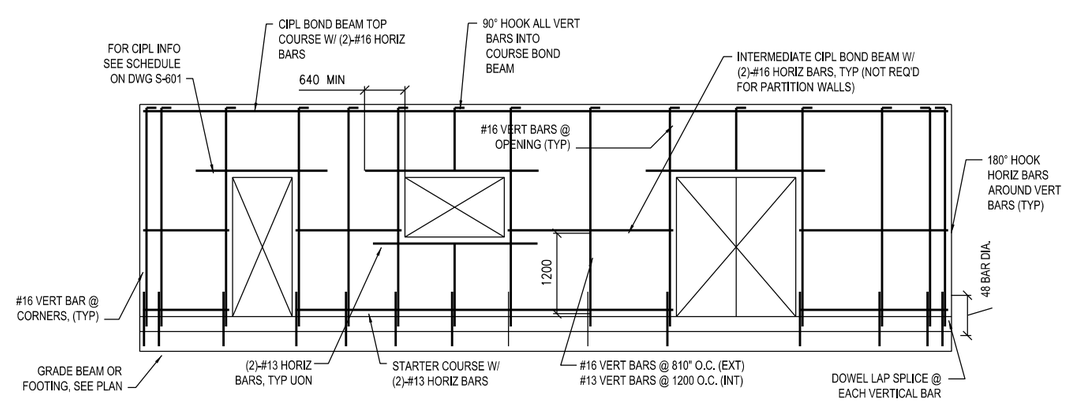

6/S-502 MIN MASONRY WALL REINFORCING

NTS

LINTEL NOTES:
CMU LINTEL REINFORCEMENT AS PER SCHEDULE ON DWG S-S4

GRAPHIC SCALE

500 200 100 0 500 1000

SCALE: 1 : 10

US Army Corps of Engineers
AFGHANISTAN ENGINEER DISTRICT

MARK	DESCRIPTION	DATE	APPR.	MARK	DESCRIPTION	DATE	APPR.

DESIGNED BY: | DATE:
DWN BY: | CKD BY: | SOLICITATION NO.:
SUBMITTED BY: | CONTRACT NO.:
PLOT SCALE: 1:10 | PLOT DATE: | FILE NUMBER:
SIZE: | FILE NAME: FP07-S-502c.dgn

U.S. ARMY CORPS OF ENGINEERS
AFGHANISTAN DISTRICT
APO AE 09356

SITE ADAPT DESIGN
FP07 - GUARD HOUSE
STRUCTURAL DETAILS

SHEET IDENTIFICATION
S-502
SHEET 4 OF 13

$FILEL$
$DATE$ $TIME$

CAST-IN-PLACE CONCRETE LINTEL SCHEDULE

OPENING TYPE OR SIZE, BEAM LOCATION OR TYPE	MAX SPAN (mm)	BEAM DEPTH (mm)	MAIN REINFORCING			SHEAR REINF STIRRUPS
			TOP	BOTTOM	OTHER	
EXT WALL OPENING, 1-STORY BLDG	1800	400	(2)-#13	(2)-#13		
EXT WALL OPENING, 1-STORY BLDG	900	200		(2)-#13		
INT WALL OPENING, NON-BEARING	1800	200		(2)-#13		
INT WALL OPENING, NON-BEARING	900	200		(2)-#13		

1. STRUCTURAL DRAWINGS DO NOT INDICATE ALL OPENINGS IN MASONRY WALLS. VERIFY NUMBER, SIZE AND LOCATION OF ALL OPENINGS IN MASONRY WALLS FROM ARCHITECTURAL DRAWINGS AND APPROVED PLUMBING, MECHANICAL, AND ELECTRICAL SHOP DRAWINGS.
2. PROVIDE 200 BEARING EA. END FOR 200 DEEP CIB. PROVIDE 400 BEARING EA. END FOR 400 DEEP CIB.
3. FOR HEAD DETAILS REFER TO ARCHITECTURAL DRAWINGS.
4. REINFORCING SHALL BE ASTM A615M, GRADE 400. CONCRETE FOR CAST-IN-PLACE BEAMS SHALL HAVE A MINIMUM COMPRESSIVE STRENGTH OF 21 MPa AT 28 DAYS.
5. CONTRACTOR SHALL SUBMIT FOR APPROVAL SHOP DRAWINGS AND SCHEDULES SHOWING SIZE, DETAILS, LOCATIONS, ETC. FOR ALL CAST-IN-PLACE BEAMS IN CMU WALLS.

CONCRETE COLUMN SCHEDULE

MARK	SIZE	REINFORCING			REMARKS
	(LxW)	1ST FLOOR	2ND FLOOR	STIRRUPS	
C1	400x400	(12)-#19	-	#13 @ 200	SPACE TOP 3 TIES @ 125mm

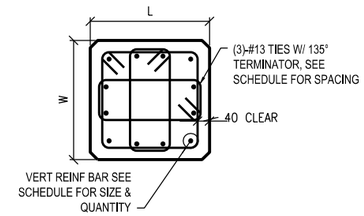

1 S-601 COLUMN DETAIL
SCALE = 1:10

CONCRETE BEAM SCHEDULE

GRADE BEAM

MARK	SIZE	REINFORCING				REMARKS
	(BxH)	TOP	BOTTOM	STIRRUPS	MIDBAR	
GB1	400x950	(6)-#16	(6)-#16	#13 @ 200	(2) #19 EF	TOP BAR LAP AT CENTER BOT BAR LAP PAST COL

ROOF BEAM

MARK	SIZE	REINFORCING				REMARKS
	(BxH)	TOP	BOTTOM	STIRRUPS	MIDBAR	
RB1	400x600	(6)-#16	(6)-#16	#13 @ 300	#19 EF	TOP BAR LAP AT CENTER BOT BAR LAP PAST COL

SPREAD FOOTING AND PIER SCHEDULE

MARK	FOOTING SIZE			FOOTING REINFORCING	PIER				REMARKS
	LENGTH	WIDTH	THICKNESS		SIZE	T/PIER	VERT. BARS	TIES	
F1	2400	1700	300	(7)-#13 E.W., TOP (7)-#19 E.W., BOTT	—	—	—	—	—

NOTES:
1. DIMENSIONS NOTED ARE MILLIMETERS (mm) U.N.O.
2. T/PIER EL GIVEN IN REFERENCE TO 0.0 mm DATUM OR FINISH FLOOR EL/SLAB EL, DISTANCE ABOVE OR BELOW INDICATED AS NEGATIVE OR POSITIVE.
3. PIER SIZE INDICATED IS SQUARE (DIMENSION SAME IN BOTH DIRECTIONS) U.N.O.

TYPICAL CMU WALL REINFORCING SCHEDULE

WALL TYPE OR LOCATION	WALL THICKNESS	CONT. VERT. REINF. (CENTERED IN CMU, U.N.O.)	CONT. CAST IN PLACE LINTEL (CIPL)			REMARKS
			DEPTH	REINF. (BOT U.N.O.)	MAX. CIPL VERT. SPACING	
ALL PERIMETER/EXTERIOR WALLS (U.N.O.)	200	1-#16 @ 600	200	2-#16	1200	—
NON-LOAD BEARING INTERIOR WALLS WITH TOP AND BOTT. SUPPORTS	200	1-#13 @ 1200	200	2-#16	1200	—

NOTES:
1. REINFORCING SIZES AND SPACING GIVEN IN SECTIONS AND DETAILS SHALL SUPERSEDE THE ABOVE SCHEDULE REQUIREMENTS.
2. PROVIDE CONTINUOUS CAST IN PLACE CONCRETE LINTEL AT ALL WALL LATERAL SUPPORT LOCATIONS.
3. REINFORCING INDICATED SHALL BE CONTINUOUS FOR FULL EXTENT OF SPLICE FOLLOWING THE REQUIREMENTS OF THE LAP SPLICE TABLE SHOWN ON THIS SHEET.
4. WALLS HAVE BEEN DESIGNATED AS VERTICALLY SPANNING U.N.O. AND THEREFORE MUST BE TEMPORARILY SUPPORTED DURING CONSTRUCTION UNTIL THE SUPPORTING DIAPHRAGMS (FLOOR AND ROOF SYSTEMS) HAVE BEEN COMPLETELY INSTALLED. SHORING IS THE RESPONSIBILITY OF THE CONTRACTOR.
5. ALL CMU WALLS SHALL BE FULLY GROUTED IN LIFTS NOT EXCEDING THOSE BY CODE (UNO)
6. SEE TYPICAL CMU WALL DETAILS ON S-502.

MASONRY REINFORCING MINIMUM LAP SPLICES

BAR SIZE	BASIC LAP SPLICE Ld FOR CMU REINFORCING
#10	450
#13	600
#16	750
#19	900
#22	1050
#25	1200

US Army Corps of Engineers
AFGHANISTAN ENGINEER DISTRICT

MARK	DESCRIPTION	DATE	APPR.	MARK	DESCRIPTION	DATE	APPR.

DESIGNED BY: DATE:
DWN BY: CKD BY: SOLICITATION NO.:
SUBMITTED BY: CONTRACT NO.:
PLOT SCALE: 1:1 PLOT DATE: FILE NUMBER:
SIZE: FILE NAME: FP07-S-601c.dgn

U.S. ARMY CORPS OF ENGINEERS
AFGHANISTAN DISTRICT
APO AE 09356

SITE ADAPT DESIGN
FP07 - GUARD HOUSE
STRUCTURAL SCHEDULES

SHEET IDENTIFICATION
S-601
SHEET 5 OF 13

SFILE:$S SDATE:$ STIME:$

f'c = 27.5MPa CONCRETE

BAR SIZE \ CENTER TO CENTER BAR SPACING	(–TOP BARS–) LESS THAN 4db	(–TOP BARS–) 4db OR MORE	(–OTHER BARS–) LESS THAN 4db	(–OTHER BARS–) 4db OR MORE	4db
#10	460	460	410	410	40
#13	660	610	510	480	50
#16	1020	760	790	580	60
#19	1450	910	1120	710	80
#22	1960	1090	1500	840	90
#25	2590	1450	1980	1120	100
#29	3280	1830	2510	1420	110
#32	4140	2340	3200	1780	130
#36	5080	2840	3910	2180	140

STEEL MATERIALS SCHEDULE

STRUCTURAL ELEMENT	FY YIELD STRENGTH (MPa)	REMARKS
BEAMS & GIRDERS	250	ASTM A36M ASTM A6M
COLUMNS	240	ASTM A53-95 GRADE B ASTM A6M
MISC BRACING	250	ASTM A572M ASTM A6M
CONNECTIONS, PLATES, & ALL OTHERS	250	ASTM A36M ASTM A6M
ANCHOR BOLTS	-	ASTM A36M or A307M ASTM A6M
PIPES	240	ASTM A53-95 GRADE B ASTM A6M
TUBING	345	ASTM A500-93 GRADE C ASTM A6M
HIGH STRENGTH BOLTS	-	ASTM A325M-N
WELDING ELECTRODES	-	AWS D1.1-90 E70xx

CONCRETE COVER SCHEDULE

MINIMUM CONCRETE COVER PROTECTION FOR REINFORCEMENT BARS SHALL BE AS FOLLOWS: (SEE ACI 318-89M, SECTION 7.7 FOR CONDITIONS NOT NOTED). DIMENSIONS FOR BAR PLACEMENT GIVEN IN SECTIONS AND DETAILS SHALL SUPERCEDE MINIMUM COVER REQUIREMENTS GIVEN HERE. DIMENSIONS ARE IN mm.

FOOTINGS (EARTH FORMED)		70
COLUMNS / PIERS		40
GRADE BEAMS OR SLAB TURNED DOWN EDGES:		
TOP		40
BOTTOM (EARTH FORMED)		70
SIDES (EARTH FORMED)		70
SIDES (BOARD FORMED)	#16 BAR & SMALLER	40
	#19 THRU #36 BAR	50
		40
SLABS-ON-GRADE (NO EXPOSURE TO WEATHER) FROM TOP		20
SLABS-ON-GRADE (EXPOSURE TO WEATHER) FROM TOP		40
UTILITY TUNNEL WALLS, RETAINING WALLS AND SHEAR WALLS, (NO SURFACES SHALL BE EARTH FORMED) EARTH SIDE AND FRONT SIDE (EXPOSED TO WEATHER):		
#16 BAR AND SMALLER		40
#19 THRU #36 BAR		50

PROVIDE STANDARD BAR CHAIRS AND SPACERS AS REQUIRED TO MAINTAIN CONCRETE PROTECTION SPECIFIED.

NOTES:

1. LAP SPLICES ABOVE ARE IN MILLIMETERS UNO.
2. YIELD STRENGTH OF REINFORCEMENT, fy, IS 400MPa (LAP SPLICE LENGTH IS IN MILLIMETERS).
3. CONCRETE IS NORMAL WEIGHT (2400Kg/m).
4. TOP BAR INDICATES HORIZONTAL REINFORCEMENT WHICH IS PLACED ABOVE 300mm OR MORE OF FRESH CONCRETE.
5. SEE COLUMN SCHEDULE FOR COLUMN AND SHEAR WALL VERTICAL LAP SPLICE.
6. STREIGHT DEVELOPMENT LENGTH OF AN UNLAPPED BAR IS EQUAL TO VALUE FROM TABLE DIVIDED BY 1.3.
7. CATEGORY FOR BARS SPACED LESS THAN 4d, OR ON CENTER CORRESPONDS TO CATEGORY 1 IN THE CRSI HANDBOOK WHEREAS FOR BARS SPACED 4d, OR MORE ON CENTER CORRESPOND TO CRSI CATEGORY 5.

STRUCTURAL DESIGN CRITERIA:

ALL DESIGNS SHALL CONFORM TO THE PROVISIONS OF THE IBS 2006 AND UFC 4-010-01 AS APPLICABLE

2.0 FOUNDATION DESIGN CRITERIA (TO BE CONFIRMED BY THE CONTRACTOR)

THE GEOTECHNICAL ANALYSIS FOR THIS PROJECT IS THE RESPONSIBILITY OF THE CONTRACTOR AWARDED THE WORK . DESIGN VALUES USED IN THE STRUCTURAL ANALYSIS ON THE BUILDINGS HERIEN INDICATED HAVE BEEN ASSUMED AND SHALL BE CONFIRMED AND VERIFIED AS PART OF THE GEOTECHNICAL INVESTIGATION. VLAUES WHICH DO NOT MEET THE REQUIREMENTS INDICATED BELOW SHALL BE IMMEDIATELY BROUGHT TO THE ATTENTION OF THE ENGINEER-OF-RECORD FOR CONSIDERATION AND DETERMINATION ON THE NEXT APPROPRIATE COURSE OF ACTION.

2.1 SOIL DESIGNN PARAMETERS

NET ALLOWABLE SOIL BEARING CAPACITY	96.0 Kpa
UNIT WEIGHT OF SOIL (moist)	1800 Kg/m³
COEFF ACTIVE EARTH PRESSURE (Kpa)	0.30
COEFF PASSIVE EARTH PRESSURE (Kpp)	3.33
COEFF AT-REST EARTH PRESSURE (Kpr)	.55
COEFF OF SOIL FRICTION	.35
SUBGRADE MODULUS	4120 g/m³
MINIMUM BEARING DEPTH BELOW GRADE	800mm
SEISMIC SITE CLASS (based on in-situ soil)	0

CONCRETE MATERIALS SCHEDULE

STRUCTURAL ELEMENT	f'c CONCRETE COMPRESSIVE STRENGTH @ 28 DAYS (MPa)
SLAB-ON-GRADE/TURN-DOWN SLABS	27.5
ROOF SLABS	27.5
ALL FOOTINGS (U.N.O.)	20
MISC. CURBS, WALLS AND PADS UNO	27.5

NOTES:
1. ALL CONCRETE SHALL BE NORMAL WEIGHT CONCRETE. (2400 Kg/m UNO) 3

STANDARD HOOKS IN TENSION PER (ACI 318-89)

BAR SIZE	HOOK DEVELOPMENT LENGTH Ldh (mm) f'c 20 MPa	f'c 27.5 MPa
#10	230	180
#13	280	250
#16	360	300
#19	430	380
#22	480	430
#25	560	480
#29	640	560
#32	710	610
#36	790	690

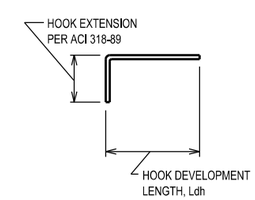

NOTES:
1. CONCRETE IS NORMAL WEIGHT CONCRETE.
2. BAR YIELD STRENGTH, fy = 400 MPa
3. SIDE COVER REQUIREMENTS OF ACI SECT. 12.5.3.2 ARE ASSUMED TO NOT BE MET.
4. TIE OR STIRRUP REQUIREMENTS OF ACI SECT. 12.5.3.2 ARE ASSUMED TO NOT BE MET.
5. REDUCTION FOR EXCESS REINFORCEMENT IS NOT TAKEN.
6. HOOK DEVELOPMENT LENGTH IS VALID FOR 180^ HOOKS ALSO.
7. FOR 35 MPa CONCRETE, USE VALUES FOR 30 MPa

US Army Corps of Engineers®
AFGHANISTAN ENGINEER DISTRICT

MARK	DESCRIPTION	DATE	APPR.	MARK	DESCRIPTION	DATE	APPR.

DESIGNED BY: DATE:
DWN BY: CKD BY: SOLICITATION NO.:
SUBMITTED BY: CONTRACT NO.:
PLOT SCALE: 1:1 PLOT DATE: FILE NUMBER:
SIZE: FILE NAME: FP07-S-602mc.dgn

U.S. ARMY CORPS OF ENGINEERS
AFGHANISTAN DISTRICT
APO AE 09356

SITE ADAPT DESIGN
FP07 - GUARD HOUSE
STRUCTURAL MATERIAL SCHEDULES

SHEET IDENTIFICATION
S-602
SHEET 6 OF 13

$FILE$ $TIME$
$DATE$

ROOM FINISH SCHEDULE

ROOM NO.	ROOM NAME	FLOOR	BASE	WALLS		CEILING		REMARKS
		FINISH	FINISH	FINISH	COLOR	FINISH	COLOR	
100	GUARD HOUSE	TT	TT	PP	P1	PP	WHITE	1, 3, 4, 5
101	TOILET	TT	TT	CT/PP	CT/P1	PP	WHITE	1, 2, 4, 5
102	TOILET	TT	TT	CT/PP	CT/P1	PP	WHITE	1, 2, 4, 5

DOOR SCHEDULE

TAG	DOOR MAT'L	DOOR TYPE	DOOR WIDTH	DOOR HEIGHT	DOOR THICK	FRAME MAT'L	FRAME TYPE	FIRE LABEL	GLAZING	HRDWRE SET	NOTES
D-1	INSUL. HM	A	900	2150	45	HM	1	-	BULLET RESISTANT	1	1,2,3,4,5,6,7,8
D-2	PVC	B	700	2150	45	HM	1	-	-	2	2,3,4,5,6,7,9

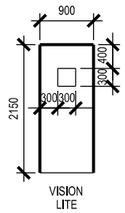

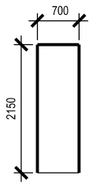

1 A-601 DOOR TYPES
SCALE = 1:50

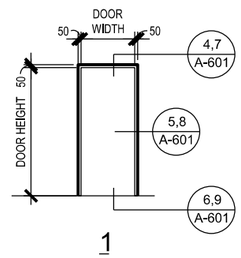

2 A-601 FRAME TYPE
SCALE = 1:50

FINISH SCHEDULE NOTES:

1. FINISH ABBREVIATIONS IN SCHEDULE ARE AS FOLLOWS: TT=TERRAZZO TILE, CT=CERAMIC TILE, PP=PAINTED PLASTER.
2. CERAMIC TILE SHALL EXTEND TO 2000mm ABOVE FINISHED FLOOR. WALL ABOVE WAINSCOT SHALL BE PAINTED WITH ONE COAT OF PRIMER AND TWO COATS OF OFF-WHITE SEMI-GLOSS PAINT.
3. PAINTED PLASTER WALLS SHALL HAVE ONE COAT OF PRIMER AND TWO COATS OF SEMI-GLOSS OFF-WHITE PAINT.
4. PAINTED PLASTER CEILINGS SHALL HAVE ONE COAT OF PRIMER AND TWO COATS OF FLAT WHITE PAINT.
5. CERAMIC TILE AND TERRAZZO TILE FINISH COLORS SHALL BE SELECTED BY THE COR FROM SAMPLES SUBMITTED BY THE CONTRACTOR.
6. EXTERIOR STUCCO COLOR SHALL BE SELECTED BY THE COR FROM SAMPLES SUBMITTED BY THE CONTRACTOR.

DOOR TYPE NOTES:

1. EXTERIOR DOOR, INCLUDING GLAZING, SHALL MEET THE REQUIREMENTS OF UL752, LEVEL 5 RESISTANCE FOR PROTECTION AGAINST AK-47 FIRE.
2. DOORS AND FRAME COLORS SHALL MATCH ADJACENT WALL COLORS AS SELECTED BY THE CONTRACTING OFFICER.
3. HARDWARE SHALL BE HEAVY DUTY, COMMERCIAL GRADE, STAINLESS STEEL WITH A MATTE FINISH. THERE SHALL BE THREE HINGES AT EACH DOOR, AT LEAST 200/16/5 MM, WITH BALL BEARINGS, SECURED BY THREADED PINS.
4. FRAMES SHALL BE MOUNTED AND ADJUSTED IN ACCORDANCE WITH MANUFACTURER'S INSTRUCTIONS. FRAMES SHALL BE FASTENED WITH MINIMUM OF THREE FASTENING POINTS PER SIDE AT REGULAR INTERVALS.
5. ALL DOOR FRAMES SHALL BE FITTED WITH DOOR SILENCERS.
6. DIMENSIONS SHOWN ON DOOR SCHEDULE ARE BASED UPON MODULAR MASONRY (OR ROUGH OPENING), HEIGHT OF 2200mm FOR STANDARD PERSONNEL DOORS. CONTRACTOR SHALL COORDINATE WITH DOOR SUPPLIER TO ENSURE THAT DIMENSIONS OF DOORS AND FRAMES PROVIDED ARE COMPATIBLE WITH DOOR OPENING DIMENSIONS.
7. ALL DOOR LOCKS SHALL BE MORTISED.
8. LOCK FUNCTION F04 - OFFICE DOOR LOCK - LATCH BOLT OPERATED BY LEVER FROM EITHER SIDE EXCEPT WHEN OUTSIDE LEVER IS MADE INOPERATIVE BY A STOP OR MECHANICAL MEANS OTHER THAN A KEY. WHEN OUTSIDE LEVER IS LOCKED, LATCH BOLT MAY BE RETRACTED BY KEY FROM OUTSIDE OR BY ROTATING INSIDE LEVER.
9. LOCK FUNCTION F02 - PRIVACY LOCK - LATCH BOLT OPERATED BY LEVER EITHER SIDE. DEADBOLT OPERATED BY TURN FROM INSIDE AND BY EMERGENCY KEY FROM OUTSIDE

HARDWARE SETS:

HW-1
1-1/2 PR HINGES
1 EA LOCKSET F04, OFFICE DOOR LOCK, W/LEVERS, GRADE 1
1 EA THRESHOLD, J32130
1 SET WEATHERSEALS
1 SET SILENCERS

HW-2
1-1/2 PR HINGES
1 EA LOCKSET F02, PRIVACY LOCK W/LEVERS, GRADE 1
1 SET SILENCERS

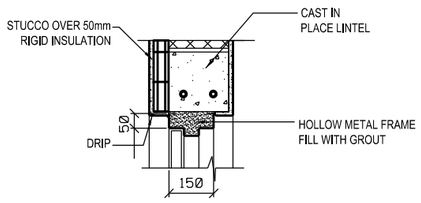

4 A-601 EXTERIOR DOOR HEAD
SCALE = 1:10

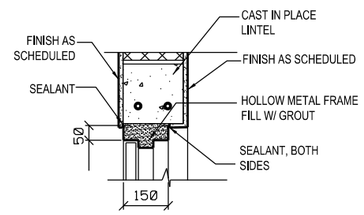

7 A-601 INTERIOR DOOR HEAD
SCALE = 1:10

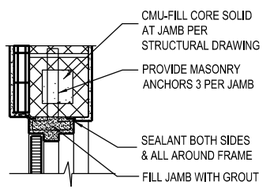

5 A-601 EXTERIOR DOOR JAMB
SCALE = 1:10

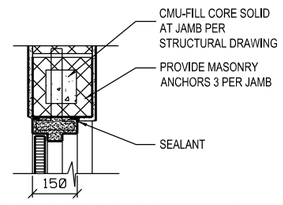

8 A-601 INTERIOR DOOR JAMB
SCALE = 1:10

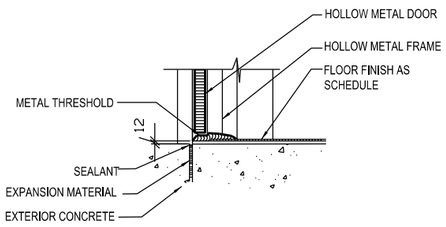

6 A-601 EXTERIOR DOOR SILL
SCALE = 1:10

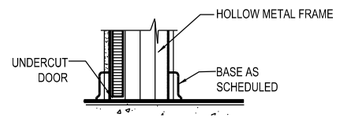

9 A-601 INTERIOR DOOR SILL
SCALE = 1:10

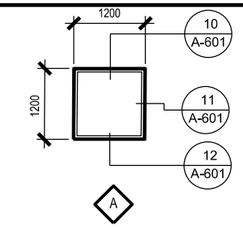

3 A-601 WINDOW TYPE
SCALE = 1:50

WINDOW TYPE NOTE:

1. WINDOW FRAME SHALL BE EXTRUDED ALUMINUM OR STEEL.
2. ALL WINDOWS AND GLAZING SHALL MEET THE REQUIREMENTS OF UL752, LEVEL 5 RESISTANCE FOR PROTECTION AGAINST AK-47 FIRE.

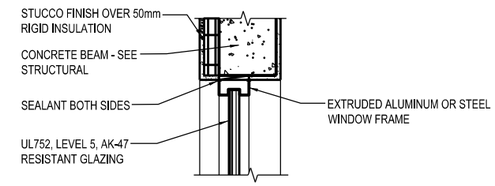

10 A-601 WINDOW HEAD
SCALE = 1:10

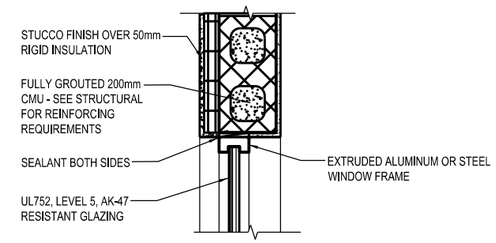

11 A-601 WINDOW JAMB
SCALE = 1:10

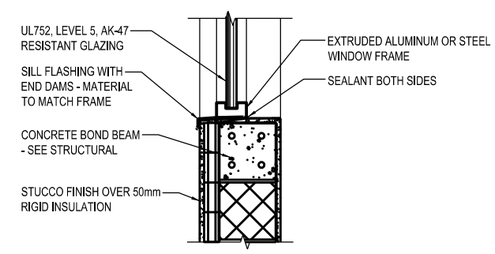

12 A-601 WINDOW SILL
SCALE = 1:10

GRAPHIC SCALES

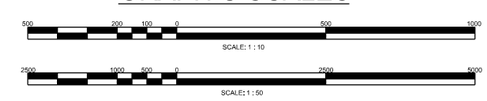

US Army Corps of Engineers
AFGHANISTAN ENGINEER DISTRICT

MARK	DESCRIPTION	DATE	APPR.	MARK	DESCRIPTION	DATE	APPR.

DESIGNED BY: | DATE: | SOLICITATION NO.:
DWN BY: | CKD BY: | CONTRACT NO.:
SUBMITTED BY: | FILE NUMBER:
PLOT SCALE: 1:1 | PLOT DATE:
SIZE: | FILE NAME: FP07-A-601.dgn

U.S. ARMY CORPS OF ENGINEERS
AFGHANISTAN DISTRICT
APO AE 09356

SITE ADAPT DESIGN
FP07 - GUARD HOUSE
DOOR & FINISH SCHEDULES AND DETAILS

SHEET IDENTIFICATION
A-601
SHEET 9 OF 13

$FILEL$
$DATE$ $TIME$

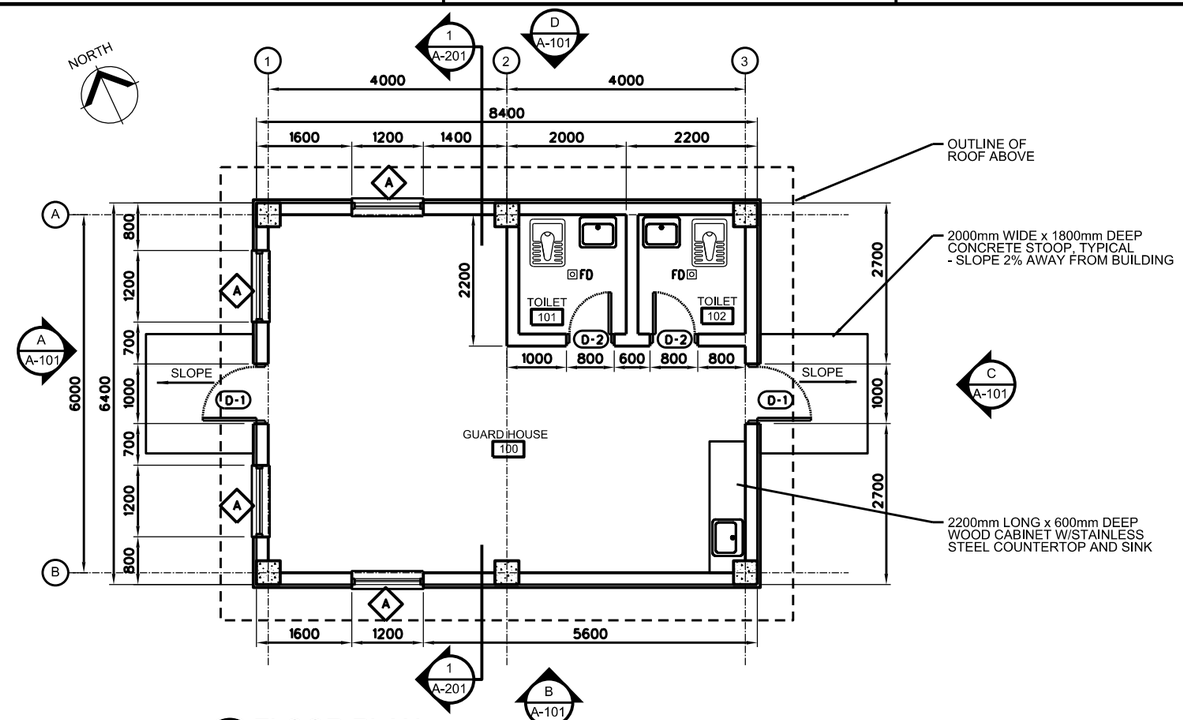

1 A-101 FLOOR PLAN
SCALE: 1:50

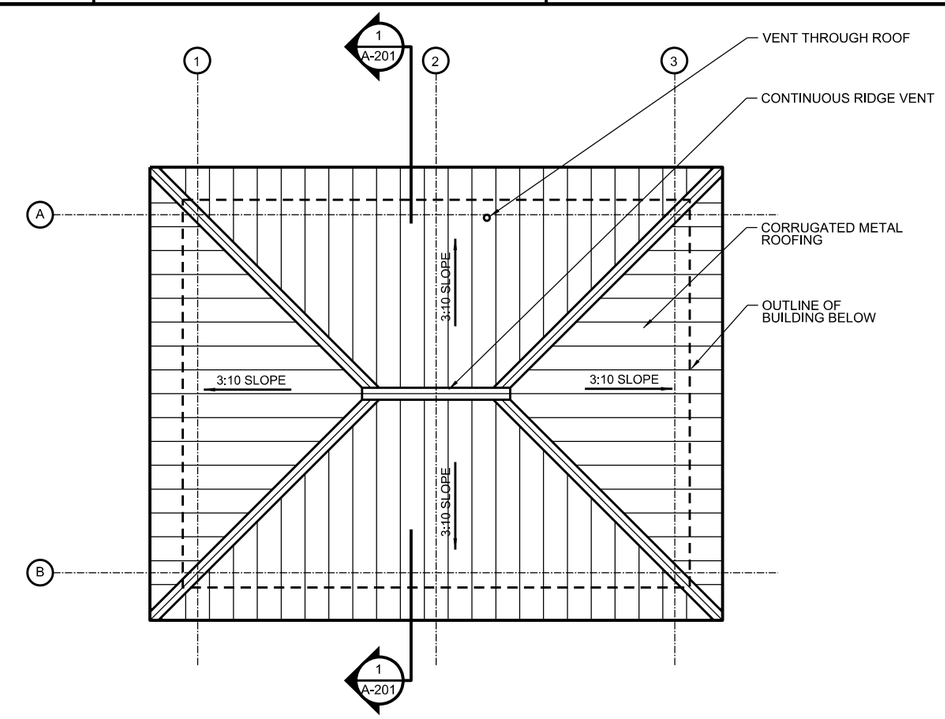

2 A-101 ROOF PLAN
SCALE: 1:50

LEGEND:

- D-# DOOR TYPE, SEE PLATE A-601
- FEB FIRE EXTINGUISHER AND WALL MOUNTED BRACKET
- A WINDOW TYPE, SEE PLATE A-601
- FD FLOOR DRAIN
- EXHAUST FAN

GENERAL NOTES:

1. WALL FINISHES SHALL BE AS INDICATED IN FINISH SCHEDULE ON PLATE A-601.
2. SURFACES TO BE PAINTED SHALL BE CLEAN AND FREE OF FOREIGN MATTER BEFORE APPLICATION OF PAINT. CLEANING SHALL BE SCHEDULED SO THAT DUST AND OTHER CONTAMINANTS WILL NOT FALL ON WET, NEWLY PAINTED SURFACES.
3. CONCRETE AND INTERIOR MASONRY SURFACES GROUTED SOLID SHALL BE ALLOWED TO DRY AT LEAST 30 DAYS BEFORE PAINTING.
4. PAINTS CONTAINING LEAD IN EXCESS OF 0.06 PERCENT BY WEIGHT OF THE TOTAL NONVOLATILE CONTENT SHALL NOT BE USED.
5. MERCURIAL FUNGICIDES SHALL NOT BE USED IN OIL-BASE PAINT.
6. REMOVE LOOSE DIRT AND CLEAN SURFACES BEFORE PAINTING. APPLY PAINT TO INTERIOR STRUCTURAL RIGID FRAMINGS AND CEILINGS AND TEST FOR ADHESION. PRIMER COAT FOR MASONRY. INITIAL FIRST COAT WITH AN ACRYLIC LATEX PAINT FOR EXTERIOR SURFACES AND A SECOND COAT WITH A WATER REPELLENT ACRYLIC LATEX PAINT.
7. DIMENSIONS ARE TO EDGE OF MASONRY OPENINGS.

GRAPHIC SCALE
1000
2500 500 0 2500 5000
SCALE: 1 : 50

US Army Corps of Engineers
AFGHANISTAN ENGINEER DISTRICT

MARK	DESCRIPTION	DATE	APPR.	MARK	DESCRIPTION	DATE	APPR.

DESIGNED BY: DATE:
DWN BY: CKD BY: SOLICITATION NO.:
SUBMITTED BY: CONTRACT NO.:
PLOT SCALE: 1:50 PLOT DATE: FILE NUMBER:
SIZE: FILE NAME: FP07-A-101o.dgn

U.S. ARMY CORPS OF ENGINEERS
AFGHANISTAN DISTRICT
APO AE 09356

SITE ADAPT DESIGN
FP07 - GUARD HOUSE
FLOOR PLAN, ROOF PLAN, AND REFLECTED CEILING PLAN

SHEET IDENTIFICATION
A-101
SHEET 7 OF 13

$FILE$
$DATE$ $TIME$

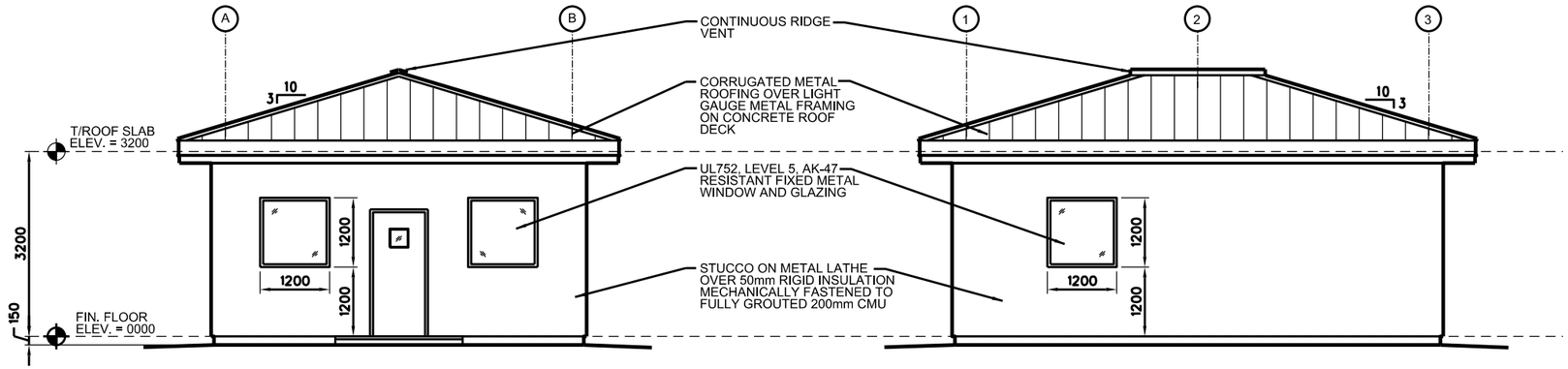

A A-201 ELEVATION
SCALE: 1:50

B A-201 ELEVATION
SCALE: 1:50

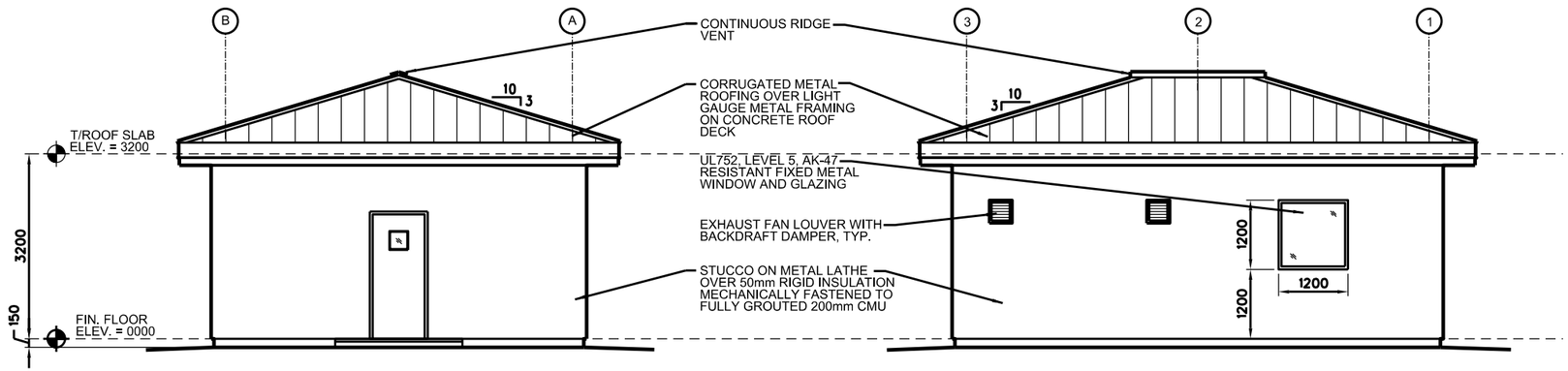

C A-201 ELEVATION
SCALE: 1:50

D A-201 ELEVATION
SCALE: 1:50

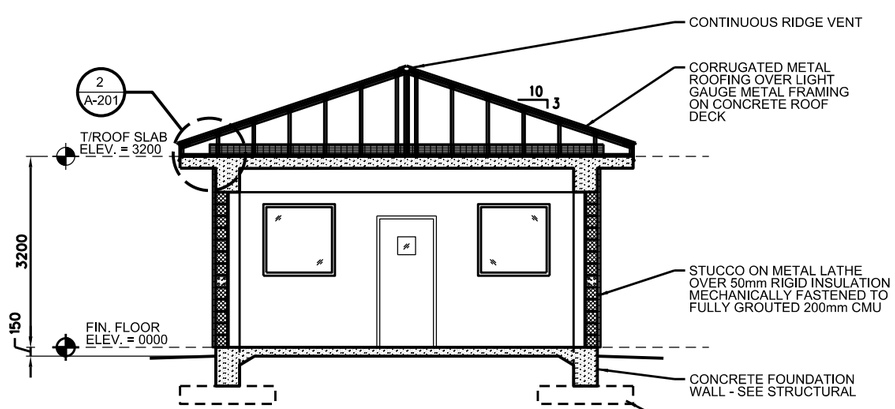

1 A-201 BUILDING SECTION
SCALE: 1:50

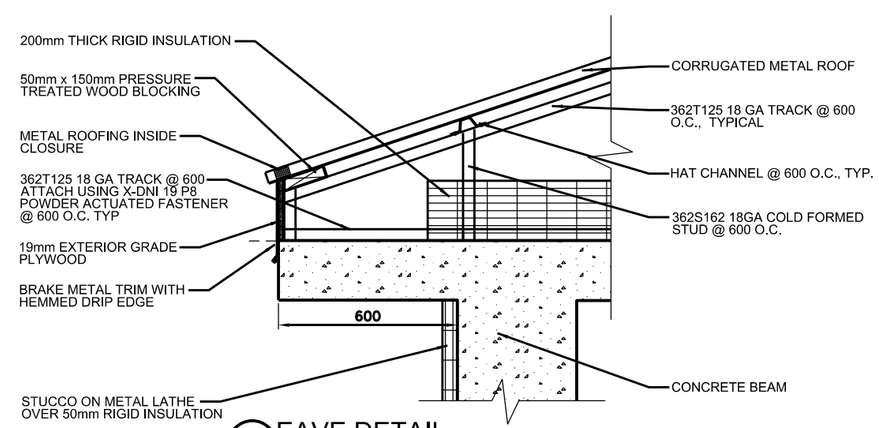

2 A-201 EAVE DETAIL
SCALE = 1:10

GENERAL NOTES:

1. WALL FINISHES SHALL BE AS INDICATED IN FINISH SCHEDULE ON PLATE A-601.
2. SURFACES TO BE PAINTED SHALL BE CLEAN AND FREE OF FOREIGN MATTER BEFORE APPLICATION OF PAINT. CLEANING SHALL BE SCHEDULED SO THAT DUST AND OTHER CONTAMINANTS WILL NOT FALL ON WET, NEWLY PAINTED, SURFACES.
3. CONCRETE AND INTERIOR MASONRY SURFACES GROUTED SOLID SHALL BE ALLOWED TO DRY AT LEAST 30 DAYS BEFORE PAINTING.
4. PAINTS CONTAINING LEAD IN EXCESS OF 0.06 PERCENT BY WEIGHT OF THE TOTAL NONVOLATILE CONTENT SHALL NOT BE USED.
5. MERCURIAL FUNGICIDES SHALL NOT BE USED IN OIL-BASE PAINT.
6. REMOVE LOOSE DIRT AND CLEAN SURFACES BEFORE PAINTING. APPLY PAINT TO INTERIOR STRUCTURAL RIGID FRAMINGS AND CEILINGS AND TEST FOR ADHESION. PRIMER COAT FOR MASONRY. INITIAL FIRST COAT WITH AN ACRYLIC LATEX PAINT FOR EXTERIOR SURFACES AND A SECOND COAT WITH A WATER REPELLENT ACRYLIC LATEX PAINT.
7. DIMENSIONS ARE TO EDGE OF MASONRY OPENINGS.

GRAPHIC SCALE
SCALE: 1 : 10

GRAPHIC SCALE
SCALE: 1 : 50

US Army Corps of Engineers®
AFGHANISTAN ENGINEER DISTRICT

MARK	DESCRIPTION	DATE	APPR.	MARK	DESCRIPTION	DATE	APPR.

DESIGNED BY: | DATE:
DWN BY: | CKD BY: | SOLICITATION NO.:
SUBMITTED BY: | CONTRACT NO.:
PLOT SCALE: 1:1.39 | PLOT DATE: | FILE NUMBER:
SIZE: | FILE NAME: FP07-A-201e.dgn

U.S. ARMY CORPS OF ENGINEERS
AFGHANISTAN DISTRICT
APO AE 09356

SITE ADAPT DESIGN
FP07 - GUARD HOUSE
ELEVATIONS, BUILDING SECTION, AND EAVE DETAIL

SHEET IDENTIFICATION
A-201
SHEET 8 OF 13

$FILEL$ $TIMES
$DATES

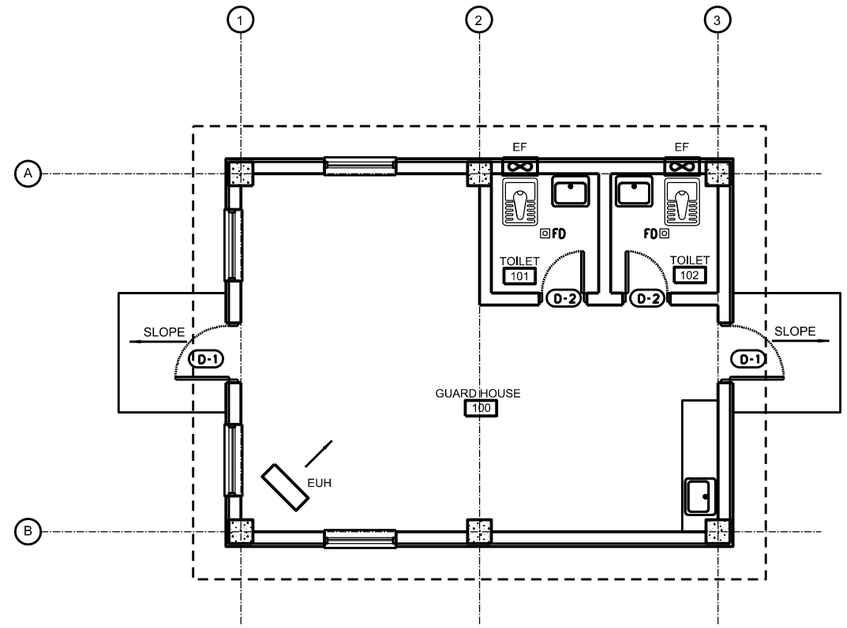

1 M-101 HVAC PLAN
SCALE: 1:50

LEGEND:

- D-• DOOR TYPE, SEE PLATE A-601
- FEB FIRE EXTINGUISHER AND WALL MOUNTED BRACKET
- A WINDOW TYPE, SEE PLATE A-601
- FD FLOOR DRAIN
- EF EXHAUST FAN, PROPELLER TYPE WITH OPERATABLE LOUVER 85 CMH
- EUH ELECTRIC UNIT HEATER 5kW, 220 VOLTS, 1 PHASE, 50 HERTZ

GRAPHIC SCALE

2500 500 0 2500 5000

SCALE: 1 : 50

US Army Corps of Engineers®
AFGHANISTAN ENGINEER DISTRICT

MARK	DESCRIPTION	DATE	APPR.	MARK	DESCRIPTION	DATE	APPR.

DESIGNED BY: DATE:
DWN BY: CKD BY: SOLICITATION NO.:
SUBMITTED BY: CONTRACT NO.:
PLOT SCALE: 1:50 PLOT DATE: FILE NUMBER:
SIZE: FILE NAME: FP07A-101c.dgn

U.S. ARMY CORPS OF ENGINEERS
AFGHANISTAN DISTRICT
APO AE 09356

SITE ADAPT DESIGN
FP07 - GUARD HOUSE
MECHANICAL PLAN

SHEET IDENTIFICATION
M-101
SHEET 10 OF 13

$FILEL$
$DATE$ $TIME$

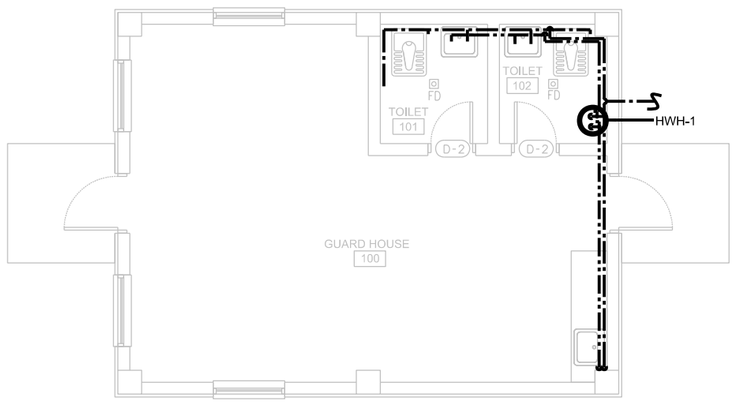

1 P-101 PLUMBING HOT & COLD PLAN
SCALE: 1:50

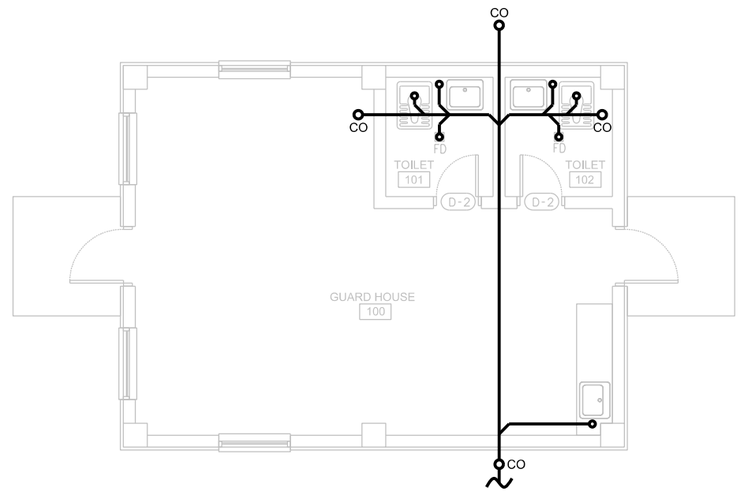

2 P-101 PLUMBING WASTE PLAN - ALTERNATE A
SCALE: 1:50

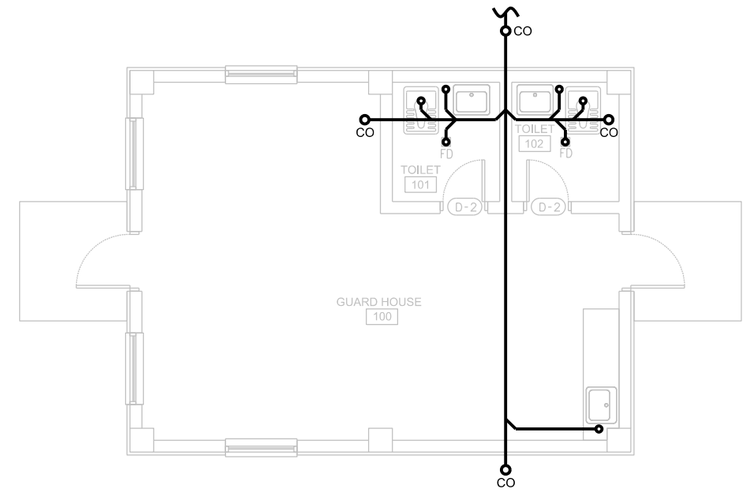

3 P-101 PLUMBING WASTE PLAN - ALTERNATE B
SCALE: 1:50

PLUMBING FIXTURE LIST SCHEDULE							
TYPE	ITEM	SOIL & WASTE	VENT	COLD WATER	HOT WATER	REMARKS	REMARKS 2
W-1	EASTERN STYLE WATER CLOSET	100mm	---	15mm	———	FLUSH TANK	----------
L-2	WALL HUNG LAVATORY	40mm	40mm	15mm	15mm	CAST IRON WITH BAKED ENAMEL FINISH	----------
FD	FLOOR DRAIN	50mm	---	---	---	SLOPE FLOOR TO DRAIN	----------
KS	KITCHEN SINK	40mm	---	15mm	15mm	STAINLESS STEEL	----------

ELECTRIC WATER HEATER SCHEDULE						
MARK	MANUF	LOCATION	STORAGE (Ltr)	TOTAL KW	VOLTS/ PHASE/ HERTZ	REMARKS
HWH-1	A.O. SMITH	TOILET 102	80	1.5	220/1/50	EXTEND DRAIN LINE FROM T&P VALVE TO FLOOR

LEGEND:

- WASTE
- COLD WATER
- HOT WATER

GRAPHIC SCALE

1000

2500 500 0 2500 5000

SCALE: 1 : 50

US Army Corps of Engineers
AFGHANISTAN ENGINEER DISTRICT

MARK	DESCRIPTION	DATE	APPR.	MARK	DESCRIPTION	DATE	APPR.

DESIGNED BY: DATE:
DWN BY: CKD BY: SOLICITATION NO.:
SUBMITTED BY: CONTRACT NO.:
PLOT SCALE: 1:50 PLOT DATE: FILE NUMBER:
SIZE: FILE NAME: FP07A-001c.dgn

U.S. ARMY CORPS OF ENGINEERS
AFGHANISTAN DISTRICT
APO AE 09356

SITE ADAPT DESIGN
FP07 - GUARD HOUSE
FLOOR PLAN - PLUMBING

SHEET IDENTIFICATION
P-101
SHEET 11 OF 13

$FILEL$ $TIMES
$DATE$

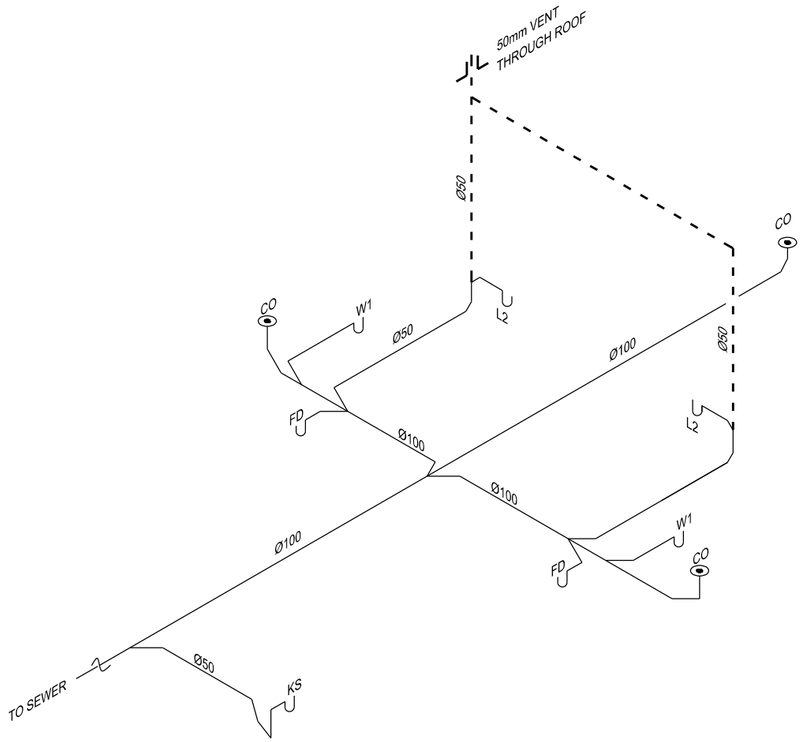

1 P-901 WATE & VENT ISOMTERIC - ALTERNATE A
SCALE: N.T.S.

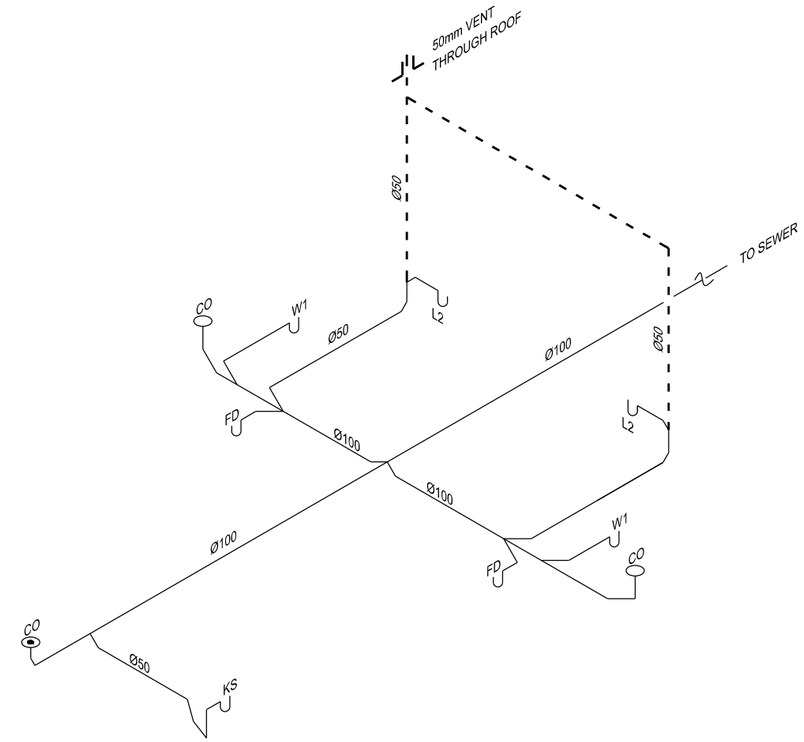

2 P-901 WASTE & VENT ISOMETRIC - ALTERNATE B
SCALE: N.T.S.

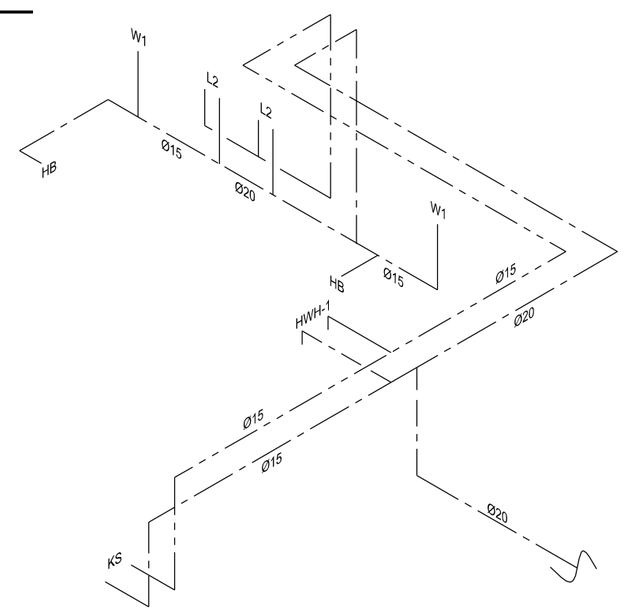

3 P-901 GUARD HOUSE HOT & COLD ISOMETRIC
SCALE: N.T.S.

LEGEND:

- WASTE
- VENT
- COLD WATER
- HOT WATER

US Army Corps of Engineers®
AFGHANISTAN ENGINEER DISTRICT

MARK	DESCRIPTION	DATE	APPR.	MARK	DESCRIPTION	DATE	APPR.

U.S. ARMY CORPS OF ENGINEERS
AFGHANISTAN DISTRICT
APO AE 09356

DESIGNED BY: JAE
DWN BY: JSP
CKD BY: JAE
SUBMITTED BY: MRH
DATE:
SOLICITATION NO.:
CONTRACT NO.:
FILE NUMBER:
PLOT SCALE: 1:1
PLOT DATE:
SIZE: ANSI D
FILE NAME: FP07_P-901.dgn

SITE ADAPT DESIGN
FP07 - GUARD HOUSE
PLUMBING ISOMETRICS

SHEET IDENTIFICATION
P-901
SHEET 12 OF 13

$FILE$ $TIME$
$DATE$

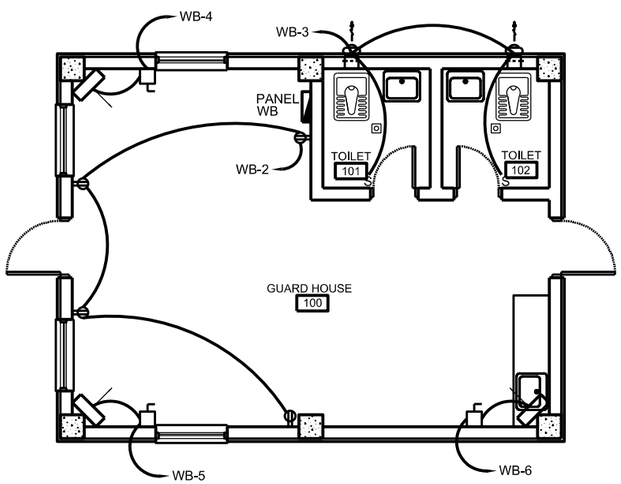

1 E-101 POWER PLAN
SCALE: N.T.S.

PANEL: WB	VOLTS: 220V	PHASE/WIRE: 1/3	LOCATION:	
MAIN BUS: 60AMP	MAIN CB: 60AMP	NEUTRAL: 100%		FAULT DUTY: 22 kAIC MIN.
LOAD INFORMATION	VOLTAMPS	BREAKER RATING /POLES		

LOAD	NOTE	TYPE	VOLTAMPS	CKT	P	CB
Lighting		L	742	1	1	20
Receptacles		R	720	2	1	20
Exhaust Fans		M2	1000	3	1	20
Unit Heater #1		RH	1000	4	1	20
Unit Heater #2		RH	1000	5	1	20
Unit Heater #3		RH	1000	6	1	20
Spare		S	1000	7	1	20
Spare		S	1000	8	1	20
Spare		S	1000	9	1	20
Space				10	1	20
Space				11	1	20
Space				12	1	20
Space				13	1	20
Space				14	1	20
Space				15	1	20
Space				16	1	20
MOUNTING: SURFACE			8,462			
ENCLOSURE: NEMA 1			CONNECTED PHASE (VA):			8,462
			CONNECTED CURRENT (A):			38.46

NOTES:

TYPE	VA	DF	VAxDF
L	742	1.00	742
M1	-	0.60	-
M2	1,000	0.30	300
O	-	0.80	-
R	720	1.00	720
R	-	0.50	-
RH	3,000	0.90	2,700
IF	-	0.90	-
AC	-	0.80	-
RC	-	0.70	-
S	3,000	0.50	1,500
CND	8,462	EMD	5,962
EMD (Amps)			27.10

LOAD TYPES:
L - LIGHTING
LM - LARGEST MOTOR
M - MOTOR LOAD
O - MISC OR OTHER TYPE LOADS
R - RECEPTACLE (First 10,000 VA per NEC)
R - RECEPTACLE (over 10,000 VA per NEC)
S - SPARE

form:panelsch.xls: 3RHFORM dated: 28 February 2005

2 E-101 PANEL WB SCHEDULE
SCALE: N.T.S.

GENERAL NOTES:

1. GROUND FAULT CIRCUIT INTERRUPTER DUPLEX RECEPTACLES AT CABINET SHALL BE PLACED ON TWO SEPARATE AND DEDICATED CIRCUITS.

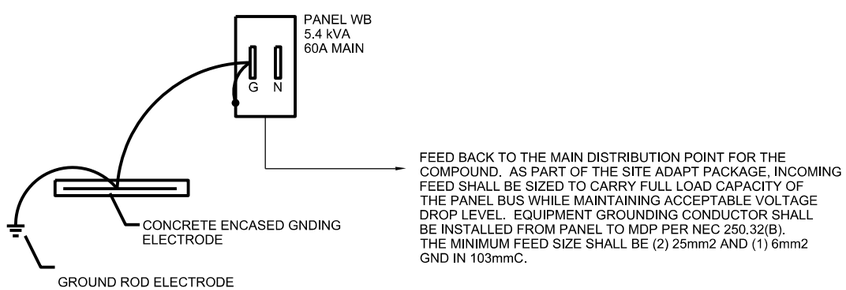

3 E-101 RISER DIAGRAM
SCALE: N.T.S.

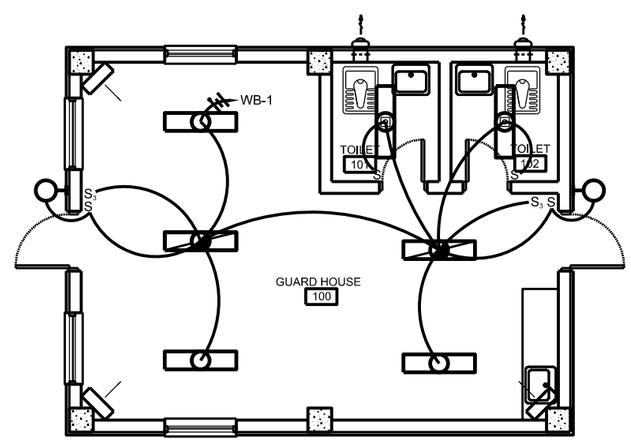

4 E-101 LIGHTING PLAN
SCALE: N.T.S.

LEGEND:

FIXTURE MARK "A"

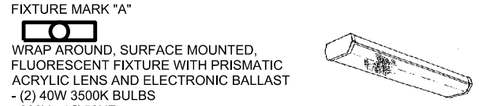

WRAP AROUND, SURFACE MOUNTED, FLUORESCENT FIXTURE WITH PRISMATIC ACRYLIC LENS AND ELECTRONIC BALLAST
- (2) 40W 3500K BULBS
- 220V - 1Ø 50HZ

FIXTURE MARK "A*"

WRAP AROUND, SURFACE MOUNTED, FLUORESCENT FIXTURE WITH PRISMATIC ACRYLIC LENS AND ELECTRONIC BALLAST WITH EMERGENCY BALLAST
- (2) 40W 3500K BULBS
- 220V - 1Ø 50HZ

FIXTURE MARK "B"

INCANDESCENT, WALL MOUNTED, ONE PIECE W/APPROVED LENS STABILIZED HIGH IMPACT POLYCARBONATE.
- (1) A19 - 100W INCANDESCENT
- 220V - 1Ø 50HZ

EXHAUST FAN

220V DUPLEX ELECTRICAL RECEPTACLE

32A, 220V, LOCKABLE DISCONNECT SWITCH

UNIT HEATER

S_3 220V, 20A, 1P GENERAL PURPOSE SWITCH (3 WAY)

GRAPHIC SCALE

US Army Corps of Engineers
AFGHANISTAN ENGINEER DISTRICT

MARK	DESCRIPTION	DATE	APPR.	MARK	DESCRIPTION	DATE	APPR.

DESIGNED BY: | DATE: | SOLICITATION NO.: | DWN BY: | CKD BY: | CONTRACT NO.: | SUBMITTED BY: | PLOT SCALE: 1:1 | PLOT DATE: | FILE NUMBER: | SIZE: | FILE NAME: FP07-E-101e.dgn

U.S. ARMY CORPS OF ENGINEERS
AFGHANISTAN DISTRICT
APO AE 09356

SITE ADAPT DESIGN
FP07 - GUARD HOUSE
ELECTRICAL PLANS

SHEET IDENTIFICATION
E-101
SHEET 13 OF 13

$FILE$ $TIME$
$DATE$