14

STANDARD BUILDING DESIGNS

TYPE 1 -2 STORY SENIOR/HIGH BARRACKS

(B12 - 862GSM)

SHEET INDEX

G1 COVER SHEET

S1 GENERAL NOTES & DESIGN CRITERIA
S2 DESIGN CRITERIA & SCHEDULES
S3 SCHEDULES
S4 FOUNDATION PLAN
S5 SECOND FLOOR FRAMING PLAN
S6 ROOF FRAMING PLAN
S7 FOUNDATION SECTIONS & DETAILS
S8 FLOOR & ROOF FRAMING SECTIONS & DETAILS
S9 FLOOR & ROOF FRAMING SECTIONS & DETAILS
S10 SECTION DETAILS

A1 FIRST FLOOR PLAN
A2 SECOND FLOOR PLAN
A3 ROOF PLAN AND DETAILS
A4 EXTERIOR ELEVATIONS
A5 BUILDING & WALL SECTIONS
A6 STAIR PLAN & SECTION
A7 STAIR DETAILS
A8 DOOR, WINDOW & FINISH TYPES & DETAILS
A9 LATRINE AND SHOWER DETAILS
A10 SECTION DETAILS

P1 FIRST FLOOR PLAN - PLUMBING AND DRAINAGE ISOMETRIC
P2 SECOND FLOOR PLAN - PLUMBING
P3 TYPICAL BUILDING PLUMBING SCHEMATICS & PLUMBING DETAILS

M1 PLANS - HVAC

SHEET INDEX

E0 ELECTRICAL SYMBOLS AND ABBREVIATIONS
E1 FIRST FLOOR LIGHTING PLAN
E2 SECOND FLOOR LIGHTING PLAN
E3 FIRST FLOOR POWER AND SYSTEMS PLAN
E4 SECOND FLOOR POWER AND SYSTEMS PLAN
E5 ROOF LIGHTNING PROTECTION PLAN
E6 DETAILS
E7 LIGHT FIXTURE SCHEDULE
E8 PANEL SCHEDULES AND RISER DIAGRAM

US Army Corps of Engineers
Afghanistan Engineer District

SYMBOL	DESCRIPTION	DATE	APP.

DESIGNED BY: JDS
DATE: 09-30-09
DWN BY: JDS
SUBMITTED BY: BAKER
CHK BY: JDS
FILE NO.: ANPSDG-001XXX

Michael Baker Jr., Inc
A unit of Michael Baker Corporation
Airside Business Park
100 Airside Drive
Moon Township PA 15108
www.mbakercorp.com

STANDARD DESIGN
BARRACK BUILDING, 2-STORY (862 GSM)
WOOD FIRED HEAT OPTION
COVER SHEET

SHEET REFERENCE NUMBER:
G1

100% SUBMISSION

STRUCTURAL DESIGN CRITERIA (CONT)

ALL DESIGNS SHALL CONFORM TO THE PROVISIONS OF THE IBC 2006 AS APPLICABLE

1.5 WIND LOADS (PER IBC 2006)

1.5.1 DESIGN PARAMETERS

BASIC WIND SPEED	137 Km/h
WIND IMPORTANCE FACTOR	1.0
WIND EXPOSURE CATEGORY	D
DIRECTIONALITY COEFFICIENT (Kd)	0.85
TOPOGRAPHIC FACTOR (Kzt)	1.0

1.5.2 DESIGN WIND PRESSURE – MAIN WINDFORCE RESISTING SYSTEM

LOCATION	CORNER ZONE WIDTH "a"	MEAN ROOF HEIGHT (H)	WINDWARD WALL (@ MEAN ROOF HEIGHT)	LEEWARD WALL (@ MEAN ROOF HEIGHT)	ROOF
FIELD ZONE	N/A	8535 mm	680 N/m^2	−480 N/m^2	−470 N/m^2
CORNER ZONE	1440mm	8535 mm	800 N/m^2	−418 N/m^2	−750 N/m^2

a = 10% OF LEAST HORIZONTAL DIMENSION OR 0.4h, WHICHEVER IS SMALLER, BUT NOT LESS THAN EITHER 4% OF LEAST HORIZONTAL DIMENSION OR 0.9M.
h = MEAN ROOF HEIGHT, IN METERS, EXCEPT THAT EAVE HEIGHT SHALL BE USED FOR ANGLE GREATER THAN 10°.

1.5.3 DESIGN WIND PRESSURE – WALL COMPONENTS AND CLADDING

EXTERIOR WALL SYSTEMS & THEIR ATTACHMENTS TO THE PRIMARY STRUCTURE SHALL BE DESIGNED FOR THE PRESSURES SHOWN IN THE DIAGRAM BELOW:

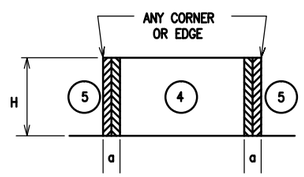

LOCATION	WINDWARD PRESSURE N/m^2 (inward)		LEEWARD PRESSURE N/m^2 (outward)		a
	4	5	4	5	
MAIN BUILDING					(mm)
AREA = 1 m^2	788	788	−850	−1050	1440
AREA = 2 m^2	748	748	−815	−967	1440
AREA = 5 m^2	700	700	−765	−880	1440
AREA = 10 m^2	648	648	−715	−750	1440

NOTES:
1. DESIGN WIND PRESSURES ABOVE REPRESENT THE NET PRESSURE (SUM OF INTERNAL AND EXTERNAL PRESSURE) APPLIED NORMAL TO ALL SURFACES.
2. LINEAR INTERPOLATION BETWEEN VALUES OF TRIBUTARY AREA IS PERMISSIBLE.
3. PLUS AND MINUS SIGNS SIGNIFY PRESSURE TOWARD AND AWAY FROM THE EXTERIOR SURFACE, RESPECTIVELY.

1.5 WIND LOADS (CONT)

1.5.4 DESIGN WIND PRESSURE – ROOF COMPONENTS AND CLADDING

ROOF COMPONENTS & THEIR ATTACHMENTS SHALL BE DESIGNED FOR THE PRESSURES SHOWN IN THE ADJACENT DIAGRAM & TABLE BELOW:

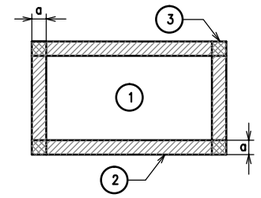

ROOF MEAN HEIGHT

LOCATION	GROSS UPLIFT PRESSURE N/m^2 (upward)			a
	1	2	3	
MAIN BUILDING				(mm)
AREA = 1 m^2	−787	−931	−1738	1440
AREA = 2 m^2	−787	−931	−1738	1440
AREA = 5 m^2	−787	−931	−1738	1440
AREA = 10 m^2	−787	−931	−1738	1440

NOTES:
1. DESIGN WIND PRESSURES ABOVE REPRESENT THE NET PRESSURE (SUM OF INTERNAL AND EXTERNAL PRESSURE) APPLIED NORMAL TO ALL SURFACES.
2. LINEAR INTERPOLATION BETWEEN VALUES OF TRIBUTARY AREA IS PERMISSIBLE.
3. PLUS AND MINUS SIGNS SIGNIFY PRESSURE TOWARD AND AWAY FROM THE EXTERIOR SURFACE, RESPECTIVELY.

2.0 FOUNDATION DESIGN CRITERIA (TO BE CONFIRMED BY THE CONTRACTOR)

THE GEOTECHNICAL ANALYSIS FOR THIS PROJECT IS THE RESPONSIBILITY OF THE CONTRACTOR AWARDED THE WORK. DESIGN VALUES USED IN THE STRUCTURAL ANALYSIS OF THE BUILDINGS HEREIN INDICATED HAVE BEEN ASSUMED AND SHALL BE CONFIRMED AND VERIFIED AS PART OF THE GEOTECHNICAL INVESTIGATION. VALUES WHICH DO NOT MEET THE REQUIREMENTS INDICATED BELOW SHALL BE IMMEDIATELY BROUGHT TO THE ATTENTION OF THE CONTRACTING OFFICER FOR CONSIDERATION AND DETERMINATION ON THE NEXT APPROPRIATE COURSE OF ACTION.

2.1.1 SOIL DESIGN PARAMETERS

NET ALLOWABLE SOIL BEARING CAPACITY	96.0 KPa
UNIT WEIGHT OF SOIL (moist)	1800 Kg/m^3
COEFF ACTIVE EARTH PRESSURE (Kpa)	0.30
COEFF PASSIVE EARTH PRESSURE (Kpp)	3.33
COEFF AT-REST EARTH PRESSURE (Kpr)	.55
COEFF OF SOIL FRICTION	.35
SUBGRADE MODULUS	4120 g/cm^3
MINIMUM BEARING DEPTH BELOW GRADE	800mm
SEISMIC SITE CLASS (based on in-situ soil)	D

CONCRETE BEAM SCHEDULE

GRADE BEAM						
MARK	SIZE (BxH)	REINFORCING TOP	BOTTOM	STIRRUPS	MIDBAR	REMARKS
GB1	500x750	(5)−#25	(4)−#25	#13 @ 200	#25 EF	TOP BAR LAP AT CENTER BOT BAR LAP PAST COL
FLOOR BEAM						
MARK	SIZE (BxH)	REINFORCING TOP	BOTTOM	STIRRUPS	MIDBAR	REMARKS
FB1	500x600	(3)−#22	(3)−#22	#13 @ 225	N/A	TOP BAR LAP AT CENTER BOT BAR LAP PAST COL
FB2	500x500	(3)−#22	(3)−#22	#13 @ 225	N/A	TOP BAR LAP AT CENTER BOT BAR LAP PAST COL
ROOF BEAM						
MARK	SIZE (BxH)	REINFORCING TOP	BOTTOM	STIRRUPS	MIDBAR	REMARKS
RB1	500x600	(2)−#19	(2)−#19	#13 @ 250	N/A	TOP BAR LAP AT CENTER BOT BAR LAP PAST COL

NOTE:
1. DIMENSIONS NOTED ARE MILLIMETERS (mm) UON.

CONCRETE COLUMN SCHEDULE

MARK	SIZE (LxW)	REINFORCING VERT BARS	TIES
C1	500x500	(8)−#32	#16 @ 100 (CORE OF EXT & CORNER COLUMNS) #16 @ 150 (CORE OF INTERIOR COLUMNS) #13 @ 200 (OTHER)

NOTE:
1. DIMENSIONS NOTED ARE MILLIMETERS (mm) UON.
2. SECOND STORY COLUMNS ARE SAME AS FIRST STORY COLUMNS.
3. CORE INDICATES THE AREA OF COLUMN & BEAM INTERSECTION
4. TIE INDICATES PERIMETER & CROSS TIE COMBINED

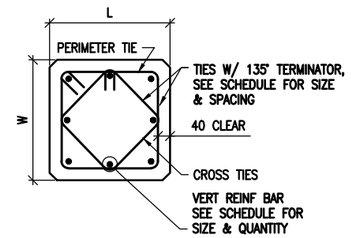

1 S2 S2 COLUMN DETAIL
SCALE: 1:10

SPREAD FOOTING SCHEDULE

MARK	FOOTING SIZE (mm) LENGTH	WIDTH	THICKNESS	FOOTING REINFORCING	REMARKS
F1	6000	3700	300	(18)−#22 SHORT, T&B (11)−#22 LONG, T&B	-----
F2	5200	3700	300	(19)−#22 SHORT, T&B (13)−#22 LONG, T&B	-----
F3	5300	3700	350	(17)−#22 SHORT, T&B (12)−#22 LONG, T&B	-----
F4	3350	3350	350	(11)−#22 EW BOTT	-----

NOTES:
1. DIMENSIONS NOTED ARE MILLIMETERS (mm) UON

UNLESS OTHERWISE NOTED, LINEAR DIMENSIONS SHOWN ARE IN MILLIMETERS (MM)

0 200 400 800
SCALE: 1: 10

US Army Corps of Engineers
Afghanistan Engineer District

SYMBOL	DESCRIPTION	DATE	APP

DESIGNED BY: MMY | DATE: 09-30-09
DWN BY: RCG | SUBMITTED BY: BAKER
CHK BY: CWW | FILE NO.: ANPSDS-002XXX

Michael Baker Jr., Inc
A unit of Michael Baker Corporation
Airside Business Park
100 Airside Drive
Moon Township PA 15108
www.mbakercorp.com

STANDARD DESIGN
BARRACK BUILDING, 2-STORY (862 GSM)
WOOD FRED HEAT OPTION

DESIGN CRITERIA & SCHEDULES

SHEET REFERENCE NUMBER:
S2

100% SUBMISSION

MINIMUM LAP SPLICES OF REINFORCING BARS IN TENSION (PER ACI 318M-05)

f'c = 28 MPa CONCRETE

BAR SIZE \ CENTER TO CENTER BAR SPACING	TOP BARS (mm) LESS THAN 4db	TOP BARS (mm) 4db OR MORE	OTHER BARS (mm) LESS THAN 4db	OTHER BARS (mm) 4db OR MORE	4db
#10	460	460	410	410	40
#13	660	610	510	480	50
#16	1020	760	790	580	60
#19	1450	910	1120	710	80
#22	1960	1090	1500	840	90
#25	2590	1450	1980	1120	100
#29	3280	1830	2510	1420	110
#32	4140	2340	3200	1780	130
#36	5080	2840	3910	2180	140

NOTES:

1. LAP SPLICES ABOVE ARE IN MILLIMETERS UON.
2. YIELD STRENGTH OF REINFORCEMENT, fy, IS 420MPa (LAP SPLICE LENGTH IS IN MILLIMETERS).
3. CONCRETE IS NORMAL WEIGHT (2400Kg/m³).
4. TOP BAR INDICATES HORIZONTAL REINFORCEMENT WHICH IS PLACED ABOVE 300mm OR MORE OF FRESH CONCRETE.
5. SEE COLUMN SCHEDULE FOR COLUMN AND SHEAR WALL VERTICAL LAP SPLICE.
6. STRAIGHT DEVELOPMENT LENGTH OF AN UNLAPPED BAR IS EQUAL TO VALUE FROM TABLE DIVIDED BY 1.3.
7. CATEGORY FOR BARS SPACED LESS THAN 4d, OR ON CENTER CORRESPONDS TO CATEGORY 1 IN THE CRSI HANDBOOK WHEREAS FOR BARS SPACED 4d, OR MORE ON CENTER CORRESPOND TO CRSI CATEGORY 5.

CONCRETE COVER SCHEDULE

MINIMUM CONCRETE COVER PROTECTION FOR REINFORCEMENT BARS SHALL BE AS FOLLOWS: (SEE ACI 318M-05, SECTION 7.7 FOR CONDITIONS NOT NOTED). DIMENSIONS FOR BAR PLACEMENT GIVEN IN SECTIONS AND DETAILS SHALL SUPERSEDE MINIMUM COVER REQUIREMENTS GIVEN HERE. DIMENSIONS ARE IN mm.

FOOTINGS (EARTH FORMED)		70
COLUMNS / PIERS (TO TIES)		40
GRADE BEAMS OR SLAB TURNED DOWN EDGES:		
TOP		40
BOTTOM (EARTH FORMED)		70
SIDES (EARTH FORMED)		70
SIDES (BOARD FORMED)	#16 BAR & SMALLER	40
	#19 THRU #36 BAR	50
ELEVATED BEAMS & SLABS:		
BEAM TIES & STIRRUPS (NOT EXPOSED TO WEATHER)		40
BEAM TIES & STIRRUPS (EXPOSED TO WEATHER)		50
FLOOR SLABS (NOT EXPOSED TO WEATHER)		20
FLOOR SLABS (EXPOSED TO WEATHER)		
#19 & LARGER		50
#13 & SMALLER		40
ROOF SLAB BARS		25
SLABS-ON-GRADE (NO EXPOSURE TO WEATHER) FROM TOP		20
SLABS-ON-GRADE (EXPOSURE TO WEATHER) FROM TOP		40
UTILITY TUNNEL WALLS, RETAINING WALLS AND SHEAR WALLS, (NO SURFACES SHALL BE EARTH FORMED) EARTH SIDE AND FRONT SIDE (EXPOSED TO WEATHER):		
#16 BAR AND SMALLER		40
#19 THRU #36 BAR		50

PROVIDE STANDARD BAR CHAIRS AND SPACERS AS REQUIRED TO MAINTAIN CONCRETE PROTECTION SPECIFIED.

MASONRY CONCRETE LINTEL SCHEDULE

OPENING TYPE OR SIZE, BEAM LOCATION OR TYPE	MAX SPAN (mm)	BEAM DEPTH (mm)	MAIN REINFORCING TOP	MAIN REINFORCING BOTTOM	MAIN REINFORCING OTHER	SHEAR REINF STIRRUPS
EXT WINDOW OR DOOR	900	400	(2)-#13	(2)-#13		----
INT WALL OPENING, NON-BEARING	2400	400		(2)-#13		----
INT WALL OPENING, NON-BEARING	1800	400		(2)-#13		----
INT WALL OPENING, NON-BEARING	900	200		(2)-#13		----

1. STRUCTURAL DRAWINGS DO NOT INDICATE ALL OPENINGS IN MASONRY WALLS. VERIFY NUMBER, SIZE AND LOCATION OF ALL OPENINGS IN MASONRY WALLS FROM ARCHITECTURAL SHEETS AND APPROVED PLUMBING, MECHANICAL, AND ELECTRICAL SHOP DRAWINGS.
2. PROVIDE 200mm BEARING EA END FOR 200mm DEEP MASONRY LINTEL. PROVIDE 400mm BEARING EA END FOR 400mm DEEP MASONRY LINTEL.
3. FOR HEAD DETAILS REFER TO ARCHITECTURAL SHEETS.
4. REINFORCING SHALL BE ASTM A615M, GRADE 420. CONCRETE FOR CAST-IN-PLACE BEAMS SHALL HAVE A MINIMUM COMPRESSIVE STRENGTH OF 28 MPa AT 28 DAYS.
5. CONTRACTOR SHALL SUBMIT FOR APPROVAL SHOP DRAWINGS AND SCHEDULES SHOWING SIZE, DETAILS, LOCATIONS, ETC FOR ALL CAST-IN-PLACE BEAMS IN CMU WALLS.

CONCRETE MATERIALS SCHEDULE

STRUCTURAL ELEMENT	f'c CONCRETE COMPRESSIVE STRENGTH @ 28 DAYS (MPa)
SLAB-ON-GRADE/TURN-DOWN SLABS	28
FLOOR SLABS	28
ALL FOOTINGS (UON)	28
MISC. CURBS, WALLS AND PADS UON	28
CAST-IN-PLACE LINTEL	28
CONCRETE FRAMING - BEAMS AND COLUMNS	28

NOTES:

1. ALL CONCRETE SHALL BE NORMAL WEIGHT CONCRETE. (2400 Kg/m³ UON)
2. ALL CONCRETE SHALL HAVE A MAX WATER-CEMENT RATIO OF 0.45.

STANDARD HOOKS IN TENSION PER (ACI 318M-05)

BAR SIZE	HOOK DEVELOPMENT LENGTH Ldh (mm) f'c 28 MPa
#10	180
#13	250
#16	300
#19	380
#22	430
#25	480
#29	560
#32	610
#36	690

MASONRY REINFORCING MINIMUM LAP SPLICES

BAR SIZE	BASIC LAP SPLICE Ld FOR CMU REINFORCING (mm)
#10	450
#13	600
#16	750
#19	900
#22	1050
#25	1200

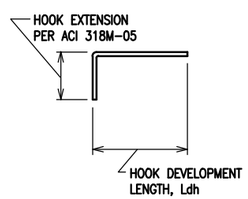

NOTES:

1. CONCRETE IS NORMAL WEIGHT CONCRETE.
2. BAR YIELD STRENGTH, fy = 420 MPa
3. SIDE COVER REQUIREMENTS OF ACI SECT. 12.5.3 ARE ASSUMED TO NOT BE MET.
4. TIE OR STIRRUP REQUIREMENTS OF ACI SECT. 12.5.3 ARE ASSUMED TO NOT BE MET.
5. REDUCTION FOR EXCESS REINFORCEMENT IS NOT TAKEN.
6. HOOK DEVELOPMENT LENGTH IS VALID FOR 180° HOOKS ALSO.

TYPICAL CMU WALL REINFORCING SCHEDULE

WALL TYPE OR LOCATION	WALL THICKNESS (mm)	CONT. VERT. REINF. (CENTERED IN CMU, UON)	CONT. CAST IN PLACE LINTEL (CIP BB) DEPTH (mm)	REINF (BOTT UON)	MAX CIPL VERT SPACING (mm)	REMARKS
ALL PERIMETER/EXTERIOR WALLS (UON)	200	1-#16 @ 800	200	2-#16	1200	------
NON-LOAD BEARING INTERIOR WALLS WITH TOP AND BOTT. SUPPORTS	200	1-#13 @ 1200	200	2-#16	1200	------

NOTES:

1. REINFORCING SIZES AND SPACING GIVEN IN SECTIONS AND DETAILS SHALL SUPERSEDE THE ABOVE SCHEDULE REQUIREMENTS.
2. PROVIDE CONTINUOUS CAST IN PLACE CONCRETE BOND BEAM AT ALL WALL LATERAL SUPPORT LOCATIONS.
3. REINFORCING INDICATED SHALL BE CONTINUOUS FOR FULL EXTENT OF SPLICE FOLLOWING THE REQUIREMENTS OF THE LAP SPLICE TABLE SHOWN ON THIS SHEET.
4. WALLS HAVE BEEN DESIGNATED AS VERTICALLY SPANNING UON AND THEREFORE MUST BE TEMPORARILY SUPPORTED DURING CONSTRUCTION UNTIL THE SUPPORTING DIAPHRAGMS (FLOOR AND ROOF SYSTEMS) HAVE BEEN COMPLETELY INSTALLED. SHORING IS THE RESPONSIBILITY OF THE CONTRACTOR.
5. ALL CMU WALLS SHALL BE FULLY GROUTED IN LIFTS NOT EXCEEDING THOSE BY CODE (UON)
6. SEE TYPICAL CMU WALL DETAILS ON SHEET S10.

MAXIMUM CMU WALL UNSUPPORTED HEIGHT OR LENGTH

	WALL THICKNESS (mm)	EXTERIOR WALL NON-LOAD BEARING (mm)	INTERIOR NON-LOAD BEARING WALL (mm)
MAX HEIGHT OR LENGTH BETWEEN SUPPORTS	200	4800	7200

NOTE: CMU WALL MAXIMUM LATERAL SUPPORT SPACING GIVEN IN SECTIONS AND DETAILS SHALL SUPERSEDE THE ABOVE SCHEDULE REQUIREMENTS.

US Army Corps of Engineers
Afghanistan Engineer District

SYMBOL	DESCRIPTION	DATE	APR

DESIGNED BY: MMY | DATE: 09-30-09
DWN BY: RCG | SUBMITTED BY: BAKER
CHK BY: CWW | FILE NO.: ANPSDS-003XXX

Michael Baker Jr., Inc
A unit of Michael Baker Corporation
Airside Business Park
100 Airside Drive
Moon Township PA 15108
www.mbakercorp.com

STANDARD DESIGN
BARRACK BUILDING, 2-STORY (862 GSM)
WOOD FIRED HEAT OPTION

SCHEDULES

SHEET REFERENCE NUMBER:
S3

100% SUBMISSION

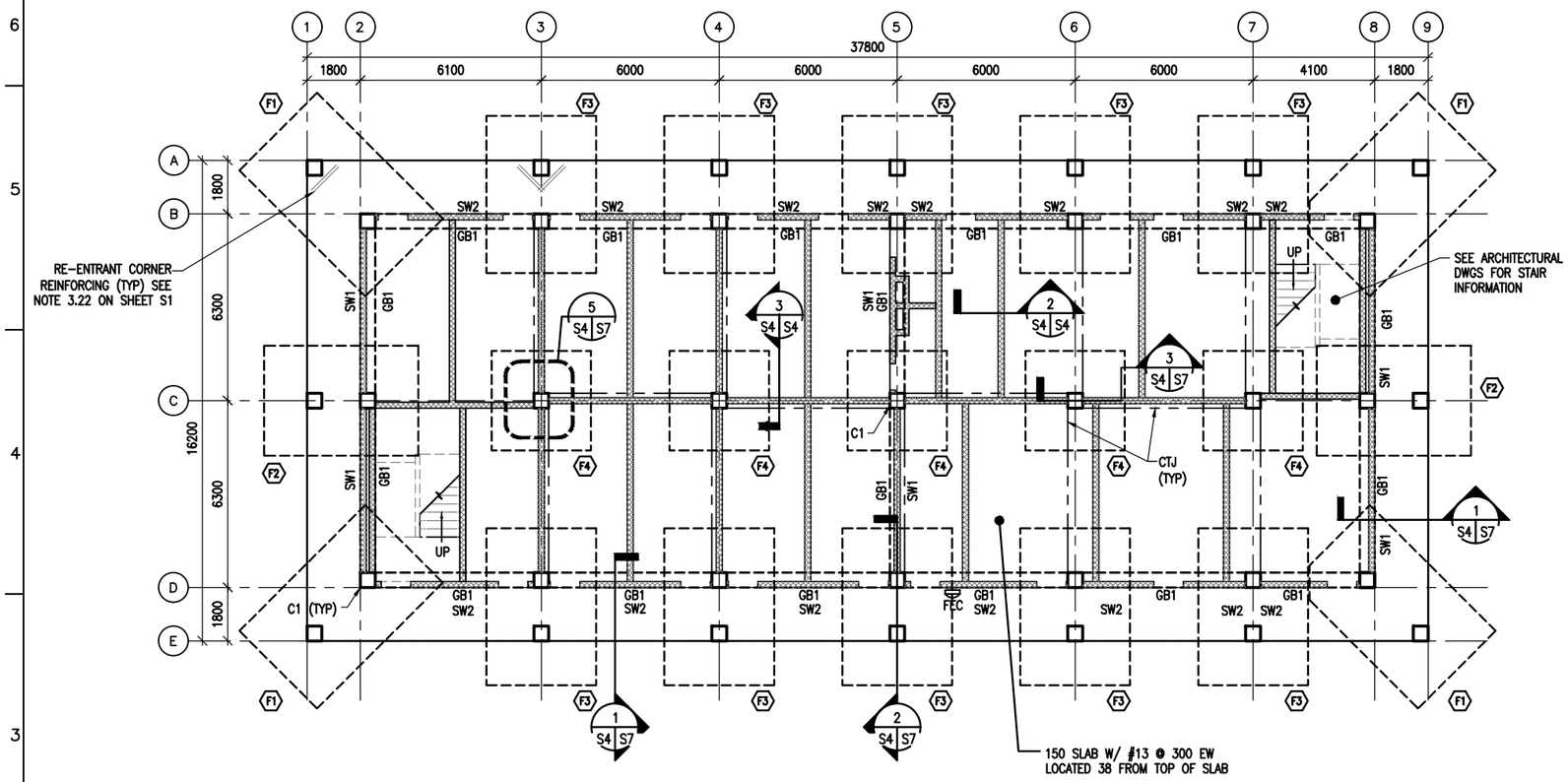

1 S4 S4 FOUNDATION PLAN
SCALE: 1:100

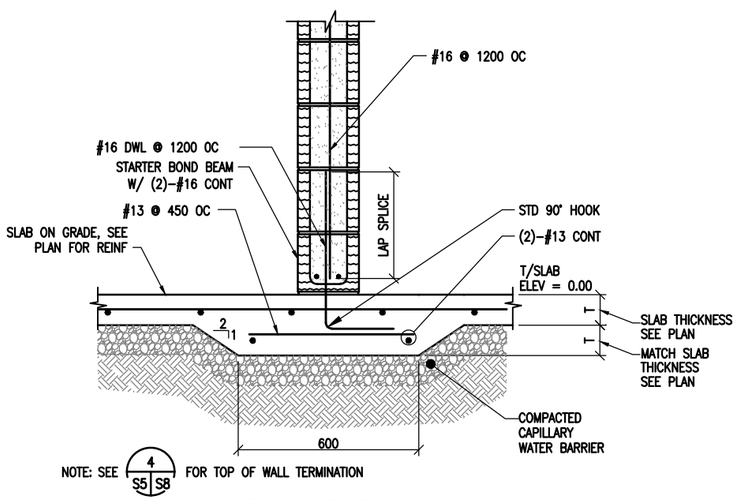

2 S4 S4 SECTION
SCALE: 1:10

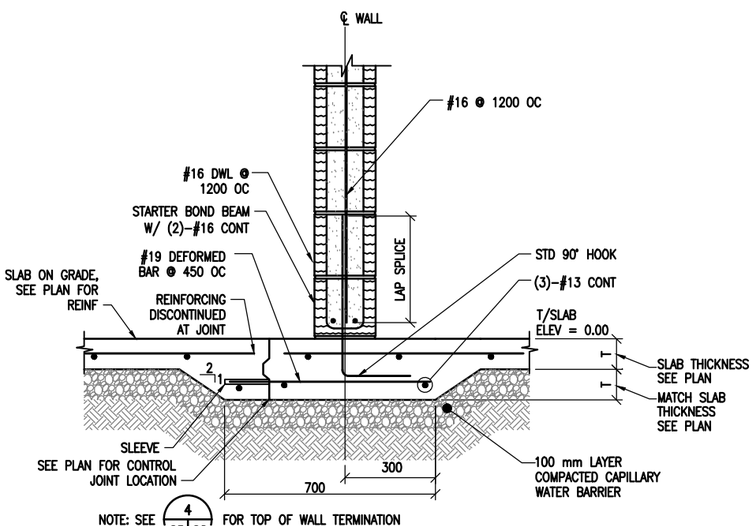

3 S4 S4 SECTION
SCALE: 1:10

PLAN NOTES:

1. FINISH FIRST FLOOR ELEVATION SHALL BE (DATUM 0.0) ALL PLUS OR MINUS DIMENSIONS INDICATED ON PLAN OR REFERRED TO IN NOTES RELATE TO FINISH FIRST FLOOR ELEVATION.
2. TOP OF EXTERIOR FOOTINGS SHALL BE −950 UNLESS OTHERWISE INDICATED.
3. TOP OF INTERIOR FOOTING SHALL BE −600 UNLESS OTHERWISE INDICATED.
4. SPREAD FOOTINGS INDICATED THUS F# ON PLAN. REFER TO SPREAD FOOTING SCHEDULE ON SHEET S2.
5. COLUMNS INDICATED THUS C# ON PLAN. REFER TO COLUMN SCHEDULE ON SHEET S2.
6. GRADE BEAM INDICATED THUS GB# ON PLAN, REFER TO BEAM SCHEDULE ON SHEET S2
7. REFER TO SHEETS S1 TO S3 FOR STRUCTURAL NOTES AND BASIS OF DESIGN.
8. CTJ & CSJ INDICATES SLAB CONTROL OR CONSTRUCTION JOINTS RESPECTIVELY. REFER TO SHEET S10 FOR DETAILS.
9. SEE CMU WALL REINFORCING SCHEDULE ON SHEET S3.
10. REFER TO ARCHITECTURAL SHEETS FOR MASONRY PARTITION TYPES.
11. SEE MECHANICAL AND ELECTRICAL SHEETS FOR CONCRETE PAD LOCATIONS, SIZES, AND THICKNESS NOT SHOWN. SEE SHEET S10 FOR DETAILS.
12. THICKENED SLAB UNDER CMU WALLS NOT SHOWN FOR CLARITY

UNLESS OTHERWISE NOTED, LINEAR DIMENSIONS SHOWN ARE IN MILLIMETERS (MM)

0 2000 4000 8000
SCALE: 1: 100

US Army Corps of Engineers
Afghanistan Engineer District

SYMBOL	DESCRIPTION	DATE	APP.

DESIGNED BY: MMY
DATE: 09-30-09
DWN BY: RCG
SUBMITTED BY: BAKER
CHK BY: CWW
FILE NO.: ANPSDS-104XXX

Michael Baker Jr. Inc
A unit of Michael Baker Corporation
Airside Business Park
100 Airside Drive
Moon Township PA 15108
www.mbakercorp.com

STANDARD DESIGN
BARRACK BUILDING, 2-STORY (862 GSM)
WOOD FIRED HEAT OPTION
FOUNDATION PLAN

SHEET REFERENCE NUMBER:
S4

100% SUBMISSION

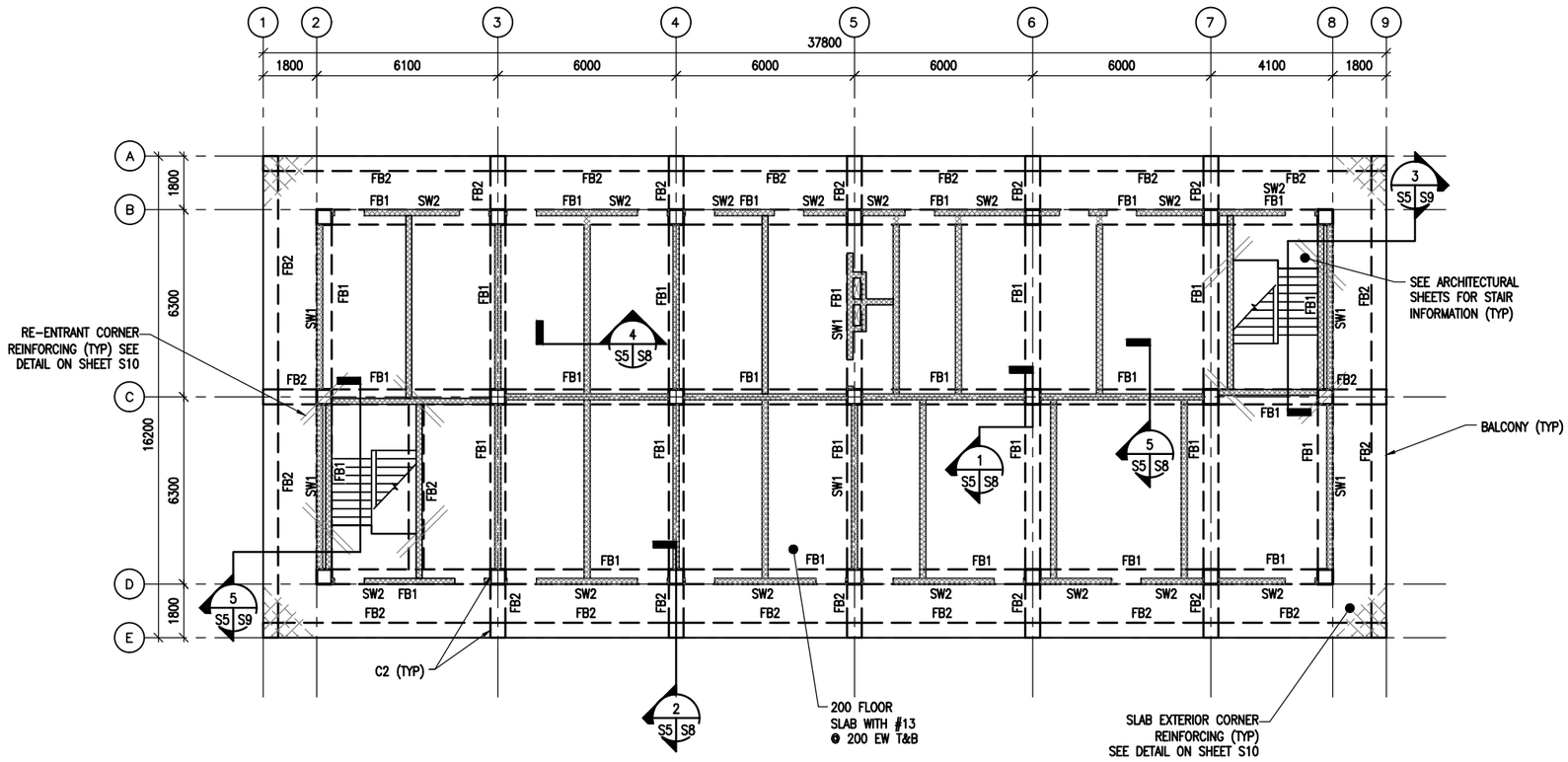

2ND FLOOR FRAMING PLAN

1 S5 S5

SCALE: 1:100

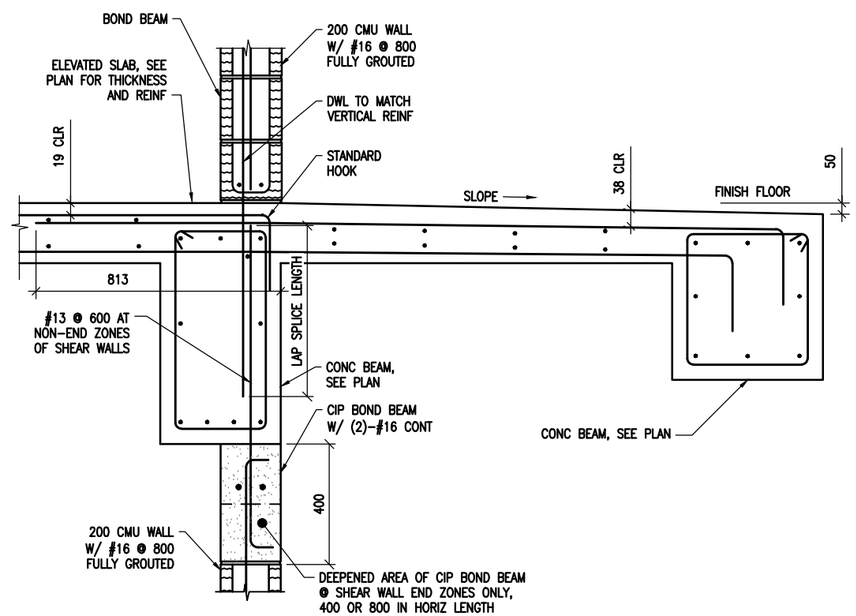

TYP SHEAR WALL END ZONE SECTION

2 S10 S5

SCALE: 1:10

PLAN NOTES:

1. TOP OF SLAB ELEVATION = 3600 UNLESS NOTED OTHERWISE.
2. COLUMNS INDICATED BY C# ON PLAN. REFER TO COLUMN SCHEDULE ON SHEET S2.
3. FLOOR BEAM INDICATED BY FB# ON PLAN. REFER TO BEAM SCHEDULE ON SHEET S2
4. REFER TO SHEETS S1 TO S3 FOR STRUCTURAL NOTES AND BASIS OF DESIGN.
5. SEE CMU WALL REINFORCING SCHEDULE ON SHEET S3.
6. REFER TO ARCHITECTURAL SHEETS FOR FLOOR SLAB OPENING LOCATIONS AND MASONRY PARTITION TYPES.
7. SEE MECHANICAL AND ELECTRICAL SHEETS FOR CONCRETE PAD LOCATIONS, SIZES, AND THICKNESS NOT SHOWN. SEE SHEET S10 FOR DETAILS.

UNLESS OTHERWISE NOTED, LINEAR DIMENSIONS SHOWN ARE IN MILLIMETERS (MM)

0 2000 4000 8000

SCALE: 1: 100

US Army Corps of Engineers
Afghanistan Engineer District

SYMBOL	DESCRIPTION	DATE	APPR

DESIGNED BY: MMY
DATE: 09-30-09
DWN BY: RCG
SUBMITTED BY: BAKER
CHK BY: CWW
FILE NO.: ANPSDS-105XXX

Michael Baker Jr., Inc
A unit of Michael Baker Corporation
Airside Business Park
100 Airside Drive
Moon Township PA 15108
www.mbakercorp.com

STANDARD DESIGN
BARRACK BUILDING, 2-STORY (862 GSM)
WOOD FIRED HEAT OPTION

SECOND FLOOR FRAMING PLAN

SHEET REFERENCE NUMBER:
S5

100% SUBMISSION

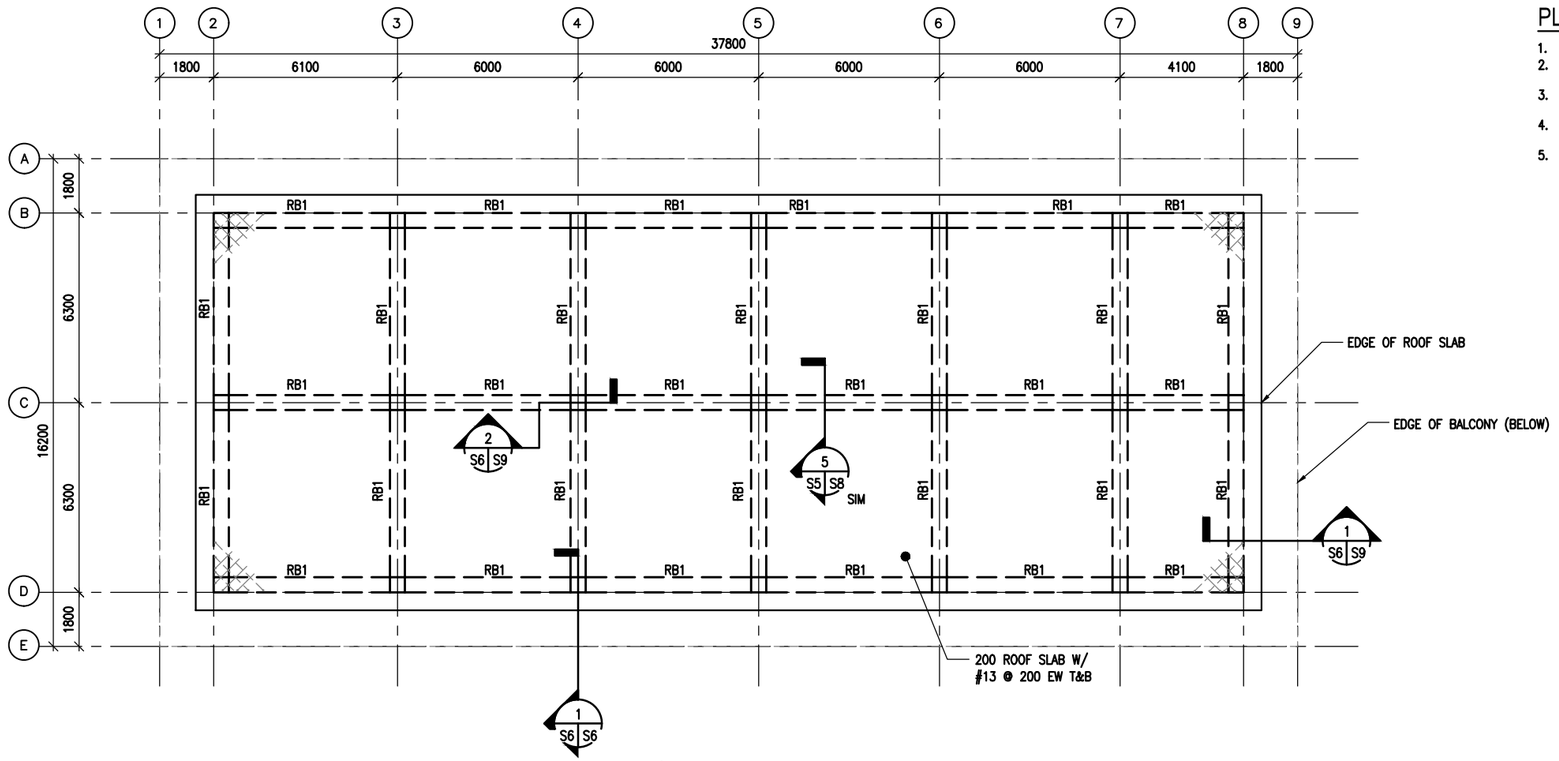

ROOF FRAMING PLAN

SCALE: 1:100

PLAN NOTES:

1. TOP OF SLAB ELEVATION = 7200 UNLESS NOTED OTHERWISE.
2. ROOF BEAM INDICATED BY RB# ON PLAN. REFER TO BEAM SCHEDULE ON SHEET S2
3. REFER TO SHEETS S1 TO S3 FOR STRUCTURAL NOTES AND BASIS OF DESIGN.
4. COORDINATE WITH ARCHITECTURAL SHEETS FOR COLD-FORMED STEEL OVERBUILT FRAMING ABOVE ROOF SLAB.
5. COLD-FORMED METAL OVERBUILT ROOF FRAMING NOT SHOWN FOR CLARITY. SEE OVERBUILT ROOF FRAMING DETAILS AND SECTIONS ON SHEET S9.

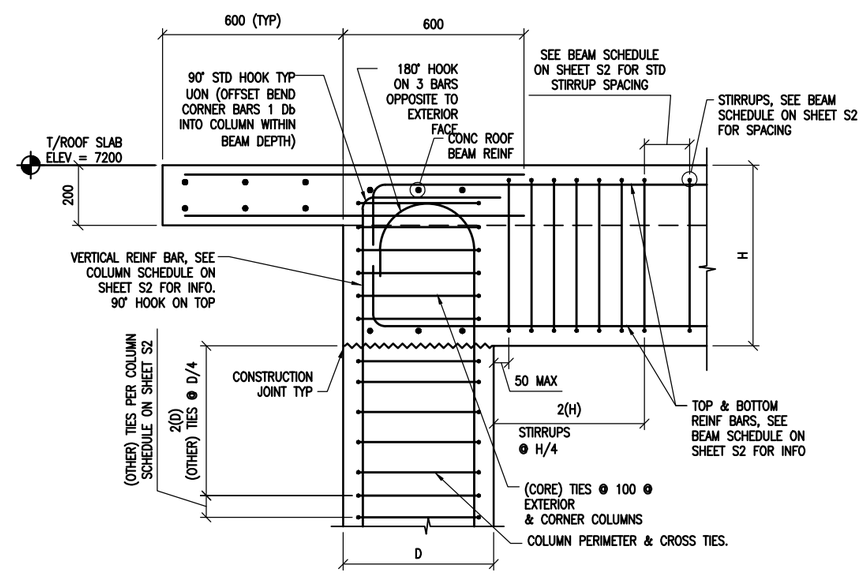

SECTION

SCALE: 1:10

UNLESS OTHERWISE NOTED, LINEAR DIMENSIONS SHOWN ARE IN MILLIMETERS (MM)

0 200 400 800

SCALE: 1: 10

0 2000 4000 8000

SCALE: 1: 100

US Army Corps of Engineers

Afghanistan Engineer District

SYMBOL	DESCRIPTION	DATE	APV

DESIGNED BY: MMY	DATE: 09-30-09	SUBMITTED BY: BAKER	FILE NO.: ANPSDS-106XXX
DWN BY: RCG			
CHK BY: CWW			

Michael Baker Jr., Inc
A unit of Michael Baker Corporation
Airside Business Park
100 Airside Drive
Moon Township, PA 15108
www.mbakercorp.com

STANDARD DESIGN
BARRACK BUILDING, 2-STORY (862 GSM)
WOOD FIRED HEAT OPTION

ROOF FRAMING PLAN

SHEET REFERENCE NUMBER:

S6

100% SUBMISSION

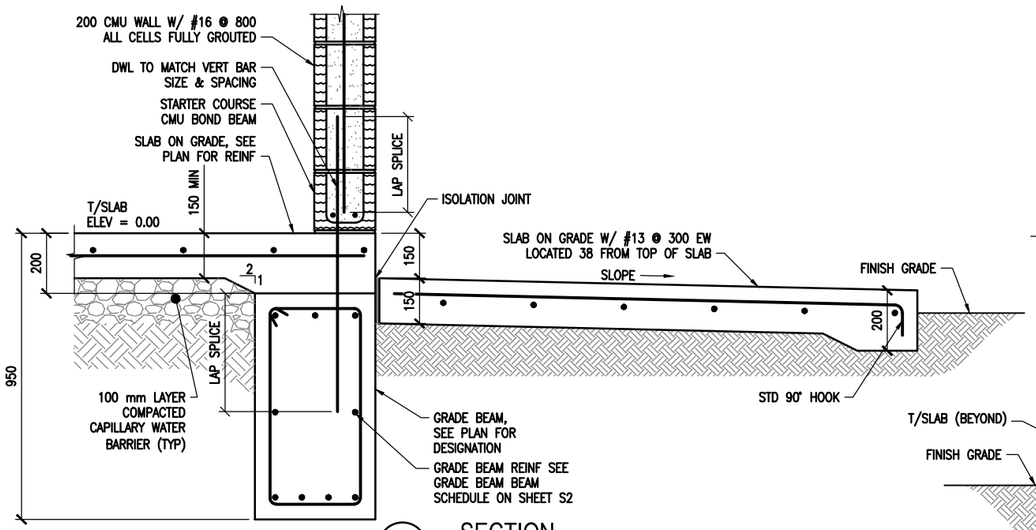

1 S4 S7 SECTION
SCALE: 1:10

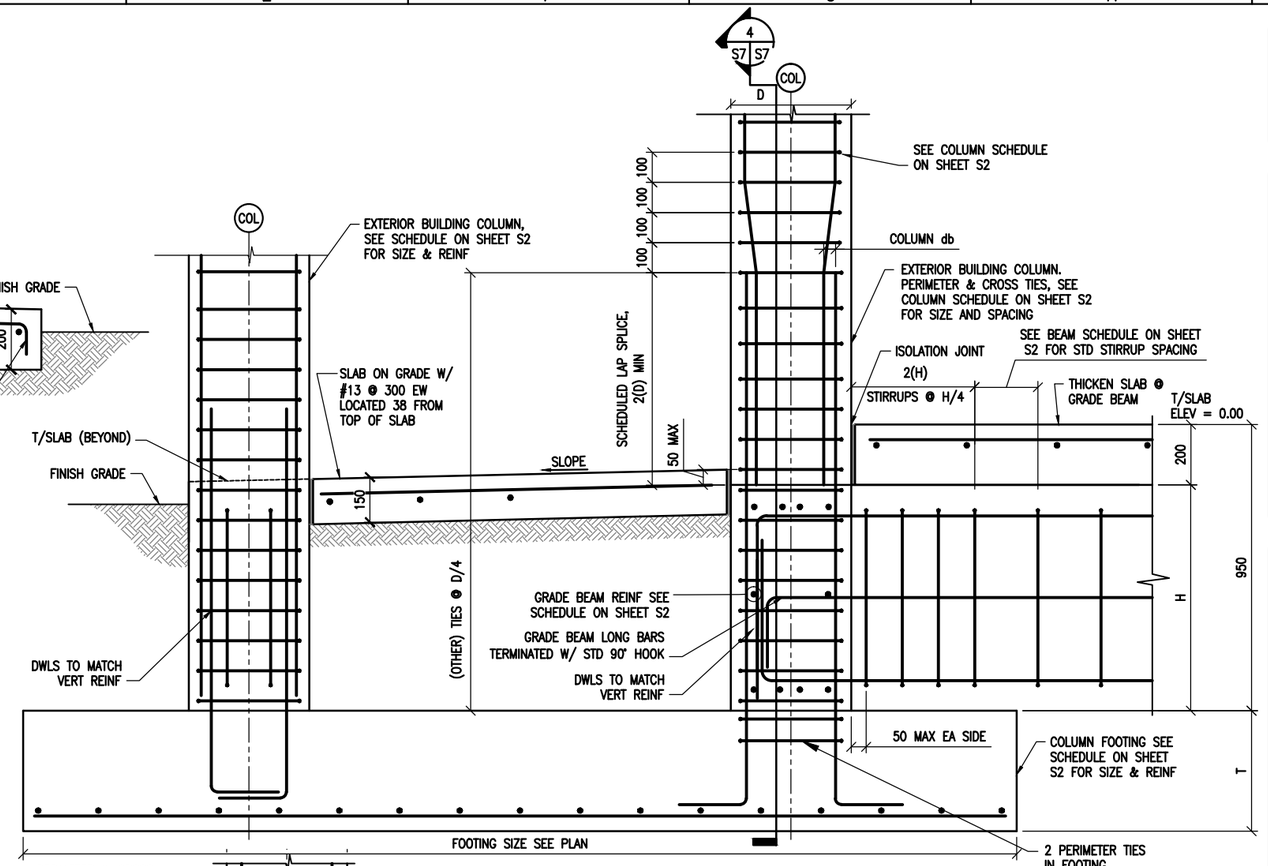

2 S4 S7 SECTION
SCALE: 1:10

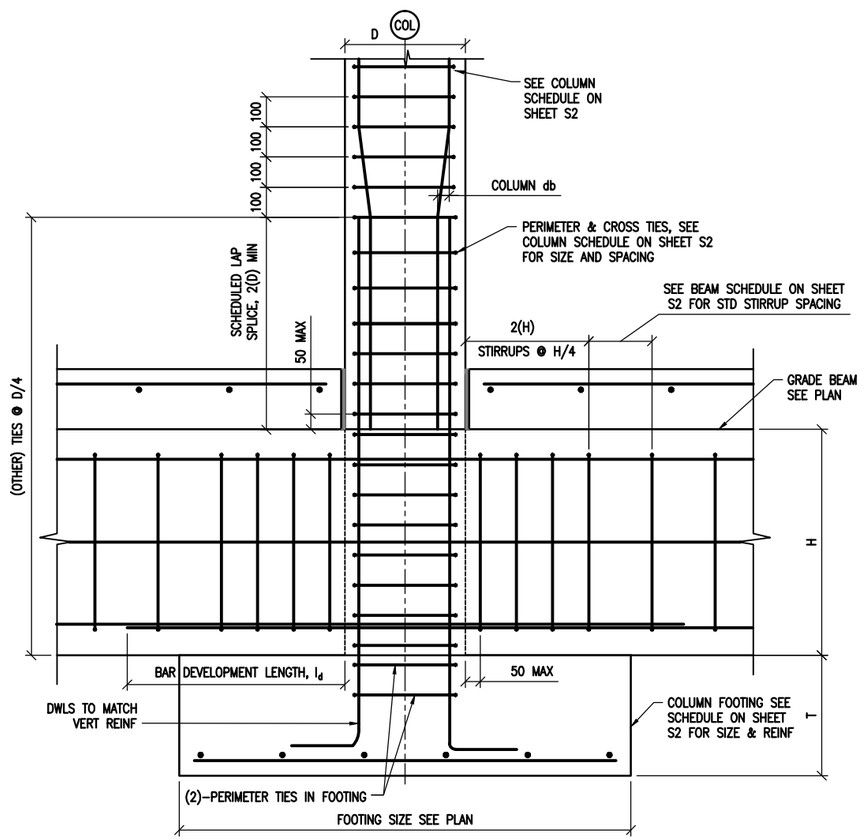

4 S7 S7 SECTION
SCALE: 1:10

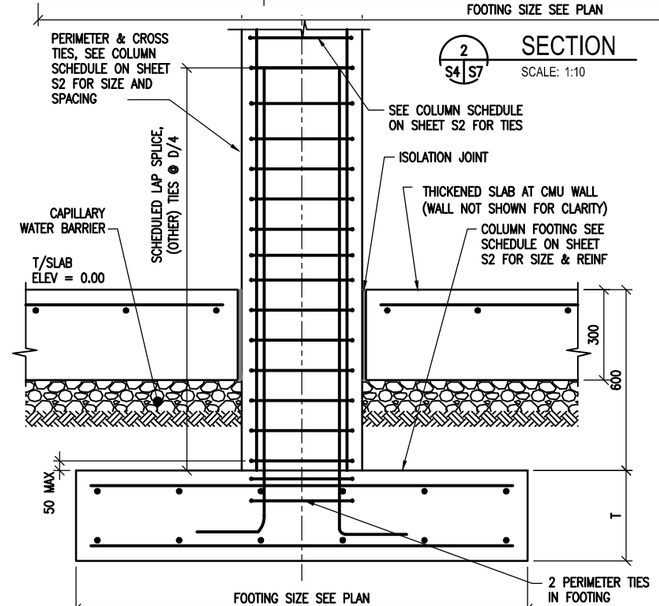

3 S4 S7 SECTION
SCALE: 1:10

NOTE:
1. CMU WALLS NOT SHOWN FOR CLARITY.

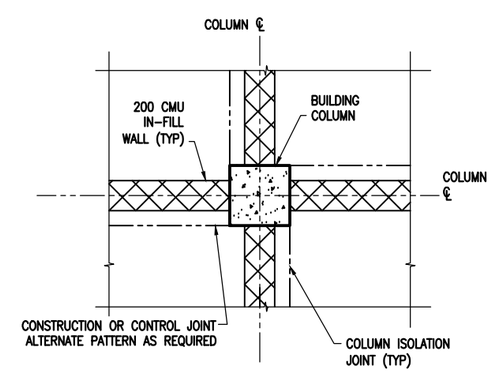

5 S4 S7 TYPICAL ISOLATION JOINT DETAIL
SCALE: 1:20

UNLESS OTHERWISE NOTED, LINEAR DIMENSIONS SHOWN ARE IN MILLIMETERS (MM)

0 200 400 800
SCALE: 1: 10

0 400 800 1600
SCALE: 1: 20

US Army Corps of Engineers
Afghanistan Engineer District

SYMBOL	DESCRIPTION	DATE	APP.

DESIGNED BY: MMY	DATE: 09-30-09
DWN BY: RCG	SUBMITTED BY: BAKER
CHK BY: CWW	FILE NO.: ANPSDS-307XXX

Michael Baker Jr., Inc
A unit of Michael Baker Corporation
Airside Business Park
100 Airside Drive
Moon Township PA 15108
www.mbakercorp.com

STANDARD DESIGN
BARRACK BUILDING, 2-STORY (862 GSM)
WOOD FIRED HEAT OPTION

FOUNDATION SECTIONS & DETAILS

SHEET REFERENCE NUMBER:
S7

100% SUBMISSION

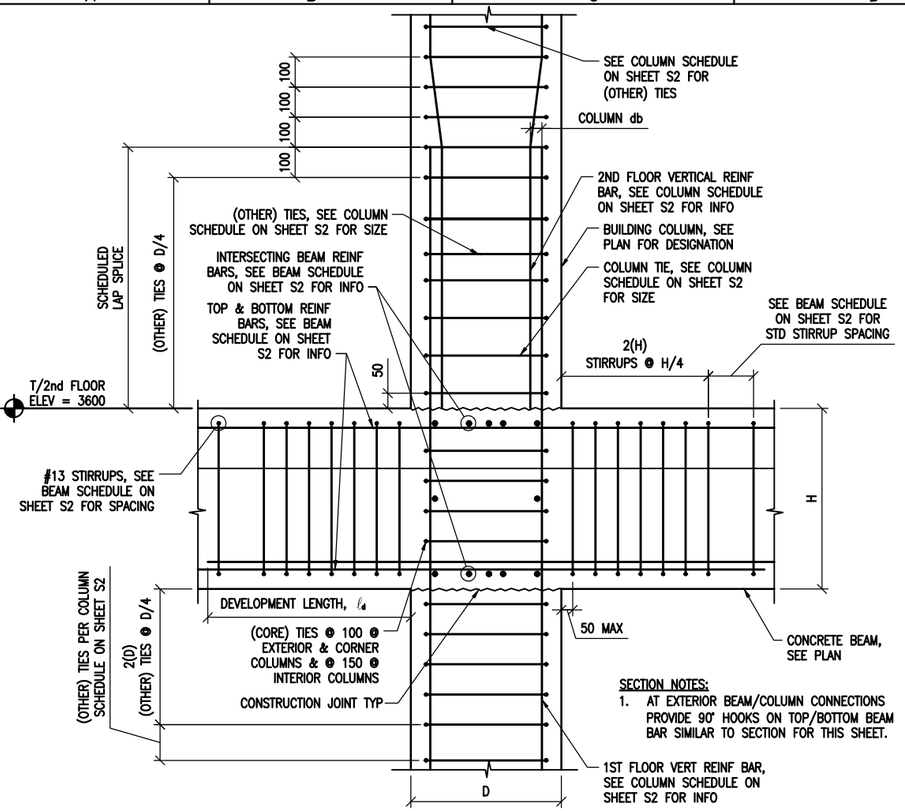

SECTION NOTES:
1. AT EXTERIOR BEAM/COLUMN CONNECTIONS PROVIDE 90° HOOKS ON TOP/BOTTOM BEAM BAR SIMILAR TO SECTION FOR THIS SHEET.

1 S5 S8 SECTION
SCALE: 1:10

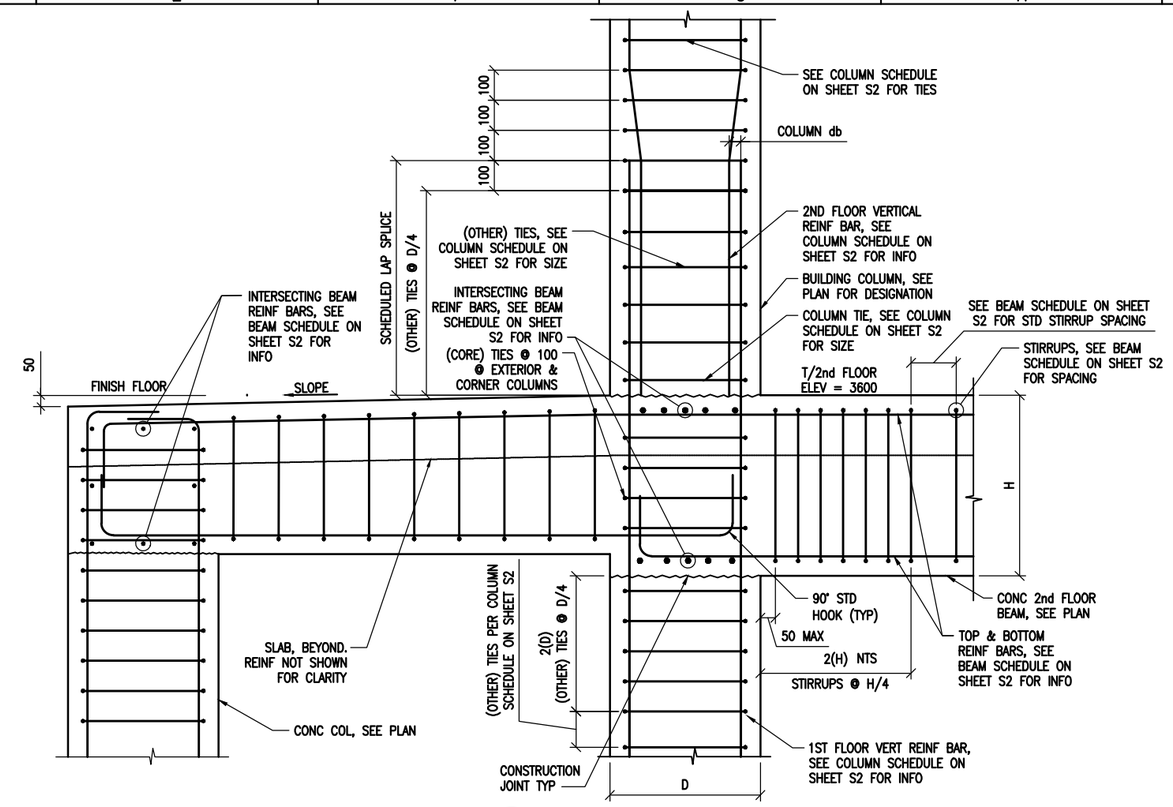

2 S5 S8 SECTION
SCALE: 1:10

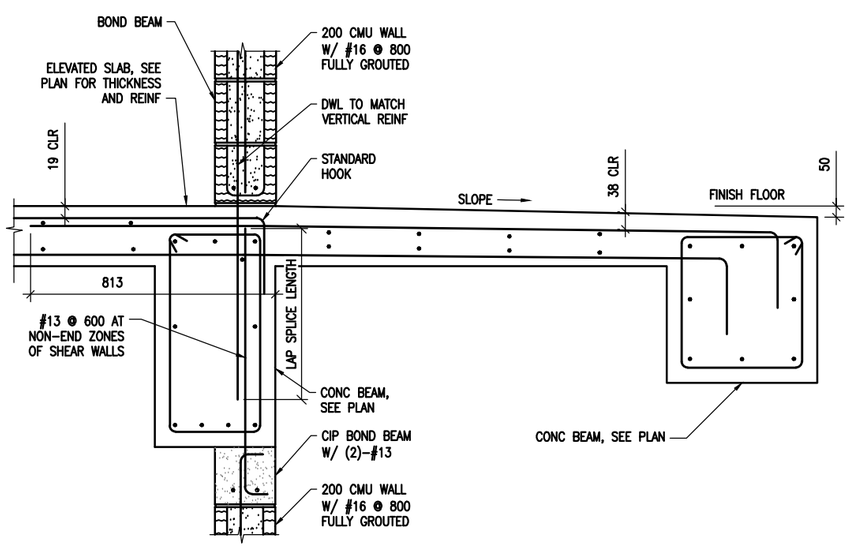

3 S10 S8 SECTION
SCALE: 1:10

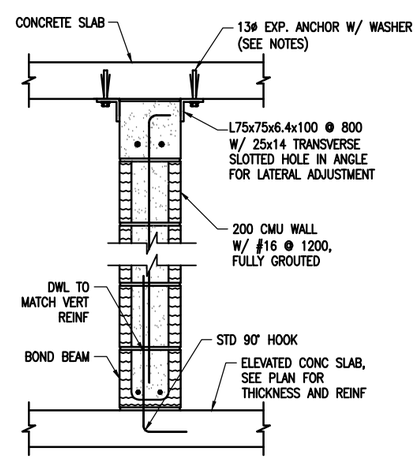

NOTES:
1. SECTION DEPICTS TYPICAL SECOND FLOOR INTERIOR NON-SHEAR WALL. INTERIOR FIRST FLOOR NON-SHEAR WALL TOP TERMINATION SIMILAR.
2. EMBED EXPANSION ANCHOR 82 MINIMUM INTO SOLID CONCRETE.
3. USE OVERSIZED STEEL PLATE WASHER 3MM THICK BETWEEN ANCHOR HEAD AND ANGLE.
4. SEE SHEETS S3 & S10 FOR CMU WALL REINF
5. INSTALL 13MM ISOLATION JOINT VERTICALLY AT WALL ENDS THAT ARE ADJACENT TO CONCRETE COLUMNS.
6. SLAB REINFORCING NOT SHOWN FOR CLARITY.

4 S5 S8 SECTION
SCALE: 1:10

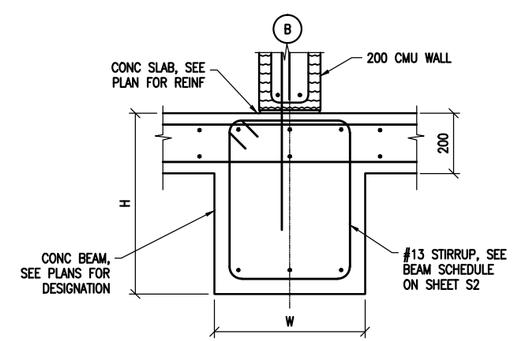

NOTE:
1. OMIT CMU WALL FOR ROOF SECTION

5 S5 S8 SECTION
SCALE: 1:10

UNLESS OTHERWISE NOTED, LINEAR DIMENSIONS SHOWN ARE IN MILLIMETERS (MM)

0 200 400 800
SCALE: 1: 10

US Army Corps of Engineers
Afghanistan Engineer District

SYMBOL	DESCRIPTION	DATE	APR

DESIGNED BY: MMY
DATE: 09-30-09
DWN BY: RCG
SUBMITTED BY: BAKER
CHK BY: CWW
FILE NO.: ANPSDS-308XXX

Michael Baker Jr., Inc
A unit of Michael Baker Corporation
Airside Business Park
100 Airside Drive
Moon Township PA 15108
www.mbakercorp.com

STANDARD DESIGN
BARRACK BUILDING, 2-STORY (862 GSM)
WOOD FIRED HEAT OPTION

FLOOR & ROOF FRAMING SECTIONS & DETAILS

SHEET REFERENCE NUMBER:
S8

100% SUBMISSION

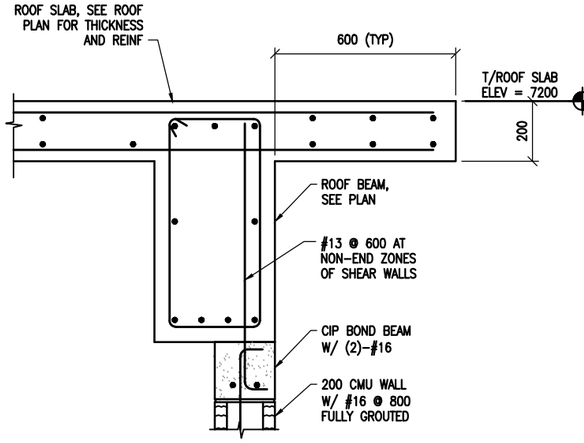

NOTES:
1. REFERENCE THIS SHEETS FOR OVERFRAMING ABOVE ROOF SLAB.

1 S6 S9 SECTION
SCALE: 1:10

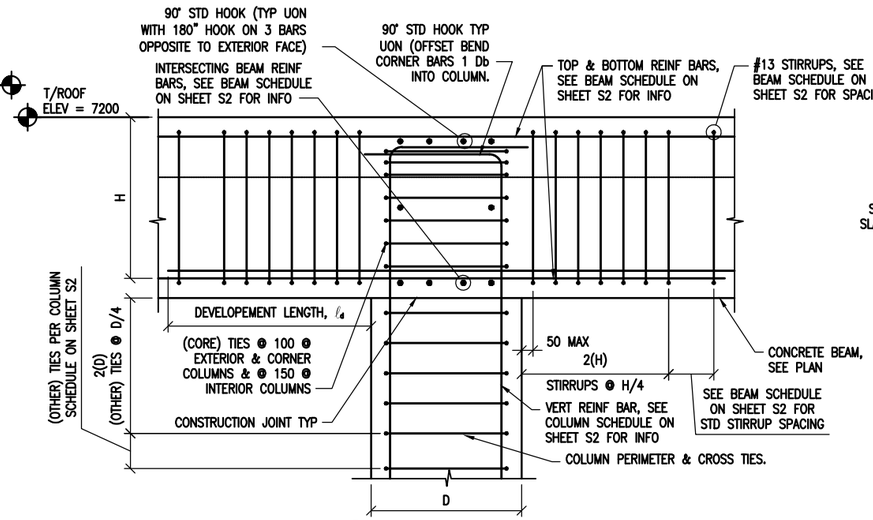

2 S6 S9 SECTION
SCALE: 1:10

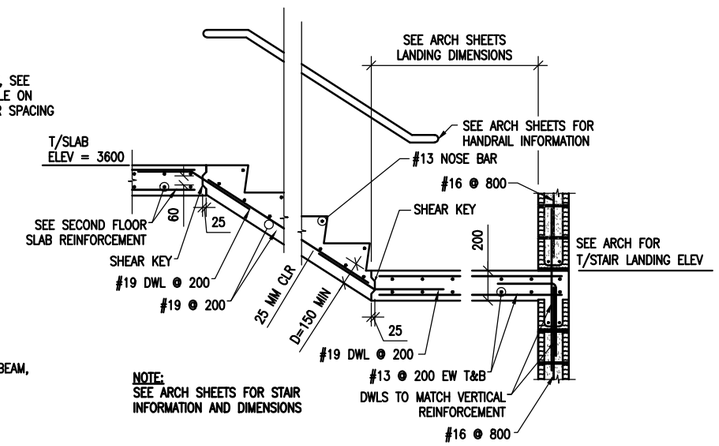

NOTE:
SEE ARCH SHEETS FOR STAIR INFORMATION AND DIMENSIONS

3 S5 S9 SECTION
SCALE: 1:10

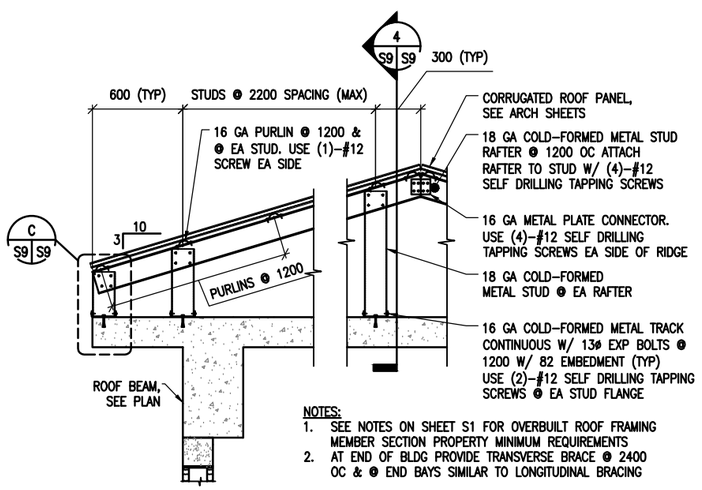

NOTES:
1. SEE NOTES ON SHEET S1 FOR OVERBUILT ROOF FRAMING MEMBER SECTION PROPERTY MINIMUM REQUIREMENTS
2. AT END OF BLDG PROVIDE TRANSVERSE BRACE @ 2400 OC & @ END BAYS SIMILAR TO LONGITUDINAL BRACING

A S9 S9 TYPICAL OVERBUILT ROOF FRAMING DETAIL
SCALE: 1:20

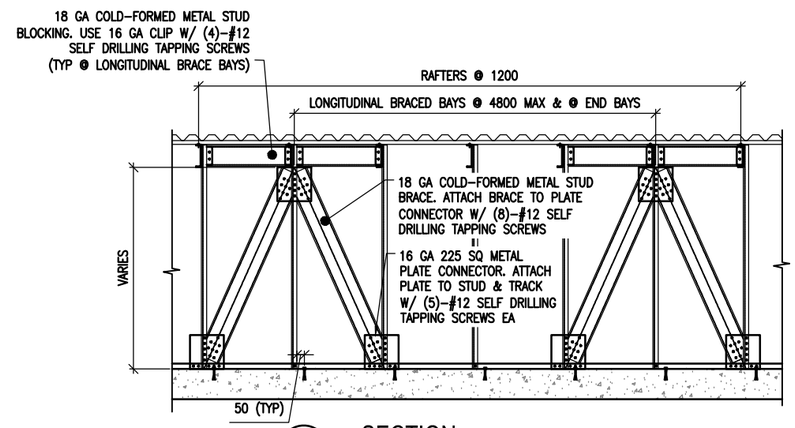

4 S9 S9 SECTION
SCALE: NTS

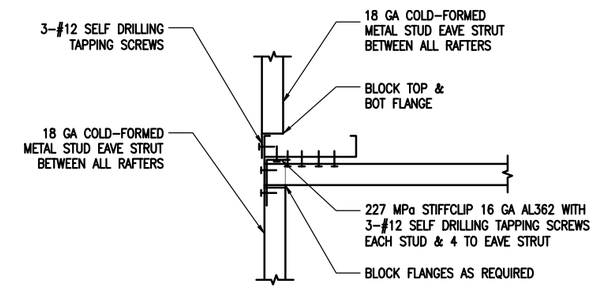

5 S9 S9 SECTION
SCALE: 1:5

DETAIL NOTE:
AT END OF BLDG PROVIDE TRANSVERSE BRACE @ 2400 OC & @ END BAYS SIMILAR TO LONGITUDINAL BRACING

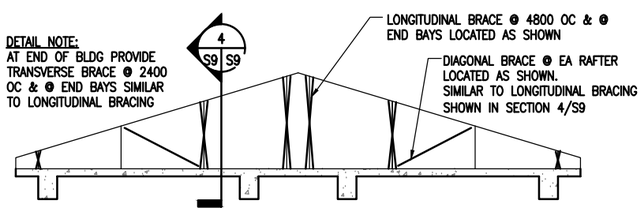

B S9 S9 TYPICAL ROOF BRACE LAYOUT DETAIL
SCALE: NTS

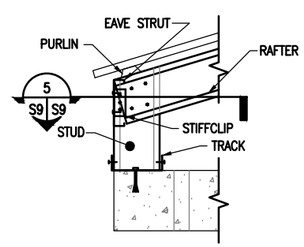

C S9 S9 DETAIL
SCALE: 1:10

DOUBLE LEDGE MEMBERS ARE 18 GA COLD-FORMED METAL TRACK.
FY = 344 MPa
DEPTH = 88.9mm
WIDTH = 34.8mm
MOMENT OF INERTIA, Ix = 236x103 mm4
SECTION MODULUS, SX = 5.3x103 mm3

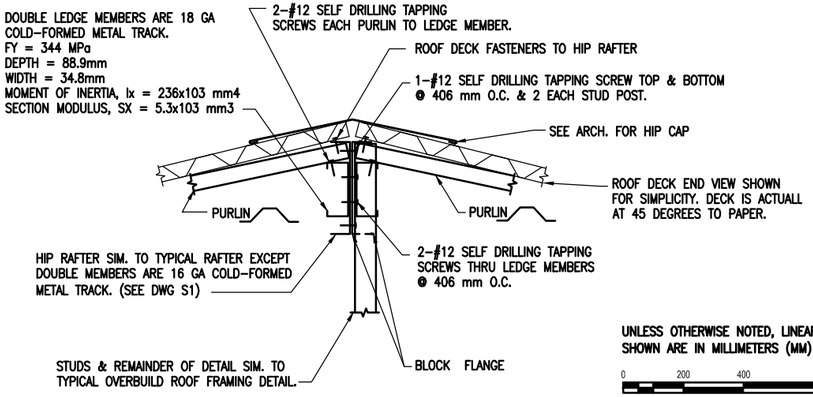

TYPICAL HIP FRAMING DETAIL
SCALE: 1:5

UNLESS OTHERWISE NOTED, LINEAR DIMENSIONS SHOWN ARE IN MILLIMETERS (MM)

0 200 400 800
SCALE: 1: 10

0 400 800 1600
SCALE: 1: 20

US Army Corps of Engineers
Afghanistan Engineer District

SYMBOL	DESCRIPTION	DATE	APP

DESIGNED BY: MMY	DATE: 09-30-09		
DWN BY: RCG	SUBMITTED BY: BAKER		
CHK BY: CWW	FILE NO.: ANPSDS-309XXX		

Michael Baker Jr., Inc
A unit of Michael Baker Corporation
Airside Business Park
100 Airside Drive
Moon Township PA 15108
www.mbakercorp.com

STANDARD DESIGN
BARRACK BUILDING, 2-STORY (862 GSM)
WOOD FIRED HEAT OPTION

FLOOR & ROOF FRAMING SECTIONS & DETAILS

SHEET REFERENCE NUMBER:
S9

100% SUBMISSION

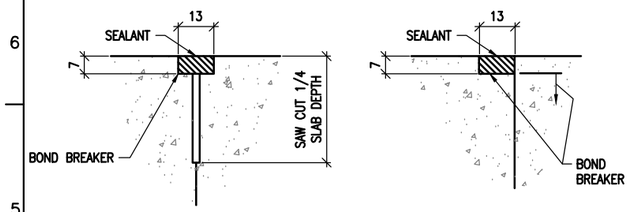

CONTROL JOINT DETAIL

CONSTRUCTION JOINT DETAIL

1/S10 TYPICAL CONCRETE SLAB JOINT FINISH DETAIL

SCALE: NTS

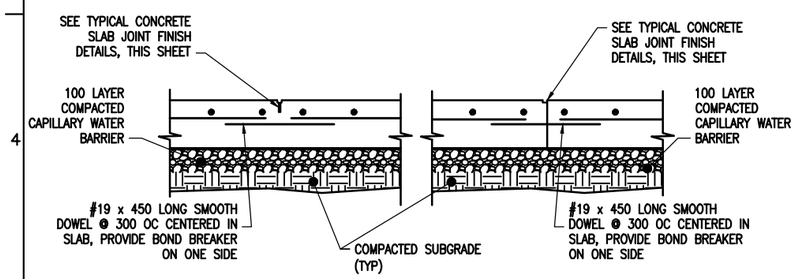

CONTROL JOINT DETAIL (CTJ)

CONSTRUCTION JOINT DETAIL (CSJ)

2/S10 TYPICAL SLAB ON GRADE JOINT DETAILS

SCALE: NTS

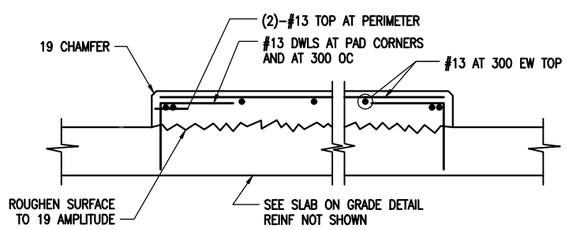

3/S10 INTERIOR EQUIPMENT PAD DETAIL

SCALE: NTS

DETAIL NOTE:

1. COORDINATE EQUIPMENT PAD SIZE AND LOCATIONS W/ ELECTRICAL/MECHANICAL DRAWINGS AND EQUIPMENT MANUFACTURER.

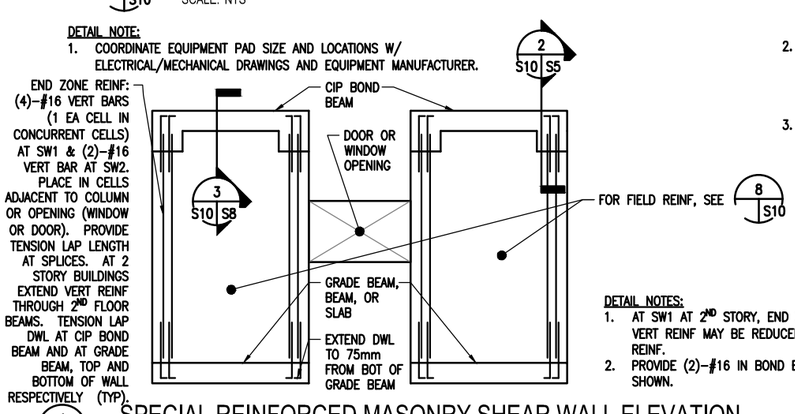

DETAIL NOTES:

1. AT SW1 AT 2ND STORY, END ZONE REINF OF (4)–#16 VERT REINF MAY BE REDUCED TO (3)–#16 VERT REINF.
2. PROVIDE (2)–#16 IN BOND BEAMS AT 1200 OC, NOT SHOWN.

4/S10 SPECIAL REINFORCED MASONRY SHEAR WALL ELEVATION

SCALE: NTS

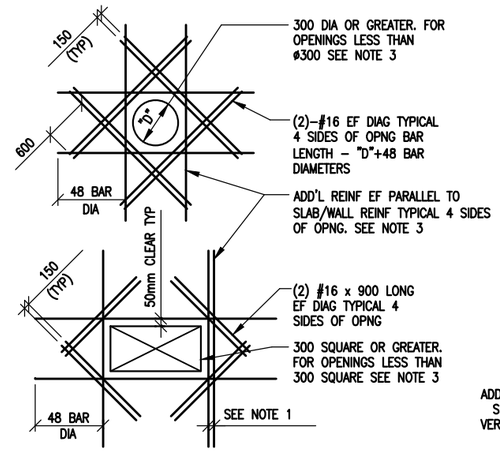

SLAB OPENINGS

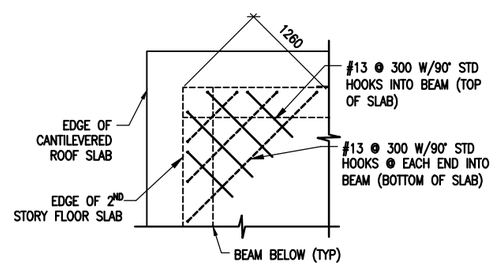

ELEVATED SLAB CORNERS

5/S10 ADD'L REINFORCEMENT DETAILS

SCALE: NTS

DETAIL NOTES:

1. WHERE MORE THAN ONE ADDITIONAL BAR IS REQUIRED PARALLEL TO THE EXISTING SLAB/WALL REINFORCING THE ADDITIONAL REINFORCING BARS SHALL BE SPACED AT 100 ON CENTER.
2. ADDITIONAL REINFORCING PARALLEL TO THE SLAB/WALL REINFORCING SHALL BE #16 BARS THAT PROVIDE A STEEL AREA ON EACH SIDE OF THE OPENING EQUAL TO 1/2 THE AREA OF THE REINFORCING CUT BY THE OPENING.
3. FOR OPENINGS WITH SIDES OR DIAMETERS LESS THAN 300 SPREAD THE SLAB/WALL REINFORCING TO CLEAR THE OPENING.

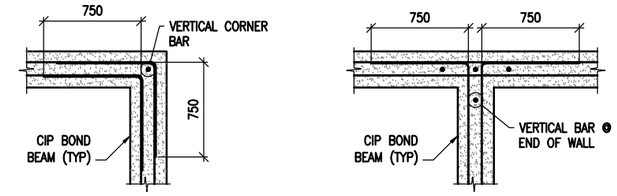

BOND BEAM CORNER

BOND BEAM INTERSECTION

6/S10 CIP BOND BEAM DETAILS

SCALE: NTS

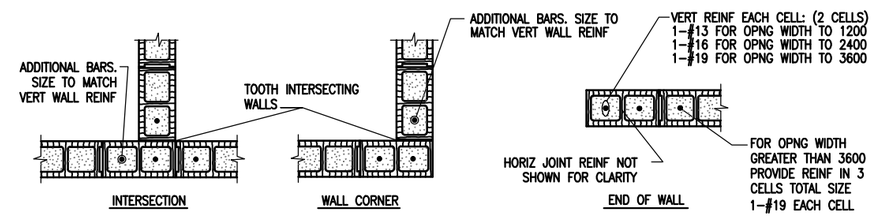

INTERSECTION

WALL CORNER

END OF WALL

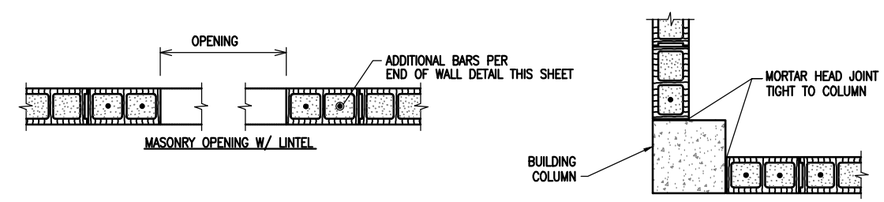

MASONRY OPENING W/ LINTEL

WALL END AT COLUMN

NOTES:

1. OPENING WIDTH SHALL NOT EXCEED 3600 FOR THIS TYPE OF JAMB
2. ALL CELLS FULLY GROUTED

7/S10 TYPICAL CMU DETAILS

SCALE: NTS

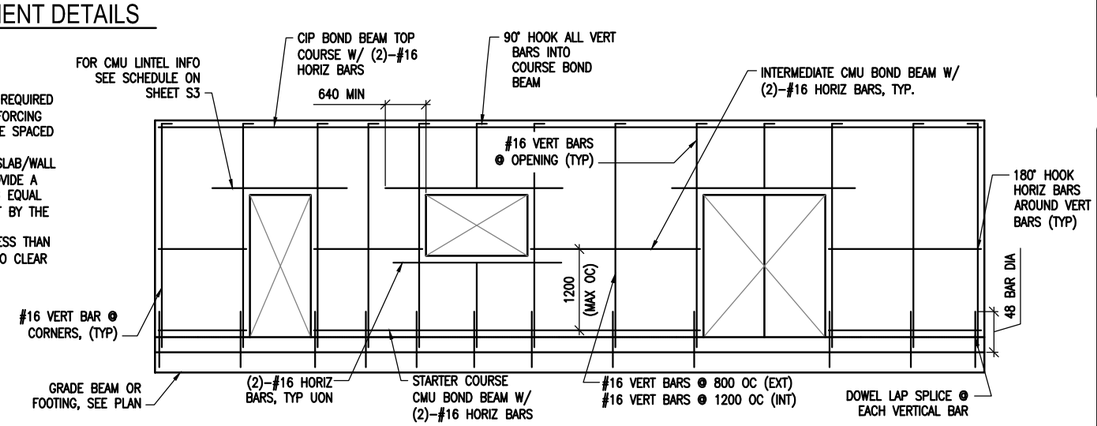

8/S10 MIN CMU WALL REINFORCING

SCALE: NTS

LINTEL NOTES:

MASONRY LINTEL REINFORCEMENT AS PER SCHEDULE ON SHEET S3

UNLESS OTHERWISE NOTED, LINEAR DIMENSIONS SHOWN ARE IN MILLIMETERS (MM)

UNLESS OTHERWISE NOTED, LINEAR DIMENSIONS SHOWN ARE IN MILLIMETERS (MM)

US Army Corps of Engineers
Afghanistan Engineer District

SYMBOL	DESCRIPTION	DATE	APP

DESIGNED BY: MMY	DATE: 09-30-09	SUBMITTED BY: BAKER	FILE NO.: ANPSDS-510XXX
DWN BY: RCG		CHK BY: CWW	

Michael Baker Jr., Inc.
A unit of Michael Baker Corporation
Airside Business Park
100 Airside Drive
Moon Township PA 15108
www.mbakercorp.com

STANDARD DESIGN
BARRACK BUILDING, 2-STORY (862 GSM)
WOOD FIRED HEAT OPTION

TYPICAL DETAILS

SHEET REFERENCE NUMBER:
S10

100% SUBMISSION

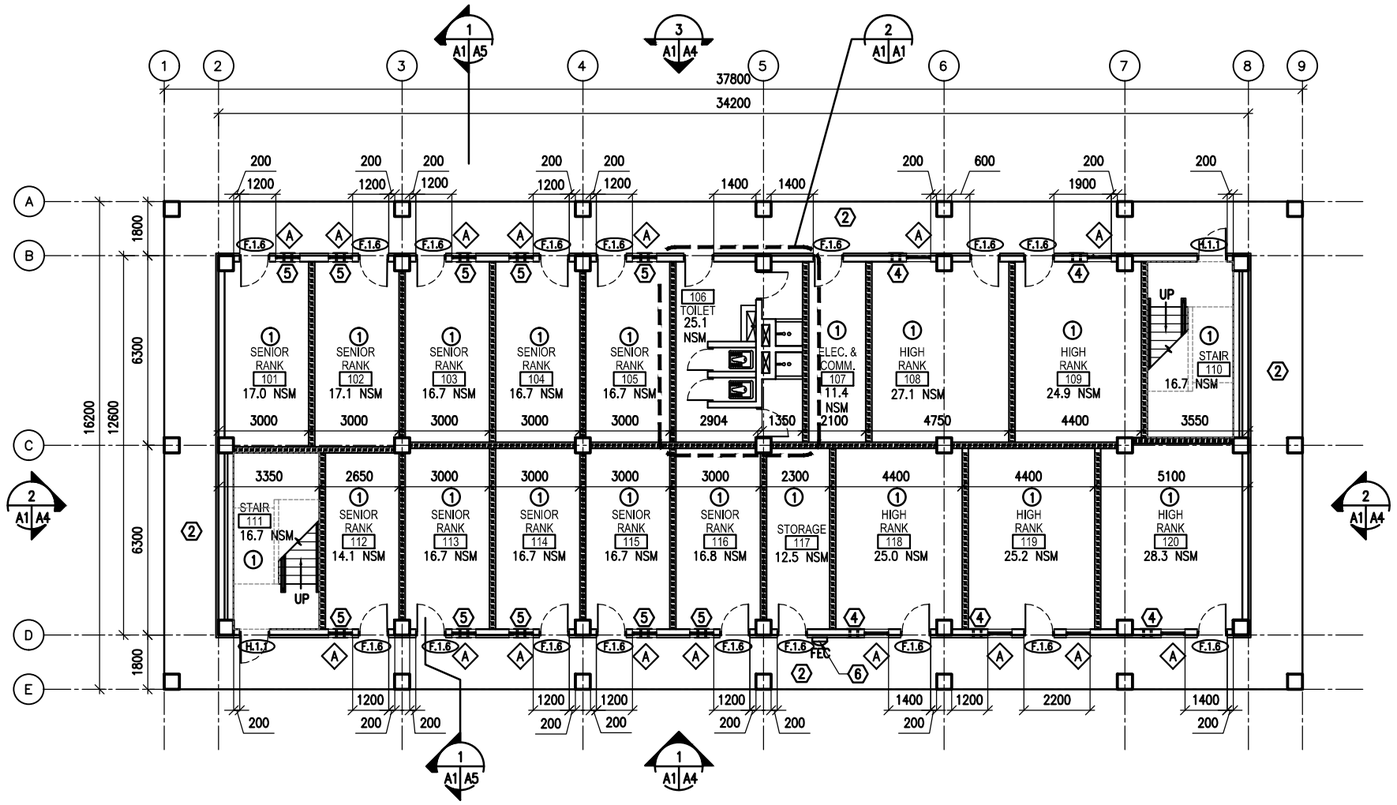

1 A1 A1 FIRST FLOOR PLAN

SCALE: 1:100

FIRST FLOOR – 431.0 GSM
SECOND FLOOR – 431.0 GSM
TOTAL –862.0 GSM

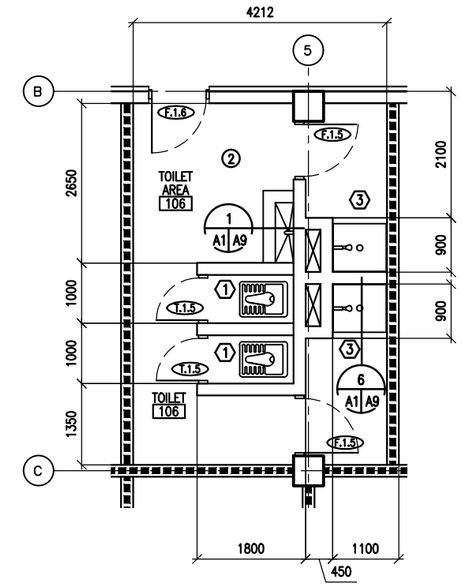

2 A1, A2 A1 ENLARGED TOILET PLAN

SCALE: 1:150

GENERAL NOTES:

A. INTERIOR PARTITIONS SHALL BE 200 MM CMU UNLESS NOTED OTHERWISE

B. OPENINGS FOR DOORS SHALL BE LOCATED 200 MM FROM THE ADJACENT WALL UNLESS NOTED OTHERWISE

C. SURFACES TO BE PAINTED SHALL BE CLEAN AND FREE OF FOREIGN MATTER BEFORE APPLICATION OF PAINT. CLEANING SHALL BE SCHEDULED SO THAT DUST AND OTHER CONTAMINANTS WILL NOT FALL ON WET, NEWLY PAINTED SURFACES.

D. CONCRETE AND INTERIOR MASONRY SURFACES GROUTED SOLID SHALL BE ALLOWED TO DRY AT LEAST 30 DAYS BEFORE PAINTING EXCEPT CONCRETE SLAB ON GRADE WHICH SHALL BE ALLOWED TO CURE 90 DAYS BEFORE PAINTING.

E. PAINTS CONTAINING LEAD IN EXCESS OF 0.06 PERCENT BY WEIGHT OF THE TOTAL NONVOLATILE CONTENT SHALL NOT BE USED.

F. MERCURIAL FUNGICIDES SHALL NOT BE USED IN OIL–BASE PAINT.

G. REMOVE LOOSE DIRT AND CLEAN SURFACES BEFORE PAINTING. APPLY PAINT TO INTERIOR STRUCTURAL RIGID FRAMINGS AND CEILINGS AND TEST FOR ADHESION. PRIMER COAT FOR MASONRY. INITIAL FIRST COAT WITH AN ACRYLIC LATEX PAINT FOR EXTERIOR SURFACES AND A SECOND COAT WITH A WATER REPELLENT ACRYLIC LATEX PAINT.

H. METAL DOORS AND FRAMES SHALL RECEIVE A PRIMER COAT PLUS TWO COATS OF PAINT.

I. DIMENSIONS ARE TO STRUCTURAL COLUMN GRID, EDGE OF WINDOW OPENINGS, AND TO HINGE SIDE OF DOOR OPENINGS.

J. PROVIDE 1 HOUR FIRE RATED PARTITIONS IN ACCORDANCE WITH NFPA 101, 28.3.7.1. AND TABLE 28.3.2.2.2. FILL ANULAR SPACE AT ANY AND ALL FLOOR, WALL OR CEILING PENETRATIONS WITH APPROPRIATE FIRE STOPPING MATERIALS.

ROOM FINISHES: (X)

1. WALLS: PAINTED PLASTER,
   FLOOR: SEALED CONCRETE
   CEILING: PAINTED PLASTER APPLIED TO STRUCTURE
2. WALLS: 2400 MM HIGH CERAMIC TILE WAINSCOT, PAINTED PLASTER ABOVE WAINSCOT
   FLOOR: CERAMIC TILE
   CEILING: PAINTED PLASTER

KEY NOTES: (X)

1. TYPICAL TOILET STALL LAYOUT – RE: DETAIL 2/A9
2. CONCRETE SIDEWALK RE: 2/A10 AND 3/A10
3. SHOWER CURTAIN (TYP)
4. TWO–PIECE WALL THIMBLE AND TRIM PLATE FOR WOOD BURNING STOVE CHIMNEY PIPE. ~~STOVE AND PIPE BY OTHERS.~~
5. TWO–PIECE WALL THIMBLE AND TRIM PLATE MOUNTED IN WALL ABOVE WINDOW.
6. PROVIDE FEC AT STORAGE ROOM IN ACCORDANCE WITH NFPA 101, 28.3.5.8.

LEGEND:

- F.1.4 — DOOR TYPE, SEE SHEET A8
- A — WINDOW TYPE, SEE SHEET A8
- X — KEY NOTE
- FEC — FIRE EXTINGUISHER CABINET
- 1–HOUR RATED PARTITION
- 1 — ROOM FINISH TYPE DESIGNATION
- ▫DS — METAL DOWNSPOUT

UNLESS OTHERWISE NOTED, LINEAR DIMENSIONS SHOWN ARE IN MILLIMETERS (MM)

0 1000 2000 4000
SCALE: 1: 50

0 2000 4000 8000
SCALE: 1: 100

US Army Corps of Engineers
Afghanistan Engineer District

SYMBOL	DESCRIPTION	DATE	APR

DESIGNED BY: DATE: 09–30–09
DWN BY: AAR SUBMITTED BY: BAKER
CHK BY: KRC FILE NO.: ANPSDA–101XXX

Michael Baker Jr., Inc
A unit of Michael Baker Corporation
Airside Business Park
100 Airside Drive
Moon Township PA 15108
www.mbakercorp.com

STANDARD DESIGN
BARRACK BUILDING, 2–STORY (862 GSM)
WOOD FIRED HEAT OPTION

FIRST FLOOR PLAN

SHEET REFERENCE NUMBER:
A1

100% SUBMISSION

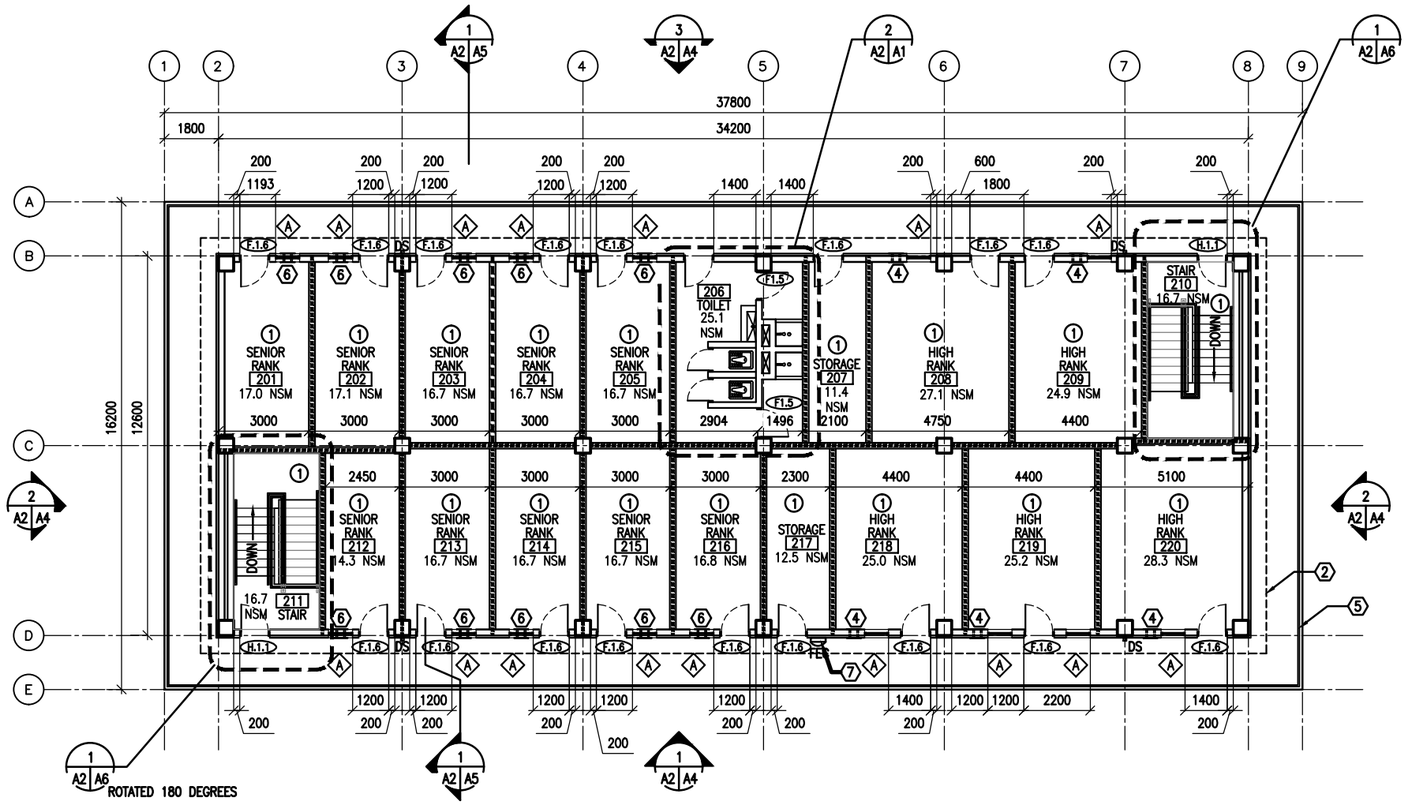

SECOND FLOOR PLAN

SCALE: 1:100

N

ROOM FINISHES:

1. WALLS: PAINTED PLASTER,
   FLOOR: SEALED CONCRETE
   CEILING: PAINTED PLASTER APPLIED TO STRUCTURE
2. WALLS: 2400 MM HIGH CERAMIC TILE WAINSCOT, PAINTED PLASTER ABOVE WAINSCOT
   FLOOR: CERAMIC TILE
   CEILING: PAINTED PLASTER

KEY NOTES:

1. TYPICAL TOILET STALL LAYOUT – RE: DETAIL 2/A9
2. LINE OF ROOF OVERHANG ABOVE
3. SHOWER CURTAIN (TYP) – RE: ENLARGED TOILET PLAN 2/A1
4. TWO-PIECE WALL THIMBLE AND TRIM PLATE FOR WOOD BURNING STOVE CHIMNEY PIPE. ~~STOVE AND PIPE BY OTHERS.~~
5. STEEL PIPE HANDRAIL AT BALCONY.
6. TWO-PIECE WALL THIMBLE AND TRIM PLATE MOUNTED IN WALL ABOVE WINDOW.
7. PROVIDE FEC AT STORAGE ROOM IN ACCORDANCE WITH NFPA 101, 28.3.5.8.

LEGEND:

- F.1.4 — DOOR TYPE, SEE SHEET A8
- A — WINDOW TYPE, SEE SHEET A8
- X — KEY NOTE
- FEC — FIRE EXTINGUISHER CABINET
- 1-HOUR RATED PARTITION
- 1 — ROOM FINISH TYPE DESIGNATION
- *DS — METAL DOWNSPOUT

UNLESS OTHERWISE NOTED, LINEAR DIMENSIONS SHOWN ARE IN MILLIMETERS (MM)

0 2000 4000 8000

SCALE: 1: 100

US Army Corps of Engineers
Afghanistan Engineer District

SYMBOL	DESCRIPTION	DATE	APP.

DESIGNED BY: DATE: 09-30-09
DWN BY: AAR
SUBMITTED BY: BAKER
CHK BY: KRC
FILE NO.: ANPSDA-102XXX

Michael Baker Jr., Inc.
A unit of Michael Baker Corporation
Airside Business Park
100 Airside Drive
Moon Township PA 15108
www.mbakercorp.com

STANDARD DESIGN
BARRACK BUILDING, 2-STORY (862 GSM)
WOOD FIRED HEAT OPTION

SECOND FLOOR PLAN

SHEET REFERENCE NUMBER:
A2

100% SUBMISSION

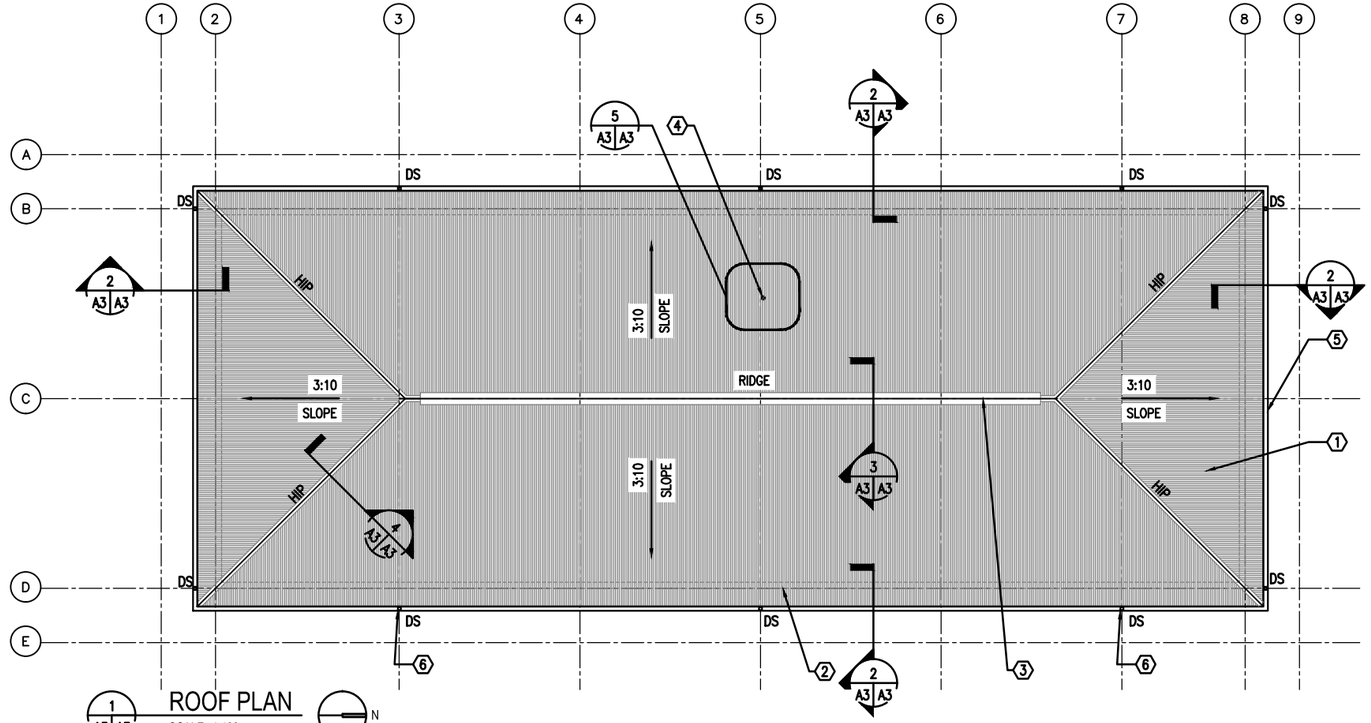

ROOF PLAN

1 A3 A3 — SCALE: 1:100

N

KEY NOTES: (X)

1. CORRUGATED METAL ROOF PANELS ON COLD–FORMED METAL FRAMING
2. LINE OF BUILDING WALL BELOW
3. CONTINUOUS RIDGE VENT
4. PLUMBING VENT – RE: DETAIL 5/A3
5. METAL GUTTER
6. METAL DOWNSPOUT WITH SPLASHBLOCK

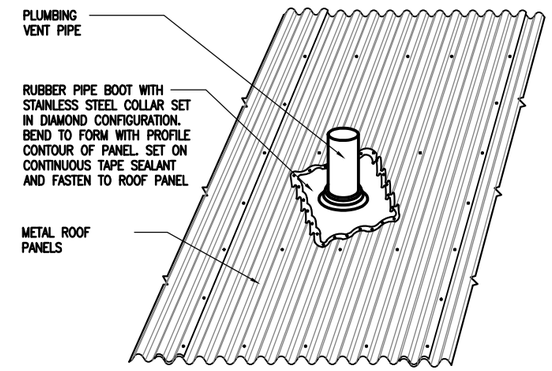

VENT THRU ROOF

5 A3 A3 — SCALE: 1:10

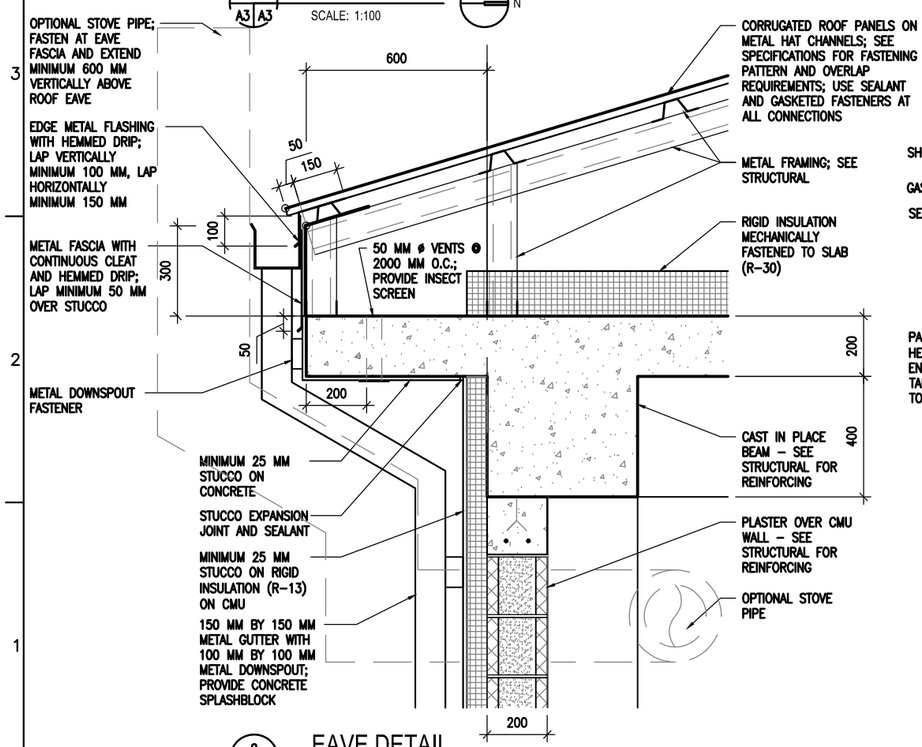

EAVE DETAIL

2 A3 A3 — SCALE: 1:10

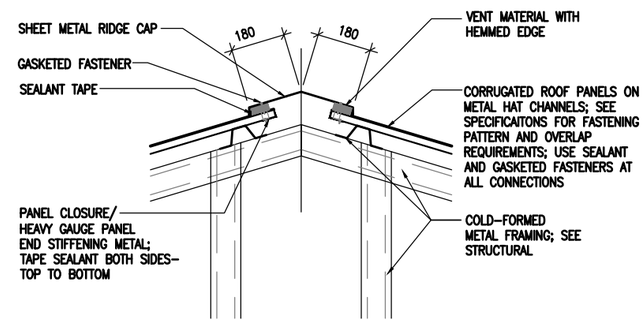

RIDGE VENT DETAIL

3 A3 A3 — SCALE: 1:10

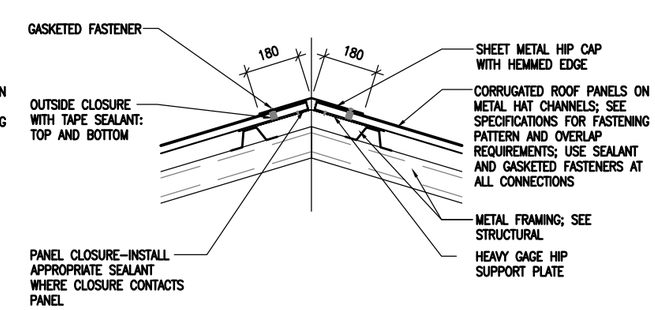

HIP DETAIL

4 A3 A3 — SCALE: 1:10

UNLESS OTHERWISE NOTED, LINEAR DIMENSIONS SHOWN ARE IN MILLIMETERS (MM)

0 200 400 800
SCALE: 1: 10

0 2000 4000 8000
SCALE: 1: 100

US Army Corps of Engineers
Afghanistan Engineer District

SYMBOL	DESCRIPTION	DATE	APP.

DESIGNED BY: DLB	DATE: 09–30–09
DWN BY: AAR	SUBMITTED BY: BAKER
CHK BY: KRC	FILE NO.: ANPSDA–103XXX

Michael Baker Jr., Inc
A unit of Michael Baker Corporation
Airside Business Park
100 Airside Drive
Moon Township PA 15108
www.mbakercorp.com

STANDARD DESIGN
BARRACK BUILDING, 2–STORY (862 GSM)
WOOD FIRED HEAT OPTION

ROOF PLAN AND DETAILS

SHEET REFERENCE NUMBER:
A3

100% SUBMISSION

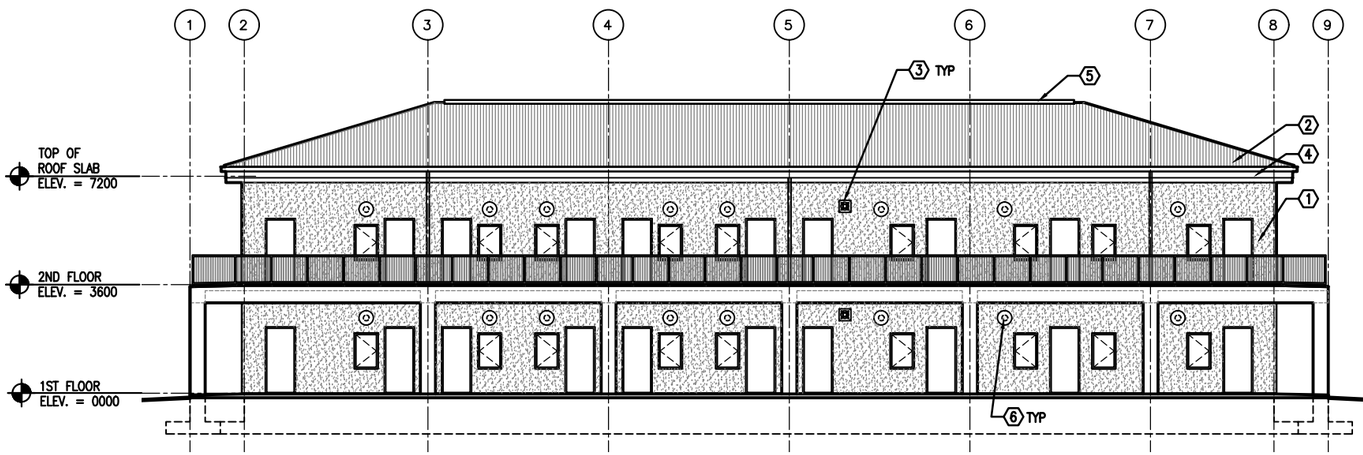

1 A1|A4 EAST ELEVATION
SCALE: 1:100

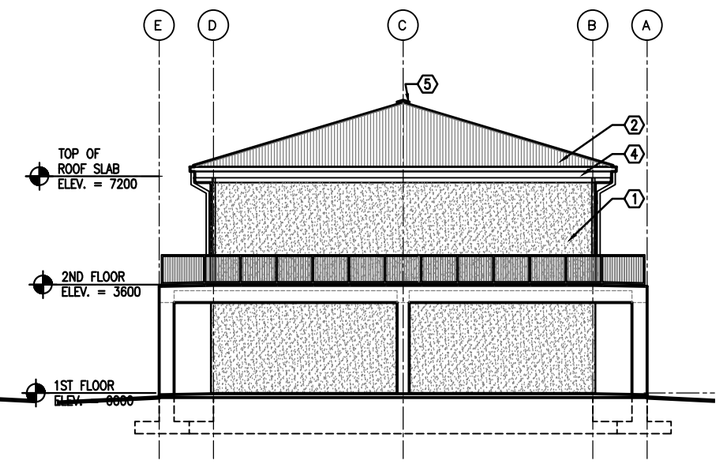

2 A1|A4 NORTH AND SOUTH ELEVATION
SCALE: 1:100

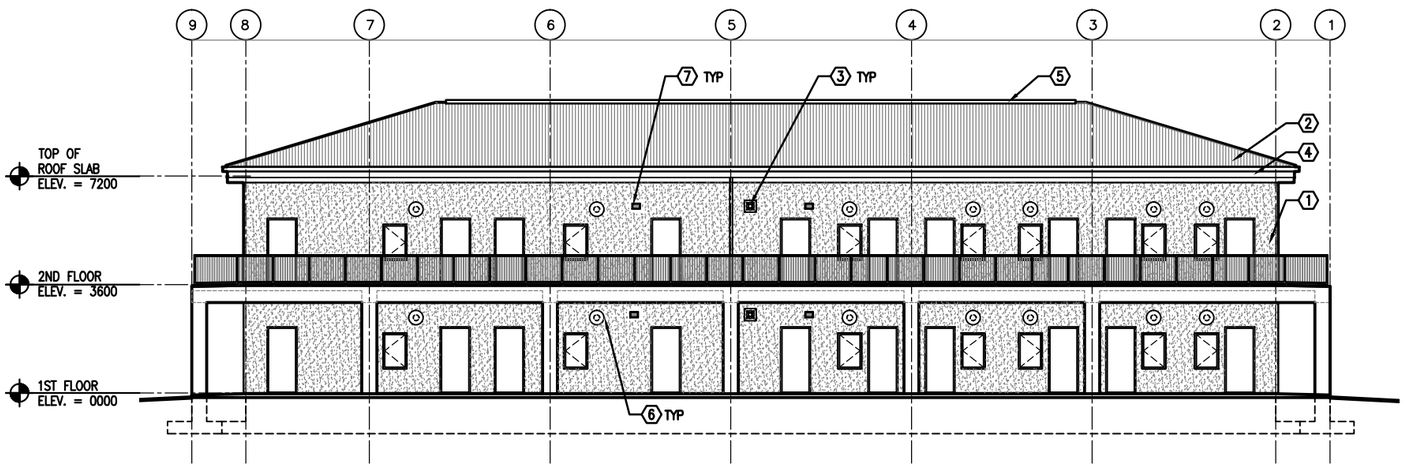

3 A1|A4 WEST ELEVATION
SCALE: 1:100

GENERAL NOTES:

A. COORDINATE SIZE AND LOCATION OF OPENINGS FOR MECHANICAL ITEMS WITH MECHANICAL DRAWINGS.
B. PROVIDE STRUCTURAL LINTELS AS REQUIRED – RE: STRUCT

KEY NOTES: (X)

1. STUCCO AND RIGID INSULATION SYSTEM OVER CMU AND CONCRETE.
2. CORRUGATED METAL ROOF PANELS ON COLD-FORMED METAL FRAMING.
3. EXHAUST FAN – RE: MECH
4. METAL GUTTER
5. CONTINUOUS RIDGE VENT
6. TWO-PIECE WALL THIMBLE AND TRIM PLATE FOR WOOD BURNING STOVE CHIMNEY PIPE. ~~STOVE AND PIPE BY OTHERS.~~
7. LOUVER – RE: MECH

UNLESS OTHERWISE NOTED, LINEAR DIMENSIONS SHOWN ARE IN MILLIMETERS (MM)

0 2000 4000 8000
SCALE: 1: 100

US Army Corps of Engineers
Afghanistan Engineer District

SYMBOL	DESCRIPTION	DATE	APP.

DESIGNED BY: DLB
DATE: 09-30-09
DWN BY: AAR
SUBMITTED BY: BAKER
CHK BY: KRC
FILE NO.: ANPSDA-204XXX

Michael Baker Jr., Inc.
A unit of Michael Baker Corporation
Airside Business Park
100 Airside Drive
Moon Township PA 15108
www.mbakercorp.com

STANDARD DESIGN
BARRACK BUILDING, 2-STORY (862 GSM)
WOOD FIRED HEAT OPTION

EXTERIOR ELEVATIONS

SHEET REFERENCE NUMBER:
A4

100% SUBMISSION

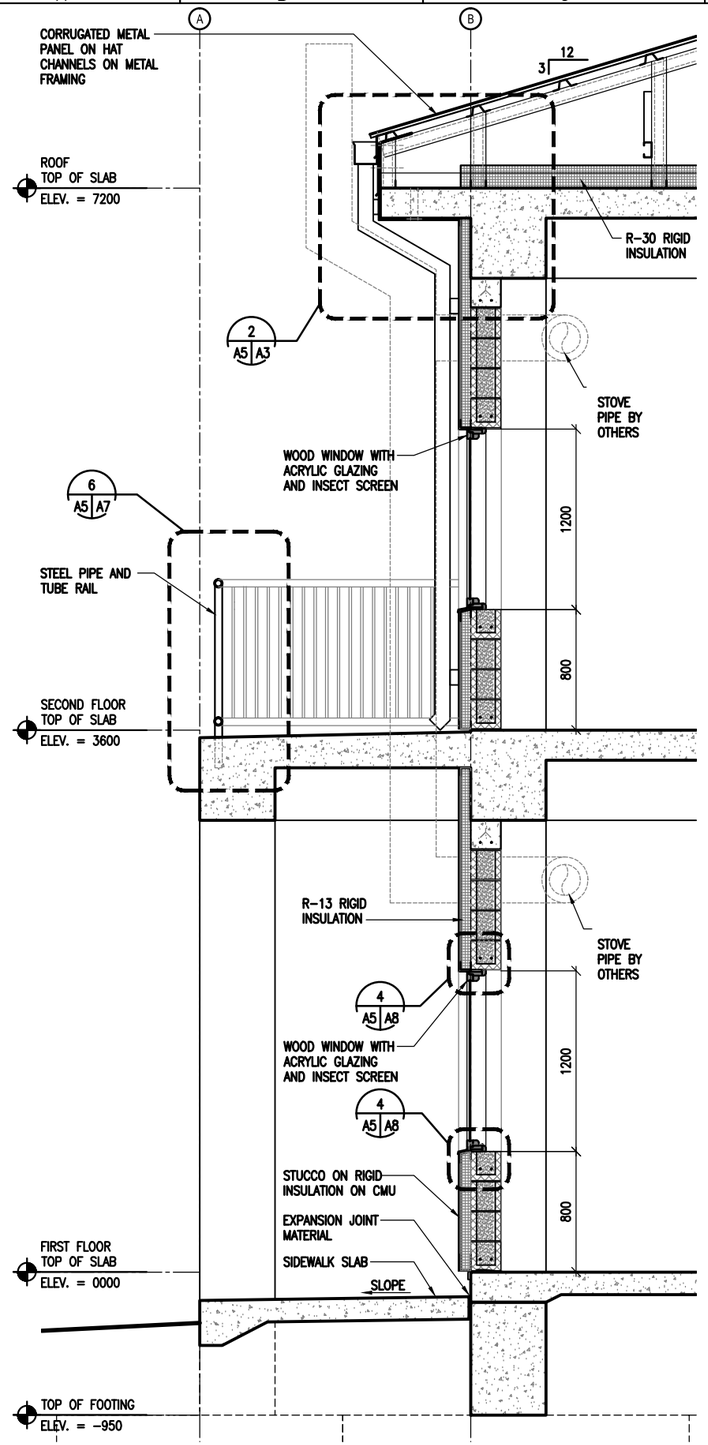

2 A5 A5 WALL SECTION
SCALE: 1:20

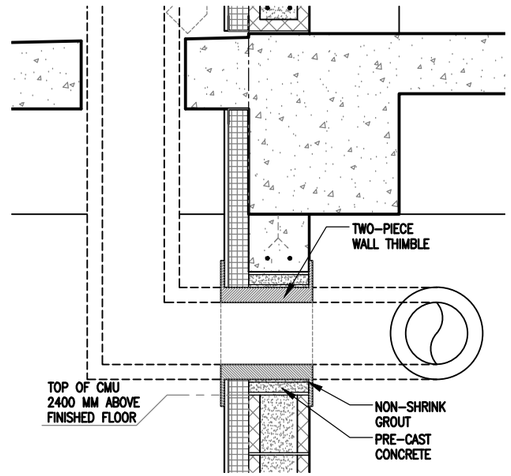

3 A5 A5 THIMBLE DETAIL, TYPICAL
SCALE: 1:10

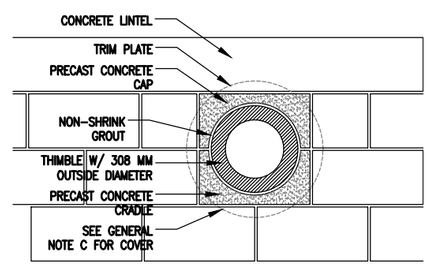

4 A5 A5 THIMBLE DETAIL, TYPICAL
SCALE: 1:10

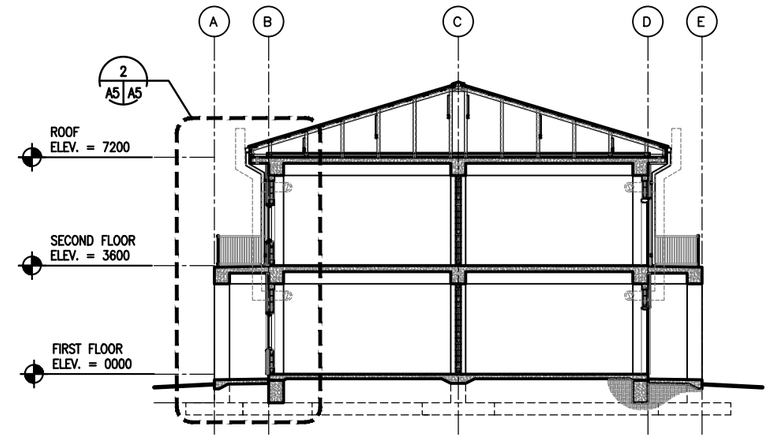

1 A1 A5 BUILDING SECTION
SCALE: 1:100

GENERAL NOTES:

A. COORDINATE SIZE AND LOCATION OF OPENINGS FOR MECHANICAL ITEMS WITH MECHANICAL DRAWINGS.
B. PROVIDE STRUCTURAL LINTELS AS REQUIRED – RE: STRUCT
C. PROVIDE 480 MM SQUARE, 1.5 MM THICK GALVANIZED SHEET METAL COVER WITH 13 MM HEMMED EDGE FOR WALL THIMBLE UNTIL STOVE PIPE IS PROVIDED. INSTALL COVER ON EXTERIOR FACE OF THIMBLE TRIM PLATE. COVER SHALL BE BE SET IN SILICONE SEALANT AND FASTENED WITH 4 STAINLESS STEEL SCREWS. ALIGN FASTENER LOCATIONS WITH COVER PLATE FASTENER OPENINGS SO ADDITIONAL FASTENER PENETRATIONS ARE NOT CREATED IN EXTERIOR FINISH.

UNLESS OTHERWISE NOTED, LINEAR DIMENSIONS SHOWN ARE IN MILLIMETERS (MM)

0 400 800 1600
SCALE: 1: 20

0 2000 4000 8000
SCALE: 1: 100

US Army Corps of Engineers
Afghanistan Engineer District

SYMBOL	DESCRIPTION	DATE	APP.

DESIGNED BY: DLB
DATE: 09-30-09
DWN BY: AAR
SUBMITTED BY: BAKER
CHK BY: KRC
FILE NO.: ANPSDA-305XXX

Michael Baker Jr., Inc
A unit of Michael Baker Corporation
Airside Business Park
100 Airside Drive
Moon Township, PA 15108
www.mbakercorp.com

STANDARD DESIGN
BARRACK BUILDING, 2-STORY (862 GSM)
WOOD FIRED HEAT OPTION

BUILDING & WALL SECTIONS

SHEET REFERENCE NUMBER:
A5

100% SUBMISSION

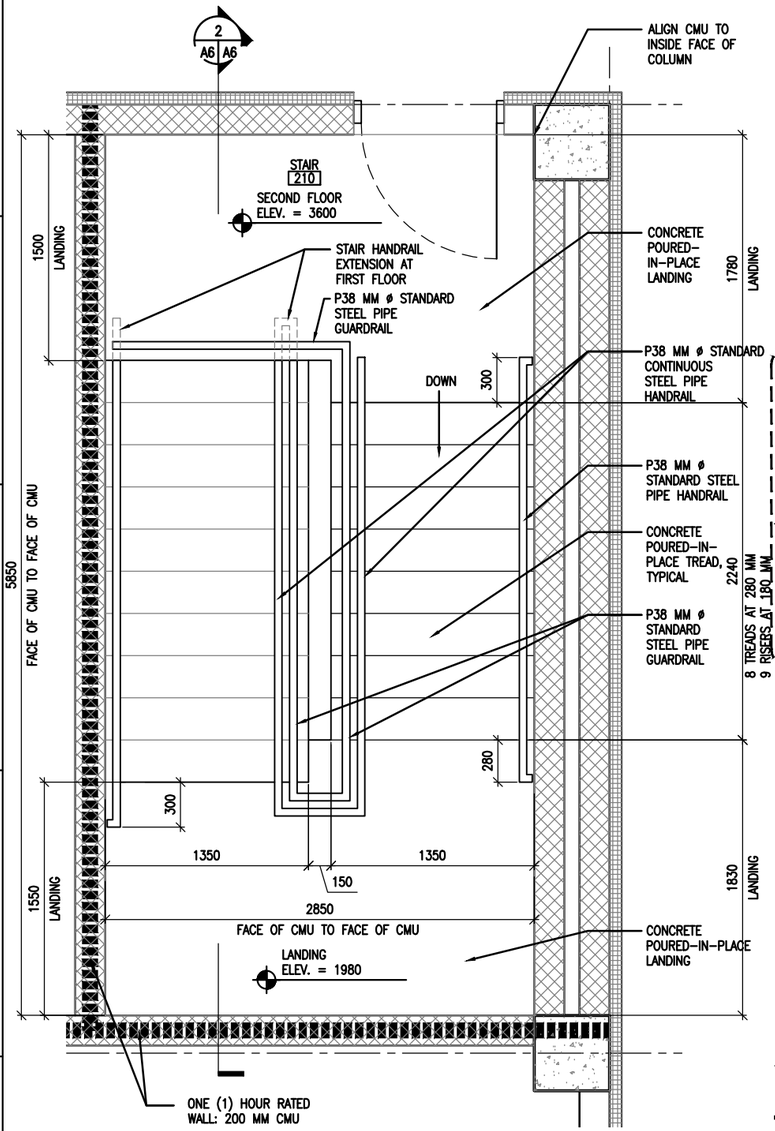

1 A2 A6 STAIR PLAN

SCALE: 1:20

NOTE: STAIR 211 IS THE SAME PLAN, BUT ROTATED 180 DEGREES.

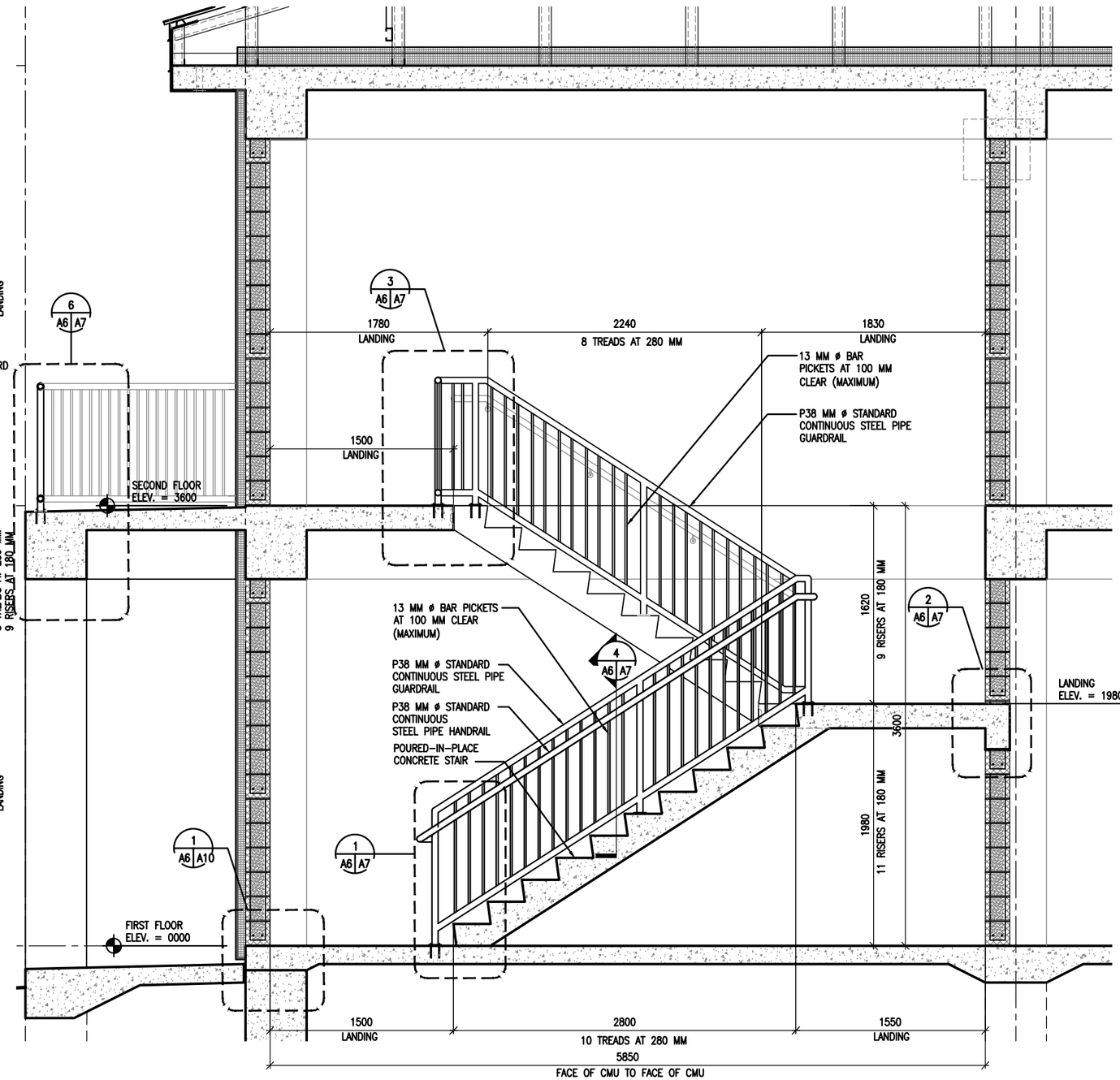

2 A6 A6 STAIR SECTION

SCALE: 1:20

UNLESS OTHERWISE NOTED, LINEAR DIMENSIONS SHOWN ARE IN MILLIMETERS (MM)

0 400 800 1600

SCALE: 1: 20

US Army Corps of Engineers

Afghanistan Engineer District

SYMBOL	DESCRIPTION	DATE	APP.

DESIGNED BY: DLB	DATE: 09-30-09
DWN BY: AAR	SUBMITTED BY: BAKER
CHK BY: KRC	FILE NO.: ANPSDA-306XXX

Michael Baker Jr., Inc
A unit of Michael Baker Corporation
Airside Business Park
100 Airside Drive
Moon Township PA 15108
www.mbakercorp.com

STANDARD DESIGN
BARRACK BUILDING, 2-STORY (862 GSM)
WOOD FIRED HEAT OPTION

STAIR PLAN & SECTION

SHEET REFERENCE NUMBER:

A6

100% SUBMISSION

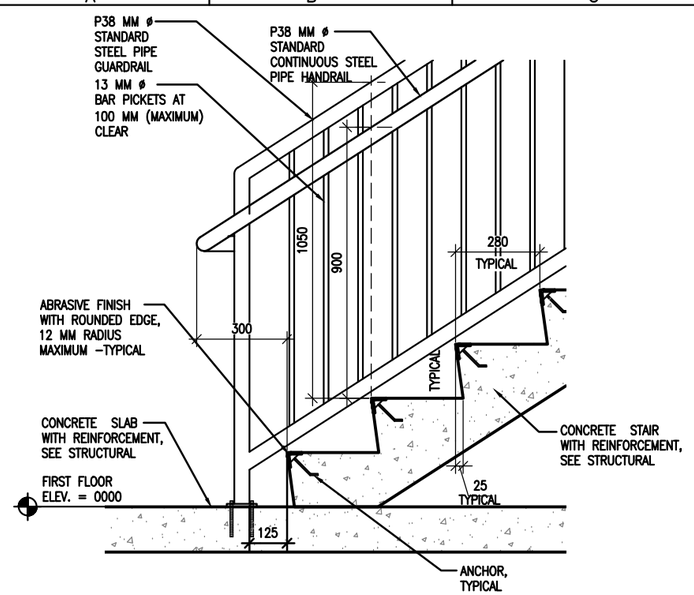

1 A6 A7 BOTTOM LANDING DETAIL
SCALE: 1:10

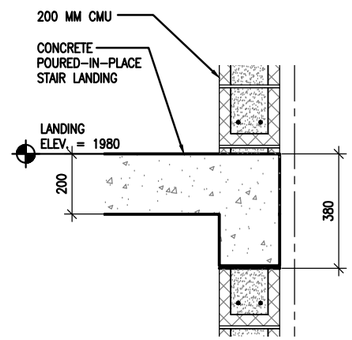

2 A6 A7 INTERMEDIATE LANDING DETAIL
SCALE: 1:10

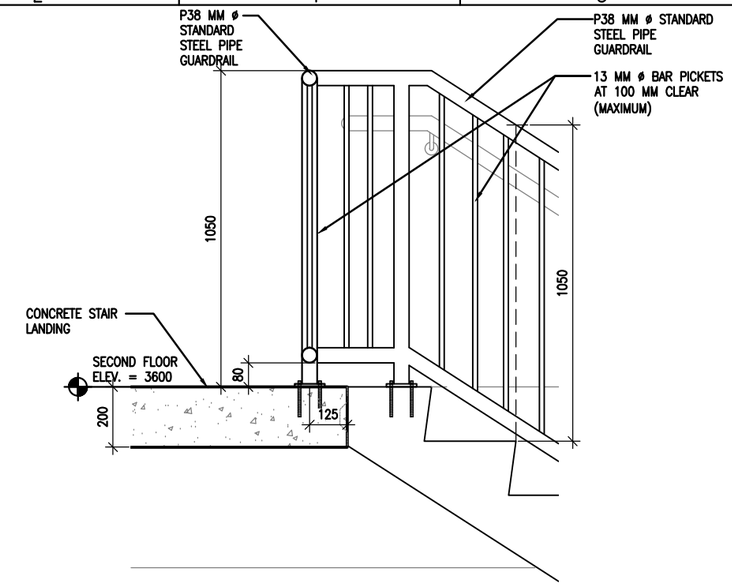

3 A6 A7 TOP LANDING DETAIL
SCALE: 1:10

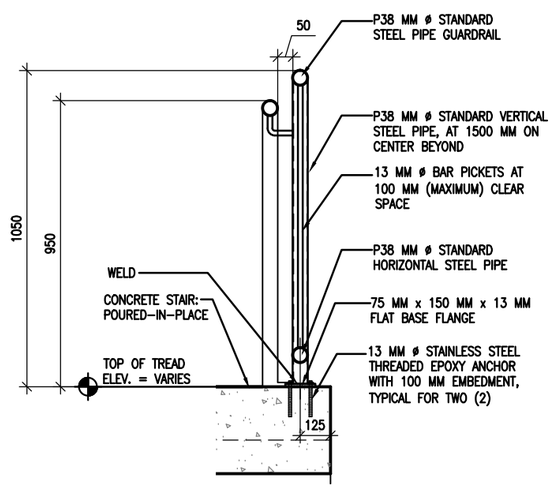

4 A6 A7 HANDRAIL & GUARDRAIL DETAIL
SCALE: 1:10

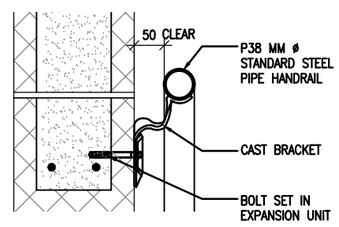

5 A6 A7 WALL MOUNTED HANDRAIL DETAIL
SCALE: 1:5

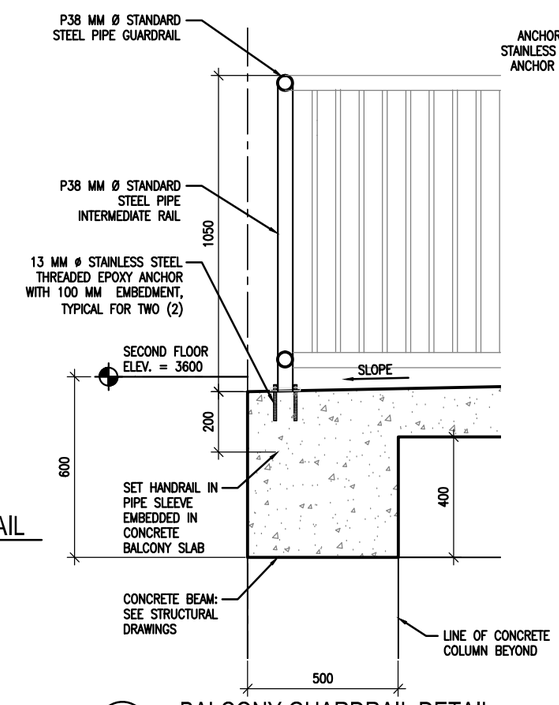

6 A6 A7 BALCONY GUARDRAIL DETAIL
SCALE: 1:10

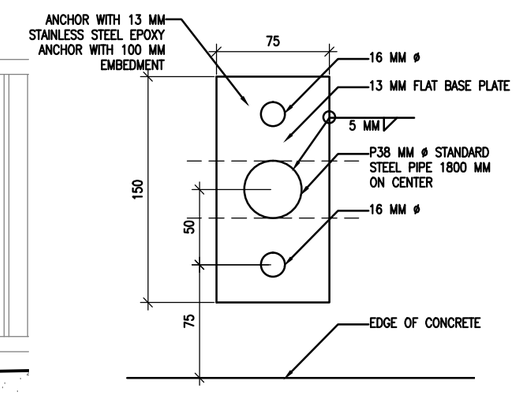

7 A6 A7 RAILING BASE PLATE DETAIL
SCALE: 1:2

UNLESS OTHERWISE NOTED, LINEAR DIMENSIONS SHOWN ARE IN MILLIMETERS (MM)

0 100 200 400
SCALE: 1: 5

0 200 400 800
SCALE: 1: 10

US Army Corps of Engineers
Afghanistan Engineer District

SYMBOL	DESCRIPTION	DATE	APP.

DESIGNED BY: DLB
DATE: 09-30-09
DWN BY: AAR
SUBMITTED BY: BAKER
CHK BY: KRC
FILE NO.: ANPSDA-507XXX

Michael Baker Jr., Inc
A unit of Michael Baker Corporation
Airside Business Park
100 Airside Drive
Moon Township PA 15108
www.mbakercorp.com

STANDARD DESIGN
BARRACK BUILDING, 2-STORY (862 GSM)
WOOD FIRED HEAT OPTION

STAIR DETAILS

SHEET REFERENCE NUMBER:
A7

100% SUBMISSION

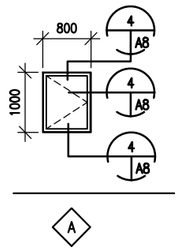

1 A8 A8 WINDOW TYPES
SCALE: 1:50

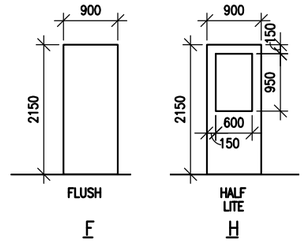

2 A8 A8 DOOR TYPES
SCALE: 1:50

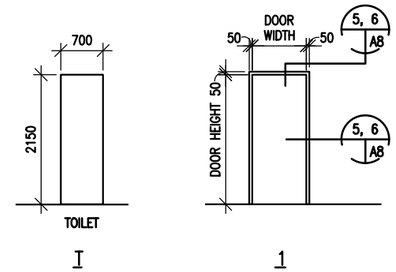

3 A8 A8 FRAME TYPES
SCALE: 1:50

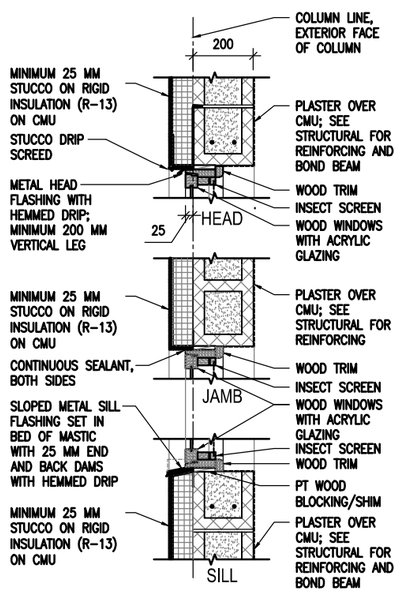

4 A8 A8 WINDOW DETAILS
SCALE: 1:10

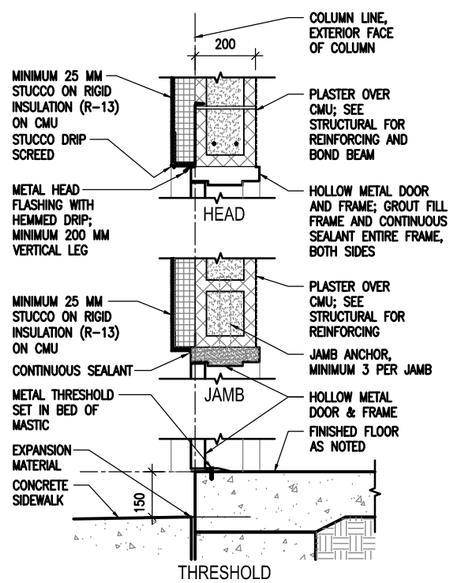

5 A8 A8 EXTERIOR DOOR DETAILS
SCALE: 1:10

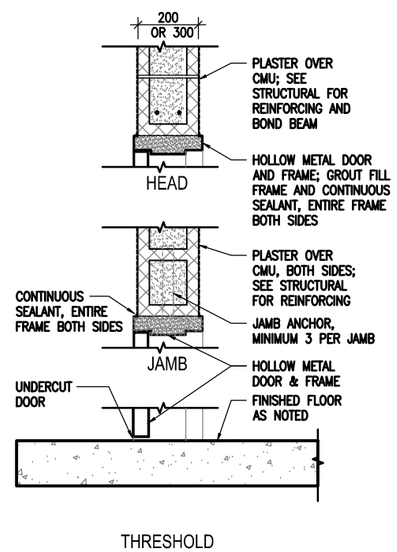

6 A8 A8 INTERIOR DOOR DETAILS
SCALE: 1:10

WINDOW TYPES NOTES:

1. ALL EXTERIOR WINDOWS SHALL BE WOOD WITH INSECT SCREENS. WINDOWS SHALL BE COMMERCIAL GRADE.
2. GLAZING SHALL BE ACRYLIC SHEET.

DOOR TYPES NOTES:

1. INTERIOR AND EXTERIOR METAL DOORS AND FRAME COLORS SHALL MATCH ADJACENT WALL COLORS AS SELECTED BY THE CONTRACTING OFFICER.
2. HARDWARE SHALL BE HEAVY DUTY, COMMERCIAL GRADE, STAINLESS STEEL WITH A MATTE FINISH.
3. FRAMES, EXCEPT FIRE-RATED FRAMES, SHALL BE MOUNTED AND ADJUSTED IN ACCORDANCE WITH MANUFACTURER'S INSTRUCTIONS. FRAMES SHALL BE FASTENED WITH MINIMUM OF THREE FASTENING POINTS PER SIDE AT REGULAR INTERVALS.
4. DIMENSIONS SHOWN ON DOOR SCHEDULE ARE BASED UPON MODULAR MASONRY (OR ROUGH OPENING), HEIGHT OF 2200mm FOR STANDARD PERSONNEL DOORS. CONTRACTOR SHALL COORDINATE WITH DOOR SUPPLIER TO ENSURE THAT DIMENSIONS OF DOORS AND FRAMES PROVIDED ARE COMPATIBLE WITH DOOR OPENING DIMENSIONS.

DOOR HARDWARE TYPES:

HW-1 1-1/2 PR HINGES
1 EA EXIT DEVICE, SURFACE MOUNTED F08
1 EA CYLINDER. GRADE 1
1 EA DOOR CLOSER, C02061,LOW RESISTANCE
1 EA THRESHOLD J32130

HW-5 1-1/2 PR HINGES, A8112
1 EA LOCKSET W/LEVERS. GRADE 1
1 EA DOOR STOP, L02101 OR L02161
2 EA MOP PLATE, J103

HW-6 1-1/2 PR HINGES
1 EA LOCKSET,F93 ENTRY LOCK W/LEVERS. GRADE 1
1 EA DOOR CLOSER, C02061,LOW RESISTANCE
1 EA THRESHOLD J32130

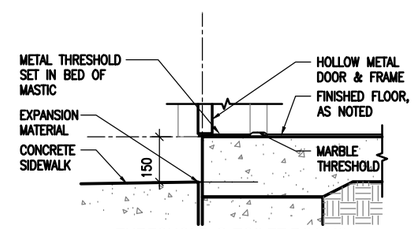

THRESHOLD @ TOILET ROOMS

7 A8 A8 EXTERIOR THRESHOLD DETAILS
SCALE: 1:10

UNLESS OTHERWISE NOTED, LINEAR DIMENSIONS SHOWN ARE IN MILLIMETERS (MM)

0 200 400 800
SCALE: 1: 10

0 1000 2000 4000
SCALE: 1: 50

US Army Corps of Engineers
Afghanistan Engineer District

SYMBOL	DESCRIPTION	DATE	APR

DESIGNED BY: DLB
DATE: 09-30-09
DWN BY: AAR
SUBMITTED BY: BAKER
CHK BY: KRC
FILE NO.: ANPSDA-508XXX

Michael Baker Jr., Inc
A unit of Michael Baker Corporation
Airside Business Park
100 Airside Drive
Moon Township PA 15108
www.mbakercorp.com

STANDARD DESIGN
BARRACK BUILDING, 2-STORY (862 GSM)
WOOD FIRED HEAT OPTION

DOOR, WINDOW & FINISH TYPES & DETAILS

SHEET REFERENCE NUMBER:
A8

100% SUBMISSION

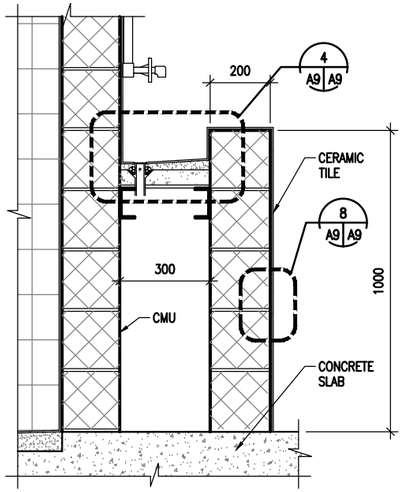

1 A1 A9 LAVATORY SECTION
SCALE: 1:10

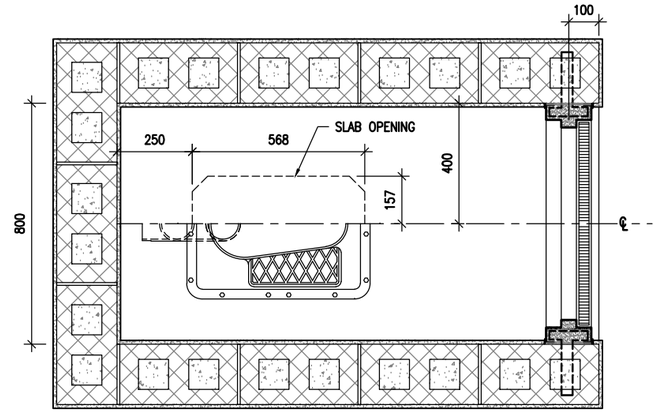

2 A1 A9 TYPICAL TOILET STALL DETAIL
SCALE: 1:10
ZURN Z1290 EASTERN STYLE WATER CLOSET

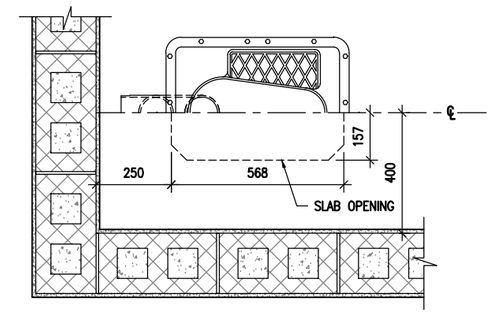

3 A1 A9 TYPICAL TOILET DETAIL
SCALE: 1:10
ZURN Z1290 EASTERN STYLE WATER CLOSET

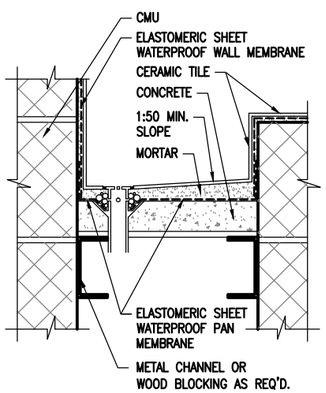

4 A9 A9 LAVATORY DETAIL
SCALE: NTS
NOTE: WALL MEMBRANE LAPS OVER PAN MEMBRANE
TCA METHOD: B417

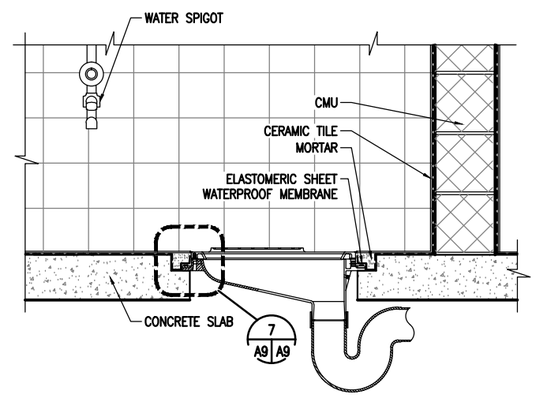

5 A9 A9 THIN SET LATRINE
SCALE: 1:10

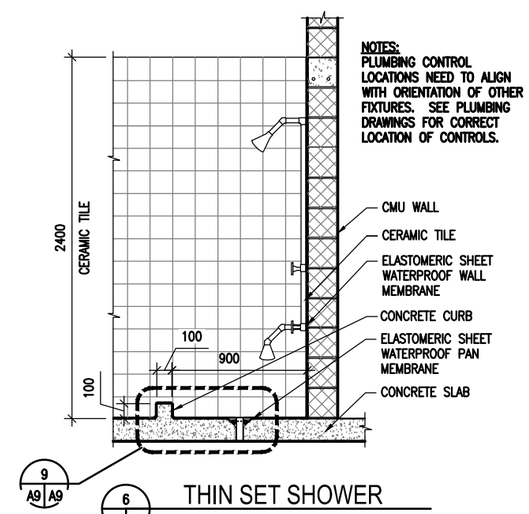

6 A1 A9 THIN SET SHOWER
SCALE: 1:20

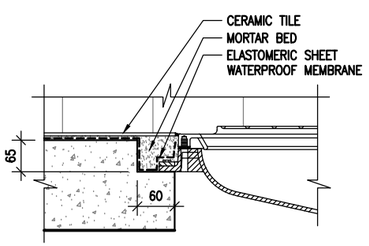

7 A9 A9 MOUNTING DETAIL
SCALE: NTS

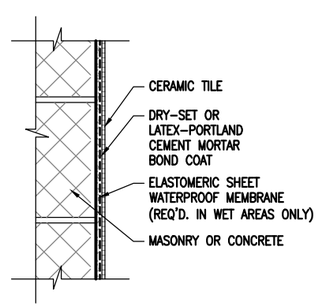

8 A9 A9 WALL DETAIL
SCALE: NTS
TCA METHOD: W222

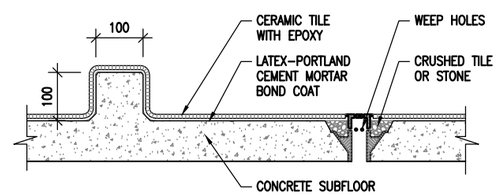

9 A9 A9 THIN SET CURB
SCALE: NTS
TCA METHOD: F115

UNLESS OTHERWISE NOTED, LINEAR DIMENSIONS SHOWN ARE IN MILLIMETERS (MM)

0 200 400 800
SCALE: 1: 10

0 400 800 1600
SCALE: 1: 20

US Army Corps of Engineers
Afghanistan Engineer District

SYMBOL	DESCRIPTION	DATE	APP

DESIGNED BY: DLB
DATE: 09-30-09
DWN BY: AAR
SUBMITTED BY: BAKER
CHK BY: KRC
FILE NO.: ANPSDA-509XXX

Michael Baker Jr. Inc
A unit of Michael Baker Corporation
Airside Business Park
100 Airside Drive
Moon Township PA 15108
www.mbakercorp.com

STANDARD DESIGN
BARRACK BUILDING, 2-STORY (862 GSM)
WOOD FIRED HEAT OPTION

LATRINE AND SHOWER DETAILS

SHEET REFERENCE NUMBER:
A9

100% SUBMISSION

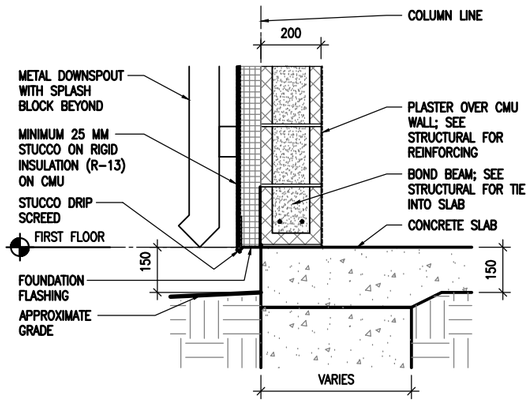

1 A6 A10 STUCCO BASE DETAIL

SCALE: 1:10

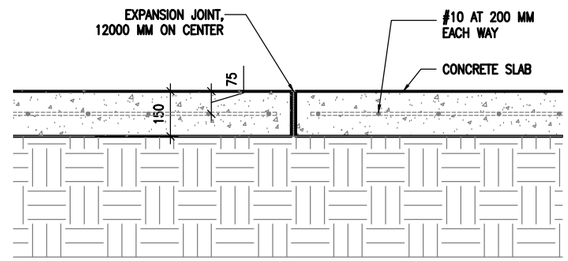

2 A1 A10 SIDEWALK EXPANSION JOINT DETAIL

SCALE: 1:10

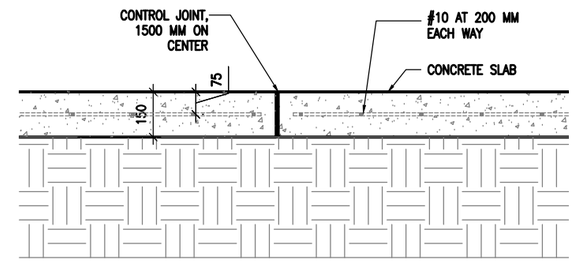

3 A1 A10 SIDEWALK CONTROL JOINT DETAIL

SCALE: 1:10

UNLESS OTHERWISE NOTED, LINEAR DIMENSIONS SHOWN ARE IN MILLIMETERS (MM)

0 1000 2000 4000

SCALE: 1: 50

US Army Corps of Engineers

Afghanistan Engineer District

SYMBOL	DESCRIPTION	DATE	APV

DESIGNED BY: DLB	DATE: 09-30-09
DWN BY: AAR	SUBMITTED BY: BAKER
CHK BY: KRC	FILE NO.: ANPSDA-510XXX

Michael Baker Jr., Inc
A unit of Michael Baker Corporation
Airside Business Park
100 Airside Drive
Moon Township PA 15108
www.mbakercorp.com

STANDARD DESIGN
BARRACK BUILDING, 2-STORY (862 GSM)
WOOD FIRED HEAT OPTION

SECTION DETAILS

SHEET REFERENCE NUMBER:

A10

100% SUBMISSION

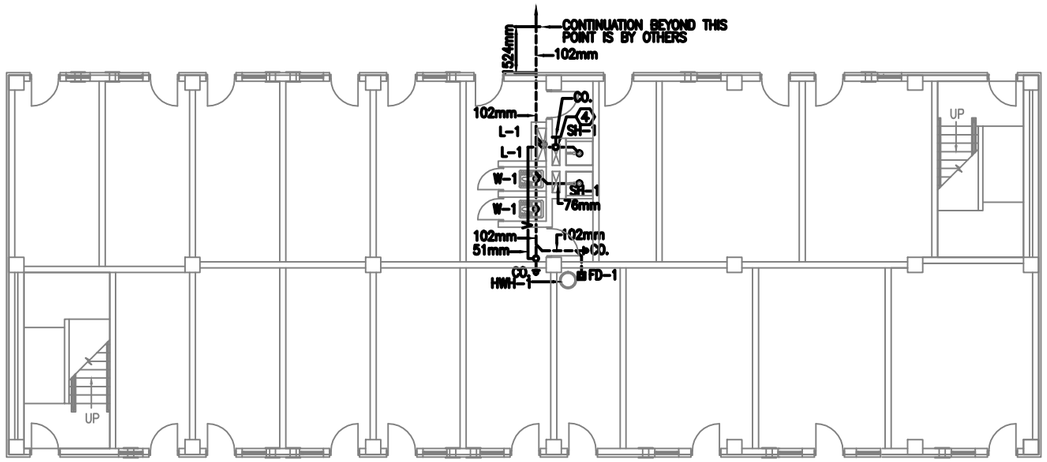

1 P1 P1 BARRACKS FIRST FLOOR PLAN - PLUMBING (SANITARY)

SCALE: 1:100

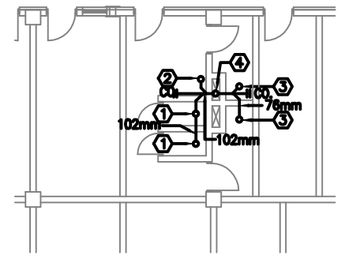

2 P1 P1 BARRACKS PARTIAL FIRST FLOOR CEILING PLAN - PLUMBING

SCALE: 1:100

SANITARY KEY NOTES:

1. 102mm SANITARY LINE UP TO EASTERN STYLE WATER CLOSET ON 2nd FLOOR.
2. 76mm SANITARY LINE UP TO TROUGH ON 2nd FLOOR.
3. 76mm SANITARY LINE UP TO SHOWER ON 2nd FLOOR.
4. 102mm SANITARY LINE DOWN IN CHASE FROM 2nd FLOOR PLUMBING FIXTURES. EXTEND VENT STACK UP THRU CHASE TO SECOND FLOOR. CONTINUE LINE UP THRU ROOF.

FLOOR PLAN NOTES:

1. DO NOT SCALE DRAWINGS – ALL DIMENSIONS AND CONDITIONS SHALL BE CHECKED AND VERIFIED BY THE CONTRACTOR AT THE SITE.
2. ALL WORK PERFORMED ON THIS BUILDING SHALL BE IN COMPLIANCE WITH ALL PERTINENT CODES, RULES, ORDINANCES AND REGULATIONS OF THE GOVERNING AUTHORITIES.
3. ALL WORK PERFORMED UNDER AND IN CONNECTION WITH THESE DRAWINGS AND SPECIFICATIONS SHALL BE IN STRICT COMPLIANCE WITH THE LATEST SAFETY AND HEALTH STANDARDS.
4. REPORT ANY DISCREPANCIES FOUND IN THE PLUMBING DRAWINGS AND/OR IN THE SPECIFICATIONS DURING THE BIDDING PROCESS FOR CLARIFICATION BY THE ENGINEER.
5. ALL EASTERN STYLE WATER CLOSETS IN THIS FACILITY ARE TO HAVE THE FIXTURE DESIGNATION OF W-1. EACH FIXTURE SHALL HAVE A (1) INCH (25mm) COLD WATER CONNECTION AND A (4) INCH (102mm) SANITARY CONNECTION.
6. ALL TROUGH FIXTURES IN THIS FACILITY ARE TO HAVE THE FIXTURE DESIGNATION OF L-1. EACH FIXTURE SHALL HAVE A (1/2 INCH) (13mm) COLD WATER, (1/2 INCH) (13mm) HOT WATER CONNECTION AND A (3 INCH) (76mm) SANITARY CONNECTION.
7. ALL SHOWER FIXTURES IN THIS FACILITY ARE TO HAVE THE FIXTURE DESIGNATION OF SH-1. EACH FIXTURE SHALL HAVE A (1/2 INCH) (13mm) COLD WATER, (1/2 INCH) (13mm) HOT WATER CONNECTION AND A (3 INCH) (76mm) SANITARY CONNECTION TO A FLOOR DRAIN.
8. PLUMBING CONTRACTOR TO PROVIDE WATER HAMMER ARRESTORS AT ALL WATER CLOSETS.
9. PLUMBING CONTRACTOR TO PROVIDE TRAP PRIMERS AND 1/2" (13mm) COLD WATER LINES FOR ALL FLOOR DRAINS. COLD WATER LINES TO BE UNDER THE FLOOR FROM TRAP PRIMERS TO TRAPS ON FLOOR DRAINS.
10. REFER TO SHEET P3 FOR DETAILS AND SYMBOLS.
11. ALL WATER, SANITARY AND VENT LINES TO BE EXPOSED. RUN LINES TIGHT TO CEILING AND WALL.

LEGEND

COLD WATER

HOT WATER

SANITARY ABOVE GROUND

SANITARY UNDER GROUND

VENT LINE

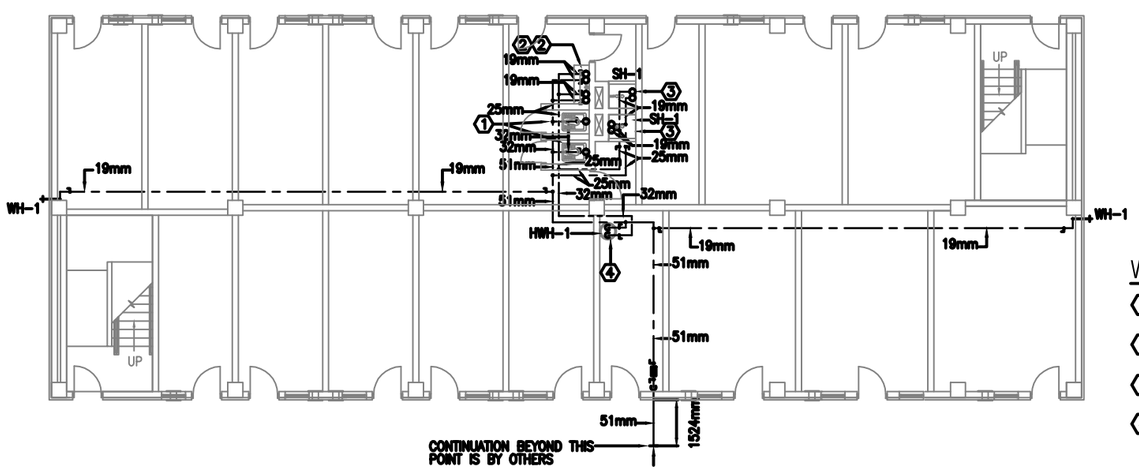

3 P1 P1 BARRACKS FIRST FLOOR PLAN - PLUMBING (WATER)

SCALE: 1:100

WATER KEY NOTES:

1. 32mm COLD WATER LINE UP TO EASTERN STYLE WATER CLOSET ON 2nd FLOOR.
2. 13mm COLD WATER LINE & 13mm HOT WATER LINE UP TO TROUGH ON 2nd FLOOR.
3. 13mm COLD WATER LINE & 13mm HOT WATER LINE UP TO SHOWER ON 2nd FLOOR.
4. SEE DETAIL ON SHEET P3 FOR WATER HEATER AND MIXING VALVE INFORMATION.

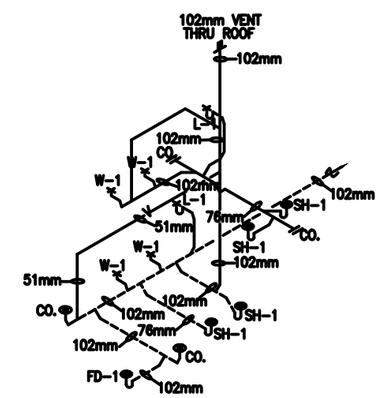

4 P1 P1 BARRACKS - DRAINAGE ISOMETRIC

SCALE: N.T.S.

1 0 1 2 3 4 5 6 7 8 9

1:100

US Army Corps of Engineers

Afghanistan Engineer District

SYMBOL	DESCRIPTION	DATE	APR

DESIGNED BY: RMH | DATE: 09-30-09

DWN BY: RMH | SUBMITTED BY: BAKER

CHK BY: CJM III | FILE NO.: ANPSDP-101XXX

Michael Baker Jr., Inc
A unit of Michael Baker Corporation
Airside Business Park
100 Airside Drive
Moon Township PA 15108
www.mbakercorp.com

STANDARD DESIGN
BARRACK BUILDING, 2-STORY (862 GSM)
WOOD FIRED HEAT OPTION

FIRST FLOOR PLAN - PLUMBING AND DRAINAGE ISOMETRIC

SHEET REFERENCE NUMBER:

P1

100% SUBMISSION

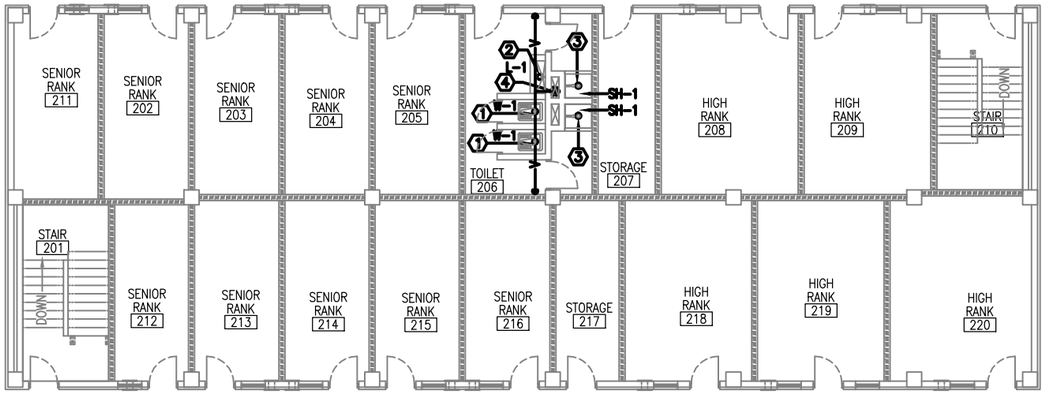

1 P2 P2 BARRACKS SECOND FLOOR PLAN - PLUMBING (SANITARY)

SCALE: 1:100

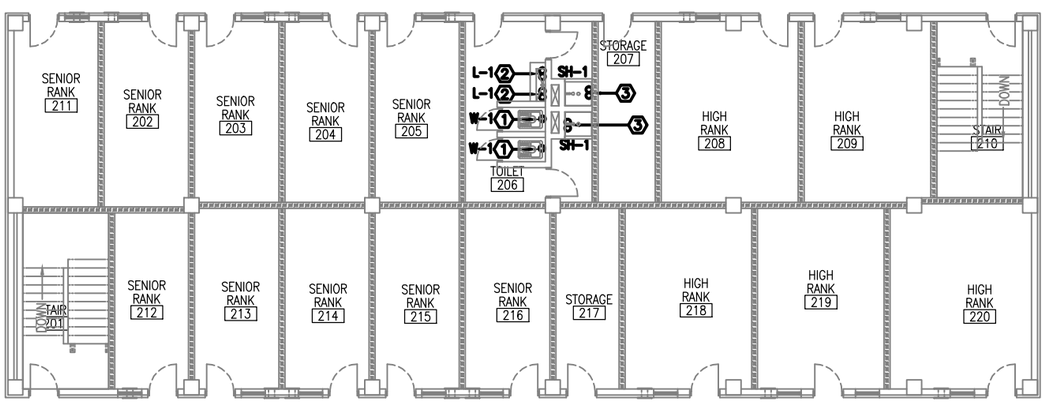

2 P2 P2 BARRACKS SECOND FLOOR PLAN - PLUMBING (WATER)

SCALE: 1:100

FLOOR PLAN NOTES:

1. DO NOT SCALE DRAWINGS – ALL DIMENSIONS AND CONDITIONS SHALL BE CHECKED AND VERIFIED BY THE CONTRACTOR AT THE SITE.
2. ALL WORK PERFORMED ON THIS BUILDING SHALL BE IN COMPLIANCE WITH ALL PERTINENT CODES, RULES, ORDINANCES AND REGULATIONS OF THE GOVERNING AUTHORITIES.
3. ALL WORK PERFORMED UNDER AND IN CONNECTION WITH THESE DRAWINGS AND SPECIFICATIONS SHALL BE IN STRICT COMPLIANCE WITH THE LATEST SAFETY AND HEALTH STANDARDS.
4. REPORT ANY DISCREPANCIES FOUND IN THE PLUMBING DRAWINGS AND/OR IN THE SPECIFICATIONS DURING THE BIDDING PROCESS FOR CLARIFICATION BY THE ENGINEER.
5. ALL EASTERN STYLE WATER CLOSETS IN THIS FACILITY ARE TO HAVE THE FIXTURE DESIGNATION OF W-1. EACH FIXTURE SHALL HAVE A (1) INCH (25mm) COLD WATER CONNECTION AND A (4) INCH (102mm) SANITARY CONNECTION.
6. ALL TROUGH FIXTURES IN THIS FACILITY ARE TO HAVE THE FIXTURE DESIGNATION OF L-1. EACH FIXTURE SHALL HAVE A (1/2 INCH) (13mm) COLD WATER, (1/2 INCH) (13mm) HOT WATER CONNECTION AND A (3 INCH) (76mm) SANITARY CONNECTION.
7. ALL SHOWER FIXTURES IN THIS FACILITY ARE TO HAVE THE FIXTURE DESIGNATION OF SH-1. EACH FIXTURE SHALL HAVE A (1/2 INCH) (13mm) COLD WATER, (1/2 INCH) (13mm) HOT WATER CONNECTION AND A (3 INCH) (76mm) SANITARY CONNECTION TO A FLOOR DRAIN.
8. PLUMBING CONTRACTOR TO PROVIDE WATER HAMMER ARRESTORS AT ALL WATER CLOSETS.
9. PLUMBING CONTRACTOR TO PROVIDE TRAP PRIMERS AND 1/2" (13mm) COLD WATER LINES FOR ALL FLOOR DRAINS. COLD WATER LINES TO BE UNDER THE FLOOR FROM TRAP PRIMERS TO TRAPS ON FLOOR DRAINS.
10. REFER TO SHEET P3 & P4 FOR DETAILS AND SYMBOLS.
11. ALL WATER, SANITARY AND VENT LINES TO BE EXPOSED. RUN LINES TIGHT TO CEILING AND WALL. WATER, SANITARY AND VENT LINES IN CELL 101 & CELL 102 TO BE PIPED ABOVE CEILING AND IN WALLS.

SANITARY KEY NOTES:

1. 102mm SANITARY LINE UP TO EASTERN STYLE WATER CLOSET FROM 1st FLOOR CEILING SPACE.
2. 76mm SANITARY LINE UP TO TROUGH FROM 1st FLOOR CEILING SPACE.
3. 76mm SANITARY LINE UP TO SHOWER FROM 1st FLOOR CEILING SPACE.
4. 102mm SANITARY STACK DOWN, AND 102mm VENT THRU ROOF.

WATER KEY NOTES:

1. 32mm COLD WATER LINE UP TO EASTERN STYLE WATER CLOSET FROM 1st FLOOR CEILING SPACE.
2. 13mm COLD WATER LINE & 13mm HOT WATER LINE UP TO TROUGH FROM 1st FLOOR CEILING SPACE.
3. 13mm COLD WATER LINE & 13mm HOT WATER LINE UP TO SHOWER FROM 1st FLOOR CEILING SPACE.

LEGEND

COLD WATER
HOT WATER
SANITARY ABOVE GROUND
SANITARY UNDER GROUND
VENT LINE

1 0 1 2 3 4 5 6 7 8 9
1:100

US Army Corps of Engineers
Afghanistan Engineer District

SYMBOL	DESCRIPTION	DATE	APP

DESIGNED BY: RMH
DATE: 09-30-09
DWN BY: RMH
SUBMITTED BY: BAKER
CHK BY: CJM III
FILE NO.: ANPSDP-102XXX

Michael Baker Jr., Inc
A unit of Michael Baker Corporation
Airside Business Park
100 Airside Drive
Moon Township PA 15108
www.mbakercorp.com

STANDARD DESIGN
BARRACK BUILDING, 2-STORY (862 GSM)
WOOD FRIED HEAT OPTION

SECOND FLOOR PLAN - PLUMBING

SHEET REFERENCE NUMBER:
P2

100% SUBMISSION

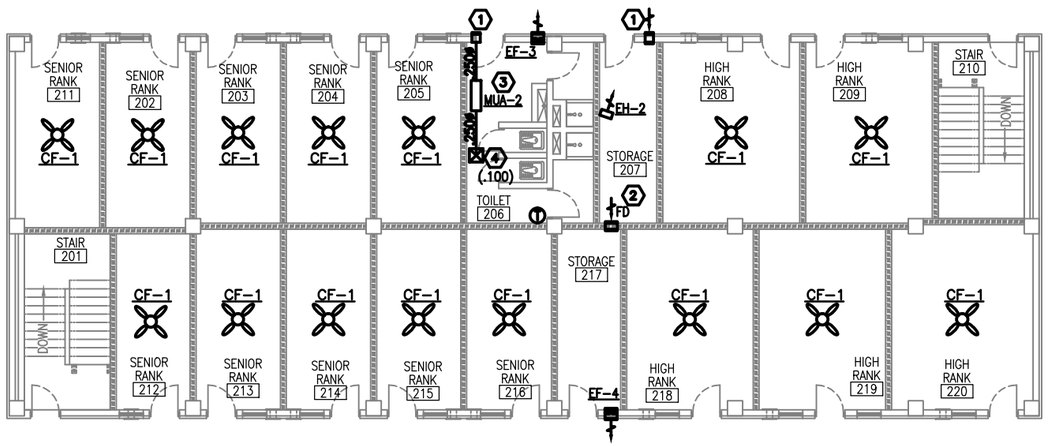

2 M1 M1 SECOND FLOOR PLAN - HVAC

SCALE: 1:100

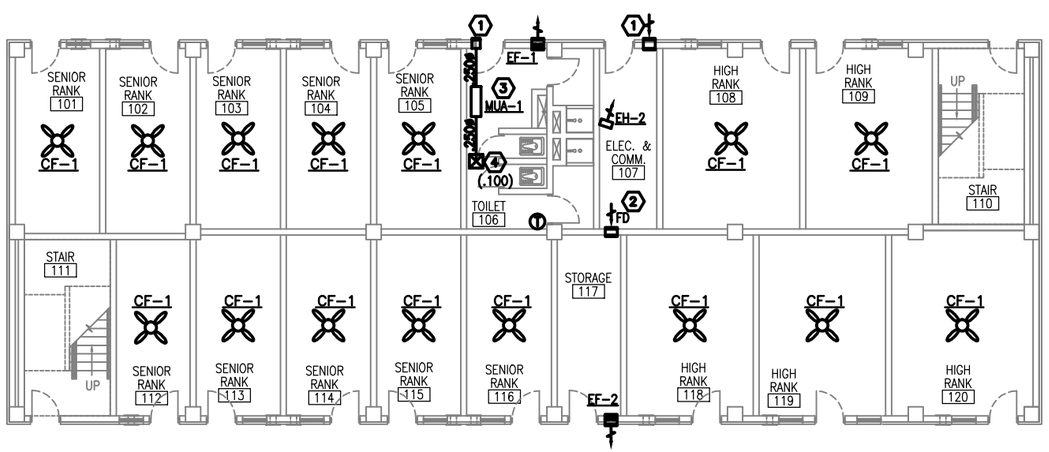

1 M1 M1 FIRST FLOOR PLAN - HVAC

SCALE: 1:100

EXHAUST FAN SCHEDULE

NO.	TYPE	FAN CMS	DRIVE	HP	SP mmH20	ELECT. CHAR.	SWITCH
EF-1	WALL	0.100	DIRECT	FRACT	13	220/1/50	⊙ WALL
EF-2	WALL	0.050	DIRECT	FRACT	13	220/1/50	⊙ WALL
EF-3	WALL	0.100	DIRECT	FRACT	13	220/1/50	⊙ WALL
EF-4	WALL	0.050	DIRECT	FRACT	13	220/1/50	⊙ WALL

NOTES:
1. WALL MOUNTED EXHAUST FAN MOUNT AT 600mm BELOW CEILING.

ELECTRIC UNIT HEATER SCHEDULE

NO.	CMS	KW	F.A.T. °C	ELECT. CHAR.	MOUNTING
EH-2	.200	2.6	38	370/1/50	WALL HUNG

NOTES:
1. UNIT HEATERS SHALL BE MOUNTED AS HIGH AS POSSIBLE.
2. UNIT HEATERS SHALL HAVE TAMPER PROOF INTEGRAL STATS.

MAKE UP AIR HEATERS

NO.	BLOWER CMS	FUSE	KW	MIN. TEMP RISE °C	SP mmH20	ELECT. CHAR.	CONTROL
MUA-1	0.100	30	5	20	13	220/1/50	REMOTE
MUA-2	0.100	30	5	20	13	220/1/50	REMOTE

NOTES:
1. PROVIDE REMOTE MOUNTED THERMOSTAT WITH LOCKING COVER.
2. INTERLOCK BLOWER OPERATION WITH EXHAUST FANS.
3. BLOWER SHALL BE SET TO ENERGIZE WITH EXHAUST FAN(S), HEAT SHALL BE CONTROLLED BY THERMOSTAT. PROVIDE AIR SENSING SWITCH FOR HEATING OPERATION.

CEILING FAN

NO.	BLADE SIZE mm	BLADE SIZE IN	VOLTAGE	SWITCH
CF-1	1320	52	220/1/50	⊙ WALL

NOTES:
1. FINAL ELECTRICAL CONNECTIONS BY EC.

GENERAL NOTES:

1. DO NOT SCALE DRAWINGS – ALL DIMENSIONS AND CONDITIONS SHALL BE CHECKED AND VERIFIED BY THE CONTRACTOR AT THE SITE.
2. ALL WORK PERFORMED ON THIS BUILDING SHALL BE IN COMPLIANCE WITH ALL PERTINENT CODES, RULES, ORDINANCES AND REGULATIONS OF THE GOVERNING AUTHORITIES.
3. ALL WORK PERFORMED UNDER AND IN CONNECTION WITH THESE DRAWINGS AND SPECIFICATIONS SHALL BE IN STRICT COMPLIANCE WITH THE LATEST SAFETY AND HEALTH STANDARDS.

SYMBOLS:

- (X) KEY NOTE
- (.050) AIR VOLUME IN CUBIC METERS PER SECOND (CMS)
- FD FIRE DAMPER

NUMBERED NOTE:

1. 200X200 (8X8) LOW LEAKAGE GRAVITY WALL LOUVER FOR SUPPLY AIR. PROVIDE WEATHERPROOF LOUVER W/ 2" WASH DOWN FILTER AND SAND TRAP.
2. 200X400 (8X16) TRANSFER GRILLE WITH FIRE DAMPER.
3. ELECTRIC MAKE UP AIR HEATER SECURED TO STRUCTURE ABOVE. ALL FINAL ELECTRICAL CONNECTIONS SHALL BE BY THE EC.
4. 150x150 (6x6) SUPPLY DIFFUSER CEILING WITH THREE WAY BLOW, BALANCE TO CMS IN PARENTHESIS.

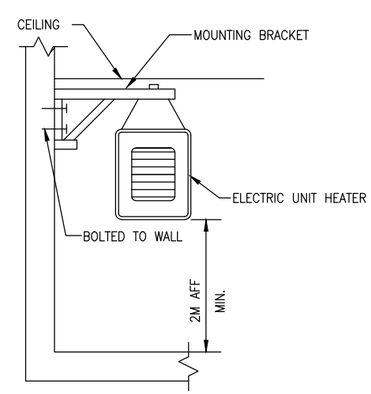

ELECTRIC UNIT HEATER MOUNTING

N.T.S.

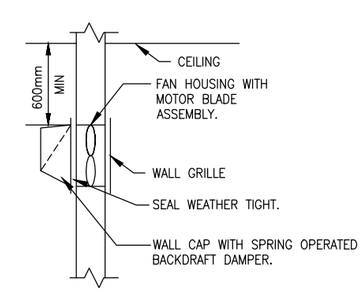

WALL MOUNTED EXHAUST FAN DETAIL

N.T.S.

US Army Corps of Engineers
Afghanistan Engineer District

SYMBOL	DESCRIPTION	DATE	APP

DESIGNED BY: RML | DATE: 09-30-09
DWN BY: JNN | SUBMITTED BY: BAKER
CHK BY: CJM III | FILE NO.: ANPSDM-101XXX

Michael Baker Jr., Inc
A unit of Michael Baker Corporation
Airside Business Park
100 Airside Drive
Moon Township, PA 15108
www.mbakercorp.com

STANDARD DESIGN
BARRACK BUILDING, 2-STORY (862 GSM)
WOOD FIRED HEAT OPTION

PLANS - HVAC

SHEET REFERENCE NUMBER:
M1

100% SUBMISSION

GENERAL NOTES:

1. REFER TO DRAWING #E0 FOR THE ELECTRICAL SYMBOLS LIST.
2. EXIT SIGNS SHALL BE WIRED AHEAD OF ANY LOCAL SWITCHING ON CIRCUITS.
3. REFER TO DRAWING #E7 FOR THE LIGHTING FIXTURE SCHEDULE.
4. REFER TO DRAWING #E6 FOR THE POWER RISER.
5. REFER TO DRAWING #E8 FOR PANEL SCHEDULES.
6. LIGHT FIXTURES INDICATED AS EMERGENCY SHALL BE PROVIDED WITH A BATTERY BACKUP BALLAST.

NUMBERED NOTES:

1. CIRCUIT SHALL BE CONTINUED TO THE FLOOR ABOVE.
2. PROVIDE REMOTE BATTERY PACK IN THE STAIRWELL TO POWER THIS FIXTURE. THIS BATTERY PACK SHALL BE WIRED INTO THE CIRCUIT SHOWN AHEAD OF ANY LOCAL SWITCHING.

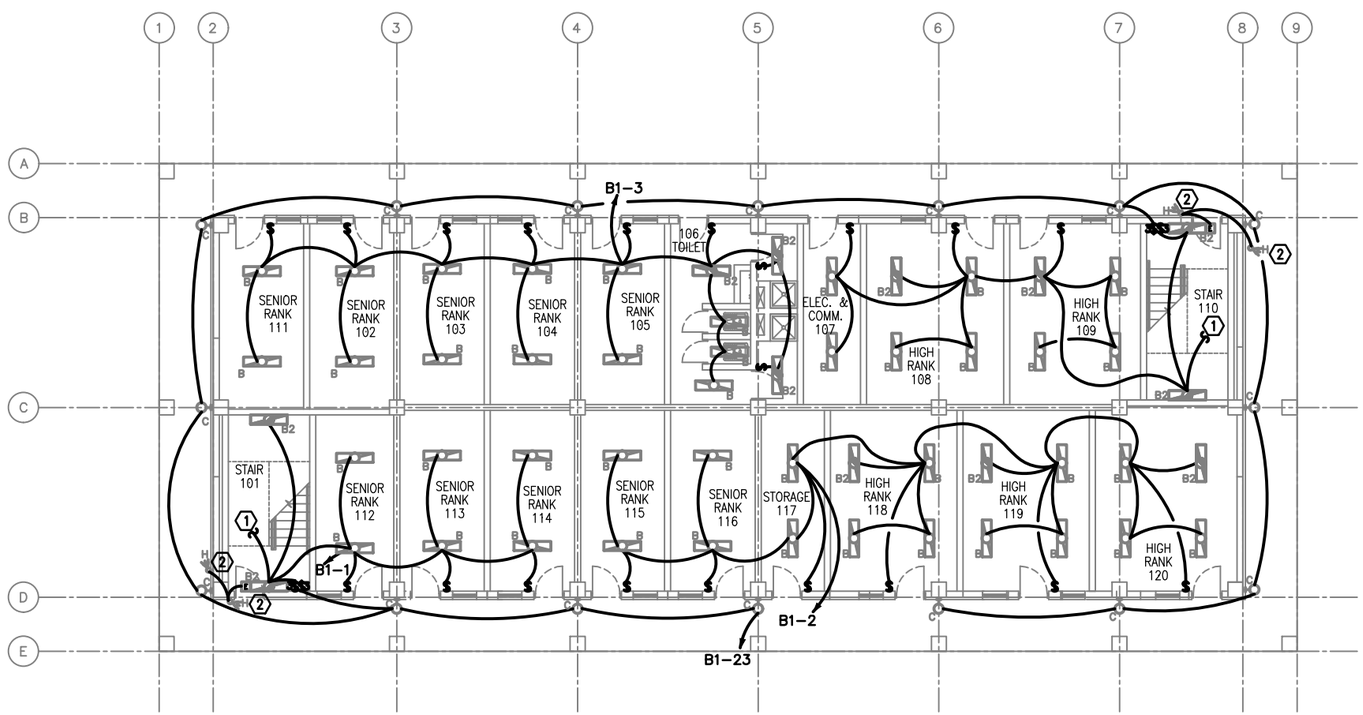

1 / E1 E1 FIRST FLOOR LIGHTING PLAN

SCALE: 1:100

N

UNLESS OTHERWISE NOTED, LINEAR DIMENSIONS SHOWN ARE IN MILLIMETERS (MM)

1 0 1 2 3 4 5 6 7 8 9
1:100

US Army Corps of Engineers
Afghanistan Engineer District

SYMBOL	DESCRIPTION	DATE	APR

DESIGNED BY: JRG	DATE: 09-30-09
DWN BY: JRG	SUBMITTED BY: BAKER
CHK BY: JRG	FILE NO.: ANPSDE-101XXX

Michael Baker Jr., Inc
A unit of Michael Baker Corporation
Airside Business Park
100 Airside Drive
Moon Township PA 15108
www.mbakercorp.com

STANDARD DESIGN
BARRACK BUILDING, 2-STORY (862 GSM)
WOOD FIRED HEAT OPTION

FIRST FLOOR LIGHTING PLAN

SHEET REFERENCE NUMBER:
E1

100% SUBMISSION

GENERAL NOTES:

1. REFER TO DRAWING #E0 FOR THE ELECTRICAL SYMBOLS LIST.
2. EXIT SIGNS SHALL BE WIRED AHEAD OF ANY LOCAL SWITCHING ON CIRCUITS.
3. REFER TO DRAWING #E7 FOR THE LIGHTING FIXTURE SCHEDULE.
4. REFER TO DRAWING #E6 FOR THE POWER RISER.
5. REFER TO DRAWING #E8 FOR PANEL SCHEDULES.
6. LIGHT FIXTURES INDICATED AS EMERGENCY SHALL BE PROVIDED WITH A BATTERY BACKUP BALLAST.

NUMBERED NOTES:

1. CIRCUIT SHALL BE CONTINUED TO THE FLOOR ABOVE.
2. PROVIDE REMOTE BATTERY PACK IN THE STAIRWELL TO POWER THIS FIXTURE. THIS BATTERY PACK SHALL BE WIRED INTO THE CIRCUIT SHOWN AHEAD OF ANY LOCAL SWITCHING.

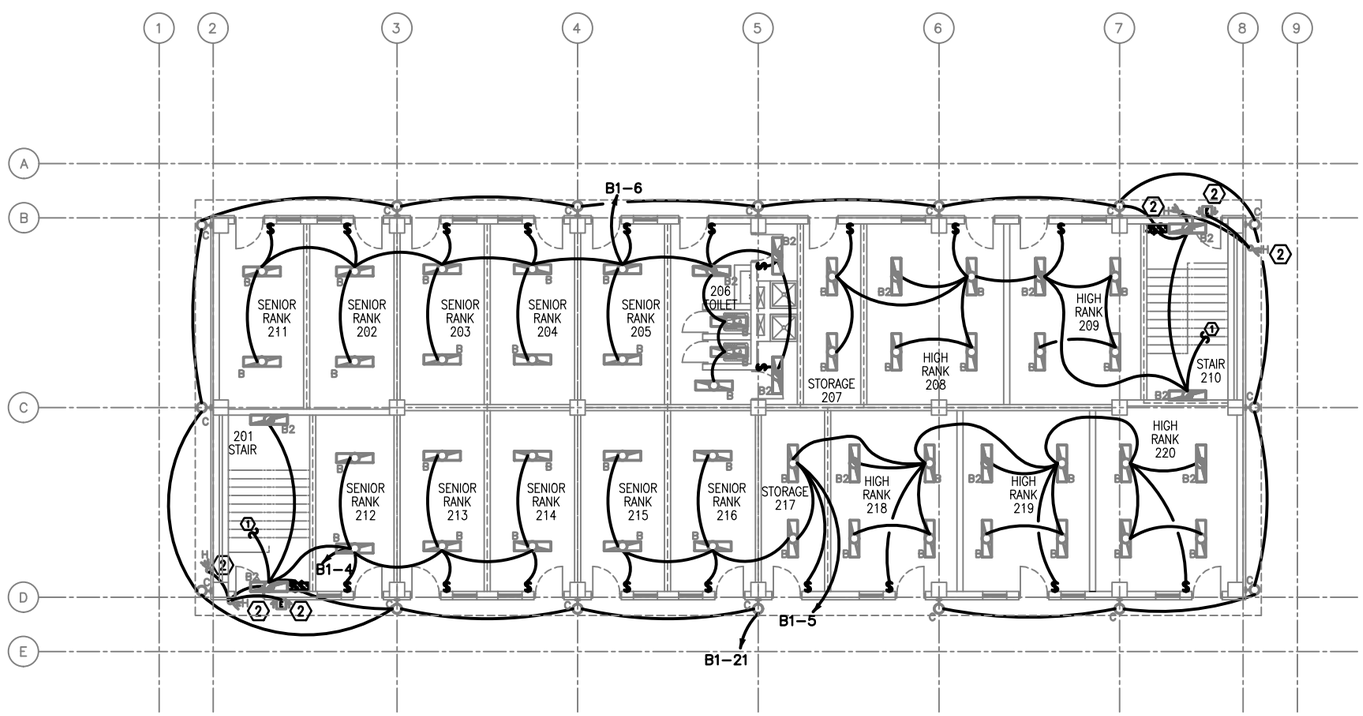

1 E2 E2 SECOND FLOOR LIGHTING PLAN

SCALE: 1:100

N

UNLESS OTHERWISE NOTED, LINEAR DIMENSIONS SHOWN ARE IN MILLIMETERS (MM)

1 0 1 2 3 4 5 6 7 8 9

1:100

US Army Corps of Engineers

Afghanistan Engineer District

SYMBOL	DESCRIPTION	DATE	APP

DESIGNED BY: JRG	DATE: 09-30-09
DWN BY: JRG	SUBMITTED BY: BAKER
CHK BY: JRG	FILE NO.: ANPSDE-102XXX

Michael Baker Jr., Inc
A unit of Michael Baker Corporation
Airside Business Park
100 Airside Drive
Moon Township PA 15108
www.mbakercorp.com

STANDARD DESIGN
BARRACK BUILDING, 2-STORY (862 GSM)
WOOD FIRED HEAT OPTION

SECOND FLOOR LIGHTING PLAN

SHEET REFERENCE NUMBER:

E2

100% SUBMISSION

GENERAL NOTES:

1. REFER TO DRAWING #E0 FOR THE ELECTRICAL SYMBOLS LIST.
2. REFER TO DRAWING #E6 FOR THE POWER RISER.
3. REFER TO DRAWING #E8 FOR PANEL SCHEDULES.
4. COORDINATE EXACT MOUNTING LOCATION OF DISCONNECTING MEANS FOR MECHANICAL AND PLUMBING EQUIPMENT IN THE FIELD.
5. FUSIBLE SAFETY SWITCHES THAT ARE NOT OTHERWISE IDENTIFIED SHALL BE 380V, 1P, 30A FUSED SAFETY SWITCHES WITH 20A FUSES.

NUMBERED NOTES:

1. PANEL B1 (SECTIONS 1 AND 2).
2. NEMA 3R, 380V, 3P, 60A FUSED DISCONNECT FUSED AT 60A.
3. PROVIDE POWER CONNECTION TO EXHAUST FANS. SEE DRAWINGS #M1 AND #E8 FOR MORE INFORMATION.
4. PROVIDE POWER CONNECTION TO ELECTRIC HEATER #2. SEE DRAWINGS #M1 AND #E8 FOR MORE INFORMATION.
5. PROVIDE POWER CONNECTION TO MAKEUP AIR UNIT #1. SEE DRAWINGS #M1 AND #E8 FOR MORE INFORMATION.

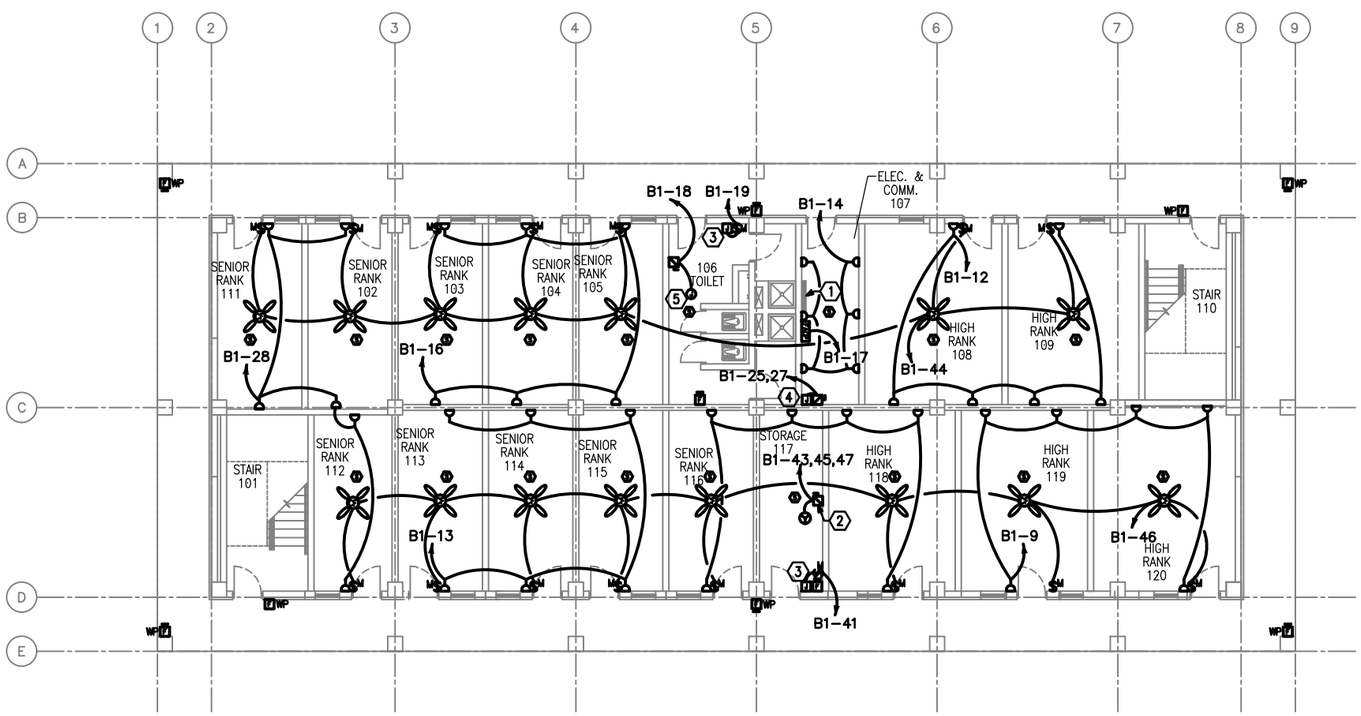

1 E3 E3 FIRST FLOOR POWER AND SYSTEMS PLAN

SCALE: 1:100

N

UNLESS OTHERWISE NOTED, LINEAR DIMENSIONS SHOWN ARE IN MILLIMETERS (MM)

1 0 1 2 3 4 5 6 7 8 9

1:100

US Army Corps of Engineers

Afghanistan Engineer District

SYMBOL	DESCRIPTION	DATE	APR

DESIGNED BY: JRG	DATE: 09-30-09
DWN BY: JRG	SUBMITTED BY: BAKER
CHK BY: JRG	FILE NO.: ANPSDE-103XXX

Michael Baker Jr., Inc
A unit of Michael Baker Corporation
Airside Business Park
100 Airside Drive
Moon Township PA 15108
www.mbakercorp.com

STANDARD DESIGN
BARRACK BUILDING, 2-STORY (862 GSM)
WOOD FIRED HEAT OPTION

FIRST FLOOR POWER AND SYSTEMS PLAN

SHEET REFERENCE NUMBER:

E3

100% SUBMISSION

GENERAL NOTES:

1. REFER TO DRAWING #E0 FOR THE ELECTRICAL SYMBOLS LIST.
2. REFER TO DRAWING #E6 FOR THE POWER RISER.
3. REFER TO DRAWING #E8 FOR PANEL SCHEDULES.
4. COORDINATE EXACT MOUNTING LOCATION OF DISCONNECTING MEANS FOR MECHANICAL AND PLUMBING EQUIPMENT IN THE FIELD.
5. FUSIBLE SAFETY SWITCHES THAT ARE NOT OTHERWISE IDENTIFIED SHALL BE 380V, 1P, 30A FUSED SAFETY SWITCHES WITH 20A FUSES.

NUMBERED NOTES:

1. PROVIDE POWER CONNECTION TO EXHAUST FANS. SEE DRAWINGS #M1 AND #E8 FOR MORE INFORMATION.
2. PROVIDE POWER CONNECTION TO ELECTRIC HEATER #2. SEE DRAWINGS #M1 AND #E8 FOR MORE INFORMATION.
3. PROVIDE POWER CONNECTION TO MAKEUP AIR UNIT #2. SEE DRAWINGS #M1 AND #E8 FOR MORE INFORMATION.

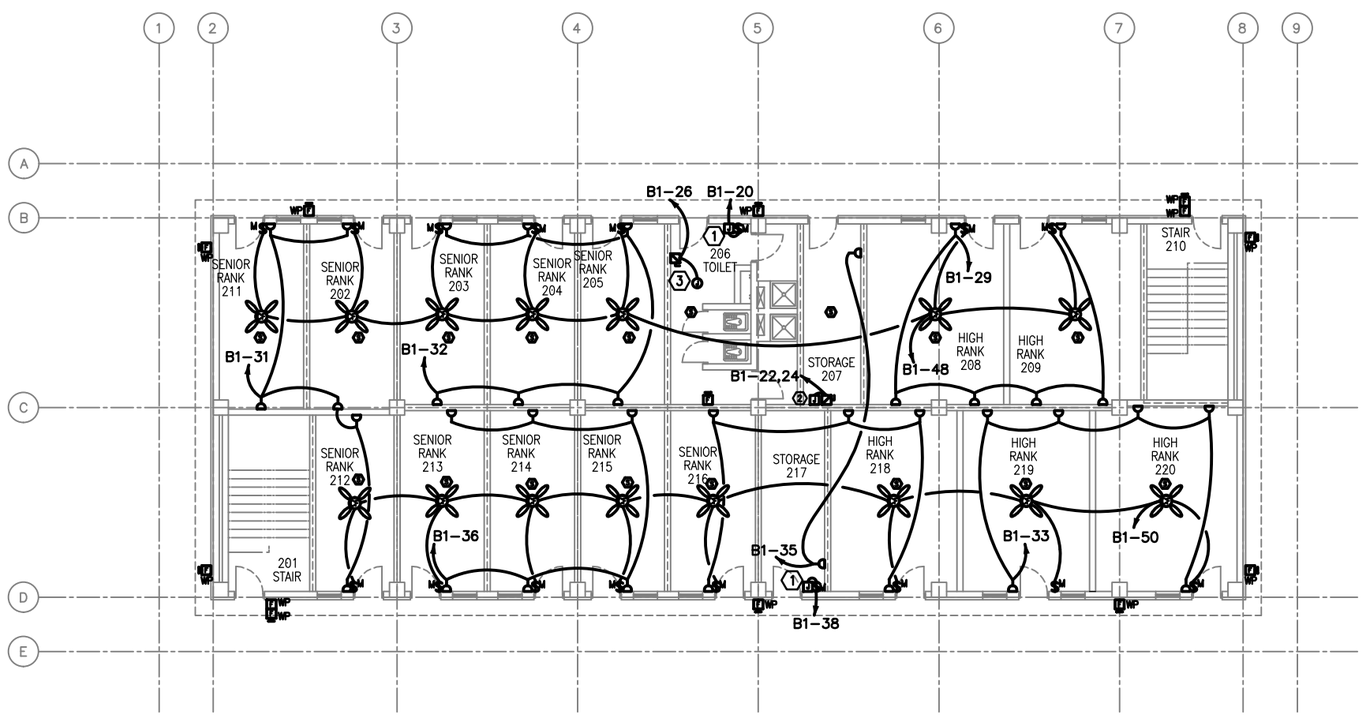

1 / E4 E4 SECOND FLOOR POWER AND SYSTEMS PLAN

SCALE: 1:100

N

UNLESS OTHERWISE NOTED, LINEAR DIMENSIONS SHOWN ARE IN MILLIMETERS (MM)

1 0 1 2 3 4 5 6 7 8 9

1:100

US Army Corps of Engineers

Afghanistan Engineer District

SYMBOL	DESCRIPTION	DATE	APR

DESIGNED BY:	DATE:
JRG	09-30-09
DWN BY:	SUBMITTED BY:
JRG	BAKER
CHK BY:	FILE NO.:
JRG	ANPSDE-104XXX

Michael Baker Jr., Inc
A unit of Michael Baker Corporation
Airside Business Park
100 Airside Drive
Moon Township PA 15108
www.mbakercorp.com

STANDARD DESIGN
BARRACK BUILDING, 2-STORY (862 GSM)
WOOD FIRED HEAT OPTION

SECOND FLOOR POWER AND SYSTEMS PLAN

SHEET REFERENCE NUMBER:

E4

100% SUBMISSION

GENERAL NOTES:

1. REFER TO DRAWING #E0 FOR THE ELECTRICAL SYMBOLS LIST.
2. REFER TO DRAWING #E8 FOR DETAILS RELATING TO LIGHTNING PROTECTION AND GROUNDING.
3. FLAG POLE SHALL HAVE THE SAME LIGHTNING PROTECTION SYSTEM AS THE POLE SUPPORTING THE PUBLIC ADDRESS SPEAKER CLUSTER. SEE DRAWING #E8 FOR DETAILS.

NUMBERED NOTES:

1. THIS DISTANCE SHALL BE A MAXIMUM OF 6.0 METERS.
2. INSTALL DOWN CONDUCTOR IN 25mm SCHEDULE 80 PVC CONDUIT TO 20mm DIAMETER x 3 METERS SOLID COPPER TINNED GROUND ROD. (TYPICAL)
3. CADWELD TO BUILDING STRUCTURE AT 18 METERS O.C. AROUND ENTIRE PERIMETER OR BUILDING. (TYPICAL)
4. (1) #120.0mm2 BARE, TINNED COPPER COUNTERPOISE GROUND 700mm BELOW GRADE.
5. 700mm MIN. (TYPICAL) BETWEEN FOUNDATION AND GROUND LOOP.
6. 120mm2 LIGHTNING PROTECTION CABLE.

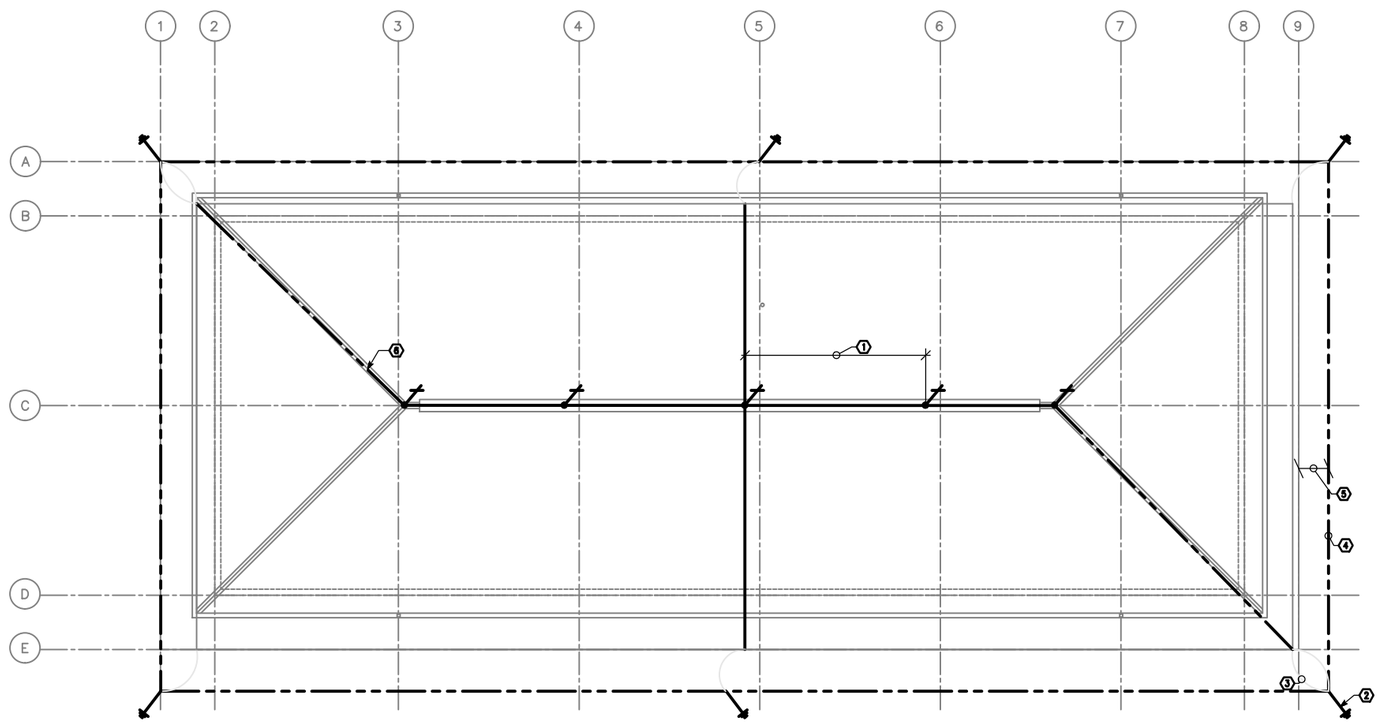

1 / E5 E5 ROOF LIGHTNING PROTECTION PLAN

SCALE: 1:100

N

UNLESS OTHERWISE NOTED, LINEAR DIMENSIONS SHOWN ARE IN MILLIMETERS (MM)

1 0 1 2 3 4 5 6 7 8 9

1:100

US Army Corps of Engineers

Afghanistan Engineer District

SYMBOL	DESCRIPTION	DATE	APPR

DESIGNED BY: JRG	DATE: 09-30-09		
DWN BY: JRG	SUBMITTED BY: BAKER		
CHK BY: JRG	FILE NO.: ANPSDE-105XXX		

Michael Baker Jr., Inc
A unit of Michael Baker Corporation
Airside Business Park
100 Airside Drive
Moon Township PA 15108
www.mbakercorp.com

STANDARD DESIGN
BARRACK BUILDING, 2-STORY (862 GSM)
WOOD FIRED HEAT OPTION

ROOF LIGHTNING PROTECTION PLAN

SHEET REFERENCE NUMBER:

E5

100% SUBMISSION

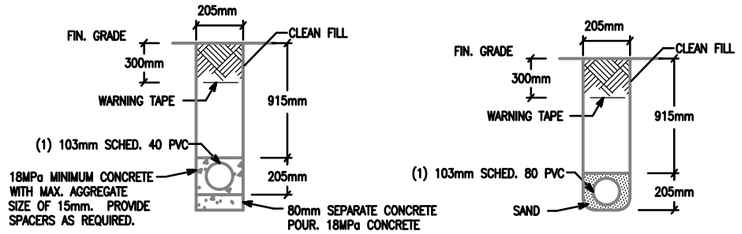

NOTE: PVC CONDUIT SHALL BE DIRECT BURIED SCHEDULE 80 FOR NO TRAFFIC AREAS AND CONCRETE-ENCASED SCHEDULE 40 FOR UNDER ROADWAYS OR TRAFFIC AREAS.

1 E6 E6 TYPICAL DUCT BANK DETAILS FOR CONDUIT IN SAND OR CONCRETE

SCALE: N.T.S.

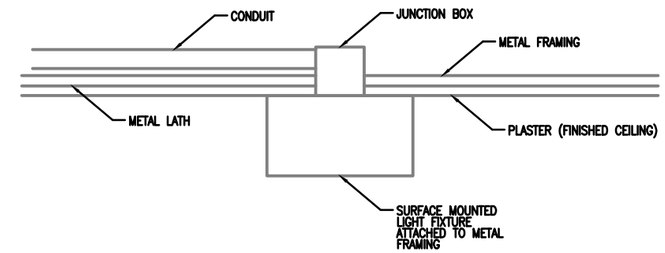

2 E6 E6 TYPICAL DETAIL FOR SURFACE MOUNTED LIGHT FIXTURES

SCALE: N.T.S.

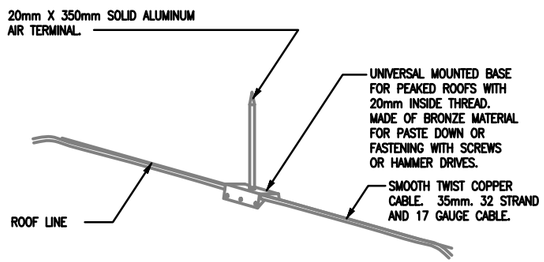

3 E6 E6 LIGHTNING PROTECTION AIR TERMINAL DETAIL

SCALE: N.T.S.

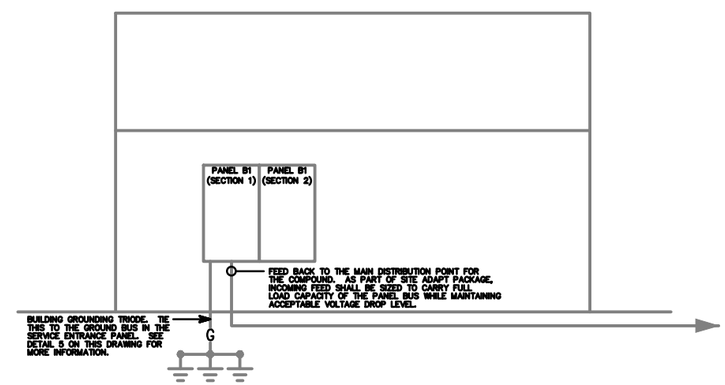

4 E6 E6 B.1 RISER DIAGRAM

SCALE: N.T.S.

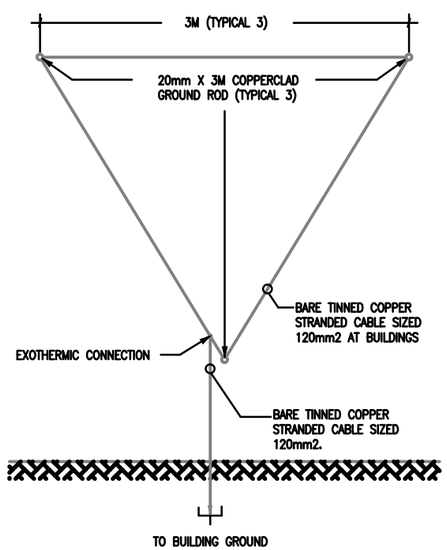

5 E6 E6 GROUND TRIPOD SYSTEM DETAIL - PLAN

SCALE: N.T.S.

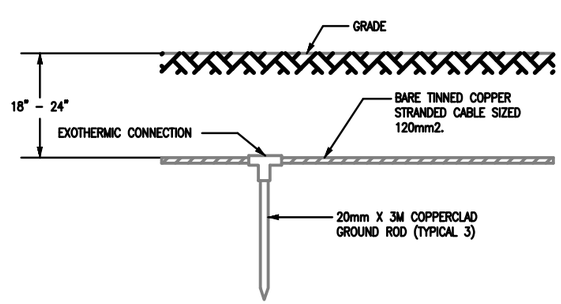

6 E6 E6 GROUND TRIPOD SYSTEM DETAIL - ELEVATION

SCALE: N.T.S.

US Army Corps of Engineers

Afghanistan Engineer District

SYMBOL	DESCRIPTION	DATE	APR

DESIGNED BY: JRG | DATE: 09-30-09
DWN BY: JRG | SUBMITTED BY: BAKER
CHK BY: JRG | FILE NO.: ANPSDE-506XXX

Michael Baker Jr. Inc
A unit of Michael Baker Corporation
Airside Business Park
100 Airside Drive
Moon Township PA 15108
www.mbakercorp.com

STANDARD DESIGN
BARRACK BUILDING, 2-STORY (862 GSM)
WOOD FIRED HEAT OPTION

DETAILS

SHEET REFERENCE NUMBER:

E6

100% SUBMISSION

FIXTURE MARK 'B'

WET LOCATION WRAP AROUND SURFACE/PENDANT MOUNTED FLUORESCENT FIXTURE WITH PRISMATIC ACRYLIC LENS AND ELECTRONIC BALLAST.

FIXTURE MARK 'B2':
SAME FIXTURE AS 'B' WITH EMERGENCY BALLAST.

FIXTURE MARK 'C'

INCANDESCENT ONE PIECE WITH APPROVED LENS, STABILIZED HIGH IMPACT POLY CARBONATE

FIXTURE MARK 'H'

REMOTE HEAD EXTERIOR LIGHT HEAD POWERED FROM EXIT SIGN BATTERY– 12V DOUBLE HEAD CORROSION RESISTANT WITH UL34 WEATHERPROOF CONSTRUCTION

FIXTURE MARK 'E'

UNIVERSAL MOUNT ENGINEER GRADE THERMOPLASTIC HOUSING EXIT SIGN WITH LED LAMPS, RED LETTERS 6" IN HEIGHT WITH ARROWS AS INDICATED, WITH 12V CADMIUM BATTERY

LIGHTING FIXTURE SCHEDULE

FIXTURE MARK	STYLE NUMBER AND TYPE	NUMBER AND TYPE OF LAMPS	VOLTAGE	MOUNTING	NOTES
B	WET LOCATION WRAP AROUND SURFACE/PENDANT MOUNTED FLUORESCENT FIXTURE WITH PRISMATIC ACRYLIC LENS AND ELECTRONIC BALLAST	(2) 32W 3500K	220V – 1ø 50HZ	PENDANT MOUNTED FROM SLOPED CEILINGS	FURNISHED WITH ELECTRONIC BALLAST, VIRGIN ACRYLIC WRAP AROUND LENS.
B2	SAME AS FIXTURE 'B' WITH EMERGENCY BALLAST	(2) 32W 3500K	220V – 1ø 50HZ	PENDANT MOUNTED FROM SLOPED CEILINGS	FURNISHED WITH ELECTRONIC BALLAST, VIRGIN ACRYLIC WRAP AROUND LENS. EMERGENCY BALLAST WITH SELF TEST SWITCH.
C	INCANDESCENT ONE PIECE W/ APPROVED LENS STABILIZED HIGH IMPACT POLY CARBONATE.	(1) A19 – 100W INCANDESCENT	220V – 1ø 50HZ	WALL MOUNTED ABOVE EXTERIOR DOORS	
H	REMOTE HEAD EXTERIOR LIGHT HEAD POWERED FROM EXIT SIGN BATTERY– 12V DOUBLE HEAD CORROSION RESISTANT WITH UL34 WEATHERPROOF CONSTRUCTION	(2) 12W/12V HALOGEN LAMP	12V – 1ø 50HZ	EXTERIOR WALL MOUNTED AT TOP OF DOOR HEIGHT	
E	UNIVERSAL MOUNT ENGINEER GRADE THERMOPLASTIC HOUSING EXIT SIGN WITH LED LAMPS, RED LETTERS 6" IN HEIGHT WITH ARROWS AS INDICATED, WITH 12V CADMIUM BATTERY WITH REMOTE HEAD CAPABILITY	LED LAMPS	220V – 1ø 50HZ	UNIVERSAL MOUNTING	

US Army Corps of Engineers
Afghanistan Engineer District

SYMBOL	DESCRIPTION	DATE	APP.

DESIGNED BY: JRG
DATE: 09-30-09
DWN BY: JRG
SUBMITTED BY: BAKER
CHK BY: JRG
FILE NO.: ANPSDE-607XXX

Michael Baker Jr., Inc
A unit of Michael Baker Corporation
Airside Business Park
100 Airside Drive
Moon Township PA 15108
www.mbakercorp.com

STANDARD DESIGN
BARRACK BUILDING, 2-STORY (862 GSM)
WOOD FIRED HEAT OPTION

LIGHT FIXTURE SCHEDULE

SHEET REFERENCE NUMBER:
E7

100% SUBMISSION

PANELBOARD B1 (SECTION 1) SURFACE MOUNTED _____ ASYM. A.I.C. MIN.
_____ AMP. MAIN LUGS (OR) 225 AMP. MAIN BREAKER W/ 225 AMP. TRIP
CIRCUIT BREAKER TYPE 380/220 VOLTS 3 PHASE 4 WIRE 50 HZ 225 AMP. BUS

CKT. NO.	TRIP AMPS	NO. POLES	WIRE MM²	GND MM²	CONDUIT MM	LOAD SERVED	LOAD-V.A. A0	LOAD-V.A. B0	LOAD-V.A. C0	LOAD-V.A. A0	LOAD-V.A. B0	LOAD-V.A. C0	LOAD SERVED	CONDUIT MM	GND MM²	WIRE MM²	NO. POLES	TRIP AMPS	CKT. NO.
1	20	1	4.0	4.0	20	LIGHTING – 111 – 116	1.5			1.4			LIGHTING – 117 – 120	20	4.0	4.0	1	20	2
3	20	1	4.0	4.0	20	LIGHTING – 102 – 106		1.5			1.1		LIGHTING – 10 – 109	20	4.0	4.0	1	20	4
5	20	1	4.0	4.0	20	LIGHTING – 211 – 216			0.9			0.9	LIGHTING – 217 – 220	20	4.0	4.0	1	20	6
7	20	1	4.0	4.0	20	LIGHTING – 202 – 206	1.0			0.9			LIGHTING – 207 – 209	20	4.0	4.0	1	20	8
9	20	1	4.0	4.0	20	RECEPTS. – 119 – 120		1.2			1.2		RECEPTS. – 110	20	4.0	4.0	1	20	10
11	20	1	4.0	4.0	20	RECEPTS. – 116 – 118			1.2			1.0	RECEPTS. – 108, 109	20	4.0	4.0	1	20	12
13	20	1	4.0	4.0	20	RECEPTS. – 113 – 115	1.2			1.2			RECEPTS. – 107	20	4.0	4.0	1	20	14
15	20	1	4.0	4.0	20	RECEPTS. – 112, 111		1.2			1.2		RECEPTS. – 104 – 106	20	4.0	4.0	1	20	16
17	20	1	4.0	4.0	20	F.A.C.P.			0.5			5.0	MUA-1	20	6.0	10.0	1	40	18
19	20	1	4.0	4.0	20	EXHAUST FANS – 108, 107	0.5			0.5			EXHAUST FANS –206, 207	20	4.0	4.0	1	20	20
21	20	1	4.0	4.0	20	LIGHTING – SECOND FLR. EXTERIOR		1.6			1.3		ELECTRIC HEAT – 207	20	4.0	4.0	2	20	22
23	20	1	4.0	4.0	20	LIGHTING – FIRST FLR. EXTERIOR			1.6			1.3							24
25	20	2	4.0	4.0	20	ELECTRIC HEAT – 107	1.3			5.0			MUA-2	20	6.0	10.0	1	40	26
27								1.3			1.2		RECEPTS. – 101 – 103	20	4.0	4.0	1	20	28
29	20	1	4.0	4.0	20	RECEPTS. – 219, 220			1.2			1.2	RECEPTS. – 216 – 218	20	4.0	4.0	1	20	30
31	20	1	4.0	4.0	20	RECEPTS. – 213 – 215	1.2			1.2			RECEPTS. – 211, 212	20	4.0	4.0	1	20	32
33	20	1	4.0	4.0	20	RECEPTS. – 206 – 209		1.2			1.2		RECEPTS. – 207, 210	20	4.0	4.0	1	20	34
35	20	1	4.0	4.0	20	RECEPTS. – 203 – 206			1.2			0.8	RECEPTS. – 201 – 203	20	4.0	4.0	1	20	36
37	20	2				SPARE				0.5			EXHAUST FAN –217	20	4.0	4.0	1	20	38
39													SPARE				2	20	40
41	20	1	4.0	4.0	20	EXHAUST FAN – 117			0.5										42
							8.0	9.3	7.1	10.7	8.5	11.5							

TOTAL CONN. LOAD PER PHASE (KVA): A0 29.7 B0 27.4 C0 28.0

TOTAL CONN. LOAD 85.1 KVA. 70 % DEMAND = ESTIMATED DEMAND LOAD 59.6 SUPPLIED FROM MAIN SWITCHGEAR DISTRIBUTION

* MAIN BREAKER SHALL BE 3P EARTH GROUND TYPE
** PROVIDE WITH FEED-THROUGH LUGS
*** THE LOAD ON THIS PANEL INCLUDES B1 (SECTIONS 1 AND 2).

PANELBOARD B1 (SECTION 2) SURFACE MOUNTED _____ ASYM. A.I.C. MIN.
225 AMP. MAIN LUGS (OR) _____ AMP. MAIN BREAKER W/ _____ AMP. TRIP
CIRCUIT BREAKER TYPE 380/220 VOLTS 3 PHASE 4 WIRE 50 HZ 225 AMP. BUS

CKT. NO.	TRIP AMPS	NO. POLES	WIRE MM²	GND MM²	CONDUIT MM	LOAD SERVED	LOAD-V.A. A0	LOAD-V.A. B0	LOAD-V.A. C0	LOAD-V.A. A0	LOAD-V.A. B0	LOAD-V.A. C0	LOAD SERVED	CONDUIT MM	GND MM²	WIRE MM²	NO. POLES	TRIP AMPS	CKT. NO.
43							8.0			1.4			CEILING FANS – 102–111	20	4.0	4.0	1	20	44
45	60	3	25.0	6.0	32	WATER HEATER – 117		8.0			1.6		CEILING FANS – 112–120	20	4.0	4.0	1	20	46
47									8.0			1.4	CEILING FANS – 202–211	20	4.0	4.0	1	20	48
49	20	1				SPARE				1.6			CEILING FANS – 212–220	20	4.0	4.0	1	20	50
51	20	1				SPARE							SPARE				1	20	52
53	20	1				SPARE							SPARE				1	20	54
55	20	1				SPARE							SPARE				1	20	56
57	20	1				SPARE							SPARE				1	20	58
59	20	1				SPARE							SPARE				1	20	60
61	20	1				SPARE							SPARE				1	20	62
63	20	1				SPARE							SPARE				1	20	64
65	20	1				SPARE							SPARE				1	20	66
67	20	1				SPARE							SPARE				1	20	68
69	20	1				SPARE							SPARE				1	20	70
71	20	1				SPARE							SPARE				1	20	72
73	20	1				SPARE							SPARE				1	20	74
75	20	1				SPARE							SPARE				1	20	76
77	20	1				SPARE							SPARE				1	20	78
79	20	1				SPARE							SPARE				1	20	80
81	20	1				SPARE							SPARE				1	20	82
83	20	1				SPARE							SPARE				1	20	84
							8.0	8.0	8.0	3.0	1.6	1.4							

TOTAL CONN. LOAD PER PHASE (KVA): A0 11.0 B0 9.6 C0 9.4

TOTAL CONN. LOAD 24.0 KVA. 70 % DEMAND = ESTIMATED DEMAND LOAD 16.8 SUPPLIED FROM PANEL B1 (SECTION 1)

US Army Corps of Engineers
Afghanistan Engineer District

SYMBOL	DESCRIPTION	DATE	APP.

DESIGNED BY: JRG
DATE: 09-30-09
DWN BY: JRG
SUBMITTED BY: BAKER
CHK BY: JRG
FILE NO.: ANPSDE-608XXX

Michael Baker Jr., Inc
A unit of Michael Baker Corporation
Airside Business Park
100 Airside Drive
Moon Township PA 15108
www.mbakercorp.com

STANDARD DESIGN
BARRACK BUILDING, 2-STORY (862 GSM)
WOOD FIRED HEAT OPTION

PANEL SCHEDULES AND RISER DIAGRAM

SHEET REFERENCE NUMBER:
E8

100% SUBMISSION

15
STANDARD BUILDING DESIGNS

BARRACK BUILDING TYPE 2 - OPEN BAY

(B13 - 579 GSM)

SHEET INDEX

G1 COVER SHEET

S1 GENERAL NOTES & DESIGN CRITERIA
S2 DESIGN CRITERIA & SCHEDULES
S3 SCHEDULES
S4 FOUNDATION PLAN
S5 ROOF FRAMING PLAN
S6 FOUNDATION SECTIONS & DETAILS
S7 FLOOR & ROOF FRAMING SECTIONS & DETAILS
S8 TYPICAL DETAILS

A1 FLOOR PLAN
A2 ROOF PLAN AND DETAILS
A3 EXTERIOR ELEVATIONS
A4 BUILDING & WALL SECTIONS
A5 DOOR, WINDOW & FINISH TYPES & DETAILS
A6 SECTION DETAILS

M1 PLAN - HVAC

E0 ELECTRICAL SYMBOLS AND ABBREVIATIONS
E1 FLOOR LIGHTING PLAN
E2 POWER AND SYSTEMS PLAN
E3 DETAILS
E4 LIGHT FIXTURE SCHEDULE
E5 PANEL SCHEDULES AND RISER DIAGRAM

US Army Corps of Engineers
Afghanistan Engineer District

SYMBOL	DESCRIPTION	DATE	APP.

DESIGNED BY: JDS
DATE: 09-30-09
DWN BY: JDS
SUBMITTED BY: BAKER
CHK BY: JDS
FILE NO.: ANPSDG-001XXX

Michael Baker Jr., Inc.
A unit of Michael Baker Corporation
Airside Business Park
100 Airside Drive
Moon Township PA 15108
www.mbakercorp.com

STANDARD DESIGN
BARRACK BUILDING, OPEN BAY (579 GSM)
WOOD FIRED HEAT OPTION
COVER SHEET

SHEET REFERENCE NUMBER:
G1

100% SUBMISSION

STRUCTURAL ABBREVIATIONS:

ACI	AMERICAN CONCRETE INSTITUTE
AISC	AMERICAN INSTITUTE OF STEEL CONSTRUCTION
ASTM	AMERICAN SOCIETY FOR TESTING AND MATERIALS
ARCH	ARCHITECTURAL
B	BOTTOM
BLDG	BUILDING
BOTT	BOTTOM
℄	CENTER LINE
CFMRF	COLD FORM METAL ROOF FRAME
CFMF	COLD FORM METAL FRAME
CFS	COLD FORMED STEEL
CIP	CAST-IN-PLACE
CIPL	CAST-IN-PLACE LINTEL
CJ	CONTROL JOINT
CLR	CLEAR
CMU	CONCRETE MASONRY UNIT
COEFF	COEFFICIENT
COL	COLUMN
CONC	CONCRETE
CONT	CONTINUOUS
COORD	COORDINATE
CSJ	CONSTRUCTION JOINT
CTJ	CONTROL JOINT
DIA	DIAMETER
DIAG	DIAGONAL
DIM	DIMENSION
DWG	DRAWING
DWL	DOWEL
EA	EACH
EF	EACH FACE
ELEC	ELECTRICAL
ELEV	ELEVATION
EMBED	EMBEDMENT
EQUIV	EQUIVALENT
ETC	ET CETERA
EW	EACH WAY
EXP	EXPANSION
EXT	EXTERIOR
FTG	FOOTING
GA	GAUGE
HORIZ	HORIZONTAL
HRS	HOURS
IBC	INTERNATIONAL BUILDING CODE
INFO	INFORMATION
INT	INTERIOR
Kg	KILOGRAM
Km	KILOMETER
kPa	KILOPASCAL
L#	ANGLE (# INDICATES SIZE)
LONG	LONGITUDINAL
LLV	LONG LEG VERTICAL
M	METER
MAX	MAXIMUM
MBM	METAL BUILDING MANUFACTURER
MECH	MECHANICAL
MFG	MANUFACTURER
MID	MIDDLE
MIN	MINIMUM
MISC	MISCELLANEOUS
MM	MILLIMETER
MPa	MEGAPASCAL
MTL	METAL
MWFRS	MAIN WIND FORCE RESISTING SYSTEM
N	NEWTON
N	NORTH
N/A	NOT APPLICABLE
#	NUMBER SYMBOL FOR REBAR SIZE
NTS	NOT TO SCALE
O.C.	ON CENTER
OPNG	OPENING
ℙ or PL	PLATE
PRE-ENG	PRE-ENGINEERED
REINF	REINFORCED
REQ'D	REQUIRED
SIM	SIMILAR
SPECS	SPECIFICATIONS
STD	STANDARD
STRUCT	STRUCTURAL
SW	SHEAR WALL
T	TOP
T/	TOP OF
T/ELEV	TOP ELEVATION
T&B	TOP AND BOTTOM
THK	THICK
TYP	TYPICAL
UFC	UNIFIED FACILITIES CRITERIA
UON	UNLESS OTHERWISE NOTED
VERT	VERTICAL
W	WIDTH
W/	WITH

GENERAL NOTES

1.0 THIS PROJECT HAS BEEN DESIGNED FOR THE WEIGHTS AND MATERIALS INDICATED ON THE SHEETS AND FOR THE LIVE LOADS INDICATED IN THE DESIGN DATA. IT IS THE CONTRACTOR'S RESPONSIBILITY TO DETERMINE ALLOWABLE CONSTRUCTION LOADS AND TO PROVIDE PROPER DESIGN AND CONSTRUCTION OF FALSEWORK, FORMWORK, STAGING, BRACING, SHEETING AND SHORING, ETC.

1.1 COORDINATE THESE SHEETS WITH THE ARCHITECTURAL, MECHANICAL, ELECTRICAL, PLUMBING, AND CIVIL SHEETS. ALL DIMENSIONS SHOWN ON THE SHEETS ARE MILLIMETERS UNLESS NOTED OTHERWISE.

1.2 THE CONTRACTOR SHALL VERIFY AND COORDINATE ALL FLOOR AND ROOF OPENING SIZES AND LOCATIONS, EQUIPMENT PAD SIZES AND LOCATIONS, ANCHOR BOLT LAYOUTS, ETC WITH EQUIPMENT SELECTED. THE CONTRACTOR SHALL MAKE ANY REQUIRED MODIFICATIONS AT NO ADDITIONAL COST.

1.3 THE CONTRACTOR SHALL REFER TO THE ARCHITECTURAL, MECHANICAL, ELECTRICAL AND PLUMBING SHEETS FOR SLEEVES, CURBS, INSERTS OR OPENINGS, ETC. NOT HEREIN INDICATED.

1.4 SLAB OPENINGS SMALLER THAN 250mm DIA TO BE CORE DRILLED IN FIELD UON. SEE MECHANICAL, ELECTRICAL AND PLUMBING SHEETS FOR LOCATIONS OF THESE OPENINGS.

1.5 WORK NOT INCLUDED ON THE SHEETS BUT IMPLIED TO BE SIMILAR TO THAT SHOWN AT CORRESPONDING PLACES ELSEWHERE ON THE SHEETS SHALL BE REPEATED.

1.6 IN CASE OF CONFLICT BETWEEN THE NOTES, DETAILS AND SPECIFICATIONS THE MOST RIGID REQUIREMENTS SHALL GOVERN.

1.7 SEE ARCHITECTURAL SHEETS FOR LOCATIONS OF MASONRY AND DRYWALL NON-LOAD BEARING PARTITIONS. PROVIDE COMPRESSIBLE FIRESAFING AT TOP OF WALL AS REQUIRED BY ARCHITECTURAL SHEETS.

1.8 COORDINATE FINISHED FLOOR DATUM ELEVATION 0.0m WITH THE CIVIL SHEETS.

2.0 FOUNDATION NOTES

2.1 THE GEOTECHNICAL ANALYSIS FOR THIS PROJECT IS THE RESPONSIBILITY OF THE CONTRACTOR AWARDED THE WORK. DESIGN VALUES USED IN THE STRUCTURAL ANALYSIS OF THE BUILDINGS HEREIN INDICATED HAVE BEEN ASSUMED AND SHALL BE CONFIRMED AND VERIFIED AS PART OF THE GEOTECHNICAL INVESTIGATION. VALUES WHICH DO NOT MEET THE REQUIREMENTS INDICATED ON THE BASIS OF DESIGN SHEET SHALL BE IMMEDIATELY BROUGHT TO THE ATTENTION OF THE CONTRACTING OFFICER FOR CONSIDERATION AND DETERMINATION ON THE NEXT APPROPRIATE COURSE OF ACTION.

2.2 SEE THE SPECIFICATION FOR ADDITIONAL REQUIREMENTS TO THOSE OUTLINED IN THE GEOTECHNICAL INVESTIGATION FOR EXCAVATION AND PREPARATION OF THE FOUNDATION AND THE SLAB ON GRADE SUBGRADE INCLUDING COMPACTION PROCEDURES.

2.3 EXCAVATIONS FOR FOOTINGS SHALL HAVE THE SIDES AND BOTTOMS TEMPORARILY LINED WITH 0.25mm POLYETHYLENE IF PLACEMENT OF CONCRETE DOES NOT OCCUR WITHIN 24 HRS OF THE EXCAVATION OF THE FOOTING.

2.4 FOUNDATION CONDITIONS NOTED DURING CONSTRUCTION WHICH DIFFER FROM THOSE DESCRIBED IN THE GEOTECHNICAL REPORT SHALL BE REPORTED TO THE GENERAL CONTRACTOR BEFORE FURTHER CONSTRUCTION IS ATTEMPTED. SEE PROJECT SPECIFICATIONS.

2.5 NO FOOTINGS OR SLABS SHALL BE POURED INTO OR AGAINST SUBGRADE CONTAINING FREE WATER, FROST, ICE OR LOOSE MATERIAL. FROST DEPTH ASSUMED TO BE 800MM

2.6 ALL SLAB-ON-GRADE, TRENCH BOTTOMS AND OTHER ON-GRADE INTERIOR HORIZONTAL SURFACES SHALL BE PLACED OVER A 0.25mm VAPOR RETARDER OVER A 100mm #57 STONE WATER BARRIER PLACED ON SUBGRADE PROPERLY PREPARED IN ACCORDANCE WITH THE CONTRACT SPECIFICATIONS. (UON)

2.7 SEE PLUMBING, ELECTRICAL & CIVIL SHEETS FOR REQUIRED UNDERSLAB UTILITIES.

2.8 SEE ARCHITECTURAL SHEETS FOR ALL WATERPROOFING DETAILS AND MATERIALS.

2.9 IF UNDERMINING OF FOOTINGS OCCURS, FILL VOIDS WITH 15MPa CONCRETE. DO NOT ATTEMPT TO REPLACE AND RECOMPACT SOIL.

3.0 CONCRETE

3.1 CONCRETE SHALL HAVE THE UNIT WEIGHT AND THE MINIMUM COMPRESSIVE STRENGTHS (f'c) AT 28 DAYS AS SHOWN IN THE CONCRETE MATERIALS SCHEDULE ON SHEET S3. SEE SPECIFICATIONS FOR ADDITIONAL INFORMATION. ENTRAIN AIR TO PRODUCE TOTAL AIR CONTENT ACCORDING TO THE SPECIFICATIONS FOR CONCRETE EXPOSED TO FREEZING TEMPERATURES (EXTERIOR FOOTINGS, SLAB TURNDOWNS, EXTERIOR SLABS AND SLABS-ON-GRADE, EXTERIOR RETAINING WALLS, AND EXTERIOR GRADE BEAMS.)

3.2 NO CALCIUM CHLORIDE SHALL BE USED IN ANY CONCRETE.

3.3 MIXING, TRANSPORTING AND PLACING OF CONCRETE SHALL CONFORM TO ACI 301M-05.

3.4 ALL CONCRETE WORK SHALL CONFORM TO THE REQUIREMENTS OF THE AMERICAN CONCRETE INSTITUTE (ACI) 318M MANUAL (metric), "BUILDING CODE REQUIREMENTS FOR REINFORCED CONCRETE", AND REQUIREMENTS OUTLINED IN THE CONTRACT SPECIFICATIONS. WHEN THERE IS A CONFLICT BETWEEN ACI AND THE SPECIFICATIONS, THE MORE STRINGENT SHALL GOVERN.

3.5 CHAMFER ALL EXPOSED EXTERNAL CORNERS OF CONCRETE WITH 20mm x45 DEGREE CHAMFER UON.

3.6 CONCRETE REINFORCEMENT BARS SHALL CONFORM TO ASTM A615M-96a, GRADE 420 MPa, REINFORCING BARS SHALL NOT BE TACK WELDED, WELDED, HEATED OR CUT, UNLESS INDICATED ON THE CONTRACT DOCUMENTS. ALL LAP SPLICES SHALL BE CLASS "B" UON.

3.7 HORIZONTAL FOOTING AND HORIZONTAL WALL REINFORCEMENT SHALL BE CONTINUOUS AND SHALL HAVE 90 DEGREE BENDS AND EXTENSIONS, OR CORNER BARS OF EQUIVALENT SIZE LAPPED WITH A CLASS B TENSION SPLICE AT CORNERS AND INTERSECTIONS. TOP BAR CRITERIA SHALL APPLY IF 300mm OR MORE OF FRESH CONCRETE IS PLACED BELOW BAR.

3.8 SLABS-ON-GRADE SHALL HAVE CONSTRUCTION JOINTS OR CRACK CONTROL JOINTS AS SHOWN ON THE DRAWINGS. CONSTRUCTION JOINTS CAN BE USED AT CONTROL JOINT LOCATIONS AT CONTRACTORS OPTION. SEE SLAB PLANS & JOINT DETAILS FOR ADDITIONAL INFORMATION. FOR AREAS NOT SHOWN ON DWGS, THE MAXIMUM SPACING OF CONSTRUCTION/ CRACK CONTROL JOINTS SHALL BE 4800mm

3.9 SEE SPECIFICATIONS FOR ALL WATERPROOFING/DAMPPROOFING REQUIREMENT.

3.10 ALL CONCRETE REINFORCEMENT SHALL BE DETAILED, FABRICATED, LABELED, SUPPORTED, AND SPACED IN FORMS AND SECURED IN PLACE IN ACCORDANCE WITH THE PROCEDURES AND REQUIREMENTS OUTLINED IN THE LATEST EDITION OF THE "BUILDING CODE REQUIREMENTS FOR REINFORCED CONCRETE", ACI 318M, AND THE "MANUAL OF STANDARD PRACTICE FOR DETAILING REINFORCED CONCRETE STRUCTURES", ACI 315M, LATEST EDITION.

3.11 SHOP DRAWINGS SHOWING REINFORCING DETAILS, INCLUDING STEEL SIZES, SPACING AND PLACEMENT, SHALL BE SUBMITTED FOR REVIEW PRIOR TO FABRICATION.

3.12 ALL DOWELS SHALL MATCH SIZE AND NUMBER OF MAIN REINFORCING, UNLESS NOTED OTHERWISE ON THE SHEETS.

3.13 ADDITIONAL BARS SHALL BE PROVIDED AROUND ALL FLOOR AND WALL OPENINGS AS SHOWN ON THE SHEETS.

3.14 SEE ARCHITECTURAL SHEETS FOR TYPE AND LOCATION OF ALL FLOOR FINISHES.

3.15 THE CONTRACTOR SHALL COORDINATE ADDITIONAL WALL/SLAB OPENINGS NOT SHOWN ON STRUCTURAL SHEETS. SEE MECHANICAL, ELECTRICAL, PLUMBING AND CIVIL SHEETS.

3.16 UNLESS NOTED OTHERWISE, ALL CURBS SHALL BE REINFORCED WITH AT LEAST (1)-#13 CONTINUOUS AND #13 AT 300mm O.C. DOWELS TO STRUCTURE BELOW.

3.17 THE SUB-CONTRACTOR SHALL VERIFY ALL OPENINGS, PAD SIZES, AND ANCHOR BOLTS WITH EQUIPMENT SELECTED.

3.18 FOR ALL WALLS & PIERS, PROVIDE DOWELS INTO FOOTING AT EACH VERT REINF BAR, UON DOWEL SIZE SHALL BE SAME AS VERT REINF.

3.19 ALL DEFORMED BAR ANCHORS SHALL BE TRS NELSON DIVISION OR EQUAL 15mm DIA (UON) CONFORMING TO ASTM A-496M WITH A MINIMUM TENSILE STRENGTH OF 550 MPa. INSTALL ANCHORS IN ACCORDANCE WITH MANUFACTURERS RECOMMENDATIONS BY AUTOMATIC END WELDING AS INDICATED ON THE DRAWINGS. NO UNAUTHORIZED OR FIELD WELDING SHALL BE MADE WITHOUT AUTHORIZATION FROM THE MANUFACTURER.

3.20 ALL REINFORCING INDICATED TO BE WELDED SHALL BE IN ACCORDANCE WITH ASTM A706M. "LOW ALLOY STEEL DEFORMED BARS FOR CONCRETE REINFORCEMENT". ANY INSTALLATIONS USING MANUFACTURER'S EQUIPMENT SHALL BE PER MANUFACTURER'S RECOMMENDATIONS.

3.21 PROVIDE CONCRETE POUR STOPS OR FORMED AS REQUIRED FOR INSTALLATION OF ALL CONCRETE WORK.

3.22 PROVIDE ADDITIONAL (2)-#13 x 600mm REINFORCING BARS IN SLAB-ON GRADE AT ALL RE-ENTRANT CORNERS. PLACE BARS AT MID-DEPTH OF SLAB WITH A CLEARANCE OF 50mm FROM CORNER UON.

4.0 CONCRETE MASONRY

4.1 MASONRY CONSTRUCTION AND MATERIALS SHALL CONFORM TO ALL REQUIREMENTS OF THESE CONTRACT DOCUMENTS AND THE PROJECT SPECIFICATIONS.

4.2 THE SPECIFIED ULTIMATE COMPRESSIVE STRENGTH OF CONCRETE MASONRY (f'm) ON THE NET AREA IS A MINIMUM OF 10.4 MPa.

4.3 PROVIDE TWO #16 BARS CONTINUOUS IN ALL MASONRY LINTELS UON ON THE SHEETS. BOND BEAM REINFORCING SHALL BE CONTINUOUS AND SPACED AT A MAXIMUM OF 1200mm OC VERTICALLY. ALL BOND BEAMS SHALL BE A MINIMUM OF 200mm IN DEPTH WITH REINFORCING BEING CONTINUOUS AND HAVING STANDARD ACI HOOKS AT EACH END. PROVIDE STANDARD BAR SPLICES AS SPECIFIED.

4.4 FOR WALL REINFORCING SEE "MIN CMU WALL REINFORCING" DETAILS ON SHEET S8. PROVIDE STANDARD BAR SPLICES AS SPECIFIED. ALL VERTICAL REINFORCEMENT EXTENDS FULL HEIGHT OF WALL.

4.5 CMU CELLS THAT REQUIRE VERTICAL REINFORCING BARS AS INDICATED ON THE CONTRACT DRAWINGS AND/OR SPECS SHALL HAVE REINF BARS PLACED IN CENTERS OF CMU CELLS AND CONTINUOUSLY GROUTED UON.

4.6 PROVIDE LADDER TYPE JOINT REINFORCEMENT AT 200mm EXTERIOR, & 400mm INTERIOR ON CENTER MAXIMUM, UON MINIMUM ROD SIZE USED SHALL BE 9 GA. DEFORMED WIRE AND CONFORM TO ASTM A82M, UON.

4.7 PROVIDE CONTROL JOINTS AS INDICATED ON THE ARCHITECTURAL SHEETS.

4.8 GROUT FOR MASONRY SHALL BE NORMAL WEIGHT AND HAVE A MINIMUM COMPRESSIVE STRENGTH OF 25 MPa AT 28 DAYS. GROUT SHALL CONFORM TO ASTM C476M. GROUT LIFTS SHALL NOT EXCEED 1400mm.

4.9 USE MORTAR TYPE S CONFORMING TO ASTM C270M, SEE SPECIFICATIONS.

4.10 CONCRETE MASONRY UNITS SHALL BE NORMAL WEIGHT AND CONFORM TO ASTM C90M.

4.11 ALL CMU CELLS, OPEN CAVITIES, AND AIR SPACES SHALL BE GROUTED TO STOP FRAGMENTS FROM MORTAR BLAST

4.12 BOND BEAM REINFORCING SHALL BE DISCONTINUOUS AT CONTROL JOINTS (UON). MAXIMUM CONTROL JOINT SPACING SHALL BE AS INDICATED ON THE ARCHITECTURAL SHEETS.

4.13 CONTRACTOR SHALL COORDINATE LOCATION OF ALL OPENINGS SEE ARCH, MECH, ELEC, AND PLUMBING SHEETS FOR SIZE AND LOCATION OF OPENINGS.

4.14 MASONRY WALLS SHALL NOT BE BACK FILLED PRIOR TO THE MORTAR AND GROUT ATTAINING THEIR RESPECTIVE MAXIMUM DESIGN STRENGTHS PER SPECIFICATIONS.

5.0 CFMRF – COLD FORM METAL ROOF FRAMING SYSTEM

5.1 CFMF SHALL BE DESIGNED BY CFMF MANUFACTURER'S ENGINEER FOR ALL LOADING PER CODE AND AS INDICATED ON THE SHEETS.

5.2 FOR WIND LOADS, SEE THE DESIGN CRITERIA ON SHEET S2.

5.3 SUBMIT VENDOR'S PUBLISHED LITERATURE, TEST DATA AND INSTALLATION INSTRUCTIONS FOR METAL STUD ASSEMBLY AND ACCESSORIES INCLUDING OTHER DATA AS MAY BE REQUIRED TO CERTIFY COMPLIANCE WITH PERFORMANCE REQUIREMENTS SPECIFIED HEREIN.

5.4 SHOP DRAWINGS AND DESIGN ANALYSIS SHALL BE STAMPED AND APPROVED BY A LICENSED PROFESSIONAL ENGINEER.

5.5 CONNECTIONS AND GAUGE SIZES ARE MINIMUM AND SHALL BE INCREASED AS NECESSARY TO PROVIDE A STRUCTURALLY ADEQUATE SYSTEM. KICKERS MAY BE ADDED TO REDUCE THE STUD HEIGHTS WHERE ACCEPTABLE AND COORDINATED WITH THE ARCHITECTURAL DRAWINGS.

5.6 CRMRF SHALL HAVE THE FOLLOWING MINIMUM PROPERTIES:

STUD/RAFTER/EAVE STRUT/BRACE/BLOCKING:
Fy = 344 MPa
GAUGE = 18
DEPTH = 152.3 mm
WIDTH = 34.8 mm
MOMENT OF INERTIA, Ix = 847×10^3 mm^4
SECTION MODULUS, Sx = 11.2×10^3 mm^3

TRACK:
Fy = 344 MPa
GAUGE = 16
DEPTH = 152.3 mm
WIDTH = 38 mm
MOMENT OF INERTIA, Ix = 1083×10^3 mm^4
SECTION MODULUS, Sx = 13.8×10^3 mm^3

PURLIN/SUBGIRT:
Fy = 393 MPa
GAUGE = 16
MOMENT OF INERTIA (TOP COMPRESSION), Ixt = 23.7×10^3 mm^4
MOMENT OF INERTIA (BOTT COMPRESSION), Ixb = 22.7×10^3 mm^4
SECTION MODULUS (TOP COMPRESSION), Sxt = 1.8×10^3 mm^3
SECTION MODULUS (BOTT COMPRESSION), Sxb = 1.7×10^3 mm^3

STRUCTURAL DESIGN CRITERIA

ALL DESIGNS SHALL CONFORM TO THE PROVISIONS OF THE IBC 2006 AS APPLICABLE

1.0 DESIGN LOADS

1.1 DEAD LOADS

1.1.1 ROOF DEAD LOADS – CONCRETE FRAMING

	MAXIMUM GRAVITY LOAD
CONC FLAT SLAB	4.80 KPa
MECH/ELEC/PLUMBING	0.15 KPa
MISC	0.05 KPa
	5.00 KPa

1.1.2 ROOF DEAD LOADS – CONVENTIONAL LIGHT FRAMING

	MAXIMUM GRAVITY LOAD	MINIMUM GRAVITY LOAD
LIGHT GAUGE FRAMING	0.20 KPa	0.15 KPa
INSULATION	0.10 KPa	0.05 KPa
METAL ROOFING	0.14 KPa	0.05 KPa
	0.44 KPa	0.25 KPa

1.1.3 FLOOR PARTITION ALLOWANCE

0.96 KPa

1.2 LIVE LOADS (PER IBC 2006)

1.2.1 ROOF LIVE LOADS: ALL BUILDINGS

GREATER OF 1.0 KPa MINIMUM OR SNOW LOAD

1.2.2 ELEVATED FLOOR UNIFORM LIVE LOADS

CORRIDOR	4.80 KPa
ALL OTHER	2.40 KPa

1.2.3 SLAB-ON-GRADE LIVE LOADS

ALL BUILDINGS	4.80 KPa

1.3 SNOW LOADS (PER IBC 2006)

1.3.1 DESIGN PARAMETERS

GROUND SNOW LOAD (per UFC 3-310-01)	1.0 KPa
SNOW IMPORTANCE FACTOR	1.0
SNOW EXPOSURE FACTOR	1.0

1.4 SEISMIC LOADS (PER IBC 2006 & UFC 3-310-04)

1.4.1 SEISMIC PARAMETERS – CAST-IN-PLACE CONCRETE STRUCTURES

SEISMIC OCCUPANCY CATEGORY	II
SEISMIC IMPORTANCE FACTOR (I)	1.0
SEISMIC SITE CLASS	D
Ss	1.28
S1	0.51
Sds	0.853
Sd1	0.51
SEISMIC DESIGN CATEGORY	D
SEISMIC RESISTING SYSTEM	SPECIAL REINFORCED MASONRY SHEAR WALLS
RESPONSE MODIFICATION FACTOR (R)	5.0
RESPONSE COEFFICIENT (Cs)	0.17
SEISMIC ANALYTICAL PROCEDURE	EQUIV LATERAL FORCE
SEISMIC BASE SHEAR	1000 kN

US Army Corps of Engineers
Afghanistan Engineer District

SYMBOL	DESCRIPTION	DATE	APR

DESIGNED BY: MMY | DATE: 09-30-09
DWN BY: RCG | SUBMITTED BY: BAKER
CHK BY: CWW | FILE NO.: ANPSDS-001XXX

Michael Baker Jr., Inc
A unit of Michael Baker Corporation
Airside Business Park
100 Airside Drive
Moon Township PA 15108
www.mbakercorp.com

STANDARD DESIGN
BARRACK BUILDING, OPEN BAY (579 GSM)
WOOD FIRED HEAT OPTION

GENERAL NOTES & DESIGN CRITERIA

SHEET REFERENCE NUMBER:
S1

100% SUBMISSION

STRUCTURAL DESIGN CRITERIA (CONT)

ALL DESIGNS SHALL CONFORM TO THE PROVISIONS OF THE IBC 2006 AS APPLICABLE

1.5 WIND LOADS (PER IBC 2006)

1.5.1 DESIGN PARAMETERS

BASIC WIND SPEED	137 Km/h
WIND IMPORTANCE FACTOR	1.0
WIND EXPOSURE CATEGORY	D
DIRECTIONALITY COEFFICIENT (Kd)	0.85
TOPOGRAPHIC FACTOR (Kzt)	1.0

1.5.2 DESIGN WIND PRESSURE – MAIN WINDFORCE RESISTING SYSTEM

LOCATION	CORNER ZONE WIDTH "a"	MEAN ROOF HEIGHT (H)	WINDWARD WALL (@ MEAN ROOF HEIGHT)	LEEWARD WALL (@ MEAN ROOF HEIGHT)	ROOF
FIELD ZONE	N/A	5115 mm	680 N/m^2	−480 N/m^2	−470 N/m^2
CORNER ZONE	1440mm	5115 mm	800 N/m^2	−418 N/m^2	−750 N/m^2

a = 10% OF LEAST HORIZONTAL DIMENSION OR 0.4h, WHICHEVER IS SMALLER, BUT NOT LESS THAN EITHER 4% OF LEAST HORIZONTAL DIMENSION OR 0.9M.
h = MEAN ROOF HEIGHT, IN METERS, EXCEPT THAT EAVE HEIGHT SHALL BE USED FOR ANGLE GREATER THAN 10°.

1.5.3 DESIGN WIND PRESSURE – WALL COMPONENTS AND CLADDING

EXTERIOR WALL SYSTEMS & THEIR ATTACHMENTS TO THE PRIMARY STRUCTURE SHALL BE DESIGNED FOR THE PRESSURES SHOWN IN THE DIAGRAM BELOW:

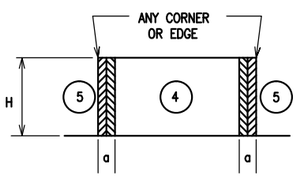

LOCATION	WINDWARD PRESSURE N/m^2 (inward)		LEEWARD PRESSURE N/m^2 (outward)		a
	4	5	4	5	
MAIN BUILDING					(mm)
AREA = 1 m^2	788	788	−850	−1050	1440
AREA = 2 m^2	748	748	−815	−967	1440
AREA = 5 m^2	700	700	−765	−880	1440
AREA = 10 m^2	648	648	−715	−750	1440

NOTES:
1. DESIGN WIND PRESSURES ABOVE REPRESENT THE NET PRESSURE (SUM OF INTERNAL AND EXTERNAL PRESSURE) APPLIED NORMAL TO ALL SURFACES.
2. LINEAR INTERPOLATION BETWEEN VALUES OF TRIBUTARY AREA IS PERMISSIBLE.
3. PLUS AND MINUS SIGNS SIGNIFY PRESSURE TOWARD AND AWAY FROM THE EXTERIOR SURFACE, RESPECTIVELY.

1.5 WIND LOADS (CONT)

1.5.4 DESIGN WIND PRESSURE – ROOF COMPONENTS AND CLADDING

ROOF COMPONENTS & THEIR ATTACHMENTS SHALL BE DESIGNED FOR THE PRESSURES SHOWN IN THE ADJACENT DIAGRAM & TABLE BELOW:

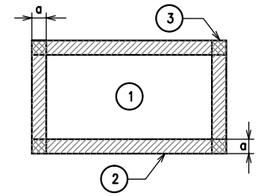

ROOF MEAN HEIGHT

LOCATION	GROSS UPLIFT PRESSURE N/m^2 (upward)			a
	1	2	3	
MAIN BUILDING				(mm)
AREA = 1 m^2	−787	−931	−1738	1440
AREA = 2 m^2	−787	−931	−1738	1440
AREA = 5 m^2	−787	−931	−1738	1440
AREA = 10 m^2	−787	−931	−1738	1440

NOTES:
1. DESIGN WIND PRESSURES ABOVE REPRESENT THE NET PRESSURE (SUM OF INTERNAL AND EXTERNAL PRESSURE) APPLIED NORMAL TO ALL SURFACES.
2. LINEAR INTERPOLATION BETWEEN VALUES OF TRIBUTARY AREA IS PERMISSIBLE.
3. PLUS AND MINUS SIGNS SIGNIFY PRESSURE TOWARD AND AWAY FROM THE EXTERIOR SURFACE, RESPECTIVELY.

2.0 FOUNDATION DESIGN CRITERIA (TO BE CONFIRMED BY THE CONTRACTOR)

THE GEOTECHNICAL ANALYSIS FOR THIS PROJECT IS THE RESPONSIBILITY OF THE CONTRACTOR AWARDED THE WORK. DESIGN VALUES USED IN THE STRUCTURAL ANALYSIS OF THE BUILDINGS HEREIN INDICATED HAVE BEEN ASSUMED AND SHALL BE CONFIRMED AND VERIFIED AS PART OF THE GEOTECHNICAL INVESTIGATION. VALUES WHICH DO NOT MEET THE REQUIREMENTS INDICATED BELOW SHALL BE IMMEDIATELY BROUGHT TO THE ATTENTION OF THE CONTRACTING OFFICER FOR CONSIDERATION AND DETERMINATION ON THE NEXT APPROPRIATE COURSE OF ACTION.

2.1.1 SOIL DESIGN PARAMETERS

NET ALLOWABLE SOIL BEARING CAPACITY	96.0 KPa
UNIT WEIGHT OF SOIL (moist)	1800 Kg/m^3
COEFF ACTIVE EARTH PRESSURE (Kpa)	0.30
COEFF PASSIVE EARTH PRESSURE (Kpp)	3.33
COEFF AT-REST EARTH PRESSURE (Kpr)	.55
COEFF OF SOIL FRICTION	.35
SUBGRADE MODULUS	4120 g/cm^3
MINIMUM BEARING DEPTH BELOW GRADE	800mm
SEISMIC SITE CLASS (based on in-situ soil)	D

CONCRETE BEAM SCHEDULE

GRADE BEAM

MARK	SIZE (BxH)	REINFORCING TOP	REINFORCING BOTTOM	REINFORCING STIRRUPS	REINFORCING MIDBAR	REMARKS
GB1	400x750	(3)−#22	(3)−#22	#13 @ 200	(1) #22 EF	TOP BAR LAP AT CENTER BOT BAR LAP PAST COL

ROOF BEAM

MARK	SIZE (BxH)	REINFORCING TOP	REINFORCING BOTTOM	REINFORCING STIRRUPS	REINFORCING MIDBAR	REMARKS
RB1	400x600	(2)−#19	(2)−#19	#13 @ 250	N/A	TOP BAR LAP AT CENTER BOT BAR LAP PAST COL

NOTE:
1. DIMENSIONS NOTED ARE MILLIMETERS (mm) UON.

CONCRETE COLUMN SCHEDULE

MARK	SIZE (LxW)	REINFORCING VERT BARS	REINFORCING TIES
C1	400x400	(8)−#25	#13 @ 100 (CORE OF EXT & CORNER COLUMNS) #13 @ 150 (CORE OF INTERIOR COLUMNS) #13 @ 200 (OTHER)

NOTE:
1. DIMENSIONS NOTED ARE MILLIMETERS (mm) UON.
2. SECOND STORY COLUMNS ARE SAME AS FIRST STORY COLUMNS.
3. CORE INDICATES THE AREA OF COLUMN & BEAM INTERSECTION
4. TIE INDICATES PERIMETER & CROSS TIE COMBINED

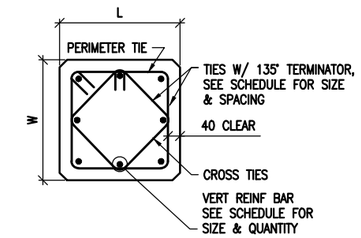

1 S2 S2 COLUMN DETAIL
SCALE: 1:10

SPREAD FOOTING SCHEDULE

MARK	FOOTING SIZE (mm) LENGTH	WIDTH	THICKNESS	FOOTING REINFORCING	REMARKS
F1	3500	2000	300	(7)−#22 SHORT BOTT (4)−#22 LONG BOTT	-----
F2	3900	1600	300	(10)−#22 SHORT BOTT (4)−#22 LONG BOTT	-----

NOTES:
1. DIMENSIONS NOTED ARE MILLIMETERS (mm) UON.

UNLESS OTHERWISE NOTED, LINEAR DIMENSIONS SHOWN ARE IN MILLIMETERS (MM)

0 200 400 800
SCALE: 1: 10

US Army Corps of Engineers
Afghanistan Engineer District

SYMBOL	DESCRIPTION	DATE	APR

DESIGNED BY: MMY | DATE: 09-30-09
DWN BY: RCG | SUBMITTED BY: BAKER
CHK BY: CWW | FILE NO.: ANPSDS-002XXX

Michael Baker Jr., Inc
A unit of Michael Baker Corporation
Airside Business Park
100 Airside Drive
Moon Township PA 15108
www.mbakercorp.com

STANDARD DESIGN
BARRACK BUILDING, OPEN BAY (579 GSM)
WOOD FIRED HEAT OPTION

DESIGN CRITERIA & SCHEDULES

SHEET REFERENCE NUMBER:
S2

100% SUBMISSION

MINIMUM LAP SPLICES OF REINFORCING BARS IN TENSION (PER ACI 318M-05)

f'c = 28 MPa CONCRETE

BAR SIZE \ CENTER TO CENTER BAR SPACING	TOP BARS (mm) LESS THAN 4db	TOP BARS (mm) 4db OR MORE	OTHER BARS (mm) LESS THAN 4db	OTHER BARS (mm) 4db OR MORE	4db
#10	460	460	410	410	40
#13	660	610	510	480	50
#16	1020	760	790	580	60
#19	1450	910	1120	710	80
#22	1960	1090	1500	840	90
#25	2590	1450	1980	1120	100
#29	3280	1830	2510	1420	110
#32	4140	2340	3200	1780	130
#36	5080	2840	3910	2180	140

NOTES:

1. LAP SPLICES ABOVE ARE IN MILLIMETERS UON.
2. YIELD STRENGTH OF REINFORCEMENT, fy, IS 420MPa (LAP SPLICE LENGTH IS IN MILLIMETERS).
3. CONCRETE IS NORMAL WEIGHT (2400Kg/m³).
4. TOP BAR INDICATES HORIZONTAL REINFORCEMENT WHICH IS PLACED ABOVE 300mm OR MORE OF FRESH CONCRETE.
5. SEE COLUMN SCHEDULE FOR COLUMN AND SHEAR WALL VERTICAL LAP SPLICE.
6. STRAIGHT DEVELOPMENT LENGTH OF AN UNLAPPED BAR IS EQUAL TO VALUE FROM TABLE DIVIDED BY 1.3.
7. CATEGORY FOR BARS SPACED LESS THAN 4d, OR ON CENTER CORRESPONDS TO CATEGORY 1 IN THE CRSI HANDBOOK WHEREAS FOR BARS SPACED 4d, OR MORE ON CENTER CORRESPOND TO CRSI CATEGORY 5.

CONCRETE COVER SCHEDULE

MINIMUM CONCRETE COVER PROTECTION FOR REINFORCEMENT BARS SHALL BE AS FOLLOWS: (SEE ACI 318M-05, SECTION 7.7 FOR CONDITIONS NOT NOTED). DIMENSIONS FOR BAR PLACEMENT GIVEN IN SECTIONS AND DETAILS SHALL SUPERSEDE MINIMUM COVER REQUIREMENTS GIVEN HERE. DIMENSIONS ARE IN mm.

FOOTINGS (EARTH FORMED)		70
COLUMNS / PIERS (TO TIES)		40
GRADE BEAMS OR SLAB TURNED DOWN EDGES:		
TOP		40
BOTTOM (EARTH FORMED)		70
SIDES (EARTH FORMED)		70
SIDES (BOARD FORMED)	#16 BAR & SMALLER	40
	#19 THRU #36 BAR	50
ELEVATED BEAMS & SLABS:		
BEAM TIES & STIRRUPS (NOT EXPOSED TO WEATHER)		40
BEAM TIES & STIRRUPS (EXPOSED TO WEATHER)		50
FLOOR SLABS (NOT EXPOSED TO WEATHER)		20
FLOOR SLABS (EXPOSED TO WEATHER)		
#19 & LARGER		50
#13 & SMALLER		40
ROOF SLAB BARS		25
SLABS-ON-GRADE (NO EXPOSURE TO WEATHER) FROM TOP		20
SLABS-ON-GRADE (EXPOSURE TO WEATHER) FROM TOP		40
UTILITY TUNNEL WALLS, RETAINING WALLS AND SHEAR WALLS, (NO SURFACES SHALL BE EARTH FORMED) EARTH SIDE AND FRONT SIDE (EXPOSED TO WEATHER):		
#16 BAR AND SMALLER		40
#19 THRU #36 BAR		50

PROVIDE STANDARD BAR CHAIRS AND SPACERS AS REQUIRED TO MAINTAIN CONCRETE PROTECTION SPECIFIED.

MASONRY CONCRETE LINTEL SCHEDULE

OPENING TYPE OR SIZE, BEAM LOCATION OR TYPE	MAX SPAN (mm)	BEAM DEPTH (mm)	MAIN REINFORCING TOP	MAIN REINFORCING BOTTOM	MAIN REINFORCING OTHER	SHEAR REINF STIRRUPS
EXT WINDOW OR DOOR	900	400	(2)-#13	(2)-#13		----
EXT WALL OPENING, 1-STORY BLDG	1800	400	(2)-#13	(2)-#13		----
EXT WALL OPENING, 1-STORY BLDG	900	200		(2)-#13		----
INT WALL OPENING, NON-BEARING	2400	400		(2)-#13		----
INT WALL OPENING, NON-BEARING	1800	400		(2)-#13		----
INT WALL OPENING, NON-BEARING	900	200		(2)-#13		----

1. STRUCTURAL DRAWINGS DO NOT INDICATE ALL OPENINGS IN MASONRY WALLS. VERIFY NUMBER, SIZE AND LOCATION OF ALL OPENINGS IN MASONRY WALLS FROM ARCHITECTURAL SHEETS AND APPROVED PLUMBING, MECHANICAL, AND ELECTRICAL SHOP DRAWINGS.
2. PROVIDE 200mm BEARING EA END FOR 200mm DEEP MASONRY LINTEL. PROVIDE 400mm BEARING EA END FOR 400mm DEEP MASONRY LINTEL.
3. FOR HEAD DETAILS REFER TO ARCHITECTURAL SHEETS.
4. REINFORCING SHALL BE ASTM A615M, GRADE 420. CONCRETE FOR CAST-IN-PLACE BEAMS SHALL HAVE A MINIMUM COMPRESSIVE STRENGTH OF 28 MPa AT 28 DAYS.
5. CONTRACTOR SHALL SUBMIT FOR APPROVAL SHOP DRAWINGS AND SCHEDULES SHOWING SIZE, DETAILS, LOCATIONS, ETC FOR ALL CAST-IN-PLACE BEAMS IN CMU WALLS.

TYPICAL CMU WALL REINFORCING SCHEDULE

WALL TYPE OR LOCATION	WALL THICKNESS (mm)	CONT. VERT. REINF. (CENTERED IN CMU, UON)	CONT. CAST IN PLACE LINTEL (CIP BB) DEPTH (mm)	REINF (BOTT UON)	MAX CIPL VERT SPACING (mm)	REMARKS
ALL PERIMETER/EXTERIOR WALLS (UON)	200	1-#16 @ 800	200	2-#16	1200	-----
NON-LOAD BEARING INTERIOR WALLS WITH TOP AND BOTT. SUPPORTS	200	1-#13 @ 1200	200	2-#16	1200	-----

NOTES:

1. REINFORCING SIZES AND SPACING GIVEN IN SECTIONS AND DETAILS SHALL SUPERSEDE THE ABOVE SCHEDULE REQUIREMENTS.
2. PROVIDE CONTINUOUS CAST IN PLACE CONCRETE BOND BEAM AT ALL WALL LATERAL SUPPORT LOCATIONS.
3. REINFORCING INDICATED SHALL BE CONTINUOUS FOR FULL EXTENT OF SPLICE FOLLOWING THE REQUIREMENTS OF THE LAP SPLICE TABLE SHOWN ON THIS SHEET.
4. WALLS HAVE BEEN DESIGNATED AS VERTICALLY SPANNING UON AND THEREFORE MUST BE TEMPORARILY SUPPORTED DURING CONSTRUCTION UNTIL THE SUPPORTING DIAPHRAGMS (FLOOR AND ROOF SYSTEMS) HAVE BEEN COMPLETELY INSTALLED. SHORING IS THE RESPONSIBILITY OF THE CONTRACTOR.
5. ALL CMU WALLS SHALL BE FULLY GROUTED IN LIFTS NOT EXCEEDING THOSE BY CODE (UON)
6. SEE TYPICAL CMU WALL DETAILS ON SHEET S8.

CONCRETE MATERIALS SCHEDULE

STRUCTURAL ELEMENT	f'c CONCRETE COMPRESSIVE STRENGTH @ 28 DAYS (MPa)
SLAB-ON-GRADE/TURN-DOWN SLABS	28
ROOF AND FLOOR SLABS	28
ALL FOOTINGS (UON)	28
MISC. CURBS, WALLS AND PADS UON	28
CAST-IN-PLACE LINTEL	28
CONCRETE FRAMING - BEAMS AND COLUMNS	28

NOTES:

1. ALL CONCRETE SHALL BE NORMAL WEIGHT CONCRETE. (2400 Kg/m³ UON)
2. ALL CONCRETE SHALL HAVE A MAX WATER-CEMENT RATIO OF 0.45.

STANDARD HOOKS IN TENSION PER (ACI 318M-05)

HOOK DEVELOPMENT LENGTH Ldh (mm) BAR SIZE	f'c 28 MPa
#10	180
#13	250
#16	300
#19	380
#22	430
#25	480
#29	560
#32	610
#36	690

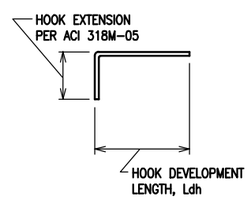

NOTES:

1. CONCRETE IS NORMAL WEIGHT CONCRETE.
2. BAR YIELD STRENGTH, fy = 420 MPa
3. SIDE COVER REQUIREMENTS OF ACI SECT. 12.5.3 ARE ASSUMED TO NOT BE MET.
4. TIE OR STIRRUP REQUIREMENTS OF ACI SECT. 12.5.3 ARE ASSUMED TO NOT BE MET.
5. REDUCTION FOR EXCESS REINFORCEMENT IS NOT TAKEN.
6. HOOK DEVELOPMENT LENGTH IS VALID FOR 180° HOOKS ALSO.

MASONRY REINFORCING MINIMUM LAP SPLICES

BAR SIZE	BASIC LAP SPLICE Ld FOR CMU REINFORCING (mm)
#10	450
#13	600
#16	750
#19	900
#22	1050
#25	1200

MAXIMUM CMU WALL UNSUPPORTED HEIGHT OR LENGTH

	WALL THICKNESS (mm)	EXTERIOR WALL NON-LOAD BEARING (mm)	INTERIOR NON-LOAD BEARING WALL (mm)
MAX HEIGHT OR LENGTH BETWEEN SUPPORTS	200	4800	7200

NOTE: CMU WALL MAXIMUM LATERAL SUPPORT SPACING GIVEN IN SECTIONS AND DETAILS SHALL SUPERSEDE THE ABOVE SCHEDULE REQUIREMENTS.

US Army Corps of Engineers
Afghanistan Engineer District

SYMBOL	DESCRIPTION	DATE	APR

DESIGNED BY: MMY
DATE: 09-30-09
DWN BY: RCG
SUBMITTED BY: BAKER
CHK BY: CWW
FILE NO.: ANPSDS-003XXX

Michael Baker Jr., Inc
A unit of Michael Baker Corporation
Airside Business Park
100 Airside Drive
Moon Township PA 15108
www.mbakercorp.com

STANDARD DESIGN
BARRACK BUILDING, OPEN BAY (579 GSM)
WOOD FIRED HEAT OPTION
SCHEDULES

SHEET REFERENCE NUMBER:
S3

100% SUBMISSION

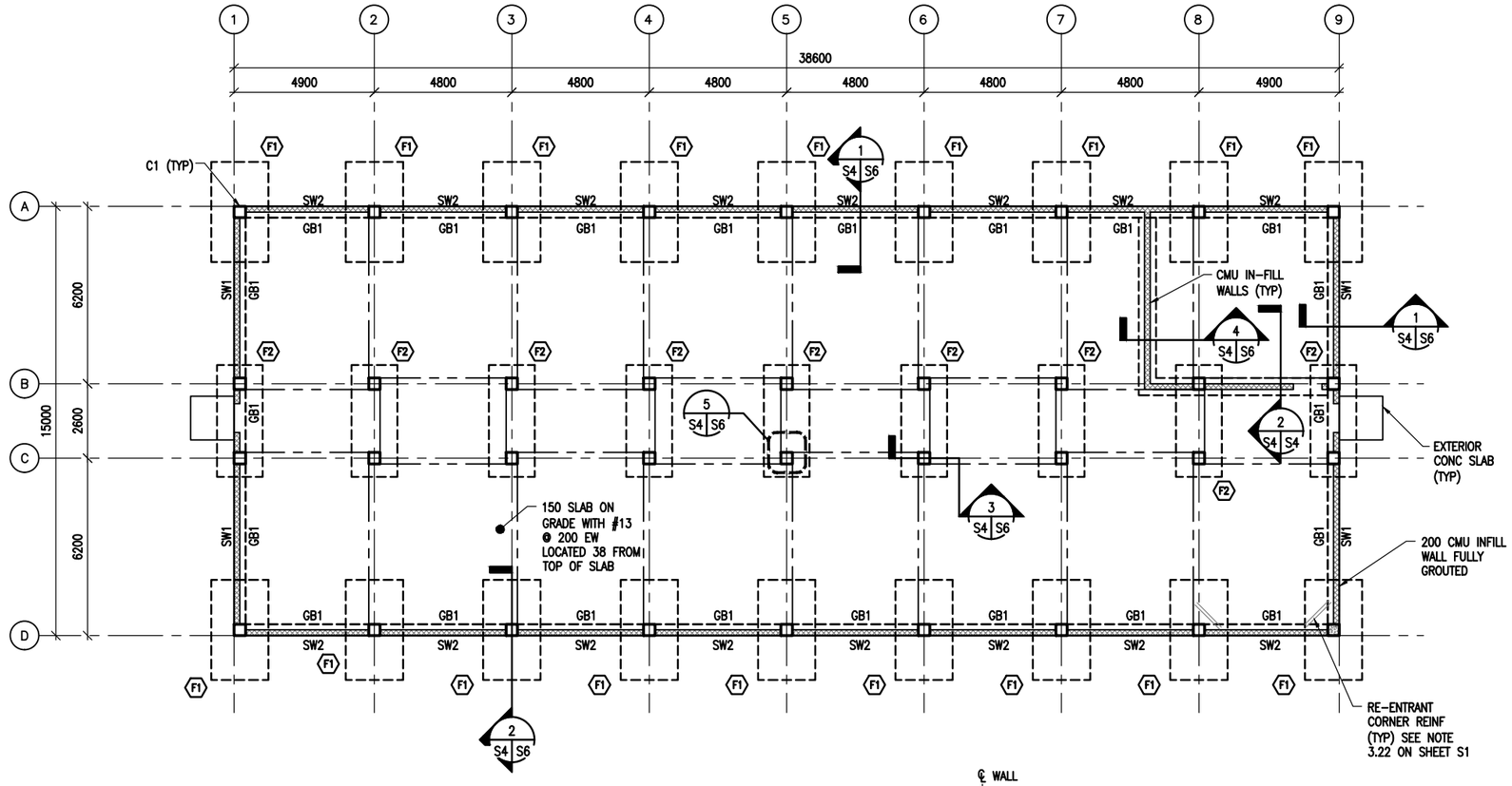

FOUNDATION PLAN

SCALE: 1:100

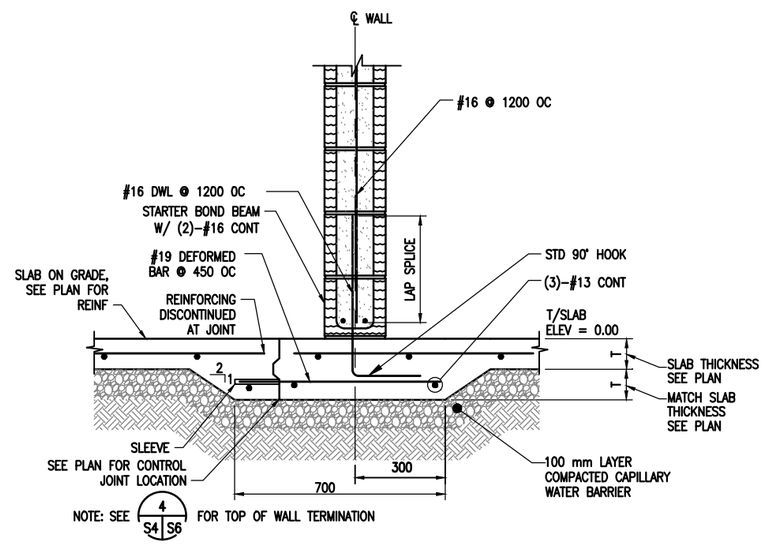

SECTION

SCALE: 1:10

PLAN NOTES:

1. FINISH FIRST FLOOR ELEVATION SHALL BE (DATUM 0.0). ALL PLUS OR MINUS DIMENSIONS INDICATED ON PLAN OR REFERRED TO IN NOTES RELATE TO FINISH FIRST FLOOR ELEVATION.
2. TOP OF EXTERIOR FOOTINGS SHALL BE −950 UNLESS OTHERWISE INDICATED.
3. TOP OF INTERIOR FOOTING SHALL BE −600 UNLESS OTHERWISE INDICATED.
4. SPREAD FOOTINGS INDICATED BY F# ON PLAN. REFER TO SPREAD FOOTING SCHEDULE ON SHEET S2.
5. COLUMNS INDICATED THUS C# ON PLAN. REFER TO COLUMN SCHEDULE ON SHEET S2.
6. REFER TO SHEETS S1 TO S3 FOR STRUCTURAL NOTES AND BASIS OF DESIGN.
7. CTJ & CSJ INDICATES SLAB CONTROL OR CONSTRUCTION JOINTS. RESPECTIVELY, REFER TO SHEET S8 FOR DETAILS.
8. SEE CMU WALL REINFORCING SCHEDULE ON SHEET S3.
9. REFER TO ARCHITECTURAL SHEETS FOR MASONRY PARTITION TYPES.
10. SEE MECHANICAL AND ELECTRICAL SHEETS FOR CONCRETE PAD LOCATIONS, SIZES, AND THICKNESS NOT SHOWN. SEE SHEET S8 FOR DETAILS.

UNLESS OTHERWISE NOTED, LINEAR DIMENSIONS SHOWN ARE IN MILLIMETERS (MM)

0 2000 4000 8000

SCALE: 1: 100

US Army Corps of Engineers
Afghanistan Engineer District

SYMBOL	DESCRIPTION	DATE	APR

DESIGNED BY: MMY
DATE: 09-30-09
DWN BY: RCG
SUBMITTED BY: BAKER
CHK BY: CWW
FILE NO.: ANPSDS-104XXX

Michael Baker Jr., Inc
A unit of Michael Baker Corporation
Airside Business Park
100 Airside Drive
Moon Township PA 15108
www.mbakercorp.com

STANDARD DESIGN
BARRACK BUILDING, OPEN BAY (579 GSM)
WOOD FIRED HEAT OPTION

FOUNDATION PLAN

SHEET REFERENCE NUMBER:
S4

100% SUBMISSION

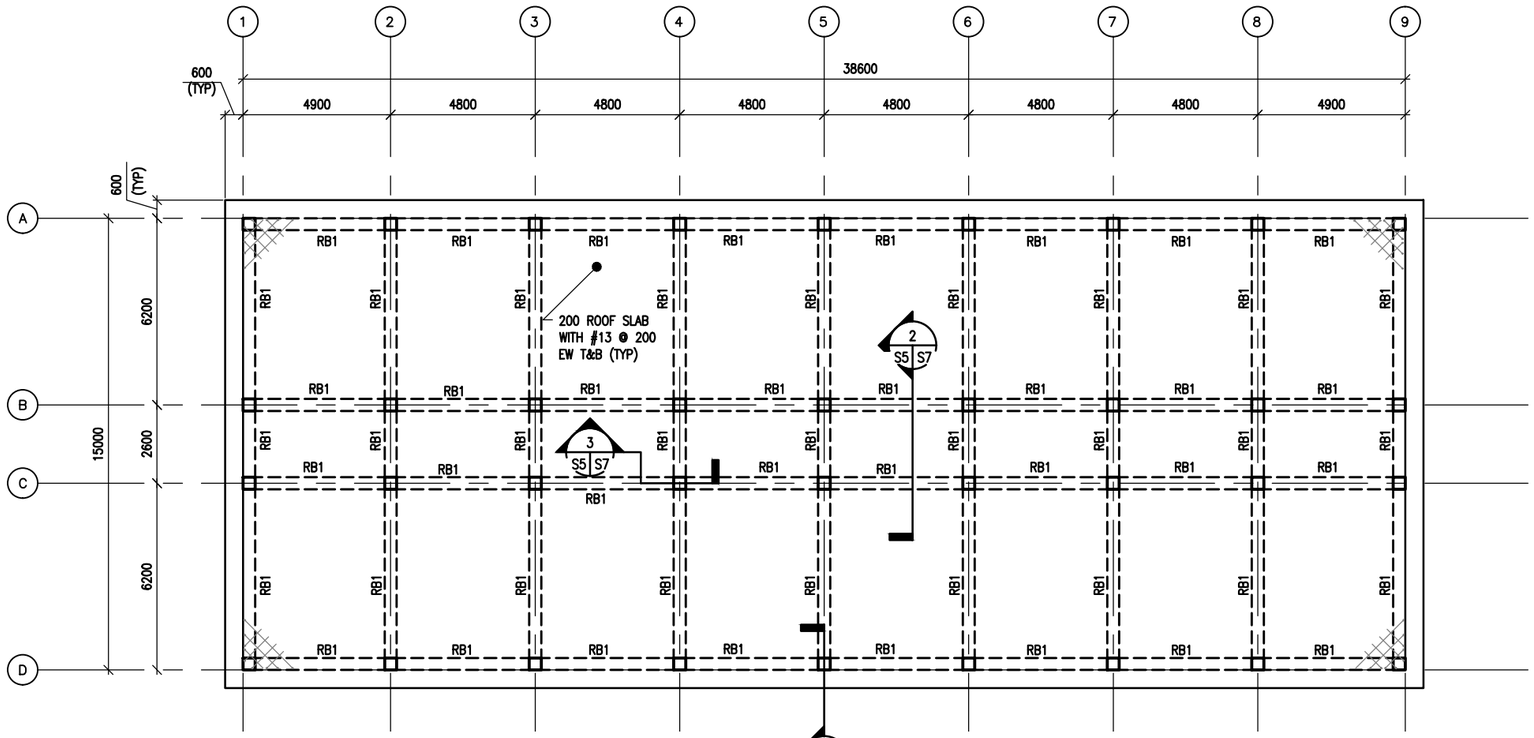

1 S5 S5 ROOF FRAMING PLAN
SCALE: 1:100

PLAN NOTES:

1. TOP OF SLAB ELEVATION = 3600 UNLESS NOTED OTHERWISE
2. RB# DENOTES ROOF BEAM TYPE. SEE BEAM SCHEDULE ON SHEET S2.
3. REFER TO SHEETS S1 AND S2 FOR STRUCTURAL NOTES AND BASIS OF DESIGN.
4. COORDINATE WITH ARCHITECTURAL SHEETS FOR COLD-FORMED STEEL OVERBUILT FRAMING ABOVE ROOF SLAB.
5. COLD-FORMED METAL OVERBUILT ROOF FRAMING NOT SHOWN FOR CLARITY. SEE OVERBUILT ROOF FRAMING DETAILS AND SECTIONS ON SHEET S7.

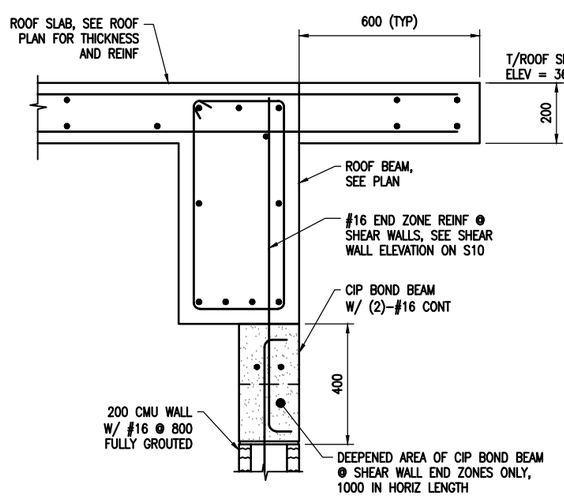

3 S8 S5 SECTION
SCALE: 1:10

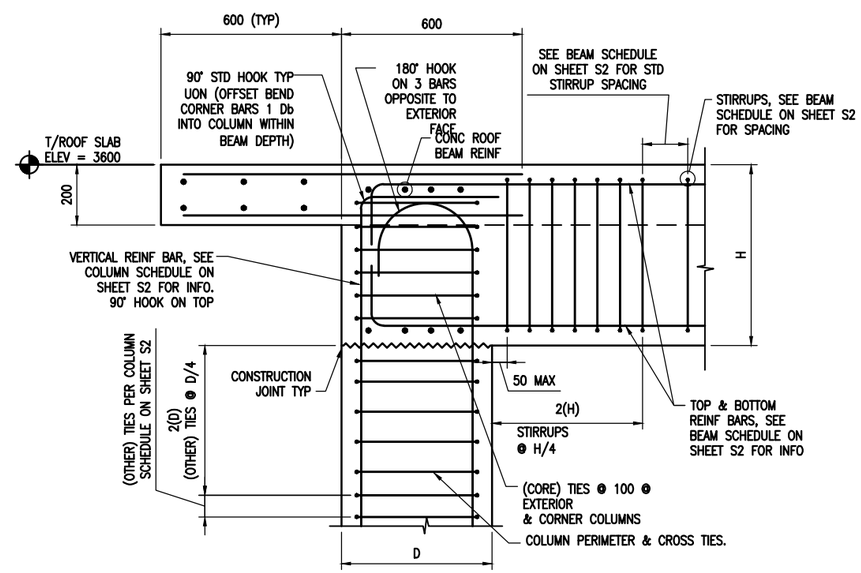

2 S5 S5 SECTION
SCALE: 1:10

UNLESS OTHERWISE NOTED, LINEAR DIMENSIONS SHOWN ARE IN MILLIMETERS (MM)

0 200 400 800
SCALE: 1: 10

0 2000 4000 8000
SCALE: 1: 100

US Army Corps of Engineers
Afghanistan Engineer District

SYMBOL	DESCRIPTION	DATE	APP

DESIGNED BY: MMY
DATE: 09-30-09
DWN BY: RCG
SUBMITTED BY: BAKER
CHK BY: CWW
FILE NO.: ANPSDS-105XXX

Michael Baker Jr., Inc
A unit of Michael Baker Corporation
Airside Business Park
100 Airside Drive
Moon Township PA 15108
www.mbakercorp.com

STANDARD DESIGN
BARRACK BUILDING, OPEN BAY (579 GSM)
WOOD FIRED HEAT OPTION

ROOF FRAMING PLAN

SHEET REFERENCE NUMBER:
S5

100% SUBMISSION

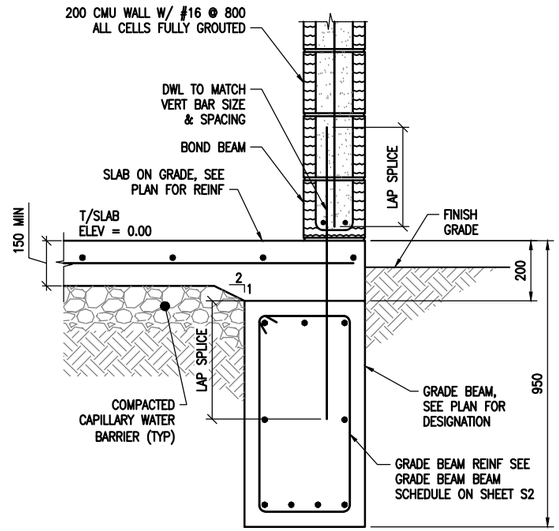

1 S4 S6 SECTION
SCALE: 1:10

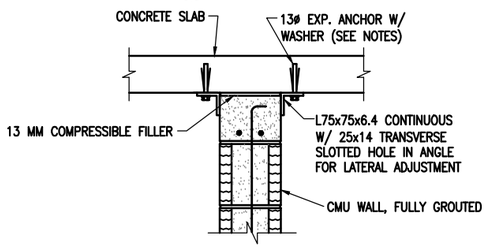

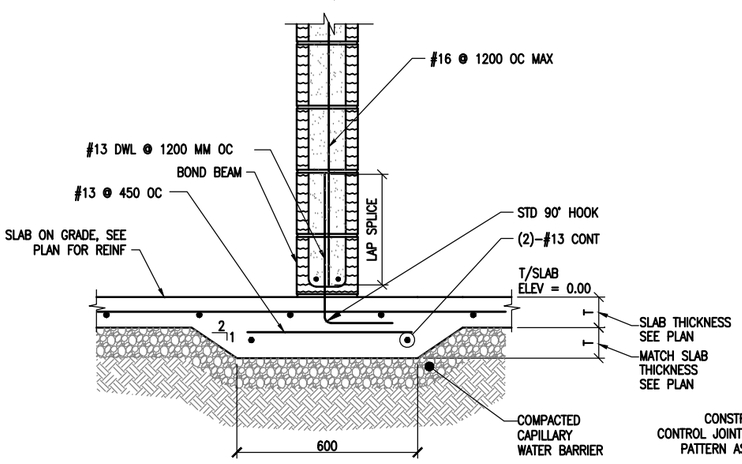

NOTES:

1. SEE SHEETS S3 AND S8 FOR ADDITIONAL CMU WALL REINF. REQUIREMENTS
2. EMBED EXPANSION ANCHOR 82 MINIMUM INTO SOLID CONCRETE.
3. INSTALL 13 MM ISOLATION JOINT VERTICALLY AT WALL ENDS THAT ARE ADJACENT TO CONCRETE COLUMNS.
4. USE STEEL WASHER BETWEEN ANCHOR HEAD AND ANGLE. NOMINAL WASHER INSIDE AND OUTSIDE DIAMETER TO BE 14 & 35 RESPECTIVELY.

4 S4 S6 SECTION
SCALE: 1:10

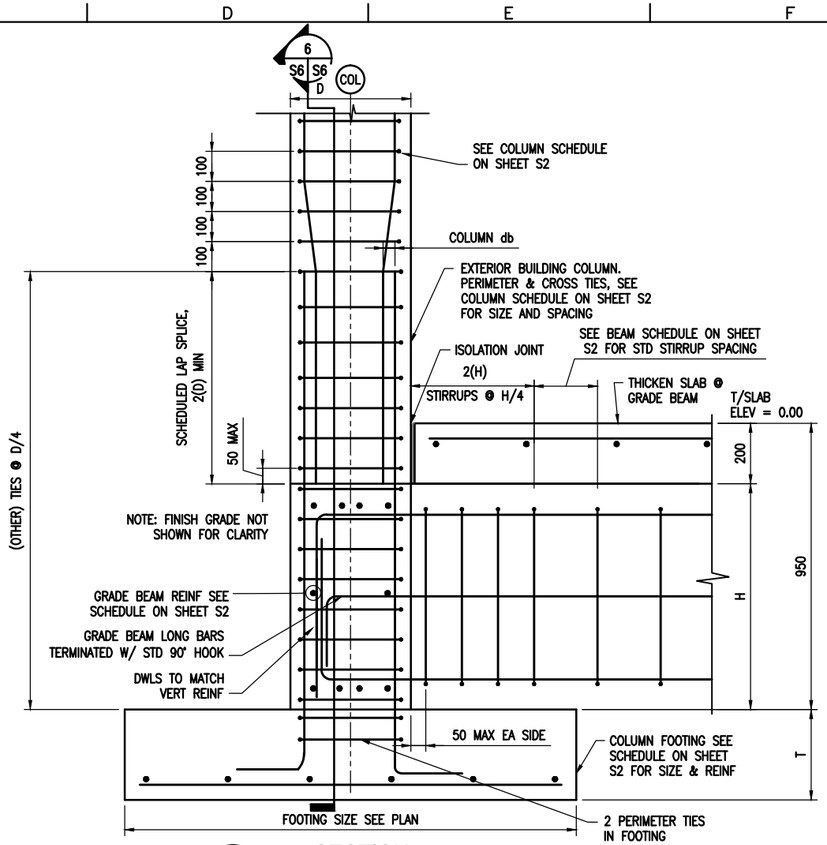

2 S4 S6 SECTION
SCALE: 1:10

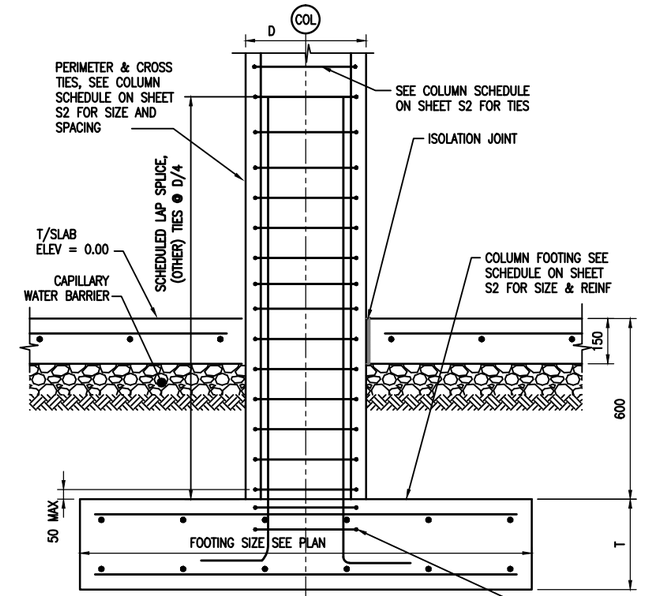

3 S4 S6 SECTION
SCALE: 1:10

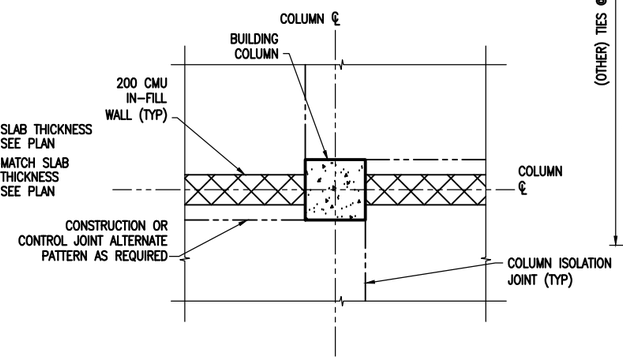

5 S4 S6 TYPICAL ISOLATION JOINT DETAIL
SCALE: 1:20

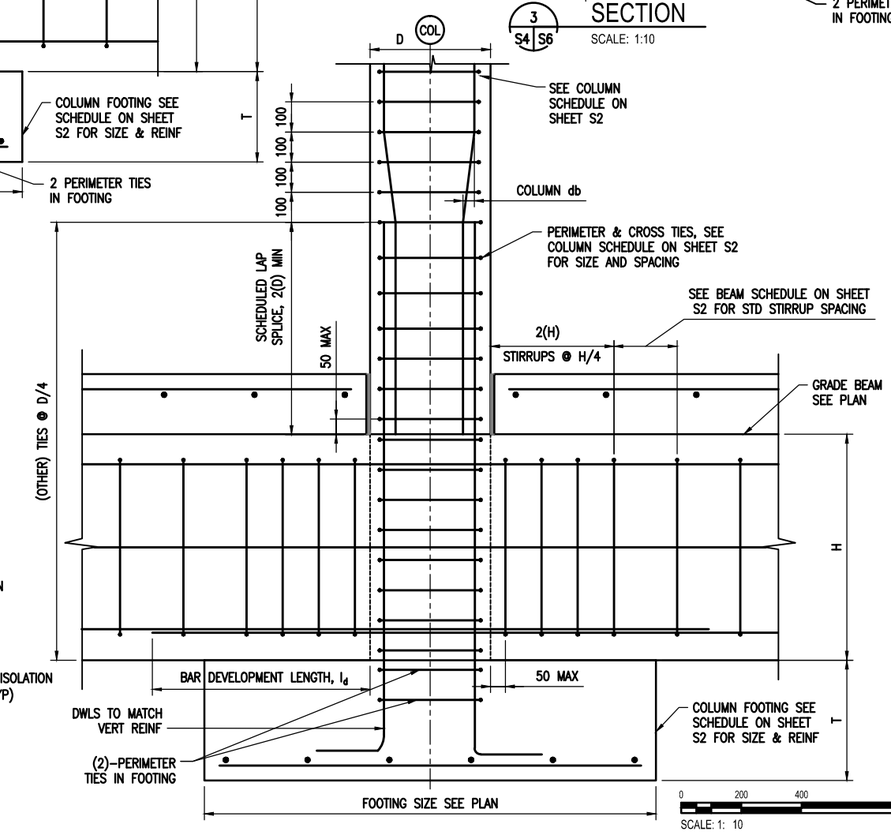

6 S6 S6 SECTION
SCALE: 1:10

0 200 400 800
SCALE: 1: 10

0 400 800 1600
SCALE: 1: 20

UNLESS OTHERWISE NOTED, LINEAR DIMENSIONS SHOWN ARE IN MILLIMETERS (MM)

US Army Corps of Engineers
Afghanistan Engineer District

SYMBOL	DESCRIPTION	DATE	APPR

DESIGNED BY: MMY
DATE: 09-30-09
DWN BY: RCG
SUBMITTED BY: BAKER
CHK BY: CWW
FILE NO.: ANPSDS-306XXX

Michael Baker Jr., Inc.
A unit of Michael Baker Corporation
Airside Business Park
100 Airside Drive
Moon Township PA 15108
www.mbakercorp.com

STANDARD DESIGN
BARRACK BUILDING, OPEN BAY (579 GSM)
WOOD FIRED HEAT OPTION

FOUNDATION SECTIONS & DETAILS

SHEET REFERENCE NUMBER:
S6

100% SUBMISSION

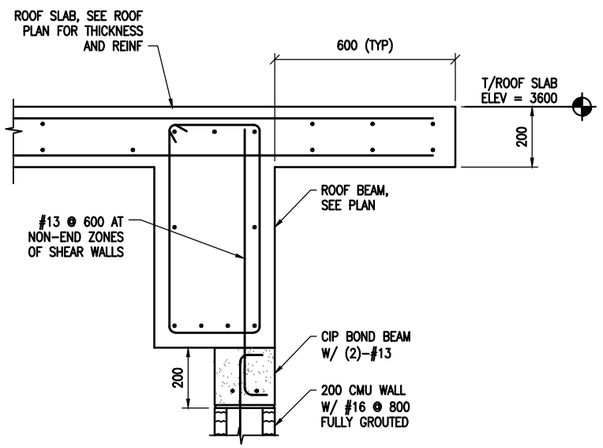

NOTES:
1. REFERENCE THIS SHEET FOR OVERFRAMING ABOVE ROOF SLAB.

1 S8 S7 SECTION
SCALE: 1:10

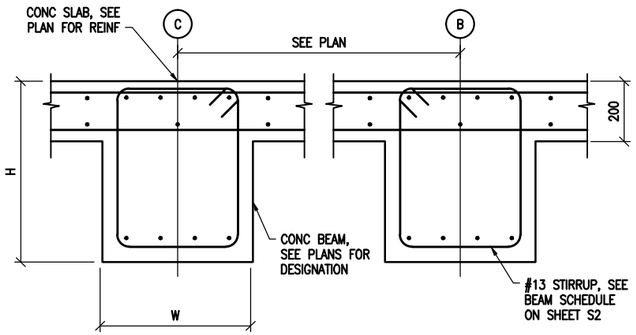

2 S5,S6 S7 SECTION
SCALE: 1:10

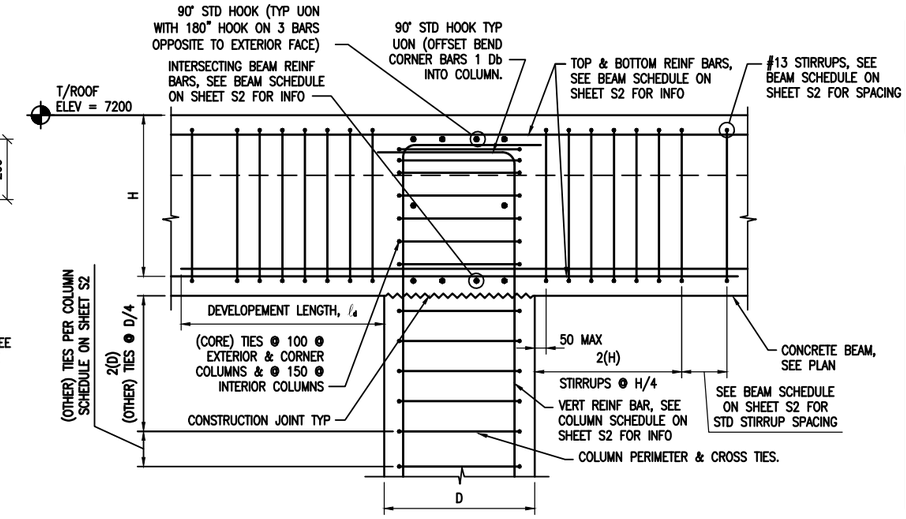

3 S6 S7 SECTION
SCALE: 1:10

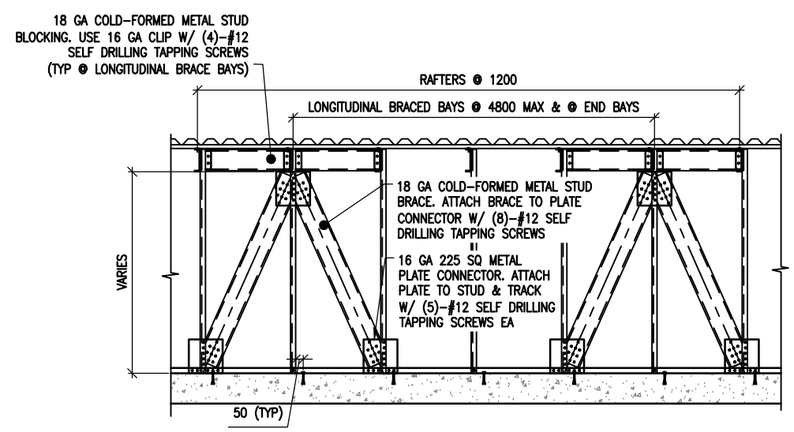

4 S7 S7 SECTION
SCALE: NTS

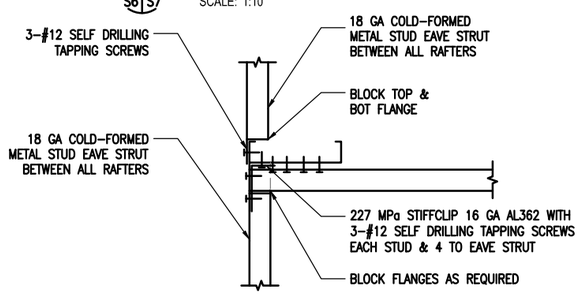

5 S7 S7 SECTION
SCALE: 1:5

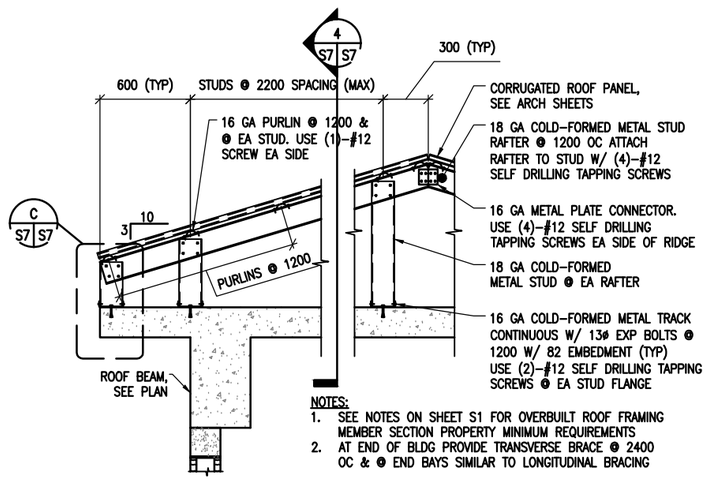

NOTES:
1. SEE NOTES ON SHEET S1 FOR OVERBUILT ROOF FRAMING MEMBER SECTION PROPERTY MINIMUM REQUIREMENTS
2. AT END OF BLDG PROVIDE TRANSVERSE BRACE @ 2400 OC & @ END BAYS SIMILAR TO LONGITUDINAL BRACING

A S7 S7 TYPICAL OVERBUILT ROOF FRAMING DETAIL
SCALE: 1:20

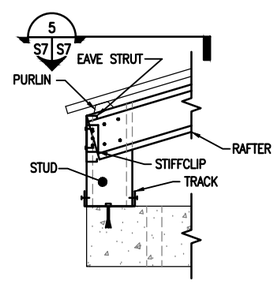

C S7 S7 DETAIL
SCALE: 1:10

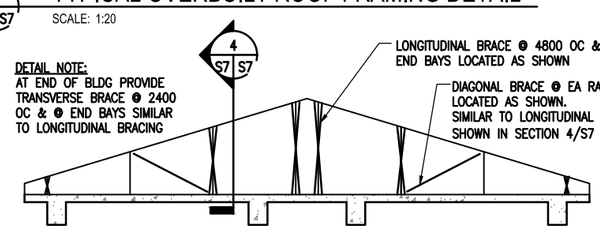

DETAIL NOTE:
AT END OF BLDG PROVIDE TRANSVERSE BRACE @ 2400 OC & @ END BAYS SIMILAR TO LONGITUDINAL BRACING

B S7 S7 TYPICAL ROOF BRACE LAYOUT DETAIL
SCALE: NTS

DETAIL NOTE:
AT END OF BLDG PROVIDE TRANSVERSE BRACE @ 2400 OC & @ END BAYS SIMILAR TO LONGITUDINAL BRACING

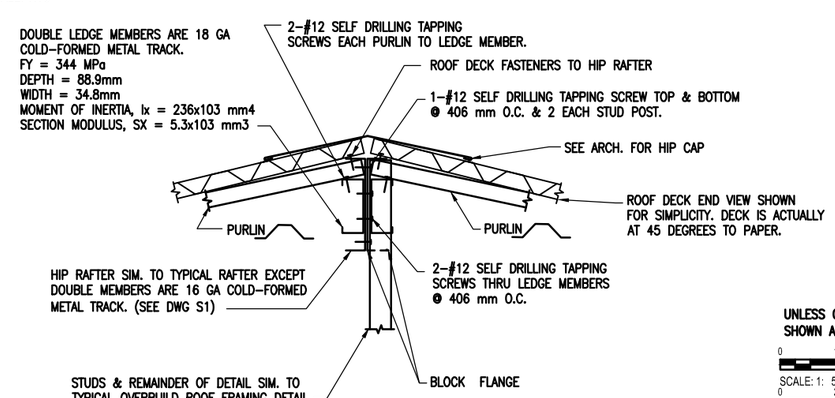

TYPICAL HIP FRAMING DETAIL
SCALE: 1:5

UNLESS OTHERWISE NOTED, LINEAR DIMENSIONS SHOWN ARE IN MILLIMETERS (MM)

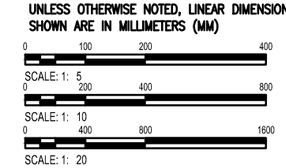

US Army Corps of Engineers
Afghanistan Engineer District

SYMBOL	DESCRIPTION	DATE	APP.

DESIGNED BY: KMP | DATE: 09-30-09
DWN BY: RCG | SUBMITTED BY: BAKER
CHK BY: CWW | FILE NO.: ANPSDS-307XXX

Michael Baker Jr., Inc.
A unit of Michael Baker Corporation
Airside Business Park
100 Airside Drive
Moon Township PA 15108
www.mbakercorp.com

STANDARD DESIGN
BARRACK BUILDING, OPEN BAY (579 GSM)
WOOD FIRED HEAT OPTION

FLOOR & ROOF FRAMING SECTIONS & DETAILS

SHEET REFERENCE NUMBER:
S7

100% SUBMISSION

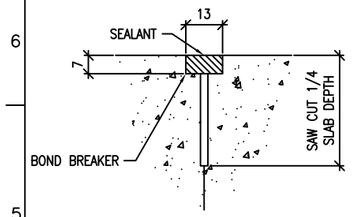

CONTROL JOINT DETAIL

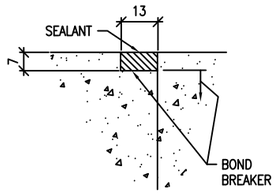

CONSTRUCTION JOINT DETAIL

TYPICAL CONCRETE SLAB JOINT FINISH DETAIL

1 S8 SCALE: NTS

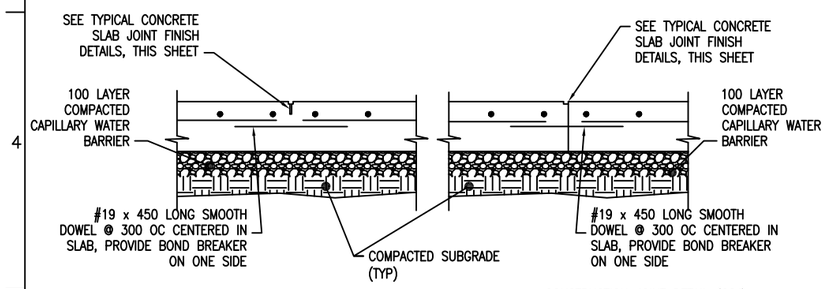

CONTROL JOINT DETAIL (CTJ)

CONSTRUCTION JOINT DETAIL (CSJ)

TYPICAL SLAB ON GRADE JOINT DETAILS

2 S8 SCALE: NTS

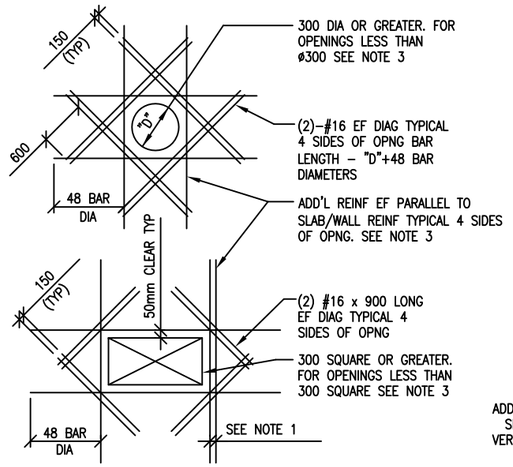

SLAB OPENINGS

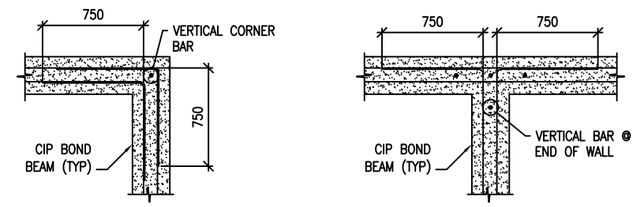

BOND BEAM CORNER

BOND BEAM INTERSECTION

CIP BOND BEAM DETAILS

6 S8 SCALE: NTS

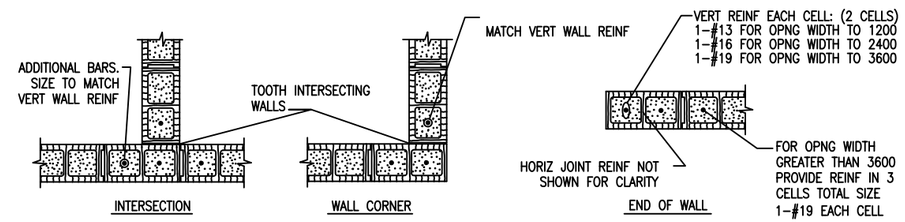

INTERSECTION

WALL CORNER

END OF WALL

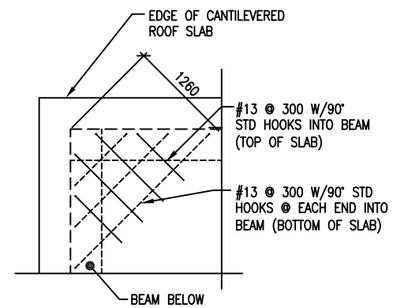

ELEVATED SLAB EXTERIOR CORNERS

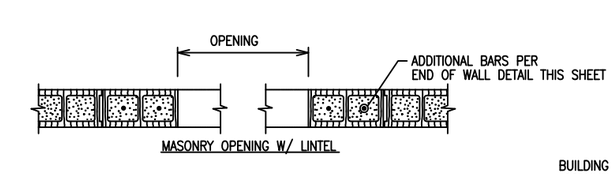

MASONRY OPENING W/ LINTEL

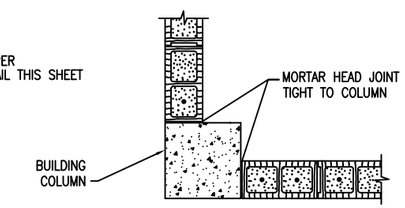

WALL END AT COLUMN

NOTES:
1. OPENING WIDTH SHALL NOT EXCEED 3600 FOR THIS TYPE OF JAMB
2. ALL CELLS FULLY GROUTED

TYPICAL CMU DETAILS

7 S8 SCALE: NTS

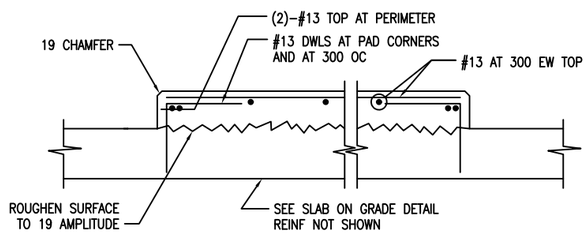

INTERIOR EQUIPMENT PAD DETAIL

3 S8 SCALE: NTS

DETAIL NOTE:
1. COORDINATE EQUIPMENT PAD SIZE AND LOCATIONS W/ ELECTRICAL/MECHANICAL DRAWINGS AND EQUIPMENT MANUFACTURER.

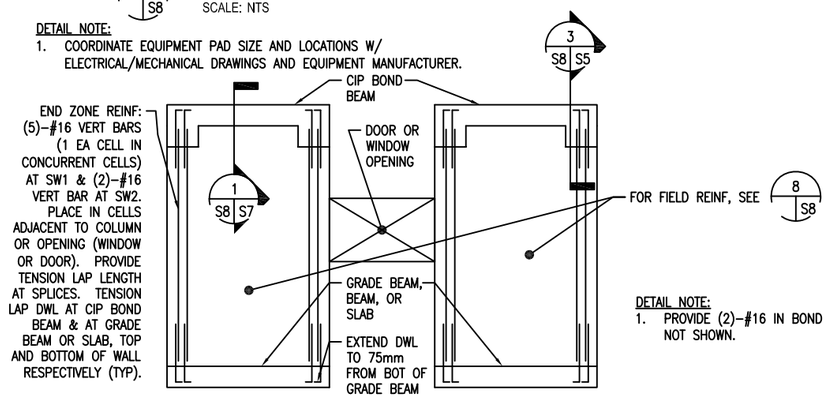

DETAIL NOTE:
1. PROVIDE (2)-#16 IN BOND BEAMS AT 1200 OC, NOT SHOWN.

SPECIAL REINFORCED MASONRY SHEAR WALL ELEVATION

4 S8 SCALE: NTS

ADD'L REINFORCEMENT DETAILS

5 S8 SCALE: NTS

DETAIL NOTES:
1. WHERE MORE THAN ONE ADDITIONAL BAR IS REQUIRED PARALLEL TO THE EXISTING SLAB/WALL REINF THE ADDITIONAL REINF BARS SHALL BE SPACED AT 100 ON CENTER.
2. ADDITIONAL REINF PARALLEL TO THE SLAB/WALL REINF SHALL BE #16 BARS THAT PROVIDE A STEEL AREA ON EACH SIDE OF THE OPENING EQUAL TO 1/2 THE AREA OF THE REINF CUT BY THE OPENING.
3. FOR OPENINGS WITH SIDES OR DIAMETERS LESS THAN 300 SPREAD THE SLAB/WALL REINF TO CLEAR THE OPENING.

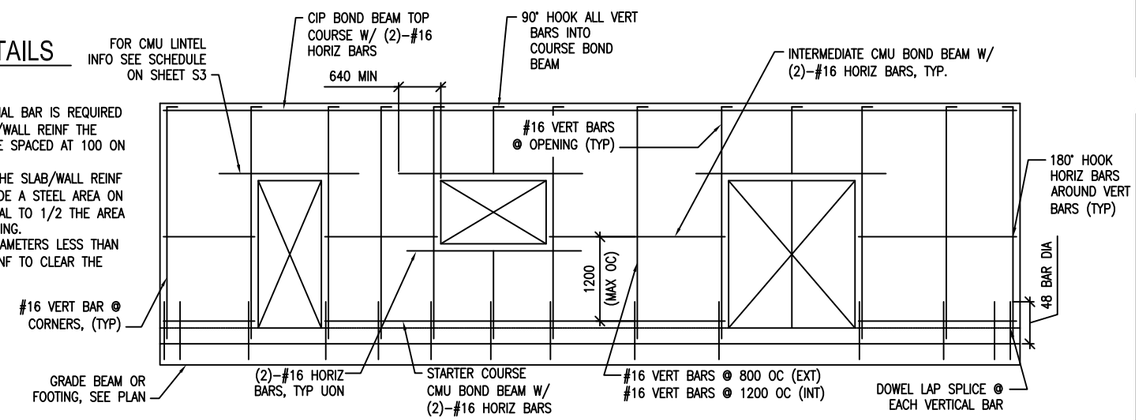

MIN CMU WALL REINFORCING

8 S8 SCALE: NTS

LINTEL NOTES:
CMU LINTEL REINFORCEMENT AS PER SCHEDULE ON SHEET S3

UNLESS OTHERWISE NOTED, LINEAR DIMENSIONS SHOWN ARE IN MILLIMETERS (MM)

US Army Corps of Engineers
Afghanistan Engineer District

SYMBOL	DESCRIPTION	DATE	APR

DESIGNED BY: MMY | DATE: 09-30-09
DWN BY: RCG | SUBMITTED BY: BAKER
CHK BY: CWW | FILE NO.: ANPSDS-508XXX

Michael Baker Jr., Inc.
A unit of Michael Baker Corporation
Airside Business Park
100 Airside Drive
Moon Township PA 15108
www.mbakercorp.com

STANDARD DESIGN
BARRACK BUILDING, OPEN BAY (579 GSM)
WOOD FIRED HEAT OPTION

TYPICAL DETAILS

SHEET REFERENCE NUMBER:
S8

100% SUBMISSION

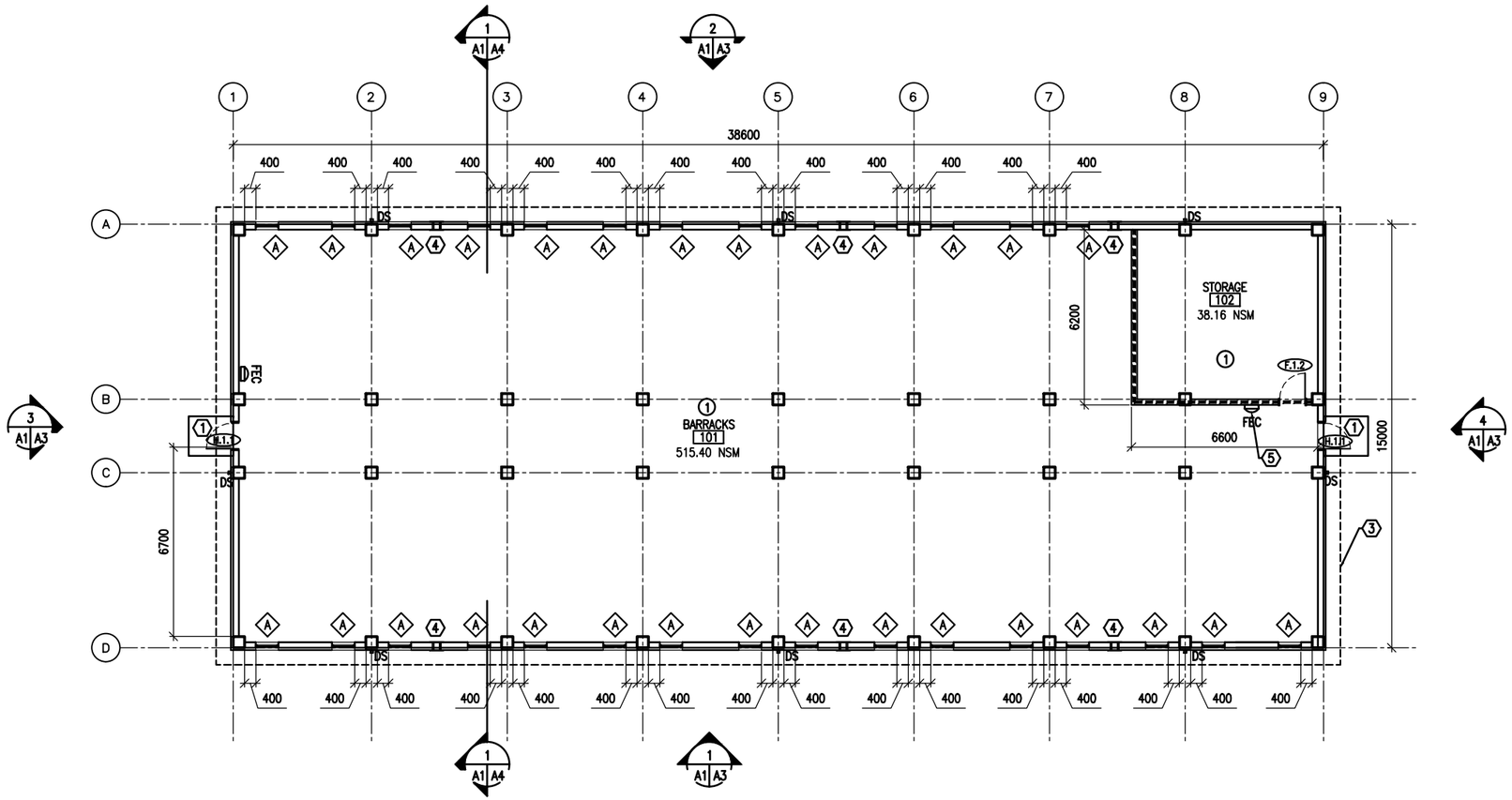

FLOOR PLAN

SCALE: 1:100

579.0 GSM

GENERAL NOTES:

A. INTERIOR PARTITIONS SHALL BE 200 MM CMU UNLESS NOTED OTHERWISE

B. OPENINGS FOR DOORS SHALL BE LOCATED 200 MM FROM THE ADJACENT WALL UNLESS NOTED OTHERWISE

C. SURFACES TO BE PAINTED SHALL BE CLEAN AND FREE OF FOREIGN MATTER BEFORE APPLICATION OF PAINT. CLEANING SHALL BE SCHEDULED SO THAT DUST AND OTHER CONTAMINANTS WILL NOT FALL ON WET, NEWLY PAINTED SURFACES.

D. CONCRETE AND INTERIOR MASONRY SURFACES GROUTED SOLID SHALL BE ALLOWED TO DRY AT LEAST 30 DAYS BEFORE PAINTING EXCEPT CONCRETE SLAB ON GRADE WHICH SHALL BE ALLOWED TO CURE 90 DAYS BEFORE PAINTING.

E. PAINTS CONTAINING LEAD IN EXCESS OF 0.06 PERCENT BY WEIGHT OF THE TOTAL NONVOLATILE CONTENT SHALL NOT BE USED.

F. MERCURIAL FUNGICIDES SHALL NOT BE USED IN OIL–BASE PAINT.

G. REMOVE LOOSE DIRT AND CLEAN SURFACES BEFORE PAINTING. APPLY PAINT TO INTERIOR STRUCTURAL RIGID FRAMINGS AND CEILINGS AND TEST FOR ADHESION. PRIMER COAT FOR MASONRY. INITIAL FIRST COAT WITH AN ACRYLIC LATEX PAINT FOR EXTERIOR SURFACES AND A SECOND COAT WITH A WATER REPELLENT ACRYLIC LATEX PAINT.

H. METAL DOORS AND FRAMES SHALL RECEIVE A PRIMER COAT PLUS TWO COATS OF PAINT.

I. DIMENSIONS ARE TO STRUCTURAL COLUMN GRID, EDGE OF WINDOW OPENINGS, AND TO HINGE SIDE OF DOOR OPENINGS.

J. PROVIDE 1 HOUR RATED PARTITIONS AT STORAGE ROOM IN ACCORDANCE WITH NFPA 101, TABLE 28.3.2.2.2. FILL ANULAR SPACE AT ANY AND ALL PENETRATIONS IN FLOORS, WALLS, OR CEILINGS WITH APPROPRIATE FIRE STORING MATERIALS.

ROOM FINISHES: (X)

1. WALLS: PAINTED PLASTER,
   FLOOR: SEALED CONCRETE
   CEILING: PAINTED PLASTER APPLIED TO STRUCTURE

KEY NOTES: (X)

1. CONCRETE STOOP – RE: DETAIL 2/A6.
2. NOT USED
3. LINE OF ROOF OVERHANG ABOVE
4. TWO–PIECE WALL THIMBLE AND TRIM PLATE FOR WOOD BURNING STOVE CHIMNEY PIPE.
   ~~STOVE AND PIPE BY OTHERS.~~
5. PROVIDE FEC AT STORAGE ROOM IN ACCORDANCE WITH NFPA 101, 28.3.5.8.

LEGEND:

- (F.1.4) DOOR TYPE, SEE SHEET A5
- (A) WINDOW TYPE, SEE SHEET A5
- (X) KEY NOTE
- FEC FIRE EXTINGUISHER CABINET
- 1–HOUR RATED PARTITION
- (1) ROOM FINISH TYPE DESIGNATION
- ▫DS METAL DOWNSPOUT

UNLESS OTHERWISE NOTED, LINEAR DIMENSIONS SHOWN ARE IN MILLIMETERS (MM)

0 2000 4000 8000

SCALE: 1: 100

US Army Corps of Engineers
Afghanistan Engineer District

SYMBOL	DESCRIPTION	DATE	APPR

DESIGNED BY: DLB
DATE: 09–30–09
DWN BY: AAR
SUBMITTED BY: BAKER
CHK BY: KRC
FILE NO.: ANPSDA–101XXX

Michael Baker Jr. Inc
A unit of Michael Baker Corporation
Airside Business Park
100 Airside Drive
Moon Township PA 15108
www.mbakercorp.com

STANDARD DESIGN
BARRACK BUILDING, OPEN BAY (579 GSM)
WOOD FIRED HEAT OPTION

FLOOR PLAN

SHEET REFERENCE NUMBER:
A1

100% SUBMISSION

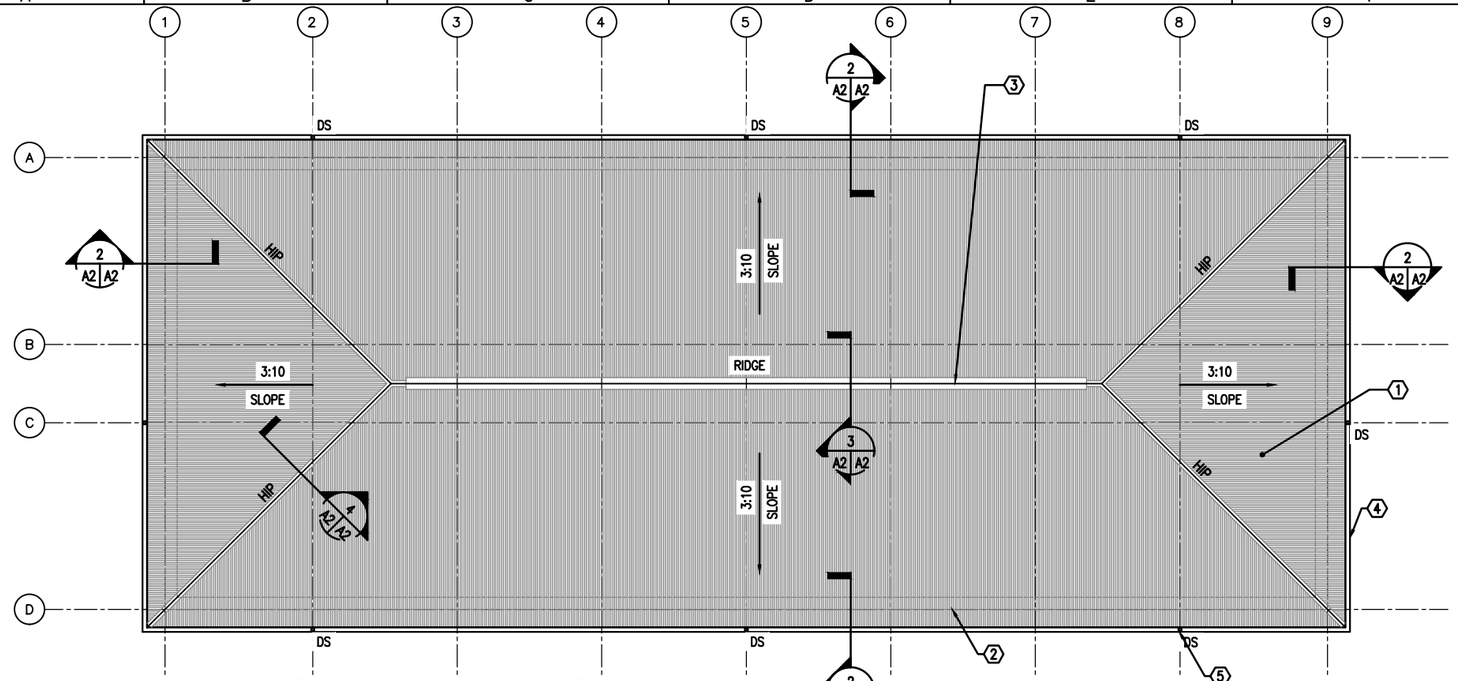

1 A2 A2 ROOF PLAN
SCALE: 1:100

N

KEY NOTES: (X)

1. CORRUGATED METAL ROOF PANELS ON COLD-FORMED METAL FRAMING
2. LINE OF BUILDING WALL BELOW
3. CONTINUOUS RIDGE VENT
4. METAL GUTTER
5. METAL DOWNSPOUT WITH SPLASHBLOCK

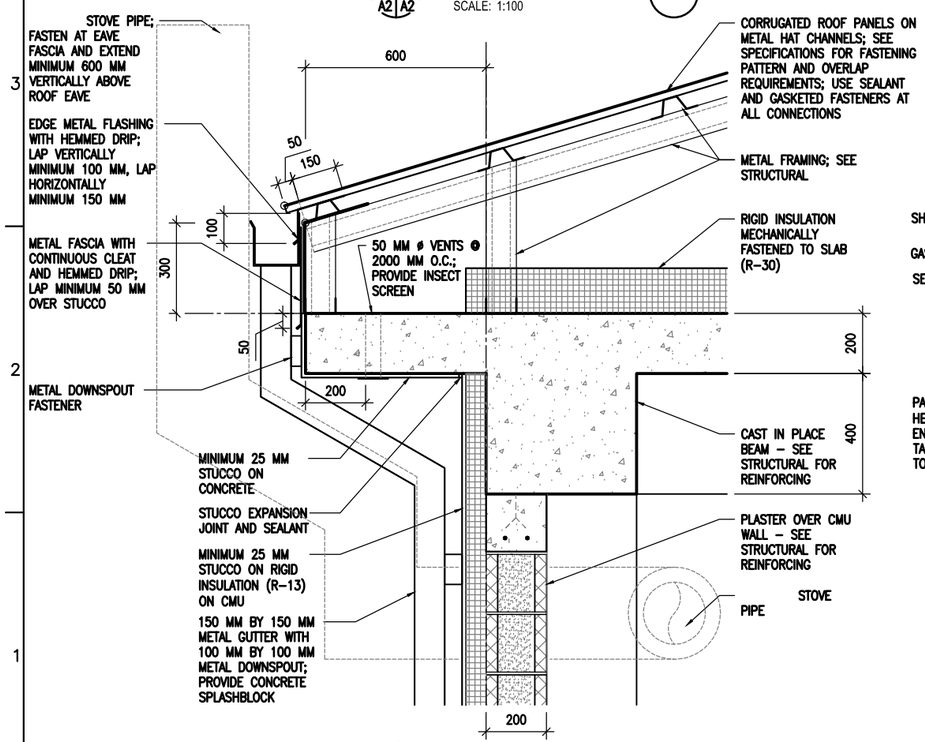

2 A2 A2 EAVE DETAIL
SCALE: 1:10

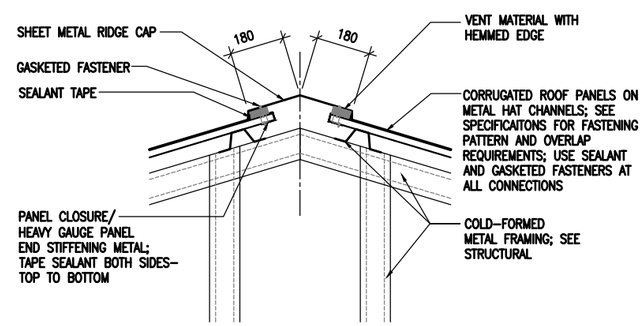

3 A2 A2 RIDGE VENT DETAIL
SCALE: 1:10

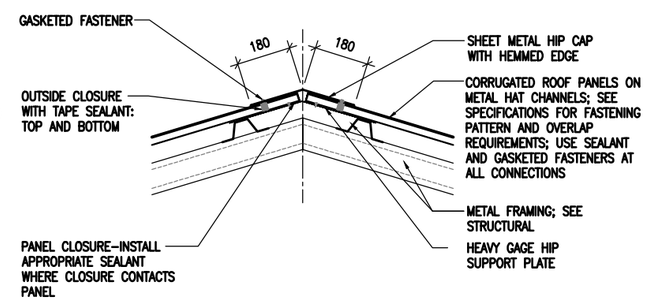

4 A2 A2 HIP DETAIL
SCALE: 1:10

UNLESS OTHERWISE NOTED, LINEAR DIMENSIONS SHOWN ARE IN MILLIMETERS (MM)

0 200 400 800
SCALE: 1: 10

0 2000 4000 8000
SCALE: 1: 100

US Army Corps of Engineers
Afghanistan Engineer District

SYMBOL	DESCRIPTION	DATE	APV

DESIGNED BY: DLB
DATE: 09-30-09
DWN BY: AAR
SUBMITTED BY: BAKER
CHK BY: KRC
FILE NO.: ANPSDA-102XXX

Michael Baker Jr, Inc
A unit of Michael Baker Corporation
Airside Business Park
100 Airside Drive
Moon Township PA 15108
www.mbakercorp.com

STANDARD DESIGN
BARRACK BUILDING, OPEN BAY (579 GSM)
WOOD FIRED HEAT OPTION

ROOF PLAN AND DETAILS

SHEET REFERENCE NUMBER:
A2

100% SUBMISSION

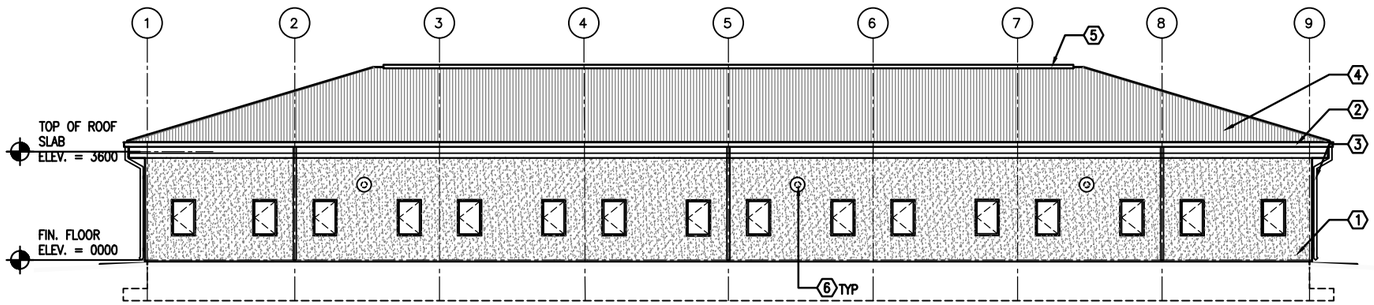

1 A1 A3 EAST ELEVATION
SCALE: 1:100

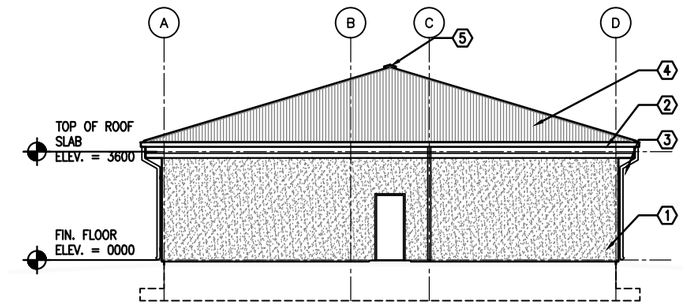

3 A1 A3 SOUTH ELEVATION
SCALE: 1:100

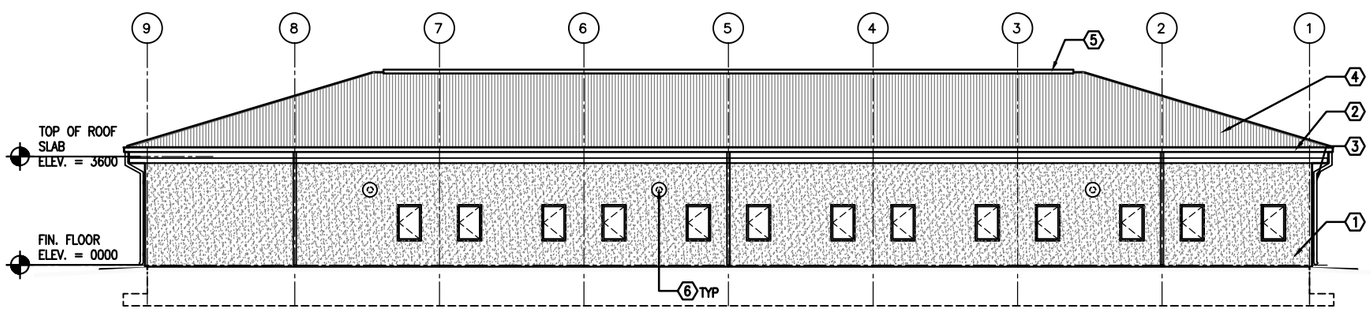

2 A1 A3 WEST ELEVATION
SCALE: 1:100

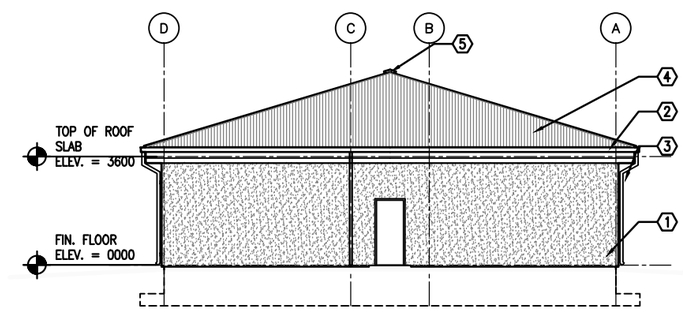

4 A1 A3 NORTH ELEVATION
SCALE: 1:100

KEY NOTES: (X)

1. STUCCO AND RIGID INSULATION SYSTEM OVER CMU AND CONCRETE.
2. METAL GUTTER
3. METAL DOWNSPOUT WITH SPLASH BLOCK
4. CORRUGATED METAL ROOF PANELS ON COLD-FORMED METAL FRAMING.
5. CONTINUOUS RIDGE VENT
8. TWO-PIECE WALL THIMBLE AND TRIM PLATE FOR WOOD BURNING STOVE CHIMNEY PIPE. ~~STOVE AND PIPE BY OTHERS.~~

GENERAL NOTES:

1. COORDINATE SIZE AND LOCATION OF OPENINGS FOR MECHANICAL ITEMS WITH MECHANICAL DRAWINGS.
2. PROVIDE STRUCTURAL LINTELS AS REQUIRED – RE: STRUCT

UNLESS OTHERWISE NOTED, LINEAR DIMENSIONS SHOWN ARE IN MILLIMETERS (MM)

0 2000 4000 8000
SCALE: 1: 100

US Army Corps of Engineers
Afghanistan Engineer District

SYMBOL	DESCRIPTION	DATE	APV

DESIGNED BY: DLB
DWN BY: AAR
CHK BY: KRC
DATE: 09-30-09
SUBMITTED BY: BAKER
FILE NO.: ANPSDA-203XXX

Michael Baker Jr. Inc
A unit of Michael Baker Corporation
Airside Business Park
100 Airside Drive
Moon Township PA 15108
www.mbakercorp.com

STANDARD DESIGN
BARRACK BUILDING, OPEN BAY (579 GSM)
WOOD FIRED HEAT OPTION

EXTERIOR ELEVATIONS

SHEET REFERENCE NUMBER:
A3

100% SUBMISSION

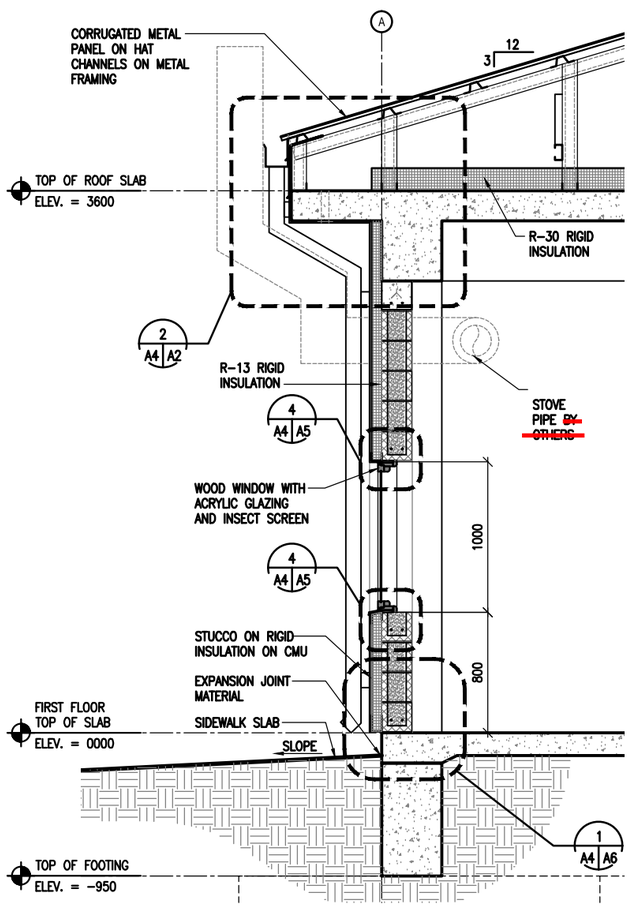

2 A4 A4 WALL SECTION
SCALE: 1:20

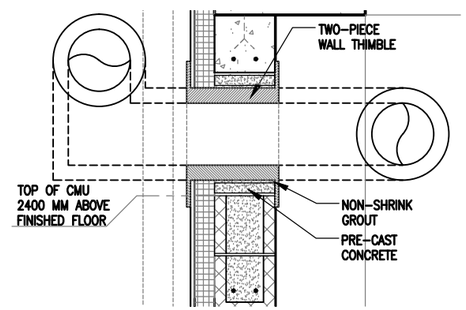

3 A4 A4 THIMBLE DETAIL, TYPICAL
SCALE: 1:10

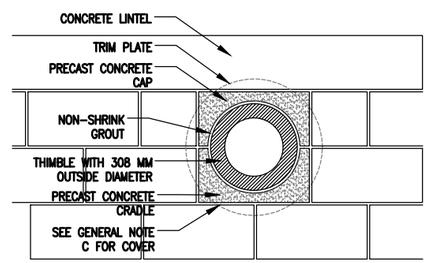

4 A4 A4 THIMBLE DETAIL, TYPICAL
SCALE: 1:10

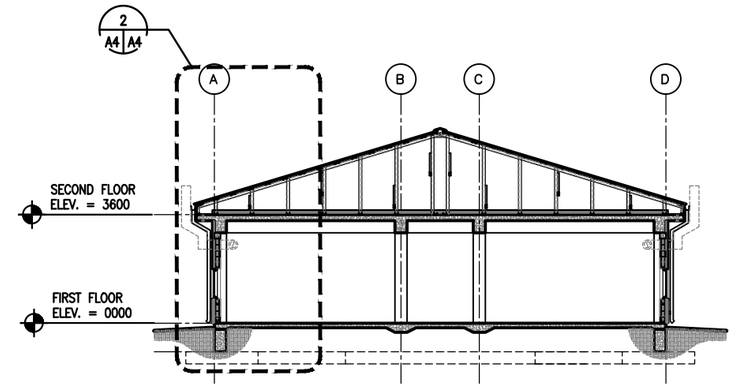

1 A1 A4 BUILDING SECTION
SCALE: 1:100

GENERAL NOTES:

A. COORDINATE SIZE AND LOCATION OF OPENINGS FOR MECHANICAL ITEMS WITH MECHANICAL DRAWINGS.
B. PROVIDE STRUCTURAL LINTELS AS REQUIRED – RE: STRUCT
C. PROVIDE 480 MM SQUARE, 1.5 MM THICK GALVANIZED SHEET METAL COVER WITH 13 MM HEMMED EDGE FOR WALL THIMBLE UNTIL STOVE PIPE IS PROVIDED. INSTALL COVER ON EXTERIOR FACE OF THIMBLE TRIM PLATE. COVER SHALL BE SET IN SILICONE SEALANT AND FASTENED WITH 4 STAINLESS STEEL SCREWS. ALIGN FASTENER LOCATIONS WITH COVER PLATE FASTENER OPENINGS SO ADDITIONAL FASTENER PENETRATIONS ARE NOT CREATED IN EXTERIOR FINISH.

UNLESS OTHERWISE NOTED, LINEAR DIMENSIONS SHOWN ARE IN MILLIMETERS (MM)

0 400 800 1600
SCALE: 1: 20

0 2000 4000 8000
SCALE: 1: 100

US Army Corps of Engineers
Afghanistan Engineer District

SYMBOL	DESCRIPTION	DATE	APP.

DESIGNED BY: DLB
DATE: 09-30-09
DWN BY: AAR
SUBMITTED BY: BAKER
CHK BY: KRC
FILE NO.: ANPSDA-304XXX

Michael Baker Jr. Inc
A unit of Michael Baker Corporation
Airside Business Park
100 Airside Drive
Moon Township PA 15108
www.mbakercorp.com

STANDARD DESIGN
BARRACK BUILDING, OPEN BAY (579 GSM)
WOOD FIRED HEAT OPTION

BUILDING & WALL SECTIONS

SHEET REFERENCE NUMBER:
A4

100% SUBMISSION

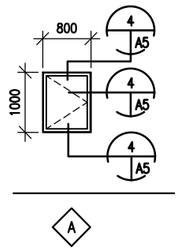

1 A5 A5 WINDOW TYPES
SCALE: 1:50

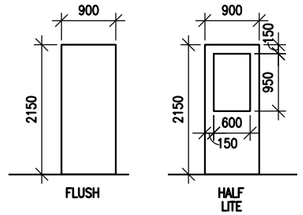

2 A5 A5 DOOR TYPES
SCALE: 1:50

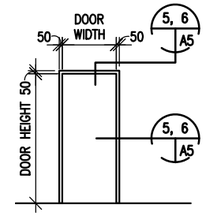

3 A5 A5 FRAME TYPES
SCALE: 1:50

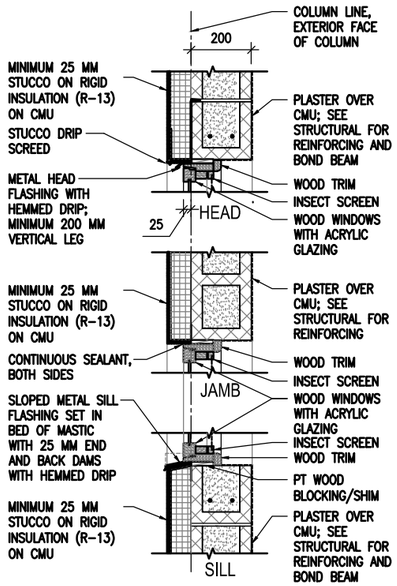

4 A5 A5 WINDOW DETAILS
SCALE: 1:10

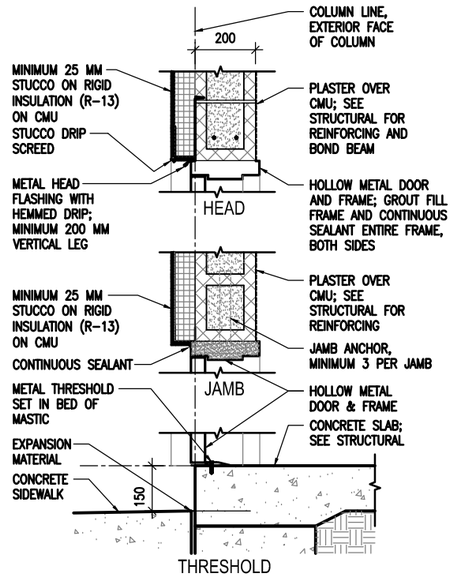

5 A5 A5 EXTERIOR DOOR DETAILS
SCALE: 1:10

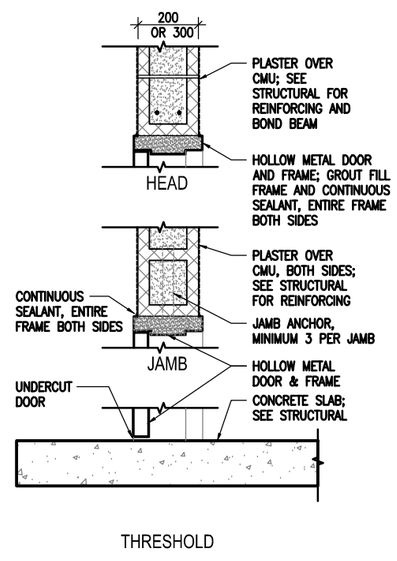

6 A5 A5 INTERIOR DOOR DETAILS
SCALE: 1:10

WINDOW TYPES NOTES:

1. ALL EXTERIOR WINDOWS SHALL BE WOOD WITH INSECT SCREENS. WINDOWS SHALL BE COMMERCIAL GRADE.
2. GLAZING SHALL BE ACRYLIC SHEET.

DOOR TYPES NOTES:

1. INTERIOR AND EXTERIOR METAL DOORS AND FRAME COLORS SHALL MATCH ADJACENT WALL COLORS AS SELECTED BY THE CONTRACTING OFFICER.
2. HARDWARE SHALL BE HEAVY DUTY, COMMERCIAL GRADE, STAINLESS STEEL WITH A MATTE FINISH.
3. FRAMES, EXCEPT FIRE-RATED FRAMES, SHALL BE MOUNTED AND ADJUSTED IN ACCORDANCE WITH MANUFACTURER'S INSTRUCTIONS. FRAMES SHALL BE FASTENED WITH MINIMUM OF THREE FASTENING POINTS PER SIDE AT REGULAR INTERVALS.
4. DIMENSIONS SHOWN ON DOOR SCHEDULE ARE BASED UPON MODULAR MASONRY (OR ROUGH OPENING), HEIGHT OF 2200mm FOR STANDARD PERSONNEL DOORS. CONTRACTOR SHALL COORDINATE WITH DOOR SUPPLIER TO ENSURE THAT DIMENSIONS OF DOORS AND FRAMES PROVIDED ARE COMPATIBLE WITH DOOR OPENING DIMENSIONS.
5. DOORS SHALL BE 45 MINUTE DOORS AS REQUIRED IN 1 HOUR RATED WALLS. (NFPA 101, TABLE 8.3.4.2.).

DOOR HARDWARE TYPES:

HW-1 1-1/2 PR HINGES
1 EA EXIT DEVICE, SURFACE MOUNTED F08
1 EA CYLINDER. GRADE 1
1 EA DOOR CLOSER, C02061,LOW RESISTANCE
1 EA THRESHOLD J32130

HW-2 1-1/2 PR HINGES
1 EA LOCKSET W/LEVERS. GRADE 1
1 EA DOOR CLOSER, C02061,LOW RESISTANCE

UNLESS OTHERWISE NOTED, LINEAR DIMENSIONS SHOWN ARE IN MILLIMETERS (MM)

0 200 400 800
SCALE: 1: 10

0 1000 2000 4000
SCALE: 1: 50

US Army Corps of Engineers
Afghanistan Engineer District

SYMBOL	DESCRIPTION	DATE	APP.

DESIGNED BY: DLB
DATE: 09-30-09
DWN BY: AAR
SUBMITTED BY: BAKER
CHK BY: KRC
FILE NO.: ANPSDA-305XXX

Michael Baker Jr., Inc
A unit of Michael Baker Corporation
Airside Business Park
100 Airside Drive
Moon Township PA 15108
www.mbakercorp.com

STANDARD DESIGN
BARRACK BUILDING, OPEN BAY (579 GSM)
WOOD FIRED HEAT OPTION

DOOR, WINDOW & FINISH TYPES & DETAILS

SHEET REFERENCE NUMBER:
A5

100% SUBMISSION

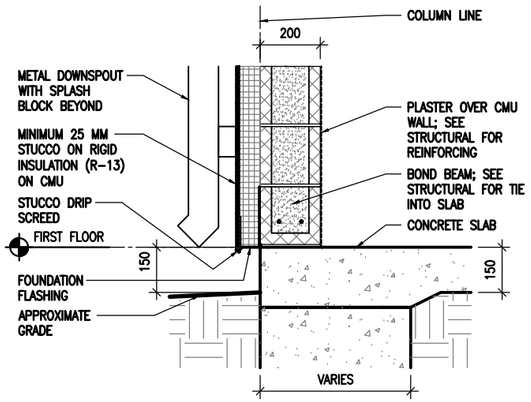

1 A4 A6 STUCCO BASE DETAIL

SCALE: 1:10

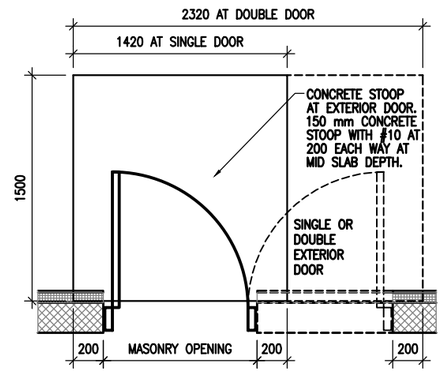

1 A1 A6 CONCRETE STOOP PLAN DETAIL

SCALE: 1:20

UNLESS OTHERWISE NOTED, LINEAR DIMENSIONS SHOWN ARE IN MILLIMETERS (MM)

0 1000 2000 4000

SCALE: 1: 50

US Army Corps of Engineers

Afghanistan Engineer District

SYMBOL	DESCRIPTION	DATE	APV

DESIGNED BY: DLB
DATE: 09-30-09
DWN BY: AAR
SUBMITTED BY: BAKER
CHK BY: KRC
FILE NO.: ANPSDA-506XXX

Michael Baker Jr., Inc
A unit of Michael Baker Corporation
Airside Business Park
100 Airside Drive
Moon Township PA 15108
www.mbakercorp.com

STANDARD DESIGN
BARRACK BUILDING, OPEN BAY (579 GSM)
WOOD FIRED HEAT OPTION

SECTION DETAILS

SHEET REFERENCE NUMBER:

A6

100% SUBMISSION

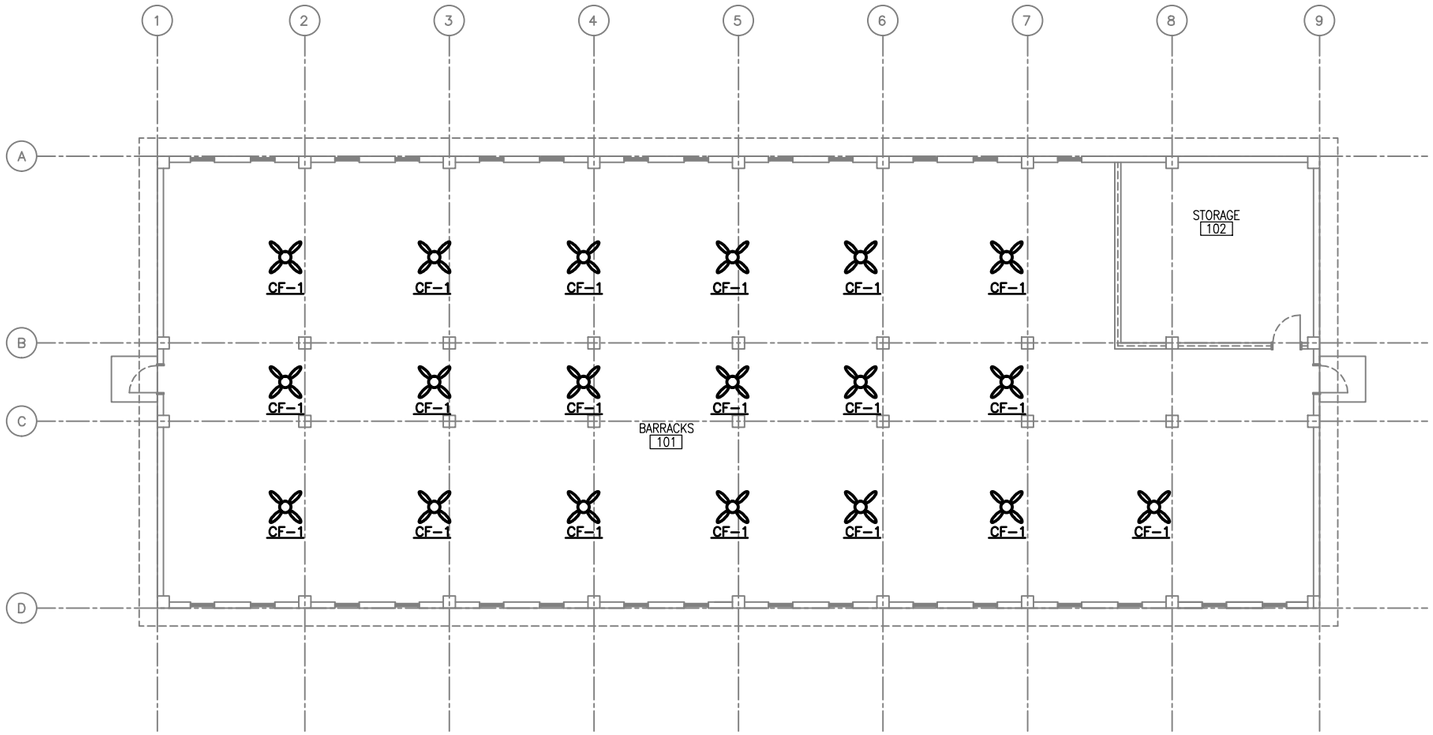

1 M1 M1 PLAN - HVAC

SCALE: 1:100

N

GENERAL NOTES:

1. DO NOT SCALE DRAWINGS – ALL DIMENSIONS AND CONDITIONS SHALL BE CHECKED AND VERIFIED BY THE CONTRACTOR AT THE SITE.
2. ALL WORK PERFORMED ON THIS BUILDING SHALL BE IN COMPLIANCE WITH ALL PERTINENT CODES, RULES, ORDINANCES AND REGULATIONS OF THE GOVERNING AUTHORITIES.
3. ALL WORK PERFORMED UNDER AND IN CONNECTION WITH THESE DRAWINGS AND SPECIFICATIONS SHALL BE IN STRICT COMPLIANCE WITH THE LATEST SAFETY AND HEALTH STANDARDS.

CEILING FAN

NO.	BLADE SIZE mm	BLADE SIZE IN	VOLTAGE	SWITCH
CF-1	1320	52	220/1/50	WALL

NOTES:
1. FINAL ELECTRICAL CONNECTIONS BY EC.

US Army Corps of Engineers
Afghanistan Engineer District

SYMBOL	DESCRIPTION	DATE	APP.

DESIGNED BY: RML
DATE: 09-30-09
DWN BY: JJN
SUBMITTED BY: BAKER
CHK BY: CJM
FILE NO.: ANPSDM-101XXX

Michael Baker Jr., Inc
A unit of Michael Baker Corporation
Airside Business Park
100 Airside Drive
Moon Township PA 15108
www.mbakercorp.com

STANDARD DESIGN
BARRACK BUILDING, OPEN BAY (579 GSM)
WOOD FIRED HEAT OPTION

PLAN - HVAC

SHEET REFERENCE NUMBER:
M1

100% SUBMISSION

POWER

- DISTRIBUTION PANELBOARD
- NEW PANELBOARD – SURFACE
- NEW PANELBOARD – RECESSED
- EXISTING PANELBOARD
- GENERATOR
- TVSS – TRANSIENT VOLTAGE SURGE SURPRESSOR
- TRANSFORMER (DRAWN TO SIZE)
- PS – POWER SUPPLY
- CP – CONTROL PANEL
- TC – TIME CLOCK
- TM – ASTRONOMICAL TIME CLOCK– "SEE SPEC."
- R – RELAY WITH RATING AND NUMBER OF POLES AS NOTED ON DRAWINGS– "SEE SPEC."
- J – JUNCTION BOX
- J – JUNCTION BOX – CEILING
- PB – PULL BOX
- BUS DUCT HORIZONTAL
- BUS DUCT VERTICAL
- EMERGENCY POWER OFF PUSH BUTTON
- NON–FUSIBLE SAFETY SWITCH
- FUSIBLE SAFETY SWITCH
- M – MOTOR
- $M – MOTOR STARTING SWITCH – 20A RATED
- $K – KEY SWITCH – 20A RATED
- FC – FAN COIL – FURNISHED BY MECHANICAL CONTRACTOR, ELECTRICAL CONTRACTOR SHALL INSTALL AND PROVIDE POWER CONNECTION
- UH – UNIT HEATER – FURNISHED BY MECHANICAL CONTRACTOR, ELECTRICAL CONTRACTOR SHALL INSTALL AND PROVIDE POWER CONNECTION
- D – JUNCTION BOX FOR CONNECTION TO GARBAGE DISPOSAL
- CF – LIGHT/HEATER/FAN – FURNISHED BY MECHANICAL CONTRACTOR, ELECTRICAL CONTRACTOR SHALL INSTALL AND PROVIDE POWER CONNECTION
- ELECTRIC WATER HEATER
- EPO – WEATHERPROOF / EXPLOSION PROOF EMERGENCY POWER OFF PUSH–BUTTON TO BE INTERCONNECTED WITH GENERATOR SHUT DOWN CONTROL
- CF – CEILING FAN – REFER TO SPECIFICATION SECTION 26 20 00

RECEPTACLES

- DUPLEX 20A BRITISH STANDARD UNSWITCHED SOCKETS
- GF – DUPLEX 20A BRITISH STANDARD UNSWITCHED SOCKETS – 10mA GROUND FAULT INTERRUPTER TYPE
- WP – DUPLEX 20A BRITISH STANDARD UNSWITCHED SOCKETS – 10mA GROUND FAULT INTERRUPTER TYPE WITH WEATHERPROOF COVER
- EXP – DUPLEX 20A BRITISH STANDARD UNSWITCHED SOCKETS – EXPLOSION PROOF
- * – INDICATES MOUNT DEVICE ABOVE COUNTER TOP

LIGHTNING PROTECTION

- AIR TERMINAL 20mm O.D. X 4m SOLID COPPER, NICKEL PLATED ON ADHESIVE BASE.
- EQ – EQUIPMENT AIR TERMINAL
- TEST WELL WITH GROUND ROD(S)
- GROUND ROD
- G – GROUND PLATE
- MAIN GROUND CONDUCTER CONCEALED WITHIN CONSTRUCTION
- MAIN GROUND CONDUCTOR EXPOSED ON EXPOSED ON BUILDING EXTERIOR SURFACE
- GROUND CONDUCTOR CAD WELDED TO GROUND CABLE OR EQUIPMENT
- GROUND CONDUCTOR CAD WELDED TO BUILDING STEEL COLUMN
- GROUND ROD TRIPOD, SPACED 10 FEET APART.
- LEVEL TO LEVEL CABLE

LIGHTING

- LIGHTING FIXTURE – SEE FIXTURE SCHEDULE FOR MORE INFORMATION
- LIGHTING FIXTURE – SEE FIXTURE SCHEDULE FOR MORE INFORMATION
- DOWNLIGHT
- LIGHTING FIXTURE ON NORMAL/EMERGENCY
- WALL MOUNTED LIGHT FIXTURE
- E – EXIT SIGN – DIRECTIONAL ARROWS AS INDICATED ON DRAWINGS
- B – BATTERY PACK WITH HEADS AS INDICATED ON DRAWINGS
- REMOTE HEAD FOR BATTERY PACK
- $ – SINGLE POLE SWITCH – 20A RATED
- $3 – 3–WAY SWITCH – 20A RATED
- $4 – 4–WAY SWITCH – 20A RATED
- PC – PHOTOCELL VOLTAGE TO MATCH CIRCUITRY
- LC – LIGHTING CONTACTOR
- POLE MOUNTED SITE LIGHTING FIXTURE– NUMBER OF FIXTURES PER POLE AS INDICATED ON DRAWINGS
- EXTERIOR DIRECTIONAL LIGHTING FIXTURE
- a – SMALL CASE LETTERS REPRESENTS LAMP(S) / SWITCHES. WHEN USED WITH AN OCCUPANCY SENSOR THIS INDICATES SENSOR WITH MANUAL OVERRIDE SWITCH

TELECOMMUNICATIONS

- TELEPHONE OUTLET(S) @ 18" AFF. U.N.O. WITH 3/4" RACEWAY TERMINATED ABOVE NEAREST ACCESSIBLE CEILING OR TO TELEPHONE TERMINAL BOARD IF NO ACCESSIBLE CEILING AVAILABLE. SEE TELE/DATA RISER DIAGRAM FOR OUTLET AND CABLE DESCRIPTION
- DATA OUTLET(S) @ 18" AFF. U.N.O. WITH 3/4" RACEWAY TERMINATED ABOVE NEAREST ACCESSIBLE CEILING OR TO DATA EQUIPMENT RACK IF NO ACCESSIBLE CEILING AVAILABLE. SEE TELE/DATA RISER DIAGRAM FOR OUTLET AND CABLE DESCRIPTION

TELECOMMUNICATIONS (CONTINUED)

- COMBINATION TELEPHONE/DATA OUTLET(S) @ 18" AFF. U.N.O. WITH 1" RACEWAY TERMINATED ABOVE NEAREST ACCESSIBLE CEILING OR TO TELE/DATA TERMINAL AREA IF NO ACCESSIBLE CEILING AVAILABLE. SEE TELE/DATA RISER DIAGRAM FOR OUTLET AND CABLE DESCRIPTION
- WALL MTD. TELEPHONE OUTLET WITH 3/4" RACEWAY TERMINATED ABOVE NEAREST ACCESSIBLE CEILING OR TO TELEPHONE TERMINAL BOARD IF NO ACCESSIBLE CEILING AVAILABLE. SEE TELE/DATA RISER DIAGRAM FOR OUTLET AND CABLE DESCRIPTION
- (x)T – INDICATES NUMBER OF TELEPHONE OUTLET(S) AND ASSOCIATED CABLING
- (x)D – INDICATES NUMBER OF DATA OUTLET(S) AND ASSOCIATED CABLING
- (x)TF – INDICATES NUMBER OF TELEPHONE OUTLETS AND ASSOCIATED CABLING WITH 1 OUTLET AND CABLE DEDICATED FOR FAX

SINGLE LINE SYMBOLS

- SWITCH
- BREAKER
- FUSE
- TRANSFORMER
- CAPACITOR
- GROUND
- CONTACT (NORMALLY OPEN)
- CONTACT (NORMALLY CLOSED)
- AUTOMATIC TRANSFER SWITCH
- MANUAL DOUBLE THROW SWITCH
- CURRENT TRANSFORMER
- INDICATES NEW ELECTRICAL EQUIPMENT
- C – INDICATES NEW CONTROL WIRING AND CONDUIT
- EQUIPMENT OUTLINE

MISCELLANEOUS

- BRANCH CIRCUIT WIRING CONCEALED ABOVE CEILINGS, SURFACE MOUNTED ON WALLS
- BRANCH CIRCUIT WIRING – #10 AWG
- BRANCH CIRCUIT WIRING – UNDER FLOOR
- HOME RUN BACK TO PANEL
- CONDUIT TURNED DOWN
- CONDUIT TURNED UP
- LV – LOW VOLTAGE WIRING AND CONDUIT
- CT–X – CABLE TRAY ("X" DENOTES WIDTH)
- INDICATES CONTINUATION OF LINE

FIRE ALARM

- FACP – FIRE ALARM CONTROL PANEL WITH BATTERY BACKUP
- F – FIRE ALARM PULL STATION

FIRE ALARM (CONTINUED)

- F – FIRE ALARM STROBE – WALL MOUNTED
- F – FIRE ALARM AUDIBLE/STROBE – WM
- F – FIRE ALARM HORN/STROBE – WM
- S – SMOKE DETECTOR
- H – HEAT DETECTOR CEILING MOUNTED
- D – DUCT DETECTOR – PROVIDED BY EC, INSTALLED BY MC AND CONNECTED BY EC

DENOTATIONS & ABBREVIATIONS

AFF	ABOVE FINISHED FLOOR
C	CEILING MOUNTED
E	EMERGENCY
EC	ELECTRICAL CONTRACTOR
EPO	EMERGENCY POWER OFF
EXP	EXPLOSION PROOF
F	FIRE ALARM
FF	FLUSH FLOOR MOUNTED
FL	FLUORESCENT
FO	FIBER OPTIC
FSS	FUSED SAFETY SWITCH
G	GROUND FAULT INTERRUPTER
GC	GENERAL CONTRACTOR
HOA	HAND–OFF AUTO
I	INFRARED
ICD	INCANDESCENT
IG	ISOLATED GROUND
K	KEY
LV	LOW VOLTAGE
M	MOTOR
MC	MECHANICAL CONTRACTOR
NE	NORMAL/EMERGENCY
NFSS	NON–FUSED SAFETY SWITCH
PA	PAGING SYSTEM
PLC	PLUMBING CONTRACTOR
REL	RELOCATE
RED	RELOCATED
SL	SINGLE LINE
SS	SURGE SUPPRESSION
T	TELEPHONE
TL	TWIST LOCK

DENOTATIONS & ABBREVIATIONS (CONT.)

TP	TAMPER PROOF
UE	UNDERGROUND ELECTRIC
UF	UNDERGROUND FIBER
UT	UNDERGROUND TELEPHONE
W	WALL MOUNTED
WG	WIRE GUARD
WP	WEATHERPROOF
WPG	WEATHERPROOF/GROUND FAULT INTERRUPTER
WT	WATER TIGHT

GENERAL PROJECT NOTES:

G1. UNLESS OTHERWISE NOTED, PROVIDE ALL EQUIPMENT SHOWN ON THE PLANS. THE ELECTRICAL CONTRACTOR SHALL COORDINATE ALL SYMBOLS SHOWN ON THE PLANS WITH THE SYMBOL LIST. IT SHALL BE THE RESPONSIBILITY OF THE CONTRACTOR TO VERIFY THE INTENT OF ANY SYMBOL THAT IS SHOWN ON THE PLANS AND NOT INDICATED ON THE SYMBOL LIST WITH THE ENGINEER PRIOR TO BID.

G2. COORDINATE THE FINAL LOCATIONS OF ALL LIGHT FIXTURES WITH THE ARCHITECT'S REFLECTED CEILING PLANS. REPORT ANY DISCREPANCIES TO THE ARCHITECT PRIOR TO INSTALLATION.

G3. THE CONTRACTOR SHALL VERIFY THE LOCATION OF ALL UNDERGROUND UTILITIES WITHIN THE CONSTRUCTION AREA THREE (3) WORKING DAYS NOTICE BEFORE COMMENCE DIGGING. NOTIFY THE LOCAL OR STATE AUTHORITY HAVING JURISDICTION AND WAIT THE REQUIRED TIME BEFORE COMMENCING TO DIG.

G4. THE CONTRACTOR SHALL COORDINATE CONDUIT RUNS, CABLE TRAY, LIGHTING FIXTURES AND OTHER EQUIPMENT LOCATIONS WITH THE OTHER TRADE CONTRACTORS TO AVOID CONFLICTS.

G5. WHERE VOLTAGES AND FREQUENCIES ON THE DRAWINGS AND IN THE SPECIFICATIONS DIFFER FROM THE LOCAL ONES, ALL WORK SHALL BE PERFORMED USING THE LOCAL VOLTAGES AND FREQUENCIES.

G6. THE MINIMUM WIRE SIZE ON THE PROJECT SHALL BE 4mm2. THE MINIMUM CONDUIT SIZE SHALL BE 20mm. THE MINIMUM BREAKER SIZE SHALL BE 20 AMPS.

G7. THE CONTRACTOR SHALL PUT A MAXIMUM OF 6 DUPLEX SOCKETS ON A 20A SINGLE POLE CIRCUIT.

G8. WHERE THE 1010 SCOPE REVIEW, 1015 TECHNICAL REVIEW, DRAWINGS, AND SPECIFICATIONS DIFFER FROM AMERICAN CODES OR STANDARDS THE 1010, 1015, DRAWINGS, AND SPECIFICATIONS SHALL RULE.

G9. WORK FOR THE AMMUNITION SUPPLY POINT SHALL BE DONE IN ACCORDANCE WITH DEPARTMENT OF DEFENSE STANDARD DOD 6055.9–STD.

G10. ALL CONDUIT AND DEVICES SHALL BE SURFACE MOUNTED UNLESS OTHERWISE INDICATED.

US Army Corps of Engineers
Afghanistan Engineer District

SYMBOL	DESCRIPTION	DATE	APP

DESIGNED BY: JRG	DATE: 09–30–09	SUBMITTED BY: BAKER	FILE NO.: ANPSDE–000XXX
DWN BY: JRG			
CHK BY: JRG			

Michael Baker Jr., Inc
A unit of Michael Baker Corporation
Airside Business Park
100 Airside Drive
Moon Township PA 15108
www.mbakercorp.com

STANDARD DESIGN
BARRACK BUILDING, OPEN BAY (579 GSM)
WOOD FIRED HEAT OPTION

ELECTRICAL SYMBOLS AND ABBREVIATIONS

SHEET REFERENCE NUMBER:
E0

100% SUBMISSION

GENERAL NOTES:

1. REFER TO DRAWING #E0 FOR THE ELECTRICAL SYMBOLS LIST.
2. EXIT SIGNS SHALL BE WIRED AHEAD OF ANY LOCAL SWITCHING ON CIRCUITS.
3. REFER TO DRAWING #E4 FOR THE LIGHTING FIXTURE SCHEDULE.
4. REFER TO DRAWING #E3 FOR THE POWER RISER.
5. REFER TO DRAWING #E5 FOR PANEL SCHEDULES.
6. LIGHT FIXTURES INDICATED AS EMERGENCY SHALL BE PROVIDED WITH A BATTERY BACKUP BALLAST.

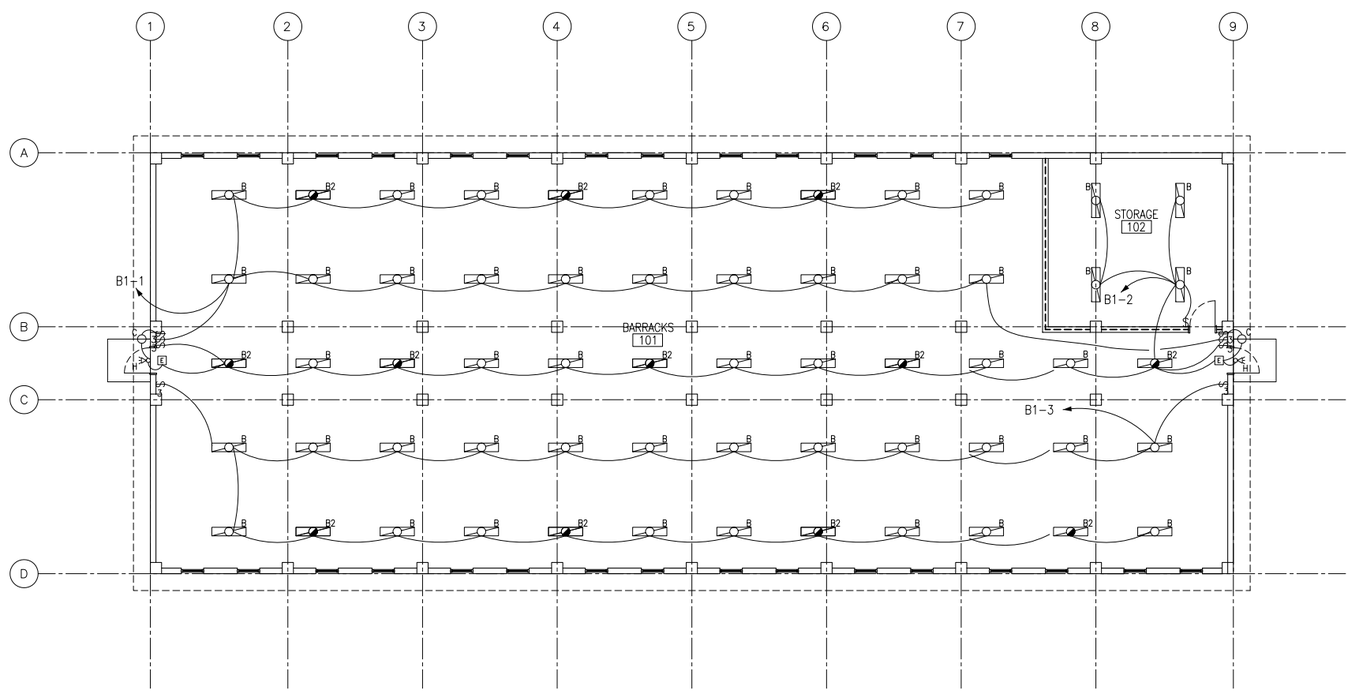

1 / E1 E1 LIGHTING PLAN

SCALE: 1:100

N

UNLESS OTHERWISE NOTED, LINEAR DIMENSIONS SHOWN ARE IN MILLIMETERS (MM)

1 0 1 2 3 4 5 6 7 8 9

1:100

US Army Corps of Engineers

Afghanistan Engineer District

SYMBOL	DESCRIPTION	DATE	APR

DESIGNED BY: JRG	DATE: 09-30-09
DWN BY: JRG	SUBMITTED BY: BAKER
CHK BY: JRG	FILE NO.: ANPSDE-101XXX

Michael Baker Jr., Inc.
A unit of Michael Baker Corporation
Airside Business Park
100 Airside Drive
Moon Township, PA 15108
www.mbakercorp.com

STANDARD DESIGN
BARRACK BUILDING OPERATY (579 GSM)
WOOD FIRED HEAT OPTION

LIGHTING PLAN

SHEET REFERENCE NUMBER:

E1

100% SUBMISSION

GENERAL NOTES:

1. REFER TO DRAWING #E0 FOR THE ELECTRICAL SYMBOLS LIST.
2. REFER TO DRAWING #E3 FOR THE POWER RISER.
3. REFER TO DRAWING #E5 FOR PANEL SCHEDULES.
4. COORDINATE EXACT MOUNTING LOCATION OF DISCONNECTING MEANS FOR MECHANICAL AND PLUMBING EQUIPMENT IN THE FIELD.
5. FUSIBLE SAFETY SWITCHES THAT ARE NOT OTHERWISE IDENTIFIED SHALL BE 380V, 1P, 30A FUSED SAFETY SWITCHES WITH 20A FUSES.

NUMBERED NOTE:

1. SURFACE MOUNTED ON COLUMN (TYPICAL OF 4).
2. PANEL B1.
3. TELECOMMUNICATIONS CONDUIT STUB-UP

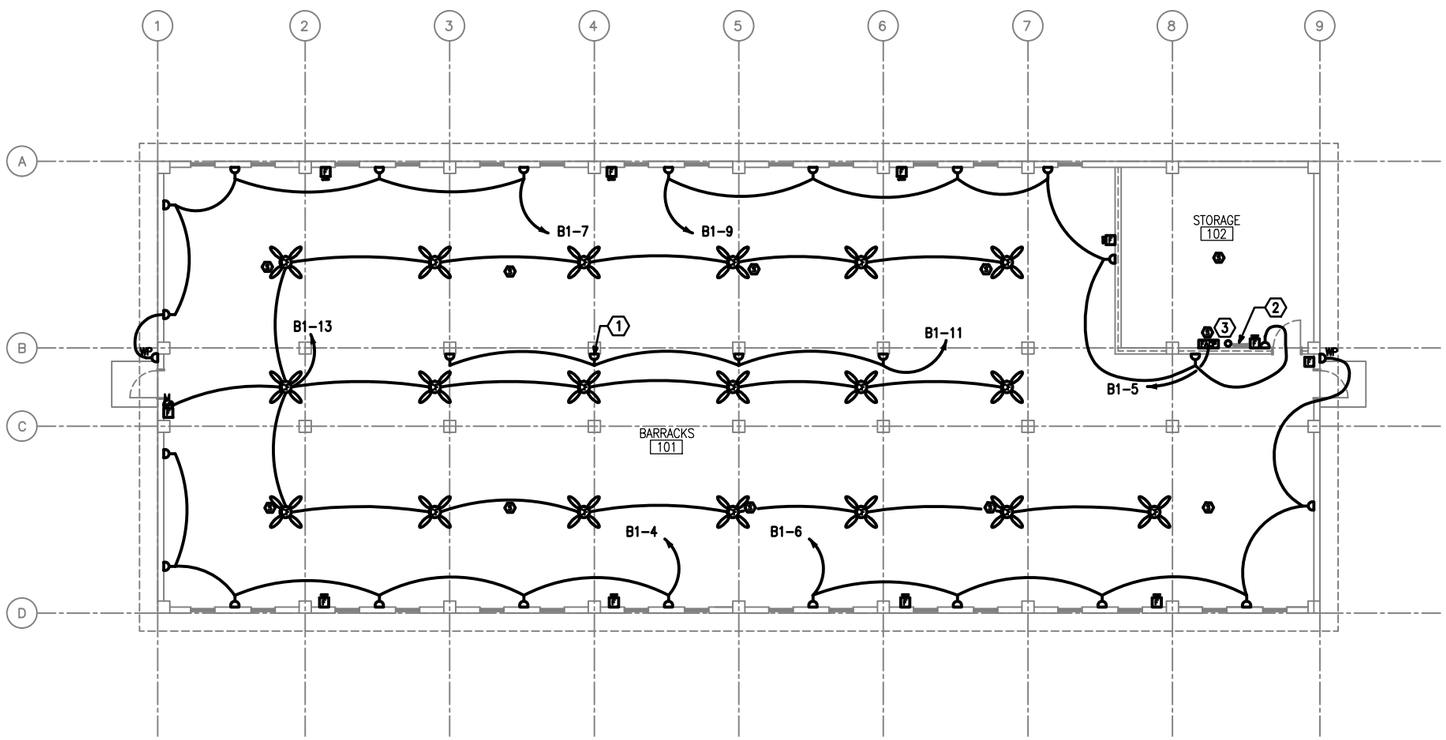

1 E2 E2 POWER AND SYSTEMS PLAN

SCALE: 1:100

N

UNLESS OTHERWISE NOTED, LINEAR DIMENSIONS SHOWN ARE IN MILLIMETERS (MM)

1 0 1 2 3 4 5 6 7 8 9

1:100

US Army Corps of Engineers

Afghanistan Engineer District

SYMBOL	DESCRIPTION	DATE	APV

DESIGNED BY: JRG	DATE: 09-30-09
DWN BY: JRG	SUBMITTED BY: BAKER
CHK BY: JRG	FILE NO.: ANPSDE-102XXX

Michael Baker Jr., Inc
A unit of Michael Baker Corporation
Airside Business Park
100 Airside Drive
Moon Township PA 15108
www.mbakercorp.com

STANDARD DESIGN
BARRACK BUILDING, OPEN BAY (579 GSM)
WOOD FIRED HEAT OPTION

POWER AND SYSTEMS PLAN

SHEET REFERENCE NUMBER:

E2

100% SUBMISSION

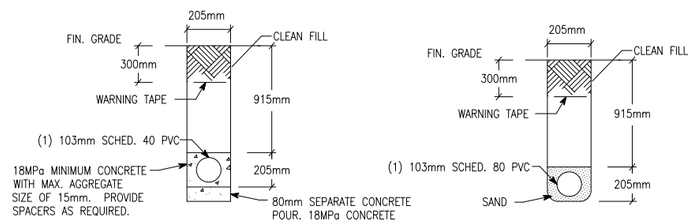

NOTE: PVC CONDUIT SHALL BE DIRECT BURIED SCHEDULE 80 FOR NO TRAFFIC AREAS AND CONCRETE-ENCASED SCHEDULE 40 FOR UNDER ROADWAYS OR TRAFFIC AREAS.

1 E3 E3 TYPICAL DUCT BANK DETAILS FOR CONDUIT IN SAND OR CONCRETE

SCALE: N.T.S.

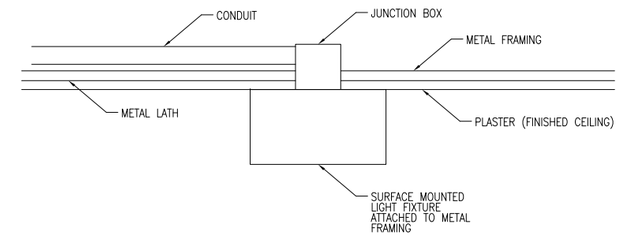

2 E3 E3 TYPICAL DETAIL FOR SURFACE MOUNTED LIGHT FIXTURES

SCALE: N.T.S.

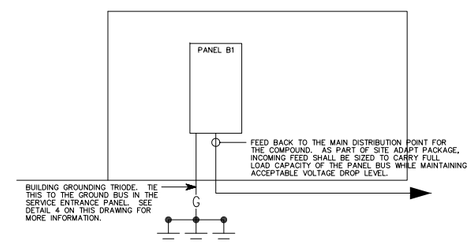

3 E3 E3 B.2 RISER DIAGRAM

SCALE: N.T.S.

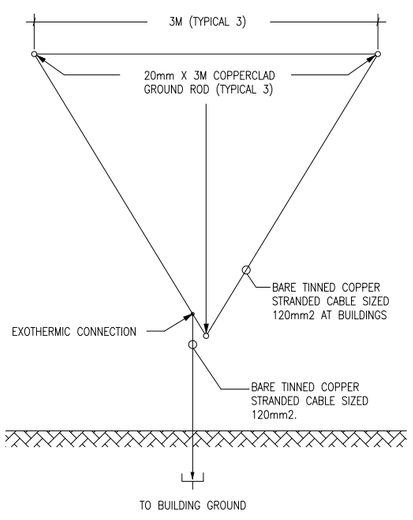

4 E3 E3 GROUND TRIPOD SYSTEM DETAIL - PLAN

SCALE: N.T.S.

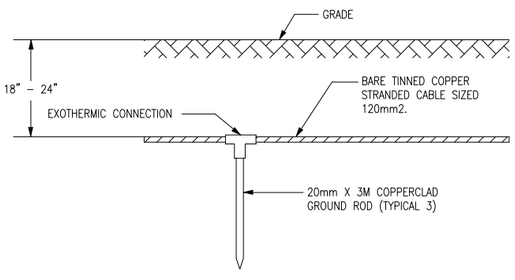

5 E3 E3 GROUND TRIPOD SYSTEM DETAIL - ELEVATION

SCALE: N.T.S.

US Army Corps of Engineers

Afghanistan Engineer District

SYMBOL	DESCRIPTION	DATE	APR

DESIGNED BY: JRG
DATE: 09-30-09
DWN BY: JRG
SUBMITTED BY: BAKER
CHK BY: JRG
FILE NO.: ANPSDE-503XXX

Michael Baker Jr., Inc
A unit of Michael Baker Corporation
Airside Business Park
100 Airside Drive
Moon Township, PA 15108
www.mbakercorp.com

STANDARD DESIGN
BARRACK BUILDING - OPEN BAY (579 GSM)
WOOD FIRED HEAT OPTION

DETAILS

SHEET REFERENCE NUMBER:

E3

100% SUBMISSION

LIGHTING FIXTURE SCHEDULE

FIXTURE MARK	STYLE NUMBER AND TYPE	NUMBER AND TYPE OF LAMPS	VOLTAGE	MOUNTING	NOTES
B	WET LOCATION WRAP AROUND SURFACE/PENDANT MOUNTED FLUORESCENT FIXTURE WITH PRISMATIC ACRYLIC LENS AND ELECTRONIC BALLAST	(2) 32W 3500K	220V – 1ø 50HZ	PENDANT MOUNTED FROM SLOPED CEILINGS	FURNISHED WITH ELECTRONIC BALLAST, VIRGIN ACRYLIC WRAP AROUND LENS.
B2	SAME AS FIXTURE 'B' WITH EMERGENCY BALLAST	(2) 32W 3500K	220V – 1ø 50HZ	PENDANT MOUNTED FROM SLOPED CEILINGS	FURNISHED WITH ELECTRONIC BALLAST, VIRGIN ACRYLIC WRAP AROUND LENS. EMERGENCY BALLAST WITH SELF TEST SWITCH.
C	INCANDESCENT ONE PIECE W/ APPROVED LENS STABILIZED HIGH IMPACT POLY CARBONATE.	(1) A19 – 100W INCANDESCENT	220V – 1ø 50HZ	WALL MOUNTED ABOVE EXTERIOR DOORS	
H	REMOTE HEAD EXTERIOR LIGHT HEAD POWERED FROM EXIT SIGN BATTERY– 12V DOUBLE HEAD CORROSION RESISTANT WITH UL34 WEATHERPROOF CONSTRUCTION	(2) 12W/12V HALOGEN LAMP	12V – 1ø 50HZ	EXTERIOR WALL MOUNTED AT TOP OF DOOR HEIGHT	
E	UNIVERSAL MOUNT ENGINEER GRADE THERMOPLASTIC HOUSING EXIT SIGN WITH LED LAMPS, RED LETTERS 6" IN HEIGHT WITH ARROWS AS INDICATED, WITH 12V CADMIUM BATTERY WITH REMOTE HEAD CAPABILITY	LED LAMPS	220V – 1ø 50HZ	UNIVERSAL MOUNTING	

FIXTURE MARK 'B'

WET LOCATION WRAP AROUND SURFACE/PENDANT MOUNTED FLUORESCENT FIXTURE WITH PRISMATIC ACRYLIC LENS AND ELECTRONIC BALLAST.

FIXTURE MARK 'B2':
SAME FIXTURE AS 'B' WITH EMERGENCY BALLAST.

FIXTURE MARK 'C'

INCANDESCENT ONE PIECE WITH APPROVED LENS, STABILIZED HIGH IMPACT POLY CARBONATE

FIXTURE MARK 'H'

REMOTE HEAD EXTERIOR LIGHT HEAD POWERED FROM EXIT SIGN BATTERY– 12V DOUBLE HEAD CORROSION RESISTANT WITH UL34 WEATHERPROOF CONSTRUCTION

FIXTURE MARK 'E'

UNIVERSAL MOUNT ENGINEER GRADE THERMOPLASTIC HOUSING EXIT SIGN WITH LED LAMPS, RED LETTERS 6" IN HEIGHT WITH ARROWS AS INDICATED, WITH 12V CADMIUM BATTERY

US Army Corps of Engineers
Afghanistan Engineer District

SYMBOL	DESCRIPTION	DATE	APR

DESIGNED BY: JRG
DATE: 09-30-09
DWN BY: JRG
SUBMITTED BY: BAKER
CHK BY: JRG
FILE NO.: ANPSDE-604XXX

Michael Baker Jr., Inc
A unit of Michael Baker Corporation
Airside Business Park
100 Airside Drive
Moon Township, PA 15108
www.mbakercorp.com

AFGHAN NATIONAL POLICE
STANDARD DESIGN
BARRACK BUILDING, OPEN BAY (579 GSM)
WOOD FIRED HEAT OPTION

LIGHT FIXTURE SCHEDULE

SHEET REFERENCE NUMBER:
E4

100% SUBMISSION

PANELBOARD B1 SURFACE MOUNTED _____ ASYM. A.I.C. MIN.

150 AMP. MAIN LUGS (OR) _____ AMP. MAIN BREAKER W/ 150 AMP. TRIP

CIRCUIT BREAKER TYPE 380/220 VOLTS 3 PHASE 4 WIRE 50 HZ 150 AMP. BUS

CKT. NO.	TRIP AMPS	NO. POLES	WIRE MM 2	GND MM2	CONDUIT MM	LOAD SERVED	LOAD-V.A. AØ	LOAD-V.A. BØ	LOAD-V.A. CØ	LOAD-V.A. AØ	LOAD-V.A. BØ	LOAD-V.A. CØ	LOAD SERVED	CONDUIT MM	GND MM2	WIRE MM2	NO. POLES	TRIP AMPS	CKT. NO.
1	20	1	4.0	4.0	20	LIGHTING – 101	1.3			1.3			LIGHTING – 101, 102	20	4.0	4.0	1	20	2
3	20	1	10.0	6.0	20	LIGHTING – 101		1.6			1.2		RECEPTACLES – 101	20	4.0	4.0	1	20	4
5	20	1	4.0	4.0	20	F.A.C.P.			0.5			1.2	RECEPTACLES – 101	20	4.0	4.0	1	20	6
7	20	1	4.0	4.0	20	RECEPTACLES – 101	1.2						SPARE				1	20	8
9	20	1	4.0	4.0	20	RECEPTACLES – 101, 102		1.4					SPARE				1	20	10
11	20	1	4.0	4.0	20	RECEPTACLES – COLUMNS			0.8				SPARE				1	20	12
13	20	1	4.0	4.0	20	CEILING FANS	1.0						SPARE				1	20	14
15	20	1				SPARE							SPARE				1	20	16
17	20	1				SPARE							SPARE				1	20	18
19	20	1				SPARE							SPARE				1	20	20
21	20	1				SPARE							SPARE				1	20	22
23	20	1				SPARE							SPARE				1	20	24
25	20	1				SPARE							SPARE				1	20	26
27	20	1				SPARE							SPARE				1	20	28
29	20	1				SPARE							SPARE				1	20	30
31	20	1				SPARE							SPARE				1	20	32
33	20	1				SPARE							SPARE				1	20	34
35	20	1				SPARE							SPARE				1	20	36
37	20	1				SPARE							SPARE				1	20	38
39	20	1				SPARE							SPARE				1	20	40
41	20	1				SPARE							SPARE				1	20	42
							3.5	3.0	1.3	1.3	1.2	1.2							

TOTAL CONN. LOAD PER PHASE (KVA): AØ 4.8 BØ 4.2 CØ 2.5

TOTAL CONN. LOAD 11.5 KVA. 70 % DEMAND = ESTIMATED DEMAND LOAD 8.5 SUPPLIED FROM PANEL _____

* MAIN BREAKER SHALL BE 3P EARTH GROUND TYPE.
** PANEL SHALL BE PROVIDE WITH FEED THRU LUGS.

US Army Corps of Engineers

Afghanistan Engineer District

SYMBOL	DESCRIPTION	DATE	APR

DESIGNED BY: JRG
DWN BY: JRG
CHK BY: JRG
DATE: 09-30-09
SUBMITTED BY: BAKER
FILE NO.: ANPSDE-605XXX

Michael Baker Jr., Inc
A unit of Michael Baker Corporation
Airside Business Park
100 Airside Drive
Moon Township, PA 15108
www.mbakercorp.com

AFGHAN NATIONAL POLICE
STANDARD DESIGN
BARRACK BUILDING, OPEN BAY (579 GSM)
WOOD FIRED HEAT OPTION

PANEL SCHEDULES AND RISER DIAGRAM

SHEET REFERENCE NUMBER:
E5

100% SUBMISSION

16

STANDARD BUILDING DESIGNS

WOMENS BARRAKS

(B25 - 294 GSM)

with DESIGN/BUILD REQUIREMENT FOR PROPANE STOVE (SHT. A101)

SHEET INDEX

G-001	COVER SHEET
S-001	GENERAL NOTES & DESIGN CRITERIA
S-101	FOUNDATION/SLAB & ROOF FRAMING PLANS
S-401	BUILDING SECTIONS
S-501	FOUNDATION SECTIONS
S-502	FOUNDATION AND FRAMING SECTIONS
S-503	BEAM AND COLUMN DETAILS
S-504	BEAM AND COLUMN DETAILS
S-601	SCHEDULES
S-701	TYPICAL DETAILS
S-702	TYPICAL DETAILS
A-101	FLOOR PLAN
A-102	ROOF PLAN AND DETAILS
A-201	ELEVATIONS
A-301	BUILDING SECTION/WALL SECTIONS
A-401	DOOR,/WINDOW DETAILS
A-501	FIXTURE DETAILS
A-601	MISCELLANEOUS DETAILS
P-101	PLUMBING PLAN
P-102	PLUMBING PLAN
P-501	TYPICAL PLUMBING SECTIONS & DETAILS AND NOTES & SCHEDULES
M-101	PLAN-HVAC
E-001	ELECTRICAL SYMBOLS AND ABBREVIATIONS
E-101	LIGHTING PLAN
E-102	POWER AND SYSTEMS PLANS
E-103	POWER PLAN
E-104	FIRE ALARM PLAN
E-505	ELECTRICAL DETAILS
E-606	PANEL SCHEDULE AND RISER DIAGRAM

US Army Corps of Engineers®
AFGHANISTAN ENGINEER DISTRICT

MARK	DESCRIPTION	DATE	APPR.	MARK	DESCRIPTION	DATE	APPR.

U.S. ARMY CORPS OF ENGINEERS
AFGHANISTAN DISTRICT
APO AE 96338

DESIGNED BY: | DATE:
DWN BY: | CKD BY: | SOLICITATION NO.:
SUBMITTED BY: | CONTRACT NO.:
PLOT SCALE: 1:1 | PLOT DATE: | FILE NUMBER:
SIZE: ANSI D | FILE NAME: RSL_CAD01.DWG

SITE ADAPT DESIGN
B25 - WOMENS BARRAKS

COVER SHEET

SHEET IDENTIFICATION
G-001
SHEET 1 OF 28

STRUCTURAL ABBREVIATIONS:

ACI	AMERICAN CONCRETE INSTITUTE
ADD'L	ADDITIONAL
AISC	AMERICAN INSTITUTE OF STEEL CONSTRUCTION
AISI	AMERICAN IRON AND STEEL INSTITUTE
ASTM	AMERICAN SOCIETY FOR TESTING AND MATERIALS
ARCH	ARCHITECTURAL
B	BOTTOM
BLDG	BUILDING
BOTT	BOTTOM
℄	CENTER LINE
CFMRF	COLD FORM METAL ROOF FRAME
CFMF	COLD FORM METAL FRAME
CFS	COLD FORMED STEEL
CIP	CAST-IN-PLACE
CIPL	CAST-IN-PLACE LINTEL
CJ	CONTROL JOINT
CLR	CLEAR
CMU	CONCRETE MASONRY UNIT
COEFF	COEFFICIENT
COL	COLUMN
CONC	CONCRETE
CONT	CONTINUOUS
COORD	COORDINATE
CRSI	CONCRETE REINFORCING STEEL INSTITUTE
CSJ	CONSTRUCTION JOINT
DIA	DIAMETER
DIAG	DIAGONAL
DIM	DIMENSION
DWG	DRAWING
DWL	DOWEL
EA	EACH
EF	EACH FACE
ELEC	ELECTRICAL
ELEV	ELEVATION
EMBED	EMBEDMENT
EQUIV	EQUIVALENT
ETC	ET CETERA
EW	EACH WAY
EXP	EXPANSION
EXT	EXTERIOR
FTG	FOOTING
GA	GAUGE
GB	GRADE BEAM
HORIZ	HORIZONTAL
h	HOUR
HRS	HOURS
IBC	INTERNATIONAL BUILDING CODE
ID	INSIDE DIAMETER
INFO	INFORMATION
INT	INTERIOR
kg	KILOGRAM
km	KILOMETER
kN	KILONEWTON
kPa	KILOPASCAL
L#	ANGLE (# INDICATES SIZE)
LONG	LONGITUDINAL
LLV	LONG LEG VERTICAL
m	METER
MAX	MAXIMUM
MECH	MECHANICAL
MFG	MANUFACTURER
MID	MIDDLE
MIN	MINIMUM
MISC	MISCELLANEOUS
mm	MILLIMETER
MPa	MEGAPASCAL
MTL	METAL
MWFRS	MAIN WIND FORCE RESISTING SYSTEM
N	NEWTON
N	NORTH
N/A	NOT APPLICABLE
#	NUMBER SYMBOL FOR REBAR SIZE
NTS	NOT TO SCALE
OC	ON CENTER
OD	OUTSIDE DIAMETER
OPNG	OPENING
ℙ or PL	PLATE
PRE-ENG	PRE-ENGINEERED
RB	ROOF BEAM
REINF	REINFORCED
REQ'D	REQUIRED
SIM	SIMILAR
SPECS	SPECIFICATIONS
STD	STANDARD
STRUCT	STRUCTURAL
SW	SHEAR WALL
T	TOP
T/	TOP OF
T/ELEV	TOP ELEVATION
T/SLAB	TOP OF SLAB
T&B	TOP AND BOTTOM
THK	THICK
TYP	TYPICAL
UFC	UNIFIED FACILITIES CRITERIA
UON	UNLESS OTHERWISE NOTED
VERT	VERTICAL
W	WIDTH
W/	WITH

1.0 GENERAL NOTES:

1.1 THIS PROJECT HAS BEEN DESIGNED FOR THE WEIGHTS AND MATERIALS INDICATED ON THE SHEETS AND FOR THE LIVE LOADS INDICATED IN THE DESIGN DATA. IT IS THE CONTRACTOR'S RESPONSIBILITY TO DETERMINE ALLOWABLE CONSTRUCTION LOADS AND TO PROVIDE PROPER DESIGN AND CONSTRUCTION OF FALSEWORK, FORMWORK, STAGING, BRACING, SHEETING AND SHORING, ETC.

1.1 COORDINATE THESE SHEETS WITH THE ARCHITECTURAL, MECHANICAL, ELECTRICAL, PLUMBING, AND CIVIL SHEETS. ALL DIMENSIONS SHOWN ON THE SHEETS ARE MILLIMETERS UNLESS NOTED OTHERWISE.

1.2 THE CONTRACTOR SHALL VERIFY AND COORDINATE ALL FLOOR AND ROOF OPENING SIZES AND LOCATIONS, EQUIPMENT PAD SIZES AND LOCATIONS, ANCHOR BOLT LAYOUTS, ETC WITH EQUIPMENT SELECTED. THE CONTRACTOR SHALL MAKE ANY REQUIRED MODIFICATIONS AT NO ADDITIONAL COST.

1.3 THE CONTRACTOR SHALL REFER TO THE ARCHITECTURAL, MECHANICAL, ELECTRICAL AND PLUMBING SHEETS FOR SLEEVES, CURBS, INSERTS OR OPENINGS, ETC. NOT HEREIN INDICATED.

1.4 WORK NOT INCLUDED ON THE SHEETS BUT IMPLIED TO BE SIMILAR TO THAT SHOWN AT CORRESPONDING PLACES ELSEWHERE ON THE SHEETS SHALL BE REPEATED.

1.5 IN CASE OF CONFLICT BETWEEN THE NOTES, DETAILS AND SPECIFICATIONS THE MOST RIGID REQUIREMENTS SHALL GOVERN.

1.6 SEE ARCHITECTURAL SHEETS FOR LOCATIONS OF MASONRY AND NON-LOAD BEARING PARTITIONS. PROVIDE COMPRESSIBLE FIRESAFING AT TOP OF WALL AS REQUIRED BY ARCHITECTURAL SHEETS.

1.7 COORDINATE FINISHED FLOOR DATUM ELEVATION 0.0m WITH THE CIVIL SHEETS.

2.0 FOUNDATION NOTES

2.1 THE GEOTECHNICAL ANALYSIS FOR THIS PROJECT IS THE RESPONSIBILITY OF THE CONTRACTOR AWARDED THE WORK. AN ASSUMED ALLOWABLE SOIL BEARING VALUE OF 72 kPa HAS BEEN USED IN THE STRUCTURAL ANALYSIS OF THE BUILDING HEREIN AND SHALL BE CONFIRMED AND VERIFIED AS PART OF THE GEOTECHNICAL INVESTIGATION. VALUES WHICH DO NOT MEET THE REQUIREMENTS INDICATED ON THE BASIS OF DESIGN SHEET SHALL BE IMMEDIATELY BROUGHT TO THE ATTENTION OF THE CONTRACTING OFFICER FOR CONSIDERATION AND DETERMINATION ON THE NEXT APPROPRIATE COURSE OF ACTION.

2.2 SEE THE SPECIFICATION FOR ADDITIONAL REQUIREMENTS TO THOSE OUTLINED IN THE GEOTECHNICAL INVESTIGATION FOR EXCAVATION AND PREPARATION OF THE FOUNDATION AND THE SLAB ON GRADE SUBGRADE INCLUDING COMPACTION PROCEDURES.

2.3 EXCAVATIONS FOR FOOTINGS SHALL HAVE THE SIDES AND BOTTOMS TEMPORARILY LINED WITH 0.25mm POLYETHYLENE IF PLACEMENT OF CONCRETE DOES NOT OCCUR WITHIN 24 HRS OF THE EXCAVATION OF THE FOOTING.

2.4 FOUNDATION CONDITIONS NOTED DURING CONSTRUCTION WHICH DIFFER FROM THOSE DESCRIBED IN THE GEOTECHNICAL REPORT SHALL BE REPORTED TO THE GENERAL CONTRACTOR BEFORE FURTHER CONSTRUCTION IS ATTEMPTED. SEE PROJECT SPECIFICATIONS.

2.5 NO FOOTINGS OR SLABS SHALL BE POURED INTO OR AGAINST SUBGRADE CONTAINING FREE WATER, FROST, ICE OR LOOSE MATERIAL. FROST DEPTH ASSUMED TO BE 800mm.

2.6 ALL SLAB-ON-GRADE, TRENCH BOTTOMS AND OTHER ON-GRADE INTERIOR HORIZONTAL SURFACES SHALL BE PLACED OVER A 0.25mm POLYETHYLENE VAPOR RETARDER OVER A 100mm #57 STONE WATER CAPILLARY BARRIER PLACED ON SUBGRADE PROPERLY PREPARED IN ACCORDANCE WITH THE CONTRACT SPECIFICATIONS. (UON)

2.7 PRIOR TO START OF FOUNDATION OR SLAB-ON-GRADE CONSTRUCTION, EXISTING SUBGRADES SHALL BE COMPACTED TO MINIMUM OF 95% MAXIMUM DRY DENSITY OBTAINED THRU ASTM D 1557 MODIFIED PROCTOR TESTING.

2.8 SEE PLUMBING, ELECTRICAL & CIVIL SHEETS FOR REQUIRED UNDERSLAB UTILITIES.

2.9 SEE ARCHITECTURAL SHEETS FOR ALL WATERPROOFING DETAILS AND MATERIALS.

2.10 IF UNDERMINING OF FOOTINGS OCCURS, FILL VOIDS WITH 18 MPa CONCRETE. DO NOT ATTEMPT TO REPLACE AND RE-COMPACT SOIL.

3.0 CONCRETE

3.1 CONCRETE SHALL HAVE THE UNIT WEIGHT OF 2400 kg/m^3 AND A MINIMUM COMPRESSIVE STRENGTH (f'c) OF 28 MPa AT 28 DAYS. ALL CONCRETE SHALL HAVE A MAXIMUM WATER-CEMENT RATIO OF 0.45. SEE SPECIFICATIONS FOR ADDITIONAL INFORMATION. ENTRAIN AIR TO PRODUCE TOTAL AIR CONTENT ACCORDING TO THE SPECIFICATIONS FOR CONCRETE EXPOSED TO FREEZING TEMPERATURES (EXTERIOR FOOTINGS, SLAB TURNDOWNS, EXTERIOR SLABS AND SLABS-ON-GRADE, EXTERIOR RETAINING WALLS, AND EXTERIOR GRADE BEAMS.)

3.2 NO CALCIUM CHLORIDE SHALL BE USED IN ANY CONCRETE.

3.3 MIXING, TRANSPORTING AND PLACING OF CONCRETE SHALL CONFORM TO ACI 301M-05.

3.4 ALL CONCRETE WORK SHALL CONFORM TO THE REQUIREMENTS OF THE AMERICAN CONCRETE INSTITUTE (ACI) 318M MANUAL (metric), "BUILDING CODE REQUIREMENTS FOR REINFORCED CONCRETE", AND REQUIREMENTS OUTLINED IN THE CONTRACT SPECIFICATIONS. WHEN THERE IS A CONFLICT BETWEEN ACI AND THE SPECIFICATIONS, THE MORE STRINGENT SHALL GOVERN.

3.5 CHAMFER ALL EXPOSED EXTERNAL CORNERS OF CONCRETE WITH 20mm x45 DEGREE CHAMFER UON.

3.6 CONCRETE REINFORCEMENT BARS SHALL CONFORM TO ASTM A615M-96a, GRADE 420 MPa, REINFORCING BARS SHALL NOT BE TACK WELDED, WELDED, HEATED OR CUT, UNLESS INDICATED ON THE CONTRACT DOCUMENTS. ALL LAP SPLICES SHALL BE CLASS "B" UON.

3.7 HORIZONTAL FOOTING AND HORIZONTAL WALL REINFORCEMENT SHALL BE CONTINUOUS AND SHALL HAVE 90 DEGREE BENDS AND EXTENSIONS, OR CORNER BARS OF EQUIVALENT SIZE LAPPED WITH A CLASS B TENSION SPLICE AT CORNERS AND INTERSECTIONS. TOP BAR CRITERIA SHALL APPLY IF 300mm OR MORE OF FRESH CONCRETE IS PLACED BELOW BAR.

3.8 SLABS-ON-GRADE SHALL HAVE CONSTRUCTION JOINTS OR CRACK CONTROL JOINTS AS SHOWN ON THE DRAWINGS. CONSTRUCTION JOINTS CAN BE USED AT CONTROL JOINT LOCATIONS AT CONTRACTORS OPTION. SEE SLAB PLANS & JOINT DETAILS FOR ADDITIONAL INFORMATION. FOR AREAS NOT SHOWN ON DWGS, THE MAXIMUM SPACING OF CONSTRUCTION/ CRACK CONTROL JOINTS SHALL BE 4800mm

3.9 ALL CONCRETE REINFORCEMENT SHALL BE DETAILED, FABRICATED, LABELED, SUPPORTED, AND SPACED IN FORMS AND SECURED IN PLACE IN ACCORDANCE WITH THE PROCEDURES AND REQUIREMENTS OUTLINED IN THE LATEST EDITION OF THE "BUILDING CODE REQUIREMENTS FOR REINFORCED CONCRETE", ACI 318M, AND THE "MANUAL OF STANDARD PRACTICE FOR DETAILING REINFORCED CONCRETE STRUCTURES", ACI 315M, LATEST EDITION. BASED ON IN COUNTRY REINFORCEMENT AVAILABILITY, IT IS THE CONTRACTOR'S OPTION TO ROUND DESIGNATED ODD NUMBERED REINFORCEMENT SIZES UP (1) ONE BAR SIZE.

3.10 ALL DOWELS SHALL MATCH SIZE AND NUMBER OF MAIN REINFORCING, UNLESS NOTED OTHERWISE ON THE SHEETS.

3.11 ADDITIONAL BARS SHALL BE PROVIDED AROUND ALL FLOOR AND WALL OPENINGS AS SHOWN ON THE SHEETS.

3.12 SEE ARCHITECTURAL SHEETS FOR TYPE AND LOCATION OF ALL FLOOR FINISHES.

3.13 THE CONTRACTOR SHALL COORDINATE ADDITIONAL WALL/SLAB OPENINGS NOT SHOWN ON STRUCTURAL SHEETS. SEE MECHANICAL, ELECTRICAL, PLUMBING AND CIVIL SHEETS.

3.14 UNLESS NOTED OTHERWISE, ALL CURBS SHALL BE REINFORCED WITH AT LEAST (1)-#13 CONTINUOUS AND #13 AT 300mm O.C. DOWELS TO STRUCTURE BELOW.

3.15 THE CONTRACTOR SHALL VERIFY ALL OPENINGS, PAD SIZES, AND ANCHOR BOLTS WITH EQUIPMENT SELECTED.

3.16 FOR ALL WALLS & PIERS, PROVIDE DOWELS INTO FOOTING AT EACH VERT REINF BAR, UON DOWEL SIZE SHALL BE SAME AS VERT REINF.

3.17 PROVIDE CONCRETE POUR STOPS OR FORMED AS REQUIRED FOR INSTALLATION OF ALL CONCRETE WORK.

3.18 PROVIDE ADDITIONAL (2)-#13 x 600mm REINFORCING BARS IN SLAB-ON GRADE AT ALL RE-ENTRANT CORNERS. PLACE BARS AT MID-DEPTH OF SLAB WITH A CLEARANCE OF 50mm FROM CORNER UON.

3.19 COLD-WEATHER PLACEMENT: COMPLY WITH ACI 306.1 AND AS FOLLOWS. PROTECT CONCRETE WORK FROM PHYSICAL DAMAGE OR REDUCED STRENGTH THAT COULD BE CAUSED BY FROST, FREEZING ACTIONS, OR LOW TEMPERATURES. SUBMIT A COLD WEATHER CONCRETING PLAN FOR APPROVAL.

3.20 PROVIDE BONDING COMPOUND PER ASTM C 1059-99: SPECIFICATION FOR LATEX AGENTS FOR BONDING FRESH CONCRETE (GROUT) TO HARDENED CONCRETE.

3.21 THE FORMED SURFACES FOR REINFORCED CONCRETE SHALL ACHIEVE A "CLASS A" FINISH WHEN RECEIVING PAINT OR A "CLASS B" FINISH WHEN RECEIVING PLASTER OR TILE AS PER SPECIFICATION SECTION 03 31 00 CAST-IN-PLACE STRUCTURAL CONCRETE.

3.22 AT INTERSECTING GRADE BEAMS AND SHEAR WALLS, PROVIDE CORNER BARS AT INTERSECTIONS WITH SAME QUANTITY, SIZE AND SPACING AS HORIZONTAL BARS WITH LEG LENGTH = 50db.

4.0 CONCRETE MASONRY

4.1 MASONRY CONSTRUCTION SHALL CONFORM TO SPECIFICATION FOR MASONRY STRUCTURES (ACI 530.1) UON.

4.2 STRENGTH OF MASONRY MATERIALS SHALL BE AS FOLLOWS:

a. CONCRETE MASONRY UNITS SHALL BE NORMAL WEIGHT, GRADE N, TYPE 1, CONFORMING TO ASTM C-90 AND HAVE A MINIMUM COMPRESSIVE STRENGTH OF 10.4 MPa ON THE NET AREA.

b. MORTAR SHALL CONFORM TO ASTM C-270 TYPE S.

c. GROUT FOR MASONRY SHALL BE NORMAL WEIGHT AND HAVE A MINIMUM COMPRESSIVE STRENGTH OF 14 MPa AT 28 DAYS. GROUT SHALL CONFORM TO ASTM C476M. GROUT LIFTS SHALL NOT EXCEED 1,400mm.

d. REINFORCED MASONRY SHALL HAVE A STRENGTH F'm = 10 MPa. (F'm IS THE COMPRESSIVE STRENGTH OF THE MASONRY AT 28 DAYS AS DETERMINED BY PRISM TESTS).

4.3 ALL VERTICAL REINFORCEMENT FOR CONCRETE MASONRY SHALL BE ASTM A615M, GRADE 420 MPa. ALL SPLICES SHALL BE LAPPED 48 BAR DIAMETERS MINIMUM.

4.4 BOND BEAMS SHALL BE SPACED AT 1200mm OC MAXIMUM VERTICALLY. BOND BEAM REINFORCING SHALL BE CONTINUOUS AND PROVIDED AT WALL INTERSECTIONS AND WALL CORNERS (REFERENCE CONCRETE MASONRY NOTE 4.11). ALL BOND BEAM REINFORCING SHALL BE CONTINUOUS AND HAVE STANDARD ACI HOOKS AT EACH END. PROVIDE STANDARD BAR SPLICES AS SPECIFIED. AS AN ALTERNATE TO CMU BOND BEAMS, IT IS THE CONTRACTOR'S OPTION TO PROVIDE 200mm x 200mm CONTINUOUS CAST-IN-PLACE CONCRETE BOND BEAMS WITH (2)-#16 IN LIEU OF CMU BOND BEAMS INDICATED ON THE DRAWINGS.

4.5 SEE TYPICAL DETAILS FOR MINIMUM REINFORCEMENT REQUIREMENTS FOR CMU WALLS. PROVIDE STANDARD BAR SPLICES AS SPECIFIED. ALL VERTICAL REINFORCEMENT EXTENDS FULL HEIGHT OF WALL.

4.6 CMU CELLS THAT REQUIRE VERTICAL REINFORCING BARS AS INDICATED ON THE CONTRACT DRAWINGS AND/OR SPECS SHALL HAVE REINF BARS PLACED IN CENTERS OF CMU CELLS AND CONTINUOUSLY GROUTED UON.

4.7 ALL CMU CELLS, OPEN CAVITIES, AND AIR SPACES OF ALL EXTERIOR WALLS SHALL BE GROUTED TO STOP FRAGMENTS FROM MORTAR BLAST.

4.8 CONTRACTOR SHALL COORDINATE LOCATION OF ALL OPENINGS SEE ARCH, MECH, ELEC, AND PLUMBING SHEETS FOR SIZE AND LOCATION OF OPENINGS.

4.9 MASONRY WALLS SHALL NOT BE BACK FILLED PRIOR TO THE MORTAR AND GROUT ATTAINING THEIR RESPECTIVE MAXIMUM DESIGN STRENGTHS PER SPECIFICATIONS.

4.10 PROVIDE GALVANIZED MORTAR/GROUT SCREEN W/ 3mm MESH WHERE CELLS BELOW ARE NOT GROUTED.

4.11 AT INTERSECTING BOND BEAMS, PROVIDE CORNER BAR FOR EACH HORIZONTAL BAR IN BOND BEAMS AT INTERSECTING WALLS. USE SAME SIZE AND SPACING AS HORIZONTAL BARS WITH LEG LENGTH = 50db.

4.12 THE ALTERNATE TOP OF CMU WALL BRACING DETAIL(S) SHOWN ON S-701 CAN BE UTILIZED AT THE CONTRACTOR'S OPTION IN PLACE OF THE "SLEEVED DOWEL" WALL CONNECTIONS DEPICTED ON S-400 AND S-500 SERIES DRAWINGS. IN ADDITION, ALTERNATE DETAIL(S) SHOW CAST-IN-PLACE WALL BOND BEAMS THAT CAN BE UTILIZED AT THE CONTRACTOR'S OPTION IN PLACE OF THE STANDARD CMU BOND BEAMS CONSTRUCTED OF CMU BLOCKS.

5.0 COLD-FORMED METAL FRAMING

5.1 ALL COLD-FORMED METAL FRAMING MEMBERS SHALL CONFORM TO ASTM A1003M, STRUCTURAL GRADE ST340 (MPa), WITH A GALVANIZED COATING OF Z275 OR BETTER IN ACCORDANCE WITH ASTM A653M.

5.2 ALL COLD-FORMED METAL FRAMING MEMBERS SHALL HAVE THE FOLLOWING MINIMUM PROPERTIES:

a. MINIMUM METAL THICKNESS:
TRACK = 1.37mm;
STUD/OTHER = 1.09mm

b. MINIMUM FLANGE WIDTH:
TRACK = 38mm;
STUD/OTHER = 35mm

c. MINIMUM MEMBER DEPTH:
ALL SECTIONS = 152.2mm

d. PURLIN (HAT CHANNEL)
DEPTHxWIDTH(FLAT TOP)xTHICK = 25mmx42mmx1.59mm

5.3 ALL CONNECTIONS SHALL BE MADE WITH CORROSION RESISTANT (ASTM A153M), SELF-DRILLING, SELF-TAPPING STEEL DRILL SCREWS IN ACCORDANCE WITH ASTM C1513. SCREWS SHALL HAVE A LOW PROFILE HEAD BENEATH ROOF DECK, AND STANDARD HEAD ALL OTHER LOCATIONS.

5.4 FABRICATE COLD FORMED METAL FRAMING AND ACCESSORIES PLUMB, SQUARE AND TRUE TO LINE, WITH CONNECTIONS SECURELY FASTENED ACCORDING TO AISI STANDARD FOR COLD FORMED STEEL FRAMING.

5.5 CUT FRAMING MEMBERS BY SAWING OR SHEATHING, DO NOT TORCH CUT.

5.6 INSTALL FRAMING MEMBERS IN ONE-PIECE LENGTHS UNLESS SPLICE CONNECTIONS ARE INDICATED FOR TRACK OR TENSION MEMBERS

5.7 INSTALL TEMPORARY BRACING AND SUPPORTS TO SECURE FRAMING DURING CONSTRUCTION. MAINTAIN BRACING AND SUPPORTS IN PLACE UNTIL THE STRUCTURE HAS BEEN COMPLETED WITH ALL CONNECTIONS AND PERMANENT BRACING SECURED.

6.0 STRUCTURAL DESIGN CRITERIA

6.1 ALL DESIGNS SHALL CONFORM TO THE PROVISIONS OF THE IBC 2006 AND UFC AS APPLICABLE.

6.2 DESIGN LOADS

6.2.1 DEAD LOADS (PER IBC 2006 & UFC 3-310-01)

MECH/ELEC/PLUMBING	0.20 kPa
MISCELLANEOUS	0.15 kPa
COLD-FORMED FRAMING	0.20 kPa
INSULATION	0.10 kPa
METAL ROOF PANEL	0.14 kPa
	0.79 kPa

6.2.2 LIVE LOADS (PER IBC 2006 & UFC 3-310-01)

ROOF	1.00 kPa
SLAB ON GRADE	4.80 kPa

6.2.3 SNOW LOADS (PER IBC 2006 & UFC 3-310-01)

GROUND SNOW LOAD (Pg)	1.2 kPa
SLOPED ROOF SNOW LOAD (Ps)	0.84 kPa
SNOW IMPORTANCE FACTOR (I)	1.0
SNOW EXPOSURE FACTOR (Ce)	1.0
THERMAL FACTOR (Ct)	1.0

6.2.4 WIND LOADS (PER IBC 2006)

BASIC WIND SPEED	137 km/h
WIND IMPORTANCE FACTOR	1.0
WIND EXPOSURE CATEGORY	D
DIRECTIONALITY COEFFICIENT (Kd)	0.85
TOPOGRAPHIC FACTOR (Kzt)	1.0
WIND BASE SHEAR: E-W	16.0 kN
WIND BASE SHEAR: N-S	74.0 kN

6.2.5 SEISMIC LOADS (PER IBC 2006 & UFC 3-310-04)

OCCUPANCY USE CATEGORY II
SEISMIC IMPORTANCE FACTOR (Ie) 1.0
SEISMIC SITE CLASS D
S_s = 1.50 (REDUCED FROM DESIGN STANDARD OF 2.40 PER ASCE 7-05,12.81.3. FOR A BUILDING WITHOUT IRREGULARITIES. REDUCTION APPLIES ONLY FOR Cs DETERMINATION.)
S_1 = 1.20
S_{DS} = 1.00
S_{D1} = 1.20
SEISMIC DESIGN CATEGORY E
SEISMIC RESISTING SYSTEM:
-SPECIAL REINFORCED CONCRETE SHEAR WALL (TYPE B.5 PER ASCE TABLE 12.2-1)
RESPONSE MODIFICATION FACTOR (R) 6
SEISMIC ANALYTICAL PROCEDURE = EQUIV LATERAL FORCE
SEISMIC BASE SHEAR: 595 kN

US Army Corps of Engineers
AFGHANISTAN ENGINEER DISTRICT

MARK	DESCRIPTION	DATE	APPR.	MARK	DESCRIPTION	DATE	APPR.

U.S. ARMY CORPS OF ENGINEERS
AFGHANISTAN DISTRICT
APO AE 96338

DESIGNED BY: | DATE:
DWN BY: | CKD BY: | SOLICITATION NO.:
SUBMITTED BY: | CONTRACT NO.:
PLOT SCALE: | PLOT DATE: | FILE NUMBER:
SIZE: ANSI D | FILE NAME: B25_S-001.DWG

SITE ADAPT DESIGN
B25 - WOMENS BARRAKS

GENERAL NOTES
AND DESIGN CRITERIA

SHEET IDENTIFICATION
S-001
SHEET 2 OF 28

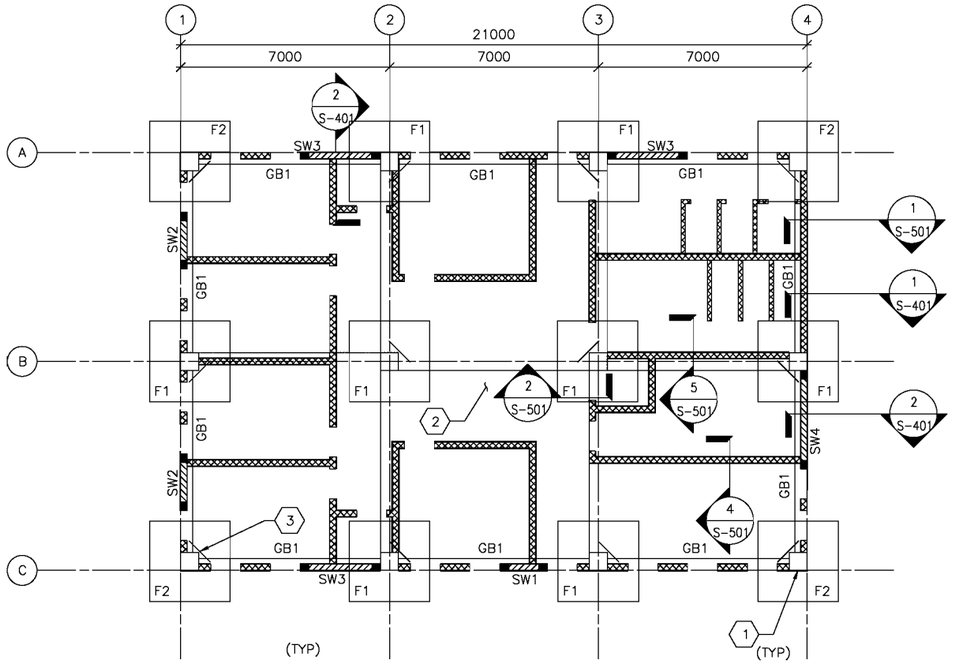

FOUNDATION/SLAB PLAN

1 / S-101 SCALE: 1:100

FOUNDATION/SLAB PLAN NOTES:

1. REFER TO SHEET S-001 FOR STRUCTURAL NOTES AND DESIGN CRITERIA.
2. FINISH FIRST FLOOR ELEVATION SHALL BE (DATUM 0.00) ALL PLUS OR MINUS DIMENSIONS INDICATED ON PLAN OR REFERRED TO IN NOTES RELATE TO FINISH FIRST FLOOR ELEVATION.
3. SLAB-ON-GRADE IS 150 WITH #12 @ 300 OC EW LOCATED 40 FROM T/SLAB OUN.
4. TOP OF EXTERIOR FOOTINGS SHALL BE -950 UNLESS OTHERWISE INDICATED.
5. COLUMN FOOTINGS INDICATED BY F# ON PLAN. REFER TO COLUMN FOOTING SCHEDULE ON SHEET S-601.
6. REFER TO COLUMN SCHEDULE ON SHEET S-601.
7. GRADE BEAM INDICATED BY GB# ON PLAN, REFER TO BEAM SCHEDULE ON SHEET S-601.
8. SHEARWALL INDICATED BY SW# ON PLAN, REFER TO SHEARWALL SCHEDULE ON SHEET S-601.
9. SEE TYP EXTERIOR & INTERIOR CMU WALL REINF DETAILS ON SHEET S-701.
10. SEE MECHANICAL AND ELECTRICAL SHEETS FOR CONCRETE PAD LOCATIONS, SIZES, AND THICKNESS NOT SHOWN. SEE SHEET S-701 FOR DETAILS.
11. THICKENED SLAB UNDER CMU PERIMETER/PARTITION WALLS NOT SHOWN FOR CLARITY.

FOUNDATION/SLAB PLAN KEY NOTES: (X)

1. REINF CONC COLUMN
2. REINF CONC SLAB-ON-GRADE
3. (2)-#13 @ RE-ENTRANT CORNERS - SEE S-701 FOR INFORMATION

FOUNDATION/SLAB PLAN LEGEND:

- REINF CONC SHEAR WALL
- REINF CMU WALL
- CONTROL JOINT

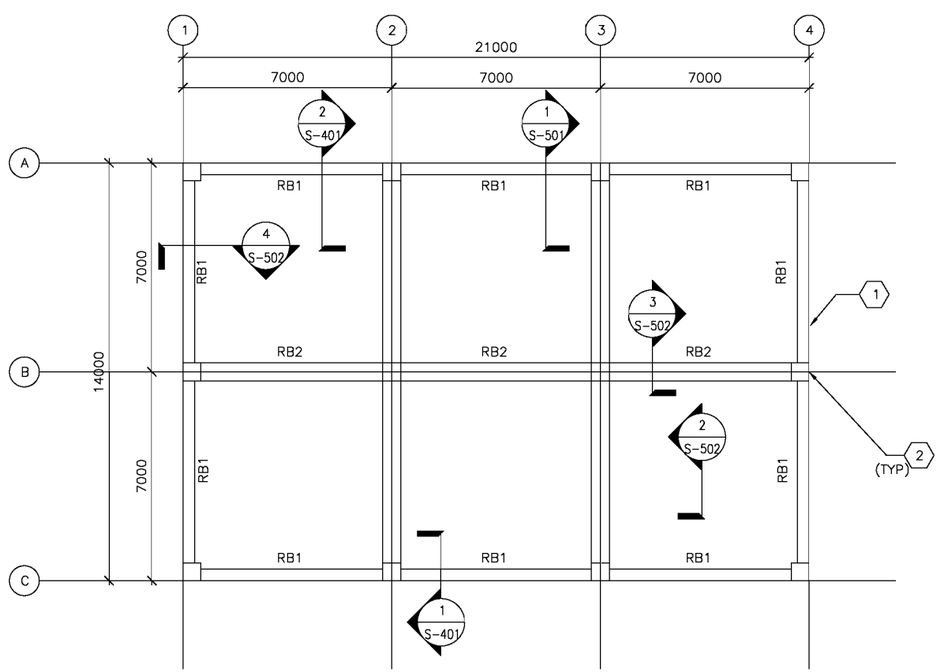

ROOF FRAMING PLAN

1 / S-101 SCALE: 1:100

ROOF FRAMING PLAN NOTES:

1. REFER TO SHEETS S-001 FOR STRUCTURAL NOTES AND DESIGN CRITERIA.
2. TOP OF SLAB ELEVATION = 3600 UNLESS NOTED OTHERWISE.
3. ROOF SLAB IS 250 WITH #16@300 OC EW T&B.
4. ROOF BEAM INDICATED BY RB# ON PLAN. REFER TO BEAM SCHEDULE ON SHEET S-601
5. COORDINATE WITH ARCHITECTURAL SHEETS FOR COLD-FORMED STEEL OVERBUILD FRAMING ABOVE ROOF SLAB.
6. COLD-FORMED METAL OVERBUILD ROOF FRAMING NOT SHOWN FOR CLARITY. SEE OVERBUILD ROOF FRAMING DETAILS AND SECTIONS ON SHEET S-702.
7. CMU PARTITION WALLS (BELOW ROOF SLAB) NOT SHOWN FOR CLARITY.
8. OVERHANG AREAS OF ROOF SLAB CONTAIN ROOF VENT PENETRATIONS. REFERENCE ARCHITECTURAL DRAWINGS FOR INFORMATION.

ROOF FRAMING PLAN KEY NOTES: (X)

1. CONC ROOF SLAB (BELOW ROOF OVERBUILD)
2. REINF CONC COLUMN (BELOW CONC ROOF SLAB)

UNLESS OTHERWISE NOTED, LINEAR DIMENSIONS SHOWN ON DRAWINGS ARE IN MILLIMETERS (mm)

5000 2000 1000 0 5000 10000

SCALE: 1 : 100

US Army Corps of Engineers
AFGHANISTAN ENGINEER DISTRICT

MARK	DESCRIPTION	DATE	APPR.	MARK	DESCRIPTION	DATE	APPR.

DESIGNED BY: | DATE:
DWN BY: | CKD BY: | SOLICITATION NO.:
SUBMITTED BY: | CONTRACT NO.:
PLOT SCALE: 1:100 | PLOT DATE: | FILE NUMBER:
SIZE: ANSI D | FILE NAME: B25_S-101.DWG

U.S. ARMY CORPS OF ENGINEERS
AFGHANISTAN DISTRICT
APO AE 96338

SITE ADAPT DESIGN
B25 - WOMENS BARRAKS
FOUNDATION/SLAB & ROOF FRAMING PLANS

SHEET IDENTIFICATION
S-101
SHEET 3 OF 28

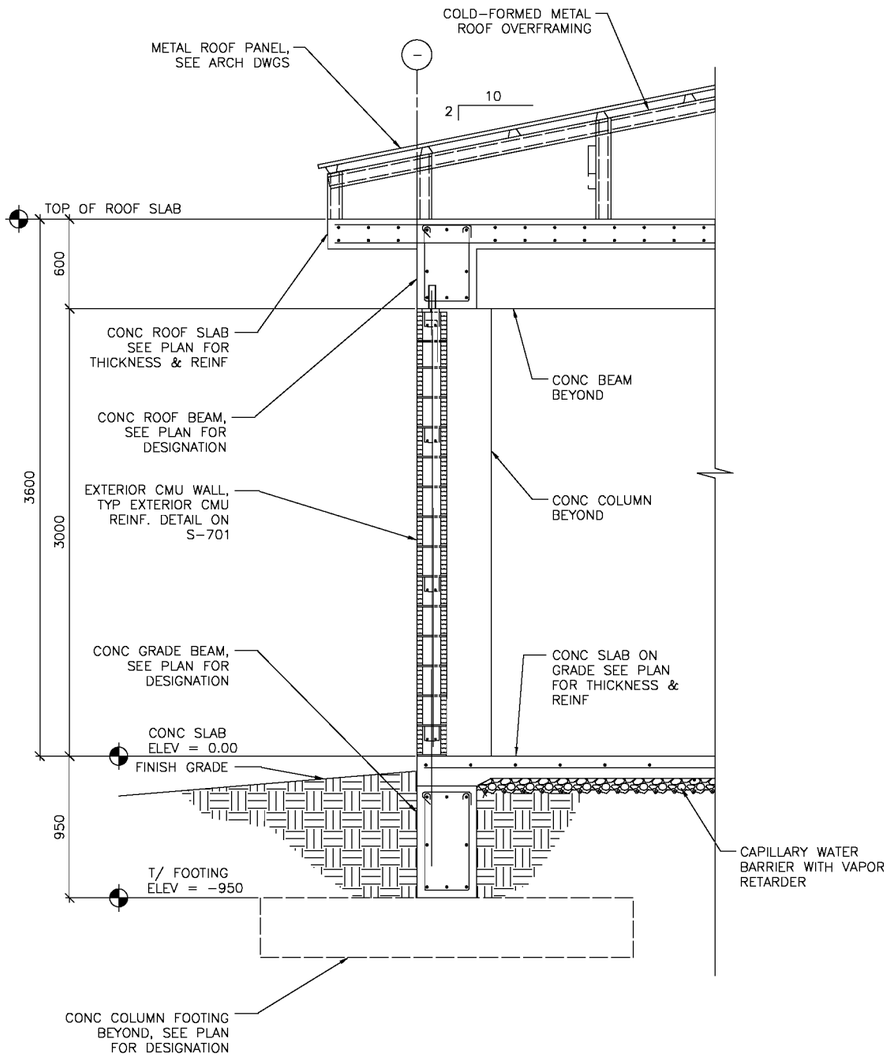

1 S-101 **TYPICAL WALL SECTION AT EXTERIOR MASONRY WALL**

SCALE: 1:20

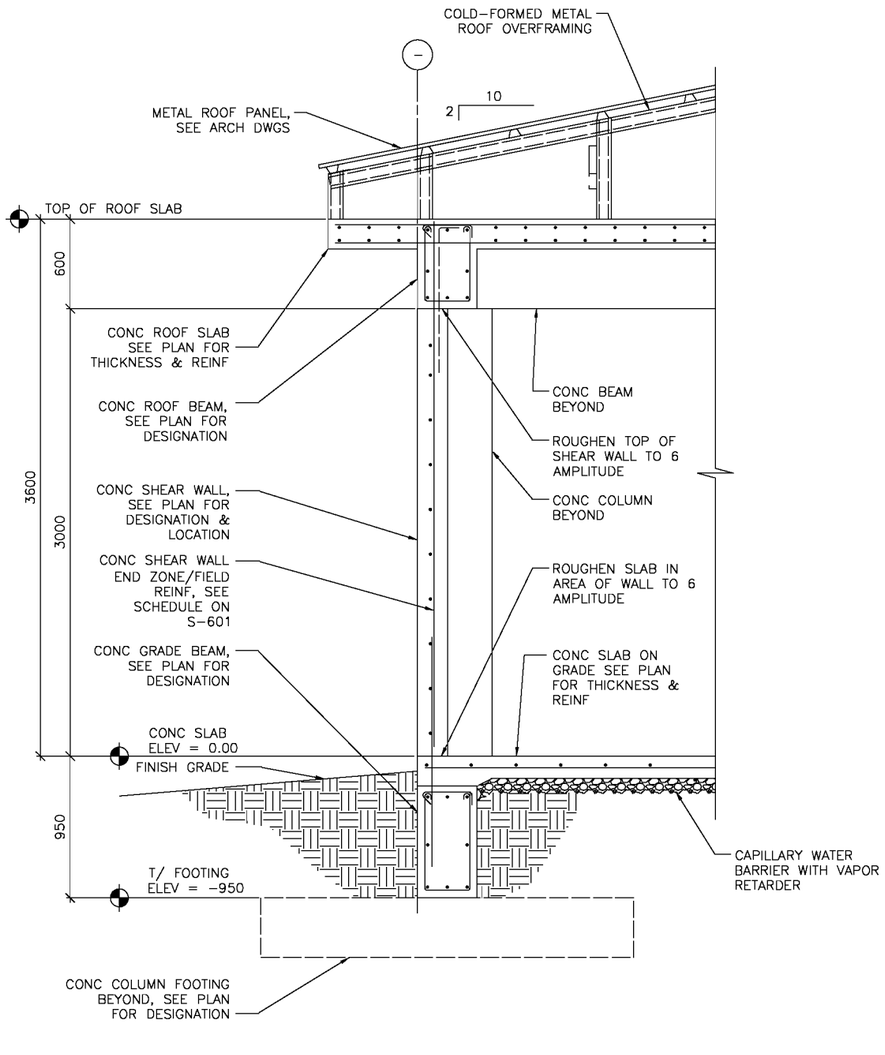

2 S-101 **TYPICAL WALL SECTION AT CONCRETE SHEAR WALL**

SCALE: 1:20

0 400 800
SCALE: 1:20

UNLESS OTHERWISE NOTED, LINEAR DIMENSIONS SHOWN ON DRAWINGS ARE IN MILLIMETERS (mm)

US Army Corps of Engineers
AFGHANISTAN ENGINEER DISTRICT

MARK	DESCRIPTION	DATE	APPR.	MARK	DESCRIPTION	DATE	APPR.

DESIGNED BY: DWN BY: CKD BY: SUBMITTED BY: DATE: SOLICITATION NO.: CONTRACT NO.: FILE NUMBER: PLOT SCALE: PLOT DATE: SIZE: ANSI D FILE NAME: B25_S-401.DWG

U.S. ARMY CORPS OF ENGINEERS
AFGHANISTAN DISTRICT
APO AE 96338

SITE ADAPT DESIGN
B25 - WOMENS BARRAKS
BUILDING SECTIONS

SHEET IDENTIFICATION
S-401
SHEET 4 OF 29

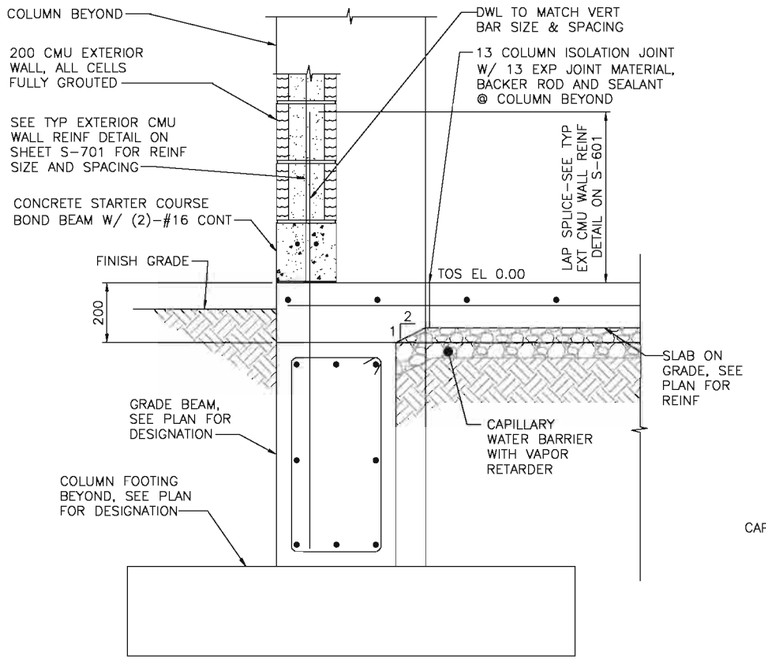

NOTE:
1. SECTION IS SIMILAR FOR INTERIOR CMU PARTITIONS OVER GRADE BEAMS SHOWING THICKENED 200 CONC SLAB AREA.

SECTION 1/S-101
SCALE: 1:10

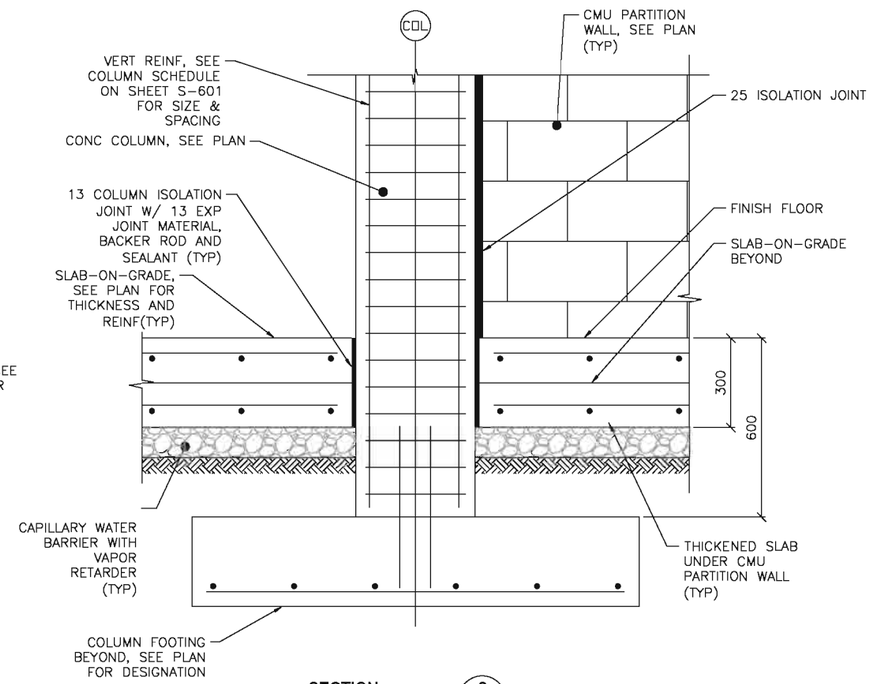

SECTION 2/S-101
SCALE: 1:10

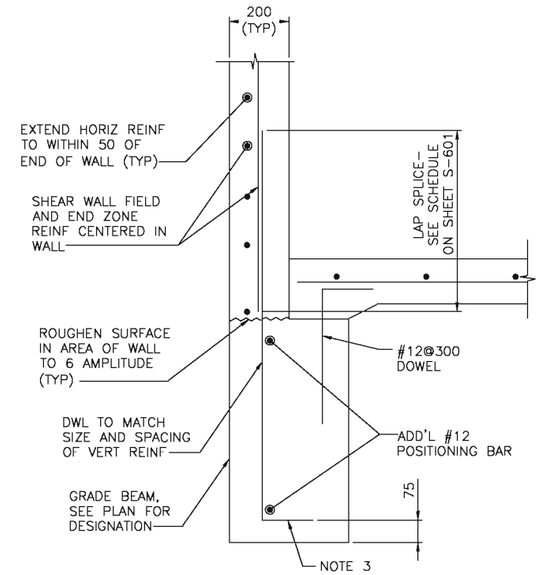

NOTE:
1. SECTION DEPICTS SHEAR WALL TERMINATION ONLY. GRADE BEAM REINFORCING NOT SHOWN FOR CLARITY.
2. SEE SHEET S-601 AND SHEET S-702 FOR SCHEDULED FIELD AND END ZONE REINF.
3. PROVIDE STANDARD HOOK WHERE REQUIRED TO DEVELOP DOWEL.

SECTION 3/S-101
SCALE: 1:10

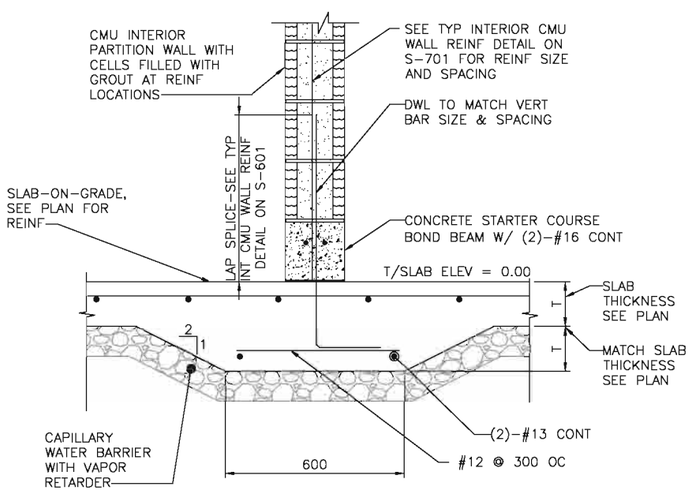

SECTION 4/S-101
SCALE: 1:10

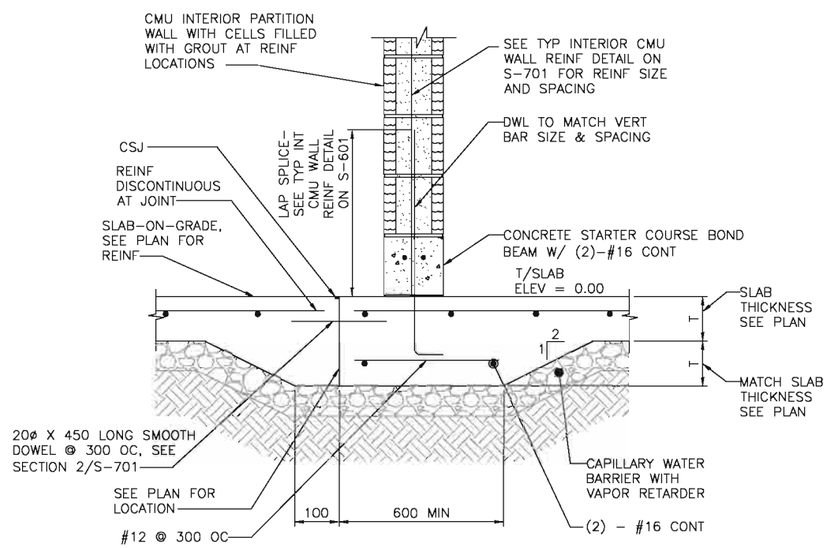

NOTE:
1. DETAIL IS APPLICABLE AT CONTROL JOINTS RUNNING PARALLEL TO CMU WALLS AND WITHIN 300 OF FACE OF WALL.

SECTION 5/S-101
SCALE: 1:10

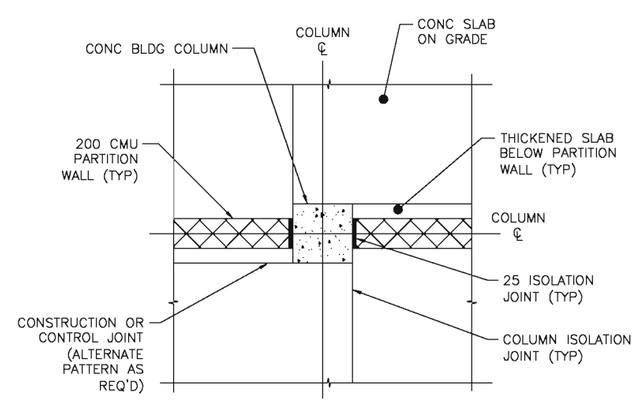

SECTION A/S-101
SCALE: 1:10

0 200 400
SCALE: 1:10

UNLESS OTHERWISE NOTED, LINEAR DIMENSIONS SHOWN ON DRAWINGS ARE IN MILLIMETERS (mm)

US Army Corps of Engineers
AFGHANISTAN ENGINEER DISTRICT

MARK	DESCRIPTION	DATE	APPR.	MARK	DESCRIPTION	DATE	APPR.

DESIGNED BY: | DATE:
DWN BY: | CKD BY: | SOLICITATION NO.:
SUBMITTED BY: | CONTRACT NO.:
PLOT SCALE: 1:1 | PLOT DATE: | FILE NUMBER:
SIZE: ANSI D | FILE NAME: B25_S-501.DWG

U.S. ARMY CORPS OF ENGINEERS
AFGHANISTAN DISTRICT
APO AE 96338

SITE ADAPT DESIGN
B25 - WOMENS BARRAKS
FOUNDATION SECTIONS

SHEET IDENTIFICATION
S-501
SHEET 5 OF 28

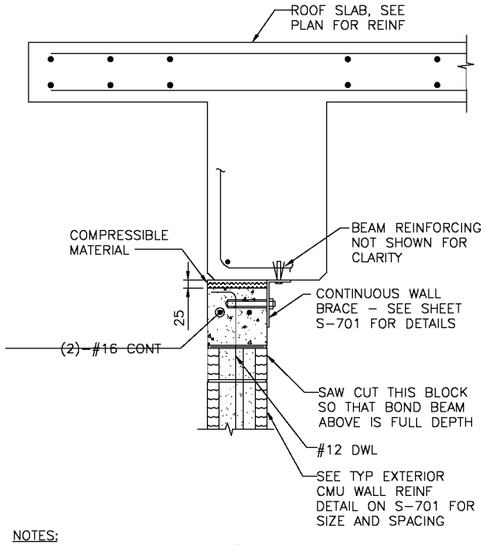

NOTES:
1. EXTEND DOWEL REINF TO 25 CLEAR FROM TOP OF WALL.

SECTION 1 / S-101
SCALE: 1:10

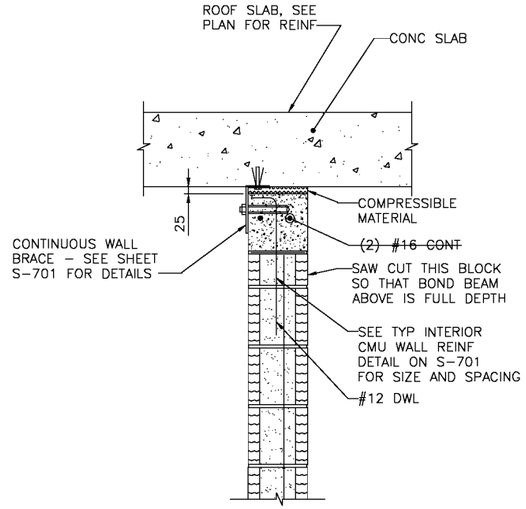

NOTES:
1. EXTEND DOWEL REINF TO 25 CLEAR FROM TOP OF WALL.
2. SLAB REINF NOT SHOWN FOR CLARITY.

SECTION 2 / S-101
SCALE: 1:10

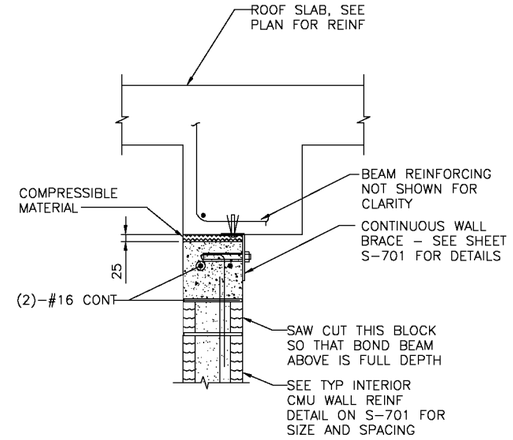

NOTES:
1. EXTEND DOWEL REINF TO 25 CLEAR FROM TOP OF WALL.
2. PARTITION WALL MAY BE CENTERED UNDER THE BEAM OR FLUSH AS SHOWN. SEE PLAN FOR LOCATION.
3. SLAB REINF NOT SHOWN FOR CLARTIY.

SECTION 3 / S-101
SCALE: 1:10

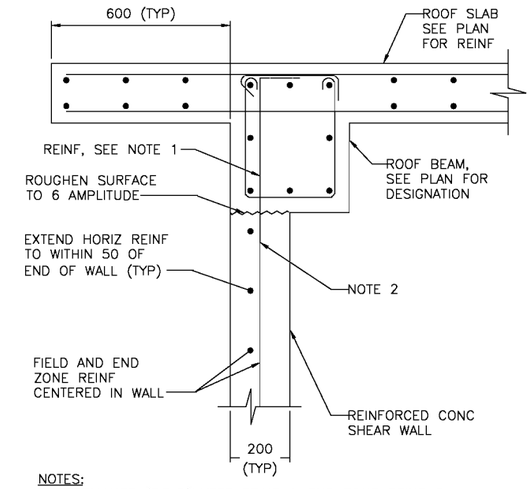

NOTES:
1. TERMINATE "FIELD" VERT REINF & END ZONE REINF @ 50 CLEAR FROM TOP OF ROOF SLAB.
2. WHERE VERTICAL REINFORCING CANNOT BE DEVELOPED IN BEAM DEPTH, PROVIDE STANDARD HOOK.
3. SEE SHEET S-601 AND SHEET S-702 FOR SCHEDULED FIELD AND END ZONE REINF.

SECTION 4 / S-101
SCALE: 1:10

US Army Corps of Engineers
AFGHANISTAN ENGINEER DISTRICT

MARK	DESCRIPTION	DATE	APPR.	MARK	DESCRIPTION	DATE	APPR.

U.S. ARMY CORPS OF ENGINEERS
AFGHANISTAN DISTRICT
APO AE 96338

DESIGNED BY: | DATE:
DWN BY: | CKD BY: | SOLICITATION NO.:
SUBMITTED BY: | CONTRACT NO.:
PLOT SCALE: 1:1 | PLOT DATE: | FILE NUMBER:
SIZE: ANSI D | FILE NAME: B25_S-502.DWG

SITE ADAPT DESIGN
B25 - WOMENS BARRAKS
FOUNDATION AND FRAMING SECTIONS

SHEET IDENTIFICATION
S-502
SHEET 6 OF 28

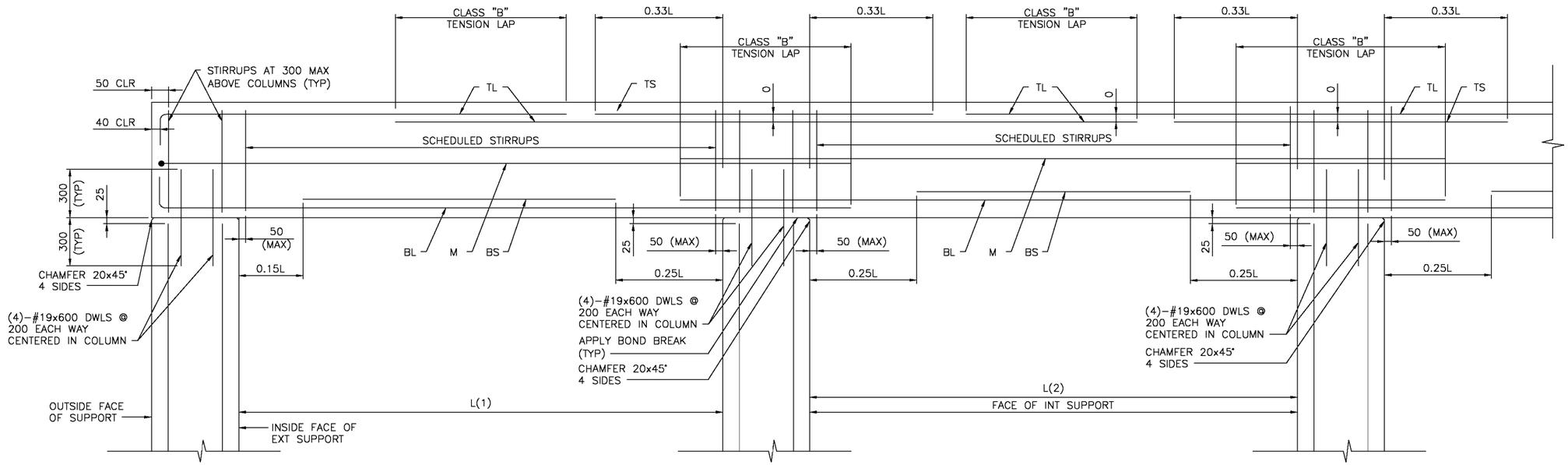

DETAIL NOTE:
1. WORK THIS DETAIL WITH BEAM SCHEDULE ON SHEET S-601.
2. L=GREATEST OF ADJACENT SPANS L(1) OR L(2)
3. ONLY COLUMN CORNER BARS ARE SHOWN

ROOF BEAM REINFORCING DETAIL (1 / S-503)

SCALE: NONE

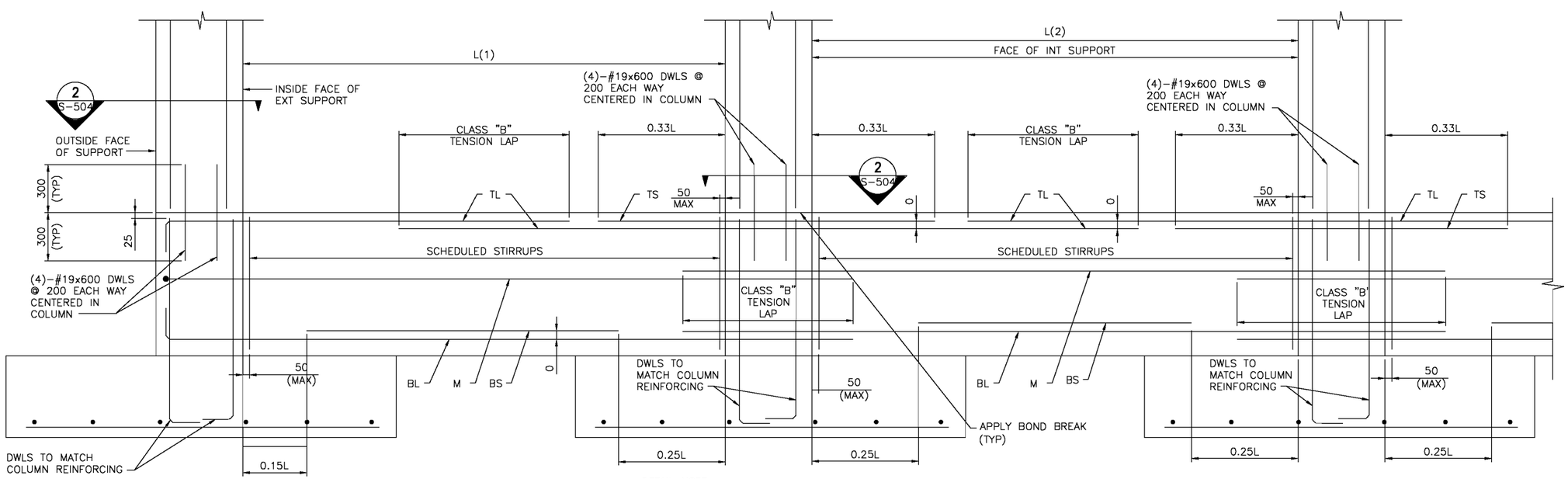

DETAIL NOTE:
1. WORK THIS DETAIL WITH BEAM SCHEDULE ON SHEET S-601.
2. L=GREATEST OF ADJACENT SPANS L(1) OR L(2)
3. ONLY COLUMN CORNER BARS ARE SHOWN.

GRADE BEAM REINFORCING DETAIL (2 / S-503)

SCALE: NONE

US Army Corps of Engineers
AFGHANISTAN ENGINEER DISTRICT

MARK	DESCRIPTION	DATE	APPR.	MARK	DESCRIPTION	DATE	APPR.

U.S. ARMY CORPS OF ENGINEERS
AFGHANISTAN DISTRICT
APO AE 96338

DESIGNED BY: | DATE:
DWN BY: | CKD BY: | SOLICITATION NO.:
SUBMITTED BY: | CONTRACT NO.:
PLOT SCALE: 1:1 | PLOT DATE: | FILE NUMBER:
SIZE: ANSI D | FILE NAME: B25_S-503.DWG

SITE ADAPT DESIGN
B25 - WOMENS BARRAKS
BEAM AND COLUMN DETAILS SHEET 1

SHEET IDENTIFICATION
S-503
SHEET 7 OF 28

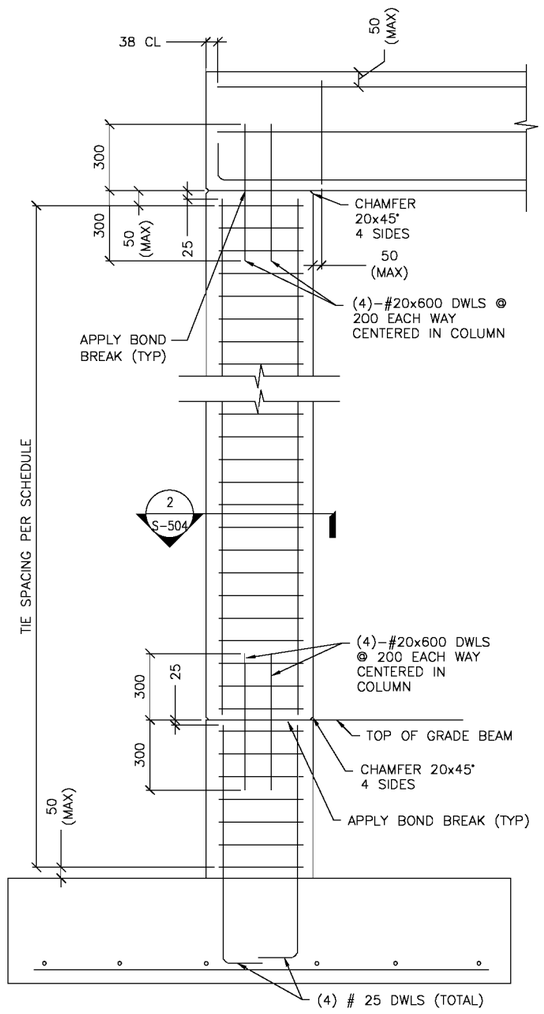

DETAIL NOTE:
1. ONLY COLUMN CORNER BARS ARE SHOWN

1 S-601 **1-STORY COLUMN REINF DETAILS**
SCALE: NTS
(WITH GRADE BEAM)

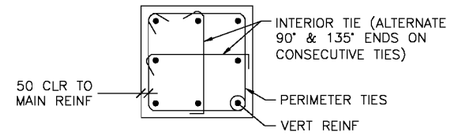

A S-504 **8 BAR COLUMN**
SCALE: NTS

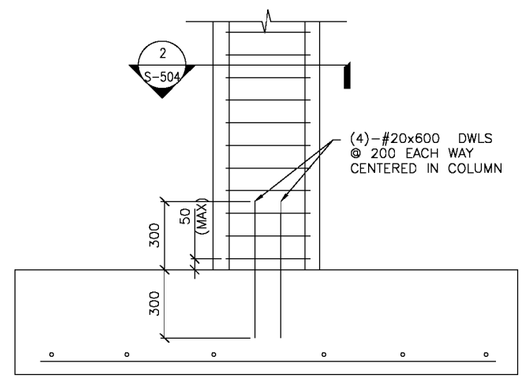

DETAIL NOTE:
1. ONLY COLUMN CORNER BARS ARE SHOWN

1 S-601 **1-STORY COLUMN REINF DETAILS**
SCALE: NTS
(WITHOUT GRADE BEAM)

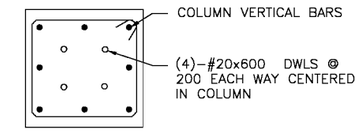

DETAIL NOTE:
1. INTERIOR TIES NOT SHOWN FOR CLARITY. REFER TO DETAIL A THIS SHEET FOR INTERIOR TIE CONFIGURATION.

2 S-601 2 S-504 **SECTION**
SCALE: NTS

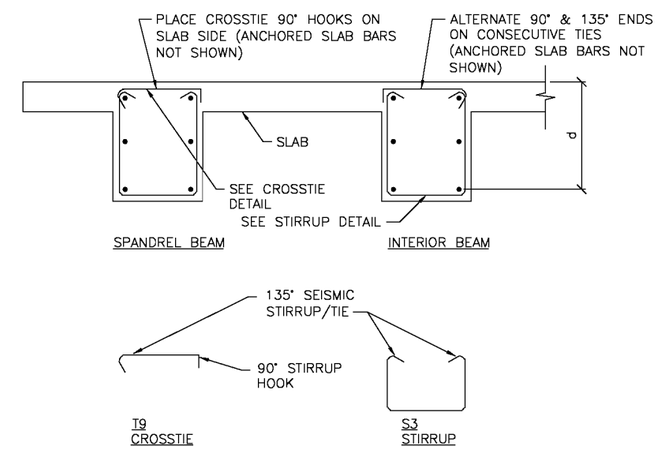

B S-601 **BEAM REINFORCEMENT DETAILS**
SCALE: NTS

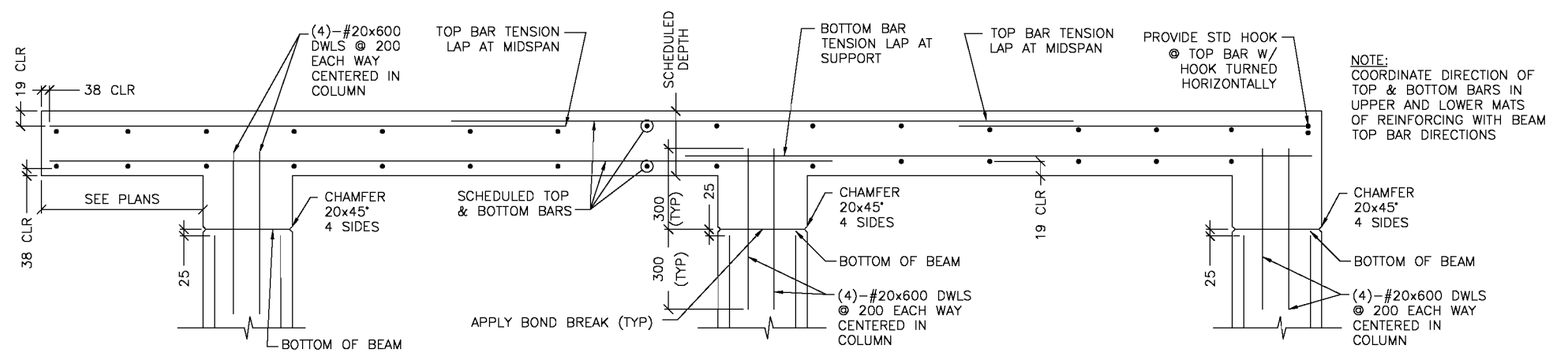

NOTE:
COORDINATE DIRECTION OF TOP & BOTTOM BARS IN UPPER AND LOWER MATS OF REINFORCING WITH BEAM TOP BAR DIRECTIONS

4 S-601 **FRAMED SLAB REINFORCING DETAIL**
SCALE: NTS

US Army Corps of Engineers
AFGHANISTAN ENGINEER DISTRICT

MARK	DESCRIPTION	DATE	APPR.	MARK	DESCRIPTION	DATE	APPR.

U.S. ARMY CORPS OF ENGINEERS
AFGHANISTAN DISTRICT
APO AE 96338

DESIGNED BY: | DATE:
DWN BY: | CKD BY: | SOLICITATION NO.:
SUBMITTED BY: | CONTRACT NO.:
PLOT SCALE: 1:1 | PLOT DATE: | FILE NUMBER:
SIZE: ANSI D | FILE NAME: B25_S-502.dgn

SITE ADAPT DESIGN
B25 - WOMENS BARRAKS
BEAM & COLUMN DETAILS

SHEET IDENTIFICATION
S-504
SHEET 8 OF 28

CONCRETE REINFORCEMENT TENSION DEVELOPMENT/LAP SPLICE SCHEDULE

f'c = 28 MPa	LAP CLASS	UNCOATED BARS			
		TOP BARS		OTHER BARS	
BAR SIZES		CASE 1	CASE 2	CASE 1	CASE 2
#10 TO #19	A	50 BAR DIA	74 BAR DIA	38 BAR DIA	57 BAR DIA
	B	64 BAR DIA	96 BAR DIA	50 BAR DIA	74 BAR DIA
#22 TO #57	A	62 BAR DIA	93 BAR DIA	48 BAR DIA	71 BAR DIA
	B	80 BAR DIA	121 BAR DIA	62 BAR DIA	93 BAR DIA

NOTES:
1. TABULATED TENSION DEVELOPMENT LENGTH VALUES ARE TAKEN FROM CRSI DESIGN HANDBOOK 2008 10TH ED.
2. TENSION DEVELOPMENT & TENSION LAP SPLICE LENGTHS ARE EXPRESSED AS MULTIPLES OF BAR DIAMETERS.
3. TABULATED VALUES ARE BASED ON MINIMUM YIELD STRENGTH OF REINFORCEMENT, fy, OF 420MPa.
4. CONCRETE IS NORMAL WEIGHT (2400Kg/m^3) AND 28 DAY COMPRESSIVE STRENGTH = 28MPa.
5. TABULATED VALUES FOR BEAMS & COLUMNS ARE BASED ON TRANSVERSE REINFORCEMENT AND CONCRETE COVER MEETING MINIMUM CODE REQUIREMENTS.
6. CASES 1 & 2, WHICH DEPEND ON THE TYPE OF STRUCTURAL MEMBER, CONCRETE COVER, AND CENTER-TO-CENTER SPACING OF THE BARS ARE DEFINED IN THE TABLE BELOW.
7. LAP SPLICE LENGTHS (MINIMUM 300mm) ARE MULTIPLES OF TENSION DEVELOPMENT LENGTHS: CLASS A = 1.0(TENSION DEVELOPMENT LENGTH) & CLASS B = 1.3(TENSION DEVELOPMENT LENGTH)
8. TOP BARS ARE HORIZONTAL REINFORCEMENT WITH MORE THAN 300mm OF CONCRETE CAST BELOW THE BARS.
9. IT SHALL BE PERMISSIBLE TO CALCULATE WALL AND SLAB REINFORCEMENT TENSION DEVELOPMENT/SPLICE LENGTHS IN ACCORDANCE WITH ACI 12.2.3 OR TABLE 5.3(b) OF CRSI 2008 IN LIEU OF VALUES TABULATED ABOVE.

BEAMS, COLUMNS	CASE 1	CONCRETE COVER AT LEAST 1 BAR DIA AND CENTER-TO-CENTER SPACING AT LEAST 2 BAR DIA
	CASE 2	CONCRETE COVER LESS THAN 1 BAR DIA OR CENTER-TO-CENTER SPACING LESS THAN 2 BAR DIA
ALL OTHERS	CASE 1	CONCRETE COVER AT LEAST 1 BAR DIA AND CENTER-TO-CENTER SPACING AT LEAST 3 BAR DIA
	CASE 2	CONCRETE COVER LESS THAN 1 BAR DIA OR CENTER-TO-CENTER SPACING LESS THAN 3 BAR DIA

CONCRETE COVER SCHEDULE

MINIMUM CONCRETE COVER PROTECTION FOR REINFORCEMENT BARS SHALL BE AS LISTED BELOW: (SEE ACI 318M-05, SECTION 7.7 FOR CONDITIONS NOT NOTED). DIMENSIONS FOR BAR PLACEMENT GIVEN IN SECTIONS AND DETAILS SHALL SUPERSEDE MINIMUM COVER REQUIREMENTS GIVEN HERE. DIMENSIONS ARE IN mm. PROVIDE STANDARD BAR CHAIRS AND SUPPORT BARS @1200mm MAXIMUM AS REQUIRED TO MAINTAIN CONCRETE PROTECTION SPECIFIED.

FOOTINGS (EARTH FORMED):		70
COLUMNS / PIERS (TO TIES)		40
GRADE BEAMS OR SLAB TURNED DOWN EDGES:		
TOP		40
BOTTOM (EARTH FORMED)		70
SIDES (EARTH FORMED)		70
SIDES (BOARD FORMED)	#16 BAR & SMALLER	40
	#19 THRU #36 BAR	50
ELEVATED BEAMS & SLABS:		
BEAM TIES & STIRRUPS (NOT EXPOSED TO WEATHER)		40
BEAM TIES & STIRRUPS (EXPOSED TO WEATHER)		50
FLOOR SLABS (NOT EXPOSED TO WEATHER)		20
FLOOR SLABS (EXPOSED TO WEATHER)		
#19 & LARGER		50
#13 & SMALLER		40
ROOF SLAB BARS		25
SLABS ON GRADE		
NOT EXPOSED TO WEATHER (FROM TOP)		20
EXPOSED TO WEATHER (FROM TOP)		40
UTILITY TUNNEL WALLS, RETAINING WALLS AND SHEAR WALLS. (NO SURFACES SHALL BE EARTH FORMED)		
EARTH SIDE AND FRONT SIDE (EXPOSED TO WEATHER)		
#16 BAR AND SMALLER		40
#19 THRU #36 BAR		50

COLUMN FOOTING SCHEDULE

MARK	FOOTING SIZE (mm)			FOOTING REINFORCING	REMARKS
	LENGTH	WIDTH	THICKNESS		
F1	3000	3000	300	(10)-#20 EW BOTT	-----
F2	2500	2500	250	(7)-#20 EW BOTT	-----

CONCRETE SHEAR WALL SCHEDULE

MARK	TYPE	WALL LENGTH (L) (mm)	WALL REINFORCEMENT		REMARKS
			END ZONE	FIELD	
SW1	A	1650	(3)-#20 @ 150mm OC	#12 @ 250mm OC	-----
SW2	A	1900	(4)-#20 @ 150mm OC	#12 @ 250mm OC	-----
SW3	B	2700	(5)-#20 @ 150mm OC	#12 @ 250mm OC	-----
SW4	B	3300	(5)-#20 @ 150mm OC	#12 @ 250mm OC	-----

NOTES:
1. WORK THIS SCHEDULE WITH SHEAR WALL DETAILS ON SHEETS S-702
2. SEE PLAN FOR LOCATION OF SHEAR WALL(S).
3. VERTICAL "FIELD" BARS MAY BE OMITTED IN LOCATION OF "END ZONE" REINFORCEMENT.
4. WALL FIELD REINF LISTED APPLIES TO VERT & HORIZ BARS.
5. WALL FIELD REINFORCEMENT CENTERED IN WALL.
6. END ZONE REINF IS VERTICAL REINF EACH END ZONE.
7. SEE SHEET S-702 FOR ADDITIONAL REINF AT OPENINGS.
8. ONLY LARGE OPENINGS ARE LISTED IN REMARKS COLUMN, FOR ADDITIONAL SMALLER OPENINGS SEE ARCHITECTURAL, MECHANICAL, AND ELECTRICAL SHEETS.

STANDARD HOOKS IN TENSION PER (ACI 318M-05)

HOOK DEVELOPMENT LENGTH (mm)	
BAR SIZE	f'c 28 MPa
#10	180
#12	230
#16	300
#20	400
#22	430
#25	480
#29	560

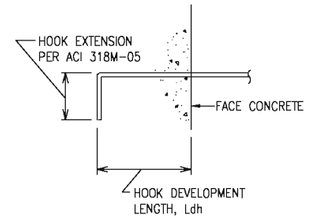

NOTES:
1. CONCRETE IS NORMAL WEIGHT CONCRETE.
2. BAR YIELD STRENGTH, fy = 420 MPa
3. SIDE COVER REQUIREMENTS OF ACI SECT. 12.5.3 ARE ASSUMED TO NOT BE MET.
4. TIE OR STIRRUP REQUIREMENTS OF ACI SECT. 12.5.3 ARE ASSUMED TO NOT BE MET.
5. REDUCTION FOR EXCESS REINFORCEMENT IS NOT TAKEN.
6. HOOK DEVELOPMENT LENGTH IS VALID FOR 180° HOOKS ALSO.

MASONRY LAP SPLICE SCHEDULE

BAR SIZE	MINIMUM LAP SPLICE (Ld) FOR CMU REINFORCING
#10	450
#12	600
#16	750
#20	950
#22	1050
#25	1200

CAST-IN-PLACE CONC LINTEL SCHEDULE (TYP)

OPENING TYPE OR SIZE, BEAM LOCATION OR TYPE	MAX SPAN (mm)	LINTEL DEPTH (mm)	REINFORCING BOTTOM
WALL OPENING	4000	600	(2)-#16 T&B
WALL OPENING	1900	400	(2)-#16 T&B
WALL OPENING	1000	200	(2)-#16 B

1. STRUCTURAL SHEETS DO NOT INDICATE ALL OPENINGS IN MASONRY WALLS. VERIFY NUMBER, SIZE AND LOCATION OF ALL OPENINGS IN MASONRY WALLS FROM ARCHITECTURAL SHEETS AND APPROVED PLUMBING, MECHANICAL, AND ELECTRICAL SHOP DRAWINGS.
2. PROVIDE 200mm BEARING EA END.
3. FOR HEAD DETAILS REFER TO ARCHITECTURAL SHEETS.
4. REINFORCING SHALL BE ASTM A615M, GRADE 420.
5. CONTRACTOR SHALL SUBMIT FOR APPROVAL SHOP DRAWINGS AND SCHEDULES SHOWING SIZE, SPAN, REINFORCEMENT, DETAILS, LOCATIONS, ETC.

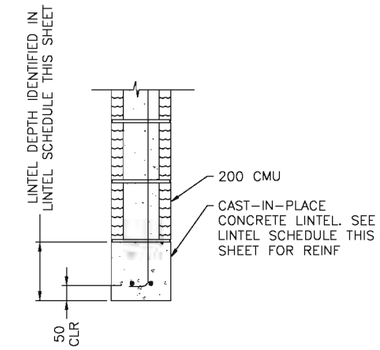

LINTEL DETAIL
SCALE: NONE

BEAM SCHEDULE

MARK	BEAM SIZE (mm)		BEAM REINFORCING						STIRRUPS			REMARKS
	DEPTH	WIDTH	BL	BS	TL	TS	TC	M	SIZE	TYPE	SPACING	-----
GRADE BEAMS												
GB1	750	400	(3)-#16	---	(3)-#16	---	---	(2)-#16	#12	S3 + T9	200	-----
ROOF BEAMS												
RB1	600	400	(2)-#22	(1)-#22	(2)-#19	---	---	---	#12	S3 + T9	200	-----
RB2	600	400	(2)-#19	(1)-#19	(2)-#19	---	---	---	#12	S3 + T9	200	-----

NOTES:
1. WORK THIS SCHEDULE WITH BEAM REINFORCING DETAILS ON SHEETS S-503 AND S-504.
2. HOOKS SHOWN ON SECTIONS AND DETAILS SHALL BE 90° STD UON.
3. M BARS ARE SIDE BARS EACH FACE.

COLUMN SCHEDULE

COLUMN MARK / DESCRIPTION	TYP UON	---	---	---
TYPE	8-BAR	---	---	---
DIMENSION	600mm SQ.	---	---	---
VERTICAL REINFORCEMENT	(8)-#25	---	---	---
TIES	#12 @ 150	---	---	---
TOP OF ROOF ELEVATION	3600mm	---	---	---
TOP OF GRADE BEAM ELEVATION	-200mm	---	---	---
TOP OF FOOTING ELEVATION	-950mm	---	---	---

NOTES:
1. WORK THIS SCHEDULE WITH COLUMN DETAILS ON SHEET S-504.
2. SEE FOOTING SCHEDULE ON THIS SHEET FOR FOOTING INFORMATION.
3. COLUMN TIES: INTERIOR TIES TO MATCH SIZE & SPACING OF PERIMETER TIES.
4. HOOKS SHOWN ON SECTIONS & DETAILS SHALL BE 90° STD UON.

US Army Corps of Engineers
AFGHANISTAN ENGINEER DISTRICT

MARK	DESCRIPTION	DATE	APPR.	MARK	DESCRIPTION	DATE	APPR.

DESIGNED BY: | DATE: | DWN BY: | CKD BY: | SOLICITATION NO.: | SUBMITTED BY: | CONTRACT NO.: | PLOT SCALE: | PLOT DATE: | FILE NUMBER: | TIT SIZE: ANSI D | FILE NAME: B25_S-601.DWG

U.S. ARMY CORPS OF ENGINEERS
AFGHANISTAN DISTRICT
APO AE 96338

SITE ADAPT DESIGN
B25 - WOMENS BARRAKS
SCHEDULES

SHEET IDENTIFICATION
S-601
SHEET 9 OF 29

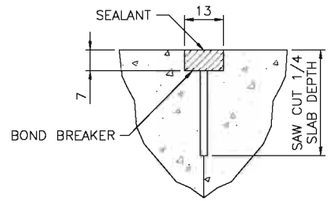

CONTROL JOINT DETAIL

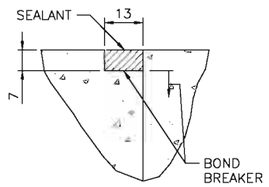

CONSTRUCTION JOINT DETAIL

TYPICAL CONCRETE SLAB JOINT FINISH DETAIL (1 / S-701)

SCALE: NONE

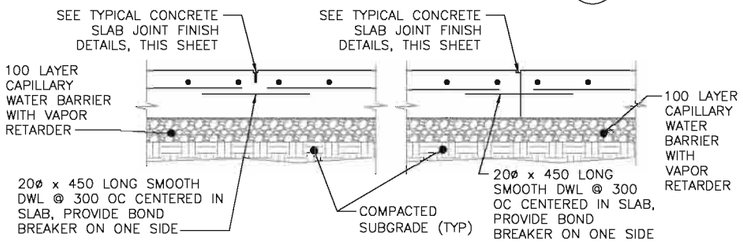

CONTROL JOINT DETAIL

CONSTRUCTION JOINT DETAIL

TYPICAL SLAB ON GRADE JOINT DETAIL (2 / S-701)

SCALE: NONE

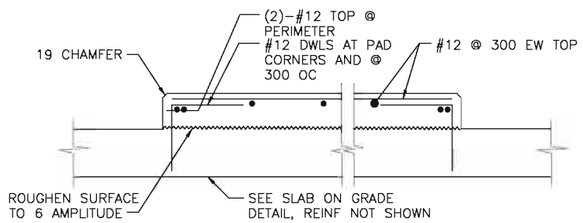

INTERIOR EQUIPMENT PAD DETAIL (3 / S-701)

SCALE: NONE

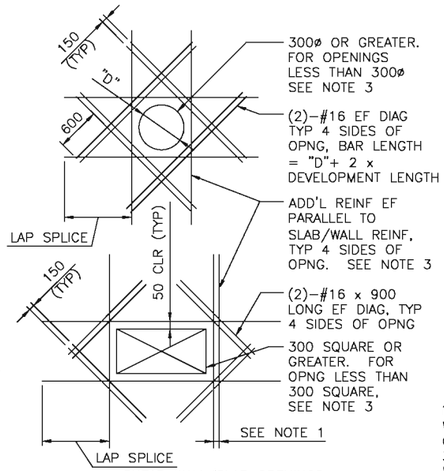

SHEAR WALL/SLAB OPENINGS

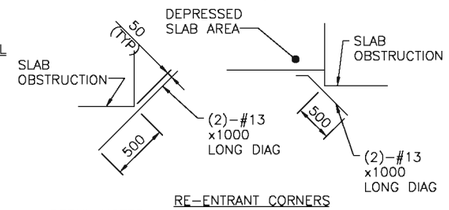

RE-ENTRANT CORNERS

DETAIL NOTES:

1. WHERE MORE THAN ONE ADDITIONAL BAR IS REQUIRED PARALLEL TO THE EXISTING SLAB/WALL REINFORCING THE ADDITIONAL REINFORCING BARS SHALL BE SPACED AT 100 ON CENTER.
2. ADDITIONAL REINFORCING PARALLEL TO THE SLAB/WALL REINFORCING SHALL BE #16 BARS THAT PROVIDE A STEEL AREA ON EACH SIDE OF THE OPENING EQUAL TO 1/2 THE AREA OF THE REINFORCING CUT BY THE OPENING.
3. FOR OPENINGS WITH SIDES OR DIAMETERS LESS THAN 300 SPREAD THE SLAB/WALL REINFORCING TO CLEAR THE OPENING.

ADD'L CONCRETE REINFORCEMENT DETAILS (4 / S-701)

SCALE: NONE

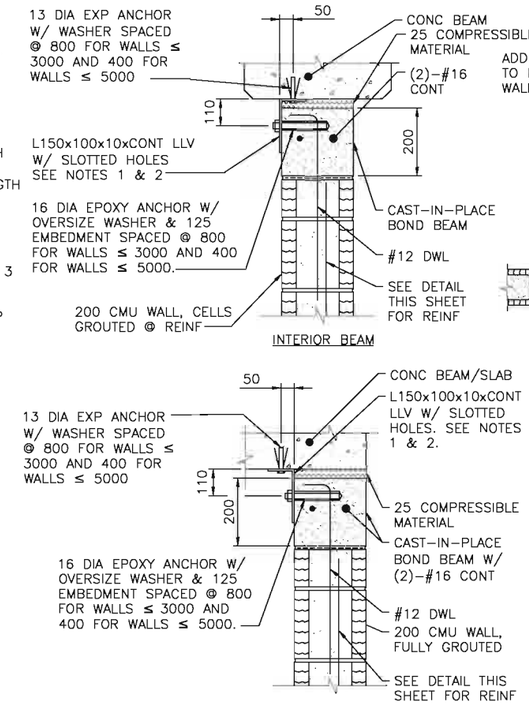

INTERIOR BEAM

EXTERIOR WALL OR SLAB

NOTES:

1. PROVIDE 40X20 VERTICAL SLOTTED HOLES IN VERTICAL LEG OF L150X100 CENTERED ON ALL 16 DIA EPOXY ANCHORS.
2. PROVIDE 25X14 SLOTTED HOLES (WITH SLOTS PARALLEL TO WALL) IN HORIZONTAL LEG ON L150X100 CENTERED ON ALL 13 DIA EXPANSION ANCHORS.
3. CAST-IN-PLACE BOND BEAM SHOWN AT TOP OF WALL IS ALSO APPLICABLE FOR INTERMEDIATE AND STARTER COURSE BOND BEAMS WITHIN WALL.

TOP OF CMU WALL BRACING DETAILS (5 / S-701)

SCALE: NONE

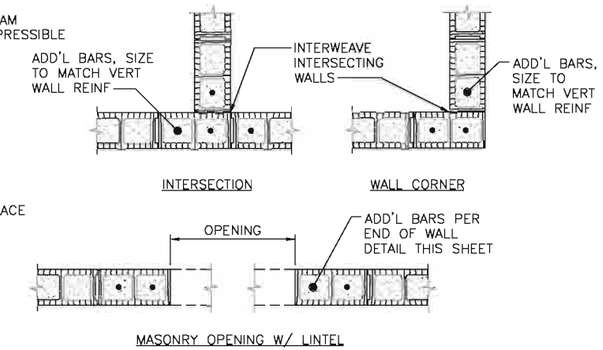

MASONRY OPENING W/ LINTEL

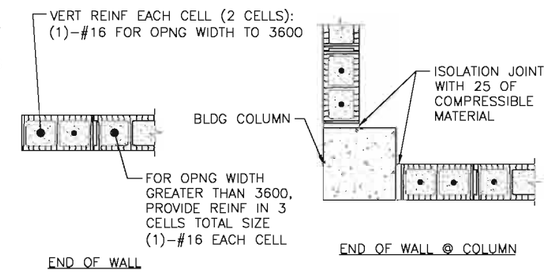

END OF WALL

END OF WALL @ COLUMN

NOTES:

1. OPENING WIDTH SHALL NOT EXCEED 3600 FOR THIS TYPE OF JAMB.
2. ALL CELLS FULLY GROUTED AT EXTERIOR WALLS. AT INTERIOR WALLS, ONLY GROUT CELLS CONTAINING REINF.

TYP CMU DETAILS (6 / S-701)

SCALE: NONE

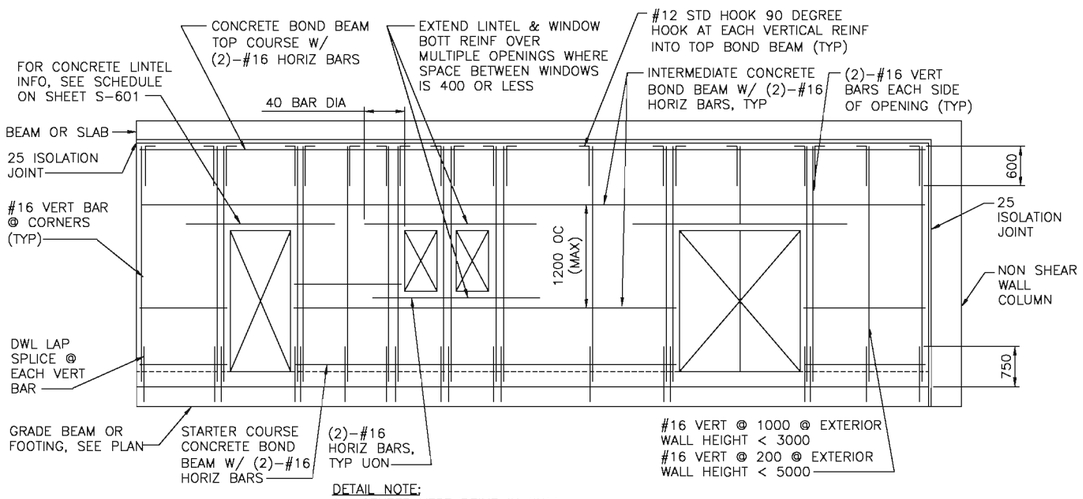

DETAIL NOTE:

1. CENTER VERT REINF IN WALL.
2. GROUT ALL CMU CELLS.
3. REFERENCE ARCH DWGS FOR JOINT INFORMATION
4. DOWELS BETWEEN TOP BOND BEAM AND BEAM/SLAB ABOVE (INCLUDING EMBEDDED PIPE SLEEVE) NOT SHOWN FOR CLARITY. SEE SPECIFIC S-500 SERIES DWGS FOR INFO.

TYPICAL EXTERIOR CMU WALL REINFORCING DETAIL (7 / S-701)

SCALE: NONE

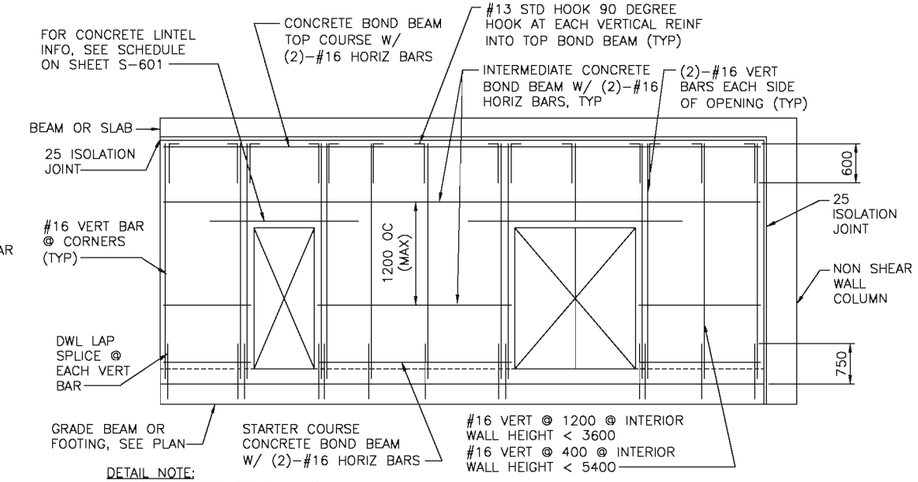

DETAIL NOTE:

1. CENTER VERT REINF IN WALL.
2. GROUT CMU CELLS THAT CONTAIN REINFORCING.
3. REFERENCE ARCH DWGS FOR JOINT INFORMATION
4. DOWELS BETWEEN TOP BOND BEAM AND BEAM/SLAB ABOVE (INCLUDING EMBEDDED PIPE SLEEVE) NOT SHOWN FOR CLARITY. SEE SPECIFIC S-500 SERIES DWGS FOR INFO.

TYPICAL INTERIOR CMU WALL REINFORCING DETAIL (8 / S-701)

SCALE: NONE

US Army Corps of Engineers
AFGHANISTAN ENGINEER DISTRICT

MARK	DESCRIPTION	DATE	APPR.	MARK	DESCRIPTION	DATE	APPR.

U.S. ARMY CORPS OF ENGINEERS
AFGHANISTAN DISTRICT
APO AE 96338

DESIGNED BY: | DATE:
DWN BY: | CKD BY: | SOLICITATION NO.:
SUBMITTED BY: | CONTRACT NO.:
PLOT SCALE: | PLOT DATE: | FILE NUMBER:
SIZE: ANSI D | FILE NAME: B25_S-701.DWG

SITE ADAPT DESIGN
B25 - WOMENS BARRAKS
TYPICAL DETAILS SHEET 1

SHEET IDENTIFICATION
S-701
SHEET 10 OF 28

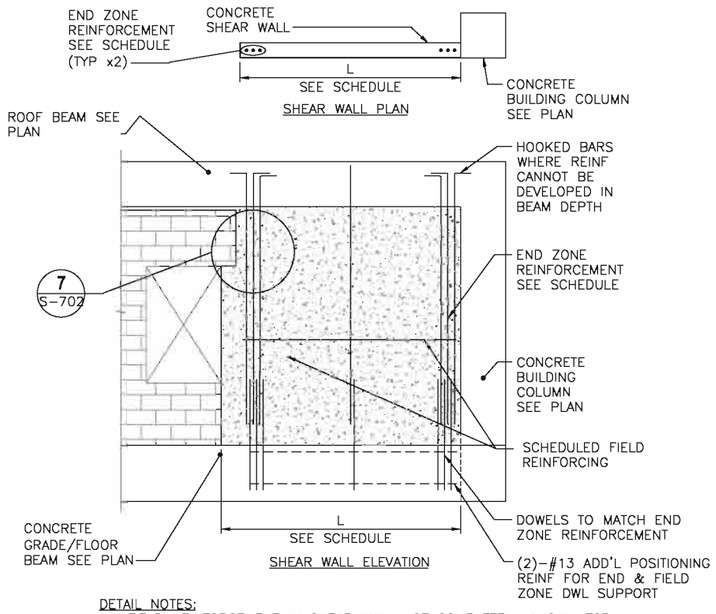

DETAIL NOTES:
1. FIELD REINFORCEMENT IN SHEAR WALL NOT COMPLETELY SHOWN FOR CLARITY.
2. FIELD REINFORCEMENT CENTERED IN WALL.
3. MINIMUM CONC CLEAR DISTANCE FOR END ZONE REINF = 76
4. SEE CONC SHEAR WALL SCHEDULE ON SHEET S-601
5. SEE ARCH DWGS FOR ISOLATION JOINT INFORMATION

TYPE "B" SHEAR WALL DETAIL 1 S-702
SCALE: NONE

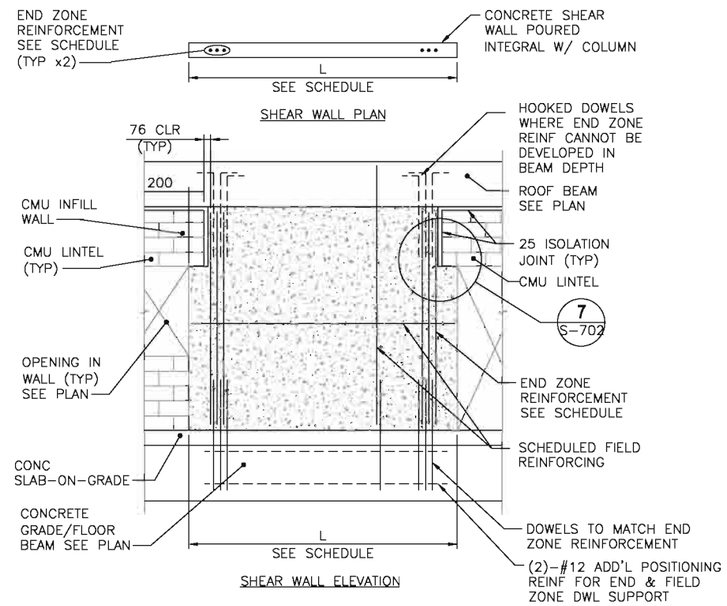

DETAIL NOTES:
1. FIELD REINFORCEMENT IN SHEAR WALL NOT COMPLETELY SHOWN FOR CLARITY.
2. FIELD REINFORCEMENT CENTERED IN WALL.
3. MINIMUM CONC CLEAR DISTANCE FOR END ZONE REINF = 76
4. SEE CONC SHEAR WALL SCHEDULE ON SHEET S-601
5. SEE ARCH DWGS FOR ISOLATION JOINT INFORMATION

TYPE "A" SHEAR WALL DETAIL 2 S-702
SCALE: NONE

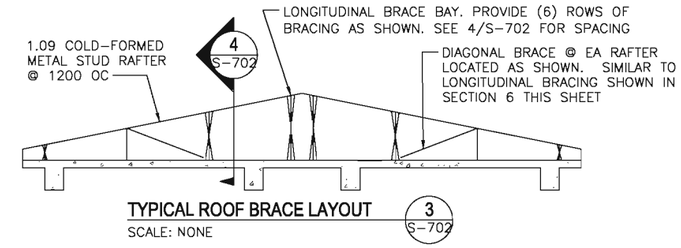

TYPICAL ROOF BRACE LAYOUT 3 S-702
SCALE: NONE

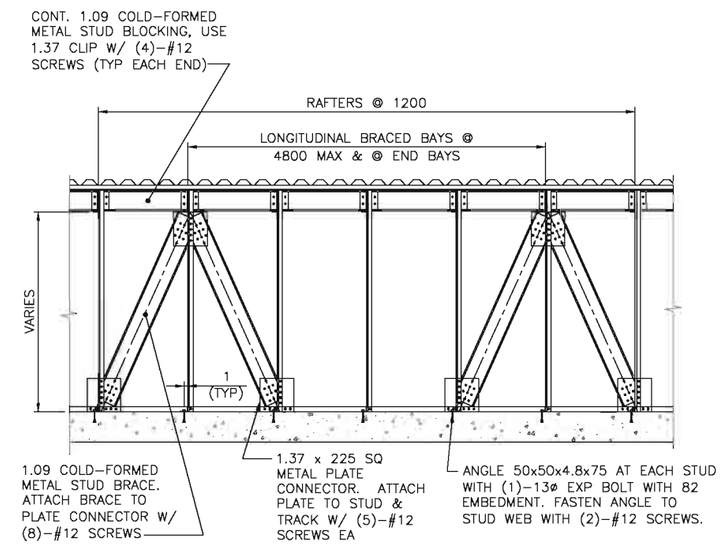

SECTION 4 S-702
SCALE: NONE

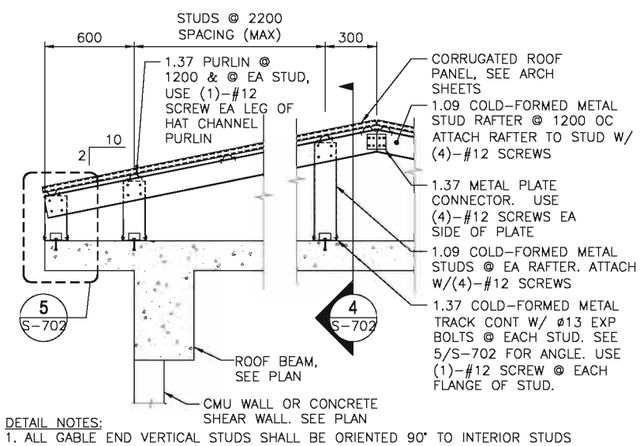

DETAIL NOTES:
1. ALL GABLE END VERTICAL STUDS SHALL BE ORIENTED 90° TO INTERIOR STUDS & SPACED @ 600 OC. GABLE END RAFTER SHALL BE 1.37 METAL TRACK SPANNING CONTINUOUSLY OVER GABLE END STUDS. INSET GIRTS AT GABLE END SHALL BE 1.09 COLD-FORMED METAL STUDS @ 1200 OC ATTACHED VIA 1.37 THICKNESS CLIP ANGLE W/ (2) #12 SCREWS EA LEG.
2. ALL INTERIOR, NON-GABLE END VERTICAL STUDS GREATER THAN 2400 IN LENGTH SHALL BE BACK-TO-BACK W/ #12 SCREWS @ 200 OC STAGGERED.

TYPICAL OVERBUILT ROOF FRAMING DETAIL 8 S-702
SCALE: NONE

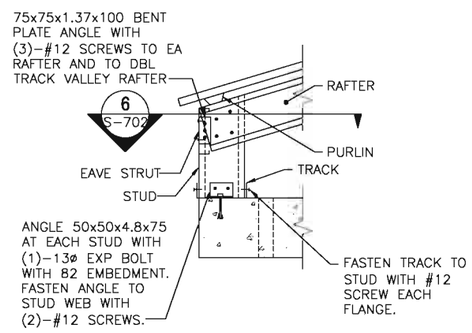

DETAIL 5 S-702
SCALE: NONE

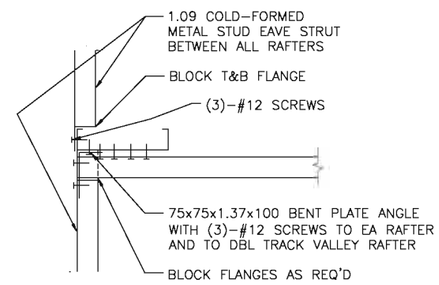

SECTION 6 S-702
SCALE: NONE

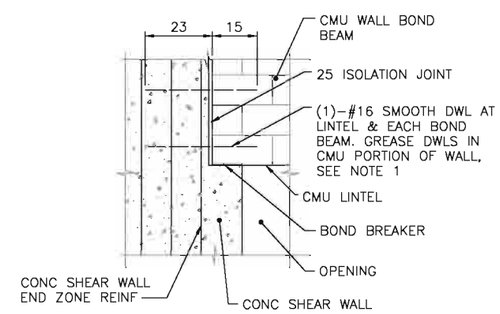

NOTE:
1. TIE SMOOTH DOWEL ROD TO SHEAR WALL END ZONE REINF FOR EACH BOND BEAM AND LINTEL.

DETAIL 7 S-702
SCALE: NONE

US Army Corps of Engineers
AFGHANISTAN ENGINEER DISTRICT

MARK	DESCRIPTION	DATE	APPR.	MARK	DESCRIPTION	DATE	APPR.

U.S. ARMY CORPS OF ENGINEERS
AFGHANISTAN DISTRICT
APO AE 96338

DESIGNED BY: | DATE:
DWN BY: | CKD BY: | SOLICITATION NO.:
SUBMITTED BY: | CONTRACT NO.:
PLOT SCALE: 1:1 | PLOT DATE: | FILE NUMBER:
SIZE: ANSI D | FILE NAME: B25_S-702.DWG

SITE ADAPT DESIGN
B25 - WOMENS BARRAKS
TYPICAL DETIALS SHEET 2

SHEET IDENTIFICATION
S-702
SHEET 11 OF 29

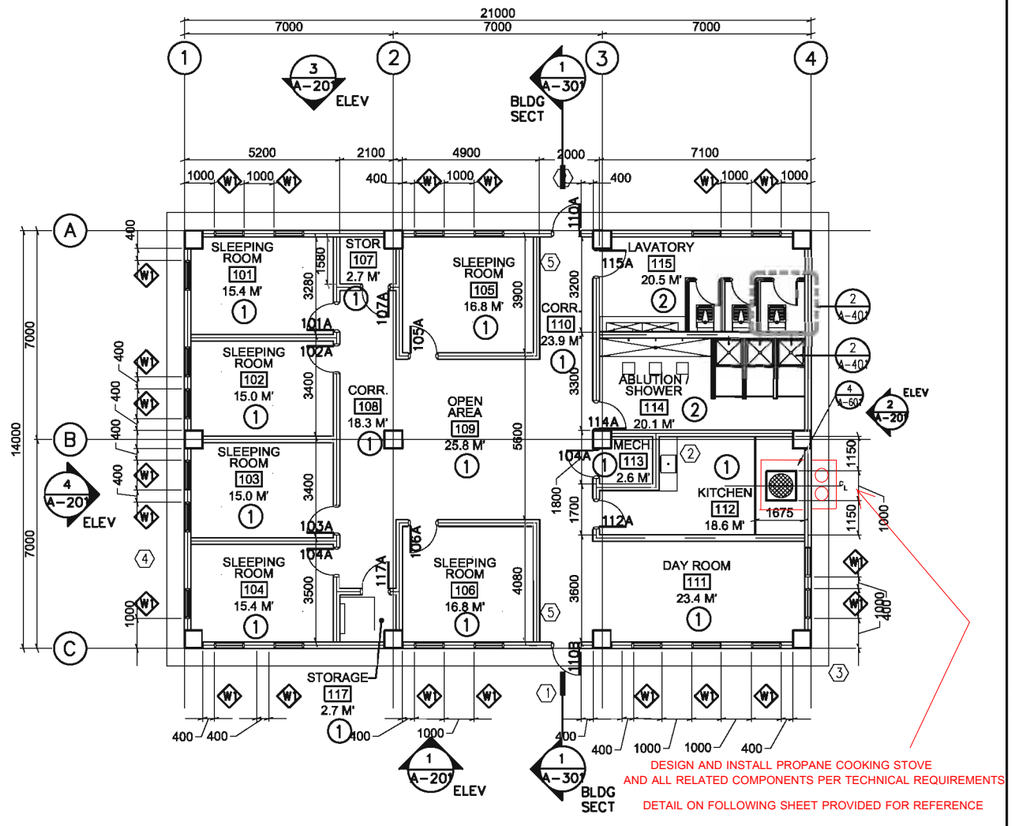

FLOOR PLAN

A-101 | A-101 SCALE: 1:100
384.0 GSM

GENERAL NOTES:

A. INTERIOR PARTITIONS SHALL BE 200 MM CMU UNLESS NOTED OTHERWISE

B. OPENINGS FOR DOORS SHALL BE LOCATED 200 MM FROM THE ADJACENT WALL UNLESS NOTED OTHERWISE

C. SURFACES TO BE PAINTED SHALL BE CLEAN AND FREE OF FOREIGN MATTER BEFORE APPLICATION OF PAINT. CLEANING SHALL BE SCHEDULED SO THAT DUST AND OTHER CONTAMINANTS WILL NOT FALL ON WET, NEWLY PAINTED SURFACES.

D. CONCRETE AND INTERIOR MASONRY SURFACES GROUTED SOLID SHALL BE ALLOWED TO DRY AT LEAST 30 DAYS BEFORE PAINTING EXCEPT CONCRETE SLAB ON GRADE WHICH SHALL BE ALLOWED TO CURE 90 DAYS BEFORE PAINTING.

E. PAINTS CONTAINING LEAD IN EXCESS OF 0.06 PERCENT BY WEIGHT OF THE TOTAL NONVOLATILE CONTENT SHALL NOT BE USED.

F. MERCURIAL FUNGICIDES SHALL NOT BE USED IN OIL-BASE PAINT.

G. REMOVE LOOSE DIRT AND CLEAN SURFACES BEFORE PAINTING. APPLY PAINT TO INTERIOR STRUCTURAL RIGID FRAMINGS AND CEILINGS AND TEST FOR ADHESION. PRIMER COAT FOR MASONRY. INITIAL FIRST COAT WITH AN ACRYLIC LATEX PAINT FOR EXTERIOR SURFACES AND A SECOND COAT WITH A WATER REPELLENT ACRYLIC LATEX PAINT.

H. METAL DOORS AND FRAMES SHALL RECEIVE A PRIMER COAT PLUS TWO COATS OF PAINT.

I. DIMENSIONS ARE TO STRUCTURAL COLUMN GRID, EDGE OF WINDOW OPENINGS, AND TO HINGE SIDE OF DOOR OPENINGS.

J. PROVIDE 1 HOUR FIRE RATED PARTITIONS IN ACCORDANCE WITH NFPA 101, 28.3.7.1. FILL ANULAR SPACE AT ANY AND ALL FLOOR, WALL OR CEILING PENETRATIONS WITH APPOPRIATE FIRE STOPPING MATERIALS.

ROOM FINISHES: (X)

1. WALLS: PAINTED PLASTER,
   FLOOR: SEALED CONCRETE
   CEILING: PAINTED PLASTER APPLIED TO STRUCTURE
2. WALLS: ~~2400 MM HIGH CERAMIC TILE WAINSCOT,~~ PAINTED PLASTER ~~ABOVE WAINSCOT~~
   FLOOR: ~~CERAMIC TILE~~
   CEILING: PAINTED PLASTER

KEYNOTES (X)

1. CONCRETE SIDEWALK RE: DETAIL 2/A-601 AND 3/A-601
2. BUILT-IN CABINET AND SINK
3. LINE OF ROOF OVERHANG ABOVE
4. TWO-PIECE WALL THIMBLE AND TRIM PLATE FOR WOOD BURNING STOVE CHIMNEY PIPE. SEE DTL. 3,4/A-301. ~~SEE MECH. FOR LOCATIONS~~ ~~STOVE AND PIPE BY OTHERS.~~
5. PROVIDE FEC IN ACCORDANCE WITH NFPA 101, 28.3.5.8.

LEGEND:

104A DOOR TYPE, SEE SHEET A6

A WINDOW TYPE, SEE SHEET A6

X KEY NOTE

FEC FIRE EXTINGUISHER CABINET

1-HOUR RATED PARTITION

1 ROOM FINISH TYPE DESIGNATION

UNLESS OTHERWISE NOTED, LINEAR DIMENSIONS SHOWN ARE IN MILLIMETERS (MM)

0 2000 4000 8000
SCALE: 1: 100

US Army Corps of Engineers
AFGHANISTAN ENGINEER DISTRICT

MARK	DESCRIPTION	DATE	APPR.	MARK	DESCRIPTION	DATE	APPR.

U.S. ARMY CORPS OF ENGINEERS
AFGHANISTAN DISTRICT
APO AE 96338

DESIGNED BY: DATE:
DWN BY: CKD BY: SOLICITATION NO.:
SUBMITTED BY: CONTRACT NO.:
PLOT SCALE: PLOT DATE: FILE NUMBER:
H: 1:100 V: 1:100
SIZE: ANSI D FILE NAME: B25_A-101.DWG

SITE ADAPT DESIGN
B25 - WOMENS BARRAKS
FLOOR PLAN

SHEET IDENTIFICATION
A-101
SHEET 12 OF 29

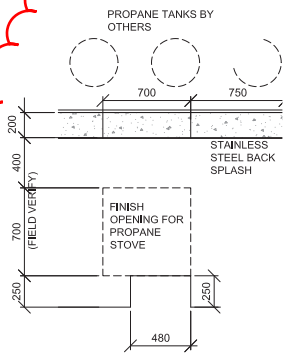

1 A-507 PARTIAL PROPANE STOVE ENCASEMENT PLAN

SCALE: 1:20

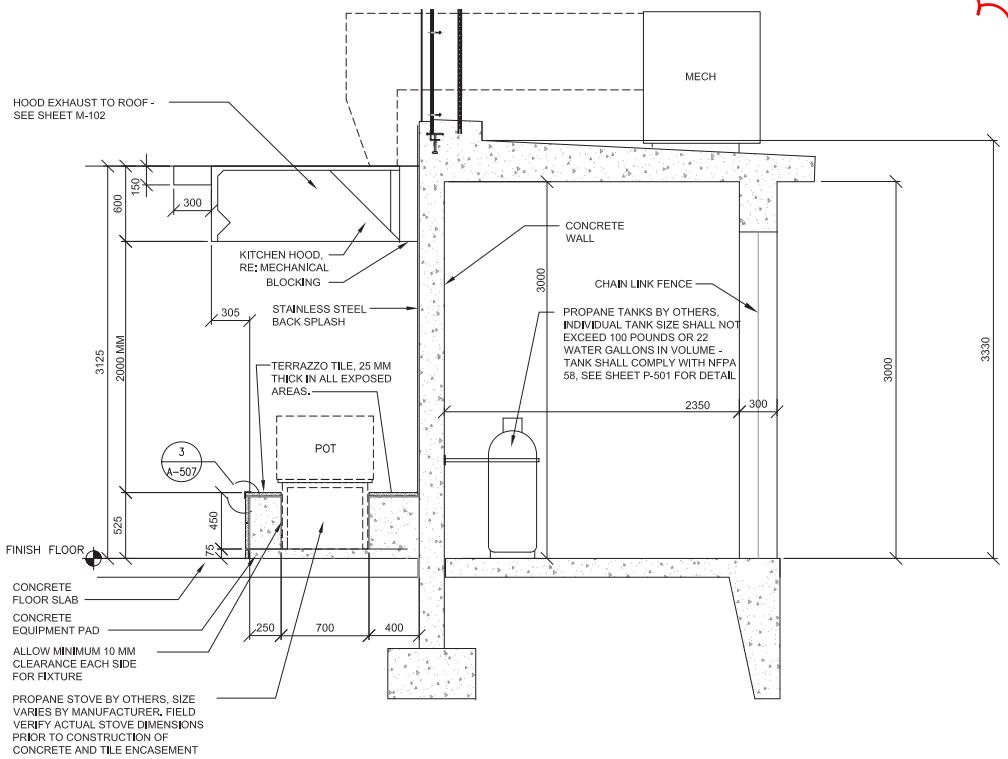

2 A-507 PROPANE STOVE ENCASEMENT SECTION

SCALE: 1:20

FOR REFERENCE ONLY

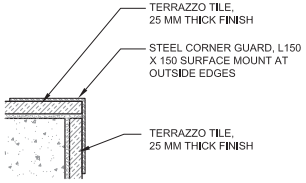

3 A-507 CORNER GUARD DETAIL

SCALE: 1:5

US ARMY CORPS OF ENGINEERS AFGHANISTAN NORTH DISTRICT

SYMBOL	DESCRIPTION	DATE	APPR.	SYMBOL	DESCRIPTION	DATE	APPR.

SITE ADAPT DESIGN

D10 - DFAC - LARGE (3000 PN) - ARCH SPAN

PROPANE STOVE PLAN AND SECTION

SHEET REFERENCE NUMBER:

3/23/2011 1:52 PM

A1 Size 594mm x 841mm

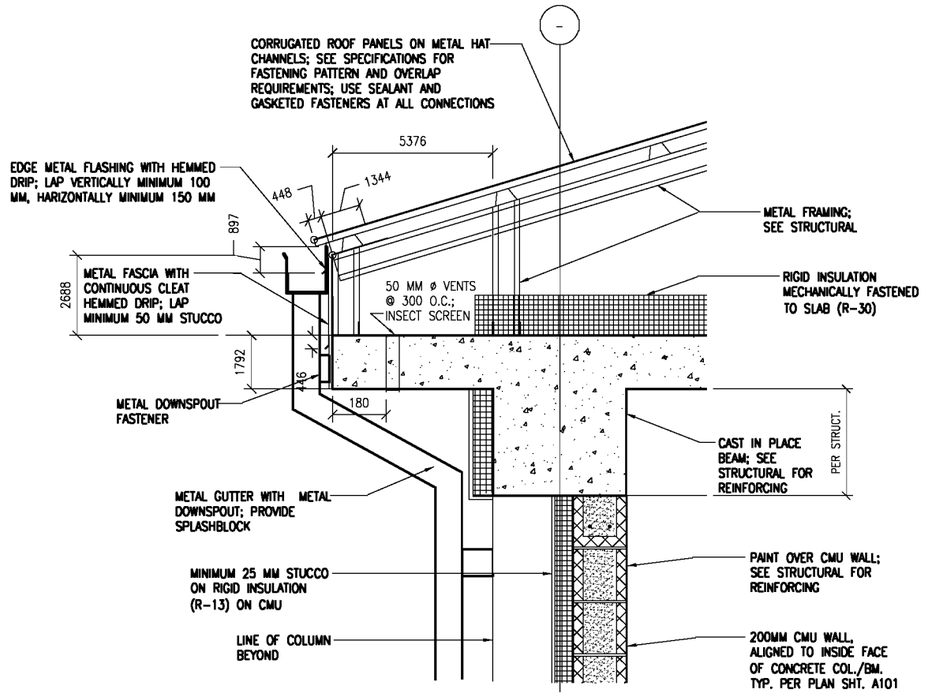

5 A-401 A-401 TYP. EAVE DETAIL
SCALE: 1:10

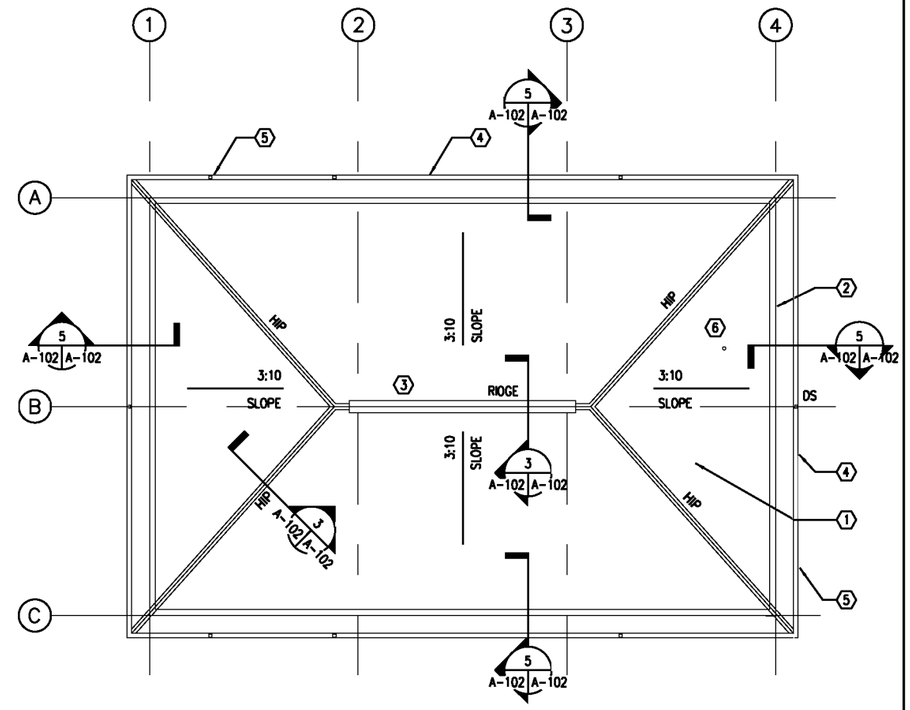

1 A-102 A-102 ROOF PLAN
SCALE: 1:100

KEY NOTES:

1. CORRUGATED METAL ROOF PANELS ON COLD-FORMED METAL FRAMING
2. LINE OF BUILDING WALL BELOW
3. CONTINUOUS RIDGE VENT
4. METAL GUTTER
5. METAL DOWNSPOUT WITH SPLASHBLOCK
6. PLUMBING VENT- SEE PLUMBING DRWGS. FOR LOCATION, RE: DETAIL 2/A-102

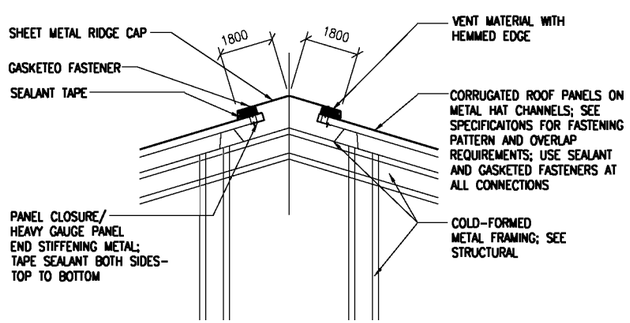

4 A-102 A-102 RIDGE VENT
SCALE: 1:1D

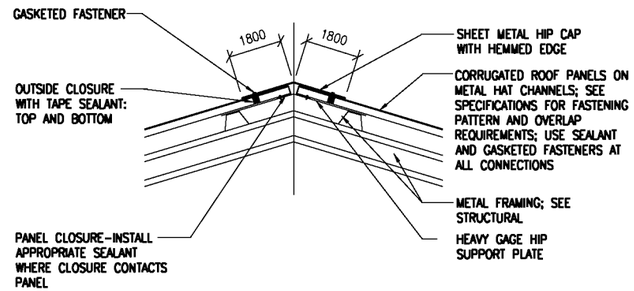

3 A-102 A-102 HIP DETAIL
SCALE: 1:10

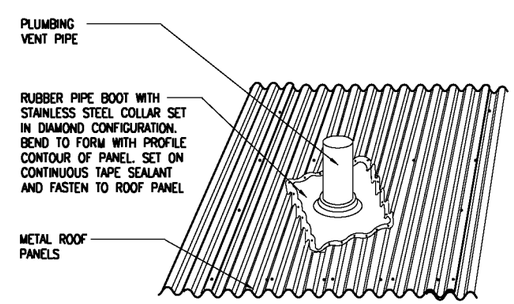

2 A-102 A-102 ROOF PENETRATION
SCALE: 1:10

UNLESS OTHERWISE NOTED, LINEAR DIMENSIONS SHOWN ARE IN MILLIMETERS (MM)

500 200 100 0 500 1000
SCALE: 1 : 10

5000 2000 1000 0 5000 10000
SCALE: 1 : 100

US Army Corps of Engineers
AFGHANISTAN ENGINEER DISTRICT

MARK	DESCRIPTION	DATE	APPR.	MARK	DESCRIPTION	DATE	APPR.

U.S. ARMY CORPS OF ENGINEERS
AFGHANISTAN DISTRICT
APO AE 96338

DESIGNED BY: | DATE:
DWN BY: | CKD BY: | SOLICITATION NO.:
SUBMITTED BY: | CONTRACT NO.:
PLOT SCALE: | PLOT DATE: | FILE NUMBER:
SIZE: ANSI D | FILE NAME: B25_A-102.DWG

SITE ADAPT DESIGN
B25 - WOMENS BARRAKS
ROOF PLAN AND DETAILS

SHEET IDENTIFICATION
A-102
SHEET 13 OF 29

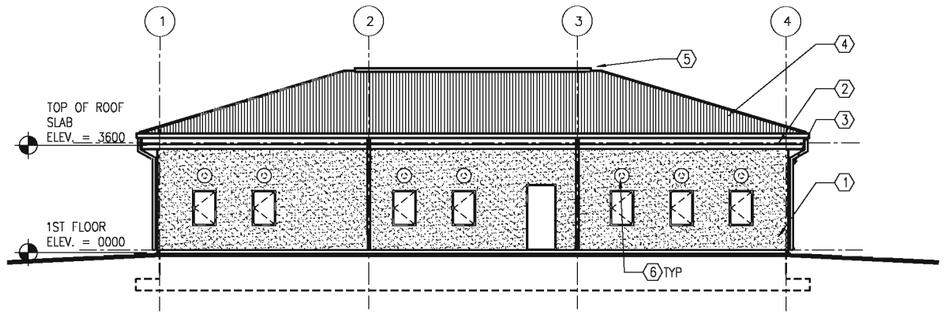

1 A1 A3 **EAST ELEVATION**
SCALE: 1:100

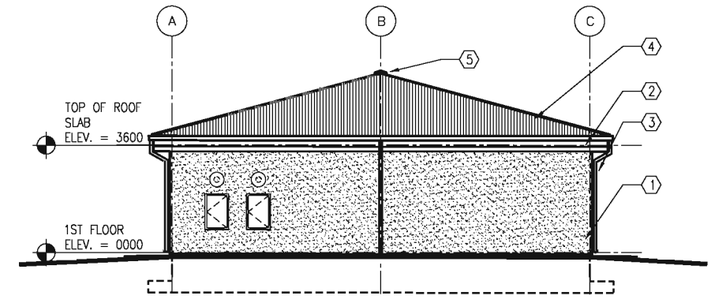

2 A1 A3 **NORTH ELEVATION**
SCALE: 1:100

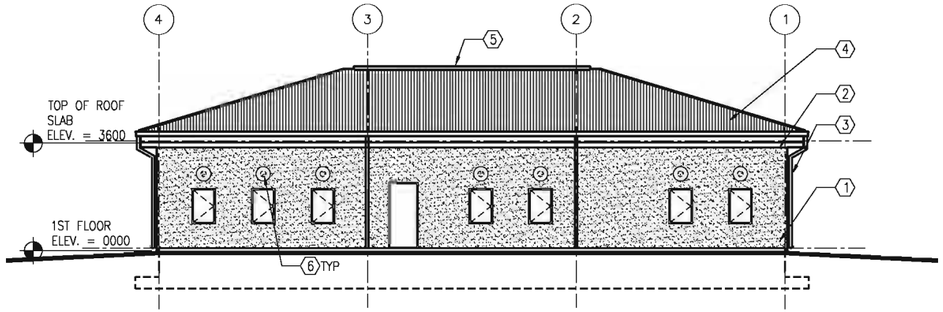

3 A1 A3 **WEST ELEVATION**
SCALE: 1:100

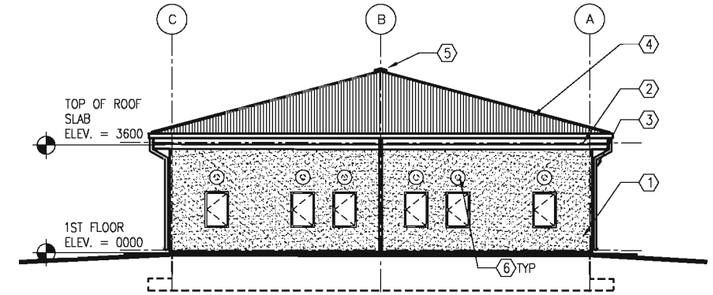

4 A1 A3 **SOUTH ELEVATION**
SCALE: 1:100

KEY NOTES: (X)

1. STUCCO AND RIGID INSULATION SYSTEM OVER CMU AND CONCRETE.
2. METAL GUTTER
3. METAL DOWNSPOUT WITH SPLASH BLOCK
4. CORRUGATED METAL ROOF PANELS ON COLD-FORMED METAL FRAMING.
5. CONTINUOUS RIDGE VENT
6. TWO-PIECE WALL THIMBLE AND TRIM PLATE FOR WOOD BURNING STOVE CHIMNEY PIPE. ~~STOVE AND PIPE BY OTHERS.~~

GENERAL NOTES:

1. COORDINATE SIZE AND LOCATION OF OPENINGS FOR MECHANICAL ITEMS WITH MECHANICAL DRAWINGS.
2. PROVIDE STRUCTURAL LINTELS AS REQUIRED – RE: STRUCT

UNLESS OTHERWISE NOTED, LINEAR DIMENSIONS SHOWN ARE IN MILLIMETERS (MM)

0 2000 4000 6000
SCALE: 1: 100

US Army Corps of Engineers®
AFGHANISTAN ENGINEER DISTRICT

MARK	DESCRIPTION	DATE	APPR.	MARK	DESCRIPTION	DATE	APPR.

DESIGNED BY: DWN BY: CKD BY: SUBMITTED BY: DATE: SOLICITATION NO.: CONTRACT NO.: FILE NUMBER:
PLOT SCALE: 1:1 PLOT DATE: SIZE: ANSI D FILE NAME: B25_A-201.DWG

U.S. ARMY CORPS OF ENGINEERS
AFGHANISTAN DISTRICT
APO AE 96338

SITE ADAPT DESIGN
B25 - WOMENS BARRAKS
ELEVATIONS

SHEET IDENTIFICATION
A-201
SHEET 14 OF 29

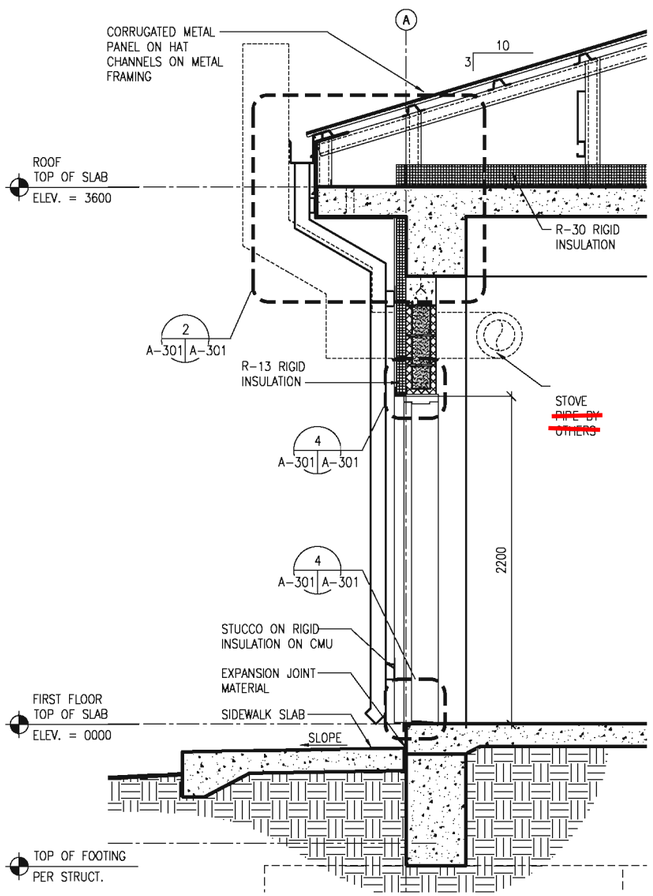

2 A-301 A-3D1 **WALL SECTION** SCALE: 1:20

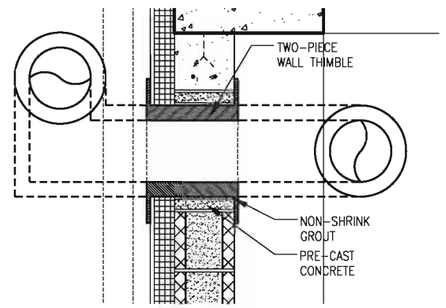

3 A-301 A-301 **THIMBLE DETAIL, TYPICAL** SCALE: 1:10

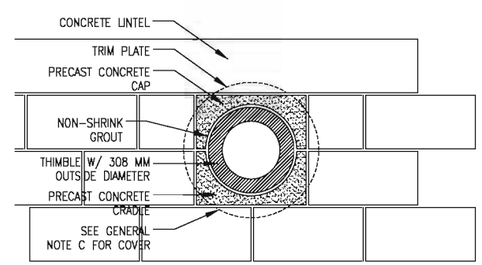

4 A-301 A-301 **THIMBLE DETAIL, TYPICAL** SCALE: 1:10

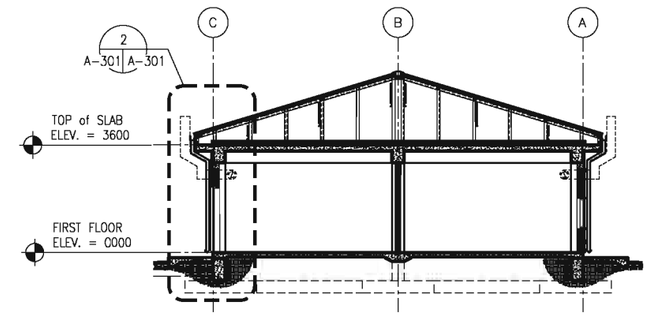

1 A-301 A-301 **BUILDING SECTION** SCALE: 1:100

GENERAL NOTES:

A. COORDINATE SIZE AND LOCATION OF OPENINGS FOR MECHANICAL ITEMS WITH MECHANICAL DRAWINGS.
B. PROVIDE STRUCTURAL LINTELS AS REQUIRED – RE: STRUCT
C. PROVIDE 480 MM SQUARE, 1.5 THICK GALVANIZED SHEET METAL COVER WITH 13 MM HEMMED EDGE FOR WALL THIMBLE UNTIL STOVE PIPE IS PROVIDED. INSTALL COVER ON EXTERIOR FACE OF THIMBLE TRIM PLATE. COVER SHALL BE SET IN SILICONE SEALANT AND FASTENED WITH 4 STAINLESS STEEL SCREWS. ALIGN FASTENER OPENINGS SO ADDITIONAL FASTENER PENETRATIONS ARE NOT CREATED IN EXTERIOR FINISH.

KEY NOTES:

(X)

1. STUCCO AND RIGID INSULATION SYSTEM OVER CMU AND CONCRETE.
2. CORRUGATED METAL ROOF PANELS ON COLD-FORMED METAL FRAMING.

UNLESS OTHERWISE NOTED, LINEAR DIMENSIONS SHOWN ARE IN MILLIMETERS (MM)

0 400 800 1600
SCALE: 1: 20

0 2000 4000 8000
SCALE: 1: 100

US Army Corps of Engineers®
AFGHANISTAN ENGINEER DISTRICT

MARK	DESCRIPTION	DATE	APPR.	MARK	DESCRIPTION	DATE	APPR.

U.S. ARMY CORPS OF ENGINEERS
AFGHANISTAN DISTRICT
APO AE 96338

DESIGNED BY: | DWN BY: | CKD BY: | SUBMITTED BY: | DATE: | SOLICITATION NO.: | CONTRACT NO.: | PLOT SCALE: | PLOT DATE: | FILE NUMBER: | SIZE: ANSI D | FILE NAME: B25_A-301.DWG

SITE ADAPT DESIGN
B25 - WOMENS BARRAKS
BUILDING SECTION / WALL SECTION

SHEET IDENTIFICATION
A-301
SHEET 15 OF 28

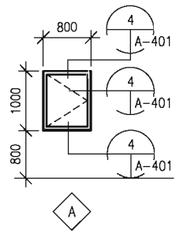

1 WINDOW TYPES
A-101 A-401 SCALE: 1:50

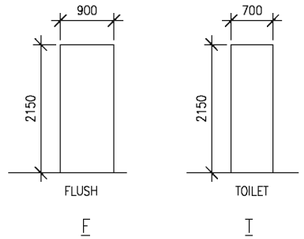

2 DOOR TYPES
A-101 A-401 SCALE: 1:50

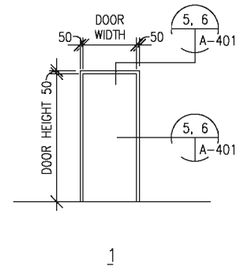

3 FRAME TYPES
A-101 A-401 SCALE: 1:50

WINDOW TYPES NOTES:

1. ALL EXTERIOR WINDOWS SHALL BE WOOD WITH INSECT SCREENS. WINDOWS SHALL BE COMMERCIAL GRADE.
2. GLAZING SHALL BE ACRYLIC SHEET.

DOOR TYPES NOTES:

1. INTERIOR AND EXTERIOR METAL DOORS AND FRAME COLORS SHALL MATCH ADJACENT WALL COLORS AS SELECTED BY THE CONTRACTING OFFICER.
2. HARDWARE SHALL BE HEAVY DUTY, COMMERCIAL GRADE, STAINLESS STEEL WITH A MATTE FINISH.
3. FRAMES, EXCEPT FIRE-RATED FRAMES, SHALL BE MOUNTED AND ADJUSTED IN ACCORDANCE WITH MANUFACTURER'S INSTRUCTIONS. FRAMES SHALL BE FASTENED WITH MINIMUM OF THREE FASTENING POINTS PER SIDE AT REGULAR INTERVALS.
4. DIMENSIONS SHOWN ON DOOR SCHEDULE ARE BASED UPON MODULAR MASONRY (OR ROUGH OPENING), HEIGHT OF 2200mm FOR STANDARD PERSONNEL DOORS. CONTRACTOR SHALL COORDINATE WITH DOOR SUPPLIER TO ENSURE THAT DIMENSIONS OF DOORS AND FRAMES PROVIDED ARE COMPATIBLE WITH DOOR OPENING DIMENSIONS.

DOOR HARDWARE TYPES:

HW-1 1-1/2 PR HINGES
1 EA EXIT DEVICE, SURFACE MOUNTED F08
1 EA CYLINDER. GRADE 1
1 EA DOOR CLOSER, C02061,LOW RESISTANCE
1 EA THRESHOLD J32130

HW-5 1-1/2 PR HINGES, A8112
1 EA LOCKSET W/LEVERS. GRADE 1
1 EA DOOR STOP. L02101 OR L02161
2 EA MOP PLATE, J103

HW-6 1-1/2 PR HINGES
1 EA LOCKSET,F93 ENTRY LOCK W/LEVERS. GRADE
1 EA DOOR CLOSER, C02061,LOW RESISTANCE
1 EA THRESHOLD J32130

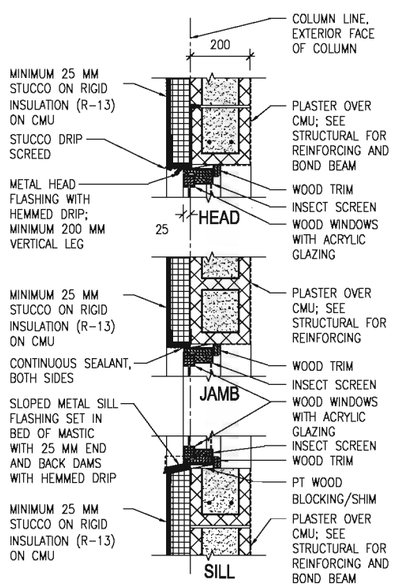

4 WINDOW DETAILS
A-101 A-401 SCALE: 1:10

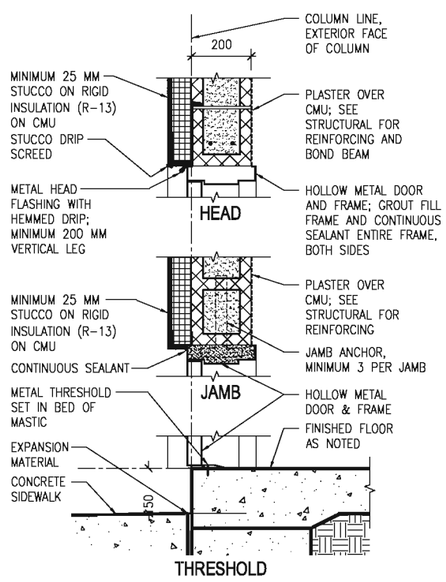

5 EXTERIOR DOOR DETAILS
A-101 A-401 SCALE: 1:10

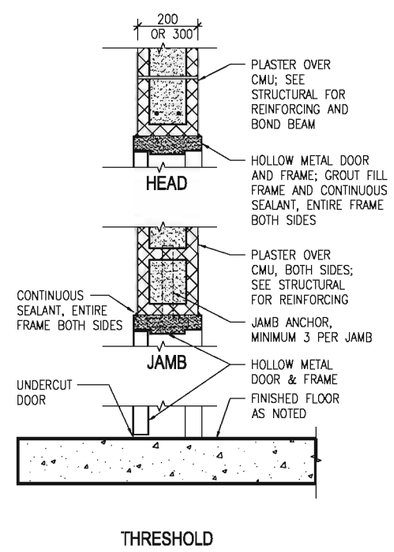

6 INTERIOR DOOR DETAILS
A-101 A-401 SCALE: 1:10

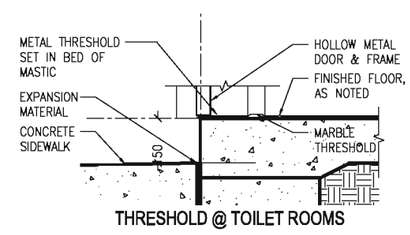

7 EXTERIOR THRESHOLD DETAILS
A-101 A-401 SCALE: 1:10

UNLESS OTHERWISE NOTED, LINEAR DIMENSIONS SHOWN ARE IN MILLIMETERS (MM)

0 200 400 800
SCALE: 1: 10

0 1000 2000 4000
SCALE: 1: 50

US Army Corps of Engineers
AFGHANISTAN ENGINEER DISTRICT

MARK	DESCRIPTION	DATE	APPR.	MARK	DESCRIPTION	DATE	APPR.

U.S. ARMY CORPS OF ENGINEERS
AFGHANISTAN DISTRICT
APO AE 96338

DESIGNED BY: | DATE:
DWN BY: | CKD BY: | SOLICITATION NO.:
SUBMITTED BY: | CONTRACT NO.:
PLOT SCALE: | PLOT DATE: | FILE NUMBER:
SIZE: ANSI D | FILE NAME: B26_A-401.DWG

SITE ADAPT DESIGN
B25 - WOMENS BARRAKS
DOOR / WINDOW DETAILS

SHEET IDENTIFICATION
A-401
SHEET 16 OF 28

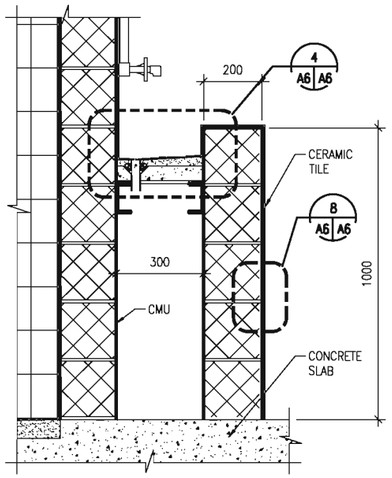

1 LAVATORY SECTION
A-101 A-501 SCALE: 1:10

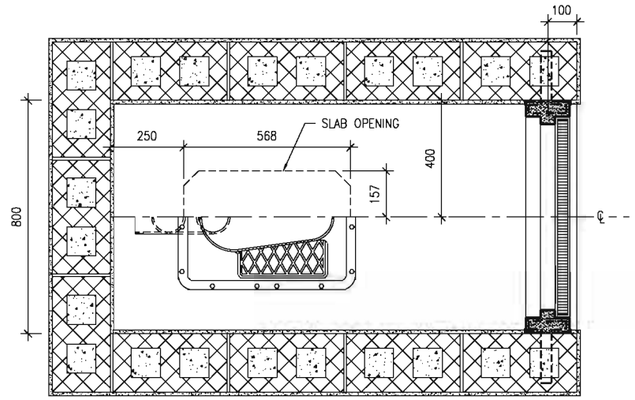

2 TYPICAL TOILET STALL DETAIL
A-101 A-501 SCALE: 1:10

ZURN Z1290 EASTERN STYLE WATER CLOSET

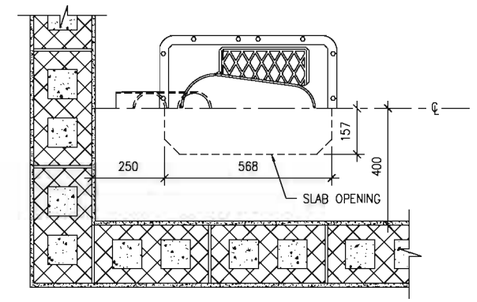

3 TYPICAL TOILET DETAIL
A-101 A-501 SCALE: 1:10

ZURN Z1290 EASTERN STYLE WATER CLOSET

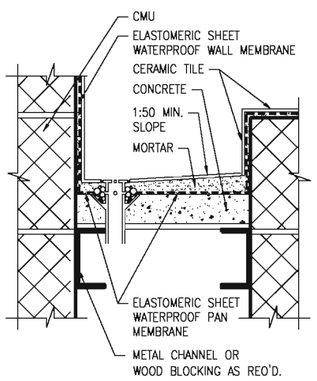

4 LAVATORY DETAIL
A-101 A-501 SCALE: NTS

NOTE: WALL MEMBRANE LAPS OVER PAN MEMBRANE
TCA METHOD: B417

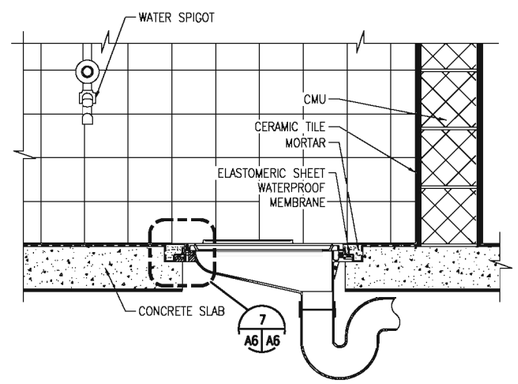

5 THIN SET LATRINE
A-101 A-501 SCALE: 1:10

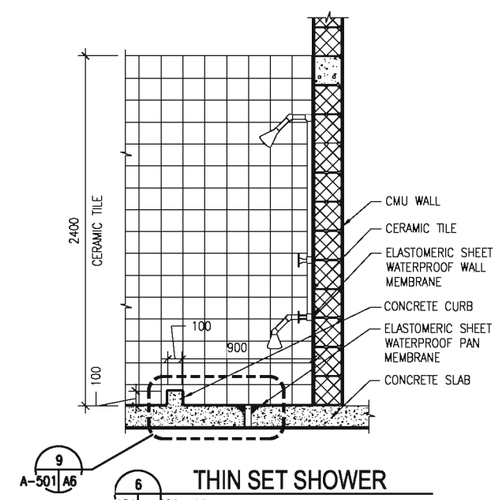

6 THIN SET SHOWER
A-101 A-501 SCALE: 1:20

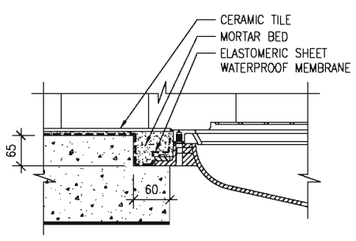

7 MOUNTING DETAIL
A-101 A-501 SCALE: NTS

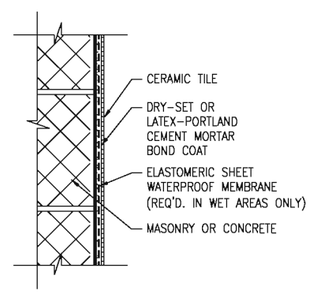

8 WALL DETAIL
A-101 A-501 SCALE: NTS

TCA METHOD: W222

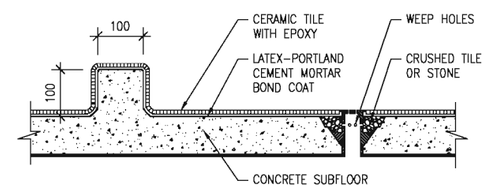

9 THIN SET CURB
A-101 A-501 SCALE: NTS

TCA METHOD: F115

0 200 400 800
SCALE: 1: 10

0 400 800 1600
SCALE: 1: 20

US Army Corps of Engineers®
AFGHANISTAN ENGINEER DISTRICT

MARK	DESCRIPTION	DATE	APPR.	MARK	DESCRIPTION	DATE	APPR.

U.S. ARMY CORPS OF ENGINEERS
AFGHANISTAN DISTRICT
APO AE 96338

DESIGNED BY: | DATE:
DWN BY: | CKD BY: | SOLICITATION NO.:
SUBMITTED BY: | CONTRACT NO.:
PLOT SCALE: 1:1 | PLOT DATE: | FILE NUMBER:
SIZE: ANSI D | FILE NAME: B25_A501.DWG

SITE ADAPT DESIGN
B25 - WOMENS BARRAKS

FIXTURE DETAILS

SHEET IDENTIFICATION
A-501
SHEET 17 OF 29

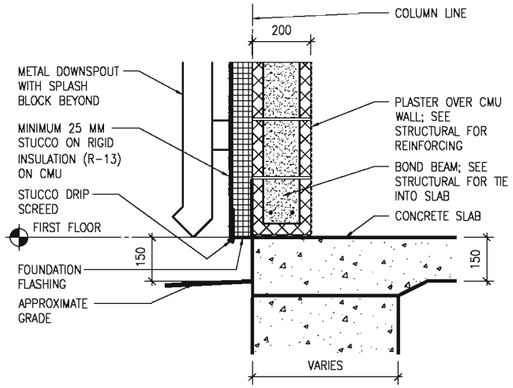

1 A-101 A-601 **STUCCO BASE DETAIL**
SCALE: 1:10

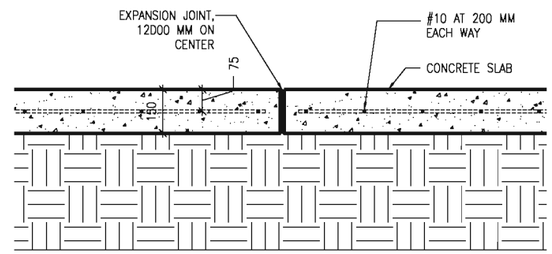

2 A-101 A-601 **SIDEWALK EXPANSION JOINT DETAIL**
SCALE: 1:10

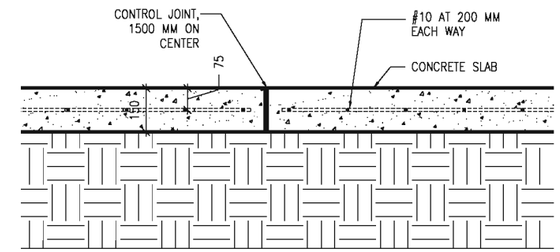

3 A-101 A-601 **SIDEWALK CONTROL JOINT DETAIL**
SCALE: 1:10

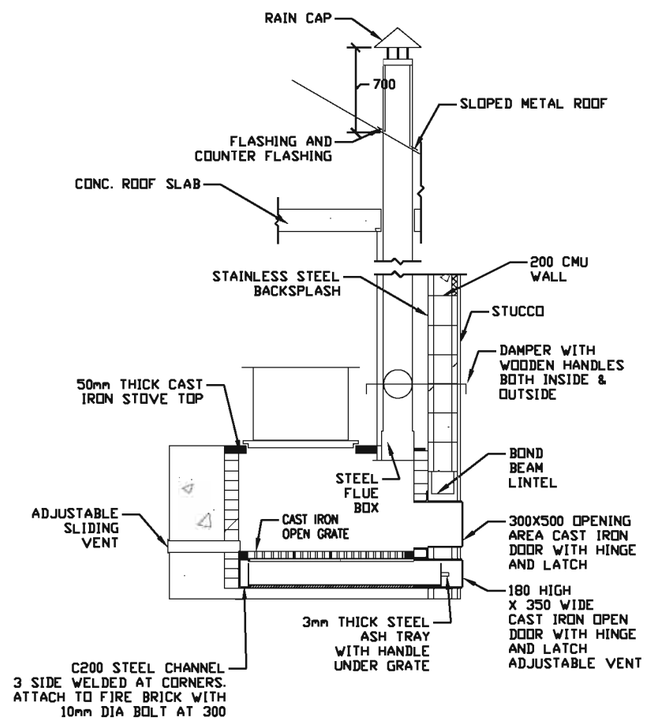

4 A-101 A-601 **WOOD STOVE DETAIL**
SCALE: 1:20

UNLESS OTHERWISE NOTED, LINEAR DIMENSIONS SHOWN ARE IN MILLIMETERS (MM)

0 1000 2000 4000
SCALE: 1: 50

US Army Corps of Engineers
AFGHANISTAN ENGINEER DISTRICT

MARK	DESCRIPTION	DATE	APPR.

MARK	DESCRIPTION	DATE	APPR.

U.S. ARMY CORPS OF ENGINEERS
AFGHANISTAN DISTRICT
APO AE 96338

DESIGNED BY: | DATE:
DWN BY: | CKD BY: | SOLICITATION NO.:
SUBMITTED BY: | CONTRACT NO.:
PLOT SCALE: 1:1 | PLOT DATE: | FILE NUMBER:
SIZE: ANSI D | FILE NAME: B20_A-601.DWG

SITE ADAPT DESIGN
B25 - WOMENS BARRAKS
MISCELLANEOUS DETAILS

SHEET IDENTIFICATION
A-601
SHEET 18 OF 29

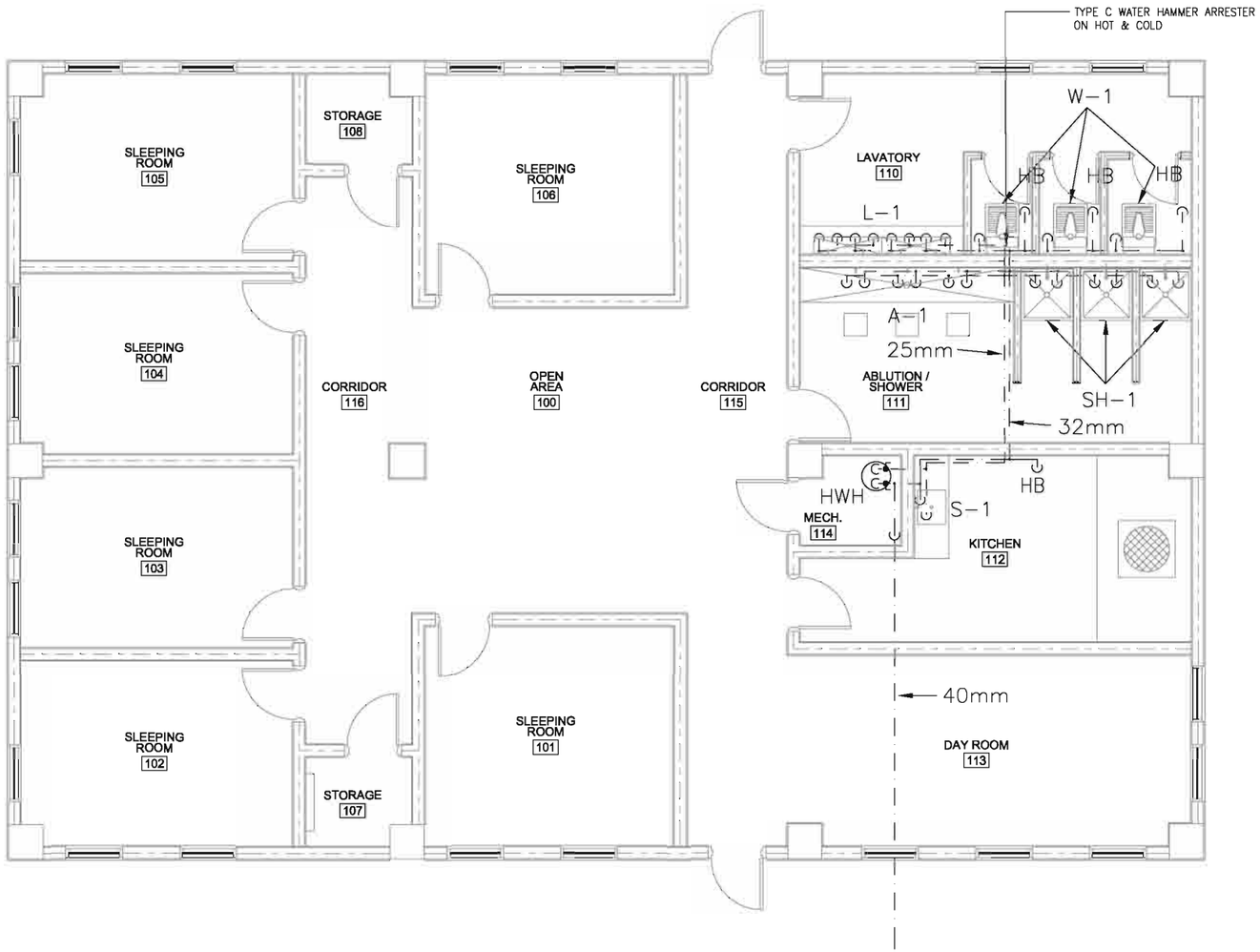

1 P1 P1 FEMALE OFFICER BARRACKS FLOOR PLAN - PLUMBING (WATER)

SCALE: 1:20

FLOOR PLAN NOTES:

1. DO NOT SCALE DRAWINGS – ALL DIMENSIONS AND CONDITIONS SHALL BE CHECKED AND VERIFIED BY THE CONTRACTOR AT THE SITE.
2. ALL WORK PERFORMED ON THIS BUILDING SHALL BE IN COMPLIANCE WITH THE INTERNATIONAL PLUMBING CODE.
3. ALL WORK PERFORMED UNDER AND IN CONNECTION WITH THESE DRAWINGS AND SPECIFICATIONS SHALL BE IN STRICT COMPLIANCE WITH THE LATEST SAFETY AND HEALTH STANDARDS.
4. REPORT ANY DISCREPANCIES FOUND IN THE PLUMBING DRAWINGS AND/OR IN THE SPECIFICATIONS DURING THE BIDDING PROCESS FOR CLARIFICATION BY THE ENGINEER.
5. REFER TO SHEET P-501 FOR DETAILS AND SYMBOLS.
6. ALL WATER, SANITARY AND VENT LINES TO BE EXPOSED. RUN LINES TIGHT TO CEILING AND WALL.
7. ALL FIXTURES TO BE "LOW FLOW EFFICIENT FIXTURES".
8. PLUMBING CONTRACTOR TO PROVIDE WATER HAMMER ARRESTORS AT ALL WATER CLOSETS.
9. HWH-400 LITER ELECTRIC WATER HEATER, 380/3PHASE/50CYCLE, 9KW. INCLUDE TEMPERATURE AND PRESSURE RELIEF VALVE.

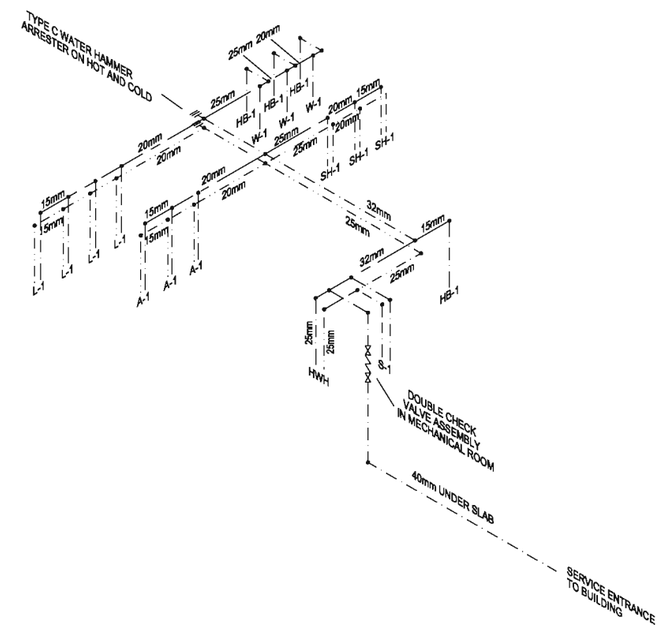

1 P2 P2 FEMAL OFFICER BARRACKS WATER SUPPLY ISOMETRIC

SCALE: N.T.S.

LEGEND

COLD WATER

HOT WATER

SANITARY SEWER LINE

VENT LINE

1000 400 200 0 1000 2000

SCALE: 1 : 20

US Army Corps of Engineers
AFGHANISTAN ENGINEER DISTRICT

MARK	DESCRIPTION	DATE	APPR.	MARK	DESCRIPTION	DATE	APPR.

DESIGNED BY: | DWN BY: | CKD BY: | SUBMITTED BY: | PLOT SCALE: | PLOT DATE: | SIZE: ANSI D | FILE NAME: B25_P-101.DWG

DATE:
SOLICITATION NO.:
CONTRACT NO.:
FILE NUMBER:

U.S. ARMY CORPS OF ENGINEERS
AFGHANISTAN DISTRICT
APO AE 96338

SITE ADAPT DESIGN
B25 - WOMENS BARRAKS
PLUMBING PLAN

SHEET IDENTIFICATION
P-101
SHEET 19 OF 28

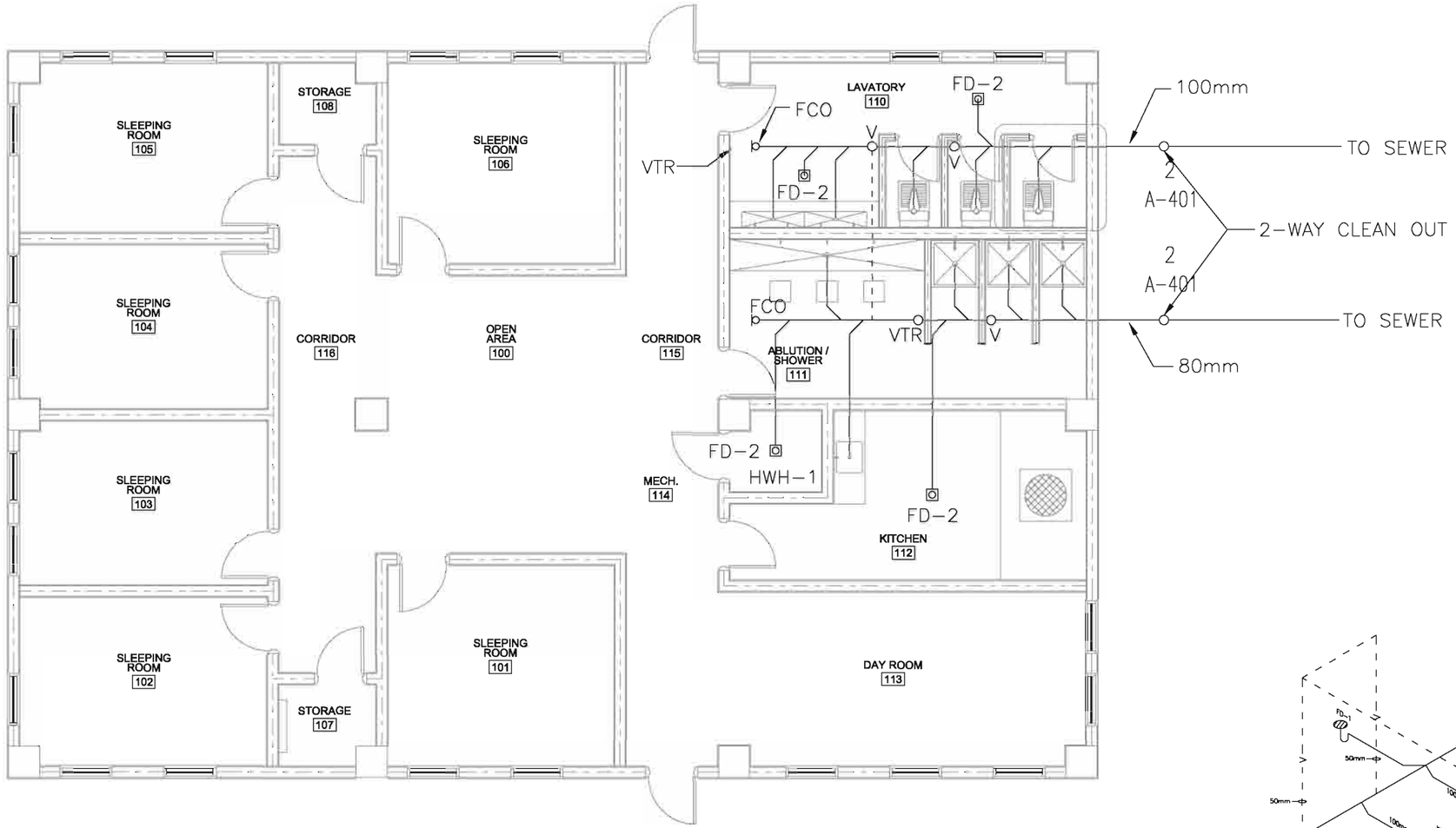

2 P1 P1 FEMALE OFFICER BARRACKS FLOOR PLAN - PLUMBING (SANITARY)

SCALE: 1:20

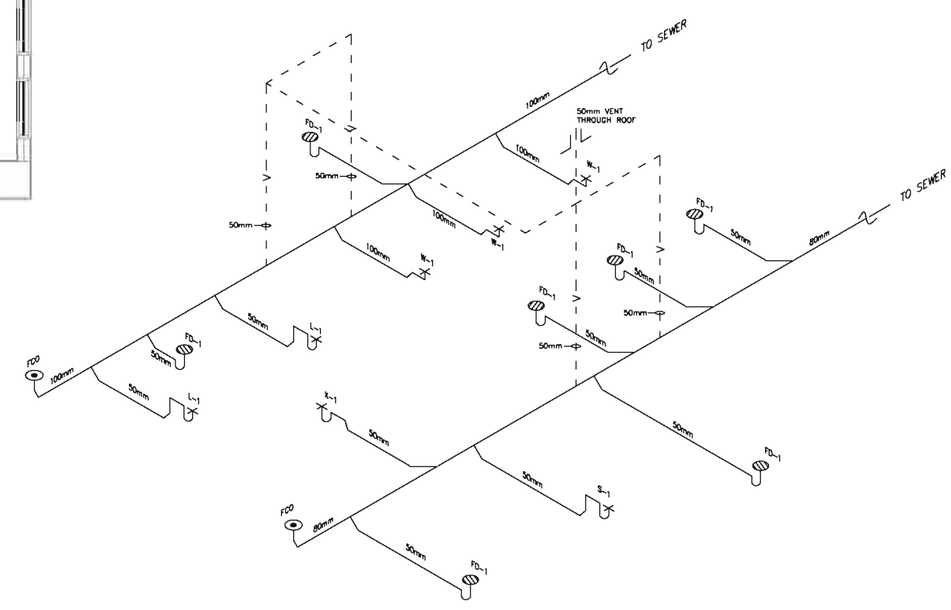

3 P1 P1 BARRACKS DRAINAGE ISOMETRIC

SCALE: N.T.S.

FLOOR PLAN NOTES:

1. DO NOT SCALE DRAWINGS – ALL DIMENSIONS AND CONDITIONS SHALL BE CHECKED AND VERIFIED BY THE CONTRACTOR AT THE SITE.
2. ALL WORK PERFORMED ON THIS BUILDING SHALL BE IN COMPLIANCE WITH THE INTERNATIONAL PLUMBING CODE.
3. ALL WORK PERFORMED UNDER AND IN CONNECTION WITH THESE DRAWINGS AND SPECIFICATIONS SHALL BE IN STRICT COMPLIANCE WITH THE LATEST SAFETY AND HEALTH STANDARDS.
4. REPORT ANY DISCREPANCIES FOUND IN THE PLUMBING DRAWINGS AND/OR IN THE SPECIFICATIONS DURING THE BIDDING PROCESS FOR CLARIFICATION BY THE ENGINEER.
5. REFER TO SHEET P-501 FOR DETAILS AND SYMBOLS.
6. ALL WATER, SANITARY AND VENT LINES TO BE EXPOSED. RUN LINES TIGHT TO CEILING AND WALL.
7. ALL FIXTURES TO BE "LOW FLOW EFFICIENT FIXTURES".
8. PLUMBING CONTRACTOR TO PROVIDE WATER HAMMER ARRESTORS AT ALL WATER CLOSETS.

LEGEND

COLD WATER

HOT WATER

SANITARY SEWER LINE

VENT LINE

1000 400 200 0 1000 2000

SCALE: 1 : 20

US Army Corps of Engineers
AFGHANISTAN ENGINEER DISTRICT

MARK	DESCRIPTION	DATE	APPR.	MARK	DESCRIPTION	DATE	APPR.

U.S. ARMY CORPS OF ENGINEERS
AFGHANISTAN DISTRICT
APO AE 96338

DESIGNED BY: | DATE:
DWN BY: | CKD BY: | SOLICITATION NO.:
SUBMITTED BY: | CONTRACT NO.:
PLOT SCALE: 1:1 | PLOT DATE: | FILE NUMBER:
SIZE: ANSI D | FILE NAME: B25_P-102.DWG

SITE ADAPT DESIGN
B25 - WOMENS BARRAKS
SHEET TITLE 2

SHEET IDENTIFICATION
P-102
SHEET 20 OF 28

FIXTURE LIST

TYPE	ITEM	SOIL & WASTE	COLD WATER	HOT WATER	REMARKS	REMARKS 2
W-1	EASTERN STYLE WATER CLOSET	100mm	20mm	------	FLUSH VALVE	LOW FLOW EFFICIENT TYPE
L-1	TROUGH FIXTURE	50mm	15mm	15mm	FABRICATED IN FIELD	LOW FLOW EFFICIENT TYPE
SH-1	SHOWER	50mm	15mm	15mm	PRIVATE SHOWER	LOW FLOW EFFICIENT TYPE
S-1	KITCHEN SINK	50mm	15mm	15mm	559mm x 635mm x 165mm STAINLESS STEEL	LOW FLOW EFFICIENT TYPE
A-1	ABLUTION	50mm	15mm	15mm	------	LOW FLOW EFFICIENT TYPE
HWH-1	WATER HEATER	---	25mm	25mm	80g 10kW	----------
HB-1	HOSE BIBB	---	15mm	---	---	----------
FD-1	FLOOR DRAIN	80mm	---	---	---	----------

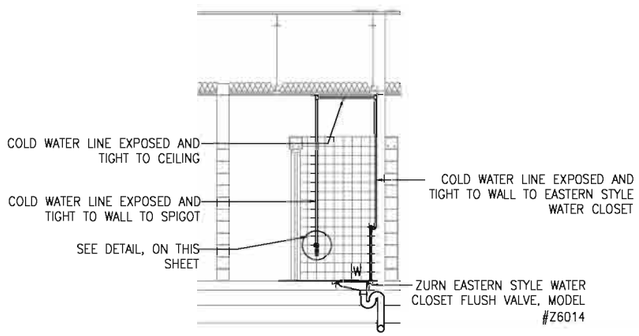

TYPICAL EASTERN STYLE WATER CLOSET SANITARY & WATER INSTALLATION SCHEMATIC
NO SCALE

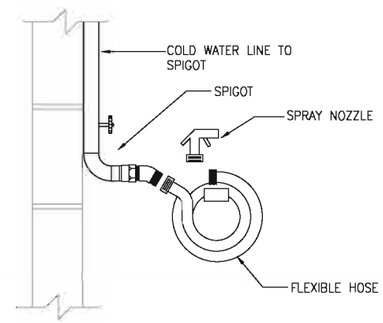

TYPICAL DETAIL – SPIGOT, FLEXIBLE HOSE, AND SPRAY NOZZLE
NO SCALE

PLUMBING LEGEND

- BALL VALVE
- UNION
- WATER HAMMER ARRESTOR (WHA)
- BACKFLOW PREVENTER
- OR — CLEANOUT (CO.)
- THERMOMETER
- FLOOR DRAIN
- ROOF PENETRATION
- VTR — VENT THROUGH ROOF

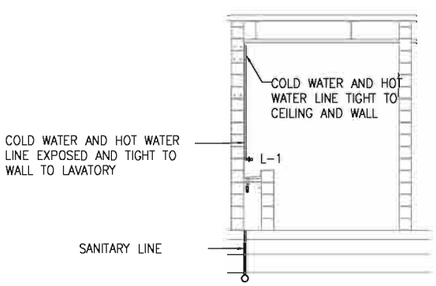

TYPICAL LAVATORY SANITARY & WATER INSTALLATION SCHEMATIC
NO SCALE

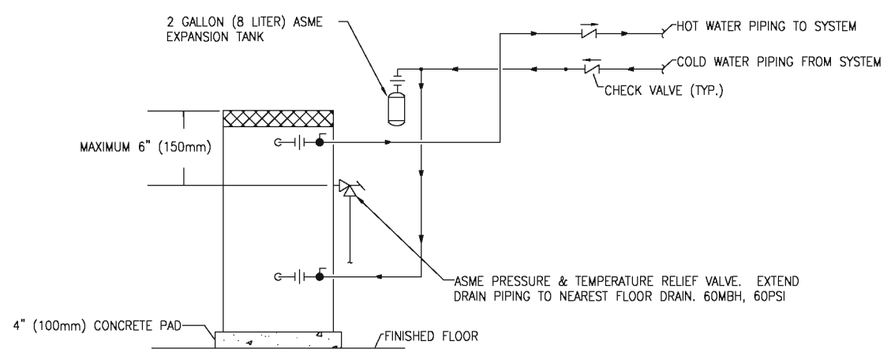

ELECTRIC WATER HEATER PIPING SCHEMATIC
NO SCALE

GENERAL PLUMBING NOTES:

1. ALL SANITARY PIPING SHALL BE BELOW FLOOR, AND ALL WATER, AND VENT PIPING SHALL BE TIGHT TO CEILING, UNLESS OTHERWISE NOTED.

2. PLUMBING CONTRACTOR SHALL COORDINATE PLUMBING WORK WITH THE WORK OF ALL OTHER TRADES. VERIFY THE LOCATIONS OF ALL UTILITIES AT THE SITE PRIOR TO THE START OF ANY PLUMBING WORK.

3. COORDINATE ALL ACCESS PANEL LOCATIONS WITH THE ARCHITECT AND GENERAL CONTRACTOR.

4. ALL SANITARY PIPING BELOW SLAB SHALL BE A MINIMUM OF 51mm, UNLESS OTHERWISE NOTED OR AS REQUIRED BY THE LOCAL AUTHORITY HAVING JURISDICTION.

5. ALL SANITARY BRANCH LINES SHALL BE SLOPED AT 6mm PER 305mm, AND ALL MAIN LINES SHALL BE SLOPED AT 3mm PER 305mm, UNLESS OTHERWISE NOTED OR AS REQUIRED BY THE LOCAL AUTHORITY HAVING JURISDICTION.

6. THE PLUMBING CONTRACTOR SHALL BE RESPONSIBLE FOR COORDINATION WITH ALL UTILITY AUTHORITIES FOR INSTALLATION REQUIRMENTS, REGULATIONS, FEES, PERMITS, AND APPROVALS BEFORE THE START OF CONSTRUCTION.

7. THE PLUMBING CONTRACTOR SHALL ROUGH-IN AND CONNECT ALL EQUIPMENT REQUIRING WATER, WASTE, AND/OR VENT WHETHER OR NOT FURNISHED UNDER THIS CONTRACT. THE PLUMBING CONTRACTOR SHALL ALSO FURNISH AND INSTALL ALL NECESSARY PIPE, FITTINGS, VALVES, TRAPS, ETC., REQUIRED FOR A COMPLETE INSTALLATION, LEAVING SAME READY FOR SERVICE.

8. SEE ARCHITECTURAL DRAWING A-301 THIMBLE DETAIL FOR TYPICAL VENT THRU ROOF DETAIL.

US Army Corps of Engineers
AFGHANISTAN ENGINEER DISTRICT

MARK	DESCRIPTION	DATE	APPR.	MARK	DESCRIPTION	DATE	APPR.

U.S. ARMY CORPS OF ENGINEERS
AFGHANISTAN DISTRICT
APO AE 96338

DESIGNED BY: | DATE:
DWN BY: | CKD BY: | SOLICITATION NO.:
SUBMITTED BY: | CONTRACT NO.:
PLOT SCALE: | PLOT DATE: | FILE NUMBER:
X10
SIZE: ANSI D | FILE NAME: B25_P-501.DWG

SITE ADAPT DESIGN
B25 - WOMENS BARRAKS
TYPICAL PLUMBING SECTIONS & DETAILS AND NOTES & SCHEDULES

SHEET IDENTIFICATION
P-501
SHEET 21 OF 29

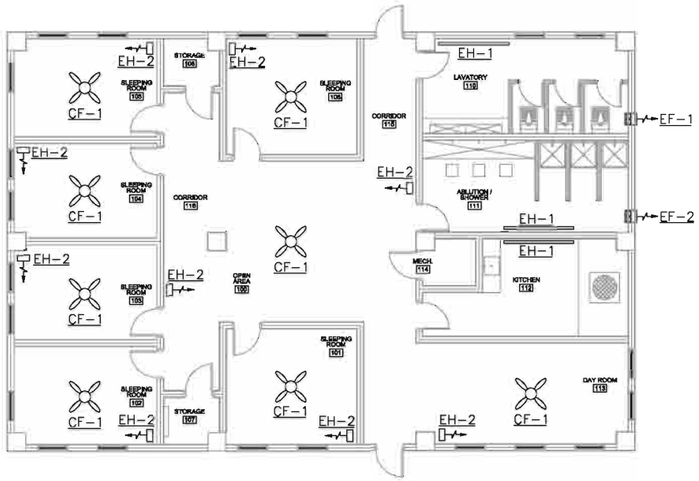

1 M1 M1 **PLAN - HVAC**

SCALE: 1:100

EXHAUST FAN SCHEDULE

NO.	TYPE	FAN LPS	DRIVE	HP	SP mmH20	ELECT. CHAR.	SWITCH
EF-1	WALL	60	DIRECT	FRACT	13	220/1/50	@ WALL
EF-2	WALL	70	DIRECT	FRACT	13	220/1/50	@ WALL

NOTES:
1. WALL MOUNTED EXHAUST FAN MOUNT AT 600mm BELOW CEILING.

ELECTRIC UNIT HEATER SCHEDULE

NO.	LPS	KW	F.A.T. °C	ELECT. CHAR.	MOUNTING	NOTE
EH-1	---	1.1	38	370/1/50	WALL HUNG	1
EH-2	200	2.2	38	370/1/50	WALL HUNG	2

NOTES:
1. MARKEL CVX SERIES RADIANT COVE CEILING HEATER MODEL CV10022Xi OR APPROVED EQUAL
2. UNIT HEATERS SHALL HAVE TAMPER PROOF INTEGRAL STATS.

CEILING FAN

NO.	BLADE SIZE mm	BLADE SIZE IN	VOLTAGE	SWITCH
CF-1	1320	52	220/1/50	@ WALL

NOTES:
1. FINAL ELECTRICAL CONNECTIONS BY EC.

GENERAL NOTES:

1. DO NOT SCALE DRAWINGS – ALL DIMENSIONS AND CONDITIONS SHALL BE CHECKED AND VERIFIED BY THE CONTRACTOR AT THE SITE.
2. ALL WORK PERFORMED ON THIS BUILDING SHALL BE IN COMPLIANCE WITH INTERNATIONAL MECHANICAL CODE.
3. ALL WORK PERFORMED UNDER AND IN CONNECTION WITH THESE DRAWINGS AND SPECIFICATIONS SHALL BE IN STRICT COMPLIANCE WITH THE LATEST SAFETY AND HEALTH STANDARDS.

SYMBOLS:

(X) KEY NOTE

(.050) AIR VOLUME IN LITERS PER SECOND (LPS)

FD FIRE DAMPER

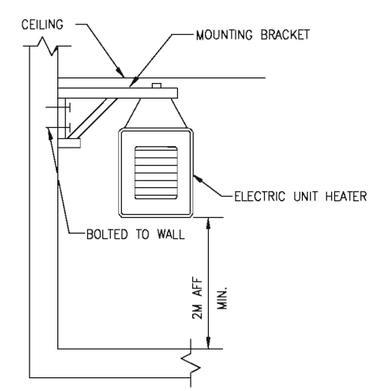

ELECTRIC UNIT HEATER MOUNTING
N.T.S.

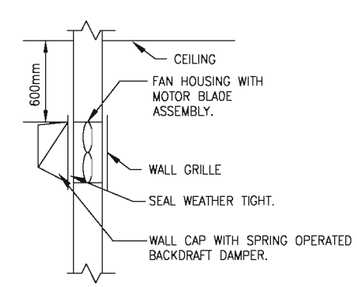

WALL MOUNTED EXHAUST FAN DETAIL
N.T.S.

5000 2000 1000 0 5000 10000
SCALE: 1 : 100

US Army Corps of Engineers
AFGHANISTAN ENGINEER DISTRICT

MARK	DESCRIPTION	DATE	APPR.

MARK	DESCRIPTION	DATE	APPR.

DESIGNED BY: | DATE:
DWN BY: | CKD BY: | SOLICITATION NO.:
SUBMITTED BY: | CONTRACT NO.:
PLOT SCALE: 1:1D | PLOT DATE: | FILE NUMBER:
SIZE: ANSI D | FILE NAME: B25_M-101.DWG

U.S. ARMY CORPS OF ENGINEERS
AFGHANISTAN DISTRICT
APO AE 96338

SITE ADAPT DESIGN
B25 - WOMENS BARRAKS
PLAN-HVAC

SHEET IDENTIFICATION
M-101
SHEET 22 OF 29

POWER

- DISTRIBUTION PANELBOARD
- NEW PANELBOARD – SURFACE
- NEW PANELBOARD – RECESSED
- GENERATOR
- TRANSFORMER (DRAWN TO SIZE)
- JUNCTION BOX
- JUNCTION BOX – CEILING
- FUSIBLE SAFETY SWITCH
- MOTOR
- ^{M} MOTOR STARTING SWITCH – 220V, 20A RATED UNLESS OTHERWISE NOTED
- ELECTRIC WATER HEATER
- CF CEILING FAN – REFER TO SPECIFICATION SECTION 26 20 00

RECEPTACLES

- DUPLEX 20A TYPE CEE 7/7 "SCHUKO STYLE" UNSWITCHED RECEPTACLE
- GF DUPLEX 20A TYPE CEE 7/7 "SCHUKO STYLE" UNSWITCHED RECEPTACLES – 10mA GROUND FAULT INTERRUPTER TYPE
- WPI DUPLEX 20A TYPE CEE 7/7 "SCHUKO STYLE" UNSWITCHED TYPE WITH WEATHERPROOF COVER – 10mA GROUND FAULT INTERRUPTER TYPE
- EXP DUPLEX 20A TYPE CEE 7/7 "SCHUKO STYLE" UNSWITCHED RECEPTACLES – EXPLOSION PROOF
- * INDICATES MOUNT DEVICE ABOVE COUNTERTOP OR AT 1070mm ABOVE FINISHED FLOOR WHERE NO COUNTER IS TO BE INSTALLED.

LIGHTNING PROTECTION

- AIR TERMINAL 20mm O.D. X 450mm SOLID COPPER, NICKEL PLATED ON ADHESIVE BASE
- EQ EQUIPMENT AIR TERMINAL
- TEST WELL WITH GROUND ROD(S)
- GROUND ROD
- G GROUND PLATE
- MAIN GROUND CONDUCTER CONCEALED WITHIN CONSTRUCTION
- MAIN GROUND CONDUCTOR EXPOSED ON EXPOSED ON BUILDING EXTERIOR SURFACE
- GROUND CONDUCTOR CAD WELDED TO GROUND CABLE OR EQUIPMENT
- GROUND ROD TRIPOD, SPACED 3 METERS APART.
- LEVEL TO LEVEL CABLE

LIGHTING

- LIGHTING FIXTURE – SEE FIXTURE SCHEDULE FOR MORE INFORMATION
- EMERGENCY LIGHTING FIXTURE – SEE FIXTURE SCHEDULE FOR MORE INFORMATION
- DOWNLIGHT
- LIGHTING FIXTURE ON NORMAL/EMERGENCY
- WALL MOUNTED LIGHT FIXTURE
- EXIT SIGN – DIRECTIONAL ARROWS AS INDICATED ON DRAWINGS
- REMOTE HEAD FOR BATTERY PACK
- $ SINGLE POLE SWITCH – 20A RATED
- $^{3} 3-WAY SWITCH – 20A RATED
- $^{4} 4-WAY SWITCH – 20A RATED
- LC LIGHTING CONTACTOR
- POLE MOUNTED SITE LIGHTING FIXTURE– NUMBER OF FIXTURES PER POLE AS INDICATED ON DRAWINGS
- EXTERIOR DIRECTIONAL LIGHTING FIXTURE
- a SMALL CASE LETTERS REPRESENTS LAMP(S) / SWITCHES.

TELECOMMUNICATIONS

- ▼ TELEPHONE OUTLET(S) @ 45cm AFF. U.N.O. WITH 20mm RACEWAY TERMINATED TO TELEDATA TERMINAL BOARD.
- ▽ DATA OUTLET(S) @ 45cm AFF. U.N.O. WITH 20mm RACEWAY TERMINATED TO TELEDATA TERMINAL BOARD.

TELECOMMUNICATIONS (CONTINUED)

- ▽ COMBINATION TELEPHONE/DATA OUTLET(S) @ 45cm AFF. U.N.O. WITH 27mm RACEWAY TERMINATED TO TELEDATA TERMINAL BOARD.
- "▼ WALL MTD. TELEPHONE OUTLET WITH 20mm RACEWAY TO TELEDATA TERMINAL BOARD.
- (x)T INDICATES NUMBER OF TELEPHONE OUTLET(S) AND ASSOCIATED CABLING
- (x)D INDICATES NUMBER OF DATA OUTLET(S) AND ASSOCIATED CABLING
- (x)TF INDICATES NUMBER OF TELEPHONE OUTLETS AND ASSOCIATED CABLING WITH 1 OUTLET AND CABLE DEDICATED FOR FAX

SINGLE LINE SYMBOLS

- SWITCH
- BREAKER
- FUSE
- TRANSFORMER
- GROUND
- CONTACT (NORMALLY OPEN)
- CONTACT (NORMALLY CLOSED)
- TRANSFER SWITCH
- CURRENT TRANSFORMER
- INDICATES NEW ELECTRICAL EQUIPMENT
- C INDICATES NEW CONTROL WIRING AND CONDUIT
- EQUIPMENT OUTLINE

MISCELLANEOUS

- BRANCH CIRCUIT WIRING, SURFACE MOUNTED ON WALLS
- BRANCH CIRCUIT WIRING – 6mm²
- BRANCH CIRCUIT WIRING – UNDER FLOOR
- HOME RUN BACK TO PANEL
- CONDUIT TURNED DOWN
- CONDUIT TURNED UP
- LV LOW VOLTAGE WIRING AND CONDUIT
- ~ INDICATES CONTINUATION OF LINE

FIRE ALARM

- FACP FIRE ALARM CONTROL PANEL WITH BATTERY BACKUP
- F FIRE ALARM PULL STATION

FIRE ALARM (CONTINUED)

- F FIRE ALARM STROBE – WALL MOUNTED
- F FIRE ALARM AUDIBLE/STROBE – WALL MOUNTED
- F FIRE ALARM HORN/STROBE – WALL MOUNTED
- S SMOKE DETECTOR
- H HEAT DETECTOR CEILING MOUNTED
- D DUCT DETECTOR – PROVIDED BY EC, INSTALLED BY MC AND CONNECTED BY EC

DENOTATIONS & ABBREVIATIONS

AFF	ABOVE FINISHED FLOOR
C	CEILING MOUNTED
E	EMERGENCY
EC	ELECTRICAL CONTRACTOR
EPO	EMERGENCY POWER OFF
EXP	EXPLOSION PROOF
F	FIRE ALARM
FF	FLUSH FLOOR MOUNTED
FL	FLUORESCENT
FO	FIBER OPTIC
FSS	FUSED SAFETY SWITCH
GF	GROUND FAULT INTERRUPTER
GC	GENERAL CONTRACTOR
IG	ISOLATED GROUND
K	KEY
LV	LOW VOLTAGE
M	MOTOR
MC	MECHANICAL CONTRACTOR
NE	NORMAL/EMERGENCY
NFSS	NON–FUSED SAFETY SWITCH
PA	PAGING SYSTEM
PLC	PLUMBING CONTRACTOR
SL	SINGLE LINE
T	TELEPHONE

DENOTATIONS & ABBREVIATIONS (CONT.)

TP	TAMPER PROOF
UE	UNDERGROUND ELECTRIC
W	WALL MOUNTED
WP	WEATHERPROOF WITH GROUND FAULT INTERRUPTION
WT	WATER TIGHT

GENERAL PROJECT NOTES:

G1. UNLESS OTHERWISE NOTED, PROVIDE ALL EQUIPMENT SHOWN ON THE PLANS. THE ELECTRICAL CONTRACTOR SHALL COORDINATE ALL SYMBOLS SHOWN ON THE PLANS WITH THE SYMBOL LIST. IT SHALL BE THE RESPONSIBILITY OF THE CONTRACTOR TO VERIFY THE INTENT OF ANY SYMBOL THAT IS SHOWN ON THE PLANS AND NOT INDICATED ON THE SYMBOL LIST WITH THE ENGINEER PRIOR TO BID.

G2. THE CONTRACTOR SHALL VERIFY THE LOCATION OF ALL UNDERGROUND UTILITIES WITHIN THE CONSTRUCTION AREA THREE (3) WORKING DAYS NOTICE BEFORE COMMENCING DIGGING. NOTIFY THE LOCAL AUTHORITY HAVING JURISDICTION AND WAIT THE REQUIRED TIME BEFORE COMMENCING TO DIG.

G3. THE CONTRACTOR SHALL COORDINATE CONDUIT RUNS, LIGHTING FIXTURES AND OTHER EQUIPMENT LOCATIONS WITH THE OTHER TRADE CONTRACTORS TO AVOID CONFLICTS.

G4. WHERE VOLTAGES AND FREQUENCIES ON THE DRAWINGS AND IN THE SPECIFICATIONS DIFFER FROM THE LOCAL ONES, ALL WORK SHALL BE PERFORMED USING THE LOCAL VOLTAGES AND FREQUENCIES.

G5. THE MINIMUM WIRE SIZE ON THE PROJECT SHALL BE 4mm². THE MINIMUM CONDUIT SIZE SHALL BE 20mm. THE MINIMUM BREAKER SIZE SHALL BE 20 AMPS.

G6. THE CONTRACTOR SHALL PUT A MAXIMUM OF 6 DUPLEX RECEPTACLES ON A 20A SINGLE POLE CIRCUIT.

G7. WHERE THE 1010 SCOPE REVIEW, 1015 TECHNICAL REVIEW, DRAWINGS, AND SPECIFICATIONS DIFFER FROM AMERICAN CODES OR STANDARDS, THE 1010, 1015, DRAWINGS, AND SPECIFICATIONS SHALL RULE.

G8. ALL CONDUIT AND DEVICES SHALL BE SURFACE MOUNTED UNLESS OTHERWISE INDICATED.

G9. CONTRACTOR SHALL COORDINATE ALL WORK WITH ALL OTHER TRADES TO ENSURE ALL WORK IS COMPLETED IN A PROFESSIONAL, WORKMAN–LIKE MANNER.

US Army Corps of Engineers
AFGHANISTAN ENGINEER DISTRICT

MARK	DESCRIPTION	DATE	APPR.

MARK	DESCRIPTION	DATE	APPR.

U.S. ARMY CORPS OF ENGINEERS
AFGHANISTAN DISTRICT
APO AE 96338

DESIGNED BY: | DATE:
DWN BY: | CKD BY: | SOLICITATION NO.:
SUBMITTED BY: | CONTRACT NO.:
PLOT SCALE: | PLOT DATE: | FILE NUMBER:
SIZE: ANSI D | FILE NAME: B25 E-001.DWG

SITE ADAPT DESIGN
B25 - WOMENS BARRAKS
ELECTRICAL SYMBOLS AND ABBREVIATIONS

SHEET IDENTIFICATION
E-001
SHEET 23 OF 29

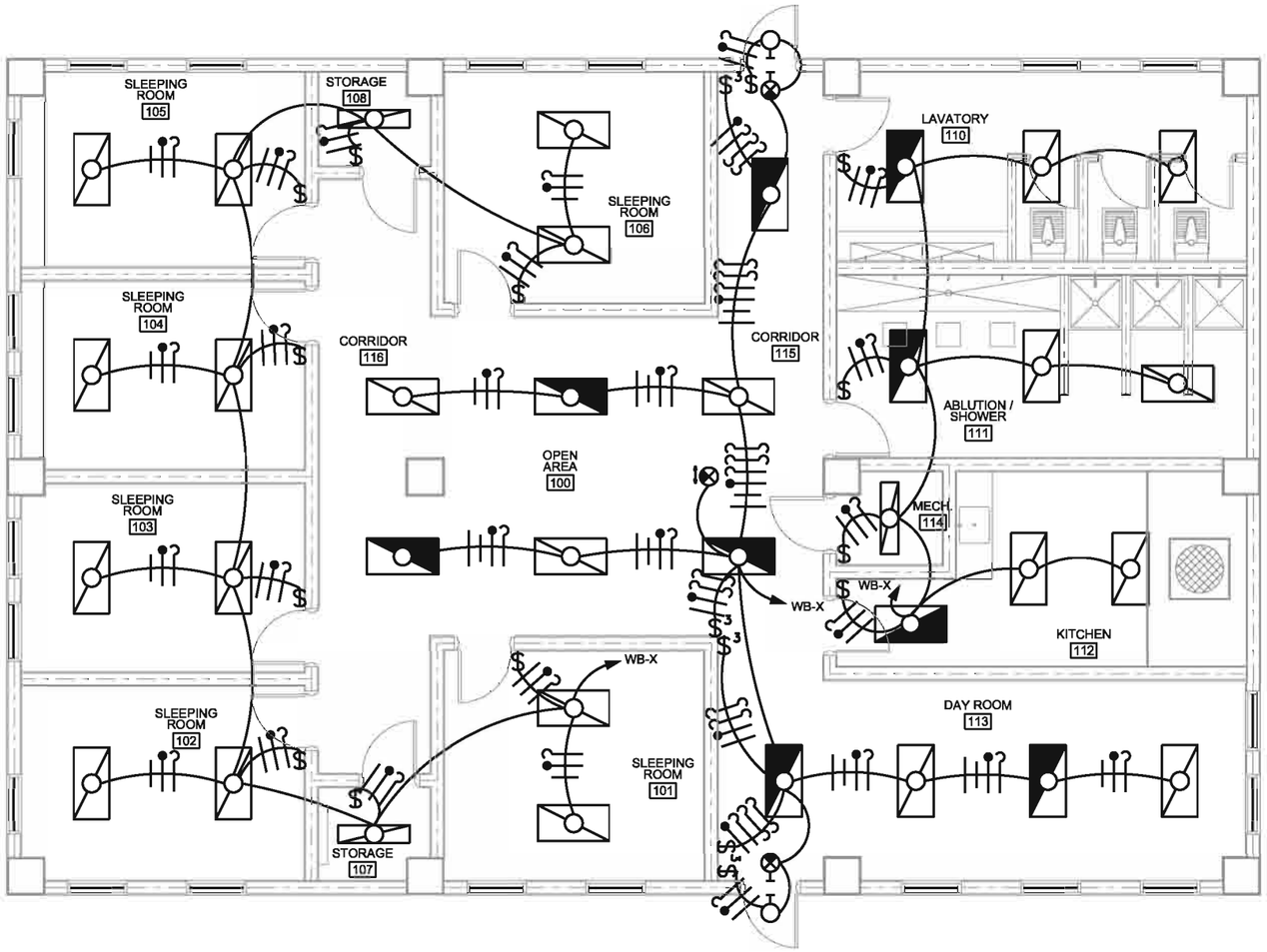

1 LIGHTING PLAN
E-101 | E-101 SCALE: 1:20

SUPPLEMENTAL LEGEND

- 600mm x 1200mm SURFACE MTD LENSED FLUORESCENT FIXTURE WITH PRISMATIC ACRYLIC LENS, ELECTRONIC BALLAST, AND 4-32w T8 LAMPS
- SAME AS ABOVE WITH EMERGENCY BALLAST AND BATTERY PACK
- 300mm x 1200mm SURFACE MTD LENSED FLUORESCENT FIXTURE WITH PRISMATIC ACRYLIC LENS, ELECTRONIC BALLAST, AND 2-32w T8 LAMPS
- SAME AS ABOVE WITH EMERGENCY BALLAST AND BATTERY PACK
- 150W HPS ROUGH-SERVICE EXTERIOR BUILDING LIGHT.
- SINGLE-FACE, WALL MOUNT EXIT LIGHT, 152mm RED LETTERS
- SINGLE-FACE, CEILING MOUNT EXIT LIGHT, 152mm RED LETTERS WITH 2 DIRECTIONAL CHEVRONS
- $ SINGLE POLE, SINGLE THROW 250V LIGHT SWITCH
- $3 THREE WAY 250V LIGHT SWITCH
- BRANCH CIRCUIT, SURFACE MOUNTED EMT. HASH MARKS SHOWN ARE PHASE, NEUTRAL, GROUND, SWITCHLEG, AND TRACER, RESPECTIVELY. IF NO HASH MARKS SHOWN, CIRCUIT IS 2.5mm2 PHASE, NEUTRAL, AND GROUND IN 12mm CONDUIT.

GENERAL NOTES:

1. EXTERIOR LIGHT FIXTURES AND LIGHT FIXTURES IN BATHROOMS SHALL BE SUITABLE FOR WET LOCATIONS.
2. ALL LIGHT FIXTURES SHALL HAVE ELECTRONIC BALLASTS.
3. EXIT SIGNS AND EMERGENCY BATTERY PACKS SHALL BE WIRED TO AN UNSWITCHED CONDUCTOR. OPERATION OF ANY LIGHT SWITCH SHALL NOT AFFECT BATTERY CHARGING.
4. CONTRACTOR SHALL GANG MOUNT LIGHT SWITCHES WITH THE FAN SWITCHES SHOWN ON SHEET E-103.

US Army Corps of Engineers®
AFGHANISTAN ENGINEER DISTRICT

MARK	DESCRIPTION	DATE	APPR.	MARK	DESCRIPTION	DATE	APPR.

U.S. ARMY CORPS OF ENGINEERS
AFGHANISTAN DISTRICT
APO AE 96338

DESIGNED BY: | DATE:
DWN BY: | CKD BY: | SOLICITATION NO.:
SUBMITTED BY: | CONTRACT NO.:
PLOT SCALE: 1:20 | PLOT DATE: | FILE NUMBER:
SIZE: ANSI D | FILE NAME: B25_E-101.DWG

SITE ADAPT DESIGN
B25 - WOMENS BARRAKS
LIGHTING PLAN

SHEET IDENTIFICATION
E-101
SHEET 24 OF 28

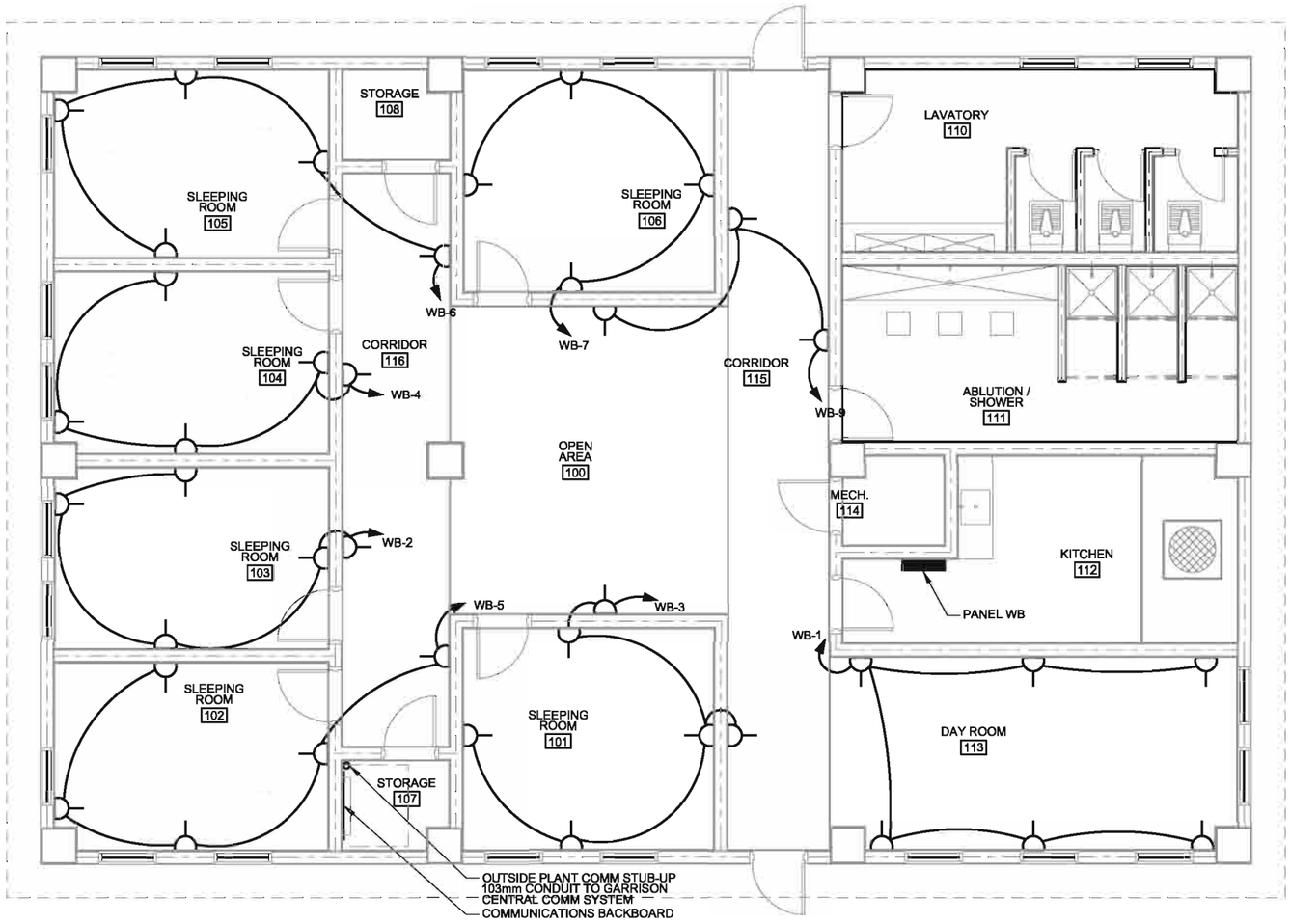

1
E-102 E-102 RECEPTACLE PLAN
SCALE: 1:20

SUPPLEMENTAL LEGEND:

- DOUBLE CEE 7/7 "SCHUKO" STYLE RECEPTACLE. MOUNT AT 450mm AFF.
- GFI DOUBLE CEE 7/7 "SCHUKO" STYLE RECEPTACLE - 10mA GROUND FAULT INTERRUPTER TYPE. MOUNT AT 450mm AFF.
- WP DOUBLE CEE 7/7 "SCHUKO" STYLE RECEPTACLE WITH WEATHERPROOF COVER - 10mA GROUND FAULT INTERRUPTER TYPE. MOUNT AT 450mm AFF.
- COMBINATION DATA/TELEPHONE OUTLET. 2-8P8C JACKS. MOUNT AT 450mm AFF.
- BRANCH CIRCUIT, EMT SURFACE MOUNTED ON WALL. IF NO HASH MARKS ARE SHOWN,CONDUIT SHALL CONTAIN A 2.5mm2 PHASE, 2.5mm2 NEUTRAL, AND 2.5mm2 GROUND CONDUCTOR IN 12mm C.

GENERAL NOTES:

1. EACH DATA/TELEPHONE OUTLET SHALL HAVE NONMETALLIC RACWAY WITH PULLSTRING HOMERUN TO BACKBOARD. CATEGORY 6 CABLE WILL BE PROVIDED IN FUTURE BY OTHERS.

2. POWER WIRING SHALL BE SEPERATED AT LEAST 150mm FROM COMMUNICATIONS RACEWAY. POWER WIRING SHALL BE INSTALLED IN EMT CONDUIT. NONMETALLIC RACEWAY SHALL NOT BE USED FOR POWER WIRING.

3. PROVIDE 1200mm X 2400 mm SHEET OF PLYWOOD PAINTED WITH FIRE RESISTANT PAINT FOR MOUNTED TELECOMMUNICATIONS EQUIPMENT.

US Army Corps of Engineers®
AFGHANISTAN ENGINEER DISTRICT

MARK	DESCRIPTION	DATE	APPR.	MARK	DESCRIPTION	DATE	APPR.

U.S. ARMY CORPS OF ENGINEERS
AFGHANISTAN DISTRICT
APO AE 96338

DESIGNED BY: | DWN BY: | CKD BY: | SUBMITTED BY: | PLOT SCALE: | PLOT DATE: | SIZE: ANSI D | FILE NAME: B25_E-102.DWG | DATE: | SOLICITATION NO.: | CONTRACT NO.: | FILE NUMBER:

SITE ADAPT DESIGN
B25 - WOMENS BARRAKS
POWER AND SYSTEMS PLAN

SHEET IDENTIFICATION
E-102
SHEET 25 OF 29

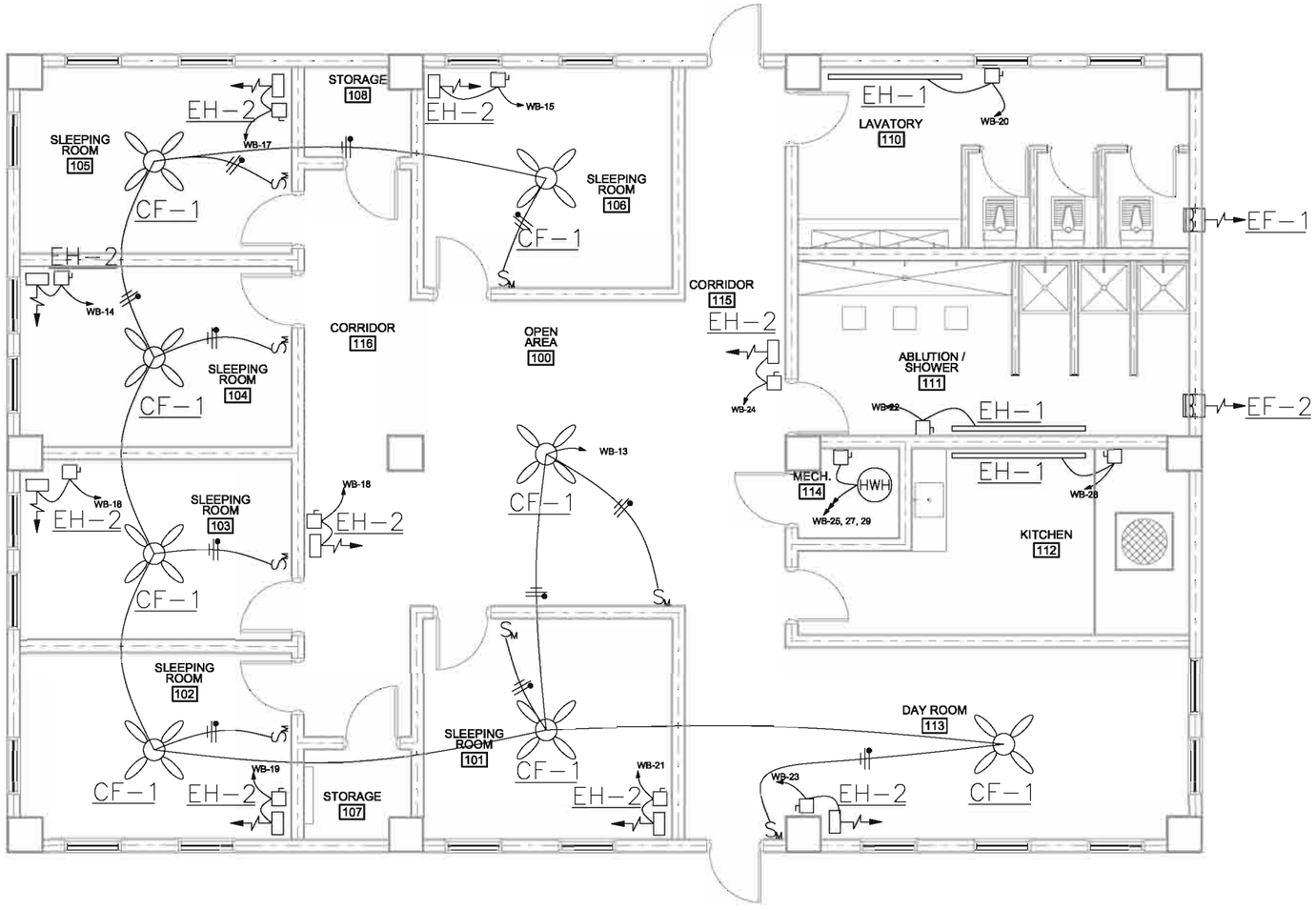

GENERAL NOTES:

1. CONTRACTOR SHALL GANG MOUNT LIGHT SWITCHES WITH THE FAN SWITCHES SHOWN ON SHEET E-101.

1 E-103 E-103 **POWER PLAN**

SCALE: 1:20

US Army Corps of Engineers
AFGHANISTAN ENGINEER DISTRICT

MARK	DESCRIPTION	DATE	APPR.

MARK	DESCRIPTION	DATE	APPR.

U.S. ARMY CORPS OF ENGINEERS
AFGHANISTAN DISTRICT
APO AE 96338

DESIGNED BY: | DATE:
DWN BY: | CKD BY: | SOLICITATION NO.:
SUBMITTED BY: | CONTRACT NO.:
PLOT SCALE: | PLOT DATE: | FILE NUMBER:
SIZE: ANSI D | FILE NAME: B25_E-103.DWG

SITE ADAPT DESIGN
B25 - WOMENS BARRAKS
POWER PLAN

SHEET IDENTIFICATION
E-103
SHEET 28 OF 29

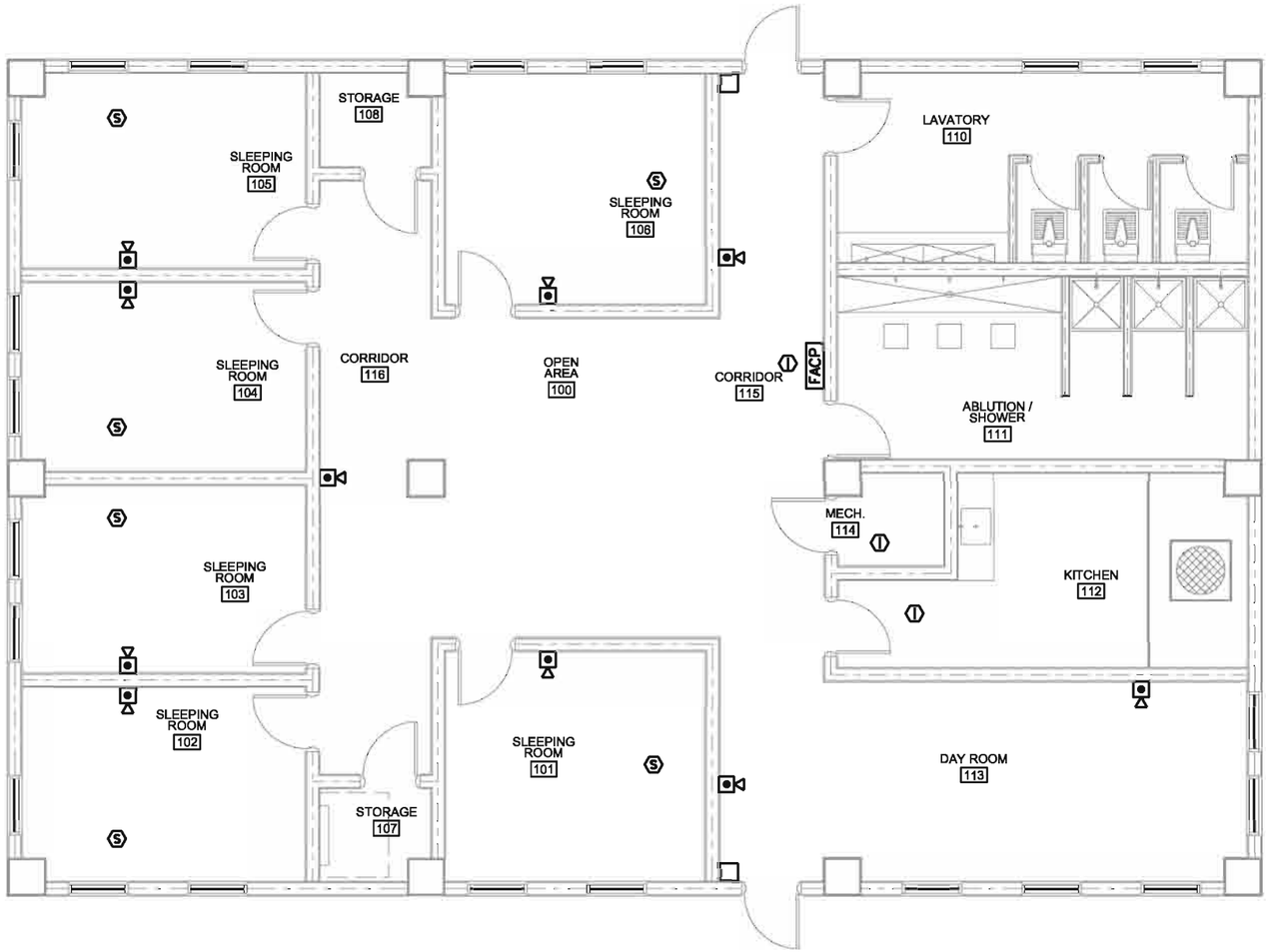

1 E-104 E-104 FIRE ALARM PLAN
SCALE: 1:20

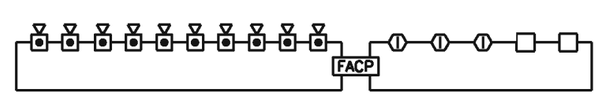

2 E-104 E-104 FIRE ALARM SYSTEM DIAGRAM
SCALE: NOT TO SCALE

SUPPLEMENTAL LEGEND

- FIRE ALARM PULL STATION. +1300mm AFF.
- DUAL SENSOR (PHOTOELECTRIC AND IONIZATION) SMOKE DETECTOR, POWERED BY 220V LIGHTING CIRCUIT IN ROOM, NOT CONNECTED TO FIRE ALARM SYSTEM
- DUAL SENSOR (PHOTOELECTRIC AND IONIZATION) SMOKE DETECTOR WITHOUT AUDIBLE ALARM
- FACP — COMMERCIALLY AVAILABLE FIRE ALARM CONTROL PANEL. FIRE ALARM SYSTEM, AT A MINIMUM, SHALL BE CLASS B, STYLE 4 WIRING PER NFPA 72.
- HORN/STROBE COMBO, 30cd MIN. +2100mm AFF

GENERAL NOTE:

1. CONTRACTOR SHALL WIRE SMOKE DETECTORS IN SLEEPING ROOMS SUCH THAT AN ALARM IN ONE SLEEPING ROOM WILL ALARM ALL SLEEPING ROOMS.

2. SMOKE DETECTORS IN SLEEPING ROOMS SHALL NOT BE CONNECTED TO THE FIRE ALARM CONTROL PANEL. SMOKE DETECTORS SHALL BE POWERED BY THE 220V LIGHTING CIRCUIT WITH 9V BATTERY BACKUP.

3. AS PER NFPA 29.8.3.4(7) - SMOKE DETECTORS SHALL NOT BE INSTALLED WITHIN 1M HORIZONTALLY FROM THE TIP OF A CEILING FAN BLADE.

US Army Corps of Engineers®
AFGHANISTAN ENGINEER DISTRICT

MARK	DESCRIPTION	DATE	APPR.	MARK	DESCRIPTION	DATE	APPR.

U.S. ARMY CORPS OF ENGINEERS
AFGHANISTAN DISTRICT
APO AE 96338

DESIGNED BY: | DATE:
DWN BY: | CKD BY: | SOLICITATION NO.:
SUBMITTED BY: | CONTRACT NO.:
PLOT SCALE: | PLOT DATE: | FILE NUMBER:
SIZE: ANSI D | FILE NAME: B25_E-104.dwg

SITE ADAPT DESIGN
B25 - WOMENS BARRAKS
FIRE ALARM PLAN

SHEET IDENTIFICATION
E-104
SHEET 27 OF 28

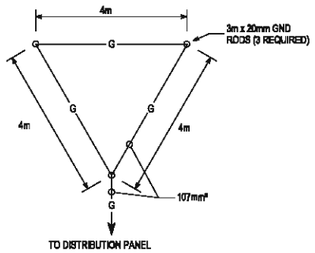

1 TYPICAL GROUNDING TRIPOD DETAIL
E-501 | E-501 NOT TO SCALE

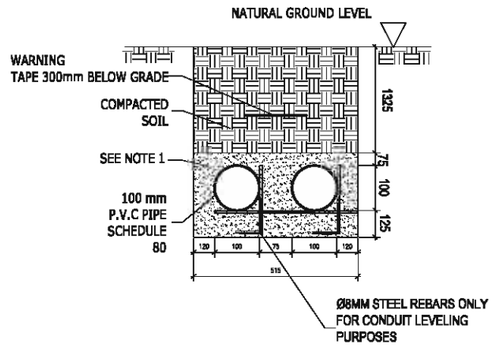

NOTE: PVC CONDUIT SHALL BE DIRECT BURIED SCHEDULE 80 FOR NO TRAFFIC AREAS AND CONCRETE-ENCASED SCHEDULE 40 FOR UNDER ROADWAYS OR TRAFFIC AREAS.

2 DUCT BANK DETAILS FOR CONDUIT IN SAND OR CONCRETE
E-501 | E-501 NOT TO SCALE

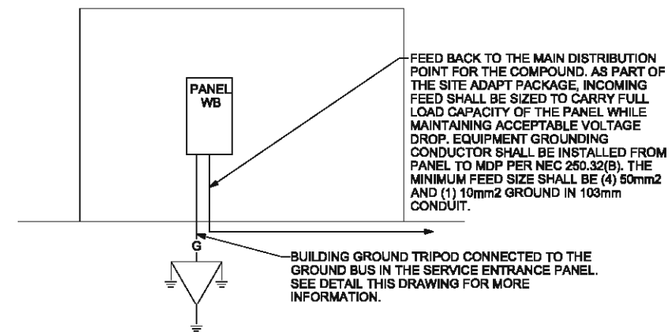

3 POWER RISER DIAGRAM
E-501 | E-501 NOT TO SCALE

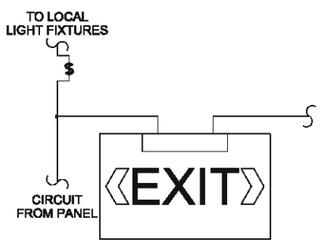

4 EXIT SIGN WIRING DIAGRAM
E-501 | E-501 NOT TO SCALE

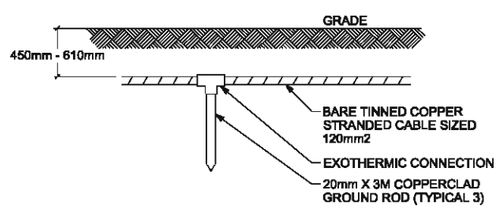

5 GROUND TRIPOD SYSTEM DETAIL - ELEVATION
E-501 | E-501 NOT TO SCALE

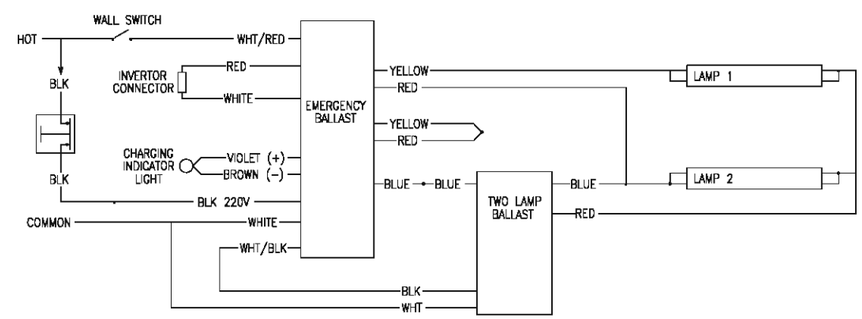

6 EMERGENCY FIXTURE WIRING DIAGRAM
E-501 | E-501 NOT TO SCALE

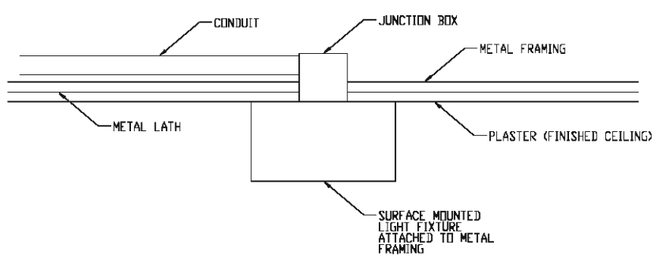

2 TYPICAL DETAIL FOR SURFACE MOUNTED LIGHT FIXTURES
E3 | E3 N.T.S.

N

US Army Corps of Engineers
AFGHANISTAN ENGINEER DISTRICT

MARK	DESCRIPTION	DATE	APPR.	MARK	DESCRIPTION	DATE	APPR.

DESIGNED BY: | DATE:
DWN BY: | CKD BY: | SOLICITATION NO.:
SUBMITTED BY: | CONTRACT NO.:
PLOT SCALE: 1:1000 | PLOT DATE: | FILE NUMBER:
SIZE: ANSI D | FILE NAME: B25_E-505.DWG

U.S. ARMY CORPS OF ENGINEERS
AFGHANISTAN DISTRICT
APO AE 09338

SITE ADAPT DESIGN
B25 - WOMENS BARRAKS
ELECTRICAL DETAILS

SHEET IDENTIFICATION
E-505
SHEET 28 OF 28

PANEL: WB	VOLTS: 380Y/220	PHASE/WIRE: 3/4	LOCATION: KITCHEN ROOM 112	
MAIN BUS: 100AMP	MAIN CB: 100AMP	NEUTRAL: 100%		FAULT DUTY: 30 kAIC MIN.

LOAD INFORMATION			VOLTAMPS			BREAKER RATING /POLES							VOLTAMPS					LOAD INFORMATION
LOAD	NOTE	TYPE	PH-A	PH-B	PH-C	CKT	P	CB	PH	CB	P	CKT	PH-A	PH-B	PH-C	TYPE	NOTE	LOAD
RECEPTACLES RM 113		R	2,100			1	1	15	A	15	1	2	1,750			R		RECEPTACLES RM 103
RECEPTACLES RM 101		R		2,100		3	1	15	B	15	1	4		1,750		R		RECEPTACLES RM 104
RECEPTACLES RM 102		R			1,750	5	1	15	C	15	1	6			1,750	R		RECEPTACLES RM 105
RECEPTACLES RM 106		R	1,400			7	1	15	A	15	1	8	1,520			L		LIGHTING LAV, ABL, KIT
RECEPTACLES CORRIDOR		R		1,050		9	1	15	B	15	1	10		2,140		L		LIGHTING COMMON AREAS
LIGHTING - SLEEPING		L			2,080	11	1	15	C	15	1	12			2,000	O		FACP
CEILING FANS		M1	2,700			13	1	15	A	15	1	14	2,200			RH		EH
EH		RH		2,200		15	1	15	B	15	1	16		2,200		RH		EH
EH		RH			2,200	17	1	15	C	15	1	18			2,200	RH		EH
EH		RH	2,200			19	1	15	A	15	1	20	1,100			RH		EH
EH		RH		2,200		21	1	15	B	15	1	22		1,100		RH		EH
EH		RH			2,200	23	1	15	C	15	1	24			2,200	RH		EH
HWH		RH	1,667			25	3	15	A	15	1	26	1,500			S		SPARE
		RH		1,667		27			B	15	1	28		1,100		RH		EH
		RH			1,667	29			C	15	1	30			1,000	M1		EF
SPARE		S	1,500			31	1	15	A	15	1	32	1,500			S		SPARE
SPARE		S		1,500		33	1	15	B	15	1	34		1,500		S		SPARE
SPARE		S			1,500	35	1	15	C	15	1	36			1,500	S		SPARE
MOUNTING: SURFACE			11,567	10,717	11,397			A	B	C			9,570	9,790	10,650			
ENCLOSURE: NEMA 1			CONNECTED PHASE (VA):					21,137	20,507	22,047								
			CONNECTED CURRENT (A):					76.31	74.03	79.59								

NOTES:

TYPE	VA	DF	VAxDF
L	5,740	1.00	5,740
M1	3,700	0.60	2,220
M2	-	0.30	-
O	2,000	0.80	1,600
R	10,000	1.00	10,000
R	3,650	0.50	1,825
RH	28,101	0.90	25,291
IF	-	0.90	-
AC	-	0.80	-
RC	-	0.70	-
SP	-	1.00	-
S	10,500	0.50	5,250
CND	63,691	EMD	51,926
EMD (Amps)			78.90

LOAD TYPES:

L - LIGHTING
M1 - GENERAL PURPOSE MOTORS
M2 - MISC, FRACTIONAL, SMALL APPLIANCE MOTORS
O - MISC OR OTHER TYPE LOADS
R - RECEPTACLE (First 10,000 VA per NEC)
R - RECEPTACLE (over 10,000 VA per NEC)
RH - RESISTANCE HEAT
IF - INDUCTION FURNACE
AC - AIR CONDITIONING EQUIPMENT
RC - REFRIGERATION COMPRESSORS
SP- SUB PANEL (DEMAND LOAD TAKEN FROM SUBPANELS)
S - SPARE

form panelsch.xls: 3PHFORM dated: 28 February 2005

US Army Corps of Engineers
AFGHANISTAN ENGINEER DISTRICT

MARK	DESCRIPTION	DATE	APPR.

MARK	DESCRIPTION	DATE	APPR.

U.S. ARMY CORPS OF ENGINEERS
AFGHANISTAN DISTRICT
APO AE 96338

DESIGNED BY: | DATE:
DWN BY: | CKD BY: | SOLICITATION NO.:
SUBMITTED BY: | CONTRACT NO.:
PLOT SCALE: | PLOT DATE: | FILE NUMBER:
SIZE: ANSI D | FILE NAME: B25_E-606.dwg

SITE ADAPT DESIGN
B25 - WOMENS BARRAKS
PANEL SCHEDULE

SHEET IDENTIFICATION
E-606
SHEET 28 OF 29

STANDARD BUILDING DESIGNS

17

LATRINE BUILDING
MEDIUM

(L02 - 180 GSM)

SHEET INDEX

G1 COVER SHEET

S1 GENERAL NOTES & DESIGN CRITERIA
S2 DESIGN CRITERIA & SCHEDULES
S3 SCHEDULES
S4 FOUNDATION PLAN
S5 ROOF FRAMING PLAN
S6 FOUNDATION SECTIONS & DETAILS
S7 SECTIONS & DETAILS
S8 TYPICAL DETAILS

A1 FLOOR PLAN AND ENLARGED PLANS
A2 ROOF PLANS AND DETAILS
A3 EXTERIOR ELEVATIONS
A4 BUILDING & WALL SECTIONS
A5 DOOR, WINDOW & FINISH TYPES & DETAILS
A6 LATRINE AND SHOWER DETAILS

P1 FLOOR PLAN PLUMBING
P2 DRAINAGE ISOMETRIC
P3 TYPICAL BUILDING PLUMBING SCHEMATICS
P4 PLUMBING SYMBOLS & ABBREVIATIONS, NOTES, SCHEDULES & DETAILS

M1 FLOOR PLAN-HVAC

E0 ELECTRICAL SYMBOLS AND ABBREVIATIONS
E1 LIGHTING PLAN
E2 POWER AND SYSTEMS PLAN
E3 DETAILS
E4 LIGHT FIXTURE SCHEDULE
E5 PANEL SCHEDULES AND RISER DIAGRAM

US Army Corps of Engineers
Afghanistan Engineer District

SYMBOL	DESCRIPTION	DATE	APR

DESIGNED BY: DATE: _____
DWN BY: SUBMITTED BY:
CHK BY: FILE NO.: ANP-SDG-001XXX.DWG

STANDARD DESIGN
VARIOUS PROJECTS
VARIOUS LOCATIONS, AFGHANISTAN

LATRINE BUILDING
MEDIUM
COVER SHEET

SHEET REFERENCE NUMBER:
G1

STRUCTURAL ABBREVIATIONS:

ACI	AMERICAN CONCRETE INSTITUTE
AISC	AMERICAN INSTITUTE OF STEEL CONSTRUCTION
ASTM	AMERICAN SOCIETY FOR TESTING AND MATERIALS
ARCH	ARCHITECTURAL
B	BOTTOM
BLDG	BUILDING
BOTT	BOTTOM
℄	CENTER LINE
CFMRF	COLD FORM METAL ROOF FRAME
CFMF	COLD FORM METAL FRAME
CFS	COLD FORMED STEEL
CIP	CAST-IN-PLACE
CIPL	CAST-IN-PLACE LINTEL
CJ	CONTROL JOINT
CLR	CLEAR
CMU	CONCRETE MASONRY UNIT
COEFF	COEFFICIENT
COL	COLUMN
CONC	CONCRETE
CONT	CONTINUOUS
COORD	COORDINATE
CSJ	CONSTRUCTION JOINT
CTJ	CONTROL JOINT
DIA	DIAMETER
DIAG	DIAGONAL
DIM	DIMENSION
DWG	DRAWING
DWL	DOWEL
EA	EACH
EF	EACH FACE
ELEC	ELECTRICAL
ELEV	ELEVATION
EMBED	EMBEDMENT
EQUIV	EQUIVALENT
ETC	ET CETERA
EW	EACH WAY
EXP	EXPANSION
EXT	EXTERIOR
FTG	FOOTING
GA	GAUGE
HORIZ	HORIZONTAL
HRS	HOURS
IBC	INTERNATIONAL BUILDING CODE
INFO	INFORMATION
INT	INTERIOR
Kg	KILOGRAM
Km	KILOMETER
kPa	KILOPASCAL
L#	ANGLE (# INDICATES SIZE)
LONG	LONGITUDINAL
LLV	LONG LEG VERTICAL
M	METER
MAX	MAXIMUM
MBM	METAL BUILDING MANUFACTURER
MECH	MECHANICAL
MFG	MANUFACTURER
MID	MIDDLE
MIN	MINIMUM
MISC	MISCELLANEOUS
MM	MILLIMETER
MPa	MEGAPASCAL
MTL	METAL
MWFRS	MAIN WIND FORCE RESISTING SYSTEM
N	NEWTON
N	NORTH
N/A	NOT APPLICABLE
#	NUMBER SYMBOL FOR REBAR SIZE
NTS	NOT TO SCALE
O.C.	ON CENTER
OPNG	OPENING
ℙ or PL	PLATE
PRE-ENG	PRE-ENGINEERED
REINF	REINFORCED
REQ'D	REQUIRED
SIM	SIMILAR
SPECS	SPECIFICATIONS
STD	STANDARD
STRUCT	STRUCTURAL
SW	SHEAR WALL
T	TOP
T/	TOP OF
T/ELEV	TOP ELEVATION
T&B	TOP AND BOTTOM
THK	THICK
TYP	TYPICAL
UFC	UNIFIED FACILITIES CRITERIA
UON	UNLESS OTHERWISE NOTED
VERT	VERTICAL
W	WIDTH
W/	WITH

GENERAL NOTES

1.0 THIS PROJECT HAS BEEN DESIGNED FOR THE WEIGHTS AND MATERIALS INDICATED ON THE SHEETS AND FOR THE LIVE LOADS INDICATED IN THE DESIGN DATA. IT IS THE CONTRACTOR'S RESPONSIBILITY TO DETERMINE ALLOWABLE CONSTRUCTION LOADS AND TO PROVIDE PROPER DESIGN AND CONSTRUCTION OF FALSEWORK, FORMWORK, STAGING, BRACING, SHEETING AND SHORING, ETC.

1.1 COORDINATE THESE SHEETS WITH THE ARCHITECTURAL, MECHANICAL, ELECTRICAL, PLUMBING, AND CIVIL SHEETS. ALL DIMENSIONS SHOWN ON THE SHEETS ARE MILLIMETERS UNLESS NOTED OTHERWISE.

1.2 THE CONTRACTOR SHALL VERIFY AND COORDINATE ALL FLOOR AND ROOF OPENING SIZES AND LOCATIONS, EQUIPMENT PAD SIZES AND LOCATIONS, ANCHOR BOLT LAYOUTS, ETC WITH EQUIPMENT SELECTED. THE CONTRACTOR SHALL MAKE ANY REQUIRED MODIFICATIONS AT NO ADDITIONAL COST.

1.3 THE CONTRACTOR SHALL REFER TO THE ARCHITECTURAL, MECHANICAL, ELECTRICAL AND PLUMBING SHEETS FOR SLEEVES, CURBS, INSERTS OR OPENINGS, ETC. NOT HEREIN INDICATED.

1.4 SLAB OPENINGS SMALLER THAN 250mm DIA TO BE CORE DRILLED IN FIELD UON. SEE MECHANICAL, ELECTRICAL AND PLUMBING SHEETS FOR LOCATIONS OF THESE OPENINGS.

1.5 WORK NOT INCLUDED ON THE SHEETS BUT IMPLIED TO BE SIMILAR TO THAT SHOWN AT CORRESPONDING PLACES ELSEWHERE ON THE SHEETS SHALL BE REPEATED.

1.6 IN CASE OF CONFLICT BETWEEN THE NOTES, DETAILS AND SPECIFICATIONS THE MOST RIGID REQUIREMENTS SHALL GOVERN.

1.7 SEE ARCHITECTURAL SHEETS FOR LOCATIONS OF MASONRY AND DRYWALL NON-LOAD BEARING PARTITIONS. PROVIDE COMPRESSIBLE FIRESAFING AT TOP OF WALL AS REQUIRED BY ARCHITECTURAL SHEETS.

1.8 COORDINATE FINISHED FLOOR DATUM ELEVATION 0.0m WITH THE CIVIL SHEETS.

2.0 FOUNDATION NOTES

2.1 THE GEOTECHNICAL ANALYSIS FOR THIS PROJECT IS THE RESPONSIBILITY OF THE CONTRACTOR AWARDED THE WORK. DESIGN VALUES USED IN THE STRUCTURAL ANALYSIS OF THE BUILDINGS HEREIN INDICATED HAVE BEEN ASSUMED AND SHALL BE CONFIRMED AND VERIFIED AS PART OF THE GEOTECHNICAL INVESTIGATION. VALUES WHICH DO NOT MEET THE REQUIREMENTS INDICATED ON THE BASIS OF DESIGN SHEET SHALL BE IMMEDIATELY BROUGHT TO THE ATTENTION OF THE CONTRACTING OFFICER FOR CONSIDERATION AND DETERMINATION ON THE NEXT APPROPRIATE COURSE OF ACTION.

2.2 SEE THE SPECIFICATION FOR ADDITIONAL REQUIREMENTS TO THOSE OUTLINED IN THE GEOTECHNICAL INVESTIGATION FOR EXCAVATION AND PREPARATION OF THE FOUNDATION AND THE SLAB ON GRADE SUBGRADE INCLUDING COMPACTION PROCEDURES.

2.3 EXCAVATIONS FOR FOOTINGS SHALL HAVE THE SIDES AND BOTTOMS TEMPORARILY LINED WITH 0.25mm POLYETHYLENE IF PLACEMENT OF CONCRETE DOES NOT OCCUR WITHIN 24 HRS OF THE EXCAVATION OF THE FOOTING.

2.4 FOUNDATION CONDITIONS NOTED DURING CONSTRUCTION WHICH DIFFER FROM THOSE DESCRIBED IN THE GEOTECHNICAL REPORT SHALL BE REPORTED TO THE GENERAL CONTRACTOR BEFORE FURTHER CONSTRUCTION IS ATTEMPTED. SEE PROJECT SPECIFICATIONS.

2.5 NO FOOTINGS OR SLABS SHALL BE POURED INTO OR AGAINST SUBGRADE CONTAINING FREE WATER, FROST, ICE OR LOOSE MATERIAL. FROST DEPTH ASSUMED TO BE 800MM

2.6 ALL SLAB-ON-GRADE, TRENCH BOTTOMS AND OTHER ON-GRADE INTERIOR HORIZONTAL SURFACES SHALL BE PLACED OVER A 0.25mm VAPOR RETARDER OVER A 100mm #57 STONE WATER BARRIER PLACED ON SUBGRADE PROPERLY PREPARED IN ACCORDANCE WITH THE CONTRACT SPECIFICATIONS. (UON)

2.7 SEE PLUMBING, ELECTRICAL & CIVIL SHEETS FOR REQUIRED UNDERSLAB UTILITIES.

2.8 SEE ARCHITECTURAL SHEETS FOR ALL WATERPROOFING DETAILS AND MATERIALS.

2.9 IF UNDERMINING OF FOOTINGS OCCURS, FILL VOIDS WITH 15MPa CONCRETE. DO NOT ATTEMPT TO REPLACE AND RECOMPACT SOIL.

3.0 CONCRETE

3.1 CONCRETE SHALL HAVE THE UNIT WEIGHT AND THE MINIMUM COMPRESSIVE STRENGTHS (f'c) AT 28 DAYS AS SHOWN IN THE CONCRETE MATERIALS SCHEDULE ON SHEET S3. SEE SPECIFICATIONS FOR ADDITIONAL INFORMATION. ENTRAIN AIR TO PRODUCE TOTAL AIR CONTENT ACCORDING TO THE SPECIFICATIONS FOR CONCRETE EXPOSED TO FREEZING TEMPERATURES (EXTERIOR FOOTINGS, SLAB TURNDOWNS, EXTERIOR SLABS AND SLABS-ON-GRADE, EXTERIOR RETAINING WALLS, AND EXTERIOR GRADE BEAMS.)

3.2 NO CALCIUM CHLORIDE SHALL BE USED IN ANY CONCRETE.

3.3 MIXING, TRANSPORTING AND PLACING OF CONCRETE SHALL CONFORM TO ACI 301M-05.

3.4 ALL CONCRETE WORK SHALL CONFORM TO THE REQUIREMENTS OF THE AMERICAN CONCRETE INSTITUTE (ACI) 318M MANUAL (metric), "BUILDING CODE REQUIREMENTS FOR REINFORCED CONCRETE", AND REQUIREMENTS OUTLINED IN THE CONTRACT SPECIFICATIONS. WHEN THERE IS A CONFLICT BETWEEN ACI AND THE SPECIFICATIONS, THE MORE STRINGENT SHALL GOVERN.

3.5 CHAMFER ALL EXPOSED EXTERNAL CORNERS OF CONCRETE WITH 20mm x45 DEGREE CHAMFER UON.

3.6 CONCRETE REINFORCEMENT BARS SHALL CONFORM TO ASTM A615M-96a, GRADE 420 MPa, REINFORCING BARS SHALL NOT BE TACK WELDED, WELDED, HEATED OR CUT, UNLESS INDICATED ON THE CONTRACT DOCUMENTS. ALL LAP SPLICES SHALL BE CLASS "B" UON.

3.7 HORIZONTAL FOOTING AND HORIZONTAL WALL REINFORCEMENT SHALL BE CONTINUOUS AND SHALL HAVE 90 DEGREE BENDS AND EXTENSIONS, OR CORNER BARS OF EQUIVALENT SIZE LAPPED WITH A CLASS B TENSION SPLICE AT CORNERS AND INTERSECTIONS. TOP BAR CRITERIA SHALL APPLY IF 300mm OR MORE OF FRESH CONCRETE IS PLACED BELOW BAR.

3.8 SLABS-ON-GRADE SHALL HAVE CONSTRUCTION JOINTS OR CRACK CONTROL JOINTS AS SHOWN ON THE DRAWINGS. CONSTRUCTION JOINTS CAN BE USED AT CONTROL JOINT LOCATIONS AT CONTRACTORS OPTION. SEE SLAB PLANS & JOINT DETAILS FOR ADDITIONAL INFORMATION. FOR AREAS NOT SHOWN ON DWGS, THE MAXIMUM SPACING OF CONSTRUCTION/ CRACK CONTROL JOINTS SHALL BE 4800mm

3.9 SEE SPECIFICATIONS FOR ALL WATERPROOFING/DAMPPROOFING REQUIREMENT.

3.10 ALL CONCRETE REINFORCEMENT SHALL BE DETAILED, FABRICATED, LABELED, SUPPORTED, AND SPACED IN FORMS AND SECURED IN PLACE IN ACCORDANCE WITH THE PROCEDURES AND REQUIREMENTS OUTLINED IN THE LATEST EDITION OF THE "BUILDING CODE REQUIREMENTS FOR REINFORCED CONCRETE", ACI 318M, AND THE "MANUAL OF STANDARD PRACTICE FOR DETAILING REINFORCED CONCRETE STRUCTURES", ACI 315M, LATEST EDITION.

3.11 SHOP DRAWINGS SHOWING REINFORCING DETAILS, INCLUDING STEEL SIZES, SPACING AND PLACEMENT, SHALL BE SUBMITTED FOR REVIEW PRIOR TO FABRICATION.

3.12 ALL DOWELS SHALL MATCH SIZE AND NUMBER OF MAIN REINFORCING, UNLESS NOTED OTHERWISE ON THE SHEETS.

3.13 ADDITIONAL BARS SHALL BE PROVIDED AROUND ALL FLOOR AND WALL OPENINGS AS SHOWN ON THE SHEETS.

3.14 SEE ARCHITECTURAL SHEETS FOR TYPE AND LOCATION OF ALL FLOOR FINISHES.

3.15 THE CONTRACTOR SHALL COORDINATE ADDITIONAL WALL/SLAB OPENINGS NOT SHOWN ON STRUCTURAL SHEETS. SEE MECHANICAL, ELECTRICAL, PLUMBING AND CIVIL SHEETS.

3.16 UNLESS NOTED OTHERWISE, ALL CURBS SHALL BE REINFORCED WITH AT LEAST (1)-#13 CONTINUOUS AND #13 AT 300mm O.C. DOWELS TO STRUCTURE BELOW.

3.17 THE SUB-CONTRACTOR SHALL VERIFY ALL OPENINGS, PAD SIZES, AND ANCHOR BOLTS WITH EQUIPMENT SELECTED.

3.18 FOR ALL WALLS & PIERS, PROVIDE DOWELS INTO FOOTING AT EACH VERT REINF BAR, UON DOWEL SIZE SHALL BE SAME AS VERT REINF.

3.19 ALL DEFORMED BAR ANCHORS SHALL BE TRS NELSON DIVISION OR EQUAL 15mm DIA (UON) CONFORMING TO ASTM A-496M WITH A MINIMUM TENSILE STRENGTH OF 550 MPa. ANCHOR DIMENSIONS SHALL BE IN ACCORDANCE WITH ASTM D-19. INSTALL ANCHORS IN ACCORDANCE WITH MANUFACTURERS RECOMMENDATIONS BY AUTOMATIC ND WELDING AS INDICATED ON THE DRAWINGS. NO UNAUTHORIZED OR FIELD WELDING SHALL BE MADE WITHOUT AUTHORIZATION FROM THE MANUFACTURER.

3.20 ALL REINFORCING INDICATED TO BE WELDED SHALL BE IN ACCORDANCE WITH ASTM A706M. "LOW ALLOY STEEL DEFORMED BARS FOR CONCRETE REINFORCEMENT". ANY INSTALLATIONS USING MANUFACTURER'S EQUIPMENT SHALL BE PER MANUFACTURER'S RECOMMENDATIONS.

3.21 PROVIDE CONCRETE POUR STOPS OR FORMED AS REQUIRED FOR INSTALLATION OF ALL CONCRETE WORK.

3.22 PROVIDE ADDITIONAL (2)-#13 x 600mm REINFORCING BARS IN SLAB-ON GRADE AT ALL RE-ENTRANT CORNERS. PLACE BARS AT MID-DEPTH OF SLAB WITH A CLEARANCE OF 50mm FROM CORNER UON.

4.0 CONCRETE MASONRY

4.1 MASONRY CONSTRUCTION AND MATERIALS SHALL CONFORM TO ALL REQUIREMENTS OF THESE CONTRACT DOCUMENTS AND THE PROJECT SPECIFICATIONS.

4.2 THE SPECIFIED ULTIMATE COMPRESSIVE STRENGTH OF CONCRETE MASONRY (f'm) ON THE NET AREA IS A MINIMUM OF 10.4 MPa.

4.3 PROVIDE TWO #16 BARS CONTINUOUS IN ALL CMU AND CAST-IN-PLACE BOND BEAMS UON ON THE SHEETS. BOND BEAMS SHALL BE CONTINUOUS AND SPACED AT A MAXIMUM OF 1200mm OC VERTICALLY. ALL BOND BEAMS SHALL BE A MINIMUM OF 200mm IN DEPTH WITH REINFORCING BEING CONTINUOUS AND HAVING STANDARD ACI HOOKS AT EACH END. PROVIDE STANDARD BAR SPLICES AS SPECIFIED.

4.4 PROVIDE AS A MINIMUM (1)-#16 BAR VERTICAL REINFORCEMENT IN ALL WALLS SPACED AT A MAXIMUM 1200mm OC PROVIDE ADDITIONAL VERTICAL BARS AT EACH END OF ALL WALLS AND ON EACH SIDE OF OPENINGS IN ALL WALLS. PROVIDE STANDARD BAR SPLICES AS SPECIFIED. ALL VERTICAL REINFORCEMENT EXTENDS FULL HEIGHT OF WALL.

4.5 CMU CELLS THAT REQUIRE VERTICAL REINFORCING BARS AS INDICATED ON THE CONTRACT DRAWINGS AND/OR SPECS SHALL HAVE REINF BARS PLACED IN CENTERS OF CMU CELLS AND CONTINUOUSLY GROUTED UON.

4.6 PROVIDE LADDER TYPE JOINT REINFORCEMENT AT 200 EXTERIOR, & 400 INTERIOR ON CENTER MAXIMUM, UON MINIMUM ROD SIZE USED SHALL BE 9 GA. DEFORMED WIRE AND CONFORM TO ASTM A82, UON.

4.7 PROVIDE CONTROL JOINTS AS INDICATED ON THE ARCHITECTURAL SHEETS.

4.8 GROUT FOR MASONRY SHALL BE NORMAL WEIGHT AND HAVE A MINIMUM COMPRESSIVE STRENGTH OF 25 MPa AT 28 DAYS. GROUT SHALL CONFORM TO ASTM C476. GROUT LIFTS SHALL NOT EXCEED 1400mm.

4.9 USE MORTAR TYPE S CONFORMING TO ASTM C270, SEE SPECIFICATIONS.

4.10 CONCRETE MASONRY UNITS SHALL BE NORMAL WEIGHT AND CONFORM TO ASTM C90.

4.11 ALL CMU CELLS, OPEN CAVITIES, AND AIR SPACES SHALL BE GROUTED TO STOP FRAGMENTS FROM MORTAR BLAST

4.12 BOND BEAM REINFORCING SHALL BE DISCONTINUOUS AT CONTROL JOINTS (UON). MAXIMUM CONTROL JOINT SPACING SHALL BE AS INDICATED ON THE ARCHITECTURAL SHEETS.

4.13 CONTRACTOR SHALL COORDINATE LOCATION OF ALL OPENINGS SEE ARCH, MECH, ELEC, AND PLUMBING SHEETS FOR SIZE AND LOCATION OF OPENINGS.

4.14 MASONRY WALLS SHALL NOT BE BACK FILLED PRIOR TO THE MORTAR AND GROUT ATTAINING THEIR RESPECTIVE MAXIMUM DESIGN STRENGTHS PER SPECIFICATIONS.

5.0 ROOF DECK

5.1 STEEL ROOF DECK SHALL BE 38mm RIB HEIGHT, 18 GAUGE PRIME-PAINTED WIDE RIB (SDI TYPE B-18) UON.

5.2 ROOF DECK SHALL HAVE THE FOLLOWING MINIMUM PROPERTIES:

	18 GAUGE
MOMENT OF INERTIA, Ip	$399mm^4/mm$ WIDTH
SECTION MODULUS (TOP OF DECK), Sn	$17.58mm^3/mm$ WIDTH
SECTION MODULUS (BOTT OF DECK) Sp	$17.10mm^3/mm$ WIDTH

IN ADDITION TO MEETING THE MINIMUM REQUIREMENTS ABOVE, THE DECK MANUFACTURER SHALL DESIGN THE ROOF DECK AND ATTACHMENTS TO STEEL FOR THE ROOF LOADS, INCLUDING DECK UPLIFT INDICATED ON THE DESIGN CRITERIA ON THIS SHEET AND SHEET S2. ALL ROOF DECK SHALL HAVE A MINIMUM 2-SPAN CONDITION.

5.3 ROOF DECK SHALL BE FASTENED TO THE MAIN SUPPORTS WITH #12 SELF-TAPPING TEK SCREWS IN THE BOTTOM OF THE FLUTES USING A SDI 36/7 PATTERN. DECK SIDELAPS SHALL BE ATTACHED USING #10 SELF-TAPPING TEK SCREWS WITH A MINIMUM 3-SIDE LAP CONNECTIONS PER SPAN. ALL ENDLAPS SHALL BE A MINIMUM OF 50mm UON AND SHALL OCCUR OVER SUPPORTS.

5.4 SUSPENDED CEILINGS, LIGHT FIXTURES, DUCTS, CONDUITS, PIPING OR OTHER UTILITIES SHALL NOT BE SUPPORTED BY THE STEEL ROOF DECK.

6.0 CFMRF - COLD FORM METAL ROOF FRAMING SYSTEM

6.1 CFMF SHALL BE DESIGNED BY CFMF MANUFACTURER'S ENGINEER FOR ALL LOADING PER CODE AND AS INDICATED ON THE SHEETS.

6.2 FOR WIND LOADS, SEE THE DESIGN CRITERIA ON SHEET S2.

6.3 SUBMIT VENDOR'S PUBLISHED LITERATURE, TEST DATA AND INSTALLATION INSTRUCTIONS FOR METAL STUD ASSEMBLY AND ACCESSORIES INCLUDING OTHER DATA AS MAY BE REQUIRED TO CERTIFY COMPLIANCE WITH PERFORMANCE REQUIREMENTS SPECIFIED HEREIN.

6.4 SHOP DRAWINGS AND DESIGN ANALYSIS SHALL BE STAMPED AND APPROVED BY A LICENSED PROFESSIONAL ENGINEER.

6.5 CONNECTIONS AND GAUGE SIZES ARE MINIMUM AND SHALL BE INCREASED AS NECESSARY TO PROVIDE A STRUCTURALLY ADEQUATE SYSTEM. KICKERS MAY BE ADDED TO REDUCE THE STUD HEIGHTS WHERE ACCEPTABLE AND COORDINATED WITH THE ARCHITECTURAL DRAWINGS.

6.6 CRMRF SHALL HAVE THE FOLLOWING MINIMUM PROPERTIES:

STUD/RAFTER/EAVE STRUT/BRACE/BLOCKING:
Fy = 344 MPa
GAUGE = 18
DEPTH = 152.3 mm
WIDTH = 34.8 mm
MOMENT OF INERTIA, Ix = $847x10^3$ mm^4
SECTION MODULUS, Sx = $11.2x10^3$ mm^3

TRACK:
Fy = 344 MPa
GAUGE = 16
DEPTH = 152.3 mm
WIDTH = 38 mm
MOMENT OF INERTIA, Ix = $1083x10^3$ mm^4
SECTION MODULUS, Sx = $13.8x10^3$ mm^3

PURLIN/SUBGIRT:
Fy = 393 MPa
GAUGE = 16
MOMENT OF INERTIA (TOP COMPRESSION), Ixt = $23.7x10^3$ mm^4
MOMENT OF INERTIA (BOTT COMPRESSION), Ixb = $22.7x10^3$ mm^4
SECTION MODULUS (TOP COMPRESSION), Sxt = $1.8x10^3$ mm^3
SECTION MODULUS (BOTT COMPRESSION), Sxb = $1.7x10^3$ mm^3

STRUCTURAL DESIGN CRITERIA

ALL DESIGNS SHALL CONFORM TO THE PROVISIONS OF THE IBC 2006 AS APPLICABLE

1.0 DESIGN LOADS

1.1 DEAD LOADS

1.1.1 ROOF DEAD LOADS - CONCRETE FRAMING

	MAXIMUM GRAVITY LOAD
CONC FLAT SLAB	4.80 KPa
MECH/ELEC/PLUMBING	0.15 KPa
MISC	0.05 KPa
	5.00 KPa

1.1.2 ROOF DEAD LOADS - CONVENTIONAL LIGHT FRAMING

	MAXIMUM GRAVITY LOAD	MINIMUM GRAVITY LOAD
LIGHT GAUGE FRAMING	0.20 KPa	0.15 KPa
METAL DECKING	0.14 KPa	0.05 KPa
METAL ROOFING	0.14 KPa	0.05 KPa
	0.48 KPa	0.25 KPa

1.2 LIVE LOADS (PER IBC 2006)

1.2.1 ROOF LIVE LOADS: ALL BUILDINGS

GREATER OF 1.0 KPa MINIMUM OR SNOW LOAD

1.2.2 ELEVATED FLOOR UNIFORM LIVE LOADS

OFFICE	2.40 KPa
CORRIDOR	4.80 KPa

1.2.3 SLAB-ON-GRADE LIVE LOADS

ALL BUILDINGS	4.80 KPa

1.3 SNOW LOADS (PER IBC 2006)

1.3.1 DESIGN PARAMETERS

GROUND SNOW LOAD (per UFC 3-310-01)	1.0 KPa
SNOW IMPORTANCE FACTOR	1.0
SNOW EXPOSURE FACTOR	1.0

1.4 SEISMIC LOADS (PER IBC 2006 & UFC 3-310-04)

1.4.1 SEISMIC PARAMETERS - CAST-IN-PLACE CONCRETE STRUCTURES

SEISMIC OCCUPANCY CATEGORY	II
SEISMIC IMPORTANCE FACTOR (I)	1.0
SEISMIC SITE CLASS	D
Ss	1.28
S1	0.51
Sds	0.853
Sd1	0.51
SEISMIC DESIGN CATEGORY	D
SEISMIC RESISTING SYSTEM	SPECIAL REINFORCED MASONRY SHEAR WALLS
RESPONSE MODIFICATION FACTOR (R)	5.0
RESPONSE COEFFICIENT (Cs)	0.17
SEISMIC ANALYTICAL PROCEDURE	EQUIV LATERAL FORCE
SEISMIC BASE SHEAR	649 kN

US Army Corps of Engineers
Afghanistan Engineer District

SYMBOL	DESCRIPTION	DATE	APR

DESIGNED BY: DATE:
DWN BY: SUBMITTED BY:
CHK BY: FILE NO.:

STANDARD DESIGN
VARIOUS PROJECTS
VARIOUS LOCATIONS, AFGHANISTAN

LATRINE BUILDING
MEDIUM

GENERAL NOTES & DESIGN CRITERIA

SHEET REFERENCE NUMBER:
S1

STRUCTURAL DESIGN CRITERIA (CONT)

ALL DESIGNS SHALL CONFORM TO THE PROVISIONS OF THE IBC 2006 AS APPLICABLE

1.5 WIND LOADS (PER IBC 2006)

1.5.1 DESIGN PARAMETERS

BASIC WIND SPEED	137 Km/h
WIND IMPORTANCE FACTOR	1.0
WIND EXPOSURE CATEGORY	D
DIRECTIONALITY COEFFICIENT (Kd)	0.85
TOPOGRAPHIC FACTOR (Kzt)	1.0

1.5.2 DESIGN WIND PRESSURE – MAIN WINDFORCE RESISTING SYSTEM

LOCATION	CORNER ZONE WIDTH "a"	MEAN ROOF HEIGHT (h)	WINDWARD WALL (@ MEAN ROOF HEIGHT)	LEEWARD WALL (@ MEAN ROOF HEIGHT)	ROOF
FIELD ZONE	N/A	4455 mm	680 N/m^2	−480 N/m^2	−470 N/m^2
CORNER ZONE	1440mm	4455 mm	800 N/m^2	−418 N/m^2	−750 N/m^2

a = 10% OF LEAST HORIZONTAL DIMENSION OR 0.4h, WHICHEVER IS SMALLER, BUT NOT LESS THAN EITHER 4% OF LEAST HORIZONTAL DIMENSION OR 0.9M.
h = MEAN ROOF HEIGHT, IN METERS, EXCEPT THAT EAVE HEIGHT SHALL BE USED FOR ANGLE GREATER THAN 10°.

1.5.3 DESIGN WIND PRESSURE – WALL COMPONENTS AND CLADDING

EXTERIOR WALL SYSTEMS & THEIR ATTACHMENTS TO THE PRIMARY STRUCTURE SHALL BE DESIGNED FOR THE PRESSURES SHOWN IN THE DIAGRAM BELOW:

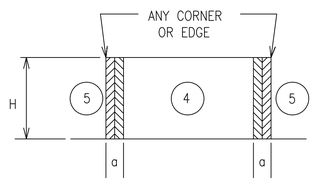

LOCATION	WINDWARD PRESSURE N/m^2 (inward)		LEEWARD PRESSURE N/m^2 (outward)		a
	4	5	4	5	
MAIN BUILDING					(mm)
AREA = 1 m^2	788	788	−850	−1050	1440
AREA = 2 m^2	748	748	−815	−967	1440
AREA = 5 m^2	700	700	−765	−880	1440
AREA = 10 m^2	648	648	−715	−750	1440

NOTES:
1. DESIGN WIND PRESSURES ABOVE REPRESENT THE NET PRESSURE (SUM OF INTERNAL AND EXTERNAL PRESSURE) APPLIED NORMAL TO ALL SURFACES.
2. LINEAR INTERPOLATION BETWEEN VALUES OF TRIBUTARY AREA IS PERMISSIBLE.
3. PLUS AND MINUS SIGNS SIGNIFY PRESSURE TOWARD AND AWAY FROM THE EXTERIOR SURFACE, RESPECTIVELY.

1.5 WIND LOADS (CONT)

1.5.4 DESIGN WIND PRESSURE – ROOF COMPONENTS AND CLADDING

ROOF COMPONENTS & THEIR ATTACHMENTS SHALL BE DESIGNED FOR THE PRESSURES SHOWN IN THE ADJACENT DIAGRAM & TABLE BELOW:

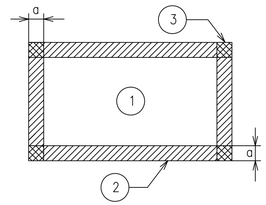

ROOF MEAN HEIGHT

LOCATION	GROSS UPLIFT PRESSURE N/m^2 (upward)			a
	1	2	3	
MAIN BUILDING				(mm)
AREA = 1 m^2	−787	−931	−1738	−1440
AREA = 2 m^2	−787	−931	−1738	−1440
AREA = 5 m^2	−787	−931	−1738	−1440
AREA = 10 m^2	−787	−931	−1738	−1440

NOTES:
1. DESIGN WIND PRESSURES ABOVE REPRESENT THE NET PRESSURE (SUM OF INTERNAL AND EXTERNAL PRESSURE) APPLIED NORMAL TO ALL SURFACES.
2. LINEAR INTERPOLATION BETWEEN VALUES OF TRIBUTARY AREA IS PERMISSIBLE.
3. PLUS AND MINUS SIGNS SIGNIFY PRESSURE TOWARD AND AWAY FROM THE EXTERIOR SURFACE, RESPECTIVELY.

2.0 FOUNDATION DESIGN CRITERIA (TO BE CONFIRMED BY THE CONTRACTOR)

THE GEOTECHNICAL ANALYSIS FOR THIS PROJECT IS THE RESPONSIBILITY OF THE CONTRACTOR AWARDED THE WORK. DESIGN VALUES USED IN THE STRUCTURAL ANALYSIS OF THE BUILDINGS HEREIN INDICATED HAVE BEEN ASSUMED AND SHALL BE CONFIRMED AND VERIFIED AS PART OF THE GEOTECHNICAL INVESTIGATION. VALUES WHICH DO NOT MEET THE REQUIREMENTS INDICATED BELOW SHALL BE IMMEDIATELY BROUGHT TO THE ATTENTION OF THE CONTRACTING OFFICER FOR CONSIDERATION AND DETERMINATION ON THE NEXT APPROPRIATE COURSE OF ACTION.

2.1.1 SOIL DESIGN PARAMETERS

NET ALLOWABLE SOIL BEARING CAPACITY	96.0 KPa
UNIT WEIGHT OF SOIL (moist)	1800 Kg/m^3
COEFF ACTIVE EARTH PRESSURE (Kpa)	0.30
COEFF PASSIVE EARTH PRESSURE (Kpp)	3.33
COEFF AT-REST EARTH PRESSURE (Kpr)	.55
COEFF OF SOIL FRICTION	.35
SUBGRADE MODULUS	4120 g/m^3
MINIMUM BEARING DEPTH BELOW GRADE	800mm
SEISMIC SITE CLASS (based on in-situ soil)	D

CONCRETE BEAM SCHEDULE

GRADE BEAM						
MARK	SIZE (BxH)	REINFORCING TOP	REINFORCING BOTTOM	REINFORCING STIRRUPS	REINFORCING MIDBAR	REMARKS
GB1	400x750	(3)−#22	(3)−#22	#13 @ 200	(1) #22 EF	TOP BAR LAP AT CENTER BOT BAR LAP PAST COL
ROOF BEAM						
MARK	SIZE (BxH)	REINFORCING TOP	REINFORCING BOTTOM	REINFORCING STIRRUPS	REINFORCING MIDBAR	REMARKS
RB1	400x600	(2)−#19	(2)−#19	#13 @ 250	N/A	TOP BAR LAP AT CENTER BOT BAR LAP PAST COL

NOTE:
1. DIMENSIONS NOTED ARE MILLIMETERS (mm) UON.

CONCRETE COLUMN SCHEDULE

MARK	SIZE (LxW)	REINFORCING VERT BARS	REINFORCING TIES
C1	400x400	(8)−#25	#13 @ 100 (CORE OF EXT & CORNER COLUMNS) #13 @ 150 (CORE OF INTERIOR COLUMNS) #13 @ 200 (OTHER)

NOTE:
1. DIMENSIONS NOTED ARE MILLIMETERS (mm) UON.
2. SECOND STORY COLUMNS ARE SAME AS FIRST STORY COLUMNS.
3. CORE INDICATES THE AREA OF COLUMN & BEAM INTERSECTION.
4. TIE INDICATES PERIMETER & CROSS TIE COMBINED.

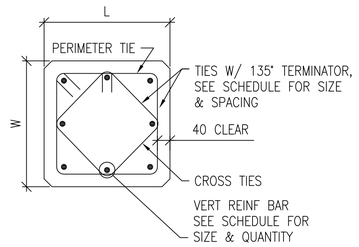

1 / S2 S2 **COLUMN DETAIL**
SCALE: 1:10

SPREAD FOOTING SCHEDULE

MARK	FOOTING SIZE LENGTH	FOOTING SIZE WIDTH	FOOTING SIZE THICKNESS	FOOTING REINFORCING	REMARKS
F1	2000	2000	300	(6)−#22 EW BOTT	-----

NOTES:
1. DIMENSIONS NOTED ARE MILLIMETERS (mm) UON.

US Army Corps of Engineers
Afghanistan Engineer District

SYMBOL	DESCRIPTION	DATE	APR

DESIGNED BY: DATE:
DWN BY: SUBMITTED BY:
CHK BY: FILE NO.:

STANDARD DESIGN
VARIOUS PROJECTS
VARIOUS LOCATIONS, AFGHANISTAN

LATRINE BUILDING
MEDIUM
DESIGN CRITERIA & SCHEDULES

UNLESS OTHERWISE NOTED, LINEAR DIMENSIONS SHOWN ARE IN MILLIMETERS (MM)

0 200 400 800
SCALE: 1: 10

SHEET REFERENCE NUMBER:
S2

MINIMUM LAP SPLICES OF REINFORCING BARS IN TENSION (PER ACI 318M-05)

f'c = 28 MPa CONCRETE

BAR SIZE \ CENTER TO CENTER BAR SPACING	(---TOP BARS--) LESS THAN 4db	(---TOP BARS--) 4db OR MORE	(--OTHER BARS--) LESS THAN 4db	(--OTHER BARS--) 4db OR MORE	(--OTHER BARS--) 4db
#10	460	460	410	410	40
#13	660	610	510	480	50
#16	1020	760	790	580	60
#19	1450	910	1120	710	80
#22	1960	1090	1500	840	90
#25	2590	1450	1980	1120	100
#29	3280	1830	2510	1420	110
#32	4140	2340	3200	1780	130
#36	5080	2840	3910	2180	140

NOTES:

1. LAP SPLICES ABOVE ARE IN MILLIMETERS UON.
2. YIELD STRENGTH OF REINFORCEMENT, fy, IS 400MPa (LAP SPLICE LENGTH IS IN MILLIMETERS).
3. CONCRETE IS NORMAL WEIGHT (2400Kg/m^3).
4. TOP BAR INDICATES HORIZONTAL REINFORCEMENT WHICH IS PLACED ABOVE 300mm OR MORE OF FRESH CONCRETE.
5. SEE COLUMN SCHEDULE FOR COLUMN AND SHEAR WALL VERTICAL LAP SPLICE.
6. STRAIGHT DEVELOPMENT LENGTH OF AN UNLAPPED BAR IS EQUAL TO VALUE FROM TABLE DIVIDED BY 1.3.
7. CATEGORY FOR BARS SPACED LESS THAN 4d, OR ON CENTER CORRESPONDS TO CATEGORY 1 IN THE CRSI HANDBOOK WHEREAS FOR BARS SPACED 4d, OR MORE ON CENTER CORRESPOND TO CRSI CATEGORY 5.

CONCRETE COVER SCHEDULE

MINIMUM CONCRETE COVER PROTECTION FOR REINFORCEMENT BARS SHALL BE AS FOLLOWS: (SEE ACI 318M-05, SECTION 7.7 FOR CONDITIONS NOT NOTED). DIMENSIONS FOR BAR PLACEMENT GIVEN IN SECTIONS AND DETAILS SHALL SUPERSEDE MINIMUM COVER REQUIREMENTS GIVEN HERE. DIMENSIONS ARE IN mm.

FOOTINGS (EARTH FORMED)		70
COLUMNS / PIERS (TO TIES)		40
GRADE BEAMS OR SLAB TURNED DOWN EDGES:		
TOP		40
BOTTOM (EARTH FORMED)		70
SIDES (EARTH FORMED)		70
SIDES (BOARD FORMED)	#16 BAR & SMALLER	40
	#19 THRU #36 BAR	50
ELEVATED BEAMS & SLABS:		
BEAM TIES & STIRRUPS (NOT EXPOSED TO WEATHER)		40
BEAM TIES & STIRRUPS (EXPOSED TO WEATHER)		50
FLOOR SLABS (NOT EXPOSED TO WEATHER)		20
FLOOR SLABS (EXPOSED TO WEATHER)		
#19 & LARGER		50
#13 & SMALLER		40
ROOF SLAB BARS		25
SLABS-ON-GRADE (NO EXPOSURE TO WEATHER) FROM TOP		20
SLABS-ON-GRADE (EXPOSURE TO WEATHER) FROM TOP		40
UTILITY TUNNEL WALLS, RETAINING WALLS AND SHEAR WALLS, (NO SURFACES SHALL BE EARTH FORMED) EARTH SIDE AND FRONT SIDE (EXPOSED TO WEATHER):		
#16 BAR AND SMALLER		40
#19 THRU #36 BAR		50

PROVIDE STANDARD BAR CHAIRS AND SPACERS AS REQUIRED TO MAINTAIN CONCRETE PROTECTION SPECIFIED.

MASONRY CONCRETE LINTEL SCHEDULE

OPENING TYPE OR SIZE, BEAM LOCATION OR TYPE	MAX SPAN (mm)	BEAM DEPTH (mm)	MAIN REINFORCING TOP	MAIN REINFORCING BOTTOM	MAIN REINFORCING OTHER	SHEAR REINF STIRRUPS
EXT WINDOW OR DOOR	900	400	(2)-#13	(2)-#13		----
EXT WALL OPENING, 1-STORY BLDG	1800	400	(2)-#13	(2)-#13		----
EXT WALL OPENING, 1-STORY BLDG	900	200		(2)-#13		----
INT WALL OPENING, NON-BEARING	2400	400		(2)-#13		----
INT WALL OPENING, NON-BEARING	1800	400		(2)-#13		----
INT WALL OPENING, NON-BEARING	900	200		(2)-#13		----

1. STRUCTURAL DRAWINGS DO NOT INDICATE ALL OPENINGS IN MASONRY WALLS. VERIFY NUMBER, SIZE AND LOCATION OF ALL OPENINGS IN MASONRY WALLS FROM ARCHITECTURAL SHEETS AND APPROVED PLUMBING, MECHANICAL, AND ELECTRICAL SHOP DRAWINGS.
2. PROVIDE 200 BEARING EA END FOR 200 DEEP CIPL PROVIDE 400 BEARING EA END FOR 400 DEEP CIPL.
3. FOR HEAD DETAILS REFER TO ARCHITECTURAL SHEETS.
4. REINFORCING SHALL BE ASTM A615M, GRADE 400. CONCRETE FOR CAST-IN-PLACE BEAMS SHALL HAVE A MINIMUM COMPRESSIVE STRENGTH OF 21 MPa AT 28 DAYS.
5. CONTRACTOR SHALL SUBMIT FOR APPROVAL SHOP DRAWINGS AND SCHEDULES SHOWING SIZE, DETAILS, LOCATIONS, ETC FOR ALL CAST-IN-PLACE BEAMS IN CMU WALLS.

TYPICAL CMU WALL REINFORCING SCHEDULE

WALL TYPE OR LOCATION	WALL THICKNESS (mm)	CONT VERT REINF (CENTERED IN CMU, UON)	CONT CAST IN PLACE LINTEL (CIP BB) DEPTH (mm)	REINF (BOTT UON)	MAX BOND BEAM VERT SPACING (mm)	REMARKS
ALL PERIMETER/EXTERIOR WALLS (UON)	200	1-#16 @ 800	200	2-#16	1200	-----
NON-LOAD BEARING INTERIOR WALLS WITH TOP AND BOTT SUPPORTS	200	1-#13 @ 1200	200	2-#16	1200	-----

NOTES:

1. REINFORCING SIZES AND SPACING GIVEN IN SECTIONS AND DETAILS SHALL SUPERSEDE THE ABOVE SCHEDULE REQUIREMENTS.
2. PROVIDE CONTINUOUS CAST IN PLACE CONCRETE BOND BEAM AT ALL WALL LATERAL SUPPORT LOCATIONS.
3. REINFORCING INDICATED SHALL BE CONTINUOUS FOR FULL EXTENT OF SPLICE FOLLOWING THE REQUIREMENTS OF THE LAP SPLICE TABLE SHOWN ON THIS SHEET.
4. WALLS HAVE BEEN DESIGNATED AS VERTICALLY SPANNING UON AND THEREFORE MUST BE TEMPORARILY SUPPORTED DURING CONSTRUCTION UNTIL THE SUPPORTING DIAPHRAGMS (FLOOR AND ROOF SYSTEMS) HAVE BEEN COMPLETELY INSTALLED. SHORING IS THE RESPONSIBILITY OF THE CONTRACTOR.
5. ALL CMU WALLS SHALL BE FULLY GROUTED IN LIFTS NOT EXCEEDING THOSE BY CODE (UON)
6. SEE TYPICAL CMU WALL DETAILS ON SHEET S8.

CONCRETE MATERIALS SCHEDULE

STRUCTURAL ELEMENT	f'c CONCRETE COMPRESSIVE STRENGTH @ 28 DAYS (MPa)
SLAB-ON-GRADE/TURN-DOWN SLABS	28
ROOF AND FLOOR SLABS	28
ALL FOOTINGS (UON)	28
MISC. CURBS, WALLS AND PADS UON	28
CAST-IN-PLACE LINTEL	28
CONCRETE FRAMING - BEAMS AND COLUMNS	28

NOTES:

1. ALL CONCRETE SHALL BE NORMAL WEIGHT CONCRETE (2400 Kg/m^3 UON)
2. ALL CONCRETE SHALL HAVE A MAX WATER-CEMENT RATIO OF 0.45.

STANDARD HOOKS IN TENSION PER (ACI 318M-05)

HOOK DEVELOPMENT LENGTH Ldh (mm)	
BAR SIZE	f'c 28 MPa
#10	180
#13	250
#16	300
#19	380
#22	430
#25	480
#29	560
#32	610
#36	690

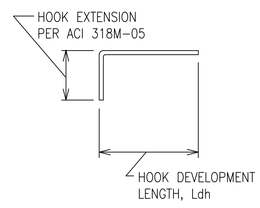

NOTES:

1. CONCRETE IS NORMAL WEIGHT CONCRETE.
2. BAR YIELD STRENGTH, fy = 400 MPa
3. SIDE COVER REQUIREMENTS OF ACI SECT. 12.5.3 ARE ASSUMED TO NOT BE MET.
4. TIE OR STIRRUP REQUIREMENTS OF ACI SECT. 12.5.3 ARE ASSUMED TO NOT BE MET.
5. REDUCTION FOR EXCESS REINFORCEMENT IS NOT TAKEN.
6. HOOK DEVELOPMENT LENGTH IS VALID FOR 180° HOOKS ALSO.

MASONRY REINFORCING MINIMUM LAP SPLICES

BAR SIZE	BASIC LAP SPLICE Ld FOR CMU REINFORCING
#10	450
#13	600
#16	750
#19	900
#22	1050
#25	1200

MAXIMUM CMU WALL UNSUPPORTED HEIGHT OR LENGTH

	WALL THICKNESS (mm)	EXTERIOR WALL NON-LOAD BEARING (mm)	INTERIOR NON-LOAD BEARING WALL (mm)
MAX HEIGHT OR LENGTH BETWEEN SUPPORTS	200	4800	7200

NOTE: CMU WALL MAXIMUM LATERAL SUPPORT SPACING GIVEN IN SECTIONS AND DETAILS SHALL SUPERSEDE THE ABOVE SCHEDULE REQUIREMENTS.

US Army Corps of Engineers
Afghanistan Engineer District

SYMBOL	DESCRIPTION	DATE	APR

DESIGNED BY: DATE:
DWN BY: SUBMITTED BY:
CHK BY: FILE NO.:

STANDARD DESIGN
VARIOUS PROJECTS
VARIOUS LOCATIONS, AFGHANISTAN
LATRINE BUILDING
MEDIUM
SCHEDULES

SHEET REFERENCE NUMBER:
S3

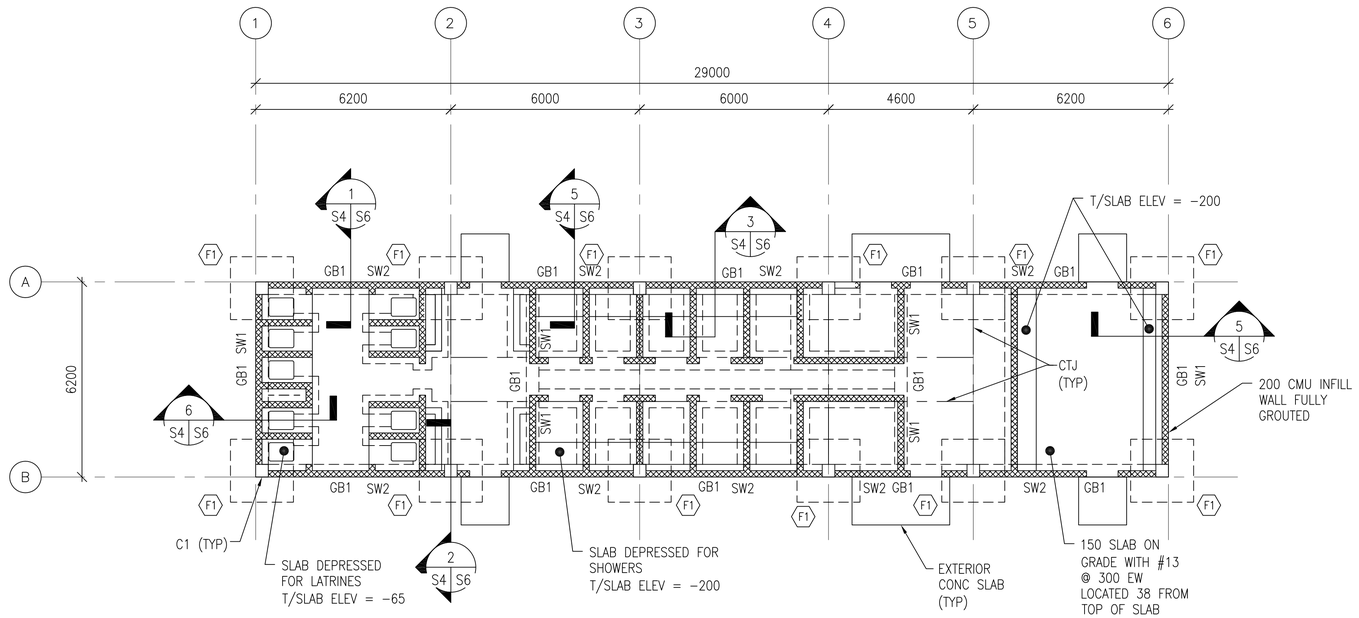

FOUNDATION PLAN

SCALE: 1:100

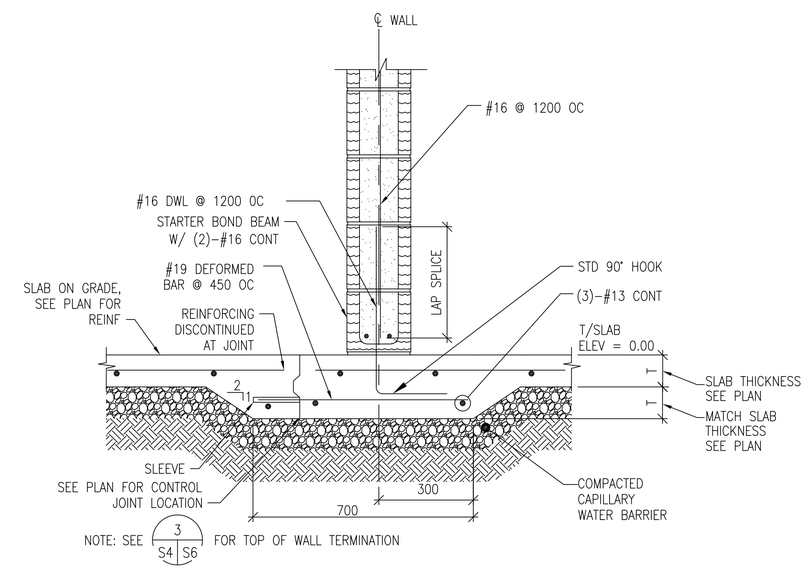

TYPICAL CONTROL JOINT AT WALL SECTION

SCALE: 1:10

PLAN NOTES:

1. FINISH FIRST FLOOR ELEVATION SHALL BE (DATUM 0.0). ALL PLUS OR MINUS DIMENSIONS INDICATED ON PLAN OR REFERRED TO IN NOTES RELATE TO FINISH FIRST FLOOR ELEVATION.
2. TOP OF FOOTINGS SHALL BE -950 UNLESS OTHERWISE INDICATED.
3. SPREAD FOOTINGS INDICATED BY F# ON PLAN. REFER TO SPREAD FOOTING SCHEDULE ON SHEET S2.
4. COLUMNS INDICATED THUS C# ON PLAN. REFER TO COLUMN SCHEDULE ON SHEET S2.
5. REFER TO SHEETS S1 TO S3 FOR STRUCTURAL NOTES AND BASIS OF DESIGN.
6. CTJ & CSJ INDICATES SLAB CONTROL OR CONSTRUCTION JOINTS. RESPECTIVELY, REFER TO SHEET S8 FOR DETAILS.
7. SEE CMU WALL REINFORCING SCHEDULE ON SHEET S3.
8. REFER TO ARCHITECTURAL SHEETS FOR MASONRY PARTITION TYPES.
9. SEE MECHANICAL AND ELECTRICAL SHEET FOR CONCRETE PAD LOCATIONS, SIZES, AND THICKNESS NOT SHOWN. SEE SHEET S8 FOR DETAILS.

UNLESS OTHERWISE NOTED, LINEAR DIMENSIONS SHOWN ARE IN MILLIMETERS (MM)

0 2000 4000 8000

SCALE: 1: 100

US Army Corps of Engineers
Afghanistan Engineer District

SYMBOL	DESCRIPTION	DATE	APR

DESIGNED BY: DATE:
DWN BY: SUBMITTED BY:
CHK BY: FILE NO.:

STANDARD DESIGN
VARIOUS PROJECTS
VARIOUS LOCATIONS, AFGHANISTAN

LATRINE BUILDING
MEDIUM
FOUNDATION PLAN

SHEET REFERENCE NUMBER:
S4

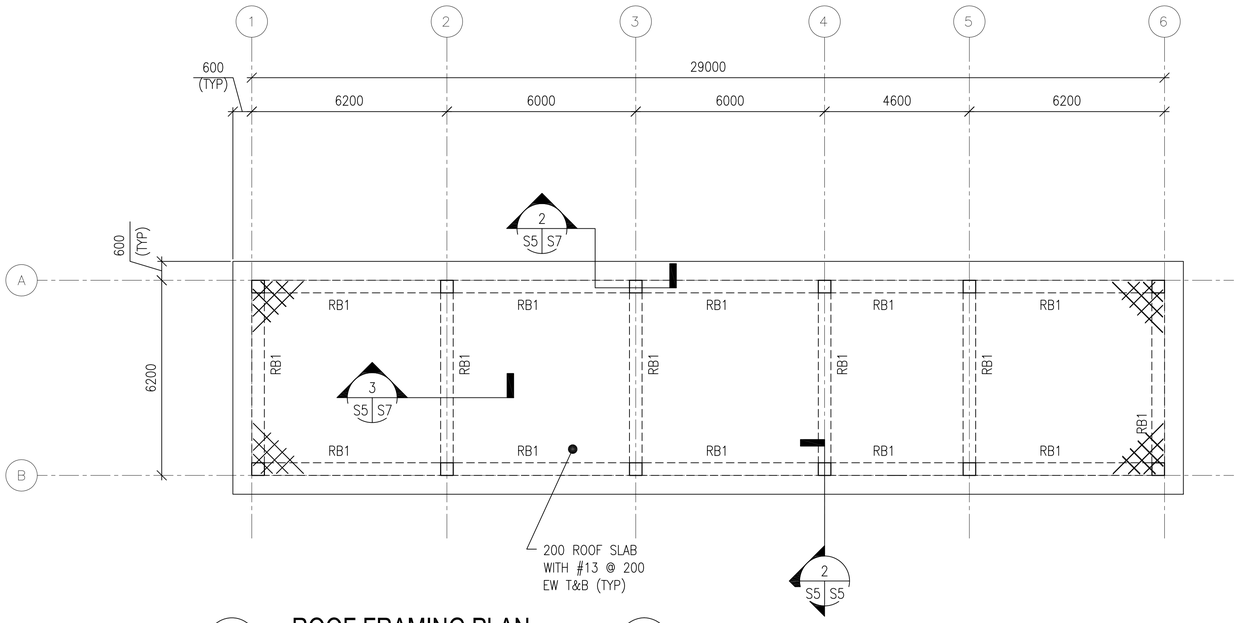

1 S5 S5 ROOF FRAMING PLAN

SCALE: 1:100

N

PLAN NOTES:

1. TOP OF SLAB ELEVATION = 3600 UNLESS NOTED OTHERWISE
2. RB# DENOTES ROOF BEAM TYPE. SEE BEAM SCHEDULE ON SHEET S2.
3. REFER TO SHEETS S1 TO S3 FOR STRUCTURAL NOTES AND BASIS OF DESIGN.
4. COORDINATE W/ ARCHITECTURAL SHEETS FOR COLD-FORMED STEEL OVERBUILT FRAMING ABOVE ROOF SLAB.
5. COLD-FORMED METAL OVERBUILT ROOF FRAMING NOT SHOWN FOR CLARITY. SEE OVERBUILT ROOF FRAMING DETAILS AND SECTIONS ON SHEET S7.

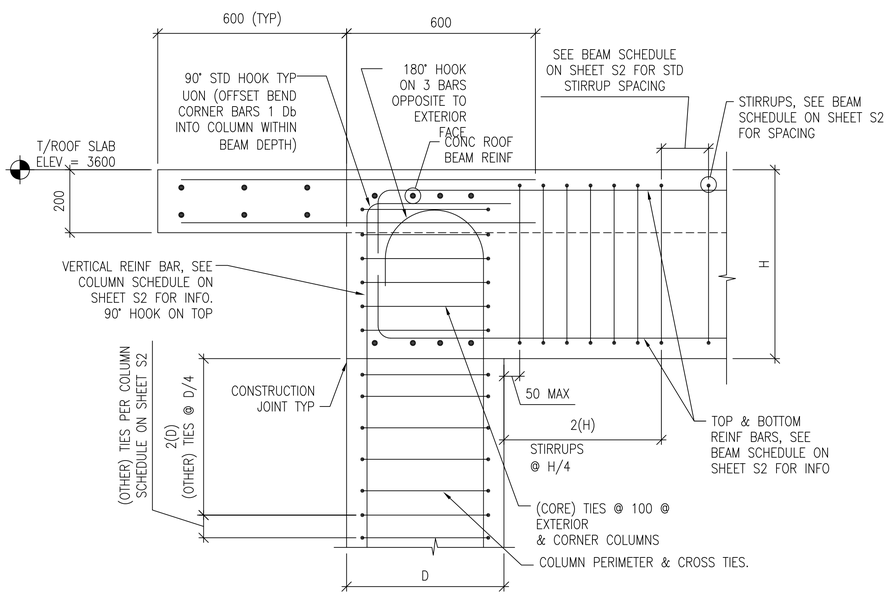

2 S5 S5 SECTION

SCALE: 1:10

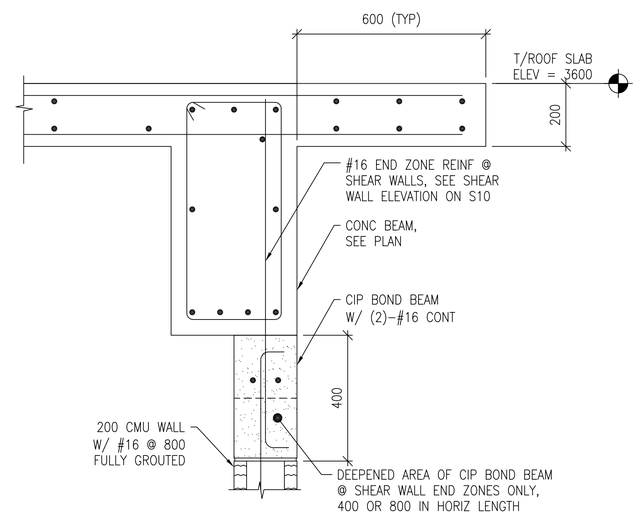

3 S8 S5 TYP SHEAR WALL END ZONE SECTION

SCALE: 1:10

UNLESS OTHERWISE NOTED, LINEAR DIMENSIONS SHOWN ARE IN MILLIMETERS (MM)

0 200 400 800

SCALE: 1: 10

0 2000 4000 8000

SCALE: 1: 100

US Army Corps of Engineers

Afghanistan Engineer District

SYMBOL	DESCRIPTION	DATE	APR

DESIGNED BY: DATE:
DWN BY: SUBMITTED BY:
CHK BY: FILE NO.:

STANDARD DESIGN
VARIOUS PROJECTS
VARIOUS LOCATIONS, AFGHANISTAN

LATRINE BUILDING
MEDIUM
ROOF FRAMING PLAN

SHEET REFERENCE NUMBER:

S5

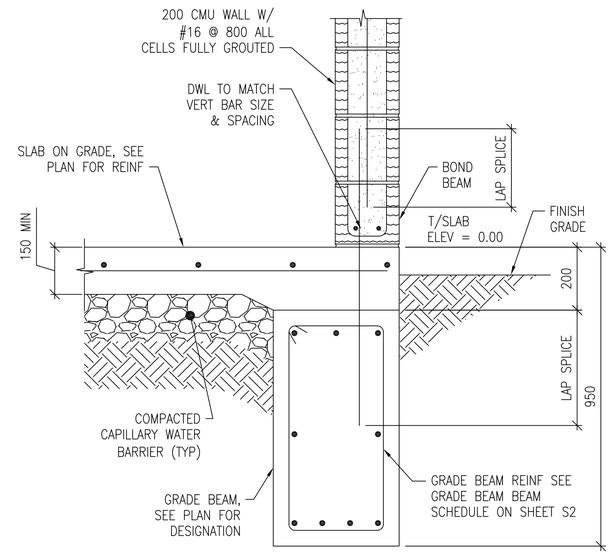

1 / S4 S6 **SECTION**
SCALE: 1:10

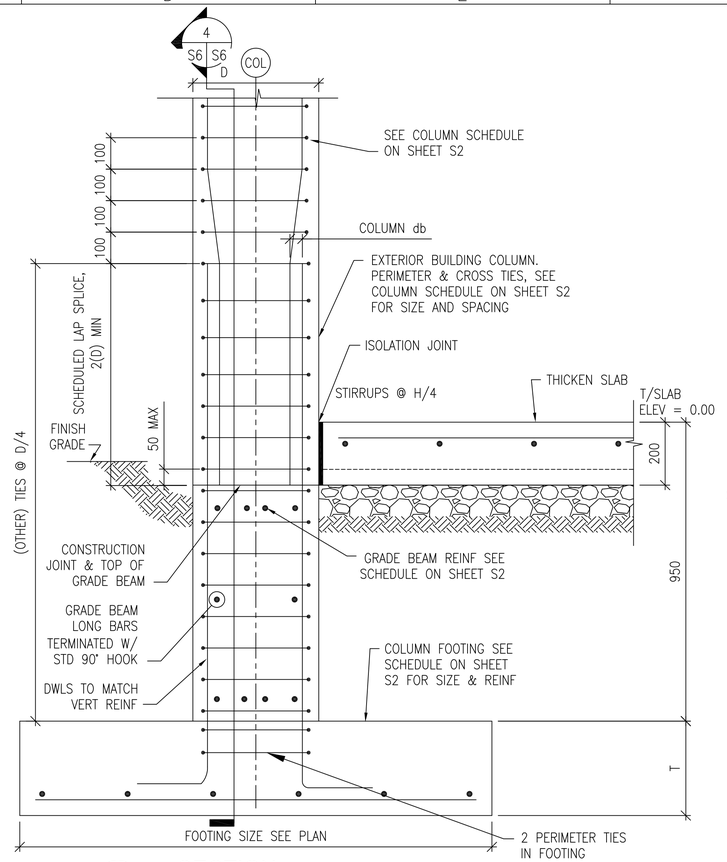

2 / S4 S6 **SECTION**
SCALE: 1:10

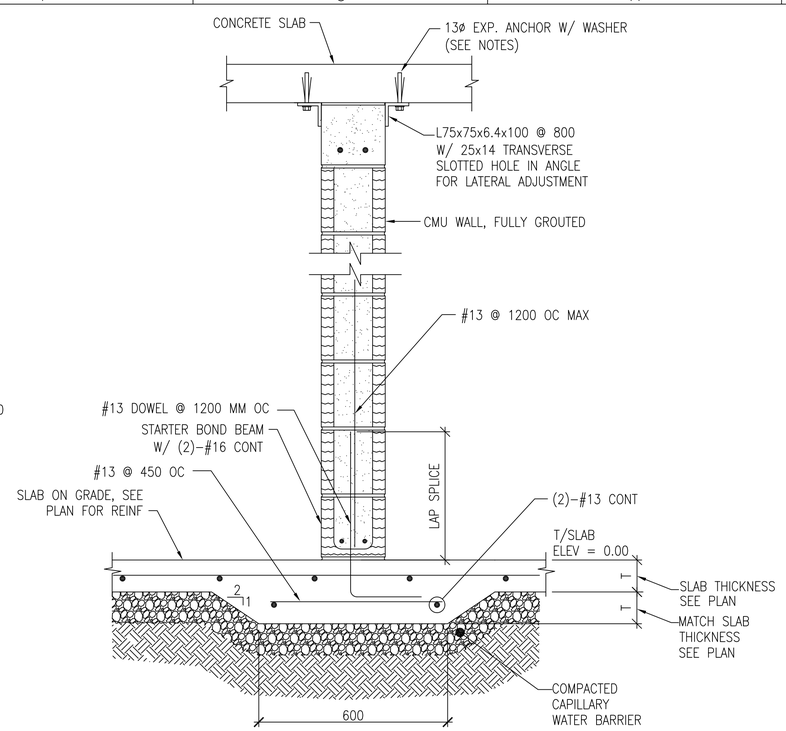

NOTES:
1. SEE SHEETS S3 AND S8 FOR CMU WALL REINFORCING.
2. EMBED EXPANSION ANCHOR 82 MINIMUM INTO SOLID CONCRETE.
3. INSTALL 13 MM ISOLATION JOINT VERTICALLY AT WALL ENDS THAT ARE ADJACENT TO CONCRETE COLUMNS.
4. USE STEEL WASHER BETWEEN ANCHOR HEAD AND ANGLE. NOMINAL WASHER INSIDE AND OUTSIDE DIAMETER TO BE 14 & 35 RESPECTIVELY.

3 / S4 S6 **SECTION**
SCALE: 1:10

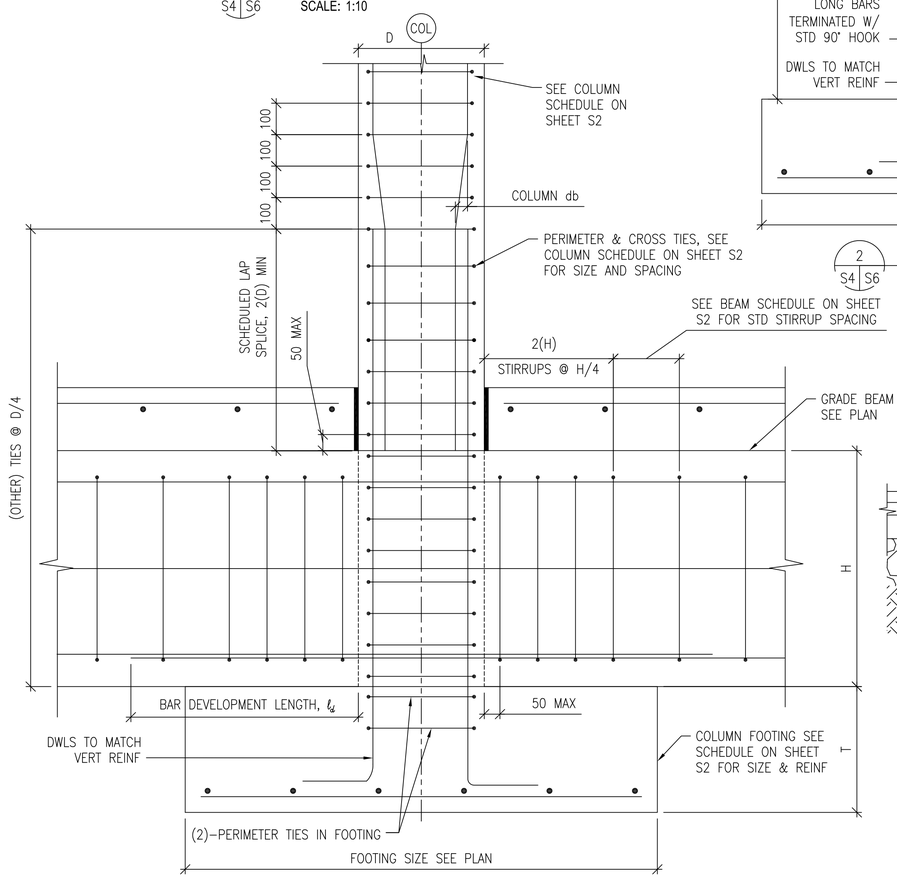

4 / S6 S6 **SECTION**
SCALE: 1:10

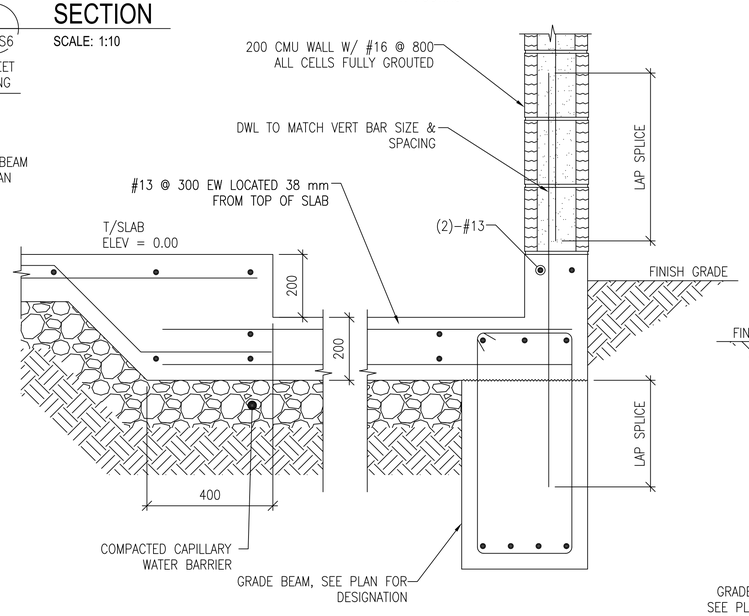

5 / S4 S6 **SECTION**
SCALE: 1:10

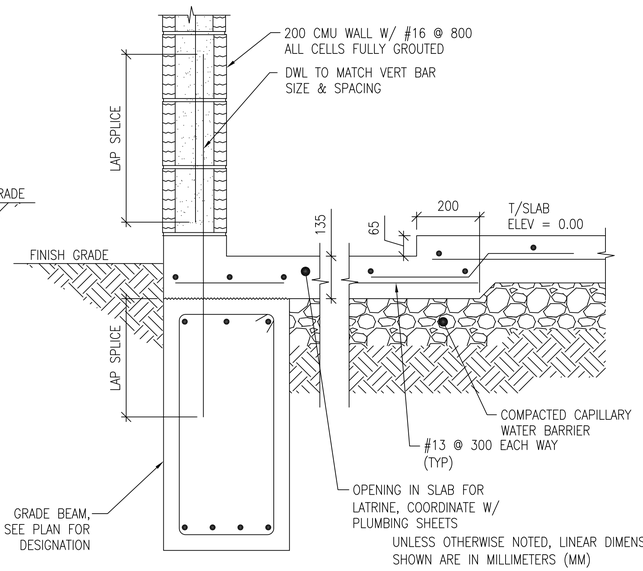

UNLESS OTHERWISE NOTED, LINEAR DIMENSIONS SHOWN ARE IN MILLIMETERS (MM)

6 / S4 S6 **SECTION**
SCALE: 1:10

0 200 400 800
SCALE: 1: 10

US Army Corps of Engineers
Afghanistan Engineer District

SYMBOL	DESCRIPTION	DATE	APR

DESIGNED BY: DATE:
DWN BY: SUBMITTED BY:
CHK BY: FILE NO.:

STANDARD DESIGN
VARIOUS PROJECTS
VARIOUS LOCATIONS, AFGHANISTAN

LATRINE BUILDING MEDIUM

FOUNDATION SECTIONS & DETAILS

SHEET REFERENCE NUMBER:
S6

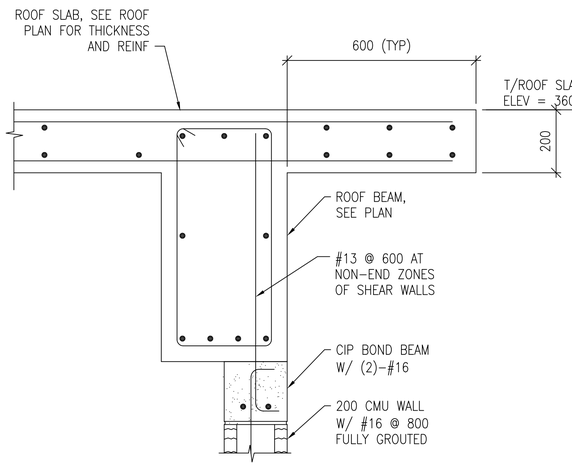

NOTES:
1. REFERENCE THIS SHEETS FOR OVERFRAMING ABOVE ROOF SLAB.

1 S8 S7 **SECTION**
SCALE: 1:10

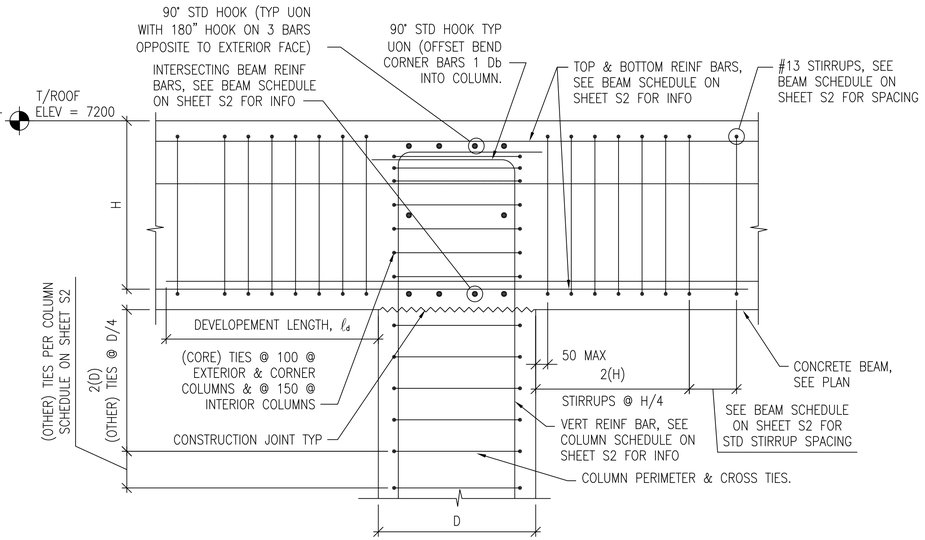

2 S5 S7 **SECTION**
SCALE: 1:10

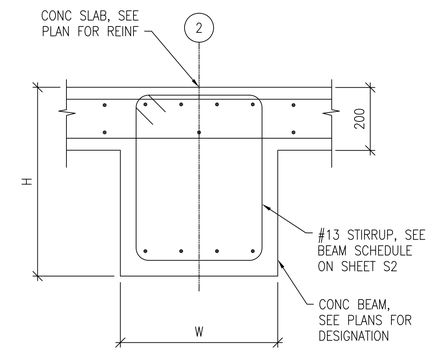

3 S5 S7 **SECTION**
SCALE: 1:10

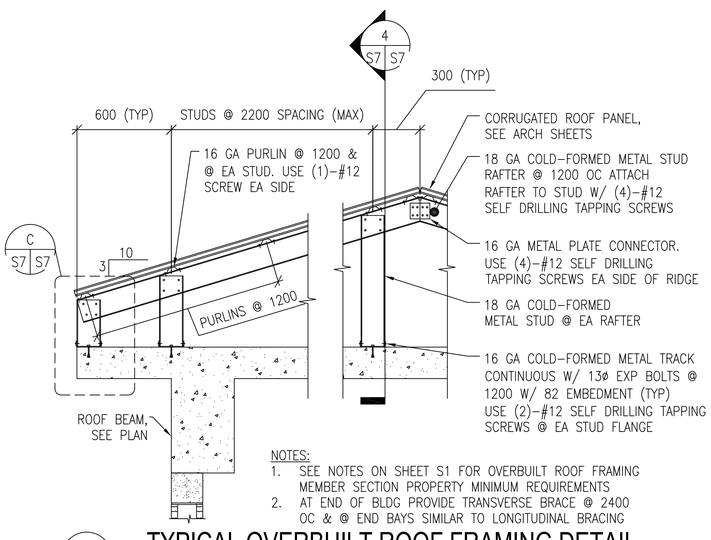

NOTES:
1. SEE NOTES ON SHEET S1 FOR OVERBUILT ROOF FRAMING MEMBER SECTION PROPERTY MINIMUM REQUIREMENTS
2. AT END OF BLDG PROVIDE TRANSVERSE BRACE @ 2400 OC & @ END BAYS SIMILAR TO LONGITUDINAL BRACING

A S7 S7 **TYPICAL OVERBUILT ROOF FRAMING DETAIL**
SCALE: 1:20

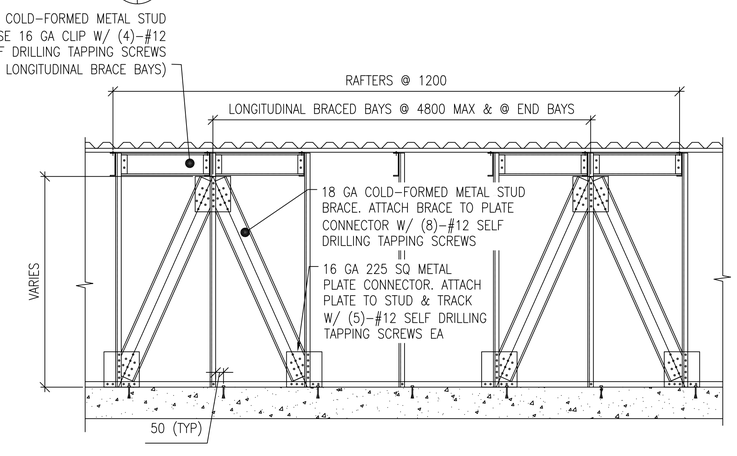

4 S7 S7 **SECTION**
SCALE: NTS

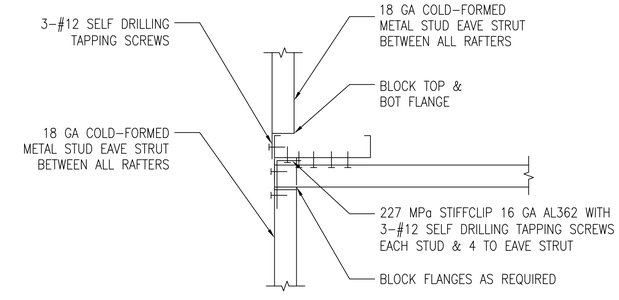

5 S7 S7 **SECTION**
SCALE: 1:5

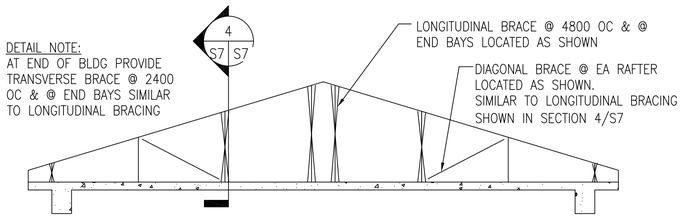

B S7 S7 **TYPICAL ROOF BRACE LAYOUT DETAIL**
SCALE: NTS

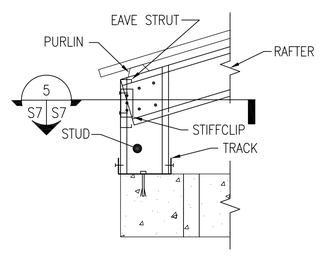

C S7 S7 **DETAIL**
SCALE: 1:10

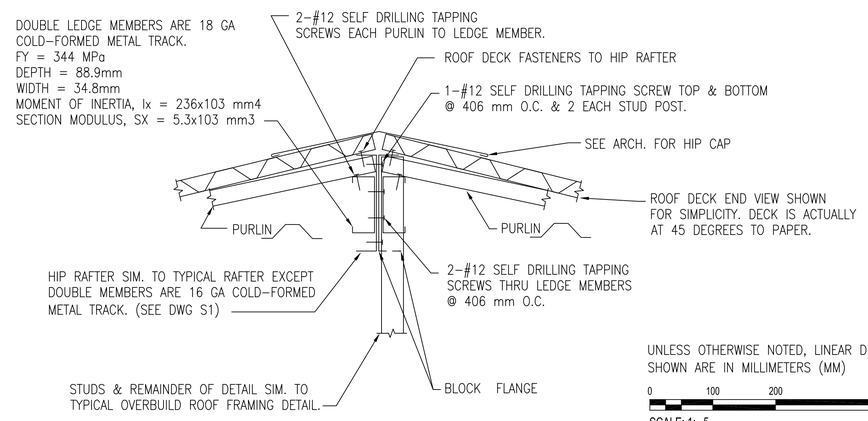

TYPICAL HIP FRAMING DETAIL
SCALE: 1:5

UNLESS OTHERWISE NOTED, LINEAR DIMENSIONS SHOWN ARE IN MILLIMETERS (MM)

0 100 200 400
SCALE: 1: 5

0 200 400 800
SCALE: 1: 10

US Army Corps of Engineers
Afghanistan Engineer District

SYMBOL	DESCRIPTION	DATE	APR

DESIGNED BY: DATE:
DWN BY: SUBMITTED BY:
CHK BY: FILE NO.:

STANDARD DESIGN
VARIOUS PROJECTS
VARIOUS LOCATIONS, AFGHANISTAN

LATRINE BUILDING
MEDIUM
SECTIONS & DETAILS

SHEET REFERENCE NUMBER:
S7

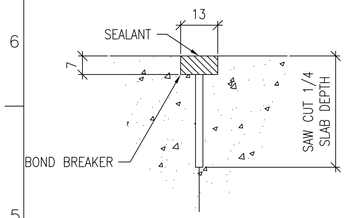

CONTROL JOINT DETAIL

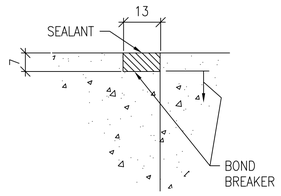

CONSTRUCTION JOINT DETAIL

TYPICAL CONCRETE SLAB JOINT FINISH DETAIL

1 / S8 SCALE: NTS

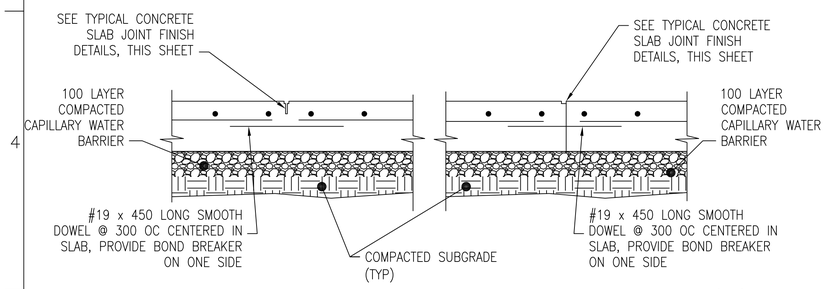

CONTROL JOINT DETAIL (CTJ) CONSTRUCTION JOINT DETAIL (CSJ)

TYPICAL SLAB ON GRADE JOINT DETAILS

2 / S8 SCALE: NTS

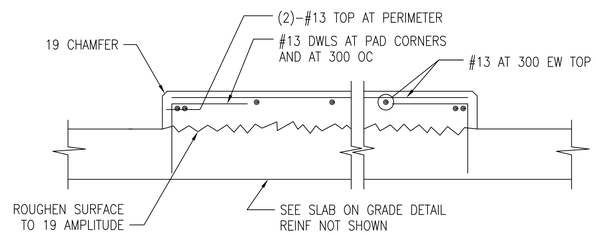

INTERIOR EQUIPMENT PAD DETAIL

3 / S8 SCALE: NTS

DETAIL NOTE:
1. COORDINATE EQUIPMENT PAD SIZE AND LOCATIONS W/ ELECTRICAL/MECHANICAL DRAWINGS AND EQUIPMENT MANUFACTURER.

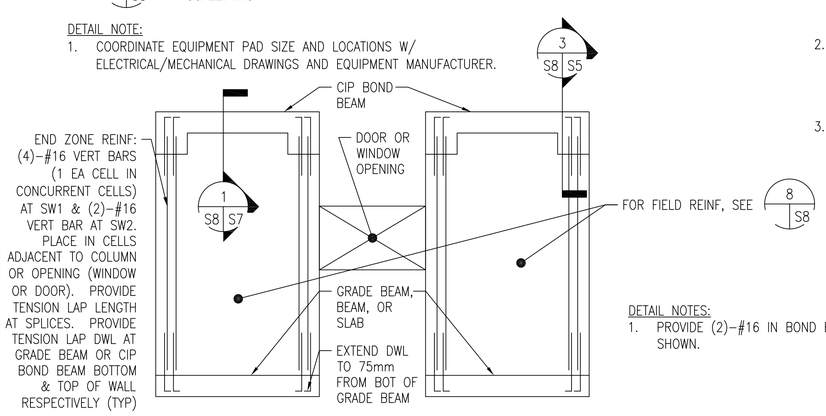

DETAIL NOTES:
1. PROVIDE (2)-#16 IN BOND BEAMS AT 1200 OC, NOT SHOWN.

SPECIAL REINFORCED MASONRY SHEAR WALL ELEVATION

4 / S8 SCALE: NTS

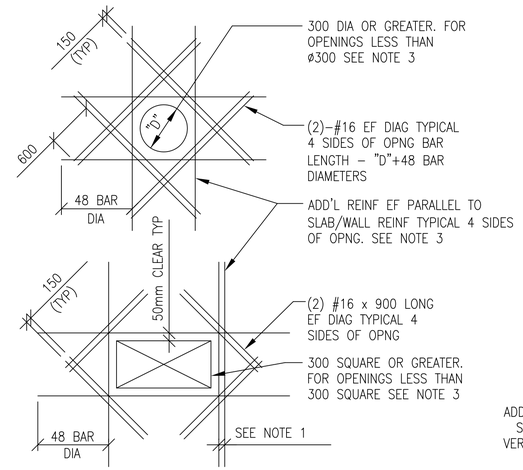

SLAB OPENINGS

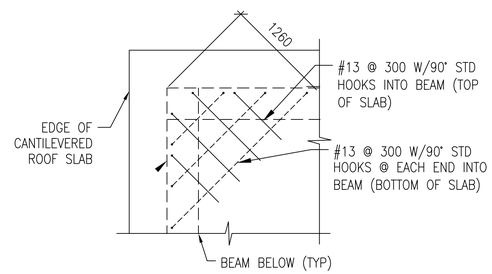

ELEVATED SLAB CORNERS

ADD'L REINFORCEMENT DETAILS

5 / S8 SCALE: NTS

DETAIL NOTES:
1. WHERE MORE THAN ONE ADDITIONAL BAR IS REQUIRED PARALLEL TO THE EXISTING SLAB/WALL REINFORCING THE ADDITIONAL REINFORCING BARS SHALL BE SPACED AT 100 ON CENTER.
2. ADDITIONAL REINFORCING PARALLEL TO THE SLAB/WALL REINFORCING SHALL BE #16 BARS THAT PROVIDE A STEEL AREA ON EACH SIDE OF THE OPENING EQUAL TO 1/2 THE AREA OF THE REINFORCING CUT BY THE OPENING.
3. FOR OPENINGS WITH SIDES OR DIAMETERS LESS THAN 300 SPREAD THE SLAB/WALL REINFORCING TO CLEAR THE OPENING.

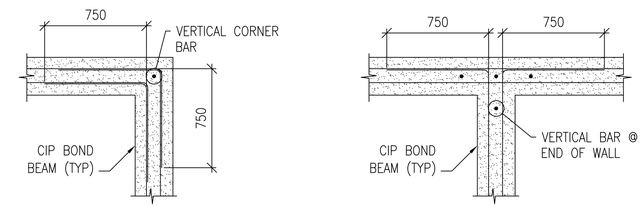

BOND BEAM CORNER BOND BEAM INTERSECTION

CIP BOND BEAM DETAILS

6 / S8 SCALE: NTS

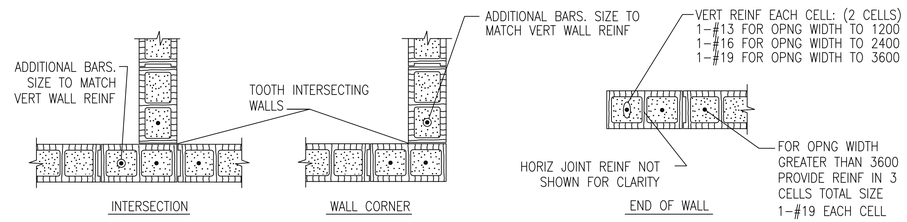

INTERSECTION WALL CORNER END OF WALL

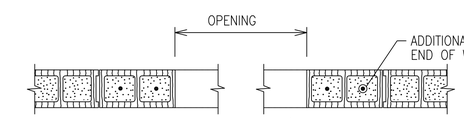

MASONRY OPENING W/ LINTEL

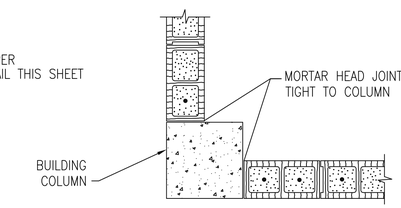

WALL END AT COLUMN

NOTES:
1. OPENING WIDTH SHALL NOT EXCEED 3600 FOR THIS TYPE OF JAMB
2. ALL CELLS FULLY GROUTED

TYPICAL CMU DETAILS

7 / S8 SCALE: NTS

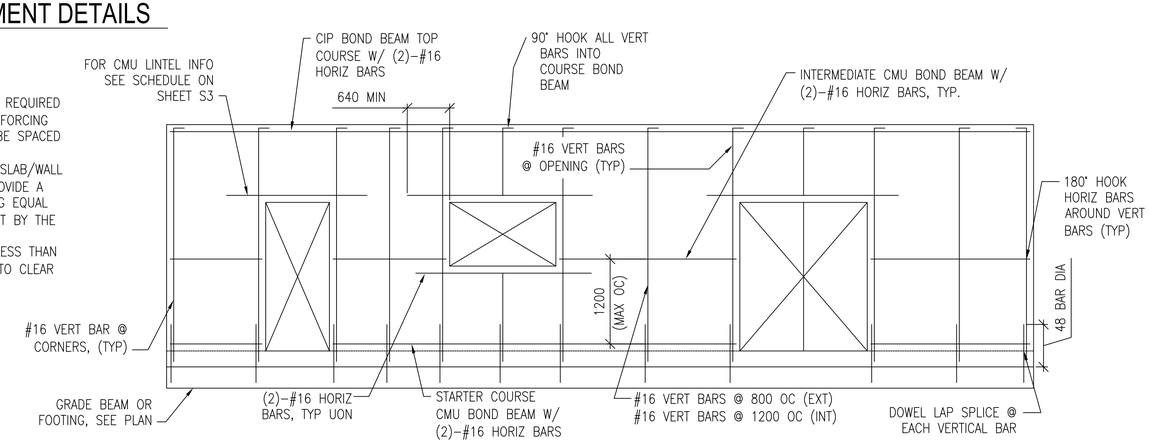

MIN CMU WALL REINFORCING

8 / S8 SCALE: NTS

LINTEL NOTES:
MASONRY LINTEL REINFORCEMENT AS PER SCHEDULE ON SHEET S3

UNLESS OTHERWISE NOTED, LINEAR DIMENSIONS SHOWN ARE IN MILLIMETERS (MM)

US Army Corps of Engineers
Afghanistan Engineer District

SYMBOL	DESCRIPTION	DATE	APR

DESIGNED BY: DATE:
DWN BY: SUBMITTED BY:
CHK BY: FILE NO.:

STANDARD DESIGN
VARIOUS PROJECTS
VARIOUS LOCATIONS, AFGHANISTAN

LATRINE BUILDING
MEDIUM
TYPICAL DETAILS

SHEET REFERENCE NUMBER:
S8

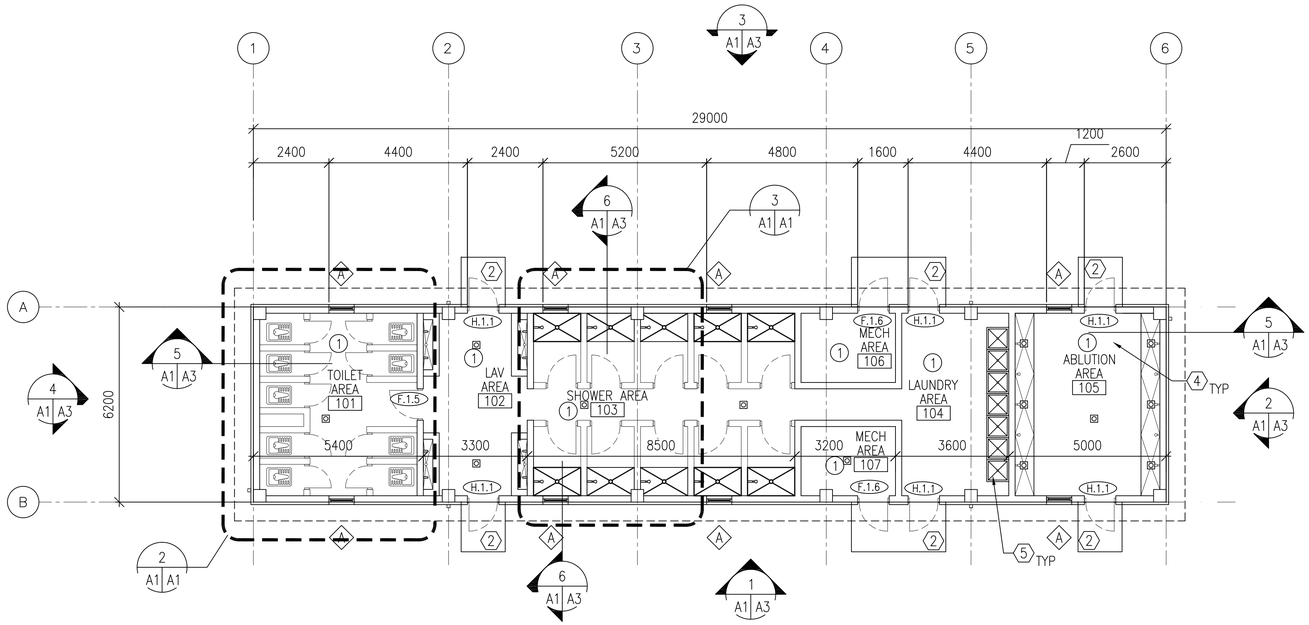

FLOOR PLAN

SCALE: 1:100

179.8 GSM

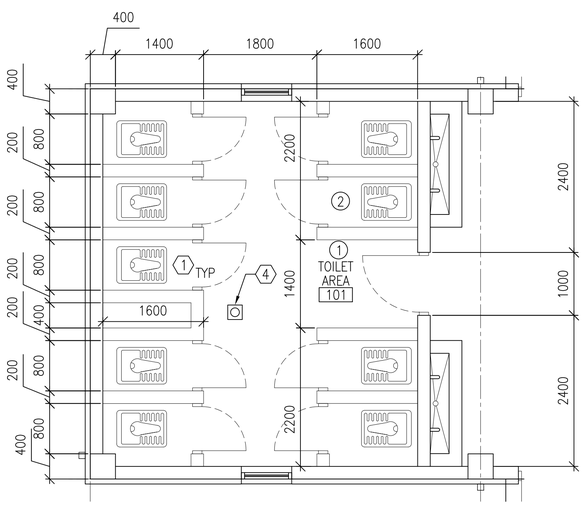

ENLARGED TOILET PLAN

SCALE: 1:50

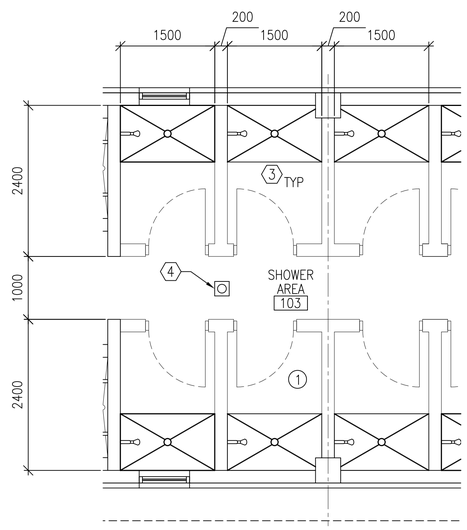

ENLARGED SHOWER PLAN

SCALE: 1:50

GENERAL NOTES:

A. INTERIOR PARTITIONS SHALL BE 200 MM CMU UNLESS NOTED OTHERWISE.
B. SURFACES TO BE PAINTED SHALL BE CLEAN AND FREE OF FOREIGN MATTER BEFORE APPLICATION OF PAINT. CLEANING SHALL BE SCHEDULED SO THAT DUST AND OTHER CONTAMINANTS WILL NOT FALL ON WET, NEWLY PAINTED SURFACES.
C. CONCRETE AND INTERIOR MASONRY SURFACES GROUTED SOLID SHALL BE ALLOWED TO DRY AT LEAST 30 DAYS BEFORE PAINTING EXCEPT CONCRETE SLAB ON GRADE WHICH SHALL BE ALLOWED TO CURE 90 DAYS BEFORE PAINTING.
D. PAINTS CONTAINING LEAD IN EXCESS OF 0.06 PERCENT BY WEIGHT OF THE TOTAL NONVOLATILE CONTENT SHALL NOT BE USED.
E. MERCURIAL FUNGICIDES SHALL NOT BE USED IN OIL–BASE PAINT.
F. REMOVE LOOSE DIRT AND CLEAN SURFACES BEFORE PAINTING. APPLY PAINT TO INTERIOR STRUCTURAL RIGID FRAMINGS AND CEILINGS AND TEST FOR ADHESION. PRIMER COAT FOR MASONRY. INITIAL FIRST COAT WITH AN ACRYLIC LATEX PAINT FOR EXTERIOR SURFACES AND A SECOND COAT WITH A WATER REPELLENT ACRYLIC LATEX PAINT.
G. METAL DOORS AND FRAMES SHALL RECEIVE A PRIMER COAT PLUS TWO COATS OF PAINT.
H. DIMENSIONS ARE TO STRUCTURAL COLUMN GRID, EDGE OF WINDOW OPENINGS, AND TO HINGE SIDE OF DOOR OPENINGS.
I. ALL SHOWER STALL DOORS SHALL BE F.1.5 UNLESS NOTED OTHERWISE. SEE A5 FOR DOOR/FRAME AND HARDWARE TYPES.
J. ALL TOILET STALL DOORS SHALL BE T.1.5 UNLESS NOTED OTHERWISE. SEE A5 FOR DOOR/FRAME AND HARDWARE TYPES.
K. INSTALL SHOWER CURTAINS AND RODS AT ALL SHOWERS.
L. SEE PLUMBING DRAWINGS FOR FLOOR DRAIN LOCATIONS.
M. PROVIDE CERAMIC TILE AT ALL SHOWER PANS AND SHOWER SURROUNDS.
N. PROVIDE CERAMIC TILE AT ALL ABLUTION AREAS PANS AND SURROUNDS.
O. SLOPE 1500 MM AREA AROUND DRAINS DOWN TO DRAIN AT 1:50 SLOPE. DRAIN SHALL BE SITUATED 30MM BELOW FINISH FLOOR.
P. SHOWER STALL WALLS AND TOILET STALL WALLS ARE 2400 MM HIGH. ALL OTHER WALLS ARE FULL HEIGHT.

ROOM FINISHES: (X)

1. WALLS: PAINTED PLASTER,
   FLOOR: SEALED CONCRETE
   CEILING: PAINTED PLASTER APPLIED TO STRUCTURE
2. WALLS: 2400 MM HIGH CERAMIC TILE WAINSCOT, PAINTED PLASTER ABOVE WAINSCOT
   FLOOR: CERAMIC TILE
   CEILING: PAINTED PLASTER

KEY NOTES: (X)

1. TYPICAL TOILET STALL LAYOUT – RE: DETAIL 1/A6
2. CONCRETE STOOP – RE: DETAIL 7/A5
3. SHOWER CURTAIN AND CURTAIN ROD, TYP. AT EACH SHOWER
4. FLOOR DRAIN, TYP
5. (7) STAINLESS STEEL LAUNDRY TUBS

LEGEND:

- DOOR TYPE, SEE SHEET A5
- (X) KEY NOTE
- FEC FIRE EXTINGUISHER CABINET
- (A) WINDOW TYPE, SEE SHEET A5
- (1) ROOM FINISH TYPE DESIGNATION
- FLOOR DRAIN

UNLESS OTHERWISE NOTED, LINEAR DIMENSIONS SHOWN ARE IN MILLIMETERS (MM)

0 1000 2000 4000
SCALE: 1: 50

0 2000 4000 8000
SCALE: 1: 100

US Army Corps of Engineers
Afghanistan Engineer District

SYMBOL	DESCRIPTION	DATE	APR

DESIGNED BY: DATE:
DWN BY: SUBMITTED BY:
CHK BY: FILE NO.:

STANDARD DESIGN
VARIOUS PROJECTS
VARIOUS LOCATIONS, AFGHANISTAN

LATRINE BUILDING
MEDIUM

FLOOR PLAN AND ENLARGED PLANS

SHEET REFERENCE NUMBER:
A1

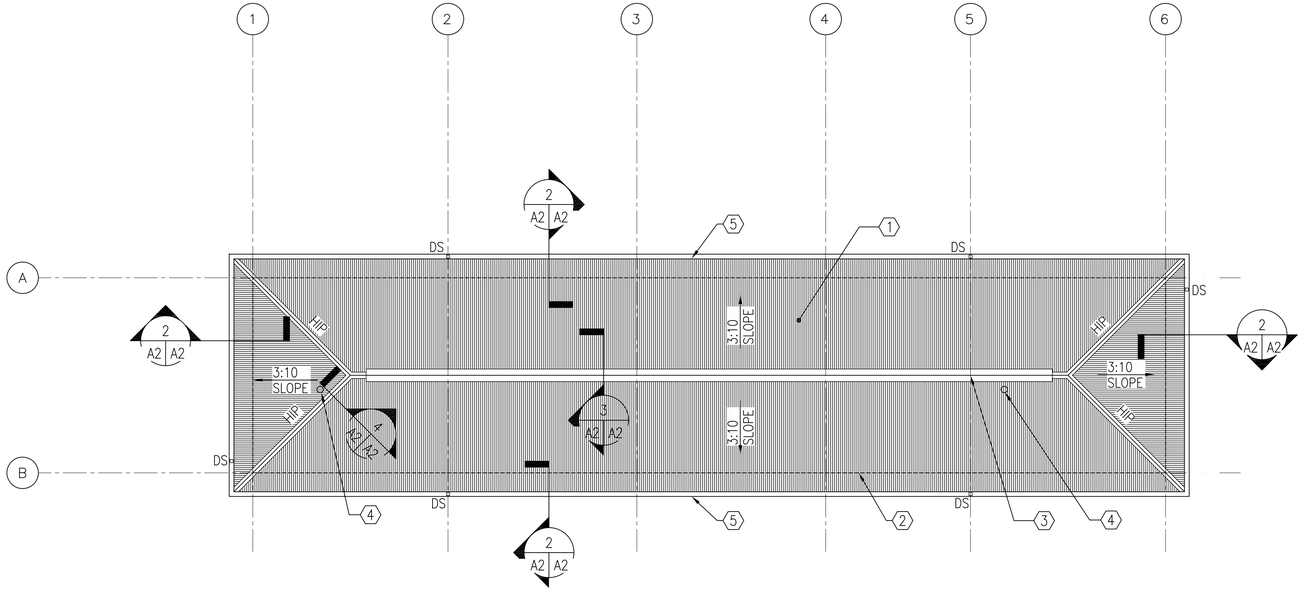

ROOF PLAN

1 A2 A2 — SCALE: 1:100

N

KEY NOTES:

1. CORRUGATED METAL ROOF PANELS ON COLD-FORMED METAL FRAMING
2. LINE OF BUILDING WALL, BELOW
3. CONTINUOUS RIDGE VENT
4. ROOF PENETRATION-RE: DETAIL 5/A2
5. METAL GUTTER

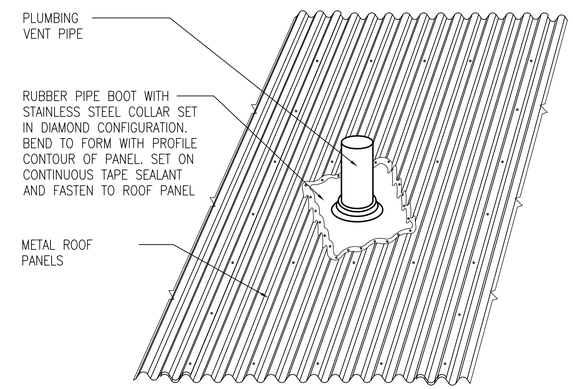

PLUMBING PIPE DETAIL

5 A2 A2 — SCALE: NONE

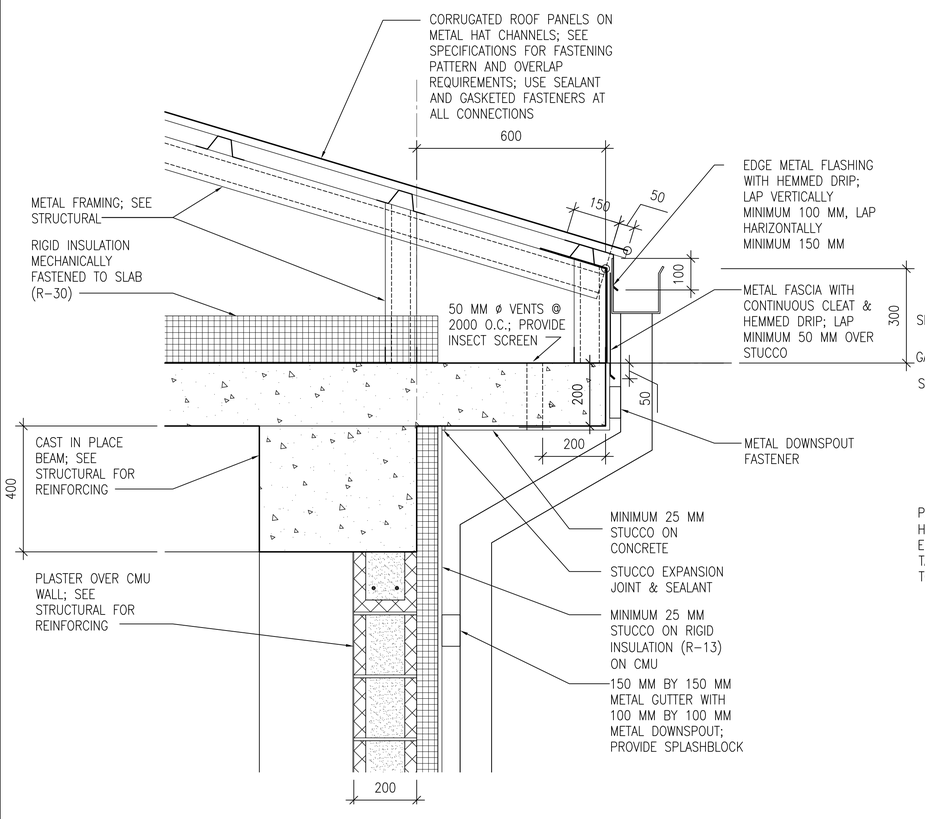

EAVE DETAIL

2 A2 A2 — SCALE: 1:10

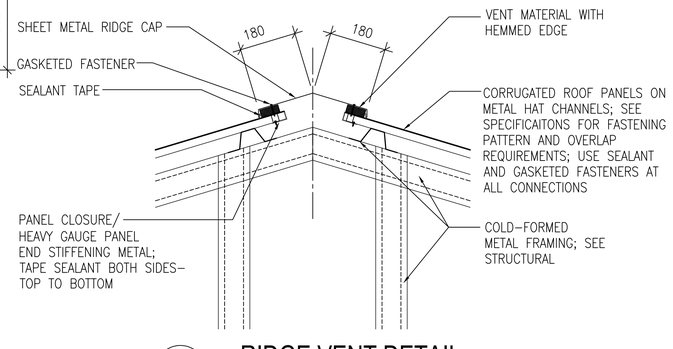

RIDGE VENT DETAIL

3 A2 A2 — SCALE: 1:10

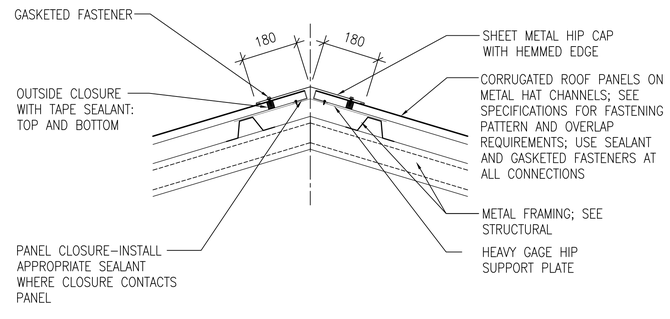

HIP DETAIL

4 A2 A2 — SCALE: 1:10

UNLESS OTHERWISE NOTED, LINEAR DIMENSIONS SHOWN ARE IN MILLIMETERS (MM)

0 200 400 800
SCALE: 1: 10

0 2000 4000 8000
SCALE: 1: 100

US Army Corps of Engineers
Afghanistan Engineer District

SYMBOL	DESCRIPTION	DATE	APR

DESIGNED BY: DATE:
DWN BY: SUBMITTED BY:
CHK BY: FILE NO.:

STANDARD DESIGN
VARIOUS PROJECTS
VARIOUS LOCATIONS, AFGHANISTAN

STANDARD DESIGN
TOILET ABLUTION BUILDING
ROOF PLAN AND DETAILS

SHEET REFERENCE NUMBER:
A2

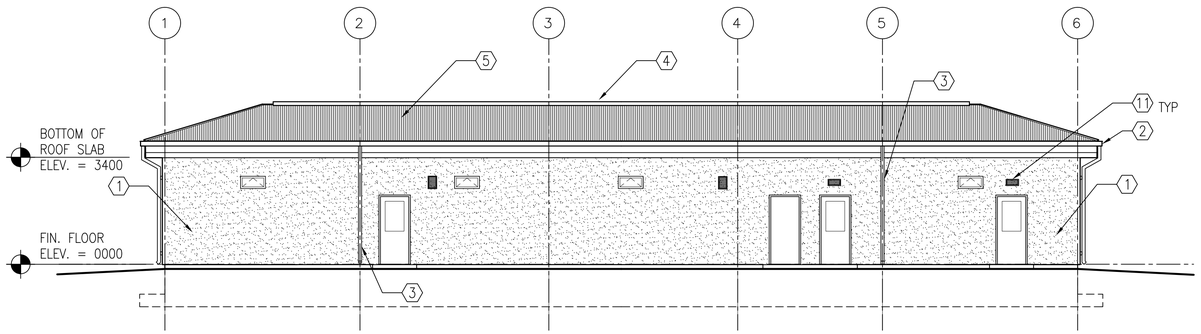

1 / A1 A3 EAST ELEVATION
SCALE: 1:100

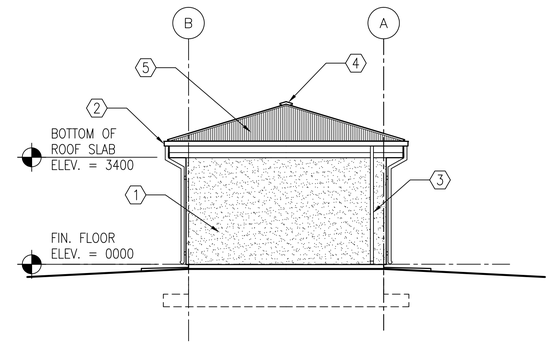

2 / A1 A3 NORTH ELEVATION
SCALE: 1:100

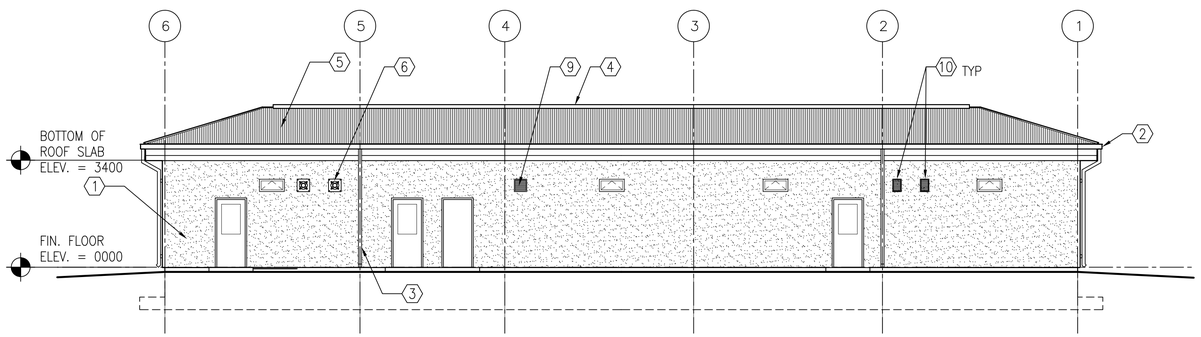

3 / A1 A3 WEST ELEVATION
SCALE: 1:100

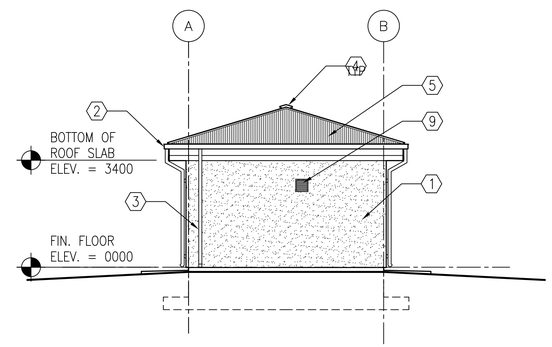

4 / A1 A3 SOUTH ELEVATION
SCALE: 1:100

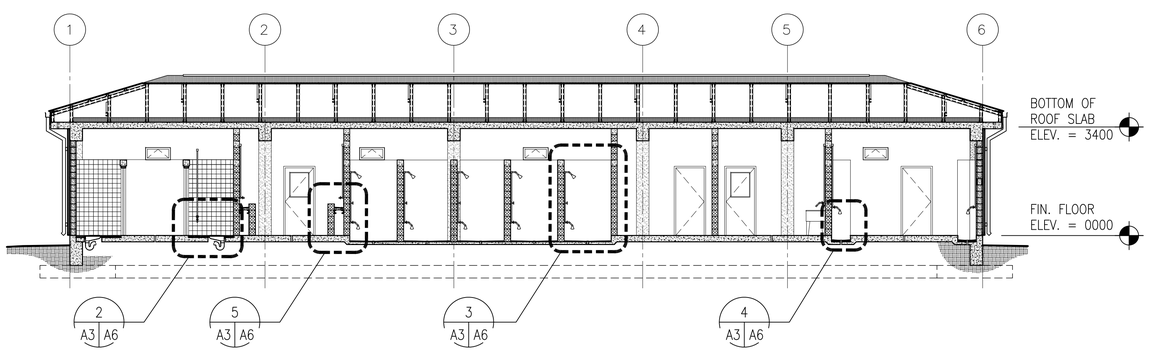

5 / A1 A6 BUILDING SECTION
SCALE: 1:100

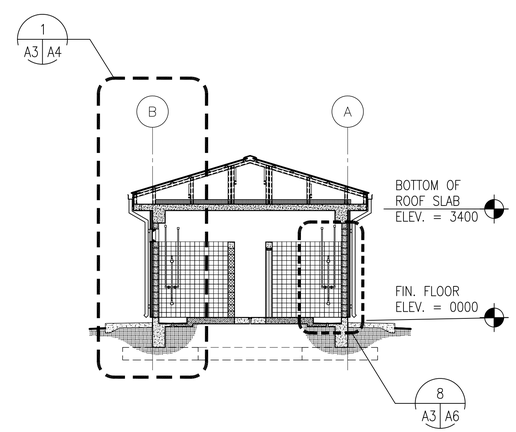

6 / A3 A6 BUILDING SECTION
SCALE: 1:100

KEY NOTES:

1. STUCCO AND RIGID INSULATION SYSTEM ON CMU AND CONCRETE.
2. METAL GUTTER
3. METAL DOWNSPOUT WITH SPLASH BLOCK
4. CONTINUOUS RIDGE VENT
5. CORRUGATED METAL ROOF PANELS ON COLD-FORMED METAL FRAMING
6. EXHAUST FAN – RE: MECH
7. CONCRETE SLAB CEILING
8. SEE STRUCTURAL DRAWINGS FOR FOUNDATION
9. EXHAUST FAN WITH DUCT WALL CAP – RE: MECH
10. SUPPLY AIR LOUVER – RE: MECH
11. INTAKE LOUVER – RE: MECH

GENERAL NOTES:

1. COORDINATE SIZE AND LOCATION OF OPENINGS FOR MECHANICAL ITEMS WITH MECHANICAL DRAWINGS.
2. PROVIDE STRUCTURAL LINTELS AS REQUIRED – RE: STRUCT

UNLESS OTHERWISE NOTED, LINEAR DIMENSIONS SHOWN ARE IN MILLIMETERS (MM)

0 2000 4000 8000
SCALE: 1: 100

US Army Corps of Engineers
Afghanistan Engineer District

SYMBOL	DESCRIPTION	DATE	APR

DESIGNED BY: DATE:
DWN BY: SUBMITTED BY:
CHK BY: FILE NO.:

STANDARD DESIGN
VARIOUS PROJECTS
VARIOUS LOCATIONS, AFGHANISTAN

LATRINE BUILDING
MEDIUM
EXTERIOR ELEVATIONS

SHEET REFERENCE NUMBER:
A3

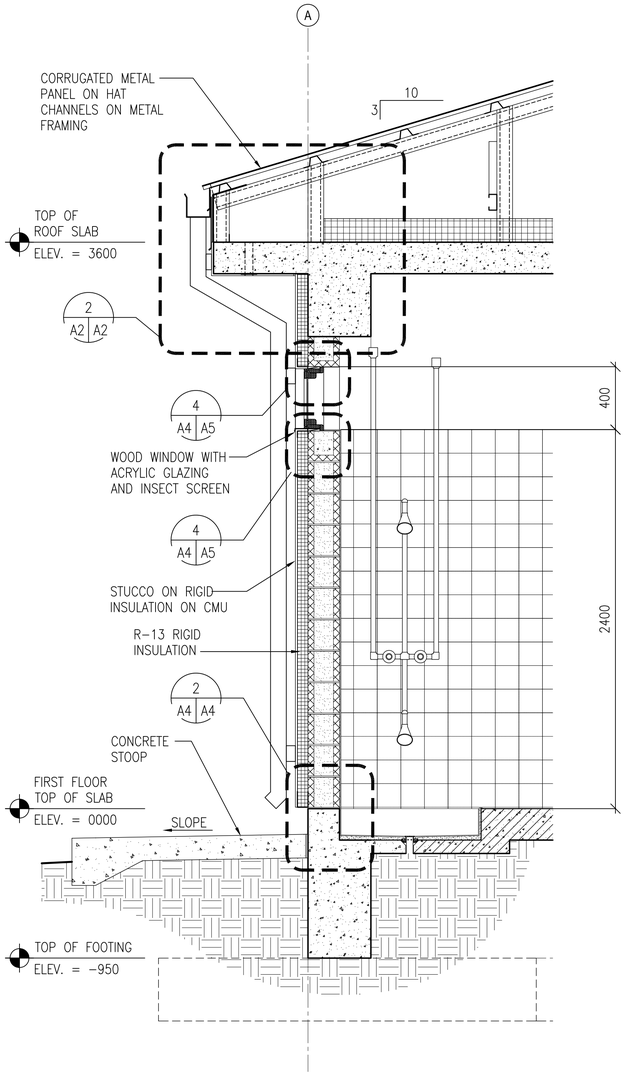

1 A3 A4 **WALL SECTION**
SCALE: 1:20

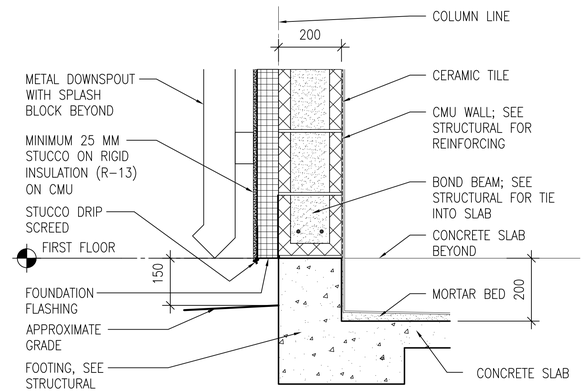

2 A4 A4 **STUCCO BASE DETAIL AT SHOWER**
SCALE: 1:10

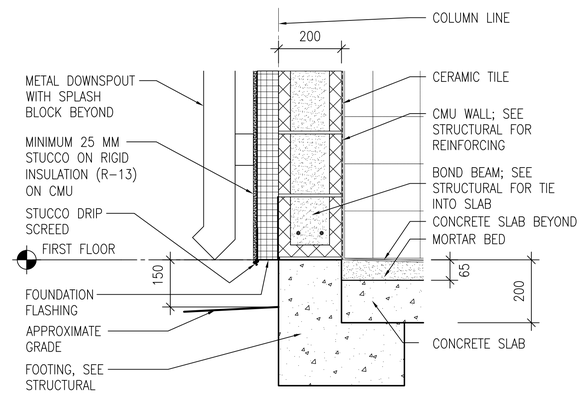

3 A4 A4 **STUCCO BASE DETAIL AT TOILET**
SCALE: 1:10

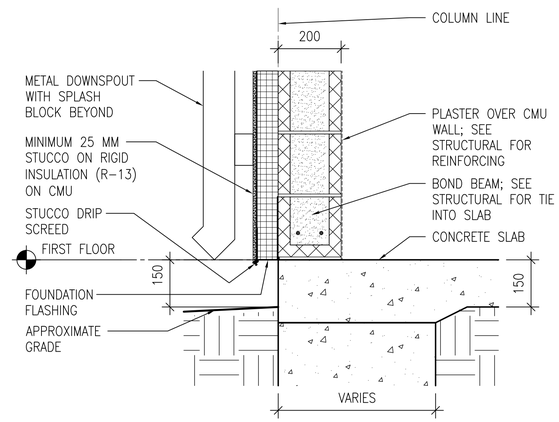

4 A4 A4 **STUCCO BASE DETAIL**
SCALE: 1:10

GENERAL NOTES:

A. COORDINATE SIZE AND LOCATION OF OPENINGS FOR MECHANICAL ITEMS WITH MECHANICAL DRAWINGS.
B. PROVIDE STRUCTURAL LINTELS AS REQUIRED – RE: STRUCT

KEY NOTES:

1. STUCCO AND RIGID INSULATION SYSTEM OVER CMU AND CONCRETE.
2. CORRUGATED METAL ROOF PANELS ON COLD-FORMED METAL FRAMING.

UNLESS OTHERWISE NOTED, LINEAR DIMENSIONS SHOWN ARE IN MILLIMETERS (MM)

0 400 800 1600
SCALE: 1: 20

0 2000 4000 8000
SCALE: 1: 100

US Army Corps of Engineers
Afghanistan Engineer District

SYMBOL	DESCRIPTION	DATE	APR

DESIGNED BY: DATE:
DWN BY: SUBMITTED BY:
CHK BY: FILE NO.:

STANDARD DESIGN
VARIOUS PROJECTS
VARIOUS LOCATIONS, AFGHANISTAN

LATRINE BUILDING
MEDIUM
BUILDING & WALL SECTIONS

SHEET REFERENCE NUMBER:
A4

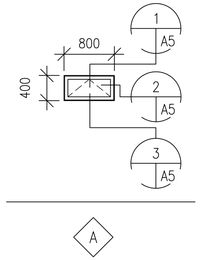

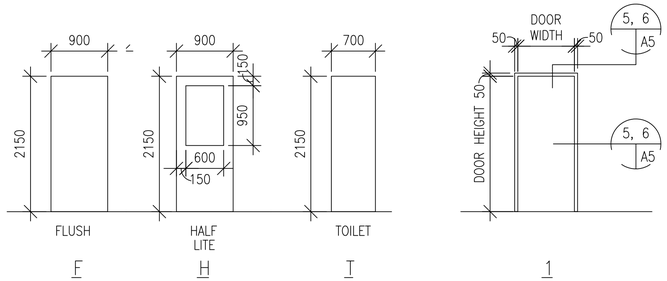

1 WINDOW TYPES
A5 A5 SCALE: 1:50

2 DOOR TYPES
A5 A5 SCALE: 1:50

3 FRAME TYPES
A5 A5 SCALE: 1:50

WINDOW TYPES NOTES:

1. ALL EXTERIOR WINDOWS SHALL BE WOOD WITH INSECT SCREENS. WINDOWS SHALL BE COMMERCIAL GRADE.
2. GLAZING SHALL BE ACRYLIC SHEET.

DOOR TYPES NOTES:

1. INTERIOR AND EXTERIOR METAL DOORS AND FRAME COLORS SHALL MATCH ADJACENT WALL COLORS AS SELECTED BY THE CONTRACTING OFFICER.
2. HARDWARE SHALL BE HEAVY DUTY, COMMERCIAL GRADE, STAINLESS STEEL WITH A MATTE FINISH.
3. FRAMES, EXCEPT FIRE-RATED FRAMES, SHALL BE MOUNTED AND ADJUSTED IN ACCORDANCE WITH MANUFACTURER'S INSTRUCTIONS. FRAMES SHALL BE FASTENED WITH MINIMUM OF THREE FASTENING POINTS PER SIDE AT REGULAR INTERVALS.
4. DIMENSIONS SHOWN ON DOOR SCHEDULE ARE BASED UPON MODULAR MASONRY (OR ROUGH OPENING), HEIGHT OF 2200mm FOR STANDARD PERSONNEL DOORS. CONTRACTOR SHALL COORDINATE WITH DOOR SUPPLIER TO ENSURE THAT DIMENSIONS OF DOORS AND FRAMES PROVIDED ARE COMPATIBLE WITH DOOR OPENING DIMENSIONS.

DOOR HARDWARE TYPES:

HW-1 1-1/2 PR HINGES
1 EA EXIT DEVICE, SURFACE MOUNTED F08
1 EA CYLINDER. GRADE 1
1 EA DOOR CLOSER, C02061,LOW RESISTANCE
1 EA THRESHOLD J32130

HW-5 1-1/2 PR HINGES, A8112
1 EA LOCKSET W/LEVERS. GRADE 1
1 EA DOOR STOP, L02101 OR L02161
2 EA MOP PLATE, J103

HW-6 1-1/2 PR HINGES
1 EA LOCKSET, F93 ENTRY LOCK W/LEVERS. GRADE 1
1 EA DOOR CLOSER, C02061,LOW RESISTANCE
1 EA THRESHOLD J32130

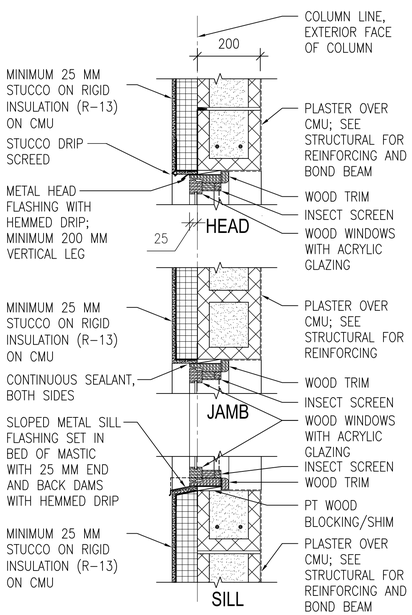

4 WINDOW DETAILS
A4 A5 SCALE: 1:10

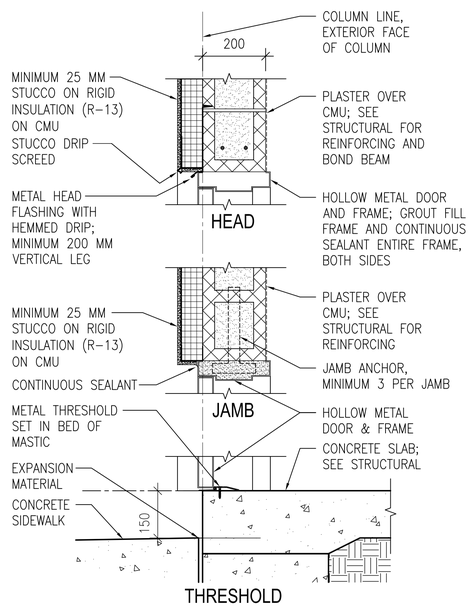

5 EXTERIOR DOOR DETAILS
A5 A5 SCALE: 1:10

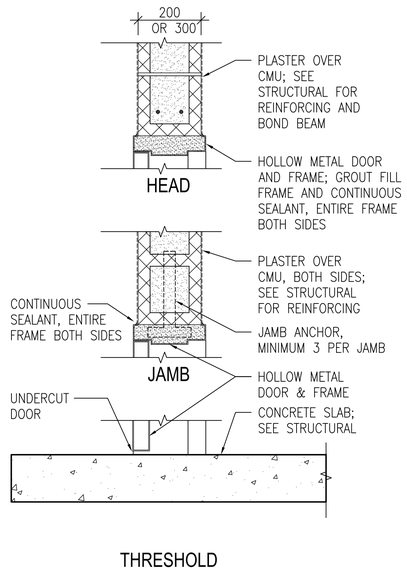

6 INTERIOR DOOR DETAILS
A5 A5 SCALE: 1:10

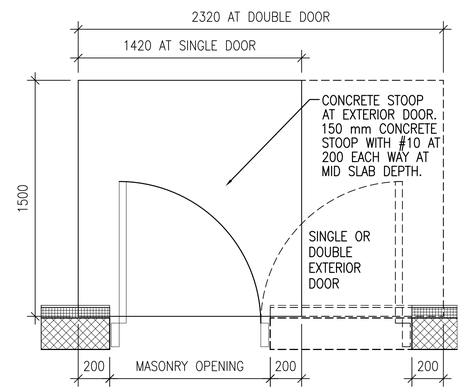

7 CONCRETE STOOP DETAILS
A5 A5 SCALE: 1:10

UNLESS OTHERWISE NOTED, LINEAR DIMENSIONS SHOWN ARE IN MILLIMETERS (MM)

0 200 400 800
SCALE: 1: 10

0 1000 2000 4000
SCALE: 1: 50

US Army Corps of Engineers
Afghanistan Engineer District

SYMBOL	DESCRIPTION	DATE	APR

DESIGNED BY: DATE:
DWN BY: SUBMITTED BY:
CHK BY: FILE NO.:

STANDARD DESIGN
VARIOUS PROJECTS
VARIOUS LOCATIONS, AFGHANISTAN

LATRINE BUILDING
MEDIUM
DOOR, WINDOW & FINISH TYPES & DETAILS

SHEET REFERENCE NUMBER:
A5

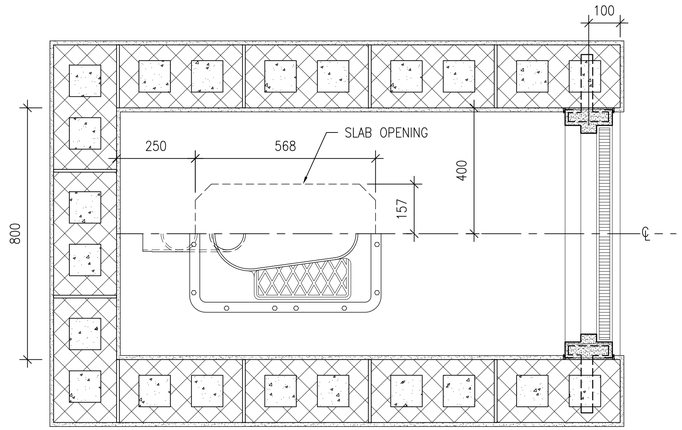

1 A1 A6 **TYPICAL TOILET STALL DETAIL**

SCALE: 1:10

ZURN Z1290 EASTERN STYLE WATER CLOSET

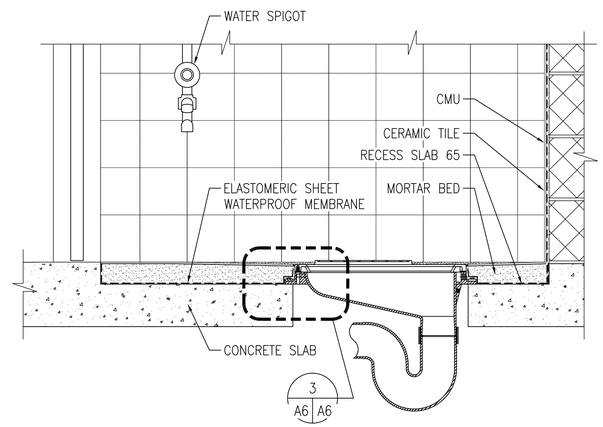

2 A1 A6 **LATRINE SECTION**

SCALE: 1:10

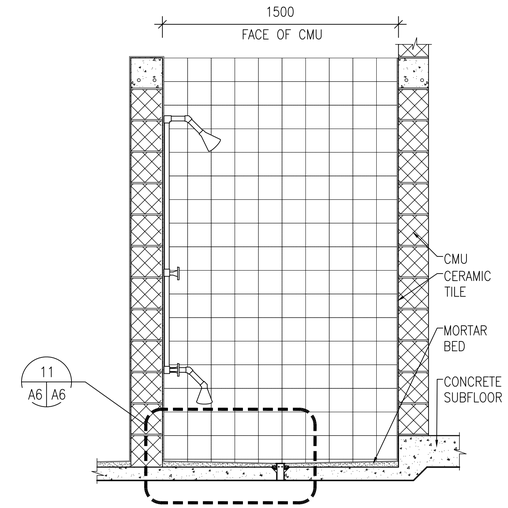

3 A1 A6 **SHOWER SECTION**

SCALE: 1:20

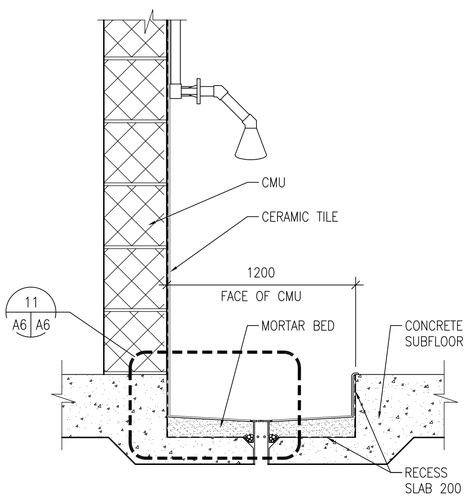

4 A3 A6 **ABLUTION SECTION**

SCALE: 1:10

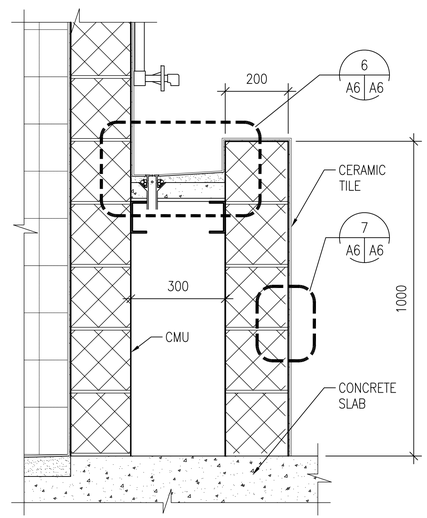

5 A1 A6 **LAVATORY SECTION**

SCALE: 1:10

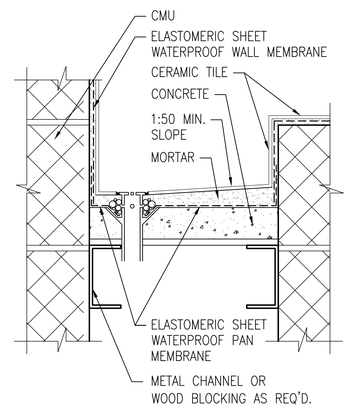

6 A6 A6 **LAVATORY DETAIL**

SCALE: NTS

NOTE: WALL MEMBRANE LAPS
OVER PAN MEMBRANE

TCA METHOD: B417

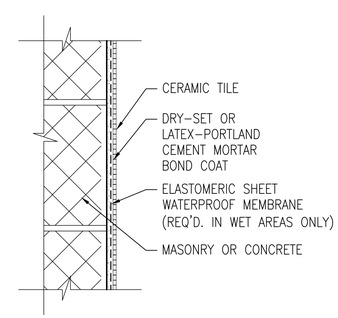

7 A6 A6 **WALL DETAIL**

SCALE: NTS

TCA METHOD: W222

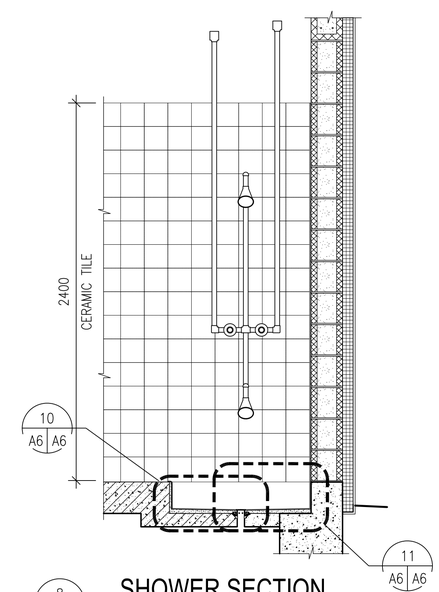

8 A1 A6 **SHOWER SECTION**

SCALE: 1:20

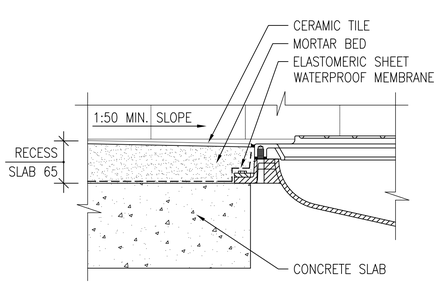

9 A6 A6 **MOUNTING DETAIL**

SCALE: NTS

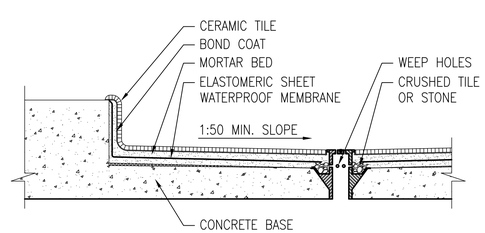

10 A6 A6 **SHOWER & ABLUTION RECESS**

SCALE: NTS

TCA METHOD: B421

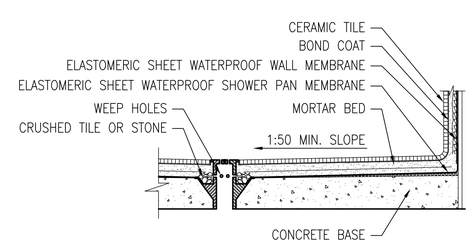

11 A6 A6 **SHOWER & ABLUTION WALL DETAIL**

SCALE: NTS

TCA METHOD: B421

UNLESS OTHERWISE NOTED, LINEAR DIMENSIONS SHOWN ARE IN MILLIMETERS (MM)

0 200 400 800

SCALE: 1: 10

0 400 800 1600

SCALE: 1: 20

US Army Corps of Engineers

Afghanistan Engineer District

SYMBOL	DESCRIPTION	DATE	APR

DESIGNED BY: DATE:

DWN BY: SUBMITTED BY:

CHK BY: FILE NO.:

STANDARD DESIGN
VARIOUS PROJECTS
VARIOUS LOCATIONS, AFGHANISTAN

LATRINE BUILDING
MEDIUM
LATRINE AND SHOWER DETAILS

SHEET REFERENCE NUMBER:

A6

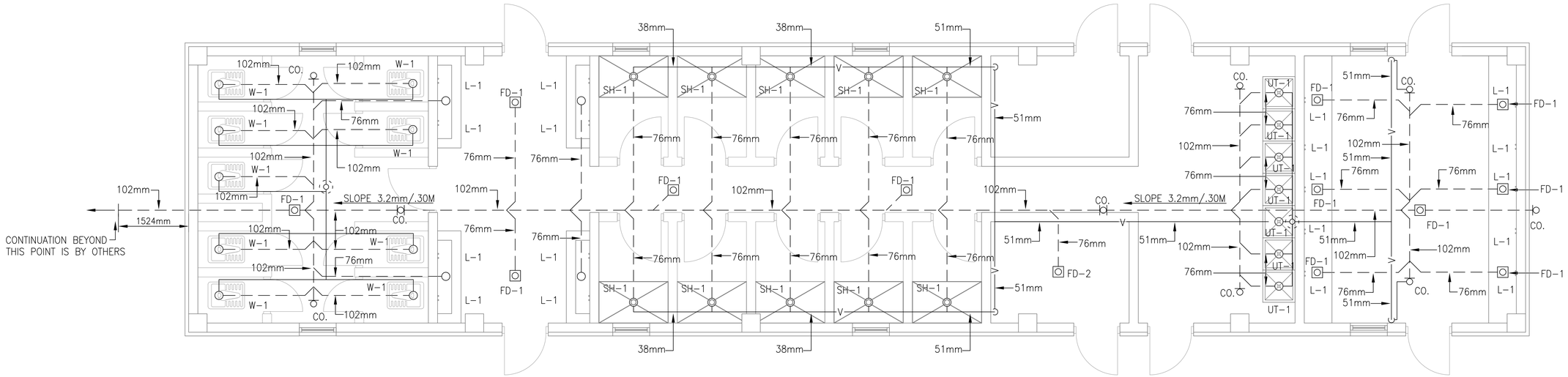

1 P1 P1 SHOWER AND LATRINE BUILDING FLOOR PLAN - PLUMBING (SANITARY)

SCALE: 1:50

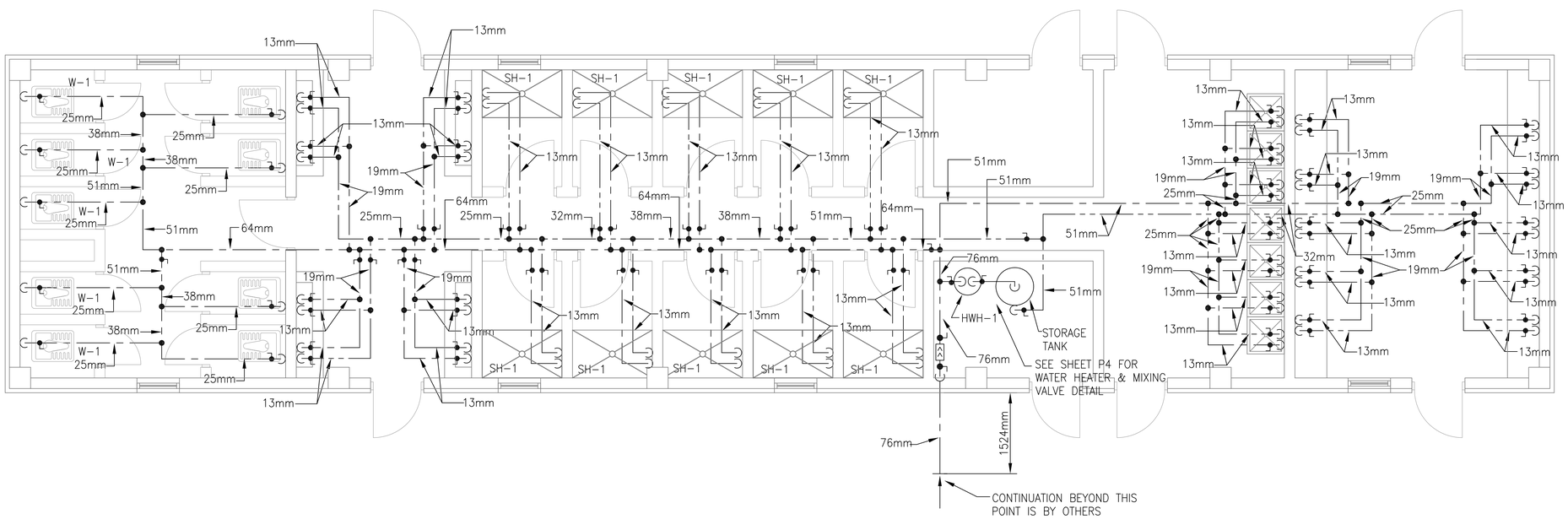

2 P1 P1 SHOWER AND LATRINE BUILDING FLOOR PLAN - PLUMBING (WATER)

SCALE: 1:50

1 0 1 2 3 4 5 6 7 8 9
1:100

FLOOR PLAN NOTES:

1. DO NOT SCALE DRAWINGS – ALL DIMENSIONS AND CONDITIONS SHALL BE CHECKED AND VERIFIED BY THE CONTRACTOR AT THE SITE.
2. ALL WORK PERFORMED ON THIS BUILDING SHALL BE IN COMPLIANCE WITH ALL PERTINENT CODES, RULES, ORDINANCES AND REGULATIONS OF THE GOVERNING AUTHORITIES.
3. ALL WORK PERFORMED UNDER AND IN CONNECTION WITH THESE DRAWINGS AND SPECIFICATIONS SHALL BE IN STRICT COMPLIANCE WITH THE LATEST SAFETY AND HEALTH STANDARDS.
4. REPORT ANY DISCREPANCIES FOUND IN THE PLUMBING DRAWINGS AND/OR IN THE SPECIFICATIONS DURING THE BIDDING PROCESS FOR CLARIFICATION BY THE ENGINEER.
5. ALL EASTERN STYLE WATER CLOSETS IN THIS FACILITY ARE TO HAVE THE FIXTURE DESIGNATION OF W-1. EACH FIXTURE SHALL HAVE A (1) INCH (25mm) COLD WATER CONNECTION AND A (4) INCH (102mm) SANITARY CONNECTION.
6. ALL TROUGH FIXTURES IN THIS FACILITY ARE TO HAVE THE FIXTURE DESIGNATION OF L-1. EACH FIXTURE SHALL HAVE A (1/2 INCH) (13mm) COLD WATER, (1/2 INCH) (13mm) HOT WATER CONNECTION AND A (3 INCH) (76mm) SANITARY CONNECTION.
7. PLUMBING CONTRACTOR TO PROVIDE WATER HAMMER ARRESTORS AT ALL WATER CLOSETS.
8. PLUMBING CONTRACTOR TO PROVIDE TRAP PRIMERS AND 1/2" (13mm) COLD WATER LINES FOR ALL FLOOR DRAINS. COLD WATER LINES TO BE UNDER THE FLOOR FROM TRAP PRIMERS TO TRAPS ON FLOOR DRAINS.
9. REFER TO SHEET P3 & P4 FOR DETAILS AND SYMBOLS.
10. ALL WATER LINES TO BE EXPOSED. RUN LINES TIGHT TO CEILING AND WALL.
11. ALL FIXTURES TO BE "LOW FLOW EFFICIENT TYPE".

LEGEND

COLD WATER
HOT WATER
SANITARY ABOVE GROUND
SANITARY UNDER GROUND
VENT LINE — V —

US Army Corps of Engineers
Afghanistan Engineer District

SYMBOL	DESCRIPTION	DATE	APR

DESIGNED BY: DATE:
DWN BY: SUBMITTED BY:
CHK BY: FILE NO.:

STANDARD DESIGN
VARIOUS PROJECTS
VARIOUS LOCATIONS, AFGHANISTAN

LATRINE BUILDING
MEDIUM
FLOOR PLAN - PLUMBING

SHEET REFERENCE NUMBER:
P1

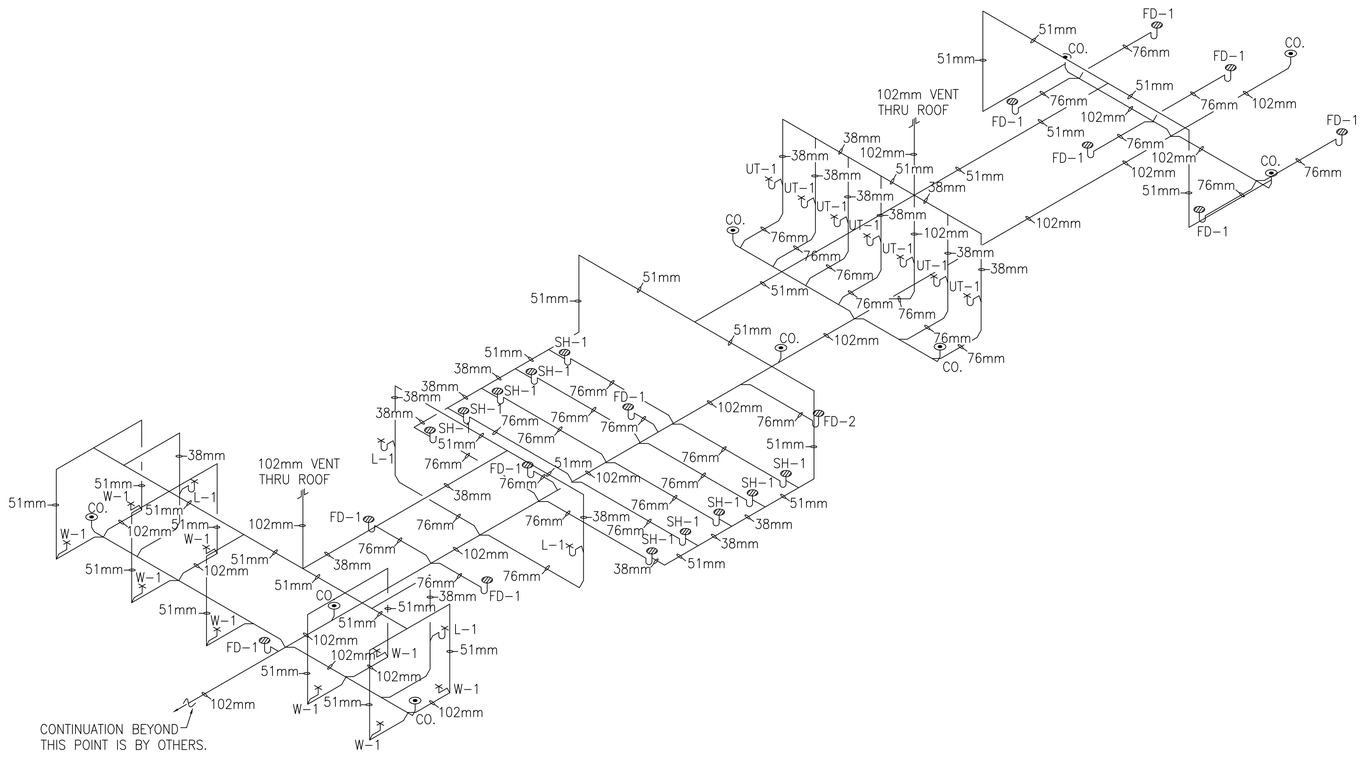

SHOWER AND LATRINE BUILDING - DRAINAGE ISOMETRIC

1 P2 P2

SCALE: NO SCALE

LEGEND

COLD WATER

HOT WATER

SANITARY ABOVE GROUND

SANITARY UNDER GROUND

VENT LINE — V —

1 0 1 2 3 4 5 6 7 8 9

1:100

US Army Corps of Engineers

Afghanistan Engineer District

SYMBOL	DESCRIPTION	DATE	APR

DESIGNED BY: DATE:

DWN BY: SUBMITTED BY:

CHK BY: FILE NO.:

STANDARD DESIGN
VARIOUS PROJECTS
VARIOUS LOCATIONS, AFGHANISTAN

LATRINE BUILDING
MEDIUM

DRAINAGE ISOMETRIC

SHEET REFERENCE NUMBER:

P2

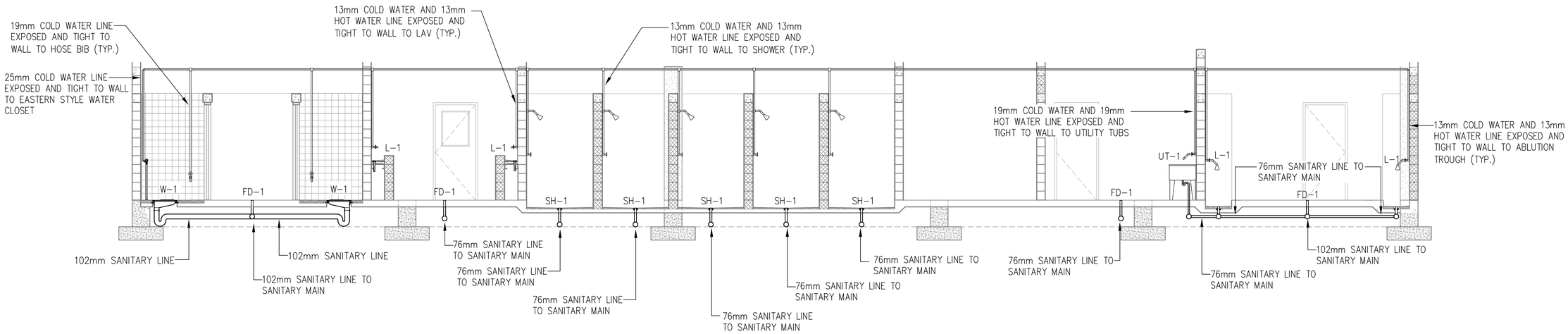

TYPICAL SHOWER & LATRINE BUILDINGSANITARY & WATER INSTALLATION SCHEMATIC

NO SCALE

1 0 1 2 3 4 5 6 7 8 9

1:100

US Army Corps of Engineers

Afghanistan Engineer District

SYMBOL	DESCRIPTION	DATE	APR

DESIGNED BY: DATE:

DWN BY: SUBMITTED BY:

CHK BY: FILE NO.:

STANDARD DESIGN
VARIOUS PROJECTS
VARIOUS LOCATIONS, AFGHANISTAN
LATRINE BUILDING
MEDIUM
TYPICAL BUILDING PLUMBING SCHEMATICS

SHEET REFERENCE NUMBER:

P3

PLUMBING LEGEND – SYMBOLS AND ABBREVIATIONS

- SANITARY SEWER PIPING
- VENT PIPING (V)
- COLD WATER PIPING (CW)
- HOT WATER PIPING (HW)
- 140° HOT WATER PIPING (HW)
- BALL VALVE
- UNION
- WATER HAMMER ARRESTOR (WHA)
- BACKFLOW PREVENTER
- OR CLEANOUT (CO.)
- THERMOMETER
- PRESSURE GAUGE (PG)
- FLOOR DRAIN
- ROOF PENETRATION

DEG. OR °	DEGREE
DIA. OR ø	DIAMETER
E.C.	ELECTRICAL CONTRACTOR
°F	FAHRENHEIT
GA.	GAGE OR GAUGE
GAL.	GALLONS
G.P.H.	GALLONS PER HOUR
G.P.M.	GALLONS PER MINUTE
HD.	HEAD
HP.	HORSEPOWER
HR.	HOUR(S)
I.D.	INSIDE DIAMETER
KW.	KILOWATT
M.B.H.	1,000 B.T.U./HR.
MIN.	MINIMUM
N.C.	NORMALLY CLOSED
N.O.	NORMALLY OPEN
N.T.S.	NOT TO SCALE
NO.	NUMBER
OZ.	OUNCE
O.D.	OUTSIDE DIAMETER
%	PERCENT
PH. OR ø	PHASE (ELECTRICAL)
P.C.	PLUMBING CONTRACTOR
LBS.	POUNDS
P.S.I.	POUNDS PER SQUARE INCH
P.S.I.G.	POUNDS PER SQUARE INCH GAGE
PRESS.	PRESSURE
S.O.V.	SHUT-OFF VALVE
SPEC.	SPECIFICATION
STD.	STANDARD
TEMP.	TEMPERATURE
TYP.	TYPICAL
V.T.R.	VENT THROUGH ROOF
V.	VOLT
VOL.	VOLUME
W.	WATT

FIXTURE LIST

TYPE	ITEM	SOIL & WASTE	VENT	COLD WATER	HOT WATER	REMARKS	REMARKS 2
W-1	EASTERN STYLE WATER CLOSET	102mm	51mm	25mm	------	FLUSH VALVE	LOW FLOW EFFICIENT TYPE
L-1	TROUGH FIXTURE	38mm	38mm	13mm	13mm	FABRICATED IN FIELD	LOW FLOW EFFICIENT TYPE
SH-1	SHOWER	FLOOR DRAIN	------	13mm	13mm	PRIVATE SHOWER	LOW FLOW EFFICIENT TYPE
UT-1	UTILITY TUB	76mm	51mm	19mm	19mm	STAINLESS STEEL, WALL HUNG	LOW FLOW EFFICIENT TYPE
HWH-1	WATER HEATER	---	---	SEE DWG.	SEE DWG.	151 LITER ELECTRIC WATER HEATER, 380/3ø, 24KW	----------

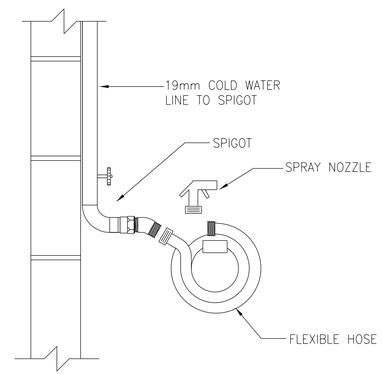

TYPICAL DETAIL – SPIGOT, FLEXIBLE HOSE, AND SPRAY NOZZLE
NO SCALE

GENERAL PLUMBING NOTES:

1. ALL SANITARY PIPING SHALL BE BELOW FLOOR, AND ALL WATER, AND VENT PIPING SHALL BE TIGHT TO CEILING, UNLESS OTHERWISE NOTED.
2. PLUMBING CONTRACTOR SHALL COORDINATE PLUMBING WORK WITH THE WORK OF ALL OTHER TRADES. VERIFY THE LOCATIONS OF ALL UTILITIES AT THE SITE PRIOR TO THE START OF ANY PLUMBING WORK.
3. COORDINATE ALL ACCESS PANEL LOCATIONS WITH THE ARCHITECT AND GENERAL CONTRACTOR.
4. ALL SANITARY PIPING BELOW SLAB SHALL BE A MINIMUM OF 51mm, UNLESS OTHERWISE NOTED OR AS REQUIRED BY THE LOCAL AUTHORITY HAVING JURISDICTION.
5. ALL SANITARY BRANCH LINES SHALL BE SLOPED AT 6mm PER 305mm, AND ALL MAIN LINES SHALL BE SLOPED AT 3mm PER 305mm, UNLESS OTHERWISE NOTED OR AS REQUIRED BY THE LOCAL AUTHORITY HAVING JURISDICTION.
6. THE PLUMBING CONTRACTOR SHALL BE RESPONSIBLE FOR COORDINATION WITH ALL UTILITY AUTHORITIES FORINSTALLATION REQUIRMENTS, REGULATIONS, FEES, PERMITS, AND APPROVALS BEFORE THE START OF CONSTRUCTION.
7. THE PLUMBING CONTRACTOR SHALL ROUGH-IN AND CONNECT ALL EQUIPMENT REQUIRING WATER, WASTE, AND/OR VENT WHETHER OR NOT FURNISHED UNDER THIS CONTRACT. THE PLUMBING CONTRACTOR SHALL ALSO FURNISH AND INSTALL ALL NECESSARY PIPE, FITTINGS, VALVES, TRAPS, ETC., REQUIRED FOR A COMPLETE INSTALLATION, LEAVING SAME READY FOR SERVICE.

(A) CIRCULATING PUMP SHALL BE 20mm, 20Lpm@ 5m HEAD, 220 VOLT, 50 Hz.

LEGEND

- SERVICE VALVE
- CIRCULATION PUMP
- CHECK VALVE

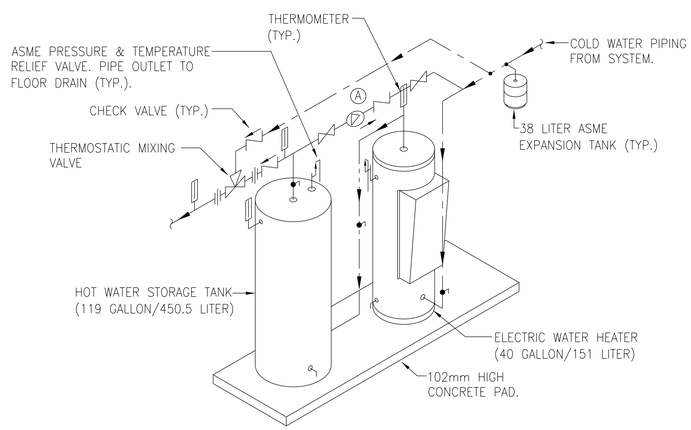

ELECTRIC WATER HEATER WITH STORAGE TANK PIPING SCHEMATIC
NO SCALE

US Army Corps of Engineers
Afghanistan Engineer District

SYMBOL	DESCRIPTION	DATE	APR
(A)	ADD CIRC PUMP		

DESIGNED BY: DATE:
DWN BY: SUBMITTED BY:
CHK BY: FILE NO.:

STANDARD DESIGN
VARIOUS PROJECTS
VARIOUS LOCATIONS, AFGHANISTAN

LATRINE BUILDING
MEDIUM
PLUMBING SYMBOLS & ABBREVIATIONS, NOTES, SCHEDULES & DETAILS

SHEET REFERENCE NUMBER:
P4

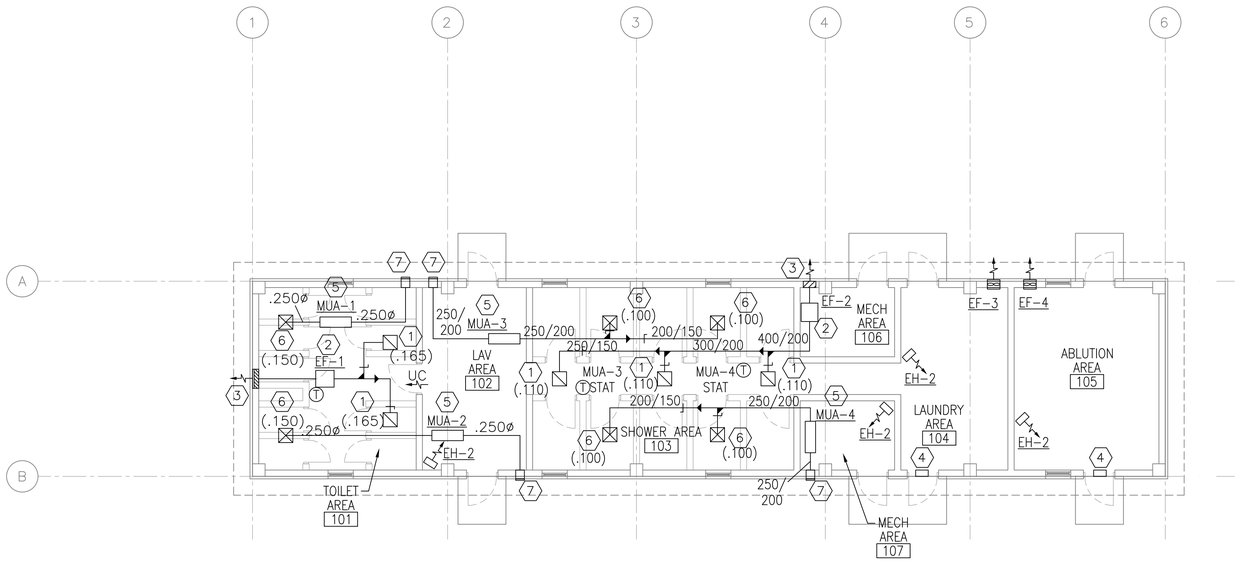

FLOOR PLAN - HVAC

1 M1 M1

SCALE: 1:100

N

GENERAL NOTES:

1. DO NOT SCALE DRAWINGS – ALL DIMENSIONS AND CONDITIONS SHALL BE CHECKED AND VERIFIED BY THE CONTRACTOR AT THE SITE.
2. ALL WORK PERFORMED ON THIS BUILDING SHALL BE IN COMPLIANCE WITH ALL PERTINENT CODES, RULES, ORDINANCES AND REGULATIONS OF THE GOVERNING AUTHORITIES.
3. ALL WORK PERFORMED UNDER AND IN CONNECTION WITH THESE DRAWINGS AND SPECIFICATIONS SHALL BE IN STRICT COMPLIANCE WITH THE LATEST SAFETY AND HEALTH STANDARDS.

SYMBOLS:

- (X) KEY NOTE
- (.050) AIR VOLUME IN CUBIC METERS PER SECOND (CMS)
- ¬ VOLUME DAMPER
- (T) THERMOSTAT WITH LOCKING COVER
  MOUNT ALL THERMOSTATS AT 1.5M (5 FT) AFF.

NUMBERED NOTE:

1. 300X300 (12X12) EXHAUST GRILLE CEILING, BALANCE TO CMS (CFM) IN PARENTHESIS.
2. INLINE EXHAUST FAN, SECURED TO STRUCTURE ABOVE WITH SPRING ISOLATORS, DUCTED TO WALL CAP..
3. 400x400 WALL CAP PER FAN MANUFACTURER.
4. 200X400 (8X16) LOW LEAKAGE GRAVITY WALL LOUVER FOR INTAKE. PROVIDE WEATHER PROOF LOUVER W/0.05mm (2") WASH DOWN FILTER AND SAND TRAP.
5. ELECTRIC MAKE UP AIR HEATER SECURED TO STRUCTURE ABOVE. ALL FINAL ELECTRICAL CONNECTIONS SHALL BE BY THE EC.
6. 300x300 (12x12) SUPPLY DIFFUSER WITH 4–WAY BLOW, BALANCE TO CMS IN PARENTHESIS.
7. 400X200 (16X8) LOW LEAKAGE GRAVITY WALL LOUVER FOR SUPPLY AIR. PROVIDE WEATHERPROOF LOUVER W/ 2" WASH DOWN FILTER AND SAND TRAP.

FAN SCHEDULE

NO.	TYPE	FAN CMS	DRIVE	HP	SP mmH2O	ELECT. CHAR.	SWITCH
EF–1	INLINE	0.330	DIRECT	1/4	13	220/1/50	@ WALL
EF–2	INLINE	0.330	DIRECT	1/4	13	220/1/50	@ WALL
EF–3	WALL	0.100	DIRECT	FRACT	13	220/1/50	@ WALL
EF–4	WALL	0.100	DIRECT	FRACT	13	220/1/50	@ WALL

NOTE:
1. FANS SHALL BE CORROSION RESISTANT
2. INLINE FANS SHALL BE SURFACE MOUNTED WITH SPRING ISOLATORS.

ELECTRIC UNIT HEATER SCHEDULE

NO.	CMS	KW	F.A.T. °C	ELECT. CHAR.	MOUNTING
EH–2	.200	2.6	38	370/1/50	WALL HUNG

NOTE:
1. ALL HEATERS SHALL BE CORROSION RESISTANT
2. UNIT HEATERS SHALL BE MOUNTED AS HIGH AS POSSIBLE.
3. UNIT HEATERS SHALL HAVE TAMPER PROOF INTEGRAL STATS.

MAKE UP AIR HEATERS

NO.	BLOWER CMS	FUSE	KW	MIN. TEMP RISE °C	SP mmH2O	ELECT. CHAR.	CONTROL
MUA–1	0.150	30	5	20	13	220/1/50	REMOTE
MUA–2	0.150	30	5	20	13	220/1/50	REMOTE
MUA–3	0.200	30	5	20	13	220/1/50	REMOTE
MUA–4	0.200	30	5	20	13	220/1/50	REMOTE

NOTES:
1. PROVIDE REMOTE MOUNTED THERMOSTAT WITH LOCKING COVER.
2. INTERLOCK BLOWER OPERATION WITH EXHAUST FANS.
3. BLOWER SHALL BE SET TO ENERGIZE WITH EXHAUST FAN(S), HEAT SHALL BE CONTROLLED BY THERMOSTAT. PROVIDE AIR SENSING SWITCH FOR HEATING OPERATION.

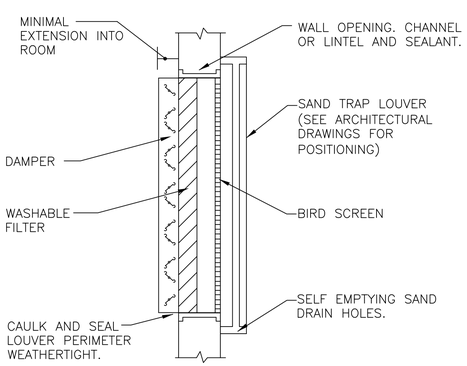

FILTERED SAND TRAP LOUVER

N.T.S.

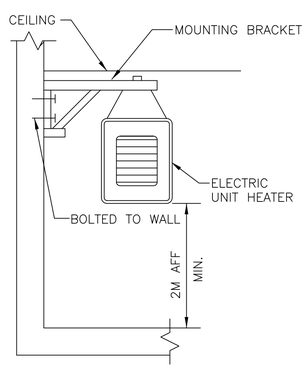

ELECTRIC UNIT HEATER MOUNTING

N.T.S.

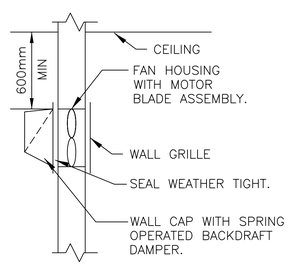

WALL MOUNTED EXHAUST FAN DETAIL

N.T.S.

US Army Corps of Engineers
Afghanistan Engineer District

SYMBOL	DESCRIPTION	DATE	APR

DESIGNED BY: DATE:
DWN BY: SUBMITTED BY:
CHK BY: FILE NO.:

STANDARD DESIGN
VARIOUS PROJECTS
VARIOUS LOCATIONS, AFGHANISTAN
LATRINE BUILDING
MEDIUM
FLOOR PLAN - HVAC

SHEET REFERENCE NUMBER:
M1

POWER

- DISTRIBUTION PANELBOARD
- NEW PANELBOARD – SURFACE
- NEW PANELBOARD – RECESSED
- EXISTING PANELBOARD
- (G) GENERATOR
- TVSS TRANSIENT VOLTAGE SURGE SURPRESSOR
- TRANSFORMER (DRAWN TO SIZE)
- PS POWER SUPPLY
- CP CONTROL PANEL
- TC TIME CLOCK
- TIM ASTRONOMICAL TIME CLOCK– "SEE SPEC."
- R RELAY WITH RATING AND NUMBER OF POLES AS NOTED ON DRAWINGS– "SEE SPEC."
- J JUNCTION BOX
- (J) JUNCTION BOX – CEILING
- PB PULL BOX
- BD BUS DUCT HORIZONTAL
- BUS DUCT VERTICAL
- EMERGENCY POWER OFF PUSH BUTTON
- NON–FUSIBLE SAFETY SWITCH
- FUSIBLE SAFETY SWITCH
- (M) MOTOR
- ^{M} MOTOR STARTING SWITCH – 20A RATED
- ^{K} KEY SWITCH – 20A RATED
- FC FAN COIL – FURNISHED BY MECHANICAL CONTRACTOR, ELECTRICAL CONTRACTOR SHALL INSTALL AND PROVIDE POWER CONNECTION
- UH UNIT HEATER – FURNISHED BY MECHANICAL CONTRACTOR, ELECTRICAL CONTRACTOR SHALL INSTALL AND PROVIDE POWER CONNECTION
- D JUNCTION BOX FOR CONNECTION TO GARBAGE DISPOSAL
- CF LIGHT/HEATER/FAN – FURNISHED BY MECHANICAL CONTRACTOR, ELECTRICAL CONTRACTOR SHALL INSTALL AND PROVIDE POWER CONNECTION
- ELECTRIC WATER HEATER
- EPO WEATHERPROOF / EXPLOSION PROOF EMERGENCY POWER OFF PUSH–BUTTON TO BE INTERCONNECTED WITH GENERATOR SHUT DOWN CONTROL
- CF CEILING FAN – REFER TO SPECIFICATION SECTION 26 20 00

RECEPTACLES

- DUPLEX 20A BRITISH STANDARD UNSWITCHED SOCKETS
- GF DUPLEX 20A BRITISH STANDARD UNSWITCHED SOCKETS – 10mA GROUND FAULT INTERRUPTER TYPE
- WP DUPLEX 20A BRITISH STANDARD UNSWITCHED SOCKETS – 10mA GROUND FAULT INTERRUPTER TYPE WITH WEATHERPROOF COVER
- EXP DUPLEX 20A BRITISH STANDARD UNSWITCHED SOCKETS – EXPLOSION PROOF
- * INDICATES MOUNT DEVICE ABOVE COUNTER TOP

LIGHTNING PROTECTION

- AIR TERMINAL 20mm O.D. X 4m SOLID COPPER, NICKEL PLATED ON ADHESIVE BASE.
- EQ EQUIPMENT AIR TERMINAL
- TEST WELL WITH GROUND ROD(S)
- GROUND ROD
- G GROUND PLATE
- G MAIN GROUND CONDUCTER CONCEALED WITHIN CONSTRUCTION
- G MAIN GROUND CONDUCTOR EXPOSED ON EXPOSED ON BUILDING EXTERIOR SURFACE
- G GROUND CONDUCTOR CAD WELDED TO GROUND CABLE OR EQUIPMENT
- G GROUND CONDUCTOR CAD WELDED TO BUILDING STEEL COLUMN
- GROUND ROD TRIPOD, SPACED 10 FEET APART.
- LEVEL TO LEVEL CABLE

LIGHTING

- LIGHTING FIXTURE – SEE FIXTURE SCHEDULE FOR MORE INFORMATION
- LIGHTING FIXTURE – SEE FIXTURE SCHEDULE FOR MORE INFORMATION
- DOWNLIGHT
- LIGHTING FIXTURE ON NORMAL/EMERGENCY
- WALL MOUNTED LIGHT FIXTURE
- E EXIT SIGN – DIRECTIONAL ARROWS AS INDICATED ON DRAWINGS
- B BATTERY PACK WITH HEADS AS INDICATED ON DRAWINGS
- REMOTE HEAD FOR BATTERY PACK
- $ SINGLE POLE SWITCH – 20A RATED
- ^{3} 3–WAY SWITCH – 20A RATED
- ^{4} 4–WAY SWITCH – 20A RATED
- PC PHOTOCELL VOLTAGE TO MATCH CIRCUITRY
- LC LIGHTING CONTACTOR
- POLE MOUNTED SITE LIGHTING FIXTURE– NUMBER OF FIXTURES PER POLE AS INDICATED ON DRAWINGS
- EXTERIOR DIRECTIONAL LIGHTING FIXTURE
- a SMALL CASE LETTERS REPRESENTS LAMP(S) / SWITCHES. WHEN USED WITH AN OCCUPANCY SENSOR THIS INDICATES SENSOR WITH MANUAL OVERRIDE SWITCH

TELECOMMUNICATIONS

- ▼ TELEPHONE OUTLET(S) @ 18" AFF. U.N.O. WITH 3/4" RACEWAY TERMINATED ABOVE NEAREST ACCESSIBLE CEILING OR TO TELEPHONE TERMINAL BOARD IF NO ACCESSIBLE CEILING AVAILABLE. SEE TELE/DATA RISER DIAGRAM FOR OUTLET AND CABLE DESCRIPTION
- ▽ DATA OUTLET(S) @ 18" AFF. U.N.O. WITH 3/4" RACEWAY TERMINATED ABOVE NEAREST ACCESSIBLE CEILING OR TO DATA EQUIPMENT RACK IF NO ACCESSIBLE CEILING AVAILABLE. SEE TELE/DATA RISER DIAGRAM FOR OUTLET AND CABLE DESCRIPTION

TELECOMMUNICATIONS (CONTINUED)

- COMBINATION TELEPHONE/DATA OUTLET(S) @ 18" AFF. U.N.O. WITH 1" RACEWAY TERMINATED ABOVE NEAREST ACCESSIBLE CEILING OR TO TELE/DATA TERMINAL AREA IF NO ACCESSIBLE CEILING AVAILABLE. SEE TELE/DATA RISER DIAGRAM FOR OUTLET AND CABLE DESCRIPTION
- W▼ WALL MTD. TELEPHONE OUTLET WITH 3/4" RACEWAY TERMINATED ABOVE NEAREST ACCESSIBLE CEILING OR TO TELEPHONE TERMINAL BOARD IF NO ACCESSIBLE CEILING AVAILABLE. SEE TELE/DATA RISER DIAGRAM FOR OUTLET AND CABLE DESCRIPTION
- (x)T INDICATES NUMBER OF TELEPHONE OUTLET(S) AND ASSOCIATED CABLING
- (x)D INDICATES NUMBER OF DATA OUTLET(S) AND ASSOCIATED CABLING
- (x)TF INDICATES NUMBER OF TELEPHONE OUTLETS AND ASSOCIATED CABLING WITH 1 OUTLET AND CABLE DEDICATED FOR FAX

SINGLE LINE SYMBOLS

- SWITCH
- BREAKER
- FUSE
- TRANSFORMER
- CAPACITOR
- GROUND
- CONTACT (NORMALLY OPEN)
- CONTACT (NORMALLY CLOSED)
- AUTOMATIC TRANSFER SWITCH
- MANUAL DOUBLE THROW SWITCH
- CURRENT TRANSFORMER
- INDICATES NEW ELECTRICAL EQUIPMENT
- C INDICATES NEW CONTROL WIRING AND CONDUIT
- EQUIPMENT OUTLINE

MISCELLANEOUS

- BRANCH CIRCUIT WIRING CONCEALED ABOVE CEILINGS, SURFACE MOUNTED ON WALLS
- BRANCH CIRCUIT WIRING – #10 AWG
- BRANCH CIRCUIT WIRING – UNDER FLOOR
- HOME RUN BACK TO PANEL
- CONDUIT TURNED DOWN
- CONDUIT TURNED UP
- LV LOW VOLTAGE WIRING AND CONDUIT
- CT–X CABLE TRAY ("X" DENOTES WIDTH)
- INDICATES CONTINUATION OF LINE

FIRE ALARM

- FACP FIRE ALARM CONTROL PANEL WITH BATTERY BACKUP
- F FIRE ALARM PULL STATION

FIRE ALARM (CONTINUED)

- F FIRE ALARM STROBE – WALL MOUNTED
- F FIRE ALARM AUDIBLE/STROBE – WM
- F FIRE ALARM HORN/STROBE – WM
- S SMOKE DETECTOR
- H HEAT DETECTOR CEILING MOUNTED
- D DUCT DETECTOR – PROVIDED BY EC, INSTALLED BY MC AND CONNECTED BY EC

DENOTATIONS & ABBREVIATIONS

AFF	ABOVE FINISHED FLOOR
C	CEILING MOUNTED
E	EMERGENCY
EC	ELECTRICAL CONTRACTOR
EPO	EMERGENCY POWER OFF
EXP	EXPLOSION PROOF
F	FIRE ALARM
FF	FLUSH FLOOR MOUNTED
FL	FLUORESCENT
FO	FIBER OPTIC
FSS	FUSED SAFETY SWITCH
G	GROUND FAULT INTERRUPTER
GC	GENERAL CONTRACTOR
HOA	HAND–OFF AUTO
I	INFRARED
ICD	INCANDESCENT
IG	ISOLATED GROUND
K	KEY
LV	LOW VOLTAGE
M	MOTOR
MC	MECHANICAL CONTRACTOR
NE	NORMAL/EMERGENCY
NFSS	NON–FUSED SAFETY SWITCH
PA	PAGING SYSTEM
PLC	PLUMBING CONTRACTOR
REL	RELOCATE
RED	RELOCATED
SL	SINGLE LINE
SS	SURGE SUPPRESSION
T	TELEPHONE
TL	TWIST LOCK

DENOTATIONS & ABBREVIATIONS (CONT.)

TP	TAMPER PROOF
UE	UNDERGROUND ELECTRIC
UF	UNDERGROUND FIBER
UT	UNDERGROUND TELEPHONE
W	WALL MOUNTED
WG	WIRE GUARD
WP	WEATHERPROOF
WPG	WEATHERPROOF/GROUND FAULT INTERRUPTER
WT	WATER TIGHT

GENERAL PROJECT NOTES:

G1. UNLESS OTHERWISE NOTED, PROVIDE ALL EQUIPMENT SHOWN ON THE PLANS. THE ELECTRICAL CONTRACTOR SHALL COORDINATE ALL SYMBOLS SHOWN ON THE PLANS WITH THE SYMBOL LIST. IT SHALL BE THE RESPONSIBILITY OF THE CONTRACTOR TO VERIFY THE INTENT OF ANY SYMBOL THAT IS SHOWN ON THE PLANS AND NOT INDICATED ON THE SYMBOL LIST WITH THE ENGINEER PRIOR TO BID.

G2. COORDINATE THE FINAL LOCATIONS OF ALL LIGHT FIXTURES WITH THE ARCHITECT'S REFLECTED CEILING PLANS. REPORT ANY DISCREPANCIES TO THE ARCHITECT PRIOR TO INSTALLATION.

G3. THE CONTRACTOR SHALL VERIFY THE LOCATION OF ALL UNDERGROUND UTILITIES WITHIN THE CONSTRUCTION AREA THREE (3) WORKING DAYS NOTICE BEFORE COMMENCE DIGGING. NOTIFY THE LOCAL OR STATE AUTHORITY HAVING JURISDICTION AND WAIT THE REQUIRED TIME BEFORE COMMENCING TO DIG.

G4. THE CONTRACTOR SHALL COORDINATE CONDUIT RUNS, CABLE TRAY, LIGHTING FIXTURES AND OTHER EQUIPMENT LOCATIONS WITH THE OTHER TRADE CONTRACTORS TO AVOID CONFLICTS.

G5. WHERE VOLTAGES AND FREQUENCIES ON THE DRAWINGS AND IN THE SPECIFICATIONS DIFFER FROM THE LOCAL ONES, ALL WORK SHALL BE PERFORMED USING THE LOCAL VOLTAGES AND FREQUENCIES.

G6. THE MINIMUM WIRE SIZE ON THE PROJECT SHALL BE 4mm2. THE MINIMUM CONDUIT SIZE SHALL BE 20mm. THE MINIMUM BREAKER SIZE SHALL BE 20 AMPS.

G7. THE CONTRACTOR SHALL PUT A MAXIMUM OF 6 DUPLEX SOCKETS ON A 20A SINGLE POLE CIRCUIT.

G8. WHERE THE 1010 SCOPE REVIEW, 1015 TECHNICAL REVIEW, DRAWINGS, AND SPECIFICATIONS DIFFER FROM AMERICAN CODES OR STANDARDS THE 1010, 1015, DRAWINGS, AND SPECIFICATIONS SHALL RULE.

G9. WORK FOR THE AMMUNITION SUPPLY POINT SHALL BE DONE IN ACCORDANCE WITH DEPARTMENT OF DEFENSE STANDARD DOD 6055.9–STD.

G10. ALL CONDUIT AND DEVICES SHALL BE SURFACE MOUNTED UNLESS OTHERWISE INDICATED.

US Army Corps of Engineers
Afghanistan Engineer District

SYMBOL	DESCRIPTION	DATE	APR

DESIGNED BY: DATE:
DWN BY: SUBMITTED BY:
CHK BY: FILE NO.:

STANDARD DESIGN
VARIOUS PROJECTS
VARIOUS LOCATIONS, AFGHANISTAN

LATRINE BUILDING
MEDIUM

ELECTRICAL SYMBOLS AND ABBREVIATIONS

SHEET REFERENCE NUMBER:
E0

GENERAL NOTES:

1. REFER TO DRAWING #E0 FOR THE ELECTRICAL SYMBOLS LIST.
2. EXIT SIGNS SHALL BE WIRED AHEAD OF ANY LOCAL SWITCHING ON CIRCUITS.
3. REFER TO DRAWING #E4 FOR THE LIGHTING FIXTURE SCHEDULE.
4. REFER TO DRAWING #E3 FOR THE POWER RISER.
5. REFER TO DRAWING #E5 FOR PANEL SCHEDULES.
6. LIGHT FIXTURES INDICATED AS EMERGENCY SHALL BE PROVIDED WITH A BATTERY BACKUP BALLAST.

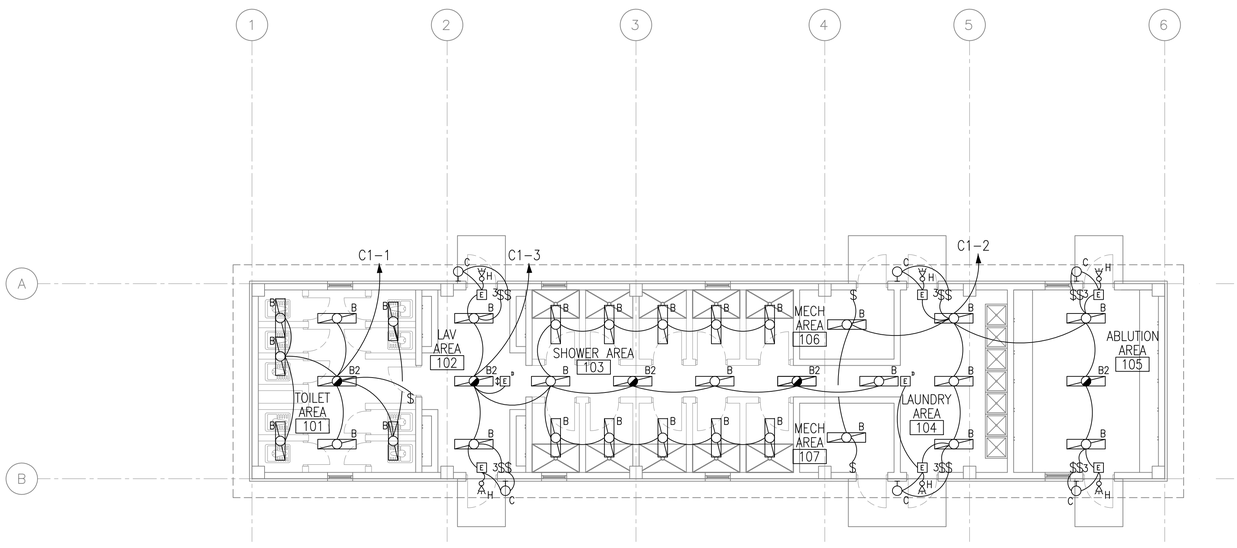

1 E1 E1 LIGHTING PLAN

SCALE: 1:100

N

UNLESS OTHERWISE NOTED, LINEAR DIMENSIONS SHOWN ARE IN MILLIMETERS (MM)

1 0 1 2 3 4 5 6 7 8 9

1:100

US Army Corps of Engineers

Afghanistan Engineer District

SYMBOL	DESCRIPTION	DATE	APR

DESIGNED BY: DATE:

DWN BY: SUBMITTED BY:

CHK BY: FILE NO.:

STANDARD DESIGN
VARIOUS PROJECTS
VARIOUS LOCATIONS, AFGHANISTAN

LATRINE BUILDING
MEDIUM

LIGHTING PLAN

SHEET REFERENCE NUMBER:

E1

GENERAL NOTES:

1. REFER TO DRAWING #E0 FOR THE ELECTRICAL SYMBOLS LIST.
2. REFER TO DRAWING #E3 FOR THE POWER RISER.
3. REFER TO DRAWING #E5 FOR PANEL SCHEDULES.
4. COORDINATE EXACT MOUNTING LOCATION OF DISCONNECTING MEANS FOR MECHANICAL AND PLUMBING EQUIPMENT IN THE FIELD.
5. FUSIBLE SAFETY SWITCHES THAT ARE NOT OTHERWISE IDENTIFIED SHALL BE 380V, 1P, 30A FUSED SAFETY SWITCHES WITH 20A FUSES.

NUMBERED NOTES:

1. PANEL C1.
2. NEMA 3R, 380V, 3P, 60A FUSED DISCONNECT FUSED AT 60A. SEE PLUMBING DRAWINGS FOR EXACT LOCATION OF WATER HEATER.
3. SEE DRAWING #E5 FOR WIRE AND CONDUIT SIZE.
4. PROVIDE POWER CONNECTION TO EXHAUST FANS. SEE DRAWINGS #M1 AND #E5 FOR MORE INFORMATION.
5. PROVIDE POWER CONNECTION TO ELECTRIC UNIT HEATER #4. SEE DRAWINGS #M1 AND #E8 FOR MORE INFORMATION.
6. PROVIDE POWER CONNECTION TO ELECTRIC UNIT HEATER #5. SEE DRAWINGS #M1 AND #E8 FOR MORE INFORMATION.
7. PROVIDE POWER CONNECTION TO ELECTRIC UNIT HEATER #2. SEE DRAWINGS #M1 AND #E8 FOR MORE INFORMATION.
8. PROVIDE POWER CONNECTION TO MAKE UP AIR HEATER #1. SEE DRAWINGS #M1 AND #E8 FOR MORE INFORMATION.
9. PROVIDE POWER CONNECTION TO MAKE UP AIR HEATER #2. SEE DRAWINGS #M1 AND #E8 FOR MORE INFORMATION.
10. PROVIDE POWER CONNECTION TO MAKE UP AIR HEATER #3. SEE DRAWINGS #M1 AND #E8 FOR MORE INFORMATION.
11. PROVIDE POWER CONNECTION TO MAKE UP AIR HEATER #4. SEE DRAWINGS #M1 AND #E8 FOR MORE INFORMATION.
12. THE DISCONNECTING MEANS FOR THIS PIECE OF EQUIPMENT SHALL BE IN A NEMA 3R ENCLOSURE.

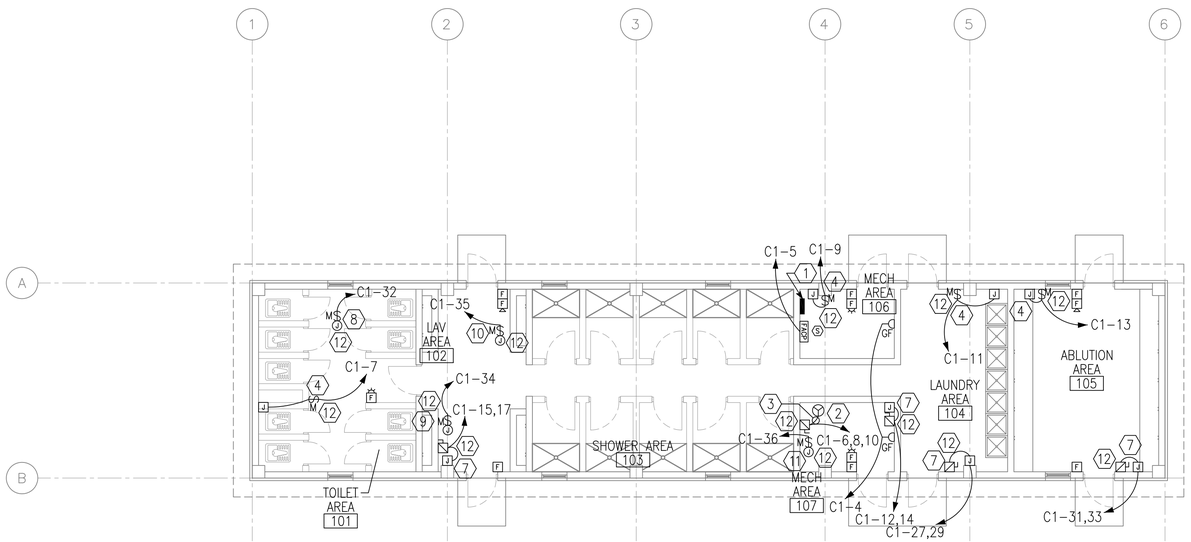

1 E2 E2 POWER AND SYSTEMS PLAN

SCALE: 1:100

N

UNLESS OTHERWISE NOTED, LINEAR DIMENSIONS SHOWN ARE IN MILLIMETERS (MM)

1 0 1 2 3 4 5 6 7 8 9

1:100

US Army Corps of Engineers

Afghanistan Engineer District

SYMBOL	DESCRIPTION	DATE	APR

DESIGNED BY: DATE:

DWN BY: SUBMITTED BY:

CHK BY: FILE NO.:

STANDARD DESIGN
VARIOUS PROJECTS
VARIOUS LOCATIONS, AFGHANISTAN
LATRINE BUILDING
MEDIUM

POWER AND SYSTEMS PLAN

SHEET REFERENCE NUMBER:

E2

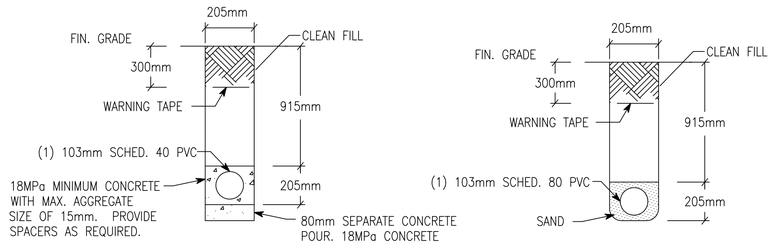

NOTE: PVC CONDUIT SHALL BE DIRECT BURIED SCHEDULE 80 FOR NO TRAFFIC AREAS AND CONCRETE-ENCASED SCHEDULE 40 FOR UNDER ROADWAYS OR TRAFFIC AREAS.

1 E6 E6 **TYPICAL DUCT BANK DETAILS FOR CONDUIT IN SAND OR CONCRETE**

SCALE: N.T.S.

N

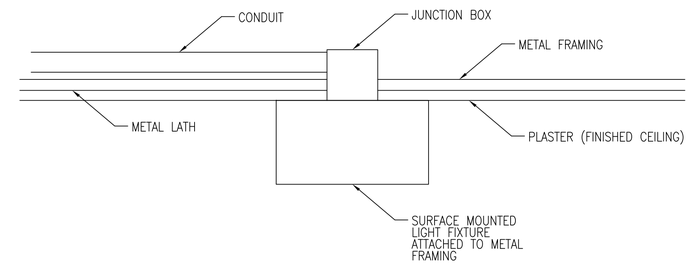

2 E6 E6 **TYPICAL DETAIL FOR SURFACE MOUNTED LIGHT FIXTURES**

SCALE: N.T.S.

N

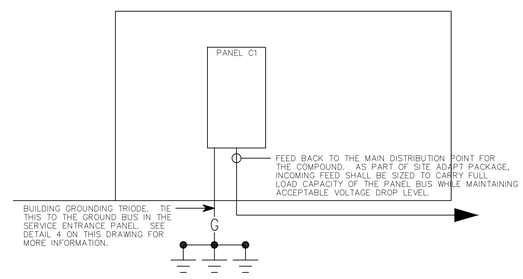

3 E6 E6 **TOILET/ABLUTION RISER DIAGRAM**

SCALE: N.T.S.

N

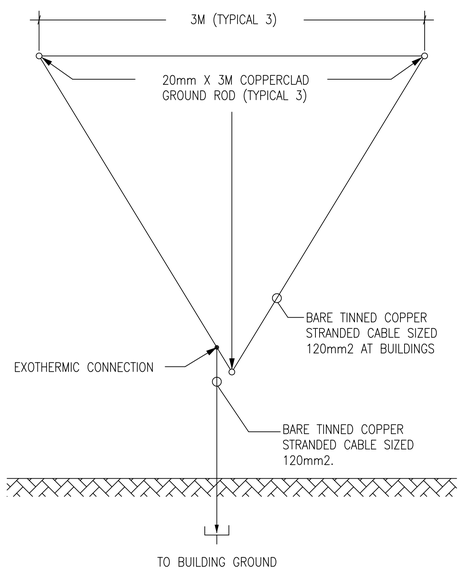

4 E6 E6 **GROUND TRIPOD SYSTEM DETAIL - PLAN**

SCALE: N.T.S.

N

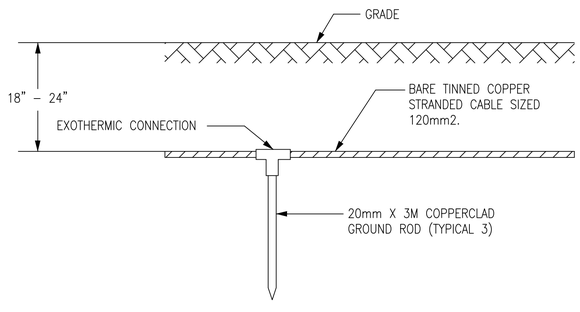

5 E6 E6 **GROUND TRIPOD SYSTEM DETAIL - ELEVATION**

SCALE: N.T.S.

N

US Army Corps of Engineers

Afghanistan Engineer District

SYMBOL	DESCRIPTION	DATE	APR

DESIGNED BY: DATE:
DWN BY: SUBMITTED BY:
CHK BY: FILE NO.:

STANDARD DESIGN
VARIOUS PROJECTS
VARIOUS LOCATIONS, AFGHANISTAN
LATRINE BUILDING
MEDIUM
DETAILS

SHEET REFERENCE NUMBER:

E3

FIXTURE MARK 'B'

WET LOCATION WRAP AROUND SURFACE/PENDANT MOUNTED FLUORESCENT FIXTURE WITH PRISMATIC ACRYLIC LENS AND ELECTRONIC BALLAST.

FIXTURE MARK 'B2':
SAME FIXTURE AS 'B' WITH EMERGENCY BALLAST.

FIXTURE MARK 'C'

INCANDESCENT ONE PIECE WITH APPROVED LENS, STABILIZED HIGH IMPACT POLY CARBONATE

FIXTURE MARK 'H'

REMOTE HEAD EXTERIOR LIGHT HEAD POWERED FROM EXIT SIGN BATTERY– 12V DOUBLE HEAD CORROSION RESISTANT WITH UL34 WEATHERPROOF CONSTRUCTION

FIXTURE MARK 'E'

UNIVERSAL MOUNT ENGINEER GRADE THERMOPLASTIC HOUSING EXIT SIGN WITH LED LAMPS, RED LETTERS 6" IN HEIGHT WITH ARROWS AS INDICATED, WITH 12V CADMIUM BATTERY

LIGHTING FIXTURE SCHEDULE

FIXTURE MARK	STYLE NUMBER AND TYPE	NUMBER AND TYPE OF LAMPS	VOLTAGE	MOUNTING	NOTES
B	WET LOCATION WRAP AROUND SURFACE/PENDANT MOUNTED FLUORESCENT FIXTURE WITH PRISMATIC ACRYLIC LENS AND ELECTRONIC BALLAST	(2) 32W 3500K	220V – 1ø 50HZ	PENDANT MOUNTED FROM SLOPED CEILINGS	FURNISHED WITH ELECTRONIC BALLAST, VIRGIN ACRYLIC WRAP AROUND LENS.
B2	SAME AS FIXTURE 'B' WITH EMERGENCY BALLAST	(2) 32W 3500K	220V – 1ø 50HZ	PENDANT MOUNTED FROM SLOPED CEILINGS	FURNISHED WITH ELECTRONIC BALLAST, VIRGIN ACRYLIC WRAP AROUND LENS. EMERGENCY BALLAST WITH SELF TEST SWITCH.
C	INCANDESCENT ONE PIECE W/ APPROVED LENS STABILIZED HIGH IMPACT POLY CARBONATE.	(1) A19 – 100W INCANDESCENT	220V – 1ø 50HZ	WALL MOUNTED ABOVE EXTERIOR DOORS	
H	REMOTE HEAD EXTERIOR LIGHT HEAD POWERED FROM EXIT SIGN BATTERY– 12V DOUBLE HEAD CORROSION RESISTANT WITH UL34 WEATHERPROOF CONSTRUCTION	(2) 12W/12V HALOGEN LAMP	12V – 1ø 50HZ	EXTERIOR WALL MOUNTED AT TOP OF DOOR HEIGHT	
E	UNIVERSAL MOUNT ENGINEER GRADE THERMOPLASTIC HOUSING EXIT SIGN WITH LED LAMPS, RED LETTERS 6" IN HEIGHT WITH ARROWS AS INDICATED, WITH 12V CADMIUM BATTERY WITH REMOTE HEAD CAPABILITY	LED LAMPS	220V – 1ø 50HZ	UNIVERSAL MOUNTING	

US Army Corps of Engineers

Afghanistan Engineer District

SYMBOL	DESCRIPTION	DATE	APR

DESIGNED BY: DATE:
DWN BY: SUBMITTED BY:
CHK BY: FILE NO.:

STANDARD DESIGN
VARIOUS PROJECTS
VARIOUS LOCATIONS, AFGHANISTAN
LATRINE BUILDING
MEDIUM

LIGHT FIXTURE SCHEDULE

SHEET REFERENCE NUMBER:

E4

PANELBOARD C1 SURFACE MOUNTED ASYM. A.I.C. MIN.

AMP. MAIN LUGS (OR) 150 AMP. MAIN BREAKER W/ 150 AMP. TRIP

CIRCUIT BREAKER TYPE 380/220 VOLTS 3 PHASE 4 WIRE 50 HZ 150 AMP. BUS

CKT. NO.	TRIP AMPS	NO. POLES	WIRE MM²	GND MM²	CONDUIT MM	LOAD SERVED	LOAD-V.A. A0	LOAD-V.A. B0	LOAD-V.A. C0	LOAD-V.A. A0	LOAD-V.A. B0	LOAD-V.A. C0	LOAD SERVED	CONDUIT MM	GND MM²	WIRE MM²	NO. POLES	TRIP AMPS	CKT. NO.
1	20	1	4.0	4.0	20	LIGHTING - 101	0.5			1.0			LIGHTING - 104-107	20	4.0	4.0	1	20	2
3	20	1	4.0	4.0	20	LIGHTING - 102, 103		1.4			0.4		RECEPTACLES - 106, 107	20	4.0	4.0	1	20	4
5	20	1	4.0	4.0	20	F.A.C.P.			0.5			6.0	WATER HEATER - 107	32	6.0	25.0	3	40	6
7	20	1	4.0	4.0	20	EXHAUST FAN - 101	0.7			6.0									8
9	20	1	4.0	4.0	20	EXHAUST FAN - 106		0.7			6.0								10
11	20	1	4.0	4.0	20	EXHAUST FAN - 104			0.5			1.3	ELECTRIC HEAT - 107	20	4.0	4.0	2	20	12
13	20	1	4.0	4.0	20	EXHAUST FAN - 105	0.5			1.3									14
15	20	2	4.0	4.0	20	ELECTRIC HEAT - 102		1.3					SPARE				2	20	16
17									1.3										18
19	20	2				SPARE							SPARE				2	20	20
21																			22
23	20	2				SPARE							SPARE				2	20	24
25																			26
27	20	2	4.0	4.0	20	ELECTRIC HEAT - 104		1.3					SPARE				2	20	28
29									1.3										30
31	20	2	4.0	4.0	20	ELECTRIC HEAT - 105	1.3			5.0			MUA-1	20	6.0	6.0	1	30	32
33								1.3			5.0		MUA-2	20	6.0	6.0	1	30	34
35	30	1	6.0	6.0	20	MUA-3			5.0			5.0	MUA-4	20	6.0	6.0	1	30	36
37	40	3	25.0	6.0	32	WATER HEATER	6.0			6.0			WATER HEATER	32	6.0	25.0	3	40	38
39								6.0			6.0								40
41									6.0			6.0							42
							9.0	12.0	14.6	19.3	17.4	18.3							

TOTAL CONN. LOAD PER PHASE (KVA): A0 18.3 B0 19.4 C0 17.9

TOTAL CONN. LOAD 90.6 KVA. 70 % DEMAND = ESTIMATED DEMAND LOAD 63.42 SUPPLIED FROM MAIN SWITCHGEAR DISTRIBUTION

• MAIN BREAKER SHALL BE 3P EARTH GROUND TYPE

US Army Corps of Engineers

Afghanistan Engineer District

SYMBOL	DESCRIPTION	DATE	APR

DESIGNED BY: DATE:

DWN BY: SUBMITTED BY:

CHK BY: FILE NO.:

STANDARD DESIGN
VARIOUS PROJECTS
VARIOUS LOCATIONS, AFGHANISTAN

LATRINE BUILDING
MEDIUM

PANEL SCHEDULES AND RISER DIAGRAM

SHEET REFERENCE NUMBER:

E5