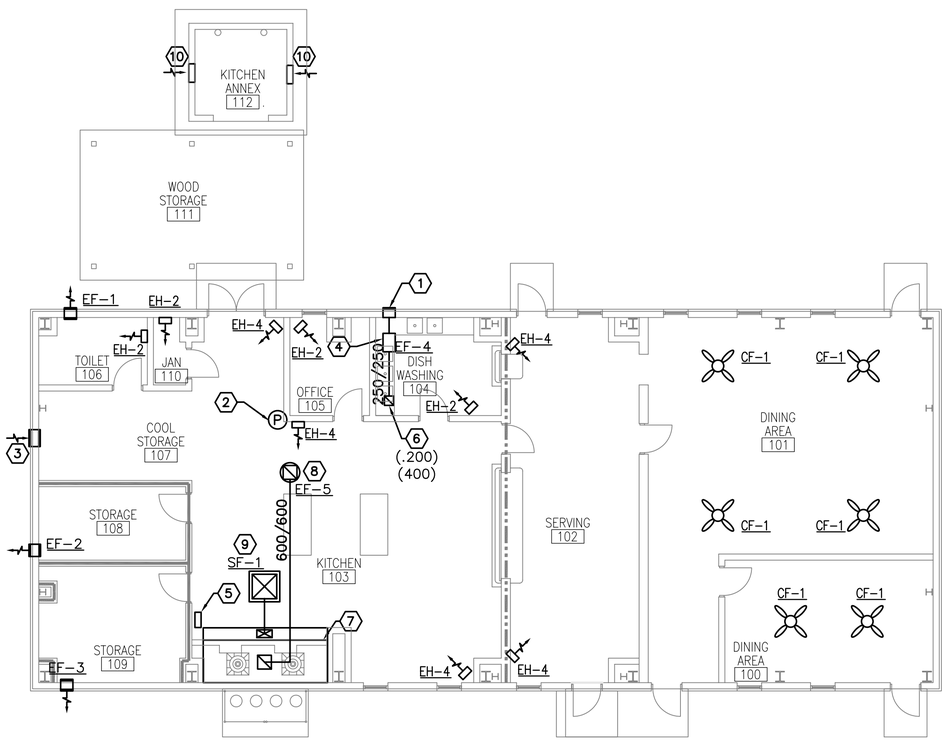

1 M1 M1 FLOOR HVAC PLAN

SCALE: 1:100

GENERAL NOTES:

1. DO NOT SCALE DRAWINGS – ALL DIMENSIONS AND CONDITIONS SHALL BE CHECKED AND VERIFIED BY THE CONTRACTOR AT THE SITE.
2. ALL WORK PERFORMED ON THIS BUILDING SHALL BE IN COMPLIANCE WITH ALL PERTINENT CODES, RULES, ORDINANCES AND REGULATIONS OF THE GOVERNING AUTHORITIES.
3. ALL WORK PERFORMED UNDER AND IN CONNECTION WITH THESE DRAWINGS AND SPECIFICATIONS SHALL BE IN STRICT COMPLIANCE WITH THE LATEST SAFETY AND HEALTH STANDARDS.

SYMBOLS:

(X) KEY NOTE

(.050) AIR VOLUME IN CUBIC METERS PER SECOND (CMS)

FD FIRE DAMPER

EXHAUST AIR GRILLE

FAN SCHEDULE

NO.	TYPE	FAN CMS	DRIVE	HP	SP mmH20	ELECT. CHAR.	SWITCH
EF-1	WALL	0.050	DIRECT	FRACT	13	220/1/50	@ WALL
EF-2	WALL	0.050	DIRECT	FRACT	13	220/1/50	@ WALL
EF-3	WALL	0.050	DIRECT	FRACT	13	220/1/50	@ WALL
EF-4	INLINE	0.200	DIRECT	FRACT	13	220/1/50	@ WALL
EF-5	UPBLAST	2.500	DIRECT	2	25	220/1/50	@ HOOD
SF-1	SUPPLY	2.400	DIRECT	2	13	220/1/50	@ HOOD

NOTE:
1. EF-2 SHALL BE EXPLOSION PROOF.
2. INLINE FANS SHALL BE SURFACE MOUNTED WITH SPRING ISOLATORS.
3. ALL FINAL ELECTRICAL CONNECTIONS ARE BY THE ELECTRICAL CONTRACTOR.

ELECTRIC UNIT HEATER SCHEDULE

NO.	CMS	KW	F.A.T. °C	ELECT. CHAR.	MOUNTING
EH-2	.200	2.6	38	370/1/50	WALL HUNG
EH-4	.200	4	38	370/1/50	WALL HUNG
EH-5	.200	5	38	370/1/50	WALL HUNG

NOTES:
1. UNIT HEATERS SHALL BE MOUNTED AS HIGH AS POSSIBLE.
2. UNIT HEATERS SHALL HAVE TAMPER PROOF INTEGRAL STATS.

CEILING FAN

NO.	BLADE SIZE mm	BLADE SIZE IN	VOLTAGE	SWITCH
CF-1	1320	52	220/1/50	@ WALL

NOTES:
1. FINAL ELECTRICAL CONNECTIONS BY EC.

NUMBERED NOTE:

1. WALL CAP PER FAN MFG.
2. REMOTE PULL STATION FOR HOOD FIRE SUPRESSION SYSTEM.
3. 400X400 (16X16) LOW LEAKAGE GRAVITY WALL LOUVER FOR RELIEF AIR.
4. INLINE EXHAUST FAN, SECURED TO STRUCTURE ABOVE WITH SPRING ISOLATORS, DUCTED TO WALL CAP.
5. HOOD FIRE SUPRESSION SYSTEM.
6. 250x250 (10x10) EGC, BALANCE TO CMS (CFM) IN PARENTHESIS.
7. 4M LONG UL RATED KITCHEN HOOD WITH UPBLAST EXHAUST FAN AND MAKE UP AIR FAN. HOOD SUPPLIED AND INSTALLED BY MC. SEE DETAILS ON M2. ALL FINAL ELECTRICAL CONNECTIONS SHALL BE BY E.C.
8. UPBLAST EXHAUST FAN CONNECTED TO HOOD DUCT AS REQUIRED. FAN SHALL SET LEVEL ON ROOF CURB. SEE DETAILS ON M2. ALL FINAL ELECTRICAL CONNECTIONS SHALL BE BY E.C.
9. FILTERED SUPPLY FAN SET LEVEL ON ROOF CURB. PROVIDE 500x500 DUCT DOWN TO FACE SUPPLY ON HOOD. MAINTAIN MIN. 3.1M BETWEEN EXHAUST AND INTAKE FANS. SEE DETAILS ON M2. ALL FINAL ELECTRICAL CONNECTIONS SHALL BE BY E.C.
10. 600X600 (24X24) WALL LOUVER, VERIFY LOCATION WITH ARCHITECTURAL DRAWINGS.

US Army Corps of Engineers
Afghanistan Engineer District

SYMBOL	DESCRIPTION	DATE	APR

DESIGNED BY: RML
DWN BY: JJN
CHK BY: CJM
DATE: 09-30-09
SUBMITTED BY: BAKER
FILE NO.: ANPSDM-101XXX

Michael Baker Jr., Inc
A unit of Michael Baker Corporation
Airside Business Park
100 Airside Drive
Moon Township, PA 15108
www.mbakercorp.com

AFGHAN NATIONAL POLICE
STANDARD DESIGN
DINING FACILITIES BUILDING (384 GSM)
WOOD FIRED HEAT OPTION

HVAC FLOOR PLAN

SHEET REFERENCE NUMBER:
M1

100% SUBMISSON

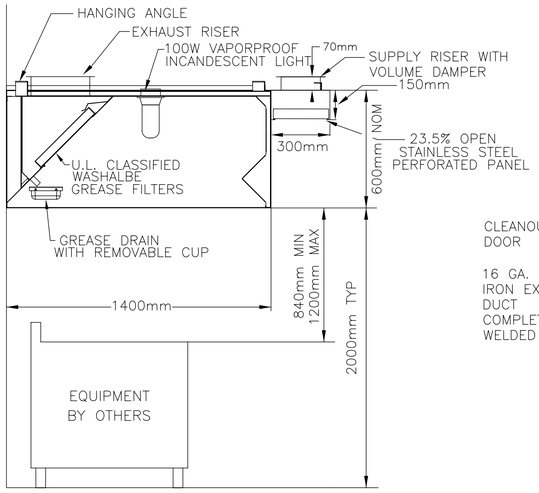

KITCHEN HOOD SECTION

N.T.S.

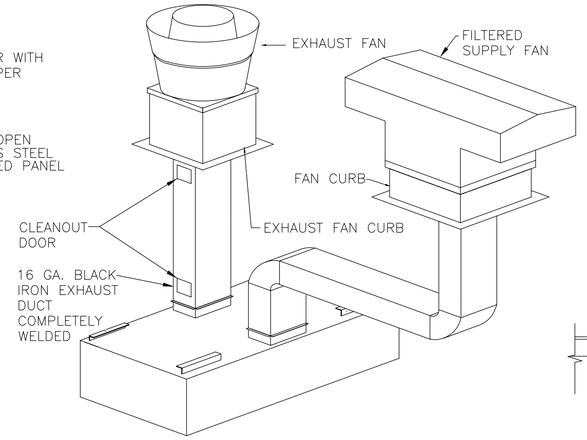

Correct Installation

1. EXHAUST DUCT STRAIGHT UP (IF DUCT CANNOT GO STRAIGHT UP USE OFFSETS)
2. FIRST ELBOW AT LEAST 450MM ABOVE HOOD
3. AT LEAST 1.2M BETWEEN ELBOWS
4. USE RADIUS BACK ELBOWS ONLY
5. DO NOT USE FLEXIBLE SUPPLY DUCTWORK.
6. INSULATE SUPPLY AND EXHAUST DUCTS.

KITCHEN HOOD DUCT DETAIL

N.T.S.

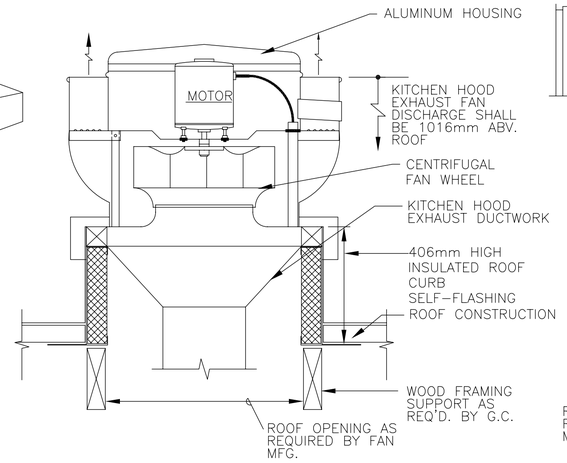

KITCHEN ROOF EXHAUST FAN

N.T.S.

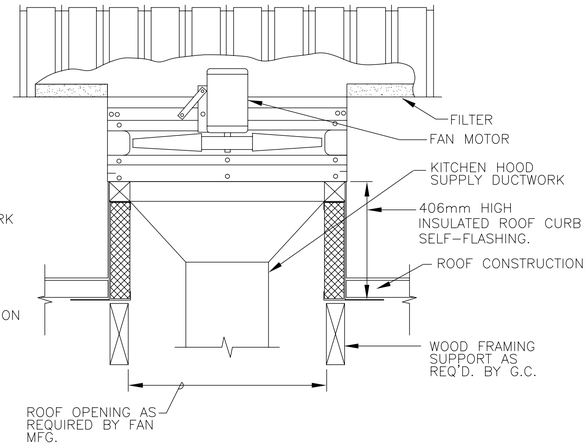

FILTERED SUPPLY FAN

N.T.S.

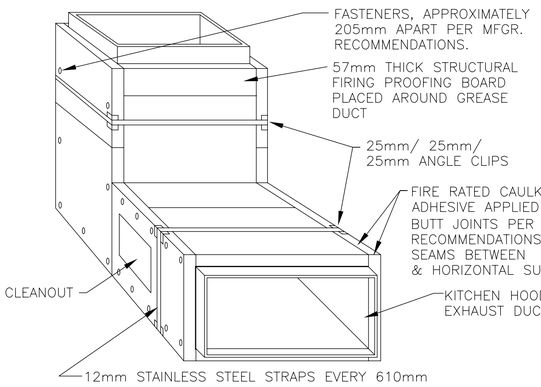

NOTES:

1. WHEN INSTALLING CLEANOUT DOOR COVER, USE REMOVABLE STAINLESS STEEL BANDS AT 305mm O.C. MAXIMUM (2 BANDS MINIMUM).
2. DUCT SYSTEM SHALL BE SLOPED PER NFPA REGULATIONS.
3. DUCT HANGERS AND SUPPORTS FOR HORIZONTAL & VERTICAL RUNS SHALL BE DESIGNED TO PROVIDE ADEQUATE SUPPORT FOR THE DUCT AND ENCLOSURE ACCORDING TO REQUIREMENTS OF THE BUILDING & MECHANICAL CODES.
4. LABELS SHALL BE PROVIDED BY THE ENCLOSURE MANUFACTURER AND BE PLACED ADJACENT TO ALL CLEANOUT OPENINGS WHICH STATE THAT COVER MUST BE REPLACED USING REMOVABLE STAINLESS STEEL BANDS AT 305mm O.C. MAXIMUM (2 BANDS MINIMUM).
5. DUCT AND ENCLOSURE SHALL BE SUPPORTED BY HANGERS FROM BUILDING STRUCTURAL STEEL. MAXIMUM DISTANCE BETWEEN SUPPORTS SHALL BE 1220mm.
6. PROVIDE 40mm GREASE DUCT INSULATION ON ALL KITCHEN EXHAUST DUCTS.

KITCHEN HOOD EXHAUST DUCT

N.T.S.

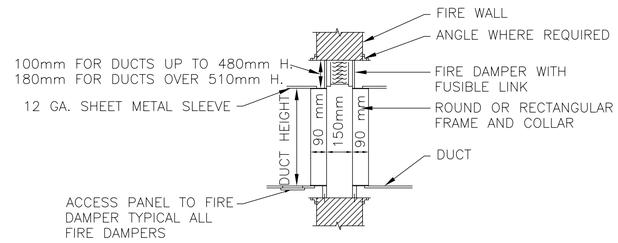

FIRE DAMPER DETAIL

N.T.S.

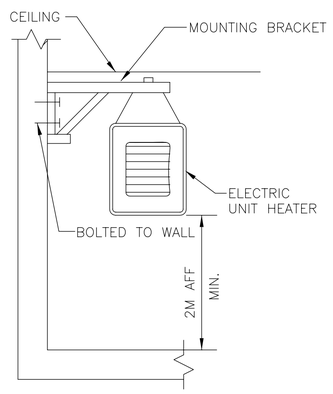

ELECTRIC UNIT HEATER MOUNTING

N.T.S.

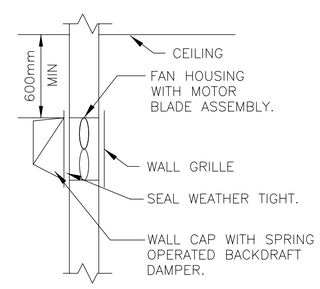

WALL MOUNTED EXHAUST FAN DETAIL

N.T.S.

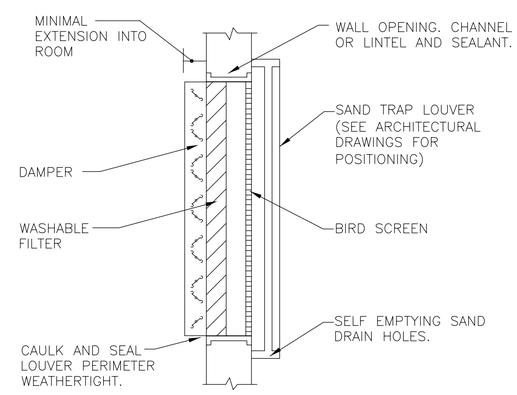

FILTERED SAND TRAP LOUVER

N.T.S.

US Army Corps of Engineers

Afghanistan Engineer District

SYMBOL	DESCRIPTION	DATE	APR

DESIGNED BY: RML | DATE: 09-30-09
DWN BY: JJN | SUBMITTED BY: BAKER
CHK BY: CJM | FILE NO.: ANPSDM-502XXX

Michael Baker Jr., Inc
A unit of Michael Baker Corporation
Airside Business Park
100 Airside Drive
Moon Township, PA 15108
www.mbakercorp.com

AFGHAN NATIONAL POLICE
STANDARD DESIGN
DINING FACILITIES BUILDING (384 GSM)
WOOD FIRED HEAT OPTION

HVAC DETAILS

SHEET REFERENCE NUMBER:

M2

100% SUBMISSON

POWER

- DISTRIBUTION PANELBOARD
- NEW PANELBOARD – SURFACE
- NEW PANELBOARD – RECESSED
- EXISTING PANELBOARD
- GENERATOR
- TVSS — TRANSIENT VOLTAGE SURGE SURPRESSOR
- TRANSFORMER (DRAWN TO SIZE)
- PS — POWER SUPPLY
- CP — CONTROL PANEL
- TC — TIME CLOCK
- TIM — ASTRONOMICAL TIME CLOCK– "SEE SPEC."
- R — RELAY WITH RATING AND NUMBER OF POLES AS NOTED ON DRAWINGS– "SEE SPEC."
- J — JUNCTION BOX
- J — JUNCTION BOX – CEILING
- PB — PULL BOX
- BD — BUS DUCT HORIZONTAL
- BUS DUCT VERTICAL
- EMERGENCY POWER OFF PUSH BUTTON
- NON–FUSIBLE SAFETY SWITCH
- FUSIBLE SAFETY SWITCH
- M — MOTOR
- $M — MOTOR STARTING SWITCH – 20A RATED
- $K — KEY SWITCH – 20A RATED
- FC — FAN COIL – FURNISHED BY MECHANICAL CONTRACTOR, ELECTRICAL CONTRACTOR SHALL INSTALL AND PROVIDE POWER CONNECTION
- UH — UNIT HEATER – FURNISHED BY MECHANICAL CONTRACTOR, ELECTRICAL CONTRACTOR SHALL INSTALL AND PROVIDE POWER CONNECTION
- D — JUNCTION BOX FOR CONNECTION TO GARBAGE DISPOSAL
- CF — LIGHT/HEATER/FAN – FURNISHED BY MECHANICAL CONTRACTOR, ELECTRICAL CONTRACTOR SHALL INSTALL AND PROVIDE POWER CONNECTION
- ELECTRIC WATER HEATER
- EPO — WEATHERPROOF / EXPLOSION PROOF EMERGENCY POWER OFF PUSH–BUTTON TO BE INTERCONNECTED WITH GENERATOR SHUT DOWN CONTROL
- CF — CEILING FAN – REFER TO SPECIFICATION SECTION 26 20 00

RECEPTACLES

- DUPLEX 20A BRITISH STANDARD UNSWITCHED SOCKETS
- GF — DUPLEX 20A BRITISH STANDARD UNSWITCHED SOCKETS – 10mA GROUND FAULT INTERRUPTER TYPE
- WP — DUPLEX 20A BRITISH STANDARD UNSWITCHED SOCKETS – 10mA GROUND FAULT INTERRUPTER TYPE WITH WEATHERPROOF COVER
- EXP — DUPLEX 20A BRITISH STANDARD UNSWITCHED SOCKETS – EXPLOSION PROOF
- * — INDICATES MOUNT DEVICE ABOVE COUNTER TOP

LIGHTNING PROTECTION

- AIR TERMINAL 20mm O.D. X 4m SOLID COPPER, NICKEL PLATED ON ADHESIVE BASE.
- EQ — EQUIPMENT AIR TERMINAL
- TEST WELL WITH GROUND ROD(S)
- GROUND ROD
- G — GROUND PLATE
- G — MAIN GROUND CONDUCTER CONCEALED WITHIN CONSTRUCTION
- G — MAIN GROUND CONDUCTOR EXPOSED ON EXPOSED ON BUILDING EXTERIOR SURFACE
- G — GROUND CONDUCTOR CAD WELDED TO GROUND CABLE OR EQUIPMENT
- G — GROUND CONDUCTOR CAD WELDED TO BUILDING STEEL COLUMN
- GROUND ROD TRIPOD, SPACED 10 FEET APART.
- LEVEL TO LEVEL CABLE

LIGHTING

- LIGHTING FIXTURE – SEE FIXTURE SCHEDULE FOR MORE INFORMATION
- LIGHTING FIXTURE – SEE FIXTURE SCHEDULE FOR MORE INFORMATION
- DOWNLIGHT
- LIGHTING FIXTURE ON NORMAL/EMERGENCY
- WALL MOUNTED LIGHT FIXTURE
- E — EXIT SIGN – DIRECTIONAL ARROWS AS INDICATED ON DRAWINGS
- B — BATTERY PACK WITH HEADS AS INDICATED ON DRAWINGS
- REMOTE HEAD FOR BATTERY PACK
- $ — SINGLE POLE SWITCH – 20A RATED
- $3 — 3–WAY SWITCH – 20A RATED
- $4 — 4–WAY SWITCH – 20A RATED
- PC — PHOTOCELL VOLTAGE TO MATCH CIRCUITRY
- LC — LIGHTING CONTACTOR
- POLE MOUNTED SITE LIGHTING FIXTURE– NUMBER OF FIXTURES PER POLE AS INDICATED ON DRAWINGS
- EXTERIOR DIRECTIONAL LIGHTING FIXTURE
- a — SMALL CASE LETTERS REPRESENTS LAMP(S) / SWITCHES. WHEN USED WITH AN OCCUPANCY SENSOR THIS INDICATES SENSOR WITH MANUAL OVERRIDE SWITCH

TELECOMMUNICATIONS

- TELEPHONE OUTLET(S) @ 18" AFF. U.N.O. WITH 3/4" RACEWAY TERMINATED ABOVE NEAREST ACCESSIBLE CEILING OR TO TELEPHONE TERMINAL BOARD IF NO ACCESSIBLE CEILING AVAILABLE. SEE TELE/DATA RISER DIAGRAM FOR OUTLET AND CABLE DESCRIPTION
- DATA OUTLET(S) @ 18" AFF. U.N.O. WITH 3/4" RACEWAY TERMINATED ABOVE NEAREST ACCESSIBLE CEILING OR TO DATA EQUIPMENT RACK IF NO ACCESSIBLE CEILING AVAILABLE. SEE TELE/DATA RISER DIAGRAM FOR OUTLET AND CABLE DESCRIPTION

TELECOMMUNICATIONS (CONTINUED)

- COMBINATION TELEPHONE/DATA OUTLET(S) @ 18" AFF. U.N.O. WITH 1" RACEWAY TERMINATED ABOVE NEAREST ACCESSIBLE CEILING OR TO TELE/DATA TERMINAL AREA IF NO ACCESSIBLE CEILING AVAILABLE. SEE TELE/DATA RISER DIAGRAM FOR OUTLET AND CABLE DESCRIPTION
- W — WALL MTD. TELEPHONE OUTLET WITH 3/4" RACEWAY TERMINATED ABOVE NEAREST ACCESSIBLE CEILING OR TO TELEPHONE TERMINAL BOARD IF NO ACCESSIBLE CEILING AVAILABLE. SEE TELE/DATA RISER DIAGRAM FOR OUTLET AND CABLE DESCRIPTION
- (x)T — INDICATES NUMBER OF TELEPHONE OUTLET(S) AND ASSOCIATED CABLING
- (x)D — INDICATES NUMBER OF DATA OUTLET(S) AND ASSOCIATED CABLING
- (x)TF — INDICATES NUMBER OF TELEPHONE OUTLETS AND ASSOCIATED CABLING WITH 1 OUTLET AND CABLE DEDICATED FOR FAX

SINGLE LINE SYMBOLS

- SWITCH
- BREAKER
- FUSE
- TRANSFORMER
- CAPACITOR
- GROUND
- CONTACT (NORMALLY OPEN)
- CONTACT (NORMALLY CLOSED)
- AUTOMATIC TRANSFER SWITCH
- MANUAL DOUBLE THROW SWITCH
- CURRENT TRANSFORMER
- INDICATES NEW ELECTRICAL EQUIPMENT
- C — INDICATES NEW CONTROL WIRING AND CONDUIT
- EQUIPMENT OUTLINE

MISCELLANEOUS

- BRANCH CIRCUIT WIRING CONCEALED ABOVE CEILINGS, SURFACE MOUNTED ON WALLS
- BRANCH CIRCUIT WIRING – #10 AWG
- BRANCH CIRCUIT WIRING – UNDER FLOOR
- HOME RUN BACK TO PANEL
- CONDUIT TURNED DOWN
- CONDUIT TURNED UP
- LV — LOW VOLTAGE WIRING AND CONDUIT
- CT–X — CABLE TRAY ("X" DENOTES WIDTH)
- INDICATES CONTINUATION OF LINE

FIRE ALARM

- FACP — FIRE ALARM CONTROL PANEL WITH BATTERY BACKUP
- F — FIRE ALARM PULL STATION

FIRE ALARM (CONTINUED)

- F — FIRE ALARM STROBE – WALL MOUNTED
- F — FIRE ALARM AUDIBLE/STROBE – WM
- F — FIRE ALARM HORN/STROBE – WM
- S — SMOKE DETECTOR
- H — HEAT DETECTOR CEILING MOUNTED
- D — DUCT DETECTOR – PROVIDED BY EC, INSTALLED BY MC AND CONNECTED BY EC

DENOTATIONS & ABBREVIATIONS

AFF	ABOVE FINISHED FLOOR
C	CEILING MOUNTED
E	EMERGENCY
EC	ELECTRICAL CONTRACTOR
EPO	EMERGENCY POWER OFF
EXP	EXPLOSION PROOF
F	FIRE ALARM
FF	FLUSH FLOOR MOUNTED
FL	FLUORESCENT
FO	FIBER OPTIC
FSS	FUSED SAFETY SWITCH
G	GROUND FAULT INTERRUPTER
GC	GENERAL CONTRACTOR
HOA	HAND–OFF AUTO
I	INFRARED
ICD	INCANDESCENT
IG	ISOLATED GROUND
K	KEY
LV	LOW VOLTAGE
M	MOTOR
MC	MECHANICAL CONTRACTOR
NE	NORMAL/EMERGENCY
NFSS	NON–FUSED SAFETY SWITCH
PA	PAGING SYSTEM
PLC	PLUMBING CONTRACTOR
REL	RELOCATE
RED	RELOCATED
SL	SINGLE LINE
SS	SURGE SUPPRESSION
T	TELEPHONE
TL	TWIST LOCK

DENOTATIONS & ABBREVIATIONS (CONT.)

TP	TAMPER PROOF
UE	UNDERGROUND ELECTRIC
UF	UNDERGROUND FIBER
UT	UNDERGROUND TELEPHONE
W	WALL MOUNTED
WG	WIRE GUARD
WP	WEATHERPROOF
WPG	WEATHERPROOF/GROUND FAULT INTERRUPTER
WT	WATER TIGHT

GENERAL PROJECT NOTES:

G1. UNLESS OTHERWISE NOTED, PROVIDE ALL EQUIPMENT SHOWN ON THE PLANS. THE ELECTRICAL CONTRACTOR SHALL COORDINATE ALL SYMBOLS SHOWN ON THE PLANS WITH THE SYMBOL LIST. IT SHALL BE THE RESPONSIBILITY OF THE CONTRACTOR TO VERIFY THE INTENT OF ANY SYMBOL THAT IS SHOWN ON THE PLANS AND NOT INDICATED ON THE SYMBOL LIST WITH THE ENGINEER PRIOR TO BID.

G2. COORDINATE THE FINAL LOCATIONS OF ALL LIGHT FIXTURES WITH THE ARCHITECT'S REFLECTED CEILING PLANS. REPORT ANY DISCREPANCIES TO THE ARCHITECT PRIOR TO INSTALLATION.

G3. THE CONTRACTOR SHALL VERIFY THE LOCATION OF ALL UNDERGROUND UTILITIES WITHIN THE CONSTRUCTION AREA THREE (3) WORKING DAYS NOTICE BEFORE COMMENCE DIGGING. NOTIFY THE LOCAL OR STATE AUTHORITY HAVING JURISDICTION AND WAIT THE REQUIRED TIME BEFORE COMMENCING TO DIG.

G4. THE CONTRACTOR SHALL COORDINATE CONDUIT RUNS, CABLE TRAY, LIGHTING FIXTURES AND OTHER EQUIPMENT LOCATIONS WITH THE OTHER TRADE CONTRACTORS TO AVOID CONFLICTS.

G5. WHERE VOLTAGES AND FREQUENCIES ON THE DRAWINGS AND IN THE SPECIFICATIONS DIFFER FROM THE LOCAL ONES, ALL WORK SHALL BE PERFORMED USING THE LOCAL VOLTAGES AND FREQUENCIES.

G6. THE MINIMUM WIRE SIZE ON THE PROJECT SHALL BE 4mm2. THE MINIMUM CONDUIT SIZE SHALL BE 20mm. THE MINIMUM BREAKER SIZE SHALL BE 20 AMPS.

G7. THE CONTRACTOR SHALL PUT A MAXIMUM OF 6 DUPLEX SOCKETS ON A 20A SINGLE POLE CIRCUIT.

G8. WHERE THE 1010 SCOPE REVIEW, 1015 TECHNICAL REVIEW, DRAWINGS, AND SPECIFICATIONS DIFFER FROM AMERICAN CODES OR STANDARDS THE 1010, 1015, DRAWINGS, AND SPECIFICATIONS SHALL RULE.

G9. WORK FOR THE AMMUNITION SUPPLY POINT SHALL BE DONE IN ACCORDANCE WITH DEPARTMENT OF DEFENSE STANDARD DOD 6055.9–STD.

G10. ALL CONDUIT AND DEVICES SHALL BE SURFACE MOUNTED UNLESS OTHERWISE INDICATED.

US Army Corps of Engineers
Afghanistan Engineer District

SYMBOL	DESCRIPTION	DATE	APR

DESIGNED BY: JRG
DWN BY: JRG
CHK BY: JRG
DATE: 09–30–09
SUBMITTED BY: BAKER
FILE NO.: ANPSDE–000XXX

Michael Baker Jr., Inc.
A unit of Michael Baker Corporation
Airside Business Park
100 Airside Drive
Moon Township, PA 15108
www.mbakercorp.com

AFGHAN NATIONAL POLICE
STANDARD DESIGN
DINING FACILITIES BUILDING (384 GSM)
WOOD FIRED HEAT OPTION

ELECTRICAL SYMBOLS AND ABBREVIATIONS

SHEET REFERENCE NUMBER:
E0

100% SUBMISSON

GENERAL NOTES:

1. REFER TO DRAWING #E0 FOR THE ELECTRICAL SYMBOLS LIST.
2. EXIT SIGNS SHALL BE WIRED AHEAD OF ANY LOCAL SWITCHING ON CIRCUITS.
3. REFER TO DRAWING #E4 FOR THE LIGHTING FIXTURE SCHEDULE.
4. REFER TO DRAWING #E3 FOR THE POWER RISER.
5. REFER TO DRAWING #E5 FOR PANEL SCHEDULES.
6. LIGHT FIXTURES INDICATED AS EMERGENCY SHALL BE PROVIDED WITH A BATTERY BACKUP BALLAST.

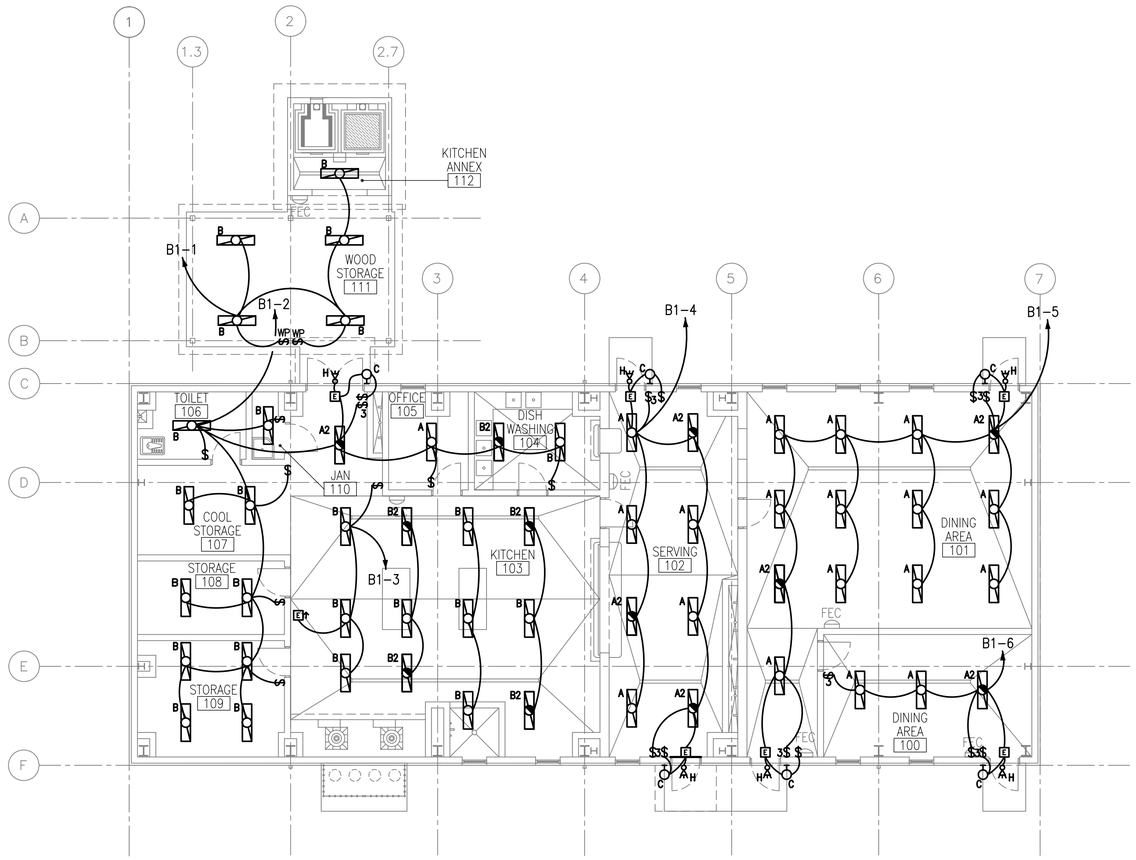

1 / E1 E1 LIGHTING PLAN

SCALE: 1:100

UNLESS OTHERWISE NOTED, LINEAR DIMENSIONS SHOWN ARE IN MILLIMETERS (MM)

1 0 1 2 3 4 5 6 7 8 9

1:100

US Army Corps of Engineers

Afghanistan Engineer District

SYMBOL	DESCRIPTION	DATE	APR

DESIGNED BY: JRG	DATE: 09-30-09
DWN BY: JRG	SUBMITTED BY: BAKER
CHK BY: JRG	FILE NO.: ANPSDE-101XXX

Michael Baker Jr., Inc
A unit of Michael Baker Corporation
Airside Business Park
100 Airside Drive
Moon Township, PA 15108
www.mbakercorp.com

AFGHAN NATIONAL POLICE
STANDARD DESIGN
DINING FACILITIES BUILDING (384 GSM)
WOOD FIRED HEAT OPTION

LIGHTING PLAN

SHEET REFERENCE NUMBER:

E1

100% SUBMISSON

GENERAL NOTES:

1. REFER TO DRAWING #E0 FOR THE ELECTRICAL SYMBOLS LIST.
2. REFER TO DRAWING #E6 FOR THE POWER RISER.
3. REFER TO DRAWING #E8 FOR PANEL SCHEDULES.
4. COORDINATE EXACT MOUNTING LOCATION OF DISCONNECTING MEANS FOR MECHANICAL AND PLUMBING EQUIPMENT IN THE FIELD.
5. FUSIBLE SAFETY SWITCHES THAT ARE NOT OTHERWISE IDENTIFIED SHALL BE 380V, 1P, 30A FUSED SAFETY SWITCHES WITH 20A FUSES.

NUMBERED NOTE:

1. PROVIDE POWER CONNECTION TO EXHAUST FAN #1. SEE DRAWINGS #E5 AND #M1 FOR MORE INFORMATION.
2. PANEL 'B1'
3. 3 16.0 mm2 + 1 6.0 mm2 GND. IN 20 mm C.
4. PROVIDE POWER CONNECTION TO EXHAUST FAN #2. SEE DRAWINGS #E5 AND #M1 FOR MORE INFORMATION.
5. PROVIDE POWER CONNECTION TO ELECTRIC UNIT HEATER #2. SEE DRAWINGS #E5 AND #M1 FOR MORE INFORMATION.
6. PROVIDE POWER CONNECTION TO ELECTRIC UNIT HEATER #4. SEE DRAWINGS #E5 AND #M1 FOR MORE INFORMATION.
7. PROVIDE POWER CONNECTION TO EXHAUST FAN #3. SEE DRAWINGS #E5 AND #M1 FOR MORE INFORMATION.
8. PROVIDE POWER CONNECTION TO EXHAUST FAN #4. SEE DRAWINGS #E5 AND #M1 FOR MORE INFORMATION.
9. PROVIDE POWER CONNECTION TO EXHAUST FAN #5. SEE DRAWINGS #E5 AND #M1 FOR MORE INFORMATION.
10. PROVIDE POWER CONNECTION TO ELECTRIC UNIT HEATER #5. SEE DRAWINGS #E5 AND #M1 FOR MORE INFORMATION.
11. TELECOMMUNICATIONS CONDUIT STUB-UP

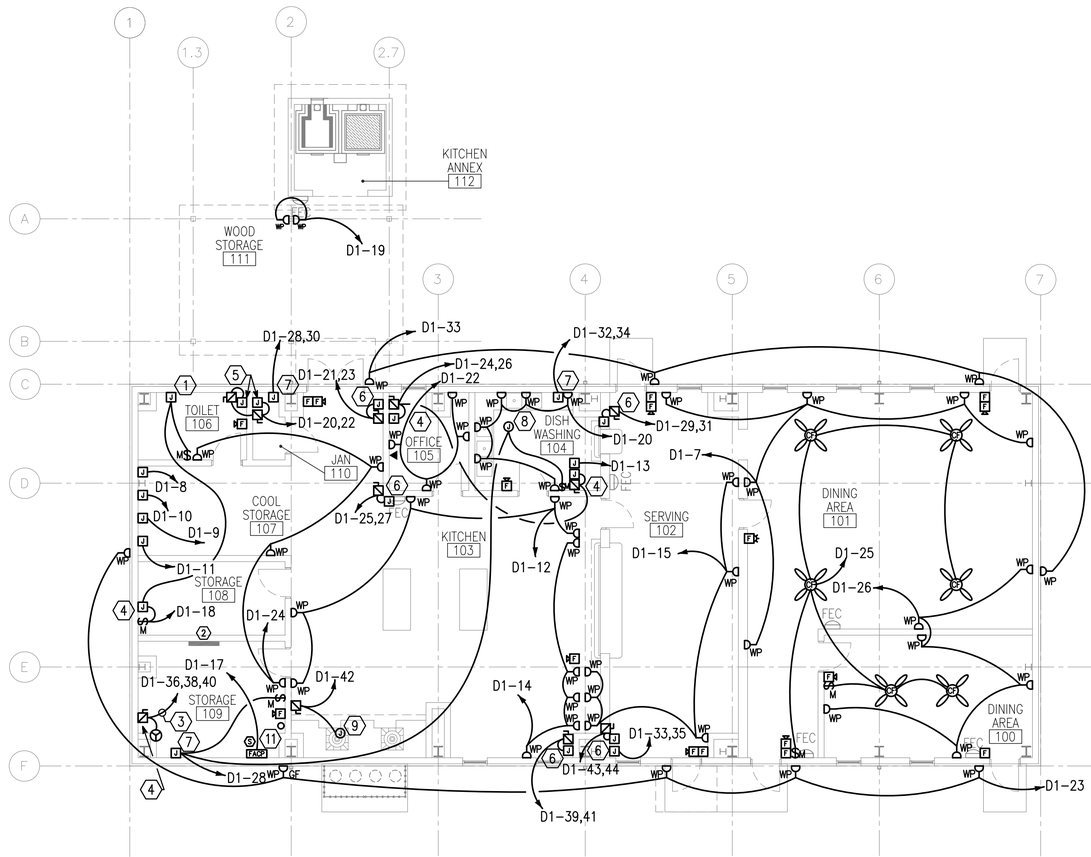

1 / E2 E2 POWER AND SYSTEMS PLAN

SCALE: 1:100

UNLESS OTHERWISE NOTED, LINEAR DIMENSIONS SHOWN ARE IN MILLIMETERS (MM)

1 0 1 2 3 4 5 6 7 8 9

1:100

US Army Corps of Engineers

Afghanistan Engineer District

SYMBOL	DESCRIPTION	DATE	APR

DESIGNED BY: JRG | DATE: 09-30-09
DWN BY: JRG | SUBMITTED BY: BAKER
CHK BY: JRG | FILE NO.: ANPSDE-102XXX

Michael Baker Jr., Inc
A unit of Michael Baker Corporation
Airside Business Park
100 Airside Drive
Moon Township, PA 15108
www.mbakercorp.com

AFGHAN NATIONAL POLICE
STANDARD DESIGN
DINING FACILITIES BUILDING (384 GSM)
WOOD FIRED HEAT OPTION

POWER AND SYSTEMS PLAN

SHEET REFERENCE NUMBER:

E2

100% SUBMISSON

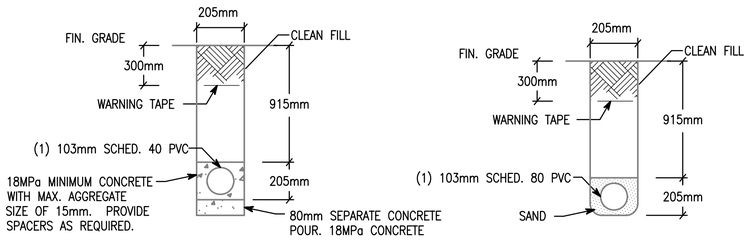

NOTE: PVC CONDUIT SHALL BE DIRECT BURIED SCHEDULE 80 FOR NO TRAFFIC AREAS AND CONCRETE-ENCASED SCHEDULE 40 FOR UNDER ROADWAYS OR TRAFFIC AREAS.

1 E3 E3 TYPICAL DUCT BANK DETAILS FOR CONDUIT IN SAND OR CONCRETE

SCALE: N.T.S.

N

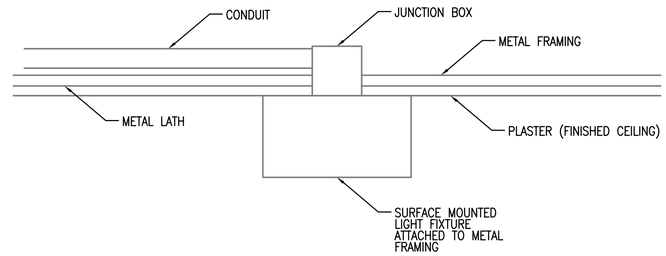

2 E3 E3 TYPICAL DETAIL FOR SURFACE MOUNTED LIGHT FIXTURES

SCALE: N.T.S.

N

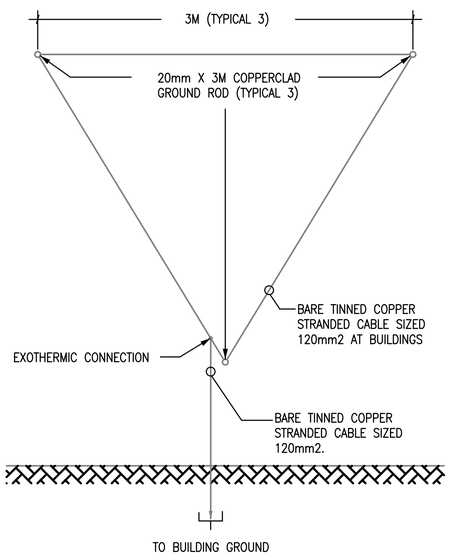

3 E3 E3 GROUND TRIPOD SYSTEM DETAIL - PLAN

SCALE: N.T.S.

N

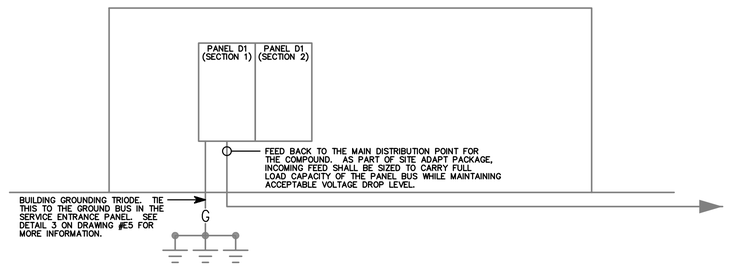

4 E3 E3 D.3 RISER DIAGRAM

SCALE: N.T.S.

N

US Army Corps of Engineers

Afghanistan Engineer District

SYMBOL	DESCRIPTION	DATE	APR

DESIGNED BY: JRG
DATE: 09-30-09
DWN BY: JRG
SUBMITTED BY: BAKER
CHK BY: JRG
FILE NO.: ANPSDE-503XXX

Michael Baker Jr., Inc
A unit of Michael Baker Corporation
Airside Business Park
100 Airside Drive
Moon Township, PA 15108
www.mbakercorp.com

AFGHAN NATIONAL POLICE
STANDARD DESIGN
DINING FACILITIES BUILDING (384 GSM)
WOOD FIRED HEAT OPTION

DETAILS

SHEET REFERENCE NUMBER:

E3

100% SUBMISSON

FIXTURE MARK 'A'

PARABOLIC SURFACE/PENDANT MOUNTED 300MM x 1200MM FLUORESCET FIXTURE WITH ELECTRONIC BALLAST.

FIXTURE MARK 'A2':
SAME FIXTURE AS 'A' WITH EMERGENCY BALLAST.

FIXTURE MARK 'B'

WET LOCATION WRAP AROUND SURFACE/PENDANT MOUNTED FLUORESCENT FIXTURE WITH PRISMATIC ACRYLIC LENS AND ELECTRONIC BALLAST.

FIXTURE MARK 'B2':
SAME FIXTURE AS 'B' WITH EMERGENCY BALLAST.

FIXTURE MARK 'C'

INCANDESCENT ONE PIECE WITH APPROVED LENS, STABILIZED HIGH IMPACT POLY CARBONATE

FIXTURE MARK 'H'

REMOTE HEAD EXTERIOR LIGHT HEAD POWERED FROM EXIT SIGN BATTERY– 12V DOUBLE HEAD CORROSION RESISTANT WITH UL34 WEATHERPROOF CONSTRUCTION

FIXTURE MARK 'E'

UNIVERSAL MOUNT ENGINEER GRADE THERMOPLASTIC HOUSING EXIT SIGN WITH LED LAMPS, RED LETTERS 6" IN HEIGHT WITH ARROWS AS INDICATED, WITH 12V CADMIUM BATTERY

FIXTURE MARK 'J'

EXPLOSION–PROOF (2) LAMP FIXTURE PROVIDED WITH LAMPS. COPPER FREE, ALUMINUM HOUSING, TEMPERED BOROSILICATE GLASS, AND BIAX LAMPS WITH WIRE GUARD

LIGHTING FIXTURE SCHEDULE

FIXTURE MARK	STYLE NUMBER AND TYPE	NUMBER AND TYPE OF LAMPS	VOLTAGE	MOUNTING	NOTES
A	PARABOLIC SURFACE/PENDANT MOUNTED 300MM X 1200MM FLUORESCENT FIXTURE WITH ELECTRONIC BALLAST	(2) 32W 3500K	220V – 1ø 50HZ	PENDANT MOUNTED FROM SLOPED CEILINGS	FURNISHED WITH ELECTRONIC BALLAST. PARABOLIC LOUVER SHALL BE SPECULAR LENS IRADESCENCE TYPE.
A2	SAME AS FIXTURE 'A' WITH EMERGENCY BALLAST	(2) 32W 3500K	220V – 1ø 50HZ	PENDANT MOUNTED FROM SLOPED CEILINGS	FURNISHED WITH ELECTRONIC BALLAST. PARABOLIC LOUVER SHALL BE SPECULAR LENS IRADESCENCE TYPE. EMERGENCY BALLAST SELF TEST.
B	WET LOCATION WRAP AROUND SURFACE/PENDANT MOUNTED FLUORESCENT FIXTURE WITH PRISMATIC ACRYLIC LENS AND ELECTRONIC BALLAST	(2) 32W 3500K	220V – 1ø 50HZ	PENDANT MOUNTED FROM SLOPED CEILINGS	FURNISHED WITH ELECTRONIC BALLAST, VIRGIN ACRYLIC WRAP AROUND LENS.
B2	SAME AS FIXTURE 'B' WITH EMERGENCY BALLAST	(2) 32W 3500K	220V – 1ø 50HZ	PENDANT MOUNTED FROM SLOPED CEILINGS	FURNISHED WITH ELECTRONIC BALLAST, VIRGIN ACRYLIC WRAP AROUND LENS. EMERGENCY BALLAST WITH SELF TEST SWITCH.
C	INCANDESCENT ONE PIECE W/ APPROVED LENS STABILIZED HIGH IMPACT POLY CARBONATE.	(1) A19 – 100W INCANDESCENT	220V – 1ø 50HZ	WALL MOUNTED ABOVE EXTERIOR DOORS	
H	REMOTE HEAD EXTERIOR LIGHT HEAD POWERED FROM EXIT SIGN BATTERY– 12V DOUBLE HEAD CORROSION RESISTANT WITH UL34 WEATHERPROOF CONSTRUCTION	(2) 12W/12V HALOGEN LAMP	12V – 1ø 50HZ	EXTERIOR WALL MOUNTED AT TOP OF DOOR HEIGHT	
J	EXPLOSION–PROOF (2) LAMP FIXTURE PROVIDED WITH LAMPS. COPPER FREE, ALUMINUM HOUSING, TEMPERED BOROSILICATE GLASS, AND BIAX LAMPS WITH WIRE GUARD	(2) 40W 3500K BIAX FLUORESCENT LAMPS	220V – 1ø 50HZ	PENDANT MOUNTED FROM SLOPED CEILINGS	FURNISHED WITH LAMPS AND WIRE GUARD
E	UNIVERSAL MOUNT ENGINEER GRADE THERMOPLASTIC HOUSING EXIT SIGN WITH LED LAMPS, RED LETTERS 6" IN HEIGHT WITH ARROWS AS INDICATED, WITH 12V CADMIUM BATTERY WITH REMOTE HEAD CAPABILITY	LED LAMPS	220V – 1ø 50HZ	UNIVERSAL MOUNTING	

US Army Corps of Engineers
Afghanistan Engineer District

SYMBOL	DESCRIPTION	DATE	APR

DESIGNED BY: JRG
DATE: 09–30–09
DWN BY: JRG
SUBMITTED BY: BAKER
CHK BY: JRG
FILE NO.: ANPSDE–604XXX

Michael Baker Jr., Inc
A unit of Michael Baker Corporation
Airside Business Park
100 Airside Drive
Moon Township, PA 15108
www.mbakercorp.com

AFGHAN NATIONAL POLICE
STANDARD DESIGN
DINING FACILITIES BUILDING (384 GSM)
WOOD FIRED HEAT OPTION

LIGHT FIXTURE SCHEDULE

SHEET REFERENCE NUMBER:
E4

100% SUBMISSON

PANELBOARD D1 SECT. 1 SURFACE MOUNTED _____ ASYM. A.I.C. MIN.
_____ AMP. MAIN LUGS (OR) 225 AMP. MAIN BREAKER W/ 225 AMP. TRIP
CIRCUIT BREAKER TYPE 380/220 VOLTS 3 PHASE 4 WIRE 50 HZ 225 AMP. BUS

CKT. NO.	TRIP AMPS	NO. POLES	WIRE MM ²	GND MM²	CONDUIT MM	LOAD SERVED	LOAD-V.A. A0	LOAD-V.A. B0	LOAD-V.A. C0	LOAD-V.A. A0	LOAD-V.A. B0	LOAD-V.A. C0	LOAD SERVED	CONDUIT MM	GND MM²	WIRE MM²	NO. POLES	TRIP AMPS	CKT. NO.
1	20	1	4.0	4.0	20	LIGHTING – 110, 111	0.4			0.6			LIGHTING – 104 – 109	20	4.0	4.0	1	20	2
3	20	1	4.0	4.0	20	LIGHTING – 103		1.2			1.5		LIGHTING – 102	20	4.0	4.0	1	20	4
5	20	1	4.0	4.0	20	LIGHTING – 101			1.5			1.5	LIGHTING – 100	20	4.0	4.0	1	20	6
7	20	1	4.0	4.0	20	RECEPTACLES – 101, 102	1.2			2.0			JUNCTION BOX – 107	20	4.0	4.0	1	20	8
9	20	1	4.0	4.0	20	JUNCTION BOX – 107		2.0			2.0		JUNCTION BOX – 107	20	4.0	4.0	1	20	10
11	20	1	4.0	4.0	20	JUNCTION BOX – 107			2.0			1.2	RECEPT – 102, 104, 105	20	4.0	4.0	1	20	12
13	20	1	4.0	4.0	20	JUNCTION BOX – 104	2.0			1.2			RECEPTACLES – 103	20	4.0	4.0	1	20	14
15	20	1	4.0	4.0	20	JUNCTION BOX – 110		2.0			2.0		JUNCTION BOX – 111	20	4.0	4.0	1	20	16
17	20	1	4.0	4.0	20	F.A.C.P			0.5			0.5	EXHAUST FANS–106,107	20	4.0	4.0	1	20	18
19	20	1	4.0	4.0	20	RECEPTACLES – 100, 101	1.2			1.3			ELECTRIC HEATERS–106	20	6.0	6.0	2	20	20
21	20	2	4.0	4.0	20	ELECTRIC HEATERS–107		2.0			1.3								22
23									2.0			1.3	ELECTRIC HEATERS–104,105	20	6.0	6.0	2	20	24
25	20	2	4.0	4.0	20	ELECTRIC HEATERS–103	2.0			1.3									26
27								2.0			0.5		EXHAUST FANS–104,109	20	4.0	4.0	1	20	28
29	20	2	4.0	4.0	20	ELECTRIC HEATERS–103			2.0			1.2	RECEPTACLES – 102, 103	20	4.0	4.0	1	20	30
31							2.0			0.4			RECEPTACLES – 108, 109	20	4.0	4.0	1	20	32
33	20	1	4.0	4.0	20	RECEPTACLES – EXTERIOR		1.2			1.2		RECEPTACLES – 105 – 107	20	4.0	4.0	1	20	34
35	20	1	4.0	4.0	20	RECEPTACLES – EXTERIOR			1.0			8.0	ELECTRIC HEATERS–106	32	6.0	25	3	60	36
37	20	1	4.0	4.0	20	RECEPTACLES – EXTERIOR	0.4			8.0									38
39	20	1	4.0	4.0	20	ELECTRIC HEATERS–103		2.0			8.0								40
41	20	1							2.0			2.7	EXHAUST FANS–103	20	4.0	4.0	1	20	42
							9.2	12.3	11.0	14.8	16.5	16.4							

TOTAL CONN. LOAD PER PHASE (KVA): A0 26.0 B0 30.8 C0 27.4

TOTAL CONN. LOAD 84.2 KVA. 70 % DEMAND = ESTIMATED DEMAND LOAD 58.9 SUPPLIED FROM SWITCHGEAR 'DP'

* MAIN BREAKER SHALL BE 3P EARTH GROUND TYPE.
** PANEL SHALL BE PROVIDE WTH FEED THRU LUGS.
*** LOADS ON THIS PANEL INCLUDE LOADS FOR PANEL D1 (SECTIONS 1 AND 2).

PANELBOARD D1 SECT. 2 SURFACE MOUNTED _____ ASYM. A.I.C. MIN.
225 AMP. MAIN LUGS (OR) _____ AMP. MAIN BREAKER W/ _____ AMP. TRIP
CIRCUIT BREAKER TYPE 380/220 VOLTS 3 PHASE 4 WIRE 50 HZ 225 AMP. BUS

CKT. NO.	TRIP AMPS	NO. POLES	WIRE MM ²	GND MM²	CONDUIT MM	LOAD SERVED	LOAD-V.A. A0	LOAD-V.A. B0	LOAD-V.A. C0	LOAD-V.A. A0	LOAD-V.A. B0	LOAD-V.A. C0	LOAD SERVED	CONDUIT MM	GND MM²	WIRE MM²	NO. POLES	TRIP AMPS	CKT. NO.
43	20	2	4.0	4.0	20	ELECTRIC HEATER–103	2.0						SPARE				1	20	44
45								2.0					SPARE				1	20	46
47	20	1				SPARE							SPARE				1	20	48
49	20	1				SPARE							SPARE				1	20	50
51	20	1				SPARE							SPARE				1	20	52
53	20	1				SPARE							SPARE				1	20	54
55	20	1				SPARE							SPARE				1	20	56
57	20	1				SPARE							SPARE				1	20	58
59	20	1				SPARE							SPARE				1	20	60
61	20	1				SPARE							SPARE				1	20	62
63	20	1				SPARE							SPARE				1	20	64
65	20	1				SPARE							SPARE				1	20	66
67	20	1				SPARE							SPARE				1	20	68
69	20	1				SPARE							SPARE				1	20	70
71	20	1				SPARE							SPARE				1	20	72
73	20	1				SPARE							SPARE				1	20	74
75	20	1				SPARE							SPARE				1	20	76
77	20	1				SPARE							SPARE				1	20	78
79	20	1				SPARE							SPARE				1	20	80
81	20	1				SPARE							SPARE				1	20	82
83	20	1				SPARE							SPARE				1	20	84
							2.0	2.0	0.0	0.0	0.0	0.0							

TOTAL CONN. LOAD PER PHASE (KVA): A0 2.0 B0 2.0 C0 0.0

TOTAL CONN. LOAD 4.0 KVA. 70 % DEMAND = ESTIMATED DEMAND LOAD 2.8 SUPPLIED FROM SWITCHGEAR _____

US Army Corps of Engineers
Afghanistan Engineer District

SYMBOL	DESCRIPTION	DATE	APR

DESIGNED BY: JRG | DATE: 09-30-09
DWN BY: JRG | SUBMITTED BY: BAKER
CHK BY: JRG | FILE NO.: ANPSDE-605XXX

Michael Baker Jr., Inc
A unit of Michael Baker Corporation
Airside Business Park
100 Airside Drive
Moon Township, PA 15108
www.mbakercorp.com

AFGHAN NATIONAL POLICE
STANDARD DESIGN
DINING FACILITIES BUILDING (384 GSM)
WOOD FIRED HEAT OPTION

PANEL SCHEDULES AND RISER DIAGRAM

SHEET REFERENCE NUMBER:
E5

100% SUBMISSON

AFGHAN NATIONAL POLICE

STANDARD BUILDING DESIGNS

POL BUILDING

215 POL STORAGE BUILDING (VM06 - 25 GSM)

SHEET INDEX

G1 COVER SHEET

S1 GENERAL NOTES
S2 GENERAL NOTES
S3 GENERAL NOTES
S4 GENERAL NOTES
S5 FOUNDATION & ROOF FRAMING PLANS & DETAILS
S6 ROOF OVERFRAMING DETAILS
S7 TYPICAL DETAILS

A1 PLANS AND ELEVATIONS
A2 SECTIONS AND DETAILS
A3 DOOR, WINDOW & HARDWARE TYPES & DETAILS

E0 ELECTRICAL SYMBOLS AND ABBREVIATIONS
E1 LIGHTING AND POWER PLANS AND SCHEDULES
E2 DETAILS

US Army Corps of Engineers
Afghanistan Engineer District

SYMBOL	DESCRIPTION	DATE	APR

DESIGNED BY: JDS
DWN BY: JDS
CHK BY: JDS
DATE: 09-30-09
SUBMITTED BY: BAKER
FILE NO.: DRAWING1

AFGHAN NATIONAL POLICE
STANDARD DESIGN
POL BUILDING
COVER SHEET

SHEET REFERENCE NUMBER:
G1

100% SUBMISSION