Appendix A

Standard Design Drawings

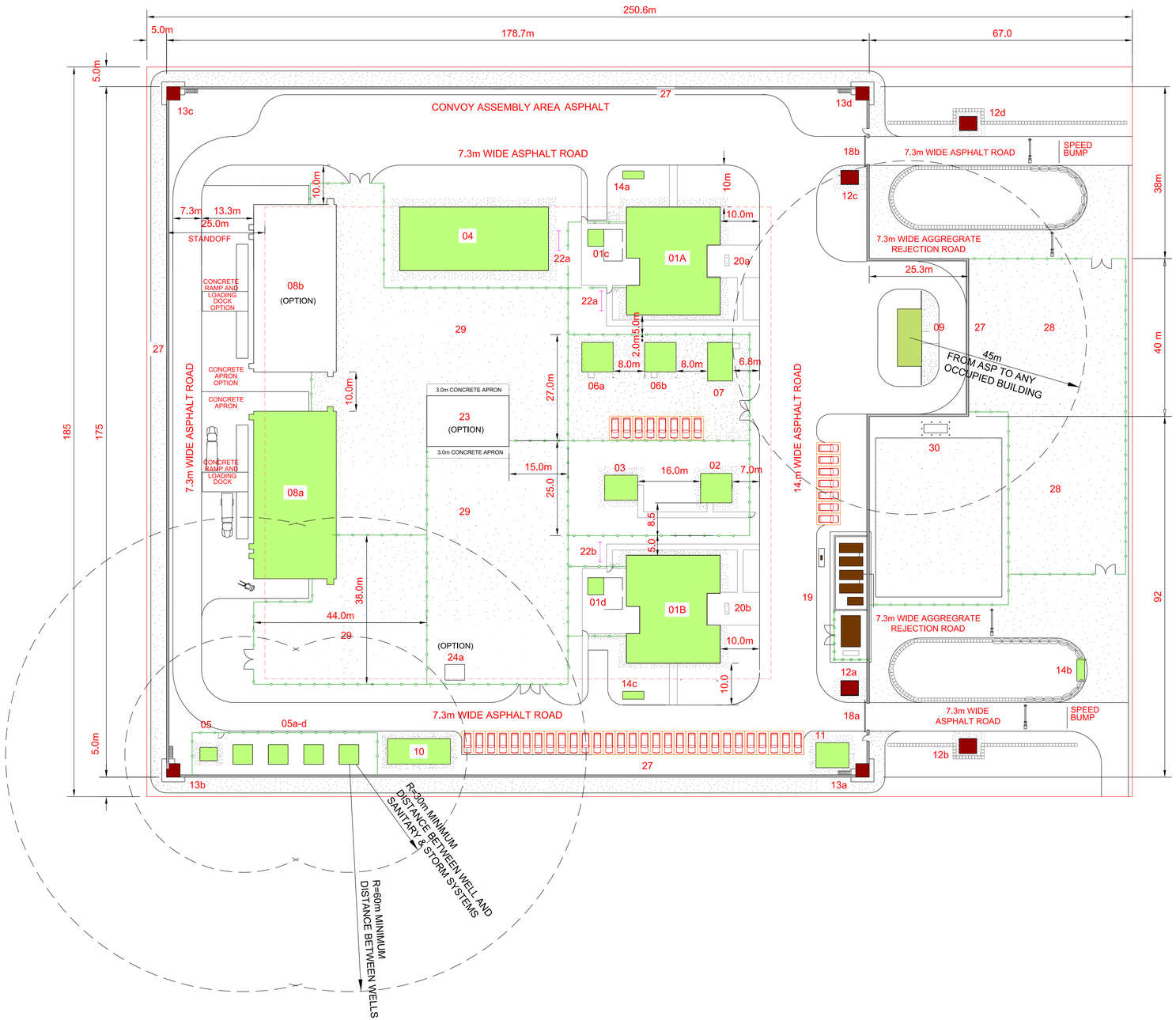

MSP - CONCEPT SITE PLAN

01A DISTRICT HEADQUARTERS BUILDING
01B DISTRICT HEADQUARTERS BUILDING with DESIGN BUILD REQUIREMENTS
01c,d WOOD STOVE ANNEX
02 FRU BUILDING
03 SMALL WOMEN'S BARRACKS
04 BARRACKS TYPE 1 (862GSM) ER
05 WELL HOUSE
05a-d WATER TOWER/TANK
06a,b MMT BUILDING
07 WAREHOUSE SMALL with DESIGN BUILD REQUIREMENTS
08a WAREHOUSE - LARGE (RMTC STORAGE)
08b WAREHOUSE - LARGE (RMTC STORAGE) (OPTION)
09 SECURE STORAGE BUILDING (ASP)
10 L01 LATRINE BUILDING SMALL
11 GATE HOUSE
12a-d GUARD SHACKS
13a-f GUARD TOWERS
14a-c TRASH COLLECTION POINT
15 not used
16 not used
17 DROP ARM BARRIER
18a,b ECP GATE
19 FUEL STORAGE, FUEL POINT, GENERATOR, CANOPY
20a,b FLAGPOLE
21 not used
22a,b CLOTHESLINE
23 VEHICLE MAINTENANCE VM10 (3-BAY) with DESIGN BUILD REQUIREMENTS (OPTION)
24a POL BUILDING (OPTION)
25 not used
26 not used
27 PERIMETER SECURITY WALL
28 TRUCK WAITING AREA
29 SECURE VEHICLE STORAGE
30 SEPTIC TANK/LEACHFIELD

HESCO BARRIER
VEHICLE PARKING
DROP-ARM GATE
CONCRETE BARRIER
BOLLARDS (at SEPTIC TANK)

Ministry of Interiors Supply Point (MSP) Concept Site Plan

30000 12000 6000 0 30000 60000
SCALE: 1 : 600

FIELD VERIFY

US Army Corps of Engineers
AFGHANISTAN ENGINEER DISTRICT

MARK	DESCRIPTION	DATE	APPR.	MARK	DESCRIPTION	DATE	APPR.

DESIGNED BY: | DATE:
DWN BY: | CKD BY: | SOLICITATION NO.:
SUBMITTED BY: | CONTRACT NO.:
PLOT SCALE: 1:1 | PLOT DATE: | FILE NUMBER:
SIZE: ANSI D | FILE NAME: SITE.dwg

U.S. ARMY CORPS OF ENGINEERS
AFGHANISTAN DISTRICT
APO AE 09356

AFGHAN NATIONAL POLICE
MINISTRY OF INTERIOR SUPPLY POINT (MSP)
FARAH, FARAH PROVINCE, AFGHANISTAN

CONCEPT SITE PLAN

SHEET IDENTIFICATION
MP001
SHEET 1 OF 1

ENGINEERING AND CONSTRUCTION DIVISION
US ARMY ENGINEER DISTRICT, AFGHANISTAN
APO AE, 09356

01A

AFGHANISTAN NATIONAL POLICE (ANP) DISTRICT HEADQUARTERS COMPOUNDS 1 STORY HQ

APPENDIX A

VARIOUS LOCATIONS, AFGHANISTAN

SECTION/DETAIL CROSS REFERENCING CONVENTIONS

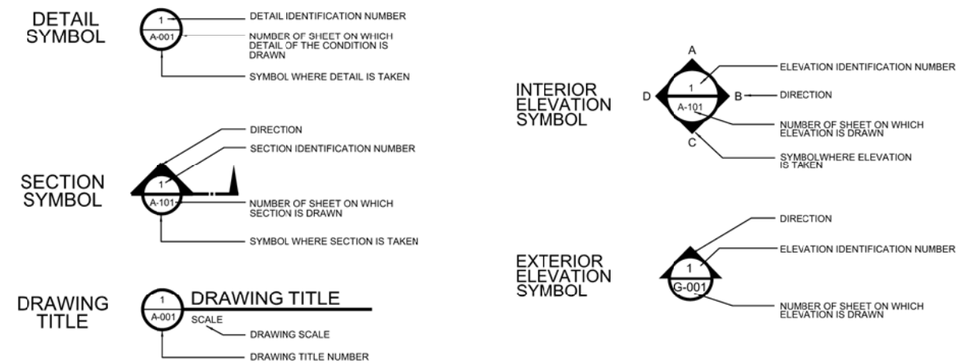

SCHEDULE OF DRAWINGS

SHEET NO	DWG CODE	SHEET REFERENCE NO	DESCRIPTION	REV STATUS
			GENERAL	
1		G-001	TITLE SHEET & SCHEDULE OF DRAWINGS	
			SITE DESIGN	
		C-1	SITE PLAN	
		C-2	DETAILS	
		C-3	DETAILS	
		C-4	WELL HOUSE PLAN AND SECTION	
		C-5	SEPTIC TANK DETAILS	
		XM-1	MECHANICAL SITE PLAN	
		XE-1	ELECTRICAL SITE PLAN	
			1 STORY BUILDING (A)	
		A-1	FIRST FLOOR PLAN	
		A-2	ROOF PLAN	
		A-3	BUILDING SECTIONS	
		A-4	WALL SECTION	
		A-5	BUILDING ELEVATIONS	
		A-6	BUILDING ELEVATIONS	
		A-7	ENLARGED TOILET PLANS	
		A-8	DOOR SCHEDULE AND DOOR TYPES	
		A-9	ROOM FINISH SCHEDULE	
		S-1	FOUNDATION PLAN	
		S-2	GRADE BEAM PLAN	
		S-3	LOWER ROOF BEAM PLAN	
		S-4	HIGH ROOF BEAM PLAN	
		S-5	FOOTING AND COLUMN DETAILS	
		S-6	BEAM DETAILS	
		S-7	STANDARD BEAM AND COLUMN DETAILS	
		M-1	HVAC PLAN	
		M-2	HEATING PLAN	
		M-3	ROOF PLAN	
		P-1	PLUMBING PLAN	
		P-2	ENLARGED PLUMBING PLANS -DOMESTIC WATER	
		P-3	ENLARGED PLUMBING PLANS -WASTE AND DRAINS	
		P-4	ENLARGED PLUMBING PLANS -WASTE AND DRAINS	
		P-5	DOMESTIC WATER RISER DIAGRAM	
		P-6	PLUMBING SCHEDULES	
		E-1	LIGHTING PLAN	
		E-2	POWER PLAN	
		E-3	PANEL SCHEDULE	

SHEET NO	DWG CODE	SHEET REFERENCE NO	DESCRIPTION	REV STATUS
			GUARD TOWER (B)	
		A-1	FLOOR PLAN, SECTION ELEVATION AND ROOF PLAN	
		S-1	FOUNDATION AND SLAB PLAN ROOF FRAMING PLAN	
		E-1	LIGHTING & POWER PLAN	
			GUARD SHACK (C)	
		A-1	FLOOR PLANS AND ELEVATIONS	
		S-1	FOUNDATION AND SLAB PLAN ROOF FRAMING PLAN	
		E-1	LIGHTING PLAN	
			POWER PLANT (D)	
		E-1	ONE LINE DIAGRAM	
			WELL HOUSE (E)	
		A-1	FLOOR PLAN, ELEVATIONS AND SCHEDULES	
		S-1	FOUNDATION PLAN AND ROOF PLAN	
		S-2	FOOTING DETAILS	
		S-3	SLAB-ON-GRADE DETAILS	
		M-1	HVAC PLAN	
		E-1	LIGHTING AND POWER PLAN	
		E-2	ELECTRICAL SCHEDULES	
			STANDARD DETAILS	
		SA-1	ABBREVIATIONS AND SYMBOLS	
		SA-2	WALL SECTION AND ROOF DETAILS	
		SA-3	VEHICLE RE-FUELING POINT	
		SS-1	GENERAL NOTES AND ABBREVIATIONS	
		SS-2	STANDARD DETAILS	
		SS-3	DETAILS	
		SS-4	MANUAL DROP ARM GATE	
		SM-1	LEGEND AND ABBREVIATIONS	
		SM-2	MECHANICAL SCHEDULES	
		SM-3	MECHANICAL STANDARD DETAILS	
		SM-4	PROPANE COOKING STOVE	
		SP-1	LEGENDS AND ABBREVIATIONS	
		SP-2	STANDARD PLUMBING DETAILS	
		SP-3	STANDARD PLUMBING DETAILS	
		SE-1	LEGEND AND ABBREVIATIONS	
		SE-2	STANDARD LIGHTING DETAILS	

SHEET NO	DWG CODE	SHEET REFERENCE NO	DESCRIPTION	REV STATUS
			STANDARD DETAILS	
		SE-3	DUCTBANK DETAILS	
		SE-4	STANDARD ELECTRICAL DETAILS	
		SE-5	POWER PLANT DETAILS	
		SE-6	HAND HOLE DETAILS	
		SE-7	WATER & SEWER TRENCH DETAIL	
		SE-8	TRUST BLOCK DETAIL	

PROJECT COORDINATION

U.S. ARMY ENGINEER DISTRICT, AFGHANISTAN

PROJECT MANAGER — DATE

CHIEF, DESIGN BRANCH — DATE

THIS PROJECT WAS DESIGNED BY AFGHANASTAN ENGINEER DISTRICT OF THE U.S ARMY CORPS OF ENGINEERS. THE INITIALS OR SIGNATURES AND REGISTRATION DESIGNATIONS OF INDIVIDUALS APPEAR ON THESE DOCUMENTS WITHIN THE SCOPE OF THEIR EMPLOYMENT AS REQUIRED BY ER 1110-1-8152.

US ARMY CORPS OF ENGINEERS AFGHANISTAN ENGINEER DISTRICT

SYMBOL	DESCRIPTION	DATE	APPR.

SYMBOL	DESCRIPTION	DATE	APPR.

DESIGNED BY: | DATE: XX-XX-XX | REV: ___
DWN BY: | CKD BY: | DESIGN FILE NO.
REVIEWED BY | DRAWING CODE:
SUBMITTED BY: | FILE NAME: G-T-S.DGN | PLOT SCALE: ___ | PLOT DATE: XX-XX-XX

U.S. ARMY ENGINEER DISTRICT, AFGHANISTAN
CORPS OF ENGINEERS
APO AE 96338

ENGINEERING AND CONSTRUCTION DIVISION

AFGHANISTAN NATIONAL POLICE (ANP) DISTRICT HEADQUARTERS COMPOUNDS - 1 STORY HQ
VARIOUS LOCATIONS, AFGHANISTAN

TITLE SHEET
SCHEDULE OF DRAWINGS

SHEET REFERENCE NUMBER:
G-001

SHEET 1 OF --

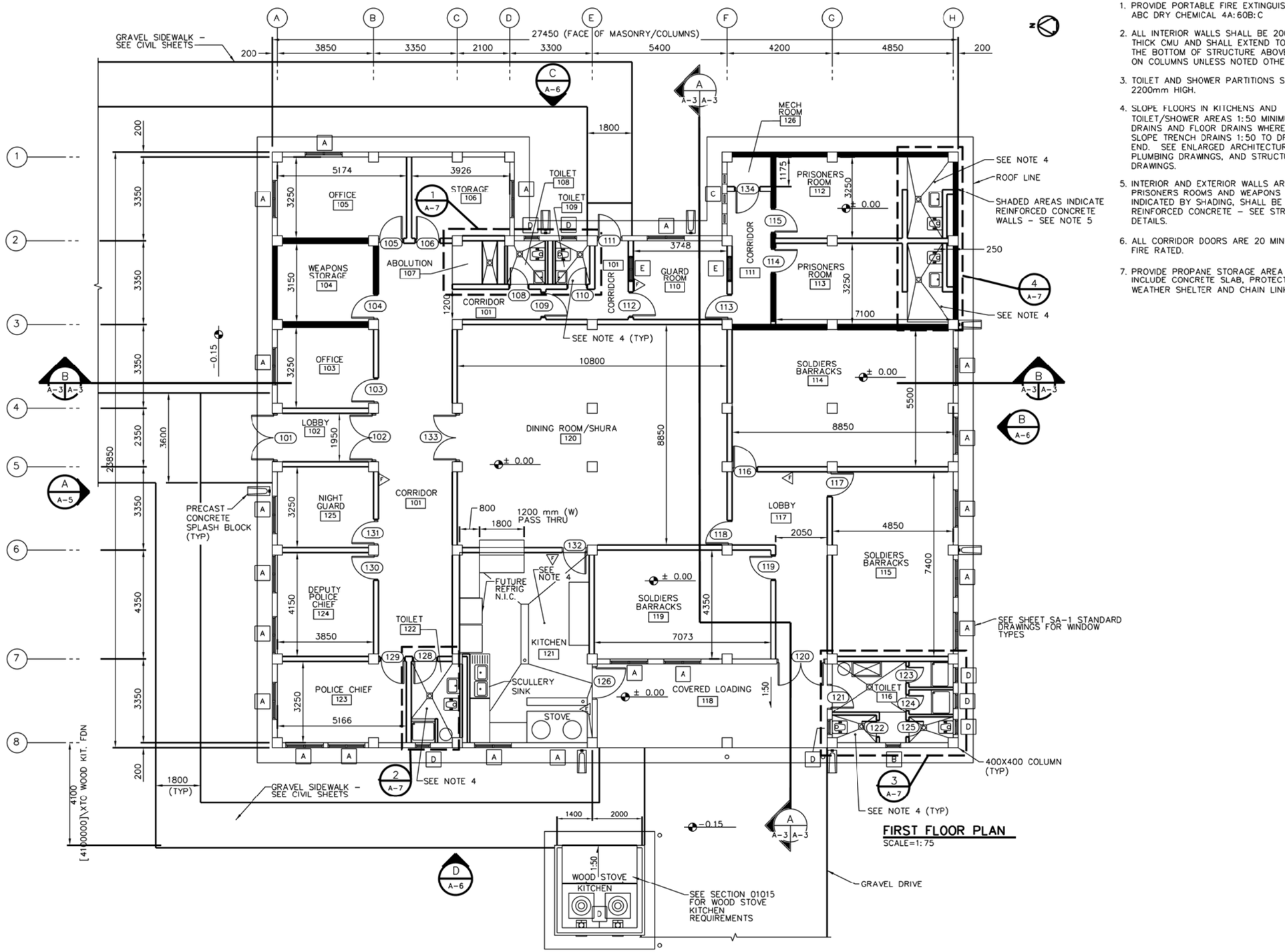

FIRST FLOOR PLAN

SCALE=1:75

GENERAL NOTES:

1. PROVIDE PORTABLE FIRE EXTINGUISHERS, ABC DRY CHEMICAL 4A:60B:C
2. ALL INTERIOR WALLS SHALL BE 200 mm THICK CMU AND SHALL EXTEND TO THE BOTTOM OF STRUCTURE ABOVE AND CENTER ON COLUMNS UNLESS NOTED OTHERWISE.
3. TOILET AND SHOWER PARTITIONS SHALL BE 2200mm HIGH.
4. SLOPE FLOORS IN KITCHENS AND TOILET/SHOWER AREAS 1:50 MINIMUM TO TRENCH DRAINS AND FLOOR DRAINS WHERE INDICATED. SLOPE TRENCH DRAINS 1:50 TO DRAIN AT ONE END. SEE ENLARGED ARCHITECTURAL DRAWINGS, PLUMBING DRAWINGS, AND STRUCTURAL DRAWINGS.
5. INTERIOR AND EXTERIOR WALLS AROUND PRISONERS ROOMS AND WEAPONS STORAGE, AS INDICATED BY SHADING, SHALL BE 200mm THICK REINFORCED CONCRETE – SEE STRUCTURAL FOR DETAILS.
6. ALL CORRIDOR DOORS ARE 20 MINUTE FIRE RATED.
7. PROVIDE PROPANE STORAGE AREA TO INCLUDE CONCRETE SLAB, PROTECTIVE WALL WEATHER SHELTER AND CHAIN LINK FENCING

US ARMY CORPS OF ENGINEERS AFGHANISTAN ENGINEER DISTRICT

SYMBOL	DESCRIPTION	DATE	APPR.	SYMBOL	DESCRIPTION	DATE	APPR.

REV.
DATE: XX-XX-XX
DESIGN FILE NO.
DRAWING CODE
FILE NAME:
PLOT SCALE:
PLOT DATE: XX-XX-XX

DESIGNED BY:
DWN BY: CKD BY:
REVIEWED BY:
SUBMITTED BY:

U.S. ARMY ENGINEER DISTRICT, AFGHANISTAN
CORPS OF ENGINEERS
APO AE 96338

ENGINEERING AND CONSTRUCTION DIVISION

AFGHANISTAN NATIONAL POLICE (ANP) DISTRICT HEADQUARTERS COMPOUNDS - 1 STORY HQ
VARIOUS LOCATIONS, AFGHANISTAN
1 STORY BUILDING

FIRST FLOOR PLAN

SHEET REFERENCE NUMBER:
A
A-1

A1 Size 594mm x 841mm

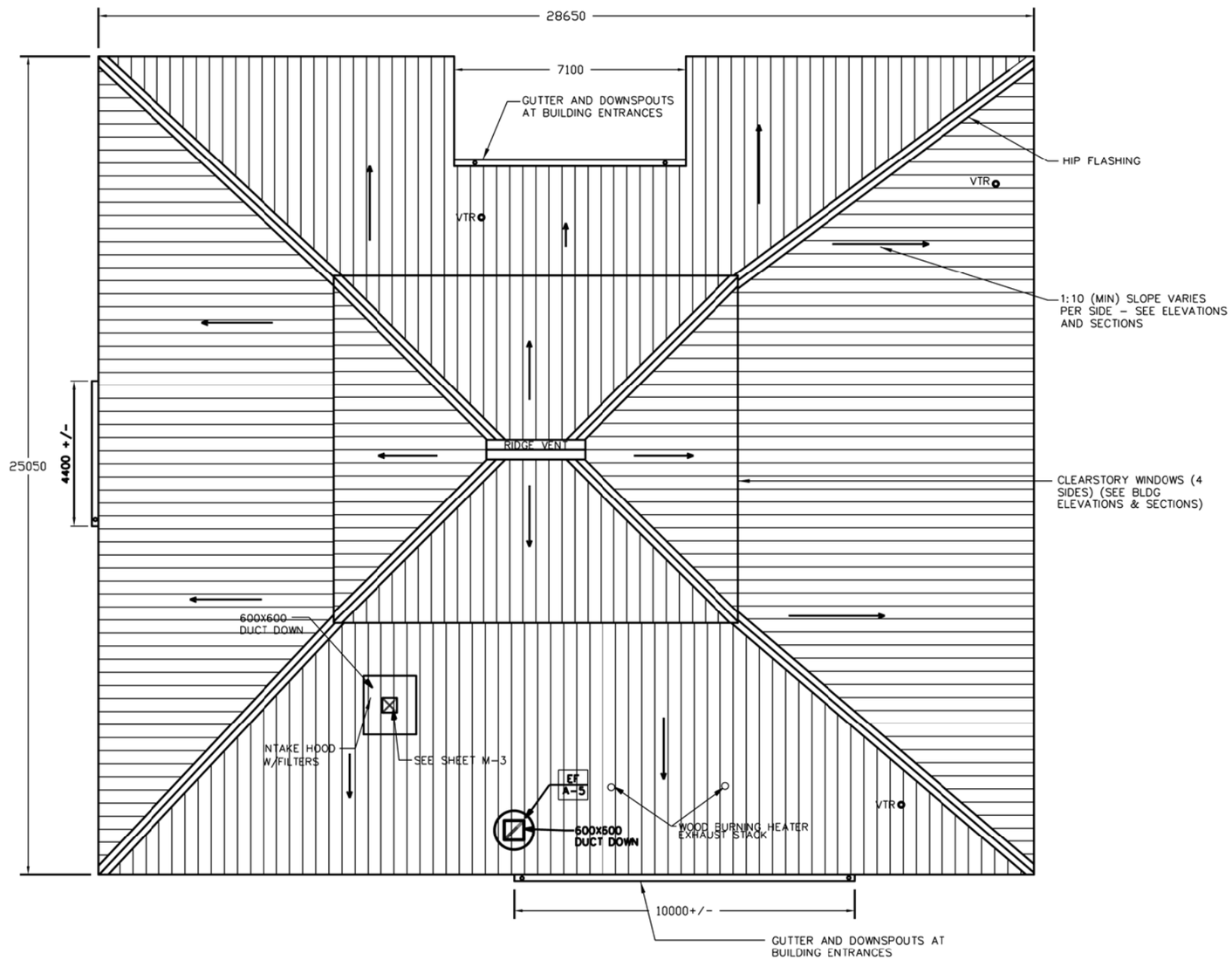

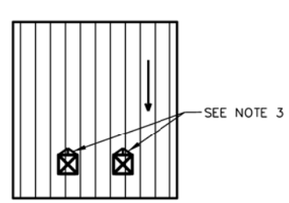

ROOF PLAN
SCALE= 1:75

NOTE:

1. TYPICAL ROOF SLOPE IS 1 IN 10.
2. ALL ROOF PENETRATIONS SHALL BE PROPERLY FLASHED AND SEALED WEATHER TIGHT.
3. PROVIDE WATER TIGHT SHEET METAL CRICKETS, FLASHING AND SEALANT PER ROOFING MANUFACTURERS RECOMMENDATIONS AT EACH PENETRATION. ALIGN STANDING SEAMS WITH FLASHING AT CRICKETS SUCH THAT WATER IS DIVERTED AROUND PENETRATIONS.
4. ROOF DIMENSIONS IN METERS AS SHOWN
5. EXHAUST STACK FOR KITCHEN STOVE MUST MIN 1020 mm ABOVE ROOF LINE.

3 1.50 0 3 4.5
1:75

US ARMY CORPS OF ENGINEERS AFGHANISTAN ENGINEER DISTRICT

SYMBOL	DESCRIPTION	DATE	APPR	SYMBOL	DESCRIPTION	DATE	APPR

DESIGNED BY: DATE: XX-XX-XX REV: __
DWN BY: CKD BY: DESIGN FILE NO.
REVIEWED BY: DRAWING CODE
SUBMITTED BY: FILE NAME: PLOT SCALE: PLOT DATE: XX-XX-XX

U.S. ARMY ENGINEER DISTRICT, AFGHANISTAN
CORPS OF ENGINEERS
APO AE 96338

ENGINEERING AND CONSTRUCTION DIVISION

AFGHANISTAN NATIONAL POLICE (ANP) DISTRICT HEADQUARTERS COMPOUNDS - 1 STORY HQ
VARIOUS LOCATIONS, AFGHANISTAN
1 STORY BUILDING

ROOF PLAN

SHEET REFERENCE NUMBER:
A
A-2

A1 Size 594mm x 841mm

GENERAL NOTES:

1. UNLESS NOTED OTHERWISE, ELEVATIONS ARE SHOWN IN METERS ABOVE OR BELOW FINISHED FLOOR.

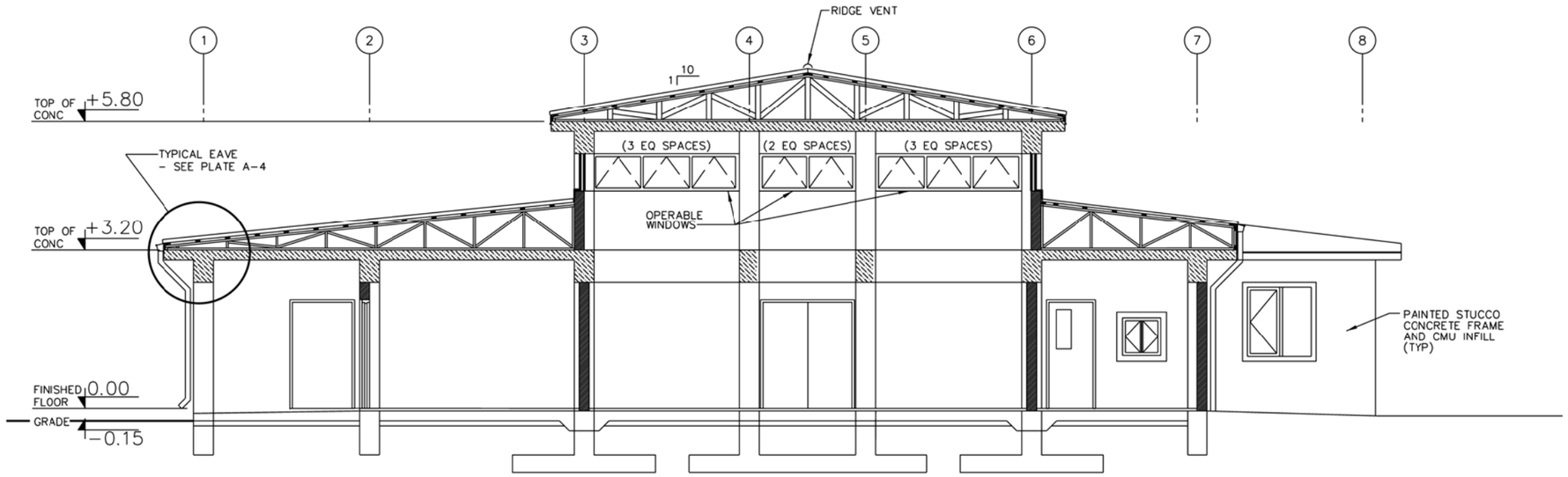

BUILDING SECTION A-A
SCALE=1:50
A-1 A-3

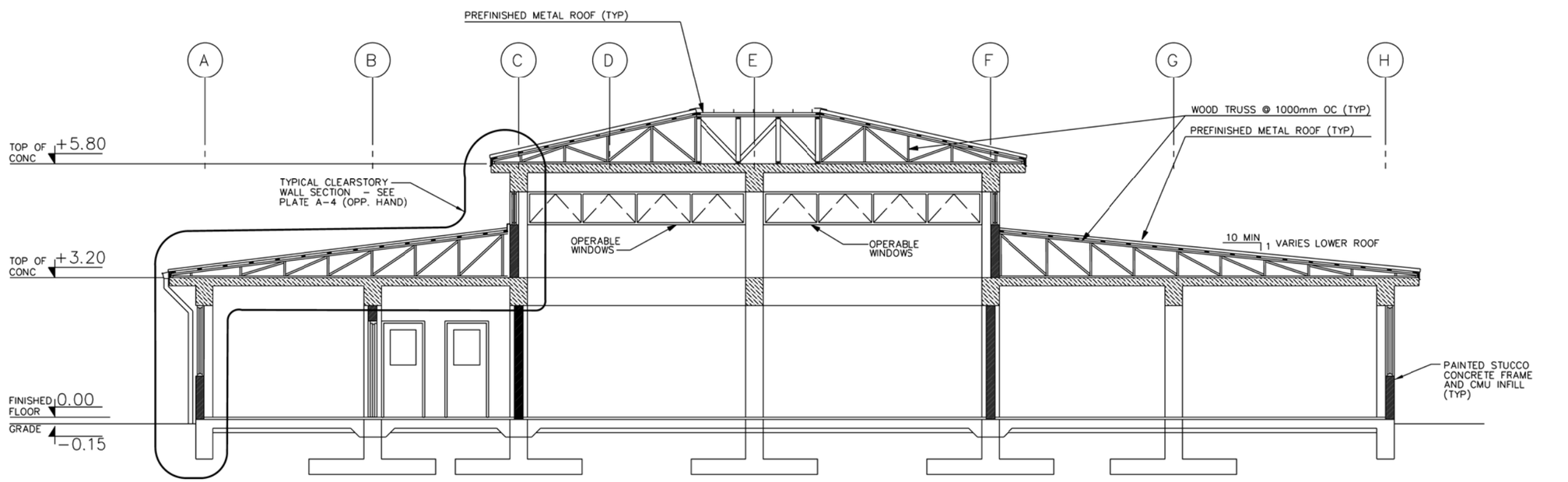

BUILDING SECTION B-B
SCALE=1:50
A-1 A-3

1:50

US ARMY CORPS OF ENGINEERS AFGHANISTAN ENGINEER DISTRICT

SYMBOL	DESCRIPTION	DATE	APPR.	SYMBOL	DESCRIPTION	DATE	APPR.

DESIGNED BY: DWN BY: CKD BY: REVIEWED BY: SUBMITTED BY: DATE: XX-XX-XX DESIGN FILE NO: DRAWING CODE: FILE NAME: PLOT SCALE: PLOT DATE: XX-XX-XX REV:

U.S. ARMY ENGINEER DISTRICT, AFGHANISTAN
CORPS OF ENGINEERS
APO AE 96338

ENGINEERING AND CONSTRUCTION DIVISION

AFGHANISTAN NATIONAL POLICE (ANP) DISTRICT HEADQUARTERS COMPOUNDS - 1 STORY HQ
VARIOUS LOCATIONS, AFGHANISTAN
1 STORY BUILDING

BUILDING SECTION

SHEET REFERENCE NUMBER:
A
A-3

A1 Size 594mm x 841mm

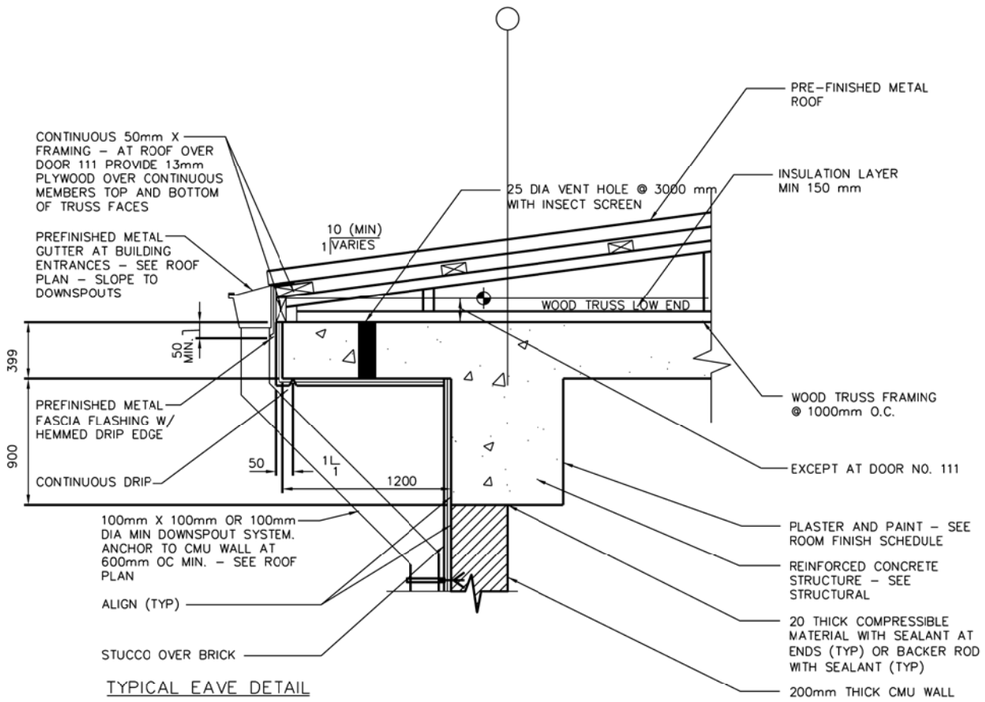

TYPICAL EAVE DETAIL

SCALE: 1:10

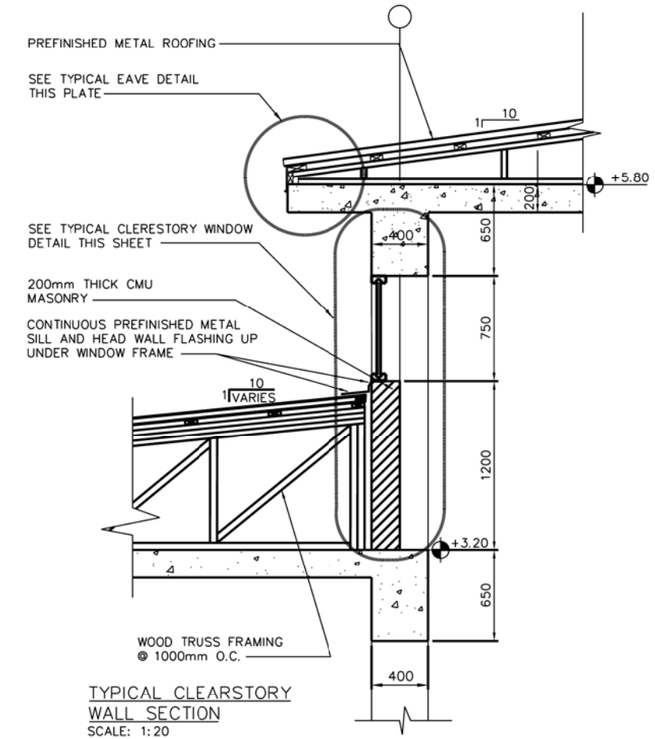

TYPICAL CLEARSTORY WALL SECTION

SCALE: 1:20

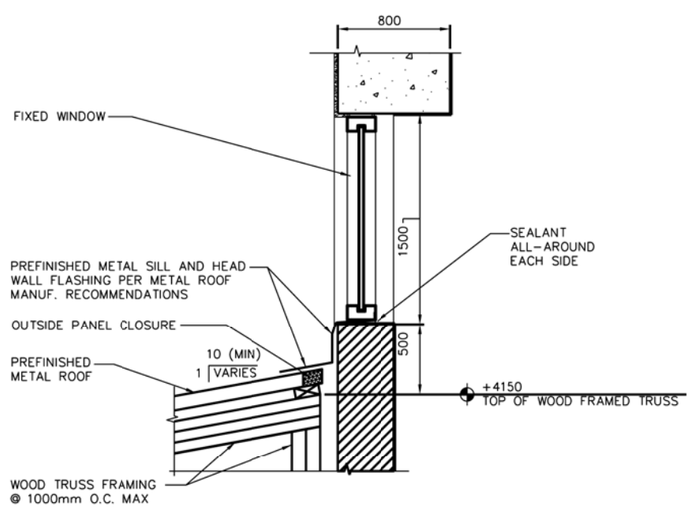

TYPICAL CLERESTORY WINDOW DETAIL

SCALE: 1:10

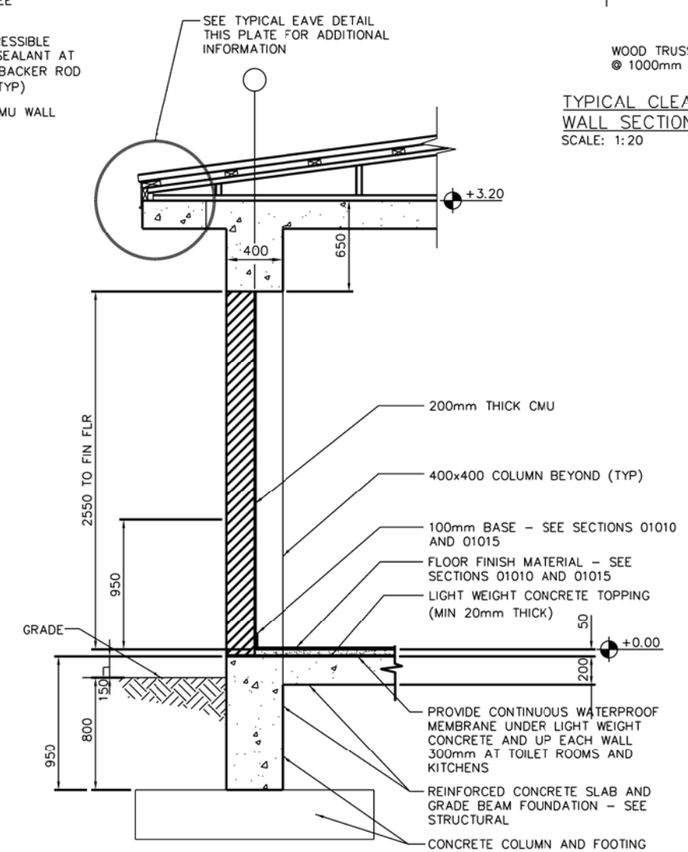

TYPICAL WALL SECTION

SCALE: 1:20

0 .50 1.00
1:10

1 .50 0 1
1:20

US ARMY CORPS OF ENGINEERS AFGHANISTAN ENGINEER DISTRICT

SYMBOL	DESCRIPTION	DATE	APPR.	SYMBOL	DESCRIPTION	DATE	APPR.

DESIGNED BY: DATE: XX-XX-XX
DWN BY: CKD BY: DESIGN FILE NO.
REVIEWED BY: DRAWING CODE
SUBMITTED BY: FILE NAME:
PLOT SCALE:
PLOT DATE: XX-XX-XX
REV.

U.S. ARMY ENGINEER DISTRICT, AFGHANISTAN
CORPS OF ENGINEERS
APO AE 96338

ENGINEERING AND CONSTRUCTION DIVISION

AFGHANISTAN NATIONAL POLICE (ANP) DISTRICT HEADQUARTERS COMPOUNDS - 1 STORY HQ
VARIOUS LOCATIONS, AFGHANISTAN
1 STORY BUILDING

WALL SECTION

SHEET REFERENCE NUMBER:
A
A-4

A1 Size 594mm x 841mm

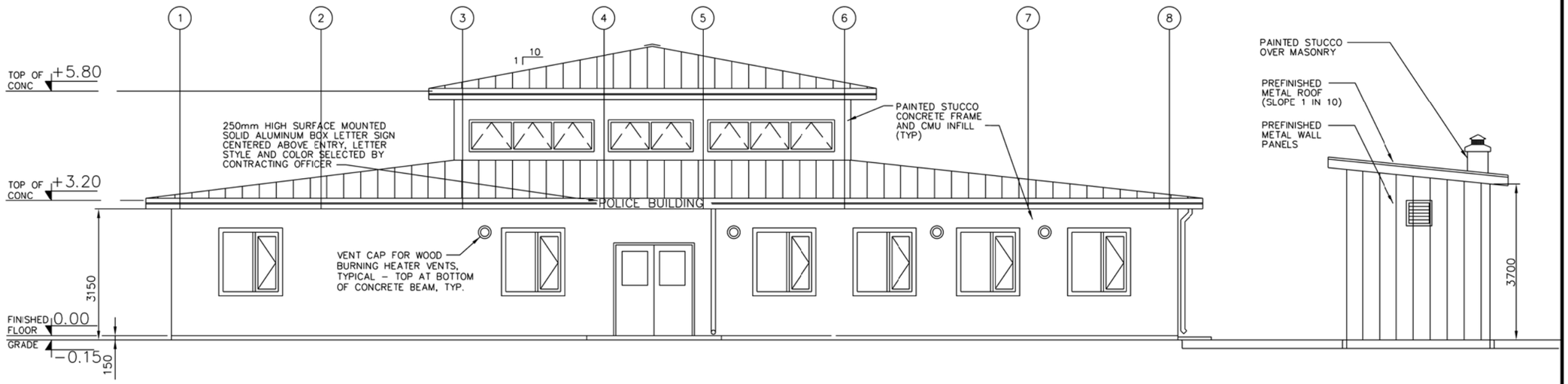

NORTH ELEVATION (A / A-1 A-5)
SCALE=1:50

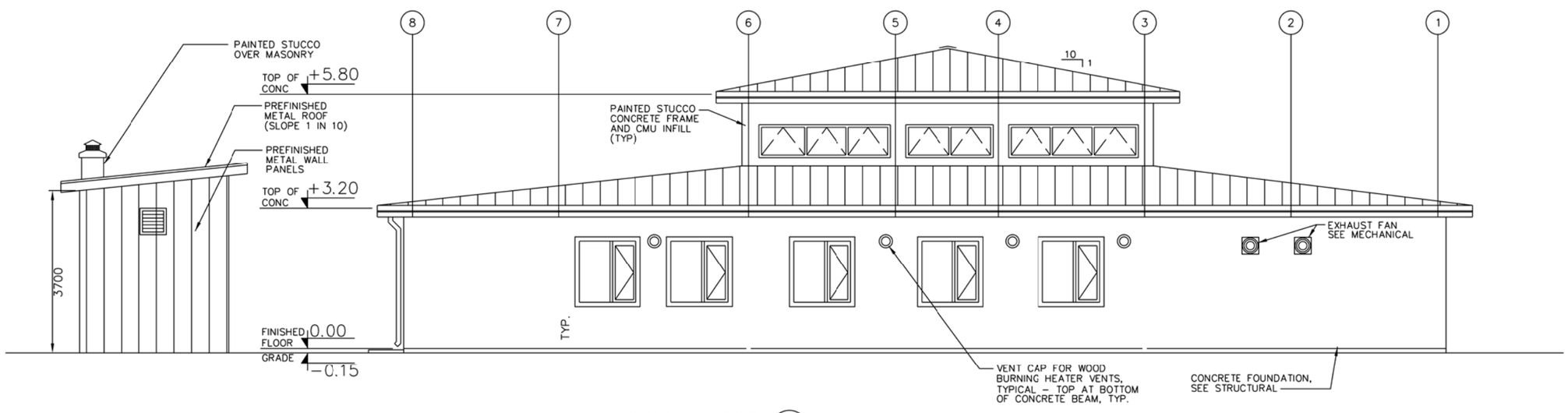

SOUTH ELEVATION (B / A-1 A-5)
SCALE=1:50

NOTE: SEE STANDARD DETAILS FOR ADDITIONAL NOTES.

1:50

US ARMY CORPS OF ENGINEERS AFGHANISTAN ENGINEER DISTRICT

SYMBOL	DESCRIPTION	DATE	APPR.	SYMBOL	DESCRIPTION	DATE	APPR.

DESIGNED BY: DWN BY: CKD BY: REVIEWED BY: SUBMITTED BY: DATE: XX-XX-XX DESIGN FILE NO: DRAWING CODE: FILE NAME: PLOT SCALE: PLOT DATE: XX-XX-XX REV:

U.S. ARMY ENGINEER DISTRICT, AFGHANISTAN CORPS OF ENGINEERS APO AE 96338

ENGINEERING AND CONSTRUCTION DIVISION

AFGHANISTAN NATIONAL POLICE (ANP) DISTRICT HEADQUARTERS COMPOUNDS - 1 STORY HQ
VARIOUS LOCATIONS, AFGHANISTAN
1 STORY BUILDING

BUILDING ELEVATIONS

SHEET REFERENCE NUMBER:
A
A-5

A1 Size 594mm x 841mm

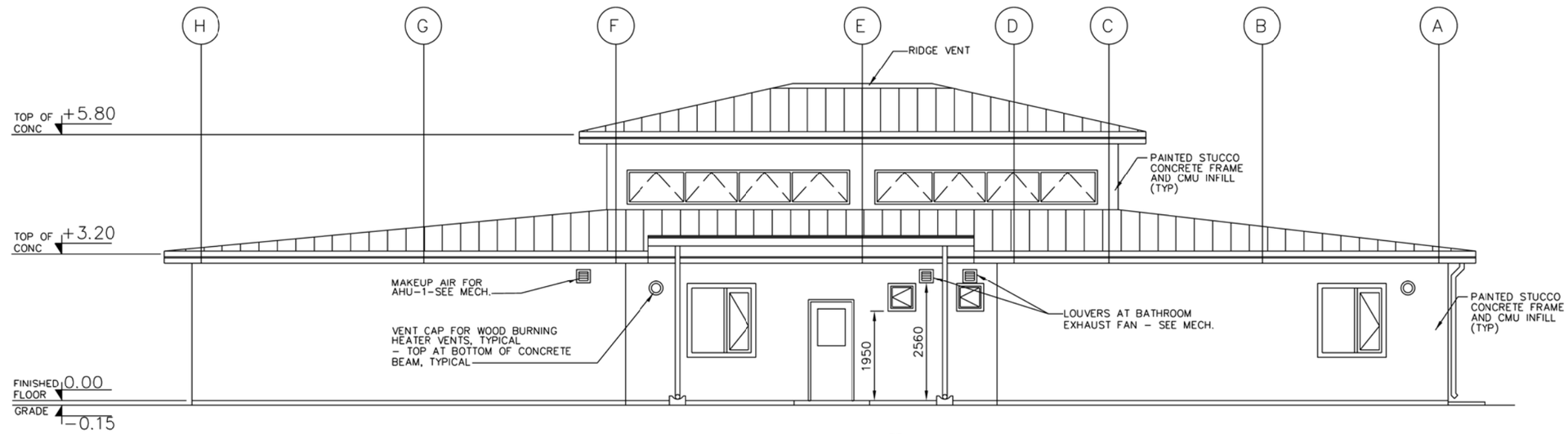

EAST ELEVATION
SCALE = 1:50
C
A-1 A-6

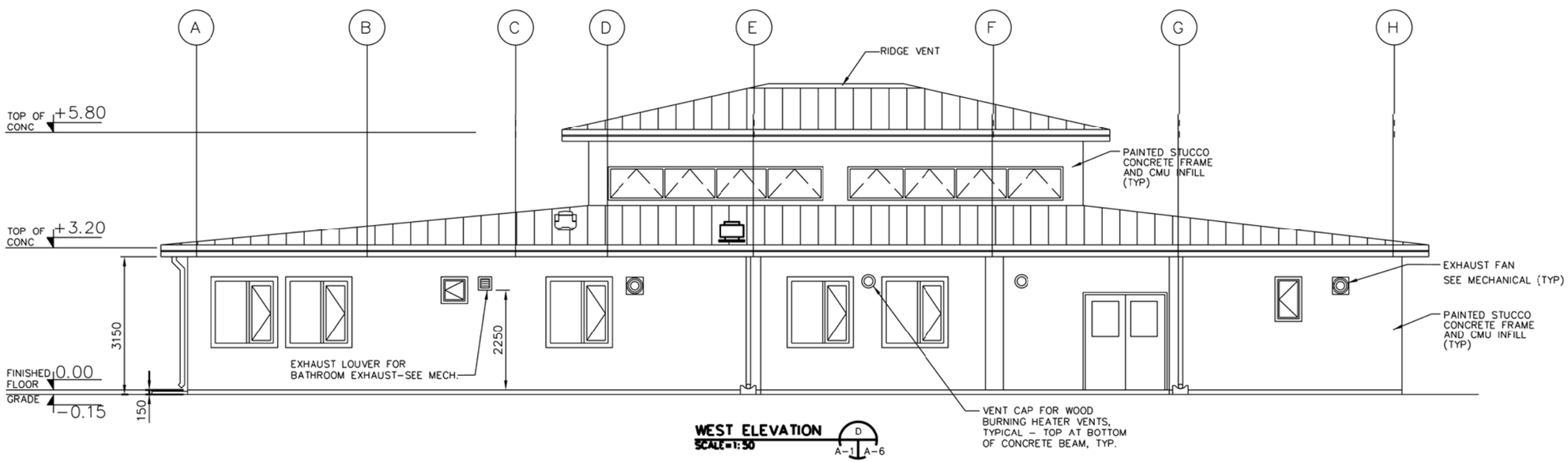

WEST ELEVATION
SCALE = 1:50
D
A-1 A-6

1 0 1 2 3 4
1:50

US ARMY CORPS OF ENGINEERS AFGHANISTAN ENGINEER DISTRICT

SYMBOL	DESCRIPTION	DATE	APPR.	SYMBOL	DESCRIPTION	DATE	APPR.

DESIGNED BY: DWN BY: CKD BY: REVIEWED BY: SUBMITTED BY:
DATE: XX-XX-XX
DESIGN FILE NO.
DRAWING CODE
FILE NAME:
PLOT SCALE:
PLOT DATE: XX-XX-XX
REV.

U.S. ARMY ENGINEER DISTRICT, AFGHANISTAN
CORPS OF ENGINEERS
APO AE 96338

ENGINEERING AND CONSTRUCTION DIVISION

AFGHANISTAN NATIONAL POLICE (ANP) DISTRICT HEADQUARTERS COMPOUNDS - 1 STORY HQ
VARIOUS LOCATIONS, AFGHANISTAN
1 STORY BUILDING

BUILDING ELEVATIONS

SHEET REFERENCE NUMBER:
A
A-6

A1 Size 594mm x 841mm

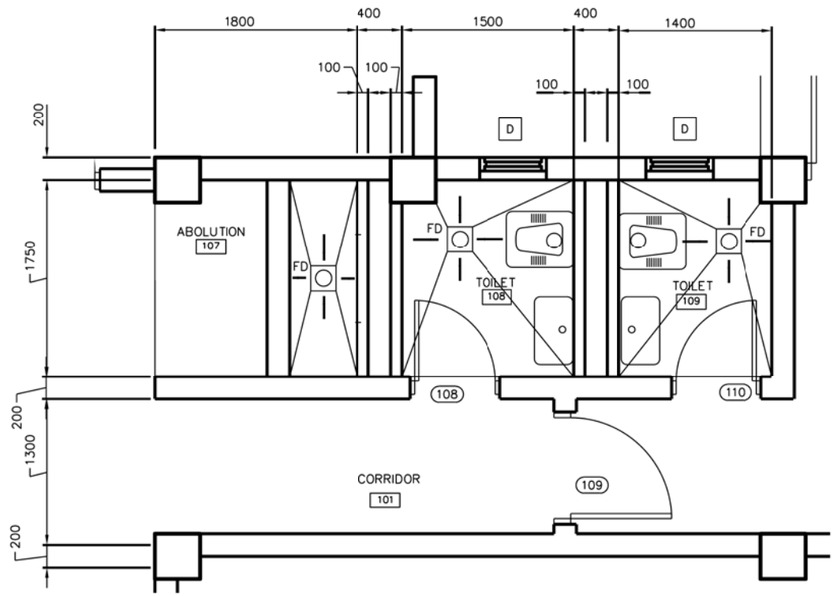

DETAIL
SCALE = 1:25
1 A-1 A-7

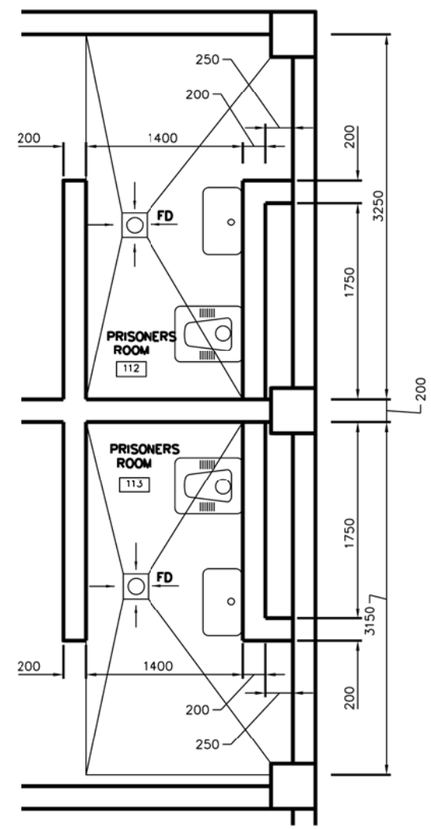

DETAIL
SCALE = 1:25
4 A-1 A-7

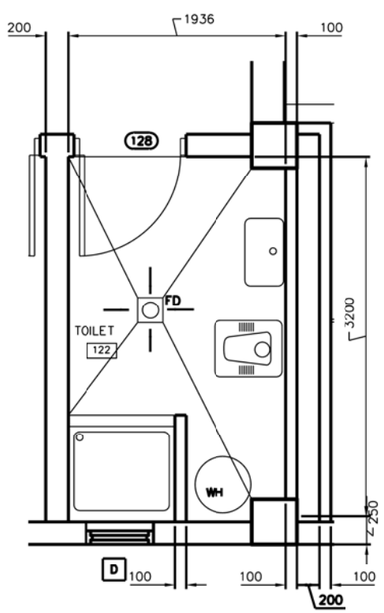

DETAIL
SCALE = 1:25
2 A-1 A-7

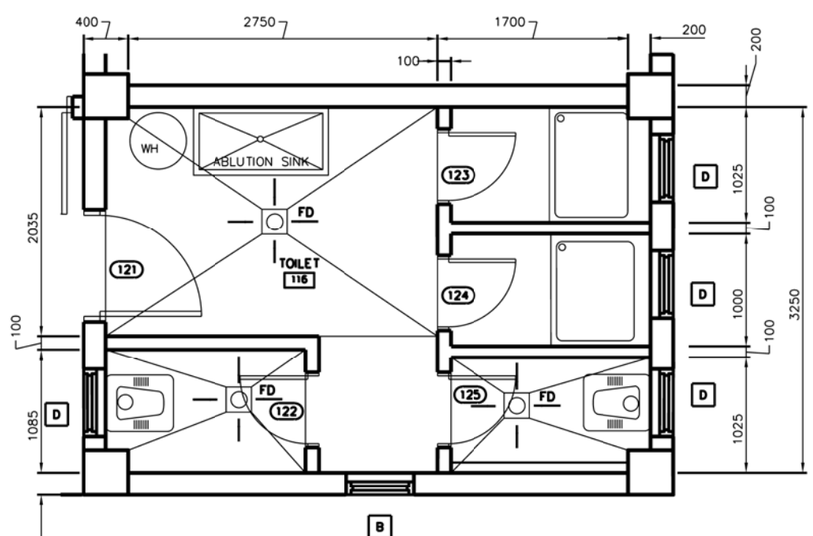

DETAIL
SCALE = 1:25
3 A-1 A-7

NOTE: PARTITION WALLS BETWEEN TOILET STALLS TO BE 2200mm HIGH.

NOTE:

1. ALL WATER CLOSETS SHALL FACE NORTH OR SOUTH DIRECTION.

1 .50 0 1 1.5
1:25

US ARMY CORPS OF ENGINEERS AFGHANISTAN ENGINEER DISTRICT

SYMBOL	DESCRIPTION	DATE	APPR.	SYMBOL	DESCRIPTION	DATE	APPR.

DESIGNED BY: DATE: XX-XX-XX REV: __
DESIGN FILE NO.
DWN BY: CKD BY: DRAWING CODE
REVIEWED BY: FILE NAME:
SUBMITTED BY: PLOT SCALE:
PLOT DATE: XX-XX-XX

U.S. ARMY ENGINEER DISTRICT, AFGHANISTAN
CORPS OF ENGINEERS
APO AE 96338

ENGINEERING AND CONSTRUCTION DIVISION

AFGHANISTAN NATIONAL POLICE (ANP) DISTRICT HEADQUARTERS COMPOUNDS - 1 STORY HQ
VARIOUS LOCATIONS, AFGHANISTAN
1 STORY BUILDING

ENLARGED TOILET PLANS

SHEET REFERENCE NUMBER:
A
A-7

A1 Size 594mm x 841mm

DOOR SCHEDULE

NO.	LOCATION	DOOR TYPE	DOOR MAT'L	DOOR WIDTH	DOOR HEIGHT	DOOR THICK	FRAME MAT"L	HDW SET	REMARKS
101	LOBBY	G (PR)	WOOD	1800	2100	45	WOOD	2	4, 7 20 MINUTE FIRE RATING
102	CORRIDOR	G (PR)	WOOD	1800			WOOD	8	4, 7 20 MINUTE FIRE RATING
103	OFFICE	F	WOOD	900			WOOD	4	20 MINUTE FIRE RATING
104	WEAPONS STORAGE	F	STEEL	900			STEEL	11	5 45 MINUTE FIRE RATING
105	OFFICE	F	WOOD	900			WOOD	4	20 MINUTE FIRE RATING
106	STORAGE	F	WOOD	900			WOOD	6	45 MINUTE FIRE RATING
107	NOT USED								
108	TOILET	L	WOOD	700			WOOD	5	2 20 MINUTE FIRE RATING
109	CORRIDOR	N	WOOD	900			WOOD	4	7 20 MINUTE FIRE RATING
110	TOILET	L	WOOD	700			WOOD	5	2 20 MINUTE FIRE RATING
111	CORRIDOR	G	WOOD	900			WOOD	1	7 20 MINUTE FIRE RATING
112	TO GUARD RM.	N	WOOD	900			WOOD	4	7 20 MINUTE FIRE RATING
113	CORRIDOR	N	WOOD	900			WOOD	4	7 20 MINUTE FIRE RATING
114	Prisoners Rm	C	STEEL	900			NOTE 1	11	CELL DOOR
115	Prisoners Rm	C	STEEL	900			NOTE 1	11	CELL DOOR
116	SOLDIERS BARRACKS	F	WOOD	900			WOOD	7	6 45 MINUTE FIRE RATING
117	SOLDIERS BARRACKS	F	WOOD	900			WOOD	7	6 45 MINUTE FIRE RATING
118	DINING ROOM	F	WOOD	900			WOOD	7	4, 6 90 MINUTE FIRE RATING – PANIC
119	SOLDIERS BARRACKS	F	WOOD	900			WOOD	7	6 45 MINUTE FIRE RATING
120	LOBBY	G (PR)	WOOD	1800			WOOD	2	4, 7 45 MINUTE FIRE RATING
121	TOILET	L	WOOD	900			WOOD	10	2 20 MINUTE FIRE RATING
122	TOILET STALL	L	WOOD	600			WOOD	3	2
123	TOILET STALL	L	WOOD	600			WOOD	3	2
124	TOILET STALL	L	WOOD	600			WOOD	3	2
125	TOILET STALL	L	WOOD	600			WOOD	3	2
126	KITCHEN	F	WOOD	1200			WOOD	1	4 90 MINUTE FIRE RATING – PANIC
127	NOT USED								
128	TOILET	L	WOOD	900			WOOD	5	2 20 MINUTE FIRE RATING
129	POLICE CHIEF	F	WOOD	900			WOOD	4	20 MINUTE FIRE RATING
130	DEPUTY POLICE CHIEF	F	WOOD	900			WOOD	4	20 MINUTE FIRE RATING
131	NIGHT GUARD	F	WOOD	900			WOOD	4	20 MINUTE FIRE RATING
132	KITCHEN	N	WOOD	900			WOOD	9	7 90 MINUTE FIRE RATING – PANIC
133	DINING ROOM	G (PR)	WOOD	1800			WOOD	2	4, 6 90 MINUTE FIRE RATING – PANIC
134	MECHANICAL ROOM	F	WOOD	900			WOOD	6	45 MINUTE FIRE RATING

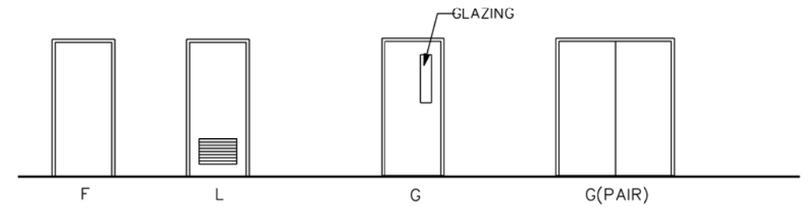

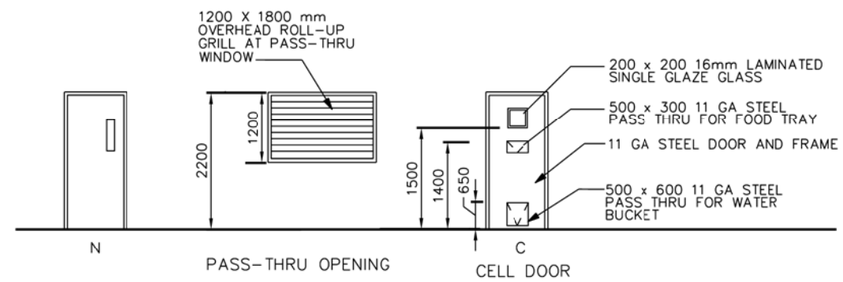

DOOR NOTES:
1. SEE DOOR SCHEDULE FOR DOOR AND FRAME SIZES.

TYPICAL DOOR TYPES
(NOT TO SCALE)

DOOR SCHEDULE NOTES:

1. CELL DOOR SHALL BE 11 GA STEEL DOOR WITH PASS-THRU WINDOWS. PROVIDE HINGED DOORS TO THESE PASS-THRU WINDOWS WITH PADLOCKS TO THE OUTSIDE.
2. PROVIDE 600 X 400 LOUVERS IN DOOR TYPE (L)
3. UNDERCUT DOORS BY 12 mm REQUIRED, EXCEPT NO UNDERCUT AT DOOR TYPE C.
4. PROVIDE PANIC HARDWARE, FOR DINING ROOM EXIT DOORS.
5. PROVIDE 11 GA STEEL DOOR AND FRAME.
6. NO THRESHOLD OR DOOR SWEEP REQUIRED.
7. ALL DOOR GLAZING SHALL BE MIN. 8mm THICK PLEXIGLASS EXCEPT AT CELL DOORS WHERE GLAZING SHALL BE LAMINATED GLASS.
8. ALL DOOR GLAZING IS FIRE RATED

US ARMY CORPS OF ENGINEERS AFGHANISTAN ENGINEER DISTRICT

SYMBOL	DESCRIPTION	DATE	APPR.	SYMBOL	DESCRIPTION	DATE	APPR.

DESIGNED BY: DATE: XX-XX-XX REV: __
DWN BY: CKD BY: DESIGN FILE NO. DRAWING CODE
REVIEWED BY: FILE NAME: PLOT SCALE:
SUBMITTED BY: PLOT DATE: XX-XX-XX

U.S. ARMY ENGINEER DISTRICT, AFGHANISTAN
CORPS OF ENGINEERS
APO AE 96338

ENGINEERING AND CONSTRUCTION DIVISION

AFGHANISTAN NATIONAL POLICE (ANP) DISTRICT HEADQUARTERS COMPOUNDS - 1 STORY HQ
VARIOUS LOCATIONS, AFGHANISTAN
1 STORY BUILDING

DOOR SCHEDULE AND DOOR TYPES

SHEET REFERENCE NUMBER:
A
A-8

A1 Size 594mm x 841mm

ROOM FINISH SCHEDULE

ROOM NO.	ROOM NAME	FLOOR FINISH	BASE FINISH	WALLS FINISH	CEILING FINISH	CEILING HEIGHT	REMARKS
101	CORRIDOR	F2	B2	W2	C2	3.0 m	
102	LOBBY	F2	B2	W2	C2		
103	OFFICE	F2	B2	W2	C2		
104	WEAPONS STORAGE	F1	B2	W2	C2		
105	OFFICE	F2	B2	W2	C2		
106	STORAGE	F1	B2	W2	C2		
107	ABOLUTION	F3	B3	W3	C2		
108	TOILET	F3	B3	W3	C2		
109	TOILET	F3	B3	W3	C2		
110	GUARD ROOM	F2	B2	W2	C2		
111	CORRIDOR	F2	B2	W2	C2		
112	PRISONER'S ROOM	F2	B2	W2	C2		
113	PRISONER'S ROOM	F2	B2	W2	C2		
114	SOLDIER'S BARRACKS	F2	B2	W2	C2		
115	SOLDIER'S BARRACKS	F2	B2	W2	C2		
116	TOILET	F3	B3	W3	C2		
117	LOBBY	F2	B2	W2	C2		
118	COVERED LOADING	F1	B5	--	--		
119	SOLDIER'S BARRACKS	F2	B2	W2	C2		
120	DINING ROOM/SHURA	F2	B2	W2	C2	5.6 m	
121	KITCHEN	F2	B2	W2	C2	3.0 m	
122	TOILET	F3	B3	W3	C2		
123	POLICE CHIEF	F2	B2	W2	C2		
124	DEPUTY POLICE CHIEF	F2	B2	W2	C2		
125	NIGHT GUARD	F2	B2	W2	C2		
126	MECHANICAL ROOM	F2	B2	W2	C2		

ROOM FINISH SCHEDULE LEGEND

FLOOR FINISH
- F1 SEALED CONCRETE
- F2 TERRAZZO TILE
- F3 CERAMIC TILE

BASE FINISH
- B2 TERRAZZO
- B3 CERAMIC TILE
- B5 NO BASE

WALL FINISH
- W2 PAINTED PLASTER
- W3 CERAMIC TILE

CEILING FINISH
- C2 PAINTED PLASTER

ROOM FINISH SCHEDULE NOTES:

1. ALL INTERIOR SURFACES NOT PROVIDED WITH A COLOR FACTORY FINISH SHALL RECEIVE A PAINT FINISH.
2. PAINTED PLASTER CEILING FINISH SHALL BE OFF-WHITE IN COLOR. ALL OTHER INTERIOR COLORS SHALL BE SELECTED FROM EARTH TONE COLORS; GRAYS, BEIGES, ETC. SUBMIT PAINT COLOR BOARD TO CONTRACTING OFFICER'S REPRESENTATIVE FOR APPROVAL PRIOR TO INSTALLATION.
3. ALL INTERIOR DOORS, WINDOWS, AND FRAMES SHALL HAVE A SEMI-GLOSS FINISH.
4. ALL WALL PENETRATIONS SHALL BE SEALED TO PROVIDE A NEAT APPEARANCE.
5. SEALANT COLORS SHALL MATCH COLOR OF ADJACENT FINISH.
6. PLASTER AND CERAMRIC TILE WALL FINISH, WHERE SCHEDULED, SHALL EXTEND TO UNDERSIDE OF CEILING.
7. PLASTER CEILINGS SHALL HAVE A FLAT PAINT FINISH EXCEPT AT TOILETS, ABOLUTION, AND KITCHEN WHERE PAINT FINISH SHALL BE SEMI-GLOSS.

EXTERIOR FINISH NOTES:

1. ALL EXTERIOR SURFACES NOT PROVIDED WITH A COLOR FACTORY FINISH SHALL RECEIVE A PAINT FINISH.
2. ALL EXTERIOR COLORS SHALL MATCH ADJACENT BUILDINGS TO THE GREATEST EXTENT POSSIBLE. SUBMIT PAINT COLOR BOARD TO CONTRACTING OFFICER'S REPRESENTATIVE FOR APPROVAL PRIOR TO INSTALLATION.
3. ALL EXTERIOR DOORS, WINDOWS, FRAMES, SOFFIT, FASCIA, AND TRIM SHALL HAVE A SEMI-GLOSS FINISH.
4. ALL WALL PENETRATIONS SHALL BE SEALED WATER-TIGHT AND SHALL HAVE A NEAT APPEARANCE.
5. SEALANT COLORS SHALL MATCH COLOR OF ADJACENT FINISH.

US ARMY CORPS OF ENGINEERS AFGHANISTAN ENGINEER DISTRICT

SYMBOL	DESCRIPTION	DATE	APPR.	SYMBOL	DESCRIPTION	DATE	APPR.

DESIGNED BY: DATE: XX-XX-XX REV: __
DWN BY: CKD BY: DESIGN FILE NO.
REVIEWED BY: DRAWING CODE
SUBMITTED BY: FILE NAME: PLOT SCALE: PLOT DATE: XX-XX-XX

U.S. ARMY ENGINEER DISTRICT, AFGHANISTAN
CORPS OF ENGINEERS
APO AE 96338

ENGINEERING AND CONSTRUCTION DIVISION

AFGHANISTAN NATIONAL POLICE (ANP) DISTRICT HEADQUARTERS COMPOUNDS - 1 STORY HQ
VARIOUS LOCATIONS, AFGHANISTAN
1 STORY BUILDING

ROOF FINISH SCHEDULE

SHEET REFERENCE NUMBER:
A
A-9

A1 Size 594mm x 841mm

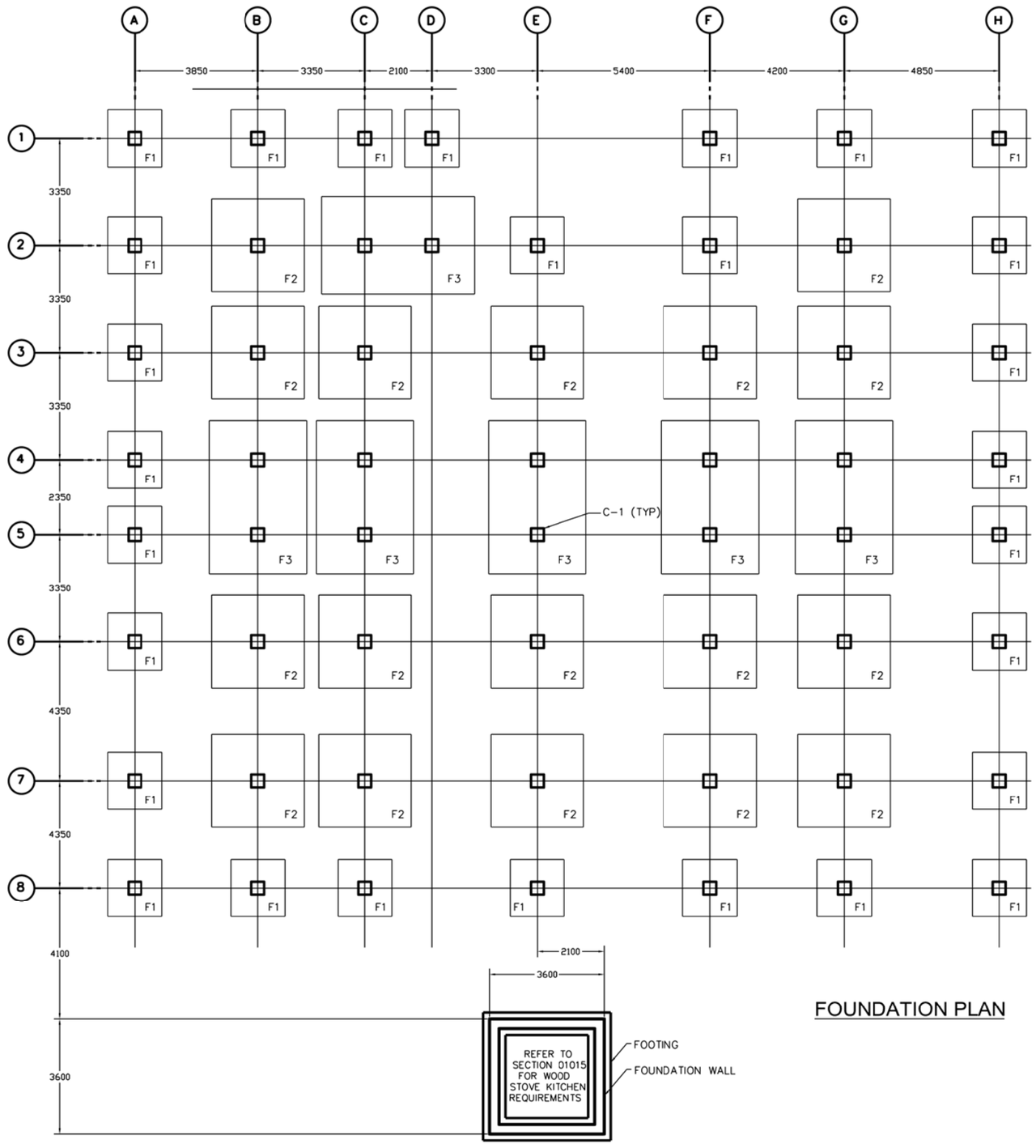

FOUNDATION PLAN

NOTES:

1. GEOTECHNICAL INVESTIGATION SHALL CONFIRM BEARING CAPACITY TO BE NO LESS THAN 0.75 KG/SQ CM. IF GEOTECHNICAL INVESTIGATION SHOWS LESS THAN 0.75 KG/SQ CM. CONTRACTOR SHALL REDESIGN FOOTINGS BASED ON THE GEOTECHNICAL INVESTIGATION, SEE SPECIFICATION 01015 PARA 2.1, GEOTECHNICAL, FOUNDATION AND SURVEY.
2. DEAD LOADS CONSIST OF THE WEIGHTS OF ALL MATERIAL OF CONSTRUCTION INCORPORATED IN THE BUILDING. LIVE LOADS USED FOR DESIGN SHAL LBE IN ACCORDANCE WITH THE ASCE STANDARDS AND MINIMUM DESIGN LOADS FOR BUILDINGS AND OTHER STRUCTURES, ASCE 7-02.
3. WIND LOADS SHALL BE CALCULATED IN ACCORDANCE WITH ASCE 7-02 USING A "3 SECOND GUST" WIND SPEED OF 125 KM/HR. ALL FACILITIES SHALL BE CLASSIFIED AS A MINIMUM OF CATEGORY II IN ACCORDANCE WITH TABLE 1-1 IN ASCE 7-02.
4. THE BULDING AND ALL PARTS THEREOF SHALL BE DESIGNED FOR THE SEISMIC REQUIREMENTS AS DEFINED BY THE INTERNATIONAL BUILDING CODE 2000. SITE SPECIFIC DATA: SPECTRAL COORDINATES SS=1.65g AND S1=0.75g.
5. REFER TO DWG S-5 FOR FOOTING SCHEDULE. TOP OF FOOTING SHALL BE LOCATED AT ELEV. -1.00.
6. ALL CONCRETE COLUMNS ARE TYPE C-1, REFER TO SECTION 10 S-5.

3 1.50 0 3 4.5
1:75

US ARMY CORPS OF ENGINEERS AFGHANISTAN ENGINEER DISTRICT

SYMBOL	DESCRIPTION	DATE	APPR.	SYMBOL	DESCRIPTION	DATE	APPR.

DESIGNED BY: DATE: XX-XX-XX REV: __
DWN BY: CKD BY: DESIGN FILE NO. DRAWING CODE
REVIEWED BY: FILE NAME: PLOT SCALE:
SUBMITTED BY: PLOT DATE: XX-XX-XX

U.S. ARMY ENGINEER DISTRICT, AFGHANISTAN
CORPS OF ENGINEERS
APO AE 96338

ENGINEERING AND CONSTRUCTION DIVISION

AFGHANISTAN NATIONAL POLICE (ANP) DISTRICT HEADQUARTERS COMPOUNDS - 1 STORY HQ
VARIOUS LOCATIONS, AFGHANISTAN
1 STORY BUILDING

FOUNDATION PLAN

SHEET REFERENCE NUMBER:
A
S-1

A1 Size 594mm x 841mm

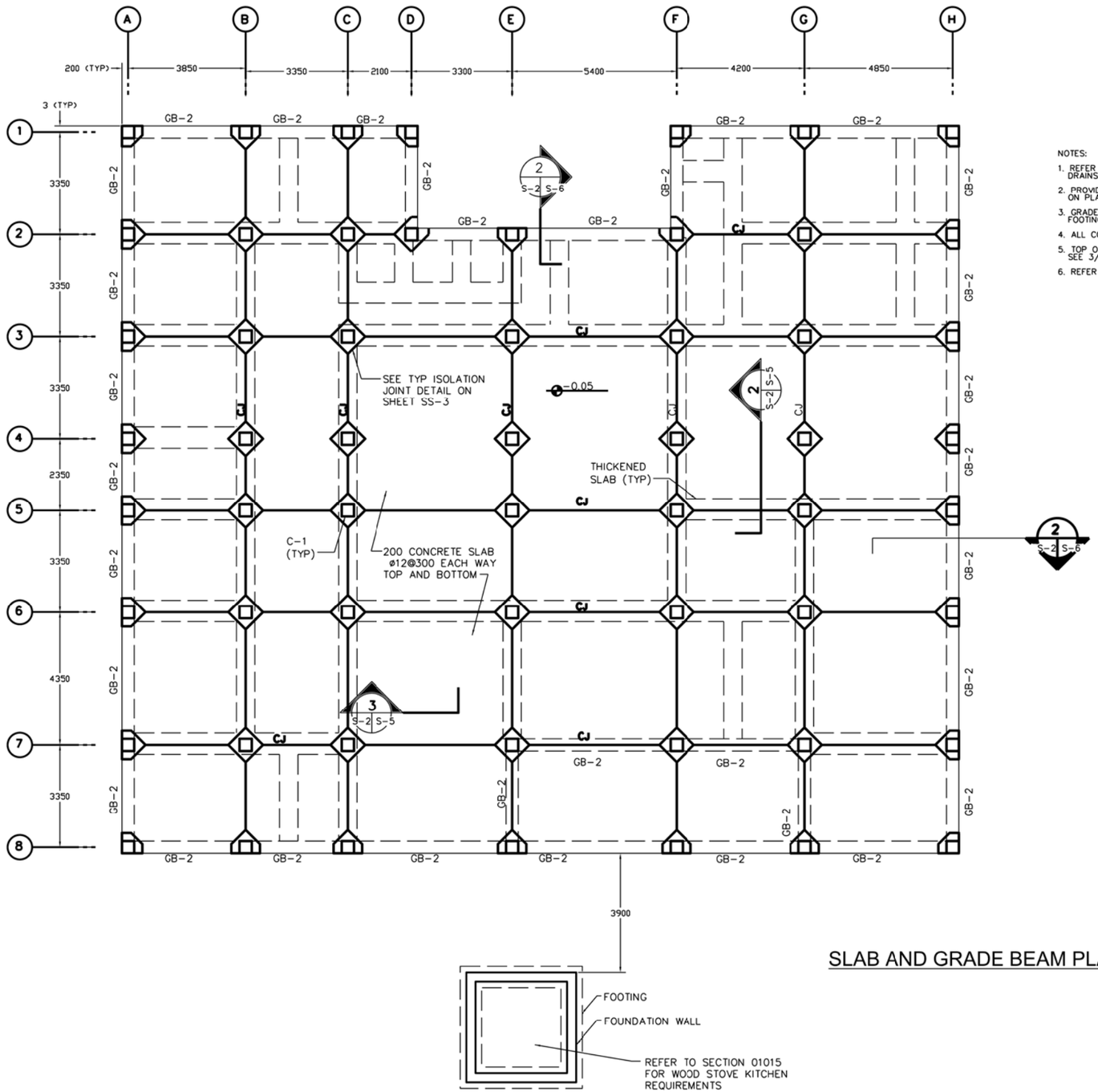

SLAB AND GRADE BEAM PLAN

NOTES:

1. REFER TO PLUMBING AND ARCHITECTURAL PLANS FOR FLOOR DRAIN LOCATIONS. NOT ALL DRAINS HAVE BEEN SHOWN. FLOOR SHALL BE SLOPED TO DRAIN.
2. PROVIDE THICKENED SLAB UNDER ALL INTERIOR PARTITIONS. REFER TO SECTIONS 1 AND 2 ON PLATE S-5 FOR ADDITIONAL INFORMATION.
3. GRADE BEAM SHALL EXTEND FROM COLUMN SPREAD FOOTING TO COLUMN SPREAD FOOTING. BOTTOM OF GRADE BEAM TO COINCIDE WITH TOP OF COLUMN FOOTING.
4. ALL CONCRETE COLUMNS ARE TYPE C-1. REFER TO SECTION 10 S-5.
5. TOP OF SLAB AND GRADE BEAM ELEVATIONS ARE AT 50mm BELOW FINISHED FLOOR. SEE 3/S-5.
6. REFER TO SHEET SS-3 FOR TYPICAL CONTROL JOINT (CJ) DETAIL.

US ARMY CORPS OF ENGINEERS AFGHANISTAN ENGINEER DISTRICT

SYMBOL	DESCRIPTION	DATE	APPR.	SYMBOL	DESCRIPTION	DATE	APPR.

DESIGNED BY: DATE: XX-XX-XX
DWN BY: CKD BY: DESIGN FILE NO.
REVIEWED BY: DRAWING CODE
SUBMITTED BY: FILE NAME: PLOT SCALE: PLOT DATE: XX-XX-XX
REV.

U.S. ARMY ENGINEER DISTRICT, AFGHANISTAN
CORPS OF ENGINEERS
APO AE 96338

ENGINEERING AND CONSTRUCTION DIVISION

AFGHANISTAN NATIONAL POLICE (ANP) DISTRICT HEADQUARTERS COMPOUNDS - 1 STORY HQ
VARIOUS LOCATIONS, AFGHANISTAN
1 STORY BUILDING

GRADE BEAM PLAN

SHEET REFERENCE NUMBER:
A
S-2

A1 Size 594mm x 841mm

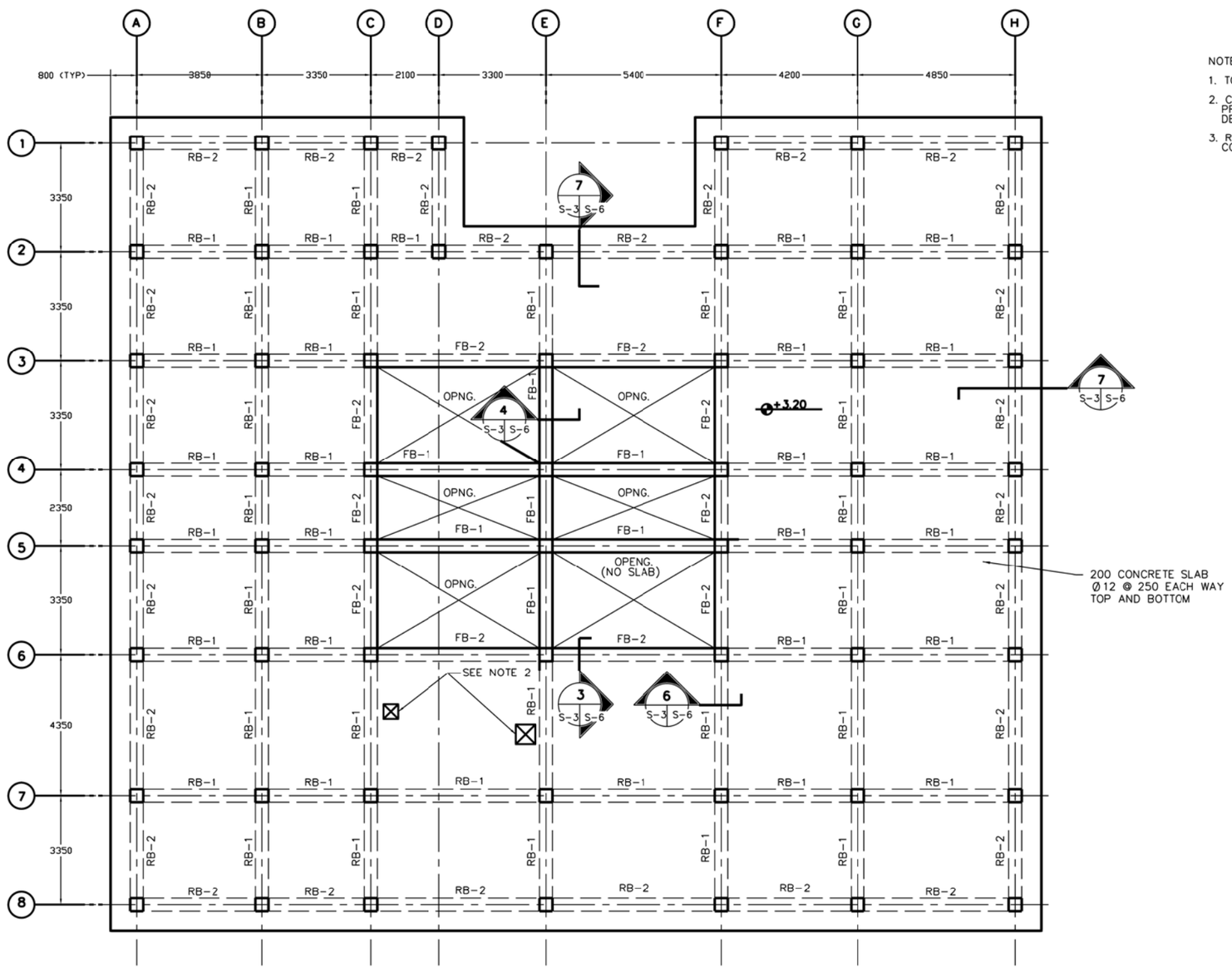

LOW ROOF BEAM AND SLAB PLAN

SCALE = 1:75

NOTES:

1. TOP OF LOW ROOF SLAB AND LOW ROOF BEAMS IS AT 3200 A.F.F.
2. COORDINATE ROOF OPENING REQUIREMENST WITH OTHER DISCIPLINES. PROVIDE ADDITIONAL REINFORCEMENT AROUND OPENINGS PER TYPICAL DETAIL ON DWG SS-2.
3. REFER TO SHEET S-7 FOR STANDARD BEAM AND COLUMN CONSTRUCTION DETAILS.

3 1.50 0 3 4.5
1:75

US ARMY CORPS OF ENGINEERS AFGHANISTAN ENGINEER DISTRICT

SYMBOL	DESCRIPTION	DATE	APPR.	SYMBOL	DESCRIPTION	DATE	APPR.

REV. ___
DATE: XX-XX-XX
DESIGN FILE NO.
DRAWING CODE
FILE NAME:
PLOT SCALE:
PLOT DATE: XX-XX-XX
DESIGNED BY:
DWN BY: CKD BY:
REVIEWED BY:
SUBMITTED BY:

U.S. ARMY ENGINEER DISTRICT, AFGHANISTAN
CORPS OF ENGINEERS
APO AE 96338

ENGINEERING AND CONSTRUCTION DIVISION

AFGHANISTAN NATIONAL POLICE (ANP) DISTRICT HEADQUARTERS COMPOUNDS - 1 STORY HQ
VARIOUS LOCATIONS, AFGHANISTAN
1 STORY BUILDING

LOWER ROOF BEAM PLAN

SHEET REFERENCE NUMBER:
A
S-3

A1 Size 594mm x 841mm

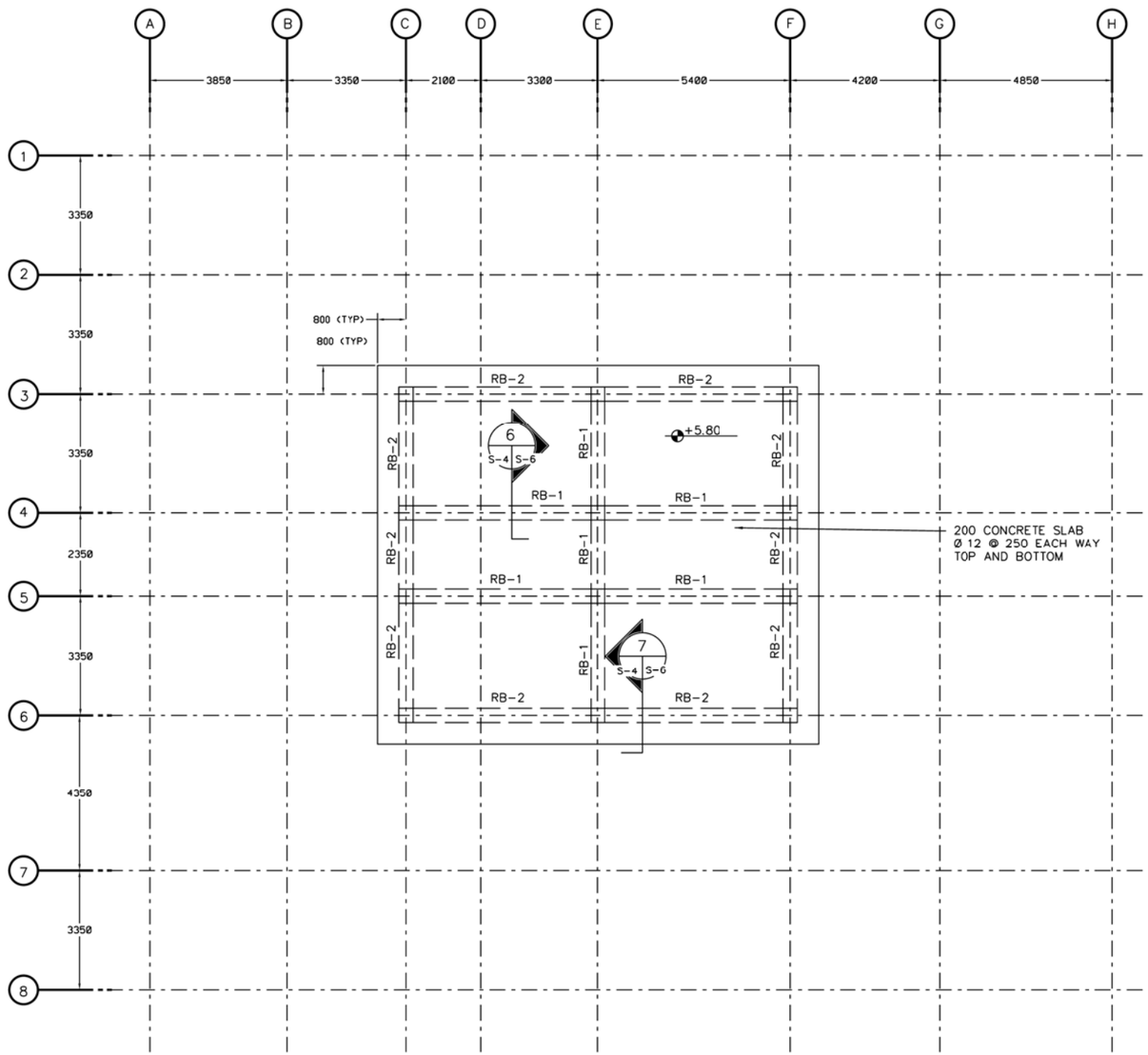

HIGH ROOF BEAM & SLAB PLAN

SCALE

1:75

NOTES:

1. TOP OF HIGH ROOF SLAB AND HIGH ROOF BEAMS IS AT 5800 A.F.F.
2. COORDINATE ROOF OPENING REQUIREMENTS WITH OTHER DISCIPLINES. PROVIDE ADDITIONAL REINFORCEMENT AROUND OPENINGS PER TYPICAL DETAIL ON DWG SS-2.
3. REFER TO SHEET S-7 FOR STANDARD BEAM AND COLUMN CONSTRUCTION DETAILS.

US ARMY CORPS OF ENGINEERS AFGHANISTAN ENGINEER DISTRICT

SYMBOL	DESCRIPTION	DATE	APPR.	SYMBOL	DESCRIPTION	DATE	APPR.

DESIGNED BY: DATE: XX-XX-XX
DWN BY: CKD BY: DESIGN FILE NO.
REVIEWED BY: DRAWING CODE
SUBMITTED BY: FILE NAME: PLOT SCALE: PLOT DATE: XX-XX-XX
REV.

U.S. ARMY ENGINEER DISTRICT, AFGHANISTAN
CORPS OF ENGINEERS
APO AE 96338

ENGINEERING AND CONSTRUCTION DIVISION

AFGHANISTAN NATIONAL POLICE (ANP) DISTRICT HEADQUARTERS COMPOUNDS - 1 STORY HQ
VARIOUS LOCATIONS, AFGHANISTAN
1-STORY BUILDING

HIGH ROOF BEAM PLAN

SHEET REFERENCE NUMBER:
A
S-4

A1 Size 594mm x 841mm

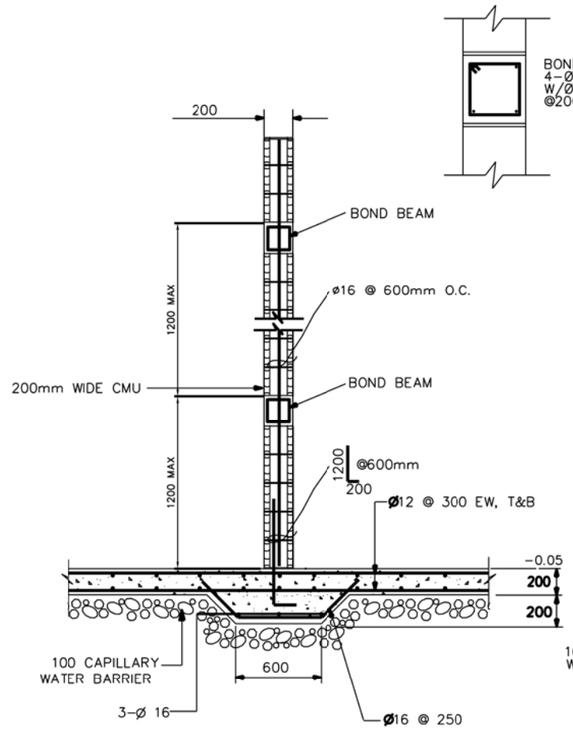

NOTE:
1. ALL EXTERIOR WALLS TO BE GROUTED SOLID.

TYPICAL PARTITION DETAIL (2 / S-2 / S-5)
NOT TO SCALE

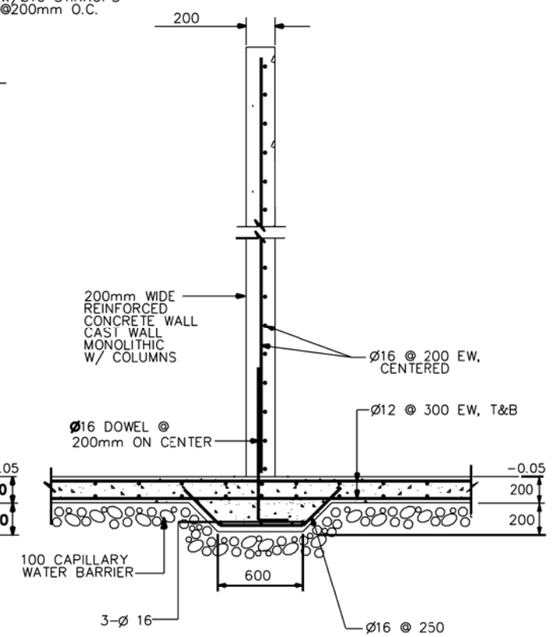

NOTES:
1. SEE ARCHITECTURAL FLOOR PLANS FOR LOCATION OF CONCRETE PARTITIONS.

REINF. CONCRETE PARTITION DETAIL (1 / S-2 / S-5)
NOT TO SCALE

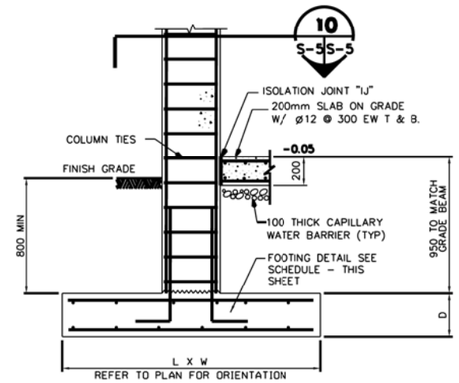

TYPICAL COLUMN AND FOOTING
NOT TO SCALE

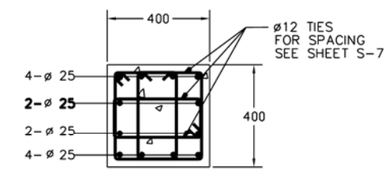

C-1
SECTION (10 / S-5 / S-5)
SCALE=1:10

FOOTING SCHEDULE

FTG TYPE	SIZE (L X W)	DEPTH (D)*	REINFORCING	
			TOP EW	BOTT EW
F1	1700 X 1700	**250**	**ø25 @ 300**	ø25 @ 300
F2	2700 X 2700	**425**	ø25 @ 350	ø25 @ 350
F3	4800 X 3050	**425**	ø25 @ 350	**ø25 @ 350**

*TOP FOOTING ELEVATION SHALL BE THE SAME FOR ALL FOOTINGS.
*FOR THE COMBINED FOOTINGS, CENTER ON THE CENTROID FOR THE TWO COLUMNS.
*REFER TO FOUNDATION PLAN FOR ORIENTATION.

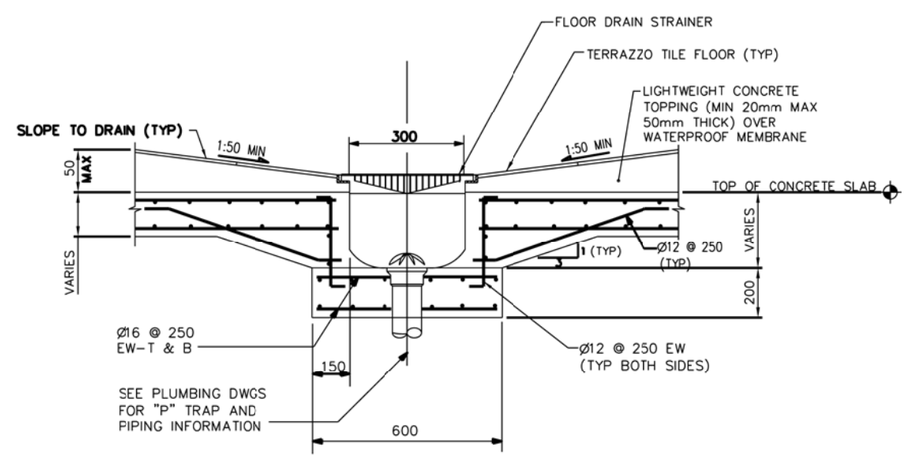

SECTION (3 / S-2 / S-5)
NOT TO SCALE

0 .50 1.00
1:10

UNLESS OTHERWISE NOTED, LINEAR DIMENSIONS SHOWN ARE IN MILLIMETERS.

US ARMY CORPS OF ENGINEERS
AFGHANISTAN ENGINEER DISTRICT

SYMBOL	DESCRIPTION	DATE	APPR.	SYMBOL	DESCRIPTION	DATE	APPR.

DESIGNED BY: DATE: XX-XX-XX
DWN BY: CKD BY: DESIGN FILE NO.
DRAWING CODE:
REVIEWED BY: FILE NAME:
SUBMITTED BY: PLOT SCALE:
PLOT DATE: XX-XX-XX
REV.

U.S. ARMY ENGINEER DISTRICT, AFGHANISTAN
CORPS OF ENGINEERS
APO AE 96338

ENGINEERING AND CONSTRUCTION DIVISION

AFGHANISTAN NATIONAL POLICE (ANP) DISTRICT HEADQUARTERS COMPOUNDS - 1 STORY HQ
VARIOUS LOCATIONS, AFGHANISTAN

1 STORY BUILDING
FOOTING AND COLUMN DETAILS

SHEET REFERENCE NUMBER:
A
S-5

A1 Size 594mm x 841mm

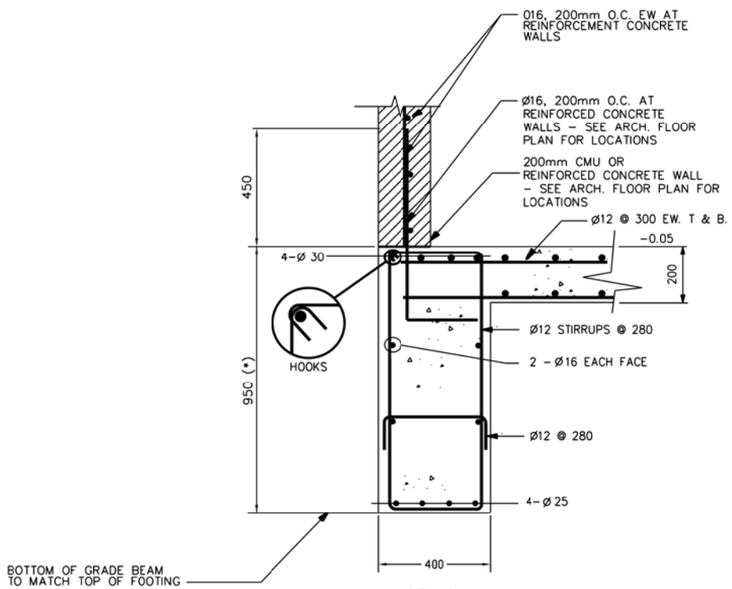

GB–2

SECTION 2 S–2 S–6
SCALE 1:10

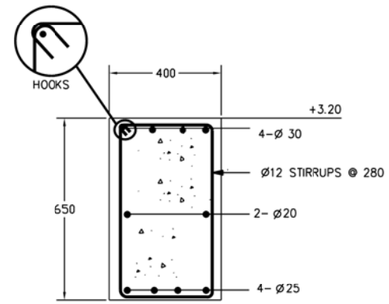

FB–1

SECTION 4 S–3 S–6
SCALE 1:10

NOTE:

1. GRADE BEAM REINFORCING IS CONTINUOUS THROUGH THE COLUMN.

2. COORDINATE REBAR PLACEMENT BETWEEN BEAMS SO THAT A MAXIMUM NUMBER OF REBAR ARE CONTINUOUS. BEND BARS AS REQUIRED.

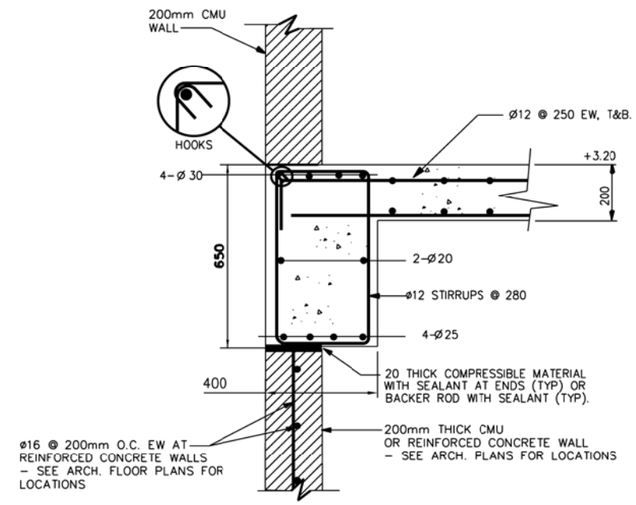

FB–2

SECTION 3 S–3 S–6
SCALE 1:10

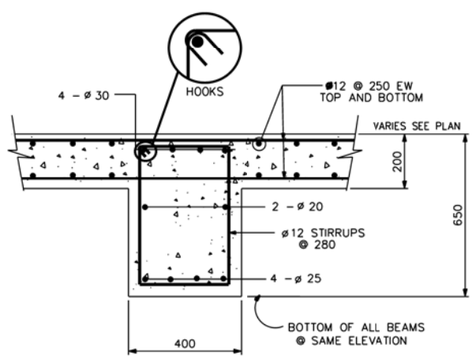

RB–1

SECTION 6 S–3,S–4 S–6
SCALE= NONE

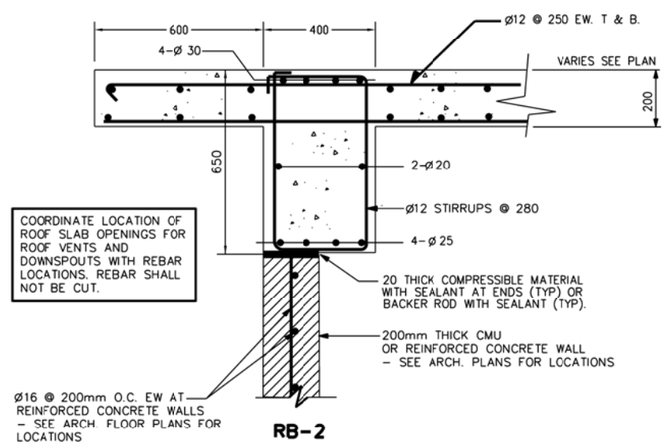

COORDINATE LOCATION OF ROOF SLAB OPENINGS FOR ROOF VENTS AND DOWNSPOUTS WITH REBAR LOCATIONS. REBAR SHALL NOT BE CUT.

RB–2

SECTION 7 S–3,S–4 S–6
SCALE 1:10

US ARMY CORPS OF ENGINEERS
AFGHANISTAN ENGINEER DISTRICT

SYMBOL	DESCRIPTION	DATE	APPR.	SYMBOL	DESCRIPTION	DATE	APPR.

DESIGNED BY: DWN BY: CKD BY: REVIEWED BY: SUBMITTED BY:
DATE: XX-XX-XX DESIGN FILE NO. DRAWING CODE: FILE NAME: PLOT SCALE: PLOT DATE: XX-XX-XX REV. __

U.S. ARMY ENGINEER DISTRICT, AFGHANISTAN
CORPS OF ENGINEERS
APO AE 96338

ENGINEERING AND CONSTRUCTION DIVISION

AFGHANISTAN NATIONAL POLICE (ANP) DISTRICT HEADQUARTERS COMPOUNDS - 1 STORY HQ
VARIOUS LOCATIONS, AFGHANISTAN
1 STORY BUILDING

BEAM DETAILS

SHEET REFERENCE NUMBER:
A
S-6
SHEET --- OF ---

A1 Size 594mm x 841mm

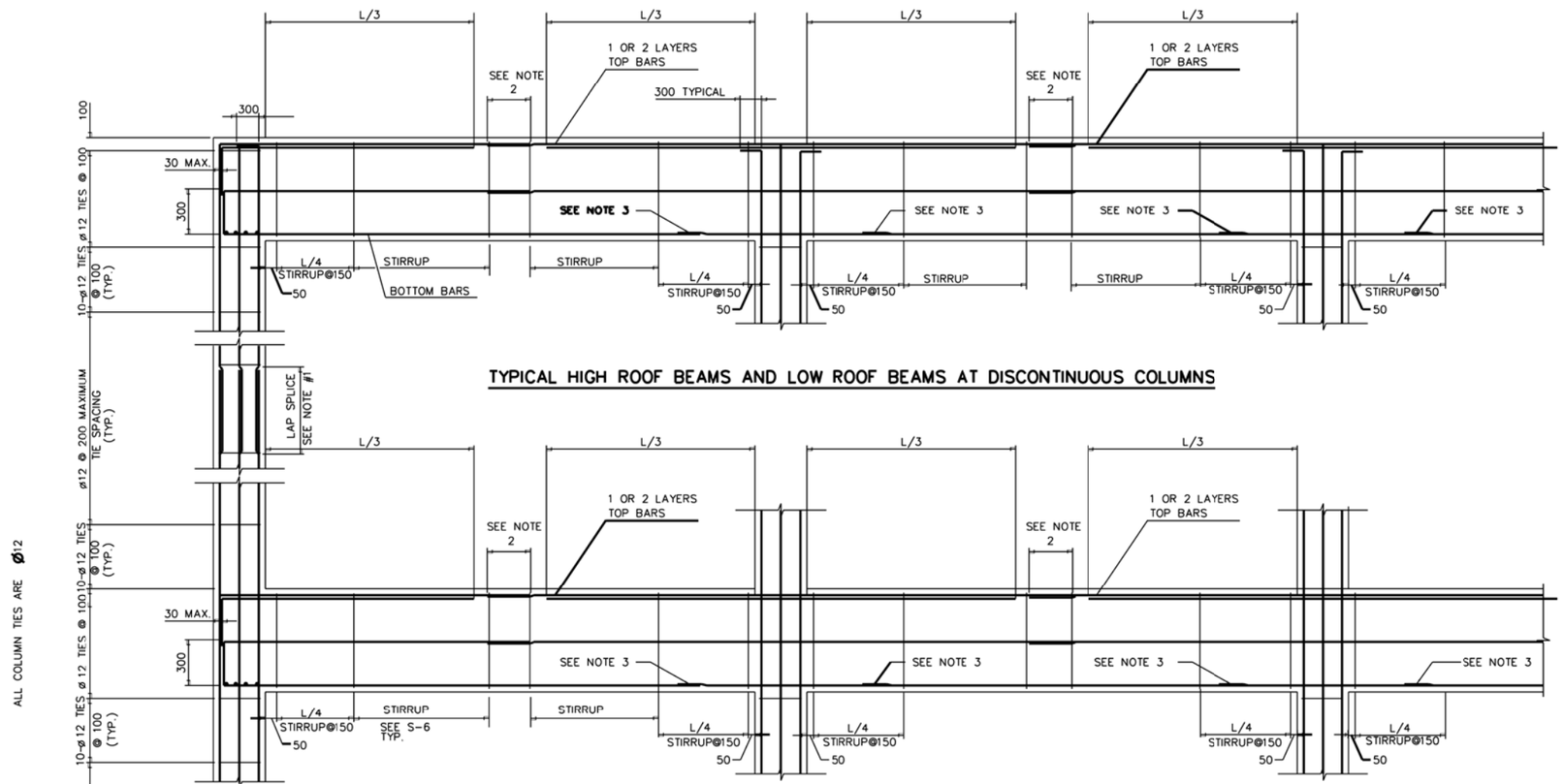

TYPICAL HIGH ROOF BEAMS AND LOW ROOF BEAMS AT DISCONTINUOUS COLUMNS

TYPICAL LOW ROOF BEAMS

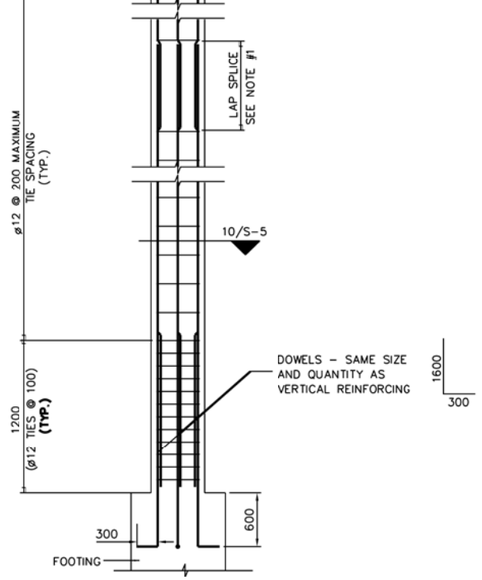

ALL COLUMN TIES ARE Ø12

NOTES:

1. ALL LAP SPLICES IN BEAMS AND COLUMNS SHALL BE CLASS B SPLICES

2. PROVIDE A 150mm MAXIMUM STIRRUP SPACING AT LAP SPLICES, AS SHOWN ON DRAWING. ALL SPLICES EXEPT BOTTOM BARS SHALL OCCUR AT MIDSPAN. REFER INDIVIDUAL BEAM DETAILS FOR STIRRUP SPACING.

3. THE LAP SPLICES SHOWN SHALL BE PERMITTED IN SPANS MEASURING 6 METERS OR MORE FROM CENTERLINES OF SUPPORTS (COLUMNS OR WALLS) ONLY. SPLICES INDICATED SHALL BE LOCATED ONE METER FROM THE FACE OF THE COLUMN, AS SHOWN.

4. BEAM STEEL NOT SHOWN FOR CLARITY.

5. LAP SPLICE = 927mm

STANDARD BEAM AND COLUMN DETAIL

US ARMY CORPS OF ENGINEERS AFGHANISTAN ENGINEER DISTRICT

SYMBOL	DESCRIPTION	DATE	APPR.	SYMBOL	DESCRIPTION	DATE	APPR.

DESIGNED BY: DATE: XX-XX-XX REV: __
DWN BY: CKD BY: DESIGN FILE NO. DRAWING CODE
REVIEWED BY: FILE NAME: PLOT SCALE:
SUBMITTED BY: PLOT DATE: XX-XX-XX

U.S. ARMY ENGINEER DISTRICT, AFGHANISTAN
CORPS OF ENGINEERS
APO AE 96338

ENGINEERING AND CONSTRUCTION DIVISION

AFGHANISTAN NATIONAL POLICE (ANP) DISTRICT HEADQUARTERS COMPOUNDS - 1 STORY HQ
VARIOUS LOCATIONS, AFGHANISTAN
1 STORY BUILDING

STANDARD BEAM AND COLUMN DETAIL

SHEET REFERENCE NUMBER:
A
S-7
SHEET --- OF ---

A1 Size 594mm x 841mm

NOTES:
1. FOR LEGENDS, ABBREVIATIONS AND STANDARD MECHANICAL DETAILS SEE SHEETS SM-1 AND SM-3.
2. FOR EQUIPMENT SCHEDULES AND CONTROL DIAGRAMS SEE SHEET SM-2.
3. ALL DIMENSIONS ARE IN MM UNLESS NOTED OTHERWISE.
4. PROVIDE EACH EXHAUST FAN WITH MANUFACTURER'S STANDARD EXHAUST GRILL AND GRAVITY BACKDRAFT DAMPER.
5. PROVIDE 200 x 100 ALL-WEATHER LOUVER WITH BIRDSCREEN.
6. KITCHEN EXHAUST HOOD WITH ALUMINUM FILTERS AND SEALED DUCT CONNECTION TO EXHAUST FAN. SIZE OF HOOD TO MATCH COOKING EQUIPMENT PROVIDED.
7. EXHAUST FAN EF-A-5 CAPACITY INDICATED HERE IS MINIMUM BASED ON 1200W X 2500 L HOOD: ITS CAPACITY SHALL BE REVISED UPWARD TO MATCH AIRFLOW PERFORMANCE REQUIRED BY THE KITCHEN HOOD EQUIPMENT MANUFACTURER. PROPANE STOVE FLUE DUCT SHALL CONNECT TO KITCHEN EXHAUST HOOD.

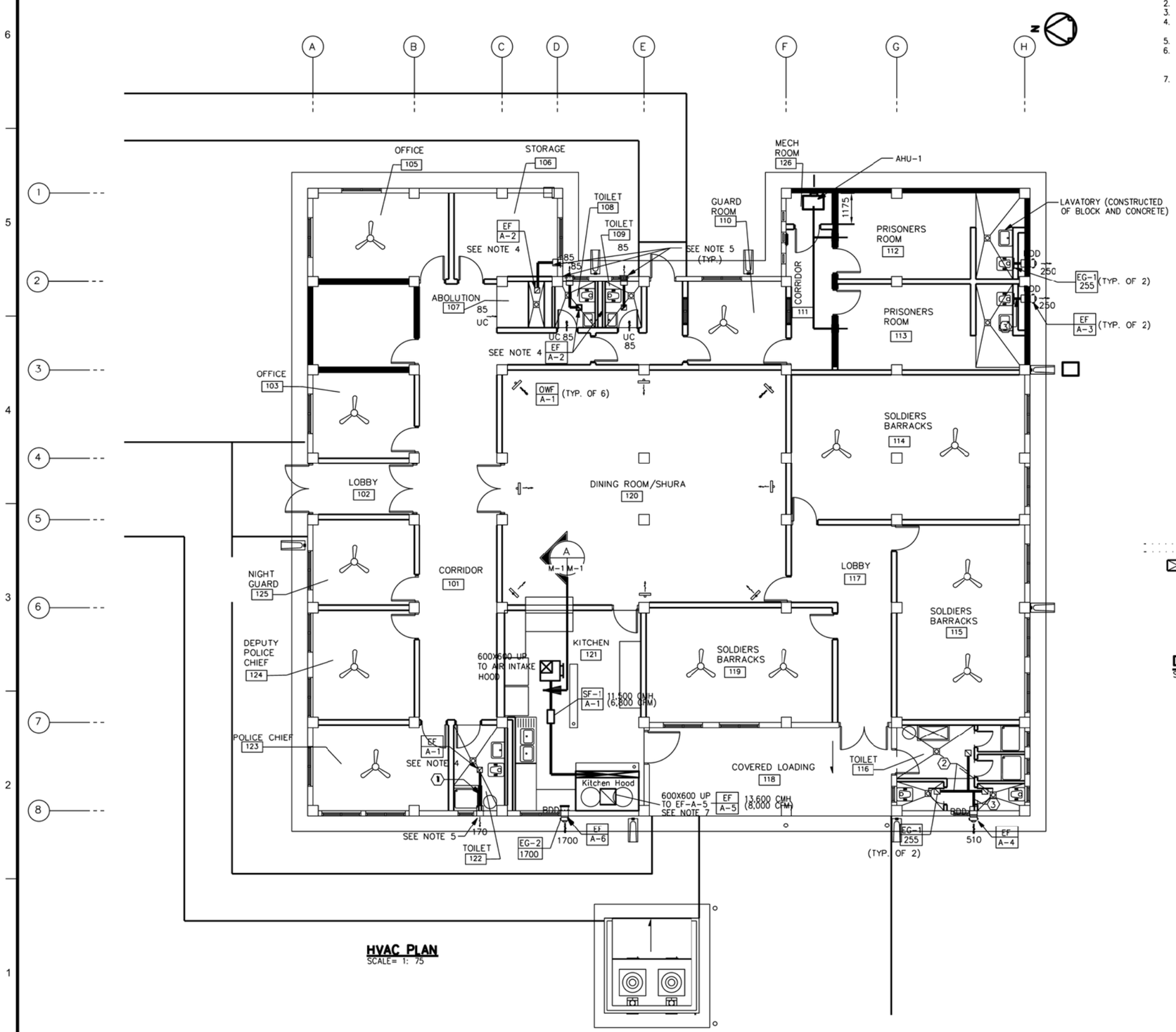

HVAC PLAN
SCALE= 1: 75

DUCT SIZING LEGEND

1	200 x 100
2	200 x 150
3	200 x 200
4	600 x 300

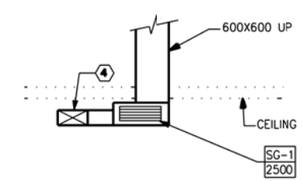

KITCHEN

DETAIL
SCALE 1: 50
A M-1

1:50 — 1 0 1 2 3 4

1:75 — 3 1.50 0 3 4.5

US ARMY CORPS OF ENGINEERS AFGHANISTAN ENGINEER DISTRICT

SYMBOL	DESCRIPTION	DATE	APPR.	SYMBOL	DESCRIPTION	DATE	APPR.

DESIGNED BY: DATE: XX-XX-XX
DWN BY: CKD BY: DESIGN FILE NO.
REVIEWED BY: DRAWING CODE
SUBMITTED BY: FILE NAME: PLOT SCALE: PLOT DATE: XX-XX-XX
REV.

U.S. ARMY ENGINEER DISTRICT, AFGHANISTAN
CORPS OF ENGINEERS
APO AE 96338

ENGINEERING AND CONSTRUCTION DIVISION

AFGHANISTAN NATIONAL POLICE (ANP) DISTRICT HEADQUARTERS COMPOUNDS - 1 STORY HQ
VARIOUS LOCATIONS, AFGHANISTAN
1 STORY BUILDING

HVAC PLAN

SHEET REFERENCE NUMBER:
A
M-1

A1 Size 594mm x 841mm

NOTES:
1. PROVIDE DOUBLE WALL TYPE METAL VENT THROUGH EXTERIOR WALL FOR VENTING OF WOOD STOVES. TOP AT BOTTOM OF CONCRETE BEAM. WOOD STOVES TO BE PROVIDED BY OCCUPANTS. COORDINATE SIZE OF VENT THROUGH WALL WITH WOOD STOVE MANUFACTURER'S RECOMMENDATIONS.

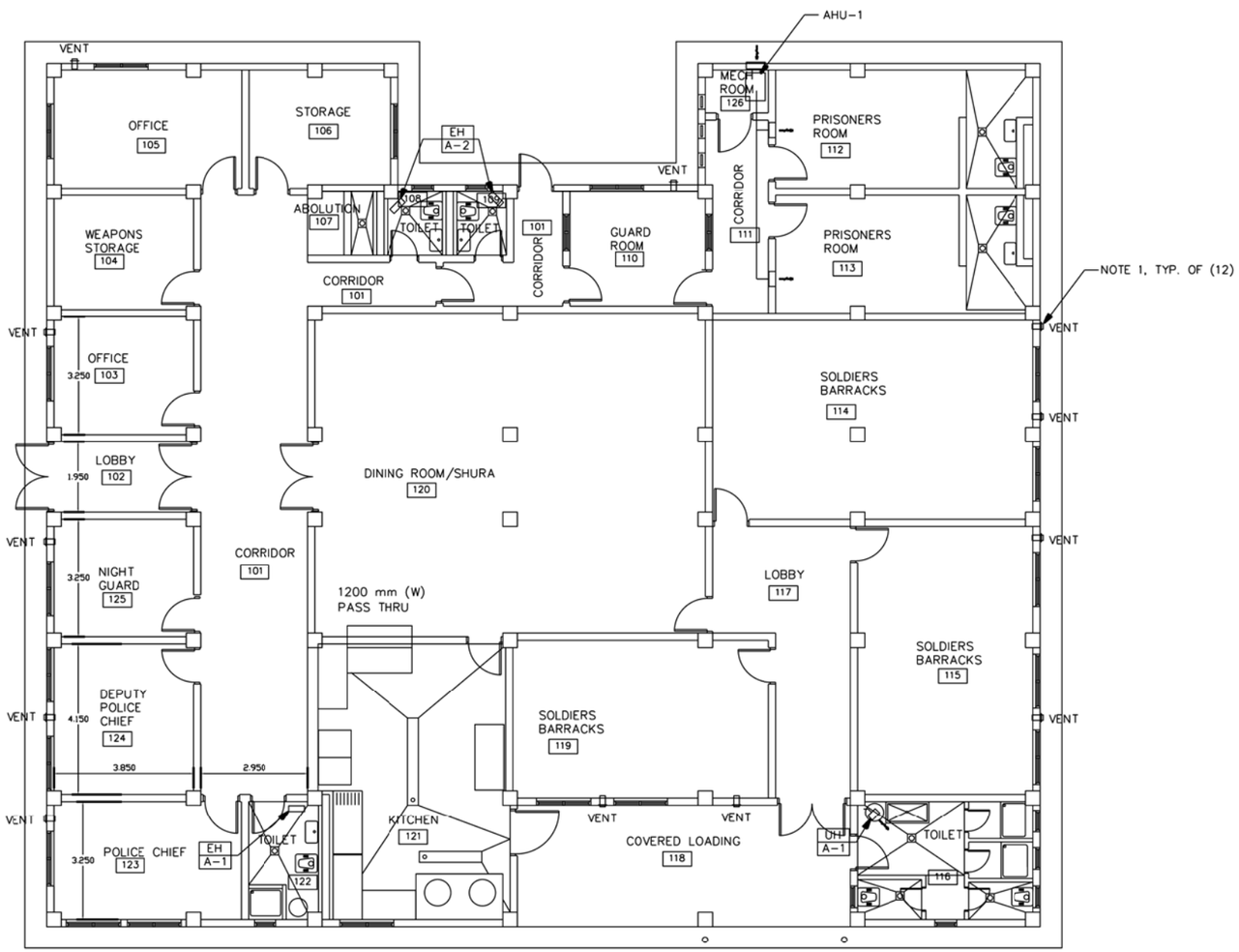

HEATING PLAN
SCALE= 1: 75

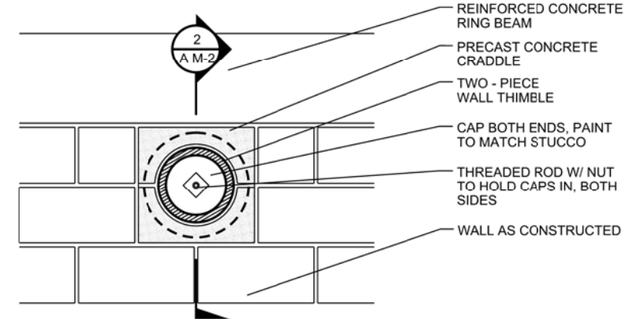

1 AM-2 THIMBLE ELEVATION DETAIL
SCALE 1:10

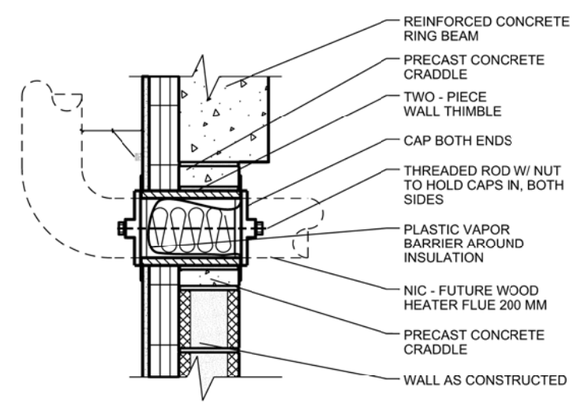

2 AM-2 THIMBLE SECTION DETAIL
SCALE 1:10

US ARMY CORPS OF ENGINEERS
AFGHANISTAN ENGINEER DISTRICT

SYMBOL	DESCRIPTION	DATE	APPR.	SYMBOL	DESCRIPTION	DATE	APPR.

REV: __
DATE: XX-XX-XX
DESIGN FILE NO.
DRAWING CODE
FILE NAME:
PLOT SCALE:
PLOT DATE: XX-XX-XX
DESIGNED BY:
DWN BY:
CKD BY:
REVIEWED BY:
SUBMITTED BY:

U.S. ARMY ENGINEER DISTRICT, AFGHANISTAN
CORPS OF ENGINEERS
APO AE 96338

ENGINEERING AND CONSTRUCTION DIVISION

AFGHANISTAN NATIONAL POLICE (ANP) DISTRICT HEADQUARTERS COMPOUNDS - 1 STORY HQ
VARIOUS LOCATIONS, AFGHANISTAN
1 STORY BUILDING

HEATING PLAN

SHEET REFERENCE NUMBER:
A
M-2

A1 Size 594mm x 841mm

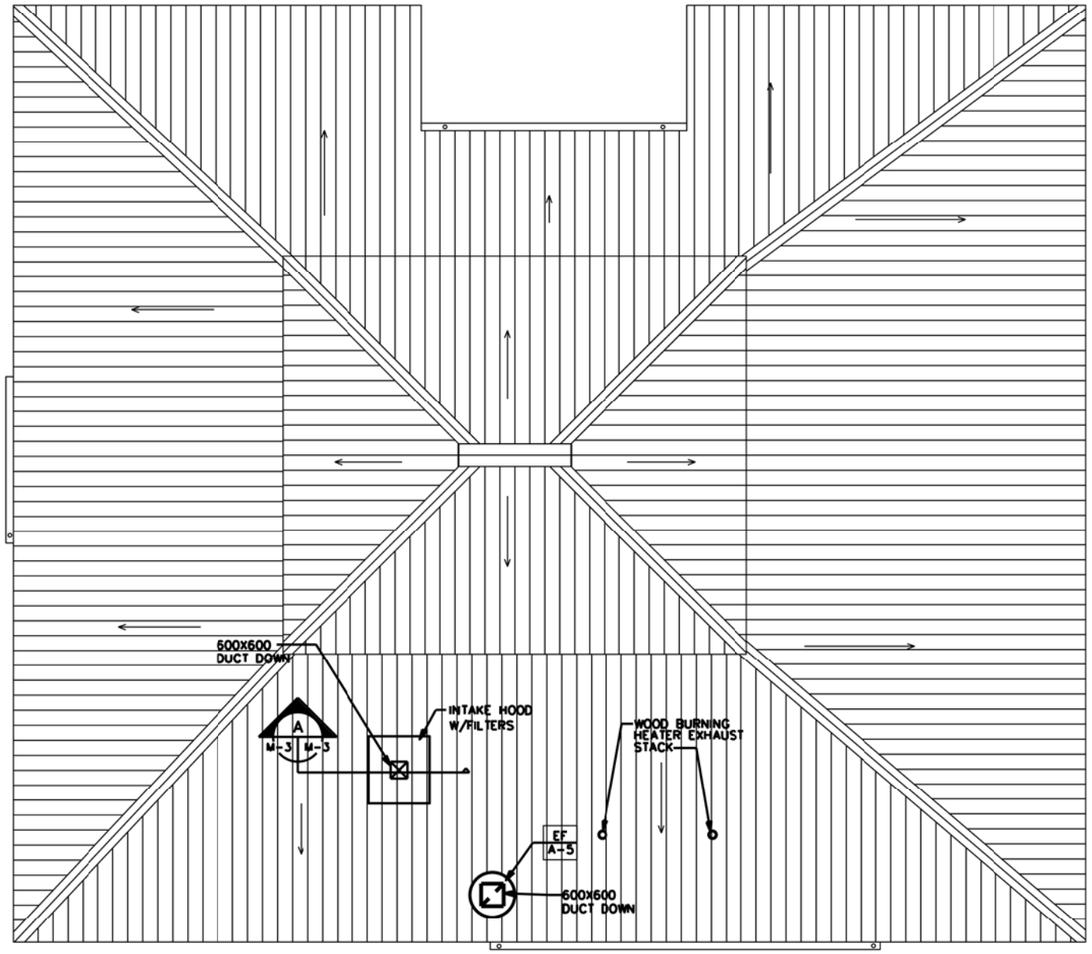

ROOF PLAN
SCALE= 1: 75

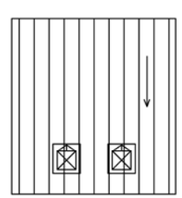

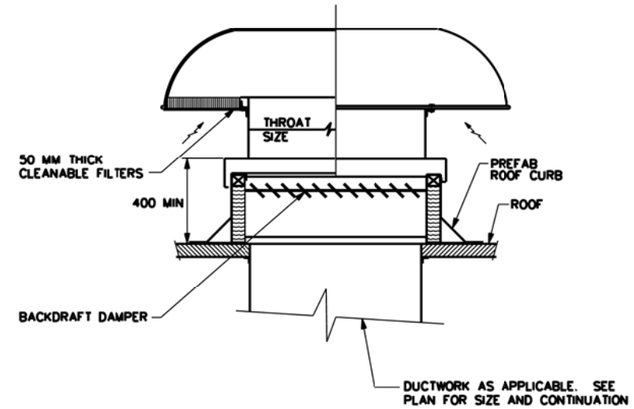

NOTE:
1. FILTER AREA SELECTION AT MAXIMUM FACE VELOCITY OF 300 FPM OR 1.52 MPS.

AIR INTAKE HOOD (A / M-3)
NOT TO SCALE

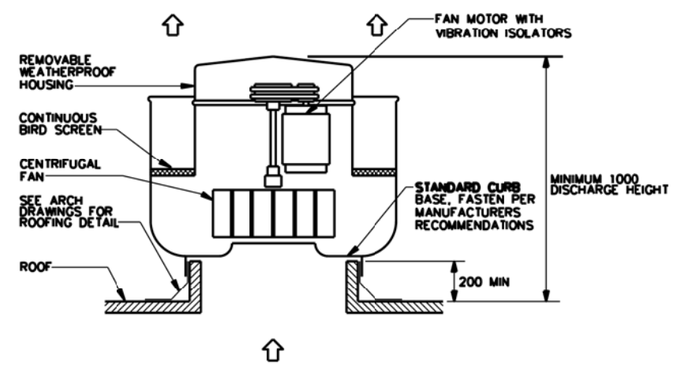

UPBLAST POWER ROOF VENTILATOR (B / M-3)
NOT TO SCALE

US ARMY CORPS
OF ENGINEERS
AFGHANISTAN
ENGINEER DISTRICT

SYMBOL	DESCRIPTION	DATE	APPR.	SYMBOL	DESCRIPTION	DATE	APPR.

DESIGNED BY: DATE: XX-XX-XX
DWN BY: CKD BY: DESIGN FILE NO.
REVIEWED BY: DRAWING CODE
SUBMITTED BY: FILE NAME:
PLOT SCALE:
PLOT DATE: XX-XX-XX
REV.

U.S. ARMY ENGINEER DISTRICT, AFGHANISTAN
CORPS OF ENGINEERS
APO AE 96338

ENGINEERING AND
CONSTRUCTION DIVISION

AFGHANISTAN NATIONAL POLICE
(ANP) DISTRICT HEADQUARTERS
COMPOUNDS - 1 STORY HQ
VARIOUS LOCATIONS, AFGHANISTAN
1 STORY BUILDING

ROOF PLAN

SHEET
REFERENCE
NUMBER:
A
M-3

A1 Size 594mm x 841mm

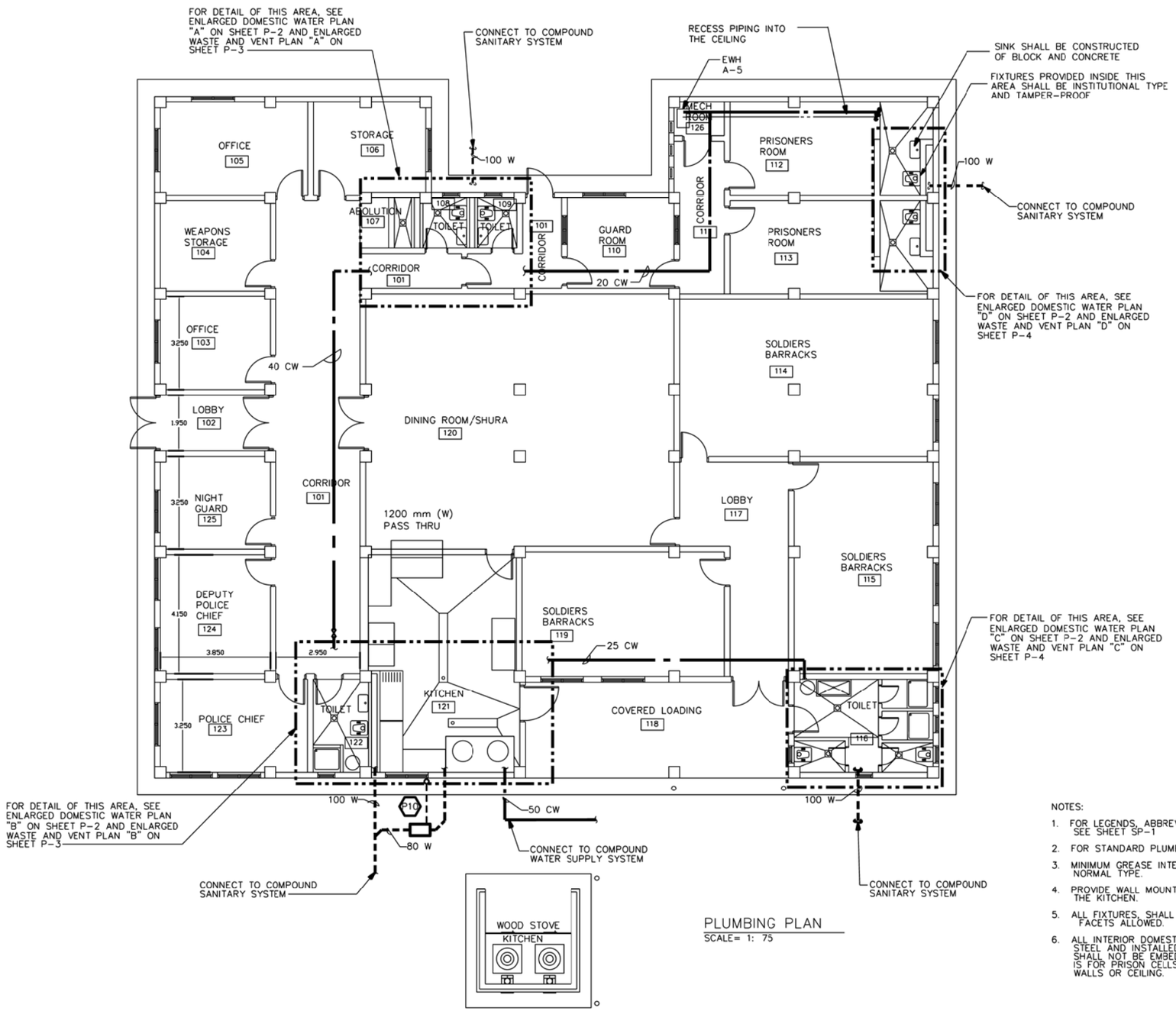

PLUMBING PLAN
SCALE= 1: 75

NOTES:

1. FOR LEGENDS, ABBREVIATION S AND PLUMBING FIXTURE SCHEDULE SEE SHEET SP-1
2. FOR STANDARD PLUMBING DETAILS SEE SHEET SP-2
3. MINIMUM GREASE INTERCEPTOR FLOW RATE SHALL BE 135 LPM NORMAL TYPE.
4. PROVIDE WALL MOUNTED, 15MM DIA. 12.5M LONG HOSE REEL IN THE KITCHEN.
5. ALL FIXTURES, SHALL BE COMMERCIAL GRADE. NO GOOSENECK FACETS ALLOWED.
6. ALL INTERIOR DOMESTIC WATER PIPING SHALL BE GALVANIZED STEEL AND INSTALLED TIGHT TO THE WALL OR CEILING. PIPING SHALL NOT BE EMBEDED IN THE CONCRETE WALLS. EXCEPTION IS FOR PRISON CELLS, WHERE PIPING SHALL BE INSTALLED IN THE WALLS OR CEILING.

US ARMY CORPS OF ENGINEERS AFGHANISTAN ENGINEER DISTRICT

SYMBOL	DESCRIPTION	DATE	APPR.	SYMBOL	DESCRIPTION	DATE	APPR.

DESIGNED BY: DATE: XX-XX-XX
DWN BY: CKD BY: DESIGN FILE NO.
REVIEWED BY: DRAWING CODE
SUBMITTED BY: FILE NAME:
PLOT SCALE:
PLOT DATE: XX-XX-XX
REV.

U.S. ARMY ENGINEER DISTRICT, AFGHANISTAN
CORPS OF ENGINEERS
APO AE 96338

ENGINEERING AND CONSTRUCTION DIVISION

AFGHANISTAN NATIONAL POLICE (ANP) DISTRICT HEADQUARTERS COMPOUNDS - 1 STORY HQ
VARIOUS LOCATIONS, AFGHANISTAN
1 STORY BUILDING

PLUMBING PLAN

SHEET REFERENCE NUMBER:
A
P-1

A1 Size 594mm x 841mm

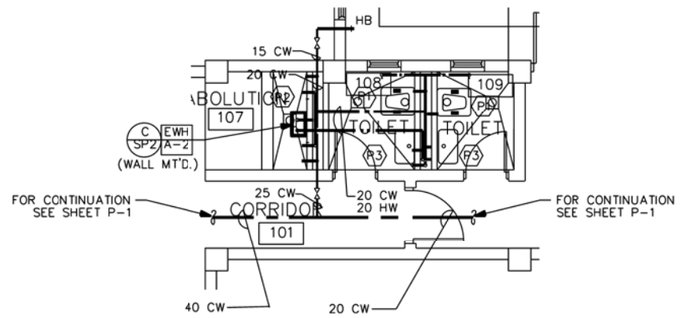

ENLARGED PLAN "A"- DOMESTIC WATER
SCALE= 1: 50

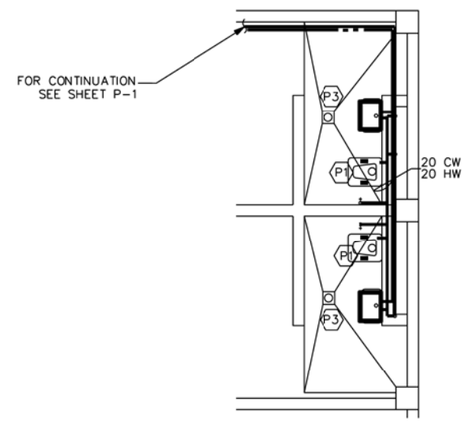

ENLARGED PLAN "D"- DOMESTIC WATER
SCALE= 1: 50

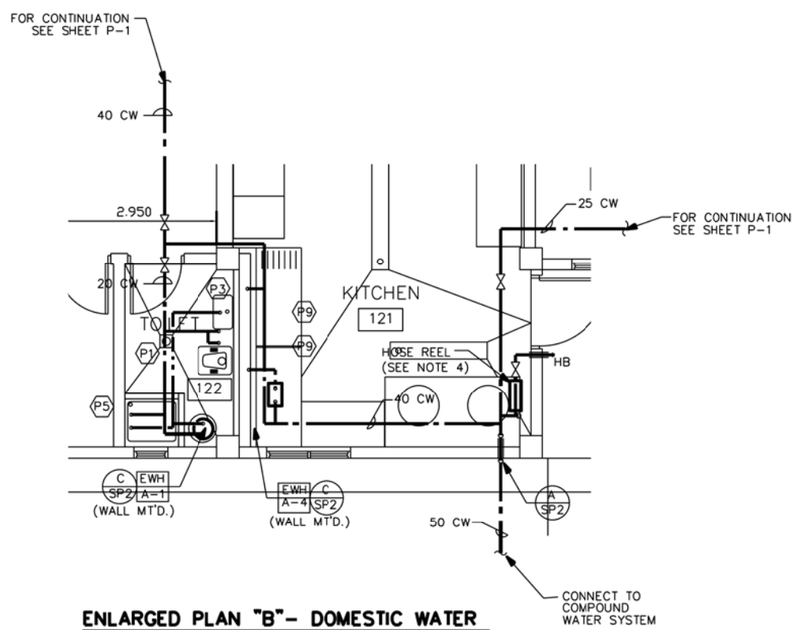

ENLARGED PLAN "B"- DOMESTIC WATER
SCALE= 1: 50

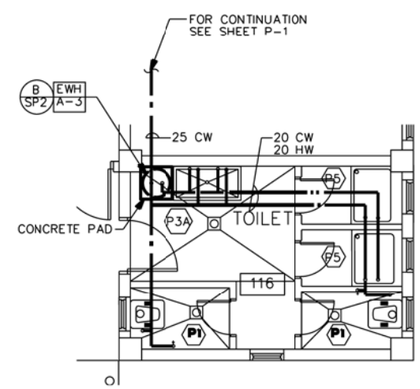

ENLARGED PLAN "C"- DOMESTIC WATER
SCALE= 1: 50

1 0 1 2 3 4
1:50

US ARMY CORPS
OF ENGINEERS
AFGHANISTAN
ENGINEER DISTRICT

SYMBOL	DESCRIPTION	DATE	APPR.	SYMBOL	DESCRIPTION	DATE	APPR.

DESIGNED BY: DATE: XX-XX-XX REV: __
DWN BY: CKD BY: DESIGN FILE NO. DRAWING CODE
REVIEWED BY: FILE NAME: PLOT SCALE:
SUBMITTED BY: PLOT DATE: XX-XX-XX

U.S. ARMY ENGINEER DISTRICT, AFGHANISTAN
CORPS OF ENGINEERS
APO AE 96338

ENGINEERING AND
CONSTRUCTION DIVISION

AFGHANISTAN NATIONAL POLICE
(ANP) DISTRICT HEADQUARTERS
COMPOUNDS - 1 STORY HQ
VARIOUS LOCATIONS, AFGHANISTAN
1 STORY BUILDING

ENLARGED PLUMBING PLANS- DOMESTIC WATER

SHEET
REFERENCE
NUMBER:
A
P-2

A1 Size 594mm x 841mm

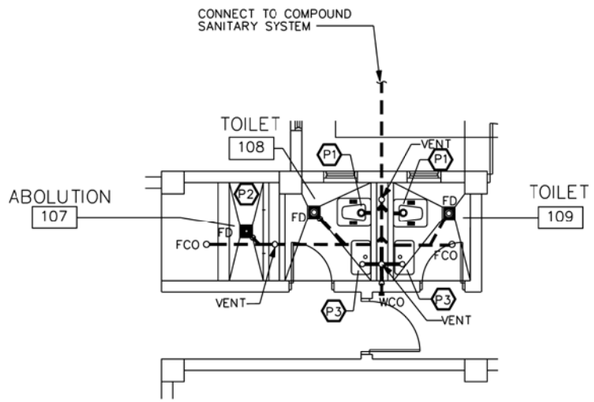

ENLARGED PLAN "A"- WASTE AND DRAINS
SCALE= 1: 50

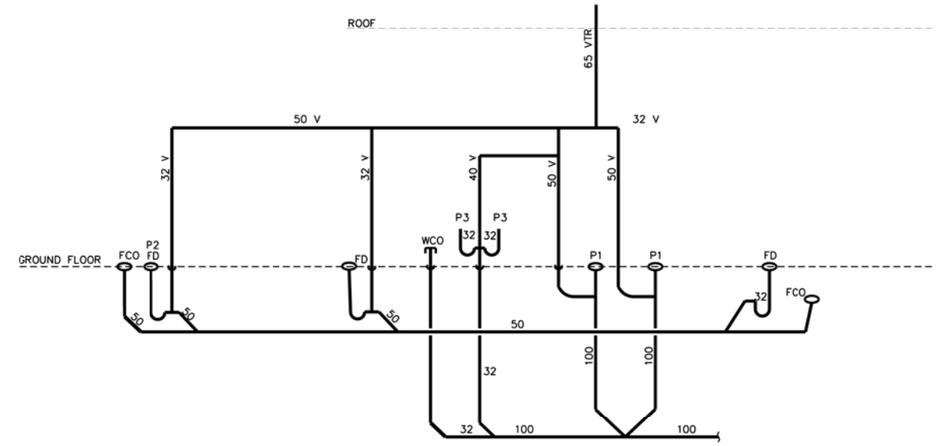

ENLARGED PLAN "A"- WASTE AND DRAIN PIPING SCHEMATIC
SCALE= NO SCALE

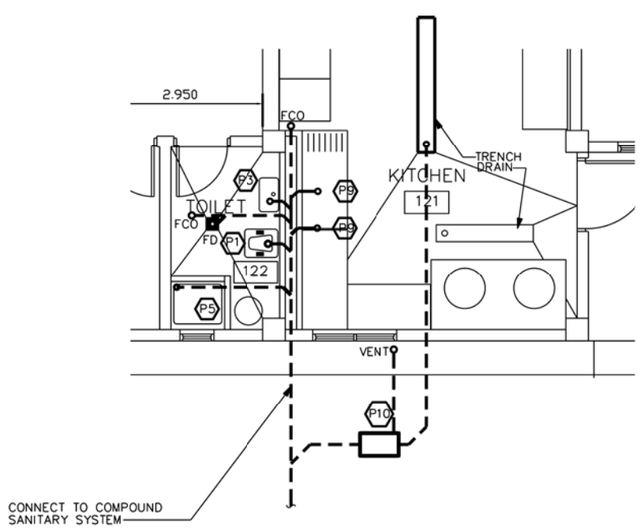

ENLARGED PLAN "B"- WASTE AND DRAINS
SCALE= 1: 50

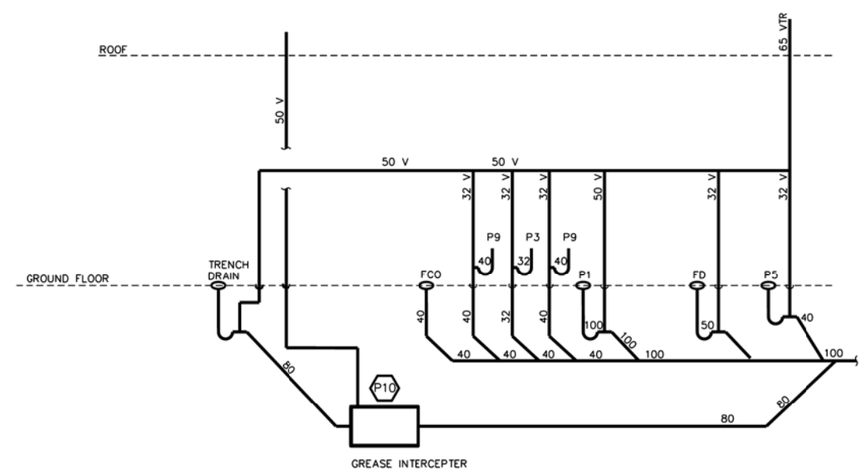

ENLARGED PLAN "B"- WASTE AND DRAIN PIPING SCHEMATIC
SCALE= NO SCALE

1:50

US ARMY CORPS OF ENGINEERS AFGHANISTAN ENGINEER DISTRICT

SYMBOL	DESCRIPTION	DATE	APPR	SYMBOL	DESCRIPTION	DATE	APPR

DESIGNED BY: DATE: XX-XX-XX REV: __
DWN BY: CKD BY: DESIGN FILE NO.
REVIEWED BY: DRAWING CODE:
SUBMITTED BY: FILE NAME: PLOT SCALE: PLOT DATE: XX-XX-XX

U.S. ARMY ENGINEER DISTRICT, AFGHANISTAN
CORPS OF ENGINEERS
APO AE 96338

ENGINEERING AND CONSTRUCTION DIVISION

AFGHANISTAN NATIONAL POLICE (ANP) DISTRICT HEADQUARTERS COMPOUNDS - 1 STORY HQ
VARIOUS LOCATIONS, AFGHANISTAN
1 STORY BUILDING

ENLARGED PLUMBING PLANS- WASTE AND DRAINS

SHEET REFERENCE NUMBER:
A
P-3

A1 Size 594mm x 841mm

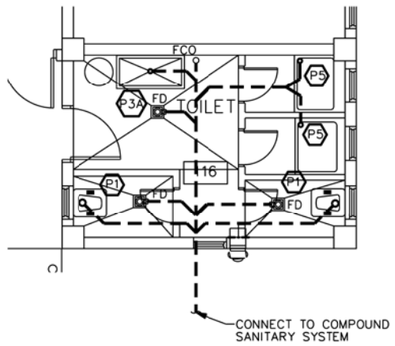

ENLARGED PLAN "C"- WASTE AND DRAINS

SCALE= 1: 50

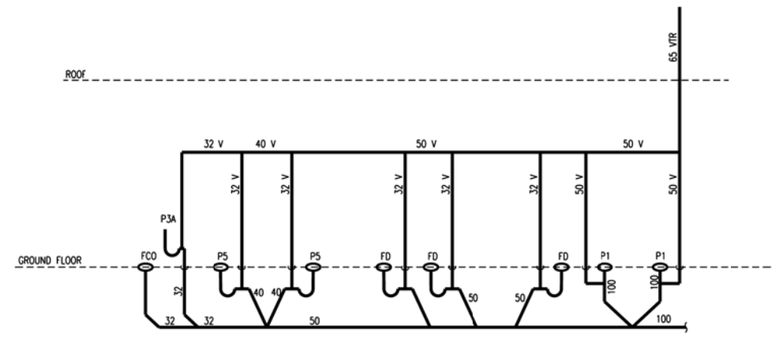

ENLARGED PLAN "C"- WASTE AND DRAIN PIPING SCHEMATIC

SCALE= NO SCALE

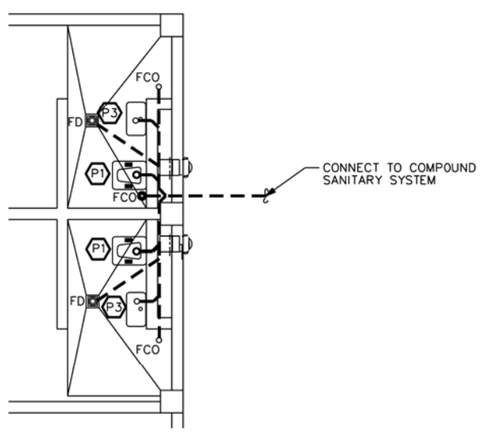

ENLARGED PLAN "D"- WASTE AND DRAINS

SCALE= 1: 50

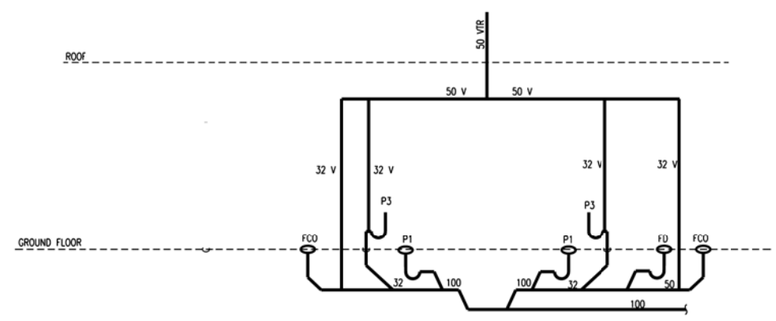

ENLARGED PLAN "D"- WASTE AND DRAIN PIPING SCHEMATIC

SCALE= NO SCALE

1 0 1 2 3 4
1:50

US ARMY CORPS
OF ENGINEERS
AFGHANISTAN
ENGINEER DISTRICT

SYMBOL	DESCRIPTION	DATE	APPR.	SYMBOL	DESCRIPTION	DATE	APPR.

DESIGNED BY: DATE: XX-XX-XX REV.
DWN BY: CKD BY: DESIGN FILE NO.
REVIEWED BY: DRAWING CODE
SUBMITTED BY: FILE NAME: PLOT SCALE: PLOT DATE: XX-XX-XX

U.S. ARMY ENGINEER DISTRICT, AFGHANISTAN
CORPS OF ENGINEERS
APO AE 96338

ENGINEERING AND
CONSTRUCTION DIVISION

AFGHANISTAN NATIONAL POLICE
(ANP) DISTRICT HEADQUARTERS
COMPOUNDS - 1 STORY HQ
VARIOUS LOCATIONS, AFGHANISTAN
1 STORY BUILDING

ENLARGED PLUMBING PLANS- WASTE AND DRAINS

SHEET
REFERENCE
NUMBER:
A
P-4

A1 Size 594mm x 841mm

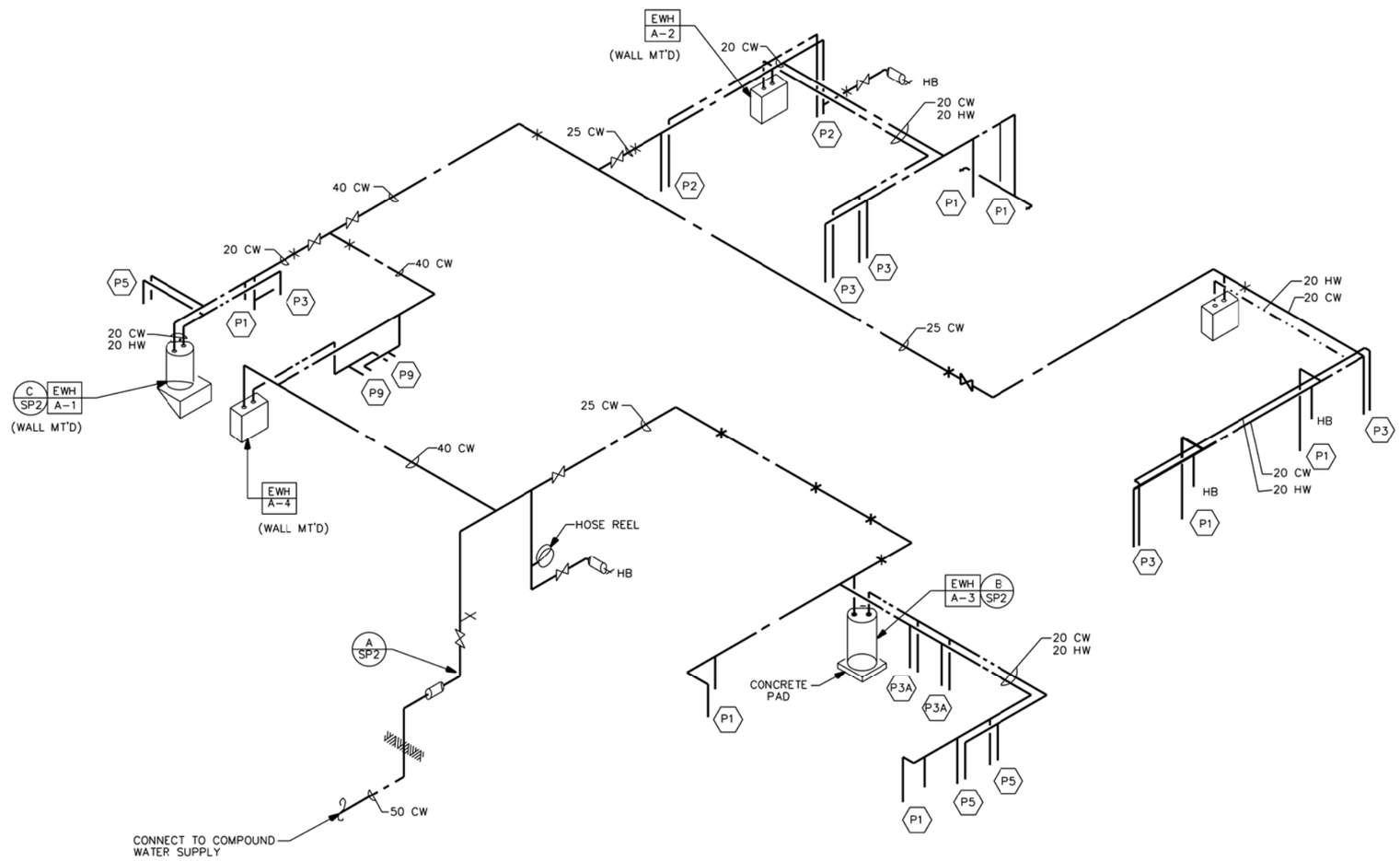

DOMESTIC WATER RISER DIAGRAM

NOT TO SCALE

US ARMY CORPS
OF ENGINEERS
AFGHANISTAN
ENGINEER DISTRICT

SYMBOL	DESCRIPTION	DATE	APPR.	SYMBOL	DESCRIPTION	DATE	APPR.

DESIGNED BY: | DATE: XX-XX-XX | REV.
DWN BY: | CKD BY: | DESIGN FILE NO. | DRAWING CODE
REVIEWED BY: | FILE NAME:
SUBMITTED BY: | PLOT SCALE:
PLOT DATE: XX-XX-XX

U.S. ARMY ENGINEER DISTRICT, AFGHANISTAN
CORPS OF ENGINEERS
APO AE 96338

ENGINEERING AND
CONSTRUCTION DIVISION

AFGHANISTAN NATIONAL POLICE
(ANP) DISTRICT HEADQUARTERS
COMPOUNDS - 1 STORY HQ
VARIOUS LOCATIONS, AFGHANISTAN
1 STORY BUILDING

DOMESTIC WATER
RISER DIAGRAM

SHEET
REFERENCE
NUMBER:
A
P-5

A1 Size 594mm x 841mm

EWH A-X ELECTRIC WATER HEATER SCHEDULE

UNIT NUMBER	LOCATION (ROOM NO.)	TYPE	STORAGE CAPACITY (LITERS)	MINIMUM RECOVERY RATE (LITERS/HOUR) @ 55.5 C RISE	NUMBER OF ELEMENTS	ELECTRICAL REQUIREMENTS				REMARKS
						KW INPUT	VOLTS	PH	HZ	
A-1	TOILET 122	STORAGE TANK	50	43	1	2.5	220	1	50	WALL MOUNTED
A-2	TOILET 108 & 109	STORAGE TANK	50	45	1	3.0	220	1	50	WALL MOUNTED
A-3	TOILET 116	STORAGE TANK	100	86	2	6.0	220	1	50	FLOOR MOUNTED
A-4	KITCHEN 121	STORAGE TANK	100	90	2	6.0	220	1	50	FLOOR MOUNTED
A-5	CELLS 112 & 113	STORAGE TANK	20	14	1	1.5	220	1	50	WALL MOUNTED

US ARMY CORPS OF ENGINEERS AFGHANISTAN ENGINEER DISTRICT

SYMBOL	DESCRIPTION	DATE	APPR.	SYMBOL	DESCRIPTION	DATE	APPR.

U.S. ARMY ENGINEER DISTRICT, AFGHANISTAN
CORPS OF ENGINEERS
APO AE 96338

DESIGNED BY: DATE: XX-XX-XX REV: __
DWN BY: CKD BY: DESIGN FILE NO.
REVIEWED BY: DRAWING CODE
SUBMITTED BY: FILE NAME: PLOT SCALE: PLOT DATE: XX-XX-XX

ENGINEERING AND CONSTRUCTION DIVISION

AFGHANISTAN NATIONAL POLICE (ANP) DISTRICT HEADQUARTERS COMPOUNDS - 1 STORY HQ
VARIOUS LOCATIONS, AFGHANISTAN
1 STORY BUILDING

PLUMBING SCHEDULE

SHEET REFERENCE NUMBER:
A
P-6

A1 Size 594mm x 841mm

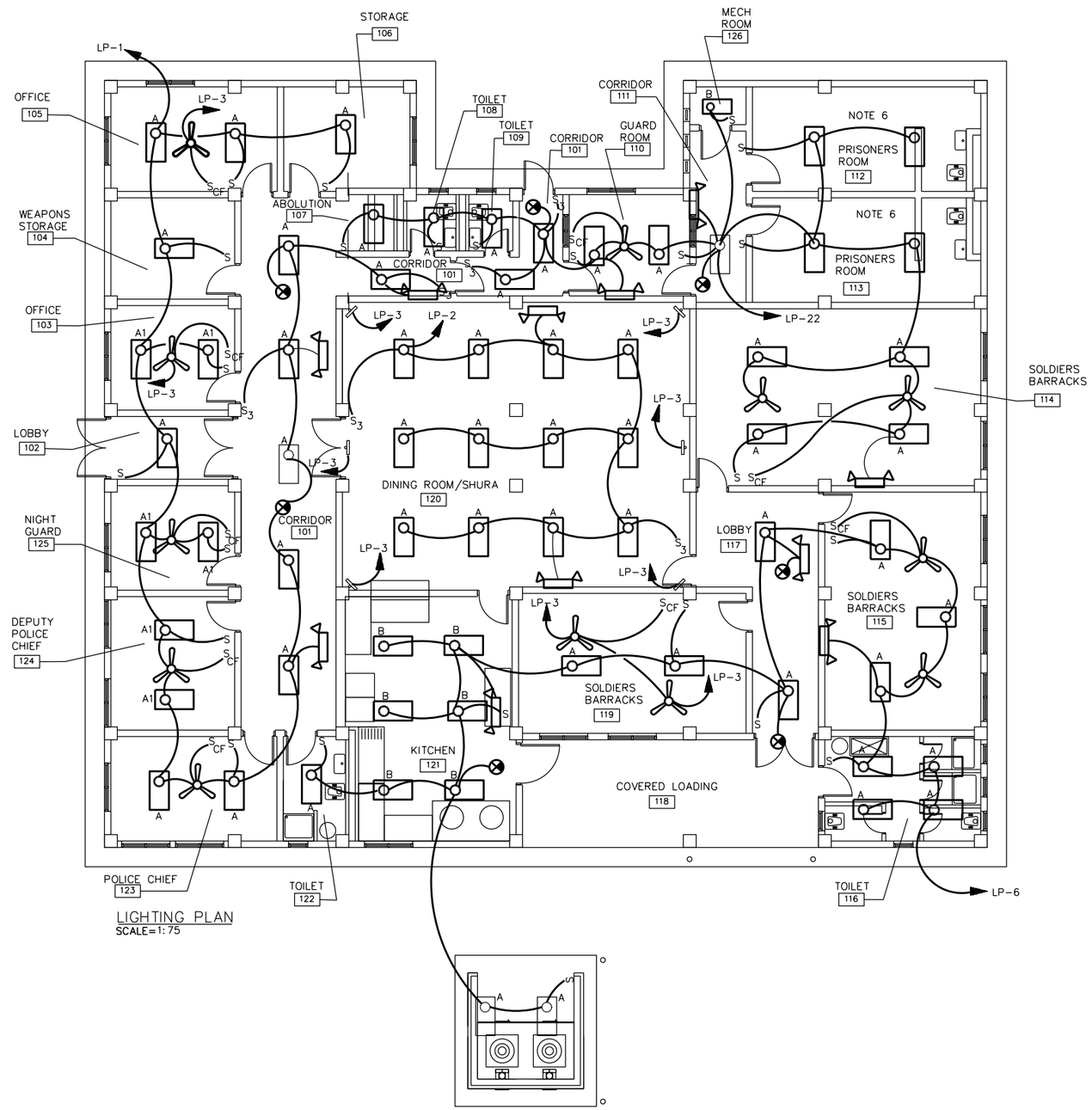

LIGHTING PLAN
SCALE=1:75

NOTES:

1. FOR LEGEND AND ABBREVIATIONS SEE DRAWING SE-1.

2. EXIT LIGHTS AND EMERGENCY LIGHTS SHALL BE CONNECTED TO AN UNSWITCHED POWER CIRCUIT.

3. FOR LIGHT FIXTURE SCHEDULE SEE DRAWING SE-1.

4. COORDINATE LOCATION OF ALL ELECTRICAL FIXTURES AND EQUIPMENT WITH ALL OTHER TRADES.

5. FOR ONE LINE DIAGRAM SEE DRAWING XE- I, POWER PLANT.

6. ALL LIGHT FIXTURES IN JAIL CELLS SHALL BE TWO LAMP FLUORESCENT TYPE FIXTURES SUITABLE FOR VANDAL RESISTANCE/ DETENTION CENTER. LIGHT FIXTURES SHALL WITHSTAND THE PHYSICAL ABUSE AND THE INTENT- TO- DESTROY TYPE ABUSE.

7. ALL WIRING INSTALLATION FOR LIGHTING AND POWER SHALL BE IN APPROVED METAL CONDUIT, EITHER CONCEALED OR SURFACE MOUNTED.

8. COORDINATE LOCATION OF THE CEILING FANS WITH LIGHT FIXTURES.

9. COORDINATE LOCATION AND MOUNTING HEIGHT OF THE LIGHT FIXTURE IN THIS ROOM WITH EXHAUST FAN AND THE DUCT TO PROVIDE REQUIRED CLEARANCE.

10. ALL WIRING INSTALLATION FOR LIGHTING, POWER, AND TELECOMMUNICATIONS SHALL BE IN APPROVED METAL CONDUIT, EITHER CONCEALED OR SURFACE MTD.

US ARMY CORPS OF ENGINEERS
AFGHANISTAN ENGINEER DISTRICT

SYMBOL	DESCRIPTION	DATE	APPR.	SYMBOL	DESCRIPTION	DATE	APPR.

DESIGNED BY: DWN BY: CKD BY: REVIEWED BY: SUBMITTED BY:
DATE: XX-XX-XX DESIGN FILE NO.: DRAWING CODE: FILE NAME: PLOT SCALE: PLOT DATE: XX-XX-XX
REV. __

U.S. ARMY ENGINEER DISTRICT, AFGHANISTAN
CORPS OF ENGINEERS
APO AE 98338

ENGINEERING AND CONSTRUCTION DIVISION

AFGHANISTAN NATIONAL POLICE (ANP) DISTRICT HEADQUARTERS COMPOUNDS - 1 STORY HQ
VARIOUS LOCATIONS, AFGHANISTAN
1 STORY BUILDING

LIGHTING PLAN

SHEET REFERENCE NUMBER:
A
E-1

A1 Size 594mm x 841mm

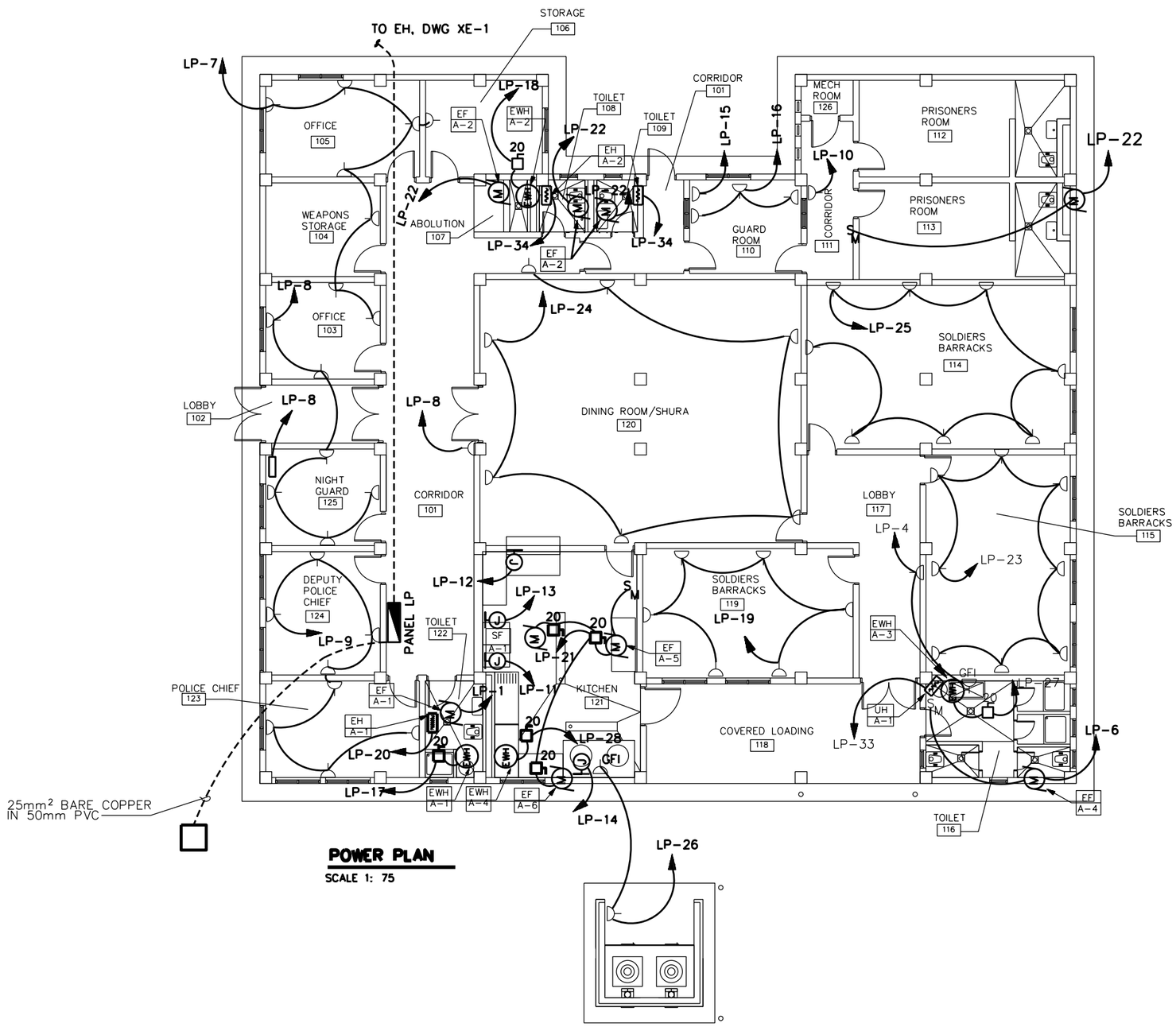

POWER PLAN

SCALE 1: 75

NOTES:

1. FOR LEGEND AND ABBREVIATIONS SEE DRAWING SE-1.
2. COORDINATE LOCATION OF ALL ELECTRICAL FIXTURES AND EQUIPMENT WITH ALL OTHER TRADES.
3. FOR ONE LINE DIAGRAM SEE DRAWING D/E-1, POWER PLANT.
4. COORDINATE LOCATION OF ALL ELECTRICAL FIXTURES AND EQUIPMENT WITH ALL OTHER TRADES.
5. FOR EXACT LOCATION OF MECHANICAL EQUIPMENT SEE MECHANICAL DRAWINGS.
6. EXHAUST FAN EF-A-1 AND EF-A-2 SHALL BE CONTROLLED BY THE LIGHT SWITCH IN THEIR RESPECTIVE ROOM.
7. EXHAUST FAN EF-A-3, EF-A-4, AND EF-A-5 SHALL BE CONTROLLED BY A MANUAL MOTOR STARTER FROM THE LOCATION AS SHOWN ON THIS DRAWING.
8. EXHAUST FAN EF-A-6 SHALL BE CONTROLLED BY A THERMOSTAT. REFER TO MECHANICAL DRAWING FOR LOCATION OF THE THERMOSTAT.
9. ALL WIRING INSTALLATION FOR LIGHTING, POWER, AND TELECOMMUNICATIONS SHALL BE IN APPROVED METAL CONDUIT, EITHER CONCEALED OR SURFACE MTD.

US ARMY CORPS OF ENGINEERS AFGHANISTAN ENGINEER DISTRICT

SYMBOL	DESCRIPTION	DATE	APPR.	SYMBOL	DESCRIPTION	DATE	APPR.

DESIGNED BY: | DATE: XX-XX-XX | REV. —
DWN BY: | CKD BY: | DESIGN FILE NO.
REVIEWED BY: | DRAWING CODE:
SUBMITTED BY: | FILE NAME: | PLOT SCALE: | PLOT DATE: XX-XX-XX

U.S. ARMY ENGINEER DISTRICT, AFGHANISTAN
CORPS OF ENGINEERS
APO AE 96338

ENGINEERING AND CONSTRUCTION DIVISION

AFGHANISTAN NATIONAL POLICE (ANP) DISTRICT HEADQUARTERS COMPOUNDS - 1 STORY HQ
VARIOUS LOCATIONS, AFGHANISTAN
1 STORY BUILDING

POWER PLAN

SHEET REFERENCE NUMBER:
A
E-2

A1 Size 594mm x 841mm

PANELBOARD LP FLUSH MOUNTED MINIMUM 22,000 ASYM. A.I.C. MIN.

AMP. MAIN LUGS (OR) 150 AMP. MAIN BREAKER W/ 150 AMP. TRIP

CIRCUIT BREAKER TYPE 380/220 VOLTS 3 PHASE 4 WIRE 150 AMP. BUS 50 HZ

CKT. NO.	TRIP AMPS	NO. POLES	WIRE mm2	GND mm2	CONDUIT mm	LOAD SERVED	LOAD-V.A. A0	LOAD-V.A. B0	LOAD-V.A. C0	LOAD-V.A. A0	LOAD-V.A. B0	LOAD-V.A. C0	LOAD SERVED	CONDUIT mm	GND 2 mm	WIRE 2 mm	NO. POLES	TRIP AMPS	CKT. NO.
1	20	1	4	4	20	LIGHTING,FANS, EF-A-1	3230			1440			LIGHTING	20	4	4	1	20	2
3	20	1	4	4	20	FANS		2000			360		RECEPTACLES	20	4	4	1	20	4
5	20	1				SPARE						3415	LIGHTING, FANS,EF-A-4	20	4	4	1	20	6
7	20	1	4	4	20	RECEPTACLES	1440			1260			RECEPTACLES	20	4	4	1	20	8
9	20	1	4	4	20	RECEPTACLES		1440			180		RECEPTACLE	20	4	4	1	20	10
11	20	1	4	4	20	JB FOR REFRIGERATOR/FREEZER			2000			2000	JB FOR REFRIGERATOR/FREEZER	20	4	4	1	20	12
13	20	1	4	4	20	JB FOR REFRIGERATOR/FREEZER	2000			2000			JB FOR REFRIGERATOR/FREEZER	20	4	4	1	20	14
15	20	1	4	4	20	RECEPTACLES		500			540		RECEPTACLES	20	4	4	1	20	16
17	20	1	4	4	20	ELECTRIC WATER HEATER A-1			2500			9000	ELECTRIC WATER HEATER A-2	20	6	10	1	50	18
19	20	1	4	4	20	RECEPTACLES	1080			1550			EH-A-1	20	4	4	1	20	20
21	20	1	4	4	20	EXHAUST FAN EF-A-5, A-6		1585			2800		LIGHTING,FANS,EF-A-2,EF-A-3	20	4	4	1	20	22
23	20	1	4	4	20	RECEPTACLES			1440			1260	RECEPTACLES	20	4	4	1	20	24
25	20	1	4	4	20	RECEPTACLES	1440			720			RECEPTACLES	20	4	4	1	20	26
27	20	3	4	4	20	EWH-A-3		3000			12000		ELECTRIC WATER HEATER A-4	20	6	16	1	70	28
29	↓	↓	↓	↓	↓	↓			3000				SPARE				1	20	30
31							3000						SPARE				1	20	32
33	20	1	4	4	20	UH-A-1		3000			2080		EH-A-2	20	4	4	1	20	34
35	20	1				SPARE							SPARE				1	20	36
37	20	1				SPARE							SPARE				1	20	38
39	20	1				SPARE							SPACE						40
41						SPACE							SPACE						42
							12190	11525	8940	6970	17960	15675							

TOTAL CONN. LOAD 73.26 KVA. 85 % DEMAND = ESTIMATED DEMAND LOAD: 62.27 kVA

TOTAL CONN. LOAD PER PHASE (KVA): A0 19.16 B0 29.49 C0 24.62

SUPPLIED FROM POWER PLANT SWITCHBOARD

NOTES:

1. FOR LEGEND AND ABBREVIATIONS SEE DRAWING SE-1.
2. CONTRACTOR SHALL CONFIRM THAT ALL CIRCUIT RATINGS ARE BASED ON THE ACTUAL NAMEPLATE OF THE SUPPLIED EQUIPMENT.

US ARMY CORPS OF ENGINEERS AFGHANISTAN ENGINEER DISTRICT

SYMBOL	DESCRIPTION	DATE	APPR.	SYMBOL	DESCRIPTION	DATE	APPR.

U.S. ARMY ENGINEER DISTRICT, AFGHANISTAN
CORPS OF ENGINEERS
APO AE 96338

DESIGNED BY: DATE: XX-XX-XX
DWN BY: CKD BY: DESIGN FILE NO.
REVIEWED BY: DRAWING CODE
SUBMITTED BY: FILE NAME:
PLOT SCALE:
PLOT DATE: XX-XX-XX
REV.

ENGINEERING AND CONSTRUCTION DIVISION

AFGHANISTAN NATIONAL POLICE (ANP) DISTRICT HEADQUARTERS COMPOUNDS - 1 STORY HQ
VARIOUS LOCATIONS, AFGHANISTAN
1 STORY BUILDING

PANEL SCHEDULE

SHEET REFERENCE NUMBER:
A
E-3

A1 Size 594mm x 841mm

ARCHITECTURAL ABBREVIATIONS AND SYMBOLS

ABBREVIATIONS

A

@	AT
AC	AIR CONDITIONER
ACCFLR	RAISED FLOOR SYSTEM
ACFT	AIRCRAFT
ACST	ACOUSTICAL
AD	AREA DRAIN
A/E	ARCHITECT/ENGINEERS
AFF	ABOVE FINISH FLOOR
ALUM	ALUMINUM
ANOD	ANODIZED
AOC	AIR OPERATIONS CENTER
APPROX	APPROXIMATELY
ARCH	ARCHITECTURAL
ASPH	ASPHALT
ATC	ACOUSTICAL TILE CEILING
AWP	ACOUSTICAL WALL PANEL

B

BB	BALL BEARING
BMUM	BITUMINOUS
BL	BASE LINE
BLDG	BUILDING
BLK	BLOCK
B/M	BENCH MARK OR BEAM
BOM	BILL OF MATERIALS
BRKT	BRACKET
BOT	BOTTOM
BRD	BOARD

C

CARP	CARPET
CB	CORE BORING
C TO C	CENTER TO CENTER
CEM	CEMENT
CH	CLEAR HEART
CFM	CUBIC FEET PER MINUTE
CI	CAST IRON
CIP	CAST IN PLACE
CJ OR CJT	CONTROL JOINT
℄	CENTER LINE
CLF	CHAIN LINK FENCE
CLG	CEILING
CLR	CLEAR
CM	CENTIMETER
CMDR	COMMANDER
CMP	CORRUGATED METAL PIPE
CMU	CONCRETE MASONRY UNIT
CO	CLEANOUT
COE	CORPS OF ENGINEERS
CONCR	CONCRETE
CONN	CONNECTION
CONST	CONSTRUCTION
CONT	CONTINUOUS
CONTAM	CONTAMINATED
CONTR	CONTRACTOR
CORR	CORRUGATED
CPRSR	COMPRESSOR
CT	CERAMIC TILE
CTR	CENTER
CUL	CULVERT
CUM	CUBIC METERS
CWT	COUNTERWEIGHT
COORD	COORDINATE

D

D	DEPTH
DECON	DECONTAMINATION
DET	DETAIL
DI	DRAIN INLET
DIA	DIAMETER
DIM	DIMENSION
DISP	DISPENSER
DJ	DUMMY JOINT
DRWG	DRAWING
DS	DOWNSPOUT
DW	DRINKING WATER

E

E	EAST
EA	EACH
EG	EXISTING GRADE
EJ	EXPANSION JOINT
EL OR ELEV	ELEVATION
ELEC	ELECTRICAL
ENCL	ENCLOSURE
ENGR	ENGINEER
ENT	ENTRANCE
EPDM	ELASTOMERIC ROOFING
EPX	EPOXY COATING
EQ	EQUAL
ES/EW	EMERGENCY SHOWER/EYE WASH
EW	EACH WAY
EXCA	EXCAVATE
EXH	EXHAUST
EXIST	EXISTING
EXP	EXPANSION OR EXPOSED
EWC	ELECTRIC WATER COOLER
EWH	ELECTRIC WATER HEATER

ABBREVIATIONS

F

F	FEET
FD	FLOOR DRAIN
FDN	FOUNDATION
FF & E	FURNITURE, FURNISHINGS AND EQUIPMENT
F TO F	FACE TO FACE
FE	FIRE EXTINGUISHER
FFLEL	FINISH FLOOR ELEVATION
FG	FINISH GRADE
FH	FIRE HYDRANT
FIN	FINISH
FL	FLOOR
FPM	FEET PER MINUTE
FTG	FOOTING

G

GA	GAUGE
GALV	GALVANIZED
GPM	GALLONS PER MINUTE
GR	GRADE
GT	GATE (FENCE)
GVL	GRAVEL
GYP	GYPSUM

H

HB	HOSE BIB
HDW	HARDWARE
HDWD	HARDWOOD
HZ	HERTZ
HF	HIGH FREQUENCY
HGT	HEIGHT
HM	HOLLOW METAL
HORIZ	HORIZONTAL
HP	HIGH POINT
HH	HEX HEAD
HC	HANDICAPPED
HR	HOUR

I

ID	INSIDE DIAMETER
INSTL	INSTALL
INTEL	INTELLIGENCE
INTER	INTERIOR
INV	INVERT
INSUL	INSULATION

J

JAN	JANITOR
JB	JUNCTION BOX
JCT	JUNCTION
JT	JOINT

K

KG	KILOGRAM
KM	KILOMETER
KPA	KILO PASCAL
KPH	KILOMETERS PER HOUR

L

LAM	LAMINATE
LAT	LATITUDE
LAV	LAVATORY
LBY	LOBBY
LBS	POUNDS
LG	LONG
LINMET	LINEAR METAL CEILING SYSTEM
LNRPNL	METAL LINER PANEL
LOC	LIMITS OF CONSTRUCTION
LONG	LONGITUDE
LP	LOW POINT
LSD	LARGE SCREEN DISPLAY
LTG P	LIGHTING PANEL
LVR	LOUVER

M

M	METER
MATL	MATERIAL
MAX	MAXIMUM
MECH	MECHANICAL
MH	MANHOLE
MISC	MISCELLANEOUS
MIN	MINIMUM
ML	MATCH LINE
MM	MILLIMETERS
MO	MASONRY OPENING
MON	MONUMENT
MOIST	MOISTURE
MPH	MILES PER HOUR
MTD	MOUNTED
MTL	METAL
MSNRY	MASONRY
MFR	MANUFACTURER
MATL	MATERIAL
MW	FORCE PROTECTION DOOR

ABBREVIATIONS

N

N	NORTH
NA	NOT APPLICABLE
NIC	NOT IN CONTRACT
NICAD	NICKEL CADMIUM
NO	NUMBER
NTS	NOT TO SCALE

O

OC	ON CENTER
OD	OUTSIDE DIAMETER
OPH	OPPOSITE HAND
OPNG	OPENING
OPP	OPPOSITE
OPS	OPERATIONS

P

PANL	PANEL
PCS	PIECES
PE	POLYETHYLENE
PKG	PARKING OR PACKAGE
PL	PLATE
PLAS	PLASTER
PLBG	PLUMBING
POL	PETROLEUM OIL LUBRICANT
PP	POWER PANEL
PRCST	PRECAST
PROP	PROPERTY
PSF	POUNDS PER SQUARE FOOT
PTD	PAINTED
PTR	PIPE TRENCH
PVMT	PAVEMENT

Q

Q	DESIGN DISCHARGE
QD	QUICK DISCONNECT

R

R	RADIUS OR REINFORCED
RCP	REINFORCED CONCRETE PIPE
RD	ROOF DRAIN
RE	REFERENCE
REINF	REINFORCED
REQD	REQUIRED
REV	REVISION
RH	RIGHT HAND
RI	RISER
RM	ROOM
RO	ROUGH OPENING
ROW	RIGHT OF WAY
RP	RADIUS POINT
RR	RAILROAD
RT	RIGHT
RTU	ROOF TOP UNIT
RVS	REVERSE
RW	RAW WATER

S

S OR SO	SOUTH
SCH	SCHEDULE
SECT	SECTION
SD	SMOKE DETECTOR
SG	SUB GRADE
SH OR SHT	SHEET
SHWR	SHOWER
SIM	SIMILIAR
SL	SLOPE
SMH	SEWER MANHOLE
SOC	STRATEGIC OPERATIONS CENTER
SPEC	SPECIFICATION
SPFC	SPECIFIC
SQ	SQUARE
SS	SANITARY SEWER
SST	STAINLESS STEEL
STA	STATION
STD	STANDARD
STL	STEEL
STRUCT	STRUCTURAL
SUSPLAS	SUSPENDED PLASTER
SVC	SERVICE CONNECTION

ABBREVIATIONS

T

TC	TOP OF CURB
TELE C	TELEPHONE CABINET
TER	TERRAZZO
TG	TOP OF GRATE
TK	TANK
TO	TECHNICAL ORDER
TOS	TOP OF STEEL
TOW	TOP OF WALL
TP	TEST PIT
TR	TRENCH
TSW	TOP OF SIDEWALK
TYP	TYPICAL
TP	TOP OF PAVEMENT
TH/THK	THICK / THICKNESS

U

UBC	UNIFORM BUILDING CODE
UG	UNDERGROUND
UNO	UNLESS NOTED OTHERWISE
UPS	UNINTERRUPTIBLE POWER SUPPLY
UTIL	UTILITY

V

VB	VALVE BOX
VC	VERTICAL CURVE
VCT	VINYL COMPOSITION TILE
VEH	VEHICLE
VEL	VELOCITY
VERT	VERTICAL
VEST	VESTIBULE
VIP	VERY IMPORTANT PERSON
VTR	VENT THRU ROOF

W

W	WEST, WIDE
WC	WATER CLOSET
WM	WIRE MESH PARTITION
WSP	WELDED STEEL PIPE
WT	WEIGHT
W/O	WITHOUT
W/	WITH
WWF	WELDED WIRE FABRIC

REFERENCE SYMBOLS

A / A-1 A-2	DETAIL IDENTIFICATION NO.OF SHEET ON WHICH DETAIL IS DRAWN NO. OF SHEET ON WHICH CONDITION IS REFERENCED
1 / A-3	BUILDING SECTION IDENTIFICATION NO.OF SHEET ON WHICH SECTION IS DRAWN
A / A-3	WALL SECTION IDENTIFICATION NO.OF SHEET ON WHICH SECTION IS DRAWN
102	ROOM NUMBER
102	DOOR NUMBER
H	COLUMN LINE
A	WINDOW TYPE
A	WALL TYPE IDENTIFIER
102	EQUIPMENT IDENTIFIER
102	FURNITURE IDENTIFIER
FIN FL ELEV 100.00	FINISH FLOOR EL. SYMBOL IN PLAN
FIN FL ELEV 100.00	FINISH FLOOR EL. SYMBOL IN SECT. AND ELEV.
A B C D	INTERIOR ELEVATION KEY SYMBOL
A / A-3	EXTERIOR ELEVATION IDENTIFIER
	STUCCO CONTROL JOINT
L2	LOUVER IDENTIFIER
	STRUCTURAL CONTROL JOINT
	WALLS TO THE UNDERSIDE OF THE STRUCTURE
F	FIRE EXTINGUISHER

GENERAL NOTES:

1. THE LIST OF ABBREVIATIONS IS SHOWN AS A GUIDE ONLY AND DOES NOT NECESSARILY INCLUDE ALL ABBREVIATIONS USED. OTHER ABBREVIATIONS MAY BE FOUND AMONG THE DRAWINGS. SOME ABBREVIATIONS LISTED MAY NOT HAVE BEEN USED.
2. FOR REFERENCE PURPOSES, A FINISHED FLOOR ELEVATION OF 100.00 HAS BEEN ESTABLISHED FOR GRADE LEVEL FLOOR PLANS. ON ARCHITECTURAL DRAWINGS. SEE CIVIL DRAWINGS FOR ACTUAL FINISHED FLOOR AND FINISHED GRADE ELEVATIONS.
3. HOUSEKEEPING PADS FOR MECHANICAL EQUIPMENT SHALL BE PROVIDED AS REQUIRED BY MECHANICAL DRAWINGS. SIZE AND LOCATION SHALL BE COORDINATED WITH MECHANICAL EQUIPMENT PROVIDED.

MATERIAL SYMBOLS

	EARTH
	CAST CONCRETE (SECTION)
	LIGHTWEIGHT CONCRETE (SECTION)
	CONCRETE MASONRY UNIT (LARGE SCALE-PLAN)
	STEEL
	ROUGH WOOD
	FINISHED WOOD
	WOOD BLOCKING
	PLYWOOD-LARGE SCALE
	GLASS (ELEVATION)
	BATT FILL INSULATION (SECTION)
	LOOSE FILL INSULATION (PLAN)
	RIGID BOARD INSULATION
	CERAMIC TILE-LARGE SCALE
	CONCRETE (PLAN & ELEVATION)
	CERAMIC TILE (PLAN & ELEVATION)
	PLASTER OR STUCCO (ELEVATION)
	SHEET MEMBRANE
	LANDSCAPING (TREE, SHRUB, ETC.)

US ARMY CORPS OF ENGINEERS AFGHANISTAN ENGINEER DISTRICT

NO.	DESCRIPTION	DRAWN	CHKD	DATE	APPR

DESIGNED BY: DWN BY: CKD BY: REVIEWED BY: SUBMITTED BY: DATE: XX-XX-XX DESIGN FILE NO: DRAWING CODE: FILE NAME: PLOT SCALE: PLOT DATE: XX-XX-XX REV

U.S. ARMY ENGINEER DISTRICT, AFGHANISTAN
CORPS OF ENGINEERS
APO AE 96338

ENGINEERING AND CONSTRUCTION DIVISION

AFGHANISTAN NATIONAL POLICE (ANP) DISTRICT HEADQUARTERS COMPOUNDS - 1 STORY HQ
VARIOUS LOCATIONS, AFGHANISTAN
STANDARD DETAIL

ABBREVIATIONS & SYMBOLS

SHEET REFERENCE NUMBER:
SA-1

A1 Size 594mm x 841mm

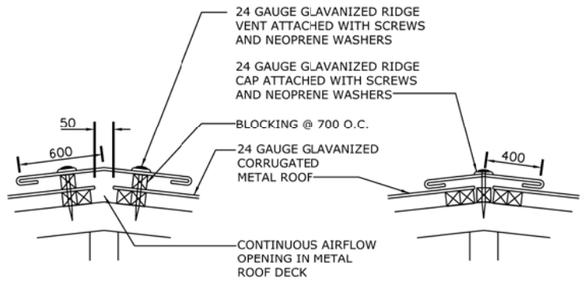

TYPICAL RIDGE VENT SECTION
NOT TO SCALE

TYPICAL RIDGE CAP SECTION
NOT TO SCALE

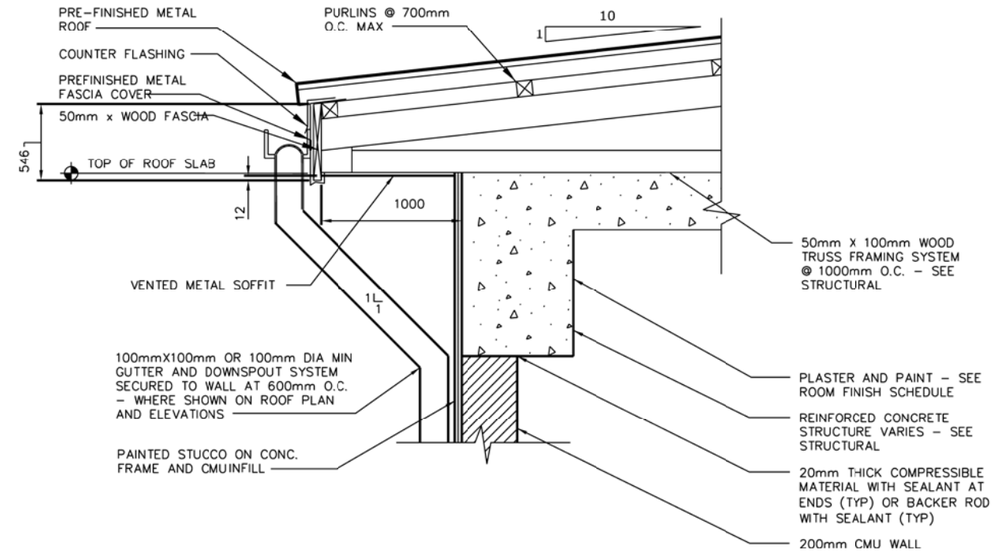

TYPICAL SECTION AT EAVE
FOR BUILDINGS C, D, H, AND I
SCALE= 1:10

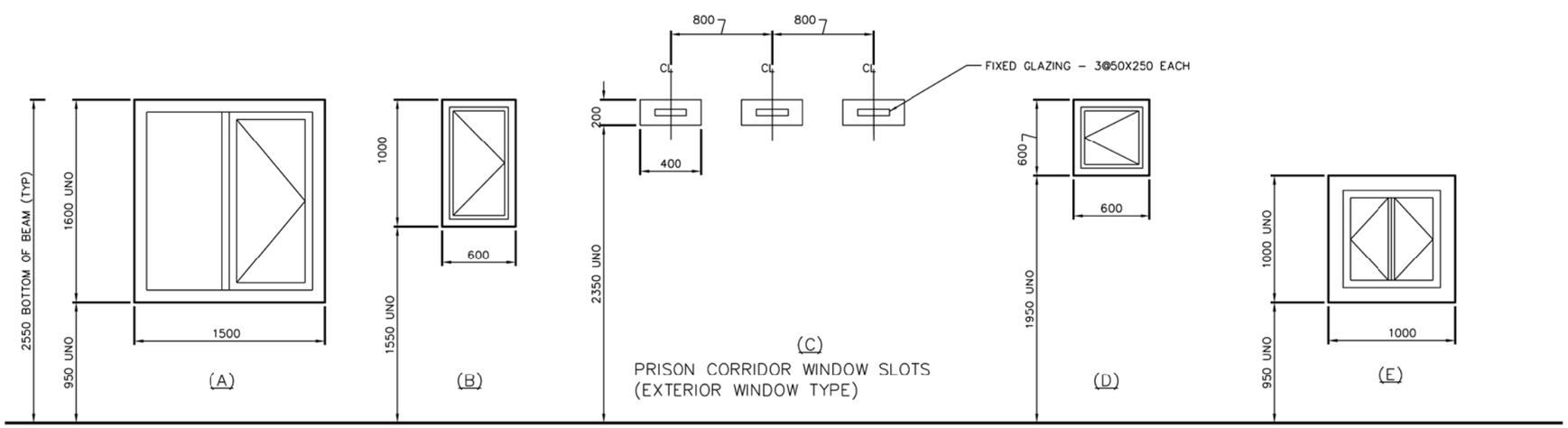

NOTES:
1.? ALL EXTERIOR WINDOWS SHALL UTILIZE MIN. 8mm THICK PLEXIGLASS.
2.? PROVIDE PROTECTIVE COATING AT ALL DISSIMILAR METALS CONTACT AREAS, AS APPROPRIATE.
3.? ALL OPERABLE EXTERIOR WINDOWS SHALL BE PROVIDED WITH INSECT SCREENS.
4.? FIXED WINDOWS AND CLEARSTORY WINDOWS ARE SHOWN ON BUILDING ELEVATIONS AND SECTIONS.

US ARMY CORPS OF ENGINEERS AFGHANISTAN ENGINEER DISTRICT

SYMBOL	DESCRIPTION	DATE	APPR.	SYMBOL	DESCRIPTION	DATE	APPR.

DESIGNED BY: DWN BY: CKD BY: REVIEWED BY: SUBMITTED BY:
DATE: XX-XX-XX DESIGN FILE NO: DRAWING CODE: FILE NAME: PLOT SCALE: PLOT DATE: XX-XX-XX
REV: __

U.S. ARMY ENGINEER DISTRICT, AFGHANISTAN
CORPS OF ENGINEERS
APO AE 96338

ENGINEERING AND CONSTRUCTION DIVISION

AFGHANISTAN NATIONAL POLICE (ANP) DISTRICT HEADQUARTERS COMPOUNDS - 1 STORY HQ
VARIOUS LOCATIONS, AFGHANISTAN
STANDARD DETAIL

WALL SECTION & ROOF DETAILS

SHEET REFERENCE NUMBER:
SA-2

A1 Size 594mm x 841mm

PIPING AND HVAC LEGEND

SYMBOL	DESCRIPTION
	THREE-WAY VALVE (ANY TYPE OF OPERATOR)
	GATE VALVE
	BALL VALVE
	GLOBE VALVE
	ANGLE GLOBE VALVE
	PRESSURE RELIEF VALVE
	PRESSURE-TEMPERATURE RELIEF VALVE
	BALANCING COCK
	BUTTERFLY VALVE
	CHECK VALVE
	UNION (SCREWED)
	PRESSURE CONTROL VALVE (SELF-CONTAINED)
	SOLENOID VALVE
	MOTOR OPERATED CONTROL VALVE
	AIR ELIMINATOR
AAV	AIR VENT, AUTOMATIC
	AIR VENT, MANUAL
	BACK PRESSURE VALVE
	PRESSURE REDUCING VALVE
	"Y" STRAINER
	AIR VALVE
	TEMPERATURE REGULATING VALVE
	EXPANSION VALVE, HAND
	EXPANSION VALVE, THERMOSTATIC
T	THERMOMETER, DIAL TYPE
T	THERMOMETER, VERTICAL TYPE
P	PRESSURE GAGE
	RISER DOWN (ELBOW)
	RISER UP (ELBOW)
	PITCH DOWN IN DIRECTION OF FLOW
	RISE OR DROP
CHS	CHILLED WATER SUPPLY
CHR	CHILLED WATER RETURN
C	CONDENSATE DRAIN

SYMBOL	DESCRIPTION
	BRANCH CONNECTION OUT OF TOP
	BRANCH CONNECTION OUT OF BOTTOM
	BRANCH CONNECTION OUT OF SIDE
	CAP ON END OF PIPE
	CONCENTRIC REDUCER
	ECCENTRIC REDUCER
	ANCHOR POINT
	FLEXIBLE CONNECTION
FS	FLOW SWITCH
	EXPANSION JOINT
	FLUSH VALVE
HB HB	HOSE BIBB
	WATER FIXTURE
	MIXING FAUCET COLD & HOT WATER
DV	DRAIN VALVE
	SIGHT GLASS
FM	FLOW METER
	PET COCK
	FLOW DIRECTION
	INLINE-PUMP
	CALIBRATED BALANCE VALVE
T	AQUASTAT
	MOTOR OPERATED BUTTERFLY VALVE
	CEILING FAN
	OSCILATING WALL FAN

ABBREVIATIONS

AAV	AIR VENT AUTOMATIC
AC	AIR CONDITIONING UNIT
ACMH	ACTUAL CUBIC METERS PER HOUR
ACC	AIR COOLED CHILLER
ACCU	AIR COOLED CONDENSING UNIT
AF	AIR FILTER
AFF	ABOVE FINISHED FLOOR
AD	AREA DRAIN
AHU	AIR HANDLING UNIT
AP	ACCESS PANEL
BF	BOTTOM FLAT
BD	BALANCING DAMPER
BDD	BACKDRAFT DAMPER
BFP	BACKFLOW PREVENTER
BHP	BRAKE HORSEPOWER
BOD	BOTTOM OF DUCT
°C	DEGREES CELSIUS
CD	CEILING DIFFUSER
CF	CEILING FAN
CHW	CHILLED WATER
CLG	CEILING
CM	CENTIMETER
CMH	CUBIC METER PER HOUR
CONN	CONNECTION
CONT	CONTINUATION
CU	CONDENSING UNIT
CW	CHILLED WATER COOLING COIL
D	DROP/DEPTH
DB	DRY BULB
DET	DETAIL
DIA	DIAMETER
DH	DUCT HEATER
DIFF	DIFFERENTIAL
DG	DOOR GRILLE
DN	DOWN
DWG	DRAWING
DX	DIRECT EXPANSION
EA	EXHAUST AIR
EAT	ENTERING AIR TEMPERATURE
EDB	ENTERING DRY BULB
EDH	ELECTRIC DUCT HEATER
EF	EXHAUST FAN
EG	EXHAUST GRILLE
EH	ELECTRICAL CABINET HEATER
EL	ELEVATION
ELEC	ELECTRICITY/ELECTRICAL
EQUIP	EQUIPMENT
ER	EXHAUST REGISTER
EWB	ENTERING WET BULB
EWH	ELECTRIC WATER HEATER
EWT	ENTERING WATER TEMPERATURE
EXH	EXHAUST
EXT	EXTERNAL/EXTERIOR
FCO	FLOOR CLEAN OUT
FCU	FAN COIL UNIT
FCV	FLOW CONTROL VALVE
FD	FLOOR DRAIN/FIRE DAMPER
FIN	FINISHED
FL	FLOOR
FOS	FUEL OIL SUPPLY
FOR	FUEL OIL RETURN
FS	FLOOR SINK
FSD	COMBINATION FIRE/SMOKE DAMPER
GA	GAUGE
HB	HOSE BIBB
HC	HEATING COIL
HORIZ	HORIZONTAL
HP	HORSEPOWER
HR	HOUR
HVAC	HEATING, VENTILATING & AIR CONDITIONING
HZ	HERTZ
ID	INSIDE DIAMETER
IH	INTAKE HOOD
IS	INERTIAL SEPARATOR
INV.EL.	INVERT ELEVATION
KG	KILOGRAM
KH	KITCHEN HOOD
KW	KILOWATT
KPa	KILO PASCALS
LAT	LEAVING AIR TEMPERATURE
LAV	LAVATORY
LFACP	LOCAL FIRE ALARM CONTROL PANEL
LPM	LITERS PER MINUTE
LPH	LITERS PER HOUR
LS	LEVEL SWITCH
LVG	LEAVING
LVR	LOUVER
M	METER
M^2	SQUARE METER
M^3	CUBIC METER
MAX	MAXIMUM
MECH	MECHANICAL
MIN	MINIMUM
MISC	MISCELLANEOUS
MM	MILLIMETER
MVD	MANUAL VOLUME DAMPER
NC	NORMALLY CLOSED
NFPA	NATIONAL FIRE PROTECTION ASSOCIATION
NO	NORMALLY OPEN/NUMBER
NOM	NOMINAL
NTS	NOT TO SCALE
OA	OUTSIDE AIR
OC	ON CENTER
OD	OVERFLOW DRAIN
OI	OIL INTERCEPTOR
OWF	OSCILATING WALL FAN
ϕ	PHASE
P	PUMP
PD	PRESSURE DIFFERENTIAL
PH	PROPANE SPACE HEATER
PRESS	PRESSURE
PRV	PRESSURE REDUCING VALVE
PS	PRESSURE SWITCH
QTY	QUANTITY
R	RISE
RA	RETURN AIR
RC	REFRIGERATION COOLER
RD	ROOF DRAIN
REQD	REQUIRED
RF	RETURN FAN
RG	RETURN GRILLE
RH	RELATIVE HUMIDITY
RL	REFRIGERANT LIQUID
RM	ROOM
RPM	REVOLUTIONS PER MINUTE
RR	RETURN REGISTER
RS	REFRIGERANT SUCTION
S	SOIL/SOUTH/SECOND
SA	SUPPLY AIR
SD	SUPPLY AIR DIFFUSER
SENS	SENSIBLE
SF	SUPPLY FAN
SG	SUPPLY GRILLE
SH	SHEET
SMACNA	SHEET METAL AND AIR CONDITIONING CONTRACTORS NATIONAL ASSOCIATION
SOV	SHUT-OFF VALVE
SP	STATIC PRESSURE
SQ FT	SQUARE FOOT/SQUARE FEET
SR	SUPPLY REGISTER
SST	SATURATED SUCTION TEMPERATURE
TCP	TEMPERATURE CONTROL PANEL
TCV	TEMPERATURE CONTROL VALVE
TEMP	TEMPERATURE
TG	TRANSFER GRILLE
TK	TANK
TP	TRAP PRIMER
TYP	TYPICAL
UC	UNDERCUT DOOR
UH	UNIT HEATER
UL	UNDERWRITER'S LABORATORIES
V	VOLTS
VEL	VELOCITY
VH	VENT HOOD
WCCU	WATER COOLED CONDENSING UNIT
WG	WATER GAGE

GENERAL NOTES:

1. SEE ARCHITECTURAL DRAWINGS FOR EXACT LOCATION OF LOUVERS, EQUIPMENT PADS AND SUPPORT PLATFORMS.
2. SEE ARCHITECTURAL REFLECTED CEILING PLAN FOR EXACT LOCATION OF DIFFUSERS, REGISTERS, AND GRIILLES.
3. INSULATE DUCTWORK AND REFRIGERANT PIPING SYSTEMS IN ACCORDANCE WITH SPEC. SECTION 01015, THERMAL INSULATION FOR MECHANICAL SYSTEMS.
4. ALL DIMENSIONS SHOWN IN mm UNLESS INDICATED OTHERWISE.
5. ALL DUCT DIMENSIONS SHOWN ON THE DRAWINGS ARE CLEAR INSIDE DIMENSIONS.
6. MOUNT WALL THERMOSTATS 1.5M ABOVE FINISHED FLOOR.
7. OUTDOOR CONDENSING UNITS SHALL BE INSTALLED ON 300 HIGH STEEL PLATFORM ON A CONCRETE PAD AND PROVIDED WITH VIBRATION PADS.

CONTROL LEGEND

SYMBOL	DESCRIPTION
M	MOTORIZED CONTROL DAMPER
	CONTROL CONNECTION
S/S	START/STOP CONTROL
H	HUMIDISTAT, TWO POSITION
Hm	HUMIDISTAT, MODULATING
H	HUMIDITY SENSOR
SD	SMOKE DETECTOR
T_2	THERMOSTAT, TWO POSITION
T	SPACE THERMOSTAT
FS	FLOW SWITCH
TI	TEMPERATURE INDICATOR
T_S	SPACE TEMPERATURE SENSOR

US ARMY CORPS OF ENGINEERS AFGHANISTAN ENGINEER DISTRICT

SYMBOL	DESCRIPTION	DATE	APPR.	SYMBOL	DESCRIPTION	DATE	APPR.

DESIGNED BY: DATE: XX-XX-XX REV. __
DWN BY: CKD BY: DESIGN FILE NO. DRAWING CODE
REVIEWED BY: FILE NAME: PLOT SCALE: PLOT DATE: XX-XX-XX
SUBMITTED BY:

U.S. ARMY ENGINEER DISTRICT, AFGHANISTAN
CORPS OF ENGINEERS
APO AE 96338

ENGINEERING AND CONSTRUCTION DIVISION

AFGHANISTAN NATIONAL POLICE (ANP) DISTRICT HEADQUARTERS COMPOUNDS - 1 STORY HQ
VARIOUS LOCATIONS, AFGHANISTAN
STANDARD DETAILS

LEGENDS AND ABBREVIATIONS

SHEET REFERENCE NUMBER:
SM-1

A1 Size 594mm x 841mm

ELECTRIC CABINET/UNIT HEATER SCHEDULE

EH X-X | UH X-X

EQUIPT. NO.	LOCATION (1)	DISCHARGE	CAPACITY (KW)	AIR FLOW (CMH)	ELECTRICAL DATA				TEMP. RISE DEG C	SOUND POWER dBA	REMARKS
					HP	VOLTS	PH	HZ			
EH-A-1	CHIEF'S TOILET	HORIZONTAL	1.5	136	50 W	220	1	50	30		WALL MOUNTED CABINET HEATER
EH-A-2	TOILETS (2)	HORIZONTAL	1	68	40 W	220	1	50	40		WALL MOUNTED CABINET HEATER
UH-A-1	TOILETS/ SHOWERS	HORIZONTAL	3.0	510	1/20	220	1	50	17		WALL MOUNTED UNIT HEATER SEE DETAIL C ON SHT. SM3.
UH-C-1	GUARD SHACK	HORIZONTAL	4	425	1/30	220	1	50	10		FLOOR MOUNTED CABINET HEATER
UH-E-1	WELL HOUSE	HORIZONTAL	3.0	510	1/20	220	1	50	17		WALL MOUNTED UNIT HEATER SEE DETAIL C ON SHT. SM3.

(1) SEE PLANS FOR LOCATION AND QUANTITY.

EXHAUST FAN SCHEDULE

EF A-X

EQUIPT. NO.	LOCATION	AIR QUANTITY CMH	S.P. MM-W.G.	FAN TYPE	ELECTRICAL DATA				CONTROL DIAGRAM	SOUND POWER dWA	REMARKS
					HP	VOLTS	PH	HZ			
EF-A-1	CHIEF'S TOILET	170	7	CEILING CABINET	80 WATTS	220	1	50	E1	50	CEILING MOUNTED WITH GRAVITY BACKDRAFT DAMPER AND CEILING GRILL
EF-A-2	TOILETS (3)	85	7	CEILING CABINET	80 WATTS	220	1	50	E1	50	CEILING MOUNTED WITH GRAVITY BACKDRAFT DAMPER AND CEILING GRILL
EF-A-3	PRISONER CELLS	510	7	WALL CENTRIFUGAL	1/12	220	1	50	E2	50	WALL MOUNTED WITH BACKDRAFT DAMPER
EF-A-4	MEN'S TOILET	510	7	WALL CENTRIFUGAL	1/12	220	1	50	E2	50	WALL MOUNTED WITH BACKDRAFT DAMPER
EF-A-5	KITCHEN	6,000	44	ROOF CENTRIFUGAL UPBLAST	2.0	220	1	50	E2	65	RATED FOR 175° C AND KITCHEN HOOD
EF-A-6	KITCHEN	1,700	8	WALL CENTRIFUGAL	1/4	220	1	50	E4	60	WALL MOUNTED WITH BACKDRAFT DAMPER
EF-E-1	WELL HOUSE	600	10	WALL CENTRIFUGAL	1/4	220	1	50	E4	65	WALL MOUNTED WITH BACKDRAFT DAMPER

CEILING AND OSCILLATING WALL FAN SCHEDULE

CF A-1 | OWF A-1

EQUIPT. NO.	AIR QUALITY CMH	FAN TYPE	ELECTRICAL DATA				REMARKS
			HP	VOLTS	PH	HZ	
CF-A-1	13,600	CEILING FAN	85 WATTS	220	1	50	CEILING MOUNTED
OWF-A-1	5,000	OSCILLATING WALL FAN	1/4	220	1	50	WALL MOUNTED

AIR HANDLING UNIT SCHEDULE

EQUIPT. NO.	LOCATION	DISCHARGE	CAPACITY (KW)	AIR FLOW (CMH)	ELECTRICAL DATA				TEMP. RISE DEG C	SOUND POWER dBA	REMARKS
					HP	VOLTS	PH	HZ			
AHU-1	CELLS	VERTICAL	5.2	1200	.25	220	1	50	35	45	DUCT MOUNTED HEATER

SUPPLY FAN SCHEDULE

SF A-X

EQUIPT. NO.	LOCATION	AIR QUANTITY CMH	S.P. MM-W.G.	FAN TYPE	ELECTRICAL DATA				CONTROL DIAGRAM	SOUND POWER dWA	REMARKS
					HP	VOLTS	PH	HZ			
SF-A-1	KITCHEN	5,100	25	INLINE CENTRIFUGAL	1.0	220	1	50	E2	60	CEILING MOUNTED W/GRAVITY BACKDRAFT DAMPER

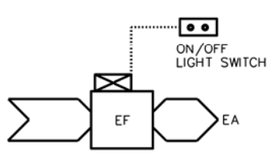

TEMPERATURE CONTROL DIAGRAM E1

E1 SEQUENCE OF CONTROL

START-UP

THE EXHAUST FAN SHALL BE STARTED MANUALLY FROM A LOCAL START/STOP LIGHT SWITCH.

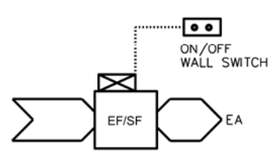

TEMPERATURE CONTROL DIAGRAM E2

E2 SEQUENCE OF CONTROL

START-UP

THE EXHAUST/SUPPLY FAN SHALL BE STARTED MANUALLY FROM A LOCAL START/STOP LIGHT SWITCH.

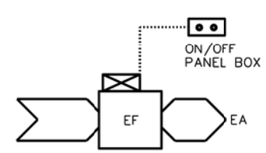

TEMPERATURE CONTROL DIAGRAM E3

E3 SEQUENCE OF CONTROL

START-UP

THE EXHAUST FAN SHALL BE STARTED MANUALLY FROM AN THE ON-OFF SWITCH IN THE PANEL BOX.

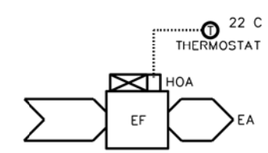

TEMPERATURE CONTROL DIAGRAM E4

E4 SEQUENCE OF CONTROL

START-UP

THE EXHAUST FAN SHALL BE STARTED MANUALLY BY PLACING THE HAND-OFF-AUTO (HOA) SWITCH IN THE HAND POSITION. IN THE AUTO POSITION, FAN OPERATION SHALL BE CONTROLLED OFF AN ADJUSTABLE THERMOSTAT.

US ARMY CORPS OF ENGINEERS AFGHANISTAN ENGINEER DISTRICT

SYMBOL	DESCRIPTION	DATE	APPR.	SYMBOL	DESCRIPTION	DATE	APPR.

U.S. ARMY ENGINEER DISTRICT, AFGHANISTAN
CORPS OF ENGINEERS
APO AE 96338

DESIGNED BY: | DATE: XX-XX-XX | REV. ___
DWN BY: | CKD BY: | DESIGN FILE NO.
REVIEWED BY: | DRAWING CODE
SUBMITTED BY: | FILE NAME: | PLOT SCALE: | PLOT DATE: XX-XX-XX

ENGINEERING AND CONSTRUCTION DIVISION

AFGHANISTAN NATIONAL POLICE (ANP) DISTRICT HEADQUARTERS COMPOUNDS - 1 STORY HQ
VARIOUS LOCATIONS, AFGHANISTAN
STANDARD DETAILS

MECHANICAL SCHEDULES

SHEET REFERENCE NUMBER:
SM-2

A1 Size 594mm x 841mm

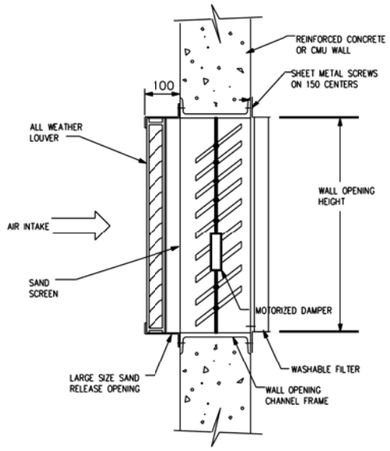

SAND TRAP TYPE LOUVER (A / SM3)
NOT TO SCALE

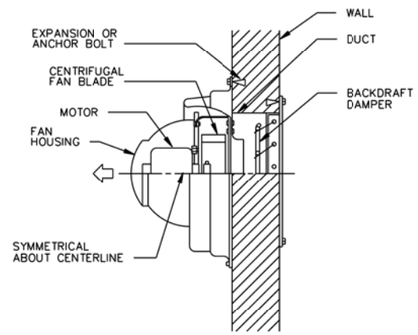

POWER WALL VENTILATOR DETAIL (B / SM3)
NOT TO SCALE

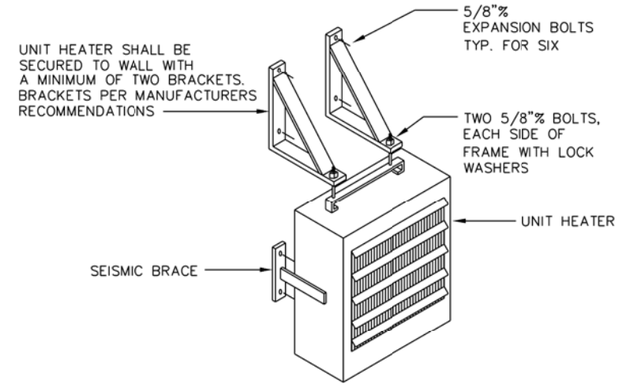

ELECTRIC UNIT HEATER DETAIL (C / SM3)
NOT TO SCALE

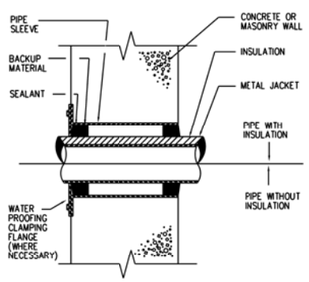

PIPE SLEEVE THRU WALL (E / SM3)
NOT TO SCALE

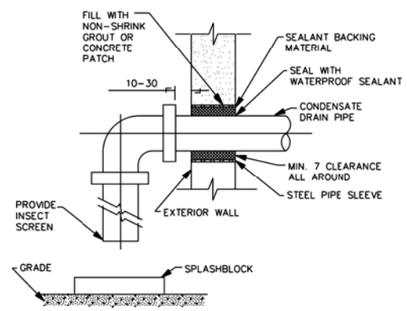

CONDENSATE DRAIN THRU EXTERIOR WALL (F / SM3)
NOT TO SCALE

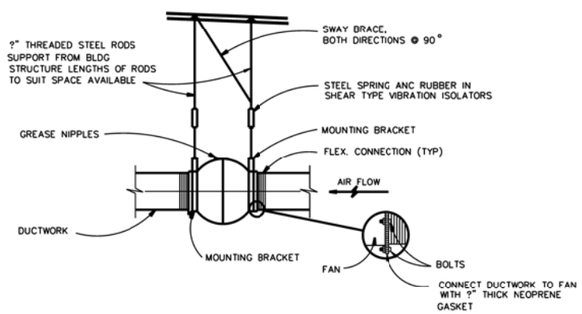

CENTRIFUGAL IN-LINE FAN (G / SM3)
NOT TO SCALE

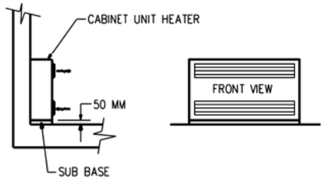

CABINET UNIT HEATER (H / SM3)
NOT TO SCALE

US ARMY CORPS OF ENGINEERS AFGHANISTAN ENGINEER DISTRICT

SYMBOL	DESCRIPTION	DATE	APPR.	SYMBOL	DESCRIPTION	DATE	APPR.

DESIGNED BY: DATE: XX-XX-XX REV. __
DWN BY: CKD BY: DESIGN FILE NO. DRAWING CODE
REVIEWED BY: FILE NAME: PLOT SCALE:
SUBMITTED BY: PLOT DATE: XX-XX-XX

U.S. ARMY ENGINEER DISTRICT, AFGHANISTAN
CORPS OF ENGINEERS
APO AE 96338

ENGINEERING AND CONSTRUCTION DIVISION

AFGHANISTAN NATIONAL POLICE (ANP) DISTRICT HEADQUARTERS COMPOUNDS - 1 STORY HQ
VARIOUS LOCATIONS, AFGHANISTAN
STANDARD DETAILS

MECHANICAL STANDARD DETAILS

SHEET REFERENCE NUMBER:
SM-3

A1 Size 594mm x 841mm

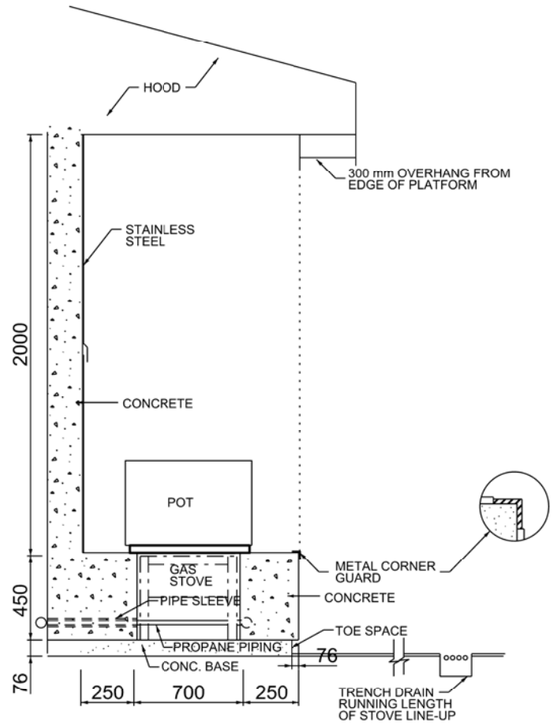

GAS STOVE SECTION

SCALE: NTS

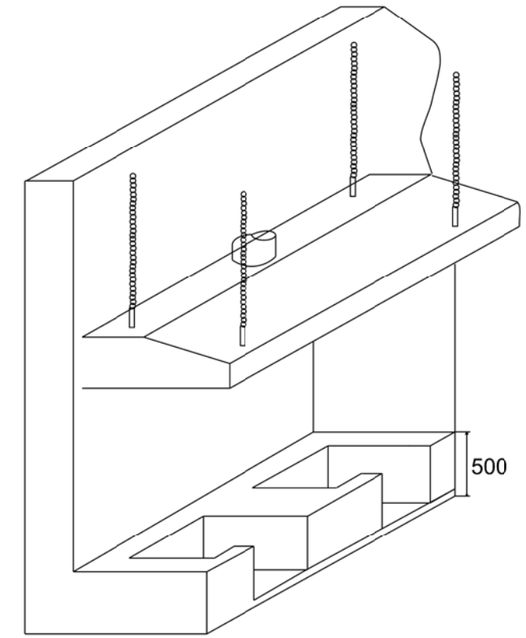

ISOMETRIC VIEW

SCALE: NTS

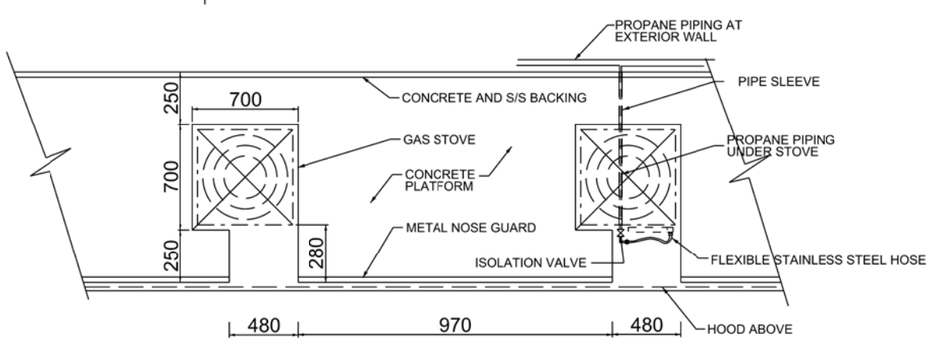

GAS STOVE PLAN

SCALE: NTS

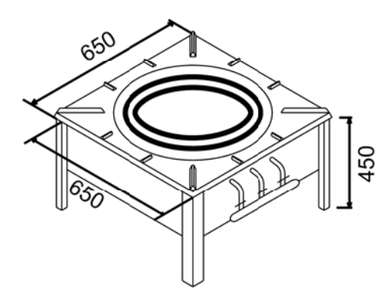

GAS STOVE VIEW

SCALE: NTS

NOTES:
- DIMENSIONS SHOWN ARE BASED ON A SPECIFIC STOVE MODEL
- CONTRACTOR SHALL ADJUST THE DIMENSIONS BASED ON THE ACTUAL STOVE DIMENSIONS
- THE SURFACE OF THE STOVE SHALL BE FLUSH WITH THE CONCRETE PLATFORM

US ARMY CORPS OF ENGINEERS AFGHANISTAN ENGINEER DISTRICT

SYMBOL	DESCRIPTION	DATE	APPR.	SYMBOL	DESCRIPTION	DATE	APPR.

DESIGNED BY: DATE: XX-XX-XX REV: __
DWN BY: CKD BY: DESIGN FILE NO.
REVIEWED BY: DRAWING CODE:
SUBMITTED BY: FILE NAME: PLOT SCALE: PLOT DATE: XX-XX-XX

U.S. ARMY ENGINEER DISTRICT, AFGHANISTAN
CORPS OF ENGINEERS
APO AE 96338

ENGINEERING AND CONSTRUCTION DIVISION

AFGHANISTAN NATIONAL POLICE (ANP) DISTRICT HEADQUARTERS COMPOUNDS - 1 STORY HQ
VARIOUS LOCATIONS, AFGHANISTAN
STANDARD DETAILS

PROPANE COOKING STOVE

SHEET REFERENCE NUMBER:
SM-4
SHEET --- OF ---

A1 Size 594mm x 841mm

LEGEND

- GATE VALVE
- GLOBE VALVE
- BUTTERFLY VALVE
- CHECK VALVE
- STOP CHECK VALVE
- PLUG VALVE
- 3-WAY VALVE
- RELIEF OR SAFETY VALVE
- ANGLE VALVE
- ANGLE GLOBE VALVE
- BALANCING COCK
- AIR VALVE
- HOSE GATE DRAIN VALVE
- EXPANSION VALVE
- AAV — AIR VENT, AUTOMATIC
- AIR VENT, MANUAL
- M — MOTORIZED VALVE (MODULATING OR TWO POSITION)
- S — SOLENOID VALVE
- M — 3-WAY MOTORIZED VALVE (MOD. OR 3-POSITION)
- S — 3-WAY SOLENOID VALVE
- TEMPERATURE REGULATING VALVE
- AIR ELIMINATOR
- BACK PRESSURE VALVE
- PRESSURE REDUCING VALVE
- D.V. — DRAIN VALVE
- SLEEVE COUPLING (SC)
- BP — BACKFLOW PREVENTER
- WHA 'A' — WATER HAMMER ARRESTOR

LEGEND

- P — PRESSURE GAUGE
- T — THERMOMETER, DIAL TYPE
- T — THERMOMETER, VERTICAL TYPE
- H.B. — HOSE BIBB, PLAN
- H.B. — HOSE BIBB, ELEV.
- W.H. — WALL HYDRANT
- CO — EXPOSED CLEANOUT
- FCO — FLOOR CLEANOUT
- WCO — WALL CLEANOUT
- BALL VALVE
- UNION
- FLANGE SET
- FLEXIBLE HOSE/CONNECTION
- Y-TYPE STRAINER
- SIGHT GLASS
- GAUGE GLASS W/COCKS
- FILTER / DRYER
- TANK AIR CONTROL FITTING
- CAPPED / PLUGGED CONNECTION
- REDUCER - INCREASER
- EXPANSION LOOP
- EXPANSION JOINT
- SUPPORT LOCATION
- PIPE TURNING DOWN
- PIPE TURNING UP
- FD — FLOOR DRAIN
- ROOF DRAIN
- POINT OF CONNECTION TO EXISTING SYSTEM

LEGEND

- A — COMPRESSED AIR DROP
- HU — HUMIDIFIER
- I.F. — INSULATING FLANGE
- THERMAL RELIEF VALVE W/ SIGHT FLOW INDICATOR
- S — BASKET STRAINER
- W — WATER METER
- TS — FLOW CONTROL VALVE
- SAMPLE CONNECTION
- FIRE SAFETY VALVE
- C — NON - SURGE CHECK VALVE
- FLOW CONTROL VALVE
- P — PRESSURE REGULATING VALVE
- W — WATER SLUG VALVE (WSV)

ABBREVIATIONS

A A	AMERICAN DISABILITIES ACT
CO	EXPOSED CLEAN OUT
CW	COLD WATER
EWH	ELECTRIC WATER HEATER
FCO	FLOOR CLEAN OUT
FD	FLOOR DRAIN
FFE	FINISHED FLOOR ELEVATION
FS	FLOOR SINK
GWH	GAS WATER HEATER
HB	HOSE BIBB
HW	HOT WATER
HWR	HOT WATER CIRCULATION
N.C.	NORMALLY CLOSED
P	PUMP
S.R.	SHORT RADIUS
S.S.	STAINLESS STEEL
V	VENT
VTR	VENT THROUGH ROOF
W	WASTE
WCO	WALL CLEAN OUT
WH	WALL HYDRANT

- SOIL OR WASTE PIPE ABOVE FLOOR
- SOIL OR WASTE PIPE BELOW FLOOR (MIN. 50 SIZE)
- COLD WATER, DOMESTIC (PLAN)
- HOT WATER, DOMESTIC (PLAN)
- HOT WATER, CIRCULATION, DOMESTIC (PLAN)
- VENT PIPE
- C — CONDENSATE DRAIN
- CA — COMPRESSED AIR
- HPIW — HIGH PRESSURE INDUSTRIAL WATER
- IW — INDUSTRIAL WATER

EQUIPMENT DESIGNATION

EF — EQUIPMENT TYPE
A-1 — EQUIPMENT NUMBER
BUILDING NUMBER

DETAIL REFERENCE

X — REFERENCE DESIGNATION LETTER
X — DETAIL SHEET LOCATION

PLUMBING FIXTURE SCHEDULE

FIX. NO.	SYMBOL	FIXTURE NAME	C.W.	H.W.	WASTE (W)	VENT (V)	REMARKS
P1		EASTERN WATER CLOSET (FLUSH TANK)	15	--	100	50	CW CONNECTION SHALL BE 25 UNLESS NOTED OTHERWISE. FLOOR OUTLET
P2		ABOLUTION (2 STATION)	15	--	50	32	(2) COMPLETE WALL MOUNTED LAVATORY VALVE ASSEMBLIES AND TRIM MOUNTED 600mm A.F.F.
P3		LAVATORY	15	15	32	32	
P3A		LAVATORY (2 STATION GANG)	15	15	32	32	
P4		MOP SINK (FLOOR MOUNT JANITOR TYPE)	15	15	50	40	DRAIN ON FLOOR OR AS INDICATED
P5		SHOWER	15	15	40	32	
P6		NOT USED					
P7		NOT USED					
P8		NOT USED					
P9		KITCHEN SINK	15	15	40	32	
P10		GREASE INTERCEPTOR			80	50	MANUAL CLEANING TYPE, WITH 135 LPM FLOW RATE

WATER HAMMER ARRESTOR SIZING CHART

P.D.I. SYMBOL	FIXTURE UNIT RATING	NIPPLE SIZE (MM)	CHAMBER HEIGHT (MM)
A	1-11	20	100
B	12-32	25	125
C	33-60	25	150
D	61-113	25	175
E	114-154	25	200
F	155-330	25	225

P. D. I. = PLUMBING AND DRAINAGE INSTITUTE.

GENERAL NOTES:

1. DRAINAGE PIPING LOCATED BELOW FLOORS SHALL BE ROUTED BELOW FOOTINGS UNLESS INDICATED OTHERWISE.
2. INTERIOR SOIL AND WASTE PIPING 80mm AND SMALLER SHALL BE ROUTED WITH A 2% SLOPE. INTERIOR SOIL AND WASTE PIPING 100mm AND LARGER SHALL BE ROUTED WITH A MINIMUM 1% SLOPE.
3. ALL DIMENSIONS SHOWN HERE AND ON PLANS ARE IN MM UNLESS INDICATED OTHERWISE.
4. MINIMUM BURIED PIPE SIZE SHALL BE 50 mm.
5. SEE STANDARD SHEET SM-1 FOR ADDITIONAL ABBREVIATIONS.
6. FOR FOOD SERVICE EQUIPMENT DESCRIPTION, SEE ARCHITECTURAL DRAWINGS.

US ARMY CORPS OF ENGINEERS AFGHANISTAN ENGINEER DISTRICT

SYMBOL	DESCRIPTION	DATE	APPR.	SYMBOL	DESCRIPTION	DATE	APPR.

DESIGNED BY: DATE: XX-XX-XX REV. __
DWN BY: CKD BY: DESIGN FILE NO. DRAWING CODE
REVIEWED BY: FILE NAME: PLOT SCALE:
SUBMITTED BY: PLOT DATE: XX-XX-XX

U.S. ARMY ENGINEER DISTRICT, AFGHANISTAN
CORPS OF ENGINEERS
APO AE 96338

ENGINEERING AND CONSTRUCTION DIVISION

AFGHANISTAN NATIONAL POLICE (ANP) DISTRICT HEADQUARTERS COMPOUNDS - 1 STORY HQ
VARIOUS LOCATIONS, AFGHANISTAN
STANDARD DETAILS

LEGEND AND ABBREVIATIONS

SHEET REFERENCE NUMBER:
SP-1

A1 Size 594mm x 841mm

NOTES:
1. PIPING SHALL BE PLASTIC PVC TO MATCH WATER DISTRIBUTION SYSTEM.
2. CONTRACTOR SHALL INSTALL DIELECTRIC UNION BETWEEN CONNECTIONS OF DISSIMILAR METALS.

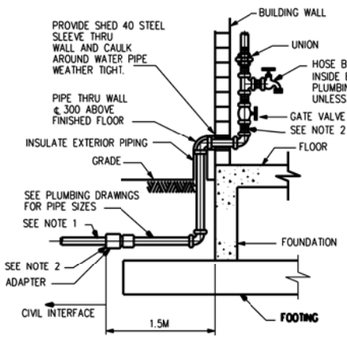

WATER SERVICE ENTRANCE SIDE VIEW

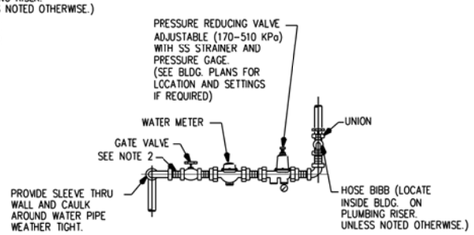

WATER SERVICE ENTRANCE FRONT VIEW

WATER SERVICE ENTRANCE DETAILS (A / SP2)
NOT TO SCALE

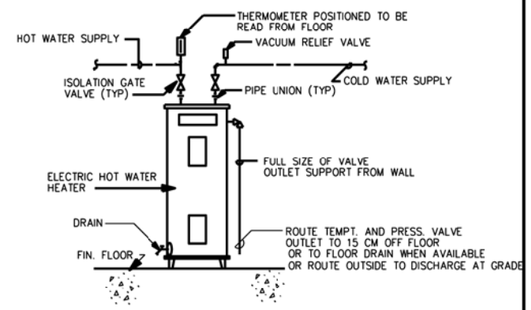

ELECTRIC WATER HEATER DETAIL (B / SP2)
NOT TO SCALE

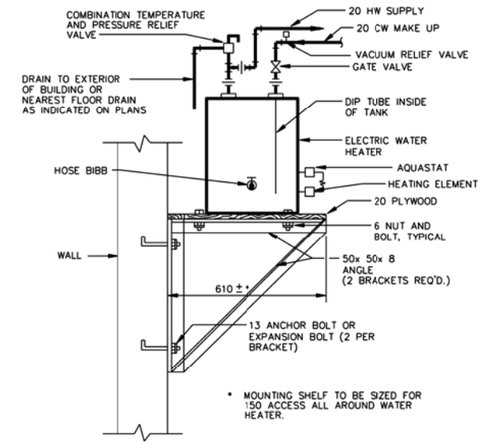

IF WATER HEATER COMES EQUIPPED WITH A MOUNTING BRACKET, CONTRACTOR WILL SUBMIT TO THE ENGINEER FOR APPROVAL, ALTERNATE INSTALLATION DETAIL AS RECOMMENDED BY HEATER MANUFACTURER FOR THE TYPE OF WALL (CMU,METAL STUD, ETC.) APPLICABLE

WALL MOUNTED ELECTRIC WATER HEATER DETAIL (C / SP2)
NOT TO SCALE

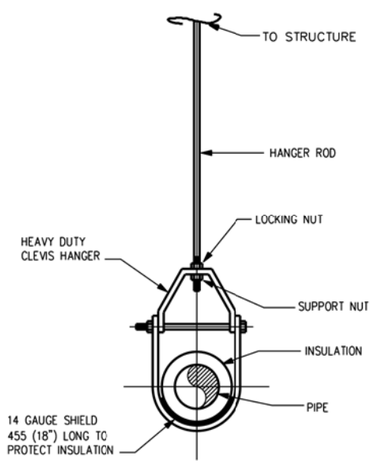

CLEVIS HANGER DETAIL (D / SP2)
NOT TO SCALE

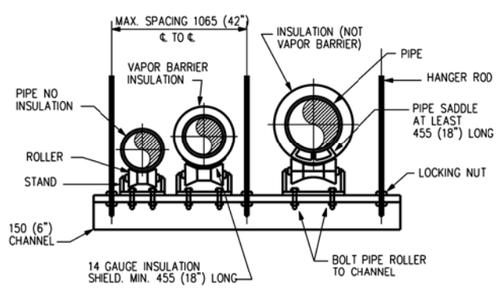

TRAPEZE HANGER DETAIL (E / SP2)
NOT TO SCALE

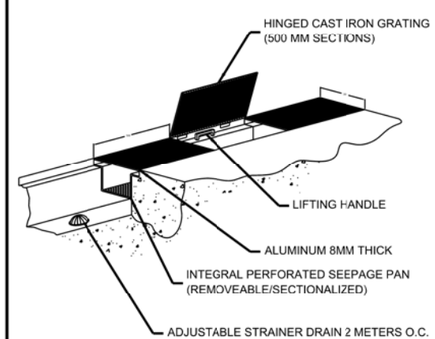

FLOOR TRENCH DRAIN DETAIL (F / SP2)
NOT TO SCALE

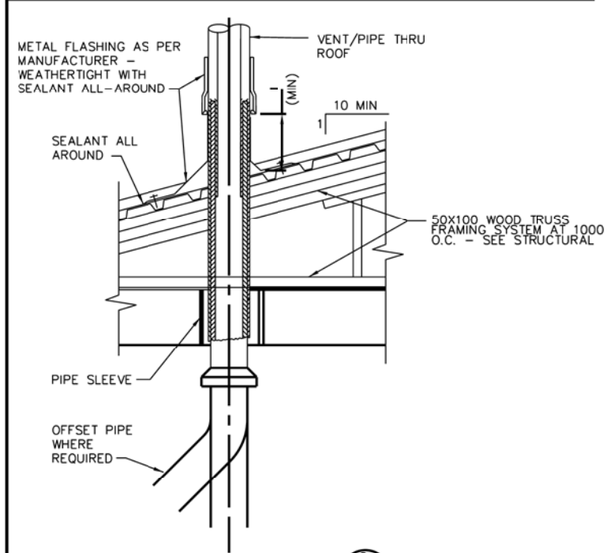

VENT THRU ROOF DETAIL (G / SP2)
NOT TO SCALE

US ARMY CORPS OF ENGINEERS AFGHANISTAN ENGINEER DISTRICT

SYMBOL	DESCRIPTION	DATE	APPR.	SYMBOL	DESCRIPTION	DATE	APPR.

DESIGNED BY: | DATE: XX-XX-XX | REV. ___
DWN BY: | CKD BY: | DESIGN FILE NO.
REVIEWED BY: | DRAWING CODE
SUBMITTED BY: | FILE NAME: | PLOT SCALE: | PLOT DATE: XXXX-XX

U.S. ARMY ENGINEER DISTRICT, AFGHANISTAN
CORPS OF ENGINEERS
APO AE 96338

ENGINEERING AND CONSTRUCTION DIVISION

AFGHANISTAN NATIONAL POLICE (ANP) DISTRICT HEADQUARTERS COMPOUNDS - 1 STORY HQ
VARIOUS LOCATIONS, AFGHANISTAN
STANDARD DETAILS

STANDARD PLUMBING DETAILS

SHEET REFERENCE NUMBER:
SP-2

A1 Size 594mm x 841mm

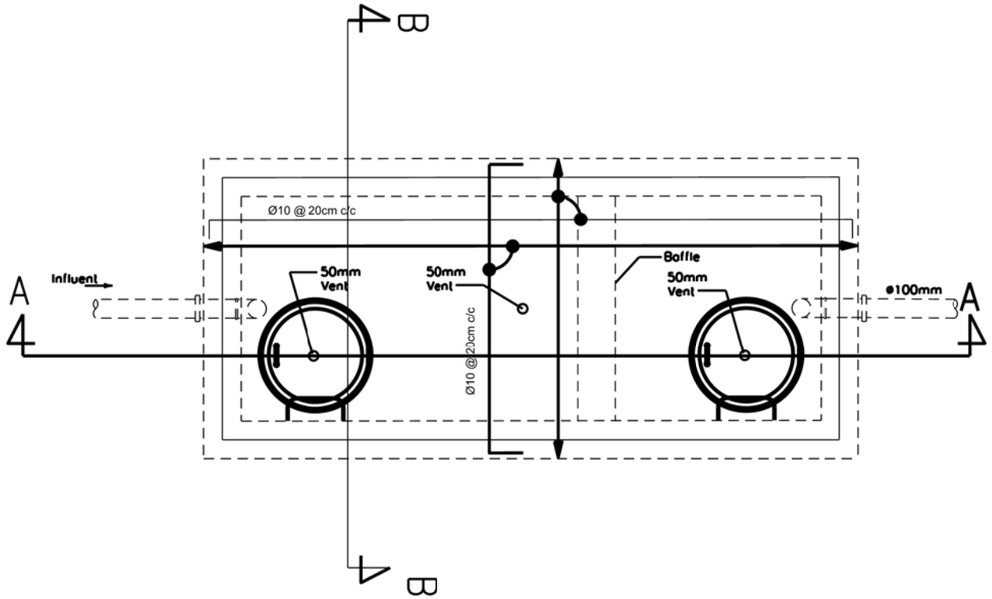

01 GREASE & OIL/WATER SEPARATOR PLAN

SP-3 REF:

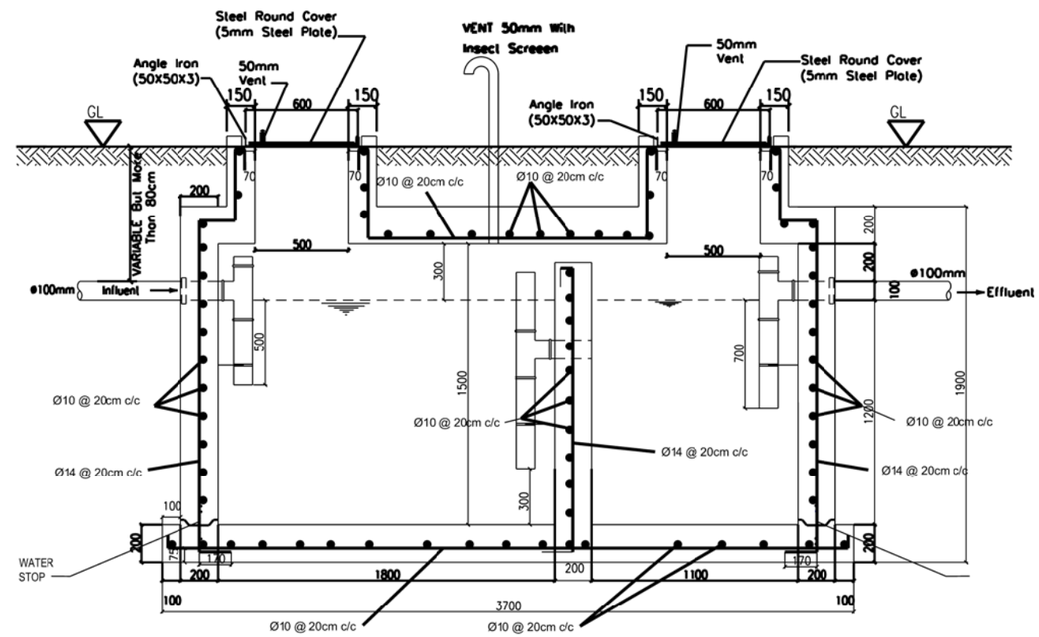

02 SECTION (A-A)

SP-3 REF:

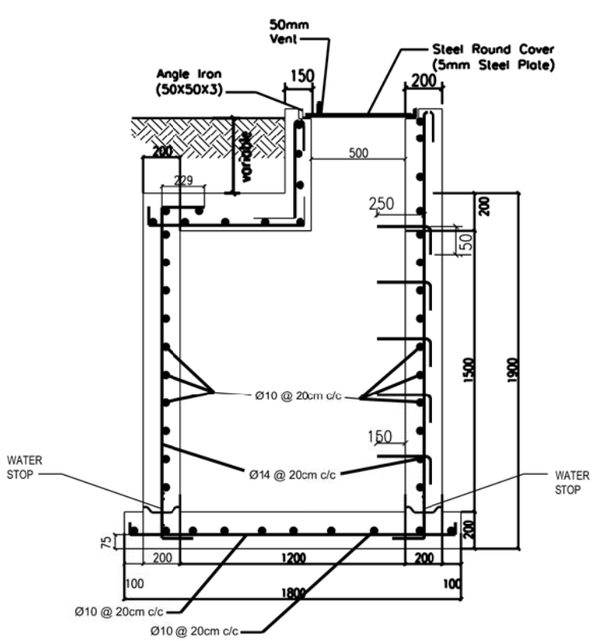

03 SECTION (B-B)

SP-3 REF:

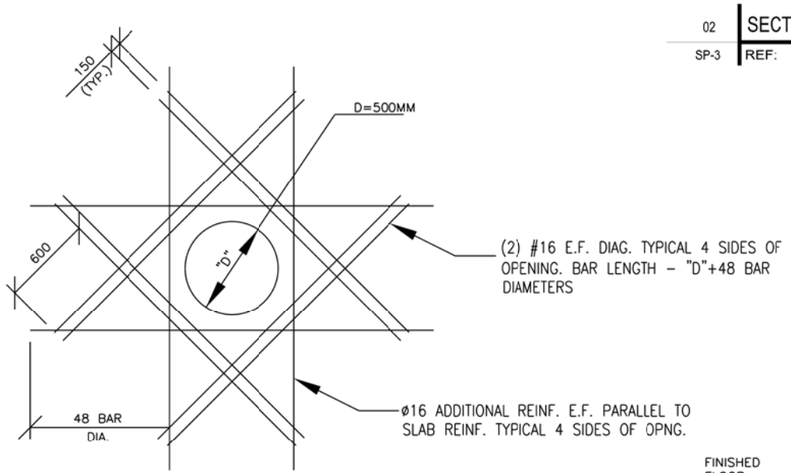

04 OPENING REINFORCEMENT

SP-3 REF :

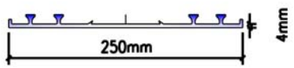

Water Stop Details

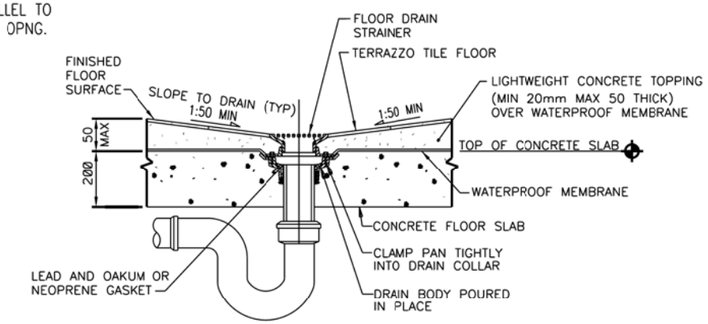

TYPICAL FLOOR DRAIN DETAIL (B / SP3)

NOT TO SCALE

US ARMY CORPS OF ENGINEERS AFGHANISTAN ENGINEER DISTRICT

SYMBOL	DESCRIPTION	DATE	APPR	SYMBOL	DESCRIPTION	DATE	APPR

DESIGNED BY: DWN BY: CKD BY: REVIEWED BY: SUBMITTED BY: DATE: XX-XX-XX DESIGN FILE NO. DRAWING CODE: FILE NAME: PLOT SCALE: PLOT DATE: XX-XX-XX REV

U.S. ARMY ENGINEER DISTRICT, AFGHANISTAN CORPS OF ENGINEERS APO AE 96338

ENGINEERING AND CONSTRUCTION DIVISION

AFGHANISTAN NATIONAL POLICE (ANP) DISTRICT HEADQUARTERS COMPOUNDS - 1 STORY HQ

VARIOUS LOCATIONS, AFGHANISTAN

STANDARD DETAILS

STANDARD PLUMBING DETAILS

SHEET REFERENCE NUMBER:

SP-3

A1 Size 594mm x 841mm

LEGEND

- FLUORESCENT LIGHT FIXTURE.
- LIGHT FIXTURES, FIXTURE MARK AS INDICATED
- EXIT SIGN, TYPE F FIXTURE, MTD 2.2M AFF
- EMERGENCY LIGHT, TYPE C FIXTURE, MTD 2.4M AFF
- WP,S — DUPLEX SOCKET OUTLET (13A, 250V), BS 1363
  S – A/C OR WATER HEATER SWITCH-RECEPTACLE COMBINATION
  WP – WEATHERPROOF
- J — JUNCTION BOX
- $S_{3,WP}$ — SWITCH, WP-WEATHERPROOF, 3-3 WAY, EP-EXPLOSION PROOF
- S — LIGHT SWITCH
- S_F — EXHAUST FAN SWITCH
- S_{CF} — CEILING FAN SWITCH
- J_{20} — SAFETY DISCONNECT SWITCH, SWITCH SHALL BE 1P56 ENCLOSURE, 20A UNO
- 1/3 — MOTOR (1/3 HP)
- S_M — MANUAL MOTOR STARTER
- ELECTRIC CABINET/ UNIT HEATER
- EWH — ELECTRIC WATER HEATER
- LP-2 — HOMERUN, PNL LP, CIRCUIT 2
- LP-2 — HOMERUN, PNL LP, 3PH CKT, CIRCUIT 2
- COMBINATION LIGHTING AND POWER PANEL (LP), OR LOAD CENTER (LC)
- 400AT/600AF — 3 POLE, 600A ADJUSTABLE TRIP CIRCUIT BREAKER
- 150AT/3P — 3 POLE, 150A CIRCUIT BREAKER
- COMBINATION TELEPHONE/DATA OUTLET. SEE DETAIL SHEET SE-5 MOUNTED 0.5M AFF
- W — SINGLE TELEPHONE ONLY OUTLET, WALL MOUNTED 1.2m AFF
- TBB — TELEPHONE BACK BOARD (TVBB INDICATES TELEVISION BACKBOARD) (1200mmx600mmx12mm)NLESS NOTED OTHERWISE
- EXOTHERMIC WELDED GROUND CONNECTION
- GROUND ROD (EARTH ELECTRODE) WITH EXOTHERMIC WELD CONNECTION, COPPER, 20mm DIA X 3.0m LENGTH
- EM 1 — ELECTRIC POWER MANHOLE, H INDICATES HANDHOLE.
- CM 1 — COMMUNICATIONS MANHOLE, H INDICATES HANDHOLE.
- SE — UNDERGROUND SECONDARY DISTRIBUTION POWER LINE, DIRECT BURIED IN SCHEDULE 80 PVC C, UNO
- UNDERGROUND DIRECT BURIED SCH 40 PVC C, AS INDICATED, 600 BFG, UNO

GENERAL NOTES:

1. REFER TO SECTION 01015 FOR ADDITIONAL / DETAIL REQUIREMENTS.
2. ALL WIRING INSTALLATION FOR LIGHTING, POWER, AND TELECOMMUNICATIONS, SHALL BE IN APPROVED METAL CONDUIT, EITHER CONCEALED OR SURFACE MTD.
3. EXIT AND EMERGENCY LIGHTING FIXTURES SHALL BE CONNECTED TO AN UN SWITCHED POWER CIRCUIT.
4. MOUNTING HEIGHT FOR ALL PENDANT MTD LIGHT FIXTURE IS 3M AFF UNO ON THE DRAWINGS OR IN THE LIGHT FIXTURE SCH.
5. MOUNT ALL LIGHT AND FAN SWITCHES 1.2M AFF UNO.
6. MOUNT ALL RECEPTACLES 500 AFF UNO. MOUNT ALL COUNTER TOP RECEPTACLES 100 ABOVE COUNTER TOP, AND PROVIDE GFI PROTECTION.
7. ALL SPARE OR EMPTY CONDUITS SHALL HAVE A PULL STRING SECURED AT BOTH ENDS OF CONDUIT.
8. ALL ELECTRICAL SYSTEMS SHALL BE INSTALLED IN ACCORDANCE WITH THE MANUFACTURERS RECOMMENDATIONS AND THE NEC.
9. BOND LIGHTING PROTECTION GROUND SYSTEMS TO BUILDING ELECTRICAL GROUND SYSTEM PER NEC 250.16

LIGHTING FIXTURE SCHEDULE

* SEE LIGHTING FIXTURE DETAILS ON DRAWINGS SE-2 & SE-3

FIXTURE MARK	LINE VOLT.	TYPE	LAMPS NO.	LAMPS WATTAGE	MOUNTING	REMARKS
A	240	230B1	3	40	SURFACE/PENDANT	INDUSTRIAL FLUORESCENT, WITH ELECTRONIC BALLAST
A1	240	230A1	2	40	SURFACE/PENDANT	INDUSTRIAL FLUORESCENT, WITH ELECTRONIC BALLAST
B	240	232	2	40	SURFACE/PENDANT	VAPORTIGHT FLUORESCENT
C	240	603	–	–	SURFACE	EMERGENCY BATTERY PACK, MTD 2.4M AFF
D	240	PH8	1	250	PENDANT	METAL HALIDE LOW BAY INDUSTRIAL
E	240	–	1	1000	ROOF	SPOT LIGHT
F	240	XF2	1	8	SURFACE/PENDANT	EXIT LIGHT MTD 2.2M AFF
G	240	502R	1	70	SURFACE	HID EXTERIOR WALLL LIGHT
H	240	SF-11	1	100	SURFACE	VAPOR PROOF PROTECTED INCANDESCENT WITH CLEAR, RED, BLUE, OR BLACK GLOBE AS INDICATED ON THE DRAWINGS

ABBREVIATIONS

AFG	ABOVE FINISHED GRADE
AFF	ABOVE FINISHED FLOOR
AF	AMP FRAME
AT	AMP TRIP
ACCU	AIR COOLED CONDENSING UNIT
A	AMPERE
AHU	AIR HANDLING UNIT
AIC	AMPERE INTERRUPTING CAPACITY
BFG	BELOW FINISHED GRADE
CH	COMMUNICATIONS HANDHOLE
CKT	CIRCUIT
CM	COMMUNICATIONS MANHOLE
CND	CONDUCTOR(S)
C	CONDUIT
COR	CONTRACTING OFFICERS REPRESENTATIVE
EF	EXHAUST FAN
EH	ELECTRIC POWER HANDHOLE
EM	ELECTRIC POWER MANHOLE
EP	EXPLOSION PROOF
ELCB	EARTH LEAKAGE CIRCUIT BREAKER
FACP	FIRE ALARM CONTROL PANEL
GFI	GROUND FAULT INTERRUPTING
GFCI	GOVERNMENT FURNISHED CONTRACTOR INSTALLED
HP	HORSEPOWER
HPS	HIGH PRESSURE SODIUM
HZ	HERTZ
KV	KILOVOLT
KW	KILOWATT
KVA	KILOVOLT-AMPERE
M	METERS
MBB	METERING BACK BOARD
MDF	MAIN DISTRIBUTION FRAME
MEW	HOST NATION MINISTRY OF ELECTRICITY AND WATER
MTD	MOUNTED
NEC	NATIONAL ELECTRICAL CODE
NFPA	NATIONAL FIRE PROTECTION ASSOCIATION
NIC	NOT IN CONTRACT
PH, Ø	PHASE
P	POLE
XXX	HOST NATION ARMED FORCES
TEL	TEL CO.
RM	ROOM
SCH	SCHEDULE
SN	SOLID NEUTRAL
TBB	TELEPHONE TERMINAL BACKBOARD
TCB	TELEPHONE CONNECTION BOX (BY TEL CO)
TYP.	TYPICAL
UNO	UNLESS NOTED OTHERWISE
V	VOLT
W	WIRE
WP	WEATHERPROOF
XFMR,T	TRANSFORMER

EQUIVALENT CONDUIT SIZE

mm	INCHES
20	3/4
25	1
32	1 1/4
38	1 1/2
50	2
60	2 1/2
80	3
90	3 1/2
100	4

METRIC COPPER CONDUCTOR CONVERSION CHART

AWG KCMIL	COMPUTED CONVERSION mm^2	ADVISED CROSS SECTION mm^2
16	1.31	1.5
14	2.08	2.5
12	3.31	4
10	5.27	6
8	8.4	10
6	13.3	16
4	21.2	25
3	26.7	25
2	33.6	35
1	42.4	50
1/0	53.4	50
2/0	67.5	70
3/0	85.0	95
4/0	107.2	120
250	126.7	120
300	152.0	150
350	177.4	185
400	202.7	240
500	253.4	300

US ARMY CORPS OF ENGINEERS AFGHANISTAN ENGINEER DISTRICT

SYMBOL	DESCRIPTION	DATE	APPR.	SYMBOL	DESCRIPTION	DATE	APPR.

U.S. ARMY ENGINEER DISTRICT, AFGHANISTAN
CORPS OF ENGINEERS
APO AE 96338

DESIGNED BY: DATE: XX-XX-XX REV. __
DWN BY: CKD BY: DESIGN FILE NO.
REVIEWED BY: DRAWING CODE
SUBMITTED BY: FILE NAME: PLOT SCALE: PLOT DATE: XX-XX-XX

ENGINEERING AND CONSTRUCTION DIVISION

AFGHANISTAN NATIONAL POLICE (ANP) DISTRICT HEADQUARTERS COMPOUNDS - 1 STORY HQ
VARIOUS LOCATIONS, AFGHANISTAN
STANDARD DETAILS

LEGEND & ABBREVIATIONS

SHEET REFERENCE NUMBER:
SE-1

A1 Size 594mm x 841mm

FIXTURE MARK A

TYPE 230
SUSPENSION MOUNTED, INDUSTRIAL,
OPEN TYPE FLUORESCENT FIXTURE, 4-FOOT

FIRST SUFFIX	SECOND-SUFFIX	DESCRIPTION
A		TWO LAMPS
B		THREE LAMPS
C		FOUR LAMPS
	1	8 TO 15 PERCENT UPLIGHT
	2	18 TO 25 PERCENT UPLIGHT

FIXTURE SHALL CONFORM TO UL1570. STANDARD BALLAST(S) SHALL BE THE CLASS P, HIGH POWER FACTOR TYPE APPROVED FOR THE APPLICATION BY THE CERTIFIED BALLAST MANUFACTURERS. CHANNEL HOUSING, END FITTINGS, AND REFLECTOR SHALL BE CONSTRUCTED WITH DIE-FORMED, COLD-ROLLED STEEL. REFLECTOR FINISH SHALL BE PORCELIAN ENAMEL, BAKED WHITE ENAMEL OR ALUMINUM OXIDE. SOCKETS SHALL BE OF THE TYPE REQUIRING A FORCED MOVEMENT ALONG THE LONGITUDINAL AXIS OF THE LAMP FOR INSERTION AND REMOVAL OF THE LAMP. FIXTURE SHALL BE PREWIRED. FLUORESCENT TUBES SHALL BE PROTECTED BY A VIRGIN ACRYLIC PROTECTIVE SLEEVE AND CLEAR PLASTIC VENTED END CAPS.

FIXTURE MARK B

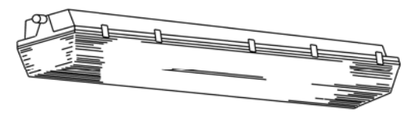

TYPE 232
4-FOOT FIXTURE LENGTH

ENCLOSED AND GASKETED, VAPOR-TIGHT FLUORESCENT FIXTURE
FOR SURFACE OR PENDANT MOUNTING

FIXTURE SHALL CONFORM TO UL1570 AND SHALL BE VAPOR-TIGHT AND SUITABLE FOR USE IN WET LOCATIONS. FIXTURE SHALL HAVE ONE-PIECE HOUSINGOF MOLDED HIGH-IMPACT PLASTIC OR REINFORCED FIBERGLASS. HOUSING BODY SHALL HAVE AN INTERNAL, DIE-FORMED, COLD-ROLLED STEEL CHANNEL WITH COVER TO PROVIDE FIXTURE RIGIDITY AND TO CONTAIN ELECTRIC COMPONENTS. THE METAL CHANNEL AND COVER SHALL RECEIVE A RUST INHIBITIVE COATING BEFORE APPLICATION OF THE FINISH COAT, WHICH SHALL CONSIST OF BAKED WHITE ENAMEL OR PORCELAIN ENAMEL. THE LENS SHALL BE ONE PIECE, OF HIGH-IMPACT-RESISTANT ACRYLIC, AND SHALL HAVE SMOOTH EXTERIOR SURFACE AND STIPPLED OR PEBBLED INTERIOR SURFACE. THE LENS SHALL BE SECURED TO THE HOUSING WITH CAPTIVE MOLDED PLASTIC OR STAINLESS STEEL SPRING LATCHES. A CONTINUOUS GASKET SHALL BE PROVIDED TO FORM A VAPOR SEAL BETWEEN THE LENS AND THE FIXTURE BODY. ALL OPENINGS IN THE HOUSING FOR MOUNTING, CONDUIT, ETC., SHALL BE CAPABLE OF FORMING A VAPOR-TIGHT SEAL. BALLAST(S) SHALL BE COLD WEATHER TYPE FOR STARTING TEMPERATURES DOWN TO MINUS 20 DEGREES F. STANDARD BALLAST(S) SHALL BE THE CLASS P, HIGH POWER FACTOR TYPE APPROVED FOR THE APPLICATION BY THE CERTIFIED BALLAST MANUFACTURERS. FIXTURE SHALL BE PREWIRED, AND PROVIDED WITH LAMPS THAT ARE PROPERLY MATED TO THE BALLAST OPERATING CHARACTERISTICS.

FIXTURE MARK E

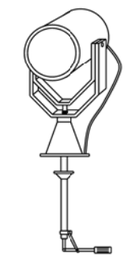

SEALED BEAM SPOTLIGHT, MOUNTED TO GUARD TOWER ROOF, WITH 1000 WATT HALOGEN NARROW SPOT PAR 56 LAMP. SPOTLIGHT SHALL BE PROVIDED WITH TWIST LEVER CONTROL, MINIMUM 10" DIAMETER LIGHT HEAD, WORKING RANGE OF 1/2 MILE, COUPLING FOR OPERATION FROM GUARD TOWER PLATFORM AND RATED FOR OUTDOOR ROUGH SERVICE WITH ANTI-SHOCK LAMPHOLDER.

FIXTURE MARK H

TYPE SF11

FEATURES

LAMP TYPE: INCCANDESCENT BULB: 100W
GLASS GLOBE CLEAR, BLUE, RED, AND BLACK LAMPS INDICATED ON THE DRAWINGS
PROFILE: 1 LAMP
SHIELDING: CLEAR GLASS GLOBE

OPTIONS

GLASS GLOBE: CLEAR, RED, BLUE, OR BLACK
LAMP TYPE: 75W, 100W, 150W
MOUNTING: PENDANT OR SURFACE
SHIELDING: HEAT RESISTANT

NOM. DIMENSIONS: 111mm X 251mm

GENERAL DESCRIPTION

HOUSING: 30 PERCENT GLASS FILLED THERMOPLASTIC POLYSTER
ELECTRICAL: 220 - 240 VOLT
FINISH: MOLDED IN NON-GRAYING FINISH

SURFACE MOUNTED INCANDESCENT
VAPOR TIGHT JELLY JAR WITH WIRE GUARD

NOT TO SCALE

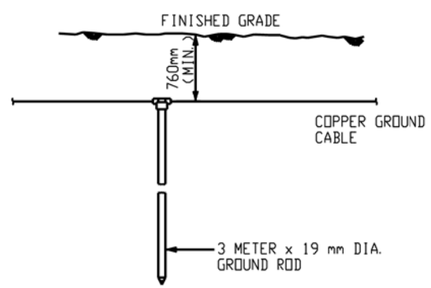

NOTES:

1. CONDUCTOR SIZE SHALL BE AS INDICATED ON PLANS.
2. EXOTHERMIC WELDS SHALL BE AS RECOMMENDED BY MANUFACTURER FOR THE SIZE OF CONNECTION AND MATERIAL INVOLVED. SEE DETAIL 5 ON SHEET SE-7.

BELOW GRADE GROUNDING ROD DETAIL

NOT TO SCALE

DETAIL 1
NOT TO SCALE

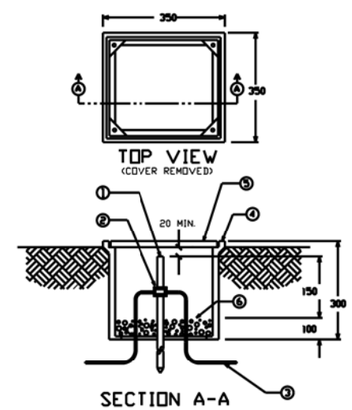

MATERIAL LIST

1. GROUND ROD
2. EXOTHERMIC WELD
3. GROUNDING CONDUCTOR 70mm² COPPER
4. POLYMER CONCRETE FIBERGLASS REINFORCED BOX
5. COVER FOR ABOVE BOX
6. GRAVEL OR CRUSHED STONE

GROUND ROD ACCESS
BOX INSTALLATION DETAIL

NOT TO SCALE

DETAIL 2
NOT TO SCALE

US ARMY CORPS OF ENGINEERS
AFGHANISTAN ENGINEER DISTRICT

SYMBOL	DESCRIPTION	DATE	APPR	COMPUTED	DESCRIPTION	DATE	APPR

DESIGNED BY: DATE: XX-XX-XX REV: __
DWN BY: CKD BY: DESIGN FILE NO.
REVIEWED BY: DRAWING CODE
SUBMITTED BY: FILE NAME: PLOT SCALE: PLOT DATE: XX-XX-XX

U.S. ARMY ENGINEER DISTRICT, AFGHANISTAN
CORPS OF ENGINEERS
APO AE 96338

ENGINEERING AND CONSTRUCTION DIVISION

AFGHANISTAN NATIONAL POLICE (ANP) DISTRICT HEADQUARTERS COMPOUNDS - 1 STORY HQ
VARIOUS LOCATIONS, AFGHANISTAN
STANDARD DETAILS

LIGHTING DETAILS

SHEET REFERENCE NUMBER:
SE-2

A1 Size 594mm x 841mm

ENGINEERING AND CONSTRUCTION DIVISION
US ARMY ENGINEER DISTRICT, AFGHANISTAN
APO AE, 09356

01B

AFGHANISTAN NATIONAL POLICE (ANP) DISTRICT HEADQUARTERS COMPOUNDS 1 STORY HQ

with DESIGN BUILD REQUIREMENTS at PRISONER'S ROOMS

APPENDIX A

VARIOUS LOCATIONS, AFGHANISTAN

SECTION/DETAIL CROSS REFERENCING CONVENTIONS

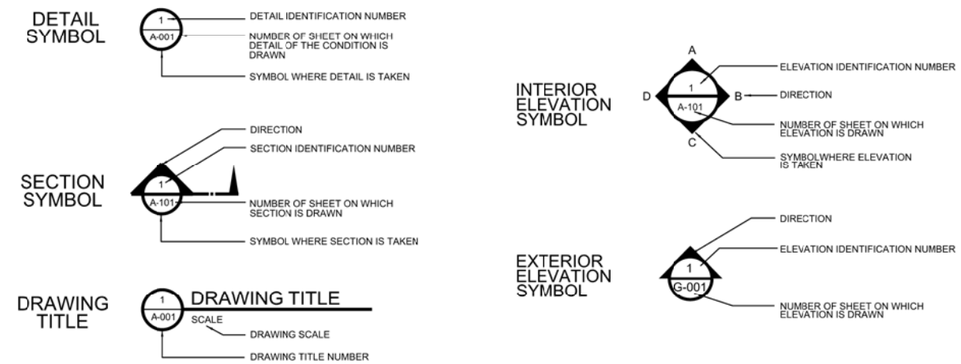

SCHEDULE OF DRAWINGS

SHEET NO	DWG CODE	SHEET REFERENCE NO	DESCRIPTION	REV STATUS
			GENERAL	
1		G-001	TITLE SHEET & SCHEDULE OF DRAWINGS	
			SITE DESIGN	
		C-1	SITE PLAN	
		C-2	DETAILS	
		C-3	DETAILS	
		C-4	WELL HOUSE PLAN AND SECTION	
		C-5	SEPTIC TANK DETAILS	
		XM-1	MECHANICAL SITE PLAN	
		XE-1	ELECTRICAL SITE PLAN	
			1 STORY BUILDING (A)	
		A-1	FIRST FLOOR PLAN	
		A-2	ROOF PLAN	
		A-3	BUILDING SECTIONS	
		A-4	WALL SECTION	
		A-5	BUILDING ELEVATIONS	
		A-6	BUILDING ELEVATIONS	
		A-7	ENLARGED TOILET PLANS	
		A-8	DOOR SCHEDULE AND DOOR TYPES	
		A-9	ROOM FINISH SCHEDULE	
		S-1	FOUNDATION PLAN	
		S-2	GRADE BEAM PLAN	
		S-3	LOWER ROOF BEAM PLAN	
		S-4	HIGH ROOF BEAM PLAN	
		S-5	FOOTING AND COLUMN DETAILS	
		S-6	BEAM DETAILS	
		S-7	STANDARD BEAM AND COLUMN DETAILS	
		M-1	HVAC PLAN	
		M-2	HEATING PLAN	
		M-3	ROOF PLAN	
		P-1	PLUMBING PLAN	
		P-2	ENLARGED PLUMBING PLANS -DOMESTIC WATER	
		P-3	ENLARGED PLUMBING PLANS -WASTE AND DRAINS	
		P-4	ENLARGED PLUMBING PLANS -WASTE AND DRAINS	
		P-5	DOMESTIC WATER RISER DIAGRAM	
		P-6	PLUMBING SCHEDULES	
		E-1	LIGHTING PLAN	
		E-2	POWER PLAN	
		E-3	PANEL SCHEDULE	

SHEET NO	DWG CODE	SHEET REFERENCE NO	DESCRIPTION	REV STATUS
			GUARD TOWER (B)	
		A-1	FLOOR PLAN, SECTION ELEVATION AND ROOF PLAN	
		S-1	FOUNDATION AND SLAB PLAN ROOF FRAMING PLAN	
		E-1	LIGHTING & POWER PLAN	
			GUARD SHACK (C)	
		A-1	FLOOR PLANS AND ELEVATIONS	
		S-1	FOUNDATION AND SLAB PLAN ROOF FRAMING PLAN	
		E-1	LIGHTING PLAN	
			POWER PLANT (D)	
		E-1	ONE LINE DIAGRAM	
			WELL HOUSE (E)	
		A-1	FLOOR PLAN, ELEVATIONS AND SCHEDULES	
		S-1	FOUNDATION PLAN AND ROOF PLAN	
		S-2	FOOTING DETAILS	
		S-3	SLAB-ON-GRADE DETAILS	
		M-1	HVAC PLAN	
		E-1	LIGHTING AND POWER PLAN	
		E-2	ELECTRICAL SCHEDULES	
			STANDARD DETAILS	
		SA-1	ABBREVIATIONS AND SYMBOLS	
		SA-2	WALL SECTION AND ROOF DETAILS	
		SA-3	VEHICLE RE-FUELING POINT	
		SS-1	GENERAL NOTES AND ABBREVIATIONS	
		SS-2	STANDARD DETAILS	
		SS-3	DETAILS	
		SS-4	MANUAL DROP ARM GATE	
		SM-1	LEGEND AND ABBREVIATIONS	
		SM-2	MECHANICAL SCHEDULES	
		SM-3	MECHANICAL STANDARD DETAILS	
		SM-4	PROPANE COOKING STOVE	
		SP-1	LEGENDS AND ABBREVIATIONS	
		SP-2	STANDARD PLUMBING DETAILS	
		SP-3	STANDARD PLUMBING DETAILS	
		SE-1	LEGEND AND ABBREVIATIONS	
		SE-2	STANDARD LIGHTING DETAILS	

SHEET NO	DWG CODE	SHEET REFERENCE NO	DESCRIPTION	REV STATUS
			STANDARD DETAILS	
		SE-3	DUCTBANK DETAILS	
		SE-4	STANDARD ELECTRICAL DETAILS	
		SE-5	POWER PLANT DETAILS	
		SE-6	HAND HOLE DETAILS	
		SE-7	WATER & SEWER TRENCH DETAIL	
		SE-8	TRUST BLOCK DETAIL	

PROJECT COORDINATION

U.S. ARMY ENGINEER DISTRICT, AFGHANISTAN

PROJECT MANAGER — DATE

CHIEF, DESIGN BRANCH — DATE

THIS PROJECT WAS DESIGNED BY AFGHANASTAN ENGINEER DISTRICT OF THE U.S ARMY CORPS OF ENGINEERS. THE INITIALS OR SIGNATURES AND REGISTRATION DESIGNATIONS OF INDIVIDUALS APPEAR ON THESE DOCUMENTS WITHIN THE SCOPE OF THEIR EMPLOYMENT AS REQUIRED BY ER 1110-1-8152.

US ARMY CORPS OF ENGINEERS AFGHANISTAN ENGINEER DISTRICT

SYMBOL	DESCRIPTION	DATE	APPR.

SYMBOL	DESCRIPTION	DATE	APPR.

DESIGNED BY: DATE: XX-XX-XX
DWN BY: CKD BY: DESIGN FILE NO.
REVIEWED BY DRAWING CODE:
SUBMITTED BY: FILE NAME: G-T-S.DGN
PLOT SCALE: ____
PLOT DATE: XX-XX-XX
REV: ____

U.S. ARMY ENGINEER DISTRICT, AFGHANISTAN
CORPS OF ENGINEERS
APO AE 96338

ENGINEERING AND CONSTRUCTION DIVISION

AFGHANISTAN NATIONAL POLICE (ANP) DISTRICT HEADQUARTERS COMPOUNDS - 1 STORY HQ
VARIOUS LOCATIONS, AFGHANISTAN

TITLE SHEET
SCHEDULE OF DRAWINGS

SHEET REFERENCE NUMBER:
G-001
SHEET 1 OF --

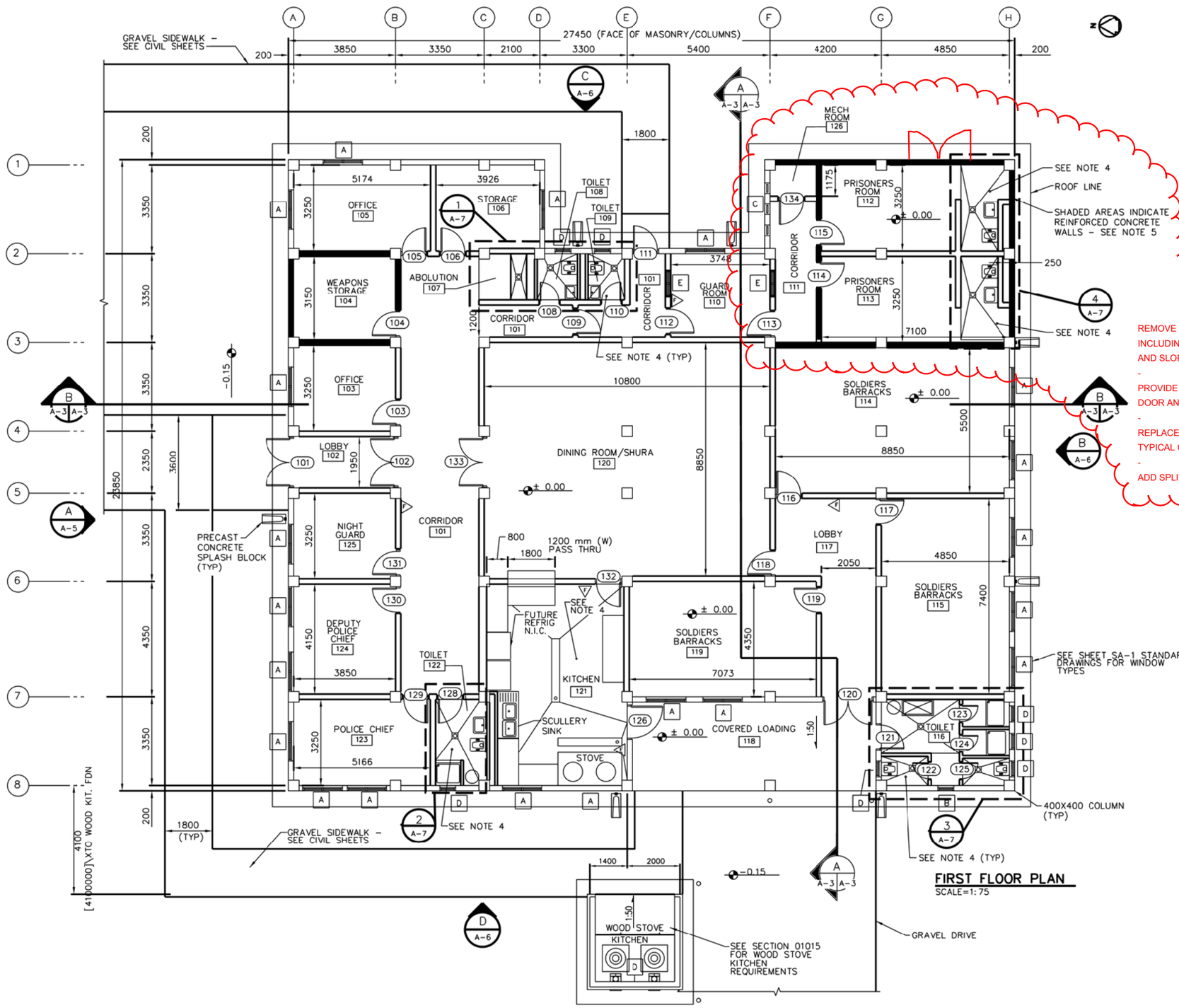

FIRST FLOOR PLAN
SCALE=1:75

GENERAL NOTES:

1. PROVIDE PORTABLE FIRE EXTINGUISHERS, ABC DRY CHEMICAL 4A:60B:C
2. ALL INTERIOR WALLS SHALL BE 200 mm THICK CMU AND SHALL EXTEND TO THE BOTTOM OF STRUCTURE ABOVE AND CENTER ON COLUMNS UNLESS NOTED OTHERWISE.
3. TOILET AND SHOWER PARTITIONS SHALL BE 2200mm HIGH.
4. SLOPE FLOORS IN KITCHENS AND TOILET/SHOWER AREAS 1:50 MINIMUM TO TRENCH DRAINS AND FLOOR DRAINS WHERE INDICATED. SLOPE TRENCH DRAINS 1:50 TO DRAIN AT ONE END. SEE ENLARGED ARCHITECTURAL DRAWINGS, PLUMBING DRAWINGS, AND STRUCTURAL DRAWINGS.
5. INTERIOR AND EXTERIOR WALLS AROUND PRISONERS ROOMS AND WEAPONS STORAGE, AS INDICATED BY SHADING, SHALL BE 200mm THICK REINFORCED CONCRETE – SEE STRUCTURAL FOR DETAILS.
6. ALL CORRIDOR DOORS ARE 20 MINUTE FIRE RATED.
7. PROVIDE PROPANE STORAGE AREA TO INCLUDE CONCRETE SLAB, PROTECTIVE WALL WEATHER SHELTER AND CHAIN LINK FENCING

REMOVE LATRINES FROM DESIGN, INCLUDING ALL FIXTURES, PIPING, FLOOR DRAINS AND SLOPING FLOOR SLABS.

-

PROVIDE DBL.-LEAF STEEL DOOR WITH HEAVY DUTY HARDWARE: DOOR AND HARDWARE TO BE PER TECHNICAL SPECIFICATION

-

REPLACE CONCRETE WALL ASSEMBLY AS NOTED WITH TYPICAL CMU WALL ASSEMBLY.

-

ADD SPLIT-PACK UNIT TO ROOM 113

US ARMY CORPS OF ENGINEERS AFGHANISTAN ENGINEER DISTRICT

SYMBOL	DESCRIPTION	DATE	APPR.	SYMBOL	DESCRIPTION	DATE	APPR.

DESIGNED BY: DATE: XX-XX-XX REV: __
DWN BY: CKD BY: DESIGN FILE NO: ____
REVIEWED BY: DRAWING CODE: ____
SUBMITTED BY: FILE NAME: ____ PLOT SCALE: ____ PLOT DATE: XX-XX-XX

U.S. ARMY ENGINEER DISTRICT, AFGHANISTAN
CORPS OF ENGINEERS
APO AE 96338

ENGINEERING AND CONSTRUCTION DIVISION

AFGHANISTAN NATIONAL POLICE (ANP) DISTRICT HEADQUARTERS COMPOUNDS - 1 STORY HQ
VARIOUS LOCATIONS, AFGHANISTAN
1 STORY BUILDING

FIRST FLOOR PLAN

SHEET REFERENCE NUMBER:
A
A-1

A1 Size 594mm x 841mm

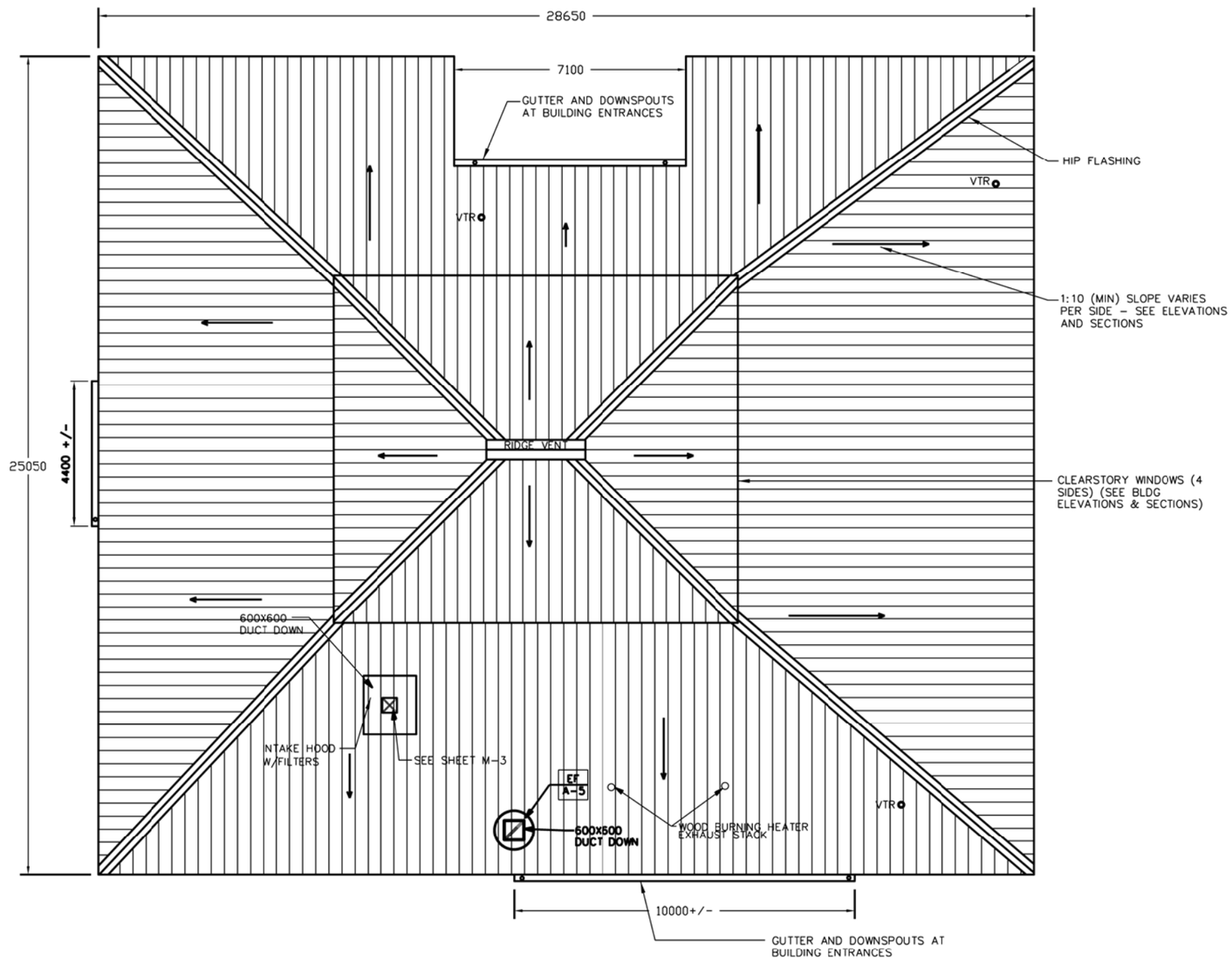

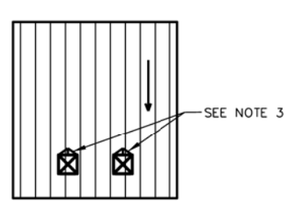

ROOF PLAN
SCALE= 1:75

NOTE:

1. TYPICAL ROOF SLOPE IS 1 IN 10.
2. ALL ROOF PENETRATIONS SHALL BE PROPERLY FLASHED AND SEALED WEATHER TIGHT.
3. PROVIDE WATER TIGHT SHEET METAL CRICKETS, FLASHING AND SEALANT PER ROOFING MANUFACTURERS RECOMMENDATIONS AT EACH PENETRATION. ALIGN STANDING SEAMS WITH FLASHING AT CRICKETS SUCH THAT WATER IS DIVERTED AROUND PENETRATIONS.
4. ROOF DIMENSIONS IN METERS AS SHOWN
5. EXHAUST STACK FOR KITCHEN STOVE MUST MIN 1020 mm ABOVE ROOF LINE.

3 1.50 0 3 4.5
1:75

US ARMY CORPS OF ENGINEERS AFGHANISTAN ENGINEER DISTRICT

SYMBOL	DESCRIPTION	DATE	APPR	SYMBOL	DESCRIPTION	DATE	APPR

DESIGNED BY: DATE: XX-XX-XX REV: __
DWN BY: CKD BY: DESIGN FILE NO.
REVIEWED BY: DRAWING CODE
SUBMITTED BY: FILE NAME: PLOT SCALE: PLOT DATE: XX-XX-XX

U.S. ARMY ENGINEER DISTRICT, AFGHANISTAN
CORPS OF ENGINEERS
APO AE 96338

ENGINEERING AND CONSTRUCTION DIVISION

AFGHANISTAN NATIONAL POLICE (ANP) DISTRICT HEADQUARTERS COMPOUNDS - 1 STORY HQ
VARIOUS LOCATIONS, AFGHANISTAN
1 STORY BUILDING

ROOF PLAN

SHEET REFERENCE NUMBER:
A
A-2

A1 Size 594mm x 841mm

GENERAL NOTES:

1. UNLESS NOTED OTHERWISE, ELEVATIONS ARE SHOWN IN METERS ABOVE OR BELOW FINISHED FLOOR.

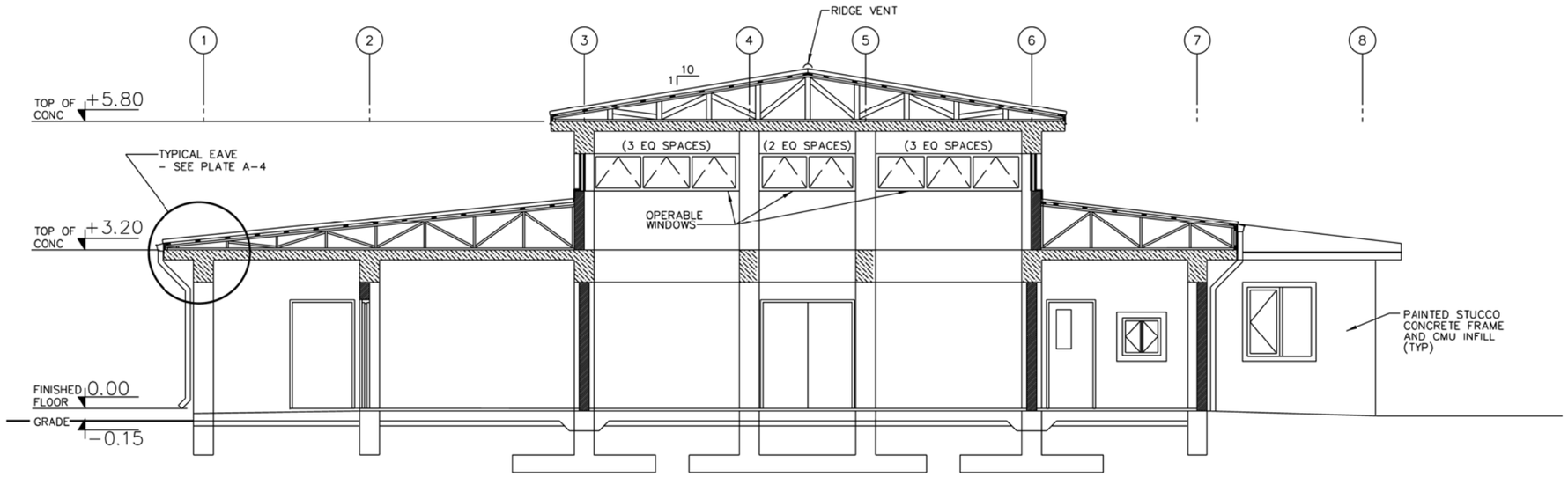

BUILDING SECTION A-A
SCALE=1:50
A-1 A-3

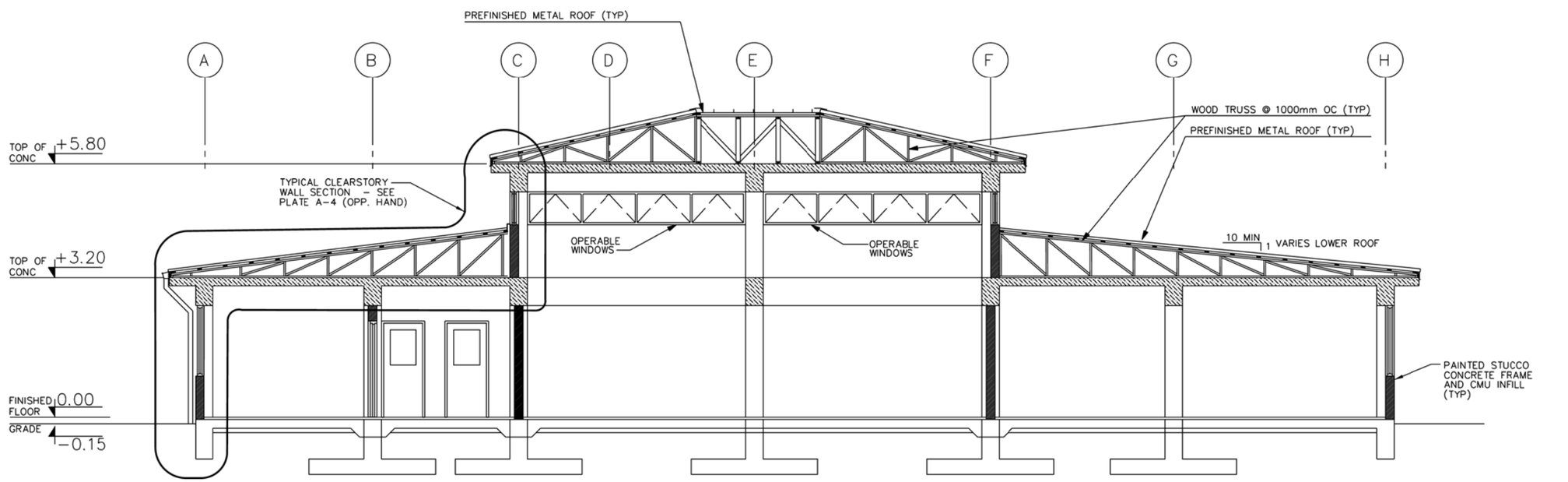

BUILDING SECTION B-B
SCALE=1:50
A-1 A-3

1:50

US ARMY CORPS OF ENGINEERS AFGHANISTAN ENGINEER DISTRICT

SYMBOL	DESCRIPTION	DATE	APPR.	SYMBOL	DESCRIPTION	DATE	APPR.

DESIGNED BY: DWN BY: CKD BY: REVIEWED BY: SUBMITTED BY: DATE: XX-XX-XX DESIGN FILE NO: DRAWING CODE: FILE NAME: PLOT SCALE: PLOT DATE: XX-XX-XX REV:

U.S. ARMY ENGINEER DISTRICT, AFGHANISTAN
CORPS OF ENGINEERS
APO AE 96338

ENGINEERING AND CONSTRUCTION DIVISION

AFGHANISTAN NATIONAL POLICE (ANP) DISTRICT HEADQUARTERS COMPOUNDS - 1 STORY HQ
VARIOUS LOCATIONS, AFGHANISTAN
1 STORY BUILDING

BUILDING SECTION

SHEET REFERENCE NUMBER:
A
A-3

A1 Size 594mm x 841mm

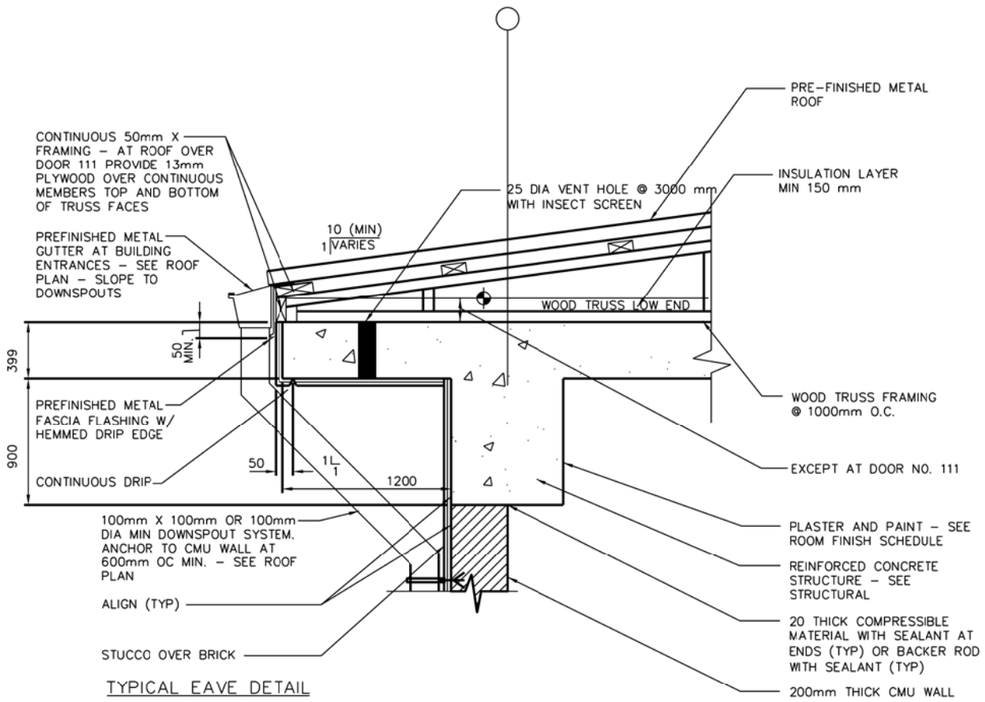

TYPICAL EAVE DETAIL

SCALE: 1:10

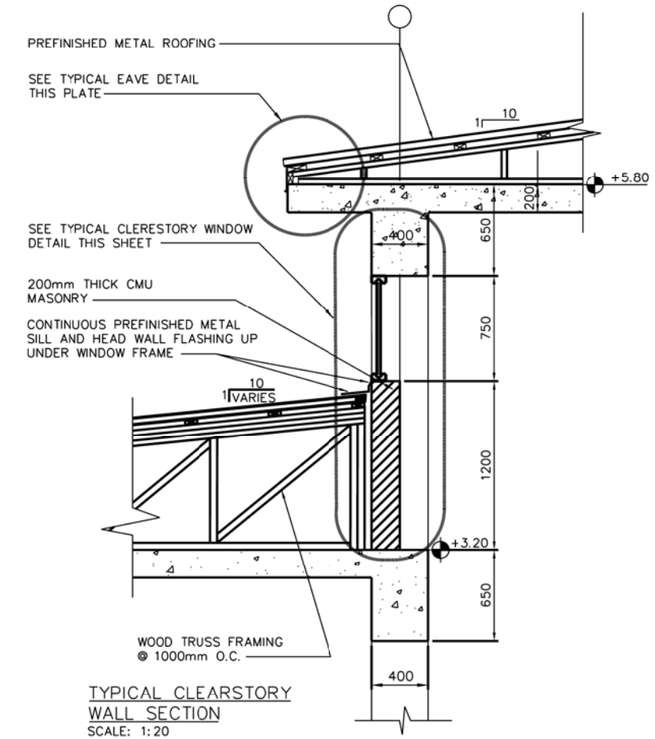

TYPICAL CLEARSTORY WALL SECTION

SCALE: 1:20

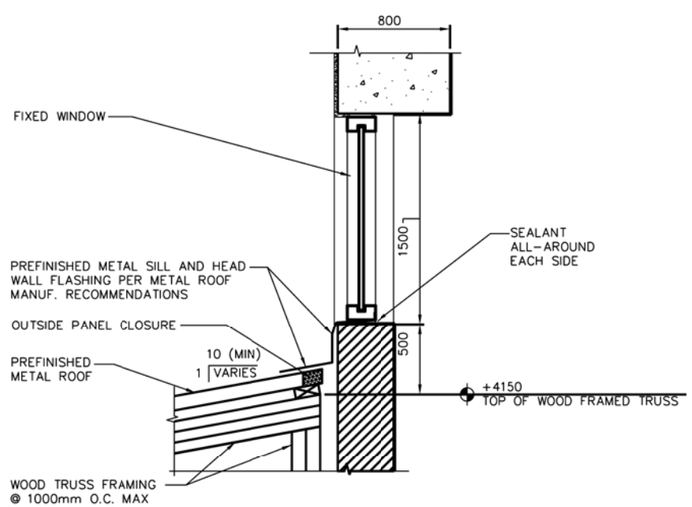

TYPICAL CLERESTORY WINDOW DETAIL

SCALE: 1:10

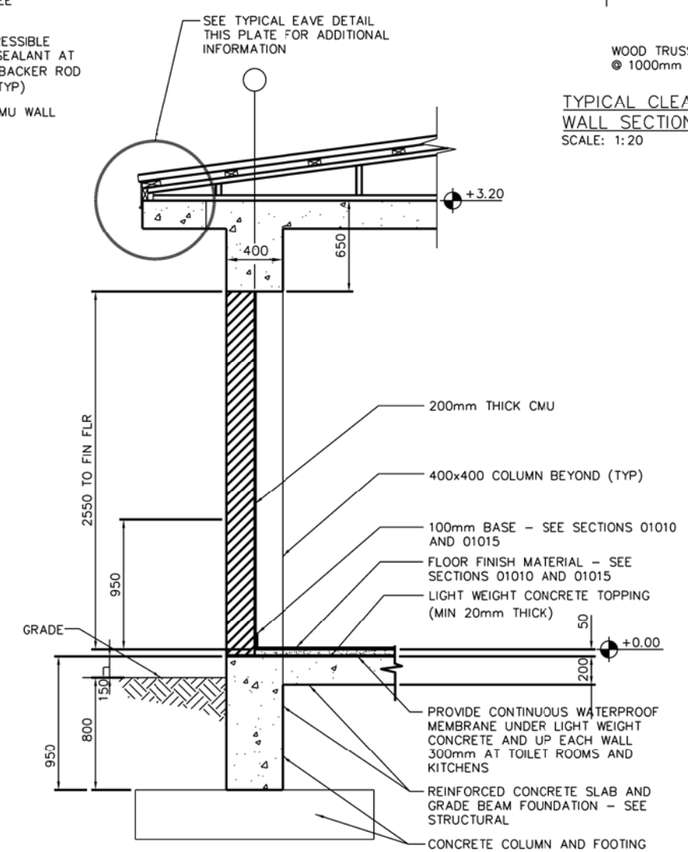

TYPICAL WALL SECTION

SCALE: 1:20

0 .50 1.00
1:10

1 .50 0 1
1:20

US ARMY CORPS OF ENGINEERS AFGHANISTAN ENGINEER DISTRICT

SYMBOL	DESCRIPTION	DATE	APPR.	SYMBOL	DESCRIPTION	DATE	APPR.

DESIGNED BY: DATE: XX-XX-XX
DWN BY: CKD BY: DESIGN FILE NO.
REVIEWED BY: DRAWING CODE
SUBMITTED BY: FILE NAME:
PLOT SCALE:
PLOT DATE: XX-XX-XX
REV.

U.S. ARMY ENGINEER DISTRICT, AFGHANISTAN
CORPS OF ENGINEERS
APO AE 96338

ENGINEERING AND CONSTRUCTION DIVISION

AFGHANISTAN NATIONAL POLICE (ANP) DISTRICT HEADQUARTERS COMPOUNDS - 1 STORY HQ
VARIOUS LOCATIONS, AFGHANISTAN
1 STORY BUILDING

WALL SECTION

SHEET REFERENCE NUMBER:
A
A-4

A1 Size 594mm x 841mm

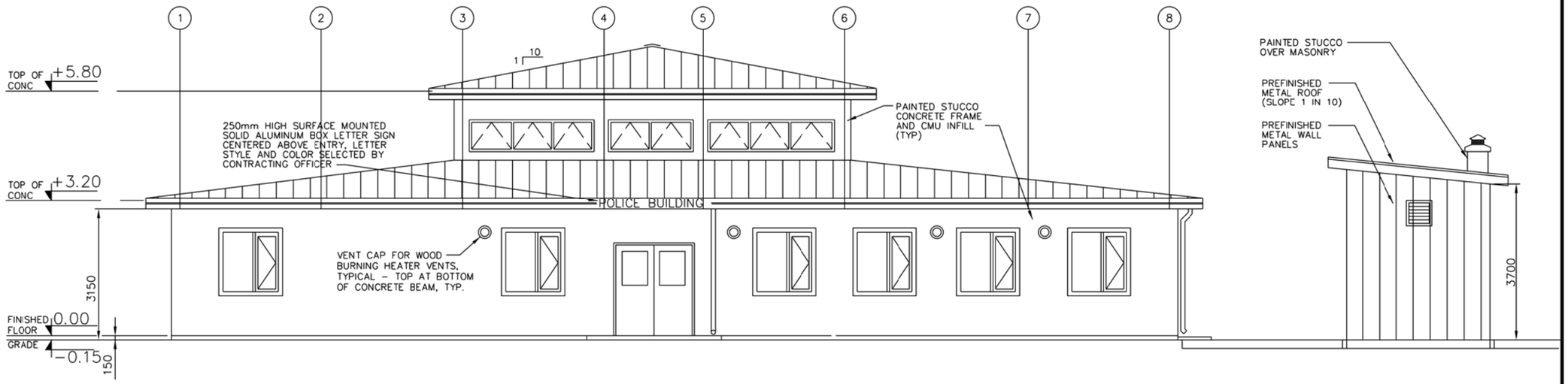

NORTH ELEVATION (A / A-1 A-5)
SCALE=1:50

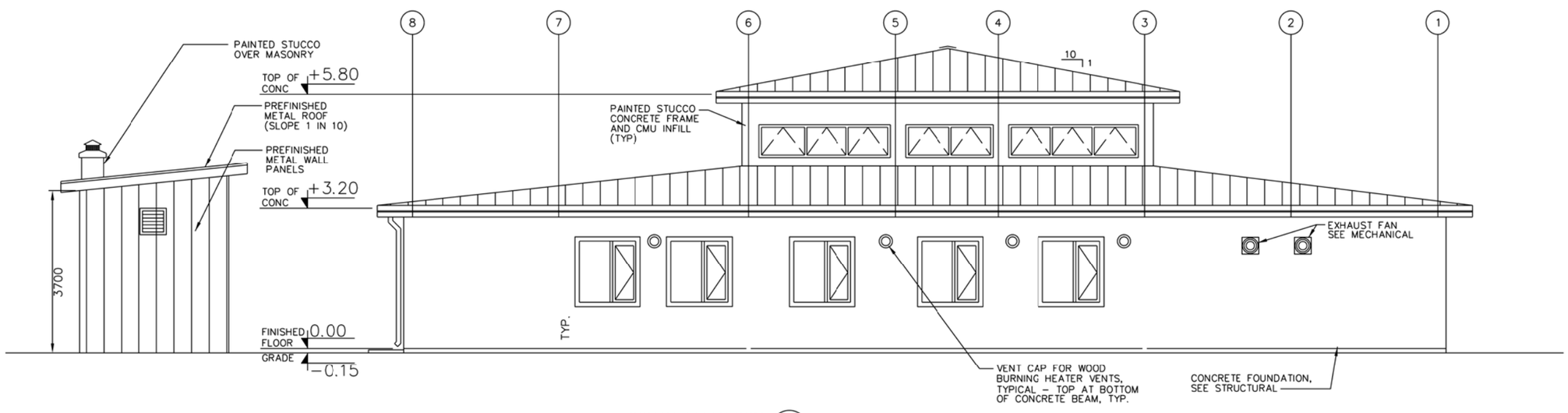

SOUTH ELEVATION (B / A-1 A-5)
SCALE=1:50

NOTE: SEE STANDARD DETAILS FOR ADDITIONAL NOTES.

1:50

US ARMY CORPS OF ENGINEERS AFGHANISTAN ENGINEER DISTRICT

SYMBOL	DESCRIPTION	DATE	APPR.	SYMBOL	DESCRIPTION	DATE	APPR.

DESIGNED BY: DWN BY: CKD BY: REVIEWED BY: SUBMITTED BY: DATE: XX-XX-XX DESIGN FILE NO: DRAWING CODE: FILE NAME: PLOT SCALE: PLOT DATE: XX-XX-XX REV:

U.S. ARMY ENGINEER DISTRICT, AFGHANISTAN CORPS OF ENGINEERS APO AE 96338

ENGINEERING AND CONSTRUCTION DIVISION

AFGHANISTAN NATIONAL POLICE (ANP) DISTRICT HEADQUARTERS COMPOUNDS - 1 STORY HQ
VARIOUS LOCATIONS, AFGHANISTAN
1 STORY BUILDING

BUILDING ELEVATIONS

SHEET REFERENCE NUMBER:
A
A-5

A1 Size 594mm x 841mm

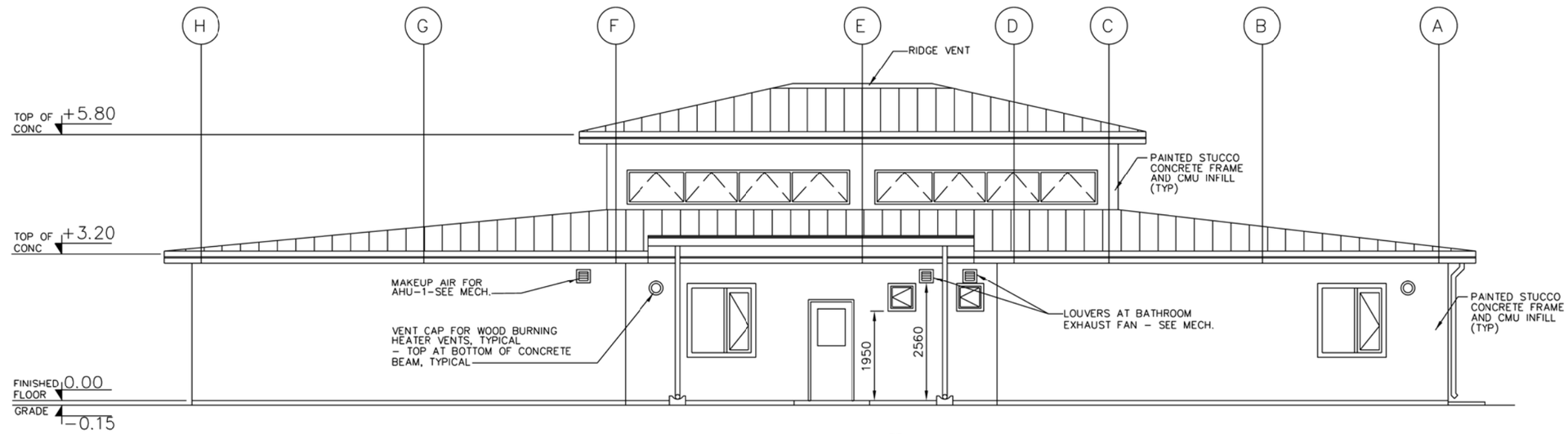

EAST ELEVATION
SCALE = 1:50
C
A-1 A-6

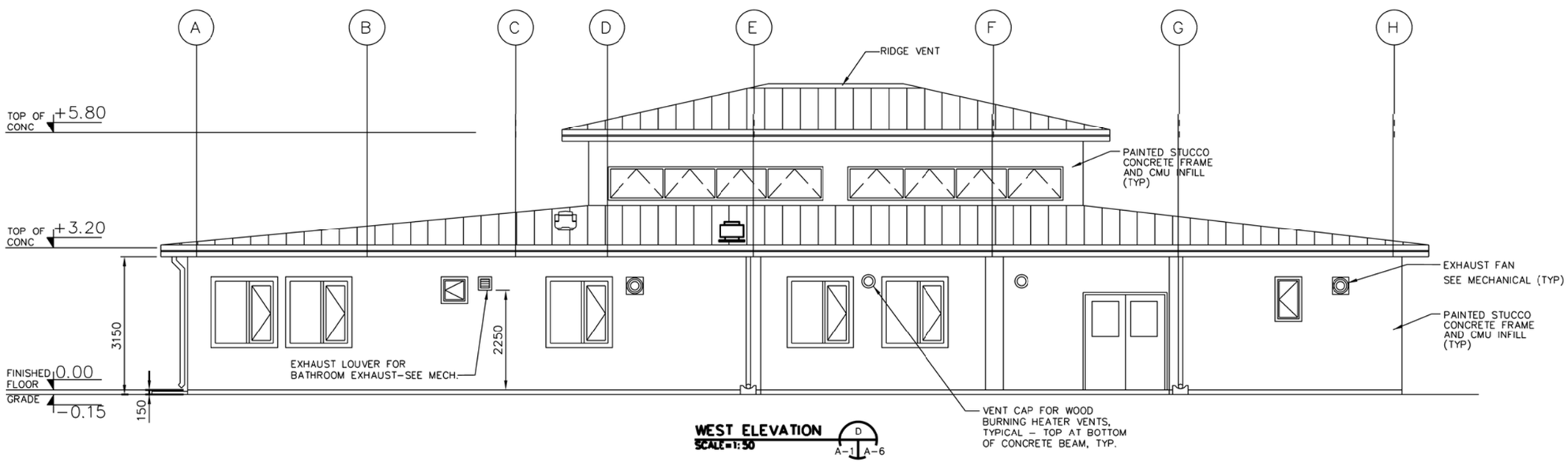

WEST ELEVATION
SCALE = 1:50
D
A-1 A-6

1 0 1 2 3 4
1:50

US ARMY CORPS OF ENGINEERS AFGHANISTAN ENGINEER DISTRICT

SYMBOL	DESCRIPTION	DATE	APPR.	SYMBOL	DESCRIPTION	DATE	APPR.

DESIGNED BY: DWN BY: CKD BY: REVIEWED BY: SUBMITTED BY:
DATE: XX-XX-XX
DESIGN FILE NO.
DRAWING CODE
FILE NAME:
PLOT SCALE:
PLOT DATE: XX-XX-XX
REV.

U.S. ARMY ENGINEER DISTRICT, AFGHANISTAN
CORPS OF ENGINEERS
APO AE 96338

ENGINEERING AND CONSTRUCTION DIVISION

AFGHANISTAN NATIONAL POLICE (ANP) DISTRICT HEADQUARTERS COMPOUNDS - 1 STORY HQ
VARIOUS LOCATIONS, AFGHANISTAN
1 STORY BUILDING

BUILDING ELEVATIONS

SHEET REFERENCE NUMBER:
A
A-6

A1 Size 594mm x 841mm

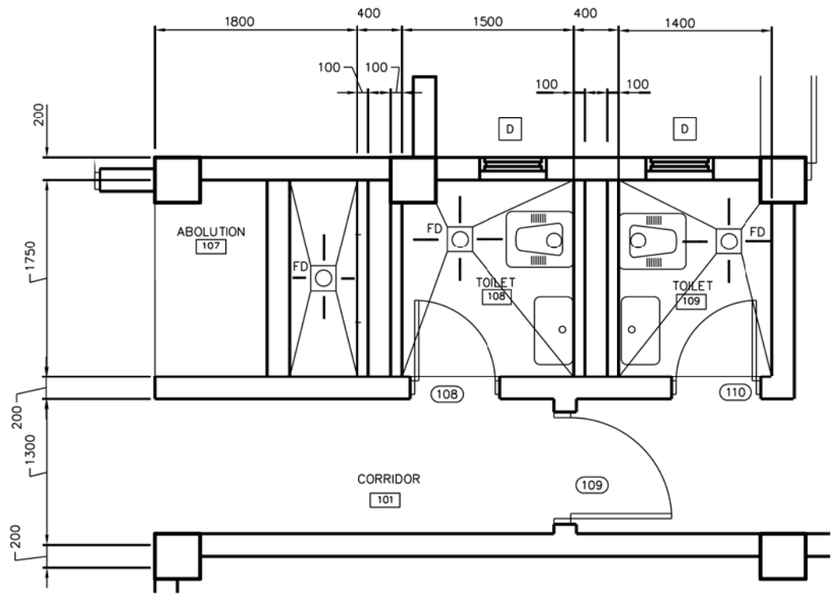

DETAIL
SCALE = 1:25
1 A-1 A-7

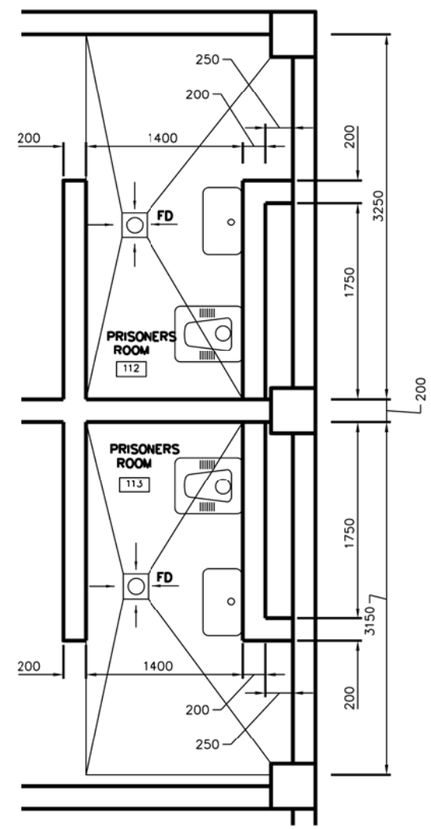

DETAIL
SCALE = 1:25
4 A-1 A-7

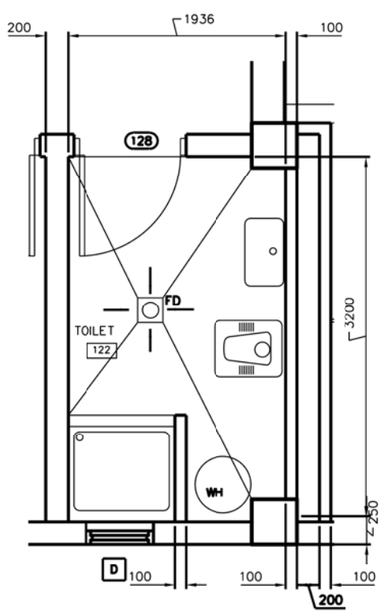

DETAIL
SCALE = 1:25
2 A-1 A-7

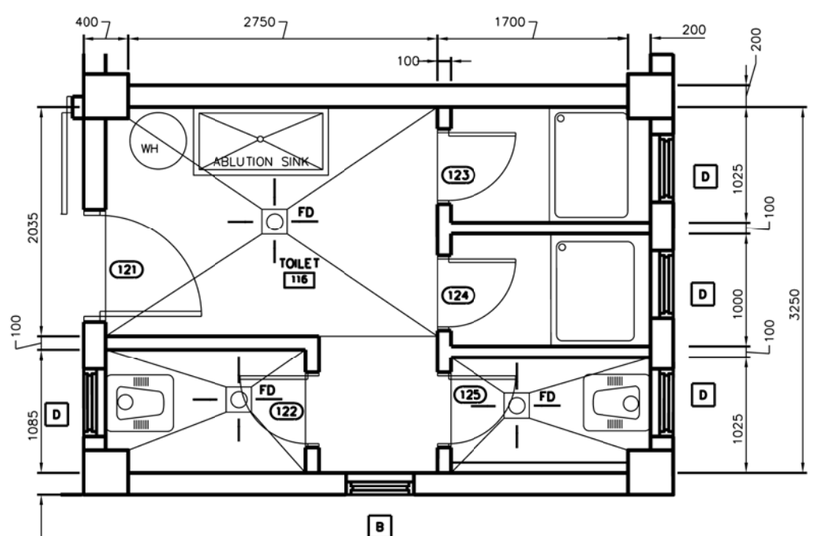

DETAIL
SCALE = 1:25
3 A-1 A-7

NOTE: PARTITION WALLS BETWEEN TOILET STALLS TO BE 2200mm HIGH.

NOTE:

1. ALL WATER CLOSETS SHALL FACE NORTH OR SOUTH DIRECTION.

1 .50 0 1 1.5
1:25

US ARMY CORPS OF ENGINEERS AFGHANISTAN ENGINEER DISTRICT

SYMBOL	DESCRIPTION	DATE	APPR.	SYMBOL	DESCRIPTION	DATE	APPR.

DESIGNED BY: DATE: XX-XX-XX REV: __
DESIGN FILE NO.
DWN BY: CKD BY: DRAWING CODE
REVIEWED BY: FILE NAME:
SUBMITTED BY: PLOT SCALE:
PLOT DATE: XX-XX-XX

U.S. ARMY ENGINEER DISTRICT, AFGHANISTAN
CORPS OF ENGINEERS
APO AE 96338

ENGINEERING AND CONSTRUCTION DIVISION

AFGHANISTAN NATIONAL POLICE (ANP) DISTRICT HEADQUARTERS COMPOUNDS - 1 STORY HQ
VARIOUS LOCATIONS, AFGHANISTAN
1 STORY BUILDING

ENLARGED TOILET PLANS

SHEET REFERENCE NUMBER:
A
A-7

A1 Size 594mm x 841mm

DOOR SCHEDULE

NO.	LOCATION	DOOR TYPE	DOOR MAT'L	DOOR WIDTH	DOOR HEIGHT	DOOR THICK	FRAME MAT"L	HDW SET	REMARKS
101	LOBBY	G (PR)	WOOD	1800	2100	45	WOOD	2	4, 7 20 MINUTE FIRE RATING
102	CORRIDOR	G (PR)	WOOD	1800			WOOD	8	4, 7 20 MINUTE FIRE RATING
103	OFFICE	F	WOOD	900			WOOD	4	20 MINUTE FIRE RATING
104	WEAPONS STORAGE	F	STEEL	900			STEEL	11	5 45 MINUTE FIRE RATING
105	OFFICE	F	WOOD	900			WOOD	4	20 MINUTE FIRE RATING
106	STORAGE	F	WOOD	900			WOOD	6	45 MINUTE FIRE RATING
107	NOT USED								
108	TOILET	L	WOOD	700			WOOD	5	2 20 MINUTE FIRE RATING
109	CORRIDOR	N	WOOD	900			WOOD	4	7 20 MINUTE FIRE RATING
110	TOILET	L	WOOD	700			WOOD	5	2 20 MINUTE FIRE RATING
111	CORRIDOR	G	WOOD	900			WOOD	1	7 20 MINUTE FIRE RATING
112	TO GUARD RM.	N	WOOD	900			WOOD	4	7 20 MINUTE FIRE RATING
113	CORRIDOR	N	WOOD	900			WOOD	4	7 20 MINUTE FIRE RATING
114	Prisoners Rm	C	STEEL	900			NOTE 1	11	CELL DOOR
115	Prisoners Rm	C	STEEL	900			NOTE 1	11	CELL DOOR
116	SOLDIERS BARRACKS	F	WOOD	900			WOOD	7	6 45 MINUTE FIRE RATING
117	SOLDIERS BARRACKS	F	WOOD	900			WOOD	7	6 45 MINUTE FIRE RATING
118	DINING ROOM	F	WOOD	900			WOOD	7	4, 6 90 MINUTE FIRE RATING – PANIC
119	SOLDIERS BARRACKS	F	WOOD	900			WOOD	7	6 45 MINUTE FIRE RATING
120	LOBBY	G (PR)	WOOD	1800			WOOD	2	4, 7 45 MINUTE FIRE RATING
121	TOILET	L	WOOD	900			WOOD	10	2 20 MINUTE FIRE RATING
122	TOILET STALL	L	WOOD	600			WOOD	3	2
123	TOILET STALL	L	WOOD	600			WOOD	3	2
124	TOILET STALL	L	WOOD	600			WOOD	3	2
125	TOILET STALL	L	WOOD	600			WOOD	3	2
126	KITCHEN	F	WOOD	1200			WOOD	1	4 90 MINUTE FIRE RATING – PANIC
127	NOT USED								
128	TOILET	L	WOOD	900			WOOD	5	2 20 MINUTE FIRE RATING
129	POLICE CHIEF	F	WOOD	900			WOOD	4	20 MINUTE FIRE RATING
130	DEPUTY POLICE CHIEF	F	WOOD	900			WOOD	4	20 MINUTE FIRE RATING
131	NIGHT GUARD	F	WOOD	900			WOOD	4	20 MINUTE FIRE RATING
132	KITCHEN	N	WOOD	900			WOOD	9	7 90 MINUTE FIRE RATING – PANIC
133	DINING ROOM	G (PR)	WOOD	1800			WOOD	2	4, 6 90 MINUTE FIRE RATING – PANIC
134	MECHANICAL ROOM	F	WOOD	900			WOOD	6	45 MINUTE FIRE RATING

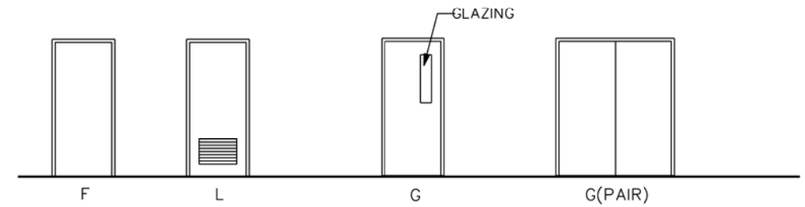

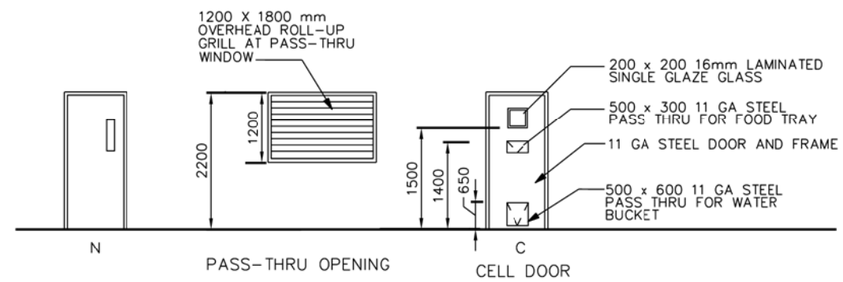

DOOR NOTES:
1. SEE DOOR SCHEDULE FOR DOOR AND FRAME SIZES.

TYPICAL DOOR TYPES
(NOT TO SCALE)

DOOR SCHEDULE NOTES:

1. CELL DOOR SHALL BE 11 GA STEEL DOOR WITH PASS-THRU WINDOWS. PROVIDE HINGED DOORS TO THESE PASS-THRU WINDOWS WITH PADLOCKS TO THE OUTSIDE.
2. PROVIDE 600 X 400 LOUVERS IN DOOR TYPE (L)
3. UNDERCUT DOORS BY 12 mm REQUIRED, EXCEPT NO UNDERCUT AT DOOR TYPE C.
4. PROVIDE PANIC HARDWARE, FOR DINING ROOM EXIT DOORS.
5. PROVIDE 11 GA STEEL DOOR AND FRAME.
6. NO THRESHOLD OR DOOR SWEEP REQUIRED.
7. ALL DOOR GLAZING SHALL BE MIN. 8mm THICK PLEXIGLASS EXCEPT AT CELL DOORS WHERE GLAZING SHALL BE LAMINATED GLASS.
8. ALL DOOR GLAZING IS FIRE RATED

US ARMY CORPS OF ENGINEERS AFGHANISTAN ENGINEER DISTRICT

SYMBOL	DESCRIPTION	DATE	APPR.	SYMBOL	DESCRIPTION	DATE	APPR.

DESIGNED BY: DATE: XX-XX-XX REV: __
DWN BY: CKD BY: DESIGN FILE NO. DRAWING CODE
REVIEWED BY: FILE NAME: PLOT SCALE:
SUBMITTED BY: PLOT DATE: XX-XX-XX

U.S. ARMY ENGINEER DISTRICT, AFGHANISTAN
CORPS OF ENGINEERS
APO AE 96338

ENGINEERING AND CONSTRUCTION DIVISION

AFGHANISTAN NATIONAL POLICE (ANP) DISTRICT HEADQUARTERS COMPOUNDS - 1 STORY HQ
VARIOUS LOCATIONS, AFGHANISTAN
1 STORY BUILDING

DOOR SCHEDULE AND DOOR TYPES

SHEET REFERENCE NUMBER:
A
A-8

A1 Size 594mm x 841mm

ROOM FINISH SCHEDULE

ROOM NO.	ROOM NAME	FLOOR FINISH	BASE FINISH	WALLS FINISH	CEILING FINISH	CEILING HEIGHT	REMARKS
101	CORRIDOR	F2	B2	W2	C2	3.0 m	
102	LOBBY	F2	B2	W2	C2		
103	OFFICE	F2	B2	W2	C2		
104	WEAPONS STORAGE	F1	B2	W2	C2		
105	OFFICE	F2	B2	W2	C2		
106	STORAGE	F1	B2	W2	C2		
107	ABOLUTION	F3	B3	W3	C2		
108	TOILET	F3	B3	W3	C2		
109	TOILET	F3	B3	W3	C2		
110	GUARD ROOM	F2	B2	W2	C2		
111	CORRIDOR	F2	B2	W2	C2		
112	PRISONER'S ROOM	F2	B2	W2	C2		
113	PRISONER'S ROOM	F2	B2	W2	C2		
114	SOLDIER'S BARRACKS	F2	B2	W2	C2		
115	SOLDIER'S BARRACKS	F2	B2	W2	C2		
116	TOILET	F3	B3	W3	C2		
117	LOBBY	F2	B2	W2	C2		
118	COVERED LOADING	F1	B5	--	--		
119	SOLDIER'S BARRACKS	F2	B2	W2	C2		
120	DINING ROOM/SHURA	F2	B2	W2	C2	5.6 m	
121	KITCHEN	F2	B2	W2	C2	3.0 m	
122	TOILET	F3	B3	W3	C2		
123	POLICE CHIEF	F2	B2	W2	C2		
124	DEPUTY POLICE CHIEF	F2	B2	W2	C2		
125	NIGHT GUARD	F2	B2	W2	C2		
126	MECHANICAL ROOM	F2	B2	W2	C2		

ROOM FINISH SCHEDULE LEGEND

FLOOR FINISH
- F1 SEALED CONCRETE
- F2 TERRAZZO TILE
- F3 CERAMIC TILE

BASE FINISH
- B2 TERRAZZO
- B3 CERAMIC TILE
- B5 NO BASE

WALL FINISH
- W2 PAINTED PLASTER
- W3 CERAMIC TILE

CEILING FINISH
- C2 PAINTED PLASTER

ROOM FINISH SCHEDULE NOTES:

1. ALL INTERIOR SURFACES NOT PROVIDED WITH A COLOR FACTORY FINISH SHALL RECEIVE A PAINT FINISH.
2. PAINTED PLASTER CEILING FINISH SHALL BE OFF-WHITE IN COLOR. ALL OTHER INTERIOR COLORS SHALL BE SELECTED FROM EARTH TONE COLORS; GRAYS, BEIGES, ETC. SUBMIT PAINT COLOR BOARD TO CONTRACTING OFFICER'S REPRESENTATIVE FOR APPROVAL PRIOR TO INSTALLATION.
3. ALL INTERIOR DOORS, WINDOWS, AND FRAMES SHALL HAVE A SEMI-GLOSS FINISH.
4. ALL WALL PENETRATIONS SHALL BE SEALED TO PROVIDE A NEAT APPEARANCE.
5. SEALANT COLORS SHALL MATCH COLOR OF ADJACENT FINISH.
6. PLASTER AND CERAMRIC TILE WALL FINISH, WHERE SCHEDULED, SHALL EXTEND TO UNDERSIDE OF CEILING.
7. PLASTER CEILINGS SHALL HAVE A FLAT PAINT FINISH EXCEPT AT TOILETS, ABOLUTION, AND KITCHEN WHERE PAINT FINISH SHALL BE SEMI-GLOSS.

EXTERIOR FINISH NOTES:

1. ALL EXTERIOR SURFACES NOT PROVIDED WITH A COLOR FACTORY FINISH SHALL RECEIVE A PAINT FINISH.
2. ALL EXTERIOR COLORS SHALL MATCH ADJACENT BUILDINGS TO THE GREATEST EXTENT POSSIBLE. SUBMIT PAINT COLOR BOARD TO CONTRACTING OFFICER'S REPRESENTATIVE FOR APPROVAL PRIOR TO INSTALLATION.
3. ALL EXTERIOR DOORS, WINDOWS, FRAMES, SOFFIT, FASCIA, AND TRIM SHALL HAVE A SEMI-GLOSS FINISH.
4. ALL WALL PENETRATIONS SHALL BE SEALED WATER-TIGHT AND SHALL HAVE A NEAT APPEARANCE.
5. SEALANT COLORS SHALL MATCH COLOR OF ADJACENT FINISH.

US ARMY CORPS OF ENGINEERS AFGHANISTAN ENGINEER DISTRICT

SYMBOL	DESCRIPTION	DATE	APPR.	SYMBOL	DESCRIPTION	DATE	APPR.

DESIGNED BY: DATE: XX-XX-XX REV: __
DWN BY: CKD BY: DESIGN FILE NO.
REVIEWED BY: DRAWING CODE
SUBMITTED BY: FILE NAME: PLOT SCALE: PLOT DATE: XX-XX-XX

U.S. ARMY ENGINEER DISTRICT, AFGHANISTAN
CORPS OF ENGINEERS
APO AE 96338

ENGINEERING AND CONSTRUCTION DIVISION

AFGHANISTAN NATIONAL POLICE (ANP) DISTRICT HEADQUARTERS COMPOUNDS - 1 STORY HQ
VARIOUS LOCATIONS, AFGHANISTAN
1 STORY BUILDING

ROOF FINISH SCHEDULE

SHEET REFERENCE NUMBER:
A
A-9

A1 Size 594mm x 841mm

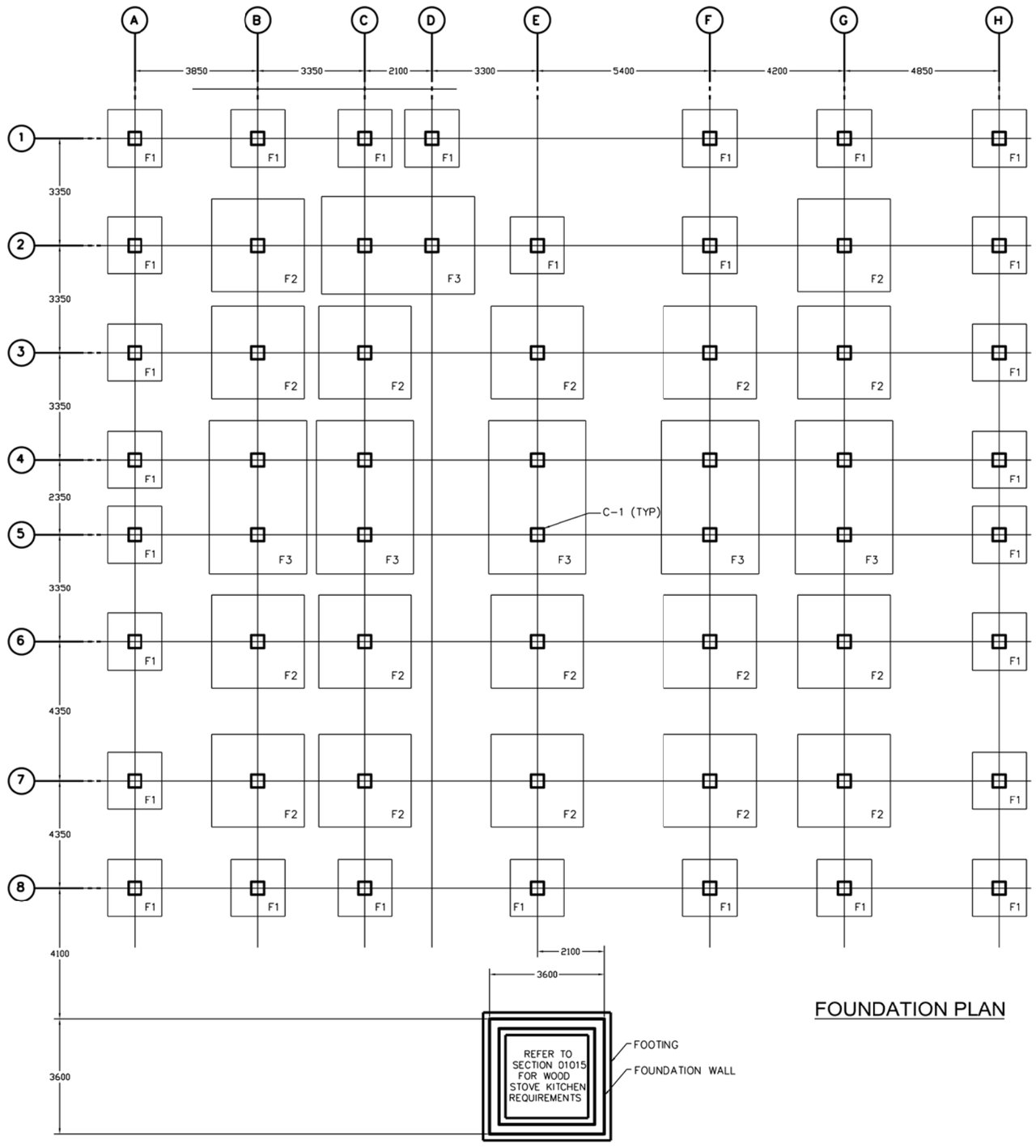

FOUNDATION PLAN

NOTES:

1. GEOTECHNICAL INVESTIGATION SHALL CONFIRM BEARING CAPACITY TO BE NO LESS THAN 0.75 KG/SQ CM. IF GEOTECHNICAL INVESTIGATION SHOWS LESS THAN 0.75 KG/SQ CM. CONTRACTOR SHALL REDESIGN FOOTINGS BASED ON THE GEOTECHNICAL INVESTIGATION, SEE SPECIFICATION 01015 PARA 2.1, GEOTECHNICAL, FOUNDATION AND SURVEY.
2. DEAD LOADS CONSIST OF THE WEIGHTS OF ALL MATERIAL OF CONSTRUCTION INCORPORATED IN THE BUILDING. LIVE LOADS USED FOR DESIGN SHAL LBE IN ACCORDANCE WITH THE ASCE STANDARDS AND MINIMUM DESIGN LOADS FOR BUILDINGS AND OTHER STRUCTURES, ASCE 7-02.
3. WIND LOADS SHALL BE CALCULATED IN ACCORDANCE WITH ASCE 7-02 USING A "3 SECOND GUST" WIND SPEED OF 125 KM/HR. ALL FACILITIES SHALL BE CLASSIFIED AS A MINIMUM OF CATEGORY II IN ACCORDANCE WITH TABLE 1-1 IN ASCE 7-02.
4. THE BULDING AND ALL PARTS THEREOF SHALL BE DESIGNED FOR THE SEISMIC REQUIREMENTS AS DEFINED BY THE INTERNATIONAL BUILDING CODE 2000. SITE SPECIFIC DATA: SPECTRAL COORDINATES SS=1.65g AND S1=0.75g.
5. REFER TO DWG S-5 FOR FOOTING SCHEDULE. TOP OF FOOTING SHALL BE LOCATED AT ELEV. -1.00.
6. ALL CONCRETE COLUMNS ARE TYPE C-1, REFER TO SECTION 10 S-5.

3 1.50 0 3 4.5
1:75

US ARMY CORPS OF ENGINEERS AFGHANISTAN ENGINEER DISTRICT

SYMBOL	DESCRIPTION	DATE	APPR.	SYMBOL	DESCRIPTION	DATE	APPR.

DESIGNED BY: DATE: XX-XX-XX REV: __
DWN BY: CKD BY: DESIGN FILE NO. DRAWING CODE
REVIEWED BY: FILE NAME: PLOT SCALE:
SUBMITTED BY: PLOT DATE: XX-XX-XX

U.S. ARMY ENGINEER DISTRICT, AFGHANISTAN
CORPS OF ENGINEERS
APO AE 96338

ENGINEERING AND CONSTRUCTION DIVISION

AFGHANISTAN NATIONAL POLICE (ANP) DISTRICT HEADQUARTERS COMPOUNDS - 1 STORY HQ
VARIOUS LOCATIONS, AFGHANISTAN
1 STORY BUILDING

FOUNDATION PLAN

SHEET REFERENCE NUMBER:
A
S-1

A1 Size 594mm x 841mm

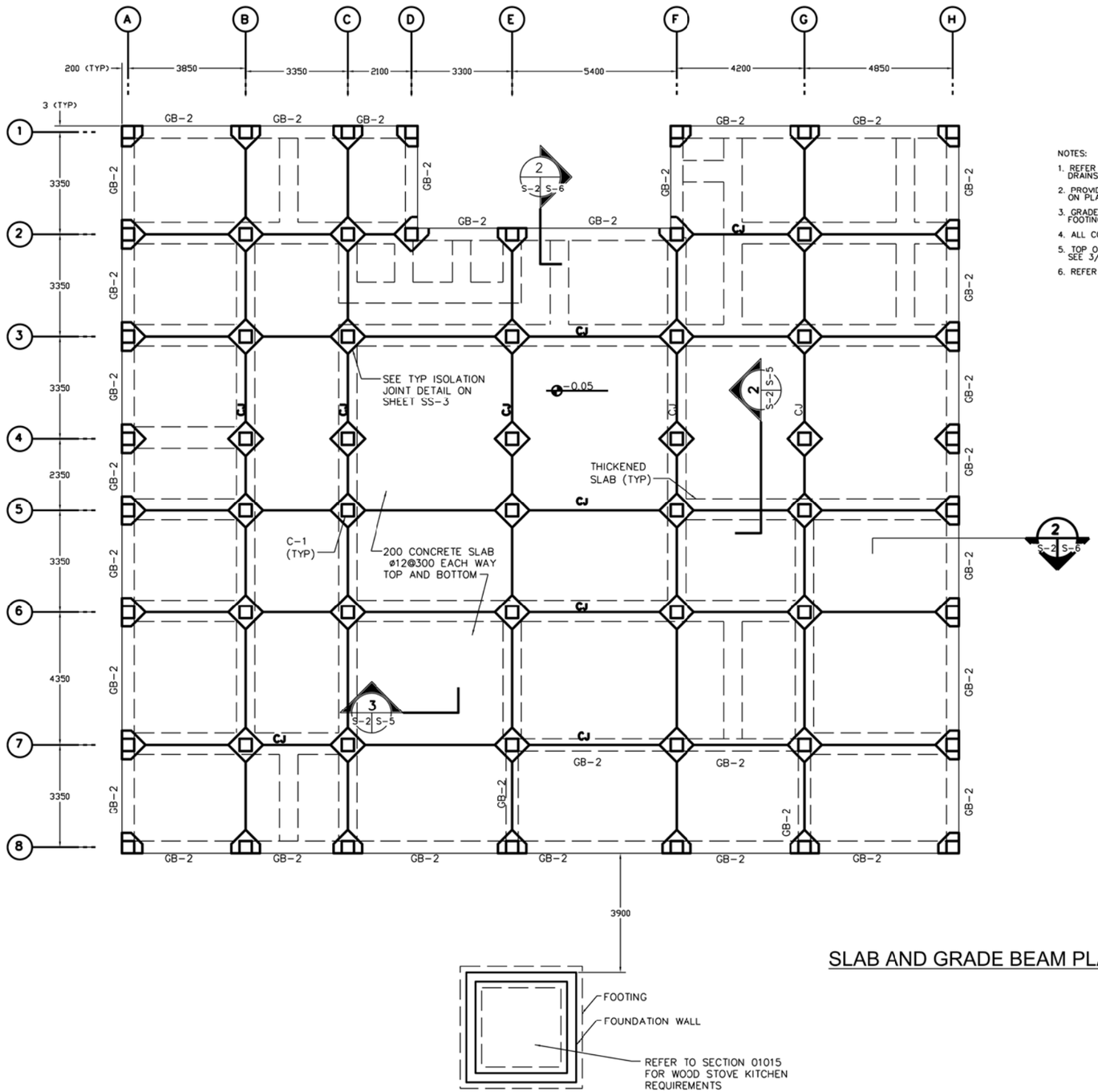

SLAB AND GRADE BEAM PLAN

NOTES:

1. REFER TO PLUMBING AND ARCHITECTURAL PLANS FOR FLOOR DRAIN LOCATIONS. NOT ALL DRAINS HAVE BEEN SHOWN. FLOOR SHALL BE SLOPED TO DRAIN.
2. PROVIDE THICKENED SLAB UNDER ALL INTERIOR PARTITIONS. REFER TO SECTIONS 1 AND 2 ON PLATE S-5 FOR ADDITIONAL INFORMATION.
3. GRADE BEAM SHALL EXTEND FROM COLUMN SPREAD FOOTING TO COLUMN SPREAD FOOTING. BOTTOM OF GRADE BEAM TO COINCIDE WITH TOP OF COLUMN FOOTING.
4. ALL CONCRETE COLUMNS ARE TYPE C-1. REFER TO SECTION 10 S-5.
5. TOP OF SLAB AND GRADE BEAM ELEVATIONS ARE AT 50mm BELOW FINISHED FLOOR. SEE 3/S-5.
6. REFER TO SHEET SS-3 FOR TYPICAL CONTROL JOINT (CJ) DETAIL.

US ARMY CORPS OF ENGINEERS AFGHANISTAN ENGINEER DISTRICT

SYMBOL	DESCRIPTION	DATE	APPR.	SYMBOL	DESCRIPTION	DATE	APPR.

DESIGNED BY: DATE: XX-XX-XX
DWN BY: CKD BY: DESIGN FILE NO.
REVIEWED BY: DRAWING CODE
SUBMITTED BY: FILE NAME: PLOT SCALE: PLOT DATE: XX-XX-XX
REV.

U.S. ARMY ENGINEER DISTRICT, AFGHANISTAN
CORPS OF ENGINEERS
APO AE 96338

ENGINEERING AND CONSTRUCTION DIVISION

AFGHANISTAN NATIONAL POLICE (ANP) DISTRICT HEADQUARTERS COMPOUNDS - 1 STORY HQ
VARIOUS LOCATIONS, AFGHANISTAN
1 STORY BUILDING

GRADE BEAM PLAN

SHEET REFERENCE NUMBER:
A
S-2

A1 Size 594mm x 841mm

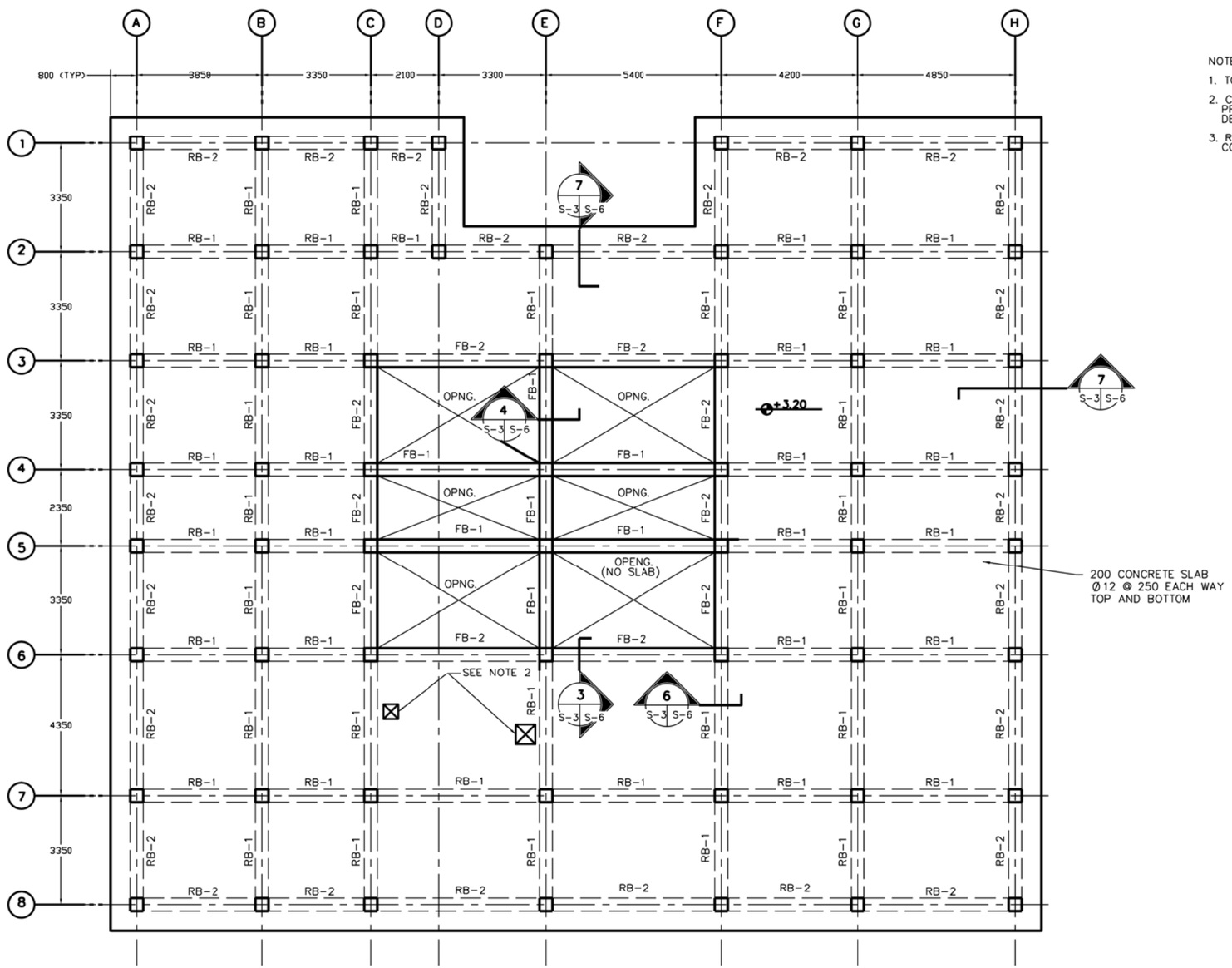

LOW ROOF BEAM AND SLAB PLAN

SCALE = 1:75

NOTES:

1. TOP OF LOW ROOF SLAB AND LOW ROOF BEAMS IS AT 3200 A.F.F.
2. COORDINATE ROOF OPENING REQUIREMENST WITH OTHER DISCIPLINES. PROVIDE ADDITIONAL REINFORCEMENT AROUND OPENINGS PER TYPICAL DETAIL ON DWG SS-2.
3. REFER TO SHEET S-7 FOR STANDARD BEAM AND COLUMN CONSTRUCTION DETAILS.

3 1.50 0 3 4.5
1:75

US ARMY CORPS OF ENGINEERS AFGHANISTAN ENGINEER DISTRICT

SYMBOL	DESCRIPTION	DATE	APPR.	SYMBOL	DESCRIPTION	DATE	APPR.

REV. ___
DATE: XX-XX-XX
DESIGN FILE NO.
DRAWING CODE
FILE NAME:
PLOT SCALE:
PLOT DATE: XX-XX-XX
DESIGNED BY:
DWN BY: CKD BY:
REVIEWED BY:
SUBMITTED BY:

U.S. ARMY ENGINEER DISTRICT, AFGHANISTAN
CORPS OF ENGINEERS
APO AE 96338

ENGINEERING AND CONSTRUCTION DIVISION

AFGHANISTAN NATIONAL POLICE (ANP) DISTRICT HEADQUARTERS COMPOUNDS - 1 STORY HQ
VARIOUS LOCATIONS, AFGHANISTAN
1 STORY BUILDING

LOWER ROOF BEAM PLAN

SHEET REFERENCE NUMBER:
A
S-3

A1 Size 594mm x 841mm

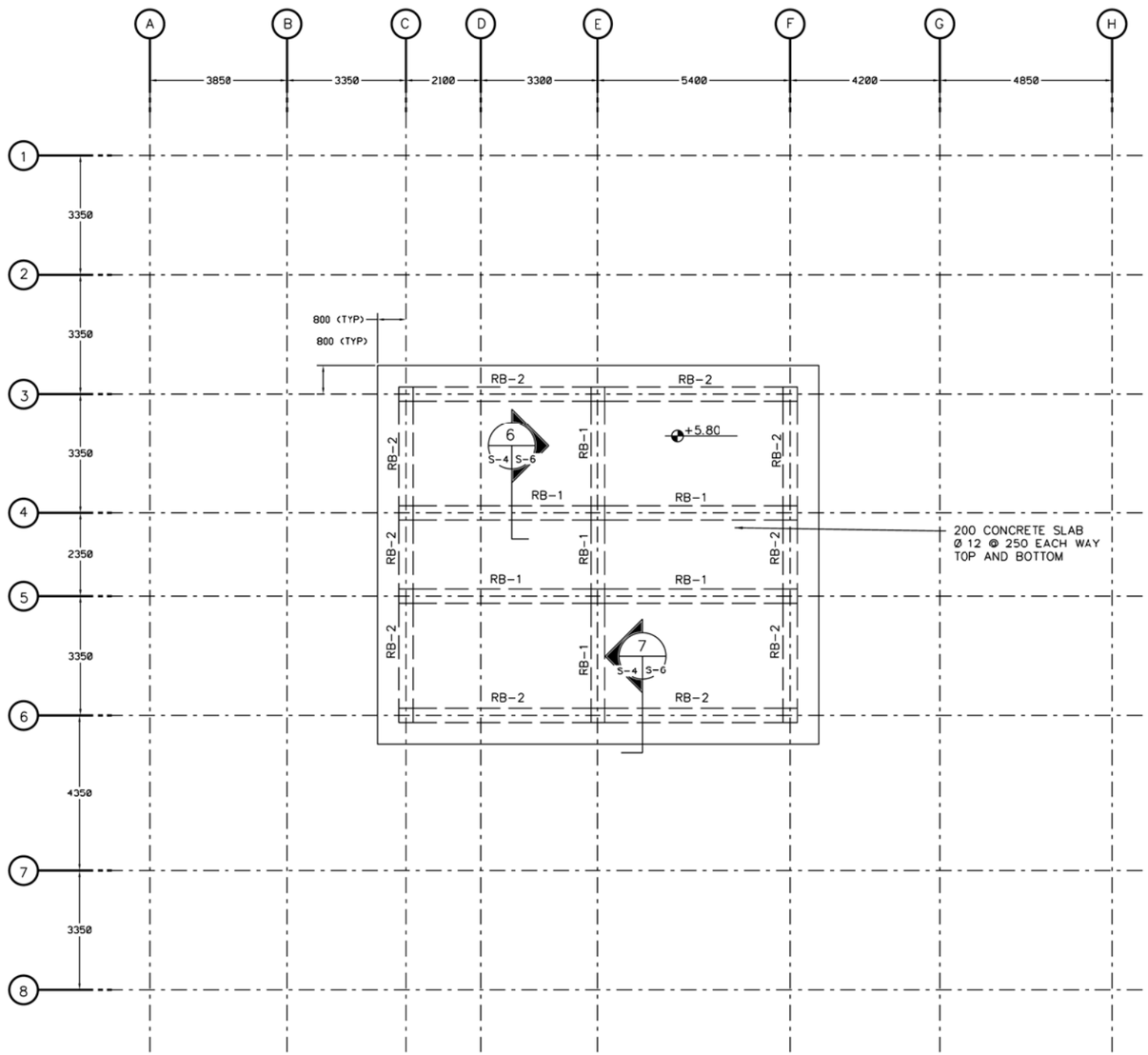

HIGH ROOF BEAM & SLAB PLAN

SCALE

1:75

NOTES:

1. TOP OF HIGH ROOF SLAB AND HIGH ROOF BEAMS IS AT 5800 A.F.F.
2. COORDINATE ROOF OPENING REQUIREMENTS WITH OTHER DISCIPLINES. PROVIDE ADDITIONAL REINFORCEMENT AROUND OPENINGS PER TYPICAL DETAIL ON DWG SS-2.
3. REFER TO SHEET S-7 FOR STANDARD BEAM AND COLUMN CONSTRUCTION DETAILS.

US ARMY CORPS OF ENGINEERS AFGHANISTAN ENGINEER DISTRICT

SYMBOL	DESCRIPTION	DATE	APPR.	SYMBOL	DESCRIPTION	DATE	APPR.

DESIGNED BY: DATE: XX-XX-XX
DWN BY: CKD BY: DESIGN FILE NO.
REVIEWED BY: DRAWING CODE
SUBMITTED BY: FILE NAME: PLOT SCALE: PLOT DATE: XX-XX-XX
REV.

U.S. ARMY ENGINEER DISTRICT, AFGHANISTAN
CORPS OF ENGINEERS
APO AE 96338

ENGINEERING AND CONSTRUCTION DIVISION

AFGHANISTAN NATIONAL POLICE (ANP) DISTRICT HEADQUARTERS COMPOUNDS - 1 STORY HQ
VARIOUS LOCATIONS, AFGHANISTAN
1-STORY BUILDING

HIGH ROOF BEAM PLAN

SHEET REFERENCE NUMBER:
A
S-4

A1 Size 594mm x 841mm

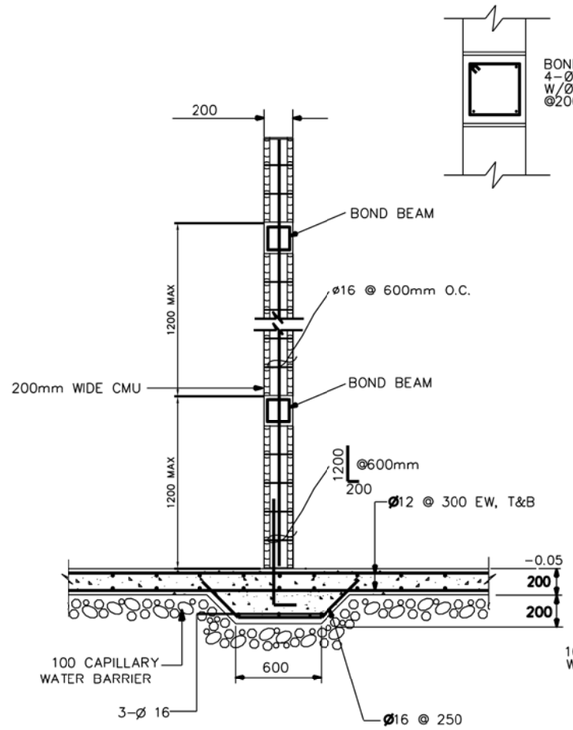

NOTE:
1. ALL EXTERIOR WALLS TO BE GROUTED SOLID.

TYPICAL PARTITION DETAIL (2 / S-2 / S-5)
NOT TO SCALE

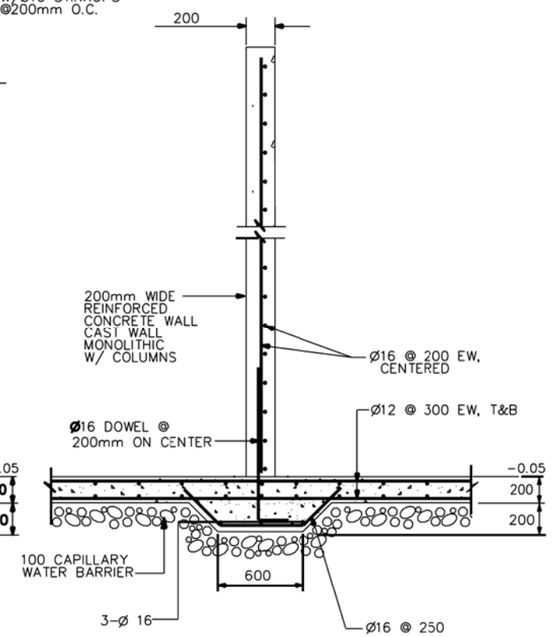

NOTES:
1. SEE ARCHITECTURAL FLOOR PLANS FOR LOCATION OF CONCRETE PARTITIONS.

REINF. CONCRETE PARTITION DETAIL (1 / S-2 / S-5)
NOT TO SCALE

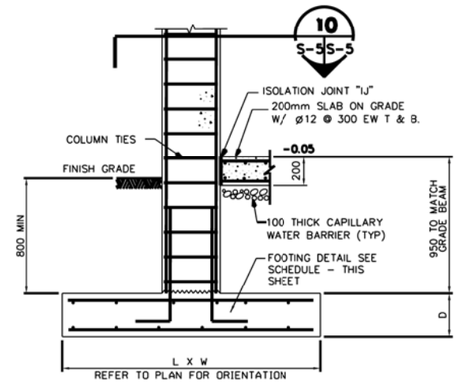

TYPICAL COLUMN AND FOOTING
NOT TO SCALE

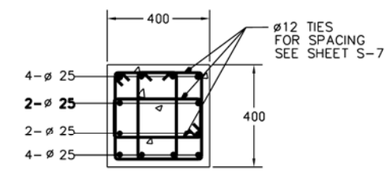

C-1
SECTION (10 / S-5 / S-5)
SCALE=1:10

FOOTING SCHEDULE

FTG TYPE	SIZE (L X W)	DEPTH (D)*	REINFORCING	
			TOP EW	BOTT EW
F1	1700 X 1700	**250**	**ø25 @ 300**	ø25 @ 300
F2	2700 X 2700	**425**	ø25 @ 350	ø25 @ 350
F3	4800 X 3050	**425**	ø25 @ 350	**ø25 @ 350**

*TOP FOOTING ELEVATION SHALL BE THE SAME FOR ALL FOOTINGS.
*FOR THE COMBINED FOOTINGS, CENTER ON THE CENTROID FOR THE TWO COLUMNS.
*REFER TO FOUNDATION PLAN FOR ORIENTATION.

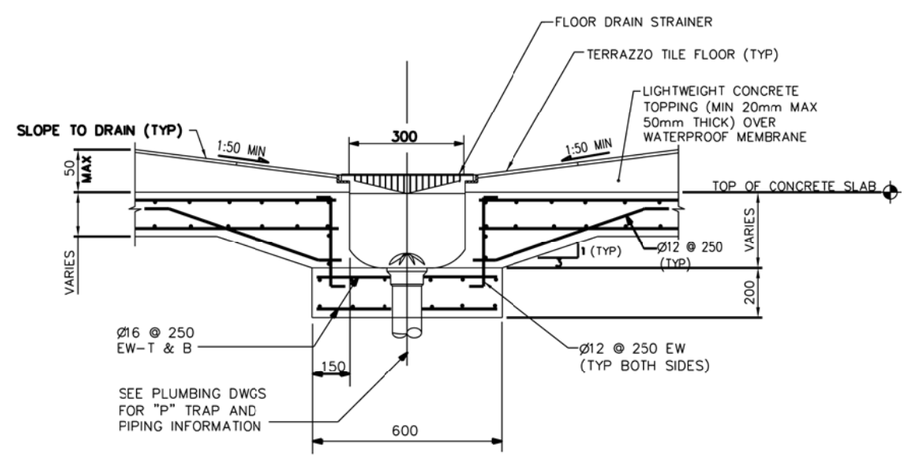

SECTION (3 / S-2 / S-5)
NOT TO SCALE

0 .50 1.00
1:10

UNLESS OTHERWISE NOTED, LINEAR DIMENSIONS SHOWN ARE IN MILLIMETERS.

US ARMY CORPS OF ENGINEERS
AFGHANISTAN ENGINEER DISTRICT

SYMBOL	DESCRIPTION	DATE	APPR.	SYMBOL	DESCRIPTION	DATE	APPR.

DESIGNED BY: DATE: XX-XX-XX
DWN BY: CKD BY: DESIGN FILE NO.
DRAWING CODE:
REVIEWED BY: FILE NAME:
SUBMITTED BY: PLOT SCALE:
PLOT DATE: XX-XX-XX
REV.

U.S. ARMY ENGINEER DISTRICT, AFGHANISTAN
CORPS OF ENGINEERS
APO AE 96338

ENGINEERING AND CONSTRUCTION DIVISION

AFGHANISTAN NATIONAL POLICE (ANP) DISTRICT HEADQUARTERS COMPOUNDS - 1 STORY HQ
VARIOUS LOCATIONS, AFGHANISTAN

1 STORY BUILDING
FOOTING AND COLUMN DETAILS

SHEET REFERENCE NUMBER:
A
S-5

A1 Size 594mm x 841mm

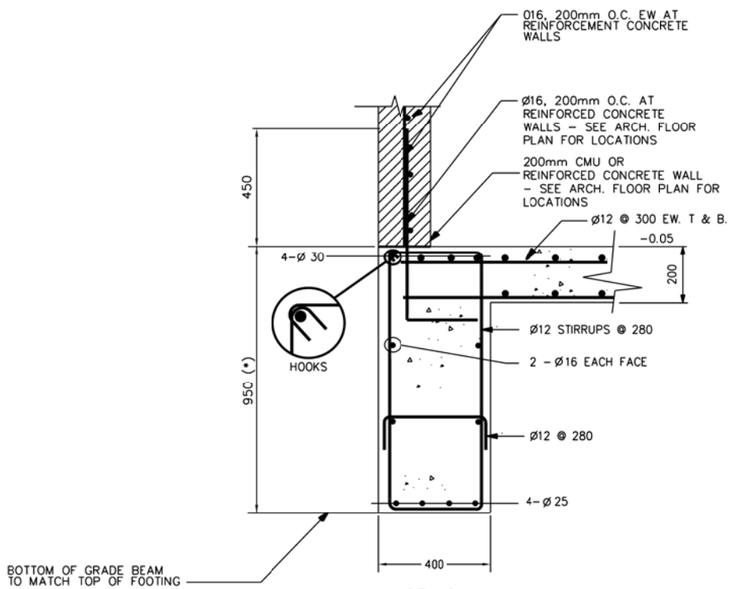

GB–2

SECTION 2 S–2 S–6
SCALE 1:10

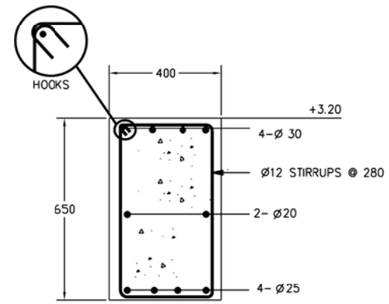

FB–1

SECTION 4 S–3 S–6
SCALE 1:10

NOTE:

1. GRADE BEAM REINFORCING IS CONTINUOUS THROUGH THE COLUMN.

2. COORDINATE REBAR PLACEMENT BETWEEN BEAMS SO THAT A MAXIMUM NUMBER OF REBAR ARE CONTINUOUS. BEND BARS AS REQUIRED.

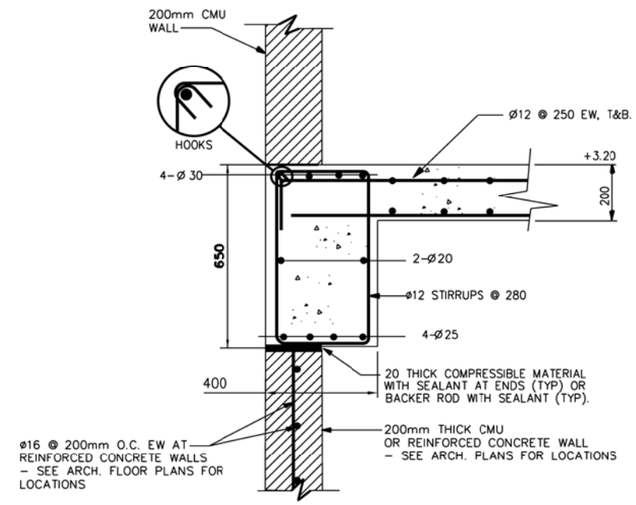

FB–2

SECTION 3 S–3 S–6
SCALE 1:10

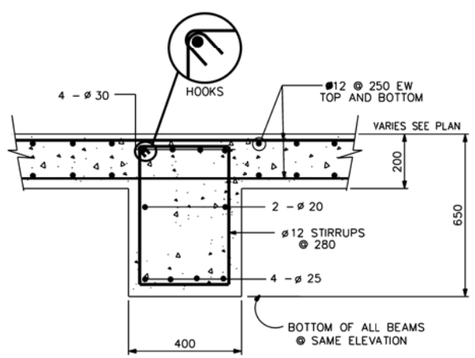

RB–1

SECTION 6 S–3,S–4 S–6
SCALE= NONE

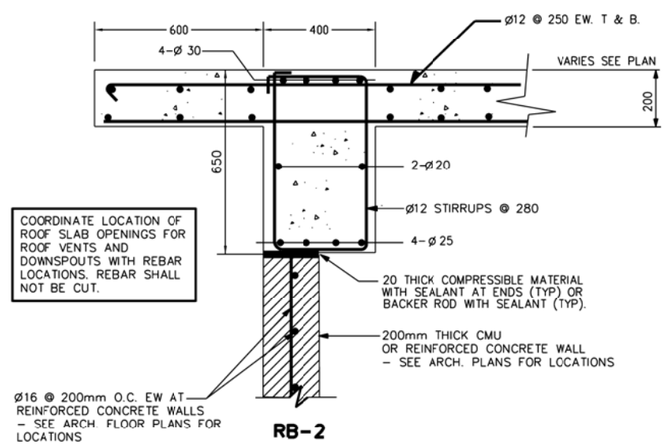

COORDINATE LOCATION OF ROOF SLAB OPENINGS FOR ROOF VENTS AND DOWNSPOUTS WITH REBAR LOCATIONS. REBAR SHALL NOT BE CUT.

RB–2

SECTION 7 S–3,S–4 S–6
SCALE 1:10

US ARMY CORPS OF ENGINEERS
AFGHANISTAN ENGINEER DISTRICT

SYMBOL	DESCRIPTION	DATE	APPR.	SYMBOL	DESCRIPTION	DATE	APPR.

DESIGNED BY: DWN BY: CKD BY: REVIEWED BY: SUBMITTED BY:
DATE: XX-XX-XX DESIGN FILE NO. DRAWING CODE: FILE NAME: PLOT SCALE: PLOT DATE: XX-XX-XX REV. __

U.S. ARMY ENGINEER DISTRICT, AFGHANISTAN
CORPS OF ENGINEERS
APO AE 96338

ENGINEERING AND CONSTRUCTION DIVISION

AFGHANISTAN NATIONAL POLICE (ANP) DISTRICT HEADQUARTERS COMPOUNDS - 1 STORY HQ
VARIOUS LOCATIONS, AFGHANISTAN
1 STORY BUILDING

BEAM DETAILS

SHEET REFERENCE NUMBER:
A
S-6
SHEET --- OF ---

A1 Size 594mm x 841mm

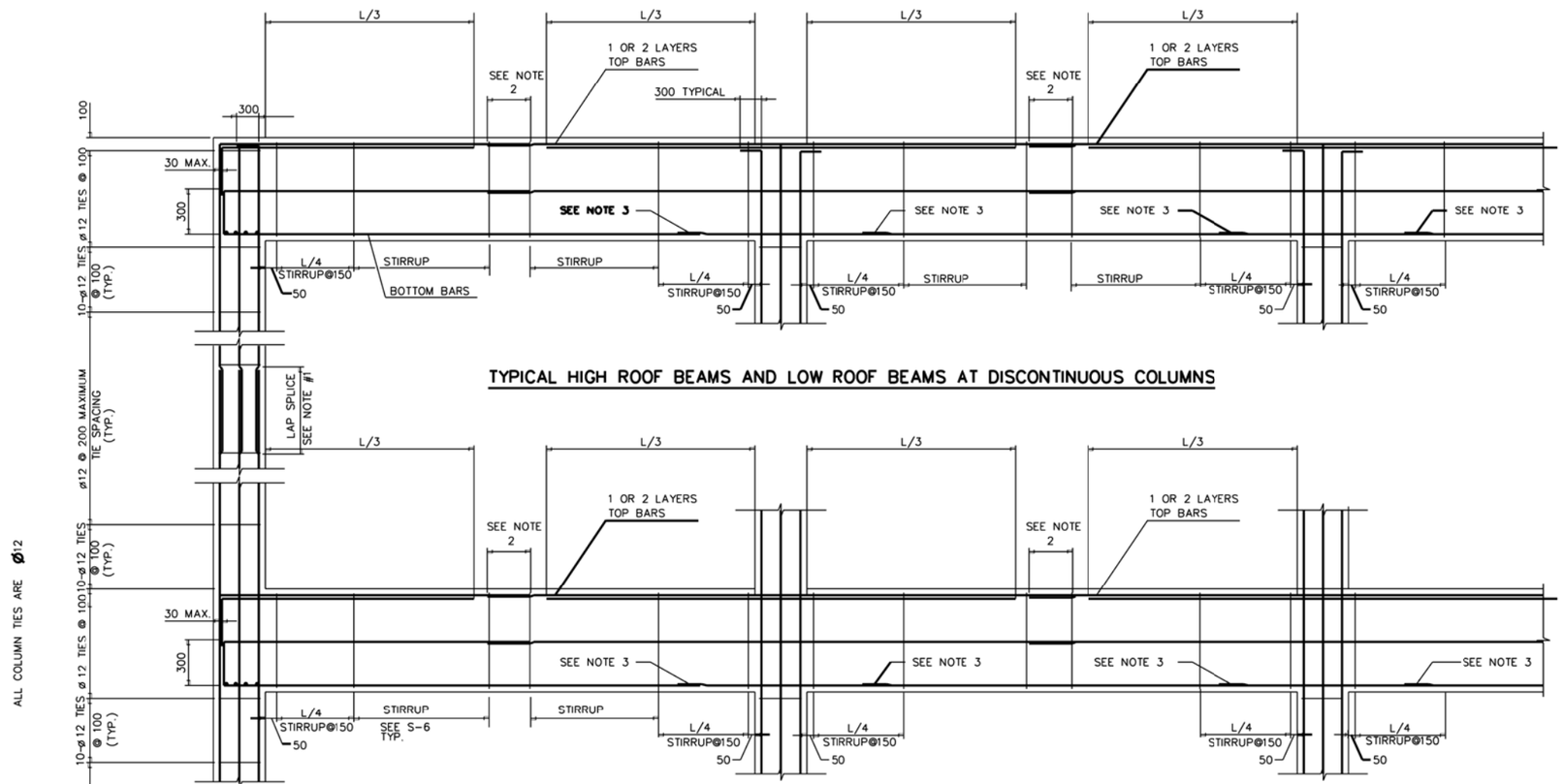

TYPICAL HIGH ROOF BEAMS AND LOW ROOF BEAMS AT DISCONTINUOUS COLUMNS

TYPICAL LOW ROOF BEAMS

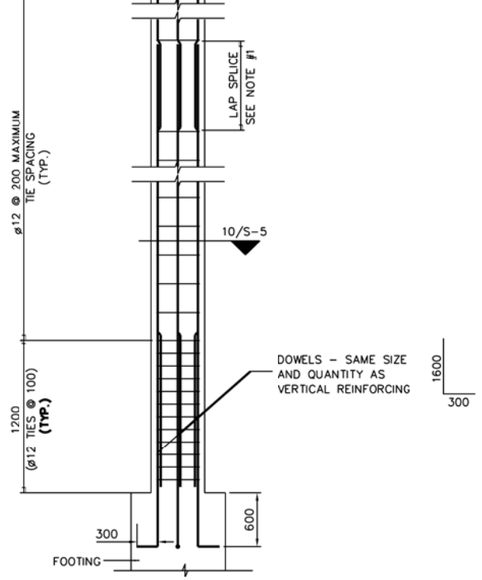

ALL COLUMN TIES ARE Ø12

NOTES:

1. ALL LAP SPLICES IN BEAMS AND COLUMNS SHALL BE CLASS B SPLICES

2. PROVIDE A 150mm MAXIMUM STIRRUP SPACING AT LAP SPLICES, AS SHOWN ON DRAWING. ALL SPLICES EXEPT BOTTOM BARS SHALL OCCUR AT MIDSPAN. REFER INDIVIDUAL BEAM DETAILS FOR STIRRUP SPACING.

3. THE LAP SPLICES SHOWN SHALL BE PERMITTED IN SPANS MEASURING 6 METERS OR MORE FROM CENTERLINES OF SUPPORTS (COLUMNS OR WALLS) ONLY. SPLICES INDICATED SHALL BE LOCATED ONE METER FROM THE FACE OF THE COLUMN, AS SHOWN.

4. BEAM STEEL NOT SHOWN FOR CLARITY.

5. LAP SPLICE = 927mm

STANDARD BEAM AND COLUMN DETAIL

US ARMY CORPS OF ENGINEERS AFGHANISTAN ENGINEER DISTRICT

SYMBOL	DESCRIPTION	DATE	APPR.	SYMBOL	DESCRIPTION	DATE	APPR.

DESIGNED BY: DATE: XX-XX-XX REV: __
DWN BY: CKD BY: DESIGN FILE NO. DRAWING CODE
REVIEWED BY: FILE NAME: PLOT SCALE:
SUBMITTED BY: PLOT DATE: XX-XX-XX

U.S. ARMY ENGINEER DISTRICT, AFGHANISTAN
CORPS OF ENGINEERS
APO AE 96338

ENGINEERING AND CONSTRUCTION DIVISION

AFGHANISTAN NATIONAL POLICE (ANP) DISTRICT HEADQUARTERS COMPOUNDS - 1 STORY HQ
VARIOUS LOCATIONS, AFGHANISTAN
1 STORY BUILDING

STANDARD BEAM AND COLUMN DETAIL

SHEET REFERENCE NUMBER:
A
S-7
SHEET --- OF ---

A1 Size 594mm x 841mm

NOTES:
1. FOR LEGENDS, ABBREVIATIONS AND STANDARD MECHANICAL DETAILS SEE SHEETS SM-1 AND SM-3.
2. FOR EQUIPMENT SCHEDULES AND CONTROL DIAGRAMS SEE SHEET SM-2.
3. ALL DIMENSIONS ARE IN MM UNLESS NOTED OTHERWISE.
4. PROVIDE EACH EXHAUST FAN WITH MANUFACTURER'S STANDARD EXHAUST GRILL AND GRAVITY BACKDRAFT DAMPER.
5. PROVIDE 200 x 100 ALL-WEATHER LOUVER WITH BIRDSCREEN.
6. KITCHEN EXHAUST HOOD WITH ALUMINUM FILTERS AND SEALED DUCT CONNECTION TO EXHAUST FAN. SIZE OF HOOD TO MATCH COOKING EQUIPMENT PROVIDED.
7. EXHAUST FAN EF-A-5 CAPACITY INDICATED HERE IS MINIMUM BASED ON 1200W X 2500 L HOOD: ITS CAPACITY SHALL BE REVISED UPWARD TO MATCH AIRFLOW PERFORMANCE REQUIRED BY THE KITCHEN HOOD EQUIPMENT MANUFACTURER. PROPANE STOVE FLUE DUCT SHALL CONNECT TO KITCHEN EXHAUST HOOD.

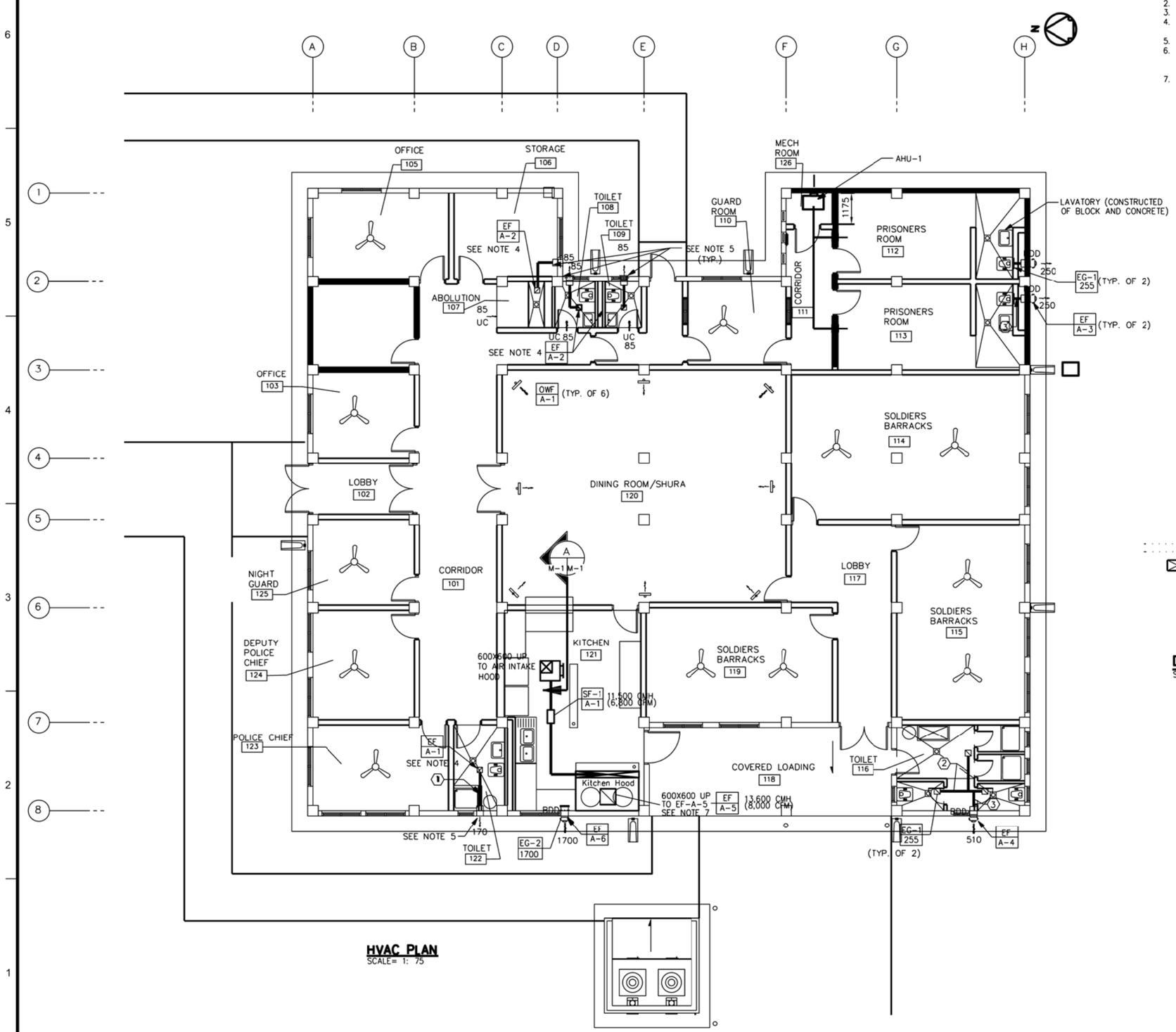

HVAC PLAN
SCALE= 1: 75

DUCT SIZING LEGEND

1	200 x 100
2	200 x 150
3	200 x 200
4	600 x 300

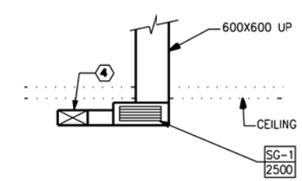

KITCHEN

DETAIL
SCALE 1: 50
A M-1

1:50 — 1 0 1 2 3 4

1:75 — 3 1.50 0 3 4.5

US ARMY CORPS OF ENGINEERS AFGHANISTAN ENGINEER DISTRICT

SYMBOL	DESCRIPTION	DATE	APPR.	SYMBOL	DESCRIPTION	DATE	APPR.

DESIGNED BY: DATE: XX-XX-XX
DWN BY: CKD BY: DESIGN FILE NO.
REVIEWED BY: DRAWING CODE
SUBMITTED BY: FILE NAME: PLOT SCALE: PLOT DATE: XX-XX-XX
REV.

U.S. ARMY ENGINEER DISTRICT, AFGHANISTAN
CORPS OF ENGINEERS
APO AE 96338

ENGINEERING AND CONSTRUCTION DIVISION

AFGHANISTAN NATIONAL POLICE (ANP) DISTRICT HEADQUARTERS COMPOUNDS - 1 STORY HQ
VARIOUS LOCATIONS, AFGHANISTAN
1 STORY BUILDING

HVAC PLAN

SHEET REFERENCE NUMBER:
A
M-1

A1 Size 594mm x 841mm

NOTES:
1. PROVIDE DOUBLE WALL TYPE METAL VENT THROUGH EXTERIOR WALL FOR VENTING OF WOOD STOVES. TOP AT BOTTOM OF CONCRETE BEAM. WOOD STOVES TO BE PROVIDED BY OCCUPANTS. COORDINATE SIZE OF VENT THROUGH WALL WITH WOOD STOVE MANUFACTURER'S RECOMMENDATIONS.

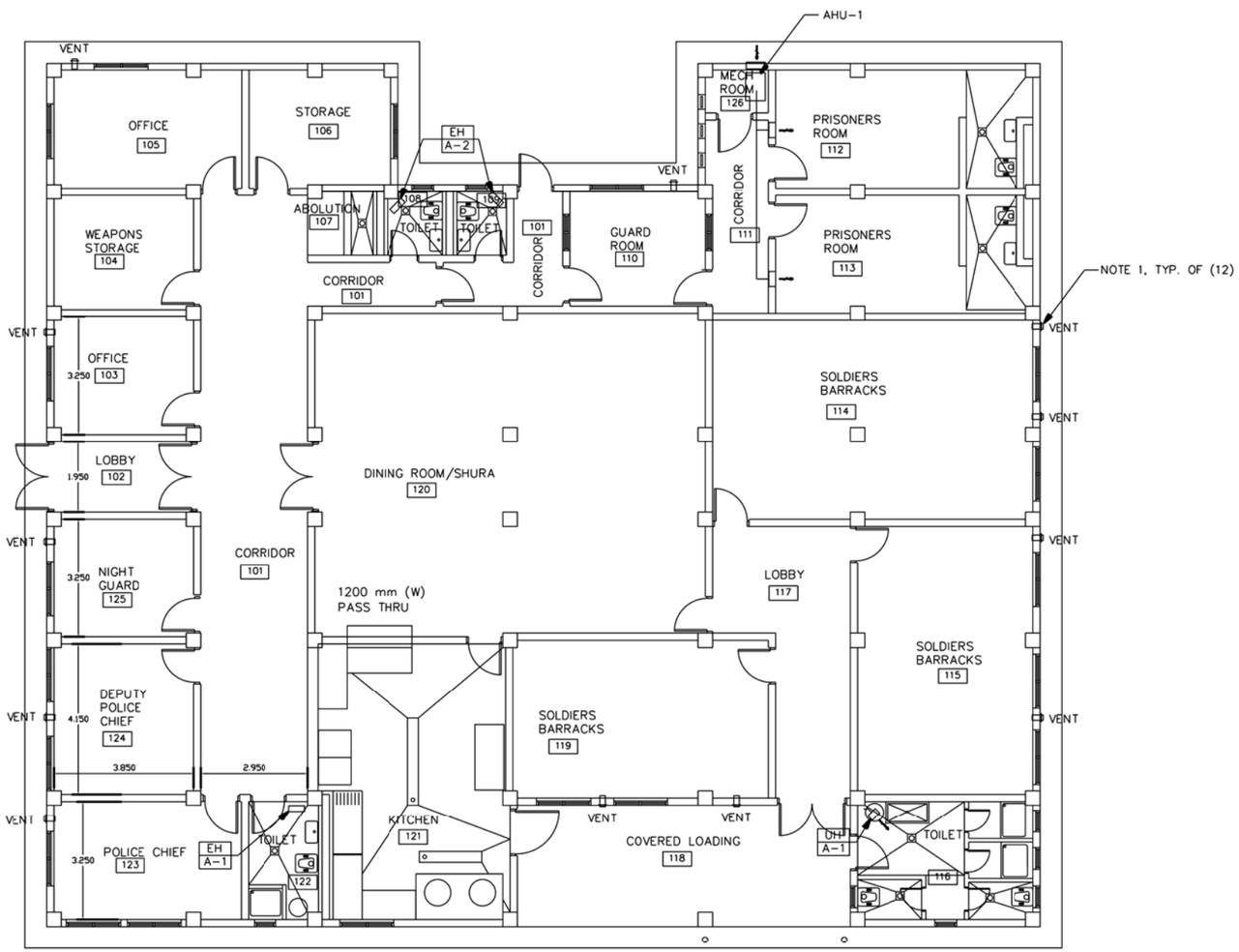

HEATING PLAN
SCALE= 1: 75

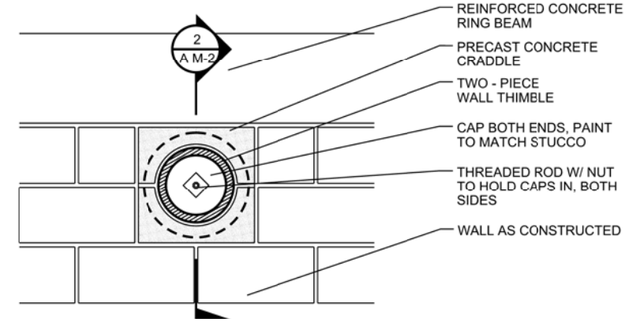

1 AM-2 THIMBLE ELEVATION DETAIL
SCALE 1:10

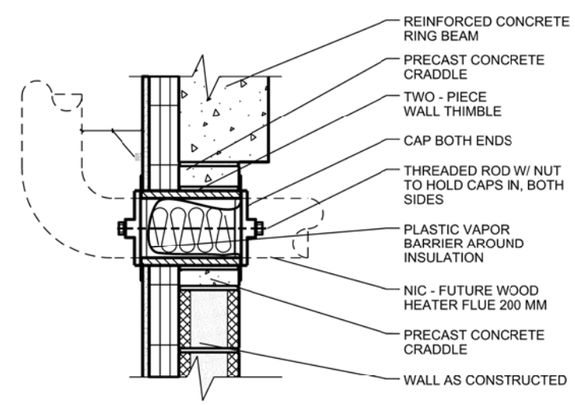

2 AM-2 THIMBLE SECTION DETAIL
SCALE 1:10

US ARMY CORPS OF ENGINEERS
AFGHANISTAN ENGINEER DISTRICT

SYMBOL	DESCRIPTION	DATE	APPR.	SYMBOL	DESCRIPTION	DATE	APPR.

REV: __
DATE: XX-XX-XX
DESIGN FILE NO.
DRAWING CODE
FILE NAME:
PLOT SCALE:
PLOT DATE: XX-XX-XX
DESIGNED BY:
DWN BY:
CKD BY:
REVIEWED BY:
SUBMITTED BY:

U.S. ARMY ENGINEER DISTRICT, AFGHANISTAN
CORPS OF ENGINEERS
APO AE 96338

ENGINEERING AND CONSTRUCTION DIVISION

AFGHANISTAN NATIONAL POLICE (ANP) DISTRICT HEADQUARTERS COMPOUNDS - 1 STORY HQ
VARIOUS LOCATIONS, AFGHANISTAN
1 STORY BUILDING

HEATING PLAN

SHEET REFERENCE NUMBER:
A
M-2

A1 Size 594mm x 841mm

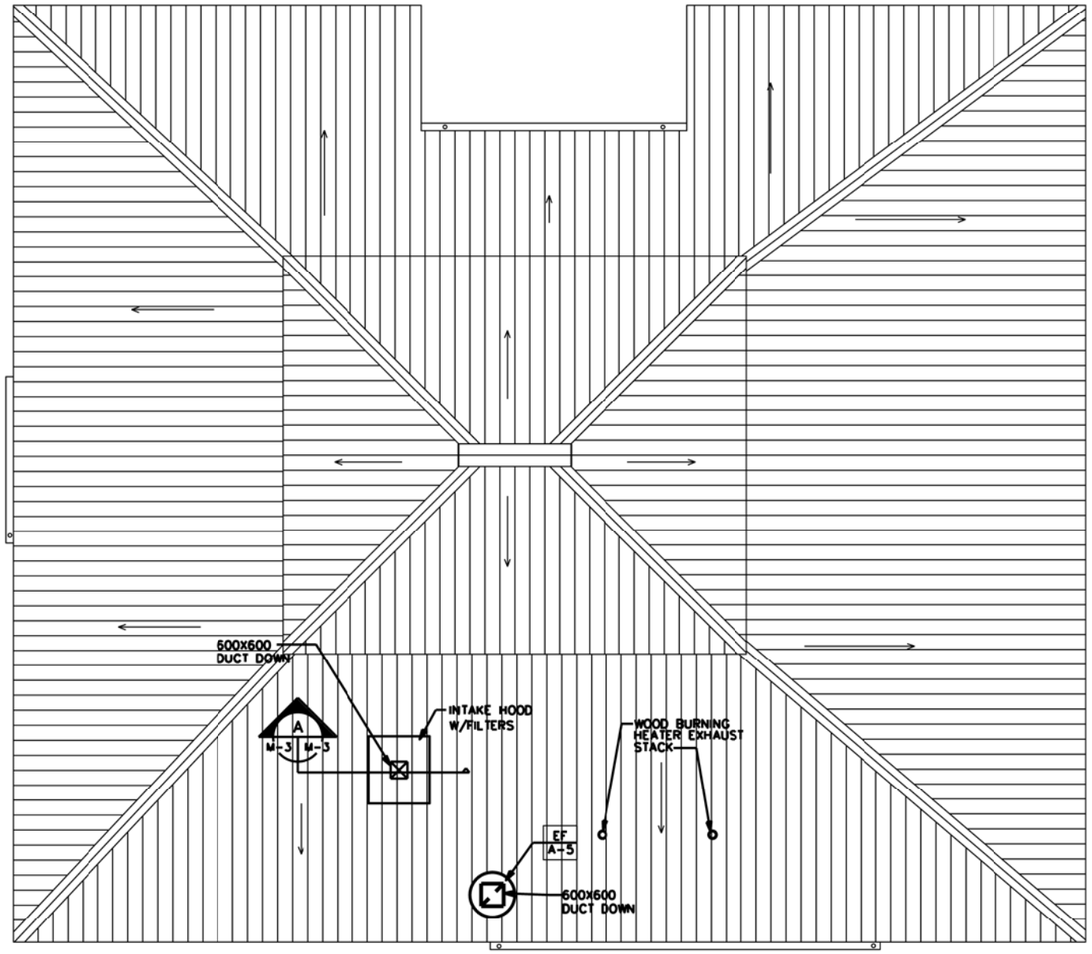

ROOF PLAN
SCALE= 1: 75

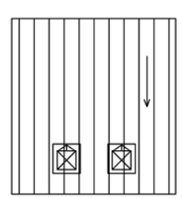

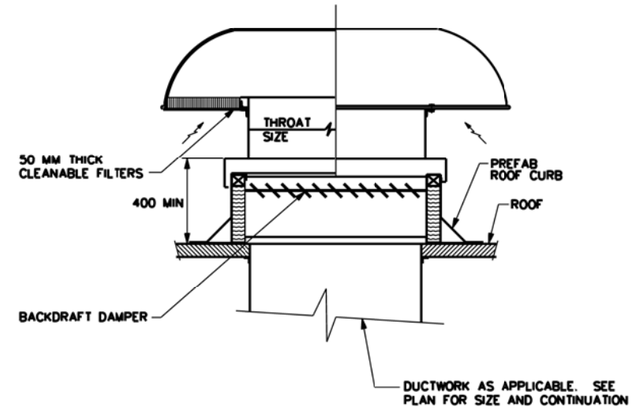

NOTE:
1. FILTER AREA SELECTION AT MAXIMUM FACE VELOCITY OF 300 FPM OR 1.52 MPS.

AIR INTAKE HOOD (A / M-3)
NOT TO SCALE

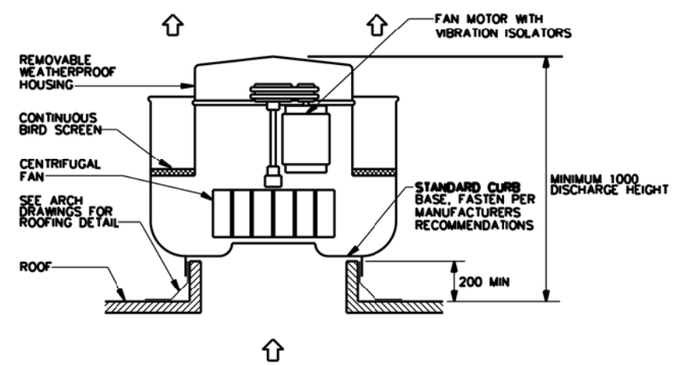

UPBLAST POWER ROOF VENTILATOR (B / M-3)
NOT TO SCALE

US ARMY CORPS
OF ENGINEERS
AFGHANISTAN
ENGINEER DISTRICT

SYMBOL	DESCRIPTION	DATE	APPR.	SYMBOL	DESCRIPTION	DATE	APPR.

DESIGNED BY: DATE: XX-XX-XX
DWN BY: CKD BY: DESIGN FILE NO.
REVIEWED BY: DRAWING CODE
SUBMITTED BY: FILE NAME:
PLOT SCALE:
PLOT DATE: XX-XX-XX
REV.

U.S. ARMY ENGINEER DISTRICT, AFGHANISTAN
CORPS OF ENGINEERS
APO AE 96338

ENGINEERING AND
CONSTRUCTION DIVISION

AFGHANISTAN NATIONAL POLICE
(ANP) DISTRICT HEADQUARTERS
COMPOUNDS - 1 STORY HQ
VARIOUS LOCATIONS, AFGHANISTAN
1 STORY BUILDING

ROOF PLAN

SHEET
REFERENCE
NUMBER:
A
M-3

A1 Size 594mm x 841mm

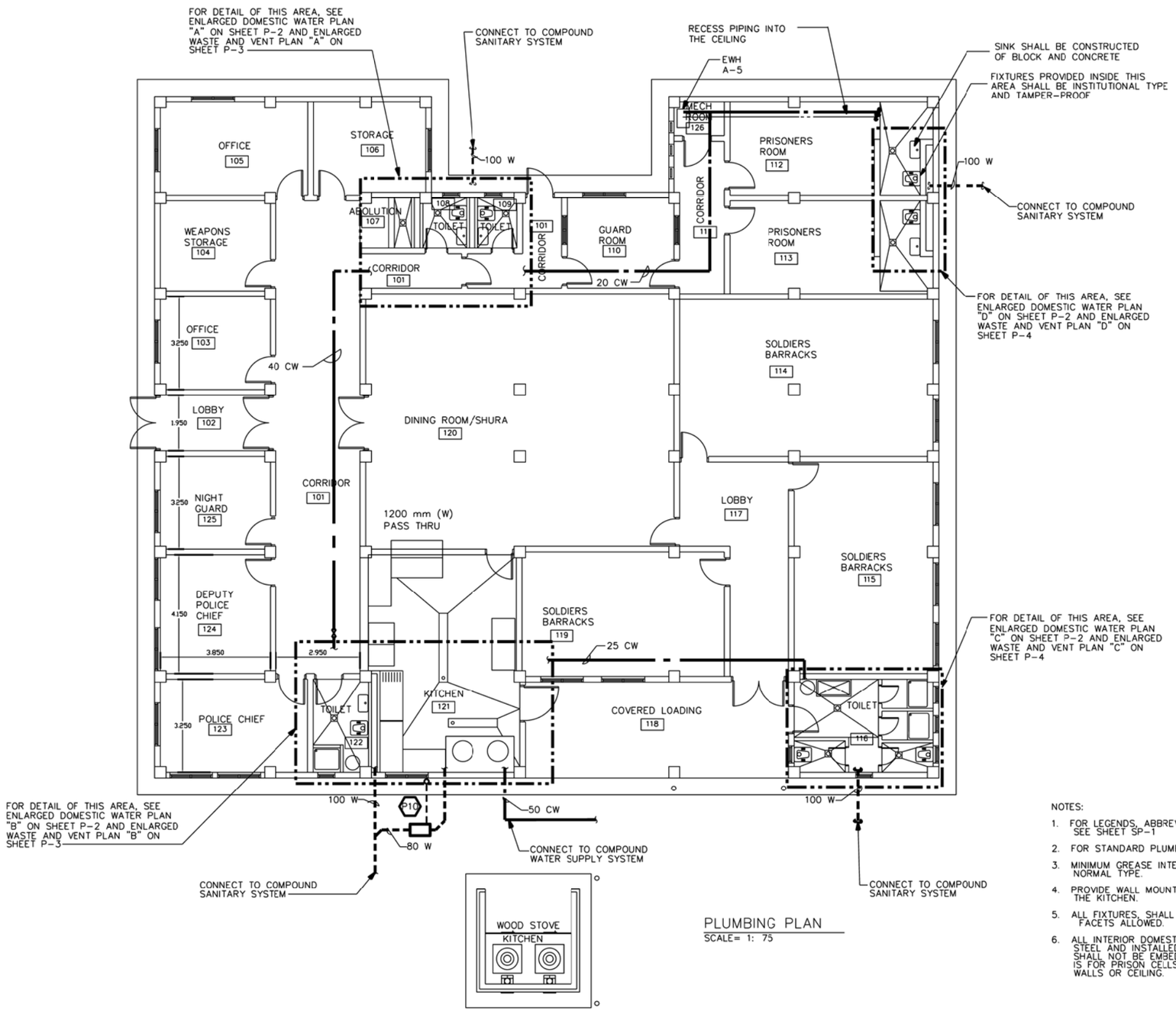

PLUMBING PLAN
SCALE= 1: 75

NOTES:

1. FOR LEGENDS, ABBREVIATION S AND PLUMBING FIXTURE SCHEDULE SEE SHEET SP-1
2. FOR STANDARD PLUMBING DETAILS SEE SHEET SP-2
3. MINIMUM GREASE INTERCEPTOR FLOW RATE SHALL BE 135 LPM NORMAL TYPE.
4. PROVIDE WALL MOUNTED, 15MM DIA. 12.5M LONG HOSE REEL IN THE KITCHEN.
5. ALL FIXTURES, SHALL BE COMMERCIAL GRADE. NO GOOSENECK FACETS ALLOWED.
6. ALL INTERIOR DOMESTIC WATER PIPING SHALL BE GALVANIZED STEEL AND INSTALLED TIGHT TO THE WALL OR CEILING. PIPING SHALL NOT BE EMBEDED IN THE CONCRETE WALLS. EXCEPTION IS FOR PRISON CELLS, WHERE PIPING SHALL BE INSTALLED IN THE WALLS OR CEILING.

US ARMY CORPS OF ENGINEERS AFGHANISTAN ENGINEER DISTRICT

SYMBOL	DESCRIPTION	DATE	APPR.	SYMBOL	DESCRIPTION	DATE	APPR.

DESIGNED BY: DATE: XX-XX-XX
DWN BY: CKD BY: DESIGN FILE NO.
REVIEWED BY: DRAWING CODE
SUBMITTED BY: FILE NAME:
PLOT SCALE:
PLOT DATE: XX-XX-XX
REV.

U.S. ARMY ENGINEER DISTRICT, AFGHANISTAN
CORPS OF ENGINEERS
APO AE 96338

ENGINEERING AND CONSTRUCTION DIVISION

AFGHANISTAN NATIONAL POLICE (ANP) DISTRICT HEADQUARTERS COMPOUNDS - 1 STORY HQ
VARIOUS LOCATIONS, AFGHANISTAN
1 STORY BUILDING

PLUMBING PLAN

SHEET REFERENCE NUMBER:
A
P-1

A1 Size 594mm x 841mm

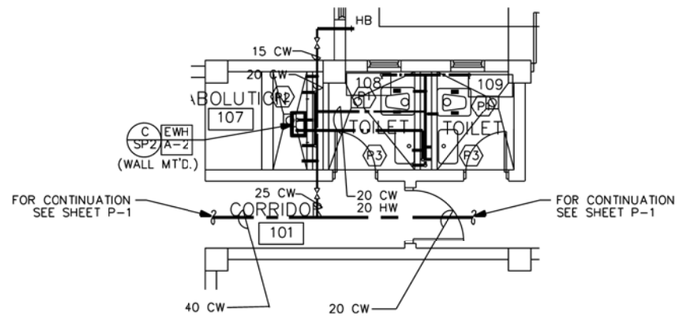

ENLARGED PLAN "A"- DOMESTIC WATER
SCALE= 1: 50

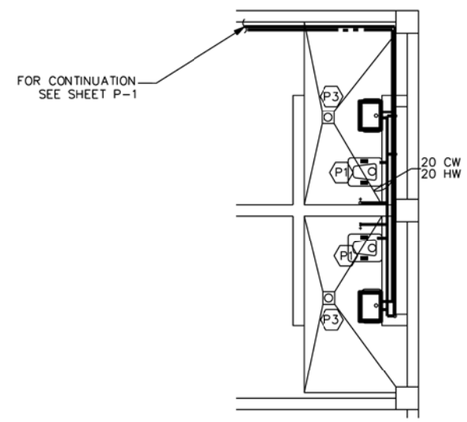

ENLARGED PLAN "D"- DOMESTIC WATER
SCALE= 1: 50

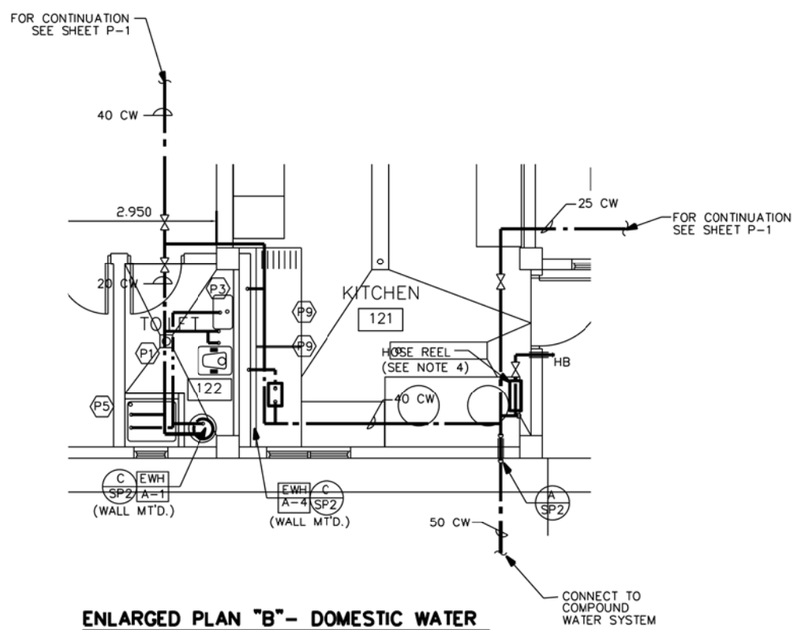

ENLARGED PLAN "B"- DOMESTIC WATER
SCALE= 1: 50

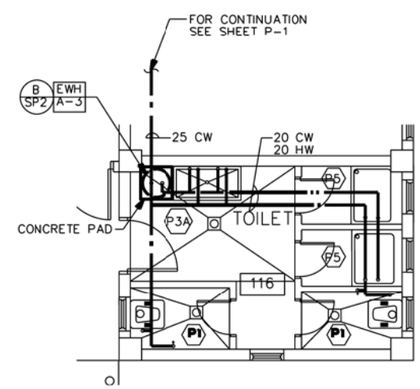

ENLARGED PLAN "C"- DOMESTIC WATER
SCALE= 1: 50

1 0 1 2 3 4
1:50

US ARMY CORPS
OF ENGINEERS
AFGHANISTAN
ENGINEER DISTRICT

SYMBOL	DESCRIPTION	DATE	APPR.	SYMBOL	DESCRIPTION	DATE	APPR.

DESIGNED BY: DATE: XX-XX-XX REV: __
DWN BY: CKD BY: DESIGN FILE NO. DRAWING CODE
REVIEWED BY: FILE NAME: PLOT SCALE:
SUBMITTED BY: PLOT DATE: XX-XX-XX

U.S. ARMY ENGINEER DISTRICT, AFGHANISTAN
CORPS OF ENGINEERS
APO AE 96338

ENGINEERING AND
CONSTRUCTION DIVISION

AFGHANISTAN NATIONAL POLICE
(ANP) DISTRICT HEADQUARTERS
COMPOUNDS - 1 STORY HQ
VARIOUS LOCATIONS, AFGHANISTAN
1 STORY BUILDING

ENLARGED PLUMBING PLANS- DOMESTIC WATER

SHEET
REFERENCE
NUMBER:
A
P-2

A1 Size 594mm x 841mm

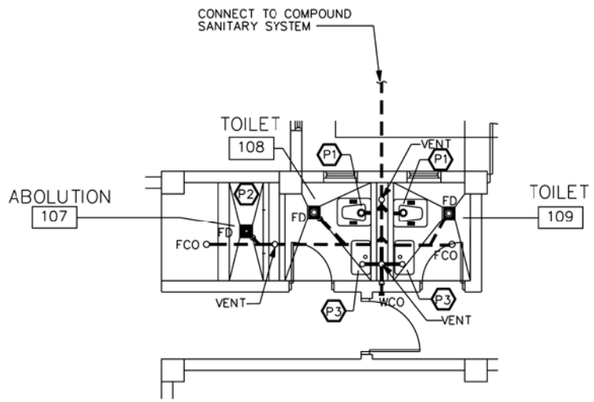

ENLARGED PLAN "A"- WASTE AND DRAINS
SCALE= 1: 50

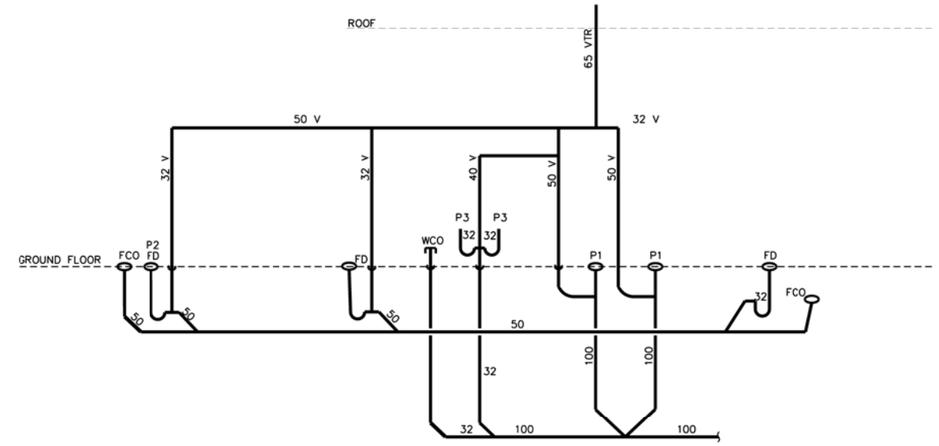

ENLARGED PLAN "A"- WASTE AND DRAIN PIPING SCHEMATIC
SCALE= NO SCALE

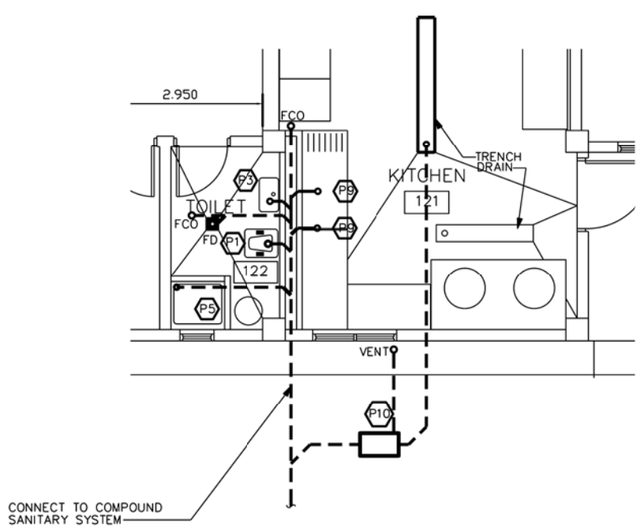

ENLARGED PLAN "B"- WASTE AND DRAINS
SCALE= 1: 50

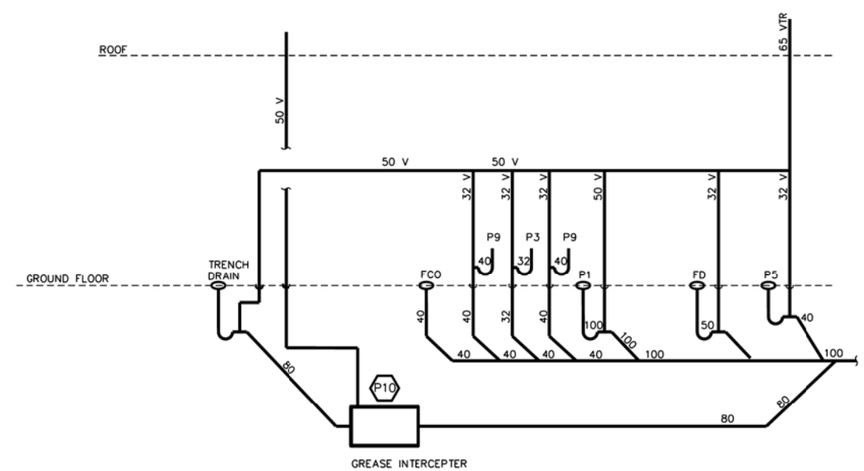

ENLARGED PLAN "B"- WASTE AND DRAIN PIPING SCHEMATIC
SCALE= NO SCALE

1:50

US ARMY CORPS OF ENGINEERS AFGHANISTAN ENGINEER DISTRICT

SYMBOL	DESCRIPTION	DATE	APPR	SYMBOL	DESCRIPTION	DATE	APPR

DESIGNED BY: DATE: XX-XX-XX REV: __
DWN BY: CKD BY: DESIGN FILE NO.
REVIEWED BY: DRAWING CODE:
SUBMITTED BY: FILE NAME: PLOT SCALE: PLOT DATE: XX-XX-XX

U.S. ARMY ENGINEER DISTRICT, AFGHANISTAN
CORPS OF ENGINEERS
APO AE 96338

ENGINEERING AND CONSTRUCTION DIVISION

AFGHANISTAN NATIONAL POLICE (ANP) DISTRICT HEADQUARTERS COMPOUNDS - 1 STORY HQ
VARIOUS LOCATIONS, AFGHANISTAN
1 STORY BUILDING

ENLARGED PLUMBING PLANS- WASTE AND DRAINS

SHEET REFERENCE NUMBER:
A
P-3

A1 Size 594mm x 841mm

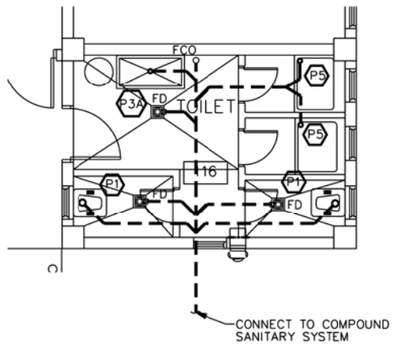

ENLARGED PLAN "C"- WASTE AND DRAINS

SCALE= 1: 50

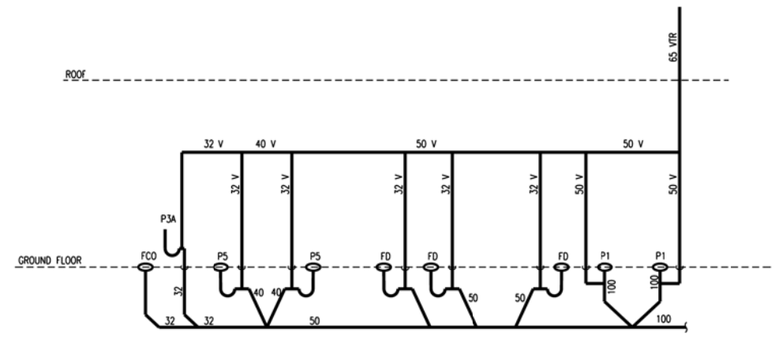

ENLARGED PLAN "C"- WASTE AND DRAIN PIPING SCHEMATIC

SCALE= NO SCALE

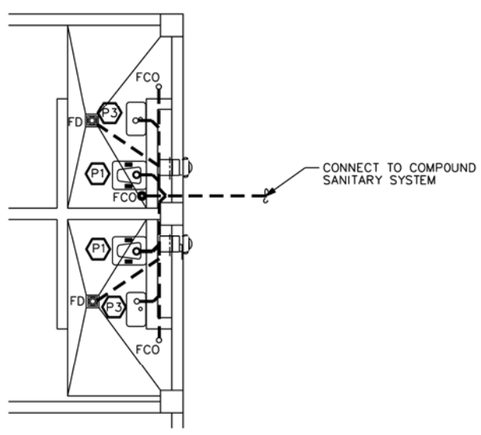

ENLARGED PLAN "D"- WASTE AND DRAINS

SCALE= 1: 50

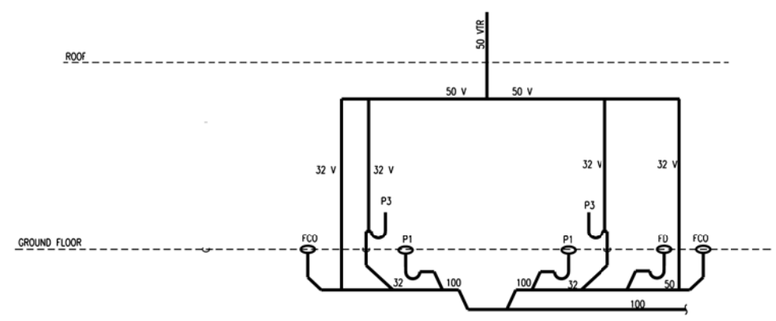

ENLARGED PLAN "D"- WASTE AND DRAIN PIPING SCHEMATIC

SCALE= NO SCALE

1 0 1 2 3 4
1:50

US ARMY CORPS
OF ENGINEERS
AFGHANISTAN
ENGINEER DISTRICT

SYMBOL	DESCRIPTION	DATE	APPR.	SYMBOL	DESCRIPTION	DATE	APPR.

DESIGNED BY: DATE: XX-XX-XX REV.
DWN BY: CKD BY: DESIGN FILE NO.
REVIEWED BY: DRAWING CODE
SUBMITTED BY: FILE NAME: PLOT SCALE: PLOT DATE: XX-XX-XX

U.S. ARMY ENGINEER DISTRICT, AFGHANISTAN
CORPS OF ENGINEERS
APO AE 96338

ENGINEERING AND
CONSTRUCTION DIVISION

AFGHANISTAN NATIONAL POLICE
(ANP) DISTRICT HEADQUARTERS
COMPOUNDS - 1 STORY HQ
VARIOUS LOCATIONS, AFGHANISTAN
1 STORY BUILDING

ENLARGED PLUMBING PLANS- WASTE AND DRAINS

SHEET
REFERENCE
NUMBER:
A
P-4

A1 Size 594mm x 841mm

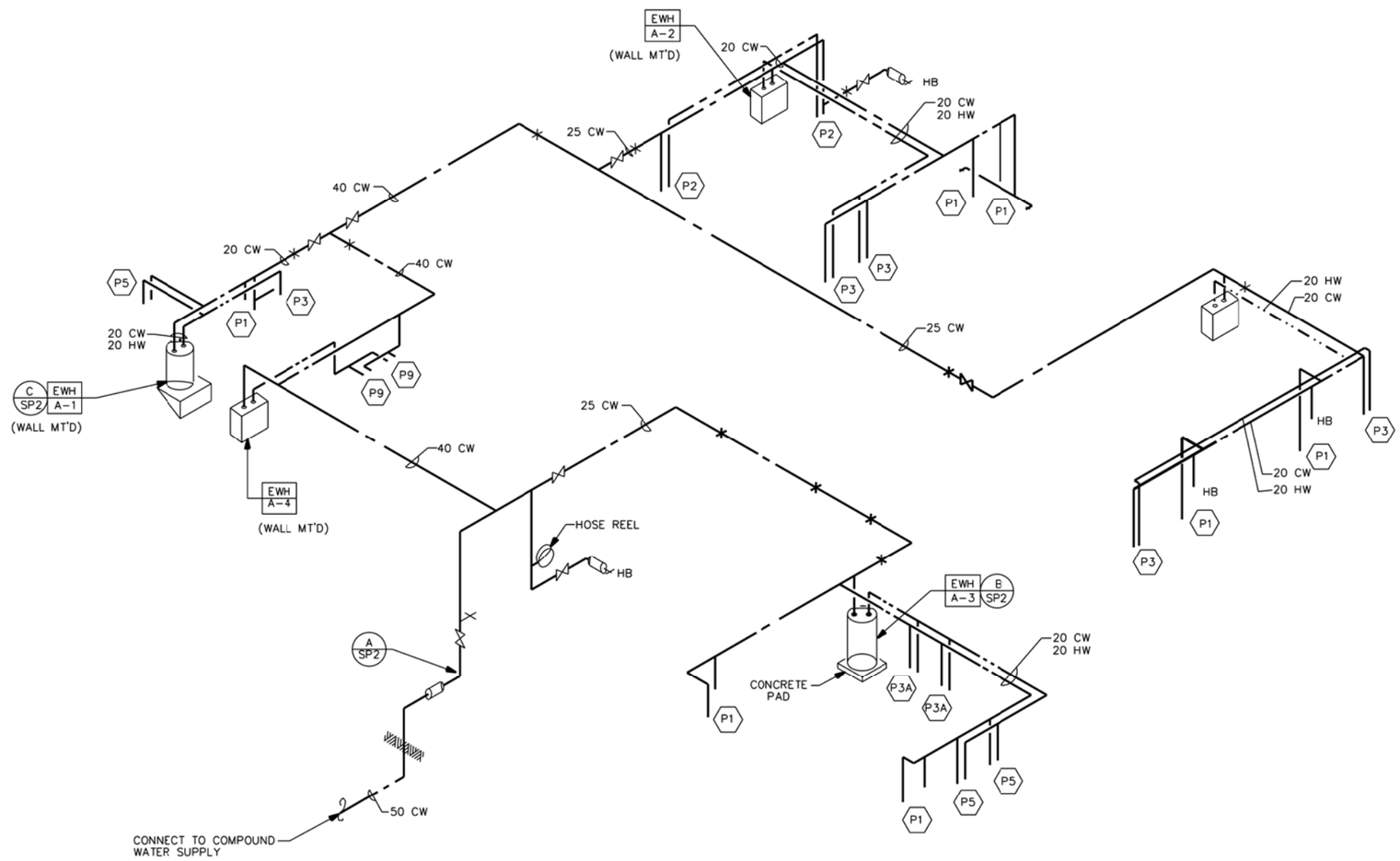

DOMESTIC WATER RISER DIAGRAM

NOT TO SCALE

US ARMY CORPS
OF ENGINEERS
AFGHANISTAN
ENGINEER DISTRICT

SYMBOL	DESCRIPTION	DATE	APPR.	SYMBOL	DESCRIPTION	DATE	APPR.

DESIGNED BY: | DATE: XX-XX-XX | REV.
DWN BY: | CKD BY: | DESIGN FILE NO. | DRAWING CODE
REVIEWED BY: | FILE NAME:
SUBMITTED BY: | PLOT SCALE:
PLOT DATE: XX-XX-XX

U.S. ARMY ENGINEER DISTRICT, AFGHANISTAN
CORPS OF ENGINEERS
APO AE 96338

ENGINEERING AND
CONSTRUCTION DIVISION

AFGHANISTAN NATIONAL POLICE
(ANP) DISTRICT HEADQUARTERS
COMPOUNDS - 1 STORY HQ
VARIOUS LOCATIONS, AFGHANISTAN
1 STORY BUILDING

DOMESTIC WATER
RISER DIAGRAM

SHEET
REFERENCE
NUMBER:
A
P-5

A1 Size 594mm x 841mm

EWH A-X ELECTRIC WATER HEATER SCHEDULE

UNIT NUMBER	LOCATION (ROOM NO.)	TYPE	STORAGE CAPACITY (LITERS)	MINIMUM RECOVERY RATE (LITERS/HOUR) @ 55.5 C RISE	NUMBER OF ELEMENTS	ELECTRICAL REQUIREMENTS				REMARKS
						KW INPUT	VOLTS	PH	HZ	
A-1	TOILET 122	STORAGE TANK	50	43	1	2.5	220	1	50	WALL MOUNTED
A-2	TOILET 108 & 109	STORAGE TANK	50	45	1	3.0	220	1	50	WALL MOUNTED
A-3	TOILET 116	STORAGE TANK	100	86	2	6.0	220	1	50	FLOOR MOUNTED
A-4	KITCHEN 121	STORAGE TANK	100	90	2	6.0	220	1	50	FLOOR MOUNTED
A-5	CELLS 112 & 113	STORAGE TANK	20	14	1	1.5	220	1	50	WALL MOUNTED

US ARMY CORPS OF ENGINEERS AFGHANISTAN ENGINEER DISTRICT

SYMBOL	DESCRIPTION	DATE	APPR.	SYMBOL	DESCRIPTION	DATE	APPR.

U.S. ARMY ENGINEER DISTRICT, AFGHANISTAN
CORPS OF ENGINEERS
APO AE 96338

DESIGNED BY: DATE: XX-XX-XX REV: __
DWN BY: CKD BY: DESIGN FILE NO.
REVIEWED BY: DRAWING CODE
SUBMITTED BY: FILE NAME: PLOT SCALE: PLOT DATE: XX-XX-XX

ENGINEERING AND CONSTRUCTION DIVISION

AFGHANISTAN NATIONAL POLICE (ANP) DISTRICT HEADQUARTERS COMPOUNDS - 1 STORY HQ
VARIOUS LOCATIONS, AFGHANISTAN
1 STORY BUILDING

PLUMBING SCHEDULE

SHEET REFERENCE NUMBER:
A
P-6

A1 Size 594mm x 841mm

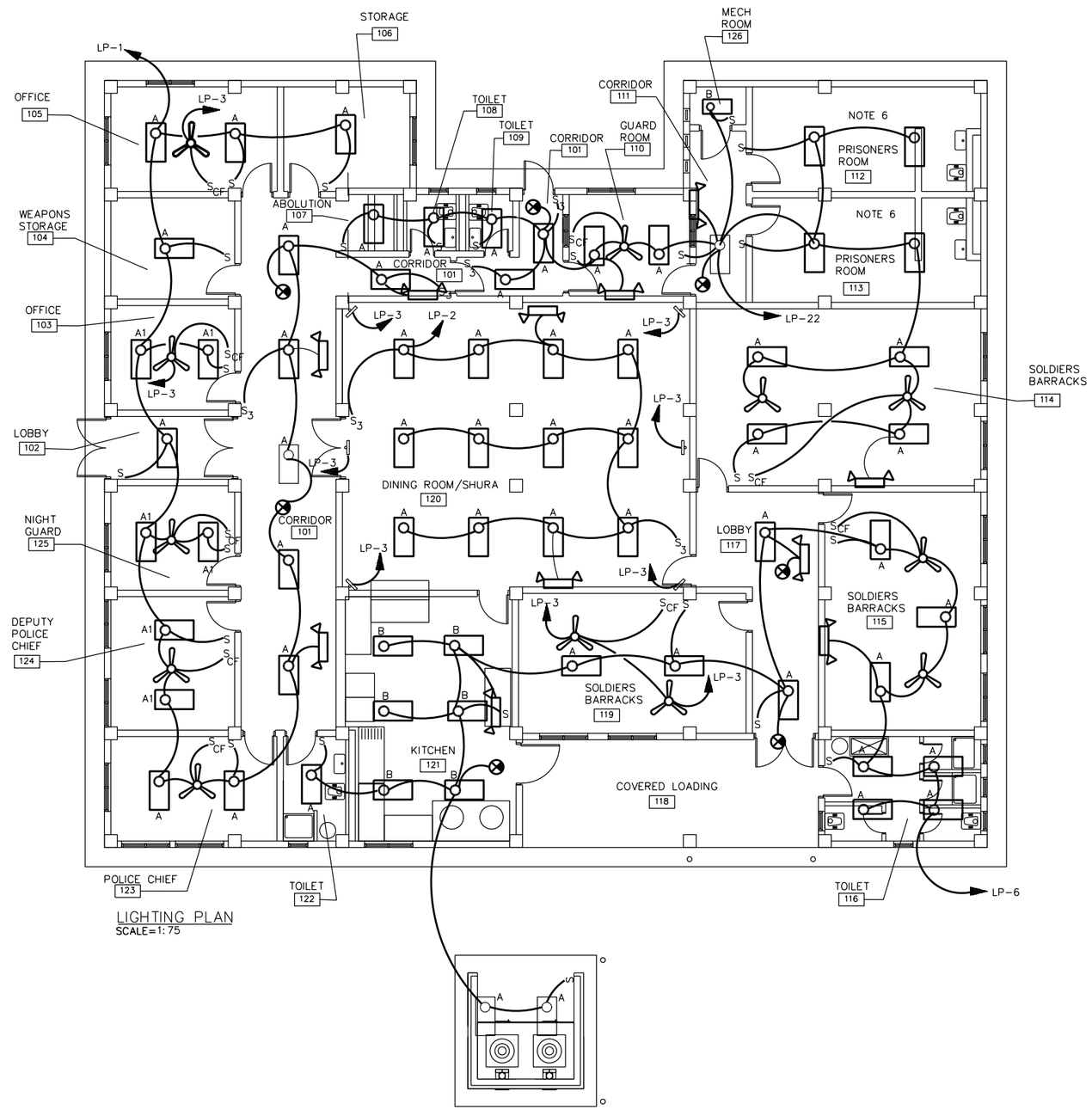

LIGHTING PLAN
SCALE=1:75

NOTES:

1. FOR LEGEND AND ABBREVIATIONS SEE DRAWING SE-1.

2. EXIT LIGHTS AND EMERGENCY LIGHTS SHALL BE CONNECTED TO AN UNSWITCHED POWER CIRCUIT.

3. FOR LIGHT FIXTURE SCHEDULE SEE DRAWING SE-1.

4. COORDINATE LOCATION OF ALL ELECTRICAL FIXTURES AND EQUIPMENT WITH ALL OTHER TRADES.

5. FOR ONE LINE DIAGRAM SEE DRAWING XE- I, POWER PLANT.

6. ALL LIGHT FIXTURES IN JAIL CELLS SHALL BE TWO LAMP FLUORESCENT TYPE FIXTURES SUITABLE FOR VANDAL RESISTANCE/ DETENTION CENTER. LIGHT FIXTURES SHALL WITHSTAND THE PHYSICAL ABUSE AND THE INTENT- TO- DESTROY TYPE ABUSE.

7. ALL WIRING INSTALLATION FOR LIGHTING AND POWER SHALL BE IN APPROVED METAL CONDUIT, EITHER CONCEALED OR SURFACE MOUNTED.

8. COORDINATE LOCATION OF THE CEILING FANS WITH LIGHT FIXTURES.

9. COORDINATE LOCATION AND MOUNTING HEIGHT OF THE LIGHT FIXTURE IN THIS ROOM WITH EXHAUST FAN AND THE DUCT TO PROVIDE REQUIRED CLEARANCE.

10. ALL WIRING INSTALLATION FOR LIGHTING, POWER, AND TELECOMMUNICATIONS SHALL BE IN APPROVED METAL CONDUIT, EITHER CONCEALED OR SURFACE MTD.

US ARMY CORPS OF ENGINEERS
AFGHANISTAN ENGINEER DISTRICT

SYMBOL	DESCRIPTION	DATE	APPR.	SYMBOL	DESCRIPTION	DATE	APPR.

DESIGNED BY: DWN BY: CKD BY: REVIEWED BY: SUBMITTED BY:
DATE: XX-XX-XX DESIGN FILE NO.: DRAWING CODE: FILE NAME: PLOT SCALE: PLOT DATE: XX-XX-XX
REV. __

U.S. ARMY ENGINEER DISTRICT, AFGHANISTAN
CORPS OF ENGINEERS
APO AE 98338

ENGINEERING AND CONSTRUCTION DIVISION

AFGHANISTAN NATIONAL POLICE (ANP) DISTRICT HEADQUARTERS COMPOUNDS - 1 STORY HQ
VARIOUS LOCATIONS, AFGHANISTAN
1 STORY BUILDING

LIGHTING PLAN

SHEET REFERENCE NUMBER:
A
E-1

A1 Size 594mm x 841mm

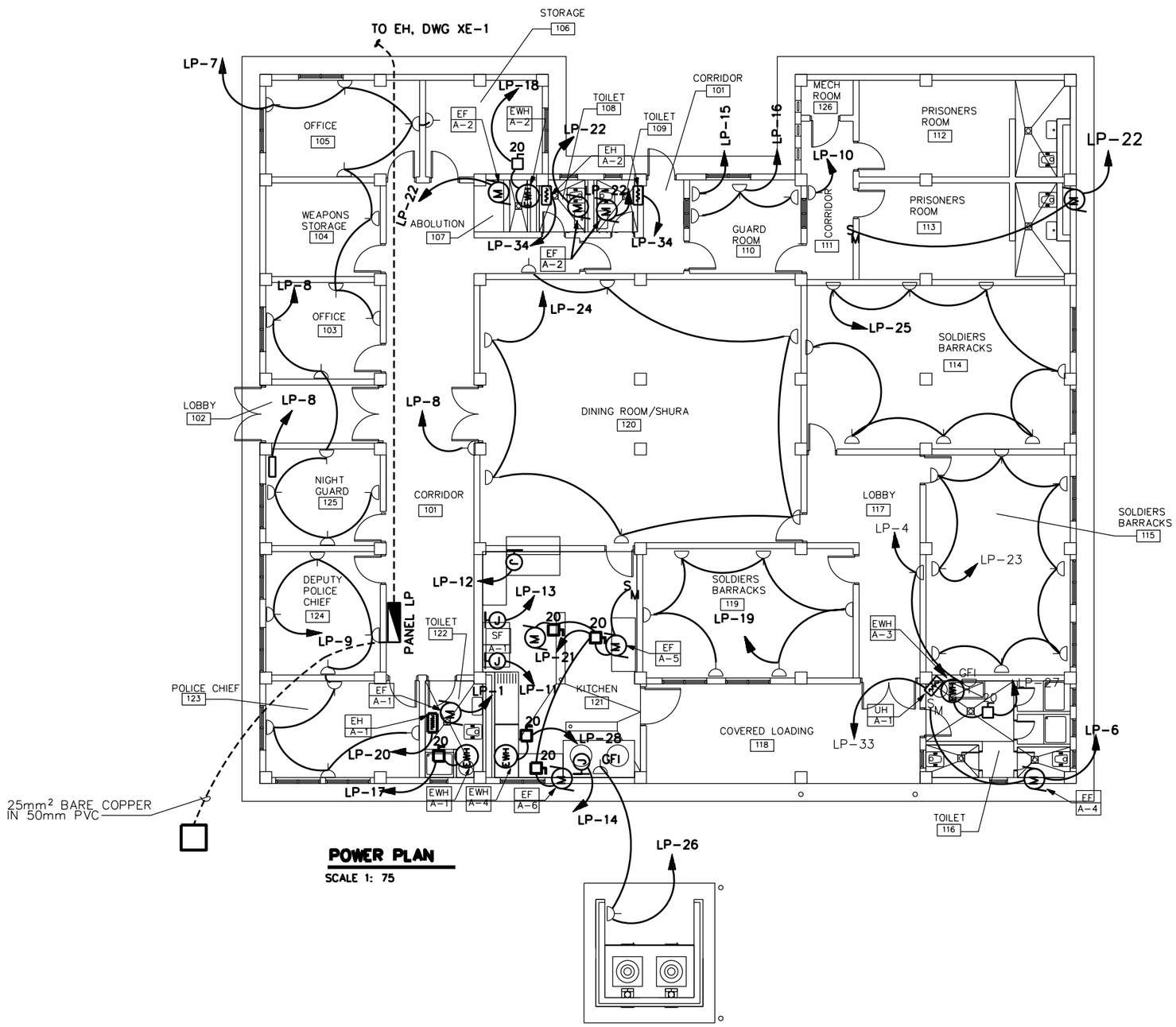

POWER PLAN

SCALE 1: 75

NOTES:

1. FOR LEGEND AND ABBREVIATIONS SEE DRAWING SE-1.
2. COORDINATE LOCATION OF ALL ELECTRICAL FIXTURES AND EQUIPMENT WITH ALL OTHER TRADES.
3. FOR ONE LINE DIAGRAM SEE DRAWING D/E-1, POWER PLANT.
4. COORDINATE LOCATION OF ALL ELECTRICAL FIXTURES AND EQUIPMENT WITH ALL OTHER TRADES.
5. FOR EXACT LOCATION OF MECHANICAL EQUIPMENT SEE MECHANICAL DRAWINGS.
6. EXHAUST FAN EF-A-1 AND EF-A-2 SHALL BE CONTROLLED BY THE LIGHT SWITCH IN THEIR RESPECTIVE ROOM.
7. EXHAUST FAN EF-A-3, EF-A-4, AND EF-A-5 SHALL BE CONTROLLED BY A MANUAL MOTOR STARTER FROM THE LOCATION AS SHOWN ON THIS DRAWING.
8. EXHAUST FAN EF-A-6 SHALL BE CONTROLLED BY A THERMOSTAT. REFER TO MECHANICAL DRAWING FOR LOCATION OF THE THERMOSTAT.
9. ALL WIRING INSTALLATION FOR LIGHTING, POWER, AND TELECOMMUNICATIONS SHALL BE IN APPROVED METAL CONDUIT, EITHER CONCEALED OR SURFACE MTD.

US ARMY CORPS OF ENGINEERS AFGHANISTAN ENGINEER DISTRICT

SYMBOL	DESCRIPTION	DATE	APPR.	SYMBOL	DESCRIPTION	DATE	APPR.

DESIGNED BY: | DATE: XX-XX-XX | REV. —
DWN BY: | CKD BY: | DESIGN FILE NO.
REVIEWED BY: | DRAWING CODE:
SUBMITTED BY: | FILE NAME: | PLOT SCALE: | PLOT DATE: XX-XX-XX

U.S. ARMY ENGINEER DISTRICT, AFGHANISTAN
CORPS OF ENGINEERS
APO AE 96338

ENGINEERING AND CONSTRUCTION DIVISION

AFGHANISTAN NATIONAL POLICE (ANP) DISTRICT HEADQUARTERS COMPOUNDS - 1 STORY HQ
VARIOUS LOCATIONS, AFGHANISTAN
1 STORY BUILDING

POWER PLAN

SHEET REFERENCE NUMBER:
A
E-2

A1 Size 594mm x 841mm

PANELBOARD LP FLUSH MOUNTED MINIMUM 22,000 ASYM. A.I.C. MIN.

AMP. MAIN LUGS (OR) 150 AMP. MAIN BREAKER W/ 150 AMP. TRIP

CIRCUIT BREAKER TYPE 380/220 VOLTS 3 PHASE 4 WIRE 150 AMP. BUS 50 HZ

CKT. NO.	TRIP AMPS	NO. POLES	WIRE mm2	GND mm2	CONDUIT mm	LOAD SERVED	LOAD-V.A. A0	LOAD-V.A. B0	LOAD-V.A. C0	LOAD-V.A. A0	LOAD-V.A. B0	LOAD-V.A. C0	LOAD SERVED	CONDUIT mm	GND 2 mm	WIRE 2 mm	NO. POLES	TRIP AMPS	CKT. NO.
1	20	1	4	4	20	LIGHTING,FANS, EF-A-1	3230			1440			LIGHTING	20	4	4	1	20	2
3	20	1	4	4	20	FANS		2000			360		RECEPTACLES	20	4	4	1	20	4
5	20	1				SPARE						3415	LIGHTING, FANS,EF-A-4	20	4	4	1	20	6
7	20	1	4	4	20	RECEPTACLES	1440			1260			RECEPTACLES	20	4	4	1	20	8
9	20	1	4	4	20	RECEPTACLES		1440			180		RECEPTACLE	20	4	4	1	20	10
11	20	1	4	4	20	JB FOR REFRIGERATOR/FREEZER			2000			2000	JB FOR REFRIGERATOR/FREEZER	20	4	4	1	20	12
13	20	1	4	4	20	JB FOR REFRIGERATOR/FREEZER	2000			2000			JB FOR REFRIGERATOR/FREEZER	20	4	4	1	20	14
15	20	1	4	4	20	RECEPTACLES		500			540		RECEPTACLES	20	4	4	1	20	16
17	20	1	4	4	20	ELECTRIC WATER HEATER A-1			2500			9000	ELECTRIC WATER HEATER A-2	20	6	10	1	50	18
19	20	1	4	4	20	RECEPTACLES	1080			1550			EH-A-1	20	4	4	1	20	20
21	20	1	4	4	20	EXHAUST FAN EF-A-5, A-6		1585			2800		LIGHTING,FANS,EF-A-2,EF-A-3	20	4	4	1	20	22
23	20	1	4	4	20	RECEPTACLES			1440			1260	RECEPTACLES	20	4	4	1	20	24
25	20	1	4	4	20	RECEPTACLES	1440			720			RECEPTACLES	20	4	4	1	20	26
27	20	3	4	4	20	EWH-A-3		3000			12000		ELECTRIC WATER HEATER A-4	20	6	16	1	70	28
29	↓	↓	↓	↓	↓	↓			3000				SPARE				1	20	30
31							3000						SPARE				1	20	32
33	20	1	4	4	20	UH-A-1		3000			2080		EH-A-2	20	4	4	1	20	34
35	20	1				SPARE							SPARE				1	20	36
37	20	1				SPARE							SPARE				1	20	38
39	20	1				SPARE							SPACE						40
41						SPACE							SPACE						42
							12190	11525	8940	6970	17960	15675							

TOTAL CONN. LOAD 73.26 KVA. 85 % DEMAND = ESTIMATED DEMAND LOAD: 62.27 kVA

TOTAL CONN. LOAD PER PHASE (KVA): A0 19.16 B0 29.49 C0 24.62

SUPPLIED FROM POWER PLANT SWITCHBOARD

NOTES:

1. FOR LEGEND AND ABBREVIATIONS SEE DRAWING SE-1.
2. CONTRACTOR SHALL CONFIRM THAT ALL CIRCUIT RATINGS ARE BASED ON THE ACTUAL NAMEPLATE OF THE SUPPLIED EQUIPMENT.

US ARMY CORPS OF ENGINEERS AFGHANISTAN ENGINEER DISTRICT

SYMBOL	DESCRIPTION	DATE	APPR.	SYMBOL	DESCRIPTION	DATE	APPR.

U.S. ARMY ENGINEER DISTRICT, AFGHANISTAN
CORPS OF ENGINEERS
APO AE 96338

DESIGNED BY: DATE: XX-XX-XX
DWN BY: CKD BY: DESIGN FILE NO.
REVIEWED BY: DRAWING CODE
SUBMITTED BY: FILE NAME:
PLOT SCALE:
PLOT DATE: XX-XX-XX
REV.

ENGINEERING AND CONSTRUCTION DIVISION

AFGHANISTAN NATIONAL POLICE (ANP) DISTRICT HEADQUARTERS COMPOUNDS - 1 STORY HQ
VARIOUS LOCATIONS, AFGHANISTAN
1 STORY BUILDING

PANEL SCHEDULE

SHEET REFERENCE NUMBER:
A
E-3

A1 Size 594mm x 841mm

ARCHITECTURAL ABBREVIATIONS AND SYMBOLS

ABBREVIATIONS

A

@	AT
AC	AIR CONDITIONER
ACCFLR	RAISED FLOOR SYSTEM
ACFT	AIRCRAFT
ACST	ACOUSTICAL
AD	AREA DRAIN
A/E	ARCHITECT/ENGINEERS
AFF	ABOVE FINISH FLOOR
ALUM	ALUMINUM
ANOD	ANODIZED
AOC	AIR OPERATIONS CENTER
APPROX	APPROXIMATELY
ARCH	ARCHITECTURAL
ASPH	ASPHALT
ATC	ACOUSTICAL TILE CEILING
AWP	ACOUSTICAL WALL PANEL

B

BB	BALL BEARING
BMUM	BITUMINOUS
BL	BASE LINE
BLDG	BUILDING
BLK	BLOCK
B/M	BENCH MARK OR BEAM
BOM	BILL OF MATERIALS
BRKT	BRACKET
BOT	BOTTOM
BRD	BOARD

C

CARP	CARPET
CB	CORE BORING
C TO C	CENTER TO CENTER
CEM	CEMENT
CH	CLEAR HEART
CFM	CUBIC FEET PER MINUTE
CI	CAST IRON
CIP	CAST IN PLACE
CJ OR CJT	CONTROL JOINT
℄	CENTER LINE
CLF	CHAIN LINK FENCE
CLG	CEILING
CLR	CLEAR
CM	CENTIMETER
CMDR	COMMANDER
CMP	CORRUGATED METAL PIPE
CMU	CONCRETE MASONRY UNIT
CO	CLEANOUT
COE	CORPS OF ENGINEERS
CONCR	CONCRETE
CONN	CONNECTION
CONST	CONSTRUCTION
CONT	CONTINUOUS
CONTAM	CONTAMINATED
CONTR	CONTRACTOR
CORR	CORRUGATED
CPRSR	COMPRESSOR
CT	CERAMIC TILE
CTR	CENTER
CUL	CULVERT
CUM	CUBIC METERS
CWT	COUNTERWEIGHT
COORD	COORDINATE

D

D	DEPTH
DECON	DECONTAMINATION
DET	DETAIL
DI	DRAIN INLET
DIA	DIAMETER
DIM	DIMENSION
DISP	DISPENSER
DJ	DUMMY JOINT
DRWG	DRAWING
DS	DOWNSPOUT
DW	DRINKING WATER

E

E	EAST
EA	EACH
EG	EXISTING GRADE
EJ	EXPANSION JOINT
EL OR ELEV	ELEVATION
ELEC	ELECTRICAL
ENCL	ENCLOSURE
ENGR	ENGINEER
ENT	ENTRANCE
EPDM	ELASTOMERIC ROOFING
EPX	EPOXY COATING
EQ	EQUAL
ES/EW	EMERGENCY SHOWER/EYE WASH
EW	EACH WAY
EXCA	EXCAVATE
EXH	EXHAUST
EXIST	EXISTING
EXP	EXPANSION OR EXPOSED
EWC	ELECTRIC WATER COOLER
EWH	ELECTRIC WATER HEATER

ABBREVIATIONS

F

F	FEET
FD	FLOOR DRAIN
FDN	FOUNDATION
FF & E	FURNITURE, FURNISHINGS AND EQUIPMENT
F TO F	FACE TO FACE
FE	FIRE EXTINGUISHER
FFLEL	FINISH FLOOR ELEVATION
FG	FINISH GRADE
FH	FIRE HYDRANT
FIN	FINISH
FL	FLOOR
FPM	FEET PER MINUTE
FTG	FOOTING

G

GA	GAUGE
GALV	GALVANIZED
GPM	GALLONS PER MINUTE
GR	GRADE
GT	GATE (FENCE)
GVL	GRAVEL
GYP	GYPSUM

H

HB	HOSE BIB
HDW	HARDWARE
HDWD	HARDWOOD
HZ	HERTZ
HF	HIGH FREQUENCY
HGT	HEIGHT
HM	HOLLOW METAL
HORIZ	HORIZONTAL
HP	HIGH POINT
HH	HEX HEAD
HC	HANDICAPPED
HR	HOUR

I

ID	INSIDE DIAMETER
INSTL	INSTALL
INTEL	INTELLIGENCE
INTER	INTERIOR
INV	INVERT
INSUL	INSULATION

J

JAN	JANITOR
JB	JUNCTION BOX
JCT	JUNCTION
JT	JOINT

K

KG	KILOGRAM
KM	KILOMETER
KPA	KILO PASCAL
KPH	KILOMETERS PER HOUR

L

LAM	LAMINATE
LAT	LATITUDE
LAV	LAVATORY
LBY	LOBBY
LBS	POUNDS
LG	LONG
LINMET	LINEAR METAL CEILING SYSTEM
LNRPNL	METAL LINER PANEL
LOC	LIMITS OF CONSTRUCTION
LONG	LONGITUDE
LP	LOW POINT
LSD	LARGE SCREEN DISPLAY
LTG P	LIGHTING PANEL
LVR	LOUVER

M

M	METER
MATL	MATERIAL
MAX	MAXIMUM
MECH	MECHANICAL
MH	MANHOLE
MISC	MISCELLANEOUS
MIN	MINIMUM
ML	MATCH LINE
MM	MILLIMETERS
MO	MASONRY OPENING
MON	MONUMENT
MOIST	MOISTURE
MPH	MILES PER HOUR
MTD	MOUNTED
MTL	METAL
MSNRY	MASONRY
MFR	MANUFACTURER
MATL	MATERIAL
MW	FORCE PROTECTION DOOR

ABBREVIATIONS

N

N	NORTH
NA	NOT APPLICABLE
NIC	NOT IN CONTRACT
NICAD	NICKEL CADMIUM
NO	NUMBER
NTS	NOT TO SCALE

O

OC	ON CENTER
OD	OUTSIDE DIAMETER
OPH	OPPOSITE HAND
OPNG	OPENING
OPP	OPPOSITE
OPS	OPERATIONS

P

PANL	PANEL
PCS	PIECES
PE	POLYETHYLENE
PKG	PARKING OR PACKAGE
PL	PLATE
PLAS	PLASTER
PLBG	PLUMBING
POL	PETROLEUM OIL LUBRICANT
PP	POWER PANEL
PRCST	PRECAST
PROP	PROPERTY
PSF	POUNDS PER SQUARE FOOT
PTD	PAINTED
PTR	PIPE TRENCH
PVMT	PAVEMENT

Q

Q	DESIGN DISCHARGE
QD	QUICK DISCONNECT

R

R	RADIUS OR REINFORCED
RCP	REINFORCED CONCRETE PIPE
RD	ROOF DRAIN
RE	REFERENCE
REINF	REINFORCED
REQD	REQUIRED
REV	REVISION
RH	RIGHT HAND
RI	RISER
RM	ROOM
RO	ROUGH OPENING
ROW	RIGHT OF WAY
RP	RADIUS POINT
RR	RAILROAD
RT	RIGHT
RTU	ROOF TOP UNIT
RVS	REVERSE
RW	RAW WATER

S

S OR SO	SOUTH
SCH	SCHEDULE
SECT	SECTION
SD	SMOKE DETECTOR
SG	SUB GRADE
SH OR SHT	SHEET
SHWR	SHOWER
SIM	SIMILIAR
SL	SLOPE
SMH	SEWER MANHOLE
SOC	STRATEGIC OPERATIONS CENTER
SPEC	SPECIFICATION
SPFC	SPECIFIC
SQ	SQUARE
SS	SANITARY SEWER
SST	STAINLESS STEEL
STA	STATION
STD	STANDARD
STL	STEEL
STRUCT	STRUCTURAL
SUSPLAS	SUSPENDED PLASTER
SVC	SERVICE CONNECTION

ABBREVIATIONS

T

TC	TOP OF CURB
TELE C	TELEPHONE CABINET
TER	TERRAZZO
TG	TOP OF GRATE
TK	TANK
TO	TECHNICAL ORDER
TOS	TOP OF STEEL
TOW	TOP OF WALL
TP	TEST PIT
TR	TRENCH
TSW	TOP OF SIDEWALK
TYP	TYPICAL
TP	TOP OF PAVEMENT
TH/THK	THICK / THICKNESS

U

UBC	UNIFORM BUILDING CODE
UG	UNDERGROUND
UNO	UNLESS NOTED OTHERWISE
UPS	UNINTERRUPTIBLE POWER SUPPLY
UTIL	UTILITY

V

VB	VALVE BOX
VC	VERTICAL CURVE
VCT	VINYL COMPOSITION TILE
VEH	VEHICLE
VEL	VELOCITY
VERT	VERTICAL
VEST	VESTIBULE
VIP	VERY IMPORTANT PERSON
VTR	VENT THRU ROOF

W

W	WEST, WIDE
WC	WATER CLOSET
WM	WIRE MESH PARTITION
WSP	WELDED STEEL PIPE
WT	WEIGHT
W/O	WITHOUT
W/	WITH
WWF	WELDED WIRE FABRIC

REFERENCE SYMBOLS

A / A-1 A-2	DETAIL IDENTIFICATION NO.OF SHEET ON WHICH DETAIL IS DRAWN NO. OF SHEET ON WHICH CONDITION IS REFERENCED
1 / A-3	BUILDING SECTION IDENTIFICATION NO.OF SHEET ON WHICH SECTION IS DRAWN
A / A-3	WALL SECTION IDENTIFICATION NO.OF SHEET ON WHICH SECTION IS DRAWN
102	ROOM NUMBER
102	DOOR NUMBER
H	COLUMN LINE
A	WINDOW TYPE
A	WALL TYPE IDENTIFIER
102	EQUIPMENT IDENTIFIER
102	FURNITURE IDENTIFIER
FIN FL ELEV 100.00	FINISH FLOOR EL. SYMBOL IN PLAN
FIN FL ELEV 100.00	FINISH FLOOR EL. SYMBOL IN SECT. AND ELEV.
A B C D	INTERIOR ELEVATION KEY SYMBOL
A / A-3	EXTERIOR ELEVATION IDENTIFIER
	STUCCO CONTROL JOINT
L2	LOUVER IDENTIFIER
	STRUCTURAL CONTROL JOINT
	WALLS TO THE UNDERSIDE OF THE STRUCTURE
F	FIRE EXTINGUISHER

GENERAL NOTES:

1. THE LIST OF ABBREVIATIONS IS SHOWN AS A GUIDE ONLY AND DOES NOT NECESSARILY INCLUDE ALL ABBREVIATIONS USED. OTHER ABBREVIATIONS MAY BE FOUND AMONG THE DRAWINGS. SOME ABBREVIATIONS LISTED MAY NOT HAVE BEEN USED.
2. FOR REFERENCE PURPOSES, A FINISHED FLOOR ELEVATION OF 100.00 HAS BEEN ESTABLISHED FOR GRADE LEVEL FLOOR PLANS. ON ARCHITECTURAL DRAWINGS. SEE CIVIL DRAWINGS FOR ACTUAL FINISHED FLOOR AND FINISHED GRADE ELEVATIONS.
3. HOUSEKEEPING PADS FOR MECHANICAL EQUIPMENT SHALL BE PROVIDED AS REQUIRED BY MECHANICAL DRAWINGS. SIZE AND LOCATION SHALL BE COORDINATED WITH MECHANICAL EQUIPMENT PROVIDED.

MATERIAL SYMBOLS

	EARTH
	CAST CONCRETE (SECTION)
	LIGHTWEIGHT CONCRETE (SECTION)
	CONCRETE MASONRY UNIT (LARGE SCALE-PLAN)
	STEEL
	ROUGH WOOD
	FINISHED WOOD
	WOOD BLOCKING
	PLYWOOD-LARGE SCALE
	GLASS (ELEVATION)
	BATT FILL INSULATION (SECTION)
	LOOSE FILL INSULATION (PLAN)
	RIGID BOARD INSULATION
	CERAMIC TILE-LARGE SCALE
	CONCRETE (PLAN & ELEVATION)
	CERAMIC TILE (PLAN & ELEVATION)
	PLASTER OR STUCCO (ELEVATION)
	SHEET MEMBRANE
	LANDSCAPING (TREE, SHRUB, ETC.)

US ARMY CORPS OF ENGINEERS AFGHANISTAN ENGINEER DISTRICT

NO.	DESCRIPTION	DRAWN	CHKD	DATE	APPR

DESIGNED BY: DWN BY: CKD BY: REVIEWED BY: SUBMITTED BY: DATE: XX-XX-XX DESIGN FILE NO: DRAWING CODE: FILE NAME: PLOT SCALE: PLOT DATE: XX-XX-XX REV

U.S. ARMY ENGINEER DISTRICT, AFGHANISTAN
CORPS OF ENGINEERS
APO AE 96338

ENGINEERING AND CONSTRUCTION DIVISION

AFGHANISTAN NATIONAL POLICE (ANP) DISTRICT HEADQUARTERS COMPOUNDS - 1 STORY HQ
VARIOUS LOCATIONS, AFGHANISTAN
STANDARD DETAIL

ABBREVIATIONS & SYMBOLS

SHEET REFERENCE NUMBER:
SA-1

A1 Size 594mm x 841mm

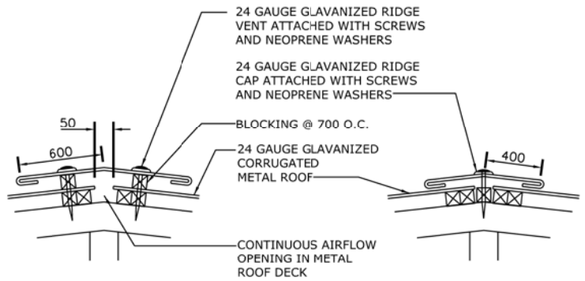

TYPICAL RIDGE VENT SECTION
NOT TO SCALE

TYPICAL RIDGE CAP SECTION
NOT TO SCALE

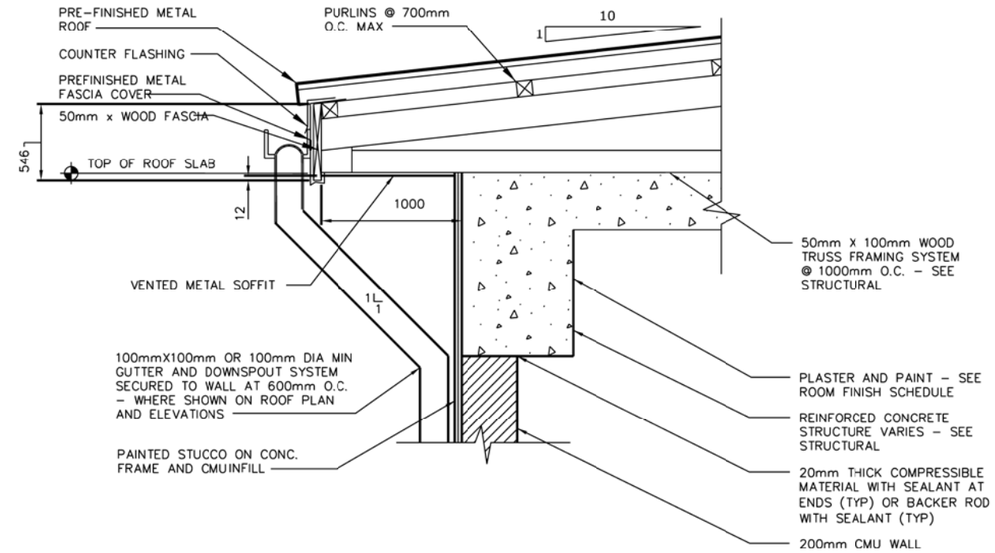

TYPICAL SECTION AT EAVE
FOR BUILDINGS C, D, H, AND I
SCALE= 1:10

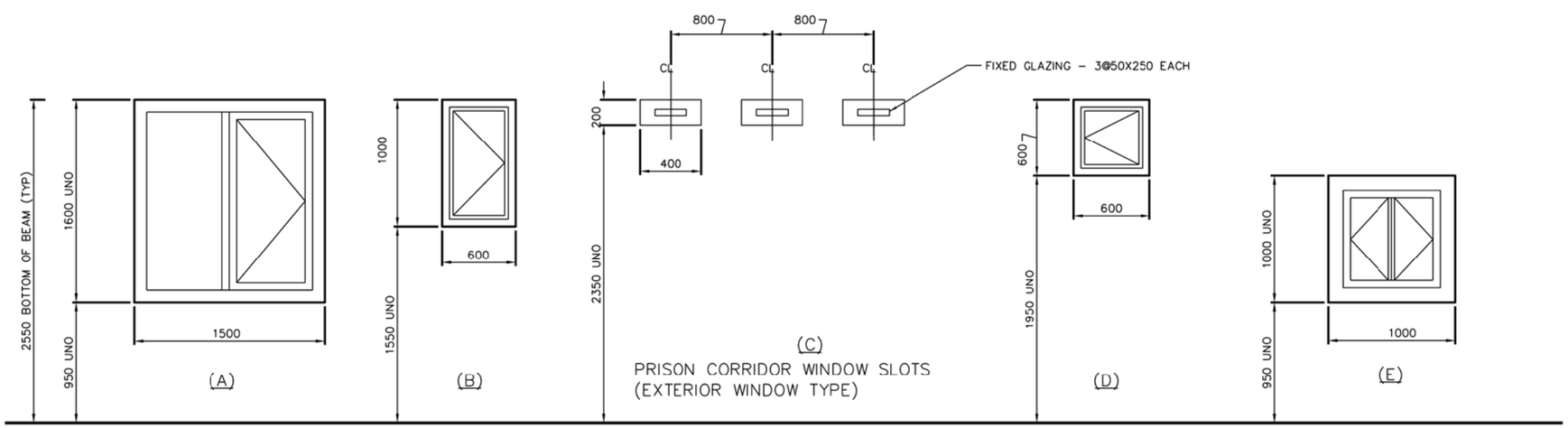

NOTES:
1.? ALL EXTERIOR WINDOWS SHALL UTILIZE MIN. 8mm THICK PLEXIGLASS.
2.? PROVIDE PROTECTIVE COATING AT ALL DISSIMILAR METALS CONTACT AREAS, AS APPROPRIATE.
3.? ALL OPERABLE EXTERIOR WINDOWS SHALL BE PROVIDED WITH INSECT SCREENS.
4.? FIXED WINDOWS AND CLEARSTORY WINDOWS ARE SHOWN ON BUILDING ELEVATIONS AND SECTIONS.

US ARMY CORPS OF ENGINEERS AFGHANISTAN ENGINEER DISTRICT

SYMBOL	DESCRIPTION	DATE	APPR.	SYMBOL	DESCRIPTION	DATE	APPR.

DESIGNED BY: DWN BY: CKD BY: REVIEWED BY: SUBMITTED BY:
DATE: XX-XX-XX DESIGN FILE NO: DRAWING CODE: FILE NAME: PLOT SCALE: PLOT DATE: XX-XX-XX
REV: __

U.S. ARMY ENGINEER DISTRICT, AFGHANISTAN
CORPS OF ENGINEERS
APO AE 96338

ENGINEERING AND CONSTRUCTION DIVISION

AFGHANISTAN NATIONAL POLICE (ANP) DISTRICT HEADQUARTERS COMPOUNDS - 1 STORY HQ
VARIOUS LOCATIONS, AFGHANISTAN
STANDARD DETAIL

WALL SECTION & ROOF DETAILS

SHEET REFERENCE NUMBER:
SA-2

A1 Size 594mm x 841mm

PIPING AND HVAC LEGEND

SYMBOL	DESCRIPTION
	THREE-WAY VALVE (ANY TYPE OF OPERATOR)
	GATE VALVE
	BALL VALVE
	GLOBE VALVE
	ANGLE GLOBE VALVE
	PRESSURE RELIEF VALVE
	PRESSURE-TEMPERATURE RELIEF VALVE
	BALANCING COCK
	BUTTERFLY VALVE
	CHECK VALVE
	UNION (SCREWED)
	PRESSURE CONTROL VALVE (SELF-CONTAINED)
	SOLENOID VALVE
	MOTOR OPERATED CONTROL VALVE
	AIR ELIMINATOR
AAV	AIR VENT, AUTOMATIC
	AIR VENT, MANUAL
	BACK PRESSURE VALVE
	PRESSURE REDUCING VALVE
	"Y" STRAINER
	AIR VALVE
	TEMPERATURE REGULATING VALVE
	EXPANSION VALVE, HAND
	EXPANSION VALVE, THERMOSTATIC
T	THERMOMETER, DIAL TYPE
T	THERMOMETER, VERTICAL TYPE
P	PRESSURE GAGE
	RISER DOWN (ELBOW)
	RISER UP (ELBOW)
	PITCH DOWN IN DIRECTION OF FLOW
	RISE OR DROP
CHS	CHILLED WATER SUPPLY
CHR	CHILLED WATER RETURN
C	CONDENSATE DRAIN

SYMBOL	DESCRIPTION
	BRANCH CONNECTION OUT OF TOP
	BRANCH CONNECTION OUT OF BOTTOM
	BRANCH CONNECTION OUT OF SIDE
	CAP ON END OF PIPE
	CONCENTRIC REDUCER
	ECCENTRIC REDUCER
	ANCHOR POINT
	FLEXIBLE CONNECTION
FS	FLOW SWITCH
	EXPANSION JOINT
	FLUSH VALVE
HB HB	HOSE BIBB
	WATER FIXTURE
	MIXING FAUCET COLD & HOT WATER
DV	DRAIN VALVE
	SIGHT GLASS
FM	FLOW METER
	PET COCK
	FLOW DIRECTION
	INLINE-PUMP
	CALIBRATED BALANCE VALVE
T	AQUASTAT
	MOTOR OPERATED BUTTERFLY VALVE
	CEILING FAN
	OSCILATING WALL FAN

ABBREVIATIONS

AAV	AIR VENT AUTOMATIC
AC	AIR CONDITIONING UNIT
ACMH	ACTUAL CUBIC METERS PER HOUR
ACC	AIR COOLED CHILLER
ACCU	AIR COOLED CONDENSING UNIT
AF	AIR FILTER
AFF	ABOVE FINISHED FLOOR
AD	AREA DRAIN
AHU	AIR HANDLING UNIT
AP	ACCESS PANEL
BF	BOTTOM FLAT
BD	BALANCING DAMPER
BDD	BACKDRAFT DAMPER
BFP	BACKFLOW PREVENTER
BHP	BRAKE HORSEPOWER
BOD	BOTTOM OF DUCT
°C	DEGREES CELSIUS
CD	CEILING DIFFUSER
CF	CEILING FAN
CHW	CHILLED WATER
CLG	CEILING
CM	CENTIMETER
CMH	CUBIC METER PER HOUR
CONN	CONNECTION
CONT	CONTINUATION
CU	CONDENSING UNIT
CW	CHILLED WATER COOLING COIL
D	DROP/DEPTH
DB	DRY BULB
DET	DETAIL
DIA	DIAMETER
DH	DUCT HEATER
DIFF	DIFFERENTIAL
DG	DOOR GRILLE
DN	DOWN
DWG	DRAWING
DX	DIRECT EXPANSION
EA	EXHAUST AIR
EAT	ENTERING AIR TEMPERATURE
EDB	ENTERING DRY BULB
EDH	ELECTRIC DUCT HEATER
EF	EXHAUST FAN
EG	EXHAUST GRILLE
EH	ELECTRICAL CABINET HEATER
EL	ELEVATION
ELEC	ELECTRICITY/ELECTRICAL
EQUIP	EQUIPMENT
ER	EXHAUST REGISTER
EWB	ENTERING WET BULB
EWH	ELECTRIC WATER HEATER
EWT	ENTERING WATER TEMPERATURE
EXH	EXHAUST
EXT	EXTERNAL/EXTERIOR
FCO	FLOOR CLEAN OUT
FCU	FAN COIL UNIT
FCV	FLOW CONTROL VALVE
FD	FLOOR DRAIN/FIRE DAMPER
FIN	FINISHED
FL	FLOOR
FOS	FUEL OIL SUPPLY
FOR	FUEL OIL RETURN
FS	FLOOR SINK
FSD	COMBINATION FIRE/SMOKE DAMPER
GA	GAUGE
HB	HOSE BIBB
HC	HEATING COIL
HORIZ	HORIZONTAL
HP	HORSEPOWER
HR	HOUR
HVAC	HEATING, VENTILATING & AIR CONDITIONING
HZ	HERTZ
ID	INSIDE DIAMETER
IH	INTAKE HOOD
IS	INERTIAL SEPARATOR
INV.EL.	INVERT ELEVATION
KG	KILOGRAM
KH	KITCHEN HOOD
KW	KILOWATT
KPa	KILO PASCALS
LAT	LEAVING AIR TEMPERATURE
LAV	LAVATORY
LFACP	LOCAL FIRE ALARM CONTROL PANEL
LPM	LITERS PER MINUTE
LPH	LITERS PER HOUR
LS	LEVEL SWITCH
LVG	LEAVING
LVR	LOUVER
M	METER
M^2	SQUARE METER
M^3	CUBIC METER
MAX	MAXIMUM
MECH	MECHANICAL
MIN	MINIMUM
MISC	MISCELLANEOUS
MM	MILLIMETER
MVD	MANUAL VOLUME DAMPER
NC	NORMALLY CLOSED
NFPA	NATIONAL FIRE PROTECTION ASSOCIATION
NO	NORMALLY OPEN/NUMBER
NOM	NOMINAL
NTS	NOT TO SCALE
OA	OUTSIDE AIR
OC	ON CENTER
OD	OVERFLOW DRAIN
OI	OIL INTERCEPTOR
OWF	OSCILATING WALL FAN
ϕ	PHASE
P	PUMP
PD	PRESSURE DIFFERENTIAL
PH	PROPANE SPACE HEATER
PRESS	PRESSURE
PRV	PRESSURE REDUCING VALVE
PS	PRESSURE SWITCH
QTY	QUANTITY
R	RISE
RA	RETURN AIR
RC	REFRIGERATION COOLER
RD	ROOF DRAIN
REQD	REQUIRED
RF	RETURN FAN
RG	RETURN GRILLE
RH	RELATIVE HUMIDITY
RL	REFRIGERANT LIQUID
RM	ROOM
RPM	REVOLUTIONS PER MINUTE
RR	RETURN REGISTER
RS	REFRIGERANT SUCTION
S	SOIL/SOUTH/SECOND
SA	SUPPLY AIR
SD	SUPPLY AIR DIFFUSER
SENS	SENSIBLE
SF	SUPPLY FAN
SG	SUPPLY GRILLE
SH	SHEET
SMACNA	SHEET METAL AND AIR CONDITIONING CONTRACTORS NATIONAL ASSOCIATION
SOV	SHUT-OFF VALVE
SP	STATIC PRESSURE
SQ FT	SQUARE FOOT/SQUARE FEET
SR	SUPPLY REGISTER
SST	SATURATED SUCTION TEMPERATURE
TCP	TEMPERATURE CONTROL PANEL
TCV	TEMPERATURE CONTROL VALVE
TEMP	TEMPERATURE
TG	TRANSFER GRILLE
TK	TANK
TP	TRAP PRIMER
TYP	TYPICAL
UC	UNDERCUT DOOR
UH	UNIT HEATER
UL	UNDERWRITER'S LABORATORIES
V	VOLTS
VEL	VELOCITY
VH	VENT HOOD
WCCU	WATER COOLED CONDENSING UNIT
WG	WATER GAGE

GENERAL NOTES:

1. SEE ARCHITECTURAL DRAWINGS FOR EXACT LOCATION OF LOUVERS, EQUIPMENT PADS AND SUPPORT PLATFORMS.
2. SEE ARCHITECTURAL REFLECTED CEILING PLAN FOR EXACT LOCATION OF DIFFUSERS, REGISTERS, AND GRIILLES.
3. INSULATE DUCTWORK AND REFRIGERANT PIPING SYSTEMS IN ACCORDANCE WITH SPEC. SECTION 01015, THERMAL INSULATION FOR MECHANICAL SYSTEMS.
4. ALL DIMENSIONS SHOWN IN mm UNLESS INDICATED OTHERWISE.
5. ALL DUCT DIMENSIONS SHOWN ON THE DRAWINGS ARE CLEAR INSIDE DIMENSIONS.
6. MOUNT WALL THERMOSTATS 1.5M ABOVE FINISHED FLOOR.
7. OUTDOOR CONDENSING UNITS SHALL BE INSTALLED ON 300 HIGH STEEL PLATFORM ON A CONCRETE PAD AND PROVIDED WITH VIBRATION PADS.

CONTROL LEGEND

SYMBOL	DESCRIPTION
M	MOTORIZED CONTROL DAMPER
	CONTROL CONNECTION
S/S	START/STOP CONTROL
H	HUMIDISTAT, TWO POSITION
Hm	HUMIDISTAT, MODULATING
H	HUMIDITY SENSOR
SD	SMOKE DETECTOR
T_2	THERMOSTAT, TWO POSITION
T	SPACE THERMOSTAT
FS	FLOW SWITCH
TI	TEMPERATURE INDICATOR
T_S	SPACE TEMPERATURE SENSOR

US ARMY CORPS OF ENGINEERS AFGHANISTAN ENGINEER DISTRICT

SYMBOL	DESCRIPTION	DATE	APPR.	SYMBOL	DESCRIPTION	DATE	APPR.

DESIGNED BY: DATE: XX-XX-XX REV. __
DWN BY: CKD BY: DESIGN FILE NO. DRAWING CODE
REVIEWED BY: FILE NAME: PLOT SCALE: PLOT DATE: XX-XX-XX
SUBMITTED BY:

U.S. ARMY ENGINEER DISTRICT, AFGHANISTAN
CORPS OF ENGINEERS
APO AE 96338

ENGINEERING AND CONSTRUCTION DIVISION

AFGHANISTAN NATIONAL POLICE (ANP) DISTRICT HEADQUARTERS COMPOUNDS - 1 STORY HQ
VARIOUS LOCATIONS, AFGHANISTAN
STANDARD DETAILS

LEGENDS AND ABBREVIATIONS

SHEET REFERENCE NUMBER:
SM-1

A1 Size 594mm x 841mm

ELECTRIC CABINET/UNIT HEATER SCHEDULE

EH X-X | UH X-X

EQUIPT. NO.	LOCATION (1)	DISCHARGE	CAPACITY (KW)	AIR FLOW (CMH)	ELECTRICAL DATA				TEMP. RISE DEG C	SOUND POWER dBA	REMARKS
					HP	VOLTS	PH	HZ			
EH-A-1	CHIEF'S TOILET	HORIZONTAL	1.5	136	50 W	220	1	50	30		WALL MOUNTED CABINET HEATER
EH-A-2	TOILETS (2)	HORIZONTAL	1	68	40 W	220	1	50	40		WALL MOUNTED CABINET HEATER
UH-A-1	TOILETS/ SHOWERS	HORIZONTAL	3.0	510	1/20	220	1	50	17		WALL MOUNTED UNIT HEATER SEE DETAIL C ON SHT. SM3.
UH-C-1	GUARD SHACK	HORIZONTAL	4	425	1/30	220	1	50	10		FLOOR MOUNTED CABINET HEATER
UH-E-1	WELL HOUSE	HORIZONTAL	3.0	510	1/20	220	1	50	17		WALL MOUNTED UNIT HEATER SEE DETAIL C ON SHT. SM3.

(1) SEE PLANS FOR LOCATION AND QUANTITY.

EXHAUST FAN SCHEDULE

EF A-X

EQUIPT. NO.	LOCATION	AIR QUANTITY CMH	S.P. MM-W.G.	FAN TYPE	ELECTRICAL DATA				CONTROL DIAGRAM	SOUND POWER dWA	REMARKS
					HP	VOLTS	PH	HZ			
EF-A-1	CHIEF'S TOILET	170	7	CEILING CABINET	80 WATTS	220	1	50	E1	50	CEILING MOUNTED WITH GRAVITY BACKDRAFT DAMPER AND CEILING GRILL
EF-A-2	TOILETS (3)	85	7	CEILING CABINET	80 WATTS	220	1	50	E1	50	CEILING MOUNTED WITH GRAVITY BACKDRAFT DAMPER AND CEILING GRILL
EF-A-3	PRISONER CELLS	510	7	WALL CENTRIFUGAL	1/12	220	1	50	E2	50	WALL MOUNTED WITH BACKDRAFT DAMPER
EF-A-4	MEN'S TOILET	510	7	WALL CENTRIFUGAL	1/12	220	1	50	E2	50	WALL MOUNTED WITH BACKDRAFT DAMPER
EF-A-5	KITCHEN	6,000	44	ROOF CENTRIFUGAL UPBLAST	2.0	220	1	50	E2	65	RATED FOR 175° C AND KITCHEN HOOD
EF-A-6	KITCHEN	1,700	8	WALL CENTRIFUGAL	1/4	220	1	50	E4	60	WALL MOUNTED WITH BACKDRAFT DAMPER
EF-E-1	WELL HOUSE	600	10	WALL CENTRIFUGAL	1/4	220	1	50	E4	65	WALL MOUNTED WITH BACKDRAFT DAMPER

CEILING AND OSCILLATING WALL FAN SCHEDULE

CF A-1 | OWF A-1

EQUIPT. NO.	AIR QUALITY CMH	FAN TYPE	ELECTRICAL DATA				REMARKS
			HP	VOLTS	PH	HZ	
CF-A-1	13,600	CEILING FAN	85 WATTS	220	1	50	CEILING MOUNTED
OWF-A-1	5,000	OSCILLATING WALL FAN	1/4	220	1	50	WALL MOUNTED

AIR HANDLING UNIT SCHEDULE

EQUIPT. NO.	LOCATION	DISCHARGE	CAPACITY (KW)	AIR FLOW (CMH)	ELECTRICAL DATA				TEMP. RISE DEG C	SOUND POWER dBA	REMARKS
					HP	VOLTS	PH	HZ			
AHU-1	CELLS	VERTICAL	5.2	1200	.25	220	1	50	35	45	DUCT MOUNTED HEATER

SUPPLY FAN SCHEDULE

SF A-X

EQUIPT. NO.	LOCATION	AIR QUANTITY CMH	S.P. MM-W.G.	FAN TYPE	ELECTRICAL DATA				CONTROL DIAGRAM	SOUND POWER dWA	REMARKS
					HP	VOLTS	PH	HZ			
SF-A-1	KITCHEN	5,100	25	INLINE CENTRIFUGAL	1.0	220	1	50	E2	60	CEILING MOUNTED W/GRAVITY BACKDRAFT DAMPER

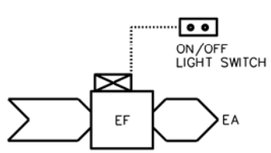

TEMPERATURE CONTROL DIAGRAM E1

E1 SEQUENCE OF CONTROL

START-UP

THE EXHAUST FAN SHALL BE STARTED MANUALLY FROM A LOCAL START/STOP LIGHT SWITCH.

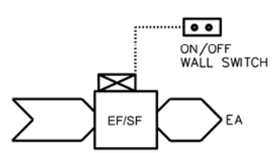

TEMPERATURE CONTROL DIAGRAM E2

E2 SEQUENCE OF CONTROL

START-UP

THE EXHAUST/SUPPLY FAN SHALL BE STARTED MANUALLY FROM A LOCAL START/STOP LIGHT SWITCH.

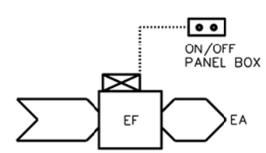

TEMPERATURE CONTROL DIAGRAM E3

E3 SEQUENCE OF CONTROL

START-UP

THE EXHAUST FAN SHALL BE STARTED MANUALLY FROM AN THE ON-OFF SWITCH IN THE PANEL BOX.

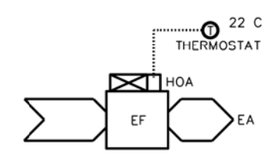

TEMPERATURE CONTROL DIAGRAM E4

E4 SEQUENCE OF CONTROL

START-UP

THE EXHAUST FAN SHALL BE STARTED MANUALLY BY PLACING THE HAND-OFF-AUTO (HOA) SWITCH IN THE HAND POSITION. IN THE AUTO POSITION, FAN OPERATION SHALL BE CONTROLLED OFF AN ADJUSTABLE THERMOSTAT.

US ARMY CORPS OF ENGINEERS AFGHANISTAN ENGINEER DISTRICT

SYMBOL	DESCRIPTION	DATE	APPR.	SYMBOL	DESCRIPTION	DATE	APPR.

U.S. ARMY ENGINEER DISTRICT, AFGHANISTAN
CORPS OF ENGINEERS
APO AE 96338

DESIGNED BY: | DATE: XX-XX-XX | REV. ___
DWN BY: | CKD BY: | DESIGN FILE NO.
REVIEWED BY: | DRAWING CODE
SUBMITTED BY: | FILE NAME: | PLOT SCALE: | PLOT DATE: XX-XX-XX

ENGINEERING AND CONSTRUCTION DIVISION

AFGHANISTAN NATIONAL POLICE (ANP) DISTRICT HEADQUARTERS COMPOUNDS - 1 STORY HQ
VARIOUS LOCATIONS, AFGHANISTAN
STANDARD DETAILS

MECHANICAL SCHEDULES

SHEET REFERENCE NUMBER:
SM-2

A1 Size 594mm x 841mm

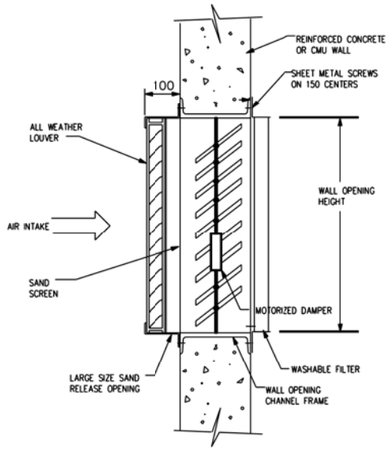

SAND TRAP TYPE LOUVER (A / SM3)
NOT TO SCALE

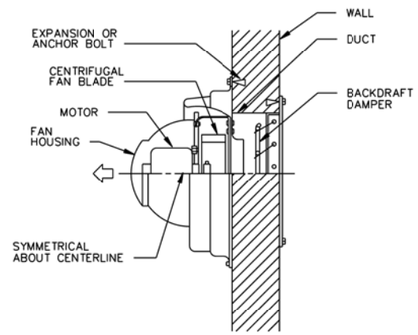

POWER WALL VENTILATOR DETAIL (B / SM3)
NOT TO SCALE

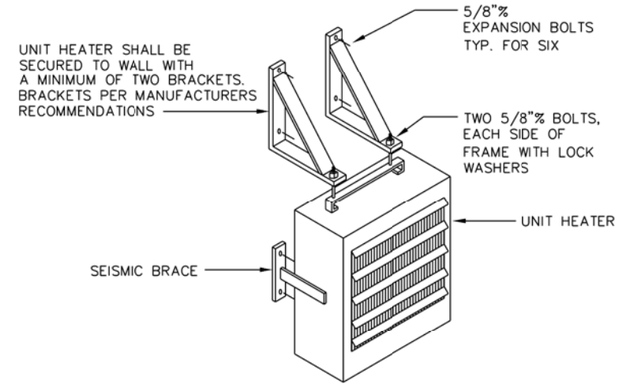

ELECTRIC UNIT HEATER DETAIL (C / SM3)
NOT TO SCALE

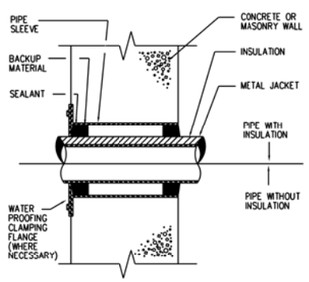

PIPE SLEEVE THRU WALL (E / SM3)
NOT TO SCALE

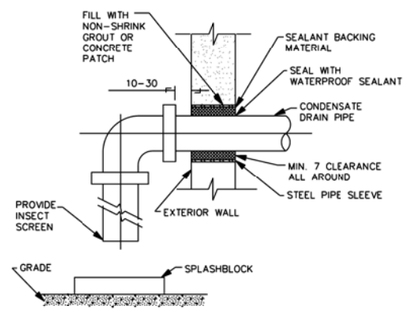

CONDENSATE DRAIN THRU EXTERIOR WALL (F / SM3)
NOT TO SCALE

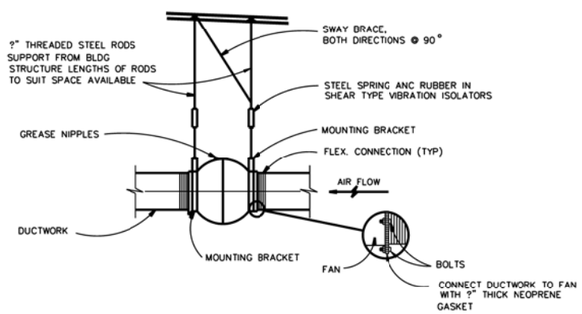

CENTRIFUGAL IN-LINE FAN (G / SM3)
NOT TO SCALE

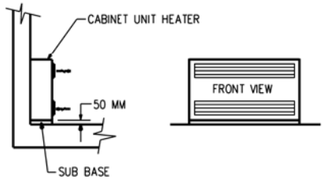

CABINET UNIT HEATER (H / SM3)
NOT TO SCALE

US ARMY CORPS OF ENGINEERS AFGHANISTAN ENGINEER DISTRICT

SYMBOL	DESCRIPTION	DATE	APPR.	SYMBOL	DESCRIPTION	DATE	APPR.

DESIGNED BY: DATE: XX-XX-XX REV. __
DWN BY: CKD BY: DESIGN FILE NO. DRAWING CODE
REVIEWED BY: FILE NAME: PLOT SCALE:
SUBMITTED BY: PLOT DATE: XX-XX-XX

U.S. ARMY ENGINEER DISTRICT, AFGHANISTAN
CORPS OF ENGINEERS
APO AE 96338

ENGINEERING AND CONSTRUCTION DIVISION

AFGHANISTAN NATIONAL POLICE (ANP) DISTRICT HEADQUARTERS COMPOUNDS - 1 STORY HQ
VARIOUS LOCATIONS, AFGHANISTAN
STANDARD DETAILS

MECHANICAL STANDARD DETAILS

SHEET REFERENCE NUMBER:
SM-3

A1 Size 594mm x 841mm

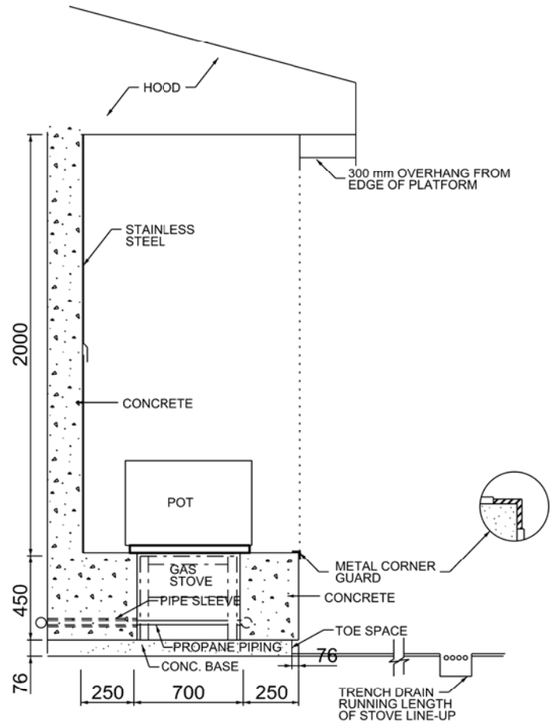

GAS STOVE SECTION

SCALE: NTS

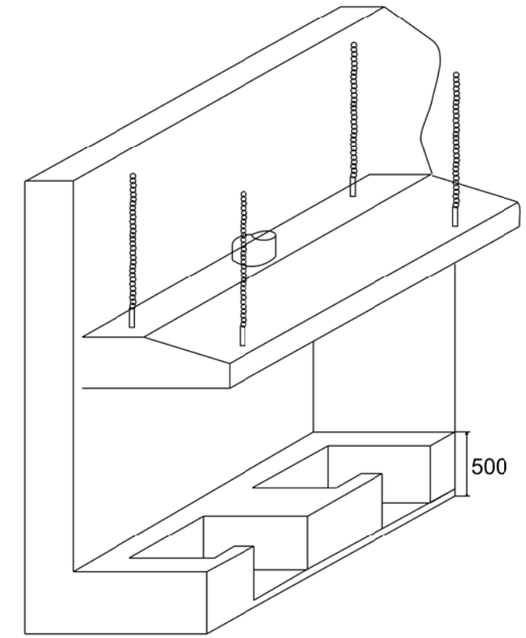

ISOMETRIC VIEW

SCALE: NTS

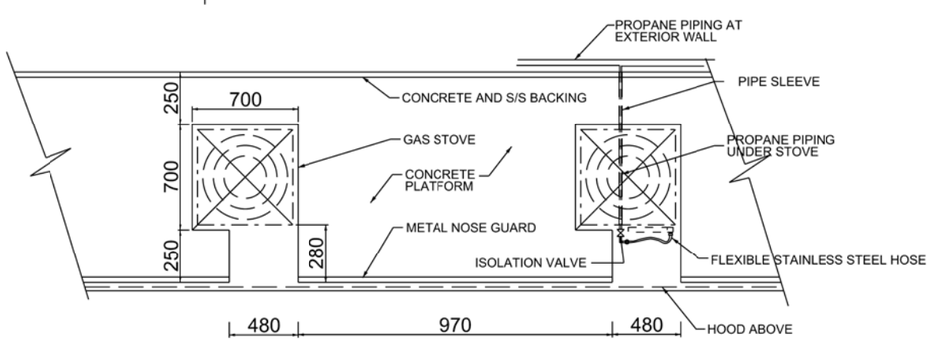

GAS STOVE PLAN

SCALE: NTS

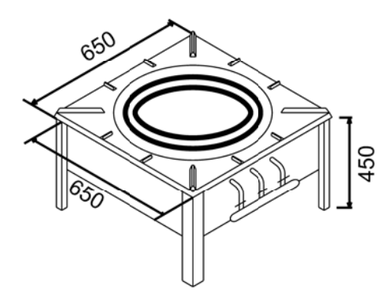

GAS STOVE VIEW

SCALE: NTS

NOTES:
- DIMENSIONS SHOWN ARE BASED ON A SPECIFIC STOVE MODEL
- CONTRACTOR SHALL ADJUST THE DIMENSIONS BASED ON THE ACTUAL STOVE DIMENSIONS
- THE SURFACE OF THE STOVE SHALL BE FLUSH WITH THE CONCRETE PLATFORM

US ARMY CORPS OF ENGINEERS AFGHANISTAN ENGINEER DISTRICT

SYMBOL	DESCRIPTION	DATE	APPR.	SYMBOL	DESCRIPTION	DATE	APPR.

DESIGNED BY: DATE: XX-XX-XX REV: __
DWN BY: CKD BY: DESIGN FILE NO.
REVIEWED BY: DRAWING CODE:
SUBMITTED BY: FILE NAME: PLOT SCALE: PLOT DATE: XX-XX-XX

U.S. ARMY ENGINEER DISTRICT, AFGHANISTAN
CORPS OF ENGINEERS
APO AE 96338

ENGINEERING AND CONSTRUCTION DIVISION

AFGHANISTAN NATIONAL POLICE (ANP) DISTRICT HEADQUARTERS COMPOUNDS - 1 STORY HQ
VARIOUS LOCATIONS, AFGHANISTAN
STANDARD DETAILS

PROPANE COOKING STOVE

SHEET REFERENCE NUMBER:
SM-4
SHEET --- OF ---

A1 Size 594mm x 841mm

LEGEND

- GATE VALVE
- GLOBE VALVE
- BUTTERFLY VALVE
- CHECK VALVE
- STOP CHECK VALVE
- PLUG VALVE
- 3-WAY VALVE
- RELIEF OR SAFETY VALVE
- ANGLE VALVE
- ANGLE GLOBE VALVE
- BALANCING COCK
- AIR VALVE
- HOSE GATE DRAIN VALVE
- EXPANSION VALVE
- AAV — AIR VENT, AUTOMATIC
- AIR VENT, MANUAL
- M — MOTORIZED VALVE (MODULATING OR TWO POSITION)
- S — SOLENOID VALVE
- M — 3-WAY MOTORIZED VALVE (MOD. OR 3-POSITION)
- S — 3-WAY SOLENOID VALVE
- TEMPERATURE REGULATING VALVE
- AIR ELIMINATOR
- BACK PRESSURE VALVE
- PRESSURE REDUCING VALVE
- D.V. — DRAIN VALVE
- SLEEVE COUPLING (SC)
- BP — BACKFLOW PREVENTER
- WHA 'A' — WATER HAMMER ARRESTOR

LEGEND

- P — PRESSURE GAUGE
- T — THERMOMETER, DIAL TYPE
- T — THERMOMETER, VERTICAL TYPE
- H.B. — HOSE BIBB, PLAN
- H.B. — HOSE BIBB, ELEV.
- W.H. — WALL HYDRANT
- CO — EXPOSED CLEANOUT
- FCO — FLOOR CLEANOUT
- WCO — WALL CLEANOUT
- BALL VALVE
- UNION
- FLANGE SET
- FLEXIBLE HOSE/CONNECTION
- Y-TYPE STRAINER
- SIGHT GLASS
- GAUGE GLASS W/COCKS
- FILTER / DRYER
- TANK AIR CONTROL FITTING
- CAPPED / PLUGGED CONNECTION
- REDUCER - INCREASER
- EXPANSION LOOP
- EXPANSION JOINT
- SUPPORT LOCATION
- PIPE TURNING DOWN
- PIPE TURNING UP
- FD — FLOOR DRAIN
- ROOF DRAIN
- POINT OF CONNECTION TO EXISTING SYSTEM

LEGEND

- A — COMPRESSED AIR DROP
- HU — HUMIDIFIER
- I.F. — INSULATING FLANGE
- THERMAL RELIEF VALVE W/ SIGHT FLOW INDICATOR
- S — BASKET STRAINER
- W — WATER METER
- TS — FLOW CONTROL VALVE
- SAMPLE CONNECTION
- FIRE SAFETY VALVE
- C — NON - SURGE CHECK VALVE
- FLOW CONTROL VALVE
- P — PRESSURE REGULATING VALVE
- W — WATER SLUG VALVE (WSV)

ABBREVIATIONS

A A	AMERICAN DISABILITIES ACT
CO	EXPOSED CLEAN OUT
CW	COLD WATER
EWH	ELECTRIC WATER HEATER
FCO	FLOOR CLEAN OUT
FD	FLOOR DRAIN
FFE	FINISHED FLOOR ELEVATION
FS	FLOOR SINK
GWH	GAS WATER HEATER
HB	HOSE BIBB
HW	HOT WATER
HWR	HOT WATER CIRCULATION
N.C.	NORMALLY CLOSED
P	PUMP
S.R.	SHORT RADIUS
S.S.	STAINLESS STEEL
V	VENT
VTR	VENT THROUGH ROOF
W	WASTE
WCO	WALL CLEAN OUT
WH	WALL HYDRANT

- SOIL OR WASTE PIPE ABOVE FLOOR
- SOIL OR WASTE PIPE BELOW FLOOR (MIN. 50 SIZE)
- COLD WATER, DOMESTIC (PLAN)
- HOT WATER, DOMESTIC (PLAN)
- HOT WATER, CIRCULATION, DOMESTIC (PLAN)
- VENT PIPE
- C — CONDENSATE DRAIN
- CA — COMPRESSED AIR
- HPIW — HIGH PRESSURE INDUSTRIAL WATER
- IW — INDUSTRIAL WATER

EQUIPMENT DESIGNATION

EF — EQUIPMENT TYPE
A-1 — EQUIPMENT NUMBER
BUILDING NUMBER

DETAIL REFERENCE

X — REFERENCE DESIGNATION LETTER
X — DETAIL SHEET LOCATION

PLUMBING FIXTURE SCHEDULE

FIX. NO.	SYMBOL	FIXTURE NAME	C.W.	H.W.	WASTE (W)	VENT (V)	REMARKS
P1		EASTERN WATER CLOSET (FLUSH TANK)	15	--	100	50	CW CONNECTION SHALL BE 25 UNLESS NOTED OTHERWISE. FLOOR OUTLET
P2		ABOLUTION (2 STATION)	15	--	50	32	(2) COMPLETE WALL MOUNTED LAVATORY VALVE ASSEMBLIES AND TRIM MOUNTED 600mm A.F.F.
P3		LAVATORY	15	15	32	32	
P3A		LAVATORY (2 STATION GANG)	15	15	32	32	
P4		MOP SINK (FLOOR MOUNT JANITOR TYPE)	15	15	50	40	DRAIN ON FLOOR OR AS INDICATED
P5		SHOWER	15	15	40	32	
P6		NOT USED					
P7		NOT USED					
P8		NOT USED					
P9		KITCHEN SINK	15	15	40	32	
P10		GREASE INTERCEPTOR			80	50	MANUAL CLEANING TYPE, WITH 135 LPM FLOW RATE

WATER HAMMER ARRESTOR SIZING CHART

P.D.I. SYMBOL	FIXTURE UNIT RATING	NIPPLE SIZE (MM)	CHAMBER HEIGHT (MM)
A	1-11	20	100
B	12-32	25	125
C	33-60	25	150
D	61-113	25	175
E	114-154	25	200
F	155-330	25	225

P. D. I. = PLUMBING AND DRAINAGE INSTITUTE.

GENERAL NOTES:

1. DRAINAGE PIPING LOCATED BELOW FLOORS SHALL BE ROUTED BELOW FOOTINGS UNLESS INDICATED OTHERWISE.
2. INTERIOR SOIL AND WASTE PIPING 80mm AND SMALLER SHALL BE ROUTED WITH A 2% SLOPE. INTERIOR SOIL AND WASTE PIPING 100mm AND LARGER SHALL BE ROUTED WITH A MINIMUM 1% SLOPE.
3. ALL DIMENSIONS SHOWN HERE AND ON PLANS ARE IN MM UNLESS INDICATED OTHERWISE.
4. MINIMUM BURIED PIPE SIZE SHALL BE 50 mm.
5. SEE STANDARD SHEET SM-1 FOR ADDITIONAL ABBREVIATIONS.
6. FOR FOOD SERVICE EQUIPMENT DESCRIPTION, SEE ARCHITECTURAL DRAWINGS.

US ARMY CORPS OF ENGINEERS AFGHANISTAN ENGINEER DISTRICT

SYMBOL	DESCRIPTION	DATE	APPR.	SYMBOL	DESCRIPTION	DATE	APPR.

DESIGNED BY: DATE: XX-XX-XX REV. __
DWN BY: CKD BY: DESIGN FILE NO. DRAWING CODE
REVIEWED BY: FILE NAME: PLOT SCALE:
SUBMITTED BY: PLOT DATE: XX-XX-XX

U.S. ARMY ENGINEER DISTRICT, AFGHANISTAN
CORPS OF ENGINEERS
APO AE 96338

ENGINEERING AND CONSTRUCTION DIVISION

AFGHANISTAN NATIONAL POLICE (ANP) DISTRICT HEADQUARTERS COMPOUNDS - 1 STORY HQ
VARIOUS LOCATIONS, AFGHANISTAN
STANDARD DETAILS

LEGEND AND ABBREVIATIONS

SHEET REFERENCE NUMBER:
SP-1

A1 Size 594mm x 841mm

NOTES:
1. PIPING SHALL BE PLASTIC PVC TO MATCH WATER DISTRIBUTION SYSTEM.
2. CONTRACTOR SHALL INSTALL DIELECTRIC UNION BETWEEN CONNECTIONS OF DISSIMILAR METALS.

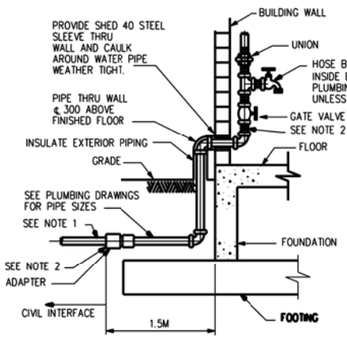

WATER SERVICE ENTRANCE SIDE VIEW

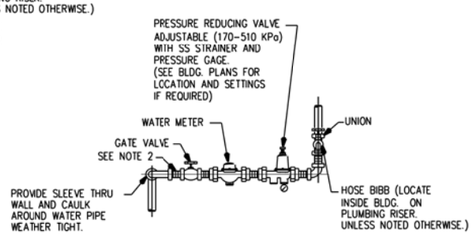

WATER SERVICE ENTRANCE FRONT VIEW

WATER SERVICE ENTRANCE DETAILS (A / SP2)
NOT TO SCALE

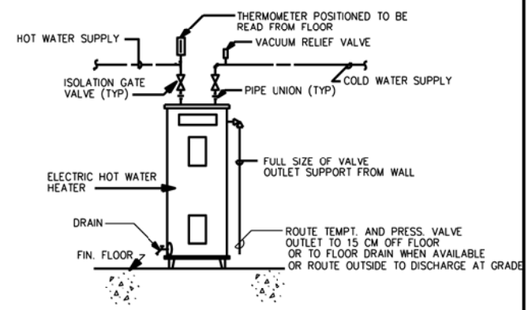

ELECTRIC WATER HEATER DETAIL (B / SP2)
NOT TO SCALE

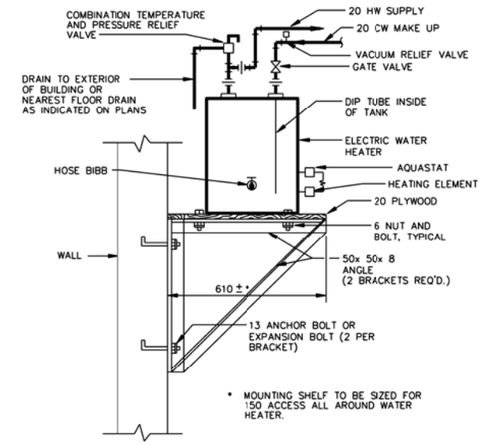

IF WATER HEATER COMES EQUIPPED WITH A MOUNTING BRACKET, CONTRACTOR WILL SUBMIT TO THE ENGINEER FOR APPROVAL, ALTERNATE INSTALLATION DETAIL AS RECOMMENDED BY HEATER MANUFACTURER FOR THE TYPE OF WALL (CMU,METAL STUD, ETC.) APPLICABLE

WALL MOUNTED ELECTRIC WATER HEATER DETAIL (C / SP2)
NOT TO SCALE

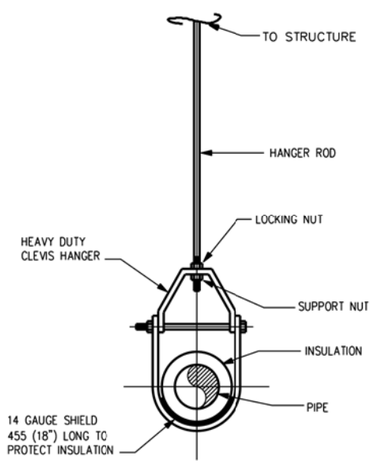

CLEVIS HANGER DETAIL (D / SP2)
NOT TO SCALE

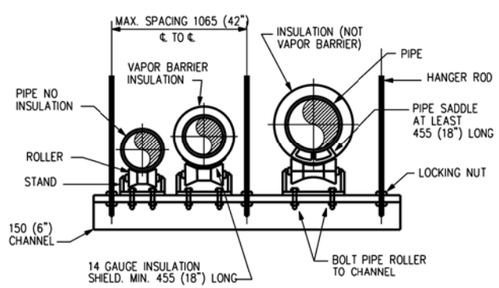

TRAPEZE HANGER DETAIL (E / SP2)
NOT TO SCALE

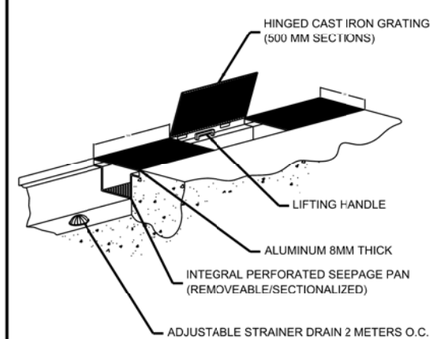

FLOOR TRENCH DRAIN DETAIL (F / SP2)
NOT TO SCALE

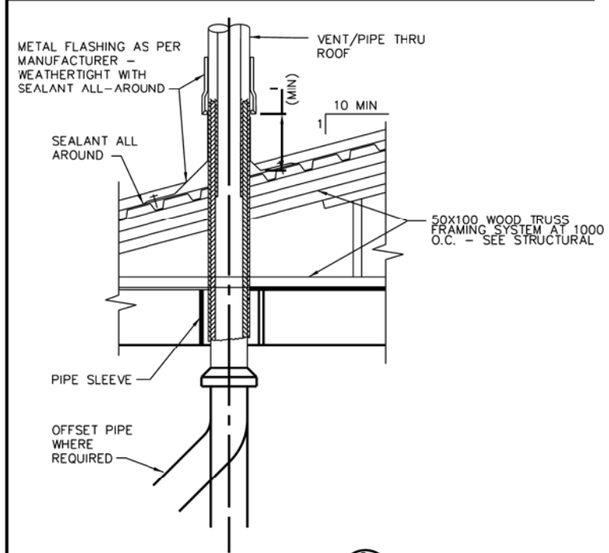

VENT THRU ROOF DETAIL (G / SP2)
NOT TO SCALE

US ARMY CORPS OF ENGINEERS AFGHANISTAN ENGINEER DISTRICT

SYMBOL	DESCRIPTION	DATE	APPR.	SYMBOL	DESCRIPTION	DATE	APPR.

DESIGNED BY: | DATE: XX-XX-XX | REV. ___
DWN BY: | CKD BY: | DESIGN FILE NO.
REVIEWED BY: | DRAWING CODE
SUBMITTED BY: | FILE NAME: | PLOT SCALE: | PLOT DATE: XXXX-XX

U.S. ARMY ENGINEER DISTRICT, AFGHANISTAN
CORPS OF ENGINEERS
APO AE 96338

ENGINEERING AND CONSTRUCTION DIVISION

AFGHANISTAN NATIONAL POLICE (ANP) DISTRICT HEADQUARTERS COMPOUNDS - 1 STORY HQ
VARIOUS LOCATIONS, AFGHANISTAN
STANDARD DETAILS

STANDARD PLUMBING DETAILS

SHEET REFERENCE NUMBER:
SP-2

A1 Size 594mm x 841mm

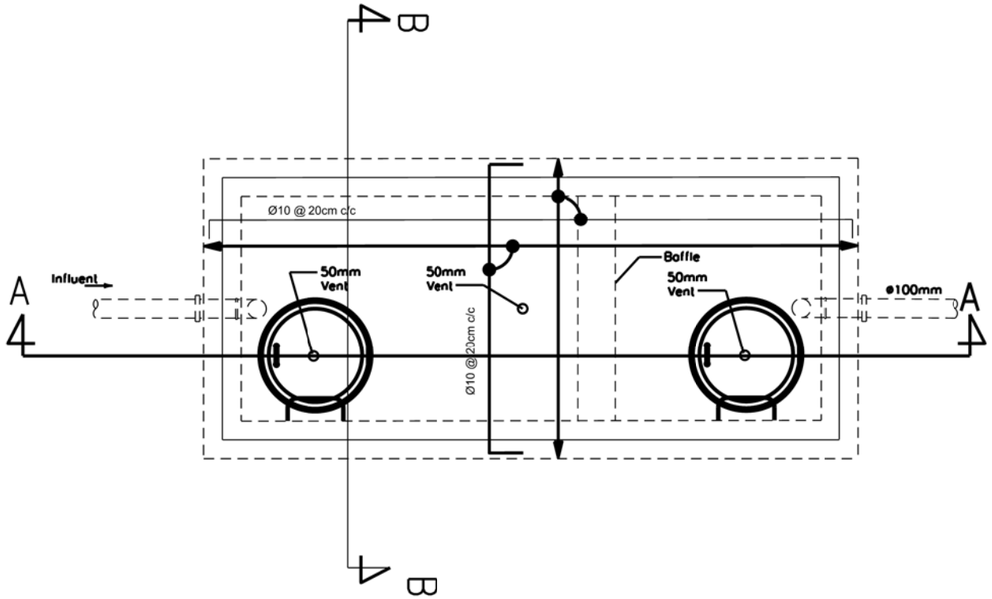

01 GREASE & OIL/WATER SEPARATOR PLAN

SP-3 REF:

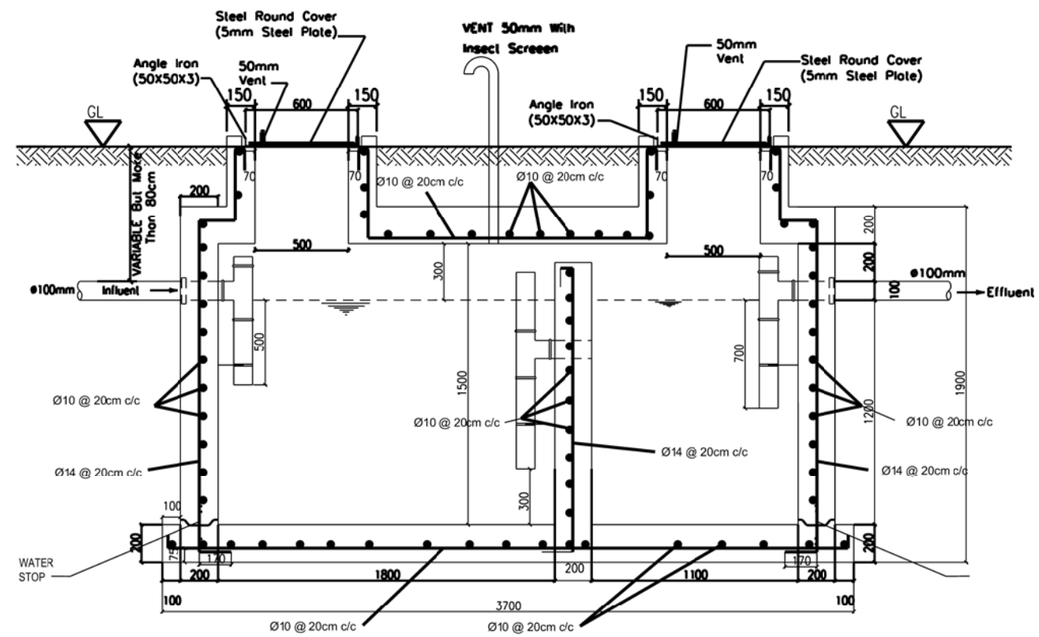

02 SECTION (A-A)

SP-3 REF:

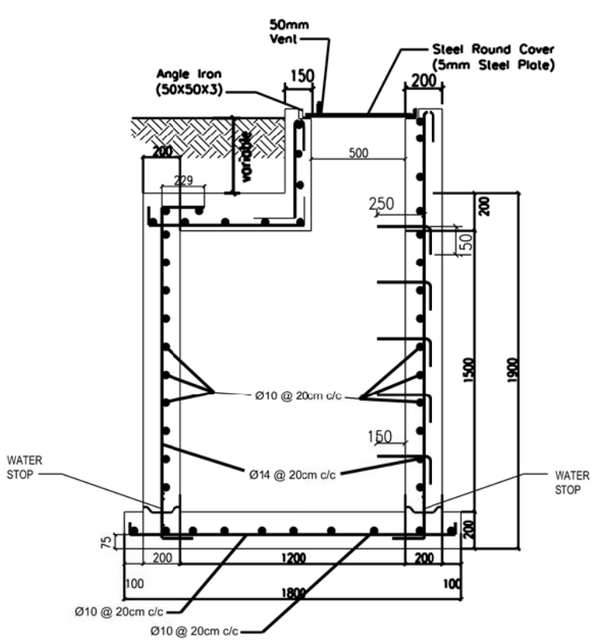

03 SECTION (B-B)

SP-3 REF:

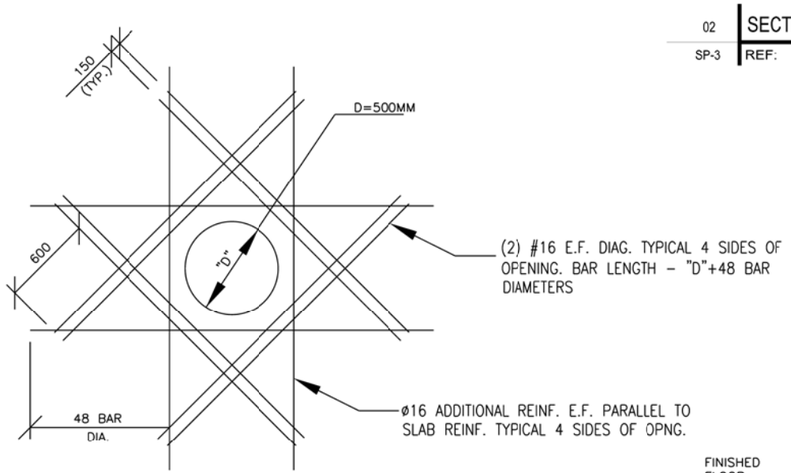

04 OPENING REINFORCEMENT

SP-3 REF :

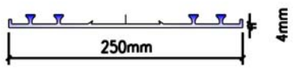

Water Stop Details

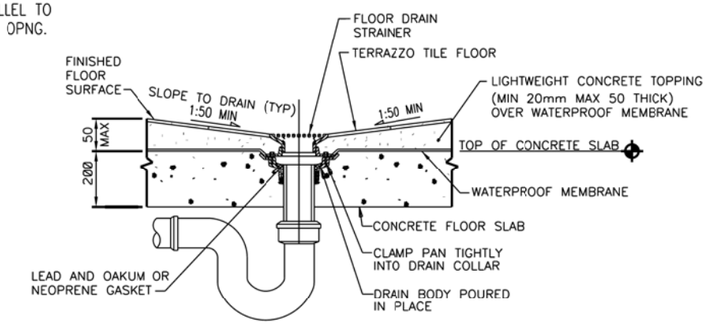

TYPICAL FLOOR DRAIN DETAIL (B / SP3)

NOT TO SCALE

US ARMY CORPS OF ENGINEERS AFGHANISTAN ENGINEER DISTRICT

SYMBOL	DESCRIPTION	DATE	APPR	SYMBOL	DESCRIPTION	DATE	APPR

DESIGNED BY: DWN BY: CKD BY: REVIEWED BY: SUBMITTED BY: DATE: XX-XX-XX DESIGN FILE NO. DRAWING CODE: FILE NAME: PLOT SCALE: PLOT DATE: XX-XX-XX REV

U.S. ARMY ENGINEER DISTRICT, AFGHANISTAN CORPS OF ENGINEERS APO AE 96338

ENGINEERING AND CONSTRUCTION DIVISION

AFGHANISTAN NATIONAL POLICE (ANP) DISTRICT HEADQUARTERS COMPOUNDS - 1 STORY HQ

VARIOUS LOCATIONS, AFGHANISTAN

STANDARD DETAILS

STANDARD PLUMBING DETAILS

SHEET REFERENCE NUMBER:

SP-3

A1 Size 594mm x 841mm

LEGEND

- FLUORESCENT LIGHT FIXTURE.
- LIGHT FIXTURES, FIXTURE MARK AS INDICATED
- EXIT SIGN, TYPE F FIXTURE, MTD 2.2M AFF
- EMERGENCY LIGHT, TYPE C FIXTURE, MTD 2.4M AFF
- WP,S — DUPLEX SOCKET OUTLET (13A, 250V), BS 1363
  S – A/C OR WATER HEATER SWITCH-RECEPTACLE COMBINATION
  WP – WEATHERPROOF
- J — JUNCTION BOX
- $S_{3,WP}$ — SWITCH, WP-WEATHERPROOF, 3-3 WAY, EP-EXPLOSION PROOF
- S — LIGHT SWITCH
- S_F — EXHAUST FAN SWITCH
- S_{CF} — CEILING FAN SWITCH
- J_{20} — SAFETY DISCONNECT SWITCH, SWITCH SHALL BE 1P56 ENCLOSURE, 20A UNO
- 1/3 — MOTOR (1/3 HP)
- S_M — MANUAL MOTOR STARTER
- ELECTRIC CABINET/ UNIT HEATER
- EWH — ELECTRIC WATER HEATER
- LP-2 — HOMERUN, PNL LP, CIRCUIT 2
- LP-2 — HOMERUN, PNL LP, 3PH CKT, CIRCUIT 2
- COMBINATION LIGHTING AND POWER PANEL (LP), OR LOAD CENTER (LC)
- 400AT/600AF — 3 POLE, 600A ADJUSTABLE TRIP CIRCUIT BREAKER
- 150AT/3P — 3 POLE, 150A CIRCUIT BREAKER
- COMBINATION TELEPHONE/DATA OUTLET. SEE DETAIL SHEET SE-5 MOUNTED 0.5M AFF
- W — SINGLE TELEPHONE ONLY OUTLET, WALL MOUNTED 1.2m AFF
- TBB — TELEPHONE BACK BOARD (TVBB INDICATES TELEVISION BACKBOARD) (1200mmx600mmx12mm)NLESS NOTED OTHERWISE
- EXOTHERMIC WELDED GROUND CONNECTION
- GROUND ROD (EARTH ELECTRODE) WITH EXOTHERMIC WELD CONNECTION, COPPER, 20mm DIA X 3.0m LENGTH
- EM 1 — ELECTRIC POWER MANHOLE, H INDICATES HANDHOLE.
- CM 1 — COMMUNICATIONS MANHOLE, H INDICATES HANDHOLE.
- SE — UNDERGROUND SECONDARY DISTRIBUTION POWER LINE, DIRECT BURIED IN SCHEDULE 80 PVC C, UNO
- UNDERGROUND DIRECT BURIED SCH 40 PVC C, AS INDICATED, 600 BFG, UNO

GENERAL NOTES:

1. REFER TO SECTION 01015 FOR ADDITIONAL / DETAIL REQUIREMENTS.
2. ALL WIRING INSTALLATION FOR LIGHTING, POWER, AND TELECOMMUNICATIONS, SHALL BE IN APPROVED METAL CONDUIT, EITHER CONCEALED OR SURFACE MTD.
3. EXIT AND EMERGENCY LIGHTING FIXTURES SHALL BE CONNECTED TO AN UN SWITCHED POWER CIRCUIT.
4. MOUNTING HEIGHT FOR ALL PENDANT MTD LIGHT FIXTURE IS 3M AFF UNO ON THE DRAWINGS OR IN THE LIGHT FIXTURE SCH.
5. MOUNT ALL LIGHT AND FAN SWITCHES 1.2M AFF UNO.
6. MOUNT ALL RECEPTACLES 500 AFF UNO. MOUNT ALL COUNTER TOP RECEPTACLES 100 ABOVE COUNTER TOP, AND PROVIDE GFI PROTECTION.
7. ALL SPARE OR EMPTY CONDUITS SHALL HAVE A PULL STRING SECURED AT BOTH ENDS OF CONDUIT.
8. ALL ELECTRICAL SYSTEMS SHALL BE INSTALLED IN ACCORDANCE WITH THE MANUFACTURERS RECOMMENDATIONS AND THE NEC.
9. BOND LIGHTING PROTECTION GROUND SYSTEMS TO BUILDING ELECTRICAL GROUND SYSTEM PER NEC 250.16

LIGHTING FIXTURE SCHEDULE

* SEE LIGHTING FIXTURE DETAILS ON DRAWINGS SE-2 & SE-3

FIXTURE MARK	LINE VOLT.	TYPE	LAMPS NO.	LAMPS WATTAGE	MOUNTING	REMARKS
A	240	230B1	3	40	SURFACE/PENDANT	INDUSTRIAL FLUORESCENT, WITH ELECTRONIC BALLAST
A1	240	230A1	2	40	SURFACE/PENDANT	INDUSTRIAL FLUORESCENT, WITH ELECTRONIC BALLAST
B	240	232	2	40	SURFACE/PENDANT	VAPORTIGHT FLUORESCENT
C	240	603	–	–	SURFACE	EMERGENCY BATTERY PACK, MTD 2.4M AFF
D	240	PH8	1	250	PENDANT	METAL HALIDE LOW BAY INDUSTRIAL
E	240	–	1	1000	ROOF	SPOT LIGHT
F	240	XF2	1	8	SURFACE/PENDANT	EXIT LIGHT MTD 2.2M AFF
G	240	502R	1	70	SURFACE	HID EXTERIOR WALLL LIGHT
H	240	SF-11	1	100	SURFACE	VAPOR PROOF PROTECTED INCANDESCENT WITH CLEAR, RED, BLUE, OR BLACK GLOBE AS INDICATED ON THE DRAWINGS

ABBREVIATIONS

AFG	ABOVE FINISHED GRADE
AFF	ABOVE FINISHED FLOOR
AF	AMP FRAME
AT	AMP TRIP
ACCU	AIR COOLED CONDENSING UNIT
A	AMPERE
AHU	AIR HANDLING UNIT
AIC	AMPERE INTERRUPTING CAPACITY
BFG	BELOW FINISHED GRADE
CH	COMMUNICATIONS HANDHOLE
CKT	CIRCUIT
CM	COMMUNICATIONS MANHOLE
CND	CONDUCTOR(S)
C	CONDUIT
COR	CONTRACTING OFFICERS REPRESENTATIVE
EF	EXHAUST FAN
EH	ELECTRIC POWER HANDHOLE
EM	ELECTRIC POWER MANHOLE
EP	EXPLOSION PROOF
ELCB	EARTH LEAKAGE CIRCUIT BREAKER
FACP	FIRE ALARM CONTROL PANEL
GFI	GROUND FAULT INTERRUPTING
GFCI	GOVERNMENT FURNISHED CONTRACTOR INSTALLED
HP	HORSEPOWER
HPS	HIGH PRESSURE SODIUM
HZ	HERTZ
KV	KILOVOLT
KW	KILOWATT
KVA	KILOVOLT-AMPERE
M	METERS
MBB	METERING BACK BOARD
MDF	MAIN DISTRIBUTION FRAME
MEW	HOST NATION MINISTRY OF ELECTRICITY AND WATER
MTD	MOUNTED
NEC	NATIONAL ELECTRICAL CODE
NFPA	NATIONAL FIRE PROTECTION ASSOCIATION
NIC	NOT IN CONTRACT
PH, Ø	PHASE
P	POLE
XXX	HOST NATION ARMED FORCES
TEL	TEL CO.
RM	ROOM
SCH	SCHEDULE
SN	SOLID NEUTRAL
TBB	TELEPHONE TERMINAL BACKBOARD
TCB	TELEPHONE CONNECTION BOX (BY TEL CO)
TYP.	TYPICAL
UNO	UNLESS NOTED OTHERWISE
V	VOLT
W	WIRE
WP	WEATHERPROOF
XFMR,T	TRANSFORMER

EQUIVALENT CONDUIT SIZE

mm	INCHES
20	3/4
25	1
32	1 1/4
38	1 1/2
50	2
60	2 1/2
80	3
90	3 1/2
100	4

METRIC COPPER CONDUCTOR CONVERSION CHART

AWG KCMIL	COMPUTED CONVERSION mm^2	ADVISED CROSS SECTION mm^2
16	1.31	1.5
14	2.08	2.5
12	3.31	4
10	5.27	6
8	8.4	10
6	13.3	16
4	21.2	25
3	26.7	25
2	33.6	35
1	42.4	50
1/0	53.4	50
2/0	67.5	70
3/0	85.0	95
4/0	107.2	120
250	126.7	120
300	152.0	150
350	177.4	185
400	202.7	240
500	253.4	300

US ARMY CORPS OF ENGINEERS AFGHANISTAN ENGINEER DISTRICT

SYMBOL	DESCRIPTION	DATE	APPR.	SYMBOL	DESCRIPTION	DATE	APPR.

U.S. ARMY ENGINEER DISTRICT, AFGHANISTAN
CORPS OF ENGINEERS
APO AE 96338

DESIGNED BY: DATE: XX-XX-XX REV. __
DWN BY: CKD BY: DESIGN FILE NO.
REVIEWED BY: DRAWING CODE
SUBMITTED BY: FILE NAME: PLOT SCALE: PLOT DATE: XX-XX-XX

ENGINEERING AND CONSTRUCTION DIVISION

AFGHANISTAN NATIONAL POLICE (ANP) DISTRICT HEADQUARTERS COMPOUNDS - 1 STORY HQ
VARIOUS LOCATIONS, AFGHANISTAN
STANDARD DETAILS

LEGEND & ABBREVIATIONS

SHEET REFERENCE NUMBER:
SE-1

A1 Size 594mm x 841mm

FIXTURE MARK A

TYPE 230
SUSPENSION MOUNTED, INDUSTRIAL,
OPEN TYPE FLUORESCENT FIXTURE, 4-FOOT

FIRST SUFFIX	SECOND-SUFFIX	DESCRIPTION
A		TWO LAMPS
B		THREE LAMPS
C		FOUR LAMPS
	1	8 TO 15 PERCENT UPLIGHT
	2	18 TO 25 PERCENT UPLIGHT

FIXTURE SHALL CONFORM TO UL1570. STANDARD BALLAST(S) SHALL BE THE CLASS P, HIGH POWER FACTOR TYPE APPROVED FOR THE APPLICATION BY THE CERTIFIED BALLAST MANUFACTURERS. CHANNEL HOUSING, END FITTINGS, AND REFLECTOR SHALL BE CONSTRUCTED WITH DIE-FORMED, COLD-ROLLED STEEL. REFLECTOR FINISH SHALL BE PORCELIAN ENAMEL, BAKED WHITE ENAMEL OR ALUMINUM OXIDE. SOCKETS SHALL BE OF THE TYPE REQUIRING A FORCED MOVEMENT ALONG THE LONGITUDINAL AXIS OF THE LAMP FOR INSERTION AND REMOVAL OF THE LAMP. FIXTURE SHALL BE PREWIRED. FLUORESCENT TUBES SHALL BE PROTECTED BY A VIRGIN ACRYLIC PROTECTIVE SLEEVE AND CLEAR PLASTIC VENTED END CAPS.

FIXTURE MARK B

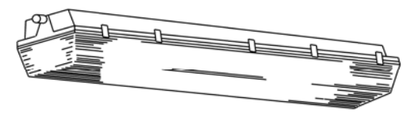

TYPE 232
4-FOOT FIXTURE LENGTH

ENCLOSED AND GASKETED, VAPOR-TIGHT FLUORESCENT FIXTURE
FOR SURFACE OR PENDANT MOUNTING

FIXTURE SHALL CONFORM TO UL1570 AND SHALL BE VAPOR-TIGHT AND SUITABLE FOR USE IN WET LOCATIONS. FIXTURE SHALL HAVE ONE-PIECE HOUSINGOF MOLDED HIGH-IMPACT PLASTIC OR REINFORCED FIBERGLASS. HOUSING BODY SHALL HAVE AN INTERNAL, DIE-FORMED, COLD-ROLLED STEEL CHANNEL WITH COVER TO PROVIDE FIXTURE RIGIDITY AND TO CONTAIN ELECTRIC COMPONENTS. THE METAL CHANNEL AND COVER SHALL RECEIVE A RUST INHIBITIVE COATING BEFORE APPLICATION OF THE FINISH COAT, WHICH SHALL CONSIST OF BAKED WHITE ENAMEL OR PORCELAIN ENAMEL. THE LENS SHALL BE ONE PIECE, OF HIGH-IMPACT-RESISTANT ACRYLIC, AND SHALL HAVE SMOOTH EXTERIOR SURFACE AND STIPPLED OR PEBBLED INTERIOR SURFACE. THE LENS SHALL BE SECURED TO THE HOUSING WITH CAPTIVE MOLDED PLASTIC OR STAINLESS STEEL SPRING LATCHES. A CONTINUOUS GASKET SHALL BE PROVIDED TO FORM A VAPOR SEAL BETWEEN THE LENS AND THE FIXTURE BODY. ALL OPENINGS IN THE HOUSING FOR MOUNTING, CONDUIT, ETC., SHALL BE CAPABLE OF FORMING A VAPOR-TIGHT SEAL. BALLAST(S) SHALL BE COLD WEATHER TYPE FOR STARTING TEMPERATURES DOWN TO MINUS 20 DEGREES F. STANDARD BALLAST(S) SHALL BE THE CLASS P, HIGH POWER FACTOR TYPE APPROVED FOR THE APPLICATION BY THE CERTIFIED BALLAST MANUFACTURERS. FIXTURE SHALL BE PREWIRED, AND PROVIDED WITH LAMPS THAT ARE PROPERLY MATED TO THE BALLAST OPERATING CHARACTERISTICS.

FIXTURE MARK E

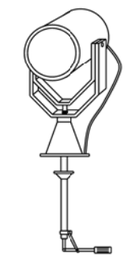

SEALED BEAM SPOTLIGHT, MOUNTED TO GUARD TOWER ROOF, WITH 1000 WATT HALOGEN NARROW SPOT PAR 56 LAMP. SPOTLIGHT SHALL BE PROVIDED WITH TWIST LEVER CONTROL, MINIMUM 10" DIAMETER LIGHT HEAD, WORKING RANGE OF 1/2 MILE, COUPLING FOR OPERATION FROM GUARD TOWER PLATFORM AND RATED FOR OUTDOOR ROUGH SERVICE WITH ANTI-SHOCK LAMPHOLDER.

FIXTURE MARK H

TYPE SF11

FEATURES

LAMP TYPE: INCCANDESCENT BULB: 100W
GLASS GLOBE CLEAR, BLUE, RED, AND BLACK LAMPS INDICATED ON THE DRAWINGS
PROFILE: 1 LAMP
SHIELDING: CLEAR GLASS GLOBE

OPTIONS

GLASS GLOBE: CLEAR, RED, BLUE, OR BLACK
LAMP TYPE: 75W, 100W, 150W
MOUNTING: PENDANT OR SURFACE
SHIELDING: HEAT RESISTANT

NOM. DIMENSIONS: 111mm X 251mm

GENERAL DESCRIPTION

HOUSING: 30 PERCENT GLASS FILLED THERMOPLASTIC POLYSTER
ELECTRICAL: 220 - 240 VOLT
FINISH: MOLDED IN NON-GRAYING FINISH

SURFACE MOUNTED INCANDESCENT
VAPOR TIGHT JELLY JAR WITH WIRE GUARD

NOT TO SCALE

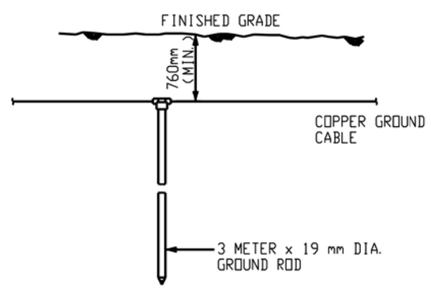

NOTES:

1. CONDUCTOR SIZE SHALL BE AS INDICATED ON PLANS.
2. EXOTHERMIC WELDS SHALL BE AS RECOMMENDED BY MANUFACTURER FOR THE SIZE OF CONNECTION AND MATERIAL INVOLVED. SEE DETAIL 5 ON SHEET SE-7.

BELOW GRADE GROUNDING ROD DETAIL

NOT TO SCALE

DETAIL 1
NOT TO SCALE

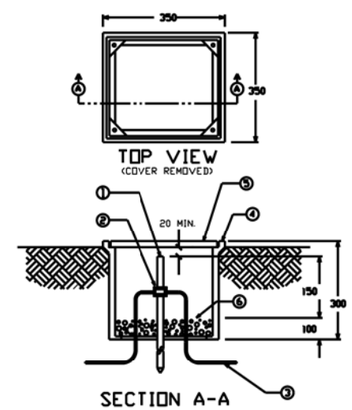

MATERIAL LIST

1. GROUND ROD
2. EXOTHERMIC WELD
3. GROUNDING CONDUCTOR 70mm² COPPER
4. POLYMER CONCRETE FIBERGLASS REINFORCED BOX
5. COVER FOR ABOVE BOX
6. GRAVEL OR CRUSHED STONE

GROUND ROD ACCESS
BOX INSTALLATION DETAIL

NOT TO SCALE

DETAIL 2
NOT TO SCALE

US ARMY CORPS OF ENGINEERS
AFGHANISTAN ENGINEER DISTRICT

SYMBOL	DESCRIPTION	DATE	APPR	COMPUTED	DESCRIPTION	DATE	APPR

DESIGNED BY: DATE: XX-XX-XX REV: __
DWN BY: CKD BY: DESIGN FILE NO.
REVIEWED BY: DRAWING CODE
SUBMITTED BY: FILE NAME: PLOT SCALE: PLOT DATE: XX-XX-XX

U.S. ARMY ENGINEER DISTRICT, AFGHANISTAN
CORPS OF ENGINEERS
APO AE 96338

ENGINEERING AND CONSTRUCTION DIVISION

AFGHANISTAN NATIONAL POLICE (ANP) DISTRICT HEADQUARTERS COMPOUNDS - 1 STORY HQ
VARIOUS LOCATIONS, AFGHANISTAN
STANDARD DETAILS

LIGHTING DETAILS

SHEET REFERENCE NUMBER:
SE-2

A1 Size 594mm x 841mm

01c,d WOOD STOVE ANNEX

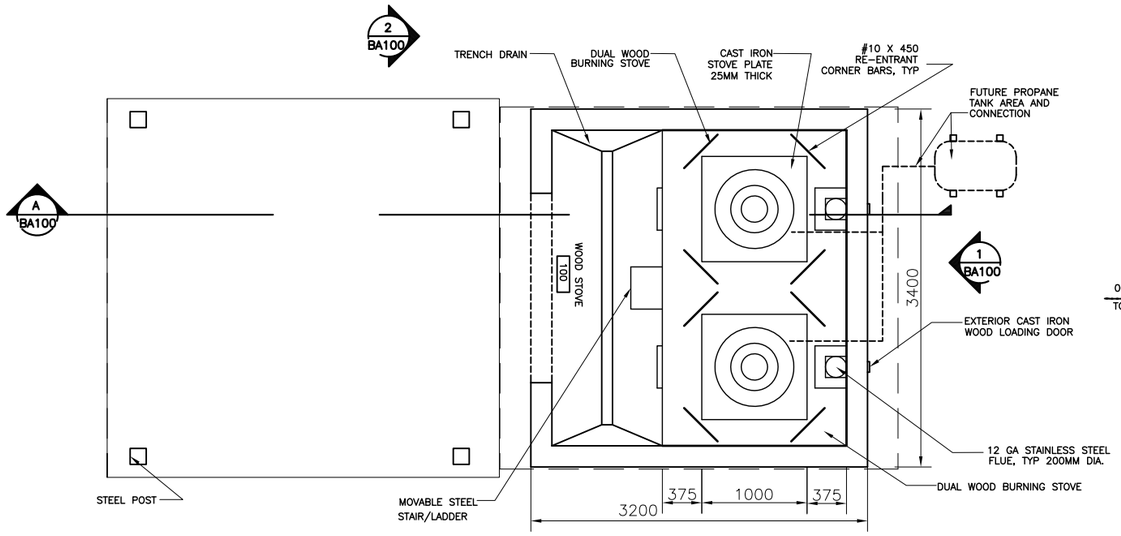

1 | WOOD STOVE & CANOPY FLOOR PLAN

B_A100 SCALE: 1:30

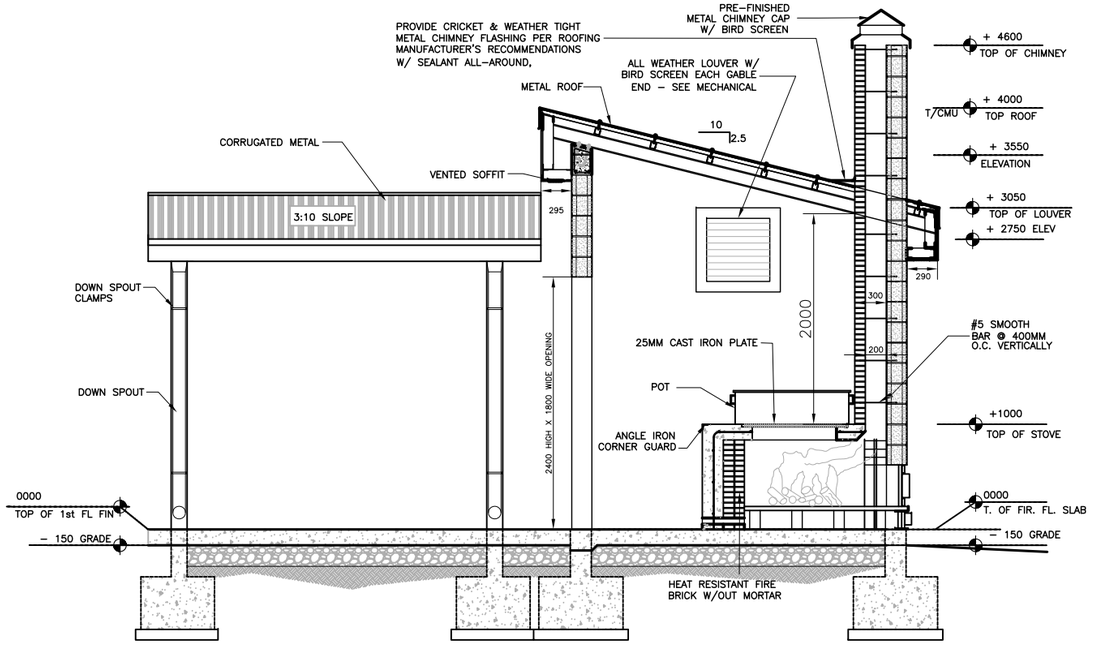

A | SECTION

B_A100 SCALE: 1:30

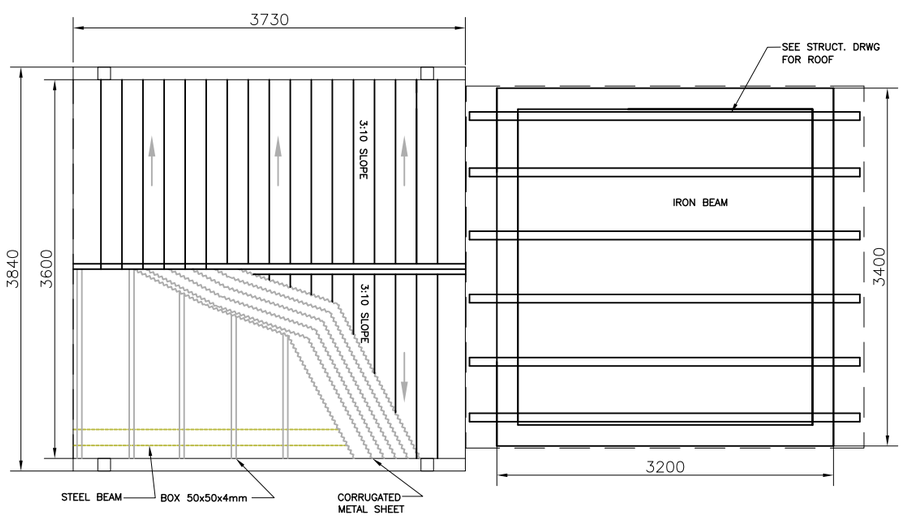

2 | WOOD STOVE & CANOPY ROOF PLAN

B_A100 SCALE: 1:30

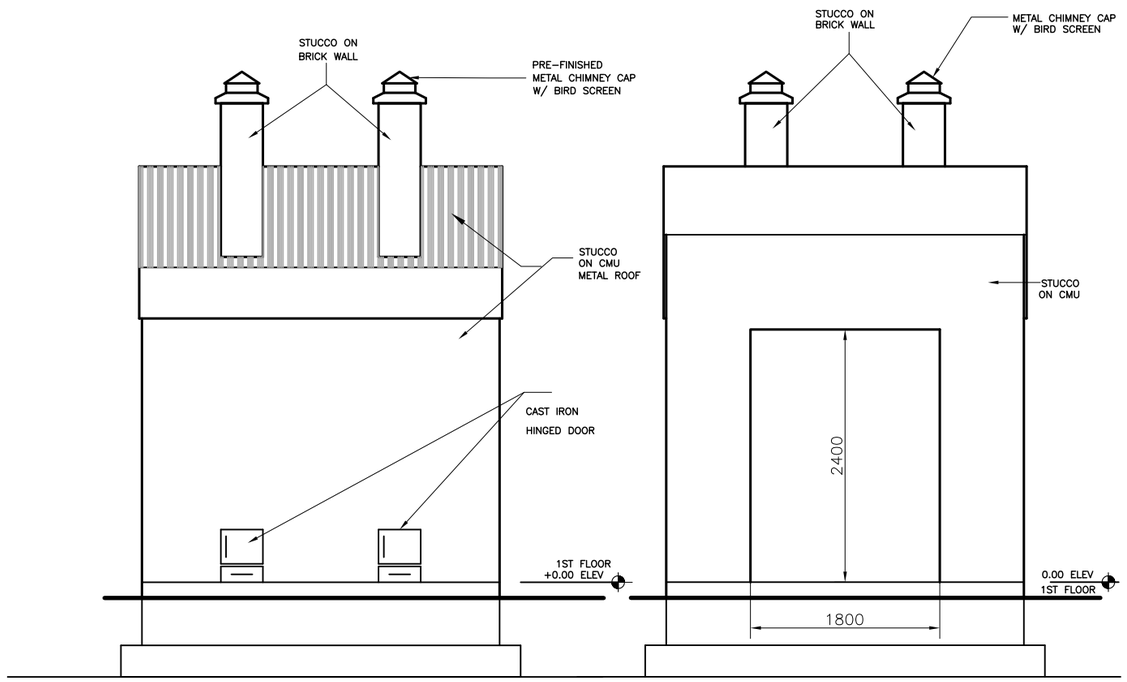

1 | ELEVATION

B_A100 SCALE: 1:30

2 | ELEVATION

B_A100 SCALE: 1:30

300 0 1500

SCALE 1:30

AFGHAN NATIONAL SECURITY FORCE
Comprehensive Plan for Facilities Development

MINISTRY OF INTERIOR (MoI) - AFGHAN NATIONAL POLICE
PROVINCIAL FIRE STATIONS

Wood Stove Kitchen
Plan, Elevation and Section

DESIGNED T. LODGE
DRAWN WAHIDULLAH.Y
CHECKED T. LODGE
IN CHARGE D. WHEELER
DATE 05 DEC 2009

REV DATE BY SUB APP DESCRIPTION

SCALE AS SHOWN

PROJECT NO. –

B_A100

N:\ANP FIRE STATIONS\~0928INITIAL_FSs\A88_C091205\FS\Common_0928INITIAL_Drwgs\ACAD\~B_Wood Stove Kitchen\Architectural\B_A100 Wood Stove Kitchen Plan, Elevation and Section.dwg 01/30/2010 1:44pm CAD_9

ROOM FINISH SCHEDULE

ROOM NO.	ROOM NAME	FLOOR MATERIAL	BASE MATERIAL	WALL MATERIAL	WALL FINISH	CEILING MATERIAL	CEILING FINISH	CEILING HEIGHT	DOOR & WINDOW FINISH MATERIAL	DOOR & WINDOW FINISH FINISH	REMARKS
100	WOOD STOVE	CONC/S	–	P	P–1	P	P–3	VARIES	–	–	LOUVER W/ BIRD SCREEN EACH GABLE END

GENERAL FINISH NOTES/TYPICAL COLORS & MATERIAL SELECTION

FLOORING

CARPET (CPT)
CPT–1 AFGHAN TURKMAN PRODUCT; 6000 x 12000 OR EQUIVALENT
CPT–2 ARABIC CARPET; IT IS AVAILABLE AS PER ROOM DIMENSION
CPT–3 XX

CONC/S CONCRETE SEALED AND HARDENED WITH BROOM FINISH

TERRAZZO TILE (TT)
TT–1 AFGHAN LOCAL PRODUCT; 300mm X 300mm WITH SPECIAL POLISH

ENTRY MAT (MAT)
MAT–1 REESE PERFEC CLEAN ALUMINUM HINGE MAT; RECESSED FRAME WITH NO. 546 CARPET INSERTS, METAL FINISH: MIL ALUMINUM; CARPET INSERTS: MAUVE 8616

CERAMIC TILE (CT)
CT–1 R.A.K CERAMIC UAE; 300mm X 300mm UNPOLISHED PORCELAIN
CT–2 AFGHAN LOCAL PRODUCT; 300mm X 600mm POLISHED PORCELAIN
CT–3 AFGHAN LOCAL PRODUCT; 600mm X 1000mm UNPOLISHE PORCELAIN
CT–4 R.A.K CERAMIC UAE;#4/700RBEM–10 200mm X 200mm UNPOLISHE PORCELAIN
CT–5 R.A.K CERAMIC UAE;# 600CPAR–2 200mm X 300mm UNPOLISHE PORCELAIN

BASE TREATMENTS

MARBLE TILE (MT)
MT–1 AFGHAN LOCAL PRODUCT; 75mm X 100mm CROSS SHEEN PORCELAIN MARBLE TILE COVE BASE; #AXXX EMPRESS BLACK

WALL FINISHES

PAINT/EPOXY PAINT (P/EP):
P–1 BRIGHTO PAINTS; # 42 SAND STONE SUPER EMULSION
P–2 BRIGHTO PAINTS; # 127 CAMEO FOR EXTERNAL USE WEATHER SHIELD
P–3 BRIGHTO PAINTS; # X LATEX FOR WATER BASE WALL AND CEILING
P–4 BRIGHTO METALLIC ENAMEL; # 3 LIGHT GRAY SUITABLE FOR USE ON ALL TYPES OF INTERIOR AND EXTERIOR WOOD AND METAL SURFACES.
P–5 BRIGHTO METALLIC ENAMEL; # 42 ASH WHITE SUITABLE FOR USE ON ALL TYPES OF INTERIOR AND EXTERIOR WOOD AND METAL SURFACES.
P–6 BRIGHTO PAINTS; # 12 OFF WHITE
P–7 BRIGHTO PAINTS; #70 ROSE WHITE
P–8 BRIGHTO PAINTS; #69 LILY WHITE
P–9 BRIGHTO PAINTS; #40 PEACH CREAM

CERAMIC TILE (CT):
CT–4 R.A.K CERAMIC UAE;#4/700RBEM–10 200mm X 200mm UNPOLISHE PORCELAIN
CT–5 R.A.K CERAMIC UAE; # 600CPAR–2 200mm X 300mm UN–POLISHE

CEILING FINISHES

GWB GYPSUM WALL BOARD
DONGFENG BOARD; WITH DIMENSION OF 1200 x 2400 mm AND THICK 3/8
TOTAL WEIGHT APROX. 21KG

PAINTED CEILINGS (P)
P–1 BRIGHTO PAINT; # 12 OFF WHITE

MISCELLANEOUS SURFACES

LAMINATE SURFACES (LAM)
LAM–1 FORMICA; 953–58 ICE WHITE (BREAK ROOMS AND FMT COUNTERTOPS)
LAM–2 FORMICA; 7481–58 NATURAL BIRCH (BREAK ROOMS AND FMT– BASE AND UPPER CABINETS)
LAM–3 FORMICA; 1485–58 CHROME YELLOW (ELEVATOR)

TOILET PARTITIONS (TP)
NOT USED

SIGNAGE (S)
S–1 BACKGROUND COLOR: MATCH P–3, TEXT: WHITE

INTERIOR DOOR AND WINDOW FRAMES
P–4 BRIGHTO ; #3 LIGHT GRAY

INTERIOR WOOD DOORS AND TRIM
WHITE OAK, CLEAR FINISH, NO STAIN

MOVEABLE WALL (MW)
NOT USED

FINISH SCHEDULE ABBREVIATIONS

AFF	ABOVE FINISHED FLOOR	LAM	PLASTIC LAMINATE
ALSF	ALUMINUM STOREFRONT SYSTEM	MANUF	BY MANUFACTURER
		MAT	ENTRY MAT
ATC	ACOUSTIC TILE CEILING	MR	MOISTURE RESISTANT
CB	CEMENT BOARD	MTL	METAL PANEL
CONC/S	CONCRETE SEALED AND HARDENED WITH BROOM FINISH	MW	MOVABLE WALL
		NA	NOT APPLICABLE
		P	PAINT
CPT	CARPET	PREFIN	PREFINISHED
CT	CERAMIC TILE	RB	RESILIENT BASE
EP	EPOXY PAINT	RBP	RACQUETBALL PANEL
EXPOSED	EXPOSED STRUCTURE	VCT	VINYL COMPOSITION TILE
GN	GENERAL NOTE	MT	MARBLE TILE
GWB	GYPSUM WALL BOARD	MTD	METALLIC DOOR
HM	HOLLOW METAL	WD	WOOD DOOR
		TT	TERRAZZO TILE
		PVC	POLYVINYL

GENERAL NOTES

1. THE MANUFACTURER'S NAMES AND THEIR PRODUCTS REFERENCED ONLY INDICATE THE COLOR, TEXTURE, AND PATTERN REQUIRED FOR THE MATERIALS LISTED. THE PRODUCTS FURNISHED SHALL MEET THE COLOR, TEXTURE, AND PATTERN INDICATED AS WELL AS THE MATERIAL QUALITY AND PERFORMANCE SPECIFIED IN THE APPLICABLE TECHNICAL SPECIFICATIONS. THE USE OF MANUFACTURER'S NAMES AND PRODUCTS DO NOT PRECLUDE THE USE OF OTHER MANUFACTURER'S PRODUCTS OF APPROVED EQUAL COLOR, TEXTURE, AND/OR PATTERN IF ALL OTHER REQUIREMENTS ARE MET.
2. ALL VISIBLE GRILLES, DIFFUSERS, AND OTHER MECHANICAL RELATED FINISH OPENING DEVICES INCLUDING FIRE ALARMS SHALL BE PAINTED TO MATCH COLOR OF ADJACENT SURFACE.
3. REFER TO APPROPRIATE ARCHITECTURAL DRAWINGS AND DETAILS TO PROPERLY ASSESS THE FULL EXTENT OF WORK REQUIRED. SPECIFICALLY REFER TO THE REFLECTED CEILING PLANS AND BUILDING SECTIONS TO DETERMINE HEIGHTS OF REQUIRED WALL MATERIALS, SPECIAL CONDITIONS AND STRUCTURES, ETC.
4. REFER TO EXTERIOR ELEVATIONS FOR EXTERIOR FINISH SELECTIONS.
5. INFILL FLOOR AT SLAB RECESSES NOT TO RECEIVE CERAMIC TILE WITH CONCRETE LEVEL WITH ADJACENT FLOOR SURFACES PRIOR TO APPLYING FLOOR FINISH.
6. WALL AND CEILING GWB SURFACES SHALL BE PAINTED WITH FLAT FINISH, TRIM SHALL BE SEMI–GLOSS.
7. INSTALL PLASTIC BUMPER RAILS AND CORNER GUARDS AT MAIN CORRIDORS
8. INTERIOR SURFACE OF EXTERIOR METAL DOORS AND FRAMES SHOULD COMPLY WITH P–4

NOTE:
NOT ALL FINISHES APPLY TO ALL BUILDINGS.

PRELIMINARY - NOT FOR CONSTRUCTION

REV	DATE	BY	SUB	APP	DESCRIPTION
					XXX

DESIGNED BOUZA
DRAWN WAHIDULLAH.Y
CHECKED P.HOPE
IN CHARGE D. WHEELER
DATE 05 DEC 2009

AFGHAN NATIONAL SECURITY FORCE
Comprehensive Plan for Facilities Development
MINISTRY OF INTERIOR (MoI) - AFGHAN NATIONAL POLICE PROVINCIAL FIRE STATIONS

WOOD STOVE FINISH SCHEDULE

SCALE AS SHOWN
PROJECT NO. –

B_A101

N:\ANP FIRE STATIONS\~0928INITIAL_FSs\A65_091205\FS\Common_0928INITIAL_Dwgs\in\CAD\~B_Wood Stove Kicher\Architectural\B_A101 Wood Stove Finishes schedule.dwg 02/13/2010 9:41am CAD_9

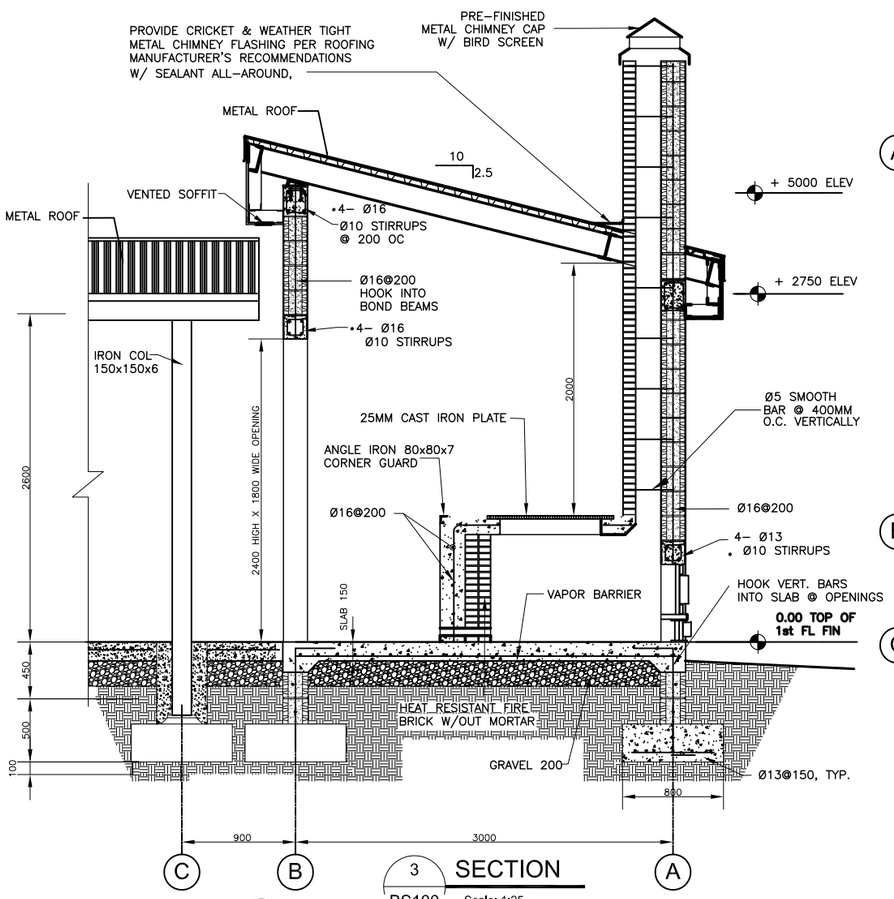

3 BS100 SECTION
Scale: 1:25

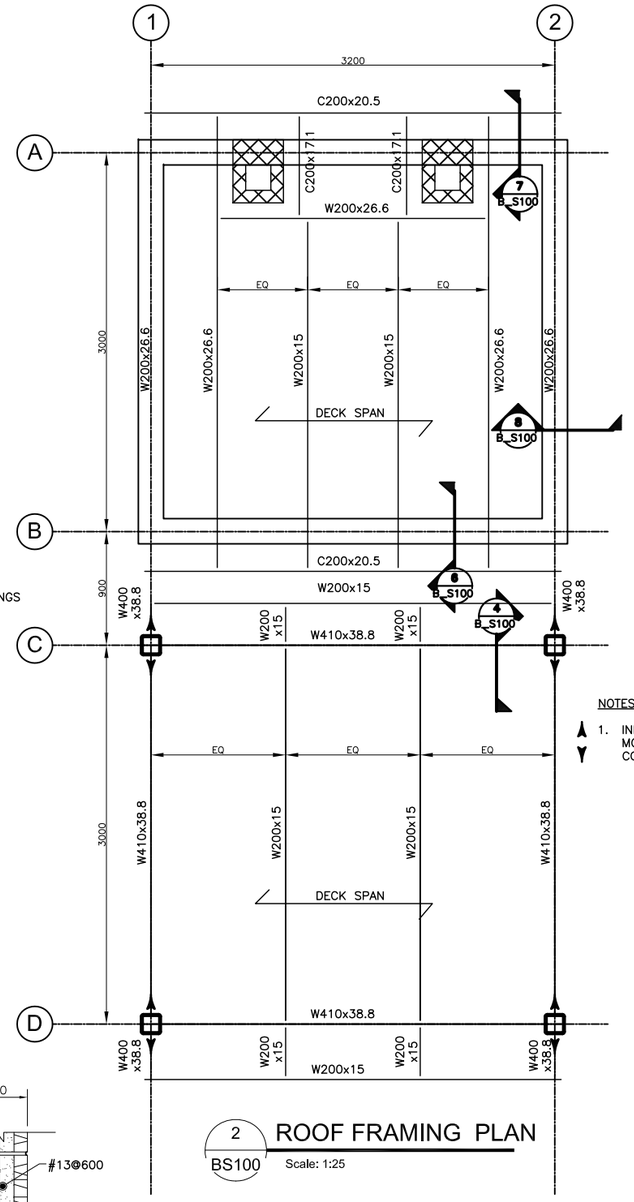

NOTES:

1. INDICATES MOMENT CONNECTION

2 BS100 ROOF FRAMING PLAN
Scale: 1:25

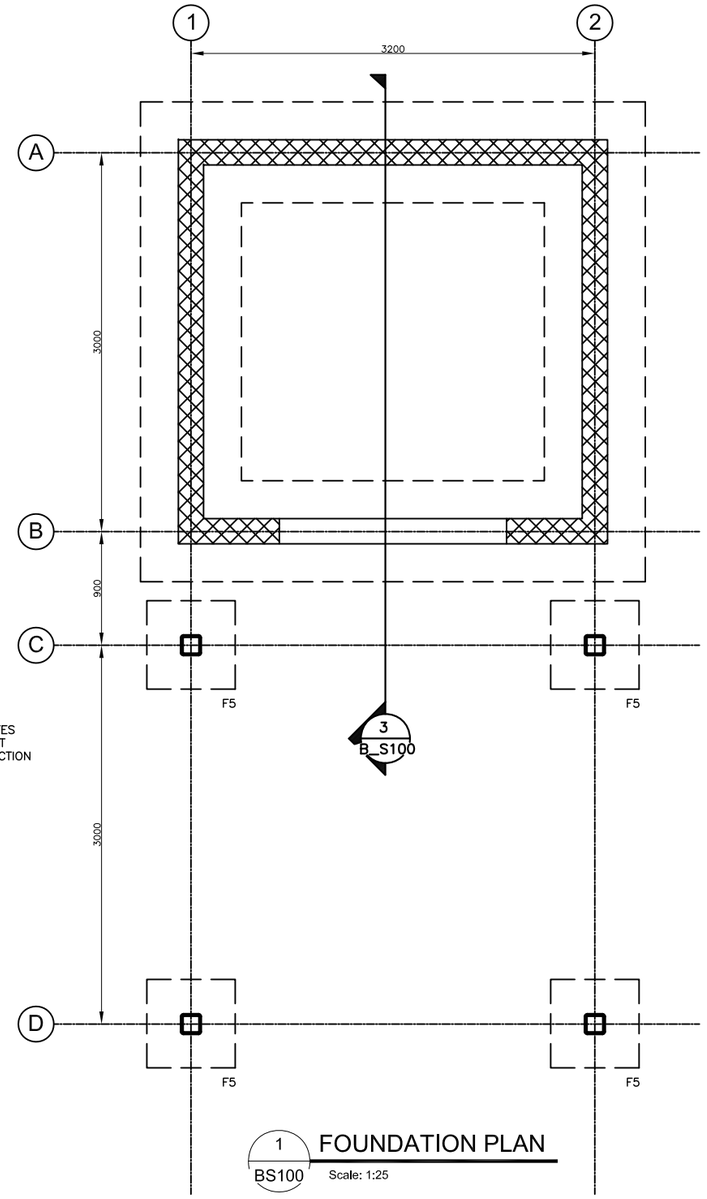

1 BS100 FOUNDATION PLAN
Scale: 1:25

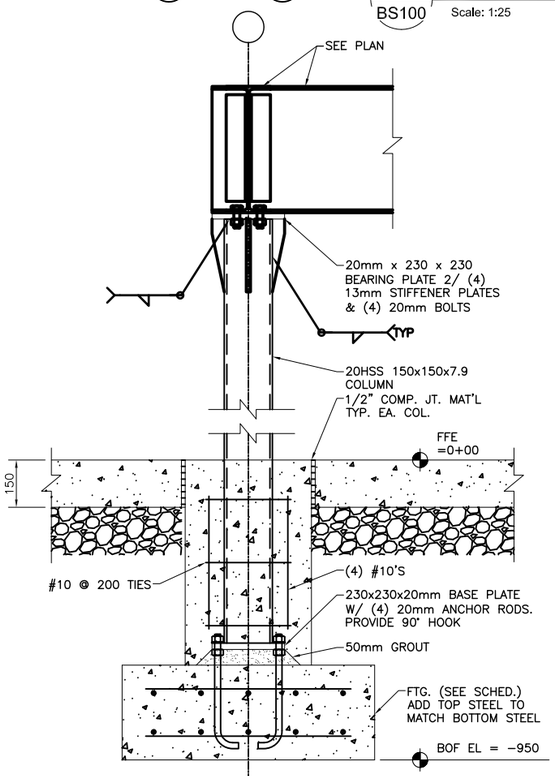

4 BS100 SECTION
Scale: 1:10

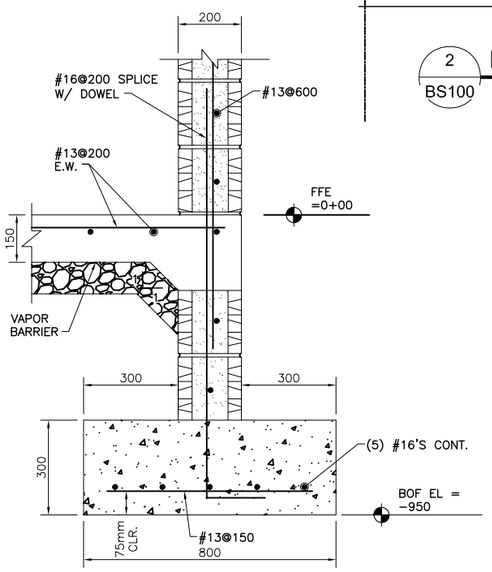

5 BS100 SECTION
Scale: 1:10

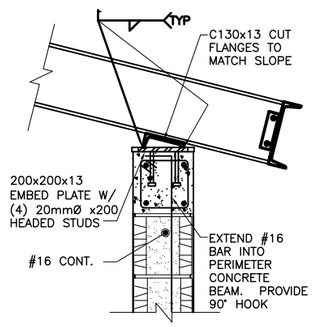

6 BS100 SECTION
Scale: 1:10

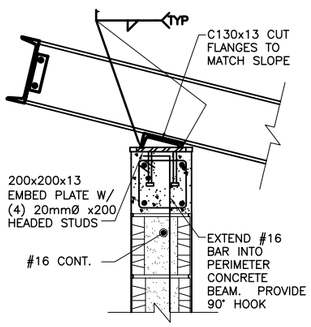

7 BS100 SECTION
Scale: 1:10

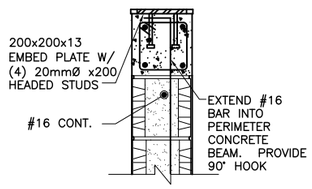

8 BS100 SECTION
Scale: 1:10

PRELIMINARY - NOT FOR CONSTRUCTION

REV	DATE	BY	SUB	APP	DESCRIPTION

DESIGNED V. STEGMEIR
DRAWN M. LORENZ
CHECKED F. HAMMERS
IN CHARGE G. LUCKENBAUGH
DATE 5 DEC 2009

AFGHAN NATIONAL SECURITY FORCE
Comprehensive Plan for Facilities Development

MINISTRY OF INTERIOR (MoI) - AFGHAN NATIONAL POLICE
PROVINCIAL FIRE STATIONS

Wood Stove Kitchen
Foundation Plan and Section

SCALE AS SHOWN

PROJECT NO. –

B_S100

N:\ANP FIRE STATIONS\~9992INITIAL_FSs\AB_091205\FS\Common_9992INITIAL_Drwgs\ACAD\~B_Wood Stove Kitchen\Structural_WoodStoveKitchen\B_S100Wood Stove Kitchen Foundation Plu.dwg 01/31/2010 11:46am CAD_9

SYMBOLS

POWER

- DELTA CONNECTION
- MOTOR
- TRANSFORMER
- WYE CONNECTION
- GROUND CONNECTION
- JUNCTION BOX, CEILING/WALL MOUNTED
- PB — PULL BOX
- RELAY CONTACT, NORMALLY OPEN
- RELAY CONTACT, NORMALLY CLOSED
- FUSE
- CIRCUIT BREAKER
  100AF FRAME SIZE
  70AT TRIP AMPS
- SWITCH AND FUSE UNIT
- 200/3 — UNFUSED SAFETY SWITCH, RATING AS NOTED
  POLES
  AMPERES
- 30/15/3 — FUSED SAFETY SWITCH, RATING AS NOTED
  POLES
  FUSE AMPERE RATING
  SWITCH AMPERE RATING
- 1 — MAGNETIC MOTOR STARTER, RATING AS NOTED
  NEMA SIZE
- COMBINATION TYPE MAGNETIC MOTOR STARTER, RATING AS NOTED
- G — GENERATOR, POWER
- BATTERY
- LIGHTNING ARRESTER
- M — METER
- A — AMMETER
- V — VOLTMETER
- W — WATTMETER
- W — WATT-HOUR METER
- R — RELAY
- AIR TERMINAL
- M — MOTOR
- T — TRANSFORMER
- WYE CONNECTION
- EARTH GROUND
- AIR TERMINAL
- J — JUNCTION BOX
- CABLE TRAY/WIREWAY, AS INDICATED ON THE DRAWINGS
- BRANCH CIRCUIT HOMERUN, TICK MARKS INDICATE
  NUMBER OF #12 AWG CONDUCTORS
  GROUNDING CONDUCTOR
  NEUTRAL CONDUCTOR
  HOT CONDUCTOR
  NO TICK MARKS INDICATES 2#12, 1#12G
- RC — RIGID CONDUIT LINE
- DB — DIRECT BURIAL CABLE
- P — POWER DUCT
- RACEWAY IN CEILING OR WALL
- RACEWAY UNDERFLOOR, UNDERGROUND
- ONE CROSSMARK PER WIRE (3 WIRES UNLESS SHOWN), GROUND NOT SHOWN
- FLEXIBLE RACEWAY
- HOME RUN (ONE ARROW PER CIRCUIT)
- CONDUIT (UP, DOWN)
- EXPOSED RACEWAY
- 380/220V, 50HZ, 4W DISTRIBUTION PANELBOARD (FLUSH, SURFACE MOUNTED)
- WOOD BACKBOARD
- PUSH BUTTON
- FLOOR OUTLET, DATA COMMUNICATION
- D — OUTLET, DATA COMMUNICATION
- C — RECEPTACLE, CLOCK HANGER
- DUPLEX RECEPTACLE
  (WP=WEATHERPROOF)
  (G=GROUND FAULT INTERRUPTING)
  (C=ISOLATED GROUND)
- ABOVE-COUNTER DUPLEX RECEPTACLE
- QUADRAPLEX
- SINGLE RECEPTACLE
- S — SINGLE RECEPTACLE WITH SWITCH
- SPECIAL RECEPTACLE
- VOICE/DATA OUTLET
- STARTER
- S — SWITCH
  F: FUSED
  L: LOCK
  M: MOTOR RATED SWITCH
  MP: MOTOR SNAP WITH PILOT LIGHT
  WP: WEATHER PROOF
  K: KEY OPERATED
  LM: LOW VOLTAGE MASTER
  MC: MOMENTARY CONTACT
  P: WITH PILOT LIGHT
  RC: REMOTE CONTROL
  X: EXPLOSION PROOF

LIGHTING

- S_ — SPST TOGGLE SWITCH
  BLANK: SINGLE POLE
  3: THREE WAY
  D: DIMMER
  LV: LOW VOLTAGE
  LM: LOW VOLTAGE MASTER
  T: TIMER OPERATED
  X: EXPLOSION PROOF
  MO: OCCUPANCY SENSOR
  2: DOUBLE POLE
  4: FOUR WAY
  K: KEY OPERATED
  L: LOCK
  P: WITH PILOT LIGHT
  RC: REMOTE CONTROL
  WP: WEATHER PROOF
- STRIP/INDUSTRIAL FLUORESCENT FIXTURE, TYPE INDICATED
- STRIP/INDUSTRIAL FLUORESCENT FIXTURE W/EMERGENCY BATTERY, TYPE INDICATED.
- 2'X4' FLUORESCENT LIGHTING FIXTURE, TYPE INDICATED
- 2'X4' FLUORESCENT LIGHTING FIXTURE W/EMERGENCY BATTERY, TYPE INDICATED
- WALL MOUNTED LIGHTING FIXTURE
- RECESSED-MOUNTED
- CEILING-MOUNTED OR SUSPENDED
- RECESSED GRID-MOUNTED FLUORESCENT
- SURFACE-MOUNTED FLUORESCENT
- OS — OCCUPANCY SENSOR
- EXIST (WALL, CEILING)
- EMERGENCY LIGHTING BATTERY UNIT WITH 2 LAMP HEADS
- REMOTE EMERGENCY LIGHTING 1 OR 2 LAMP HEADS
- POLE MOUNTED SITE LIGHT, ONE LUMINARIES
- POLE MOUNTED SITE LIGHT, TWO LUMINARIES
- 2'X2' FLUORESCENT LIGHTING FIXTURE, TYPE INDICATED
- 2'X2' FLUORESCENT LIGHTING FIXTURE W/EMERGENCY BATTERY, TYPE INDICATED
- TRACK LIGHT
- BOLLARD
- P — PHOTOCELL
- LC — LIGHTING CONTACTOR

FIRE ALARM EQUIPMENT

- F — FIRE ALARM PULL STATION
- F — FIRE ALARM HORN/STROBE/SPEAKER
- F — FIRE ALARM STROBE ONLY
- S — FIRE ALARM SMOKE DETECTOR
- S — FIRE ALARM DUCT MOUNTED SMOKE DETECTOR
- FAP — FIRE ALARM CONTROL PANEL

GENREAL NOTES

1. ALL ELECTRICAL WORK SHALL BE IN ACCORDANCE WITH THE LATEST APPROVED NEC EDITION, AND LOCAL CODES AND REGULATIONS.
2. A GREEN EQUIPMENT GROUNDING CONDUCTOR INSULATED OR BARE WIRE SHALL BE INCLUDED IN EACH CABLE OR CONDUIT AND ATTACHED TO THE FRAME OF ENCLOSURE OF EVERY ELECTRICALLY ENERGIZED DEVICE. CONDUIT SHALL NOT BE USED AS GROUNDING CONDUCTOR. THE CONDUIT GROUND IS CONSIDERED AS BACK UP GROUNDING.
3. MINIMUM TRADE CONDUIT SIZE SHALL BE 21MM. CONDUITS CONTAINING MORE THAN THREE CURRENT CARRYING CONDUCTORS SHALL BE ADJUSTED ACCORDING TO NEC CODEBOOK (TABLE 310.15(B)(2)(a)).
4. ALL EXTERIOR CONDUIT SHALL BE RIGID GALVANIZED STEEL AND ALL UNDERGROUND CONDUITS SHALL BE PVC UNLESS OTHERWISE NOTED.
5. ROUTE POWER AND LIGHTING BRANCH CIRCUIT CONDUCTORS TO THEIR PERSPECTIVE CIRCUITS IN LOAD CENTER.
6. COORDINATE LIGHTING FIXTURES LOCATIONS WITH OTHER EQUIPMENT PRIOR TO INSTALLATION.
7. ALL CONDUIT RUNS SHALL BE MADE EITHER PARALLEL OR PERPENDICULAR TO STRUCTURES.
8. FIELD VERIFY ALL DIMENSIONS PRIOR TO COMMENCING WORK.
9. ALL CONDUITS AND CABLES SHALL HAVE A NON-CORRODING TAG. ALL WIRES SHALL HAVE A NON-CORRODING TAG. ALL TERMINAL BLOCKS SHALL HAVE A NON-CORRODING IDENTIFICATION OF WIRE NUMBERS FROM SCHEMATICS.
10. ALL MATERIAL FURNISHED BY THE CONTRACTOR SHALL BE NEW AND UL LISTED. MATERIALS SHALL BE SUBJECT TO TEST, INSPECTION AND APPROVAL BY THE OWNER OR THE ENGINEERS.
11. WIRES AND CABLES SHALL HAVE BE PULLED INTO THEIR CONDUITS BY APPLICATION OF SUITABLE LUBRICANTS THAT WILL HAVE NO INJURIOUS EFFECT ON THE COVERING TO THE CONDUCTOR. OIL OR GREASE SHALL NOT BE USED. WIRES AND CABLES SHALL BE INSTALLED WITHOUT JOINTS OR SPLICES INSOFAR AS PRACTICAL. SUFFICIENT WIRE SHALL BE LEFT AT ALL OUTLETS FOR CONNECTING FIXTURES AND WIRING DEVICES. WHEN FITTINGS ARE REQUIRED WITH PLUGS FOR POSSIBLE FUTURE EXTENSIONS, SUFFICIENT LOOP IN WIRE SHALL BE LEFT FOR THIS PURPOSE.
12. ALL CIRCUITS SHALL BE CORRECTLY IDENTIFIED AND A DIRECTORY SHALL BE MADE FOR THE LOAD CENTER.
13. THE CONTRACTOR SHALL INSTALL AND TEST THE COMPLETE LIGHTING AND RECEPTACLE SYSTEMS MAKING ALL CONNECTIONS TO THE LIGHTING FIXTURES, RECEPTACLES, APPARATUS AS SHOWN ON THE ENGINEERS' DRAWINGS.
14. THE COMPLETE POWER SYSTEM SHALL BE INSTALLED AND TESTED, MAKING ALL CONNECTIONS TO THE EQUIPMENT AND APPARATUS AS SHOWN ON THE ENGINEERS' DRAWINGS.
15. SEISMIC REQUIREMENTS ARE SITE SPECIFIC. CONTRACTOR SHALL DETERMINE WHETHER THE SITE IS IN A SEISMIC ZONE.
16. CONTRACTOR SHALL BE RESPONSIBLE FOR THE SEISMIC REQUIREMENTS AS SPECIFIED IN SECTION 26 05 48.00 10 SEISMIC PROTECTION FOR ELECTRICAL EQUIPMENT AND THE UNIFIED FACILITIES CRITERIA (UFC) 3-310-04 SEISMIC DESIGN FOR BUILDINGS.

ABBREVIATIONS

1PH	SINGLE PHASE
1P	SINGLE POLE
2/C	TWO-CONDUCTOR
3/C	THREE-CONDUCTOR
3PH	THREE PHASE
4/C	FOUR-CONDUCTOR
4W	FOUR WIRE
A/C UNIT	AIR CONDITIONING UIT
A/E	ARCHITECT/ENGINEER
AAP	ALARM ANNUNCIATOR PANEL
AC	ALTERNATING CURRENT OR ARMORED
ACC	ACCESSIBLE
ADDL	ADDITIONAL
ADJ	ADJACENT
ADO	AUTOMATIC DOOR OPENER
AF	AMP FRAME
AFC	AUTOMATIC FREQUENCY CONTROL
AFF	ABOVE FINISHED FLOOR
AFG	ABOVE FINISHED GRADE
AH	AMPERE HOUR
AHJ	AUTHORITY HAVING JURISDICTION
AIC	AMPERE INTERRUPTING CAPACITY
ALT	ALTERNATE
AMB	AMBIENT
AMP OR A	AMPERE
ARCH	ARCHITECT
ASC	AMPS SHORT CIRCUIT
AT	AMPERE TRIP
ATS	AUTOMATIC TRANSFER SWITCH
AUTO	AUTOMATIC
AV	AUDIO VISUAL
BAT	BATTERY
BC	BARE COPPER
BD	BOARD
BFF	BELOW FINISH FLOOR
BIL	BASIC INSULATION LEVEL
BLDG	BUILDING
BPIP	BOILER PLANT INSTRUMENTATION PANEL
BARKER	BREAKER
BYP	BY PASS
C OR CD	CONDUIT
CAB	CABINET
CALC	CALCULATION
CAP	CAPACITY
CAT	CATALOG
CATV	COMMUNITY ANTENNA TELEVISION
CCR	CONTROL CONTRACTOR
CCTV	CLOSED CIRCUIT TELEVISION
CDA	CANDELA
CD	CONSTRUCTION DOCUMENTS
CF	CONTRACTOR FURNISHED
CF/CI	CONTRACTOR FURNISHED/CONTRACTOR INSTALLED
CF/OI	CONTRACTOR FURNISHED/OWNER INSTALLED
CFE	CONTRACTOR FURNISHED EQUIPMENT
CHW	CHILLED WATER
CHWP	CHILLED WATER PUMP
CKT	CIRCUIT
CKT BARKER	CIRCUIT BREAKER
CLF	CURRENT LIMITING FUSE
CLG	CEILING
CMU	CONCRETE MASONRY UNIT
COAX	COAXIAL CABLE
COMM	COMMUNICATION
CONC	CONCRETE
CONT	CONTINUE
CONTR	CONTRACTOR
COORD	COORDINATE
CPT	CONTROL POWER TRANSFORMER
CRI	COLOR RENDERING INDEX
CT	CURRENT TRANSFORMER
CTV	CABLE TELEVISION
CU	COPPER
CU FT	CUBIC FEET
CUR	CURRENT
DB	DIRECT BURIAL
DC	DIRECT CURRENT
DCP	DIMMER CONTROL PANEL
DEG C	DEGREE CELSIUS
DEG F	DEGREE FAHRENHEIT
DEMO	DEMOLITION
DIAG	DIAGRAM
DISC	DISCONNECT
DISTR	DISTRIBUTION
DISTR PNL	DISTRIBUTION PANEL
DMR SW	DIMMER SWITCH
DN	DOWN
DPDT	DOUBLE POLE, DOUBLE THROW
DPST	DOUBLE POLE, SINGLE THROW
DRSW	DOOR SWITCH
DS	DISCONNECT SWITCH
DWG	DRAWINGS
EC	EMPTY CONDUIT
EG	EQUIPMENT GROUND
EL	ELEVATION
ELEC	ELECTRICAL
ELEV	ELEVATOR
EMCP	EMERGENCY MONITORING CONTROL PANEL
EMER	EMERGENCY
EMI	ELECTROMAGNETIC INTERFERENCE
EMT	ELECTRICAL METALLIC TUBING
ENCL	ENCLOSURE
EPO	EMERGENCY POWER OFF
EPRF	EXPLOSION PROOF
ESMT	EASEMENT
EWC	ELECTRIC WATER COOLER
EWH	ELECTRIC WATER HEATER
FA	FIRE ALARM
FAAP	FIRE ALARM ANNUNCIATOR PANEL
FABL	FIRE ALARM BELL
FABX	FIRE ALARM BOX
FACP	FIRE ALARM CONTROL PANEL
FC	FOOT CANDLE
FIXT	FIXTURE
FLA	FULL LOAD AMPS
FLEX	FLEXIBLE METALLIC CONDUIT
FLT	FLOOD LIGHT
FLUOR	FLUORESCENT
FOUTT	TELEPHONE FLOOR OUTLET
FP	FIRE PROTECTION
FT	FEET
FU SW	FUSED SWITCH
FVNR	FULL VOLTAGE NON-REVERSING
FVR	FULL VOLTAGE REVERSING
GND	GROUND
GEN	GENERATOR
GFCI	GROUND FAULT CIRCUIT INTERRUPTER
GTB	GROUND TERMINAL BOX
GEC	GROUND ELECTRODE CONDUCTOR
HID	HIGH INTENSITY DISCHARGE
HOA	HAND-OFF-AUTOMATIC
HP	HORSEPOWER
HT	HEIGHT
HZ	HERTZ
IESNA	ILLUMINATION ENGINEERING SOCIETY OF NORTH AMERICA
IMC	INTERMEDIATE METAL CONDUIT
INC	INCANDESCENT
IR	INFRARED
J-BOX	JUNCTION BOX
KV	KILOVOLT
KVA	KILOVOLT AMPERE
KVAH	KILOVOLT AMPERE PER HOUR
KVAR	KILOVOLT AMPERE PER HOUR
KW	KILOWATT
KWH	KILOWATT HOUR
KWHM	KILOWATT HOUT METER
LED	LIGHT EMITTING DIODE
LF	LINEAR FEET
LM	LUMEN
LP	LIGHT POLE
LPS	LOW PRESSURE SODIUM
LRA	LOCKED ROTOR AMPS
LTCP	LOCAL TEMPERATURE CONTROL PANEL
LTG	LIGHTING
LTG PNL	LIGHTING PANEL
LV	LOW VOLTAGE
MATV	MASTER ANTENNA TELEVISION
MAX	MAXIMUM
MB	MAIN BREAKER
MC	METAL CLAD
MCA	MINIMUM CIRCUIT AMPS
MCB	MAIN CIRCUIT BREAKER
MCC	MOTOR CONTROL CENTER
MDP	MAIN DISTRIBUTION PANEL
MECH	MECHANICAL
MG	MOTOR GENERATOR
MH	MANHOLE
MIN	MINIMUM
MOCP	MAXIMUM OVER CURRENT PROTECTION
MLO	MAIN LUGS ONLY
MTD	MOUNTED
MTG	MOUNTING
MTS	MANUAL TRANSFER SWITCH
MV	MEDIUM VOLTAGE
MVA	MEGAVOLT AMPS
MW	MEGAWATT
NA	NOT APPLICABLE
NEC	NATIONAL ELECTRICAL CODE
NEMA	NATIONAL ELECTRICAL MANUFACTURERS ASSOCIATION
NEUT OR N	NEUTRAL
NFPA	NATIONAL FIRE PROTECTION ASSOCIATION
NIC	NOT IN CONTRACT
NL	NIGHT LIGHT
NO	NORMALLY OPEN
NS	NO SCALE
NTS	NOT TO SCALE
OL	OVERLOAD
P	POLE
PA	PUBLIC ADDRESS
PB	PANELBOARD
PEC	PHOTOELECTRIC CELL
PED	PEDESTAL
PEND	PENDENT
PF	POWER FACTOR
PH	PHASE
PNL	PANEL
POD	POWER OPERATED DAMPER
POS	POINT OF SERVICE
PT	POTENTIAL TRANSFORMER
PTRV	POWER TYPE ROOF VENTILATION
PVC	POLYVINYL CHLORIDE (PLASTIC)
PWR	POWER
RCP	REFLECTED CEILING PLAN
REC	RECESSED
RECP	RECEPTACLE
RGS	RIGID GALVANIZED STEEL
RM	ROOM
RMS	ROOT MEAN SQUARE
REQD	REQUIRED
SCC	SHORT CIRCUIT CAPACITY
SES	SERVICE ENTRANCE SECTION
SD	SMOKE DETECTOR
SF	SQUARE FOOT
SHT	SHEET
SI	INTERNATIONAL SYSTEM OF UNITS
SPEC	SPECIFICATION
SPST	SINGLE POLE, SINGLE THROW
SURF	SURFACE
SW	SWITCH
SWBD	SWITCHBOARD
TC	TIME CLOCK
TEL	TELEPHONE
TP	TWISTED PAIR
TPS	TWISTED PAIR SHIELDED
TTB	TELEPHONE TERMINAL BOARD
TV	TELEVISION
TYP	TYPICAL
UFD	UNDERFLOOR DUCT
UL	UNDERWRITERS LABORATORY
UON	UNLESS OTHERWISE NOTED
UPS	UNINTERRUPTIBLE POWER SUPPLY
UTIL	UTILITY
V	VOLT
VA	VOLT-AMPERE
VAR	VOLT-AMPERE REACTIVE
VFD	VARIABLE FREQUENCY DRIVE
VPS	VACUUM PRESSURE SWITCH
W	WATT OR WIRE
WH	WATT HOUR
WM	WATT METER
WP	WEATHERPROOF
XLP	CROSS LINKED POLYETHYLENE
XFMR	TRANSFORMER
ZSC	LIMIT SWITCH CLOSED
ZSO	LIMIT SWITCH OPEN

PRELIMINARY - NOT FOR CONSTRUCTION

REV	DATE	BY	SUB	APP	DESCRIPTION

DESIGNED M. ESTAFANOUS
DRAWN M. ESTAFANOUS
CHECKED B. CRAWFORD
IN CHARGE D. WHEELER
DATE 05 DEC 2009

AFGHAN NATIONAL SECURITY FORCE
Comprehensive Plan for Facilities Development
MINISTRY OF INTERIOR (MoI) - AFGHAN NATIONAL POLICE
PROVINCIAL FIRE STATIONS
Wood Stove Kitchen
Legend, Abbreviations & Gen. Notes

SCALE AS SHOWN
PROJECT NO. 6151-08-0328
B_E000

J:\6151-08-0328 Afghanistan\Task 32.20 COMMON BUILDINGS\CAD\B_E000 Legend Abbreviations and general notes.dwg 12/03/2009 4:29pm mseestafanous

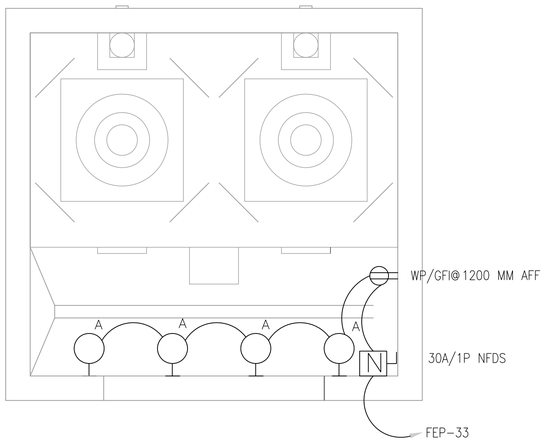

ELECTRICAL PLAN

SCALE 1:25

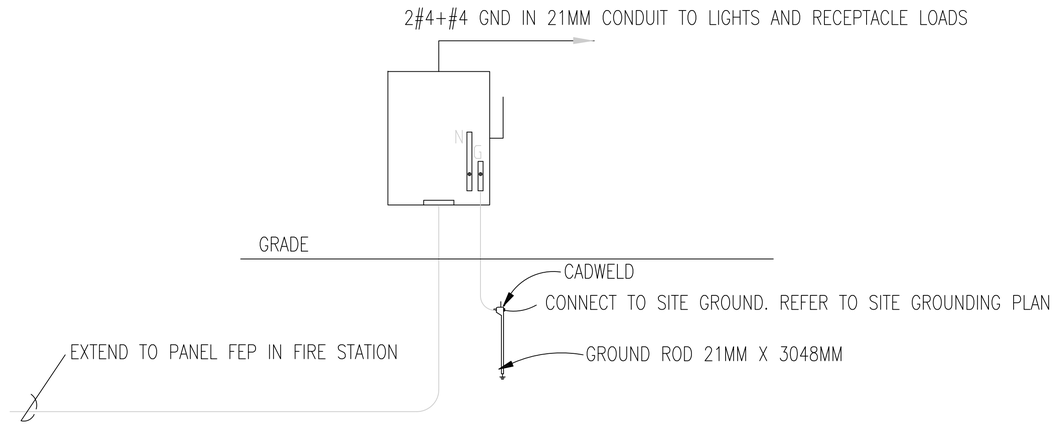

POWER RISER DIAGRAM

LIGHTING FIXTURE SCHEDULE

MARK	LAMPS	VOLTAGE	FIXTURE DISCRIPTION	MOUNTING	NOTES
A	1-100MH	220	HID FLOOD LIGHT. ALUMINUM HOUSING TEMPERED GLASS LENS. DARK BRONZE COLOR . ENCLOSE3D AND GASKETED. HPF BALLAST.	BRACKET	SEE NOTE 1.

NOTE 1.
MOUNT TWO TYPE A FIXTURES TO POINT UP FOR INDIRECT LIGHTING AND TWO TO POINT DOWN AT COOKING SURFACE.

PRELIMINARY - NOT FOR CONSTRUCTION

DESCRIPTION

REV DATE BY SUB APP

DESIGNED L. TAYLOR
DRAWN L. TAYLOR
CHECKED B. CRAWFORD
IN CHARGE D. WHEELER
DATE 05 DEC 2009

AFGHAN NATIONAL SECURITY FORCE
Comprehensive Plan for Facilities Development

MINISTRY OF INTERIOR (MoI) - AFGHAN NATIONAL POLICE
PROVINCIAL FIRE STATIONS

Wood Stove Kitchen
Electrical Plans, Schedules & Details

SCALE AS SHOWN

PROJECT NO. 6151-08-0328

B_E100

J:\6151-08-0328 Afghanistan\Task 32.20 COMMON BUILDINGS\CAD\B_E100 COMMON WOOD BURNING KITCHEN ELECTRICAL PLANS AND DETAILS.dwg 12/03/2009 4:37pm syelliams

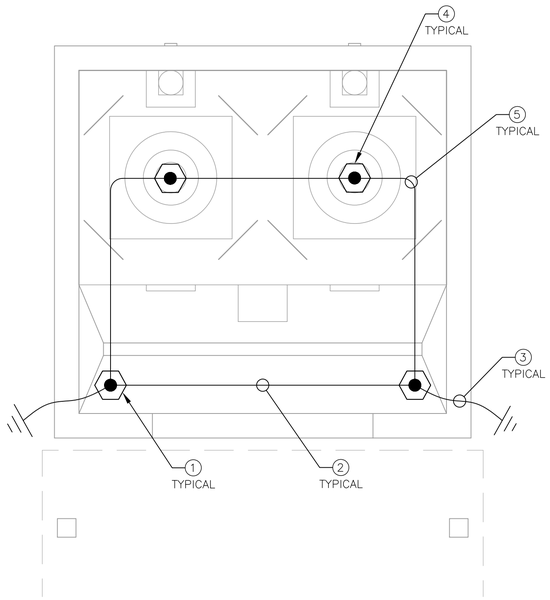

WOOD STOVE KITCHEN ROOF PLAN
LIGHTNING PROTECTION SYSTEM
1
B_E101
SCALE 1:25

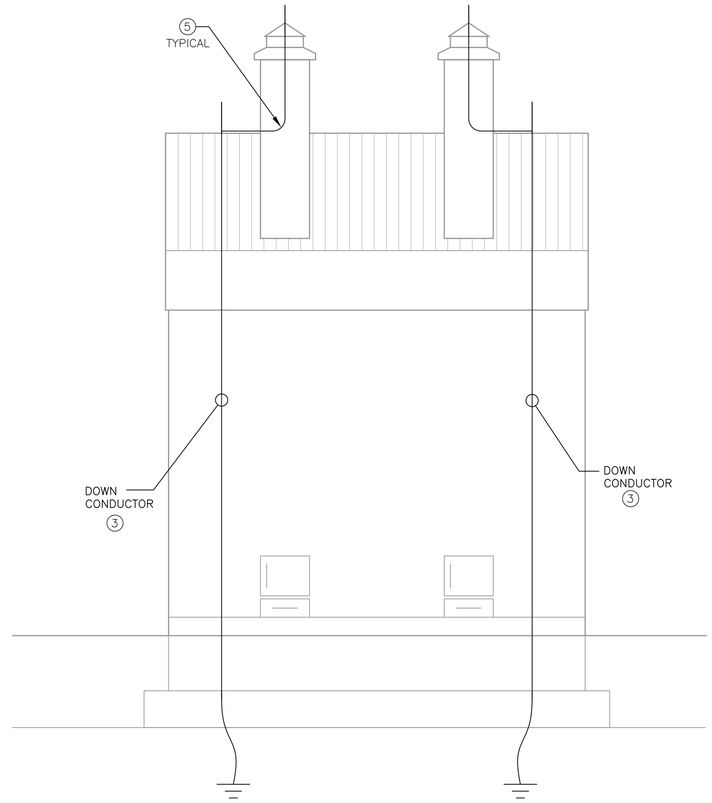

WOOD STOVE KITCHEN ELEVATION
LIGHTNING PROTECTION SYSTEM
2
B_E101
SCALE 1:25

GENERAL NOTES:

1. SEE SHEET B_E000 FOR LEGEND, ABBREVIATIONS AND GENERAL NOTES.
2. SEE SITE GROUNDING DESIGN.
3. CLASS I COMPONENTS SHALL APPLY FOR THE WOOD STOVE KITCHEN STRUCTURE, HEIGHT IS NOT MORE THAN 75 FEET (23M).
4. ALL LIGHTNING PROTECTION CONDUCTORS SHALL BE FASTENED NOT MORE THAN 914.4MM (3 FEET) MAXIMUM SPACING.
5. CONDUCTORS SHALL INTERCONNECT ALL AIR TERMINALS AND SHALL FORM A TWO-WAY PATH FROM EACH AIR TERMINAL HORIZONTALLY OR DOWNWARD TO CONNECTORS WITH GROUND RODS.
6. THE INSTALLATION OF THE LIGHTNING PROTECTION SYSTEM SHALL MEET THE REQUIREMENTS OF NATIONAL FIRE PROTECTION ASSOCIATION 780 AND UNDER WRITERS LAB UL96/96A.
7. THE TIP OF AN AIR TERMINALS SHALL NOT BE LESS THAN 254MM (10 INCHES) LONG ABOVE THE OBJECT TO BE PROTECTED WHEN THE INTERVAL BETWEEN AIR TERMINALS IS NOT MORE THAN 6M (20 FEET).
8. AT LEAST TWO DOWN CONDUCTORS SHALL BE INSTALLED.

KEY NOTES:

1. AIR TERMINAL SHALL BE 12.7MMX457 MM (1/2" X 18") ALUMINUM, 90 DEGREES VERTICAL.
2. MAIN CONDUCTORS SHALL BE# A28 ALUMINUM ROOF CONDUCTOR.
3. #A28 ALUMINUM DOWN CONDUCTORS SHALL BE CONNECTED TO #32S COPPER DOWN CONDUCTOR AT LEAST 457MM (18") ABOVE GRADE LEVEL. BIMETALLIC CONNECTORS WILL BE USED.
4. AIR TERMINALS SHALL BE PROVIDED ON THE CHIMNEY SO THAT NO CORNER IS MORE THAN 610MM (2 FEET) FROM AIR TERMINAL..
5. RADIUS OF BEND SHALL NOT BE LESS THAN 203 MM (8 INCHES).

PRELIMINARY - NOT FOR CONSTRUCTION

REV	DATE	BY	SUB	APP	DESCRIPTION

DESIGNED M. ESTAFANOUS
DRAWN M. ESTAFANOUS
CHECKED B. CRAWFORD
IN CHARGE D. WHEELER
DATE 05 DEC 2009

AFGHAN NATIONAL SECURITY FORCE
Comprehensive Plan for Facilities Development
MINISTRY OF INTERIOR (MoI) - AFGHAN NATIONAL POLICE
PROVINCIAL FIRE STATIONS
Wood Stove Kitchen
Lightning Protection System

SCALE
AS SHOWN

PROJECT NO.
6151-08-0328

B_E101

J:\6151-08-0328 Afghanistan\Task 32.20 COMMON BUILDINGS\CAD\B_E101 Lightning Protection System.dwg 12/03/2009 4:39pm swilliams

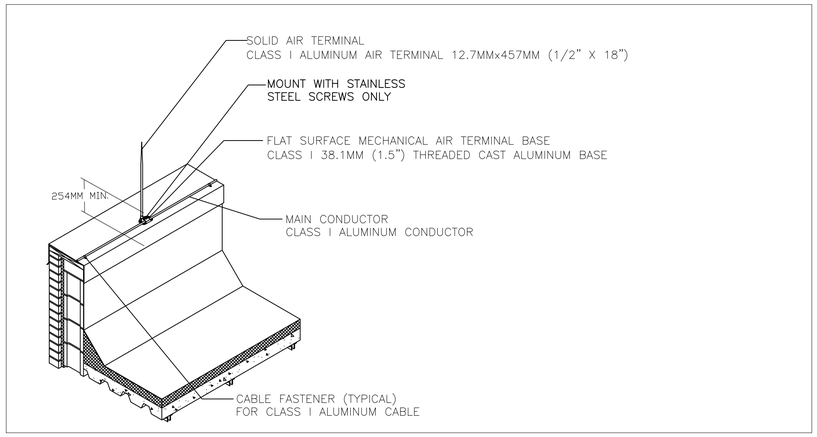

AIR TERMINAL DETAIL

SCALE: NONE

1 / B_E102

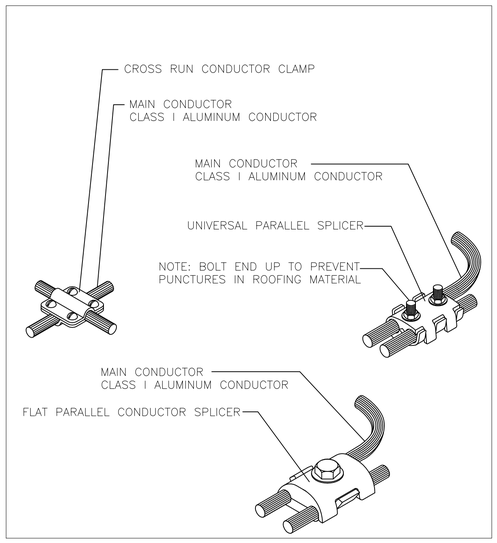

CABLE CLAMPS & SPLICERS

SCALE: NONE

2 / B_E102

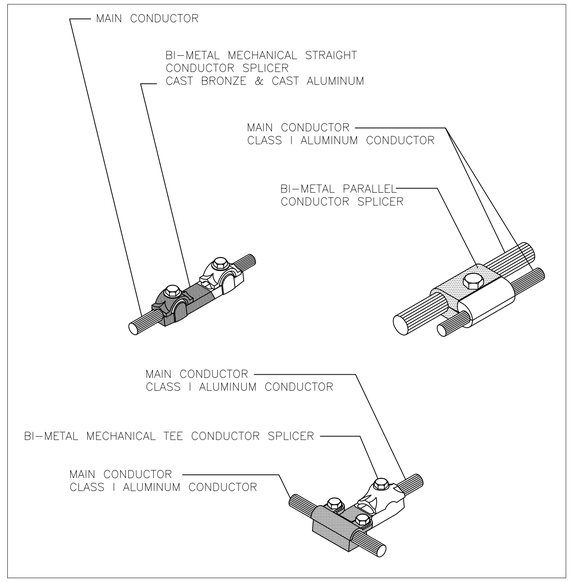

CABLE CLAMPS & SPLICERS

SCALE: NONE

3 / B_E102

PRELIMINARY - NOT FOR CONSTRUCTION

REV	DATE	BY	SUB	APP	DESCRIPTION

DESIGNED M. ESTAFANOUS
DRAWN M. ESTAFANOUS
CHECKED B. CRAWFORD
IN CHARGE D. WHEELER
DATE 05 DEC 2009

AFGHAN NATIONAL SECURITY FORCE
Comprehensive Plan for Facilities Development

MINISTRY OF INTERIOR (MoI) - AFGHAN NATIONAL POLICE
PROVINCIAL FIRE STATIONS

Wood Stove Kitchen
Details

SCALE
AS SHOWN

PROJECT NO.
6151-08-0328

B_E102

J:\6151-08-0328 Afghanistan\Task 32.20 COMMON BUILDINGS\CAD\B_E102 Details.dwg 12/03/2009 4:40pm sywilliams