AFGHAN NATIONAL ARMY

STANDARD BUILDING DESIGN

06 - MOBILE MAINTENANCE TEAM BUILDING

SHEET INDEX

G-001 COVER SHEET

STRUCTURAL

S-001 GENERAL NOTES & DESIGN CRITERIA
S-101 FOUNDATION/SLAB & ROOF FRAMING PLAN
S-401 BUILDING SECTIONS
S-501 FOUNDATION SECTIONS
S-502 FOUNDATION & FRAMING SECTIONS
S-503 BEAM & COLUMN DETAILS
S-601 SCHEDULES
S-701 TYPICAL DETAILS
S-702 TYPICAL DETAILS

ARCHITECTURAL

A-001 LIFE SAFETY PLAN
A-101 FLOOR PLAN
A-102 ROOF PLAN
A-201 ELEVATIONS
A-301 BUILDING SECTIONS
A-401 WALL SECTIONS
A-501 EXTERIOR DETAILS
A-502 HEAD, JAMB, & SILL DETAILS
A-503 STOOP & CANOPY DETAILS
A-504 TOILET & LAVATORY DETAILS
A-601 WINDOW & DOOR SCHEDULES

MECHANICAL

P-101 FLOOR PLAN PLUMBING
P-501 PLUMBING DETAILS
P-901 PLUMBING ISOMETRICS

M-101 HVAC – FLOOR PLAN

ELECTRICAL

E-001 ELECTRICAL – SYMBOLS, NOTES, & ABBREVIATIONS
E-101 ELECTRICAL – LIGHTING PLAN
E-102 ELECTRICAL – POWER PLAN
E-501 ELECTRICAL – DETAILS
E-502 ELECTRICAL – DETAILS
E-601 ELECTRICAL – LIGHTING & PANEL SCHEDULES

APPROVED:

A/E DESIGNER OF RECORD

SEAL:

US ARMY CORPS OF ENGINEERS
AFGHANISTAN ENGINEER DISTRICT

Mark	Description	Date	Appr.

Mark	Description	Date	Appr.

Date: 8/16/10
Rev: 0
Design file no.
Drawing code:
File name: ANAFRUS001CS
Plot date: 8/24/2010
Plot scale: x:x

Designed by: KMF/MMY
Dwn by: RCG
Ckd by: CWW
Reviewed by: LHM
Submitted by: BAKER

U.S. ARMY CORPS OF ENGINEERS
AFGHANISTAN ENGINEER DISTRICT
APO AE 96338

Michael Baker Jr., Inc.
A unit of Michael Baker Corporation
Airside Business Park
100 Airside Drive
Moon Township, PA 15108
www.mbakercorp.com

AFGHAN NATIONAL ARMY
STANDARD DESIGN
FAMILY RESPONSE UNIT OFFICES (STAND ALONE)
COVER SHEET

Sheet reference number:
G-001

STRUCTURAL ABBREVIATIONS:

ACI	AMERICAN CONCRETE INSTITUTE
ADD'L	ADDITIONAL
AISC	AMERICAN INSTITUTE OF STEEL CONSTRUCTION
AISI	AMERICAN IRON AND STEEL INSTITUTE
ASTM	AMERICAN SOCIETY FOR TESTING AND MATERIALS
ARCH	ARCHITECTURAL
B	BOTTOM
BLDG	BUILDING
BOTT	BOTTOM
℄	CENTER LINE
CFMRF	COLD FORM METAL ROOF FRAME
CFMF	COLD FORM METAL FRAME
CFS	COLD FORMED STEEL
CIP	CAST-IN-PLACE
CIPL	CAST-IN-PLACE LINTEL
CJ	CONTROL JOINT
CLR	CLEAR
CMU	CONCRETE MASONRY UNIT
COEFF	COEFFICIENT
COL	COLUMN
CONC	CONCRETE
CONT	CONTINUOUS
COORD	COORDINATE
CRSI	CONCRETE REINFORCING STEEL INSTITUTE
CSJ	CONSTRUCTION JOINT
DIA	DIAMETER
DIAG	DIAGONAL
DIM	DIMENSION
DWG	DRAWING
DWL	DOWEL
EA	EACH
EF	EACH FACE
ELEC	ELECTRICAL
ELEV	ELEVATION
EMBED	EMBEDMENT
EQUIV	EQUIVALENT
ETC	ET CETERA
EW	EACH WAY
EXP	EXPANSION
EXT	EXTERIOR
FTG	FOOTING
GA	GAUGE
GB	GRADE BEAM
HORIZ	HORIZONTAL
h	HOUR
HRS	HOURS
IBC	INTERNATIONAL BUILDING CODE
ID	INSIDE DIAMETER
INFO	INFORMATION
INT	INTERIOR
kg	KILOGRAM
km	KILOMETER
kN	KILONEWTON
kPa	KILOPASCAL
L#	ANGLE (# INDICATES SIZE)
LONG	LONGITUDINAL
LLV	LONG LEG VERTICAL
m	METER
MAX	MAXIMUM
MECH	MECHANICAL
MFG	MANUFACTURER
MID	MIDDLE
MIN	MINIMUM
MISC	MISCELLANEOUS
mm	MILLIMETER
MPa	MEGAPASCAL
MTL	METAL
MWFRS	MAIN WIND FORCE RESISTING SYSTEM
N	NEWTON
N	NORTH
N/A	NOT APPLICABLE
#	NUMBER SYMBOL FOR REBAR SIZE
NTS	NOT TO SCALE
OC	ON CENTER
OD	OUTSIDE DIAMETER
OPNG	OPENING
P̲L or PL	PLATE
PRE-ENG	PRE-ENGINEERED
RB	ROOF BEAM
REINF	REINFORCED
REQ'D	REQUIRED
SIM	SIMILAR
SPECS	SPECIFICATIONS
STD	STANDARD
STRUCT	STRUCTURAL
SW	SHEAR WALL
T	TOP
T/	TOP OF
T/ELEV	TOP ELEVATION
T/SLAB	TOP OF SLAB
T&B	TOP AND BOTTOM
THK	THICK
TYP	TYPICAL
UFC	UNIFIED FACILITIES CRITERIA
UON	UNLESS OTHERWISE NOTED
VERT	VERTICAL
W	WIDTH
W/	WITH

1.0 GENERAL NOTES:

1.1 THIS PROJECT HAS BEEN DESIGNED FOR THE WEIGHTS AND MATERIALS INDICATED ON THE SHEETS AND FOR THE LIVE LOADS INDICATED IN THE DESIGN DATA. IT IS THE CONTRACTOR'S RESPONSIBILITY TO DETERMINE ALLOWABLE CONSTRUCTION LOADS AND TO PROVIDE PROPER DESIGN AND CONSTRUCTION OF FALSEWORK, FORMWORK, STAGING, BRACING, SHEETING AND SHORING, ETC.

1.1 COORDINATE THESE SHEETS WITH THE ARCHITECTURAL, MECHANICAL, ELECTRICAL, PLUMBING, AND CIVIL SHEETS. ALL DIMENSIONS SHOWN ON THE SHEETS ARE MILLIMETERS UNLESS NOTED OTHERWISE.

1.2 THE CONTRACTOR SHALL VERIFY AND COORDINATE ALL FLOOR AND ROOF OPENING SIZES AND LOCATIONS, EQUIPMENT PAD SIZES AND LOCATIONS, ANCHOR BOLT LAYOUTS, ETC WITH EQUIPMENT SELECTED. THE CONTRACTOR SHALL MAKE ANY REQUIRED MODIFICATIONS AT NO ADDITIONAL COST.

1.3 THE CONTRACTOR SHALL REFER TO THE ARCHITECTURAL, MECHANICAL, ELECTRICAL AND PLUMBING SHEETS FOR SLEEVES, CURBS, INSERTS OR OPENINGS, ETC. NOT HEREIN INDICATED.

1.4 WORK NOT INCLUDED ON THE SHEETS BUT IMPLIED TO BE SIMILAR TO THAT SHOWN AT CORRESPONDING PLACES ELSEWHERE ON THE SHEETS SHALL BE REPEATED.

1.5 IN CASE OF CONFLICT BETWEEN THE NOTES, DETAILS AND SPECIFICATIONS THE MOST RIGID REQUIREMENTS SHALL GOVERN.

1.6 SEE ARCHITECTURAL SHEETS FOR LOCATIONS OF MASONRY AND NON-LOAD BEARING PARTITIONS. PROVIDE COMPRESSIBLE FIRESAFING AT TOP OF WALL AS REQUIRED BY ARCHITECTURAL SHEETS.

1.7 COORDINATE FINISHED FLOOR DATUM ELEVATION 0.0m WITH THE CIVIL SHEETS.

2.0 FOUNDATION NOTES

2.1 THE GEOTECHNICAL ANALYSIS FOR THIS PROJECT IS THE RESPONSIBILITY OF THE CONTRACTOR AWARDED THE WORK. AN ASSUMED ALLOWABLE SOIL BEARING VALUE OF 72 kPa HAS BEEN USED IN THE STRUCTURAL ANALYSIS OF THE BUILDING HEREIN AND SHALL BE CONFIRMED AND VERIFIED AS PART OF THE GEOTECHNICAL INVESTIGATION. VALUES WHICH DO NOT MEET THE REQUIREMENTS INDICATED ON THE BASIS OF DESIGN SHEET SHALL BE IMMEDIATELY BROUGHT TO THE ATTENTION OF THE CONTRACTING OFFICER FOR CONSIDERATION AND DETERMINATION ON THE NEXT APPROPRIATE COURSE OF ACTION.

2.2 SEE THE SPECIFICATION FOR ADDITIONAL REQUIREMENTS TO THOSE OUTLINED IN THE GEOTECHNICAL INVESTIGATION FOR EXCAVATION AND PREPARATION OF THE FOUNDATION AND THE SLAB ON GRADE SUBGRADE INCLUDING COMPACTION PROCEDURES.

2.3 EXCAVATIONS FOR FOOTINGS SHALL HAVE THE SIDES AND BOTTOMS TEMPORARILY LINED WITH 0.25mm POLYETHYLENE IF PLACEMENT OF CONCRETE DOES NOT OCCUR WITHIN 24 HRS OF THE EXCAVATION OF THE FOOTING.

2.4 FOUNDATION CONDITIONS NOTED DURING CONSTRUCTION WHICH DIFFER FROM THOSE DESCRIBED IN THE GEOTECHNICAL REPORT SHALL BE REPORTED TO THE GENERAL CONTRACTOR BEFORE FURTHER CONSTRUCTION IS ATTEMPTED. SEE PROJECT SPECIFICATIONS.

2.5 NO FOOTINGS OR SLABS SHALL BE POURED INTO OR AGAINST SUBGRADE CONTAINING FREE WATER, FROST, ICE OR LOOSE MATERIAL. FROST DEPTH ASSUMED TO BE 800mm.

2.6 ALL SLAB-ON-GRADE, TRENCH BOTTOMS AND OTHER ON-GRADE INTERIOR HORIZONTAL SURFACES SHALL BE PLACED OVER A 0.25mm POLYETHYLENE VAPOR RETARDER OVER A 100mm #57 STONE WATER CAPILLARY BARRIER PLACED ON SUBGRADE PROPERLY PREPARED IN ACCORDANCE WITH THE CONTRACT SPECIFICATIONS. (UON)

2.7 PRIOR TO START OF FOUNDATION OR SLAB-ON-GRADE CONSTRUCTION, EXISTING SUBGRADES SHALL BE COMPACTED TO MINIMUM OF 95% MAXIMUM DRY DENSITY OBTAINED THRU ASTM D 1557 MODIFIED PROCTOR TESTING.

2.8 SEE PLUMBING, ELECTRICAL & CIVIL SHEETS FOR REQUIRED UNDERSLAB UTILITIES.

2.9 SEE ARCHITECTURAL SHEETS FOR ALL WATERPROOFING DETAILS AND MATERIALS.

2.10 IF UNDERMINING OF FOOTINGS OCCURS, FILL VOIDS WITH 18 MPa CONCRETE. DO NOT ATTEMPT TO REPLACE AND RE-COMPACT SOIL.

3.0 CONCRETE

3.1 CONCRETE SHALL HAVE THE UNIT WEIGHT OF 2400 kg/m^3 AND A MINIMUM COMPRESSIVE STRENGTH (f'c) OF 28 MPa AT 28 DAYS. ALL CONCRETE SHALL HAVE A MAXIMUM WATER-CEMENT RATIO OF 0.45. SEE SPECIFICATIONS FOR ADDITIONAL INFORMATION. ENTRAIN AIR TO PRODUCE TOTAL AIR CONTENT ACCORDING TO THE SPECIFICATIONS FOR CONCRETE EXPOSED TO FREEZING TEMPERATURES (EXTERIOR FOOTINGS, SLAB TURNDOWNS, EXTERIOR SLABS AND SLABS-ON-GRADE, EXTERIOR RETAINING WALLS, AND EXTERIOR GRADE BEAMS.)

3.2 NO CALCIUM CHLORIDE SHALL BE USED IN ANY CONCRETE.

3.3 MIXING, TRANSPORTING AND PLACING OF CONCRETE SHALL CONFORM TO ACI 301M-05.

3.4 ALL CONCRETE WORK SHALL CONFORM TO THE REQUIREMENTS OF THE AMERICAN CONCRETE INSTITUTE (ACI) 318M MANUAL (metric), "BUILDING CODE REQUIREMENTS FOR REINFORCED CONCRETE", AND REQUIREMENTS OUTLINED IN THE CONTRACT SPECIFICATIONS. WHEN THERE IS A CONFLICT BETWEEN ACI AND THE SPECIFICATIONS, THE MORE STRINGENT SHALL GOVERN.

3.5 CHAMFER ALL EXPOSED EXTERNAL CORNERS OF CONCRETE WITH 20mm x45 DEGREE CHAMFER UON.

3.6 CONCRETE REINFORCEMENT BARS SHALL CONFORM TO ASTM A615M-96a, GRADE 420 MPa, REINFORCING BARS SHALL NOT BE TACK WELDED, WELDED, HEATED OR CUT, UNLESS INDICATED ON THE CONTRACT DOCUMENTS. ALL LAP SPLICES SHALL BE CLASS "B" UON.

3.7 HORIZONTAL FOOTING AND HORIZONTAL WALL REINFORCEMENT SHALL BE CONTINUOUS AND SHALL HAVE 90 DEGREE BENDS AND EXTENSIONS, OR CORNER BARS OF EQUIVALENT SIZE LAPPED WITH A CLASS B TENSION SPLICE AT CORNERS AND INTERSECTIONS. TOP BAR CRITERIA SHALL APPLY IF 300mm OR MORE OF FRESH CONCRETE IS PLACED BELOW BAR.

3.8 SLABS-ON-GRADE SHALL HAVE CONSTRUCTION JOINTS OR CRACK CONTROL JOINTS AS SHOWN ON THE DRAWINGS. CONSTRUCTION JOINTS CAN BE USED AT CONTROL JOINT LOCATIONS AT CONTRACTORS OPTION. SEE SLAB PLANS & JOINT DETAILS FOR ADDITIONAL INFORMATION. FOR AREAS NOT SHOWN ON DWGS, THE MAXIMUM SPACING OF CONSTRUCTION/ CRACK CONTROL JOINTS SHALL BE 4800mm

3.9 ALL CONCRETE REINFORCEMENT SHALL BE DETAILED, FABRICATED, LABELED, SUPPORTED, AND SPACED IN FORMS AND SECURED IN PLACE IN ACCORDANCE WITH THE PROCEDURES AND REQUIREMENTS OUTLINED IN THE LATEST EDITION OF THE "BUILDING CODE REQUIREMENTS FOR REINFORCED CONCRETE", ACI 318M, AND THE "MANUAL OF STANDARD PRACTICE FOR DETAILING REINFORCED CONCRETE STRUCTURES", ACI 315M, LATEST EDITION. BASED ON IN COUNTRY REINFORCEMENT AVAILABILITY, IT IS THE CONTRACTOR'S OPTION TO ROUND DESIGNATED ODD NUMBERED REINFORCEMENT SIZES UP (1) ONE BAR SIZE.

3.10 ALL DOWELS SHALL MATCH SIZE AND NUMBER OF MAIN REINFORCING, UNLESS NOTED OTHERWISE ON THE SHEETS.

3.11 ADDITIONAL BARS SHALL BE PROVIDED AROUND ALL FLOOR AND WALL OPENINGS AS SHOWN ON THE SHEETS.

3.12 SEE ARCHITECTURAL SHEETS FOR TYPE AND LOCATION OF ALL FLOOR FINISHES.

3.13 THE CONTRACTOR SHALL COORDINATE ADDITIONAL WALL/SLAB OPENINGS NOT SHOWN ON STRUCTURAL SHEETS. SEE MECHANICAL, ELECTRICAL, PLUMBING AND CIVIL SHEETS.

3.14 UNLESS NOTED OTHERWISE, ALL CURBS SHALL BE REINFORCED WITH AT LEAST (1)-#13 CONTINUOUS AND #13 AT 300mm O.C. DOWELS TO STRUCTURE BELOW.

3.15 THE CONTRACTOR SHALL VERIFY ALL OPENINGS, PAD SIZES, AND ANCHOR BOLTS WITH EQUIPMENT SELECTED.

3.16 FOR ALL WALLS & PIERS, PROVIDE DOWELS INTO FOOTING AT EACH VERT REINF BAR, UON DOWEL SIZE SHALL BE SAME AS VERT REINF.

3.17 PROVIDE CONCRETE POUR STOPS OR FORMED AS REQUIRED FOR INSTALLATION OF ALL CONCRETE WORK.

3.18 PROVIDE ADDITIONAL (2)-#13 x 600mm REINFORCING BARS IN SLAB-ON GRADE AT ALL RE-ENTRANT CORNERS. PLACE BARS AT MID-DEPTH OF SLAB WITH A CLEARANCE OF 50mm FROM CORNER UON.

3.19 COLD-WEATHER PLACEMENT: COMPLY WITH ACI 306.1 AND AS FOLLOWS. PROTECT CONCRETE WORK FROM PHYSICAL DAMAGE OR REDUCED STRENGTH THAT COULD BE CAUSED BY FROST, FREEZING ACTIONS, OR LOW TEMPERATURES. SUBMIT A COLD WEATHER CONCRETING PLAN FOR APPROVAL.

3.20 PROVIDE BONDING COMPOUND PER ASTM C 1059-99: SPECIFICATION FOR LATEX AGENTS FOR BONDING FRESH CONCRETE (GROUT) TO HARDENED CONCRETE.

3.21 THE FORMED SURFACES FOR REINFORCED CONCRETE SHALL ACHIEVE A "CLASS A" FINISH WHEN RECEIVING PAINT OR A "CLASS B" FINISH WHEN RECEIVING PLASTER OR TILE AS PER SPECIFICATION SECTION 03 31 00 CAST-IN-PLACE STRUCTURAL CONCRETE.

3.22 AT INTERSECTING GRADE BEAMS AND SHEAR WALLS, PROVIDE CORNER BARS AT INTERSECTIONS WITH SAME QUANTITY, SIZE AND SPACING AS HORIZONTAL BARS WITH LEG LENGTH = 50db.

4.0 CONCRETE MASONRY

4.1 MASONRY CONSTRUCTION SHALL CONFORM TO SPECIFICATION FOR MASONRY STRUCTURES (ACI 530.1) UON.

4.2 STRENGTH OF MASONRY MATERIALS SHALL BE AS FOLLOWS:

a. CONCRETE MASONRY UNITS SHALL BE NORMAL WEIGHT, GRADE N, TYPE 1, CONFORMING TO ASTM C-90 AND HAVE A MINIMUM COMPRESSIVE STRENGTH OF 10.4 MPa ON THE NET AREA.

b. MORTAR SHALL CONFORM TO ASTM C-270 TYPE S.

c. GROUT FOR MASONRY SHALL BE NORMAL WEIGHT AND HAVE A MINIMUM COMPRESSIVE STRENGTH OF 14 MPa AT 28 DAYS. GROUT SHALL CONFORM TO ASTM C476M. GROUT LIFTS SHALL NOT EXCEED 1,400mm.

d. REINFORCED MASONRY SHALL HAVE A STRENGTH F'm = 10 MPa. (F'm IS THE COMPRESSIVE STRENGTH OF THE MASONRY AT 28 DAYS AS DETERMINED BY PRISM TESTS).

4.3 ALL VERTICAL REINFORCEMENT FOR CONCRETE MASONRY SHALL BE ASTM A615M, GRADE 420 MPa. ALL SPLICES SHALL BE LAPPED 48 BAR DIAMETERS MINIMUM.

4.4 BOND BEAMS SHALL BE SPACED AT 1200mm OC MAXIMUM VERTICALLY. BOND BEAM REINFORCING SHALL BE CONTINUOUS AND PROVIDED AT WALL INTERSECTIONS AND WALL CORNERS (REFERENCE CONCRETE MASONRY NOTE 4.11). ALL BOND BEAM REINFORCING SHALL BE CONTINUOUS AND HAVE STANDARD ACI HOOKS AT EACH END. PROVIDE STANDARD BAR SPLICES AS SPECIFIED. AS AN ALTERNATE TO CMU BOND BEAMS, IT IS THE CONTRACTOR'S OPTION TO PROVIDE 200mm x 200mm CONTINUOUS CAST-IN-PLACE CONCRETE BOND BEAMS WITH (2)-#16 IN LIEU OF CMU BOND BEAMS INDICATED ON THE DRAWINGS.

4.5 SEE TYPICAL DETAILS FOR MINIMUM REINFORCEMENT REQUIREMENTS FOR CMU WALLS. PROVIDE STANDARD BAR SPLICES AS SPECIFIED. ALL VERTICAL REINFORCEMENT EXTENDS FULL HEIGHT OF WALL.

4.6 CMU CELLS THAT REQUIRE VERTICAL REINFORCING BARS AS INDICATED ON THE CONTRACT DRAWINGS AND/OR SPECS SHALL HAVE REINF BARS PLACED IN CENTERS OF CMU CELLS AND CONTINUOUSLY GROUTED UON.

4.7 ALL CMU CELLS, OPEN CAVITIES, AND AIR SPACES OF ALL EXTERIOR WALLS SHALL BE GROUTED TO STOP FRAGMENTS FROM MORTAR BLAST.

4.8 CONTRACTOR SHALL COORDINATE LOCATION OF ALL OPENINGS SEE ARCH, MECH, ELEC, AND PLUMBING SHEETS FOR SIZE AND LOCATION OF OPENINGS.

4.9 MASONRY WALLS SHALL NOT BE BACK FILLED PRIOR TO THE MORTAR AND GROUT ATTAINING THEIR RESPECTIVE MAXIMUM DESIGN STRENGTHS PER SPECIFICATIONS.

4.10 PROVIDE GALVANIZED MORTAR/GROUT SCREEN W/ 3mm MESH WHERE CELLS BELOW ARE NOT GROUTED.

4.11 AT INTERSECTING BOND BEAMS, PROVIDE CORNER BAR FOR EACH HORIZONTAL BAR IN BOND BEAMS AT INTERSECTING WALLS. USE SAME SIZE AND SPACING AS HORIZONTAL BARS WITH LEG LENGTH = 50db.

4.12 THE ALTERNATE TOP OF CMU WALL BRACING DETAIL(S) SHOWN ON S-701 CAN BE UTILIZED AT THE CONTRACTOR'S OPTION IN PLACE OF THE "SLEEVED DOWEL" WALL CONNECTIONS DEPICTED ON S-400 AND S-500 SERIES DRAWINGS. IN ADDITION, ALTERNATE DETAIL(S) SHOW CAST-IN-PLACE WALL BOND BEAMS THAT CAN BE UTILIZED AT THE CONTRACTOR'S OPTION IN PLACE OF THE STANDARD CMU BOND BEAMS CONSTRUCTED OF CMU BLOCKS.

5.0 COLD-FORMED METAL FRAMING

5.1 ALL COLD-FORMED METAL FRAMING MEMBERS SHALL CONFORM TO ASTM A1003M, STRUCTURAL GRADE ST340 (MPa), WITH A GALVANIZED COATING OF Z275 OR BETTER IN ACCORDANCE WITH ASTM A653M.

5.2 ALL COLD-FORMED METAL FRAMING MEMBERS SHALL HAVE THE FOLLOWING MINIMUM PROPERTIES:

a. MINIMUM METAL THICKNESS:
TRACK = 1.37mm;
STUD/OTHER = 1.09mm

b. MINIMUM FLANGE WIDTH:
TRACK = 38mm;
STUD/OTHER = 35mm

c. MINIMUM MEMBER DEPTH:
ALL SECTIONS = 152.2mm

d. PURLIN (HAT CHANNEL)
DEPTHxWIDTH(FLAT TOP)xTHICK = 25mmx42mmx1.59mm

5.3 ALL CONNECTIONS SHALL BE MADE WITH CORROSION RESISTANT (ASTM A153M), SELF-DRILLING, SELF-TAPPING STEEL DRILL SCREWS IN ACCORDANCE WITH ASTM C1513. SCREWS SHALL HAVE A LOW PROFILE HEAD BENEATH ROOF DECK, AND STANDARD HEAD ALL OTHER LOCATIONS.

5.4 FABRICATE COLD FORMED METAL FRAMING AND ACCESSORIES PLUMB, SQUARE AND TRUE TO LINE, WITH CONNECTIONS SECURELY FASTENED ACCORDING TO AISI STANDARD FOR COLD FORMED STEEL FRAMING.

5.5 CUT FRAMING MEMBERS BY SAWING OR SHEATHING, DO NOT TORCH CUT.

5.6 INSTALL FRAMING MEMBERS IN ONE-PIECE LENGTHS UNLESS SPLICE CONNECTIONS ARE INDICATED FOR TRACK OR TENSION MEMBERS

5.7 INSTALL TEMPORARY BRACING AND SUPPORTS TO SECURE FRAMING DURING CONSTRUCTION. MAINTAIN BRACING AND SUPPORTS IN PLACE UNTIL THE STRUCTURE HAS BEEN COMPLETED WITH ALL CONNECTIONS AND PERMANENT BRACING SECURED.

6.0 STRUCTURAL DESIGN CRITERIA

6.1 ALL DESIGNS SHALL CONFORM TO THE PROVISIONS OF THE IBC 2006 AND UFC AS APPLICABLE.

6.2 DESIGN LOADS

6.2.1 DEAD LOADS (PER IBC 2006 & UFC 3-310-01)

MECH/ELEC/PLUMBING	0.20 kPa
MISCELLANEOUS	0.15 kPa
COLD-FORMED FRAMING	0.20 kPa
INSULATION	0.10 kPa
METAL ROOF PANEL	0.14 kPa
	0.79 kPa

6.2.2 LIVE LOADS (PER IBC 2006 & UFC 3-310-01)

ROOF	1.00 kPa
SLAB ON GRADE	4.80 kPa

6.2.3 SNOW LOADS (PER IBC 2006 & UFC 3-310-01)

GROUND SNOW LOAD (Pg)	1.2 kPa
SLOPED ROOF SNOW LOAD (Ps)	0.84 KPa
SNOW IMPORTANCE FACTOR (I)	1.0
SNOW EXPOSURE FACTOR (Ce)	1.0
THERMAL FACTOR (Ct)	1.0

6.2.4 WIND LOADS (PER IBC 2006)

BASIC WIND SPEED	137 km/h
WIND IMPORTANCE FACTOR	1.0
WIND EXPOSURE CATEGORY	D
DIRECTIONALITY COEFFICIENT (Kd)	0.85
TOPOGRAPHIC FACTOR (Kzt)	1.0
WIND BASE SHEAR: E-W	16.0 kN
WIND BASE SHEAR: N-S	16.0 kN

6.2.5 SEISMIC LOADS (PER IBC 2006 & UFC 3-310-04)

OCCUPANCY USE CATEGORY	II
SEISMIC IMPORTANCE FACTOR (Ie)	1.0
SEISMIC SITE CLASS	D
S_s = 2.4	
S_1 = 1.20	
S_{DS} = 1.6	
S_{D1} = 1.20	
SEISMIC DESIGN CATEGORY	E
SEISMIC RESISTING SYSTEM: -SPECIAL REINFORCED CONCRETE SHEAR WALL (TYPE B.5 PER ASCE TABLE 12.2-1)	
RESPONSE MODIFICATION FACTOR (R)	6
RESPONSE COEFFICIENT (Cs)	0.267
SEISMIC ANALYTICAL PROCEDURE =	EQUIV LATERAL FORCE
SEISMIC BASE SHEAR	360 kN

APPROVED:

A/E DESIGNER OF RECORD

SEAL:

GEORGIA REGISTERED 8/25/10 No. 27141 PROFESSIONAL ENGINEER CHRISTOPHER W. WHITMORE

US ARMY CORPS OF ENGINEERS
AFGHANISTAN ENGINEER DISTRICT

Mark	Description	Date	Appr.

Date: 8/16/10
Rev: 0
Design file no.
Drawing code:
Ckd by: CWW
File name: ANAFRUS-S01GN
Plot date: 8/24/2010
Plot scale: X:X

Designed by: KMP
Dwn by: RCG
Ckd by: CWW
Reviewed by: LHM
Submitted by: BAKER

U.S. ARMY CORPS OF ENGINEERS
AFGHANISTAN ENGINEER DISTRICT
APO AE 96338

Michael Baker Jr., Inc
A unit of Michael Baker Corporation
Airside Business Park
100 Airside Drive
Moon Township, PA 15108
www.mbakercorp.com

AFGHAN NATIONAL ARMY
STANDARD DESIGN

FAMILY RESPONSE UNIT OFFICES (STAND ALONE)

GENERAL NOTES & DESIGN CRITERIA

Sheet reference number:
S-001

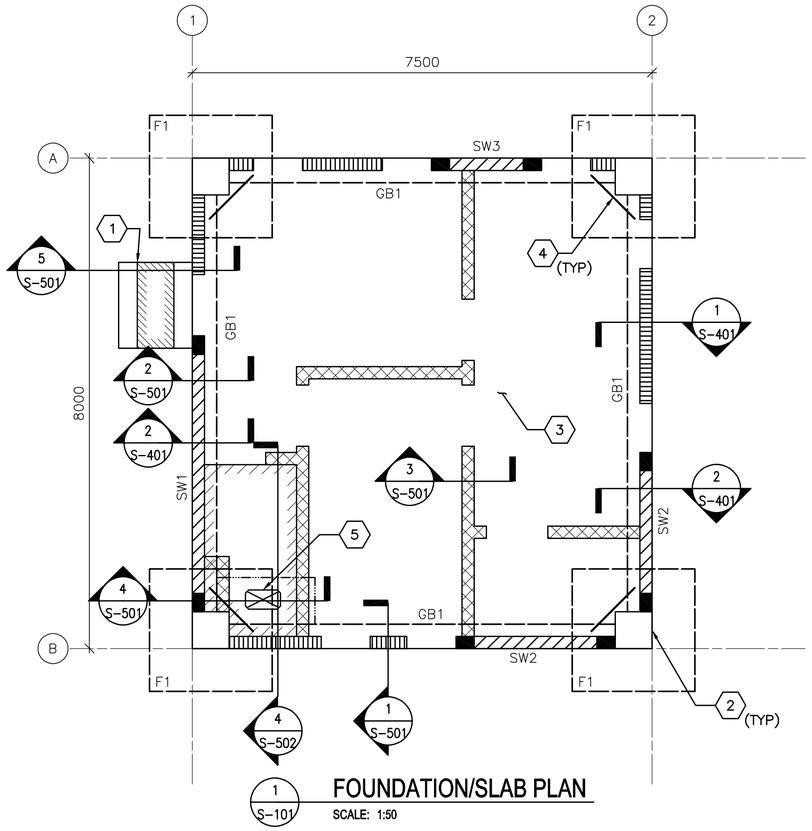

1 S-101 **FOUNDATION/SLAB PLAN**
SCALE: 1:50

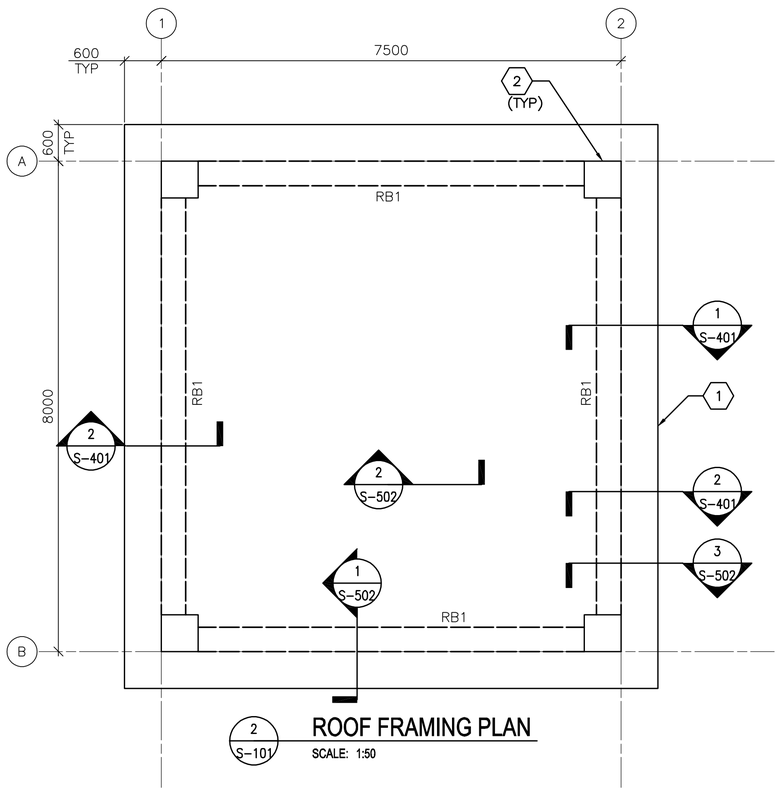

2 S-101 **ROOF FRAMING PLAN**
SCALE: 1:50

FOUNDATION/SLAB PLAN NOTES:

1. REFER TO SHEET S-001 FOR STRUCTURAL NOTES AND DESIGN CRITERIA.
2. FINISH FIRST FLOOR ELEVATION SHALL BE (DATUM 0.00) ALL PLUS OR MINUS DIMENSIONS INDICATED ON PLAN OR REFERRED TO IN NOTES RELATE TO FINISH FLOOR ELEVATION.
3. SLAB-ON-GRADE IS 150 WITH #13 @ 300 OC EW LOCATED 38 FROM T/SLAB.
4. TOP OF EXTERIOR FOOTINGS SHALL BE -950 UNLESS OTHERWISE INDICATED.
5. COLUMN FOOTINGS INDICATED BY F# ON PLAN. REFER TO COLUMN FOOTING SCHEDULE ON SHEET S-601.
6. REFER TO COLUMN SCHEDULE ON SHEET S-601.
7. GRADE BEAM INDICATED BY GB# ON PLAN, REFER TO BEAM SCHEDULE ON SHEET S-601.
8. SHEARWALL INDICATED BY SW# ON PLAN, REFER TO SHEARWALL SCHEDULE ON SHEET S-601.
9. SEE TYP EXTERIOR CMU WALL DETAIL ON SHEET S-701.
10. SEE MECHANICAL AND ELECTRICAL SHEETS FOR CONCRETE PAD LOCATIONS, SIZES, AND THICKNESS NOT SHOWN. SEE SHEET S-701 FOR DETAILS.
11. THICKENED SLAB UNDER PERIMETER CMU WALLS NOT SHOWN FOR CLARITY.

FOUNDATION/SLAB PLAN KEY NOTES: (X)

1. CONC PAD (ENTRANCE)-SEE ARCH DWGS FOR INFORMATION
2. REINF CONC COLUMN
3. REINF CONC SLAB-ON-GRADE
4. (2)-#13 RE-ENTRANT CORNER BARS - SEE S-701 FOR INFORMATION
5. SLAB OPENING - COORD W/ ARCH & MECH SHEETS

FOUNDATION/SLAB PLAN LEGEND:

- REINF CONC SHEAR WALL
- REINF CONCRETE INFILL WALL
- REINF CMU WALL
- INDICATES DROP SLAB 65 BELOW FINISH FLOOR
- INDICATES DROP SLAB FOR DOOR STOOP 2/A-503
- SLAB OPENING
- OUTLINE OF THICKENED SLAB AREAS

ROOF FRAMING PLAN NOTES:

1. REFER TO SHEETS S-001 FOR STRUCTURAL NOTES AND BASIS OF DESIGN.
2. TOP OF SLAB ELEVATION = 3600 UNLESS NOTED OTHERWISE.
3. ROOF SLAB IS 200 WITH #16 @ 300 OC EW T&B.
4. ROOF BEAM INDICATED BY RB# ON PLAN. REFER TO BEAM SCHEDULE ON SHEET S-601.
5. COORDINATE WITH ARCHITECTURAL SHEETS FOR COLD-FORMED STEEL OVERBUILD FRAMING ABOVE ROOF SLAB.
6. COLD-FORMED METAL OVERBUILD ROOF FRAMING NOT SHOWN FOR CLARITY. SEE OVERBUILD ROOF FRAMING DETAILS AND SECTIONS ON SHEET S-702.
7. OVERHANG AREAS OF ROOF SLAB CONTAIN ROOF VENT PENETRATIONS. REFERENCE ARCHITECTURAL DRAWINGS FOR INFORMATION.

ROOF FRAMING PLAN KEY NOTES: (X)

ROOF FRAMING PLAN:
1. CONC ROOF SLAB (BELOW ROOF OVERBUILD)
2. REINF CONC COLUMN (BELOW CONC ROOF SLAB)

0 1000 2000
SCALE: 1:50

UNLESS OTHERWISE NOTED, LINEAR DIMENSIONS SHOWN ON DRAWINGS ARE IN MILLIMETERS (mm)

APPROVED:

A/E DESIGNER OF RECORD

SEAL:

GEORGIA REGISTERED 8/23/10 No. 27141 PROFESSIONAL ENGINEER CHRISTOPHER W. WHITMORE

US ARMY CORPS OF ENGINEERS
AFGHANISTAN ENGINEER DISTRICT

Mark	Description	Date	Appr.

Date: 8/16/10
Rev: 0
Design file no.
Drawing code:
File name: ANAFRUS-101FFP
Plot date: 8/24/2010
Plot scale: x:X

Designed by: KMP/MMY
Dwn by: RCG
Ckd by: CWW
Reviewed by: LHM
Submitted by: BAKER

U.S. ARMY CORPS OF ENGINEERS
AFGHANISTAN ENGINEER DISTRICT
APO AE 96338

Michael Baker Jr., Inc
A unit of Michael Baker Corporation
Airside Business Park
100 Airside Drive
Moon Township, PA 15108
www.mbakercorp.com

AFGHAN NATIONAL ARMY
STANDARD DESIGN
FAMILY RESPONSE UNIT OFFICES (STAND ALONE)

FOUNDATION/SLAB & ROOF FRAMING PLAN

Sheet reference number:
S-101

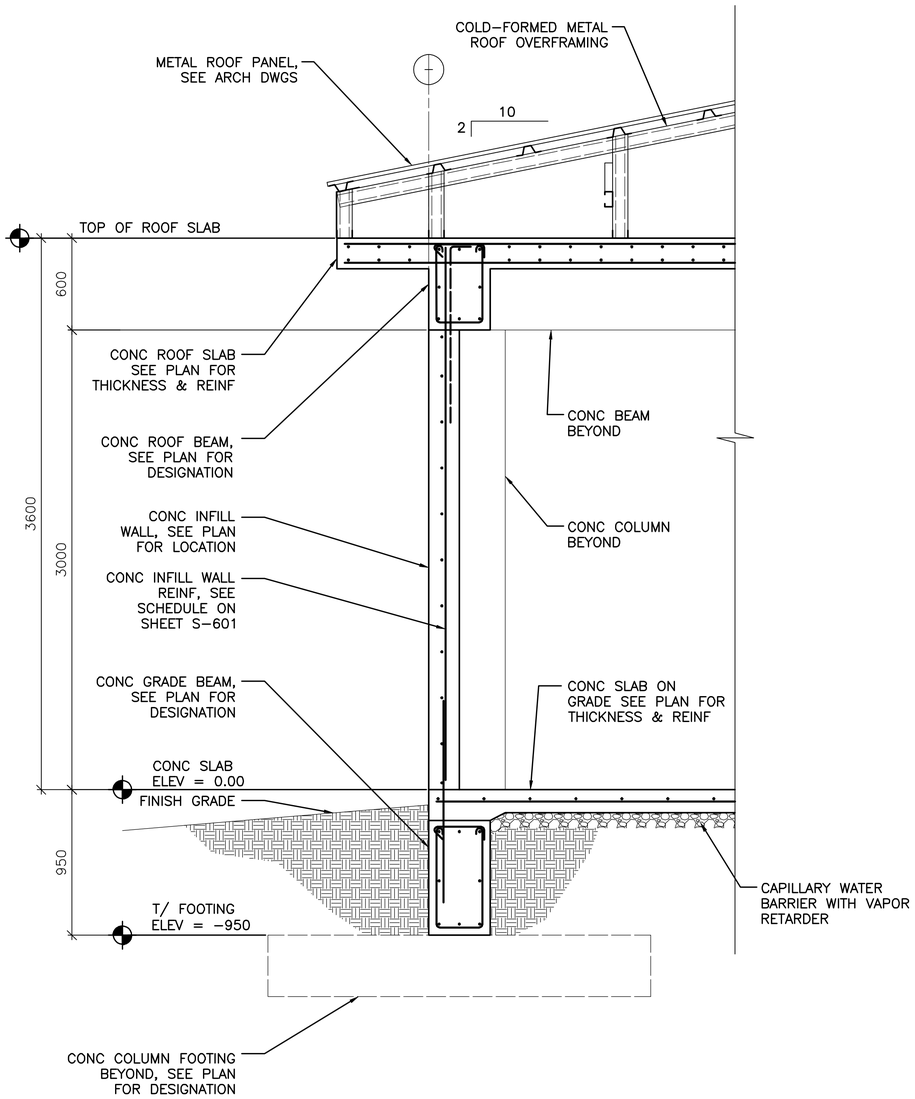

1 S–101 **TYPICAL WALL SECTION AT CONCRETE INFILL WALL**

SCALE: 1:20

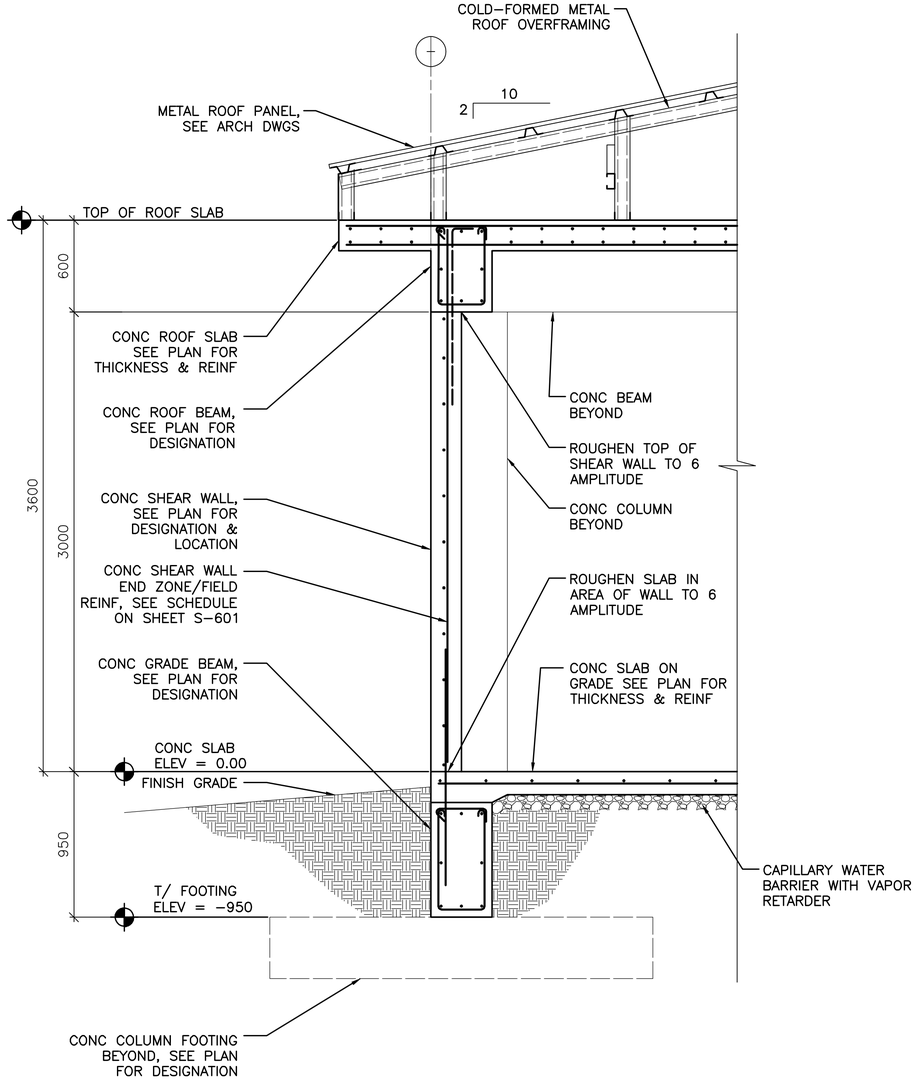

2 S–101 **TYPICAL WALL SECTION AT CONCRETE SHEAR WALL**

SCALE: 1:20

0 400 800

SCALE: 1:20

UNLESS OTHERWISE NOTED, LINEAR DIMENSIONS SHOWN ON DRAWINGS ARE IN MILLIMETERS (mm)

APPROVED:

A/E DESIGNER OF RECORD

SEAL:

GEORGIA REGISTERED 8/23/10 No. 27141 PROFESSIONAL ENGINEER CHRISTOPHER W. WHITMORE

US ARMY CORPS OF ENGINEERS
AFGHANISTAN ENGINEER DISTRICT

Mark	Description	Date	Appr.

Rev: 0
Date: 8/16/10
Design file no.
Drawing code:
File name: ANAFRUS-401BS
Plot date: 8/24/2010
Plot scale: x:x

Designed by: KMP
Dwn by: RCG
Ckd by: CWW
Reviewed by: LHM
Submitted by: BAKER

U.S. ARMY CORPS OF ENGINEERS
AFGHANISTAN ENGINEER DISTRICT
APO AE 96338

Michael Baker Jr., Inc
A unit of Michael Baker Corporation
Airside Business Park
100 Airside Drive
Moon Township, PA 15108
www.mbakercorp.com

AFGHAN NATIONAL ARMY
STANDARD DESIGN

FAMILY RESPONSE UNIT OFFICES (STAND ALONE)

BUILDING SECTIONS

Sheet reference number:
S–401

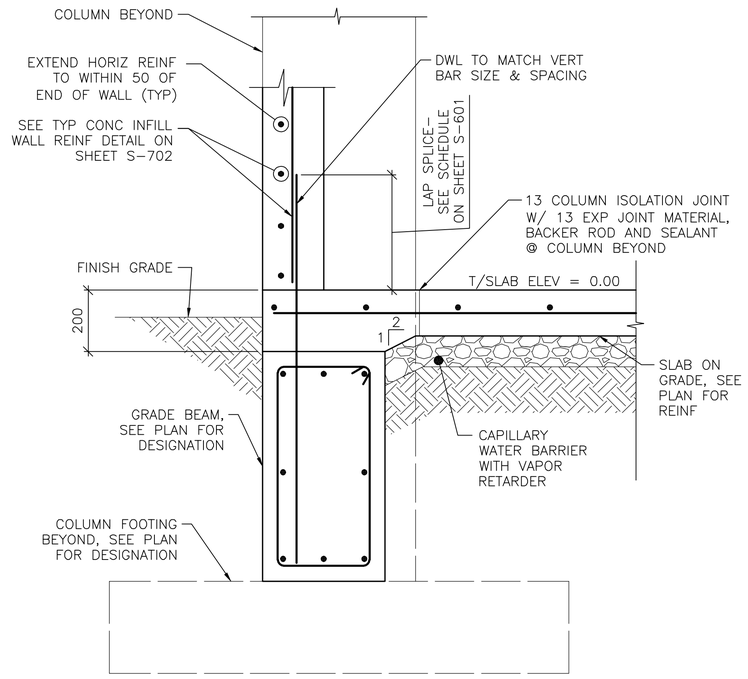

1 S-101 **SECTION**
SCALE: 1:10

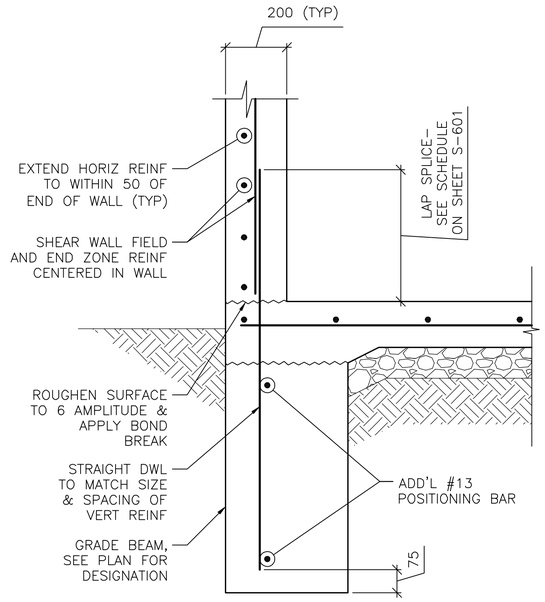

NOTE:
1. SECTION DEPICTS SHEAR WALL TERMINATION ONLY. GRADE BEAM REINFORCING NOT SHOWN FOR CLARITY.
2. SEE SHEET S-601 AND SHEET S-702 FOR SCHEDULED FIELD AND END ZONE REINF.

2 S-101 **SECTION**
SCALE: 1:10

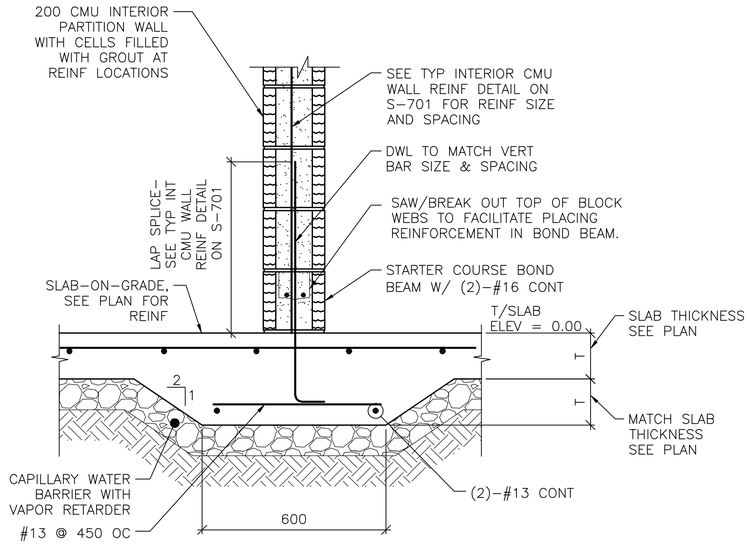

3 S-101 **SECTION**
SCALE: 1:10

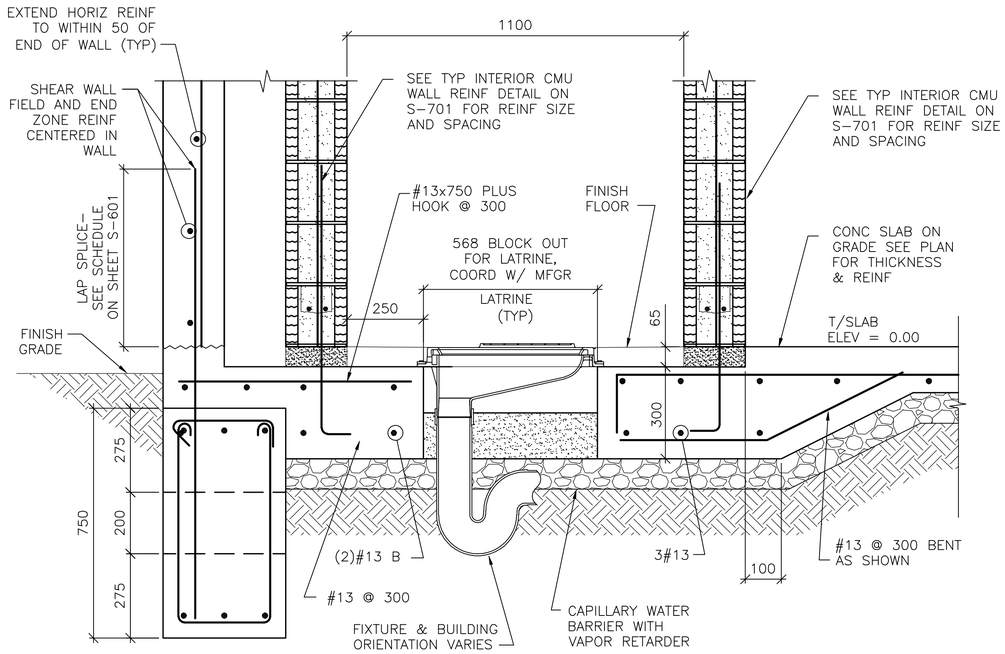

4 S-101 **SECTION**
SCALE: 1:10

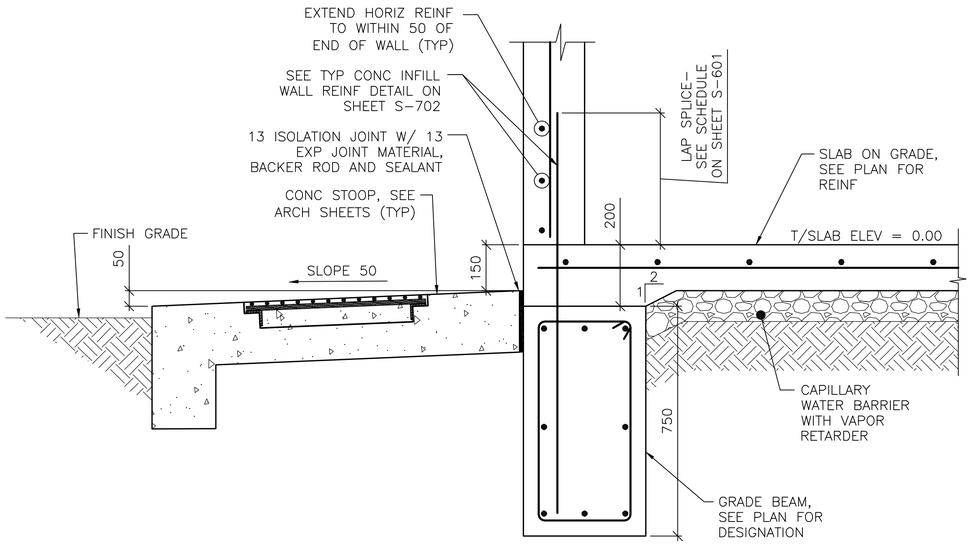

5 S-101 **SECTION**
SCALE: 1:10

0 200 400
SCALE: 1:10

UNLESS OTHERWISE NOTED, LINEAR DIMENSIONS SHOWN ON DRAWINGS ARE IN MILLIMETERS (mm)

APPROVED:

A/E DESIGNER OF RECORD

SEAL:

GEORGIA REGISTERED 8/23/10 No. 27141 PROFESSIONAL ENGINEER CHRISTOPHER W. WHITMORE

US ARMY CORPS OF ENGINEERS
AFGHANISTAN ENGINEER DISTRICT

Mark	Description	Date	Appr.

Date: 8/16/10
Design file no.
Drawing code:
Rev: 0
File name: ANAFRUS-601SC
Plot date: 8/24/2010
Plot scale: x:x

Designed by: KMP
Dwn by: RCG
Ckd by: CWW
Reviewed by: LHM
Submitted by: BAKER

U.S. ARMY CORPS OF ENGINEERS
AFGHANISTAN ENGINEER DISTRICT
APO AE 96338

Michael Baker Jr., Inc
A unit of Michael Baker Corporation
Airside Business Park
100 Airside Drive
Moon Township, PA 15108
www.mbakercorp.com

AFGHAN NATIONAL ARMY
STANDARD DESIGN
FAMILY RESPONSE UNIT OFFICES (STAND ALONE)

FOUNDATION SECTIONS

Sheet reference number:
S-501

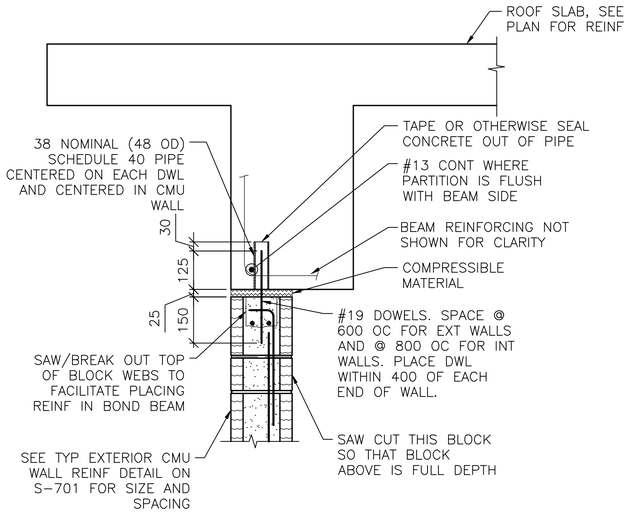

NOTES:
1. EXTEND DOWEL REINF TO 25 CLEAR FROM TOP OF CMU WALL.

1 S-101 **SECTION**
SCALE: 1:10

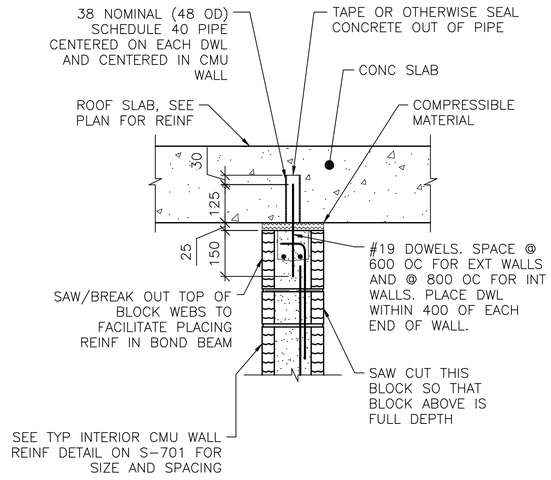

NOTES:
1. EXTEND DOWEL REINF TO 25 CLEAR FROM TOP OF CMU WALL.
2. SLAB REINF NOT SHOWN FOR CLARITY.

2 S-101 **SECTION**
SCALE: 1:10

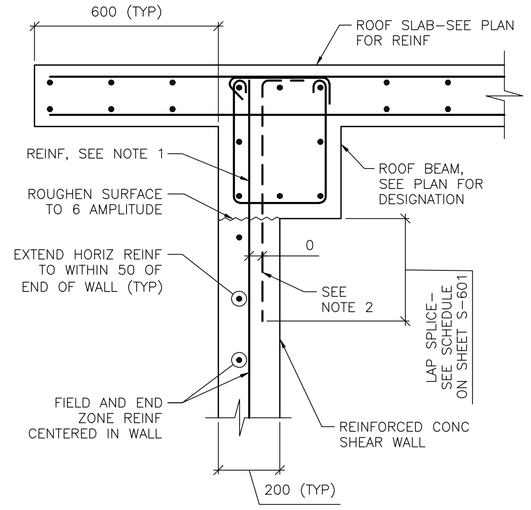

NOTES:
1. TERMINATE "FIELD" VERT REINF & END ZONE REINF @ 50 CLEAR FROM TOP OF ROOF SLAB.
2. WHERE END ZONE REINFORCING CANNOT BE DEVELOPED IN BEAM DEPTH, PROVIDE HOOKED DWLS SAME SIZE & SPACING. PROVIDE TENSION LAP BELOW ROOF BEAM.
3. SEE SHEET S-601 AND SHEET S-702 FOR SCHEDULED FIELD AND END ZONE REINF.

3 S-101 **SECTION**
SCALE: 1:10

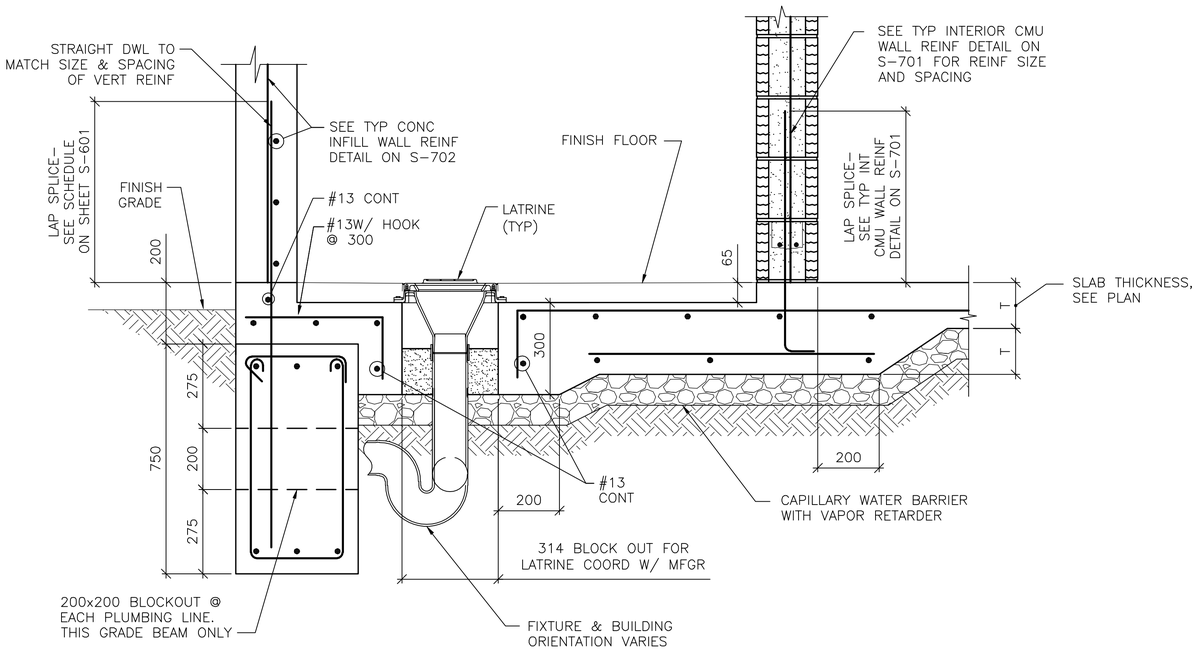

4 S-101 **SECTION**
SCALE: 1:10

0 200 400
SCALE: 1:10

UNLESS OTHERWISE NOTED, LINEAR DIMENSIONS SHOWN ON DRAWINGS ARE IN MILLIMETERS (mm)

APPROVED:

A/E DESIGNER OF RECORD

SEAL:

GEORGIA REGISTERED 8/23/10 No. 27141 PROFESSIONAL ENGINEER CHRISTOPHER W. WHITMORE

US ARMY CORPS OF ENGINEERS
AFGHANISTAN ENGINEER DISTRICT

Mark	Description	Date	Appr.

Date: 8/16/10
Design file no.
Drawing code:
Rev: 0
File name: ANAFRUS-6025C
Plot date: 8/24/2010
Plot scale: x:x

Designed by: KMP
Dwn by: RCG
Ckd by: CWW
Reviewed by: LHM
Submitted by: BAKER

U.S. ARMY CORPS OF ENGINEERS
AFGHANISTAN ENGINEER DISTRICT
APO AE 96338

Michael Baker Jr., Inc.
A unit of Michael Baker Corporation
Airside Business Park
100 Airside Drive
Moon Township, PA 15108
www.mbakercorp.com

AFGHAN NATIONAL ARMY
STANDARD DESIGN

FAMILY RESPONSE UNIT OFFICES (STAND ALONE)

FOUNDATION & FRAMING SECTIONS

Sheet reference number:
S-502

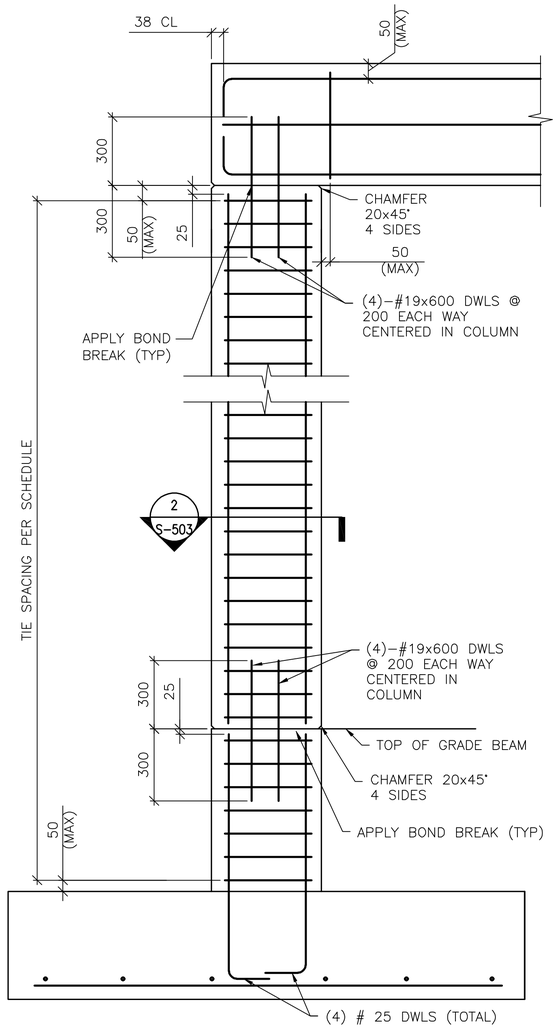

DETAIL NOTE:
1. ONLY COLUMN CORNER BARS ARE SHOWN

1 S-503 **1-STORY COLUMN REINF DETAILS**
SCALE: NTS
(WITH GRADE BEAM)

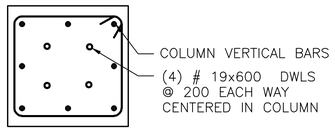

2 S-503 **SECTION**
SCALE: NTS

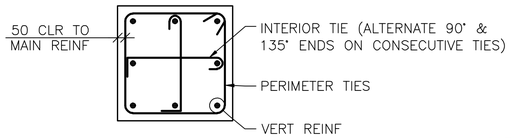

A S-503 **8 BAR COLUMN**
SCALE: NTS

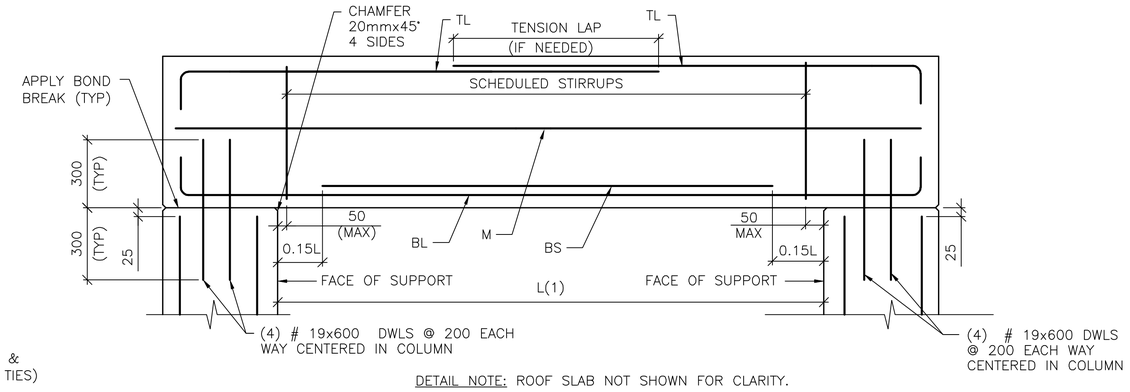

DETAIL NOTE: ROOF SLAB NOT SHOWN FOR CLARITY.

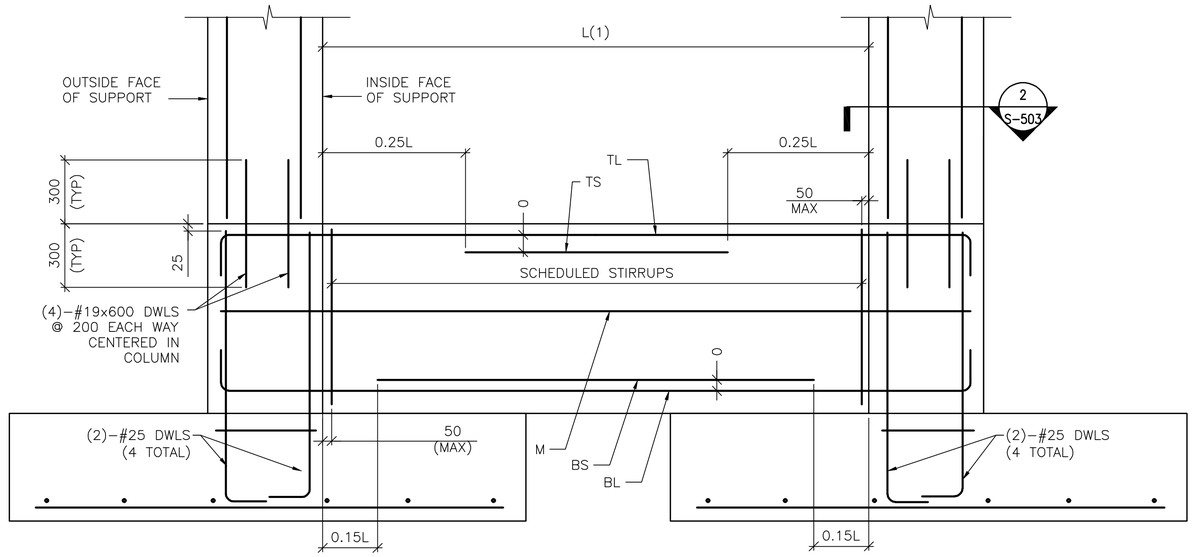

DETAIL NOTE:
1. WORK THIS DETAIL WITH BEAM SCHEDULE ON SHEET S-601.
2. L=GREATEST OF ADJACENT SPANS L(1) OR L(2)
3. ONLY COLUMN CORNER BARS ARE SHOWN.

3 S-503 **SINGLE SPAN FRAME REINFORCING DETAIL**
SCALE: NTS

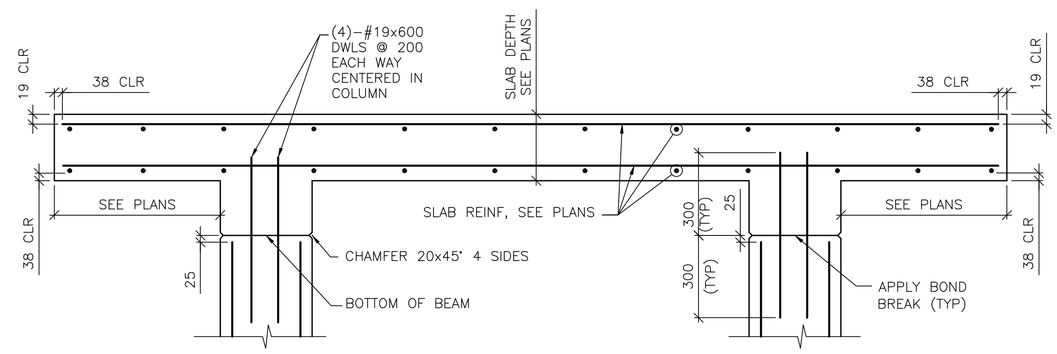

4 S-503 **SINGLE SPAN FRAMED SLAB REINFORCING DETAIL**
SCALE: NTS

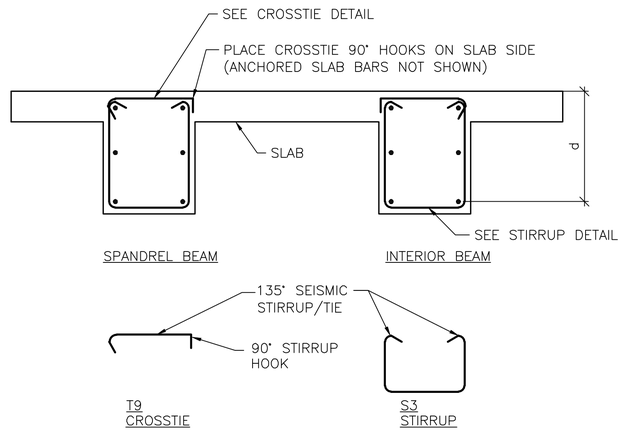

B S-503 **BEAM REINFORCEMENT DETAILS**
SCALE: NTS

UNLESS OTHERWISE NOTED, LINEAR DIMENSIONS SHOWN ON DRAWINGS ARE IN MILLIMETERS (mm)

APPROVED:

A/E DESIGNER OF RECORD

SEAL:

GEORGIA REGISTERED 8/23/10 No. 27141 PROFESSIONAL ENGINEER CHRISTOPHER W. WHITMORE

US ARMY CORPS OF ENGINEERS
AFGHANISTAN ENGINEER DISTRICT

Mark	Description	Date	Appr.

Rev: 0
Date: 8/16/10
Design file no.
Drawing code:
File name: ANAFRUS503T
Plot date: 8/24/2010
Plot scale: x:x

Designed by: KMP
Drwn by: RCG
Ckd by: CWW
Reviewed by: LHM
Submitted by: BAKER

U.S. ARMY CORPS OF ENGINEERS
AFGHANISTAN ENGINEER DISTRICT
APO AE 96338

Michael Baker Jr., Inc
A unit of Michael Baker Corporation
Airside Business Park
100 Airside Drive
Moon Township, PA 15108
www.mbakercorp.com

AFGHAN NATIONAL ARMY
STANDARD DESIGN
FAMILY RESPONSE UNIT OFFICES (STAND ALONE)
BEAM & COLUMN DETAILS

Sheet reference number:
S-503

CONCRETE REINFORCEMENT TENSION DEVELOPMENT/LAP SPLICE SCHEDULE

f'c = 28 MPa	LAP CLASS	UNCOATED BARS			
		TOP BARS		OTHER BARS	
BAR SIZES		CASE 1	CASE 2	CASE 1	CASE 2
#10 TO #19	A	50 BAR DIA	74 BAR DIA	38 BAR DIA	57 BAR DIA
	B	64 BAR DIA	96 BAR DIA	50 BAR DIA	74 BAR DIA
#22 TO #57	A	62 BAR DIA	93 BAR DIA	48 BAR DIA	71 BAR DIA
	B	80 BAR DIA	121 BAR DIA	62 BAR DIA	93 BAR DIA

NOTES:
1. TABULATED TENSION DEVELOPMENT LENGTH VALUES ARE TAKEN FROM CRSI DESIGN HANDBOOK 2008 10TH ED.
2. TENSION DEVELOPMENT & TENSION LAP SPLICE LENGTHS ARE EXPRESSED AS MULTIPLES OF BAR DIAMETERS.
3. TABULATED VALUES ARE BASED ON MINIMUM YIELD STRENGTH OF REINFORCEMENT, fy, OF 420MPa.
4. CONCRETE IS NORMAL WEIGHT (2400Kg/m^3) AND 28 DAY COMPRESSIVE STRENGTH = 28MPa.
5. TABULATED VALUES FOR BEAMS & COLUMNS ARE BASED ON TRANSVERSE REINFORCEMENT AND CONCRETE COVER MEETING MINIMUM CODE REQUIREMENTS.
6. CASES 1 & 2, WHICH DEPEND ON THE TYPE OF STRUCTURAL MEMBER, CONCRETE COVER, AND CENTER-TO-CENTER SPACING OF THE BARS ARE DEFINED IN THE TABLE BELOW.
7. LAP SPLICE LENGTHS (MINIMUM 300mm) ARE MULTIPLES OF TENSION DEVELOPMENT LENGTHS: CLASS A = 1.0(TENSION DEVELOPMENT LENGTH) & CLASS B = 1.3(TENSION DEVELOPMENT LENGTH)
8. TOP BARS ARE HORIZONTAL REINFORCEMENT WITH MORE THAN 300mm OF CONCRETE CAST BELOW THE BARS.
9. IT SHALL BE PERMISSIBLE TO CALCULATE WALL AND SLAB REINFORCEMENT TENSION DEVELOPMENT/SPLICE LENGTHS IN ACCORDANCE WITH ACI 12.2.3 OR TABLE 5.3(b) OF CRSI 2008 IN LIEU OF VALUES TABULATED ABOVE.

BEAMS, COLUMNS	CASE 1	CONCRETE COVER AT LEAST 1 BAR DIA AND CENTER-TO-CENTER SPACING AT LEAST 2 BAR DIA
	CASE 2	CONCRETE COVER LESS THAN 1 BAR DIA OR CENTER-TO-CENTER SPACING LESS THAN 2 BAR DIA
ALL OTHERS	CASE 1	CONCRETE COVER AT LEAST 1 BAR DIA AND CENTER-TO-CENTER SPACING AT LEAST 3 BAR DIA
	CASE 2	CONCRETE COVER LESS THAN 1 BAR DIA OR CENTER-TO-CENTER SPACING LESS THAN 3 BAR DIA

CONCRETE COVER SCHEDULE

MINIMUM CONCRETE COVER PROTECTION FOR REINFORCEMENT BARS SHALL BE AS LISTED BELOW: (SEE ACI 318M-05, SECTION 7.7 FOR CONDITIONS NOT NOTED). DIMENSIONS FOR BAR PLACEMENT GIVEN IN SECTIONS AND DETAILS SHALL SUPERSEDE MINIMUM COVER REQUIREMENTS GIVEN HERE. DIMENSIONS ARE IN mm. PROVIDE STANDARD BAR CHAIRS AND SUPPORT BARS @1200mm MAXIMUM AS REQUIRED TO MAINTAIN CONCRETE PROTECTION SPECIFIED.

FOOTINGS (EARTH FORMED):		70
COLUMNS / PIERS (TO TIES)		40
GRADE BEAMS OR SLAB TURNED DOWN EDGES:		
TOP		40
BOTTOM (EARTH FORMED)		70
SIDES (EARTH FORMED)		70
SIDES (BOARD FORMED)	#16 BAR & SMALLER	40
	#19 THRU #36 BAR	50
ELEVATED BEAMS & SLABS:		
BEAM TIES & STIRRUPS (NOT EXPOSED TO WEATHER)		40
BEAM TIES & STIRRUPS (EXPOSED TO WEATHER)		50
FLOOR SLABS (NOT EXPOSED TO WEATHER)		20
FLOOR SLABS (EXPOSED TO WEATHER)		
#19 & LARGER		50
#13 & SMALLER		40
ROOF SLAB BARS		25
SLABS ON GRADE		
NOT EXPOSED TO WEATHER (FROM TOP)		20
EXPOSED TO WEATHER (FROM TOP)		40
UTILITY TUNNEL WALLS, RETAINING WALLS AND SHEAR WALLS. (NO SURFACES SHALL BE EARTH FORMED)		
EARTH SIDE AND FRONT SIDE (EXPOSED TO WEATHER)		
#16 BAR AND SMALLER		40
#19 THRU #36 BAR		50

COLUMN FOOTING SCHEDULE

MARK	FOOTING SIZE (mm)			FOOTING REINFORCING	REMARKS
	LENGTH	WIDTH	THICKNESS		
F1	2500	2500	300	(10)-#16 EW BOTT	-----

COLUMN SCHEDULE

COLUMN MARK / DESCRIPTION	TYP UON	---	---
TYPE	8-BAR	---	---
DIMENSION	600mm SQ.	---	---
VERTICAL REINFORCEMENT	(8)-#25	---	---
TIES	#13 @ d/2	---	---
TOP OF ROOF ELEVATION	3600mm	---	---
TOP OF GRADE BEAM ELEVATION	-200mm	---	---
TOP OF FOOTING ELEVATION	-950mm	---	---

NOTES:
1. WORK THIS SCHEDULE WITH COLUMN DETAILS ON SHEET S-504.
2. SEE FOOTING SCHEDULE ON THIS SHEET FOR FOOTING INFORMATION.
3. COLUMN TIES: INTERIOR TIES TO MATCH SIZE & SPACING OF PERIMETER TIES.
4. HOOKS SHOWN ON SECTIONS & DETAILS SHALL BE 90° STD UON.

CONCRETE SHEAR WALL SCHEDULE

MARK	TYPE	WALL LENGTH (L) (mm)	WALL REINFORCEMENT		REMARKS
			END ZONE	FIELD	
SW1	B	4500	(4)-#16 @ 150mm OC	#13 @ 300mm OC	-----
SW2	B	2600	(7)-#16 @ 150mm OC	#13 @ 300mm OC	-----
SW3	A	1800	(6)-#16 @ 150mm OC	#13 @ 300mm OC	-----

NOTES:
1. WORK THIS SCHEDULE WITH SHEAR WALL DETAILS ON SHEETS S-702
2. SEE PLAN FOR LOCATION OF SHEAR WALL(S).
3. VERTICAL "FIELD" BARS MAY BE OMITTED IN LOCATION OF "END ZONE" REINFORCEMENT.
4. WALL FIELD REINFORCEMENT LISTED APPLIES TO VERTICAL & HORIZONTAL BARS.
5. WALL FIELD REINFORCEMENT SHOULD BE CENTERED IN WALL.

REINFORCED CONCRETE INFILL WALL SCHEDULE

HORIZONTAL REINF	VERTICAL REINF	REMARKS
#13 @ 300	#13 @ 300	SEE DETAIL ON S-702 CENTER VERTICAL REINF

BEAM SCHEDULE

MARK	BEAM SIZE (mm)		BEAM REINFORCING						STIRRUPS			REMARKS
	DEPTH	WIDTH	BL	BS	TL	TS	TC	M	SIZE	TYPE	SPACING	-----
GRADE BEAMS												
GB1	750	400	(2)-#25	(2)-#25	(2)-#25	---	---	---	#13	S3 + T9	d/2	-----
ROOF BEAMS												
RB1	600	400	(2)-#25	---	(2)-#25	---	---	---	#13	S3 + T9	d/2	

NOTES:
1. WORK THIS SCHEDULE WITH BEAM REINFORCING DETAILS ON SHEETS S-503 AND S-504.
2. HOOKS SHOWN ON SECTIONS AND DETAILS SHALL BE 90° STD UON.
3. USE ONLY (1) TS AT BEAM COLUMN INTERSECTION WHERE REQ'D.

CMU OR CAST IN PLACE CONC LINTEL SCHEDULE (TYP)

OPENING TYPE OR SIZE, BEAM LOCATION OR TYPE	MAX SPAN (mm)	LINTEL DEPTH (mm)	REINFORCING BOTTOM
WALL OPENING	4000	600	(2)-#16 T&B
WALL OPENING	1900	400	(2)-#16 T&B
WALL OPENING	1000	400	(2)-#13 B

1. STRUCTURAL SHEETS DO NOT INDICATE ALL OPENINGS IN MASONRY WALLS. VERIFY NUMBER, SIZE AND LOCATION OF ALL OPENINGS IN MASONRY WALLS FROM ARCHITECTURAL SHEETS AND APPROVED PLUMBING, MECHANICAL, AND ELECTRICAL SHOP DRAWINGS.
2. PROVIDE 200mm BEARING EA END.
3. FOR HEAD DETAILS REFER TO ARCHITECTURAL SHEETS.
4. REINFORCING SHALL BE ASTM A615M, GRADE 420. GROUT FOR CMU LINTELS SHALL HAVE A MINIMUM COMPRESSIVE STRENGTH OF 14MPa AT 28 DAYS.
5. CONTRACTOR SHALL SUBMIT FOR APPROVAL SHOP DRAWINGS AND SCHEDULES SHOWING SIZE, SPAN, REINFORCEMENT, DETAILS, LOCATIONS, ETC.

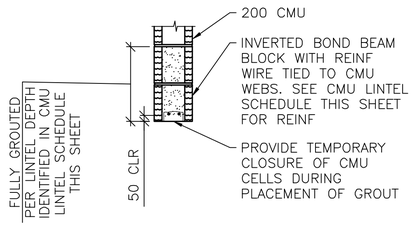

A / S-601 **LINTEL DETAILS**
SCALE: NTS

STANDARD HOOKS IN TENSION PER (ACI 318M-05)

HOOK DEVELOPMENT LENGTH (mm)

BAR SIZE	f'c 28 MPa
#10	180
#13	250
#16	300
#19	380
#22	430
#25	480
#29	560
#32	610
#36	690

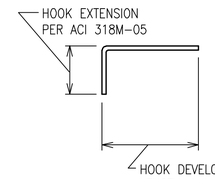

NOTES:
1. CONCRETE IS NORMAL WEIGHT CONCRETE.
2. BAR YIELD STRENGTH, fy = 420 MPa
3. SIDE COVER REQUIREMENTS OF ACI SECT. 12.5.3 ARE ASSUMED TO NOT BE MET.
4. TIE OR STIRRUP REQUIREMENTS OF ACI SECT. 12.5.3 ARE ASSUMED TO NOT BE MET.
5. REDUCTION FOR EXCESS REINFORCEMENT IS NOT TAKEN.
6. HOOK DEVELOPMENT LENGTH IS VALID FOR 180° HOOKS ALSO.

UNLESS OTHERWISE NOTED, LINEAR DIMENSIONS SHOWN ARE IN MILLIMETERS (mm)

APPROVED:

A/E DESIGNER OF RECORD

SEAL:

GEORGIA REGISTERED 9/22/10 NO. 27141 PROFESSIONAL ENGINEER CHRISTOPHER W. WHITMORE

US ARMY CORPS OF ENGINEERS
AFGHANISTAN ENGINEER DISTRICT

Mark	Description	Date	Appr.

Date: 8/16/10
Design file no.
Drawing code:
Rev: 0
Designed by: KMP
Dwn by: RCG
Ckd by: CWW
Reviewed by: LHM
Submitted by:
File name: ANAFRUS501SCH
Plot date: 8/24/2010
Plot scale: X:X

U.S. ARMY CORPS OF ENGINEERS
AFGHANISTAN ENGINEER DISTRICT
APO AE 96338

Michael Baker Jr., Inc
A unit of Michael Baker Corporation
Airside Business Park
100 Airside Drive
Moon Township, PA 15108
www.mbakercorp.com

BAKER

AFGHAN NATIONAL ARMY
STANDARD DESIGN

FAMILY RESPONSE UNIT OFFICES (STAND ALONE)

SCHEDULES

Sheet reference number:
S-601

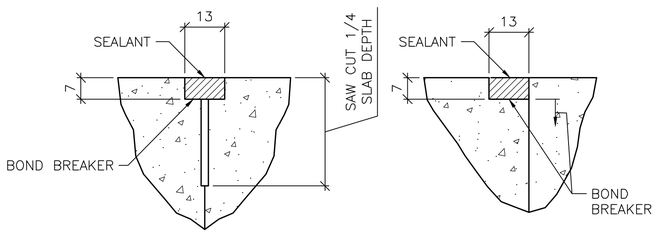

CONTROL JOINT DETAIL | CONSTRUCTION JOINT DETAIL

1 S-701 TYPICAL CONCRETE SLAB JOINT FINISH DETAILS

SCALE: NTS

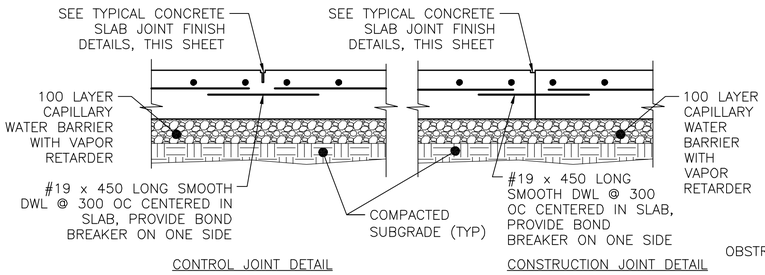

CONTROL JOINT DETAIL | CONSTRUCTION JOINT DETAIL

2 S-701 TYPICAL SLAB ON GRADE JOINT DETAIL

SCALE: NTS

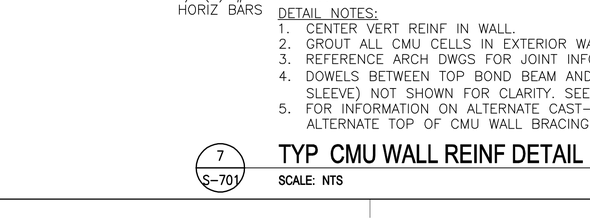

3 S-701 INTERIOR EQUIPMENT PAD DETAIL

SCALE: NTS

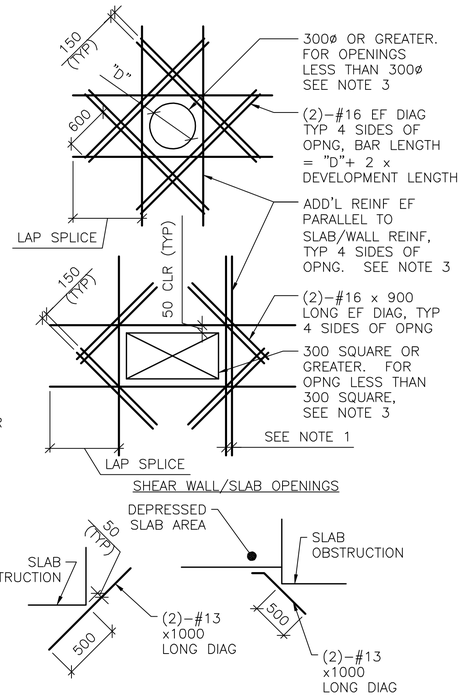

SHEAR WALL/SLAB OPENINGS

RE-ENTRANT CORNERS

DETAIL NOTES:
1. WHERE MORE THAN ONE ADDITIONAL BAR IS REQUIRED PARALLEL TO THE EXISTING SLAB/WALL REINFORCING THE ADDITIONAL REINFORCING BARS SHALL BE SPACED AT 100 ON CENTER.
2. ADDITIONAL REINFORCING PARALLEL TO THE SLAB/WALL REINFORCING SHALL BE #16 BARS THAT PROVIDE A STEEL AREA ON EACH SIDE OF THE OPENING EQUAL TO 1/2 THE AREA OF THE REINFORCING CUT BY THE OPENING.
3. FOR OPENINGS WITH SIDES OR DIAMETERS LESS THAN 300 SPREAD THE SLAB/WALL REINFORCING TO CLEAR THE OPENING.

4 S-701 ADD'L CONCRETE REINFORCEMENT DETAILS

SCALE: NTS

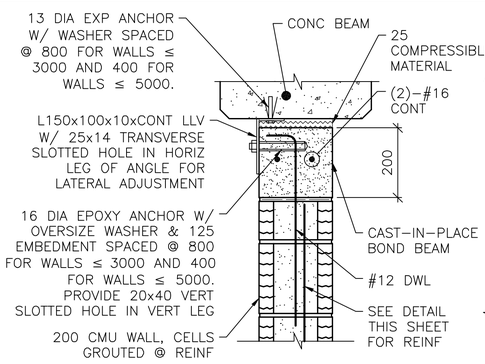

NOTE:
1. AT ANCHOR BOLTS, ADD AN ADDITIONAL 25 COMPRESSIBLE MATERIAL BELOW EXP ANCHOR HEAD.

INTERIOR BEAM

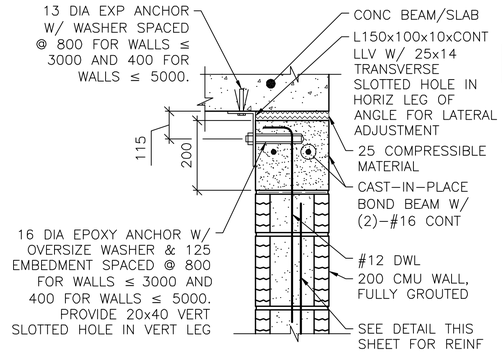

EXTERIOR WALL OR SLAB

NOTES:
1. THIS DETAIL IS AN ALTERNATE TOP OF WALL ANCHORAGE DETAIL TO BE USED AT THE CONTRACTOR'S OPTION IN LIEU OF DETAILS SHOWN ON S-400 & S-500 DRAWINGS.
2. CAST-IN-PLACE BOND BEAM SHOWN AT TOP OF WALL IS ALSO APPLICABLE FOR INTERMEDIATE AND STARTER COURSE BOND BEAMS WITHIN WALL.

5 S-701 ALTERNATE TOP OF CMU WALL BRACING DETAILS

SCALE: NTS

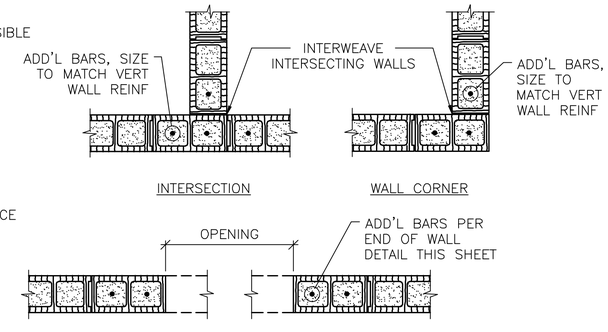

INTERSECTION | WALL CORNER

MASONRY OPENING W/ LINTEL

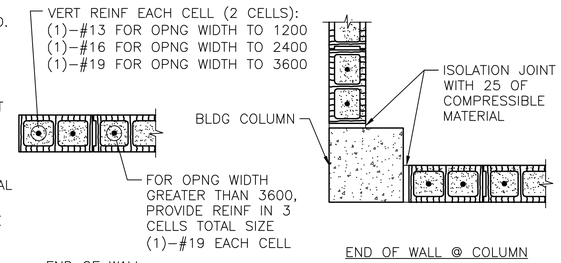

END OF WALL | END OF WALL @ COLUMN

NOTES:
1. OPENING WIDTH SHALL NOT EXCEED 3600 FOR THIS TYPE OF JAMB.
2. ALL CELLS FULLY GROUTED AT EXTERIOR WALLS. AT INTERIOR WALLS, ONLY GROUT CELLS CONTAINING REINF.

6 S-701 TYP CMU DETAILS

SCALE: NTS

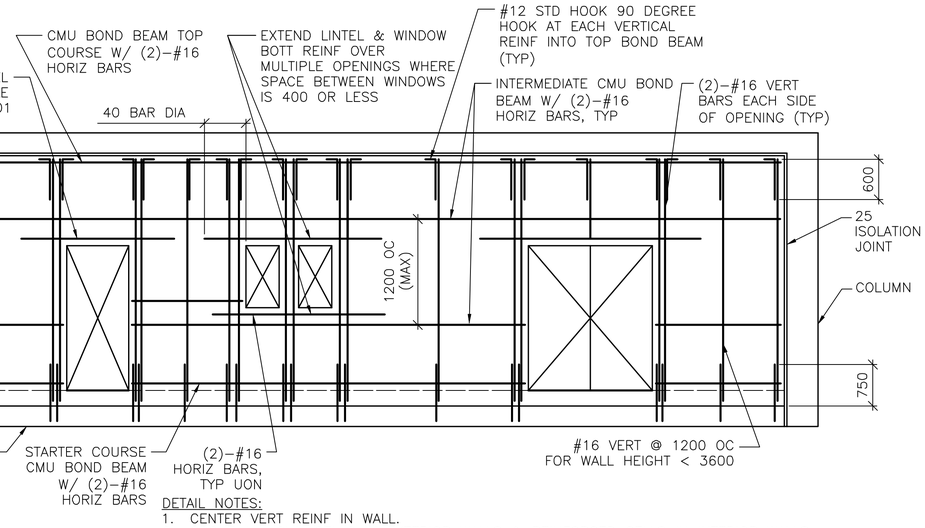

DETAIL NOTES:
1. CENTER VERT REINF IN WALL.
2. GROUT ALL CMU CELLS IN EXTERIOR WALLS & REINFORCED CELLS IN INTERIOR WALLS.
3. REFERENCE ARCH DWGS FOR JOINT INFORMATION
4. DOWELS BETWEEN TOP BOND BEAM AND BEAM/SLAB ABOVE (INCLUDING EMBEDDED PIPE SLEEVE) NOT SHOWN FOR CLARITY. SEE SPECIFIC S-500 SERIES DWGS FOR INFO.
5. FOR INFORMATION ON ALTERNATE CAST-IN-PLACE WALL BOND BEAMS, REFERENCE ALTERNATE TOP OF CMU WALL BRACING DETAILS THIS SHEET.

7 S-701 TYP CMU WALL REINF DETAIL

SCALE: NTS

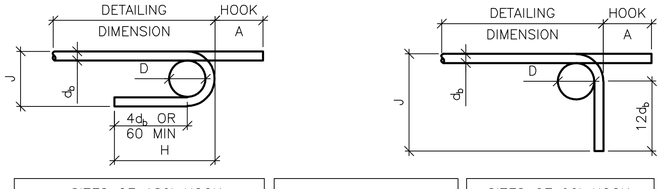

SIZES OF 180° HOOK			
BAR SIZE	A	J	APPROX H
#10	130	80	100
#13	150	100	110
#16	180	130	130
#19	200	150	150
#22	250	180	180
#25	280	200	200
#29	380	290	260
#32	430	320	290
#36	480	360	320

$D = 6d_b$ FOR #10-#25
$D = 6d_b$ FOR #29-#36
d_b = BAR DIA

SIZES OF 90° HOOK		
BAR SIZE	A	J
#10	140	150
#13	190	220
#16	230	270
#19	270	320
#22	320	370
#25	370	430
#29	420	480
#32	470	580
#36	520	610

8 S-701 TYP REINFORCEMENT BAR BENDING DETAILS

SCALE: NTS

UNLESS OTHERWISE NOTED, LINEAR DIMENSIONS SHOWN ARE IN MILLIMETERS (mm)

APPROVED:

A/E DESIGNER OF RECORD

SEAL:

GEORGIA REGISTERED 9/23/10 NO. 27141 PROFESSIONAL ENGINEER CHRISTOPHER W. WHITMORE

US ARMY CORPS OF ENGINEERS
AFGHANISTAN ENGINEER DISTRICT

Mark	Description	Date	Appr.

Rev. 0
Date: 8/16/10
Designed by: KMP
Dwn by: RCG
Ckd by: CWW
Reviewed by: LHM
Submitted by: BAKER
Design file no.
Drawing code:
File name: ANAFRUS-701.DGT
Plot date: 8/24/2010
Plot scale: X:X

U.S. ARMY CORPS OF ENGINEERS
AFGHANISTAN ENGINEER DISTRICT
APO AE 96338

Michael Baker Jr., Inc
A unit of Michael Baker Corporation
Airside Business Park
100 Airside Drive
Moon Township, PA 15108
www.mbakercorp.com

AFGHAN NATIONAL ARMY
STANDARD DESIGN

FAMILY RESPONSE UNIT OFFICES (STAND ALONE)

TYPICAL DETAILS

Sheet reference number:
S-701

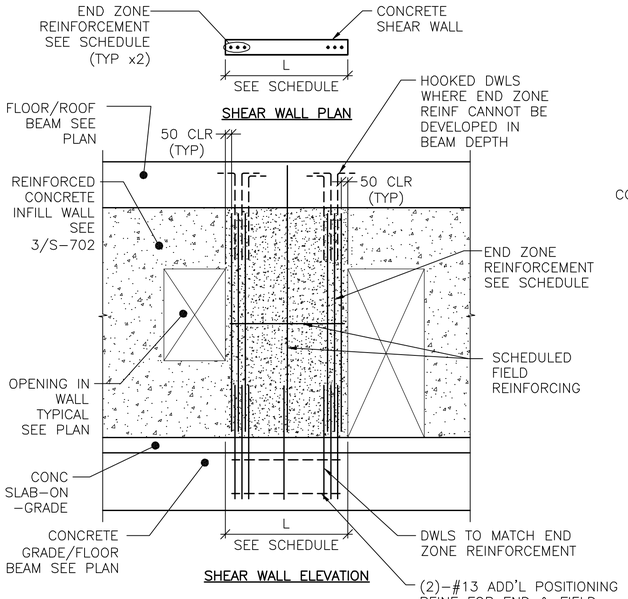

DETAIL NOTES:
1. FIELD REINFORCEMENT IN SHEAR WALL NOT SHOWN COMPLETELY FOR CLARITY.
2. FIELD REINFORCEMENT CENTERED IN WALL.
3. MINIMUM CONC CLEAR DISTANCE FOR END ZONE REINF = 76
4. SEE CONC SHEAR WALL SCHEDULE ON SHEET S-601

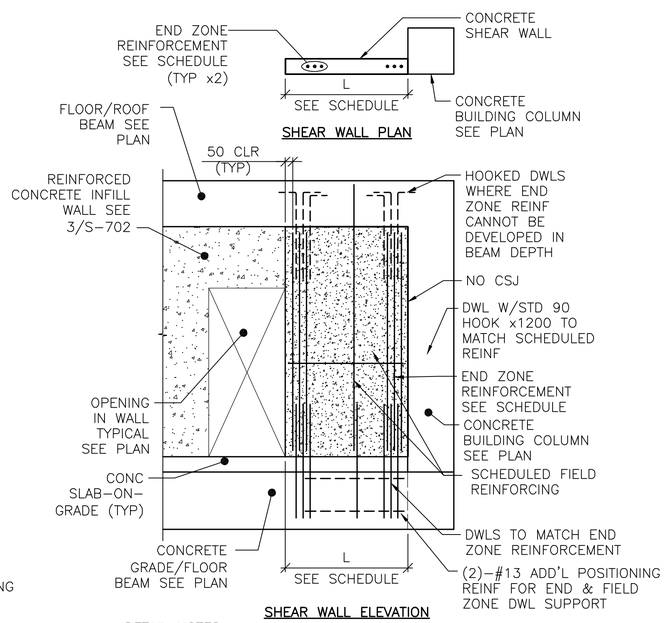

DETAIL NOTES:
1. FIELD REINFORCEMENT IN SHEAR WALL NOT SHOWN COMPLETELY FOR CLARITY.
2. FIELD REINFORCEMENT CENTERED IN WALL.
3. MINIMUM CONC CLEAR DISTANCE FOR END ZONE REINF = 76
4. SEE CONC SHEAR WALL SCHEDULE ON SHEET S-601

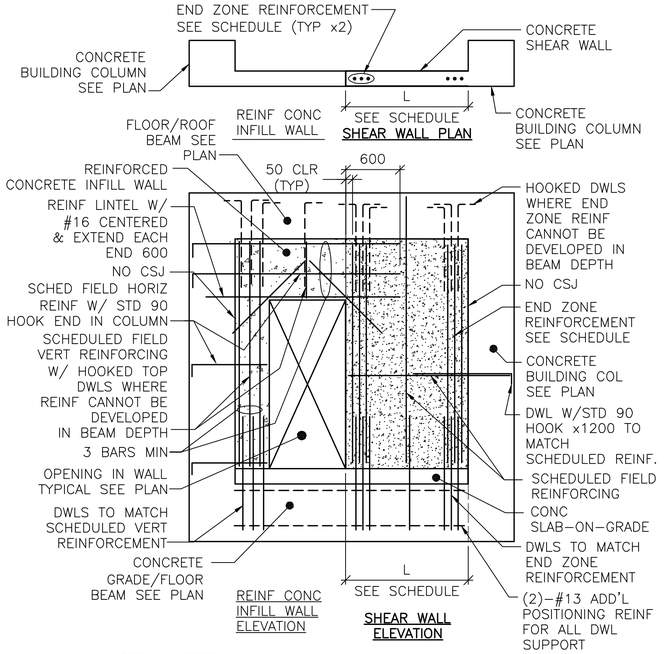

DETAIL NOTES:
1. FIELD REINFORCEMENT IN WALLS NOT SHOWN COMPLETELY FOR CLARITY.
2. FIELD REINFORCEMENT CENTERED IN WALL.
3. MINIMUM CONC CLEAR DISTANCE FOR END ZONE REINF = 76
4. SEE CONC SHEAR WALL SCHEDULE ON SHEET S-601
5. SEE REINF CONC INFILL WALL SCHEDULE ON SHEET S-601
6. SEE ARCH DWGS FOR JOINT INFORMATION

1 S-702 TYPE "A" SHEAR WALL DETAIL

SCALE: NTS

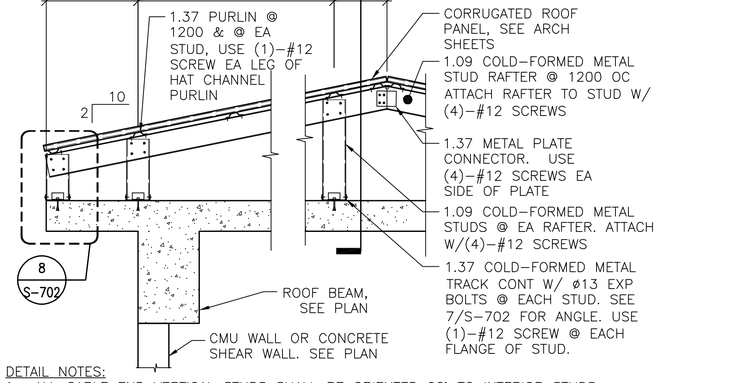

DETAIL NOTES:
1. ALL GABLE END VERTICAL STUDS SHALL BE ORIENTED 90° TO INTERIOR STUDS & SPACED @ 600 OC. GABLE END RAFTER SHALL BE 1.37 METAL TRACK SPANNING CONTINUOUSLY OVER GABLE END STUDS. INSET GIRTS AT GABLE END SHALL BE 1.09 COLD-FORMED METAL STUDS @ 1200 OC ATTACHED VIA 1.37 THICKNESS CLIP ANGLE W/ (2) #12 SCREWS EA LEG.
2. ALL INTERIOR, NON-GABLE END VERTICAL STUDS GREATER THAN 2400 IN LENGTH SHALL BE BACK-TO-BACK W/ #12 SCREWS @ 200 OC STAGGERED.

4 S-702 TYPICAL OVERBUILT ROOF FRAMING DETAIL

SCALE: NTS

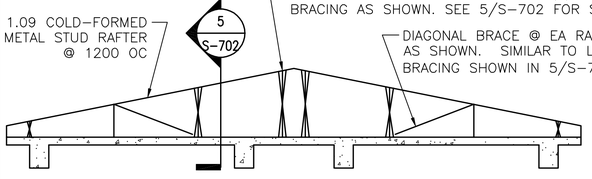

7 S-702 TYPICAL ROOF BRACE LAYOUT

SCALE: NTS

2 S-702 TYPE "B" SHEAR WALL DETAIL

SCALE: NTS

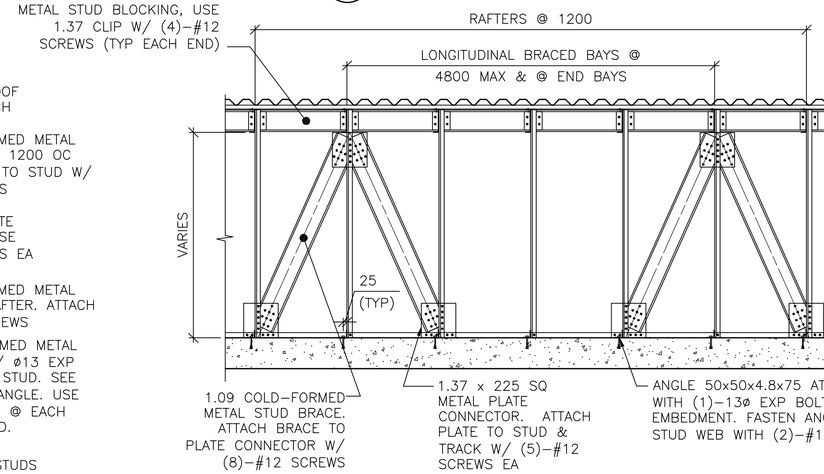

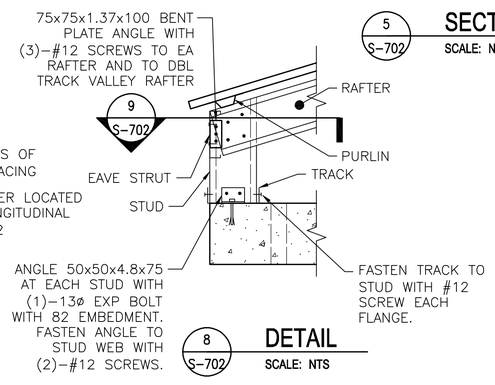

5 S-702 SECTION

SCALE: NTS

8 S-702 DETAIL

SCALE: NTS

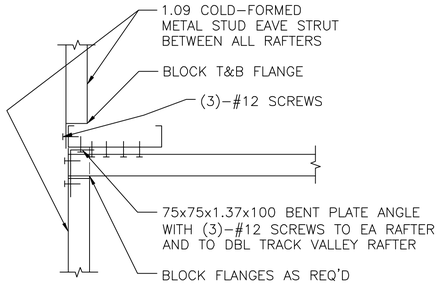

9 S-702 SECTION

SCALE: NTS

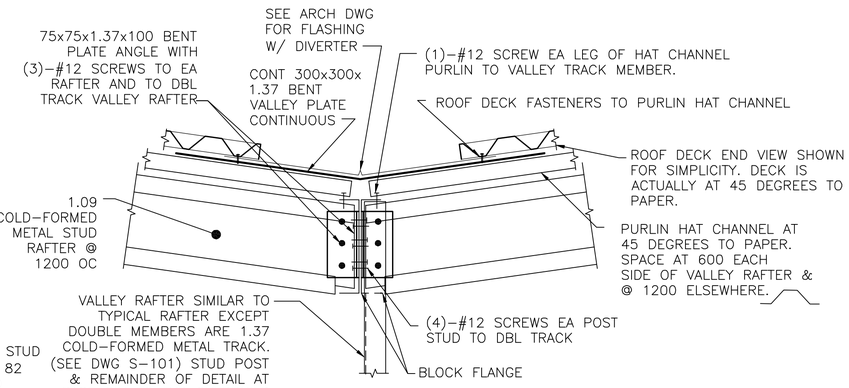

6 S-702 TYPICAL OVERBUILT ROOF SECTION THROUGH VALLEY

SCALE: NTS

3 S-702 SHEAR WALL / REINF CONC INFILL WALL DETAIL DETAIL

SCALE: NTS

UNLESS OTHERWISE NOTED, LINEAR DIMENSIONS SHOWN ARE IN MILLIMETERS (mm)

APPROVED:

A/E DESIGNER OF RECORD

SEAL:

GEORGIA REGISTERED 8/23/10 No. 27141 PROFESSIONAL ENGINEER CHRISTOPHER W. WHITMORE

US ARMY CORPS OF ENGINEERS
AFGHANISTAN ENGINEER DISTRICT

Mark	Description	Date	Appr.

Rev: 0
Date: 8/16/10
Design file no.
Drawing code:
File name: ANAFRUS-702TDT
Plot date: 8/24/2010
Plot scale: x:x

Designed by:	Drwn by:	Reviewed by:	Submitted by:
KMP	RCG	LHM	BAKER

Ckd by: CWW

U.S. ARMY CORPS OF ENGINEERS
AFGHANISTAN ENGINEER DISTRICT
APO AE 96338

Michael Baker Jr., Inc
A unit of Michael Baker Corporation
Airside Business Park
100 Airside Drive
Moon Township, PA 15108
www.mbakercorp.com

AFGHAN NATIONAL ARMY
STANDARD DESIGN
FAMILY RESPONSE UNIT OFFICES (STAND ALONE)

TYPICAL DETAILS

Sheet reference number:
S-702

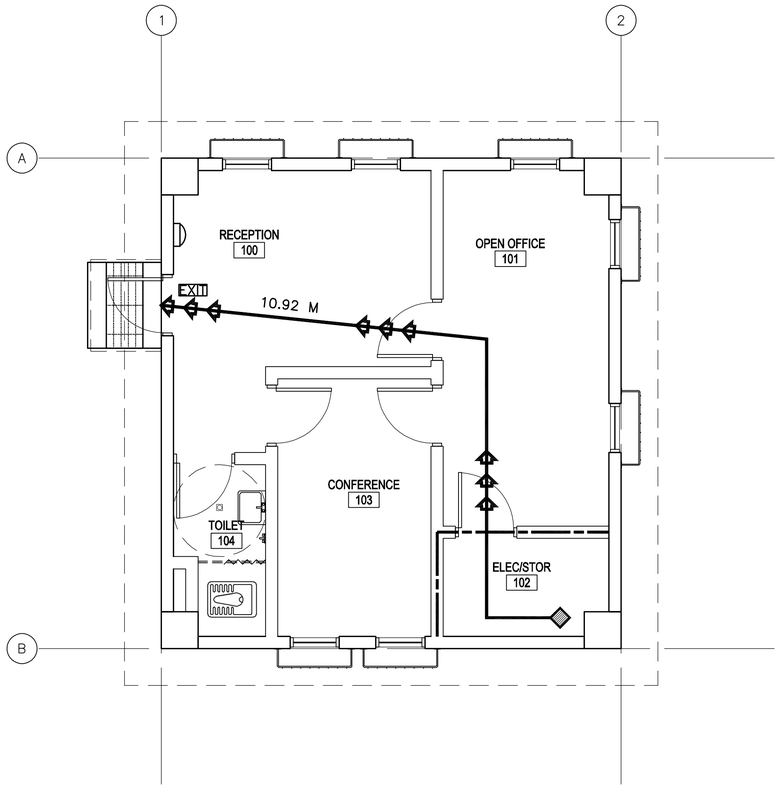

1 / A–001 **FLOOR PLAN LIFE SAFETY PLAN**

SCALE: 1:50

CODE ANALYSIS:

1. REFERENCES:
   2006 INTERNATIONAL BUILDING CODE (2006 IBC)
   2006 LIFE SAFETY CODE (2006 NFPA 101)

2. IBC OCCUPANCY CLASSIFICATION:
   GROUP B (BUSINESS NFPA 101 6.1.11 AND CHAPTER 38)

3. TYPE OF CONSTRUCTION (IBC): TYPE II–B (UNPROTECTED/NONSPRINKLERED)

4. IBC TABLE 503: ALLOWABLE HEIGHT AND BUILDING AREAS:
   GROUP B
   ALLOWABLE AREA: 2,137 SM
   ALLOWABLE HEIGHT: 3 STORIES (16 M)

   GROUP B
   PROPOSED AREA: 60 SM
   PROPOSED HEIGHT: 1 STORY (<16 M)

5. IBC TABLE 601 & 602: FIRE RESISTANCE RATING REQUIREMENTS FOR BUILDING ELEMENTS FOR TYPE II–B

BUILDING ELEMENT	RATING (HOUR)	REFERENCE
STRUCTURAL FRAME (COLUMNS, GIRDERS & TRUSSES)	0	TABLE 601
BEARING WALLS		
EXTERIOR	0	TABLE 601
INTERIOR	0	TABLE 601
NONBEARING WALLS & PARTITIONS		
INTERIOR	0	TABLE 601
FLOOR CONSTRUCTION	0	TABLE 601
ROOF CONSTRUCTION	0	TABLE 601
EXTERIOR WALL	0	TABLE 602

6. IBC TABLE 803.5 – INTERIOR WALL AND CEILING FINISH REQUIREMENTS FOR B OCCUPANCY/NONSPRINKLERED

GROUP	EXIT ENCLOSURES AND EXIT PASSAGEWAY	CORRIDORS	ROOMS AND ENCLOSED SPACES
B	A	B	C

7. NFPA 101 TABLE 7.3.1.2 – OCCUPANT LOAD
   BUSINESS = 9.3 SM/PERSON BUSINESS PROPOSED = 6 OCCUPANTS

8. NFPA 101 TABLE 7.3.3.1 – EGRESS CAPACITY
   BUSINESS = 5 MM PER OCCUPANT

   REQUIRED: 30 MM (6 OCCUPANTS x 5 MM PER OCCUPANT)
   PROPOSED EGRESS CAPACITY: 900 MM

9. NFPA 101 PARAGRAPH 38.2.6.2 – EXIT ACCESS TRAVEL DISTANCE (NONSPRINKLERED)
   REQUIRED: 60 METERS
   PROPOSED: 11 METERS

10. NFPA 101 PARAGRAPH 38.3.6.1(1) & (2) – CORRIDORS
    NO RATED CORRIDOR REQUIRED (NONSPRINKLERED):
    (1) ALL EXITS ARE AVAILABLE FROM AN OPEN FLOOR AREA
    (2) SPACE IS OCCUPIED BY A SINGLE TENANT

11. NFPA 101 PARAGRAPH 38.2.4.1 – NUMBER OF EXITS
    BUSINESS REQUIRED: 1 MINIMUM
    BUSINESS PROPOSED: 1 EXITS

LEGEND:

- DENOTES PATHS OF EXIT TRAVEL
- EXIT — DENOTES DOOR AS AN EMERGENCY EXIT; SEE E–101 FOR ILLUMINATED EXIT SIGNS
- DENOTES STARTING POINT FOR TRAVEL DISTANCE
- DENOTES FIRE EXTINGUISHER LOCATIONS
- (1) HOUR RATED WALL

LINEAR DIMENSIONS SHOWN ARE IN MILLIMETERS (MM), UNLESS OTHERWISE NOTED

0 1000 2000
SCALE: 1:50

APPROVED:

A/E DESIGNER OF RECORD

SEAL:

STATE OF SOUTH CAROLINA — KEVIN L. CHAPIN, N. Charleston, SC, 6374 — 12-23-10 — REGISTERED ARCHITECT

US ARMY CORPS OF ENGINEERS
AFGHANISTAN ENGINEER DISTRICT

Mark	Description	Date	Appr.

Date: 8/16/10
Design file no.
Drawing code:
Rev: 0
File name: ANAFRUA-A001.SP
Plot date: 8/24/2010
Plot scale: x:x

Designed by: KRC
Dwn by: KJG
Ckd by: NLJ
Reviewed by: LHM
Submitted by: BAKER

U.S. ARMY CORPS OF ENGINEERS
AFGHANISTAN ENGINEER DISTRICT
APO AE 96338

Michael Baker Jr., Inc.
A unit of Michael Baker Corporation
Airside Business Park
100 Airside Drive
Moon Township, PA 15108
www.mbakercorp.com

AFGHAN NATIONAL ARMY
STANDARD DESIGN

FAMILY RESPONSE UNIT OFFICES (STAND ALONE)

LIFE SAFETY PLAN

Sheet reference number:
A–001

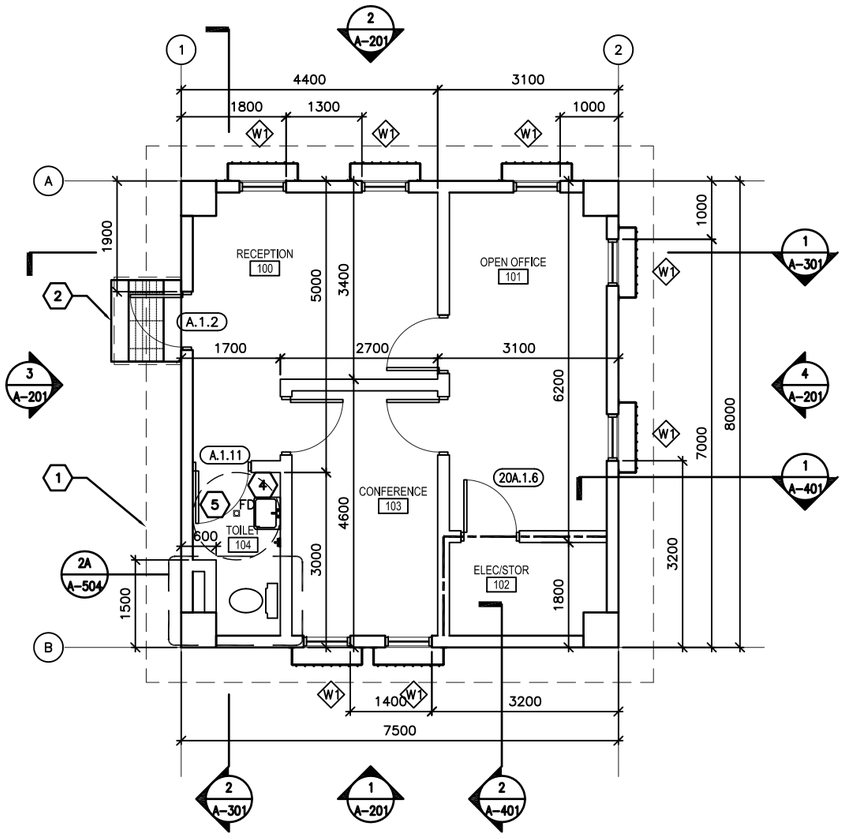

1 A-101 FLOOR PLAN
SCALE: 1:50

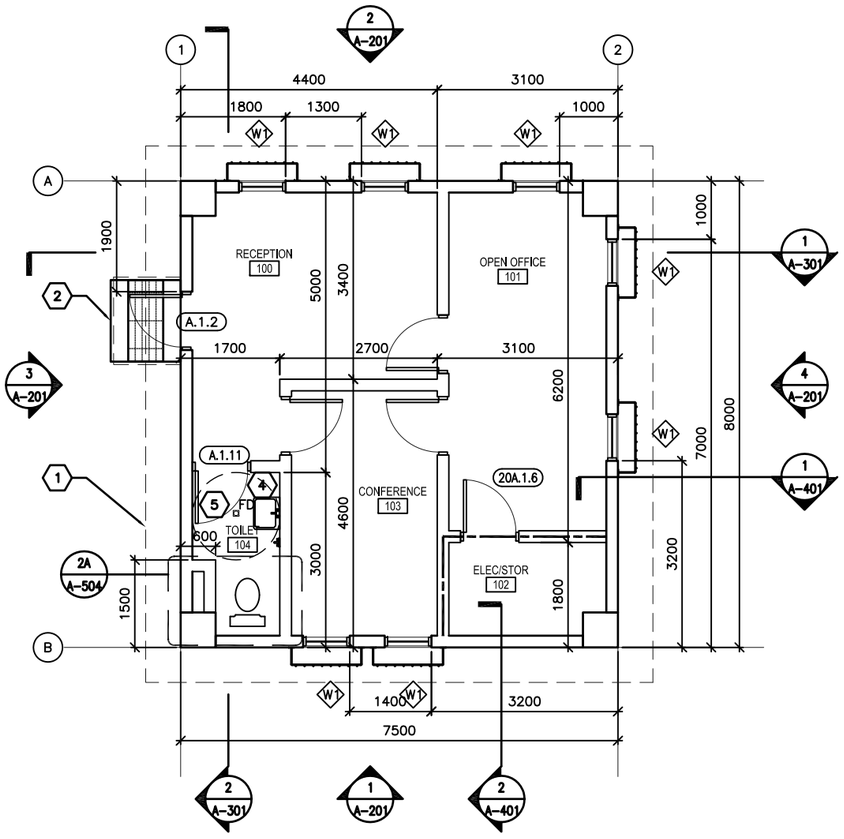

1 A-101 FLOOR PLAN - ALTERNATE
SCALE: 1:50

NOTE:

CONTRACTOR TO ENSURE PROPER ORIENTATION OF THE TOILETS. IT SHOULD BE ALWAYS N–S OR S–N.

GENERAL NOTES:

A. DIMENSIONS ARE SHOWN TO OUTER EDGE OF EXTERIOR STRUCTURAL COLUMNS, STRUCTURAL COLUMN GRID, EDGE OF INTERIOR PARTITIONS, EDGE OF WINDOW ROUGH OPENINGS, AND TO HINGED SIDE OF DOOR FRAME OPENINGS.

B. HINGE SIDE OF OPENINGS FOR DOORS AND FRAMES SHALL BE LOCATED 200 MM FROM THE ADJACENT WALL OR COLUMN, UNLESS NOTED OTHERWISE.

C. INTERIOR PARTITIONS SHALL BE 200 MM CMU. SEE STRUCTURAL DRAWINGS FOR LOCATION OF CONCRETE SHEAR WALLS.

D. COSMETIC REPAIR OF MINOR DEFECTS: REPAIR OR FILL MORTAR JOINTS AND MINOR DEFECTS, INCLUDING BUT NOT LIMITED TO SPALLS, IN ACCORDANCE WITH MANUFACTURER'S RECOMMENDATIONS AND PRIOR TO COATING APPLICATION. SURFACES TO BE PAINTED SHALL BE CLEAN AND FREE OF FOREIGN MATTER BEFORE APPLICATION OF PAINT. CLEANING SHALL BE SCHEDULED SO THAT DUST AND OTHER CONTAMINANTS WILL NOT FALL ON NEWLY PAINTED SURFACES.

E. PLASTER AND MASONRY SURFACES SHALL BE ALLOWED TO CURE FOR AT LEAST 30 DAYS BEFORE PAINTING. CONCRETE SLABS–ON–GRADE SHALL BE ALLOWED TO CURE 90 DAYS BEFORE STAINING OR SEALING.

F. DO NOT USE PAINT MATERIALS CONTAINING LEAD CONTENT IN EXCESS OF 0.009 PERCENT OF THE WEIGHT OF THE TOTAL NONVOLATILE CONTENT OF THE PAINT OR THE WEIGHT OF THE DRIED PAINT FILM.

G. DO NOT USE ANY ASBESTOS CONTAINING MATERIALS (ACM) IN PROJECT. ACM IS DEFINED AS 1% OR MORE BY VOLUME.

H. DO NOT USE PAINT MATERIALS CONTAINING MERCURIAL FUNGICIDES.

I. FACTORY PRIMED METAL DOORS AND FRAMES SHALL RECEIVE TWO COATS OF PAINT.

J. FILL REMAINING SPACE AT PENETRATIONS IN FIRE–RATED FLOORS, PARTITIONS AND CEILINGS WITH APPROPRIATE FIRESTOPPING MATERIALS.

K. ALL CEILING FINISHES SHALL BE PAINTED PLASTER APPLIED TO STRUCTURE.

L. ALL WALL FINISHES SHALL BE PAINTED PLASTER APPLIED TO STRUCTURE, UNLESS NOTED OTHERWISE.

M. ALL FLOOR FINISHES SHALL BE EPOXY SEALED CONCRETE, UNLESS NOTED OTHERWISE

N. PROVIDE TILE FINISHES AS INDICATED IN DETAILS.

O. ALL DOOR, FRAME AND HARDWARE TYPES SHALL BE A.1.6 UNLESS NOTED OTHERWISE.

P. PROVIDE POLISHED STAINLESS STEEL MIRROR 600 X 800 ABOVE LAVATORY FAUCET.

KEY NOTES:

1. LINE OF ROOF OVERHANG ABOVE.
2. CONCRETE STOOP WITH GRATE – SEE DETAIL 4/A–503.
3. CANOPY – SEE DETAIL 2/A–503.
4. WALL MOUNTED LAVATORY – SEE DETAIL 5/A–504.
5. TERRAZZO FLOOR TILE AND CERAMIC WALL TILE TO 2000 MM ABOVE FINISHED FLOOR.

LEGEND:

XXX — DOOR FRAME AND HARDWARE TYPE, SEE SHEET A–601

A — WINDOW TYPE, SEE SHEET A–601

X — KEY NOTE

ABBREVIATIONS:

COMM	COMMUNICATIONS
ELEC	ELECTRICAL
MECH	MECHANICAL
JAN	JANITOR
CLOS	CLOSET
FD	FLOOR DRAIN

0 1000 2000
SCALE: 1:50

LINEAR DIMENSIONS SHOWN ARE IN MILLIMETERS (MM), UNLESS OTHERWISE NOTED

US Army Corps of Engineers ® AFGHANISTAN ENGINEER DISTRICT

MARK	DESCRIPTION	DATE	APPR.
MARK	DESCRIPTION	DATE	APPR.

DESIGNED BY:
DWN BY:
CKD BY:
SUBMITTED BY:
DATE:
SOLICITATION NO.:
CONTRACT NO.:
FILE NUMBER:
PLOT SCALE: 1:50
PLOT DATE:
SIZE: ANSI D
FILE NAME: AAMERUA-101.dwg

U.S. ARMY CORPS OF ENGINEERS
AFGHANISTAN DISTRICT
APO AE 09356

SITE ADAPT DESIGN
FAMILY RESPONSE UNIT OFFICES
AD20 - FRU

FLOOR PLAN

SHEET IDENTIFICATION
A-101
SHEET OF

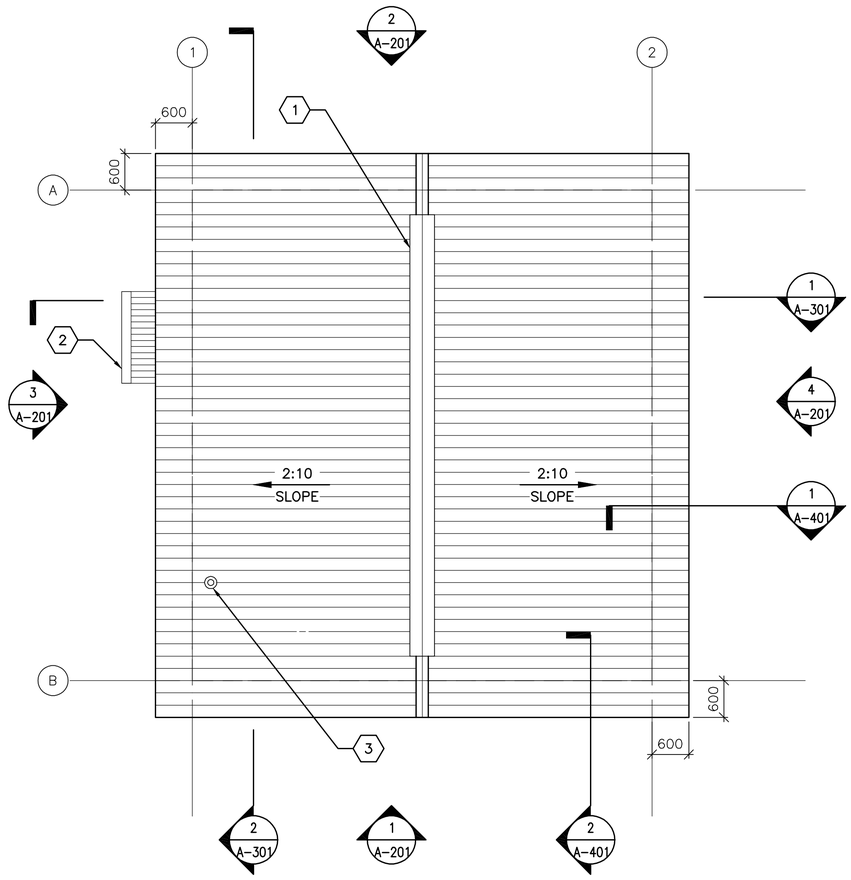

1 A-101 **ROOF PLAN**

SCALE: 1:50

GENERAL NOTES:

A. THE APPROXIMATE LOCATION OF ROOF DEVICES AND PENETRATIONS ARE SHOWN ON THE ROOF PLAN FOR INFORMATION ONLY. THE CONTRACTOR SHALL BE RESPONSIBLE FOR UNDERSTANDING THE ACTUAL LOCATION OF THESE AND ALL OTHER ITEMS PRIOR TO BEGINNING CONSTRUCTION. COORDINATE ALL ROOF PENETRATIONS WITH STRUCTURAL, MECHANICAL AND PLUMBING WORK.

B. PLUMBING VENT PENETRATIONS SHALL TERMINATE 300 MM MINIMUM ABOVE THE ROOF.

C. UNLESS OTHERWISE NOTED, NOTES, DETAILS OR FEATURES INDICATED FOR ONE CONDITION SHALL BE APPLICABLE FOR ALL ALIKE AND SIMILAR CONDITIONS.

D. STOCKPILING OF MATERIALS, EQUIPMENT AND ANY OTHER ITEMS ON THE ROOF IS PROHIBITED.

E. ROOFS SHALL BE CORRUGATED METAL ROOF PANELS ON COLD-FORMED METAL FRAMING ON CONCRETE SLAB.

KEY NOTES: (X)

1. CONTINUOUS METAL RIDGE VENT – SEE DETAIL 4/A-501.
2. CANOPY – SEE DETAIL 2/A-503.
3. PLUMBING VENT – SEE DETAIL 5/A-501.

0 1000 2000

SCALE: 1:50

LINEAR DIMENSIONS SHOWN ARE IN MILLIMETERS (MM), UNLESS OTHERWISE NOTED

APPROVED:

A/E DESIGNER OF RECORD

SEAL:

STATE OF SOUTH CAROLINA
KEVIN B. CHAFIN
N. Charleston, SC
6374
10-23-10
REGISTERED ARCHITECT

US ARMY CORPS OF ENGINEERS
AFGHANISTAN ENGINEER DISTRICT

Mark	Description	Date	Appr.

Mark	Description	Date	Appr.

Date: 8/16/10
Design file no.
Rev: 0
Drawing code:
File name: ANAFRUA-1028P
Plot date: 9/24/2010
Plot scale: x:X

Designed by: KRC
Drwn by: KJG
Ckd by: NLJ
Reviewed by: LHM
Submitted by: BAKER

U.S. ARMY CORPS OF ENGINEERS
AFGHANISTAN ENGINEER DISTRICT
APO AE 96338

Michael Baker Jr., Inc
A unit of Michael Baker Corporation
Airside Business Park
100 Airside Drive
Moon Township, PA 15108
www.mbakercorp.com

AFGHAN NATIONAL ARMY
STANDARD DESIGN

FAMILY RESPONSE UNIT OFFICES (STAND ALONE)

ROOF PLAN

Sheet reference number:
A-102

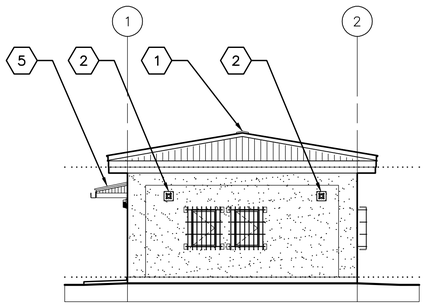

1 A-201 **ELEVATION**
SCALE: 1:100

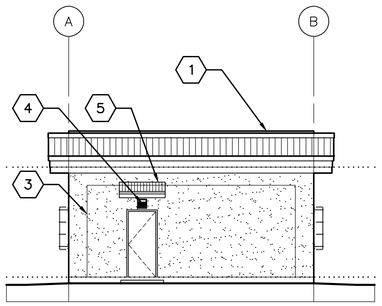

3 A-201 **ELEVATION**
SCALE: 1:100

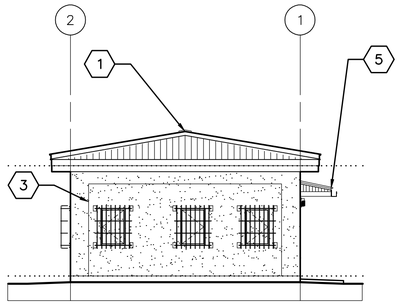

2 A-201 **ELEVATION**
SCALE: 1:100

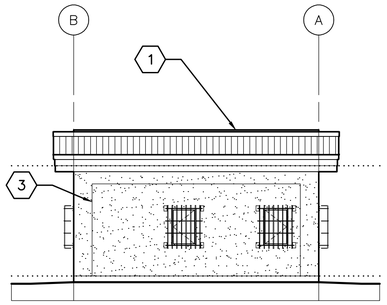

4 A-201 **ELEVATION**
SCALE: 1:100

GENERAL NOTES:

A. COORDINATE SIZE AND LOCATION OF OPENINGS FOR MECHANICAL ITEMS WITH MECHANICAL DRAWINGS.

B. PROVIDE STRUCTURAL LINTELS AS REQUIRED – SEE STRUCTURAL DRAWINGS

C. ALL EXTERIOR WALL FINISHES SHALL BE STUCCO OVER CMU AND CONCRETE SUBSTRATES. PROVIDE CONTROL JOINTS IN STUCCO WALL FINISH AS NOTED. SEE DETAIL 2A/A-501.

D. ROOF SHALL BE CORRUGATED METAL ROOF PANELS ON COLD-FORMED METAL FRAMING ON CONCRETE SLAB.

KEY NOTES: (X)

1. CONTINUOUS METAL RIDGE VENT – SEE DETAIL 4/A-501.
2. EXHAUST FAN, LOCATE TOP OF WALL PENETRATION 2800 MM ABOVE FINISHED FLOOR – SEE MECHANICAL DRAWINGS.
3. STUCCO CONTROL JOINT – SEE DETAIL 2A/A-501.
4. EXTERIOR LIGHT FIXTURE – SEE ELECTRICAL.
5. CANOPY – SEE DETAIL 2/A-503.

LINEAR DIMENSIONS SHOWN ARE IN MILLIMETERS (MM), UNLESS OTHERWISE NOTED

APPROVED:

A/E DESIGNER OF RECORD

SEAL:

0 2000 4000
SCALE: 1:100

US ARMY CORPS OF ENGINEERS
AFGHANISTAN ENGINEER DISTRICT

Mark	Description	Date	Appr.

Mark	Description	Date	Appr.

Date: 06/30/10
Design file no.
Rev: 0
Drawing code:
File name: ANAFRUA-201EL
Plot date: 9/24/2010
Plot scale: x:x

Designed by: KRC
Drwn by: KJG
Ckd by: NLJ
Reviewed by: LHM
Submitted by: BAKER

U.S. ARMY CORPS OF ENGINEERS
AFGHANISTAN ENGINEER DISTRICT
APO AE 96338

Michael Baker Jr., Inc
A unit of Michael Baker Corporation
Airside Business Park
100 Airside Drive
Moon Township, PA 15108
www.mbakercorp.com

AFGHAN NATIONAL ARMY
REGIONAL MILITARY TRAINING CENTER
STANDARD DESIGN

FAMILY RESPONSE UNIT OFFICES (STAND ALONE)

ELEVATIONS

Sheet reference number:
A-201

1 / A-301 **BUILDING SECTION**
SCALE: 1:50

2 / A-301 **BUILDING SECTION**
SCALE: 1:50

LINEAR DIMENSIONS SHOWN
ARE IN MILLIMETERS (MM),
UNLESS OTHERWISE NOTED

0 1000 2000
SCALE: 1:50

APPROVED:

A/E DESIGNER OF RECORD

SEAL:

STATE OF SOUTH CAROLINA
KEVIN R. CHAFIN
N. Charleston, SC
6374
REGISTERED ARCHITECT

US ARMY CORPS OF ENGINEERS
AFGHANISTAN ENGINEER DISTRICT

Mark	Description	Date	Appr.

Mark	Description	Date	Appr.

U.S. ARMY CORPS OF ENGINEERS
AFGHANISTAN ENGINEER DISTRICT
APO AE 96338

Michael Baker Jr., Inc
A unit of Michael Baker Corporation
Airside Business Park
100 Airside Drive
Moon Township PA 15108
www.mbakercorp.com

Designed by: KRC
Dwn by: KJG
Ckd by: NLJ
Reviewed by: LHM
Submitted by: BAKER
Date: **8/16/10**
Rev: 0
Design file no.
Drawing code:
File name: ANAFRUA-301BS
Plot date: 8/24/2010
Plot scale:

AFGHAN NATIONAL ARMY
STANDARD DESIGN
FAMILY RESPONSE UNIT OFFICES (STAND ALONE)
BUILDING SECTIONS

Sheet reference number:
A-301

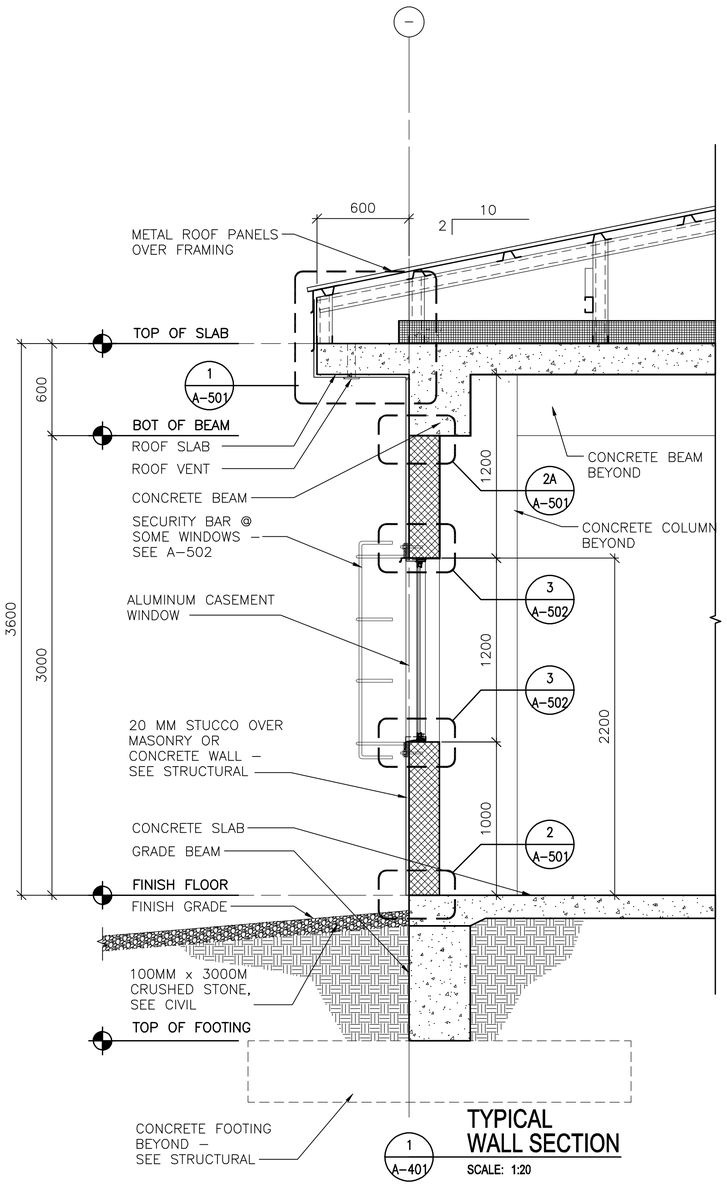

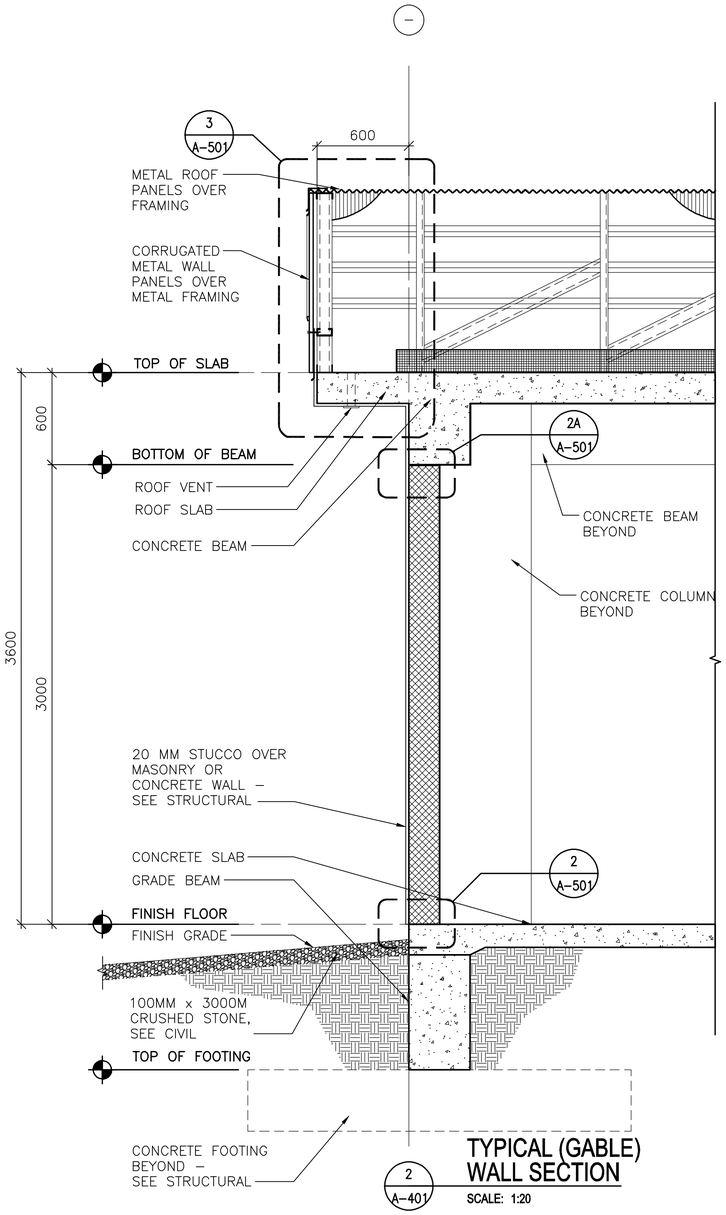

LINEAR DIMENSIONS SHOWN ARE IN MILLIMETERS (MM), UNLESS OTHERWISE NOTED

0 400 800
SCALE: 1:20

APPROVED:

A/E DESIGNER OF RECORD

SEAL:

STATE OF SOUTH CAROLINA
JOHN C. CHAFIN
No. Charleston, SC
6374
REGISTERED ARCHITECT

US ARMY CORPS OF ENGINEERS
AFGHANISTAN ENGINEER DISTRICT

Mark	Description	Date	Appr.

Mark	Description	Date	Appr.

Date: 8/16/10
Rev: 0
Design file no.
Drawing code:
File name: ANAFRUA-401WS
Plot date: 9/24/2010
Plot scale: x:X

Designed by: KRC
Dwn by: KJG
Ckd by: NLJ
Reviewed by: LHM
Submitted by: BAKER

U.S. ARMY CORPS OF ENGINEERS
AFGHANISTAN ENGINEER DISTRICT
APO AE 96338

Michael Baker Jr., Inc
A unit of Michael Baker Corporation
Airside Business Park
100 Airside Drive
Moon Township, PA 15108
www.mbakercorp.com

AFGHAN NATIONAL ARMY
STANDARD DESIGN
FAMILY RESPONSE UNIT OFFICES (STAND ALONE)

WALL SECTIONS

Sheet reference number:
A-401

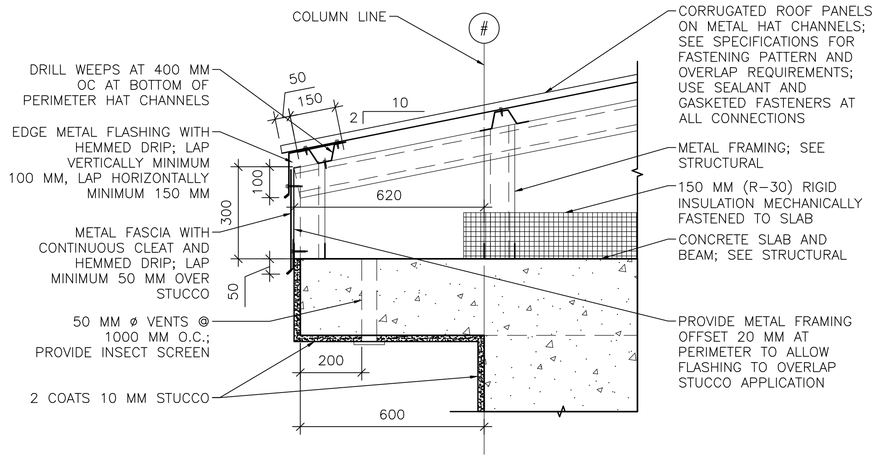

1 A-501 **EAVE DETAIL**
SCALE: 1:10

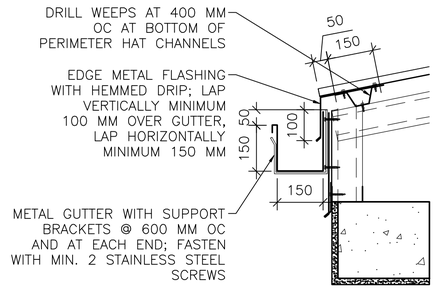

1A A-501 **GUTTER DETAIL**
SCALE: 1:10

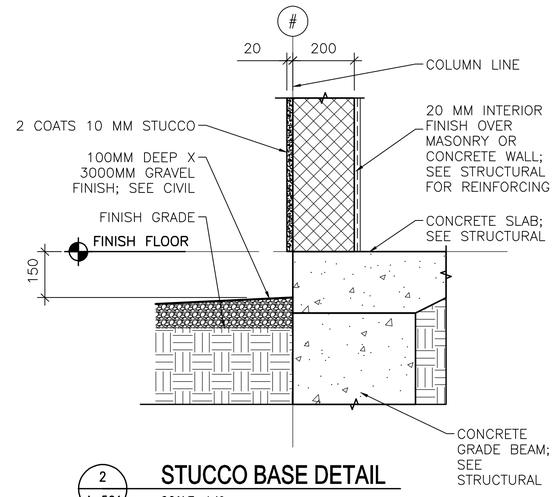

2 A-501 **STUCCO BASE DETAIL**
SCALE: 1:10

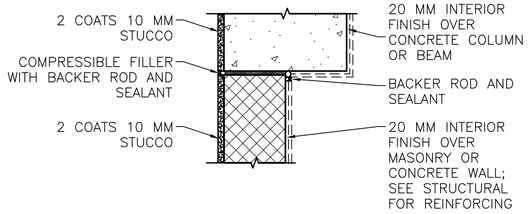

NOTE: DETAIL TYPICAL AT ALL WALL/COLUMN AND WALL/BEAM LOCATIONS, SEE ALTERNATE BRACING DETAIL BELOW 2B/A-501.

2A A-501 **STUCCO/CONTROL JOINT DETAIL**
SCALE: 1:10

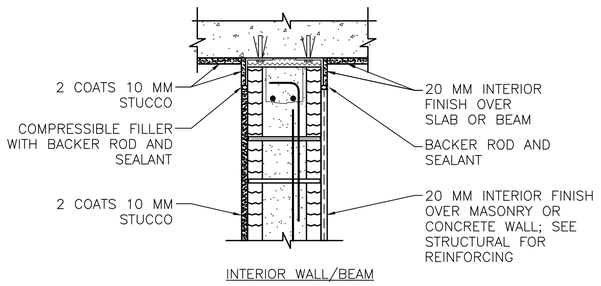

2B A-501 **STUCCO @ BRACING DETAIL**
SCALE: 1:10

NOTE:
DETAIL FOR FINISHES ONLY. SEE STRUCTURAL FOR INFORMATION.

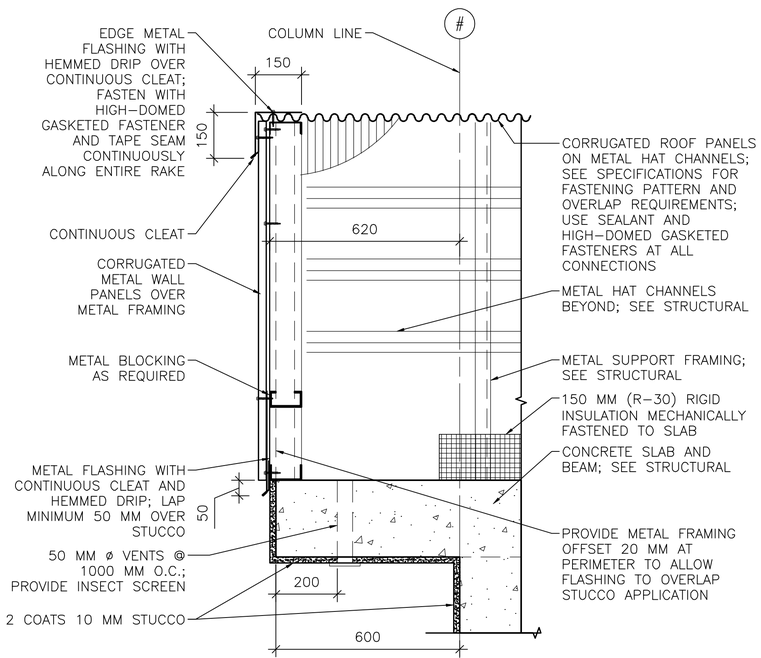

3 A-501 **RAKE/EAVE DETAIL**
SCALE: 1:10

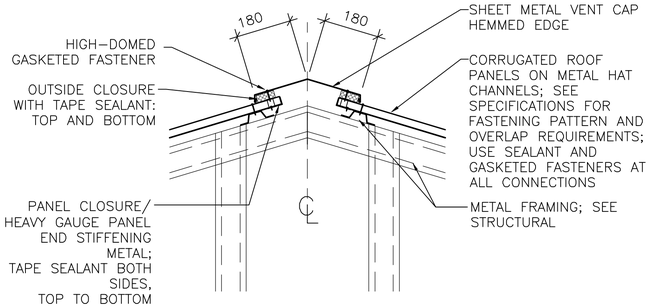

4 A-501 **RIDGE VENT DETAIL**
SCALE: 1:10

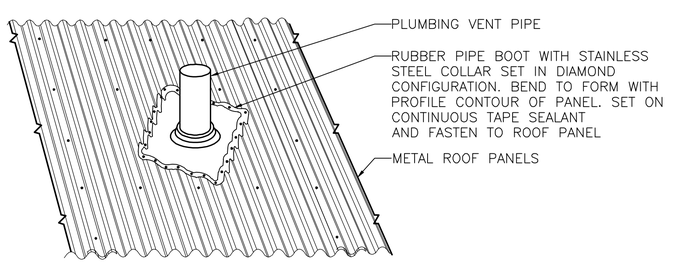

5 A-501 **PLUMBING VENT DETAIL**
SCALE: NTS

LINEAR DIMENSIONS SHOWN ARE IN MILLIMETERS (MM), UNLESS OTHERWISE NOTED

0 200 400
SCALE: 1:10

APPROVED:

A/E DESIGNER OF RECORD

SEAL:

STATE OF SOUTH CAROLINA
KEVIN L. CHAFIN
N. Charleston, SC
6374
12-23-10
REGISTERED ARCHITECT

US ARMY CORPS OF ENGINEERS
AFGHANISTAN ENGINEER DISTRICT

Mark	Description	Date	Appr.

Designed by: KRC
Drawn by: KJG
Checked by: NLJ
Reviewed by: LHM
Submitted by: BAKER

Date: 8/16/10
Design file no.
Drawing code:
Rev: 0
File name: ANARUA-501DT
Plot date: 8/24/2010
Plot scale: x:x

U.S. ARMY CORPS OF ENGINEERS
AFGHANISTAN ENGINEER DISTRICT
APO AE 96338

Michael Baker Jr., Inc
A unit of Michael Baker Corporation
Airside Business Park
100 Airside Drive
Moon Township, PA 15108
www.mbakercorp.com

AFGHAN NATIONAL ARMY
STANDARD DESIGN

FAMILY RESPONSE UNIT OFFICES (STAND ALONE)

EXTERIOR DETAILS

Sheet reference number:
A-501

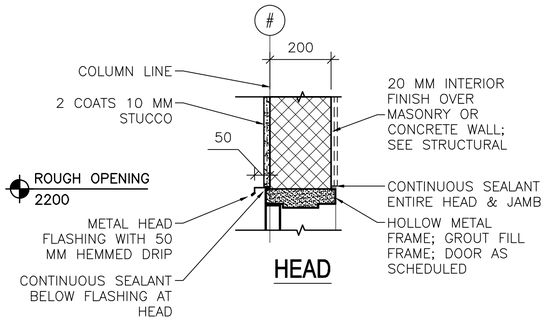

HEAD

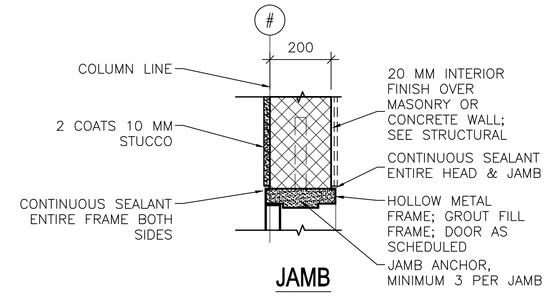

JAMB

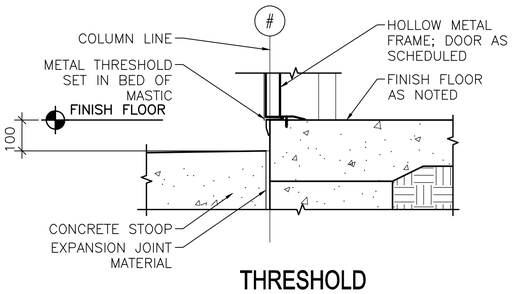

THRESHOLD

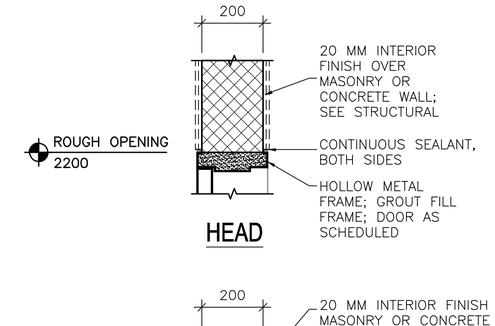

HEAD

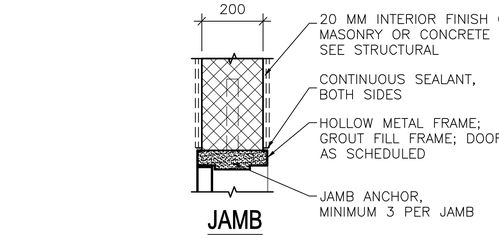

JAMB

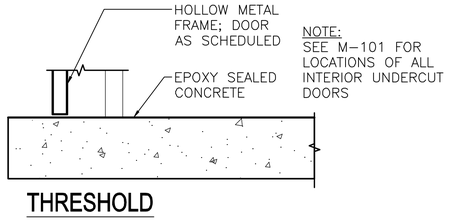

THRESHOLD

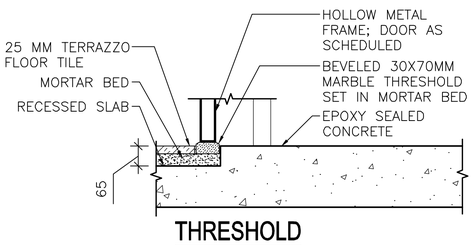

THRESHOLD

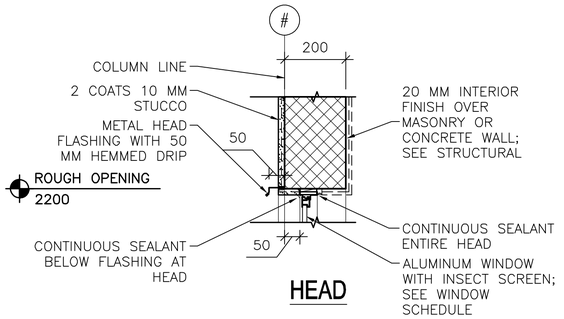

HEAD

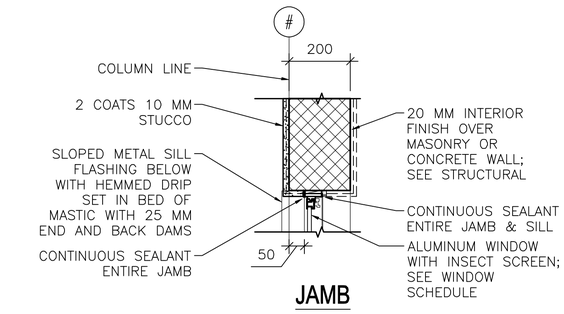

JAMB

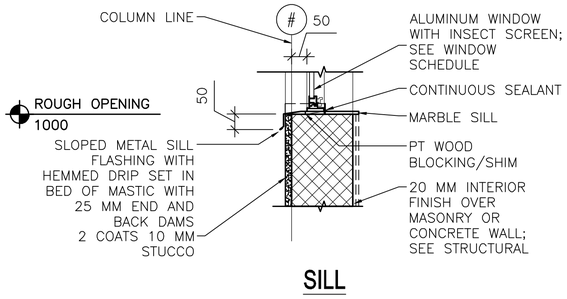

SILL

1 A-502 **EXTERIOR DOOR DETAILS**
SCALE: 1:10

2 A-502 **INTERIOR DOOR DETAILS**
SCALE: 1:10

3 A-502 **EXTERIOR WINDOW DETAILS**
SCALE: 1:10

NOTES:
1. ALL SECURITY BAR STEEL SHALL BE HOT-DIPPED GALVANIZED.

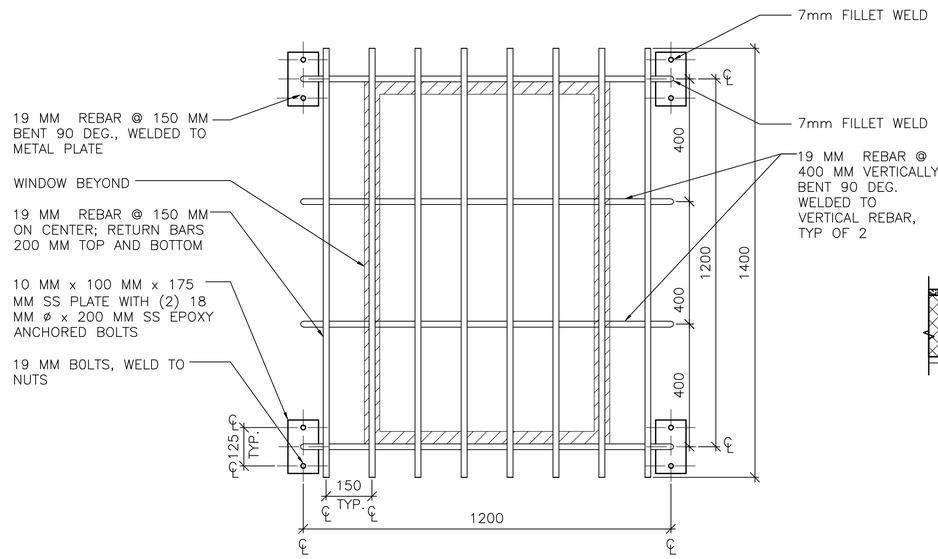

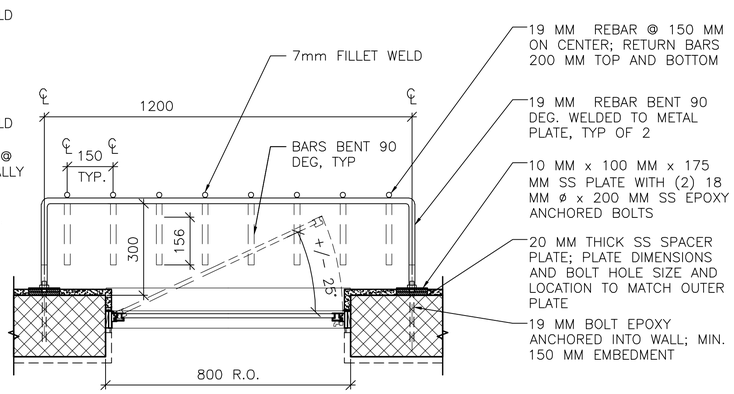

4 A-502 **SECURITY BAR DETAIL**
SCALE: 1:10

GENERAL NOTES:
A. ALL EXTERIOR DOOR AND WINDOW WOOD BLOCKING SHALL BE PRESERVATIVE TREATED.

APPROVED:

A/E DESIGNER OF RECORD

SEAL:

STATE OF SOUTH CAROLINA
KEVIN L. CHAFIN
No. Charleston, SC
6574
REGISTERED ARCHITECT

LINEAR DIMENSIONS SHOWN ARE IN MILLIMETERS (MM), UNLESS OTHERWISE NOTED

0 200 400
SCALE: 1:10

US ARMY CORPS OF ENGINEERS
AFGHANISTAN ENGINEER DISTRICT

Mark	Description	Date	Appr.

U.S. ARMY CORPS OF ENGINEERS
AFGHANISTAN ENGINEER DISTRICT
APO AE 96338

Michael Baker Jr., Inc
A unit of Michael Baker Corporation
Airside Business Park
100 Airside Drive
Moon Township, PA 15108
www.mbakercorp.com

Designed by: KRC
Dwn by: KJG
Ckd by: NLJ
Reviewed by: LHM
Submitted by: BAKER

Date: 8/16/10
Design file no.
Drawing code:
File name: ANAFRUA-002
Plot date: 8/24/2010
Plot scale: x:x
Rev: 0

AFGHAN NATIONAL ARMY
STANDARD DESIGN
FAMILY RESPONSE UNIT OFFICES (STAND ALONE)

HEAD, JAMB & SILL DETAILS

Sheet reference number:
A-502

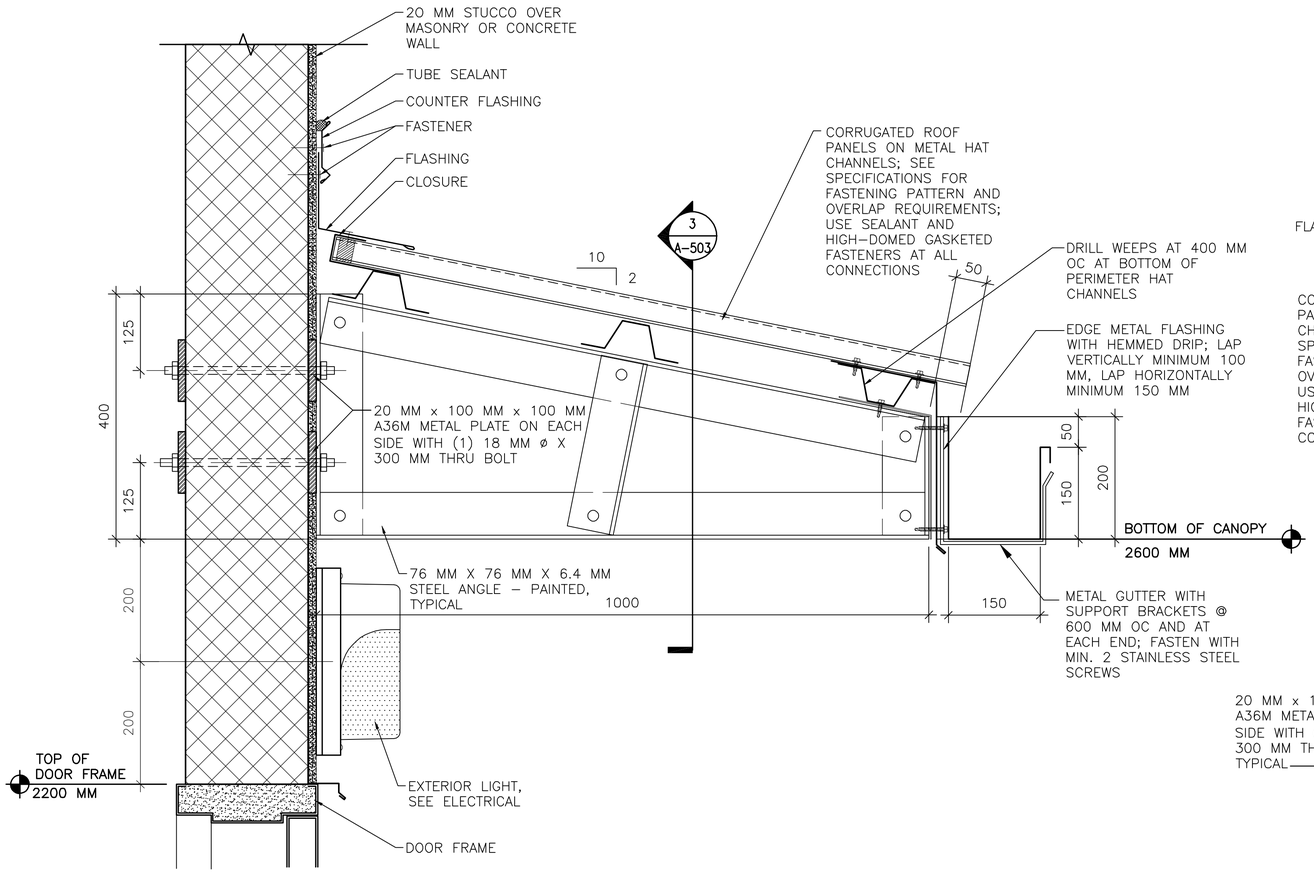

1 A-503 **CANOPY CONNECTION DETAILS**
SCALE: 1:5

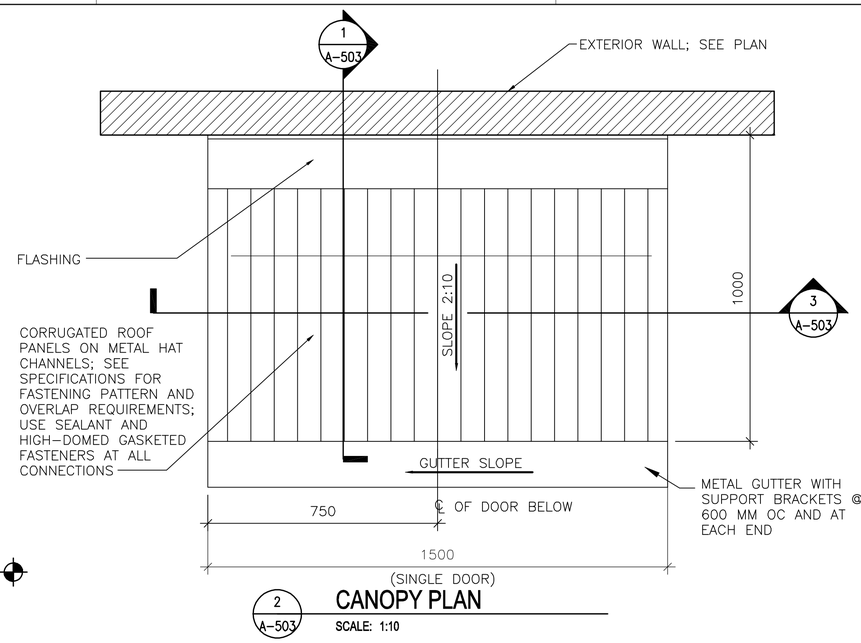

2 A-503 **CANOPY PLAN**
SCALE: 1:10

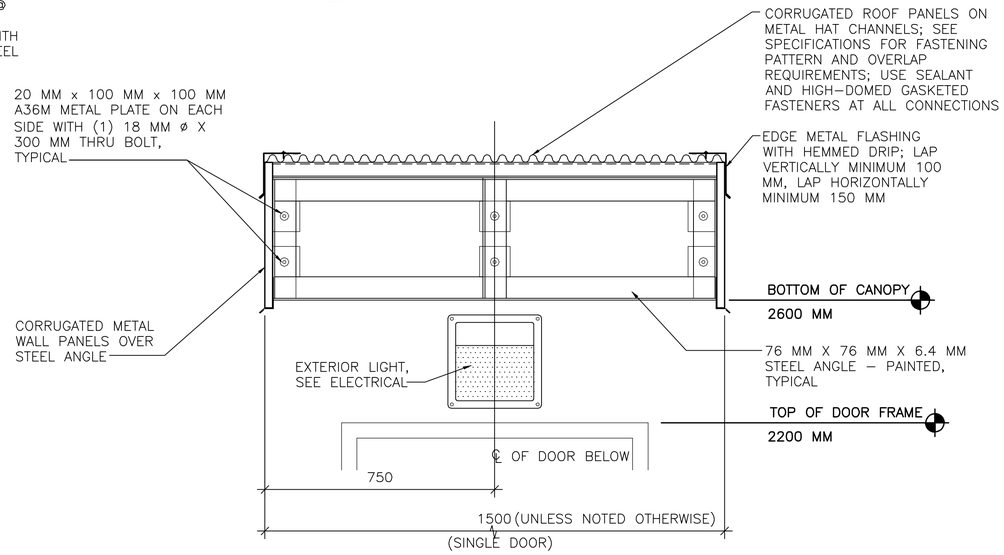

3 A-503 **CANOPY CONNECTION DETAILS**
SCALE: 1:10

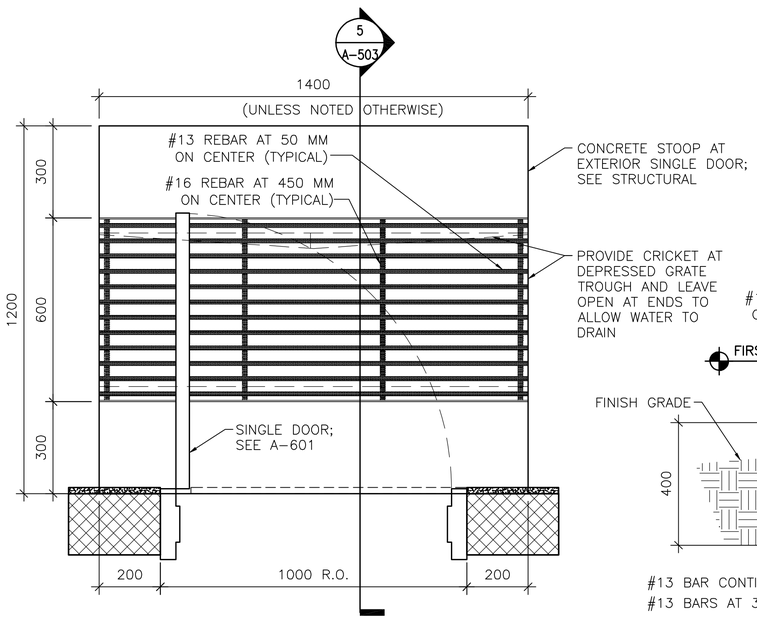

4 A-503 **DOOR STOOP PLAN (WITH GRATE)**
SCALE: 1:10

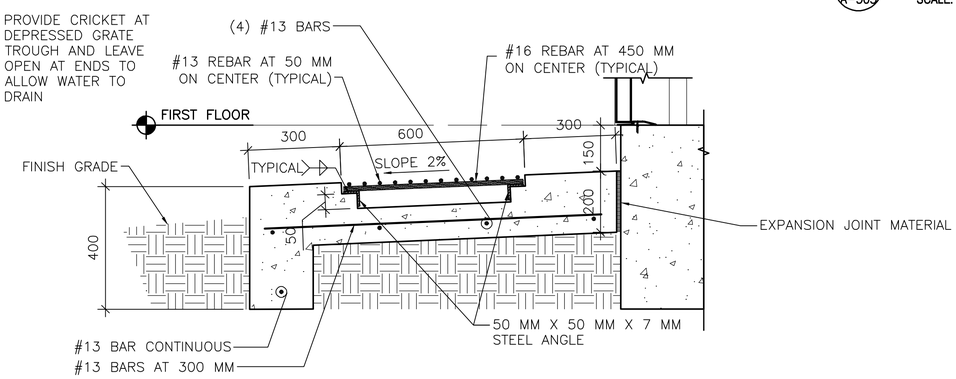

5 A-503 **DOOR STOOP DETAIL**
SCALE: 1:10

SHEET NOTES:

1. SEE A-102 FOR FLOOR PLANS AND CANOPY LOCATIONS.

APPROVED:

A/E DESIGNER OF RECORD

SEAL:

STATE OF SOUTH CAROLINA
KEVIN R. CHAPIN
N. Charleston, SC
6374
11-23-10
REGISTERED ARCHITECT

0 200 400
SCALE: 1:10

0 100 200
SCALE: 1:5

LINEAR DIMENSIONS SHOWN ARE IN MILLIMETERS (MM), UNLESS OTHERWISE NOTED

US ARMY CORPS OF ENGINEERS
AFGHANISTAN ENGINEER DISTRICT

Mark	Description	Date	Appr.

Date: 8/16/10
Design file no.
Drawing code:
Rev: 0
Designed by: DLB
Dwn by: ECN
Ckd by: KRC
Reviewed by: LHM
Submitted by: BAKER
File name: ANAFRUA-A05CDT
Plot date: 8/24/2010
Plot scale: x:x

U.S. ARMY CORPS OF ENGINEERS
AFGHANISTAN ENGINEER DISTRICT
APO AE 96338

Michael Baker Jr., Inc
A unit of Michael Baker Corporation
Airside Business Park
100 Airside Drive
Moon Township, PA 15108
www.mbakercorp.com

AFGHAN NATIONAL ARMY
STANDARD DESIGN
FAMILY RESPONSE UNIT OFFICES (STAND ALONE)

STOOP & CANOPY DETAILS

Sheet reference number:
A-503

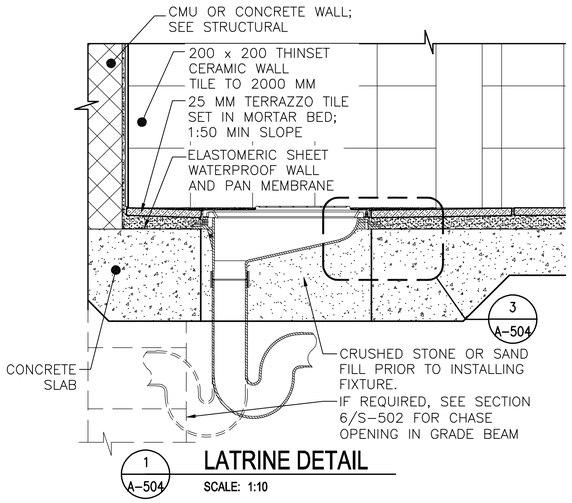

1 A-504 **LATRINE DETAIL**

SCALE: 1:10

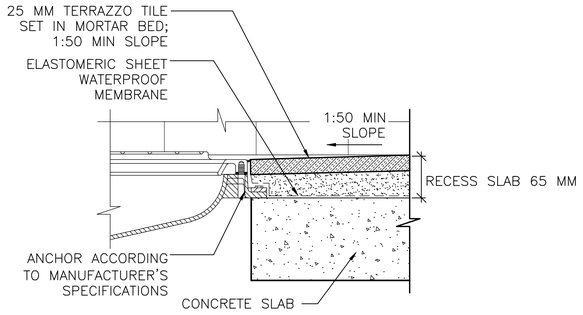

3 A-504 **MOUNTING DETAIL**

SCALE: 1:5

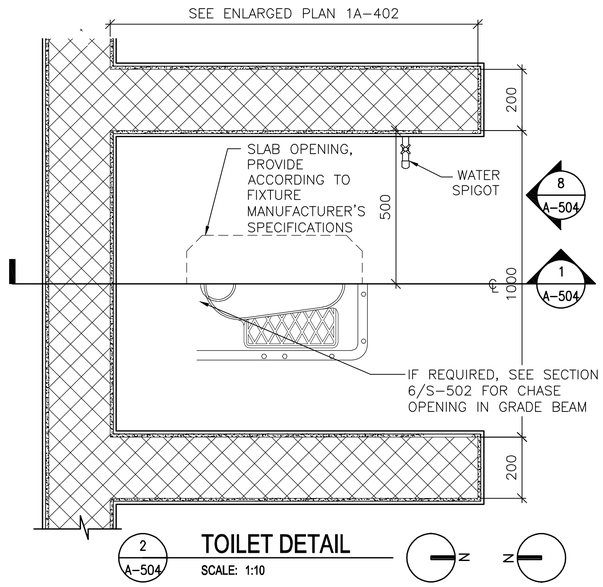

2 A-504 **TOILET DETAIL**

SCALE: 1:10

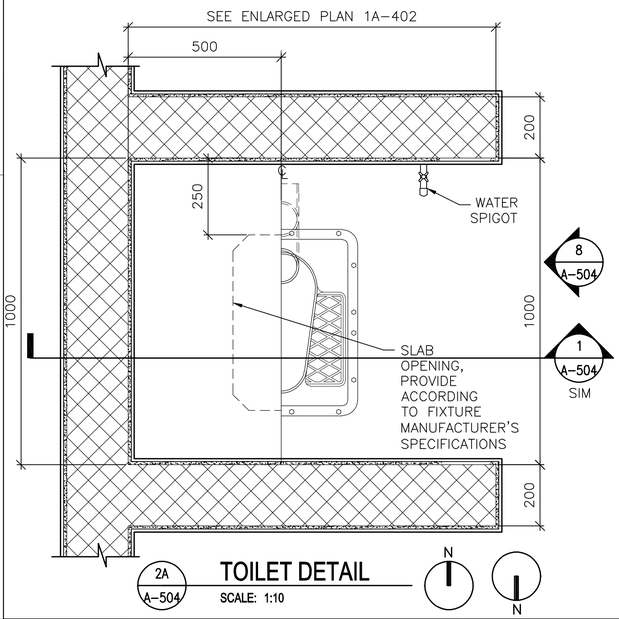

2A A-504 **TOILET DETAIL**

SCALE: 1:10

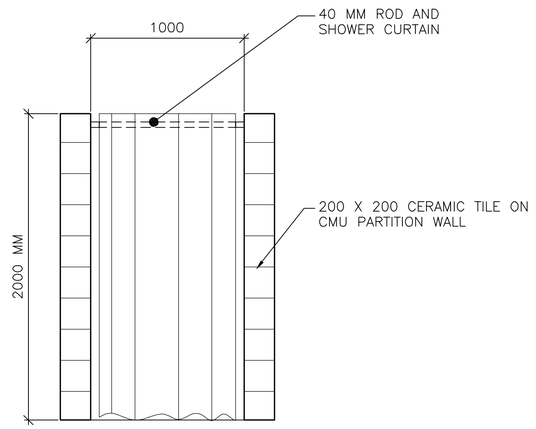

4 A-504 **TOILET PARTITION ELEVATION**

SCALE: 1:20

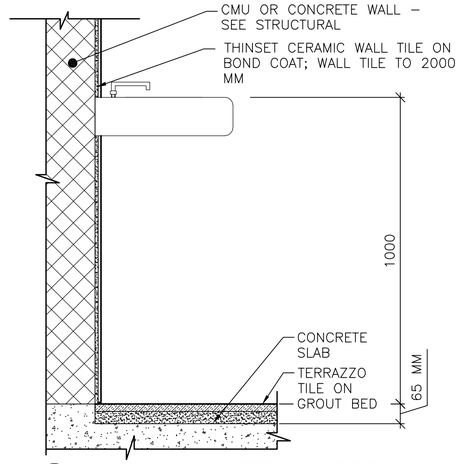

5 A-504 **WALL MOUNTED LAVATORY**

SCALE: 1:10

LINEAR DIMENSIONS SHOWN ARE IN MILLIMETERS (MM), UNLESS OTHERWISE NOTED

0 100 200
SCALE: 1:5

0 200 400
SCALE: 1:10

0 400 800
SCALE: 1:20

APPROVED:

A/E DESIGNER OF RECORD

SEAL:

STATE OF SOUTH CAROLINA
JOHN L. CHAFIN
N. Charleston, SC
6374
11-23-10
REGISTERED ARCHITECT

US ARMY CORPS OF ENGINEERS
AFGHANISTAN ENGINEER DISTRICT

Mark	Description	Date	Appr.

Mark	Description	Date	Appr.

Date: 8/16/10
Design file no.
Drawing code:
File name: ANAFRUA-504DT
Plot date: 8/24/2010
Plot scale: x:X
Rev: 0

Designed by: KRC
Dwn by: KJG
Ckd by: NLJ
Reviewed by: LHM
Submitted by:

U.S. ARMY CORPS OF ENGINEERS
AFGHANISTAN ENGINEER DISTRICT
APO AE 96338

Michael Baker Jr, Inc
A unit of Michael Baker Corporation
Airside Business Park
100 Airside Drive
Moon Township, PA 15108
www.mbakercorp.com

BAKER

AFGHAN NATIONAL ARMY
STANDARD DESIGN

FAMILY RESPONSE UNIT OFFICES (STAND ALONE)

TOILET & LAVATORY DETAILS

Sheet reference number:
A-504

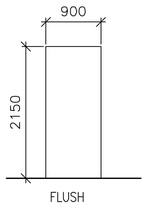

A

1 A-601 **DOOR TYPES**
SCALE: 1:50

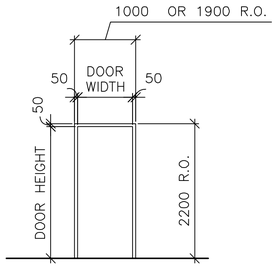

1

2 A-601 **FRAME TYPES**
SCALE: 1:50

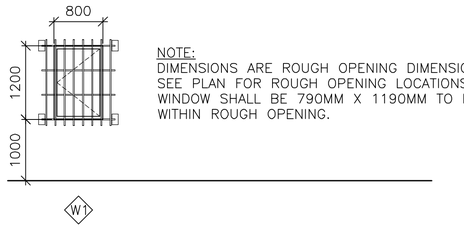

NOTE:
DIMENSIONS ARE ROUGH OPENING DIMENSIONS. SEE PLAN FOR ROUGH OPENING LOCATIONS. WINDOW SHALL BE 790MM X 1190MM TO FIT WITHIN ROUGH OPENING.

3 A-601 **WINDOW TYPES**
SCALE: 1:50

WINDOW TYPE NOTES:

1. ALL EXTERIOR WINDOWS SHALL BE ALUMINUM WITH INSECT SCREENS. WINDOWS SHALL BE COMMERCIAL GRADE.
2. ALL EXTERIOR WINDOWS SHALL BE OPERABLE.
3. SEE 4/A-502 FOR SECURITY BAR DETAILS.

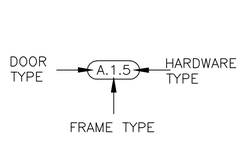

4 A-601 **DOOR TAG**
SCALE: NTS

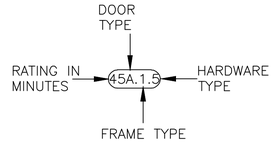

5 A-601 **RATED DOOR TAG**
SCALE: NTS

DOOR TAG NOTES:

1. THE DOOR TAG INDICATES THE DOOR TYPE, FRAME TYPE AND HARDWARE SET FOR EACH DOOR.
2. THE DOOR TAG FOR RATED DOORS INCLUDES THE RATING OF THE DOOR IN MINUTES.

THIS SHEET IS STANDARD AND IS INCLUSIVE OF ALL THE DOOR/ WINDOW/ HARDWARE TYPES FOR THE ENTIRE CONTRACT. NOT ALL DOOR/ WINDOW/ HARDWARE TYPES ARE USED FOR ANY PARTICULAR BUILDING DESIGN. CONTRACTOR SHALL REFER TO THE FLOOR PLAN FOR THE TYPES BEING USED.

EXTERIOR DOOR HARDWARE TYPES:

HW-1
1-1/2 PR HINGES, A5112 114 X 114
1 EA RIM EXIT DEVICE, TYPE 1
1 EA CYLINDER. E09221A, GRADE 1
1 EA OVERHEAD CLOSER, C02061, LOW RESISTANCE
1 EA THRESHOLD, J32130
3 EA DOOR SILENCERS, L03011
1 EA WEATHERSTRIPPING

HW-2
1-1/2 PR HINGES, A5112 114 X 114
1 EA LOCKSET, F13 ENTRY LOCK W/LEVER HANDLES, GRADE 1
1 EA OVERHEAD CLOSER, C02061, LOW RESISTANCE
1 EA THRESHOLD, J32130
3 EA DOOR SILENCERS, L03011
1 EA WEATHERSTRIPPING

HW-3
3 PR HINGES, A5112 114 X 114
2 EA RIM EXIT DEVICE, TYPE 1
2 EA CYLINDER. GRADE 1
2 EA OVERHEAD CLOSER, C02061, LOW RESISTANCE
1 EA DOOR COORDINATOR, TYPE 21
1 EA ASTRAGAL
1 EA THRESHOLD, J32130
2 EA DOOR SILENCERS, L03011
1 EA WEATHERSTRIPPING

HW-4
3 PR HINGES, A5112 114 X 114
1 EA LOCKSET W/LEVER HANDLES. GRADE 1, F13
1 EA OVERHEAD CLOSER, C02061, LOW RESISTANCE
2 EA MAGNETIC HOLDER PIN, ATTACHED TO DOOR LEAF
2 EA MAGNETIC HOLDER RECEIVER, ATTACHED TO STOOP
2 EA LEVER EXTENSION FLUSH BOLTS, L04081
1 EA ASTRAGAL
1 EA THRESHOLD, J32130
2 EA DOOR SILENCERS, L03011
1 EA WEATHERSTRIPPING

DOOR AND HARDWARE NOTES:

1. INTERIOR AND EXTERIOR METAL DOORS AND FRAME COLORS SHALL MATCH ADJACENT WALL COLORS AS SELECTED BY THE CONTRACTING OFFICER.
2. FRAMES, EXCEPT FIRE-RATED FRAMES, SHALL BE MOUNTED AND ADJUSTED IN ACCORDANCE WITH MANUFACTURER'S INSTRUCTIONS. FRAMES SHALL BE FASTENED WITH MINIMUM OF THREE ANCHORS PER JAMB AT EQUAL INTERVALS.
3. DIMENSIONS SHOWN ON DOOR TYPES DETAIL ARE BASED UPON MODULAR MASONRY (OR ROUGH OPENING) WIDTH OF 1000MM AND HEIGHT OF 2200 MM FOR STANDARD PERSONNEL DOORS. CONTRACTOR SHALL COORDINATE WITH DOOR SUPPLIER TO ENSURE THAT DIMENSIONS OF DOORS AND FRAMES PROVIDED ARE COMPATIBLE WITH DOOR OPENING DIMENSIONS.
4. HARDWARE SHALL BE HEAVY DUTY, COMMERCIAL GRADE, STAINLESS STEEL WITH A SATIN OR BRUSHED FINISH.
5. HARDWARE TYPES INCLUDE BUILDERS HARDWARE MANUFACTURERS ASSOCIATION (BMHA) NUMBER.
6. DOORS IN 2 HOUR RATED PARTITIONS SHALL BE 1.5 HOUR (90 MINUTE) RATED DOORS IN ACCORDANCE WITH NFPA 101, TABLE 8.3.4.2.
7. DOORS IN 1 HOUR RATED WALLS SHALL BE 3/4 HOUR (45 MINUTE) RATED DOORS IN ACCORDANCE WITH NFPA 101, TABLE 8.3.4.2.
8. DOORS IN 1 HOUR RATED CORRIDOR WALLS SHALL BE 1/3 HOUR (20 MINUTE) IN ACCORDANCE WITH NFPA 101, TABLE 8.3.4.2.
10. PROVIDE DOOR STOPS TO PROTECT WALLS ON LOCATIONS WHERE DOOR SWING WILL STRIKE WALL.
11. SEE M-101 FOR LOCATIONS OF ALL UNDERCUT DOORS.

INTERIOR DOOR HARDWARE TYPES:

HW-5
1-1/2 PR HINGES, A8133 114 X 114
1 EA LOCKSET W/LEVER HANDLES, F08, GRADE 1
1 EA WALL STOP, L02101 OR L02161
3 EA DOOR SILENCERS, L03011

HW-6
1-1/2 PR HINGES, A8112 114 X 114
1 EA LOCKSET W/LEVER HANDLES, F08, GRADE 1
1 EA WALL STOP, L02101 OR L02161
1 EA OVERHEAD CLOSER, C02061, LOW RESISTANCE
3 EA DOOR SILENCERS, L03011

HW-7
1-1/2 PR HINGES, A8133
1 EA LOCKSET W/LEVER HANDLES, F13 GRADE 1
1 EA WALL STOP, L02101 OR L02161
2 EA MOP PLATE, J103
3 EA DOOR SILENCERS, L03011

HW-8
1-1/2 PR HINGES, A8112
1 EA LOCKSET W/LEVER HANDLES, F13 GRADE 1
1 EA WALL STOP, L02101 OR L02161
2 EA MOP PLATE, J103
1 EA OVERHEAD CLOSER, C02061, LOW RESISTANCE
3 EA DOOR SILENCERS, L03011

HW-9
1-1/2 PR HINGES, A5112 114 X 114
1 EA RIM EXIT DEVICE, TYPE 1
1 EA CYLINDER. E09221A, GRADE 1
1 EA OVERHEAD CLOSER, C02061, LOW RESISTANCE
3 EA DOOR SILENCERS, L03011

HW-10
3 PR HINGES, A5112 114 X 114
1 EA LOCKSET W/LEVER HANDLES. GRADE 1, F13
2 EA LEVER EXTENSION FLUSH BOLTS, L04081
1 EA ASTRAGAL
2 EA DOOR SILENCERS, L03011

HW-11
1-1/2 PR HINGES, A8112 114 X 114
1 EA LOCKSET W/LEVER HANDLES, F13, GRADE 1
1 EA WALL STOP, L02101 OR L02161
1 EA OVERHEAD CLOSER, C02061, LOW RESISTANCE
3 EA DOOR SILENCERS, L03011
1 EA ROBE HOOK

HW-13
3 PR HINGES, A5112 114 X 114
1 EA LOCKSET W/LEVER HANDLES. GRADE 1, F13
1 EA OVERHEAD CLOSER, C02061, LOW RESISTANCE
2 EA LEVER EXTENSION FLUSH BOLTS, L04081
1 EA ASTRAGAL
2 EA DOOR SILENCERS, L03011

HW-14
3 PR HINGES, A5112 114 X 114
2 EA RIM EXIT DEVICE, TYPE 1
2 EA CYLINDER. GRADE 1
2 EA OVERHEAD CLOSER, C02061, LOW RESISTANCE
1 EA DOOR COORDINATOR, TYPE 21
1 EA ASTRAGAL
2 EA DOOR SILENCERS, L03011

APPROVED:

A/E DESIGNER OF RECORD

SEAL:

US ARMY CORPS OF ENGINEERS
AFGHANISTAN ENGINEER DISTRICT

Mark	Description	Date	Appr.

Designed by: KRC | Drawn by: KJG | Checked by: NLJ | Reviewed by: LHM | Submitted by: BAKER

U.S. ARMY CORPS OF ENGINEERS
AFGHANISTAN ENGINEER DISTRICT
APO AE 96338

Michael Baker Jr., Inc
A unit of Michael Baker Corporation
Airside Business Park
100 Airside Drive
Moon Township, PA 15108
www.mbakercorp.com

Date: 8/16/10
Design file no.
Drawing code:
File name: ANAFRUA-A01SCH
Plot date: 8/24/2010
Plot scale: x:x
Rev: 0

AFGHAN NATIONAL ARMY
STANDARD DESIGN
FAMILY RESPONSE UNIT OFFICES (STAND ALONE)

WINDOW AND DOOR SCHEDULES

Sheet reference number:
A-601

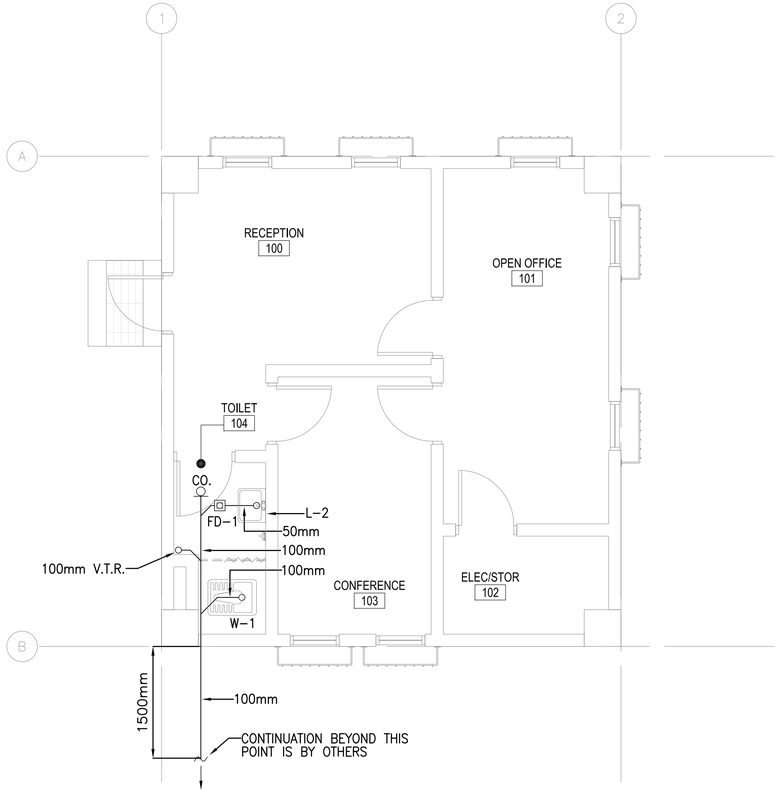

1 P-101 **FLOOR PLAN - PLUMBING (SANITARY AND VENT)**

SCALE: 1:50

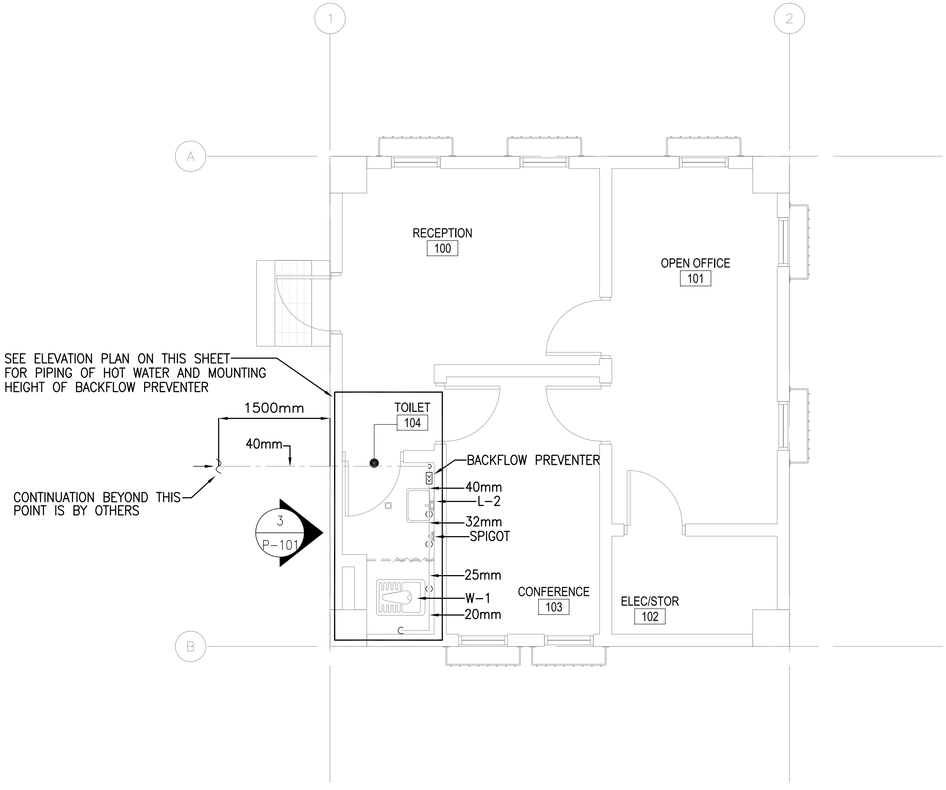

2 P-101 **FLOOR PLAN - PLUMBING (HOT AND COLD WATER)**

SCALE: 1:50

FLOOR PLAN NOTES:

1. DO NOT SCALE DRAWINGS – ALL DIMENSIONS AND CONDITIONS SHALL BE CHECKED AND VERIFIED BY THE CONTRACTOR AT THE SITE.
2. ALL WORK PERFORM ON THIS BUILDING SHALL BE IN COMPLIANCE WITH ALL PERTINENT CODES, RULES, ORDINANCES AND REGULATIONS OF THE GOVERNING AUTHORITIES.
3. ALL WORK PERFORM ON UNDER AND IN CONNECTION WITH THESE DRAWINGS AND SPECIFICATIONS SHALL BE IN STRICT COMPLIANCE WITH THE LATEST SAFETY AND HEALTH STANDARDS.
4. REPORT ANY DISCREPANCIES FOUND IN THE PLUMBING DRAWINGS AND/OR IN THE SPECIFICATIONS DURING THE BIDDING PROCESS FOR CLARIFICATION BY THE ENGINEER.
5. ALL EASTERN STYLE WATER CLOSETS IN THIS FACILITY ARE TO HAVE THE FIXTURE DESIGNATION OF W-1. EACH FIXTURE SHALL HAVE A 25mm COLD WATER LINE AND A 100mm SANITARY CONNECTION.
6. ALL LAV FIXTURES ARE TO HAVE THE FIXTURE DESIGNATION OF L-2. EACH FIXTURE SHALL HAVE A 15mm COLD WATER, 15mm HOT WATER CONNECTION AND A 80mm SANITARY CONNECTION.
7. ALL WATER, SANITARY AND VENT PIPING SHALL BE EXPOSED. RUN LINES TIGHT TO THE CEILING AND WALL.
8. REFER TO SHEETS P501 FOR DETAILS.
9. ALL SANITARY BRANCH LINES SHALL BE SLOPED AT 6mm PER 0.3m, AND ALL MAIN LINES SHALL BE SLOPED AT 3mm PER 0.3m, UNLESS OTHERWISE NOTED OR AS REQUIRED BY THE LOCAL AUTHORITY HAVING JURISDICTION.

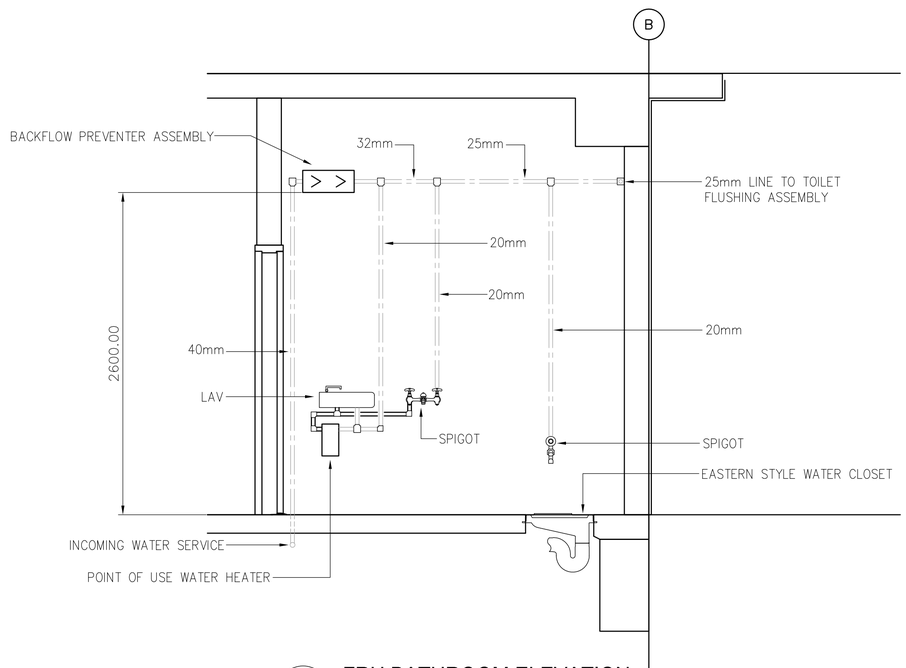

3 P-101 **FRU BATHROOM ELEVATION**

SCALE: 1:25

LINEAR DIMENSIONS SHOWN ARE IN MILLIMETERS (MM), UNLESS OTHERWISE NOTED

0 1000 2000

SCALE: 1:50

APPROVED:

A/E DESIGNER OF RECORD

SEAL:

COMMONWEALTH OF PENNSYLVANIA
REGISTERED PROFESSIONAL
MATTHEW R. SOTOSKY
ENGINEER
045576-E

US ARMY CORPS OF ENGINEERS
AFGHANISTAN ENGINEER DISTRICT

Mark	Description	Date	Appr

Date: 06/30/10 | Rev: 0
Design file no.
Drawing code:
File name: ANAFRUP-101
Plot date: 07/30/2010
Plot scale: xx

Designed by: RHM | Ckd by: CJM
Dwn by: MM | Reviewed by: MRS
Submitted by: BAKER

U.S. ARMY CORPS OF ENGINEERS
AFGHANISTAN ENGINEER DISTRICT
APO AE 96338

Michael Baker Jr., Inc.
A unit of Michael Baker Corporation
Airside Business Park
100 Airside Drive
Moon Township, PA 15108
www.mbakercorp.com

AFGHAN NATIONAL ARMY
STANDARD DESIGN
FAMILY RESPONSE UNIT OFFICES (STAND ALONE)

PLUMBING – FLOOR PLAN

Sheet reference number:
P-101

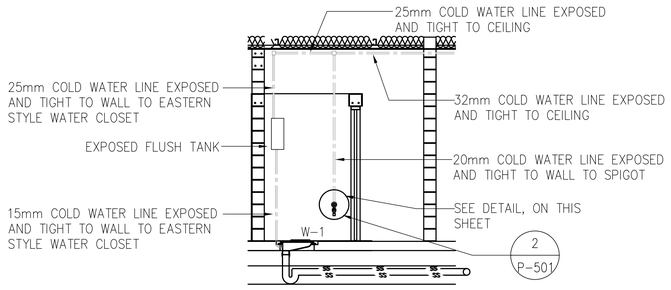

TYPICAL EASTERN STYLE WATER CLOSET SANITARY & WATER INSTALLATION SCHEMATIC

1 / P-501 — SCALE: N.T.S.

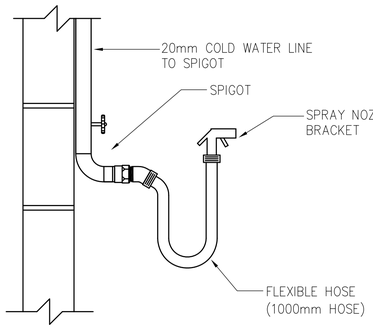

TYPICAL DETAIL - SPIGOT, FLEXIBLE HOSE, AND SPRAY NOZZLE

2 / P-501 — SCALE: N.T.S.

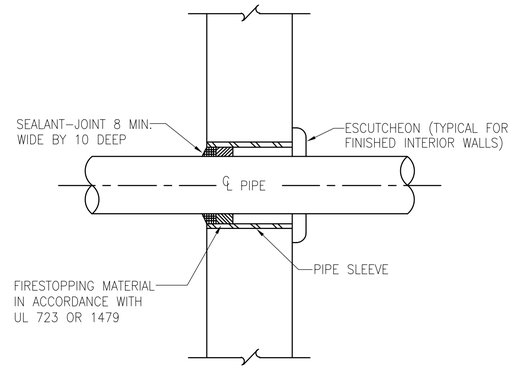

TYPICAL WALL PENETRATION DETAIL

3 / P-501 — SCALE: N.T.S.

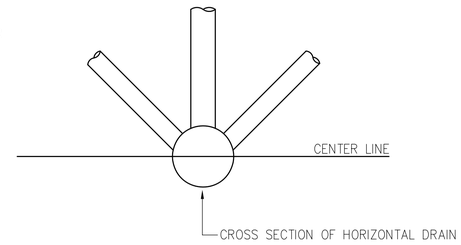

ACCEPTABLE VENT CONNECTIONS TO HORIZONTAL DRAIN - DETAIL

4 / P-501 — SCALE: N.T.S.

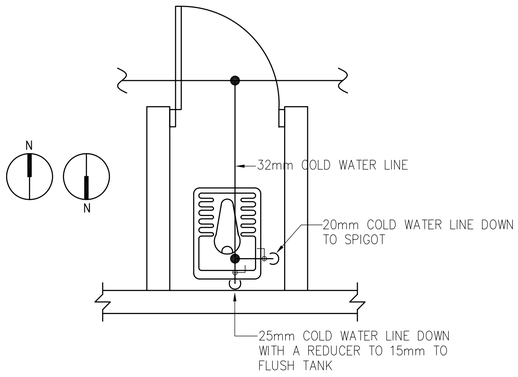

TYPICAL EASTERN STYLE WATER CLOSET WITH SPIGOT WATER PIPING DETAIL

5 / P-501 — SCALE: N.T.S.

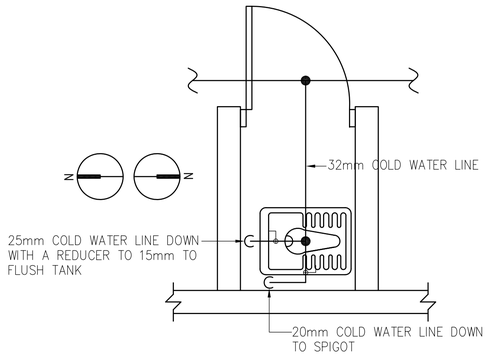

TYPICAL EASTERN STYLE WATER CLOSET WITH SPIGOT WATER PIPING DETAIL

6 / P-501 — SCALE: N.T.S.

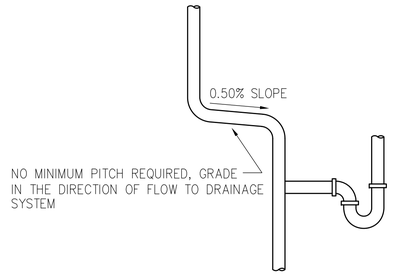

TYPICAL VENT SLOPE DETAILS

7 / P-501 — SCALE: N.T.S.

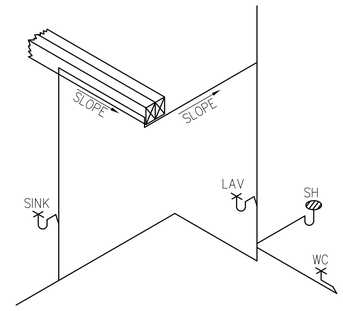

TYPICAL VENT SLOPE DETAILS

8 / P-501 — SCALE: N.T.S.

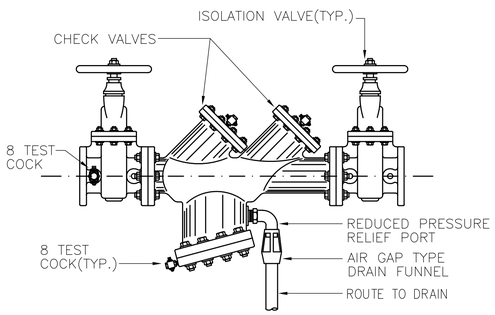

TYPICAL BACKFLOW PREVENTER DETAIL

9 / P-501 — SCALE: N.T.S.

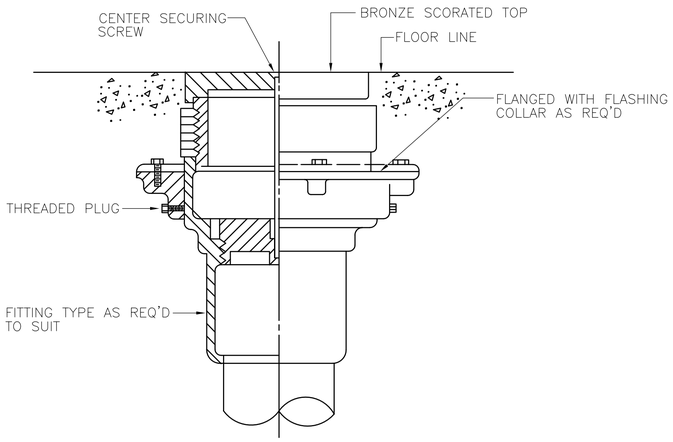

TYPICAL FLOOR CLEANOUT DETAIL

10 / P-501 — SCALE: N.T.S.

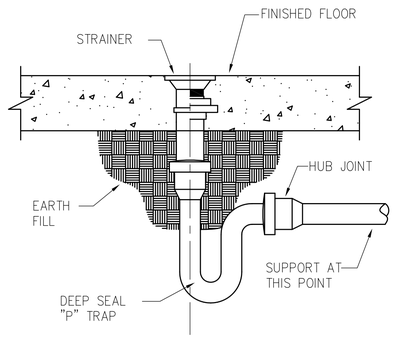

ALL FLOOR DRAINS SHALL HAVE DEEP SEAL TRAPS WITH A MINIMUM 4" WATER SEAL.

FLOOR DRAIN DETAIL

11 / P-501 — SCALE: N.T.S.

FIXTURE LIST

TYPE	ITEM	SOIL & WASTE	VENT	COLD WATER	HOT WATER	REMARKS	REMARKS 2
W-1	EASTERN STYLE WATER CLOSET	100mm	50mm	25mm	------	FLUSH VALVE	LOW FLOW EFFICIENT TYPE
L-2	WALL MOUNTED	40mm	40mm	15mm	15mm	WALL HUNG	LOW FLOW EFFICIENT TYPE
FD-1	FLOOR DRAIN	50mm	---	---	---	FINISH FLOOR SPACES	----------
HWH-1	POINT OF USE WATER HEATER	---	---	SEE DWG.	SEE DWG.	INSTANTANEOUS ELECTRIC WATER HEATER, 220/50/1, 7kW	----------

APPROVED:

A/E DESIGNER OF RECORD

SEAL:

COMMONWEALTH OF PENNSYLVANIA — REGISTERED PROFESSIONAL — MATTHEW R. SOTOSKY — ENGINEER — 045576-E

US ARMY CORPS OF ENGINEERS
AFGHANISTAN ENGINEER DISTRICT

Mark	Description	Date	Appr

Designed by: RMH | Drawn by: RMH | Checked by: CJM | Reviewed by: CJM | Submitted by:

Date: 06/30/10 | Rev: 0
Design file no.
Drawing code:
File name: ANAFRUP-501
Plot date: 07/30/2010
Plot scale: 1:100

U.S. ARMY CORPS OF ENGINEERS
AFGHANISTAN ENGINEER DISTRICT
APO AE 96338

Michael Baker Jr., Inc
A unit of Michael Baker Corporation
Airside Business Park
100 Airside Drive
Moon Township, PA 15108
www.mbakercorp.com

AFGHAN NATIONAL ARMY
STANDARD DESIGN

FAMILY RESPONSE UNIT OFFICES (STAND ALONE)

PLUMBING DETAILS

Sheet reference number: P-501

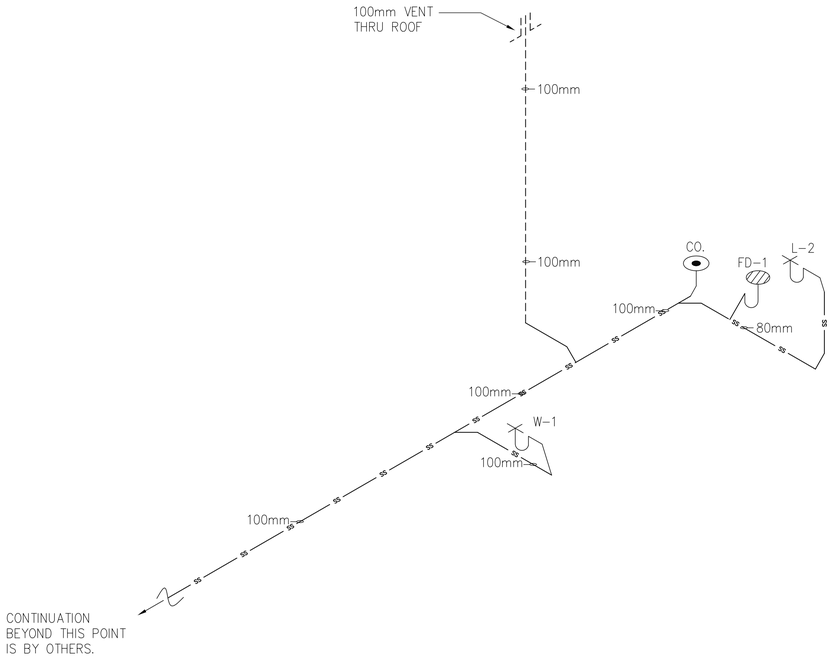

1 P-901 **DRAINAGE ISOMETRIC**

SCALE: N.T.S.

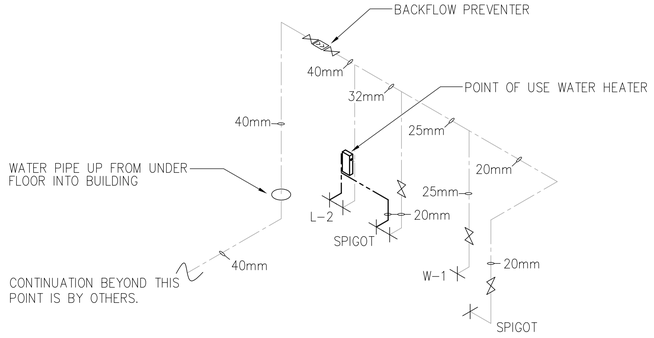

2 P-901 **HOT AND COLD WATER ISOMETRIC**

SCALE: N.T.S.

GENERAL PLUMBING NOTES:

1. CONTRACTOR TO REFER TO ARCHITECTURAL DRAWINGS FOR DETAIL OF VENT THRU ROOF AND RESPONSIBILITY OF VENT THRU ROOF.

PLUMBING SYMBOLS

- SS — SS — SANITARY SEWER PIPING (BELOW GROUND)
- SS — SS — SANITARY SEWER PIPING (ABOVE GROUND)
- VENT PIPING (V)
- COLD WATER PIPING (CW)
- HOT WATER PIPING (HW)
- BALL VALVE
- BACKFLOW PREVENTER
- OR CLEANOUT (CO.)
- ROOF PENETRATION

APPROVED:

A/E DESIGNER OF RECORD

SEAL:

COMMONWEALTH OF PENNSYLVANIA
REGISTERED PROFESSIONAL
MATTHEW R. SOTOSKY
ENGINEER
045576-E

US ARMY CORPS OF ENGINEERS
AFGHANISTAN ENGINEER DISTRICT

Mark	Description	Date	Appr.

Date: 06/30/10 Rev: 0
Designed by: RMH
Drawn by: RMH
Ckd by: CJM
Reviewed by: CJM
Submitted by:
Design file no.
Drawing code:
File name: ANAFRUP-901
Plot date: 07/30/2010
Plot scale: 1:100

U.S. ARMY CORPS OF ENGINEERS
AFGHANISTAN ENGINEER DISTRICT
APO AE 96338

Michael Baker Jr., Inc.
A unit of Michael Baker Corporation
Airside Business Park
100 Airside Drive
Moon Township, PA 15108
www.mbakercorp.com

AFGHAN NATIONAL ARMY
STANDARD DESIGN

FAMILY RESPONSE UNIT OFFICES (STAND ALONE)

PLUMBING ISOMETRICS

Sheet reference number:
P-901

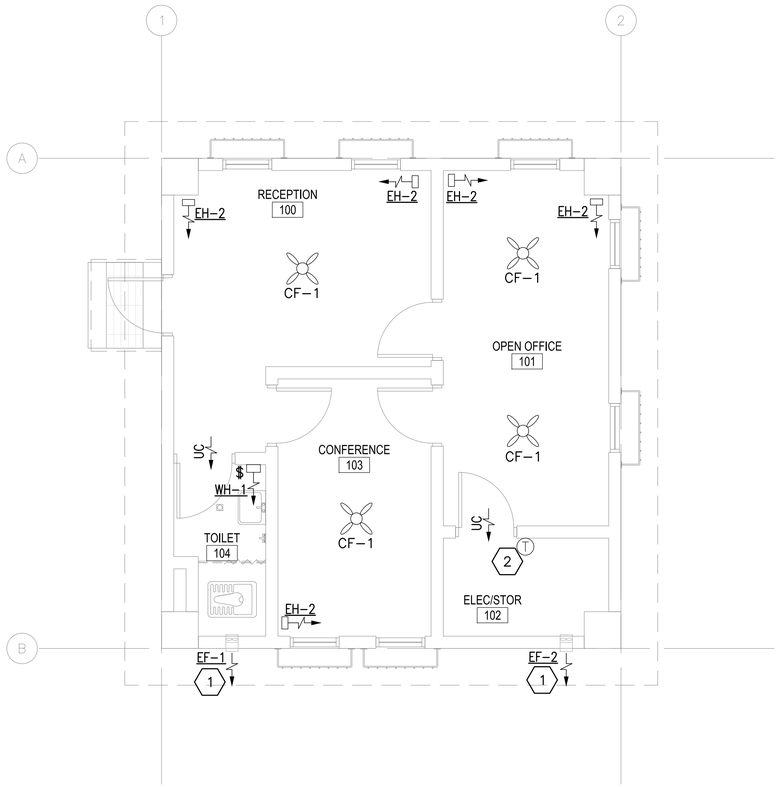

1 / M-101 HVAC FLOOR PLAN

SCALE: 1:50

ELECTRIC UNIT HEATER SCHEDULE

NO.	CMS	KW	FINAL AIR TEMP. °C	ELECT. CHAR.	MOUNTING
EH-2	0.200	2.6	38	220/1/50	WALL HUNG

NOTES:
1. UNIT HEATERS SHALL HAVE TAMPER PROOF INTEGRAL STATS.
2. COORDINATE LOCATION AND ORIENTATION IN FIELD.

EXHAUST FAN SCHEDULE

NO.	TYPE	FAN CMS	DRIVE	HP	SP mmH2O	ELECTRICAL DATA	SWITCH
EF-1	WALL	0.035	DIRECT	FRACT	9.5	220/1/50	@ WALL
EF-2	WALL	0.035	DIRECT	FRACT	9.5	220/1/50	W/ STAT

NOTE:
1. FANS SHALL HAVE SPRING OPERATED BACK DRAFT DAMPER.

CEILING FAN

NO.	BLADE SIZE mm	BLADE SIZE IN	VOLTAGE	SWITCH	REMARKS
CF-1	1320	52	220/1/50	@ WALL	3 SPEED REVERSIBLE MOTOR

NOTES:
1. INSTALL FANS 2.5M AFF.
2. PROVIDE WITH OUT LIGHT FIXTURE.
3. PROVIDE WITH REMOTE MOUNTED ON-OFF SWITCH SHOWN ON ELECTRICAL DRAWINGS.

ELECTRIC FAN-FORCED WALL HEATER SCHEDULE

NO.	KW	AMPS	KW/HR	ELECT. CHAR.	MOUNTING
WH-1	0.5	2.1	38	220/1/50	SURFACE

NOTES:
1. COORDINATE LOCATION AND ORIENTATION IN FIELD.

GENERAL NOTES:

1. DO NOT SCALE DRAWINGS – ALL DIMENSIONS AND CONDITIONS SHALL BE CHECKED AND VERIFIED BY THE CONTRACTOR AT THE SITE.
2. ALL WORK PERFORMED ON THIS BUILDING SHALL BE IN COMPLIANCE WITH ALL PERTINENT CODES, RULES, ORDINANCES AND REGULATIONS OF THE GOVERNING AUTHORITIES.
3. ALL WORK PERFORMED UNDER AND IN CONNECTION WITH THESE DRAWINGS AND SPECIFICATIONS SHALL BE IN STRICT COMPLIANCE WITH THE LATEST SAFETY AND HEALTH STANDARDS.

SYMBOLS:

- (X) KEY NOTE
- (0.050) AIR VOLUME IN CUBIC METERS PER SECOND (CMS)
- (T) THERMOSTAT WITH LOCKING COVER
- UC DOOR UNDERCUT 25mm.
- $ SINGLE POLE SWITCH FOR EXHAUST FAN – 20A RATED
- ELECTRIC HEATER
- CEILING FAN
- DIRECTION OF AIR FLOW

ABBREVIATIONS:

AFF	ABOVE FINISH FLOOR
CF	CEILING FANS
CMS	CUBIC METERS PER SECOND
EF	EXHAUST FAN
EH	ELECTRIC HEAT
STATS	THERMOSTATS
WH	WALL HEATER

KEY NOTE:

1. WALL EXHAUST FAN WITH LOW SPRING OPERATED BACK-DRAFT DAMPER. SEE DETAIL THIS SHEET.
2. THERMOSTAT MOUNTED AS HIGH AS POSSIBLE. INTERLOCK STAT WITH CORRESPONDING EXHAUST FAN, SET FAN TO ENERGIZE ON RISE IN TEMPERATURE ABOVE 25°C (77°F).

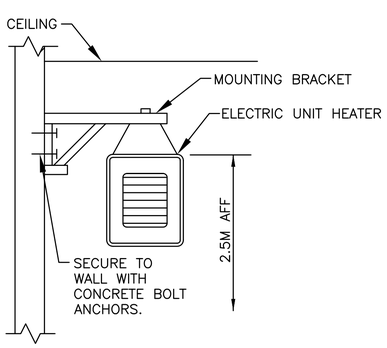

2 / M-101 ELECTRIC UNIT HEATER MOUNTING DETAIL

N.T.S.

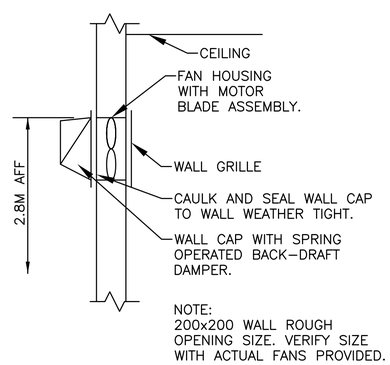

3 / M-101 WALL EXHAUST FAN DETAIL

N.T.S.

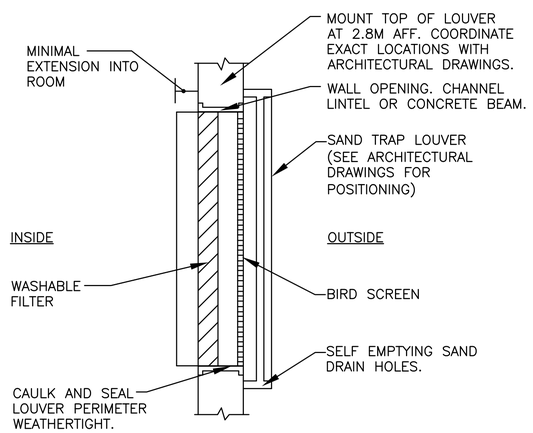

4 / M-101 FILTERED SAND TRAP LOUVER

N.T.S.

LINEAR DIMENSIONS SHOWN ARE IN MILLIMETERS (MM), UNLESS OTHERWISE NOTED

0 1000 2000

SCALE: 1:50

APPROVED:

A/E DESIGNER OF RECORD

SEAL:

COMMONWEALTH OF PENNSYLVANIA REGISTERED PROFESSIONAL MATTHEW R. SOTOSKY ENGINEER 045576-E

US ARMY CORPS OF ENGINEERS
AFGHANISTAN ENGINEER DISTRICT

Mark	Description	Date	Appr

Mark	Description	Date	Appr

Rev: 0
Date: 06/30/10
Design file no.
Drawing code:
File name: ANAFRUM-101
Plot date: 07/30/2010
Plot scale: xx

Designed by: RML
Dwn by: JJN
Ckd by: CJM
Reviewed by: MRS
Submitted by: BAKER

U.S. ARMY CORPS OF ENGINEERS
AFGHANISTAN ENGINEER DISTRICT
APO AE 96338

Michael Baker Jr., Inc
A unit of Michael Baker Corporation
Airside Business Park
100 Airside Drive
Moon Township, PA 15108
www.mbakercorp.com

AFGHAN NATIONAL ARMY
STANDARD DESIGN
FAMILY RESPONSE UNIT OFFICES (STAND ALONE)

HVAC - FLOOR PLAN

Sheet reference number:
M-101

POWER

- DISTRIBUTION PANELBOARD
- NEW PANELBOARD - SURFACE
- NEW PANELBOARD - RECESSED
- GENERATOR
- TRANSFORMER (DRAWN TO SIZE)
- JUNCTION BOX
- JUNCTION BOX - CEILING
- FUSIBLE SAFETY SWITCH
- MOTOR
- MOTOR STARTING SWITCH - 220V, 20A RATED UNLESS OTHERWISE NOTED
- ELECTRIC WATER HEATER
- CEILING FAN - REFER TO SPECIFICATION SECTION 26 20 00

RECEPTACLES

- DUPLEX 20A TYPE CEE 7/7 "SCHUKO STYLE" UNSWITCHED RECEPTACLE
- GF — DUPLEX 20A TYPE CEE 7/7 "SCHUKO STYLE" UNSWITCHED RECEPTACLES - 10mA GROUND FAULT INTERRUPTER TYPE
- WP — DUPLEX 20A TYPE CEE 7/7 "SCHUKO STYLE" UNSWITCHED TYPE WITH WEATHERPROOF COVER - 10mA GROUND FAULT INTERRUPTER TYPE
- EXP — DUPLEX 20A TYPE CEE 7/7 "SCHUKO STYLE" UNSWITCHED RECEPTACLES - EXPLOSION PROOF
- * INDICATES MOUNT DEVICE ABOVE COUNTERTOP OR AT 1070mm ABOVE FINISHED FLOOR WHERE NO COUNTER IS TO BE INSTALLED.

LIGHTNING PROTECTION

- AIR TERMINAL 20mm O.D. X 450mm SOLID COPPER, NICKEL PLATED ON ADHESIVE BASE
- EQ — EQUIPMENT AIR TERMINAL
- TEST WELL WITH GROUND ROD(S)
- GROUND ROD
- G — GROUND PLATE
- MAIN GROUND CONDUCTOR CONCEALED WITHIN CONSTRUCTION
- MAIN GROUND CONDUCTOR EXPOSED ON EXPOSED ON BUILDING EXTERIOR SURFACE
- GROUND CONDUCTOR CAD WELDED TO GROUND CABLE OR EQUIPMENT
- GROUND ROD TRIPOD, SPACED 3 METERS APART.
- LEVEL TO LEVEL CABLE

LIGHTING

- LIGHTING FIXTURE - SEE FIXTURE SCHEDULE FOR MORE INFORMATION
- EMERGENCY LIGHTING FIXTURE - SEE FIXTURE SCHEDULE FOR MORE INFORMATION
- DOWNLIGHT
- LIGHTING FIXTURE ON NORMAL/EMERGENCY
- WALL MOUNTED LIGHT FIXTURE
- E — EXIT SIGN - DIRECTIONAL ARROWS AS INDICATED ON DRAWINGS
- REMOTE HEAD FOR BATTERY PACK
- $ — SINGLE POLE SWITCH - 20A RATED
- $3 — 3-WAY SWITCH - 20A RATED
- $4 — 4-WAY SWITCH - 20A RATED
- LC — LIGHTING CONTACTOR
- POLE MOUNTED SITE LIGHTING FIXTURE- NUMBER OF FIXTURES PER POLE AS INDICATED ON DRAWINGS
- EXTERIOR DIRECTIONAL LIGHTING FIXTURE
- a — SMALL CASE LETTERS REPRESENTS LAMP(S) / SWITCHES.

TELECOMMUNICATIONS

- TELEPHONE OUTLET(S) @ 45cm AFF. U.N.O. WITH 20mm RACEWAY TERMINATED TO TELEDATA TERMINAL BOARD.
- DATA OUTLET(S) @ 45cm AFF. U.N.O. WITH 20mm RACEWAY TERMINATED TO TELEDATA TERMINAL BOARD.

TELECOMMUNICATIONS (CONTINUED)

- COMBINATION TELEPHONE/DATA OUTLET(S) @ 45cm AFF. U.N.O. WITH 27mm RACEWAY TERMINATED TO TELEDATA TERMINAL BOARD.
- W — WALL MTD. TELEPHONE OUTLET WITH 20mm RACEWAY TO TELEDATA TERMINAL BOARD.
- (x)T — INDICATES NUMBER OF TELEPHONE OUTLET(S) AND ASSOCIATED CABLING
- (x)D — INDICATES NUMBER OF DATA OUTLET(S) AND ASSOCIATED CABLING
- (x)TF — INDICATES NUMBER OF TELEPHONE OUTLETS AND ASSOCIATED CABLING WITH 1 OUTLET AND CABLE DEDICATED FOR FAX

SINGLE LINE SYMBOLS

- SWITCH
- BREAKER
- FUSE
- TRANSFORMER
- GROUND
- CONTACT (NORMALLY OPEN)
- CONTACT (NORMALLY CLOSED)
- TRANSFER SWITCH
- CURRENT TRANSFORMER
- INDICATES NEW ELECTRICAL EQUIPMENT
- C — INDICATES NEW CONTROL WIRING AND CONDUIT
- EQUIPMENT OUTLINE

MISCELLANEOUS

- BRANCH CIRCUIT WIRING, SURFACE MOUNTED ON WALLS
- BRANCH CIRCUIT WIRING - 6mm²
- BRANCH CIRCUIT WIRING - UNDER FLOOR
- HOME RUN BACK TO PANEL
- CONDUIT TURNED DOWN
- CONDUIT TURNED UP
- LV — LOW VOLTAGE WIRING AND CONDUIT
- INDICATES CONTINUATION OF LINE

FIRE ALARM

- FACP — FIRE ALARM CONTROL PANEL WITH BATTERY BACKUP
- F — FIRE ALARM PULL STATION

FIRE ALARM (CONTINUED)

- F — FIRE ALARM STROBE - WALL MOUNTED
- F — FIRE ALARM AUDIBLE/STROBE - WALL MOUNTED
- F — FIRE ALARM HORN/STROBE - WALL MOUNTED
- S — SMOKE DETECTOR
- H — HEAT DETECTOR CEILING MOUNTED
- D — DUCT DETECTOR - PROVIDED BY EC, INSTALLED BY MC AND CONNECTED BY EC

DENOTATIONS & ABBREVIATIONS

AFF	ABOVE FINISHED FLOOR
C	CEILING MOUNTED
E	EMERGENCY
EC	ELECTRICAL CONTRACTOR
EPO	EMERGENCY POWER OFF
EXP	EXPLOSION PROOF
F	FIRE ALARM
FF	FLUSH FLOOR MOUNTED
FL	FLUORESCENT
FO	FIBER OPTIC
FSS	FUSED SAFETY SWITCH
GF	GROUND FAULT INTERRUPTER
GC	GENERAL CONTRACTOR
IG	ISOLATED GROUND
K	KEY
LV	LOW VOLTAGE
M	MOTOR
MC	MECHANICAL CONTRACTOR
NE	NORMAL/EMERGENCY
NFSS	NON-FUSED SAFETY SWITCH
PA	PAGING SYSTEM
PLC	PLUMBING CONTRACTOR
SL	SINGLE LINE
T	TELEPHONE

DENOTATIONS & ABBREVIATIONS (CONT.)

TP	TAMPER PROOF
UE	UNDERGROUND ELECTRIC
W	WALL MOUNTED
WP	WEATHERPROOF WITH GROUND FAULT INTERRUPTION
WT	WATER TIGHT

GENERAL PROJECT NOTES:

G1. UNLESS OTHERWISE NOTED, PROVIDE ALL EQUIPMENT SHOWN ON THE PLANS. THE ELECTRICAL CONTRACTOR SHALL COORDINATE ALL SYMBOLS SHOWN ON THE PLANS WITH THE SYMBOL LIST. IT SHALL BE THE RESPONSIBILITY OF THE CONTRACTOR TO VERIFY THE INTENT OF ANY SYMBOL THAT IS SHOWN ON THE PLANS AND NOT INDICATED ON THE SYMBOL LIST WITH THE ENGINEER PRIOR TO BID.

G2. THE CONTRACTOR SHALL VERIFY THE LOCATION OF ALL UNDERGROUND UTILITIES WITHIN THE CONSTRUCTION AREA THREE (3) WORKING DAYS NOTICE BEFORE COMMENCING DIGGING. NOTIFY THE LOCAL AUTHORITY HAVING JURISDICTION AND WAIT THE REQUIRED TIME BEFORE COMMENCING TO DIG.

G3. THE CONTRACTOR SHALL COORDINATE CONDUIT RUNS, LIGHTING FIXTURES AND OTHER EQUIPMENT LOCATIONS WITH THE OTHER TRADE CONTRACTORS TO AVOID CONFLICTS.

G4. WHERE VOLTAGES AND FREQUENCIES ON THE DRAWINGS AND IN THE SPECIFICATIONS DIFFER FROM THE LOCAL ONES, ALL WORK SHALL BE PERFORMED USING THE LOCAL VOLTAGES AND FREQUENCIES.

G5. THE MINIMUM WIRE SIZE ON THE PROJECT SHALL BE 4mm². THE MINIMUM CONDUIT SIZE SHALL BE 20mm. THE MINIMUM BREAKER SIZE SHALL BE 20 AMPS.

G6. THE CONTRACTOR SHALL PUT A MAXIMUM OF 6 DUPLEX RECEPTACLES ON A 20A SINGLE POLE CIRCUIT.

G7. WHERE THE 1010 SCOPE REVIEW, 1015 TECHNICAL REVIEW, DRAWINGS, AND SPECIFICATIONS DIFFER FROM AMERICAN CODES OR STANDARDS, THE 1010, 1015, DRAWINGS, AND SPECIFICATIONS SHALL RULE.

G8. ALL CONDUIT AND DEVICES SHALL BE SURFACE MOUNTED UNLESS OTHERWISE INDICATED.

G9. CONTRACTOR SHALL COORDINATE ALL WORK WITH ALL OTHER TRADES TO ENSURE ALL WORK IS COMPLETED IN A PROFESSIONAL, WORKMAN-LIKE MANNER.

APPROVED:

A/E DESIGNER OF RECORD

SEAL:

COMMONWEALTH OF PENNSYLVANIA — REGISTERED PROFESSIONAL — JOSEPH R. GAUS — 8/24/2010 — ENGINEER — PE-074251

US ARMY CORPS OF ENGINEERS
AFGHANISTAN ENGINEER DISTRICT

Mark	Description	Date	Appr.

Date: 06/30/10 | Design file no. | Drawing code: | Rev: 0

File name: ANAFRUE-A001
Plot date: 8/24/2010
Plot scale: X:X

Designed by: ALF | Dwn by: BJB | Ckd by: JRG | Reviewed by: MRS | Submitted by: BAKER

U.S. ARMY CORPS OF ENGINEERS
AFGHANISTAN ENGINEER DISTRICT
APO AE 96338

Michael Baker Jr., Inc.
A unit of Michael Baker Corporation
Airside Business Park
100 Airside Drive
Moon Township, PA 15108
www.mbakercorp.com

AFGHAN NATIONAL ARMY
STANDARD DESIGN

FAMILY RESPONSE UNIT OFFICES (STAND ALONE)

ELECTRICAL – SYMBOLS, NOTES, AND ABBREVIATIONS

Sheet reference number: E–001

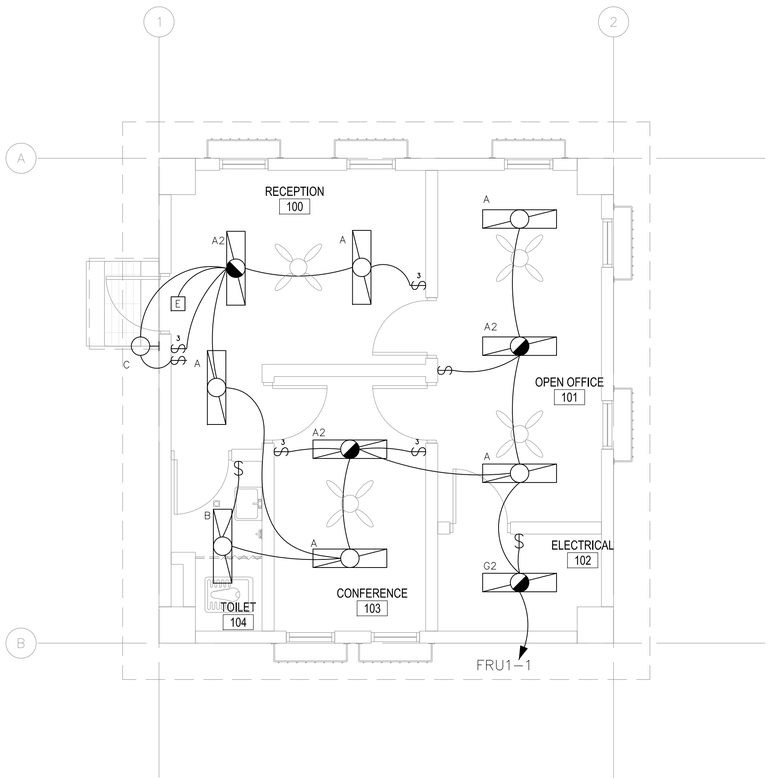

1
E-101

ELECTRICAL LIGHTING PLAN

SCALE: 1:50

GENERAL NOTES:

1. REFER TO DRAWING #E-001 FOR THE ELECTRICAL SYMBOLS LIST.
2. REFER TO DRAWING #E-501 FOR THE POWER RISER.
3. REFER TO DRAWING #E-602 AND #E-603 FOR PANEL SCHEDULES.
4. COORDINATE EXACT MOUNTING LOCATION OF DISCONNECTING MEANS FOR MECHANICAL AND PLUMBING EQUIPMENT IN THE FIELD.
5. FUSIBLE SAFETY SWITCHES THAT ARE NOT OTHERWISE IDENTIFIED SHALL BE 220V, 1P, 30A FUSED SAFETY SWITCHES WITH 20A FUSES.
6. LIGHT FIXTURES INDICATED AS EMERGENCY SHALL BE PROVIDED WITH A BATTERY BACK UP BALLAST. SEE WIRING DIAGRAM DETAIL 7 ON DRAWING #E-501.

LINEAR DIMENSIONS SHOWN ARE IN MILLIMETERS (MM), UNLESS OTHERWISE NOTED

APPROVED:

A/E DESIGNER OF RECORD

SEAL:

COMMONWEALTH OF PENNSYLVANIA
REGISTERED PROFESSIONAL ENGINEER
JOSEPH R. GAUS
8/24/2010
PE-074251

0 1000 2000
SCALE: 1:50

US ARMY CORPS OF ENGINEERS
AFGHANISTAN ENGINEER DISTRICT

Mark	Description	Date	Appr.	Mark	Description	Date	Appr.

Designed by: JRG
Dwn by: BJB
Ckd by: JRG
Reviewed by: MRS
Submitted by: BAKER
Date: 06/30/10
Rev: 0
Design file no.
Drawing code:
File name: ANAFRU-E-101
Plot date: 8/24/2010
Plot scale: 1:50

U.S. ARMY CORPS OF ENGINEERS
AFGHANISTAN ENGINEER DISTRICT
APO AE 96338

Michael Baker Jr., Inc.
A unit of Michael Baker Corporation
Airside Business Park
100 Airside Drive
Moon Township PA 15108
www.mbakercorp.com

AFGHAN NATIONAL ARMY
STANDARD DESIGN

FAMILY RESPONSE UNIT OFFICES (STAND ALONE)

ELECTRICAL – LIGHTING PLAN

Sheet reference number:
E-101

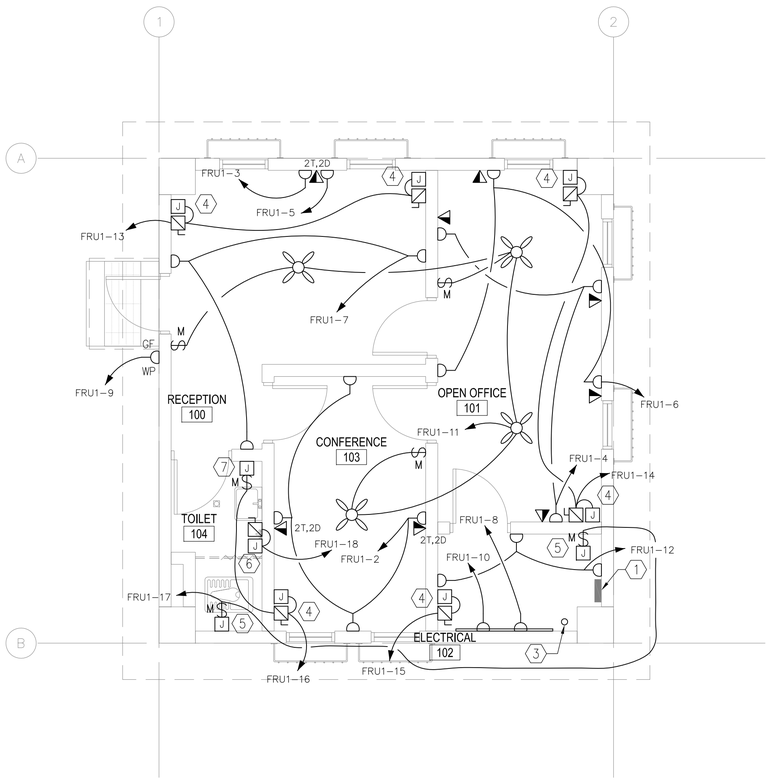

1 / E–102 ELECTRICAL POWER AND SYSTEMS PLAN

SCALE: 1:50

GENERAL NOTES:

1. REFER TO DRAWING #E-001 FOR THE ELECTRICAL SYMBOLS LIST.
2. REFER TO DRAWING #E-601 FOR THE POWER RISER.
3. REFER TO DRAWING #E-601 FOR PANEL SCHEDULES.
4. COORDINATE EXACT MOUNTING LOCATION OF DISCONNECTING MEANS FOR MECHANICAL AND PLUMBING EQUIPMENT IN THE FIELD.
5. FUSIBLE SAFETY SWITCHES THAT ARE NOT OTHERWISE IDENTIFIED SHALL BE 220V, 1P, 30A FUSED SAFETY SWITCHES WITH 20A FUSES.
6. REFER TO DRAWINGS #E-501 AND #E-502 FOR GROUNDING DETAILS.

NUMBERED NOTES:

1. PANEL FRU1.
2. PROVIDE A 1200mm X 2400mm SHEET OF PLYWOOD PAINTED WITH FIRE RESISTANT PAINT FOR MOUNTING TELECOMMUNICATIONS EQUIPMENT.
3. PROVIDE CONDUIT STUB UP IN THE ROOM FOR INCOMING TELECOMMUNICATIONS SERVICE FROM THE CENTRAL COMMUNICATIONS SYSTEM IN THE GARRISON.
4. PROVIDE POWER CONNECTION TO ELECTRIC UNIT HEATER. SEE DRAWINGS #M-101 AND #E-602 FOR MORE INFORMATION.
5. PROVIDE POWER CONNECTION TO EXHAUST FANS. SEE DRAWINGS #M-101 AND #E-602 FOR MORE INFORMATION.
6. PROVIDE POWER CONNECTION TO TANKLESS WATER HEATER. PROVIDE 220V 1PH 60A FUSED SAFETY SWITCH WITH 40A FUSES. SEE DRAWING #P-501 AND #E-601.
7. PROVIDE POWER CONNECTION TO WALL HEATER. SEE DRAWINGS #M-101 AND #E-601 FOR MORE INFORMATION.

LINEAR DIMENSIONS SHOWN ARE IN MILLIMETERS (MM), UNLESS OTHERWISE NOTED

0 1000 2000
SCALE: 1:50

APPROVED:

A/E DESIGNER OF RECORD

SEAL:

COMMONWEALTH OF PENNSYLVANIA
REGISTERED PROFESSIONAL
JOSEPH R. GAUS
8/24/2010
ENGINEER
PE-074251

US ARMY CORPS OF ENGINEERS
AFGHANISTAN ENGINEER DISTRICT

Mark	Description	Date	Appr.

Mark	Description	Date	Appr.

Date: 06/30/10 | Design file no. | Rev: 0
Drawing code:
File name: ANAFRUE-102
Plot date: 8/24/2010
Plot scale: 1:50

Designed by: JRG | Drawn by: BJB | Ckd by: JRG
Reviewed by: MRS
Submitted by: BAKER

U.S. ARMY CORPS OF ENGINEERS
AFGHANISTAN ENGINEER DISTRICT
APO AE 96338

Michael Baker Jr., Inc.
A unit of Michael Baker Corporation
Airside Business Park
100 Airside Drive
Moon Township, PA 15108
www.mbakercorp.com

AFGHAN NATIONAL ARMY
STANDARD DESIGN

FAMILY RESPONSE UNIT OFFICES (STAND ALONE)

ELECTRICAL – POWER PLAN

Sheet reference number:
E–102

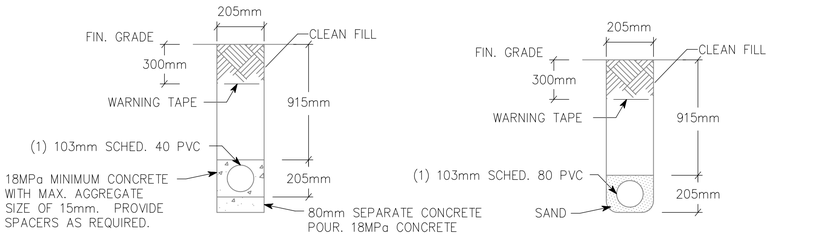

NOTE: PVC CONDUIT SHALL BE DIRECT BURIED SCHEDULE 80 FOR NO TRAFFIC AREAS AND CONCRETE-ENCASED SCHEDULE 40 FOR UNDER ROADWAYS OR TRAFFIC AREAS.

1 / E-501

TYPICAL DUCT BANK DETAILS FOR CONDUIT IN SAND OR CONCRETE

SCALE: N.T.S.

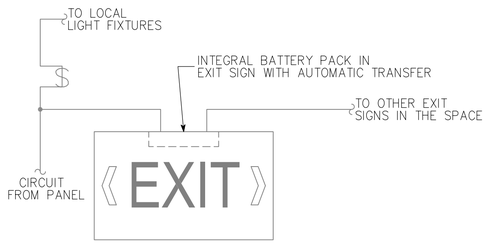

3 / E-501

EXIT SIGN WIRING DIAGRAM

SCALE: N.T.S.

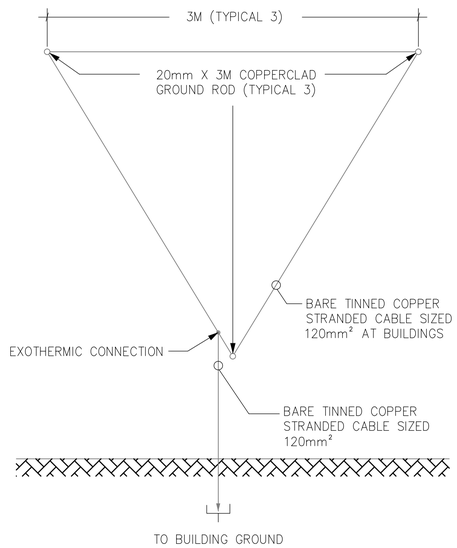

5 / E-501

GROUND TRIPOD SYSTEM DETAIL - PLAN

SCALE: N.T.S.

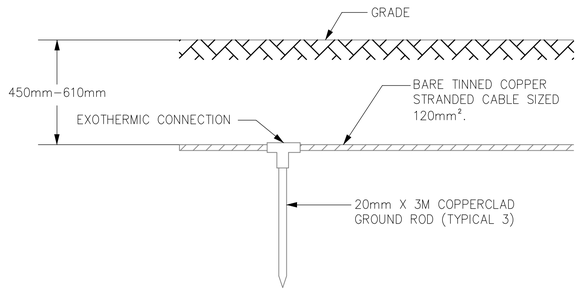

2 / E-501

GROUND TRIPOD SYSTEM DETAIL - ELEVATION

SCALE: N.T.S.

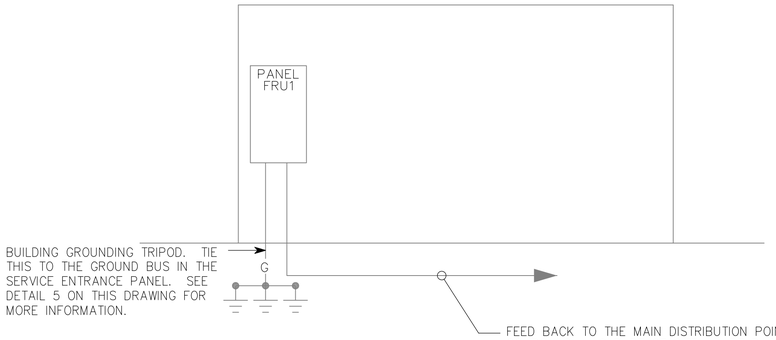

4 / E-501

FRU BUILDING RISER DIAGRAM

SCALE: N.T.S.

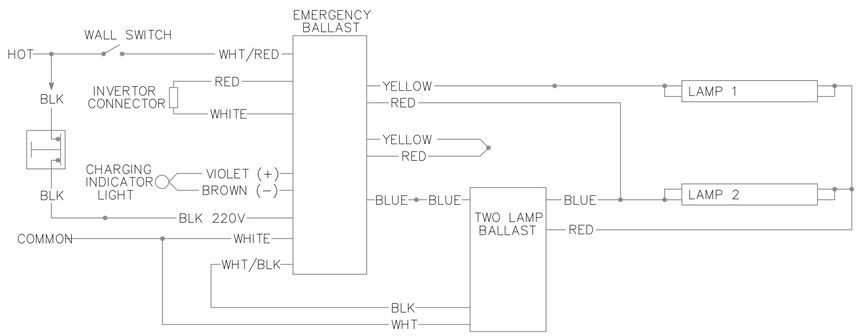

6 / E-501

EMERGENCY FIXTURE WIRING DIAGRAM

SCALE: N.T.S.

APPROVED:

A/E DESIGNER OF RECORD

SEAL:

COMMONWEALTH OF PENNSYLVANIA
REGISTERED PROFESSIONAL
JOSEPH R. GAUS
8/24/2010
ENGINEER
PE-074251

US ARMY CORPS OF ENGINEERS
AFGHANISTAN ENGINEER DISTRICT

Mark	Description	Date	Appr.

Date: 06/30/10 | Rev: 0
Design file no.
Drawing code:
File name: ANAFRUE-501
Plot date: 8/24/2010
Plot scale: NOT TO SCALE

Designed by: ALF | Dwn by: BJB | Ckd by: JRG
Reviewed by: MRS
Submitted by: BAKER

U.S. ARMY CORPS OF ENGINEERS
AFGHANISTAN ENGINEER DISTRICT
APO AE 96338

Michael Baker Jr., Inc.
A unit of Michael Baker Corporation
Airside Business Park
100 Airside Drive
Moon Township, PA 15108
www.mbakercorp.com

AFGHAN NATIONAL ARMY
STANDARD DESIGN

FAMILY RESPONSE UNIT OFFICES (STAND ALONE)

ELECTRICAL - DETAILS

Sheet reference number:
E-501

(A) LARGER OF THE TWO SIZES GIVEN IN THE TABLES BELOW	
GROUNDING ELECTRODE CONDUCTOR (BASED ON AIC RATING)	
AIC RATING OF SERVICE EQUIPMENT	NECESSARY GROUNDING ELECTRODE CONDUCTOR SIZE
10K	(1) 35mm²
14K	(1) 50mm²
18K	(1) 70mm²
22K	(1) 70mm²
25K	(1) 70mm²
30K	(1) 95mm²
35K	(1) 120mm²
42K	(1) 150mm²
65K	(1) 185mm²
100K	(1) 300mm²
125K	(2) 185mm²
200K	(2) 300mm²

GROUNDING ELECTRODE CONDUCTOR (BASED ON NEC TABLE 250.66)	
SIZE OF LARGEST UNGROUNDED SERVICE CONDUCTOR OR EQUIVALENT AREA FOR PARALLEL CONDUCTORS	NECESSARY GROUNDING ELECTRODE CONDUCTOR SIZE
185mm² OR SMALLER	35mm²
OVER 185mm² TO 300mm²	70mm²
OVER 300mm² TO 630mm²	70mm²
OVER 630mm²	95mm²
NOTE: ALL SIZES ARE BASED ON COPPER CONDUCTORS.	

(B) EQUIPMENT GROUNDING CONDUCTOR	
RATING OR SETTING OF AUTOMATIC OVERCURRENT DEVICE IN CIRCUIT AHEAD OF EQUIPMENT, CONDUIT, ETC, NOT EXCEEDING (AMPERES)	NECESSARY EQUIPMENT GROUNDING CONDUCTOR SIZE
15	4.0mm²
20	4.0mm²
30	6.0mm²
40	6.0mm²
60	6.0mm²
100	10mm²
200	16mm²
300	25mm²
400	25mm²
500	35mm²
600	50mm²
800	70mm²
1000	70mm²
1200	95mm²
1600	120mm²
2000	150mm²
2500	185mm²
3000	240mm²
4000	300mm²
5000	400mm²
6000	400mm²
NOTE: ALL SIZES ARE BASED ON COPPER CONDUCTORS.	

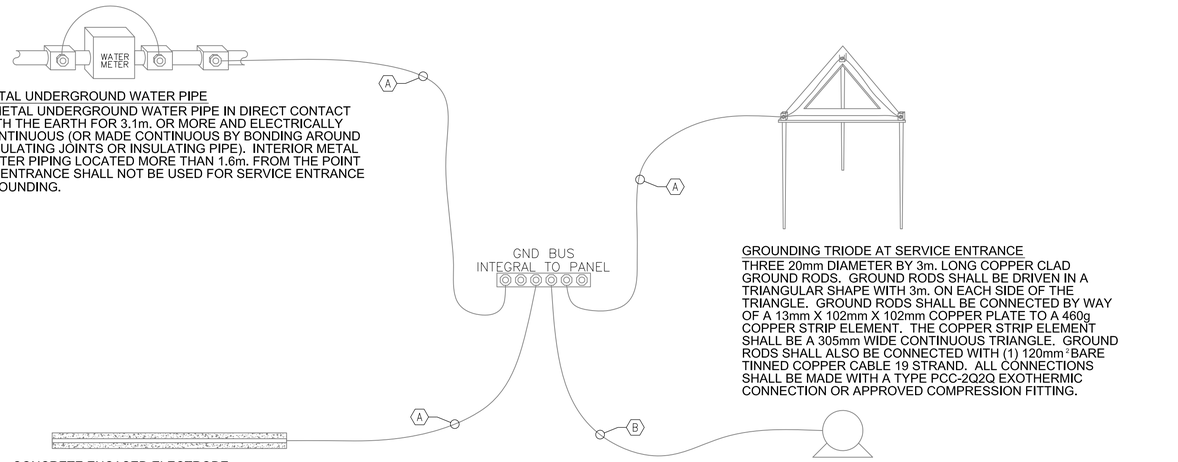

METAL UNDERGROUND WATER PIPE
A METAL UNDERGROUND WATER PIPE IN DIRECT CONTACT WITH THE EARTH FOR 3.1m. OR MORE AND ELECTRICALLY CONTINUOUS (OR MADE CONTINUOUS BY BONDING AROUND INSULATING JOINTS OR INSULATING PIPE). INTERIOR METAL WATER PIPING LOCATED MORE THAN 1.6m. FROM THE POINT OF ENTRANCE SHALL NOT BE USED FOR SERVICE ENTRANCE GROUNDING.

GROUNDING TRIODE AT SERVICE ENTRANCE
THREE 20mm DIAMETER BY 3m. LONG COPPER CLAD GROUND RODS. GROUND RODS SHALL BE DRIVEN IN A TRIANGULAR SHAPE WITH 3m. ON EACH SIDE OF THE TRIANGLE. GROUND RODS SHALL BE CONNECTED BY WAY OF A 13mm X 102mm X 102mm COPPER PLATE TO A 460g COPPER STRIP ELEMENT. THE COPPER STRIP ELEMENT SHALL BE A 305mm WIDE CONTINUOUS TRIANGLE. GROUND RODS SHALL ALSO BE CONNECTED WITH (1) 120mm² BARE TINNED COPPER CABLE 19 STRAND. ALL CONNECTIONS SHALL BE MADE WITH A TYPE PCC-2Q2Q EXOTHERMIC CONNECTION OR APPROVED COMPRESSION FITTING.

CONCRETE ENCASED ELECTRODE
AN ELECTRODE ENCASED BY AT LEAST 51m. OF CONCRETE , LOCATED WITHIN AND NEAR THE BOTTOM OF A CONCRETE FOUNDATION OR FOOTING THAT IS IN DIRECT CONTACT WITH THE EARTH, CONSISTING OF AT LEAST 6.1m. OF ONE OR MORE BARE OR ZINC GALVANIZED OR OTHER ELECTRICALLY CONDUCTIVE COATED STEEL REINFORCING BARS OR RODS OF NOT LESS THAN 13mm DIAMETER OR BARE COPPER CONDUCTOR NOT SMALLER THAN 25mm².

LOAD OR DOWNSTREAM PANEL
EACH LOAD IN THE BUILDING SHALL HAVE A DEDICATED EQUIPMENT GROUNDING CONDUCTOR PULLED FROM ITS ASSOCIATED PANEL.

1
E-502

SERVICE ENTRANCE GROUNDING DETAIL

SCALE: N.T.S.

APPROVED:

A/E DESIGNER OF RECORD

SEAL:

COMMONWEALTH OF PENNSYLVANIA
REGISTERED PROFESSIONAL
JOSEPH R. GAUS
8/24/2010
ENGINEER
PE-074251

US ARMY CORPS OF ENGINEERS
AFGHANISTAN ENGINEER DISTRICT

Mark	Description	Date	Appr.

Mark	Description	Date	Appr.

Date: 06/30/10 | Rev: 0
Design file no.
Drawing code:
File name: ANAFRUE-502
Plot date: 8/24/2010
Plot scale: X:X

Designed by: ALF | Ckd by: JRG
Dwn by: BJB | Reviewed by: MRS
Submitted by: BAKER

U.S. ARMY CORPS OF ENGINEERS
AFGHANISTAN ENGINEER DISTRICT
APO AE 96338

Michael Baker Jr., Inc.
A unit of Michael Baker Corporation
Airside Business Park
100 Airside Drive
Moon Township, PA 15108
www.mbakercorp.com

AFGHAN NATIONAL ARMY
STANDARD DESIGN

FAMILY RESPONSE UNIT OFFICES (STAND ALONE)

ELECTRICAL - DETAILS

Sheet reference number:
E-502

FIXTURE MARK 'A'

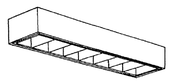

FIXTURE MARK 'B'

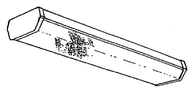

FIXTURE MARK 'C'

FIXTURE MARK 'G'

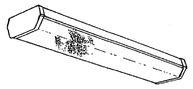

FIXTURE MARK '[E]'

LIGHT FIXTURE SCHEDULE

FIXTURE MARK	STYLE NUMBER AND TYPE	NUMBER AND TYPE OF LAMPS	VOLTAGE	MOUNTING	NOTES
A	PARABOLIC SURFACE/PENDANT MOUNTED 300MM X 1200MM FLUORESCENT FIXTURE WITH ELECTRONIC BALLAST	(2) 32W 3500K	220V – 1ø 50HZ	SURFACE MOUNTED	FURNISHED WITH ELECTRONIC BALLAST. PARABOLIC LOUVER SHALL BE SPECULAR LENS IRIDESCENCE TYPE.
A2	SAME AS FIXTURE 'A' WITH EMERGENCY BALLAST	(2) 32W 3500K	220V – 1ø 50HZ	SURFACE MOUNTED	FURNISHED WITH ELECTRONIC BALLAST. PARABOLIC LOUVER SHALL BE SPECULAR LENS IRIDESCENCE TYPE. EMERGENCY BALLAST SELF TEST.
B	WET LOCATION WRAP AROUND SURFACE/PENDANT MOUNTED FLUORESCENT FIXTURE WITH PRISMATIC ACRYLIC LENS AND ELECTRONIC BALLAST	(2) 32W 3500K	220V – 1ø 50HZ	SURFACE MOUNTED	FURNISHED WITH ELECTRONIC BALLAST, VIRGIN ACRYLIC WRAP AROUND LENS.
B2	SAME AS FIXTURE 'B' WITH EMERGENCY BALLAST	(2) 32W 3500K	220V – 1ø 50HZ	SURFACE MOUNTED	FURNISHED WITH ELECTRONIC BALLAST, VIRGIN ACRYLIC WRAP AROUND LENS. EMERGENCY BALLAST WITH SELF TEST SWITCH.
C	INCANDESCENT ONE PIECE W/ APPROVED LENS STABILIZED HIGH IMPACT POLYCARBONATE.	(1) A19 – 100W INCANDESCENT	220V – 1ø 50HZ	WALL MOUNTED ABOVE EXTERIOR DOORS	
G	WRAP AROUND SURFACE/PENDANT MOUNTED FLUORESCENT FIXTURE WITH PRISMATIC ACRYLIC LENS AND ELECTRONIC BALLAST	(2) 32W 3500K	220V – 1ø 50HZ	SURFACE MOUNTED	FURNISHED WITH ELECTRONIC BALLAST, VIRGIN ACRYLIC WRAP AROUND LENS.
G2	SAME AS FIXTURE 'B' WITH EMERGENCY BALLAST	(2) 32W 3500K	220V – 1ø 50HZ	SURFACE MOUNTED	FURNISHED WITH ELECTRONIC BALLAST, VIRGIN ACRYLIC WRAP AROUND LENS. EMERGENCY BALLAST WITH SELF TEST SWITCH.
[E]	UNIVERSAL MOUNT ENGINEER GRADE THERMOPLASTIC HOUSING EXIT SIGN WITH LED LAMPS, RED LETTERS 6" IN HEIGHT WITH ARROWS AS INDICATED, WITH 12V CADMIUM BATTERY WITH REMOTE HEAD CAPABILITY	LED LAMPS	220V – 1ø 50HZ	UNIVERSAL MOUNTING	

PANELBOARD FRU1 SURFACE MOUNTED
____ AMP. MAIN LUGS (OR) 60 AMP. MAIN BREAKER W/ 60 AMP. TRIP
CIRCUIT BREAKER TYPE 380/220 VOLTS 3 PHASE 4 WIRE 50 HZ 100 AMP. BUS

CKT. NO.	TRIP AMPS	NO. POLES	WIRE MM ²	GND MM²	CONDUIT MM	LOAD SERVED	LOAD-KVA A0	LOAD-KVA B0	LOAD-KVA C0	LOAD-KVA A0	LOAD-KVA B0	LOAD-KVA C0	LOAD SERVED	CONDUIT MM	GND MM²	WIRE MM²	NO. POLES	TRIP AMPS	CKT. NO.
1	20	1	4.0	4.0	20	LIGHTING	1.2			0.8			RECEPTACLES – 103	20	4.0	4.0	1	20	2
3	20	1	4.0	4.0	20	RECEPTACLE – 100		1.0			0.6		RECEPTACLES – 101	20	4.0	4.0	1	20	4
5	20	1	4.0	4.0	20	RECEPTACLE – 100			1.0			0.6	RECEPTACLES – 101	20	4.0	4.0	1	20	6
7	20	1	4.0	4.0	20	RECEPTACLES – 100	0.6			1.0			RECEPTACLES – 102	20	4.0	4.0	1	20	8
9	20	1	4.0	4.0	20	RECEPTACLE – EXTERIOR		0.2			1.0		RECEPTACLES – 102	20	4.0	4.0	1	20	10
11	20	1	4.0	4.0	20	CEILING FANS – 100,101,103			0.8			0.6	RECEPTACLES – 102	20	4.0	4.0	1	20	12
13	30	1	6.0	6.0	20	ELECTRIC HEATERS –100	5.2			5.2			ELECTRIC HEATERS – 101	20	6.0	6.0	1	30	14
15	20	1	4.0	4.0	20	ELECTRIC HEATER – 102		2.6			3.1		ELECTRIC HEATERS – 103	20	6.0	6.0	1	30	16
17	20	1	4.0	4.0	20	EXHAUST FANS – 102,104			1.0			7.0	TANKLESS WATER HEATER – 104	20	6.0	10.0	1	40	18
19	20	1	4.0	4.0	20	SPARE							SPARE				1	20	20
21	20	1	4.0	4.0	20	SPARE							SPARE				1	20	22
23	20	1	4.0	4.0	20	SPARE							SPARE				1	20	24
							7.0	3.8	2.8	7.0	4.7	8.2							

TOTAL CONN. LOAD PER PHASE (KVA): A0 14.0 B0 8.5 C0 6.0

TOTAL CONN. LOAD 28.5 ESTIMATED DEMAND LOAD 34.9 KVA.

* MAIN BREAKER SHALL BE 3P EARTH GROUND TYPE (GROUND FAULT).
** PANELBOARD SHALL BE SERVICE ENTRANCE RATED.
*** PROVIDE A SURGE PROTECTIVE DEVICE PER THE SPECIFICATIONS.
**** SITE ADAPT CONTRACTOR SHALL BE RESPONSIBLE FOR SHORT CIRCUIT CALCULATIONS BASED ON SITE CONDITIONS.
***** ESTIMATED DEMAND LOAD INCLUDES 25% SPARE CAPACITY.

GENERAL NOTES:

1. ALL PANELBOARDS SHALL BE PROVIDED WITH 25% SPARE BREAKER CAPACITY

APPROVED:

A/E DESIGNER OF RECORD

SEAL:

COMMONWEALTH OF PENNSYLVANIA
REGISTERED PROFESSIONAL ENGINEER
JOSEPH R. GAUS
PE-074251

US ARMY CORPS OF ENGINEERS
AFGHANISTAN ENGINEER DISTRICT

Mark	Description	Date	Appr.

Mark	Description	Date	Appr.

Designed by: ALF
Drawn by: BJB
Ckd by: JRG
Reviewed by: MRS
Submitted by: BAKER

Date: 06/30/10
Design file no.
Drawing code:
File name: ANAFRUE-601
Plot date: 8/24/2010
Plot scale: X:X
Rev: 0

U.S. ARMY CORPS OF ENGINEERS
AFGHANISTAN ENGINEER DISTRICT
APO AE 96338

Michael Baker Jr., Inc
A unit of Michael Baker Corporation
Airside Business Park
100 Airside Drive
Moon Township, PA 15108
www.mbakercorp.com

AFGHAN NATIONAL ARMY
STANDARD DESIGN

FAMILY RESPONSE UNIT OFFICES (STAND ALONE)

ELECTRICIAL – LIGHTING SCHEDULE AND PANEL SCHEDULES

Sheet reference number:
E–601

AFGHAN NATIONAL POLICE

STANDARD BUILDING DESIGNS

WAREHOUSE BUILDING

SMALL

WITH DESIGN/BUILD REQUIREMENTS FOR ENCLOSED WORKSHOP AND EYEWASH STATION

07

SHEET INDEX

G1	COVER SHEET
S1	GENERAL NOTES & DESIGN CRITERIA
S2	DESIGN CRITERIA & SCHEDULES
S3	SCHEDULES
S4	FOUNDATION & ROOF FRAMING PLANS
S5	FOUNDATION SECTIONS & DETAILS
S6	SECTIONS AND DETAILS
S7	TYPICAL DETAILS
A1	FLOOR AND ROOF PLANS AND DETAILS
A2	EXTERIOR ELEVATIONS
A3	DOOR & WINDOW & FINISH TYPES & DETAILS
A4	SECTION DETAILS
E0	ELECTRICAL SYMBOLS AND ABBREVIATIONS
E1	LIGHTING AND POWER PLAN
E2	DETAILS
E3	LIGHT FIXTURE SCHEDULE
E4	PANEL SCHEDULES AND RISER DIAGRAM

US Army Corps of Engineers

Afghanistan Engineer District

SYMBOL	DESCRIPTION	DATE	APP'D

DESIGNED BY: JDS | DWN BY: JDS | CHK BY: JDS

DATE: 09-30-09 | SUBMITTED BY: BAKER | FILE NO.: ANPSDG-001XXX

Michael Baker Jr., Inc
A unit of Michael Baker Corporation
Airside Business Park
100 Airside Drive
Moon Township, PA 15108
www.mbakercorp.com

AFGHAN NATIONAL POLICE
STANDARD DESIGN
WAREHOUSE BUILDING

COVER SHEET

SHEET REFERENCE NUMBER:

G1

100% SUBMISSION

STRUCTURAL ABBREVIATIONS:

ACI	AMERICAN CONCRETE INSTITUTE
AISC	AMERICAN INSTITUTE OF STEEL CONSTRUCTION
ASTM	AMERICAN SOCIETY FOR TESTING AND MATERIALS
ARCH	ARCHITECTURAL
B	BOTTOM
BLDG	BUILDING
BOTT	BOTTOM
℄	CENTER LINE
CFMRF	COLD FORM METAL ROOF FRAME
CFMF	COLD FORM METAL FRAME
CFS	COLD FORMED STEEL
CIP	CAST-IN-PLACE
CIPL	CAST-IN-PLACE LINTEL
CJ	CONTROL JOINT
CLR	CLEAR
CMU	CONCRETE MASONRY UNIT
COEFF	COEFFICIENT
COL	COLUMN
CONC	CONCRETE
CONT	CONTINUOUS
COORD	COORDINATE
CSJ	CONSTRUCTION JOINT
CTJ	CONTROL JOINT
DIA	DIAMETER
DIAG	DIAGONAL
DIM	DIMENSION
DWG	DRAWING
DWL	DOWEL
EA	EACH
EF	EACH FACE
ELEC	ELECTRICAL
ELEV	ELEVATION
EMBED	EMBEDMENT
EQUIV	EQUIVALENT
ETC	ET CETERA
EW	EACH WAY
EXP	EXPANSION
EXT	EXTERIOR
FTG	FOOTING
GA	GAUGE
HORIZ	HORIZONTAL
HRS	HOURS
IBC	INTERNATIONAL BUILDING CODE
INFO	INFORMATION
INT	INTERIOR
Kg	KILOGRAM
Km	KILOMETER
kPa	KILOPASCAL
L#	ANGLE (# INDICATES SIZE)
LONG	LONGITUDINAL
LLV	LONG LEG VERTICAL
M	METER
MAX	MAXIMUM
MBM	METAL BUILDING MANUFACTURER
MECH	MECHANICAL
MFG	MANUFACTURER
MID	MIDDLE
MIN	MINIMUM
MISC	MISCELLANEOUS
MM	MILLIMETER
MPa	MEGAPASCAL
MTL	METAL
MWFRS	MAIN WIND FORCE RESISTING SYSTEM
N	NEWTON
N	NORTH
N/A	NOT APPLICABLE
#	NUMBER SYMBOL FOR REBAR SIZE
NTS	NOT TO SCALE
O.C.	ON CENTER
OPNG	OPENING
P̲L or PL	PLATE
PRE-ENG	PRE-ENGINEERED
REINF	REINFORCED
REQ'D	REQUIRED
SIM	SIMILAR
SPECS	SPECIFICATIONS
STD	STANDARD
STRUCT	STRUCTURAL
T	TOP
T/	TOP OF
T/ELEV	TOP ELEVATION
T&B	TOP AND BOTTOM
THK	THICK
TYP	TYPICAL
SW	SHEAR WALL
UFC	UNIFIED FACILITIES CRITERIA
UON	UNLESS OTHERWISE NOTED
VERT	VERTICAL
W	WIDTH
W/	WITH

GENERAL NOTES

1.0 THIS PROJECT HAS BEEN DESIGNED FOR THE WEIGHTS AND MATERIALS INDICATED ON THE SHEETS AND FOR THE LIVE LOADS INDICATED IN THE DESIGN DATA. IT IS THE CONTRACTOR'S RESPONSIBILITY TO DETERMINE ALLOWABLE CONSTRUCTION LOADS AND TO PROVIDE PROPER DESIGN AND CONSTRUCTION OF FALSEWORK, FORMWORK, STAGING, BRACING, SHEETING AND SHORING, ETC.

1.1 COORDINATE THESE SHEETS WITH THE ARCHITECTURAL, MECHANICAL, ELECTRICAL, PLUMBING, AND CIVIL SHEETS. ALL DIMENSIONS SHOWN ON THE SHEETS ARE MILLIMETERS UNLESS NOTED OTHERWISE.

1.2 THE CONTRACTOR SHALL VERIFY AND COORDINATE ALL FLOOR AND ROOF OPENING SIZES AND LOCATIONS, EQUIPMENT PAD SIZES AND LOCATIONS, ANCHOR BOLT LAYOUTS, ETC WITH EQUIPMENT SELECTED. THE CONTRACTOR SHALL MAKE ANY REQUIRED MODIFICATIONS AT NO ADDITIONAL COST.

1.3 THE CONTRACTOR SHALL REFER TO THE ARCHITECTURAL, MECHANICAL, ELECTRICAL AND PLUMBING SHEETS FOR SLEEVES, CURBS, INSERTS OR OPENINGS, ETC. NOT HEREIN INDICATED.

1.4 SLAB OPENINGS SMALLER THAN 250mm DIA TO BE CORE DRILLED IN FIELD UON. SEE MECHANICAL, ELECTRICAL AND PLUMBING SHEETS FOR LOCATIONS OF THESE OPENINGS.

1.5 WORK NOT INCLUDED ON THE SHEETS BUT IMPLIED TO BE SIMILAR TO THAT SHOWN AT CORRESPONDING PLACES ELSEWHERE ON THE SHEETS SHALL BE REPEATED.

1.6 IN CASE OF CONFLICT BETWEEN THE NOTES, DETAILS AND SPECIFICATIONS THE MOST RIGID REQUIREMENTS SHALL GOVERN.

1.7 SEE ARCHITECTURAL SHEETS FOR LOCATIONS OF MASONRY AND DRYWALL NON-LOAD BEARING PARTITIONS. PROVIDE COMPRESSIBLE FIRESAFING AT TOP OF WALL AS REQUIRED BY ARCHITECTURAL SHEETS.

1.8 COORDINATE FINISHED FLOOR DATUM ELEVATION 0.0m WITH THE CIVIL SHEETS.

2.0 FOUNDATION NOTES

2.1 THE GEOTECHNICAL ANALYSIS FOR THIS PROJECT IS THE RESPONSIBILITY OF THE CONTRACTOR AWARDED THE WORK. DESIGN VALUES USED IN THE STRUCTURAL ANALYSIS OF THE BUILDINGS HEREIN INDICATED HAVE BEEN ASSUMED AND SHALL BE CONFIRMED AND VERIFIED AS PART OF THE GEOTECHNICAL INVESTIGATION. VALUES WHICH DO NOT MEET THE REQUIREMENTS INDICATED ON THE BASIS OF DESIGN SHEET SHALL BE IMMEDIATELY BROUGHT TO THE ATTENTION OF THE CONTRACTING OFFICER FOR CONSIDERATION AND DETERMINATION ON THE NEXT APPROPRIATE COURSE OF ACTION.

2.2 SEE THE SPECIFICATION FOR ADDITIONAL REQUIREMENTS TO THOSE OUTLINED IN THE GEOTECHNICAL INVESTIGATION FOR EXCAVATION AND PREPARATION OF THE FOUNDATION AND THE SLAB ON GRADE SUBGRADE INCLUDING COMPACTION PROCEDURES.

2.3 EXCAVATIONS FOR FOOTINGS SHALL HAVE THE SIDES AND BOTTOMS TEMPORARILY LINED WITH 0.25mm POLYETHYLENE IF PLACEMENT OF CONCRETE DOES NOT OCCUR WITHIN 24 HRS OF THE EXCAVATION OF THE FOOTING.

2.4 FOUNDATION CONDITIONS NOTED DURING CONSTRUCTION WHICH DIFFER FROM THOSE DESCRIBED IN THE GEOTECHNICAL REPORT SHALL BE REPORTED TO THE GENERAL CONTRACTOR BEFORE FURTHER CONSTRUCTION IS ATTEMPTED. SEE PROJECT SPECIFICATIONS.

2.5 NO FOOTINGS OR SLABS SHALL BE POURED INTO OR AGAINST SUBGRADE CONTAINING FREE WATER, FROST, ICE OR LOOSE MATERIAL. FROST DEPTH ASSUMED TO BE 800MM

2.6 ALL SLAB-ON-GRADE, TRENCH BOTTOMS AND OTHER ON-GRADE INTERIOR HORIZONTAL SURFACES SHALL BE PLACED OVER A 0.25mm VAPOR RETARDER OVER A 100mm #57 STONE WATER BARRIER PLACED ON SUBGRADE PROPERLY PREPARED IN ACCORDANCE WITH THE CONTRACT SPECIFICATIONS. (UON)

2.7 SEE PLUMBING, ELECTRICAL & CIVIL SHEETS FOR REQUIRED UNDERSLAB UTILITIES.

2.8 SEE ARCHITECTURAL SHEETS FOR ALL WATERPROOFING DETAILS AND MATERIALS.

2.9 IF UNDERMINING OF FOOTINGS OCCURS, FILL VOIDS WITH 15MPa CONCRETE. DO NOT ATTEMPT TO REPLACE AND RECOMPACT SOIL.

3.0 CONCRETE

3.1 CONCRETE SHALL HAVE THE UNIT WEIGHT AND THE MINIMUM COMPRESSIVE STRENGTHS (f'c) AT 28 DAYS AS SHOWN IN THE CONCRETE MATERIALS SCHEDULE ON SHEET S3. SEE SPECIFICATIONS FOR ADDITIONAL INFORMATION. ENTRAIN AIR TO PRODUCE TOTAL AIR CONTENT ACCORDING TO THE SPECIFICATIONS FOR CONCRETE EXPOSED TO FREEZING TEMPERATURES (EXTERIOR FOOTINGS, SLAB TURNDOWNS, EXTERIOR SLABS AND SLABS-ON-GRADE, EXTERIOR RETAINING WALLS, AND EXTERIOR GRADE BEAMS.)

3.2 NO CALCIUM CHLORIDE SHALL BE USED IN ANY CONCRETE.

3.3 MIXING, TRANSPORTING AND PLACING OF CONCRETE SHALL CONFORM TO ACI 301M-05.

3.4 ALL CONCRETE WORK SHALL CONFORM TO THE REQUIREMENTS OF THE AMERICAN CONCRETE INSTITUTE (ACI) 318M MANUAL (metric), "BUILDING CODE REQUIREMENTS FOR REINFORCED CONCRETE", AND REQUIREMENTS OUTLINED IN THE CONTRACT SPECIFICATIONS. WHEN THERE IS A CONFLICT BETWEEN ACI AND THE SPECIFICATIONS, THE MORE STRINGENT SHALL GOVERN.

3.5 CHAMFER ALL EXPOSED EXTERNAL CORNERS OF CONCRETE WITH 20mm x45 DEGREE CHAMFER UON.

3.6 CONCRETE REINFORCEMENT BARS SHALL CONFORM TO ASTM A615M-96a, GRADE 420 MPa, REINFORCING BARS SHALL NOT BE TACK WELDED, WELDED, HEATED OR CUT, UNLESS INDICATED ON THE CONTRACT DOCUMENTS. ALL LAP SPLICES SHALL BE CLASS "B" UON.

3.7 HORIZONTAL FOOTING AND HORIZONTAL WALL REINFORCEMENT SHALL BE CONTINUOUS AND SHALL HAVE 90 DEGREE BENDS AND EXTENSIONS, OR CORNER BARS OF EQUIVALENT SIZE LAPPED WITH A CLASS B TENSION SPLICE AT CORNERS AND INTERSECTIONS. TOP BAR CRITERIA SHALL APPLY IF 300mm OR MORE OF FRESH CONCRETE IS PLACED BELOW BAR.

3.8 SLABS-ON-GRADE SHALL HAVE CONSTRUCTION JOINTS OR CRACK CONTROL JOINTS AS SHOWN ON THE DRAWINGS. CONSTRUCTION JOINTS CAN BE USED AT CONTROL JOINT LOCATIONS AT CONTRACTORS OPTION. SEE SLAB PLANS & JOINT DETAILS FOR ADDITIONAL INFORMATION. FOR AREAS NOT SHOWN ON DWGS, THE MAXIMUM SPACING OF CONSTRUCTION/ CRACK CONTROL JOINTS SHALL BE 4800mm

3.9 SEE SPECIFICATIONS FOR ALL WATERPROOFING/DAMPPROOFING REQUIREMENT.

3.10 ALL CONCRETE REINFORCEMENT SHALL BE DETAILED, FABRICATED, LABELED, SUPPORTED, AND SPACED IN FORMS AND SECURED IN PLACE IN ACCORDANCE WITH THE PROCEDURES AND REQUIREMENTS OUTLINED IN THE LATEST EDITION OF THE "BUILDING CODE REQUIREMENTS FOR REINFORCED CONCRETE", ACI 318M, AND THE "MANUAL OF STANDARD PRACTICE FOR DETAILING REINFORCED CONCRETE STRUCTURES", ACI 315M, LATEST EDITION.

3.11 SHOP DRAWINGS SHOWING REINFORCING DETAILS, INCLUDING STEEL SIZES, SPACING AND PLACEMENT, SHALL BE SUBMITTED FOR REVIEW PRIOR TO FABRICATION.

3.12 ALL DOWELS SHALL MATCH SIZE AND NUMBER OF MAIN REINFORCING, UNLESS NOTED OTHERWISE ON THE SHEETS.

3.13 ADDITIONAL BARS SHALL BE PROVIDED AROUND ALL FLOOR AND WALL OPENINGS AS SHOWN ON THE SHEETS.

3.14 SEE ARCHITECTURAL SHEETS FOR TYPE AND LOCATION OF ALL FLOOR FINISHES.

3.15 THE CONTRACTOR SHALL COORDINATE ADDITIONAL WALL/SLAB OPENINGS NOT SHOWN ON STRUCTURAL SHEETS. SEE MECHANICAL, ELECTRICAL, PLUMBING AND CIVIL SHEETS.

3.16 UNLESS NOTED OTHERWISE, ALL CURBS SHALL BE REINFORCED WITH AT LEAST (1)-#13 CONTINUOUS AND #13 AT 300mm O.C. DOWELS TO STRUCTURE BELOW.

3.17 THE SUB-CONTRACTOR SHALL VERIFY ALL OPENINGS, PAD SIZES, AND ANCHOR BOLTS WITH EQUIPMENT SELECTED.

3.18 FOR ALL WALLS & PIERS, PROVIDE DOWELS INTO FOOTING AT EACH VERT REINF BAR, UON DOWEL SIZE SHALL BE SAME AS VERT REINF.

3.19 ALL DEFORMED BAR ANCHORS SHALL BE TRS NELSON DIVISION OR EQUAL 15mm DIA (UON) CONFORMING TO ASTM A-496M WITH A MINIMUM TENSILE STRENGTH OF 550 MPa. INSTALL ANCHORS IN ACCORDANCE WITH MANUFACTURERS RECOMMENDATIONS BY AUTOMATIC END WELDING AS INDICATED ON THE DRAWINGS. NO UNAUTHORIZED OR FIELD WELDING SHALL BE MADE WITHOUT AUTHORIZATION FROM THE MANUFACTURER.

3.20 ALL REINFORCING INDICATED TO BE WELDED SHALL BE IN ACCORDANCE WITH ASTM A706M. "LOW ALLOY STEEL DEFORMED BARS FOR CONCRETE REINFORCEMENT". ANY INSTALLATIONS USING MANUFACTURER'S EQUIPMENT SHALL BE PER MANUFACTURER'S RECOMMENDATIONS.

3.21 PROVIDE CONCRETE POUR STOPS OR FORMED AS REQUIRED FOR INSTALLATION OF ALL CONCRETE WORK.

3.22 PROVIDE ADDITIONAL (2)-#13 x 600mm REINFORCING BARS IN SLAB-ON GRADE AT ALL RE-ENTRANT CORNERS. PLACE BARS AT MID-DEPTH OF SLAB WITH A CLEARANCE OF 50mm FROM CORNER UON.

4.0 CONCRETE MASONRY

4.1 MASONRY CONSTRUCTION AND MATERIALS SHALL CONFORM TO ALL REQUIREMENTS OF THESE CONTRACT DOCUMENTS AND THE PROJECT SPECIFICATIONS.

4.2 THE SPECIFIED ULTIMATE COMPRESSIVE STRENGTH OF CONCRETE MASONRY (f'm) ON THE NET AREA IS A MINIMUM OF 10.4 MPa.

4.3 PROVIDE TWO #16 BARS CONTINUOUS IN ALL MASONRY LINTELS UON ON THE SHEETS. BOND BEAM REINFORCING SHALL BE CONTINUOUS AND SPACED AT A MAXIMUM OF 1200mm OC VERTICALLY. ALL BOND BEAMS SHALL BE A MINIMUM OF 200mm IN DEPTH WITH REINFORCING BEING CONTINUOUS AND HAVING STANDARD ACI HOOKS AT EACH END. PROVIDE STANDARD BAR SPLICES AS SPECIFIED.

4.4 FOR WALL REINFORCING SEE "MIN CMU WALL REINFORCING" DETAILS ON SHEET S7. PROVIDE STANDARD BAR SPLICES AS SPECIFIED. ALL VERTICAL REINFORCEMENT EXTENDS FULL HEIGHT OF WALL.

4.5 CMU CELLS THAT REQUIRE VERTICAL REINFORCING BARS AS INDICATED ON THE CONTRACT DRAWINGS AND/OR SPECS SHALL HAVE REINF BARS PLACED IN CENTERS OF CMU CELLS AND CONTINUOUSLY GROUTED UON.

4.6 PROVIDE LADDER TYPE JOINT REINFORCEMENT AT 200 EXTERIOR, & 400 INTERIOR ON CENTER MAXIMUM, UON MINIMUM ROD SIZE USED SHALL BE 9 GA. DEFORMED WIRE AND CONFORM TO ASTM A82M, UON.

4.7 PROVIDE CONTROL JOINTS AS INDICATED ON THE ARCHITECTURAL SHEETS.

4.8 GROUT FOR MASONRY SHALL BE NORMAL WEIGHT AND HAVE A MINIMUM COMPRESSIVE STRENGTH OF 25 MPa AT 28 DAYS. GROUT SHALL CONFORM TO ASTM C476. GROUT LIFTS SHALL NOT EXCEED 1400mm.

4.9 USE MORTAR TYPE S CONFORMING TO ASTM C270M, SEE SPECIFICATIONS.

4.10 CONCRETE MASONRY UNITS SHALL BE NORMAL WEIGHT AND CONFORM TO ASTM C90.

4.11 ALL CMU CELLS, OPEN CAVITIES, AND AIR SPACES SHALL BE GROUTED TO STOP FRAGMENTS FROM MORTAR BLAST

4.12 BOND BEAM REINFORCING SHALL BE DISCONTINUOUS AT CONTROL JOINTS (UON). MAXIMUM CONTROL JOINT SPACING SHALL BE AS INDICATED ON THE ARCHITECTURAL SHEETS.

4.13 CONTRACTOR SHALL COORDINATE LOCATION OF ALL OPENINGS SEE ARCH, MECH, ELEC, AND PLUMBING SHEETS FOR SIZE AND LOCATION OF OPENINGS.

4.14 MASONRY WALLS SHALL NOT BE BACK FILLED PRIOR TO THE MORTAR AND GROUT ATTAINING THEIR RESPECTIVE MAXIMUM DESIGN STRENGTHS PER SPECIFICATIONS.

5.0 CFMRF - COLD FORM METAL ROOF FRAMING SYSTEM

5.1 CFMF SHALL BE DESIGNED BY CFMF MANUFACTURER'S ENGINEER FOR ALL LOADING PER CODE AND AS INDICATED ON THE SHEETS.

5.2 FOR WIND LOADS, SEE THE DESIGN CRITERIA ON SHEET S2.

5.3 SUBMIT VENDOR'S PUBLISHED LITERATURE, TEST DATA AND INSTALLATION INSTRUCTIONS FOR METAL STUD ASSEMBLY AND ACCESSORIES INCLUDING OTHER DATA AS MAY BE REQUIRED TO CERTIFY COMPLIANCE WITH PERFORMANCE REQUIREMENTS SPECIFIED HEREIN.

5.4 SHOP DRAWINGS AND DESIGN ANALYSIS SHALL BE STAMPED AND APPROVED BY A LICENSED PROFESSIONAL ENGINEER.

5.5 CONNECTIONS AND GAUGE SIZES ARE MINIMUM AND SHALL BE INCREASED AS NECESSARY TO PROVIDE A STRUCTURALLY ADEQUATE SYSTEM. KICKERS MAY BE ADDED TO REDUCE THE STUD HEIGHTS WHERE ACCEPTABLE AND COORDINATED WITH THE ARCHITECTURAL DRAWINGS.

5.6 CRMRF SHALL HAVE THE FOLLOWING MINIMUM PROPERTIES:

STUD/RAFTER/EAVE STRUT/BRACE/BLOCKING:
Fy = 344 MPa
GAUGE = 16
DEPTH = 152.3 mm
WIDTH = 34.8 mm
MOMENT OF INERTIA, Ix = $847x10^3$ mm^4
SECTION MODULUS, Sx = $11.2x10^3$ mm^3

TRACK:
Fy = 344 MPa
GAUGE = 16
DEPTH = 152.3 mm
WIDTH = 38 mm
MOMENT OF INERTIA, Ix = $1083x10^3$ mm^4
SECTION MODULUS, Sx = $13.8x10^3$ mm^3

PURLIN:
Fy = 393 MPa
GAUGE = 16
MOMENT OF INTERTIA (TOP COMPRESSION), Ixt = $23.7x10^3$ mm^4
MOMENT OF INTERTIA (BOTT COMPRESSION), Ixb = $22.7x10^3$ mm^4
SECTION MODULUS (TOP COMPRESSION), Sxt = $1.8x10^3$ mm^3
SECTION MODULUS (BOTT COMPRESSION), Sxb = $1.7x10^3$ mm^3

STRUCTURAL DESIGN CRITERIA

ALL DESIGNS SHALL CONFORM TO THE PROVISIONS OF THE IBC 2006 AS APPLICABLE

1.0 DESIGN LOADS

1.1 DEAD LOADS

1.1.1 ROOF DEAD LOADS - CONCRETE FRAMING

	MAXIMUM GRAVITY LOAD
CONC FLAT SLAB	4.80 KPa
MECH/ELEC/PLUMBING	0.15 KPa
MISC	0.05 KPa
	5.00 KPa

1.1.2 ROOF DEAD LOADS - CONVENTIONAL LIGHT FRAMING

	MAXIMUM GRAVITY LOAD	MINIMUM GRAVITY LOAD
LIGHT GAUGE FRAMING	0.20 KPa	0.15 KPa
INSULATION	0.10 KPa	0.05 KPa
METAL ROOFING	0.14 KPa	0.05 KPa
	0.44 KPa	0.25 KPa

1.2 LIVE LOADS (PER IBC 2006)

1.2.1 ROOF LIVE LOADS: ALL BUILDINGS

GREATER OF 1.0 KPa MINIMUM OR SNOW LOAD

1.2.2 ELEVATED FLOOR UNIFORM LIVE LOADS

OFFICE	2.40 KPa
CORRIDOR	4.80 KPa

1.2.3 SLAB-ON-GRADE LIVE LOADS

ALL BUILDINGS	4.80 KPa

1.3 SNOW LOADS (PER IBC 2006)

1.3.1 DESIGN PARAMETERS

GROUND SNOW LOAD (per UFC 3-310-01)	1.0 KPa
SNOW IMPORTANCE FACTOR	1.0
SNOW EXPOSURE FACTOR	1.0

1.4 SEISMIC LOADS (PER IBC 2006 & UFC 3-310-04)

1.4.1 SEISMIC PARAMETERS - CAST-IN-PLACE CONCRETE STRUCTURES

SEISMIC OCCUPANCY CATEGORY	II
SEISMIC IMPORTANCE FACTOR (I)	1.0
SEISMIC SITE CLASS	D
Ss	1.28
S1	0.51
Sds	0.853
Sd1	0.51
SEISMIC DESIGN CATEGORY	D
SEISMIC RESISTING SYSTEM	SPECIAL REINFORCED MASONRY SHEAR WALLS
RESPONSE MODIFICATION FACTOR (R)	5.0
RESPONSE COEFFICIENT (CS)	0.17
SEISMIC ANALYTICAL PROCEDURE	EQUIV LATERAL FORCE
SEISMIC BASE SHEAR	209kN

US Army Corps of Engineers
Afghanistan Engineer District

SYMBOL	DESCRIPTION	DATE	APP

DESIGNED BY: KMP | DRN BY: RCG | CHK BY: CWW | DATE: 09-30-09 | SUBMITTED BY: BAKER | FILE NO.: ANPSDS-001XXX

Michael Baker Jr., Inc
A unit of Michael Baker Corporation
Airside Business Park
100 Airside Drive
Moon Township, PA 15108
www.mbakercorp.com

AFGHAN NATIONAL POLICE
STANDARD DESIGN
WAREHOUSE BUILDING

GENERAL NOTES & DESIGN CRITERIA

SHEET REFERENCE NUMBER:
S1

100% SUBMISSION

STRUCTURAL DESIGN CRITERIA (CONT)

ALL DESIGNS SHALL CONFORM TO THE PROVISIONS OF THE IBC 2006 AS APPLICABLE

1.6 WIND LOADS (PER IBC 2006)

1.6.1 DESIGN PARAMETERS

BASIC WIND SPEED	137 Km/h
WIND IMPORTANCE FACTOR	1.0
WIND EXPOSURE CATEGORY	D
DIRECTIONALITY COEFFICIENT (Kd)	0.85
TOPOGRAPHIC FACTOR (Kzt)	1.0

1.6.2 DESIGN WIND PRESSURE – MAIN WINDFORCE RESISTING SYSTEM

LOCATION	CORNER ZONE WIDTH "a"	MEAN ROOF HEIGHT (h)	WINDWARD WALL (@ MEAN ROOF HEIGHT)	LEEWARD WALL (@ MEAN ROOF HEIGHT)	ROOF
FIELD ZONE	N/A	4080mm	680 N/m^2	−480 N/m^2	−470 N/m^2
CORNER ZONE	1440mm	4080mm	800 N/m^2	−418 N/m^2	−750 N/m^2

a = 10% OF LEAST HORIZONTAL DIMENSION OR 0.4h, WHICHEVER IS SMALLER, BUT NOT LESS THAN EITHER 4% OF LEAST HORIZONTAL DIMENSION OR 0.9M.
h = MEAN ROOF HIEGHT, IN METERS, EXCEPT THAT EAVE HIEGHT SHALL BE USED FOR ANGLE GREATER THAN 10°.

1.5.3 DESIGN WIND PRESSURE – WALL COMPONENTS AND CLADDING

EXTERIOR WALL SYSTEMS & THEIR ATTACHMENTS TO THE PRIMARY STRUCTURE SHALL BE DESIGNED FOR THE PRESSURES SHOWN IN THE DIAGRAM BELOW:

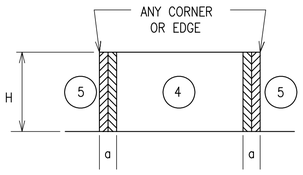

LOCATION	WINDWARD PRESSURE N/m^2 (inward)		LEEWARD PRESSURE N/m^2 (outward)		a
	④	⑤	④	⑤	
MAIN BUILDING					(mm)
AREA = 1 m^2	788	788	−850	−1050	1440
AREA = 2 m^2	748	748	−815	−967	1440
AREA = 5 m^2	700	700	−765	−880	1440
AREA = 10 m^2	648	648	−715	−750	1440

NOTES:
1. DESIGN WIND PRESSURES ABOVE REPRESENT THE NET PRESSURE (SUM OF INTERNAL AND EXTERNAL PRESSURE) APPLIED NORMAL TO ALL SURFACES.
2. LINEAR INTERPOLATION BETWEEN VALUES OF TRIBUTARY AREA IS PERMISSIBLE.
3. PLUS AND MINUS SIGNS SIGNIFY PRESSURE TOWARD AND AWAY FROM THE EXTERIOR SURFACE, RESPECTIVELY.

1.6 WIND LOADS (CONT)

1.6.4 DESIGN WIND PRESSURE – ROOF COMPONENTS AND CLADDING

ROOF COMPONENTS & THEIR ATTACHMENTS SHALL BE DESIGNED FOR THE PRESSURES SHOWN IN THE ADJACENT DIAGRAM & TABLE BELOW:

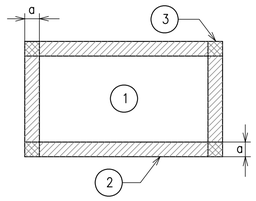

ROOF MEAN HEIGHT

LOCATION	GROSS UPLIFT PRESSURE N/m^2 (upward)			a
	①	②	③	
MAIN BUILDING				(mm)
AREA = 1 m^2	−787	−931	−1738	1440
AREA = 2 m^2	−787	−931	−1738	1440
AREA = 5 m^2	−787	−931	−1738	1440
AREA = 10 m^2	−787	−931	−1738	1440

NOTES:
1. DESIGN WIND PRESSURES ABOVE REPRESENT THE NET PRESSURE (SUM OF INTERNAL AND EXTERNAL PRESSURE) APPLIED NORMAL TO ALL SURFACES.
2. LINEAR INTERPOLATION BETWEEN VALUES OF TRIBUTARY AREA IS PERMISSIBLE.
3. PLUS AND MINUS SIGNS SIGNIFY PRESSURE TOWARD AND AWAY FROM THE EXTERIOR SURFACE, RESPECTIVELY.

2.0 FOUNDATION DESIGN CRITERIA (TO BE CONFIRMED BY THE CONTRACTOR)

THE GEOTECHNICAL ANALYSIS FOR THIS PROJECT IS THE RESPONSIBILITY OF THE CONTRACTOR AWARDED THE WORK. DESIGN VALUES USED IN THE STRUCTURAL ANALYSIS OF THE BUILDINGS HEREIN INDICATED HAVE BEEN ASSUMED AND SHALL BE CONFIRMED AND VERIFIED AS PART OF THE GEOTECHNICAL INVESTIGATION. VALUES WHICH DO NOT MEET THE REQUIREMENTS INDICATED BELOW SHALL BE IMMEDIATELY BROUGHT TO THE ATTENTION OF THE CONTRACTING OFFICER FOR CONSIDERATION AND DETERMINATION ON THE NEXT APPROPRIATE COURSE OF ACTION.

2.1.1 SOIL DESIGN PARAMETERS

NET ALLOWABLE SOIL BEARING CAPACITY	96.0 KPa
UNIT WEIGHT OF SOIL (moist)	1800 Kg/m^3
COEFF ACTIVE EARTH PRESSURE (Kpa)	0.30
COEFF PASSIVE EARTH PRESSURE (Kpp)	3.33
COEFF AT-REST EARTH PRESSURE (Kpr)	.55
COEFF OF SOIL FRICTION	.35
SUBGRADE MODULUS	4120 g/cm^3
MINIMUM BEARING DEPTH BELOW GRADE	800mm
SEISMIC SITE CLASS (based on in-situ soil)	D

CONCRETE BEAM SCHEDULE

GRADE BEAM						
MARK	SIZE (BxH)	REINFORCING TOP	REINFORCING BOTTOM	STIRRUPS	MIDBAR	REMARKS
GB1	400x750	(3)−#22	(3)−#22	#13 @ 200	(1) #22 EF	TOP BAR LAP AT CENTER BOT BAR LAP PAST COL

ROOF BEAM						
MARK	SIZE (BxH)	REINFORCING TOP	REINFORCING BOTTOM	STIRRUPS	MIDBAR	REMARKS
RB1	400x600	(2)−#19	(2)−#19	#13 @ 250	N/A	TOP BAR LAP AT CENTER BOT BAR LAP PAST COL

NOTE:
1. DIMENSIONS NOTED ARE MILLIMETERS (mm) UON.

CONCRETE COLUMN SCHEDULE

MARK	SIZE (LxW)	REINFORCING VERT BARS	REINFORCING TIES
C1	400x400	(8)−#25	#13 @ 100 (CORE OF EXT & CORNER COLUMNS) #13 @ 150 (CORE OF INTERIOR COLUMNS) #13 @ 200 (OTHER)

NOTE:
1. DIMENSIONS NOTED ARE MILLIMETERS (mm) UON.
2. SECOND STORY COLUMNS ARE SAME AS FIRST STORY COLUMNS.
3. CORE INDICATES THE AREA OF COLUMN & BEAM INTERSECTION.
4. TIE INDICATES PERIMETER & CROSS TIE COMBINED.

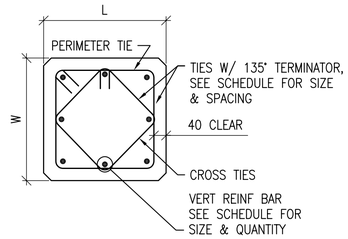

1 S2 S2 COLUMN DETAIL
SCALE: 1:10

SPREAD FOOTING SCHEDULE

MARK	FOOTING SIZE (mm) LENGTH	WIDTH	THICKNESS	FOOTING REINFORCING	REMARKS
F1	1700	1700	300	(6)−#16 EW BOTT	-----
F2	1800	1800	300	(6)−#16 EW BOTT	-----

NOTES:
1. DIMENSIONS NOTED ARE MILLIMETERS (mm) UON.

US Army Corps of Engineers
Afghanistan Engineer District

SYMBOL	DESCRIPTION	DATE	APP

DESIGNED BY: KMP | DATE: 09-30-09
DWN BY: RCG | SUBMITTED BY: BAKER
CHK BY: CWW | FILE NO.: ANPSDS-002XXX

Michael Baker Jr., Inc
A unit of Michael Baker Corporation
Airside Business Park
100 Airside Drive
Moon Township, PA 15108
www.mbakercorp.com

AFGHAN NATIONAL POLICE
STANDARD DESIGN
WAREHOUSE BUILDING

DESIGN CRITERIA & SCHEDULES

SHEET REFERENCE NUMBER:
S2

100% SUBMISSION

MINIMUM LAP SPLICES OF REINFORCING BARS IN TENSION (PER ACI 318M-05)

f'c = 28 MPa CONCRETE

BAR SIZE / CENTER TO CENTER BAR SPACING	(---TOP BARS--) LESS THAN 4db	(---TOP BARS--) 4db OR MORE	(--OTHER BARS--) LESS THAN 4db	(--OTHER BARS--) 4db OR MORE	4db
#10	460	460	410	410	40
#13	660	610	510	480	50
#16	1020	760	790	580	60
#19	1450	910	1120	710	80
#22	1960	1090	1500	840	90
#25	2590	1450	1980	1120	100
#29	3280	1830	2510	1420	110
#32	4140	2340	3200	1780	130
#36	5080	2840	3910	2180	140

NOTES:

1. LAP SPLICES ABOVE ARE IN MILLIMETERS UON.
2. YIELD STRENGTH OF REINFORCEMENT, fy, IS 420MPa (LAP SPLICE LENGTH IS IN MILLIMETERS).
3. CONCRETE IS NORMAL WEIGHT (2400Kg/m³).
4. TOP BAR INDICATES HORIZONTAL REINFORCEMENT WHICH IS PLACED ABOVE 300mm OR MORE OF FRESH CONCRETE.
5. SEE COLUMN SCHEDULE FOR COLUMN AND SHEAR WALL VERTICAL LAP SPLICE.
6. STRAIGHT DEVELOPMENT LENGTH OF AN UNLAPPED BAR IS EQUAL TO VALUE FROM TABLE DIVIDED BY 1.3.
7. CATEGORY FOR BARS SPACED LESS THAN 4d, OR ON CENTER CORRESPONDS TO CATEGORY 1 IN THE CRSI HANDBOOK WHEREAS FOR BARS SPACED 4d, OR MORE ON CENTER CORRESPOND TO CRSI CATEGORY 5.

CONCRETE COVER SCHEDULE

MINIMUM CONCRETE COVER PROTECTION FOR REINFORCEMENT BARS SHALL BE AS FOLLOWS: (SEE ACI 318M-05, SECTION 7.7 FOR CONDITIONS NOT NOTED). DIMENSIONS FOR BAR PLACEMENT GIVEN IN SECTIONS AND DETAILS SHALL SUPERSEDE MINIMUM COVER REQUIREMENTS GIVEN HERE. DIMENSIONS ARE IN mm.

FOOTINGS (EARTH FORMED)		70
COLUMNS / PIERS (TO TIES)		40
GRADE BEAMS OR SLAB TURNED DOWN EDGES:		
TOP		40
BOTTOM (EARTH FORMED)		70
SIDES (EARTH FORMED)		70
SIDES (BOARD FORMED)	#16 BAR & SMALLER	40
	#19 THRU #36 BAR	50
ELEVATED BEAMS & SLABS:		
BEAM TIES & STIRRUPS (NOT EXPOSED TO WEATHER)		40
BEAM TIES & STIRRUPS (EXPOSED TO WEATHER)		50
FLOOR SLABS (NOT EXPOSED TO WEATHER)		20
FLOOR SLABS (EXPOSED TO WEATHER)		
#19 & LARGER		50
#13 & SMALLER		40
ROOF SLAB BARS		25
SLABS-ON-GRADE (NO EXPOSURE TO WEATHER) FROM TOP		20
SLABS-ON-GRADE (EXPOSURE TO WEATHER) FROM TOP		40
UTILITY TUNNEL WALLS, RETAINING WALLS AND SHEAR WALLS, (NO SURFACES SHALL BE EARTH FORMED) EARTH SIDE AND FRONT SIDE (EXPOSED TO WEATHER):		
#16 BAR AND SMALLER		40
#19 THRU #36 BAR		50

PROVIDE STANDARD BAR CHAIRS AND SPACERS AS REQUIRED TO MAINTAIN CONCRETE PROTECTION SPECIFIED.

MASONRY CONCRETE LINTEL SCHEDULE

OPENING TYPE OR SIZE, BEAM LOCATION OR TYPE	MAX SPAN (mm)	BEAM DEPTH (mm)	MAIN REINFORCING TOP	MAIN REINFORCING BOTTOM	MAIN REINFORCING OTHER	SHEAR REINF STIRRUPS
EXT WINDOW OR DOOR	900	400	(2)-#13	(2)-#13		----
INT WALL OPENING, NON-BEARING	1800	400		(2)-#13		----
INT WALL OPENING, NON-BEARING	900	200		(2)-#13		----

NOTES:

1. STRUCTURAL DRAWINGS DO NOT INDICATE ALL OPENINGS IN MASONRY WALLS. VERIFY NUMBER, SIZE AND LOCATION OF ALL OPENINGS IN MASONRY WALLS FROM ARCHITECTURAL DRAWINGS AND APPROVED PLUMBING, MECHANICAL, AND ELECTRICAL SHOP DRAWINGS.
2. PROVIDE 200mm BEARING EA END FOR 200mm DEEP MASONRY LINTEL. PROVIDE 400mm BEARING EA END FOR 400mm DEEP MASONRY LINTEL.
3. FOR HEAD DETAILS REFER TO ARCHITECTURAL DRAWINGS.
4. REINFORCING SHALL BE ASTM A615M, GRADE 420. CONCRETE FOR CAST-IN-PLACE BEAMS SHALL HAVE A MINIMUM COMPRESSIVE STRENGTH OF 28 MPa AT 28 DAYS.
5. CONTRACTOR SHALL SUBMIT FOR APPROVAL SHOP DRAWINGS AND SCHEDULES SHOWING SIZE, DETAILS, LOCATIONS, ETC FOR ALL CAST-IN-PLACE BEAMS IN CMU WALLS.

TYPICAL CMU WALL REINFORCING SCHEDULE

WALL TYPE OR LOCATION	WALL THICKNESS (mm)	CONT. VERT. REINF. (CENTERED IN CMU, UON)	CONT. CAST IN PLACE LINTEL (CIP BB) DEPTH (mm)	REINF (BOTT UON)	MAX CIPL VERT SPACING (mm)	REMARKS
ALL PERIMETER/EXTERIOR WALLS (UON)	200	1-#16 @ 800	200	2-#16	1200	-----
NON-LOAD BEARING INTERIOR WALLS WITH TOP AND BOTT. SUPPORTS	200	1-#13 @ 1200	200	2-#16	1200	-----

NOTES:

1. REINFORCING SIZES AND SPACING GIVEN IN SECTIONS AND DETAILS SHALL SUPERSEDE THE ABOVE SCHEDULE REQUIREMENTS.
2. PROVIDE CONTINUOUS CAST IN PLACE CONCRETE BOND BEAM AT ALL WALL LATERAL SUPPORT LOCATIONS.
3. REINFORCING INDICATED SHALL BE CONTINUOUS FOR FULL EXTENT OF SPLICE FOLLOWING THE REQUIREMENTS OF THE LAP SPLICE TABLE SHOWN ON THIS SHEET.
4. WALLS HAVE BEEN DESIGNATED AS VERTICALLY SPANNING UON AND THEREFORE MUST BE TEMPORARILY SUPPORTED DURING CONSTRUCTION UNTIL THE SUPPORTING DIAPHRAGMS (FLOOR AND ROOF SYSTEMS) HAVE BEEN COMPLETELY INSTALLED. SHORING IS THE RESPONSIBILITY OF THE CONTRACTOR.
5. ALL CMU WALLS SHALL BE FULLY GROUTED IN LIFTS NOT EXCEEDING THOSE BY CODE (UON)
6. SEE TYPICAL CMU WALL DETAILS ON SHEET S7.

CONCRETE MATERIALS SCHEDULE

STRUCTURAL ELEMENT	f'c CONCRETE COMPRESSIVE STRENGTH @ 28 DAYS (MPa)
SLAB-ON-GRADE/TURN-DOWN SLABS	28
ROOF AND FLOOR SLABS	28
ALL FOOTINGS (UON)	28
MISC. CURBS, WALLS AND PADS (UON)	28
CAST-IN-PLACE LINTEL	28
CONCRETE FRAMING - BEAMS AND COLUMNS	28

NOTES:

1. ALL CONCRETE SHALL BE NORMAL WEIGHT CONCRETE. (2400 Kg/m³ UON)
2. ALL CONCRETE SHALL HAVE A MAX WATER-CEMENT RATIO OF 0.45.

STANDARD HOOKS IN TENSION PER (ACI 318M-05)

BAR SIZE	HOOK DEVELOPMENT LENGTH Ldh (mm) f'c 28 MPa
#10	180
#13	250
#16	300
#19	380
#22	430
#25	480
#29	560
#32	610
#36	690

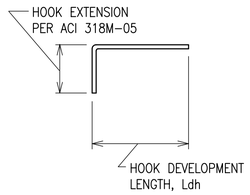

NOTES:

1. CONCRETE IS NORMAL WEIGHT CONCRETE.
2. BAR YIELD STRENGTH, fy = 420 MPa
3. SIDE COVER REQUIREMENTS OF ACI SECT. 12.5.3 ARE ASSUMED TO NOT BE MET.
4. TIE OR STIRRUP REQUIREMENTS OF ACI SECT. 12.5.3 ARE ASSUMED TO NOT BE MET.
5. REDUCTION FOR EXCESS REINFORCEMENT IS NOT TAKEN.
6. HOOK DEVELOPMENT LENGTH IS VALID FOR 180° HOOKS ALSO.

MASONRY REINFORCING MINIMUM LAP SPLICES

BAR SIZE	BASIC LAP SPLICE Ld FOR CMU REINFORCING
#10	450
#13	600
#16	750
#19	900
#22	1050
#25	1200

MAXIMUM CMU WALL UNSUPPORTED HEIGHT OR LENGTH

	WALL THICKNESS (mm)	EXTERIOR WALL NON-LOAD BEARING (mm)	INTERIOR NON-LOAD BEARING WALL (mm)
MAX HEIGHT OR LENGTH BETWEEN SUPPORTS	200	4800	7200

NOTE: CMU WALL MAXIMUM LATERAL SUPPORT SPACING GIVEN IN SECTIONS AND DETAILS SHALL SUPERSEDE THE ABOVE SCHEDULE REQUIREMENTS.

US Army Corps of Engineers
Afghanistan Engineer District

SYMBOL	DESCRIPTION	DATE	APP

DESIGNED BY: KMP
DWN BY: RCG
CHK BY: CWW
DATE: 09-30-09
SUBMITTED BY: BAKER
FILE NO.: ANPSDS-003XXX

Michael Baker Jr., Inc
A unit of Michael Baker Corporation
Airside Business Park
100 Airside Drive
Moon Township, PA 15108
www.mbakercorp.com

AFGHAN NATIONAL POLICE
STANDARD DESIGN
WAREHOUSE BUILDING

SCHEDULES

SHEET REFERENCE NUMBER:
S3

100% SUBMISSION

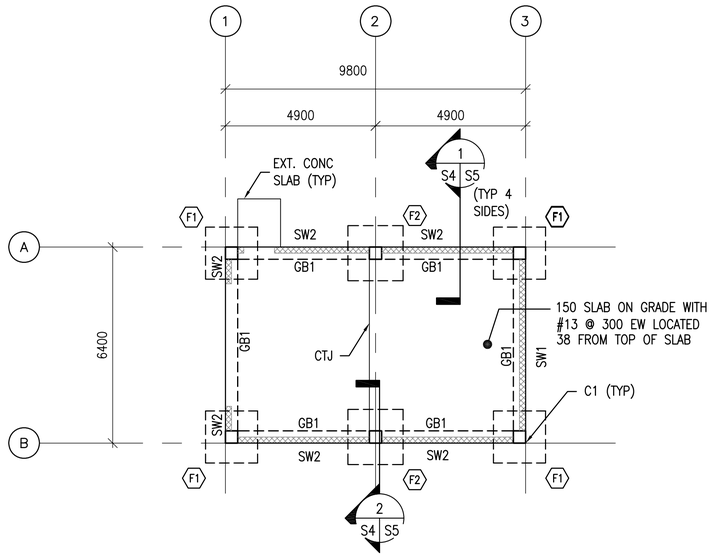

1 S4 S4 **FOUNDATION PLAN**

SCALE: 1:100

N

FOUNDATION PLAN NOTES:

1. FINISH FIRST FLOOR ELEVATION SHALL BE (DATUM 0.0). ALL PLUS OR MINUS DIMENSIONS INDICATED ON PLAN OR REFERRED TO IN NOTES RELATE TO FINISH FIRST FLOOR ELEVATION.
2. TOP OF EXTERIOR FOOTINGS SHALL BE –950 UNLESS OTHERWISE INDICATED.
3. SPREAD FOOTINGS INDICATED BY F# ON PLAN. REFER TO SPREAD FOOTING SCHEDULE ON SHEET S2.
4. COLUMNS INDICATED THUS C# ON PLAN. REFER TO COLUMN SCHEDULE ON SHEET S2.
5. REFER TO DRAWINGS S1TO S3 FOR STRUCTURAL NOTES AND BASIS OF DESIGN.
6. CTJ & CSJ INDICATES SLAB CONTROL OR CONSTRUCTION JOINTS. RESPECTIVELY, REFER TO SHEET S7 FOR DETAILS.
7. SEE CMU WALL REINFORCING SCHEDULE ON SHEET S3.
8. REFER TO ARCHITECTURAL SHEETS FOR MASONRY PARTITION TYPES.
9. SEE MECHANICAL AND ELECTRICAL SHEETS FOR CONCRETE PAD LOCATIONS, SIZES, AND THICKNESS NOT SHOWN. SEE SHEET S7 FOR DETAILS.

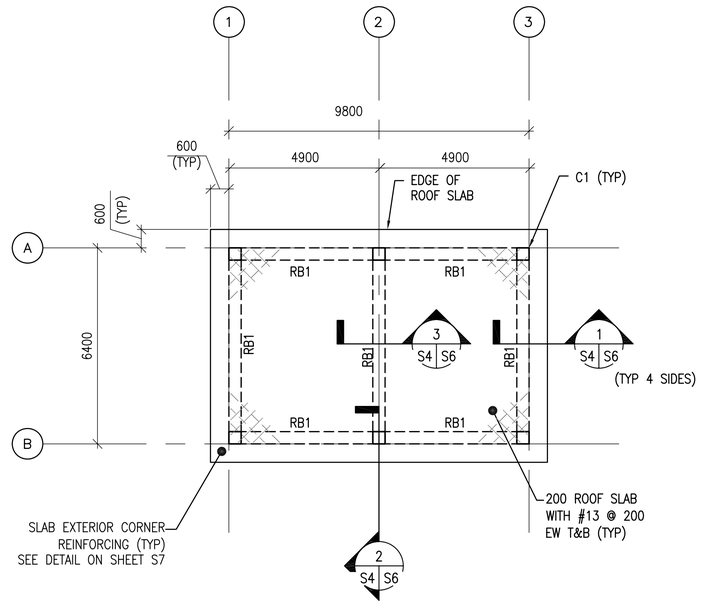

2 S4 S4 **ROOF FRAMING PLAN**

SCALE: 1:100

N

PLAN NOTES:

1. TOP OF SLAB ELEVATION = 3600 UNLESS NOTED OTHERWISE
2. RB# DENOTES ROOF BEAM TYPE. SEE BEAM SCHEDULE ON SHEET S2.
3. REFER TO SHEETS S1 TO S3 FOR STRUCTURAL NOTES AND BASIS OF DESIGN.
4. COORD W/ ARCHITECTURAL SHEETS FOR COLD–FORMED STEEL OVERBUILT FRAMING ABOVE ROOF SLAB.
5. COLD–FORMED METAL OVERBUILT ROOF FRAMING NOT SHOWN FOR CLARITY. SEE OVERBUILT ROOF FRAMING DETAILS AND SECTIONS ON SHEET S6

UNLESS OTHERWISE NOTED, LINEAR DIMENSIONS SHOWN ARE IN MILLIMETERS (MM)

0 2000 4000 8000

SCALE: 1: 100

US Army Corps of Engineers
Afghanistan Engineer District

APP.	DATE	DESCRIPTION	SYMBOL

DESIGNED BY: KMP	DATE: 09–30–09		
DWN BY: MDB	SUBMITTED BY: BAKER	CHK BY: CWW	FILE NO.: ANPSDS–104XXX

Michael Baker Jr., Inc
A unit of Michael Baker Corporation
Airside Business Park
100 Airside Drive
Moon Township, PA 15108
www.mbakercorp.com

AFGHAN NATIONAL POLICE
STANDARD DESIGN
WAREHOUSE BUILDING

FOUNDATION PLAN & ROOF PLANS

SHEET REFERENCE NUMBER:

S4

100% SUBMISSION

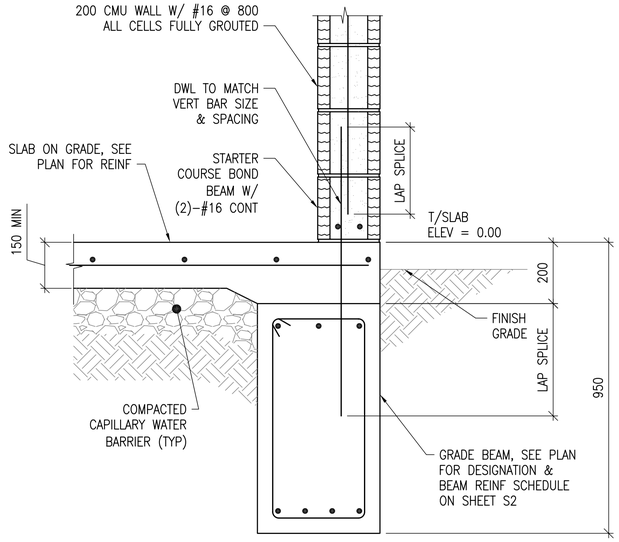

1 S4 S5 **SECTION**
SCALE: 1:10

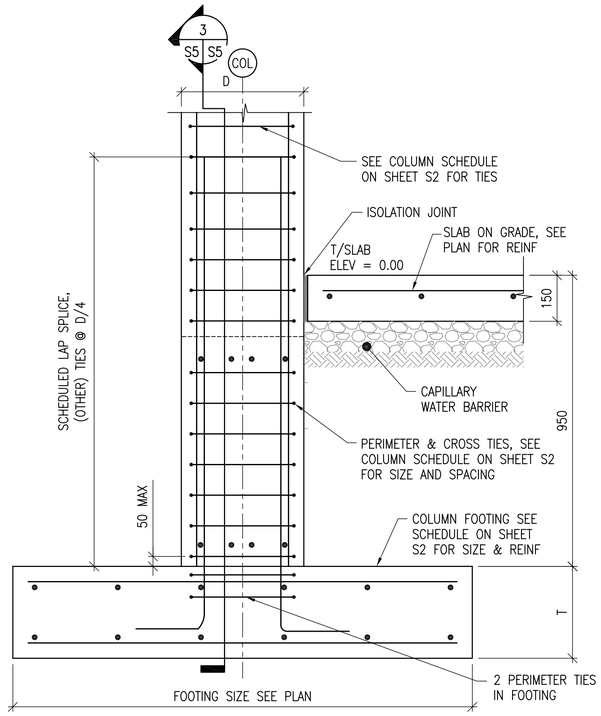

2 S4 S5 **SECTION**
SCALE: NTS

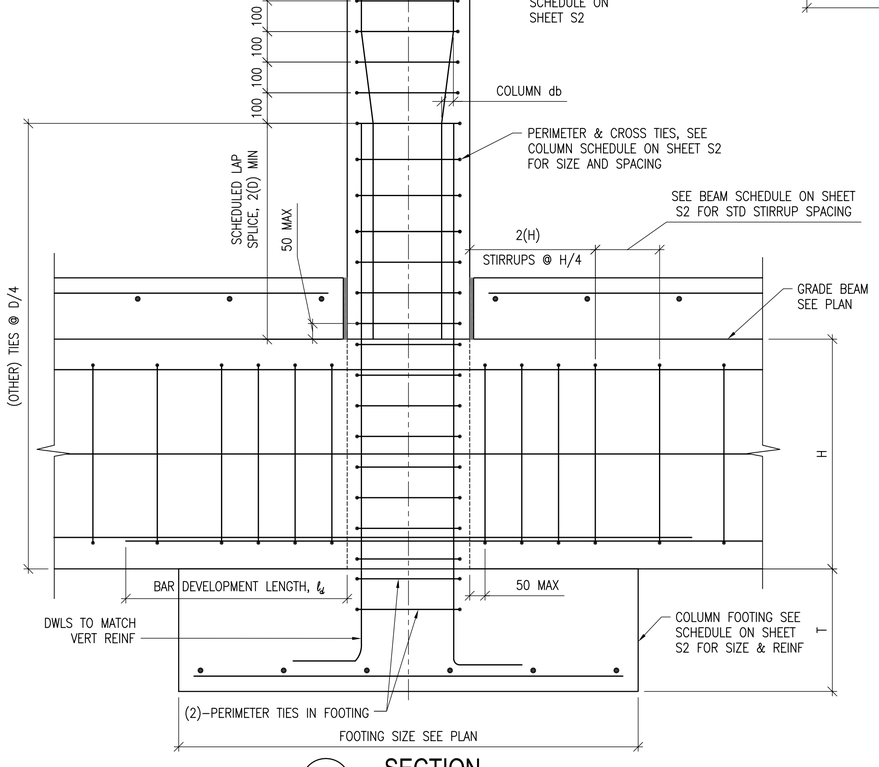

3 S5 S5 **SECTION**
SCALE: NTS

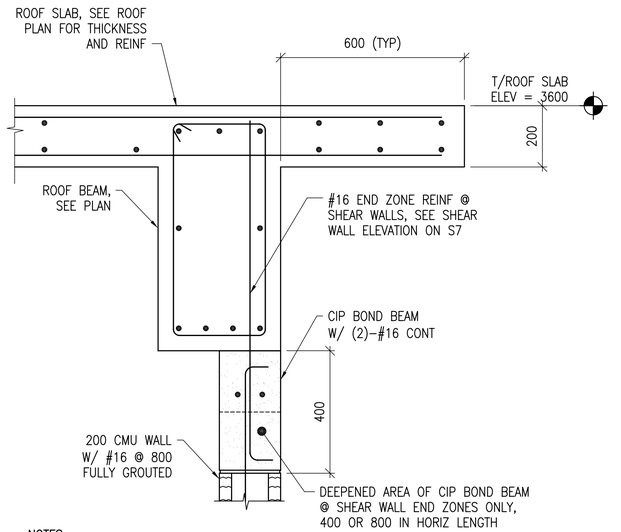

NOTES:
1. REFERENCE SHEET S6 FOR OVERFRAMING ABOVE ROOF SLAB.

4 S7 S5 **SECTION**
SCALE: 1:10

UNLESS OTHERWISE NOTED, LINEAR DIMENSIONS SHOWN ARE IN MILLIMETERS (MM)

0 200 400 800

SCALE: 1: 10

US Army Corps of Engineers
Afghanistan Engineer District

SYMBOL	DESCRIPTION	DATE	APP'D

DESIGNED BY: KMP	DATE: 09-30-09
DWN BY: RCG	SUBMITTED BY: BAKER
CHK BY: CWW	FILE NO.: ANPSDS-305XXX

Michael Baker Jr., Inc
A unit of Michael Baker Corporation
Airside Business Park
100 Airside Drive
Moon Township, PA. 15108
www.mbakercorp.com

AFGHAN NATIONAL POLICE
STANDARD DESIGN
WAREHOUSE BUILDING

FOUNDATION SECTIONS & DETAILS

SHEET REFERENCE NUMBER:
S5

100% SUBMISSION

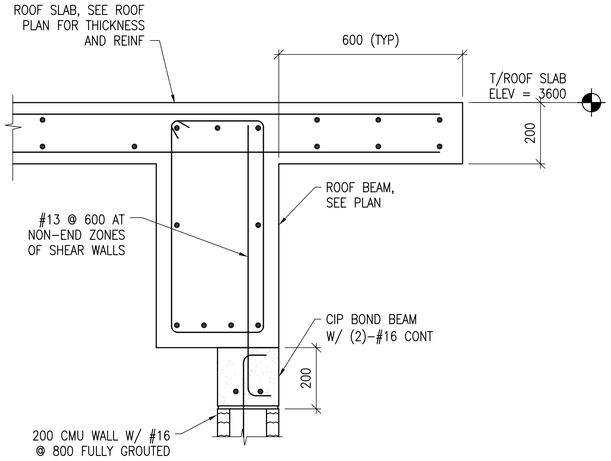

NOTES:
1. REFERENCE THIS SHEET FOR OVERFRAMING ABOVE ROOF SLAB.

1 S4 S6 SECTION
SCALE: 1:10

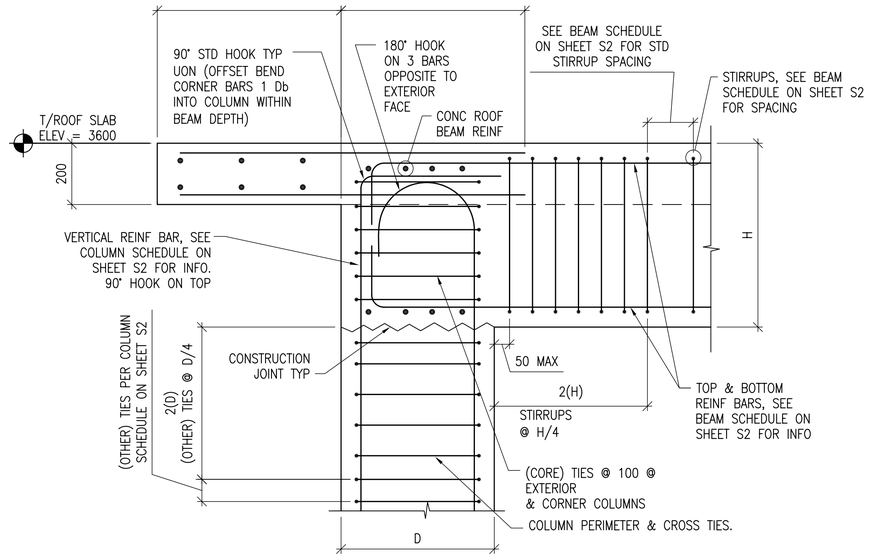

2 S4 S6 SECTION
SCALE: 1:10

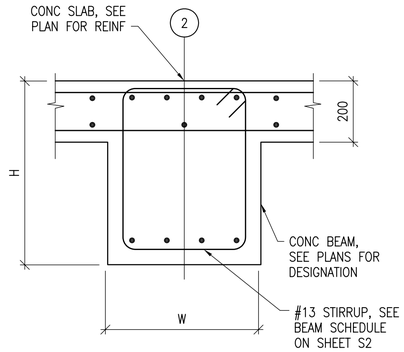

3 S4 S6 SECTION
SCALE: 1:10

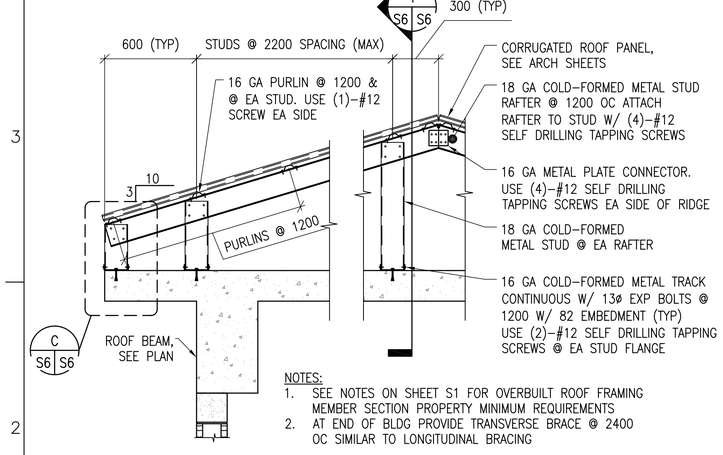

NOTES:
1. SEE NOTES ON SHEET S1 FOR OVERBUILT ROOF FRAMING MEMBER SECTION PROPERTY MINIMUM REQUIREMENTS
2. AT END OF BLDG PROVIDE TRANSVERSE BRACE @ 2400 OC SIMILAR TO LONGITUDINAL BRACING

A S6 S6 TYPICAL OVERBUILT ROOF FRAMING DETAIL
SCALE: 1:20

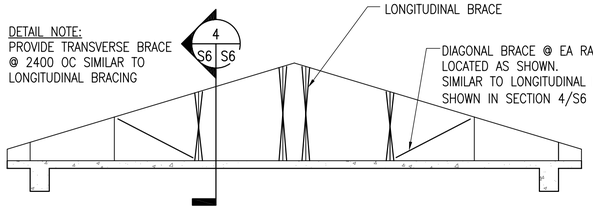

B S6 S6 TYPICAL ROOF BRACE LAYOUT DETAIL
SCALE: NTS

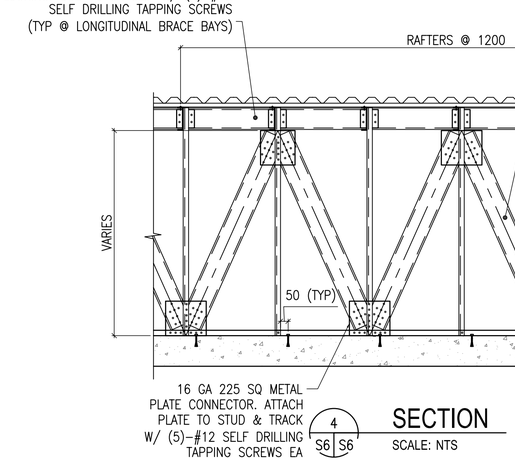

4 S6 S6 SECTION
SCALE: NTS

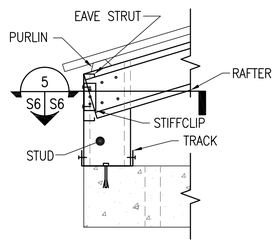

C S6 S6 DETAIL
SCALE: 1:10

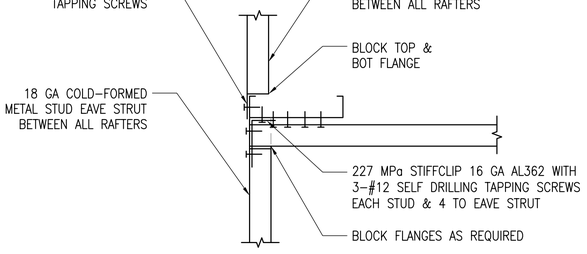

5 S6 S6 SECTION
SCALE: 1:5

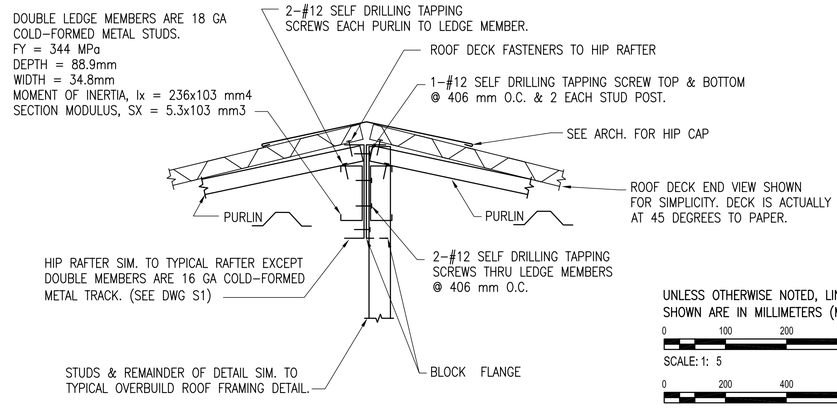

TYPICAL HIP FRAMING DETAIL
SCALE: 1:5

UNLESS OTHERWISE NOTED, LINEAR DIMENSIONS SHOWN ARE IN MILLIMETERS (MM)

0 100 200 400
SCALE: 1: 5

0 200 400 800
SCALE: 1: 10

0 400 800 1600
SCALE: 1: 20

US Army Corps of Engineers
Afghanistan Engineer District

SYMBOL	DESCRIPTION	DATE	APP

DESIGNED BY: KMP | DATE: 09-30-09
DWN BY: RCG | SUBMITTED BY: BAKER
CHK BY: CWW | FILE NO.: ANPSDS-306XXX

Michael Baker Jr., Inc
A unit of Michael Baker Corporation
Airside Business Park
100 Airside Drive
Moon Township, PA 15108
www.mbakercorp.com

AFGHAN NATIONAL POLICE
STANDARD DESIGN
WAREHOUSE BUILDING

SECTIONS & DETAILS

SHEET REFERENCE NUMBER:
S6

100% SUBMISSION

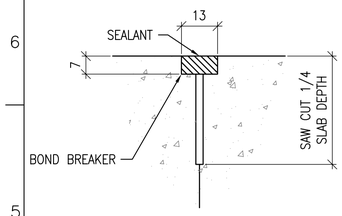

CONTROL JOINT DETAIL

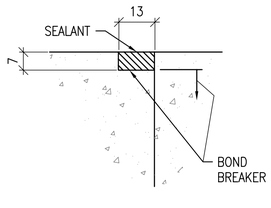

CONSTRUCTION JOINT DETAIL

1 S7 TYPICAL CONCRETE SLAB JOINT FINISH DETAIL

SCALE: NTS

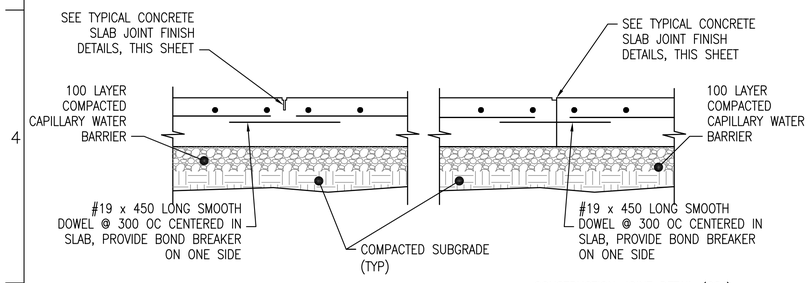

CONTROL JOINT DETAIL (CTJ)

CONSTRUCTION JOINT DETAIL (CSJ)

2 S7 TYPICAL SLAB ON GRADE JOINT DETAILS

SCALE: NTS

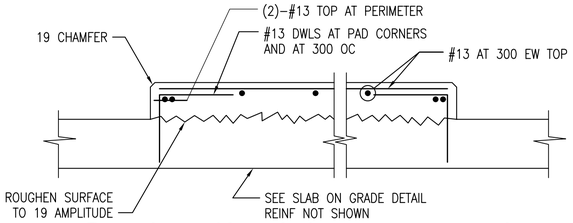

3 S7 INTERIOR EQUIPMENT PAD DETAIL

SCALE: NTS

DETAIL NOTE:

1. COORDINATE EQUIPMENT PAD SIZE AND LOCATIONS W/ ELECTRICAL/MECHANICAL SHEETS AND EQUIPMENT
2. MANUFACTURER.

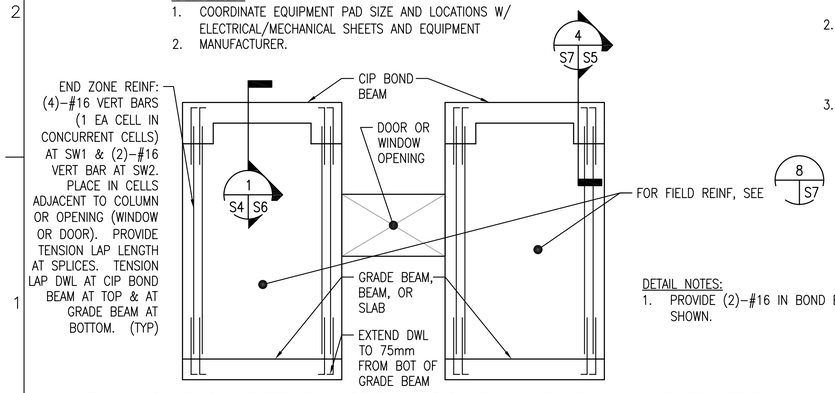

DETAIL NOTES:

1. PROVIDE (2)–#16 IN BOND BEAMS AT 1200 OC, NOT SHOWN.

4 S7 SPECIAL REINFORCED MASONRY SHEAR WALL ELEVATION

SCALE: NTS

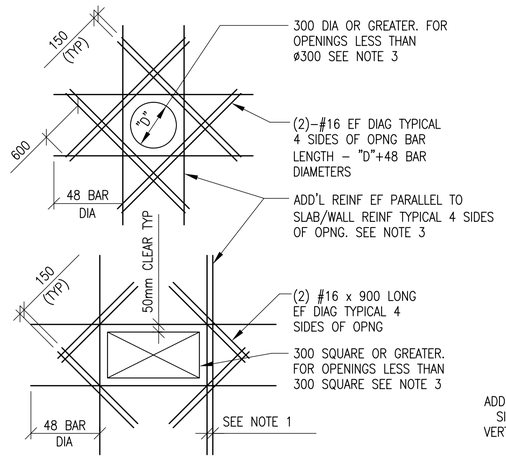

SLAB OPENINGS

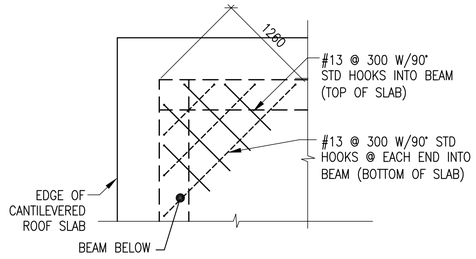

ELEVATED SLAB CORNERS

5 S7 ADD'L REINFORCEMENT DETAILS

SCALE: NTS

DETAIL NOTES:

1. WHERE MORE THAN ONE ADDITIONAL BAR IS REQUIRED PARALLEL TO THE EXISTING SLAB/WALL REINFORCING THE ADDITIONAL REINFORCING BARS SHALL BE SPACED AT 100 ON CENTER.
2. ADDITIONAL REINFORCING PARALLEL TO THE SLAB/WALL REINFORCING SHALL BE #16 BARS THAT PROVIDE A STEEL AREA ON EACH SIDE OF THE OPENING EQUAL TO 1/2 THE AREA OF THE REINFORCING CUT BY THE OPENING.
3. FOR OPENINGS WITH SIDES OR DIAMETERS LESS THAN 300 SPREAD THE SLAB/WALL REINFORCING TO CLEAR THE OPENING.

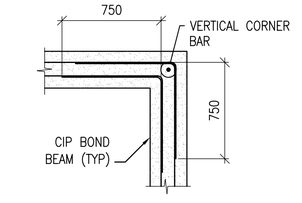

BOND BEAM CORNER

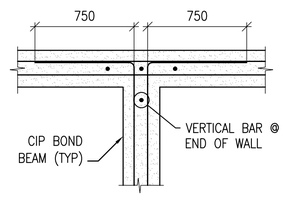

BOND BEAM INTERSECTION

6 S7 CIP BOND BEAM DETAILS

SCALE: NTS

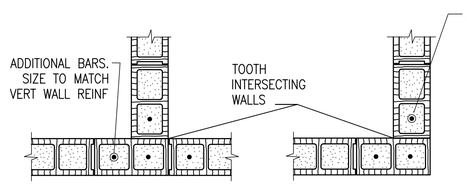

INTERSECTION

WALL CORNER

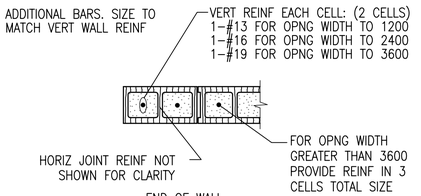

END OF WALL

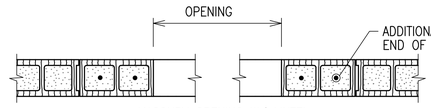

MASONRY OPENING W/ LINTEL

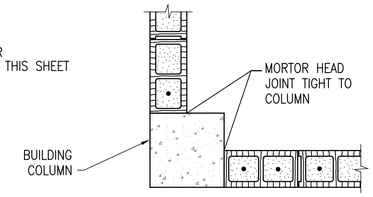

WALL END AT COLUMN

NOTES:

1. OPENING WIDTH SHALL NOT EXCEED 3600 FOR THIS TYPE OF JAMB
2. ALL CMU CELLS TO BE FULLY GROUTED

7 S7 TYPICAL CMU DETAILS

SCALE: NTS

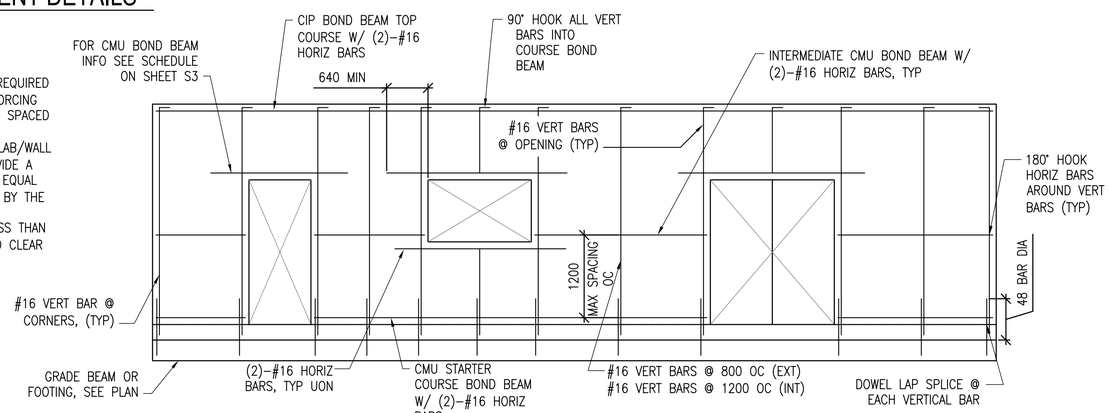

8 S7 MIN CMU WALL REINFORCING

SCALE: NTS

LINTEL NOTES:
CMU LINTEL REINFORCEMENT AS PER SCHEDULE ON SHEET S3

UNLESS OTHERWISE NOTED, LINEAR DIMENSIONS SHOWN ARE IN MILLIMETERS (MM)

US Army Corps of Engineers
Afghanistan Engineer District

SYMBOL	DESCRIPTION	DATE	APP

DESIGNED BY: KMP	DATE: 09-30-09	
DWN BY: RCG	SUBMITTED BY: BAKER	
CHK BY: CWW	FILE NO.: ANPSDS-507XXX	

Michael Baker Jr., Inc.
A unit of Michael Baker Corporation
Airside Business Park
100 Airside Drive
Moon Township, PA 15108
www.mbakercorp.com

AFGHAN NATIONAL POLICE
STANDARD DESIGN
WAREHOUSE BUILDING

TYPICAL DETAILS

SHEET REFERENCE NUMBER:
S7

100% SUBMISSION

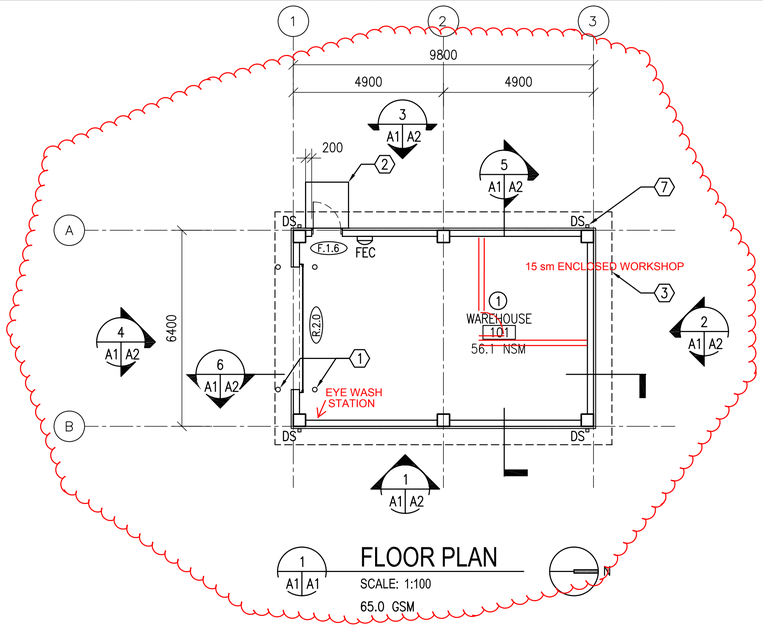

1 A1 A1 FLOOR PLAN

SCALE: 1:100

65.0 GSM

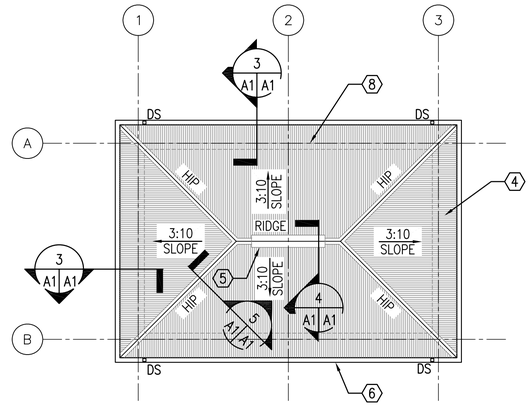

2 A1 A1 ROOF PLAN

SCALE: 1:100

GENERAL NOTES:

A. OPENINGS FOR DOORS SHALL BE LOCATED 200 MM FROM THE ADJACENT WALL UNLESS NOTED OTHERWISE

B. SURFACES TO BE PAINTED SHALL BE CLEAN AND FREE OF FOREIGN MATTER BEFORE APPLICATION OF PAINT. CLEANING SHALL BE SCHEDULED SO THAT DUST AND OTHER CONTAMINANTS WILL NOT FALL ON WET, NEWLY PAINTED SURFACES.

C. CONCRETE AND INTERIOR MASONRY SURFACES GROUTED SOLID SHALL BE ALLOWED TO DRY AT LEAST 30 DAYS BEFORE PAINTING EXCEPT CONCRETE SLAB ON GRADE WHICH SHALL BE ALLOWED TO CURE 90 DAYS BEFORE PAINTING.

D. PAINTS CONTAINING LEAD IN EXCESS OF 0.06 PERCENT BY WEIGHT OF THE TOTAL NONVOLATILE CONTENT SHALL NOT BE USED.

E. MERCURIAL FUNGICIDES SHALL NOT BE USED IN OIL–BASE PAINT.

F. REMOVE LOOSE DIRT AND CLEAN SURFACES BEFORE PAINTING. APPLY PAINT TO INTERIOR STRUCTURAL RIGID FRAMINGS AND CEILINGS AND TEST FOR ADHESION. PRIMER COAT FOR MASONRY. INITIAL FIRST COAT WITH AN ACRYLIC LATEX PAINT FOR EXTERIOR SURFACES AND A SECOND COAT WITH A WATER REPELLENT ACRYLIC LATEX PAINT.

G. METAL DOORS AND FRAMES SHALL RECEIVE A PRIMER COAT PLUS TWO COATS OF PAINT.

H. DIMENSIONS ARE TO STRUCTURAL COLUMN GRID, EDGE OF WINDOW OPENINGS, AND TO HINGE SIDE OF DOOR OPENINGS.

KEY NOTES: (X)

1. STEEL PIPE BOLLARD – RE: DETAIL 3/A4
2. CONCRETE STOOP – RE: DETAIL 2/A4
3. LINE OF ROOF OVERHANG ABOVE
4. CORRUGATED METAL ROOF PANELS ON COLD–FORMED METAL FRAMING
5. CONTINUOUS RIDGE VENT
6. METAL GUTTER
7. METAL DOWNSPOUT WITH SPLASH BLOCK
8. LINE OF BUILDING WALL BELOW

ROOM FINISHES: (X)

1. WALLS: PAINTED PLASTER,
   FLOOR: SEALED CONCRETE
   CEILING: PAINTED PLASTER APPLIED TO STRUCTURE

LEGEND:

- F.1.4 — DOOR TYPE, SEE SHEET A3
- (X) — KEY NOTE
- FEC — FIRE EXTINGUISHER CABINET
- (1) — ROOM FINISH DESIGNATION

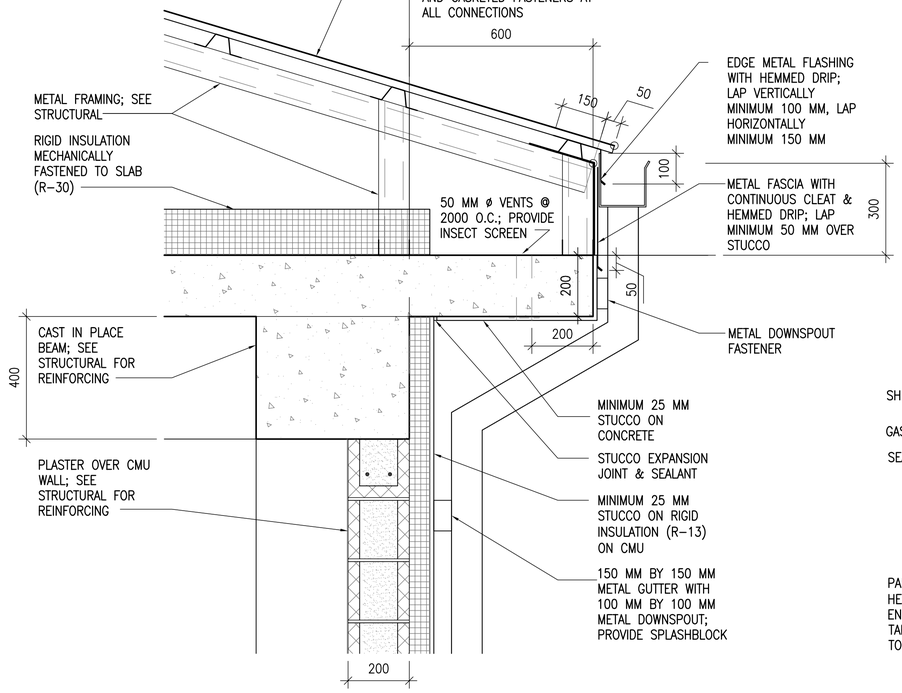

3 A1 A1 EAVE DETAIL

SCALE: 1:10

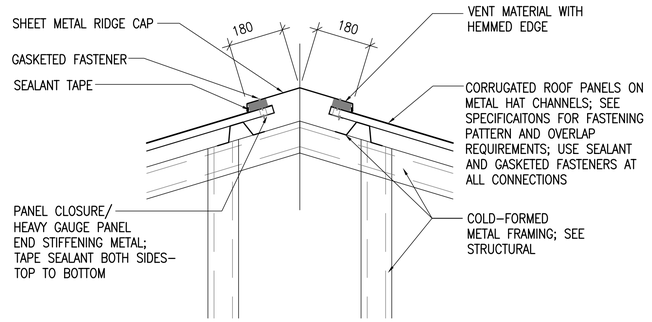

4 A1 A1 RIDGE VENT DETAIL

SCALE: 1:10

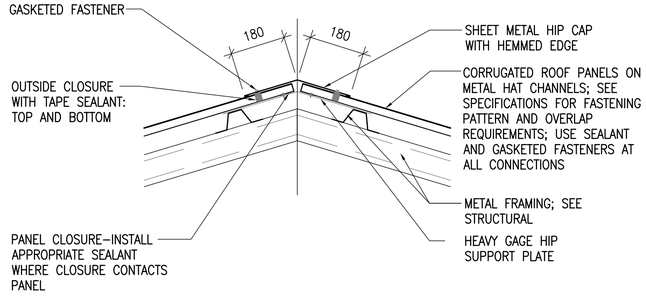

5 A1 A1 HIP DETAIL

SCALE: 1:10

UNLESS OTHERWISE NOTED, LINEAR DIMENSIONS SHOWN ARE IN MILLIMETERS (MM)

0 200 400 800

SCALE: 1: 10

0 2000 4000 8000

SCALE: 1: 100

US Army Corps of Engineers
Afghanistan Engineer District

SYMBOL	DESCRIPTION	DATE	APP'D

DESIGNED BY:	DATE:
PFF	09–30–09
DWN BY:	SUBMITTED BY:
ECN	BAKER
CHK BY:	FILE NO.:
NLJ	ANPSDA–101XXX

Michael Baker Jr., Inc.
A unit of Michael Baker Corporation
Airside Business Park
100 Airside Drive
Moon Township, PA 15108
www.mbakercorp.com

AFGHAN NATIONAL POLICE
STANDARD DESIGN
WAREHOUSE BUILDING

FLOOR AND ROOF PLANS AND DETAILS

SHEET REFERENCE NUMBER:

A1

100% SUBMISSION

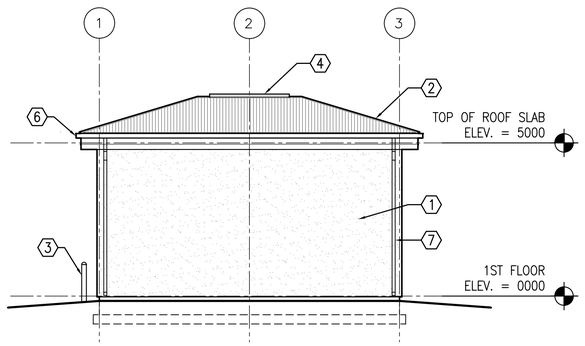

1 A1 A2 EAST ELEVATION

SCALE: 1:100

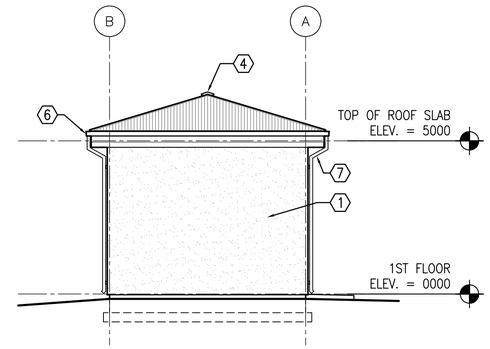

2 A1 A2 NORTH ELEVATION

SCALE: 1:100

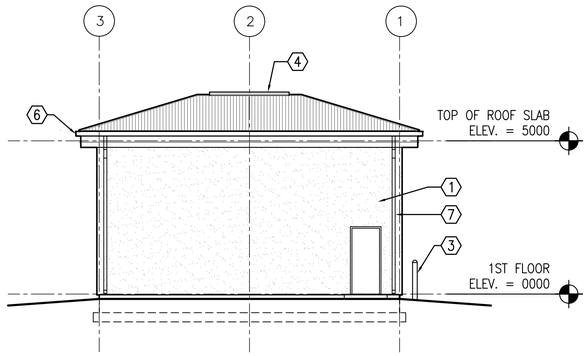

3 A1 A2 WEST ELEVATION

SCALE: 1:100

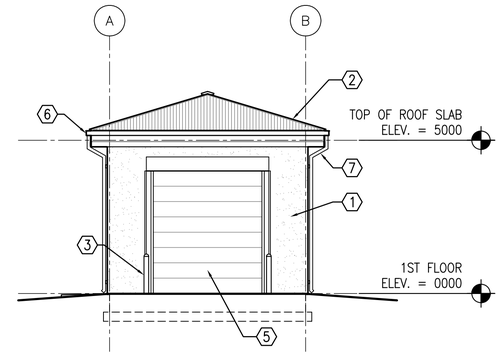

4 A1 A2 SOUTH ELEVATION

SCALE: 1:100

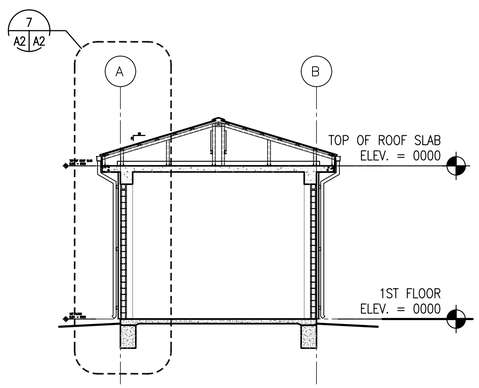

5 A1 A2 BUILDING SECTION

SCALE: 1:100

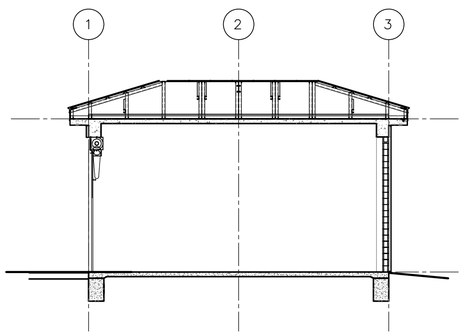

6 A1 A2 BUILDING SECTION

SCALE: 1:100

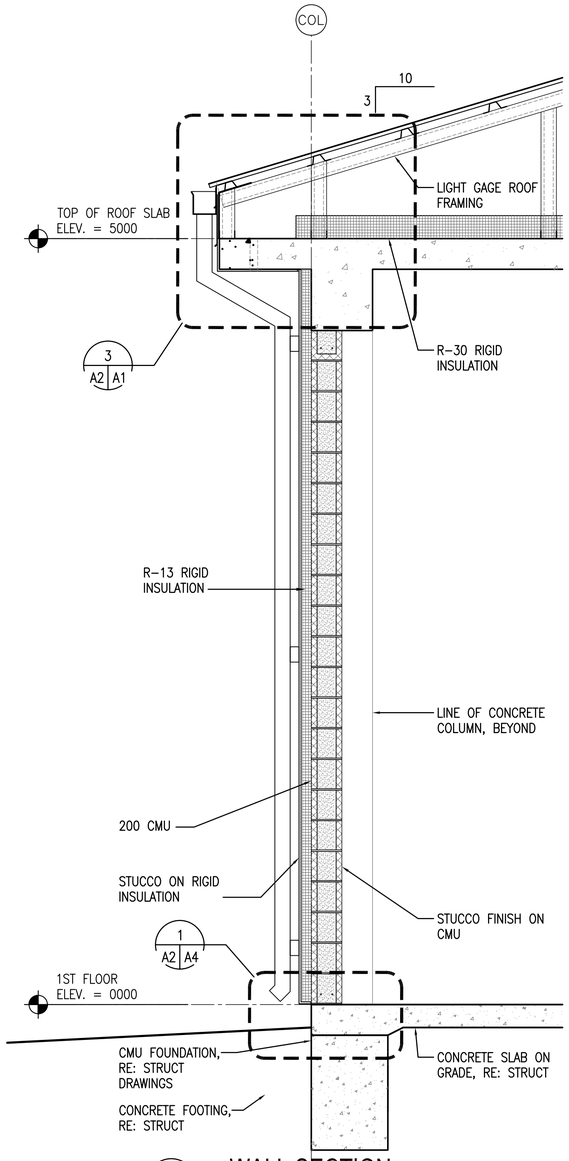

7 A2 A2 WALL SECTION

SCALE: 1:20

KEY NOTES:

1. STUCCO AND RIGID INSULATION SYSTEM OVER CMU AND CONCRETE.
2. CORRUGATED METAL ROOF PANELS ON COLD-FORMED METAL FRAMING.
3. GALVANIZED STEEL PIPE BOLLARD FILLED WITH CONCRETE ON EACH SIDE OF ROLL UP DOOR.
4. CONTINUOUS RIDGE VENT
5. OVERHEAD COILING DOOR
6. METAL GUTTER
7. METAL DOWNSPOUT WITH SPLASH BLOCK

GENERAL NOTES:

A. COORDINATE SIZE AND LOCATION OF OPENINGS FOR MECHANICAL ITEMS WITH MECHANICAL DRAWINGS.

B. PROVIDE STRUCTURAL LINTELS AS REQUIRED – RE: STRUCT

UNLESS OTHERWISE NOTED, LINEAR DIMENSIONS SHOWN ARE IN MILLIMETERS (MM)

0 400 800 1600

SCALE: 1: 20

0 2000 4000 8000

SCALE: 1: 100

US Army Corps of Engineers

Afghanistan Engineer District

SYMBOL	DESCRIPTION	DATE	APP'D

DESIGNED BY: PFF	DWN BY: ECN	CHK BY: NLJ	DATE: 09-30-09
SUBMITTED BY: BAKER	FILE NO.: ANPSDA-202XXX		

Michael Baker Jr., Inc
A unit of Michael Baker Corporation
Airside Business Park
100 Airside Drive
Moon Township, PA 15108
www.mbakercorp.com

AFGHAN NATIONAL POLICE
STANDARD DESIGN
WAREHOUSE BUILDING

EXTERIOR ELEVATIONS

SHEET REFERENCE NUMBER:

A2

100% SUBMISSION

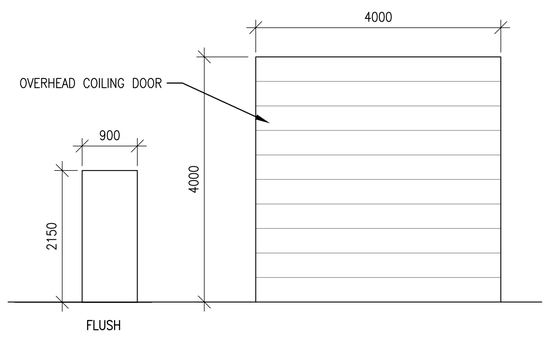

F R

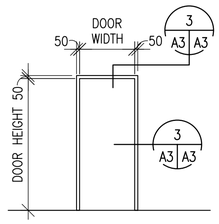

1

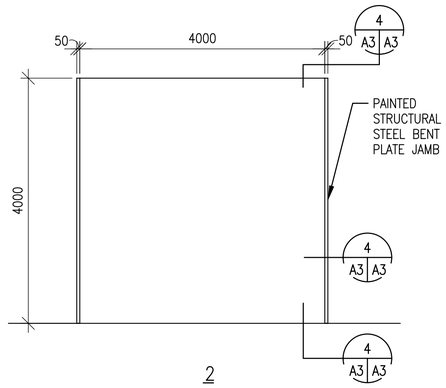

2

DOOR TYPES NOTES:

1. INTERIOR AND EXTERIOR METAL DOORS AND FRAME COLORS SHALL MATCH ADJACENT WALL COLORS AS SELECTED BY THE CONTRACTING OFFICER.
2. HARDWARE SHALL BE HEAVY DUTY, COMMERCIAL GRADE, STAINLESS STEEL WITH A MATTE FINISH.
3. FRAMES, EXCEPT FIRE-RATED FRAMES, SHALL BE MOUNTED AND ADJUSTED IN ACCORDANCE WITH MANUFACTURER'S INSTRUCTIONS. FRAMES SHALL BE FASTENED WITH MINIMUM OF THREE FASTENING POINTS PER SIDE AT REGULAR INTERVALS.
4. DIMENSIONS SHOWN ON DOOR SCHEDULE ARE BASED UPON MODULAR MASONRY (OR ROUGH OPENING), HEIGHT OF 2200mm FOR STANDARD PERSONNEL DOORS. CONTRACTOR SHALL COORDINATE WITH DOOR SUPPLIER TO ENSURE THAT DIMENSIONS OF DOORS AND FRAMES PROVIDED ARE COMPATIBLE WITH DOOR OPENING DIMENSIONS.

HARDWARE TYPES:

HW-6 1-1/2 PR HINGES
1 EA LOCKSET,F04 ENTRY LOCK W/LEVERS. GRADE 1
1 EA DOOR CLOSER, C02061,LOW RESISTANCE
1 EA THRESHOLD J32130

1 A3 A3 DOOR TYPES
SCALE: 1:50

2 A3 A3 FRAME TYPES
SCALE: 1:50

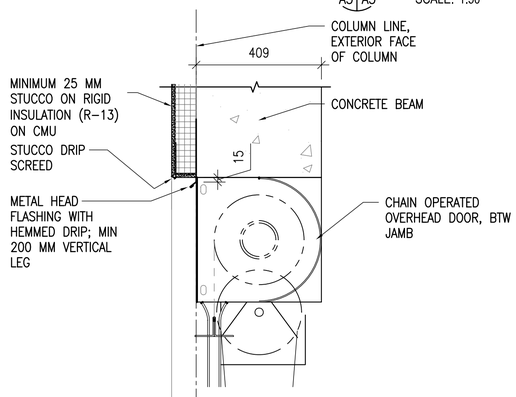

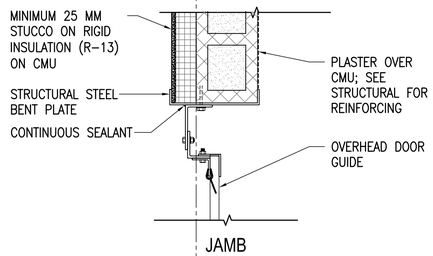

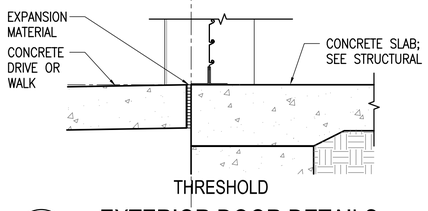

4 A3 A3 EXTERIOR DOOR DETAILS
SCALE: 1:10

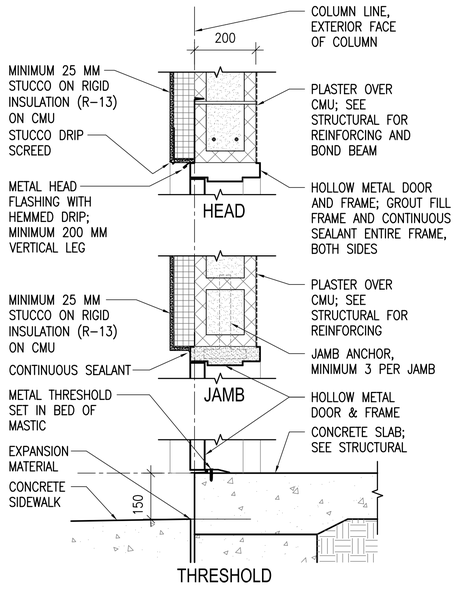

3 A3 A3 EXTERIOR DOOR DETAILS
SCALE: 1:10

UNLESS OTHERWISE NOTED, LINEAR DIMENSIONS SHOWN ARE IN MILLIMETERS (MM)

0 1000 2000 4000
SCALE: 1: 50

0 200 400 800
SCALE: 1: 10

US Army Corps of Engineers
Afghanistan Engineer District

SYMBOL	DESCRIPTION	DATE	APP'D

DESIGNED BY: PFF
DWN BY: ECN
CHK BY: NLJ
DATE: 09-30-09
SUBMITTED BY: BAKER
FILE NO.: ANPSDA-503XXX

Michael Baker Jr., Inc
A unit of Michael Baker Corporation
Airside Business Park
100 Airside Drive
Moon Township, PA 15108
www.mbakercorp.com

AFGHAN NATIONAL POLICE
STANDARD DESIGN
WAREHOUSE BUILDING

DOOR, WINDOW & FINISH TYPES & DETAILS

SHEET REFERENCE NUMBER:
A3

100% SUBMISSION

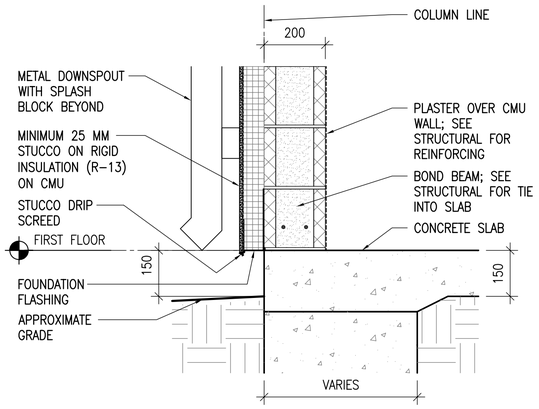

1 A4 A4 **STUCCO BASE DETAIL**

SCALE: 1:10

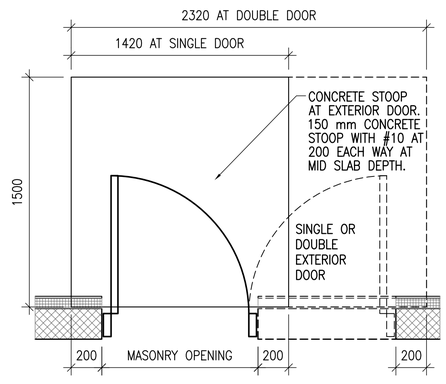

2 A4 A4 **CONCRETE STOOP PLAN DETAIL**

SCALE: 1:20

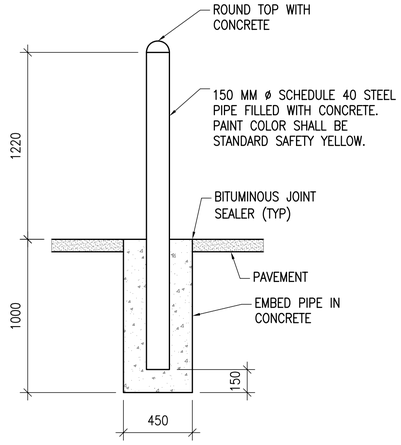

3 A4 A4 **STEEL PIPE BOLLARD DETAIL**

SCALE: 1:20

UNLESS OTHERWISE NOTED, LINEAR DIMENSIONS SHOWN ARE IN MILLIMETERS (MM)

0 200 400 800

SCALE: 1: 10

0 400 800 1600

SCALE: 1: 20

US Army Corps of Engineers

Afghanistan Engineer District

SYMBOL	DESCRIPTION	DATE	APP'D

DESIGNED BY: PFF	DATE: 09-30-09		
DWN BY: ECN	SUBMITTED BY: BAKER	CHK BY: NLJ	FILE NO.: ANPSDA-504XXX

Michael Baker Jr., Inc
A unit of Michael Baker Corporation
Airside Business Park
100 Airside Drive
Moon Township, PA 15108
www.mbakercorp.com

AFGHAN NATIONAL POLICE
STANDARD DESIGN
WAREHOUSE BUILDING

SECTION DETAILS

SHEET REFERENCE NUMBER:

A4

100% SUBMISSION

POWER

- DISTRIBUTION PANELBOARD
- NEW PANELBOARD – SURFACE
- NEW PANELBOARD – RECESSED
- EXISTING PANELBOARD
- (G) GENERATOR
- TVSS TRANSIENT VOLTAGE SURGE SURPRESSOR
- TRANSFORMER (DRAWN TO SIZE)
- PS POWER SUPPLY
- CP CONTROL PANEL
- TC TIME CLOCK
- TIM ASTRONOMICAL TIME CLOCK– "SEE SPEC."
- R RELAY WITH RATING AND NUMBER OF POLES AS NOTED ON DRAWINGS– "SEE SPEC."
- J JUNCTION BOX
- (J) JUNCTION BOX – CEILING
- PB PULL BOX
- BD BUS DUCT HORIZONTAL
- BUS DUCT VERTICAL
- EMERGENCY POWER OFF PUSH BUTTON
- NON–FUSIBLE SAFETY SWITCH
- FUSIBLE SAFETY SWITCH
- (M) MOTOR
- ^{M} MOTOR STARTING SWITCH – 20A RATED
- ^{K} KEY SWITCH – 20A RATED
- FC FAN COIL – FURNISHED BY MECHANICAL CONTRACTOR, ELECTRICAL CONTRACTOR SHALL INSTALL AND PROVIDE POWER CONNECTION
- UH UNIT HEATER – FURNISHED BY MECHANICAL CONTRACTOR, ELECTRICAL CONTRACTOR SHALL INSTALL AND PROVIDE POWER CONNECTION
- D JUNCTION BOX FOR CONNECTION TO GARBAGE DISPOSAL
- CF LIGHT/HEATER/FAN – FURNISHED BY MECHANICAL CONTRACTOR, ELECTRICAL CONTRACTOR SHALL INSTALL AND PROVIDE POWER CONNECTION
- ELECTRIC WATER HEATER
- EPO WEATHERPROOF / EXPLOSION PROOF EMERGENCY POWER OFF PUSH–BUTTON TO BE INTERCONNECTED WITH GENERATOR SHUT DOWN CONTROL
- CF CEILING FAN – REFER TO SPECIFICATION SECTION 26 20 00

RECEPTACLES

- DUPLEX 20A BRITISH STANDARD UNSWITCHED SOCKETS
- $_{GF}$ DUPLEX 20A BRITISH STANDARD UNSWITCHED SOCKETS – 10mA GROUND FAULT INTERRUPTER TYPE
- $_{WP}$ DUPLEX 20A BRITISH STANDARD UNSWITCHED SOCKETS – 10mA GROUND FAULT INTERRUPTER TYPE WITH WEATHERPROOF COVER
- $_{EXP}$ DUPLEX 20A BRITISH STANDARD UNSWITCHED SOCKETS – EXPLOSION PROOF
- * INDICATES MOUNT DEVICE ABOVE COUNTER TOP

LIGHTNING PROTECTION

- AIR TERMINAL 20mm O.D. X 4m SOLID COPPER, NICKEL PLATED ON ADHESIVE BASE.
- EQ EQUIPMENT AIR TERMINAL
- TEST WELL WITH GROUND ROD(S)
- GROUND ROD
- G GROUND PLATE
- MAIN GROUND CONDUCTER CONCEALED WITHIN CONSTRUCTION
- MAIN GROUND CONDUCTOR EXPOSED ON EXPOSED ON BUILDING EXTERIOR SURFACE
- GROUND CONDUCTOR CAD WELDED TO GROUND CABLE OR EQUIPMENT
- GROUND CONDUCTOR CAD WELDED TO BUILDING STEEL COLUMN
- GROUND ROD TRIPOD, SPACED 10 FEET APART.
- LEVEL TO LEVEL CABLE

LIGHTING

- LIGHTING FIXTURE – SEE FIXTURE SCHEDULE FOR MORE INFORMATION
- LIGHTING FIXTURE – SEE FIXTURE SCHEDULE FOR MORE INFORMATION
- DOWNLIGHT
- LIGHTING FIXTURE ON NORMAL/EMERGENCY
- WALL MOUNTED LIGHT FIXTURE
- E EXIT SIGN – DIRECTIONAL ARROWS AS INDICATED ON DRAWINGS
- B BATTERY PACK WITH HEADS AS INDICATED ON DRAWINGS
- REMOTE HEAD FOR BATTERY PACK
- $ SINGLE POLE SWITCH – 20A RATED
- ^{3} 3–WAY SWITCH – 20A RATED
- ^{4} 4–WAY SWITCH – 20A RATED
- PC PHOTOCELL VOLTAGE TO MATCH CIRCUITRY
- LC LIGHTING CONTACTOR
- POLE MOUNTED SITE LIGHTING FIXTURE– NUMBER OF FIXTURES PER POLE AS INDICATED ON DRAWINGS
- EXTERIOR DIRECTIONAL LIGHTING FIXTURE
- a SMALL CASE LETTERS REPRESENTS LAMP(S) / SWITCHES. WHEN USED WITH AN OCCUPANCY SENSOR THIS INDICATES SENSOR WITH MANUAL OVERRIDE SWITCH

TELECOMMUNICATIONS

- TELEPHONE OUTLET(S) @ 18" AFF. U.N.O. WITH 3/4" RACEWAY TERMINATED ABOVE NEAREST ACCESSIBLE CEILING OR TO TELEPHONE TERMINAL BOARD IF NO ACCESSIBLE CEILING AVAILABLE. SEE TELE/DATA RISER DIAGRAM FOR OUTLET AND CABLE DESCRIPTION
- DATA OUTLET(S) @ 18" AFF. U.N.O. WITH 3/4" RACEWAY TERMINATED ABOVE NEAREST ACCESSIBLE CEILING OR TO DATA EQUIPMENT RACK IF NO ACCESSIBLE CEILING AVAILABLE. SEE TELE/DATA RISER DIAGRAM FOR OUTLET AND CABLE DESCRIPTION

TELECOMMUNICATIONS (CONTINUED)

- COMBINATION TELEPHONE/DATA OUTLET(S) @ 18" AFF. U.N.O. WITH 1" RACEWAY TERMINATED ABOVE NEAREST ACCESSIBLE CEILING OR TO TELE/DATA TERMINAL AREA IF NO ACCESSIBLE CEILING AVAILABLE. SEE TELE/DATA RISER DIAGRAM FOR OUTLET AND CABLE DESCRIPTION
- W WALL MTD. TELEPHONE OUTLET WITH 3/4" RACEWAY TERMINATED ABOVE NEAREST ACCESSIBLE CEILING OR TO TELEPHONE TERMINAL BOARD IF NO ACCESSIBLE CEILING AVAILABLE. SEE TELE/DATA RISER DIAGRAM FOR OUTLET AND CABLE DESCRIPTION
- (x)T INDICATES NUMBER OF TELEPHONE OUTLET(S) AND ASSOCIATED CABLING
- (x)D INDICATES NUMBER OF DATA OUTLET(S) AND ASSOCIATED CABLING
- (x)TF INDICATES NUMBER OF TELEPHONE OUTLETS AND ASSOCIATED CABLING WITH 1 OUTLET AND CABLE DEDICATED FOR FAX

SINGLE LINE SYMBOLS

- SWITCH
- BREAKER
- FUSE
- TRANSFORMER
- CAPACITOR
- GROUND
- CONTACT (NORMALLY OPEN)
- CONTACT (NORMALLY CLOSED)
- AUTOMATIC TRANSFER SWITCH
- MANUAL DOUBLE THROW SWITCH
- CURRENT TRANSFORMER
- INDICATES NEW ELECTRICAL EQUIPMENT
- C INDICATES NEW CONTROL WIRING AND CONDUIT
- EQUIPMENT OUTLINE

MISCELLANEOUS

- BRANCH CIRCUIT WIRING CONCEALED ABOVE CEILINGS, SURFACE MOUNTED ON WALLS
- BRANCH CIRCUIT WIRING – #10 AWG
- BRANCH CIRCUIT WIRING – UNDER FLOOR
- HOME RUN BACK TO PANEL
- CONDUIT TURNED DOWN
- CONDUIT TURNED UP
- LV LOW VOLTAGE WIRING AND CONDUIT
- CT–X CABLE TRAY ("X" DENOTES WIDTH)
- INDICATES CONTINUATION OF LINE

FIRE ALARM

- FACP FIRE ALARM CONTROL PANEL WITH BATTERY BACKUP
- F FIRE ALARM PULL STATION

FIRE ALARM (CONTINUED)

- F FIRE ALARM STROBE – WALL MOUNTED
- F FIRE ALARM AUDIBLE/STROBE – WM
- F FIRE ALARM HORN/STROBE – WM
- S SMOKE DETECTOR
- H HEAT DETECTOR CEILING MOUNTED
- D DUCT DETECTOR – PROVIDED BY EC, INSTALLED BY MC AND CONNECTED BY EC

DENOTATIONS & ABBREVIATIONS

AFF	ABOVE FINISHED FLOOR
C	CEILING MOUNTED
E	EMERGENCY
EC	ELECTRICAL CONTRACTOR
EPO	EMERGENCY POWER OFF
EXP	EXPLOSION PROOF
F	FIRE ALARM
FF	FLUSH FLOOR MOUNTED
FL	FLUORESCENT
FO	FIBER OPTIC
FSS	FUSED SAFETY SWITCH
G	GROUND FAULT INTERRUPTER
GC	GENERAL CONTRACTOR
HOA	HAND–OFF AUTO
I	INFRARED
ICD	INCANDESCENT
IG	ISOLATED GROUND
K	KEY
LV	LOW VOLTAGE
M	MOTOR
MC	MECHANICAL CONTRACTOR
NE	NORMAL/EMERGENCY
NFSS	NON–FUSED SAFETY SWITCH
PA	PAGING SYSTEM
PLC	PLUMBING CONTRACTOR
REL	RELOCATE
RED	RELOCATED
SL	SINGLE LINE
SS	SURGE SUPPRESSION
T	TELEPHONE
TL	TWIST LOCK

DENOTATIONS & ABBREVIATIONS (CONT.)

TP	TAMPER PROOF
UE	UNDERGROUND ELECTRIC
UF	UNDERGROUND FIBER
UT	UNDERGROUND TELEPHONE
W	WALL MOUNTED
WG	WIRE GUARD
WP	WEATHERPROOF
WPG	WEATHERPROOF/GROUND FAULT INTERRUPTER
WT	WATER TIGHT

GENERAL PROJECT NOTES:

G1. UNLESS OTHERWISE NOTED, PROVIDE ALL EQUIPMENT SHOWN ON THE PLANS. THE ELECTRICAL CONTRACTOR SHALL COORDINATE ALL SYMBOLS SHOWN ON THE PLANS WITH THE SYMBOL LIST. IT SHALL BE THE RESPONSIBILITY OF THE CONTRACTOR TO VERIFY THE INTENT OF ANY SYMBOL THAT IS SHOWN ON THE PLANS AND NOT INDICATED ON THE SYMBOL LIST WITH THE ENGINEER PRIOR TO BID.

G2. COORDINATE THE FINAL LOCATIONS OF ALL LIGHT FIXTURES WITH THE ARCHITECT'S REFLECTED CEILING PLANS. REPORT ANY DISCREPANCIES TO THE ARCHITECT PRIOR TO INSTALLATION.

G3. THE CONTRACTOR SHALL VERIFY THE LOCATION OF ALL UNDERGROUND UTILITIES WITHIN THE CONSTRUCTION AREA THREE (3) WORKING DAYS NOTICE BEFORE COMMENCE DIGGING. NOTIFY THE LOCAL OR STATE AUTHORITY HAVING JURISDICTION AND WAIT THE REQUIRED TIME BEFORE COMMENCING TO DIG.

G4. THE CONTRACTOR SHALL COORDINATE CONDUIT RUNS, CABLE TRAY, LIGHTING FIXTURES AND OTHER EQUIPMENT LOCATIONS WITH THE OTHER TRADE CONTRACTORS TO AVOID CONFLICTS.

G5. WHERE VOLTAGES AND FREQUENCIES ON THE DRAWINGS AND IN THE SPECIFICATIONS DIFFER FROM THE LOCAL ONES, ALL WORK SHALL BE PERFORMED USING THE LOCAL VOLTAGES AND FREQUENCIES.

G6. THE MINIMUM WIRE SIZE ON THE PROJECT SHALL BE 4mm2. THE MINIMUM CONDUIT SIZE SHALL BE 20mm. THE MINIMUM BREAKER SIZE SHALL BE 20 AMPS.

G7. THE CONTRACTOR SHALL PUT A MAXIMUM OF 6 DUPLEX SOCKETS ON A 20A SINGLE POLE CIRCUIT.

G8. WHERE THE 1010 SCOPE REVIEW, 1015 TECHNICAL REVIEW, DRAWINGS, AND SPECIFICATIONS DIFFER FROM AMERICAN CODES OR STANDARDS THE 1010, 1015, DRAWINGS, AND SPECIFICATIONS SHALL RULE.

G9. WORK FOR THE AMMUNITION SUPPLY POINT SHALL BE DONE IN ACCORDANCE WITH DEPARTMENT OF DEFENSE STANDARD DOD 6055.9–STD.

G10. ALL CONDUIT AND DEVICES SHALL BE SURFACE MOUNTED UNLESS OTHERWISE INDICATED.

US Army Corps of Engineers
Afghanistan Engineer District

SYMBOL	DESCRIPTION	DATE	APR

DESIGNED BY: JRG
DWN BY: JRG
CHK BY: JRG
DATE: 09-30-09
SUBMITTED BY: BAKER
FILE NO.: ANPSDE-000XXX

Michael Baker Jr, Inc
A unit of Michael Baker Corporation
Airside Business Park
100 Airside Drive
Moon Township, PA 15108
www.mbakercorp.com

AFGHAN NATIONAL POLICE
STANDARD DESIGN
WAREHOUSE BUILDING

ELECTRICAL SYMBOLS AND ABBREVIATIONS

SHEET REFERENCE NUMBER:
E0

100% SUBMISSION

GENERAL NOTES:

1. REFER TO DRAWING #E0 FOR THE ELECTRICAL SYMBOLS LIST.
2. EXIT SIGNS SHALL BE WIRED AHEAD OF ANY LOCAL SWITCHING ON CIRCUITS.
3. REFER TO DRAWING #E3 FOR THE LIGHTING FIXTURE SCHEDULE.
4. REFER TO DRAWING #E2 FOR THE POWER RISER.
5. REFER TO DRAWING #E4 FOR PANEL SCHEDULES.
6. LIGHT FIXTURES INDICATED AS EMERGENCY SHALL BE PROVIDED WITH A BATTERY BACKUP BALLAST.
7. COORDINATE EXACT MOUNTING LOCATION OF DISCONNECTING MEANS FOR MECHANICAL AND PLUMBING EQUIPMENT IN THE FIELD.
8. FUSIBLE SAFETY SWITCHES THAT ARE NOT OTHERWISE IDENTIFIED SHALL BE 380V, 1P, 30A FUSED SAFETY SWITCHES WITH 20A FUSES.

NUMBERED NOTES:

(1) PANEL R1.

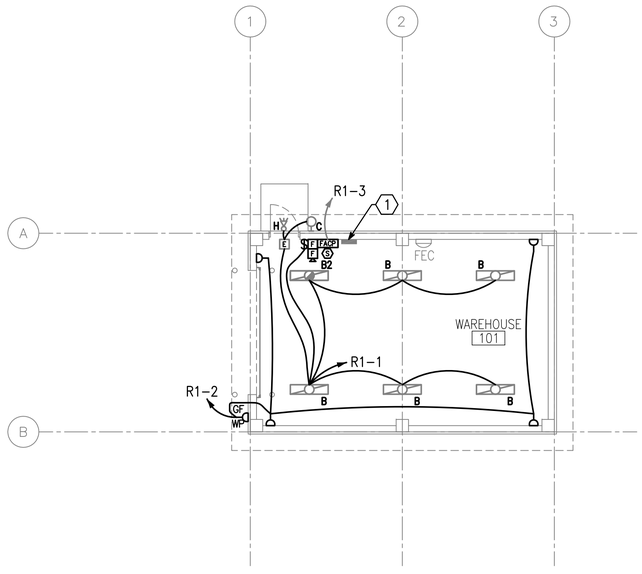

1 / E1 | E1 LIGHTING AND POWER PLAN

SCALE: 1:100

N

UNLESS OTHERWISE NOTED, LINEAR DIMENSIONS SHOWN ARE IN MILLIMETERS (MM)

1 0 1 2 3 4 5 6 7 8 9

1:100

US Army Corps of Engineers

Afghanistan Engineer District

SYMBOL	DESCRIPTION	DATE	APP'D

DESIGNED BY:	DATE:
JRG	09-30-09
DWN BY:	SUBMITTED BY:
JRG	BAKER
CHK BY:	FILE NO.:
JRG	ANPSDE-101XXX

Michael Baker Jr., Inc
A unit of Michael Baker Corporation
Airside Business Park
100 Airside Drive
Moon Township, PA 15108
www.mbakercorp.com

AFGHAN NATIONAL POLICE
STANDARD DESIGN
WAREHOUSE BUILDING

LIGHTING AND POWER PLAN

SHEET REFERENCE NUMBER:

E1

100% SUBMISSION

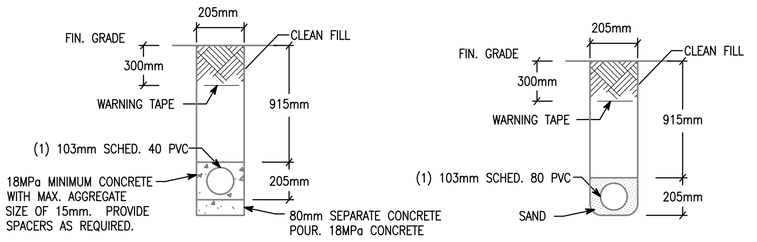

NOTE: PVC CONDUIT SHALL BE DIRECT BURIED SCHEDULE 80 FOR NO TRAFFIC AREAS AND CONCRETE-ENCASED SCHEDULE 40 FOR UNDER ROADWAYS OR TRAFFIC AREAS.

1 E2 E2 TYPICAL DUCT BANK DETAILS FOR CONDUIT IN SAND OR CONCRETE
SCALE: N.T.S.

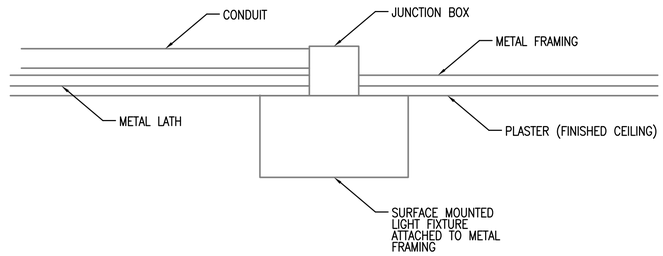

2 E2 E2 TYPICAL DETAIL FOR SURFACE MOUNTED LIGHT FIXTURES
SCALE: N.T.S.

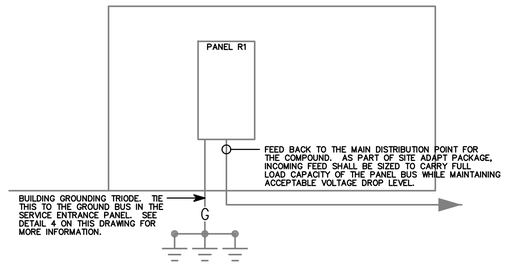

3 E2 E2 WAREHOUSE RISER DIAGRAM
SCALE: N.T.S.

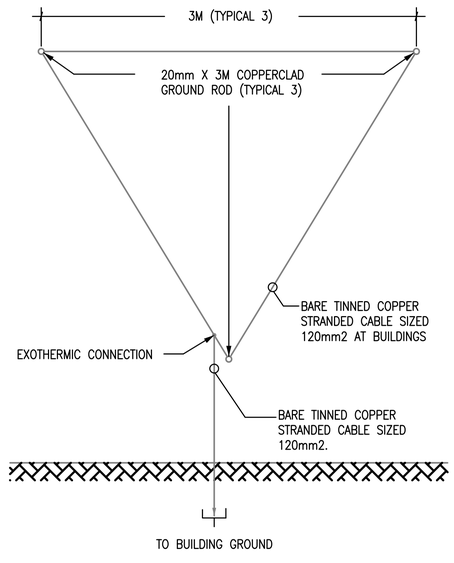

4 E2 E2 GROUND TRIPOD SYSTEM DETAIL - PLAN
SCALE: N.T.S.

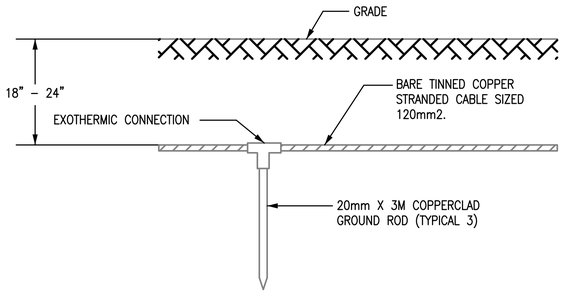

5 E2 E2 GROUND TRIPOD SYSTEM DETAIL - ELEVATION
SCALE: N.T.S.

US Army Corps of Engineers
Afghanistan Engineer District

SYMBOL	DESCRIPTION	DATE	APR

DESIGNED BY: JRG
DATE: 09-30-09
DWN BY: JRG
SUBMITTED BY: JRG
CHK BY: JRG
FILE NO.: ANPS[illegible]XXX

Michael Baker Jr., Inc
A unit of Michael Baker Corporation
Airside Business Park
100 Airside Drive
Moon Township PA 15108
www.mbakercorp.com

AFGHAN NATIONAL POLICE
STANDARD DESIGN
WAREHOUSE BUILDING

DETAILS

SHEET REFERENCE NUMBER:
E2

100% SUBMISSION

LIGHTING FIXTURE SCHEDULE

FIXTURE MARK	STYLE NUMBER AND TYPE	NUMBER AND TYPE OF LAMPS	VOLTAGE	MOUNTING	NOTES
B	WET LOCATION WRAP AROUND SURFACE/PENDANT MOUNTED FLUORESCENT FIXTURE WITH PRISMATIC ACRYLIC LENS AND ELECTRONIC BALLAST	(2) 32W 3500K	220V – 1ø 50HZ	PENDANT MOUNTED FROM SLOPED CEILINGS	FURNISHED WITH ELECTRONIC BALLAST, VIRGIN ACRYLIC WRAP AROUND LENS.
B2	SAME AS FIXTURE 'B' WITH EMERGENCY BALLAST	(2) 32W 3500K	220V – 1ø 50HZ	PENDANT MOUNTED FROM SLOPED CEILINGS	FURNISHED WITH ELECTRONIC BALLAST, VIRGIN ACRYLIC WRAP AROUND LENS. EMERGENCY BALLAST WITH SELF TEST SWITCH.
C	INCANDESCENT ONE PIECE W/ APPROVED LENS STABILIZED HIGH IMPACT POLY CARBONATE.	(1) A19 – 100W INCANDESCENT	220V – 1ø 50HZ	WALL MOUNTED ABOVE EXTERIOR DOORS	
H	REMOTE HEAD EXTERIOR LIGHT HEAD POWERED FROM EXIT SIGN BATTERY– 12V DOUBLE HEAD CORROSION RESISTANT WITH UL34 WEATHERPROOF CONSTRUCTION	(2) 12W/12V HALOGEN LAMP	12V – 1ø 50HZ	EXTERIOR WALL MOUNTED AT TOP OF DOOR HEIGHT	
[E]	UNIVERSAL MOUNT ENGINEER GRADE THERMOPLASTIC HOUSING EXIT SIGN WITH LED LAMPS, RED LETTERS 6" IN HEIGHT WITH ARROWS AS INDICATED, WITH 12V CADMIUM BATTERY WITH REMOTE HEAD CAPABILITY	LED LAMPS	220V – 1ø 50HZ	UNIVERSAL MOUNTING	

FIXTURE MARK 'B'

WET LOCATION WRAP AROUND SURFACE/PENDANT MOUNTED FLUORESCENT FIXTURE WITH PRISMATIC ACRYLIC LENS AND ELECTRONIC BALLAST.

FIXTURE MARK 'B2':
SAME FIXTURE AS 'B' WITH EMERGENCY BALLAST.

FIXTURE MARK 'C'

INCANDESCENT ONE PIECE WITH APPROVED LENS, STABILIZED HIGH IMPACT POLY CARBONATE

FIXTURE MARK 'H'

REMOTE HEAD EXTERIOR LIGHT HEAD POWERED FROM EXIT SIGN BATTERY– 12V DOUBLE HEAD CORROSION RESISTANT WITH UL34 WEATHERPROOF CONSTRUCTION

FIXTURE MARK '[E]'

UNIVERSAL MOUNT ENGINEER GRADE THERMOPLASTIC HOUSING EXIT SIGN WITH LED LAMPS, RED LETTERS 6" IN HEIGHT WITH ARROWS AS INDICATED, WITH 12V CADMIUM BATTERY

US Army Corps of Engineers
Afghanistan Engineer District

SYMBOL	DESCRIPTION	DATE	APP.

DESIGNED BY:	DATE:
JRG	09-30-09
DWN BY:	SUBMITTED BY:
JRG	BAKER
CHK BY:	FILE NO.:
JRG	ANPSDE-603XXX

Michael Baker Jr., Inc
A unit of Michael Baker Corporation
Airside Business Park
100 Airside Drive
Moon Township, PA 15108
www.mbakercorp.com

AFGHAN NATIONAL POLICE
STANDARD DESIGN
WAREHOUSE BUILDING

LIGHT FIXTURE SCHEDULE

SHEET REFERENCE NUMBER:
E3

100% SUBMISSION

PANELBOARD R1 SURFACE MOUNTED ASYM. A.I.C. MIN.
AMP. MAIN LUGS (OR) 100 AMP. MAIN BREAKER W/ 100 AMP. TRIP
CIRCUIT BREAKER TYPE 380/220 VOLTS 3 PHASE 4 WIRE 50 HZ 100 AMP. BUS

CKT. NO.	TRIP AMPS	NO. POLES	WIRE MM²	GND MM²	CONDUIT MM	LOAD SERVED	LOAD-V.A. AØ	LOAD-V.A. BØ	LOAD-V.A. CØ	LOAD-V.A. AØ	LOAD-V.A. BØ	LOAD-V.A. CØ	LOAD SERVED	CONDUIT MM	GND MM²	WIRE MM²	NO. POLES	TRIP AMPS	CKT. NO.
1	20	1	4.0	4.0	20	LIGHTING - 101	0.6			0.6			RECEPTACLES - 101	20	4.0	4.0	1	20	2
3	20	1	4.0	4.0	20	F. A. C. P.		0.5					SPARE				1	20	4
5	20	1				SPARE							SPARE				1	20	6
7	20	1				SPARE							SPARE				1	20	8
9	20	1				SPARE							SPARE				1	20	10
11	20	1				SPARE							SPARE				1	20	12
							0.6	0.5	0.0	0.6	0.0	0.0							

TOTAL CONN. LOAD PER PHASE (KVA): AØ 1.2 BØ 0.5 CØ 0.0

TOTAL CONN. LOAD 1.7 KVA. 70 % DEMAND = ESTIMATED DEMAND LOAD 1.2 SUPPLIED FROM MAIN SWITCHGEAR DISTRIBUTION

• MAIN BREAKER SHALL BE 3P EARTH GROUND TYPE

US Army Corps of Engineers
Afghanistan Engineer District

SYMBOL	DESCRIPTION	DATE	APR

DESIGNED BY:	DATE:
JRG	09-30-09
DWN BY:	SUBMITTED BY:
JRG	BAKER
CHK BY:	FILE NO.:
JRG	ANPSDE-604XXX

Michael Baker Jr., Inc
A unit of Michael Baker Corporation
Airside Business Park
100 Airside Drive
Moon Township, PA 15108
www.mbakercorp.com

AFGHAN NATIONAL POLICE
STANDARD DESIGN
WAREHOUSE BUILDING

PANEL SCHEDULES AND RISER DIAGRAM

SHEET REFERENCE NUMBER:
E4

100% SUBMISSION

AFGHAN NATIONAL ARMY

STANDARD BUILDING DESIGN

08 RMTC STORAGE

100% FINAL DESIGN SUBMITTAL

SHEET INDEX

G-001 COVER SHEET

STRUCTURAL

S-001 GENERAL NOTES & DESIGN CRITERIA
S-101 FOUNDATION/SLAB PLAN
S-102 ROOF FRAMING PLAN
S-401 BUILDING SECTIONS
S-402 ENLARGED ELEVATED SLAB PLAN
S-501 FOUNDATION SECTIONS
S-502 FRAMING SECTIONS
S-503 BEAM & COLUMN DETAILS
S-504 BEAM & COLUMN DETAILS
S-601 SCHEDULES
S-701 TYPICAL DETAILS
S-702 TYPICAL DETAILS

ARCHITECTURAL

A-001 LIFE SAFETY PLAN
A-101 FLOOR PLAN
A-102 ROOF PLAN
A-201 ELEVATIONS
A-301 BUILDING SECTIONS
A-401 WALL SECTIONS
A-501 EXTERIOR DETAILS
A-502 HEAD, JAMB, & SILL DETAILS
A-503 STOOP DETAILS
A-504 CANOPY DETAILS
A-601 WINDOW & DOOR SCHEDULES

MECHANICAL

M-101 HVAC FLOOR PLAN, SCHEDULES, & DETAILS

ELECTRICAL

E-001 ELECTRICAL SYMBOLS & ABBREVIATIONS
E-101 ELECTRICAL LIGHTING PLAN
E-102 ELECTRICAL POWER & SYSTEMS PLAN
E-103 ELECTRICAL LIGHTNING PROTECTION
E-501 ELECTRICAL DETAILS
E-502 ELECTRICAL DETAILS
E-601 ELECTRICAL LIGHT FIXTURE SCHEDULE
E-602 ELECTRICAL PANEL SCHEDULES

US ARMY CORPS OF ENGINEERS
AFGHANISTAN ENGINEER DISTRICT

Mark	Description	Date	Appr.	Mark	Description	Date	Appr.

Designed by: KMP/MMY
Dwn by: RCG
Ckd by: CWW
Reviewed by: LHM
Submitted by: BAKER
Date: 2/23/10
Rev: 0
Design file no.
Drawing code:
File name: ANASTORD-001
Plot date: 6/3/2010
Plot scale: X.X

U.S. ARMY CORPS OF ENGINEERS
AFGHANISTAN ENGINEER DISTRICT
APO AE 96338

Michael Baker Jr., Inc.
A unit of Michael Baker Corporation
Airside Business Park
100 Airside Drive
Moon Township PA 15108
www.mbakercorp.com

STANDARD DESIGN
VARIOUS PROJECTS
VARIOUS LOCATIONS, AFGHANISTAN

RMTC STORAGE

COVER SHEET

Sheet reference number:
G-001

STRUCTURAL ABBREVIATIONS:

ACI	AMERICAN CONCRETE INSTITUTE
ADD'L	ADDITIONAL
AISC	AMERICAN INSTITUTE OF STEEL CONSTRUCTION
AISI	AMERICAN IRON AND STEEL INSTITUTE
ASTM	AMERICAN SOCIETY FOR TESTING AND MATERIALS
ARCH	ARCHITECTURAL
B	BOTTOM
BLDG	BUILDING
BOTT	BOTTOM
℄	CENTER LINE
CFMRF	COLD FORM METAL ROOF FRAME
CFMF	COLD FORM METAL FRAME
CFS	COLD FORMED STEEL
CIP	CAST–IN–PLACE
CIPL	CAST–IN–PLACE LINTEL
CJ	CONTROL JOINT
CLR	CLEAR
CMU	CONCRETE MASONRY UNIT
COEFF	COEFFICIENT
COL	COLUMN
CONC	CONCRETE
CONT	CONTINUOUS
COORD	COORDINATE
CRSI	CONCRETE REINFORCING STEEL INSTITUTE
CSJ	CONSTRUCTION JOINT
DIA	DIAMETER
DIAG	DIAGONAL
DIM	DIMENSION
DWG	DRAWING
DWL	DOWEL
EA	EACH
EF	EACH FACE
ELEC	ELECTRICAL
ELEV	ELEVATION
EMBED	EMBEDMENT
EQUIV	EQUIVALENT
ETC	ET CETERA
EW	EACH WAY
EXP	EXPANSION
EXT	EXTERIOR
FTG	FOOTING
GA	GAUGE
GB	GRADE BEAM
HORIZ	HORIZONTAL
h	HOUR
HRS	HOURS
IBC	INTERNATIONAL BUILDING CODE
INFO	INFORMATION
INT	INTERIOR
kg	KILOGRAM
km	KILOMETER
kN	KILONEWTON
kPa	KILOPASCAL
L#	ANGLE (# INDICATES SIZE)
LONG	LONGITUDINAL
LLV	LONG LEG VERTICAL
m	METER
MAX	MAXIMUM
MECH	MECHANICAL
MFG	MANUFACTURER
MID	MIDDLE
MIN	MINIMUM
MISC	MISCELLANEOUS
mm	MILLIMETER
MPa	MEGAPASCAL
MTL	METAL
MWFRS	MAIN WIND FORCE RESISTING SYSTEM
N	NEWTON
N	NORTH
N/A	NOT APPLICABLE
#	NUMBER SYMBOL FOR REBAR SIZE
NTS	NOT TO SCALE
OC	ON CENTER
OD	OUTSIDE DIAMETER
OPNG	OPENING
ℙ or PL	PLATE
PRE–ENG	PRE–ENGINEERED
REINF	REINFORCED
REQ'D	REQUIRED
RB	ROOF BEAM
SIM	SIMILAR
SPECS	SPECIFICATIONS
STD	STANDARD
STRUCT	STRUCTURAL
SW	SHEAR WALL
T	TOP
T/	TOP OF
T/ELEV	TOP ELEVATION
T/SLAB	TOP OF SLAB
T&B	TOP AND BOTTOM
THK	THICK
TYP	TYPICAL
UFC	UNIFIED FACILITIES CRITERIA
UON	UNLESS OTHERWISE NOTED
VERT	VERTICAL
W	WIDTH
W/	WITH

1.0 GENERAL NOTES:

1.1 THIS PROJECT HAS BEEN DESIGNED FOR THE WEIGHTS AND MATERIALS INDICATED ON THE SHEETS AND FOR THE LIVE LOADS INDICATED IN THE DESIGN DATA. IT IS THE CONTRACTOR'S RESPONSIBILITY TO DETERMINE ALLOWABLE CONSTRUCTION LOADS AND TO PROVIDE PROPER DESIGN AND CONSTRUCTION OF FALSEWORK, FORMWORK, STAGING, BRACING, SHEETING AND SHORING, ETC.

1.1 COORDINATE THESE SHEETS WITH THE ARCHITECTURAL, MECHANICAL, ELECTRICAL, PLUMBING, AND CIVIL SHEETS. ALL DIMENSIONS SHOWN ON THE SHEETS ARE MILLIMETERS UNLESS NOTED OTHERWISE.

1.2 THE CONTRACTOR SHALL VERIFY AND COORDINATE ALL FLOOR AND ROOF OPENING SIZES AND LOCATIONS, EQUIPMENT PAD SIZES AND LOCATIONS, ANCHOR BOLT LAYOUTS, ETC WITH EQUIPMENT SELECTED. THE CONTRACTOR SHALL MAKE ANY REQUIRED MODIFICATIONS AT NO ADDITIONAL COST.

1.3 THE CONTRACTOR SHALL REFER TO THE ARCHITECTURAL, MECHANICAL, ELECTRICAL AND PLUMBING SHEETS FOR SLEEVES, CURBS, INSERTS OR OPENINGS, ETC. NOT HEREIN INDICATED.

1.4 WORK NOT INCLUDED ON THE SHEETS BUT IMPLIED TO BE SIMILAR TO THAT SHOWN AT CORRESPONDING PLACES ELSEWHERE ON THE SHEETS SHALL BE REPEATED.

1.5 IN CASE OF CONFLICT BETWEEN THE NOTES, DETAILS AND SPECIFICATIONS THE MOST RIGID REQUIREMENTS SHALL GOVERN.

1.6 SEE ARCHITECTURAL SHEETS FOR LOCATIONS OF MASONRY AND NON–LOAD BEARING PARTITIONS. PROVIDE COMPRESSIBLE FIRESAFING AT TOP OF WALL AS REQUIRED BY ARCHITECTURAL SHEETS.

1.7 COORDINATE FINISHED FLOOR DATUM ELEVATION 0.0m WITH THE CIVIL SHEETS.

2.0 FOUNDATION NOTES

2.1 THE GEOTECHNICAL ANALYSIS FOR THIS PROJECT IS THE RESPONSIBILITY OF THE CONTRACTOR AWARDED THE WORK. AN ASSUMED ALLOWABLE SOIL BEARING VALUE OF 72 kPa HAS BEEN USED IN THE STRUCTURAL ANALYSIS OF THE BUILDING HEREIN AND SHALL BE CONFIRMED AND VERIFIED AS PART OF THE GEOTECHNICAL INVESTIGATION. VALUES WHICH DO NOT MEET THE REQUIREMENTS INDICATED ON THE BASIS OF DESIGN SHEET SHALL BE IMMEDIATELY BROUGHT TO THE ATTENTION OF THE CONTRACTING OFFICER FOR CONSIDERATION AND DETERMINATION ON THE NEXT APPROPRIATE COURSE OF ACTION.

2.2 SEE THE SPECIFICATION FOR ADDITIONAL REQUIREMENTS TO THOSE OUTLINED IN THE GEOTECHNICAL INVESTIGATION FOR EXCAVATION AND PREPARATION OF THE FOUNDATION AND THE SLAB ON GRADE SUBGRADE INCLUDING COMPACTION PROCEDURES.

2.3 EXCAVATIONS FOR FOOTINGS SHALL HAVE THE SIDES AND BOTTOMS TEMPORARILY LINED WITH 0.25mm POLYETHYLENE IF PLACEMENT OF CONCRETE DOES NOT OCCUR WITHIN 24 HRS OF THE EXCAVATION OF THE FOOTING.

2.4 FOUNDATION CONDITIONS NOTED DURING CONSTRUCTION WHICH DIFFER FROM THOSE DESCRIBED IN THE GEOTECHNICAL REPORT SHALL BE REPORTED TO THE GENERAL CONTRACTOR BEFORE FURTHER CONSTRUCTION IS ATTEMPTED. SEE PROJECT SPECIFICATIONS.

2.5 NO FOOTINGS OR SLABS SHALL BE POURED INTO OR AGAINST SUBGRADE CONTAINING FREE WATER, FROST, ICE OR LOOSE MATERIAL. FROST DEPTH ASSUMED TO BE 800mm.

2.6 ALL SLAB–ON–GRADE, TRENCH BOTTOMS AND OTHER ON–GRADE INTERIOR HORIZONTAL SURFACES SHALL BE PLACED OVER A 0.25mm POLYETHYLENE VAPOR RETARDER OVER A 100mm #57 STONE WATER CAPILLARY BARRIER PLACED ON SUBGRADE PROPERLY PREPARED IN ACCORDANCE WITH THE CONTRACT SPECIFICATIONS. (UON)

2.7 PRIOR TO START OF FOUNDATION OR SLAB–ON–GRADE CONSTRUCTION, EXISTING SUBGRADES SHALL BE COMPACTED TO MINIMUM OF 95% MAXIMUM DRY DENSITY OBTAINED THRU ASTM D 1557 MODIFIED PROCTOR TESTING.

2.8 SEE PLUMBING, ELECTRICAL & CIVIL SHEETS FOR REQUIRED UNDERSLAB UTILITIES.

2.9 SEE ARCHITECTURAL SHEETS FOR ALL WATERPROOFING DETAILS AND MATERIALS.

2.10 IF UNDERMINING OF FOOTINGS OCCURS, FILL VOIDS WITH 18 MPa CONCRETE. DO NOT ATTEMPT TO REPLACE AND RE–COMPACT SOIL.

3.0 CONCRETE

3.1 CONCRETE SHALL HAVE THE UNIT WEIGHT OF 2400 kg/m^3 AND A MINIMUM COMPRESSIVE STRENGTH (f'c) OF 28 MPa AT 28 DAYS. ALL CONCRETE SHALL HAVE A WATER–CEMENT RATIO OF 0.45. SEE SPECIFICATIONS FOR ADDITIONAL INFORMATION. ENTRAIN AIR TO PRODUCE TOTAL AIR CONTENT ACCORDING TO THE SPECIFICATIONS FOR CONCRETE EXPOSED TO FREEZING TEMPERATURES (EXTERIOR FOOTINGS, SLAB TURNDOWNS, EXTERIOR SLABS AND SLABS–ON–GRADE, EXTERIOR RETAINING WALLS, AND EXTERIOR GRADE BEAMS.)

3.2 NO CALCIUM CHLORIDE SHALL BE USED IN ANY CONCRETE.

3.3 MIXING, TRANSPORTING AND PLACING OF CONCRETE SHALL CONFORM TO ACI 301M–05.

3.4 ALL CONCRETE WORK SHALL CONFORM TO THE REQUIREMENTS OF THE AMERICAN CONCRETE INSTITUTE (ACI) 318M MANUAL (metric), "BUILDING CODE REQUIREMENTS FOR REINFORCED CONCRETE", AND REQUIREMENTS OUTLINED IN THE CONTRACT SPECIFICATIONS. WHEN THERE IS A CONFLICT BETWEEN ACI AND THE SPECIFICATIONS, THE MORE STRINGENT SHALL GOVERN.

3.5 CHAMFER ALL EXPOSED EXTERNAL CORNERS OF CONCRETE WITH 20mm x45 DEGREE CHAMFER UON.

3.6 CONCRETE REINFORCEMENT BARS SHALL CONFORM TO ASTM A615M–96a, GRADE 420 MPa, REINFORCING BARS SHALL NOT BE TACK WELDED, WELDED, HEATED OR CUT, UNLESS INDICATED ON THE CONTRACT DOCUMENTS. ALL LAP SPLICES SHALL BE CLASS "B" UON.

3.7 HORIZONTAL FOOTING AND HORIZONTAL WALL REINFORCEMENT SHALL BE CONTINUOUS AND SHALL HAVE 90 DEGREE BENDS AND EXTENSIONS, OR CORNER BARS OF EQUIVALENT SIZE LAPPED WITH A CLASS B TENSION SPLICE AT CORNERS AND INTERSECTIONS. TOP BAR CRITERIA SHALL APPLY IF 300mm OR MORE OF FRESH CONCRETE IS PLACED BELOW BAR.

3.8 SLABS–ON–GRADE SHALL HAVE CONSTRUCTION JOINTS OR CRACK CONTROL JOINTS AS SHOWN ON THE DRAWINGS. CONSTRUCTION JOINTS CAN BE USED AT CONTROL JOINT LOCATIONS AT CONTRACTORS OPTION. SEE SLAB PLANS & JOINT DETAILS FOR ADDITIONAL INFORMATION. FOR AREAS NOT SHOWN ON DWGS, THE MAXIMUM SPACING OF CONSTRUCTION/ CRACK CONTROL JOINTS SHALL BE 4800mm

3.9 ALL CONCRETE REINFORCEMENT SHALL BE DETAILED, FABRICATED, LABELED, SUPPORTED, AND SPACED IN FORMS AND SECURED IN PLACE IN ACCORDANCE WITH THE PROCEDURES AND REQUIREMENTS OUTLINED IN THE LATEST EDITION OF THE "BUILDING CODE REQUIREMENTS FOR REINFORCED CONCRETE", ACI 318M, AND THE "MANUAL OF STANDARD PRACTICE FOR DETAILING REINFORCED CONCRETE STRUCTURES", ACI 315M, LATEST EDITION. BASED ON IN COUNTRY REINFORCEMENT AVAILABILITY, IT IS THE CONTRACTOR'S OPTION TO ROUND DESIGNATED ODD NUMBERED REINFORCEMENT SIZES UP (1) ONE BAR SIZE.

3.10 ALL DOWELS SHALL MATCH SIZE AND NUMBER OF MAIN REINFORCING, UNLESS NOTED OTHERWISE ON THE SHEETS.

3.11 ADDITIONAL BARS SHALL BE PROVIDED AROUND ALL FLOOR AND WALL OPENINGS AS SHOWN ON THE SHEETS.

3.12 SEE ARCHITECTURAL SHEETS FOR TYPE AND LOCATION OF ALL FLOOR FINISHES.

3.13 THE CONTRACTOR SHALL COORDINATE ADDITIONAL WALL/SLAB OPENINGS NOT SHOWN ON STRUCTURAL SHEETS. SEE MECHANICAL, ELECTRICAL, PLUMBING AND CIVIL SHEETS.

3.14 UNLESS NOTED OTHERWISE, ALL CURBS SHALL BE REINFORCED WITH AT LEAST (1)–#13 CONTINUOUS AND #13 AT 300mm O.C. DOWELS TO STRUCTURE BELOW.

3.15 THE CONTRACTOR SHALL VERIFY ALL OPENINGS, PAD SIZES, AND ANCHOR BOLTS WITH EQUIPMENT SELECTED.

3.16 FOR ALL WALLS & PIERS, PROVIDE DOWELS INTO FOOTING AT EACH VERT REINF BAR, UON DOWEL SIZE SHALL BE SAME AS VERT REINF.

3.17 PROVIDE CONCRETE POUR STOPS OR FORMED AS REQUIRED FOR INSTALLATION OF ALL CONCRETE WORK.

3.18 PROVIDE ADDITIONAL (2)–#13 x 600mm REINFORCING BARS IN SLAB–ON GRADE AT ALL RE–ENTRANT CORNERS. PLACE BARS AT MID–DEPTH OF SLAB WITH A CLEARANCE OF 50mm FROM CORNER UON.

3.19 COLD–WEATHER PLACEMENT: COMPLY WITH ACI 306.1 AND AS FOLLOWS. PROTECT CONCRETE WORK FROM PHYSICAL DAMAGE OR REDUCED STRENGTH THAT COULD BE CAUSED BY FROST, FREEZING ACTIONS, OR LOW TEMPERATURES. SUBMIT A COLD WEATHER CONCRETING PLAN FOR APPROVAL.

3.20 PROVIDE BONDING COMPOUND PER ASTM C 1059–99: SPECIFICATION FOR LATEX AGENTS FOR BONDING FRESH CONCRETE (GROUT) TO HARDENED CONCRETE.

3.21 THE FORMED SURFACES FOR REINFORCED CONCRETE SHALL ACHIEVE A "CLASS A" FINISH WHEN RECEIVING PAINT OR A "CLASS B" FINISH WHEN RECEIVING PLASTER OR TILE AS PER SPECIFICATION SECTION 03 31 00 CAST–IN–PLACE STRUCTURAL CONCRETE.

3.22 AT INTERSECTING GRADE BEAMS AND SHEAR WALLS, PROVIDE CORNER BARS AT INTERSECTIONS WITH SAME QUANTITY, SIZE AND SPACING AS HORIZONTAL BARS WITH LEG LENGTH = 50db.

3.23 REFER TO S–800 SERIES REINFORCING BAR PLACEMENT DRAWINGS DEFINING LENGTHS, BENDS, AND SPACINGS FOR ALL STRUCTURAL CONCRETE. THE S–800 SERIES DRAWING ARE BASED ON THE S–400, S–500, S–600, AND S–700 SERIES DRAWING SCHEDULES, DETAILS, AND DIAGRAMS.

4.0 CONCRETE MASONRY

4.1 MASONRY CONSTRUCTION SHALL CONFORM TO SPECIFICATION FOR MASONRY STRUCTURES (ACI 530.1) UON.

4.2 STRENGTH OF MASONRY MATERIALS SHALL BE AS FOLLOWS:

a. CONCRETE MASONRY UNITS SHALL BE NORMAL WEIGHT, GRADE N, TYPE 1, CONFORMING TO ASTM C–90 AND HAVE A MINIMUM COMPRESSIVE STRENGTH OF 10.4 MPa ON THE NET AREA.

b. MORTAR SHALL CONFORM TO ASTM C–270 TYPE S.

c. GROUT FOR MASONRY SHALL BE NORMAL WEIGHT AND HAVE A MINIMUM COMPRESSIVE STRENGTH OF 14 MPa AT 28 DAYS. GROUT SHALL CONFORM TO ASTM C476M. GROUT LIFTS SHALL NOT EXCEED 1,400mm.

d. REINFORCED MASONRY SHALL HAVE A STRENGTH F'm = 10 MPa. (F'm IS THE COMPRESSIVE STRENGTH OF THE MASONRY AT 28 DAYS AS DETERMINED BY PRISM TESTS).

4.3 ALL VERTICAL REINFORCEMENT FOR CONCRETE MASONRY SHALL BE ASTM A615M–96a, GRADE 420 MPa. ALL SPLICES SHALL BE LAPPED 48 BAR DIAMETERS MINIMUM.

4.4 BOND BEAMS SHALL BE SPACED AT 1200mm OC VERTICALLY. BOND BEAM REINFORCING SHALL BE CONTINUOUS AND PROVIDED AT WALL INTERSECTIONS AND WALL CORNERS (REFERENCE CONCRETE MASONRY NOTE 4.11). ALL BOND BEAM REINFORCING SHALL BE CONTINUOUS AND HAVE STANDARD ACI HOOKS AT EACH END. PROVIDE STANDARD BAR SPLICES AS SPECIFIED. AS AN ALTERNATE TO CMU BOND BEAMS, IT IS THE CONTRACTOR'S OPTION TO PROVIDE 200mm x 200mm CONTINUOUS CAST–IN–PLACE CONCRETE BOND BEAMS WITH (2)–#16 IN LIEU OF CMU BOND BEAMS INDICATED ON THE DRAWINGS.

4.5 SEE TYPICAL DETAILS FOR MINIMUM REINFORCEMENT REQUIREMENTS FOR CMU WALLS. PROVIDE STANDARD BAR SPLICES AS SPECIFIED. ALL VERTICAL REINFORCEMENT EXTENDS FULL HEIGHT OF WALL.

4.6 CMU CELLS THAT REQUIRE VERTICAL REINFORCING BARS AS INDICATED ON THE CONTRACT DRAWINGS AND/OR SPECS SHALL HAVE REINF BARS PLACED IN CENTERS OF CMU CELLS AND CONTINUOUSLY GROUTED UON.

4.7 ALL CMU CELLS, OPEN CAVITIES, AND AIR SPACES OF ALL EXTERIOR WALLS SHALL BE GROUTED TO STOP FRAGMENTS FROM MORTAR BLAST.

4.8 CONTRACTOR SHALL COORDINATE LOCATION OF ALL OPENINGS SEE ARCH, MECH, ELEC, AND PLUMBING SHEETS FOR SIZE AND LOCATION OF OPENINGS.

4.9 MASONRY WALLS SHALL NOT BE BACK FILLED PRIOR TO THE MORTAR AND GROUT ATTAINING THEIR RESPECTIVE MAXIMUM DESIGN STRENGTHS PER SPECIFICATIONS.

4.10 PROVIDE GALVANIZED MORTAR/GROUT SCREEN W/ 3mm MESH WHERE CELLS BELOW ARE NOT GROUTED.

4.11 AT INTERSECTING BOND BEAMS, PROVIDE CORNER BAR FOR EACH HORIZONTAL BAR IN BOND BEAMS AT INTERSECTING WALLS. USE SAME SIZE AND SPACING AS HORIZONTAL BARS WITH LEG LENGTH = 50db.

4.12 THE ALTERNATE CMU BRACE DETAILS SHOWN ON S–701 CAN BE UTILIZED AT THE CONTRACTOR'S OPTION IN PLACE OF THE "FLOATING PIN" WALL BRACE CONNECTIONS AT TOP OF CMU WALLS DEPICTED ON S–400 AND S–500 SERIES DRAWINGS THESE ALTERNATE DETAILS ALSO SHOW ALTERNATE CAST–IN–PLACE WALL BOND BEAMS THAT CAN BE UTILIZED AT THE CONTRACTOR'S OPTION IN PLACE OF THE STANDARD CMU BOND BEAMS CONSTRUCTED OF CMU BLOCKS.

5.0 COLD–FORMED METAL FRAMING

5.1 ALL COLD–FORMED METAL FRAMING MEMBERS SHALL CONFORM TO ASTM A1003M, STRUCTURAL GRADE ST340 (MPa), WITH A GALVANIZED COATING OF Z275 OR BETTER IN ACCORDANCE WITH ASTM A653M.

5.2 ALL COLD–FORMED METAL FRAMING MEMBERS SHALL HAVE THE FOLLOWING MINIMUM PROPERTIES:

a. MINIMUM METAL THICKNESS:
TRACK = 1.37mm;
STUD/OTHER = 1.09mm

b. MINIMUM FLANGE WIDTH:
TRACK = 38mm;
STUD/OTHER = 35mm

c. MINIMUM MEMBER DEPTH:
ALL SECTIONS = 152.2mm

d. PURLIN (HAT CHANNEL)
DEPTHxWIDTH(FLAT TOP)xTHICK = 25mmx42mmx1.59mm

5.3 ALL CONNECTIONS SHALL BE MADE WITH CORROSION RESISTANT (ASTM A153M), SELF–DRILLING, SELF–TAPPING STEEL DRILL SCREWS IN ACCORDANCE WITH ASTM C1513. SCREWS SHALL HAVE A LOW PROFILE HEAD BENEATH ROOF DECK, AND STANDARD HEAD ALL OTHER LOCATIONS.

5.4 FABRICATE COLD FORMED METAL FRAMING AND ACCESSORIES PLUMB, SQUARE AND TRUE TO LINE, WITH CONNECTIONS SECURELY FASTENED ACCORDING TO AISI STANDARD FOR COLD FORMED STEEL FRAMING.

5.5 CUT FRAMING MEMBERS BY SAWING OR SHEATHING, DO NOT TORCH CUT.

5.6 INSTALL FRAMING MEMBERS IN ONE–PIECE LENGTHS UNLESS SPLICE CONNECTIONS ARE INDICATED FOR TRACK OR TENSION MEMBERS

5.7 INSTALL TEMPORARY BRACING AND SUPPORTS TO SECURE FRAMING DURING CONSTRUCTION. MAINTAIN BRACING AND SUPPORTS IN PLACE UNTIL THE STRUCTURE HAS BEEN COMPLETED WITH ALL CONNECTIONS AND PERMANENT BRACING SECURED.

6.0 STRUCTURAL DESIGN CRITERIA

6.1 ALL DESIGNS SHALL CONFORM TO THE PROVISIONS OF THE IBC 2006 AND UFC AS APPLICABLE.

6.2 DESIGN LOADS

6.2.1 DEAD LOADS (PER IBC 2006 & UFC 3–310–01)

MECH/ELEC/PLUMBING	0.20 kPa
MISCELLANEOUS	0.15 kPa
COLD–FORMED FRAMING	0.20 kPa
INSULATION	0.10 kPa
METAL ROOF PANEL	0.14 kPa
	0.79 kPa
FLOOR PARTITION ALLOWANCE	0.96 kPa

6.2.2 LIVE LOADS (PER IBC 2006 & UFC 3–310–01)

ROOF	1.00 kPa
CORRIDOR (2–STORY BLDG ONLY)	4.80 kPa
ALL OTHERS (2–STORY BLDG ONLY)	2.40 kPa
SLAB ON GRADE	4.80 kPa

6.2.3 SNOW LOADS (PER IBC 2006 & UFC 3–310–01)

GROUND SNOW LOAD (Pg)	1.2 kPa
SNOW IMPORTANCE FACTOR (I)	1.0
SNOW EXPOSURE FACTOR (Ce)	1.0
THERMAL FACTOR (Ct)	1.0

6.2.4 WIND LOADS (PER IBC 2006)

BASIC WIND SPEED	137 km/h
WIND IMPORTANCE FACTOR	1.0
WIND EXPOSURE CATEGORY	D
DIRECTIONALITY COEFFICIENT (Kd)	0.85
TOPOGRAPHIC FACTOR (Kzt)	1.0

6.2.5 SEISMIC LOADS (PER IBC 2006 & UFC 3–310–04)

OCCUPANCY USE CATEGORY II
SEISMIC IMPORTANCE FACTOR (Ie) 1.0
SEISMIC SITE CLASS D
S_s = 1.50 (REDUCED FROM 2.40 PER ASCE 7–05, 12.8.1.3 FOR A BUILDING WITHOUT IRREGULARITIES)
S_1 = 1.20
S_{DS} = 1.00
S_{D1} = 1.20
SEISMIC DESIGN CATEGORY E
SEISMIC RESISTING SYSTEM:
–SPECIAL REINFORCED CONCRETE SHEAR WALL
RESPONSE MODIFICATION FACTOR (R) 6
RESPONSE COEFFICIENT (Cs) 0.167
SEISMIC ANALYTICAL PROCEDURE = EQUIV LATERAL FORCE
SEISMIC BASE SHEAR 1900 kN

APPROVED:

A/E DESIGNER OF RECORD

SEAL:

US ARMY CORPS OF ENGINEERS
AFGHANISTAN ENGINEER DISTRICT

Mark	Date	Appr.	Description

Mark	Date	Appr.	Description

Designed by: KMP/MMY
Dwn by: RCG
Ckd by: CWW
Reviewed by: LHM
Submitted by: BAKER
Date: 2/23/10
Rev: 0
Design file no.
Drawing code:
File name: ANASTORS-001
Plot date: 6/3/2010
Plot scale: X:X

U.S. ARMY CORPS OF ENGINEERS
AFGHANISTAN ENGINEER DISTRICT
APO AE 96338

Michael Baker Jr., Inc
A unit of Michael Baker Corporation
Airside Business Park
100 Airside Drive
Moon Township PA 15108
www.mbakercorp.com

STANDARD DESIGN
VARIOUS PROJECTS
VARIOUS LOCATIONS, AFGHANISTAN

RMTC STORAGE

GENERAL NOTES & DESIGN CRITERIA

Sheet reference number:
S–001

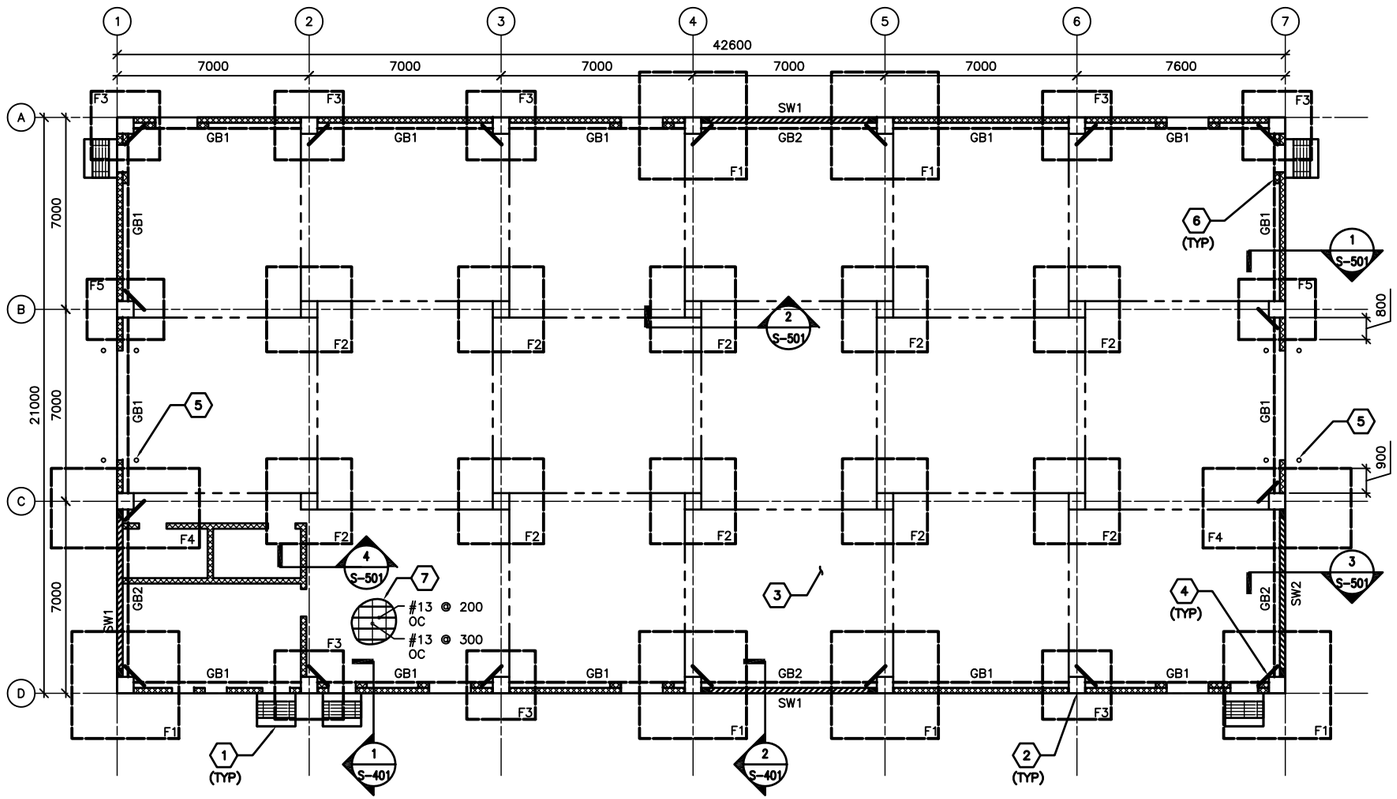

1 S-101 FOUNDATION/SLAB PLAN
SCALE: 1:100

FOUNDATION/SLAB PLAN NOTES:

1. REFER TO SHEET S-001 FOR STRUCTURAL NOTES AND DESIGN CRITERIA.
2. FINISH FIRST FLOOR ELEVATION SHALL BE (DATUM 0.00MM) ALL PLUS OR MINUS DIMENSIONS INDICATED ON PLAN OR REFERRED TO IN NOTES RELATE TO FINISH FIRST FLOOR ELEVATION.
3. SLAB-ON-GRADE IS 150 WITH #13 @ 300 OC EW LOCATED 38 FROM T/SLAB.
4. TOP OF EXTERIOR FOOTINGS SHALL BE -950 UNLESS OTHERWISE INDICATED.
5. TOP OF INTERIOR FOOTINGS WITHOUT GRADE BEAM ABOVE SHALL BE -600.
6. COLUMN FOOTINGS INDICATED THUS F# ON PLAN. REFER TO COLUMN FOOTING SCHEDULE ON SHEET S-601.
7. REFER TO COLUMN SCHEDULE ON SHEET S-601.
8. GRADE BEAM INDICATED THUS GB# ON PLAN, REFER TO BEAM SCHEDULE ON SHEET S-601.
9. SHEARWALL INDICATED THUS SW# ON PLAN, REFER TO SHEARWALL SCHEDULE ON SHEET S-601.
10. SEE TYP EXTERIOR AND INTERIOR CMU WALL REINF DETAILS ON SHEET S-701.
11. SEE MECHANICAL AND ELECTRICAL SHEETS FOR CONCRETE PAD LOCATIONS, SIZES, AND THICKNESS NOT SHOWN. SEE SHEET S-701 FOR DETAILS.
12. THICKENED SLAB UNDER CMU WALLS NOT SHOWN FOR CLARITY.

FOUNDATION/SLAB PLAN KEY NOTES: (X)

1. CONC PAD (ENTRANCE) – SEE ARCH DWGS FOR INFORMATION
2. REINF CONC COLUMN
3. REINF CONC SLAB-ON-GRADE
4. (2)-#13 @ RE-ENTRANT CORNERS – SEE S-701 FOR INFORMATION
5. BOLLARD – SEE SECTION 8/S-502
6. WALL STIFFENER EACH SIDE OF PEDESTRIAN DOOR WHERE NO BOTTOM OF SLAB EXIST AT ELEVATION 3000.
7. SPACE #13 LONGITUDINAL SLAB REINF @ 200 OC BETWEEN COLUMN LINES 1 & 3 FROM C TO D

FOUNDATION/SLAB PLAN LEGEND:

- REINF CONC SHEAR WALL
- REINF CMU WALL
- CONTROL JOINT

0 2000 4000
SCALE: 1:100

UNLESS OTHERWISE NOTED, LINEAR DIMENSIONS SHOWN ON DRAWINGS ARE IN MILLIMETERS (mm)

APPROVED:

A/E DESIGNER OF RECORD

SEAL:

US ARMY CORPS OF ENGINEERS
AFGHANISTAN ENGINEER DISTRICT

Mark	Description	Date	Appr.	Mark	Description	Date	Appr.

Designed by: KMP/MMY
Dwn by: RCG
Ckd by: CWW
Reviewed by: LHM
Submitted by: BAKER
Date: 2/23/10
Rev: 0
Design file no.
Drawing code:
File name: AN-ASTORS-101
Plot date: 6/3/2010
Plot scale: X:X

U.S. ARMY CORPS OF ENGINEERS
AFGHANISTAN ENGINEER DISTRICT
APO AE 96338

Michael Baker Jr., Inc
A unit of Michael Baker Corporation
Airside Business Park
100 Airside Drive
Moon Township PA 15108
www.mbakercorp.com

STANDARD DESIGN
VARIOUS PROJECTS
VARIOUS LOCATIONS, AFGHANISTAN

RMTC STORAGE

FOUNDATION/SLAB PLAN

Sheet reference number:
S-101

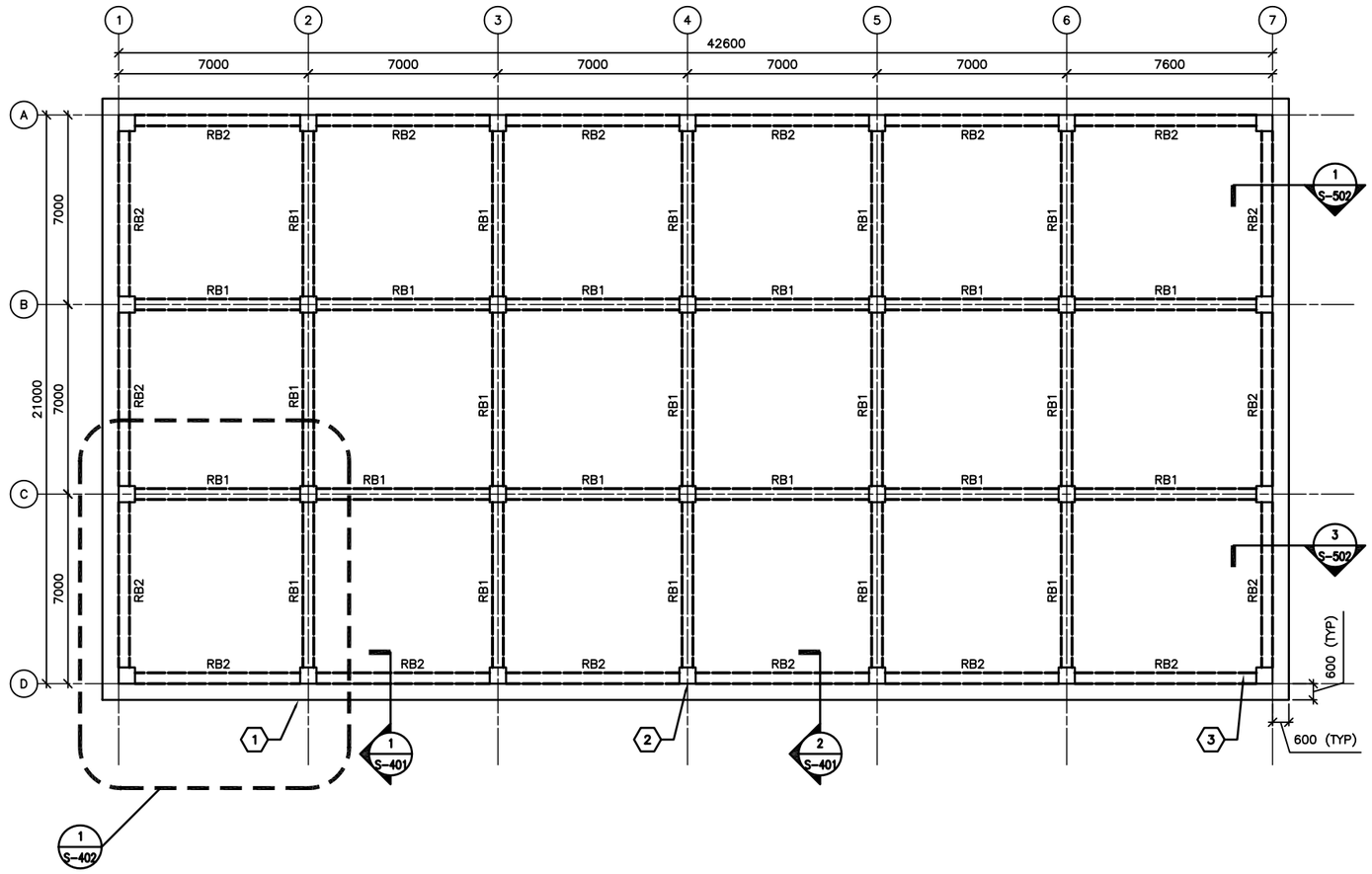

1 S-102 ROOF FRAMING PLAN

SCALE: 1:100

ROOF FRAMING PLAN NOTES:

1. REFER TO SHEETS S-001 FOR STRUCTURAL NOTES AND DESIGN CRITERIA.
2. TOP OF SLAB ELEVATION = 5600 UNLESS NOTED OTHERWISE.
3. ROOF SLAB IS 250 WITH #16 @ 300 OC EW T&B.
4. ROOF BEAM INDICATED BY RB# ON PLAN. REFER TO BEAM SCHEDULE ON SHEET S-601.
5. COORDINATE WITH ARCHITECTURAL SHEETS FOR COLD-FORMED STEEL OVERBUILD FRAMING ABOVE ROOF SLAB.
6. COLD-FORMED METAL OVERBUILD ROOF FRAMING NOT SHOWN FOR CLARITY. SEE OVERBUILD ROOF FRAMING DETAILS AND SECTIONS ON SHEET S-702.
7. CMU PARTITION WALLS (BELOW ROOF SLAB) NOT SHOWN FOR CLARITY.
8. OVERHANG AREAS OF ROOF SLAB CONTAIN ROOF VENT PENETRATIONS. REFERENCE ARCHITECTURAL DRAWINGS FOR INFORMATION.

ROOF FRAMING PLAN KEY NOTES: (X)

1. CONC ROOF SLAB (BELOW ROOF OVERBUILD)
2. REINF CONC COLUMN (BELOW CONC ROOF SLAB)

0 2000 4000

SCALE: 1:100

UNLESS OTHERWISE NOTED, LINEAR DIMENSIONS SHOWN ON DRAWINGS ARE IN MILLIMETERS (mm)

APPROVED:

A/E DESIGNER OF RECORD

SEAL:

US ARMY CORPS OF ENGINEERS
AFGHANISTAN ENGINEER DISTRICT

Mark	Description	Date	Appr.	Mark	Description	Date	Appr.

Designed by: KMP/MMY
Dwn by: RCG
Ckd by: CWW
Reviewed by: LHM
Submitted by: BAKER
Date: 2/23/10
Rev: 0
Design file no.
Drawing code:
File name: ANASTORS-102
Plot date: 6/3/2010
Plot scale: X:X

U.S. ARMY CORPS OF ENGINEERS
AFGHANISTAN ENGINEER DISTRICT
APO AE 96338

Michael Baker Jr., Inc.
A unit of Michael Baker Corporation
Airside Business Park
100 Airside Drive
Moon Township, PA 15108
www.mbakercorp.com

STANDARD DESIGN
VARIOUS PROJECTS
VARIOUS LOCATIONS, AFGHANISTAN

RMTC STORAGE

ROOF FRAMING PLAN

Sheet reference number:
S-102

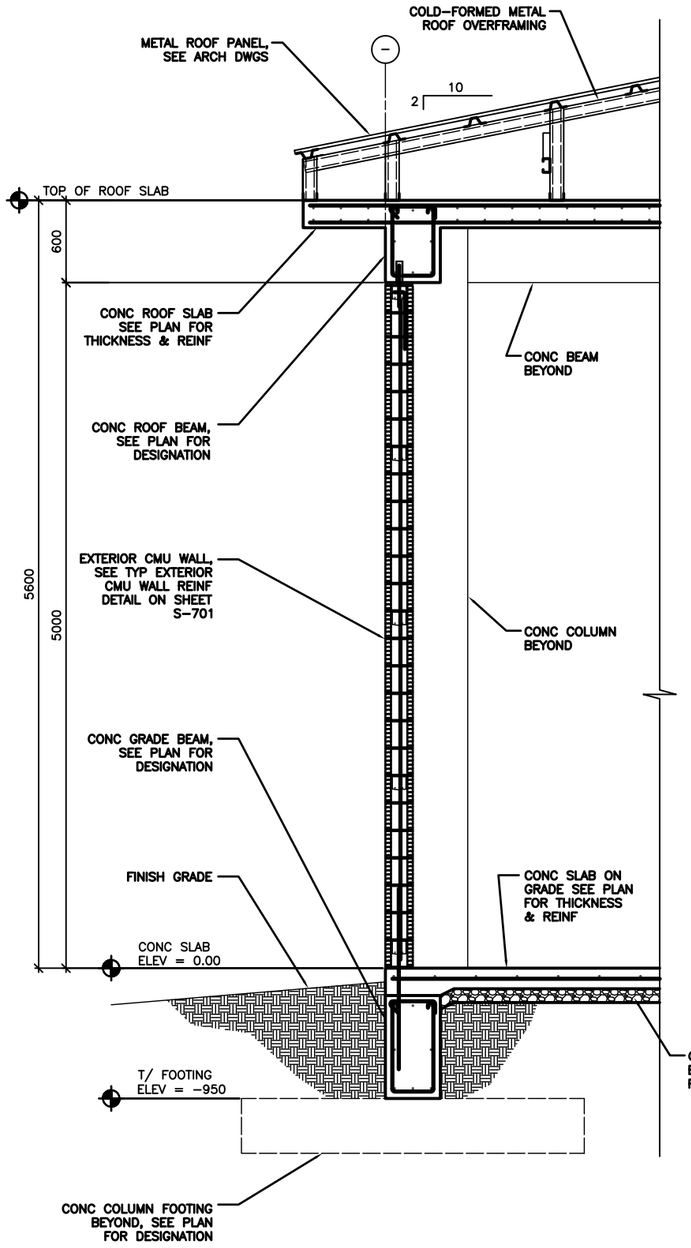

1 S-101 1 S-102 TYPICAL WALL SECTION AT EXTERIOR MASONRY WALL

SCALE: 1:20

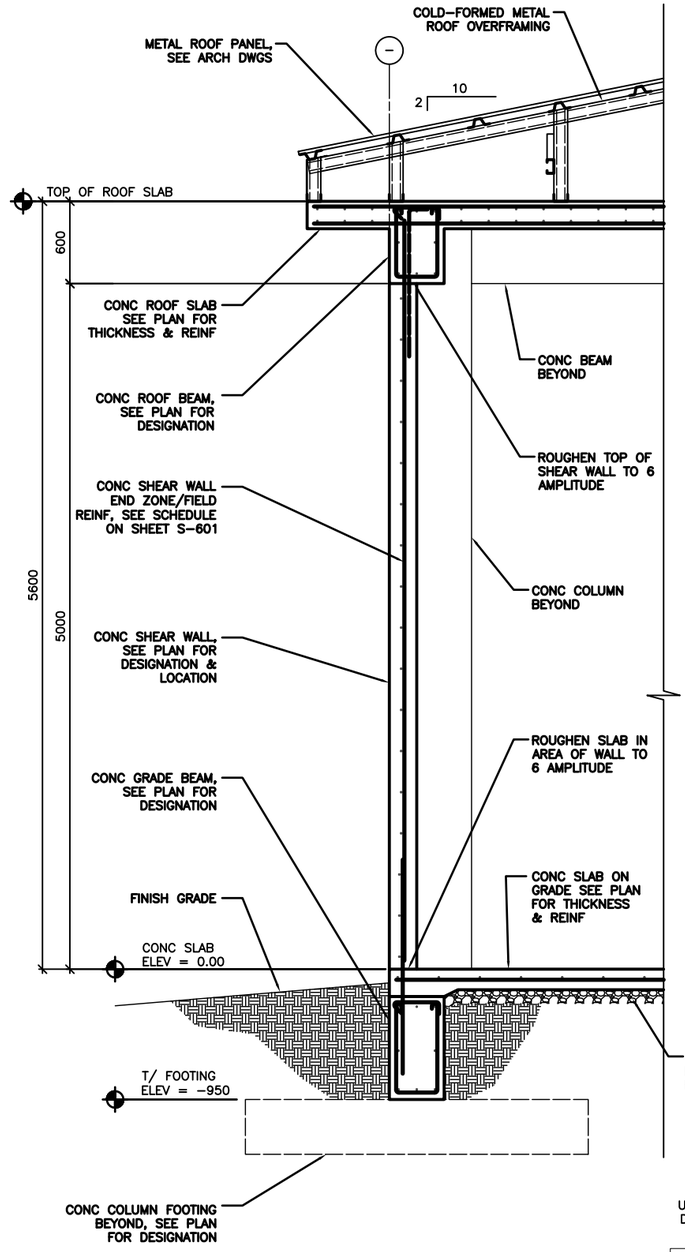

2 S-101 2 S-102 TYPICAL WALL SECTION AT CONCRETE SHEAR WALL

SCALE: 1:20

0 400 800

SCALE: 1:20

UNLESS OTHERWISE NOTED, LINEAR DIMENSIONS SHOWN ON DRAWINGS ARE IN MILLIMETERS (mm)

APPROVED:

A/E DESIGNER OF RECORD

SEAL:

US ARMY CORPS OF ENGINEERS
AFGHANISTAN ENGINEER DISTRICT

Mark	Description	Date	Appr.

Mark	Description	Date	Appr.

Date: 2/23/10 Rev: 0
Design file no.
Drawing code:
File name: AN-STDS-401
Plot date: 6/3/2010
Plot scale: 1:1

Designed by: KMP/MMY
Drawn by: RCC
Checked by: CWW
Reviewed by: LHM
Submitted by: BAKER

U.S. ARMY CORPS OF ENGINEERS
AFGHANISTAN ENGINEER DISTRICT
APO AE 96338

Michael Baker Jr., Inc.
A unit of Michael Baker Corporation
Airside Business Park
100 Airport Drive
Moon Township, PA 15108
www.mbakercorp.com

STANDARD DESIGN
VARIOUS PROJECTS
VARIOUS LOCATIONS, AFGHANISTAN

RMTC STORAGE

BUILDING SECTIONS

Sheet reference number:
S-401

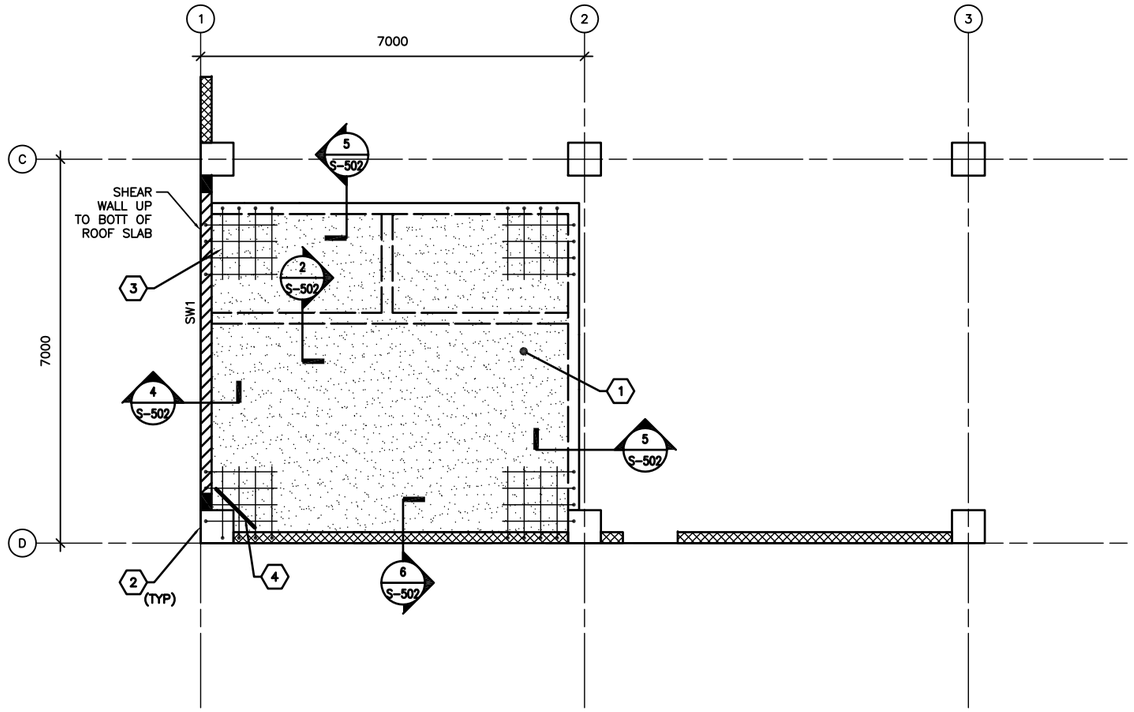

1 S-102 ENLARGED ELEVATED SLAB PLAN @ ELEV 3250

SCALE: 1:50

ROOF/ELEVATED SLAB FRAMING PLAN NOTES:

1. REFER TO SHEETS S-001 FOR STRUCTURAL NOTES AND DESIGN CRITERIA.
2. ELEVATED SLAB IS 250 W/ #13 @ 250 OC EW
3. TOP OF ELEVATED SLAB IS 3250.

ELEVATED SLAB PLAN LEGEND:

REINF CONC SHEAR WALL

REINF CMU WALL

ELEVATED SLAB FRAMING PLAN KEY NOTES: (X)

1. ELEVATED CONCRETE SLAB
2. REINF CONC COLUMN (ABOVE AND BELOW CONC SLAB)
3. ADD'L REINF @ CONCRETE SLAB CORNERS – SEE S-701 FOR INFORMATION
4. (2)-#13 @ RE-ENTRANT CORNERS – SEE S-701 FOR INFORMATION

0 1000 2000

SCALE: 1:50

UNLESS OTHERWISE NOTED, LINEAR DIMENSIONS SHOWN ON DRAWINGS ARE IN MILLIMETERS (mm)

APPROVED:

A/E DESIGNER OF RECORD

SEAL:

US ARMY CORPS OF ENGINEERS
AFGHANISTAN ENGINEER DISTRICT

Mark	Description	Date	Appr.	Mark	Description	Date	Appr.

Designed by: KMP/MMY
Dwn by: RCG
Ckd by: CWW
Reviewed by: LHM
Submitted by: BAKER
Date: 2/23/10
Rev: 0
Design file no.
Drawing code:
File name: ANASTORS-402
Plot date: 6/3/2010
Plot scale: X:X

U.S. ARMY CORPS OF ENGINEERS
AFGHANISTAN ENGINEER DISTRICT
APO AE 96338

Michael Baker Jr., Inc.
A unit of Michael Baker Corporation
Airside Business Park
100 Airside Drive
Moon Township PA 15108
www.mbakercorp.com

STANDARD DESIGN
VARIOUS PROJECTS
VARIOUS LOCATIONS, AFGHANISTAN

RMTC STORAGE

ENLARGED ELEVATED SLAB PLAN

Sheet reference number:
S-402

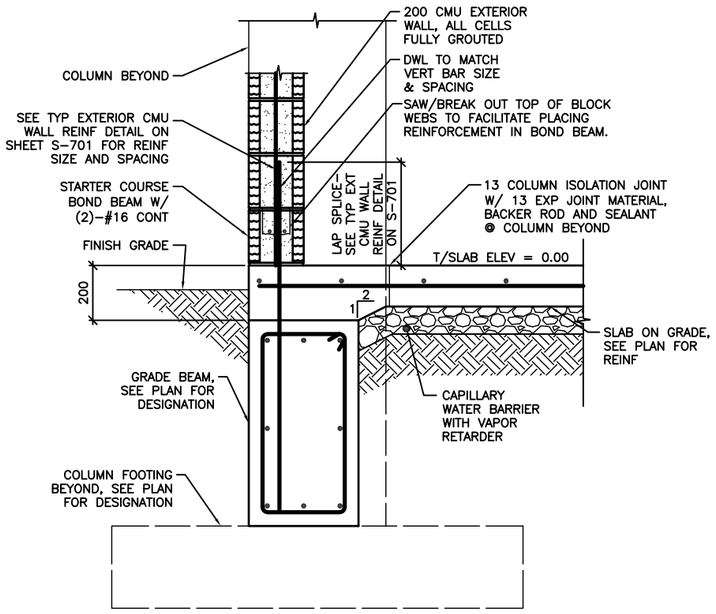

NOTE:
1. SECTION IS SIMILAR FOR INTERIOR CMU PARTITIONS OVER GRADE BEAMS SHOWING THICKENED 200 CONC SLAB AREA.

1 / S-101 SECTION
SCALE: 1:10

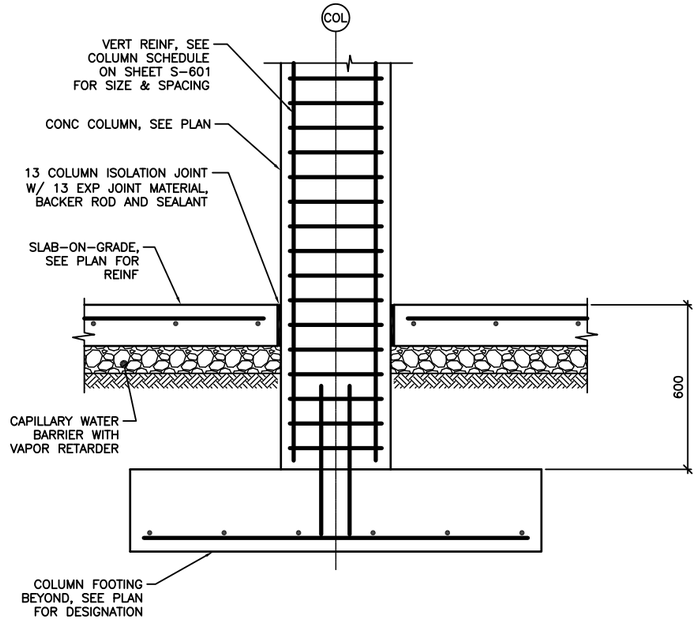

2 / S-101 SECTION
SCALE: 1:10

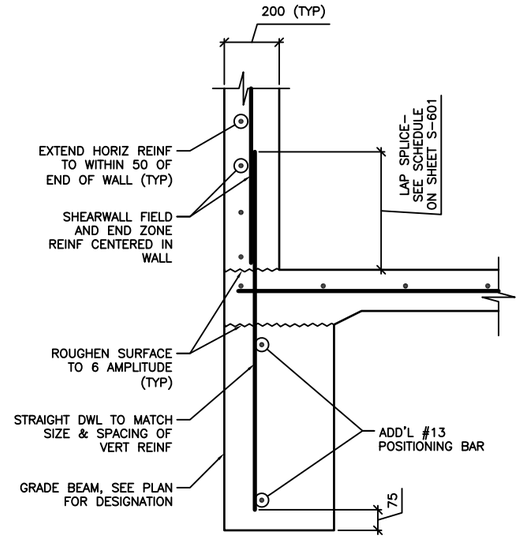

NOTE:
1. SECTION DEPICTS SHEAR WALL TERMINATION ONLY. GRADE BEAM REINFORCING NOT SHOWN FOR CLARITY
2. SEE SHEET S-601 AND SHEET S-702 FOR SCHEDULED FIELD AND END ZONE REINF.

3 / S-101 SECTION
SCALE: 1:10

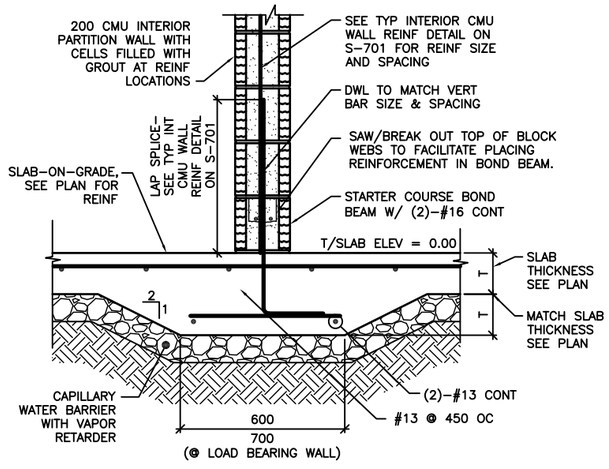

4 / S-101 SECTION
SCALE: 1:10

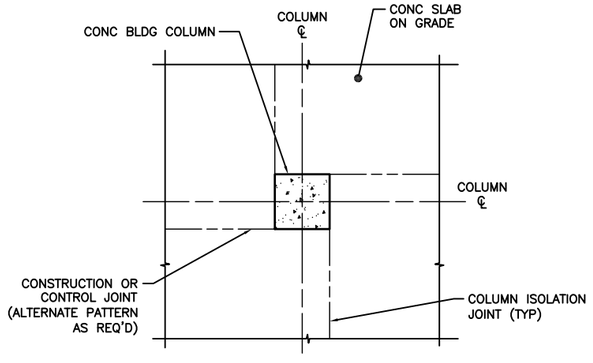

A / S-501 COLUMN ISOLATION JOINT DETAIL
SCALE: NTS

0 200 400
SCALE: 1:10

UNLESS OTHERWISE NOTED, LINEAR DIMENSIONS SHOWN ON DRAWINGS ARE IN MILLIMETERS (mm)

APPROVED:

A/E DESIGNER OF RECORD

SEAL:

US ARMY CORPS OF ENGINEERS
AFGHANISTAN ENGINEER DISTRICT

Mark	Description	Date	Appr.

Rev: 0
Date: 2/23/10
File no.
Design file no.
Drawing code:
File name: AN4STOR5-S01
Plot date: 6/3/2010
Plot scale: 1:1

Designed by: KMP/AMY
Drawn by: RCC
Chkd by: CWW
Reviewed by: LHM
Submitted by: BAKER

U.S. ARMY CORPS OF ENGINEERS
AFGHANISTAN ENGINEER DISTRICT
APO AE 96338

Michael Baker Jr., Inc.
A unit of Michael Baker Corporation
Airside Business Park
100 Airport Drive
Moon Township, PA 15108
www.mbakercorp.com

STANDARD DESIGN
VARIOUS PROJECTS
VARIOUS LOCATIONS, AFGHANISTAN

RMTC STORAGE

FOUNDATION SECTIONS

Sheet reference number:
S-501

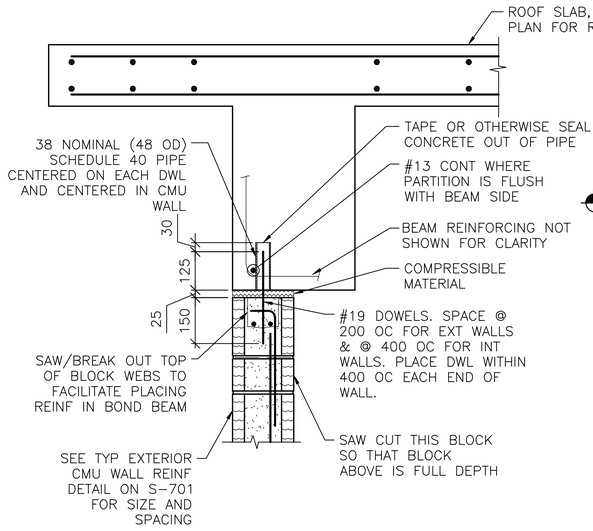

NOTES:
1. EXTEND DOWEL REINF TO 25 CLEAR FROM TOP OF CMU WALL.

1 S-102 **SECTION**
SCALE: 1:10

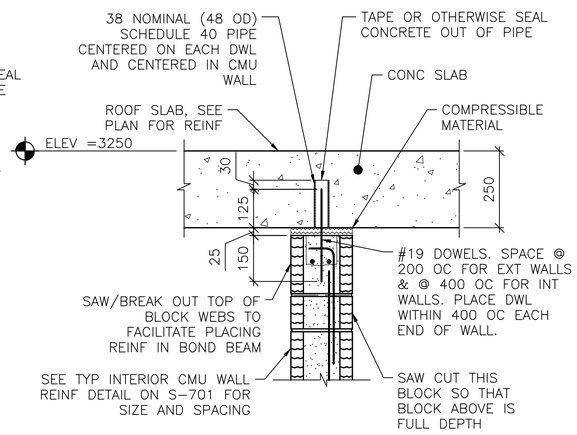

NOTES:
1. EXTEND DOWEL REINF TO 25 CLEAR FROM TOP OF CMU WALL.
2. SLAB REINF NOT SHOWN FOR CLARITY.

2 S-402 **SECTION**
SCALE: 1:10

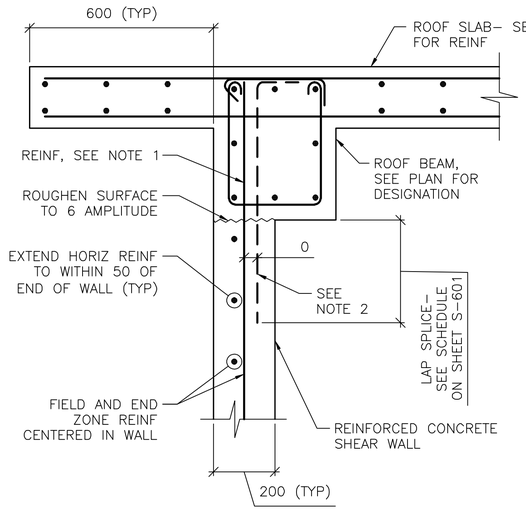

NOTES:
1. TERMINATE "FIELD" VERT REINF & END ZONE REINF @ 50 CLEAR FROM TOP OF ROOF SLAB.
2. WHERE END ZONE REINFORCING CANNOT BE DEVELOPED IN BEAM DEPTH, PROVIDE HOOKED DWLS SAME SIZE & SPACING. PROVIDE TENSION LAP BELOW ROOF BEAM.
3. SEE SHEET S-601 AND SHEET S-702 FOR SCHEDULED FIELD AND END ZONE REINF.

3 S-102 **SECTION**
SCALE: 1:10

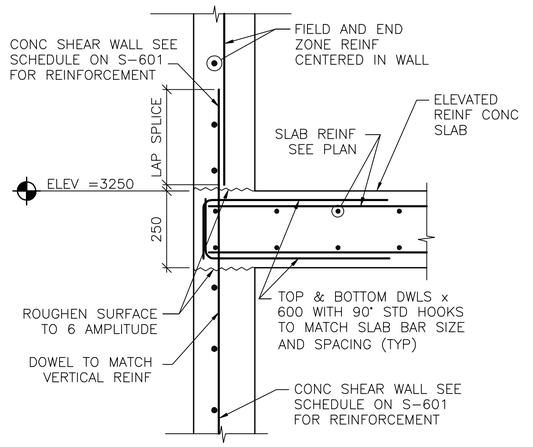

4 S-402 **SECTION**
SCALE: 1:10

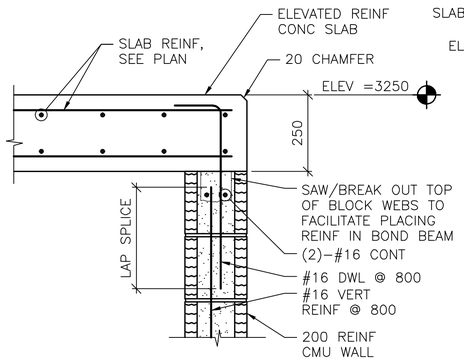

5 S-402 **SECTION**
SCALE: 1:10

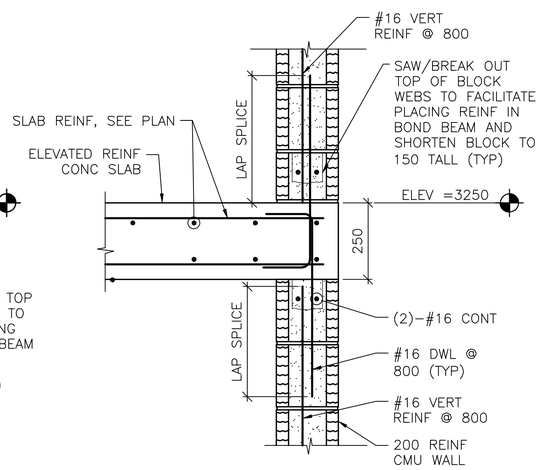

6 S-402 **SECTION**
SCALE: 1:10

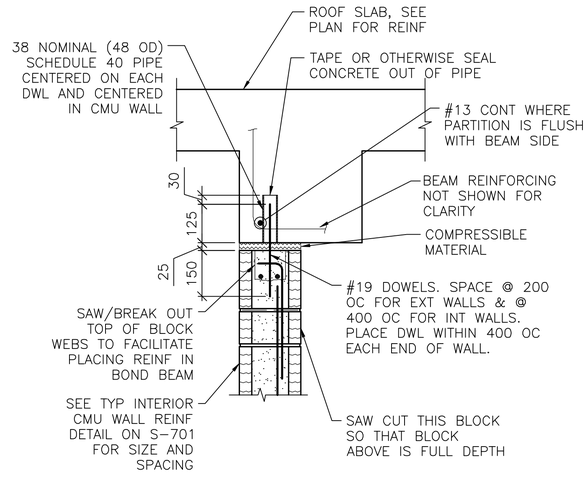

NOTES:
1. EXTEND DOWEL REINF TO 25 CLEAR FROM TOP OF CMU WALL.
2. PARTITION WALL MAY BE CENTERED UNDER THE BEAM OR FLUSH AS SHOWN. SEE PLAN FOR LOCATION.
3. SLAB REINF NOT SHOWN FOR CLARITY.

7 S-102 **SECTION**
SCALE: 1:10

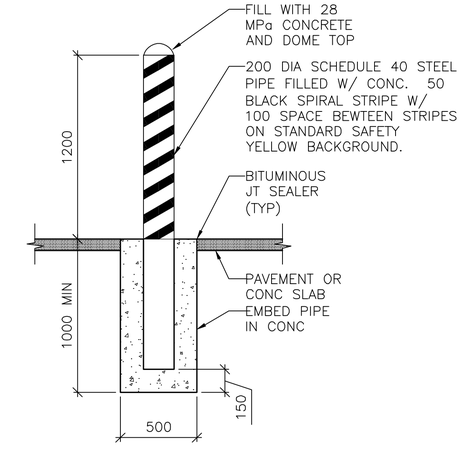

8 S-101 **SECTION AT BOLLARD**
SCALE: 1:20

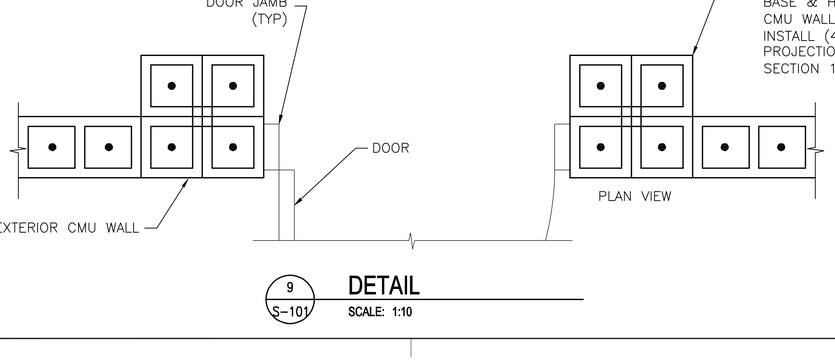

9 S-101 **DETAIL**
SCALE: 1:10

0 400 800
SCALE: 1:20

0 200 400
SCALE: 1:10

UNLESS OTHERWISE NOTED, LINEAR DIMENSIONS SHOWN ON DRAWINGS ARE IN MILLIMETERS (mm)

APPROVED:

A/E DESIGNER OF RECORD

SEAL:

GEORGIA REGISTERED 1-29-10 No. 27141 PROFESSIONAL ENGINEER CHRISTOPHER W. WHITMORE

US ARMY CORPS OF ENGINEERS
AFGHANISTAN ENGINEER DISTRICT

Mark	Description	Date	Appr.
1	REVISED TOP OF CMU DOWEL SPACING	9/1/10	CWW

U.S. ARMY CORPS OF ENGINEERS
AFGHANISTAN ENGINEER DISTRICT
APO AE 96338

Michael Baker Jr., Inc.
A unit of Michael Baker Corporation
Airside Business Park
100 Airside Drive
Moon Township, PA 15108
www.mbakercorp.com

Designed by: KMP/MMY
Drawn by: RCG
Ckd by: CWW
Reviewed by: LHM
Submitted by: BAKER

Date: 2/23/10
Design file no.
Drawing code:
File name: ANASTORS-502SC
Plot date: 9/1/2010
Plot scale: X:X
Rev: 0

AFGHAN NATIONAL ARMY REGIONAL MILITARY TRAINING CENTER STANDARD DESIGN

RMTC STORAGE

FRAMING SECTIONS

Sheet reference number:
S-502

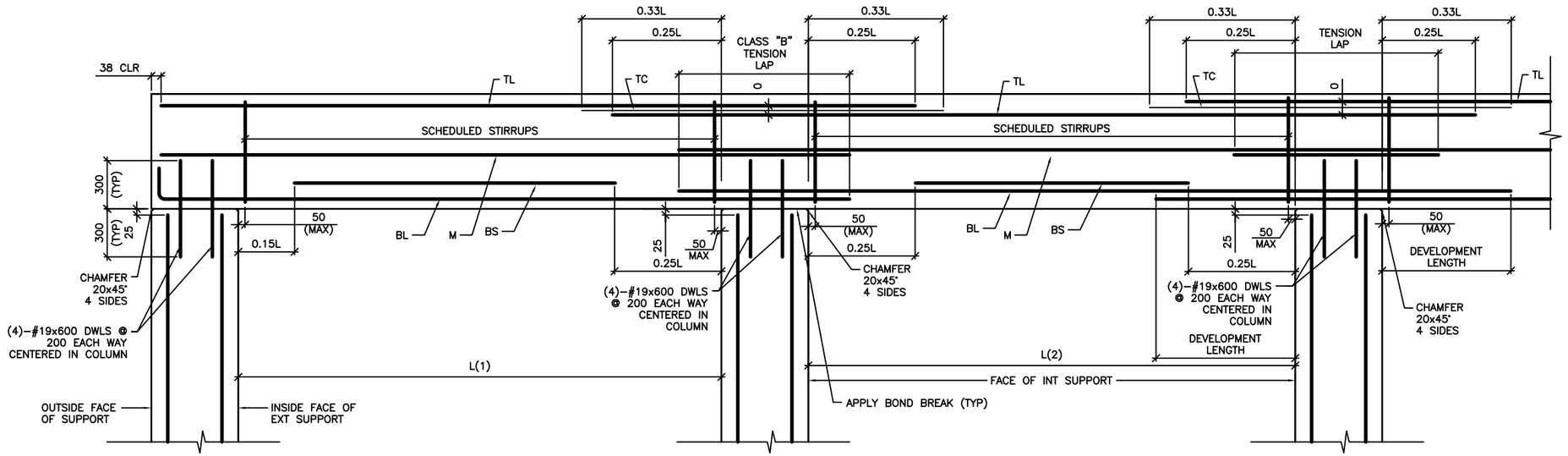

DETAIL NOTE:
1. WORK THIS DETAIL WITH BEAM SCHEDULE ON SHEET S–601.
2. L=GREATEST OF ADJACENT SPANS L(1) OR L(2)
3. ONLY COLUMN CORNER BARS ARE SHOWN

1 / S–503 ROOF BEAM REINFORCING DETAIL

SCALE: NTS

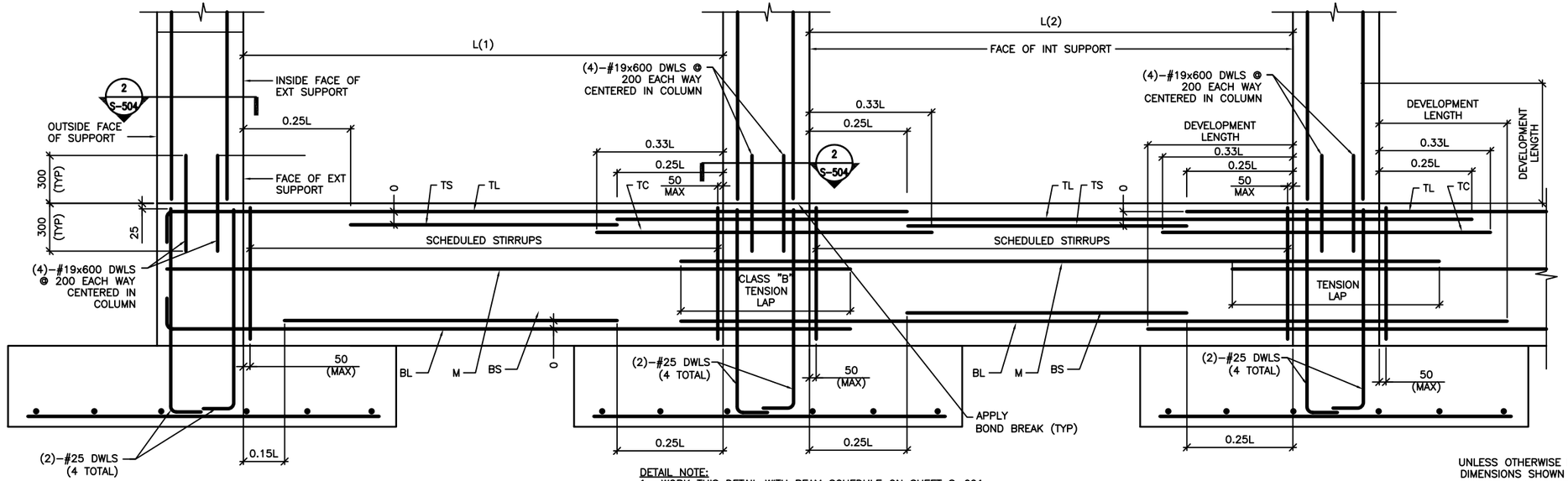

DETAIL NOTE:
1. WORK THIS DETAIL WITH BEAM SCHEDULE ON SHEET S–601.
2. L=GREATEST OF ADJACENT SPANS L(1) OR L(2)
3. ONLY COLUMN CORNER BARS ARE SHOWN.

2 / S–503 GRADE BEAM REINFORCING DETAIL

SCALE: NTS

UNLESS OTHERWISE NOTED, LINEAR DIMENSIONS SHOWN ON DRAWINGS ARE IN MILLIMETERS (mm)

APPROVED:

A/E DESIGNER OF RECORD

SEAL:

US ARMY CORPS OF ENGINEERS
AFGHANISTAN ENGINEER DISTRICT

Mark	Description	Date	Appr.

Rev: 0
Date: 2/23/10
Design file no.:
Drawing code:
File name: AANSTOR5-503
Plot date: 6/3/2010
Plot scale: 1:1

Designed by:	Drawn by:	Checked by:
KMP / MMY	RCC	CWW

Reviewed by: LHM
Submitted by: BAKER

U.S. ARMY CORPS OF ENGINEERS
AFGHANISTAN ENGINEER DISTRICT
APO AE 96338

Michael Baker Jr., Inc.
A unit of Michael Baker Corporation
Airside Business Park
100 Airport Drive
Moon Township, PA 15108
www.mbakercorp.com

STANDARD DESIGN
VARIOUS PROJECTS
VARIOUS LOCATIONS, AFGHANISTAN

RMTC STORAGE

BEAM & COLUMN DETAILS

Sheet reference number:
S–503

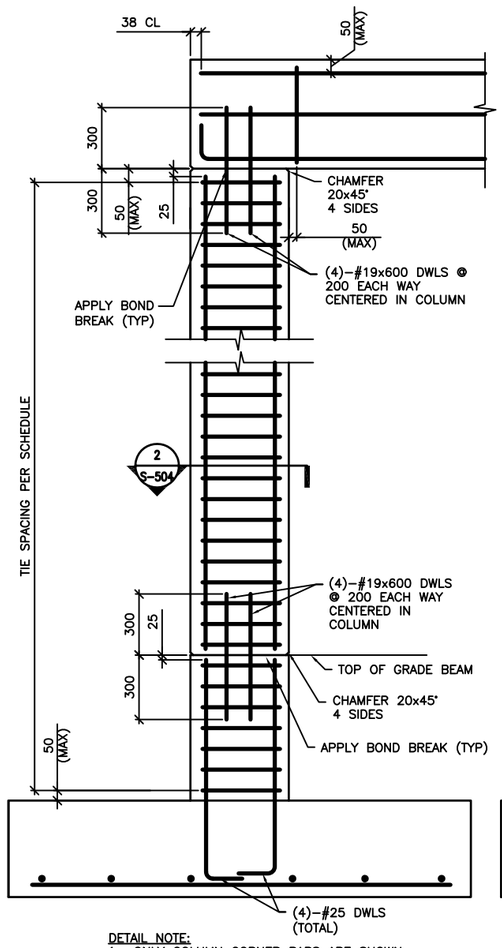

DETAIL NOTE:
1. ONLY COLUMN CORNER BARS ARE SHOWN

1 S-504 1-STORY COLUMN REINF DETAILS
SCALE: NTS
(WITH GRADE BEAM)

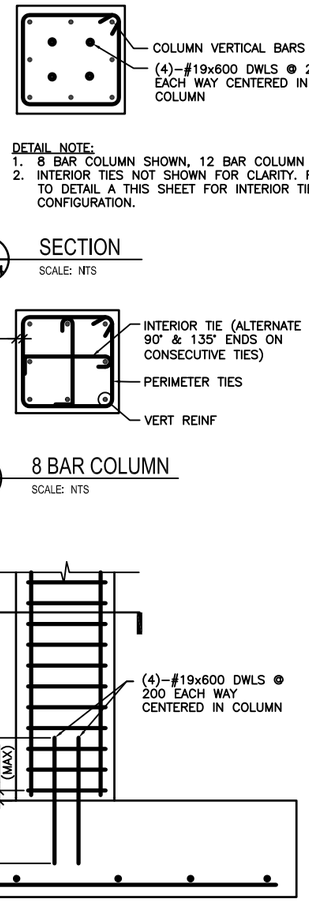

DETAIL NOTE:
1. ONLY COLUMN CORNER BARS ARE SHOWN

1 S-504 1-STORY COLUMN REINF DETAILS
SCALE: NTS
(WITHOUT GRADE BEAM)

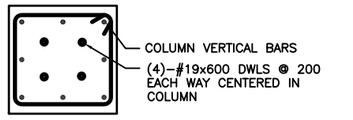

DETAIL NOTE:
1. 8 BAR COLUMN SHOWN, 12 BAR COLUMN SIMILAR
2. INTERIOR TIES NOT SHOWN FOR CLARITY. REFER TO DETAIL A THIS SHEET FOR INTERIOR TIE CONFIGURATION.

2 S-503 2 S-504 SECTION
SCALE: NTS

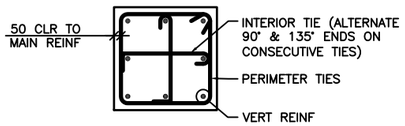

A S-504 8 BAR COLUMN
SCALE: NTS

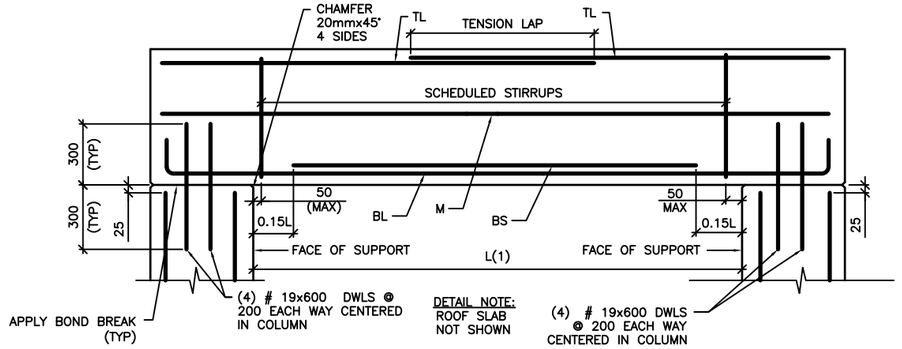

3 S-504 SINGLE SPAN ROOF BEAM REINFORCING DETAIL
SCALE: NTS

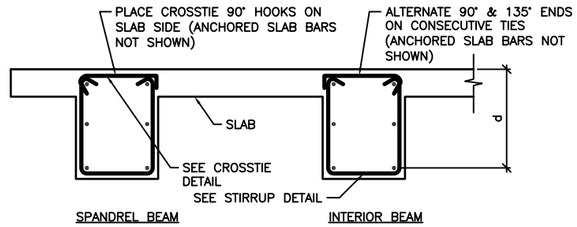

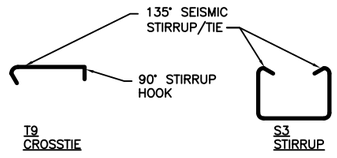

B S-504 BEAM REINFORCEMENT DETAILS
SCALE: NTS

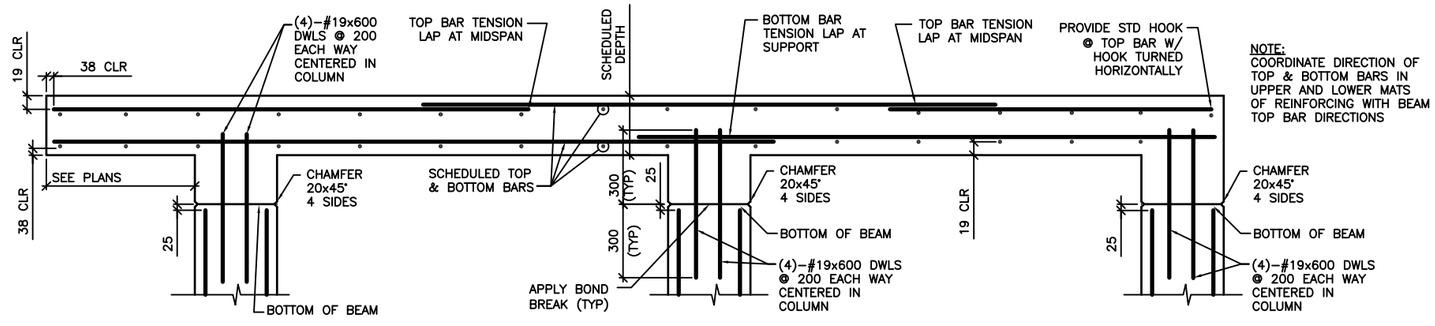

4 S-504 FRAMED SLAB REINFORCING DETAIL
SCALE: NTS

UNLESS OTHERWISE NOTED, LINEAR DIMENSIONS SHOWN ON DRAWINGS ARE IN MILLIMETERS (mm)

APPROVED:

A/E DESIGNER OF RECORD

SEAL:

US ARMY CORPS OF ENGINEERS
AFGHANISTAN ENGINEER DISTRICT

Mark	Description	Date	Appr.

Designed by: KMP/MMY
Drawn by: RCC
Checked by: CWW
Reviewed by: LHM
Submitted by: BAKER
Date: 2/23/10
Design file no.
Drawing code:
File name: AANSTDRS-504
Plot date: 6/3/2010
Plot scale: 1:1
Rev: 0

U.S. ARMY CORPS OF ENGINEERS
AFGHANISTAN ENGINEER DISTRICT
APO AE 96338

Michael Baker Jr, Inc.
A unit of Michael Baker Corporation
Airside Business Park
100 Airport Drive
Moon Township, PA 15108
www.mbakercorp.com

STANDARD DESIGN
VARIOUS PROJECTS
VARIOUS LOCATIONS, AFGHANISTAN

RMTC STORAGE

BEAM & COLUMN DETAILS

Sheet reference number:
S-504

CONCRETE REINFORCEMENT TENSION DEVELOPMENT/LAP SPLICE SCHEDULE

f'c = 28 MPa	LAP CLASS	UNCOATED BARS			
		TOP BARS		OTHER BARS	
BAR SIZES		CASE 1	CASE 2	CASE 1	CASE 2
#10 TO #19	A	50 BAR DIA	74 BAR DIA	38 BAR DIA	57 BAR DIA
	B	64 BAR DIA	96 BAR DIA	50 BAR DIA	74 BAR DIA
#22 TO #57	A	62 BAR DIA	93 BAR DIA	48 BAR DIA	71 BAR DIA
	B	80 BAR DIA	121 BAR DIA	62 BAR DIA	93 BAR DIA

NOTES:
1. TABULATED TENSION DEVELOPMENT LENGTH VALUES ARE TAKEN FROM CRSI DESIGN HANDBOOK 2008 10TH ED.
2. TENSION DEVELOPMENT & TENSION LAP SPLICE LENGTHS ARE EXPRESSED AS MULTIPLES OF BAR DIAMETERS.
3. TABULATED VALUES ARE BASED ON MINIMUM YIELD STRENGTH OF REINFORCEMENT, fy, OF 420MPa.
4. CONCRETE IS NORMAL WEIGHT (2400Kg/m^3) AND 28 DAY COMPRESSIVE STRENGTH = 28MPa.
5. TABULATED VALUES FOR BEAMS & COLUMNS ARE BASED ON TRANSVERSE REINFORCEMENT AND CONCRETE COVER MEETING MINIMUM CODE REQUIREMENTS.
6. CASES 1 & 2, WHICH DEPEND ON THE TYPE OF STRUCTURAL MEMBER, CONCRETE COVER, AND CENTER-TO-CENTER SPACING OF THE BARS ARE DEFINED IN THE TABLE BELOW.
7. LAP SPLICE LENGTHS (MINIMUM 300mm) ARE MULTIPLES OF TENSION DEVELOPMENT LENGTHS: CLASS A = 1.0(TENSION DEVELOPMENT LENGTH) & CLASS B = 1.3(TENSION DEVELOPMENT LENGTH)
8. TOP BARS ARE HORIZONTAL REINFORCEMENT WITH MORE THAN 300mm OF CONCRETE CAST BELOW THE BARS.
9. IT SHALL BE PERMISSIBLE TO CALCULATE WALL AND SLAB REINFORCEMENT TENSION DEVELOPMENT/SPLICE LENGTHS IN ACCORDANCE WITH ACI 12.2.3 OR TABLE 5.3(b) OF CRSI 2008 IN LIEU OF VALUES TABULATED ABOVE.

BEAMS, COLUMNS	CASE 1	CONCRETE COVER AT LEAST 1 BAR DIA AND CENTER-TO-CENTER SPACING AT LEAST 2 BAR DIA
	CASE 2	CONCRETE COVER LESS THAN 1 BAR DIA OR CENTER-TO-CENTER SPACING LESS THAN 2 BAR DIA
ALL OTHERS	CASE 1	CONCRETE COVER AT LEAST 1 BAR DIA AND CENTER-TO-CENTER SPACING AT LEAST 3 BAR DIA
	CASE 2	CONCRETE COVER LESS THAN 1 BAR DIA OR CENTER-TO-CENTER SPACING LESS THAN 3 BAR DIA

CONCRETE COVER SCHEDULE

MINIMUM CONCRETE COVER PROTECTION FOR REINFORCEMENT BARS SHALL BE AS LISTED BELOW: (SEE ACI 318M-05, SECTION 7.7 FOR CONDITIONS NOT NOTED). DIMENSIONS FOR BAR PLACEMENT GIVEN IN SECTIONS AND DETAILS SHALL SUPERSEDE MINIMUM COVER REQUIREMENTS GIVEN HERE. DIMENSIONS ARE IN mm. PROVIDE STANDARD BAR CHAIRS AND SUPPORT BARS @1200mm MAXIMUM AS REQUIRED TO MAINTAIN CONCRETE PROTECTION SPECIFIED.

FOOTINGS (EARTH FORMED):		70
COLUMNS / PIERS (TO TIES)		40
GRADE BEAMS OR SLAB TURNED DOWN EDGES:		
TOP		40
BOTTOM (EARTH FORMED)		70
SIDES (EARTH FORMED)		70
SIDES (BOARD FORMED)	#16 BAR & SMALLER	40
	#19 THRU #36 BAR	50
ELEVATED BEAMS & SLABS:		
BEAM TIES & STIRRUPS (NOT EXPOSED TO WEATHER)		40
BEAM TIES & STIRRUPS (EXPOSED TO WEATHER)		50
FLOOR SLABS (NOT EXPOSED TO WEATHER)		20
FLOOR SLABS (EXPOSED TO WEATHER)		
#19 & LARGER		50
#13 & SMALLER		40
ROOF SLAB BARS		25
SLABS ON GRADE		
NOT EXPOSED TO WEATHER (FROM TOP)		20
EXPOSED TO WEATHER (FROM TOP)		40
UTILITY TUNNEL WALLS, RETAINING WALLS AND SHEAR WALLS. (NO SURFACES SHALL BE EARTH FORMED)		
EARTH SIDE AND FRONT SIDE (EXPOSED TO WEATHER)		
#16 BAR AND SMALLER		40
#19 THRU #36 BAR		50

COLUMN FOOTING SCHEDULE

MARK	FOOTING SIZE (mm)			FOOTING REINFORCING	REMARKS
	LENGTH	WIDTH	THICKNESS		
F1	3900	3900	400	(9)-#25 EW BOTT	-----
F2	3100	3100	300	(8)-#22 EW BOTT	-----
F3	2500	2500	250	(6)-#19 EW BOTT	-----
F4	5400	2900	450	(12)-#22 SHORT BOTT (12)-#25 LONG BOTT	-----
F5	2800	2200	250	(7)-#16 SHORT BOTT (7)-#19 LONG BOTT	-----

CONCRETE SHEAR WALL SCHEDULE

MARK	TYPE	WALL LENGTH (L) (mm)	WALL REINFORCEMENT		REMARKS
			END ZONE	FIELD	
SW1	C	6400	(5)-#19 @ 225mm OC	#13 @ 300mm OC	-----
SW2	C	6100	(5)-#19 @ 225mm OC	#13 @ 300mm OC	-----

NOTES:
1. WORK THIS SCHEDULE WITH SHEAR WALL DETAILS ON SHEETS S-702
2. SEE PLAN FOR LOCATION OF SHEAR WALL(S).
3. VERTICAL "FIELD" BARS MAY BE OMITTED IN LOCATION OF "END ZONE" REINFORCEMENT.
4. WALL FIELD REINF LISTED APPLIES TO VERT & HORIZ BARS.
5. WALL FIELD REINFORCEMENT CENTERED IN WALL.

STANDARD HOOKS IN TENSION PER (ACI 318M-05)

HOOK DEVELOPMENT LENGTH (mm)

BAR SIZE	f'c 28 MPa
#10	180
#13	250
#16	300
#19	380
#22	430
#25	480
#29	560
#32	610
#36	690

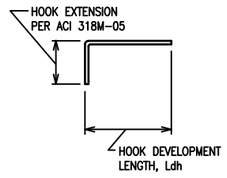

NOTES:
1. CONCRETE IS NORMAL WEIGHT CONCRETE.
2. BAR YIELD STRENGTH, fy = 420 MPa
3. SIDE COVER REQUIREMENTS OF ACI SECT. 12.5.3 ARE ASSUMED TO NOT BE MET.
4. TIE OR STIRRUP REQUIREMENTS OF ACI SECT. 12.5.3 ARE ASSUMED TO NOT BE MET.
5. REDUCTION FOR EXCESS REINFORCEMENT IS NOT TAKEN.
6. HOOK DEVELOPMENT LENGTH IS VALID FOR 180° HOOKS ALSO.

CMU OR CAST IN PLACE CONC LINTEL SCHEDULE (TYP)

OPENING TYPE OR SIZE, BEAM LOCATION OR TYPE	MAX SPAN (mm)	LINTEL DEPTH (mm)	REINFORCING BOTTOM
WALL OPENING	4000	600	(2)-#16 T&B
WALL OPENING	1900	400	(2)-#16 T&B
WALL OPENING	1000	400	(2)-#13 B

1. STRUCTURAL SHEETS DO NOT INDICATE ALL OPENINGS IN MASONRY WALLS. VERIFY NUMBER, SIZE AND LOCATION OF ALL OPENINGS IN MASONRY WALLS FROM ARCHITECTURAL SHEETS AND APPROVED PLUMBING, MECHANICAL, AND ELECTRICAL SHOP DRAWINGS.
2. PROVIDE 200mm BEARING EA END.
3. FOR HEAD DETAILS REFER TO ARCHITECTURAL SHEETS.
4. REINFORCING SHALL BE ASTM A615M, GRADE 420. GROUT FOR CMU LINTELS SHALL HAVE A MINIMUM COMPRESSIVE STRENGTH OF 14 MPa AT 28 DAYS.
5. CONTRACTOR SHALL SUBMIT FOR APPROVAL SHOP DRAWINGS AND SCHEDULES SHOWING SIZE, SPAN, REINFORCEMENT, DETAILS, LOCATIONS, ETC.

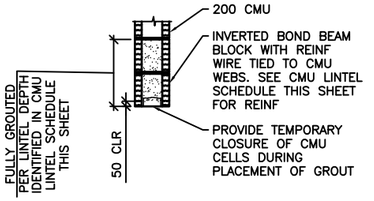

A S-601 LINTEL DETAIL
SCALE: NTS

BEAM SCHEDULE

MARK	BEAM SIZE (mm)		BEAM REINFORCING						STIRRUPS			REMARKS
	DEPTH	WIDTH	BL	BS	TL	TS	TC	M	SIZE	TYPE	SPACING	
GRADE BEAMS												
GB1	750	400	(2)-#22	(1)-#22	(2)-#19	---	---	---	#13	S3 +T9	d/2	---
GB2	750	400	(2)-#25	(2)-#25	(2)-#25	---	---	---	#13	S3 +T9	d/2	---
ROOF BEAMS												
RB1	600	400	(2)-#22	(1)-#22	(2)-#19	---	---	---	#13	S3+T9	d/2	---
RB2	600	400	(2)-#22	(1)-#22	(2)-#22	---	---	---	#13	S3+T9	d/2	

NOTES:
1. WORK THIS SCHEDULE WITH BEAM REINFORCING DETAILS ON SHEETS S-503 AND S-504.
2. HOOKS SHOWN ON SECTIONS AND DETAILS SHALL BE 90° STD UON.
3. USE ONLY (1) TC AT BEAM COLUMN INTERSECTION WHERE REQ'D.

COLUMN SCHEDULE

DESCRIPTION \ COLUMN MARK	TYP UON	---	---	---
TYPE	8-BAR	---	---	---
DIMENSIONS	600mm SQ	---	---	---
VERTICAL REINFORCEMENT	(8)-#25	---	---	---
TIES	#13 @ d/2	---	---	---
TOP OF ROOF ELEVATION	5600mm	---	---	---
TOP OF GRADE BEAM ELEVATION	-200mm	---	---	---
TOP OF FOOTING ELEVATION	-950mm	---	---	---

NOTES:
1. WORK THIS SCHEDULE WITH COLUMN DETAILS ON SHEET S-504.
2. SEE FOOTING SCHEDULE ON THIS SHEET FOR FOOTING INFORMATION.
3. COLUMN TIES: INTERIOR TIES TO MATCH SIZE & SPACING OF PERIMETER TIES.
4. HOOKS SHOWN ON SECTIONS & DETAILS SHALL BE 90° STD UON.

UNLESS OTHERWISE NOTED, LINEAR DIMENSIONS SHOWN ON DRAWINGS ARE IN MILLIMETERS (mm)

APPROVED:

A/E DESIGNER OF RECORD

SEAL:

US ARMY CORPS OF ENGINEERS
AFGHANISTAN ENGINEER DISTRICT

Mark	Description	Date	Appr.

Mark	Description	Date	Appr.

Rev: 0
Date: 2/23/10
Design file no.
Drawing code:
File name: AANSTDRS-601
Plot date: 6/3/2010
Plot scale: 1:1

Designed by: KMP / MMY
Drawn by: RC
Checked by: CWW
Reviewed by: LHM
Submitted by: BAKER

U.S. ARMY CORPS OF ENGINEERS
AFGHANISTAN ENGINEER DISTRICT
APO AE 96338

Michael Baker Jr., Inc.
A unit of Michael Baker Corporation
Airside Business Park
100 Airport Drive
Moon Township, PA 15108
www.mbakercorp.com

STANDARD DESIGN
VARIOUS PROJECTS
VARIOUS LOCATIONS, AFGHANISTAN

RMTC STORAGE

SCHEDULES

Sheet reference number:
S-601

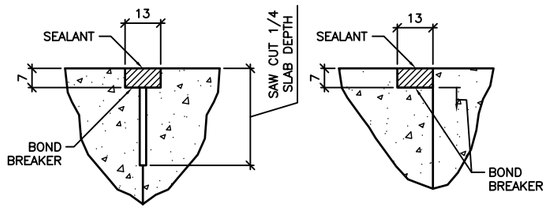

CONTROL JOINT DETAIL

CONSTRUCTION JOINT DETAIL

1 S-701 TYPICAL CONCRETE SLAB JOINT FINISH DETAILS

SCALE: NTS

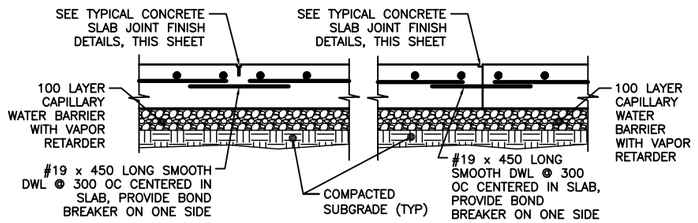

CONTROL JOINT DETAIL

CONSTRUCTION JOINT DETAIL

2 S-701 TYPICAL SLAB ON GRADE JOINT DETAIL

SCALE: NTS

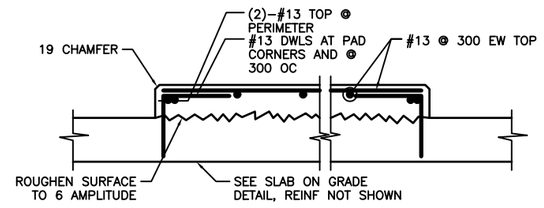

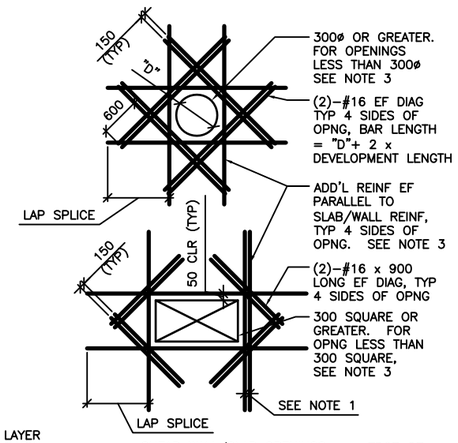

SHEAR WALL/SLAB OPENINGS

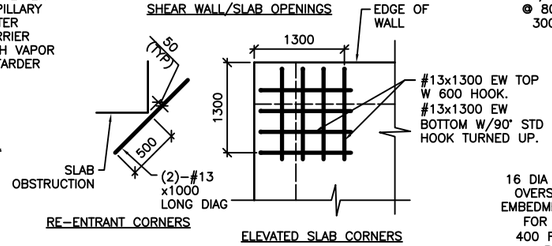

RE–ENTRANT CORNERS

ELEVATED SLAB CORNERS

DETAIL NOTES:
1. WHERE MORE THAN ONE ADDITIONAL BAR IS REQUIRED PARALLEL TO THE EXISTING SLAB/WALL REINFORCING THE ADDITIONAL REINFORCING BARS SHALL BE SPACED AT 100 ON CENTER.
2. ADDITIONAL REINFORCING PARALLEL TO THE SLAB/WALL REINFORCING SHALL BE #16 BARS THAT PROVIDE A STEEL AREA ON EACH SIDE OF THE OPENING EQUAL TO 1/2 THE AREA OF THE REINFORCING CUT BY THE OPENING.
3. FOR OPENINGS WITH SIDES OR DIAMETERS LESS THAN 300 SPREAD THE SLAB/WALL REINFORCING TO CLEAR THE OPENING.

4 S-701 ADD'L CONCRETE REINFORCEMENT DETAILS

SCALE: NTS

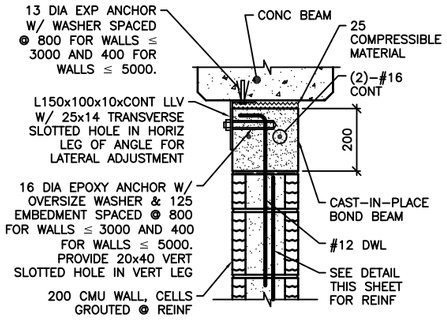

NOTE:
1. AT ANCHOR BOLTS, ADD AN ADDITIONAL 25 COMPRESSIBLE MATERIAL BELOW EXP ANCHOR HEAD.

INTERIOR BEAM

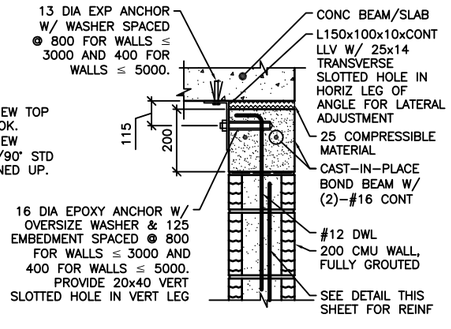

EXTERIOR WALL OR SLAB

NOTES:
1. THIS DETAIL IS AN ALTERNATE TOP OF WALL ANCHORAGE DETAIL TO BE USED AT THE CONTRACTOR'S OPTION IN LIEU OF DETAILS SHOWN ON S–400 & S–500 DRAWINGS.
2. CAST–IN–PLACE BOND BEAM SHOWN AT TOP OF WALL IS ALSO APPLICABLE FOR INTERMEDIATE AND STARTER COURSE BOND BEAMS WITHIN WALL.

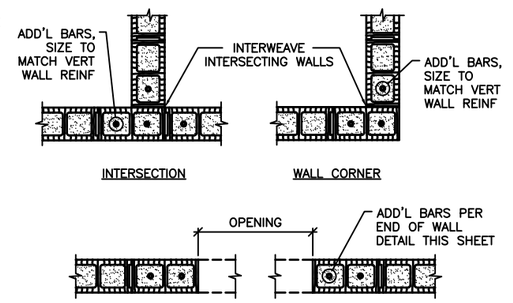

INTERSECTION

WALL CORNER

MASONRY OPENING W/ LINTEL

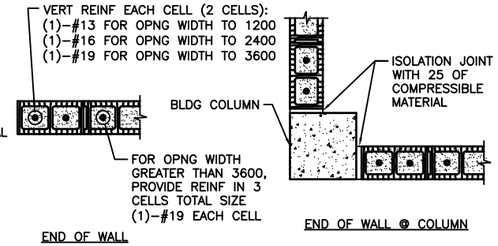

END OF WALL

END OF WALL @ COLUMN

NOTES:
1. OPENING WIDTH SHALL NOT EXCEED 3600 FOR THIS TYPE OF JAMB.
2. ALL CELLS FULLY GROUTED AT EXTERIOR WALLS. AT INTERIOR WALLS, ONLY GROUT CELLS CONTAINING REINF.

6 S-701 TYP CMU DETAILS

SCALE: NTS

3 S-701 INTERIOR EQUIPMENT PAD DETAIL

SCALE: NTS

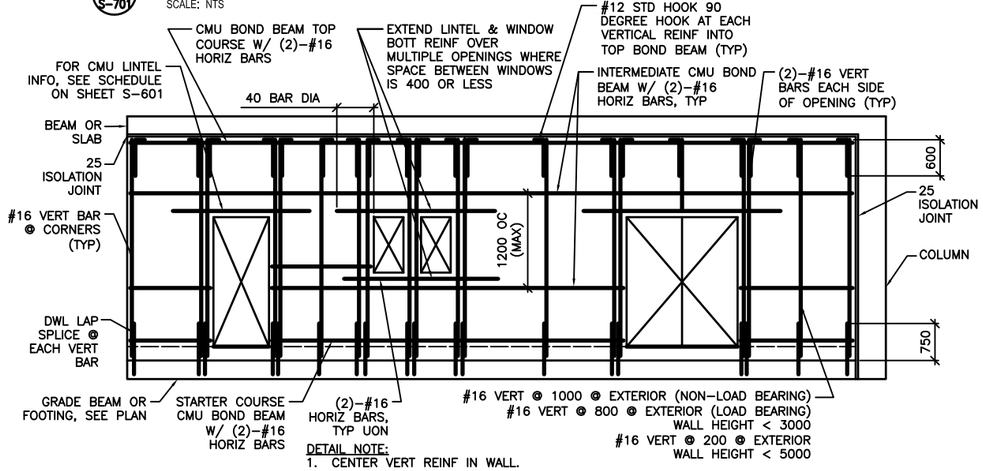

DETAIL NOTE:
1. CENTER VERT REINF IN WALL.
2. GROUT ALL CMU CELLS.
3. REFERENCE ARCH DWGS FOR JOINT INFORMATION
4. DOWELS BETWEEN TOP BOND BEAM AND BEAM/SLAB ABOVE (INCLUDING EMBEDDED PIPE SLEEVE) NOT SHOWN FOR CLARITY. SEE SPECIFIC S–500 SERIES DWGS FOR INFO.
5. FOR INFORMATION ON ALTERNATE CAST–IN–PLACE WALL BOND BEAMS, REFERENCE ALTERNATE TOP OF CMU WALL BRACING DETAILS THIS SHEET.

7 S-701 TYP EXTERIOR CMU WALL REINF DETAIL

SCALE: NTS

5 S-701 ALTERNATE TOP OF CMU WALL BRACING DETAILS

SCALE: NTS

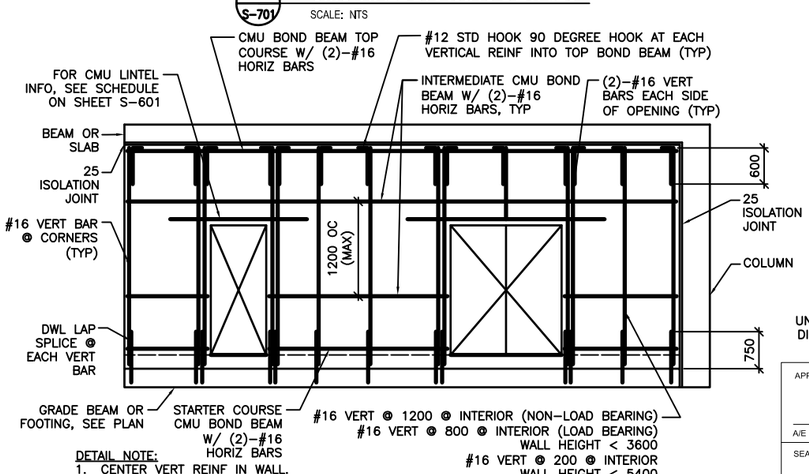

DETAIL NOTE:
1. CENTER VERT REINF IN WALL.
2. GROUT ALL CMU CELLS.
3. REFERENCE ARCH DWGS FOR JOINT INFORMATION
4. DOWELS BETWEEN TOP BOND BEAM AND BEAM/SLAB ABOVE (INCLUDING EMBEDDED PIPE SLEEVE) NOT SHOWN FOR CLARITY. SEE SPECIFIC S–500 SERIES DWGS FOR INFO.
5. FOR INFORMATION ON ALTERNATE CAST–IN–PLACE WALL BOND BEAMS, REFERENCE ALTERNATE TOP OF CMU WALL BRACING DETAILS THIS SHEET.

8 S-701 TYP INTERIOR CMU WALL REINF DETAIL

SCALE: NTS

UNLESS OTHERWISE NOTED, LINEAR DIMENSIONS SHOWN ON DRAWINGS ARE IN MILLIMETERS (mm)

APPROVED:

A/E DESIGNER OF RECORD

SEAL:

US ARMY CORPS OF ENGINEERS
AFGHANISTAN ENGINEER DISTRICT

Mark	Description	Date	Appr.

Date: 2/23/10 | Rev: 0
Design file no.:
Drawing code:
File name: AANISTOR5-701
Plot date: 6/3/2010
Plot scale: X:X

Designed by: KMP/AMY | Det by: RCC | Chk by: CWW
Reviewed by: LHM
Submitted by: BAKER

U.S. ARMY CORPS OF ENGINEERS
AFGHANISTAN ENGINEER DISTRICT
APO AE 96338

Michael Baker Jr, Inc.
A unit of Michael Baker Corporation
Airside Business Park
100 Airport Drive
Moon Township, PA 15108
www.mbakercorp.com

STANDARD DESIGN
VARIOUS LOCATIONS, AFGHANISTAN
RMTC STORAGE
TYPICAL DETAILS

Sheet reference number:
S–701

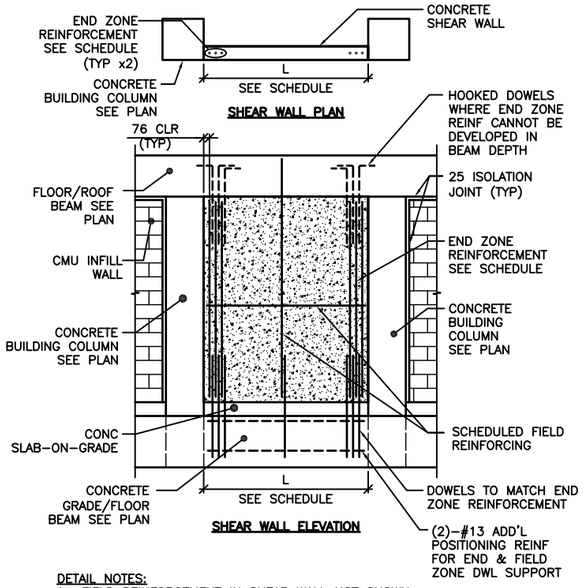

DETAIL NOTES:
1. FIELD REINFORCEMENT IN SHEAR WALL NOT SHOWN COMPLETELY FOR CLARITY.
2. FIELD REINFORCEMENT CENTERED IN WALL.
3. MINIMUM CONC CLEAR DISTANCE FOR END ZONE REINF = 76
4. SEE CONC SHEAR WALL SCHEDULE ON SHEET S-601
5. SEE ARCH DWGS FOR ISOLATION JOINT INFORMATION

1/S-702 TYPE "C" SHEAR WALL DETAIL
SCALE: NTS

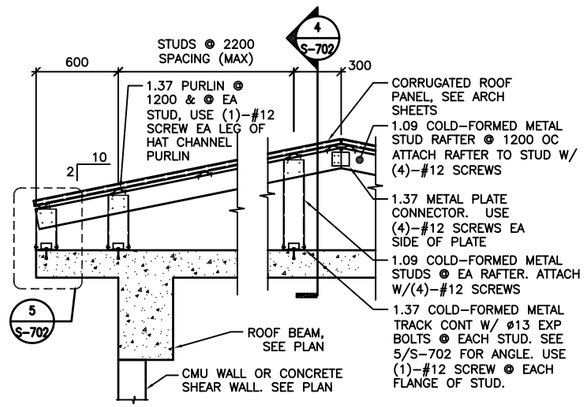

DETAIL NOTES:
1. ALL GABLE END VERTICAL STUDS SHALL BE ORIENTED 90° TO INTERIOR STUDS & SPACED @ 600 OC. GABLE END RAFTER SHALL BE 1.37 METAL TRACK SPANNING CONTINUOUSLY OVER GABLE END STUDS. INSET GIRTS AT GABLE END SHALL BE 1.09 COLD-FORMED METAL STUDS @ 1200 OC ATTACHED VIA 1.37 THICKNESS CLIP ANGLE W/ (2) #12 SCREWS EA LEG.
2. ALL INTERIOR, NON-GABLE END VERTICAL STUDS GREATER THAN 2400 IN LENGTH SHALL BE BACK-TO-BACK W/ #12 SCREWS @ 200 OC STAGGERED.

2/S-702 TYPICAL OVERBUILT ROOF FRAMING DETAIL
SCALE: NTS

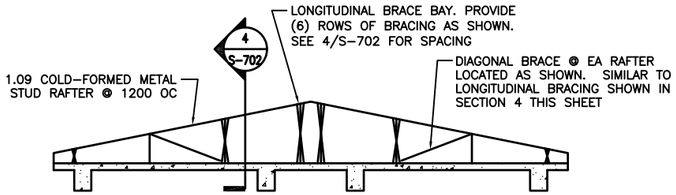

3/S-702 TYPICAL ROOF BRACE LAYOUT
SCALE: NTS

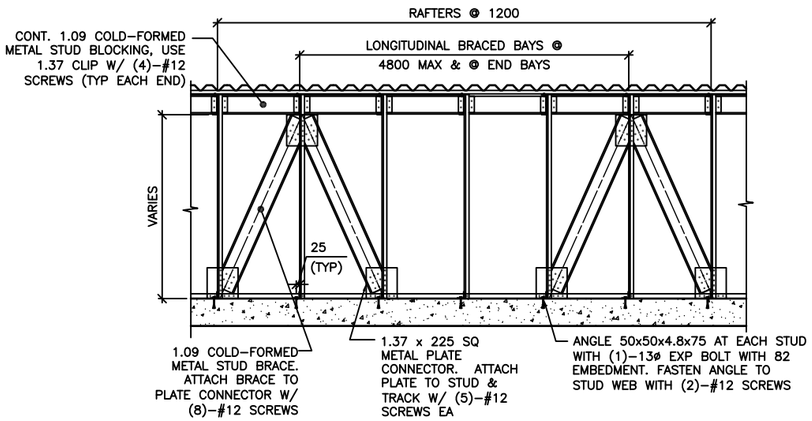

4/S-702 SECTION
SCALE: NTS

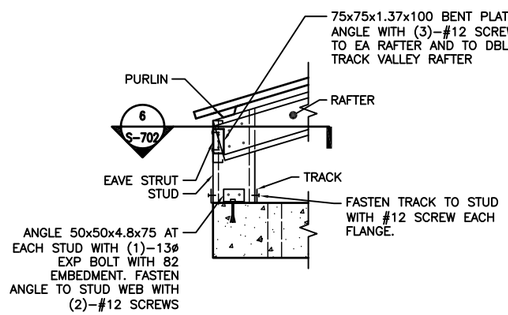

5/S-702 DETAIL
SCALE: NTS

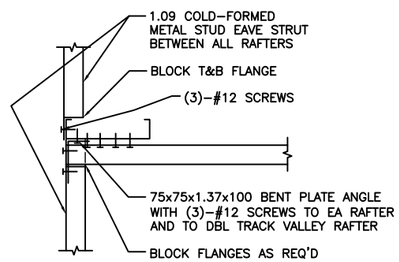

6/S-702 SECTION
SCALE: NTS

UNLESS OTHERWISE NOTED, LINEAR DIMENSIONS SHOWN ARE IN MILLIMETERS (mm)

APPROVED:

A/E DESIGNER OF RECORD

SEAL:

US ARMY CORPS OF ENGINEERS
AFGHANISTAN ENGINEER DISTRICT

Mark	Description	Date	Appr.

Date: 2/23/10 | Rev: 0
Design file no.:
Drawing code:
File name: AANSTDRS-702
Plot date: 6/3/2010
Plot scale: 6/4

Designed by: KMF / MMY
Drawn by: RCC
Checked by: CWW
Reviewed by: LHM
Submitted by: BAKER

U.S. ARMY CORPS OF ENGINEERS
AFGHANISTAN ENGINEER DISTRICT
APO AE 96338

Michael Baker Jr., Inc.
A unit of Michael Baker Corporation
Airside Business Park
100 Airport Drive
Moon Township, PA 15108
www.mbakercorp.com

STANDARD DESIGN
VARIOUS PROJECTS
VARIOUS LOCATIONS; AFGHANISTAN

RMTC STORAGE

TYPICAL DETAILS

Sheet reference number:
S-702

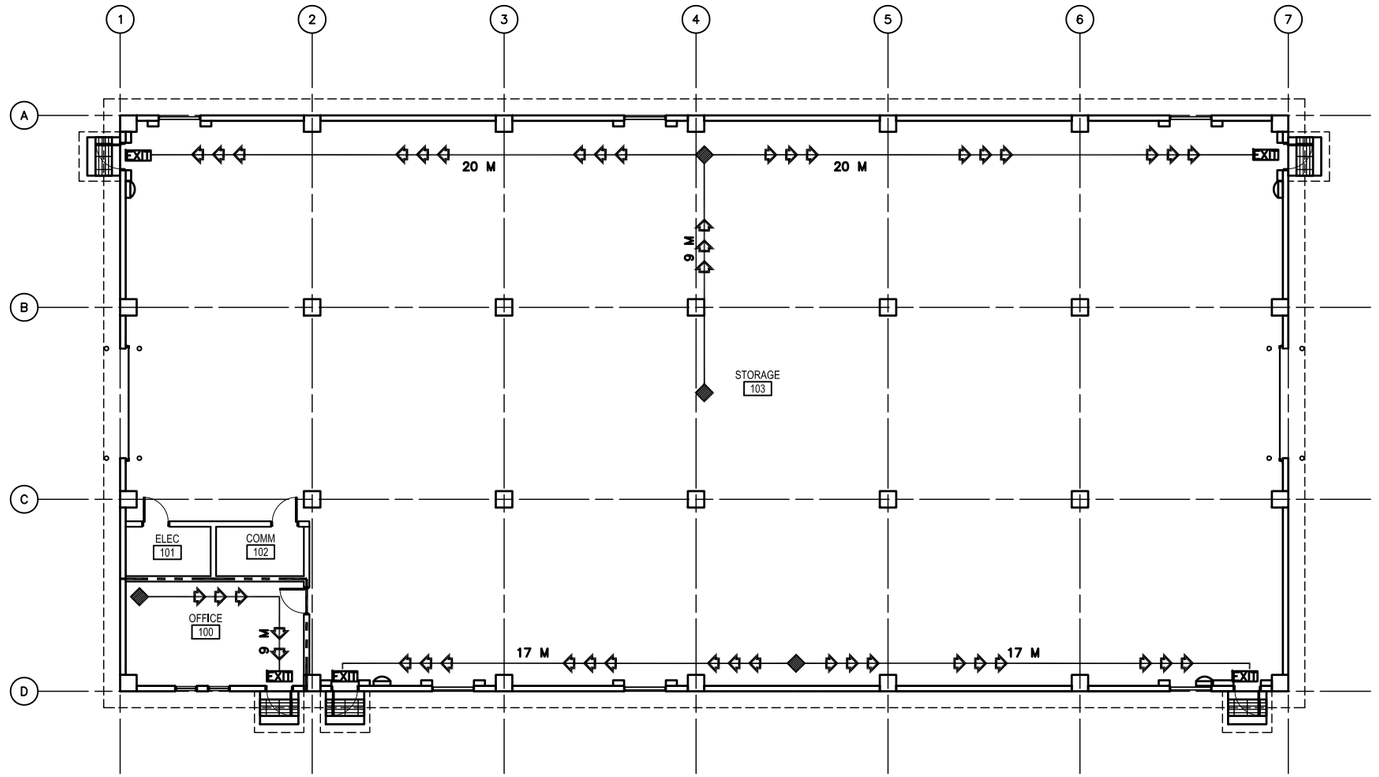

1 A-001 LIFE SAFETY PLAN
SCALE: 1:100

CODE ANALYSIS:

1. REFERENCES:
   2006 INTERNATIONAL BUILDING CODE (2006 IBC)
   2006 LIFE SAFETY CODE (2006 NFPA 101)

2. IBC OCCUPANCY CLASSIFICATION:
   GROUP S-1
   (STORAGE, ORDINARY HAZARD NFPA 101 6.1.13.1 & 6.2.2 AND CHAPTER 42)

3. TYPE OF CONSTRUCTION (IBC): TYPE II-B (UNPROTECTED/NONSPRINKLERED)

4. IBC TABLE 503: ALLOWABLE HEIGHT AND BUILDING AREAS:
   GROUP S-1
   ALLOWABLE AREA: 1625 SM
   ALLOWABLE HEIGHT: 2 STORIES (16 M)

   GROUP S-1
   PROPOSED AREA: 895 SM
   PROPOSED HEIGHT: 1 STORY (<16 M)

5. IBC TABLE 601 & 602: FIRE RESISTANCE RATING REQUIREMENTS FOR BUILDING ELEMENTS FOR TYPE II-B

BUILDING ELEMENT	RATING (HOUR)	REFERENCE
STRUCTURAL FRAME (COLUMNS, GIRDERS & TRUSSES)	0	TABLE 601
BEARING WALLS		
EXTERIOR	0	TABLE 601
INTERIOR	0	TABLE 601
NONBEARING WALLS & PARTITIONS		
INTERIOR	0	TABLE 601
FLOOR CONSTRUCTION	0	TABLE 601
ROOF CONSTRUCTION	0	TABLE 601
EXTERIOR WALL	0	TABLE 602

6. IBC TABLE 803.5 – INTERIOR WALL AND CEILING FINISH REQUIREMENTS FOR S-1 OCCUPANCY/NONSPRINKLERED

GROUP	EXIT ENCLOSURES AND EXIT PASSAGEWAY	CORRIDORS	ROOMS AND ENCLOSED SPACES
S	A	A	B

7. NFPA 101 TABLE 7.3.1.2 – OCCUPANT LOAD
   STORAGE = N/A
   NFPA 101 42.1.7: USE THE PROBABLE POPULATION: 5

8. NFPA 101 TABLE 7.3.3.1 – EGRESS CAPACITY
   STORAGE = 5 MM PER OCCUPANT

   REQUIRED: 25 MM (5 OCCUPANTS x 5 MM PER OCCUPANT)
   PROPOSED EGRESS CAPACITY: 4500 MM: (5) 900 MM DOORS

9. NFPA 101 PARAGRAPH 42.2.6 AND TABLE 42.2.6 – EXIT ACCESS TRAVEL DISTANCE
   REQUIRED: 61 METERS
   PROPOSED: 20 METERS

10. NFPA 101 PARAGRAPH 42.3.6 – CORRIDORS
    CORRIDORS ARE NOT REQUIRED AS DOORS EXIT DIRECTLY TO OUTSIDE

11. NFPA 101 PARAGRAPH 42.2.4.1 AND 7.4.1.1 – MINIMUM NUMBER OF EXITS
    REQUIRED: 1 MINIMUM
    PROPOSED: 4 EXIT

12. NFPA 101, TABLE 6.1.14.4.1 – REQUIRED SEPARATION OF OCCUPANCIES
    BUSINESS TO ORDINARY HAZARD STORAGE
    REQUIRED: 2 HOUR
    PROVIDED: 2 HOUR

13. NFPA 101, TABLE 8.3.4.2 –OPENING PROTECTIVE
    REQUIRED: 90 MINUTE DOOR IN 2 HOUR FIRE BARRIER
    PROVIDED: 90 MINUTE DOOR IN 2 HOUR FIRE BARRIER

LEGEND:

- DENOTES PATHS OF EXIT TRAVEL
- EXIT — DENOTES DOOR AS AN EMERGENCY EXIT
- DENOTES STARTING POINT FOR TRAVEL DISTANCE
- DENOTES FIRE EXTINGUISHER LOCATIONS
- (1) HOUR RATED WALL
- (2) HOUR RATED WALL
- (3) HOUR RATED WALL

LINEAR DIMENSIONS SHOWN ARE IN MILLIMETERS (MM), UNLESS OTHERWISE NOTED

0 2000 4000
SCALE: 1:100

APPROVED:

A/E DESIGNER OF RECORD

SEAL:

US ARMY CORPS OF ENGINEERS
AFGHANISTAN ENGINEER DISTRICT

Mark	Description	Date	Appr.

Designed by: KRC
Dwn by: EBB
Ckd by: NLJ
Reviewed by: LHM
Submitted by: BAKER
Date: 2/23/10
Rev: 0
Design file no.
Drawing code:
File name: ANASTORA-001
Plot date: 6/3/2010
Plot scale: X:X

U.S. ARMY CORPS OF ENGINEERS
AFGHANISTAN ENGINEER DISTRICT
APO AE 96338

Michael Baker Jr., Inc.
A unit of Michael Baker Corporation
Airside Business Park
100 Airside Drive
Moon Township PA 15108
www.mbakercorp.com

STANDARD DESIGN
VARIOUS PROJECTS
VARIOUS LOCATIONS, AFGHANISTAN

RMTC STORAGE

LIFE SAFETY PLAN

Sheet reference number:
A-001

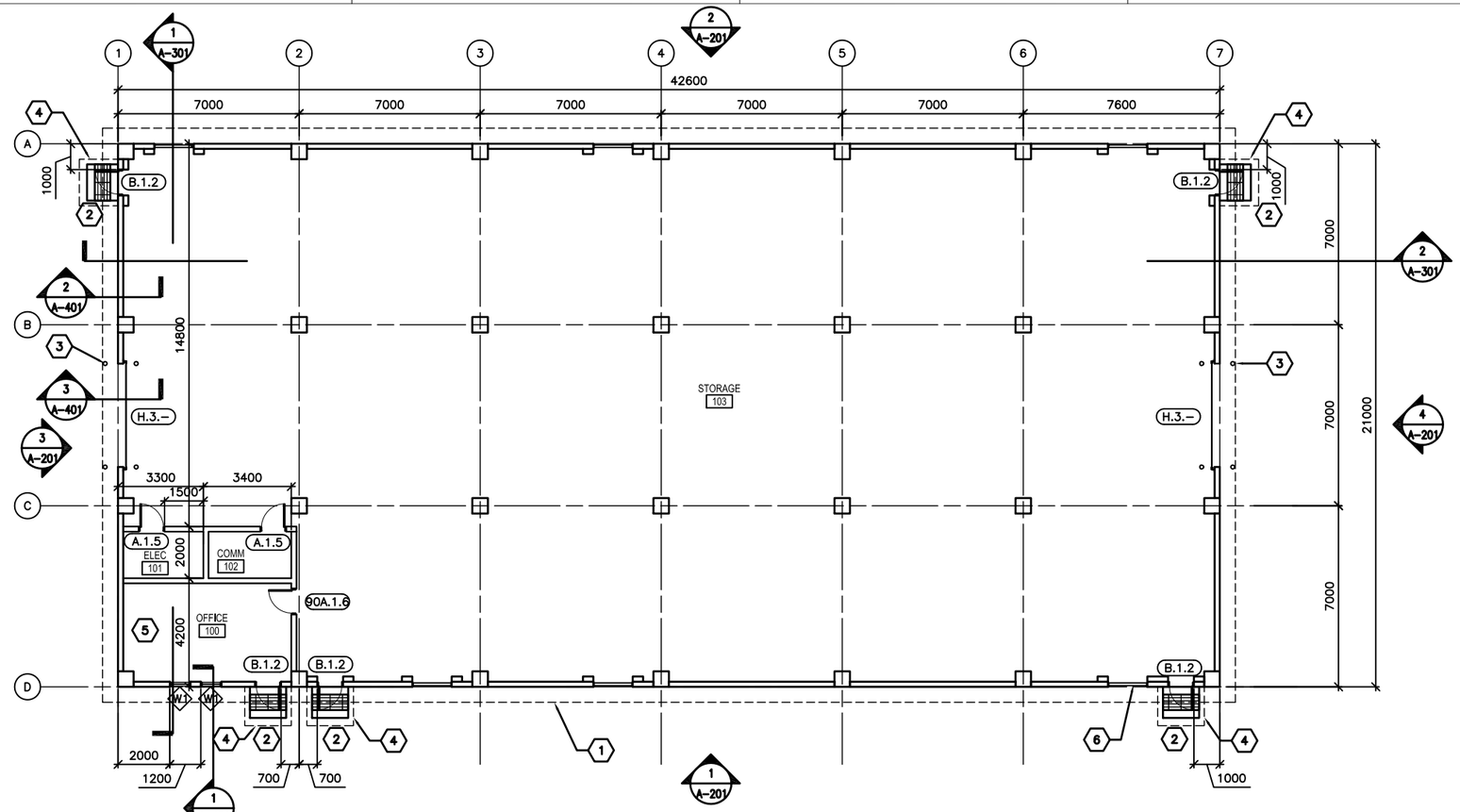

1 A–101 FLOOR PLAN

SCALE: 1:100

GENERAL NOTES:

A. DIMENSIONS ARE SHOWN TO OUTER EDGE OF EXTERIOR STRUCTURAL COLUMNS, STRUCTURAL COLUMN GRID, EDGE OF INTERIOR PARTITIONS, EDGE OF WINDOW OPENINGS, AND TO HINGE SIDE OF DOOR FRAME OPENINGS.

B. HINGE SIDE OF OPENINGS FOR DOORS AND FRAMES SHALL BE LOCATED 200 MM FROM THE ADJACENT WALL OR COLUMN, UNLESS NOTED OTHERWISE.

C. INTERIOR PARTITIONS SHALL BE 200 MM CMU. SEE STRUCTURAL DRAWINGS FOR LOCATION OF CONCRETE SHEAR WALLS.

D. COSMETIC REPAIR OF MINOR DEFECTS: REPAIR OR FILL MORTAR JOINTS AND MINOR DEFECTS, INCLUDING BUT NOT LIMITED TO SPALLS, IN ACCORDANCE WITH MANUFACTURER'S RECOMMENDATIONS AND PRIOR TO COATING APPLICATION. SURFACES TO BE PAINTED SHALL BE CLEAN AND FREE OF FOREIGN MATTER BEFORE APPLICATION OF PAINT. CLEANING SHALL BE SCHEDULED SO THAT DUST AND OTHER CONTAMINANTS WILL NOT FALL ON NEWLY PAINTED SURFACES.

E. CONCRETE, PLASTER AND MASONRY SURFACES SHALL BE ALLOWED TO CURE FOR AT LEAST 30 DAYS BEFORE PAINTING. CONCRETE SLABS–ON–GRADE SHALL BE ALLOWED TO CURE 90 DAYS BEFORE STAINING OR SEALING.

F. DO NOT USE PAINT MATERIALS CONTAINING LEAD CONTENT IN EXCESS OF 0.009 PERCENT OF THE WEIGHT OF THE TOTAL NONVOLATILE CONTENT OF THE PAINT OR THE WEIGHT OF THE DRIED PAINT FILM.

G. DO NOT USE ANY ASBESTOS CONTAINING MATERIALS (ACM) IN PROJECT. ACM IS DEFINED AS 1% OR MORE BY VOLUME.

H. DO NOT USE PAINT MATERIALS CONTAINING MERCURIAL FUNGICIDES.

I. FACTORY PRIMED METAL DOORS AND FRAMES SHALL RECEIVE TWO COATS OF PAINT.

J. FILL REMAINING SPACE AT PENETRATIONS IN FIRE–RATED FLOORS, PARTITIONS AND CEILINGS WITH APPROPRIATE FIRESTOPPING MATERIALS.

K. ALL CEILING FINISHES SHALL BE PAINTED STRUCTURE, UNLESS OTHERWISE NOTED.

L. ALL WALL FINISHES SHALL BE PAINTED STRUCTURE, UNLESS OTHERWISE NOTED.

M. ALL FLOOR FINISHES SHALL BE EPOXY SEALED CONCRETE.

KEY NOTES: (X)

1. LINE OF ROOF OVERHANG ABOVE.
2. CONCRETE STOOP WITH GRATE – SEE DETAIL 1/A–503.
3. BOLLARD – SEE STRUCTURAL DRAWINGS FOR TYPICAL DETAIL
4. CANOPY – SEE DETAIL 2/A–504.
5. OFFICE WALLS & CEILING TO BE PAINTED PLASTER.
6. LOUVER – SEE SHEET M–101.

LEGEND:

(XXX) DOOR FRAME AND HARDWARE TYPE, SEE SHEET A–601

(A) WINDOW TYPE, SEE SHEET A–601

(X) KEY NOTE

ABBREVIATIONS:

COMM	COMMUNICATIONS	JAN	JANITOR
ELEC	ELECTRICAL	CLOS	CLOSET
MECH	MECHANICAL		

LINEAR DIMENSIONS SHOWN ARE IN MILLIMETERS (MM), UNLESS OTHERWISE NOTED

0 2000 4000
SCALE: 1:100

APPROVED:

A/E DESIGNER OF RECORD

SEAL:

US ARMY CORPS OF ENGINEERS
AFGHANISTAN ENGINEER DISTRICT

Mark	Description	Date	Appr.

Rev: 0
Date: 2/23/10
Design file no.
Drawing code:
File name: AA36T08X-101
Plot date: 6/3/2010
Plot scale: 6/4

Designed by: KRC
Drawn by: EBB
Cad by: NLJ
Reviewed by: LHM
Submitted by: BAKER

U.S. ARMY CORPS OF ENGINEERS
AFGHANISTAN ENGINEER DISTRICT
APO AE 96338

Michael Baker Jr, Inc
A unit of Michael Baker Corporation
Airside Business Park
100 Airport Drive
Moon Township, PA 15108
www.mbakercorp.com

STANDARD DESIGN
VARIOUS PROJECTS
VARIOUS LOCATIONS, AFGHANISTAN

RMTC STORAGE

FLOOR PLAN

Sheet reference number:
A–101

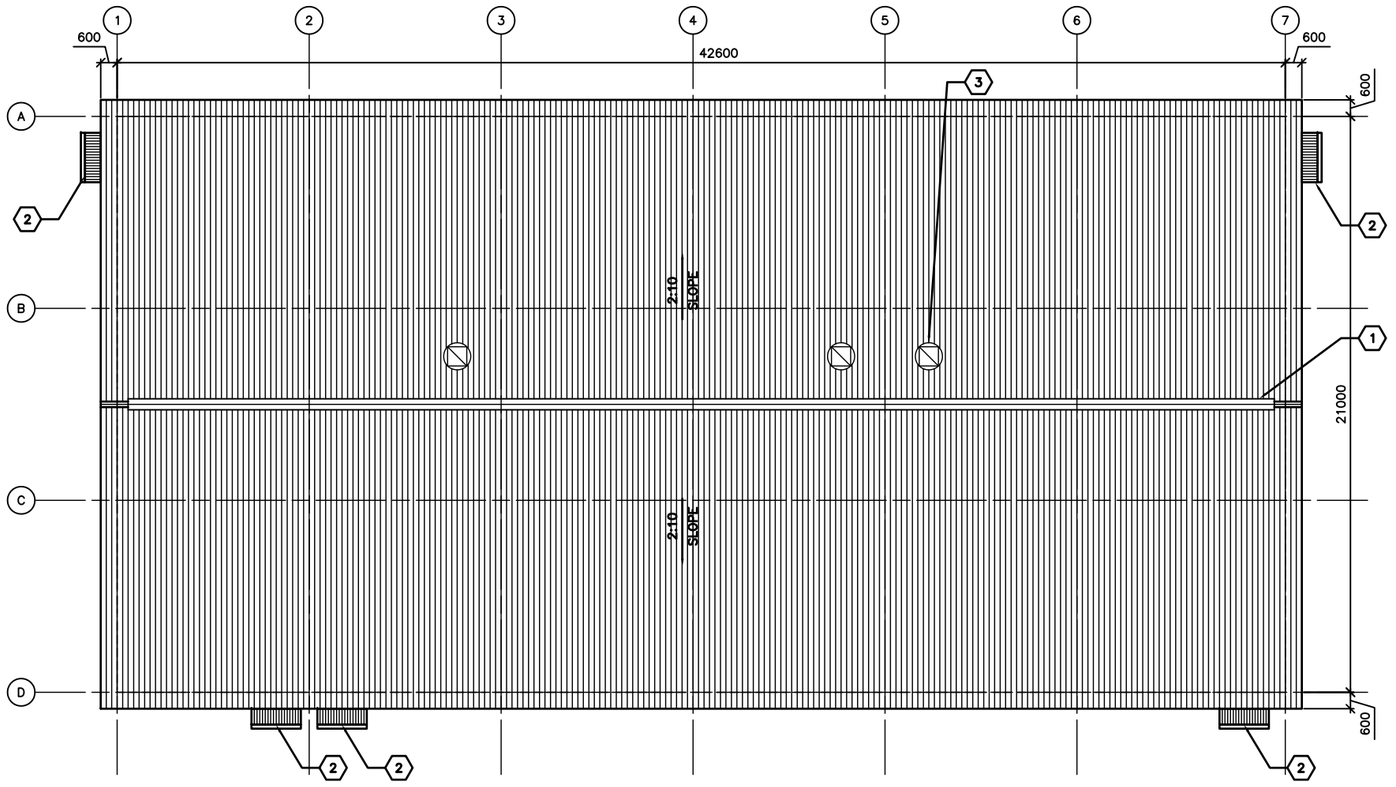

1 A-102 ROOF PLAN
SCALE: 1:100

GENERAL NOTES:

A. THE APPROXIMATE LOCATION OF ROOF DEVICES AND PENETRATIONS ARE SHOWN ON THE ROOF PLAN FOR INFORMATION ONLY. THE CONTRACTOR SHALL BE RESPONSIBLE FOR UNDERSTANDING THE ACTUAL LOCATION OF THESE AND ALL OTHER ITEMS PRIOR TO BEGINNING CONSTRUCTION. COORDINATE ALL ROOF PENETRATIONS WITH STRUCTURAL, MECHANICAL AND PLUMBING WORK.

B. UNLESS OTHERWISE NOTED, NOTES, DETAILS OR FEATURES INDICATED FOR ONE CONDITION SHALL BE APPLICABLE FOR ALL ALIKE AND SIMILAR CONDITIONS.

C. STOCKPILING OF MATERIALS, EQUIPMENT AND ANY OTHER ITEMS ON THE ROOF IS PROHIBITED.

D. ROOFS SHALL BE CORRUGATED METAL ROOF PANELS ON COLD-FORMED METAL FRAMING ON CONCRETE SLAB.

KEY NOTES: (X)

1. CONTINUOUS METAL RIDGE VENT SEE DETAIL 4/A-501.
2. CANOPY – SEE DETAIL 2/A-504.
3. EXHAUST FAN – SEE SHEET M-101.

LINEAR DIMENSIONS SHOWN ARE IN MILLIMETERS (MM), UNLESS OTHERWISE NOTED

0 2000 4000
SCALE: 1:100

APPROVED:

A/E DESIGNER OF RECORD

SEAL:

US ARMY CORPS OF ENGINEERS
AFGHANISTAN ENGINEER DISTRICT

Mark	Description	Date	Appr.	Mark	Description	Date	Appr.

Designed by: KRC
Dwn by: EBB
Ckd by: NLJ
Reviewed by: LHM
Submitted by: BAKER
Date: 2/23/10
Rev: 0
Design file no.
Drawing code:
File name: ANASTORA-102
Plot date: 6/3/2010
Plot scale: X:X

U.S. ARMY CORPS OF ENGINEERS
AFGHANISTAN ENGINEER DISTRICT
APO AE 96338

Michael Baker Jr., Inc
A unit of Michael Baker Corporation
Airside Business Park
100 Airside Drive
Moon Township PA 15108
www.mbakercorp.com

STANDARD DESIGN
VARIOUS PROJECTS
VARIOUS LOCATIONS, AFGHANISTAN

RMTC STORAGE

ROOF PLAN

Sheet reference number:
A-102

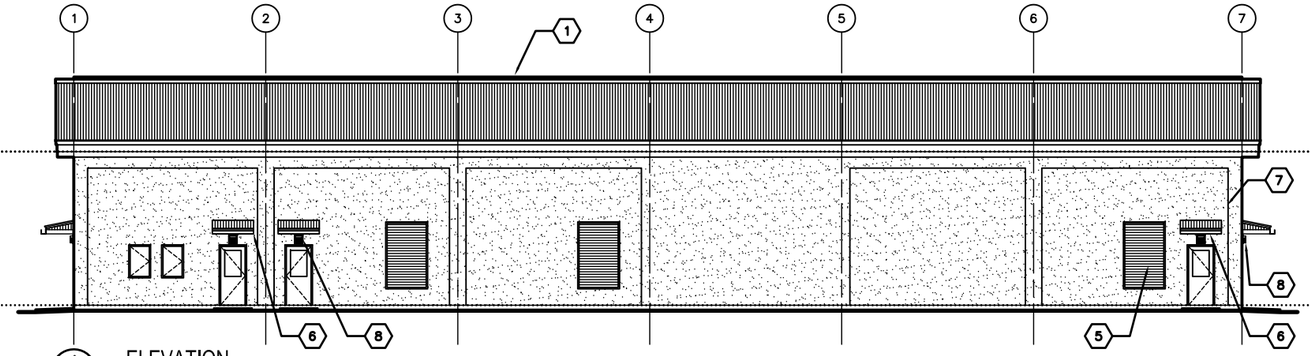

1 A-201 ELEVATION
SCALE: 1:100

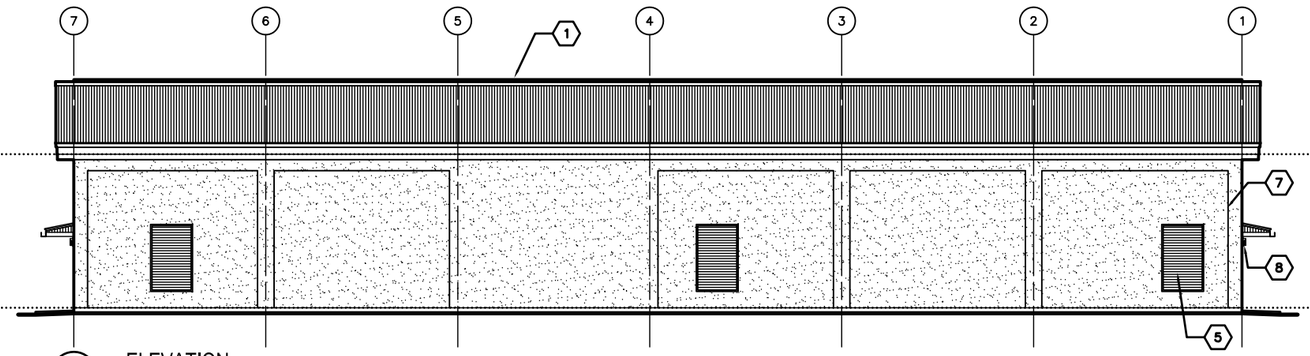

2 A-201 ELEVATION
SCALE: 1:100

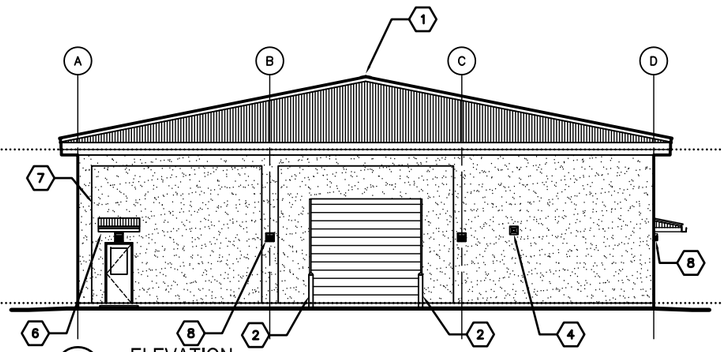

3 A-201 ELEVATION
SCALE: 1:100

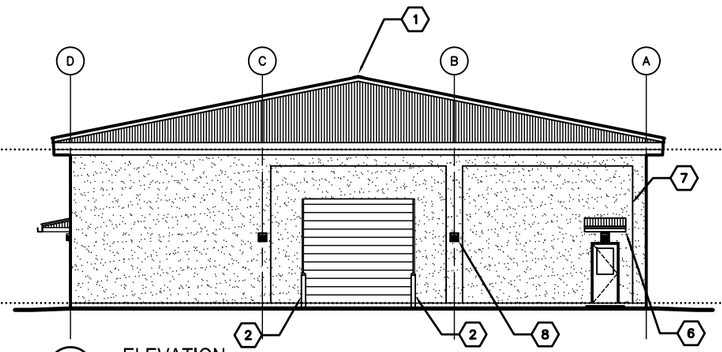

4 A-201 ELEVATION
SCALE: 1:100

GENERAL NOTES:

A. COORDINATE SIZE AND LOCATION OF OPENINGS FOR MECHANICAL ITEMS WITH MECHANICAL DRAWINGS.

B. PROVIDE STRUCTURAL LINTELS AS REQUIRED – SEE STRUCTURAL DRAWINGS

C. ALL EXTERIOR WALL FINISHES SHALL BE STUCCO OVER CMU AND CONCRETE SUBSTRATES. PROVIDE CONTROL JOINTS IN STUCCO WALL FINISH.

D. ROOF SHALL BE CORRUGATED METAL ROOF PANELS ON COLD–FORMED METAL FRAMING ON CONCRETE SLAB.

KEY NOTES: (X)

1. CONTINUOUS METAL RIDGE VENT – SEE DETAIL 4/A–501.
2. BOLLARD – SEE STRUCTURAL DRAWINGS FOR TYPICAL DETAIL
3. NOT USED.
4. EXHAUST FAN, LOCATE TOP OF WALL PENETRATION 2800 MM ABOVE FINISHED FLOOR – SEE MECHANICAL DRAWINGS.
5. LOUVER 600 AFF – SEE SHEET M–101.
6. CANOPY – SEE DETAIL 1/A–504.
7. STUCCO CONTROL JOINT – SEE DETAIL 2A/A–501.
8. EXTERIOR LIGHT FIXTURE – SEE EXTERIOR

LINEAR DIMENSIONS SHOWN ARE IN MILLIMETERS (MM), UNLESS OTHERWISE NOTED

0 2000 4000
SCALE: 1:100

APPROVED:

A/E DESIGNER OF RECORD

SEAL:

US ARMY CORPS OF ENGINEERS
AFGHANISTAN ENGINEER DISTRICT

Mark	Description	Date	Appr.	Mark	Description	Date	Appr.

Designed by: KRC
Dwn by: EBB
Ckd by: NLJ
Reviewed by: LHM
Submitted by: BAKER
Date: 2/23/10
Rev: 0
Design file no.
Drawing code:
File name: ANASTORA-201
Plot date: 6/3/2010
Plot scale: X:X

U.S. ARMY CORPS OF ENGINEERS
AFGHANISTAN ENGINEER DISTRICT
APO AE 96338

Michael Baker Jr., Inc
A unit of Michael Baker Corporation
Airside Business Park
100 Airside Drive
Moon Township PA 15108
www.mbakercorp.com

STANDARD DESIGN
VARIOUS PROJECTS
VARIOUS LOCATIONS, AFGHANISTAN

RMTC STORAGE

ELEVATIONS

Sheet reference number:
A–201

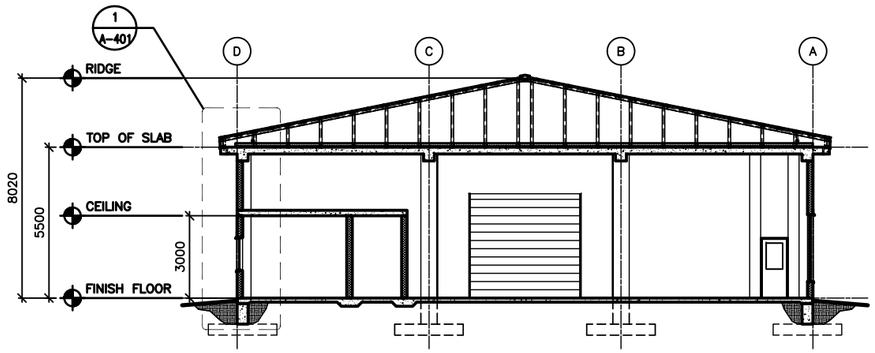

1 A-301 BUILDING SECTION
SCALE: 1:100

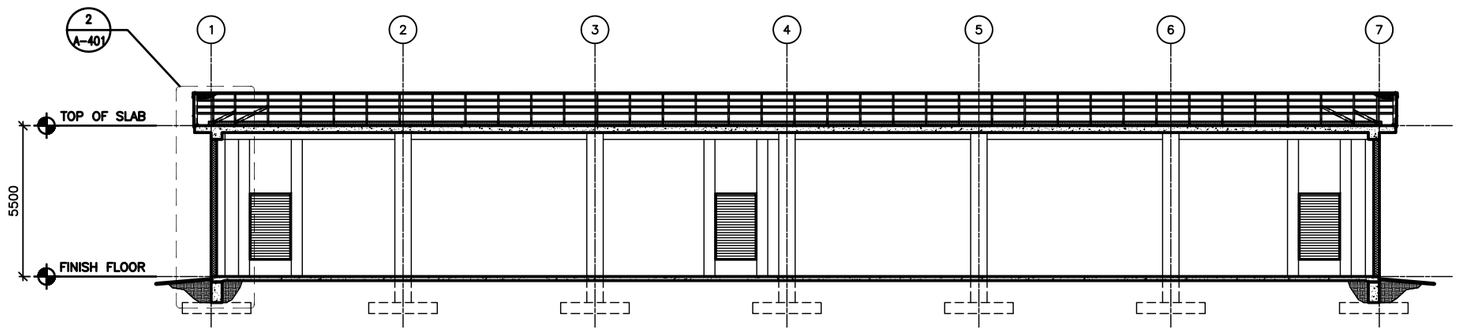

2 A-301 BUILDING SECTION
SCALE: 1:100

LINEAR DIMENSIONS SHOWN ARE IN MILLIMETERS (MM), UNLESS OTHERWISE NOTED

0 2000 4000
SCALE: 1:100

APPROVED:

A/E DESIGNER OF RECORD

SEAL:

US ARMY CORPS OF ENGINEERS
AFGHANISTAN ENGINEER DISTRICT

Mark	Description	Date	Appr.	Mark	Description	Date	Appr.

Designed by: KRC
Dwn by: EBB
Ckd by: NLJ
Reviewed by: LHM
Submitted by: BAKER
Date: 2/23/10
Rev: 0
Design file no.
Drawing code:
File name: ANASTORA-001
Plot date: 6/3/2010
Plot scale: X:X

U.S. ARMY CORPS OF ENGINEERS
AFGHANISTAN ENGINEER DISTRICT
APO AE 96338

Michael Baker Jr., Inc.
A unit of Michael Baker Corporation
Airside Business Park
100 Airside Drive
Moon Township PA 15108
www.mbakercorp.com

STANDARD DESIGN
VARIOUS PROJECTS
VARIOUS LOCATIONS, AFGHANISTAN

RMTC STORAGE

BUILDING SECTIONS

Sheet reference number:
A-301

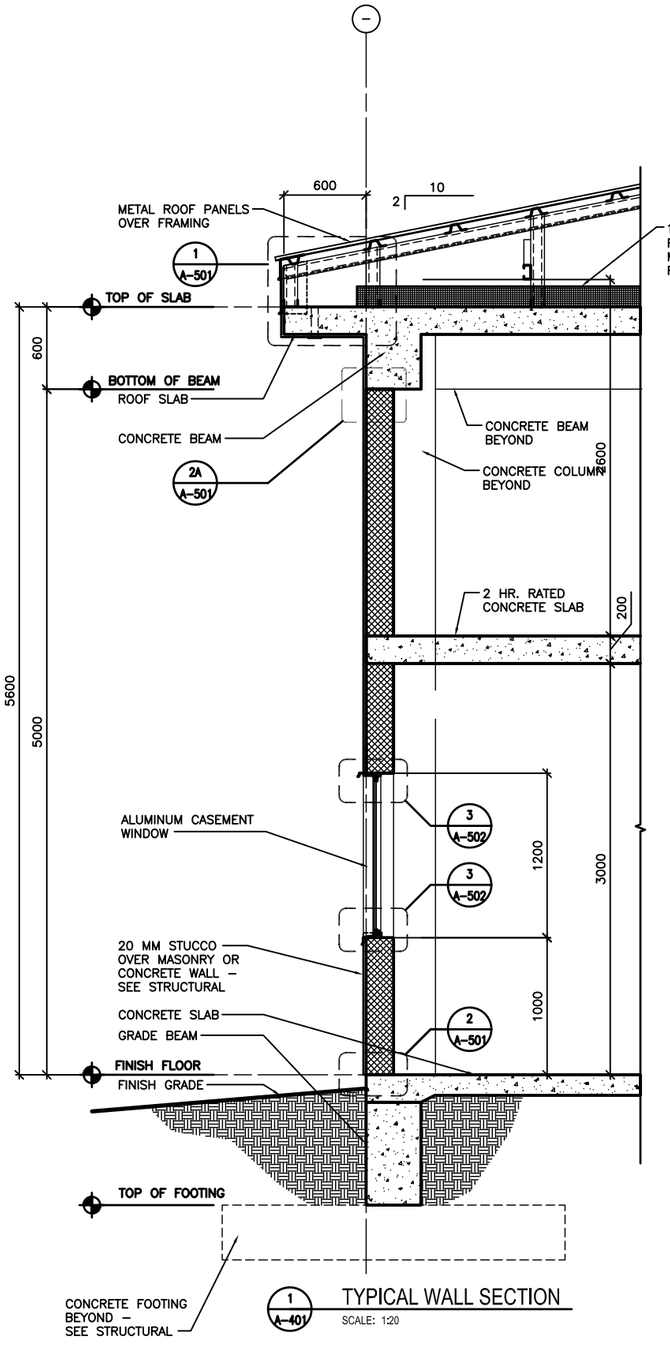

1 A-401 TYPICAL WALL SECTION
SCALE: 1:20

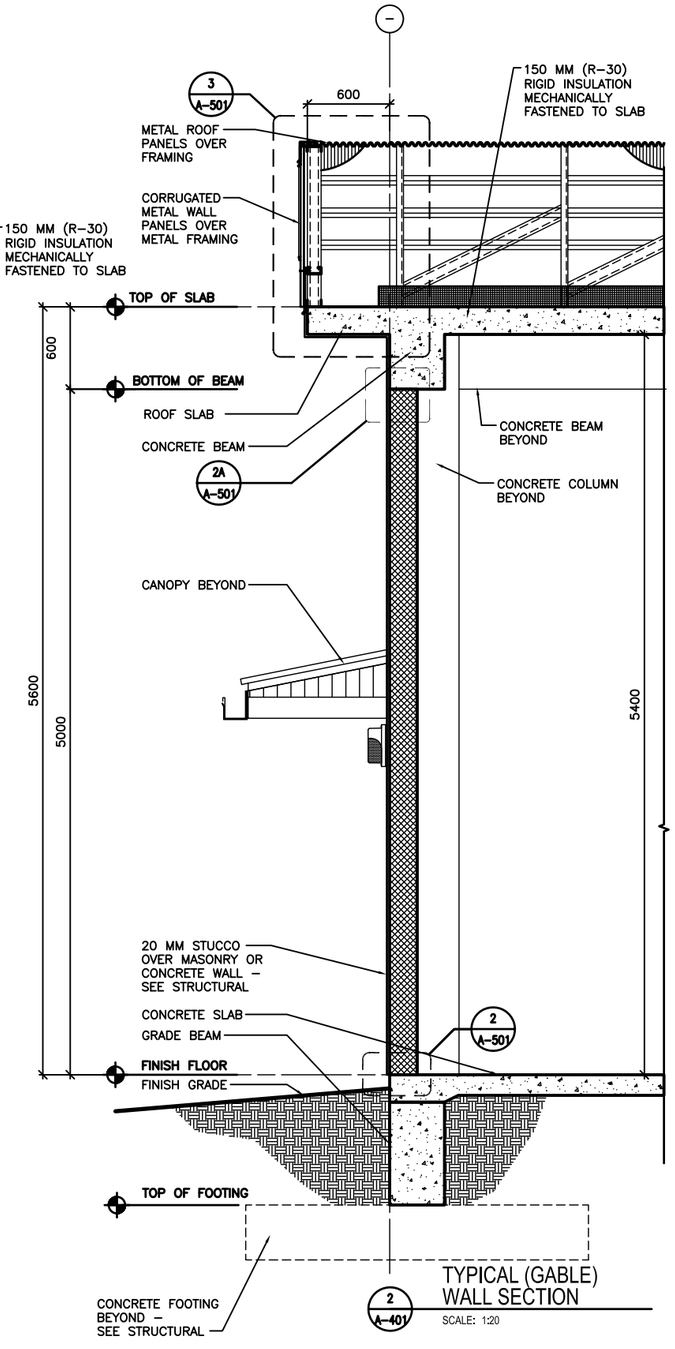

2 A-401 TYPICAL (GABLE) WALL SECTION
SCALE: 1:20

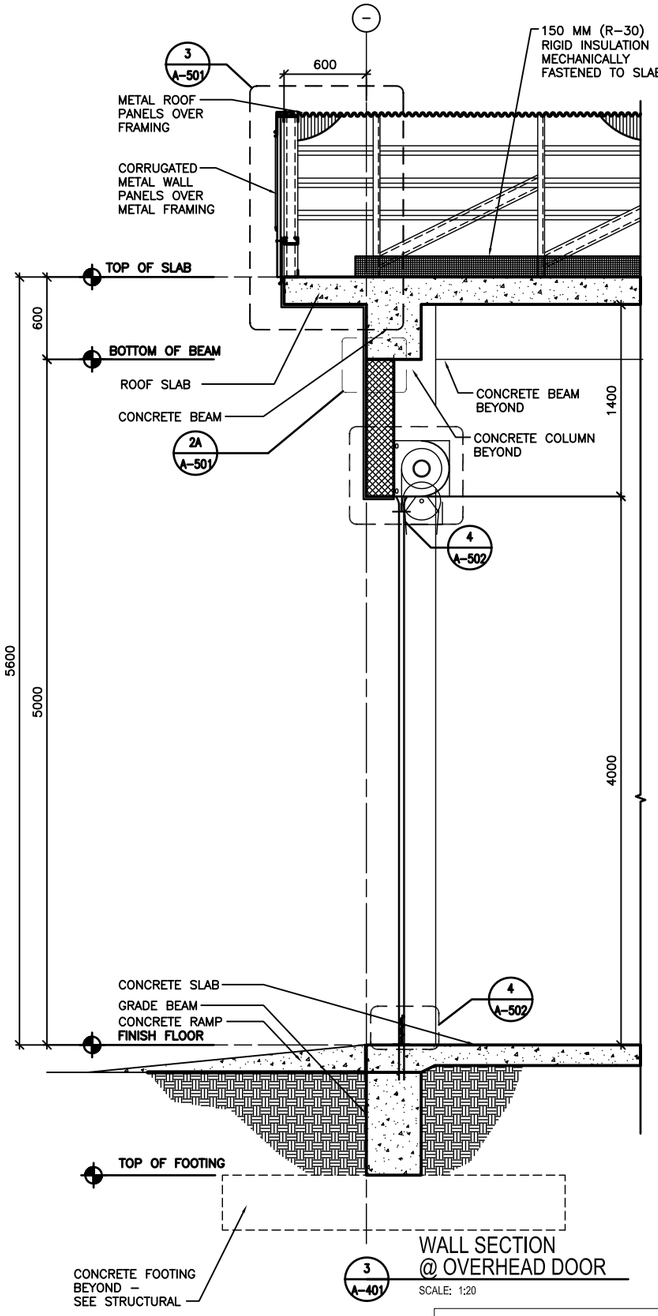

3 A-401 WALL SECTION @ OVERHEAD DOOR
SCALE: 1:20

LINEAR DIMENSIONS SHOWN ARE IN MILLIMETERS (MM), UNLESS OTHERWISE NOTED

0 400 800
SCALE: 1:20

APPROVED:

A/E DESIGNER OF RECORD

SEAL:

US ARMY CORPS OF ENGINEERS
AFGHANISTAN ENGINEER DISTRICT

Mark	Description	Date	Appr.	Mark	Description	Date	Appr.

Designed by: KRC
Dwn by: EBB
Ckd by: NLJ
Reviewed by: LHM
Submitted by: BAKER
Date: 2/23/10
Rev: 0
Design file no.
Drawing code:
File name: ANASTORA-401
Plot date: 6/3/2010
Plot scale: X:X

U.S. ARMY CORPS OF ENGINEERS
AFGHANISTAN ENGINEER DISTRICT
APO AE 96338

Michael Baker Jr., Inc
A unit of Michael Baker Corporation
Airside Business Park
100 Airside Drive
Moon Township PA 15108
www.mbakercorp.com

STANDARD DESIGN
VARIOUS PROJECTS
VARIOUS LOCATIONS, AFGHANISTAN

RMTC STORAGE

WALL SECTIONS

Sheet reference number:
A–401

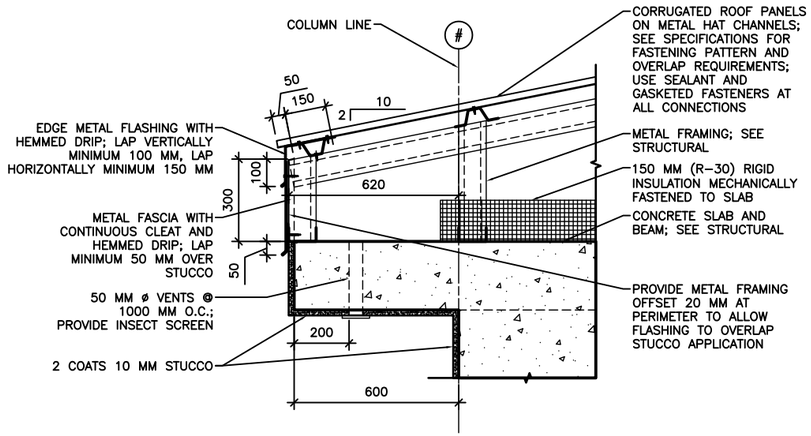

1 A-501 EAVE DETAIL
SCALE: 1:10

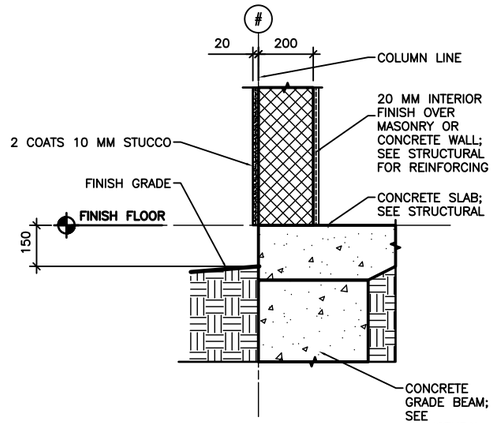

2 A-501 STUCCO BASE DETAIL
SCALE: 1:10

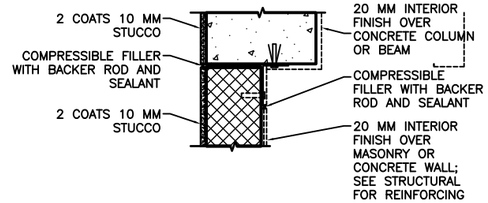

NOTE: DETAIL TYPICAL AT ALL WALL/COLUMN AND WALL/BEAM LOCATIONS, SEE ALTERNATE BRACING DETAIL BELOW 2B/A-501.

2A A-501 STUCCO JOINT DETAIL
SCALE: 1:10

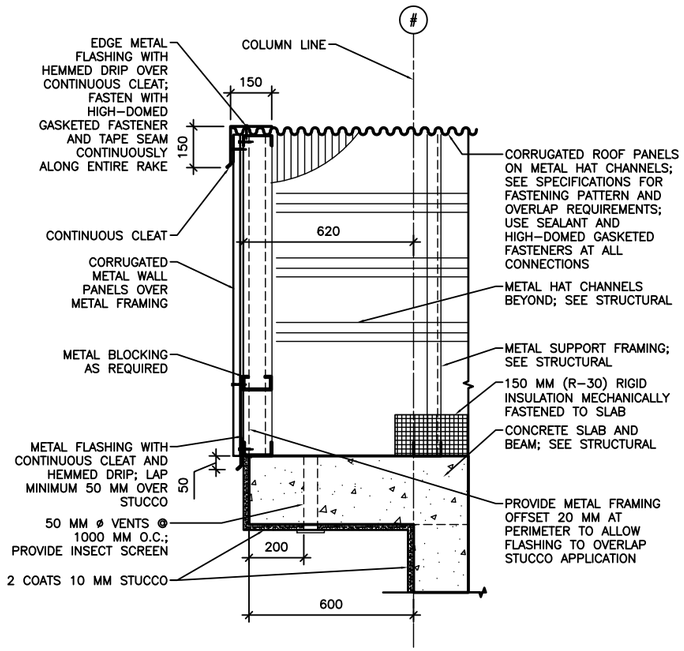

3 A-501 RAKE/EAVE DETAIL
SCALE: 1:10

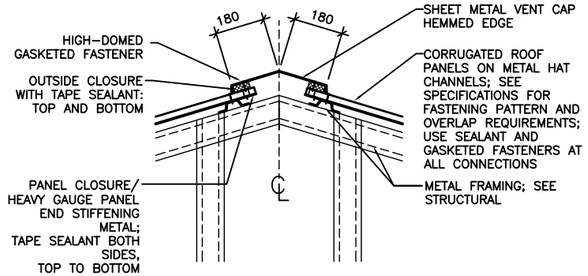

4 A-501 RIDGE VENT DETAIL
SCALE: 1:10

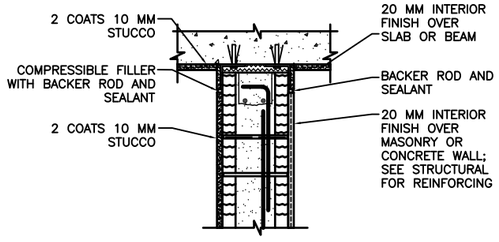

INTERIOR WALL/BEAM

2B A-501 ALTERNATE BRACING DETAIL
SCALE: 1:10

LINEAR DIMENSIONS SHOWN ARE IN MILLIMETERS (MM), UNLESS OTHERWISE NOTED

0 200 400
SCALE: 1:10

APPROVED:

A/E DESIGNER OF RECORD

SEAL:

US ARMY CORPS OF ENGINEERS
AFGHANISTAN ENGINEER DISTRICT

Mark	Description	Date	Appr.

Date: 2/23/10 Rev: 0
Designed by: KRC Cad by: EBR Design file no.
Reviewed by: LHM Drawing code:
Submitted by: BAKER File name: ANASTORA-001 Plot date: 6/3/2010 Plot scale: X:X

U.S. ARMY CORPS OF ENGINEERS
AFGHANISTAN ENGINEER DISTRICT
APO AE 96338

Michael Baker Jr., Inc
A unit of Michael Baker Corporation
Airside Business Park
100 Airport Dr.
Moon Township, PA 15108
www.mbakercorp.com

STANDARD DESIGN
VARIOUS PROJECTS
VARIOUS LOCATIONS, AFGHANISTAN

RMTC STORAGE

EXTERIOR DETAILS

Sheet reference number:
A-501

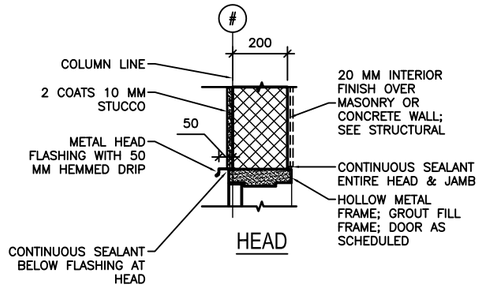

HEAD

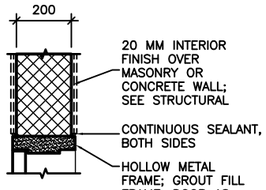

HEAD

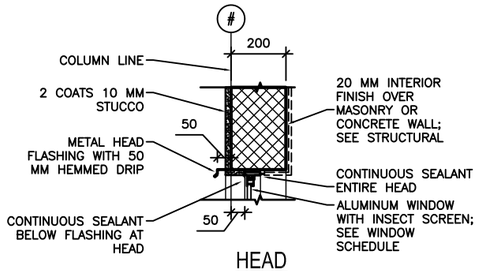

HEAD

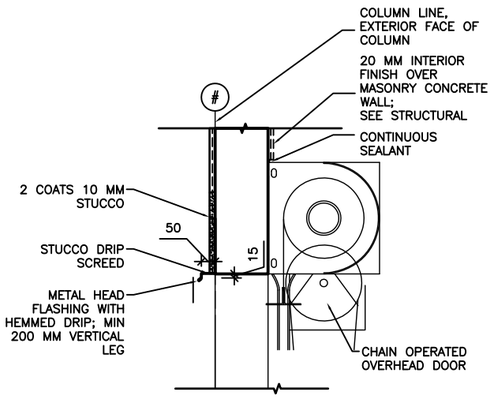

HEAD

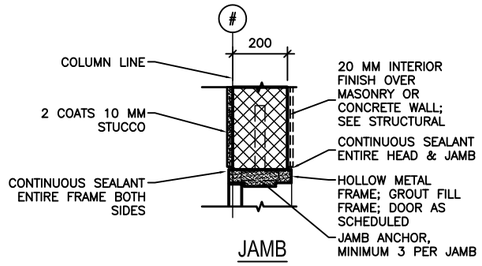

JAMB

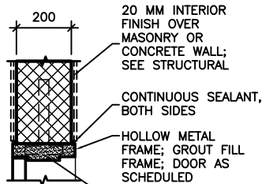

JAMB

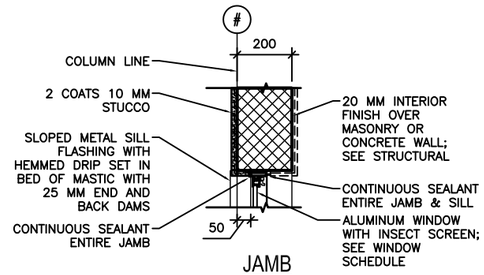

JAMB

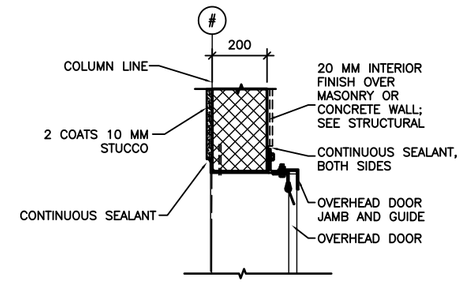

JAMB

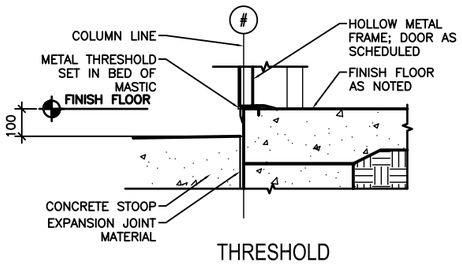

THRESHOLD

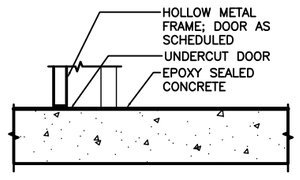

THRESHOLD

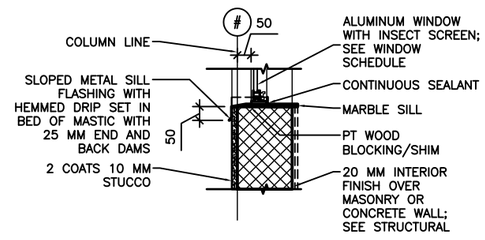

SILL

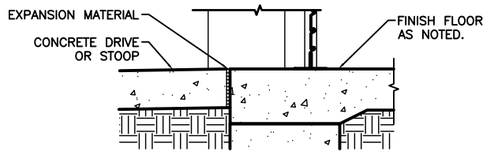

THRESHOLD

1 A-502 EXTERIOR DOOR DETAILS
SCALE: 1:10

2 A-502 INTERIOR DOOR DETAILS
SCALE: 1:10

3 A-502 EXTERIOR WINDOW DETAILS
SCALE: 1:10

4 A-502 OVERHEAD DOOR DETAILS
SCALE: 1:10

LINEAR DIMENSIONS SHOWN ARE IN MILLIMETERS (MM), UNLESS OTHERWISE NOTED

0 200 400
SCALE: 1:10

APPROVED:

A/E DESIGNER OF RECORD

SEAL:

US ARMY CORPS OF ENGINEERS
AFGHANISTAN ENGINEER DISTRICT

Mark	Description	Date	Appr.	Mark	Description	Date	Appr.

Designed by: KRC
Drawn by: EBB
Reviewed by: LHM
Submitted by: BAKER

Date: 2/23/10
Rev: 0
Ckd by: NLJ
Design file no.
Drawing code:
File name: AN4STOR4-502
Plot date: 6/3/2010
Plot scale: 1:1

U.S. ARMY CORPS OF ENGINEERS
AFGHANISTAN ENGINEER DISTRICT
APO AE 96338

Michael Baker Jr., Inc.
A unit of Michael Baker Corporation
Airside Business Park
100 Airport Drive
Moon Township, PA 15108
www.mbakercorp.com

STANDARD DESIGN
VARIOUS PROJECTS
VARIOUS LOCATIONS; AFGHANISTAN

RMTC STORAGE

HEAD, JAMB & SILL DETAILS

Sheet reference number:
A-502

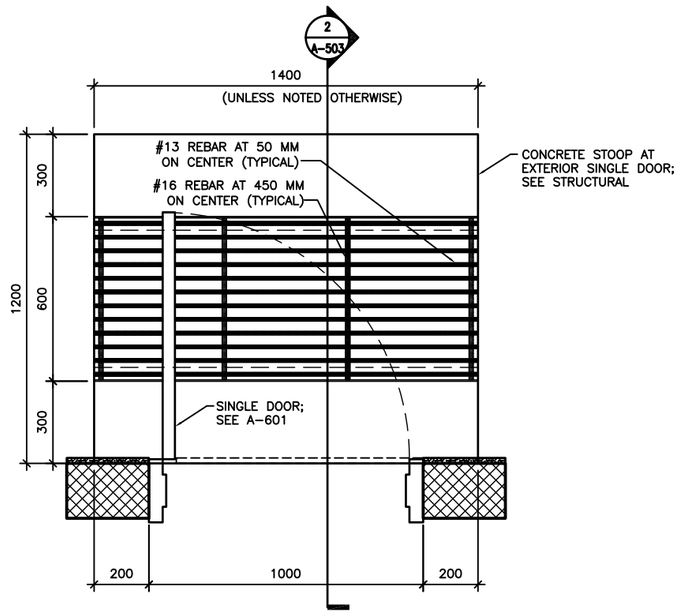

1 A-503 DOOR STOOP PLAN (WITH GRATE)

SCALE: 1:10

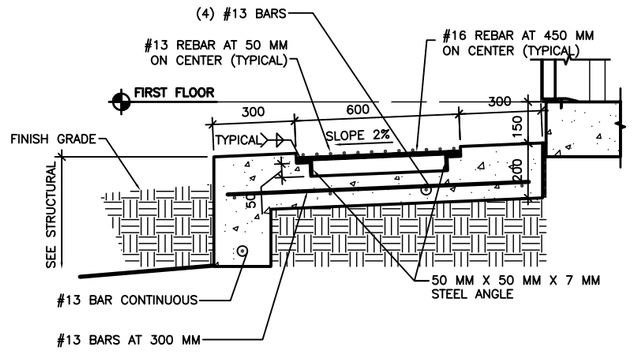

2 A-503 DOOR STOOP DETAIL

SCALE: 1:10

LINEAR DIMENSIONS SHOWN ARE IN MILLIMETERS (MM), UNLESS OTHERWISE NOTED

0 200 400

SCALE: 1:10

APPROVED:

A/E DESIGNER OF RECORD

SEAL:

US ARMY CORPS OF ENGINEERS
AFGHANISTAN ENGINEER DISTRICT

Mark	Description	Date	Appr.

Mark	Description	Date	Appr.

Date: 2/23/10 Rev: 0
Design file no.
Drawing code:
File name: AN-STDR-003
Plot date: 6/3/2010
Plot scale: 0.5

Designed by: KFC
Drawn by: EBB
Chd by: NLJ
Reviewed by: LHM
Submitted by:

U.S. ARMY CORPS OF ENGINEERS
AFGHANISTAN ENGINEER DISTRICT
APO AE 96338

Michael Baker Jr., Inc.
A unit of Michael Baker Corporation
Airside Business Park
100 Airport Drive
Moon Township, PA 15108
www.mbakercorp.com

BAKER

STANDARD DESIGN
VARIOUS PROJECTS
VARIOUS LOCATIONS, AFGHANISTAN

RMTC STORAGE

STOOP DETAILS

Sheet reference number:
A-503

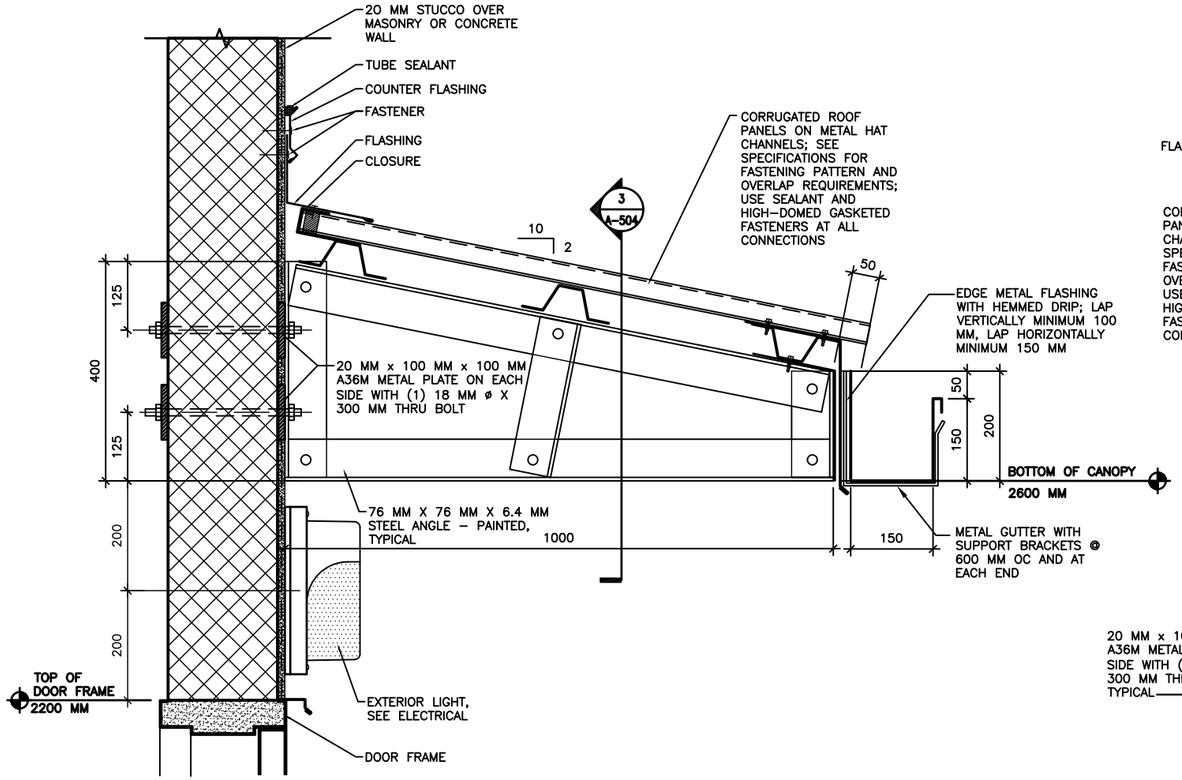

1 A-504 CANOPY CONNECTION DETAILS

SCALE: 1:5

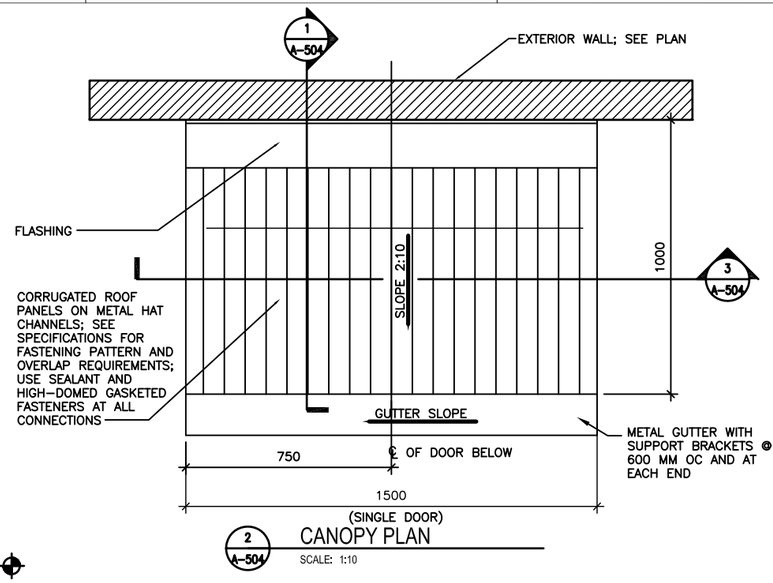

2 A-504 CANOPY PLAN

SCALE: 1:10

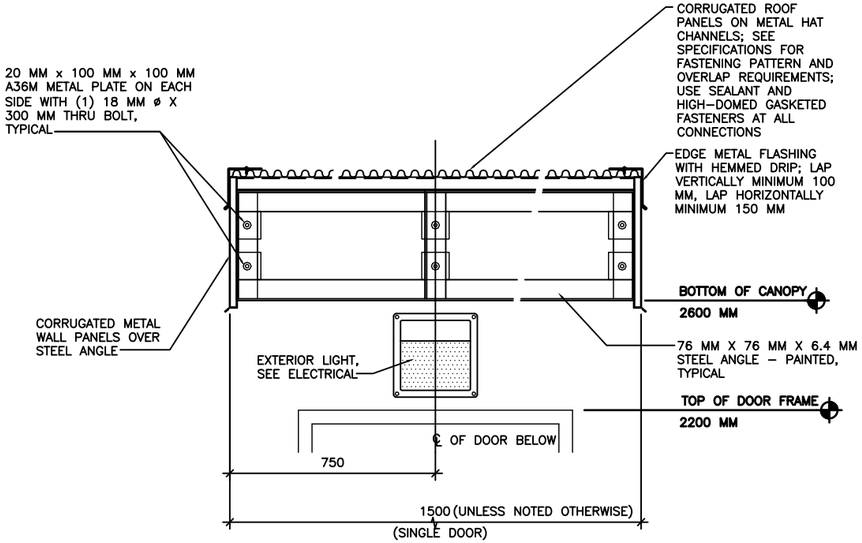

3 A-504 CANOPY CONNECTION DETAILS

SCALE: 1:10

SHEET NOTES:

1. SEE A–101 FOR FLOOR PLANS AND CANOPY LOCATIONS.

LINEAR DIMENSIONS SHOWN ARE IN MILLIMETERS (MM), UNLESS OTHERWISE NOTED

0 100 200

SCALE: 1:5

APPROVED:

A/E DESIGNER OF RECORD

SEAL:

US ARMY CORPS OF ENGINEERS
AFGHANISTAN ENGINEER DISTRICT

Mark	Description	Date	Appr.

Designed by: KRC
Drawn by: EB
Checked by:
Reviewed by: LHM
Submitted by: BAKER

Date: 2/23/10
Design file no.
Drawing code:
Plot date: 6/3/2010
Plot scale: 1:1

Rev: 0

U.S. ARMY CORPS OF ENGINEERS
AFGHANISTAN ENGINEER DISTRICT
APO AE 96338

Michael Baker Jr., Inc.
A unit of Michael Baker Corporation
Airside Business Park
100 Airport Drive
Moon Township, PA 15108
www.mbakercorp.com

STANDARD DESIGN
VARIOUS PROJECTS
VARIOUS LOCATIONS; AFGHANISTAN

RMTC STORAGE

CANOPY DETAILS

Sheet reference number:
A–504

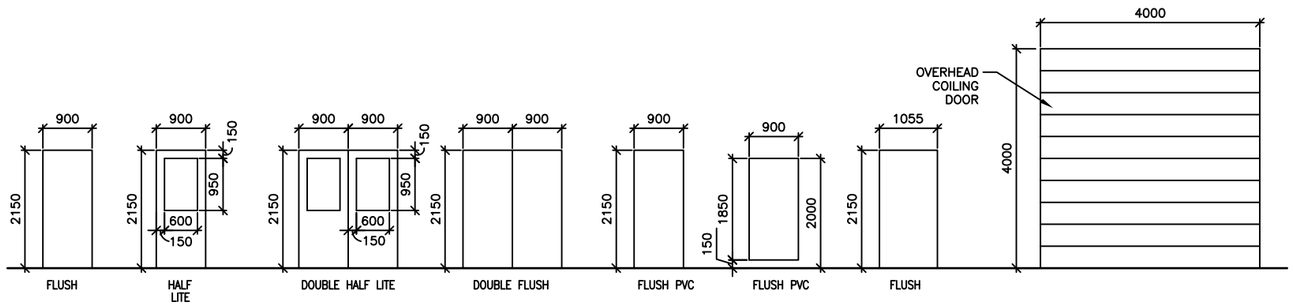

1 A-601 DOOR TYPES
SCALE: 1:50

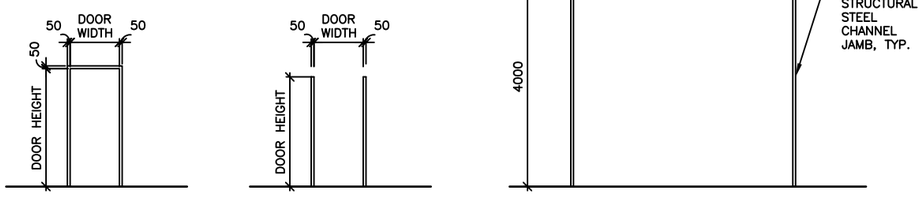

2 A-601 FRAME TYPES
SCALE: 1:50

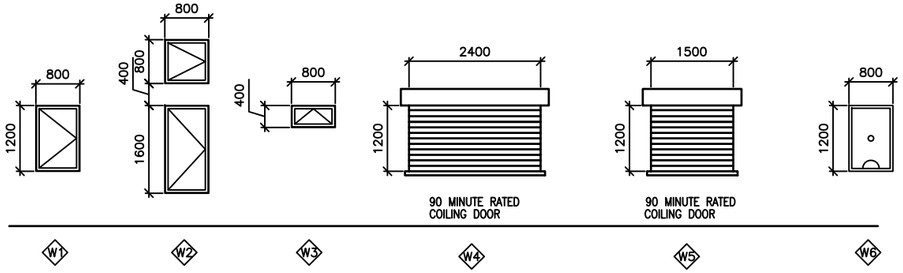

3 A-601 WINDOW TYPES
SCALE: 1:50

WINDOW TYPE NOTES:

1. ALL EXTERIOR WINDOWS SHALL BE ALUMINUM WITH INSECT SCREENS. WINDOWS SHALL BE COMMERCIAL GRADE.
2. ALL EXTERIOR WINDOWS SHALL BE OPERABLE.

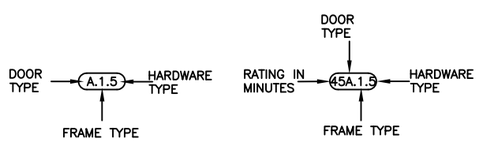

4 A-601 DOOR TAG
SCALE: NTS

5 A-601 RATED DOOR TAG
SCALE: NTS

DOOR TAG NOTES:

1. THE DOOR TAG INDICATES THE DOOR TYPE, FRAME TYPE AND HARDWARE SET FOR EACH DOOR.
2. THE DOOR TAG FOR RATED DOORS INCLUDES THE RATING OF THE DOOR IN MINUTES.

EXTERIOR DOOR HARDWARE TYPES:

HW-1 1-1/2 PR HINGES, A5112 114 X 114
1 EA RIM EXIT DEVICE, TYPE 1
1 EA CYLINDER. E09221A, GRADE 1
1 EA OVERHEAD CLOSER, C02061, LOW RESISTANCE
1 EA THRESHOLD, J32130
3 EA DOOR SILENCERS, L03011

HW-2 1-1/2 PR HINGES, A5112 114 X 114
1 EA LOCKSET, F13 ENTRY LOCK W/LEVER HANDLES, GRADE 1
1 EA OVERHEAD CLOSER, C02061, LOW RESISTANCE
1 EA THRESHOLD, J32130
3 EA DOOR SILENCERS, L03011

HW-3 3 PR HINGES, A5112 114 X 114
2 EA RIM EXIT DEVICE, TYPE 1
2 EA CYLINDER. GRADE 1
2 EA OVERHEAD CLOSER, C02061, LOW RESISTANCE
1 EA DOOR COORDINATOR, TYPE 21
1 EA ASTRAGAL
1 EA THRESHOLD, J32130
2 EA DOOR SILENCERS, L03011

HW-4 3 PR HINGES, A5112 114 X 114
1 EA LOCKSET W/LEVER HANDLES. GRADE 1, F13
1 EA OVERHEAD CLOSER, C02061, LOW RESISTANCE
2 EA MAGNETIC HOLDER PIN, ATTACHED TO DOOR LEAF
2 EA MAGNETIC HOLDER RECEIVER, ATTACHED TO STOOP
2 EA LEVER EXTENSION FLUSH BOLTS, L04081
1 EA ASTRAGAL
1 EA THRESHOLD, J32130
2 EA DOOR SILENCERS, L03011

DOOR AND HARDWARE NOTES:

1. INTERIOR AND EXTERIOR METAL DOORS AND FRAME COLORS SHALL MATCH ADJACENT WALL COLORS AS SELECTED BY THE CONTRACTING OFFICER.
2. FRAMES, EXCEPT FIRE-RATED FRAMES, SHALL BE MOUNTED AND ADJUSTED IN ACCORDANCE WITH MANUFACTURER'S INSTRUCTIONS. FRAMES SHALL BE FASTENED WITH MINIMUM OF THREE ANCHORS PER JAMB AT EQUAL INTERVALS.
3. DIMENSIONS SHOWN ON DOOR TYPES DETAIL ARE BASED UPON MODULAR MASONRY (OR ROUGH OPENING), HEIGHT OF 2200 MM FOR STANDARD PERSONNEL DOORS. CONTRACTOR SHALL COORDINATE WITH DOOR SUPPLIER TO ENSURE THAT DIMENSIONS OF DOORS AND FRAMES PROVIDED ARE COMPATIBLE WITH DOOR OPENING DIMENSIONS.
4. HARDWARE SHALL BE HEAVY DUTY, COMMERCIAL GRADE, STAINLESS STEEL WITH A SATIN OR BRUSHED FINISH.
5. HARDWARE TYPES INCLUDE BUILDERS HARDWARE MANUFACTURERS ASSOCIATION (BMHA) NUMBER.
6. DOORS IN 2 HOUR RATED PARTITIONS SHALL BE 1.5 HOUR (90 MINUTE) RATED DOORS IN ACCORDANCE WITH NFPA 101, TABLE 8.3.4.2.
7. DOORS AT STAIR ENCLOSURES SHALL BE 1 HOUR (60 MINUTE) RATED AT 1 HOUR WALL IN ACCORDANCE WITH NFPA 101, TABLE 8.3.4.2.
8. DOORS IN 1 HOUR RATED WALLS SHALL BE 3/4 HOUR (45 MINUTE) RATED DOORS IN ACCORDANCE WITH NFPA 101, TABLE 8.3.4.2.
9. DOORS IN 1 HOUR RATED CORRIDOR WALLS SHALL BE 1/3 HOUR (20 MINUTE) IN ACCORDANCE WITH NFPA 101, TABLE 8.3.4.2.
10. PROVIDE DOOR STOPS TO PROTECT WALLS ON LOCATIONS WHERE DOOR SWING WILL STRIKE WALL.

THIS SHEET IS STANDARD AND IS INCLUSIVE OF ALL THE DOOR/ WINDOW/ HARDWARE TYPES FOR THE ENTIRE RMTC CONTRACT. NOT ALL DOOR/ WINDOW/ HARDWARE TYPES ARE USED FOR ANY PARTICULAR BUILDING DESIGN. CONTRACTOR SHALL REFER TO THE FLOOR PLAN FOR THE TYPES BEING USED.

INTERIOR DOOR HARDWARE TYPES:

HW-5 1-1/2 PR HINGES, A8133 114 X 114
1 EA LOCKSET W/LEVER HANDLES, F08, GRADE 1
1 EA WALL STOP, L02101 OR L02161
3 EA DOOR SILENCERS, L03011

HW-6 1-1/2 PR HINGES, A8112 114 X 114
1 EA LOCKSET W/LEVER HANDLES, F08, GRADE 1
1 EA WALL STOP, L02101 OR L02161
1 EA OVERHEAD CLOSER, C02061, LOW RESISTANCE
3 EA DOOR SILENCERS, L03011

HW-7 1-1/2 PR HINGES, A8133
1 EA LOCKSET W/LEVER HANDLES, F13 GRADE 1
1 EA WALL STOP, L02101 OR L02161
2 EA MOP PLATE, J103
3 EA DOOR SILENCERS, L03011

HW-8 1-1/2 PR HINGES, A8112
1 EA LOCKSET W/LEVER HANDLES, F13 GRADE 1
1 EA WALL STOP, L02101 OR L02161
2 EA MOP PLATE, J103
1 EA OVERHEAD CLOSER, C02061, LOW RESISTANCE
3 EA DOOR SILENCERS, L03011

HW-9 1-1/2 PR HINGES, A5112 114 X 114
1 EA RIM EXIT DEVICE, TYPE 1
1 EA CYLINDER. E09221A, GRADE 1
1 EA OVERHEAD CLOSER, C02061, LOW RESISTANCE
3 EA DOOR SILENCERS, L03011

HW-10 3 PR HINGES, A5112 114 X 114
1 EA LOCKSET W/LEVER HANDLES. GRADE 1, F13
2 EA LEVER EXTENSION FLUSH BOLTS, L04081
1 EA ASTRAGAL
2 EA DOOR SILENCERS, L03011

HW-11 1-1/2 PR HINGES, A8112 114 X 114
1 EA LOCKSET W/LEVER HANDLES, F13, GRADE 1
1 EA WALL STOP, L02101 OR L02161
1 EA OVERHEAD CLOSER, C02061, LOW RESISTANCE
3 EA DOOR SILENCERS, L03011
1 EA ROBE HOOK

HW-12 1-1/2 PR HINGES, A8133
1 EA LATCHSET W/LEVER HANDLES, F76 GRADE 1
1 EA WALL STOP, L02101 OR L02161
2 EA MOP PLATE, J103
3 EA DOOR SILENCERS, L03011
1 EA ROBE HOOK

HW-13 3 PR HINGES, A5112 114 X 114
1 EA LOCKSET W/LEVER HANDLES. GRADE 1, F13
1 EA OVERHEAD CLOSER, C02061, LOW RESISTANCE
2 EA LEVER EXTENSION FLUSH BOLTS, L04081
1 EA ASTRAGAL
2 EA DOOR SILENCERS, L03011

HW-14 3 PR HINGES, A5112 114 X 114
2 EA RIM EXIT DEVICE, TYPE 1
2 EA CYLINDER. GRADE 1
2 EA OVERHEAD CLOSER, C02061, LOW RESISTANCE
1 EA DOOR COORDINATOR, TYPE 21
1 EA ASTRAGAL
2 EA DOOR SILENCERS, L03011

APPROVED:

A/E DESIGNER OF RECORD

SEAL:

US ARMY CORPS OF ENGINEERS
AFGHANISTAN ENGINEER DISTRICT

Mark	Description	Date	Appr.

Rev: 0
Date: 2/23/10
Design file no.:
Drawing code: AAASTD0X-001
File name: AAASTD0X-001
Plot date: 6/2/2010
Plot scale: xx
Designed by: KRC
Drawn by: EBB
Chkd by: NLJ
Reviewed by: LHM
Submitted by:
BAKER

U.S. ARMY CORPS OF ENGINEERS
AFGHANISTAN ENGINEER DISTRICT
APO AE 96338

Michael Baker Jr, Inc
A unit of Michael Baker Corporation
Airside Business Park
100 Airport Drive
Moon Township, PA 15108
www.mbakercorp.com

STANDARD DESIGN
VARIOUS PROJECTS
VARIOUS LOCATIONS, AFGHANISTAN

RMTC STORAGE

WINDOW AND DOOR SCHEDULES

Sheet reference number:
A-601

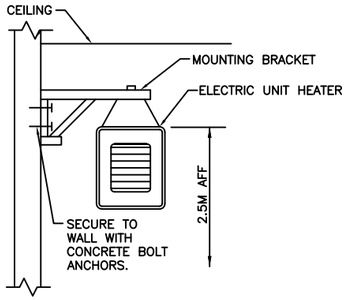

1 M-101 ELECTRIC UNIT HEATER MOUNTING DETAIL
N.T.S.

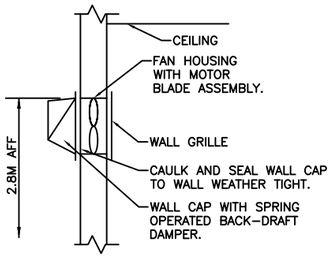

2 M-101 WALL EXHAUST FAN DETAIL
N.T.S.

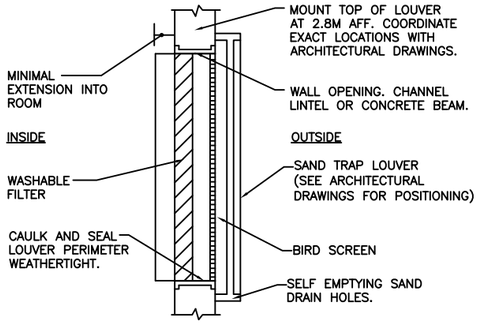

3 M-101 FILTERED SAND TRAP LOUVER
N.T.S.

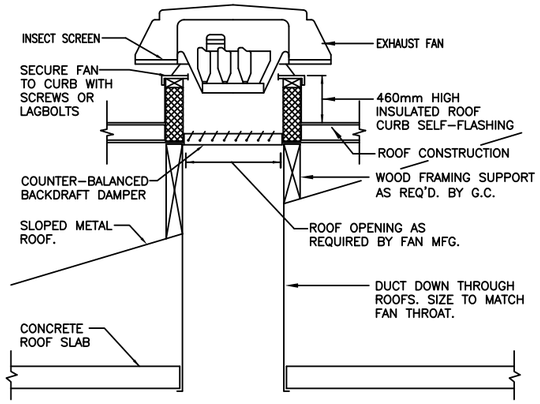

4 M-101 ROOF MOUNTED EXHAUST FAN
N.T.S.

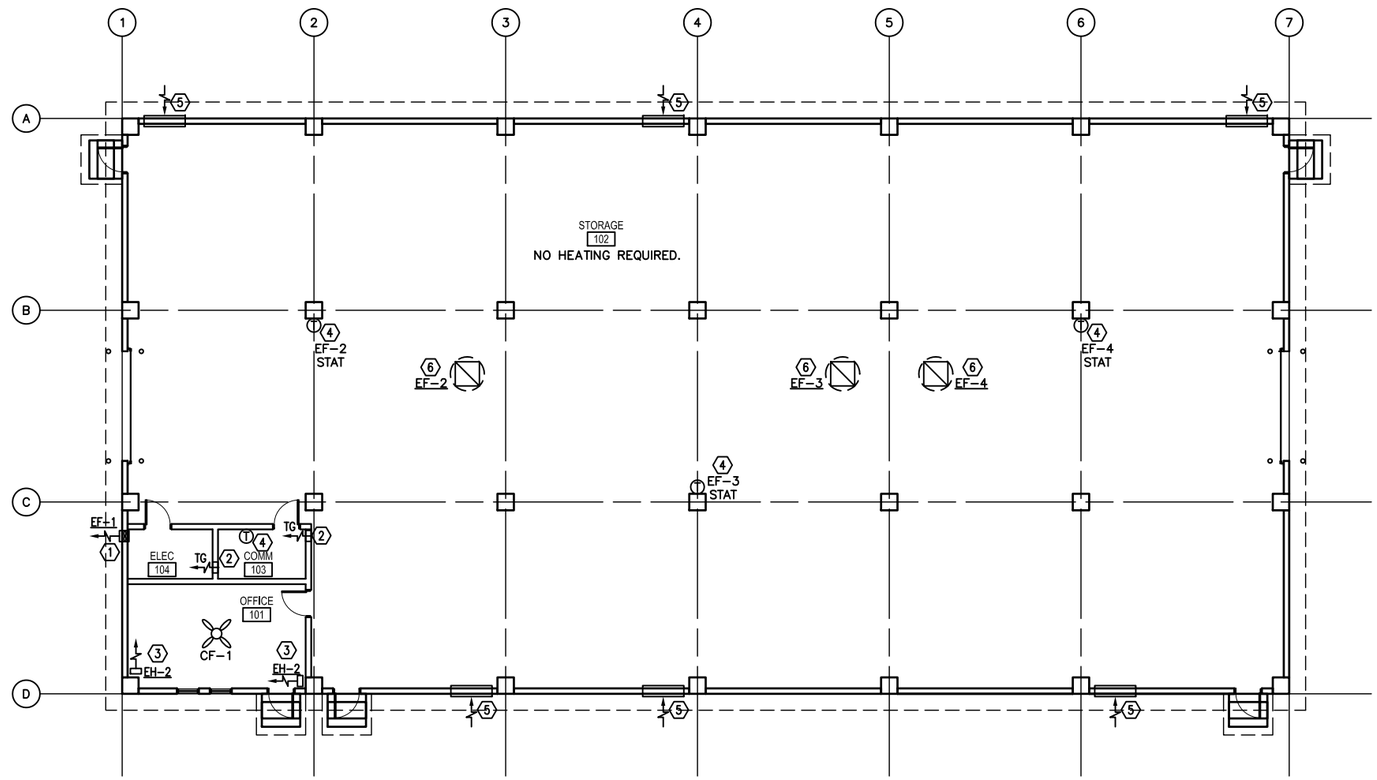

1 M-101 FLOOR PLAN - HVAC
SCALE: 1:100

GENERAL NOTES:

1. DO NOT SCALE DRAWINGS – ALL DIMENSIONS AND CONDITIONS SHALL BE CHECKED AND VERIFIED BY THE CONTRACTOR AT THE SITE.
2. ALL WORK PERFORMED ON THIS BUILDING SHALL BE IN COMPLIANCE WITH ALL PERTINENT CODES, RULES, ORDINANCES AND REGULATIONS OF THE GOVERNING AUTHORITIES.
3. ALL WORK PERFORMED UNDER AND IN CONNECTION WITH THESE DRAWINGS AND SPECIFICATIONS SHALL BE IN STRICT COMPLIANCE WITH THE LATEST SAFETY AND HEALTH STANDARDS.

SYMBOLS:

- (X) KEY NOTE
- (.050) AIR VOLUME IN CUBIC METERS PER SECOND (CMS)
- ¬ VOLUME DAMPER
- (T) THERMOSTAT WITH LOCKING COVER
- UC DOOR UNDERCUT
- TG TRANSFER GRILLE

ABBREVIATIONS:

AFF	ABOVE FINISH FLOOR
CF	CEILING FANS
CMS	CUBIC METERS PER SECOND
STATS	THERMOSTATS

KEY NOTE:

1. WALL EXHAUST FAN WITH SPRING OPERATED BACK-DRAFT DAMPER.
2. 200x150 (8x6) TRANSFER GRILLE. MOUNT GRILLE 800mm BELOW CEILING. COORDINATE LOCATION IN FIELD WITH EC.
3. UNIT HEATER SECURED FROM WALL. SEE DETAIL THIS SHEET.
4. THERMOSTAT MOUNTED 2M (6.5') AFF, STAT SHALL BE INTERLOCKED WITH CORRESPONDING EXHAUST FAN, SET FAN TO ENERGIZE ON RISE IN TEMPERATURE ABOVE 30°C (86°F).
5. (2) 1.5x1.2 (60x48) INTAKE LOUVERS 1 STACKED ON TOP OF THE OTHER. SEE ARCHITECTURAL ELEVATIONS FOR EXACT LOCATIONS HOLD BOTTOM LOUVER 600mm AFF. PROVIDE WEATHER PROOF LOUVERS W/ 50mm (2") WASHABLE FILTER AND SAND TRAP. SEE DETAIL 3 THIS SHEET.
6. ROOF MOUNTED EXHAUST FAN ON FACTORY CURB. EXTEND DUCT DOWN THROUGH CONCRETE ROOF SLAB. DUCT SIZE SHALL MATCH FAN THROAT.

ELECTRIC UNIT HEATER SCHEDULE

NO.	CMS	KW	F.A.T. °C	ELECT. CHAR.	MOUNTING
EH-2	0.200	2.6	38	380/1/50	WALL HUNG

NOTES:
1. UNIT HEATERS SHALL HAVE TAMPER PROOF INTEGRAL STATS.
2. COORDINATE LOCATION AND ORIENTATION IN FIELD.

EXHAUST FAN SCHEDULE

NO.	TYPE	FAN CMS	DRIVE	HP	SP mmH2O	ELECTRICAL DATA	SWITCH
EF-1	WALL	0.045	DIRECT	FRACT	13	220/1/50	W/ STAT
EF-2	ROOF	3.300	DIRECT	3	9.5	220/1/50	W/ STAT
EF-3	ROOF	3.300	DIRECT	3	9.5	220/1/50	W/ STAT
EF-4	ROOF	3.300	DIRECT	3	9.5	220/1/50	W/ STAT

NOTE:
1. FANS SHALL HAVE SPRING OPERATED BACK DRAFT DAMPER.

CEILING FAN

NO.	BLADE SIZE mm	BLADE SIZE IN	VOLTAGE	SWITCH	REMARKS
CF-1	1320	52	220/1/50	@ WALL	3 SPEED REVERSIBLE MOTOR

NOTES:
1. INSTALL FANS 2.5M AFF.
2. PROVIDE WITH OUT LIGHT FIXTURE.
3. PROVIDE WITH REMOTE MOUNTED ON-OFF SWITCH SHOWN ON ELECTRICAL DRAWINGS.

LINEAR DIMENSIONS SHOWN ARE IN MILLIMETERS (MM), UNLESS OTHERWISE NOTED

0 2000 4000
SCALE: 1:100

APPROVED:

A/E DESIGNER OF RECORD

SEAL:

US ARMY CORPS OF ENGINEERS
AFGHANISTAN ENGINEER DISTRICT

Mark	Description	Date	Appr.

Date: 02/23/10
Design file no.
Drawing code:
Rev: D
File name: AANSTORM-101
Plot date: 02/25/2010
Pat. code: 11450

Designed by: RML
Drn. by: JJN
Chkd. by: CJM
Reviewed by: MRS
Submitted by: BAKER

U.S. ARMY CORPS OF ENGINEERS
AFGHANISTAN ENGINEER DISTRICT
APO AE 96338

Michael Baker Jr., Inc.
A unit of Michael Baker Corporation
Airside Business Park
100 Airport Drive
Moon Township, PA 15108
www.mbakercorp.com

STANDARD DESIGN
VARIOUS PROJECTS
VARIOUS LOCATIONS, AFGHANISTAN

RMTC STORAGE

HVAC – FLOOR PLAN, SCHEDULES AND DETAILS

Sheet reference number:
M-101

POWER

- DISTRIBUTION PANELBOARD
- NEW PANELBOARD – SURFACE
- NEW PANELBOARD – RECESSED
- GENERATOR
- TRANSFORMER (DRAWN TO SIZE)
- JUNCTION BOX
- JUNCTION BOX – CEILING
- FUSIBLE SAFETY SWITCH
- MOTOR
- ^{M} MOTOR STARTING SWITCH – 220V, 20A RATED UNLESS OTHERWISE NOTED
- ELECTRIC WATER HEATER
- CEILING FAN – REFER TO SPECIFICATION SECTION 26 20 00

RECEPTACLES

- DUPLEX 20A TYPE CEE 7/7 "SCHUKO STYLE" UNSWITCHED RECEPTACLE
- ^{GF} DUPLEX 20A TYPE CEE 7/7 "SCHUKO STYLE" UNSWITCHED RECEPTACLES – 10mA GROUND FAULT INTERRUPTER TYPE
- ^{WP} DUPLEX 20A TYPE CEE 7/7 "SCHUKO STYLE" UNSWITCHED TYPE WITH WEATHERPROOF COVER – 10mA GROUND FAULT INTERRUPTER TYPE
- ^{EXP} DUPLEX 20A TYPE CEE 7/7 "SCHUKO STYLE" UNSWITCHED RECEPTACLES – EXPLOSION PROOF
- * INDICATES MOUNT DEVICE ABOVE COUNTERTOP OR AT 1070mm ABOVE FINISHED FLOOR WHERE NO COUNTER IS TO BE INSTALLED.

LIGHTNING PROTECTION

- AIR TERMINAL 20mm O.D. X 450mm SOLID COPPER, NICKEL PLATED ON ADHESIVE BASE
- EQ EQUIPMENT AIR TERMINAL
- TEST WELL WITH GROUND ROD(S)
- GROUND ROD
- G GROUND PLATE
- MAIN GROUND CONDUCTER CONCEALED WITHIN CONSTRUCTION
- MAIN GROUND CONDUCTOR EXPOSED ON EXPOSED ON BUILDING EXTERIOR SURFACE
- GROUND CONDUCTOR CAD WELDED TO GROUND CABLE OR EQUIPMENT
- GROUND ROD TRIPOD, SPACED 3 METERS APART.
- LEVEL TO LEVEL CABLE

LIGHTING

- LIGHTING FIXTURE – SEE FIXTURE SCHEDULE FOR MORE INFORMATION
- EMERGENCY LIGHTING FIXTURE – SEE FIXTURE SCHEDULE FOR MORE INFORMATION
- DOWNLIGHT
- LIGHTING FIXTURE ON NORMAL/EMERGENCY
- WALL MOUNTED LIGHT FIXTURE
- E EXIT SIGN – DIRECTIONAL ARROWS AS INDICATED ON DRAWINGS
- REMOTE HEAD FOR BATTERY PACK
- $ SINGLE POLE SWITCH – 20A RATED
- ^{3} 3–WAY SWITCH – 20A RATED
- ^{4} 4–WAY SWITCH – 20A RATED

- LC LIGHTING CONTACTOR
- POLE MOUNTED SITE LIGHTING FIXTURE– NUMBER OF FIXTURES PER POLE AS INDICATED ON DRAWINGS
- EXTERIOR DIRECTIONAL LIGHTING FIXTURE
- a SMALL CASE LETTERS REPRESENTS LAMP(S) / SWITCHES.

TELECOMMUNICATIONS

- ▼ TELEPHONE OUTLET(S) @ 45cm AFF. U.N.O. WITH 20mm RACEWAY TERMINATED TO TELEDATA TERMINAL BOARD.
- ▽ DATA OUTLET(S) @ 45cm AFF. U.N.O. WITH 20mm RACEWAY TERMINATED TO TELEDATA TERMINAL BOARD.

TELECOMMUNICATIONS (CONTINUED)

- COMBINATION TELEPHONE/DATA OUTLET(S) @ 45cm AFF. U.N.O. WITH 27mm RACEWAY TERMINATED TO TELEDATA TERMINAL AREA.
- WALL MTD. TELEPHONE OUTLET WITH 20mm RACEWAY TO TELEDATA TERMINAL BOARD.
- (x)T INDICATES NUMBER OF TELEPHONE OUTLET(S) AND ASSOCIATED CABLING
- (x)D INDICATES NUMBER OF DATA OUTLET(S) AND ASSOCIATED CABLING
- (x)TF INDICATES NUMBER OF TELEPHONE OUTLETS AND ASSOCIATED CABLING WITH 1 OUTLET AND CABLE DEDICATED FOR FAX

SINGLE LINE SYMBOLS

- SWITCH
- BREAKER
- FUSE
- TRANSFORMER
- GROUND
- CONTACT (NORMALLY OPEN)
- CONTACT (NORMALLY CLOSED)
- TRANSFER SWITCH
- CURRENT TRANSFORMER
- INDICATES NEW ELECTRICAL EQUIPMENT
- C INDICATES NEW CONTROL WIRING AND CONDUIT
- EQUIPMENT OUTLINE

MISCELLANEOUS

- BRANCH CIRCUIT WIRING, SURFACE MOUNTED ON WALLS
- BRANCH CIRCUIT WIRING – 6mm^{2}
- BRANCH CIRCUIT WIRING – UNDER FLOOR
- HOME RUN BACK TO PANEL
- CONDUIT TURNED DOWN
- CONDUIT TURNED UP
- LV LOW VOLTAGE WIRING AND CONDUIT
- ~ INDICATES CONTINUATION OF LINE

FIRE ALARM

- FACP FIRE ALARM CONTROL PANEL WITH BATTERY BACKUP
- F FIRE ALARM PULL STATION

FIRE ALARM (CONTINUED)

- F FIRE ALARM STROBE – WALL MOUNTED
- F FIRE ALARM AUDIBLE/STROBE – WALL MOUNTED
- F FIRE ALARM HORN/STROBE – WALL MOUNTED
- S SMOKE DETECTOR
- H HEAT DETECTOR CEILING MOUNTED
- D DUCT DETECTOR – PROVIDED BY EC, INSTALLED BY MC AND CONNECTED BY EC

DENOTATIONS & ABBREVIATIONS

AFF	ABOVE FINISHED FLOOR
C	CEILING MOUNTED
E	EMERGENCY
EC	ELECTRICAL CONTRACTOR
EPO	EMERGENCY POWER OFF
EXP	EXPLOSION PROOF
F	FIRE ALARM
FF	FLUSH FLOOR MOUNTED
FL	FLUORESCENT
FO	FIBER OPTIC
FSS	FUSED SAFETY SWITCH
GF	GROUND FAULT INTERRUPTER
GC	GENERAL CONTRACTOR
IG	ISOLATED GROUND
K	KEY
LV	LOW VOLTAGE
M	MOTOR
MC	MECHANICAL CONTRACTOR
NE	NORMAL/EMERGENCY
NFSS	NON–FUSED SAFETY SWITCH
PA	PAGING SYSTEM
PLC	PLUMBING CONTRACTOR
SL	SINGLE LINE
T	TELEPHONE

DENOTATIONS & ABBREVIATIONS (CONT.)

TP	TAMPER PROOF
UE	UNDERGROUND ELECTRIC
W	WALL MOUNTED
WP	WEATHERPROOF WITH GROUND FAULT INTERRUPTION
WT	WATER TIGHT

GENERAL PROJECT NOTES:

G1. UNLESS OTHERWISE NOTED, PROVIDE ALL EQUIPMENT SHOWN ON THE PLANS. THE ELECTRICAL CONTRACTOR SHALL COORDINATE ALL SYMBOLS SHOWN ON THE PLANS WITH THE SYMBOL LIST. IT SHALL BE THE RESPONSIBILITY OF THE CONTRACTOR TO VERIFY THE INTENT OF ANY SYMBOL THAT IS SHOWN ON THE PLANS AND NOT INDICATED ON THE SYMBOL LIST WITH THE ENGINEER PRIOR TO BID.

G2. THE CONTRACTOR SHALL VERIFY THE LOCATION OF ALL UNDERGROUND UTILITIES WITHIN THE CONSTRUCTION AREA THREE (3) WORKING DAYS NOTICE BEFORE COMMENCING DIGGING. NOTIFY THE LOCAL AUTHORITY HAVING JURISDICTION AND WAIT THE REQUIRED TIME BEFORE COMMENCING TO DIG.

G3. THE CONTRACTOR SHALL COORDINATE CONDUIT RUNS, LIGHTING FIXTURES AND OTHER EQUIPMENT LOCATIONS WITH THE OTHER TRADE CONTRACTORS TO AVOID CONFLICTS.

G4. WHERE VOLTAGES AND FREQUENCIES ON THE DRAWINGS AND IN THE SPECIFICATIONS DIFFER FROM THE LOCAL ONES, ALL WORK SHALL BE PERFORMED USING THE LOCAL VOLTAGES AND FREQUENCIES.

G5. THE MINIMUM WIRE SIZE ON THE PROJECT SHALL BE 4mm^{2}. THE MINIMUM CONDUIT SIZE SHALL BE 20mm. THE MINIMUM BREAKER SIZE SHALL BE 20 AMPS.

G6. THE CONTRACTOR SHALL PUT A MAXIMUM OF 6 DUPLEX RECEPTACLES ON A 20A SINGLE POLE CIRCUIT.

G7. WHERE THE 1010 SCOPE REVIEW, 1015 TECHNICAL REVIEW, DRAWINGS, AND SPECIFICATIONS DIFFER FROM AMERICAN CODES OR STANDARDS, THE 1010, 1015, DRAWINGS, AND SPECIFICATIONS SHALL RULE.

G8. ALL CONDUIT AND DEVICES SHALL BE SURFACE MOUNTED UNLESS OTHERWISE INDICATED.

G9. CONTRACTOR SHALL COORDINATE ALL WORK WITH ALL OTHER TRADES TO ENSURE ALL WORK IS COMPLETED IN A PROFESSIONAL, WORKMAN–LIKE MANNER.

APPROVED:

A/E DESIGNER OF RECORD

SEAL:

US ARMY CORPS OF ENGINEERS
AFGHANISTAN ENGINEER DISTRICT

Mark	Description	Date	Appr.	Mark	Description	Date	Appr.

Date: 2/23/10
Rev:
Design file no.
Drawing code:
File name: ANASTORE-E01
Plot date:
Plot scale:

Designed by: KJR
Drawn by: BJB
Checked by: JRG
Reviewed by: JRG
Submitted by: BAKER

U.S. ARMY CORPS OF ENGINEERS
AFGHANISTAN ENGINEER DISTRICT
APO AE 96338

Michael Baker Jr., Inc.
A unit of Michael Baker Corporation
Airside Business Park
100 Airside Drive
Moon Township PA 15108
www.mbakercorp.com

STANDARD DESIGN
VARIOUS PROJECTS
VARIOUS LOCATIONS, AFGHANISTAN

RMTC STORAGE
ELECTRICAL SYMBOLS & ABBREVIATIONS

Sheet reference number:
E–001

C:\DOCUMENTS AND SETTINGS\W2AENRAD\DESKTOP\STANDARD\ANASTORE–001.DWG

GENERAL NOTES:

1. REFER TO DRAWING #E-001 FOR THE ELECTRICAL SYMBOLS LIST.
2. EXIT SIGNS SHALL BE WIRED AHEAD OF ANY LOCAL SWITCHING ON CIRCUITS. SEE WIRING DIAGRAM DETAIL 8, ON DRAWING #E-501.
3. REFER TO DRAWING #E-601 FOR THE LIGHTING FIXTURE SCHEDULE.
4. REFER TO DRAWING #E-501 FOR THE POWER RISER.
5. REFER TO DRAWING #E-602 FOR PANEL SCHEDULES.
6. LIGHT FIXTURES INDICATED AS EMERGENCY SHALL BE PROVIDED WITH A BATTERY BACKUP BALLAST. WIRING DIAGRAM DETAIL 7, ON DRAWING #E-501.

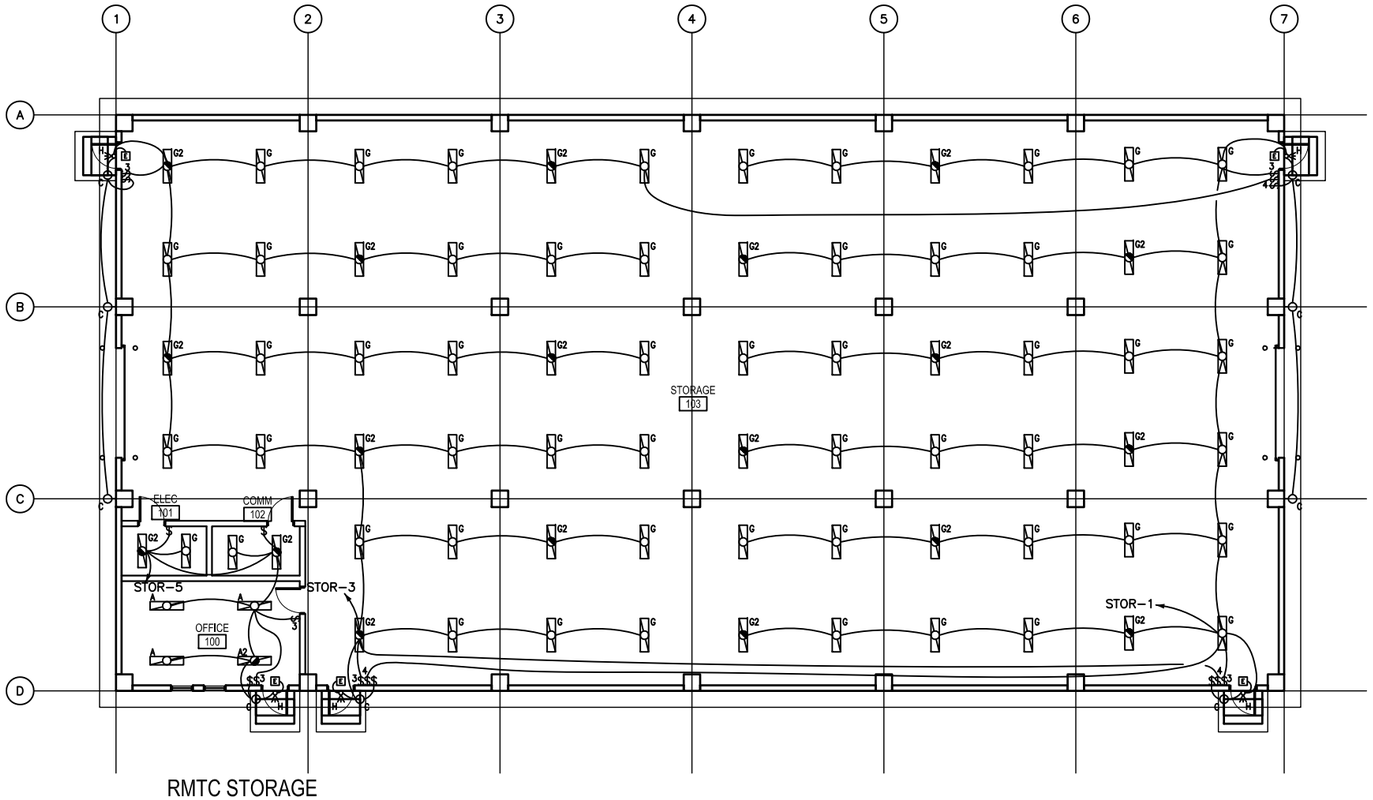

RMTC STORAGE
FLOOR PLAN - LIGHTING

1
E-101

SCALE: 1:100

0 2000 4000
SCALE: 1:100

APPROVED:

A/E DESIGNER OF RECORD

SEAL:

US ARMY CORPS OF ENGINEERS
AFGHANISTAN ENGINEER DISTRICT

Mark	Description	Date	Appr.	Mark	Description	Date	Appr.

Rev: 0

Date: 2/23/10
Design file no.
Drawing code:
File name:
Plot date:
Plot scale:

Designed by: KMT
Drawn by: BJB
Checked by: JRG
Reviewed by: JRG
Submitted by: BAKER

U.S. ARMY CORPS OF ENGINEERS
AFGHANISTAN ENGINEER DISTRICT
APO AE 96338

Michael Baker Jr, Inc.
A unit of Michael Baker Corporation
Airside Business Park
100 Airport Drive
Moon Township, PA 15108
www.mbakercorp.com

STANDARD DESIGN
VARIOUS PROJECTS
VARIOUS LOCATIONS, AFGHANISTAN

RMTC STORAGE
ELECTRICAL LIGHTING PLAN

Sheet reference number:
E-101

GENERAL NOTES:

1. REFER TO DRAWING #E-001 FOR THE ELECTRICAL SYMBOLS LIST.
2. REFER TO DRAWING #E-501 FOR THE POWER RISER.
3. REFER TO DRAWING #E-602 FOR PANEL SCHEDULES.
4. COORDINATE EXACT MOUNTING LOCATION OF DISCONNECTING MEANS FOR MECHANICAL AND PLUMBING EQUIPMENT IN THE FIELD.
5. FUSIBLE SAFETY SWITCHES THAT ARE NOT OTHERWISE IDENTIFIED SHALL BE 380V, 1P, 30A FUSED SAFETY SWITCHES WITH 20A FUSES.

NUMBERED NOTES:

1. PANEL STOR.
2. PROVIDE A 1200mm X 2400mm SHEET OF PLYWOOD PAINTED WITH FIRE RESISTANTPAINT FOR MOUNTING TELECOMMUNICATIONS EQUIPMENT.
3. PROVIDE CONDUIT STUB UP IN THE ROOM FOR INCOMING TELECOMMUNICATIONS SERVICES FROM THE CENTRAL COMMUNICATIONS SYSTEM IN THE GARRISON.
4. PROVIDE POWER CONNECTION TO EXHAUST FANS. SEE DRAWINGS #M-101 AND #E-602 FOR MORE INFORMATION.
5. PROVIDE POWER CONNECTION TO ELECTRIC UNIT HEATER #2. SEE DRAWINGS #M-101 AND #E-602 FOR MORE INFORMATION.
6. CONTRACTOR SHALL PROVIDE WEATHER PROOF RECEPTACLE AT 18" ABOVE FINISHED ROOF MOUNTED TO MECHANICAL EQUIPMENT HOUSING. RECEPTACLE SHALL BE WITHIN 7M OF ALL ROOFTOP EQUIPMENT.
7. PROVIDE 220V, 1P, 30A FUSED SAFETY SWITCH WITH 30A FUSES.

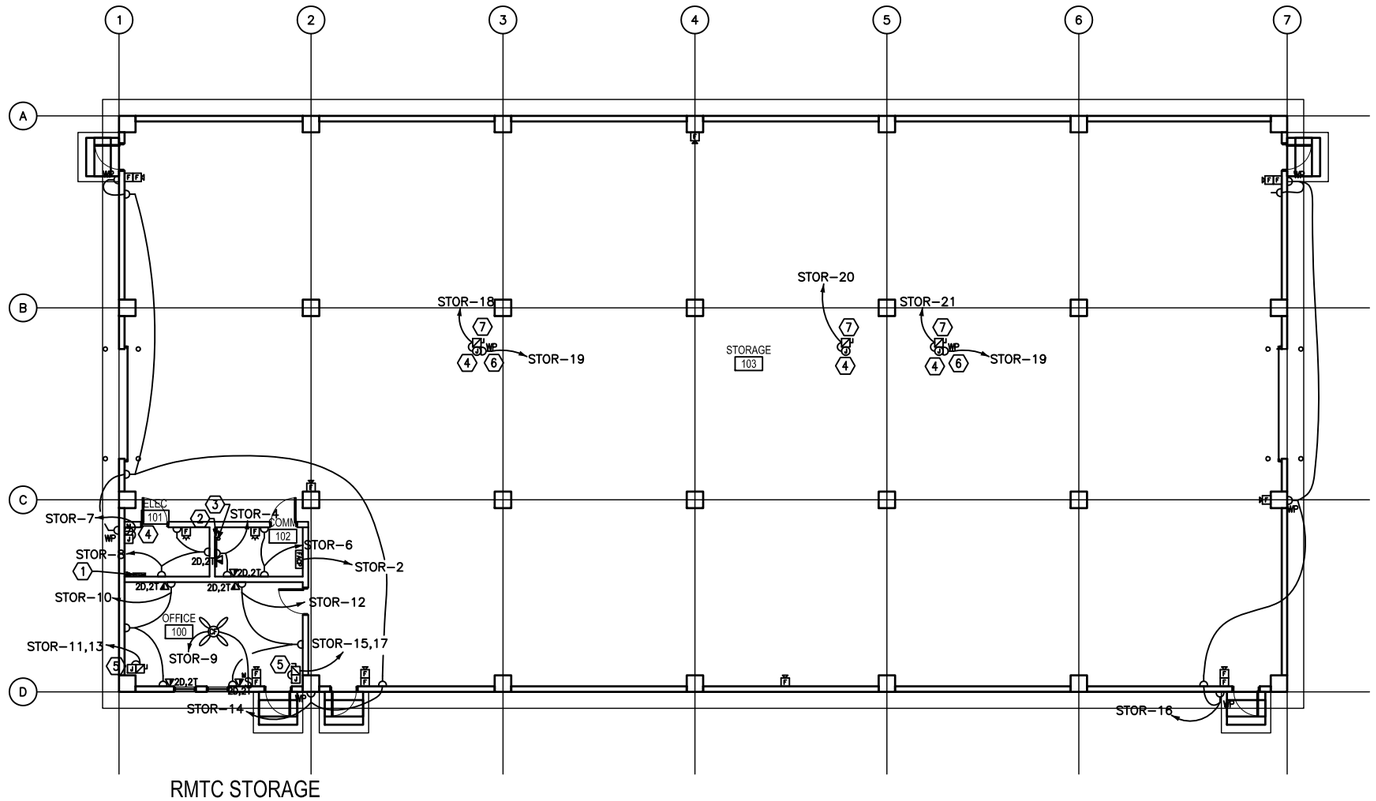

RMTC STORAGE
FLOOR PLAN - POWER & SYSTEMS

1 / E-102

SCALE: 1:100

0 2000 4000
SCALE: 1:100

APPROVED:

A/E DESIGNER OF RECORD

SEAL:

US ARMY CORPS OF ENGINEERS
AFGHANISTAN ENGINEER DISTRICT

Mark	Description	Date	Appr.

Mark	Description	Date	Appr.

Rev: 0

Date: 2/23/10
Design file no.
Drawing code:
File name:
Plot date:
Plot scale:

Designed by: KAT
Drawn by: BJB
Reviewed by: JRG
Submitted by: BAKER

U.S. ARMY CORPS OF ENGINEERS
AFGHANISTAN ENGINEER DISTRICT
APO AE 96338

Michael Baker Jr, Inc.
A unit of Michael Baker Corporation
Airside Business Park
100 Airport Drive
Moon Township, PA 15108
www.mbakercorp.com

STANDARD DESIGN
VARIOUS PROJECTS
VARIOUS LOCATIONS, AFGHANISTAN

RMTC STORAGE

ELECTRICAL POWER AND SYSTEMS PLAN

Sheet reference number:
E-102

GENERAL NOTES:

1. REFER TO DRAWING #E-001 FOR THE ELECTRICAL SYMBOLS LIST.

NUMBERED NOTES:

1. (1) 120.0mm² BARE, TINNED, COPPER COUNTERPOISE GROUND 700mm BELOW GRADE.
2. INSTALL DOWN CONDUCTOR IN 25mm SCHEDULE 80 PVC CONDUIT TO 20mm DIAMETER X 3 METERS SOLID COPPER TINNED GROUND ROD. (TYPICAL)
3. CADWELD TO BUILDING STRUCTURE AT 18 METERS ON CENTER AROUND THE ENTIRE PERIMETER OF THE BUILDING. (TYPICAL)
4. 120mm² LIGHTNING PROTECTION CABLE.
5. AIR TERMINAL. TERMINALS SHALL BE PLACED AT A MAXIMUM OF 6M ON CENTER PER NFPA 780 PARA. 7.8.2.1, AND WITHIN 0.6M OF RIDGE ENDS PER NFPA 780 PARA. 4.8 (TYPICAL)
6. 700mm MIN. (TYP) BETWEEN FOUNDATION AND GROUND LOOP.
7. AIR TERMINAL ON ROOFTOP FAN.

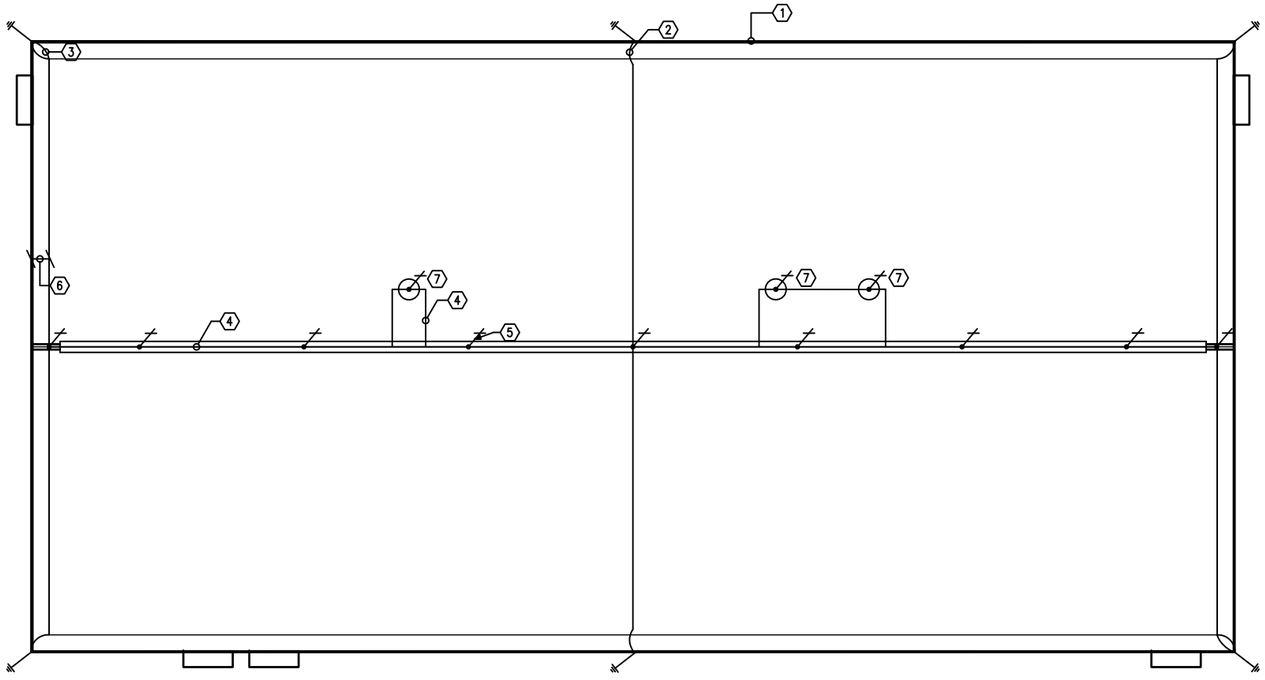

1 / E-103 RMTC STORAGE
FLOOR PLAN - LIGHTNING PROTECTION
SCALE: 1:100

0 2000 4000
SCALE: 1:100

APPROVED:

A/E DESIGNER OF RECORD

SEAL:

US ARMY CORPS OF ENGINEERS
AFGHANISTAN ENGINEER DISTRICT

Mark	Description	Date	Appr.

Mark	Description	Date	Appr.

Date: 2/23/10 | Rev: 0
Design file no.
Drawing code:
File name:
Plot date:
Plot scale:

Designed by: KJR | Drawn by: BJB | Chd by: JRG
Reviewed by: JRG | Submitted by: BAKER

U.S. ARMY CORPS OF ENGINEERS
AFGHANISTAN ENGINEER DISTRICT
APO, AE 96338

Michael Baker Jr., Inc
A unit of Michael Baker Corporation
Airside Business Park
100 Airside Drive
Moon Township, PA 15108
www.mbakercorp.com

STANDARD DESIGN
VARIOUS PROJECTS
VARIOUS LOCATIONS, AFGHANISTAN

RMTC STORAGE
ELECTRICAL LIGHTNING PROTECTION PLAN

Sheet reference number:
E-103

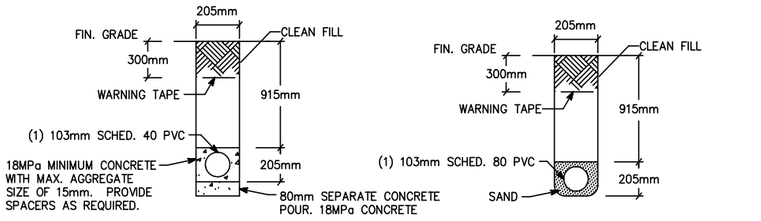

NOTE: PVC CONDUIT SHALL BE DIRECT BURIED SCHEDULE 80 FOR NO TRAFFIC AREAS AND CONCRETE-ENCASED SCHEDULE 40 FOR UNDER ROADWAYS OR TRAFFIC AREAS.

1 / E-501 TYPICAL DUCT BANK DETAILS FOR CONDUIT IN SAND OR CONCRETE

SCALE: N.T.S.

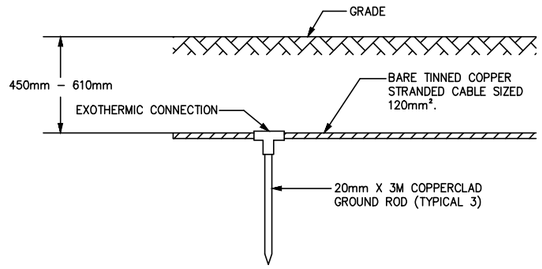

2 / E-501 GROUND TRIPOD SYSTEM DETAIL - ELEVATION

SCALE: N.T.S.

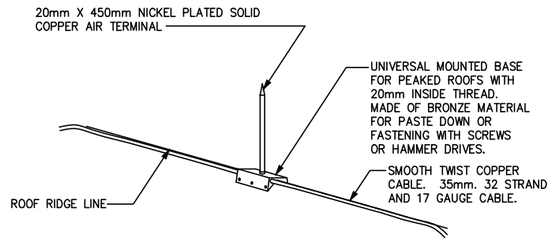

3 / E-501 LIGHTNING PROTECTION AIR TERMINAL DETAIL

SCALE: N.T.S.

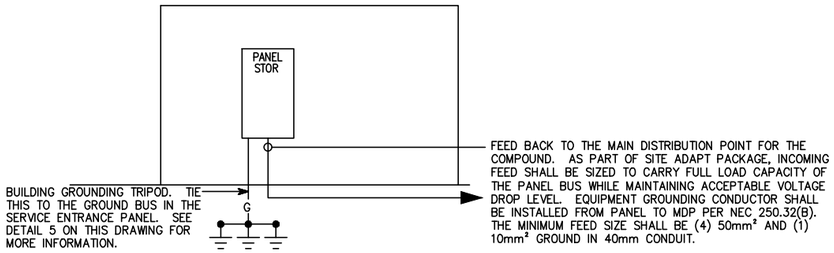

4 / E-501 STOR RISER DIAGRAM

SCALE: N.T.S.

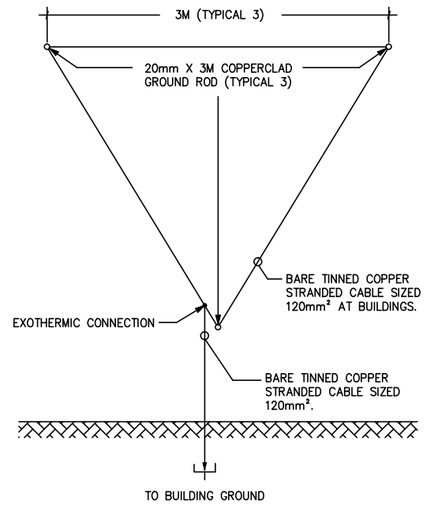

5 / E-501 GROUND TRIPOD SYSTEM DETAIL - PLAN

SCALE: N.T.S.

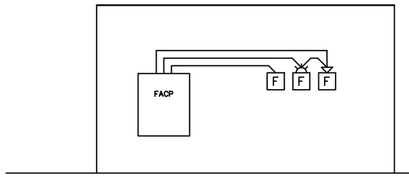

6 / E-501 TYPICAL ONE STORY FIRE ALARM RISER

SCALE: N.T.S.

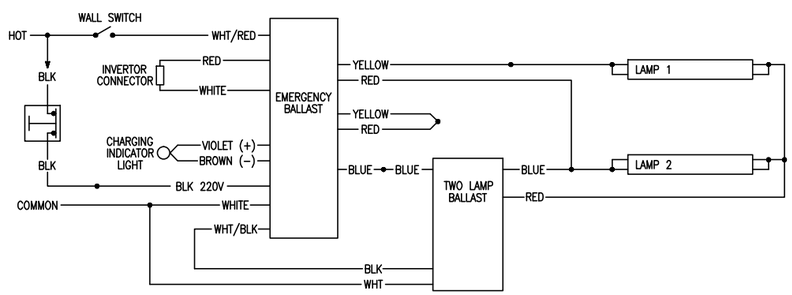

7 / E-501 EMERGENCY FIXTURE WIRING DIAGRAM

SCALE: N.T.S.

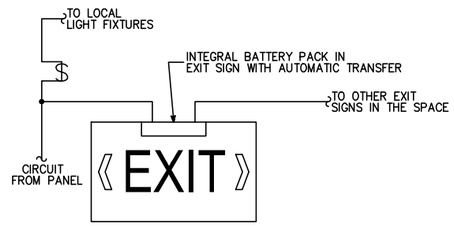

8 / E-501 EXIT SIGN WIRING DIAGRAM

SCALE: N.T.S.

APPROVED:

A/E DESIGNER OF RECORD

SEAL:

US ARMY CORPS OF ENGINEERS
AFGHANISTAN ENGINEER DISTRICT

Mark	Description	Date	Appr.

Rev:

Date: 2/23/10
Design file no.
Drawing code:
File name: ANASTORE-501
Plot date:
Plot scale:

Designed by: KJR
Drn. by: BJB
Chkd by: JRG
Reviewed by: JRG
Submitted by: BAKER

U.S. ARMY CORPS OF ENGINEERS
AFGHANISTAN ENGINEER DISTRICT
APO AE 96338

Michael Baker Jr, Inc.
A unit of Michael Baker Corporation
Airside Business Park
100 Airside Drive
Moon Township PA 15108
www.mbakercorp.com

STANDARD DESIGN
VARIOUS PROJECTS
VARIOUS LOCATIONS, AFGHANISTAN

RMTC STORAGE
ELECTRICAL DETAILS

Sheet reference number:
E-501

C:\DOCUMENTS AND SETTINGS\WZAENRAD\DESKTOP\STANDARD\ANASTORE-501.DWG

Ⓐ LARGER OF THE TWO SIZES GIVEN IN THE TABLES BELOW	
GROUNDING ELECTRODE CONDUCTOR (BASED ON AIC RATING)	
AIC RATING OF SERVICE EQUIPMENT	NECESSARY GROUNDING ELECTRODE CONDUCTOR SIZE
10K	(1) 35mm²
14K	(1) 50mm²
18K	(1) 70mm²
22K	(1) 70mm²
25K	(1) 70mm²
30K	(1) 95mm²
35K	(1) 120mm²
42K	(1) 150mm²
65K	(1) 185mm²
100K	(1) 300mm²
125K	(2) 185mm²
200K	(2) 300mm²
GROUNDING ELECTRODE CONDUCTOR (BASED ON NEC TABLE 250.66)	
SIZE OF LARGEST UNGROUNDED SERVICE CONDUCTOR OR EQUIVALENT AREA FOR PARALLEL CONDUCTORS	NECESSARY GROUNDING ELECTRODE CONDUCTOR SIZE
350 kcmil OR SMALLER	35mm²
OVER 350 kcmil TO 600 kcmil	70mm²
OVER 600 kcmil TO 1100 kcmil	70mm²
OVER 1100 kcmil	95mm²
NOTE: ALL SIZES ARE BASED ON COPPER CONDUCTORS.	

Ⓑ EQUIPMENT GROUNDING CONDUCTOR	
RATING OR SETTING OF AUTOMATIC OVERCURRENT DEVICE IN CIRCUIT AHEAD OF EQUIPMENT, CONDUIT, ETC. NOT EXCEEDING (AMPERES)	NECESSARY EQUIPMENT GROUNDING CONDUCTOR SIZE
15	2.5mm²
20	4.0mm²
30	6.0mm²
40	6.0mm²
60	6.0mm²
100	10mm²
200	16mm²
300	25mm²
400	25mm²
500	35mm²
600	50mm²
800	70mm²
1000	70mm²
1200	95mm²
1600	120mm²
2000	150mm²
2500	185mm²
3000	240mm²
4000	300mm²
5000	400mm²
6000	400mm²
NOTE: ALL SIZES ARE BASED ON COPPER CONDUCTORS.	

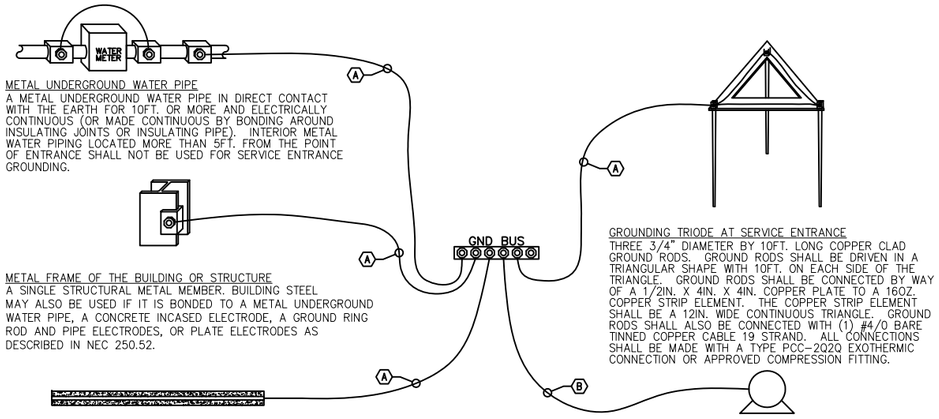

METAL UNDERGROUND WATER PIPE
A METAL UNDERGROUND WATER PIPE IN DIRECT CONTACT WITH THE EARTH FOR 10FT. OR MORE AND ELECTRICALLY CONTINUOUS (OR MADE CONTINUOUS BY BONDING AROUND INSULATING JOINTS OR INSULATING PIPE). INTERIOR METAL WATER PIPING LOCATED MORE THAN 5FT. FROM THE POINT OF ENTRANCE SHALL NOT BE USED FOR SERVICE ENTRANCE GROUNDING.

METAL FRAME OF THE BUILDING OR STRUCTURE
A SINGLE STRUCTURAL METAL MEMBER. BUILDING STEEL MAY ALSO BE USED IF IT IS BONDED TO A METAL UNDERGROUND WATER PIPE, A CONCRETE INCASED ELECTRODE, A GROUND RING ROD AND PIPE ELECTRODES, OR PLATE ELECTRODES AS DESCRIBED IN NEC 250.52.

CONCRETE ENCASED ELECTRODE
AN ELECTRODE ENCASED BY AT LEAST 2IN. OF CONCRETE , LOCATED WITHIN AND NEAR THE BOTTOM OF A CONCRETE FOUNDATION OR FOOTING THAT IS IN DIRECT CONTACT WITH THE EARTH, CONSISTING OF AT LEAST 20FT. OF ONE OR MORE BARE OR ZINC GALVANIZED OR OTHER ELECTRICALLY CONDUCTIVE COATED STEEL REINFORCING BARS OR RODS OF NOT LESS THAN 1/2" DIAMETER OR BARE COPPER CONDUCTOR NOT SMALLER THAN 4AWG.

GROUNDING TRIODE AT SERVICE ENTRANCE
THREE 3/4" DIAMETER BY 10FT. LONG COPPER CLAD GROUND RODS. GROUND RODS SHALL BE DRIVEN IN A TRIANGULAR SHAPE WITH 10FT. ON EACH SIDE OF THE TRIANGLE. GROUND RODS SHALL BE CONNECTED BY WAY OF A 1/2IN. X 4IN. X 4IN. COPPER PLATE TO A 16OZ. COPPER STRIP ELEMENT. THE COPPER STRIP ELEMENT SHALL BE A 12IN. WIDE CONTINUOUS TRIANGLE. GROUND RODS SHALL ALSO BE CONNECTED WITH (1) #4/0 BARE TINNED COPPER CABLE 19 STRAND. ALL CONNECTIONS SHALL BE MADE WITH A TYPE PCC-2Q2Q EXOTHERMIC CONNECTION OR APPROVED COMPRESSION FITTING.

LOAD OR DOWNSTREAM PANEL
ALL LOADS IN THE BUILDING SHALL HAVE AN EQUIPMENT GROUNDING CONDUCTOR PULLED TO THEM.

1 / E-502 SERVICE ENTRANCE GROUNDING DETAIL
SCALE: N.T.S.

US ARMY CORPS OF ENGINEERS
AFGHANISTAN ENGINEER DISTRICT

Mark	Description	Date	Appr.

Mark	Description	Date	Appr.

Date: 2/23/10 Rev: 0
Design file no.
Drawing code:
File name:
Plot date:
Plot scale:

Designed by: KJK
Drawn by: BJB
Ckd by: JRG
Reviewed by: JRG
Submitted by: BAKER

U.S. ARMY CORPS OF ENGINEERS
AFGHANISTAN ENGINEER DISTRICT
APO AE 96338

Michael Baker Jr., Inc.
A unit of Michael Baker Corporation
Airside Business Park
100 Airport Drive
Moon Township, PA 15108
www.mbakercorp.com

APPROVED:

A/E DESIGNER OF RECORD

SEAL:

STANDARD DESIGN
VARIOUS PROJECTS
VARIOUS LOCATIONS, AFGHANISTAN

RMTC STORAGE
ELECTRICAL DETAILS

Sheet reference number:
E-502

LIGHT FIXTURE SCHEDULE

FIXTURE MARK	STYLE NUMBER AND TYPE	NUMBER AND TYPE OF LAMPS	VOLTAGE	MOUNTING	NOTES
A	PARABOLIC SURFACE/PENDANT MOUNTED 300MM X 1200MM FLUORESCENT FIXTURE WITH ELECTRONIC BALLAST	(2) 32W 3500K	220V – 1ø 50HZ	SURFACE MOUNTED	FURNISHED WITH ELECTRONIC BALLAST. PARABOLIC LOUVER SHALL BE SPECULAR LENS IRADESCENCE TYPE.
A2	SAME AS FIXTURE 'A' WITH EMERGENCY BALLAST	(2) 32W 3500K	220V – 1ø 50HZ	SURFACE MOUNTED	FURNISHED WITH ELECTRONIC BALLAST. PARABOLIC LOUVER SHALL BE SPECULAR LENS IRADESCENCE TYPE. EMERGENCY BALLAST SELF TEST.
C	INCANDESCENT ONE PIECE W/ APPROVED LENS STABILIZED HIGH IMPACT POLY CARBONATE.	(1) A19 – 100W INCANDESCENT	220V – 1ø 50HZ	WALL MOUNTED ABOVE EXTERIOR DOORS	
G	WRAP AROUND SURFACE/PENDANT MOUNTED FLUORESCENT FIXTURE WITH PRISMATIC ACRYLIC LENS AND ELECTRONIC BALLAST	(2) 32W 3500K	220V – 1ø 50HZ	SURFACE MOUNTED	FURNISHED WITH ELECTRONIC BALLAST, VIRGIN ACRYLIC WRAP AROUND LENS.
G2	SAME AS FIXTURE 'G' WITH EMERGENCY BALLAST	(2) 32W 3500K	220V – 1ø 50HZ	SURFACE MOUNTED	FURNISHED WITH ELECTRONIC BALLAST, VIRGIN ACRYLIC WRAP AROUND LENS. EMERGENCY BALLAST WITH SELF TEST SWITCH.
H	REMOTE HEAD EXTERIOR LIGHT HEAD POWERED FROM EXIT SIGN BATTERY– 12V DOUBLE HEAD CORROSION RESISTANT WITH UL34 WEATHERPROOF CONSTRUCTION	(2) 12W/12V HALOGEN LAMP	12V – 1ø 50HZ	EXTERIOR WALL MOUNTED AT TOP OF DOOR HEIGHT	
[E]	UNIVERSAL MOUNT ENGINEER GRADE THERMOPLASTIC HOUSING EXIT SIGN WITH LED LAMPS, RED LETTERS 6" IN HEIGHT WITH ARROWS AS INDICATED, WITH 12V CADMIUM BATTERY WITH REMOTE HEAD CAPABILITY	LED LAMPS	220V – 1ø 50HZ	UNIVERSAL MOUNTING	

FIXTURE MARK 'A'

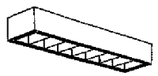

FIXTURE MARK 'C'

FIXTURE MARK 'G'

FIXTURE MARK 'H'

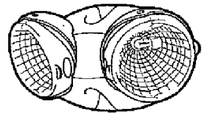

FIXTURE MARK '[E]'

APPROVED:

A/E DESIGNER OF RECORD

SEAL:

US ARMY CORPS OF ENGINEERS
AFGHANISTAN ENGINEER DISTRICT

Mark	Description	Date	Appr.

Mark	Description	Date	Appr.

U.S. ARMY CORPS OF ENGINEERS
AFGHANISTAN ENGINEER DISTRICT
APO AE 96338

Michael Baker Jr, Inc.
A unit of Michael Baker Corporation
Airside Business Park
100 Airside Drive
Moon Township PA 15108
www.mbakercorp.com

Designed by: KJR	Date: 2/23/10
Dwn. by: BJB	Chkd by: JRG
Reviewed by: JRG	Design file no.
Submitted by: BAKER	Drawing code:
	File name: ANASTORE-601
	Plot date:
	Plot scale:

STANDARD DESIGN
VARIOUS LOCATIONS, AFGHANISTAN

RMTC STORAGE

ELECTRICAL LIGHTING FIXTURE SCHEDULE

Sheet reference number:
E–601

C:\DOCUMENTS AND SETTINGS\N2AENRAD\DESKTOP\STANDARD\ANASTORE-601.DWG

PANELBOARD STOR SURFACE MOUNTED
AMP. MAIN LUGS (OR) 100 AMP. MAIN BREAKER W/ 100 AMP. TRIP
CIRCUIT BREAKER TYPE 380/220 VOLTS 3 PHASE 4 WIRE 50 HZ 100 AMP. BUS

CKT. NO.	TRIP AMPS	NO. POLES	WIRE MM 2	GND MM2	CONDUIT MM	LOAD SERVED	LOAD-KVA AØ	LOAD-KVA BØ	LOAD-KVA CØ	LOAD-KVA AØ	LOAD-KVA BØ	LOAD-KVA CØ	LOAD SERVED	CONDUIT MM	GND MM2	WIRE MM2	NO. POLES	TRIP AMPS	CKT. NO.
1	20	1	4.0	4.0	20	LIGHTING – RM 103	2.6			0.5			FACP – RM 102	20	4.0	4.0	1	20	2
3	20	1	4.0	4.0	20	LIGHTING – RM 103, EXTERIOR		2.3			0.6		RECEPTACLES – RM 102	20	4.0	4.0	1	20	4
5	20	1	4.0	4.0	20	LIGHTING – RM 100–102			0.7			0.4	RECEPTACLES – RM 102	20	4.0	4.0	1	20	6
7	20	1	4.0	4.0	20	EXHAUST FAN #1 – RM 101	0.5			0.6			RECEPTACLES – RM 101	20	4.0	4.0	1	20	8
9	20	1	4.0	4.0	20	CEILING FAN – RM 100		0.3			0.6		RECEPTACLES – RM 100	20	4.0	4.0	1	20	10
11	20	2	4.0	4.0	20	ELECTRIC HEAT #2 – RM 100			1.3			0.6	RECEPTACLES – RM 100	20	4.0	4.0	1	20	12
13							1.3			1.2			RECEPTACLES – 103, EXTERIOR	20	4.0	4.0	1	20	14
15	20	2	4.0	4.0	20	ELECTRIC HEAT #2 – RM 100		1.3			1.0		RECEPTACLES – 103, EXTERIOR	20	4.0	4.0	1	20	16
17									1.3			3.9	EXHAUST FAN #2 – RM 103	20	6.0	6.0	1	30	18
19	20	1	4.0	4.0	20	ROOFTOP RECEPTACLES	0.4			3.9			EXHAUST FAN #3 – RM 104	20	6.0	6.0	1	30	20
21	30	1	6.0	6.0	20	EXHAUST FAN #4 – RM 104		3.9					SPARE				1	20	22
23	20	1				SPARE							SPARE				1	20	24
							4.8	7.8	3.3	6.2	2.2	4.9	TOTAL CONN. LOAD PER PHASE (KVA): AØ 11.0 BØ 10.0 CØ 8.2						

TOTAL CONN. LOAD 29.2 KVA. 70 % DEMAND = ESTIMATED DEMAND LOAD 20.44

• MAIN BREAKER SHALL BE 3P EARTH GROUND TYPE

APPROVED:

A/E DESIGNER OF RECORD

SEAL:

US ARMY CORPS OF ENGINEERS
AFGHANISTAN ENGINEER DISTRICT

Mark	Description	Date	Appr.	Mark	Description	Date	Appr.

Date: 2/23/10 Rev: 0
Design file no.
Drawing code:
File name:
Plot date:
Plot scale:

Designed by: KJK
Drawn by: BJB
Checked by: JRG
Reviewed by: JRG
Submitted by: BAKER

U.S. ARMY CORPS OF ENGINEERS
AFGHANISTAN ENGINEER DISTRICT
APO AE 96338

Michael Baker Jr., Inc.
A unit of Michael Baker Corporation
Airside Business Park
100 Airport Drive
Moon Township, PA 15108
www.mbakercorp.com

STANDARD DESIGN
VARIOUS PROJECTS
VARIOUS LOCATIONS, AFGHANISTAN

RMTC STORAGE
ELECTRICAL PANEL SCHEDULES

Sheet reference number:
E–602

AFGHAN NATIONAL POLICE

STANDARD BUILDING DESIGNS

09 SECURE STORAGE

SHEET INDEX

G1	COVER SHEET
S1	GENERAL NOTES
S2	DESIGN CRITERIA
S3	FOUNDATION PLAN
S4	ROOF FRAMING PLAN
S5	SECTIONS GENERAL NOTES
S6	TYPICAL DETAILS
A1	FLOOR AND ROOF PLANS
A2	EXTERIOR ELEVATIONS, BUILDING SECTIONS, AND WALL SECTIONS
A3	DOOR & WINDOW TYPES & DETAILS
M1	HVAC PLAN
E0	ELECTRICAL SYMBOLS AND ABBREVIATIONS
E1	LIGHTING AND POWER PLAN
E2	DETAILS
E3	LIGHT FIXTURE SCHEDULE
E4	PANEL SCHEDULES AND RISER DIAGRAM

US Army Corps of Engineers
Afghanistan Engineer District

SYMBOL	DESCRIPTION	DATE	APP'D

DESIGNED BY: JDS
DWN BY: JDS
CHK BY: JDS
DATE: 09-30-09
SUBMITTED BY: BAKER
FILE NO.: ANPSDG-001XXX

Michael Baker Jr., Inc
A unit of Michael Baker Corporation
Airside Business Park
100 Airside Drive
Moon Township, PA 15108
www.mbakercorp.com

AFGHAN NATIONAL POLICE
STANDARD DESIGN
SECURE STORAGE

COVER SHEET

SHEET REFERENCE NUMBER:
G1

100% SUBMISSION

STRUCTURAL ABBREVIATIONS:

ACI	AMERICAN CONCRETE INSTITUTE
AISC	AMERICAN INSTITUTE OF STEEL CONSTRUCTION
ALT	ALTERNATE
ASTM	AMERICAN SOCIETY FOR TESTING AND MATERIALS
AWS	AMERICAN WELDING SOCIETY
ARCH	ARCHITECTURAL
B	BOTTOM
BLDG	BUILDING
BOTT	BOTTOM
℄	CENTER LINE
CFMF	COLD FORM METAL FRAME
CFS	COLD FORMED STEEL
CIP	CAST IN PLACE
CIPL	CAST-IN-PLACE LINTEL
CJ	CONTROL JOINT
CLR	CLEAR
CMU	CONCRETE MASONRY UNIT
COEFF	COEFFICIENT
COL	COLUMN
CONC	CONCRETE
CONT	CONTINUOUS
COORD	COORDINATE
CSJ	CONSTRUCTION JOINT
CTJ	CONTROL JOINT
DIA	DIAMETER
DIAG	DIAGONAL
DIM	DIMENSION
DWG	DRAWING
DWL	DOWEL
EA	EACH
ELEC	ELECTRICAL
ELEV	ELEVATION
EMBED	EMBEDMENT
EQUIV	EQUIVALENT
ETC	ET CETERA
EW	EACH WAY
EXT	EXTERIOR
FTG	FOOTING
GA	GAUGE
HORIZ	HORIZONTAL
HRS	HOURS
IBC	INTERNATIONAL BUILDING CODE
INT	INTERIOR
Kg	KILOGRAM
KIP	KIPS (1 KIP = 1,000 POUNDS)
kN	KILONEWTON
kPa	KILOPASCAL
L#	ANGLE (# INDICATES SIZE)
LLV	LONG LEG VERTICAL
M	METER
MAX	MAXIMUM
MBM	METAL BUILDING MANUFACTURER
MECH	MECHANICAL
MFG	MANUFACTURER
MID	MIDDLE
MIN	MINIMUM
MISC	MISCELLANEOUS
MM	MILLIMETER
MPa	MEGAPASCAL
MTL	METAL
MWFRS	MAIN WIND FORCE RESISTING SYSTEM
N	NEWTON
N	NORTH
N/A	NOT APPLICABLE
#	NUMBER SYMBOL FOR REBAR SIZE
NTS	NOT TO SCALE
OC	ON CENTER
OPNG	OPENING
P℄ or PL	PLATE
PRE-ENG	PRE-ENGINEERED
REINF	REINFORCED
REQ'D	REQUIRED
SIM	SIMILAR
SPECS	SPECIFICATIONS
STD	STANDARD
STRUCT	STRUCTURAL
T	TOP
T/	TOP OF
T/ELEV	TOP ELEVATION
T&B	TOP AND BOTTOM
THK	THICK
TM	TRADE MARK
TYP	TYPICAL
UON	UNLESS OTHERWISE NOTED
VERT	VERTICAL
W	WIDTH
W/	WITH

GENERAL NOTES

1.0 THIS PROJECT HAS BEEN DESIGNED FOR THE WEIGHTS AND MATERIALS INDICATED ON THE SHEETS AND FOR THE LIVE LOADS INDICATED IN THE DESIGN DATA. IT IS THE CONTRACTOR'S RESPONSIBILITY TO DETERMINE ALLOWABLE CONSTRUCTION LOADS AND TO PROVIDE PROPER DESIGN AND CONSTRUCTION OF FALSEWORK, FORMWORK, STAGING, BRACING, SHEETING AND SHORING, ETC.

1.1 COORDINATE THESE SHEETS WITH THE ARCHITECTURAL, MECHANICAL, ELECTRICAL, PLUMBING, AND CIVIL SHEETS. ALL DIMENSIONS SHOWN ON THE SHEETS ARE MILLIMETERS UNLESS NOTED OTHERWISE.

1.2 THE CONTRACTOR SHALL VERIFY AND COORDINATE ALL FLOOR AND ROOF OPENING SIZES AND LOCATIONS, EQUIPMENT PAD SIZES AND LOCATIONS, ANCHOR BOLT LAYOUTS, ETC WITH EQUIPMENT SELECTED. THE CONTRACTOR SHALL MAKE ANY REQUIRED MODIFICATIONS AT NO ADDITIONAL COST.

1.3 THE CONTRACTOR SHALL REFER TO THE ARCHITECTURAL, MECHANICAL, ELECTRICAL AND PLUMBING SHEETS FOR SLEEVES, CURBS, INSERTS OR OPENINGS, ETC. NOT HEREIN INDICATED.

1.4 SLAB OPENINGS SMALLER THAN 250mm DIA TO BE CORE DRILLED IN FIELD UON. SEE MECHANICAL, ELECTRICAL AND PLUMBING SHEETS FOR LOCATIONS OF THESE OPENINGS.

1.5 WORK NOT INCLUDED ON THE SHEETS BUT IMPLIED TO BE SIMILAR TO THAT SHOWN AT CORRESPONDING PLACES ELSEWHERE ON THE SHEETS SHALL BE REPEATED.

1.6 IN CASE OF CONFLICT BETWEEN THE NOTES, DETAILS AND SPECIFICATIONS THE MOST RIGID REQUIREMENTS SHALL GOVERN.

1.7 SEE ARCHITECTURAL SHEETS FOR LOCATIONS OF MASONRY AND DRYWALL NON-LOAD BEARING PARTITIONS. PROVIDE COMPRESSIBLE FIRESAFING AT TOP OF WALL AS REQUIRED BY ARCHITECTURAL SHEETS.

1.8 COORDINATE FINISHED FLOOR DATUM ELEVATION 0.0m WITH THE CIVIL SHEETS.

2.0 FOUNDATION NOTES

2.1 THE GEOTECHNICAL ANALYSIS FOR THIS PROJECT IS THE RESPONSIBILITY OF THE CONTRACTOR AWARDED THE WORK. DESIGN VALUES USED IN THE STRUCTURAL ANALYSIS OF THE BUILDINGS HEREIN INDICATED HAVE BEEN ASSUMED AND SHALL BE CONFIRMED AND VERIFIED AS PART OF THE GEOTECHNICAL INVESTIGATION. VALUES WHICH DO NOT MEET THE REQUIREMENTS INDICATED ON SHEET S2 SHALL BE IMMEDIATELY BROUGHT TO THE ATTENTION OF THE CONTRACTING OFFICER FOR CONSIDERATION AND DETERMINATION ON THE NEXT APPROPRIATE COURSE OF ACTION.

2.2 SEE THE SPECIFICATION FOR ADDITIONAL REQUIREMENTS TO THOSE OUTLINED IN THE GEOTECHNICAL INVESTIGATION FOR EXCAVATION AND PREPARATION OF THE FOUNDATION AND THE SLAB ON GRADE SUBGRADE INCLUDING COMPACTION PROCEDURES.

2.3 EXCAVATIONS FOR FOOTINGS SHALL HAVE THE SIDES AND BOTTOMS TEMPORARILY LINED WITH 0.25mm POLYETHYLENE IF PLACEMENT OF CONCRETE DOES NOT OCCUR WITHIN 24 HRS OF THE EXCAVATION OF THE FOOTING.

2.4 FOUNDATION CONDITIONS NOTED DURING CONSTRUCTION WHICH DIFFER FROM THOSE DESCRIBED IN THE GEOTECHNICAL REPORT SHALL BE REPORTED TO THE GENERAL CONTRACTOR BEFORE FURTHER CONSTRUCTION IS ATTEMPTED. SEE PROJECT SPECIFICATIONS.

2.5 NO FOOTINGS OR SLABS SHALL BE POURED INTO OR AGAINST SUBGRADE CONTAINING FREE WATER, FROST, ICE OR LOOSE MATERIAL. FROST DEPTH ASSUMED TO BE 800MM

2.6 ALL SLAB-ON-GRADE, TRENCH BOTTOMS AND OTHER ON-GRADE INTERIOR HORIZONTAL SURFACES SHALL BE PLACED OVER A 0.25mm VAPOR RETARDER OVER A 100mm #57 STONE WATER BARRIER PLACED ON SUBGRADE PROPERLY PREPARED IN ACCORDANCE WITH THE CONTRACT SPECIFICATIONS. (UON)

2.7 SEE PLUMBING, ELECTRICAL & CIVIL SHEETS FOR REQUIRED UNDERSLAB UTILITIES.

2.8 SEE ARCHITECTURAL SHEETS FOR ALL WATERPROOFING DETAILS AND MATERIALS.

2.9 IF UNDERMINING OF FOOTINGS OCCURS, FILL VOIDS WITH 15MPa CONCRETE. DO NOT ATTEMPT TO REPLACE AND RECOMPACT SOIL.

3.0 CONCRETE

3.1 CONCRETE SHALL HAVE THE UNIT WEIGHT AND THE MINIMUM COMPRESSIVE STRENGTHS (f'c) AT 28 DAYS AS SHOWN IN THE CONCRETE MATERIALS SCHEDULE ON THIS SHEET. SEE SPECIFICATIONS FOR ADDITIONAL INFORMATION. ENTRAIN AIR TO PRODUCE TOTAL AIR CONTENT ACCORDING TO THE SPECIFICATIONS FOR CONCRETE EXPOSED TO FREEZING TEMPERATURES (EXTERIOR FOOTINGS, SLAB TURNDOWNS, EXTERIOR SLABS AND SLABS-ON-GRADE, EXTERIOR RETAINING WALLS, AND EXTERIOR GRADE BEAMS.)

3.2 GROUT FOR BASE PLATES SHALL BE NON-SHRINKABLE GROUT AND SHALL HAVE A MINIMUM SPECIFIED COMPRESSIVE STRENGTH AT 28 DAYS OF 35MPa, UNLESS NOTED OTHERWISE.

3.3 NO CALCIUM CHLORIDE SHALL BE USED IN ANY CONCRETE.

3.4 MIXING, TRANSPORTING AND PLACING OF CONCRETE SHALL CONFORM TO ACI 301M-05.

3.5 ALL CONCRETE WORK SHALL CONFORM TO THE REQUIREMENTS OF THE AMERICAN CONCRETE INSTITUTE (ACI) 318M MANUAL (metric), "BUILDING CODE REQUIREMENTS FOR REINFORCED CONCRETE", AND REQUIREMENTS OUTLINED IN THE CONTRACT SPECIFICATIONS. WHEN THERE IS A CONFLICT BETWEEN ACI AND THE SPECIFICATIONS, THE MORE STRINGENT SHALL GOVERN.

3.6 CHAMFER ALL EXPOSED EXTERNAL CORNERS OF CONCRETE WITH 20mm x45 DEGREE CHAMFER UON.

3.7 CONCRETE REINFORCEMENT BARS SHALL CONFORM TO ASTM A615M, GRADE 420, REINFORCING BARS SHALL NOT BE TACK WELDED, WELDED, HEATED OR CUT, UNLESS INDICATED ON THE CONTRACT DOCUMENTS. ALL LAP SPLICES SHALL BE CLASS "B" UON.

3.8 HORIZONTAL FOOTING AND HORIZONTAL WALL REINFORCEMENT SHALL BE CONTINUOUS AND SHALL HAVE 90 DEGREE BENDS AND EXTENSIONS, OR CORNER BARS OF EQUIVALENT SIZE LAPPED WITH A CLASS B TENSION SPLICE AT CORNERS AND INTERSECTIONS. TOP BAR CRITERIA SHALL APPLY IF 300mm OR MORE OF FRESH CONCRETE IS PLACED BELOW BAR.

3.9 SLABS-ON-GRADE SHALL HAVE CONSTRUCTION JOINTS OR CRACK CONTROL JOINTS AS SHOWN ON THE SHEETS. CONSTRUCTION JOINTS CAN BE USED AT CONTROL JOINT LOCATIONS AT CONTRACTORS OPTION. SEE SLAB PLANS & JOINT DETAILS FOR ADDITIONAL INFORMATION. FOR AREAS NOT SHOWN ON THE SHEETS, THE MAXIMUM SPACING OF CONSTRUCTION/ CRACK CONTROL JOINTS SHALL BE 4800 mm.

3.10 SEE SPECIFICATIONS FOR ALL WATERPROOFING/DAMPPROOFING REQUIREMENT.

3.11 ALL CONCRETE REINFORCEMENT SHALL BE DETAILED, FABRICATED, LABELED, SUPPORTED, AND SPACED IN FORMS AND SECURED IN PLACE IN ACCORDANCE WITH THE PROCEDURES AND REQUIREMENTS OUTLINED IN THE LATEST EDITION OF THE "BUILDING CODE REQUIREMENTS FOR REINFORCED CONCRETE", ACI 318M, AND THE "MANUAL OF STANDARD PRACTICE FOR DETAILING REINFORCED CONCRETE STRUCTURES", ACI 315M, LATEST EDITION.

3.12 SHOP DRAWINGS SHOWING REINFORCING DETAILS, INCLUDING STEEL SIZES, SPACING AND PLACEMENT, SHALL BE SUBMITTED FOR REVIEW PRIOR TO FABRICATION.

3.13 ALL DOWELS SHALL MATCH SIZE AND NUMBER OF MAIN REINFORCING, UNLESS NOTED OTHERWISE ON THE SHEETS.

3.14 ADDITIONAL BARS SHALL BE PROVIDED AROUND ALL FLOOR AND WALL OPENINGS AS SHOWN ON THE SHEETS.

3.15 SEE ARCHITECTURAL SHEETS FOR TYPE AND LOCATION OF ALL FLOOR FINISHES.

3.16 THE CONTRACTOR SHALL COORDINATE ADDITIONAL WALL/SLAB OPENINGS NOT SHOWN ON STRUCTURAL SHEETS. SEE MECHANICAL, ELECTRICAL, PLUMBING AND CIVIL SHEETS.

3.17 THE SUB-CONTRACTOR SHALL VERIFY ALL OPENINGS, PAD SIZES, AND ANCHOR BOLTS WITH EQUIPMENT SELECTED.

3.18 FOR ALL WALLS & PIERS, PROVIDE DOWELS INTO FOOTING AT EACH VERT REINF BAR, UON DOWEL SIZE SHALL BE SAME AS VERT REINF.

3.19 ALL REINFORCING INDICATED TO BE WELDED SHALL BE IN ACCORDANCE WITH ASTM A706M. "LOW ALLOY STEEL DEFORMED BARS FOR CONCRETE REINFORCEMENT". ANY INSTALLATIONS USING MANUFACTURER'S EQUIPMENT SHALL BE PER MANUFACTURER'S RECOMMENDATIONS.

3.20 PROVIDE CONCRETE POUR STOPS OR FORMED AS REQUIRED FOR INSTALLATION OF ALL CONCRETE WORK.

3.21 PROVIDE ADDITIONAL (2)-#13 x 600mm REINFORCING BARS IN SLAB-ON GRADE AT ALL RE-ENTRANT CORNERS. PLACE BARS AT MID-DEPTH OF SLAB WITH A CLEARANCE OF 50mm FROM CORNER UON.

4.0 CONCRETE MASONRY

4.1 MASONRY CONSTRUCTION AND MATERIALS SHALL CONFORM TO ALL REQUIREMENTS OF THESE CONTRACT DOCUMENTS AND THE PROJECT SPECIFICATIONS.

4.2 THE SPECIFIED ULTIMATE COMPRESSIVE STRENGTH OF CONCRETE MASONRY (f'm) ON THE NET AREA IS A MINIMUM OF 10.4 MPa.

4.3 PROVIDE TWO #16 BARS CONTINUOUS IN ALL CMU AND CAST-IN-PLACE BOND BEAMS UON ON THE SHEETS. BOND BEAM REINFORCING SHALL BE CONTINUOUS AND SPACED AT A MAXIMUM OF 1200mm OC VERTICALLY. PROVIDE BOND BEAM STARTER COURSE AT BOTTOM OF FIRST COURSE ON ALL MASONRY WALLS AND PARTITIONS. ALL BOND BEAMS SHALL BE A MINIMUM OF 200mm IN DEPTH WITH REINFORCING BEING CONTINUOUS AND HAVING STANDARD ACI HOOKS AT EACH END. PROVIDE STANDARD BAR SPLICES AS SPECIFIED.

4.4 FOR WALL REINFORCING SEE "MIN CMU WALL REINFORCING" DETAILS ON SHEET S6. PROVIDE STANDARD BAR SPLICES AS SPECIFIED. ALL VERTICAL REINFORCEMENT EXTENDS FULL HEIGHT OF WALL.

4.5 CMU CELLS THAT REQUIRE VERTICAL REINFORCING BARS AS INDICATED ON THE CONTRACT DRAWINGS AND/OR SPECS SHALL HAVE REINF BARS PLACED IN CENTERS OF CMU CELLS AND CONTINUOUSLY GROUTED UON.

4.6 PROVIDE LADDER TYPE JOINT REINFORCEMENT AT (200mm EXTERIOR & 400mm INTERIOR) ON CENTER MAXIMUM UON MINIMUM ROD SIZE USED SHALL BE 9 GA. DEFORMED WIRE AND CONFORM TO ASTM A82M, UON.

4.7 PROVIDE CONTROL JOINTS AS INDICATED ON THE ARCHITECTURAL SHEETS.

4.8 GROUT FOR MASONRY SHALL BE NORMAL WEIGHT AND HAVE A MINIMUM COMPRESSIVE STRENGTH OF 25 MPa AT 28 DAYS. GROUT SHALL CONFORM TO ASTM C476M. GROUT LIFTS SHALL NOT EXCEED 1400mm.

4.9 USE MORTAR TYPE S CONFORMING TO ASTM C270M, SEE SPECIFICATIONS.

4.10 CONCRETE MASONRY UNITS SHALL BE NORMAL WEIGHT AND CONFORM TO ASTM C90M.

4.11 ALL CMU CELLS, OPEN CAVITIES, AND AIR SPACES SHALL BE GROUTED TO STOP FRAGMENTS FROM MORTAR BLAST

4.12 BOND BEAM REINFORCING SHALL BE DISCONTINUOUS AT CONTROL JOINTS (UON). MAXIMUM CONTROL JOINT SPACING SHALL BE AS INDICATED ON THE ARCHITECTURAL SHEETS.

4.13 CONTRACTOR SHALL COORDINATE LOCATION OF ALL OPENINGS SEE ARCH, MECH, ELEC, AND PLUMBING SHEETS. FOR SIZE AND LOCATION OF OPENINGS.

4.14 MASONRY WALLS SHALL NOT BE BACK FILLED PRIOR TO THE MORTAR AND GROUT ATTAINING THEIR RESPECTIVE MAXIMUM DESIGN STRENGTHS PER SPECIFICATIONS.

MASONRY REINFORCING MINIMUM LAP SPLICES

BAR SIZE	BASIC LAP SPLICE Ld FOR CMU REINFORCING
#10	450
#13	600
#16	750

MINIMUM LAP SPLICES OF REINFORCING BARS IN TENSION (PER ACI 318M-05)

f'c = 28 MPa CONCRETE

BAR SIZE \ CENTER TO CENTER BAR SPACING	(---TOP BARS--) LESS THAN 4db	(---TOP BARS--) 4db OR MORE	(--OTHER BARS--) LESS THAN 4db	(--OTHER BARS--) 4db OR MORE	4db
#10	460	460	410	410	40
#13	660	610	510	480	50
#16	1020	760	790	580	60

NOTES:

1. LAP SPLICES ABOVE ARE IN MILLIMETERS UON.
2. YIELD STRENGTH OF REINFORCEMENT, fy, IS 420MPa (LAP SPLICE LENGTH IS IN MILLIMETERS).
3. CONCRETE IS NORMAL WEIGHT (2400Kg/m^3).
4. TOP BAR INDICATES HORIZONTAL REINFORCEMENT WHICH IS PLACED ABOVE 300mm OR MORE OF FRESH CONCRETE.
5. SEE COLUMN SCHEDULE FOR COLUMN AND SHEAR WALL VERTICAL LAP SPLICE.
6. STRAIGHT DEVELOPMENT LENGTH OF AN UNLAPPED BAR IS EQUAL TO VALUE FROM TABLE DIVIDED BY 1.3.
7. CATEGORY FOR BARS SPACED LESS THAN 4d, OR ON CENTER CORRESPONDS TO CATEGORY 1 IN THE CRSI HANDBOOK WHEREAS FOR BARS SPACED 4d, OR MORE ON CENTER CORRESPOND TO CRSI CATEGORY 5.

CONCRETE MATERIALS SCHEDULE

STRUCTURAL ELEMENT	f'c CONCRETE COMPRESSIVE STRENGTH @ 28 DAYS (MPa)
SLAB-ON-GRADE/TURN-DOWN SLABS	28
ROOF AND FLOOR SLABS	28
ALL FOOTINGS (UON)	28
MISC. CURBS, WALLS AND PADS UON	28
CAST-IN-PLACE LINTEL	28

NOTES:
1. ALL CONCRETE SHALL BE NORMAL WEIGHT CONCRETE. (2400 Kg/m^3 UON)
2. ALL CONCRETE SHALL HAVE A WATER-CEMENT RATIO OF 0.45.

STANDARD HOOKS IN TENSION PER (ACI 318M-05)

HOOK DEVELOPMENT LENGTH Ldh (mm)	
BAR SIZE	f'c 28 MPa
#10	180
#13	250
#16	300
#19	380
#22	430
#25	480
#29	560
#32	610
#36	690

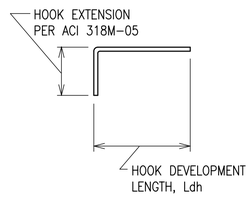

NOTES:
1. CONCRETE IS NORMAL WEIGHT CONCRETE.
2. BAR YIELD STRENGTH, fy = 420 MPa
3. SIDE COVER REQUIREMENTS OF ACI SECT. 12.5.3.2 ARE ASSUMED TO NOT BE MET.
4. TIE OR STIRRUP REQUIREMENTS OF ACI SECT. 12.5.3.2 ARE ASSUMED TO NOT BE MET.
5. REDUCTION FOR EXCESS REINFORCEMENT IS NOT TAKEN.
6. HOOK DEVELOPMENT LENGTH IS VALID FOR 180° HOOKS ALSO.

US Army Corps of Engineers
Afghanistan Engineer District

SYMBOL	DESCRIPTION	DATE	APP

DESIGNED BY: GDH	DWN BY: MDB	CHK BY: CWW
DATE: 09-30-09	SUBMITTED BY: BAKER	FILE NO.: ANPSDS-001XXX

Michael Baker Jr, Inc
A unit of Michael Baker Corporation
Airside Business Park
100 Airside Drive
Moon Township, PA 15108
www.mbakercorp.com

AFGHAN NATIONAL POLICE
STANDARD DESIGN
SECURE STORAGE

GENERAL NOTES

SHEET REFERENCE NUMBER:
S1

100% SUBMISSION

STRUCTURAL DESIGN CRITERIA

ALL DESIGNS SHALL CONFORM TO THE PROVISIONS OF THE IBC 2006 AS APPLICABLE

1.0 DESIGN LOADS

1.1 DEAD LOADS

1.1.1 ROOF DEAD LOADS

	MAXIMUM GRAVITY LOAD	MINIMUM GRAVITY LOAD
MISC	0.05 KPa	0.00 KPa
	0.05 KPa	0.00 KPa

1.1.2 ROOF DEAD LOADS – CONCRETE FRAMING

	MAXIMUM GRAVITY LOAD
CONC FLAT SLAB	6.00 KPa
MISC	0.05 KPa
	6.05 KPa

1.2 LIVE LOADS (PER IBC 2006)

1.2.1 ROOF LIVE LOADS: ALL BUILDINGS

GREATER OF 1.0 KPa MINIMUM OR SNOW LOAD

1.2.2 SLAB–ON–GRADE LIVE LOADS

LIVE LOAD 12.0 KPa

1.3 SNOW LOADS (PER IBC 2006)

1.3.1 DESIGN PARAMETERS

GROUND SNOW LOAD (per UFC 3–310–01)	PER LOCAL CONDITION
SNOW IMPORTANCE FACTOR	1.0 KPa
SNOW EXPOSURE FACTOR	1.0 KPa

1.4 SEISMIC LOADS (PER IBC 2006 & UFC 3–310–04)

1.4.1 SEISMIC PARAMETERS – LOAD BEARING MASONRY

SEISMIC OCCUPANCY CATEGORY	II
SEISMIC IMPORTANCE FACTOR (I)	1.0
SEISMIC SITE CLASS	D
Ss	1.280
S1	0.510
Sds	0.853
Sd1	0.510
SEISMIC DESIGN CATEGORY	D
SEISMIC RESISTING SYSTEM	BEARING WALL SYSTEM SPECIAL REINF SHEAR WALLS
RESPONSE MODIFICATION FACTOR (R)	5.0
RESPONSE COEFFICIENT (Cs)	0.170
SEISMIC ANALYTICAL PROCEDURE	EQUIV LATERAL FORCE
SEISMIC BASE SHEAR	284.7kN

1.5 WIND LOADS (PER IBC 2006)

1.5.1 DESIGN PARAMETERS

BASIC WIND SPEED	137 Km/h
WIND IMPORTANCE FACTOR	1.0
WIND EXPOSURE CATEGORY	D
DIRECTIONALITY COEFFICIENT (Kd)	0.85
TOPOGRAPHIC FACTOR (Kzt)	1.0

1.5.2 DESIGN WIND PRESSURE – MAIN WINDFORCE RESISTING SYSTEM

LOCATION	CORNER ZONE WIDTH "a"	MEAN ROOF HEIGHT "h"	WINDWARD WALL (@ MEAN ROOF HEIGHT)	LEEWARD WALL (@ MEAN ROOF HEIGHT)	ROOF
FIELD ZONE	N/A	3790mm	508 N/m^2	286 N/m^2	867 N/m^2
CORNER ZONE	900mm	3790mm	776 N/m^2	421 N/m^2	–1340 N/m^2

a = 10% OF LEAST HORIZONTAL DIMENSION OR 0.4h, WHICHEVER IS SMALLER, BUT NOT LESS THAN EITHER 4% OF LEAST HORIZONTAL DIMENSION OR 0.9M.
h = MEAN ROOF HIEGHT, IN METERS, EXCEPT THAT EAVE HIEGHT SHALL BE USED FOR ANGLE GREATER THAN 10°.

1.5.3 DESIGN WIND PRESSURE – WALL COMPONENTS AND CLADDING

EXTERIOR WALL SYSTEMS & THEIR ATTACHMENTS TO THE PRIMARY STRUCTURE SHALL BE DESIGNED FOR THE PRESSURES SHOWN IN THE DIAGRAM BELOW:

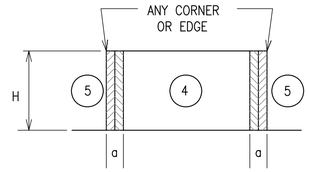

LOCATION	WINDWARD PRESSURE N/m^2 (inward)		LEEWARD PRESSURE N/m^2 (outward)		a
	④	⑤	④	⑤	
MAIN BUILDING					(mm)
AREA = 1 m^2	909	909	–986	–1216	900
AREA = 2 m^2	867	867	–948	–1134.8	900
AREA = 5 m^2	804	804	–885	–1010	900
AREA = 10 m^2	804	804	–885	–1010	900

NOTES:
1. DESIGN WIND PRESSURES ABOVE REPRESENT THE NET PRESSURE (SUM OF INTERNAL AND EXTERNAL PRESSURE) APPLIED NORMAL TO ALL SURFACES.
2. LINEAR INTERPOLATION BETWEEN VALUES OF TRIBUTARY AREA IS PERMISSIBLE.
3. PLUS AND MINUS SIGNS SIGNIFY PRESSURE TOWARD AND AWAY FROM THE EXTERIOR SURFACE, RESPECTIVELY.

1.5 WIND LOADS (CON'T)

1.5.4 DESIGN WIND PRESSURE – ROOF COMPONENTS AND CLADDING

ROOF COMPONENTS & THEIR ATTACHMENTS SHALL BE DESIGNED FOR THE PRESSURES SHOWN IN THE ADJACENT DIAGRAM & TABLE BELOW:

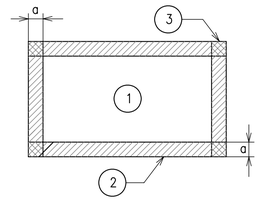

ROOF MEAN HEIGHT

LOCATION	GROSS UPLIFT PRESSURE N/m^2 (upward)			a
	①	②	③	
MAIN BUILDING				(mm)
AREA = 1 m^2	–838	–1460	–1460	900
AREA = 2 m^2	–838	–1460	–1460	900
AREA = 5 m^2	–838	–1460	–1460	900
AREA = 10 m^2	–838	–1460	–1460	900

NOTES:
1. DESIGN WIND PRESSURES ABOVE REPRESENT THE NET PRESSURE (SUM OF INTERNAL AND EXTERNAL PRESSURE) APPLIED NORMAL TO ALL SURFACES.
2. LINEAR INTERPOLATION BETWEEN VALUES OF TRIBUTARY AREA IS PERMISSIBLE.
3. PLUS AND MINUS SIGNS SIGNIFY PRESSURE TOWARD AND AWAY FROM THE EXTERIOR SURFACE, RESPECTIVELY.

2.0 FOUNDATION DESIGN CRITERIA (TO BE CONFIRMED BY THE CONTRACTOR)

THE GEOTECHNICAL ANALYSIS FOR THIS PROJECT IS THE RESPONSIBILITY OF THE CONTRACTOR AWARDED THE WORK. DESIGN VALUES USED IN THE STRUCTURAL ANALYSIS OF THE BUILDINGS HEREIN INDICATED HAVE BEEN ASSUMED AND SHALL BE CONFIRMED AND VERIFIED AS PART OF THE GEOTECHNICAL INVESTIGATION. VALUES WHICH DO NOT MEET THE REQUIREMENTS INDICATED BELOW SHALL BE IMMEDIATELY BROUGHT TO THE ATTENTION OF THE CONTRACTING OFFICER FOR CONSIDERATION AND DETERMINATION ON THE NEXT APPROPRIATE COURSE OF ACTION.

2.1.1 SOIL DESIGN PARAMETERS

NET ALLOWABLE SOIL BEARING CAPACITY	96.0 KPa
UNIT WEIGHT OF SOIL (moist)	1800 Kg/m^3
COEFF ACTIVE EARTH PRESSURE (Kpa)	0.30
COEFF PASSIVE EARTH PRESSURE (Kpp)	3.33
COEFF AT–REST EARTH PRESSURE (Kpr)	.55
COEFF OF SOIL FRICTION	.35
SUBGRADE MODULUS	4120 g/m^3
MINIMUM BEARING DEPTH BELOW GRADE	800mm
SEISMIC SITE CLASS (based on in–situ soil)	D

CONCRETE COVER SCHEDULE

MINIMUM CONCRETE COVER PROTECTION FOR REINFORCEMENT BARS SHALL BE AS FOLLOWS: (SEE ACI 318M–05, SECTION 7.7 FOR CONDITIONS NOT NOTED). DIMENSIONS FOR BAR PLACEMENT GIVEN IN SECTIONS AND DETAILS SHALL SUPERSEDE MINIMUM COVER REQUIREMENTS GIVEN HERE. DIMENSIONS ARE IN mm.

FOOTINGS (EARTH FORMED)		70
COLUMNS / PIERS (TO TIES)		40
GRADE BEAMS OR SLAB TURNED DOWN EDGES:		
TOP		40
BOTTOM (EARTH FORMED)		70
SIDES (EARTH FORMED)		70
SIDES (BOARD FORMED)	#16 BAR & SMALLER	40
	#19 THRU #36 BAR	50
ELEVATED BEAMS & SLABS:		
BEAM TIES & STIRRUPS (NOT EXPOSED TO WEATHER)		40
BEAM TIES & STIRRUPS (EXPOSED TO WEATHER)		50
FLOOR SLABS (NOT EXPOSED TO WEATHER)		20
FLOOR SLABS (EXPOSED TO WEATHER)		
#19 & LARGER		50
#13 & SMALLER		40
ROOF SLAB BARS		25
SLABS–ON–GRADE (NO EXPOSURE TO WEATHER) FROM TOP		20
SLABS–ON–GRADE (EXPOSURE TO WEATHER) FROM TOP		40
UTILITY TUNNEL WALLS, RETAINING WALLS AND SHEAR WALLS, (NO SURFACES SHALL BE EARTH FORMED) EARTH SIDE AND FRONT SIDE (EXPOSED TO WEATHER):		
#16 BAR AND SMALLER		40
#19 THRU #36 BAR		50

PROVIDE STANDARD BAR CHAIRS AND SPACERS AS REQUIRED TO MAINTAIN CONCRETE PROTECTION SPECIFIED.

CMU LINTEL SCHEDULE

OPENING TYPE OR SIZE, BEAM LOCATION OR TYPE	MAX SPAN (mm)	BEAM DEPTH (mm)	MAIN REINFORCING			SHEAR REINF STIRRUPS
			TOP	BOTTOM	OTHER	
INT WALL OPENING, NON–BEARING	1800	400		(2)–#13		----
INT WALL OPENING, NON–BEARING	900	200		(2)–#13		----

1. STRUCTURAL DRAWINGS DO NOT INDICATE ALL OPENINGS IN MASONRY WALLS. VERIFY NUMBER, SIZE AND LOCATION OF ALL OPENINGS IN MASONRY WALLS FROM ARCHITECTURAL SHEETS AND APPROVED PLUMBING, MECHANICAL, AND ELECTRICAL SHOP DRAWINGS.
2. PROVIDE 200mm BEARING EA END FOR 200mm DEEP CMU LINTEL PROVIDE 400mm BEARING EA END FOR 400mm DEEP CMU LINTEL.
3. FOR HEAD DETAILS REFER TO ARCHITECTURAL SHEETS.
4. REINFORCING SHALL BE ASTM A615M, GRADE 420. CONCRETE FOR CAST–IN–PLACE BEAMS SHALL HAVE A MINIMUM COMPRESSIVE STRENGTH OF 28 MPa AT 28 DAYS.
5. CONTRACTOR SHALL SUBMIT FOR APPROVAL SHOP DRAWINGS AND SCHEDULES SHOWING SIZE, DETAILS, LOCATIONS, ETC FOR ALL CAST–IN–PLACE BEAMS IN CMU WALLS.

US Army Corps of Engineers
Afghanistan Engineer District

APP	
DATE	
DESCRIPTION	
SYMBOL	

DESIGNED BY: GDH	DATE: 09–30–09
DWN BY: MDB	SUBMITTED BY: BAKER
CHK BY: CWW	FILE NO.: ANPSDS–002XXX

Michael Baker Jr, Inc
A unit of Michael Baker Corporation
Airside Business Park
100 Airside Drive
Moon Township, PA 15108
www.mbakercorp.com

AFGHAN NATIONAL POLICE
STANDARD DESIGN
SECURE STORAGE

DESIGN CRITERIA

SHEET REFERENCE NUMBER:
S2

100% SUBMISSION

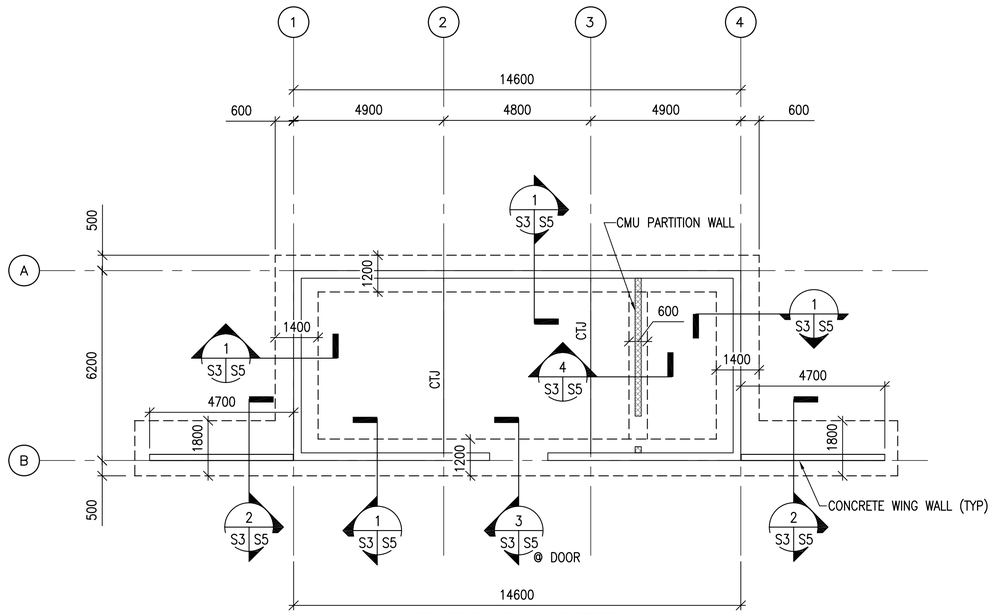

1 / S3 S3 FOUNDATION PLAN

SCALE: 1:100

N

NOTES:

1. FINISH FIRST FLOOR ELEVATION SHALL BE (DATUM 0.0) ALL PLUS OR MINUS DIMENSIONS INDICATED ON PLAN OR REFERRED TO IN NOTES RELATE TO FINISH FIRST FLOOR ELEVATION.
2. TOP OF EXTERIOR FOOTINGS SHALL BE −500 UNLESS OTHERWISE INDICATED.
3. UNLESS OTHERWISE INDICATED, FLOORS SHALL BE 150 THICK CONCRETE SLAB−ON−GRADE W/ 13 DIA REBAR @ 250 OC EW (38 CLR TOP) OVER 100 COMPACTED POROUS FILL (#57 STONE)
4. REFER TO SHEETS S1 & S2 FOR STRUCTURAL NOTES, BASIS OF DESIGN, SYMBOLS AND ABBREVIATIONS.
5. CTJ AND CJ INDICATES SLAB CONTROL OR CONSTRUCTION JOINTS RESPECTIVELY REFER TO SHEET S6 FOR SECTIONS & DETAILS.
6. REFER TO ARCHITECTURAL SHEETS FOR MASONRY PARTITION TYPES AND SHEET S6 FOR REINFORCEMENT.
7. SEE MECHANICAL AND ELECTRICAL SHEETS FOR CONCRETE PAD LOCATIONS, SIZES, AND THICKNESS NOT SHOWN. SEE SHEET S6 FOR DETAILS.
8. CONCRETE ROOF STRUCTURE SHALL BE POURED−IN−PLACE IN ONE CONTINUOUS OPERATION AND SHORED AS REQUIRED UNTIL THE CONCRETE REACHES 75% OF ITS DESIGN STRENGTH AS A MINIMUM.
9. CONCRETE WALLS OF THE BUILDING SHALL NOT HAVE BACKFILL PLACED AGAINST THEM UNTIL THE SLAB−ON−GRADE AND CONCRETE ROOF STRUCTURES ARE IN PLACE AND ALL CONCRETE HAS ACHIEVED 75% OF ITS DESIGN STRENGTH AS A MINIMUM.

UNLESS OTHERWISE NOTED, LINEAR DIMENSIONS SHOWN ARE IN MILLIMETERS (MM)

0 2000 4000 8000

SCALE: 1: 100

US Army Corps of Engineers

Afghanistan Engineer District

SYMBOL	DESCRIPTION	DATE	APP.

DESIGNED BY: GDH	DATE: 09-30-09
DWN BY: MDB	SUBMITTED BY: BAKER
CHK BY: CWW	FILE NO.: ANPSDS-103XXX

Michael Baker Jr, Inc
A unit of Michael Baker Corporation
Airside Business Park
100 Airside Drive
Moon Township, PA 15108
www.mbakercorp.com

AFGHAN NATIONAL POLICE
STANDARD DESIGN
SECURE STORAGE

FOUNDATION PLAN

SHEET REFERENCE NUMBER:

S3

100% SUBMISSION

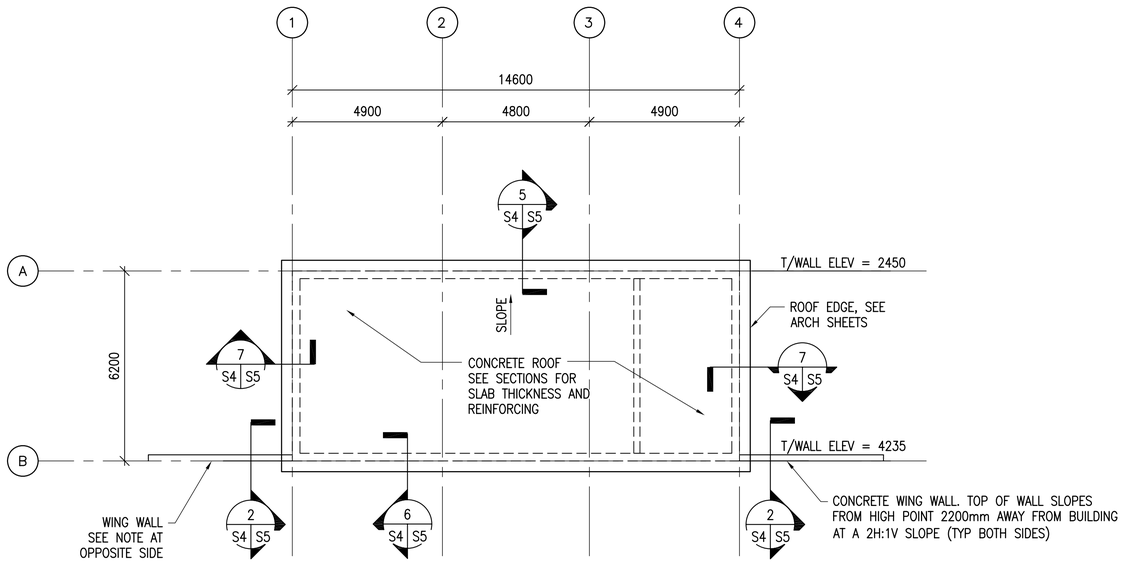

1 S4 S4 ROOF FRAMING PLAN

SCALE: 1:100

N

NOTES :

1. REFER TO SHEET S3 FOR PLAN NOTES.

UNLESS OTHERWISE NOTED, LINEAR DIMENSIONS SHOWN ARE IN MILLIMETERS (MM)

0 2000 4000 8000

SCALE: 1: 100

US Army Corps of Engineers

Afghanistan Engineer District

SYMBOL	DESCRIPTION	DATE	APP'D

DESIGNED BY: GDH	DATE: 09-30-09		
DWN BY: MDB	SUBMITTED BY: BAKER	CHK BY: CWW	FILE NO.: ANPSDS-104XXX

Michael Baker Jr., Inc.
A unit of Michael Baker Corporation
Airside Business Park
100 Airside Drive
Moon Township, PA 15108
www.mbakercorp.com

AFGHAN NATIONAL POLICE
STANDARD DESIGN
SECURE STORAGE

ROOF FRAMING PLAN

SHEET REFERENCE NUMBER:

S4

100% SUBMISSION

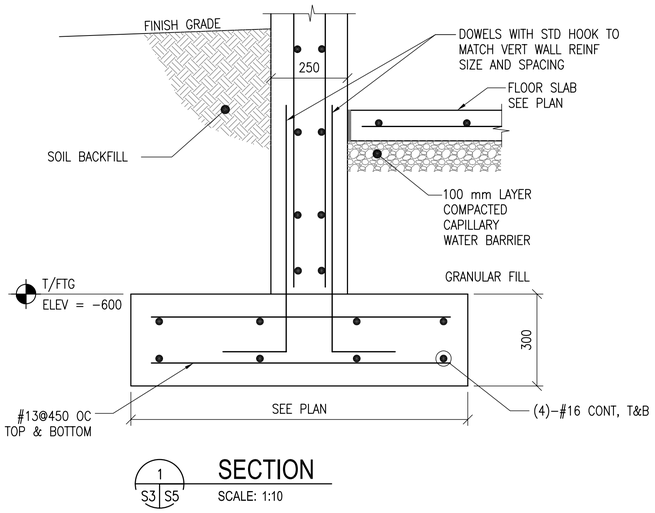

1 S3 S5 **SECTION**
SCALE: 1:10

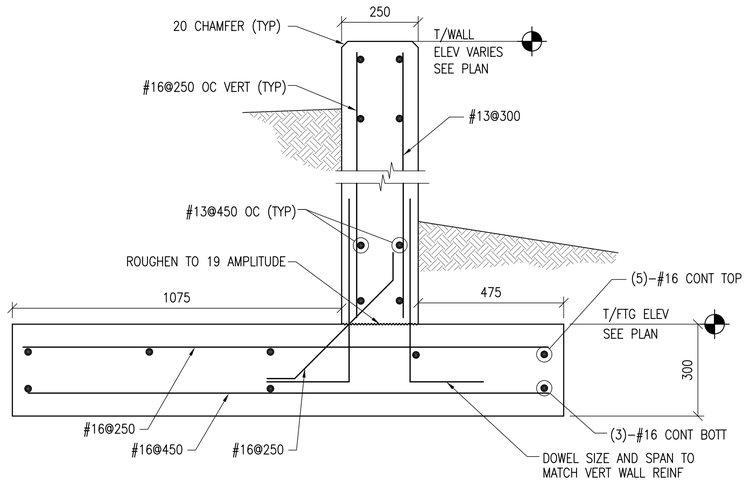

2 S3,S4 S5 **SECTION**
SCALE: 1:10

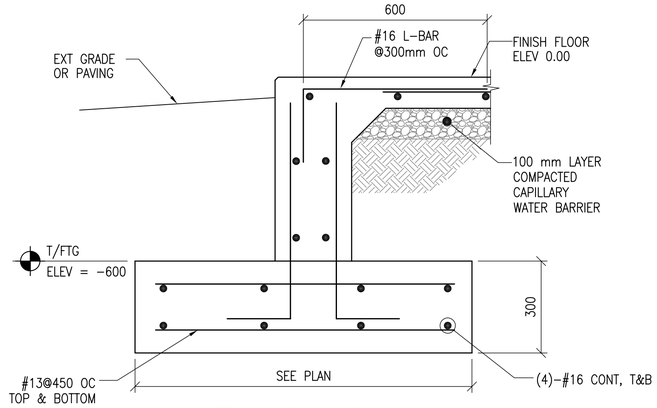

3 S3 S5 **SECTION**
SCALE: 1:10

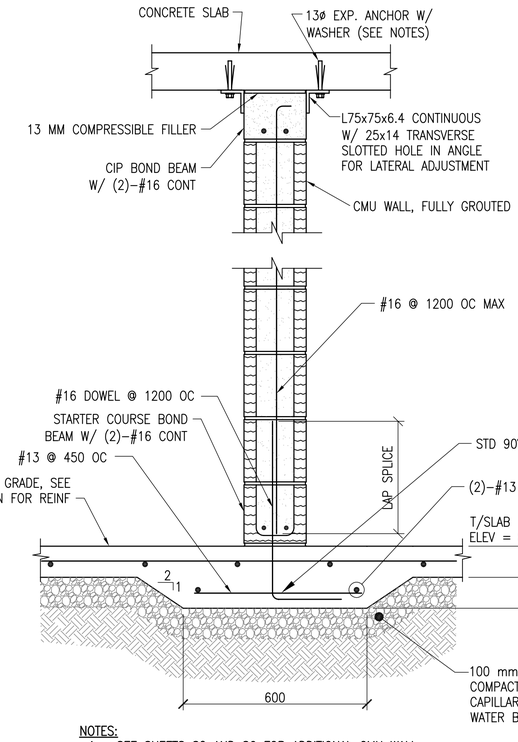

NOTES:
1. SEE SHEETS S2 AND S6 FOR ADDITIONAL CMU WALL REINFORCING REQUIREMENTS.
2. EMBED EXPANSION ANCHOR 82 MINIMUM INTO SOLID CONCRETE.
3. INSTALL 13 MM ISOLATION JOINT VERTICALLY AT WALL ENDS THAT ARE ADJACENT TO CONCRETE WALLS.
4. USE STEEL WASHER BETWEEN ANCHOR HEAD AND ANGLE. NOMINAL WASHER INSIDE AND OUTSIDE DIAMETER TO BE 14 & 35 RESPECTIVELY.

4 S3 S5 **SECTION**
SCALE: 1:10

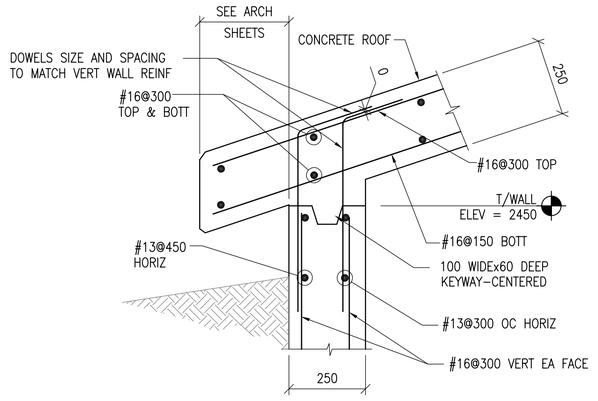

5 S4 S5 **SECTION**
SCALE: 1:10

7 S4 S5 **SECTION**
SCALE: 1:10

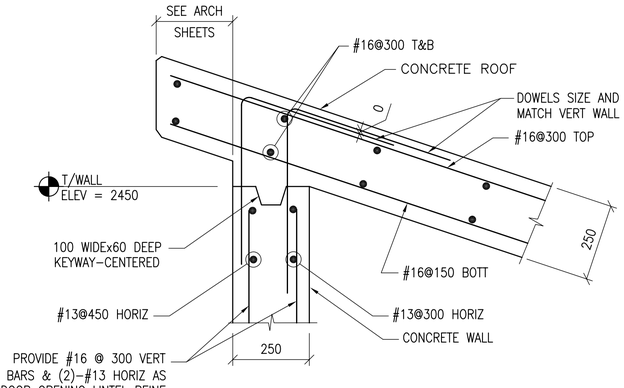

6 S4 S5 **SECTION**
SCALE: 1:10

UNLESS OTHERWISE NOTED, LINEAR DIMENSIONS SHOWN ARE IN MILLIMETERS (MM)

0 200 400 800

SCALE: 1: 10

US Army Corps of Engineers
Afghanistan Engineer District

SYMBOL	DESCRIPTION	DATE	APP

DESIGNED BY: GDH	DWN BY: MDB	CHK BY: CWW	DATE: 09-30-09
SUBMITTED BY: BAKER	FILE NO.: ANPSDS-305XXX		

Michael Baker Jr, Inc
A unit of Michael Baker Corporation
Airside Business Park
100 Airside Drive
Moon Township, PA 15108
www.mbakercorp.com

AFGHAN NATIONAL POLICE
STANDARD DESIGN
SECURE STORAGE

SECTIONS
GENERAL NOTES

SHEET REFERENCE NUMBER:
S5

100% SUBMISSION

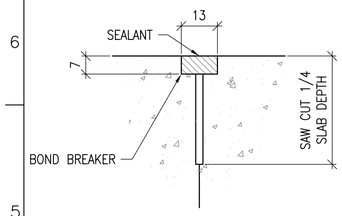

CONTROL JOINT DETAIL

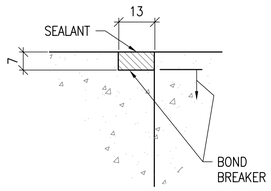

CONSTRUCTION JOINT DETAIL

1 S6 TYPICAL CONCRETE SLAB JOINT FINISH DETAIL

SCALE: NTS

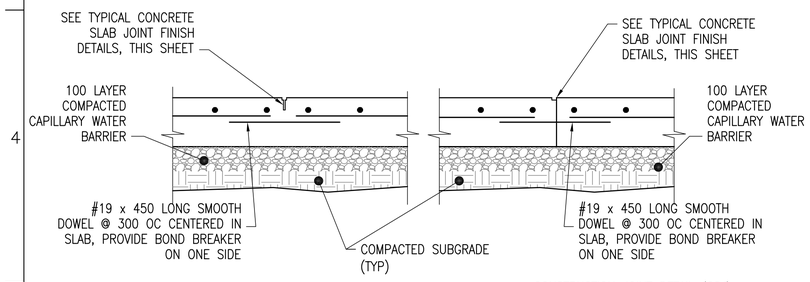

CONTROL JOINT DETAIL (CTJ) CONSTRUCTION JOINT DETAIL (CSJ)

2 S6 TYPICAL SLAB ON GRADE JOINT DETAILS

SCALE: NTS

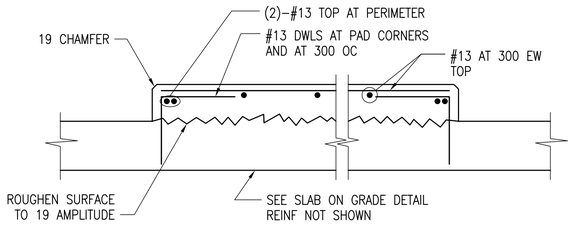

3 S6 INTERIOR EQUIPMENT PAD DETAIL

SCALE: NTS

DETAIL NOTE:
1. COORDINATE EQUIPMENT PAD SIZE AND LOCATIONS W/ ELECTRICAL/MECHANICAL SHEETS AND EQUIPMENT MANUFACTURER.

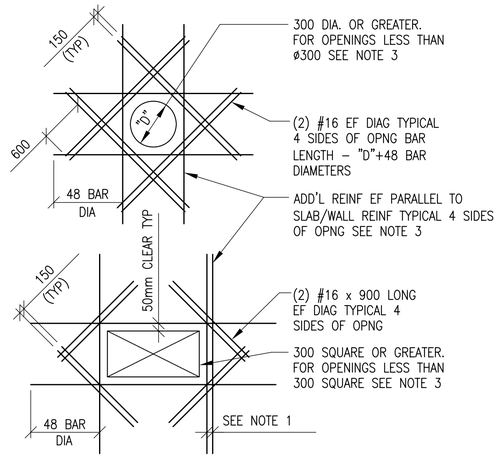

SLAB OPENINGS

4 S6 ADD'L REINFORCEMENT DETAILS

SCALE: NTS

DETAIL NOTES:
1. WHERE MORE THAN ONE ADDITIONAL BAR IS REQUIRED PARALLEL TO THE EXISTING SLAB/WALL REINFORCING THE ADDITIONAL REINFORCING BARS SHALL BE SPACED AT 100 ON CENTER.
2. ADDITIONAL REINFORCING PARALLEL TO THE SLAB/WALL REINFORCING SHALL BE #15 BARS THAT PROVIDE A STEEL AREA ON EACH SIDE OF THE OPENING EQUAL TO 1/2 THE AREA OF THE REINFORCING CUT BY THE OPENING.
3. FOR OPENINGS WITH SIDES OR DIAMETERS LESS THAN 300 SPREAD THE SLAB/WALL REINFORCING TO CLEAR THE OPENING.

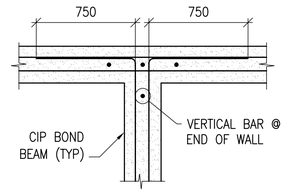

BOND BEAM INTERSECTION

5 S6 CIP BOND BEAM DETAIL

SCALE: NTS

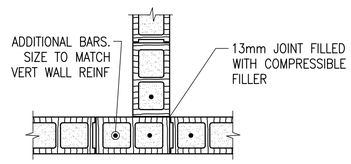

INTERSECTION

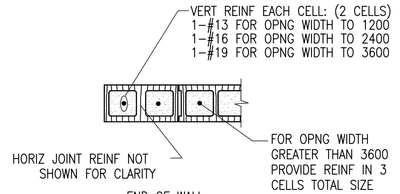

END OF WALL

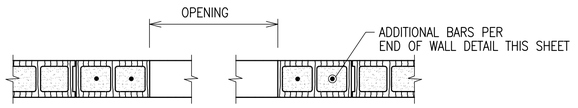

MASONRY OPENING W/ LINTEL

NOTES:
1. OPENING WIDTH SHALL NOT EXCEED 3600 FOR THIS TYPE OF JAMB
2. ALL CMU CELLS FULLY GROUTED

6 S6 TYPICAL CMU DETAILS

SCALE: NTS

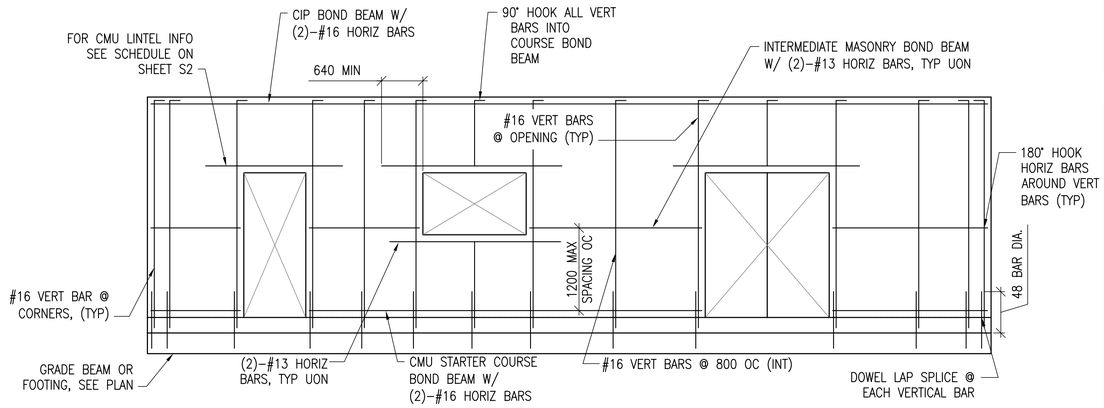

7 S6 MIN CMU WALL REINFORCING

SCALE: NTS

LINTEL NOTES:
CMU LINTEL REINFORCEMENT AS PER SCHEDULE ON SHEET S2

UNLESS OTHERWISE NOTED, LINEAR DIMENSIONS SHOWN ARE IN MILLIMETERS (MM)

US Army Corps of Engineers
Afghanistan Engineer District

SYMBOL	DESCRIPTION	DATE	APP'D

DESIGNED BY: GDH	DWN BY: RCG	CHK BY: CWW
DATE: 09-30-09	SUBMITTED BY: BAKER	FILE NO.: ANPSDS-506XXX

Michael Baker Jr., Inc
A unit of Michael Baker Corporation
Airside Business Park
100 Airside Drive
Moon Township, PA 15108
www.mbakercorp.com

AFGHAN NATIONAL POLICE
STANDARD DESIGN
SECURE STORAGE

TYPICAL DETAILS

SHEET REFERENCE NUMBER:
S6

100% SUBMISSION

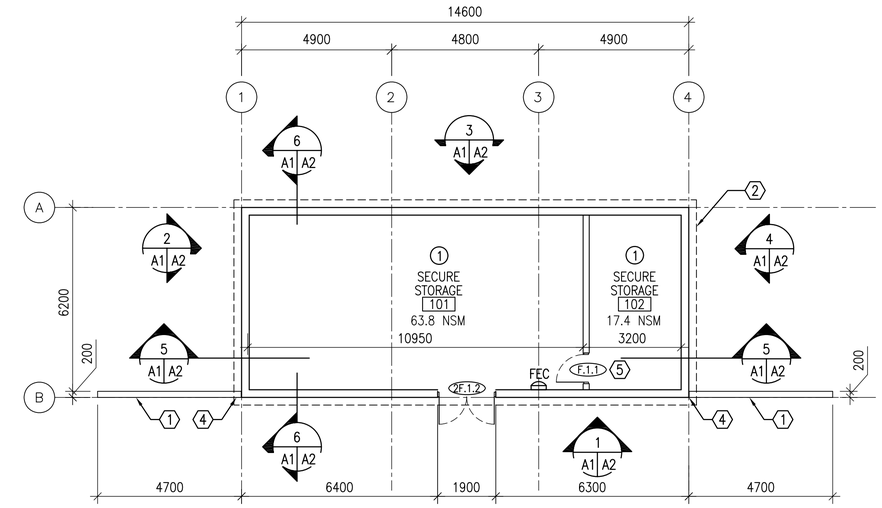

1 A1 A1 **FLOOR PLAN**
SCALE: 1:100
90.5 GSM

N

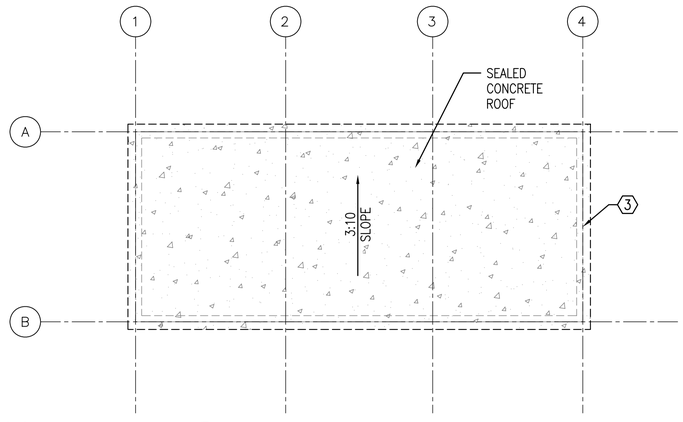

2 A1 A1 **ROOF PLAN**
SCALE: 1:100

N

GENERAL NOTES:

A. INTERIOR PARTITION SHALL BE 200 MM CMU UNLESS NOTED OTHERWISE.

B. OPENINGS FOR DOORS SHALL BE LOCATED 200 MM FROM THE ADJACENT WALL UNLESS NOTED OTHERWISE.

C. SURFACES TO BE PAINTED SHALL BE CLEAN AND FREE OF FOREIGN MATTER BEFORE APPLICATION OF PAINT. CLEANING SHALL BE SCHEDULED SO THAT DUST AND OTHER CONTAMINANTS WILL NOT FALL ON WET, NEWLY PAINTED SURFACES.

D. CONCRETE AND INTERIOR MASONRY SURFACES GROUTED SOLID SHALL BE ALLOWED TO DRY AT LEAST 30 DAYS BEFORE PAINTING EXCEPT CONCRETE SLAB ON GRADE WHICH SHALL BE ALLOWED TO CURE 90 DAYS BEFORE PAINTING.

E. PAINTS CONTAINING LEAD IN EXCESS OF 0.06 PERCENT BY WEIGHT OF THE TOTAL NONVOLATILE CONTENT SHALL NOT BE USED.

F. MERCURIAL FUNGICIDES SHALL NOT BE USED IN OIL–BASE PAINT.

G. REMOVE LOOSE DIRT AND CLEAN SURFACES BEFORE PAINTING. APPLY PAINT TO INTERIOR STRUCTURAL RIGID FRAMINGS AND CEILINGS AND TEST FOR ADHESION. PRIMER COAT FOR MASONRY. INITIAL FIRST COAT WITH AN ACRYLIC LATEX PAINT FOR EXTERIOR SURFACES AND A SECOND COAT WITH A WATER REPELLENT ACRYLIC LATEX PAINT.

H. METAL DOORS AND FRAMES SHALL RECEIVE A PRIMER COAT PLUS TWO COATS OF PAINT.

I. DIMENSIONS ARE TO STRUCTURAL COLUMN GRID, EDGE OF WINDOW OPENINGS, AND TO HINGE SIDE OF DOOR OPENINGS.

KEY NOTES: (X)

1. CONCRETE WING WALL
2. LINE OF ROOF OVERHANG ABOVE
3. LINE OF BUILDING WALL BELOW
4. EXPANSION JOINT BETWEEN BUILDING WALL AND WING WALLS.
5. PROVIDE UNDERCUT INTERIOR DOOR BETWEEN ROOMS 101 AND 102. RE: MECHANICAL

LEGEND:

F.1.4 DOOR TYPE, SEE SHEET A3

(X) KEY NOTE

FEC FIRE EXTINGUISHER CABINET

(1) ROOM FINISH TYPE DESIGNATION

(X)

ROOM FINISHES:

1. WALLS: PAINTED PLASTER,
   FLOOR: SEALED CONCRETE
   CEILING: PAINTED PLASTER APPLIED TO STRUCTURE

UNLESS OTHERWISE NOTED, LINEAR DIMENSIONS SHOWN ARE IN MILLIMETERS (MM)

0 2000 4000 8000
SCALE: 1: 100

US Army Corps of Engineers
Afghanistan Engineer District

SYMBOL	DESCRIPTION	DATE	APP

DESIGNED BY: BAKER
DWN BY: JEB
CHK BY: NLJ
DATE: 09-30-09
SUBMITTED BY: BAKER
FILE NO.: ANPSDA-101XXX

Michael Baker Jr, Inc
A unit of Michael Baker Corporation
Airside Business Park
100 Airside Drive
Moon Township, PA 15108
www.mbakercorp.com

AFGHAN NATIONAL POLICE
STANDARD DESIGN
SECURE STORAGE

FLOOR AND ROOF PLANS

SHEET REFERENCE NUMBER:
A1

100% SUBMISSION

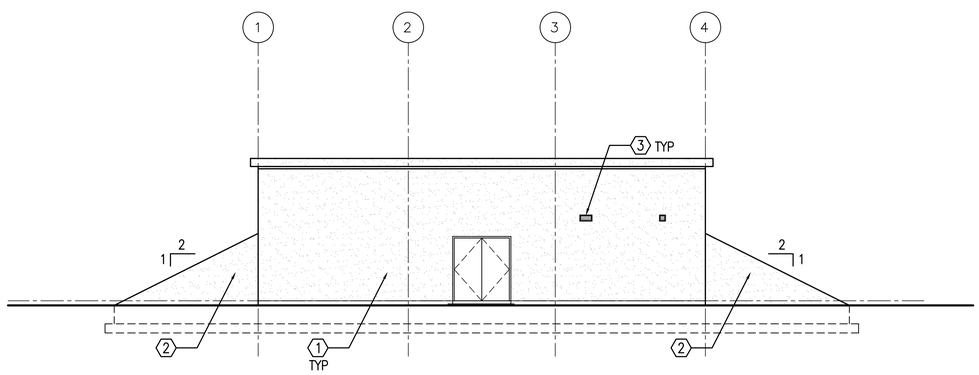

1 / A1 | A2 — EAST ELEVATION
SCALE: 1:100

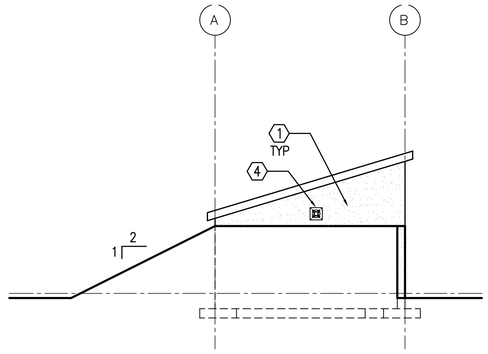

2 / A1 | A2 — SOUTH ELEVATION
SCALE: 1:100

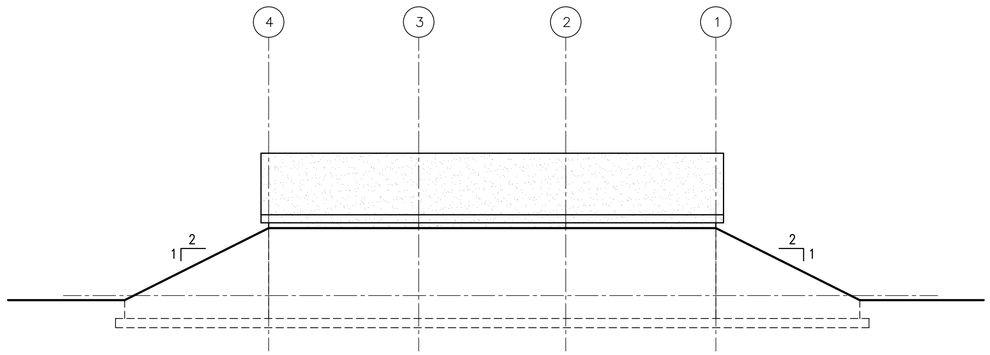

3 / A1 | A2 — WEST ELEVATION
SCALE: 1:100

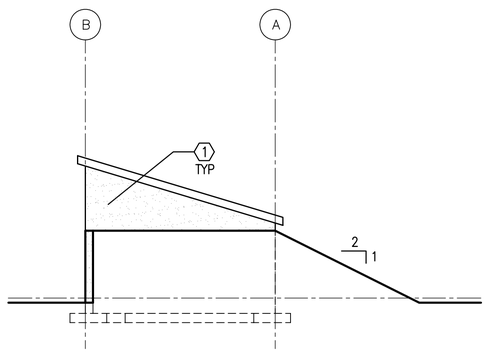

4 / A1 | A2 — NORTH ELEVATION
SCALE: 1:100

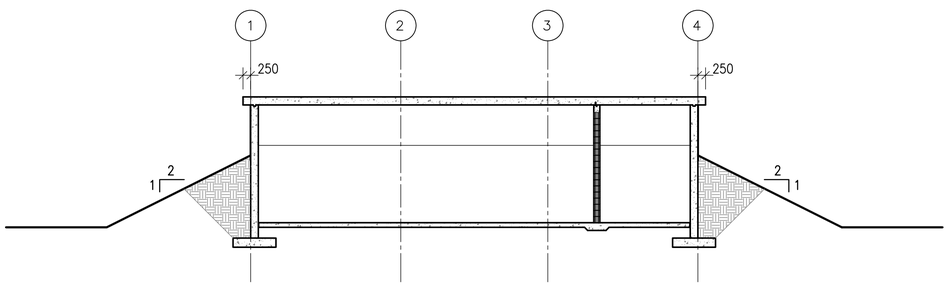

5 / A1 | A2 — LONGITUDINAL BUILDING SECTION
SCALE: 1:100

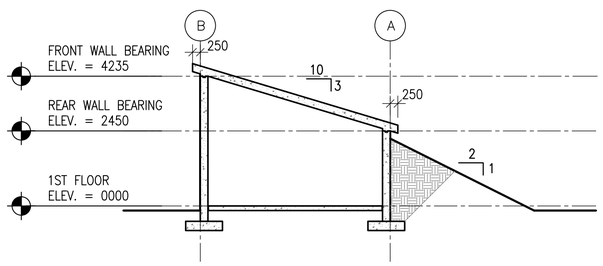

6 / A1 | A2 — TRANSVERSE BUILDING SECTION
SCALE: 1:100

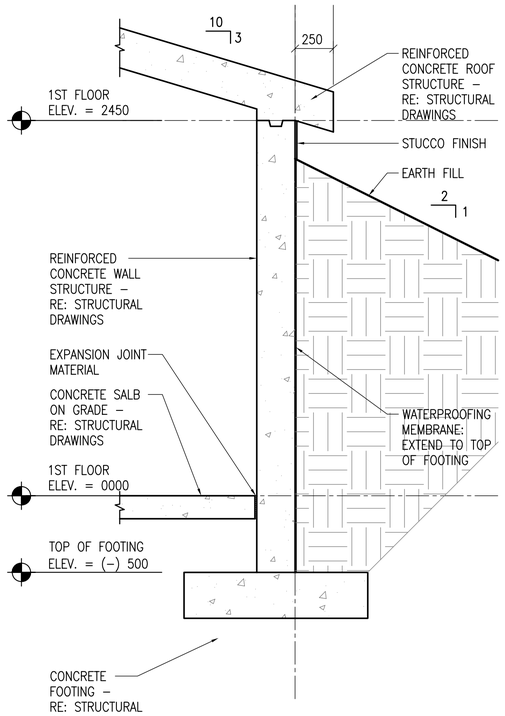

7 / A2 | A2 — WALL SECTION
SCALE: 1:20

KEY NOTES:

1. STUCCO ON CONCRETE WALLS
2. STUCCO ON CONCRETE WING WALLS
3. LOUVER – RE: MECHANICAL
4. EXHAUST FAN – RE: MECHANICAL

UNLESS OTHERWISE NOTED, LINEAR DIMENSIONS SHOWN ARE IN MILLIMETERS (MM)

0 400 800 1600
SCALE: 1: 20

0 2000 4000 8000
SCALE: 1: 100

US Army Corps of Engineers
Afghanistan Engineer District

SYMBOL	DESCRIPTION	DATE	APP'D

DESIGNED BY: BAKER	DWN BY: JEB	CHK BY: NLJ	DATE: 09-30-09
SUBMITTED BY: BAKER	FILE NO.: ANPSDA-102XXX		

Michael Baker Jr., Inc
A unit of Michael Baker Corporation
Airside Business Park
100 Airside Drive
Moon Township, PA 15108
www.mbakercorp.com

AFGHAN NATIONAL POLICE
STANDARD DESIGN
SECURE STORAGE

EXTERIOR ELEVATIONS,
BUILDING SECTIONS & WALL SECTION

SHEET REFERENCE NUMBER:
A2

100% SUBMISSION

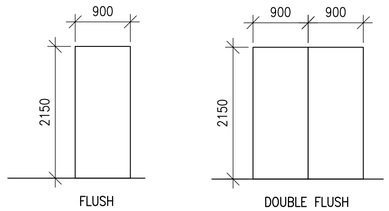

F 2F

1 A3 A3 DOOR TYPES

SCALE: 1:50

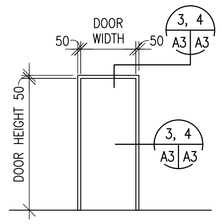

1

2 A3 A3 FRAME TYPES

SCALE: 1:50

DOOR TYPES NOTES:

1. INTERIOR AND EXTERIOR METAL DOORS AND FRAME COLORS SHALL MATCH ADJACENT WALL COLORS AS SELECTED BY THE CONTRACTING OFFICER.
2. HARDWARE SHALL BE HEAVY DUTY, COMMERCIAL GRADE, STAINLESS STEEL WITH A MATTE FINISH.
3. FRAMES, EXCEPT FIRE-RATED FRAMES, SHALL BE MOUNTED AND ADJUSTED IN ACCORDANCE WITH MANUFACTURER'S INSTRUCTIONS. FRAMES SHALL BE FASTENED WITH MINIMUM OF THREE FASTENING POINTS PER SIDE AT REGULAR INTERVALS.
4. DIMENSIONS SHOWN ON DOOR SCHEDULE ARE BASED UPON MODULAR MASONRY (OR ROUGH OPENING), HEIGHT OF 2200mm FOR STANDARD PERSONNEL DOORS. CONTRACTOR SHALL COORDINATE WITH DOOR SUPPLIER TO ENSURE THAT DIMENSIONS OF DOORS AND FRAMES PROVIDED ARE COMPATIBLE WITH DOOR OPENING DIMENSIONS.

HARDWARE TYPES:

HW-1 1-1/2 PR HINGES
1 EA LOCKSET W/LEVERS. GRADE 1, F93
1 EA CYLINDER, GRADE 1
1 EA HEAVY DUTY HASP, WELDED TO EXTERIOR FACE
1 EA THRESHOLD J32130

HW-2 3 PR HINGES
1 EA LOCKSET W/LEVERS. GRADE 1, F93
1 EA CYLINDER. GRADE 1
1 EA HEAVY DUTY HASP WELDED TO EXTERIOR FACE
2 EA FLSUH BOLTS
1 EA REMOVEABLE ASTRAGAL
1 EA THRESHOLD J32130

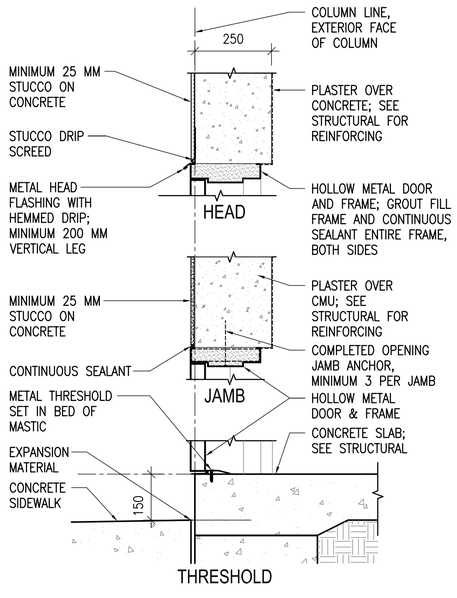

3 A3 A3 EXTERIOR DOOR DETAILS

SCALE: 1:10

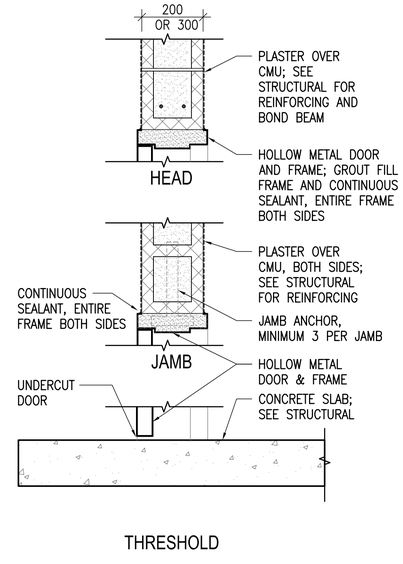

4 A3 A3 INTERIOR DOOR DETAILS

SCALE: 1:10

UNLESS OTHERWISE NOTED, LINEAR DIMENSIONS SHOWN ARE IN MILLIMETERS (MM)

0 200 400 800

SCALE: 1: 10

0 1000 2000 4000

SCALE: 1: 50

US Army Corps of Engineers
Afghanistan Engineer District

SYMBOL	DESCRIPTION	DATE	APP'D

DESIGNED BY: BAKER	DATE: 09-30-09
DWN BY: AR	SUBMITTED BY: BAKER
CHK BY: KRC	FILE NO.: ANPSDA-303XXX

Michael Baker Jr., Inc
A unit of Michael Baker Corporation
Airside Business Park
100 Airside Drive
Moon Township, PA 15108
www.mbakercorp.com

AFGHAN NATIONAL POLICE
STANDARD DESIGN
SECURE STORAGE

DOOR & WINDOW TYPES & DETAILS

SHEET REFERENCE NUMBER:
A3

100% SUBMISSION

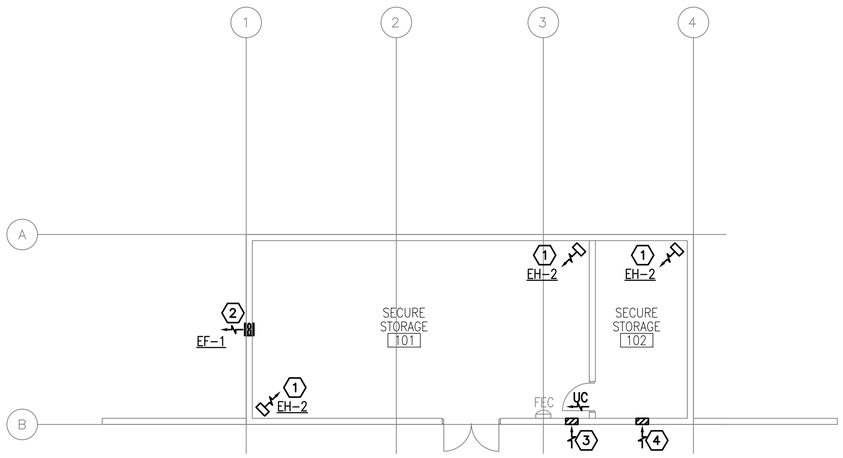

1 M1 M1 HVAC PLAN

SCALE: 1:100

N

GENERAL NOTES:

1. DO NOT SCALE DRAWINGS – ALL DIMENSIONS AND CONDITIONS SHALL BE CHECKED AND VERIFIED BY THE CONTRACTOR AT THE SITE.
2. ALL WORK PERFORMED ON THIS BUILDING SHALL BE IN COMPLIANCE WITH ALL PERTINENT CODES, RULES, ORDINANCES AND REGULATIONS OF THE GOVERNING AUTHORITIES.
3. ALL WORK PERFORMED UNDER AND IN CONNECTION WITH THESE DRAWINGS AND SPECIFICATIONS SHALL BE IN STRICT COMPLIANCE WITH THE LATEST SAFETY AND HEALTH STANDARDS.
4. UC – UNDERCUT DOOR (20mm).

NUMBERED NOTE:

1. EXPLOSION PROOF ELECTRIC UNIT HEATER SUSPENDED FROM STRUCTURE ABOVE.
2. WALL MOUNTED EXHAUST FAN.
3. 200x400 (8x16) LOW LEAKAGE GRAVITY WALL LOUVER FOR INTAKE. PROVIDE WEATHER PROOF LOUVER W/0.05mm (2") WASH DOWN FILTER AND SAND TRAP.
4. 200x200 (8x8) GRAVITY LOW LEAKAGE EXTERIOR LOUVER. SUPPLIED AND INSTALLED BY EC.

EXHAUST FAN SCHEDULE

NO.	TYPE	FAN CMS	DRIVE	HP	SP mmH20	ELECT. CHAR.	SWITCH
EF-1	WALL	0.100	DIRECT	FRACT	13	220/1/50	W/ STAT

NOTES:
1. WALL MOUNTED EXHAUST FAN MOUNT AT 600mm BELOW CEILING.
2. FANS SHALL HAVE LOW LEAKAGE GRAVITY LOUVER AND SECURITY GRILLE.
3. FANS SHALL BE EXPLOSION PROOF.

ELECTRIC UNIT HEATER SCHEDULE

NO.	CMS	KW	F.A.T. °C	ELECT. CHAR.	MOUNTING
EH-2	.200	2.6	33	370/1/50	CEILING HUNG

NOTES:
1. HEATERS SHALL BE EXPLOSION PROOF.

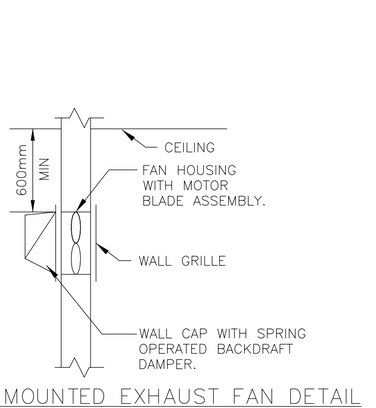

WALL MOUNTED EXHAUST FAN DETAIL
N.T.S.

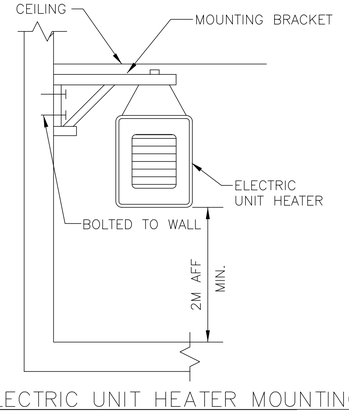

ELECTRIC UNIT HEATER MOUNTING
N.T.S.

US Army Corps of Engineers
Afghanistan Engineer District

SYMBOL	DESCRIPTION	DATE	APP'D

DESIGNED BY: RML	DATE: 09-30-09
DWN BY: JJN	SUBMITTED BY: BAKER
CHK BY: CJM	FILE NO.: ANPSDM-101XXX

Michael Baker Jr., Inc
A unit of Michael Baker Corporation
Airside Business Park
100 Airside Drive
Moon Township, PA 15108
www.mbakercorp.com

AFGHAN NATIONAL POLICE
STANDARD DESIGN
SECURE STORAGE

HVAC PLAN

SHEET REFERENCE NUMBER:
M1

100% SUBMISSION

POWER

- DISTRIBUTION PANELBOARD
- NEW PANELBOARD – SURFACE
- NEW PANELBOARD – RECESSED
- EXISTING PANELBOARD
- (G) GENERATOR
- TVSS TRANSIENT VOLTAGE SURGE SURPRESSOR
- TRANSFORMER (DRAWN TO SIZE)
- PS POWER SUPPLY
- CP CONTROL PANEL
- TC TIME CLOCK
- TIM ASTRONOMICAL TIME CLOCK– "SEE SPEC."
- R RELAY WITH RATING AND NUMBER OF POLES AS NOTED ON DRAWINGS– "SEE SPEC."
- J JUNCTION BOX
- (J) JUNCTION BOX – CEILING
- PB PULL BOX
- BD BUS DUCT HORIZONTAL
- BUS DUCT VERTICAL
- EMERGENCY POWER OFF PUSH BUTTON
- NON–FUSIBLE SAFETY SWITCH
- FUSIBLE SAFETY SWITCH
- (M) MOTOR
- ^{M} MOTOR STARTING SWITCH – 20A RATED
- ^{K} KEY SWITCH – 20A RATED
- FC FAN COIL – FURNISHED BY MECHANICAL CONTRACTOR, ELECTRICAL CONTRACTOR SHALL INSTALL AND PROVIDE POWER CONNECTION
- UH UNIT HEATER – FURNISHED BY MECHANICAL CONTRACTOR, ELECTRICAL CONTRACTOR SHALL INSTALL AND PROVIDE POWER CONNECTION
- D JUNCTION BOX FOR CONNECTION TO GARBAGE DISPOSAL
- CF LIGHT/HEATER/FAN – FURNISHED BY MECHANICAL CONTRACTOR, ELECTRICAL CONTRACTOR SHALL INSTALL AND PROVIDE POWER CONNECTION
- ELECTRIC WATER HEATER
- EPO WEATHERPROOF / EXPLOSION PROOF EMERGENCY POWER OFF PUSH–BUTTON TO BE INTERCONNECTED WITH GENERATOR SHUT DOWN CONTROL
- CF CEILING FAN – REFER TO SPECIFICATION SECTION 26 20 00

RECEPTACLES

- DUPLEX 20A BRITISH STANDARD UNSWITCHED SOCKETS
- GF DUPLEX 20A BRITISH STANDARD UNSWITCHED SOCKETS – 10mA GROUND FAULT INTERRUPTER TYPE
- WPGF DUPLEX 20A BRITISH STANDARD UNSWITCHED SOCKETS – 10mA GROUND FAULT INTERRUPTER TYPE WITH WEATHERPROOF COVER
- EXP DUPLEX 20A BRITISH STANDARD UNSWITCHED SOCKETS – EXPLOSION PROOF
- * INDICATES MOUNT DEVICE ABOVE COUNTER TOP

LIGHTNING PROTECTION

- AIR TERMINAL 20mm O.D. X 4m SOLID COPPER, NICKEL PLATED ON ADHESIVE BASE.
- EQ EQUIPMENT AIR TERMINAL
- TEST WELL WITH GROUND ROD(S)
- GROUND ROD
- G GROUND PLATE
- MAIN GROUND CONDUCTER CONCEALED WITHIN CONSTRUCTION
- MAIN GROUND CONDUCTOR EXPOSED ON EXPOSED ON BUILDING EXTERIOR SURFACE
- GROUND CONDUCTOR CAD WELDED TO GROUND CABLE OR EQUIPMENT
- GROUND CONDUCTOR CAD WELDED TO BUILDING STEEL COLUMN
- GROUND ROD TRIPOD, SPACED 10 FEET APART.
- LEVEL TO LEVEL CABLE

LIGHTING

- LIGHTING FIXTURE – SEE FIXTURE SCHEDULE FOR MORE INFORMATION
- LIGHTING FIXTURE – SEE FIXTURE SCHEDULE FOR MORE INFORMATION
- DOWNLIGHT
- LIGHTING FIXTURE ON NORMAL/EMERGENCY
- WALL MOUNTED LIGHT FIXTURE
- E EXIT SIGN – DIRECTIONAL ARROWS AS INDICATED ON DRAWINGS
- B BATTERY PACK WITH HEADS AS INDICATED ON DRAWINGS
- REMOTE HEAD FOR BATTERY PACK
- $ SINGLE POLE SWITCH – 20A RATED
- ^{3} 3–WAY SWITCH – 20A RATED
- ^{4} 4–WAY SWITCH – 20A RATED
- PC PHOTOCELL VOLTAGE TO MATCH CIRCUITRY
- LC LIGHTING CONTACTOR
- POLE MOUNTED SITE LIGHTING FIXTURE– NUMBER OF FIXTURES PER POLE AS INDICATED ON DRAWINGS
- EXTERIOR DIRECTIONAL LIGHTING FIXTURE
- a SMALL CASE LETTERS REPRESENTS LAMP(S) / SWITCHES. WHEN USED WITH AN OCCUPANCY SENSOR THIS INDICATES SENSOR WITH MANUAL OVERRIDE SWITCH

TELECOMMUNICATIONS

- TELEPHONE OUTLET(S) @ 18" AFF. U.N.O. WITH 3/4" RACEWAY TERMINATED ABOVE NEAREST ACCESSIBLE CEILING OR TO TELEPHONE TERMINAL BOARD IF NO ACCESSIBLE CEILING AVAILABLE. SEE TELE/DATA RISER DIAGRAM FOR OUTLET AND CABLE DESCRIPTION
- DATA OUTLET(S) @ 18" AFF. U.N.O. WITH 3/4" RACEWAY TERMINATED ABOVE NEAREST ACCESSIBLE CEILING OR TO DATA EQUIPMENT RACK IF NO ACCESSIBLE CEILING AVAILABLE. SEE TELE/DATA RISER DIAGRAM FOR OUTLET AND CABLE DESCRIPTION

TELECOMMUNICATIONS (CONTINUED)

- COMBINATION TELEPHONE/DATA OUTLET(S) @ 18" AFF. U.N.O. WITH 1" RACEWAY TERMINATED ABOVE NEAREST ACCESSIBLE CEILING OR TO TELE/DATA TERMINAL AREA IF NO ACCESSIBLE CEILING AVAILABLE. SEE TELE/DATA RISER DIAGRAM FOR OUTLET AND CABLE DESCRIPTION
- W WALL MTD. TELEPHONE OUTLET WITH 3/4" RACEWAY TERMINATED ABOVE NEAREST ACCESSIBLE CEILING OR TO TELEPHONE TERMINAL BOARD IF NO ACCESSIBLE CEILING AVAILABLE. SEE TELE/DATA RISER DIAGRAM FOR OUTLET AND CABLE DESCRIPTION
- (x)T INDICATES NUMBER OF TELEPHONE OUTLET(S) AND ASSOCIATED CABLING
- (x)D INDICATES NUMBER OF DATA OUTLET(S) AND ASSOCIATED CABLING
- (x)TF INDICATES NUMBER OF TELEPHONE OUTLETS AND ASSOCIATED CABLING WITH 1 OUTLET AND CABLE DEDICATED FOR FAX

SINGLE LINE SYMBOLS

- SWITCH
- BREAKER
- FUSE
- TRANSFORMER
- CAPACITOR
- GROUND
- CONTACT (NORMALLY OPEN)
- CONTACT (NORMALLY CLOSED)
- AUTOMATIC TRANSFER SWITCH
- MANUAL DOUBLE THROW SWITCH
- CURRENT TRANSFORMER
- INDICATES NEW ELECTRICAL EQUIPMENT
- C INDICATES NEW CONTROL WIRING AND CONDUIT
- EQUIPMENT OUTLINE

MISCELLANEOUS

- BRANCH CIRCUIT WIRING CONCEALED ABOVE CEILINGS, SURFACE MOUNTED ON WALLS
- BRANCH CIRCUIT WIRING – #10 AWG
- BRANCH CIRCUIT WIRING – UNDER FLOOR
- HOME RUN BACK TO PANEL
- CONDUIT TURNED DOWN
- CONDUIT TURNED UP
- LV LOW VOLTAGE WIRING AND CONDUIT
- CT–X CABLE TRAY ("X" DENOTES WIDTH)
- INDICATES CONTINUATION OF LINE

FIRE ALARM

- FACP FIRE ALARM CONTROL PANEL WITH BATTERY BACKUP
- F FIRE ALARM PULL STATION

FIRE ALARM (CONTINUED)

- F FIRE ALARM STROBE – WALL MOUNTED
- F FIRE ALARM AUDIBLE/STROBE – WM
- F FIRE ALARM HORN/STROBE – WM
- S SMOKE DETECTOR
- H HEAT DETECTOR CEILING MOUNTED
- D DUCT DETECTOR – PROVIDED BY EC, INSTALLED BY MC AND CONNECTED BY EC

DENOTATIONS & ABBREVIATIONS

AFF	ABOVE FINISHED FLOOR
C	CEILING MOUNTED
E	EMERGENCY
EC	ELECTRICAL CONTRACTOR
EPO	EMERGENCY POWER OFF
EXP	EXPLOSION PROOF
F	FIRE ALARM
FF	FLUSH FLOOR MOUNTED
FL	FLUORESCENT
FO	FIBER OPTIC
FSS	FUSED SAFETY SWITCH
G	GROUND FAULT INTERRUPTER
GC	GENERAL CONTRACTOR
HOA	HAND–OFF AUTO
I	INFRARED
ICD	INCANDESCENT
IG	ISOLATED GROUND
K	KEY
LV	LOW VOLTAGE
M	MOTOR
MC	MECHANICAL CONTRACTOR
NE	NORMAL/EMERGENCY
NFSS	NON–FUSED SAFETY SWITCH
PA	PAGING SYSTEM
PLC	PLUMBING CONTRACTOR
REL	RELOCATE
RED	RELOCATED
SL	SINGLE LINE
SS	SURGE SUPPRESSION
T	TELEPHONE
TL	TWIST LOCK

DENOTATIONS & ABBREVIATIONS (CONT.)

TP	TAMPER PROOF
UE	UNDERGROUND ELECTRIC
UF	UNDERGROUND FIBER
UT	UNDERGROUND TELEPHONE
W	WALL MOUNTED
WG	WIRE GUARD
WP	WEATHERPROOF
WPG	WEATHERPROOF/GROUND FAULT INTERRUPTER
WT	WATER TIGHT

GENERAL PROJECT NOTES:

G1. UNLESS OTHERWISE NOTED, PROVIDE ALL EQUIPMENT SHOWN ON THE PLANS. THE ELECTRICAL CONTRACTOR SHALL COORDINATE ALL SYMBOLS SHOWN ON THE PLANS WITH THE SYMBOL LIST. IT SHALL BE THE RESPONSIBILITY OF THE CONTRACTOR TO VERIFY THE INTENT OF ANY SYMBOL THAT IS SHOWN ON THE PLANS AND NOT INDICATED ON THE SYMBOL LIST WITH THE ENGINEER PRIOR TO BID.

G2. COORDINATE THE FINAL LOCATIONS OF ALL LIGHT FIXTURES WITH THE ARCHITECT'S REFLECTED CEILING PLANS. REPORT ANY DISCREPANCIES TO THE ARCHITECT PRIOR TO INSTALLATION.

G3. THE CONTRACTOR SHALL VERIFY THE LOCATION OF ALL UNDERGROUND UTILITIES WITHIN THE CONSTRUCTION AREA THREE (3) WORKING DAYS NOTICE BEFORE COMMENCE DIGGING. NOTIFY THE LOCAL OR STATE AUTHORITY HAVING JURISDICTION AND WAIT THE REQUIRED TIME BEFORE COMMENCING TO DIG.

G4. THE CONTRACTOR SHALL COORDINATE CONDUIT RUNS, CABLE TRAY, LIGHTING FIXTURES AND OTHER EQUIPMENT LOCATIONS WITH THE OTHER TRADE CONTRACTORS TO AVOID CONFLICTS.

G5. WHERE VOLTAGES AND FREQUENCIES ON THE DRAWINGS AND IN THE SPECIFICATIONS DIFFER FROM THE LOCAL ONES, ALL WORK SHALL BE PERFORMED USING THE LOCAL VOLTAGES AND FREQUENCIES.

G6. THE MINIMUM WIRE SIZE ON THE PROJECT SHALL BE 4mm2. THE MINIMUM CONDUIT SIZE SHALL BE 20mm. THE MINIMUM BREAKER SIZE SHALL BE 20 AMPS.

G7. THE CONTRACTOR SHALL PUT A MAXIMUM OF 6 DUPLEX SOCKETS ON A 20A SINGLE POLE CIRCUIT.

G8. WHERE THE 1010 SCOPE REVIEW, 1015 TECHNICAL REVIEW, DRAWINGS, AND SPECIFICATIONS DIFFER FROM AMERICAN CODES OR STANDARDS THE 1010, 1015, DRAWINGS, AND SPECIFICATIONS SHALL RULE.

G9. WORK FOR THE SECURE STORAGE SHALL BE DONE IN ACCORDANCE WITH DEPARTMENT OF DEFENSE STANDARD DOD 6055.9–STD.

G10. ALL CONDUIT AND DEVICES SHALL BE SURFACE MOUNTED UNLESS OTHERWISE INDICATED.

US Army Corps of Engineers
Afghanistan Engineer District

SYMBOL	DESCRIPTION	DATE	APP

DESIGNED BY: JRG
DWN BY: JRG
CHK BY: JRG
DATE: 09-30-09
SUBMITTED BY: BAKER
FILE NO.: ANPSDE-000XXX

Michael Baker Jr, Inc
A unit of Michael Baker Corporation
Airside Business Park
100 Airside Drive
Moon Township, PA 15108
www.mbakercorp.com

AFGHAN NATIONAL POLICE
STANDARD DESIGN
SECURE STORAGE

ELECTRICAL SYMBOLS AND ABBREVIATIONS

SHEET REFERENCE NUMBER:
E0

100% SUBMISSION

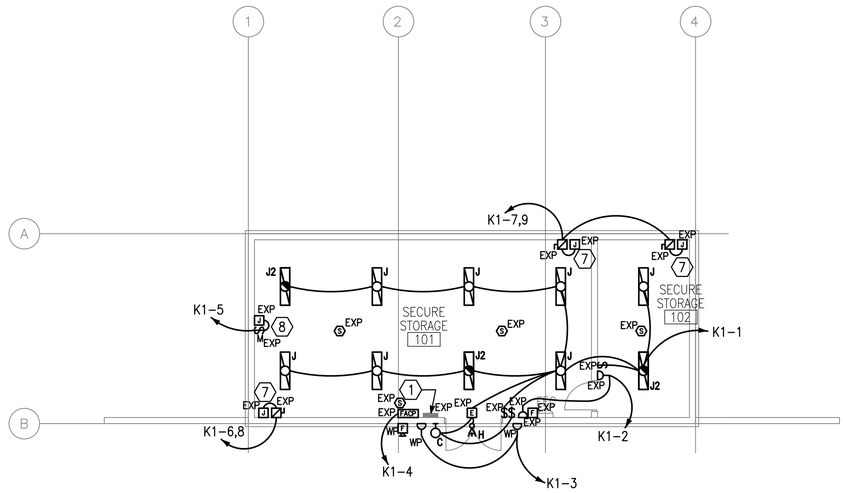

1 E1 E1 LIGHTING AND POWER PLAN

SCALE: 1:100

N

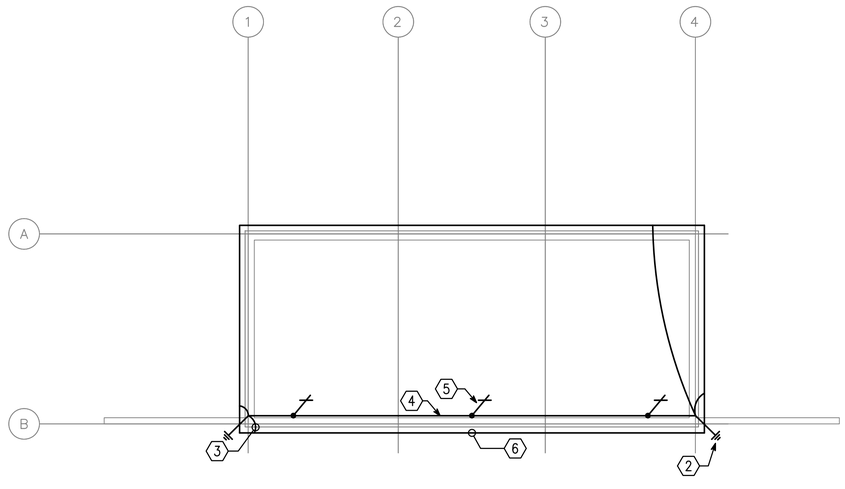

2 E1 E1 ROOF LIGHTNING PROTECTION PLAN

SCALE: 1:100

N

GENERAL NOTES:

1. REFER TO DRAWING #E0 FOR THE ELECTRICAL SYMBOLS LIST.
2. EXIT SIGNS SHALL BE WIRED AHEAD OF ANY LOCAL SWITCHING ON CIRCUITS.
3. REFER TO DRAWING #E3 FOR THE LIGHTING FIXTURE SCHEDULE.
4. REFER TO DRAWING #E2 FOR THE POWER RISER.
5. REFER TO DRAWING #E4 FOR PANEL SCHEDULES.
6. LIGHT FIXTURES INDICATED AS EMERGENCY SHALL BE PROVIDED WITH A BATTERY BACKUP BALLAST.
7. COORDINATE EXACT MOUNTING LOCATION OF DISCONNECTING MEANS FOR MECHANICAL AND PLUMBING EQUIPMENT IN THE FIELD.
8. FUSIBLE SAFETY SWITCHES THAT ARE NOT OTHERWISE IDENTIFIED SHALL BE 380V, 1P, 30A FUSED SAFETY SWITCHES WITH 20A FUSES.
9. ALL PANELS, DEVICES, EQUIPMENT, ETC. SHALL BE EXPLOSION–PROOF OR SHALL BE PROVIDED WITH AN EXPLOSION–PROOF ENCLOSURE. ALL WORK IN THIS BUILDING SHALL BE IN ACCORDANCE WITH NEC ARTICLE 511. EXPLOSION PROOF EQUIPMENT SHALL BE USED FOR ALL FIXTURES AND DEVICES. PROVIDE CONDUIT SEALS WHERE REQUIRED. ALL WIRING SHALL BE IN ACCORDANCE WITH NEC ARTICLE 501. FOR CLASS I LOCATIONS.

NUMBERED NOTES:

1. PANEL K1 WITH NEMA 4X EXPLOSION–PROOF COVER.
2. INSTALL DOWN CONDUCTOR IN 25MM SCHEDULE 80 PVC CONDUIT TO 20MM DIAMETER X 3 METERS SOLID COPPER TINNED GROUND ROD. (TYPICAL)
3. CADWELD TO BUILDING STRUCTURE AT 18 METERS ON CENTER AROUND THE ENTIRE PERIMETER OF THE BUILDING. (TYPICAL)
4. 120mm LIGHTNING PROTECTION CABLE.
5. AIR TERMINAL. (TYPICAL)
6. (1) 120.0MM2 BARE, TINNED, COPPER COUNTERPOISE GROUND 700MM BELOW GRADE.
7. PROVIDE POWER CONNECTION TO ELECTRIC UNIT HEATER #2. SEE DRAWINGS #M1 AND #E4 FOR MORE INFORMATION.
8. PROVIDE POWER CONNECTION TO EXHAUST FANS. SEE DRAWINGS #M1 AND #E4 FOR MORE INFORMATION.

UNLESS OTHERWISE NOTED, LINEAR DIMENSIONS SHOWN ARE IN MILLIMETERS (MM)

1 0 1 2 3 4 5 6 7 8 9

1:100

US Army Corps of Engineers

Afghanistan Engineer District

SYMBOL	DESCRIPTION	DATE	APP.

DESIGNED BY:	DATE:
JRG	09-30-09
DWN BY:	SUBMITTED BY:
JRG	BAKER
CHK BY:	FILE NO.:
JRG	ANPSDE-101XXX

Michael Baker Jr., Inc
A unit of Michael Baker Corporation
Airside Business Park
100 Airside Drive
Moon Township, PA 15108
www.mbakercorp.com

AFGHAN NATIONAL POLICE
STANDARD DESIGN
SECURE STORAGE

LIGHTING AND POWER PLAN

SHEET REFERENCE NUMBER:

E1

100% SUBMISSION

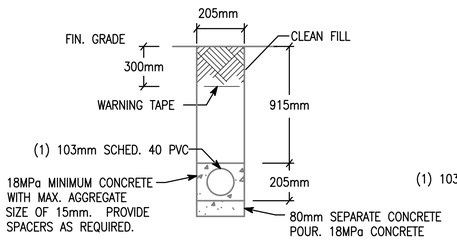

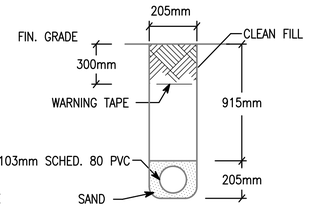

NOTE: PVC CONDUIT SHALL BE DIRECT BURIED SCHEDULE 80 FOR NO TRAFFIC AREAS AND CONCRETE-ENCASED SCHEDULE 40 FOR UNDER ROADWAYS OR TRAFFIC AREAS.

1 E2 | E2 TYPICAL DUCT BANK DETAILS FOR CONDUIT IN SAND OR CONCRETE

SCALE: N.T.S.

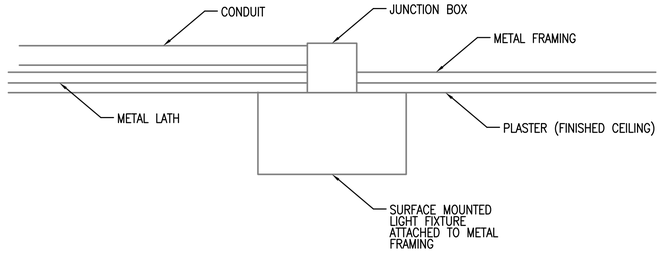

2 E2 | E2 TYPICAL DETAIL FOR SURFACE MOUNTED LIGHT FIXTURES

SCALE: N.T.S.

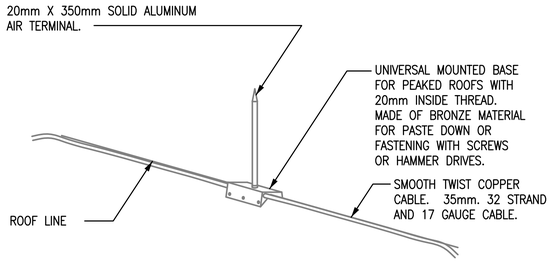

3 E2 | E2 LIGHTNING PROTECTION AIR TERMINAL DETAIL

SCALE: N.T.S.

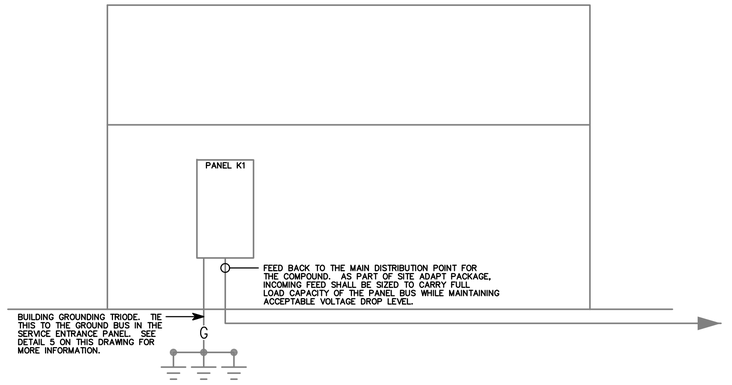

4 E2 | E2 B.1 RISER DIAGRAM

SCALE: N.T.S.

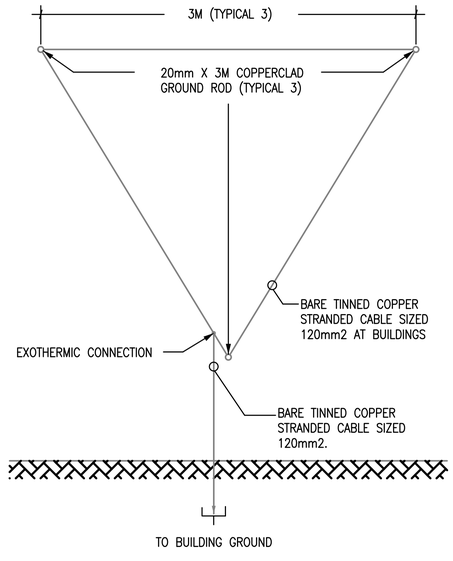

5 E2 | E2 GROUND TRIPOD SYSTEM DETAIL - PLAN

SCALE: N.T.S.

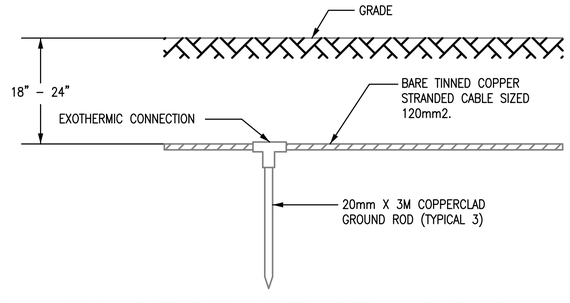

6 E2 | E2 GROUND TRIPOD SYSTEM DETAIL - ELEVATION

SCALE: N.T.S.

US Army Corps of Engineers
Afghanistan Engineer District

SYMBOL	DESCRIPTION	DATE	APR

DESIGNED BY: JRG	DATE: 09-30-09
DWN BY: JRG	SUBMITTED BY: BAKER
CHK BY: JRG	FILE NO.: ANPSDE-502XXX

Michael Baker Jr., Inc
A unit of Michael Baker Corporation
Airside Business Park
100 Airside Drive
Moon Township, PA 15108
www.mbakercorp.com

AFGHAN NATIONAL POLICE
STANDARD DESIGN
SECURE STORAGE

DETAILS

SHEET REFERENCE NUMBER:
E2

100% SUBMISSION

LIGHTING FIXTURE SCHEDULE

FIXTURE MARK	STYLE NUMBER AND TYPE	NUMBER AND TYPE OF LAMPS	VOLTAGE	MOUNTING	NOTES
C	INCANDESCENT ONE PIECE W/ APPROVED LENS STABILIZED HIGH IMPACT POLY CARBONATE.	(1) A19 – 100W INCANDESCENT	220V – 1ø 50HZ	WALL MOUNTED ABOVE EXTERIOR DOORS	
H	REMOTE HEAD EXTERIOR LIGHT HEAD POWERED FROM EXIT SIGN BATTERY– 12V DOUBLE HEAD CORROSION RESISTANT WITH UL34 WEATHERPROOF CONSTRUCTION	(2) 12W/12V HALOGEN LAMP	12V – 1ø 50HZ	EXTERIOR WALL MOUNTED AT TOP OF DOOR HEIGHT	
J	EXPLOSION–PROOF (2) LAMP FIXTURE PROVIDED WITH LAMPS. COPPER FREE, ALUMINUM HOUSING, TEMPERED BOROSILICATE GLASS, AND BIAX LAMPS WITH WIRE GUARD	(2) 40W 3500K BIAX FLUORESCENT LAMPS	220V – 1ø 50HZ	PENDANT MOUNTED FROM SLOPED CEILINGS	FURNISHED WITH LAMPS AND WIRE GUARD
J2	SAME AS FIXTURE 'A' WITH EMERGENCY BALLAST	(2) 40W 3500K BIAX FLUORESCENT LAMPS	220V – 1ø 50HZ	PENDANT MOUNTED FROM SLOPED CEILINGS	FURNISHED WITH LAMPS, WIRE GUARD, EMERGENCY BALLAST WITH SELF TEST SWITCH
[E]	UNIVERSAL MOUNT ENGINEER GRADE THERMOPLASTIC HOUSING EXIT SIGN WITH LED LAMPS, RED LETTERS 6" IN HEIGHT WITH ARROWS AS INDICATED, WITH 12V CADMIUM BATTERY WITH REMOTE HEAD CAPABILITY	LED LAMPS	220V – 1ø 50HZ	UNIVERSAL MOUNTING	

FIXTURE MARK 'C'

INCANDESCENT ONE PIECE WITH APPROVED LENS, STABILIZED HIGH IMPACT POLY CARBONATE

FIXTURE MARK 'H'

REMOTE HEAD EXTERIOR LIGHT HEAD POWERED FROM EXIT SIGN BATTERY– 12V DOUBLE HEAD CORROSION RESISTANT WITH UL34 WEATHERPROOF CONSTRUCTION

FIXTURE MARK '[E]'

UNIVERSAL MOUNT ENGINEER GRADE THERMOPLASTIC HOUSING EXIT SIGN WITH LED LAMPS, RED LETTERS 6" IN HEIGHT WITH ARROWS AS INDICATED, WITH 12V CADMIUM BATTERY

FIXTURE MARK 'J'

EXPLOSION–PROOF (2) LAMP FIXTURE PROVIDED WITH LAMPS. COPPER FREE, ALUMINUM HOUSING, TEMPERED BOROSILICATE GLASS, AND BIAX LAMPS WITH WIRE GUARD

FIXTURE MARK 'J2':
SAME FIXTURE AS 'J' WITH EMERGENCY BALLAST.

US Army Corps of Engineers
Afghanistan Engineer District

SYMBOL	DESCRIPTION	DATE	APP.

DESIGNED BY:	DATE:
JRG	09-30-09
DWN BY:	SUBMITTED BY:
JRG	BAKER
CHK BY:	FILE NO.:
JRG	ANPSDE-603XXX

Michael Baker Jr., Inc
A unit of Michael Baker Corporation
Airside Business Park
100 Airside Drive
Moon Township, PA 15108
www.mbakercorp.com

AFGHAN NATIONAL POLICE
STANDARD DESIGN
SECURE STORAGE

LIGHT FIXTURE SCHEDULE

SHEET REFERENCE NUMBER:
E3

100% SUBMISSION

PANELBOARD K1 SURFACE MOUNTED ASYM. A.I.C. MIN.

AMP. MAIN LUGS (OR) 100 AMP. MAIN BREAKER W/ 100 AMP. TRIP

CIRCUIT BREAKER TYPE 380/220 VOLTS 3 PHASE 4 WIRE 50 HZ 100 AMP. BUS

CKT. NO.	TRIP AMPS	NO. POLES	WIRE MM²	GND MM²	CONDUIT MM	LOAD SERVED	LOAD-V.A. AØ	LOAD-V.A. BØ	LOAD-V.A. CØ	LOAD-V.A. AØ	LOAD-V.A. BØ	LOAD-V.A. CØ	LOAD SERVED	CONDUIT MM	GND MM²	WIRE MM²	NO. POLES	TRIP AMPS	CKT. NO.
1	20	1	4.0	4.0	20	LIGHTING - 101, 102	0.6			0.6			RECEPTACLES - 102	20	4.0	4.0	1	20	2
3	20	1	4.0	4.0	20	RECEPTACLES-OUTDOOR		0.6			0.5		F.A.C.P.	20	4.0	4.0	1	20	4
5	20	1	4.0	4.0	20	EF-1			0.2			1.3	EH-2	20	4.0	4.0	2	20	6
7	20	2	4.0	4.0	20	EH-2	1.3			1.3								20	8
9	20							1.3					SPARE				1	20	10
11	20	1				SPARE							SPARE				1	20	12
							1.9	1.9	0.2	1.9	0.5	1.3							

TOTAL CONN. LOAD PER PHASE (KVA): AØ 3.8 BØ 2.4 CØ 1.5

TOTAL CONN. LOAD 7.7 KVA. 70 % DEMAND = ESTIMATED DEMAND LOAD 5.4 SUPPLIED FROM MAIN SWITCHGEAR DISTRIBUTION

• MAIN BREAKER SHALL BE 3P EARTH GROUND TYPE

US Army Corps of Engineers

Afghanistan Engineer District

SYMBOL	DESCRIPTION	DATE	APP.

DESIGNED BY: JRG	DATE: 09-30-09
DWN BY: JRG	SUBMITTED BY: BAKER
CHK BY: JRG	FILE NO.: ANPSDE-604XXX

Michael Baker Jr., Inc
A unit of Michael Baker Corporation
Airside Business Park
100 Airside Drive
Moon Township, PA 15108
www.mbakercorp.com

AFGHAN NATIONAL POLICE
STANDARD DESIGN
SECURE STORAGE

PANEL SCHEDULES AND RISER DIAGRAM

SHEET REFERENCE NUMBER:

E4

100% SUBMISSION