Appendix A

Standard Design Drawings

MSP - CONCEPT SITE PLAN

100a	ADMINISTRATION BUILDING
100b	ADMINISTRATION BUILDING
101	FRU BUILDING
102	FEMALE BARRACKS
104	WELL HOUSE
105	VEHICLE MAINTENANCE BLDG
106	POL BUILDING
107	MMT BUILDING
108a-b	WAREHOUSE - LARGE
109	SECURE STORAGE BUILDING (ASP)
110	LATRINE
111	GUARD HOUSE
112a-d	GUARD SHACKS
113a-d	GUARD TOWERS
114a-c	TRASH COLLECTION POINT
115	WAREHOUSE -SMALL
116a-b	ECP CANOPY
117	not used
118	MMT BUILDING (OPTIONAL ITEM)
119	MAIN ECP
120	SECONDARY ECP
121	PERIMETER SECURITY WALL
122a-b	FLAGPOLES
123	FUEL STORAGE, GENERATOR CANOPY, AND VEHICLE FUEL POINT
124	WATER TANK
125	TRUCK WAITING AREA
126	SECURE VEHICLE STORAGE
127a-f	PERSONNEL BUNKER
128	SEPTIC TANK/FIELD

CONVOY ASSEMBLY AREA
7.3m WIDE ASPHALT ROAD
7.3m WIDE ASPHALT ROAD
7.3m WIDE ASPHALT ROAD
7.3m WIDE ASPHALT ROAD
CONCRETE APRON
3.0m CONCRETE APRON
3.0m CONCRETE APRON
2.4m HIGH CHAIN LINK FENCE
R=30m MINIMUM DISTANCE BETWEEN WELL AND SANITARY & STORM SYSTEMS
R=60m MINIMUM DISTANCE BETWEEN WELLS

FIELD VERIFY

Ministry of Interiors Supply Point (MSP) Concept Site Plan

SCALE: 1 : 600

US Army Corps of Engineers
AFGHANISTAN ENGINEER DISTRICT

U.S. ARMY CORPS OF ENGINEERS
AFGHANISTAN DISTRICT
APO AE 09356

AFGHAN NATIONAL POLICE
MINISTRY OF INTERIOR SUPPLY POINT (MSP)
VARIOUS LOCATIONS, AFGHANISTAN

CONCEPT SITE PLAN

SHEET IDENTIFICATION
MP001
SHEET 1 OF 1

ENGINEERING AND CONSTRUCTION DIVISION
US ARMY ENGINEER DISTRICT, AFGHANISTAN
APO AE, 09356

AFGHANISTAN NATIONAL POLICE (ANP) DISTRICT HEADQUARTERS COMPOUNDS 1 STORY HQ

APPENDIX A

VARIOUS LOCATIONS, AFGHANISTAN

SECTION/DETAIL CROSS REFERENCING CONVENTIONS

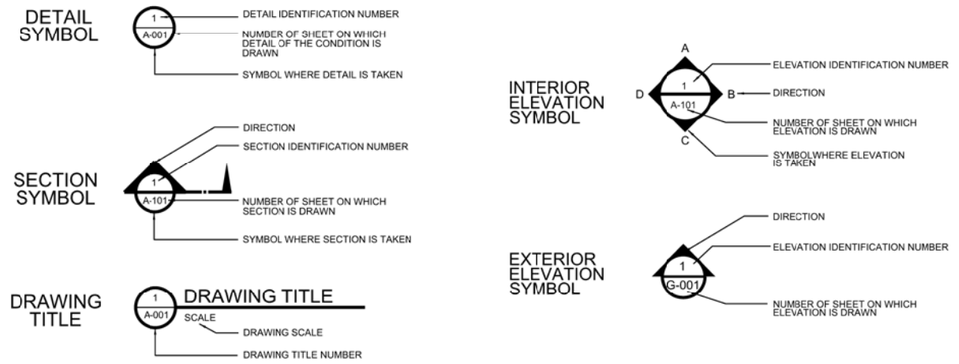

SCHEDULE OF DRAWINGS

SHEET NO	DWG CODE	SHEET REFERENCE NO	DESCRIPTION	REV STATUS
			GENERAL	
1		G-001	TITLE SHEET & SCHEDULE OF DRAWINGS	
			SITE DESIGN	
		C-1	SITE PLAN	
		C-2	DETAILS	
		C-3	DETAILS	
		C-4	WELL HOUSE PLAN AND SECTION	
		C-5	SEPTIC TANK DETAILS	
		XM-1	MECHANICAL SITE PLAN	
		XE-1	ELECTRICAL SITE PLAN	
			1 STORY BUILDING (A)	
		A-1	FIRST FLOOR PLAN	
		A-2	ROOF PLAN	
		A-3	BUILDING SECTIONS	
		A-4	WALL SECTION	
		A-5	BUILDING ELEVATIONS	
		A-6	BUILDING ELEVATIONS	
		A-7	ENLARGED TOILET PLANS	
		A-8	DOOR SCHEDULE AND DOOR TYPES	
		A-9	ROOM FINISH SCHEDULE	
		S-1	FOUNDATION PLAN	
		S-2	GRADE BEAM PLAN	
		S-3	LOWER ROOF BEAM PLAN	
		S-4	HIGH ROOF BEAM PLAN	
		S-5	FOOTING AND COLUMN DETAILS	
		S-6	BEAM DETAILS	
		S-7	STANDARD BEAM AND COLUMN DETAILS	
		M-1	HVAC PLAN	
		M-2	HEATING PLAN	
		M-3	ROOF PLAN	
		P-1	PLUMBING PLAN	
		P-2	ENLARGED PLUMBING PLANS -DOMESTIC WATER	
		P-3	ENLARGED PLUMBING PLANS -WASTE AND DRAINS	
		P-4	ENLARGED PLUMBING PLANS -WASTE AND DRAINS	
		P-5	DOMESTIC WATER RISER DIAGRAM	
		P-6	PLUMBING SCHEDULES	
		E-1	LIGHTING PLAN	
		E-2	POWER PLAN	
		E-3	PANEL SCHEDULE	

SHEET NO	DWG CODE	SHEET REFERENCE NO	DESCRIPTION	REV STATUS
			GUARD TOWER (B)	
		A-1	FLOOR PLAN, SECTION ELEVATION AND ROOF PLAN	
		S-1	FOUNDATION AND SLAB PLAN ROOF FRAMING PLAN	
		E-1	LIGHTING & POWER PLAN	
			GUARD SHACK (C)	
		A-1	FLOOR PLANS AND ELEVATIONS	
		S-1	FOUNDATION AND SLAB PLAN ROOF FRAMING PLAN	
		E-1	LIGHTING PLAN	
			POWER PLANT (D)	
		E-1	ONE LINE DIAGRAM	
			WELL HOUSE (E)	
		A-1	FLOOR PLAN, ELEVATIONS AND SCHEDULES	
		S-1	FOUNDATION PLAN AND ROOF PLAN	
		S-2	FOOTING DETAILS	
		S-3	SLAB-ON-GRADE DETAILS	
		M-1	HVAC PLAN	
		E-1	LIGHTING AND POWER PLAN	
		E-2	ELECTRICAL SCHEDULES	
			STANDARD DETAILS	
		SA-1	ABBREVIATIONS AND SYMBOLS	
		SA-2	WALL SECTION AND ROOF DETAILS	
		SA-3	VEHICLE RE-FUELING POINT	
		SS-1	GENERAL NOTES AND ABBREVIATIONS	
		SS-2	STANDARD DETAILS	
		SS-3	DETAILS	
		SS-4	MANUAL DROP ARM GATE	
		SM-1	LEGEND AND ABBREVIATIONS	
		SM-2	MECHANICAL SCHEDULES	
		SM-3	MECHANICAL STANDARD DETAILS	
		SM-4	PROPANE COOKING STOVE	
		SP-1	LEGENDS AND ABBREVIATIONS	
		SP-2	STANDARD PLUMBING DETAILS	
		SP-3	STANDARD PLUMBING DETAILS	
		SE-1	LEGEND AND ABBREVIATIONS	
		SE-2	STANDARD LIGHTING DETAILS	

SHEET NO	DWG CODE	SHEET REFERENCE NO	DESCRIPTION	REV STATUS
			STANDARD DETAILS	
		SE-3	DUCTBANK DETAILS	
		SE-4	STANDARD ELECTRICAL DETAILS	
		SE-5	POWER PLANT DETAILS	
		SE-6	HAND HOLE DETAILS	
		SE-7	WATER & SEWER TRENCH DETAIL	
		SE-8	TRUST BLOCK DETAIL	

PROJECT COORDINATION

U.S. ARMY ENGINEER DISTRICT, AFGHANISTAN

PROJECT MANAGER _____ DATE _____

CHIEF, DESIGN BRANCH _____ DATE _____

THIS PROJECT WAS DESIGNED BY AFGHANASTAN ENGINEER DISTRICT OF THE U.S ARMY CORPS OF ENGINEERS. THE INITIALS OR SIGNATURES AND REGISTRATION DESIGNATIONS OF INDIVIDUALS APPEAR ON THESE DOCUMENTS WITHIN THE SCOPE OF THEIR EMPLOYMENT AS REQUIRED BY ER 1110-1-8152.

US ARMY CORPS OF ENGINEERS AFGHANISTAN ENGINEER DISTRICT

DESIGNED BY:
DRAWN BY:
CKD BY:
REVIEWED BY:
SUBMITTED BY:
DATE: XX-XX-XX
DESIGN FILE NO.:
DRAWING CODE:
FILE NAME: G-T3.DGN
PLOT SCALE: _____
PLOT DATE: XX-XX-XX
REV: ___
DESCRIPTION / DATE / APPR.

U.S. ARMY ENGINEER DISTRICT, AFGHANISTAN
CORPS OF ENGINEERS
APO AE 96338

ENGINEERING AND CONSTRUCTION DIVISION

AFGHANISTAN NATIONAL POLICE (ANP) DISTRICT HEADQUARTERS COMPOUNDS -1 STORY HQ
VARIOUS LOCATIONS, AFGHANISTAN

TITLE SHEET
SCHEDULE OF DRAWINGS

SHEET REFERENCE NUMBER:
G-001
SHEET 1 OF --

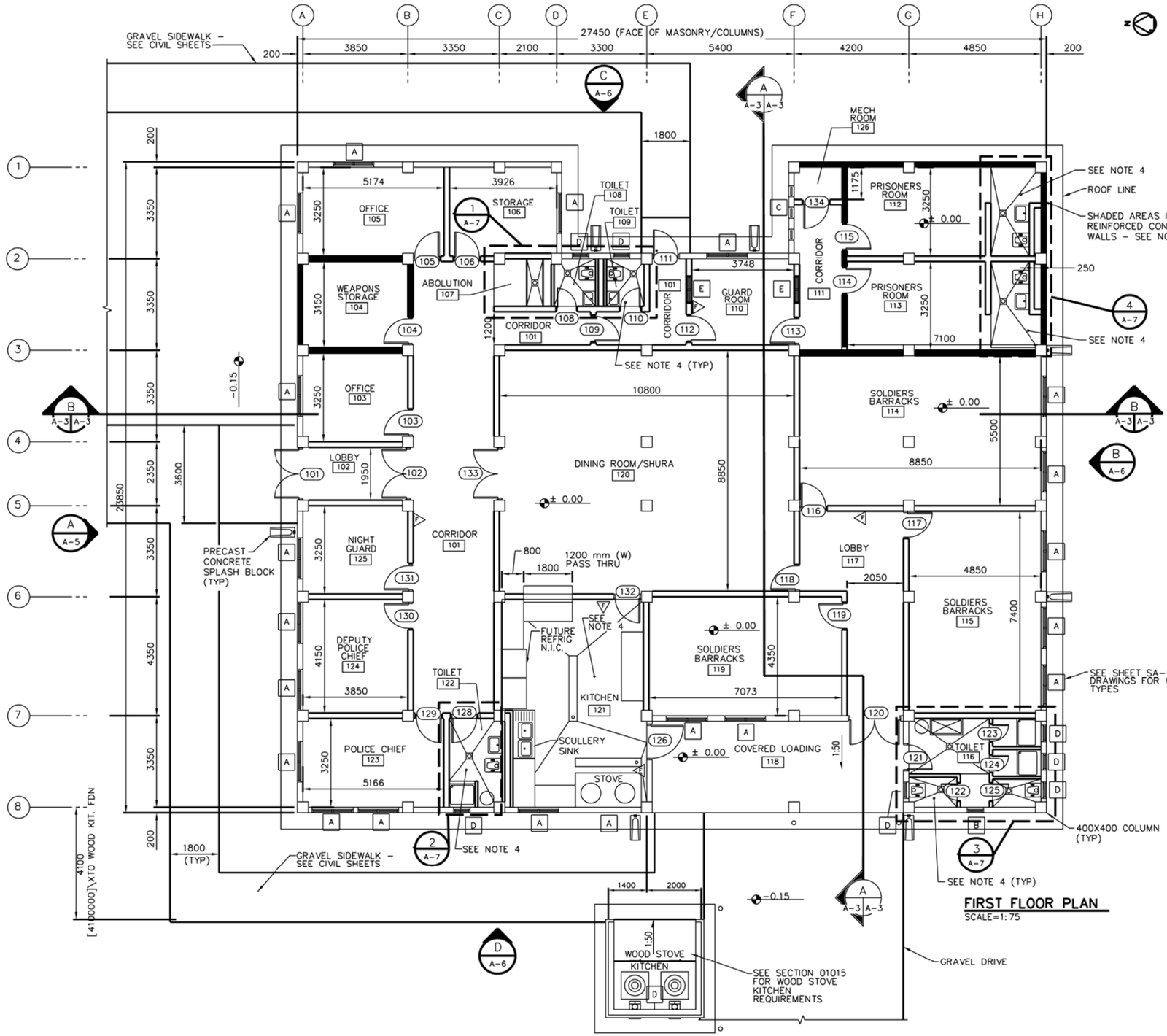

FIRST FLOOR PLAN
SCALE=1: 75

GENERAL NOTES:

1. PROVIDE PORTABLE FIRE EXTINGUISHERS, ABC DRY CHEMICAL 4A:60B:C
2. ALL INTERIOR WALLS SHALL BE 200 mm THICK CMU AND SHALL EXTEND TO THE BOTTOM OF STRUCTURE ABOVE AND CENTER ON COLUMNS UNLESS NOTED OTHERWISE.
3. TOILET AND SHOWER PARTITIONS SHALL BE 2200mm HIGH.
4. SLOPE FLOORS IN KITCHENS AND TOILET/SHOWER AREAS 1:50 MINIMUM TO TRENCH DRAINS AND FLOOR DRAINS WHERE INDICATED. SLOPE TRENCH DRAINS 1:50 TO DRAIN AT ONE END. SEE ENLARGED ARCHITECTURAL DRAWINGS, PLUMBING DRAWINGS, AND STRUCTURAL DRAWINGS.
5. INTERIOR AND EXTERIOR WALLS AROUND PRISONERS ROOMS AND WEAPONS STORAGE, AS INDICATED BY SHADING, SHALL BE 200mm THICK REINFORCED CONCRETE – SEE STRUCTURAL FOR DETAILS.
6. ALL CORRIDOR DOORS ARE 20 MINUTE FIRE RATED.
7. PROVIDE PROPANE STORAGE AREA TO INCLUDE CONCRETE SLAB, PROTECTIVE WALL WEATHER SHELTER AND CHAIN LINK FENCING

US ARMY CORPS OF ENGINEERS AFGHANISTAN ENGINEER DISTRICT

REV	DESCRIPTION	DATE	APPR

DESIGNED BY:
DRWN BY:
CKD BY:
REVIEWED BY:
SUBMITTED BY:
DATE: XX-XX-XX
DESIGN FILE NO:
DRAWING CODE:
FILE NAME:
PLOT SCALE:
PLOT DATE: XX-XX-XX

U.S. ARMY ENGINEER DISTRICT, AFGHANISTAN
CORPS OF ENGINEERS
APO AE 96338

ENGINEERING AND CONSTRUCTION DIVISION

AFGHANISTAN NATIONAL POLICE (ANP) DISTRICT HEADQUARTERS COMPOUNDS - 1 STORY HQ
VARIOUS LOCATIONS, AFGHANISTAN
1 STORY BUILDING

FIRST FLOOR PLAN

SHEET REFERENCE NUMBER:
A
A-1

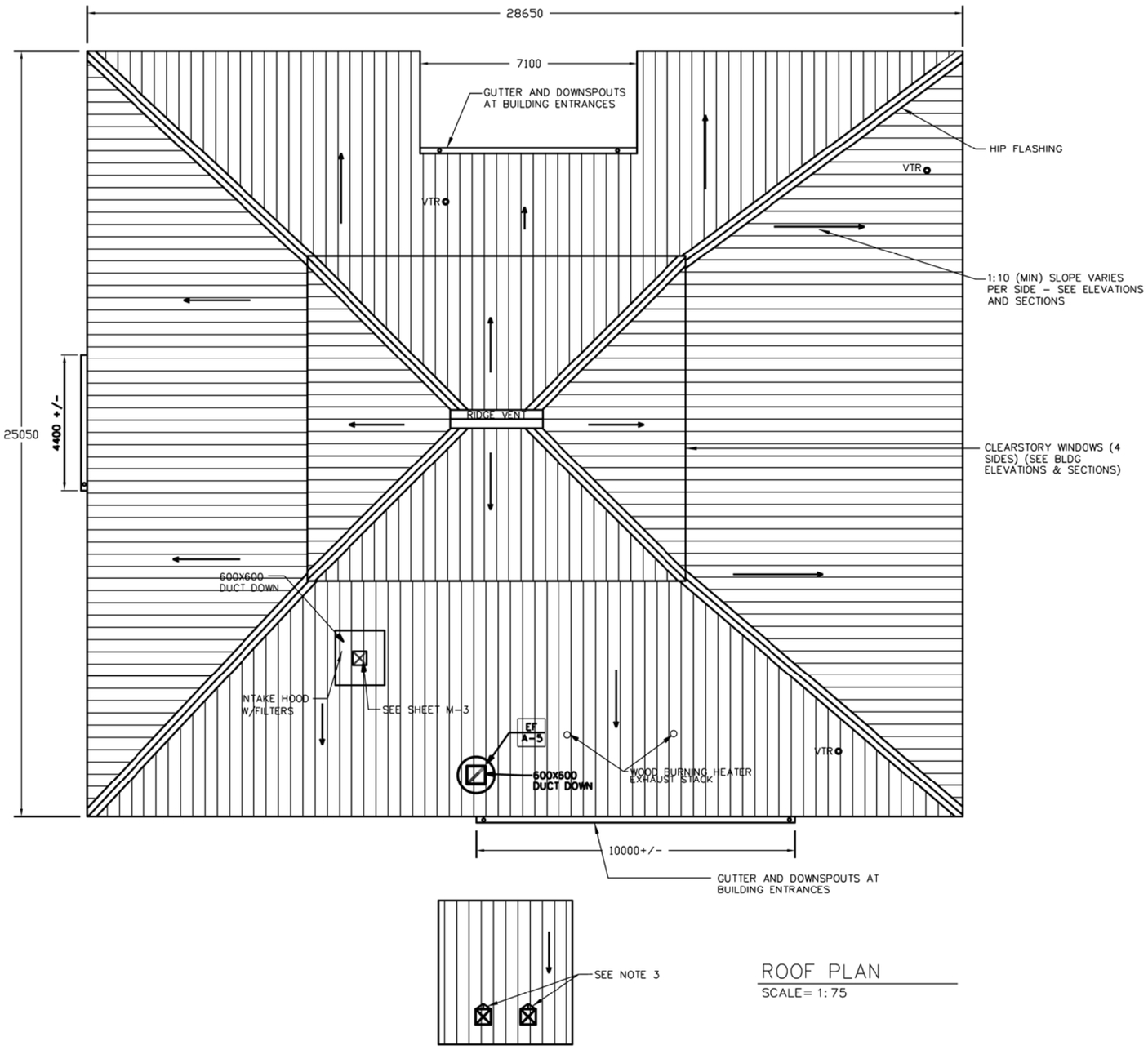

ROOF PLAN
SCALE= 1:75

N

NOTE:

1. TYPICAL ROOF SLOPE IS 1 IN 10.
2. ALL ROOF PENETRATIONS SHALL BE PROPERLY FLASHED AND SEALED WEATHER TIGHT.
3. PROVIDE WATER TIGHT SHEET METAL CRICKETS, FLASHING AND SEALANT PER ROOFING MANUFACTURERS RECOMMENDATIONS AT EACH PENETRATION. ALIGN STANDING SEAMS WITH FLASHING AT CRICKETS SUCH THAT WATER IS DIVERTED AROUND PENETRATIONS.
4. ROOF DIMENSIONS IN METERS AS SHOWN
5. EXHAUST STACK FOR KITCHEN STOVE MUST MIN 1020 mm ABOVE ROOF LINE.

3 1.50 0 3 4.5
1:75

US ARMY CORPS OF ENGINEERS
AFGHANISTAN ENGINEER DISTRICT

SYMBOL	DESCRIPTION	DATE	APPR

REV	DESCRIPTION	DATE	APPR

DESIGNED BY:
DRAWN BY:
CKD BY:
REVIEWED BY:
SUBMITTED BY:
DATE: XX-XX-XX
DESIGN FILE NO.
DRAWING CODE
FILE NAME:
PLOT SCALE:
PLOT DATE: XX-XX-XX

U.S. ARMY ENGINEER DISTRICT, AFGHANISTAN
CORPS OF ENGINEERS
APO AE 96338

ENGINEERING AND CONSTRUCTION DIVISION

AFGHANISTAN NATIONAL POLICE (ANP) DISTRICT HEADQUARTERS COMPOUNDS - 1 STORY HQ
VARIOUS LOCATIONS, AFGHANISTAN
1 STORY BUILDING

ROOF PLAN

SHEET REFERENCE NUMBER:
A
A-2

GENERAL NOTES:

1. UNLESS NOTED OTHERWISE, ELEVATIONS ARE SHOWN IN METERS ABOVE OR BELOW FINISHED FLOOR.

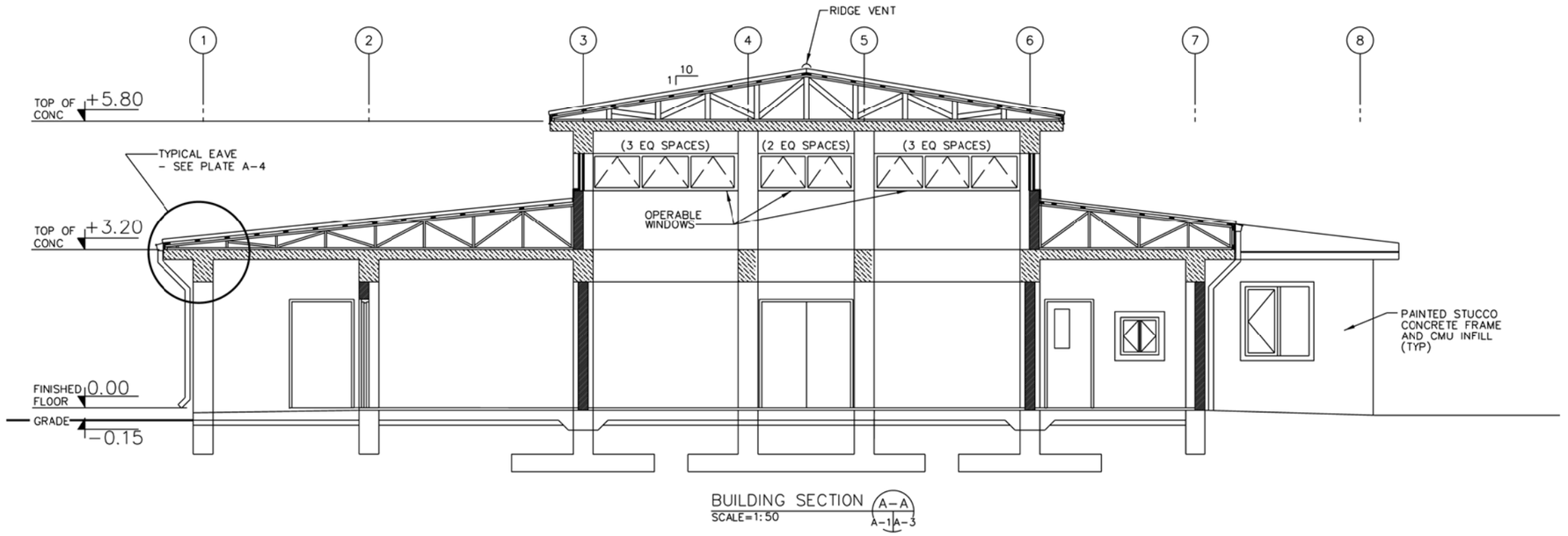

BUILDING SECTION A-A
SCALE=1:50
A-1 A-3

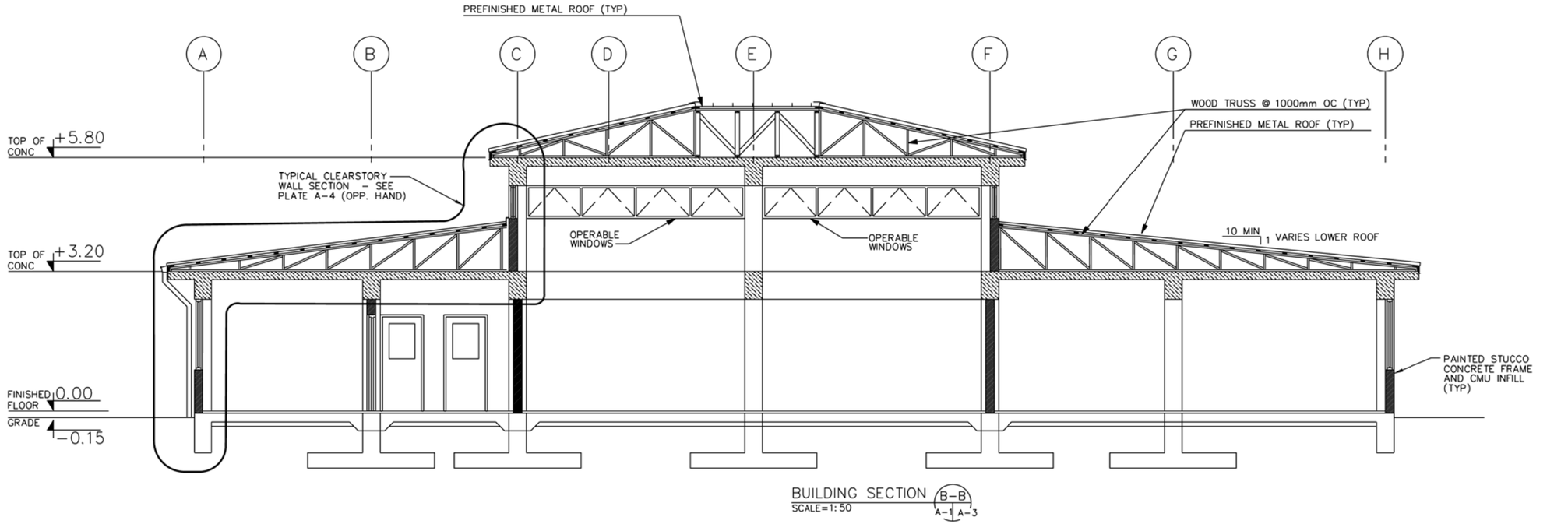

BUILDING SECTION B-B
SCALE=1:50
A-1 A-3

1 0 1 2 3 4
1:50

US ARMY CORPS OF ENGINEERS
AFGHANISTAN ENGINEER DISTRICT

SYMBOL	DESCRIPTION	DATE	APPR

SYMBOL	DESCRIPTION	DATE	APPR

REV:
DATE: XX-XX-XX
DESIGN FILE NO.
DRAWING CODE
FILE NAME:
PLOT SCALE:
PLOT DATE: XX-XX-XX

DESIGNED BY:
DWN BY:
CKD BY:
REVIEWED BY:
SUBMITTED BY:

U.S. ARMY ENGINEER DISTRICT, AFGHANISTAN
CORPS OF ENGINEERS
APO AE 96338

ENGINEERING AND CONSTRUCTION DIVISION

AFGHANISTAN NATIONAL POLICE (ANP) DISTRICT HEADQUARTERS COMPOUNDS - 1 STORY HQ
VARIOUS LOCATIONS, AFGHANISTAN
1 STORY BUILDING

BUILDING SECTION

SHEET REFERENCE NUMBER:
A
A-3

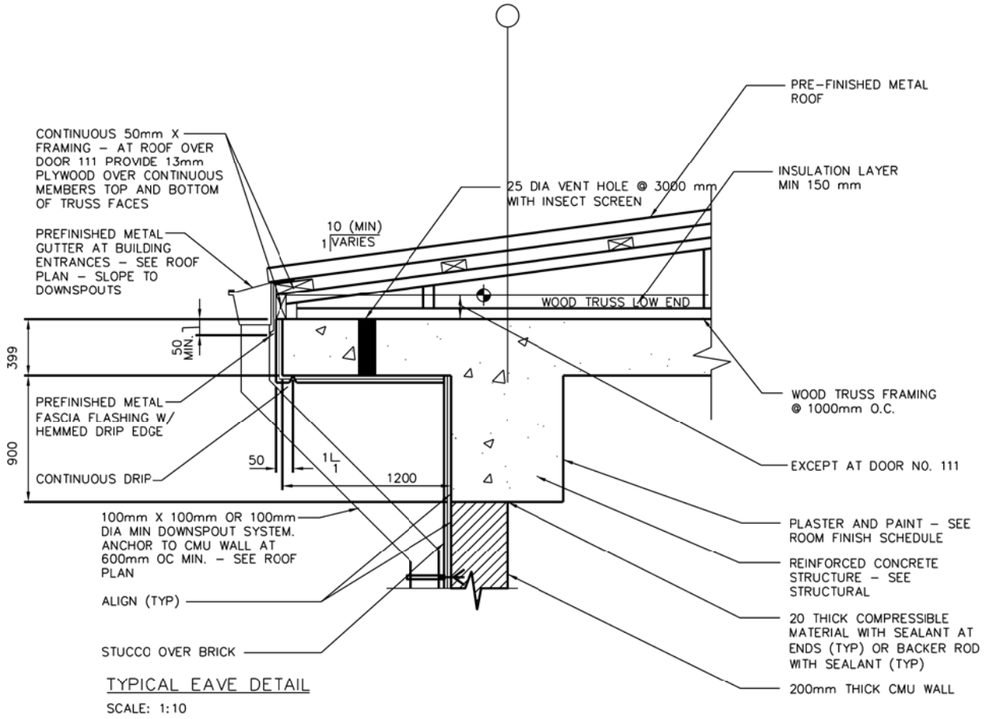

TYPICAL EAVE DETAIL

SCALE: 1:10

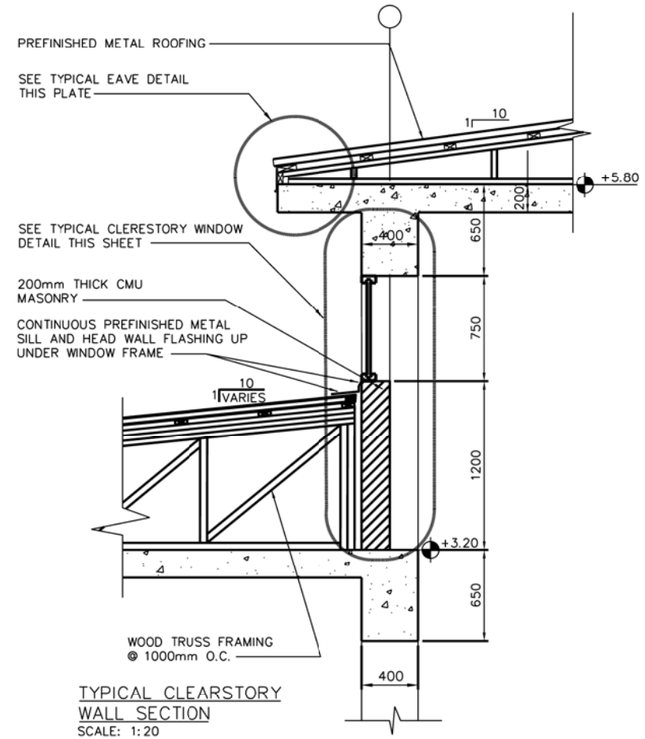

TYPICAL CLEARSTORY WALL SECTION

SCALE: 1:20

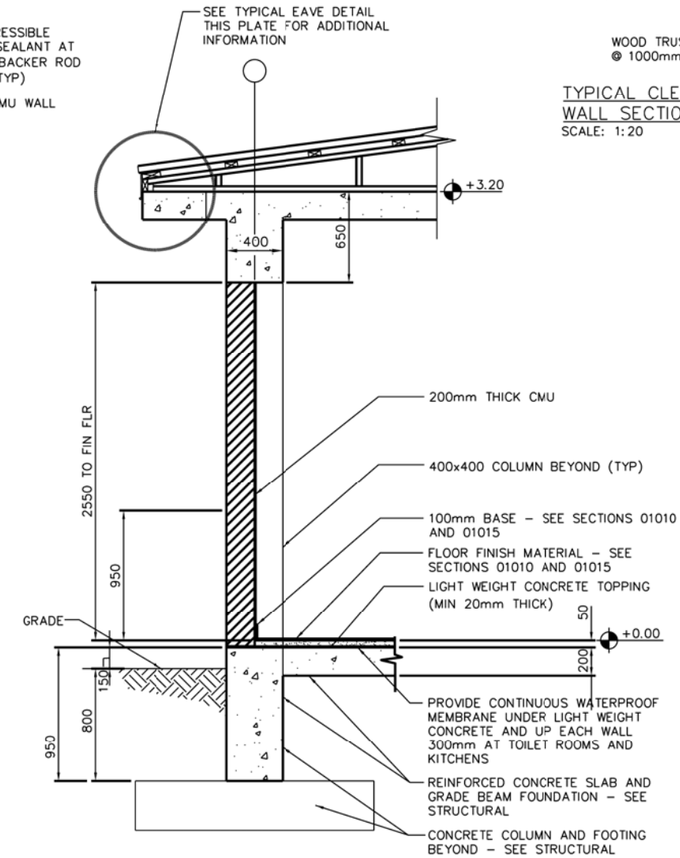

TYPICAL WALL SECTION

SCALE: 1:20

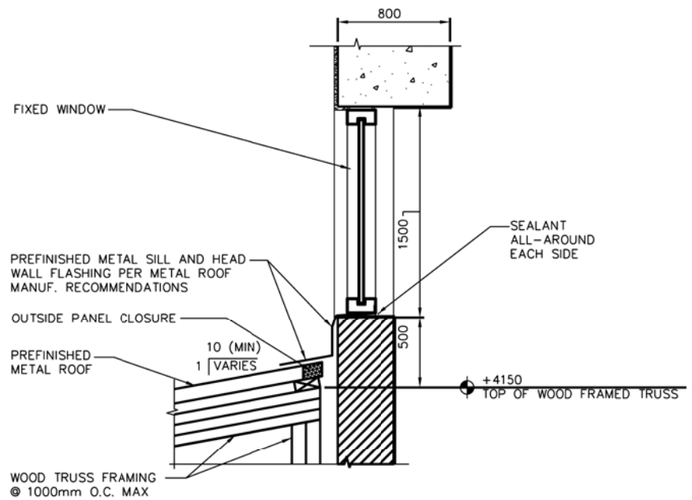

TYPICAL CLERESTORY WINDOW DETAIL

SCALE: 1:10

0 .50 1.00
1:10

1 .50 0 1
1:20

US ARMY CORPS OF ENGINEERS AFGHANISTAN ENGINEER DISTRICT

NO.	DESCRIPTION	DATE	APPD
SYMBOL	DESCRIPTION	DATE	APPD

DESIGNED BY:
DRWN BY:
CKD BY:
REVIEWED BY:
SUBMITTED BY:

U.S. ARMY ENGINEER DISTRICT, AFGHANISTAN
CORPS OF ENGINEERS
APO AE 96338

ENGINEERING AND CONSTRUCTION DIVISION

DATE: XX-XX-XX
DESIGN FILE NO.
DRAWING CODE
FILE NAME:
PLOT SCALE:
PLOT DATE: XX-XX-XX
REV:

AFGHANISTAN NATIONAL POLICE (ANP) DISTRICT HEADQUARTERS COMPOUNDS - 1 STORY HQ
VARIOUS LOCATIONS, AFGHANISTAN
1 STORY BUILDING

WALL SECTION

SHEET REFERENCE NUMBER:
A
A-4

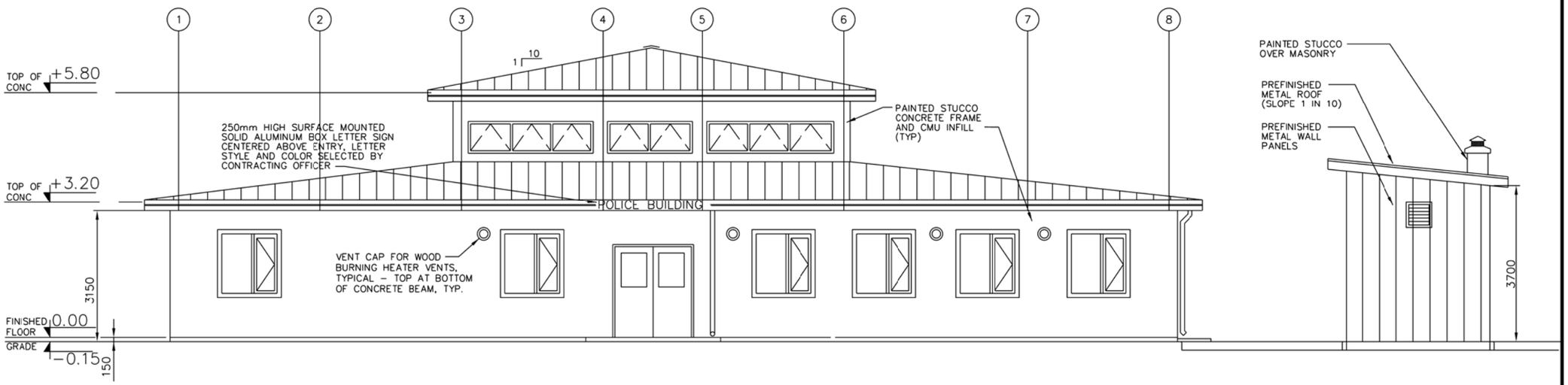

NORTH ELEVATION (A) SCALE=1:50 — A-1 | A-5

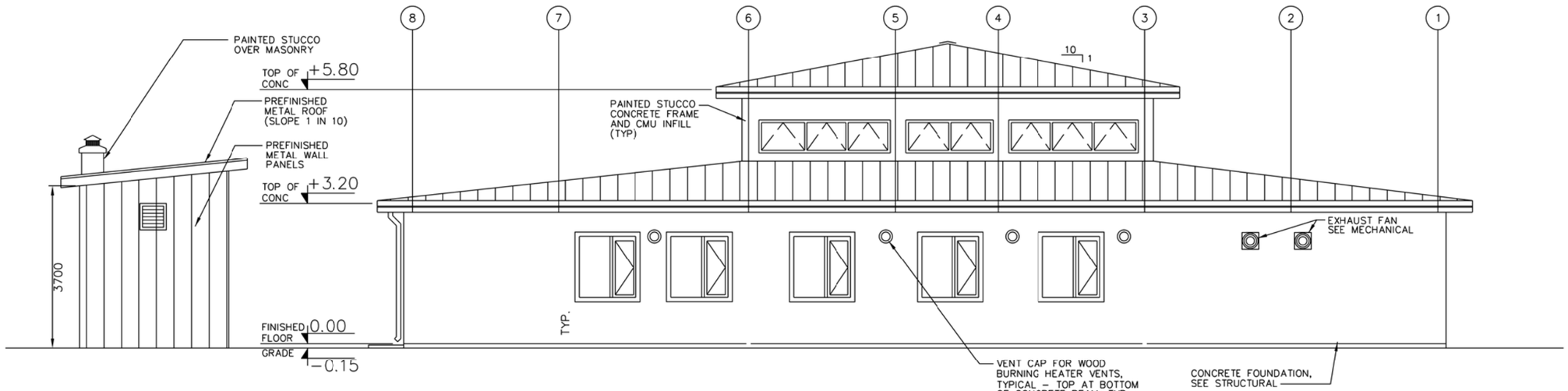

SOUTH ELEVATION (B) SCALE=1:50 — A-1 | A-5

NOTE: SEE STANDARD DETAILS FOR ADDITIONAL NOTES.

1 0 1 2 3 4
1:50

US ARMY CORPS OF ENGINEERS
AFGHANISTAN ENGINEER DISTRICT

SYMBOL	DESCRIPTION	DATE	APPR

DESIGNED BY: DWN BY: CKD BY: REVIEWED BY: SUBMITTED BY:
DATE: XX-XX-XX DESIGN FILE NO: DRAWING CODE: FILE NAME: PLOT SCALE: PLOT DATE: XX-XX-XX
REV:

U.S. ARMY ENGINEER DISTRICT, AFGHANISTAN
CORPS OF ENGINEERS
APO AE 96338

ENGINEERING AND CONSTRUCTION DIVISION

AFGHANISTAN NATIONAL POLICE (ANP) DISTRICT HEADQUARTERS COMPOUNDS - 1 STORY HQ
VARIOUS LOCATIONS, AFGHANISTAN
1 STORY BUILDING

BUILDING ELEVATIONS

SHEET REFERENCE NUMBER:
A
A-5

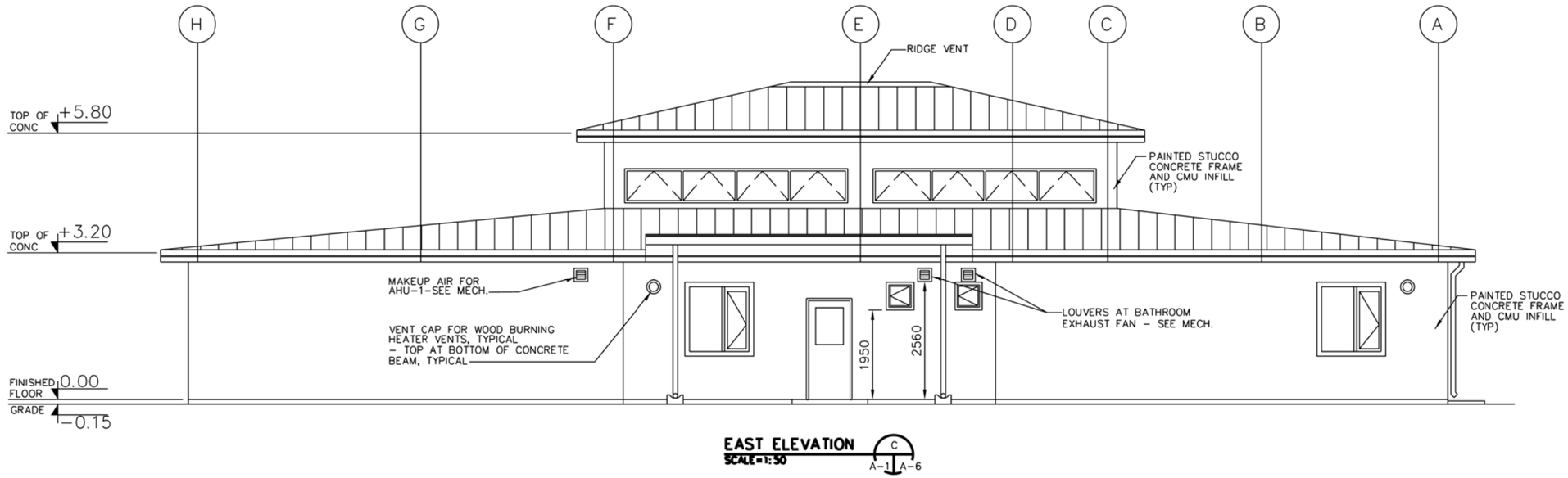

EAST ELEVATION
SCALE = 1:50

C
A-1 A-6

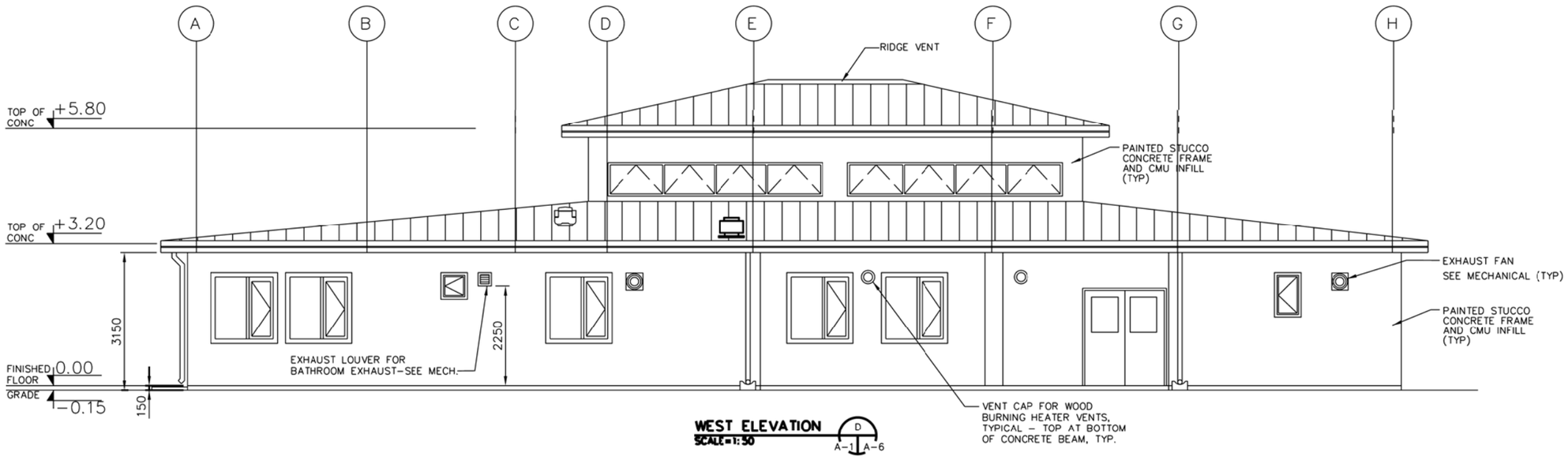

WEST ELEVATION
SCALE = 1:50

D
A-1 A-6

1 0 1 2 3 4
1:50

US ARMY CORPS OF ENGINEERS
AFGHANISTAN ENGINEER DISTRICT

SYMBOL	DESCRIPTION	DATE	APPD

DESIGNED BY:
DWN BY:
CKD BY:
REVIEWED BY:
SUBMITTED BY:

DATE: XX-XX-XX
DESIGN FILE NO.
DRAWING CODE
FILE NAME:
PLOT SCALE:
PLOT DATE: XX-XX-XX
REV:

U.S. ARMY ENGINEER DISTRICT, AFGHANISTAN
CORPS OF ENGINEERS
APO AE 96338

ENGINEERING AND CONSTRUCTION DIVISION

AFGHANISTAN NATIONAL POLICE (ANP) DISTRICT HEADQUARTERS COMPOUNDS - 1 STORY HQ
VARIOUS LOCATIONS, AFGHANISTAN
1 STORY BUILDING

BUILDING ELEVATIONS

SHEET REFERENCE NUMBER:
A
A-6

A1 Size 594mm x 841mm

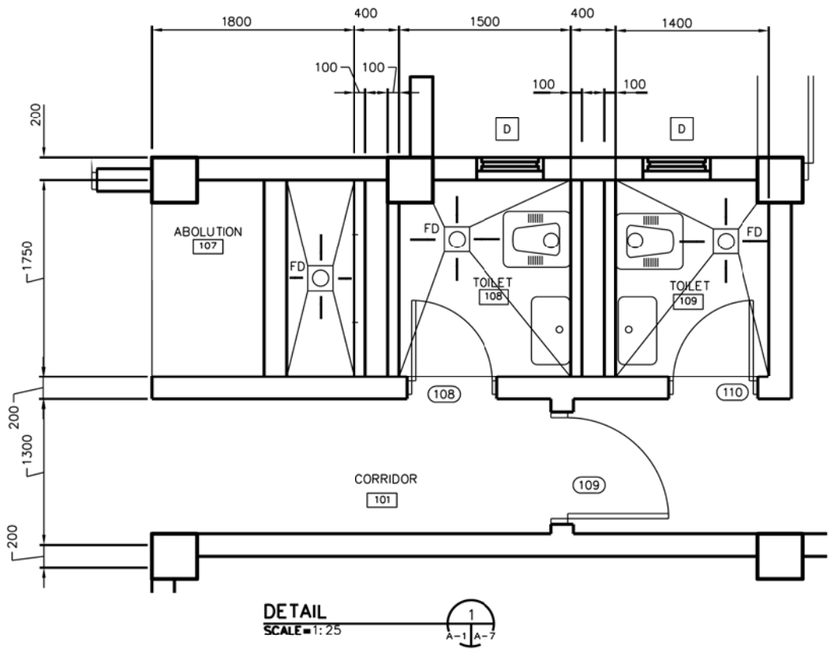

DETAIL
SCALE = 1:25
1 A-1 A-7

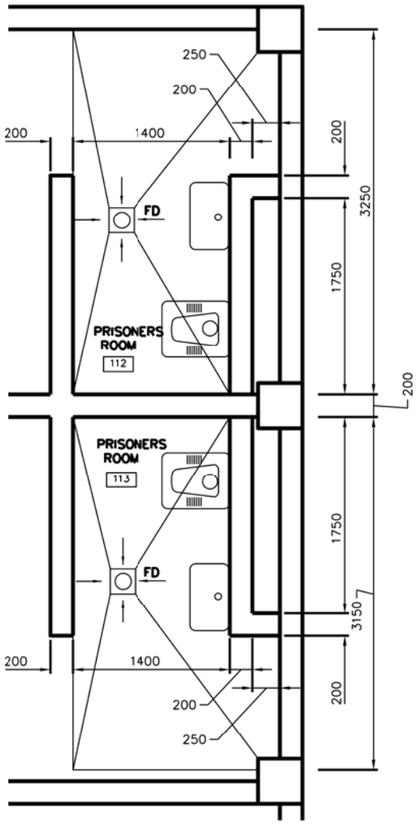

DETAIL
SCALE = 1:25
4 A-1 A-7

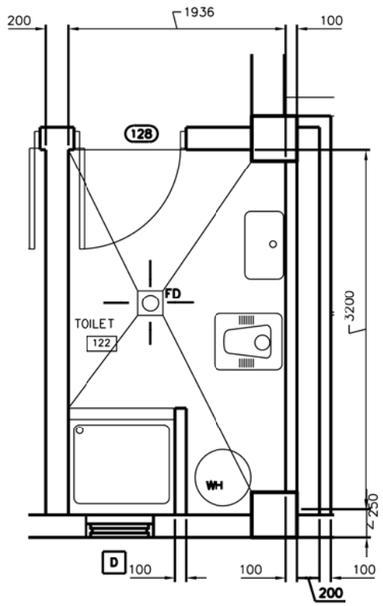

DETAIL
SCALE = 1:25
2 A-1 A-7

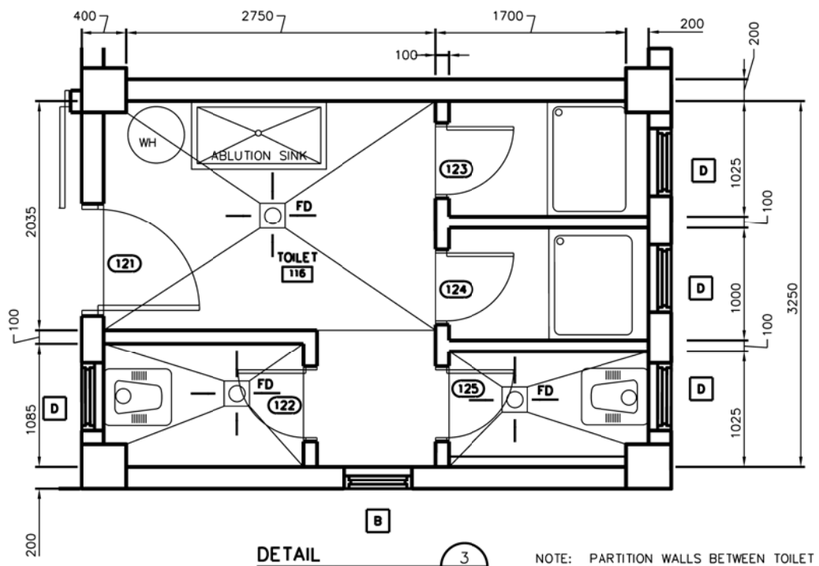

DETAIL
SCALE = 1:25
3 A-1 A-7

NOTE: PARTITION WALLS BETWEEN TOILET STALLS TO BE 2200mm HIGH.

NOTE:

1. ALL WATER CLOSETS SHALL FACE NORTH OR SOUTH DIRECTION.

1 .50 0 1 1.5
1:25

US ARMY CORPS OF ENGINEERS
AFGHANISTAN ENGINEER DISTRICT

SYMBOL	DESCRIPTION	DATE	APPR.

DESIGNED BY:
DRAWN BY:
CKD BY:
REVIEWED BY:
SUBMITTED BY:
DATE: XX-XX-XX
DESIGN FILE NO.
DRAWING CODE
FILE NAME:
PLOT SCALE:
PLOT DATE: XX-XX-XX
REV:

U.S. ARMY ENGINEER DISTRICT, AFGHANISTAN
CORPS OF ENGINEERS
APO AE 96338

ENGINEERING AND CONSTRUCTION DIVISION

AFGHANISTAN NATIONAL POLICE (ANP) DISTRICT HEADQUARTERS COMPOUNDS - 1 STORY HQ
VARIOUS LOCATIONS, AFGHANISTAN
1 STORY BUILDING

ENLARGED TOILET PLANS

SHEET REFERENCE NUMBER:
A
A-7

A1 Size 594mm x 841mm

DOOR SCHEDULE

NO.	LOCATION	DOOR TYPE	DOOR MAT'L	WIDTH	HEIGHT	THICK	FRAME MAT'L	HDW SET	REMARKS
101	LOBBY	G (PR)	WOOD	1800	2100	45	WOOD	2	4, 7 20 MINUTE FIRE RATING
102	CORRIDOR	G (PR)	WOOD	1800			WOOD	8	4, 7 20 MINUTE FIRE RATING
103	OFFICE	F	WOOD	900			WOOD	4	20 MINUTE FIRE RATING
104	WEAPONS STORAGE	F	STEEL	900			STEEL	11	5 45 MINUTE FIRE RATING
105	OFFICE	F	WOOD	900			WOOD	4	20 MINUTE FIRE RATING
106	STORAGE	F	WOOD	900			WOOD	6	45 MINUTE FIRE RATING
107	NOT USED								
108	TOILET	L	WOOD	700			WOOD	5	2 20 MINUTE FIRE RATING
109	CORRIDOR	N	WOOD	900			WOOD	4	7 20 MINUTE FIRE RATING
110	TOILET	L	WOOD	700			WOOD	5	2 20 MINUTE FIRE RATING
111	CORRIDOR	G	WOOD	900			WOOD	1	7 20 MINUTE FIRE RATING
112	TO GUARD RM.	N	WOOD	900			WOOD	4	7 20 MINUTE FIRE RATING
113	CORRIDOR	N	WOOD	900			WOOD	4	7 20 MINUTE FIRE RATING
114	Prisoners Rm	C	STEEL	900			NOTE 1	11	CELL DOOR
115	Prisoners Rm	C	STEEL	900			NOTE 1	11	CELL DOOR
116	SOLDIERS BARRACKS	F	WOOD	900			WOOD	7	6 45 MINUTE FIRE RATING
117	SOLDIERS BARRACKS	F	WOOD	900			WOOD	7	6 45 MINUTE FIRE RATING
118	DINING ROOM	F	WOOD	900			WOOD	7	4, 6 90 MINUTE FIRE RATING – PANIC
119	SOLDIERS BARRACKS	F	WOOD	900			WOOD	7	6 45 MINUTE FIRE RATING
120	LOBBY	G (PR)	WOOD	1800			WOOD	2	4, 7 45 MINUTE FIRE RATING
121	TOILET	L	WOOD	900			WOOD	10	2 20 MINUTE FIRE RATING
122	TOILET STALL	L	WOOD	600			WOOD	3	2
123	TOILET STALL	L	WOOD	600			WOOD	3	2
124	TOILET STALL	L	WOOD	600			WOOD	3	2
125	TOILET STALL	L	WOOD	600			WOOD	3	2
126	KITCHEN	F	WOOD	1200			WOOD	1	4 90 MINUTE FIRE RATING – PANIC
127	NOT USED								
128	TOILET	L	WOOD	900			WOOD	5	2 20 MINUTE FIRE RATING
129	POLICE CHIEF	F	WOOD	900			WOOD	4	20 MINUTE FIRE RATING
130	DEPUTY POLICE CHIEF	F	WOOD	900			WOOD	4	20 MINUTE FIRE RATING
131	NIGHT GUARD	F	WOOD	900			WOOD	4	20 MINUTE FIRE RATING
132	KITCHEN	N	WOOD	900			WOOD	9	7 90 MINUTE FIRE RATING – PANIC
133	DINING ROOM	G (PR)	WOOD	1800			WOOD	2	4, 6 90 MINUTE FIRE RATING – PANIC
134	MECHANICAL ROOM	F	WOOD	900			WOOD	6	45 MINUTE FIRE RATING

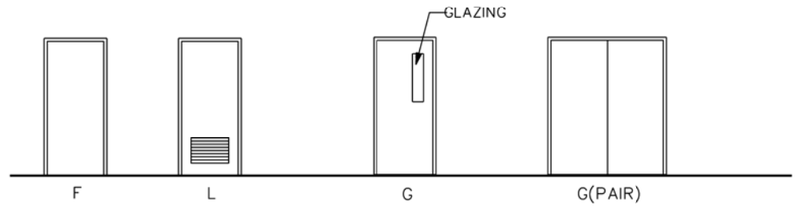

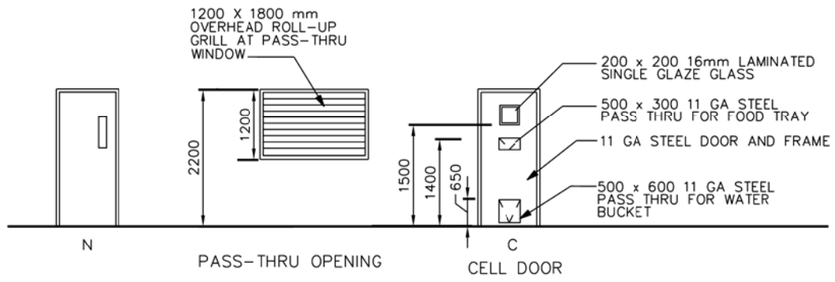

DOOR NOTES:
1. SEE DOOR SCHEDULE FOR DOOR AND FRAME SIZES.

TYPICAL DOOR TYPES
(NOT TO SCALE)

DOOR SCHEDULE NOTES:

1. CELL DOOR SHALL BE 11 GA STEEL DOOR WITH PASS-THRU WINDOWS. PROVIDE HINGED DOORS TO THESE PASS-THRU WINDOWS WITH PADLOCKS TO THE OUTSIDE.
2. PROVIDE 600 X 400 LOUVERS IN DOOR TYPE (L)
3. UNDERCUT DOORS BY 12 mm REQUIRED, EXCEPT NO UNDERCUT AT DOOR TYPE C.
4. PROVIDE PANIC HARDWARE, FOR DINING ROOM EXIT DOORS.
5. PROVIDE 11 GA STEEL DOOR AND FRAME.
6. NO THRESHOLD OR DOOR SWEEP REQUIRED.
7. ALL DOOR GLAZING SHALL BE MIN. 8mm THICK PLEXIGLASS EXCEPT AT CELL DOORS WHERE GLAZING SHALL BE LAMINATED GLASS.
8. ALL DOOR GLAZING IS FIRE RATED

US ARMY CORPS OF ENGINEERS
AFGHANISTAN ENGINEER DISTRICT

SYMBOL	DESCRIPTION	DATE	APPR

DESIGNED BY:
DRAWN BY:
CKD BY:
REVIEWED BY:
SUBMITTED BY:
DATE: XX-XX-XX
DESIGN FILE NO.
DRAWING CODE
FILE NAME:
PLOT SCALE:
PLOT DATE: XX-XX-XX
REV:

U.S. ARMY ENGINEER DISTRICT, AFGHANISTAN
CORPS OF ENGINEERS
APO AE 96338

ENGINEERING AND CONSTRUCTION DIVISION

AFGHANISTAN NATIONAL POLICE (ANP) DISTRICT HEADQUARTERS COMPOUNDS - 1 STORY HQ
VARIOUS LOCATIONS, AFGHANISTAN
1 STORY BUILDING

DOOR SCHEDULE AND DOOR TYPES

SHEET REFERENCE NUMBER:
A
A-8

ROOM FINISH SCHEDULE

ROOM NO.	ROOM NAME	FLOOR	BASE	WALLS	CEILING		REMARKS
		FINISH	FINISH	FINISH	FINISH	HEIGHT	
101	CORRIDOR	F2	B2	W2	C2	3.0 m	
102	LOBBY	F2	B2	W2	C2		
103	OFFICE	F2	B2	W2	C2		
104	WEAPONS STORAGE	F1	B2	W2	C2		
105	OFFICE	F2	B2	W2	C2		
106	STORAGE	F1	B2	W2	C2		
107	ABOLUTION	F3	B3	W3	C2		
108	TOILET	F3	B3	W3	C2		
109	TOILET	F3	B3	W3	C2		
110	GUARD ROOM	F2	B2	W2	C2		
111	CORRIDOR	F2	B2	W2	C2		
112	PRISONER'S ROOM	F2	B2	W2	C2		
113	PRISONER'S ROOM	F2	B2	W2	C2		
114	SOLDIER'S BARRACKS	F2	B2	W2	C2		
115	SOLDIER'S BARRACKS	F2	B2	W2	C2		
116	TOILET	F3	B3	W3	C2		
117	LOBBY	F2	B2	W2	C2		
118	COVERED LOADING	F1	B5	--	--		
119	SOLDIER'S BARRACKS	F2	B2	W2	C2		
120	DINING ROOM/SHURA	F2	B2	W2	C2	5.6 m	
121	KITCHEN	F2	B2	W2	C2	3.0 m	
122	TOILET	F3	B3	W3	C2		
123	POLICE CHIEF	F2	B2	W2	C2		
124	DEPUTY POLICE CHIEF	F2	B2	W2	C2		
125	NIGHT GUARD	F2	B2	W2	C2		
126	MECHANICAL ROOM	F2	B2	W2	C2		

ROOM FINISH SCHEDULE LEGEND

FLOOR FINISH
- F1 SEALED CONCRETE
- F2 TERRAZZO TILE
- F3 CERAMIC TILE

BASE FINISH
- B2 TERRAZZO
- B3 CERAMIC TILE
- B5 NO BASE

WALL FINISH
- W2 PAINTED PLASTER
- W3 CERAMIC TILE

CEILING FINISH
- C2 PAINTED PLASTER

ROOM FINISH SCHEDULE NOTES:

1. ALL INTERIOR SURFACES NOT PROVIDED WITH A COLOR FACTORY FINISH SHALL RECEIVE A PAINT FINISH.
2. PAINTED PLASTER CEILING FINISH SHALL BE OFF-WHITE IN COLOR. ALL OTHER INTERIOR COLORS SHALL BE SELECTED FROM EARTH TONE COLORS; GRAYS, BEIGES, ETC. SUBMIT PAINT COLOR BOARD TO CONTRACTING OFFICER'S REPRESENTATIVE FOR APPROVAL PRIOR TO INSTALLATION.
3. ALL INTERIOR DOORS, WINDOWS, AND FRAMES SHALL HAVE A SEMI-GLOSS FINISH.
4. ALL WALL PENETRATIONS SHALL BE SEALED TO PROVIDE A NEAT APPEARANCE.
5. SEALANT COLORS SHALL MATCH COLOR OF ADJACENT FINISH.
6. PLASTER AND CERAMRIC TILE WALL FINISH, WHERE SCHEDULED, SHALL EXTEND TO UNDERSIDE OF CEILING.
7. PLASTER CEILINGS SHALL HAVE A FLAT PAINT FINISH EXCEPT AT TOILETS, ABOLUTION, AND KITCHEN WHERE PAINT FINISH SHALL BE SEMI-GLOSS.

EXTERIOR FINISH NOTES:

1. ALL EXTERIOR SURFACES NOT PROVIDED WITH A COLOR FACTORY FINISH SHALL RECEIVE A PAINT FINISH.
2. ALL EXTERIOR COLORS SHALL MATCH ADJACENT BUILDINGS TO THE GREATEST EXTENT POSSIBLE. SUBMIT PAINT COLOR BOARD TO CONTRACTING OFFICER'S REPRESENTATIVE FOR APPROVAL PRIOR TO INSTALLATION.
3. ALL EXTERIOR DOORS, WINDOWS, FRAMES, SOFFIT, FASCIA, AND TRIM SHALL HAVE A SEMI-GLOSS FINISH.
4. ALL WALL PENETRATIONS SHALL BE SEALED WATER-TIGHT AND SHALL HAVE A NEAT APPEARANCE.
5. SEALANT COLORS SHALL MATCH COLOR OF ADJACENT FINISH.

US ARMY CORPS OF ENGINEERS
AFGHANISTAN ENGINEER DISTRICT

SYMBOL	DESCRIPTION	DATE	APPR

DESIGNED BY:
DWN BY:
CKD BY:
REVIEWED BY:
SUBMITTED BY:
DATE: XX-XX-XX
DESIGN FILE NO.
DRAWING CODE
FILE NAME:
PLOT SCALE:
PLOT DATE: XX-XX-XX

U.S. ARMY ENGINEER DISTRICT, AFGHANISTAN
CORPS OF ENGINEERS
APO AE 96338

ENGINEERING AND CONSTRUCTION DIVISION

AFGHANISTAN NATIONAL POLICE (ANP) DISTRICT HEADQUARTERS COMPOUNDS - 1 STORY HQ
VARIOUS LOCATIONS, AFGHANISTAN
1 STORY BUILDING

ROOF FINISH SCHEDULE

SHEET REFERENCE NUMBER:
A
A-9

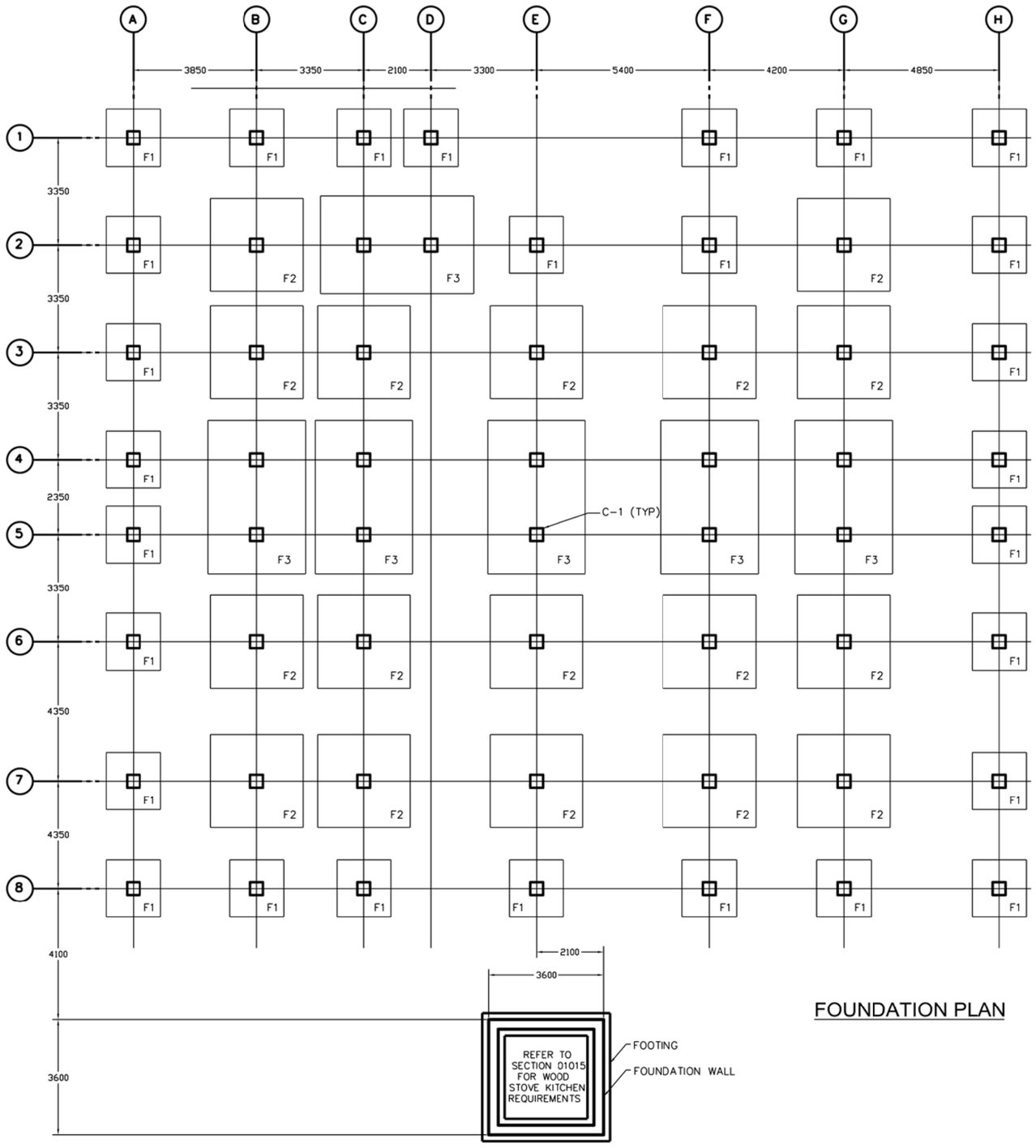

FOUNDATION PLAN

NOTES:

1. GEOTECHNICAL INVESTIGATION SHALL CONFIRM BEARING CAPACITY TO BE NO LESS THAN 0.75 KG/SQ CM. IF GEOTECHNICAL INVESTIGATION SHOWS LESS THAN 0.75 KG/SQ CM. CONTRACTOR SHALL REDESIGN FOOTINGS BASED ON THE GEOTECHNICAL INVESTIGATION, SEE SPECIFICATION 01015 PARA 2.1, GEOTECHNICAL, FOUNDATION AND SURVEY.

2. DEAD LOADS CONSIST OF THE WEIGHTS OF ALL MATERIAL OF CONSTRUCTION INCORPORATED IN THE BUILDING. LIVE LOADS USED FOR DESIGN SHAL LBE IN ACCORDANCE WITH THE ASCE STANDARDS AND MINIMUM DESIGN LOADS FOR BUILDINGS AND OTHER STRUCTURES, ASCE 7-02.

3. WIND LOADS SHALL BE CALCULATED IN ACCORDANCE WITH ASCE 7-02 USING A "3 SECOND GUST" WIND SPEED OF 125 KM/HR. ALL FACILITIES SHALL BE CLASSIFIED AS A MINIMUM OF CATEGORY II IN ACCORDANCE WITH TABLE 1-1 IN ASCE 7-02.

4. THE BULDING AND ALL PARTS THEREOF SHALL BE DESIGNED FOR THE SEISMIC REQUIREMENTS AS DEFINED BY THE INTERNATIONAL BUILDING CODE 2000. SITE SPECIFIC DATA: SPECTRAL COORDINATES SS=1.65g AND S1=0.75g.

5. REFER TO DWG S-5 FOR FOOTING SCHEDULE. TOP OF FOOTING SHALL BE LOCATED AT ELEV. -1.00.

6. ALL CONCRETE COLUMNS ARE TYPE C-1, REFER TO SECTION 10 S-5.

3 1.50 0 3 4.5
1:75

US ARMY CORPS OF ENGINEERS
AFGHANISTAN ENGINEER DISTRICT

SYMBOL	DESCRIPTION	DATE	APPR	SYMBOL	DESCRIPTION	DATE	APPR

DESIGNED BY:
DRWN BY:
CKD BY:
REVIEWED BY:
SUBMITTED BY:
DATE: XX-XX-XX
DESIGN FILE NO.
DRAWING CODE
FILE NAME:
PLOT SCALE:
PLOT DATE: XX-XX-XX
REV:

U.S. ARMY ENGINEER DISTRICT, AFGHANISTAN
CORPS OF ENGINEERS
APO AE 96338

ENGINEERING AND CONSTRUCTION DIVISION

AFGHANISTAN NATIONAL POLICE (ANP) DISTRICT HEADQUARTERS COMPOUNDS - 1 STORY HQ
VARIOUS LOCATIONS, AFGHANISTAN
1 STORY BUILDING

FOUNDATION PLAN

SHEET REFERENCE NUMBER:
A
S-1

A1 Size 594mm x 841mm

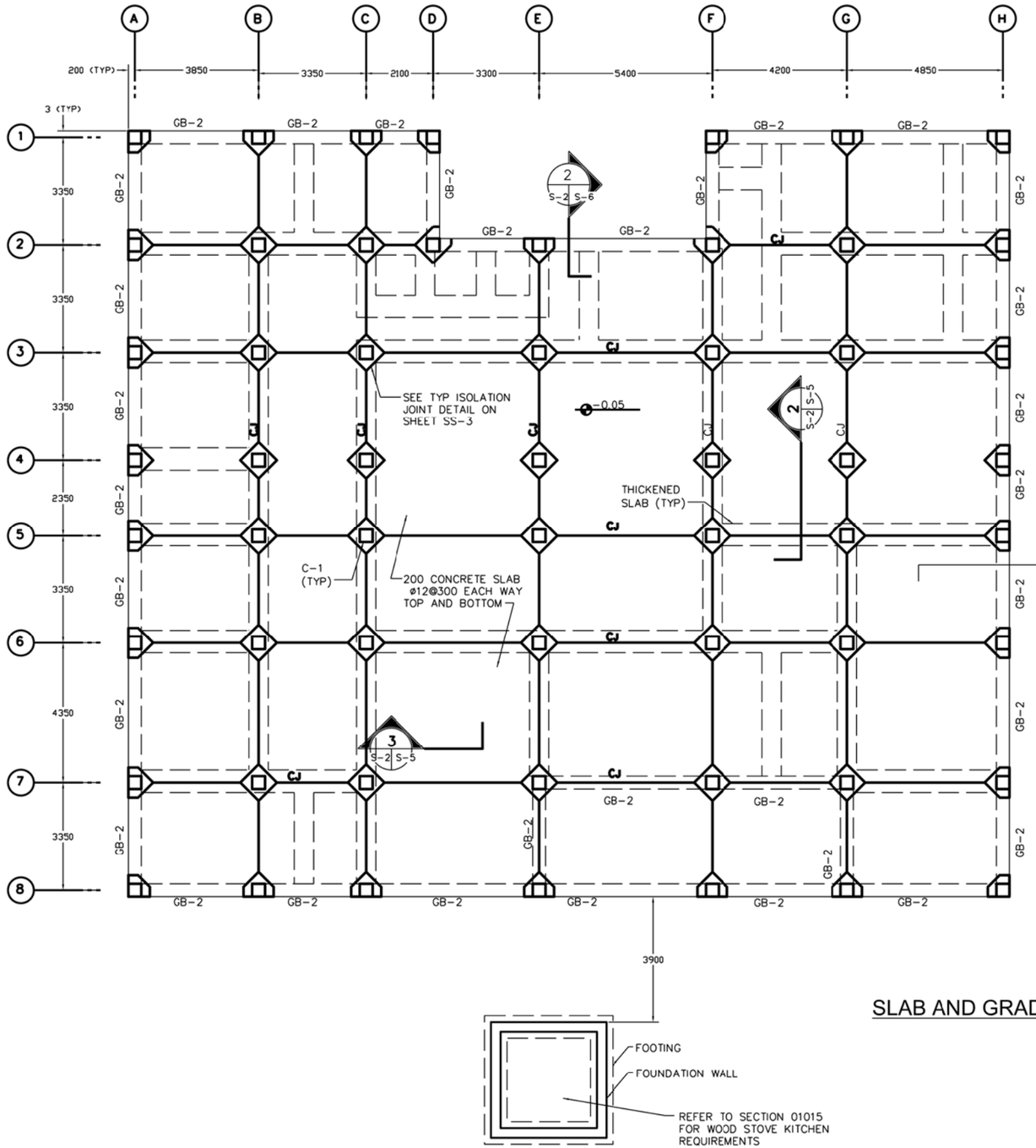

SLAB AND GRADE BEAM PLAN

N

NOTES:

1. REFER TO PLUMBING AND ARCHITECTURAL PLANS FOR FLOOR DRAIN LOCATIONS. NOT ALL DRAINS HAVE BEEN SHOWN. FLOOR SHALL BE SLOPED TO DRAIN.
2. PROVIDE THICKENED SLAB UNDER ALL INTERIOR PARTITIONS. REFER TO SECTIONS 1 AND 2 ON PLATE S-5 FOR ADDITIONAL INFORMATION.
3. GRADE BEAM SHALL EXTEND FROM COLUMN SPREAD FOOTING TO COLUMN SPREAD FOOTING. BOTTOM OF GRADE BEAM TO COINCIDE WITH TOP OF COLUMN FOOTING.
4. ALL CONCRETE COLUMNS ARE TYPE C-1. REFER TO SECTION 10 S-5.
5. TOP OF SLAB AND GRADE BEAM ELEVATIONS ARE AT 50mm BELOW FINISHED FLOOR. SEE 3/S-5.
6. REFER TO SHEET SS-3 FOR TYPICAL CONTROL JOINT (CJ) DETAIL.

US ARMY CORPS OF ENGINEERS AFGHANISTAN ENGINEER DISTRICT

SYMBOL	DESCRIPTION	DATE	APPR

DESIGNED BY:
DRAWN BY:
CKD BY:
REVIEWED BY:
SUBMITTED BY:
DATE: XX-XX-XX
DESIGN FILE NO.
DRAWING CODE
FILE NAME:
PLOT SCALE:
PLOT DATE: XX-XX-XX
REV:

U.S. ARMY ENGINEER DISTRICT, AFGHANISTAN
CORPS OF ENGINEERS
APO AE 96338

ENGINEERING AND CONSTRUCTION DIVISION

AFGHANISTAN NATIONAL POLICE (ANP) DISTRICT HEADQUARTERS COMPOUNDS - 1 STORY HQ
VARIOUS LOCATIONS, AFGHANISTAN
1 STORY BUILDING

GRADE BEAM PLAN

SHEET REFERENCE NUMBER:
A
S-2

A1 Size 594mm x 841mm

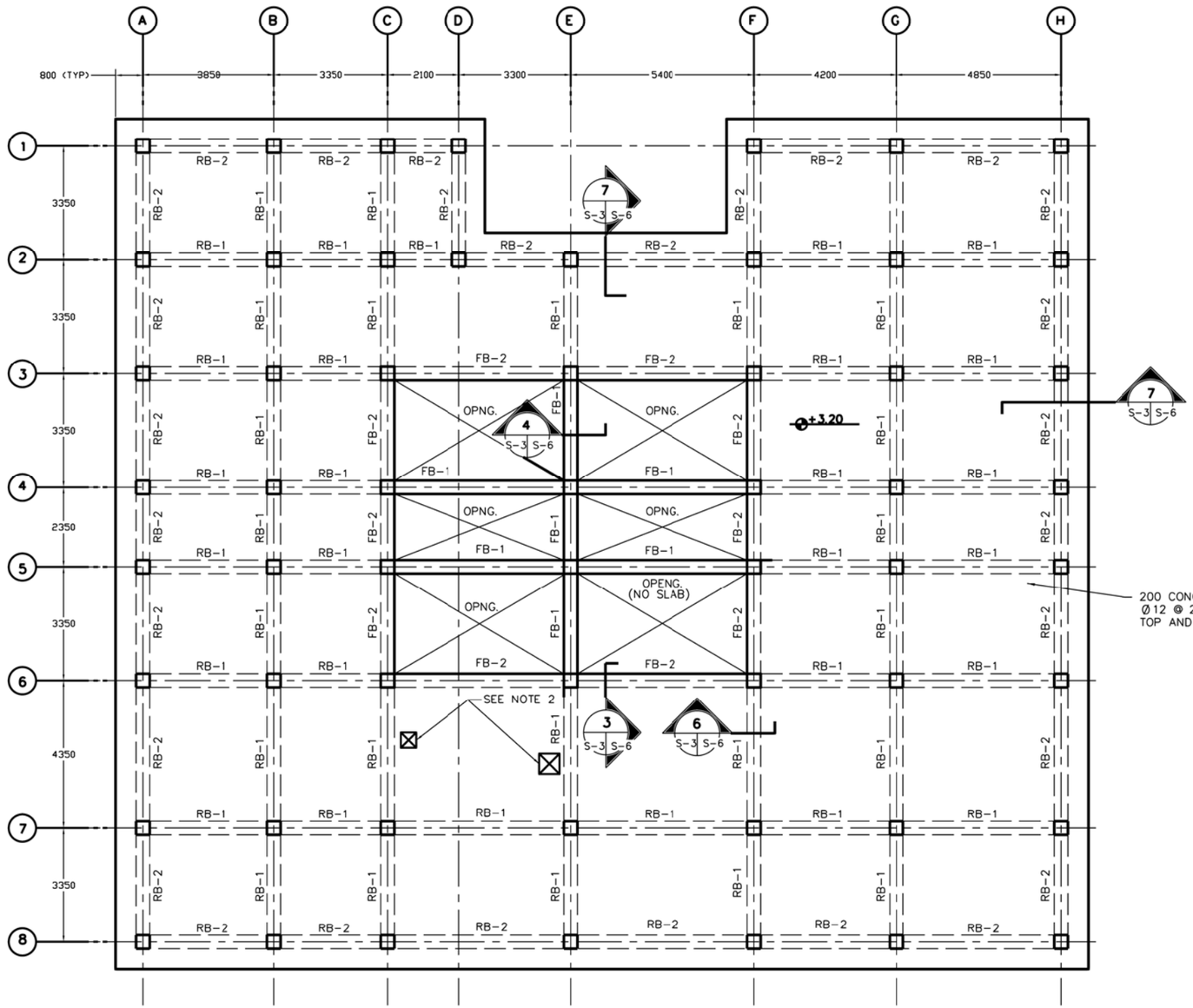

LOW ROOF BEAM AND SLAB PLAN

SCALE = 1:75

NOTES:

1. TOP OF LOW ROOF SLAB AND LOW ROOF BEAMS IS AT 3200 A.F.F.
2. COORDINATE ROOF OPENING REQUIREMENST WITH OTHER DISCIPLINES. PROVIDE ADDITIONAL REINFORCEMENT AROUND OPENINGS PER TYPICAL DETAIL ON DWG SS-2.
3. REFER TO SHEET S-7 FOR STANDARD BEAM AND COLUMN CONSTRUCTION DETAILS.

3 1.50 0 3 4.5
1:75

US ARMY CORPS OF ENGINEERS
AFGHANISTAN ENGINEER DISTRICT

SYMBOL	DESCRIPTION	DATE	APPR.

DESIGNED BY:
DRWN BY:
CKD BY:
REVIEWED BY:
SUBMITTED BY:
DATE: XX-XX-XX
DESIGN FILE NO.
DRAWING CODE
FILE NAME:
PLOT SCALE:
PLOT DATE: XX-XX-XX
REV:

U.S. ARMY ENGINEER DISTRICT, AFGHANISTAN
CORPS OF ENGINEERS
APO AE 96338

ENGINEERING AND CONSTRUCTION DIVISION

AFGHANISTAN NATIONAL POLICE (ANP) DISTRICT HEADQUARTERS COMPOUNDS - 1 STORY HQ
VARIOUS LOCATIONS, AFGHANISTAN
1 STORY BUILDING

LOWER ROOF BEAM PLAN

SHEET REFERENCE NUMBER:
A
S-3

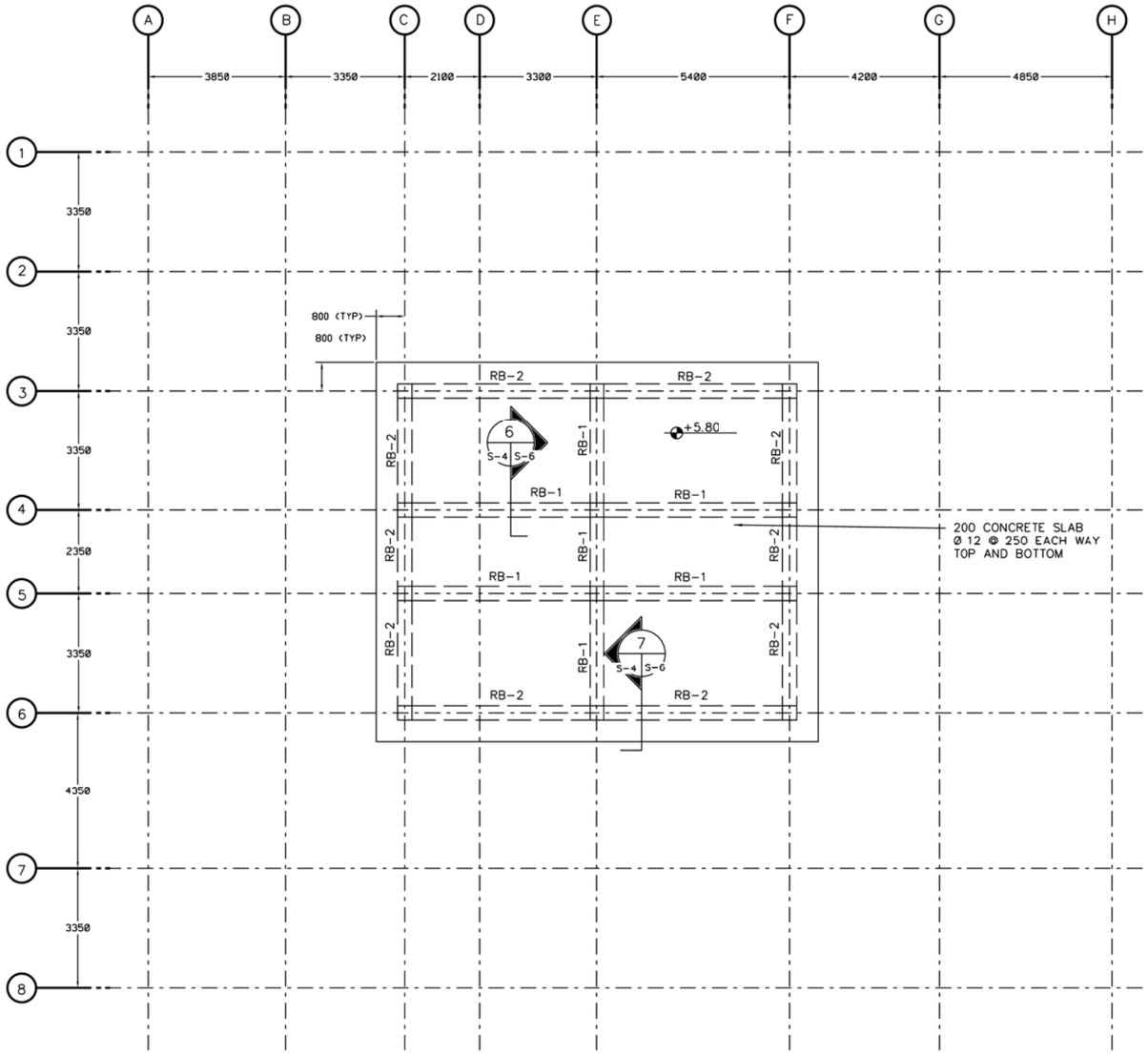

HIGH ROOF BEAM & SLAB PLAN

SCALE

1:75

NOTES:

1. TOP OF HIGH ROOF SLAB AND HIGH ROOF BEAMS IS AT 5800 A.F.F.

2. COORDINATE ROOF OPENING REQUIREMENTS WITH OTHER DISCIPLINES. PROVIDE ADDITIONAL REINFORCEMENT AROUND OPENINGS PER TYPICAL DETAIL ON DWG SS-2.

3. REFER TO SHEET S-7 FOR STANDARD BEAM AND COLUMN CONSTRUCTION DETAILS.

US ARMY CORPS OF ENGINEERS
AFGHANISTAN ENGINEER DISTRICT

SYMBOL	DESCRIPTION	DATE	APPR.

DESIGNED BY:
DRAWN BY: CADD BY:
REVIEWED BY:
SUBMITTED BY:
DATE: XX-XX-XX
DESIGN FILE NO.
DRAWING CODE
FILE NAME:
PLOT SCALE:
PLOT DATE: XX-XX-XX
REV:

U.S. ARMY ENGINEER DISTRICT, AFGHANISTAN
CORPS OF ENGINEERS
APO AE 96338

ENGINEERING AND CONSTRUCTION DIVISION

AFGHANISTAN NATIONAL POLICE (ANP) DISTRICT HEADQUARTERS COMPOUNDS - 1 STORY HQ
VARIOUS LOCATIONS, AFGHANISTAN
1-STORY BUILDING

HIGH ROOF BEAM PLAN

SHEET REFERENCE NUMBER:
A
S-4

A1 Size 594mm x 841mm

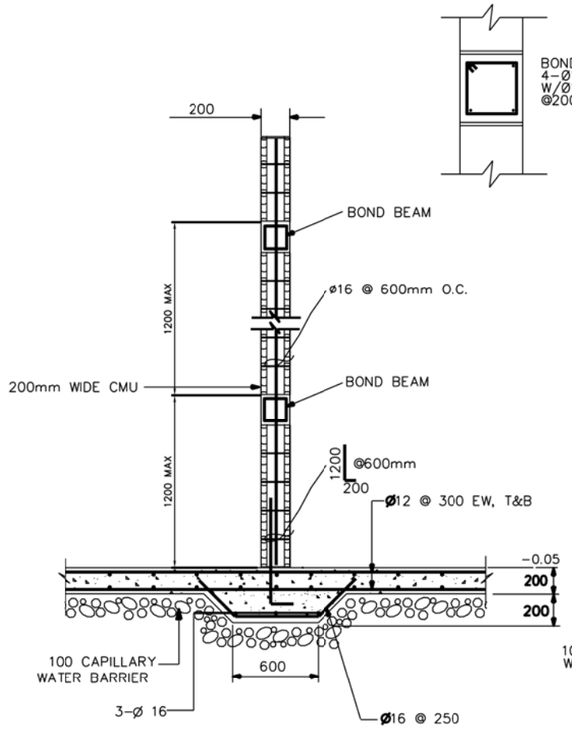

NOTE:
1. ALL EXTERIOR WALLS TO BE GROUTED SOLID.

TYPICAL PARTITION DETAIL 2 / S-2 S-5
NOT TO SCALE

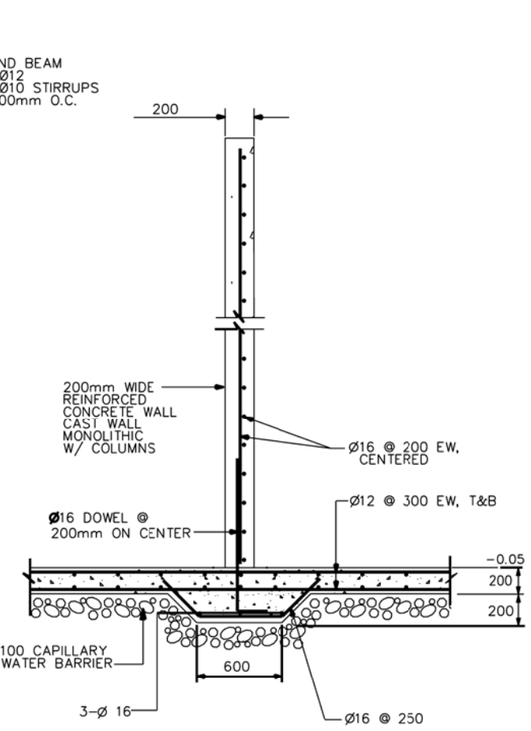

NOTES:
1. SEE ARCHITECTURAL FLOOR PLANS FOR LOCATION OF CONCRETE PARTITIONS.

REINF. CONCRETE PARTITION DETAIL 1 / S-2 S-5
NOT TO SCALE

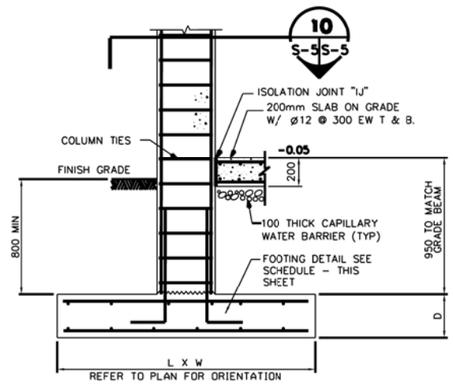

TYPICAL COLUMN AND FOOTING
NOT TO SCALE

FOOTING SCHEDULE				
FTG TYPE	SIZE (L X W)	DEPTH (D)*	REINFORCING	
			TOP EW	BOTT EW
F1	1700 X 1700	**250**	**ø25 @ 300**	ø25 @ 300
F2	2700 X 2700	**425**	ø25 @ 350	ø25 @ 350
F3	4800 X 3050	**425**	ø25 @ 350	**ø**25 @ 350

*TOP FOOTING ELEVATION SHALL BE THE SAME FOR ALL FOOTINGS.
*FOR THE COMBINED FOOTINGS, CENTER ON THE CENTROID FOR THE TWO COLUMNS.
*REFER TO FOUNDATION PLAN FOR ORIENTATION.

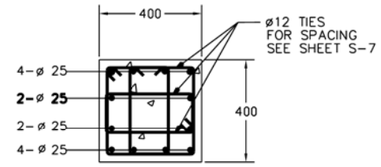

C-1
SECTION
SCALE=1:10
10 / S-5 S-5

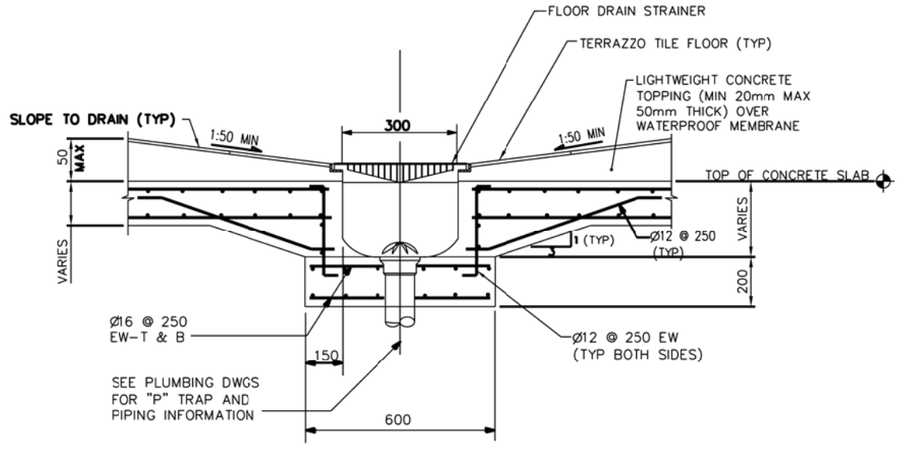

SECTION
NOT TO SCALE
3 / S-2 S-5

0 .50 1.00
1:10

UNLESS OTHERWISE NOTED, LINEAR DIMENSIONS SHOWN ARE IN MILLIMETERS.

US ARMY CORPS OF ENGINEERS
AFGHANISTAN ENGINEER DISTRICT

SYMBOL	DESCRIPTION	DATE	APPR

DESIGNED BY:
DRAWN BY:
CKD BY:
REVIEWED BY:
SUBMITTED BY:
REV:
DATE: XX-XX-XX
DESIGN FILE NO:
DRAWING CODE:
FILE NAME:
PLOT SCALE:
PLOT DATE: XX-XX-XX

U.S. ARMY ENGINEER DISTRICT, AFGHANISTAN
CORPS OF ENGINEERS
APO AE 96338

ENGINEERING AND CONSTRUCTION DIVISION

AFGHANISTAN NATIONAL POLICE (ANP) DISTRICT HEADQUARTERS COMPOUNDS - 1 STORY HQ
VARIOUS LOCATIONS, AFGHANISTAN

1 STORY BUILDING FOOTING AND COLUMN DETAILS

SHEET REFERENCE NUMBER:
A
S-5

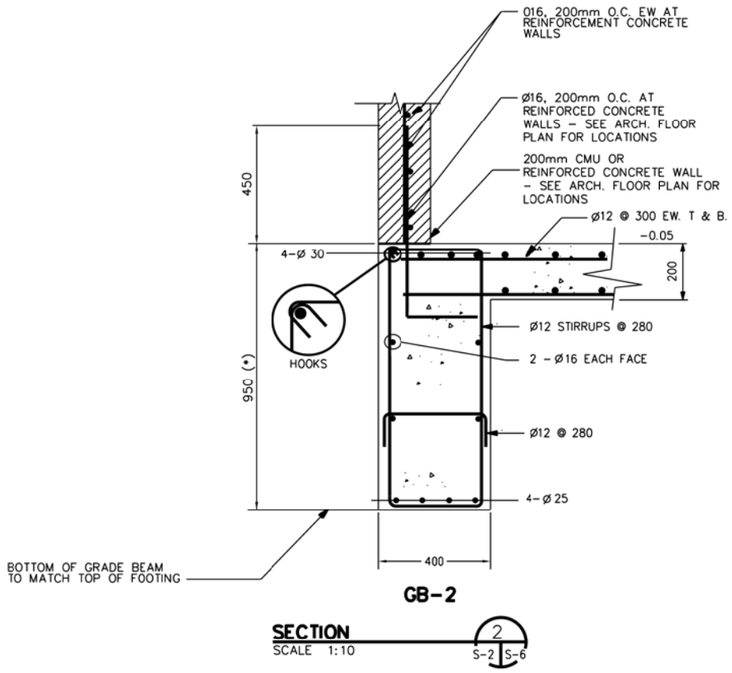

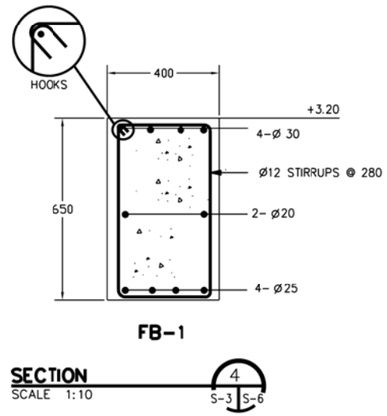

NOTE:

1. GRADE BEAM REINFORCING IS CONTINUOUS THROUGH THE COLUMN.

2. COORDINATE REBAR PLACEMENT BETWEEN BEAMS SO THAT A MAXIMUM NUMBER OF REBAR ARE CONTINUOUS. BEND BARS AS REQUIRED.

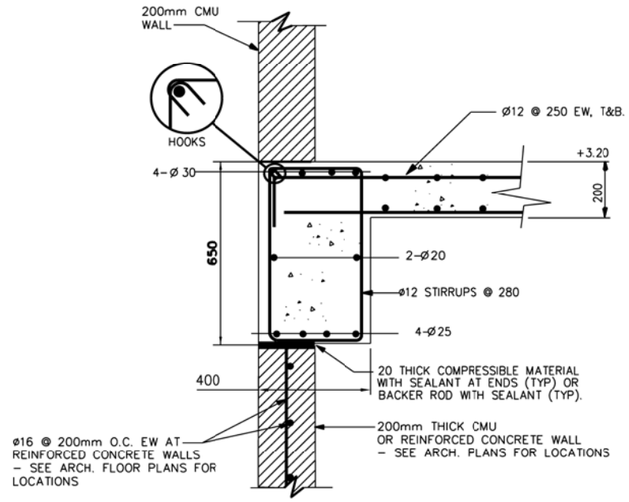

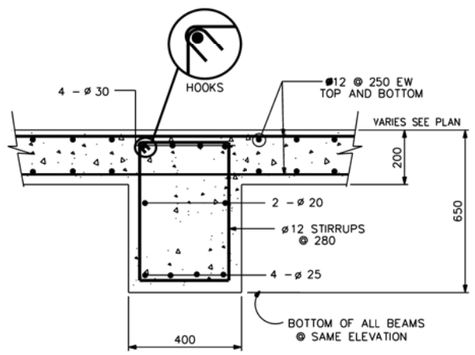

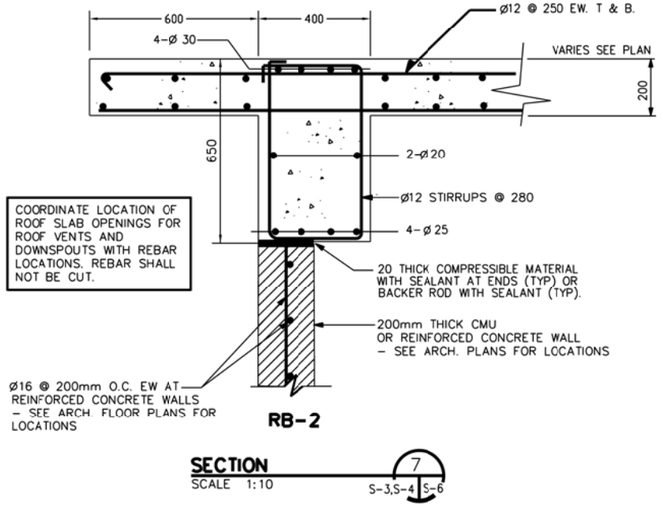

US ARMY CORPS OF ENGINEERS
AFGHANISTAN ENGINEER DISTRICT

SYMBOL	DESCRIPTION	DATE	APPD

DESIGNED BY:
DRAWN BY:
CKD BY:
REVIEWED BY:
SUBMITTED BY:
DATE: XX-XX-XX
DESIGN FILE NO.
DRAWING CODE
FILE NAME:
PLOT SCALE:
PLOT DATE: XX-XX-XX
REV:

U.S. ARMY ENGINEER DISTRICT, AFGHANISTAN
CORPS OF ENGINEERS
APO AE 96338

ENGINEERING AND CONSTRUCTION DIVISION

AFGHANISTAN NATIONAL POLICE (ANP) DISTRICT HEADQUARTERS COMPOUNDS - 1 STORY HQ
VARIOUS LOCATIONS, AFGHANISTAN
1 STORY BUILDING

BEAM DETAILS

SHEET REFERENCE NUMBER:
A
S-6
SHEET --- OF ---

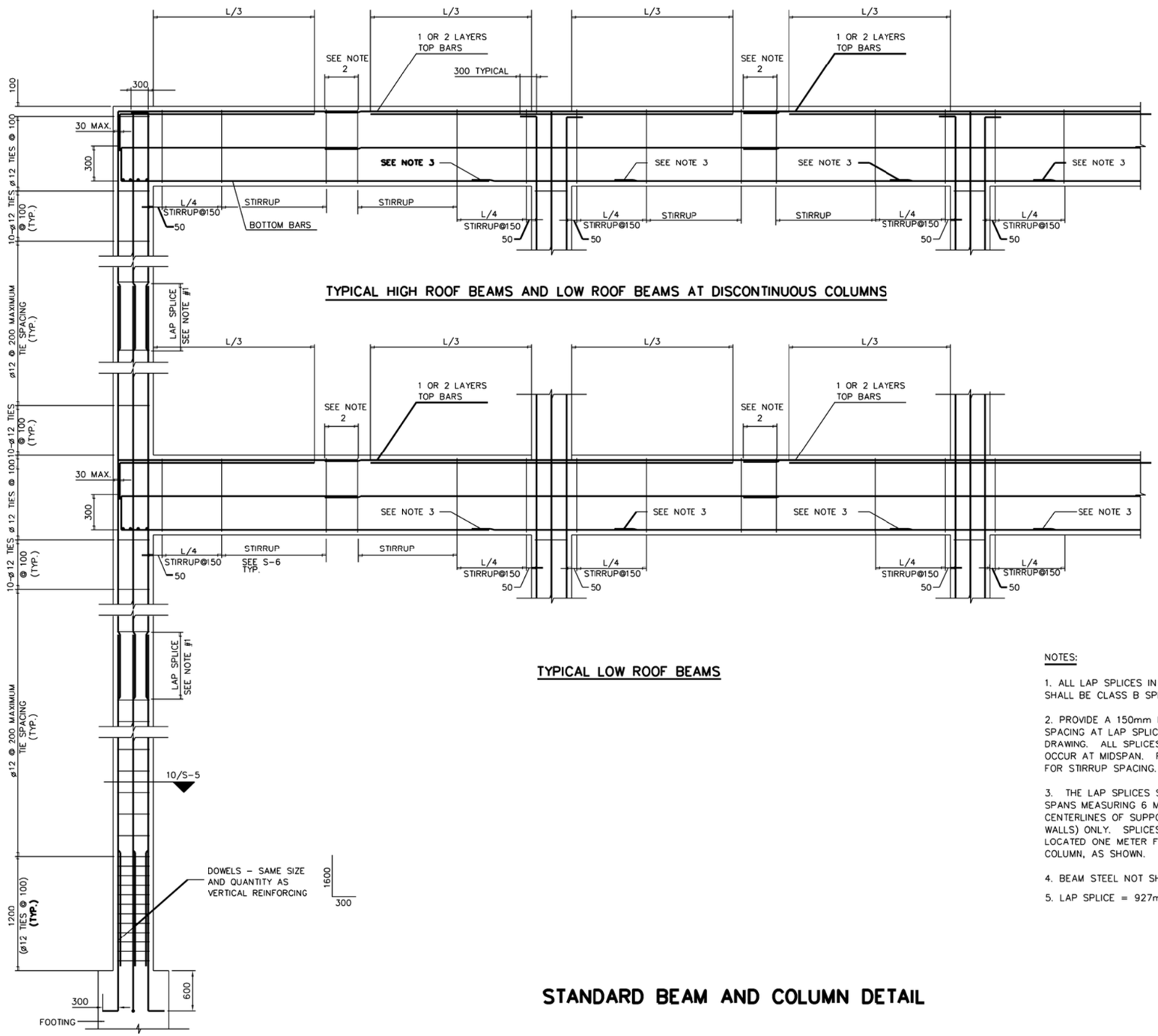

TYPICAL HIGH ROOF BEAMS AND LOW ROOF BEAMS AT DISCONTINUOUS COLUMNS

TYPICAL LOW ROOF BEAMS

NOTES:

1. ALL LAP SPLICES IN BEAMS AND COLUMNS SHALL BE CLASS B SPLICES

2. PROVIDE A 150mm MAXIMUM STIRRUP SPACING AT LAP SPLICES, AS SHOWN ON DRAWING. ALL SPLICES EXEPT BOTTOM BARS SHALL OCCUR AT MIDSPAN. REFER INDIVIDUAL BEAM DETAILS FOR STIRRUP SPACING.

3. THE LAP SPLICES SHOWN SHALL BE PERMITTED IN SPANS MEASURING 6 METERS OR MORE FROM CENTERLINES OF SUPPORTS (COLUMNS OR WALLS) ONLY. SPLICES INDICATED SHALL BE LOCATED ONE METER FROM THE FACE OF THE COLUMN, AS SHOWN.

4. BEAM STEEL NOT SHOWN FOR CLARITY.

5. LAP SPLICE = 927mm

STANDARD BEAM AND COLUMN DETAIL

US ARMY CORPS OF ENGINEERS
AFGHANISTAN ENGINEER DISTRICT

SYMBOL	DESCRIPTION	DATE	APPR

DESIGNED BY:
DRWN BY:
CKD BY:
REVIEWED BY:
SUBMITTED BY:
REV:
DATE: XX-XX-XX
DESIGN FILE NO.
DRAWING CODE
FILE NAME:
PLOT SCALE:
PLOT DATE: XX-XX-XX

U.S. ARMY ENGINEER DISTRICT, AFGHANISTAN
CORPS OF ENGINEERS
APO AE 96338

ENGINEERING AND CONSTRUCTION DIVISION

AFGHANISTAN NATIONAL POLICE (ANP) DISTRICT HEADQUARTERS COMPOUNDS - 1 STORY HQ
VARIOUS LOCATIONS, AFGHANISTAN
1 STORY BUILDING

STANDARD BEAM AND COLUMN DETAIL

SHEET REFERENCE NUMBER:
A
S-7
SHEET --- OF ---

A1 Size 594mm x 841mm

NOTES:
1. FOR LEGENDS, ABBREVIATIONS AND STANDARD MECHANICAL DETAILS SEE SHEETS SM-1 AND SM-3.
2. FOR EQUIPMENT SCHEDULES AND CONTROL DIAGRAMS SEE SHEET SM-2.
3. ALL DIMENSIONS ARE IN MM UNLESS NOTED OTHERWISE.
4. PROVIDE EACH EXHAUST FAN WITH MANUFACTURER'S STANDARD EXHAUST GRILL AND GRAVITY BACKDRAFT DAMPER.
5. PROVIDE 200 x 100 ALL-WEATHER LOUVER WITH BIRDSCREEN.
6. KITCHEN EXHAUST HOOD WITH ALUMINUM FILTERS AND SEALED DUCT CONNECTION TO EXHAUST FAN. SIZE OF HOOD TO MATCH COOKING EQUIPMENT PROVIDED.
7. EXHAUST FAN EF-A-5 CAPACITY INDICATED HERE IS MINIMUM BASED ON 1200W X 2500 L HOOD: ITS CAPACITY SHALL BE REVISED UPWARD TO MATCH AIRFLOW PERFORMANCE REQUIRED BY THE KITCHEN HOOD EQUIPMENT MANUFACTURER. PROPANE STOVE FLUE DUCT SHALL CONNECT TO KITCHEN EXHAUST HOOD.

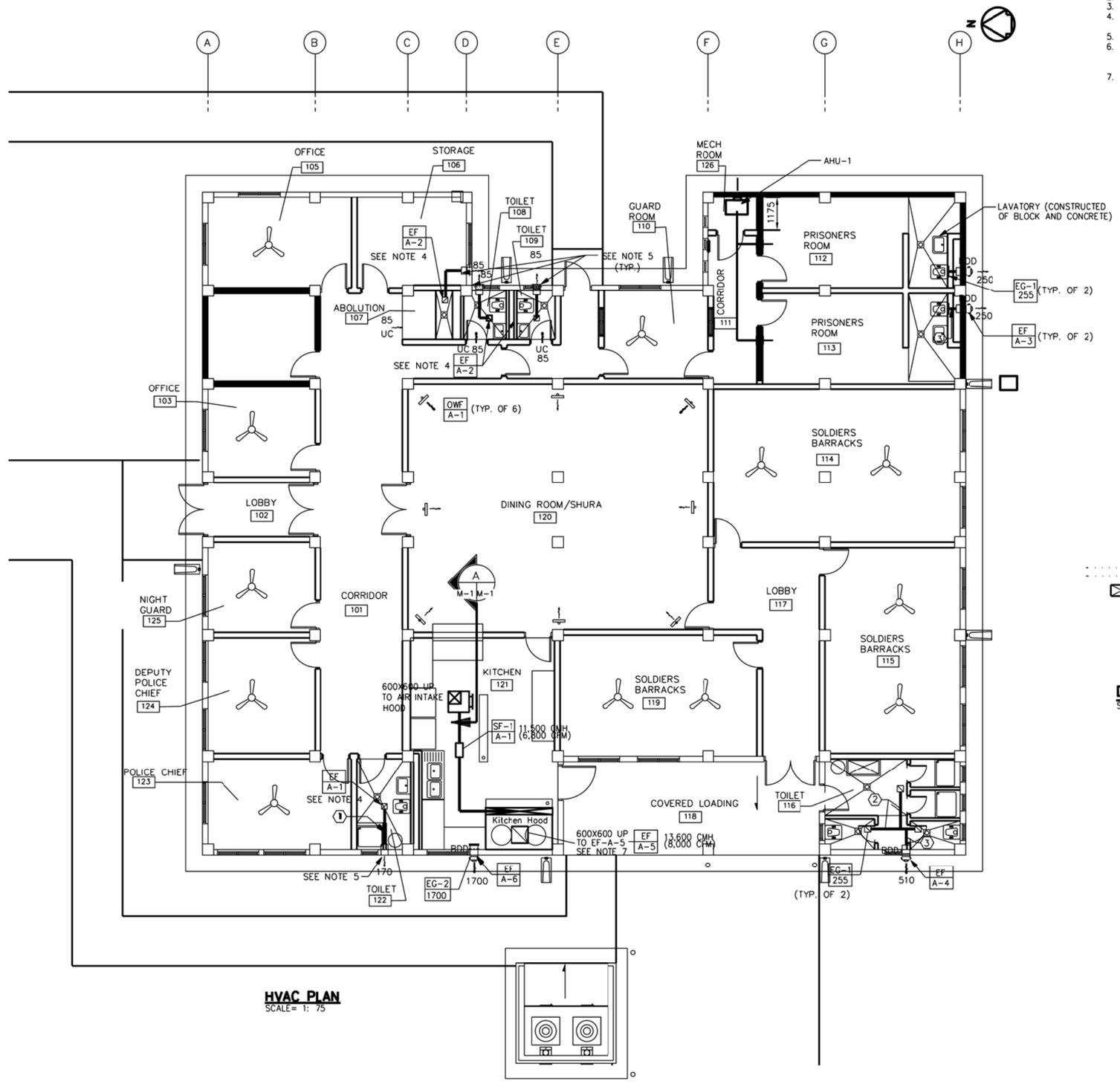

HVAC PLAN
SCALE= 1: 75

DUCT SIZING LEGEND

1	200 x 100
2	200 x 150
3	200 x 200
4	600 x 300

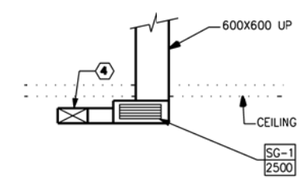

KITCHEN

DETAIL A M-1
SCALE 1: 50

1:50 0 1 2 3 4

1:75 3 1.50 0 3 4.5

US ARMY CORPS OF ENGINEERS AFGHANISTAN ENGINEER DISTRICT

SYMBOL	DESCRIPTION	DATE	APPR.

SYMBOL	DESCRIPTION	DATE	APPR.

DESIGNED BY: DATE: XX-XX-XX REV.
DWN BY: CKD BY: DESIGN FILE NO.
REVIEWED BY: DRAWING CODE:
SUBMITTED BY: FILE NAME:
PLOT SCALE:
PLOT DATE: XX-XX-XX

U.S. ARMY ENGINEER DISTRICT, AFGHANISTAN
CORPS OF ENGINEERS
APO AE 96338

ENGINEERING AND CONSTRUCTION DIVISION

AFGHANISTAN NATIONAL POLICE (ANP) DISTRICT HEADQUARTERS COMPOUNDS - 1 STORY HQ
VARIOUS LOCATIONS, AFGHANISTAN
1 STORY BUILDING

HVAC PLAN

SHEET REFERENCE NUMBER:
A
M-1

A1 Size 594mm x 841mm

NOTES:
1. PROVIDE DOUBLE WALL TYPE METAL VENT THROUGH EXTERIOR WALL FOR VENTING OF WOOD STOVES. TOP AT BOTTOM OF CONCRETE BEAM. WOOD STOVES TO BE PROVIDED BY OCCUPANTS. COORDINATE SIZE OF VENT THROUGH WALL WITH WOOD STOVE MANUFACTURER'S RECOMMENDATIONS.

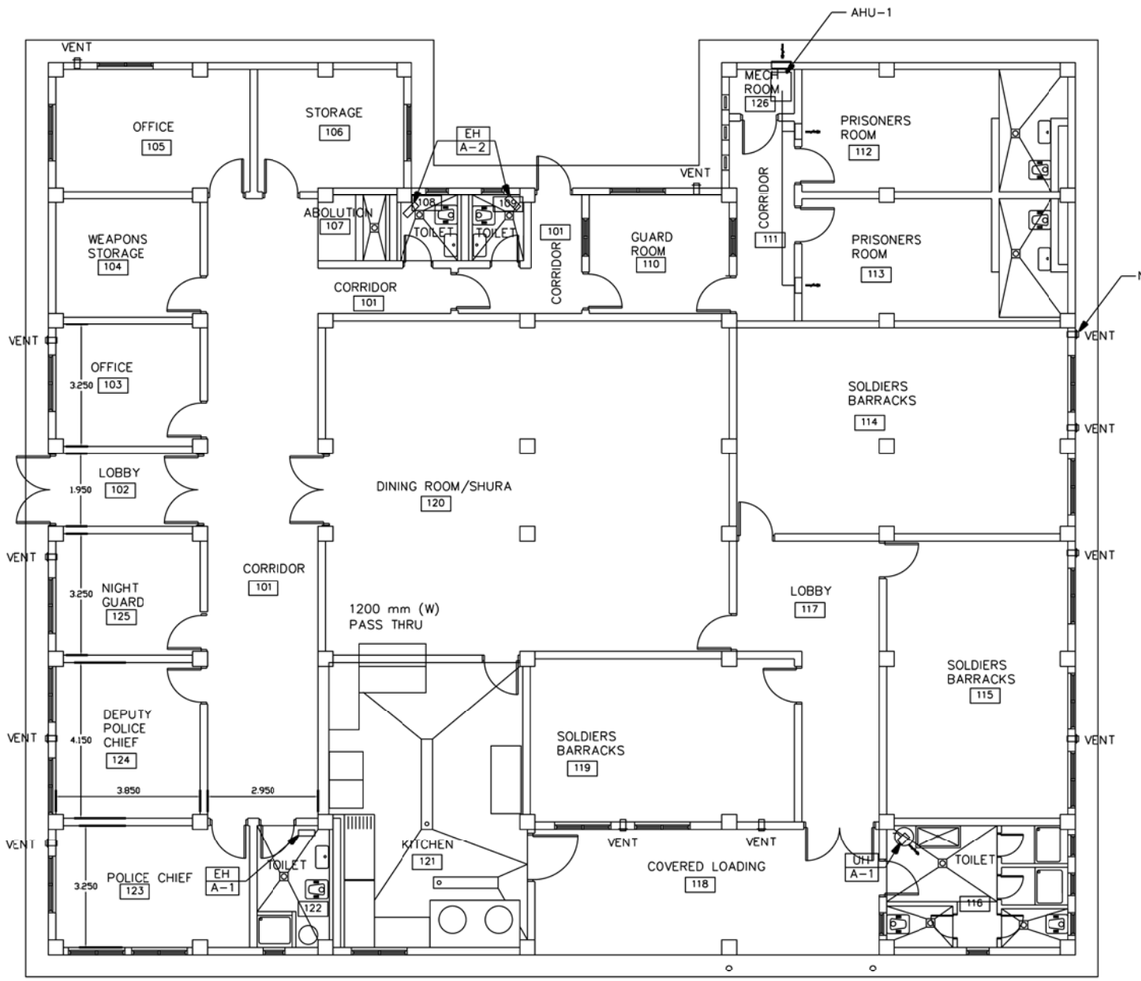

HEATING PLAN
SCALE= 1: 75

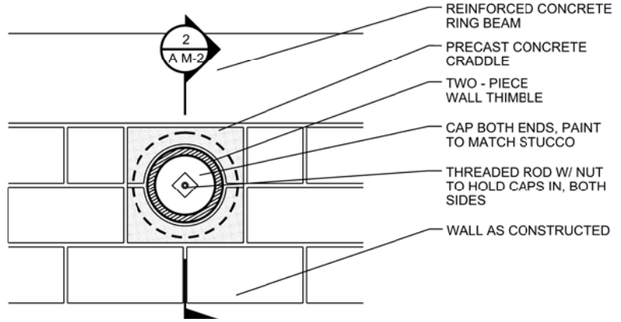

1 AM-2 THIMBLE ELEVATION DETAIL
SCALE 1:10

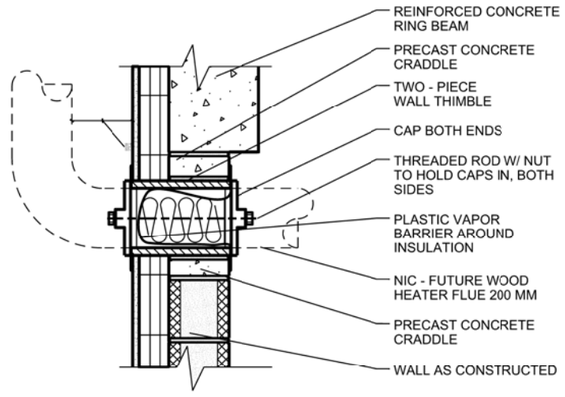

2 AM-2 THIMBLE SECTION DETAIL
SCALE 1:10

US ARMY CORPS OF ENGINEERS
AFGHANISTAN ENGINEER DISTRICT

REV	DESCRIPTION	DATE	APPD

DESIGNED BY:
DRWN BY:
CKD BY:
REVIEWED BY:
SUBMITTED BY:
DATE: XX-XX-XX
DESIGN FILE NO.
DRAWING CODE
FILE NAME:
PLOT SCALE:
PLOT DATE: XX-XX-XX

U.S. ARMY ENGINEER DISTRICT, AFGHANISTAN
CORPS OF ENGINEERS
APO AE 96338

ENGINEERING AND CONSTRUCTION DIVISION

AFGHANISTAN NATIONAL POLICE (ANP) DISTRICT HEADQUARTERS COMPOUNDS - 1 STORY HQ
VARIOUS LOCATIONS, AFGHANISTAN
1 STORY BUILDING

HEATING PLAN

SHEET REFERENCE NUMBER:
A
M-2

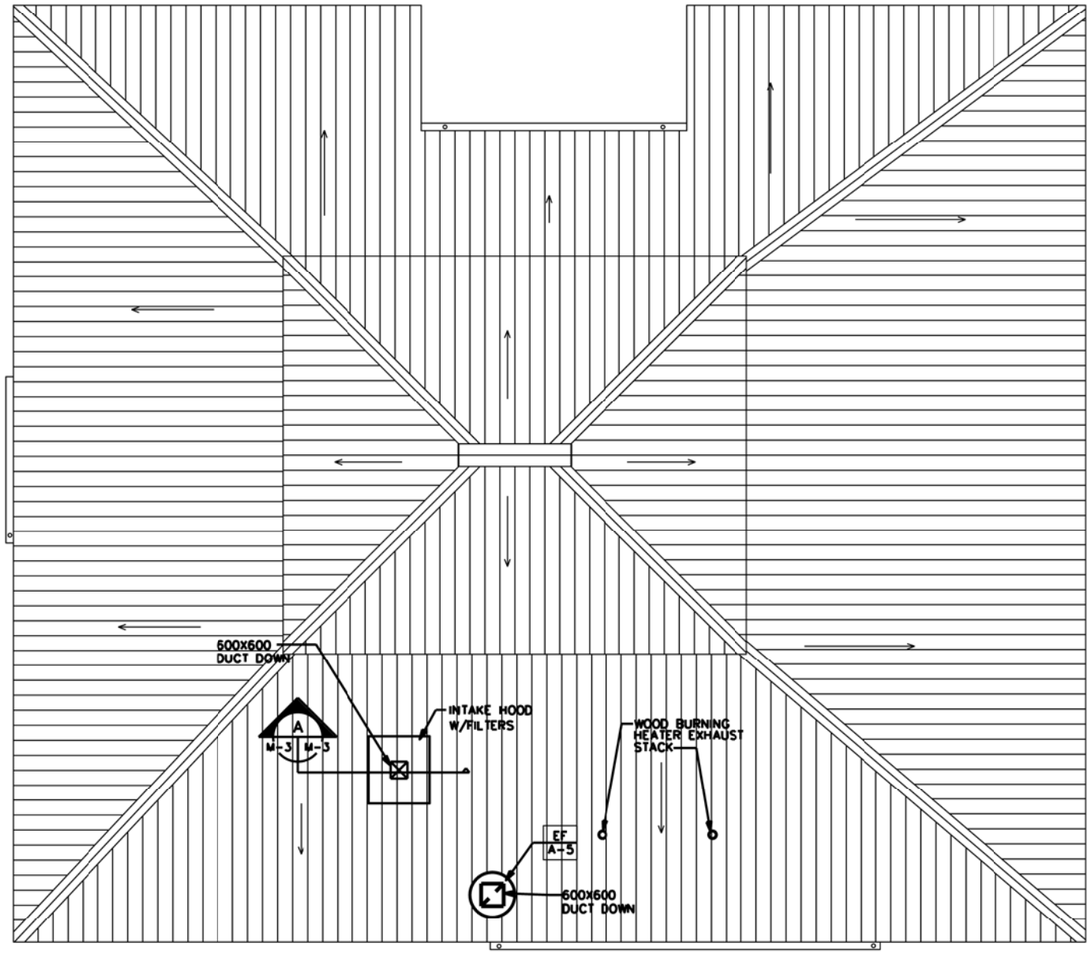

ROOF PLAN
SCALE= 1: 75

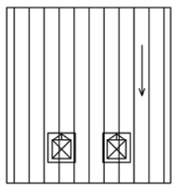

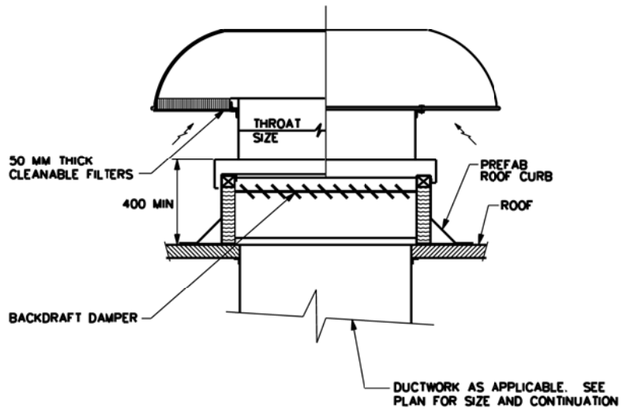

NOTE:
1. FILTER AREA SELECTION AT MAXIMUM FACE VELOCITY OF 300 FPM OR 1.52 MPS.

AIR INTAKE HOOD (A / M-3)
NOT TO SCALE

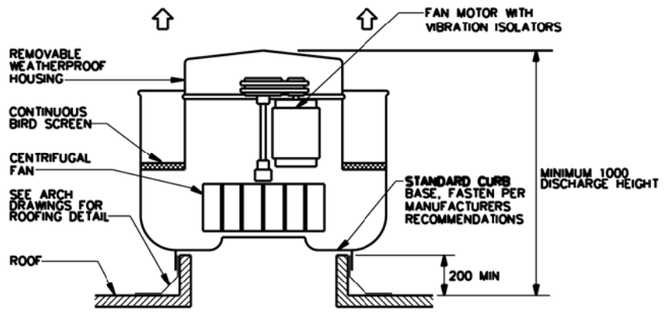

UPBLAST POWER ROOF VENTILATOR (B / M-3)
NOT TO SCALE

US ARMY CORPS
OF ENGINEERS
AFGHANISTAN
ENGINEER DISTRICT

SYMBOL	DESCRIPTION	DATE	APPD

SYMBOL	DESCRIPTION	DATE	APPD

REV:
DATE: XX-XX-XX
DESIGN FILE NO.
DRAWING CODE
FILE NAME:
PLOT SCALE:
PLOT DATE: XX-XX-XX

DESIGNED BY:
DWN BY: CKD BY:
REVIEWED BY:
SUBMITTED BY:

U.S. ARMY ENGINEER DISTRICT, AFGHANISTAN
CORPS OF ENGINEERS
APO AE 96338

ENGINEERING AND
CONSTRUCTION DIVISION

AFGHANISTAN NATIONAL POLICE
(ANP) DISTRICT HEADQUARTERS
COMPOUNDS - 1 STORY HQ
VARIOUS LOCATIONS, AFGHANISTAN
1 STORY BUILDING

ROOF PLAN

SHEET
REFERENCE
NUMBER:
A
M-3

A1 Size 594mm x 841mm

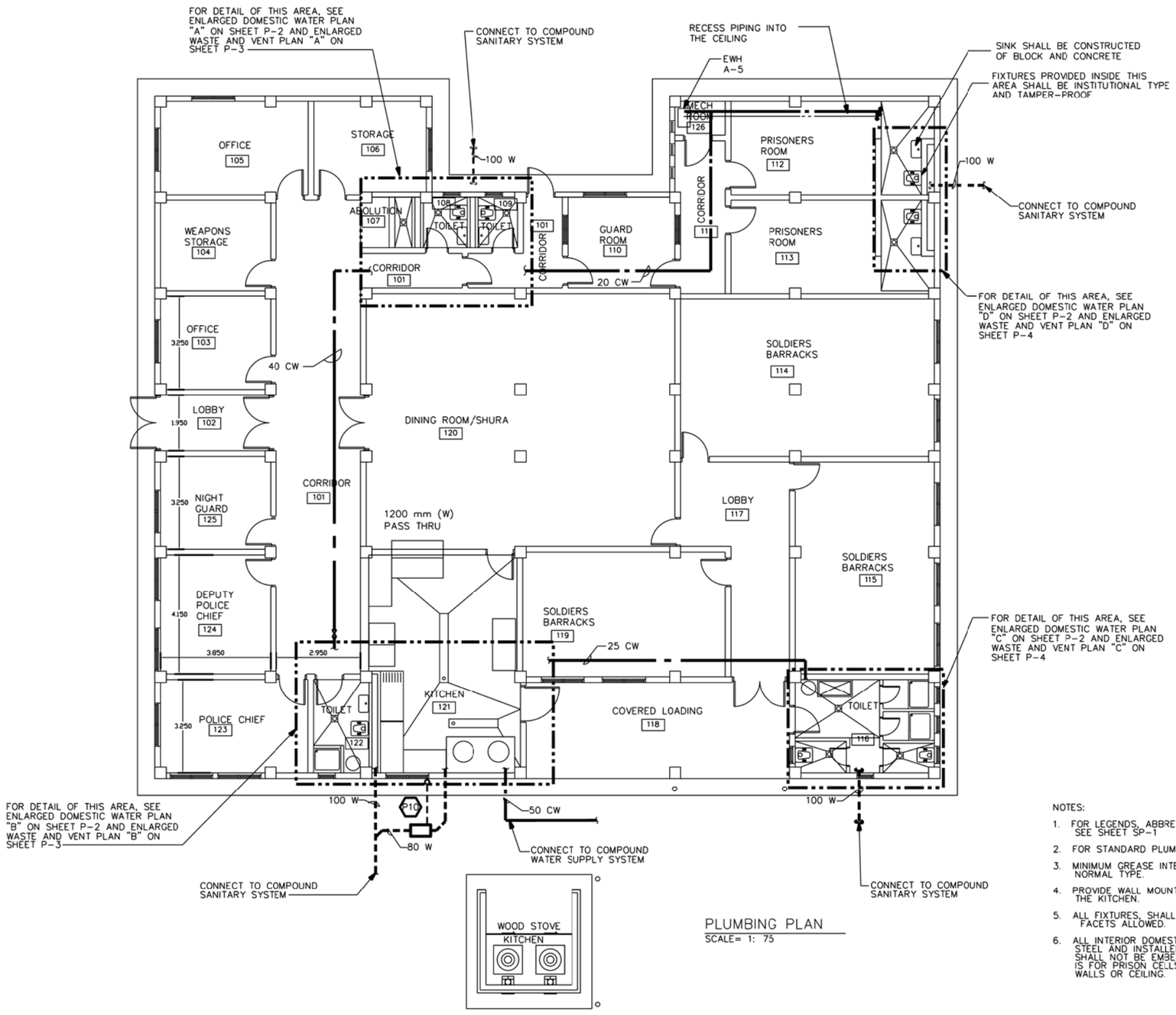

PLUMBING PLAN
SCALE= 1: 75

NOTES:

1. FOR LEGENDS, ABBREVIATION S AND PLUMBING FIXTURE SCHEDULE SEE SHEET SP-1
2. FOR STANDARD PLUMBING DETAILS SEE SHEET SP-2
3. MINIMUM GREASE INTERCEPTOR FLOW RATE SHALL BE 135 LPM NORMAL TYPE.
4. PROVIDE WALL MOUNTED, 15MM DIA. 12.5M LONG HOSE REEL IN THE KITCHEN.
5. ALL FIXTURES, SHALL BE COMMERCIAL GRADE. NO GOOSENECK FACETS ALLOWED.
6. ALL INTERIOR DOMESTIC WATER PIPING SHALL BE GALVANIZED STEEL AND INSTALLED TIGHT TO THE WALL OR CEILING. PIPING SHALL NOT BE EMBEDED IN THE CONCRETE WALLS. EXCEPTION IS FOR PRISON CELLS, WHERE PIPING SHALL BE INSTALLED IN THE WALLS OR CEILING.

US ARMY CORPS OF ENGINEERS AFGHANISTAN ENGINEER DISTRICT

SYMBOL	DESCRIPTION	DATE	APPR

DESIGNED BY: DRAWN BY: CKD BY: REVIEWED BY: SUBMITTED BY:
DATE: XX-XX-XX DESIGN FILE NO: DRAWING CODE: FILE NAME: PLOT SCALE: PLOT DATE: XX-XX-XX
REV: __

U.S. ARMY ENGINEER DISTRICT, AFGHANISTAN
CORPS OF ENGINEERS
APO AE 96338

ENGINEERING AND CONSTRUCTION DIVISION

AFGHANISTAN NATIONAL POLICE (ANP) DISTRICT HEADQUARTERS COMPOUNDS - 1 STORY HQ
VARIOUS LOCATIONS, AFGHANISTAN
1 STORY BUILDING

PLUMBING PLAN

SHEET REFERENCE NUMBER:
A
P-1

A1 Size 594mm x 841mm

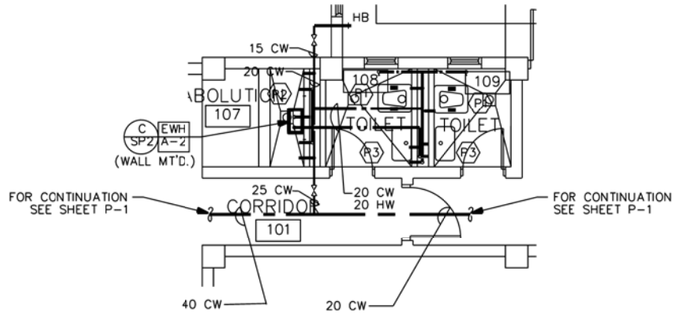

ENLARGED PLAN "A"- DOMESTIC WATER
SCALE= 1: 50

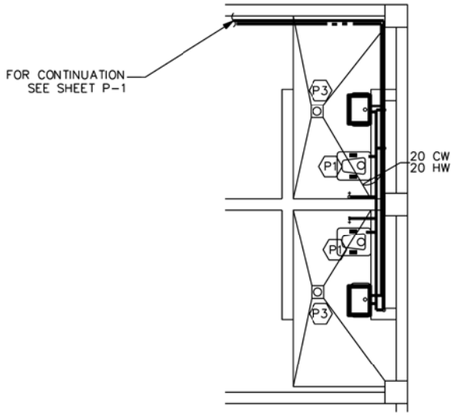

ENLARGED PLAN "D"- DOMESTIC WATER
SCALE= 1: 50

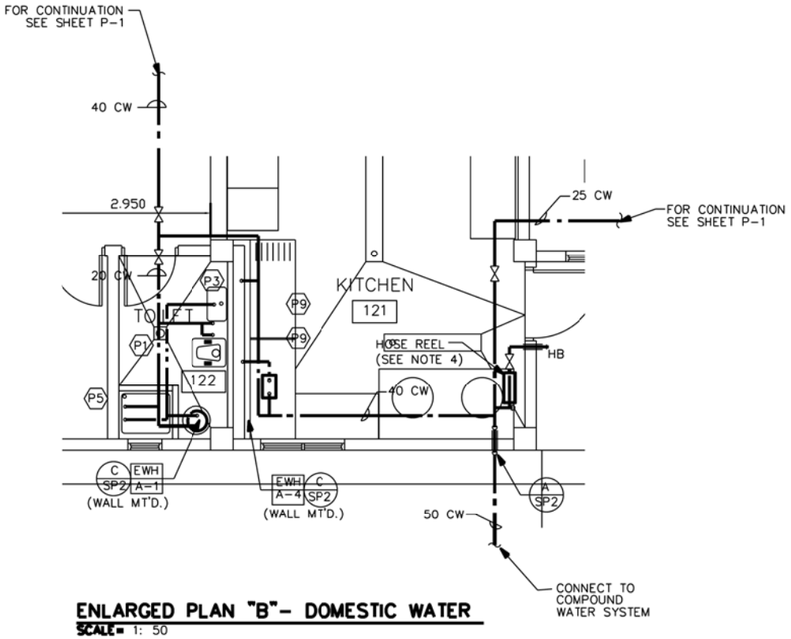

ENLARGED PLAN "B"- DOMESTIC WATER
SCALE= 1: 50

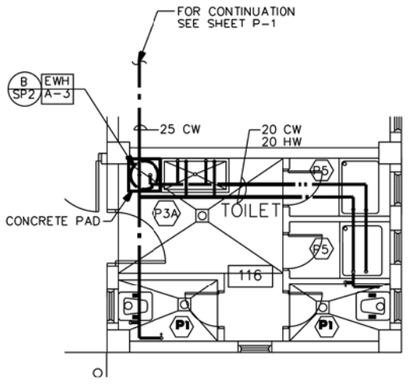

ENLARGED PLAN "C"- DOMESTIC WATER
SCALE= 1: 50

1 0 1 2 3 4
1:50

US ARMY CORPS
OF ENGINEERS
AFGHANISTAN
ENGINEER DISTRICT

SYMBOL	DESCRIPTION	DATE	APPR.

DESIGNED BY:
DWN BY:
CKD BY:
REVIEWED BY:
SUBMITTED BY:
DATE: XX-XX-XX
DESIGN FILE NO.
DRAWING CODE
FILE NAME:
PLOT SCALE:
PLOT DATE: XX-XX-XX
REV:

U.S. ARMY ENGINEER DISTRICT, AFGHANISTAN
CORPS OF ENGINEERS
APO AE 96338

ENGINEERING AND
CONSTRUCTION DIVISION

AFGHANISTAN NATIONAL POLICE
(ANP) DISTRICT HEADQUARTERS
COMPOUNDS - 1 STORY HQ
VARIOUS LOCATIONS, AFGHANISTAN
1 STORY BUILDING

ENLARGED PLUMBING PLANS- DOMESTIC WATER

SHEET
REFERENCE
NUMBER:
A
P-2

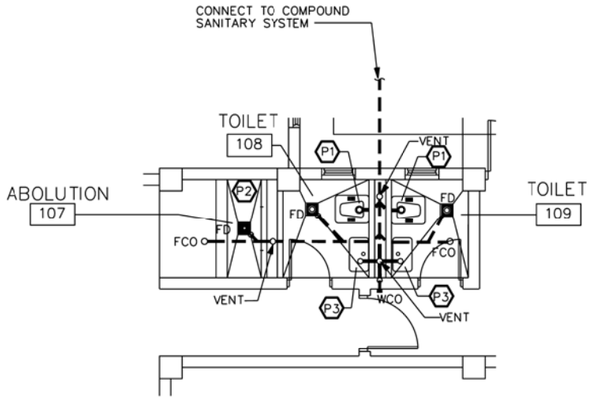

ENLARGED PLAN "A"- WASTE AND DRAINS
SCALE= 1: 50

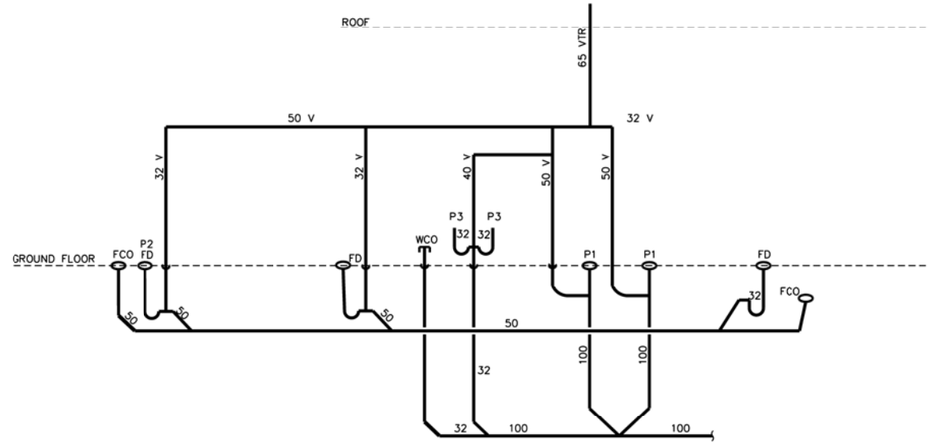

ENLARGED PLAN "A"- WASTE AND DRAIN PIPING SCHEMATIC
SCALE= NO SCALE

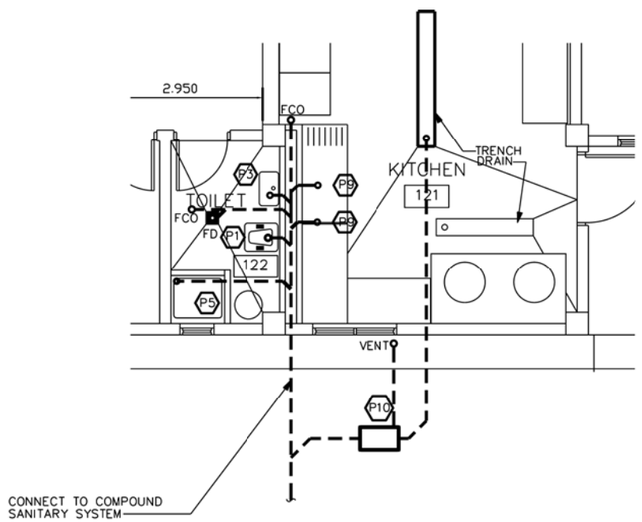

ENLARGED PLAN "B"- WASTE AND DRAINS
SCALE= 1: 50

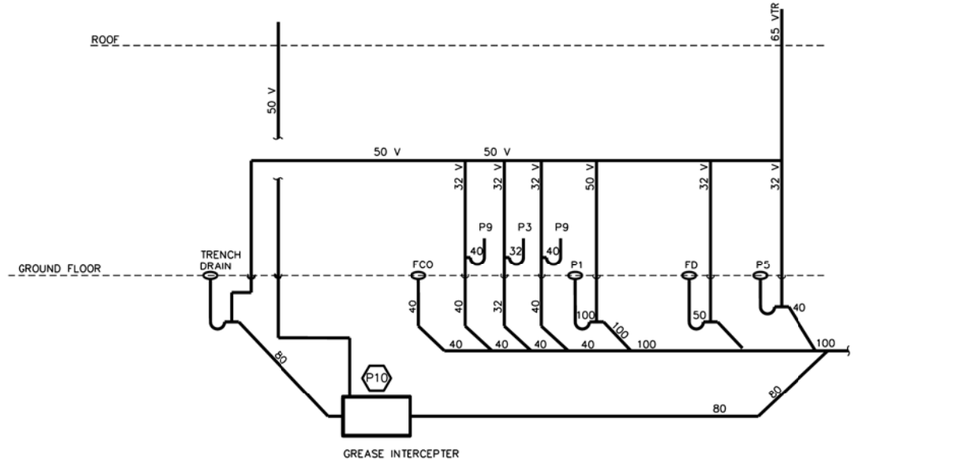

ENLARGED PLAN "B"- WASTE AND DRAIN PIPING SCHEMATIC
SCALE= NO SCALE

1 0 1 2 3 4
1:50

US ARMY CORPS OF ENGINEERS
AFGHANISTAN ENGINEER DISTRICT

SYMBOL	DESCRIPTION	DATE	APPD

SYMBOL	DESCRIPTION	DATE	APPD

DESIGNED BY:
DWN BY:
CKD BY:
REVIEWED BY:
SUBMITTED BY:
DATE: XX-XX-XX
DESIGN FILE NO.
DRAWING CODE
FILE NAME:
PLOT SCALE: XXXX-XX
PLOT DATE: XX-XX-XX
REV: —

U.S. ARMY ENGINEER DISTRICT, AFGHANISTAN
CORPS OF ENGINEERS
APO AE 96338

ENGINEERING AND CONSTRUCTION DIVISION

AFGHANISTAN NATIONAL POLICE (ANP) DISTRICT HEADQUARTERS COMPOUNDS - 1 STORY HQ
VARIOUS LOCATIONS, AFGHANISTAN
1 STORY BUILDING

ENLARGED PLUMBING PLANS- WASTE AND DRAINS

SHEET REFERENCE NUMBER:
A
P-3

A1 Size 594mm x 841mm

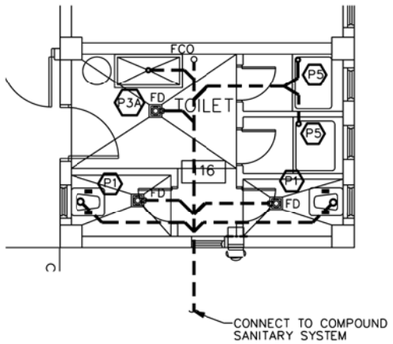

ENLARGED PLAN "C"- WASTE AND DRAINS
SCALE= 1: 50

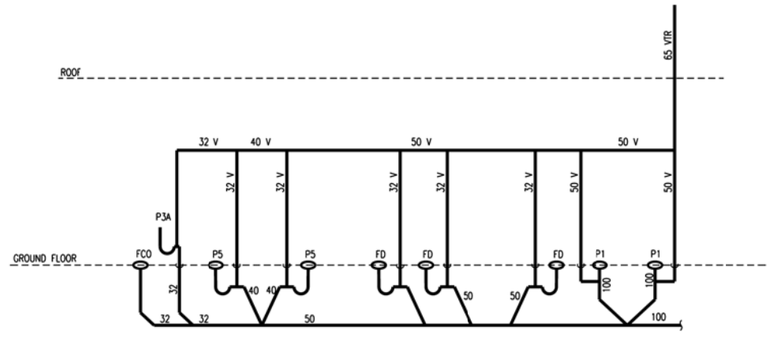

ENLARGED PLAN "C"- WASTE AND DRAIN PIPING SCHEMATIC
SCALE= NO SCALE

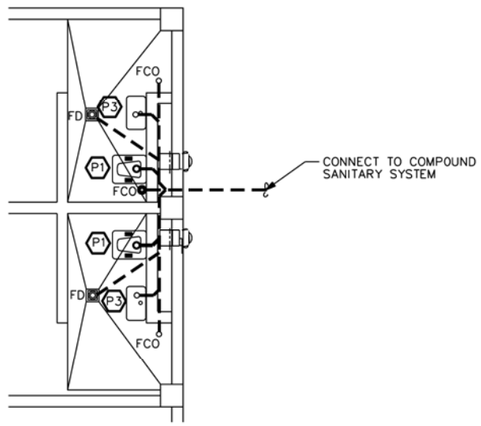

ENLARGED PLAN "D"- WASTE AND DRAINS
SCALE= 1: 50

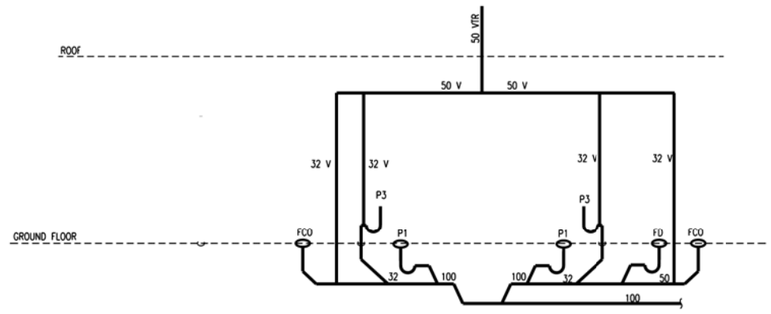

ENLARGED PLAN "D"- WASTE AND DRAIN PIPING SCHEMATIC
SCALE= NO SCALE

1 0 1 2 3 4
1:50

US ARMY CORPS OF ENGINEERS
AFGHANISTAN ENGINEER DISTRICT

SYMBOL	DESCRIPTION	DATE	APPR

DESIGNED BY:
DWN BY:
CKD BY:
REVIEWED BY:
SUBMITTED BY:
DATE: XX-XX-XX
DESIGN FILE NO.
DRAWING CODE
FILE NAME:
PLOT SCALE: XXXX-XX
PLOT DATE:
REV:

U.S. ARMY ENGINEER DISTRICT, AFGHANISTAN
CORPS OF ENGINEERS
APO AE 96338

ENGINEERING AND CONSTRUCTION DIVISION

AFGHANISTAN NATIONAL POLICE (ANP) DISTRICT HEADQUARTERS COMPOUNDS - 1 STORY HQ
VARIOUS LOCATIONS, AFGHANISTAN
1 STORY BUILDING

ENLARGED PLUMBING PLANS- WASTE AND DRAINS

SHEET REFERENCE NUMBER:
A
P-4

A1 Size 594mm x 841mm

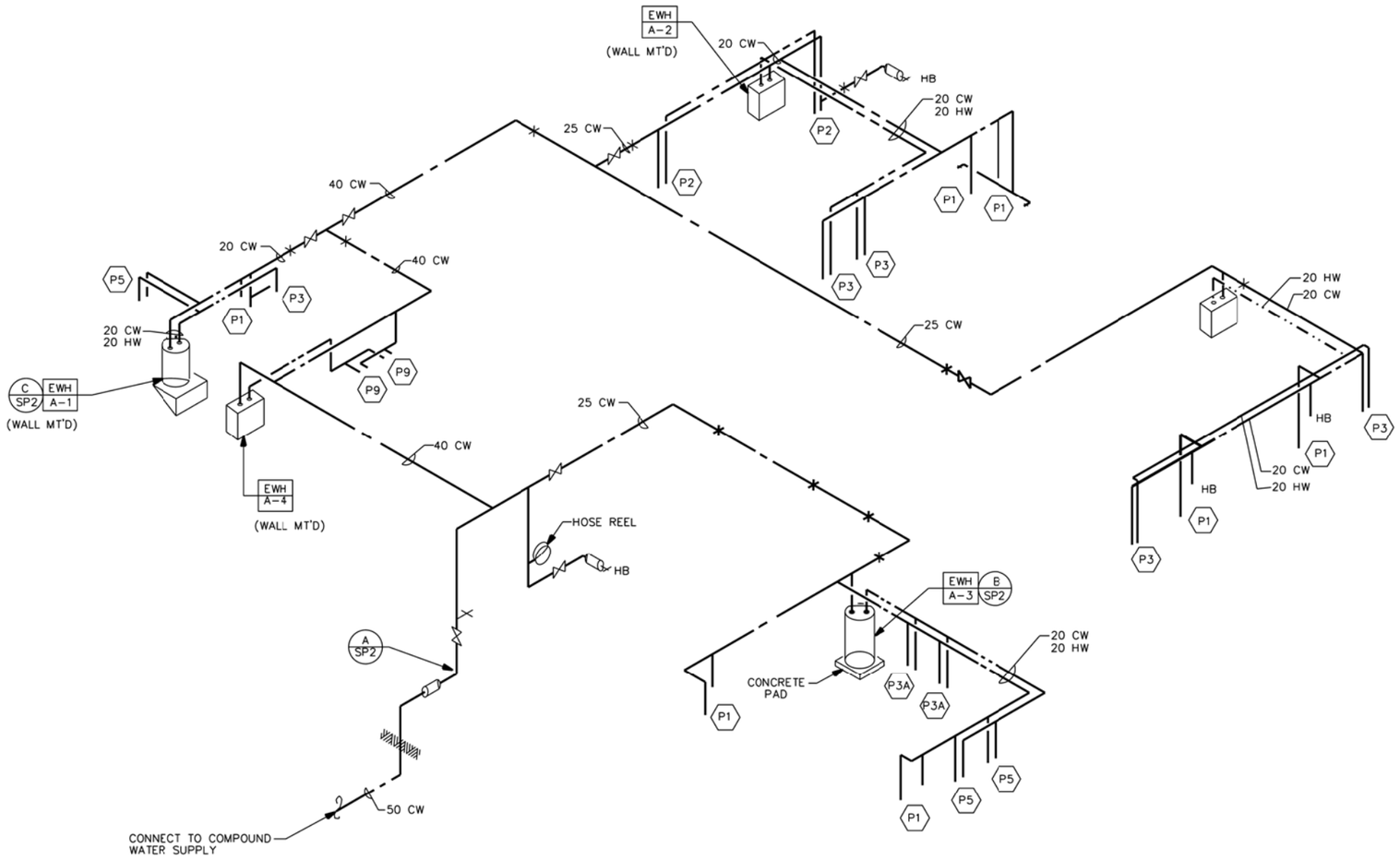

DOMESTIC WATER RISER DIAGRAM
NOT TO SCALE

US ARMY CORPS
OF ENGINEERS
AFGHANISTAN
ENGINEER DISTRICT

SYMBOL	DESCRIPTION	DATE	APPR.	SYMBOL	DESCRIPTION	DATE	APPR.

DESIGNED BY:
DRAWN BY:
REVIEWED BY:
SUBMITTED BY:
DATE: XX-XX-XX
CAD FILE NO.
DRAWING CODE
FILE NAME:
PLOT SCALE:
PLOT DATE: XX-XX-XX
REV: _

U.S. ARMY ENGINEER DISTRICT, AFGHANISTAN
CORPS OF ENGINEERS
APO AE 96338

ENGINEERING AND
CONSTRUCTION DIVISION

AFGHANISTAN NATIONAL POLICE
(ANP) DISTRICT HEADQUARTERS
COMPOUNDS - 1 STORY HQ
VARIOUS LOCATIONS, AFGHANISTAN
1 STORY BUILDING

DOMESTIC WATER RISER DIAGRAM

SHEET
REFERENCE
NUMBER:
A
P-5

EWH / A-X ELECTRIC WATER HEATER SCHEDULE

UNIT NUMBER	LOCATION (ROOM NO.)	TYPE	STORAGE CAPACITY (LITERS)	MINIMUM RECOVERY RATE (LITERS/HOUR) @ 55.5 C RISE	NUMBER OF ELEMENTS	ELECTRICAL REQUIREMENTS				REMARKS
						KW INPUT	VOLTS	PH	HZ	
A-1	TOILET 122	STORAGE TANK	50	43	1	2.5	220	1	50	WALL MOUNTED
A-2	TOILET 108 & 109	STORAGE TANK	50	45	1	3.0	220	1	50	WALL MOUNTED
A-3	TOILET 116	STORAGE TANK	100	86	2	6.0	220	1	50	FLOOR MOUNTED
A-4	KITCHEN 121	STORAGE TANK	100	90	2	6.0	220	1	50	FLOOR MOUNTED
A-5	CELLS 112 & 113	STORAGE TANK	20	14	1	1.5	220	1	50	WALL MOUNTED

US ARMY CORPS OF ENGINEERS
AFGHANISTAN ENGINEER DISTRICT

SYMBOL	DESCRIPTION	DATE	APPR	SYMBOL	DESCRIPTION	DATE	APPR

DESIGNED BY:
DWN BY:
CKD BY:
REVIEWED BY:
SUBMITTED BY:
DATE: XX-XX-XX
DESIGN FILE NO.
DRAWING CODE
FILE NAME:
PLOT SCALE:
PLOT DATE: XX-XX-XX
REV:

U.S. ARMY ENGINEER DISTRICT, AFGHANISTAN
CORPS OF ENGINEERS
APO AE 96338

ENGINEERING AND CONSTRUCTION DIVISION

AFGHANISTAN NATIONAL POLICE (ANP) DISTRICT HEADQUARTERS COMPOUNDS - 1 STORY HQ
VARIOUS LOCATIONS, AFGHANISTAN
1 STORY BUILDING

PLUMBING SCHEDULE

SHEET REFERENCE NUMBER:
A
P-6

A1 Size 594mm x 841mm

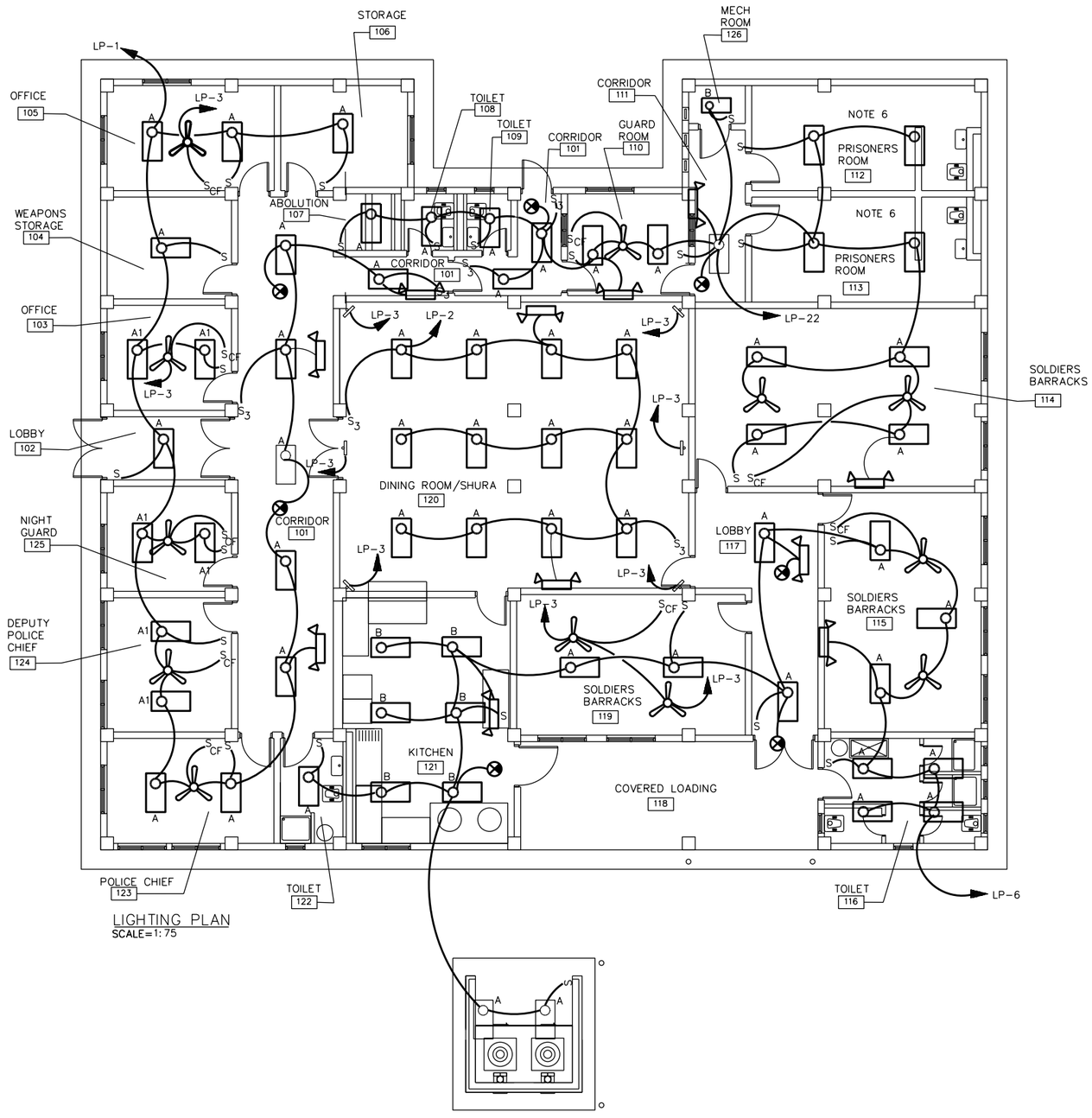

LIGHTING PLAN
SCALE=1:75

NOTES:

1. FOR LEGEND AND ABBREVIATIONS SEE DRAWING SE-1.
2. EXIT LIGHTS AND EMERGENCY LIGHTS SHALL BE CONNECTED TO AN UNSWITCHED POWER CIRCUIT.
3. FOR LIGHT FIXTURE SCHEDULE SEE DRAWING SE-1.
4. COORDINATE LOCATION OF ALL ELECTRICAL FIXTURES AND EQUIPMENT WITH ALL OTHER TRADES.
5. FOR ONE LINE DIAGRAM SEE DRAWING XE- I, POWER PLANT.
6. ALL LIGHT FIXTURES IN JAIL CELLS SHALL BE TWO LAMP FLUORESCENT TYPE FIXTURES SUITABLE FOR VANDAL RESISTANCE/ DETENTION CENTER. LIGHT FIXTURES SHALL WITHSTAND THE PHYSICAL ABUSE AND THE INTENT- TO- DESTROY TYPE ABUSE.
7. ALL WIRING INSTALLATION FOR LIGHTING AND POWER SHALL BE IN APPROVED METAL CONDUIT, EITHER CONCEALED OR SURFACE MOUNTED.
8. COORDINATE LOCATION OF THE CEILING FANS WITH LIGHT FIXTURES.
9. COORDINATE LOCATION AND MOUNTING HEIGHT OF THE LIGHT FIXTURE IN THIS ROOM WITH EXHAUST FAN AND THE DUCT TO PROVIDE REQUIRED CLEARANCE.
10. ALL WIRING INSTALLATION FOR LIGHTING, POWER, AND TELECOMMUNICATIONS SHALL BE IN APPROVED METAL CONDUIT, EITHER CONCEALED OR SURFACE MTD.

US ARMY CORPS OF ENGINEERS
AFGHANISTAN ENGINEER DISTRICT

SYMBOL	DESCRIPTION	DATE	APPR.	SYMBOL	DESCRIPTION	DATE	APPR.

DESIGNED BY:
DWN BY:
CKD BY:
REVIEWED BY:
SUBMITTED BY:
DATE: XX/XX/XX
DESIGN FILE NO.:
DRAWING CODE:
FILE NAME:
PLOT SCALE:
PLOT DATE: XX/XX/XX
REV. —

U.S. ARMY ENGINEER DISTRICT, AFGHANISTAN
CORPS OF ENGINEERS
APO AE 96338

ENGINEERING AND CONSTRUCTION DIVISION

AFGHANISTAN NATIONAL POLICE (ANP) DISTRICT HEADQUARTERS COMPOUNDS - 1 STORY HQ
VARIOUS LOCATIONS, AFGHANISTAN
1 STORY BUILDING

LIGHTING PLAN

SHEET REFERENCE NUMBER:
A
E-1

A1 Size 594mm x 841mm

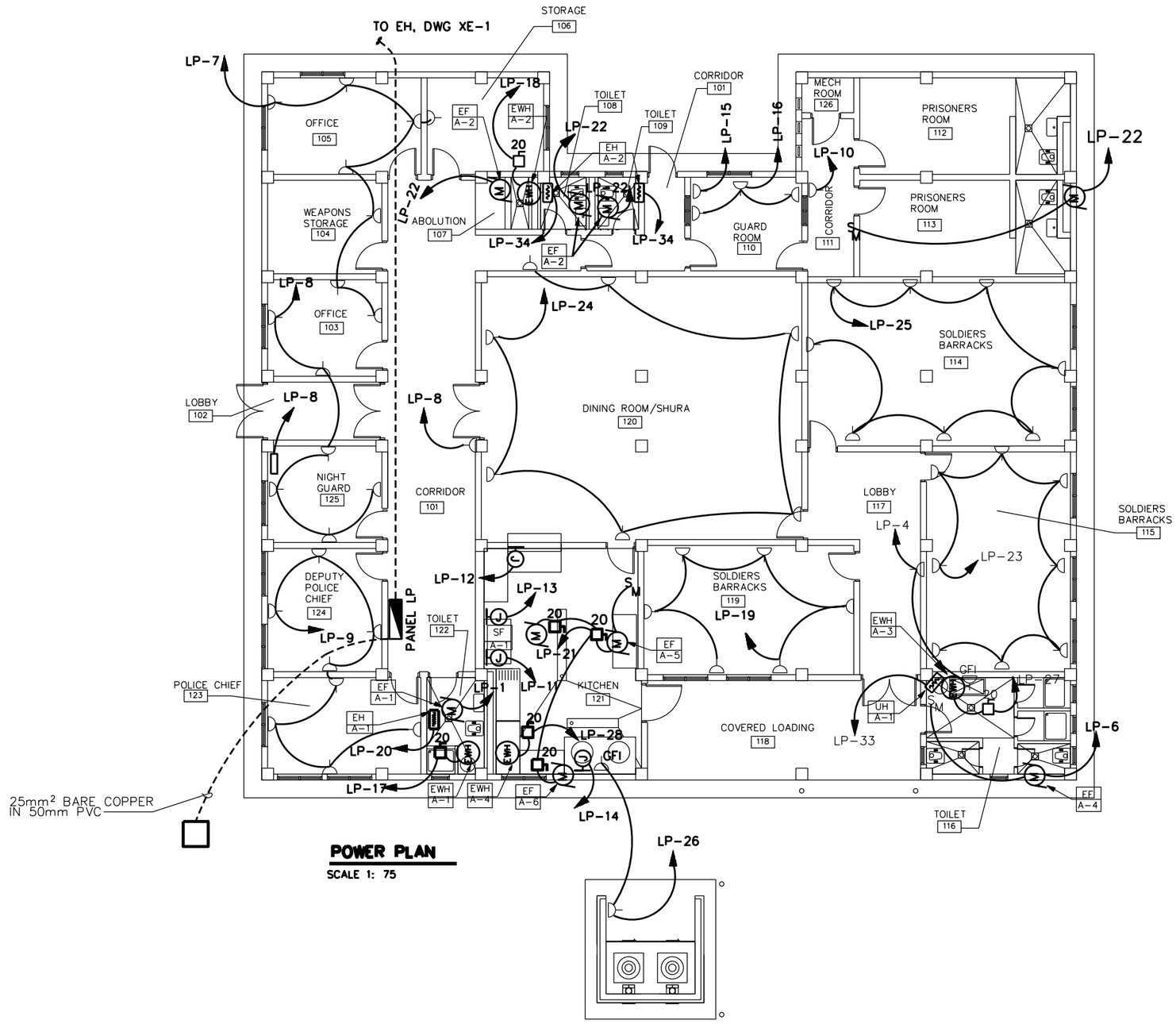

POWER PLAN
SCALE 1: 75

NOTES:

1. FOR LEGEND AND ABBREVIATIONS SEE DRAWING SE-1.
2. COORDINATE LOCATION OF ALL ELECTRICAL FIXTURES AND EQUIPMENT WITH ALL OTHER TRADES.
3. FOR ONE LINE DIAGRAM SEE DRAWING D/E-1, POWER PLANT.
4. COORDINATE LOCATION OF ALL ELECTRICAL FIXTURES AND EQUIPMENT WITH ALL OTHER TRADES.
5. FOR EXACT LOCATION OF MECHANICAL EQUIPMENT SEE MECHANICAL DRAWINGS.
6. EXHAUST FAN EF-A-1 AND EF-A-2 SHALL BE CONTROLLED BY THE LIGHT SWITCH IN THEIR RESPECTIVE ROOM.
7. EXHAUST FAN EF-A-3, EF-A-4, AND EF-A-5 SHALL BE CONTROLLED BY A MANUAL MOTOR STARTER FROM THE LOCATION AS SHOWN ON THIS DRAWING.
8. EXHAUST FAN EF-A-6 SHALL BE CONTROLLED BY A THERMOSTAT. REFER TO MECHANICAL DRAWING FOR LOCATION OF THE THERMOSTAT.
9. ALL WIRING INSTALLATION FOR LIGHTING, POWER, AND TELECOMMUNICATIONS SHALL BE IN APPROVED METAL CONDUIT, EITHER CONCEALED OR SURFACE MTD.

US ARMY CORPS OF ENGINEERS
AFGHANISTAN ENGINEER DISTRICT

SYMBOL	DESCRIPTION	DATE	APPR.	SYMBOL	DESCRIPTION	DATE	APPR.

DESIGNED BY:
DWN BY:
REVIEWED BY:
SUBMITTED BY:
DATE: XX-XX-XX
CKD BY:
DESIGN FILE NO.
DRAWING CODE:
FILE NAME:
PLOT SCALE:
PLOT DATE: XX-XX-XX
REV. 1

U.S. ARMY ENGINEER DISTRICT, AFGHANISTAN
CORPS OF ENGINEERS
APO AE 96338

ENGINEERING AND CONSTRUCTION DIVISION

AFGHANISTAN NATIONAL POLICE (ANP) DISTRICT HEADQUARTERS COMPOUNDS - 1 STORY HQ
VARIOUS LOCATIONS, AFGHANISTAN
1 STORY BUILDING

POWER PLAN

SHEET REFERENCE NUMBER:
A
E-2

A1 Size 594mm x 841mm

PANELBOARD LP FLUSH MOUNTED MINIMUM 22,000 ASYM. A.I.C. MIN.

______ AMP. MAIN LUGS (OR) 150 AMP. MAIN BREAKER W/ 150 AMP. TRIP

CIRCUIT BREAKER TYPE 380/220 VOLTS 3 PHASE 4 WIRE 150 AMP. BUS 50 HZ

CKT. NO.	TRIP AMPS	NO. POLES	WIRE mm^2	GND mm^2	CONDUIT mm	LOAD SERVED	LOAD-V.A.			LOAD-V.A.			LOAD SERVED	CONDUIT mm	GND 2 mm	WIRE 2 mm	NO. POLES	TRIP AMPS	CKT. NO.
							A0	B0	C0	A0	B0	C0							
1	20	1	4	4	20	LIGHTING,FANS, EF-A-1	3230			1440			LIGHTING	20	4	4	1	20	2
3	20	1	4	4	20	FANS		2000			360		RECEPTACLES	20	4	4	1	20	4
5	20	1				SPARE						3415	LIGHTING, FANS,EF-A-4	20	4	4	1	20	6
7	20	1	4	4	20	RECEPTACLES	1440			1260			RECEPTACLES	20	4	4	1	20	8
9	20	1	4	4	20	RECEPTACLES		1440			180		RECEPTACLE	20	4	4	1	20	10
11	20	1	4	4	20	JB FOR REFRIGERATOR/FREEZER			2000			2000	JB FOR REFRIGERATOR/FREEZER	20	4	4	1	20	12
13	20	1	4	4	20	JB FOR REFRIGERATOR/FREEZER	2000			2000			JB FOR REFRIGERATOR/FREEZER	20	4	4	1	20	14
15	20	1	4	4	20	RECEPTACLES		500			540		RECEPTACLES	20	4	4	1	20	16
17	20	1	4	4	20	ELECTRIC WATER HEATER A-1			2500			9000	ELECTRIC WATER HEATER A-2	20	6	10	1	50	18
19	20	1	4	4	20	RECEPTACLES	1080			1550			EH-A-1	20	4	4	1	20	20
21	20	1	4	4	20	EXHAUST FAN EF-A-5, A-6		1585			2800		LIGHTING,FANS,EF-A-2,EF-A-3	20	4	4	1	20	22
23	20	1	4	4	20	RECEPTACLES			1440			1260	RECEPTACLES	20	4	4	1	20	24
25	20	1	4	4	20	RECEPTACLES	1440			720			RECEPTACLES	20	4	4	1	20	26
27	20	3	4	4	20	EWH-A-3		3000			12000		ELECTRIC WATER HEATER A-4	20	6	16	1	70	28
29	↓	↓	↓	↓	↓	↓			3000				SPARE				1	20	30
31	↓	↓	↓	↓	↓	↓	3000						SPARE				1	20	32
33	20	1	4	4	20	UH-A-1		3000			2080		EH-A-2	20	4	4	1	20	34
35	20	1				SPARE							SPARE				1	20	36
37	20	1				SPARE							SPARE				1	20	38
39	20	1				SPARE							SPACE						40
41						SPACE							SPACE						42
							12190	11525	8940	6970	17960	15675							

TOTAL CONN. LOAD 73.26 KVA. 85 % DEMAND = ESTIMATED DEMAND LOAD: 62.27 kVA

TOTAL CONN. LOAD PER PHASE (KVA): A0 19.16 B0 29.49 C0 24.62

SUPPLIED FROM POWER PLANT SWITCHBOARD

NOTES:

1. FOR LEGEND AND ABBREVIATIONS SEE DRAWING SE-1.
2. CONTRACTOR SHALL CONFIRM THAT ALL CIRCUIT RATINGS ARE BASED ON THE ACTUAL NAMEPLATE OF THE SUPPLIED EQUIPMENT.

US ARMY CORPS OF ENGINEERS AFGHANISTAN ENGINEER DISTRICT

SYMBOL	DESCRIPTION	DATE	APPR.

SYMBOL	DESCRIPTION	DATE	APPR.

DESIGNED BY: | DATE: xx-xx-xx | REV.
DWN BY: | CKD BY: | DESIGN FILE NO.
REVIEWED BY: | DRAWING CODE:
SUBMITTED BY: | FILE NAME: | PLOT SCALE: | PLOT DATE: xx-xx-xx

U.S. ARMY ENGINEER DISTRICT, AFGHANISTAN
CORPS OF ENGINEERS
APO AE 96338

ENGINEERING AND CONSTRUCTION DIVISION

AFGHANISTAN NATIONAL POLICE (ANP) DISTRICT HEADQUARTERS COMPOUNDS - 1 STORY HQ
VARIOUS LOCATIONS, AFGHANISTAN
1 STORY BUILDING

PANEL SCHEDULE

SHEET REFERENCE NUMBER:
A
E-3

A1 Size 594mm x 841mm

ARCHITECTURAL ABBREVIATIONS AND SYMBOLS

ABBREVIATIONS

A

@	AT
AC	AIR CONDITIONER
ACCFLR	RAISED FLOOR SYSTEM
ACFT	AIRCRAFT
ACST	ACOUSTICAL
AD	AREA DRAIN
A/E	ARCHITECT/ENGINEERS
AFF	ABOVE FINISH FLOOR
ALUM	ALUMINUM
ANOD	ANODIZED
AOC	AIR OPERATIONS CENTER
APPROX	APPROXIMATELY
ARCH	ARCHITECTURAL
ASPH	ASPHALT
ATC	ACOUSTICAL TILE CEILING
AWP	ACOUSTICAL WALL PANEL

B

BB	BALL BEARING
BMUM	BITUMINOUS
BL	BASE LINE
BLDG	BUILDING
BLK	BLOCK
B/M	BENCH MARK OR BEAM
BOM	BILL OF MATERIALS
BRKT	BRACKET
BOT	BOTTOM
BRD	BOARD

C

CARP	CARPET
CB	CORE BORING
C TO C	CENTER TO CENTER
CEM	CEMENT
CH	CLEAR HEART
CFM	CUBIC FEET PER MINUTE
CI	CAST IRON
CIP	CAST IN PLACE
CJ OR CJT	CONTROL JOINT
℄	CENTER LINE
CLF	CHAIN LINK FENCE
CLG	CEILING
CLR	CLEAR
CM	CENTIMETER
CMDR	COMMANDER
CMP	CORRUGATED METAL PIPE
CMU	CONCRETE MASONRY UNIT
CO	CLEANOUT
COE	CORPS OF ENGINEERS
CONCR	CONCRETE
CONN	CONNECTION
CONST	CONSTRUCTION
CONT	CONTINUOUS
CONTAM	CONTAMINATED
CONTR	CONTRACTOR
CORR	CORRUGATED
CPRSR	COMPRESSOR
CT	CERAMIC TILE
CTR	CENTER
CUL	CULVERT
CUM	CUBIC METERS
CWT	COUNTERWEIGHT
COORD	COORDINATE

D

D	DEPTH
DECON	DECONTAMINATION
DET	DETAIL
DI	DRAIN INLET
DIA	DIAMETER
DIM	DIMENSION
DISP	DISPENSER
DJ	DUMMY JOINT
DRWG	DRAWING
DS	DOWNSPOUT
DW	DRINKING WATER

E

E	EAST
EA	EACH
EG	EXISTING GRADE
EJ	EXPANSION JOINT
EL OR ELEV	ELEVATION
ELEC	ELECTRICAL
ENCL	ENCLOSURE
ENGR	ENGINEER
ENT	ENTRANCE
EPDM	ELASTOMERIC ROOFING
EPX	EPOXY COATING
EQ	EQUAL
ES/EW	EMERGENCY SHOWER/EYE WASH
EW	EACH WAY
EXCA	EXCAVATE
EXH	EXHAUST
EXIST	EXISTING
EXP	EXPANSION OR EXPOSED
EWC	ELECTRIC WATER COOLER
EWH	ELECTRIC WATER HEATER

ABBREVIATIONS

F

F	FEET
FD	FLOOR DRAIN
FDN	FOUNDATION
FF & E	FURNITURE, FURNISHINGS AND EQUIPMENT
F TO F	FACE TO FACE
FE	FIRE EXTINGUISHER
FFLEL	FINISH FLOOR ELEVATION
FG	FINISH GRADE
FH	FIRE HYDRANT
FIN	FINISH
FL	FLOOR
FPM	FEET PER MINUTE
FTG	FOOTING

G

GA	GAUGE
GALV	GALVANIZED
GPM	GALLONS PER MINUTE
GR	GRADE
GT	GATE (FENCE)
GVL	GRAVEL
GYP	GYPSUM

H

HB	HOSE BIB
HDW	HARDWARE
HDWD	HARDWOOD
HZ	HERTZ
HF	HIGH FREQUENCY
HGT	HEIGHT
HM	HOLLOW METAL
HORIZ	HORIZONTAL
HP	HIGH POINT
HH	HEX HEAD
HC	HANDICAPPED
HR	HOUR

I

ID	INSIDE DIAMETER
INSTL	INSTALL
INTEL	INTELLIGENCE
INTER	INTERIOR
INV	INVERT
INSUL	INSULATION

J

JAN	JANITOR
JB	JUNCTION BOX
JCT	JUNCTION
JT	JOINT

K

KG	KILOGRAM
KM	KILOMETER
KPA	KILO PASCAL
KPH	KILOMETERS PER HOUR

L

LAM	LAMINATE
LAT	LATITUDE
LAV	LAVATORY
LBY	LOBBY
LBS	POUNDS
LG	LONG
LINMET	LINEAR METAL CEILING SYSTEM
LNRPNL	METAL LINER PANEL
LOC	LIMITS OF CONSTRUCTION
LONG	LONGITUDE
LP	LOW POINT
LSD	LARGE SCREEN DISPLAY
LTG P	LIGHTING PANEL
LVR	LOUVER

M

M	METER
MATL	MATERIAL
MAX	MAXIMUM
MECH	MECHANICAL
MH	MANHOLE
MISC	MISCELLANEOUS
MIN	MINIMUM
ML	MATCH LINE
MM	MILLIMETERS
MO	MASONRY OPENING
MON	MONUMENT
MOIST	MOISTURE
MPH	MILES PER HOUR
MTD	MOUNTED
MTL	METAL
MSNRY	MASONRY
MFR	MANUFACTURER
MATL	MATERIAL
MW	FORCE PROTECTION DOOR

ABBREVIATIONS

N

N	NORTH
NA	NOT APPLICABLE
NIC	NOT IN CONTRACT
NICAD	NICKEL CADMIUM
NO	NUMBER
NTS	NOT TO SCALE

O

OC	ON CENTER
OD	OUTSIDE DIAMETER
OPH	OPPOSITE HAND
OPNG	OPENING
OPP	OPPOSITE
OPS	OPERATIONS

P

PANL	PANEL
PCS	PIECES
PE	POLYETHYLENE
PKG	PARKING OR PACKAGE
PL	PLATE
PLAS	PLASTER
PLBG	PLUMBING
POL	PETROLEUM OIL LUBRICANT
PP	POWER PANEL
PRCST	PRECAST
PROP	PROPERTY
PSF	POUNDS PER SQUARE FOOT
PTD	PAINTED
PTR	PIPE TRENCH
PVMT	PAVEMENT

Q

Q	DESIGN DISCHARGE
QD	QUICK DISCONNECT

R

R	RADIUS OR REINFORCED
RCP	REINFORCED CONCRETE PIPE
RD	ROOF DRAIN
RE	REFERENCE
REINF	REINFORCED
REQD	REQUIRED
REV	REVISION
RH	RIGHT HAND
RI	RISER
RM	ROOM
RO	ROUGH OPENING
ROW	RIGHT OF WAY
RP	RADIUS POINT
RR	RAILROAD
RT	RIGHT
RTU	ROOF TOP UNIT
RVS	REVERSE
RW	RAW WATER

S

S OR SO	SOUTH
SCH	SCHEDULE
SECT	SECTION
SD	SMOKE DETECTOR
SG	SUB GRADE
SH OR SHT	SHEET
SHWR	SHOWER
SIM	SIMILIAR
SL	SLOPE
SMH	SEWER MANHOLE
SOC	STRATEGIC OPERATIONS CENTER
SPEC	SPECIFICATION
SPFC	SPECIFIC
SQ	SQUARE
SS	SANITARY SEWER
SST	STAINLESS STEEL
STA	STATION
STD	STANDARD
STL	STEEL
STRUCT	STRUCTURAL
SUSPLAS	SUSPENDED PLASTER
SVC	SERVICE CONNECTION

ABBREVIATIONS

T

TC	TOP OF CURB
TELE C	TELEPHONE CABINET
TER	TERRAZZO
TG	TOP OF GRATE
TK	TANK
TO	TECHNICAL ORDER
TOS	TOP OF STEEL
TOW	TOP OF WALL
TP	TEST PIT
TR	TRENCH
TSW	TOP OF SIDEWALK
TYP	TYPICAL
TP	TOP OF PAVEMENT
TH/THK	THICK / THICKNESS

U

UBC	UNIFORM BUILDING CODE
UG	UNDERGROUND
UNO	UNLESS NOTED OTHERWISE
UPS	UNINTERRUPTIBLE POWER SUPPLY
UTIL	UTILITY

V

VB	VALVE BOX
VC	VERTICAL CURVE
VCT	VINYL COMPOSITION TILE
VEH	VEHICLE
VEL	VELOCITY
VERT	VERTICAL
VEST	VESTIBULE
VIP	VERY IMPORTANT PERSON
VTR	VENT THRU ROOF

W

W	WEST, WIDE
WC	WATER CLOSET
WM	WIRE MESH PARTITION
WSP	WELDED STEEL PIPE
WT	WEIGHT
W/O	WITHOUT
W/	WITH
WWF	WELDED WIRE FABRIC

REFERENCE SYMBOLS

- A / A-1 | A-2 — DETAIL IDENTIFICATION; NO.OF SHEET ON WHICH DETAIL IS DRAWN; NO. OF SHEET ON WHICH CONDITION IS REFERENCED
- 1 / A-3 — BUILDING SECTION IDENTIFICATION; NO.OF SHEET ON WHICH SECTION IS DRAWN
- A / A-3 — WALL SECTION IDENTIFICATION; NO.OF SHEET ON WHICH SECTION IS DRAWN
- 102 — ROOM NUMBER
- (102) — DOOR NUMBER
- (H) — COLUMN LINE
- A — WINDOW TYPE
- (A) — WALL TYPE IDENTIFIER
- (102) — EQUIPMENT IDENTIFIER
- (102) — FURNITURE IDENTIFIER
- FIN FL ELEV 100.00 — FINISH FLOOR EL. SYMBOL IN PLAN
- FIN FL ELEV 100.00 — FINISH FLOOR EL. SYMBOL IN SECT. AND ELEV.
- A / B / C / D — INTERIOR ELEVATION KEY SYMBOL
- A / A-3 — EXTERIOR ELEVATION IDENTIFIER
- STUCCO CONTROL JOINT
- L2 — LOUVER IDENTIFIER
- STRUCTURAL CONTROL JOINT
- WALLS TO THE UNDERSIDE OF THE STRUCTURE
- F — FIRE EXTINGUISHER

MATERIAL SYMBOLS

- EARTH
- CAST CONCRETE (SECTION)
- LIGHTWEIGHT CONCRETE (SECTION)
- CONCRETE MASONRY UNIT (LARGE SCALE–PLAN)
- STEEL
- ROUGH WOOD
- FINISHED WOOD
- WOOD BLOCKING
- PLYWOOD–LARGE SCALE
- GLASS (ELEVATION)
- BATT FILL INSULATION (SECTION)
- LOOSE FILL INSULATION (PLAN)
- RIGID BOARD INSULATION
- CERAMIC TILE–LARGE SCALE
- CONCRETE (PLAN & ELEVATION)
- CERAMIC TILE (PLAN & ELEVATION)
- PLASTER OR STUCCO (ELEVATION)
- SHEET MEMBRANE
- LANDSCAPING (TREE, SHRUB, ETC.)

GENERAL NOTES:

1. THE LIST OF ABBREVIATIONS IS SHOWN AS A GUIDE ONLY AND DOES NOT NECESSARILY INCLUDE ALL ABBREVIATIONS USED. OTHER ABBREVIATIONS MAY BE FOUND AMONG THE DRAWINGS. SOME ABBREVIATIONS LISTED MAY NOT HAVE BEEN USED.
2. FOR REFERENCE PURPOSES, A FINISHED FLOOR ELEVATION OF 100.00 HAS BEEN ESTABLISHED FOR GRADE LEVEL FLOOR PLANS. ON ARCHITECTURAL DRAWINGS. SEE CIVIL DRAWINGS FOR ACTUAL FINISHED FLOOR AND FINISHED GRADE ELEVATIONS.
3. HOUSEKEEPING PADS FOR MECHANICAL EQUIPMENT SHALL BE PROVIDED AS REQUIRED BY MECHANICAL DRAWINGS. SIZE AND LOCATION SHALL BE COORDINATED WITH MECHANICAL EQUIPMENT PROVIDED.

US ARMY CORPS OF ENGINEERS AFGHANISTAN ENGINEER DISTRICT

REV	DESCRIPTION	DATE	APPD

DESIGNED BY:	DATE: XX-XX-XX
DWN BY:	CKD BY:
REVIEWED BY:	
SUBMITTED BY:	
DESIGN FILE NO.	
DRAWING CODE	
FILE NAME:	
PLOT SCALE:	XX:XX:XX
PLOT DATE:	

U.S. ARMY ENGINEER DISTRICT, AFGHANISTAN
CORPS OF ENGINEERS
APO AE 96338

ENGINEERING AND CONSTRUCTION DIVISION

AFGHANISTAN NATIONAL POLICE (ANP) DISTRICT HEADQUARTERS COMPOUNDS - 1 STORY HQ
VARIOUS LOCATIONS, AFGHANISTAN
STANDARD DETAIL

ABBREVIATIONS & SYMBOLS

SHEET REFERENCE NUMBER:

SA-1

A1 Size 594mm x 841mm

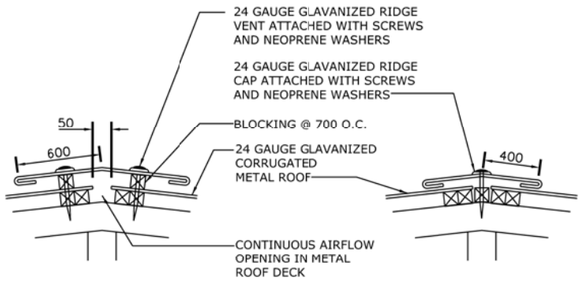

TYPICAL RIDGE VENT SECTION
NOT TO SCALE

TYPICAL RIDGE CAP SECTION
NOT TO SCALE

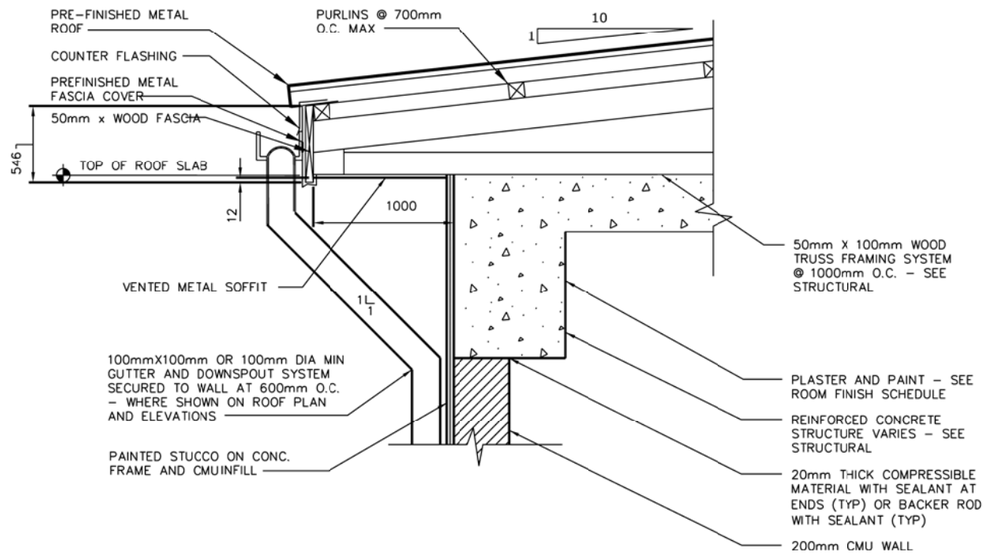

TYPICAL SECTION AT EAVE
FOR BUILDINGS C, D, H, AND I
SCALE= 1:10

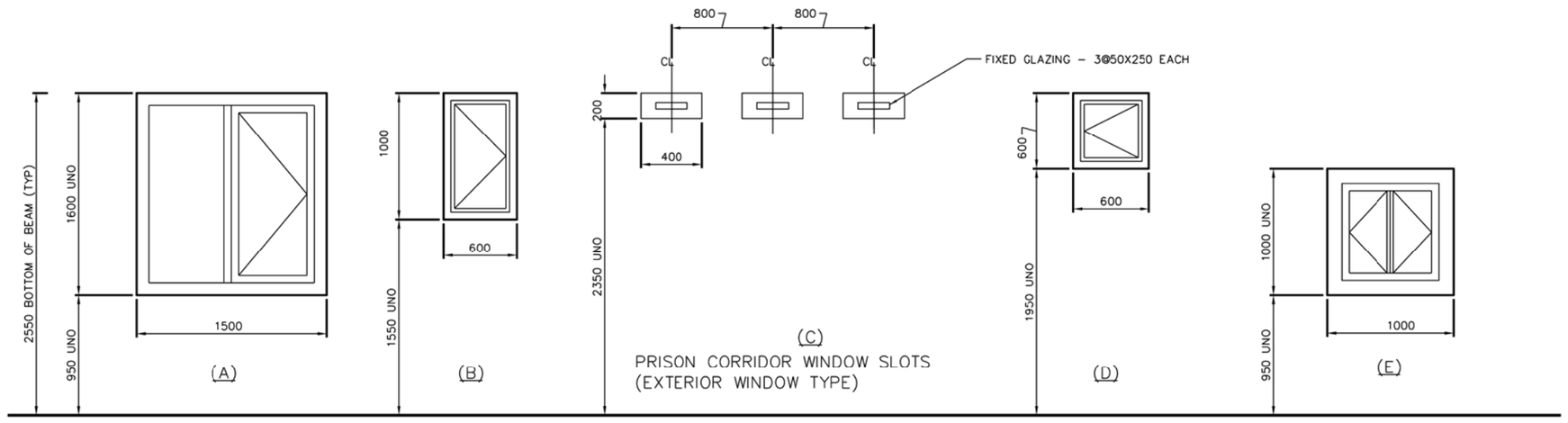

NOTES:
1.? ALL EXTERIOR WINDOWS SHALL UTILIZE MIN. 8mm THICK PLEXIGLASS.
2.? PROVIDE PROTECTIVE COATING AT ALL DISSIMILAR METALS CONTACT AREAS, AS APPROPRIATE.
3.? ALL OPERABLE EXTERIOR WINDOWS SHALL BE PROVIDED WITH INSECT SCREENS.
4.? FIXED WINDOWS AND CLEARSTORY WINDOWS ARE SHOWN ON BUILDING ELEVATIONS AND SECTIONS.

US ARMY CORPS OF ENGINEERS
AFGHANISTAN ENGINEER DISTRICT

SYMBOL	DESCRIPTION	DATE	APPR

DESIGNED BY:
DWN BY:
CKD BY:
REVIEWED BY:
SUBMITTED BY:
DATE: XX-XX-XX
DESIGN FILE NO.
DRAWING CODE
FILE NAME:
PLOT SCALE:
PLOT DATE: XX-XX-XX
REV:

U.S. ARMY ENGINEER DISTRICT, AFGHANISTAN
CORPS OF ENGINEERS
APO AE 96338

ENGINEERING AND CONSTRUCTION DIVISION

AFGHANISTAN NATIONAL POLICE (ANP) DISTRICT HEADQUARTERS COMPOUNDS - 1 STORY HQ
VARIOUS LOCATIONS, AFGHANISTAN
STANDARD DETAIL

WALL SECTION & ROOF DETAILS

SHEET REFERENCE NUMBER:
SA-2

PIPING AND HVAC LEGEND

SYMBOL	DESCRIPTION
	THREE-WAY VALVE (ANY TYPE OF OPERATOR)
	GATE VALVE
	BALL VALVE
	GLOBE VALVE
	ANGLE GLOBE VALVE
	PRESSURE RELIEF VALVE
	PRESSURE-TEMPERATURE RELIEF VALVE
	BALANCING COCK
	BUTTERFLY VALVE
	CHECK VALVE
	UNION (SCREWED)
	PRESSURE CONTROL VALVE (SELF-CONTAINED)
S	SOLENOID VALVE
M	MOTOR OPERATED CONTROL VALVE
	AIR ELIMINATOR
AAV	AIR VENT, AUTOMATIC
	AIR VENT, MANUAL
	BACK PRESSURE VALVE
	PRESSURE REDUCING VALVE
	"Y" STRAINER
	AIR VALVE
	TEMPERATURE REGULATING VALVE
	EXPANSION VALVE, HAND
	EXPANSION VALVE, THERMOSTATIC
T	THERMOMETER, DIAL TYPE
T	THERMOMETER, VERTICAL TYPE
P	PRESSURE GAGE
	RISER DOWN (ELBOW)
	RISER UP (ELBOW)
	PITCH DOWN IN DIRECTION OF FLOW
	RISE OR DROP
CHS	CHILLED WATER SUPPLY
CHR	CHILLED WATER RETURN
C	CONDENSATE DRAIN

SYMBOL	DESCRIPTION
	BRANCH CONNECTION OUT OF TOP
	BRANCH CONNECTION OUT OF BOTTOM
	BRANCH CONNECTION OUT OF SIDE
	CAP ON END OF PIPE
	CONCENTRIC REDUCER
	ECCENTRIC REDUCER
	ANCHOR POINT
	FLEXIBLE CONNECTION
FS	FLOW SWITCH
	EXPANSION JOINT
	FLUSH VALVE
HB HB	HOSE BIBB
	WATER FIXTURE
	MIXING FAUCET COLD & HOT WATER
DV	DRAIN VALVE
	SIGHT GLASS
FM	FLOW METER
	PET COCK
	FLOW DIRECTION
	INLINE-PUMP
	CALIBRATED BALANCE VALVE
T	AQUASTAT
	MOTOR OPERATED BUTTERFLY VALVE
	CEILING FAN
	OSCILATING WALL FAN

ABBREVIATIONS

AAV	AIR VENT AUTOMATIC
AC	AIR CONDITIONING UNIT
ACMH	ACTUAL CUBIC METERS PER HOUR
ACC	AIR COOLED CHILLER
ACCU	AIR COOLED CONDENSING UNIT
AF	AIR FILTER
AFF	ABOVE FINISHED FLOOR
AD	AREA DRAIN
AHU	AIR HANDLING UNIT
AP	ACCESS PANEL
BF	BOTTOM FLAT
BD	BALANCING DAMPER
BDD	BACKDRAFT DAMPER
BFP	BACKFLOW PREVENTER
BHP	BRAKE HORSEPOWER
BOD	BOTTOM OF DUCT
°C	DEGREES CELSIUS
CD	CEILING DIFFUSER
CF	CEILING FAN
CHW	CHILLED WATER
CLG	CEILING
CM	CENTIMETER
CMH	CUBIC METER PER HOUR
CONN	CONNECTION
CONT	CONTINUATION
CU	CONDENSING UNIT
CW	CHILLED WATER COOLING COIL
D	DROP/DEPTH
DB	DRY BULB
DET	DETAIL
DIA	DIAMETER
DH	DUCT HEATER
DIFF	DIFFERENTIAL
DG	DOOR GRILLE
DN	DOWN
DWG	DRAWING
DX	DIRECT EXPANSION
EA	EXHAUST AIR
EAT	ENTERING AIR TEMPERATURE
EDB	ENTERING DRY BULB
EDH	ELECTRIC DUCT HEATER
EF	EXHAUST FAN
EG	EXHAUST GRILLE
EH	ELECTRICAL CABINET HEATER
EL	ELEVATION
ELEC	ELECTRICITY/ELECTRICAL
EQUIP	EQUIPMENT
ER	EXHAUST REGISTER
EWB	ENTERING WET BULB
EWH	ELECTRIC WATER HEATER
EWT	ENTERING WATER TEMPERATURE
EXH	EXHAUST
EXT	EXTERNAL/EXTERIOR
FCO	FLOOR CLEAN OUT
FCU	FAN COIL UNIT
FCV	FLOW CONTROL VALVE
FD	FLOOR DRAIN/FIRE DAMPER
FIN	FINISHED
FL	FLOOR
FOS	FUEL OIL SUPPLY
FOR	FUEL OIL RETURN
FS	FLOOR SINK
FSD	COMBINATION FIRE/SMOKE DAMPER
GA	GAUGE
HB	HOSE BIBB
HC	HEATING COIL
HORIZ	HORIZONTAL
HP	HORSEPOWER
HR	HOUR
HVAC	HEATING, VENTILATING & AIR CONDITIONING
HZ	HERTZ
ID	INSIDE DIAMETER
IH	INTAKE HOOD
IS	INERTIAL SEPARATOR
INV.EL.	INVERT ELEVATION
KG	KILOGRAM
KH	KITCHEN HOOD
KW	KILOWATT
KPa	KILO PASCALS
LAT	LEAVING AIR TEMPERATURE
LAV	LAVATORY
LFACP	LOCAL FIRE ALARM CONTROL PANEL
LPM	LITERS PER MINUTE
LPH	LITERS PER HOUR
LS	LEVEL SWITCH
LVG	LEAVING
LVR	LOUVER
M	METER
M^2	SQUARE METER
M^3	CUBIC METER
MAX	MAXIMUM
MECH	MECHANICAL
MIN	MINIMUM
MISC	MISCELLANEOUS
MM	MILLIMETER
MVD	MANUAL VOLUME DAMPER
NC	NORMALLY CLOSED
NFPA	NATIONAL FIRE PROTECTION ASSOCIATION
NO	NORMALLY OPEN/NUMBER
NOM	NOMINAL
NTS	NOT TO SCALE
OA	OUTSIDE AIR
OC	ON CENTER
OD	OVERFLOW DRAIN
OI	OIL INTERCEPTOR
OWF	OSCILATING WALL FAN
ϕ	PHASE
P	PUMP
PD	PRESSURE DIFFERENTIAL
PH	PROPANE SPACE HEATER
PRESS	PRESSURE
PRV	PRESSURE REDUCING VALVE
PS	PRESSURE SWITCH
QTY	QUANTITY
R	RISE
RA	RETURN AIR
RC	REFRIGERATION COOLER
RD	ROOF DRAIN
REQD	REQUIRED
RF	RETURN FAN
RG	RETURN GRILLE
RH	RELATIVE HUMIDITY
RL	REFRIGERANT LIQUID
RM	ROOM
RPM	REVOLUTIONS PER MINUTE
RR	RETURN REGISTER
RS	REFRIGERANT SUCTION
S	SOIL/SOUTH/SECOND
SA	SUPPLY AIR
SD	SUPPLY AIR DIFFUSER
SENS	SENSIBLE
SF	SUPPLY FAN
SG	SUPPLY GRILLE
SH	SHEET
SMACNA	SHEET METAL AND AIR CONDITIONING CONTRACTORS NATIONAL ASSOCIATION
SOV	SHUT-OFF VALVE
SP	STATIC PRESSURE
SQ FT	SQUARE FOOT/SQUARE FEET
SR	SUPPLY REGISTER
SST	SATURATED SUCTION TEMPERATURE
TCP	TEMPERATURE CONTROL PANEL
TCV	TEMPERATURE CONTROL VALVE
TEMP	TEMPERATURE
TG	TRANSFER GRILLE
TK	TANK
TP	TRAP PRIMER
TYP	TYPICAL
UC	UNDERCUT DOOR
UH	UNIT HEATER
UL	UNDERWRITER'S LABORATORIES
V	VOLTS
VEL	VELOCITY
VH	VENT HOOD
WCCU	WATER COOLED CONDENSING UNIT
WG	WATER GAGE

GENERAL NOTES:

1. SEE ARCHITECTURAL DRAWINGS FOR EXACT LOCATION OF LOUVERS, EQUIPMENT PADS AND SUPPORT PLATFORMS.
2. SEE ARCHITECTURAL REFLECTED CEILING PLAN FOR EXACT LOCATION OF DIFFUSERS, REGISTERS, AND GRIILLES.
3. INSULATE DUCTWORK AND REFRIGERANT PIPING SYSTEMS IN ACCORDANCE WITH SPEC. SECTION 01015, THERMAL INSULATION FOR MECHANICAL SYSTEMS.
4. ALL DIMENSIONS SHOWN IN mm UNLESS INDICATED OTHERWISE.
5. ALL DUCT DIMENSIONS SHOWN ON THE DRAWINGS ARE CLEAR INSIDE DIMENSIONS.
6. MOUNT WALL THERMOSTATS 1.5M ABOVE FINISHED FLOOR.
7. OUTDOOR CONDENSING UNITS SHALL BE INSTALLED ON 300 HIGH STEEL PLATFORM ON A CONCRETE PAD AND PROVIDED WITH VIBRATION PADS.

CONTROL LEGEND

SYMBOL	DESCRIPTION
M	MOTORIZED CONTROL DAMPER
	CONTROL CONNECTION
S/S	START/STOP CONTROL
H	HUMIDISTAT, TWO POSITION
Hm	HUMIDISTAT, MODULATING
H	HUMIDITY SENSOR
SD	SMOKE DETECTOR
Ta	THERMOSTAT, TWO POSITION
T	SPACE THERMOSTAT
FS	FLOW SWITCH
TI	TEMPERATURE INDICATOR
Ts	SPACE TEMPERATURE SENSOR

US ARMY CORPS OF ENGINEERS AFGHANISTAN ENGINEER DISTRICT

SYMBOL	DESCRIPTION	DATE	APPR

SYMBOL	DESCRIPTION	DATE	APPR

DESIGNED BY: | DRAWN BY: | REVIEWED BY: | SUBMITTED BY:
DATE: XX-XX-XX | DESIGN FILE NO. | DRAWING CODE | FILE NAME: | PLOT SCALE: | PLOT DATE: XX-XX-XX | REV: _

U.S. ARMY ENGINEER DISTRICT, AFGHANISTAN
CORPS OF ENGINEERS
APO AE 96338

ENGINEERING AND CONSTRUCTION DIVISION

AFGHANISTAN NATIONAL POLICE (ANP) DISTRICT HEADQUARTERS COMPOUNDS - 1 STORY HQ
VARIOUS LOCATIONS, AFGHANISTAN
STANDARD DETAILS

LEGENDS AND ABBREVIATIONS

SHEET REFERENCE NUMBER:
SM-1

A1 Size 594mm x 841mm

EH X-X / UH X-X — ELECTRIC CABINET/UNIT HEATER SCHEDULE

EQUIPT. NO.	LOCATION (1)	DISCHARGE	CAPACITY (KW)	AIR FLOW (CMH)	ELECTRICAL DATA HP	VOLTS	PH	HZ	TEMP. RISE DEG C	SOUND POWER dBA	REMARKS
EH-A-1	CHIEF'S TOILET	HORIZONTAL	1.5	136	50 W	220	1	50	30		WALL MOUNTED CABINET HEATER
EH-A-2	TOILETS (2)	HORIZONTAL	1	68	40 W	220	1	50	40		WALL MOUNTED CABINET HEATER
UH-A-1	TOILETS/ SHOWERS	HORIZONTAL	3.0	510	1/20	220	1	50	17		WALL MOUNTED UNIT HEATER SEE DETAIL C ON SHT. SM3.
UH-C-1	GUARD SHACK	HORIZONTAL	4	425	1/30	220	1	50	10		FLOOR MOUNTED CABINET HEATER
UH-E-1	WELL HOUSE	HORIZONTAL	3.0	510	1/20	220	1	50	17		WALL MOUNTED UNIT HEATER SEE DETAIL C ON SHT. SM3.

(1) SEE PLANS FOR LOCATION AND QUANTITY.

EF A-X — EXHAUST FAN SCHEDULE

EQUIPT. NO.	LOCATION	AIR QUANTITY CMH	S.P. MM-W.G.	FAN TYPE	ELECTRICAL DATA HP	VOLTS	PH	HZ	CONTROL DIAGRAM	SOUND POWER dWA	REMARKS
EF-A-1	CHIEF'S TOILET	170	7	CEILING CABINET	80 WATTS	220	1	50	E1	50	CEILING MOUNTED WITH GRAVITY BACKDRAFT DAMPER AND CEILING GRILL
EF-A-2	TOILETS (3)	85	7	CEILING CABINET	80 WATTS	220	1	50	E1	50	CEILING MOUNTED WITH GRAVITY BACKDRAFT DAMPER AND CEILING GRILL
EF-A-3	PRISONER CELLS	510	7	WALL CENTRIFUGAL	1/12	220	1	50	E2	50	WALL MOUNTED WITH BACKDRAFT DAMPER
EF-A-4	MEN'S TOILET	510	7	WALL CENTRIFUGAL	1/12	220	1	50	E2	50	WALL MOUNTED WITH BACKDRAFT DAMPER
EF-A-5	KITCHEN	6,000	44	ROOF CENTRIFUGAL UPBLAST	2.0	220	1	50	E2	65	RATED FOR 175° C AND KITCHEN HOOD
EF-A-6	KITCHEN	1,700	8	WALL CENTRIFUGAL	1/4	220	1	50	E4	60	WALL MOUNTED WITH BACKDRAFT DAMPER
EF-E-1	WELL HOUSE	600	10	WALL CENTRIFUGAL	1/4	220	1	50	E4	65	WALL MOUNTED WITH BACKDRAFT DAMPER

CF A-1 / OWF A-1 — CEILING AND OSCILLATING WALL FAN SCHEDULE

EQUIPT. NO.	AIR QUALITY CMH	FAN TYPE	ELECTRICAL DATA HP	VOLTS	PH	HZ	REMARKS
CF-A-1	13,600	CEILING FAN	85 WATTS	220	1	50	CEILING MOUNTED
OWF-A-1	5,000	OSCILLATING WALL FAN	1/4	220	1	50	WALL MOUNTED

AIR HANDLING UNIT SCHEDULE

EQUIPT. NO.	LOCATION	DISCHARGE	CAPACITY (KW)	AIR FLOW (CMH)	ELECTRICAL DATA HP	VOLTS	PH	HZ	TEMP. RISE DEG C	SOUND POWER dBA	REMARKS
AHU-1	CELLS	VERTICAL	5.2	1200	.25	220	1	50	35	45	DUCT MOUNTED HEATER

SF A-X — SUPPLY FAN SCHEDULE

EQUIPT. NO.	LOCATION	AIR QUANTITY CMH	S.P. MM-W.G.	FAN TYPE	ELECTRICAL DATA HP	VOLTS	PH	HZ	CONTROL DIAGRAM	SOUND POWER dWA	REMARKS
SF-A-1	KITCHEN	5,100	25	INLINE CENTRIFUGAL	1.0	220	1	50	E2	60	CEILING MOUNTED W/GRAVITY BACKDRAFT DAMPER

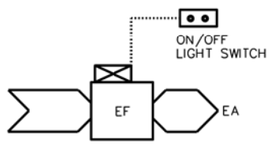

TEMPERATURE CONTROL DIAGRAM E1

E1 SEQUENCE OF CONTROL

START-UP

THE EXHAUST FAN SHALL BE STARTED MANUALLY FROM A LOCAL START/STOP LIGHT SWITCH.

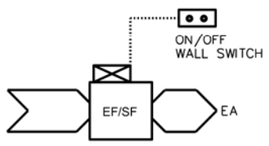

TEMPERATURE CONTROL DIAGRAM E2

E2 SEQUENCE OF CONTROL

START-UP

THE EXHAUST/SUPPLY FAN SHALL BE STARTED MANUALLY FROM A LOCAL START/STOP LIGHT SWITCH.

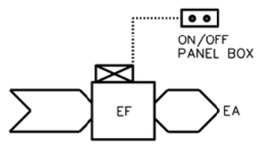

TEMPERATURE CONTROL DIAGRAM E3

E3 SEQUENCE OF CONTROL

START-UP

THE EXHAUST FAN SHALL BE STARTED MANUALLY FROM AN THE ON-OFF SWITCH IN THE PANEL BOX.

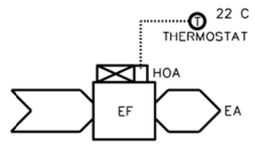

TEMPERATURE CONTROL DIAGRAM E4

E4 SEQUENCE OF CONTROL

START-UP

THE EXHAUST FAN SHALL BE STARTED MANUALLY BY PLACING THE HAND-OFF-AUTO (HOA) SWITCH IN THE HAND POSITION. IN THE AUTO POSITION, FAN OPERATION SHALL BE CONTROLLED OFF AN ADJUSTABLE THERMOSTAT.

US ARMY CORPS OF ENGINEERS
AFGHANISTAN ENGINEER DISTRICT

U.S. ARMY ENGINEER DISTRICT, AFGHANISTAN
CORPS OF ENGINEERS
APO AE 96338

ENGINEERING AND CONSTRUCTION DIVISION

AFGHANISTAN NATIONAL POLICE (ANP) DISTRICT HEADQUARTERS COMPOUNDS - 1 STORY HQ
VARIOUS LOCATIONS, AFGHANISTAN
STANDARD DETAILS

MECHANICAL SCHEDULES

SHEET REFERENCE NUMBER:
SM-2

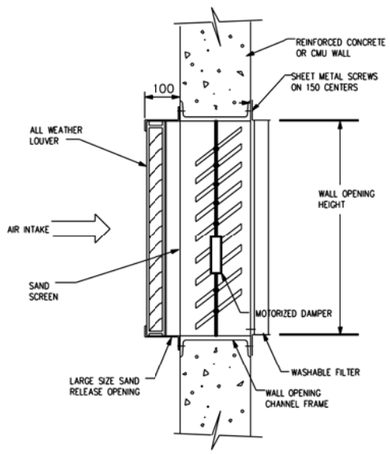

SAND TRAP TYPE LOUVER (A, SM3)
NOT TO SCALE

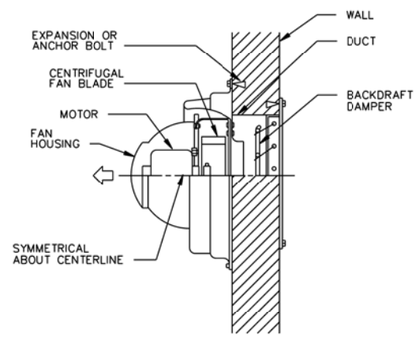

POWER WALL VENTILATOR DETAIL (B, SM3)
NOT TO SCALE

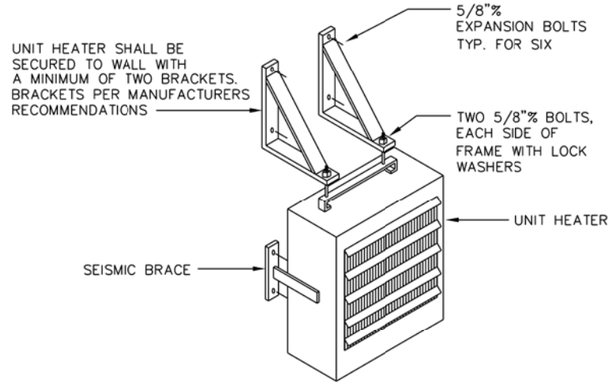

ELECTRIC UNIT HEATER DETAIL (C, SM3)
NOT TO SCALE

PIPE SLEEVE THRU WALL (F1, SM3)
NOT TO SCALE

CONDENSATE DRAIN THRU EXTERIOR WALL (F, SM3)
NOT TO SCALE

CENTRIFUGAL IN-LINE FAN (G, SM3)
NOT TO SCALE

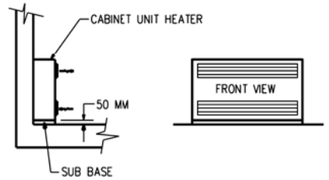

CABINET UNIT HEATER (H, SM3)
NOT TO SCALE

US ARMY CORPS OF ENGINEERS
AFGHANISTAN ENGINEER DISTRICT

SYMBOL	DESCRIPTION	DATE	APPR.	SYMBOL	DESCRIPTION	DATE	APPR.

DESIGNED BY:
DRAWN BY:
CKD BY:
REVIEWED BY:
SUBMITTED BY:
DATE: XX-XX-XX
DESIGN FILE NO.
DRAWING CODE
FILE NAME:
PLOT SCALE:
PLOT DATE: XX-XX-XX
REV:

U.S. ARMY ENGINEER DISTRICT, AFGHANISTAN
CORPS OF ENGINEERS
APO AE 96338

ENGINEERING AND CONSTRUCTION DIVISION

AFGHANISTAN NATIONAL POLICE (ANP) DISTRICT HEADQUARTERS COMPOUNDS - 1 STORY HQ
VARIOUS LOCATIONS, AFGHANISTAN
STANDARD DETAILS

MECHANICAL STANDARD DETAILS

SHEET REFERENCE NUMBER:
SM-3

A1 Size 594mm x 841mm

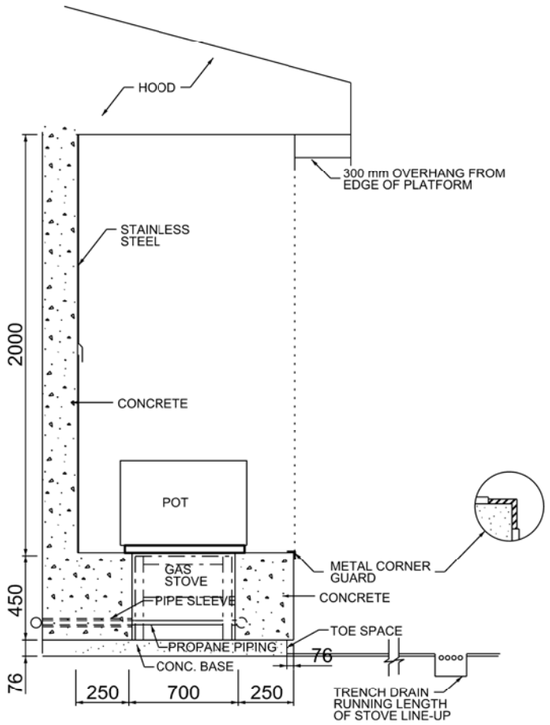

GAS STOVE SECTION

SCALE: NTS

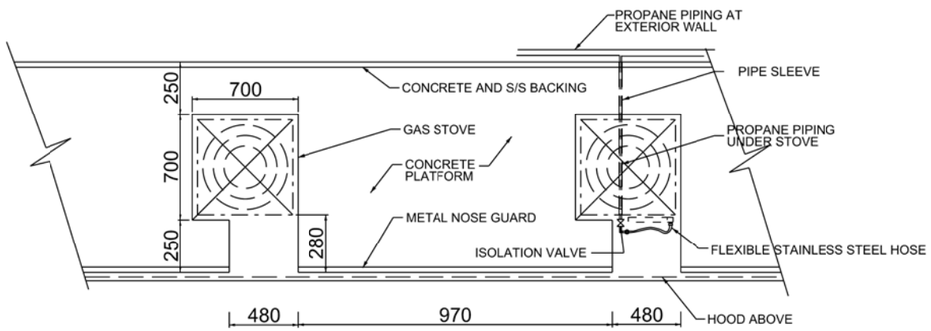

GAS STOVE PLAN

SCALE: NTS

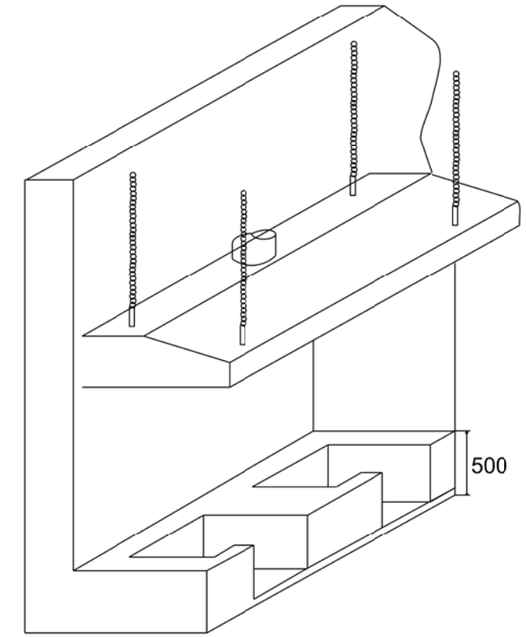

ISOMETRIC VIEW

SCALE: NTS

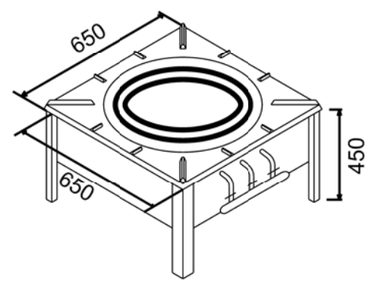

GAS STOVE VIEW

SCALE: NTS

NOTES:
- DIMENSIONS SHOWN ARE BASED ON A SPECIFIC STOVE MODEL
- CONTRACTOR SHALL ADJUST THE DIMENSIONS BASED ON THE ACTUAL STOVE DIMENSIONS
- THE SURFACE OF THE STOVE SHALL BE FLUSH WITH THE CONCRETE PLATFORM

US ARMY CORPS OF ENGINEERS AFGHANISTAN ENGINEER DISTRICT

SYMBOL	DESCRIPTION	DATE	APPR.	SYMBOL	DESCRIPTION	DATE	APPR.

DESIGNED BY:
DRAWN BY: CAD BY:
REVIEWED BY:
SUBMITTED BY:
DATE: XX-XX-XX
DESIGN FILE NO.
DRAWING CODE
FILE NAME:
PLOT SCALE:
PLOT DATE: XX-XX-XX
REV:

U.S. ARMY ENGINEER DISTRICT, AFGHANISTAN
CORPS OF ENGINEERS
APO AE 96338

ENGINEERING AND CONSTRUCTION DIVISION

AFGHANISTAN NATIONAL POLICE (ANP) DISTRICT HEADQUARTERS COMPOUNDS - 1 STORY HQ
VARIOUS LOCATIONS, AFGHANISTAN
STANDARD DETAILS

PROPANE COOKING STOVE

SHEET REFERENCE NUMBER:
SM-4
SHEET --- OF ---

A1 Size 594mm x 841mm

LEGEND

- GATE VALVE
- GLOBE VALVE
- BUTTERFLY VALVE
- CHECK VALVE
- STOP CHECK VALVE
- PLUG VALVE
- 3-WAY VALVE
- RELIEF OR SAFETY VALVE
- ANGLE VALVE
- ANGLE GLOBE VALVE
- BALANCING COCK
- AIR VALVE
- HOSE GATE DRAIN VALVE
- EXPANSION VALVE
- AAV — AIR VENT, AUTOMATIC
- AIR VENT, MANUAL
- M — MOTORIZED VALVE (MODULATING OR TWO POSITION)
- S — SOLENOID VALVE
- M — 3-WAY MOTORIZED VALVE (MOD. OR 3-POSITION)
- S — 3-WAY SOLENOID VALVE
- TEMPERATURE REGULATING VALVE
- AIR ELIMINATOR
- BACK PRESSURE VALVE
- PRESSURE REDUCING VALVE
- D.V. — DRAIN VALVE
- SLEEVE COUPLING (SC)
- BP — BACKFLOW PREVENTER
- WHA 'A' — WATER HAMMER ARRESTOR

LEGEND

- P — PRESSURE GAUGE
- T — THERMOMETER, DIAL TYPE
- T — THERMOMETER, VERTICAL TYPE
- H.B. — HOSE BIBB, PLAN
- H.B. — HOSE BIBB, ELEV.
- W.H. — WALL HYDRANT
- CO — EXPOSED CLEANOUT
- FCO — FLOOR CLEANOUT
- WCO — WALL CLEANOUT
- BALL VALVE
- UNION
- FLANGE SET
- FLEXIBLE HOSE/CONNECTION
- Y-TYPE STRAINER
- SIGHT GLASS
- GAUGE GLASS W/COCKS
- FILTER / DRYER
- TANK AIR CONTROL FITTING
- CAPPED / PLUGGED CONNECTION
- REDUCER - INCREASER
- EXPANSION LOOP
- EXPANSION JOINT
- SUPPORT LOCATION
- PIPE TURNING DOWN
- PIPE TURNING UP
- FD — FLOOR DRAIN
- ROOF DRAIN
- POINT OF CONNECTION TO EXISTING SYSTEM

LEGEND

- A — COMPRESSED AIR DROP
- HU — HUMIDIFIER
- I.F. — INSULATING FLANGE
- THERMAL RELIEF VALVE W/ SIGHT FLOW INDICATOR
- S — BASKET STRAINER
- W — WATER METER
- TS — FLOW CONTROL VALVE
- SAMPLE CONNECTION
- FIRE SAFETY VALVE
- C — NON - SURGE CHECK VALVE
- FLOW CONTROL VALVE
- P — PRESSURE REGULATING VALVE
- W — WATER SLUG VALVE (WSV)

ABBREVIATIONS

A A	AMERICAN DISABILITIES ACT
CO	EXPOSED CLEAN OUT
CW	COLD WATER
EWH	ELECTRIC WATER HEATER
FCO	FLOOR CLEAN OUT
FD	FLOOR DRAIN
FFE	FINISHED FLOOR ELEVATION
FS	FLOOR SINK
GWH	GAS WATER HEATER
HB	HOSE BIBB
HW	HOT WATER
HWR	HOT WATER CIRCULATION
N.C.	NORMALLY CLOSED
P	PUMP
S.R.	SHORT RADIUS
S.S.	STAINLESS STEEL
V	VENT
VTR	VENT THROUGH ROOF
W	WASTE
WCO	WALL CLEAN OUT
WH	WALL HYDRANT

- SOIL OR WASTE PIPE ABOVE FLOOR
- SOIL OR WASTE PIPE BELOW FLOOR (MIN. 50 SIZE)
- COLD WATER, DOMESTIC (PLAN)
- HOT WATER, DOMESTIC (PLAN)
- HOT WATER, CIRCULATION, DOMESTIC (PLAN)
- VENT PIPE
- C — CONDENSATE DRAIN
- CA — COMPRESSED AIR
- HPIW — HIGH PRESSURE INDUSTRIAL WATER
- IW — INDUSTRIAL WATER

EQUIPMENT DESIGNATION

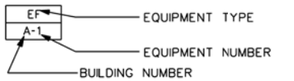

DETAIL REFERENCE

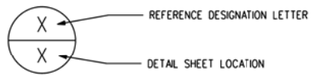

PLUMBING FIXTURE SCHEDULE

FIX. NO.	SYMBOL	FIXTURE NAME	C.W.	H.W.	WASTE (W)	VENT (V)	REMARKS
P1		EASTERN WATER CLOSET (FLUSH TANK)	15	..	100	50	CW CONNECTION SHALL BE 25 UNLESS NOTED OTHERWISE. FLOOR OUTLET
P2		ABOLUTION (2 STATION)	15	..	50	32	(2) COMPLETE WALL MOUNTED LAVATORY VALVE ASSEMBLIES AND TRIM MOUNTED 600mm A.F.F.
P3		LAVATORY	15	15	32	32	
P3A		LAVATORY (2 STATION GANG)	15	15	32	32	
P4		MOP SINK (FLOOR MOUNT JANITOR TYPE)	15	15	50	40	DRAIN ON FLOOR OR AS INDICATED
P5		SHOWER	15	15	40	32	
P6		NOT USED					
P7		NOT USED					
P8		NOT USED					
P9		KITCHEN SINK	15	15	40	32	
P10		GREASE INTERCEPTOR			80	50	MANUAL CLEANING TYPE, WITH 135 LPM FLOW RATE

WATER HAMMER ARRESTOR SIZING CHART			
P.D.I. SYMBOL	FIXTURE UNIT RATING	NIPPLE SIZE (MM)	CHAMBER HEIGHT (MM)
A	1-11	20	100
B	12-32	25	125
C	33-60	25	150
D	61-113	25	175
E	114-154	25	200
F	155-330	25	225

P. D. I. = PLUMBING AND DRAINAGE INSTITUTE.

GENERAL NOTES:

1. DRAINAGE PIPING LOCATED BELOW FLOORS SHALL BE ROUTED BELOW FOOTINGS UNLESS INDICATED OTHERWISE.
2. INTERIOR SOIL AND WASTE PIPING 80mm AND SMALLER SHALL BE ROUTED WITH A 2% SLOPE. INTERIOR SOIL AND WASTE PIPING 100mm AND LARGER SHALL BE ROUTED WITH A MINIMUM 1% SLOPE.
3. ALL DIMENSIONS SHOWN HERE AND ON PLANS ARE IN MM UNLESS INDICATED OTHERWISE.
4. MINIMUM BURIED PIPE SIZE SHALL BE 50 mm.
5. SEE STANDARD SHEET SM-1 FOR ADDITIONAL ABBREVIATIONS.
6. FOR FOOD SERVICE EQUIPMENT DESCRIPTION, SEE ARCHITECTURAL DRAWINGS.

US ARMY CORPS OF ENGINEERS AFGHANISTAN ENGINEER DISTRICT

SYMBOL	DESCRIPTION	DATE	APPR

SYMBOL	DESCRIPTION	DATE	APPR

DESIGNED BY: | DRAWN BY: | CKED BY: | REVIEWED BY: | SUBMITTED BY:

DATE: XX-XX-XX | DESIGN FILE NO. | DRAWING CODE | FILE NAME: | PLOT SCALE: | PLOT DATE: XX-XX-XX | REV:

U.S. ARMY ENGINEER DISTRICT, AFGHANISTAN
CORPS OF ENGINEERS
APO AE 96338

ENGINEERING AND CONSTRUCTION DIVISION

AFGHANISTAN NATIONAL POLICE (ANP) DISTRICT HEADQUARTERS COMPOUNDS - 1 STORY HQ
VARIOUS LOCATIONS, AFGHANISTAN
STANDARD DETAILS

LEGEND AND ABBREVIATIONS

SHEET REFERENCE NUMBER:

SP-1

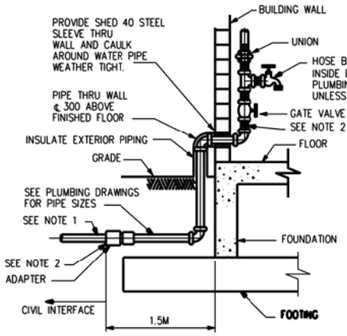

WATER SERVICE ENTRANCE SIDE VIEW

NOTES:
1. PIPING SHALL BE PLASTIC PVC TO MATCH WATER DISTRIBUTION SYSTEM.
2. CONTRACTOR SHALL INSTALL DIELECTRIC UNION BETWEEN CONNECTIONS OF DISSIMILAR METALS.

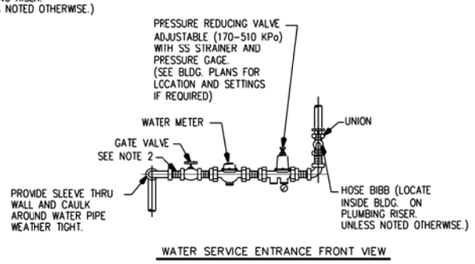

WATER SERVICE ENTRANCE FRONT VIEW

WATER SERVICE ENTRANCE DETAILS (A, SP2)
NOT TO SCALE

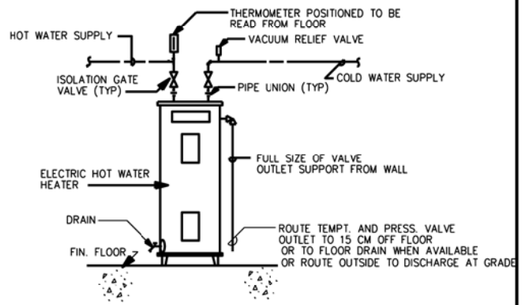

ELECTRIC WATER HEATER DETAIL (B, SP2)
NOT TO SCALE

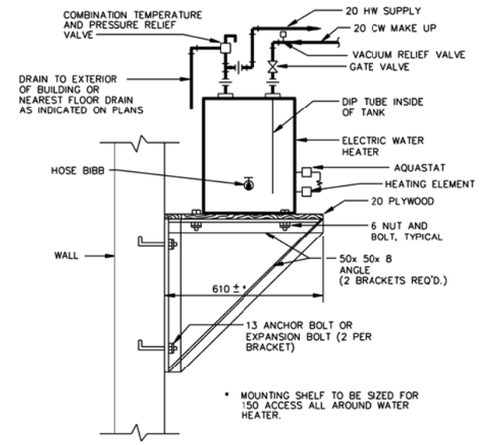

IF WATER HEATER COMES EQUIPPED WITH A MOUNTING BRACKET, CONTRACTOR WILL SUBMIT TO THE ENGINEER FOR APPROVAL, ALTERNATE INSTALLATION DETAIL AS RECOMMENDED BY HEATER MANUFACTURER FOR THE TYPE OF WALL (CMU,METAL STUD, ETC.) APPLICABLE

WALL MOUNTED ELECTRIC WATER HEATER DETAIL (C, SP2)
NOT TO SCALE

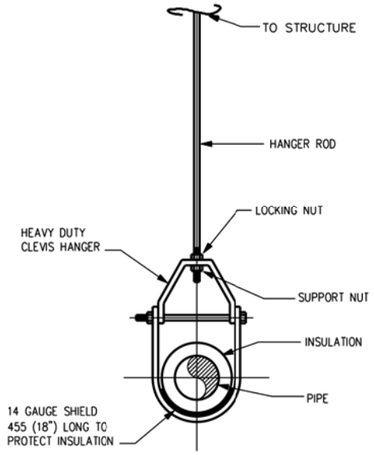

CLEVIS HANGER DETAIL (D, SP2)
NOT TO SCALE

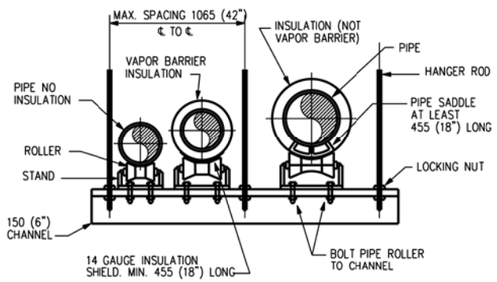

TRAPEZE HANGER DETAIL (E, SP2)
NOT TO SCALE

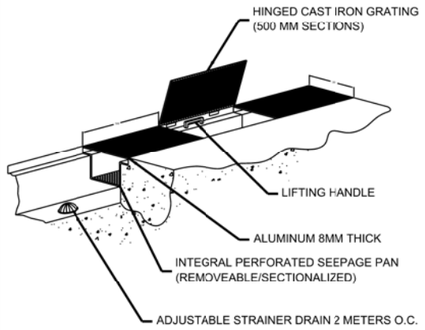

FLOOR TRENCH DRAIN DETAIL (F, SP2)
NOT TO SCALE

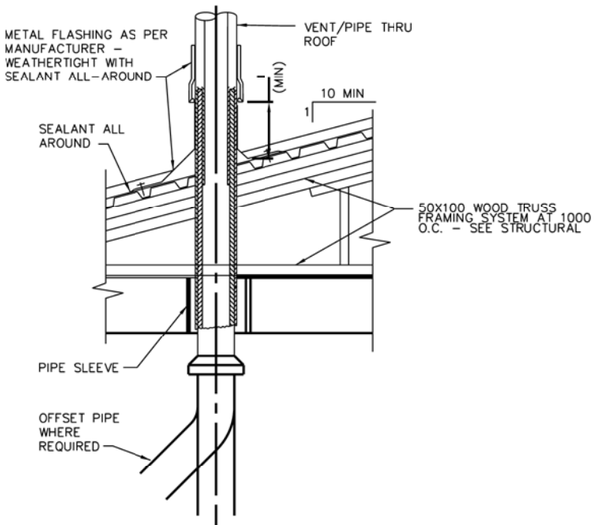

VENT THRU ROOF DETAIL (G, SP2)
NOT TO SCALE

US ARMY CORPS OF ENGINEERS
AFGHANISTAN ENGINEER DISTRICT

SYMBOL	DESCRIPTION	DATE	APPR

REV:	DATE:	DESIGNED BY:	
	XX-XX-XX		
	DESIGN FILE NO.	DRAWN BY:	CKD BY:
	DRAWING CODE	REVIEWED BY:	
	FILE NAME:	SUBMITTED BY:	
	PLOT SCALE:		
	PLOT DATE: XX-XX-XX		

U.S. ARMY ENGINEER DISTRICT, AFGHANISTAN
CORPS OF ENGINEERS
APO AE 96338

ENGINEERING AND CONSTRUCTION DIVISION

AFGHANISTAN NATIONAL POLICE (ANP) DISTRICT HEADQUARTERS COMPOUNDS - 1 STORY HQ
VARIOUS LOCATIONS, AFGHANISTAN
STANDARD DETAILS

STANDARD PLUMBING DETAILS

SHEET REFERENCE NUMBER:
SP-2

A1 Size 594mm x 841mm

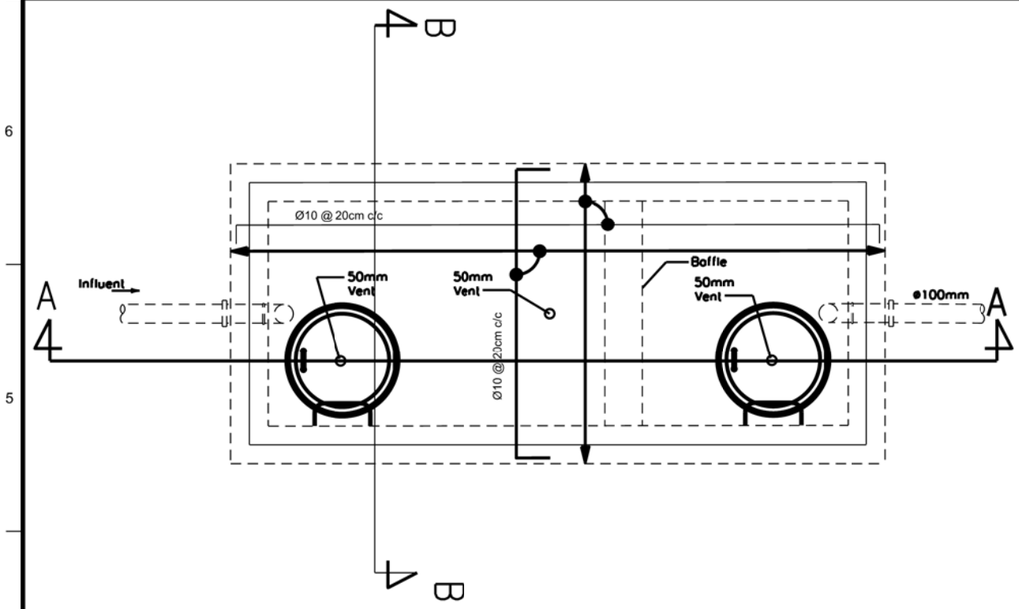

01 GREASE & OIL/WATER SEPARATOR PLAN

SP-3 REF:

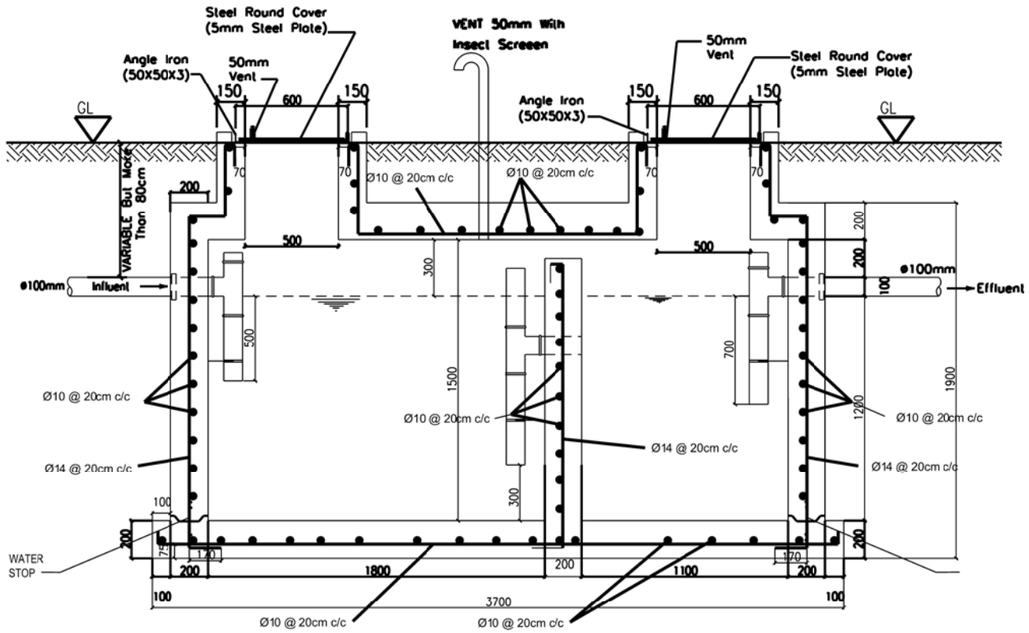

02 SECTION (A-A)

SP-3 REF:

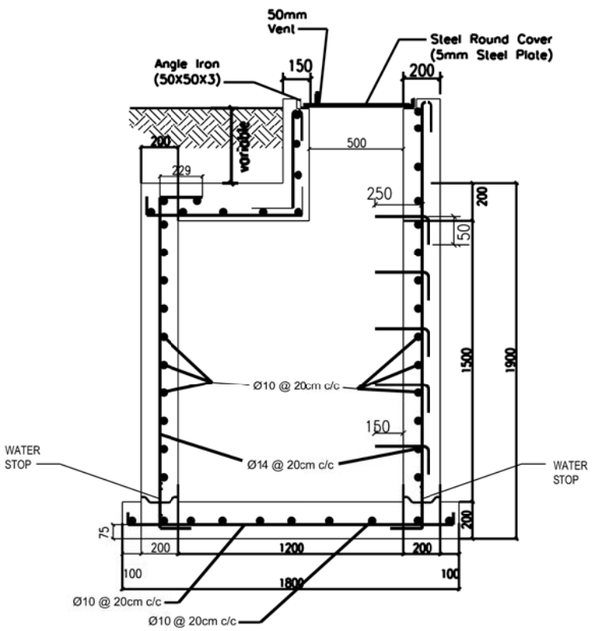

03 SECTION (B-B)

SP-3 REF:

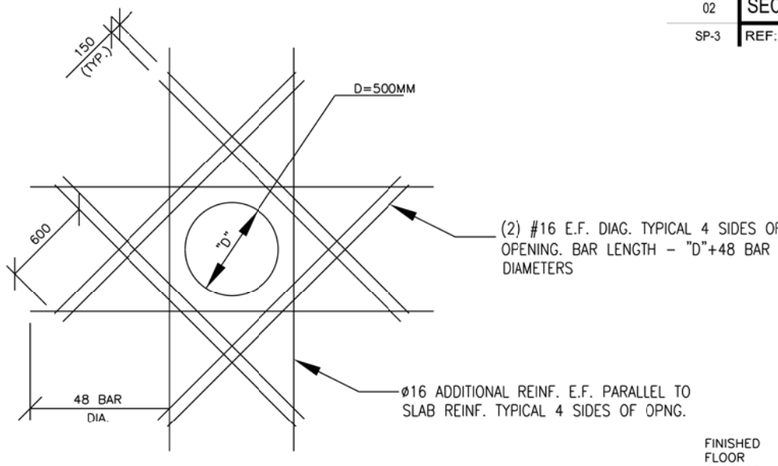

04 OPENING REINFORCEMENT

SP-3 REF :

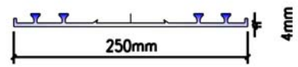

Water Stop Details

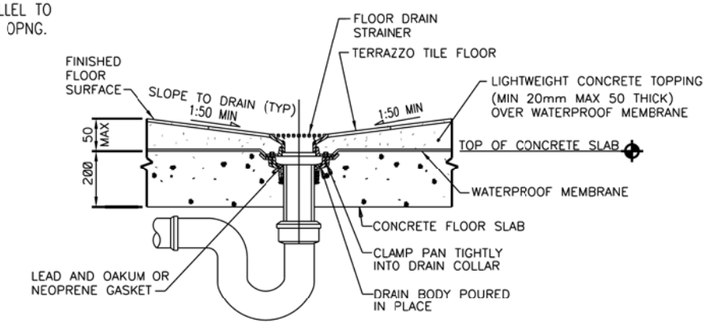

TYPICAL FLOOR DRAIN DETAIL
NOT TO SCALE
B
SP3

US ARMY CORPS OF ENGINEERS AFGHANISTAN ENGINEER DISTRICT

REV	DESCRIPTION	DATE	APPR

SYMBOL	DESCRIPTION	DATE	APPR

DESIGNED BY:
DWN BY:
CKD BY:
REVIEWED BY:
SUBMITTED BY:
DATE: XX-XX-XX
DESIGN FILE NO.
DRAWING CODE
FILE NAME:
PLOT SCALE: XXXX:XX
PLOT DATE: XX-XX-XX

U.S. ARMY ENGINEER DISTRICT, AFGHANISTAN
CORPS OF ENGINEERS
APO AE 96338

ENGINEERING AND CONSTRUCTION DIVISION

AFGHANISTAN NATIONAL POLICE (ANP) DISTRICT HEADQUARTERS COMPOUNDS - 1 STORY HQ
VARIOUS LOCATIONS, AFGHANISTAN
STANDARD DETAILS

STANDARD PLUMBING DETAILS

SHEET REFERENCE NUMBER:
SP-3

LEGEND

- FLUORESCENT LIGHT FIXTURE,
- LIGHT FIXTURES, FIXTURE MARK AS INDICATED
- EXIT SIGN, TYPE F FIXTURE, MTD 2.2M AFF
- EMERGENCY LIGHT, TYPE C FIXTURE, MTD 2.4M AFF
- $S_{WP,S}$ DUPLEX SOCKET OUTLET (13A, 250V), BS 1363
  S – A/C OR WATER HEATER SWITCH-RECEPTACLE COMBINATION
  WP – WEATHERPROOF
- J JUNCTION BOX
- $S_{3,WP}$ SWITCH, WP-WEATHERPROOF, 3-3 WAY, EP-EXPLOSION PROOF
- S LIGHT SWITCH
- S_F EXHAUST FAN SWITCH
- S_{CF} CEILING FAN SWITCH
- J_{20} SAFETY DISCONNECT SWITCH, SWITCH SHALL BE 1P56 ENCLOSURE, 20A UNO
- M MOTOR (1/3 HP)
- S_M MANUAL MOTOR STARTER
- ELECTRIC CABINET/ UNIT HEATER
- EWH ELECTRIC WATER HEATER
- LP-2 HOMERUN, PNL LP, CIRCUIT 2
- LP-2 HOMERUN, PNL LP, 3PH CKT, CIRCUIT 2
- COMBINATION LIGHTING AND POWER PANEL (LP), OR LOAD CENTER (LC)
- 400AT / 600AF 3 POLE, 600A ADJUSTABLE TRIP CIRCUIT BREAKER
- 150AT / 3P 3 POLE, 150A CIRCUIT BREAKER
- COMBINATION TELEPHONE/DATA OUTLET. SEE DETAIL SHEET SE-5 MOUNTED 0.5M AFF
- T_W SINGLE TELEPHONE ONLY OUTLET, WALL MOUNTED 1.2m AFF
- TBB TELEPHONE BACK BOARD (TVBB INDICATES TELEVISION BACKBOARD) (1200mmx600mmx12mm)NLESS NOTED OTHERWISE
- EXOTHERMIC WELDED GROUND CONNECTION
- GROUND ROD (EARTH ELECTRODE) WITH EXOTHERMIC WELD CONNECTION, COPPER, 20mm DIA X 3.0m LENGTH
- EM 1 ELECTRIC POWER MANHOLE, H INDICATES HANDHOLE.
- CM 1 COMMUNICATIONS MANHOLE, H INDICATES HANDHOLE.
- —SE— UNDERGROUND SECONDARY DISTRIBUTION POWER LINE, DIRECT BURIED IN SCHEDULE 80 PVC C, UNO
- UNDERGROUND DIRECT BURIED SCH 40 PVC C, AS INDICATED, 600 BFG, UNO

GENERAL NOTES:

1. REFER TO SECTION 01015 FOR ADDITIONAL / DETAIL REQUIREMENTS.
2. ALL WIRING INSTALLATION FOR LIGHTING, POWER, AND TELECOMMUNICATIONS, SHALL BE IN APPROVED METAL CONDUIT, EITHER CONCEALED OR SURFACE MTD.
3. EXIT AND EMERGENCY LIGHTING FIXTURES SHALL BE CONNECTED TO AN UN SWITCHED POWER CIRCUIT.
4. MOUNTING HEIGHT FOR ALL PENDANT MTD LIGHT FIXTURE IS 3M AFF UNO ON THE DRAWINGS OR IN THE LIGHT FIXTURE SCH.
5. MOUNT ALL LIGHT AND FAN SWITCHES 1.2M AFF UNO.
6. MOUNT ALL RECEPTACLES 500 AFF UNO. MOUNT ALL COUNTER TOP RECEPTACLES 100 ABOVE COUNTER TOP, AND PROVIDE GFI PROTECTION.
7. ALL SPARE OR EMPTY CONDUITS SHALL HAVE A PULL STRING SECURED AT BOTH ENDS OF CONDUIT.
8. ALL ELECTRICAL SYSTEMS SHALL BE INSTALLED IN ACCORDANCE WITH THE MANUFACTURERS RECOMMENDATIONS AND THE NEC.
9. BOND LIGHTING PROTECTION GROUND SYSTEMS TO BUILDING ELECTRICAL GROUND SYSTEM PER NEC 250.16

LIGHTING FIXTURE SCHEDULE * SEE LIGHTING FIXTURE DETAILS ON DRAWINGS SE-2 & SE-3

FIXTURE MARK	LINE VOLT.	TYPE	LAMPS NO.	LAMPS WATTAGE	MOUNTING	REMARKS
A	240	230B1	3	40	SURFACE/PENDANT	INDUSTRIAL FLUORESCENT, WITH ELECTRONIC BALLAST
A1	240	230A1	2	40	SURFACE/PENDANT	INDUSTRIAL FLUORESCENT, WITH ELECTRONIC BALLAST
B	240	232	2	40	SURFACE/PENDANT	VAPORTIGHT FLUORESCENT
C	240	603	–	–	SURFACE	EMERGENCY BATTERY PACK, MTD 2.4M AFF
D	240	PH8	1	250	PENDANT	METAL HALIDE LOW BAY INDUSTRIAL
E	240	–	1	1000	ROOF	SPOT LIGHT
F	240	XF2	1	8	SURFACE/PENDANT	EXIT LIGHT MTD 2.2M AFF
G	240	502R	1	70	SURFACE	HID EXTERIOR WALLL LIGHT
H	240	SF-11	1	100	SURFACE	VAPOR PROOF PROTECTED INCANDESCENT WITH CLEAR, RED, BLUE, OR BLACK GLOBE AS INDICATED ON THE DRAWINGS

ABBREVIATIONS

AFG	ABOVE FINISHED GRADE
AFF	ABOVE FINISHED FLOOR
AF	AMP FRAME
AT	AMP TRIP
ACCU	AIR COOLED CONDENSING UNIT
A	AMPERE
AHU	AIR HANDLING UNIT
AIC	AMPERE INTERRUPTING CAPACITY
BFG	BELOW FINISHED GRADE
CH	COMMUNICATIONS HANDHOLE
CKT	CIRCUIT
CM	COMMUNICATIONS MANHOLE
CND	CONDUCTOR(S)
C	CONDUIT
COR	CONTRACTING OFFICERS REPRESENTATIVE
EF	EXHAUST FAN
EH	ELECTRIC POWER HANDHOLE
EM	ELECTRIC POWER MANHOLE
EP	EXPLOSION PROOF
ELCB	EARTH LEAKAGE CIRCUIT BREAKER
FACP	FIRE ALARM CONTROL PANEL
GFI	GROUND FAULT INTERRUPTING
GFCI	GOVERNMENT FURNISHED CONTRACTOR INSTALLED
HP	HORSEPOWER
HPS	HIGH PRESSURE SODIUM
HZ	HERTZ
KV	KILOVOLT
KW	KILOWATT
KVA	KILOVOLT-AMPERE
M	METERS
MBB	METERING BACK BOARD
MDF	MAIN DISTRIBUTION FRAME
MEW	HOST NATION MINISTRY OF ELECTRICITY AND WATER
MTD	MOUNTED
NEC	NATIONAL ELECTRICAL CODE
NFPA	NATIONAL FIRE PROTECTION ASSOCIATION
NIC	NOT IN CONTRACT
PH, Ø	PHASE
P	POLE
XXX	HOST NATION ARMED FORCES
TEL	TEL CO.
RM	ROOM
SCH	SCHEDULE
SN	SOLID NEUTRAL
TBB	TELEPHONE TERMINAL BACKBOARD
TCB	TELEPHONE CONNECTION BOX (BY TEL CO)
TYP.	TYPICAL
UNO	UNLESS NOTED OTHERWISE
V	VOLT
W	WIRE
WP	WEATHERPROOF
XFMR,T	TRANSFORMER

EQUIVALENT CONDUIT SIZE	
mm	INCHES
20	3/4
25	1
32	1 1/4
38	1 1/2
50	2
60	2 1/2
80	3
90	3 1/2
100	4

METRIC COPPER CONDUCTOR CONVERSION CHART

AWG KCMIL	COMPUTED CONVERSION mm²	ADVISED CROSS SECTION mm²
16	1.31	1.5
14	2.08	2.5
12	3.31	4
10	5.27	6
8	8.4	10
6	13.3	16
4	21.2	25
3	26.7	25
2	33.6	35
1	42.4	50
1/0	53.4	50
2/0	67.5	70
3/0	85.0	95
4/0	107.2	120
250	126.7	120
300	152.0	150
350	177.4	185
400	202.7	240
500	253.4	300

US ARMY CORPS OF ENGINEERS
AFGHANISTAN ENGINEER DISTRICT

SYMBOL	DESCRIPTION	DATE	APPR.

SYMBOL	DESCRIPTION	DATE	APPR.

DESIGNED BY: | DRAWN BY: | CKD BY: | REVIEWED BY: | SUBMITTED BY:
DATE: XX-XX-XX
DESIGN FILE NO.
DRAWING CODE
FILE NAME:
PLOT SCALE:
PLOT DATE: XX-XX-XX
REV:

U.S. ARMY ENGINEER DISTRICT, AFGHANISTAN
CORPS OF ENGINEERS
APO AE 96338

ENGINEERING AND CONSTRUCTION DIVISION

AFGHANISTAN NATIONAL POLICE (ANP) DISTRICT HEADQUARTERS COMPOUNDS - 1 STORY HQ
VARIOUS LOCATIONS, AFGHANISTAN
STANDARD DETAILS

LEGEND & ABBREVIATIONS

SHEET REFERENCE NUMBER:
SE-1

A1 Size 594mm x 841mm

FIXTURE MARK A

TYPE 230
SUSPENSION MOUNTED, INDUSTRIAL,
OPEN TYPE FLUORESCENT FIXTURE, 4-FOOT

FIRST SUFFIX	SECOND-SUFFIX	DESCRIPTION
A		TWO LAMPS
B		THREE LAMPS
C		FOUR LAMPS
	1	8 TO 15 PERCENT UPLIGHT
	2	18 TO 25 PERCENT UPLIGHT

FIXTURE SHALL CONFORM TO UL1570. STANDARD BALLAST(S) SHALL BE THE CLASS P, HIGH POWER FACTOR TYPE APPROVED FOR THE APPLICATION BY THE CERTIFIED BALLAST MANUFACTURERS. CHANNEL HOUSING, END FITTINGS, AND REFLECTOR SHALL BE CONSTRUCTED WITH DIE-FORMED, COLD-ROLLED STEEL. REFLECTOR FINISH SHALL BE PORCELAIN ENAMEL, BAKED WHITE ENAMEL OR ALUMINUM OXIDE. SOCKETS SHALL BE OF THE TYPE REQUIRING A FORCED MOVEMENT ALONG THE LONGITUDINAL AXIS OF THE LAMP FOR INSERTION AND REMOVAL OF THE LAMP. FIXTURE SHALL BE PREWIRED. FLUORESCENT TUBES SHALL BE PROTECTED BY A VIRGIN ACRYLIC PROTECTIVE SLEEVE AND CLEAR PLASTIC VENTED END CAPS.

FIXTURE MARK B

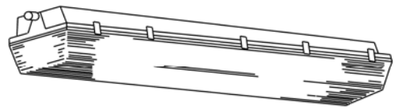

TYPE 232
4-FOOT FIXTURE LENGTH

ENCLOSED AND GASKETED, VAPOR-TIGHT FLUORESCENT FIXTURE
FOR SURFACE OR PENDANT MOUNTING

FIXTURE SHALL CONFORM TO UL1570 AND SHALL BE VAPOR-TIGHT AND SUITABLE FOR USE IN WET LOCATIONS. FIXTURE SHALL HAVE ONE-PIECE HOUSINGOF MOLDED HIGH-IMPACT PLASTIC OR REINFORCED FIBERGLASS. HOUSING BODY SHALL HAVE AN INTERNAL, DIE-FORMED, COLD-ROLLED STEEL CHANNEL WITH COVER TO PROVIDE FIXTURE RIGIDITY AND TO CONTAIN ELECTRIC COMPONENTS. THE METAL CHANNEL AND COVER SHALL RECEIVE A RUST INHIBITIVE COATING BEFORE APPLICATION OF THE FINISH COAT, WHICH SHALL CONSIST OF BAKED WHITE ENAMEL OR PORCELAIN ENAMEL. THE LENS SHALL BE ONE PIECE, OF HIGH-IMPACT-RESISTANT ACRYLIC, AND SHALL HAVE SMOOTH EXTERIOR SURFACE AND STIPPLED OR PEBBLED INTERIOR SURFACE. THE LENS SHALL BE SECURED TO THE HOUSING WITH CAPTIVE MOLDED PLASTIC OR STAINLESS STEEL SPRING LATCHES. A CONTINUOUS GASKET SHALL BE PROVIDED TO FORM A VAPOR SEAL BETWEEN THE LENS AND THE FIXTURE BODY. ALL OPENINGS IN THE HOUSING FOR MOUNTING, CONDUIT, ETC., SHALL BE CAPABLE OF FORMING A VAPOR-TIGHT SEAL. BALLAST(S) SHALL BE COLD WEATHER TYPE FOR STARTING TEMPERATURES DOWN TO MINUS 20 DEGREES F. STANDARD BALLAST(S) SHALL BE THE CLASS P, HIGH POWER FACTOR TYPE APPROVED FOR THE APPLICATION BY THE CERTIFIED BALLAST MANUFACTURERS. FIXTURE SHALL BE PREWIRED, AND PROVIDED WITH LAMPS THAT ARE PROPERLY MATED TO THE BALLAST OPERATING CHARACTERISTICS.

FIXTURE MARK E

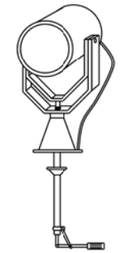

SEALED BEAM SPOTLIGHT, MOUNTED TO GUARD TOWER ROOF, WITH 1000 WATT HALOGEN NARROW SPOT PAR 56 LAMP. SPOTLIGHT SHALL BE PROVIDED WITH TWIST LEVER CONTROL, MINIMUM 10" DIAMETER LIGHT HEAD, WORKING RANGE OF 1/2 MILE, COUPLING FOR OPERATION FROM GUARD TOWER PLATFORM AND RATED FOR OUTDOOR ROUGH SERVICE WITH ANTI-SHOCK LAMPHOLDER.

FIXTURE MARK H

TYPE SF11

FEATURES
LAMP TYPE: INCCANDESCENT BULB: 100W
GLASS GLOBE CLEAR, BLUE, RED, AND BLACK LAMPS INDICATED ON THE DRAWINGS
PROFILE: 1 LAMP
SHIELDING: CLEAR GLASS GLOBE

OPTIONS
GLASS GLOBE: CLEAR, RED, BLUE, OR BLACK
LAMP TYPE: 75W, 100W, 150W
MOUNTING: PENDANT OR SURFACE
SHIELDING: HEAT RESISTANT

NOM. DIMENSIONS: 111mm X 251mm

GENERAL DESCRIPTION
HOUSING: 30 PERCENT GLASS FILLED THERMOPLASTIC POLYSTER
ELECTRICAL: 220 ~ 240 VOLT
FINISH: MOLDED IN NON-GRAYING FINISH

SURFACE MOUNTED INCANDESCENT
VAPOR TIGHT JELLY JAR WITH WIRE GUARD
NOT TO SCALE

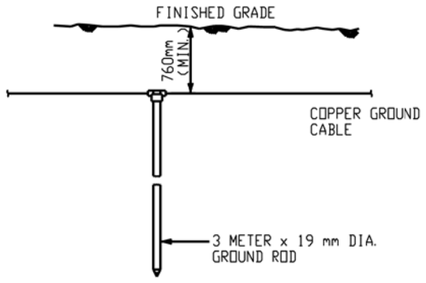

NOTES:

1. CONDUCTOR SIZE SHALL BE AS INDICATED ON PLANS.
2. EXOTHERMIC WELDS SHALL BE AS RECOMMENDED BY MANUFACTURER FOR THE SIZE OF CONNECTION AND MATERIAL INVOLVED. SEE DETAIL 5 ON SHEET SE-7.

BELOW GRADE GROUNDING ROD DETAIL
NOT TO SCALE

DETAIL 1
NOT TO SCALE

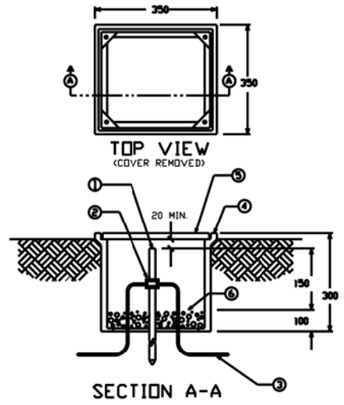

MATERIAL LIST
1. GROUND ROD
2. EXOTHERMIC WELD
3. GROUNDING CONDUCTOR 70mm² COPPER
4. POLYMER CONCRETE FIBERGLASS REINFORCED BOX
5. COVER FOR ABOVE BOX
6. GRAVEL OR CRUSHED STONE

GROUND ROD ACCESS
BOX INSTALLATION DETAIL
NOT TO SCALE

DETAIL 2
NOT TO SCALE

US ARMY CORPS OF ENGINEERS
AFGHANISTAN ENGINEER DISTRICT

SYMBOL	DESCRIPTION	DATE	APPD

REV	DATE:	DESIGNED BY:	DRAWN BY:	REVIEWED BY:	SUBMITTED BY:
	XX-XX-XX	CKD BY:	DRAWING CODE:	FILE NAME:	PLOT SCALE: XXXX:XX
	DESIGN FILE NO:				PLOT DATE: XX-XX-XX

U.S. ARMY ENGINEER DISTRICT, AFGHANISTAN
CORPS OF ENGINEERS
APO AE 96338

ENGINEERING AND CONSTRUCTION DIVISION

AFGHANISTAN NATIONAL POLICE (ANP) DISTRICT HEADQUARTERS COMPOUNDS - 1 STORY HQ
VARIOUS LOCATIONS, AFGHANISTAN
STANDARD DETAILS

LIGHTING DETAILS

SHEET REFERENCE NUMBER:
SE-2

A1 Size 594mm x 841mm

AFGHAN NATIONAL ARMY

STANDARD BUILDING DESIGN

FAMILY RESPONSE UNIT OFFICES

100% DESIGN SUBMITTAL

SHEET INDEX

G-001 COVER SHEET

STRUCTURAL

S-001 GENERAL NOTES & DESIGN CRITERIA
S-101 FOUNDATION/SLAB & ROOF FRAMING PLAN
S-401 BUILDING SECTIONS
S-501 FOUNDATION SECTIONS
S-502 FOUNDATION & FRAMING SECTIONS
S-503 BEAM & COLUMN DETAILS
S-601 SCHEDULES
S-701 TYPICAL DETAILS
S-702 TYPICAL DETAILS

ARCHITECTURAL

A-001 LIFE SAFETY PLAN
A-101 FLOOR PLAN
A-102 ROOF PLAN
A-201 ELEVATIONS
A-301 BUILDING SECTIONS
A-401 WALL SECTIONS
A-501 EXTERIOR DETAILS
A-502 HEAD, JAMB, & SILL DETAILS
A-503 STOOP & CANOPY DETAILS
A-504 TOILET & LAVATORY DETAILS
A-601 WINDOW & DOOR SCHEDULES

MECHANICAL

P-101 FLOOR PLAN PLUMBING
P-501 PLUMBING DETAILS
P-901 PLUMBING ISOMETRICS

M-101 HVAC – FLOOR PLAN

ELECTRICAL

E-001 ELECTRICAL – SYMBOLS, NOTES, & ABBREVIATIONS
E-101 ELECTRICAL – LIGHTING PLAN
E-102 ELECTRICAL – POWER PLAN
E-501 ELECTRICAL – DETAILS
E-502 ELECTRICAL – DETAILS
E-601 ELECTRICAL – LIGHTING & PANEL SCHEDULES

APPROVED:

A/E DESIGNER OF RECORD

SEAL:

US ARMY CORPS OF ENGINEERS
AFGHANISTAN ENGINEER DISTRICT

Mark	Description	Date	Appr.

Mark	Description	Date	Appr.

Date: 8/16/10
Rev: 0
Design file no.
Drawing code:
File name: ANAFRUG001CS
Plot date: 8/24/2010
Plot scale: x:x

Designed by: KMF/MMY
Drwn by: RCG
Ckd by: CWW
Reviewed by: LHM
Submitted by: BAKER

U.S. ARMY CORPS OF ENGINEERS
AFGHANISTAN ENGINEER DISTRICT
APO AE 96338

Michael Baker Jr., Inc.
A unit of Michael Baker Corporation
Airside Business Park
100 Airside Drive
Moon Township, PA 15108
www.mbakercorp.com

AFGHAN NATIONAL ARMY
STANDARD DESIGN
FAMILY RESPONSE UNIT OFFICES (STAND ALONE)
COVER SHEET

Sheet reference number:
G-001

STRUCTURAL ABBREVIATIONS:

ACI	AMERICAN CONCRETE INSTITUTE
ADD'L	ADDITIONAL
AISC	AMERICAN INSTITUTE OF STEEL CONSTRUCTION
AISI	AMERICAN IRON AND STEEL INSTITUTE
ASTM	AMERICAN SOCIETY FOR TESTING AND MATERIALS
ARCH	ARCHITECTURAL
B	BOTTOM
BLDG	BUILDING
BOTT	BOTTOM
℄	CENTER LINE
CFMRF	COLD FORM METAL ROOF FRAME
CFMF	COLD FORM METAL FRAME
CFS	COLD FORMED STEEL
CIP	CAST-IN-PLACE
CIPL	CAST-IN-PLACE LINTEL
CJ	CONTROL JOINT
CLR	CLEAR
CMU	CONCRETE MASONRY UNIT
COEFF	COEFFICIENT
COL	COLUMN
CONC	CONCRETE
CONT	CONTINUOUS
COORD	COORDINATE
CRSI	CONCRETE REINFORCING STEEL INSTITUTE
CSJ	CONSTRUCTION JOINT
DIA	DIAMETER
DIAG	DIAGONAL
DIM	DIMENSION
DWG	DRAWING
DWL	DOWEL
EA	EACH
EF	EACH FACE
ELEC	ELECTRICAL
ELEV	ELEVATION
EMBED	EMBEDMENT
EQUIV	EQUIVALENT
ETC	ET CETERA
EW	EACH WAY
EXP	EXPANSION
EXT	EXTERIOR
FTG	FOOTING
GA	GAUGE
GB	GRADE BEAM
HORIZ	HORIZONTAL
h	HOUR
HRS	HOURS
IBC	INTERNATIONAL BUILDING CODE
ID	INSIDE DIAMETER
INFO	INFORMATION
INT	INTERIOR
kg	KILOGRAM
km	KILOMETER
kN	KILONEWTON
kPa	KILOPASCAL
L#	ANGLE (# INDICATES SIZE)
LONG	LONGITUDINAL
LLV	LONG LEG VERTICAL
m	METER
MAX	MAXIMUM
MECH	MECHANICAL
MFG	MANUFACTURER
MID	MIDDLE
MIN	MINIMUM
MISC	MISCELLANEOUS
mm	MILLIMETER
MPa	MEGAPASCAL
MTL	METAL
MWFRS	MAIN WIND FORCE RESISTING SYSTEM
N	NEWTON
N	NORTH
N/A	NOT APPLICABLE
#	NUMBER SYMBOL FOR REBAR SIZE
NTS	NOT TO SCALE
OC	ON CENTER
OD	OUTSIDE DIAMETER
OPNG	OPENING
P̲L or PL	PLATE
PRE-ENG	PRE-ENGINEERED
RB	ROOF BEAM
REINF	REINFORCED
REQ'D	REQUIRED
SIM	SIMILAR
SPECS	SPECIFICATIONS
STD	STANDARD
STRUCT	STRUCTURAL
SW	SHEAR WALL
T	TOP
T/	TOP OF
T/ELEV	TOP ELEVATION
T/SLAB	TOP OF SLAB
T&B	TOP AND BOTTOM
THK	THICK
TYP	TYPICAL
UFC	UNIFIED FACILITIES CRITERIA
UON	UNLESS OTHERWISE NOTED
VERT	VERTICAL
W	WIDTH
W/	WITH

1.0 GENERAL NOTES:

1.1 THIS PROJECT HAS BEEN DESIGNED FOR THE WEIGHTS AND MATERIALS INDICATED ON THE SHEETS AND FOR THE LIVE LOADS INDICATED IN THE DESIGN DATA. IT IS THE CONTRACTOR'S RESPONSIBILITY TO DETERMINE ALLOWABLE CONSTRUCTION LOADS AND TO PROVIDE PROPER DESIGN AND CONSTRUCTION OF FALSEWORK, FORMWORK, STAGING, BRACING, SHEETING AND SHORING, ETC.

1.1 COORDINATE THESE SHEETS WITH THE ARCHITECTURAL, MECHANICAL, ELECTRICAL, PLUMBING, AND CIVIL SHEETS. ALL DIMENSIONS SHOWN ON THE SHEETS ARE MILLIMETERS UNLESS NOTED OTHERWISE.

1.2 THE CONTRACTOR SHALL VERIFY AND COORDINATE ALL FLOOR AND ROOF OPENING SIZES AND LOCATIONS, EQUIPMENT PAD SIZES AND LOCATIONS, ANCHOR BOLT LAYOUTS, ETC WITH EQUIPMENT SELECTED. THE CONTRACTOR SHALL MAKE ANY REQUIRED MODIFICATIONS AT NO ADDITIONAL COST.

1.3 THE CONTRACTOR SHALL REFER TO THE ARCHITECTURAL, MECHANICAL, ELECTRICAL AND PLUMBING SHEETS FOR SLEEVES, CURBS, INSERTS OR OPENINGS, ETC. NOT HEREIN INDICATED.

1.4 WORK NOT INCLUDED ON THE SHEETS BUT IMPLIED TO BE SIMILAR TO THAT SHOWN AT CORRESPONDING PLACES ELSEWHERE ON THE SHEETS SHALL BE REPEATED.

1.5 IN CASE OF CONFLICT BETWEEN THE NOTES, DETAILS AND SPECIFICATIONS THE MOST RIGID REQUIREMENTS SHALL GOVERN.

1.6 SEE ARCHITECTURAL SHEETS FOR LOCATIONS OF MASONRY AND NON-LOAD BEARING PARTITIONS. PROVIDE COMPRESSIBLE FIRESAFING AT TOP OF WALL AS REQUIRED BY ARCHITECTURAL SHEETS.

1.7 COORDINATE FINISHED FLOOR DATUM ELEVATION 0.0m WITH THE CIVIL SHEETS.

2.0 FOUNDATION NOTES

2.1 THE GEOTECHNICAL ANALYSIS FOR THIS PROJECT IS THE RESPONSIBILITY OF THE CONTRACTOR AWARDED THE WORK. AN ASSUMED ALLOWABLE SOIL BEARING VALUE OF 72 kPa HAS BEEN USED IN THE STRUCTURAL ANALYSIS OF THE BUILDING HEREIN AND SHALL BE CONFIRMED AND VERIFIED AS PART OF THE GEOTECHNICAL INVESTIGATION. VALUES WHICH DO NOT MEET THE REQUIREMENTS INDICATED ON THE BASIS OF DESIGN SHEET SHALL BE IMMEDIATELY BROUGHT TO THE ATTENTION OF THE CONTRACTING OFFICER FOR CONSIDERATION AND DETERMINATION ON THE NEXT APPROPRIATE COURSE OF ACTION.

2.2 SEE THE SPECIFICATION FOR ADDITIONAL REQUIREMENTS TO THOSE OUTLINED IN THE GEOTECHNICAL INVESTIGATION FOR EXCAVATION AND PREPARATION OF THE FOUNDATION AND THE SLAB ON GRADE SUBGRADE INCLUDING COMPACTION PROCEDURES.

2.3 EXCAVATIONS FOR FOOTINGS SHALL HAVE THE SIDES AND BOTTOMS TEMPORARILY LINED WITH 0.25mm POLYETHYLENE IF PLACEMENT OF CONCRETE DOES NOT OCCUR WITHIN 24 HRS OF THE EXCAVATION OF THE FOOTING.

2.4 FOUNDATION CONDITIONS NOTED DURING CONSTRUCTION WHICH DIFFER FROM THOSE DESCRIBED IN THE GEOTECHNICAL REPORT SHALL BE REPORTED TO THE GENERAL CONTRACTOR BEFORE FURTHER CONSTRUCTION IS ATTEMPTED. SEE PROJECT SPECIFICATIONS.

2.5 NO FOOTINGS OR SLABS SHALL BE POURED INTO OR AGAINST SUBGRADE CONTAINING FREE WATER, FROST, ICE OR LOOSE MATERIAL. FROST DEPTH ASSUMED TO BE 800mm.

2.6 ALL SLAB-ON-GRADE, TRENCH BOTTOMS AND OTHER ON-GRADE INTERIOR HORIZONTAL SURFACES SHALL BE PLACED OVER A 0.25mm POLYETHYLENE VAPOR RETARDER OVER A 100mm #57 STONE WATER CAPILLARY BARRIER PLACED ON SUBGRADE PROPERLY PREPARED IN ACCORDANCE WITH THE CONTRACT SPECIFICATIONS. (UON)

2.7 PRIOR TO START OF FOUNDATION OR SLAB-ON-GRADE CONSTRUCTION, EXISTING SUBGRADES SHALL BE COMPACTED TO MINIMUM OF 95% MAXIMUM DRY DENSITY OBTAINED THRU ASTM D 1557 MODIFIED PROCTOR TESTING.

2.8 SEE PLUMBING, ELECTRICAL & CIVIL SHEETS FOR REQUIRED UNDERSLAB UTILITIES.

2.9 SEE ARCHITECTURAL SHEETS FOR ALL WATERPROOFING DETAILS AND MATERIALS.

2.10 IF UNDERMINING OF FOOTINGS OCCURS, FILL VOIDS WITH 18 MPa CONCRETE. DO NOT ATTEMPT TO REPLACE AND RE-COMPACT SOIL.

3.0 CONCRETE

3.1 CONCRETE SHALL HAVE THE UNIT WEIGHT OF 2400 kg/m^3 AND A MINIMUM COMPRESSIVE STRENGTH (f'c) OF 28 MPa AT 28 DAYS. ALL CONCRETE SHALL HAVE A MAXIMUM WATER-CEMENT RATIO OF 0.45. SEE SPECIFICATIONS FOR ADDITIONAL INFORMATION. ENTRAIN AIR TO PRODUCE TOTAL AIR CONTENT ACCORDING TO THE SPECIFICATIONS FOR CONCRETE EXPOSED TO FREEZING TEMPERATURES (EXTERIOR FOOTINGS, SLAB TURNDOWNS, EXTERIOR SLABS AND SLABS-ON-GRADE, EXTERIOR RETAINING WALLS, AND EXTERIOR GRADE BEAMS.)

3.2 NO CALCIUM CHLORIDE SHALL BE USED IN ANY CONCRETE.

3.3 MIXING, TRANSPORTING AND PLACING OF CONCRETE SHALL CONFORM TO ACI 301M-05.

3.4 ALL CONCRETE WORK SHALL CONFORM TO THE REQUIREMENTS OF THE AMERICAN CONCRETE INSTITUTE (ACI) 318M MANUAL (metric), "BUILDING CODE REQUIREMENTS FOR REINFORCED CONCRETE", AND REQUIREMENTS OUTLINED IN THE CONTRACT SPECIFICATIONS. WHEN THERE IS A CONFLICT BETWEEN ACI AND THE SPECIFICATIONS, THE MORE STRINGENT SHALL GOVERN.

3.5 CHAMFER ALL EXPOSED EXTERNAL CORNERS OF CONCRETE WITH 20mm x45 DEGREE CHAMFER UON.

3.6 CONCRETE REINFORCEMENT BARS SHALL CONFORM TO ASTM A615M-96a, GRADE 420 MPa, REINFORCING BARS SHALL NOT BE TACK WELDED, WELDED, HEATED OR CUT, UNLESS INDICATED ON THE CONTRACT DOCUMENTS. ALL LAP SPLICES SHALL BE CLASS "B" UON.

3.7 HORIZONTAL FOOTING AND HORIZONTAL WALL REINFORCEMENT SHALL BE CONTINUOUS AND SHALL HAVE 90 DEGREE BENDS AND EXTENSIONS, OR CORNER BARS OF EQUIVALENT SIZE LAPPED WITH A CLASS B TENSION SPLICE AT CORNERS AND INTERSECTIONS. TOP BAR CRITERIA SHALL APPLY IF 300mm OR MORE OF FRESH CONCRETE IS PLACED BELOW BAR.

3.8 SLABS-ON-GRADE SHALL HAVE CONSTRUCTION JOINTS OR CRACK CONTROL JOINTS AS SHOWN ON THE DRAWINGS. CONSTRUCTION JOINTS CAN BE USED AT CONTROL JOINT LOCATIONS AT CONTRACTORS OPTION. SEE SLAB PLANS & JOINT DETAILS FOR ADDITIONAL INFORMATION. FOR AREAS NOT SHOWN ON DWGS, THE MAXIMUM SPACING OF CONSTRUCTION/ CRACK CONTROL JOINTS SHALL BE 4800mm

3.9 ALL CONCRETE REINFORCEMENT SHALL BE DETAILED, FABRICATED, LABELED, SUPPORTED, AND SPACED IN FORMS AND SECURED IN PLACE IN ACCORDANCE WITH THE PROCEDURES AND REQUIREMENTS OUTLINED IN THE LATEST EDITION OF THE "BUILDING CODE REQUIREMENTS FOR REINFORCED CONCRETE", ACI 318M, AND THE "MANUAL OF STANDARD PRACTICE FOR DETAILING REINFORCED CONCRETE STRUCTURES", ACI 315M, LATEST EDITION. BASED ON IN COUNTRY REINFORCEMENT AVAILABILITY, IT IS THE CONTRACTOR'S OPTION TO ROUND DESIGNATED ODD NUMBERED REINFORCEMENT SIZES UP (1) ONE BAR SIZE.

3.10 ALL DOWELS SHALL MATCH SIZE AND NUMBER OF MAIN REINFORCING, UNLESS NOTED OTHERWISE ON THE SHEETS.

3.11 ADDITIONAL BARS SHALL BE PROVIDED AROUND ALL FLOOR AND WALL OPENINGS AS SHOWN ON THE SHEETS.

3.12 SEE ARCHITECTURAL SHEETS FOR TYPE AND LOCATION OF ALL FLOOR FINISHES.

3.13 THE CONTRACTOR SHALL COORDINATE ADDITIONAL WALL/SLAB OPENINGS NOT SHOWN ON STRUCTURAL SHEETS. SEE MECHANICAL, ELECTRICAL, PLUMBING AND CIVIL SHEETS.

3.14 UNLESS NOTED OTHERWISE, ALL CURBS SHALL BE REINFORCED WITH AT LEAST (1)-#13 CONTINUOUS AND #13 AT 300mm O.C. DOWELS TO STRUCTURE BELOW.

3.15 THE CONTRACTOR SHALL VERIFY ALL OPENINGS, PAD SIZES, AND ANCHOR BOLTS WITH EQUIPMENT SELECTED.

3.16 FOR ALL WALLS & PIERS, PROVIDE DOWELS INTO FOOTING AT EACH VERT REINF BAR, UON DOWEL SIZE SHALL BE SAME AS VERT REINF.

3.17 PROVIDE CONCRETE POUR STOPS OR FORMED AS REQUIRED FOR INSTALLATION OF ALL CONCRETE WORK.

3.18 PROVIDE ADDITIONAL (2)-#13 x 600mm REINFORCING BARS IN SLAB-ON GRADE AT ALL RE-ENTRANT CORNERS. PLACE BARS AT MID-DEPTH OF SLAB WITH A CLEARANCE OF 50mm FROM CORNER UON.

3.19 COLD-WEATHER PLACEMENT: COMPLY WITH ACI 306.1 AND AS FOLLOWS. PROTECT CONCRETE WORK FROM PHYSICAL DAMAGE OR REDUCED STRENGTH THAT COULD BE CAUSED BY FROST, FREEZING ACTIONS, OR LOW TEMPERATURES. SUBMIT A COLD WEATHER CONCRETING PLAN FOR APPROVAL.

3.20 PROVIDE BONDING COMPOUND PER ASTM C 1059-99: SPECIFICATION FOR LATEX AGENTS FOR BONDING FRESH CONCRETE (GROUT) TO HARDENED CONCRETE.

3.21 THE FORMED SURFACES FOR REINFORCED CONCRETE SHALL ACHIEVE A "CLASS A" FINISH WHEN RECEIVING PAINT OR A "CLASS B" FINISH WHEN RECEIVING PLASTER OR TILE AS PER SPECIFICATION SECTION 03 31 00 CAST-IN-PLACE STRUCTURAL CONCRETE.

3.22 AT INTERSECTING GRADE BEAMS AND SHEAR WALLS, PROVIDE CORNER BARS AT INTERSECTIONS WITH SAME QUANTITY, SIZE AND SPACING AS HORIZONTAL BARS WITH LEG LENGTH = 50db.

4.0 CONCRETE MASONRY

4.1 MASONRY CONSTRUCTION SHALL CONFORM TO SPECIFICATION FOR MASONRY STRUCTURES (ACI 530.1) UON.

4.2 STRENGTH OF MASONRY MATERIALS SHALL BE AS FOLLOWS:

a. CONCRETE MASONRY UNITS SHALL BE NORMAL WEIGHT, GRADE N, TYPE 1, CONFORMING TO ASTM C-90 AND HAVE A MINIMUM COMPRESSIVE STRENGTH OF 10.4 MPa ON THE NET AREA.

b. MORTAR SHALL CONFORM TO ASTM C-270 TYPE S.

c. GROUT FOR MASONRY SHALL BE NORMAL WEIGHT AND HAVE A MINIMUM COMPRESSIVE STRENGTH OF 14 MPa AT 28 DAYS. GROUT SHALL CONFORM TO ASTM C476M. GROUT LIFTS SHALL NOT EXCEED 1,400mm.

d. REINFORCED MASONRY SHALL HAVE A STRENGTH F'm = 10 MPa. (F'm IS THE COMPRESSIVE STRENGTH OF THE MASONRY AT 28 DAYS AS DETERMINED BY PRISM TESTS).

4.3 ALL VERTICAL REINFORCEMENT FOR CONCRETE MASONRY SHALL BE ASTM A615M, GRADE 420 MPa. ALL SPLICES SHALL BE LAPPED 48 BAR DIAMETERS MINIMUM.

4.4 BOND BEAMS SHALL BE SPACED AT 1200mm OC MAXIMUM VERTICALLY. BOND BEAM REINFORCING SHALL BE CONTINUOUS AND PROVIDED AT WALL INTERSECTIONS AND WALL CORNERS (REFERENCE CONCRETE MASONRY NOTE 4.11). ALL BOND BEAM REINFORCING SHALL BE CONTINUOUS AND HAVE STANDARD ACI HOOKS AT EACH END. PROVIDE STANDARD BAR SPLICES AS SPECIFIED. AS AN ALTERNATE TO CMU BOND BEAMS, IT IS THE CONTRACTOR'S OPTION TO PROVIDE 200mm x 200mm CONTINUOUS CAST-IN-PLACE CONCRETE BOND BEAMS WITH (2)-#16 IN LIEU OF CMU BOND BEAMS INDICATED ON THE DRAWINGS.

4.5 SEE TYPICAL DETAILS FOR MINIMUM REINFORCEMENT REQUIREMENTS FOR CMU WALLS. PROVIDE STANDARD BAR SPLICES AS SPECIFIED. ALL VERTICAL REINFORCEMENT EXTENDS FULL HEIGHT OF WALL.

4.6 CMU CELLS THAT REQUIRE VERTICAL REINFORCING BARS AS INDICATED ON THE CONTRACT DRAWINGS AND/OR SPECS SHALL HAVE REINF BARS PLACED IN CENTERS OF CMU CELLS AND CONTINUOUSLY GROUTED UON.

4.7 ALL CMU CELLS, OPEN CAVITIES, AND AIR SPACES OF ALL EXTERIOR WALLS SHALL BE GROUTED TO STOP FRAGMENTS FROM MORTAR BLAST.

4.8 CONTRACTOR SHALL COORDINATE LOCATION OF ALL OPENINGS SEE ARCH, MECH, ELEC, AND PLUMBING SHEETS FOR SIZE AND LOCATION OF OPENINGS.

4.9 MASONRY WALLS SHALL NOT BE BACK FILLED PRIOR TO THE MORTAR AND GROUT ATTAINING THEIR RESPECTIVE MAXIMUM DESIGN STRENGTHS PER SPECIFICATIONS.

4.10 PROVIDE GALVANIZED MORTAR/GROUT SCREEN W/ 3mm MESH WHERE CELLS BELOW ARE NOT GROUTED.

4.11 AT INTERSECTING BOND BEAMS, PROVIDE CORNER BAR FOR EACH HORIZONTAL BAR IN BOND BEAMS AT INTERSECTING WALLS. USE SAME SIZE AND SPACING AS HORIZONTAL BARS WITH LEG LENGTH = 50db.

4.12 THE ALTERNATE TOP OF CMU WALL BRACING DETAIL(S) SHOWN ON S-701 CAN BE UTILIZED AT THE CONTRACTOR'S OPTION IN PLACE OF THE "SLEEVED DOWEL" WALL CONNECTIONS DEPICTED ON S-400 AND S-500 SERIES DRAWINGS. IN ADDITION, ALTERNATE DETAIL(S) SHOW CAST-IN-PLACE WALL BOND BEAMS THAT CAN BE UTILIZED AT THE CONTRACTOR'S OPTION IN PLACE OF THE STANDARD CMU BOND BEAMS CONSTRUCTED OF CMU BLOCKS.

5.0 COLD-FORMED METAL FRAMING

5.1 ALL COLD-FORMED METAL FRAMING MEMBERS SHALL CONFORM TO ASTM A1003M, STRUCTURAL GRADE ST340 (MPa), WITH A GALVANIZED COATING OF Z275 OR BETTER IN ACCORDANCE WITH ASTM A653M.

5.2 ALL COLD-FORMED METAL FRAMING MEMBERS SHALL HAVE THE FOLLOWING MINIMUM PROPERTIES:

a. MINIMUM METAL THICKNESS:
TRACK = 1.37mm;
STUD/OTHER = 1.09mm

b. MINIMUM FLANGE WIDTH:
TRACK = 38mm;
STUD/OTHER = 35mm

c. MINIMUM MEMBER DEPTH:
ALL SECTIONS = 152.2mm

d. PURLIN (HAT CHANNEL)
DEPTHxWIDTH(FLAT TOP)xTHICK = 25mmx42mmx1.59mm

5.3 ALL CONNECTIONS SHALL BE MADE WITH CORROSION RESISTANT (ASTM A153M), SELF-DRILLING, SELF-TAPPING STEEL DRILL SCREWS IN ACCORDANCE WITH ASTM C1513. SCREWS SHALL HAVE A LOW PROFILE HEAD BENEATH ROOF DECK, AND STANDARD HEAD ALL OTHER LOCATIONS.

5.4 FABRICATE COLD FORMED METAL FRAMING AND ACCESSORIES PLUMB, SQUARE AND TRUE TO LINE, WITH CONNECTIONS SECURELY FASTENED ACCORDING TO AISI STANDARD FOR COLD FORMED STEEL FRAMING.

5.5 CUT FRAMING MEMBERS BY SAWING OR SHEATHING, DO NOT TORCH CUT.

5.6 INSTALL FRAMING MEMBERS IN ONE-PIECE LENGTHS UNLESS SPLICE CONNECTIONS ARE INDICATED FOR TRACK OR TENSION MEMBERS

5.7 INSTALL TEMPORARY BRACING AND SUPPORTS TO SECURE FRAMING DURING CONSTRUCTION. MAINTAIN BRACING AND SUPPORTS IN PLACE UNTIL THE STRUCTURE HAS BEEN COMPLETED WITH ALL CONNECTIONS AND PERMANENT BRACING SECURED.

6.0 STRUCTURAL DESIGN CRITERIA

6.1 ALL DESIGNS SHALL CONFORM TO THE PROVISIONS OF THE IBC 2006 AND UFC AS APPLICABLE.

6.2 DESIGN LOADS

6.2.1 DEAD LOADS (PER IBC 2006 & UFC 3-310-01)

MECH/ELEC/PLUMBING	0.20 kPa
MISCELLANEOUS	0.15 kPa
COLD-FORMED FRAMING	0.20 kPa
INSULATION	0.10 kPa
METAL ROOF PANEL	0.14 kPa
	0.79 kPa

6.2.2 LIVE LOADS (PER IBC 2006 & UFC 3-310-01)

ROOF	1.00 kPa
SLAB ON GRADE	4.80 kPa

6.2.3 SNOW LOADS (PER IBC 2006 & UFC 3-310-01)

GROUND SNOW LOAD (Pg)	1.2 kPa
SLOPED ROOF SNOW LOAD (Ps)	0.84 KPa
SNOW IMPORTANCE FACTOR (I)	1.0
SNOW EXPOSURE FACTOR (Ce)	1.0
THERMAL FACTOR (Ct)	1.0

6.2.4 WIND LOADS (PER IBC 2006)

BASIC WIND SPEED	137 km/h
WIND IMPORTANCE FACTOR	1.0
WIND EXPOSURE CATEGORY	D
DIRECTIONALITY COEFFICIENT (Kd)	0.85
TOPOGRAPHIC FACTOR (Kzt)	1.0
WIND BASE SHEAR: E-W	16.0 kN
WIND BASE SHEAR: N-S	16.0 kN

6.2.5 SEISMIC LOADS (PER IBC 2006 & UFC 3-310-04)

OCCUPANCY USE CATEGORY	II
SEISMIC IMPORTANCE FACTOR (Ie)	1.0
SEISMIC SITE CLASS	D
S_s = 2.4	
S_1 = 1.20	
S_{DS} = 1.6	
S_{D1} = 1.20	
SEISMIC DESIGN CATEGORY	E
SEISMIC RESISTING SYSTEM: -SPECIAL REINFORCED CONCRETE SHEAR WALL (TYPE B.5 PER ASCE TABLE 12.2-1)	
RESPONSE MODIFICATION FACTOR (R)	6
RESPONSE COEFFICIENT (Cs)	0.267
SEISMIC ANALYTICAL PROCEDURE =	EQUIV LATERAL FORCE
SEISMIC BASE SHEAR	360 kN

APPROVED:

A/E DESIGNER OF RECORD

SEAL:

GEORGIA REGISTERED 8/25/10 No. 27141 PROFESSIONAL ENGINEER CHRISTOPHER W. WHITMORE

US ARMY CORPS OF ENGINEERS
AFGHANISTAN ENGINEER DISTRICT

Mark	Description	Date	Appr.

Date: 8/16/10
Rev: 0
Design file no.
Drawing code:
Ckd by: CWW
File name: ANAFRUS-S01GN
Plot date: 8/24/2010
Plot scale: X:X

Designed by: KMP
Dwn by: RCG
Ckd by: CWW
Reviewed by: LHM
Submitted by: BAKER

U.S. ARMY CORPS OF ENGINEERS
AFGHANISTAN ENGINEER DISTRICT
APO AE 96338

Michael Baker Jr., Inc
A unit of Michael Baker Corporation
Airside Business Park
100 Airside Drive
Moon Township, PA 15108
www.mbakercorp.com

AFGHAN NATIONAL ARMY
STANDARD DESIGN

FAMILY RESPONSE UNIT OFFICES (STAND ALONE)

GENERAL NOTES & DESIGN CRITERIA

Sheet reference number:
S-001

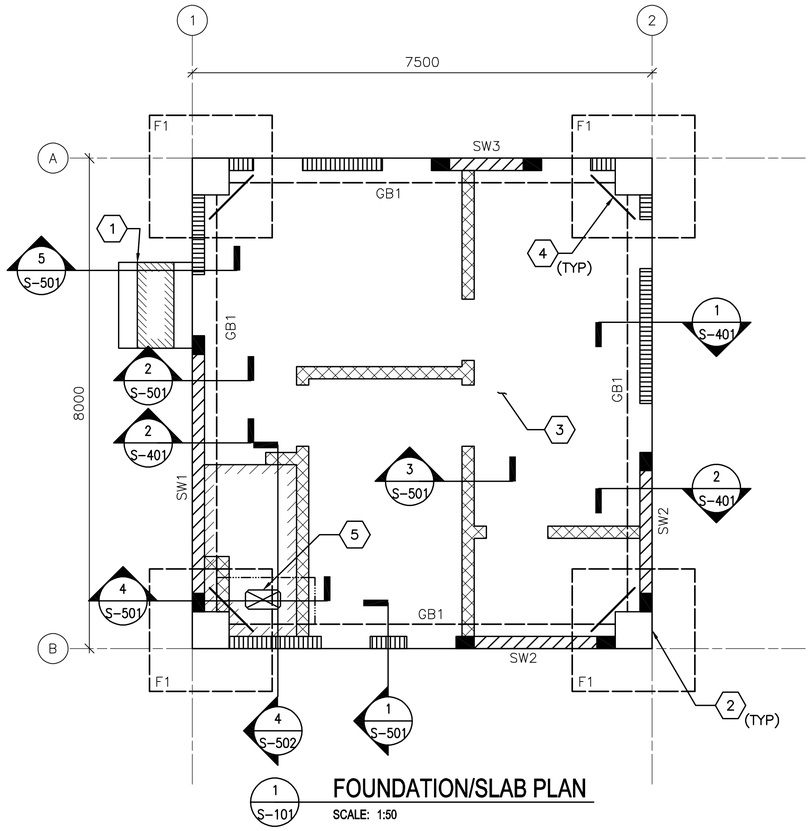

1 S-101 **FOUNDATION/SLAB PLAN**
SCALE: 1:50

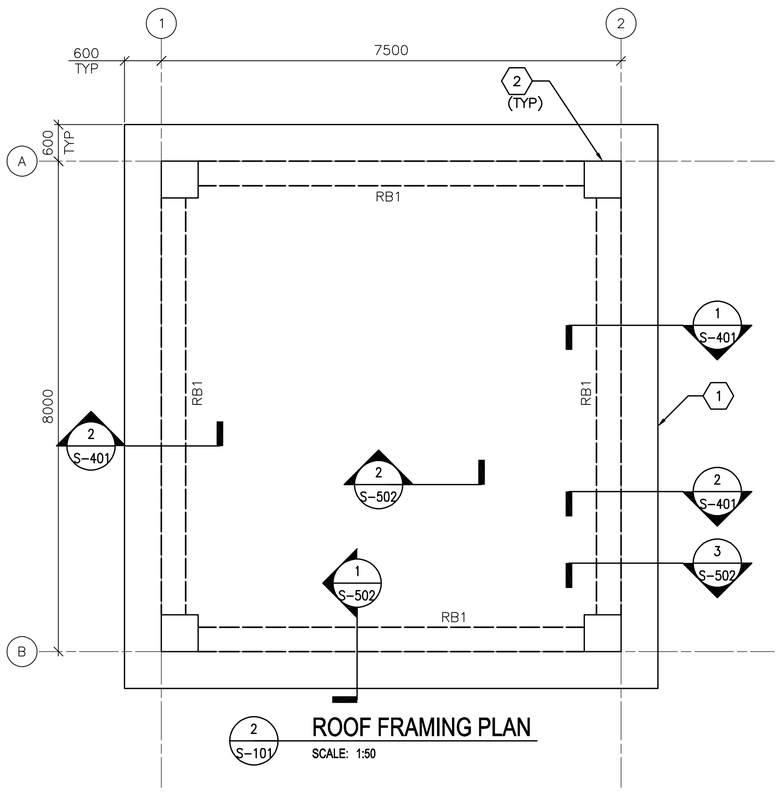

2 S-101 **ROOF FRAMING PLAN**
SCALE: 1:50

FOUNDATION/SLAB PLAN NOTES:

1. REFER TO SHEET S-001 FOR STRUCTURAL NOTES AND DESIGN CRITERIA.
2. FINISH FIRST FLOOR ELEVATION SHALL BE (DATUM 0.00) ALL PLUS OR MINUS DIMENSIONS INDICATED ON PLAN OR REFERRED TO IN NOTES RELATE TO FINISH FLOOR ELEVATION.
3. SLAB-ON-GRADE IS 150 WITH #13 @ 300 OC EW LOCATED 38 FROM T/SLAB.
4. TOP OF EXTERIOR FOOTINGS SHALL BE -950 UNLESS OTHERWISE INDICATED.
5. COLUMN FOOTINGS INDICATED BY F# ON PLAN. REFER TO COLUMN FOOTING SCHEDULE ON SHEET S-601.
6. REFER TO COLUMN SCHEDULE ON SHEET S-601.
7. GRADE BEAM INDICATED BY GB# ON PLAN, REFER TO BEAM SCHEDULE ON SHEET S-601.
8. SHEARWALL INDICATED BY SW# ON PLAN, REFER TO SHEARWALL SCHEDULE ON SHEET S-601.
9. SEE TYP EXTERIOR CMU WALL DETAIL ON SHEET S-701.
10. SEE MECHANICAL AND ELECTRICAL SHEETS FOR CONCRETE PAD LOCATIONS, SIZES, AND THICKNESS NOT SHOWN. SEE SHEET S-701 FOR DETAILS.
11. THICKENED SLAB UNDER PERIMETER CMU WALLS NOT SHOWN FOR CLARITY.

FOUNDATION/SLAB PLAN KEY NOTES: (X)

1. CONC PAD (ENTRANCE)-SEE ARCH DWGS FOR INFORMATION
2. REINF CONC COLUMN
3. REINF CONC SLAB-ON-GRADE
4. (2)-#13 RE-ENTRANT CORNER BARS - SEE S-701 FOR INFORMATION
5. SLAB OPENING - COORD W/ ARCH & MECH SHEETS

FOUNDATION/SLAB PLAN LEGEND:

- REINF CONC SHEAR WALL
- REINF CONCRETE INFILL WALL
- REINF CMU WALL
- INDICATES DROP SLAB 65 BELOW FINISH FLOOR
- INDICATES DROP SLAB FOR DOOR STOOP 2/A-503
- SLAB OPENING
- OUTLINE OF THICKENED SLAB AREAS

ROOF FRAMING PLAN NOTES:

1. REFER TO SHEETS S-001 FOR STRUCTURAL NOTES AND BASIS OF DESIGN.
2. TOP OF SLAB ELEVATION = 3600 UNLESS NOTED OTHERWISE.
3. ROOF SLAB IS 200 WITH #16 @ 300 OC EW T&B.
4. ROOF BEAM INDICATED BY RB# ON PLAN. REFER TO BEAM SCHEDULE ON SHEET S-601.
5. COORDINATE WITH ARCHITECTURAL SHEETS FOR COLD-FORMED STEEL OVERBUILD FRAMING ABOVE ROOF SLAB.
6. COLD-FORMED METAL OVERBUILD ROOF FRAMING NOT SHOWN FOR CLARITY. SEE OVERBUILD ROOF FRAMING DETAILS AND SECTIONS ON SHEET S-702.
7. OVERHANG AREAS OF ROOF SLAB CONTAIN ROOF VENT PENETRATIONS. REFERENCE ARCHITECTURAL DRAWINGS FOR INFORMATION.

ROOF FRAMING PLAN KEY NOTES: (X)

ROOF FRAMING PLAN:
1. CONC ROOF SLAB (BELOW ROOF OVERBUILD)
2. REINF CONC COLUMN (BELOW CONC ROOF SLAB)

0 1000 2000
SCALE: 1:50

UNLESS OTHERWISE NOTED, LINEAR DIMENSIONS SHOWN ON DRAWINGS ARE IN MILLIMETERS (mm)

APPROVED:

A/E DESIGNER OF RECORD

SEAL:

GEORGIA REGISTERED 8/23/10 No. 27141 PROFESSIONAL ENGINEER CHRISTOPHER W. WHITMORE

US ARMY CORPS OF ENGINEERS
AFGHANISTAN ENGINEER DISTRICT

Mark	Description	Date	Appr.

Date: 8/16/10
Rev: 0
Design file no.
Drawing code:
File name: ANAFRUS-101FFP
Plot date: 8/24/2010
Plot scale: x:X

Designed by: KMP/MMY
Dwn by: RCG
Ckd by: CWW
Reviewed by: LHM
Submitted by: BAKER

U.S. ARMY CORPS OF ENGINEERS
AFGHANISTAN ENGINEER DISTRICT
APO AE 96338

Michael Baker Jr., Inc
A unit of Michael Baker Corporation
Airside Business Park
100 Airside Drive
Moon Township, PA 15108
www.mbakercorp.com

AFGHAN NATIONAL ARMY
STANDARD DESIGN
FAMILY RESPONSE UNIT OFFICES (STAND ALONE)

FOUNDATION/SLAB & ROOF FRAMING PLAN

Sheet reference number:
S-101

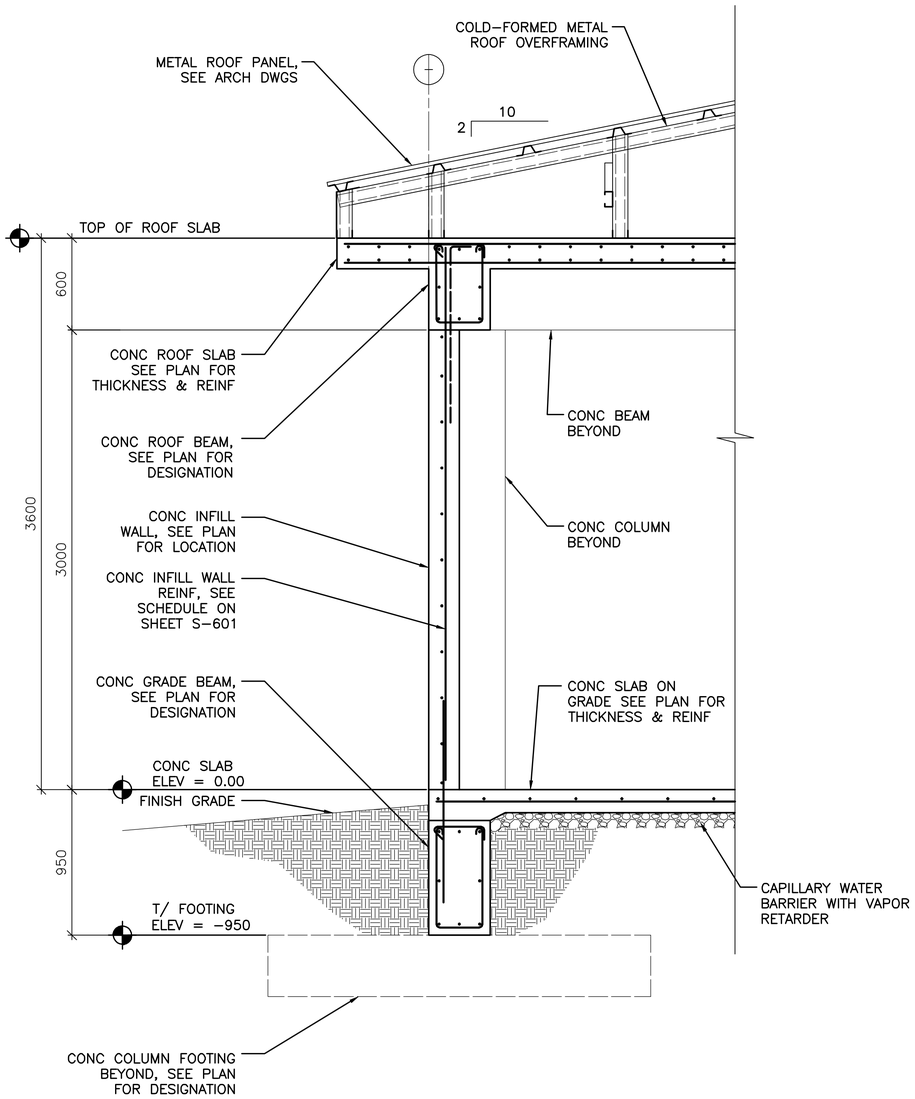

1 S–101 **TYPICAL WALL SECTION AT CONCRETE INFILL WALL**

SCALE: 1:20

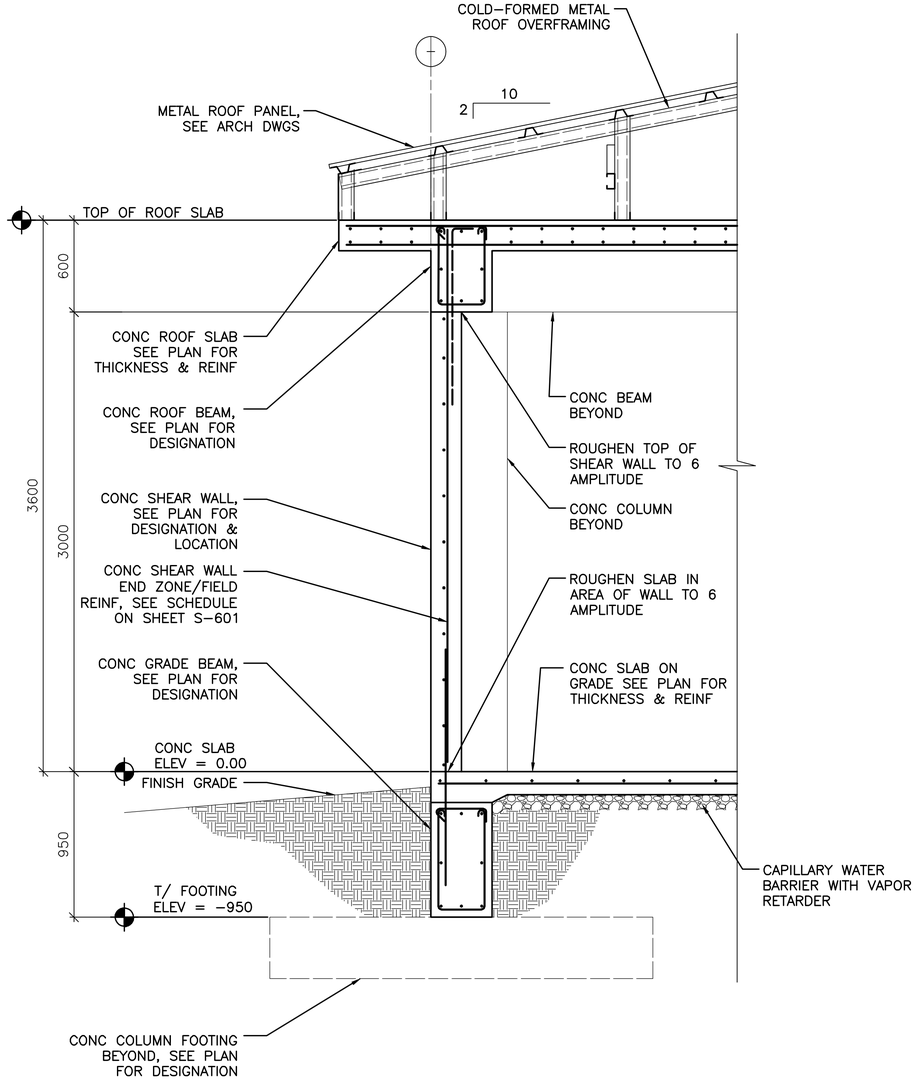

2 S–101 **TYPICAL WALL SECTION AT CONCRETE SHEAR WALL**

SCALE: 1:20

0 400 800

SCALE: 1:20

UNLESS OTHERWISE NOTED, LINEAR DIMENSIONS SHOWN ON DRAWINGS ARE IN MILLIMETERS (mm)

APPROVED:

A/E DESIGNER OF RECORD

SEAL:

GEORGIA REGISTERED 8/23/10 No. 27141 PROFESSIONAL ENGINEER CHRISTOPHER W. WHITMORE

US ARMY CORPS OF ENGINEERS
AFGHANISTAN ENGINEER DISTRICT

Mark	Description	Date	Appr.

Rev: 0
Date: 8/16/10
Design file no.
Drawing code:
File name: ANAFRUS-401BS
Plot date: 8/24/2010
Plot scale: x:x

Designed by: KMP
Dwn by: RCG
Ckd by: CWW
Reviewed by: LHM
Submitted by: BAKER

U.S. ARMY CORPS OF ENGINEERS
AFGHANISTAN ENGINEER DISTRICT
APO AE 96338

Michael Baker Jr., Inc
A unit of Michael Baker Corporation
Airside Business Park
100 Airside Drive
Moon Township, PA 15108
www.mbakercorp.com

AFGHAN NATIONAL ARMY
STANDARD DESIGN

FAMILY RESPONSE UNIT OFFICES (STAND ALONE)

BUILDING SECTIONS

Sheet reference number:
S–401

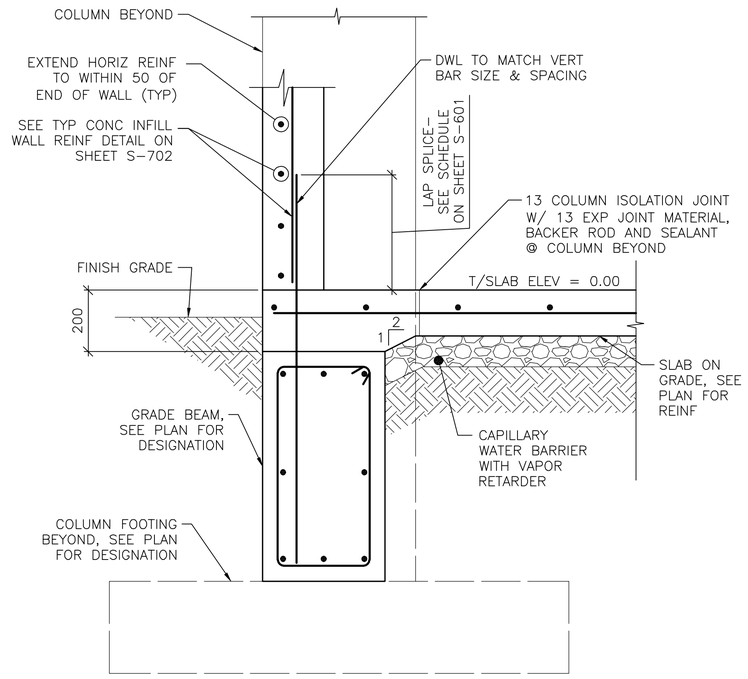

1 S-101 **SECTION**
SCALE: 1:10

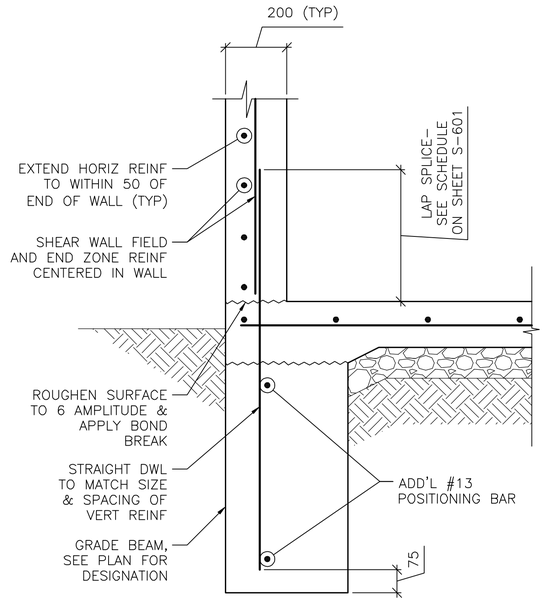

NOTE:
1. SECTION DEPICTS SHEAR WALL TERMINATION ONLY. GRADE BEAM REINFORCING NOT SHOWN FOR CLARITY.
2. SEE SHEET S-601 AND SHEET S-702 FOR SCHEDULED FIELD AND END ZONE REINF.

2 S-101 **SECTION**
SCALE: 1:10

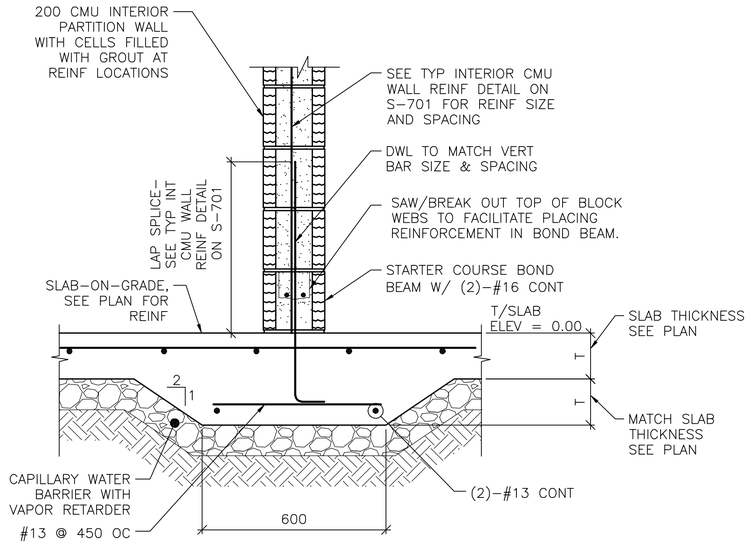

3 S-101 **SECTION**
SCALE: 1:10

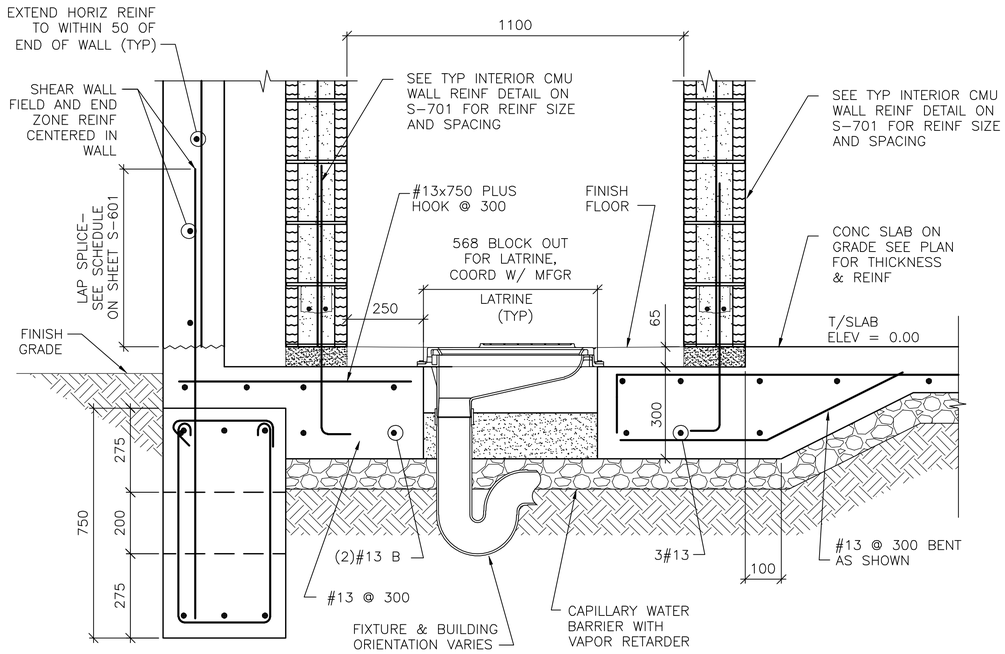

4 S-101 **SECTION**
SCALE: 1:10

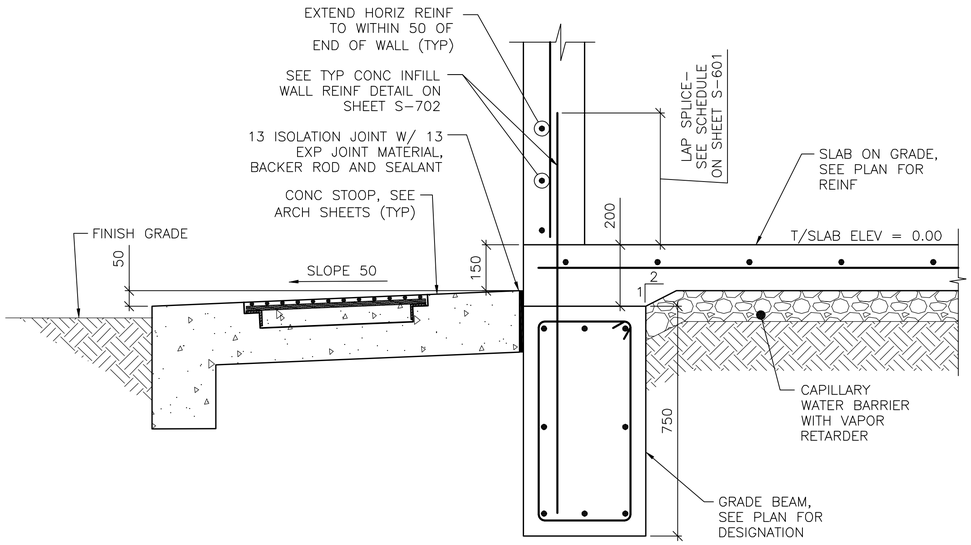

5 S-101 **SECTION**
SCALE: 1:10

0 200 400
SCALE: 1:10

UNLESS OTHERWISE NOTED, LINEAR DIMENSIONS SHOWN ON DRAWINGS ARE IN MILLIMETERS (mm)

APPROVED:

A/E DESIGNER OF RECORD

SEAL:

GEORGIA REGISTERED 8/23/10 No. 27141 PROFESSIONAL ENGINEER CHRISTOPHER W. WHITMORE

US ARMY CORPS OF ENGINEERS
AFGHANISTAN ENGINEER DISTRICT

Mark	Description	Date	Appr.

Date: 8/16/10
Design file no.
Drawing code:
Rev: 0
File name: ANAFRUS-601SC
Plot date: 8/24/2010
Plot scale: x:x

Designed by: KMP
Dwn by: RCG
Ckd by: CWW
Reviewed by: LHM
Submitted by: BAKER

U.S. ARMY CORPS OF ENGINEERS
AFGHANISTAN ENGINEER DISTRICT
APO AE 96338

Michael Baker Jr., Inc
A unit of Michael Baker Corporation
Airside Business Park
100 Airside Drive
Moon Township, PA 15108
www.mbakercorp.com

AFGHAN NATIONAL ARMY
STANDARD DESIGN
FAMILY RESPONSE UNIT OFFICES (STAND ALONE)

FOUNDATION SECTIONS

Sheet reference number:
S-501

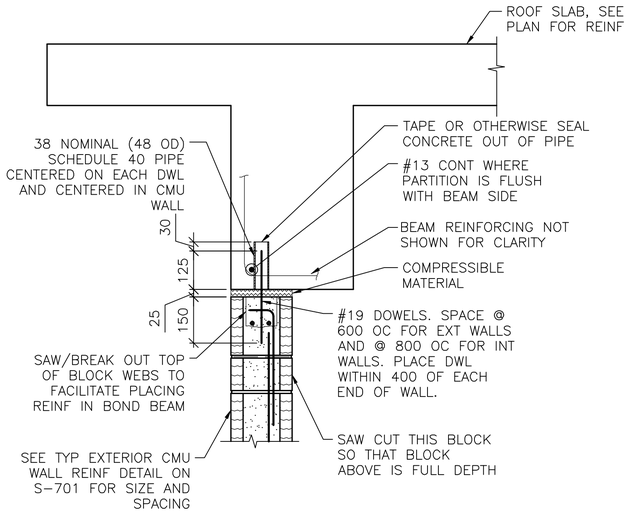

NOTES:
1. EXTEND DOWEL REINF TO 25 CLEAR FROM TOP OF CMU WALL.

1 S-101 **SECTION**
SCALE: 1:10

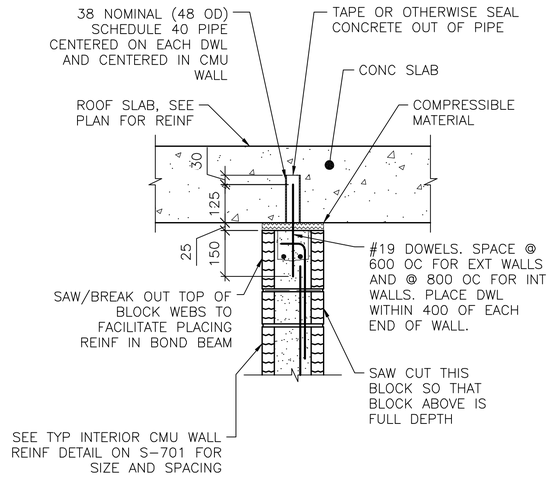

NOTES:
1. EXTEND DOWEL REINF TO 25 CLEAR FROM TOP OF CMU WALL.
2. SLAB REINF NOT SHOWN FOR CLARITY.

2 S-101 **SECTION**
SCALE: 1:10

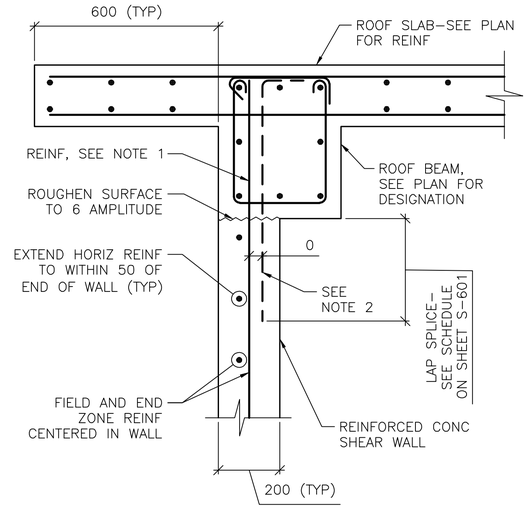

NOTES:
1. TERMINATE "FIELD" VERT REINF & END ZONE REINF @ 50 CLEAR FROM TOP OF ROOF SLAB.
2. WHERE END ZONE REINFORCING CANNOT BE DEVELOPED IN BEAM DEPTH, PROVIDE HOOKED DWLS SAME SIZE & SPACING. PROVIDE TENSION LAP BELOW ROOF BEAM.
3. SEE SHEET S-601 AND SHEET S-702 FOR SCHEDULED FIELD AND END ZONE REINF.

3 S-101 **SECTION**
SCALE: 1:10

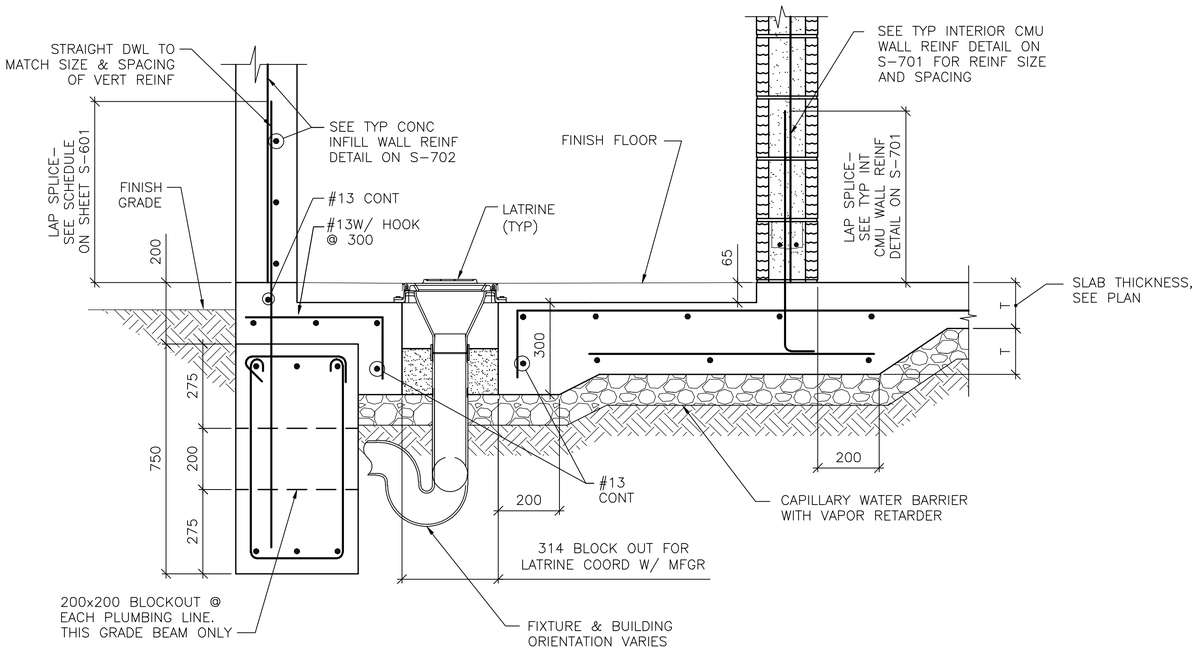

4 S-101 **SECTION**
SCALE: 1:10

0 200 400
SCALE: 1:10

UNLESS OTHERWISE NOTED, LINEAR DIMENSIONS SHOWN ON DRAWINGS ARE IN MILLIMETERS (mm)

APPROVED:

A/E DESIGNER OF RECORD

SEAL:

GEORGIA REGISTERED 8/23/10 No. 27141 PROFESSIONAL ENGINEER CHRISTOPHER W. WHITMORE

US ARMY CORPS OF ENGINEERS
AFGHANISTAN ENGINEER DISTRICT

Mark	Description	Date	Appr.

Date: 8/16/10
Design file no.
Drawing code:
Rev: 0
File name: ANAFRUS-6025C
Plot date: 8/24/2010
Plot scale: x:x

Designed by: KMP
Dwn by: RCG
Ckd by: CWW
Reviewed by: LHM
Submitted by: BAKER

U.S. ARMY CORPS OF ENGINEERS
AFGHANISTAN ENGINEER DISTRICT
APO AE 96338

Michael Baker Jr., Inc.
A unit of Michael Baker Corporation
Airside Business Park
100 Airside Drive
Moon Township, PA 15108
www.mbakercorp.com

AFGHAN NATIONAL ARMY
STANDARD DESIGN

FAMILY RESPONSE UNIT OFFICES (STAND ALONE)

FOUNDATION & FRAMING SECTIONS

Sheet reference number:
S-502

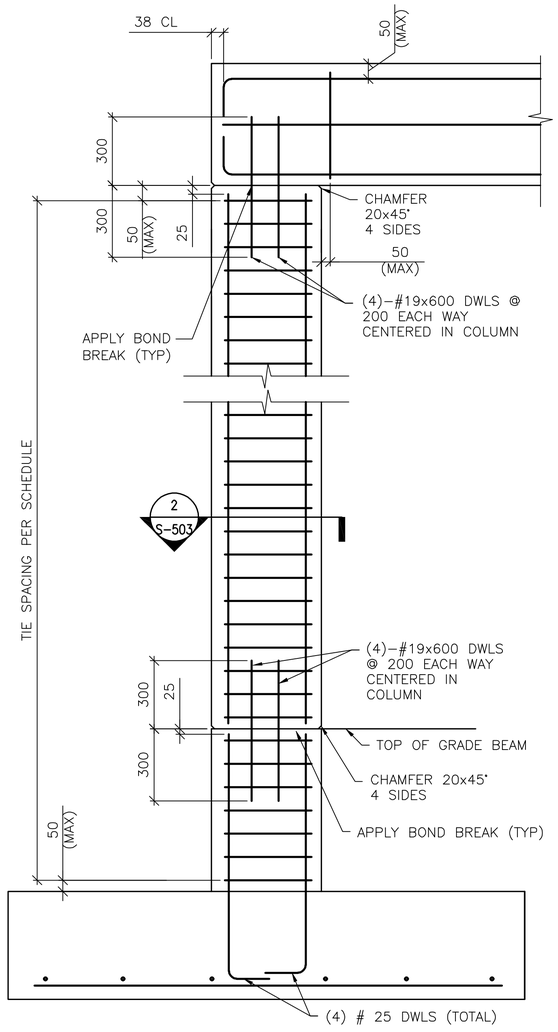

DETAIL NOTE:
1. ONLY COLUMN CORNER BARS ARE SHOWN

1 S-503 **1-STORY COLUMN REINF DETAILS**
SCALE: NTS
(WITH GRADE BEAM)

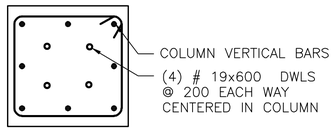

2 S-503 **SECTION**
SCALE: NTS

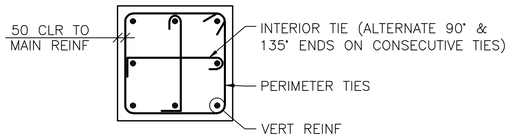

A S-503 **8 BAR COLUMN**
SCALE: NTS

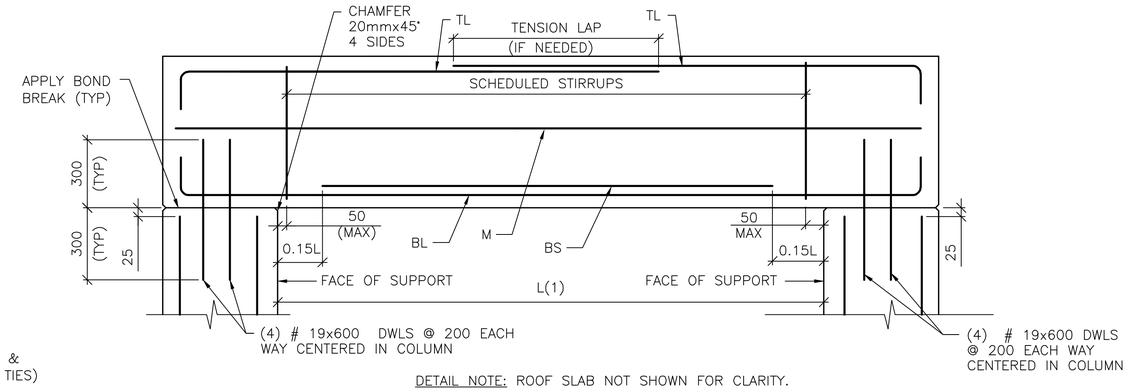

DETAIL NOTE: ROOF SLAB NOT SHOWN FOR CLARITY.

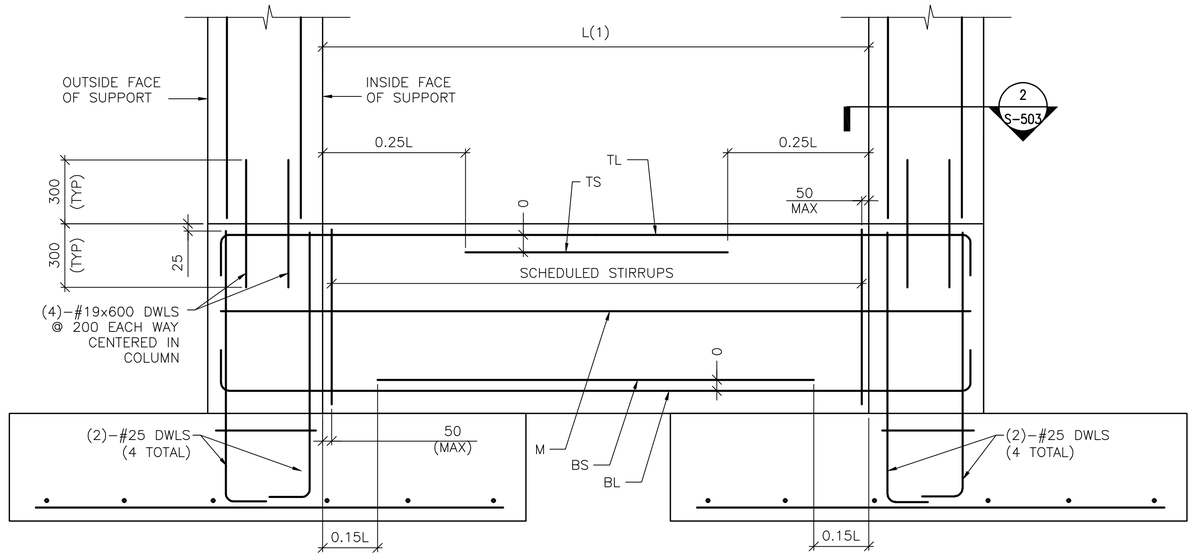

DETAIL NOTE:
1. WORK THIS DETAIL WITH BEAM SCHEDULE ON SHEET S-601.
2. L=GREATEST OF ADJACENT SPANS L(1) OR L(2)
3. ONLY COLUMN CORNER BARS ARE SHOWN.

3 S-503 **SINGLE SPAN FRAME REINFORCING DETAIL**
SCALE: NTS

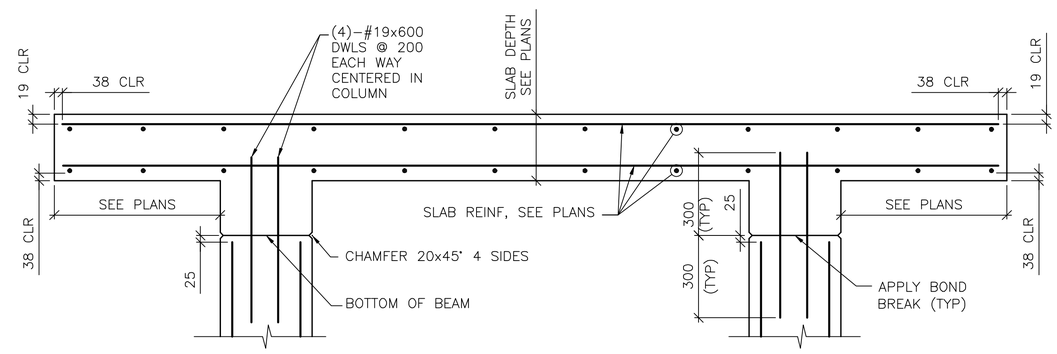

4 S-503 **SINGLE SPAN FRAMED SLAB REINFORCING DETAIL**
SCALE: NTS

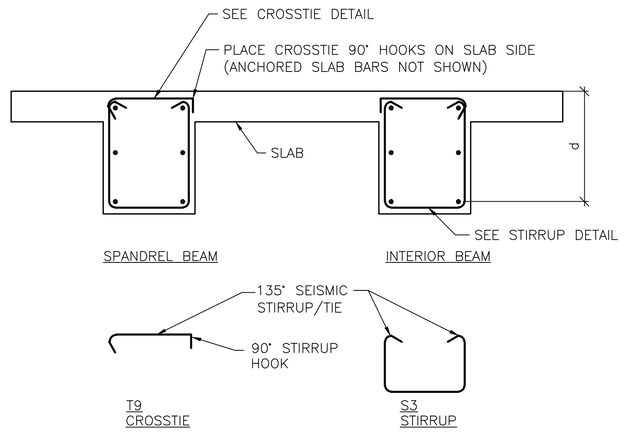

B S-503 **BEAM REINFORCEMENT DETAILS**
SCALE: NTS

UNLESS OTHERWISE NOTED, LINEAR DIMENSIONS SHOWN ON DRAWINGS ARE IN MILLIMETERS (mm)

APPROVED:

A/E DESIGNER OF RECORD

SEAL:

GEORGIA REGISTERED 8/23/10 No. 27141 PROFESSIONAL ENGINEER CHRISTOPHER W. WHITMORE

US ARMY CORPS OF ENGINEERS
AFGHANISTAN ENGINEER DISTRICT

Mark	Description	Date	Appr.

Rev: 0
Date: 8/16/10
Design file no.
Drawing code:
File name: ANAFRUS503T
Plot date: 8/24/2010
Plot scale: x:x

Designed by: KMP
Drwn by: RCG
Ckd by: CWW
Reviewed by: LHM
Submitted by: BAKER

U.S. ARMY CORPS OF ENGINEERS
AFGHANISTAN ENGINEER DISTRICT
APO AE 96338

Michael Baker Jr., Inc
A unit of Michael Baker Corporation
Airside Business Park
100 Airside Drive
Moon Township, PA 15108
www.mbakercorp.com

AFGHAN NATIONAL ARMY
STANDARD DESIGN
FAMILY RESPONSE UNIT OFFICES (STAND ALONE)
BEAM & COLUMN DETAILS

Sheet reference number:
S-503

CONCRETE REINFORCEMENT TENSION DEVELOPMENT/LAP SPLICE SCHEDULE

f'c = 28 MPa	LAP CLASS	UNCOATED BARS			
		TOP BARS		OTHER BARS	
BAR SIZES		CASE 1	CASE 2	CASE 1	CASE 2
#10 TO #19	A	50 BAR DIA	74 BAR DIA	38 BAR DIA	57 BAR DIA
	B	64 BAR DIA	96 BAR DIA	50 BAR DIA	74 BAR DIA
#22 TO #57	A	62 BAR DIA	93 BAR DIA	48 BAR DIA	71 BAR DIA
	B	80 BAR DIA	121 BAR DIA	62 BAR DIA	93 BAR DIA

NOTES:
1. TABULATED TENSION DEVELOPMENT LENGTH VALUES ARE TAKEN FROM CRSI DESIGN HANDBOOK 2008 10TH ED.
2. TENSION DEVELOPMENT & TENSION LAP SPLICE LENGTHS ARE EXPRESSED AS MULTIPLES OF BAR DIAMETERS.
3. TABULATED VALUES ARE BASED ON MINIMUM YIELD STRENGTH OF REINFORCEMENT, fy, OF 420MPa.
4. CONCRETE IS NORMAL WEIGHT (2400Kg/m^3) AND 28 DAY COMPRESSIVE STRENGTH = 28MPa.
5. TABULATED VALUES FOR BEAMS & COLUMNS ARE BASED ON TRANSVERSE REINFORCEMENT AND CONCRETE COVER MEETING MINIMUM CODE REQUIREMENTS.
6. CASES 1 & 2, WHICH DEPEND ON THE TYPE OF STRUCTURAL MEMBER, CONCRETE COVER, AND CENTER-TO-CENTER SPACING OF THE BARS ARE DEFINED IN THE TABLE BELOW.
7. LAP SPLICE LENGTHS (MINIMUM 300mm) ARE MULTIPLES OF TENSION DEVELOPMENT LENGTHS: CLASS A = 1.0(TENSION DEVELOPMENT LENGTH) & CLASS B = 1.3(TENSION DEVELOPMENT LENGTH)
8. TOP BARS ARE HORIZONTAL REINFORCEMENT WITH MORE THAN 300mm OF CONCRETE CAST BELOW THE BARS.
9. IT SHALL BE PERMISSIBLE TO CALCULATE WALL AND SLAB REINFORCEMENT TENSION DEVELOPMENT/SPLICE LENGTHS IN ACCORDANCE WITH ACI 12.2.3 OR TABLE 5.3(b) OF CRSI 2008 IN LIEU OF VALUES TABULATED ABOVE.

BEAMS, COLUMNS	CASE 1	CONCRETE COVER AT LEAST 1 BAR DIA AND CENTER-TO-CENTER SPACING AT LEAST 2 BAR DIA
	CASE 2	CONCRETE COVER LESS THAN 1 BAR DIA OR CENTER-TO-CENTER SPACING LESS THAN 2 BAR DIA
ALL OTHERS	CASE 1	CONCRETE COVER AT LEAST 1 BAR DIA AND CENTER-TO-CENTER SPACING AT LEAST 3 BAR DIA
	CASE 2	CONCRETE COVER LESS THAN 1 BAR DIA OR CENTER-TO-CENTER SPACING LESS THAN 3 BAR DIA

CONCRETE COVER SCHEDULE

MINIMUM CONCRETE COVER PROTECTION FOR REINFORCEMENT BARS SHALL BE AS LISTED BELOW: (SEE ACI 318M-05, SECTION 7.7 FOR CONDITIONS NOT NOTED). DIMENSIONS FOR BAR PLACEMENT GIVEN IN SECTIONS AND DETAILS SHALL SUPERSEDE MINIMUM COVER REQUIREMENTS GIVEN HERE. DIMENSIONS ARE IN mm. PROVIDE STANDARD BAR CHAIRS AND SUPPORT BARS @1200mm MAXIMUM AS REQUIRED TO MAINTAIN CONCRETE PROTECTION SPECIFIED.

FOOTINGS (EARTH FORMED):		70
COLUMNS / PIERS (TO TIES)		40
GRADE BEAMS OR SLAB TURNED DOWN EDGES:		
TOP		40
BOTTOM (EARTH FORMED)		70
SIDES (EARTH FORMED)		70
SIDES (BOARD FORMED)	#16 BAR & SMALLER	40
	#19 THRU #36 BAR	50
ELEVATED BEAMS & SLABS:		
BEAM TIES & STIRRUPS (NOT EXPOSED TO WEATHER)		40
BEAM TIES & STIRRUPS (EXPOSED TO WEATHER)		50
FLOOR SLABS (NOT EXPOSED TO WEATHER)		20
FLOOR SLABS (EXPOSED TO WEATHER)		
#19 & LARGER		50
#13 & SMALLER		40
ROOF SLAB BARS		25
SLABS ON GRADE		
NOT EXPOSED TO WEATHER (FROM TOP)		20
EXPOSED TO WEATHER (FROM TOP)		40
UTILITY TUNNEL WALLS, RETAINING WALLS AND SHEAR WALLS. (NO SURFACES SHALL BE EARTH FORMED)		
EARTH SIDE AND FRONT SIDE (EXPOSED TO WEATHER)		
#16 BAR AND SMALLER		40
#19 THRU #36 BAR		50

COLUMN FOOTING SCHEDULE

MARK	FOOTING SIZE (mm)			FOOTING REINFORCING	REMARKS
	LENGTH	WIDTH	THICKNESS		
F1	2500	2500	300	(10)-#16 EW BOTT	-----

COLUMN SCHEDULE

COLUMN MARK / DESCRIPTION	TYP UON	---	---
TYPE	8-BAR	---	---
DIMENSION	600mm SQ.	---	---
VERTICAL REINFORCEMENT	(8)-#25	---	---
TIES	#13 @ d/2	---	---
TOP OF ROOF ELEVATION	3600mm	---	---
TOP OF GRADE BEAM ELEVATION	-200mm	---	---
TOP OF FOOTING ELEVATION	-950mm	---	---

NOTES:
1. WORK THIS SCHEDULE WITH COLUMN DETAILS ON SHEET S-504.
2. SEE FOOTING SCHEDULE ON THIS SHEET FOR FOOTING INFORMATION.
3. COLUMN TIES: INTERIOR TIES TO MATCH SIZE & SPACING OF PERIMETER TIES.
4. HOOKS SHOWN ON SECTIONS & DETAILS SHALL BE 90° STD UON.

CONCRETE SHEAR WALL SCHEDULE

MARK	TYPE	WALL LENGTH (L) (mm)	WALL REINFORCEMENT		REMARKS
			END ZONE	FIELD	
SW1	B	4500	(4)-#16 @ 150mm OC	#13 @ 300mm OC	-----
SW2	B	2600	(7)-#16 @ 150mm OC	#13 @ 300mm OC	-----
SW3	A	1800	(6)-#16 @ 150mm OC	#13 @ 300mm OC	-----

NOTES:
1. WORK THIS SCHEDULE WITH SHEAR WALL DETAILS ON SHEETS S-702
2. SEE PLAN FOR LOCATION OF SHEAR WALL(S).
3. VERTICAL "FIELD" BARS MAY BE OMITTED IN LOCATION OF "END ZONE" REINFORCEMENT.
4. WALL FIELD REINFORCEMENT LISTED APPLIES TO VERTICAL & HORIZONTAL BARS.
5. WALL FIELD REINFORCEMENT SHOULD BE CENTERED IN WALL.

REINFORCED CONCRETE INFILL WALL SCHEDULE

HORIZONTAL REINF	VERTICAL REINF	REMARKS
#13 @ 300	#13 @ 300	SEE DETAIL ON S-702 CENTER VERTICAL REINF

BEAM SCHEDULE

MARK	BEAM SIZE (mm)		BEAM REINFORCING						STIRRUPS			REMARKS
	DEPTH	WIDTH	BL	BS	TL	TS	TC	M	SIZE	TYPE	SPACING	-----
GRADE BEAMS												
GB1	750	400	(2)-#25	(2)-#25	(2)-#25	---	---	---	#13	S3 + T9	d/2	-----
ROOF BEAMS												
RB1	600	400	(2)-#25	---	(2)-#25	---	---	---	#13	S3 + T9	d/2	

NOTES:
1. WORK THIS SCHEDULE WITH BEAM REINFORCING DETAILS ON SHEETS S-503 AND S-504.
2. HOOKS SHOWN ON SECTIONS AND DETAILS SHALL BE 90° STD UON.
3. USE ONLY (1) TS AT BEAM COLUMN INTERSECTION WHERE REQ'D.

CMU OR CAST IN PLACE CONC LINTEL SCHEDULE (TYP)

OPENING TYPE OR SIZE, BEAM LOCATION OR TYPE	MAX SPAN (mm)	LINTEL DEPTH (mm)	REINFORCING BOTTOM
WALL OPENING	4000	600	(2)-#16 T&B
WALL OPENING	1900	400	(2)-#16 T&B
WALL OPENING	1000	400	(2)-#13 B

1. STRUCTURAL SHEETS DO NOT INDICATE ALL OPENINGS IN MASONRY WALLS. VERIFY NUMBER, SIZE AND LOCATION OF ALL OPENINGS IN MASONRY WALLS FROM ARCHITECTURAL SHEETS AND APPROVED PLUMBING, MECHANICAL, AND ELECTRICAL SHOP DRAWINGS.
2. PROVIDE 200mm BEARING EA END.
3. FOR HEAD DETAILS REFER TO ARCHITECTURAL SHEETS.
4. REINFORCING SHALL BE ASTM A615M, GRADE 420. GROUT FOR CMU LINTELS SHALL HAVE A MINIMUM COMPRESSIVE STRENGTH OF 14MPa AT 28 DAYS.
5. CONTRACTOR SHALL SUBMIT FOR APPROVAL SHOP DRAWINGS AND SCHEDULES SHOWING SIZE, SPAN, REINFORCEMENT, DETAILS, LOCATIONS, ETC.

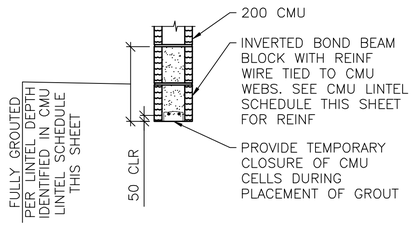

A / S-601 **LINTEL DETAILS**
SCALE: NTS

STANDARD HOOKS IN TENSION PER (ACI 318M-05)

HOOK DEVELOPMENT LENGTH (mm)

BAR SIZE	f'c 28 MPa
#10	180
#13	250
#16	300
#19	380
#22	430
#25	480
#29	560
#32	610
#36	690

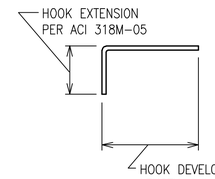

NOTES:
1. CONCRETE IS NORMAL WEIGHT CONCRETE.
2. BAR YIELD STRENGTH, fy = 420 MPa
3. SIDE COVER REQUIREMENTS OF ACI SECT. 12.5.3 ARE ASSUMED TO NOT BE MET.
4. TIE OR STIRRUP REQUIREMENTS OF ACI SECT. 12.5.3 ARE ASSUMED TO NOT BE MET.
5. REDUCTION FOR EXCESS REINFORCEMENT IS NOT TAKEN.
6. HOOK DEVELOPMENT LENGTH IS VALID FOR 180° HOOKS ALSO.

UNLESS OTHERWISE NOTED, LINEAR DIMENSIONS SHOWN ARE IN MILLIMETERS (mm)

APPROVED:

A/E DESIGNER OF RECORD

SEAL:

GEORGIA REGISTERED 9/22/10 NO. 27141 PROFESSIONAL ENGINEER CHRISTOPHER W. WHITMORE

US ARMY CORPS OF ENGINEERS
AFGHANISTAN ENGINEER DISTRICT

Mark	Description	Date	Appr.

Date: 8/16/10
Design file no.
Drawing code:
Rev: 0
Designed by: KMP
Dwn by: RCG
Ckd by: CWW
Reviewed by: LHM
Submitted by:
File name: ANAFRUS501SCH
Plot date: 8/24/2010
Plot scale: X:X

U.S. ARMY CORPS OF ENGINEERS
AFGHANISTAN ENGINEER DISTRICT
APO AE 96338

Michael Baker Jr., Inc
A unit of Michael Baker Corporation
Airside Business Park
100 Airside Drive
Moon Township, PA 15108
www.mbakercorp.com

BAKER

AFGHAN NATIONAL ARMY
STANDARD DESIGN

FAMILY RESPONSE UNIT OFFICES (STAND ALONE)

SCHEDULES

Sheet reference number:
S-601

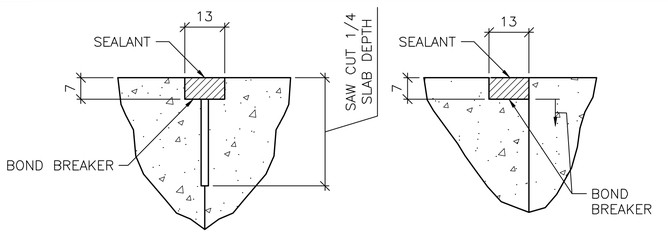

CONTROL JOINT DETAIL | CONSTRUCTION JOINT DETAIL

1 S-701 TYPICAL CONCRETE SLAB JOINT FINISH DETAILS

SCALE: NTS

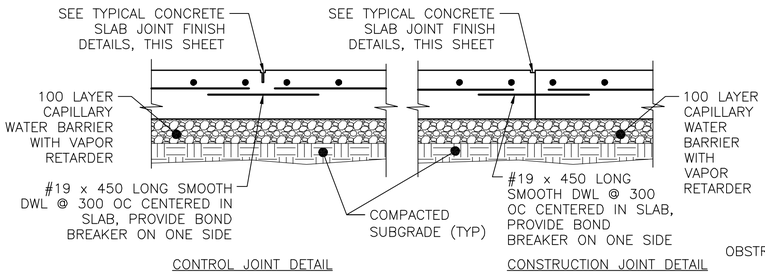

CONTROL JOINT DETAIL | CONSTRUCTION JOINT DETAIL

2 S-701 TYPICAL SLAB ON GRADE JOINT DETAIL

SCALE: NTS

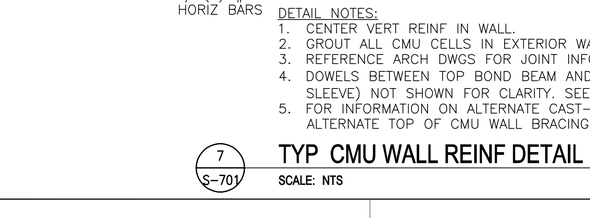

3 S-701 INTERIOR EQUIPMENT PAD DETAIL

SCALE: NTS

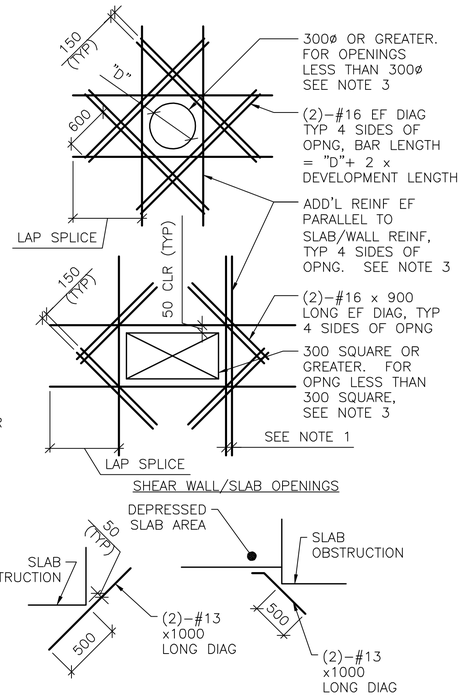

SHEAR WALL/SLAB OPENINGS

RE-ENTRANT CORNERS

DETAIL NOTES:
1. WHERE MORE THAN ONE ADDITIONAL BAR IS REQUIRED PARALLEL TO THE EXISTING SLAB/WALL REINFORCING THE ADDITIONAL REINFORCING BARS SHALL BE SPACED AT 100 ON CENTER.
2. ADDITIONAL REINFORCING PARALLEL TO THE SLAB/WALL REINFORCING SHALL BE #16 BARS THAT PROVIDE A STEEL AREA ON EACH SIDE OF THE OPENING EQUAL TO 1/2 THE AREA OF THE REINFORCING CUT BY THE OPENING.
3. FOR OPENINGS WITH SIDES OR DIAMETERS LESS THAN 300 SPREAD THE SLAB/WALL REINFORCING TO CLEAR THE OPENING.

4 S-701 ADD'L CONCRETE REINFORCEMENT DETAILS

SCALE: NTS

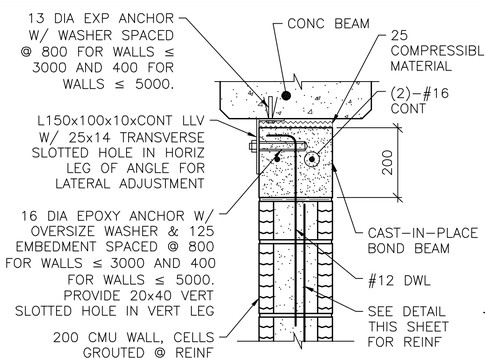

NOTE:
1. AT ANCHOR BOLTS, ADD AN ADDITIONAL 25 COMPRESSIBLE MATERIAL BELOW EXP ANCHOR HEAD.

INTERIOR BEAM

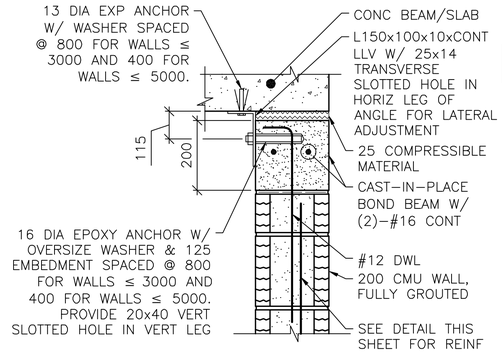

EXTERIOR WALL OR SLAB

NOTES:
1. THIS DETAIL IS AN ALTERNATE TOP OF WALL ANCHORAGE DETAIL TO BE USED AT THE CONTRACTOR'S OPTION IN LIEU OF DETAILS SHOWN ON S-400 & S-500 DRAWINGS.
2. CAST-IN-PLACE BOND BEAM SHOWN AT TOP OF WALL IS ALSO APPLICABLE FOR INTERMEDIATE AND STARTER COURSE BOND BEAMS WITHIN WALL.

5 S-701 ALTERNATE TOP OF CMU WALL BRACING DETAILS

SCALE: NTS

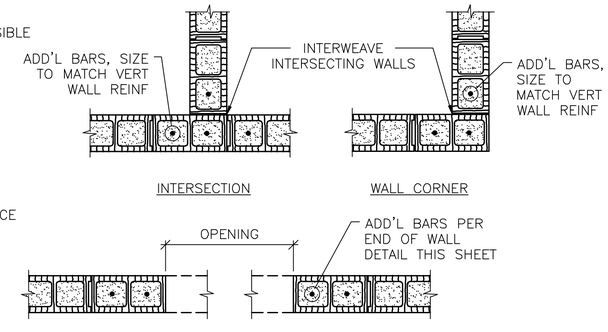

INTERSECTION | WALL CORNER

MASONRY OPENING W/ LINTEL

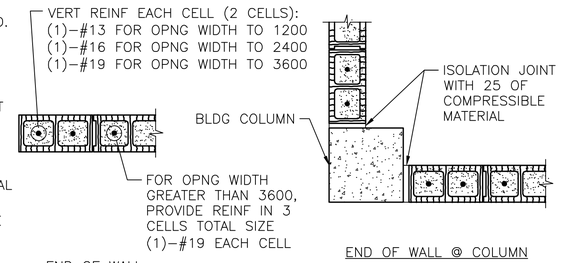

END OF WALL | END OF WALL @ COLUMN

NOTES:
1. OPENING WIDTH SHALL NOT EXCEED 3600 FOR THIS TYPE OF JAMB.
2. ALL CELLS FULLY GROUTED AT EXTERIOR WALLS. AT INTERIOR WALLS, ONLY GROUT CELLS CONTAINING REINF.

6 S-701 TYP CMU DETAILS

SCALE: NTS

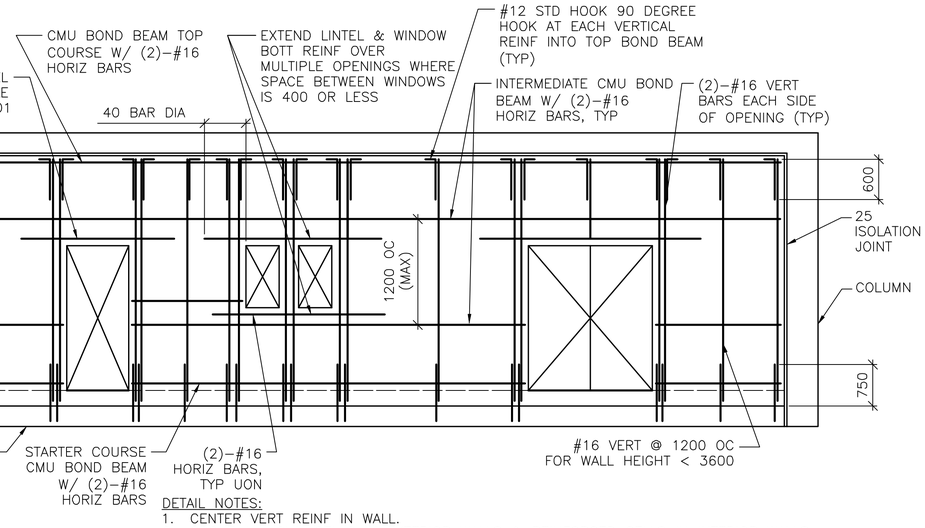

DETAIL NOTES:
1. CENTER VERT REINF IN WALL.
2. GROUT ALL CMU CELLS IN EXTERIOR WALLS & REINFORCED CELLS IN INTERIOR WALLS.
3. REFERENCE ARCH DWGS FOR JOINT INFORMATION
4. DOWELS BETWEEN TOP BOND BEAM AND BEAM/SLAB ABOVE (INCLUDING EMBEDDED PIPE SLEEVE) NOT SHOWN FOR CLARITY. SEE SPECIFIC S-500 SERIES DWGS FOR INFO.
5. FOR INFORMATION ON ALTERNATE CAST-IN-PLACE WALL BOND BEAMS, REFERENCE ALTERNATE TOP OF CMU WALL BRACING DETAILS THIS SHEET.

7 S-701 TYP CMU WALL REINF DETAIL

SCALE: NTS

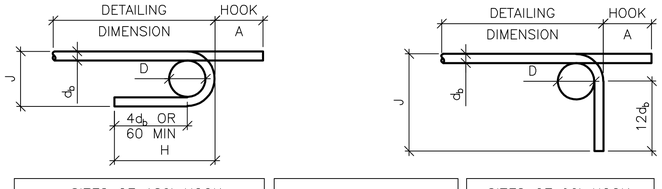

SIZES OF 180° HOOK			
BAR SIZE	A	J	APPROX H
#10	130	80	100
#13	150	100	110
#16	180	130	130
#19	200	150	150
#22	250	180	180
#25	280	200	200
#29	380	290	260
#32	430	320	290
#36	480	360	320

$D = 6d_b$ FOR #10-#25
$D = 6d_b$ FOR #29-#36
d_b = BAR DIA

SIZES OF 90° HOOK		
BAR SIZE	A	J
#10	140	150
#13	190	220
#16	230	270
#19	270	320
#22	320	370
#25	370	430
#29	420	480
#32	470	580
#36	520	610

8 S-701 TYP REINFORCEMENT BAR BENDING DETAILS

SCALE: NTS

UNLESS OTHERWISE NOTED, LINEAR DIMENSIONS SHOWN ARE IN MILLIMETERS (mm)

APPROVED:

A/E DESIGNER OF RECORD

SEAL:

GEORGIA REGISTERED 9/23/10 NO. 27141 PROFESSIONAL ENGINEER CHRISTOPHER W. WHITMORE

US ARMY CORPS OF ENGINEERS
AFGHANISTAN ENGINEER DISTRICT

Mark	Description	Date	Appr.

Rev. 0
Date: 8/16/10
Designed by: KMP
Dwn by: RCG
Ckd by: CWW
Reviewed by: LHM
Submitted by: BAKER
Design file no.
Drawing code:
File name: ANAFRUS-701.DGT
Plot date: 8/24/2010
Plot scale: X:X

U.S. ARMY CORPS OF ENGINEERS
AFGHANISTAN ENGINEER DISTRICT
APO AE 96338

Michael Baker Jr., Inc
A unit of Michael Baker Corporation
Airside Business Park
100 Airside Drive
Moon Township, PA 15108
www.mbakercorp.com

AFGHAN NATIONAL ARMY
STANDARD DESIGN

FAMILY RESPONSE UNIT OFFICES (STAND ALONE)

TYPICAL DETAILS

Sheet reference number:
S-701

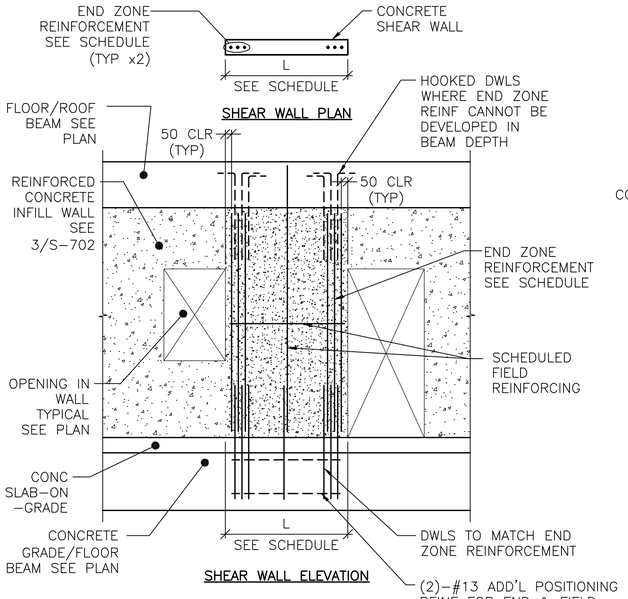

DETAIL NOTES:
1. FIELD REINFORCEMENT IN SHEAR WALL NOT SHOWN COMPLETELY FOR CLARITY.
2. FIELD REINFORCEMENT CENTERED IN WALL.
3. MINIMUM CONC CLEAR DISTANCE FOR END ZONE REINF = 76
4. SEE CONC SHEAR WALL SCHEDULE ON SHEET S-601

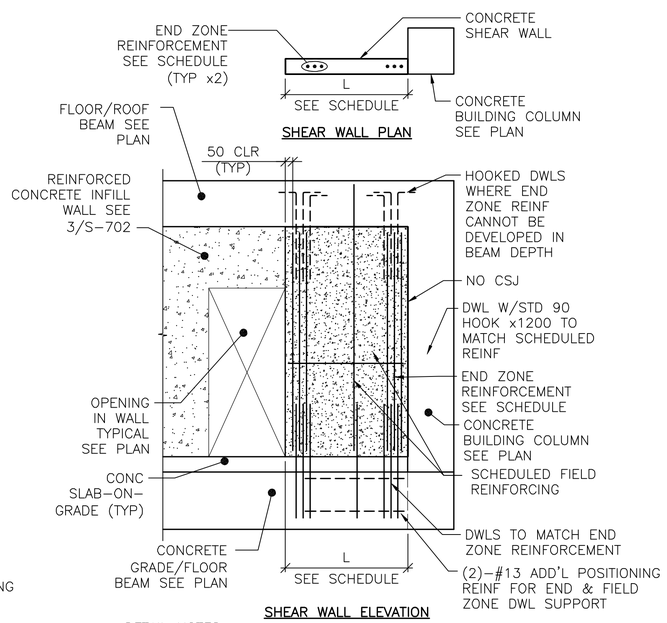

DETAIL NOTES:
1. FIELD REINFORCEMENT IN SHEAR WALL NOT SHOWN COMPLETELY FOR CLARITY.
2. FIELD REINFORCEMENT CENTERED IN WALL.
3. MINIMUM CONC CLEAR DISTANCE FOR END ZONE REINF = 76
4. SEE CONC SHEAR WALL SCHEDULE ON SHEET S-601

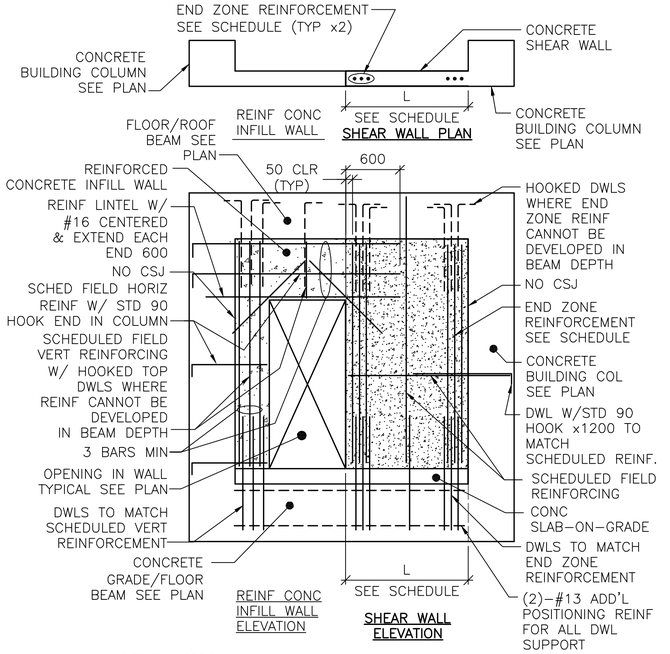

DETAIL NOTES:
1. FIELD REINFORCEMENT IN WALLS NOT SHOWN COMPLETELY FOR CLARITY.
2. FIELD REINFORCEMENT CENTERED IN WALL.
3. MINIMUM CONC CLEAR DISTANCE FOR END ZONE REINF = 76
4. SEE CONC SHEAR WALL SCHEDULE ON SHEET S-601
5. SEE REINF CONC INFILL WALL SCHEDULE ON SHEET S-601
6. SEE ARCH DWGS FOR JOINT INFORMATION

1 S-702 TYPE "A" SHEAR WALL DETAIL

SCALE: NTS

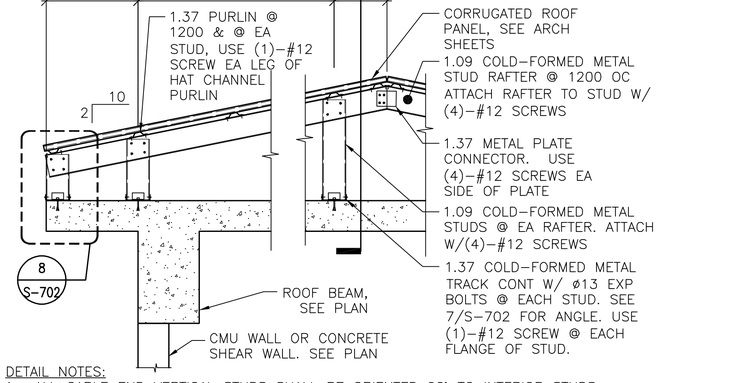

DETAIL NOTES:
1. ALL GABLE END VERTICAL STUDS SHALL BE ORIENTED 90° TO INTERIOR STUDS & SPACED @ 600 OC. GABLE END RAFTER SHALL BE 1.37 METAL TRACK SPANNING CONTINUOUSLY OVER GABLE END STUDS. INSET GIRTS AT GABLE END SHALL BE 1.09 COLD-FORMED METAL STUDS @ 1200 OC ATTACHED VIA 1.37 THICKNESS CLIP ANGLE W/ (2) #12 SCREWS EA LEG.
2. ALL INTERIOR, NON-GABLE END VERTICAL STUDS GREATER THAN 2400 IN LENGTH SHALL BE BACK-TO-BACK W/ #12 SCREWS @ 200 OC STAGGERED.

4 S-702 TYPICAL OVERBUILT ROOF FRAMING DETAIL

SCALE: NTS

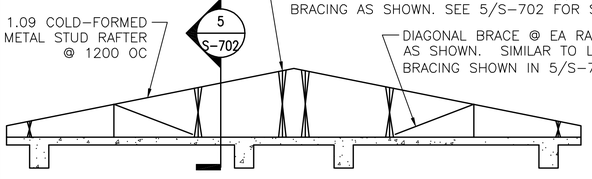

7 S-702 TYPICAL ROOF BRACE LAYOUT

SCALE: NTS

2 S-702 TYPE "B" SHEAR WALL DETAIL

SCALE: NTS

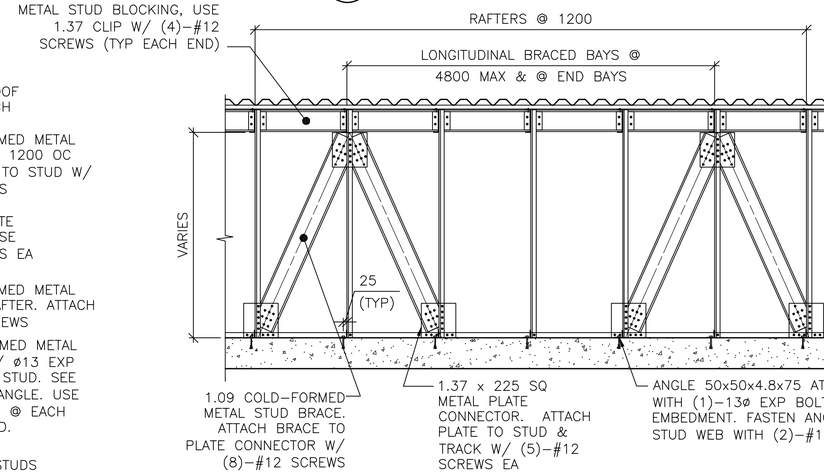

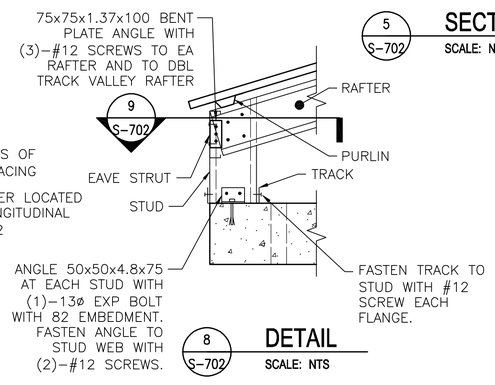

5 S-702 SECTION

SCALE: NTS

8 S-702 DETAIL

SCALE: NTS

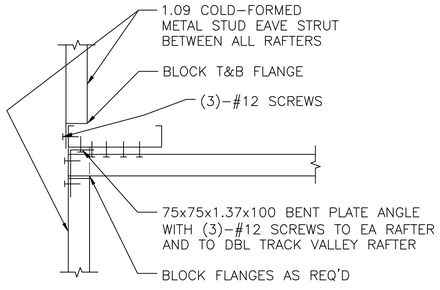

9 S-702 SECTION

SCALE: NTS

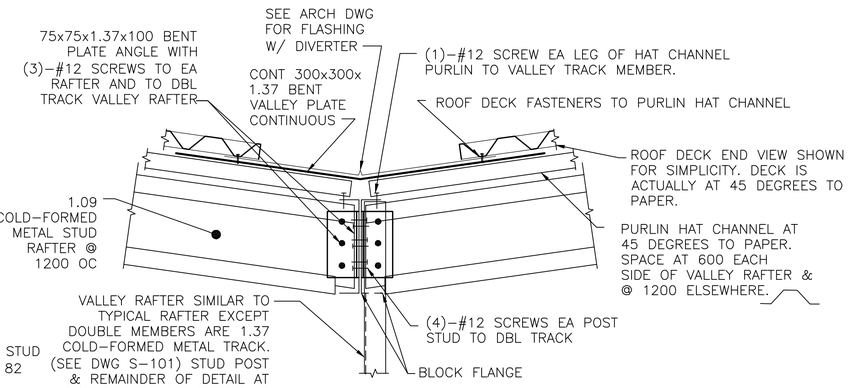

6 S-702 TYPICAL OVERBUILT ROOF SECTION THROUGH VALLEY

SCALE: NTS

3 S-702 SHEAR WALL / REINF CONC INFILL WALL DETAIL DETAIL

SCALE: NTS

UNLESS OTHERWISE NOTED, LINEAR DIMENSIONS SHOWN ARE IN MILLIMETERS (mm)

APPROVED:

A/E DESIGNER OF RECORD

SEAL:

GEORGIA REGISTERED 8/23/10 No. 27141 PROFESSIONAL ENGINEER CHRISTOPHER W. WHITMORE

US ARMY CORPS OF ENGINEERS
AFGHANISTAN ENGINEER DISTRICT

Mark	Description	Date	Appr.

Rev: 0
Date: 8/16/10
Design file no.
Drawing code:
File name: ANAFRUS-702TDT
Plot date: 8/24/2010
Plot scale: x:x

Designed by:	Drwn by:	Reviewed by:	Submitted by:
KMP	RCG	LHM	BAKER

Ckd by: CWW

U.S. ARMY CORPS OF ENGINEERS
AFGHANISTAN ENGINEER DISTRICT
APO AE 96338

Michael Baker Jr., Inc
A unit of Michael Baker Corporation
Airside Business Park
100 Airside Drive
Moon Township, PA 15108
www.mbakercorp.com

AFGHAN NATIONAL ARMY
STANDARD DESIGN
FAMILY RESPONSE UNIT OFFICES (STAND ALONE)

TYPICAL DETAILS

Sheet reference number:
S-702

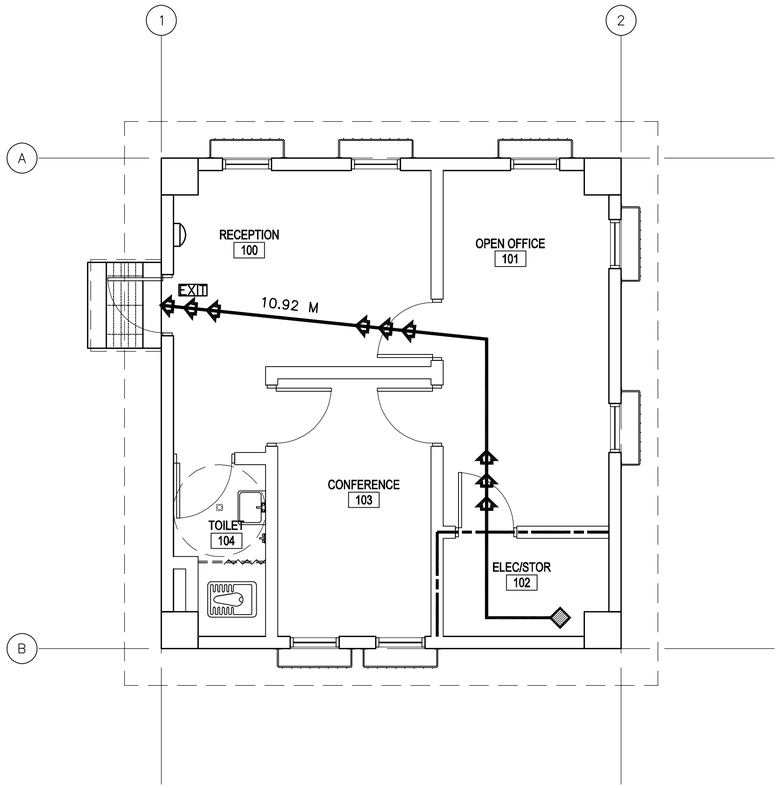

1 / A–001 **FLOOR PLAN LIFE SAFETY PLAN**

SCALE: 1:50

CODE ANALYSIS:

1. REFERENCES:
   2006 INTERNATIONAL BUILDING CODE (2006 IBC)
   2006 LIFE SAFETY CODE (2006 NFPA 101)

2. IBC OCCUPANCY CLASSIFICATION:
   GROUP B (BUSINESS NFPA 101 6.1.11 AND CHAPTER 38)

3. TYPE OF CONSTRUCTION (IBC): TYPE II–B (UNPROTECTED/NONSPRINKLERED)

4. IBC TABLE 503: ALLOWABLE HEIGHT AND BUILDING AREAS:
   GROUP B
   ALLOWABLE AREA: 2,137 SM
   ALLOWABLE HEIGHT: 3 STORIES (16 M)

   GROUP B
   PROPOSED AREA: 60 SM
   PROPOSED HEIGHT: 1 STORY (<16 M)

5. IBC TABLE 601 & 602: FIRE RESISTANCE RATING REQUIREMENTS FOR BUILDING ELEMENTS FOR TYPE II–B

BUILDING ELEMENT	RATING (HOUR)	REFERENCE
STRUCTURAL FRAME (COLUMNS, GIRDERS & TRUSSES)	0	TABLE 601
BEARING WALLS		
EXTERIOR	0	TABLE 601
INTERIOR	0	TABLE 601
NONBEARING WALLS & PARTITIONS		
INTERIOR	0	TABLE 601
FLOOR CONSTRUCTION	0	TABLE 601
ROOF CONSTRUCTION	0	TABLE 601
EXTERIOR WALL	0	TABLE 602

6. IBC TABLE 803.5 – INTERIOR WALL AND CEILING FINISH REQUIREMENTS FOR B OCCUPANCY/NONSPRINKLERED

GROUP	EXIT ENCLOSURES AND EXIT PASSAGEWAY	CORRIDORS	ROOMS AND ENCLOSED SPACES
B	A	B	C

7. NFPA 101 TABLE 7.3.1.2 – OCCUPANT LOAD
   BUSINESS = 9.3 SM/PERSON BUSINESS PROPOSED = 6 OCCUPANTS

8. NFPA 101 TABLE 7.3.3.1 – EGRESS CAPACITY
   BUSINESS = 5 MM PER OCCUPANT

   REQUIRED: 30 MM (6 OCCUPANTS x 5 MM PER OCCUPANT)
   PROPOSED EGRESS CAPACITY: 900 MM

9. NFPA 101 PARAGRAPH 38.2.6.2 – EXIT ACCESS TRAVEL DISTANCE (NONSPRINKLERED)
   REQUIRED: 60 METERS
   PROPOSED: 11 METERS

10. NFPA 101 PARAGRAPH 38.3.6.1(1) & (2) – CORRIDORS
    NO RATED CORRIDOR REQUIRED (NONSPRINKLERED):
    (1) ALL EXITS ARE AVAILABLE FROM AN OPEN FLOOR AREA
    (2) SPACE IS OCCUPIED BY A SINGLE TENANT

11. NFPA 101 PARAGRAPH 38.2.4.1 – NUMBER OF EXITS
    BUSINESS REQUIRED: 1 MINIMUM
    BUSINESS PROPOSED: 1 EXITS

LEGEND:

- DENOTES PATHS OF EXIT TRAVEL
- EXIT — DENOTES DOOR AS AN EMERGENCY EXIT; SEE E–101 FOR ILLUMINATED EXIT SIGNS
- DENOTES STARTING POINT FOR TRAVEL DISTANCE
- DENOTES FIRE EXTINGUISHER LOCATIONS
- (1) HOUR RATED WALL

LINEAR DIMENSIONS SHOWN ARE IN MILLIMETERS (MM), UNLESS OTHERWISE NOTED

0 1000 2000
SCALE: 1:50

APPROVED:

A/E DESIGNER OF RECORD

SEAL:

STATE OF SOUTH CAROLINA — KEVIN L. CHAPIN, N. Charleston, SC, 6374 — 12-23-10 — REGISTERED ARCHITECT

US ARMY CORPS OF ENGINEERS
AFGHANISTAN ENGINEER DISTRICT

Mark	Description	Date	Appr.

Date: 8/16/10
Design file no.
Drawing code:
Rev: 0
File name: ANAFRUA-A001.SP
Plot date: 8/24/2010
Plot scale: x:x

Designed by: KRC
Dwn by: KJG
Ckd by: NLJ
Reviewed by: LHM
Submitted by: BAKER

U.S. ARMY CORPS OF ENGINEERS
AFGHANISTAN ENGINEER DISTRICT
APO AE 96338

Michael Baker Jr., Inc.
A unit of Michael Baker Corporation
Airside Business Park
100 Airside Drive
Moon Township, PA 15108
www.mbakercorp.com

AFGHAN NATIONAL ARMY
STANDARD DESIGN

FAMILY RESPONSE UNIT OFFICES (STAND ALONE)

LIFE SAFETY PLAN

Sheet reference number:
A–001

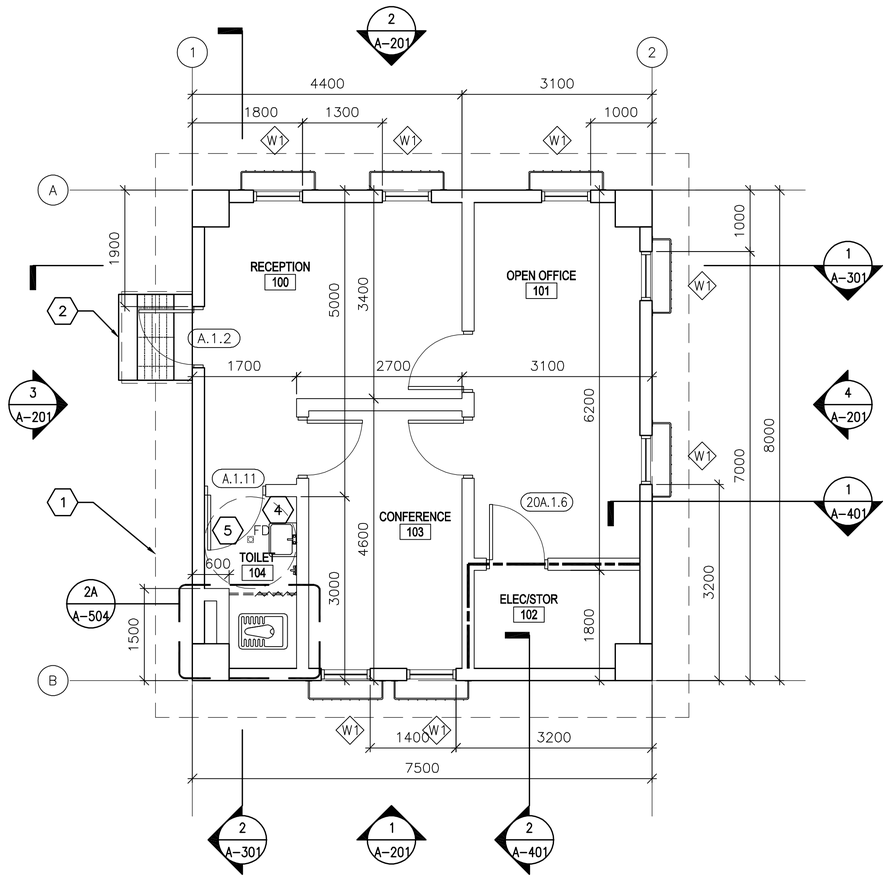

1 A-101 **FLOOR PLAN**

SCALE: 1:50

GENERAL NOTES:

A. DIMENSIONS ARE SHOWN TO OUTER EDGE OF EXTERIOR STRUCTURAL COLUMNS, STRUCTURAL COLUMN GRID, EDGE OF INTERIOR PARTITIONS, EDGE OF WINDOW ROUGH OPENINGS, AND TO HINGED SIDE OF DOOR FRAME OPENINGS.

B. HINGE SIDE OF OPENINGS FOR DOORS AND FRAMES SHALL BE LOCATED 200 MM FROM THE ADJACENT WALL OR COLUMN, UNLESS NOTED OTHERWISE.

C. INTERIOR PARTITIONS SHALL BE 200 MM CMU. SEE STRUCTURAL DRAWINGS FOR LOCATION OF CONCRETE SHEAR WALLS.

D. COSMETIC REPAIR OF MINOR DEFECTS: REPAIR OR FILL MORTAR JOINTS AND MINOR DEFECTS, INCLUDING BUT NOT LIMITED TO SPALLS, IN ACCORDANCE WITH MANUFACTURER'S RECOMMENDATIONS AND PRIOR TO COATING APPLICATION. SURFACES TO BE PAINTED SHALL BE CLEAN AND FREE OF FOREIGN MATTER BEFORE APPLICATION OF PAINT. CLEANING SHALL BE SCHEDULED SO THAT DUST AND OTHER CONTAMINANTS WILL NOT FALL ON NEWLY PAINTED SURFACES.

E. PLASTER AND MASONRY SURFACES SHALL BE ALLOWED TO CURE FOR AT LEAST 30 DAYS BEFORE PAINTING. CONCRETE SLABS–ON–GRADE SHALL BE ALLOWED TO CURE 90 DAYS BEFORE STAINING OR SEALING.

F. DO NOT USE PAINT MATERIALS CONTAINING LEAD CONTENT IN EXCESS OF 0.009 PERCENT OF THE WEIGHT OF THE TOTAL NONVOLATILE CONTENT OF THE PAINT OR THE WEIGHT OF THE DRIED PAINT FILM.

G. DO NOT USE ANY ASBESTOS CONTAINING MATERIALS (ACM) IN PROJECT. ACM IS DEFINED AS 1% OR MORE BY VOLUME.

H. DO NOT USE PAINT MATERIALS CONTAINING MERCURIAL FUNGICIDES.

I. FACTORY PRIMED METAL DOORS AND FRAMES SHALL RECEIVE TWO COATS OF PAINT.

J. FILL REMAINING SPACE AT PENETRATIONS IN FIRE–RATED FLOORS, PARTITIONS AND CEILINGS WITH APPROPRIATE FIRESTOPPING MATERIALS.

K. ALL CEILING FINISHES SHALL BE PAINTED PLASTER APPLIED TO STRUCTURE.

L. ALL WALL FINISHES SHALL BE PAINTED PLASTER APPLIED TO STRUCTURE, UNLESS NOTED OTHERWISE.

M. ALL FLOOR FINISHES SHALL BE EPOXY SEALED CONCRETE, UNLESS NOTED OTHERWISE

N. PROVIDE TILE FINISHES AS INDICATED IN DETAILS.

O. ALL DOOR, FRAME AND HARDWARE TYPES SHALL BE A.1.6 UNLESS NOTED OTHERWISE.

P. PROVIDE POLISHED STAINLESS STEEL MIRROR 600 X 800 ABOVE LAVATORY FAUCET.

KEY NOTES: (X)

1. LINE OF ROOF OVERHANG ABOVE.
2. CONCRETE STOOP WITH GRATE – SEE DETAIL 4/A–503.
3. CANOPY – SEE DETAIL 2/A–503.
4. WALL MOUNTED LAVATORY – SEE DETAIL 5/A–504.
5. TERRAZZO FLOOR TILE AND CERAMIC WALL TILE TO 2000 MM ABOVE FINISHED FLOOR.

LEGEND:

(XXX) DOOR FRAME AND HARDWARE TYPE, SEE SHEET A–601

<A> WINDOW TYPE, SEE SHEET A–601

<X> KEY NOTE

ABBREVIATIONS:

COMM	COMMUNICATIONS
ELEC	ELECTRICAL
MECH	MECHANICAL
JAN	JANITOR
CLOS	CLOSET
FD	FLOOR DRAIN

LINEAR DIMENSIONS SHOWN ARE IN MILLIMETERS (MM), UNLESS OTHERWISE NOTED

0 1000 2000
SCALE: 1:50

APPROVED:

A/E DESIGNER OF RECORD

SEAL:

STATE OF SOUTH CAROLINA · KEVIN D. CHAFIN · N. Charleston, SC · 6374 · 10.23.10 · REGISTERED ARCHITECT

US ARMY CORPS OF ENGINEERS
AFGHANISTAN ENGINEER DISTRICT

Mark	Description	Date	Appr.

Mark	Description	Date	Appr.

Rev: 0
Date: 8/16/10
Design file no.
Drawing code:
File name: ANAFRUA-1stFP
Plot date: 8/24/2010
Plot scale: x:x

Designed by: KRC
Drwn by: KJC
Ckd by: NLJ
Reviewed by: LHM
Submitted by: BAKER

U.S. ARMY CORPS OF ENGINEERS
AFGHANISTAN ENGINEER DISTRICT
APO AE 96338

Michael Baker Jr., Inc
A unit of Michael Baker Corporation
Airside Business Park
100 Airside Drive
Moon Township, PA 15108
www.mbakercorp.com

AFGHAN NATIONAL ARMY
STANDARD DESIGN

FAMILY RESPONSE UNIT OFFICES (STAND ALONE)

FLOOR PLAN

Sheet reference number:
A–101

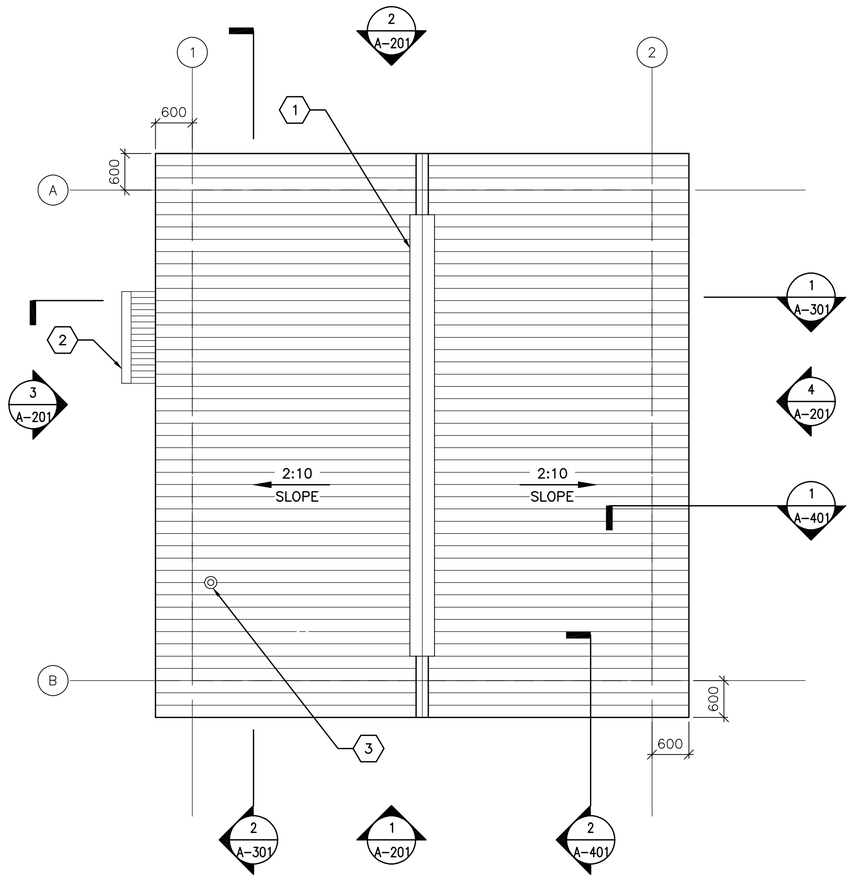

1 A-101 **ROOF PLAN**

SCALE: 1:50

GENERAL NOTES:

A. THE APPROXIMATE LOCATION OF ROOF DEVICES AND PENETRATIONS ARE SHOWN ON THE ROOF PLAN FOR INFORMATION ONLY. THE CONTRACTOR SHALL BE RESPONSIBLE FOR UNDERSTANDING THE ACTUAL LOCATION OF THESE AND ALL OTHER ITEMS PRIOR TO BEGINNING CONSTRUCTION. COORDINATE ALL ROOF PENETRATIONS WITH STRUCTURAL, MECHANICAL AND PLUMBING WORK.

B. PLUMBING VENT PENETRATIONS SHALL TERMINATE 300 MM MINIMUM ABOVE THE ROOF.

C. UNLESS OTHERWISE NOTED, NOTES, DETAILS OR FEATURES INDICATED FOR ONE CONDITION SHALL BE APPLICABLE FOR ALL ALIKE AND SIMILAR CONDITIONS.

D. STOCKPILING OF MATERIALS, EQUIPMENT AND ANY OTHER ITEMS ON THE ROOF IS PROHIBITED.

E. ROOFS SHALL BE CORRUGATED METAL ROOF PANELS ON COLD-FORMED METAL FRAMING ON CONCRETE SLAB.

KEY NOTES: (X)

1. CONTINUOUS METAL RIDGE VENT – SEE DETAIL 4/A-501.
2. CANOPY – SEE DETAIL 2/A-503.
3. PLUMBING VENT – SEE DETAIL 5/A-501.

0 1000 2000

SCALE: 1:50

LINEAR DIMENSIONS SHOWN ARE IN MILLIMETERS (MM), UNLESS OTHERWISE NOTED

APPROVED:

A/E DESIGNER OF RECORD

SEAL:

STATE OF SOUTH CAROLINA
KEVIN B. CHAFIN
N. Charleston, SC
6374
10-23-10
REGISTERED ARCHITECT

US ARMY CORPS OF ENGINEERS
AFGHANISTAN ENGINEER DISTRICT

Mark	Description	Date	Appr.

Mark	Description	Date	Appr.

Date: 8/16/10
Design file no.
Rev: 0
Drawing code:
File name: ANAFRUA-1028P
Plot date: 9/24/2010
Plot scale: x:X

Designed by: KRC
Drwn by: KJG
Ckd by: NLJ
Reviewed by: LHM
Submitted by: BAKER

U.S. ARMY CORPS OF ENGINEERS
AFGHANISTAN ENGINEER DISTRICT
APO AE 96338

Michael Baker Jr., Inc
A unit of Michael Baker Corporation
Airside Business Park
100 Airside Drive
Moon Township, PA 15108
www.mbakercorp.com

AFGHAN NATIONAL ARMY
STANDARD DESIGN

FAMILY RESPONSE UNIT OFFICES (STAND ALONE)

ROOF PLAN

Sheet reference number:
A-102

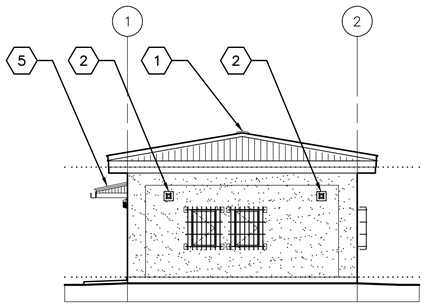

1 A-201 **ELEVATION**
SCALE: 1:100

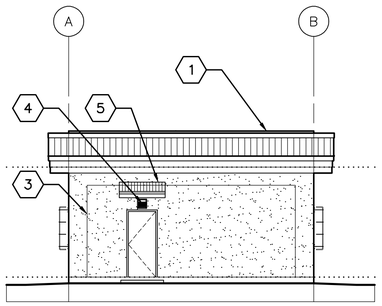

3 A-201 **ELEVATION**
SCALE: 1:100

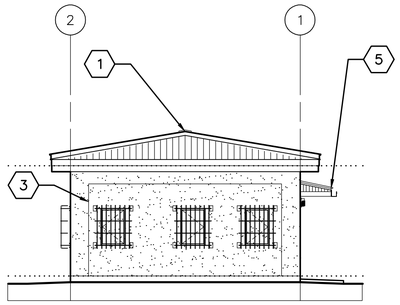

2 A-201 **ELEVATION**
SCALE: 1:100

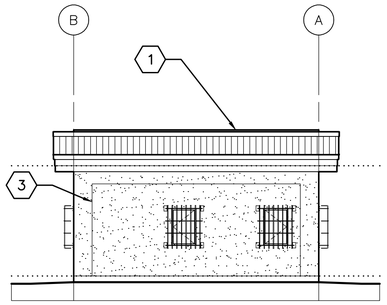

4 A-201 **ELEVATION**
SCALE: 1:100

GENERAL NOTES:

A. COORDINATE SIZE AND LOCATION OF OPENINGS FOR MECHANICAL ITEMS WITH MECHANICAL DRAWINGS.

B. PROVIDE STRUCTURAL LINTELS AS REQUIRED – SEE STRUCTURAL DRAWINGS

C. ALL EXTERIOR WALL FINISHES SHALL BE STUCCO OVER CMU AND CONCRETE SUBSTRATES. PROVIDE CONTROL JOINTS IN STUCCO WALL FINISH AS NOTED. SEE DETAIL 2A/A-501.

D. ROOF SHALL BE CORRUGATED METAL ROOF PANELS ON COLD-FORMED METAL FRAMING ON CONCRETE SLAB.

KEY NOTES: (X)

1. CONTINUOUS METAL RIDGE VENT – SEE DETAIL 4/A-501.
2. EXHAUST FAN, LOCATE TOP OF WALL PENETRATION 2800 MM ABOVE FINISHED FLOOR – SEE MECHANICAL DRAWINGS.
3. STUCCO CONTROL JOINT – SEE DETAIL 2A/A-501.
4. EXTERIOR LIGHT FIXTURE – SEE ELECTRICAL.
5. CANOPY – SEE DETAIL 2/A-503.

LINEAR DIMENSIONS SHOWN ARE IN MILLIMETERS (MM), UNLESS OTHERWISE NOTED

APPROVED:

A/E DESIGNER OF RECORD

SEAL:

0 2000 4000
SCALE: 1:100

US ARMY CORPS OF ENGINEERS
AFGHANISTAN ENGINEER DISTRICT

Mark	Description	Date	Appr.

Mark	Description	Date	Appr.

Date: 06/30/10
Design file no.
Rev: 0
Drawing code:
File name: ANAFRUA-201EL
Plot date: 9/24/2010
Plot scale: x:x

Designed by: KRC
Drwn by: KJG
Ckd by: NLJ
Reviewed by: LHM
Submitted by: BAKER

U.S. ARMY CORPS OF ENGINEERS
AFGHANISTAN ENGINEER DISTRICT
APO AE 96338

Michael Baker Jr., Inc
A unit of Michael Baker Corporation
Airside Business Park
100 Airside Drive
Moon Township, PA 15108
www.mbakercorp.com

AFGHAN NATIONAL ARMY
REGIONAL MILITARY TRAINING CENTER
STANDARD DESIGN

FAMILY RESPONSE UNIT OFFICES (STAND ALONE)

ELEVATIONS

Sheet reference number:
A-201

1
A-301

BUILDING SECTION

SCALE: 1:50

2
A-301

BUILDING SECTION

SCALE: 1:50

LINEAR DIMENSIONS SHOWN ARE IN MILLIMETERS (MM), UNLESS OTHERWISE NOTED

0 1000 2000
SCALE: 1:50

APPROVED:

A/E DESIGNER OF RECORD

SEAL:

STATE OF SOUTH CAROLINA
KEVIN R. CHAFIN
N. Charleston, SC
6374
REGISTERED ARCHITECT

US ARMY CORPS OF ENGINEERS
AFGHANISTAN ENGINEER DISTRICT

Mark	Description	Date	Appr.	Mark	Description	Date	Appr.

Designed by: KRC
Dwn by: KJG
Ckd by: NLJ
Reviewed by: LHM
Submitted by: BAKER
Date: 8/16/10
Rev: 0
Design file no.
Drawing code:
File name: ANAFRUA-301BS
Plot date: 8/24/2010
Plot scale:

U.S. ARMY CORPS OF ENGINEERS
AFGHANISTAN ENGINEER DISTRICT
APO AE 96338

Michael Baker Jr., Inc
A unit of Michael Baker Corporation
Airside Business Park
100 Airside Drive
Moon Township PA 15108
www.mbakercorp.com

AFGHAN NATIONAL ARMY
STANDARD DESIGN
FAMILY RESPONSE UNIT OFFICES (STAND ALONE)
BUILDING SECTIONS

Sheet reference number:
A–301

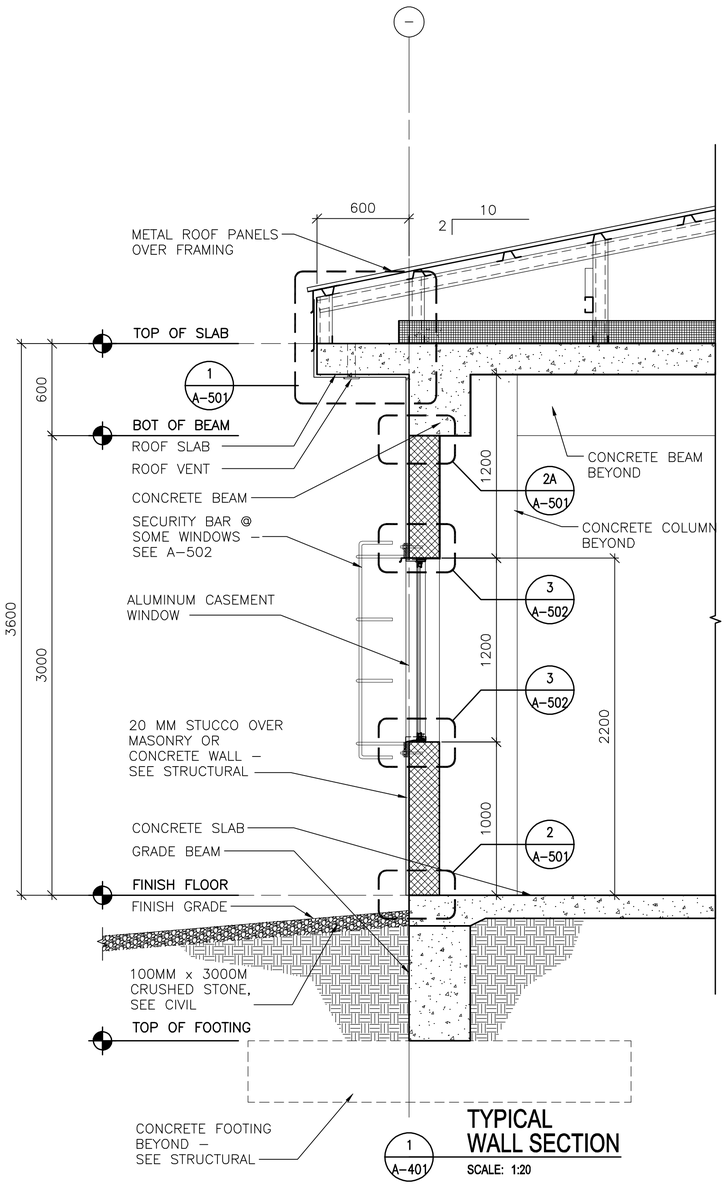

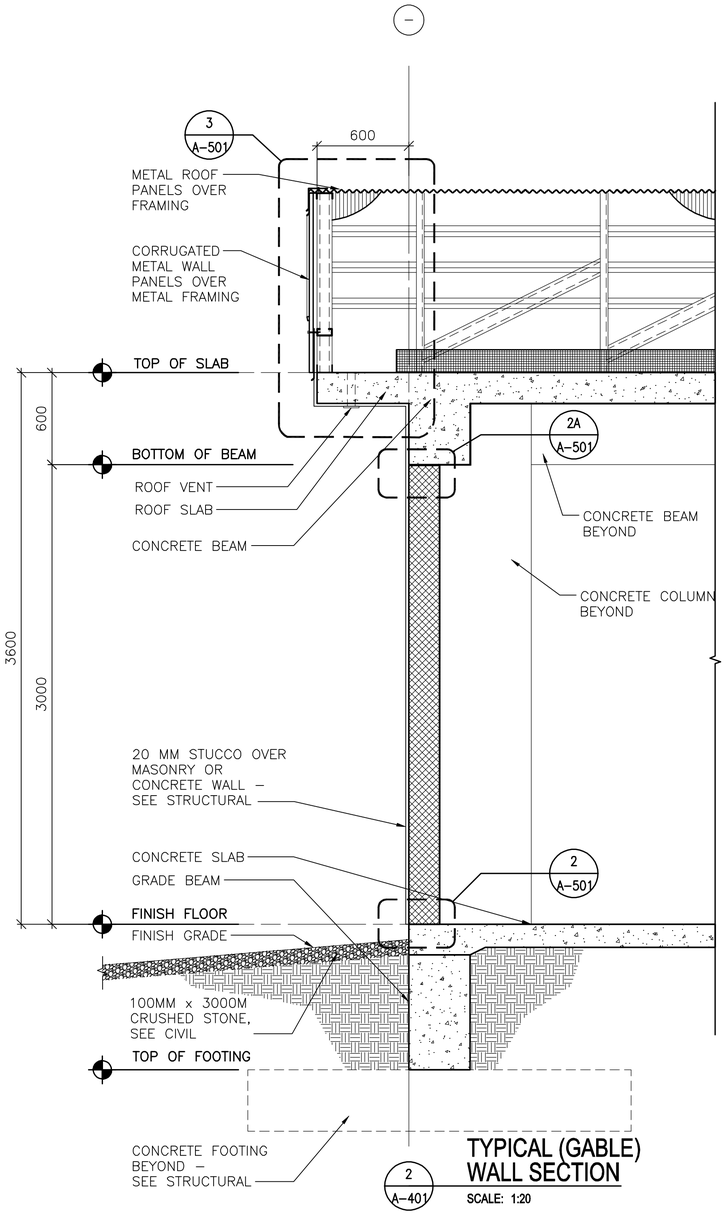

LINEAR DIMENSIONS SHOWN ARE IN MILLIMETERS (MM), UNLESS OTHERWISE NOTED

0 400 800
SCALE: 1:20

APPROVED:

A/E DESIGNER OF RECORD

SEAL:

STATE OF SOUTH CAROLINA
JOHN C. CHAFIN
No. Charleston, SC
6374
REGISTERED ARCHITECT

US ARMY CORPS OF ENGINEERS
AFGHANISTAN ENGINEER DISTRICT

Mark	Description	Date	Appr.

Mark	Description	Date	Appr.

Date: 8/16/10
Rev: 0
Design file no.
Drawing code:
File name: ANAFRUA-401WS
Plot date: 9/24/2010
Plot scale: x:X

Designed by: KRC
Dwn by: KJG
Ckd by: NLJ
Reviewed by: LHM
Submitted by: BAKER

U.S. ARMY CORPS OF ENGINEERS
AFGHANISTAN ENGINEER DISTRICT
APO AE 96338

Michael Baker Jr., Inc
A unit of Michael Baker Corporation
Airside Business Park
100 Airside Drive
Moon Township, PA 15108
www.mbakercorp.com

AFGHAN NATIONAL ARMY
STANDARD DESIGN
FAMILY RESPONSE UNIT OFFICES (STAND ALONE)

WALL SECTIONS

Sheet reference number:
A-401

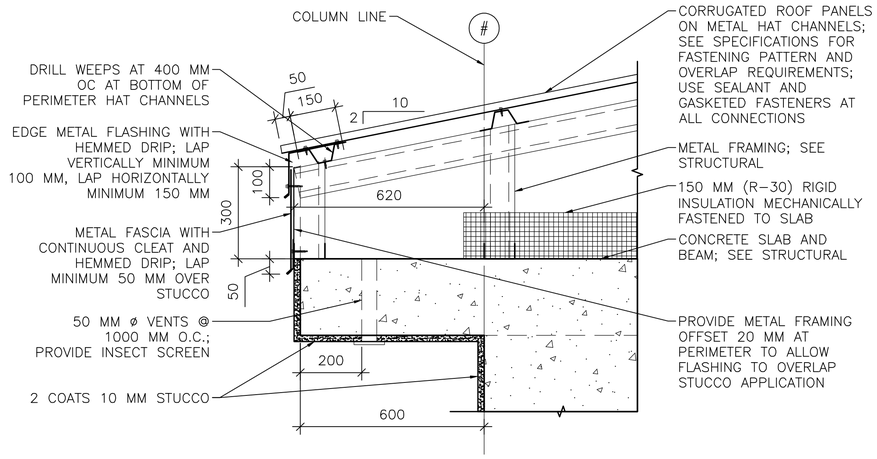

1 A-501 **EAVE DETAIL**
SCALE: 1:10

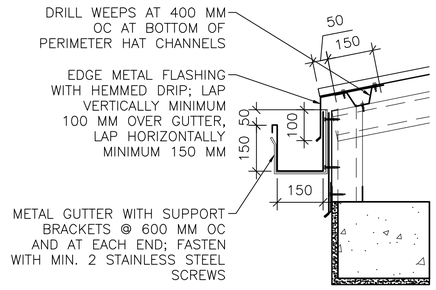

1A A-501 **GUTTER DETAIL**
SCALE: 1:10

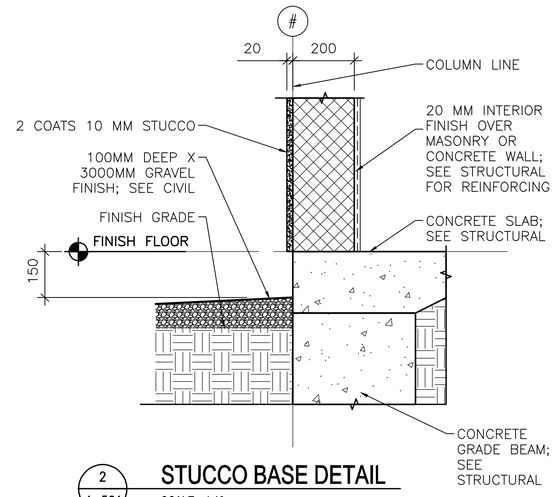

2 A-501 **STUCCO BASE DETAIL**
SCALE: 1:10

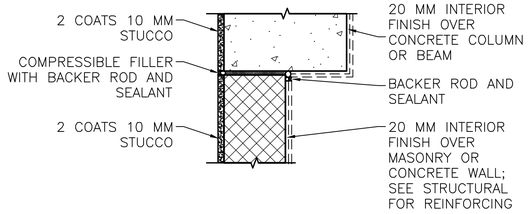

NOTE: DETAIL TYPICAL AT ALL WALL/COLUMN AND WALL/BEAM LOCATIONS, SEE ALTERNATE BRACING DETAIL BELOW 2B/A-501.

2A A-501 **STUCCO/CONTROL JOINT DETAIL**
SCALE: 1:10

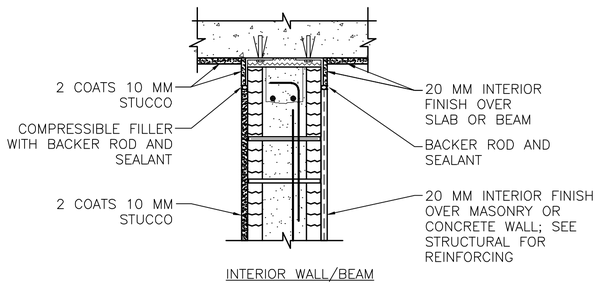

2B A-501 **STUCCO @ BRACING DETAIL**
SCALE: 1:10

NOTE:
DETAIL FOR FINISHES ONLY. SEE STRUCTURAL FOR INFORMATION.

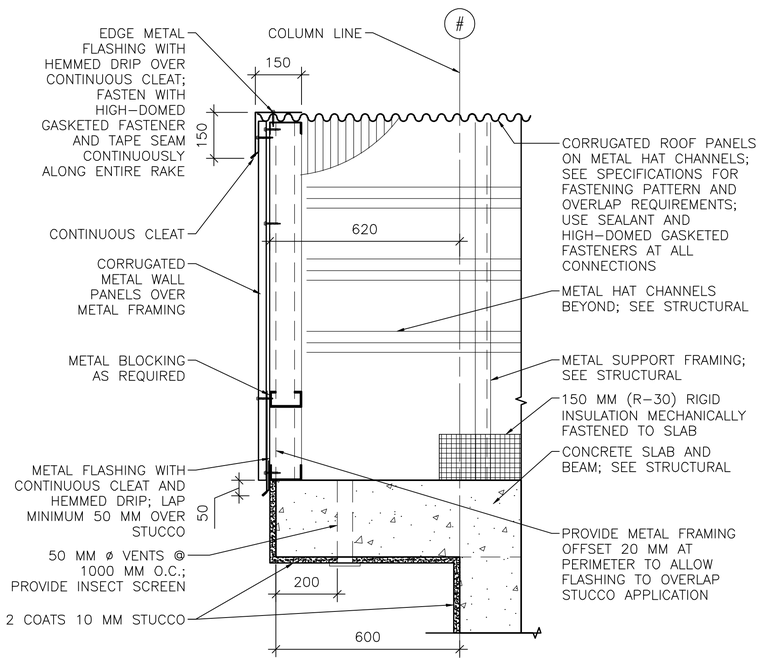

3 A-501 **RAKE/EAVE DETAIL**
SCALE: 1:10

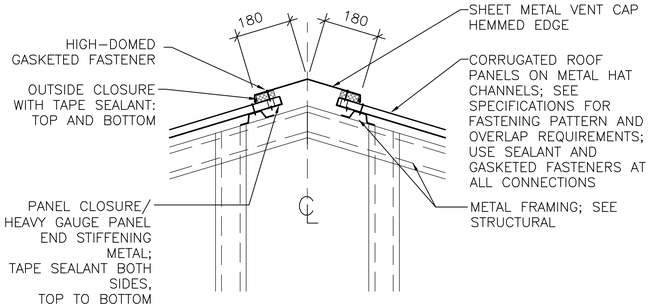

4 A-501 **RIDGE VENT DETAIL**
SCALE: 1:10

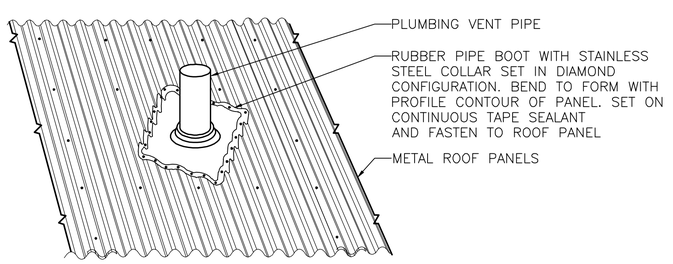

5 A-501 **PLUMBING VENT DETAIL**
SCALE: NTS

LINEAR DIMENSIONS SHOWN ARE IN MILLIMETERS (MM), UNLESS OTHERWISE NOTED

0 200 400
SCALE: 1:10

APPROVED:

A/E DESIGNER OF RECORD

SEAL:

STATE OF SOUTH CAROLINA
KEVIN L. CHAFIN
N. Charleston, SC
6374
12-23-10
REGISTERED ARCHITECT

US ARMY CORPS OF ENGINEERS
AFGHANISTAN ENGINEER DISTRICT

Mark	Description	Date	Appr.

Designed by: KRC
Drawn by: KJG
Checked by: NLJ
Reviewed by: LHM
Submitted by: BAKER

Date: 8/16/10
Design file no.
Drawing code:
Rev: 0
File name: ANARUA-501DT
Plot date: 8/24/2010
Plot scale: x:x

U.S. ARMY CORPS OF ENGINEERS
AFGHANISTAN ENGINEER DISTRICT
APO AE 96338

Michael Baker Jr., Inc
A unit of Michael Baker Corporation
Airside Business Park
100 Airside Drive
Moon Township, PA 15108
www.mbakercorp.com

AFGHAN NATIONAL ARMY
STANDARD DESIGN

FAMILY RESPONSE UNIT OFFICES (STAND ALONE)

EXTERIOR DETAILS

Sheet reference number:
A-501

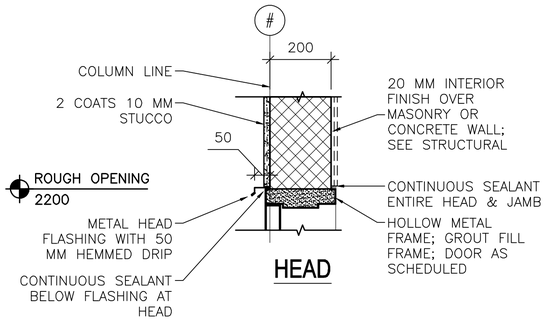

HEAD

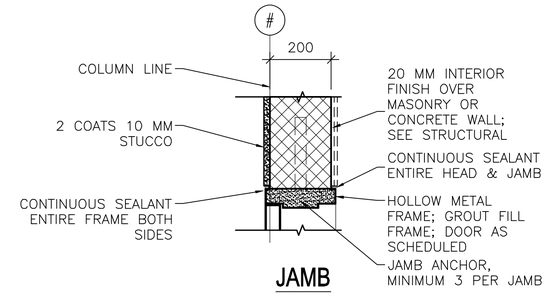

JAMB

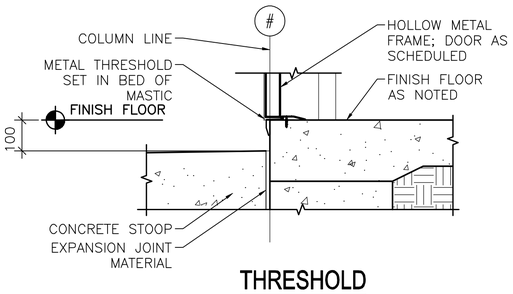

THRESHOLD

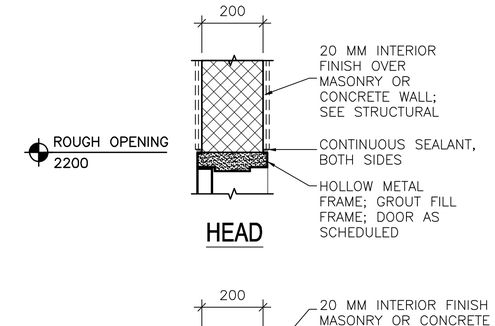

HEAD

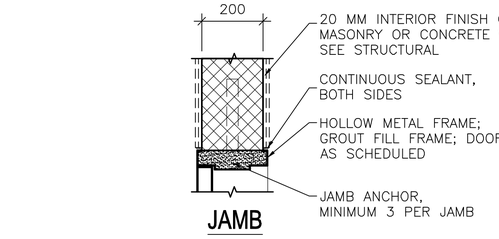

JAMB

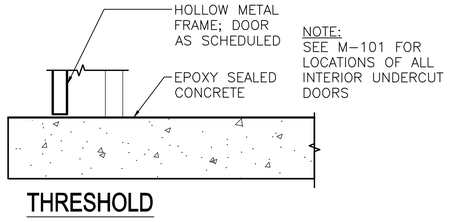

THRESHOLD

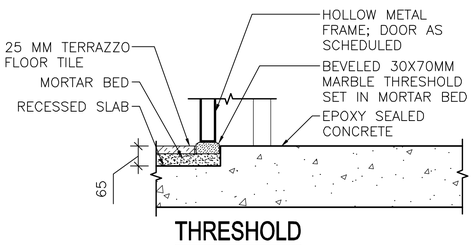

THRESHOLD

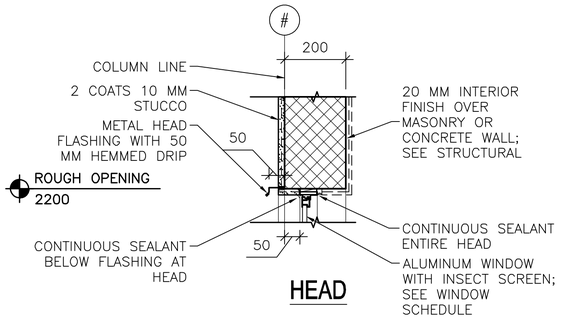

HEAD

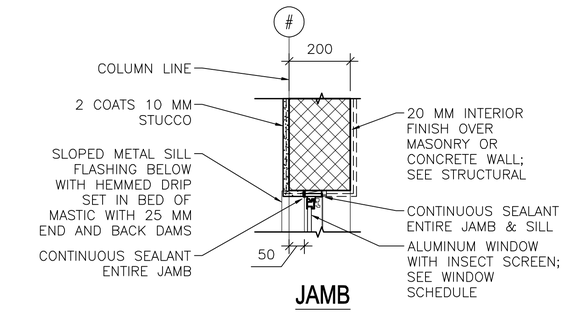

JAMB

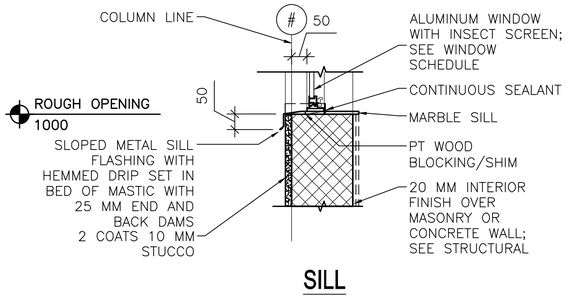

SILL

1 A-502 **EXTERIOR DOOR DETAILS**
SCALE: 1:10

2 A-502 **INTERIOR DOOR DETAILS**
SCALE: 1:10

3 A-502 **EXTERIOR WINDOW DETAILS**
SCALE: 1:10

NOTES:
1. ALL SECURITY BAR STEEL SHALL BE HOT-DIPPED GALVANIZED.

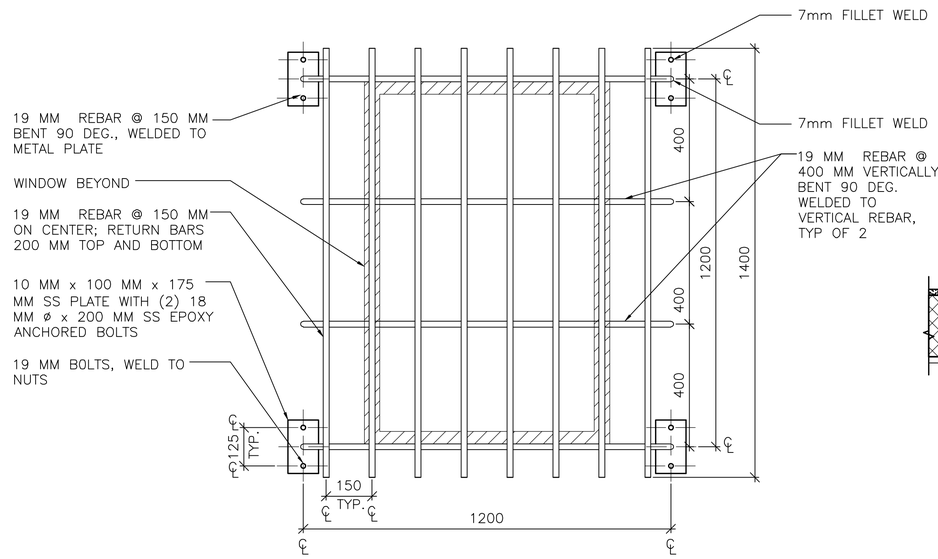

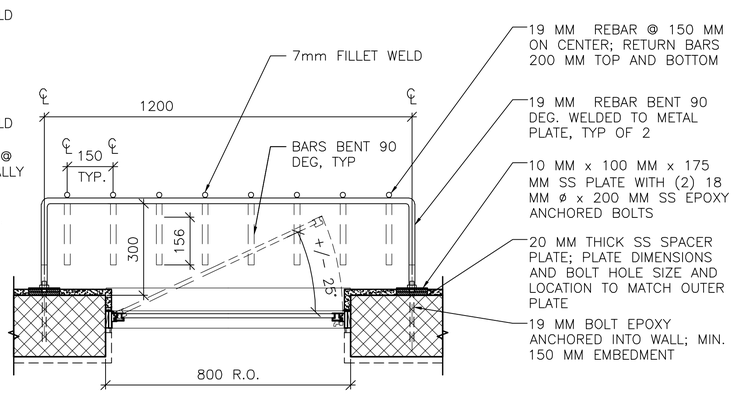

4 A-502 **SECURITY BAR DETAIL**
SCALE: 1:10

GENERAL NOTES:
A. ALL EXTERIOR DOOR AND WINDOW WOOD BLOCKING SHALL BE PRESERVATIVE TREATED.

APPROVED:

A/E DESIGNER OF RECORD

SEAL:

STATE OF SOUTH CAROLINA
KEVIN L. CHAFIN
No. Charleston, SC
6574
REGISTERED ARCHITECT

LINEAR DIMENSIONS SHOWN ARE IN MILLIMETERS (MM), UNLESS OTHERWISE NOTED

0 200 400
SCALE: 1:10

US ARMY CORPS OF ENGINEERS
AFGHANISTAN ENGINEER DISTRICT

Mark	Description	Date	Appr.

U.S. ARMY CORPS OF ENGINEERS
AFGHANISTAN ENGINEER DISTRICT
APO AE 96338

Michael Baker Jr., Inc
A unit of Michael Baker Corporation
Airside Business Park
100 Airside Drive
Moon Township, PA 15108
www.mbakercorp.com

Designed by: KRC
Dwn by: KJG
Ckd by: NLJ
Reviewed by: LHM
Submitted by: BAKER

Date: 8/16/10
Design file no.
Drawing code:
File name: ANAFRUA-002
Plot date: 8/24/2010
Plot scale: x:x
Rev: 0

AFGHAN NATIONAL ARMY
STANDARD DESIGN
FAMILY RESPONSE UNIT OFFICES (STAND ALONE)

HEAD, JAMB & SILL DETAILS

Sheet reference number:
A-502

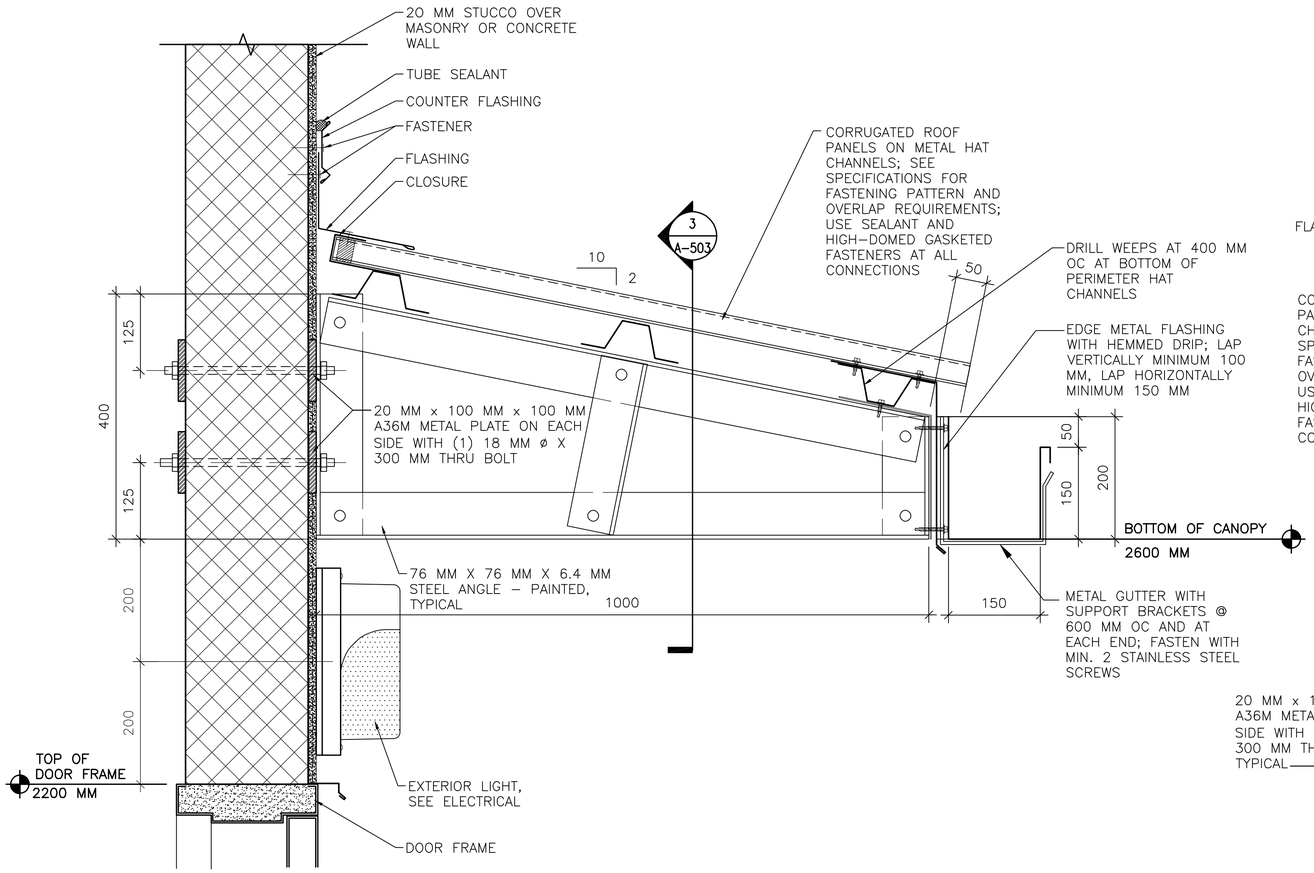

1 A-503 **CANOPY CONNECTION DETAILS**
SCALE: 1:5

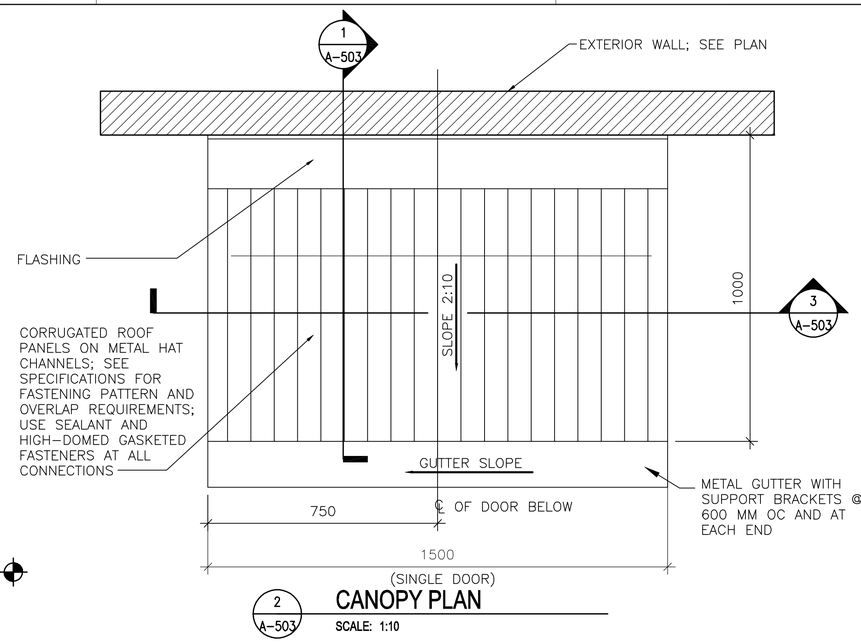

2 A-503 **CANOPY PLAN**
SCALE: 1:10

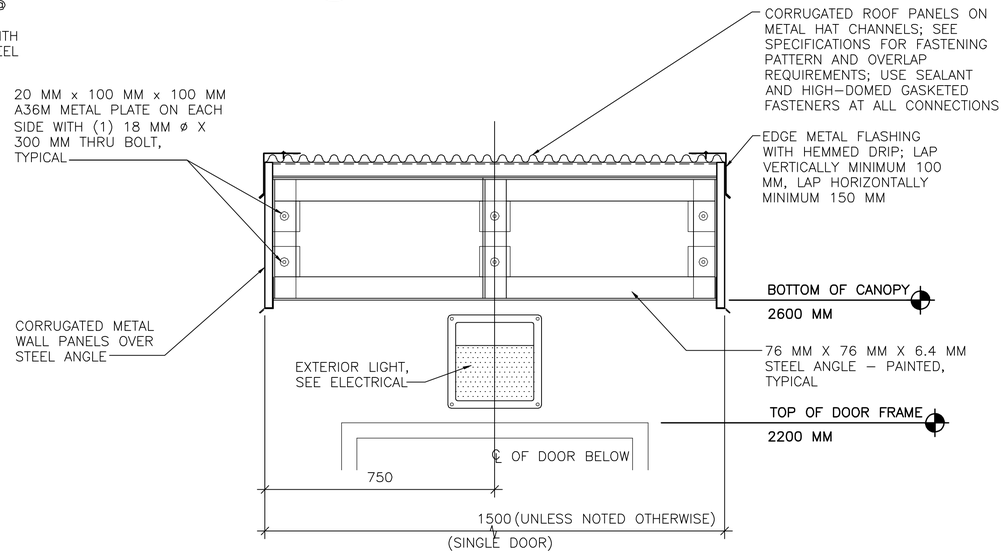

3 A-503 **CANOPY CONNECTION DETAILS**
SCALE: 1:10

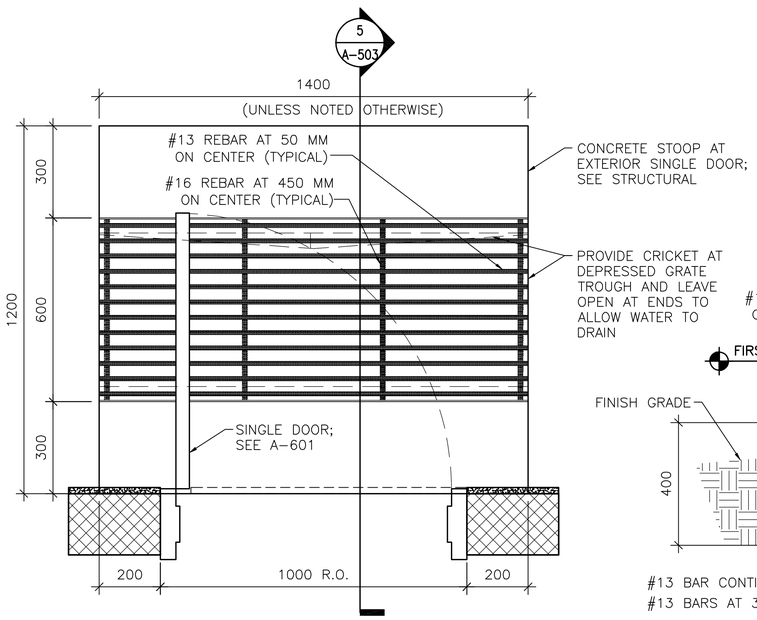

4 A-503 **DOOR STOOP PLAN (WITH GRATE)**
SCALE: 1:10

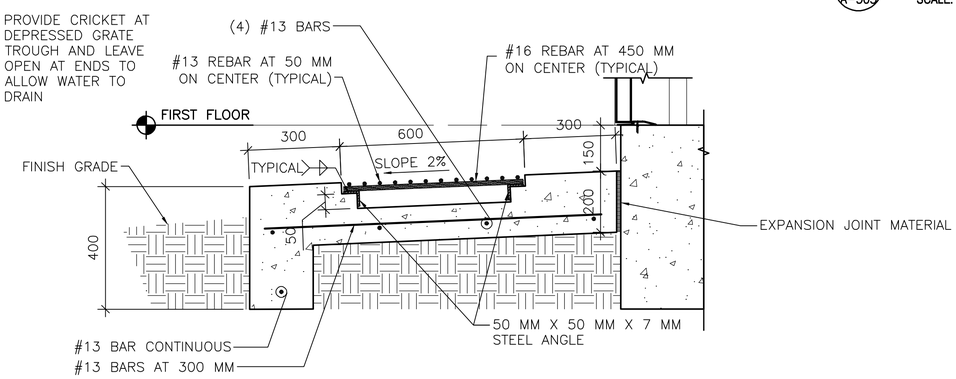

5 A-503 **DOOR STOOP DETAIL**
SCALE: 1:10

SHEET NOTES:

1. SEE A-102 FOR FLOOR PLANS AND CANOPY LOCATIONS.

APPROVED:

A/E DESIGNER OF RECORD

SEAL:

STATE OF SOUTH CAROLINA
KEVIN R. CHAPIN
N. Charleston, SC
6374
11-23-10
REGISTERED ARCHITECT

0 200 400
SCALE: 1:10

0 100 200
SCALE: 1:5

LINEAR DIMENSIONS SHOWN ARE IN MILLIMETERS (MM), UNLESS OTHERWISE NOTED

US ARMY CORPS OF ENGINEERS
AFGHANISTAN ENGINEER DISTRICT

Mark	Description	Date	Appr.

Date: 8/16/10
Design file no.
Drawing code:
Rev: 0
Designed by: DLB
Dwn by: ECN
Ckd by: KRC
Reviewed by: LHM
Submitted by: BAKER
File name: ANAFRUA-A05CDT
Plot date: 8/24/2010
Plot scale: x:x

U.S. ARMY CORPS OF ENGINEERS
AFGHANISTAN ENGINEER DISTRICT
APO AE 96338

Michael Baker Jr., Inc
A unit of Michael Baker Corporation
Airside Business Park
100 Airside Drive
Moon Township, PA 15108
www.mbakercorp.com

AFGHAN NATIONAL ARMY
STANDARD DESIGN
FAMILY RESPONSE UNIT OFFICES (STAND ALONE)

STOOP & CANOPY DETAILS

Sheet reference number:
A-503

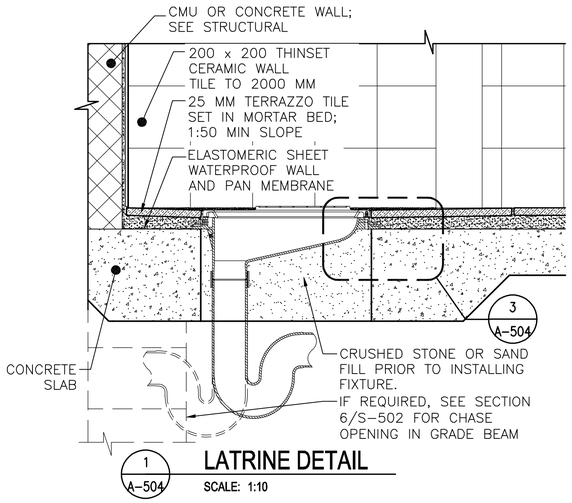

1 A-504 **LATRINE DETAIL**

SCALE: 1:10

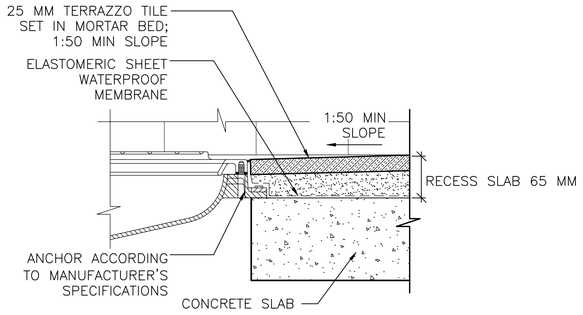

3 A-504 **MOUNTING DETAIL**

SCALE: 1:5

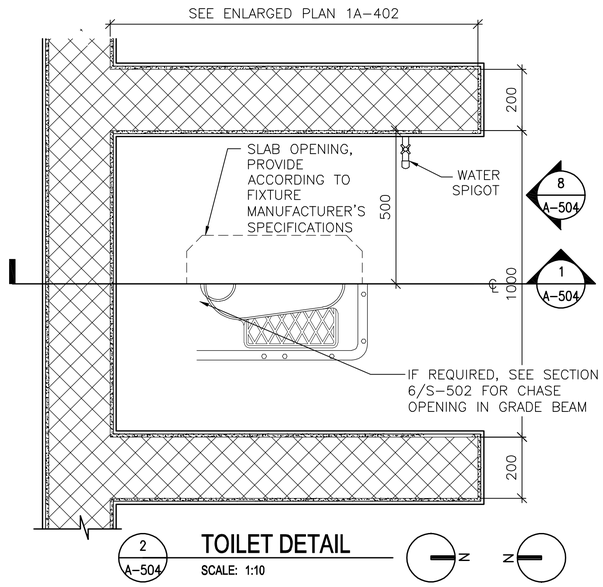

2 A-504 **TOILET DETAIL**

SCALE: 1:10

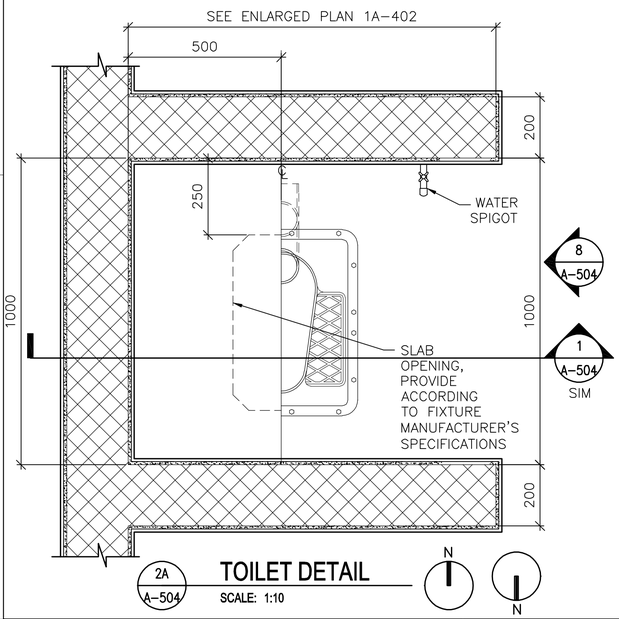

2A A-504 **TOILET DETAIL**

SCALE: 1:10

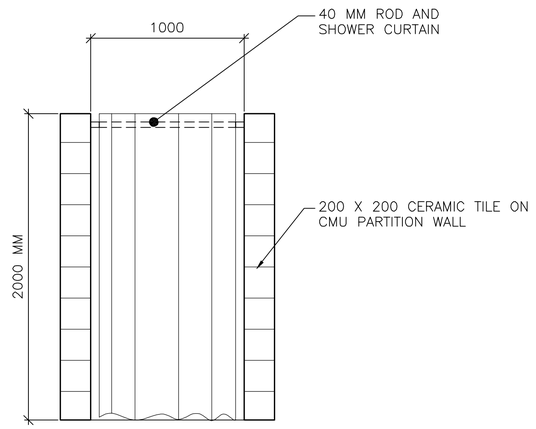

4 A-504 **TOILET PARTITION ELEVATION**

SCALE: 1:20

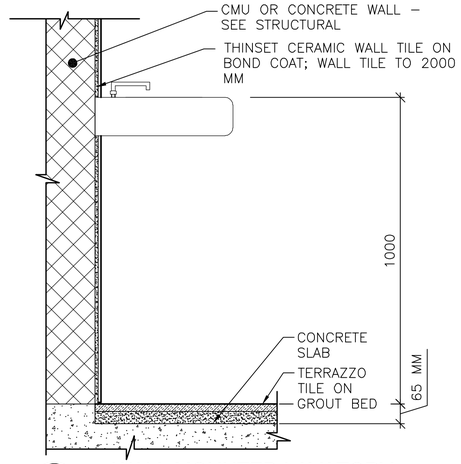

5 A-504 **WALL MOUNTED LAVATORY**

SCALE: 1:10

LINEAR DIMENSIONS SHOWN ARE IN MILLIMETERS (MM), UNLESS OTHERWISE NOTED

0 100 200
SCALE: 1:5

0 200 400
SCALE: 1:10

0 400 800
SCALE: 1:20

APPROVED:

A/E DESIGNER OF RECORD

SEAL:

STATE OF SOUTH CAROLINA
JOHN L. CHAFIN
N. Charleston, SC
6374
11-23-10
REGISTERED ARCHITECT

US ARMY CORPS OF ENGINEERS
AFGHANISTAN ENGINEER DISTRICT

Mark	Description	Date	Appr.

Mark	Description	Date	Appr.

Date: 8/16/10
Design file no.
Drawing code:
File name: ANAFRUA-504DT
Plot date: 8/24/2010
Plot scale: x:X
Rev: 0

Designed by: KRC
Dwn by: KJG
Ckd by: NLJ
Reviewed by: LHM
Submitted by:

U.S. ARMY CORPS OF ENGINEERS
AFGHANISTAN ENGINEER DISTRICT
APO AE 96338

Michael Baker Jr, Inc
A unit of Michael Baker Corporation
Airside Business Park
100 Airside Drive
Moon Township, PA 15108
www.mbakercorp.com

BAKER

AFGHAN NATIONAL ARMY
STANDARD DESIGN

FAMILY RESPONSE UNIT OFFICES (STAND ALONE)

TOILET & LAVATORY DETAILS

Sheet reference number:
A-504

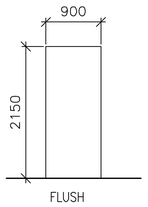

A

1 A-601 **DOOR TYPES**
SCALE: 1:50

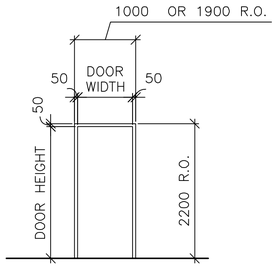

1

2 A-601 **FRAME TYPES**
SCALE: 1:50

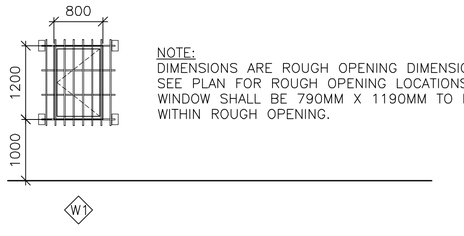

NOTE:
DIMENSIONS ARE ROUGH OPENING DIMENSIONS. SEE PLAN FOR ROUGH OPENING LOCATIONS. WINDOW SHALL BE 790MM X 1190MM TO FIT WITHIN ROUGH OPENING.

3 A-601 **WINDOW TYPES**
SCALE: 1:50

WINDOW TYPE NOTES:

1. ALL EXTERIOR WINDOWS SHALL BE ALUMINUM WITH INSECT SCREENS. WINDOWS SHALL BE COMMERCIAL GRADE.
2. ALL EXTERIOR WINDOWS SHALL BE OPERABLE.
3. SEE 4/A-502 FOR SECURITY BAR DETAILS.

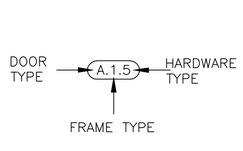

4 A-601 **DOOR TAG**
SCALE: NTS

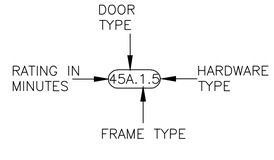

5 A-601 **RATED DOOR TAG**
SCALE: NTS

DOOR TAG NOTES:

1. THE DOOR TAG INDICATES THE DOOR TYPE, FRAME TYPE AND HARDWARE SET FOR EACH DOOR.
2. THE DOOR TAG FOR RATED DOORS INCLUDES THE RATING OF THE DOOR IN MINUTES.

THIS SHEET IS STANDARD AND IS INCLUSIVE OF ALL THE DOOR/ WINDOW/ HARDWARE TYPES FOR THE ENTIRE CONTRACT. NOT ALL DOOR/ WINDOW/ HARDWARE TYPES ARE USED FOR ANY PARTICULAR BUILDING DESIGN. CONTRACTOR SHALL REFER TO THE FLOOR PLAN FOR THE TYPES BEING USED.

EXTERIOR DOOR HARDWARE TYPES:

HW-1
1-1/2 PR HINGES, A5112 114 X 114
1 EA RIM EXIT DEVICE, TYPE 1
1 EA CYLINDER. E09221A, GRADE 1
1 EA OVERHEAD CLOSER, C02061, LOW RESISTANCE
1 EA THRESHOLD, J32130
3 EA DOOR SILENCERS, L03011
1 EA WEATHERSTRIPPING

HW-2
1-1/2 PR HINGES, A5112 114 X 114
1 EA LOCKSET, F13 ENTRY LOCK W/LEVER HANDLES, GRADE 1
1 EA OVERHEAD CLOSER, C02061, LOW RESISTANCE
1 EA THRESHOLD, J32130
3 EA DOOR SILENCERS, L03011
1 EA WEATHERSTRIPPING

HW-3
3 PR HINGES, A5112 114 X 114
2 EA RIM EXIT DEVICE, TYPE 1
2 EA CYLINDER. GRADE 1
2 EA OVERHEAD CLOSER, C02061, LOW RESISTANCE
1 EA DOOR COORDINATOR, TYPE 21
1 EA ASTRAGAL
1 EA THRESHOLD, J32130
2 EA DOOR SILENCERS, L03011
1 EA WEATHERSTRIPPING

HW-4
3 PR HINGES, A5112 114 X 114
1 EA LOCKSET W/LEVER HANDLES. GRADE 1, F13
1 EA OVERHEAD CLOSER, C02061, LOW RESISTANCE
2 EA MAGNETIC HOLDER PIN, ATTACHED TO DOOR LEAF
2 EA MAGNETIC HOLDER RECEIVER, ATTACHED TO STOOP
2 EA LEVER EXTENSION FLUSH BOLTS, L04081
1 EA ASTRAGAL
1 EA THRESHOLD, J32130
2 EA DOOR SILENCERS, L03011
1 EA WEATHERSTRIPPING

DOOR AND HARDWARE NOTES:

1. INTERIOR AND EXTERIOR METAL DOORS AND FRAME COLORS SHALL MATCH ADJACENT WALL COLORS AS SELECTED BY THE CONTRACTING OFFICER.
2. FRAMES, EXCEPT FIRE-RATED FRAMES, SHALL BE MOUNTED AND ADJUSTED IN ACCORDANCE WITH MANUFACTURER'S INSTRUCTIONS. FRAMES SHALL BE FASTENED WITH MINIMUM OF THREE ANCHORS PER JAMB AT EQUAL INTERVALS.
3. DIMENSIONS SHOWN ON DOOR TYPES DETAIL ARE BASED UPON MODULAR MASONRY (OR ROUGH OPENING) WIDTH OF 1000MM AND HEIGHT OF 2200 MM FOR STANDARD PERSONNEL DOORS. CONTRACTOR SHALL COORDINATE WITH DOOR SUPPLIER TO ENSURE THAT DIMENSIONS OF DOORS AND FRAMES PROVIDED ARE COMPATIBLE WITH DOOR OPENING DIMENSIONS.
4. HARDWARE SHALL BE HEAVY DUTY, COMMERCIAL GRADE, STAINLESS STEEL WITH A SATIN OR BRUSHED FINISH.
5. HARDWARE TYPES INCLUDE BUILDERS HARDWARE MANUFACTURERS ASSOCIATION (BMHA) NUMBER.
6. DOORS IN 2 HOUR RATED PARTITIONS SHALL BE 1.5 HOUR (90 MINUTE) RATED DOORS IN ACCORDANCE WITH NFPA 101, TABLE 8.3.4.2.
7. DOORS IN 1 HOUR RATED WALLS SHALL BE 3/4 HOUR (45 MINUTE) RATED DOORS IN ACCORDANCE WITH NFPA 101, TABLE 8.3.4.2.
8. DOORS IN 1 HOUR RATED CORRIDOR WALLS SHALL BE 1/3 HOUR (20 MINUTE) IN ACCORDANCE WITH NFPA 101, TABLE 8.3.4.2.
10. PROVIDE DOOR STOPS TO PROTECT WALLS ON LOCATIONS WHERE DOOR SWING WILL STRIKE WALL.
11. SEE M-101 FOR LOCATIONS OF ALL UNDERCUT DOORS.

INTERIOR DOOR HARDWARE TYPES:

HW-5
1-1/2 PR HINGES, A8133 114 X 114
1 EA LOCKSET W/LEVER HANDLES, F08, GRADE 1
1 EA WALL STOP, L02101 OR L02161
3 EA DOOR SILENCERS, L03011

HW-6
1-1/2 PR HINGES, A8112 114 X 114
1 EA LOCKSET W/LEVER HANDLES, F08, GRADE 1
1 EA WALL STOP, L02101 OR L02161
1 EA OVERHEAD CLOSER, C02061, LOW RESISTANCE
3 EA DOOR SILENCERS, L03011

HW-7
1-1/2 PR HINGES, A8133
1 EA LOCKSET W/LEVER HANDLES, F13 GRADE 1
1 EA WALL STOP, L02101 OR L02161
2 EA MOP PLATE, J103
3 EA DOOR SILENCERS, L03011

HW-8
1-1/2 PR HINGES, A8112
1 EA LOCKSET W/LEVER HANDLES, F13 GRADE 1
1 EA WALL STOP, L02101 OR L02161
2 EA MOP PLATE, J103
1 EA OVERHEAD CLOSER, C02061, LOW RESISTANCE
3 EA DOOR SILENCERS, L03011

HW-9
1-1/2 PR HINGES, A5112 114 X 114
1 EA RIM EXIT DEVICE, TYPE 1
1 EA CYLINDER. E09221A, GRADE 1
1 EA OVERHEAD CLOSER, C02061, LOW RESISTANCE
3 EA DOOR SILENCERS, L03011

HW-10
3 PR HINGES, A5112 114 X 114
1 EA LOCKSET W/LEVER HANDLES. GRADE 1, F13
2 EA LEVER EXTENSION FLUSH BOLTS, L04081
1 EA ASTRAGAL
2 EA DOOR SILENCERS, L03011

HW-11
1-1/2 PR HINGES, A8112 114 X 114
1 EA LOCKSET W/LEVER HANDLES, F13, GRADE 1
1 EA WALL STOP, L02101 OR L02161
1 EA OVERHEAD CLOSER, C02061, LOW RESISTANCE
3 EA DOOR SILENCERS, L03011
1 EA ROBE HOOK

HW-13
3 PR HINGES, A5112 114 X 114
1 EA LOCKSET W/LEVER HANDLES. GRADE 1, F13
1 EA OVERHEAD CLOSER, C02061, LOW RESISTANCE
2 EA LEVER EXTENSION FLUSH BOLTS, L04081
1 EA ASTRAGAL
2 EA DOOR SILENCERS, L03011

HW-14
3 PR HINGES, A5112 114 X 114
2 EA RIM EXIT DEVICE, TYPE 1
2 EA CYLINDER. GRADE 1
2 EA OVERHEAD CLOSER, C02061, LOW RESISTANCE
1 EA DOOR COORDINATOR, TYPE 21
1 EA ASTRAGAL
2 EA DOOR SILENCERS, L03011

APPROVED:

A/E DESIGNER OF RECORD

SEAL:

US ARMY CORPS OF ENGINEERS
AFGHANISTAN ENGINEER DISTRICT

Mark	Description	Date	Appr.

Designed by: KRC | Drawn by: KJG | Checked by: NLJ | Reviewed by: LHM | Submitted by: BAKER

U.S. ARMY CORPS OF ENGINEERS
AFGHANISTAN ENGINEER DISTRICT
APO AE 96338

Michael Baker Jr., Inc
A unit of Michael Baker Corporation
Airside Business Park
100 Airside Drive
Moon Township, PA 15108
www.mbakercorp.com

Date: 8/16/10
Design file no.
Drawing code:
File name: ANAFRUA-A01SCH
Plot date: 8/24/2010
Plot scale: x:x
Rev: 0

AFGHAN NATIONAL ARMY
STANDARD DESIGN
FAMILY RESPONSE UNIT OFFICES (STAND ALONE)

WINDOW AND DOOR SCHEDULES

Sheet reference number:
A-601

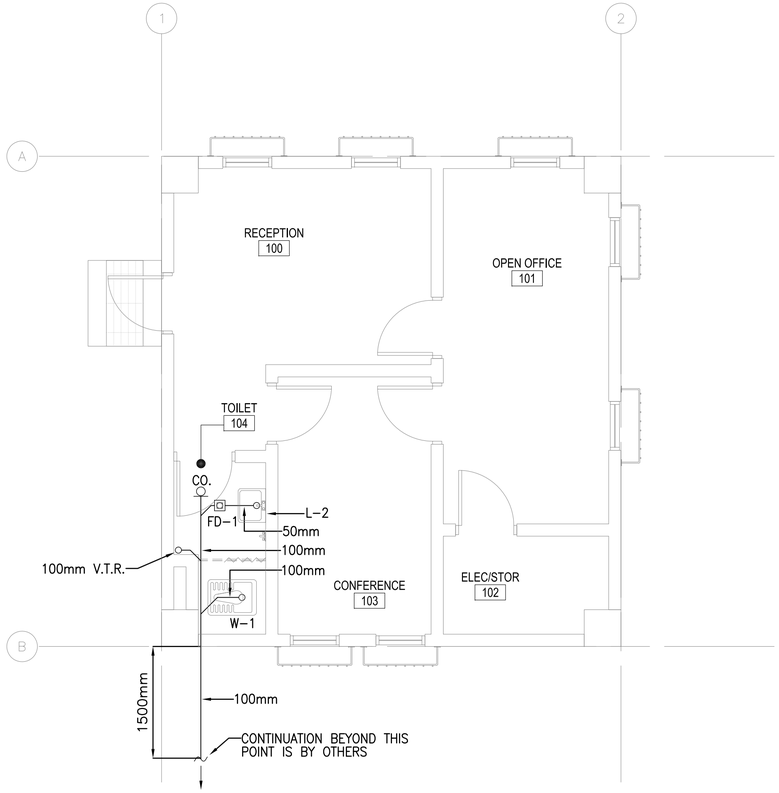

1 P-101 **FLOOR PLAN - PLUMBING (SANITARY AND VENT)**

SCALE: 1:50

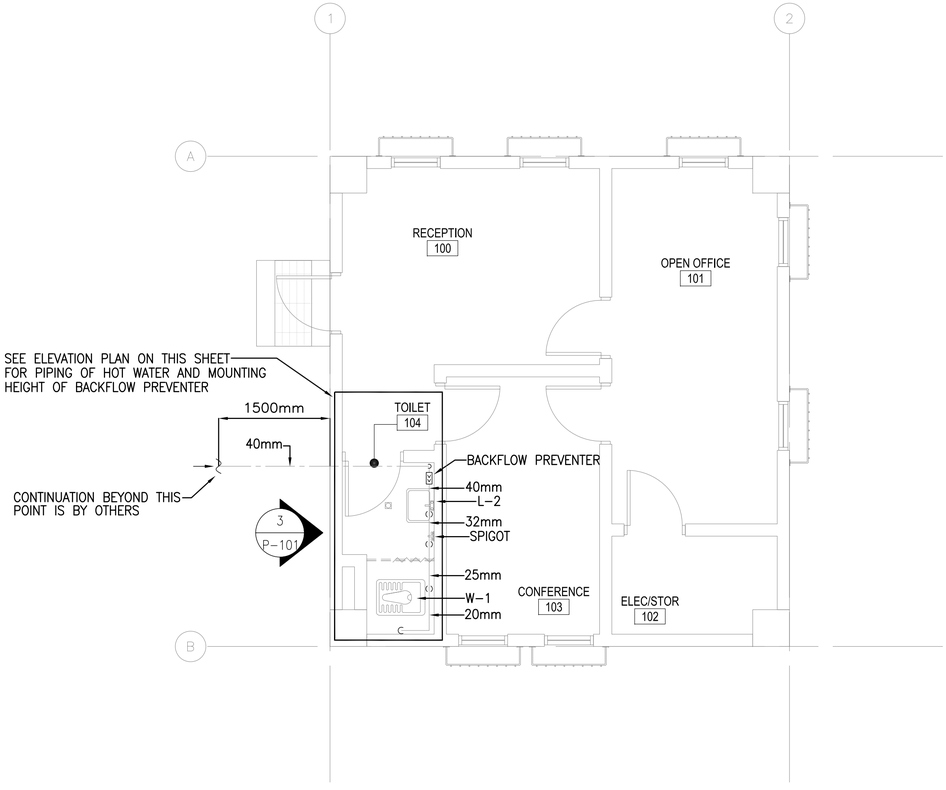

2 P-101 **FLOOR PLAN - PLUMBING (HOT AND COLD WATER)**

SCALE: 1:50

FLOOR PLAN NOTES:

1. DO NOT SCALE DRAWINGS – ALL DIMENSIONS AND CONDITIONS SHALL BE CHECKED AND VERIFIED BY THE CONTRACTOR AT THE SITE.
2. ALL WORK PERFORM ON THIS BUILDING SHALL BE IN COMPLIANCE WITH ALL PERTINENT CODES, RULES, ORDINANCES AND REGULATIONS OF THE GOVERNING AUTHORITIES.
3. ALL WORK PERFORM ON UNDER AND IN CONNECTION WITH THESE DRAWINGS AND SPECIFICATIONS SHALL BE IN STRICT COMPLIANCE WITH THE LATEST SAFETY AND HEALTH STANDARDS.
4. REPORT ANY DISCREPANCIES FOUND IN THE PLUMBING DRAWINGS AND/OR IN THE SPECIFICATIONS DURING THE BIDDING PROCESS FOR CLARIFICATION BY THE ENGINEER.
5. ALL EASTERN STYLE WATER CLOSETS IN THIS FACILITY ARE TO HAVE THE FIXTURE DESIGNATION OF W-1. EACH FIXTURE SHALL HAVE A 25mm COLD WATER LINE AND A 100mm SANITARY CONNECTION.
6. ALL LAV FIXTURES ARE TO HAVE THE FIXTURE DESIGNATION OF L-2. EACH FIXTURE SHALL HAVE A 15mm COLD WATER, 15mm HOT WATER CONNECTION AND A 80mm SANITARY CONNECTION.
7. ALL WATER, SANITARY AND VENT PIPING SHALL BE EXPOSED. RUN LINES TIGHT TO THE CEILING AND WALL.
8. REFER TO SHEETS P501 FOR DETAILS.
9. ALL SANITARY BRANCH LINES SHALL BE SLOPED AT 6mm PER 0.3m, AND ALL MAIN LINES SHALL BE SLOPED AT 3mm PER 0.3m, UNLESS OTHERWISE NOTED OR AS REQUIRED BY THE LOCAL AUTHORITY HAVING JURISDICTION.

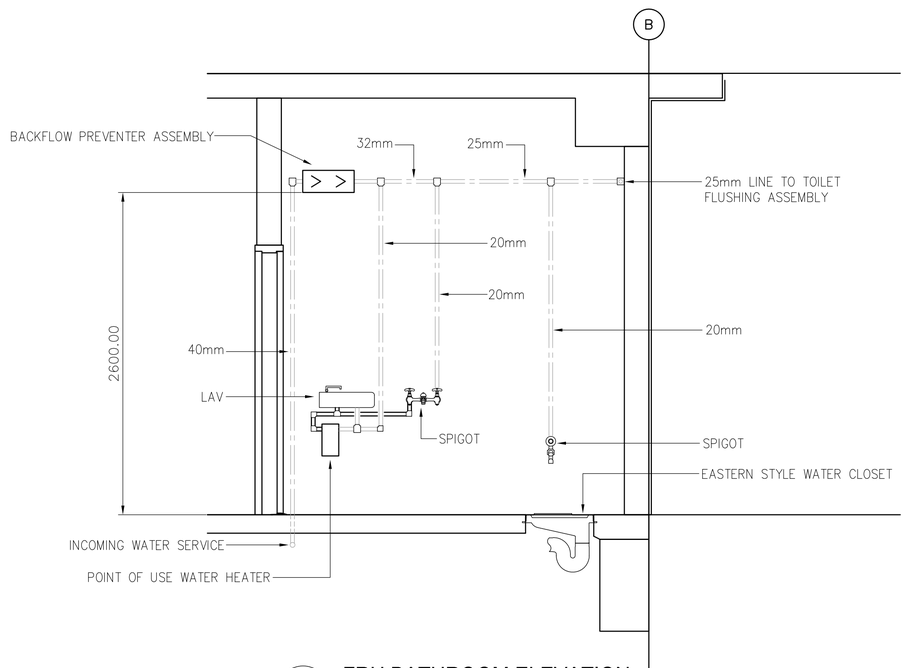

3 P-101 **FRU BATHROOM ELEVATION**

SCALE: 1:25

LINEAR DIMENSIONS SHOWN ARE IN MILLIMETERS (MM), UNLESS OTHERWISE NOTED

0 1000 2000

SCALE: 1:50

APPROVED:

A/E DESIGNER OF RECORD

SEAL:

COMMONWEALTH OF PENNSYLVANIA
REGISTERED PROFESSIONAL
MATTHEW R. SOTOSKY
ENGINEER
045576-E

US ARMY CORPS OF ENGINEERS
AFGHANISTAN ENGINEER DISTRICT

Mark	Description	Date	Appr

Date: 06/30/10 | Rev: 0
Design file no.
Drawing code:
File name: ANAFRUP-101
Plot date: 07/30/2010
Plot scale: xx

Designed by: RHM | Ckd by: CJM
Dwn by: MM | Reviewed by: MRS
Submitted by: BAKER

U.S. ARMY CORPS OF ENGINEERS
AFGHANISTAN ENGINEER DISTRICT
APO AE 96338

Michael Baker Jr., Inc.
A unit of Michael Baker Corporation
Airside Business Park
100 Airside Drive
Moon Township, PA 15108
www.mbakercorp.com

AFGHAN NATIONAL ARMY
STANDARD DESIGN
FAMILY RESPONSE UNIT OFFICES (STAND ALONE)

PLUMBING – FLOOR PLAN

Sheet reference number:
P-101

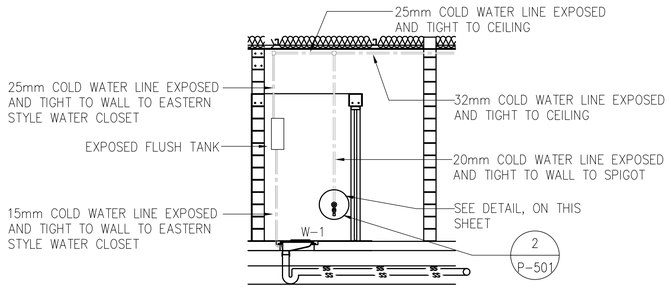

TYPICAL EASTERN STYLE WATER CLOSET SANITARY & WATER INSTALLATION SCHEMATIC

1 / P-501 — SCALE: N.T.S.

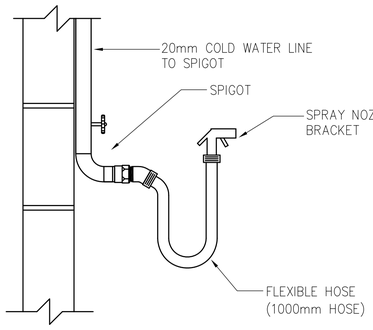

TYPICAL DETAIL - SPIGOT, FLEXIBLE HOSE, AND SPRAY NOZZLE

2 / P-501 — SCALE: N.T.S.

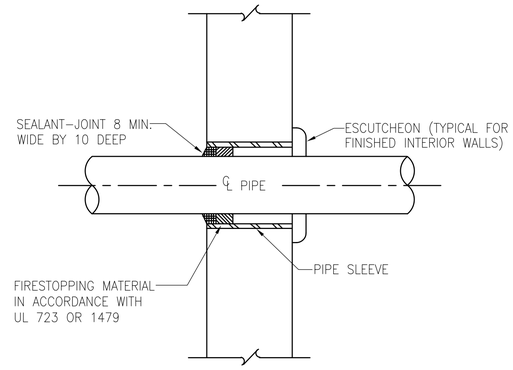

TYPICAL WALL PENETRATION DETAIL

3 / P-501 — SCALE: N.T.S.

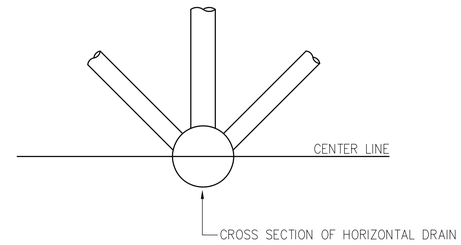

ACCEPTABLE VENT CONNECTIONS TO HORIZONTAL DRAIN - DETAIL

4 / P-501 — SCALE: N.T.S.

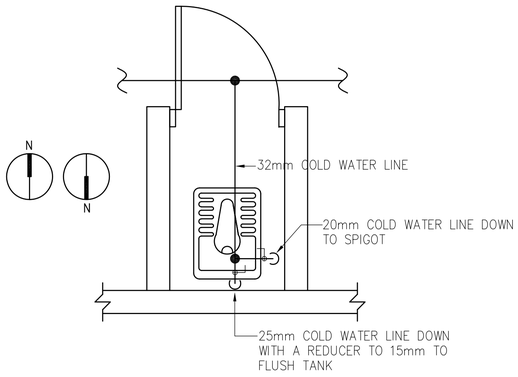

TYPICAL EASTERN STYLE WATER CLOSET WITH SPIGOT WATER PIPING DETAIL

5 / P-501 — SCALE: N.T.S.

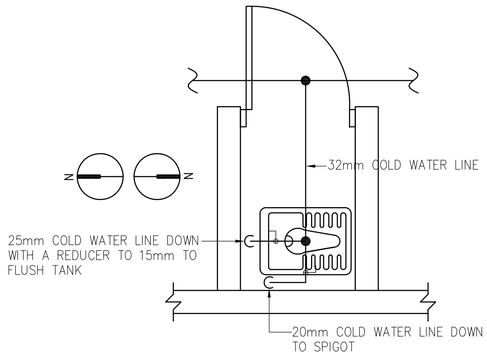

TYPICAL EASTERN STYLE WATER CLOSET WITH SPIGOT WATER PIPING DETAIL

6 / P-501 — SCALE: N.T.S.

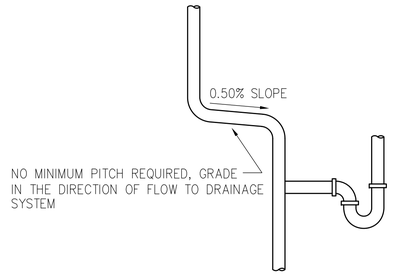

TYPICAL VENT SLOPE DETAILS

7 / P-501 — SCALE: N.T.S.

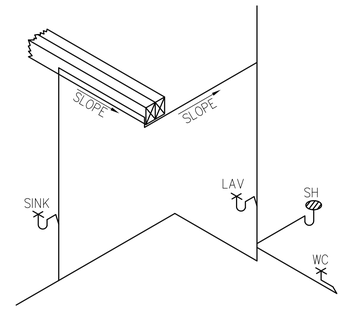

TYPICAL VENT SLOPE DETAILS

8 / P-501 — SCALE: N.T.S.

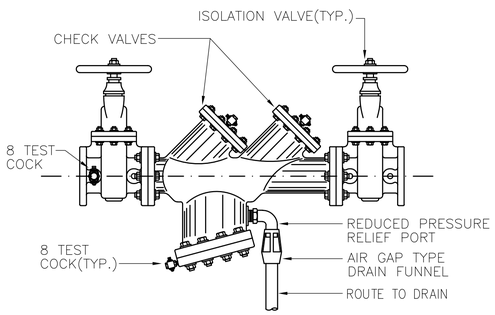

TYPICAL BACKFLOW PREVENTER DETAIL

9 / P-501 — SCALE: N.T.S.

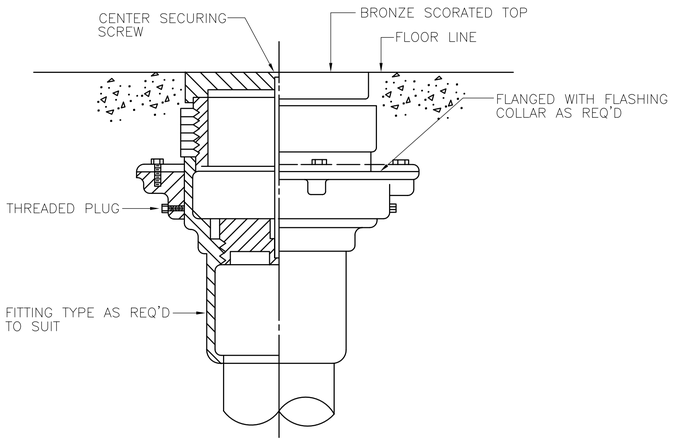

TYPICAL FLOOR CLEANOUT DETAIL

10 / P-501 — SCALE: N.T.S.

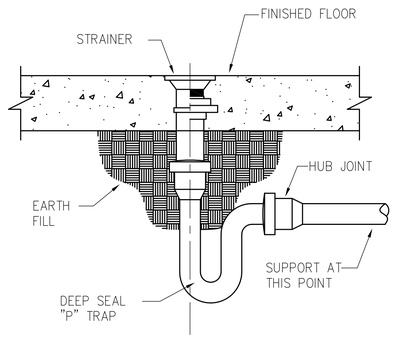

ALL FLOOR DRAINS SHALL HAVE DEEP SEAL TRAPS WITH A MINIMUM 4" WATER SEAL.

FLOOR DRAIN DETAIL

11 / P-501 — SCALE: N.T.S.

FIXTURE LIST

TYPE	ITEM	SOIL & WASTE	VENT	COLD WATER	HOT WATER	REMARKS	REMARKS 2
W-1	EASTERN STYLE WATER CLOSET	100mm	50mm	25mm	------	FLUSH VALVE	LOW FLOW EFFICIENT TYPE
L-2	WALL MOUNTED	40mm	40mm	15mm	15mm	WALL HUNG	LOW FLOW EFFICIENT TYPE
FD-1	FLOOR DRAIN	50mm	---	---	---	FINISH FLOOR SPACES	----------
HWH-1	POINT OF USE WATER HEATER	---	---	SEE DWG.	SEE DWG.	INSTANTANEOUS ELECTRIC WATER HEATER, 220/50/1, 7kW	----------

APPROVED:

A/E DESIGNER OF RECORD

SEAL:

COMMONWEALTH OF PENNSYLVANIA — REGISTERED PROFESSIONAL — MATTHEW R. SOTOSKY — ENGINEER — 045576-E

US ARMY CORPS OF ENGINEERS
AFGHANISTAN ENGINEER DISTRICT

Mark	Description	Date	Appr

Designed by: RMH | Drawn by: RMH | Checked by: CJM | Reviewed by: CJM | Submitted by:

Date: 06/30/10 | Rev: 0
Design file no.
Drawing code:
File name: ANAFRUP-501
Plot date: 07/30/2010
Plot scale: 1:100

U.S. ARMY CORPS OF ENGINEERS
AFGHANISTAN ENGINEER DISTRICT
APO AE 96338

Michael Baker Jr., Inc
A unit of Michael Baker Corporation
Airside Business Park
100 Airside Drive
Moon Township, PA 15108
www.mbakercorp.com

AFGHAN NATIONAL ARMY
STANDARD DESIGN

FAMILY RESPONSE UNIT OFFICES (STAND ALONE)

PLUMBING DETAILS

Sheet reference number: P-501

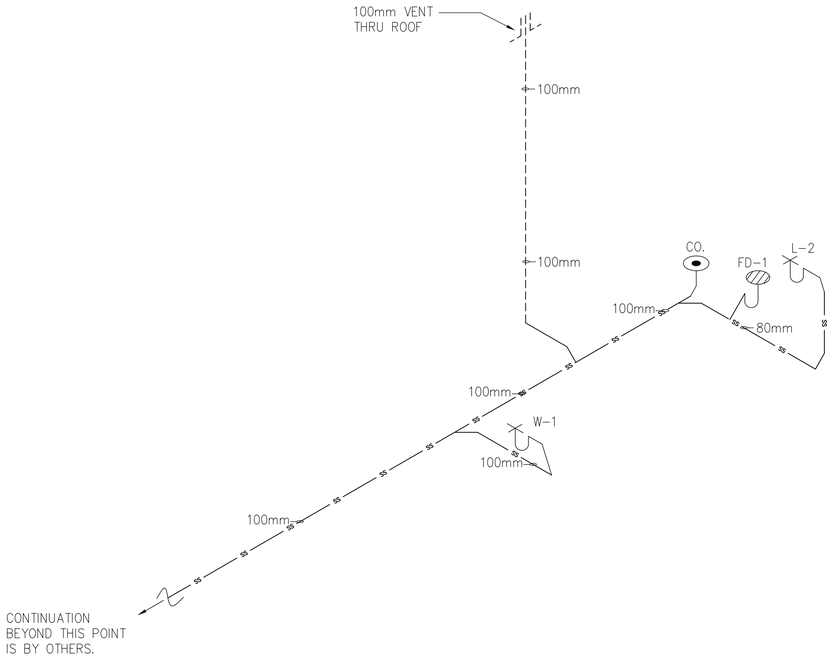

1 P-901 **DRAINAGE ISOMETRIC**

SCALE: N.T.S.

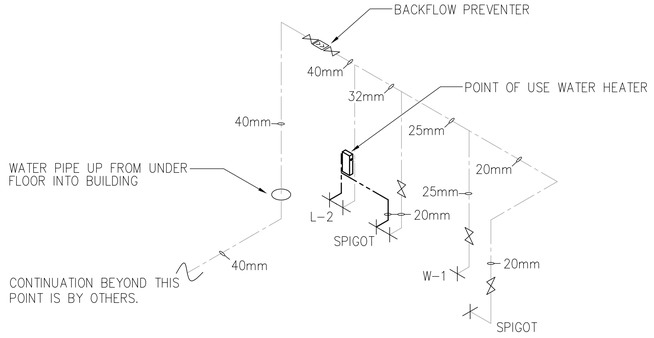

2 P-901 **HOT AND COLD WATER ISOMETRIC**

SCALE: N.T.S.

GENERAL PLUMBING NOTES:

1. CONTRACTOR TO REFER TO ARCHITECTURAL DRAWINGS FOR DETAIL OF VENT THRU ROOF AND RESPONSIBILITY OF VENT THRU ROOF.

PLUMBING SYMBOLS

- SS — SS — SANITARY SEWER PIPING (BELOW GROUND)
- SS — SS — SANITARY SEWER PIPING (ABOVE GROUND)
- VENT PIPING (V)
- COLD WATER PIPING (CW)
- HOT WATER PIPING (HW)
- BALL VALVE
- BACKFLOW PREVENTER
- OR CLEANOUT (CO.)
- ROOF PENETRATION

APPROVED:

A/E DESIGNER OF RECORD

SEAL:

COMMONWEALTH OF PENNSYLVANIA
REGISTERED PROFESSIONAL
MATTHEW R. SOTOSKY
ENGINEER
045576-E

US ARMY CORPS OF ENGINEERS
AFGHANISTAN ENGINEER DISTRICT

Mark	Description	Date	Appr.

Date: 06/30/10 Rev: 0
Designed by: RMH
Drawn by: RMH
Ckd by: CJM
Reviewed by: CJM
Submitted by:
Design file no.
Drawing code:
File name: ANAFRUP-901
Plot date: 07/30/2010
Plot scale: 1:100

U.S. ARMY CORPS OF ENGINEERS
AFGHANISTAN ENGINEER DISTRICT
APO AE 96338

Michael Baker Jr., Inc.
A unit of Michael Baker Corporation
Airside Business Park
100 Airside Drive
Moon Township, PA 15108
www.mbakercorp.com

AFGHAN NATIONAL ARMY
STANDARD DESIGN

FAMILY RESPONSE UNIT OFFICES (STAND ALONE)

PLUMBING ISOMETRICS

Sheet reference number:
P-901

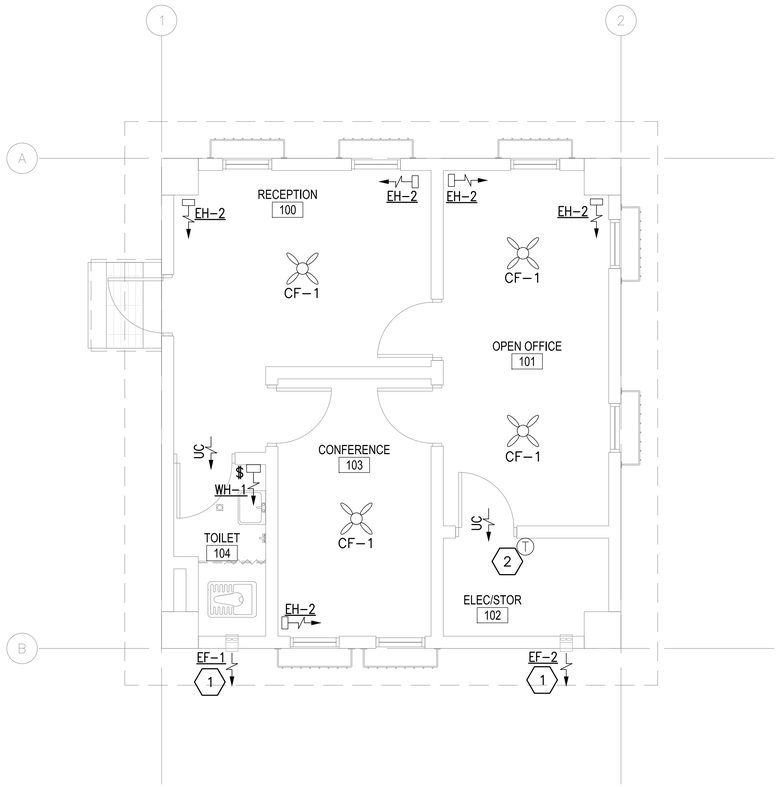

1 / M-101 HVAC FLOOR PLAN

SCALE: 1:50

ELECTRIC UNIT HEATER SCHEDULE

NO.	CMS	KW	FINAL AIR TEMP. °C	ELECT. CHAR.	MOUNTING
EH-2	0.200	2.6	38	220/1/50	WALL HUNG

NOTES:
1. UNIT HEATERS SHALL HAVE TAMPER PROOF INTEGRAL STATS.
2. COORDINATE LOCATION AND ORIENTATION IN FIELD.

EXHAUST FAN SCHEDULE

NO.	TYPE	FAN CMS	DRIVE	HP	SP mmH2O	ELECTRICAL DATA	SWITCH
EF-1	WALL	0.035	DIRECT	FRACT	9.5	220/1/50	@ WALL
EF-2	WALL	0.035	DIRECT	FRACT	9.5	220/1/50	W/ STAT

NOTE:
1. FANS SHALL HAVE SPRING OPERATED BACK DRAFT DAMPER.

CEILING FAN

NO.	BLADE SIZE mm	BLADE SIZE IN	VOLTAGE	SWITCH	REMARKS
CF-1	1320	52	220/1/50	@ WALL	3 SPEED REVERSIBLE MOTOR

NOTES:
1. INSTALL FANS 2.5M AFF.
2. PROVIDE WITH OUT LIGHT FIXTURE.
3. PROVIDE WITH REMOTE MOUNTED ON-OFF SWITCH SHOWN ON ELECTRICAL DRAWINGS.

ELECTRIC FAN-FORCED WALL HEATER SCHEDULE

NO.	KW	AMPS	KW/HR	ELECT. CHAR.	MOUNTING
WH-1	0.5	2.1	38	220/1/50	SURFACE

NOTES:
1. COORDINATE LOCATION AND ORIENTATION IN FIELD.

GENERAL NOTES:

1. DO NOT SCALE DRAWINGS – ALL DIMENSIONS AND CONDITIONS SHALL BE CHECKED AND VERIFIED BY THE CONTRACTOR AT THE SITE.
2. ALL WORK PERFORMED ON THIS BUILDING SHALL BE IN COMPLIANCE WITH ALL PERTINENT CODES, RULES, ORDINANCES AND REGULATIONS OF THE GOVERNING AUTHORITIES.
3. ALL WORK PERFORMED UNDER AND IN CONNECTION WITH THESE DRAWINGS AND SPECIFICATIONS SHALL BE IN STRICT COMPLIANCE WITH THE LATEST SAFETY AND HEALTH STANDARDS.

SYMBOLS:

- (X) KEY NOTE
- (0.050) AIR VOLUME IN CUBIC METERS PER SECOND (CMS)
- (T) THERMOSTAT WITH LOCKING COVER
- UC DOOR UNDERCUT 25mm.
- $ SINGLE POLE SWITCH FOR EXHAUST FAN – 20A RATED
- ELECTRIC HEATER
- CEILING FAN
- DIRECTION OF AIR FLOW

ABBREVIATIONS:

AFF	ABOVE FINISH FLOOR
CF	CEILING FANS
CMS	CUBIC METERS PER SECOND
EF	EXHAUST FAN
EH	ELECTRIC HEAT
STATS	THERMOSTATS
WH	WALL HEATER

KEY NOTE:

1. WALL EXHAUST FAN WITH LOW SPRING OPERATED BACK-DRAFT DAMPER. SEE DETAIL THIS SHEET.
2. THERMOSTAT MOUNTED AS HIGH AS POSSIBLE. INTERLOCK STAT WITH CORRESPONDING EXHAUST FAN, SET FAN TO ENERGIZE ON RISE IN TEMPERATURE ABOVE 25°C (77°F).

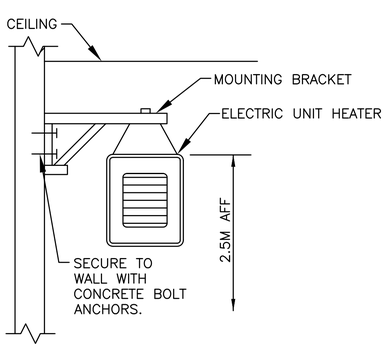

2 / M-101 ELECTRIC UNIT HEATER MOUNTING DETAIL

N.T.S.

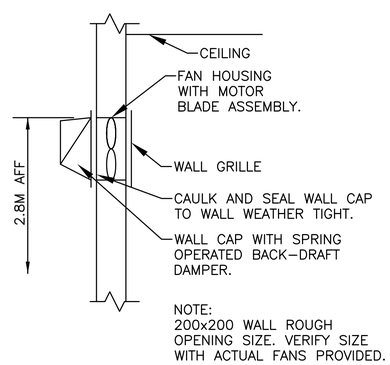

3 / M-101 WALL EXHAUST FAN DETAIL

N.T.S.

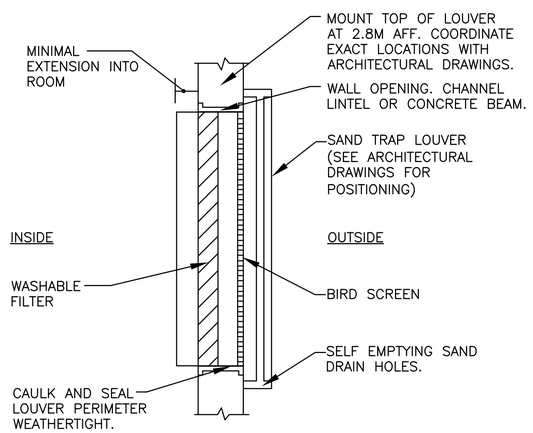

4 / M-101 FILTERED SAND TRAP LOUVER

N.T.S.

LINEAR DIMENSIONS SHOWN ARE IN MILLIMETERS (MM), UNLESS OTHERWISE NOTED

0 1000 2000

SCALE: 1:50

APPROVED:

A/E DESIGNER OF RECORD

SEAL:

COMMONWEALTH OF PENNSYLVANIA REGISTERED PROFESSIONAL MATTHEW R. SOTOSKY ENGINEER 045576-E

US ARMY CORPS OF ENGINEERS
AFGHANISTAN ENGINEER DISTRICT

Mark	Description	Date	Appr

Mark	Description	Date	Appr

Rev: 0
Date: 06/30/10
Design file no.
Drawing code:
File name: ANAFRUM-101
Plot date: 07/30/2010
Plot scale: xx

Designed by: RML
Dwn by: JJN
Ckd by: CJM
Reviewed by: MRS
Submitted by: BAKER

U.S. ARMY CORPS OF ENGINEERS
AFGHANISTAN ENGINEER DISTRICT
APO AE 96338

Michael Baker Jr., Inc
A unit of Michael Baker Corporation
Airside Business Park
100 Airside Drive
Moon Township, PA 15108
www.mbakercorp.com

AFGHAN NATIONAL ARMY
STANDARD DESIGN
FAMILY RESPONSE UNIT OFFICES (STAND ALONE)

HVAC - FLOOR PLAN

Sheet reference number:
M-101

POWER

- DISTRIBUTION PANELBOARD
- NEW PANELBOARD - SURFACE
- NEW PANELBOARD - RECESSED
- GENERATOR
- TRANSFORMER (DRAWN TO SIZE)
- JUNCTION BOX
- JUNCTION BOX - CEILING
- FUSIBLE SAFETY SWITCH
- MOTOR
- MOTOR STARTING SWITCH - 220V, 20A RATED UNLESS OTHERWISE NOTED
- ELECTRIC WATER HEATER
- CEILING FAN - REFER TO SPECIFICATION SECTION 26 20 00

RECEPTACLES

- DUPLEX 20A TYPE CEE 7/7 "SCHUKO STYLE" UNSWITCHED RECEPTACLE
- GF — DUPLEX 20A TYPE CEE 7/7 "SCHUKO STYLE" UNSWITCHED RECEPTACLES - 10mA GROUND FAULT INTERRUPTER TYPE
- WP — DUPLEX 20A TYPE CEE 7/7 "SCHUKO STYLE" UNSWITCHED TYPE WITH WEATHERPROOF COVER - 10mA GROUND FAULT INTERRUPTER TYPE
- EXP — DUPLEX 20A TYPE CEE 7/7 "SCHUKO STYLE" UNSWITCHED RECEPTACLES - EXPLOSION PROOF
- * INDICATES MOUNT DEVICE ABOVE COUNTERTOP OR AT 1070mm ABOVE FINISHED FLOOR WHERE NO COUNTER IS TO BE INSTALLED.

LIGHTNING PROTECTION

- AIR TERMINAL 20mm O.D. X 450mm SOLID COPPER, NICKEL PLATED ON ADHESIVE BASE
- EQ — EQUIPMENT AIR TERMINAL
- TEST WELL WITH GROUND ROD(S)
- GROUND ROD
- G — GROUND PLATE
- MAIN GROUND CONDUCTOR CONCEALED WITHIN CONSTRUCTION
- MAIN GROUND CONDUCTOR EXPOSED ON EXPOSED ON BUILDING EXTERIOR SURFACE
- GROUND CONDUCTOR CAD WELDED TO GROUND CABLE OR EQUIPMENT
- GROUND ROD TRIPOD, SPACED 3 METERS APART.
- LEVEL TO LEVEL CABLE

LIGHTING

- LIGHTING FIXTURE - SEE FIXTURE SCHEDULE FOR MORE INFORMATION
- EMERGENCY LIGHTING FIXTURE - SEE FIXTURE SCHEDULE FOR MORE INFORMATION
- DOWNLIGHT
- LIGHTING FIXTURE ON NORMAL/EMERGENCY
- WALL MOUNTED LIGHT FIXTURE
- E — EXIT SIGN - DIRECTIONAL ARROWS AS INDICATED ON DRAWINGS
- REMOTE HEAD FOR BATTERY PACK
- $ — SINGLE POLE SWITCH - 20A RATED
- $3 — 3-WAY SWITCH - 20A RATED
- $4 — 4-WAY SWITCH - 20A RATED
- LC — LIGHTING CONTACTOR
- POLE MOUNTED SITE LIGHTING FIXTURE- NUMBER OF FIXTURES PER POLE AS INDICATED ON DRAWINGS
- EXTERIOR DIRECTIONAL LIGHTING FIXTURE
- a — SMALL CASE LETTERS REPRESENTS LAMP(S) / SWITCHES.

TELECOMMUNICATIONS

- TELEPHONE OUTLET(S) @ 45cm AFF. U.N.O. WITH 20mm RACEWAY TERMINATED TO TELEDATA TERMINAL BOARD.
- DATA OUTLET(S) @ 45cm AFF. U.N.O. WITH 20mm RACEWAY TERMINATED TO TELEDATA TERMINAL BOARD.

TELECOMMUNICATIONS (CONTINUED)

- COMBINATION TELEPHONE/DATA OUTLET(S) @ 45cm AFF. U.N.O. WITH 27mm RACEWAY TERMINATED TO TELEDATA TERMINAL BOARD.
- W — WALL MTD. TELEPHONE OUTLET WITH 20mm RACEWAY TO TELEDATA TERMINAL BOARD.
- (x)T — INDICATES NUMBER OF TELEPHONE OUTLET(S) AND ASSOCIATED CABLING
- (x)D — INDICATES NUMBER OF DATA OUTLET(S) AND ASSOCIATED CABLING
- (x)TF — INDICATES NUMBER OF TELEPHONE OUTLETS AND ASSOCIATED CABLING WITH 1 OUTLET AND CABLE DEDICATED FOR FAX

SINGLE LINE SYMBOLS

- SWITCH
- BREAKER
- FUSE
- TRANSFORMER
- GROUND
- CONTACT (NORMALLY OPEN)
- CONTACT (NORMALLY CLOSED)
- TRANSFER SWITCH
- CURRENT TRANSFORMER
- INDICATES NEW ELECTRICAL EQUIPMENT
- C — INDICATES NEW CONTROL WIRING AND CONDUIT
- EQUIPMENT OUTLINE

MISCELLANEOUS

- BRANCH CIRCUIT WIRING, SURFACE MOUNTED ON WALLS
- BRANCH CIRCUIT WIRING - 6mm²
- BRANCH CIRCUIT WIRING - UNDER FLOOR
- HOME RUN BACK TO PANEL
- CONDUIT TURNED DOWN
- CONDUIT TURNED UP
- LV — LOW VOLTAGE WIRING AND CONDUIT
- INDICATES CONTINUATION OF LINE

FIRE ALARM

- FACP — FIRE ALARM CONTROL PANEL WITH BATTERY BACKUP
- F — FIRE ALARM PULL STATION

FIRE ALARM (CONTINUED)

- F — FIRE ALARM STROBE - WALL MOUNTED
- F — FIRE ALARM AUDIBLE/STROBE - WALL MOUNTED
- F — FIRE ALARM HORN/STROBE - WALL MOUNTED
- S — SMOKE DETECTOR
- H — HEAT DETECTOR CEILING MOUNTED
- D — DUCT DETECTOR - PROVIDED BY EC, INSTALLED BY MC AND CONNECTED BY EC

DENOTATIONS & ABBREVIATIONS

AFF	ABOVE FINISHED FLOOR
C	CEILING MOUNTED
E	EMERGENCY
EC	ELECTRICAL CONTRACTOR
EPO	EMERGENCY POWER OFF
EXP	EXPLOSION PROOF
F	FIRE ALARM
FF	FLUSH FLOOR MOUNTED
FL	FLUORESCENT
FO	FIBER OPTIC
FSS	FUSED SAFETY SWITCH
GF	GROUND FAULT INTERRUPTER
GC	GENERAL CONTRACTOR
IG	ISOLATED GROUND
K	KEY
LV	LOW VOLTAGE
M	MOTOR
MC	MECHANICAL CONTRACTOR
NE	NORMAL/EMERGENCY
NFSS	NON-FUSED SAFETY SWITCH
PA	PAGING SYSTEM
PLC	PLUMBING CONTRACTOR
SL	SINGLE LINE
T	TELEPHONE

DENOTATIONS & ABBREVIATIONS (CONT.)

TP	TAMPER PROOF
UE	UNDERGROUND ELECTRIC
W	WALL MOUNTED
WP	WEATHERPROOF WITH GROUND FAULT INTERRUPTION
WT	WATER TIGHT

GENERAL PROJECT NOTES:

G1. UNLESS OTHERWISE NOTED, PROVIDE ALL EQUIPMENT SHOWN ON THE PLANS. THE ELECTRICAL CONTRACTOR SHALL COORDINATE ALL SYMBOLS SHOWN ON THE PLANS WITH THE SYMBOL LIST. IT SHALL BE THE RESPONSIBILITY OF THE CONTRACTOR TO VERIFY THE INTENT OF ANY SYMBOL THAT IS SHOWN ON THE PLANS AND NOT INDICATED ON THE SYMBOL LIST WITH THE ENGINEER PRIOR TO BID.

G2. THE CONTRACTOR SHALL VERIFY THE LOCATION OF ALL UNDERGROUND UTILITIES WITHIN THE CONSTRUCTION AREA THREE (3) WORKING DAYS NOTICE BEFORE COMMENCING DIGGING. NOTIFY THE LOCAL AUTHORITY HAVING JURISDICTION AND WAIT THE REQUIRED TIME BEFORE COMMENCING TO DIG.

G3. THE CONTRACTOR SHALL COORDINATE CONDUIT RUNS, LIGHTING FIXTURES AND OTHER EQUIPMENT LOCATIONS WITH THE OTHER TRADE CONTRACTORS TO AVOID CONFLICTS.

G4. WHERE VOLTAGES AND FREQUENCIES ON THE DRAWINGS AND IN THE SPECIFICATIONS DIFFER FROM THE LOCAL ONES, ALL WORK SHALL BE PERFORMED USING THE LOCAL VOLTAGES AND FREQUENCIES.

G5. THE MINIMUM WIRE SIZE ON THE PROJECT SHALL BE 4mm². THE MINIMUM CONDUIT SIZE SHALL BE 20mm. THE MINIMUM BREAKER SIZE SHALL BE 20 AMPS.

G6. THE CONTRACTOR SHALL PUT A MAXIMUM OF 6 DUPLEX RECEPTACLES ON A 20A SINGLE POLE CIRCUIT.

G7. WHERE THE 1010 SCOPE REVIEW, 1015 TECHNICAL REVIEW, DRAWINGS, AND SPECIFICATIONS DIFFER FROM AMERICAN CODES OR STANDARDS, THE 1010, 1015, DRAWINGS, AND SPECIFICATIONS SHALL RULE.

G8. ALL CONDUIT AND DEVICES SHALL BE SURFACE MOUNTED UNLESS OTHERWISE INDICATED.

G9. CONTRACTOR SHALL COORDINATE ALL WORK WITH ALL OTHER TRADES TO ENSURE ALL WORK IS COMPLETED IN A PROFESSIONAL, WORKMAN-LIKE MANNER.

APPROVED:

A/E DESIGNER OF RECORD

SEAL:

COMMONWEALTH OF PENNSYLVANIA — REGISTERED PROFESSIONAL — JOSEPH R. GAUS — 8/24/2010 — ENGINEER — PE-074251

US ARMY CORPS OF ENGINEERS
AFGHANISTAN ENGINEER DISTRICT

Mark	Description	Date	Appr.

Date: 06/30/10 | Design file no. | Drawing code: | Rev: 0

File name: ANAFRUE-A001
Plot date: 8/24/2010
Plot scale: X:X

Designed by: ALF | Dwn by: BJB | Ckd by: JRG | Reviewed by: MRS | Submitted by: BAKER

U.S. ARMY CORPS OF ENGINEERS
AFGHANISTAN ENGINEER DISTRICT
APO AE 96338

Michael Baker Jr., Inc.
A unit of Michael Baker Corporation
Airside Business Park
100 Airside Drive
Moon Township, PA 15108
www.mbakercorp.com

AFGHAN NATIONAL ARMY
STANDARD DESIGN

FAMILY RESPONSE UNIT OFFICES (STAND ALONE)

ELECTRICAL – SYMBOLS, NOTES, AND ABBREVIATIONS

Sheet reference number: E–001

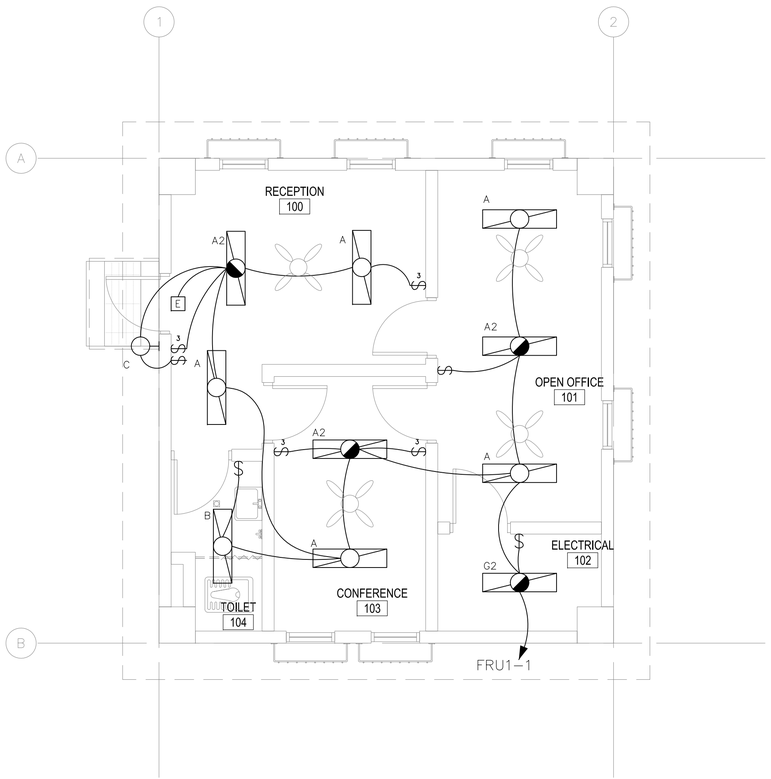

1
E-101

ELECTRICAL LIGHTING PLAN

SCALE: 1:50

GENERAL NOTES:

1. REFER TO DRAWING #E-001 FOR THE ELECTRICAL SYMBOLS LIST.
2. REFER TO DRAWING #E-501 FOR THE POWER RISER.
3. REFER TO DRAWING #E-602 AND #E-603 FOR PANEL SCHEDULES.
4. COORDINATE EXACT MOUNTING LOCATION OF DISCONNECTING MEANS FOR MECHANICAL AND PLUMBING EQUIPMENT IN THE FIELD.
5. FUSIBLE SAFETY SWITCHES THAT ARE NOT OTHERWISE IDENTIFIED SHALL BE 220V, 1P, 30A FUSED SAFETY SWITCHES WITH 20A FUSES.
6. LIGHT FIXTURES INDICATED AS EMERGENCY SHALL BE PROVIDED WITH A BATTERY BACK UP BALLAST. SEE WIRING DIAGRAM DETAIL 7 ON DRAWING #E-501.

LINEAR DIMENSIONS SHOWN ARE IN MILLIMETERS (MM), UNLESS OTHERWISE NOTED

APPROVED:

A/E DESIGNER OF RECORD

SEAL:

COMMONWEALTH OF PENNSYLVANIA
REGISTERED PROFESSIONAL ENGINEER
JOSEPH R. GAUS
8/24/2010
PE-074251

0 1000 2000
SCALE: 1:50

US ARMY CORPS OF ENGINEERS
AFGHANISTAN ENGINEER DISTRICT

Mark	Description	Date	Appr.	Mark	Description	Date	Appr.

Designed by: JRG
Dwn by: BJB
Ckd by: JRG
Reviewed by: MRS
Submitted by: BAKER
Date: 06/30/10
Rev: 0
Design file no.
Drawing code:
File name: ANAFRU-E-101
Plot date: 8/24/2010
Plot scale: 1:50

U.S. ARMY CORPS OF ENGINEERS
AFGHANISTAN ENGINEER DISTRICT
APO AE 96338

Michael Baker Jr., Inc.
A unit of Michael Baker Corporation
Airside Business Park
100 Airside Drive
Moon Township PA 15108
www.mbakercorp.com

AFGHAN NATIONAL ARMY
STANDARD DESIGN

FAMILY RESPONSE UNIT OFFICES (STAND ALONE)

ELECTRICAL – LIGHTING PLAN

Sheet reference number:
E-101

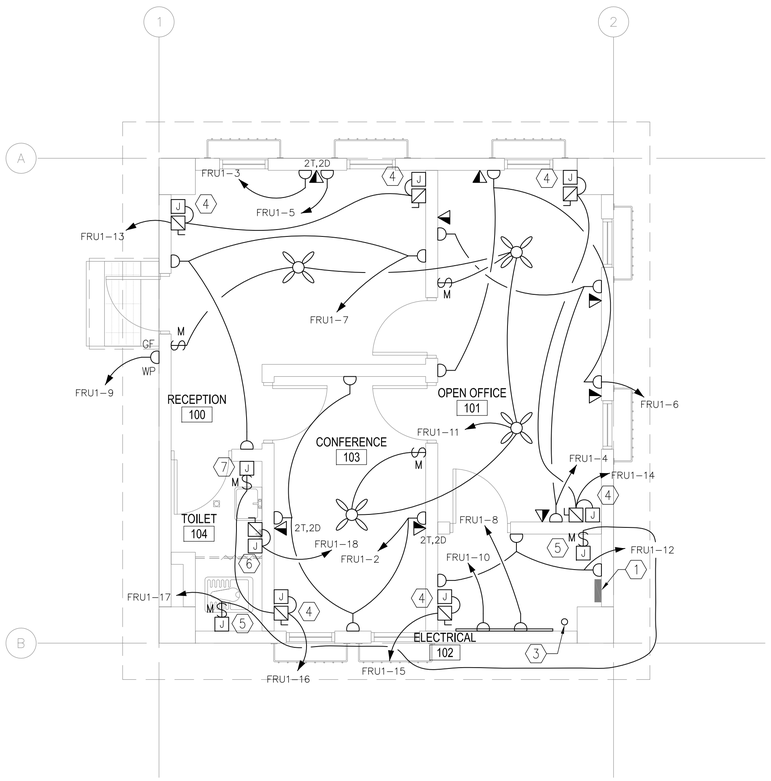

1 / E–102 ELECTRICAL POWER AND SYSTEMS PLAN

SCALE: 1:50

GENERAL NOTES:

1. REFER TO DRAWING #E-001 FOR THE ELECTRICAL SYMBOLS LIST.
2. REFER TO DRAWING #E-601 FOR THE POWER RISER.
3. REFER TO DRAWING #E-601 FOR PANEL SCHEDULES.
4. COORDINATE EXACT MOUNTING LOCATION OF DISCONNECTING MEANS FOR MECHANICAL AND PLUMBING EQUIPMENT IN THE FIELD.
5. FUSIBLE SAFETY SWITCHES THAT ARE NOT OTHERWISE IDENTIFIED SHALL BE 220V, 1P, 30A FUSED SAFETY SWITCHES WITH 20A FUSES.
6. REFER TO DRAWINGS #E-501 AND #E-502 FOR GROUNDING DETAILS.

NUMBERED NOTES:

1. PANEL FRU1.
2. PROVIDE A 1200mm X 2400mm SHEET OF PLYWOOD PAINTED WITH FIRE RESISTANT PAINT FOR MOUNTING TELECOMMUNICATIONS EQUIPMENT.
3. PROVIDE CONDUIT STUB UP IN THE ROOM FOR INCOMING TELECOMMUNICATIONS SERVICE FROM THE CENTRAL COMMUNICATIONS SYSTEM IN THE GARRISON.
4. PROVIDE POWER CONNECTION TO ELECTRIC UNIT HEATER. SEE DRAWINGS #M-101 AND #E-602 FOR MORE INFORMATION.
5. PROVIDE POWER CONNECTION TO EXHAUST FANS. SEE DRAWINGS #M-101 AND #E-602 FOR MORE INFORMATION.
6. PROVIDE POWER CONNECTION TO TANKLESS WATER HEATER. PROVIDE 220V 1PH 60A FUSED SAFETY SWITCH WITH 40A FUSES. SEE DRAWING #P-501 AND #E-601.
7. PROVIDE POWER CONNECTION TO WALL HEATER. SEE DRAWINGS #M-101 AND #E-601 FOR MORE INFORMATION.

LINEAR DIMENSIONS SHOWN ARE IN MILLIMETERS (MM), UNLESS OTHERWISE NOTED

0 1000 2000
SCALE: 1:50

APPROVED:

A/E DESIGNER OF RECORD

SEAL:

COMMONWEALTH OF PENNSYLVANIA
REGISTERED PROFESSIONAL
JOSEPH R. GAUS
8/24/2010
ENGINEER
PE-074251

US ARMY CORPS OF ENGINEERS
AFGHANISTAN ENGINEER DISTRICT

Mark	Description	Date	Appr.

Mark	Description	Date	Appr.

Date: 06/30/10 | Design file no. | Rev: 0
Drawing code:
File name: ANAFRUE-102
Plot date: 8/24/2010
Plot scale: 1:50

Designed by: JRG | Drawn by: BJB | Ckd by: JRG
Reviewed by: MRS
Submitted by: BAKER

U.S. ARMY CORPS OF ENGINEERS
AFGHANISTAN ENGINEER DISTRICT
APO AE 96338

Michael Baker Jr., Inc.
A unit of Michael Baker Corporation
Airside Business Park
100 Airside Drive
Moon Township, PA 15108
www.mbakercorp.com

AFGHAN NATIONAL ARMY
STANDARD DESIGN

FAMILY RESPONSE UNIT OFFICES (STAND ALONE)

ELECTRICAL – POWER PLAN

Sheet reference number:
E–102

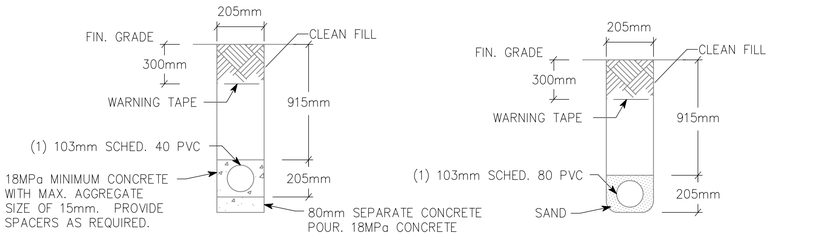

NOTE: PVC CONDUIT SHALL BE DIRECT BURIED SCHEDULE 80 FOR NO TRAFFIC AREAS AND CONCRETE-ENCASED SCHEDULE 40 FOR UNDER ROADWAYS OR TRAFFIC AREAS.

1 / E-501

TYPICAL DUCT BANK DETAILS FOR CONDUIT IN SAND OR CONCRETE

SCALE: N.T.S.

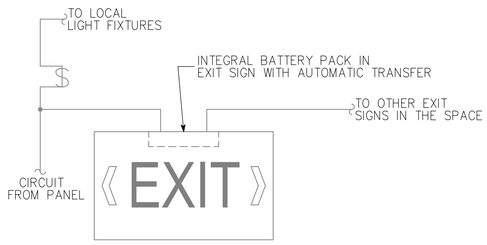

3 / E-501

EXIT SIGN WIRING DIAGRAM

SCALE: N.T.S.

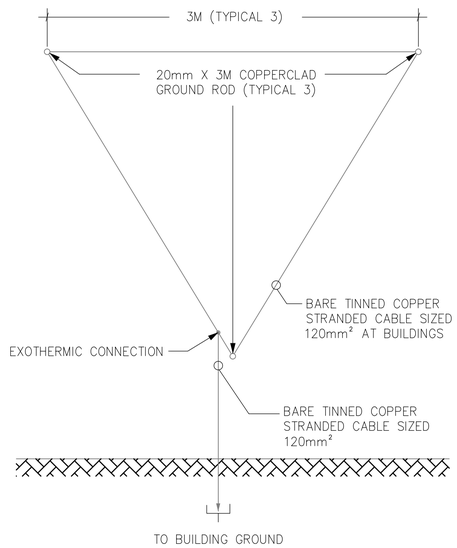

5 / E-501

GROUND TRIPOD SYSTEM DETAIL - PLAN

SCALE: N.T.S.

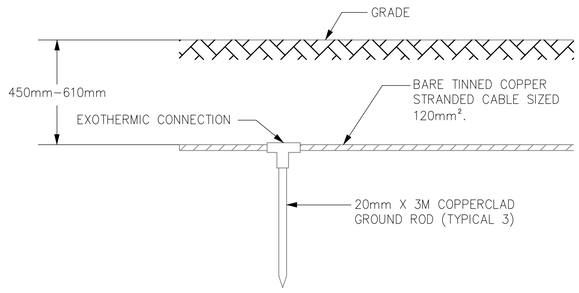

2 / E-501

GROUND TRIPOD SYSTEM DETAIL - ELEVATION

SCALE: N.T.S.

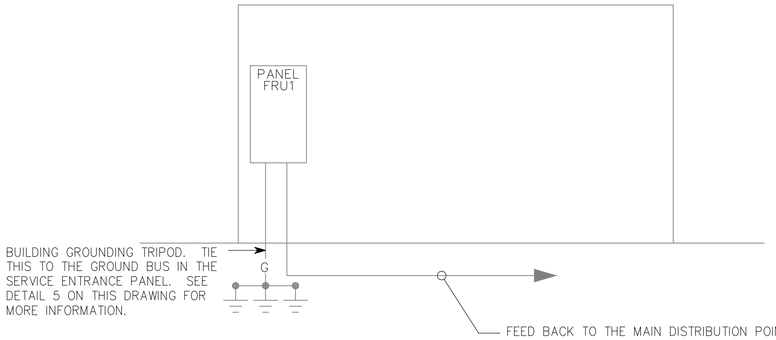

4 / E-501

FRU BUILDING RISER DIAGRAM

SCALE: N.T.S.

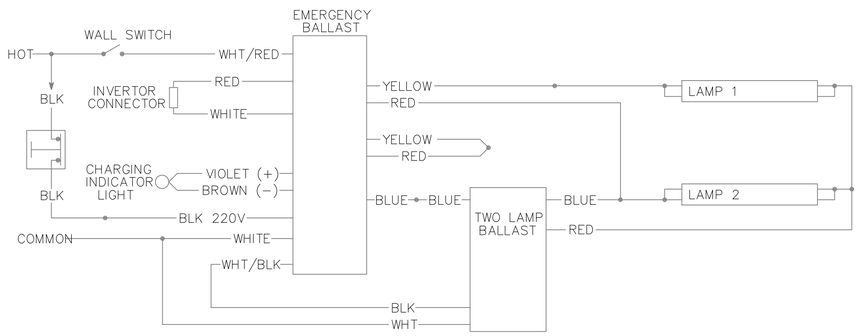

6 / E-501

EMERGENCY FIXTURE WIRING DIAGRAM

SCALE: N.T.S.

APPROVED:

A/E DESIGNER OF RECORD

SEAL:

COMMONWEALTH OF PENNSYLVANIA
REGISTERED PROFESSIONAL
JOSEPH R. GAUS
8/24/2010
ENGINEER
PE-074251

US ARMY CORPS OF ENGINEERS
AFGHANISTAN ENGINEER DISTRICT

Mark	Description	Date	Appr.

Date: 06/30/10 | Rev: 0
Design file no.
Drawing code:
File name: ANAFRUE-501
Plot date: 8/24/2010
Plot scale: NOT TO SCALE

Designed by: ALF | Dwn by: BJB | Ckd by: JRG
Reviewed by: MRS
Submitted by: BAKER

U.S. ARMY CORPS OF ENGINEERS
AFGHANISTAN ENGINEER DISTRICT
APO AE 96338

Michael Baker Jr., Inc.
A unit of Michael Baker Corporation
Airside Business Park
100 Airside Drive
Moon Township, PA 15108
www.mbakercorp.com

AFGHAN NATIONAL ARMY
STANDARD DESIGN

FAMILY RESPONSE UNIT OFFICES (STAND ALONE)

ELECTRICAL - DETAILS

Sheet reference number:
E-501

(A) LARGER OF THE TWO SIZES GIVEN IN THE TABLES BELOW	
GROUNDING ELECTRODE CONDUCTOR (BASED ON AIC RATING)	
AIC RATING OF SERVICE EQUIPMENT	NECESSARY GROUNDING ELECTRODE CONDUCTOR SIZE
10K	(1) 35mm²
14K	(1) 50mm²
18K	(1) 70mm²
22K	(1) 70mm²
25K	(1) 70mm²
30K	(1) 95mm²
35K	(1) 120mm²
42K	(1) 150mm²
65K	(1) 185mm²
100K	(1) 300mm²
125K	(2) 185mm²
200K	(2) 300mm²

GROUNDING ELECTRODE CONDUCTOR (BASED ON NEC TABLE 250.66)	
SIZE OF LARGEST UNGROUNDED SERVICE CONDUCTOR OR EQUIVALENT AREA FOR PARALLEL CONDUCTORS	NECESSARY GROUNDING ELECTRODE CONDUCTOR SIZE
185mm² OR SMALLER	35mm²
OVER 185mm² TO 300mm²	70mm²
OVER 300mm² TO 630mm²	70mm²
OVER 630mm²	95mm²
NOTE: ALL SIZES ARE BASED ON COPPER CONDUCTORS.	

(B) EQUIPMENT GROUNDING CONDUCTOR	
RATING OR SETTING OF AUTOMATIC OVERCURRENT DEVICE IN CIRCUIT AHEAD OF EQUIPMENT, CONDUIT, ETC, NOT EXCEEDING (AMPERES)	NECESSARY EQUIPMENT GROUNDING CONDUCTOR SIZE
15	4.0mm²
20	4.0mm²
30	6.0mm²
40	6.0mm²
60	6.0mm²
100	10mm²
200	16mm²
300	25mm²
400	25mm²
500	35mm²
600	50mm²
800	70mm²
1000	70mm²
1200	95mm²
1600	120mm²
2000	150mm²
2500	185mm²
3000	240mm²
4000	300mm²
5000	400mm²
6000	400mm²
NOTE: ALL SIZES ARE BASED ON COPPER CONDUCTORS.	

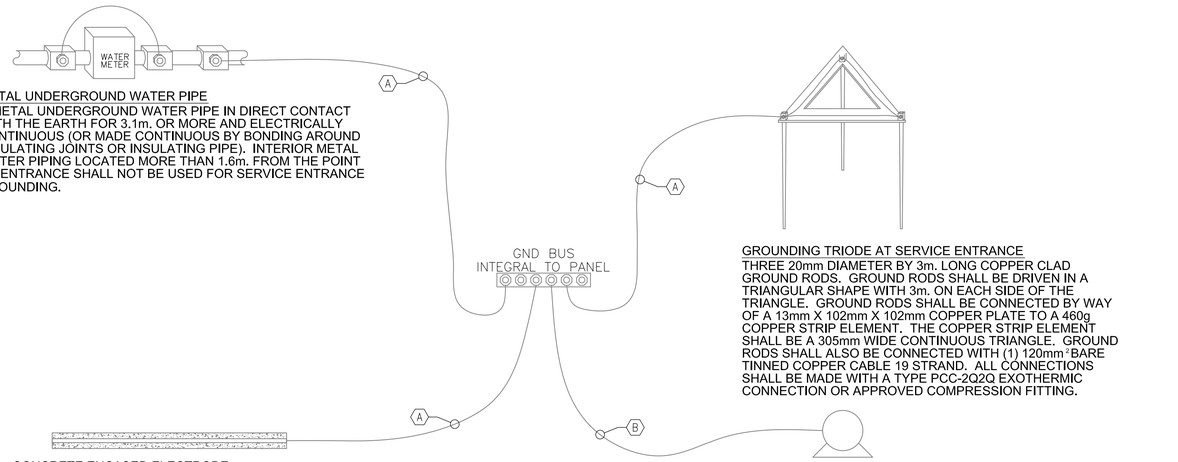

METAL UNDERGROUND WATER PIPE
A METAL UNDERGROUND WATER PIPE IN DIRECT CONTACT WITH THE EARTH FOR 3.1m. OR MORE AND ELECTRICALLY CONTINUOUS (OR MADE CONTINUOUS BY BONDING AROUND INSULATING JOINTS OR INSULATING PIPE). INTERIOR METAL WATER PIPING LOCATED MORE THAN 1.6m. FROM THE POINT OF ENTRANCE SHALL NOT BE USED FOR SERVICE ENTRANCE GROUNDING.

GROUNDING TRIODE AT SERVICE ENTRANCE
THREE 20mm DIAMETER BY 3m. LONG COPPER CLAD GROUND RODS. GROUND RODS SHALL BE DRIVEN IN A TRIANGULAR SHAPE WITH 3m. ON EACH SIDE OF THE TRIANGLE. GROUND RODS SHALL BE CONNECTED BY WAY OF A 13mm X 102mm X 102mm COPPER PLATE TO A 460g COPPER STRIP ELEMENT. THE COPPER STRIP ELEMENT SHALL BE A 305mm WIDE CONTINUOUS TRIANGLE. GROUND RODS SHALL ALSO BE CONNECTED WITH (1) 120mm² BARE TINNED COPPER CABLE 19 STRAND. ALL CONNECTIONS SHALL BE MADE WITH A TYPE PCC-2Q2Q EXOTHERMIC CONNECTION OR APPROVED COMPRESSION FITTING.

CONCRETE ENCASED ELECTRODE
AN ELECTRODE ENCASED BY AT LEAST 51m. OF CONCRETE , LOCATED WITHIN AND NEAR THE BOTTOM OF A CONCRETE FOUNDATION OR FOOTING THAT IS IN DIRECT CONTACT WITH THE EARTH, CONSISTING OF AT LEAST 6.1m. OF ONE OR MORE BARE OR ZINC GALVANIZED OR OTHER ELECTRICALLY CONDUCTIVE COATED STEEL REINFORCING BARS OR RODS OF NOT LESS THAN 13mm DIAMETER OR BARE COPPER CONDUCTOR NOT SMALLER THAN 25mm².

LOAD OR DOWNSTREAM PANEL
EACH LOAD IN THE BUILDING SHALL HAVE A DEDICATED EQUIPMENT GROUNDING CONDUCTOR PULLED FROM ITS ASSOCIATED PANEL.

1
E-502

SERVICE ENTRANCE GROUNDING DETAIL

SCALE: N.T.S.

APPROVED:

A/E DESIGNER OF RECORD

SEAL:

COMMONWEALTH OF PENNSYLVANIA
REGISTERED PROFESSIONAL
JOSEPH R. GAUS
8/24/2010
ENGINEER
PE-074251

US ARMY CORPS OF ENGINEERS
AFGHANISTAN ENGINEER DISTRICT

Mark	Description	Date	Appr.

Mark	Description	Date	Appr.

Date: 06/30/10 | Rev: 0
Design file no.
Drawing code:
File name: ANAFRUE-502
Plot date: 8/24/2010
Plot scale: X:X

Designed by: ALF | Ckd by: JRG
Dwn by: BJB | Reviewed by: MRS
Submitted by: BAKER

U.S. ARMY CORPS OF ENGINEERS
AFGHANISTAN ENGINEER DISTRICT
APO AE 96338

Michael Baker Jr., Inc.
A unit of Michael Baker Corporation
Airside Business Park
100 Airside Drive
Moon Township, PA 15108
www.mbakercorp.com

AFGHAN NATIONAL ARMY
STANDARD DESIGN

FAMILY RESPONSE UNIT OFFICES (STAND ALONE)

ELECTRICAL - DETAILS

Sheet reference number:
E-502

FIXTURE MARK 'A'

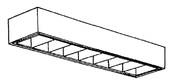

FIXTURE MARK 'B'

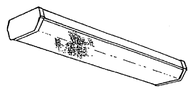

FIXTURE MARK 'C'

FIXTURE MARK 'G'

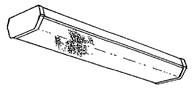

FIXTURE MARK '[E]'

LIGHT FIXTURE SCHEDULE

FIXTURE MARK	STYLE NUMBER AND TYPE	NUMBER AND TYPE OF LAMPS	VOLTAGE	MOUNTING	NOTES
A	PARABOLIC SURFACE/PENDANT MOUNTED 300MM X 1200MM FLUORESCENT FIXTURE WITH ELECTRONIC BALLAST	(2) 32W 3500K	220V – 1ø 50HZ	SURFACE MOUNTED	FURNISHED WITH ELECTRONIC BALLAST. PARABOLIC LOUVER SHALL BE SPECULAR LENS IRIDESCENCE TYPE.
A2	SAME AS FIXTURE 'A' WITH EMERGENCY BALLAST	(2) 32W 3500K	220V – 1ø 50HZ	SURFACE MOUNTED	FURNISHED WITH ELECTRONIC BALLAST. PARABOLIC LOUVER SHALL BE SPECULAR LENS IRIDESCENCE TYPE. EMERGENCY BALLAST SELF TEST.
B	WET LOCATION WRAP AROUND SURFACE/PENDANT MOUNTED FLUORESCENT FIXTURE WITH PRISMATIC ACRYLIC LENS AND ELECTRONIC BALLAST	(2) 32W 3500K	220V – 1ø 50HZ	SURFACE MOUNTED	FURNISHED WITH ELECTRONIC BALLAST, VIRGIN ACRYLIC WRAP AROUND LENS.
B2	SAME AS FIXTURE 'B' WITH EMERGENCY BALLAST	(2) 32W 3500K	220V – 1ø 50HZ	SURFACE MOUNTED	FURNISHED WITH ELECTRONIC BALLAST, VIRGIN ACRYLIC WRAP AROUND LENS. EMERGENCY BALLAST WITH SELF TEST SWITCH.
C	INCANDESCENT ONE PIECE W/ APPROVED LENS STABILIZED HIGH IMPACT POLYCARBONATE.	(1) A19 – 100W INCANDESCENT	220V – 1ø 50HZ	WALL MOUNTED ABOVE EXTERIOR DOORS	
G	WRAP AROUND SURFACE/PENDANT MOUNTED FLUORESCENT FIXTURE WITH PRISMATIC ACRYLIC LENS AND ELECTRONIC BALLAST	(2) 32W 3500K	220V – 1ø 50HZ	SURFACE MOUNTED	FURNISHED WITH ELECTRONIC BALLAST, VIRGIN ACRYLIC WRAP AROUND LENS.
G2	SAME AS FIXTURE 'B' WITH EMERGENCY BALLAST	(2) 32W 3500K	220V – 1ø 50HZ	SURFACE MOUNTED	FURNISHED WITH ELECTRONIC BALLAST, VIRGIN ACRYLIC WRAP AROUND LENS. EMERGENCY BALLAST WITH SELF TEST SWITCH.
[E]	UNIVERSAL MOUNT ENGINEER GRADE THERMOPLASTIC HOUSING EXIT SIGN WITH LED LAMPS, RED LETTERS 6" IN HEIGHT WITH ARROWS AS INDICATED, WITH 12V CADMIUM BATTERY WITH REMOTE HEAD CAPABILITY	LED LAMPS	220V – 1ø 50HZ	UNIVERSAL MOUNTING	

PANELBOARD FRU1 SURFACE MOUNTED
____ AMP. MAIN LUGS (OR) 60 AMP. MAIN BREAKER W/ 60 AMP. TRIP
CIRCUIT BREAKER TYPE 380/220 VOLTS 3 PHASE 4 WIRE 50 HZ 100 AMP. BUS

CKT. NO.	TRIP AMPS	NO. POLES	WIRE MM ²	GND MM²	CONDUIT MM	LOAD SERVED	LOAD-KVA A0	LOAD-KVA B0	LOAD-KVA C0	LOAD-KVA A0	LOAD-KVA B0	LOAD-KVA C0	LOAD SERVED	CONDUIT MM	GND MM²	WIRE MM²	NO. POLES	TRIP AMPS	CKT. NO.
1	20	1	4.0	4.0	20	LIGHTING	1.2			0.8			RECEPTACLES – 103	20	4.0	4.0	1	20	2
3	20	1	4.0	4.0	20	RECEPTACLE – 100		1.0			0.6		RECEPTACLES – 101	20	4.0	4.0	1	20	4
5	20	1	4.0	4.0	20	RECEPTACLE – 100			1.0			0.6	RECEPTACLES – 101	20	4.0	4.0	1	20	6
7	20	1	4.0	4.0	20	RECEPTACLES – 100	0.6			1.0			RECEPTACLES – 102	20	4.0	4.0	1	20	8
9	20	1	4.0	4.0	20	RECEPTACLE – EXTERIOR		0.2			1.0		RECEPTACLES – 102	20	4.0	4.0	1	20	10
11	20	1	4.0	4.0	20	CEILING FANS – 100,101,103			0.8			0.6	RECEPTACLES – 102	20	4.0	4.0	1	20	12
13	30	1	6.0	6.0	20	ELECTRIC HEATERS –100	5.2			5.2			ELECTRIC HEATERS – 101	20	6.0	6.0	1	30	14
15	20	1	4.0	4.0	20	ELECTRIC HEATER – 102		2.6			3.1		ELECTRIC HEATERS – 103	20	6.0	6.0	1	30	16
17	20	1	4.0	4.0	20	EXHAUST FANS – 102,104			1.0			7.0	TANKLESS WATER HEATER – 104	20	6.0	10.0	1	40	18
19	20	1	4.0	4.0	20	SPARE							SPARE				1	20	20
21	20	1	4.0	4.0	20	SPARE							SPARE				1	20	22
23	20	1	4.0	4.0	20	SPARE							SPARE				1	20	24
							7.0	3.8	2.8	7.0	4.7	8.2							

TOTAL CONN. LOAD PER PHASE (KVA): A0 14.0 B0 8.5 C0 6.0

TOTAL CONN. LOAD 28.5 ESTIMATED DEMAND LOAD 34.9 KVA.

* MAIN BREAKER SHALL BE 3P EARTH GROUND TYPE (GROUND FAULT).
** PANELBOARD SHALL BE SERVICE ENTRANCE RATED.
*** PROVIDE A SURGE PROTECTIVE DEVICE PER THE SPECIFICATIONS.
**** SITE ADAPT CONTRACTOR SHALL BE RESPONSIBLE FOR SHORT CIRCUIT CALCULATIONS BASED ON SITE CONDITIONS.
***** ESTIMATED DEMAND LOAD INCLUDES 25% SPARE CAPACITY.

GENERAL NOTES:

1. ALL PANELBOARDS SHALL BE PROVIDED WITH 25% SPARE BREAKER CAPACITY

APPROVED:

A/E DESIGNER OF RECORD

SEAL:

COMMONWEALTH OF PENNSYLVANIA
REGISTERED PROFESSIONAL ENGINEER
JOSEPH R. GAUS
PE-074251

US ARMY CORPS OF ENGINEERS
AFGHANISTAN ENGINEER DISTRICT

Mark	Description	Date	Appr.

Mark	Description	Date	Appr.

Designed by: ALF
Drawn by: BJB
Ckd by: JRG
Reviewed by: MRS
Submitted by: BAKER

Date: 06/30/10
Design file no.
Drawing code:
File name: ANAFRUE-601
Plot date: 8/24/2010
Plot scale: X:X
Rev: 0

U.S. ARMY CORPS OF ENGINEERS
AFGHANISTAN ENGINEER DISTRICT
APO AE 96338

Michael Baker Jr., Inc
A unit of Michael Baker Corporation
Airside Business Park
100 Airside Drive
Moon Township, PA 15108
www.mbakercorp.com

AFGHAN NATIONAL ARMY
STANDARD DESIGN

FAMILY RESPONSE UNIT OFFICES (STAND ALONE)

ELECTRICIAL – LIGHTING SCHEDULE AND PANEL SCHEDULES

Sheet reference number:
E–601

ENGINEERING AND CONSTRUCTION DIVISION
US ARMY ENGINEER DISTRICT, AFGHANISTAN
APO AE, 09356

SMALL WOMEN'S BARRACK'S

APPENDIX A

VARIOUS LOCATIONS

SECTION/DETAIL CROSS REFERENCING CONVENTIONS

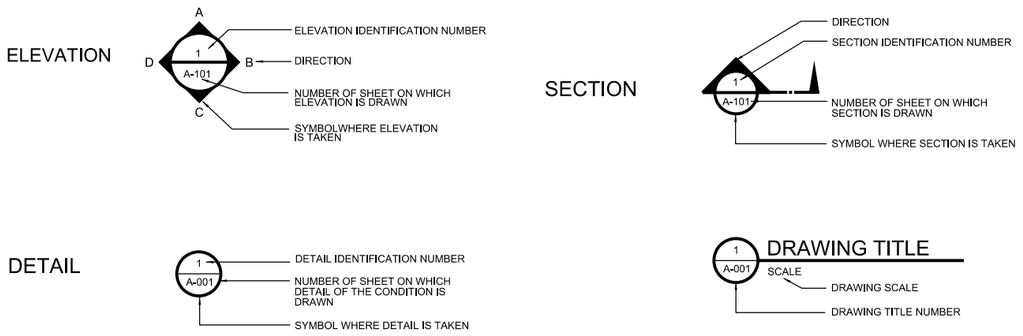

SCHEDULE OF DRAWINGS

SHEET NO	DWG CODE	SHEET REFERENCE NO	DESCRIPTION	REV STATUS
			GENERAL	
		G-001	TITLE SHEET & SCHEDULE OF DRAWINGS	
			STRUCTURAL	
		S-101	FOUNDATION AND ROOF FRAMING PLANS	
		S-501	STRUCTURAL DETAILS	
		S-502	STRUCTURAL DETAILS	
		S-601	STRUCTURAL SCHEDULES	
		S-602	STRUCTURAL METERIAL SCHEDULES	
			ARCHITECTURAL	
		A-101	FLOOR PLAN, ROOF PLAN	
		A-201	ELEVATIONS, BUILDING SECTION, AND EAVE DETAIL	
		A-601	DOOR & FINISH SCHEDULES AND DETAILS	
			ELECTRICAL	
		E-101	ELECTRICAL PLAN	

PROJECT COORDINATION

U.S. ARMY ENGINEER DISTRICT, AFGHANISTAN

PROJECT MANAGER _____ DATE _____

CHIEF, DESIGN BRANCH _____ DATE _____

THIS PROJECT WAS DESIGNED BY AFGHANASTAN ENGINEER DISTRICT OF THE U.S ARMY CORPS OF ENGINEERS. THE INITIALS OR SIGNATURES AND REGISTRATION DESIGNATIONS OF INDIVIDUALS APPEAR ON THESE DOCUMENTS WITHIN THE SCOPE OF THEIR EMPLOYMENT AS REQUIRED BY ER 1110-1-8152.

US ARMY CORPS OF ENGINEERS AFGHANISTAN ENGINEER DISTRICT

SYMBOL	DESCRIPTION	DATE	APR

DESIGNED BY: AED
DWN BY: AED
CKD BY: AED
REVIEWED BY:
SUBMITTED BY:
DATE: 08/08/2010
DESIGN FILE NO.
DRAWING CODE:
FILE NAME: G-TS.dgn
PLOT SCALE: AS SHOWN
CONTRACT NO. xx-xx-xx
REV. ___

U.S. ARMY CORPS OF ENGINEERS
AFGHANISTAN ENGINEER DISTRICT
APO AE 09356

ENGINEERING AND CONSTRUCTION DIVISION

SMALL WOMEN'S BARRACK'S
VARIOUS LOCATIONS

TITLE SHEET
SCHEDULE OF DRAWINGS

SHEET REFERENCE NUMBER:
G-001

SHEET 1 OF 5

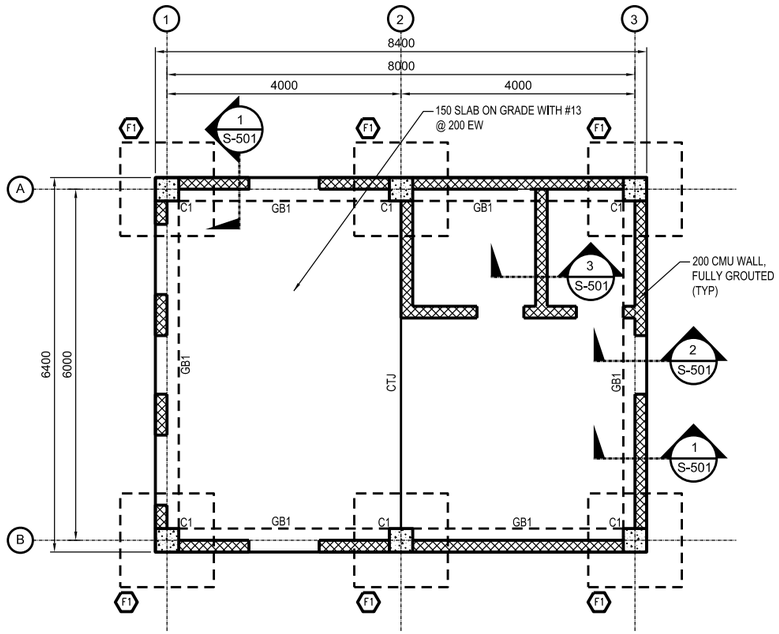

1 S-101 FOUNDATION PLAN
SCALE: 1:50

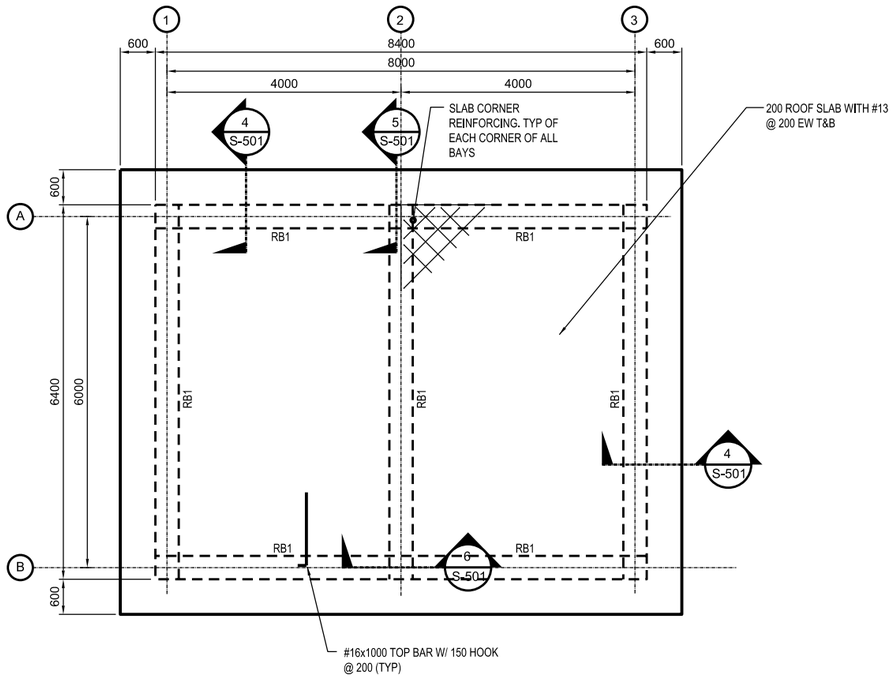

2 S-101 ROOF FRAMING PLAN
SCALE: 1:50

GENERAL NOTES

1. DESIGN LOADS (SERVICE)

LIVE LOADS:

ROOF: 1.0 KPA (20 PSF)
OTHERS: 4.8 KPA (100 PSF)
8.9 KN (2.0 K) CONCENTRATED LOAD

WIND LOADS PER IBC-2003

USING A "3-SECOND" WIND VELOCITY OF 125 KPH EXPOSURE C AND IMPORTANCE FACTOR I=1.0

EARTHQUAKE LOADS PER IBC-2003:

USING A SEISMICITY: Ss=1.65g AND S_1=0.75g

2. MATERIALS:

CONCRETE: 28 MPa (4 KSI) - CYLINDER STRENGTH AT 28 DAYS

REINFORCING: ASTM A615 GRADE 60 (60 KSI)

CONCRETE MASONRY UNITS:
ASTM C90, TYPE I (NORMAL WEIGHT, MOISTURE CONTROLLED) MORTAR, ASTM C270, TYPE S GROUT, ASTM C 476

3. WORK THESE STRUCTURAL DRAWINGS WITH THE STANDARD-DETAILS DRAWINGS.

4. A RELATIVE (DATUM) FINISH FLOOR ELEVATION EQUAL TO 0.00 M. IS USED AS REFERENCE ELEVATION FOR ALL STRUCTURAL DRAWINGS. COORDINATE WITH SITE SPECIFIC GRADING PLAN TO BE PROVIDED BY CONTRACTOR.

5. FOUNDATIONS ARE DESIGNED USING AN ALLOWABLE BEARING PRESSURE OF 0.75 KG/SQ. CM (1500 PSF), AND BOTTOM OF FOOTINGS ARE PLACED AS SHOWN ON DRAWINGS. GEOTECHNICAL INVESTIGATION SHALL CONFIRM BEARING CAPACITY TO BE NO LESS THAN 0.75 KG/SQ CM. IF GEOTECHNICAL INVESTIGATION SHOWS LESS THAN 0.75 KG/SQ CM THE CONTRACTOR SHALL REDESIGN FOOTINGS BASED ON THE GEOTECHNICAL INVESTIGATION. SEE SPECIFICATION 01015 PARAGRAPH, GEOTECHNICAL, FOUNDATION AND SURVEY.

6. FOR BUILDING NORTH ORIENTATION SEE SHEET C-1.

NOTES

1. ALL CELLS OF CMU WALL SHALL BE FULLY GROUTED - SEE PLATE S-601 FOR REINFORCING REQUIREMENTS.
2. SEE PLATE S-601 FOR FOOTING, COLUMN, BEAM, AND CMU REINFORCING SCHEDULES.

1 0 1 2 3 4
1:50

US ARMY CORPS OF ENGINEERS
AFGHANISTAN ENGINEER DISTRICT

SYMBOL	DESCRIPTION	DATE	APR

DESIGNED BY: AED
DWN BY: AED
CKD BY: AED
REVIEWED BY:
SUBMITTED BY:
DATE: 06-02-2010
REV.
DESIGN FILE NO.
DRAWING CODE:
FILE NAME:
PLOT SCALE: AS SHOWN
CONTRACT NO. xx-xx-xx

U.S. ARMY CORPS OF ENGINEERS
AFGHANISTAN ENGINEER DISTRICT
APO AE 09356

ENGINEERING AND CONSTRUCTION DIVISION

SMALL WOMEN'S BARRACK'S
VARIOUS LOCATIONS

FOUNDATION AND ROOF FRAMING PLANS

SHEET REFERENCE NUMBER:
S-101
SHEET 2 OF 9

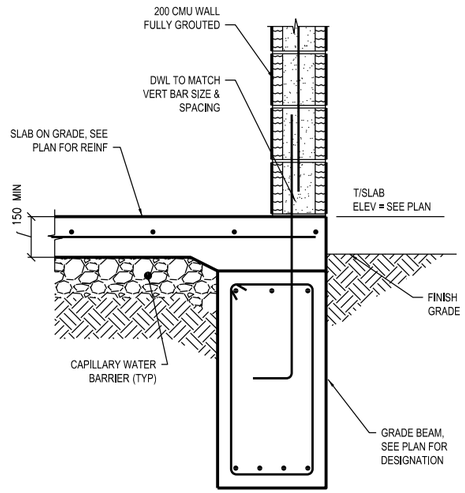

1 S-501 SECTION
SCALE = 1:10

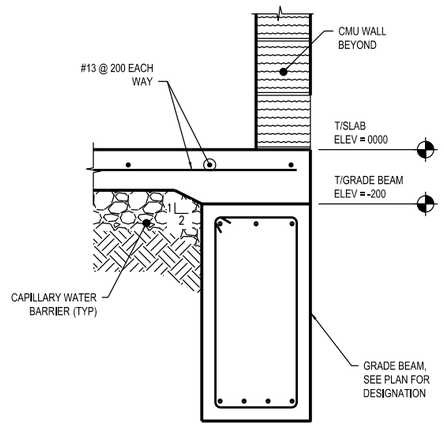

2 S-501 SECTION
SCALE = 1:10

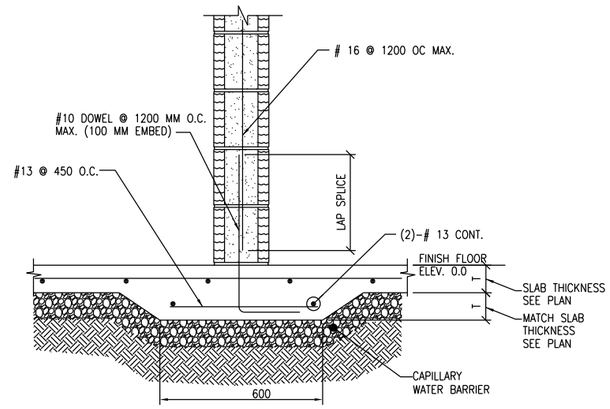

3 S-501 SECTION
SCALE = 1:10

NOTE: REFERENCE ARCHITECTURAL DRAWINGS FOR OVERFRAMING ABOVE ROOF SLAB

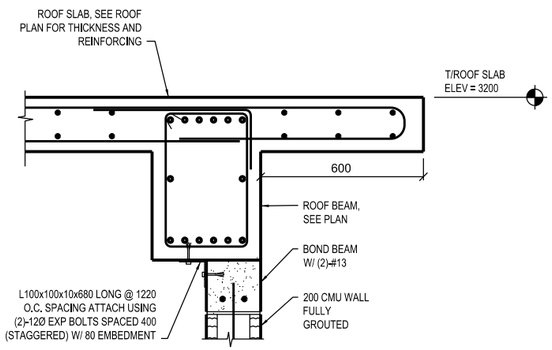

4 S-501 SECTION
SCALE = 1:10

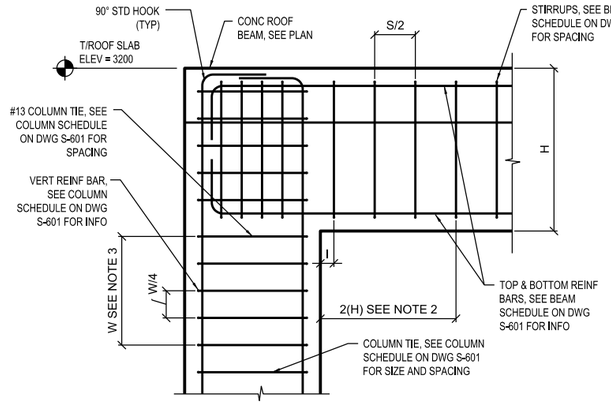

5 S-501 BEAM/COLUMN REINFORCING DETAIL
SCALE = 1:10

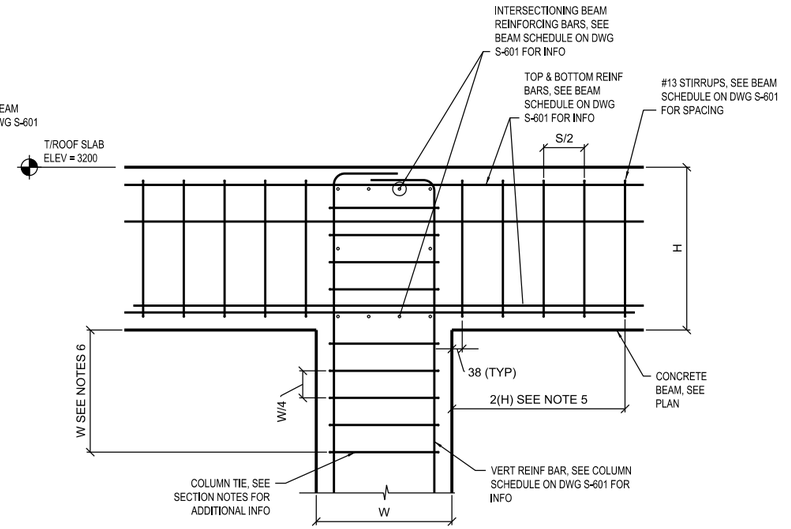

6 S-501 BEAM/COLUMN REINFORCING DETAIL
SCALE = 1:10

SECTION NOTES:
1. COLUMN/BEAM REINFORCEMENT AT OUTSIDE CORNERS AND BEAM ENDS.
2. PROVIDE STIRRUPS IN BEAM ENDS AT SPACING OF "S/2" FOR A DIATANCE OF "2(H)" MEASURE FROM FACE OF COLUMN, TYPICAL EACH END OF BEAM.
3. PROVIDE COLUMN TIES AT BEAM/COLUMN JOINTS AT A SPACING OF "W/4" FOR A DISTANCE OF "W" MEASURED FROM BOT OF BEAM.
4. "S" DENOTES TIE SPACING FOR BOTTOM BARS AT COLUMN, SEE SCHEDULE ON DWG S-601.
4. "W" DENOTES WIDTH OF COLUMN, SEE SCHEDULE ON S-601

GRAPHIC SCALE

US ARMY CORPS
OF ENGINEERS
AFGHANISTAN
ENGINEER DISTRICT

APP'D
DATE
DESCRIPTION
NUMBER

DATE: 04/02/2010
DESIGN FILE NO.
DRAWING CODE:
FILE NAME:
PLOT SCALE: AS SHOWN
CONTRACT NO.: XXXXXX
REV:

DESIGNED BY: AED
DWN BY: AED
CKD BY: AED
REVIEWED BY:
SUBMITTED BY:

U.S. ARMY CORPS OF ENGINEERS
AFGHANISTAN ENGINEER DISTRICT
APO AE 09356

ENGINEERING AND
CONSTRUCTION DIVISION

SMALL WOMEN'S BARRACK'S
VARIOUS LOCATIONS

STRUCTURAL DETAILS

SHEET REFERENCE NUMBER:
S-501
SHEET 3 OF 9

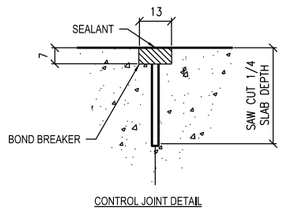

CONTROL JOINT DETAIL

1/S-502 TYPICAL CONCRETE SLAB JOINT FINISH DETAIL

NTS

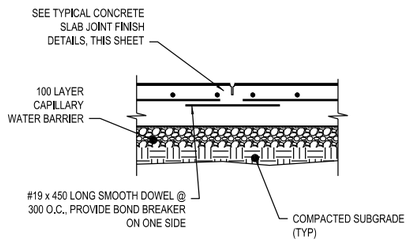

CONTROL JOINT DETAIL (CTJ)

2/S-502 TYPICAL SLAB ON GRADE JOINT DETAILS

NTS

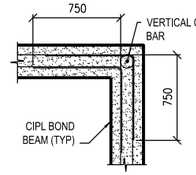

BOND BEAM CORNER

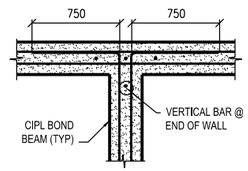

BOND BEAM INTERSECTION

4/S-502 CMU BOND DETAIL

NTS

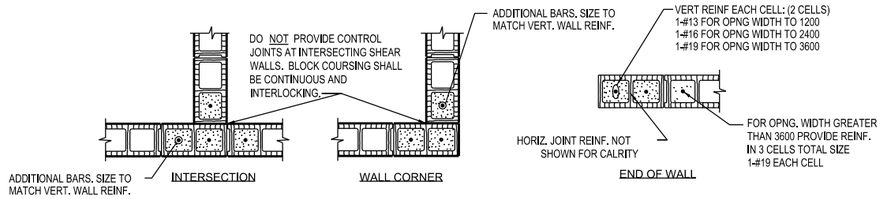

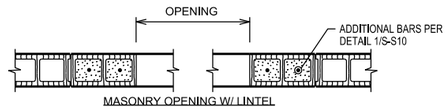

MASONRY OPENING W/ LINTEL

TYPICAL CONCRETE MASONRY UNIT DETAILS

NOTE:
OPNG WIDTH SHALL NOT EXCEED
3600 FOR THIS TYPE OF JAMB

5/S-502 TYPICAL CMU DETAILS

SCALE

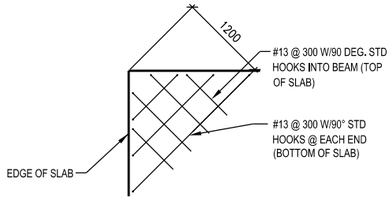

3/S-502 ELEVATED SLAB CORNERS

NTS

ADD'L REINFORCEMENT DETAILS

1. WHERE MORE THAN ONE ADDITIONAL BAR IS REQUIRED PARALLEL TO THE EXISTING SLAB/WALL REINFORCING THE ADDITIONAL REINFORCING BARS SHALL BE SPACED AT 100 ON CENTER.
2. ADDITIONAL REINFORCING PARALLEL TO THE SLAB/WALL REINFORCING SHALL BE #16 BARS THAT PROVIDE A STEEL AREA ON EACH SIDE OF THE OPENING EQUAL TO 1/2 THE AREA OF THE REINFORCING CUT BY THE OPENING.

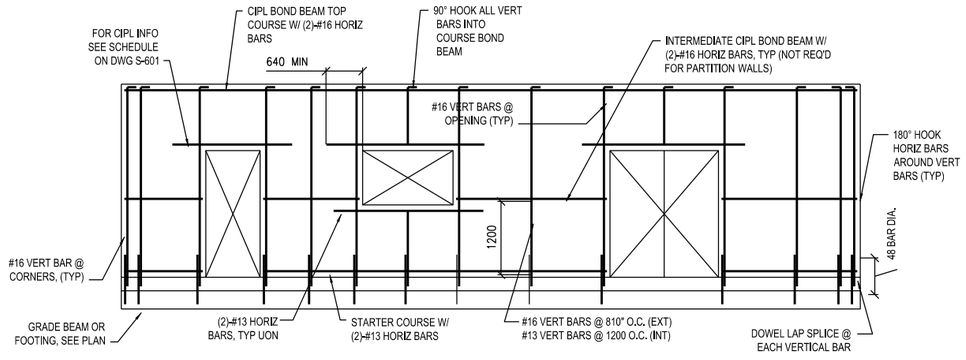

6/S-502 MIN MASONRY WALL REINFORCING

NTS

LINTEL NOTES:
CMU LINTEL REINFORCEMENT AS PER SCHEDULE ON DWG S-S4

GRAPHIC SCALE

500 200 100 0 500 1000

SCALE: 1 : 10

US ARMY CORPS OF ENGINEERS
AFGHANISTAN ENGINEER DISTRICT

NO.	DESCRIPTION	DATE
		APR

DESIGNED BY: AED
DWN BY: AED
REVIEWED BY:
CHKD BY: AED
SUBMITTED BY:

DATE: 04/05/2010
DESIGN FILE NO.
DRAWING CODE:
FILE NAME:
PLOT SCALE: AS SHOWN
CONTRACT NO. XXXXXX
REV:

U.S. ARMY CORPS OF ENGINEERS
AFGHANISTAN ENGINEER DISTRICT
APO AE 09356

ENGINEERING AND CONSTRUCTION DIVISION

SMALL WOMEN'S BARRACK'S

VARIOUS LOCATIONS

STRUCTURAL DETAILS

SHEET REFERENCE NUMBER:
S-502

SHEET 4 OF 9

CAST-IN-PLACE CONCRETE LINTEL SCHEDULE

OPENING TYPE OR SIZE, BEAM LOCATION OR TYPE	MAX SPAN (mm)	BEAM DEPTH (mm)	MAIN REINFORCING			SHEAR REINF STIRRUPS
			TOP	BOTTOM	OTHER	
EXT WALL OPENING, 1-STORY BLDG	1800	400	(2)-#13	(2)-#13		
EXT WALL OPENING, 1-STORY BLDG	900	200		(2)-#13		
INT WALL OPENING, NON-BEARING	1800	200		(2)-#13		
INT WALL OPENING, NON-BEARING	900	200		(2)-#13		

1. STRUCTURAL DRAWINGS DO NOT INDICATE ALL OPENINGS IN MASONRY WALLS. VERIFY NUMBER, SIZE AND LOCATION OF ALL OPENINGS IN MASONRY WALLS FROM ARCHITECTURAL DRAWINGS AND APPROVED PLUMBING, MECHANICAL, AND ELECTRICAL SHOP DRAWINGS.
2. PROVIDE 200 BEARING EA. END FOR 200 DEEP CIB. PROVIDE 400 BEARING EA. END FOR 400 DEEP CIB.
3. FOR HEAD DETAILS REFER TO ARCHITECTURAL DRAWINGS.
4. REINFORCING SHALL BE ASTM A615M, GRADE 400. CONCRETE FOR CAST-IN-PLACE BEAMS SHALL HAVE A MINIMUM COMPRESSIVE STRENGTH OF 21 MPa AT 28 DAYS.
5. CONTRACTOR SHALL SUBMIT FOR APPROVAL SHOP DRAWINGS AND SCHEDULES SHOWING SIZE, DETAILS, LOCATIONS, ETC. FOR ALL CAST-IN-PLACE BEAMS IN CMU WALLS.

CONCRETE COLUMN SCHEDULE

MARK	SIZE	REINFORCING			REMARKS
	(LxW)	1ST FLOOR	2ND FLOOR	STIRRUPS	
C1	400x400	(12)-#19	-	#13 @ 200	SPACE TOP 3 TIES @ 125mm

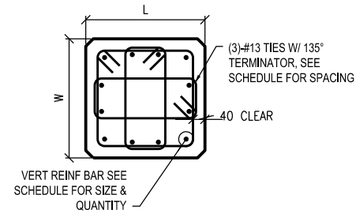

1 S-601 COLUMN DETAIL
SCALE = 1:10

CONCRETE BEAM SCHEDULE

GRADE BEAM

MARK	SIZE	REINFORCING				REMARKS
	(BxH)	TOP	BOTTOM	STIRRUPS	MIDBAR	
GB1	400x950	(6)-#16	(6)-#16	#13 @ 200	(2) #19 EF	TOP BAR LAP AT CENTER BOT BAR LAP PAST COL

ROOF BEAM

MARK	SIZE	REINFORCING				REMARKS
	(BxH)	TOP	BOTTOM	STIRRUPS	MIDBAR	
RB1	400x600	(6)-#16	(6)-#16	#13 @ 300	#19 EF	TOP BAR LAP AT CENTER BOT BAR LAP PAST COL

SPREAD FOOTING AND PIER SCHEDULE

MARK	FOOTING SIZE			FOOTING REINFORCING	PIER				REMARKS
	LENGTH	WIDTH	THICKNESS		SIZE	T/PIER	VERT. BARS	TIES	
F1	2400	1700	300	(7)-#13 E.W., TOP (7)-#19 E.W., BOTT	—	—	—	—	—

NOTES:
1. DIMENSIONS NOTED ARE MILLIMETERS (mm) U.N.O.
2. T/PIER EL GIVEN IN REFERENCE TO 0.0 mm DATUM OR FINISH FLOOR EL/SLAB EL. DISTANCE ABOVE OR BELOW INDICATED AS NEGATIVE OR POSITIVE.
3. PIER SIZE INDICATED IS SQUARE (DIMENSION SAME IN BOTH DIRECTIONS) U.N.O.

TYPICAL CMU WALL REINFORCING SCHEDULE

WALL TYPE OR LOCATION	WALL THICKNESS	CONT. VERT. REINF. (CENTERED IN CMU, U.N.O.)	CONT. CAST IN PLACE LINTEL (CIPL)			REMARKS
			DEPTH	REINF. (BOT U.N.O.)	MAX. CIPL VERT. SPACING	
ALL PERIMETER/EXTERIOR WALLS (U.N.O.)	200	1-#16 @ 600	200	2-#16	1200	—
NON-LOAD BEARING INTERIOR WALLS WITH TOP AND BOTT. SUPPORTS	200	1-#13 @ 1200	200	2-#16	1200	—

NOTES:
1. REINFORCING SIZES AND SPACING GIVEN IN SECTIONS AND DETAILS SHALL SUPERSEDE THE ABOVE SCHEDULE REQUIREMENTS.
2. PROVIDE CONTINUOUS CAST IN PLACE CONCRETE LINTEL AT ALL WALL LATERAL SUPPORT LOCATIONS.
3. REINFORCING INDICATED SHALL BE CONTINUOUS FOR FULL EXTENT OF SPLICE FOLLOWING THE REQUIREMENTS OF THE LAP SPLICE TABLE SHOWN ON THIS SHEET.
4. WALLS HAVE BEEN DESIGNATED AS VERTICALLY SPANNING U.N.O. AND THEREFORE MUST BE TEMPORARILY SUPPORTED DURING CONSTRUCTION UNTIL THE SUPPORTING DIAPHRAGMS (FLOOR AND ROOF SYSTEMS) HAVE BEEN COMPLETELY INSTALLED. SHORING IS THE RESPONSIBILITY OF THE CONTRACTOR.
5. ALL CMU WALLS SHALL BE FULLY GROUTED IN LIFTS NOT EXCEDING THOSE BY CODE (UNO)
6. SEE TYPICAL CMU WALL DETAILS ON S-502.

MASONRY REINFORCING MINIMUM LAP SPLICES

BAR SIZE	BASIC LAP SPLICE Ld FOR CMU REINFORCING
#10	450
#13	600
#16	750
#19	900
#22	1050
#25	1200

US ARMY CORPS OF ENGINEERS AFGHANISTAN ENGINEER DISTRICT

APP. DATE DESCRIPTION SYMBOL

REV. —
DATE:
DESIGN FILE NO.
DRAWING CODE:
FILE NAME:
PLOT SCALE: AS SHOWN
CONTRACT NO. XX-XXX-XXX

DESIGNED BY: AED
DRAWN BY: AED
CHKD BY: AED
REVIEWED BY:
SUBMITTED BY:

U.S. ARMY CORPS OF ENGINEERS AFGHANISTAN ENGINEER DISTRICT APO AE 09356

ENGINEERING AND CONSTRUCTION DIVISION

SMALL WOMEN'S BARRACK'S
VARIOUS LOCATIONS

STRUCTURAL SCHEDULES

SHEET REFERENCE NUMBER:
S-601
SHEET 5 OF 9

f'c = 27.5MPa CONCRETE

BAR SIZE \ CENTER TO CENTER BAR SPACING	(—TOP BARS—) LESS THAN 4db	(—TOP BARS—) 4db OR MORE	(—OTHER BARS—) LESS THAN 4db	(—OTHER BARS—) 4db OR MORE	4db
#10	460	460	410	410	40
#13	660	610	510	480	50
#16	1020	760	790	580	60
#19	1450	910	1120	710	80
#22	1960	1090	1500	840	90
#25	2590	1450	1980	1120	100
#29	3280	1830	2510	1420	110
#32	4140	2340	3200	1780	130
#36	5080	2840	3910	2180	140

NOTES:

1. LAP SPLICES ABOVE ARE IN MILLIMETERS UNO.
2. YIELD STRENGTH OF REINFORCEMENT, fy, IS 400MPa (LAP SPLICE LENGTH IS IN MILLIMETERS).
3. CONCRETE IS NORMAL WEIGHT (2400Kg/m).
4. TOP BAR INDICATES HORIZONTAL REINFORCEMENT WHICH IS PLACED ABOVE 300mm OR MORE OF FRESH CONCRETE.
5. SEE COLUMN SCHEDULE FOR COLUMN AND SHEAR WALL VERTICAL LAP SPLICE.
6. STREIGHT DEVELOPMENT LENGTH OF AN UNLAPPED BAR IS EQUAL TO VALUE FROM TABLE DIVIDED BY 1.3.
7. CATEGORY FOR BARS SPACED LESS THAN 4d, OR ON CENTER CORRESPONDS TO CATEGORY 1 IN THE CRSI HANDBOOK WHEREAS FOR BARS SPACED 4d, OR MORE ON CENTER CORRESPOND TO CRSI CATEGORY 5.

STRUCTURAL DESIGN CRITERIA:

ALL DESIGNS SHALL CONFORM TO THE PROVISIONS OF THE IBS 2006 AND UFC 4-010-01 AS APPLICABLE

2.0 FOUNDATION DESIGN CRITERIA (TO BE CONFIRMED BY THE CONTRACTOR)

THE GEOTECHNICAL ANALYSIS FOR THIS PROJECT IS THE RESPONSIBILITY OF THE CONTRACTOR AWARDED THE WORK , DESIGN VALUES USED IN THE STRUCTURAL ANALYSIS ON THE BUILDINGS HERIEN INDICATED HAVE BEEN ASSUMED AND SHALL BE CONFIRMED AND VERIFIED AS PART OF THE GEOTECHNICAL INVESTIGATION. VLAUES WHICH DO NOT MEET THE REQUIREMENTS INDICATED BELOW SHALL BE IMMEDIATELY BROUGHT TO THE ATTENTION OF THE ENGINEER-OF-RECORD FOR CONSIDERATION AND DETERMINATION ON THE NEXT APPROPRIATE COURSE OF ACTION.

2.1 SOIL DESIGNN PARAMETERS

NET ALLOWABLE SOIL BEARING CAPACITY	96.0 Kpa
UNIT WEIGHT OF SOIL (moist)	1800 Kg/m³
COEFF ACTIVE EARTH PRESSURE (Kpa)	0.30
COEFF PASSIVE EARTH PRESSURE (Kpp)	3.33
COEFF AT-REST EARTH PRESSURE (Kpr)	.55
COEFF OF SOIL FRICTION	.35
SUBGRADE MODULUS	4120 g/m³
MINIMUM BEARING DEPTH BELOW GRADE	800mm
SEISMIC SITE CLASS (based on in-situ soil)	0

STEEL MATERIALS SCHEDULE

STRUCTURAL ELEMENT	FY YIELD STRENGTH (MPa)	REMARKS
BEAMS & GIRDERS	250	ASTM A36M ASTM A6M
COLUMNS	240	ASTM A53-95 GRADE B ASTM A6M
MISC BRACING	250	ASTM A572M ASTM A6M
CONNECTIONS, PLATES, & ALL OTHERS	250	ASTM A36M ASTM A6M
ANCHOR BOLTS	-	ASTM A36M or A307M ASTM A6M
PIPES	240	ASTM A53-95 GRADE B ASTM A6M
TUBING	345	ASTM A500-93 GRADE C ASTM A6M
HIGH STRENGTH BOLTS	-	ASTM A325M-N
WELDING ELECTRODES	-	AWS D1.1-90 E70xx

CONCRETE COVER SCHEDULE

MINIMUM CONCRETE COVER PROTECTION FOR REINFORCEMENT BARS SHALL BE AS FOLLOWS: (SEE ACI 318-89M, SECTION 7.7 FOR CONDITIONS NOT NOTED). DIMENSIONS FOR BAR PLACEMENT GIVEN IN SECTIONS AND DETAILS SHALL SUPERCEDE MINIMUM COVER REQUIREMENTS GIVEN HERE. DIMENSIONS ARE IN mm.

FOOTINGS (EARTH FORMED)		70
COLUMNS / PIERS		40
GRADE BEAMS OR SLAB TURNED DOWN EDGES:		
TOP		40
BOTTOM (EARTH FORMED)		70
SIDES (EARTH FORMED)		70
SIDES (BOARD FORMED)	#16 BAR & SMALLER	40
	#19 THRU #36 BAR	50
		40
SLABS-ON-GRADE (NO EXPOSURE TO WEATHER) FROM TOP		20
SLABS-ON-GRADE (EXPOSURE TO WEATHER) FROM TOP		40
UTILITY TUNNEL WALLS, RETAINING WALLS AND SHEAR WALLS, (NO SURFACES SHALL BE EARTH FORMED) EARTH SIDE AND FRONT SIDE (EXPOSED TO WEATHER):		
#16 BAR AND SMALLER		40
#19 THRU #36 BAR		50

PROVIDE STANDARD BAR CHAIRS AND SPACERS AS REQUIRED TO MAINTAIN CONCRETE PROTECTION SPECIFIED.

CONCRETE MATERIALS SCHEDULE

STRUCTURAL ELEMENT	f'c CONCRETE COMPRESSIVE STRENGTH @ 28 DAYS (MPa)
SLAB-ON-GRADE/TURN-DOWN SLABS	27.5
ROOF SLABS	27.5
ALL FOOTINGS (U.N.O.)	20
MISC. CURBS, WALLS AND PADS UNO	27.5

NOTES:
1. ALL CONCRETE SHALL BE NORMAL WEIGHT CONCRETE. (2400 Kg/m UNO) 3

STANDARD HOOKS IN TENSION PER (ACI 318-89)

BAR SIZE	HOOK DEVELOPMENT LENGTH Ldh (mm) f'c 20 MPa	f'c 27.5 MPa
#10	230	180
#13	280	250
#16	360	300
#19	430	380
#22	480	430
#25	560	480
#29	640	560
#32	710	610
#36	790	690

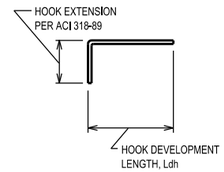

NOTES:
1. CONCRETE IS NORMAL WEIGHT CONCRETE.
2. BAR YIELD STRENGTH, fy = 400 MPa
3. SIDE COVER REQUIREMENTS OF ACI SECT. 12.5.3.2 ARE ASSUMED TO NOT BE MET.
4. TIE OR STIRRUP REQUIREMENTS OF ACI SECT. 12.5.3.2 ARE ASSUMED TO NOT BE MET.
5. REDUCTION FOR EXCESS REINFORCEMENT IS NOT TAKEN.
6. HOOK DEVELOPMENT LENGTH IS VALID FOR 180^ HOOKS ALSO.
7. FOR 35 MPa CONCRETE, USE VALUES FOR 30 MPa

US ARMY CORPS OF ENGINEERS AFGHANISTAN ENGINEER DISTRICT

APP'D | DATE | DESCRIPTION | REV.

DESIGNED BY: AED
DRAWN BY: AED
CHKD BY: AED
REVIEWED BY:
SUBMITTED BY:
DATE: 04/02/2010
DESIGN FILE NO.
DRAWING CODE:
FILE NAME:
PLOT SCALE: AS SHOWN
CONTRACT NO.: XXXXXX

U.S. ARMY CORPS OF ENGINEERS AFGHANISTAN ENGINEER DISTRICT APO AE 09356

ENGINEERING AND CONSTRUCTION DIVISION

SMALL WOMEN'S BARRACK'S

VARIOUS LOCATIONS

STRUCTURAL MATERIAL SCHEDULES

SHEET REFERENCE NUMBER:
S-602
SHEET 6 OF 9

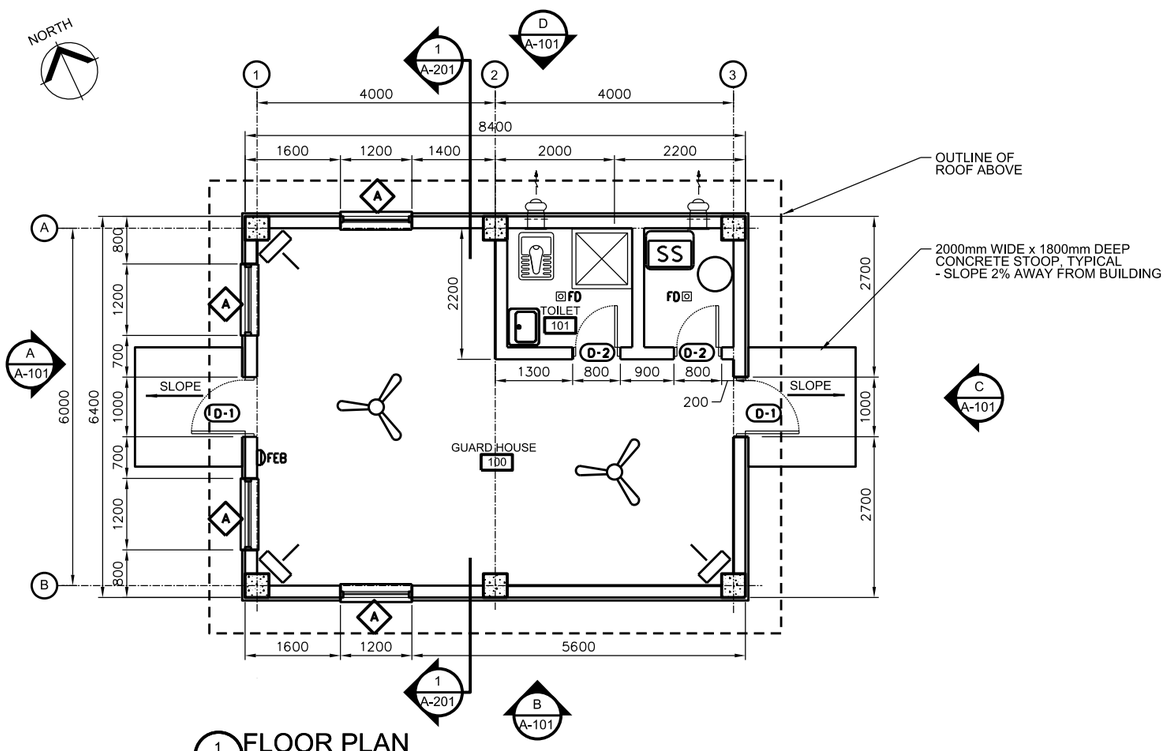

1 A-101 FLOOR PLAN
SCALE: 1:50

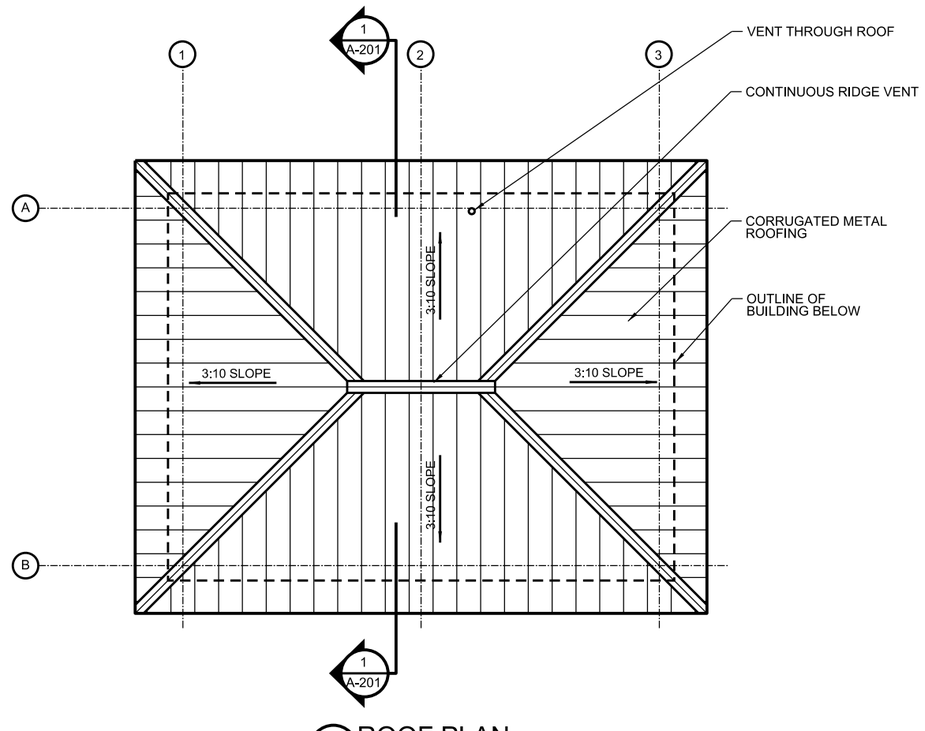

2 A-101 ROOF PLAN
SCALE: 1:50

LEGEND:

- D-* — DOOR TYPE, SEE PLATE A-601
- FEB — FIRE EXTINGUISHER AND WALL MOUNTED BRACKET
- A — WINDOW TYPE, SEE PLATE A-601
- FD — FLOOR DRAIN
- EXHAUST FAN
- CEILING FAN

GENERAL NOTES:

1. WALL FINISHES SHALL BE AS INDICATED IN FINISH SCHEDULE ON PLATE A-601.
2. SURFACES TO BE PAINTED SHALL BE CLEAN AND FREE OF FOREIGN MATTER BEFORE APPLICATION OF PAINT. CLEANING SHALL BE SCHEDULED SO THAT DUST AND OTHER CONTAMINANTS WILL NOT FALL ON WET, NEWLY PAINTED SURFACES.
3. CONCRETE AND INTERIOR MASONRY SURFACES GROUTED SOLID SHALL BE ALLOWED TO DRY AT LEAST 30 DAYS BEFORE PAINTING.
4. PAINTS CONTAINING LEAD IN EXCESS OF 0.06 PERCENT BY WEIGHT OF THE TOTAL NONVOLATILE CONTENT SHALL NOT BE USED.
5. MERCURIAL FUNGICIDES SHALL NOT BE USED IN OIL-BASE PAINT.
6. REMOVE LOOSE DIRT AND CLEAN SURFACES BEFORE PAINTING. APPLY PAINT TO INTERIOR STRUCTURAL RIGID FRAMINGS AND CEILINGS AND TEST FOR ADHESION. PRIMER COAT FOR MASONRY. INITIAL FIRST COAT WITH AN ACRYLIC LATEX PAINT FOR EXTERIOR SURFACES AND A SECOND COAT WITH A WATER REPELLENT ACRYLIC LATEX PAINT.
7. DIMENSIONS ARE TO EDGE OF MASONRY OPENINGS.

GRAPHIC SCALE

1000 500 0 2500 5000
2500
SCALE: 1 : 50

US ARMY CORPS OF ENGINEERS AFGHANISTAN ENGINEER DISTRICT

APP | DATE | DESCRIPTION | SYMBOL

DATE:
DESIGN PHASE:
DESIGN FILE NO.:
DRAWING CODE:
REV.: —
FILE NAME:
PLOT SCALE: AS SHOWN
CONTRACT NO.: XX-XXXX

DESIGNED BY: AED
DRAWN BY: AED
CKD BY: AED
REVIEWED BY:
SUBMITTED BY:

U.S. ARMY CORPS OF ENGINEERS
AFGHANISTAN ENGINEER DISTRICT
APO AE 09356

ENGINEERING AND CONSTRUCTION DIVISION

SMALL WOMEN'S BARRACK'S
VARIOUS LOCATIONS
FLOOR PLAN, ROOF PLAN

SHEET REFERENCE NUMBER:
A-101
SHEET 7 OF 9

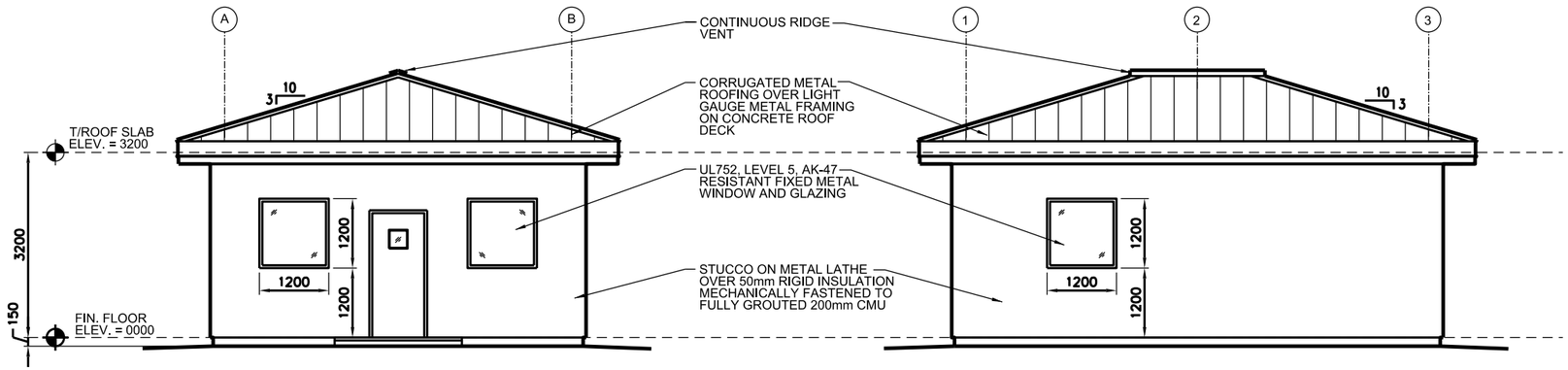

A A-201 ELEVATION
SCALE: 1:50

B A-201 ELEVATION
SCALE: 1:50

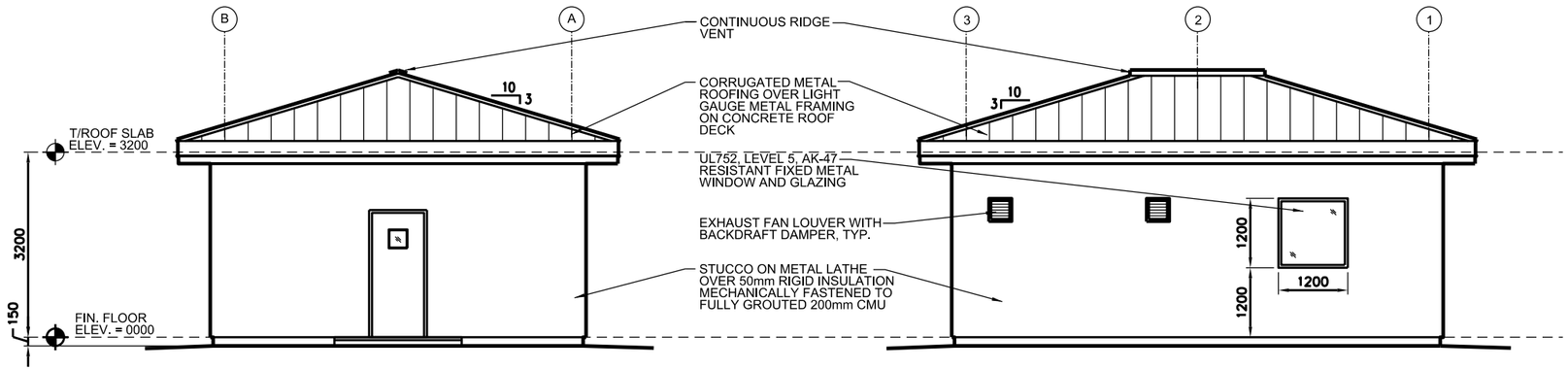

C A-201 ELEVATION
SCALE: 1:50

D A-201 ELEVATION
SCALE: 1:50

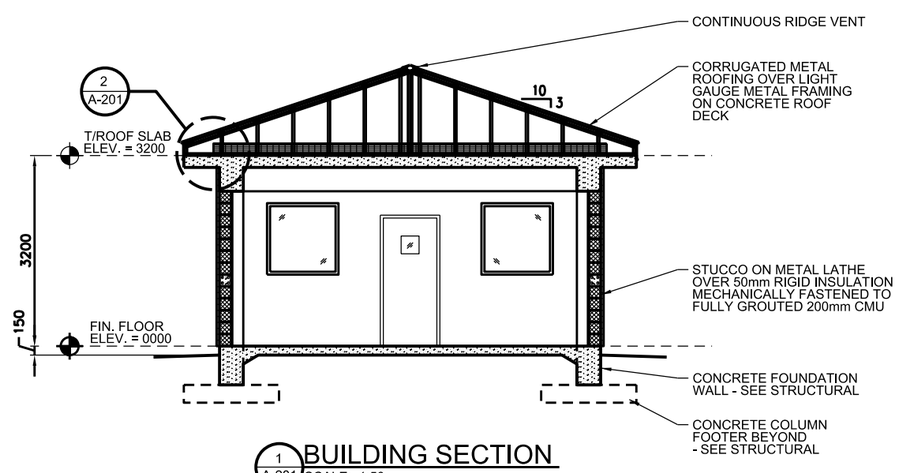

1 A-201 BUILDING SECTION
SCALE: 1:50

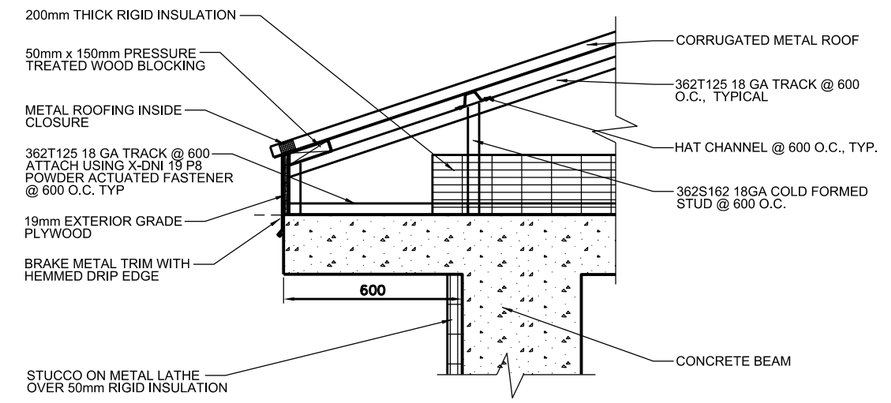

2 A-201 EAVE DETAIL
SCALE = 1:10

GENERAL NOTES:

1. WALL FINISHES SHALL BE AS INDICATED IN FINISH SCHEDULE ON PLATE A-601.
2. SURFACES TO BE PAINTED SHALL BE CLEAN AND FREE OF FOREIGN MATTER BEFORE APPLICATION OF PAINT. CLEANING SHALL BE SCHEDULED SO THAT DUST AND OTHER CONTAMINANTS WILL NOT FALL ON WET, NEWLY PAINTED, SURFACES.
3. CONCRETE AND INTERIOR MASONRY SURFACES GROUTED SOLID SHALL BE ALLOWED TO DRY AT LEAST 30 DAYS BEFORE PAINTING.
4. PAINTS CONTAINING LEAD IN EXCESS OF 0.06 PERCENT BY WEIGHT OF THE TOTAL NONVOLATILE CONTENT SHALL NOT BE USED.
5. MERCURIAL FUNGICIDES SHALL NOT BE USED IN OIL-BASE PAINT.
6. REMOVE LOOSE DIRT AND CLEAN SURFACES BEFORE PAINTING. APPLY PAINT TO INTERIOR STRUCTURAL RIGID FRAMINGS AND CEILINGS AND TEST FOR ADHESION. PRIMER COAT FOR MASONRY. INITIAL FIRST COAT WITH AN ACRYLIC LATEX PAINT FOR EXTERIOR SURFACES AND A SECOND COAT WITH A WATER REPELLENT ACRYLIC LATEX PAINT.
7. DIMENSIONS ARE TO EDGE OF MASONRY OPENINGS.

GRAPHIC SCALE
500 200 100 0 500 1000
SCALE: 1 : 10

GRAPHIC SCALE
2500 1000 500 0 2500 5000
SCALE: 1 : 50

US ARMY CORPS OF ENGINEERS AFGHANISTAN ENGINEER DISTRICT

APP. | DATE | DESCRIPTION | SYMBOL

DESIGNED BY: AED
DRAWN BY: AED
REVIEWED BY:
SUBMITTED BY:

DATE: DESIGN FILE NO.
DRAWING CODE:
FILE NAME:
PLOT SCALE: AS SHOWN
CONTRACT NO. XX-XX-XX
REV. ___

U.S. ARMY CORPS OF ENGINEERS AFGHANISTAN ENGINEER DISTRICT APO AE 09356

ENGINEERING AND CONSTRUCTION DIVISION

SMALL WOMEN'S BARRACK'S
VARIOUS LOCATIONS

ELEVATIONS, BUILDING SECTION, AND EAVE DETAIL

SHEET REFERENCE NUMBER:
A-201
SHEET 8 OF 9

ROOM FINISH SCHEDULE

ROOM NO.	ROOM NAME	FLOOR	BASE	WALLS		CEILING		REMARKS
		FINISH	FINISH	FINISH	COLOR	FINISH	COLOR	
100	GUARD HOUSE	TT	TT	PP	P1	PP	WHITE	1, 3, 4, 5
101	TOILET	TT	TT	CT/PP	CT/P1	PP	WHITE	1, 2, 4, 5
102	TOILET	TT	TT	CT/PP	CT/P1	PP	WHITE	1, 2, 4, 5

DOOR SCHEDULE

TAG	DOOR MAT'L	DOOR TYPE	DOOR WIDTH	DOOR HEIGHT	DOOR THICK	FRAME MAT'L	FRAME TYPE	FIRE LABEL	GLAZING	HRDWRE SET	NOTES
D-1	INSUL. HM	A	900	2150	45	HM	1	-	BULLET RESISTANT	1	1,2,3,4,5,6,7,8
D-2	PVC	B	700	2150	45	HM	1	-	-	2	2,3,4,5,6,7,9

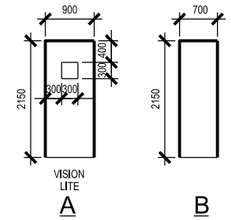

1 A-601 DOOR TYPES
SCALE = 1:50

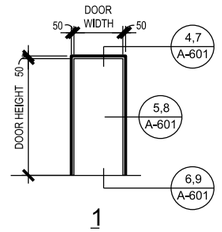

2 A-601 FRAME TYPE
SCALE = 1:50

FINISH SCHEDULE NOTES:

1. FINISH ABBREVIATIONS IN SCHEDULE ARE AS FOLLOWS: TT=TERRAZZO TILE, CT=CERAMIC TILE, PP=PAINTED PLASTER.
2. CERAMIC TILE SHALL EXTEND TO 2000mm ABOVE FINISHED FLOOR. WALL ABOVE WAINSCOT SHALL BE PAINTED WITH ONE COAT OF PRIMER AND TWO COATS OF OFF-WHITE SEMI-GLOSS PAINT.
3. PAINTED PLASTER WALLS SHALL HAVE ONE COAT OF PRIMER AND TWO COATS OF SEMI-GLOSS OFF-WHITE PAINT.
4. PAINTED PLASTER CEILINGS SHALL HAVE ONE COAT OF PRIMER AND TWO COATS OF FLAT WHITE PAINT.
5. CERAMIC TILE AND TERRAZZO TILE FINISH COLORS SHALL BE SELECTED BY THE COR FROM SAMPLES SUBMITTED BY THE CONTRACTOR.
6. EXTERIOR STUCCO COLOR SHALL BE SELECTED BY THE COR FROM SAMPLES SUBMITTED BY THE CONTRACTOR.

DOOR TYPE NOTES:

1. EXTERIOR DOOR, INCLUDING GLAZING, SHALL MEET THE REQUIREMENTS OF UL752, LEVEL 5 RESISTANCE FOR PROTECTION AGAINST AK-47 FIRE.
2. DOORS AND FRAME COLORS SHALL MATCH ADJACENT WALL COLORS AS SELECTED BY THE CONTRACTING OFFICER.
3. HARDWARE SHALL BE HEAVY DUTY, COMMERCIAL GRADE, STAINLESS STEEL WITH A MATTE FINISH. THERE SHALL BE THREE HINGES AT EACH DOOR, AT LEAST 200/16/5 MM, WITH BALL BEARINGS, SECURED BY THREADED PINS.
4. FRAMES SHALL BE MOUNTED AND ADJUSTED IN ACCORDANCE WITH MANUFACTURER'S INSTRUCTIONS. FRAMES SHALL BE FASTENED WITH MINIMUM OF THREE FASTENING POINTS PER SIDE AT REGULAR INTERVALS.
5. ALL DOOR FRAMES SHALL BE FITTED WITH DOOR SILENCERS.
6. DIMENSIONS SHOWN ON DOOR SCHEDULE ARE BASED UPON MODULAR MASONRY (OR ROUGH OPENING), HEIGHT OF 2200mm FOR STANDARD PERSONNEL DOORS. CONTRACTOR SHALL COORDINATE WITH DOOR SUPPLIER TO ENSURE THAT DIMENSIONS OF DOORS AND FRAMES PROVIDED ARE COMPATIBLE WITH DOOR OPENING DIMENSIONS.
7. ALL DOOR LOCKS SHALL BE MORTISED.
8. LOCK FUNCTION F04 - OFFICE DOOR LOCK - LATCH BOLT OPERATED BY LEVER FROM EITHER SIDE EXCEPT WHEN OUTSIDE LEVER IS MADE INOPERATIVE BY A STOP OR MECHANICAL MEANS OTHER THAN A KEY. WHEN OUTSIDE LEVER IS LOCKED, LATCH BOLT MAY BE RETRACTED BY KEY FROM OUTSIDE OR BY ROTATING INSIDE LEVER.
9. LOCK FUNCTION F02 - PRIVACY LOCK - LATCH BOLT OPERATED BY LEVER EITHER SIDE. DEADBOLT OPERATED BY TURN FROM INSIDE AND BY EMERGENCY KEY FROM OUTSIDE

HARDWARE SETS:

HW-1
- 1-1/2 PR HINGES
- 1 EA LOCKSET F04, OFFICE DOOR LOCK, W/LEVERS, GRADE 1
- 1 EA THRESHOLD, J32130
- 1 SET WEATHERSEALS
- 1 SET SILENCERS

HW-2
- 1-1/2 PR HINGES
- 1 EA LOCKSET F02, PRIVACY LOCK W/LEVERS, GRADE 1
- 1 SET SILENCERS

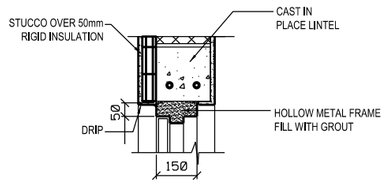

4 A-601 EXTERIOR DOOR HEAD
SCALE = 1:10

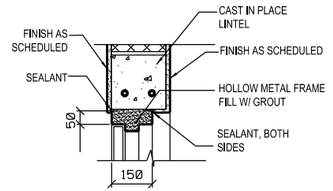

7 A-601 INTERIOR DOOR HEAD
SCALE = 1:10

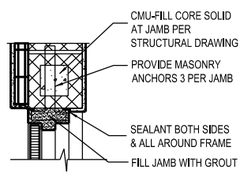

5 A-601 EXTERIOR DOOR JAMB
SCALE = 1:10

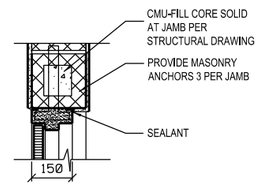

8 A-601 INTERIOR DOOR JAMB
SCALE = 1:10

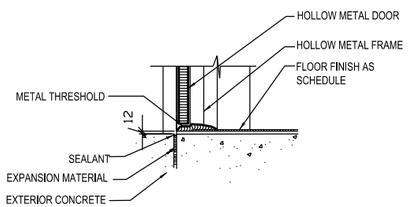

6 A-601 EXTERIOR DOOR SILL
SCALE = 1:10

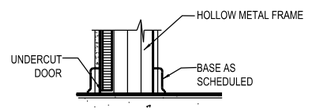

9 A-601 INTERIOR DOOR SILL
SCALE = 1:10

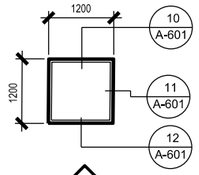

3 A-601 WINDOW TYPE
SCALE = 1:50

WINDOW TYPE NOTE:

1. WINDOW FRAME SHALL BE EXTRUDED ALUMINUM OR STEEL.
2. ALL WINDOWS AND GLAZING SHALL MEET THE REQUIREMENTS OF UL752, LEVEL 5 RESISTANCE FOR PROTECTION AGAINST AK-47 FIRE.

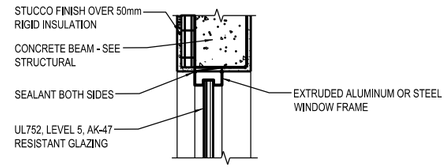

10 A-601 WINDOW HEAD
SCALE = 1:10

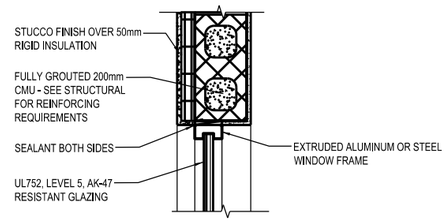

11 A-601 WINDOW JAMB
SCALE = 1:10

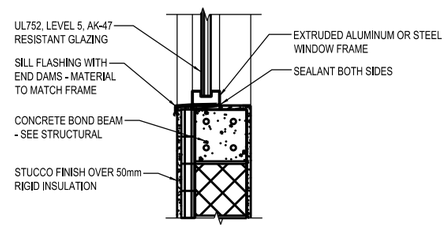

12 A-601 WINDOW SILL
SCALE = 1:10

GRAPHIC SCALES

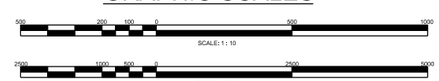

US ARMY CORPS OF ENGINEERS
AFGHANISTAN ENGINEER DISTRICT

REV.	DESCRIPTION	DATE	APP'D

DESIGNED BY: AED
DWN BY: AED
CKD BY: AED
REVIEWED BY:
SUBMITTED BY:
DATE: 06/02/2010
DESIGN FILE NO.
DRAWING CODE:
FILE NAME:
PLOT SCALE: AS SHOWN
CONTRACT NO.: XXXXXX

U.S. ARMY CORPS OF ENGINEERS
AFGHANISTAN ENGINEER DISTRICT
APO AE 09356

ENGINEERING AND CONSTRUCTION DIVISION

SMALL WOMEN'S BARRACK'S
VARIOUS LOCATIONS

DOOR & FINISH SCHEDULES AND DETAILS

SHEET REFERENCE NUMBER:
A-601
SHEET 9 OF 9

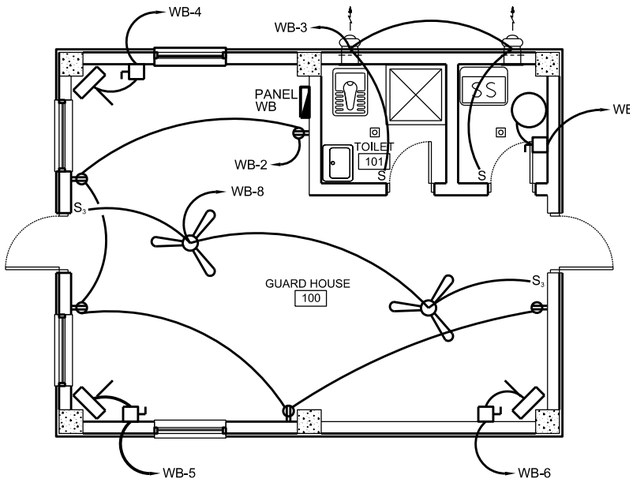

1 POWER PLAN
E-101 SCALE: N.T.S.

PANEL: WB			VOLTS: 380Y/220			PHASE/WIRE: 3/4						LOCATION: Women's Barracks					
MAIN BUS: 60AMP			MAIN CB: 60AMP			NEUTRAL: 100%											FAULT DUTY: 22 kAIC MIN.
LOAD INFORMATION			VOLTAMPS			BREAKER RATING /POLES						VOLTAMPS			LOAD INFORMATION		
LOAD	NOTE	TYPE	PH-A	PH-B	PH-C	CKT	P	CB	PH	CB	P	CKT	PH-A	PH-B	PH-C	TYPE	NOTE	LOAD
Lighting		L	840			1	1	20	A	20	1	2	900			R		Receptacles
Exhaust Fans		M2		300		3	1	20	B	20	1	4		1,500		RH		Unit Heater #1
Unit Heater #2		RH			1,500	5	1	20	C	20	1	6			1,500	RH		Unit Heater #3
FACP		O	1,000			7	1	20	A	20	1	8	200			M2		Ceiling Fans
Water Heater		RH		4,000		9	1	30	B	20	1	10		1,000		S		SPARE
SPARE		S			1,000	11	1	20	C	20	1	12			1,000	S		SPARE
SPARE		S	1,000			13	1	20	A	20	1	14	1,000			S		SPARE
Space						15	1	20	B	20	1	16						Space
SPARE		S			1,000	17	1	20	C	20	1	18			1,000	S		SPARE
SPARE		S	1,000			19	1	20	A	20	1	20	1,000			S		SPARE
Space						21	1	20	B	20	1	22						Space
Space						23	1	20	C	20	1	24						Space
MOUNTING: SURFACE			3,840	4,300	3,500			A	B	C			3,100	2,500	3,500			
ENCLOSURE: NEMA 1			CONNECTED PHASE (VA):					6,940	6,800	7,000								
			CONNECTED CURRENT (A):					31.55	30.91	31.82								

NOTES:

TYPE	VA	DF	VAxDF
L	840	1.00	840
M1	-	1.25	-
M2	500	0.80	400
O	1,000	0.80	800
R	900	1.00	900
R	-	0.50	-
RH	8,500	0.90	7,650
IF	-	0.90	-
AC	-	0.80	-
RC	-	0.70	-
S	9,000	0.50	4,500
CND	20,740	EMD	15,090
EMD (Amps)			22.93

LOAD TYPES:
L - LIGHTING
M1 - General Purpose Motors
M2 - Miscellaneous, Fractional, Small Appliance Motor
O - MISC OR OTHER TYPE LOADS
R - RECEPTACLE (First 10,000 VA per NEC)
R - RECEPTACLE (over 10,000 VA per NEC)
RH - Resistance Heat
IF - Induction Furnaces
AC - Air Conditioning Equipment
RC - Refrigeration Compressors
S - SPARE

form:panelsch.xls: 3PHFORM dated: 28 February 2005

2 PANEL WB SCHEDULE
E-101 SCALE: N.T.S.

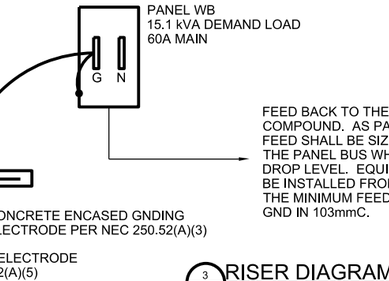

3 RISER DIAGRAM
E-101 SCALE: N.T.S.

LEGEND:

FIXTURE MARK "A"

WRAP AROUND, SURFACE MOUNTED, FLUORESCENT FIXTURE WITH PRISMATIC ACRYLIC LENS AND ELECTRONIC BALLAST
- (2) 32W 3500K BULBS
- 220V - 1Ø 50HZ

FIXTURE MARK "A*"

WRAP AROUND, SURFACE MOUNTED, FLUORESCENT FIXTURE WITH PRISMATIC ACRYLIC LENS AND ELECTRONIC BALLAST WITH EMERGENCY BALLAST
- (2) 32W 3500K BULBS
- 220V - 1Ø 50HZ

FIXTURE MARK "B"

INCANDESCENT, WALL MOUNTED, ONE PIECE W/APPROVED LENS STABILIZED HIGH IMPACT POLYCARBONATE.
- (1) A19 - 100W INCANDESCENT
- 220V - 1Ø 50HZ

- 30A, 1P, NON-FUSED DISCONNECT (SAFETY) SWITCH
- UNIT HEATER
- EXHAUST FAN
- DOUBLE CEE 7/7 "SCHUKO" STYLE RECEPTACLE. MOUNT AT 450mm A.F.F.
- S_3 220V, 20A, 1P GENERAL PURPOSE SWITCH (3 WAY)
- DUAL-SENSOR (PHOTOELECTRIC AND IONIZATION) SMOKE DETECTOR
- HEAT DETECTOR
- FACP COMMERCIALLY AVAILABLE FIRE ALARM CONTROL PANEL. FIRE ALARM SYSTEM, AT A MINIMUM, SHALL HAVE CLASS B, STYLE 4 WIRING PER NFPA 72.
- HORN/STROBE COMBO. 60cd MIN. +2100mm A.F.F.
- F FIRE ALARM PULL STATION. +1300mm A.F.F.

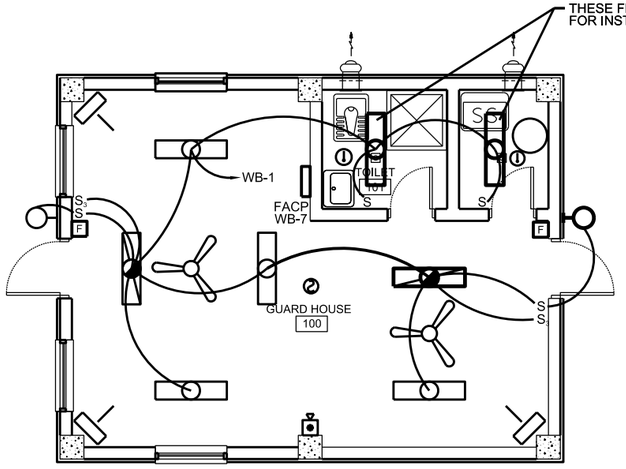

4 LIGHTING/FIRE ALARM PLAN
E-101 SCALE: N.T.S.

US ARMY CORPS OF ENGINEERS
AFGHANISTAN ENGINEER DISTRICT

REV.	DATE	DESCRIPTION	APP.
—			

DESIGNED BY: AED
DRAWN BY: AED
CKD BY: AED
REVIEWED BY:
SUBMITTED BY:
DATE:
DESIGN FILE NO.
DRAWING CODE:
FILE NAME:
PLOT SCALE: AS SHOWN
CONTRACT NO. XX-XX-XXX

U.S. ARMY CORPS OF ENGINEERS
AFGHANISTAN ENGINEER DISTRICT
APO AE 09356

ENGINEERING AND CONSTRUCTION DIVISION

SMALL WOMEN'S BARRACK'S
VARIOUS LOCATIONS
ELECTRICAL PLANS

SHEET REFERENCE NUMBER:
E-101

AFGHAN NATIONAL POLICE

STANDARD BUILDING DESIGNS

WELL HOUSE

SHEET INDEX

G1 COVER SHEET

S1 GENERAL NOTES
S2 DESIGN CRITERIA & SCHEDULES
S3 FOUNDATION & ROOF FRAMING PLANS
S4 SECTIONS AND DETAILS
S5 TYPICAL DETAILS

A1 FLOOR AND ROOF PLANS AND DETAILS
A2 EXTERIOR ELEVATIONS
A3 DOOR & WINDOW & FINISH TYPES & DETAILS

P1 PLUMBING SCHEMATIC AND DETAILS

M1 HVAC PLAN

E0 ELECTRICAL SYMBOLS AND ABBREVIATIONS
E1 LIGHTING AND POWER PLAN
E2 DETAILS
E3 LIGHT FIXTURE SCHEDULE
E4 PANEL SCHEDULES AND RISER DIAGRAM

US Army Corps of Engineers
Afghanistan Engineer District

SYMBOL	DESCRIPTION	DATE	APP'D

DESIGNED BY: JDS | DWN BY: JDS | CHK BY: JDS | DATE: 09-30-09 | SUBMITTED BY: BAKER | FILE NO.: ANPSDG-001XXX

Michael Baker Jr., Inc
A unit of Michael Baker Corporation
Airside Business Park
100 Airside Drive
Moon Township, PA 15108
www.mbakercorp.com

AFGHAN NATIONAL POLICE
STANDARD DESIGN
WELL HOUSE

COVER SHEET

SHEET REFERENCE NUMBER:
G1

100% SUBMISSION

STRUCTURAL ABBREVIATIONS:

ACI	AMERICAN CONCRETE INSTITUTE
AISC	AMERICAN INSTITUTE OF STEEL CONSTRUCTION
ALT	ALTERNATE
ASTM	AMERICAN SOCIETY FOR TESTING AND MATERIALS
AWS	AMERICAN WELDING SOCIETY
ARCH	ARCHITECTURAL
B	BOTTOM
BLDG	BUILDING
BOTT	BOTTOM
℄	CENTER LINE
CFMF	COLD FORM METAL FRAME
CFS	COLD FORMED STEEL
CIP	CAST IN PLACE
CIPL	CAST-IN-PLACE LINTEL
CJ	CONTROL JOINT
CLR	CLEAR
CMU	CONCRETE MASONRY UNIT
COEFF	COEFFICIENT
COL	COLUMN
CONC	CONCRETE
CONT	CONTINUOUS
COORD	COORDINATE
CSJ	CONSTRUCTION JOINT
CTJ	CONTROL JOINT
DIA	DIAMETER
DIAG	DIAGONAL
DIM	DIMENSION
DWG	DRAWING
DWL	DOWEL
EA	EACH
ELEC	ELECTRICAL
ELEV	ELEVATION
EMBED	EMBEDMENT
EQUIV	EQUIVALENT
ETC	ET CETERA
EW	EACH WAY
EXT	EXTERIOR
FTG	FOOTING
GA	GAUGE
HORIZ	HORIZONTAL
HRS	HOURS
IBC	INTERNATIONAL BUILDING CODE
INT	INTERIOR
Kg	KILOGRAM
KIP	KIPS (1 KIP = 1,000 POUNDS)
kN	KILONEWTON
kPa	KILOPASCAL
L#	ANGLE (# INDICATES SIZE)
LLV	LONG LEG VERTICAL
M	METER
MAX	MAXIMUM
MBM	METAL BUILDING MANUFACTURER
MECH	MECHANICAL
MFG	MANUFACTURER
MID	MIDDLE
MIN	MINIMUM
MISC	MISCELLANEOUS
MM	MILLIMETER
MPa	MEGAPASCAL
MTL	METAL
MWFRS	MAIN WIND FORCE RESISTING SYSTEM
N	NEWTON
N	NORTH
N/A	NOT APPLICABLE
#	NUMBER SYMBOL FOR REBAR SIZE
NTS	NOT TO SCALE
OC	ON CENTER
OPNG	OPENING
PL or PL	PLATE
PRE-ENG	PRE-ENGINEERED
REINF	REINFORCED
REQ'D	REQUIRED
SIM	SIMILAR
SPECS	SPECIFICATIONS
STD	STANDARD
STRUCT	STRUCTURAL
SW	SHEAR WALL
T	TOP
T/	TOP OF
T/ELEV	TOP ELEVATION
T&B	TOP AND BOTTOM
THK	THICK
TM	TRADE MARK
TYP	TYPICAL
UON	UNLESS OTHERWISE NOTED
VERT	VERTICAL
W	WIDTH
W/	WITH

GENERAL NOTES

1.0 THIS PROJECT HAS BEEN DESIGNED FOR THE WEIGHTS AND MATERIALS INDICATED ON THE SHEETS AND FOR THE LIVE LOADS INDICATED IN THE DESIGN DATA. IT IS THE CONTRACTOR'S RESPONSIBILITY TO DETERMINE ALLOWABLE CONSTRUCTION LOADS AND TO PROVIDE PROPER DESIGN AND CONSTRUCTION OF FALSEWORK, FORMWORK, STAGING, BRACING, SHEETING AND SHORING, ETC.

1.1 COORDINATE THESE SHEETS WITH THE ARCHITECTURAL, MECHANICAL, ELECTRICAL, PLUMBING, AND CIVIL SHEETS. ALL DIMENSIONS SHOWN ON THE SHEETS ARE MILLIMETERS UNLESS NOTED OTHERWISE.

1.2 THE CONTRACTOR SHALL VERIFY AND COORDINATE ALL FLOOR AND ROOF OPENING SIZES AND LOCATIONS, EQUIPMENT PAD SIZES AND LOCATIONS, ANCHOR BOLT LAYOUTS, ETC WITH EQUIPMENT SELECTED. THE CONTRACTOR SHALL MAKE ANY REQUIRED MODIFICATIONS AT NO ADDITIONAL COST.

1.3 THE CONTRACTOR SHALL REFER TO THE ARCHITECTURAL, MECHANICAL, ELECTRICAL AND PLUMBING SHEETS FOR SLEEVES, CURBS, INSERTS OR OPENINGS, ETC. NOT HEREIN INDICATED.

1.4 SLAB OPENINGS SMALLER THAN 250mm DIA TO BE CORE DRILLED IN FIELD UON. SEE MECHANICAL, ELECTRICAL AND PLUMBING SHEETS FOR LOCATIONS OF THESE OPENINGS.

1.5 WORK NOT INCLUDED ON THE SHEETS BUT IMPLIED TO BE SIMILAR TO THAT SHOWN AT CORRESPONDING PLACES ELSEWHERE ON THE SHEETS SHALL BE REPEATED.

1.6 IN CASE OF CONFLICT BETWEEN THE NOTES, DETAILS AND SPECIFICATIONS THE MOST RIGID REQUIREMENTS SHALL GOVERN.

1.7 SEE ARCHITECTURAL SHEETS FOR LOCATIONS OF MASONRY AND DRYWALL NON-LOAD BEARING PARTITIONS. PROVIDE COMPRESSIBLE FIRESAFING AT TOP OF WALL AS REQUIRED BY ARCHITECTURAL SHEETS.

1.8 COORDINATE FINISHED FLOOR DATUM ELEVATION 0.0m WITH THE CIVIL SHEETS.

2.0 FOUNDATION NOTES

2.1 THE GEOTECHNICAL ANALYSIS FOR THIS PROJECT IS THE RESPONSIBILITY OF THE CONTRACTOR AWARDED THE WORK. DESIGN VALUES USED IN THE STRUCTURAL ANALYSIS OF THE BUILDINGS HEREIN INDICATED HAVE BEEN ASSUMED AND SHALL BE CONFIRMED AND VERIFIED AS PART OF THE GEOTECHNICAL INVESTIGATION. VALUES WHICH DO NOT MEET THE REQUIREMENTS INDICATED ON SHEET S2 SHALL BE IMMEDIATELY BROUGHT TO THE ATTENTION OF THE CONTRACTING OFFICER FOR CONSIDERATION AND DETERMINATION ON THE NEXT APPROPRIATE COURSE OF ACTION.

2.2 SEE THE SPECIFICATION FOR ADDITIONAL REQUIREMENTS TO THOSE OUTLINED IN THE GEOTECHNICAL INVESTIGATION FOR EXCAVATION AND PREPARATION OF THE FOUNDATION AND THE SLAB ON GRADE SUBGRADE INCLUDING COMPACTION PROCEDURES.

2.3 EXCAVATIONS FOR FOOTINGS SHALL HAVE THE SIDES AND BOTTOMS TEMPORARILY LINED WITH 0.25mm POLYETHYLENE IF PLACEMENT OF CONCRETE DOES NOT OCCUR WITHIN 24 HRS OF THE EXCAVATION OF THE FOOTING.

2.4 FOUNDATION CONDITIONS NOTED DURING CONSTRUCTION WHICH DIFFER FROM THOSE DESCRIBED IN THE GEOTECHNICAL REPORT SHALL BE REPORTED TO THE GENERAL CONTRACTOR BEFORE FURTHER CONSTRUCTION IS ATTEMPTED. SEE PROJECT SPECIFICATIONS.

2.5 NO FOOTINGS OR SLABS SHALL BE POURED INTO OR AGAINST SUBGRADE CONTAINING FREE WATER, FROST, ICE OR LOOSE MATERIAL. FROST DEPTH ASSUMED TO BE 800MM

2.6 ALL SLAB-ON-GRADE, TRENCH BOTTOMS AND OTHER ON-GRADE INTERIOR HORIZONTAL SURFACES SHALL BE PLACED OVER A 0.25mm VAPOR RETARDER OVER A 100mm #57 STONE WATER BARRIER PLACED ON SUBGRADE PROPERLY PREPARED IN ACCORDANCE WITH THE CONTRACT SPECIFICATIONS. (UON)

2.7 SEE PLUMBING, ELECTRICAL & CIVIL SHEETS FOR REQUIRED UNDERSLAB UTILITIES.

2.8 SEE ARCHITECTURAL SHEETS FOR ALL WATERPROOFING DETAILS AND MATERIALS.

2.9 IF UNDERMINING OF FOOTINGS OCCURS, FILL VOIDS WITH 15MPa CONCRETE. DO NOT ATTEMPT TO REPLACE AND RECOMPACT SOIL.

3.0 CONCRETE

3.1 CONCRETE SHALL HAVE THE UNIT WEIGHT AND THE MINIMUM COMPRESSIVE STRENGTHS (f'c) AT 28 DAYS AS SHOWN IN THE CONCRETE MATERIALS SCHEDULE ON THIS SHEET. SEE SPECIFICATIONS FOR ADDITIONAL INFORMATION. ENTRAIN AIR TO PRODUCE TOTAL AIR CONTENT ACCORDING TO THE SPECIFICATIONS FOR CONCRETE EXPOSED TO FREEZING TEMPERATURES (EXTERIOR FOOTINGS, SLAB TURNDOWNS, EXTERIOR SLABS AND SLABS-ON-GRADE, EXTERIOR RETAINING WALLS, AND EXTERIOR GRADE BEAMS.)

3.2 GROUT FOR BASE PLATES SHALL BE NON-SHRINKABLE GROUT AND SHALL HAVE A MINIMUM SPECIFIED COMPRESSIVE STRENGTH AT 28 DAYS OF 35MPa, UNLESS NOTED OTHERWISE.

3.3 NO CALCIUM CHLORIDE SHALL BE USED IN ANY CONCRETE.

3.4 MIXING, TRANSPORTING AND PLACING OF CONCRETE SHALL CONFORM TO ACI 301M-05.

3.5 ALL CONCRETE WORK SHALL CONFORM TO THE REQUIREMENTS OF THE AMERICAN CONCRETE INSTITUTE (ACI) 318M MANUAL (metric), "BUILDING CODE REQUIREMENTS FOR REINFORCED CONCRETE", AND REQUIREMENTS OUTLINED IN THE CONTRACT SPECIFICATIONS. WHEN THERE IS A CONFLICT BETWEEN ACI AND THE SPECIFICATIONS, THE MORE STRINGENT SHALL GOVERN.

3.6 CHAMFER ALL EXPOSED EXTERNAL CORNERS OF CONCRETE WITH 20mm x45 DEGREE CHAMFER UON.

3.7 CONCRETE REINFORCEMENT BARS SHALL CONFORM TO ASTM A615M, GRADE 420, REINFORCING BARS SHALL NOT BE TACK WELDED, WELDED, HEATED OR CUT, UNLESS INDICATED ON THE CONTRACT DOCUMENTS. ALL LAP SPLICES SHALL BE CLASS "B" UON.

3.8 HORIZONTAL FOOTING AND HORIZONTAL WALL REINFORCEMENT SHALL BE CONTINUOUS AND SHALL HAVE 90 DEGREE BENDS AND EXTENSIONS, OR CORNER BARS OF EQUIVALENT SIZE LAPPED WITH A CLASS B TENSION SPLICE AT CORNERS AND INTERSECTIONS. TOP BAR CRITERIA SHALL APPLY IF 300mm OR MORE OF FRESH CONCRETE IS PLACED BELOW BAR.

3.9 SLABS-ON-GRADE SHALL HAVE CONSTRUCTION JOINTS OR CRACK CONTROL JOINTS AS SHOWN ON THE SHEETS. CONSTRUCTION JOINTS CAN BE USED AT CONTROL JOINT LOCATIONS AT CONTRACTORS OPTION. SEE SLAB PLANS & JOINT DETAILS FOR ADDITIONAL INFORMATION. FOR AREAS NOT SHOWN ON THE SHEETS, THE MAXIMUM SPACING OF CONSTRUCTION/ CRACK CONTROL JOINTS SHALL BE 4800 mm.

3.10 SEE SPECIFICATIONS FOR ALL WATERPROOFING/DAMPPROOFING REQUIREMENT.

3.11 ALL CONCRETE REINFORCEMENT SHALL BE DETAILED, FABRICATED, LABELED, SUPPORTED, AND SPACED IN FORMS AND SECURED IN PLACE IN ACCORDANCE WITH THE PROCEDURES AND REQUIREMENTS OUTLINED IN THE LATEST EDITION OF THE "BUILDING CODE REQUIREMENTS FOR REINFORCED CONCRETE", ACI 318M, AND THE "MANUAL OF STANDARD PRACTICE FOR DETAILING REINFORCED CONCRETE STRUCTURES", ACI 315M, LATEST EDITION.

3.12 SHOP DRAWINGS SHOWING REINFORCING DETAILS, INCLUDING STEEL SIZES, SPACING AND PLACEMENT, SHALL BE SUBMITTED FOR REVIEW PRIOR TO FABRICATION.

3.13 ALL DOWELS SHALL MATCH SIZE AND NUMBER OF MAIN REINFORCING, UNLESS NOTED OTHERWISE ON THE SHEETS.

3.14 ADDITIONAL BARS SHALL BE PROVIDED AROUND ALL FLOOR AND WALL OPENINGS AS SHOWN ON THE SHEETS.

3.15 SEE ARCHITECTURAL SHEETS FOR TYPE AND LOCATION OF ALL FLOOR FINISHES.

3.16 THE CONTRACTOR SHALL COORDINATE ADDITIONAL WALL/SLAB OPENINGS NOT SHOWN ON STRUCTURAL SHEETS. SEE MECHANICAL, ELECTRICAL, PLUMBING AND CIVIL SHEETS.

3.17 THE SUB-CONTRACTOR SHALL VERIFY ALL OPENINGS, PAD SIZES, AND ANCHOR BOLTS WITH EQUIPMENT SELECTED.

3.18 FOR ALL WALLS & PIERS, PROVIDE DOWELS INTO FOOTING AT EACH VERT REINF BAR, UON DOWEL SIZE SHALL BE SAME AS VERT REINF.

3.19 ALL REINFORCING INDICATED TO BE WELDED SHALL BE IN ACCORDANCE WITH ASTM A706M. "LOW ALLOY STEEL DEFORMED BARS FOR CONCRETE REINFORCEMENT". ANY INSTALLATIONS USING MANUFACTURER'S EQUIPMENT SHALL BE PER MANUFACTURER'S RECOMMENDATIONS.

3.20 PROVIDE CONCRETE POUR STOPS OR FORMED AS REQUIRED FOR INSTALLATION OF ALL CONCRETE WORK.

3.21 PROVIDE ADDITIONAL (2)-#13 x 600mm REINFORCING BARS IN SLAB-ON GRADE AT ALL RE-ENTRANT CORNERS. PLACE BARS AT MID-DEPTH OF SLAB WITH A CLEARANCE OF 50mm FROM CORNER UON.

4.0 CONCRETE MASONRY

4.1 MASONRY CONSTRUCTION AND MATERIALS SHALL CONFORM TO ALL REQUIREMENTS OF THESE CONTRACT DOCUMENTS AND THE PROJECT SPECIFICATIONS.

4.2 THE SPECIFIED ULTIMATE COMPRESSIVE STRENGTH OF CONCRETE MASONRY (f'm) ON THE NET AREA IS A MINIMUM OF 10.4 MPa.

4.3 PROVIDE TWO #16 BARS CONTINUOUS IN ALL CMU AND CAST-IN-PLACE BOND BEAMS UON ON THE SHEETS. BOND BEAMS SHALL BE CONTINUOUS AND SPACED AT A MAXIMUM OF 1200mm OC VERTICALLY. PROVIDE BOND BEAM STARTER COURSE AT BOTTOM OR FIRST COURSE ON ALL MASONRY WALLS AND PARTITIONS. ALL BOND BEAMS SHALL BE A MINIMUM OF 200mm IN DEPTH WITH REINFORCING BEING CONTINUOUS AND HAVING STANDARD ACI 180° HOOKS AT EACH END. PROVIDE STANDARD BAR SPLICES AS SPECIFIED.

4.4 FOR WALL REINFORCING, SEE DETAIL 7 ON SHEET S5

4.5 CMU CELLS THAT REQUIRE VERTICAL REINFORCING BARS AS INDICATED ON THE CONTRACT DRAWINGS AND/OR SPECS SHALL HAVE REINF BARS PLACED IN CENTERS OF CMU CELLS AND CONTINUOUSLY GROUTED UON.

4.6 PROVIDE LADDER TYPE JOINT REINFORCEMENT AT (200mm EXTERIOR & 400mm INTERIOR) ON CENTER MAXIMUM UON MINIMUM ROD SIZE USED SHALL BE 9 GA. DEFORMED WIRE AND CONFORM TO ASTM A82M, UON.

4.7 PROVIDE CONTROL JOINTS AS INDICATED ON THE ARCHITECTURAL SHEETS.

4.8 GROUT FOR MASONRY SHALL BE NORMAL WEIGHT AND HAVE A MINIMUM COMPRESSIVE STRENGTH OF 25 MPa AT 28 DAYS. GROUT SHALL CONFORM TO ASTM C476M. GROUT LIFTS SHALL NOT EXCEED 1400mm.

4.9 USE MORTAR TYPE S CONFORMING TO ASTM C270M, SEE SPECIFICATIONS.

4.10 CONCRETE MASONRY UNITS SHALL BE NORMAL WEIGHT AND CONFORM TO ASTM C90M.

4.11 ALL CMU CELLS, OPEN CAVITIES, AND AIR SPACES SHALL BE GROUTED TO STOP FRAGMENTS FROM MORTAR BLAST

4.12 BOND BEAM REINFORCING SHALL BE DISCONTINUOUS AT CONTROL JOINTS (UON). MAXIMUM CONTROL JOINT SPACING SHALL BE AS INDICATED ON THE ARCHITECTURAL SHEETS.

4.13 CONTRACTOR SHALL COORDINATE LOCATION OF ALL OPENINGS SEE ARCH, MECH, ELEC, AND PLUMBING SHEETS. FOR SIZE AND LOCATION OF OPENINGS.

4.14 MASONRY WALLS SHALL NOT BE BACK FILLED PRIOR TO THE MORTAR AND GROUT ATTAINING THEIR RESPECTIVE MAXIMUM DESIGN STRENGTHS PER SPECIFICATIONS.

5.0 CFMRF - COLD FORM METAL ROOF FRAMING SYSTEM

5.1 CFMF SHALL BE DESIGNED BY CFMF MANUFACTURER'S ENGINEER FOR ALL LOADING PER CODE AND AS INDICATED ON THE SHEETS.

5.2 FOR WIND LOADS, SEE THE DESIGN CRITERIA ON SHEET S2.

5.3 SUBMIT VENDOR'S PUBLISHED LITERATURE, TEST DATA AND INSTALLATION INSTRUCTIONS FOR METAL STUD ASSEMBLY AND ACCESSORIES INCLUDING OTHER DATA AS MAY BE REQUIRED TO CERTIFY COMPLIANCE WITH PERFORMANCE REQUIREMENTS SPECIFIED HEREIN.

5.4 SHOP DRAWINGS AND DESIGN ANALYSIS SHALL BE STAMPED AND APPROVED BY A LICENSED PROFESSIONAL ENGINEER.

5.5 CONNECTIONS AND GAUGE SIZES ARE MINIMUM AND SHALL BE INCREASED AS NECESSARY TO PROVIDE A STRUCTURALLY ADEQUATE SYSTEM. KICKERS MAY BE ADDED TO REDUCE THE STUD HEIGHTS WHERE ACCEPTABLE AND COORDINATED WITH THE ARCHITECTURAL DRAWINGS.

5.6 CRMRF SHALL HAVE THE FOLLOWING MINIMUM PROPERTIES:

STUD/RAFTER/EAVE STRUT:
Fy = 344 MPa
GAUGE = 18
DEPTH = 152.3 mm
WIDTH = 34.8 mm
MOMENT OF INERTIA, Ix = $847x10^3$ mm^4
SECTION MODULUS, Sx = $11.2x10^3$ mm^3

TRACK:
Fy = 344 MPa
GAUGE = 16
DEPTH = 152.3 mm
WIDTH = 38 mm
MOMENT OF INERTIA, Ix = $1083x10^3$ mm^4
SECTION MODULUS, Sx = $13.8x10^3$ mm^3

PURLIN:
Fy = 393 MPa
GAUGE = 16
MOMENT OF INERTIA (TOP COMPRESSION), Ixt = $23.7x10^3$ mm^4
MOMENT OF INERTIA (BOTT COMPRESSION), Ixb = $22.7x10^3$ mm^4
SECTION MODULUS (TOP COMPRESSION), Sxt = $1.8x10^3$ mm^3
SECTION MODULUS (BOTT COMPRESSION), Sxb = $1.7x10^3$ mm^3

MINIMUM LAP SPLICES OF REINFORCING BARS IN TENSION (PER ACI 318M-05)

f'c = 28 MPa CONCRETE

BAR SIZE \ CENTER TO CENTER BAR SPACING	(---TOP BARS--) LESS THAN 4db	(---TOP BARS--) 4db OR MORE	(--OTHER BARS--) LESS THAN 4db	(--OTHER BARS--) 4db OR MORE	4db
#10	460	460	410	410	40
#13	660	610	510	480	50
#16	1020	760	790	580	60

NOTES:
1. LAP SPLICES ABOVE ARE IN MILLIMETERS UON.
2. YIELD STRENGTH OF REINFORCEMENT, fy, IS 420MPa (LAP SPLICE LENGTH IS IN MILLIMETERS).
3. CONCRETE IS NORMAL WEIGHT (2400Kg/m^3).
4. TOP BAR INDICATES HORIZONTAL REINFORCEMENT WHICH IS PLACED ABOVE 300mm OR MORE OF FRESH CONCRETE.
5. SEE COLUMN SCHEDULE FOR COLUMN AND SHEAR WALL VERTICAL LAP SPLICE.
6. STRAIGHT DEVELOPMENT LENGTH OF AN UNLAPPED BAR IS EQUAL TO VALUE FROM TABLE DIVIDED BY 1.3.
7. CATEGORY FOR BARS SPACED LESS THAN 4d, OR ON CENTER CORRESPONDS TO CATEGORY 1 IN THE CRSI HANDBOOK WHEREAS FOR BARS SPACED 4d, OR MORE ON CENTER CORRESPOND TO CRSI CATEGORY 5.

CONCRETE MATERIALS SCHEDULE

STRUCTURAL ELEMENT	f'c CONCRETE COMPRESSIVE STRENGTH @ 28 DAYS (MPa)
SLAB-ON-GRADE/TURN-DOWN SLABS	28
ROOF AND FLOOR SLABS	28
ALL FOOTINGS (UON)	28
MISC. CURBS, WALLS AND PADS UON	28
CAST-IN-PLACE LINTEL	28

NOTES:
1. ALL CONCRETE SHALL BE NORMAL WEIGHT CONCRETE. (2400 Kg/m^3 UON)
2. ALL CONCRETE SHALL HAVE A WATER-CEMENT RATIO OF 0.45.

MASONRY REINFORCING MINIMUM LAP SPLICES

BAR SIZE	BASIC LAP SPLICE Ld FOR CMU REINFORCING(mm)
#10	450
#13	600
#16	750

STANDARD HOOKS IN TENSION PER (ACI 318M-05)

HOOK DEVELOPMENT LENGTH Ldh (mm)	
BAR SIZE	f'c 28 MPa
#10	180
#13	250
#16	300
#19	380
#22	430
#25	480
#29	560
#32	610
#36	690

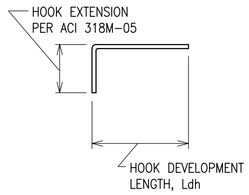

NOTES:
1. CONCRETE IS NORMAL WEIGHT CONCRETE.
2. BAR YIELD STRENGTH, fy = 420 MPa
3. SIDE COVER REQUIREMENTS OF ACI SECT. 12.5.3 ARE ASSUMED TO NOT BE MET.
4. TIE OR STIRRUP REQUIREMENTS OF ACI SECT. 12.5.3 ARE ASSUMED TO NOT BE MET.
5. REDUCTION FOR EXCESS REINFORCEMENT IS NOT TAKEN.
6. HOOK DEVELOPMENT LENGTH IS VALID FOR 180° HOOKS ALSO.

US Army Corps of Engineers
Afghanistan Engineer District

	APP	DATE	DESCRIPTION	SYMBOL

DESIGNED BY: GDH | DATE: 09-30-09
DWN BY: MDB | SUBMITTED BY: BAKER
CHK BY: CWW | FILE NO.: ANPSDS-001XXX

Michael Baker Jr., Inc
A unit of Michael Baker Corporation
Airside Business Park
100 Airside Drive
Moon Township, PA 15108
www.mbakercorp.com

AFGHAN NATIONAL POLICE
STANDARD DESIGN
WELL HOUSE

GENERAL NOTES

SHEET REFERENCE NUMBER:
S1

100% SUBMISSION

STRUCTURAL DESIGN CRITERIA

ALL DESIGNS SHALL CONFORM TO THE PROVISIONS OF THE IBC 2006 AS APPLICABLE

1.0 DESIGN LOADS

1.1 DEAD LOADS

1.1.1 ROOF DEAD LOADS – CONVENTIONAL FRAMING

	MAXIMUM GRAVITY LOAD	MINIMUM GRAVITY LOAD
LIGHT GAUGE FRAMING	0.20 KPa	0.15 KPa
METAL ROOFING	0.14 KPa	0.05 KPa
INSULATION	0.10 KPa	0.05 KPa
MISC	0.05 KPa	0.00 KPa
	0.49 KPa	0.25 KPa

1.1.2 ROOF DEAD LOADS – CONCRETE FRAMING

	MAXIMUM GRAVITY LOAD
CONC FLAT SLAB	4.80 KPa
MECH/ELEC/PLUMBING	0.15 KPa
MISC	0.05 KPa
	5.00 KPa

1.2 LIVE LOADS (PER IBC 2006)

1.2.1 ROOF LIVE LOADS: ALL BUILDINGS

GREATER OF 1.0 KPa MINIMUM OR SNOW LOAD

1.2.2 SLAB–ON–GRADE LIVE LOADS

ALL BUILDINGS 4.80 KPa

1.3 SNOW LOADS (PER IBC 2006)

1.3.1 DESIGN PARAMETERS

GROUND SNOW LOAD (per UFC 3–310–01)	PER LOCAL CONDITION
SNOW IMPORTANCE FACTOR	1.0 KPa
SNOW EXPOSURE FACTOR	1.0 KPa

1.4 SEISMIC LOADS (PER IBC 2006 & UFC 3–310–04)

1.4.1 SEISMIC PARAMETERS – LOAD BEARING MASONRY

SEISMIC OCCUPANCY CATEGORY	II
SEISMIC IMPORTANCE FACTOR (I)	1.0
SEISMIC SITE CLASS	D
Ss	1.280
S_1	0.510
Sds	0.853
Sd1	0.510
SEISMIC DESIGN CATEGORY	D
SEISMIC RESISTING SYSTEM	BEARING WALL SYSTEM SPECIAL REINF MASONRY SHEAR WALLS
RESPONSE MODIFICATION FACTOR (R)	5.0
RESPONSE CEFFICIENT (Cs)	0.17
SEISMIC ANALYTICAL PROCEDURE	EQUIV LATERAL FORCE
SEISMIC BASE SHEAR	49 kN

1.6 WIND LOADS (PER IBC 2006)

1.6.1 DESIGN PARAMETERS

BASIC WIND SPEED	137 Km/h
WIND IMPORTANCE FACTOR	1.0
WIND EXPOSURE CATEGORY	D
DIRECTIONALITY COEFFICIENT (Kd)	0.85
TOPOGRAPHIC FACTOR (Kzt)	1.0

1.6.2 DESIGN WIND PRESSURE – MAIN WINDFORCE RESISTING SYSTEM

LOCATION	CORNER ZONE WIDTH "a"	MEAN ROOF HEIGHT (h)	WINDWARD WALL (@ MEAN ROOF HEIGHT)	LEEWARD WALL (@ MEAN ROOF HEIGHT)	ROOF
FIELD ZONE	N/A	3890mm	582 N/m^2	–463 N/m^2	–803 N/m^2
CORNER ZONE	900mm	3890mm	883 N/m^2	–689 N/m^2	–1244 N/m^2

a = 10% OF LEAST HORIZONTAL DIMENSION OR 0.4h, WHICHEVER IS SMALLER, BUT NOT LESS THAN EITHER 4% OF LEAST HORIZONTAL DIMENSION OR 0.9M.
h = MEAN ROOF HIEGHT, IN METERS, EXCEPT THAT EAVE HIEGHT SHALL BE USED FOR ANGLE GREATER THAN 10°.

1.6.3 DESIGN WIND PRESSURE – WALL COMPONENTS AND CLADDING

EXTERIOR WALL SYSTEMS & THEIR ATTACHMENTS TO THE PRIMARY STRUCTURE SHALL BE DESIGNED FOR THE PRESSURES SHOWN IN THE DIAGRAM BELOW:

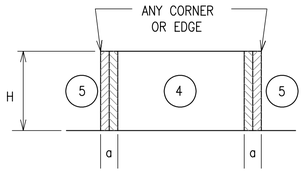

LOCATION	WINDWARD PRESSURE N/m^2 (inward)		LEEWARD PRESSURE N/m^2 (outward)		a
	④	⑤	④	⑤	
MAIN BUILDING					(mm)
AREA = 1 m^2	627	627	–986	–1216	900
AREA = 2 m^2	589	589	–948	–1134.8	900
AREA = 5 m^2	565	565	–910	–1086.9	900
AREA = 10 m^2	565	565	–910	–1086.9	900

NOTES:
1. DESIGN WIND PRESSURES ABOVE REPRESENT THE NET PRESSURE (SUM OF INTERNAL AND EXTERNAL PRESSURE) APPLIED NORMAL TO ALL SURFACES.
2. LINEAR INTERPOLATION BETWEEN VALUES OF TRIBUTARY AREA IS PERMISSIBLE.
3. PLUS AND MINUS SIGNS SIGNIFY PRESSURE TOWARD AND AWAY FROM THE EXTERIOR SURFACE, RESPECTIVELY.

1.6.4 DESIGN WIND PRESSURE – ROOF COMPONENTS AND CLADDING

ROOF COMPONENTS & THEIR ATTACHMENTS SHALL BE DESIGNED FOR THE PRESSURES SHOWN IN THE ADJACENT DIAGRAM & TABLE BELOW:

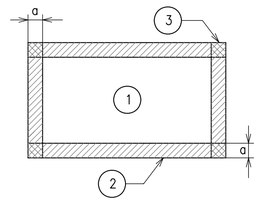

ROOF MEAN HEIGHT

1.6 WIND LOADS (CON'T)

LOCATION	GROSS UPLIFT PRESSURE N/m^2 (upward)			a
	①	②	③	
MAIN BUILDING				(mm)
AREA = 1 m^2	–838	–1460	–1460	900
AREA = 2 m^2	–838	–1460	–1460	900
AREA = 5 m^2	–838	–1460	–1460	900
AREA = 10 m^2	–838	–1460	–1460	900

NOTES:
1. DESIGN WIND PRESSURES ABOVE REPRESENT THE NET PRESSURE (SUM OF INTERNAL AND EXTERNAL PRESSURE) APPLIED NORMAL TO ALL SURFACES.
2. LINEAR INTERPOLATION BETWEEN VALUES OF TRIBUTARY AREA IS PERMISSIBLE.
3. PLUS AND MINUS SIGNS SIGNIFY PRESSURE TOWARD AND AWAY FROM THE EXTERIOR SURFACE, RESPECTIVELY.

2.0 FOUNDATION DESIGN CRITERIA (TO BE CONFIRMED BY THE CONTRACTOR)

THE GEOTECHNICAL ANALYSIS FOR THIS PROJECT IS THE RESPONSIBILITY OF THE CONTRACTOR AWARDED THE WORK. DESIGN VALUES USED IN THE STRUCTURAL ANALYSIS OF THE BUILDINGS HEREIN INDICATED HAVE BEEN ASSUMED AND SHALL BE CONFIRMED AND VERIFIED AS PART OF THE GEOTECHNICAL INVESTIGATION. VALUES WHICH DO NOT MEET THE REQUIREMENTS INDICATED BELOW SHALL BE IMMEDIATELY BROUGHT TO THE ATTENTION OF THE CONTRACTING OFFICER FOR CONSIDERATION AND DETERMINATION ON THE NEXT APPROPRIATE COURSE OF ACTION.

2.1.1 SOIL DESIGN PARAMETERS

NET ALLOWABLE SOIL BEARING CAPACITY	96.0 KPa
UNIT WEIGHT OF SOIL (moist)	1800 Kg/m^3
COEFF ACTIVE EARTH PRESSURE (Kpa)	0.30
COEFF PASSIVE EARTH PRESSURE (Kpp)	3.33
COEFF AT–REST EARTH PRESSURE (Kpr)	.55
COEFF OF SOIL FRICTION	.35
SUBGRADE MODULUS	4120 g/m^3
MINIMUM BEARING DEPTH BELOW GRADE	800mm
SEISMIC SITE CLASS (based on in–situ soil)	D

MASONRY CONCRETE LINTEL SCHEDULE

OPENING TYPE OR SIZE, BEAM LOCATION OR TYPE	MAX SPAN (mm)	BEAM DEPTH (mm)	MAIN REINFORCING			SHEAR REINF STIRRUPS
			TOP	BOTTOM	OTHER	
EXT WINDOW OR DOOR	900	400	(2)–#13	(2)–#13		----
INT WALL OPENING, NON–BEARING	1800	400		(2)–#13		----
INT WALL OPENING, NON–BEARING	900	200		(2)–#13		----

1. STRUCTURAL DRAWINGS DO NOT INDICATE ALL OPENINGS IN MASONRY WALLS. VERIFY NUMBER, SIZE AND LOCATION OF ALL OPENINGS IN MASONRY WALLS FROM ARCHITECTURAL SHEETS AND APPROVED PLUMBING, MECHANICAL, AND ELECTRICAL SHOP DRAWINGS.
2. PROVIDE 200mm BEARING EA END FOR 200mm DEEP CMU LINTEL PROVIDE 400mm BEARING EA END FOR 400mm DEEP CIPL.
3. FOR HEAD DETAILS REFER TO ARCHITECTURAL SHEETS.
4. REINFORCING SHALL BE ASTM A615M, GRADE 400. CONCRETE FOR CAST–IN–PLACE BEAMS SHALL HAVE A MINIMUM COMPRESSIVE STRENGTH OF 28 MPa AT 28 DAYS.
5. CONTRACTOR SHALL SUBMIT FOR APPROVAL SHOP DRAWINGS AND SCHEDULES SHOWING SIZE, DETAILS, LOCATIONS, ETC FOR ALL CAST–IN–PLACE BEAMS IN CMU WALLS.

CONCRETE COVER SCHEDULE

MINIMUM CONCRETE COVER PROTECTION FOR REINFORCEMENT BARS SHALL BE AS FOLLOWS: (SEE ACI 318M–05, SECTION 7.7 FOR CONDITIONS NOT NOTED). DIMENSIONS FOR BAR PLACEMENT GIVEN IN SECTIONS AND DETAILS SHALL SUPERSEDE MINIMUM COVER REQUIREMENTS GIVEN HERE. DIMENSIONS ARE IN mm.

FOOTINGS (EARTH FORMED)		70
COLUMNS / PIERS (TO TIES)		40
GRADE BEAMS OR SLAB TURNED DOWN EDGES:		
TOP		40
BOTTOM (EARTH FORMED)		70
SIDES (EARTH FORMED)		70
SIDES (BOARD FORMED)	#16 BAR & SMALLER	40
	#19 THRU #36 BAR	50
ELEVATED BEAMS & SLABS:		
BEAM TIES & STIRRUPS (NOT EXPOSED TO WEATHER)		40
BEAM TIES & STIRRUPS (EXPOSED TO WEATHER)		50
FLOOR SLABS (NOT EXPOSED TO WEATHER)		20
FLOOR SLABS (EXPOSED TO WEATHER)		
#19 & LARGER		50
#13 & SMALLER		40
ROOF SLAB BARS		25
SLABS–ON–GRADE (NO EXPOSURE TO WEATHER) FROM TOP		20
SLABS–ON–GRADE (EXPOSURE TO WEATHER) FROM TOP		40
UTILITY TUNNEL WALLS, RETAINING WALLS AND SHEAR WALLS, (NO SURFACES SHALL BE EARTH FORMED) EARTH SIDE AND FRONT SIDE (EXPOSED TO WEATHER):		
#16 BAR AND SMALLER		40
#19 THRU #36 BAR		50

PROVIDE STANDARD BAR CHAIRS AND SPACERS AS REQUIRED TO MAINTAIN CONCRETE PROTECTION SPECIFIED.

US Army Corps of Engineers
Afghanistan Engineer District

SYMBOL	DESCRIPTION	DATE	APP

DESIGNED BY: GDH | DATE: 09–30–09
DWN BY: MDB | SUBMITTED BY: BAKER
CHK BY: CWW | FILE NO.: ANPSDS–002XXX

Michael Baker Jr., Inc
A unit of Michael Baker Corporation
Airside Business Park
100 Airside Drive
Moon Township, PA 15108
www.mbakercorp.com

AFGHAN NATIONAL POLICE
STANDARD DESIGN
WELL HOUSE

DESGIN CRITERIA & SCHEDULES

SHEET REFERENCE NUMBER:
S2

100% SUBMISSION

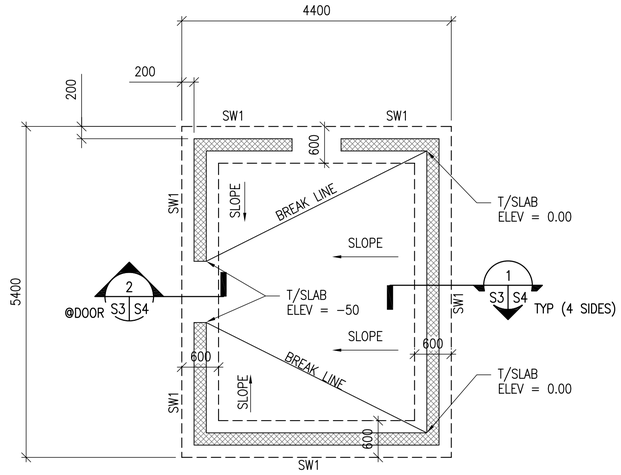

1 S3 S3 WELL HOUSE FOUNDATION PLAN

SCALE: 1:50

N

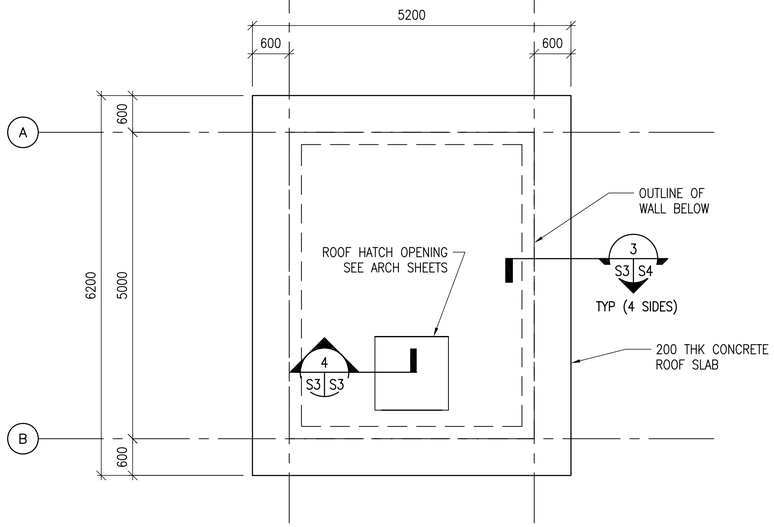

2 S3 S3 WELL HOUSE ROOF FRAMING PLAN

SCALE: 1:50

N

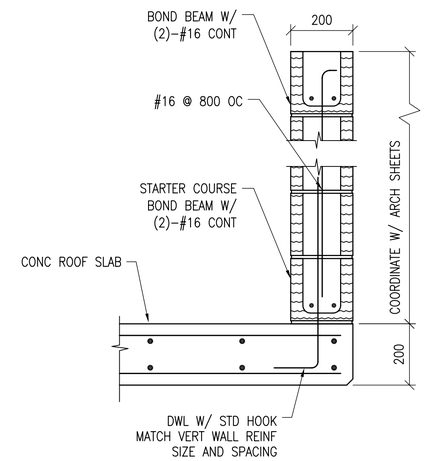

4 S3 S3 SECTION

SCALE: 1:10

NOTES:

1. FINISH FIRST FLOOR ELEVATION SHALL BE (DATUM 0.0) ALL PLUS OR MINUS DIMENSIONS INDICATED ON PLAN OR REFERRED TO IN NOTES RELATE TO FINISH FIRST FLOOR ELEVATION.
2. TOP OF EXTERIOR FOOTINGS SHALL BE -600 UNLESS OTHERWISE INDICATED.
3. UNLESS OTHERWISE INDICATED, FLOORS SHALL BE 150 THICK CONCRETE SLAB-ON-GRADE W/ 13 DIA REBAR @ 450 OC E.W. (38 CLR. TOP)
4. REFER TO SHEET S1 AND S2 FOR STRUCTURAL NOTES, ABBREVIATIONS AND SYMBOLS.
5. REFER TO ARCHITECTURAL SHEETS FOR MASONRY PARTITION TYPES AND SHEET S5 REINFORCEMENT.
6. SEE MECHANICAL AND ELECTRICAL SHEETS FOR CONCRETE PAD LOCATIONS, SIZES, AND THICKNESS NOT SHOWN. SEE SHEET S5 FOR DETAILS.
7. ⟶ INDICATES SLOPE IN SLAB ON GRADE. COORDINATE LOCATION AND ELEVATION WITH ARCHITECTURAL AND PLUMBING SHEETS (TYP).
8. COORD W/ ARCHITECTURAL SHEETS FOR COLD-FORMED STEEL OVERBUILT FRAMING ABOVE ROOF SLAB.
9. COLD-FORMED METAL OVERBUILT ROOF FRAMING NOT SHOWN FOR CLARITY. SEE OVERBUILT ROOF FRAMING DETAILS AND SECTIONS ON SHEET S4.

UNLESS OTHERWISE NOTED, LINEAR DIMENSIONS SHOWN ARE IN MILLIMETERS (MM)

0 200 400 800
SCALE: 1: 10

0 1000 2000 4000
SCALE: 1: 50

US Army Corps of Engineers
Afghanistan Engineer District

	DATE	DESCRIPTION	APP'D

DESIGNED BY: GDH	DATE: 09-30-09		
DWN BY: MDB	SUBMITTED BY: BAKER		
CHK BY: CWW	FILE NO.: ANPSDS-103XXX		

Michael Baker Jr., Inc
A unit of Michael Baker Corporation
Airside Business Park
100 Airside Drive
Moon Township, PA 15108
www.mbakercorp.com

AFGHAN NATIONAL POLICE
STANDARD DESIGN
WELL HOUSE

FOUNDATION & ROOF FRAMING PLANS

SHEET REFERENCE NUMBER:
S3

100% SUBMISSION

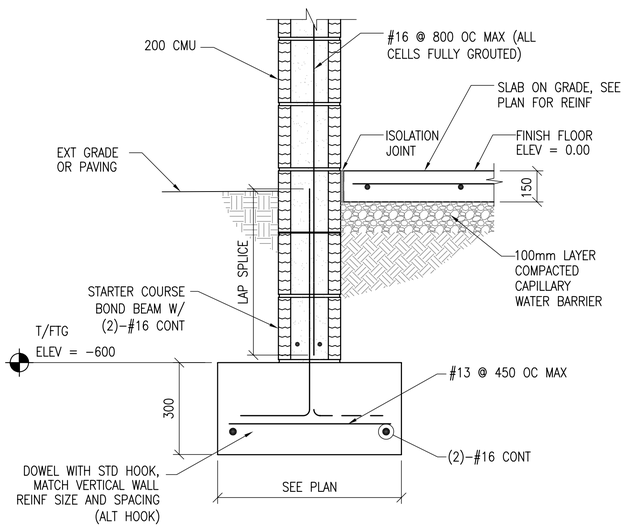

1 S3 S4 **SECTION**
SCALE: 1:10

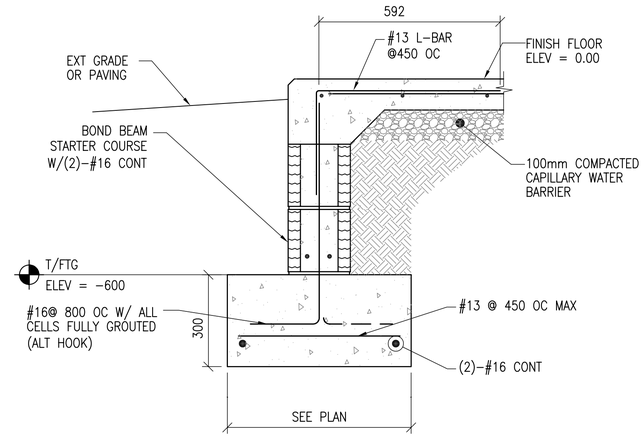

2 S3 S4 **SECTION**
SCALE: 1:10

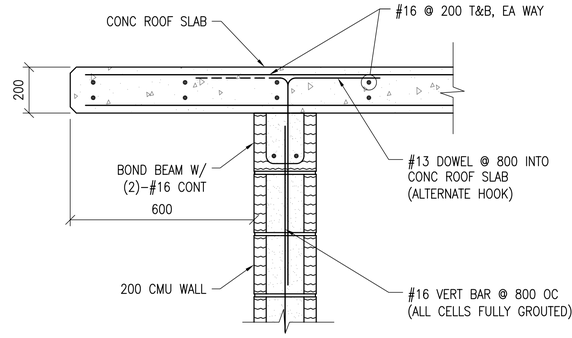

3 S3 S4 **SECTION**
SCALE: 1:10

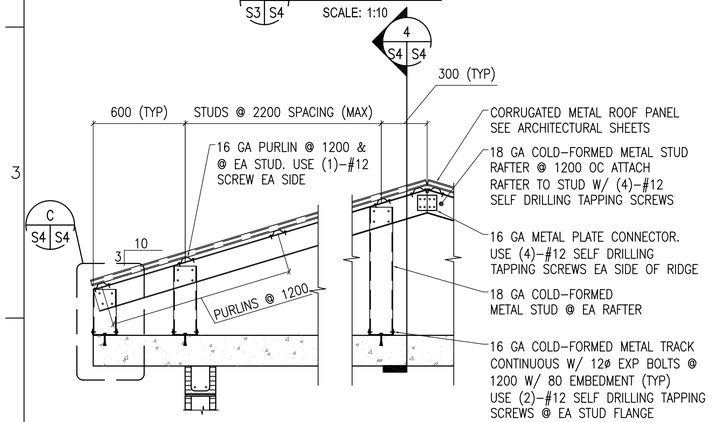

NOTES:
1. SEE NOTES ON SHEET S1 FOR OVERBUILT ROOF FRAMING MEMBER SECTION PROPERTY MINIMUM REQUIREMENTS
2. AT END OF BLDG PROVIDE TRANSVERSE BRACE @ 2400 OC SIMILAR TO LONGITUDINAL BRACING

A S4 S4 **TYPICAL OVERBUILT ROOF FRAMING DETAIL**
SCALE: 1:20

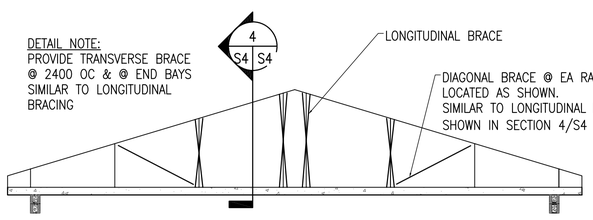

B S4 S4 **TYPICAL ROOF BRACE LAYOUT DETAIL**
SCALE: NTS

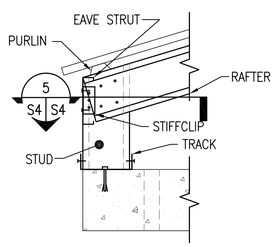

C S4 S4 **DETAIL**
SCALE: 1:10

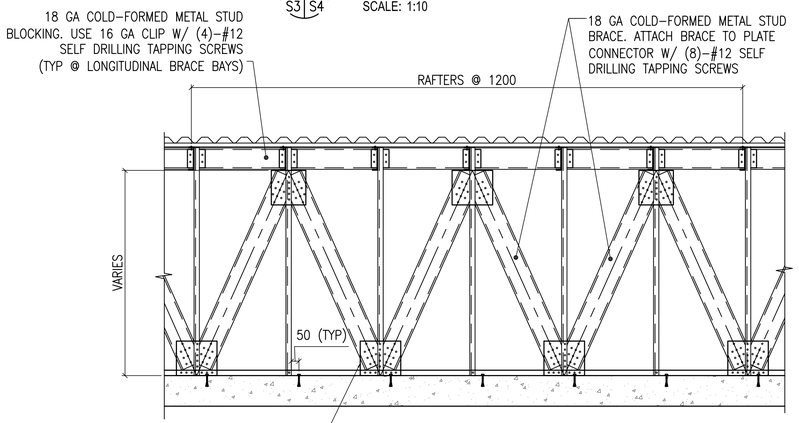

4 S4 S4 **SECTION**
SCALE: NTS

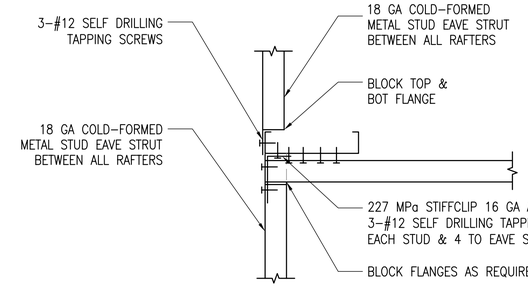

5 S4 S4 **SECTION**
SCALE: 1:5

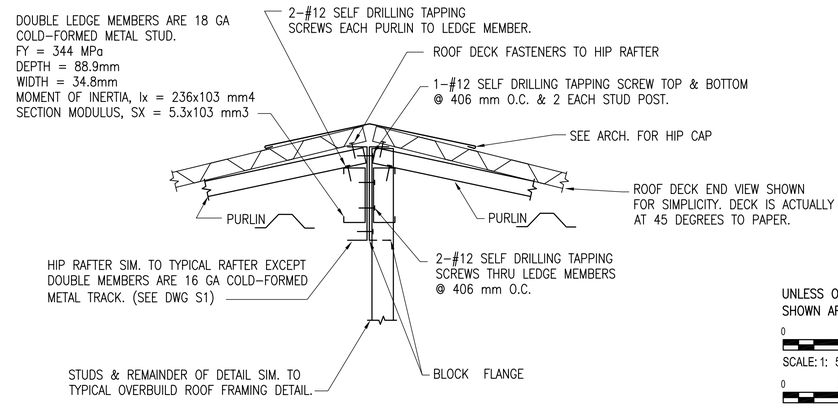

TYPICAL HIP FRAMING DETAIL
SCALE: 1:5

UNLESS OTHERWISE NOTED, LINEAR DIMENSIONS SHOWN ARE IN MILLIMETERS (MM)

0 100 200 400
SCALE: 1: 5

0 200 400 800
SCALE: 1: 10

0 400 800 1600
SCALE: 1: 20

US Army Corps of Engineers
Afghanistan Engineer District

SYMBOL	DESCRIPTION	DATE	APP

DESIGNED BY: GDH	DATE: 09-30-09	FILE NO.: ANPSDS-304XXX
DWN BY: MDB	SUBMITTED BY: BAKER	
CHK BY: CWW		

Michael Baker Jr., Inc
A unit of Michael Baker Corporation
Airside Business Park
100 Airside Drive
Moon Township, PA 15108
www.mbakercorp.com

AFGHAN NATIONAL POLICE
STANDARD DESIGN
WELL HOUSE

SECTIONS AND DETAILS

SHEET REFERENCE NUMBER:
S4

100% SUBMISSION

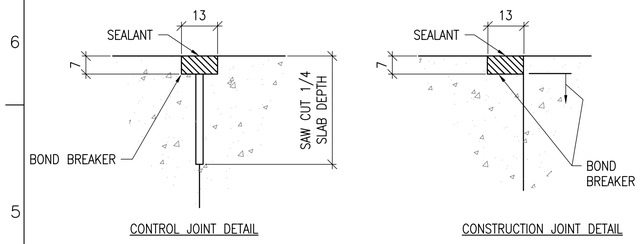

CONTROL JOINT DETAIL

CONSTRUCTION JOINT DETAIL

1 S5 TYPICAL CONCRETE SLAB JOINT FINISH DETAIL

SCALE: NTS

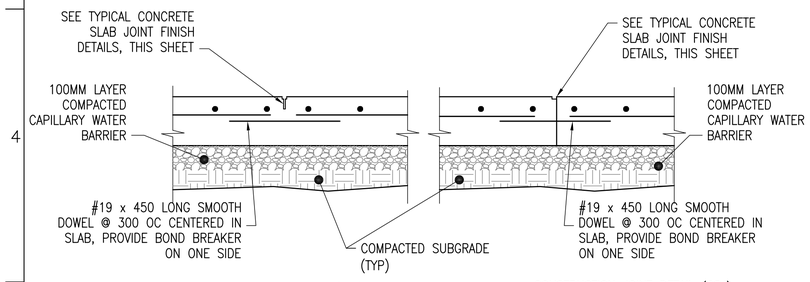

CONTROL JOINT DETAIL (CTJ)

CONSTRUCTION JOINT DETAIL (CSJ)

2 S5 TYPICAL SLAB ON GRADE JOINT DETAILS

SCALE: NTS

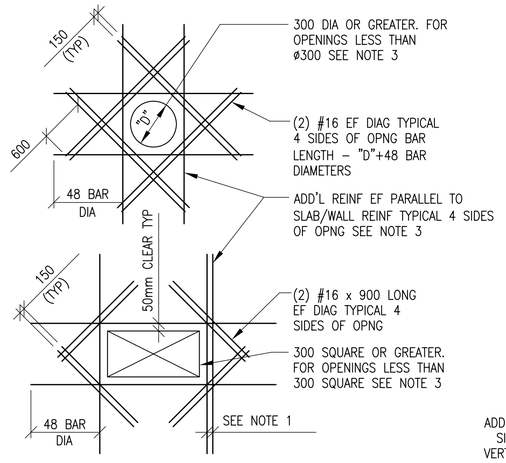

SLAB OPENINGS

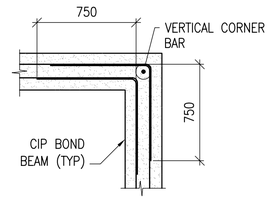

BOND BEAM CORNER

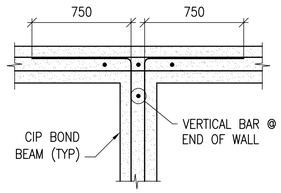

BOND BEAM INTERSECTION

5 S5 CIP BOND BEAM DETAILS

SCALE: NTS

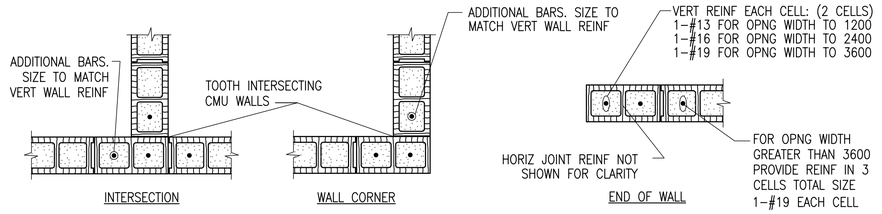

INTERSECTION

WALL CORNER

END OF WALL

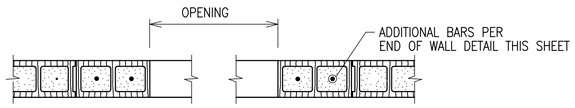

MASONRY OPENING W/ LINTEL

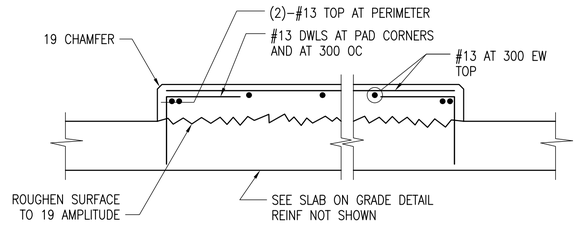

DETAIL NOTE:
1. COORDINATE EQUIPMENT PAD SIZE AND LOCATIONS W/ ELECTRICAL/MECHANICAL SHEETS AND EQUIPMENT MANUFACTURER.

3 S5 INTERIOR EQUIPMENT PAD DETAIL

SCALE: NTS

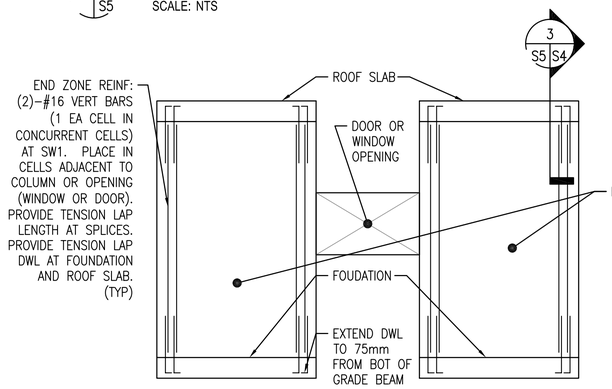

DETAIL NOTE:
1. PROVIDE (2)-#16 IN BOND BEAMS AT 1200 OC, NOT SHOWN.

4 S5 SPECIAL REINFORCED MASONRY SHEAR WALL ELEVATION

SCALE: NTS

NOTES:
1. OPNG WIDTH SHALL NOT EXCEED 3600 FOR THIS TYPE OF JAMB
2. ALL CELLS FULLY GROUTED

6 S5 TYPICAL CMU DETAILS

SCALE: NTS

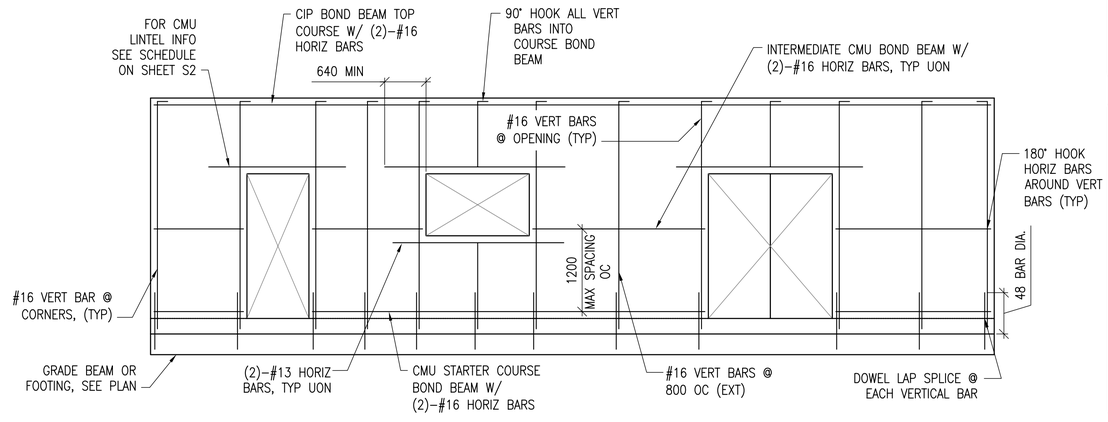

7 S5 MIN CMU WALL REINFORCING

SCALE: NTS

UNLESS OTHERWISE NOTED, LINEAR DIMENSIONS SHOWN ARE IN MILLIMETERS (MM)

US Army Corps of Engineers
Afghanistan Engineer District

SYMBOL	DESCRIPTION	DATE	APP

DESIGNED BY: GDH	DATE: 09-30-09
DWN BY: RCG	SUBMITTED BY: BAKER
CHK BY: CWW	FILE NO.: ANPSDS-505XXX

Michael Baker Jr., Inc
A unit of Michael Baker Corporation
Airside Business Park
100 Airside Drive
Moon Township, PA 15108
www.mbakercorp.com

AFGHAN NATIONAL POLICE
STANDARD DESIGN
WELL HOUSE

TYPICAL DETAILS

SHEET REFERENCE NUMBER:
S5

100% SUBMISSION

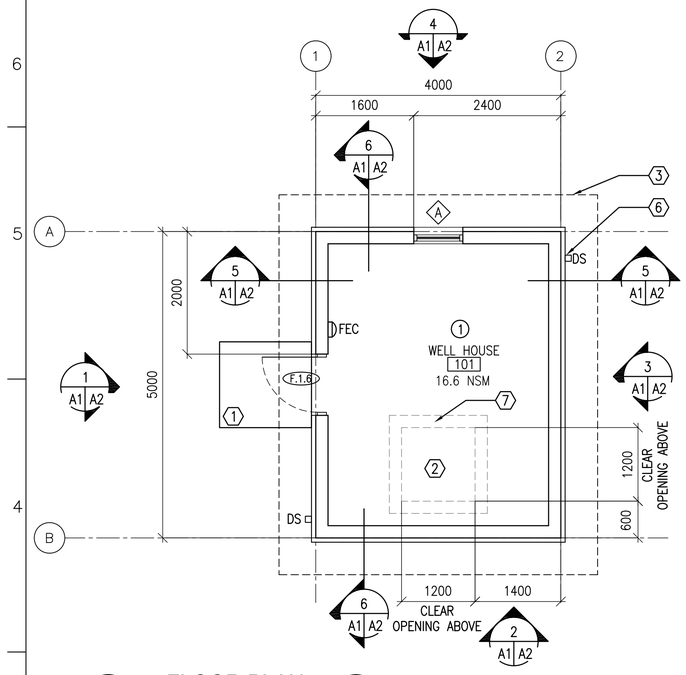

1 A1 A1 **FLOOR PLAN**

SCALE: 1:50

20.0 GSM

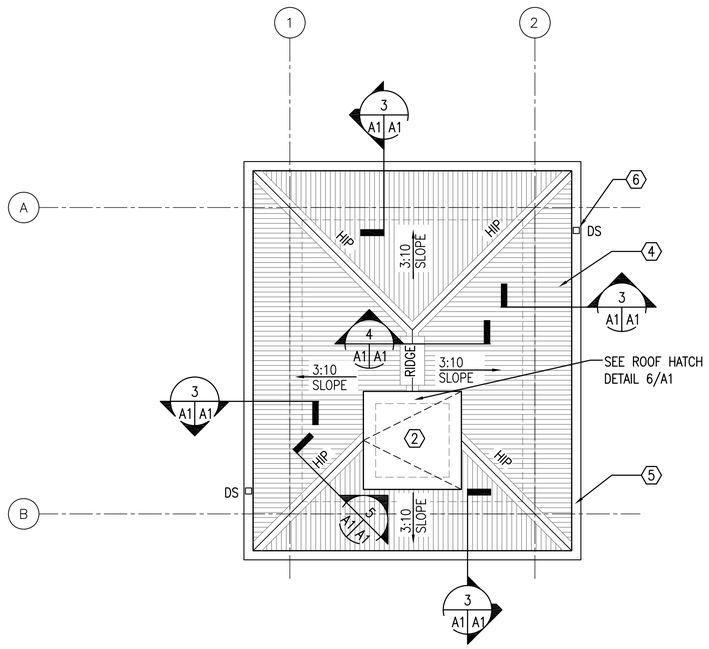

2 A1 A1 **ROOF PLAN**

SCALE: 1:50

GENERAL NOTES:

A. OPENINGS FOR DOORS SHALL BE LOCATED 200 FROM THE ADJACENT WALL UNLESS NOTED OTHERWISE

B. SURFACES TO BE PAINTED SHALL BE CLEAN AND FREE OF FOREIGN MATTER BEFORE APPLICATION OF PAINT. CLEANING SHALL BE SCHEDULED SO THAT DUST AND OTHER CONTAMINANTS WILL NOT FALL ON WET, NEWLY PAINTED SURFACES.

C. CONCRETE AND INTERIOR MASONRY SURFACES GROUTED SOLID SHALL BE ALLOWED TO DRY AT LEAST 30 DAYS BEFORE PAINTING EXCEPT CONCRETE SLAB ON GRADE WHICH SHALL BE ALLOWED TO CURE 90 DAYS BEFORE PAINTING.

D. PAINTS CONTAINING LEAD IN EXCESS OF 0.06 PERCENT BY WEIGHT OF THE TOTAL NONVOLATILE CONTENT SHALL NOT BE USED.

E. MERCURIAL FUNGICIDES SHALL NOT BE USED IN OIL–BASE PAINT.

F. REMOVE LOOSE DIRT AND CLEAN SURFACES BEFORE PAINTING. APPLY PAINT TO INTERIOR STRUCTURAL RIGID FRAMINGS AND CEILINGS AND TEST FOR ADHESION. PRIMER COAT FOR MASONRY. INITIAL FIRST COAT WITH AN ACRYLIC LATEX PAINT FOR EXTERIOR SURFACES AND A SECOND COAT WITH A WATER REPELLENT ACRYLIC LATEX PAINT.

G. METAL DOORS AND FRAMES SHALL RECEIVE A PRIMER COAT PLUS TWO COATS OF PAINT.

H. DIMENSIONS ARE TO STRUCTURAL COLUMN GRID, EDGE OF WINDOW OPENINGS, AND TO HINGE SIDE OF DOOR OPENINGS.

KEY NOTES: (X)

1. CONCRETE STOOP – RE: DETAIL 7/A3
2. ROOF HATCH ABOVE, CENTER ON WELL PUMP
3. LINE OF ROOF OVERHANG ABOVE.
4. CORRUGATED METAL ROOF PANEL ON COLD–FORMED METAL FRAMING
5. METAL GUTTER.
6. METAL DOWNSPOUT WITH SPLASH BLOCK.
7. 200 MM CMU WITH EXTERIOR STUCCO

ROOM FINISHES: (X)

1. WALLS: PAINTED PLASTER,
   FLOOR: SEALED CONCRETE
   CEILING: PAINTED PLASTER APPLIED TO STRUCTURE

LEGEND:

- F.1.4 — DOOR TYPE, SEE SHEET A3
- A — WINDOW TYPE, SEE SHEET A3
- (X) — KEY NOTE
- FEC — FIRE EXTINGUISHER CABINET
- (1) — ROOM FINISH DESIGNATION

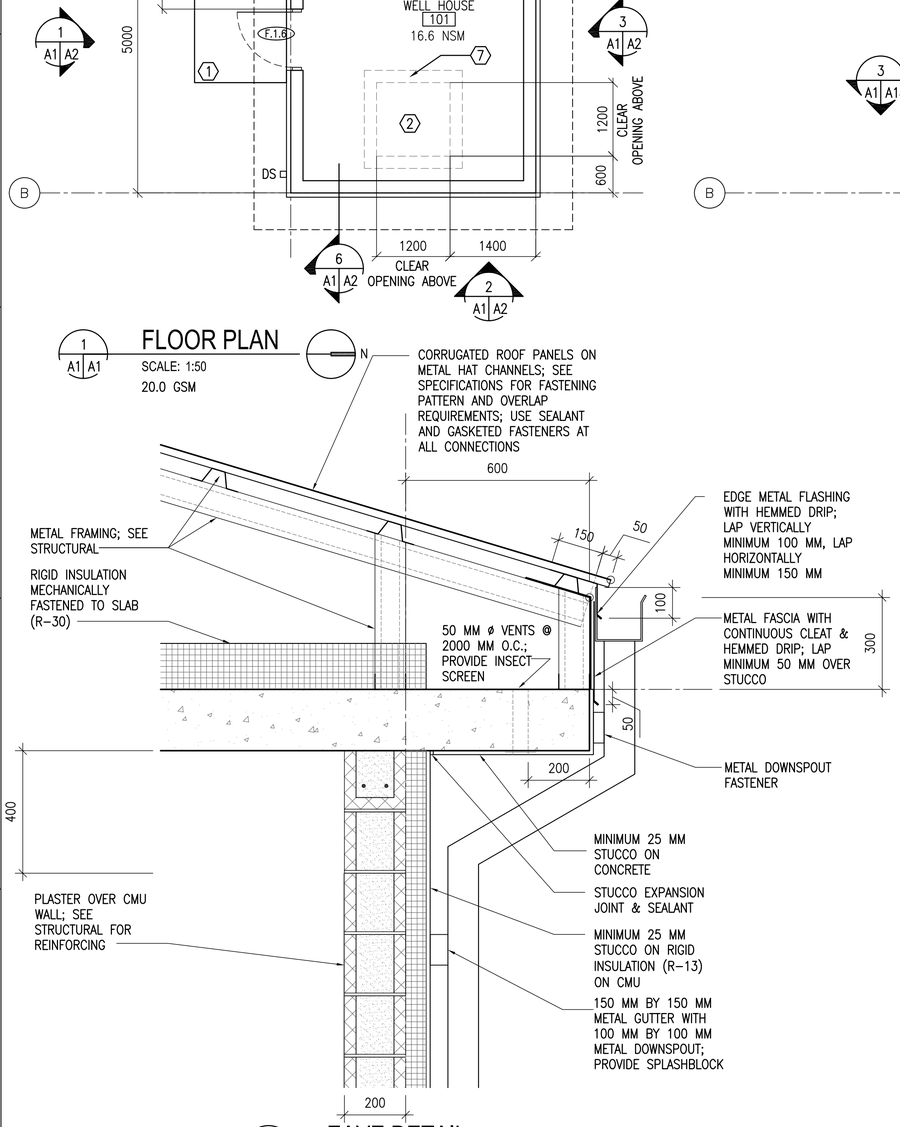

3 A1 A1 **EAVE DETAIL**

SCALE: 1:10

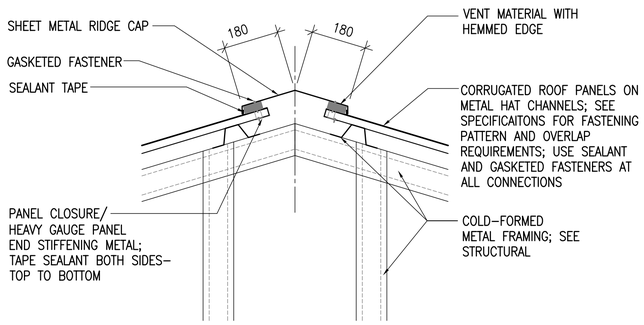

4 A1 A1 **RIDGE VENT DETAIL**

SCALE: 1:10

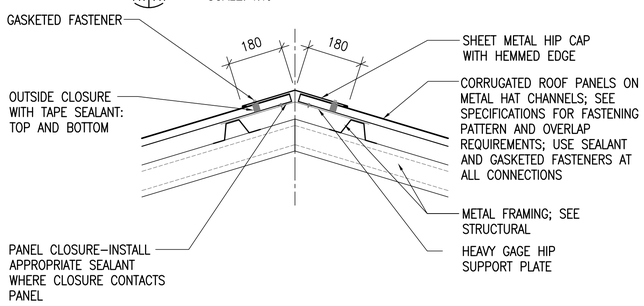

5 A1 A1 **HIP DETAIL**

SCALE: 1:10

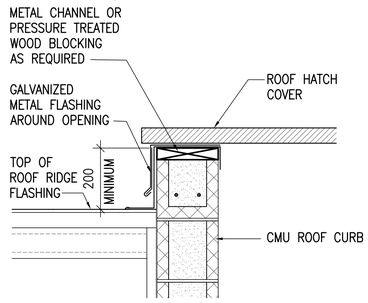

ROOF HATCH TO BE CENTERED ON WELL PUMP – SEE P1

6 A1 A1 **ROOF HATCH**

SCALE: 1:10

UNLESS OTHERWISE NOTED, LINEAR DIMENSIONS SHOWN ARE IN MILLIMETERS (MM)

0 200 400 800

SCALE: 1: 10

0 1000 2000 4000

SCALE: 1: 50

US Army Corps of Engineers
Afghanistan Engineer District

DESIGNED BY: PFF	DWN BY: ECN	CHK BY: NLJ
DATE: 09–30–09	SUBMITTED BY: BAKER	FILE NO.: ANPSDA–101XXX

SYMBOL	DESCRIPTION	DATE	APP'D

Michael Baker Jr., Inc
A unit of Michael Baker Corporation
Airside Business Park
100 Airside Drive
Moon Township, PA 15108
www.mbakercorp.com

AFGHAN NATIONAL POLICE
STANDARD DESIGN
WELL HOUSE

FLOOR AND ROOF PLANS AND DETAILS

SHEET REFERENCE NUMBER:

A1

100% SUBMISSION

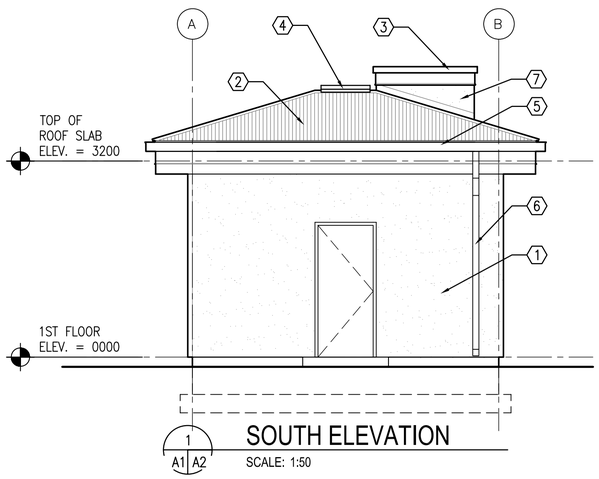

1 A1 A2 SOUTH ELEVATION

SCALE: 1:50

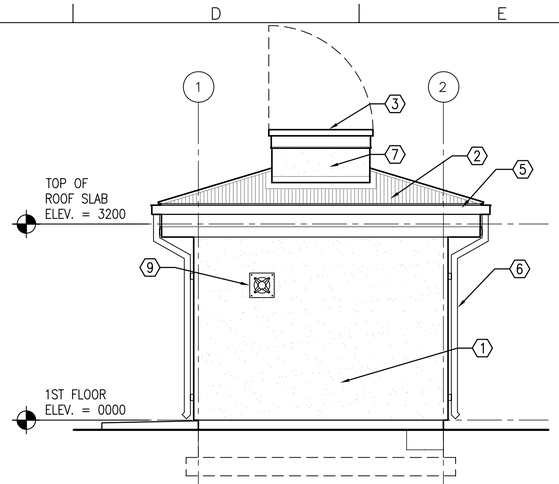

2 A1 A2 EAST ELEVATION

SCALE: 1:50

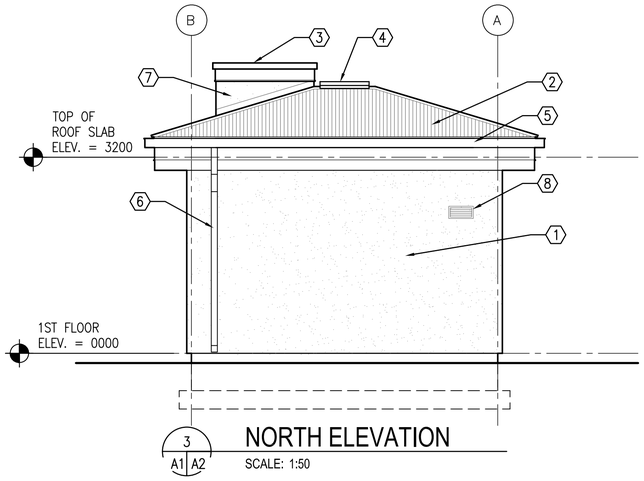

3 A1 A2 NORTH ELEVATION

SCALE: 1:50

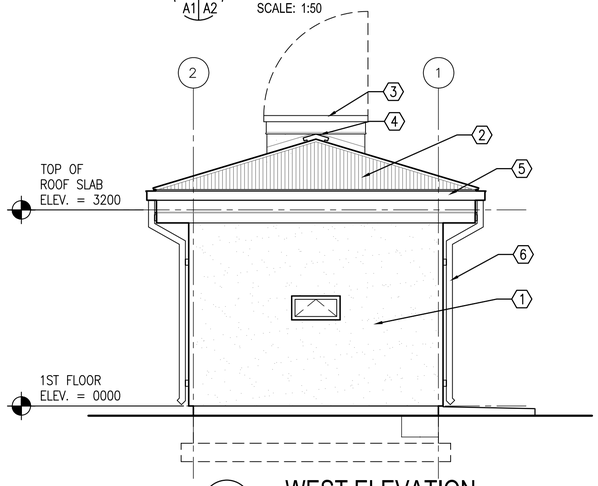

4 A1 A2 WEST ELEVATION

SCALE: 1:50

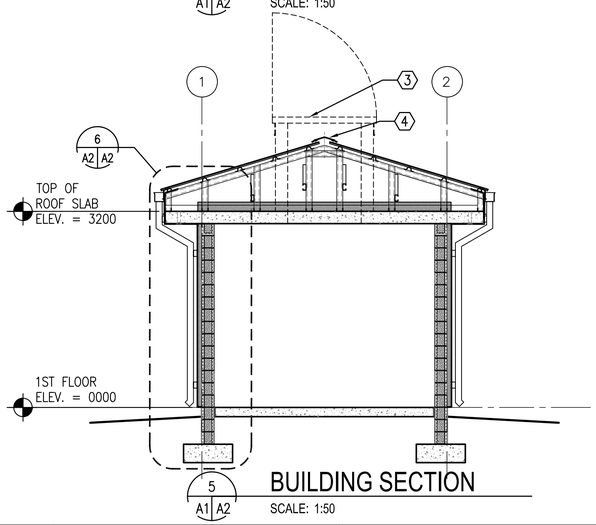

5 A1 A2 BUILDING SECTION

SCALE: 1:50

KEY NOTES: (X)

1. STUCCO AND RIGID INSULATION SYSTEM ON CMU
2. CORRUGATED METAL ROOF PANELS ON COLD-FORMED METAL FRAMING
3. ROOF HATCH WITH CURB. CENTER ON WELL PUMP – RE: CIVIL
4. RIDGE VENT
5. METAL GUTTER
6. METAL DOWNSPOUT WITH SPLASH BLOCK
7. STUCCO ON CMU
8. LOUVER – RE: MECHANICAL
9. EXHAUST FAN – RE: MECHANICAL

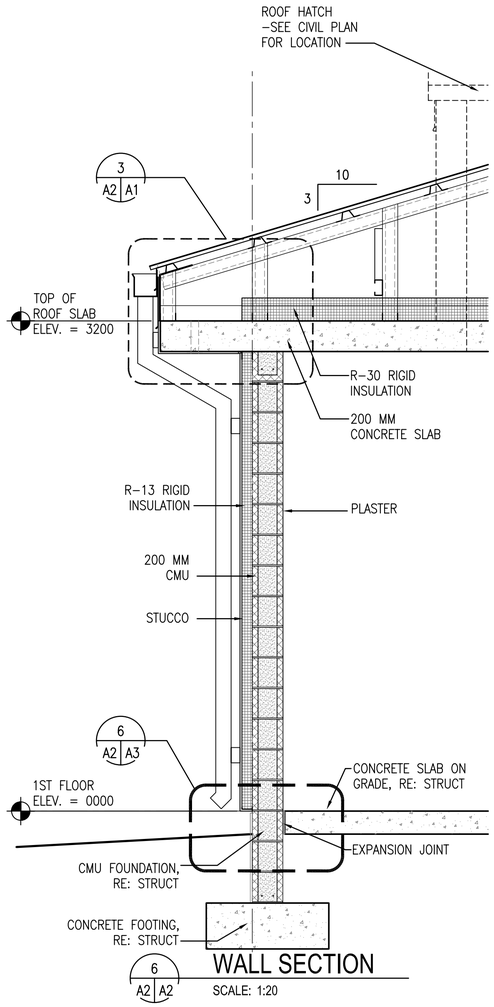

6 A2 A2 WALL SECTION

SCALE: 1:20

UNLESS OTHERWISE NOTED, LINEAR DIMENSIONS SHOWN ARE IN MILLIMETERS (MM)

0 400 800 1600

SCALE: 1: 20

0 1000 2000 4000

SCALE: 1: 50

US Army Corps of Engineers

Afghanistan Engineer District

SYMBOL	DESCRIPTION	DATE	APP

DESIGNED BY:	DATE:	
PFF	09-30-09	
DWN BY:	SUBMITTED BY:	
ECN	BAKER	
CHK BY:	FILE NO.:	
NLJ	ANPSDA-202XXX	

Michael Baker Jr, Inc
A unit of Michael Baker Corporation
Airside Business Park
100 Airside Drive
Moon Township, PA 15108
www.mbakercorp.com

AFGHAN NATIONAL POLICE
STANDARD DESIGN
WELL HOUSE

EXTERIOR ELEVATIONS

SHEET REFERENCE NUMBER:

A2

100% SUBMISSION

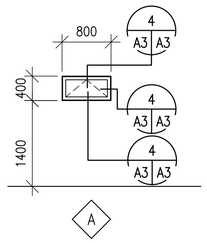

1 A3 A3 WINDOW TYPES
SCALE: 1:50

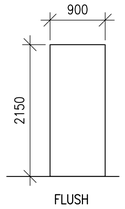

F

2 A3 A3 DOOR TYPES
SCALE: 1:50

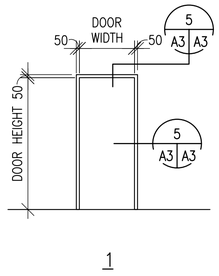

1

3 A3 A3 FRAME TYPES
SCALE: 1:50

WINDOW TYPES NOTES:

1. ALL EXTERIOR WINDOWS SHALL BE WOOD WITH INSECT SCREENS. WINDOWS SHALL BE COMMERCIAL GRADE.
2. GLAZING SHALL BE ACRYLIC SHEET.

DOOR TYPES NOTES:

1. INTERIOR AND EXTERIOR METAL DOORS AND FRAME COLORS SHALL MATCH ADJACENT WALL COLORS AS SELECTED BY THE CONTRACTING OFFICER.
2. HARDWARE SHALL BE HEAVY DUTY, COMMERCIAL GRADE, STAINLESS STEEL WITH A MATTE FINISH.
3. FRAMES, EXCEPT FIRE-RATED FRAMES, SHALL BE MOUNTED AND ADJUSTED IN ACCORDANCE WITH MANUFACTURER'S INSTRUCTIONS. FRAMES SHALL BE FASTENED WITH MINIMUM OF THREE FASTENING POINTS PER SIDE AT REGULAR INTERVALS.
4. DIMENSIONS SHOWN ON DOOR SCHEDULE ARE BASED UPON MODULAR MASONRY (OR ROUGH OPENING), HEIGHT OF 2200mm FOR STANDARD PERSONNEL DOORS. CONTRACTOR SHALL COORDINATE WITH DOOR SUPPLIER TO ENSURE THAT DIMENSIONS OF DOORS AND FRAMES PROVIDED ARE COMPATIBLE WITH DOOR OPENING DIMENSIONS.

HARDWARE TYPES:

HW-6 1-1/2 PR HINGES
1 EA LOCKSET,F04 ENTRY LOCK W/LEVERS. GRADE 1
1 EA DOOR CLOSER, C02061,LOW RESISTANCE
1 EA THRESHOLD J32130

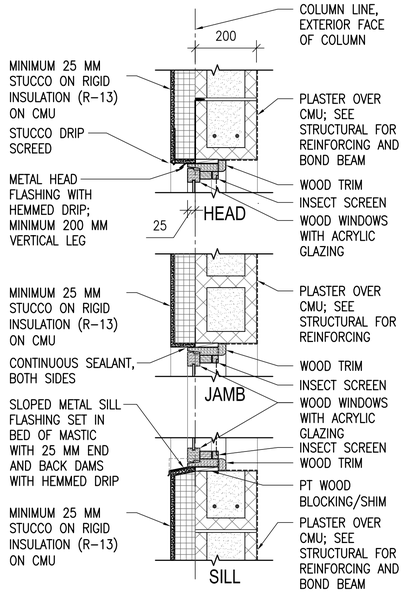

4 A3 A3 WINDOW DETAILS
SCALE: 1:10

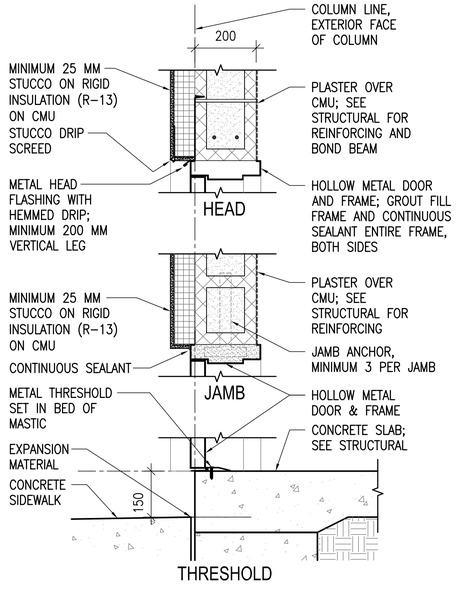

5 A3 A3 EXTERIOR DOOR DETAILS
SCALE: 1:10

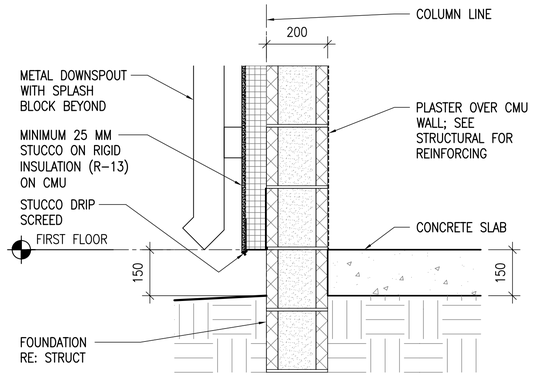

6 A3 A3 STUCCO BASE DETAIL
SCALE: 1:10

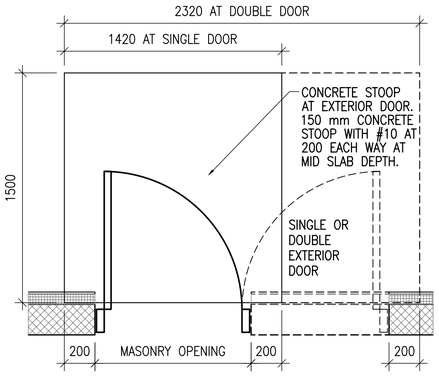

7 A3 A3 CONCRETE STOOP PLAN DETAIL
SCALE: 1:20

UNLESS OTHERWISE NOTED, LINEAR DIMENSIONS SHOWN ARE IN MILLIMETERS (MM)

0 200 400 800
SCALE: 1: 10

0 1000 2000 4000
SCALE: 1: 50

US Army Corps of Engineers
Afghanistan Engineer District

SYMBOL	DESCRIPTION	DATE	APP'D

DESIGNED BY: PFF	DATE: 09-30-09		
DWN BY: ECN	SUBMITTED BY: BAKER	CHK BY: NLJ	FILE NO.: ANPSDA-303XXX

Michael Baker Jr., Inc
A unit of Michael Baker Corporation
Airside Business Park
100 Airside Drive
Moon Township, PA 15108
www.mbakercorp.com

AFGHAN NATIONAL POLICE
STANDARD DESIGN
WELL HOUSE

DOOR, WINDOW & FINISH TYPES & DETAILS

SHEET REFERENCE NUMBER:
A3

100% SUBMISSION

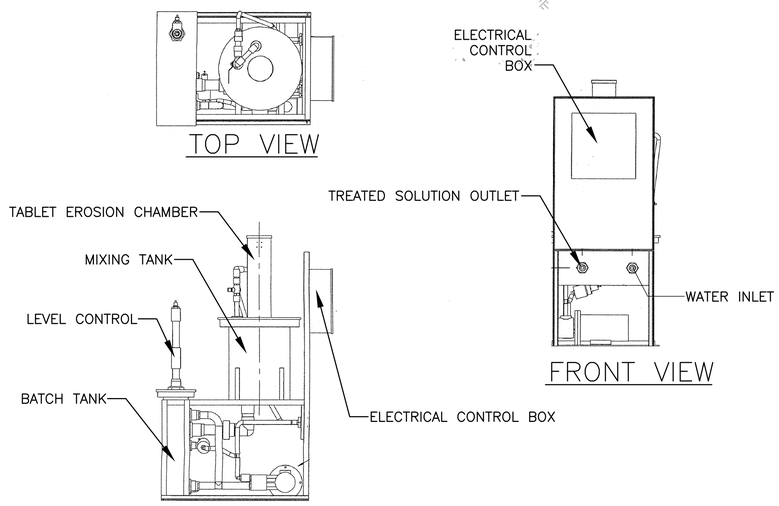

CHLORINE FEED SYSTEM
(Calcium Hypochorite Tablet Feeder)
N.T.S.

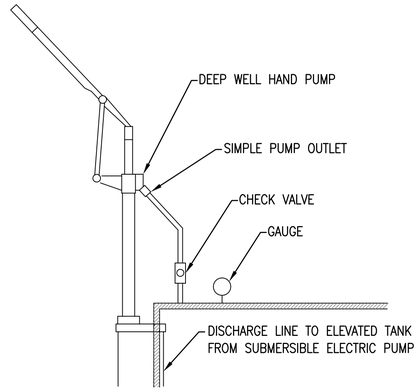

HAND PUMP INSTALLATION DETAIL
N.T.S.

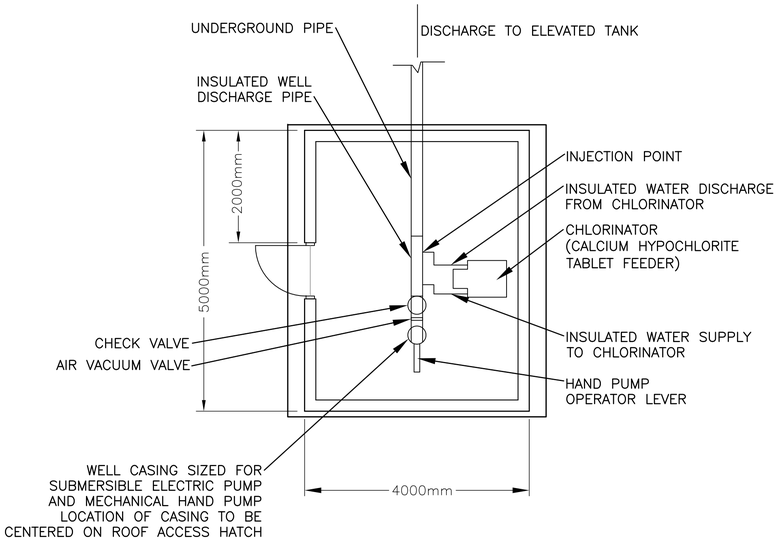

WELL HOUSE PLUMBING SCHEMATIC
N.T.S.

US Army Corps of Engineers
Afghanistan Engineer District

SYMBOL	DESCRIPTION	DATE	APR

DESIGNED BY: BAKER	DATE: 09-30-09
DWN BY: BAKER	SUBMITTED BY: BAKER
CHK BY: GPH	FILE NO.: ANPSDP-501XXX

Michael Baker Jr., Inc
A unit of Michael Baker Corporation
Airside Business Park
100 Airside Drive
Moon Township, PA 15108
www.mbakercorp.com

AFGHAN NATIONAL POLICE
STANDARD DESIGN
WELL HOUSE

PLUMBING SCHEMATIC AND DETAILS

SHEET REFERENCE NUMBER:
P1

100% SUBMISSION

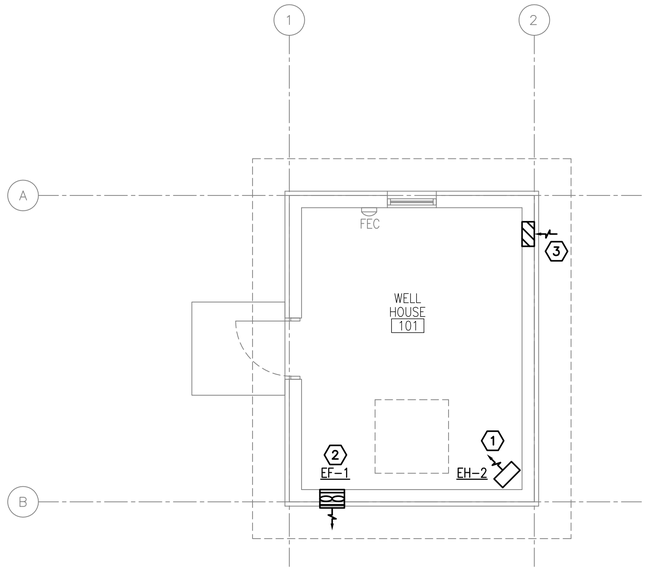

1 M1 M1 HVAC PLAN

SCALE: 1:50

N

GENERAL NOTES:

1. DO NOT SCALE DRAWINGS – ALL DIMENSIONS AND CONDITIONS SHALL BE CHECKED AND VERIFIED BY THE CONTRACTOR AT THE SITE.
2. ALL WORK PERFORMED ON THIS BUILDING SHALL BE IN COMPLIANCE WITH ALL PERTINENT CODES, RULES, ORDINANCES AND REGULATIONS OF THE GOVERNING AUTHORITIES.
3. ALL WORK PERFORMED UNDER AND IN CONNECTION WITH THESE DRAWINGS AND SPECIFICATIONS SHALL BE IN STRICT COMPLIANCE WITH THE LATEST SAFETY AND HEALTH STANDARDS.

NUMBERED NOTE:

(1) CORROSION RESISTANT ELECTRIC UNIT HEATER SUSPENDED FROM STRUCTURE ABOVE.

(2) CORROSION RESISTANT WALL MOUNTED EXHAUST FAN.

(3) 200x400 (8x16) LOW LEAKAGE GRAVITY WALL LOUVER FOR INTAKE. PROVIDE WEATHER PROOF LOUVER W/0.05mm (2") WASH DOWN FILTER AND SAND TRAP.

ELECTRIC UNIT HEATER SCHEDULE

NO.	CMS	KW	F.A.T. °C	ELECT. CHAR.	MOUNTING
EH–2	.200	2.6	33	370/1/50	CEILING

NOTES:
1. HEATERS SHALL BE CORROSION RESISTANT

EXHAUST FAN SCHEDULE

NO.	TYPE	FAN CMS	DRIVE	HP	SP mmH20	ELECT. CHAR.	SWITCH
EF–1	WALL	0.100	DIRECT	FRACT	13	220/1/50	@ WALL

NOTES:
1. WALL MOUNTED EXHAUST FAN MOUNT AT 600mm BELOW CEILING.
2. FANS SHALL HAVE LOW LEAKAGE GRAVITY LOUVER AND SECURITY GRILLE.
3. FANS SHALL BE EXPLOSION PROOF.

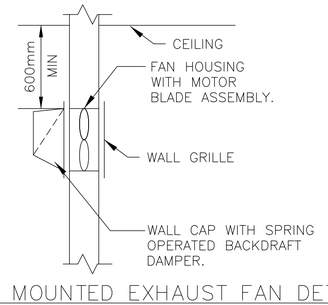

WALL MOUNTED EXHAUST FAN DETAIL
N.T.S.

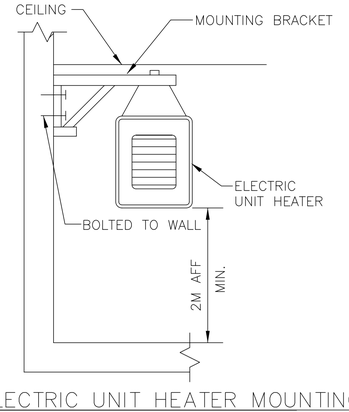

ELECTRIC UNIT HEATER MOUNTING
N.T.S.

US Army Corps of Engineers
Afghanistan Engineer District

SYMBOL	DESCRIPTION	DATE	APP

DESIGNED BY: RML	DWN BY: JJN	CHK BY: CJM
DATE: 09-30-09	SUBMITTED BY: BAKER	FILE NO.: ANPSDM-101XXX

Michael Baker Jr., Inc
A unit of Michael Baker Corporation
Airside Business Park
100 Airside Drive
Moon Township, PA 15108
www.mbakercorp.com

AFGHAN NATIONAL POLICE
STANDARD DESIGN
WELL HOUSE

HVAC PLAN

SHEET REFERENCE NUMBER:
M1

100% SUBMISSION

POWER

- DISTRIBUTION PANELBOARD
- NEW PANELBOARD – SURFACE
- NEW PANELBOARD – RECESSED
- EXISTING PANELBOARD
- (G) GENERATOR
- TVSS TRANSIENT VOLTAGE SURGE SURPRESSOR
- TRANSFORMER (DRAWN TO SIZE)
- PS POWER SUPPLY
- CP CONTROL PANEL
- TC TIME CLOCK
- TIM ASTRONOMICAL TIME CLOCK– "SEE SPEC."
- R RELAY WITH RATING AND NUMBER OF POLES AS NOTED ON DRAWINGS– "SEE SPEC."
- J JUNCTION BOX
- (J) JUNCTION BOX – CEILING
- PB PULL BOX
- BD BUS DUCT HORIZONTAL
- BUS DUCT VERTICAL
- EMERGENCY POWER OFF PUSH BUTTON
- NON–FUSIBLE SAFETY SWITCH
- FUSIBLE SAFETY SWITCH
- (M) MOTOR
- ^{M} MOTOR STARTING SWITCH – 20A RATED
- ^{K} KEY SWITCH – 20A RATED
- FC FAN COIL – FURNISHED BY MECHANICAL CONTRACTOR, ELECTRICAL CONTRACTOR SHALL INSTALL AND PROVIDE POWER CONNECTION
- UH UNIT HEATER – FURNISHED BY MECHANICAL CONTRACTOR, ELECTRICAL CONTRACTOR SHALL INSTALL AND PROVIDE POWER CONNECTION
- D JUNCTION BOX FOR CONNECTION TO GARBAGE DISPOSAL
- CF LIGHT/HEATER/FAN – FURNISHED BY MECHANICAL CONTRACTOR, ELECTRICAL CONTRACTOR SHALL INSTALL AND PROVIDE POWER CONNECTION
- ELECTRIC WATER HEATER
- EPO WEATHERPROOF / EXPLOSION PROOF EMERGENCY POWER OFF PUSH–BUTTON TO BE INTERCONNECTED WITH GENERATOR SHUT DOWN CONTROL
- CF CEILING FAN – REFER TO SPECIFICATION SECTION 26 20 00

RECEPTACLES

- DUPLEX 20A BRITISH STANDARD UNSWITCHED SOCKETS
- GF DUPLEX 20A BRITISH STANDARD UNSWITCHED SOCKETS – 10mA GROUND FAULT INTERRUPTER TYPE
- WP DUPLEX 20A BRITISH STANDARD UNSWITCHED SOCKETS – 10mA GROUND FAULT INTERRUPTER TYPE WITH WEATHERPROOF COVER
- EXP DUPLEX 20A BRITISH STANDARD UNSWITCHED SOCKETS – EXPLOSION PROOF
- * INDICATES MOUNT DEVICE ABOVE COUNTER TOP

LIGHTNING PROTECTION

- AIR TERMINAL 200mm O.D. X 4m SOLID COPPER, NICKEL PLATED ON ADHESIVE BASE.
- EQ EQUIPMENT AIR TERMINAL
- TEST WELL WITH GROUND ROD(S)
- GROUND ROD
- G GROUND PLATE
- MAIN GROUND CONDUCTER CONCEALED WITHIN CONSTRUCTION
- MAIN GROUND CONDUCTOR EXPOSED ON EXPOSED ON BUILDING EXTERIOR SURFACE
- GROUND CONDUCTOR CAD WELDED TO GROUND CABLE OR EQUIPMENT
- GROUND CONDUCTOR CAD WELDED TO BUILDING STEEL COLUMN
- GROUND ROD TRIPOD, SPACED 10 FEET APART.
- LEVEL TO LEVEL CABLE

LIGHTING

- LIGHTING FIXTURE – SEE FIXTURE SCHEDULE FOR MORE INFORMATION
- LIGHTING FIXTURE – SEE FIXTURE SCHEDULE FOR MORE INFORMATION
- DOWNLIGHT
- LIGHTING FIXTURE ON NORMAL/EMERGENCY
- WALL MOUNTED LIGHT FIXTURE
- E EXIT SIGN – DIRECTIONAL ARROWS AS INDICATED ON DRAWINGS
- B BATTERY PACK WITH HEADS AS INDICATED ON DRAWINGS
- REMOTE HEAD FOR BATTERY PACK
- $ SINGLE POLE SWITCH – 20A RATED
- ^{3} 3–WAY SWITCH – 20A RATED
- ^{4} 4–WAY SWITCH – 20A RATED
- PC PHOTOCELL VOLTAGE TO MATCH CIRCUITRY
- LC LIGHTING CONTACTOR
- POLE MOUNTED SITE LIGHTING FIXTURE– NUMBER OF FIXTURES PER POLE AS INDICATED ON DRAWINGS
- EXTERIOR DIRECTIONAL LIGHTING FIXTURE
- a SMALL CASE LETTERS REPRESENTS LAMP(S) / SWITCHES. WHEN USED WITH AN OCCUPANCY SENSOR THIS INDICATES SENSOR WITH MANUAL OVERRIDE SWITCH

TELECOMMUNICATIONS

- TELEPHONE OUTLET(S) @ 18" AFF. U.N.O. WITH 3/4" RACEWAY TERMINATED ABOVE NEAREST ACCESSIBLE CEILING OR TO TELEPHONE TERMINAL BOARD IF NO ACCESSIBLE CEILING AVAILABLE. SEE TELE/DATA RISER DIAGRAM FOR OUTLET AND CABLE DESCRIPTION
- DATA OUTLET(S) @ 18" AFF. U.N.O. WITH 3/4" RACEWAY TERMINATED ABOVE NEAREST ACCESSIBLE CEILING OR TO DATA EQUIPMENT RACK IF NO ACCESSIBLE CEILING AVAILABLE. SEE TELE/DATA RISER DIAGRAM FOR OUTLET AND CABLE DESCRIPTION

TELECOMMUNICATIONS (CONTINUED)

- COMBINATION TELEPHONE/DATA OUTLET(S) @ 18" AFF. U.N.O. WITH 1" RACEWAY TERMINATED ABOVE NEAREST ACCESSIBLE CEILING OR TO TELE/DATA TERMINAL AREA IF NO ACCESSIBLE CEILING AVAILABLE. SEE TELE/DATA RISER DIAGRAM FOR OUTLET AND CABLE DESCRIPTION
- W WALL MTD. TELEPHONE OUTLET WITH 3/4" RACEWAY TERMINATED ABOVE NEAREST ACCESSIBLE CEILING OR TO TELEPHONE TERMINAL BOARD IF NO ACCESSIBLE CEILING AVAILABLE. SEE TELE/DATA RISER DIAGRAM FOR OUTLET AND CABLE DESCRIPTION
- (x)T INDICATES NUMBER OF TELEPHONE OUTLET(S) AND ASSOCIATED CABLING
- (x)D INDICATES NUMBER OF DATA OUTLET(S) AND ASSOCIATED CABLING
- (x)TF INDICATES NUMBER OF TELEPHONE OUTLETS AND ASSOCIATED CABLING WITH 1 OUTLET AND CABLE DEDICATED FOR FAX

SINGLE LINE SYMBOLS

- SWITCH
- BREAKER
- FUSE
- TRANSFORMER
- CAPACITOR
- GROUND
- CONTACT (NORMALLY OPEN)
- CONTACT (NORMALLY CLOSED)
- AUTOMATIC TRANSFER SWITCH
- MANUAL DOUBLE THROW SWITCH
- CURRENT TRANSFORMER
- INDICATES NEW ELECTRICAL EQUIPMENT
- C INDICATES NEW CONTROL WIRING AND CONDUIT
- EQUIPMENT OUTLINE

MISCELLANEOUS

- BRANCH CIRCUIT WIRING CONCEALED ABOVE CEILINGS, SURFACE MOUNTED ON WALLS
- BRANCH CIRCUIT WIRING – #10 AWG
- BRANCH CIRCUIT WIRING – UNDER FLOOR
- HOME RUN BACK TO PANEL
- CONDUIT TURNED DOWN
- CONDUIT TURNED UP
- LV LOW VOLTAGE WIRING AND CONDUIT
- CT–X CABLE TRAY ("X" DENOTES WIDTH)
- INDICATES CONTINUATION OF LINE

FIRE ALARM

- FACP FIRE ALARM CONTROL PANEL WITH BATTERY BACKUP
- F FIRE ALARM PULL STATION

FIRE ALARM (CONTINUED)

- F FIRE ALARM STROBE – WALL MOUNTED
- F FIRE ALARM AUDIBLE/STROBE – WM
- F FIRE ALARM HORN/STROBE – WM
- S SMOKE DETECTOR
- H HEAT DETECTOR CEILING MOUNTED
- D DUCT DETECTOR – PROVIDED BY EC, INSTALLED BY MC AND CONNECTED BY EC

DENOTATIONS & ABBREVIATIONS

AFF	ABOVE FINISHED FLOOR
C	CEILING MOUNTED
E	EMERGENCY
EC	ELECTRICAL CONTRACTOR
EPO	EMERGENCY POWER OFF
EXP	EXPLOSION PROOF
F	FIRE ALARM
FF	FLUSH FLOOR MOUNTED
FL	FLUORESCENT
FO	FIBER OPTIC
FSS	FUSED SAFETY SWITCH
G	GROUND FAULT INTERRUPTER
GC	GENERAL CONTRACTOR
HOA	HAND–OFF AUTO
I	INFRARED
ICD	INCANDESCENT
IG	ISOLATED GROUND
K	KEY
LV	LOW VOLTAGE
M	MOTOR
MC	MECHANICAL CONTRACTOR
NE	NORMAL/EMERGENCY
NFSS	NON–FUSED SAFETY SWITCH
PA	PAGING SYSTEM
PLC	PLUMBING CONTRACTOR
REL	RELOCATE
RED	RELOCATED
SL	SINGLE LINE
SS	SURGE SUPPRESSION
T	TELEPHONE
TL	TWIST LOCK

DENOTATIONS & ABBREVIATIONS (CONT.)

TP	TAMPER PROOF
UE	UNDERGROUND ELECTRIC
UF	UNDERGROUND FIBER
UT	UNDERGROUND TELEPHONE
W	WALL MOUNTED
WG	WIRE GUARD
WP	WEATHERPROOF
WPG	WEATHERPROOF/GROUND FAULT INTERRUPTER
WT	WATER TIGHT

GENERAL PROJECT NOTES:

G1. UNLESS OTHERWISE NOTED, PROVIDE ALL EQUIPMENT SHOWN ON THE PLANS. THE ELECTRICAL CONTRACTOR SHALL COORDINATE ALL SYMBOLS SHOWN ON THE PLANS WITH THE SYMBOL LIST. IT SHALL BE THE RESPONSIBILITY OF THE CONTRACTOR TO VERIFY THE INTENT OF ANY SYMBOL THAT IS SHOWN ON THE PLANS AND NOT INDICATED ON THE SYMBOL LIST WITH THE ENGINEER PRIOR TO BID.

G2. COORDINATE THE FINAL LOCATIONS OF ALL LIGHT FIXTURES WITH THE ARCHITECT'S REFLECTED CEILING PLANS. REPORT ANY DISCREPANCIES TO THE ARCHITECT PRIOR TO INSTALLATION.

G3. THE CONTRACTOR SHALL VERIFY THE LOCATION OF ALL UNDERGROUND UTILITIES WITHIN THE CONSTRUCTION AREA THREE (3) WORKING DAYS NOTICE BEFORE COMMENCE DIGGING. NOTIFY THE LOCAL OR STATE AUTHORITY HAVING JURISDICTION AND WAIT THE REQUIRED TIME BEFORE COMMENCING TO DIG.

G4. THE CONTRACTOR SHALL COORDINATE CONDUIT RUNS, CABLE TRAY, LIGHTING FIXTURES AND OTHER EQUIPMENT LOCATIONS WITH THE OTHER TRADE CONTRACTORS TO AVOID CONFLICTS.

G5. WHERE VOLTAGES AND FREQUENCIES ON THE DRAWINGS AND IN THE SPECIFICATIONS DIFFER FROM THE LOCAL ONES, ALL WORK SHALL BE PERFORMED USING THE LOCAL VOLTAGES AND FREQUENCIES.

G6. THE MINIMUM WIRE SIZE ON THE PROJECT SHALL BE 4mm2. THE MINIMUM CONDUIT SIZE SHALL BE 20mm. THE MINIMUM BREAKER SIZE SHALL BE 20 AMPS.

G7. THE CONTRACTOR SHALL PUT A MAXIMUM OF 6 DUPLEX SOCKETS ON A 20A SINGLE POLE CIRCUIT.

G8. WHERE THE 1010 SCOPE REVIEW, 1015 TECHNICAL REVIEW, DRAWINGS, AND SPECIFICATIONS DIFFER FROM AMERICAN CODES OR STANDARDS THE 1010, 1015, DRAWINGS, AND SPECIFICATIONS SHALL RULE.

G9. WORK FOR THE AMMUNITION SUPPLY POINT SHALL BE DONE IN ACCORDANCE WITH DEPARTMENT OF DEFENSE STANDARD DOD 6055.9–STD.

G10. ALL CONDUIT AND DEVICES SHALL BE SURFACE MOUNTED UNLESS OTHERWISE INDICATED.

US Army Corps of Engineers
Afghanistan Engineer District

SYMBOL	DESCRIPTION	DATE	APP

DESIGNED BY: JRG
DWN BY: JRG
CHK BY: JRG
DATE: 09-30-09
SUBMITTED BY: BAKER
FILE NO.: ANPSDE-000XXX

Michael Baker Jr, Inc
A unit of Michael Baker Corporation
Airside Business Park
100 Airside Drive
Moon Township, PA 15108
www.mbakercorp.com

AFGHAN NATIONAL POLICE
STANDARD DESIGN
WELL HOUSE

ELECTRICAL SYMBOLS AND ABBREVIATIONS

SHEET REFERENCE NUMBER:
E0

100% SUBMISSION

GENERAL NOTES:

1. REFER TO DRAWING #E0 FOR THE ELECTRICAL SYMBOLS LIST.
2. EXIT SIGNS SHALL BE WIRED AHEAD OF ANY LOCAL SWITCHING ON CIRCUITS.
3. REFER TO DRAWING #E3 FOR THE LIGHTING FIXTURE SCHEDULE.
4. REFER TO DRAWING #E2 FOR THE POWER RISER.
5. REFER TO DRAWING #E4 FOR PANEL SCHEDULES.
6. LIGHT FIXTURES INDICATED AS EMERGENCY SHALL BE PROVIDED WITH A BATTERY BACKUP BALLAST.

NUMBERED NOTE:

1. REFER TO RISER DIAGRAM FOR FEEDER SIZE.
2. WELL WATER PUMP.
3. PANEL P1
4. 3 4mm + 1 4mm GND. IN 20mm C.
5. PROVIDE POWER CONNECTION TO ELECTRIC UNIT HEATER #2. SEE DRAWINGS #E5 AND #M1 FOR MORE INFORMATION.
6. PROVIDE POWER CONNECTION TO EXHAUST FAN. SEE DRAWINGS #E5 AND #M1 FOR MORE INFORMATION.
7. PROVIDE POWER CONNECTION TO CHLORINATION UNIT. COORDINATE FINAL LOCATION IN THE FIELD.

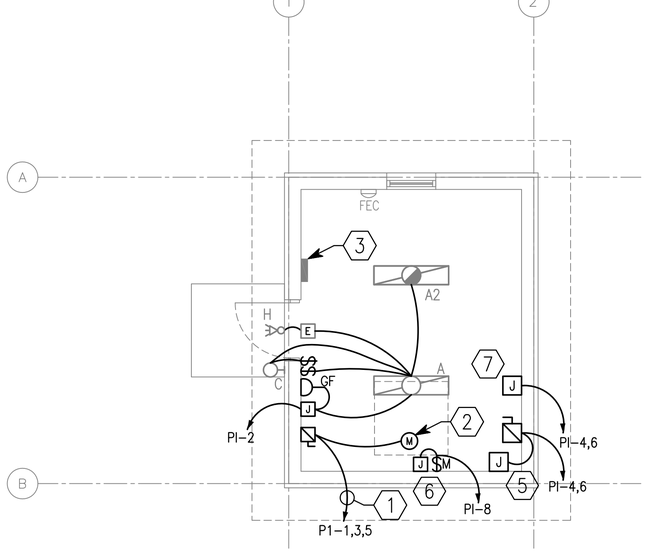

1 / E1 E1 LIGHTING AND POWER PLAN

SCALE: 1:50

N

UNLESS OTHERWISE NOTED, LINEAR DIMENSIONS SHOWN ARE IN MILLIMETERS (MM)

1 0 1 2 3 4

1:50

US Army Corps of Engineers

Afghanistan Engineer District

SYMBOL	DESCRIPTION	DATE	APP.

DESIGNED BY:	DATE:
JRG	09-30-09
DWN BY:	SUBMITTED BY:
JRG	BAKER
CHK BY:	FILE NO.:
JRG	ANPSDE-101XXX

Michael Baker Jr., Inc.
A unit of Michael Baker Corporation
Airside Business Park
100 Airside Drive
Moon Township, PA 15108
www.mbakercorp.com

AFGHAN NATIONAL POLICE
STANDARD DESIGN
WELL HOUSE

LIGHTING AND POWER PLAN

SHEET REFERENCE NUMBER:

E1

100% SUBMISSION

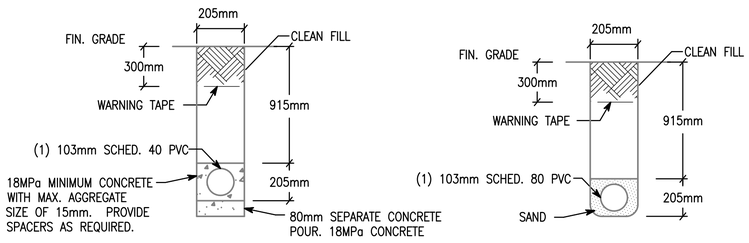

NOTE: PVC CONDUIT SHALL BE DIRECT BURIED SCHEDULE 80 FOR NO TRAFFIC AREAS AND CONCRETE-ENCASED SCHEDULE 40 FOR UNDER ROADWAYS OR TRAFFIC AREAS.

1 E2 | E2 TYPICAL DUCT BANK DETAILS FOR CONDUIT IN SAND OR CONCRETE

SCALE: N.T.S.

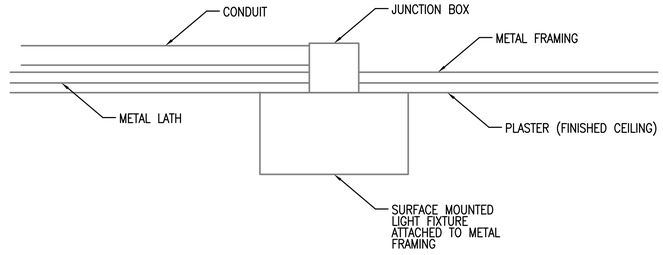

2 E2 | E2 TYPICAL DETAIL FOR SURFACE MOUNTED LIGHT FIXTURES

SCALE: N.T.S.

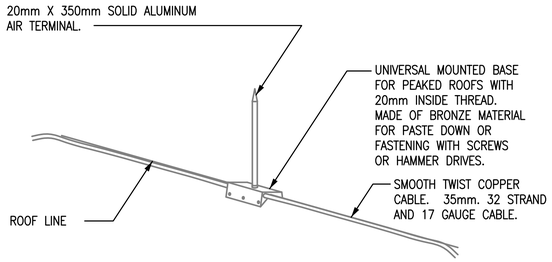

3 E2 | E2 LIGHTNING PROTECTION AIR TERMINAL DETAIL

SCALE: N.T.S.

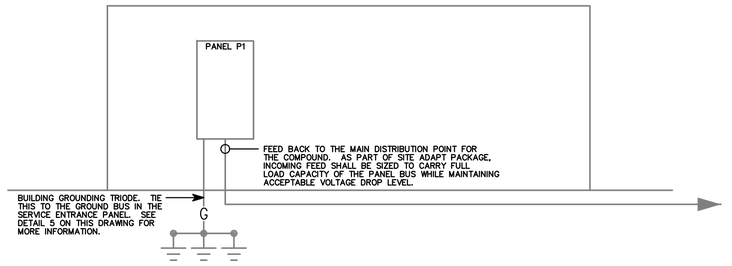

4 E2 | E2 WELLHOUSE RISER DIAGRAM

SCALE: N.T.S.

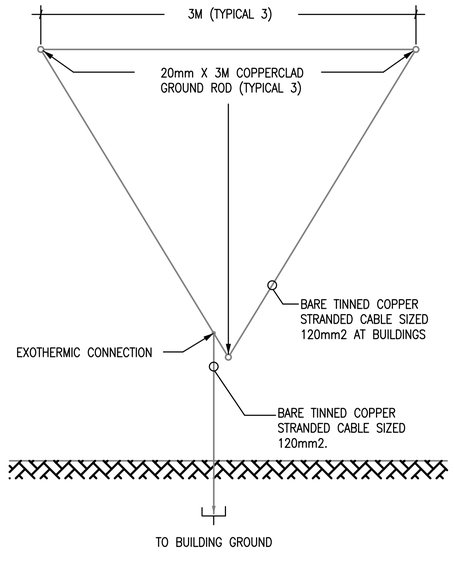

5 E2 | E2 GROUND TRIPOD SYSTEM DETAIL - PLAN

SCALE: N.T.S.

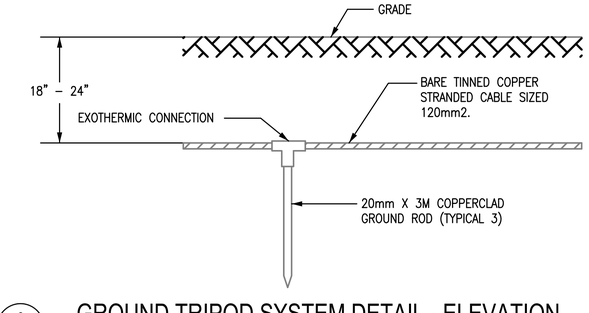

6 E2 | E2 GROUND TRIPOD SYSTEM DETAIL - ELEVATION

SCALE: N.T.S.

US Army Corps of Engineers
Afghanistan Engineer District

SYMBOL	DESCRIPTION	DATE	APR

DESIGNED BY:	DATE:
JRG	09-30-09
DWN BY:	SUBMITTED BY:
JRG	BAKER
CHK BY:	FILE NO.:
JRG	ANPSDE-502XXX

Michael Baker Jr., Inc
A unit of Michael Baker Corporation
Airside Business Park
100 Airside Drive
Moon Township, PA 15108
www.mbakercorp.com

AFGHAN NATIONAL POLICE
STANDARD DESIGN
WELL HOUSE

DETAILS

SHEET REFERENCE NUMBER:
E2

100% SUBMISSION

LIGHTING FIXTURE SCHEDULE

FIXTURE MARK	STYLE NUMBER AND TYPE	NUMBER AND TYPE OF LAMPS	VOLTAGE	MOUNTING	NOTES
A	PARABOLIC SURFACE/PENDANT MOUNTED 300MM X 1200MM FLUORESCENT FIXTURE WITH ELECTRONIC BALLAST	(2) 32W 3500K	220V – 1ø 50HZ	PENDANT MOUNTED FROM SLOPED CEILINGS	FURNISHED WITH ELECTRONIC BALLAST. PARABOLIC LOUVER SHALL BE SPECULAR LENS IRADESCENCE TYPE.
A2	SAME AS FIXTURE 'A' WITH EMERGENCY BALLAST	(2) 32W 3500K	220V – 1ø 50HZ	PENDANT MOUNTED FROM SLOPED CEILINGS	FURNISHED WITH ELECTRONIC BALLAST. PARABOLIC LOUVER SHALL BE SPECULAR LENS IRADESCENCE TYPE. EMERGENCY BALLAST SELF TEST.
C	INCANDESCENT ONE PIECE W/ APPROVED LENS STABILIZED HIGH IMPACT POLY CARBONATE.	(1) A19 – 100W INCANDESCENT	220V – 1ø 50HZ	WALL MOUNTED ABOVE EXTERIOR DOORS	
H	REMOTE HEAD EXTERIOR LIGHT HEAD POWERED FROM EXIT SIGN BATTERY– 12V DOUBLE HEAD CORROSION RESISTANT WITH UL34 WEATHERPROOF CONSTRUCTION	(2) 12W/12V HALOGEN LAMP	12V – 1ø 50HZ	EXTERIOR WALL MOUNTED AT TOP OF DOOR HEIGHT	
E	UNIVERSAL MOUNT ENGINEER GRADE THERMOPLASTIC HOUSING EXIT SIGN WITH LED LAMPS, RED LETTERS 6" IN HEIGHT WITH ARROWS AS INDICATED, WITH 12V CADMIUM BATTERY WITH REMOTE HEAD CAPABILITY	LED LAMPS	220V – 1ø 50HZ	UNIVERSAL MOUNTING	

FIXTURE MARK 'A'

PARABOLIC SURFACE/PENDANT MOUNTED 300MM x 1200MM FLUORESCET FIXTURE WITH ELECTRONIC BALLAST.

FIXTURE MARK 'A2':
SAME FIXTURE AS 'A' WITH EMERGENCY BALLAST.

FIXTURE MARK 'C'

INCANDESCENT ONE PIECE WITH APPROVED LENS, STABILIZED HIGH IMPACT POLY CARBONATE

FIXTURE MARK 'H'

REMOTE HEAD EXTERIOR LIGHT HEAD POWERED FROM EXIT SIGN BATTERY– 12V DOUBLE HEAD CORROSION RESISTANT WITH UL34 WEATHERPROOF CONSTRUCTION

FIXTURE MARK 'E'

UNIVERSAL MOUNT ENGINEER GRADE THERMOPLASTIC HOUSING EXIT SIGN WITH LED LAMPS, RED LETTERS 6" IN HEIGHT WITH ARROWS AS INDICATED, WITH 12V CADMIUM BATTERY

US Army Corps of Engineers
Afghanistan Engineer District

SYMBOL	DESCRIPTION	DATE	APP.

DESIGNED BY:	DATE:
JRG	09-30-09
DWN BY:	SUBMITTED BY:
JRG	BAKER
CHK BY:	FILE NO.:
JRG	ANPSDE-603XXX

Michael Baker Jr., Inc
A unit of Michael Baker Corporation
Airside Business Park
100 Airside Drive
Moon Township, PA 15108
www.mbakercorp.com

AFGHAN NATIONAL POLICE
STANDARD DESIGN
WELL HOUSE

LIGHT FIXTURE SCHEDULE

SHEET REFERENCE NUMBER:
E3

100% SUBMISSION

PANELBOARD P1 SURFACE MOUNTED ASYM. A.I.C. MIN.

AMP. MAIN LUGS (OR) 100 AMP. MAIN BREAKER W/ 100 AMP. TRIP

CIRCUIT BREAKER TYPE 380/220 VOLTS 3 PHASE 4 WIRE 50 HZ 100 AMP. BUS

CKT. NO.	TRIP AMPS	NO. POLES	WIRE MM ²	GND MM²	CONDUIT MM	LOAD SERVED	LOAD-V.A. AØ	LOAD-V.A. BØ	LOAD-V.A. CØ	LOAD-V.A. AØ	LOAD-V.A. BØ	LOAD-V.A. CØ	LOAD SERVED	CONDUIT MM	GND MM²	WIRE MM²	NO. POLES	TRIP AMPS	CKT. NO.
1							3.7			0.5			LIGHTING AND RECEPTACLES	20	4.0	4.0	1	20	2
3	20	3	4.0	4.0	20	WELL PUMP		3.7			1.3		ELECTRIC UNIT HEATER	20	4.0	4.0	2	20	4
5									3.7			1.3							6
7	20	1				CHLORINATION UNIT	2.2			0.2			EXHAUST FAN	20	4.0	4.0	1	20	8
9	20	1				SPARE							SPARE				1	20	10
11	20	1				SPARE							SPARE				1	20	12
							5.9	3.7	3.7	0.5	1.3	1.3							

TOTAL CONN. LOAD PER PHASE (KVA): AØ 4.2 BØ 5.0 CØ 5.0

TOTAL CONN. LOAD 16.4 KVA. 70 % DEMAND = ESTIMATED DEMAND LOAD 11.5 SUPPLIED FROM MAIN SWITCHGEAR DISTRIBUTION

• MAIN BREAKER SHALL BE 3P EARTH GROUND TYPE

US Army Corps of Engineers

Afghanistan Engineer District

SYMBOL	DESCRIPTION	DATE	APP.

DESIGNED BY: JRG	DATE: 09-30-09
DWN BY: JRG	SUBMITTED BY: BAKER
CHK BY: JRG	FILE NO.: ANPSDE-604XXX

Michael Baker Jr., Inc
A unit of Michael Baker Corporation
Airside Business Park
100 Airside Drive
Moon Township, PA 15108
www.mbakercorp.com

AFGHAN NATIONAL POLICE
STANDARD DESIGN
WELL HOUSE

PANEL SCHEDULES AND RISER DIAGRAM

SHEET REFERENCE NUMBER:

E4

100% SUBMISSION

20 METER WATER TOWER

U.S. Army Corps
OF Engineers
AFGHANISTAN ENGINEER DISTRICT
AFGHANISTAN, APO AE, 09356

17 DECEMBER 2009

ENGINEERING AND CONSTRUCTION DIVISION
US ARMY ENGINEER DISTRICT, AFGHANISTAN
APO AE, 09356

20 METER WATER TOWER

APPENDIX A

AFGHANISTAN

SECTION/DETAIL CROSS REFERENCING CONVENTIONS

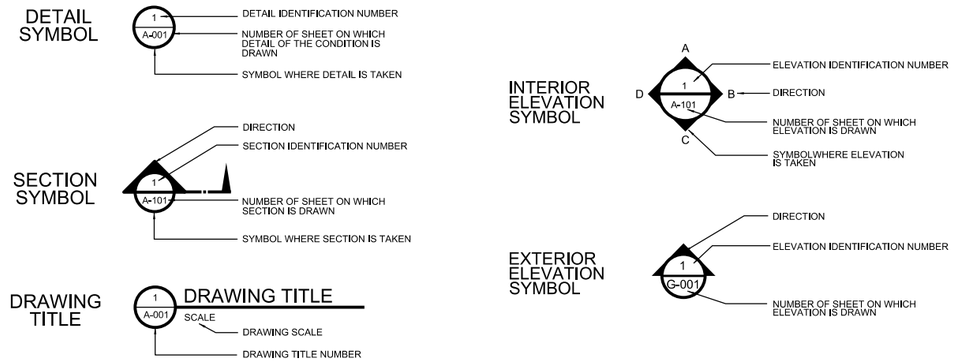

SCHEDULE OF DRAWINGS

SHEET NO	DWG CODE	SHEET REFERENCE NO	DESCRIPTION	REV STATUS
			GENERAL	
			COVER SHEET	
1		G-001	TITLE SHEET & SCHEDULE OF DRAWINGS	
			STRUCTURAL	
2		S-01	GENERAL NOTES	
3		S-02	FOUNDATION PLAN	
4		S-03	PLATFORM AND CATWALK FRAMING PLAN	
5		S-04	ELEVATIONS	
6		S-05	FOUNDATION SECTIONS	
7		S-06	FOUNDATION STEEL FRAMING SECTIONS	
8		S-07	SECTIONS AND DETAILS	
9		S-08	SECTIONS AND DETAILS	
10		S-09	SECTIONS AND DETAILS	
11		S-10	MEMBER DETAILS	
12		S-11	MEMBER DETAILS	
13		S-12	MEMBER DETAILS	
14		S-13	MEMBER DETAILS	
15		S-14	MEMBER DETAILS	
16		S-15	MEMBER DETAILS	
17		S-16	MEMBER DETAILS	
18		S-17	MEMBER DETAILS	
19		S-18	MEMBER DETAILS	
20		S-19	MEMBER DETAILS	
21		S-20	MEMBER DETAILS	
			PLUMBING	
22		P-01	WATER TANK, PIPING AND INSULATION	
23		P-02	PIPING AND INSULATION DETAILS	
24		P-03	WELL HOUSE SECTION PIPING	
25		P-04	ELEVATION AND DETAIL	
			ELECTRICAL	
26		E-01	LIGHTNING PROTECTION DETAILS	

PROJECT COORDINATION

U.S. ARMY ENGINEER DISTRICT, AFGHANISTAN

PROJECT MANAGER _____ DATE _____

CHIEF, DESIGN BRANCH _____ DATE _____

THIS PROJECT WAS DESIGNED BY AFGHANASTAN ENGINEER DISTRICT OF THE U.S ARMY CORPS OF ENGINEERS. THE INITIALS OR SIGNATURES AND REGISTRATION DESIGNATIONS OF INDIVIDUALS APPEAR ON THESE DOCUMENTS WITHIN THE SCOPE OF THEIR EMPLOYMENT AS REQUIRED BY ER 1110-1-8152.

US ARMY CORPS OF ENGINEERS
AFGHANISTAN ENGINEER DISTRICT

SYMBOL	DESCRIPTION	DATE	APPR.

SYMBOL	DESCRIPTION	DATE	APPR.

REV: —
DATE: 17 DEC 2009
DESIGN FILE NO.:
DRAWING CODE:
FILE NAME: G-TS.DGN
PLOT SCALE: _____
PLOT DATE: XX=XX=XX

DESIGNED BY:
DWN BY:
CKD BY:
REVIEWED BY:
SUBMITTED BY:

U.S. ARMY ENGINEER DISTRICT, AFGHANISTAN
CORPS OF ENGINEERS
APO AE 96338

ENGINEERING AND CONSTRUCTION DIVISION

AFGHANISTAN ENGINEER DISTRICT
20 METER WATER TOWER

TITLE SHEET
SCHEDULE OF DRAWINGS

SHEET REFERENCE NUMBER:
G-001
SHEET 1 OF 26

GENERAL:

1. CONTRACTOR SHALL VERIFY ALL DIMENSIONS AND CONDITIONS AFFECTING THE WORK AT JOBSITE.

2. ALL STRUCTURAL WORK AND MATERIALS SHALL CONFORM TO THE REQUIREMENTS OF THE PROJECT.

3. FOR LOCATION AND DIMENSIONS OF GROOVES, REGLETS, SLEEVES, OPENINGS, AND EMBEDDED OR ATTACHED ITEMS, REFER TO ELECTRICAL, AND PIPING DRAWINGS.

CODES:

1. ALL PARTS SHALL BE FURNISHED AND ERECTED ACCORDING TO THE LATEST VERSION OF THE APPLICABLE CODES OF THE FOLLOWING:

AMERICAN CONCRETE INSTITUTE	(ACI)
AMERICAN INSTITUTE OF STEEL CONSTRUCTION	(AISC)
AMERICAN IRON AND STEEL INSTITUTE	(AISI)
AMERICAN WATER WORKS ASSOCIATION	(AWWA)

2. ALL PARTS SHALL BE FURNISHED AND ERECTED ACCORDING TO THE APPLICABLE CODES OF THE FOLLOWING:

MINIMUM DESIGN LOADS FOR BUILDINGS AND OTHER STRUCTURES	(ASCE 7-05)
INTERNATIONAL BUILDING CODE	(IBC-2006)
BUILDING CODE REQUIREMENTS FOR STRUCTURAL CONCRETE	(ACI 318-08)
SPECIFICATIONS FOR STRUCTURAL STEEL BUILDINGS	(AISC 13TH EDITION)

DESIGN LOADS:

1. ROOF LOADING

A. LIVE LOAD 195 KG/SQ METER (40 PSF)
B. SNOW LOAD 75 KG/SQ METER (15 PSF)
C. COLLATERAL LOAD 50 KG/SQ METER (10 PSF)

2. WIND LOADING

A. BASIC WIND SPEED 135 KM/HR (85 MPH)
B. EXPOSURE CATEGORY "B"
C. IMPORTANCE FACTOR, Iw = 1.00
D. BUILDING CATEGORY "II"

3. SEISMIC LOADING:

A. Ss = 1.28g
B. S1 = 0.51g
C. SEISMIC USE GROUP "I"
D. SITE CLASSIFICATION "D"
E. IMPORTANCE FACTOR I = 1.0

BASIC SEISMIC FORCE RESISTING SYSTEM:

CROSS-BRACED COLUMN-SUPPORTED ELEVATED TANK
DESIGN BASE SHEAR: 0.284W

ANALYSIS PROCEDURE: EQUIVALENT LATERAL FORCE METHOD

4. THE WATER TOWER IS DESIGNED TO SUPPORT A 26,500 LITER (7,000 GALLON) WATER TANK, UNIFORMLY LOADING THE PLATFORM IN A BALANCED CONFIGURATION. SEE SHEET S-3 FOR TANK LIMITS.

600 0 600mm
SCALE: 1 = 30

UNLESS NOTED OTHERWISE, LINEAR DIMENSIONS ARE IN MILLIMETERS.

FOUNDATIONS:

1. ALL FOOTINGS SHALL BEAR ON SOIL CAPABLE OF SUSTAINING THE LOADS. GEOTECHNICAL INVESTIGATIONS TO VERIFY THIS REQUIREMENT ARE CONTAINED IN THE AED DESIGN GUIDE – GEOTECHNICAL INVESTIGATIONS (LATEST VERSION). ALL REQUIREMENTS OF THIS PUBLICATION SHALL BE FOLLOWED, WITH EMPHASIS ON PARAGRAPH 2.2, DEPTH, LOCATION, SPACINT OF EXPLORATION.

2. FOUNDATION DESIGNED FOR A MAXIMUM BEARING CAPACITY OF 7323 KG/SQ. METER (1500 PSF).

3. ELEVATIONS SHOWN ON PLANS FOR TOP OF FOOTINGS ARE MINIMUM DEPTH. BOTTOM OF FOOTING SHALL BE A MINIMUM 800mm BELOW GRADE. DIFFERENT OR UNUSUAL CONDITIONS SHALL BE REPORTED TO THE CONTRACTING OFFICER.

4. ALL FOOTING REINFORCEMENT SHALL BE SECURELY SUPPORTED ABOVE GROUND. SUPPORT REINFORCEMENT WITH CONCRETE BRICK OR WITH ADEQUATE NUMBER AND SIZE OF REBAR CHAIRS.

5. ALL FOUNDATION FORMWORK SHALL BE ADEQUATELY PREPARED FOR CONCRETE PLACEMENT; SUFFICIENTLY BRACED; PROPER ELEVATIONS AND ALIGNMENT; NO STANDING WATER OR DEBRIS; ETC.

CONCRETE:

1. STRUCTURAL CONCRETE FOR THE BUILDING STRUCTURE SHALL HAVE THE FOLLOWING PROPERTIES:

ALL CONCRETE
UNLESS NOTED OTHERWISE: f'c = 280 KG/SQ. CM (4,000 PSI) AT 28 DAYS WITH MAXIMUM WATER/CEMENT RATIO OF 0.45. MIX DESIGN SHALL BE APPROVED BY COR PRIOR TO PLACEMENT.

2. ALL REINFORCING STEEL SHALL BE DEFORMED BARS CONFORMING TO ASTM A615 GRADE 60 UNLESS NOTED OTHERWISE.

3. MINIMUM PROTECTIVE COVER OF REINFORCEMENT (SEE DETAILS) SHALL BE AS FOLLOWS:

FOOTINGS, 75mm CLEAR BOTTOM AND SIDES, 40mm CLEAR TOP.
CONCRETE PIERS, 40mm CLEAR TO TIES.

4. MINIMUM CONCRETE SPLICES AND HOOKS FOR REINFORCING STEEL SHALL CONFORM TO ACI 318, CURRENT EDITION.

5. CONCRETE WORK SHALL BE COORDINATED WITH DRAINS, UNDERGROUND UTILITIES, MECHANICAL, ELECTRICAL, AND ARCHITECTURAL PLANS. CONCRETE SHALL NOT BE CAST UNTIL THESE ITEMS HAVE BEEN INSTALLED AND ACCEPTED.

6. CONCRETE OPERATIONS SHALL BE APPROVED BY COR PRIOR TO CONCRETE PLACEMENT. PLAN SHALL BE IN WRITING AND INCLUDE THE FOLLOWING:

a. PORTLAND CEMENT CONCRETE (PCC) PLACEMENT.

b. EMBEDDED METALS PLAN SHALL DESCRIBE HOW REINFORCEMENT AND TOWER LEG ANCHORAGE PLATES WILL BE INSTALLED. SPECIFIC DISCUSSION OF ANCHORAGE PLATES SHALL INCLUDE HOW THESE CRITICAL COMPONENTS WILL BE ACCURATELY LOCATED AND SECURED FOR TRUE PLAN, ELEVATION AND VERTICAL POSITION, WITH NO ROTATION, PRIOR TO, DURING AND AFTER CONCRETING OPERATIONS. THE FOUR CORNERS SHALL BE LAID OUT TO BE DIMENSIONALLY SQUARE AS PER DRAWINGS.

c. PLAN SHALL ADDRESS CONCRETE DELIVERY (BATCHING EQUIPMENT, CAPACITY AND LOCATION); CONCRETE PLACEMENT OPERATIONS INTO THE FORMWORK; NUMBER AND USE OF VIBRATORS; FIELD AND LABORATORY TESTING REQUIRED; HOT OR COLD WEATHER PLACEMENT REQUIREMENTS; MANPOWER REQUIRED; AND OTHER PROCEDURES TO BE FOLLOWED TO COMPLETE SUCCESSFUL CONCRETING OPERATIONS. SUFFICIENT CONCRETE DELIVERY SHALL BE SHOWN TO ELIMINATE THE POTENTIAL FOR CONCRETE DEFECTS IN THE FINAL PRODUCT, INCLUDING COLD JOINTS, VOIDS, SEGREGATION OF AGGREGATE, AND EXCESSIVE REWORK LEADING TO STRENGTH REDUCTION.

STRUCTURAL STEEL:

1. STRUCTURAL STEEL SHALL BE FABRICATED AND ERECTED IN ACCORDANCE WITH THE AMERICAN INSTITUTE OF STEEL CONSTRUCTION, "SPECIFICATION FOR STRUCTURAL STEEL BUILDINGS", 2005 (AISC MANUAL, 13TH EDITION).

2. STEEL SHALL CONFORM TO THE FOLLOWING REQUIREMENTS UNLESS NOTED OTHERWISE:

MISCELLANEOUS PLATES AND ANGLES – ASTM A36 250MPa (Fy = 36 KSI)
"W" SHAPES – ASTM A36 250MPa (Fy = 36 KSI)

3. NO STRUCTURAL STEEL SHALL BE FABRICATED OR ERECTED UNTIL SHOP DRAWINGS HAVE BEEN APPROVED.

4. NO HOLES OTHER THAN THOSE SPECIFICALLY DETAILED SHALL BE ALLOWED THROUGH STRUCTURAL STEEL MEMBERS. FIELD CUTTING OF STEEL SHALL NOT BE PERMITTED WITHOUT APPROVAL OF THE CONTRACTING OFFICER.

5. THE CONTRACTOR SHALL VERIFY ALL SHOP DRAWING DIMENSIONS WITH THE STRUCTURAL PLANS AND DETAILS, AND WITH DIMENSIONS OF COLUMN LAYOUT.

6. BOLTED CONNECTIONS: BOLTS SHALL CONFORM TO ASTM A307, 20MM DIAMETER MINIMUM UNLESS NOTED OTHERWISE AND HOT-DIP GALVANIZED; NUTS SHALL CONFORM TO ASTM A563 HOT DIP GALVANIZED; WASHERS SHALL NOT BE USED.

7. BOLTS SHALL BE TIGHTENED TO ADEQUATELY DEVELOP BOLT TENSION.

FABRICATION NOTES

1. THE CONTRACTOR SHALL SUBMIT A SEPARATE, SPECIFIC ERECTION AND SAFETY PLAN ADDRESSING ALL FACETS OF TOWER CONSTRUCTION.

2. THIS SET OF DRAWINGS WAS DEVELOPED AS A SOLUTION TO MEET AED REQUIREMENTS FOR THE CONSTRUCTION OF WATER TOWERS THAT MEET U.S. STANDARDS FOR DESIGN, TO INCLUDE SEISMIC CRITERIA, USING MATERIALS AND CONSTRUCTION METHODS THAT REDUCE OR ELIMINATE THE NEED FOR LARGE CRANES THAT MAY NOT BE ABLE TO ACCESS PROJECT SITES, AND ENABLE EASE OF CONSTRUCTION QUALITY CONTROL. WATER TOWER HAS BEEN DESIGNED TO SUPPORT A PRE-FABRICATED WATER TANK.

3. ALL ANGLES, BEAMS AND PLATES ARE TO BE FABRICATED IN A SHOP WHERE THE STRICTEST TOLERANCES FOR FABRICATION (MEMBER LENGTHS, LOCATION AND SIZE OF BOLT HOLES) CAN BE MAINTAINED. THESE COMPONENTS WOULD THEN BE TRANSPORTED TO PROJECT SITES AND ERECTED WITHOUT THE USE OF HEAVY EQUIPMENT AS THE MAXIMUM WEIGHT PER PIECE IS UNDER 90 KG. THIS DESIGN SHALL NOT BE MODIFIED, IN EITHER THE FABRICATION SHOP OR AT THE PROJECT SITE. UNDER NO CONDITIONS SHALL BOLT HOLES BE MODIFIED OR ADDED AT THE PROJECT SITE AS A RESULT OF INACCURATE CONSTRUCTION PRACTICES. CONTRACTOR SHALL ASSEMBLE PLATFORM IN SHOP, POSITION STEEL CHECKER PLATE SECTIONS IN FINAL LOCATION, AND DRILL HOLES IN PLATE TO ALIGH WITH FLANGES OF STRUCTURAL MEMBERS (SEE FUTHER NOTES ON S-3). LIMITED FIELD DRILLING OF HOLES FOR WATER TANK ERECTION MAY BE REQUIRED AND WILL BE SUBMITTED FOR APPROVAL.

4. IF THE CONTRACTOR CANNOT OBTAIN THE REQUIRED ANGLE, BEAM, OR PLATES, ANY MODIFICATIONS OR SUBSTITUTIONS WILL REQUIRE A SUBMISSION OF COMPLETE ALTERNATE FABRICATION DRAWINGS FOR REVIEW AND APPROVAL, AND ONLY INCREASES IN MEMBER SIZE WILL BE CONSIDERED.

5. WELDING WILL ABSOLUTELY NOT BE ALLOWED ON THIS TOWER.

6. FABRICATION SHALL BE DONE IN A SHOP WITH TOLERANCES PER AISC MANUAL OF STEEL CONSTRUCTION AND ALL ADDITIONAL CODES REFERENCED THERE IN. CONTRACTOR SHALL ESTABLISH A SYSTEM OF MARKING MEMBERS TO FACILITATE ASSEMBLY IN THE FIELD.

7. STEEL FINISH REQUIREMENTS SHALL INCLUDE REMOVAL OF ALL SCALE AND RUST PRIOR TO APPLICATION OF A BASE COAT PRIMER ON ALL METAL SURFACES. THIS WILL BE FOLLOWED BY TWO FINISH COATS OF EPOXY ENAMEL PAINT. IF AVAILABLE, HOT-DIP GALVANIZING OF TOWER ELEMENTS IS ACCEPTABLE, BUT GALVANIZED BOLTS AND NUTS MUST THEN BE PROVIDED, AND CARE MUST BE TAKEN TO PREVENT DAMAGING THE SURFACE FINISH.

8. TO AID IN MEANS OF CONSTRUCTION, THE 2L100x100 HANDRAIL PIECE HAS BEEN DESIGNED FOR A LOAD OF 250KG AT MIDSPAN. THE CONTRACTOR MAY USE THIS PIECE IN A PULLEY MECHANISM TO RAISE THE PLATFORM FRAMING TO THE REQUIRED ELEVATION. THE CONTRACTOR ASSUMES ALL RESPONSIBILITY FOR MEANS OF CONSTRUCTION AND SHALL NOT HOLD THE GOVERNMENT LIABLE.

9. FIT-UP FOR DIMENSIONAL CHECK SHALL BE MADE BY THE CONTRACTOR.

WATER TANK

1. WATER TOWER HAS BEEN DESIGNED TO ACCEPT A PRE-FABRICATED WATER TANK. ONLY METAL TANKS SHALL BE PERMITTED. FULL DETAILS OF THE PROPOSED TANK SHALL BE SUBMITTED FOR APPROVAL.

2. A PARTIAL LIST OF WTER TANK SUPPLIERS:

http://www.alibaba.com/product-free/100696118/Panel Water tank.html

http://www.alibaba.com/product/my100479764-100277497-0/prodductdetail.html

http://www.modutank.com/

http://www.binasteel.com.my/stainless-steel-tank.html

http://www.sunnik.com.my/products01.htm

http://www.watertank.com/products.asp#eltank

3. CONTRACTOR SHALL COORDINATE WATER TANK CONNECTIONS WITH SHOP FABRICATOR.

US Army Corps of Engineers
Mobile District

Symbol	No.	Description Revisions	Date	Approved

Date: 17 DECEMBER 2009
Contract No:
CADD CODE: MDTG17
Solicitation Number:
FILENAME:
Designed By:
Drawn By:
Checked By:
Reviewed By:
SIZE: 559x864mm

U.S. ARMY ENGINEER DISTRICT
CORPS OF ENGINEERS
MOBILE, ALABAMA

AFGHANISTAN ENGINEER DISTRICT
20 METER WATER TOWER

GENERAL NOTES

SHEET IDENTIFICATION
S-1

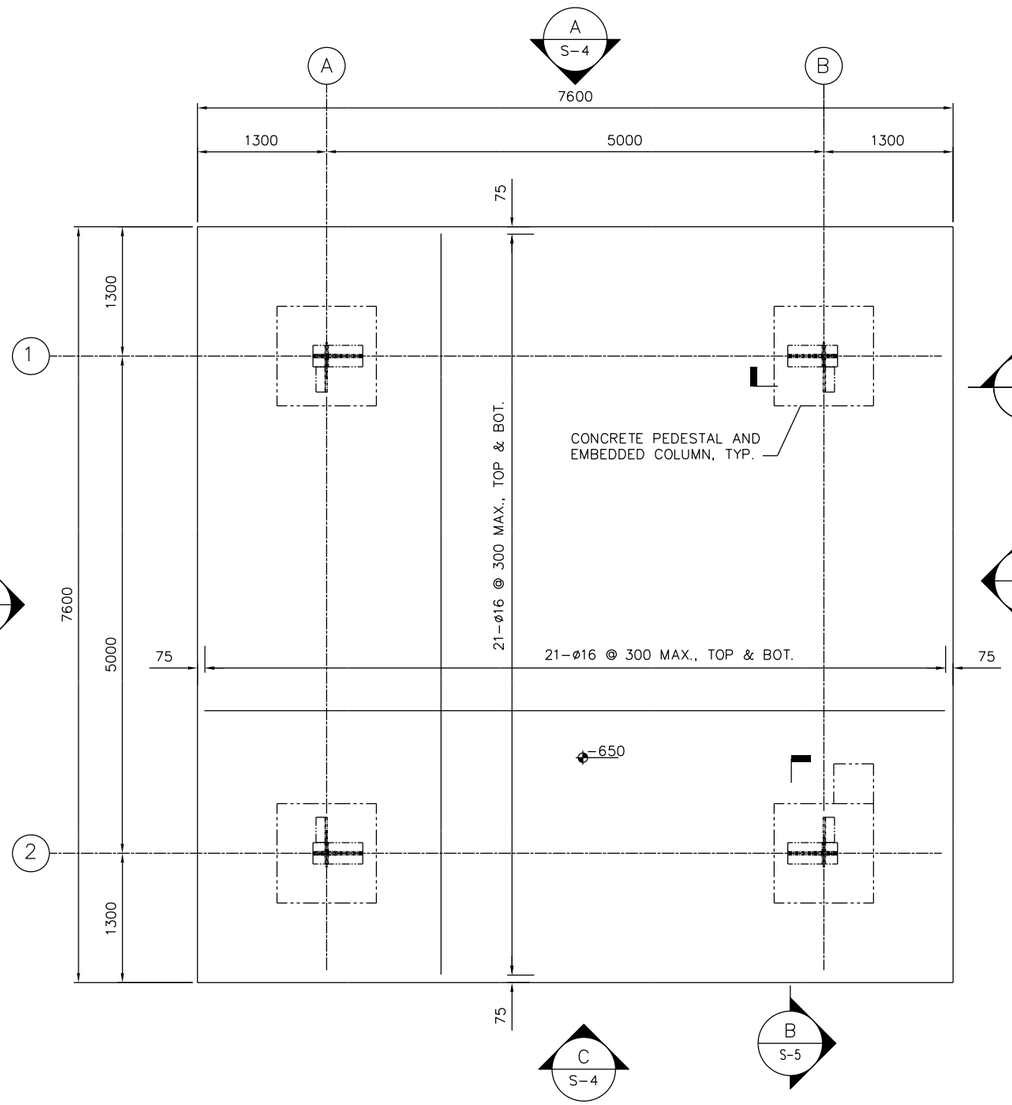

FOUNDATION PLAN
AT ELEVATION -650mm

1:30

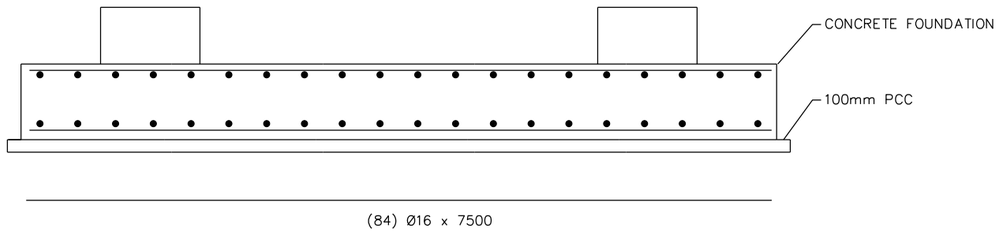

REBAR DETAIL

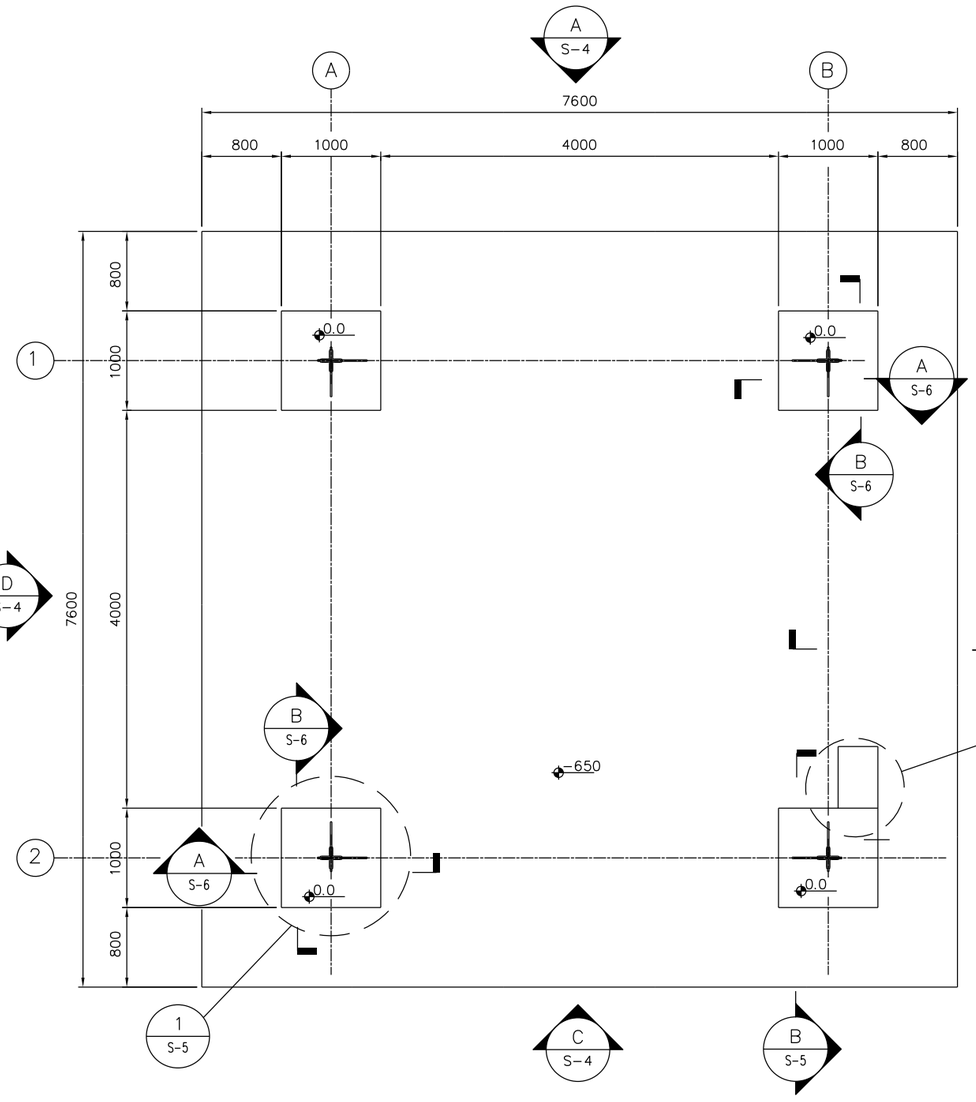

FOUNDATION PLAN
AT ELEVATION 0.0mm

1:30

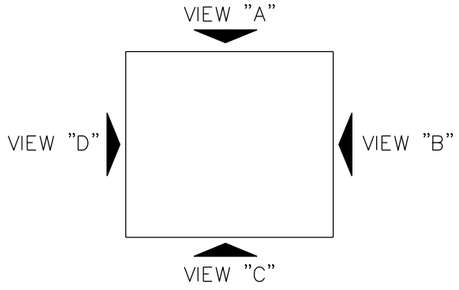

NOTES:

1. TOWER WAS DESIGNED FOR A 535mm BACKFILL OVER THE FOUNDATION SLAB. THE PEDESTALS SHALL BE A MAXIMUM OF 115mm ABOVE GRADE.

600 0 600mm
SCALE: 1 = 30

UNLESS NOTED OTHERWISE, LINEAR DIMENSIONS ARE IN MILLIMETERS.

US Army Corps of Engineers ®
Mobile District

Symbol	No.	Description	Revisions	Date	Approved

Designed By:		Date: 17 DECEMBER 2009	
Drawn By:		Contract No:	
Checked By:		CADD CODE: MVDTG17	
Reviewed By:		Solicitation Number:	
SIZE: 559x864mm		FILENAME:	

U.S. ARMY ENGINEER DISTRICT
CORPS OF ENGINEERS
MOBILE, ALABAMA

AFGHANISTAN ENGINEER DISTRICT
20 METER WATER TOWER

FOUNDATION PLAN

SHEET IDENTIFICATION

S-2

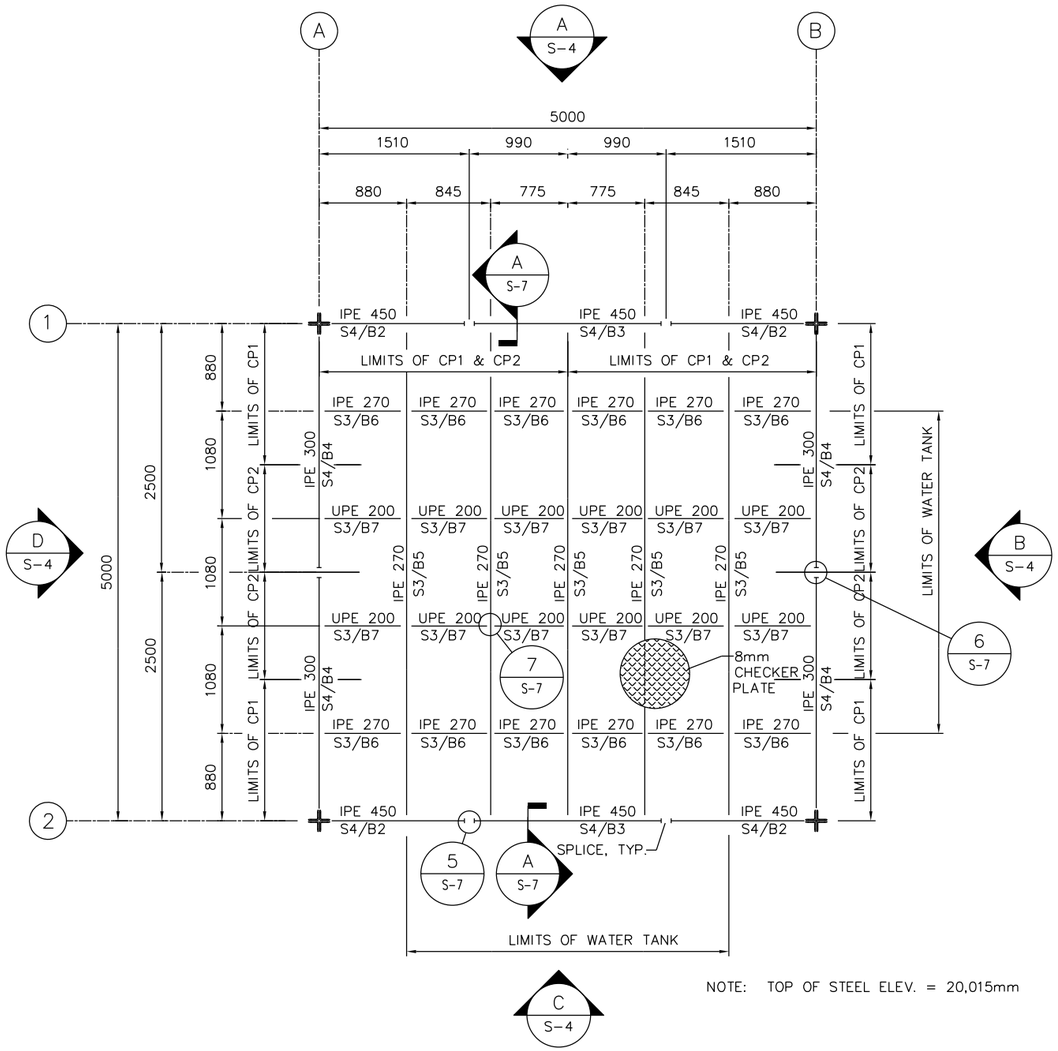

NOTE: TOP OF STEEL ELEV. = 20,015mm

PLATFORM FRAMING PLAN

1:30

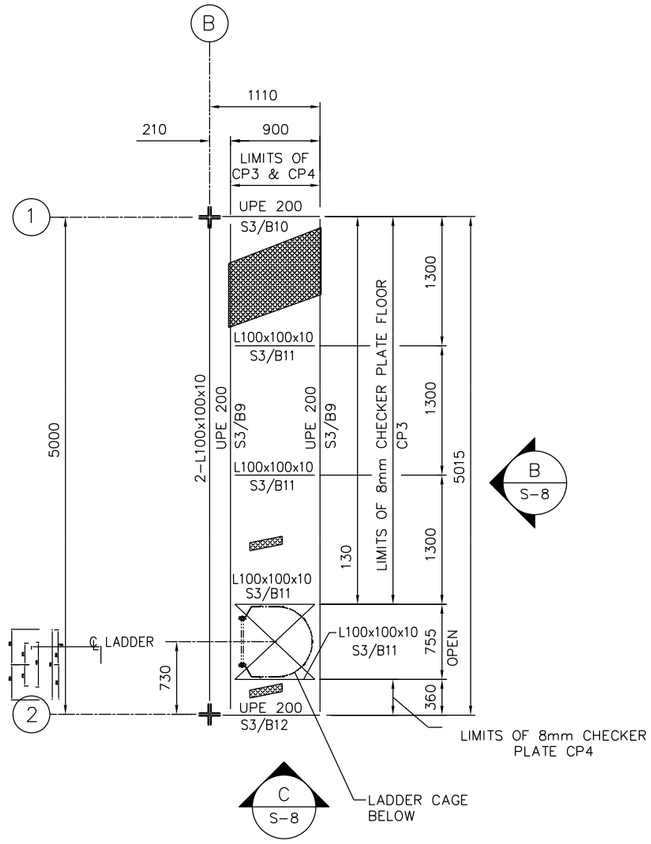

NOTE: TOP OF PLATFORM STEEL ELEV. = 9790mm

STAIR LANDING FRAMING PLAN

1:30

CHECKER PLATE NOTES:

PLATFORM

1. PLATFORM CHECKER PLATE SHALL BE INSTALLED IN SIX (6) SEPARATE PIECES; FOUR (4) EACH CP1'S AND TWO (2) EACH CP2'S.

2. PLATES WILL BE ATTACHED WITH 12mm ø BOLTS TO THE SUPPORTING MEMBERS AT A MAXIMUM SPACING IF 700mm AROUND PERIMETER BEAMS AND WALKWAY AREA. COORDINATE BOLT LOCATION AND INTERFERENCE WITH WATER TANK ON BOLTS UNDER THE WATER TANK.

3. CUT OUT PLATES AROUND BEAM SPLICE PLATES WHERE NECESSARY.

LANDING

4. LANDING CHECKER PLATE SHALL BE INSTALLED IN TWO (2) SEPARATE PIECES; ONE (1) EACH CP3 AND ONE (1) EACH CP4.

5. PLATES WILL BE ATTACHED WITH 12mm ø BOLTS TO THE SUPPORTING MEMBERS AT A MAXIMUM SPACING IF 700mm AROUND PERIMETER BEAMS.

CHECKER PLATE DIMENSIONS:

CP1 – 2470mm x 1390mm
CP2 – 2470mm x 1080mm
CP3 – 3885mm x 895mm
CP4 – 355mm x 895mm

LEGEND:

CPX – 8mm CHECKER PLATE NUMBER
SX/XX – MEMBER MARK NUMBER

NOTES:

1. PLAN DIMENSIONS ON IPE SHAPES ARE MEASURED TO THE CENTERLINE MEMBERS. PLAN DIMENSIONS ON UPE AND L SHAPES ARE MEASURED TO THE OUTSIDE OF THE VERTICAL FACE OF THE WEB OR LEG.

600 0 600mm
SCALE: 1 = 30

UNLESS NOTED OTHERWISE, LINEAR DIMENSIONS ARE IN MILLIMETERS.

US Army Corps of Engineers ®
Mobile District

Symbol	No.	Description	Date	Approved
		Revisions		

Date: 17 DECEMBER 2009
Contract No:
CADD CODE: MOTOTG17
Solicitation Number:
FILENAME:
Designed By:
Drawn By:
Checked By:
Reviewed By:
SIZE: 559x864mm

U.S. ARMY ENGINEER DISTRICT
CORPS OF ENGINEERS
MOBILE, ALABAMA

AFGHANISTAN ENGINEER DISTRICT
20 METER WATER TOWER

PLANFORM & CATWALK FRAMING PLAN

SHEET IDENTIFICATION

S-3

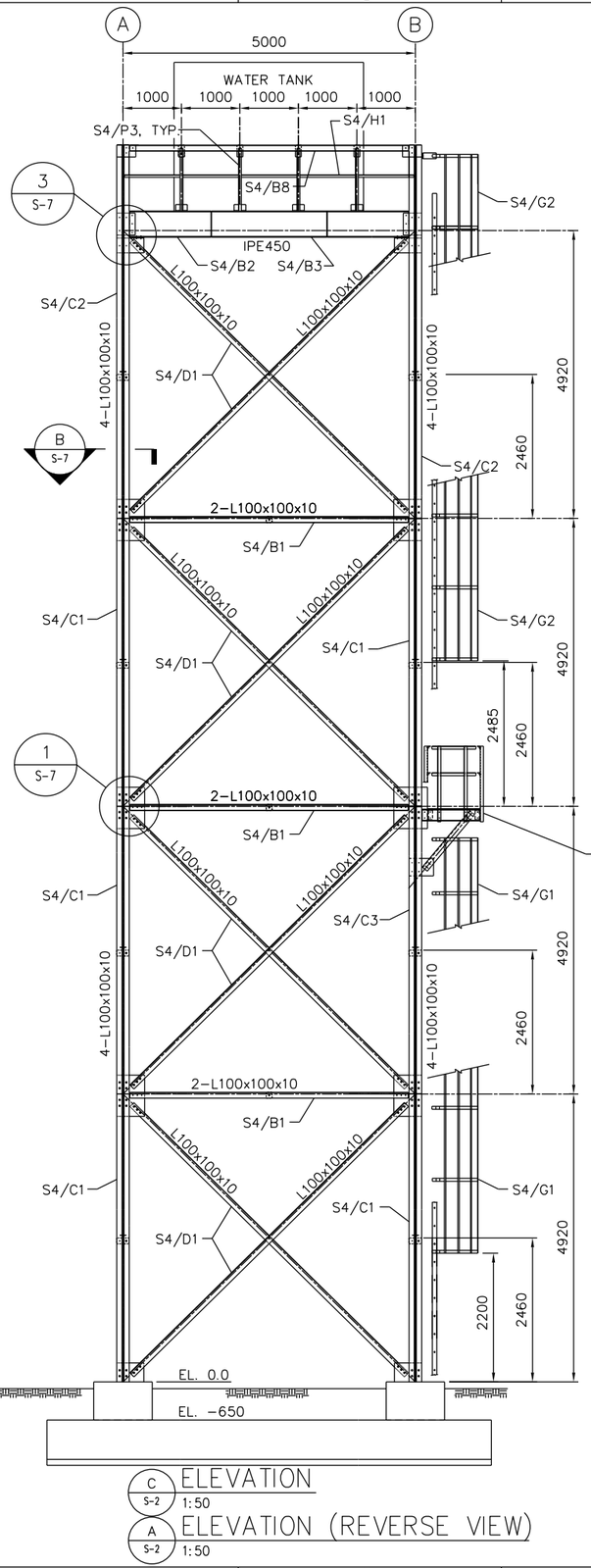

C S-2 ELEVATION
1:50

A S-2 ELEVATION (REVERSE VIEW)
1:50

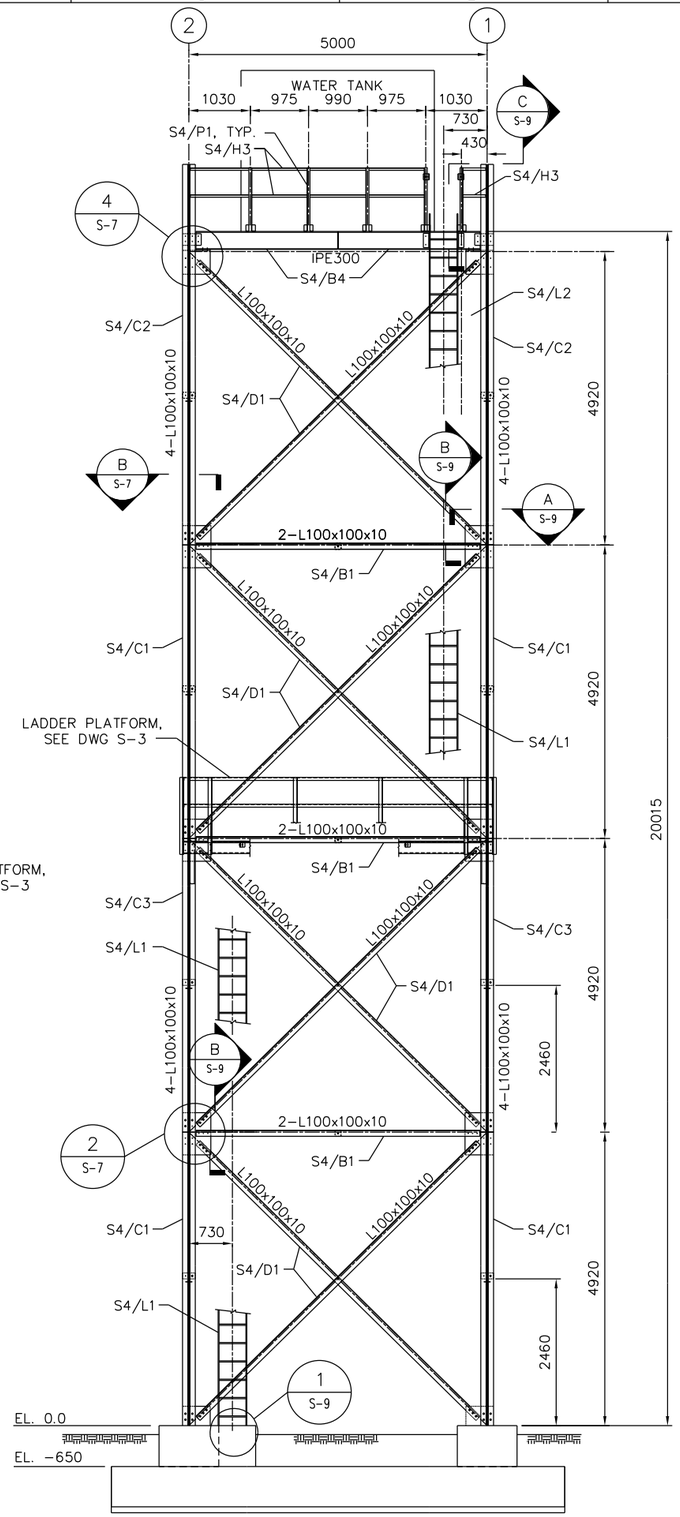

B S-2 ELEVATION
1:50

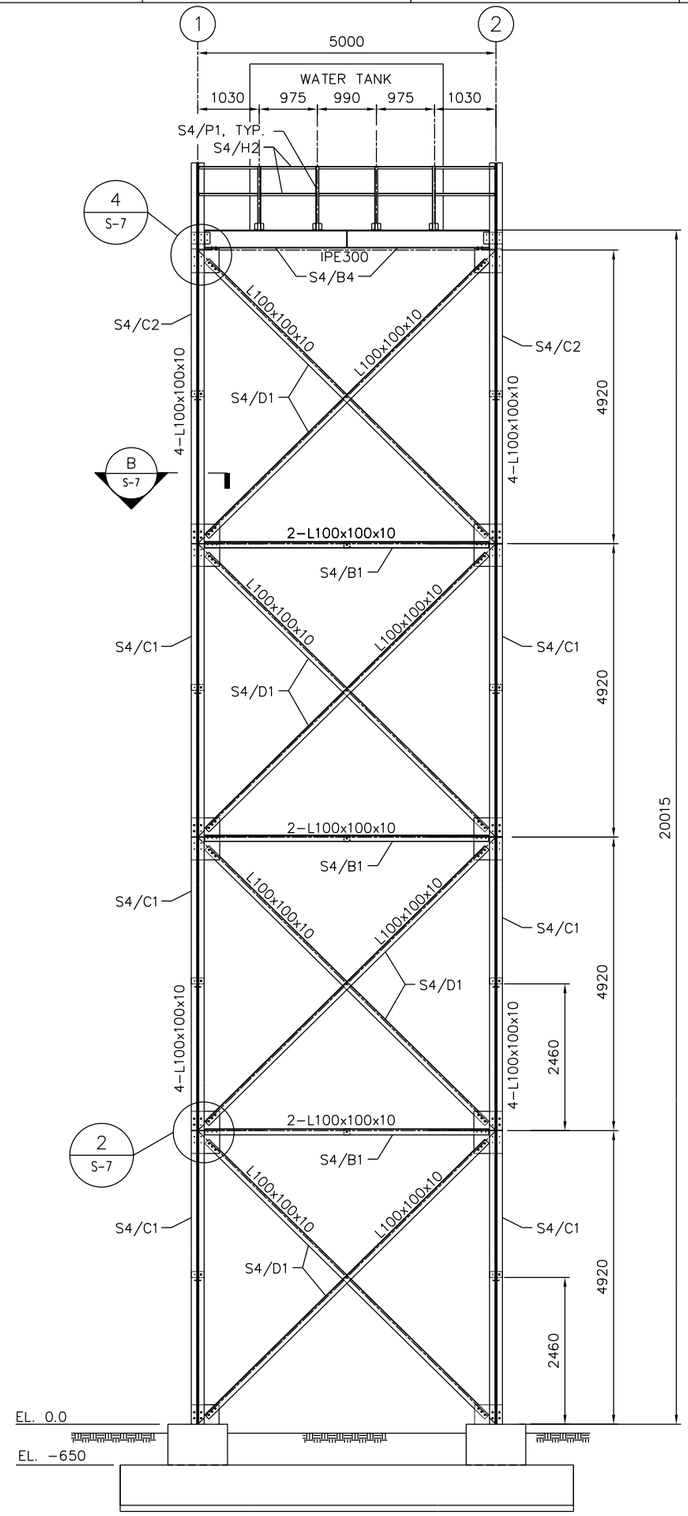

D S-2 ELEVATION
1:50

1000 0 1000mm
SCALE: 1 = 50

UNLESS NOTED OTHERWISE, LINEAR DIMENSIONS ARE IN MILLIMETERS.

US Army Corps of Engineers ®
Mobile District

Symbol	No.	Description	Date	Approved
		Revisions		

Designed By:	Date: 17 DECEMBER 2009
Drawn By:	Contract No:
Checked By:	CADD CODE: M01DTG17
Reviewed By:	Specification Number:
SIZE: 559x864mm	FILENAME:

U.S. ARMY ENGINEER DISTRICT
CORPS OF ENGINEERS
MOBILE, ALABAMA

AFGHANISTAN ENGINEER DISTRICT
20 METER WATER TOWER

ELEVATIONS

SHEET IDENTIFICATION
S-4

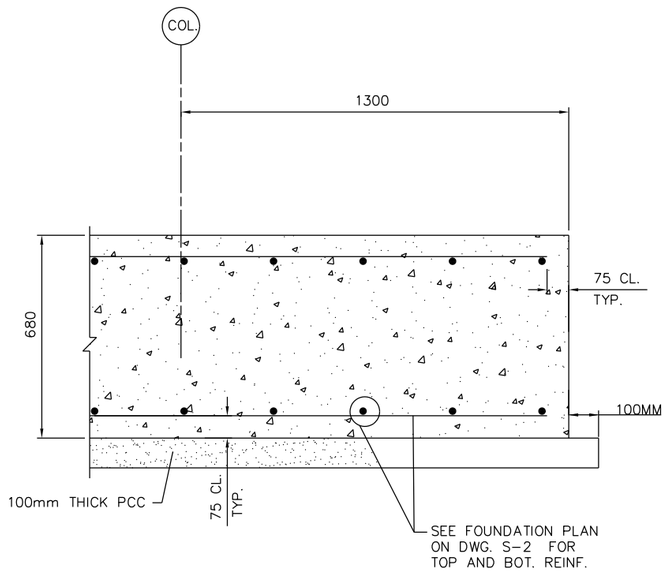

SECTION A
1:10 S-2

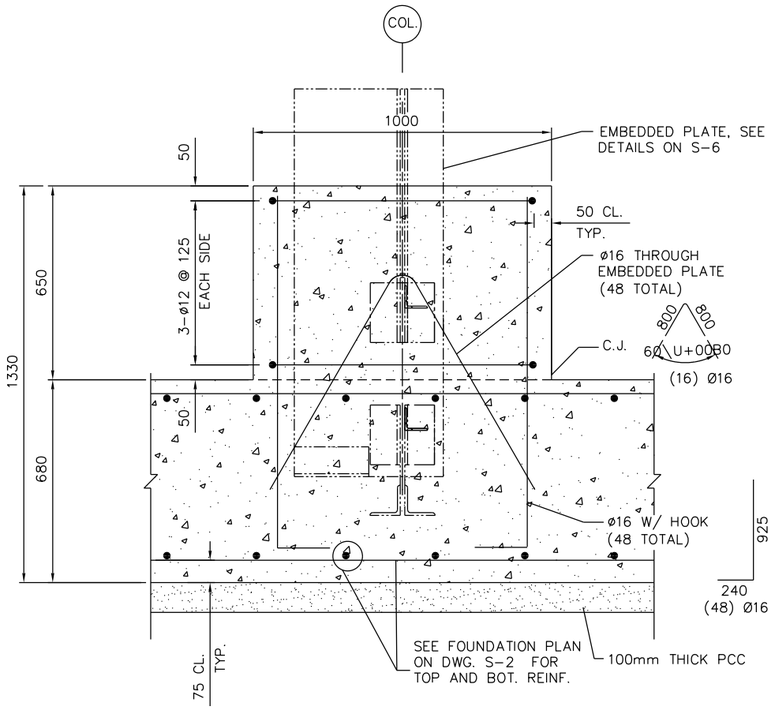

SECTION B
1:10 S-2 S-5

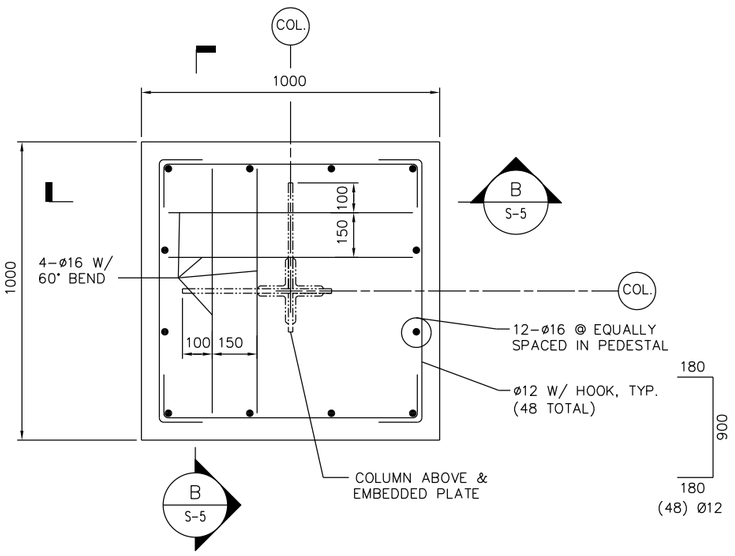

DETAIL 1
1:10 S-2

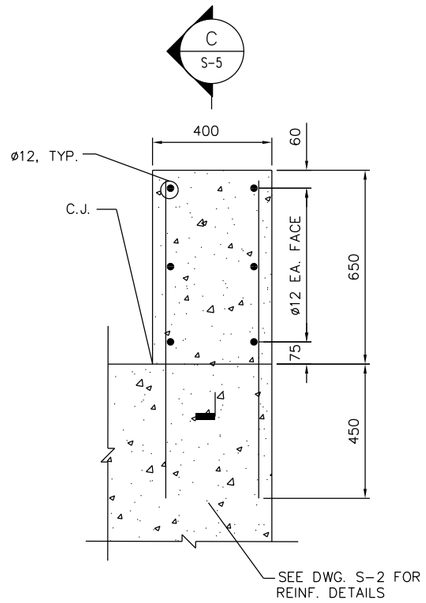

DETAIL 2
1:10 S-2

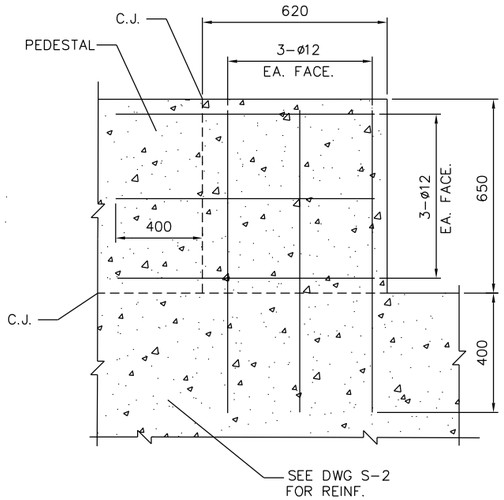

SECTION C
1:10 S-5

200 0 200mm
SCALE: 1 = 10

NOTE: SEPARATE CONCRETE PLACEMENT. SEE DETAIL 1 ON DRAWING S-9 FOR ANCHOR BOLT REQUIREMENTS.

UNLESS NOTED OTHERWISE, LINEAR DIMENSIONS ARE IN MILLIMETERS.

US Army Corps of Engineers ®
Mobile District

Symbol	No.	Description	Date	Approved
		Revisions		

Designed By:		Date: 17 DECEMBER 2009	
Drawn By:		Contract No:	
Checked By:		CADD CODE: MIL01G17	
Reviewed By:		Solicitation Number:	
SIZE: 559x864mm		FILENAME:	

U.S. ARMY ENGINEER DISTRICT
CORPS OF ENGINEERS
MOBILE, ALABAMA

AFGHANISTAN ENGINEER DISTRICT
20 METER WATER TOWER

FOUNDATION SECTIONS

SHEET IDENTIFICATION
S-5

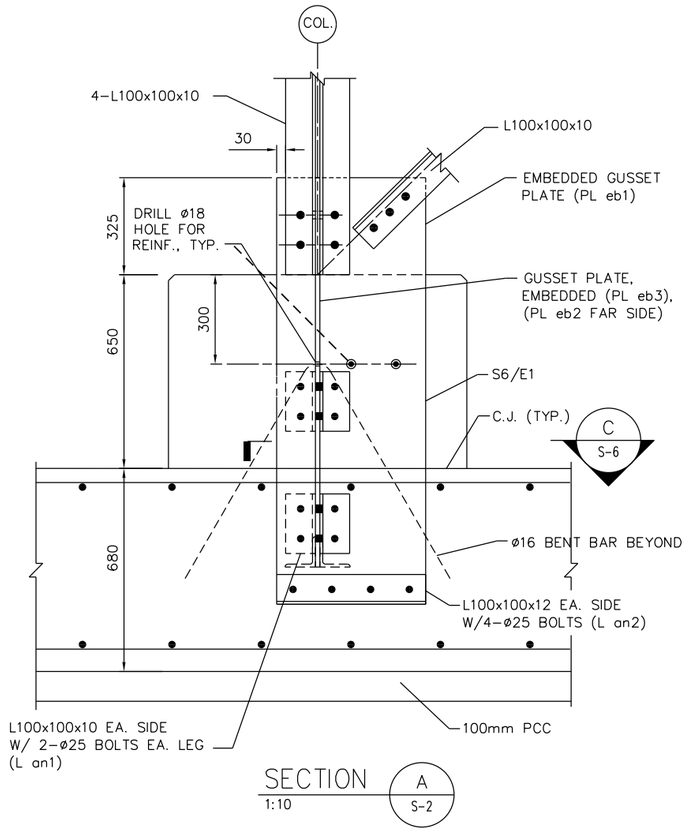

SECTION A
1:10 S-2

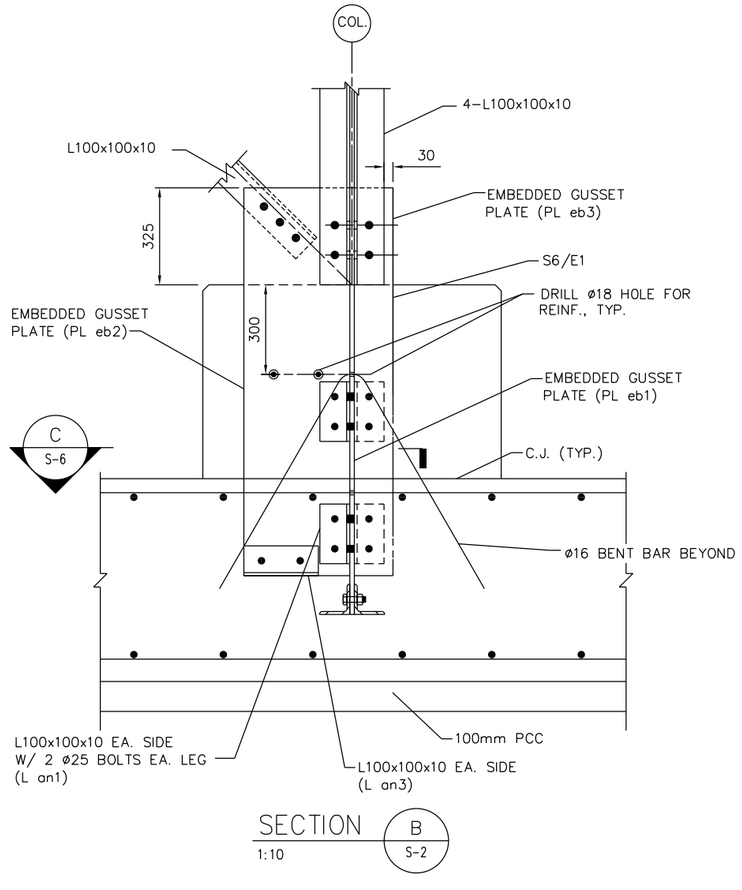

SECTION B
1:10 S-2

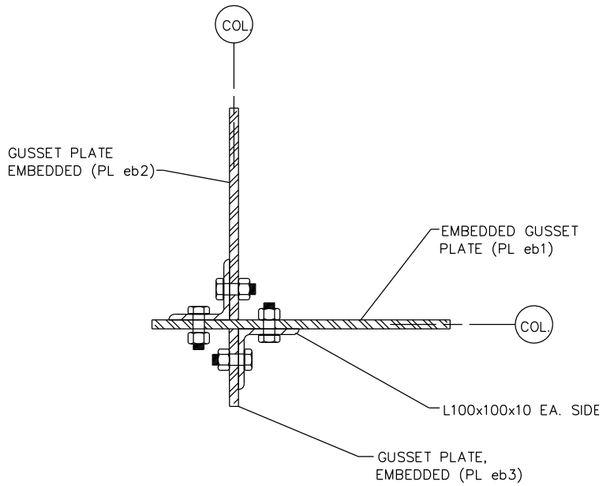

SECTION C
1:5 S-6

US Army Corps of Engineers ®
Mobile District

Symbol	No.	Description	Date	Approved
		Revisions		

Date: 17 DECEMBER 2009	
Contract No:	
CADD CODE: MD10TG17	
Specification Number:	
FILENAME:	
Designed By:	
Drawn By:	
Checked By:	
Reviewed By:	
SIZE: 559x864mm	E

U.S. ARMY ENGINEER DISTRICT
CORPS OF ENGINEERS
MOBILE, ALABAMA

AFGHANISTAN ENGINEER DISTRICT
20 METER WATER TOWER

FOUNDATION STEEL FRAMING SECTIONS

SHEET IDENTIFICATION

S–6

UNLESS NOTED OTHERWISE, LINEAR DIMENSIONS ARE IN MILLIMETERS.

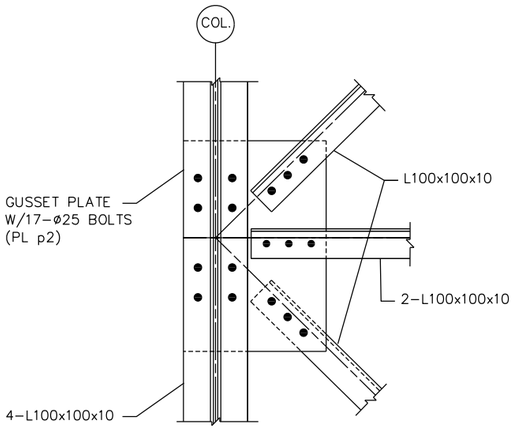

DETAIL 1 / S-4
1:10

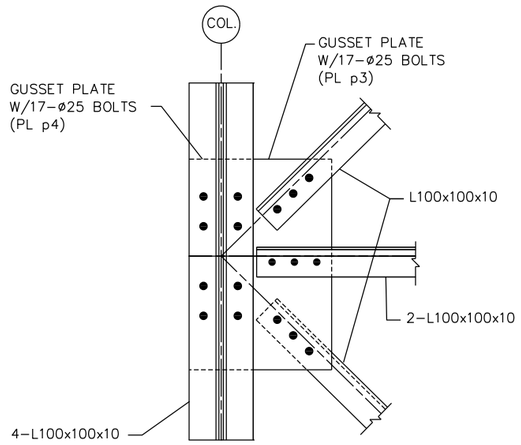

DETAIL 2 / S-4
1:10

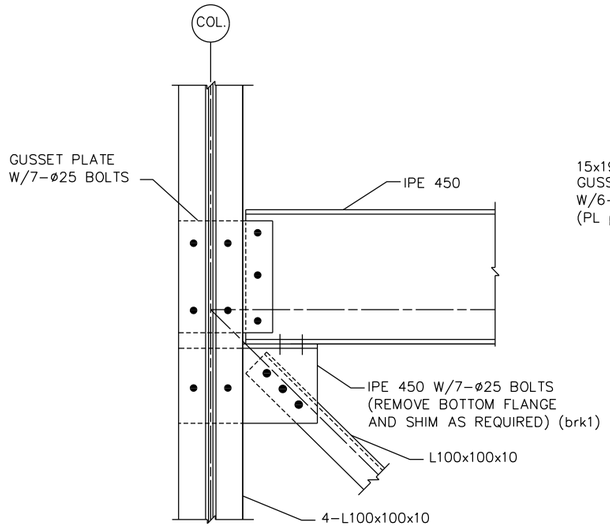

DETAIL 3 / S-4
1:10

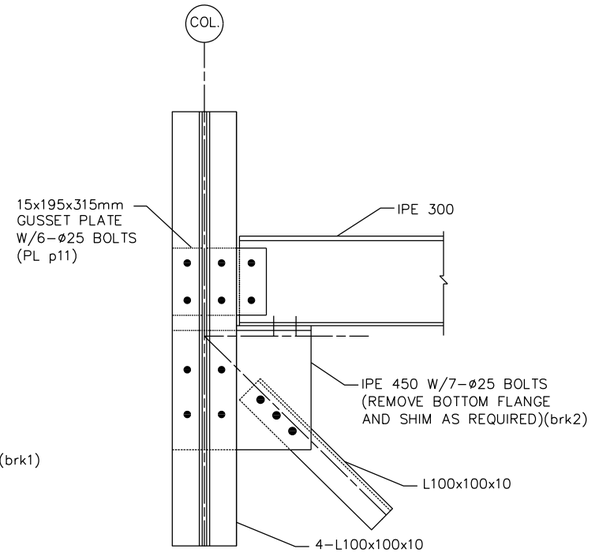

DETAIL 4 / S-4
1:10

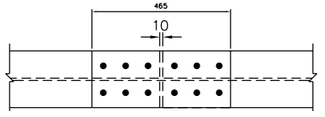

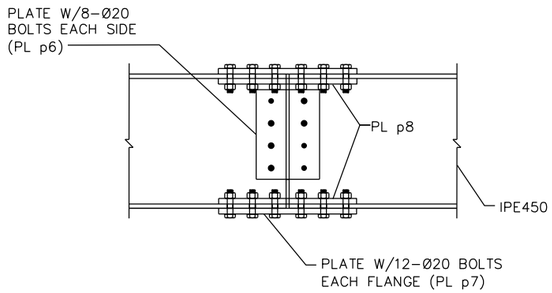

DETAIL 5 / S-3
1:10

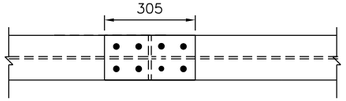

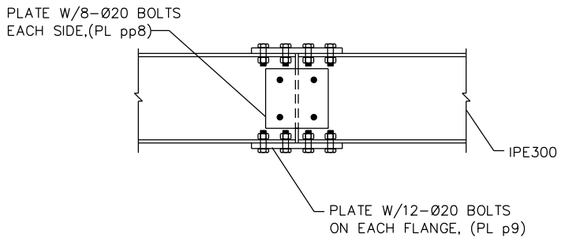

DETAIL 6 / S-3
1:10

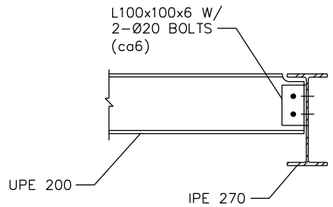

DETAIL 7 / S-3
1:10

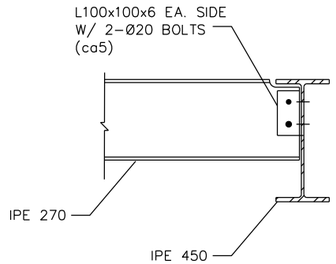

SECTION A / S-3
1:10

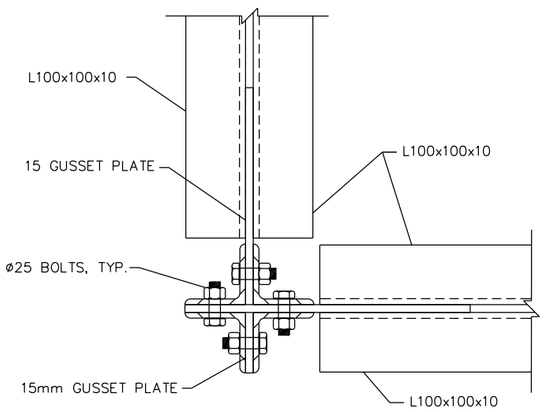

SECTION B / S-4
1:5

1000 0 1000mm
SCALE: 1 = 50

UNLESS NOTED OTHERWISE, LINEAR
DIMENSIONS ARE IN MILLIMETERS.

US Army Corps of Engineers ®
Mobile District

Symbol	No.	Description	Date	Approved
		Revisions		

Designed By:	Date: 17 DECEMBER 2009
Drawn By:	Contract No:
Checked By:	CADD CODE: MMD TCT 7
Reviewed By:	Solicitation Number:
SIZE: 559x864mm	FILENAME:

U.S. ARMY ENGINEER DISTRICT
CORPS OF ENGINEERS
MOBILE, ALABAMA

AFGHANISTAN ENGINEER DISTRICT
20 METER WATER TOWER

SECTIONS & DETAILS

SHEET IDENTIFICATION

S-7

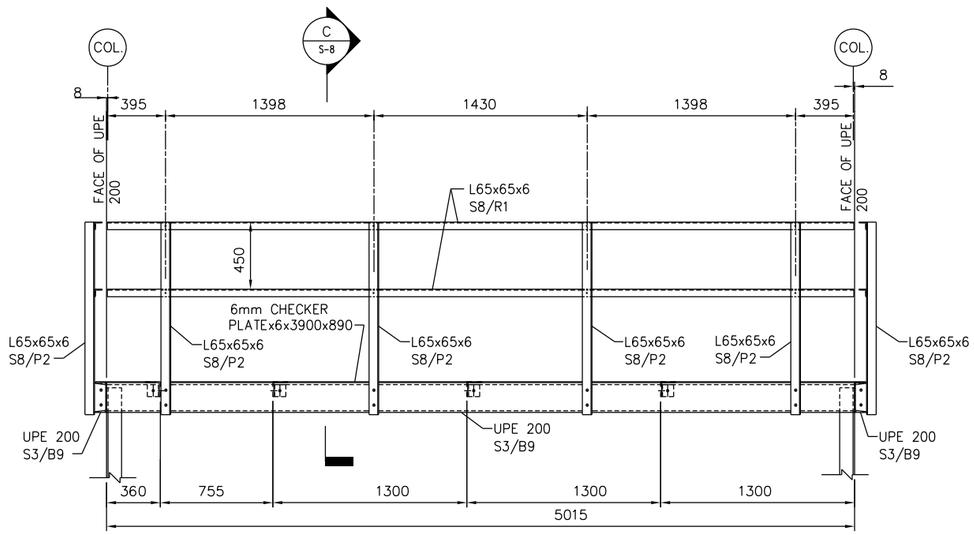

PLATFORM ELEVATION A S-3

1:20

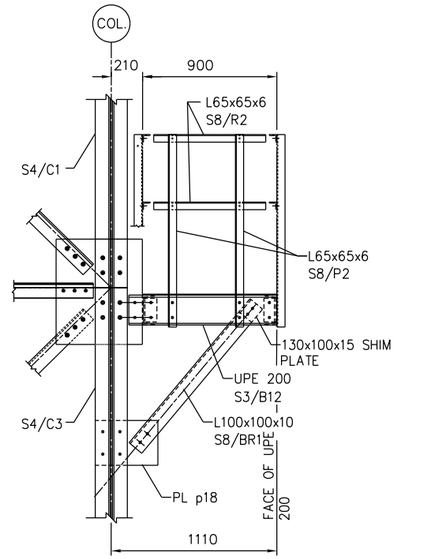

PLATFORM ELEVATION B S-3

1:20

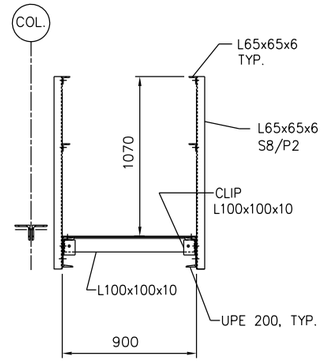

SECTION C S-8

1:20

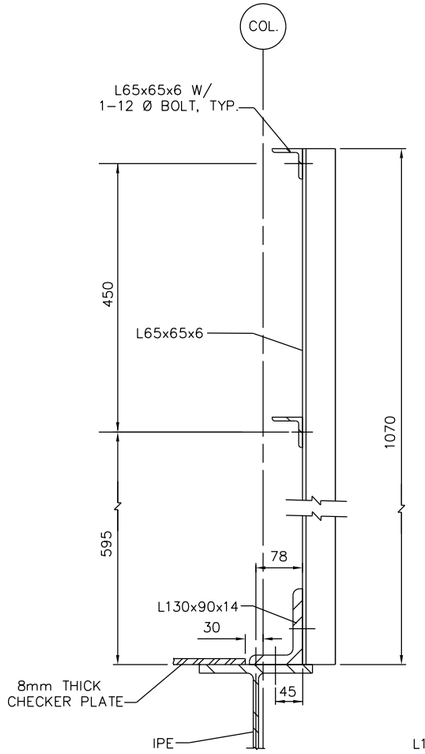

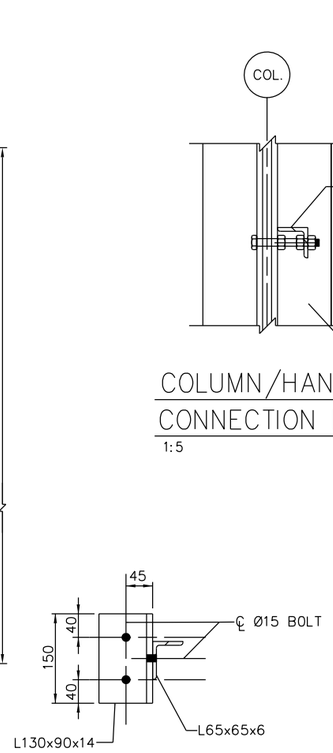

PLATFORM HANDRAIL DETAIL

1:5

COLUMN/HANDRAIL CONNECTION DETAIL

1:5

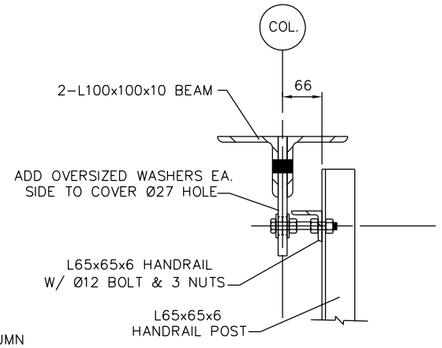

BEAM/HANDRAIL CONNECTION DETAIL

1:5

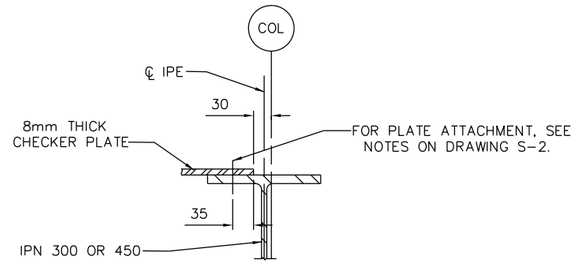

CHECKER PLATE ATTACHMENT DETAIL

1:5

100 0 100mm

SCALE: 1 = 5

UNLESS NOTED OTHERWISE, LINEAR DIMENSIONS ARE IN MILLIMETERS.

US Army Corps of Engineers ®
Mobile District

Symbol	No.	Description	Date	Approved
		Revisions		

Designed By:	Date: 17 DECEMBER 2009
Drawn By:	Contract No:
Checked By:	CADD CODE: MOTDG17
Reviewed By:	Solicitation Number:
SIZE: 559x864mm	FILENAME:

U.S. ARMY ENGINEER DISTRICT
CORPS OF ENGINEERS
MOBILE, ALABAMA

AFGHANISTAN ENGINEER DISTRICT
20 METER WATER TOWER

SECTIONS & DETAILS

SHEET IDENTIFICATION

S-8

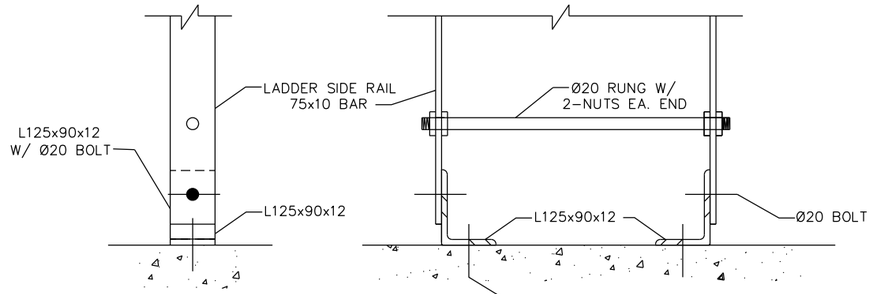

DETAIL 1 / S-4
1:5

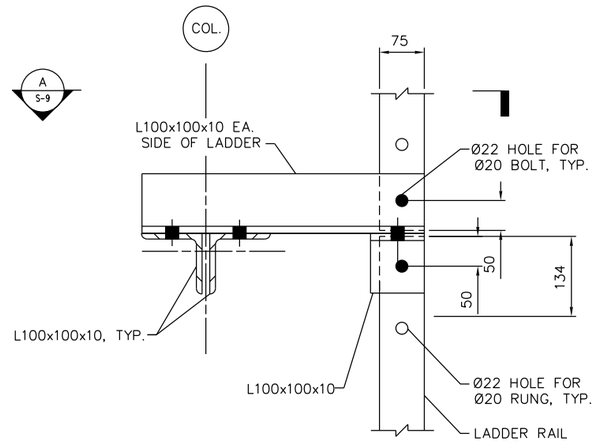

SECTION B / S-4
1:5

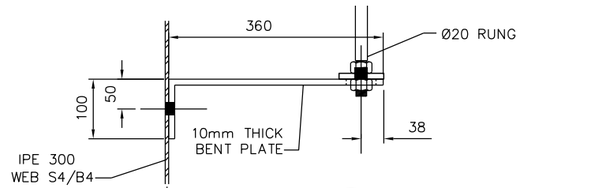

SECTION D / S-9
1:5

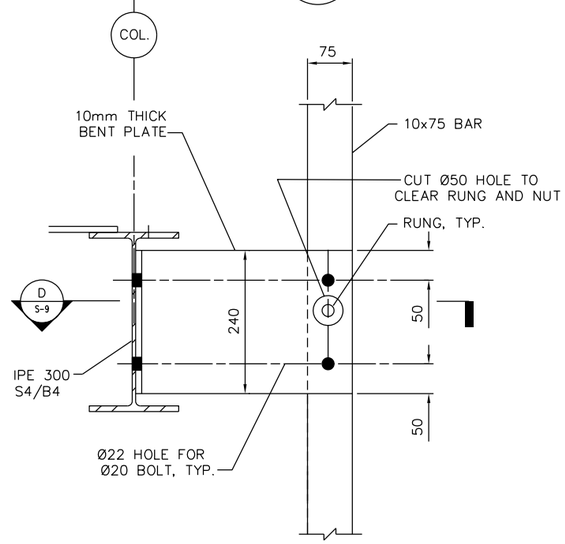

SECTION C / S-4
1:5

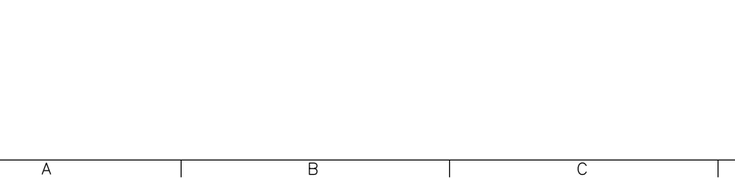

SECTION A / S-4 S-9
1:5

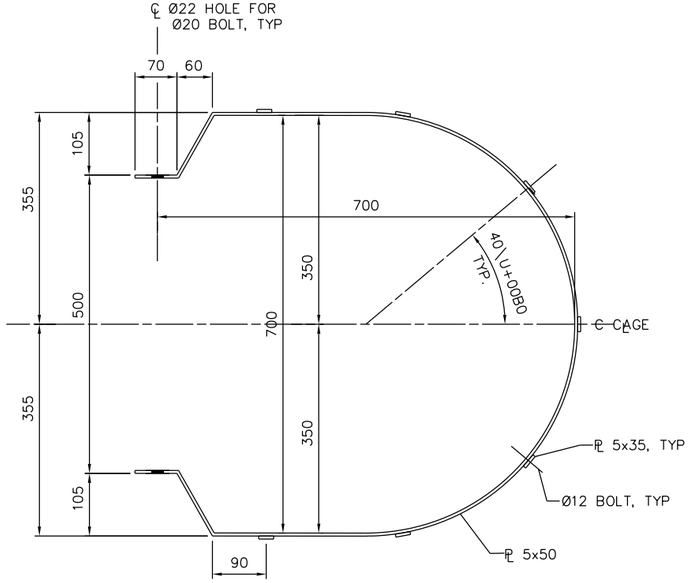

LADDER CAGE DETAIL
1:5

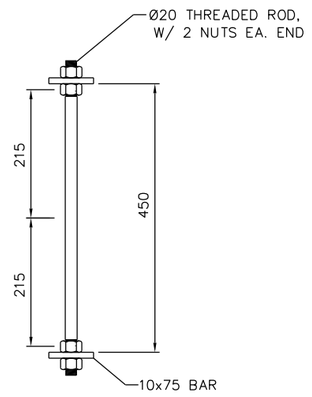

LADDER RUNG & SIDE RAIL
1:5

100 0 100mm
SCALE: 1 = 5

UNLESS NOTED OTHERWISE, LINEAR DIMENSIONS ARE IN MILLIMETERS.

US Army Corps of Engineers ®
Mobile District

Symbol	No.	Description	Date	Approved
		Revisions		

Designed By:
Drawn By:
Checked By:
Reviewed By:
Date: 17 DECEMBER 2009
Contract No:
CADD CODE: MDTDTG17
Solicitation Number:
FILENAME:
SIZE: 559x864mm

U.S. ARMY ENGINEER DISTRICT
CORPS OF ENGINEERS
MOBILE, ALABAMA

AFGHANISTAN ENGINEER DISTRICT
20 METER WATER TOWER

SECTIONS & DETAILS

SHEET IDENTIFICATION
S-9

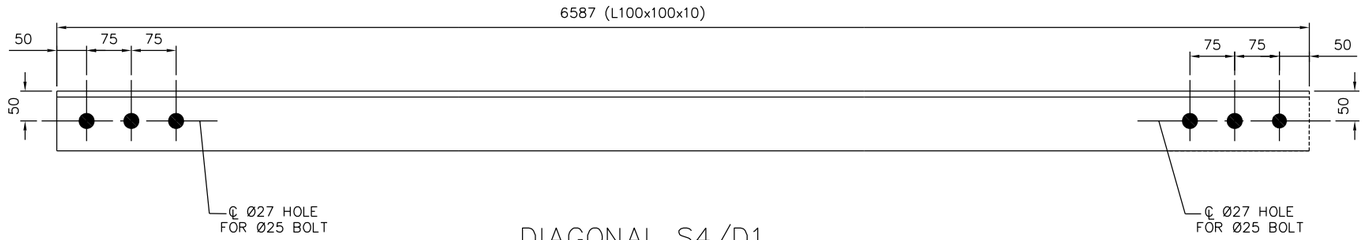

DIAGONAL S4/D1

MAKE: 32

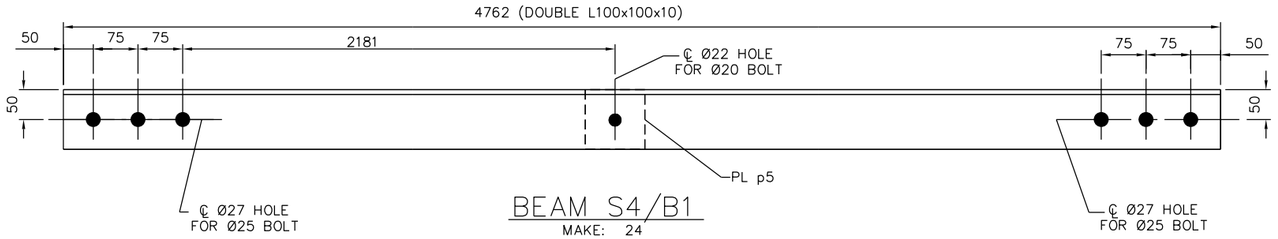

BEAM S4/B1

MAKE: 24

24-ø20 A307 BOLTS

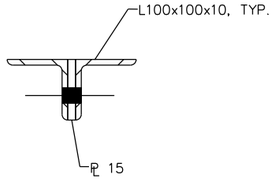

SHIP	MARK	NO. PCS	DESCRIPTION	LENGTH (mm)	FAB. MARK	NOTES
32	S4/D1		L100x100x10	6587		
24	S4/B1		2L100x100x10	4762		
		12	℄ 15x100	100	PL p5	
4	S4/B2		IPE 450	1388		
		4	℄ 10x215	300	PL p6	
		8	℄ 20x190	465	PL p7	
		16	℄ 20x80	465	PL p8	
		8	L100x100x10	200	ca5	
2	S4/B3		IPE 450	1970		
		12	L100x100x10	200	ca5	

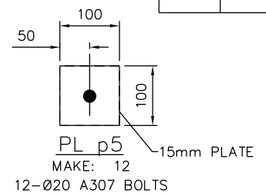

PL p5

MAKE: 12

12-ø20 A307 BOLTS

15mm PLATE

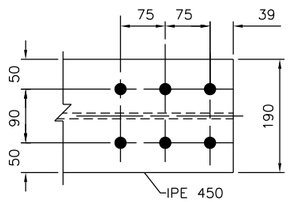

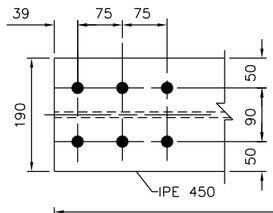

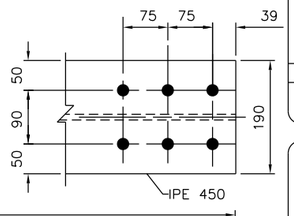

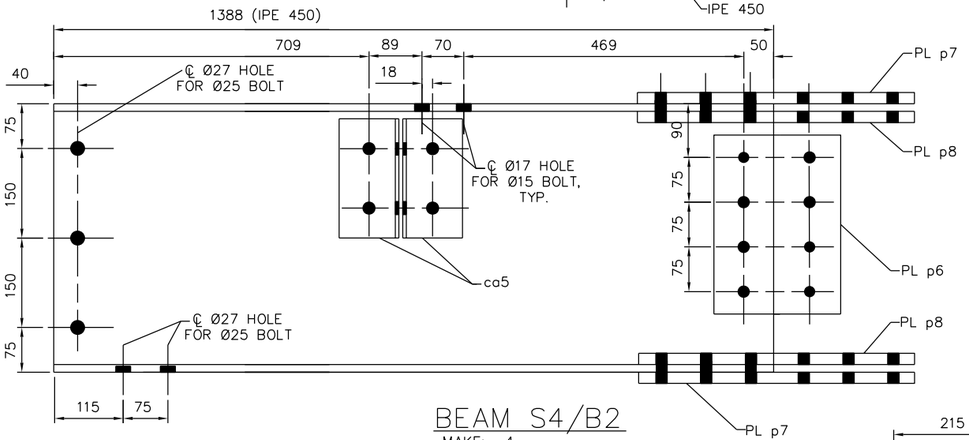

BEAM S4/B2

MAKE: 4

12-ø25 A307 BOLTS

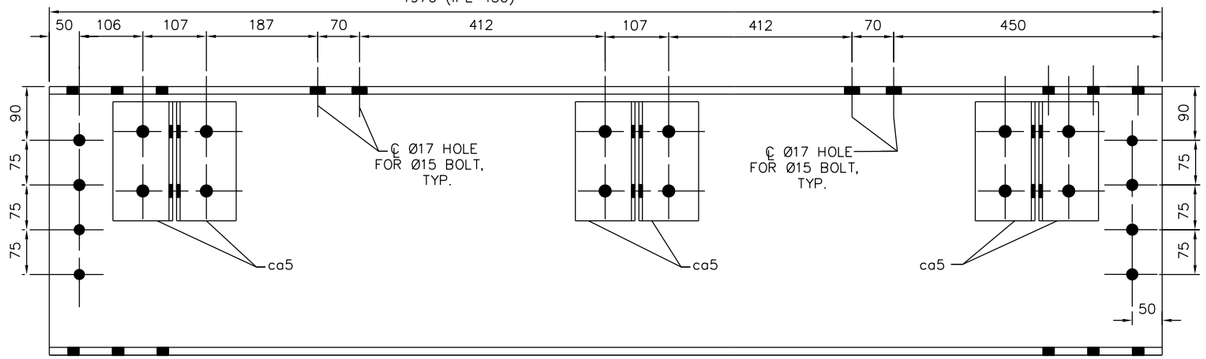

BEAM S4/B3

MAKE: 2

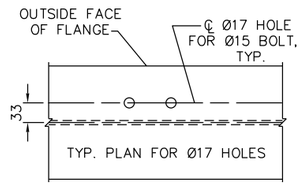

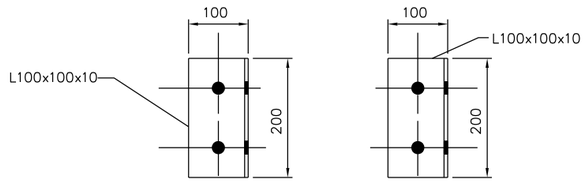

ca5

MAKE: 20

40-ø25 A307 BOLTS

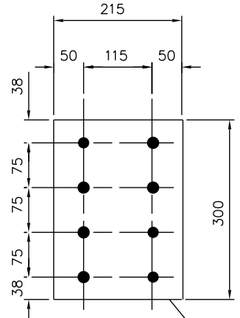

PL p6

MAKE: 8

32-ø20 A307 BOLTS

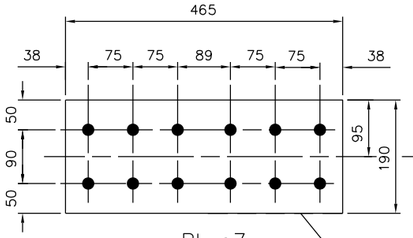

PL p7

MAKE: 8

96-ø20 A307 BOLTS

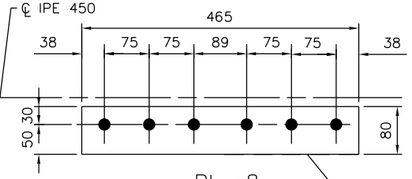

PL p8

MAKE: 16

UNLESS NOTED OTHERWISE, LINEAR DIMENSIONS ARE IN MILLIMETERS.

US Army Corps of Engineers
Mobile District

Symbol	No.	Description Revisions	Date	Approved

Designed By:
Drawn By:
Checked By:
Reviewed By:
Date: 17 DECEMBER 2009
Contract No:
CADD CODE: MDDTG17
Solicitation Number:
SIZE: 559x864mm
FILENAME:

U.S. ARMY ENGINEER DISTRICT
CORPS OF ENGINEERS
MOBILE, ALABAMA

AFGHANISTAN ENGINEER DISTRICT
20 METER WATER TOWER

MEMBER DETAILS

SHEET IDENTIFICATION

S-10

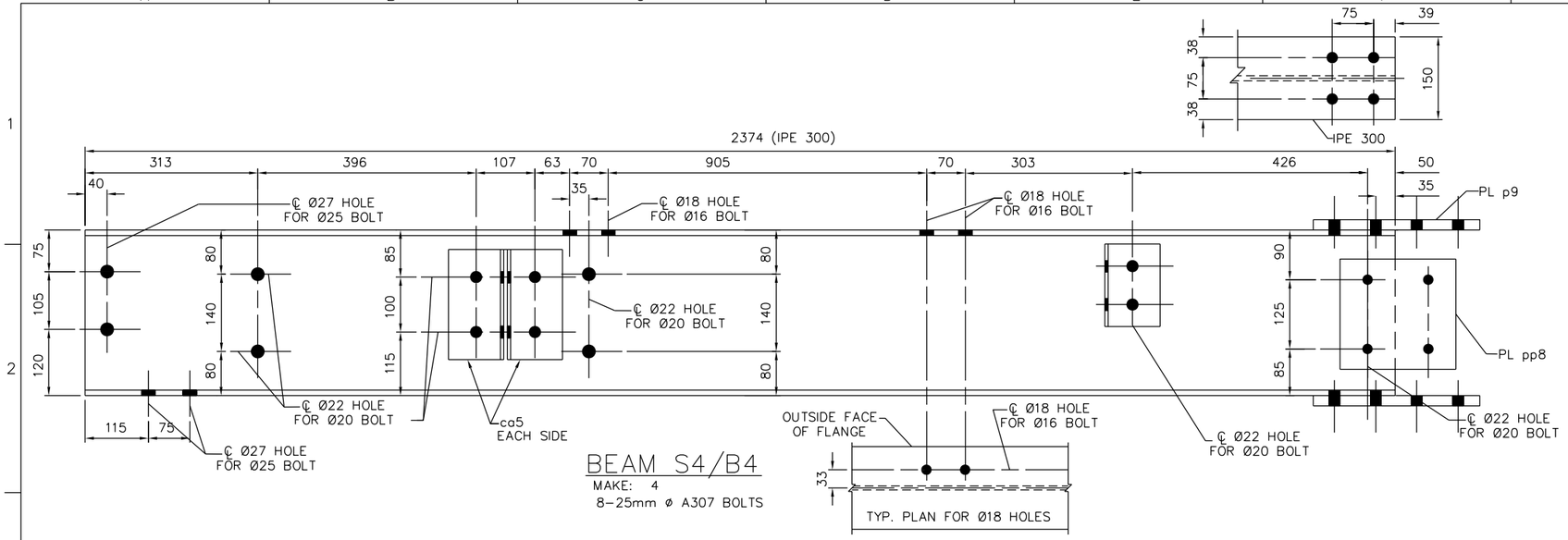

BEAM S4/B4

MAKE: 4
8-25mm ø A307 BOLTS

PL pp8

MAKE: 4
16-ø20 A307 BOLTS

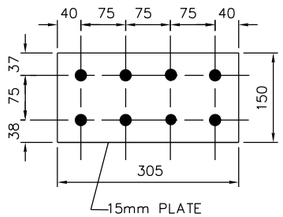

PL p9

MAKE: 4
24-ø20 A307 BOLTS

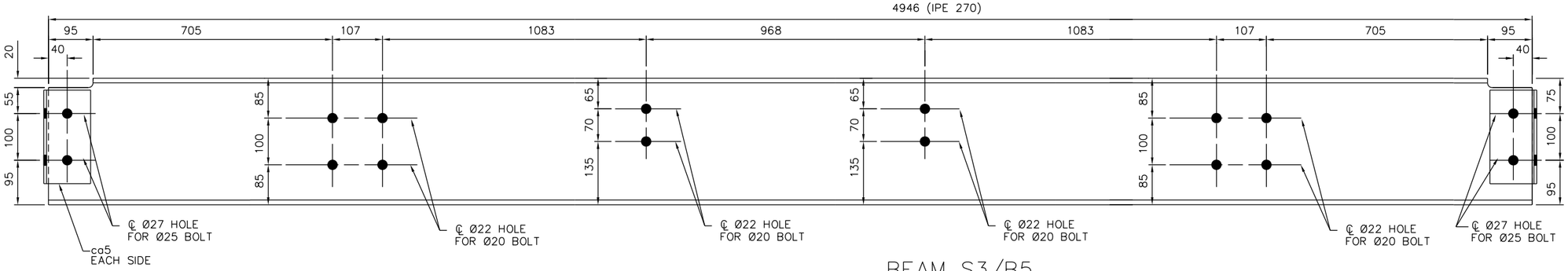

BEAM S3/B5

MAKE: 5
80-ø25 A307 BOLTS

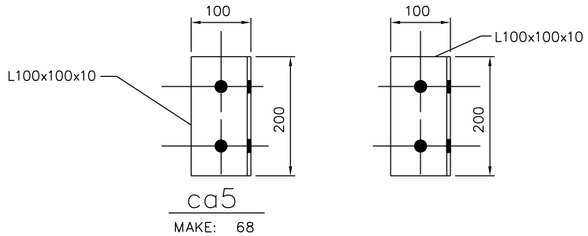

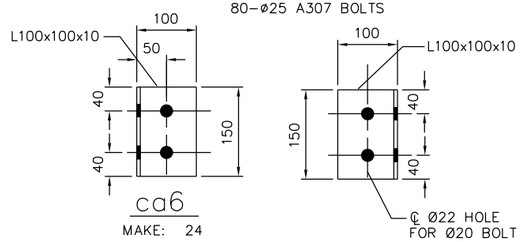

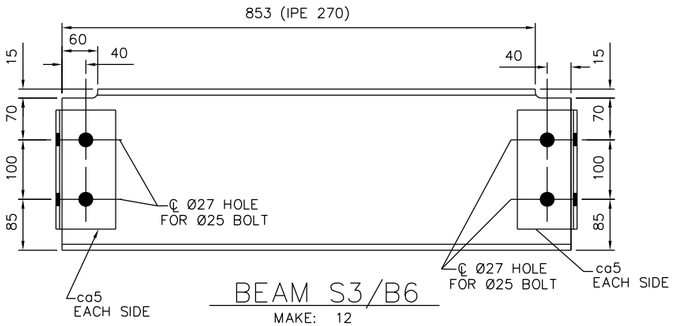

BEAM S3/B6

MAKE: 12
48-ø25 A307 BOLTS

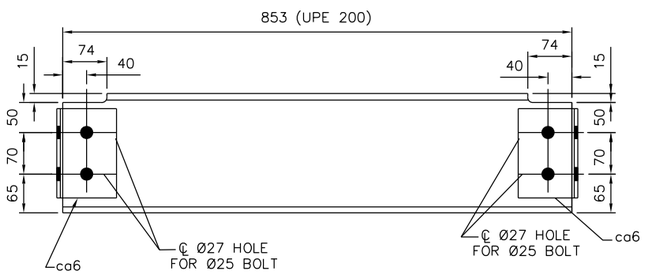

BEAM S3/B7

MAKE: 12
48-ø25 A307 BOLTS

SHIP	MARK	NO. PCS	DESCRIPTION	LENGTH (mm)	FAB. MARK	NOTES
4	S4/B4		IPE 300	2367		
		4	PL 210x10	200	PL pp8	
		4	PL 150x15	305	PL p9	
5	S3/B5		IPE 270	4947		
		20	L100x100x10	200	ca5	
12	S3/B6		IPE 270	853		
		48	L100x100x10	200	ca5	
12	S3/B7		UPE 200	853		
		24	L100x100x10	150	ca6	

UNLESS NOTED OTHERWISE, LINEAR DIMENSIONS ARE IN MILLIMETERS.

US Army Corps of Engineers ®
Mobile District

Symbol	No.	Description	Date	Approved
		Revisions		

Date: 17 DECEMBER 2009
Contract No:
CADD CODE: MDOTGT7
Specification Number:
FILENAME:
Designed By:
Drawn By:
Checked By:
Reviewed By:
SIZE: 559x864mm

U.S. ARMY ENGINEER DISTRICT
CORPS OF ENGINEERS
MOBILE, ALABAMA

AFGHANISTAN ENGINEER DISTRICT
20 METER WATER TOWER

MEMBER DETAILS

SHEET IDENTIFICATION
S-11

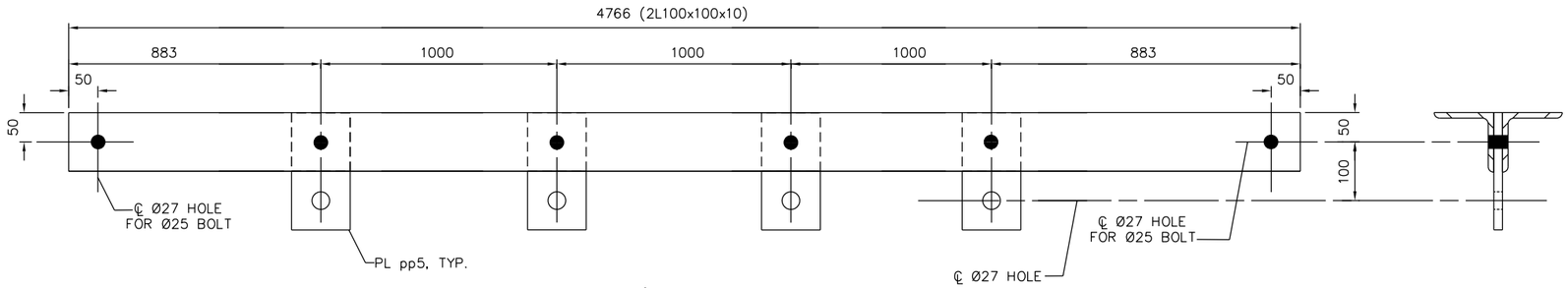

BEAM S4/B8

MAKE: 2
4-ø25 A307 BOLTS

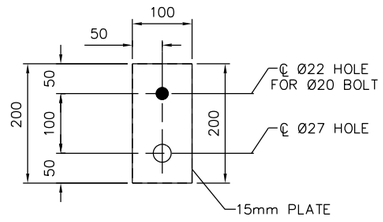

PL pp5

MAKE: 8
8-ø20 A307 BOLTS

SHIP	MARK	NO. PCS	DESCRIPTION	LENGTH (mm)	FAB. MARK	NOTES
4	S4/B8		2L100x100x10	4766		
		4	PL 15x100	200	PL pp5	

UNLESS NOTED OTHERWISE, LINEAR DIMENSIONS ARE IN MILLIMETERS.

US Army Corps of Engineers ®
Mobile District

Symbol	No.	Description	Date	Approved
		Revisions		

Date: 17 DECEMBER 2009
Contract No:
CADD CODE: MD10GT17
Solicitation Number:
FILENAME:

Designed By:
Drawn By:
Checked By:
Reviewed By:
SIZE: 559x864mm

U.S. ARMY ENGINEER DISTRICT
CORPS OF ENGINEERS
MOBILE, ALABAMA

AFGHANISTAN ENGINEER DISTRICT
20 METER WATER TOWER

MEMBER DETAILS

SHEET IDENTIFICATION

S-12

SHIP	MARK	NO. PCS	DESCRIPTION	LENGTH (mm)	FAB. MARK	WEIGHT	NOTES
10	S4/C1		4-L100x100x10	4920			
		40	L100x100x10	4920	L am1		
		20	PL 100x15	215	PL p1		
		10	PL 480x15	705	PL p2		
		10	PL 100x15	705	PL p3		
		10	PL 365x15	705	PL p4		
		4	PL 100X15	515	PL pp1		
		4	PL 100X15	515	PL pp2		

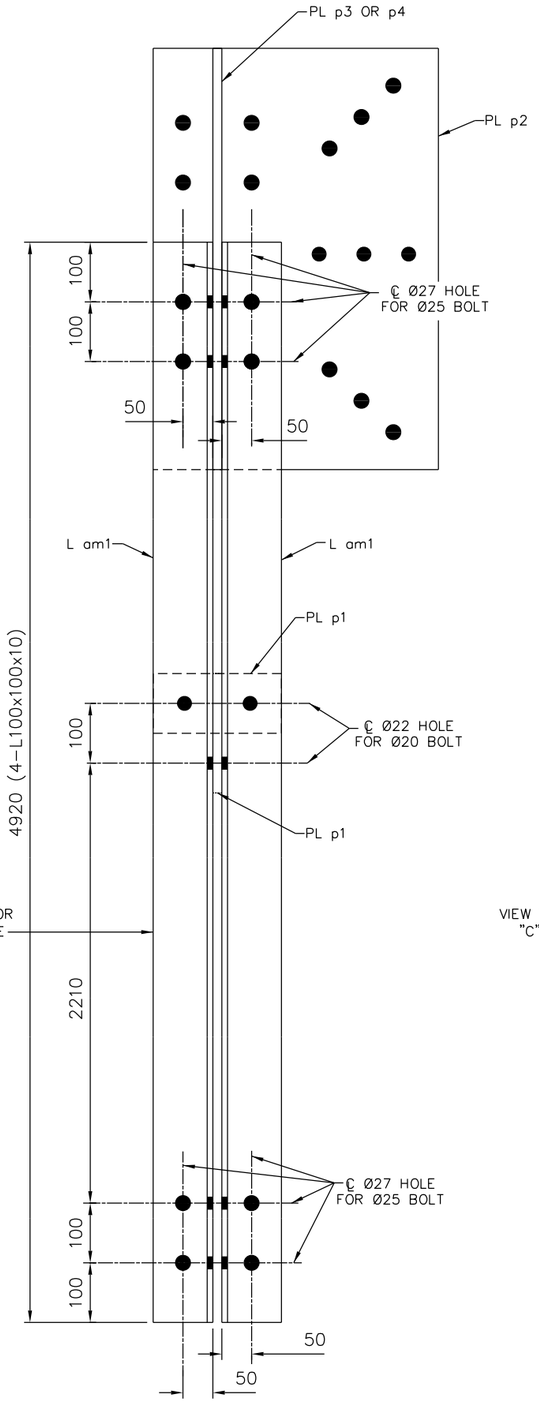

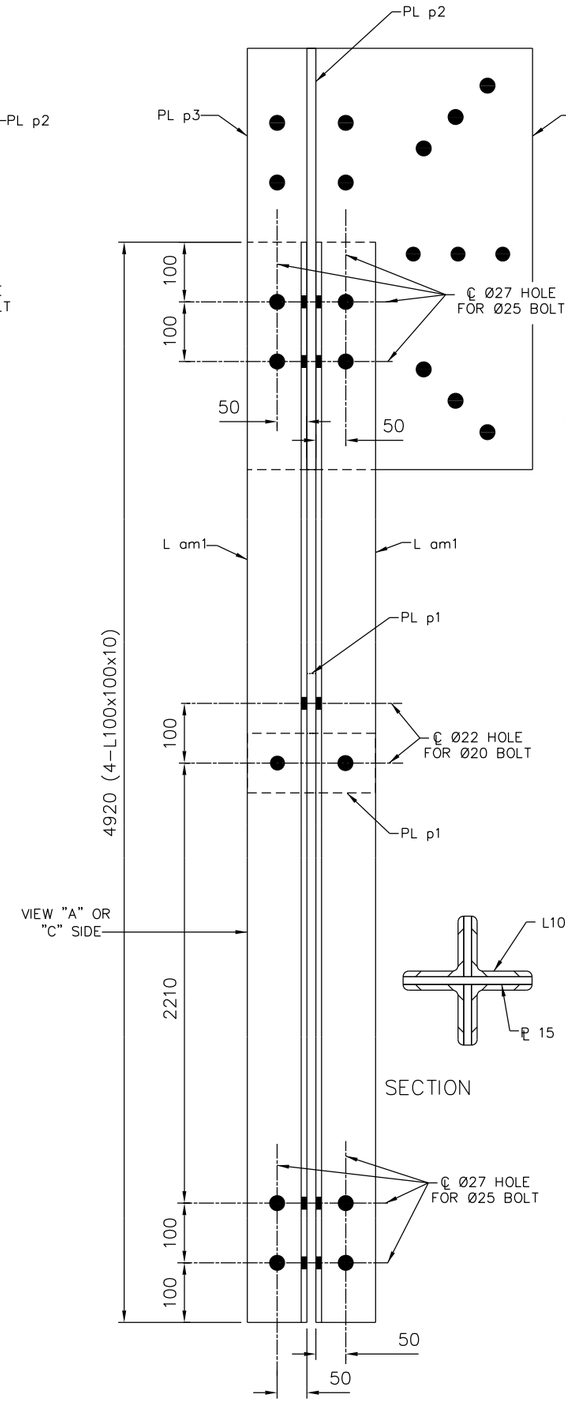

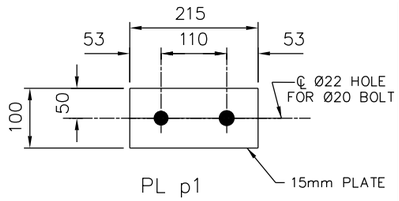

PL p1
MAKE: 20
40-ø20 A307 BOLTS

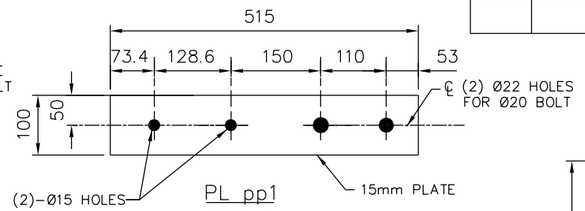

PL pp1
MAKE: 4
16-ø20 A307 BOLTS

NOTE: PLUMBING PIPE SUPPORT (PL pp1) MAY BE INTERCHANGED WITH PL p1 TO ATTACH PLUMBING.

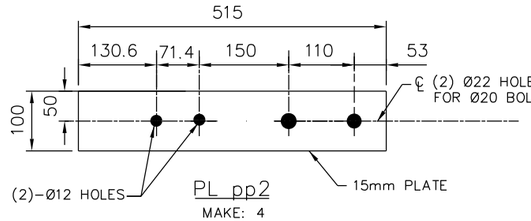

PL pp2
MAKE: 4
16-ø20 A307 BOLTS

NOTE: PLUMBING PIPE SUPPORT (PL pp2) MAY BE INTERCHANGED WITH PL p1 TO ATTACH PLUMBING.

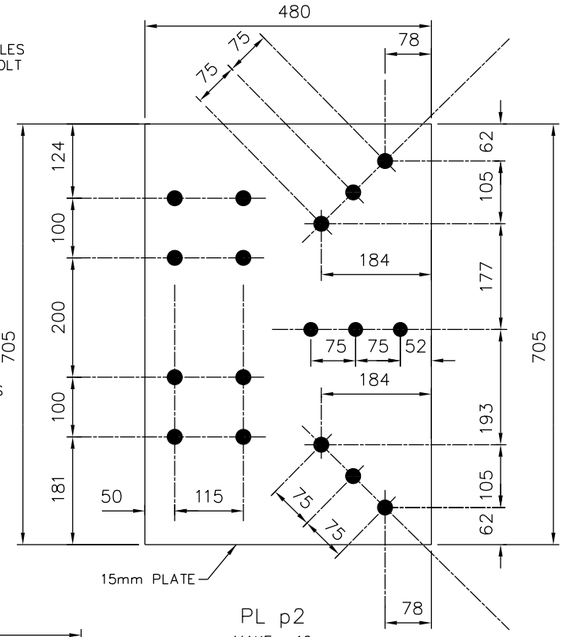

PL p2
MAKE: 10
170-ø25 A307 BOLTS

SECTION

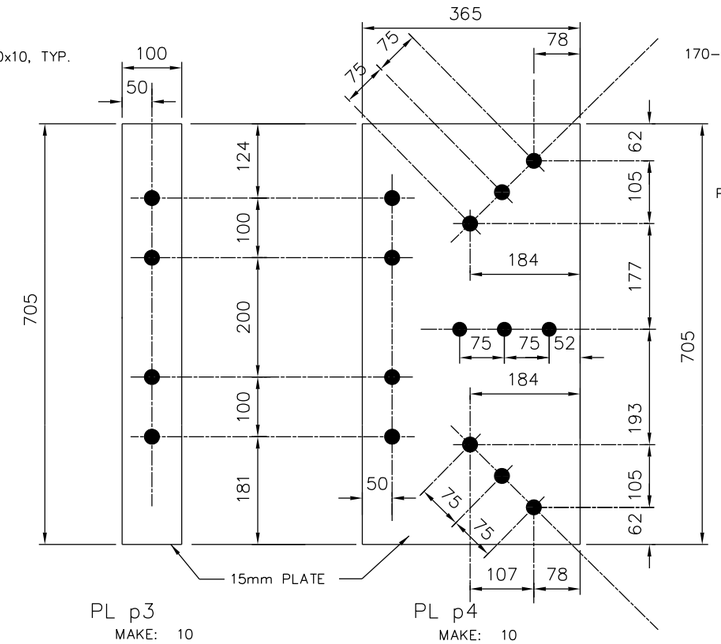

PL p3
MAKE: 10
40-ø25 A307 BOLTS

PL p4
MAKE: 10
130-ø25 A307 BOLTS

NOTE: BOLT HOLES IN PL p2, p3, & p4 ARE Ø27

COLUMN S4/C1
MAKE: 10

UNLESS NOTED OTHERWISE, LINEAR DIMENSIONS ARE IN MILLIMETERS.

US Army Corps of Engineers ®
Mobile District

Symbol	No.	Description Revisions	Date	Approved

Date: 17 DECEMBER 2009
Contract No:
Designed By:
Drawn By:
Checked By:
Reviewed By:
CADD CODE: MD1DTG17
Specification Number:
FILENAME:
SIZE: 559x864mm

U.S. ARMY ENGINEER DISTRICT
CORPS OF ENGINEERS
MOBILE, ALABAMA

AFGHANISTAN ENGINEER DISTRICT
20 METER WATER TOWER

MEMBER DETAILS

SHEET IDENTIFICATION
S-13

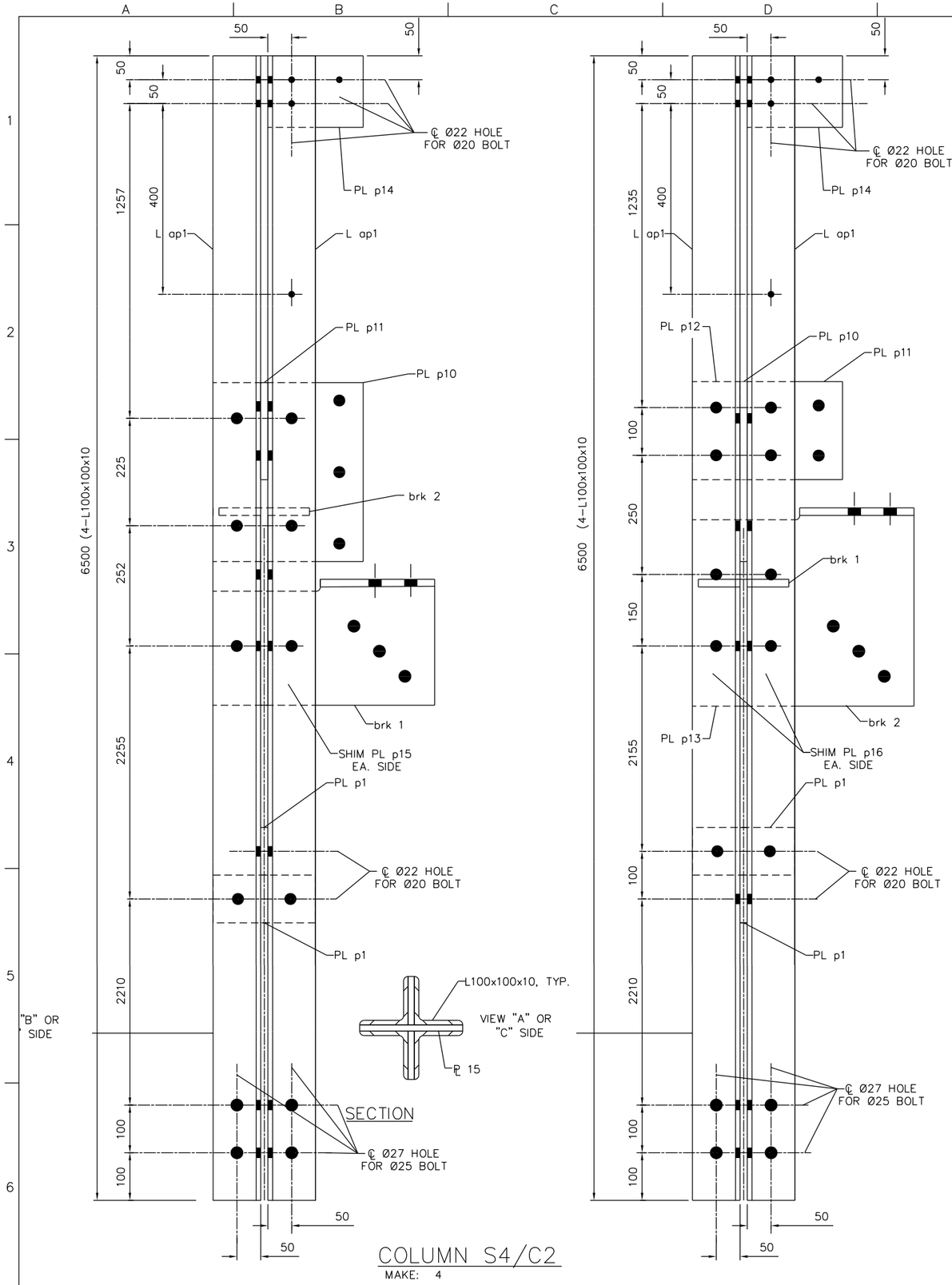

COLUMN S4/C2
MAKE: 4

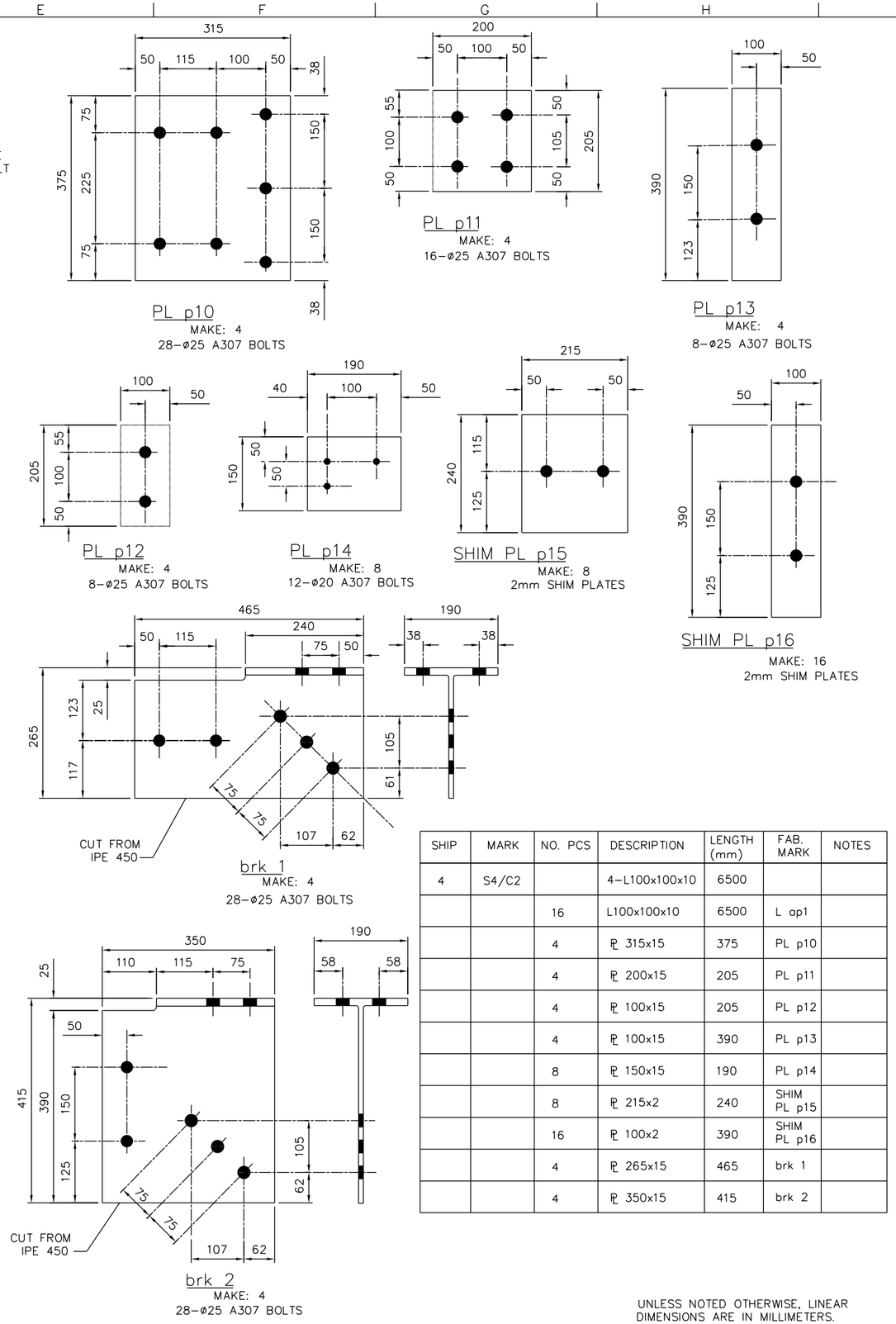

SHIP	MARK	NO. PCS	DESCRIPTION	LENGTH (mm)	FAB. MARK	NOTES
4	S4/C2		4-L100x100x10	6500		
		16	L100x100x10	6500	L ap1	
		4	PL 315x15	375	PL p10	
		4	PL 200x15	205	PL p11	
		4	PL 100x15	205	PL p12	
		4	PL 100x15	390	PL p13	
		8	PL 150x15	190	PL p14	
		8	PL 215x2	240	SHIM PL p15	
		16	PL 100x2	390	SHIM PL p16	
		4	PL 265x15	465	brk 1	
		4	PL 350x15	415	brk 2	

UNLESS NOTED OTHERWISE, LINEAR DIMENSIONS ARE IN MILLIMETERS.

US Army Corps of Engineers ® Mobile District

Symbol | No. | Description | Date | Approved
Revisions

Designed By: | Date: 17 DECEMBER 2009
Drawn By: | Contract No:
Checked By: | CADD CODE: M010TG17
Reviewed By: | Solicitation Number: -
SIZE: 559x864mm | FILENAME:

U.S. ARMY ENGINEER DISTRICT CORPS OF ENGINEERS MOBILE, ALABAMA

AFGHANISTAN ENGINEER DISTRICT 20 METER WATER TOWER

MEMBER DETAILS

SHEET IDENTIFICATION
S-14

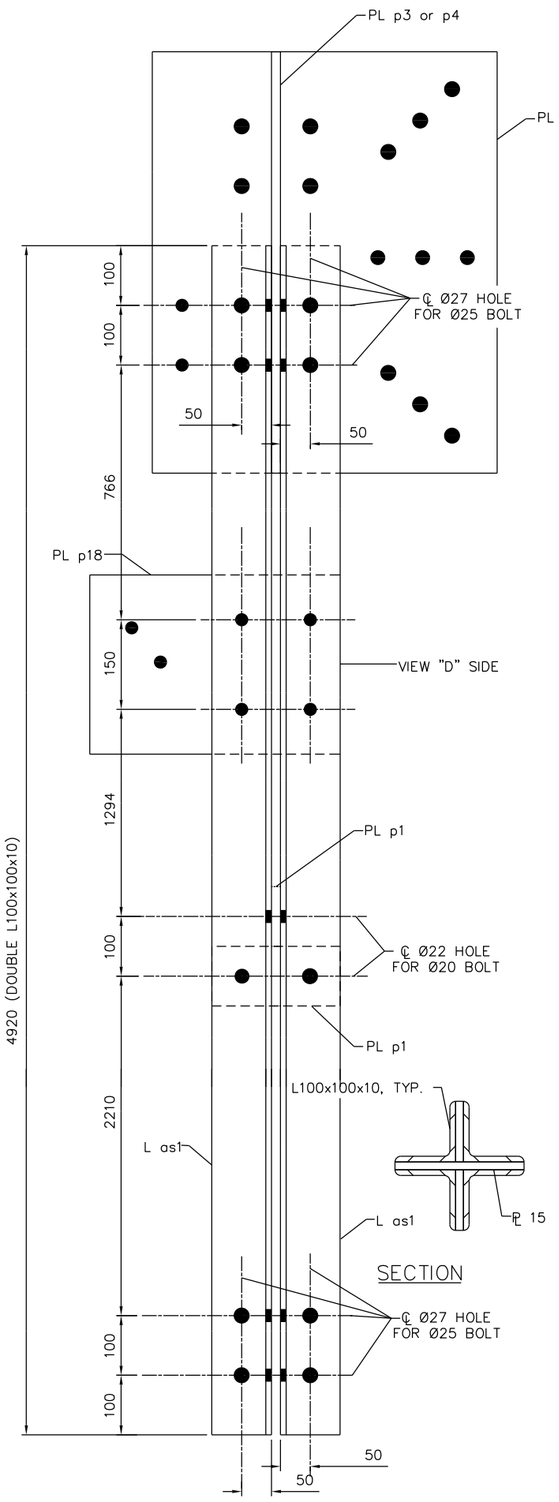

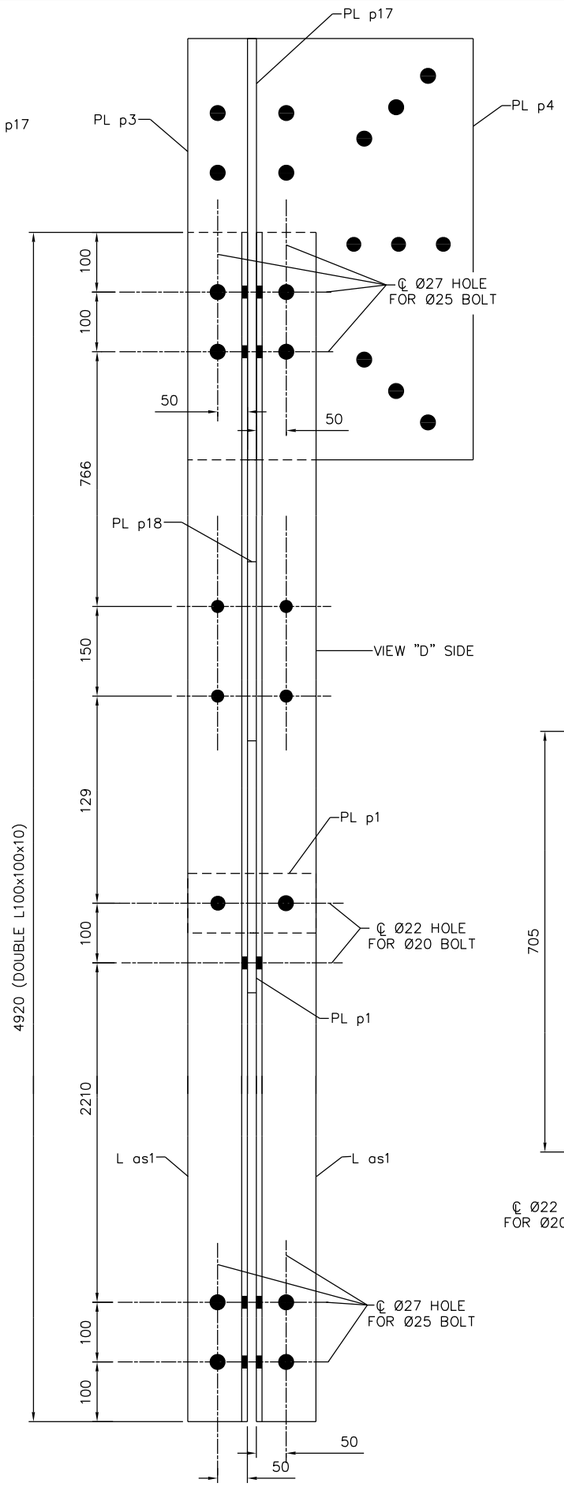

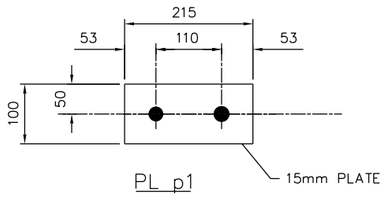

PL p1
MAKE: 4
64–ø20 A307 BOLTS

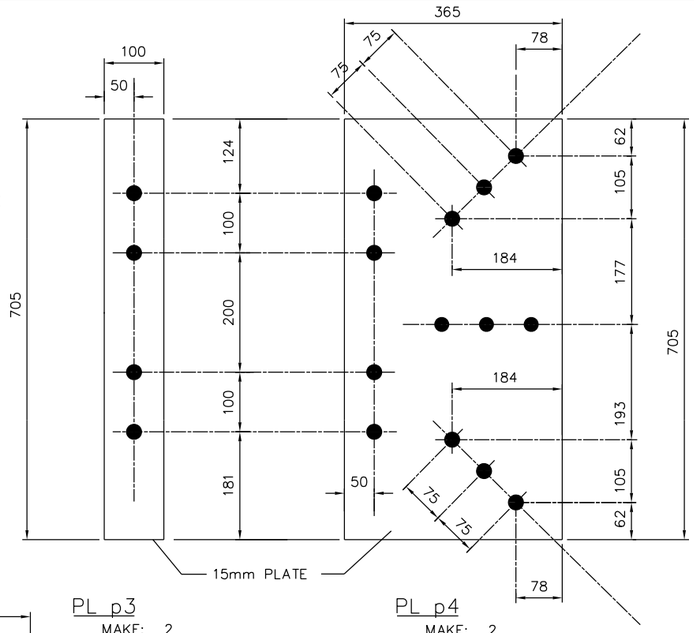

PL p3
MAKE: 2
8–ø25 A307 BOLTS

PL p4
MAKE: 2
26–ø25 A307 BOLTS

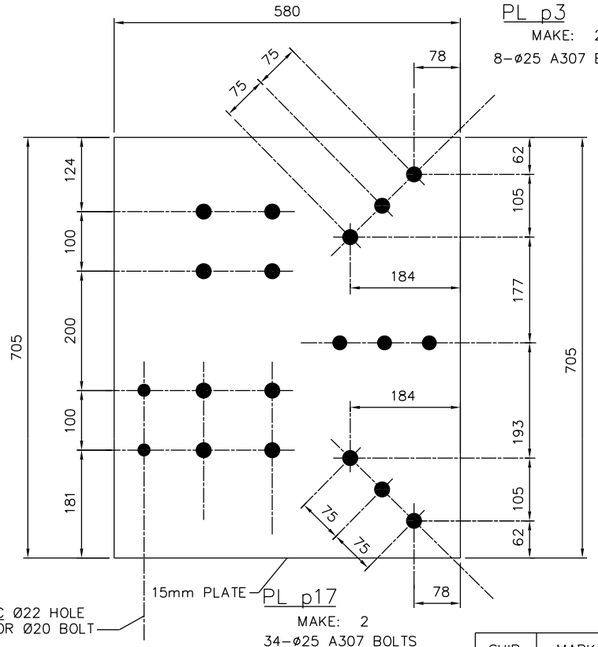

PL p17
MAKE: 2
34–ø25 A307 BOLTS
4–ø20 A307 BOLTS

TE: HOLES IN PL p3, p4,
, & p18 ARE Ø27 UNLESS
SHOWN OTHERWISE.

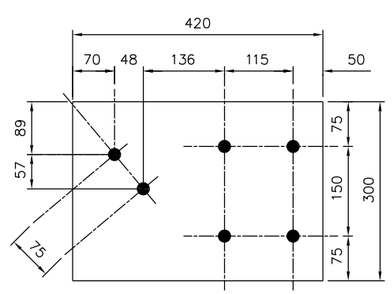

PL p18
MAKE: 2
12–ø25 A307 BOLTS

SHIP	MARK	NO. PCS	DESCRIPTION	LENGTH (mm)	FAB. MARK	WEIGHT	NOTES
2	S4/C3		4–L100x100x10	4920			
		8	4–L100x100x10	4920	L as1		
		4	℄ 100x15	215	PL p1		
		2	℄ 100x15	705	PL p3		
		2	℄ 100x15	705	PL p4		
		2	℄ 580x15	705	PL p17		
		2	℄ 300x15	420	PL p18		

UNLESS NOTED OTHERWISE, LINEAR
DIMENSIONS ARE IN MILLIMETERS.

COLUMN S4/C3
MAKE: 2

US Army Corps of Engineers ®
Mobile District

Symbol	No.	Description Revisions	Date	Approved

Designed By:
Drawn By:
Checked By:
Reviewed By:
Date: 17 DECEMBER 2009
Contract No:
CADD CODE: MD1CT17
Solicitation Number:
SIZE: 559x864mm
FILENAME:

U.S. ARMY ENGINEER DISTRICT
CORPS OF ENGINEERS
MOBILE, ALABAMA

AFGHANISTAN ENGINEER DISTRICT
20 METER WATER TOWER

MEMBER DETAILS

SHEET IDENTIFICATION
S–15

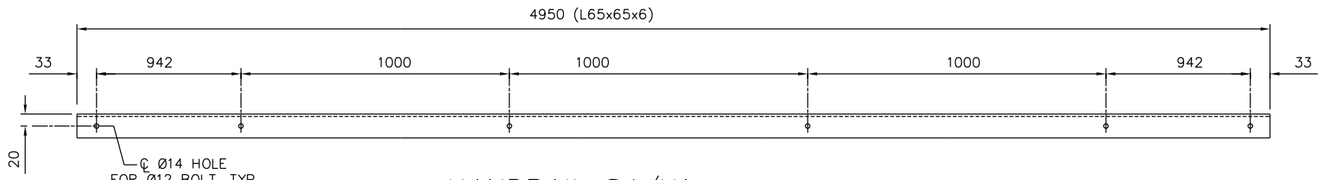

HANDRAIL S4/H1

MAKE: 2
24–Ø12 A307 BOLTS

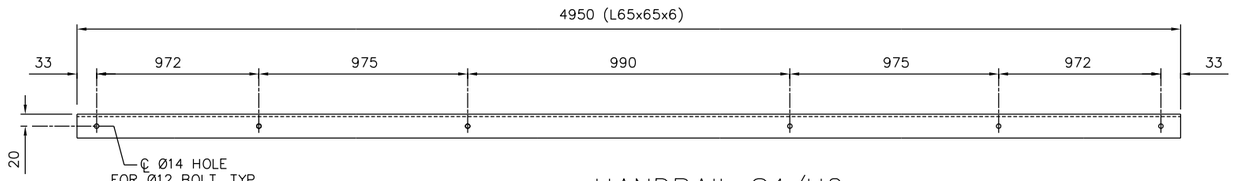

HANDRAIL S4/H2

MAKE: 2
20–Ø12 A307 BOLTS

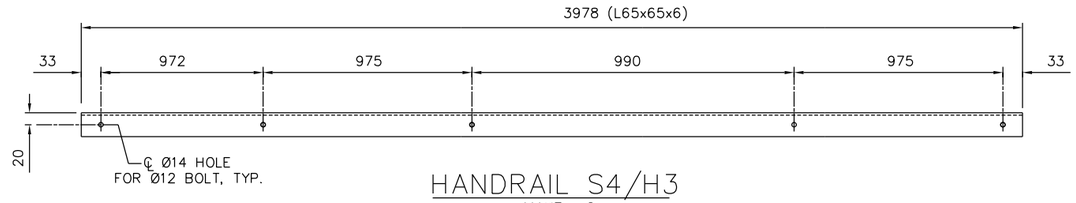

HANDRAIL S4/H3

MAKE: 2
10–Ø12 A307 BOLTS

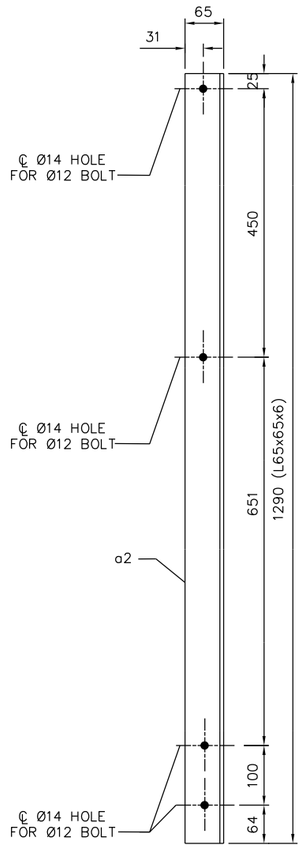

HANDRAIL POST S8/P2

MAKE: 12
48–12 ø A307 BOLTS

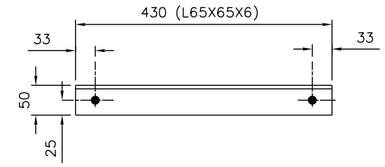

HANDRAIL S4/H4

MAKE: 2
4–Ø12 A307 BOLTS

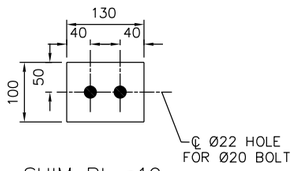

SHIM PL p19

MAKE: 2
15mm SHIM PLATES

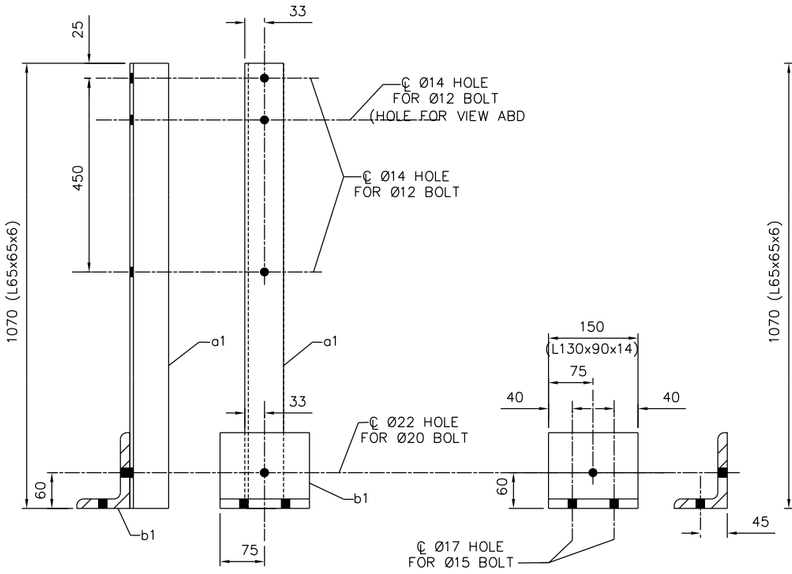

b1

8–Ø20 A307 BOLTS

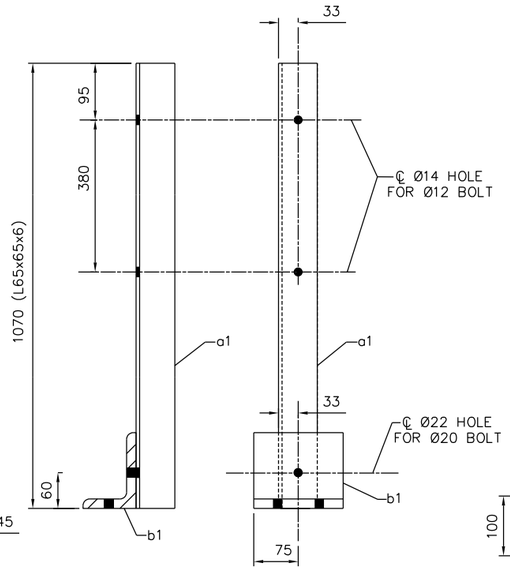

HANDRAIL POST S4/P1

MAKE: 9
28–Ø12 A307 BOLTS
42–Ø15 A307 BOLTS

HANDRAIL POST S4/P3

MAKE: 8
28–Ø12 A307 BOLTS
42–Ø15 A307 BOLTS

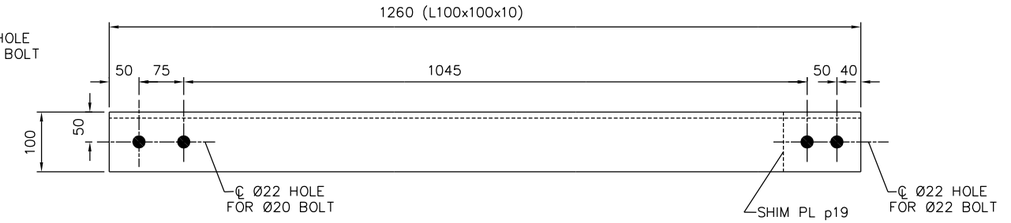

BEAM S8/BR1

MAKE: 2
4–Ø15 A307 BOLTS

SHIP	MARK	NO. PCS	DESCRIPTION	LENGTH (mm)	FAB. MARK	NOTES
2	S4/H1		L65x65x6	4950		
2	S4/H2		L65x65x6	4950		
2	S4/H3		L65x65x6	3978		
2	S4/H4		L65x65x6	3978		
14	S4/P1					
			L65x65x6	1070		
		14	L130x90x14	150	b1	
12	S4/P2		HANDRAIL POST	1290		
		14	L65x65x6	1290	a2	
2	S8/BR1		L100x100x10	1260		
		2	PL 100x15	130	PL p19	

UNLESS NOTED OTHERWISE, LINEAR DIMENSIONS ARE IN MILLIMETERS.

US Army Corps of Engineers ®
Mobile District

Symbol	No.	Description Revisions	Date	Approved

Date: 17 DECEMBER 2009
Contract No:
Designed By:
Drawn By:
CADD CODE: MD10TG17
Solicitation Number:
Checked By:
Reviewed By:
FILENAME:
SIZE: 559x864mm

U.S. ARMY ENGINEER DISTRICT
CORPS OF ENGINEERS
MOBILE, ALABAMA

AFGHANISTAN ENGINEER DISTRICT
20 METER WATER TOWER

MEMBER DETAILS

SHEET IDENTIFICATION
S–16

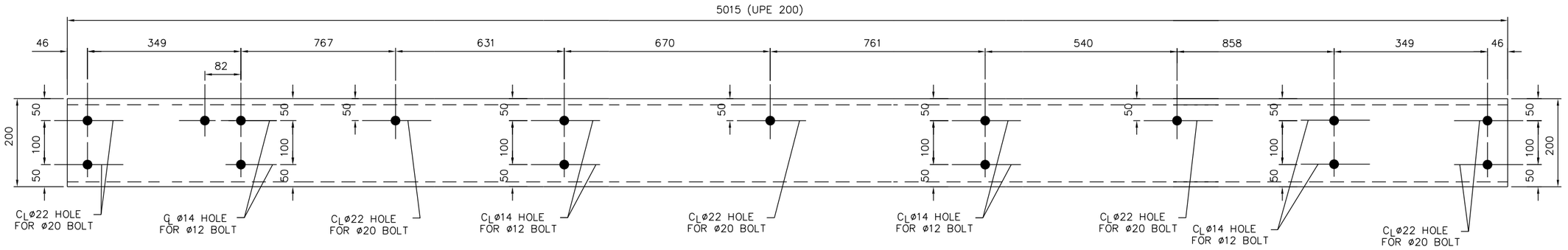

BEAM S3/B9

MAKE: 2

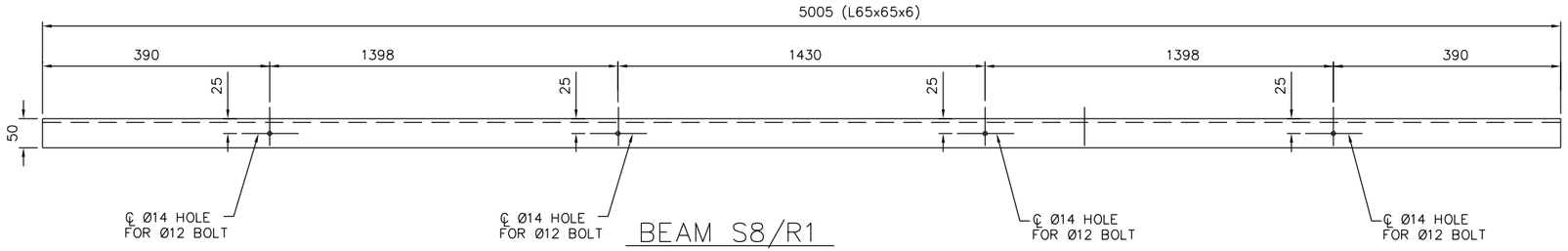

BEAM S8/R1

MAKE: 2

SHIP	MARK	NO. PCS	DESCRIPTION	LENGTH (mm)	FAB. MARK	NOTES
2	S3/B9		UPE 200	5015		
2	S8/R1		L65x65x6	5005		
2	S8/R2		L65x65x6	750		
1	S3/B10		UPE 200	992		
		1	L100x100x10	160	ca1	
4	S3/B11		L100x100x10	870		
		8	L100x100x10	100	ca2	
1	S3/B12		UPE 200	992		
		1	L100x100x10	100	ca1	

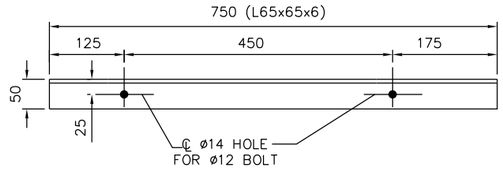

BEAM S8/R2

MAKE: 2

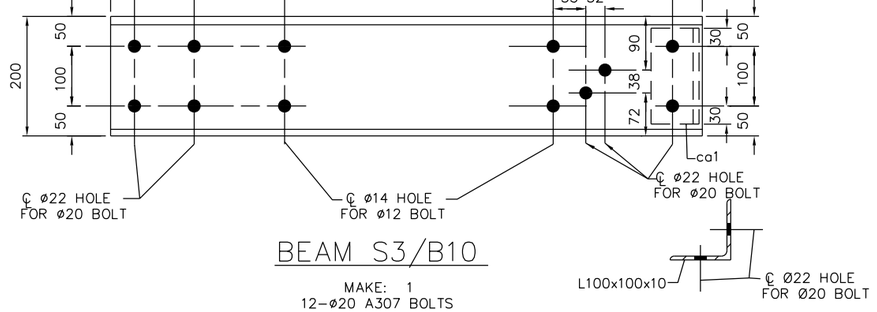

BEAM S3/B10

MAKE: 1
12–ø20 A307 BOLTS

MAKE: 2

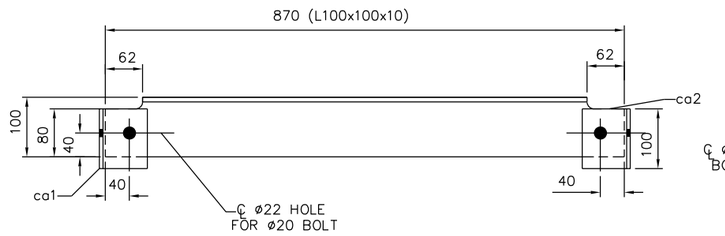

BEAM S3/B11

MAKE: 4
16–ø20 A307 BOLTS

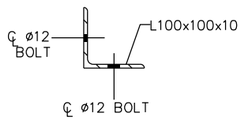

MAKE: 8

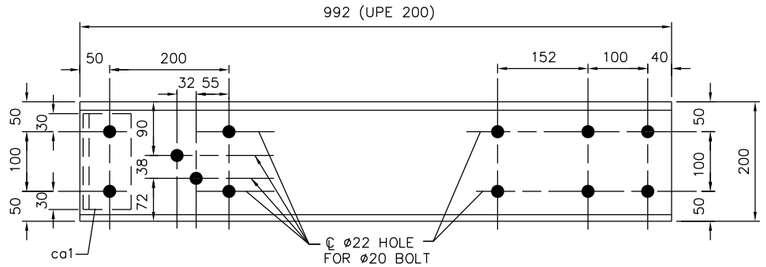

BEAM S3/B12

MAKE: 1
12–ø20 A307 BOLTS

UNLESS NOTED OTHERWISE, LINEAR DIMENSIONS ARE IN MILLIMETERS.

100 0 100mm
SCALE: 1 = 5

US Army Corps of Engineers ®
Mobile District

Symbol	No.	Description	Date	Approved
		Revisions		

Date: 17 DECEMBER 2009
Contract No:
CADD CODE: MOTOT17
Solicitation Number:
FILENAME:
Designed By:
Drawn By:
Checked By:
Reviewed By:
SIZE: 559x864mm

U.S. ARMY ENGINEER DISTRICT
CORPS OF ENGINEERS
MOBILE, ALABAMA

AFGHANISTAN ENGINEER DISTRICT
20 METER WATER TOWER

SECTIONS & DETAILS

SHEET IDENTIFICATION

S–17

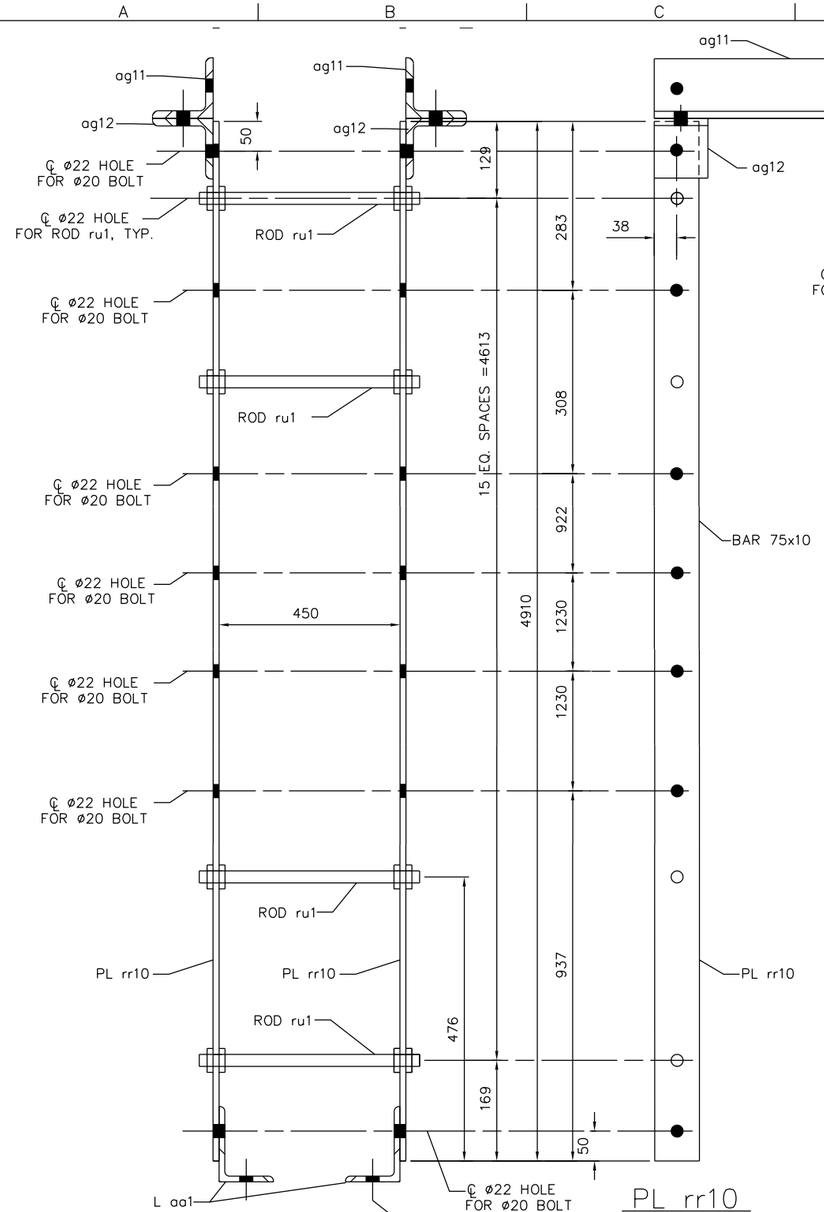

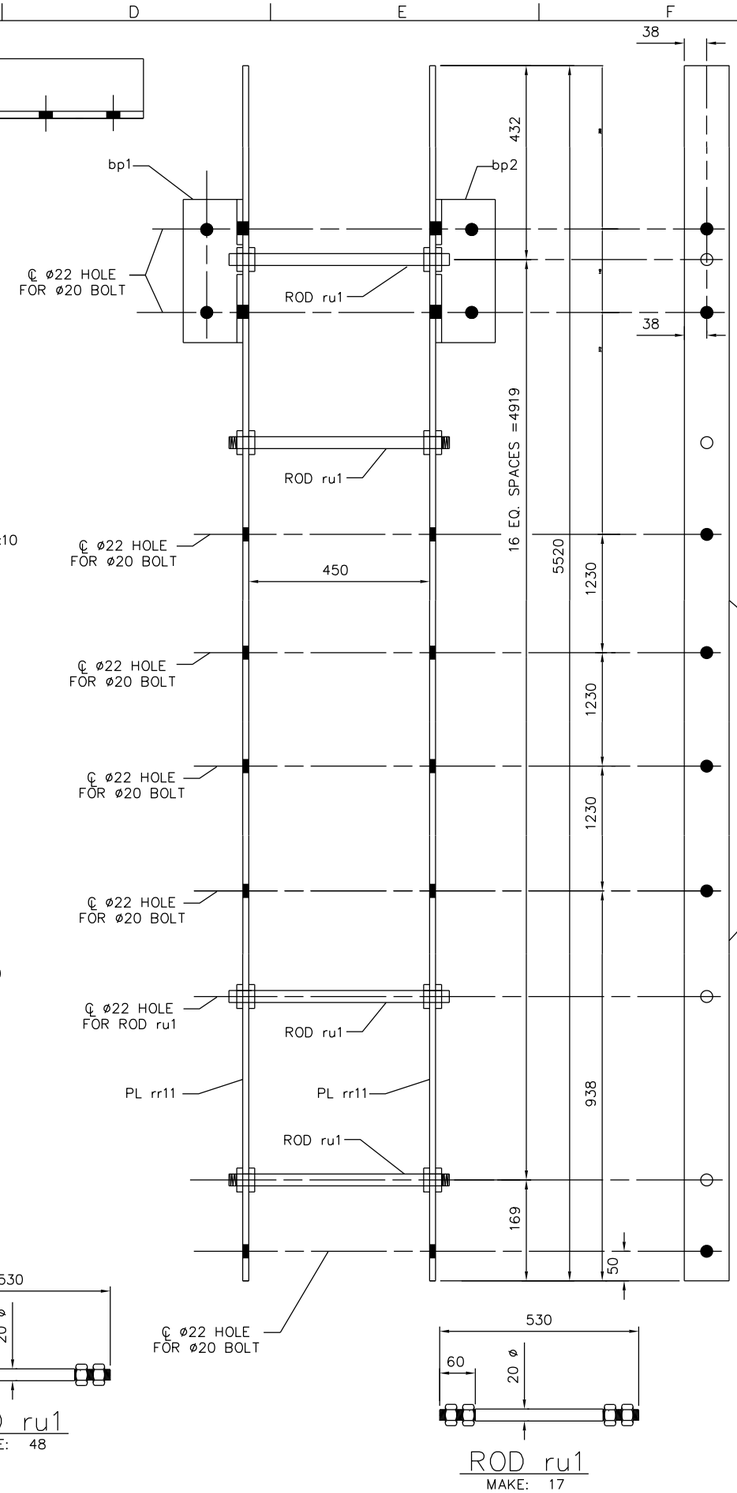

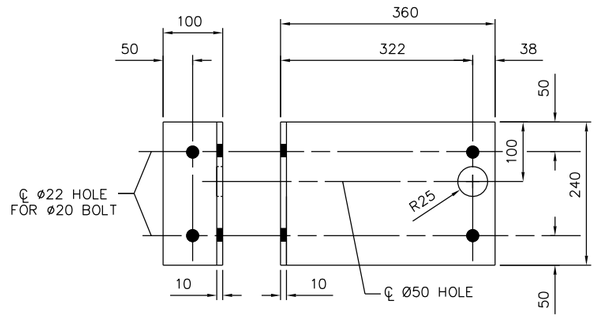

bp1
MAKE: 1

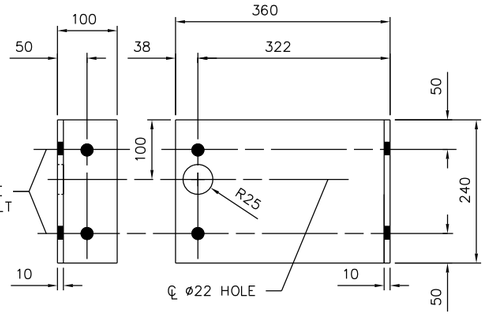

bp2
MAKE: 1

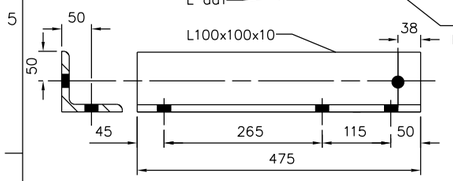

ag11
MAKE: 6

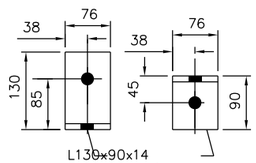

aa1
MAKE: 2

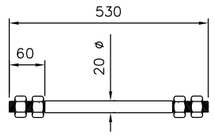

ROD ru1
MAKE: 48

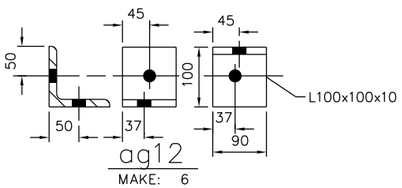

ag12
MAKE: 6

LADDER S4/L1
MAKE: 3
54-ø20 A307 BOLTS
2-ø20 A307 ANCHOR BOLTS

ROD ru1
MAKE: 17

LADDER S4/L2
MAKE: 1

SHIP	MARK	NO. PCS	DESCRIPTION	LENGTH (mm)	FAB. MARK	WEIGHT	NOTES
3	S4/L1		LADDER	4910			
		6	PL 10x75	4910	PL rr10		
		48	ø20	530	ROD ru1		
		2	L130x90x14	75	aa1		
		6	L100x100x10	475	ag11		
		6	L100x100x10	76	ag12		
1	S4/L2		LADDER	4910			
		2	PL 10x75	5920	PL rr11		
		17	ø20	530	ROD ru1		
		1	PL 10x460	240	bp1		
		1	PL 10x460	240	bp2		

UNLESS NOTED OTHERWISE, LINEAR DIMENSIONS ARE IN MILLIMETERS.

US Army Corps of Engineers ®
Mobile District

Symbol	No.	Description	Date	Approved
		Revisions		

Date: 17 DECEMBER 2009
Contract No:
CADD CODE: MD10GT17
Specification Number:
FILENAME:
Designed By:
Drawn By:
Checked By:
Reviewed By:
SIZE: 559x864mm

U.S. ARMY ENGINEER DISTRICT
CORPS OF ENGINEERS
MOBILE, ALABAMA

AFGHANISTAN ENGINEER DISTRICT
20 METER WATER TOWER

SECTIONS & DETAILS

SHEET IDENTIFICATION
S-18

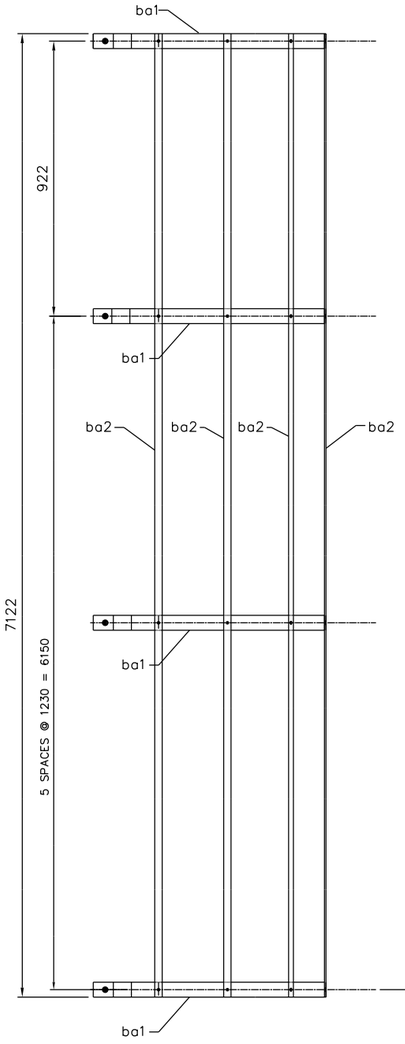

LADDER CAGE S4/G1
MAKE: 1

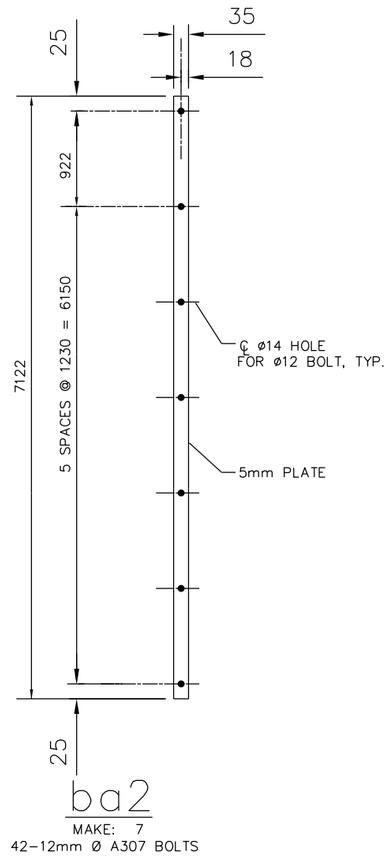

ba2
MAKE: 7
42–12mm Ø A307 BOLTS

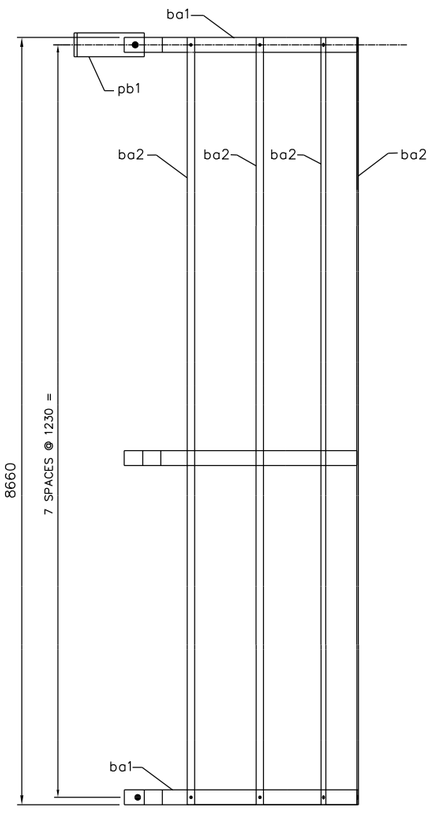

LADDER CAGE S4/G2
MAKE: 1

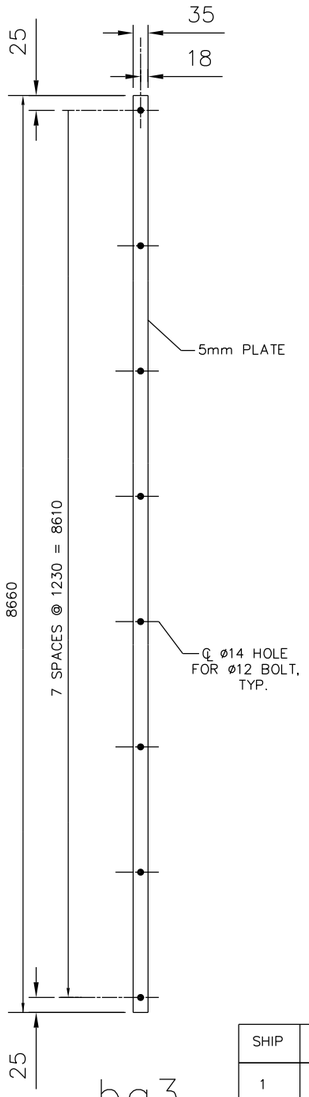

ba3
MAKE: 7

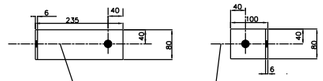

pb1
MAKE: 2

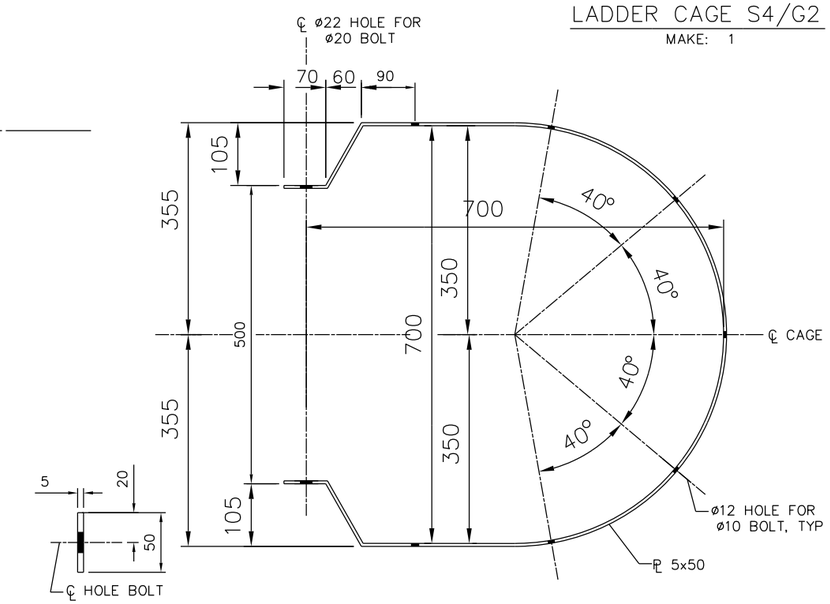

ba1
MAKE: 15

SHIP	MARK	NO. PCS	DESCRIPTION	LENGTH (mm)	FAB. MARK	WEIGHT	NOTES
1	S4/G1		LADDER CAGE	7150			
		6	PL 5x50	1990	ba1		
		7	PL 5x35	7122	ba2		
1	S4/G2		LADDER CAGE	8660			
		8	PL 5x50	1990	ba1		
		7	PL 5x35	8660	ba2		
		2	PL 6x80	335	pb1		

UNLESS NOTED OTHERWISE, LINEAR DIMENSIONS ARE IN MILLIMETERS.

US Army Corps of Engineers ®
Mobile District

Symbol	No.	Description	Date	Approved
		Revisions		

Date: 17 DECEMBER 2009
Contract No:
Designed By:
Drawn By:
CADD CODE: M01DTG17
Specification Number:
Checked By:
FILENAME:
Reviewed By:
SIZE: 559x864mm

U.S. ARMY ENGINEER DISTRICT
CORPS OF ENGINEERS
MOBILE, ALABAMA

AFGHANISTAN ENGINEER DISTRICT
20 METER WATER TOWER

MEMBER DETAILS

SHEET IDENTIFICATION
S–19

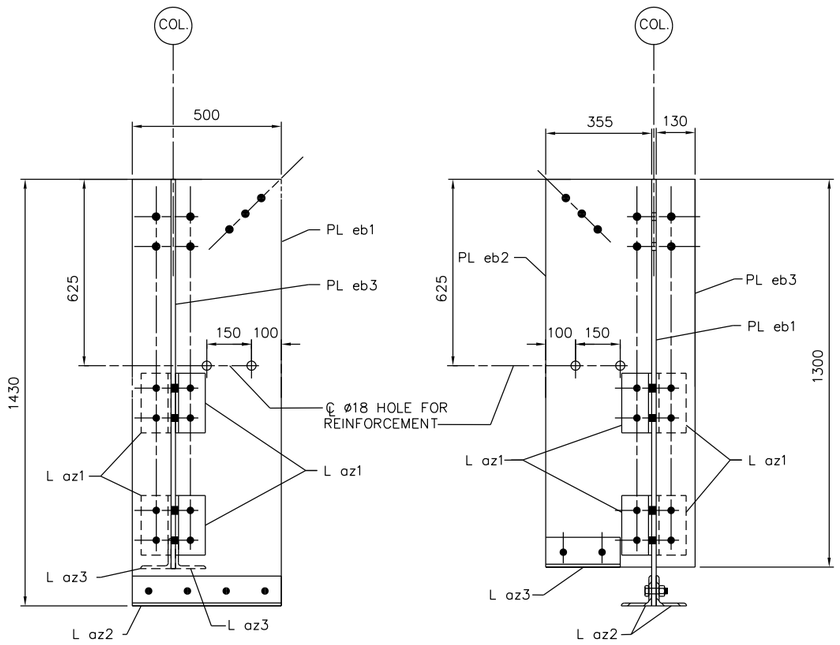

EMBEDDED ANCHOR PLATE S6/E1

MAKE: 4

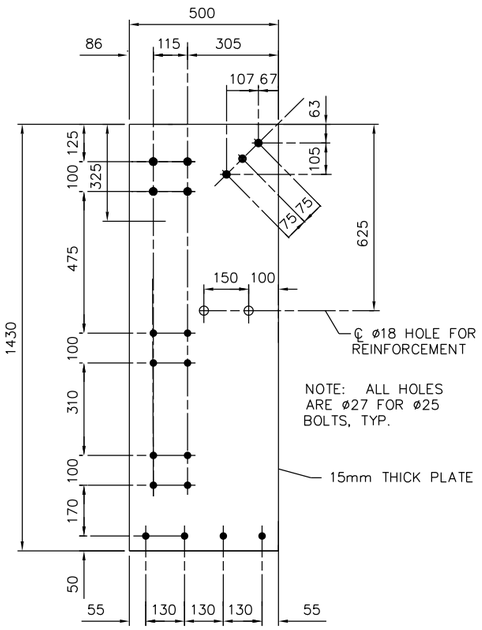

PL eb1

MAKE: 4
76–ø25 A307 BOLTS

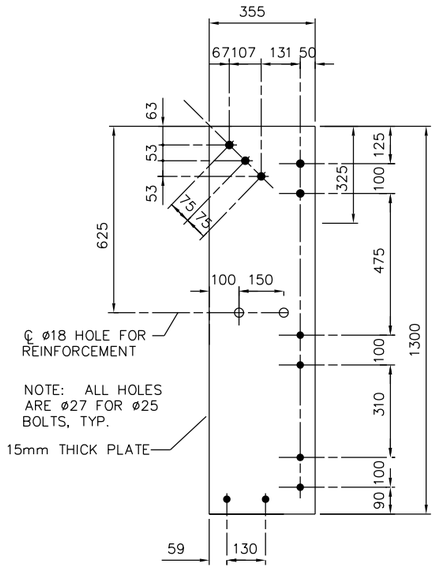

PL eb2

MAKE: 4
44–ø25 A307 BOLTS

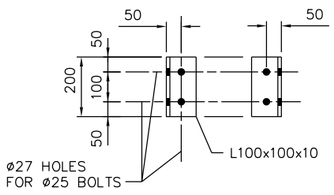

L az1

MAKE: 16

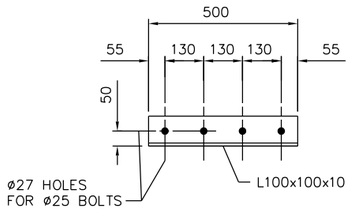

L az2

MAKE: 8

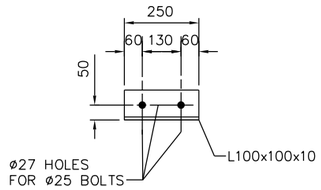

L az3

MAKE: 8

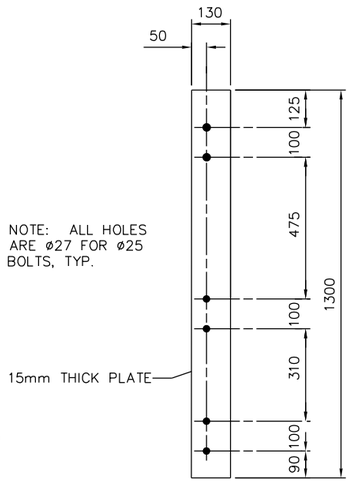

PL eb3

MAKE: 4
24–ø25 A307 BOLTS

SHIP	MARK	NO. PCS	DESCRIPTION	LENGTH (mm)	FAB. MARK	WEIGHT	NOTES
4	S6/E1		EMBEDDED ANCHOR PLATE	1430			
		4	PL 15x500	1430	PL eb1		
		4	PL 15x355	1300	PL eb2		
		4	PL 15x130	1300	PL eb3		
		16	L100x100x10	200	L az1		
		8	L100x100x10	500	L az2		
		8	L100x100x10	250	L az3		

UNLESS NOTED OTHERWISE, LINEAR DIMENSIONS ARE IN MILLIMETERS.

US Army Corps of Engineers ®
Mobile District

Symbol	No.	Description Revisions	Date	Approved

Date: 17 DECEMBER 2009
Contract No:
CADD CODE: MD10GT17
Solicitation Number:
FILENAME:
Designed By:
Drawn By:
Checked By:
Reviewed By:
SIZE: 559x864mm

U.S. ARMY ENGINEER DISTRICT
CORPS OF ENGINEERS
MOBILE, ALABAMA

AFGHANISTAN ENGINEER DISTRICT
20 METER WATER TOWER

MEMBER DETAILS

SHEET IDENTIFICATION

S-20

NOTES:
1. ROUTE 100MM PIPING AND INSULATION TO TANK DISCHARGE FLANGE. CONTRACTOR SHALL INSTALL INSULATION AND CLADDING SUCH THAT EXPOSED PIPING AND VALVES ARE PROTECTED AGAINST FREEZING. INSULATION AND CLADDING SHALL COMPLETELY ENCLOSE TANK FLANGE.
2. ROUTE 50MM PIPING AND INSULATION TO TANK FILL FLANGE. CONTRACTOR SHALL INSTALL INSULATION AND CLADDING SUCH THAT ALL EXPOSED PIPING AND VALVES ARE PROTECTED AGAINST FREEZING. INSULATION AND CLADDING SHALL COMPLETELY ENCLOSE TANK FLANGE.
3. INSULATION AND CLADDING SHALL FULLY ENCASE PIPING AND VALVES. THERE SHALL BE NO EXPOSED PIPING WHEN INSULATION IS COMPLETE. ALUMINUM CLADDING SHALL BE INSTALLED USING STAINLESS STEEL CLAMPS AT 1.0 M ON CENTER.
4. TANK SHALL BE ORIENTED SUCH THAT DISCHARGE FLANGE IS TOWARD PIPING MOUNTED TO TOWER.
5. OVERFLOW PIPE WITH INSECT SCREEN.
6. TOWER STRUCTURAL PIPE SUPPORTS FOR 100MM AND 50MM PIPING. SEE STRUCTURAL DRAWINGS FOR LOCATIONS.

CONTRACTOR TO COORDINATE PIPING WITH TANK MANUFACTURER TO ENSURE PROPER SUPPORT AND ADEQUATE NOZZLE STRENGTH.

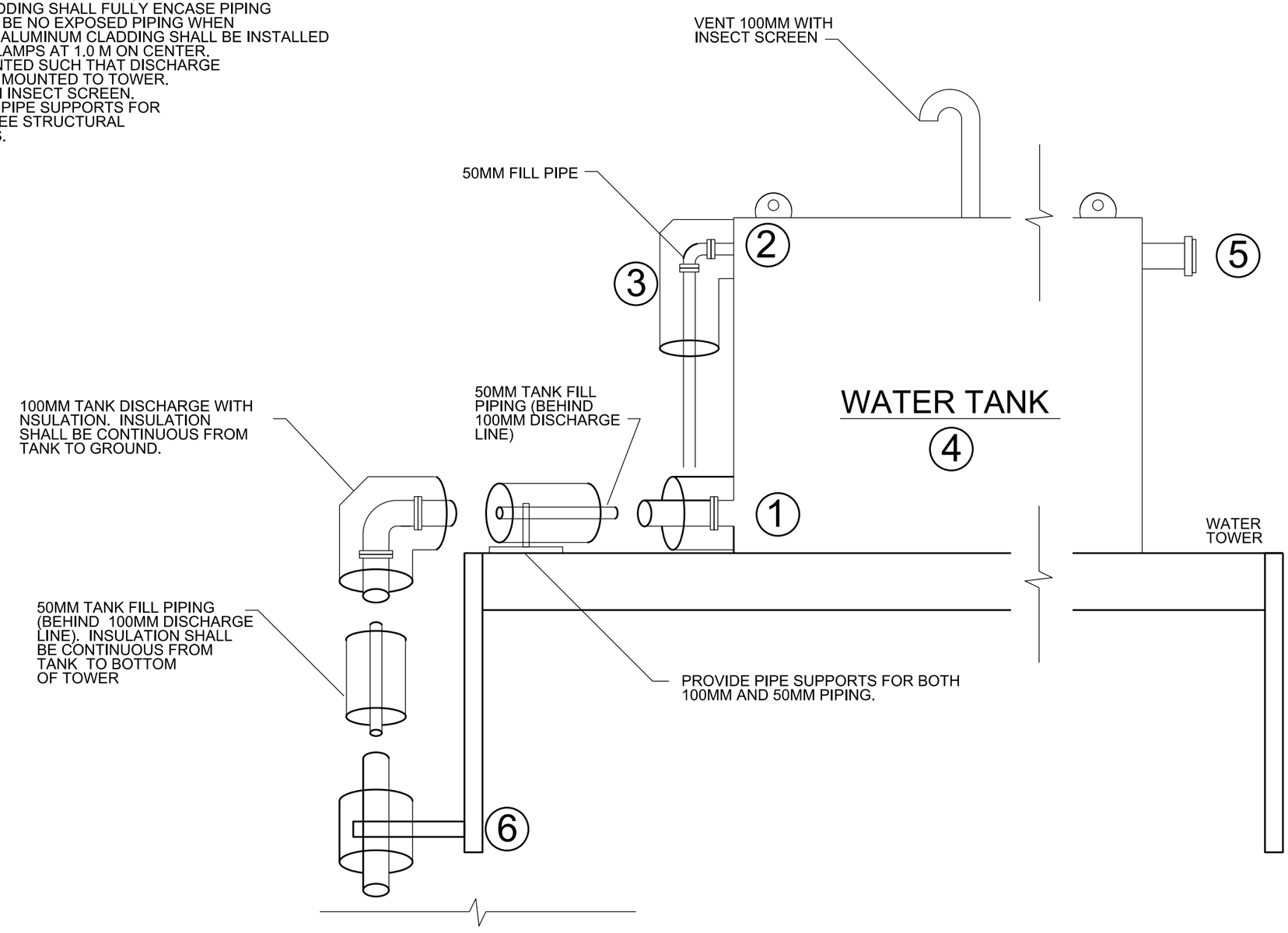

WATER TANK, PIPING AND INSULATION

NTS

US ARMY CORPS OF ENGINEERS
AFGHANISTAN ENGINEER DISTRICT

SYMBOL	DESCRIPTION	DATE	APPR.

REV.	DESCRIPTION	DATE	APPR.
—			

DESIGNED BY:
DRWN BY:
CKD BY:
REVIEWED BY:
SUBMITTED BY:
DATE: 17 DEC 2009
DESIGN FILE NO.:
DRAWING CODE:
FILE NAME:
PLOT SCALE:
PLOT DATE: xx-xx-xx

U.S. ARMY ENGINEER DISTRICT, AFGHANISTAN
CORPS OF ENGINEERS
APO AE 96338

ENGINEERING AND CONSTRUCTION DIVISION

20 METER WATER TANK
AFGHANISTAN

WATER TANK PIPING AND INSULATION

SHEET REFERENCE NUMBER:
P-01

GENERAL NOTE: 50MM FILL PIPING AND 100MM DISCHARGE PIPING SHALL BE FLANGED, A53 STEEL. NO WELDED CONNECTIONS ARE ALLOWED.

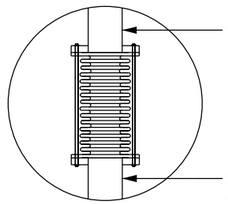

FLEXIBLE COUPLING DETAIL
NTS

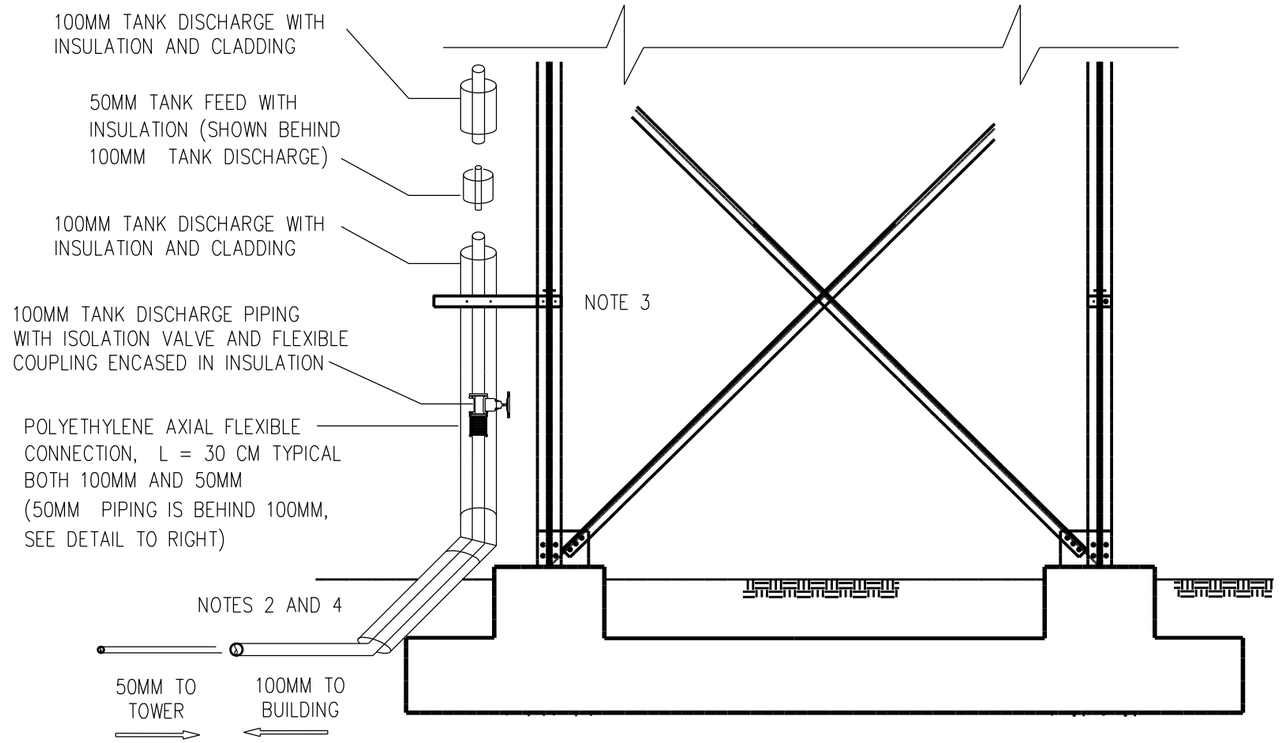

WATER TOWER ELEVATION
NTS

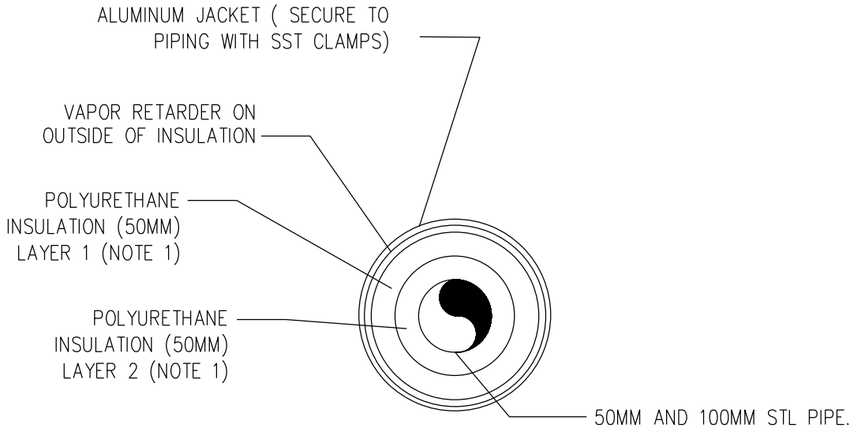

2-LAYER INSULATION DETAIL
NTS

NOTES:
1. PIPE INSULATION SHALL BE AS FOLLOWS: RIGID OR FLEXIBLE POLYURETHANE WITH A K-FACTOR OF 0.0160 W/M*HR*K (0.176 BTU*IN/HR*FT2*F) OR LESS. DENSITY OF MATERIAL SHALL BE 50 KG/M3 (2 LB/FT2) OR GREATER. WATER ABSORPTION SHALL BE 2% OR LOWER. TOTAL THICKNESS OF INSULATION SHALL BE 100MM. INSULATION SHALL BE APPLIED IN 1 OR 2 LAYERS. A SINGLE LAYER IS PREFERED. (IF 2 LAYERS ARE REQUIRED, SEAMS IN INSULATION LAYERS SHALL BE STAGGERED TO PROVIDE OVERLAPS AND PREVENT GAPS. EACH LAYER SHALL BE 50MM THICK FOR A TOTAL THICKNESS OF 100MM.) PLACE A VAPOR RETARDER ON OUTSIDE OF INSULATION. INSULATION SYSTEM SHALL BE COMPLETELY ENCLOSED IN 0.024 THICK CORRUGATED ALUMINUM JACKETS. USE SST CLAMPS TO SECURE JACKET TO OUTSIDE OF INSULATION. FULLY ENCLOSE VALVES AND FLANGES INSIDE INSULATOIN. JACKET AND INSULATION SHALL NOT HAVE BREAKS OR OPENINGS. SYSTEM SHALL BE WATERTIGHT.
2. INSULATION ON BOTH 100MM TANK FILL AND TANK DISCHARGE SHALL EXTEND 500MM BELOW GROUND SURFACE.
3. SEE SHEETS P-4, S-4, S-13 FOR LOCATIONS OF PIPE SUPPORTS AND CONNECTION DETAILS.
4. NO PIPING SHALL PENETRATE OR BE ENCASED WITHIN THE TOWER FOUNDATION OR FOOTING.

PIPING AND INSULATION DETAILS

US ARMY CORPS OF ENGINEERS
AFGHANISTAN ENGINEER DISTRICT

SYMBOL	DESCRIPTION	DATE	APPR.	SYMBOL	DESCRIPTION	DATE	APPR.

DESIGNED BY:
DRWN BY:
CKD BY:
REVIEWED BY:
SUBMITTED BY:
DATE: 17 DEC 2009
DESIGN FILE NO.
DRAWING CODE:
FILE NAME:
PLOT SCALE:
PLOT DATE: xx-xxx-xx
REV: —

U.S. ARMY ENGINEER DISTRICT, AFGHANISTAN
CORPS OF ENGINEERS
APO AE 96338

ENGINEERING AND CONSTRUCTION DIVISION

20 METER WATER TANK
AFGHANISTAN

PIPING AND INSULATION DETAILS

SHEET REFERENCE NUMBER:
P-02

NOTES FOR SCOPE ITEMS INCLUDED IN WATER TOWER CONSTRUCTION:

COMPONENTS LISTED AND SHOWN ARE INTENDED TO PROVIDE A DRAIN LINE FOR THE FEED POWER TO THE WATER TOWER. THE SOLENOID VALVE IS TO REMAIN OPEN EXCEPT WHEN THE PUMP IS RUNNING. PIPING FROM THE TOWER WILL DRAIN BACK INTO THE WELL.

1. 16MM SOLENOID VALVE; NORMALLY OPEN; POWER TO CLOSE; SPRING OPEN; FAIL OPEN. PROVIDE POWER TO OPEN THE SOLENOID FROM THE WELL PUMP CONTROL PANEL. POWER SHALL CLOSE THE VALVE WHEN THE PUMP TURNS ON AND INTERNAL VALVE SPRING SHALL OPEN THE VALVE WHEN THE PUMP MOTOR IS TURNED OFF.

2. SUPPORT 16MM PVC DRAIN LINE AT EVERY PIPE SUPPORT USING PIPE CLAMPS.

3. 16MM DRAIN PIPING WITH GATE VALVE AND STRAINER.

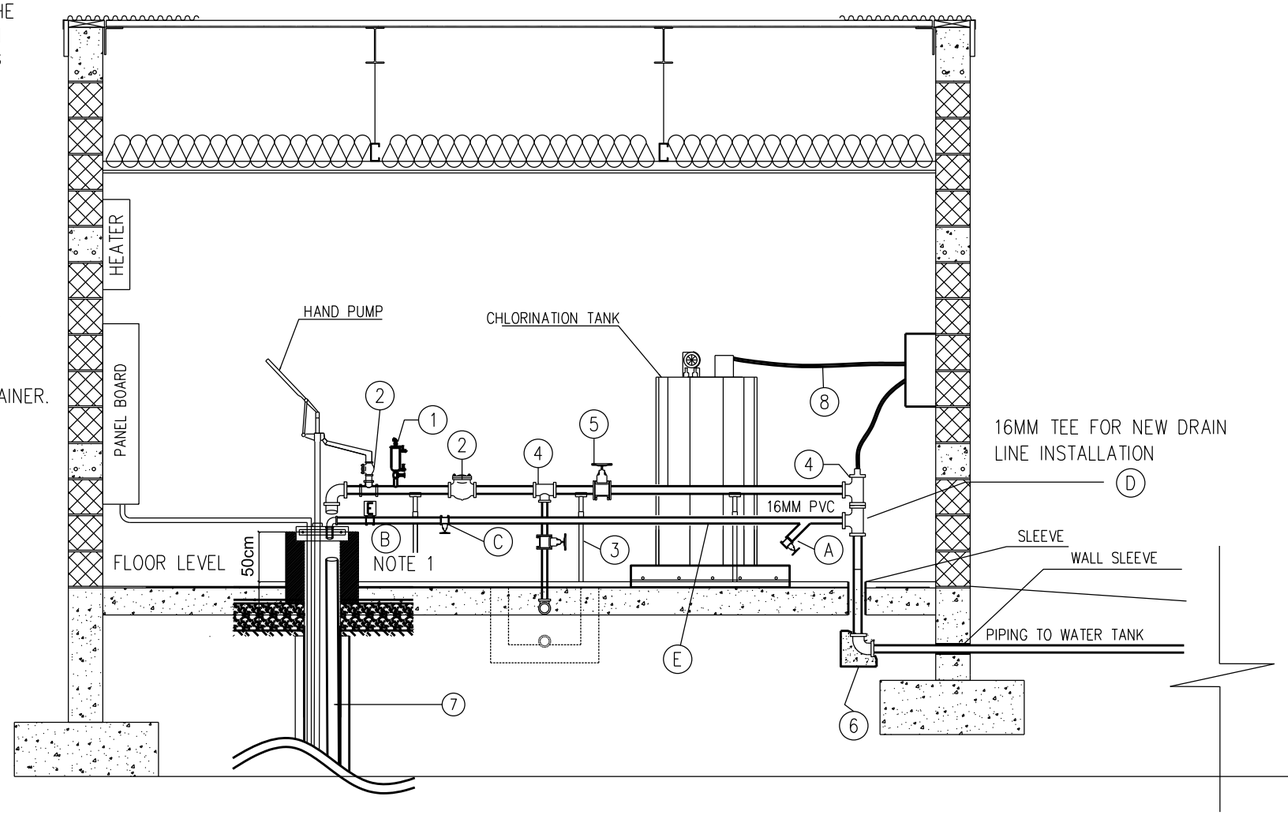

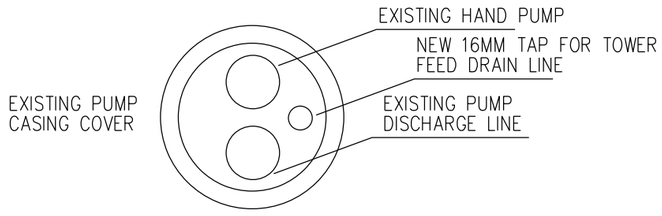

EXISTING EQUIPMENT DESCRIPTION	
ITEM	DESCRIPTION
1	AIR RELEASE VALVE
2	CHECK VALVE
3	PIPE SADDLE SUPPORT
4	TEE
5	GATE VALVE
6	90° ELBOW
7	RISER PIPE 80
8	ø12MM FLEXIBLE PVC PIPE

TOWER ADDITION EQUIPMENT DESCRIPTION	
ITEM	DESCRIPTION
A	16MM STRAINER W/ GATE VALVE
B	16MM ELECTRIC SOLENOID
C	GATE VALVE
D	16MM TEE
E	16MM SCH 80 PVC

WELL HOUSE SECTION PIPING

NTS

US ARMY CORPS OF ENGINEERS
AFGHANISTAN ENGINEER DISTRICT

SYMBOL	DESCRIPTION	DATE	APPR.	SYMBOL	DESCRIPTION	DATE	APPR.

REV: —
DATE: 17 DEC 2009
DESIGN FILE NO.:
DRAWING CODE:
FILE NAME:
PLOT SCALE:
PLOT DATE: XX-XX-XX

DESIGNED BY:
DRAWN BY:
CKD BY:
REVIEWED BY:
SUBMITTED BY:

U.S. ARMY ENGINEER DISTRICT, AFGHANISTAN
CORPS OF ENGINEERS
APO AE 96338

ENGINEERING AND CONSTRUCTION DIVISION

20 METER WATER TANK
AFGHANISTAN

WELL HOUSE SECTION PIPING

SHEET REFERENCE NUMBER:
P-03

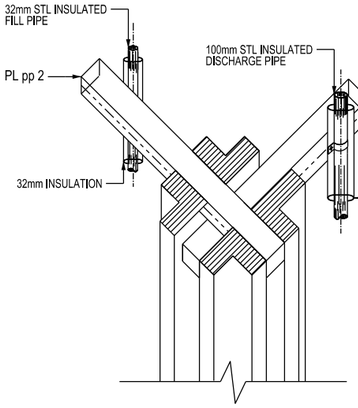

CONNECTION OF WATER PIPE DETAIL:
SCALE: NTS

NOTE: SEE STRUCTURAL SHEET S-13 FOR PLUMBING SUPPORT PLATES

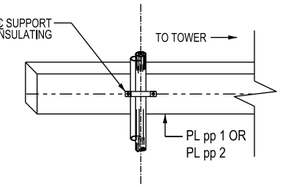

CONNECTION PIPE SUPPORT DETAIL:
SCALE: NTS

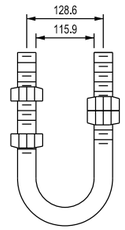

THREAD SIZE-12mm
THREAD LENGTH-76.2mm
TANGENT-114.3mm
TOP OF PIPE TO TOP OF THREAD-57.1
WT.-42.6kg

PIPE CLAMP DETAILS: NOMINAL 100mm
SCALE: NTS

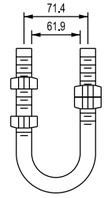

THREAD SIZE-10mm
THREAD LENGTH-63.5mm
TANGENT-82.5mm
TOP OF PIPE TO TOP OF THREAD-52.4
WT.-14.0kg

PIPE CLAMP DETAILS: NOMINAL 50mm
SCALE: NTS

PLUMBING NOTES:

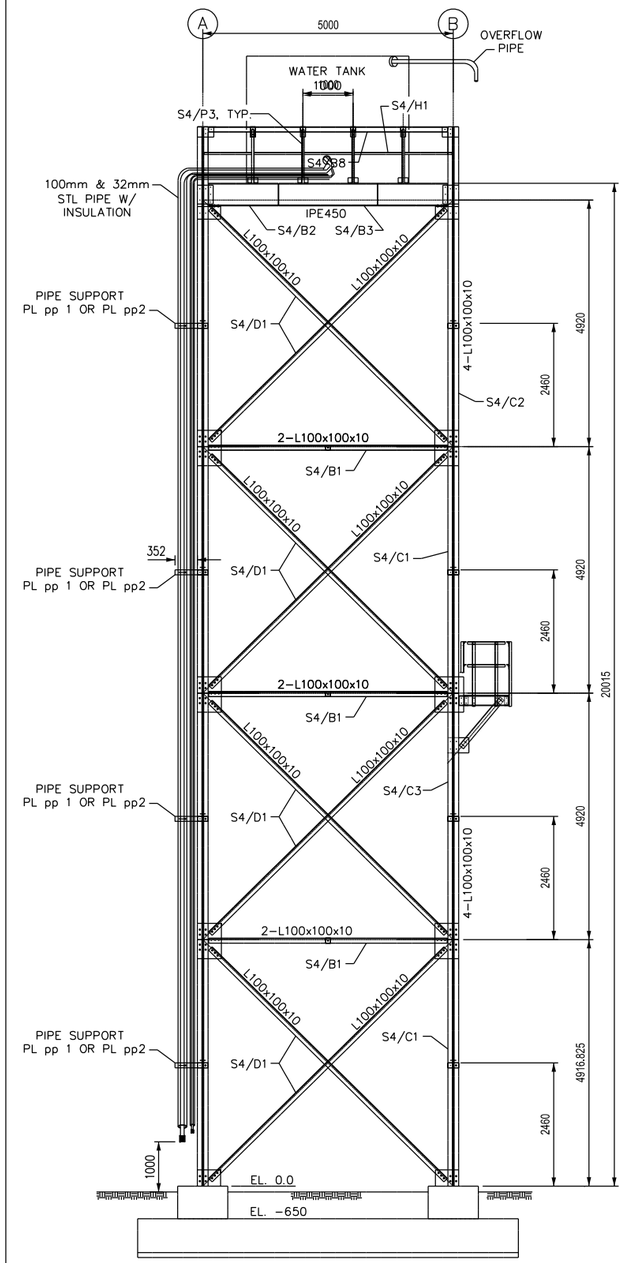

PIPING ELEVATION
1:50

US ARMY CORPS OF ENGINEERS
AFGHANISTAN ENGINEER DISTRICT

SYMBOL	DESCRIPTION	DATE	APPR.

DESIGNED BY:
DRN BY:
CKD BY:
REVIEWED BY:
SUBMITTED BY:
DATE: 17 DEC 2009
DESIGN FILE NO.:
DRAWING CODE:
FILE NAME:
PLOT SCALE:
PLOT DATE: xx-xx-xx
REV: —

U.S. ARMY ENGINEER DISTRICT, AFGHANISTAN
CORPS OF ENGINEERS
APO AE 96338

ENGINEERING AND CONSTRUCTION DIVISION

20 METER WATER TANK
AFGHANISTAN

PIPING ELEVATION

SHEET REFERENCE NUMBER:
P-04

A1 Size 594mm x 841mm

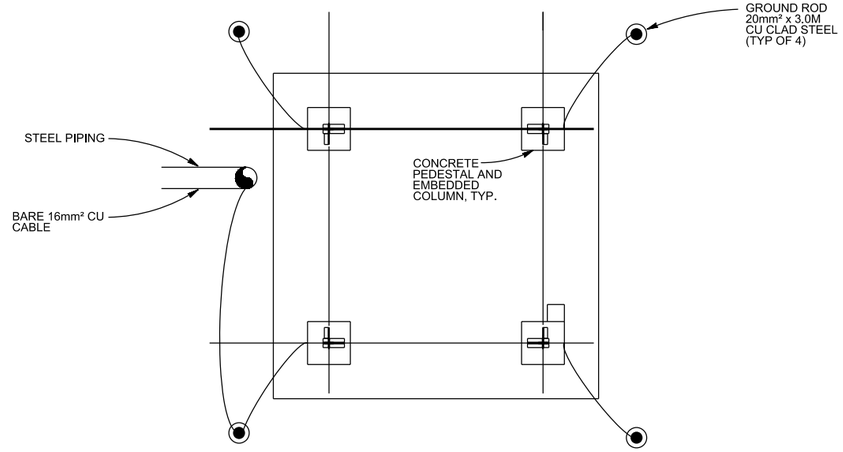

01 GROUNDING ELECTRODE PLAN
N.T.S.

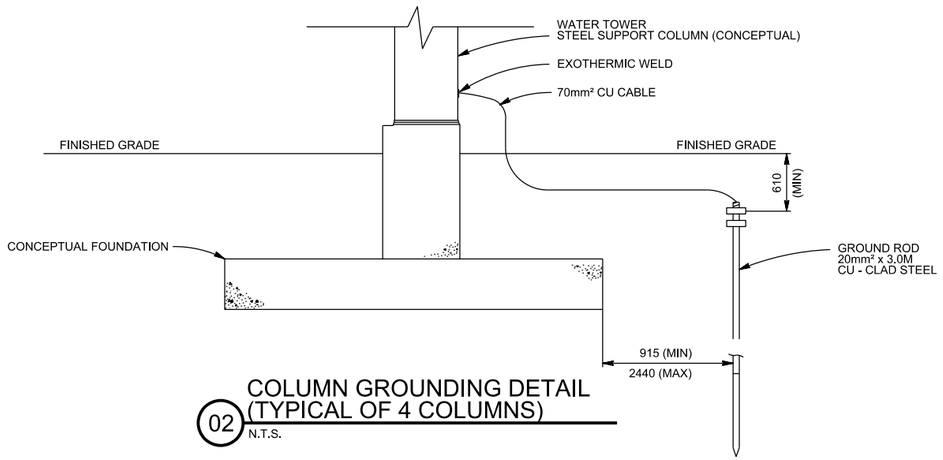

02 COLUMN GROUNDING DETAIL
(TYPICAL OF 4 COLUMNS)
N.T.S.

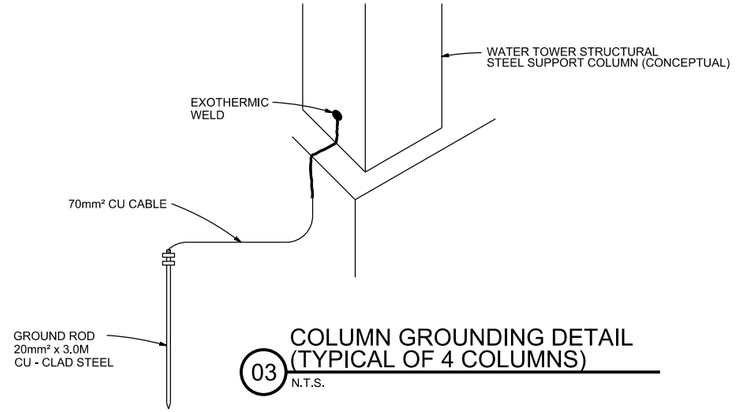

03 COLUMN GROUNDING DETAIL
(TYPICAL OF 4 COLUMNS)
N.T.S.

LIGHTING PROTECTION PLANS AND DETAILS
N.T.S.

NOTES:
1. CONTRACTOR SHALL MAKE ALL METALLIC ELEMENTS OF WATER TOWER TANK AND SUPPORT STRUCTURE ELECTRICALLY CONTINUOUS BY BOLTING REINFORCEMENT STEEL SHALL BE MADE ELECTRICALLY CONTINUOUS BY METALLIC WIRE TIES.
2. BOND EACH METALLIC UNDERGROUND PIPE TO AT LEAST ONE GROUND ROD WITH 16mm² CU CABLE.
3. EACH COLUMN SHALL BE BONDED TO A 20mm² x 3.0M CU CLAD STEEL GROUND ROD VIA A BARE 70mm² CU CABLE. CABLE SHALL BE EXOTHERMIC ALLY WELDED TO COLUMN 150mm ABOVE CONCRETE FOUNDATION.

US ARMY CORPS
OF ENGINEERS
AFGHANISTAN
ENGINEER DISTRICT

SYMBOL	DESCRIPTION	DATE	APPR.	SYMBOL	DESCRIPTION	DATE	APPR.

REV: —
DATE: 17 DEC 2009
DESIGN FILE NO.:
DRAWING CODE:
FILE NAME:
PLOT SCALE: ——
PLOT DATE: xx-xxx-xx

DESIGNED BY:
DWN BY:
CADD BY:
REVIEWED BY:
SUBMITTED BY:

U.S. ARMY ENGINEER DISTRICT, AFGHANISTAN
CORPS OF ENGINEERS
APO AE 96338

ENGINEERING AND
CONSTRUCTION DIVISION

20 METER WATER TANK
AFGHANISTAN

LIGHTING PROTECTION
DETAILS

SHEET
REFERENCE
NUMBER:
E-01

A1 Size 594mm x 841mm

AFGHAN NATIONAL POLICE

STANDARD BUILDING DESIGNS

VEHICLE MAINTENANCE & POL BUILDING

SHEET INDEX

G1 COVER SHEET

S1 GENERAL NOTES
S2 GENERAL NOTES
S3 GENERAL NOTES
S4 GENERAL NOTES
S5 FOUNDATION PLAN
S6 VEHICLE MAINTENANCE/POL BUILDING ROOF FRAMING PLAN
S7 VEHICLE MAINTENANCE/POL BUILDING SECTIONS AND DETAILS
S8 SECTIONS & DETAILS
S9 SECTIONS & DETAILS
S10 TYPICAL DETAILS (VEHICLE MAINTENANCE BLDG)

A1 FLOOR AND ROOF PLANS
A2 ROOF DETAILS
A3 EXTERIOR ELEVATIONS
A4 BUILDING & WALL SECTIONS
A5 DOOR, WINDOW & HARDWARE TYPES & DETAILS
A6 SECTION DETAILS
A7 MISCELLANEOUS DETAILS

P1 FLOOR PLAN - PLUMBING AND DRAINAGE ISOMETRIC

M1 HVAC FLOOR PLAN

SHEET INDEX

E0 ELECTRICAL SYMBOLS AND ABBREVIATIONS
E1 LIGHTING PLAN
E2 POWER AND SYSTEMS PLAN
E3 DETAILS
E4 LIGHT FIXTURE SCHEDULE
E5 PANEL SCHEDULES AND RISER DIAGRAM

US Army Corps of Engineers
Afghanistan Engineer District

SYMBOL	DESCRIPTION	DATE	APP'D

DESIGNED BY: JDS
DWN BY: JDS
CHK BY: JDS
DATE: 09-30-09
SUBMITTED BY: BAKER
FILE NO.: ANPSDG-001XXX

Michael Baker Jr., Inc
A unit of Michael Baker Corporation
Airside Business Park
100 Airside Drive
Moon Township, PA 15108
www.mbakercorp.com

AFGHAN NATIONAL POLICE
STANDARD DESIGN
VEHICLE MAINTENANCE & POL BUILDING

COVER SHEET

SHEET REFERENCE NUMBER:
G1

100% SUBMISSION

STRUCTURAL ABBREVIATIONS:

ACI	AMERICAN CONCRETE INSTITUTE
AISC	AMERICAN INSTITUTE OF STEEL CONSTRUCTION
ALT	ALTERNATE
ASTM	AMERICAN SOCIETY FOR TESTING AND MATERIALS
AWS	AMERICAN WELDING SOCIETY
ARCH	ARCHITECTURAL
B	BOTTOM
BLDG	BUILDING
BOTT	BOTTOM
℄	CENTER LINE
CFMF	COLD FORM METAL FRAME
CFS	COLD FORMED STEEL
CIP	CAST IN PLACE
CIPL	CAST-IN-PLACE LINTEL
CJ	CONTROL JOINT
CLG	CEILING
CLR	CLEAR
CMU	CONCRETE MASONRY UNIT
COEFF	COEFFICIENT
COL	COLUMN
CONC	CONCRETE
CONT	CONTINUOUS
COORD	COORDINATE
CSJ	CONSTRUCTION JOINT
CTJ	CONTROL JOINT
DIA	DIAMETER
DIAG	DIAGONAL
DIM	DIMENSION
DWG	DRAWING
DWL	DOWEL
EA	EACH
ELEC	ELECTRICAL
ELEV	ELEVATION
EMBED	EMBEDMENT
EQUIV	EQUIVALENT
ETC	ET CETERA
E.W.	EACH WAY
EXT	EXTERIOR
FTG	FOOTING
GA	GAUGE
HORIZ	HORIZONTAL
HRS	HOURS
IBC	INTERNATIONAL BUILDING CODE
INT	INTERIOR
Kg	KILOGRAM
KIP	KIPS (1 KIP = 1,000 POUNDS)
kN	KILONEWTON
kPa	KILOPASCAL
L#	ANGLE (# INDICATES SIZE)
LLV	LONG LEG VERTICAL
M	METER
MAX	MAXIMUM
MBM	METAL BUILDING MANUFACTURER
MBMA	METAL BUILDING MANUFACTURERS ASSOCIATION
MECH	MECHANICAL
MFG	MANUFACTURER
MID	MIDDLE
MIN	MINIMUM
MISC	MISCELLANEOUS
MM	MILLIMETER
MPa	MEGAPASCAL
MTL	METAL
MWFRS	MAIN WIND FORCE RESISTING SYSTEM
N	NEWTON
N	NORTH
N/A	NOT APPLICABLE
#	NUMBER SYMBOL FOR REBAR SIZE
NTS	NOT TO SCALE
O.C.	ON CENTER
OPNG	OPENING
P or PL	PLATE
PRE-ENG	PRE-ENGINEERED
REINF	REINFORCED
REQ'D	REQUIRED
SIM	SIMILAR
SPECS	SPECIFICATIONS
STD	STANDARD
STRUCT	STRUCTURAL
T	TOP
T/	TOP OF
T/ELEV	TOP ELEVATION
T&B	TOP AND BOTTOM
THK	THICK
TM	TRADE MARK
TYP	TYPICAL
UFC	UNIFIED FACILITIES CRITERIA
UON	UNLESS OTHERWISE NOTED
VERT	VERTICAL
W	WIDTH
W/	WITH

GENERAL NOTES

1.0 THIS PROJECT HAS BEEN DESIGNED FOR THE WEIGHTS AND MATERIALS INDICATED ON THE SHEETS AND FOR THE LIVE LOADS INDICATED IN THE DESIGN CRITERIA. IT IS THE CONTRACTOR'S RESPONSIBILITY TO DETERMINE ALLOWABLE CONSTRUCTION LOADS AND TO PROVIDE PROPER DESIGN AND CONSTRUCTION OF FALSEWORK, FORMWORK, STAGING, BRACING, SHEETING AND SHORING, ETC.

1.1 COORDINATE THESE SHEETS WITH THE ARCHITECTURAL, MECHANICAL, ELECTRICAL, PLUMBING, AND CIVIL SHEETS. ALL DIMENSIONS SHOWN ON THE SHEETS ARE MILLIMETERS UNLESS NOTED OTHERWISE.

1.2 THE CONTRACTOR SHALL VERIFY AND COORDINATE ALL FLOOR AND ROOF OPENING SIZES AND LOCATIONS, EQUIPMENT PAD SIZES AND LOCATIONS, ANCHOR BOLT LAYOUTS, ETC WITH EQUIPMENT SELECTED. THE CONTRACTOR SHALL MAKE ANY REQUIRED MODIFICATIONS AT NO ADDITIONAL COST.

1.3 THE CONTRACTOR SHALL REFER TO THE ARCHITECTURAL, MECHANICAL, ELECTRICAL AND PLUMBING SHEETS FOR SLEEVES, CURBS, INSERTS OR OPENINGS, ETC. NOT HEREIN INDICATED.

1.4 SLAB OPENINGS SMALLER THAN 250mm DIA TO BE CORE DRILLED IN FIELD UON. SEE MECHANICAL, ELECTRICAL AND PLUMBING SHEETS FOR LOCATIONS OF THESE OPENINGS.

1.5 WORK NOT INCLUDED ON THE SHEETS BUT IMPLIED TO BE SIMILAR TO THAT SHOWN AT CORRESPONDING PLACES ELSEWHERE ON THE SHEETS SHALL BE REPEATED.

1.6 IN CASE OF CONFLICT BETWEEN THE NOTES, DETAILS AND SPECIFICATIONS THE MOST RIGID REQUIREMENTS SHALL GOVERN.

1.7 SEE ARCHITECTURAL SHEETS FOR LOCATIONS OF MASONRY AND DRYWALL NON-LOAD BEARING PARTITIONS. PROVIDE COMPRESSIBLE FIRESAFING AT TOP OF WALL AS REQUIRED BY ARCHITECTURAL SHEETS.

1.8 COORDINATE FINISHED FLOOR DATUM ELEVATION 0.0m WITH THE CIVIL SHEETS.

1.9 DESIGN PRE-ENGINEERED METAL BUILDINGS IN ACCORDANCE W/ MBMA LATEST EDITION PER DESIGN CRITERIA ON SHEET S2.

2.0 FOUNDATION NOTES

2.1 THE GEOTECHNICAL ANALYSIS FOR THIS PROJECT IS THE RESPONSIBILITY OF THE CONTRACTOR AWARDED THE WORK. DESIGN VALUES USED IN THE STRUCTURAL ANALYSIS OF THE BUILDINGS HEREIN INDICATED HAVE BEEN ASSUMED AND SHALL BE CONFIRMED AND VERIFIED AS PART OF THE GEOTECHNICAL INVESTIGATION. VALUES WHICH DO NOT MEET THE REQUIREMENTS INDICATED ON SHEET S2 SHALL BE IMMEDIATELY BROUGHT TO THE ATTENTION OF THE CONTRACTING OFFICER FOR CONSIDERATION AND DETERMINATION ON THE NEXT APPROPRIATE COURSE OF ACTION.

2.2 SEE THE SPECIFICATION FOR ADDITIONAL REQUIREMENTS TO THOSE OUTLINED IN THE GEOTECHNICAL INVESTIGATION FOR EXCAVATION AND PREPARATION OF THE FOUNDATION AND THE SLAB ON GRADE SUBGRADE INCLUDING COMPACTION PROCEDURES.

2.3 EXCAVATIONS FOR FOOTINGS SHALL HAVE THE SIDES AND BOTTOMS TEMPORARILY LINED WITH 0.25mm POLYETHYLENE IF PLACEMENT OF CONCRETE DOES NOT OCCUR WITHIN 24 HRS OF THE EXCAVATION OF THE FOOTING.

2.4 FOUNDATION CONDITIONS NOTED DURING CONSTRUCTION WHICH DIFFER FROM THOSE DESCRIBED IN THE GEOTECHNICAL REPORT SHALL BE REPORTED TO THE GENERAL CONTRACTOR BEFORE FURTHER CONSTRUCTION IS ATTEMPTED. SEE PROJECT SPECIFICATIONS.

2.5 NO FOOTINGS OR SLABS SHALL BE POURED INTO OR AGAINST SUBGRADE CONTAINING FREE WATER, FROST, ICE OR LOOSE MATERIAL. FROST DEPTH ASSUMED TO BE 800MM

2.6 ALL SLAB-ON-GRADE, TRENCH BOTTOMS AND OTHER ON-GRADE INTERIOR HORIZONTAL SURFACES SHALL BE PLACED OVER A 0.25mm VAPOR RETARDER OVER A 100mm #57 STONE WATER BARRIER PLACED ON SUBGRADE PROPERLY PREPARED IN ACCORDANCE WITH THE CONTRACT SPECIFICATIONS. (UON)

2.7 SEE PLUMBING, ELECTRICAL & CIVIL SHEETS FOR REQUIRED UNDERSLAB UTILITIES.

2.8 SEE ARCHITECTURAL SHEETS FOR ALL WATERPROOFING DETAILS AND MATERIALS.

2.9 IF UNDERMINING OF FOOTINGS OCCURS, FILL VOIDS WITH 15MPa CONCRETE. DO NOT ATTEMPT TO REPLACE AND RECOMPACT SOIL.

3.0 CONCRETE

3.1 CONCRETE SHALL HAVE THE UNIT WEIGHT AND THE MINIMUM COMPRESSIVE STRENGTHS (f'c) AT 28 DAYS AS SHOWN IN THE CONCRETE MATERIALS SCHEDULE ON SHEET S3. SEE SPECIFICATIONS FOR ADDITIONAL INFORMATION. ENTRAIN AIR TO PRODUCE TOTAL AIR CONTENT ACCORDING TO THE SPECIFICATIONS FOR CONCRETE EXPOSED TO FREEZING TEMPERATURES (EXTERIOR FOOTINGS, SLAB TURNDOWNS, EXTERIOR SLABS AND SLABS-ON-GRADE, EXTERIOR RETAINING WALLS, AND EXTERIOR GRADE BEAMS.)

3.2 GROUT FOR BASE PLATES SHALL BE NON-SHRINKABLE GROUT AND SHALL HAVE A MINIMUM SPECIFIED COMPRESSIVE STRENGTH AT 28 DAYS OF 35MPa, UNLESS NOTED OTHERWISE.

3.3 NO CALCIUM CHLORIDE SHALL BE USED IN ANY CONCRETE.

3.4 MIXING, TRANSPORTING AND PLACING OF CONCRETE SHALL CONFORM TO ACI 301M-05

3.5 ALL CONCRETE WORK SHALL CONFORM TO THE REQUIREMENTS OF THE AMERICAN CONCRETE INSTITUTE (ACI) 318M MANUAL (metric), "BUILDING CODE REQUIREMENTS FOR REINFORCED CONCRETE", AND REQUIREMENTS OUTLINED IN THE CONTRACT SPECIFICATIONS. WHEN THERE IS A CONFLICT BETWEEN ACI AND THE SPECIFICATIONS, THE MORE STRINGENT SHALL GOVERN.

3.6 CHAMFER ALL EXPOSED EXTERNAL CORNERS OF CONCRETE WITH 20mm x45 DEGREE CHAMFER UON.

3.7 CONCRETE REINFORCEMENT BARS SHALL CONFORM TO ASTM A615M-96a, GRADE 420 MPa. REINFORCING BARS SHALL NOT BE TACK WELDED, WELDED, HEATED OR CUT, UNLESS INDICATED ON THE CONTRACT DOCUMENTS. ALL LAP SPLICES SHALL BE CLASS "B" UON.

3.8 HORIZONTAL FOOTING AND HORIZONTAL WALL REINFORCEMENT SHALL BE CONTINUOUS AND SHALL HAVE 90 DEGREE BENDS AND EXTENSIONS, OR CORNER BARS OF EQUIVALENT SIZE LAPPED WITH A CLASS B TENSION SPLICE AT CORNERS AND INTERSECTIONS. TOP BAR CRITERIA SHALL APPLY IF 300mm OR MORE OF FRESH CONCRETE IS PLACED BELOW BAR.

3.9 SLABS-ON-GRADE SHALL HAVE CONSTRUCTION JOINTS OR CRACK CONTROL JOINTS AS SHOWN ON THE SHEETS. CONSTRUCTION JOINTS CAN BE USED AT CONTROL JOINT LOCATIONS AT CONTRACTORS OPTION. SEE SLAB PLANS & JOINT DETAILS FOR ADDITIONAL INFORMATION. FOR AREAS NOT SHOWN ON SHEETS, THE MAXIMUM SPACING OF CONSTRUCTION/ CRACK CONTROL JOINTS SHALL BE 4800mm

3.10 SEE SPECIFICATIONS FOR ALL WATERPROOFING/DAMPPROOFING REQUIREMENTS.

3.11 ALL CONCRETE REINFORCEMENT SHALL BE DETAILED, FABRICATED, LABELED, SUPPORTED, AND SPACED IN FORMS AND SECURED IN PLACE IN ACCORDANCE WITH THE PROCEDURES AND REQUIREMENTS OUTLINED IN THE LATEST EDITION OF THE "BUILDING CODE REQUIREMENTS FOR REINFORCED CONCRETE", ACI 318M, AND THE "MANUAL OF STANDARD PRACTICE FOR DETAILING REINFORCED CONCRETE STRUCTURES", ACI 315M, LATEST EDITION.

3.12 SHOP DRAWINGS SHOWING REINFORCING DETAILS, INCLUDING STEEL SIZES, SPACING AND PLACEMENT, SHALL BE SUBMITTED FOR REVIEW PRIOR TO FABRICATION.

3.13 ALL DOWELS SHALL MATCH SIZE AND NUMBER OF MAIN REINFORCING, UNLESS NOTED OTHERWISE ON SHEETS.

3.14 ADDITIONAL BARS SHALL BE PROVIDED AROUND ALL FLOOR AND WALL OPENINGS AS SHOWN ON THE SHEETS.

3.15 SEE ARCHITECTURAL SHEETS FOR TYPE AND LOCATION OF ALL FLOOR FINISHES.

3.16 THE CONTRACTOR SHALL COORDINATE ADDITIONAL WALL/SLAB OPENINGS NOT SHOWN ON STRUCTURAL SHEETS. SEE MECHANICAL, ELECTRICAL, PLUMBING AND CIVIL SHEETS.

3.17 UNLESS NOTED OTHERWISE, ALL CURBS SHALL BE REINFORCED WITH AT LEAST (1)-#13 CONTINUOUS AND #13 AT 300mm O.C. DOWELS TO STRUCTURE BELOW.

3.18 THE SUB-CONTRACTOR SHALL VERIFY ALL OPENINGS, PAD SIZES, AND ANCHOR BOLTS WITH EQUIPMENT SELECTED.

3.19 FOR ALL WALLS & PIERS, PROVIDE DOWELS INTO FOOTING AT EACH VERT REINF BAR, UON DOWEL SIZE SHALL BE SAME AS VERT REINF.

3.20 ALL DEFORMED BAR ANCHORS SHALL BE TRS NELSON DIVISION OR EQUAL 15mm DIA (UON) CONFORMING TO ASTM A-496M WITH A MINIMUM TENSILE STRENGTH OF 550 MPa. ANCHOR DIMENSIONS SHALL BE IN ACCORDANCE WITH ASTM D-19. INSTALL ANCHORS IN ACCORDANCE WITH MANUFACTURERS RECOMMENDATIONS BY AUTOMATIC END WELDING AS INDICATED ON THE DRAWINGS. NO UNAUTHORIZED OR FIELD WELDING SHALL BE MADE WITHOUT AUTHORIZATION FROM THE MANUFACTURER.

3.21 ALL REINFORCING INDICATED TO BE WELDED SHALL BE IN ACCORDANCE WITH ASTM A706M. "LOW ALLOY STEEL DEFORMED BARS FOR CONCRETE REINFORCEMENT". ANY INSTALLATIONS USING MANUFACTURER'S EQUIPMENT SHALL BE PER MANUFACTURER'S RECOMMENDATIONS.

3.22 PROVIDE CONCRETE POUR STOPS OR FORMS AS REQUIRED FOR INSTALLATION OF ALL CONCRETE WORK.

3.23 PROVIDE ADDITIONAL (2)-#13 x 600mm REINFORCING BARS IN SLAB-ON-GRADE AT ALL RE-ENTRANT CORNERS. PLACE BARS AT MID-DEPTH OF SLAB WITH A CLEARANCE OF 50mm FROM CORNER UON.

4.0 CONCRETE MASONRY

4.1 MASONRY CONSTRUCTION AND MATERIALS SHALL CONFORM TO ALL REQUIREMENTS OF THESE CONTRACT DOCUMENTS AND THE PROJECT SPECIFICATIONS.

4.2 THE SPECIFIED ULTIMATE COMPRESSIVE STRENGTH OF CONCRETE MASONRY (f'm) ON THE NET AREA IS A MINIMUM OF 10.4 MPa.

4.3 PROVIDE TWO #16 BARS CONTINUOUS IN ALL CMU AND CAST-IN-PLACE BOND BEAMS UON ON THE SHEETS. INTERMEDIATE BOND BEAMS SHALL BE CONTINUOUS AND SPACED AT A MAXIMUM OF 1200mm OC VERTICALLY. ALL BOND BEAMS SHALL BE A MINIMUM OF 200mm IN DEPTH WITH REINFORCING BEING CONTINUOUS AND HAVING STANDARD ACI HOOKS AT EACH END. PROVIDE STANDARD BAR SPLICES AS SPECIFIED.

4.4 FOR MINIMUM WALL REINFORCING, SEE MIN CMU WALL REINFORCING DETAILS ON SHEET S10.

4.5 CMU CELLS THAT REQUIRE VERTICAL REINFORCING BARS AS INDICATED ON THE CONTRACT DRAWINGS AND/OR SPECS SHALL HAVE REINF BAR PLACED IN CENTERS OF CMU CELLS AND CONTINUOUSLY GROUTED UON.

4.6 PROVIDE LADDER TYPE JOINT REINFORCEMENT AT 200mm FOR EXTERIOR & 400mm FOR INTERIOR ON CENTER MAXIMUM, UON MINIMUM ROD SIZE USED SHALL BE 9 GA. DEFORMED WIRE AND CONFORM TO ASTM A82M, UON.

4.7 PROVIDE CONTROL JOINTS AS INDICATED ON THE ARCHITECTURAL SHEETS.

4.8 GROUT FOR MASONRY SHALL BE NORMAL WEIGHT AND HAVE A MINIMUM COMPRESSIVE STRENGTH OF 25 MPa AT 28 DAYS. GROUT SHALL CONFORM TO ASTM C476M. GROUT LIFTS SHALL NOT EXCEED 1400mm.

4.9 USE MORTAR TYPE S CONFORMING TO ASTM C270M, SEE SPECIFICATIONS.

4.10 CONCRETE MASONRY UNITS SHALL BE NORMAL WEIGHT AND CONFORM TO ASTM C90M.

4.11 ALL CMU CELLS, OPEN CAVITIES, AND AIR SPACES SHALL BE GROUTED. TO STOP FRAGMENTS FROM MORTAR BLAST

4.12 BOND BEAM REINFORCING SHALL BE DISCONTINUOUS AT CONTROL JOINTS (UON). MAXIMUM CONTROL JOINT SPACING SHALL BE AS INDICATED ON THE ARCHITECTURAL SHEETS.

4.13 CONTRACTOR SHALL COORDINATE LOCATION OF ALL OPENINGS SEE ARCH, MECH, ELEC, AND PLUMBING SHEETS. FOR SIZE AND LOCATION OF OPENINGS.

4.14 MASONRY WALLS SHALL NOT BE BACK FILLED PRIOR TO THE MORTAR AND GROUT ATTAINING THEIR RESPECTIVE MAXIMUM DESIGN STRENGTHS PER SPECIFICATIONS.

5.0 STEEL DECK

5.1 STEEL DECK SHALL BE ASTM A611M, GRADES C & D OR A653M STRUCTURAL QUALITY HAVING A MINIMUM YIELD STRENGTH OF 345 MPa AS PER THE STEEL DECK INSTITUTE (SDI) DESIGN MANUAL.

5.2 STEEL DECK SHALL BE ERECTED IN ACCORDANCE WITH THE MANUFACTURER'S SPECIFICATIONS AND ERECTION LAYOUTS AND CONNECTED TO SUPPORTING MEMBERS AS INDICATED.

5.3 COMPOSITE FLOOR DECK

5.3.1 STEEL FLOOR DECK SHALL BE 51mm RIB HEIGHT, 18 GA HOT-DIP GALVANIZED (SDI TYPE 2VLI-18) UON.

5.3.2 FLOOR DECK SHALL HAVE THE FOLLOWING MINIMUM PROPERTIES:

	18 GAUGE
MOMENT OF INERTIA, Ip	760mm4/mm WIDTH
SECTION MODULUS (TOP OF DECK), Sn	27.5mm3/mm WIDTH
SECTION MODULUS (BOTT OF DECK) Sp	27.8mm3/mm WIDTH

5.3.3 FLOOR DECK SHALL BE FASTENED TO THE SUPPORTS AS INDICATED IN THE BOTTOM OF THE FLUTES USING A SDI 36/7 PATTERN. DECK SIDELAPS SHALL BE ATTACHED USING #10 SELF-TAPPING TEK SCREWS WITH A MINIMUM 3-SIDE LAP CONNECTIONS PER SPAN.

5.3.4 SUSPENDED CEILINGS, LIGHT FIXTURES, DUCTS, CONDUITS, PIPING OR OTHER UTILITIES SHALL NOT BE SUPPORTED BY THE STEEL FLOOR DECK.

5.3.5 IN ADDITION TO MEETING THE MINIMUM REQUIREMENTS ABOVE, THE DECK MANUFACTURER SHALL DESIGN THE FLOOR DECK AND ATTACHMENTS TO STEEL FOR A MAXIMUM DEFLECTION DUE TO WET CONCRETE & 1 KPa CONSTANT LOAD OF L/240. FLOOR DECK SHALL NOT REQUIRE SHORING DURING CONCRETE PLACEMENT.

6.0 STRUCTURAL STEEL

6.1 STRUCTURAL STEEL ROLLED SHAPES AND PLATES SHALL CONFORM TO THE MATERIAL INFORMATION SCHEDULE. DIMENSIONS AND PROPERTIES SHALL BE IN ACCORDANCE TO ASTM A36M.

6.2 ANCHOR BOLTS SHALL CONFORM TO ASTM A36M HEAVY HEX UNLESS NOTED OTHERWISE.

6.3 CONNECTION BOLTS FOR STRUCTURAL STEEL MEMBERS SHALL BE 20 DIA ASTM A325M-N, UON; NUTS SHALL CONFORM TO ASTM A563M; WASHERS SHALL CONFORM TO ASTM F436M. CONNECTION BOLTS SHALL HAVE A HARDENED WASHER PLACED UNDER THE ELEMENT TO BE TIGHTENED.

6.4 DETAILING OF STRUCTURAL STEEL CONNECTIONS MUST BE CONSISTENT WITH RECOGNIZED, PUBLISHED METHODS SUCH AS IN THE AISC "STEEL CONSTRUCTION MANUAL", THIRTEENTH EDITION; "ENGINEERING FOR STEEL CONSTRUCTION", OR "VOLUME II CONNECTIONS MANUAL OF STEEL CONSTRUCTION".

6.4.1 THE CODE OF STANDARD PRACTICE OF AISC THIRTEENTH EDITION IS AMENDED SUCH THAT THE FABRICATOR/DETAILER IS RESPONSIBLE FOR THE DESIGN AND DETAILING OF ALL CONNECTIONS.

6.5 STANDARD FRAMING CONNECTIONS SHALL BE DETAILED BY THE FABRICATOR IN ACCORDANCE WITH THE AISC "STEEL CONSTRUCTION MANUAL", THIRTEENTH EDITION. CONNECTIONS SHALL BE DESIGNED TO DEVELOP A MINIMUM END REACTION OF 54kN.

6.5.1 UNLESS NOTED OTHERWISE AS THUS: (##kN), CONNECTIONS SHALL BE DESIGNED AND DETAILED FOR THE END REACTION DETERMINED FROM PART 2 – "ALLOWABLE UNIFORM LOAD TABLES" FROM THE AISC STEEL CONSTRUCTION MANUAL 13TH EDITION OR A MINIMUM OF 54 kN WHICH EVER IS GREATER.

6.6 ALL MEMBERS AND CONNECTIONS ON THE CONTRACT DRAWINGS AND CONNECTIONS NOT SHOWN SHALL BE DESIGNED AND SEALED BY A LICENSED PROFESSIONAL ENGINEER, DETAILED AND SUBMITTED FOR APPROVAL AND SHOWN ON THE SHOP DRAWINGS.

6.7 ALTERNATIVE CONNECTION DETAILS MAY BE SUBMITTED ON SHOP DRAWINGS BY THE CONTRACTOR ONLY IF ACCOMPANIED BY COMPLETE STRUCTURAL CALCULATIONS PREPARED AND SEALED BY A LICENSED PROFESSIONAL ENGINEER AND SUBMITTED FOR REVIEW.

6.8 CALCULATIONS FOR DETAILS MUST SHOW A RATIONAL ANALYSIS OF A COMPLETE LOAD PATH, INCLUDING LOCAL EFFECTS ON WEBS, FLANGES, ETC OF THE CONNECTED MEMBERS AND THE DEVICES (PLATES, SEATS, BRACKETS, BOLTS, WEBS, ETC) AFFECTING ALL CONNECTIONS. FAILURE TO SUBMIT SUCH CALCULATIONS FOR REVIEW CONCURRENT WITH SHOP DRAWING ERECTION PLANS AND DETAILS WILL BE CAUSE FOR REJECTION OF THAT SUBMITTAL.

6.8.1 ALL SHEAR TAB CONNECTIONS SUBMITTED AS AN ALTERNATE FOR APPROVAL SHALL BE DESIGNED USING A FLEXIBLE SUPPORT CONDITION.

6.8.2 BEAM AND GIRDER CONNECTIONS SHALL BE DESIGNED SUCH THAT ALL ADDITIONAL STRESSES DUE TO CONNECTION ECCENTRICITY SHALL BE DEVELOPED BY THE CONNECTION AND NOT INDUCE ANY ADDITIONAL STRESSES INTO SUPPORTING MEMBERS.

6.9 STRUCTURAL STEEL DETAILING, FABRICATION AND ERECTION SHALL CONFORM TO THE AISC "SPECIFICATION FOR STRUCTURAL STEEL BUILDINGS – ALLOWABLE STRESS DESIGN AND PLASTIC DESIGN" AND THE AISC "CODE OF STANDARD PRACTICE FOR STEEL BUILDINGS AND BRIDGES" – LATEST EDITIONS.

6.10 WELDING SHALL CONFORM TO THE AMERICAN WELDING SOCIETY STRUCTURAL WELDING CODE AWS D1.1. ELECTRODES FOR SHOP AND FIELD WELDS SHALL BE CLASS E70XX. ALL WELDING SHALL BE DONE BY QUALIFIED, CERTIFIED WELDERS PER THE ABOVE STANDARD.

6.11 SHOP AND FIELD TESTING OF WELDS AND BOLTS SHALL BE AS OUTLINED IN THE SPECIFICATIONS.

6.12 ALL FILLET WELDS SHALL BE A MINIMUM OF 5mm UNLESS NOTED OTHERWISE

6.13 THERE SHALL BE NO FIELD CUTTING OF STRUCTURAL STEEL MEMBERS FOR THE WORK OF OTHER TRADES WITHOUT PRIOR APPROVAL OF THE CONTRACTING OFFICER.

6.14 FOR FLOOR AND ROOF OPENINGS, THE FABRICATOR SHALL VERIFY OPENING LOCATIONS WITH EQUIPMENT SELECTED AND MAKE ANY NECESSARY MODIFICATIONS AT NO ADDITIONAL COST. THE CONTRACTOR SHALL COORDINATE MECHANICAL UNITS AND OPENINGS & ARCHITECTURAL ITEMS REQUIRED FOR COMPLETE INSTALLATION OF WORK. IT IS THE RESPONSIBILITY OF FABRICATOR TO RECEIVE ALL NECESSARY INFORMATION PRIOR TO FABRICATION OF THE STEEL.

6.15 ALL STRUCTURAL STEEL SHALL BE PRIMED AS PER THE SPECIFICATIONS.

6.16 ALL PLATES NOT INDICATED SHALL BE 13mm MIN THICKNESS. ALL ANGLES NOT INDICATED SHALL BE 76x76x7.9 MIN. ALL WELDS NOT INDICATED SHALL BE 6mm MIN ALL AROUND UON.

6.17 SEE MECHANICAL, ELECTRICAL, AND PLUMBING SHEETS FOR ADDITIONAL OPENINGS NOT SHOWN. ALL OPENINGS SHALL BE FRAMED 4 SIDES WITH C200x17'S UON.

US Army Corps of Engineers
Afghanistan Engineer District

SYMBOL	DESCRIPTION	DATE	APP

DESIGNED BY: WJJ | DATE: 09-30-09
DWN BY: RCG | SUBMITTED BY: BAKER
CHK BY: CWW | FILE NO.: ANPSDS-001XXX

Michael Baker Jr, Inc
A unit of Michael Baker Corporation
Airside Business Park
100 Airside Drive
Moon Township, PA 15108
www.mbakercorp.com

AFGHAN NATIONAL POLICE
STANDARD DESIGN
VEHICLE MAINTENANCE & POL BUILDING

GENERAL NOTES

SHEET REFERENCE NUMBER:
S1

100% SUBMISSION

STRUCTURAL DESIGN CRITERIA

ALL DESIGNS SHALL CONFORM TO THE PROVISIONS OF THE IBC 2006 AS APPLICABLE

1.0 DESIGN LOADS

1.1 DEAD LOADS

1.1.1 ROOF DEAD LOADS – PRE-ENGINEERED FRAMING

	MAXIMUM GRAVITY LOAD	MINIMUM GRAVITY LOAD
STEEL FRAMING	0.20 KPa	0.15 KPa
METAL DECKING/ROOFING	0.14 KPa	0.05 KPa
MECH/ELEC/PLUMBING	0.15 KPa	0.10 KPa
METAL PANEL CEILING	0.15 KPa	0.15 KPa
MISC	0.40 KPa	0.00 KPa
	1.00 KPa	0.45 KPa

1.2 LIVE LOADS (PER IBC 2006)

1.2.1 ELEVATED SLAB

STORAGE AREA 4.80 KPa

1.2.2 ROOF LIVE LOADS: ALL BUILDINGS

GREATER OF 1.0 KPa MINIMUM OR SNOW LOAD

1.2.3 SLAB-ON-GRADE LIVE LOADS

ALL BUILDINGS 4.80 KPa

1.3 SNOW LOADS (PER IBC 2006)

1.3.1 DESIGN PARAMETERS

GROUND SNOW LOAD (per UFC 3-310-01)	1.0 KPa
SNOW IMPORTANCE FACTOR	1.0
SNOW EXPOSURE FACTOR	1.0

1.4 SEISMIC LOADS (PER IBC 2006 & UFC 3-310-04)

1.4.1 SEISMIC PARAMETERS – PRE-ENGINEERED BUILDINGS

SEISMIC OCCUPANCY CATEGORY	II
SEISMIC IMPORTANCE FACTOR (I)	1.0
SEISMIC SITE CLASS	D
Ss	1.280
S1	0.510
Sds	0.853
Sd1	0.510
SEISMIC DESIGN CATEGORY	D
SEISMIC RESISTING SYSTEM	MOMENT RESISTING FRAME INTERMEDIATE STEEL MOMENT FRAMES
RESPONSE MODIFICATION FACTOR (R)	4.5
RESPONSE COEFFICIENT (Cs)	EQUIV LATERAL FORCE
SEISMIC ANALYTICAL PROCEDURE	111.2kn
SEISMIC BASE SHEAR	0.133

1.5 WIND LOADS (PER IBC 2006)

1.5.1 DESIGN PARAMETERS

BASIC WIND SPEED	137 Km/h
WIND IMPORTANCE FACTOR	1.0
WIND EXPOSURE CATEGORY	D
DIRECTIONALITY COEFFICIENT (Kd)	0.85
TOPOGRAPHIC FACTOR (Kzt)	1.0

1.5.2 DESIGN WIND PRESSURE – MAIN WINDFORCE RESISTING SYSTEM

LOCATION	CORNER ZONE WIDTH "a"	MEAN ROOF HEIGHT (h)	WINDWARD WALL (@ MEAN ROOF HEIGHT)	LEEWARD WALL (@ MEAN ROOF HEIGHT)	ROOF
FIELD ZONE	N/A	6544mm	600 N/m^2	−570 N/m^2	−780 N/m^2
CORNER ZONE	1440mm	6544mm	830 N/m^2	−680 N/m^2	−1130 N/m^2

a = 10% OF LEAST HORIZONTAL DIMENSION OR 0.4h, WHICHEVER IS SMALLER, BUT NOT LESS THAN EITHER 4% OF LEAST HORIZONTAL DIMENSION OR 0.9M.
h = MEAN ROOF HIEGHT, IN METERS, EXCEPT THAT EAVE HIEGHT SHALL BE USED FOR ANGLE GREATER THAN 10°.

1.5.3 DESIGN WIND PRESSURE – WALL COMPONENTS AND CLADDING

EXTERIOR WALL SYSTEMS & THEIR ATTACHMENTS TO THE PRIMARY STRUCTURE SHALL BE DESIGNED FOR THE PRESSURES SHOWN IN THE DIAGRAM BELOW:

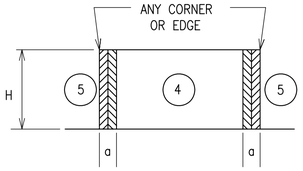

LOCATION	WINDWARD PRESSURE N/m^2 (inward)		LEEWARD PRESSURE N/m^2 (outward)		a
	④	⑤	④	⑤	
MAIN BUILDING					(mm)
AREA = 1 m^2	1050	1050	−1140	−1410	1440
AREA = 2 m^2	1010	1010	−1100	−1310	1440
AREA = 5 m^2	910	910	−1000	−1120	1440
AREA = 10 m^2	820	820	−910	−930	1440

NOTES:
1. DESIGN WIND PRESSURES ABOVE REPRESENT THE NET PRESSURE (SUM OF INTERNAL AND EXTERNAL PRESSURE) APPLIED NORMAL TO ALL SURFACES.
2. LINEAR INTERPOLATION BETWEEN VALUES OF TRIBUTARY AREA IS PERMISSIBLE.
3. PLUS AND MINUS SIGNS SIGNIFY PRESSURE TOWARD AND AWAY FROM THE EXTERIOR SURFACE, RESPECTIVELY.

1.5 WIND LOADS (CONT)

1.5.4 DESIGN WIND PRESSURE – ROOF COMPONENTS AND CLADDING

ROOF COMPONENTS & THEIR ATTACHMENTS SHALL BE DESIGNED FOR THE PRESSURES SHOWN IN THE ADJACENT DIAGRAM & TABLE BELOW:

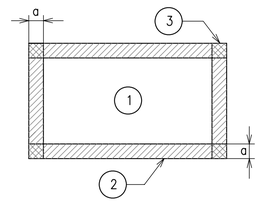

ROOF MEAN HEIGHT

LOCATION	GROSS UPLIFT PRESSURE N/m^2 (upward)			a
	①	②	③	
MAIN BUILDING				(mm)
AREA = 1 m^2	−970	−1670	−2480	1440
AREA = 2 m^2	−950	−1540	−2320	1440
AREA = 5 m^2	−880	−1260	−1990	1440
AREA = 10 m^2	−880	−1240	−1960	1440

NOTES:
1. DESIGN WIND PRESSURES ABOVE REPRESENT THE NET PRESSURE (SUM OF INTERNAL AND EXTERNAL PRESSURE) APPLIED NORMAL TO ALL SURFACES.
2. LINEAR INTERPOLATION BETWEEN VALUES OF TRIBUTARY AREA IS PERMISSIBLE.
3. PLUS AND MINUS SIGNS SIGNIFY PRESSURE TOWARD AND AWAY FROM THE EXTERIOR SURFACE, RESPECTIVELY.

2.0 FOUNDATION DESIGN CRITERIA (TO BE CONFIRMED BY THE CONTRACTOR)

THE GEOTECHNICAL ANALYSIS FOR THIS PROJECT IS THE RESPONSIBILITY OF THE CONTRACTOR AWARDED THE WORK. DESIGN VALUES USED IN THE STRUCTURAL ANALYSIS OF THE BUILDINGS HEREIN INDICATED HAVE BEEN ASSUMED AND SHALL BE CONFIRMED AND VERIFIED AS PART OF THE GEOTECHNICAL INVESTIGATION. VALUES WHICH DO NOT MEET THE REQUIREMENTS INDICATED BELOW SHALL BE IMMEDIATELY BROUGHT TO THE ATTENTION OF THE CONTRACTING OFFICER FOR CONSIDERATION AND DETERMINATION ON THE NEXT APPROPRIATE COURSE OF ACTION.

2.1.1 SOIL DESIGN PARAMETERS

NET ALLOWABLE SOIL BEARING CAPACITY	96.0 KPa
UNIT WEIGHT OF SOIL (moist)	1800 Kg/m^3
COEFF ACTIVE EARTH PRESSURE (Kpa)	0.30
COEFF PASSIVE EARTH PRESSURE (Kpp)	3.33
COEFF AT-REST EARTH PRESSURE (Kpr)	.55
COEFF OF SOIL FRICTION	.35
SUBGRADE MODULUS	4120 g/m^3
MINIMUM BEARING DEPTH BELOW GRADE	800mm
SEISMIC SITE CLASS (based on in-situ soil)	D

US Army Corps of Engineers
Afghanistan Engineer District

SYMBOL	DESCRIPTION	DATE	APP

DESIGNED BY: WJJ
DWN BY: RCG
CHK BY: CWW
DATE: 09-30-09
SUBMITTED BY: BAKER
FILE NO.: ANPSDS-002XXX

Michael Baker Jr., Inc
A unit of Michael Baker Corporation
Airside Business Park
100 Airside Drive
Moon Township, PA 15108
www.mbakercorp.com

AFGHAN NATIONAL POLICE
STANDARD DESIGN
VEHICLE MAINTENANCE & POL BUILDING

GENERAL NOTES

SHEET REFERENCE NUMBER:
S2

100% SUBMISSION

MINIMUM LAP SPLICES OF REINFORCING BARS IN TENSION (PER ACI 318M-05)

f'c = 28 MPa CONCRETE

BAR SIZE / CENTER TO CENTER BAR SPACING	(---TOP BARS--) LESS THAN 4db	(---TOP BARS--) 4db OR MORE	(--OTHER BARS--) LESS THAN 4db	(--OTHER BARS--) 4db OR MORE	4db
#10	460	460	410	410	40
#13	660	610	510	480	50
#16	1020	760	790	580	60
#19	1450	910	1120	710	80
#22	1960	1090	1500	840	90
#25	2590	1450	1980	1120	100
#29	3280	1830	2510	1420	110
#32	4140	2340	3200	1780	130
#36	5080	2840	3910	2180	140

NOTES:

1. LAP SPLICES ABOVE ARE IN MILLIMETERS UON.
2. YIELD STRENGTH OF REINFORCEMENT, fy, IS 400MPa (LAP SPLICE LENGTH IS IN MILLIMETERS).
3. CONCRETE IS NORMAL WEIGHT (2400Kg/m³).
4. TOP BAR INDICATES HORIZONTAL REINFORCEMENT WHICH IS PLACED ABOVE 300mm OR MORE OF FRESH CONCRETE.
5. SEE COLUMN SCHEDULE FOR COLUMN AND SHEAR WALL VERTICAL LAP SPLICE.
6. STRAIGHT DEVELOPMENT LENGTH OF AN UNLAPPED BAR IS EQUAL TO VALUE FROM TABLE DIVIDED BY 1.3.
7. CATEGORY FOR BARS SPACED LESS THAN 4d, OR ON CENTER CORRESPONDS TO CATEGORY 1 IN THE CRSI HANDBOOK WHEREAS FOR BARS SPACED 4d, OR MORE ON CENTER CORRESPOND TO CRSI CATEGORY 5.

STEEL MATERIALS SCHEDULE

STRUCTURAL ELEMENT	FY YIELD STRENGTH (MPa)	REMARKS
BEAMS & GIRDERS	250	ASTM A36M ASTM A6M
COLUMNS	240	ASTM A53-95 GRADE B ASTM A6M
MISC BRACING	250	ASTM A572M ASTM A6M
CONNECTIONS, PLATES, & ALL OTHERS	250	ASTM A36M ASTM A6M
ANCHOR BOLTS	-	ASTM A36M or A307M ASTM A6M
PIPES	240	ASTM A53-95 GRADE B ASTM A6M
TUBING	345	ASTM A500-93 GRADE C ASTM A6M
HIGH STRENGTH BOLTS	-	ASTM A325M-N
WELDING ELECTRODES	-	AWS D1.1-90 E70xx

CONCRETE COVER SCHEDULE

MINIMUM CONCRETE COVER PROTECTION FOR REINFORCEMENT BARS SHALL BE AS FOLLOWS: (SEE ACI 318M-05, SECTION 7.7 FOR CONDITIONS NOT NOTED). DIMENSIONS FOR BAR PLACEMENT GIVEN IN SECTIONS AND DETAILS SHALL SUPERSEDE MINIMUM COVER REQUIREMENTS GIVEN HERE. DIMENSIONS ARE IN mm.

FOOTINGS (EARTH FORMED)		70
COLUMNS / PIERS (TO TIES)		40
GRADE BEAMS OR SLAB TURNED DOWN EDGES:		
TOP		40
BOTTOM (EARTH FORMED)		70
SIDES (EARTH FORMED)		70
SIDES (BOARD FORMED)	#16 BAR & SMALLER	40
	#19 THRU #36 BAR	50
ELEVATED BEAMS & SLABS:		
BEAM TIES & STIRRUPS (NOT EXPOSED TO WEATHER)		40
BEAM TIES & STIRRUPS (EXPOSED TO WEATHER)		50
FLOOR SLABS (NOT EXPOSED TO WEATHER)		20
FLOOR SLABS (EXPOSED TO WEATHER)		
#19 & LARGER		50
#13 & SMALLER		40
ROOF SLAB BARS		25
SLABS-ON-GRADE (NO EXPOSURE TO WEATHER) FROM TOP		20
SLABS-ON-GRADE (EXPOSURE TO WEATHER) FROM TOP		40
UTILITY TUNNEL WALLS, RETAINING WALLS AND SHEAR WALLS, (NO SURFACES SHALL BE EARTH FORMED) EARTH SIDE AND FRONT SIDE (EXPOSED TO WEATHER):		
#16 BAR AND SMALLER		40
#19 THRU #36 BAR		50

PROVIDE STANDARD BAR CHAIRS AND SPACERS AS REQUIRED TO MAINTAIN CONCRETE PROTECTION SPECIFIED.

CONCRETE MATERIALS SCHEDULE

STRUCTURAL ELEMENT	f'c CONCRETE COMPRESSIVE STRENGTH @ 28 DAYS (MPa)
SLAB-ON-GRADE/TURN-DOWN SLABS	28
ROOF AND FLOOR SLABS	28
ALL FOOTINGS (UON)	28
MISC. CURBS, WALLS AND PADS UON	28
CAST-IN-PLACE LINTEL	28
CONCRETE FRAMING - BEAMS AND COLUMNS	28

NOTES:

1. ALL CONCRETE SHALL BE NORMAL WEIGHT CONCRETE (2400 Kg/m³ UON)
2. ALL CONCRETE SHALL HAVE A MAX WATER-CEMENT RATIO OF 0.45.

STANDARD HOOKS IN TENSION PER (ACI 318M-05)

HOOK DEVELOPMENT LENGTH Ldh (mm)	
BAR SIZE	f'c 28 MPa
#10	180
#13	250
#16	300
#19	380
#22	430
#25	480
#29	560
#32	610
#36	690

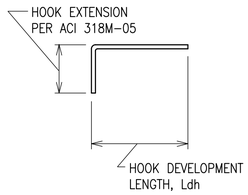

NOTES:

1. CONCRETE IS NORMAL WEIGHT CONCRETE.
2. BAR YIELD STRENGTH, fy = 420 MPa
3. SIDE COVER REQUIREMENTS OF ACI SECT. 12.5.3 ARE ASSUMED TO NOT BE MET.
4. TIE OR STIRRUP REQUIREMENTS OF ACI SECT. 12.5.3 ARE ASSUMED TO NOT BE MET.
5. REDUCTION FOR EXCESS REINFORCEMENT IS NOT TAKEN.
6. HOOK DEVELOPMENT LENGTH IS VALID FOR 180° HOOKS ALSO.

SPREAD FOOTING AND PIER SCHEDULE

MARK	FOOTING SIZE LENGTH	FOOTING SIZE WIDTH	FOOTING SIZE THICKNESS	FOOTING REINFORCING	PIER SIZE	PIER T/PIER	PIER VERT. BARS	PIER TIES	REMARKS
F1	2500	2500	300	(7)-#16 EW T&B	900	-150	(8)-#19	2 SETS #13 @ 125	HAIRPINS REQ'D. SEE DETAILS
F2	1800	1800	300	(5)-#16 EW T&B	900	-150	(8)-#19	#13 @ 250 TOP 2 @ 75	----

NOTES:

1. DIMENSIONS NOTED ARE MILLIMETERS (mm) UON
2. T/PIER ELEV GIVEN IN REFERENCE TO 0.0 mm DATUM OR FINISH FLOOR ELEV/SLAB ELEV, DISTANCE ABOVE OR BELOW INDICATED AS NEGATIVE OR POSITIVE.
3. PIER SIZE INDICATED IS SQUARE (DIMENSION SAME IN BOTH DIRECTIONS) UON

US Army Corps of Engineers
Afghanistan Engineer District

SYMBOL	DESCRIPTION	DATE	APP

DESIGNED BY: WJJ | DRN BY: RCG | CHK BY: CWW | DATE: 09-30-09 | SUBMITTED BY: BAKER | FILE NO.: ANPSDS-003XXX

Michael Baker Jr., Inc
A unit of Michael Baker Corporation
Airside Business Park
100 Airside Drive
Moon Township, PA 15108
www.mbakercorp.com

AFGHAN NATIONAL POLICE
STANDARD DESIGN
VEHICLE MAINTENANCE & POL BUILDING

GENERAL NOTES

SHEET REFERENCE NUMBER:
S3

100% SUBMISSION

CMU LINTEL SCHEDULE

OPENING TYPE OR SIZE, BEAM LOCATION OR TYPE	MAX SPAN (mm)	BEAM DEPTH (mm)	MAIN REINFORCING			SHEAR REINF STIRRUPS
			TOP	BOTTOM	OTHER	
EXT WALL OPENING, 1-STORY BLDG	1800	400	(2)-#13	(2)-#13		----
EXT WALL OPENING, 1-STORY BLDG	900	200		(2)-#13		----
INT WALL OPENING, NON-BEARING	2400	400		(2)-#13		----
INT WALL OPENING, NON-BEARING	1800	200		(2)-#13		----
INT WALL OPENING, NON-BEARING	900	200		(2)-#13		----
INT WALL OPENING, SHEAR WALL	900	200		(2)-#13		----
INT WALL OPENING, SHEAR WALL	1800	200	(2)-#13	(2)-#13		----
INT WALL OPENING, SHEAR WALL	2400	400	(2)-#16	(2)-#16		#13 @ 300

1. STRUCTURAL SHEETS DO NOT INDICATE ALL OPENINGS IN MASONRY WALLS. VERIFY NUMBER, SIZE AND LOCATION OF ALL OPENINGS IN MASONRY WALLS FROM ARCHITECTURAL SHEETS AND APPROVED PLUMBING, MECHANICAL, AND ELECTRICAL SHOP DRAWINGS.
2. PROVIDE 200mm BEARING EA END FOR 200mm DEEP CMU LINTEL BB PROVIDE 400mm BEARING EA END FOR 400mm DEEP CMU LINTEL BB.
3. FOR HEAD DETAILS REFER TO ARCHITECTURAL SHEETS.
4. REINFORCING SHALL BE ASTM A615M, GRADE 420. CONCRETE FOR CAST-IN-PLACE BEAMS SHALL HAVE A MINIMUM COMPRESSIVE STRENGTH OF 28 MPa AT 28 DAYS.
5. CONTRACTOR SHALL SUBMIT FOR APPROVAL SHOP DRAWINGS AND SCHEDULES SHOWING SIZE, DETAILS, LOCATIONS, ETC FOR ALL CAST-IN-PLACE BEAMS IN CMU WALLS.

MAXIMUM CMU WALL UNSUPPORTED HEIGHT OR LENGTH

	WALL THICKNESS (mm)	EXTERIOR WALL NON-LOAD BEARING (mm)	INTERIOR NON-LOAD BEARING WALL (mm)
MAX HEIGHT OR LENGTH BETWEEN SUPPORTS	200	4800	7200

NOTE: CMU WALL MAXIMUM LATERAL SUPPORT SPACING GIVEN IN SECTIONS AND DETAILS SHALL SUPERSEDE THE ABOVE SCHEDULE REQUIREMENTS.

MASONRY REINFORCING MINIMUM LAP SPLICES

BAR SIZE	BASIC LAP SPLICE Ld FOR CMU REINFORCING
#10	450
#13	600
#16	750
#19	900
#22	1050
#25	1200

TYPICAL CMU WALL REINFORCING SCHEDULE

WALL TYPE OR LOCATION	WALL THICKNESS (mm)	CONT VERT REINF (CENTERED IN CMU, UON)	CONT CAST IN PLACE BOND BEAM			REMARKS
			DEPTH (mm)	REINF (BOTT UON)	MAX BOND BEAM VERT SPACING(mm)	
ALL PERIMETER/EXTERIOR WALLS (UON)	200	1-#16 @ 800	200	2-#16	1200	-----
NON-LOAD BEARING INTERIOR WALLS WITH TOP AND BOTT SUPPORTS	200	1-#13 @ 1200	200	2-#16	1200	-----

NOTES:
1. REINFORCING SIZES AND SPACING GIVEN IN SECTIONS AND DETAILS SHALL SUPERSEDE THE ABOVE SCHEDULE REQUIREMENTS.
2. PROVIDE CONTINUOUS CAST IN PLACE CONCRETE BOND BEAM AT ALL WALL LATERAL SUPPORT LOCATIONS.
3. REINFORCING INDICATED SHALL BE CONTINUOUS FOR FULL EXTENT OF SPLICE FOLLOWING THE REQUIREMENTS OF THE LAP SPLICE TABLE SHOWN ON THIS SHEET.
4. WALLS HAVE BEEN DESIGNATED AS VERTICALLY SPANNING UON AND THEREFORE MUST BE TEMPORARILY SUPPORTED DURING CONSTRUCTION UNTIL THE SUPPORTING DIAPHRAGMS (FLOOR AND ROOF SYSTEMS) HAVE BEEN COMPLETELY INSTALLED. SHORING IS THE RESPONSIBILITY OF THE CONTRACTOR.
5. ALL CMU WALLS SHALL BE FULLY GROUTED IN LIFTS NOT EXCEEDING THOSE BY CODE (UON)
6. SEE TYPICAL CMU WALL DETAILS ON SHEET S10.

US Army Corps of Engineers
Afghanistan Engineer District

SYMBOL	DESCRIPTION	DATE	APP'D

DESIGNED BY: WJJ | DATE: 09-30-09
DWN BY: RCG | SUBMITTED BY: BAKER
CHK BY: CWW | FILE NO.: ANPSDS-004XXX

Michael Baker Jr., Inc
A unit of Michael Baker Corporation
Airside Business Park
100 Airside Drive
Moon Township, PA 15108
www.mbakercorp.com

AFGHAN NATIONAL POLICE
STANDARD DESIGN
VEHICLE MAINTENANCE & POL BUILDING

GENERAL NOTES

SHEET REFERENCE NUMBER:
S4

100% SUBMISSION

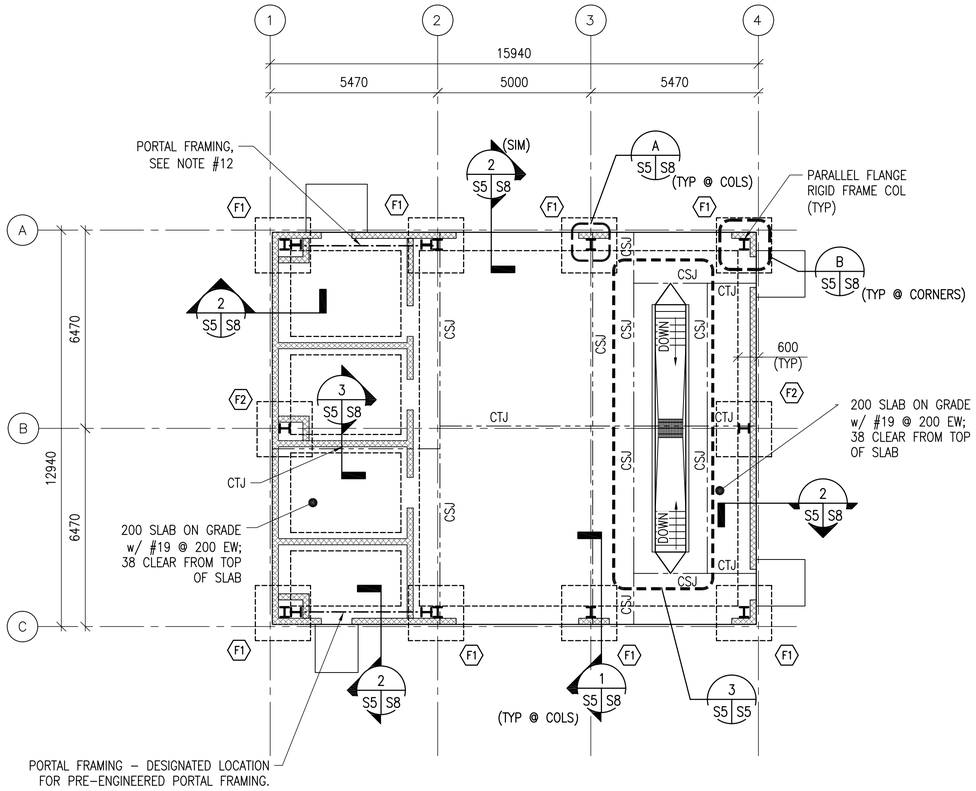

VEHICLE MAINTENANCE FOUNDATION/ SLAB PLAN

1 S5 S5 — SCALE: 1:100

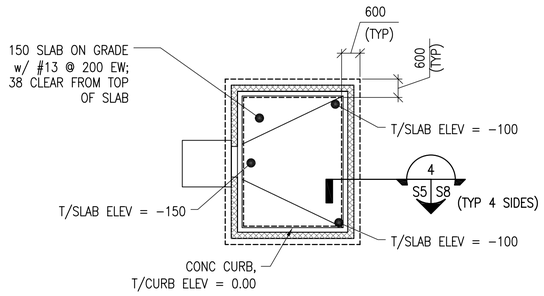

POL BUILDING FOUNDATION/ SLAB PLAN

2 S5 S5 — SCALE: 1:100

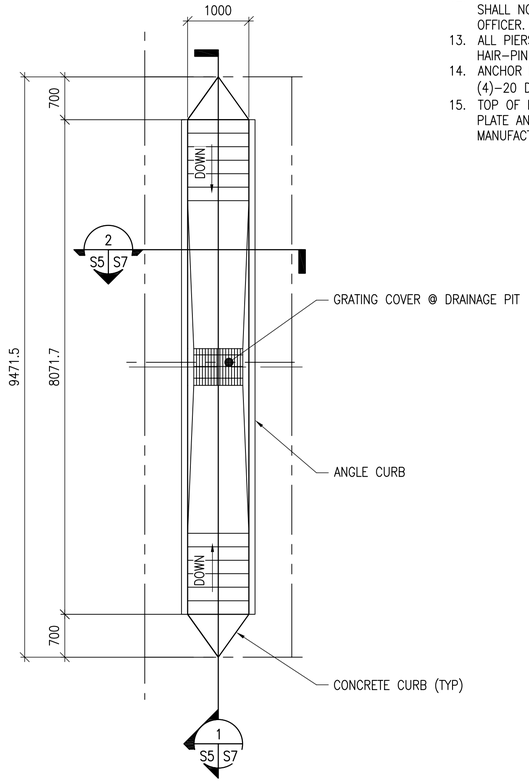

ENLARGED PIT PLAN

3 S5 S5 — SCALE: 1:50

NOTES:

1. FINISH FIRST FLOOR ELEVATION SHALL BE (DATUM 0.0) ALL PLUS OR MINUS DIMENSIONS INDICATED ON PLAN OR REFERRED TO IN NOTES RELATE TO FINISH FIRST FLOOR ELEVATION.
2. TOP OF FOOTINGS SHALL BE –950 UNLESS OTHERWISE INDICATED.
3. UNLESS OTHERWISE INDICATED, FLOORS SHALL BE 200 THICK (UON) CONCRETE SLAB–ON–GRADE W/ #19 REBAR @ 200 OC E.W. (38 CLR. TOP) OVER 100 COMPACTED POROUS FILL (#57 STONE)
4. SPREAD FOOTINGS INDICATED THUS ⟨XXXX⟩ ON PLAN. REFER TO SPREAD FOOTING SCHEDULE ON SHEET S3.
5. REFER TO SHEETS S1 TO S3 FOR STRUCTURAL NOTES, BASIS OF DESIGN, SYMBOLS AND ABBREVIATIONS.
6. CTJ & CJ INDICATES SLAB CONTROL OR CONSTRUCTION JOINTS. RESPECTIVELY, REFER TO SHEET S10 FOR SECTIONS & DETAILS.
7. REFER TO ARCHITECTURAL SHEETS FOR MASONRY PARTITION TYPES.
8. ALL CMU TO BE FULLY GROUTED UNLESS OTHERWISE NOTED. SEE CMU WALL REINFORCING SCHEDULE ON SHEET S4.
9. SEE MECHANICAL AND ELECTRICAL SHEETS FOR CONCRETE PAD LOCATIONS, SIZES, AND THICKNESS NOT SHOWN. SEE SHEET S11 FOR DETAILS.
10. PRIOR TO CONSTRUCTION OF FOUNDATIONS, THE CONTRACTOR SHALL COORDINATE THE LOCATIONS OF ALL FOOTINGS, PIERS, AND TURN DOWN SLAB EDGES WITH THE PRE–ENGINEERED BUILDING DRAWINGS AND REVISE AS NECESSARY.
11. PRE–ENGINEERED COLUMN BASES SHALL BE DESIGNED AS PINNED ONLY.
12. LOCATIONS OF PORTAL FRAMES HAVE BEEN SHOWN IN PLAN AND SHALL NOT BE MODIFIED UNLESS APPROVED BY THE CONTRACTING OFFICER.
13. ALL PIERS FOR PRE–ENGINEERED BUILDING COLUMNS SHALL HAVE HAIR–PIN TIES AS INDICATED IN THE DETAILS.
14. ANCHOR BOLTS FOR PRE–ENGINEERED BUILDING COLUMNS SHALL BE (4)–20 DIA A36M ANCHOR BOLTS WITH 300 EMBED MIN.
15. TOP OF PIER ELEVATION SET AT –200. COORDINATE BOTTOM/BASE PLATE AND GROUT REQUIREMENTS WITH PRE–ENGINEERED BUILDING MANUFACTURER.

UNLESS OTHERWISE NOTED, LINEAR DIMENSIONS SHOWN ARE IN MILLIMETERS (MM)

0 2000 4000 8000

SCALE: 1: 100

US Army Corps of Engineers
Afghanistan Engineer District

SYMBOL	DESCRIPTION	DATE	APP

DESIGNED BY: GDH	DATE: 09–30–09		
DWN BY: MDB	SUBMITTED BY: BAKER	FILE NO.: ANPSDS–105XXX	
CHK BY: CWW			

Michael Baker Jr., Inc
A unit of Michael Baker Corporation
Airside Business Park
100 Airside Drive
Moon Township, PA 15108
www.mbakercorp.com

AFGHAN NATIONAL POLICE
STANDARD DESIGN
VEHICLE MAINTENANCE & POL BUILDING

FOUNDATION PLAN

SHEET REFERENCE NUMBER:
S5

100% SUBMISSION

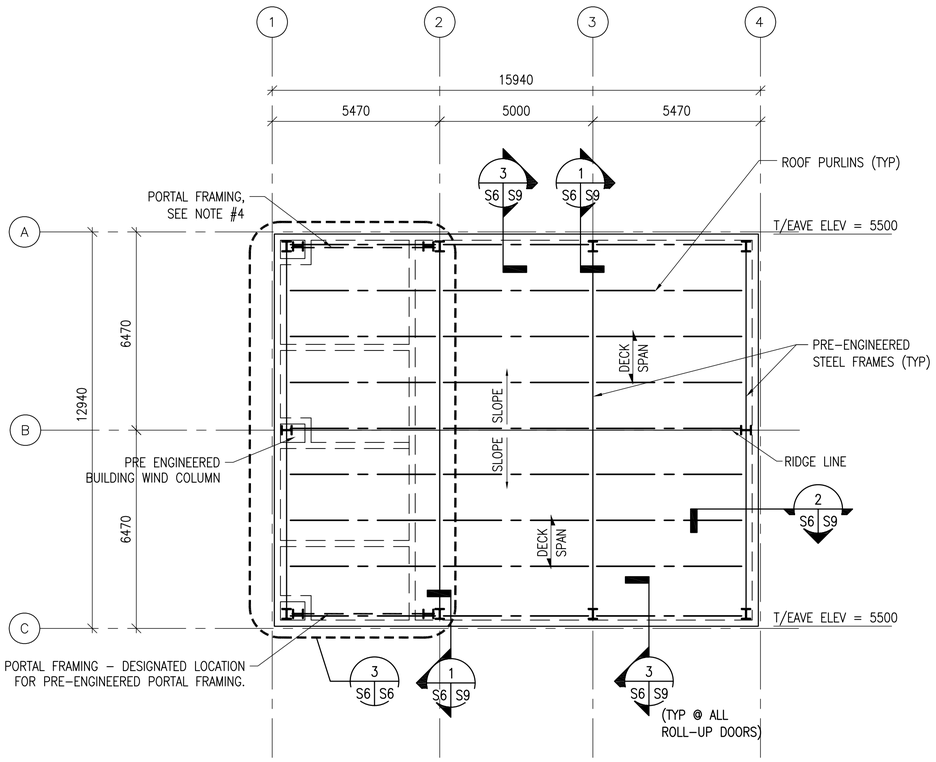

VEHICLE MAINTENANCE ROOF FRAMING PLAN

SCALE: 1:100

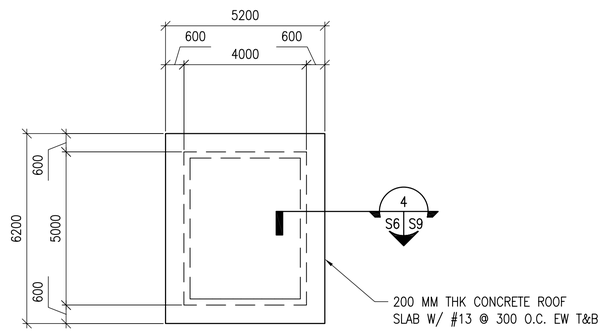

POL BUILDING ROOF FRAMING PLAN

SCALE: 1:100

NOTES:

1. REFER TO SHEETS S1 TO S3 FOR STRUCTURAL NOTES, BASIS OF DESIGN SYMBOLS AND ABBREVIATIONS.
2. THE PRE-ENGINEERED BUILDING MANUFACTURER SHALL COORDINATE ALL LOADING REQUIREMENTS INDICATED ON THE SHEETS AND SPECIFICATIONS WITH ARCH., STRUCT., MECH., AND ELEC.
3. PRE-ENGINEERED BUILDING COLUMN BASES SHALL BE DESIGNED AS PINNED ONLY.
4. LOCATIONS OF PORTAL FRAMES HAVE BEEN SHOWN IN PLAN AND SHALL NOT BE MODIFIED UNLESS APPROVED BY THE ENGINEER OF RECORD.
5. THE PRE-ENGINEERED BUILDING MANUFACTURER SHALL COORDINATE ALL HANGING LOADING FROM EQUIPMENT OR ARCHITECTURAL ELEMENTS AND INCLUDE IN THE DESIGN OF THE FRAMING.
6. SEE SPECIFICATION FOR LATERAL DRIFT REQUIREMENTS.
7. LOCATIONS OF END WALL COLUMNS SHALL BE MAINTAINED AT LOCATIONS INDICATED. THE BUILDING DOES NOT NEED PROVISIONS FOR FUTURE EXPANSION AT END WALLS.
8. THE PRE-ENGINEERED BUILDING MANUFACTURER IS RESPONSIBLE TO DESIGN ALL JAMB AND HEAD CONDITION SUPPORT SUB-FRAMING AS REQUIRED FOR THE LOADING INDICATED AND THE REQUIREMENTS OF THE ATTACHED COMPONENTS.
9. SEE CMU WALL REINFORCING SCHEDULE ON SHEET S4.

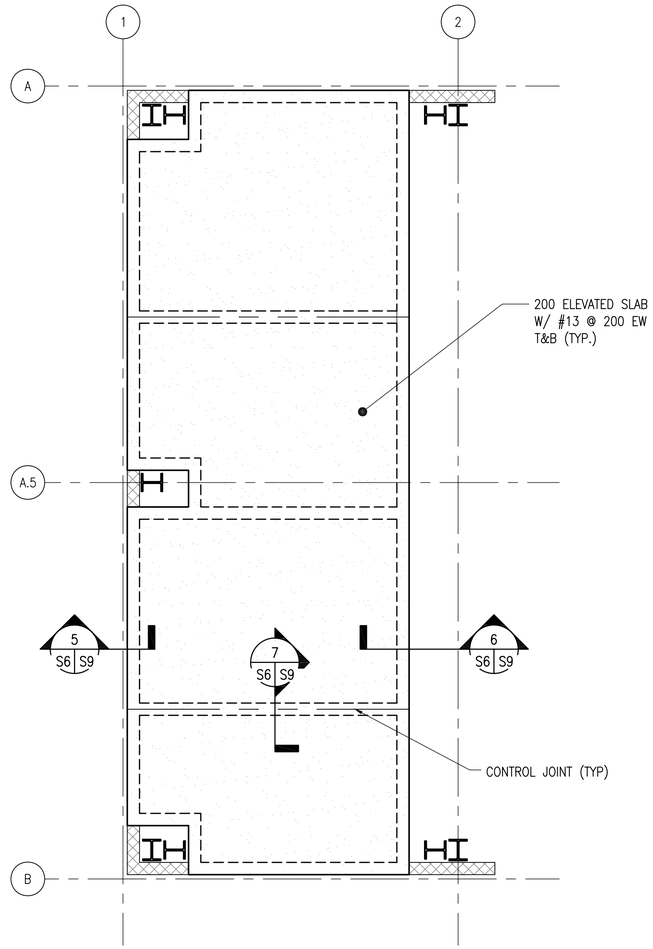

ENLARGED ELEVATED SLAB STORAGE AREA FRAMING PLAN

SCALE: 1:50

UNLESS OTHERWISE NOTED, LINEAR DIMENSIONS SHOWN ARE IN MILLIMETERS (MM)

0 2000 4000 8000

SCALE: 1: 100

US Army Corps of Engineers
Afghanistan Engineer District

SYMBOL	DESCRIPTION	DATE	APP'D

DESIGNED BY: GDH	DATE: 09-30-09
DWN BY: MDB	SUBMITTED BY: BAKER
CHK BY: CWW	FILE NO.: ANPSDS-106XXX

Michael Baker Jr, Inc
A unit of Michael Baker Corporation
Airside Business Park
100 Airside Drive
Moon Township, PA 15108
www.mbakercorp.com

AFGHAN NATIONAL POLICE
STANDARD DESIGN
VEHICLE MAINTENANCE & POL BUILDING

VEHICLE MAINTENANCE/POL BUILDING ROOF FRAMING PLAN

SHEET REFERENCE NUMBER:
S6

100% SUBMISSION

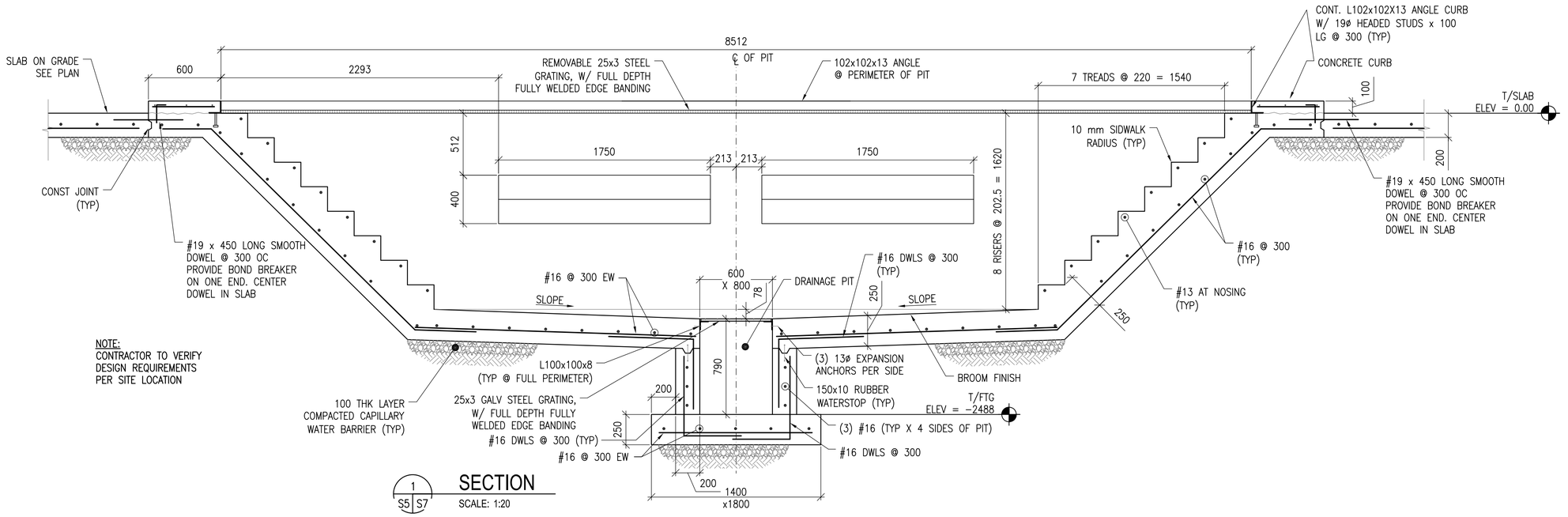

1 S5 S7 **SECTION**
SCALE: 1:20

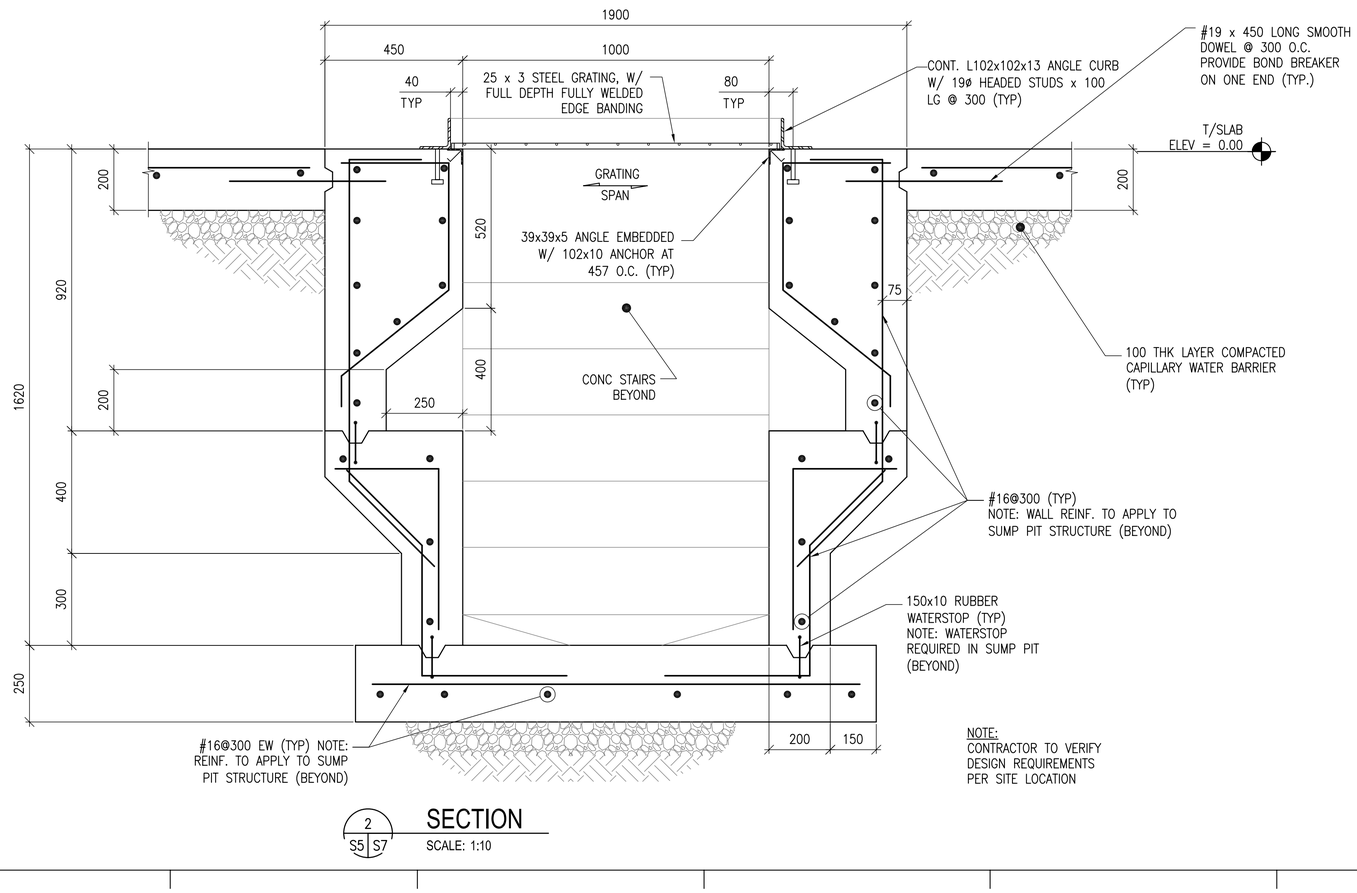

2 S5 S7 **SECTION**
SCALE: 1:10

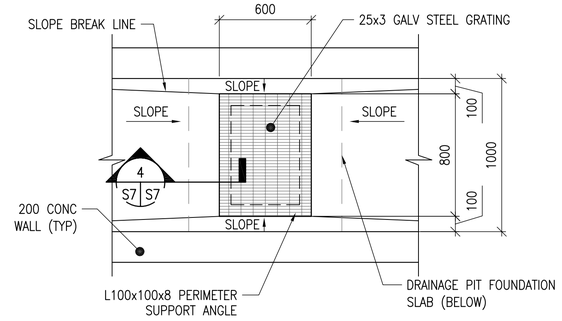

3 S7 S7 **DRAINAGE PIT DETAIL**
SCALE: 1:20

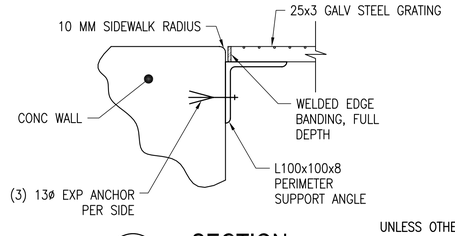

4 S7 S7 **SECTION**
SCALE: 1:5

UNLESS OTHERWISE NOTED, LINEAR DIMENSIONS SHOWN ARE IN MILLIMETERS (MM)

0 100 200 400
SCALE: 1: 5

0 200 400 800
SCALE: 1: 10

0 400 800 1600
SCALE: 1: 20

US Army Corps of Engineers
Afghanistan Engineer District

SYMBOL	DESCRIPTION	DATE	APP

DESIGNED BY: GDH
DWN BY: MDB
CHK BY: CWW
DATE: 09-30-09
SUBMITTED BY: BAKER
FILE NO.: ANPSDS-307XXX

Michael Baker Jr., Inc
A unit of Michael Baker Corporation
Airside Business Park
100 Airport Road
Moon Township, PA 15108
www.mbakercorp.com

AFGHAN NATIONAL POLICE
STANDARD DESIGN
VEHICLE MAINTENANCE & POL BUILDING

VEHICLE MAINTENANCE/POL BUILDING
SECTIONS AND DETAILS

SHEET REFERENCE NUMBER:
S7

100% SUBMISSION

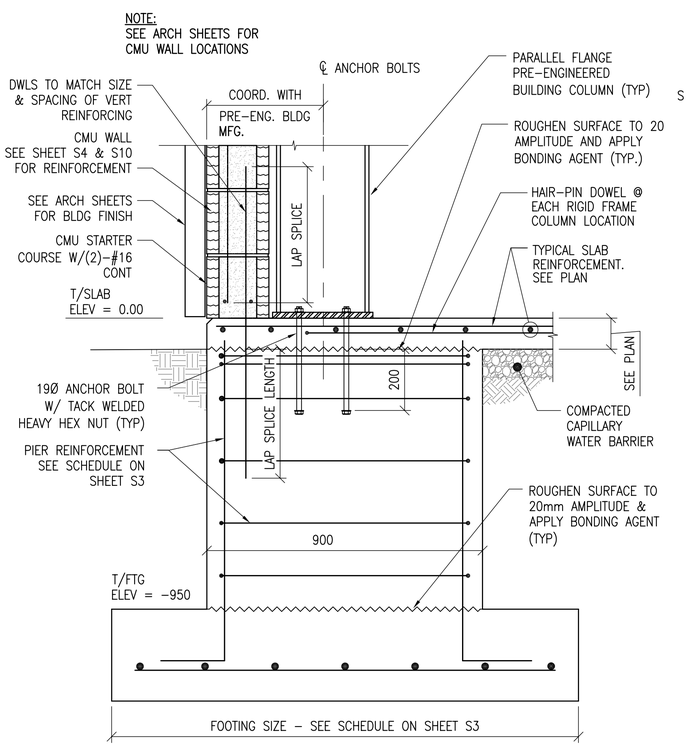

1 S5 S8 SECTION
SCALE: 1:10

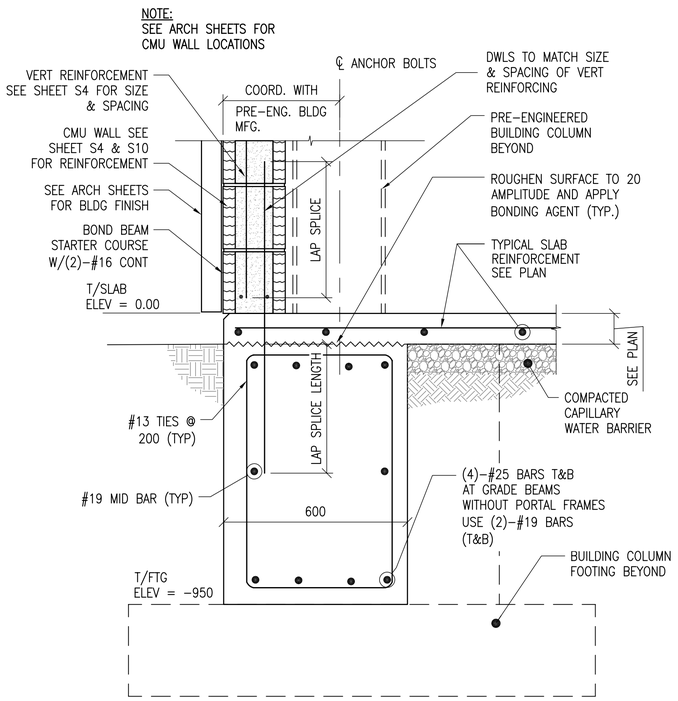

2 S5 S8 SECTION
SCALE: 1:10

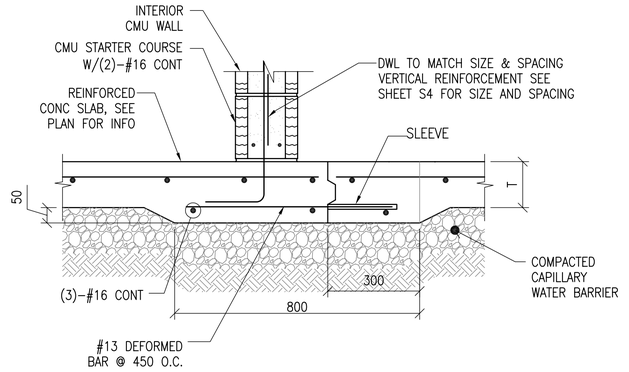

3 S5 S8 SECTION
SCALE: 1:10

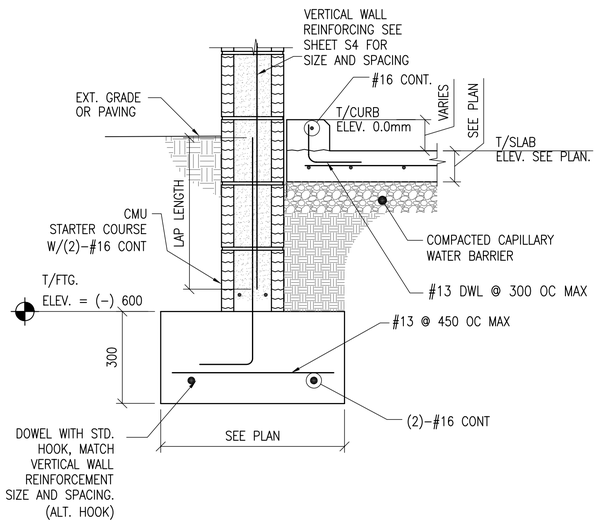

4 S5 S8 SECTION
SCALE: 1:10

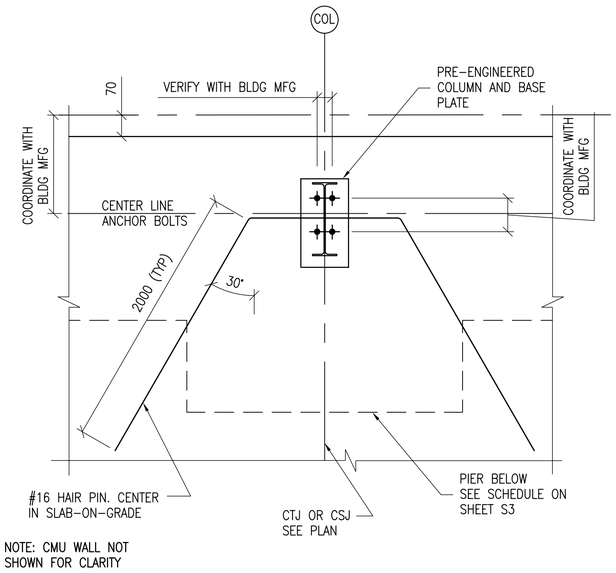

A S5 S8 COLUMN DETAIL
SCALE: 1:10

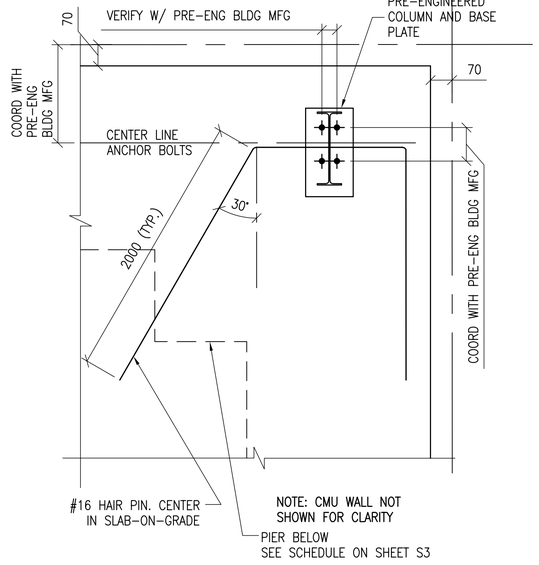

B S5 S8 COLUMN DETAIL
SCALE: 1:10

UNLESS OTHERWISE NOTED, LINEAR DIMENSIONS SHOWN ARE IN MILLIMETERS (MM)

0 200 400 800

SCALE: 1: 10

US Army Corps of Engineers
Afghanistan Engineer District

SYMBOL	DESCRIPTION	DATE	APP

DESIGNED BY: GDH	DATE: 09-30-09		
DWN BY: RCG	SUBMITTED BY: BAKER		
CHK BY: CWW	FILE NO.: ANPSDS-308XXX		

Michael Baker Jr., Inc
A unit of Michael Baker Corporation
Airside Business Park
100 Airside Drive
Moon Township, PA 15108
www.mbakercorp.com

AFGHAN NATIONAL POLICE
STANDARD DESIGN
VEHICLE MAINTENANCE & POL BUILDING

SECTIONS & DETAILS

SHEET REFERENCE NUMBER:
S8

100% SUBMISSION

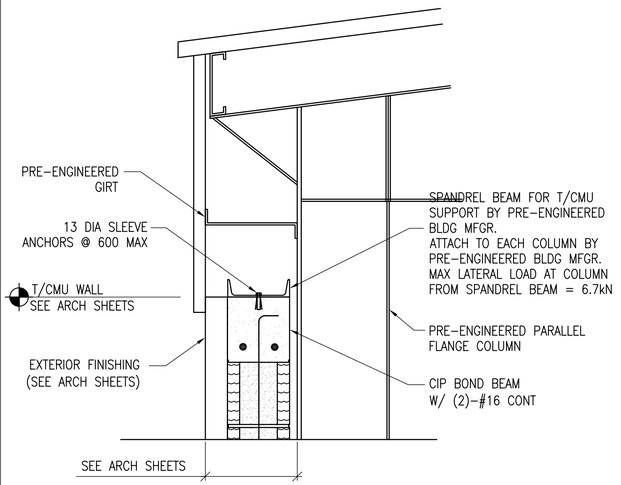

NOTE:
VERTICAL CMU WALL REINF NOT SHOWN FOR CLARITY, SEE SHEET S4 FOR SIZE AND SPACING (TYP)

1 S6 S9 SECTION
SCALE: 1:10

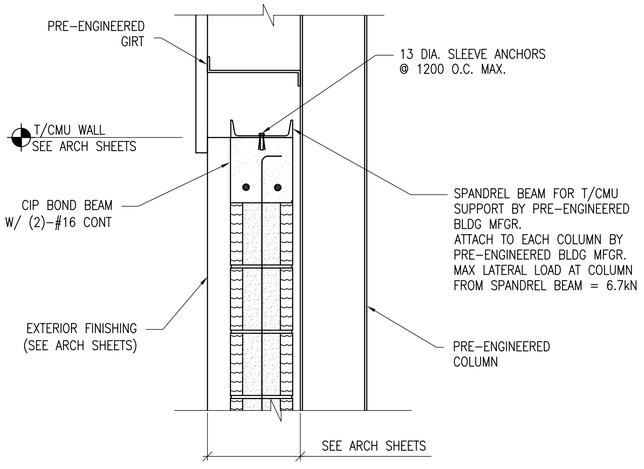

NOTE:
VERTICAL CMU WALL REINF NOT SHOWN FOR CLARITY, SEE SHEET S4 FOR SIZE AND SPACING (TYP)

2 S6 S9 SECTION
SCALE: 1:10

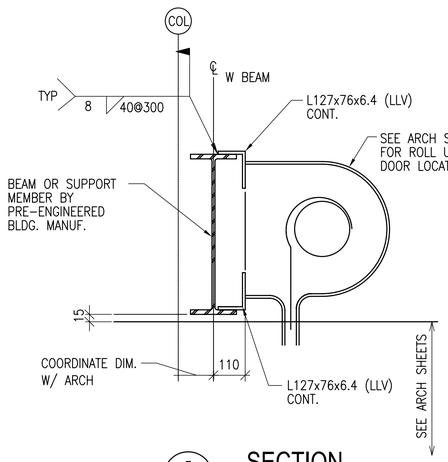

3 S6 S9 SECTION
SCALE: 1:10

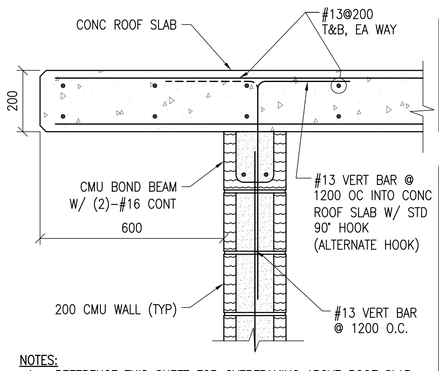

NOTES:
1. REFERENCE THIS SHEET FOR OVERFRAMING ABOVE ROOF SLAB.

4 S6 S9 SECTION
SCALE: 1:10

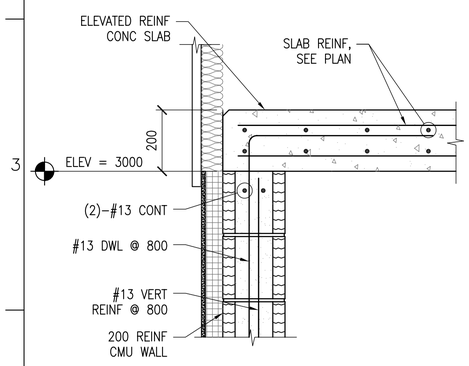

5 S6 S9 SECTION
SCALE: 1:10

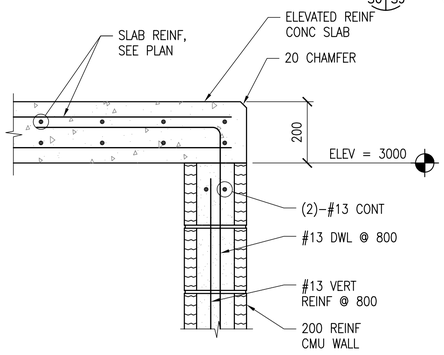

6 S6 S9 SECTION
SCALE: 1:10

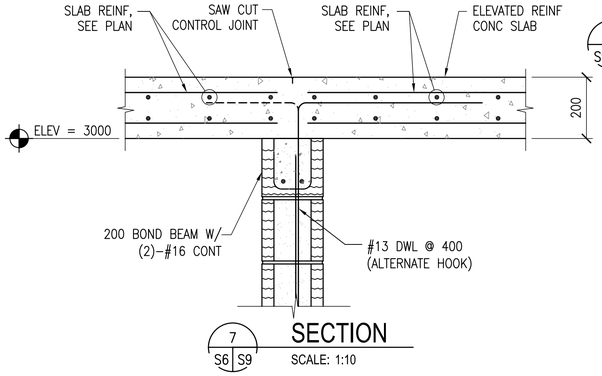

7 S6 S9 SECTION
SCALE: 1:10

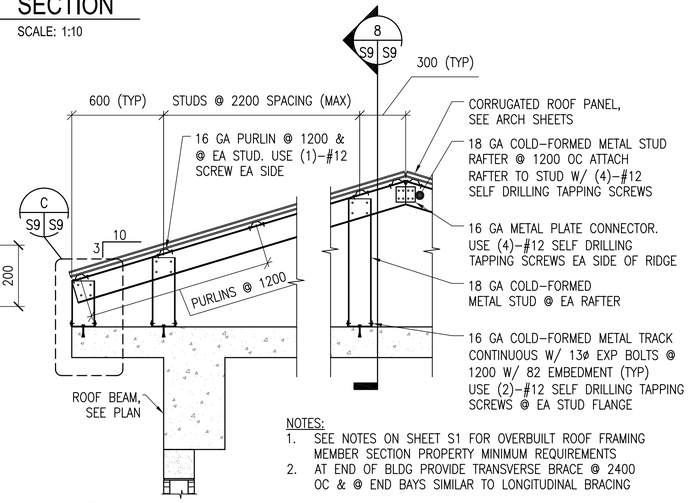

NOTES:
1. SEE NOTES ON SHEET S1 FOR OVERBUILT ROOF FRAMING MEMBER SECTION PROPERTY MINIMUM REQUIREMENTS
2. AT END OF BLDG PROVIDE TRANSVERSE BRACE @ 2400 OC & @ END BAYS SIMILAR TO LONGITUDINAL BRACING

A S9 S9 TYPICAL ROOF BRACE LAYOUT DETAIL
SCALE: NTS

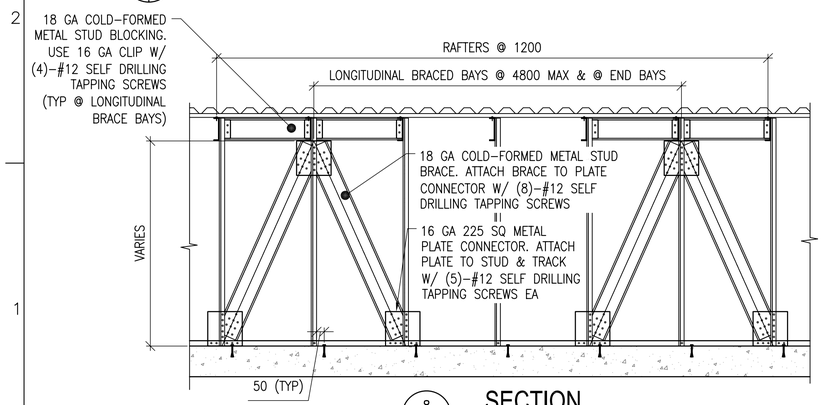

8 S9 S9 SECTION
SCALE: NTS

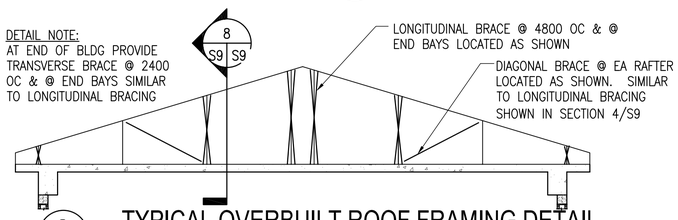

B S9 S9 TYPICAL OVERBUILT ROOF FRAMING DETAIL
SCALE: NTS

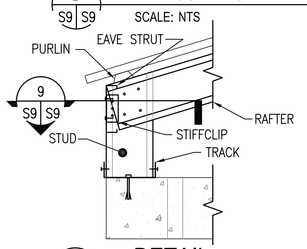

C S9 S9 DETAIL
SCALE: 1:10

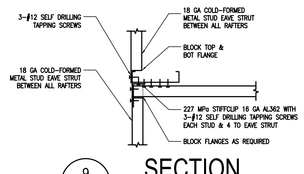

9 S9 S9 SECTION
SCALE: 1:5

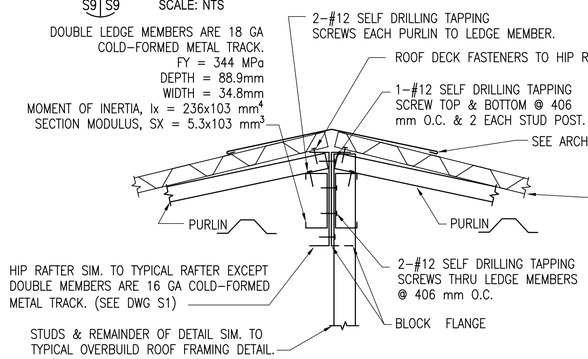

TYPICAL HIP FRAMING DETAIL
SCALE: 1:5

UNLESS OTHERWISE NOTED, LINEAR DIMENSIONS SHOWN ARE IN MILLIMETERS (MM)

0 100 200 400
SCALE: 1: 5
0 200 400 800
SCALE: 1: 10

US Army Corps of Engineers
Afghanistan Engineer District

SYMBOL	DESCRIPTION	DATE	APP

DESIGNED BY: WJJ	DATE: 09-30-09
DWN BY: RCG	SUBMITTED BY: BAKER
CHK BY: CWW	FILE NO.: ANPSDS-309XXX

Michael Baker Jr., Inc
A unit of Michael Baker Corporation
Airside Business Park
100 Airside Drive
Moon Township, PA 15108
www.mbakercorp.com

AFGHAN NATIONAL POLICE
STANDARD DESIGN
VEHICLE MAINTENANCE & POL BUILDING

SECTIONS & DETAILS

SHEET REFERENCE NUMBER:
S9

100% SUBMISSION

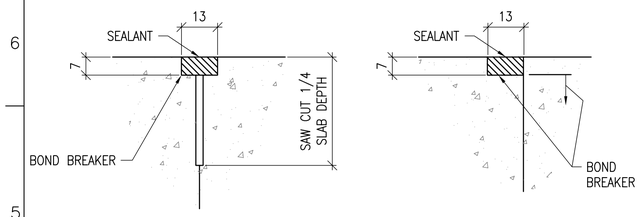

CONTROL JOINT DETAIL

CONSTRUCTION JOINT DETAIL

1 S10 TYPICAL CONCRETE SLAB JOINT FINISH DETAIL

SCALE: NTS

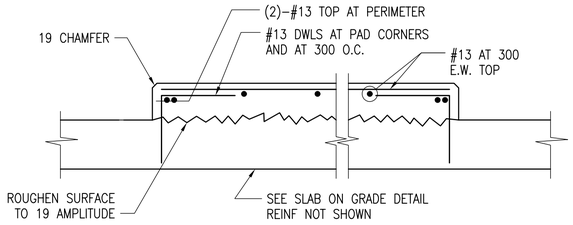

2 S10 INTERIOR EQUIPMENT PAD DETAIL

SCALE: NTS

DETAIL NOTE:

1. COORDINATE EQUIPMENT PAD SIZE AND LOCATIONS W/ ELECTRICAL/MECHANICAL SHEETS AND EQUIPMENT MANUFACTURER.

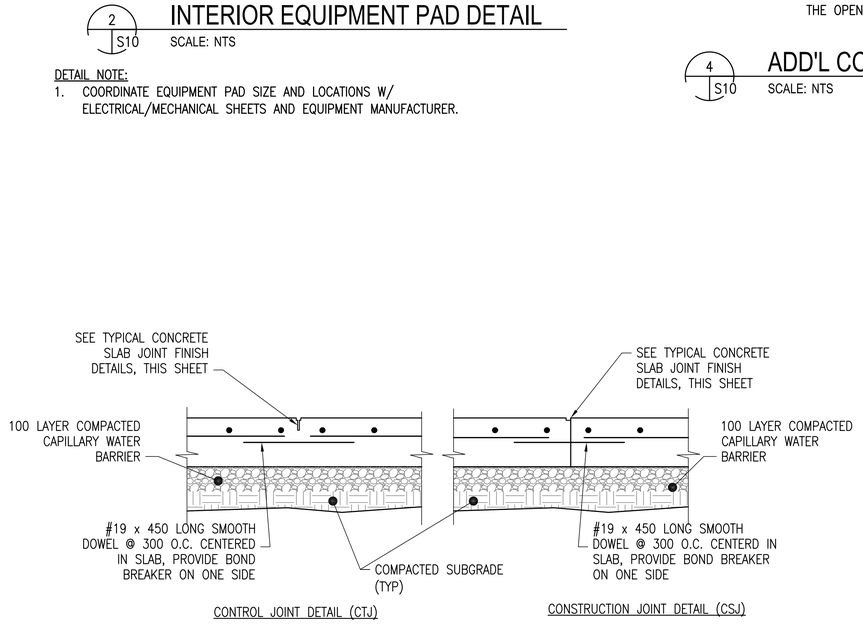

CONTROL JOINT DETAIL (CTJ)

CONSTRUCTION JOINT DETAIL (CSJ)

3 S10 TYPICAL SLAB ON GRADE JOINT DETAILS

SCALE: NTS

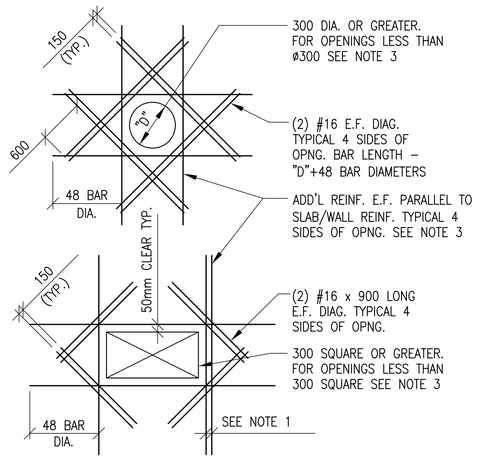

SLAB OPENINGS

DETAIL NOTES:

1. WHERE MORE THAN ONE ADDITIONAL BAR IS REQUIRED PARALLEL TO THE EXISTING SLAB/WALL REINFORCING THE ADDITIONAL REINFORCING BARS SHALL BE SPACED AT 100 ON CENTER.
2. ADDITIONAL REINFORCING PARALLEL TO THE SLAB/WALL REINFORCING SHALL BE #16 BARS THAT PROVIDE A STEEL AREA ON EACH SIDE OF THE OPENING EQUAL TO 1/2 THE AREA OF THE REINFORCING CUT BY THE OPENING.
3. FOR OPENINGS WITH SIDES OR DIAMETERS LESS THAN 300 SPREAD THE SLAB/WALL REINFORCING TO CLEAR THE OPENING.

4 S10 ADD'L CONCRETE REINFORCEMENT DETAILS

SCALE: NTS

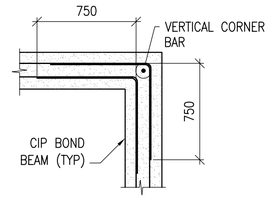

BOND BEAM CORNER

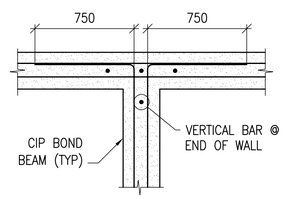

BOND BEAM INTERSECTION

5 S10 CIP BOND BEAM DETAILS

SCALE: NTS

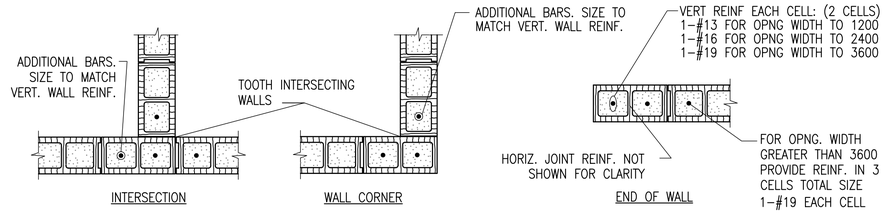

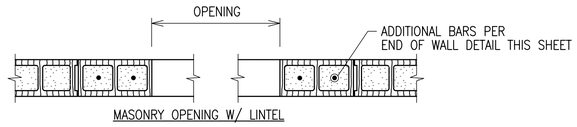

MASONRY OPENING W/ LINTEL

NOTE:

1. ALL CELLS TO BE FULLY GROUTED

6 S10 TYPICAL CMU DETAILS

SCALE: NTS

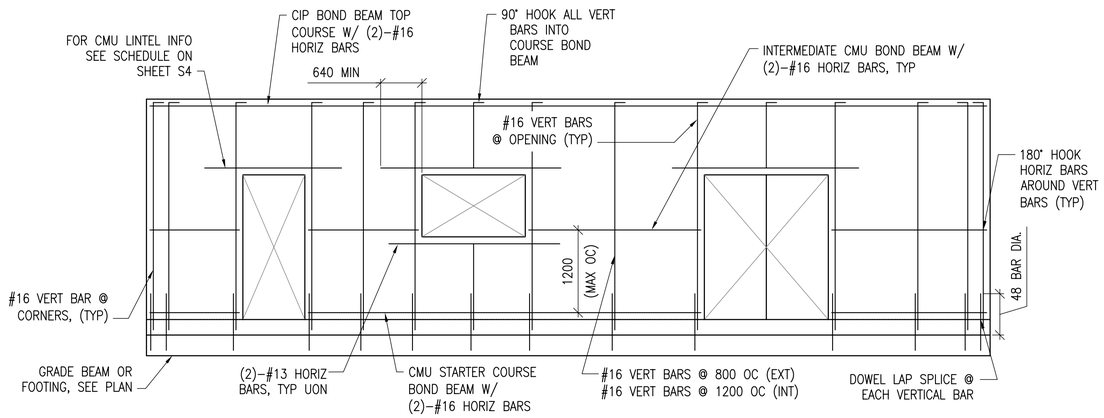

7 S10 MIN CMU WALL REINFORCING

SCALE: NTS

LINTEL NOTES:

CMU LINTEL REINFORCEMENT AS PER SCHEDULE ON SHEET S4

UNLESS OTHERWISE NOTED, LINEAR DIMENSIONS SHOWN ARE IN MILLIMETERS (MM)

US Army Corps of Engineers

Afghanistan Engineer District

SYMBOL	DESCRIPTION	DATE	APP

DESIGNED BY: WJJ	DATE: 09-30-09
DWN BY: RCG	SUBMITTED BY: BAKER
CHK BY: CWW	FILE NO.: ANPSDS-510XXX

Michael Baker Jr., Inc
A unit of Michael Baker Corporation
Airside Business Park
100 Airside Drive
Moon Township, PA 15108
www.mbakercorp.com

AFGHAN NATIONAL POLICE
STANDARD DESIGN
VEHICLE MAINTENANCE & POL BUILDING

TYPICAL DETAILS (VEHICLE MAINTENANCE BLDG)

SHEET REFERENCE NUMBER:

S10

100% SUBMISSION

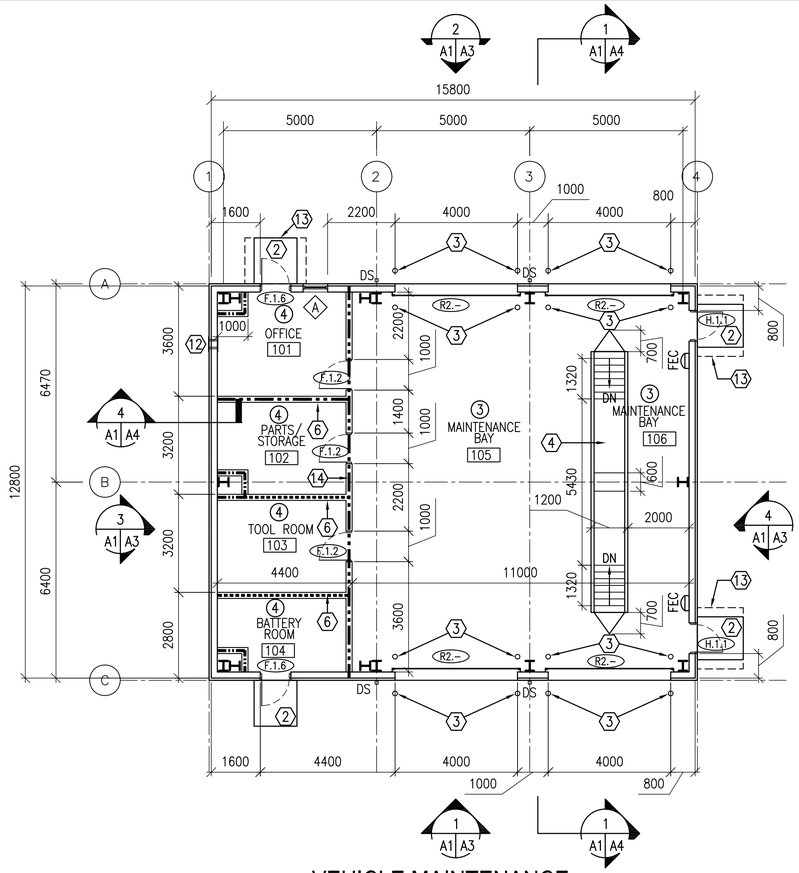

VEHICLE MAINTENANCE FLOOR PLAN

1 A1 A1 — SCALE: 1:100

206.3 GSM

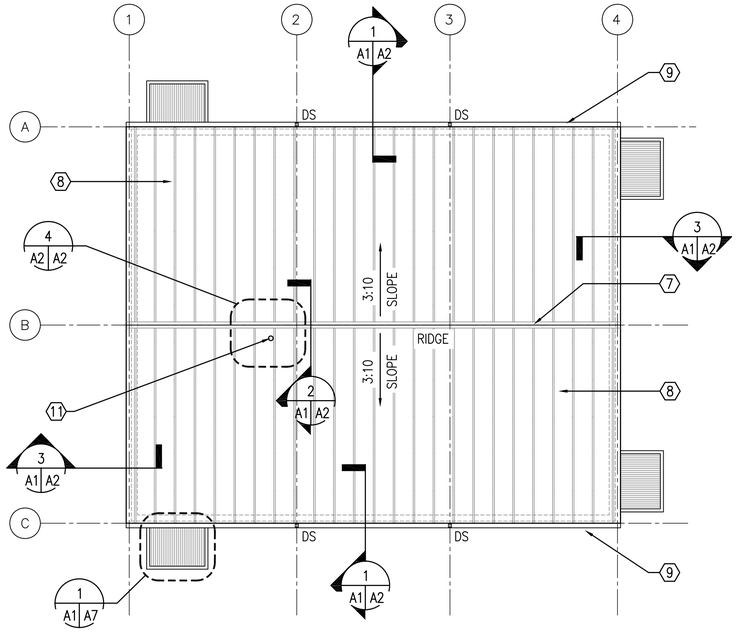

VEHICLE MAINTENANCE ROOF PLAN

2 A1 A1 — SCALE: 1:100

VEHICLE MAINTENANCE ROOF PLAN NOTES:

1. PRODUCTS BY METAL BUILDING MANUFACTUER:
   - A. PRE–FINISHED METAL ROOF PANELS.
   - B. STEEL PURLINS
   - C. VINYL FACED FIBERGLASS INSULATION.
   - D. ACCESSORIES.
   - E. GUTTERS, DOWNSPOUTS AND SUPPORTS.
2. ROOFING INSTALLTION SHALL BE CONTINUOUS WITH ALL OPERATIONS PROCEEDING TOGETHER. BEFORE CESSATION OF WORK ON EACH WORKING DAY OR WHEN WORK IS I NTERRUPTED DUE TO RAINFALL OR OTHER CAUSES, THE ROOF SHALL BE SEALED AGAINST WATER INTRUSION.

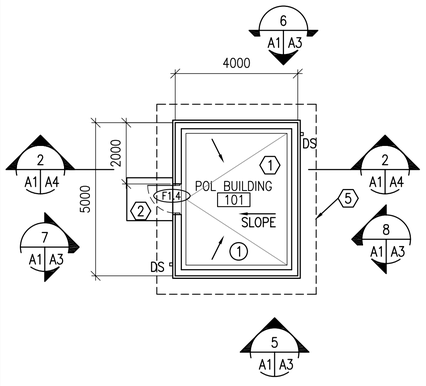

POL BUILDING FLOOR PLAN

3 A1 A1 — SCALE: 1:100

21.5 GSM

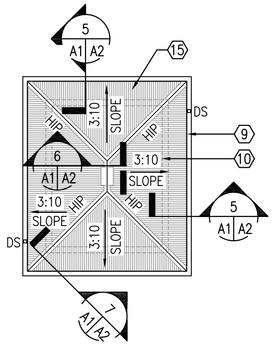

POL BUILDING ROOF PLAN

4 A1 A1 — SCALE: 1:100

POL BUILDING ROOF PLAN NOTES:

1. PRODUCTS:
   - A. CORRUGATED METAL ROOF PANELS.
2. ROOFING INSTALLATION SHALL BE CONTINUOUS WITH ALL OPERATIONS PROCEEDING TOGETHER. BEFORE CESSATION OF WORK ON EACH WORKING DAY OR WHEN WORK IS INTERRUPTED DUE TO RAINFALL OR OTHER CAUSES, THE ROOF SHALL BE SEALED AGAINST WATER INTRUSION.

ROOM FINISHES: (X)

1. WALLS: PAINTED PLASTER,
   FLOOR: SEALED CONCRETE
   CEILING: PAINTED PLASTER APPLIED TO STRUCTURE
3. WALLS: METAL LINER PANEL ABOVE PAINTED PLASTER
   FLOOR: SEALED CONCRETE
   CEILING: METAL LINER PANEL
4. WALLS: PAINTED PLASTER
   FLOOR: SEALED CONCRETE
   CEILING: EXPOSED METAL DECK

GENERAL NOTES:

A. INTERIOR PARTITIONS ARE 3000 MM HIGH. INTERIOR PARTITIONS SHALL BE 200 MM CMU UNLESS OTHERWISE NOTED.

B. OPENINGS FOR DOORS SHALL BE LOCATED A MINIMUM OF 200 MM FROM THE ADJACENT WALL.

C. SURFACES TO BE PAINTED SHALL BE CLEAN AND FREE OF FOREIGN MATTER BEFORE APPLICATION OF PAINT. CLEANING SHALL BE SCHEDULED SO THAT DUST AND OTHER CONTAMINANTS WILL NOT FALL ON WET, NEWLY PAINTED SURFACES.

D. CONCRETE AND INTERIOR MASONRY SURFACES GROUTED SOLID SHALL BE ALLOWED TO DRY AT LEAST 30 DAYS BEFORE PAINTING EXCEPT CONCRETE SLAB ON GRADE WHICH SHALL BE ALLOWED TO CURE 90 DAYS BEFORE PAINTING.

E. PAINTS CONTAINING LEAD IN EXCESS OF 0.06 PERCENT BY WEIGHT OF THE TOTAL NONVOLATILE CONTENT SHALL NOT BE USED.

F. MERCURIAL FUNGICIDES SHALL NOT BE USED IN OIL–BASE PAINT.

G. REMOVE LOOSE DIRT AND CLEAN SURFACES BEFORE PAINTING. APPLY PAINT TO INTERIOR STRUCTURAL RIGID FRAMINGS AND CEILINGS AND TEST FOR ADHESION. PRIMER COAT FOR MASONRY. INITIAL FIRST COAT WITH AN ACRYLIC LATEX PAINT FOR EXTERIOR SURFACES AND A SECOND COAT WITH A WATER REPELLENT ACRYLIC LATEX PAINT.

H. METAL DOORS AND FRAMES SHALL RECEIVE A PRIMER COAT PLUS TWO COATS OF PAINT.

I. DIMENSIONS ARE TO STRUCTURAL COLUMN GRID, EDGE OF WINDOW OPENINGS, AND TO HINGE SIDE OF DOOR OPENINGS.

J. THE 2 HOUR SEPARATION BETWEEN THE MAINTENANCE BAY AND ALL OTHER ANCILLARY INTERIOR SPACES IS PROVIDED AS DIRECTED IN THE SCOPE OF WORK TO COMPLY WITH NFPA 101, 40.2.4.1.2 AND 40.2.5.1. IN ACCORDANCE WITH NFPA 101, TABLE 6.1.14.4.1, THE OFFICE MUST HAVE A 2 HOUR SEPARATION FROM ALL OTHER INTERIOR SPACES. THE BATTERY ROOM MUST HAVE A MINIMUM 1 HOUR SEPARATION FROM ALL OTHER INTERIOR SPACES. PROVIDE SEPARATION AS INDICATED.

K. FILL ANULAR SPACE AT ANY AND ALL PENETRATIONS IN FIRE RATED PARTITIONS AND CEILINGS WITH APPROPRIATE FIRE STOPPING MATERIALS.

KEY NOTES: (X)

1. DEPRESS SLAB 100 MM TO 150 MM – RE: 9,10/A5
2. CONCRETE STOOP – RE: DETAIL 1/A6.
3. GALVANIZED STEEL BOLLARD FILLED WITH CONCRETE ON BOTH SIDE OF ROLL UP DOOR, TYPICAL. SEE DETAIL 4/A6.
4. MAINTENANCE PIT. SEE SECTION 2/A6 AND 3/A6.
5. LINE OF ROOF OVERHANG ABOVE.
6. 1–HOUR RATED PARTITION.
7. CONTINUOUS RIDGE FLASHING.
8. PRE–FINISHED METAL ROOF PANELS OVER STEEL PURLINS WITH VINYL FACED FIBERGLASS INSULATION BY METAL BUILDING MANUFACTURER.
9. METAL GUTTERS AND DOWNSPOUTS WITH SPLASH BLOCK.
10. LINE OF BUILDING WALL, BELOW
11. ROOF PENETRATION RE: PLUMBING DRAWINGS
12. TWO–PIECE WALL THIMBLE AND TRIM PLATE FOR OPTIONAL WOOD BURNING STOVE CHIMNEY PIPE. STOVE AND PIPE BY OTHERS.
13. LINE OF CANOPY ABOVE–SEE SHEET A7.
14. 2–HOUR RATED PARTITION.
15. CORRUIGATED METAL ROOF PANELS N COLD–FORMED METAL FRAMING.

LEGEND:

- F.1.4 — DOOR TYPE, SEE SHEET A5
- A — WINDOW TYPE, SEE SHEET A5
- (X) — KEY NOTE
- FEC — FIRE EXTINGUISHER CABINET
- (1) — ROOM FINISH TYPE DESIGNATION
- 1–HOUR RATED PARTITION
- 2–HOUR RATED PARTITION

UNLESS OTHERWISE NOTED, LINEAR DIMENSIONS SHOWN ARE IN MILLIMETERS (MM)

0 2000 4000 8000

SCALE: 1: 100

US Army Corps of Engineers
Afghanistan Engineer District

DESIGNED BY: PFF	DWN BY: KJG	CHK BY: NLJ
DATE: 09–30–09	SUBMITTED BY: BAKER	FILE NO.: ANPSDA–101XXX

SYMBOL	DESCRIPTION	DATE	APP

Michael Baker Jr., Inc
A unit of Michael Baker Corporation
Airside Business Park
100 Airside Drive
Moon Township, PA 15108
www.mbakercorp.com

AFGHAN NATIONAL POLICE
STANDARD DESIGN
VEHICLE MAINTENANCE & POL BUILDING

FLOOR AND ROOF PLANS

SHEET REFERENCE NUMBER: A1

100% SUBMISSION

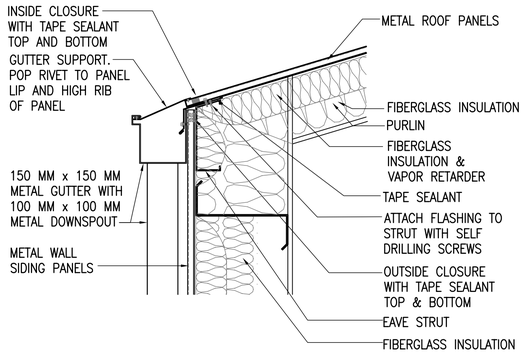

1 A1 A2 **EAVE WITH GUTTER DETAIL**

SCALE: 1:10

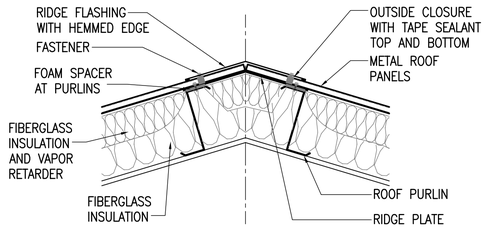

2 A1 A2 **RIDGE DETAIL**

SCALE: 1:10

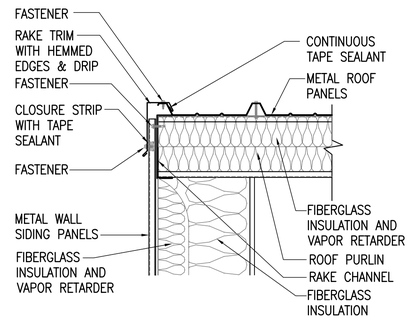

3 A1 A2 **RAKE DETAIL**

SCALE: 1:10

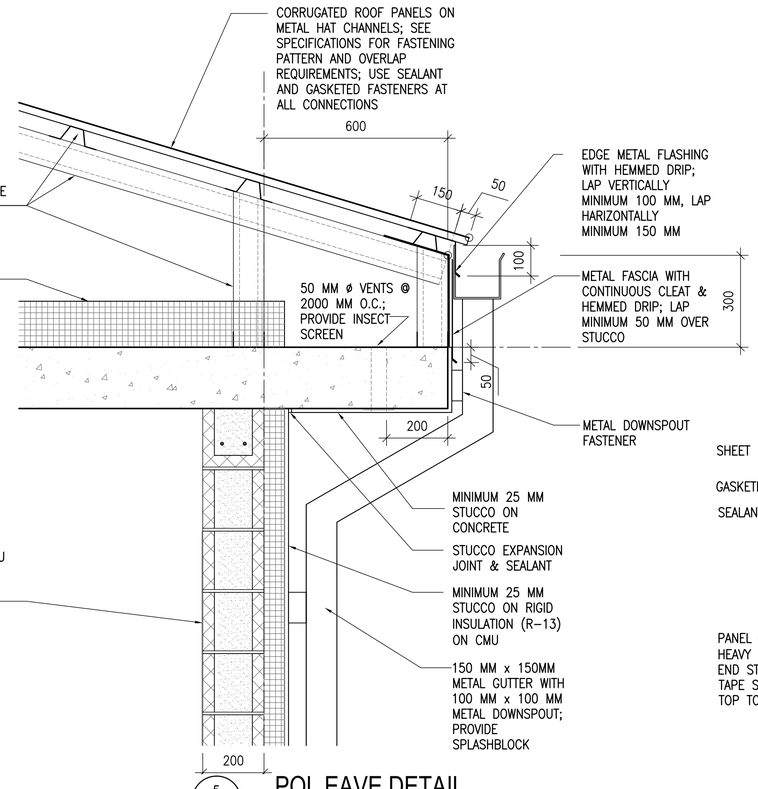

5 A1 A2 **POL EAVE DETAIL**

SCALE: 1:10

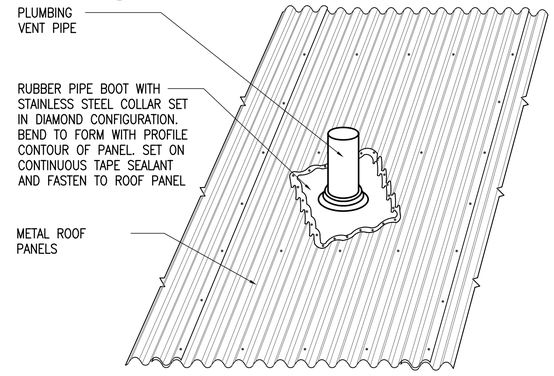

4 A1 A2 **PLUMBING VENT DETAIL**

SCALE: NONE

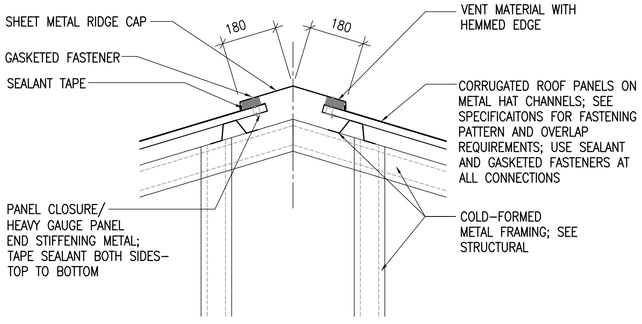

6 A1 A2 **POL RIDGE VENT DETAIL**

SCALE: 1:10

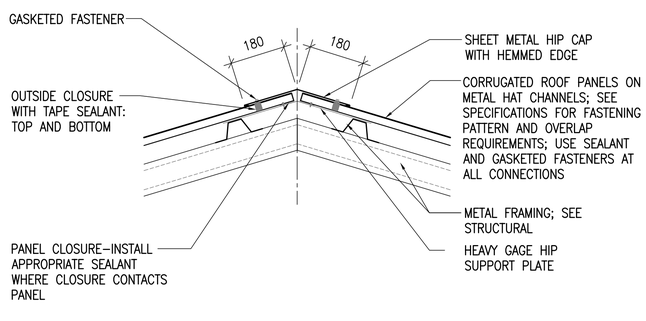

7 A1 A2 **POL HIP DETAIL**

SCALE: 1:10

UNLESS OTHERWISE NOTED, LINEAR DIMENSIONS SHOWN ARE IN MILLIMETERS (MM)

0 200 400 800

SCALE: 1: 10

US Army Corps of Engineers

Afghanistan Engineer District

SYMBOL	DESCRIPTION	DATE	APP

DESIGNED BY: PFF
DWN BY: KJG
CHK BY: NLJ
DATE: 09-30-09
SUBMITTED BY: BAKER
FILE NO.: ANPSDA-502XXX

Michael Baker Jr., Inc
A unit of Michael Baker Corporation
Airside Business Park
100 Airside Drive
Moon Township, PA 15108
www.mbakercorp.com

AFGHAN NATIONAL POLICE
STANDARD DESIGN
VEHICLE MAINTENANCE & POL BUILDING

ROOF DETAILS

SHEET REFERENCE NUMBER:

A2

100% SUBMISSION

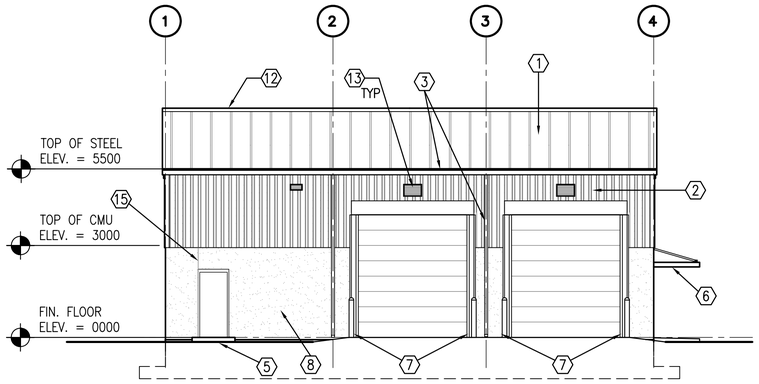

1 A1 A3 **EAST ELEVATION**

SCALE: 1:100
VEHICLE MAINTENNCE BUILDING

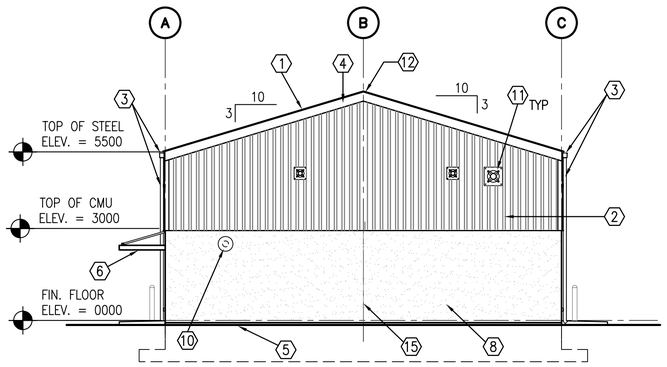

3 A1 A3 **SOUTH ELEVATION**

SCALE: 1:100
VEHICLE MAINTENNCE BUILDING

KEY NOTES: (X)

1. PRE-FINISHED METAL ROOF PANELS BY METAL BUILDING MANUFACTURER.
2. PRE-FINISHED METAL WALL PANELS BY METAL BUILDING MANUFACTURER.
3. METAL GUTTERS AND DOWNSPOUTS BY METAL BUILDING MANUFACTURER, TYPICAL.
4. RAKE TRIM BY METAL BUILDING MANUFACTURER.
5. CONCRETE STOOP – RE: DETAIL 1/A6
6. METAL CANOPY BY METAL BUILDING MANUFACTURER.
7. GALVANIZED STEEL BOLLARD FILLED WITH CONCRETE ON EACH SIDE OF ROLL UP DOOR.
8. STUCCO AND RIGID INSULATION SYSTEM OVER CMU.
9. CORRUGATED METAL ROOF PANELS ON COLD-FORMED METAL FRAMING.
10. 275 MM SLEEVE THROUGH WALL WITH CAP FOR FUTURE WOOD BURNING STOVE. MOUNT SLEEVE 2400 MM ABOVE FINISH FLOOR. STOVE BY OTHERS.
11. EXHAUST FAN – RE: MECH
12. CONTINUOUS RIDGE FLASHING – RE: 2/A2
13. LOUVER – RE: MECH
14. RIDGE VENT AND FLASHING – RE: 6,7/A2
15. CMU CONTROL JOINT, TYPICAL.

GENERAL NOTES:

1. COORDINATE SIZE AND LOCATION OF OPENINGS FOR MECHANICAL ITEMS WITH MECHANICAL DRAWINGS.
2. PROVIDE STRUCTURAL LINTELS AS REQUIRED – RE: STRUCT.
3. PROVIDE CMU CONTROL JOINT AT EACH STEEL COLUMN – RE: DETAIL 8/A4.

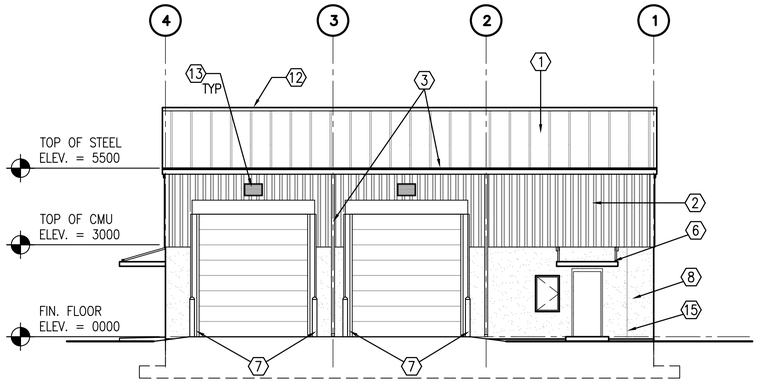

2 A1 A3 **WEST ELEVATION**

SCALE: 1:100
VEHICLE MAINTENNCE BUILDING

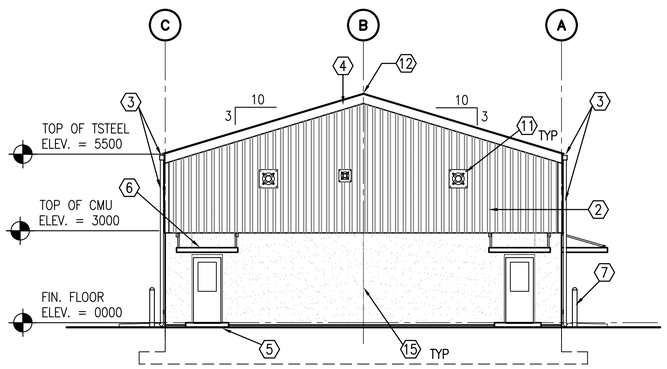

4 A1 A3 **NORTH ELEVATION**

SCALE: 1:100
VEHICLE MAINTENNCE BUILDING

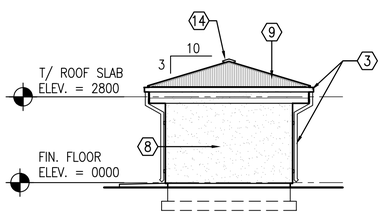

5 A1 A3 **POL EAST ELEVATION**

SCALE: 1:100
POL BUILDING

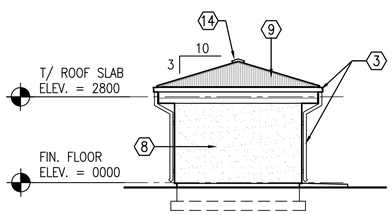

6 A1 A3 **POL WEST ELEVATION**

SCALE: 1:100
POL BUILDING

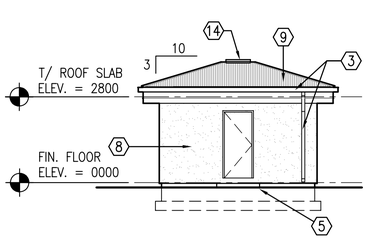

7 A1 A3 **POL SOUTH ELEVATION**

SCALE: 1:100
POL BUILDING

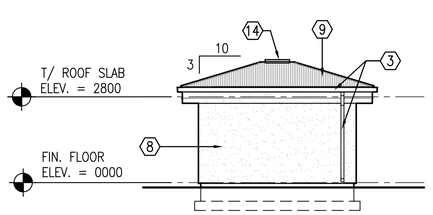

8 A1 A3 **POL NORTH ELEVATION**

SCALE: 1:100
POL BUILDING

UNLESS OTHERWISE NOTED, LINEAR DIMENSIONS SHOWN ARE IN MILLIMETERS (MM)

0 2000 4000 8000

SCALE: 1: 100

US Army Corps of Engineers
Afghanistan Engineer District

SYMBOL	DESCRIPTION	DATE	APP'D

DESIGNED BY: PFF | DRAWN BY: KJG | CHK BY: NLJ | DATE: 09-30-09 | SUBMITTED BY: BAKER | FILE NO.: ANPSDA-203XXX

Michael Baker Jr., Inc
A unit of Michael Baker Corporation
Airside Business Park
100 Airside Drive
Moon Township, PA 15108
www.mbakercorp.com

AFGHAN NATIONAL POLICE
STANDARD DESIGN
VEHICLE MAINTENANCE & POL BUILDING

EXTERIOR ELEVATIONS

SHEET REFERENCE NUMBER:
A3

100% SUBMISSION

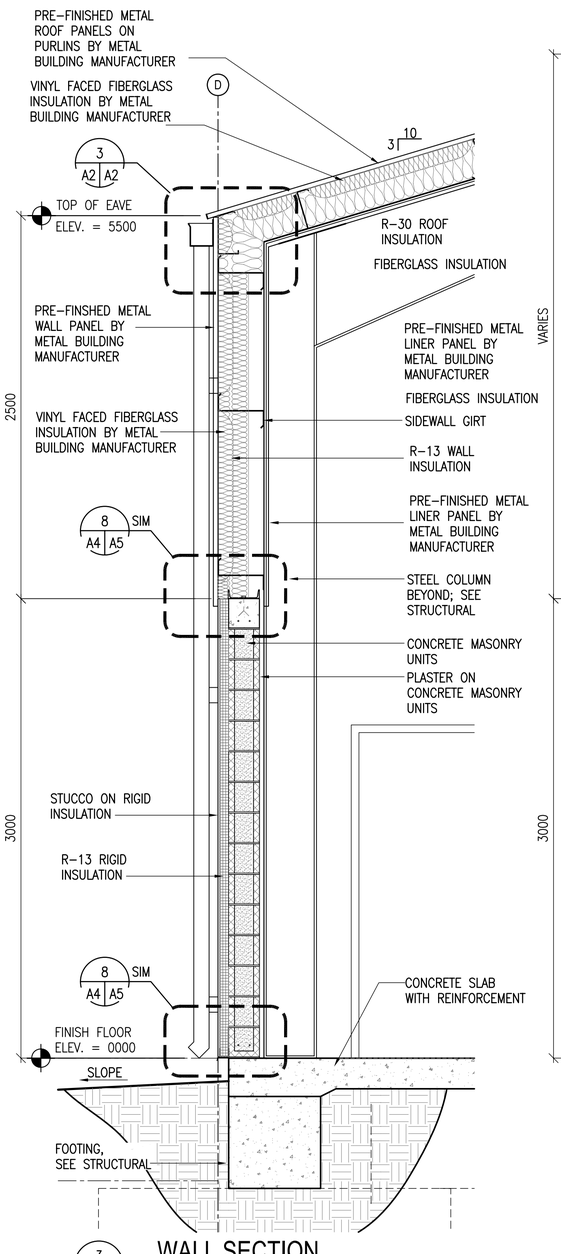

3 A4 A4 WALL SECTION
SCALE: 1:20

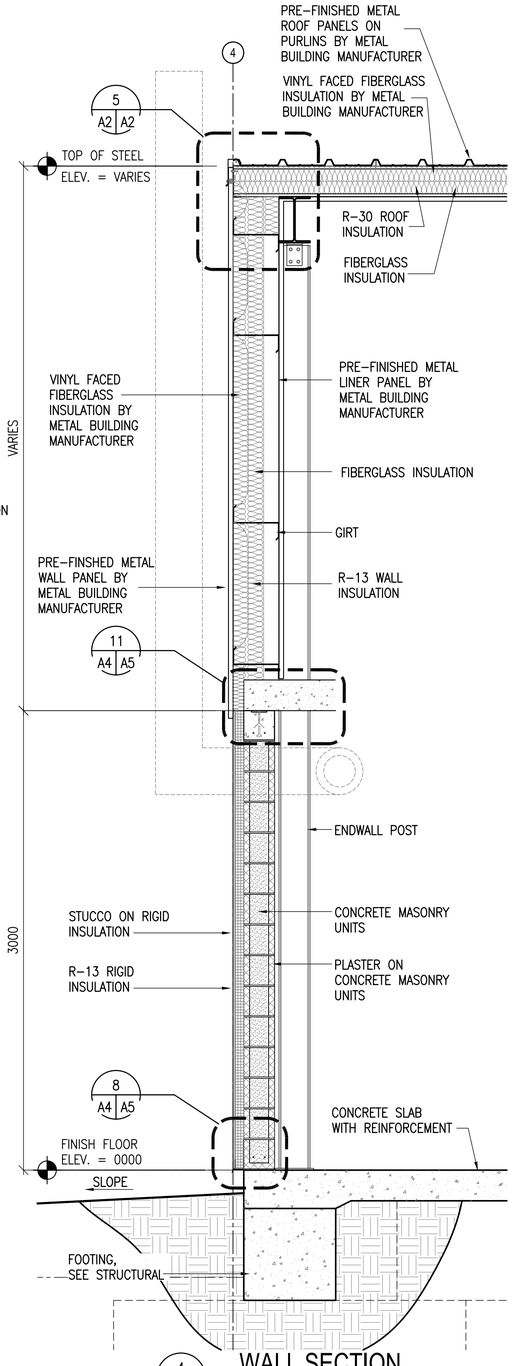

4 A4 A4 WALL SECTION
SCALE: 1:20

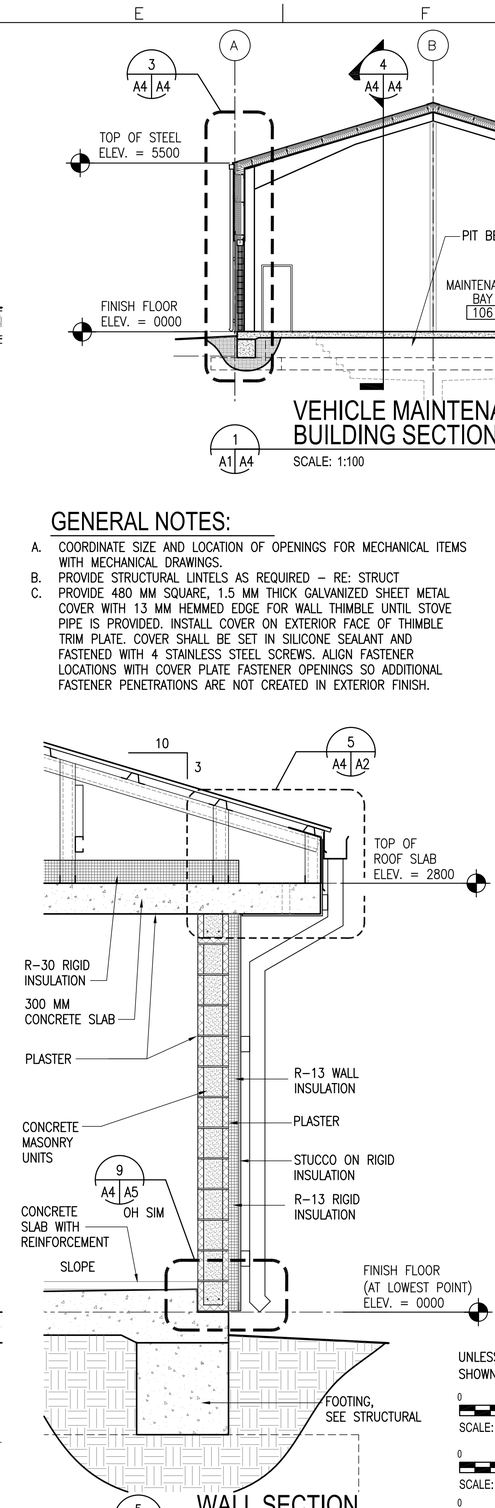

5 A4 A4 WALL SECTION
SCALE: 1:20

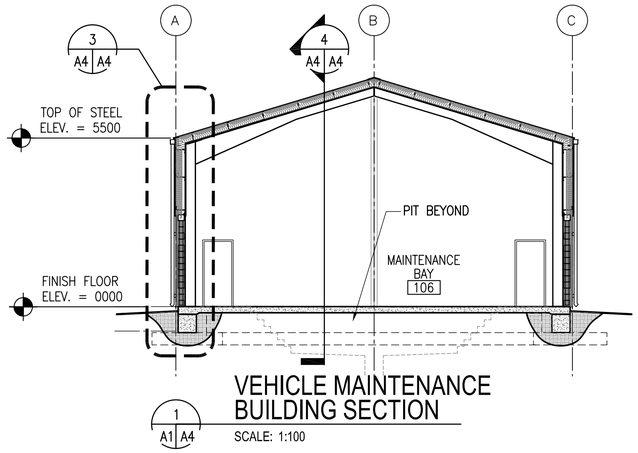

1 A1 A4 VEHICLE MAINTENANCE BUILDING SECTION
SCALE: 1:100

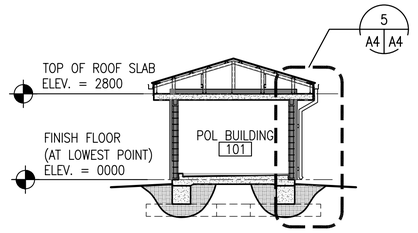

2 A1 A4 POL BUILDING BUILDING SECTION
SCALE: 1:100

GENERAL NOTES:

A. COORDINATE SIZE AND LOCATION OF OPENINGS FOR MECHANICAL ITEMS WITH MECHANICAL DRAWINGS.
B. PROVIDE STRUCTURAL LINTELS AS REQUIRED – RE: STRUCT
C. PROVIDE 480 MM SQUARE, 1.5 MM THICK GALVANIZED SHEET METAL COVER WITH 13 MM HEMMED EDGE FOR WALL THIMBLE UNTIL STOVE PIPE IS PROVIDED. INSTALL COVER ON EXTERIOR FACE OF THIMBLE TRIM PLATE. COVER SHALL BE SET IN SILICONE SEALANT AND FASTENED WITH 4 STAINLESS STEEL SCREWS. ALIGN FASTENER LOCATIONS WITH COVER PLATE FASTENER OPENINGS SO ADDITIONAL FASTENER PENETRATIONS ARE NOT CREATED IN EXTERIOR FINISH.

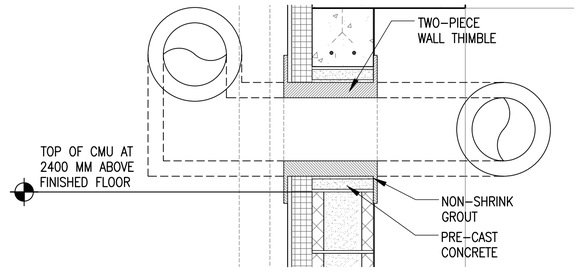

6 A4 A4 THIMBLE DETAIL, TYPICAL
SCALE: 1:10

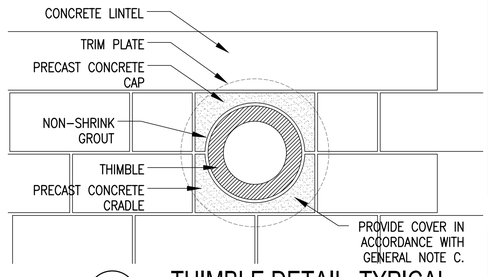

7 A4 A4 THIMBLE DETAIL, TYPICAL
SCALE: 1:10

UNLESS OTHERWISE NOTED, LINEAR DIMENSIONS SHOWN ARE IN MILLIMETERS (MM)

0 200 400 800
SCALE: 1: 10

0 400 800 1600
SCALE: 1: 20

0 2000 4000 8000
SCALE: 1: 100

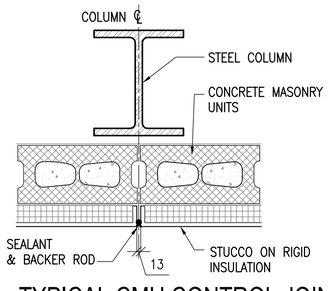

8 A4 A4 TYPICAL CMU CONTROL JOINT
SCALE: 1:10

US Army Corps of Engineers
Afghanistan Engineer District

SYMBOL	DESCRIPTION	DATE	APP'D

DESIGNED BY: PFF	DATE: 09-30-09		
DWN BY: KJG	SUBMITTED BY: BAKER		
CHK BY: NLJ	FILE NO.: ANPSDA-304XXX		

Michael Baker Jr., Inc
A unit of Michael Baker Corporation
Airside Business Park
100 Airside Drive
Moon Township, PA 15108
www.mbakercorp.com

AFGHAN NATIONAL POLICE
STANDARD DESIGN
VEHICLE MAINTENANCE & POL BUILDING

BUILDING & WALL SECTIONS

SHEET REFERENCE NUMBER:
A4

100% SUBMISSION

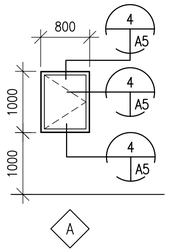

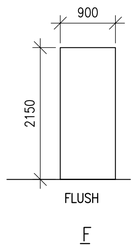

F

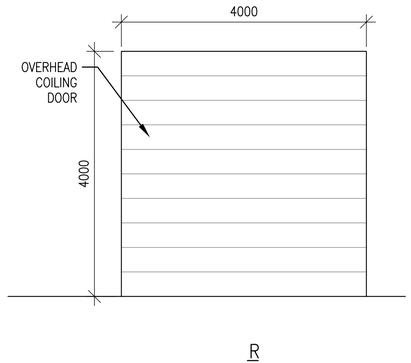

R

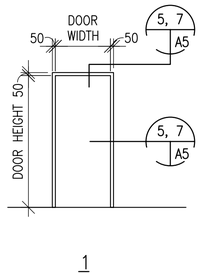

1

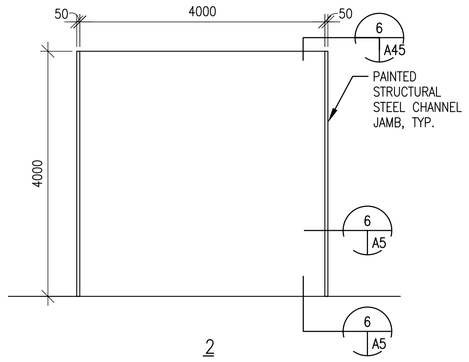

2

1 A5 A5 WINDOW TYPE

SCALE: 1:50

2 A5 A5 DOOR TYPES

SCALE: 1:50

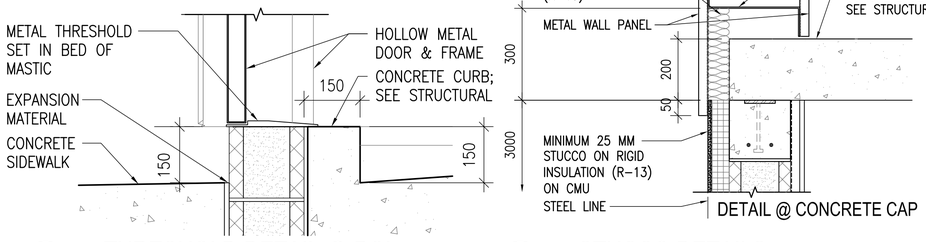

DETAIL @ CONCRETE CAP

3 A5 A5 FRAME TYPES

SCALE: 1:50

DOOR HARDWARE TYPES:

HW-1 1-1/2 PR HINGES
1 EA EXIT DEVICE, SURFACE MOUNTED F08
1 EA CYLINDER. GRADE 1
1 EA DOOR CLOSER, C02061,LOW RESISTANCE
1 EA THRESHOLD J32130

HW-2 1-1/2 PR HINGES
1 EA LOCKSET W/LEVERS. GRADE 1
1 EA DOOR CLOSER, C02061,LOW RESISTANCE

HW-4 1-1/2 PR HINGES
1 EA LOCKSET W/LEVERS. GRADE 1
1 EA STOP L02101 OR L02161

HW-6 1-1/2 PR HINGES
1 EA LOCKSET,F93 ENTRY LOCK W/LI
1 EA DOOR CLOSER, C02061,LOW RE
1 EA THRESHOLD J32130

WINDOW TYPES NOTES:

1. ALL EXTERIOR WINDOWS SHALL BE WOOD WITH INSECT SCREENS. WINDOWS SHALL BE COMMERCIAL GRADE.
2. GLAZING SHALL BE ACRYLIC SHEET.

DOOR TYPES NOTES:

1. INTERIOR AND EXTERIOR METAL DOORS AND FRAME COLORS SHALL MATCH ADJACENT WALL COLORS AS SELECTED BY THE CONTRACTING OFFICER.
2. HARDWARE SHALL BE HEAVY DUTY, COMMERCIAL GRADE, STAINLESS STEEL WITH A MATTE FINISH.
3. FRAMES, EXCEPT FIRE-RATED FRAMES, SHALL BE MOUNTED AND ADJUSTED IN ACCORDANCE WITH MANUFACTURER'S INSTRUCTIONS. FRAMES SHALL BE FASTENED WITH MINIMUM OF THREE FASTENING POINTS PER SIDE AT REGULAR INTERVALS.
4. DIMENSIONS SHOWN ON DOOR SCHEDULE ARE BASED UPON MODULAR MASONRY (OR ROUGH OPENING), HEIGHT OF 2200mm FOR STANDARD PERSONNEL DOORS. CONTRACTOR SHALL COORDINATE WITH DOOR SUPPLIER TO ENSURE THAT DIMENSIONS OF DOORS AND FRAMES PROVIDED ARE COMPATIBLE WITH DOOR OPENING DIMENSIONS.
5. DOORS SHALL BE 90 MINUTE DOORS AS REQUIRED IN 2 HOUR RATED WALLS (IBC TABLE 7.5.4) AND NFPA (TABLE 8.3.4.2).

UNLESS OTHERWISE NOTED, LINEAR DIMENSIONS SHOWN ARE IN MILLIMETERS (MM)

0 1000 2000 4000

SCALE: 1: 50

0 200 400 800

SCALE: 1: 10

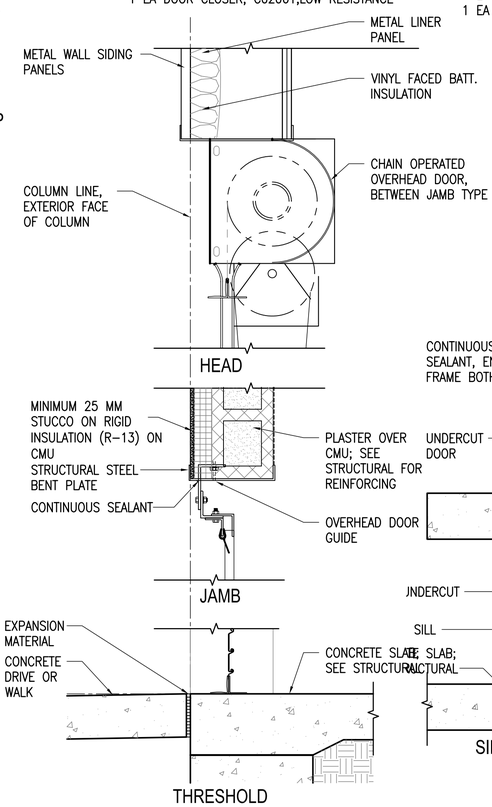

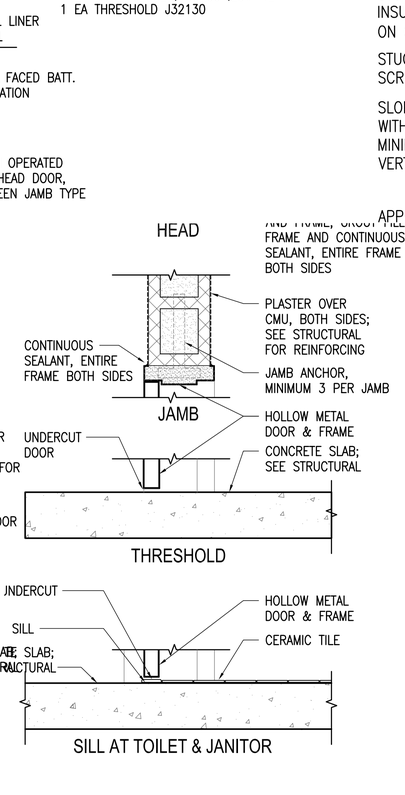

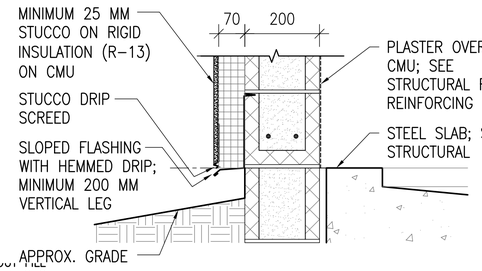

9 A5 A5 FOUNDATION DETAIL @ POL

SCALE: 1:10

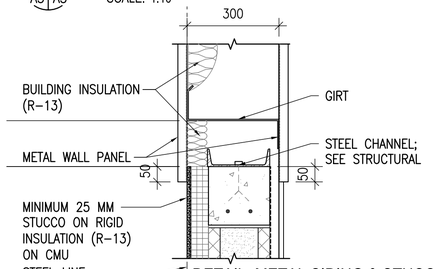

DETAIL: METAL SIDING & STUCCO

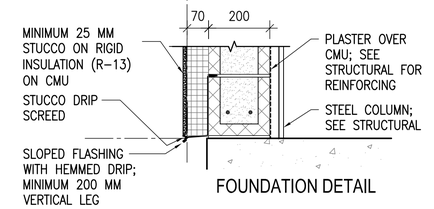

FOUNDATION DETAIL

10 A5 A5 THRESHOLD DETAIL @ POL

SCALE: 1:10

11 A5 A5 STUCCO DETAILS

SCALE: 1:10

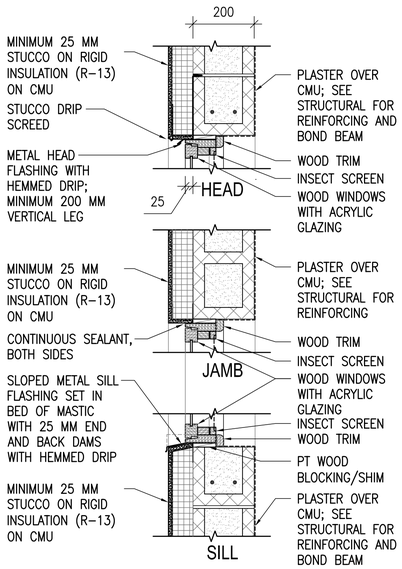

4 A5 A5 WINDOW DETAILS

SCALE: 1:10

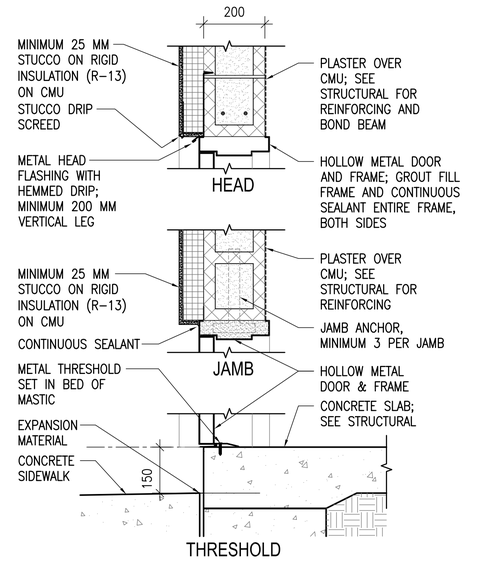

5 A5 A5 EXTERIOR DOOR DETAILS

SCALE: 1:10

6 A5 A5 OVERHEAD DOOR DETAILS

SCALE: 1:10

7 A5 A5 INTERIOR DOOR DETAILS

SCALE: 1:10

8 A4 A5 EXTERIOR STUCCO DETAILS

SCALE: 1:10

US Army Corps of Engineers
Afghanistan Engineer District

	DATE	DESCRIPTION	APP'D

DESIGNED BY: PFF	DATE: 09-30-09
DWN BY: KJG	SUBMITTED BY: BAKER
CHK BY: NLJ	FILE NO.: ANPSDA-505XXX

Michael Baker Jr., Inc
A unit of Michael Baker Corporation
Airside Business Park
100 Airside Drive
Moon Township, PA 15108
www.mbakercorp.com

AFGHAN NATIONAL POLICE
STANDARD DESIGN
VEHICLE MAINTENANCE & POL BUILDING

DOOR, WINDOW & HARDWARE TYPES & DETAILS

SHEET REFERENCE NUMBER:
A5

100% SUBMISSION

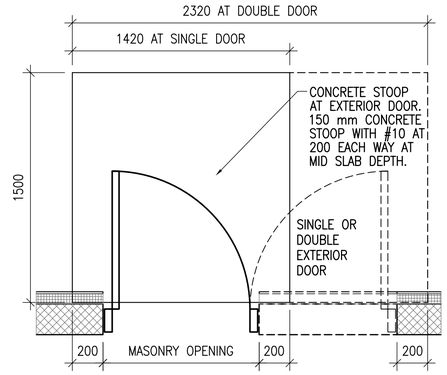

1 A6 A6 CONCRETE STOOP PLAN DETAIL

SCALE: 1:20

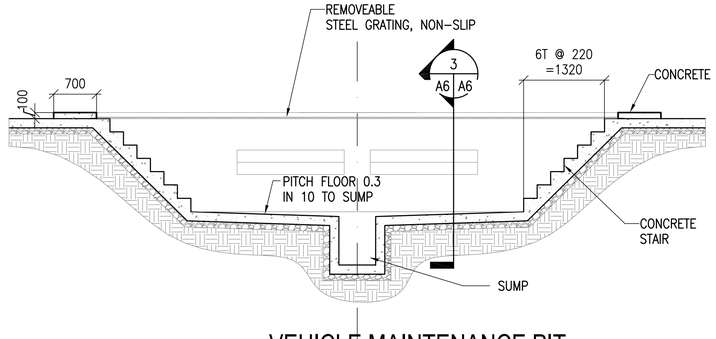

2 A6 A6 VEHICLE MAINTENANCE PIT SECTION

SCALE: 1:50

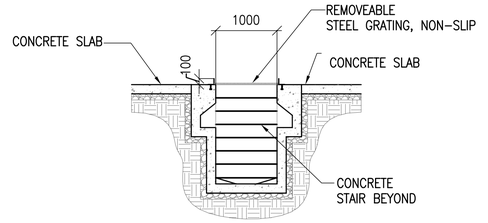

3 A6 A6 VEHICLE MAINTENANCE PIT SECTION

SCALE: 1:50

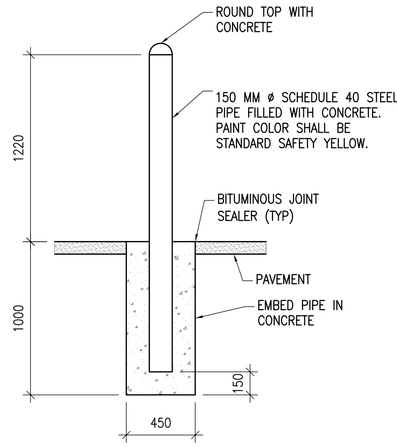

4 A6 A6 STEEL PIPE BOLLARD DETAIL

SCALE: 1:20

UNLESS OTHERWISE NOTED, LINEAR DIMENSIONS SHOWN ARE IN MILLIMETERS (MM)

0 400 800 1600

SCALE: 1: 20

0 1000 2000 4000

SCALE: 1: 50

US Army Corps of Engineers

Afghanistan Engineer District

SYMBOL	DESCRIPTION	DATE	APP'D

DESIGNED BY: PFF	DATE: 09-30-09
DWN BY: KJG	SUBMITTED BY: BAKER
CHK BY: NLJ	FILE NO.: ANPSDA-506XXX

Michael Baker Jr., Inc
A unit of Michael Baker Corporation
Airside Business Park
100 Airside Drive
Moon Township, PA 15108
www.mbakercorp.com

AFGHAN NATIONAL POLICE
STANDARD DESIGN
VEHICLE MAINTENANCE & POL BUILDING

SECTION DETAILS

SHEET REFERENCE NUMBER:

A6

100% SUBMISSION

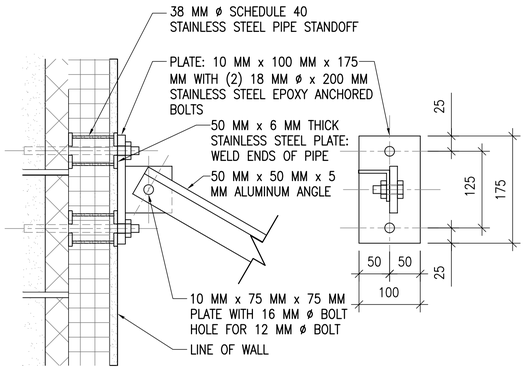

3 / A7 A7 TOP CONNECTION DETAIL

SCALE: 1:5

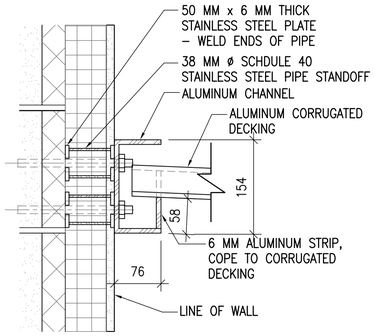

4 / A7 A7 BOTTOM CONNECTION DETAIL

SCALE: 1:5

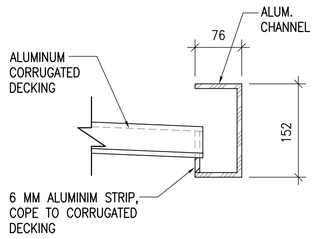

5 / A7 A7 FRONT SECTION

SCALE: 1:5

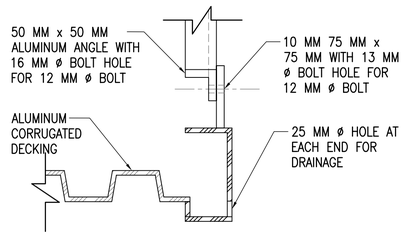

6 / A7 A7 SIDE SECTION

SCALE: 1:5 1 AS SHOWN 1 OPP. HAND

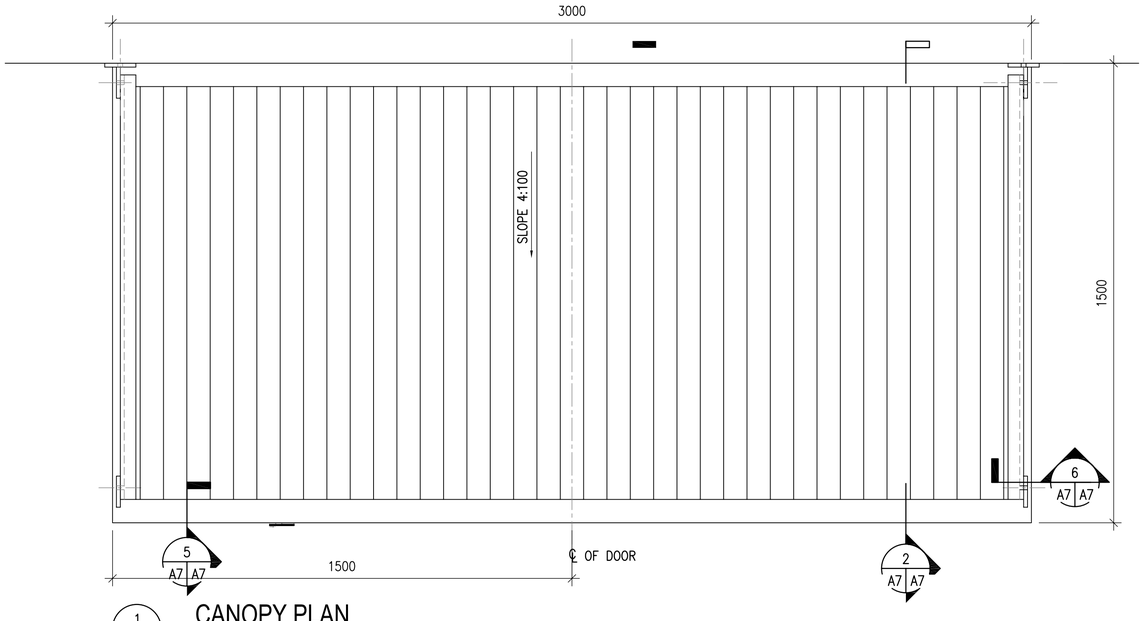

1 / A1 A7 CANOPY PLAN

SCALE: 1:10

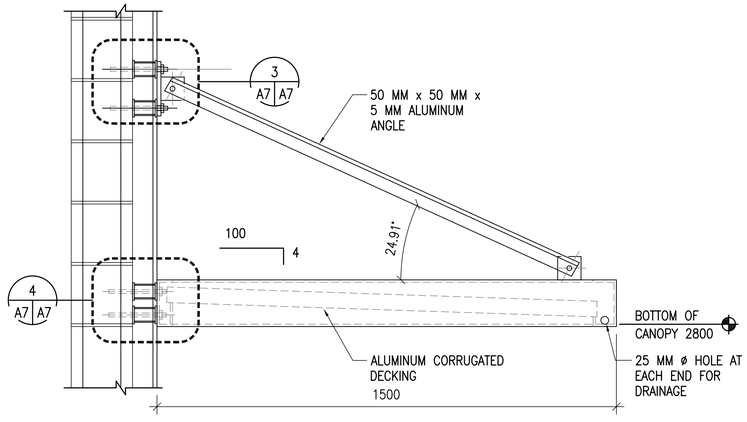

2 / A7 A7 CANOPY SECTION

SCALE: 1:10

UNLESS OTHERWISE NOTED, LINEAR DIMENSIONS SHOWN ARE IN MILLIMETERS (MM)

0 100 200 400

SCALE: 1: 5

0 200 400 800

SCALE: 1: 10

US Army Corps of Engineers

Afghanistan Engineer District

SYMBOL	DESCRIPTION	DATE	APP'D

DESIGNED BY: PFF	DATE: 09-30-09		
DWN BY: KJG	SUBMITTED BY: BAKER	CHK BY: NLJ	FILE NO.: ANPSDA-507XXX

Michael Baker Jr, Inc
A unit of Michael Baker Corporation
Airside Business Park
100 Airside Drive
Moon Township, PA 15108
www.mbakercorp.com

AFGHAN NATIONAL POLICE
STANDARD DESIGN
VEHICLE MAINTENANCE & POL BUILDING

MISCELLANEOUS DETAILS

SHEET REFERENCE NUMBER:

A7

100% SUBMISSION

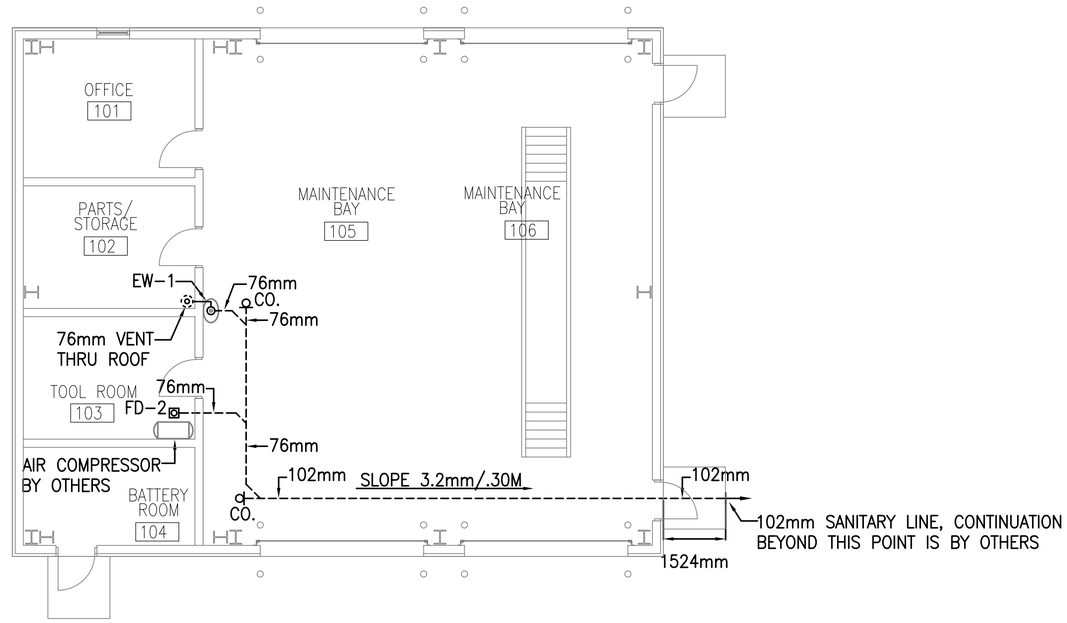

1 P1 P1 VEHICLE MAINTENANCE FLOOR PLAN - PLUMBING (SANITARY)

SCALE: 1:75

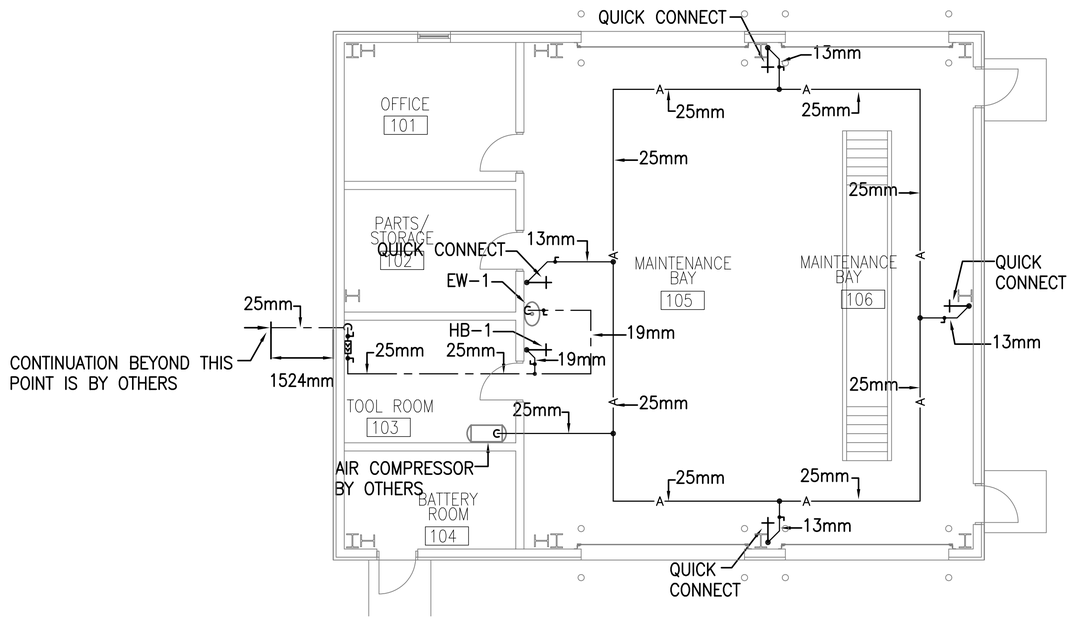

2 P1 P1 VEHICLE MAINTENANCE FLOOR PLAN - PLUMBING (WATER & AIR)

SCALE: 1:75

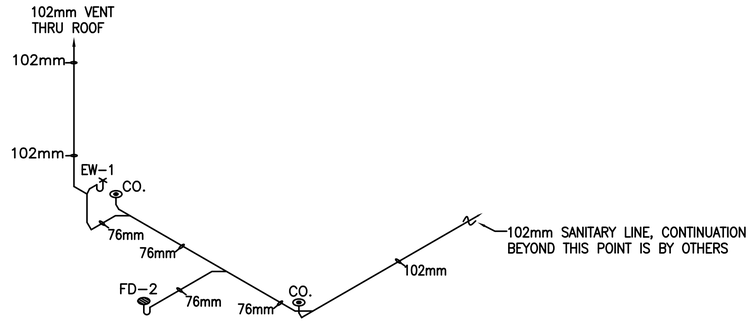

3 P1 P1 DRAINAGE ISOMETRIC

SCALE: NO SCALE

FLOOR PLAN NOTES:

1. DO NOT SCALE DRAWINGS – ALL DIMENSIONS AND CONDITIONS SHALL BE CHECKED AND VERIFIED BY THE CONTRACTOR AT THE SITE.
2. ALL WORK PERFORMED ON THIS BUILDING SHALL BE IN COMPLIANCE WITH ALL PERTINENT CODES, RULES, ORDINANCES AND REGULATIONS OF THE GOVERNING AUTHORITIES.
3. ALL WORK PERFORMED UNDER AND IN CONNECTION WITH THESE DRAWINGS AND SPECIFICATIONS SHALL BE IN STRICT COMPLIANCE WITH THE LATEST SAFETY AND HEALTH STANDARDS.
4. REPORT ANY DISCREPANCIES FOUND IN THE PLUMBING DRAWINGS AND/OR IN THE SPECIFICATIONS DURING THE BIDDING PROCESS FOR CLARIFICATION BY THE ENGINEER.
5. PLUMBING CONTRACTOR TO PROVIDE TRAP PRIMERS AND 1/2" (13mm) COLD WATER LINES FOR ALL FLOOR DRAINS. COLD WATER LINES TO BE UNDER THE FLOOR FROM TRAP PRIMERS TO TRAPS ON FLOOR DRAINS.
6. ALL WATER LINES TO BE EXPOSED. RUN LINES TIGHT TO CEILING AND WALL.

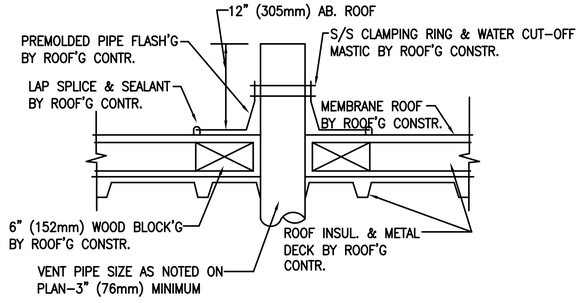

TYPICAL DETAIL – VENT THRU ROOF

NO SCALE

LEGEND

- COLD WATER
- HOT WATER
- SANITARY ABOVE GROUND
- SANITARY UNDER GROUND
- VENT LINE — V —

1 0 1 2 3 4 5 6 7 8 9

1:100

US Army Corps of Engineers
Afghanistan Engineer District

SYMBOL	DESCRIPTION	DATE	APP'D

DESIGNED BY: RMH	DWN BY: RMH	CHK BY: CJM III	
DATE: 09-30-09	SUBMITTED BY: BAKER	FILE NO.: ANPSDP-101XXX	

Michael Baker Jr., Inc
A unit of Michael Baker Corporation
Airside Business Park
100 Airside Drive
Moon Township, PA. 15108
www.mbakercorp.com

AFGHAN NATIONAL POLICE
STANDARD DESIGN
VEHICLE MAINTENANCE & POL BUILDING

FLOOR PLAN - PLUMBING
AND DRAINAGE ISOMETRIC

SHEET REFERENCE NUMBER:
P1

100% SUBMISSION

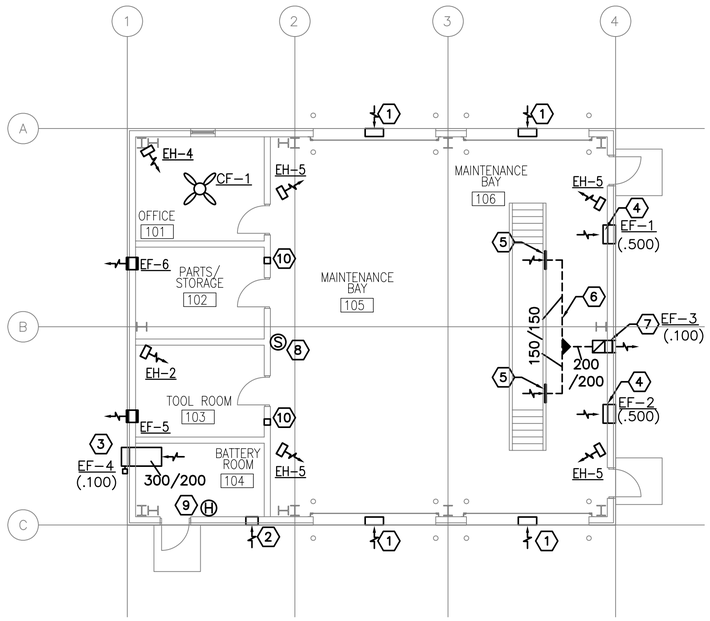

FLOOR HVAC PLAN

SCALE: 1:100

GENERAL NOTES:

1. DO NOT SCALE DRAWINGS – ALL DIMENSIONS AND CONDITIONS SHALL BE CHECKED AND VERIFIED BY THE CONTRACTOR AT THE SITE.
2. ALL WORK PERFORMED ON THIS BUILDING SHALL BE IN COMPLIANCE WITH ALL PERTINENT CODES, RULES, ORDINANCES AND REGULATIONS OF THE GOVERNING AUTHORITIES.
3. ALL WORK PERFORMED UNDER AND IN CONNECTION WITH THESE DRAWINGS AND SPECIFICATIONS SHALL BE IN STRICT COMPLIANCE WITH THE LATEST SAFETY AND HEALTH STANDARDS.

BATTERY ROOM FAN OPERATION:

THE BATTERY ROOM WILL BE PROVIDED WITH A DEDICATED EXHAUST FAN INTERLOCKED WITH A HYDROGEN SENSOR TO PROVE FAN IS OPERATING. AN ALARM SHALL SOUND WITH INCREASED HYDROGEN LEVELS AND THE CHARGERS SHALL BE SHUT DOWN. THE FAN SHALL BE INTERLOCKED WITH THE BATTERY CHARGER SO THAT THE CHARGER WILL NOT OPERATE WITHOUT VENTILATION. A WALL MOUNTED FAN SWITCH SHALL BE PROVIDED TO CONTROL THE FAN. FAN MOTORS WILL BE INSTALLED OUTSIDE THE BATTERY ROOM. THE BLOWER WILL HAVE A NON-SPARKING FAN AND THE MOTOR SHALL BE OUT OF THE AIR STREAM.

FAN SCHEDULE

NO.	TYPE	FAN CMS	DRIVE	HP	SP mmH20	ELECT. CHAR.	SWITCH
EF-1	WALL	0.500	DIRECT	1/4	20	220/1/50	@ WALL
EF-2	WALL	0.500	DIRECT	1/4	20	220/1/50	@ WALL
EF-3	WALL	0.100	DIRECT	1/30	25	220/1/50	@ WALL
EF-4	WALL	0.100	DIRECT	1/30	13	220/1/50	@ PANEL
EF-5	WALL	0.050	DIRECT	FRACT	13	220/1/50	@ WALL
EF-6	WALL	0.050	DIRECT	FRACT	13	220/1/50	@ WALL

ELECTRIC UNIT HEATER SCHEDULE

NO.	CMS	KW	F.A.T. °C	ELECT. CHAR.	MOUNTING
EH-2	.200	2.6	38	370/1/50	WALL HUNG
EH-4	.200	4	38	370/1/50	WALL HUNG
EH-5	.200	5	38	370/1/50	WALL HUNG

NOTE:
1. ALL HEATERS SHALL BE CORROSION RESISTANT
2. UNIT HEATERS SHALL HAVE TAMPER PROOF INTEGRAL STATS.
3. UNIT HEATERS SHALL BE MOUNTED AS HIGH AS POSSIBLE.

○ CEILING FAN

NO.	BLADE SIZE mm	BLADE SIZE IN	VOLTAGE	SWITCH
CF-1	1320	52	220/1/50	@ WALL

NOTES:
1. FINAL ELECTRICAL CONNECTIONS BY EC.

SYMBOLS:

- (X) KEY NOTE
- (.050) AIR VOLUME IN CUBIC METERS PER SECOND (CMS)
- ¬ VOLUME DAMPER
- FD FIRE DAMPER
- (X) SENSOR

NUMBERED NOTE:

1. 600X400 (24X16) LOW LEAKAGE GRAVITY WALL LOUVER FOR INTAKE. PROVIDE WEATHER PROOF LOUVER W/ 50mm (2") WASH DOWN FILTER AND SAND TRAP.
2. 400X200 (16X8) LOW LEAKAGE GRAVITY WALL LOUVER FOR INTAKE. PROVIDE WEATHER PROOF LOUVER W/ 50mm (2") WASH DOWN FILTER AND SAND TRAP.
3. WALL EXHAUST FAN MOUNTED AS HIGH AS POSSIBLE, EXTEND DUCT INTO BATTERY ROOM WITH END OPEN. FAN MOTOR SHALL BE OUT OF THE AIR STREAM. FAN TO BE EXPLOSION PROOF.
4. WALL EXHAUST FAN MOUNTED AS HIGH AS POSSIBLE, EXTEND DUCT DOWN TO 150mm ABOVE FLOOR. PROVIDE 2 300X300 (12X12) GRILLES ONE LOCATED 300 (12") AFF AND THE OTHER AT 300 (12") BELOW CEILING. SEE DETAIL THIS SHEET.
5. 300X300 (12X12) WALL EXHAUST GRILLE LOCATED 300mm (12") AFF OF PIT.
6. EXTEND DUCT UNDERGROUND OVER TO WALL AND UP TO EXHAUST FAN.
7. EXHAUST FAN WITH DUCT DOWN BELOW FLOOR TO PIT AS SHOWN.
8. COMBINATION NITROGEN DIOXIDE / CARBON MONOXIDE SENSOR INTERLOCKED WITH EF-1 & EF-2 TO TURN FANS ON WITH INCREASED LEVELS AS SPECIFIED.
9. HYDROGEN SENSOR INTERLOCKED W/ EF-4 MOUNTED AT CEILING.
10. 200X200 (8X8) TRANSFER GRILLE.

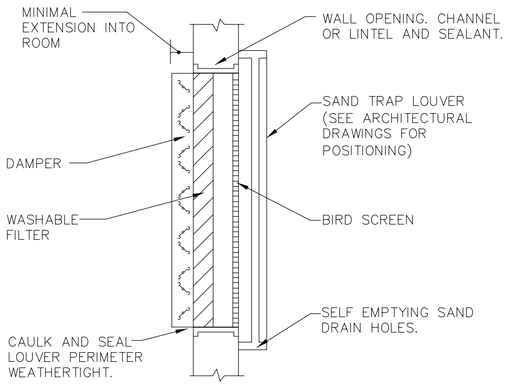

FILTERED SAND TRAP LOUVER

N.T.S.

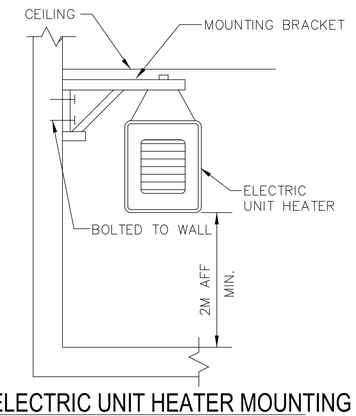

ELECTRIC UNIT HEATER MOUNTING

N.T.S.

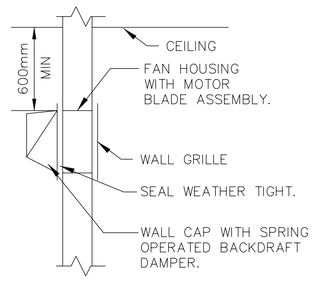

WALL MOUNTED EXHAUST FAN DETAIL

N.T.S.

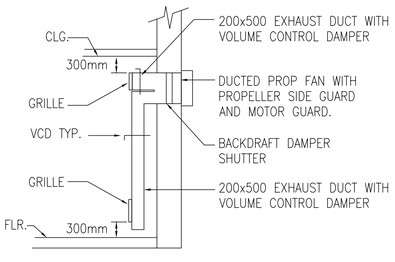

TYPICAL FAN HIGH LOW GRILLE DETAIL

N.T.S.

US Army Corps of Engineers
Afghanistan Engineer District

SYMBOL	DESCRIPTION	DATE	APP'D

DESIGNED BY: RML	DWN BY: JJN	CHK BY: CJM
DATE: 09-30-09	SUBMITTED BY: BAKER	FILE NO.: ANPSDM-101XXX

Michael Baker Jr., Inc
A unit of Michael Baker Corporation
Airside Business Park
100 Airside Drive
Moon Township, PA 15108
www.mbakercorp.com

AFGHAN NATIONAL POLICE
STANDARD DESIGN
VEHICLE MAINTENANCE & POL BUILDING

HVAC FLOOR PLAN

SHEET REFERENCE NUMBER:
M1

100% SUBMISSION

POWER

- DISTRIBUTION PANELBOARD
- NEW PANELBOARD – SURFACE
- NEW PANELBOARD – RECESSED
- EXISTING PANELBOARD
- (G) GENERATOR
- TVSS TRANSIENT VOLTAGE SURGE SURPRESSOR
- TRANSFORMER (DRAWN TO SIZE)
- PS POWER SUPPLY
- CP CONTROL PANEL
- TC TIME CLOCK
- TIM ASTRONOMICAL TIME CLOCK– "SEE SPEC."
- R RELAY WITH RATING AND NUMBER OF POLES AS NOTED ON DRAWINGS– "SEE SPEC."
- J JUNCTION BOX
- (J) JUNCTION BOX – CEILING
- PB PULL BOX
- BD BUS DUCT HORIZONTAL
- BUS DUCT VERTICAL
- EMERGENCY POWER OFF PUSH BUTTON
- NON–FUSIBLE SAFETY SWITCH
- FUSIBLE SAFETY SWITCH
- (M) MOTOR
- ^{M} MOTOR STARTING SWITCH – 20A RATED
- ^{K} KEY SWITCH – 20A RATED
- FC FAN COIL – FURNISHED BY MECHANICAL CONTRACTOR, ELECTRICAL CONTRACTOR SHALL INSTALL AND PROVIDE POWER CONNECTION
- UH UNIT HEATER – FURNISHED BY MECHANICAL CONTRACTOR, ELECTRICAL CONTRACTOR SHALL INSTALL AND PROVIDE POWER CONNECTION
- D JUNCTION BOX FOR CONNECTION TO GARBAGE DISPOSAL
- CF LIGHT/HEATER/FAN – FURNISHED BY MECHANICAL CONTRACTOR, ELECTRICAL CONTRACTOR SHALL INSTALL AND PROVIDE POWER CONNECTION
- ELECTRIC WATER HEATER
- EPO WEATHERPROOF / EXPLOSION PROOF EMERGENCY POWER OFF PUSH–BUTTON TO BE INTERCONNECTED WITH GENERATOR SHUT DOWN CONTROL
- CF CEILING FAN – REFER TO SPECIFICATION SECTION 26 20 00

RECEPTACLES

- DUPLEX 20A BRITISH STANDARD UNSWITCHED SOCKETS
- $_{GF}$ DUPLEX 20A BRITISH STANDARD UNSWITCHED SOCKETS – 10mA GROUND FAULT INTERRUPTER TYPE
- $_{WP}$ DUPLEX 20A BRITISH STANDARD UNSWITCHED SOCKETS – 10mA GROUND FAULT INTERRUPTER TYPE WITH WEATHERPROOF COVER
- $_{EXP}$ DUPLEX 20A BRITISH STANDARD UNSWITCHED SOCKETS – EXPLOSION PROOF
- * INDICATES MOUNT DEVICE ABOVE COUNTER TOP

LIGHTNING PROTECTION

- AIR TERMINAL 20mm O.D. X 4m SOLID COPPER, NICKEL PLATED ON ADHESIVE BASE.
- EQ EQUIPMENT AIR TERMINAL
- TEST WELL WITH GROUND ROD(S)
- GROUND ROD
- G GROUND PLATE
- MAIN GROUND CONDUCTER CONCEALED WITHIN CONSTRUCTION
- MAIN GROUND CONDUCTOR EXPOSED ON EXPOSED ON BUILDING EXTERIOR SURFACE
- GROUND CONDUCTOR CAD WELDED TO GROUND CABLE OR EQUIPMENT
- GROUND CONDUCTOR CAD WELDED TO BUILDING STEEL COLUMN
- GROUND ROD TRIPOD, SPACED 10 FEET APART.
- LEVEL TO LEVEL CABLE

LIGHTING

- LIGHTING FIXTURE – SEE FIXTURE SCHEDULE FOR MORE INFORMATION
- LIGHTING FIXTURE – SEE FIXTURE SCHEDULE FOR MORE INFORMATION
- DOWNLIGHT
- LIGHTING FIXTURE ON NORMAL/EMERGENCY
- WALL MOUNTED LIGHT FIXTURE
- E EXIT SIGN – DIRECTIONAL ARROWS AS INDICATED ON DRAWINGS
- B BATTERY PACK WITH HEADS AS INDICATED ON DRAWINGS
- REMOTE HEAD FOR BATTERY PACK
- $ SINGLE POLE SWITCH – 20A RATED
- ^{3} 3–WAY SWITCH – 20A RATED
- ^{4} 4–WAY SWITCH – 20A RATED
- PC PHOTOCELL VOLTAGE TO MATCH CIRCUITRY
- LC LIGHTING CONTACTOR
- POLE MOUNTED SITE LIGHTING FIXTURE– NUMBER OF FIXTURES PER POLE AS INDICATED ON DRAWINGS
- EXTERIOR DIRECTIONAL LIGHTING FIXTURE
- a SMALL CASE LETTERS REPRESENTS LAMP(S) / SWITCHES. WHEN USED WITH AN OCCUPANCY SENSOR THIS INDICATES SENSOR WITH MANUAL OVERRIDE SWITCH

TELECOMMUNICATIONS

- TELEPHONE OUTLET(S) @ 18" AFF. U.N.O. WITH 3/4" RACEWAY TERMINATED ABOVE NEAREST ACCESSIBLE CEILING OR TO TELEPHONE TERMINAL BOARD IF NO ACCESSIBLE CEILING AVAILABLE. SEE TELE/DATA RISER DIAGRAM FOR OUTLET AND CABLE DESCRIPTION
- DATA OUTLET(S) @ 18" AFF. U.N.O. WITH 3/4" RACEWAY TERMINATED ABOVE NEAREST ACCESSIBLE CEILING OR TO DATA EQUIPMENT RACK IF NO ACCESSIBLE CEILING AVAILABLE. SEE TELE/DATA RISER DIAGRAM FOR OUTLET AND CABLE DESCRIPTION

TELECOMMUNICATIONS (CONTINUED)

- COMBINATION TELEPHONE/DATA OUTLET(S) @ 18" AFF. U.N.O. WITH 1" RACEWAY TERMINATED ABOVE NEAREST ACCESSIBLE CEILING OR TO TELE/DATA TERMINAL AREA IF NO ACCESSIBLE CEILING AVAILABLE. SEE TELE/DATA RISER DIAGRAM FOR OUTLET AND CABLE DESCRIPTION
- W WALL MTD. TELEPHONE OUTLET WITH 3/4" RACEWAY TERMINATED ABOVE NEAREST ACCESSIBLE CEILING OR TO TELEPHONE TERMINAL BOARD IF NO ACCESSIBLE CEILING AVAILABLE. SEE TELE/DATA RISER DIAGRAM FOR OUTLET AND CABLE DESCRIPTION
- (x)T INDICATES NUMBER OF TELEPHONE OUTLET(S) AND ASSOCIATED CABLING
- (x)D INDICATES NUMBER OF DATA OUTLET(S) AND ASSOCIATED CABLING
- (x)TF INDICATES NUMBER OF TELEPHONE OUTLETS AND ASSOCIATED CABLING WITH 1 OUTLET AND CABLE DEDICATED FOR FAX

SINGLE LINE SYMBOLS

- SWITCH
- BREAKER
- FUSE
- TRANSFORMER
- CAPACITOR
- GROUND
- CONTACT (NORMALLY OPEN)
- CONTACT (NORMALLY CLOSED)
- AUTOMATIC TRANSFER SWITCH
- MANUAL DOUBLE THROW SWITCH
- CURRENT TRANSFORMER
- INDICATES NEW ELECTRICAL EQUIPMENT
- C INDICATES NEW CONTROL WIRING AND CONDUIT
- EQUIPMENT OUTLINE

MISCELLANEOUS

- BRANCH CIRCUIT WIRING CONCEALED ABOVE CEILINGS, SURFACE MOUNTED ON WALLS
- BRANCH CIRCUIT WIRING – #10 AWG
- BRANCH CIRCUIT WIRING – UNDER FLOOR
- HOME RUN BACK TO PANEL
- CONDUIT TURNED DOWN
- CONDUIT TURNED UP
- LV LOW VOLTAGE WIRING AND CONDUIT
- CT–X CABLE TRAY ("X" DENOTES WIDTH)
- INDICATES CONTINUATION OF LINE

FIRE ALARM

- FACP FIRE ALARM CONTROL PANEL WITH BATTERY BACKUP
- F FIRE ALARM PULL STATION

FIRE ALARM (CONTINUED)

- F FIRE ALARM STROBE – WALL MOUNTED
- F FIRE ALARM AUDIBLE/STROBE – WM
- F FIRE ALARM HORN/STROBE – WM
- S SMOKE DETECTOR
- H HEAT DETECTOR CEILING MOUNTED
- D DUCT DETECTOR – PROVIDED BY EC, INSTALLED BY MC AND CONNECTED BY EC

DENOTATIONS & ABBREVIATIONS

AFF	ABOVE FINISHED FLOOR
C	CEILING MOUNTED
E	EMERGENCY
EC	ELECTRICAL CONTRACTOR
EPO	EMERGENCY POWER OFF
EXP	EXPLOSION PROOF
F	FIRE ALARM
FF	FLUSH FLOOR MOUNTED
FL	FLUORESCENT
FO	FIBER OPTIC
FSS	FUSED SAFETY SWITCH
G	GROUND FAULT INTERRUPTER
GC	GENERAL CONTRACTOR
HOA	HAND–OFF AUTO
I	INFRARED
ICD	INCANDESCENT
IG	ISOLATED GROUND
K	KEY
LV	LOW VOLTAGE
M	MOTOR
MC	MECHANICAL CONTRACTOR
NE	NORMAL/EMERGENCY
NFSS	NON–FUSED SAFETY SWITCH
PA	PAGING SYSTEM
PLC	PLUMBING CONTRACTOR
REL	RELOCATE
RED	RELOCATED
SL	SINGLE LINE
SS	SURGE SUPPRESSION
T	TELEPHONE
TL	TWIST LOCK

DENOTATIONS & ABBREVIATIONS (CONT.)

TP	TAMPER PROOF
UE	UNDERGROUND ELECTRIC
UF	UNDERGROUND FIBER
UT	UNDERGROUND TELEPHONE
W	WALL MOUNTED
WG	WIRE GUARD
WP	WEATHERPROOF
WPG	WEATHERPROOF/GROUND FAULT INTERRUPTER
WT	WATER TIGHT

GENERAL PROJECT NOTES:

G1. UNLESS OTHERWISE NOTED, PROVIDE ALL EQUIPMENT SHOWN ON THE PLANS. THE ELECTRICAL CONTRACTOR SHALL COORDINATE ALL SYMBOLS SHOWN ON THE PLANS WITH THE SYMBOL LIST. IT SHALL BE THE RESPONSIBILITY OF THE CONTRACTOR TO VERIFY THE INTENT OF ANY SYMBOL THAT IS SHOWN ON THE PLANS AND NOT INDICATED ON THE SYMBOL LIST WITH THE ENGINEER PRIOR TO BID.

G2. COORDINATE THE FINAL LOCATIONS OF ALL LIGHT FIXTURES WITH THE ARCHITECT'S REFLECTED CEILING PLANS. REPORT ANY DISCREPANCIES TO THE ARCHITECT PRIOR TO INSTALLATION.

G3. THE CONTRACTOR SHALL VERIFY THE LOCATION OF ALL UNDERGROUND UTILITIES WITHIN THE CONSTRUCTION AREA THREE (3) WORKING DAYS NOTICE BEFORE COMMENCE DIGGING. NOTIFY THE LOCAL OR STATE AUTHORITY HAVING JURISDICTION AND WAIT THE REQUIRED TIME BEFORE COMMENCING TO DIG.

G4. THE CONTRACTOR SHALL COORDINATE CONDUIT RUNS, CABLE TRAY, LIGHTING FIXTURES AND OTHER EQUIPMENT LOCATIONS WITH THE OTHER TRADE CONTRACTORS TO AVOID CONFLICTS.

G5. WHERE VOLTAGES AND FREQUENCIES ON THE DRAWINGS AND IN THE SPECIFICATIONS DIFFER FROM THE LOCAL ONES, ALL WORK SHALL BE PERFORMED USING THE LOCAL VOLTAGES AND FREQUENCIES.

G6. THE MINIMUM WIRE SIZE ON THE PROJECT SHALL BE 4mm2. THE MINIMUM CONDUIT SIZE SHALL BE 20mm. THE MINIMUM BREAKER SIZE SHALL BE 20 AMPS.

G7. THE CONTRACTOR SHALL PUT A MAXIMUM OF 6 DUPLEX SOCKETS ON A 20A SINGLE POLE CIRCUIT.

G8. WHERE THE 1010 SCOPE REVIEW, 1015 TECHNICAL REVIEW, DRAWINGS, AND SPECIFICATIONS DIFFER FROM AMERICAN CODES OR STANDARDS THE 1010, 1015, DRAWINGS, AND SPECIFICATIONS SHALL RULE.

G9. WORK FOR THE AMMUNITION SUPPLY POINT SHALL BE DONE IN ACCORDANCE WITH DEPARTMENT OF DEFENSE STANDARD DOD 6055.9–STD.

G10. ALL CONDUIT AND DEVICES SHALL BE SURFACE MOUNTED UNLESS OTHERWISE INDICATED.

US Army Corps of Engineers
Afghanistan Engineer District

SYMBOL	DESCRIPTION	DATE	APP

DESIGNED BY:	DRAWN BY:	CHK BY:
JRG	JRG	JRG

DATE: 09–30–09
SUBMITTED BY: BAKER
FILE NO.: ANPSDE–000XXX

Michael Baker Jr, Inc
A unit of Michael Baker Corporation
Airside Business Park
1500 Airside Drive
Moon Township, PA 15108
www.mbakercorp.com

AFGHAN NATIONAL POLICE
STANDARD DESIGN
VEHICLE MAINTENANCE & POL BUILDING

ELECTRICAL SYMBOLS AND ABBREVIATIONS

SHEET REFERENCE NUMBER:
E0

100% SUBMISSION

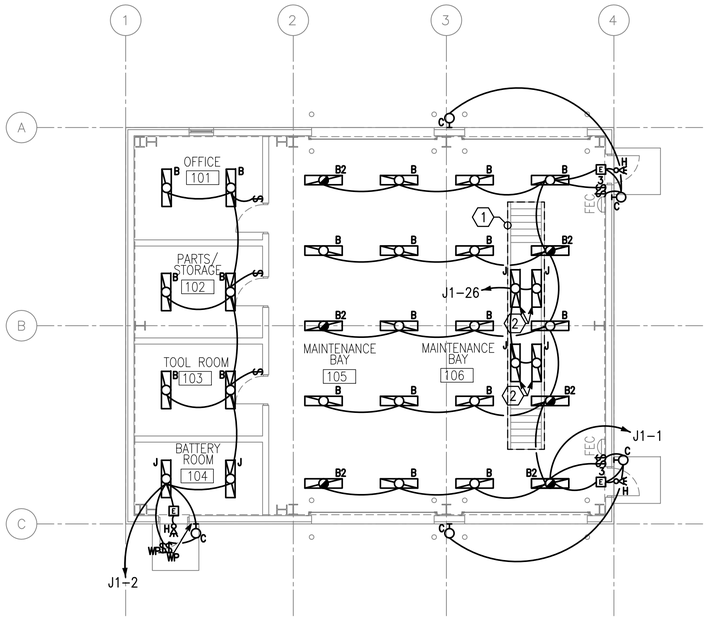

1 E1 E1 LIGHTING PLAN (VEHICLE MAINTENANCE)

SCALE: 1:100

N

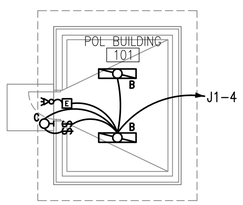

2 E1 E1 LIGHTING PLAN (POL BUILDING)

SCALE: 1:100

N

GENERAL NOTES:

1. REFER TO DRAWING #E0 FOR THE ELECTRICAL SYMBOLS LIST.
2. EXIT SIGNS SHALL BE WIRED AHEAD OF ANY LOCAL SWITCHING ON CIRCUITS.
3. REFER TO DRAWING #E4 FOR THE LIGHTING FIXTURE SCHEDULE.
4. REFER TO DRAWING #E3 FOR THE POWER RISER.
5. REFER TO DRAWING #E5 FOR PANEL SCHEDULES.
6. LIGHT FIXTURES INDICATED AS EMERGENCY SHALL BE PROVIDED WITH A BATTERY BACKUP BALLAST.

NUMBERED NOTES:

(1) ALL WORK IN MAINTENANCE PIT SHALL BE IN ACCORDANCE WITH NEC ARTICLE 511. EXPLOSION PROOF EQUIPMENT SHALL BE USED FOR ALL FIXTURES AND DEVICES. PROVIDE CONDUIT SEALS WHERE REQUIRED. ALL WIRING SHALL BE IN ACCORDANCE WITH NEC ARTICLE 501. FOR CLASS I LOCATIONS.

(2) FIXTURE SHALL BE MOUNTED TO WALL OF MAINTENANCE PIT.

UNLESS OTHERWISE NOTED, LINEAR DIMENSIONS SHOWN ARE IN MILLIMETERS (MM)

1 0 1 2 3 4 5 6 7 8 9
1:100

US Army Corps of Engineers
Afghanistan Engineer District

SYMBOL	DESCRIPTION	DATE	APP'D

DESIGNED BY: JRG
DATE: 09-30-09
DWN BY: JRG
SUBMITTED BY: BAKER
CHK BY: JRG
FILE NO.: ANPSDE-101XXX

Michael Baker Jr., Inc
A unit of Michael Baker Corporation
Airside Business Park
100 Airside Drive
Moon Township, PA 15108
www.mbakercorp.com

AFGHAN NATIONAL POLICE
STANDARD DESIGN
VEHICLE MAINTENANCE & POL BUILDING

LIGHTING PLANS

SHEET REFERENCE NUMBER:
E1

100% SUBMISSION

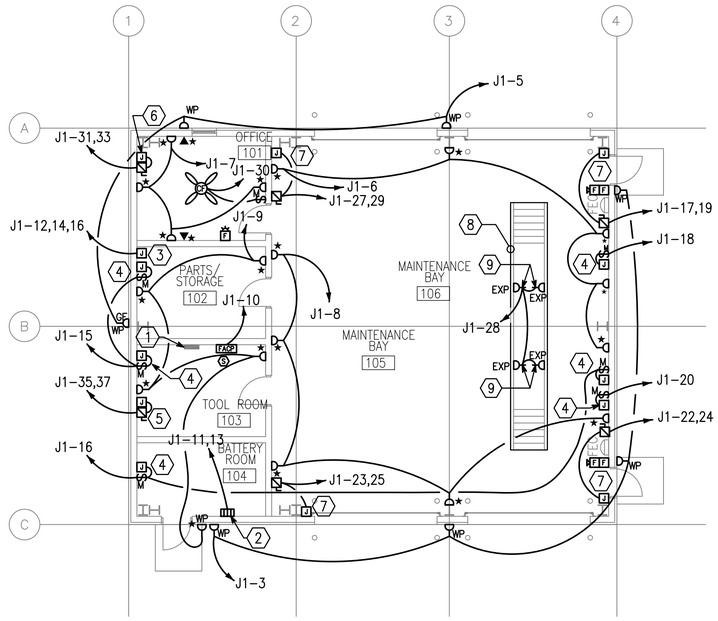

1 E2 E2 POWER AND SYSTEMS PLAN (VEHICLE MAINTENANCE)

SCALE: 1:100

N

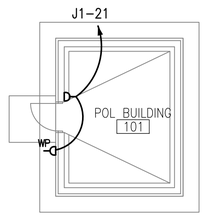

3 E2 E2 POWER AND SYSTEMS PLAN (POL BUILDING)

SCALE: 1:100

N

GENERAL NOTES:

1. REFER TO DRAWING #E0 FOR THE ELECTRICAL SYMBOLS LIST.
2. REFER TO DRAWING #E3 FOR THE POWER RISER.
3. REFER TO DRAWING #E5 FOR PANEL SCHEDULES.
4. COORDINATE EXACT MOUNTING LOCATION OF DISCONNECTING MEANS FOR MECHANICAL AND PLUMBING EQUIPMENT IN THE FIELD.
5. FUSIBLE SAFETY SWITCHES THAT ARE NOT OTHERWISE IDENTIFIED SHALL BE 380V, 1P, 30A FUSED SAFETY SWITCHES WITH 20A FUSES.

NUMBERED NOTE:

1. PANEL J1.
2. BATTERY CHARGER
3. PROVIDE ELECTRICAL CONNECTION TO AIR COMPRESSOR (BY OTHERS). COORDINATE ELECTRICAL CONNECTION WITH MODEL PURCHASED PRIOR TO ROUGH IN OF ELECTRICAL EQUIPMENT.
4. PROVIDE POWER CONNECTION TO EXHAUST FANS. SEE DRAWINGS #M1 AND #E5 FOR MORE INFORMATION.
5. PROVIDE POWER CONNECTION TO ELECTRIC HEATER #2. SEE DRAWINGS #M1 AND #E5 FOR MORE INFORMATION.
6. PROVIDE POWER CONNECTION TO ELECTRIC HEATER #4. SEE DRAWINGS #M1 AND #E5 FOR MORE INFORMATION.
7. PROVIDE POWER CONNECTION TO ELECTRIC HEATER #5. SEE DRAWINGS #M1 AND #E5 FOR MORE INFORMATION.
8. ALL WORK DONE IN THE MAINTENANCE PIT SHALL BE IN ACCORDANCE WITH NEC ARTICLE 511. EXPLOSION PROOF EQUIPMENT SHALL BE USED FOR A FIXTURES AND DEVICES. PROVIDE CONDUIT SEALS WHERE REQUIRED. ALL WIRING SHALL BE IN ACCORDANCE WITH NEC ARTICLE 501. FOR CLASS I LOCATIONS.
9. RECEPTACLE SHALL BE MOUNTED TO WALL OF MAINTENANCE PIT AT 1070mm ABOVE FINISHED FLOOR OF MAINTENANCE PIT.

UNLESS OTHERWISE NOTED, LINEAR DIMENSIONS SHOWN ARE IN MILLIMETERS (MM)

1 0 1 2 3 4 5 6 7 8 9

1:100

US Army Corps of Engineers

Afghanistan Engineer District

SYMBOL	DESCRIPTION	DATE	APP'D

DESIGNED BY: JRG	DATE: 09-30-09
DWN BY: JRG	SUBMITTED BY: BAKER
CHK BY: JRG	FILE NO.: ANPSDE-102XXX

Michael Baker Jr., Inc
A unit of Michael Baker Corporation
Airside Business Park
100 Airside Drive
Moon Township, PA 15108
www.mbakercorp.com

AFGHAN NATIONAL POLICE
STANDARD DESIGN
VEHICLE MAINTENANCE & POL BUILDING

POWER AND SYSTEMS PLAN

SHEET REFERENCE NUMBER:

E2

100% SUBMISSION

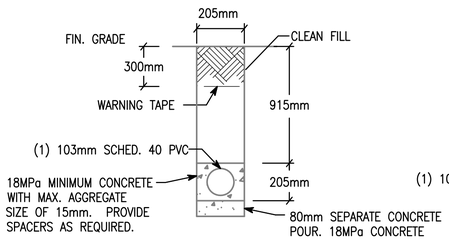

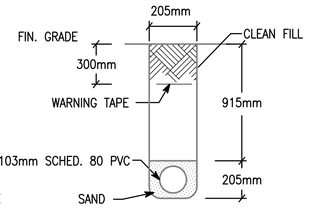

NOTE: PVC CONDUIT SHALL BE DIRECT BURIED SCHEDULE 80 FOR NO TRAFFIC AREAS AND CONCRETE-ENCASED SCHEDULE 40 FOR UNDER ROADWAYS OR TRAFFIC AREAS.

1 E3 E3 TYPICAL DUCT BANK DETAILS FOR CONDUIT IN SAND OR CONCRETE

SCALE: N.T.S.

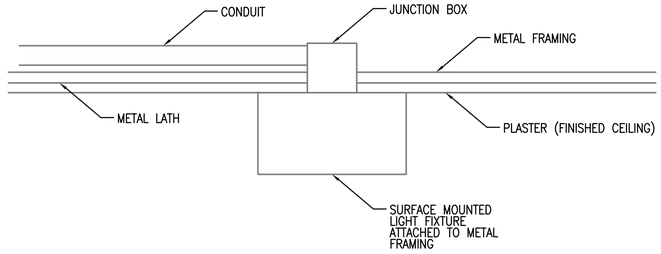

2 E3 E3 TYPICAL DETAIL FOR SURFACE MOUNTED LIGHT FIXTURES

SCALE: N.T.S.

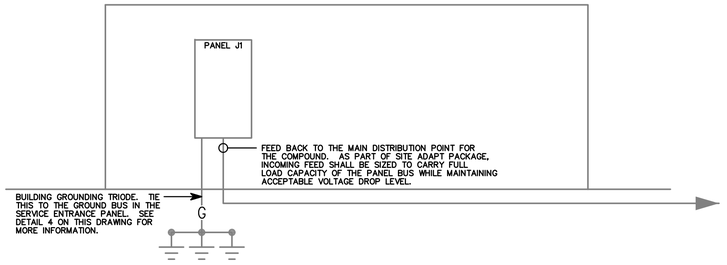

3 E3 E3 VEHICLE/POL RISER DIAGRAM

SCALE: N.T.S.

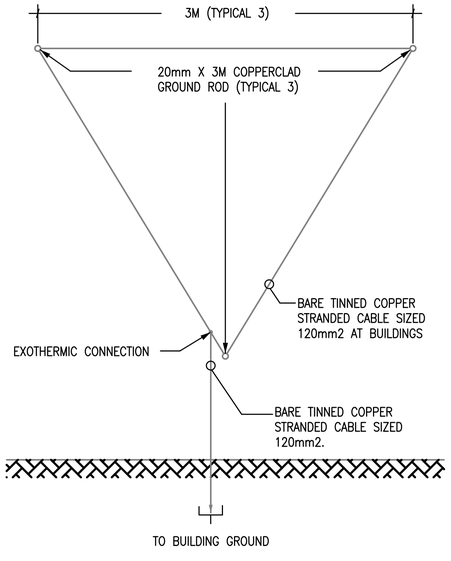

4 E3 E3 GROUND TRIPOD SYSTEM DETAIL - PLAN

SCALE: N.T.S.

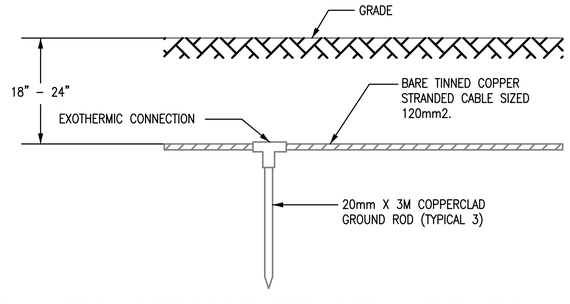

5 E3 E3 GROUND TRIPOD SYSTEM DETAIL - ELEVATION

SCALE: N.T.S.

US Army Corps of Engineers
Afghanistan Engineer District

SYMBOL	DESCRIPTION	DATE	APR

DESIGNED BY: JRG	DATE: 09-30-09
DWN BY: JRG	SUBMITTED BY: BAKER
CHK BY: JRG	FILE NO.: ANPSDE-503XXX

Michael Baker Jr., Inc
A unit of Michael Baker Corporation
Airside Business Park
100 Airside Drive
Moon Township, PA 15108
www.mbakercorp.com

AFGHAN NATIONAL POLICE
STANDARD DESIGN
VEHICLE MAINTENANCE & POL BUILDING

DETAILS

SHEET REFERENCE NUMBER:
E3

100% SUBMISSION

LIGHTING FIXTURE SCHEDULE

FIXTURE MARK	STYLE NUMBER AND TYPE	NUMBER AND TYPE OF LAMPS	VOLTAGE	MOUNTING	NOTES
B	WET LOCATION WRAP AROUND SURFACE/PENDANT MOUNTED FLUORESCENT FIXTURE WITH PRISMATIC ACRYLIC LENS AND ELECTRONIC BALLAST	(2) 32W 3500K	220V – 1ø 50HZ	PENDANT MOUNTED FROM SLOPED CEILINGS	FURNISHED WITH ELECTRONIC BALLAST, VIRGIN ACRYLIC WRAP AROUND LENS.
B2	SAME AS FIXTURE 'B' WITH EMERGENCY BALLAST	(2) 32W 3500K	220V – 1ø 50HZ	PENDANT MOUNTED FROM SLOPED CEILINGS	FURNISHED WITH ELECTRONIC BALLAST, VIRGIN ACRYLIC WRAP AROUND LENS. EMERGENCY BALLAST WITH SELF TEST SWITCH.
C	INCANDESCENT ONE PIECE W/ APPROVED LENS STABILIZED HIGH IMPACT POLY CARBONATE.	(1) A19 – 100W INCANDESCENT	220V – 1ø 50HZ	WALL MOUNTED ABOVE EXTERIOR DOORS	
H	REMOTE HEAD EXTERIOR LIGHT HEAD POWERED FROM EXIT SIGN BATTERY– 12V DOUBLE HEAD CORROSION RESISTANT WITH UL34 WEATHERPROOF CONSTRUCTION	(2) 12W/12V HALOGEN LAMP	12V – 1ø 50HZ	EXTERIOR WALL MOUNTED AT TOP OF DOOR HEIGHT	
J	EXPLOSION–PROOF (2) LAMP FIXTURE PROVIDED WITH LAMPS. COPPER FREE, ALUMINUM HOUSING, TEMPERED BOROSILICATE GLASS, AND BIAX LAMPS WITH WIRE GUARD	(2) 40W 3500K BIAX FLUORESCENT LAMPS	220V – 1ø 50HZ	PENDANT MOUNTED FROM SLOPED CEILINGS	FURNISHED WITH LAMPS AND WIRE GUARD
E	UNIVERSAL MOUNT ENGINEER GRADE THERMOPLASTIC HOUSING EXIT SIGN WITH LED LAMPS, RED LETTERS 6" IN HEIGHT WITH ARROWS AS INDICATED, WITH 12V CADMIUM BATTERY WITH REMOTE HEAD CAPABILITY	LED LAMPS	220V – 1ø 50HZ	UNIVERSAL MOUNTING	

FIXTURE MARK 'B'

WET LOCATION WRAP AROUND SURFACE/PENDANT MOUNTED FLUORESCENT FIXTURE WITH PRISMATIC ACRYLIC LENS AND ELECTRONIC BALLAST.

FIXTURE MARK 'B2':
SAME FIXTURE AS 'B' WITH EMERGENCY BALLAST.

FIXTURE MARK 'C'

INCANDESCENT ONE PIECE WITH APPROVED LENS, STABILIZED HIGH IMPACT POLY CARBONATE

FIXTURE MARK 'H'

REMOTE HEAD EXTERIOR LIGHT HEAD POWERED FROM EXIT SIGN BATTERY– 12V DOUBLE HEAD CORROSION RESISTANT WITH UL34 WEATHERPROOF CONSTRUCTION

FIXTURE MARK 'E'

UNIVERSAL MOUNT ENGINEER GRADE THERMOPLASTIC HOUSING EXIT SIGN WITH LED LAMPS, RED LETTERS 6" IN HEIGHT WITH ARROWS AS INDICATED, WITH 12V CADMIUM BATTERY

FIXTURE MARK 'J'

EXPLOSION–PROOF (2) LAMP FIXTURE PROVIDED WITH LAMPS. COPPER FREE, ALUMINUM HOUSING, TEMPERED BOROSILICATE GLASS, AND BIAX LAMPS WITH WIRE GUARD

US Army Corps of Engineers
Afghanistan Engineer District

SYMBOL	DESCRIPTION	DATE	APP.

DESIGNED BY:	DATE:	FILE NO.:
JRG	09-30-09	ANPSDE-604XXX
DWN BY:	SUBMITTED BY:	
JRG	BAKER	
CHK BY:		
JRG		

Michael Baker Jr., Inc
A unit of Michael Baker Corporation
Airside Business Park
100 Airside Drive
Moon Township, PA 15108
www.mbakercorp.com

AFGHAN NATIONAL POLICE
STANDARD DESIGN
VEHICLE MAINTENANCE & POL BUILDING

LIGHT FIXTURE SCHEDULE

SHEET REFERENCE NUMBER:
E4

100% SUBMISSION

PANELBOARD J1 SURFACE MOUNTED ASYM. A.I.C. MIN.

AMP. MAIN LUGS (OR) 150 AMP. MAIN BREAKER W/ 150 AMP. TRIP

CIRCUIT BREAKER TYPE 380/220 VOLTS 3 PHASE 4 WIRE 50 HZ 150 AMP. BUS

CKT. NO.	TRIP AMPS	NO. POLES	WIRE MM 2	GND MM2	CONDUIT MM	LOAD SERVED	LOAD-V.A. A0	LOAD-V.A. B0	LOAD-V.A. C0	LOAD-V.A. A0	LOAD-V.A. B0	LOAD-V.A. C0	LOAD SERVED	CONDUIT MM	GND MM2	WIRE MM2	NO. POLES	TRIP AMPS	CKT. NO.
1	20	1	4.0	4.0	20	LIGHTING - 105, 106	1.7			0.7			LIGHTING - 101-105	20	4.0	4.0	1	20	2
3	20	1	4.0	4.0	20	RECEPTACLES - EXTERIOR		0.8			0.3		LIGHTING - POL BUILDING	20	4.0	4.0	1	20	4
5	20	1	4.0	4.0	20	RECEPTACLES - EXTERIOR			0.6			1.0	RECEPTACLES - 105, 106	20	4.0	4.0	1	20	6
7	20	1	4.0	4.0	20	RECEPTACLES - 101	0.8			1.0			RECEPTACLES - 105, 106	20	4.0	4.0	1	20	8
9	20	1	4.0	4.0	20	RECEPTACLES - 102-104		1.0			0.5		F.A.C.P.	20	4.0	4.0	1	20	10
11	60	2	16.0	16.0	32	BATTERY CHARGER	9.1		9.1				AIR COMPRESSOR (BY OTHERS)	20	4.0	4.0	2	20	12
13																			14
15	20	1	4.0	4.0	20	EXHAUST FAN - 102, 103		0.5			0.5		EXHAUST FAN - 104, 106	20	4.0	4.0	1	20	16
17	20	2	4.0	4.0	20	ELECTRIC HEAT - 106	2.5		2.5			0.7	EXHAUST FAN - 106	20	4.0	4.0	1	20	18
19										0.7			EXHAUST FAN - 106	20	4.0	4.0	1	20	20
21	20	1	4.0	4.0	20	RECEPTACLES - POL BUILDING		0.6			2.5		ELECTRIC HEAT - 106	20	4.0	4.0	2	20	22
23	20	2	4.0	4.0	20	ELECTRIC UNIT HEATER - 106	2.5		2.5			2.5							24
25										0.5			LIGHTING-MAINTENANCE PIT	20	4.0	4.0	1	20	26
27	20	2	4.0	4.0	20	ELECTRIC UNIT HEATER - 106		2.5			1.0		RECEPTACLES-MAINTENANCE PIT	20	4.0	4.0	1	20	28
29							2.5		2.5			0.2	CEILING FAN	20	4.0	4.0	1	20	30
31	20	2	4.0	4.0	20	ELECTRIC UNIT HEATER - 101	2.0						SPARE				1	20	32
33								2.0					SPARE				1	20	34
35	20	2	4.0	4.0	20	ELECTRIC UNIT HEATER - 103	1.3		1.3				SPARE				1	20	36
37													SPARE				1	20	38
39	20	1				SPARE							SPARE				1	20	40
41	20	1				SPARE							SPARE				1	20	42
							19.9	7.4	18.5	2.9	4.8	4.4							

TOTAL CONN. LOAD PER PHASE (KVA): A0 22.8 B0 12.2 C0 22.9

TOTAL CONN. LOAD 57.9 KVA. 70 % DEMAND = ESTIMATED DEMAND LOAD 40.5 SUPPLIED FROM SWITCHGEAR MAIN DISTRIBUTION

• MAIN BREAKER SHALL BE EARTH GROUND TYPE

US Army Corps of Engineers
Afghanistan Engineer District

APR		
DATE		
DESCRIPTION		
SYMBOL		

DESIGNED BY: JRG	DWN BY: JRG	CHK BY: JRG	DATE: 09-30-09
		SUBMITTED BY: BAKER	FILE NO.: ANPSDE-605XXX

Michael Baker Jr., Inc
A unit of Michael Baker Corporation
Airside Business Park
100 Airside Drive
Moon Township, PA 15108
www.mbakercorp.com

AFGHAN NATIONAL POLICE
STANDARD DESIGN
VEHICLE MAINTENANCE & POL BUILDING

PANEL SCHEDULES AND RISER DIAGRAM

SHEET REFERENCE NUMBER:
E5

100% SUBMISSION

AFGHAN NATIONAL ARMY

STANDARD BUILDING DESIGN

RMTC STORAGE

100% FINAL DESIGN SUBMITTAL

SHEET INDEX

G–001 COVER SHEET

STRUCTURAL

S–001 GENERAL NOTES & DESIGN CRITERIA
S–101 FOUNDATION/SLAB PLAN
S–102 ROOF FRAMING PLAN
S–401 BUILDING SECTIONS
S–402 ENLARGED ELEVATED SLAB PLAN
S–501 FOUNDATION SECTIONS
S–502 FRAMING SECTIONS
S–503 BEAM & COLUMN DETAILS
S–504 BEAM & COLUMN DETAILS
S–601 SCHEDULES
S–701 TYPICAL DETAILS
S–702 TYPICAL DETAILS

ARCHITECTURAL

A–001 LIFE SAFETY PLAN
A–101 FLOOR PLAN
A–102 ROOF PLAN
A–201 ELEVATIONS
A–301 BUILDING SECTIONS
A–401 WALL SECTIONS
A–501 EXTERIOR DETAILS
A–502 HEAD, JAMB, & SILL DETAILS
A–503 STOOP DETAILS
A–504 CANOPY DETAILS
A–601 WINDOW & DOOR SCHEDULES

MECHANICAL

M–101 HVAC FLOOR PLAN, SCHEDULES, & DETAILS

ELECTRICAL

E–001 ELECTRICAL SYMBOLS & ABBREVIATIONS
E–101 ELECTRICAL LIGHTING PLAN
E–102 ELECTRICAL POWER & SYSTEMS PLAN
E–103 ELECTRICAL LIGHTNING PROTECTION
E–501 ELECTRICAL DETAILS
E–502 ELECTRICAL DETAILS
E–601 ELECTRICAL LIGHT FIXTURE SCHEDULE
E–602 ELECTRICAL PANEL SCHEDULES

US ARMY CORPS OF ENGINEERS
AFGHANISTAN ENGINEER DISTRICT

Mark	Description	Date	Appr.	Mark	Description	Date	Appr.

Designed by: KMP/MMY
Dwn by: RCG
Ckd by: CWW
Reviewed by: LHM
Submitted by: BAKER
Date: 2/23/10
Rev: 0
Design file no.
Drawing code:
File name: ANASTORD-001
Plot date: 6/3/2010
Plot scale: X:X

U.S. ARMY CORPS OF ENGINEERS
AFGHANISTAN ENGINEER DISTRICT
APO AE 96338

Michael Baker Jr., Inc.
A unit of Michael Baker Corporation
Airside Business Park
100 Airside Drive
Moon Township, PA 15108
www.mbakercorp.com

STANDARD DESIGN
VARIOUS PROJECTS
VARIOUS LOCATIONS, AFGHANISTAN

RMTC STORAGE

COVER SHEET

Sheet reference number:
G–001

STRUCTURAL ABBREVIATIONS:

ACI	AMERICAN CONCRETE INSTITUTE
ADD'L	ADDITIONAL
AISC	AMERICAN INSTITUTE OF STEEL CONSTRUCTION
AISI	AMERICAN IRON AND STEEL INSTITUTE
ASTM	AMERICAN SOCIETY FOR TESTING AND MATERIALS
ARCH	ARCHITECTURAL
B	BOTTOM
BLDG	BUILDING
BOTT	BOTTOM
℄	CENTER LINE
CFMRF	COLD FORM METAL ROOF FRAME
CFMF	COLD FORM METAL FRAME
CFS	COLD FORMED STEEL
CIP	CAST-IN-PLACE
CIPL	CAST-IN-PLACE LINTEL
CJ	CONTROL JOINT
CLR	CLEAR
CMU	CONCRETE MASONRY UNIT
COEFF	COEFFICIENT
COL	COLUMN
CONC	CONCRETE
CONT	CONTINUOUS
COORD	COORDINATE
CRSI	CONCRETE REINFORCING STEEL INSTITUTE
CSJ	CONSTRUCTION JOINT
DIA	DIAMETER
DIAG	DIAGONAL
DIM	DIMENSION
DWG	DRAWING
DWL	DOWEL
EA	EACH
EF	EACH FACE
ELEC	ELECTRICAL
ELEV	ELEVATION
EMBED	EMBEDMENT
EQUIV	EQUIVALENT
ETC	ET CETERA
EW	EACH WAY
EXP	EXPANSION
EXT	EXTERIOR
FTG	FOOTING
GA	GAUGE
GB	GRADE BEAM
HORIZ	HORIZONTAL
h	HOUR
HRS	HOURS
IBC	INTERNATIONAL BUILDING CODE
INFO	INFORMATION
INT	INTERIOR
kg	KILOGRAM
km	KILOMETER
kN	KILONEWTON
kPa	KILOPASCAL
L#	ANGLE (# INDICATES SIZE)
LONG	LONGITUDINAL
LLV	LONG LEG VERTICAL
m	METER
MAX	MAXIMUM
MECH	MECHANICAL
MFG	MANUFACTURER
MID	MIDDLE
MIN	MINIMUM
MISC	MISCELLANEOUS
mm	MILLIMETER
MPa	MEGAPASCAL
MTL	METAL
MWFRS	MAIN WIND FORCE RESISTING SYSTEM
N	NEWTON
N	NORTH
N/A	NOT APPLICABLE
#	NUMBER SYMBOL FOR REBAR SIZE
NTS	NOT TO SCALE
OC	ON CENTER
OD	OUTSIDE DIAMETER
OPNG	OPENING
ℙ or PL	PLATE
PRE-ENG	PRE-ENGINEERED
REINF	REINFORCED
REQ'D	REQUIRED
RB	ROOF BEAM
SIM	SIMILAR
SPECS	SPECIFICATIONS
STD	STANDARD
STRUCT	STRUCTURAL
SW	SHEAR WALL
T	TOP
T/	TOP OF
T/ELEV	TOP ELEVATION
T/SLAB	TOP OF SLAB
T&B	TOP AND BOTTOM
THK	THICK
TYP	TYPICAL
UFC	UNIFIED FACILITIES CRITERIA
UON	UNLESS OTHERWISE NOTED
VERT	VERTICAL
W	WIDTH
W/	WITH

1.0 GENERAL NOTES:

1.1 THIS PROJECT HAS BEEN DESIGNED FOR THE WEIGHTS AND MATERIALS INDICATED ON THE SHEETS AND FOR THE LIVE LOADS INDICATED IN THE DESIGN DATA. IT IS THE CONTRACTOR'S RESPONSIBILITY TO DETERMINE ALLOWABLE CONSTRUCTION LOADS AND TO PROVIDE PROPER DESIGN AND CONSTRUCTION OF FALSEWORK, FORMWORK, STAGING, BRACING, SHEETING AND SHORING, ETC.

1.1 COORDINATE THESE SHEETS WITH THE ARCHITECTURAL, MECHANICAL, ELECTRICAL, PLUMBING, AND CIVIL SHEETS. ALL DIMENSIONS SHOWN ON THE SHEETS ARE MILLIMETERS UNLESS NOTED OTHERWISE.

1.2 THE CONTRACTOR SHALL VERIFY AND COORDINATE ALL FLOOR AND ROOF OPENING SIZES AND LOCATIONS, EQUIPMENT PAD SIZES AND LOCATIONS, ANCHOR BOLT LAYOUTS, ETC WITH EQUIPMENT SELECTED. THE CONTRACTOR SHALL MAKE ANY REQUIRED MODIFICATIONS AT NO ADDITIONAL COST.

1.3 THE CONTRACTOR SHALL REFER TO THE ARCHITECTURAL, MECHANICAL, ELECTRICAL AND PLUMBING SHEETS FOR SLEEVES, CURBS, INSERTS OR OPENINGS, ETC. NOT HEREIN INDICATED.

1.4 WORK NOT INCLUDED ON THE SHEETS BUT IMPLIED TO BE SIMILAR TO THAT SHOWN AT CORRESPONDING PLACES ELSEWHERE ON THE SHEETS SHALL BE REPEATED.

1.5 IN CASE OF CONFLICT BETWEEN THE NOTES, DETAILS AND SPECIFICATIONS THE MOST RIGID REQUIREMENTS SHALL GOVERN.

1.6 SEE ARCHITECTURAL SHEETS FOR LOCATIONS OF MASONRY AND NON-LOAD BEARING PARTITIONS. PROVIDE COMPRESSIBLE FIRESAFING AT TOP OF WALL AS REQUIRED BY ARCHITECTURAL SHEETS.

1.7 COORDINATE FINISHED FLOOR DATUM ELEVATION 0.0m WITH THE CIVIL SHEETS.

2.0 FOUNDATION NOTES

2.1 THE GEOTECHNICAL ANALYSIS FOR THIS PROJECT IS THE RESPONSIBILITY OF THE CONTRACTOR AWARDED THE WORK. AN ASSUMED ALLOWABLE SOIL BEARING VALUE OF 72 kPa HAS BEEN USED IN THE STRUCTURAL ANALYSIS OF THE BUILDING HEREIN AND SHALL BE CONFIRMED AND VERIFIED AS PART OF THE GEOTECHNICAL INVESTIGATION. VALUES WHICH DO NOT MEET THE REQUIREMENTS INDICATED ON THE BASIS OF DESIGN SHEET SHALL BE IMMEDIATELY BROUGHT TO THE ATTENTION OF THE CONTRACTING OFFICER FOR CONSIDERATION AND DETERMINATION ON THE NEXT APPROPRIATE COURSE OF ACTION.

2.2 SEE THE SPECIFICATION FOR ADDITIONAL REQUIREMENTS TO THOSE OUTLINED IN THE GEOTECHNICAL INVESTIGATION FOR EXCAVATION AND PREPARATION OF THE FOUNDATION AND THE SLAB ON GRADE SUBGRADE INCLUDING COMPACTION PROCEDURES.

2.3 EXCAVATIONS FOR FOOTINGS SHALL HAVE THE SIDES AND BOTTOMS TEMPORARILY LINED WITH 0.25mm POLYETHYLENE IF PLACEMENT OF CONCRETE DOES NOT OCCUR WITHIN 24 HRS OF THE EXCAVATION OF THE FOOTING.

2.4 FOUNDATION CONDITIONS NOTED DURING CONSTRUCTION WHICH DIFFER FROM THOSE DESCRIBED IN THE GEOTECHNICAL REPORT SHALL BE REPORTED TO THE GENERAL CONTRACTOR BEFORE FURTHER CONSTRUCTION IS ATTEMPTED. SEE PROJECT SPECIFICATIONS.

2.5 NO FOOTINGS OR SLABS SHALL BE POURED INTO OR AGAINST SUBGRADE CONTAINING FREE WATER, FROST, ICE OR LOOSE MATERIAL. FROST DEPTH ASSUMED TO BE 800mm.

2.6 ALL SLAB-ON-GRADE, TRENCH BOTTOMS AND OTHER ON-GRADE INTERIOR HORIZONTAL SURFACES SHALL BE PLACED OVER A 0.25mm POLYETHYLENE VAPOR RETARDER OVER A 100mm #57 STONE WATER CAPILLARY BARRIER PLACED ON SUBGRADE PROPERLY PREPARED IN ACCORDANCE WITH THE CONTRACT SPECIFICATIONS. (UON)

2.7 PRIOR TO START OF FOUNDATION OR SLAB-ON-GRADE CONSTRUCTION, EXISTING SUBGRADES SHALL BE COMPACTED TO MINIMUM OF 95% MAXIMUM DRY DENSITY OBTAINED THRU ASTM D 1557 MODIFIED PROCTOR TESTING.

2.8 SEE PLUMBING, ELECTRICAL & CIVIL SHEETS FOR REQUIRED UNDERSLAB UTILITIES.

2.9 SEE ARCHITECTURAL SHEETS FOR ALL WATERPROOFING DETAILS AND MATERIALS.

2.10 IF UNDERMINING OF FOOTINGS OCCURS, FILL VOIDS WITH 18 MPa CONCRETE. DO NOT ATTEMPT TO REPLACE AND RE-COMPACT SOIL.

3.0 CONCRETE

3.1 CONCRETE SHALL HAVE THE UNIT WEIGHT OF 2400 kg/m^3 AND A MINIMUM COMPRESSIVE STRENGTH (f'c) OF 28 MPa AT 28 DAYS. ALL CONCRETE SHALL HAVE A WATER-CEMENT RATIO OF 0.45. SEE SPECIFICATIONS FOR ADDITIONAL INFORMATION. ENTRAIN AIR TO PRODUCE TOTAL AIR CONTENT ACCORDING TO THE SPECIFICATIONS FOR CONCRETE EXPOSED TO FREEZING TEMPERATURES (EXTERIOR FOOTINGS, SLAB TURNDOWNS, EXTERIOR SLABS AND SLABS-ON-GRADE, EXTERIOR RETAINING WALLS, AND EXTERIOR GRADE BEAMS.)

3.2 NO CALCIUM CHLORIDE SHALL BE USED IN ANY CONCRETE.

3.3 MIXING, TRANSPORTING AND PLACING OF CONCRETE SHALL CONFORM TO ACI 301M-05.

3.4 ALL CONCRETE WORK SHALL CONFORM TO THE REQUIREMENTS OF THE AMERICAN CONCRETE INSTITUTE (ACI) 318M MANUAL (metric), "BUILDING CODE REQUIREMENTS FOR REINFORCED CONCRETE", AND REQUIREMENTS OUTLINED IN THE CONTRACT SPECIFICATIONS. WHEN THERE IS A CONFLICT BETWEEN ACI AND THE SPECIFICATIONS, THE MORE STRINGENT SHALL GOVERN.

3.5 CHAMFER ALL EXPOSED EXTERNAL CORNERS OF CONCRETE WITH 20mm x45 DEGREE CHAMFER UON.

3.6 CONCRETE REINFORCEMENT BARS SHALL CONFORM TO ASTM A615M-96a, GRADE 420 MPa, REINFORCING BARS SHALL NOT BE TACK WELDED, WELDED, HEATED OR CUT, UNLESS INDICATED ON THE CONTRACT DOCUMENTS. ALL LAP SPLICES SHALL BE CLASS "B" UON.

3.7 HORIZONTAL FOOTING AND HORIZONTAL WALL REINFORCEMENT SHALL BE CONTINUOUS AND SHALL HAVE 90 DEGREE BENDS AND EXTENSIONS, OR CORNER BARS OF EQUIVALENT SIZE LAPPED WITH A CLASS B TENSION SPLICE AT CORNERS AND INTERSECTIONS. TOP BAR CRITERIA SHALL APPLY IF 300mm OR MORE OF FRESH CONCRETE IS PLACED BELOW BAR.

3.8 SLABS-ON-GRADE SHALL HAVE CONSTRUCTION JOINTS OR CRACK CONTROL JOINTS AS SHOWN ON THE DRAWINGS. CONSTRUCTION JOINTS CAN BE USED AT CONTROL JOINT LOCATIONS AT CONTRACTORS OPTION. SEE SLAB PLANS & JOINT DETAILS FOR ADDITIONAL INFORMATION. FOR AREAS NOT SHOWN ON DWGS, THE MAXIMUM SPACING OF CONSTRUCTION/ CRACK CONTROL JOINTS SHALL BE 4800mm

3.9 ALL CONCRETE REINFORCEMENT SHALL BE DETAILED, FABRICATED, LABELED, SUPPORTED, AND SPACED IN FORMS AND SECURED IN PLACE IN ACCORDANCE WITH THE PROCEDURES AND REQUIREMENTS OUTLINED IN THE LATEST EDITION OF THE "BUILDING CODE REQUIREMENTS FOR REINFORCED CONCRETE", ACI 318M, AND THE "MANUAL OF STANDARD PRACTICE FOR DETAILING REINFORCED CONCRETE STRUCTURES", ACI 315M, LATEST EDITION. BASED ON IN COUNTRY REINFORCEMENT AVAILABILITY, IT IS THE CONTRACTOR'S OPTION TO ROUND DESIGNATED ODD NUMBERED REINFORCEMENT SIZES UP (1) ONE BAR SIZE.

3.10 ALL DOWELS SHALL MATCH SIZE AND NUMBER OF MAIN REINFORCING, UNLESS NOTED OTHERWISE ON THE SHEETS.

3.11 ADDITIONAL BARS SHALL BE PROVIDED AROUND ALL FLOOR AND WALL OPENINGS AS SHOWN ON THE SHEETS.

3.12 SEE ARCHITECTURAL SHEETS FOR TYPE AND LOCATION OF ALL FLOOR FINISHES.

3.13 THE CONTRACTOR SHALL COORDINATE ADDITIONAL WALL/SLAB OPENINGS NOT SHOWN ON STRUCTURAL SHEETS. SEE MECHANICAL, ELECTRICAL, PLUMBING AND CIVIL SHEETS.

3.14 UNLESS NOTED OTHERWISE, ALL CURBS SHALL BE REINFORCED WITH AT LEAST (1)-#13 CONTINUOUS AND #13 AT 300mm O.C. DOWELS TO STRUCTURE BELOW.

3.15 THE CONTRACTOR SHALL VERIFY ALL OPENINGS, PAD SIZES, AND ANCHOR BOLTS WITH EQUIPMENT SELECTED.

3.16 FOR ALL WALLS & PIERS, PROVIDE DOWELS INTO FOOTING AT EACH VERT REINF BAR, UON DOWEL SIZE SHALL BE SAME AS VERT REINF.

3.17 PROVIDE CONCRETE POUR STOPS OR FORMED AS REQUIRED FOR INSTALLATION OF ALL CONCRETE WORK.

3.18 PROVIDE ADDITIONAL (2)-#13 x 600mm REINFORCING BARS IN SLAB-ON GRADE AT ALL RE-ENTRANT CORNERS. PLACE BARS AT MID-DEPTH OF SLAB WITH A CLEARANCE OF 50mm FROM CORNER UON.

3.19 COLD-WEATHER PLACEMENT: COMPLY WITH ACI 306.1 AND AS FOLLOWS. PROTECT CONCRETE WORK FROM PHYSICAL DAMAGE OR REDUCED STRENGTH THAT COULD BE CAUSED BY FROST, FREEZING ACTIONS, OR LOW TEMPERATURES. SUBMIT A COLD WEATHER CONCRETING PLAN FOR APPROVAL.

3.20 PROVIDE BONDING COMPOUND PER ASTM C 1059-99: SPECIFICATION FOR LATEX AGENTS FOR BONDING FRESH CONCRETE (GROUT) TO HARDENED CONCRETE.

3.21 THE FORMED SURFACES FOR REINFORCED CONCRETE SHALL ACHIEVE A "CLASS A" FINISH WHEN RECEIVING PAINT OR A "CLASS B" FINISH WHEN RECEIVING PLASTER OR TILE AS PER SPECIFICATION SECTION 03 31 00 CAST-IN-PLACE STRUCTURAL CONCRETE.

3.22 AT INTERSECTING GRADE BEAMS AND SHEAR WALLS, PROVIDE CORNER BARS AT INTERSECTIONS WITH SAME QUANTITY, SIZE AND SPACING AS HORIZONTAL BARS WITH LEG LENGTH = 50db.

3.23 REFER TO S-800 SERIES REINFORCING BAR PLACEMENT DRAWINGS DEFINING LENGTHS, BENDS, AND SPACINGS FOR ALL STRUCTURAL CONCRETE. THE S-800 SERIES DRAWING ARE BASED ON THE S-400, S-500, S-600, AND S-700 SERIES DRAWING SCHEDULES, DETAILS, AND DIAGRAMS.

4.0 CONCRETE MASONRY

4.1 MASONRY CONSTRUCTION SHALL CONFORM TO SPECIFICATION FOR MASONRY STRUCTURES (ACI 530.1) UON.

4.2 STRENGTH OF MASONRY MATERIALS SHALL BE AS FOLLOWS:

a. CONCRETE MASONRY UNITS SHALL BE NORMAL WEIGHT, GRADE N, TYPE 1, CONFORMING TO ASTM C-90 AND HAVE A MINIMUM COMPRESSIVE STRENGTH OF 10.4 MPa ON THE NET AREA.

b. MORTAR SHALL CONFORM TO ASTM C-270 TYPE S.

c. GROUT FOR MASONRY SHALL BE NORMAL WEIGHT AND HAVE A MINIMUM COMPRESSIVE STRENGTH OF 14 MPa AT 28 DAYS. GROUT SHALL CONFORM TO ASTM C476M. GROUT LIFTS SHALL NOT EXCEED 1,400mm.

d. REINFORCED MASONRY SHALL HAVE A STRENGTH F'm = 10 MPa. (F'm IS THE COMPRESSIVE STRENGTH OF THE MASONRY AT 28 DAYS AS DETERMINED BY PRISM TESTS).

4.3 ALL VERTICAL REINFORCEMENT FOR CONCRETE MASONRY SHALL BE ASTM A615M-96a, GRADE 420 MPa. ALL SPLICES SHALL BE LAPPED 48 BAR DIAMETERS MINIMUM.

4.4 BOND BEAMS SHALL BE SPACED AT 1200mm OC VERTICALLY. BOND BEAM REINFORCING SHALL BE CONTINUOUS AND PROVIDED AT WALL INTERSECTIONS AND WALL CORNERS (REFERENCE CONCRETE MASONRY NOTE 4.11). ALL BOND BEAM REINFORCING SHALL BE CONTINUOUS AND HAVE STANDARD ACI HOOKS AT EACH END. PROVIDE STANDARD BAR SPLICES AS SPECIFIED. AS AN ALTERNATE TO CMU BOND BEAMS, IT IS THE CONTRACTOR'S OPTION TO PROVIDE 200mm x 200mm CONTINUOUS CAST-IN-PLACE CONCRETE BOND BEAMS WITH (2)-#16 IN LIEU OF CMU BOND BEAMS INDICATED ON THE DRAWINGS.

4.5 SEE TYPICAL DETAILS FOR MINIMUM REINFORCEMENT REQUIREMENTS FOR CMU WALLS. PROVIDE STANDARD BAR SPLICES AS SPECIFIED. ALL VERTICAL REINFORCEMENT EXTENDS FULL HEIGHT OF WALL.

4.6 CMU CELLS THAT REQUIRE VERTICAL REINFORCING BARS AS INDICATED ON THE CONTRACT DRAWINGS AND/OR SPECS SHALL HAVE REINF BARS PLACED IN CENTERS OF CMU CELLS AND CONTINUOUSLY GROUTED UON.

4.7 ALL CMU CELLS, OPEN CAVITIES, AND AIR SPACES OF ALL EXTERIOR WALLS SHALL BE GROUTED TO STOP FRAGMENTS FROM MORTAR BLAST.

4.8 CONTRACTOR SHALL COORDINATE LOCATION OF ALL OPENINGS SEE ARCH, MECH, ELEC, AND PLUMBING SHEETS FOR SIZE AND LOCATION OF OPENINGS.

4.9 MASONRY WALLS SHALL NOT BE BACK FILLED PRIOR TO THE MORTAR AND GROUT ATTAINING THEIR RESPECTIVE MAXIMUM DESIGN STRENGTHS PER SPECIFICATIONS.

4.10 PROVIDE GALVANIZED MORTAR/GROUT SCREEN W/ 3mm MESH WHERE CELLS BELOW ARE NOT GROUTED.

4.11 AT INTERSECTING BOND BEAMS, PROVIDE CORNER BAR FOR EACH HORIZONTAL BAR IN BOND BEAMS AT INTERSECTING WALLS. USE SAME SIZE AND SPACING AS HORIZONTAL BARS WITH LEG LENGTH = 50db.

4.12 THE ALTERNATE CMU BRACE DETAILS SHOWN ON S-701 CAN BE UTILIZED AT THE CONTRACTOR'S OPTION IN PLACE OF THE "FLOATING PIN" WALL BRACE CONNECTIONS AT TOP OF CMU WALLS DEPICTED ON S-400 AND S-500 SERIES DRAWINGS THESE ALTERNATE DETAILS ALSO SHOW ALTERNATE CAST-IN-PLACE WALL BOND BEAMS THAT CAN BE UTILIZED AT THE CONTRACTOR'S OPTION IN PLACE OF THE STANDARD CMU BOND BEAMS CONSTRUCTED OF CMU BLOCKS.

5.0 COLD-FORMED METAL FRAMING

5.1 ALL COLD-FORMED METAL FRAMING MEMBERS SHALL CONFORM TO ASTM A1003M, STRUCTURAL GRADE ST340 (MPa), WITH A GALVANIZED COATING OF Z275 OR BETTER IN ACCORDANCE WITH ASTM A653M.

5.2 ALL COLD-FORMED METAL FRAMING MEMBERS SHALL HAVE THE FOLLOWING MINIMUM PROPERTIES:

a. MINIMUM METAL THICKNESS:
TRACK = 1.37mm;
STUD/OTHER = 1.09mm

b. MINIMUM FLANGE WIDTH:
TRACK = 38mm;
STUD/OTHER = 35mm

c. MINIMUM MEMBER DEPTH:
ALL SECTIONS = 152.2mm

d. PURLIN (HAT CHANNEL)
DEPTHxWIDTH(FLAT TOP)xTHICK = 25mmx42mmx1.59mm

5.3 ALL CONNECTIONS SHALL BE MADE WITH CORROSION RESISTANT (ASTM A153M), SELF-DRILLING, SELF-TAPPING STEEL DRILL SCREWS IN ACCORDANCE WITH ASTM C1513. SCREWS SHALL HAVE A LOW PROFILE HEAD BENEATH ROOF DECK, AND STANDARD HEAD ALL OTHER LOCATIONS.

5.4 FABRICATE COLD FORMED METAL FRAMING AND ACCESSORIES PLUMB, SQUARE AND TRUE TO LINE, WITH CONNECTIONS SECURELY FASTENED ACCORDING TO AISI STANDARD FOR COLD FORMED STEEL FRAMING.

5.5 CUT FRAMING MEMBERS BY SAWING OR SHEATHING, DO NOT TORCH CUT.

5.6 INSTALL FRAMING MEMBERS IN ONE-PIECE LENGTHS UNLESS SPLICE CONNECTIONS ARE INDICATED FOR TRACK OR TENSION MEMBERS

5.7 INSTALL TEMPORARY BRACING AND SUPPORTS TO SECURE FRAMING DURING CONSTRUCTION. MAINTAIN BRACING AND SUPPORTS IN PLACE UNTIL THE STRUCTURE HAS BEEN COMPLETED WITH ALL CONNECTIONS AND PERMANENT BRACING SECURED.

6.0 STRUCTURAL DESIGN CRITERIA

6.1 ALL DESIGNS SHALL CONFORM TO THE PROVISIONS OF THE IBC 2006 AND UFC AS APPLICABLE.

6.2 DESIGN LOADS

6.2.1 DEAD LOADS (PER IBC 2006 & UFC 3-310-01)

MECH/ELEC/PLUMBING	0.20 kPa
MISCELLANEOUS	0.15 kPa
COLD-FORMED FRAMING	0.20 kPa
INSULATION	0.10 kPa
METAL ROOF PANEL	0.14 kPa
	0.79 kPa
FLOOR PARTITION ALLOWANCE	0.96 kPa

6.2.2 LIVE LOADS (PER IBC 2006 & UFC 3-310-01)

ROOF	1.00 kPa
CORRIDOR (2-STORY BLDG ONLY)	4.80 kPa
ALL OTHERS (2-STORY BLDG ONLY)	2.40 kPa
SLAB ON GRADE	4.80 kPa

6.2.3 SNOW LOADS (PER IBC 2006 & UFC 3-310-01)

GROUND SNOW LOAD (Pg)	1.2 kPa
SNOW IMPORTANCE FACTOR (I)	1.0
SNOW EXPOSURE FACTOR (Ce)	1.0
THERMAL FACTOR (Ct)	1.0

6.2.4 WIND LOADS (PER IBC 2006)

BASIC WIND SPEED	137 km/h
WIND IMPORTANCE FACTOR	1.0
WIND EXPOSURE CATEGORY	D
DIRECTIONALITY COEFFICIENT (Kd)	0.85
TOPOGRAPHIC FACTOR (Kzt)	1.0

6.2.5 SEISMIC LOADS (PER IBC 2006 & UFC 3-310-04)

OCCUPANCY USE CATEGORY — II
SEISMIC IMPORTANCE FACTOR (Ie) — 1.0
SEISMIC SITE CLASS — D
S_s = 1.50 (REDUCED FROM 2.40 PER ASCE 7-05, 12.8.1.3 FOR A BUILDING WITHOUT IRREGULARITIES)
S_1 = 1.20
S_{DS} = 1.00
S_{D1} = 1.20
SEISMIC DESIGN CATEGORY — E
SEISMIC RESISTING SYSTEM:
-SPECIAL REINFORCED CONCRETE SHEAR WALL
RESPONSE MODIFICATION FACTOR (R) — 6
RESPONSE COEFFICIENT (Cs) — 0.167
SEISMIC ANALYTICAL PROCEDURE = EQUIV LATERAL FORCE
SEISMIC BASE SHEAR — 1900 kN

APPROVED:

A/E DESIGNER OF RECORD

SEAL:

US ARMY CORPS OF ENGINEERS
AFGHANISTAN ENGINEER DISTRICT

Mark	Description	Date	Appr.

Mark	Description	Date	Appr.

Date: 2/23/10 | Rev: 0
Design file no.
Drawing code:
File name: ANASTORS-001
Plot date: 6/3/2010
Plot scale: X:X
Designed by: KMP/MMY
Dwn by: RCG | Ckd by: CWW
Reviewed by: LHM
Submitted by: BAKER

U.S. ARMY CORPS OF ENGINEERS
AFGHANISTAN ENGINEER DISTRICT
APO AE 96338

Michael Baker Jr., Inc
A unit of Michael Baker Corporation
Airside Business Park
100 Airside Drive
Moon Township PA 15108
www.mbakercorp.com

STANDARD DESIGN
VARIOUS PROJECTS
VARIOUS LOCATIONS, AFGHANISTAN

RMTC STORAGE

GENERAL NOTES & DESIGN CRITERIA

Sheet reference number:
S-001

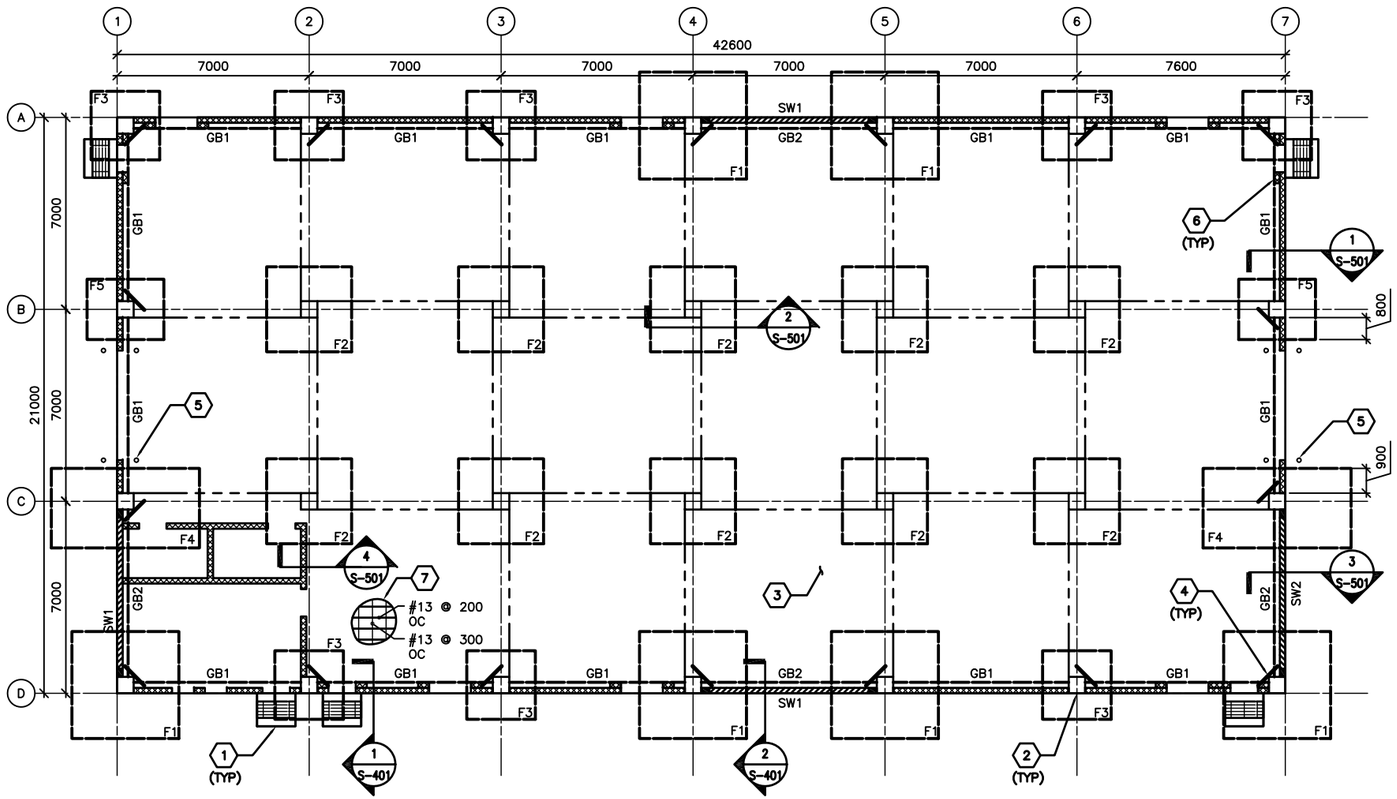

1 S-101 FOUNDATION/SLAB PLAN
SCALE: 1:100

FOUNDATION/SLAB PLAN NOTES:

1. REFER TO SHEET S-001 FOR STRUCTURAL NOTES AND DESIGN CRITERIA.
2. FINISH FIRST FLOOR ELEVATION SHALL BE (DATUM 0.00MM) ALL PLUS OR MINUS DIMENSIONS INDICATED ON PLAN OR REFERRED TO IN NOTES RELATE TO FINISH FIRST FLOOR ELEVATION.
3. SLAB-ON-GRADE IS 150 WITH #13 @ 300 OC EW LOCATED 38 FROM T/SLAB.
4. TOP OF EXTERIOR FOOTINGS SHALL BE -950 UNLESS OTHERWISE INDICATED.
5. TOP OF INTERIOR FOOTINGS WITHOUT GRADE BEAM ABOVE SHALL BE -600.
6. COLUMN FOOTINGS INDICATED THUS F# ON PLAN. REFER TO COLUMN FOOTING SCHEDULE ON SHEET S-601.
7. REFER TO COLUMN SCHEDULE ON SHEET S-601.
8. GRADE BEAM INDICATED THUS GB# ON PLAN, REFER TO BEAM SCHEDULE ON SHEET S-601.
9. SHEARWALL INDICATED THUS SW# ON PLAN, REFER TO SHEARWALL SCHEDULE ON SHEET S-601.
10. SEE TYP EXTERIOR AND INTERIOR CMU WALL REINF DETAILS ON SHEET S-701.
11. SEE MECHANICAL AND ELECTRICAL SHEETS FOR CONCRETE PAD LOCATIONS, SIZES, AND THICKNESS NOT SHOWN. SEE SHEET S-701 FOR DETAILS.
12. THICKENED SLAB UNDER CMU WALLS NOT SHOWN FOR CLARITY.

FOUNDATION/SLAB PLAN KEY NOTES: (X)

1. CONC PAD (ENTRANCE) – SEE ARCH DWGS FOR INFORMATION
2. REINF CONC COLUMN
3. REINF CONC SLAB-ON-GRADE
4. (2)-#13 @ RE-ENTRANT CORNERS – SEE S-701 FOR INFORMATION
5. BOLLARD – SEE SECTION 8/S-502
6. WALL STIFFENER EACH SIDE OF PEDESTRIAN DOOR WHERE NO BOTTOM OF SLAB EXIST AT ELEVATION 3000.
7. SPACE #13 LONGITUDINAL SLAB REINF @ 200 OC BETWEEN COLUMN LINES 1 & 3 FROM C TO D

FOUNDATION/SLAB PLAN LEGEND:

- REINF CONC SHEAR WALL
- REINF CMU WALL
- CONTROL JOINT

0 2000 4000
SCALE: 1:100

UNLESS OTHERWISE NOTED, LINEAR DIMENSIONS SHOWN ON DRAWINGS ARE IN MILLIMETERS (mm)

APPROVED:

A/E DESIGNER OF RECORD

SEAL:

US ARMY CORPS OF ENGINEERS
AFGHANISTAN ENGINEER DISTRICT

Mark	Description	Date	Appr.	Mark	Description	Date	Appr.

Designed by: KMP/MMY
Dwn by: RCG
Ckd by: CWW
Reviewed by: LHM
Submitted by: BAKER
Date: 2/23/10
Rev: 0
Design file no.
Drawing code:
File name: AVASTORS-101
Plot date: 6/3/2010
Plot scale: X:X

U.S. ARMY CORPS OF ENGINEERS
AFGHANISTAN ENGINEER DISTRICT
APO AE 96338

Michael Baker Jr., Inc
A unit of Michael Baker Corporation
Airside Business Park
100 Airside Drive
Moon Township PA 15108
www.mbakercorp.com

STANDARD DESIGN
VARIOUS PROJECTS
VARIOUS LOCATIONS, AFGHANISTAN

RMTC STORAGE

FOUNDATION/SLAB PLAN

Sheet reference number:
S-101

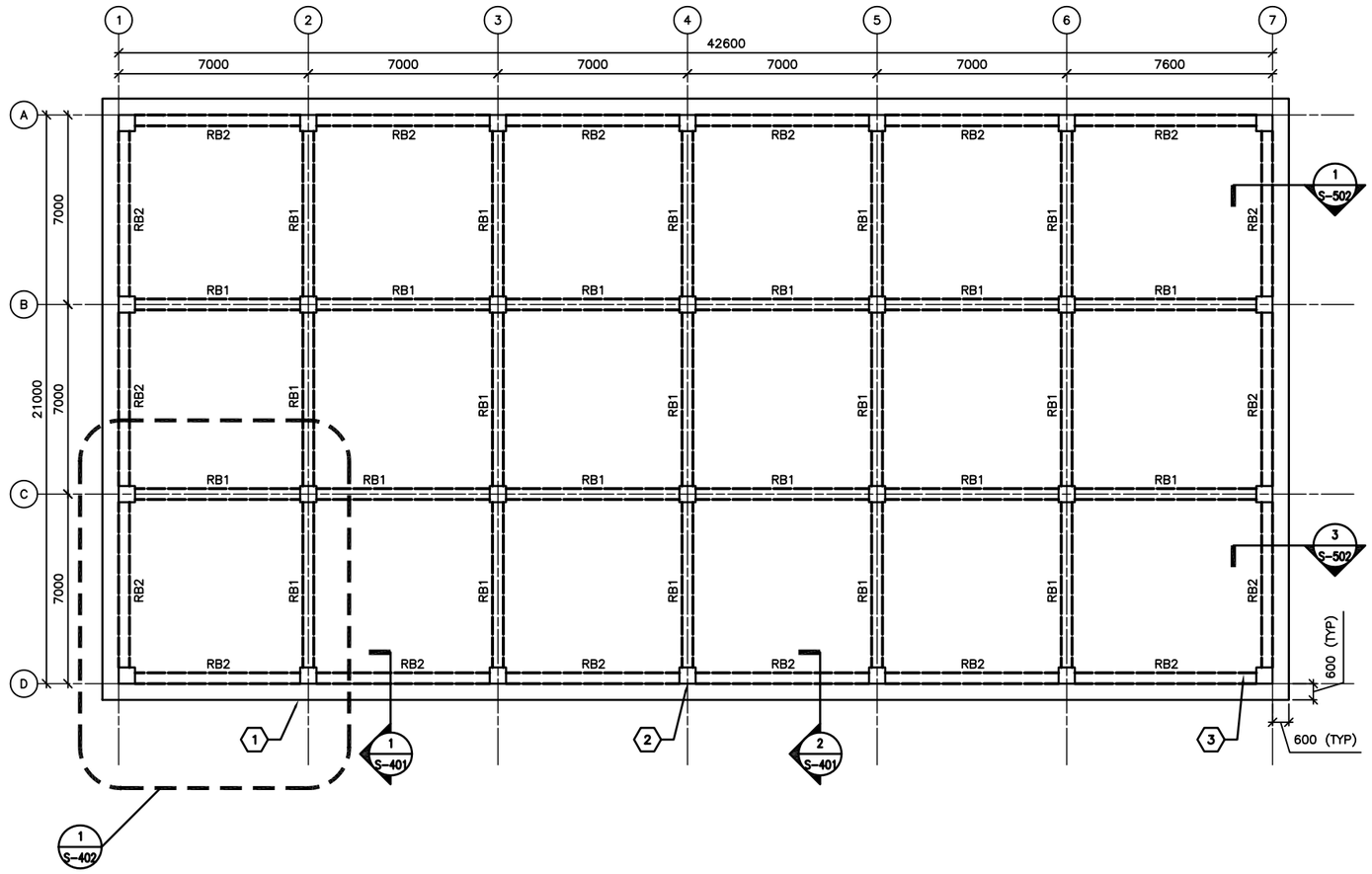

1 S-102 ROOF FRAMING PLAN

SCALE: 1:100

ROOF FRAMING PLAN NOTES:

1. REFER TO SHEETS S-001 FOR STRUCTURAL NOTES AND DESIGN CRITERIA.
2. TOP OF SLAB ELEVATION = 5600 UNLESS NOTED OTHERWISE.
3. ROOF SLAB IS 250 WITH #16 @ 300 OC EW T&B.
4. ROOF BEAM INDICATED BY RB# ON PLAN. REFER TO BEAM SCHEDULE ON SHEET S-601.
5. COORDINATE WITH ARCHITECTURAL SHEETS FOR COLD-FORMED STEEL OVERBUILD FRAMING ABOVE ROOF SLAB.
6. COLD-FORMED METAL OVERBUILD ROOF FRAMING NOT SHOWN FOR CLARITY. SEE OVERBUILD ROOF FRAMING DETAILS AND SECTIONS ON SHEET S-702.
7. CMU PARTITION WALLS (BELOW ROOF SLAB) NOT SHOWN FOR CLARITY.
8. OVERHANG AREAS OF ROOF SLAB CONTAIN ROOF VENT PENETRATIONS. REFERENCE ARCHITECTURAL DRAWINGS FOR INFORMATION.

ROOF FRAMING PLAN KEY NOTES: (X)

1. CONC ROOF SLAB (BELOW ROOF OVERBUILD)
2. REINF CONC COLUMN (BELOW CONC ROOF SLAB)

0 2000 4000

SCALE: 1:100

UNLESS OTHERWISE NOTED, LINEAR DIMENSIONS SHOWN ON DRAWINGS ARE IN MILLIMETERS (mm)

APPROVED:

A/E DESIGNER OF RECORD

SEAL:

US ARMY CORPS OF ENGINEERS
AFGHANISTAN ENGINEER DISTRICT

Mark	Description	Date	Appr.	Mark	Description	Date	Appr.

Designed by: KMP/MMY
Dwn by: RCG
Ckd by: CWW
Reviewed by: LHM
Submitted by: BAKER
Date: 2/23/10
Rev: 0
Design file no.
Drawing code:
File name: ANASTORS-102
Plot date: 6/3/2010
Plot scale: X:X

U.S. ARMY CORPS OF ENGINEERS
AFGHANISTAN ENGINEER DISTRICT
APO AE 96338

Michael Baker Jr., Inc.
A unit of Michael Baker Corporation
Airside Business Park
100 Airside Drive
Moon Township, PA 15108
www.mbakercorp.com

STANDARD DESIGN
VARIOUS PROJECTS
VARIOUS LOCATIONS, AFGHANISTAN

RMTC STORAGE

ROOF FRAMING PLAN

Sheet reference number:
S-102

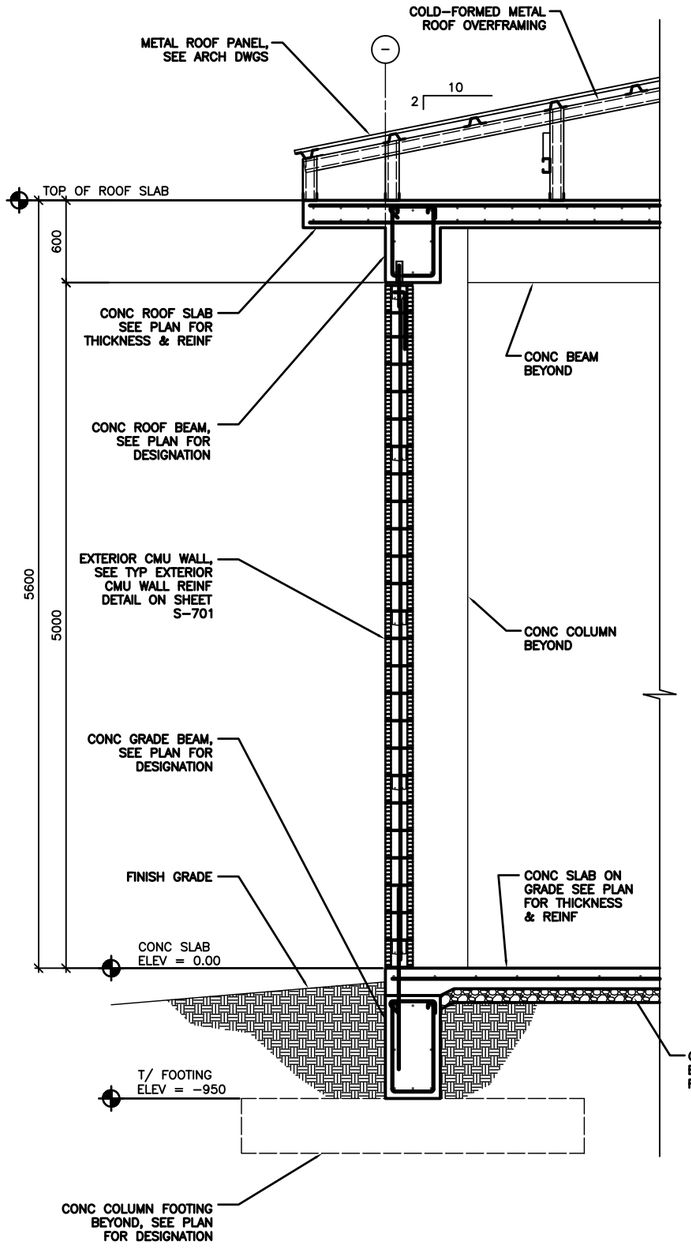

1 S-101 1 S-102 TYPICAL WALL SECTION AT EXTERIOR MASONRY WALL

SCALE: 1:20

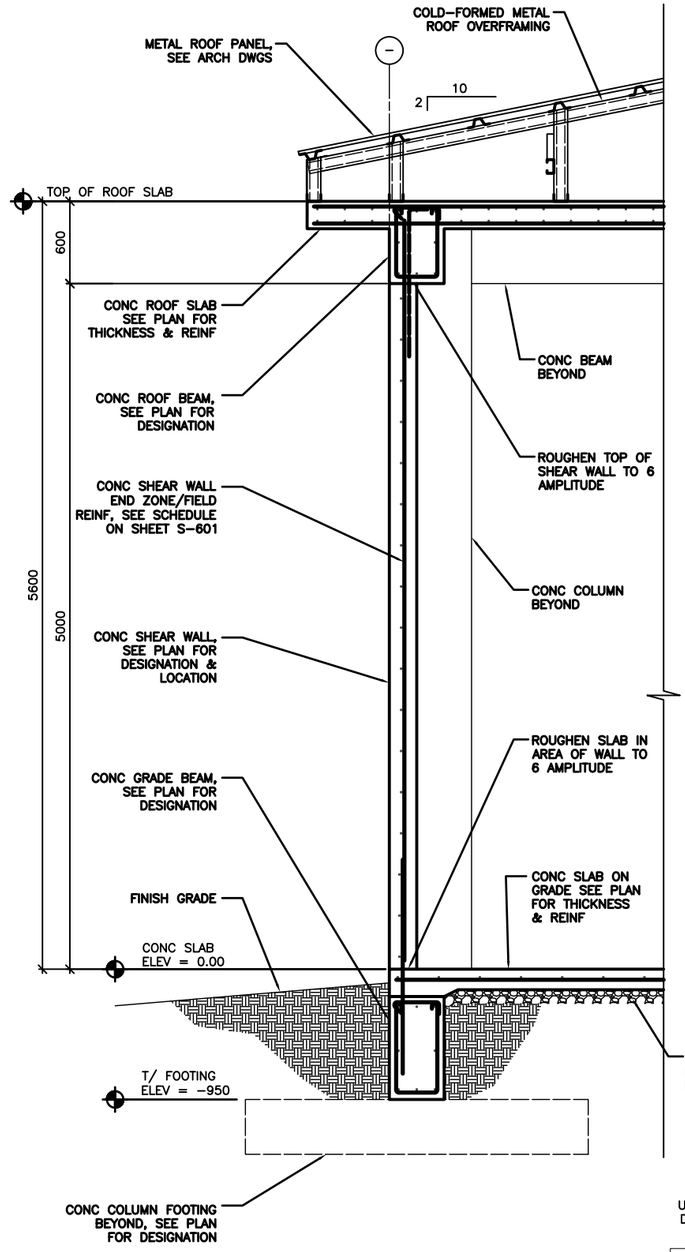

2 S-101 2 S-102 TYPICAL WALL SECTION AT CONCRETE SHEAR WALL

SCALE: 1:20

0 400 800

SCALE: 1:20

UNLESS OTHERWISE NOTED, LINEAR DIMENSIONS SHOWN ON DRAWINGS ARE IN MILLIMETERS (mm)

APPROVED:

A/E DESIGNER OF RECORD

SEAL:

US ARMY CORPS OF ENGINEERS
AFGHANISTAN ENGINEER DISTRICT

Mark	Description	Date	Appr.

Mark	Description	Date	Appr.

Date: 2/23/10 Rev: 0
Design file no.
Drawing code:
File name: AN-STDS-401
Plot date: 6/3/2010
Plot scale: 1:1

Designed by: KMP/MMY
Drawn by: RCC
Checked by: CWW
Reviewed by: LHM
Submitted by: BAKER

U.S. ARMY CORPS OF ENGINEERS
AFGHANISTAN ENGINEER DISTRICT
APO AE 96338

Michael Baker Jr., Inc.
A unit of Michael Baker Corporation
Airside Business Park
100 Airport Drive
Moon Township, PA 15108
www.mbakercorp.com

STANDARD DESIGN
VARIOUS PROJECTS
VARIOUS LOCATIONS, AFGHANISTAN

RMTC STORAGE

BUILDING SECTIONS

Sheet reference number:
S-401

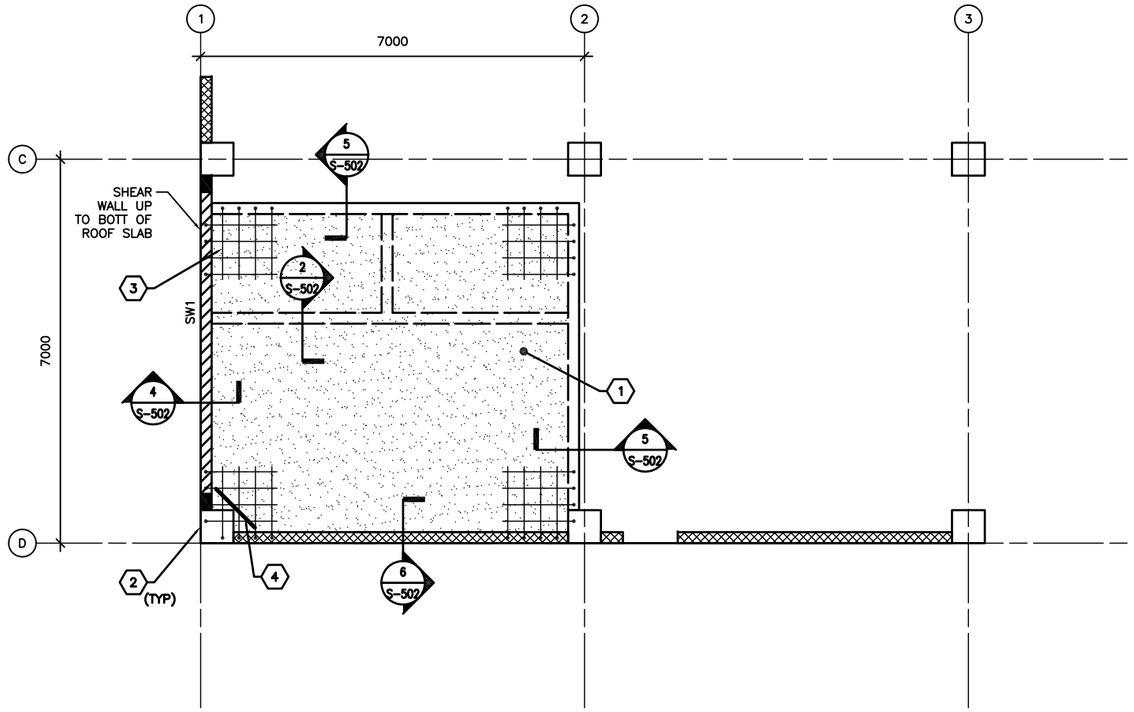

1 S-102 ENLARGED ELEVATED SLAB PLAN @ ELEV 3250

SCALE: 1:50

ROOF/ELEVATED SLAB FRAMING PLAN NOTES:

1. REFER TO SHEETS S-001 FOR STRUCTURAL NOTES AND DESIGN CRITERIA.
2. ELEVATED SLAB IS 250 W/ #13 @ 250 OC EW
3. TOP OF ELEVATED SLAB IS 3250.

ELEVATED SLAB PLAN LEGEND:

REINF CONC SHEAR WALL

REINF CMU WALL

ELEVATED SLAB FRAMING PLAN KEY NOTES: (X)

1. ELEVATED CONCRETE SLAB
2. REINF CONC COLUMN (ABOVE AND BELOW CONC SLAB)
3. ADD'L REINF @ CONCRETE SLAB CORNERS – SEE S-701 FOR INFORMATION
4. (2)-#13 @ RE-ENTRANT CORNERS – SEE S-701 FOR INFORMATION

0 1000 2000

SCALE: 1:50

UNLESS OTHERWISE NOTED, LINEAR DIMENSIONS SHOWN ON DRAWINGS ARE IN MILLIMETERS (mm)

APPROVED:

A/E DESIGNER OF RECORD

SEAL:

US ARMY CORPS OF ENGINEERS
AFGHANISTAN ENGINEER DISTRICT

Mark	Description	Date	Appr.	Mark	Description	Date	Appr.

Designed by: KMP/MMY
Dwn by: RCG
Ckd by: CWW
Reviewed by: LHM
Submitted by: BAKER
Date: 2/23/10
Rev: 0
Design file no.
Drawing code:
File name: ANASTORS-402
Plot date: 6/3/2010
Plot scale: X:X

U.S. ARMY CORPS OF ENGINEERS
AFGHANISTAN ENGINEER DISTRICT
APO AE 96338

Michael Baker Jr., Inc.
A unit of Michael Baker Corporation
Airside Business Park
100 Airside Drive
Moon Township PA 15108
www.mbakercorp.com

STANDARD DESIGN
VARIOUS PROJECTS
VARIOUS LOCATIONS, AFGHANISTAN

RMTC STORAGE

ENLARGED ELEVATED SLAB PLAN

Sheet reference number:
S-402

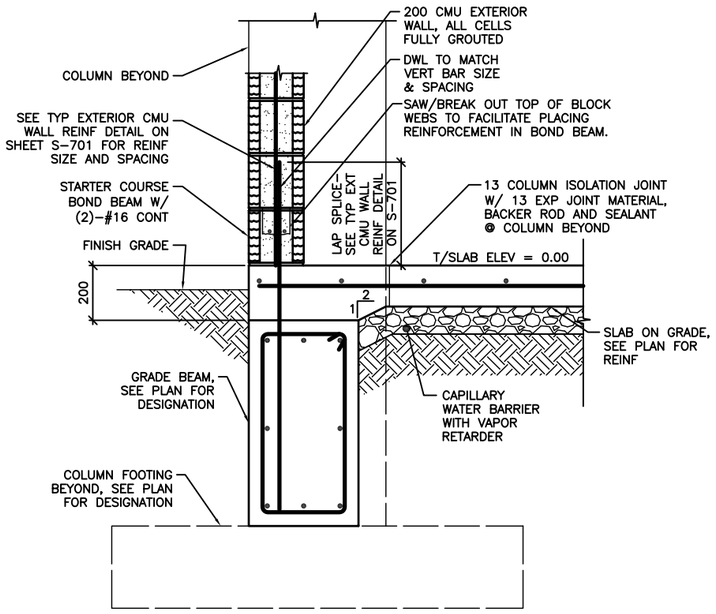

NOTE:
1. SECTION IS SIMILAR FOR INTERIOR CMU PARTITIONS OVER GRADE BEAMS SHOWING THICKENED 200 CONC SLAB AREA.

1 / S-101 SECTION
SCALE: 1:10

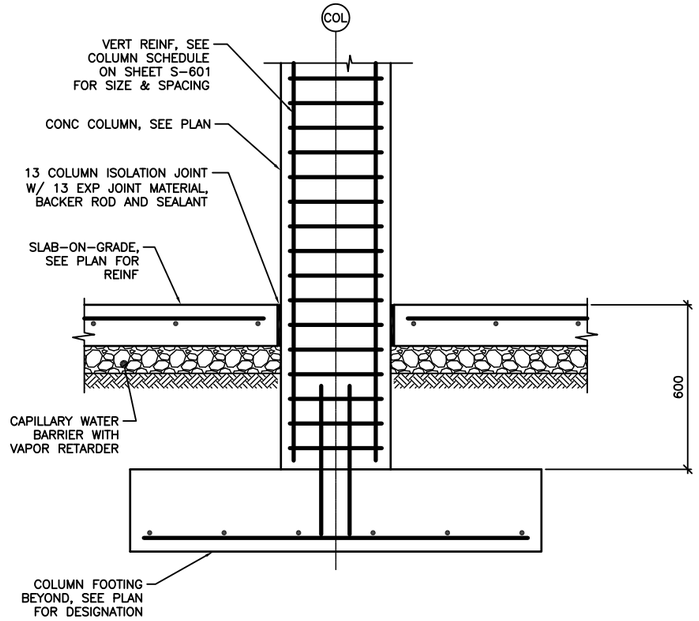

2 / S-101 SECTION
SCALE: 1:10

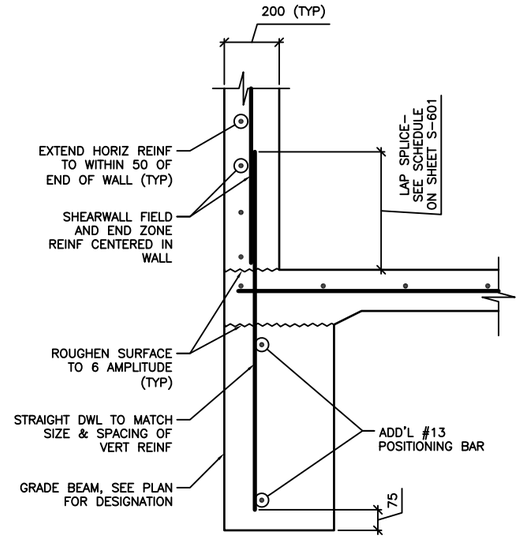

NOTE:
1. SECTION DEPICTS SHEAR WALL TERMINATION ONLY. GRADE BEAM REINFORCING NOT SHOWN FOR CLARITY
2. SEE SHEET S-601 AND SHEET S-702 FOR SCHEDULED FIELD AND END ZONE REINF.

3 / S-101 SECTION
SCALE: 1:10

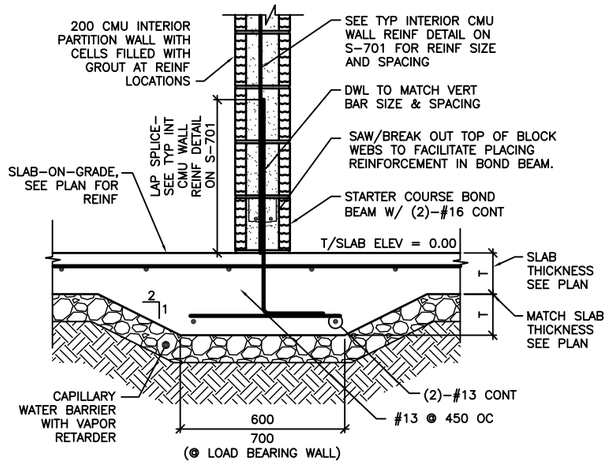

4 / S-101 SECTION
SCALE: 1:10

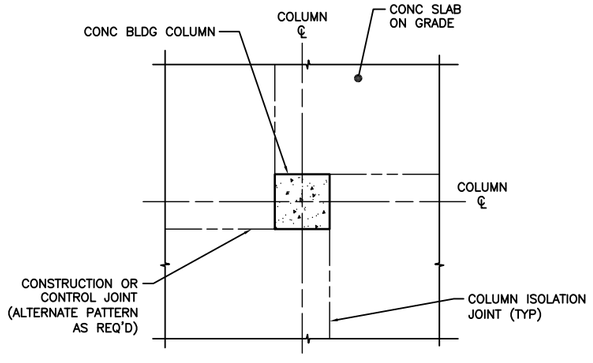

A / S-501 COLUMN ISOLATION JOINT DETAIL
SCALE: NTS

0 200 400
SCALE: 1:10

UNLESS OTHERWISE NOTED, LINEAR DIMENSIONS SHOWN ON DRAWINGS ARE IN MILLIMETERS (mm)

APPROVED:

A/E DESIGNER OF RECORD

SEAL:

US ARMY CORPS OF ENGINEERS
AFGHANISTAN ENGINEER DISTRICT

Mark	Description	Date	Appr.

Rev: 0
Date: 2/23/10
File no.
Design file no.
Drawing code:
File name: AN4STOR5-S01
Plot date: 6/3/2010
Plot scale: 1:1

Designed by: KMP/AMY
Drawn by: RCC
Chkd by: CWW
Reviewed by: LHM
Submitted by: BAKER

U.S. ARMY CORPS OF ENGINEERS
AFGHANISTAN ENGINEER DISTRICT
APO AE 96338

Michael Baker Jr., Inc.
A unit of Michael Baker Corporation
Airside Business Park
100 Airport Drive
Moon Township, PA 15108
www.mbakercorp.com

STANDARD DESIGN
VARIOUS PROJECTS
VARIOUS LOCATIONS, AFGHANISTAN

RMTC STORAGE

FOUNDATION SECTIONS

Sheet reference number:
S-501

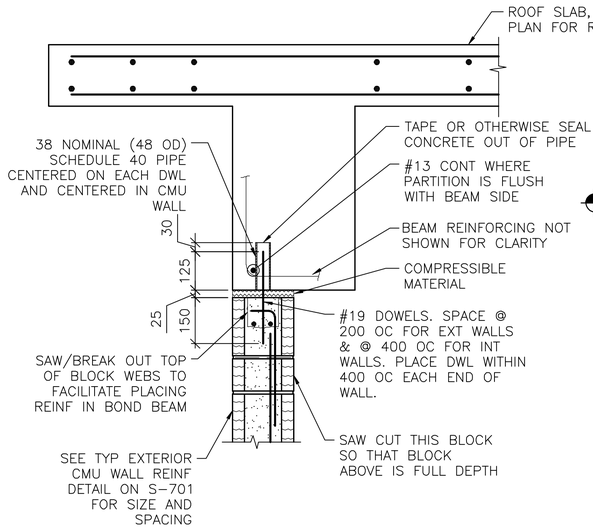

NOTES:
1. EXTEND DOWEL REINF TO 25 CLEAR FROM TOP OF CMU WALL.

1 S-102 **SECTION**
SCALE: 1:10

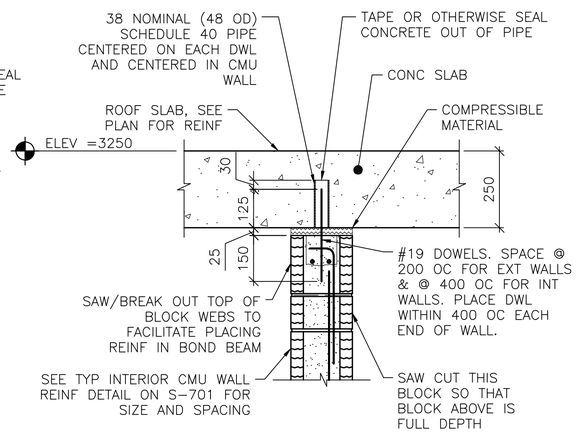

NOTES:
1. EXTEND DOWEL REINF TO 25 CLEAR FROM TOP OF CMU WALL.
2. SLAB REINF NOT SHOWN FOR CLARITY.

2 S-402 **SECTION**
SCALE: 1:10

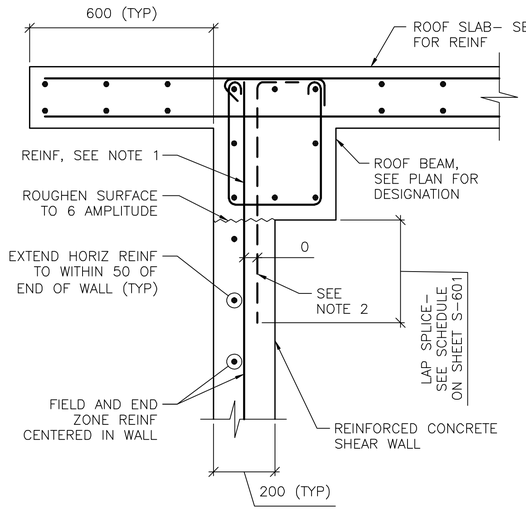

NOTES:
1. TERMINATE "FIELD" VERT REINF & END ZONE REINF @ 50 CLEAR FROM TOP OF ROOF SLAB.
2. WHERE END ZONE REINFORCING CANNOT BE DEVELOPED IN BEAM DEPTH, PROVIDE HOOKED DWLS SAME SIZE & SPACING. PROVIDE TENSION LAP BELOW ROOF BEAM.
3. SEE SHEET S-601 AND SHEET S-702 FOR SCHEDULED FIELD AND END ZONE REINF.

3 S-102 **SECTION**
SCALE: 1:10

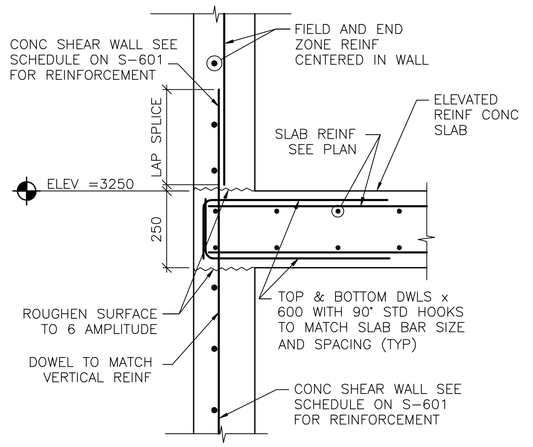

4 S-402 **SECTION**
SCALE: 1:10

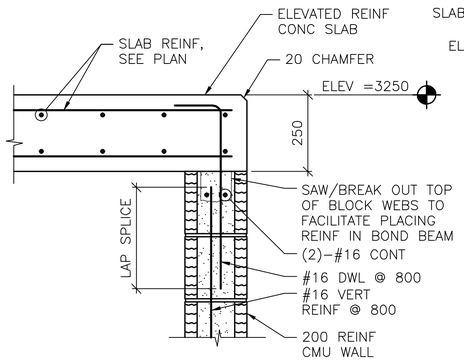

5 S-402 **SECTION**
SCALE: 1:10

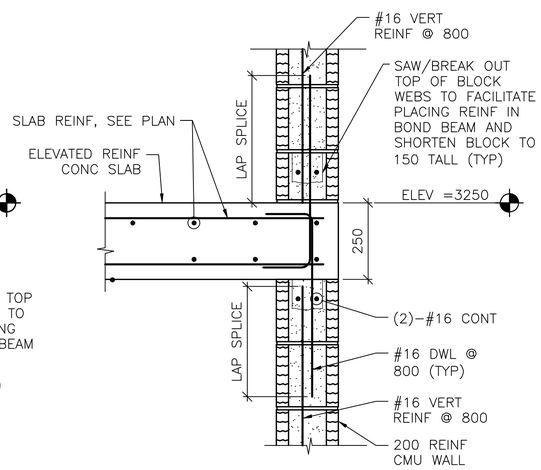

6 S-402 **SECTION**
SCALE: 1:10

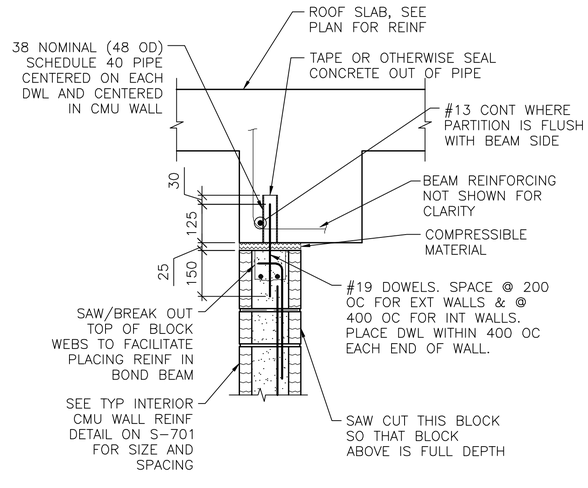

NOTES:
1. EXTEND DOWEL REINF TO 25 CLEAR FROM TOP OF CMU WALL.
2. PARTITION WALL MAY BE CENTERED UNDER THE BEAM OR FLUSH AS SHOWN. SEE PLAN FOR LOCATION.
3. SLAB REINF NOT SHOWN FOR CLARITY.

7 S-102 **SECTION**
SCALE: 1:10

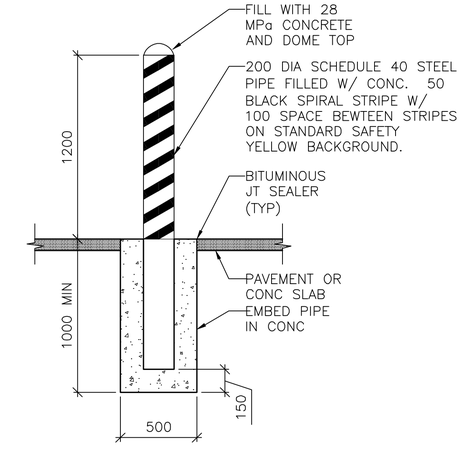

8 S-101 **SECTION AT BOLLARD**
SCALE: 1:20

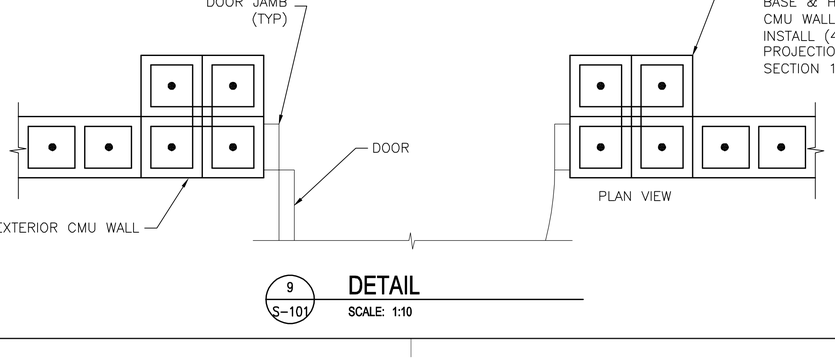

9 S-101 **DETAIL**
SCALE: 1:10

0 400 800
SCALE: 1:20

0 200 400
SCALE: 1:10

UNLESS OTHERWISE NOTED, LINEAR DIMENSIONS SHOWN ON DRAWINGS ARE IN MILLIMETERS (mm)

APPROVED:

A/E DESIGNER OF RECORD

SEAL:

GEORGIA REGISTERED 1-29-10 No. 27141 PROFESSIONAL ENGINEER CHRISTOPHER W. WHITMORE

US ARMY CORPS OF ENGINEERS
AFGHANISTAN ENGINEER DISTRICT

Mark	Description	Date	Appr.
1	REVISED TOP OF CMU DOWEL SPACING	9/1/10	CWW

U.S. ARMY CORPS OF ENGINEERS
AFGHANISTAN ENGINEER DISTRICT
APO AE 96338

Michael Baker Jr., Inc.
A unit of Michael Baker Corporation
Airside Business Park
100 Airside Drive
Moon Township, PA 15108
www.mbakercorp.com

Designed by: KMP/MMY
Drawn by: RCG
Ckd by: CWW
Reviewed by: LHM
Submitted by: BAKER

Date: 2/23/10
Design file no.
Drawing code:
File name: ANASTORS-502SC
Plot date: 9/1/2010
Plot scale: X:X
Rev: 0

AFGHAN NATIONAL ARMY REGIONAL MILITARY TRAINING CENTER STANDARD DESIGN

RMTC STORAGE

FRAMING SECTIONS

Sheet reference number:
S-502

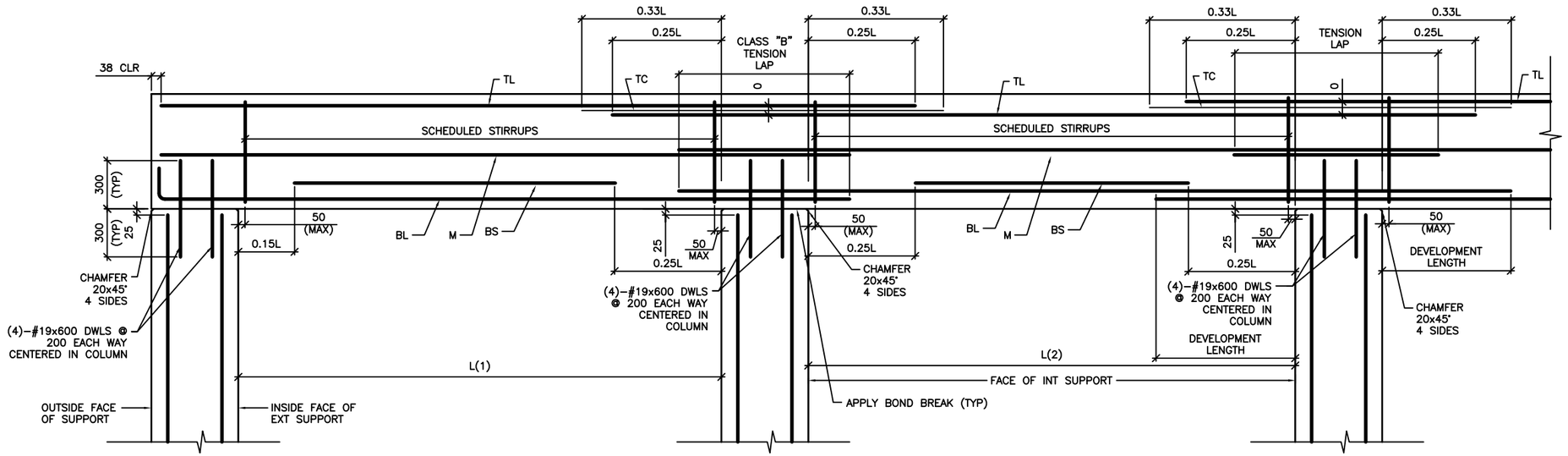

DETAIL NOTE:
1. WORK THIS DETAIL WITH BEAM SCHEDULE ON SHEET S–601.
2. L=GREATEST OF ADJACENT SPANS L(1) OR L(2)
3. ONLY COLUMN CORNER BARS ARE SHOWN

1 / S–503 ROOF BEAM REINFORCING DETAIL

SCALE: NTS

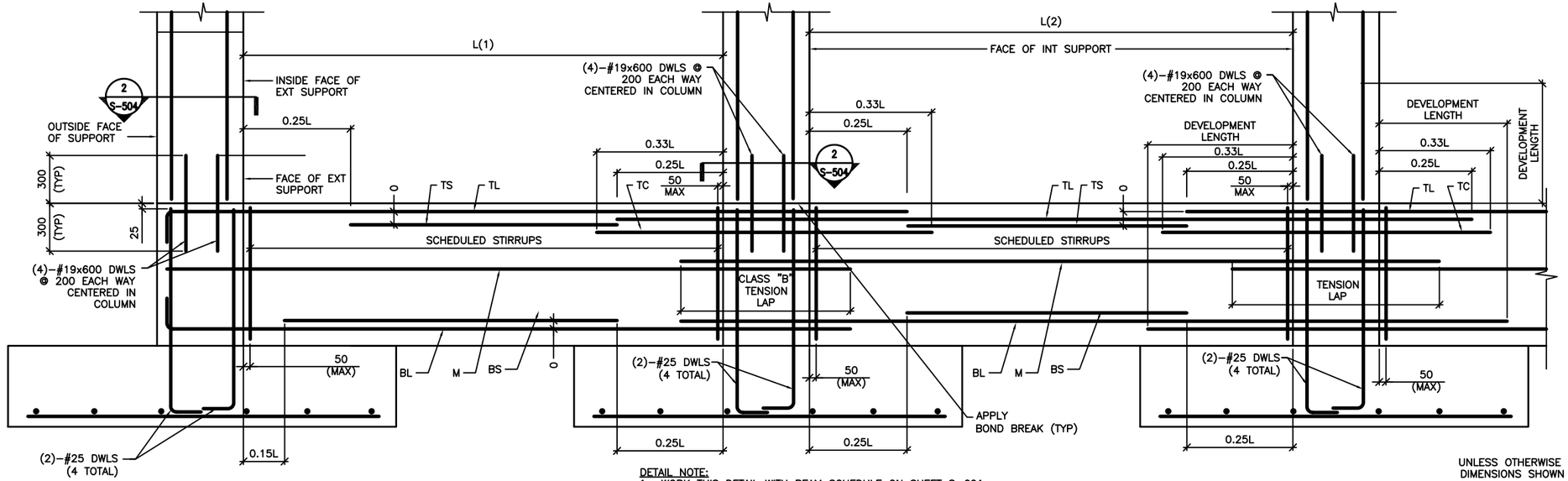

DETAIL NOTE:
1. WORK THIS DETAIL WITH BEAM SCHEDULE ON SHEET S–601.
2. L=GREATEST OF ADJACENT SPANS L(1) OR L(2)
3. ONLY COLUMN CORNER BARS ARE SHOWN.

2 / S–503 GRADE BEAM REINFORCING DETAIL

SCALE: NTS

UNLESS OTHERWISE NOTED, LINEAR DIMENSIONS SHOWN ON DRAWINGS ARE IN MILLIMETERS (mm)

APPROVED:

A/E DESIGNER OF RECORD

SEAL:

US ARMY CORPS OF ENGINEERS
AFGHANISTAN ENGINEER DISTRICT

Mark	Description	Date	Appr.

Rev: 0
Date: 2/23/10
Design file no.:
Drawing code:
File name: AANSTOR5-503
Plot date: 6/3/2010
Plot scale: 1:1

Designed by:	Drawn by:	Checked by:
KMP / MMY	RCC	CWW

Reviewed by: LHM
Submitted by: BAKER

U.S. ARMY CORPS OF ENGINEERS
AFGHANISTAN ENGINEER DISTRICT
APO AE 96338

Michael Baker Jr., Inc.
A unit of Michael Baker Corporation
Airside Business Park
100 Airport Drive
Moon Township, PA 15108
www.mbakercorp.com

STANDARD DESIGN
VARIOUS PROJECTS
VARIOUS LOCATIONS, AFGHANISTAN

RMTC STORAGE

BEAM & COLUMN DETAILS

Sheet reference number:
S–503

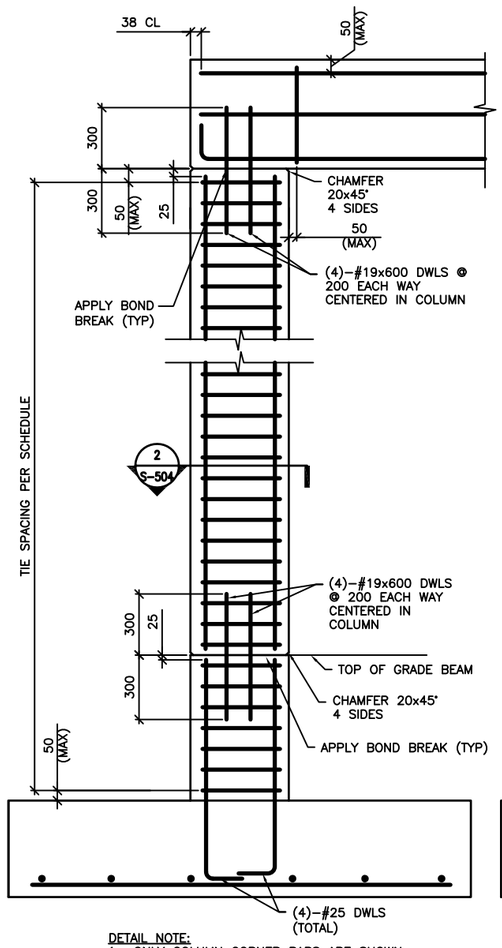

DETAIL NOTE:
1. ONLY COLUMN CORNER BARS ARE SHOWN

1 S-504 1-STORY COLUMN REINF DETAILS
SCALE: NTS
(WITH GRADE BEAM)

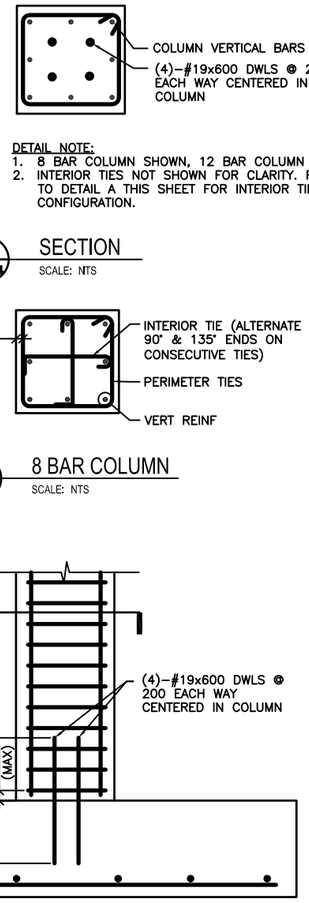

DETAIL NOTE:
1. ONLY COLUMN CORNER BARS ARE SHOWN

1 S-504 1-STORY COLUMN REINF DETAILS
SCALE: NTS
(WITHOUT GRADE BEAM)

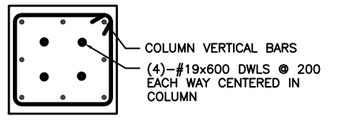

DETAIL NOTE:
1. 8 BAR COLUMN SHOWN, 12 BAR COLUMN SIMILAR
2. INTERIOR TIES NOT SHOWN FOR CLARITY. REFER TO DETAIL A THIS SHEET FOR INTERIOR TIE CONFIGURATION.

2 S-503 2 S-504 SECTION
SCALE: NTS

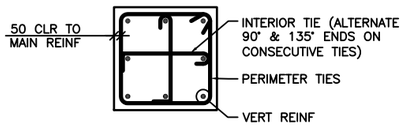

A S-504 8 BAR COLUMN
SCALE: NTS

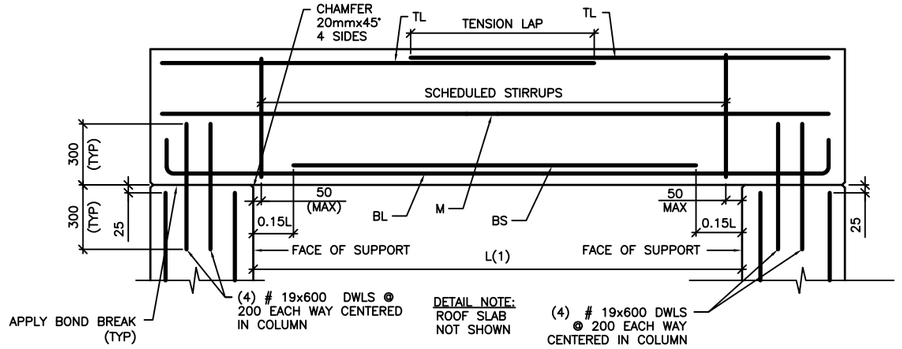

3 S-504 SINGLE SPAN ROOF BEAM REINFORCING DETAIL
SCALE: NTS

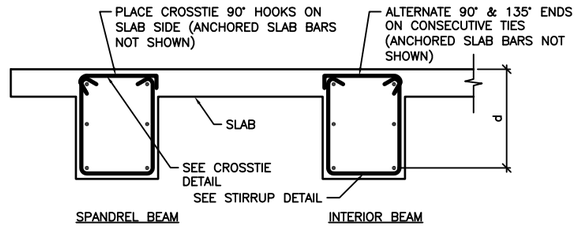

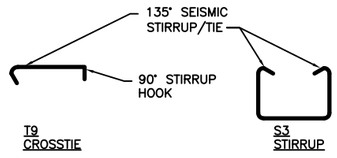

B S-504 BEAM REINFORCEMENT DETAILS
SCALE: NTS

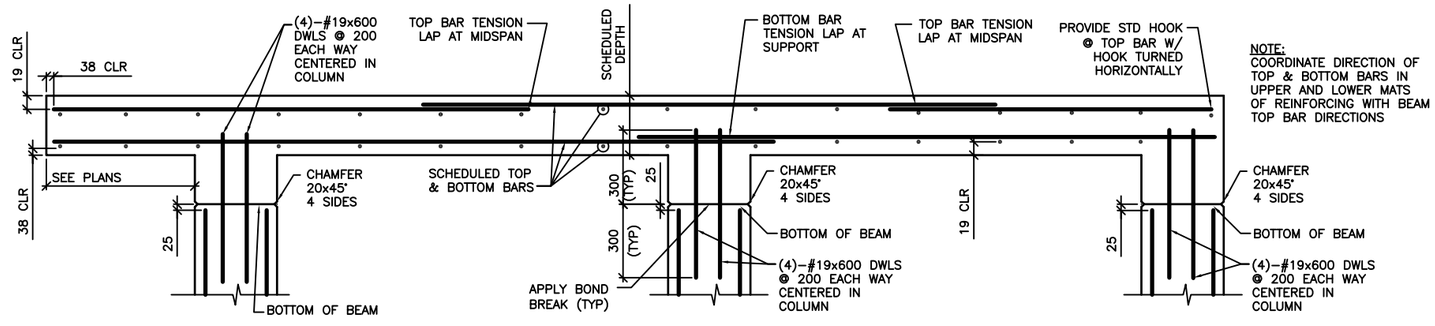

4 S-504 FRAMED SLAB REINFORCING DETAIL
SCALE: NTS

UNLESS OTHERWISE NOTED, LINEAR DIMENSIONS SHOWN ON DRAWINGS ARE IN MILLIMETERS (mm)

APPROVED:

A/E DESIGNER OF RECORD

SEAL:

US ARMY CORPS OF ENGINEERS
AFGHANISTAN ENGINEER DISTRICT

Mark	Description	Date	Appr.

Designed by: KMP/MMY
Drawn by: RCC
Checked by: CWW
Reviewed by: LHM
Submitted by: BAKER
Date: 2/23/10
Design file no.
Drawing code:
File name: AANSTDRS-504
Plot date: 6/3/2010
Plot scale: 1:1
Rev: 0

U.S. ARMY CORPS OF ENGINEERS
AFGHANISTAN ENGINEER DISTRICT
APO AE 96338

Michael Baker Jr, Inc.
A unit of Michael Baker Corporation
Airside Business Park
100 Airport Drive
Moon Township, PA 15108
www.mbakercorp.com

STANDARD DESIGN
VARIOUS PROJECTS
VARIOUS LOCATIONS, AFGHANISTAN

RMTC STORAGE

BEAM & COLUMN DETAILS

Sheet reference number:
S-504

CONCRETE REINFORCEMENT TENSION DEVELOPMENT/LAP SPLICE SCHEDULE

f'c = 28 MPa	LAP CLASS	UNCOATED BARS			
		TOP BARS		OTHER BARS	
BAR SIZES		CASE 1	CASE 2	CASE 1	CASE 2
#10 TO #19	A	50 BAR DIA	74 BAR DIA	38 BAR DIA	57 BAR DIA
	B	64 BAR DIA	96 BAR DIA	50 BAR DIA	74 BAR DIA
#22 TO #57	A	62 BAR DIA	93 BAR DIA	48 BAR DIA	71 BAR DIA
	B	80 BAR DIA	121 BAR DIA	62 BAR DIA	93 BAR DIA

NOTES:
1. TABULATED TENSION DEVELOPMENT LENGTH VALUES ARE TAKEN FROM CRSI DESIGN HANDBOOK 2008 10TH ED.
2. TENSION DEVELOPMENT & TENSION LAP SPLICE LENGTHS ARE EXPRESSED AS MULTIPLES OF BAR DIAMETERS.
3. TABULATED VALUES ARE BASED ON MINIMUM YIELD STRENGTH OF REINFORCEMENT, fy, OF 420MPa.
4. CONCRETE IS NORMAL WEIGHT (2400Kg/m^3) AND 28 DAY COMPRESSIVE STRENGTH = 28MPa.
5. TABULATED VALUES FOR BEAMS & COLUMNS ARE BASED ON TRANSVERSE REINFORCEMENT AND CONCRETE COVER MEETING MINIMUM CODE REQUIREMENTS.
6. CASES 1 & 2, WHICH DEPEND ON THE TYPE OF STRUCTURAL MEMBER, CONCRETE COVER, AND CENTER-TO-CENTER SPACING OF THE BARS ARE DEFINED IN THE TABLE BELOW.
7. LAP SPLICE LENGTHS (MINIMUM 300mm) ARE MULTIPLES OF TENSION DEVELOPMENT LENGTHS: CLASS A = 1.0(TENSION DEVELOPMENT LENGTH) & CLASS B = 1.3(TENSION DEVELOPMENT LENGTH)
8. TOP BARS ARE HORIZONTAL REINFORCEMENT WITH MORE THAN 300mm OF CONCRETE CAST BELOW THE BARS.
9. IT SHALL BE PERMISSIBLE TO CALCULATE WALL AND SLAB REINFORCEMENT TENSION DEVELOPMENT/SPLICE LENGTHS IN ACCORDANCE WITH ACI 12.2.3 OR TABLE 5.3(b) OF CRSI 2008 IN LIEU OF VALUES TABULATED ABOVE.

BEAMS, COLUMNS	CASE 1	CONCRETE COVER AT LEAST 1 BAR DIA AND CENTER-TO-CENTER SPACING AT LEAST 2 BAR DIA
	CASE 2	CONCRETE COVER LESS THAN 1 BAR DIA OR CENTER-TO-CENTER SPACING LESS THAN 2 BAR DIA
ALL OTHERS	CASE 1	CONCRETE COVER AT LEAST 1 BAR DIA AND CENTER-TO-CENTER SPACING AT LEAST 3 BAR DIA
	CASE 2	CONCRETE COVER LESS THAN 1 BAR DIA OR CENTER-TO-CENTER SPACING LESS THAN 3 BAR DIA

CONCRETE COVER SCHEDULE

MINIMUM CONCRETE COVER PROTECTION FOR REINFORCEMENT BARS SHALL BE AS LISTED BELOW: (SEE ACI 318M-05, SECTION 7.7 FOR CONDITIONS NOT NOTED). DIMENSIONS FOR BAR PLACEMENT GIVEN IN SECTIONS AND DETAILS SHALL SUPERSEDE MINIMUM COVER REQUIREMENTS GIVEN HERE. DIMENSIONS ARE IN mm. PROVIDE STANDARD BAR CHAIRS AND SUPPORT BARS @1200mm MAXIMUM AS REQUIRED TO MAINTAIN CONCRETE PROTECTION SPECIFIED.

FOOTINGS (EARTH FORMED):		70
COLUMNS / PIERS (TO TIES)		40
GRADE BEAMS OR SLAB TURNED DOWN EDGES:		
TOP		40
BOTTOM (EARTH FORMED)		70
SIDES (EARTH FORMED)		70
SIDES (BOARD FORMED)	#16 BAR & SMALLER	40
	#19 THRU #36 BAR	50
ELEVATED BEAMS & SLABS:		
BEAM TIES & STIRRUPS (NOT EXPOSED TO WEATHER)		40
BEAM TIES & STIRRUPS (EXPOSED TO WEATHER)		50
FLOOR SLABS (NOT EXPOSED TO WEATHER)		20
FLOOR SLABS (EXPOSED TO WEATHER)		
#19 & LARGER		50
#13 & SMALLER		40
ROOF SLAB BARS		25
SLABS ON GRADE		
NOT EXPOSED TO WEATHER (FROM TOP)		20
EXPOSED TO WEATHER (FROM TOP)		40
UTILITY TUNNEL WALLS, RETAINING WALLS AND SHEAR WALLS. (NO SURFACES SHALL BE EARTH FORMED)		
EARTH SIDE AND FRONT SIDE (EXPOSED TO WEATHER)		
#16 BAR AND SMALLER		40
#19 THRU #36 BAR		50

COLUMN FOOTING SCHEDULE

MARK	FOOTING SIZE (mm)			FOOTING REINFORCING	REMARKS
	LENGTH	WIDTH	THICKNESS		
F1	3900	3900	400	(9)-#25 EW BOTT	-----
F2	3100	3100	300	(8)-#22 EW BOTT	-----
F3	2500	2500	250	(6)-#19 EW BOTT	-----
F4	5400	2900	450	(12)-#22 SHORT BOTT (12)-#25 LONG BOTT	-----
F5	2800	2200	250	(7)-#16 SHORT BOTT (7)-#19 LONG BOTT	-----

CONCRETE SHEAR WALL SCHEDULE

MARK	TYPE	WALL LENGTH (L) (mm)	WALL REINFORCEMENT		REMARKS
			END ZONE	FIELD	
SW1	C	6400	(5)-#19 @ 225mm OC	#13 @ 300mm OC	-----
SW2	C	6100	(5)-#19 @ 225mm OC	#13 @ 300mm OC	-----

NOTES:
1. WORK THIS SCHEDULE WITH SHEAR WALL DETAILS ON SHEETS S-702
2. SEE PLAN FOR LOCATION OF SHEAR WALL(S).
3. VERTICAL "FIELD" BARS MAY BE OMITTED IN LOCATION OF "END ZONE" REINFORCEMENT.
4. WALL FIELD REINF LISTED APPLIES TO VERT & HORIZ BARS.
5. WALL FIELD REINFORCEMENT CENTERED IN WALL.

STANDARD HOOKS IN TENSION PER (ACI 318M-05)

HOOK DEVELOPMENT LENGTH (mm)

BAR SIZE	f'c 28 MPa
#10	180
#13	250
#16	300
#19	380
#22	430
#25	480
#29	560
#32	610
#36	690

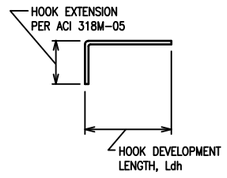

NOTES:
1. CONCRETE IS NORMAL WEIGHT CONCRETE.
2. BAR YIELD STRENGTH, fy = 420 MPa
3. SIDE COVER REQUIREMENTS OF ACI SECT. 12.5.3 ARE ASSUMED TO NOT BE MET.
4. TIE OR STIRRUP REQUIREMENTS OF ACI SECT. 12.5.3 ARE ASSUMED TO NOT BE MET.
5. REDUCTION FOR EXCESS REINFORCEMENT IS NOT TAKEN.
6. HOOK DEVELOPMENT LENGTH IS VALID FOR 180° HOOKS ALSO.

CMU OR CAST IN PLACE CONC LINTEL SCHEDULE (TYP)

OPENING TYPE OR SIZE, BEAM LOCATION OR TYPE	MAX SPAN (mm)	LINTEL DEPTH (mm)	REINFORCING BOTTOM
WALL OPENING	4000	600	(2)-#16 T&B
WALL OPENING	1900	400	(2)-#16 T&B
WALL OPENING	1000	400	(2)-#13 B

1. STRUCTURAL SHEETS DO NOT INDICATE ALL OPENINGS IN MASONRY WALLS. VERIFY NUMBER, SIZE AND LOCATION OF ALL OPENINGS IN MASONRY WALLS FROM ARCHITECTURAL SHEETS AND APPROVED PLUMBING, MECHANICAL, AND ELECTRICAL SHOP DRAWINGS.
2. PROVIDE 200mm BEARING EA END.
3. FOR HEAD DETAILS REFER TO ARCHITECTURAL SHEETS.
4. REINFORCING SHALL BE ASTM A615M, GRADE 420. GROUT FOR CMU LINTELS SHALL HAVE A MINIMUM COMPRESSIVE STRENGTH OF 14 MPa AT 28 DAYS.
5. CONTRACTOR SHALL SUBMIT FOR APPROVAL SHOP DRAWINGS AND SCHEDULES SHOWING SIZE, SPAN, REINFORCEMENT, DETAILS, LOCATIONS, ETC.

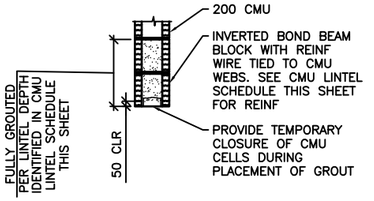

A S-601 LINTEL DETAIL
SCALE: NTS

BEAM SCHEDULE

MARK	BEAM SIZE (mm)		BEAM REINFORCING						STIRRUPS			REMARKS
	DEPTH	WIDTH	BL	BS	TL	TS	TC	M	SIZE	TYPE	SPACING	
GRADE BEAMS												
GB1	750	400	(2)-#22	(1)-#22	(2)-#19	---	---	---	#13	S3 +T9	d/2	---
GB2	750	400	(2)-#25	(2)-#25	(2)-#25	---	---	---	#13	S3 +T9	d/2	---
ROOF BEAMS												
RB1	600	400	(2)-#22	(1)-#22	(2)-#19	---	---	---	#13	S3+T9	d/2	---
RB2	600	400	(2)-#22	(1)-#22	(2)-#22	---	---	---	#13	S3+T9	d/2	

NOTES:
1. WORK THIS SCHEDULE WITH BEAM REINFORCING DETAILS ON SHEETS S-503 AND S-504.
2. HOOKS SHOWN ON SECTIONS AND DETAILS SHALL BE 90° STD UON.
3. USE ONLY (1) TC AT BEAM COLUMN INTERSECTION WHERE REQ'D.

COLUMN SCHEDULE

DESCRIPTION \ COLUMN MARK	TYP UON	---	---	---
TYPE	8-BAR	---	---	---
DIMENSIONS	600mm SQ	---	---	---
VERTICAL REINFORCEMENT	(8)-#25	---	---	---
TIES	#13 @ d/2	---	---	---
TOP OF ROOF ELEVATION	5600mm	---	---	---
TOP OF GRADE BEAM ELEVATION	-200mm	---	---	---
TOP OF FOOTING ELEVATION	-950mm	---	---	---

NOTES:
1. WORK THIS SCHEDULE WITH COLUMN DETAILS ON SHEET S-504.
2. SEE FOOTING SCHEDULE ON THIS SHEET FOR FOOTING INFORMATION.
3. COLUMN TIES: INTERIOR TIES TO MATCH SIZE & SPACING OF PERIMETER TIES.
4. HOOKS SHOWN ON SECTIONS & DETAILS SHALL BE 90° STD UON.

UNLESS OTHERWISE NOTED, LINEAR DIMENSIONS SHOWN ON DRAWINGS ARE IN MILLIMETERS (mm)

APPROVED:

A/E DESIGNER OF RECORD

SEAL:

US ARMY CORPS OF ENGINEERS
AFGHANISTAN ENGINEER DISTRICT

Mark	Description	Date	Appr.

Mark	Description	Date	Appr.

Rev: 0
Date: 2/23/10
Design file no.
Drawing code:
File name: AANSTDRS-601
Plot date: 6/3/2010
Plot scale: 1:1

Designed by: KMP / MMY
Drawn by: RC
Checked by: CWW
Reviewed by: LHM
Submitted by: BAKER

U.S. ARMY CORPS OF ENGINEERS
AFGHANISTAN ENGINEER DISTRICT
APO AE 96338

Michael Baker Jr., Inc.
A unit of Michael Baker Corporation
Airside Business Park
100 Airport Drive
Moon Township, PA 15108
www.mbakercorp.com

STANDARD DESIGN
VARIOUS PROJECTS
VARIOUS LOCATIONS, AFGHANISTAN

RMTC STORAGE

SCHEDULES

Sheet reference number:
S-601

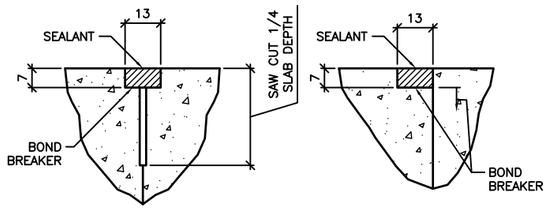

CONTROL JOINT DETAIL

CONSTRUCTION JOINT DETAIL

1 S-701 TYPICAL CONCRETE SLAB JOINT FINISH DETAILS

SCALE: NTS

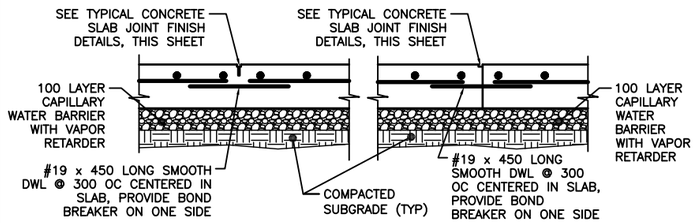

CONTROL JOINT DETAIL

CONSTRUCTION JOINT DETAIL

2 S-701 TYPICAL SLAB ON GRADE JOINT DETAIL

SCALE: NTS

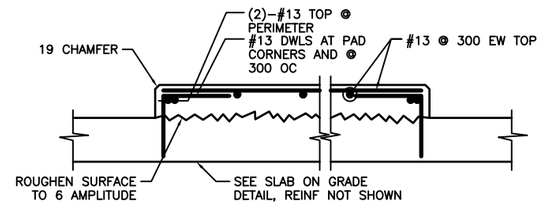

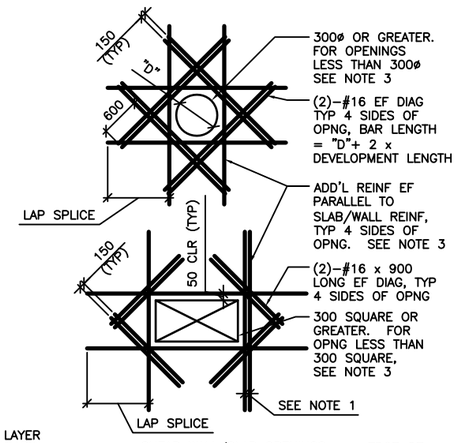

SHEAR WALL/SLAB OPENINGS

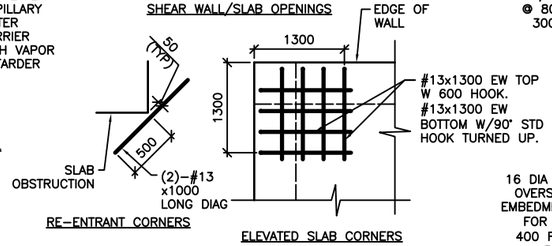

RE–ENTRANT CORNERS

ELEVATED SLAB CORNERS

DETAIL NOTES:
1. WHERE MORE THAN ONE ADDITIONAL BAR IS REQUIRED PARALLEL TO THE EXISTING SLAB/WALL REINFORCING THE ADDITIONAL REINFORCING BARS SHALL BE SPACED AT 100 ON CENTER.
2. ADDITIONAL REINFORCING PARALLEL TO THE SLAB/WALL REINFORCING SHALL BE #16 BARS THAT PROVIDE A STEEL AREA ON EACH SIDE OF THE OPENING EQUAL TO 1/2 THE AREA OF THE REINFORCING CUT BY THE OPENING.
3. FOR OPENINGS WITH SIDES OR DIAMETERS LESS THAN 300 SPREAD THE SLAB/WALL REINFORCING TO CLEAR THE OPENING.

4 S-701 ADD'L CONCRETE REINFORCEMENT DETAILS

SCALE: NTS

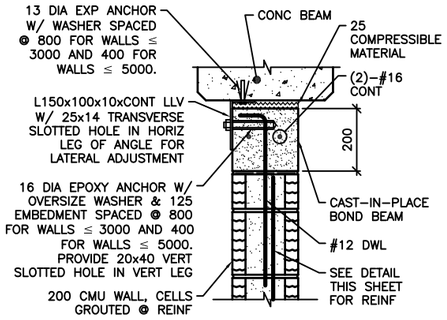

NOTE:
1. AT ANCHOR BOLTS, ADD AN ADDITIONAL 25 COMPRESSIBLE MATERIAL BELOW EXP ANCHOR HEAD.

INTERIOR BEAM

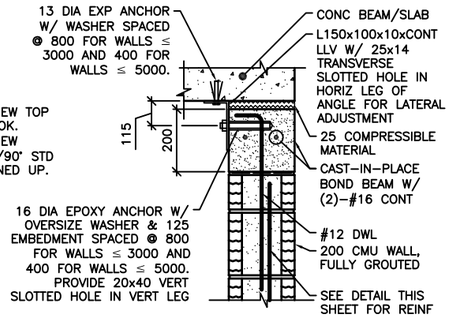

EXTERIOR WALL OR SLAB

NOTES:
1. THIS DETAIL IS AN ALTERNATE TOP OF WALL ANCHORAGE DETAIL TO BE USED AT THE CONTRACTOR'S OPTION IN LIEU OF DETAILS SHOWN ON S–400 & S–500 DRAWINGS.
2. CAST–IN–PLACE BOND BEAM SHOWN AT TOP OF WALL IS ALSO APPLICABLE FOR INTERMEDIATE AND STARTER COURSE BOND BEAMS WITHIN WALL.

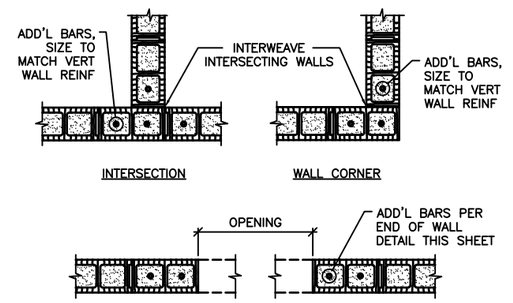

INTERSECTION

WALL CORNER

MASONRY OPENING W/ LINTEL

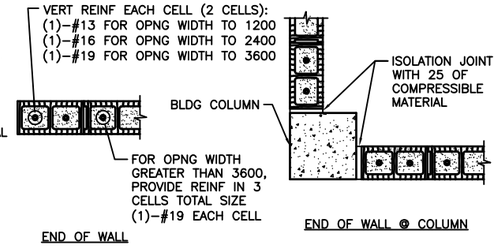

END OF WALL

END OF WALL @ COLUMN

NOTES:
1. OPENING WIDTH SHALL NOT EXCEED 3600 FOR THIS TYPE OF JAMB.
2. ALL CELLS FULLY GROUTED AT EXTERIOR WALLS. AT INTERIOR WALLS, ONLY GROUT CELLS CONTAINING REINF.

6 S-701 TYP CMU DETAILS

SCALE: NTS

3 S-701 INTERIOR EQUIPMENT PAD DETAIL

SCALE: NTS

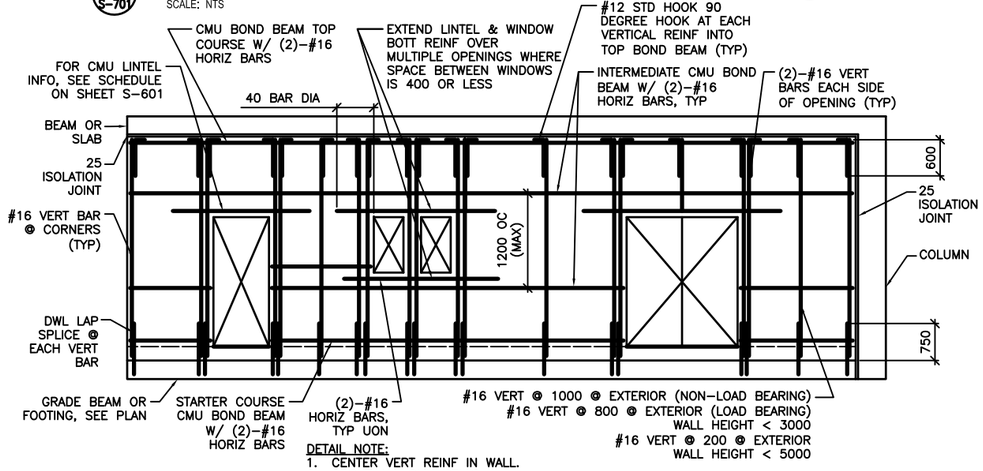

DETAIL NOTE:
1. CENTER VERT REINF IN WALL.
2. GROUT ALL CMU CELLS.
3. REFERENCE ARCH DWGS FOR JOINT INFORMATION
4. DOWELS BETWEEN TOP BOND BEAM AND BEAM/SLAB ABOVE (INCLUDING EMBEDDED PIPE SLEEVE) NOT SHOWN FOR CLARITY. SEE SPECIFIC S–500 SERIES DWGS FOR INFO.
5. FOR INFORMATION ON ALTERNATE CAST–IN–PLACE WALL BOND BEAMS, REFERENCE ALTERNATE TOP OF CMU WALL BRACING DETAILS THIS SHEET.

7 S-701 TYP EXTERIOR CMU WALL REINF DETAIL

SCALE: NTS

5 S-701 ALTERNATE TOP OF CMU WALL BRACING DETAILS

SCALE: NTS

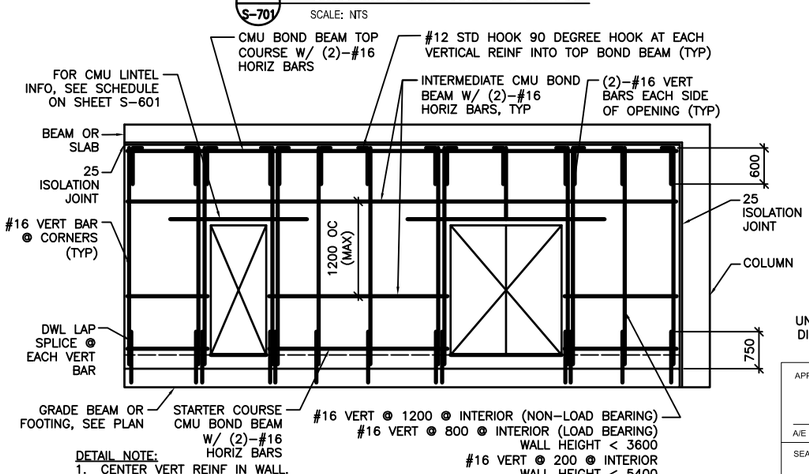

DETAIL NOTE:
1. CENTER VERT REINF IN WALL.
2. GROUT ALL CMU CELLS.
3. REFERENCE ARCH DWGS FOR JOINT INFORMATION
4. DOWELS BETWEEN TOP BOND BEAM AND BEAM/SLAB ABOVE (INCLUDING EMBEDDED PIPE SLEEVE) NOT SHOWN FOR CLARITY. SEE SPECIFIC S–500 SERIES DWGS FOR INFO.
5. FOR INFORMATION ON ALTERNATE CAST–IN–PLACE WALL BOND BEAMS, REFERENCE ALTERNATE TOP OF CMU WALL BRACING DETAILS THIS SHEET.

8 S-701 TYP INTERIOR CMU WALL REINF DETAIL

SCALE: NTS

UNLESS OTHERWISE NOTED, LINEAR DIMENSIONS SHOWN ON DRAWINGS ARE IN MILLIMETERS (mm)

APPROVED:

A/E DESIGNER OF RECORD

SEAL:

US ARMY CORPS OF ENGINEERS
AFGHANISTAN ENGINEER DISTRICT

Mark	Description	Date	Appr.

Date: 2/23/10 | Rev: 0
Design file no.:
Drawing code:
File name: AANISTOR5-701
Plot date: 6/3/2010
Plot scale: X:X

Designed by: KMP/AMY | Det by: RCC | Chk by: CWW
Reviewed by: LHM
Submitted by: BAKER

U.S. ARMY CORPS OF ENGINEERS
AFGHANISTAN ENGINEER DISTRICT
APO AE 96338

Michael Baker Jr, Inc.
A unit of Michael Baker Corporation
Airside Business Park
100 Airport Drive
Moon Township, PA 15108
www.mbakercorp.com

STANDARD DESIGN
VARIOUS LOCATIONS, AFGHANISTAN
RMTC STORAGE
TYPICAL DETAILS

Sheet reference number:
S–701

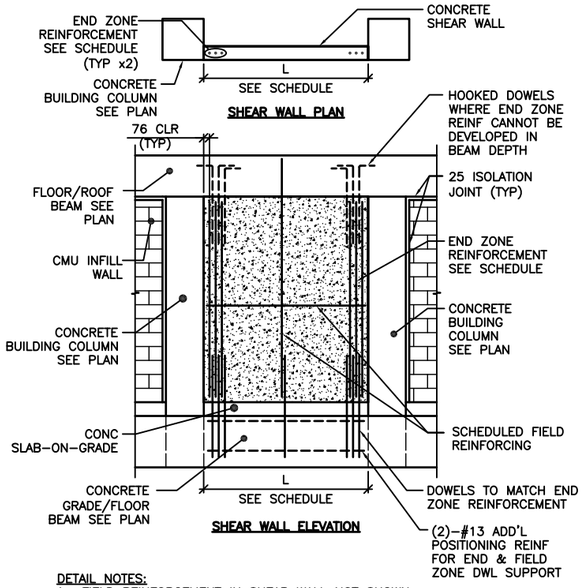

DETAIL NOTES:
1. FIELD REINFORCEMENT IN SHEAR WALL NOT SHOWN COMPLETELY FOR CLARITY.
2. FIELD REINFORCEMENT CENTERED IN WALL.
3. MINIMUM CONC CLEAR DISTANCE FOR END ZONE REINF = 76
4. SEE CONC SHEAR WALL SCHEDULE ON SHEET S-601
5. SEE ARCH DWGS FOR ISOLATION JOINT INFORMATION

1/S-702 TYPE "C" SHEAR WALL DETAIL
SCALE: NTS

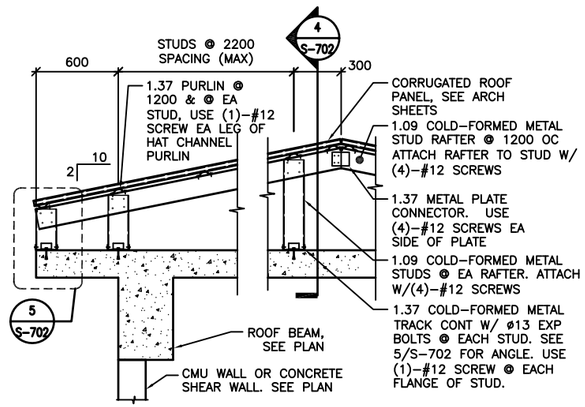

DETAIL NOTES:
1. ALL GABLE END VERTICAL STUDS SHALL BE ORIENTED 90° TO INTERIOR STUDS & SPACED @ 600 OC. GABLE END RAFTER SHALL BE 1.37 METAL TRACK SPANNING CONTINUOUSLY OVER GABLE END STUDS. INSET GIRTS AT GABLE END SHALL BE 1.09 COLD-FORMED METAL STUDS @ 1200 OC ATTACHED VIA 1.37 THICKNESS CLIP ANGLE W/ (2) #12 SCREWS EA LEG.
2. ALL INTERIOR, NON-GABLE END VERTICAL STUDS GREATER THAN 2400 IN LENGTH SHALL BE BACK-TO-BACK W/ #12 SCREWS @ 200 OC STAGGERED.

2/S-702 TYPICAL OVERBUILT ROOF FRAMING DETAIL
SCALE: NTS

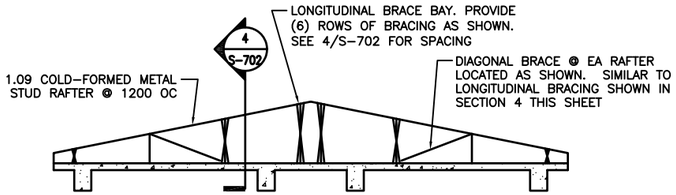

3/S-702 TYPICAL ROOF BRACE LAYOUT
SCALE: NTS

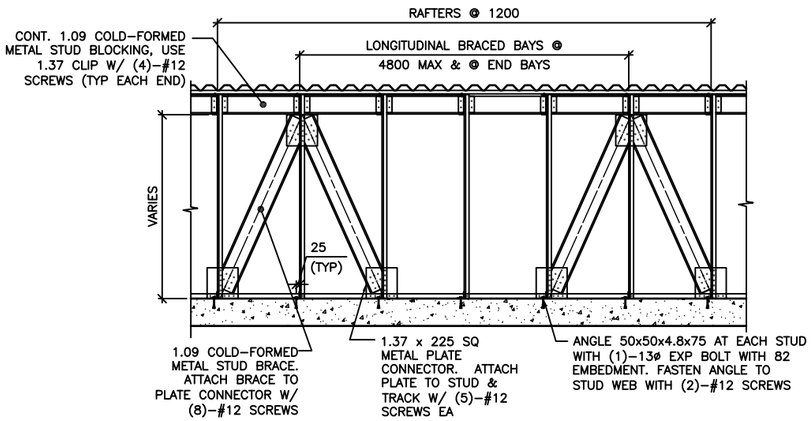

4/S-702 SECTION
SCALE: NTS

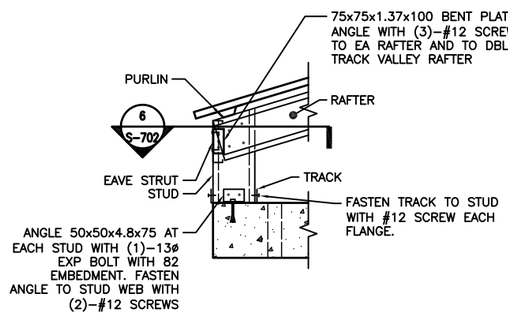

5/S-702 DETAIL
SCALE: NTS

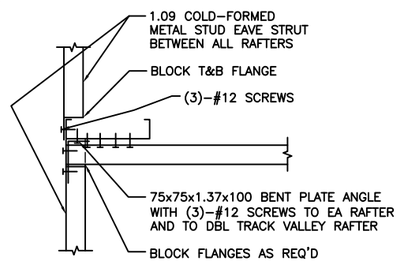

6/S-702 SECTION
SCALE: NTS

UNLESS OTHERWISE NOTED, LINEAR DIMENSIONS SHOWN ARE IN MILLIMETERS (mm)

APPROVED:

A/E DESIGNER OF RECORD

SEAL:

US ARMY CORPS OF ENGINEERS
AFGHANISTAN ENGINEER DISTRICT

Mark	Description	Date	Appr.

Date: 2/23/10 | Rev: 0
Design file no.:
Drawing code:
File name: AANSTDRS-702
Plot date: 6/3/2010
Plot scale: 6/4

Designed by: KMF / MMY
Drawn by: RCC
Checked by: CWW
Reviewed by: LHM
Submitted by: BAKER

U.S. ARMY CORPS OF ENGINEERS
AFGHANISTAN ENGINEER DISTRICT
APO AE 96338

Michael Baker Jr., Inc.
A unit of Michael Baker Corporation
Airside Business Park
100 Airport Drive
Moon Township, PA 15108
www.mbakercorp.com

STANDARD DESIGN
VARIOUS PROJECTS
VARIOUS LOCATIONS; AFGHANISTAN

RMTC STORAGE

TYPICAL DETAILS

Sheet reference number:
S-702

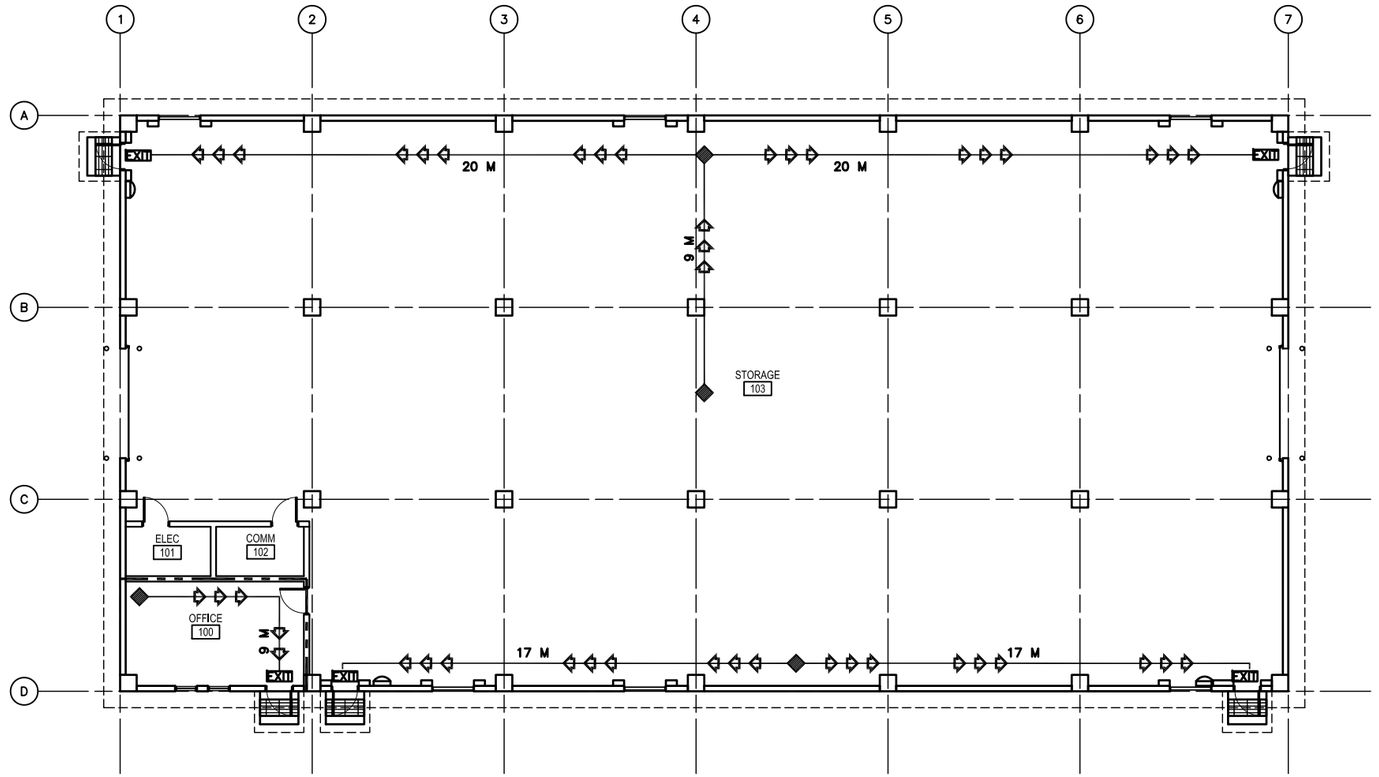

1 A-001 LIFE SAFETY PLAN
SCALE: 1:100

CODE ANALYSIS:

1. REFERENCES:
   2006 INTERNATIONAL BUILDING CODE (2006 IBC)
   2006 LIFE SAFETY CODE (2006 NFPA 101)

2. IBC OCCUPANCY CLASSIFICATION:
   GROUP S-1
   (STORAGE, ORDINARY HAZARD NFPA 101 6.1.13.1 & 6.2.2 AND CHAPTER 42)

3. TYPE OF CONSTRUCTION (IBC): TYPE II-B (UNPROTECTED/NONSPRINKLERED)

4. IBC TABLE 503: ALLOWABLE HEIGHT AND BUILDING AREAS:
   GROUP S-1
   ALLOWABLE AREA: 1625 SM
   ALLOWABLE HEIGHT: 2 STORIES (16 M)

   GROUP S-1
   PROPOSED AREA: 895 SM
   PROPOSED HEIGHT: 1 STORY (<16 M)

5. IBC TABLE 601 & 602: FIRE RESISTANCE RATING REQUIREMENTS FOR BUILDING ELEMENTS FOR TYPE II-B

BUILDING ELEMENT	RATING (HOUR)	REFERENCE
STRUCTURAL FRAME (COLUMNS, GIRDERS & TRUSSES)	0	TABLE 601
BEARING WALLS		
EXTERIOR	0	TABLE 601
INTERIOR	0	TABLE 601
NONBEARING WALLS & PARTITIONS		
INTERIOR	0	TABLE 601
FLOOR CONSTRUCTION	0	TABLE 601
ROOF CONSTRUCTION	0	TABLE 601
EXTERIOR WALL	0	TABLE 602

6. IBC TABLE 803.5 – INTERIOR WALL AND CEILING FINISH REQUIREMENTS FOR S-1 OCCUPANCY/NONSPRINKLERED

GROUP	EXIT ENCLOSURES AND EXIT PASSAGEWAY	CORRIDORS	ROOMS AND ENCLOSED SPACES
S	A	A	B

7. NFPA 101 TABLE 7.3.1.2 – OCCUPANT LOAD
   STORAGE = N/A
   NFPA 101 42.1.7: USE THE PROBABLE POPULATION: 5

8. NFPA 101 TABLE 7.3.3.1 – EGRESS CAPACITY
   STORAGE = 5 MM PER OCCUPANT

   REQUIRED: 25 MM (5 OCCUPANTS x 5 MM PER OCCUPANT)
   PROPOSED EGRESS CAPACITY: 4500 MM: (5) 900 MM DOORS

9. NFPA 101 PARAGRAPH 42.2.6 AND TABLE 42.2.6 – EXIT ACCESS TRAVEL DISTANCE
   REQUIRED: 61 METERS
   PROPOSED: 20 METERS

10. NFPA 101 PARAGRAPH 42.3.6 – CORRIDORS
    CORRIDORS ARE NOT REQUIRED AS DOORS EXIT DIRECTLY TO OUTSIDE

11. NFPA 101 PARAGRAPH 42.2.4.1 AND 7.4.1.1 – MINIMUM NUMBER OF EXITS
    REQUIRED: 1 MINIMUM
    PROPOSED: 4 EXIT

12. NFPA 101, TABLE 6.1.14.4.1 – REQUIRED SEPARATION OF OCCUPANCIES
    BUSINESS TO ORDINARY HAZARD STORAGE
    REQUIRED: 2 HOUR
    PROVIDED: 2 HOUR

13. NFPA 101, TABLE 8.3.4.2 –OPENING PROTECTIVE
    REQUIRED: 90 MINUTE DOOR IN 2 HOUR FIRE BARRIER
    PROVIDED: 90 MINUTE DOOR IN 2 HOUR FIRE BARRIER

LEGEND:

- DENOTES PATHS OF EXIT TRAVEL
- EXIT — DENOTES DOOR AS AN EMERGENCY EXIT
- DENOTES STARTING POINT FOR TRAVEL DISTANCE
- DENOTES FIRE EXTINGUISHER LOCATIONS
- (1) HOUR RATED WALL
- (2) HOUR RATED WALL
- (3) HOUR RATED WALL

LINEAR DIMENSIONS SHOWN ARE IN MILLIMETERS (MM), UNLESS OTHERWISE NOTED

0 2000 4000
SCALE: 1:100

APPROVED:

A/E DESIGNER OF RECORD

SEAL:

US ARMY CORPS OF ENGINEERS
AFGHANISTAN ENGINEER DISTRICT

Mark	Description	Date	Appr.

Designed by: KRC
Dwn by: EBB
Ckd by: NLJ
Reviewed by: LHM
Submitted by: BAKER
Date: 2/23/10
Rev: 0
Design file no.
Drawing code:
File name: ANASTORA-001
Plot date: 6/3/2010
Plot scale: X:X

U.S. ARMY CORPS OF ENGINEERS
AFGHANISTAN ENGINEER DISTRICT
APO AE 96338

Michael Baker Jr., Inc.
A unit of Michael Baker Corporation
Airside Business Park
100 Airside Drive
Moon Township PA 15108
www.mbakercorp.com

STANDARD DESIGN
VARIOUS PROJECTS
VARIOUS LOCATIONS, AFGHANISTAN

RMTC STORAGE

LIFE SAFETY PLAN

Sheet reference number:
A-001

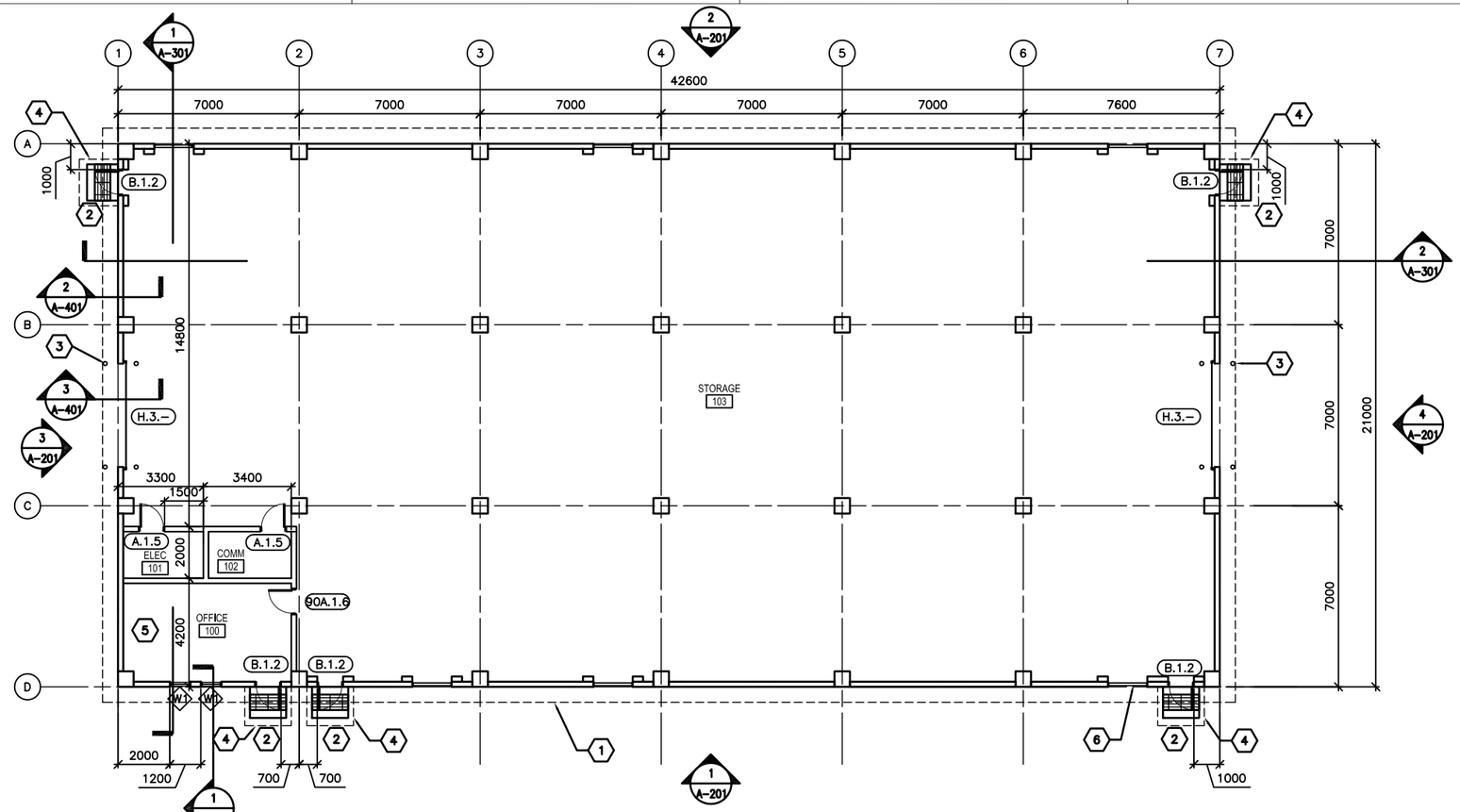

1 A–101 FLOOR PLAN

SCALE: 1:100

GENERAL NOTES:

A. DIMENSIONS ARE SHOWN TO OUTER EDGE OF EXTERIOR STRUCTURAL COLUMNS, STRUCTURAL COLUMN GRID, EDGE OF INTERIOR PARTITIONS, EDGE OF WINDOW OPENINGS, AND TO HINGE SIDE OF DOOR FRAME OPENINGS.

B. HINGE SIDE OF OPENINGS FOR DOORS AND FRAMES SHALL BE LOCATED 200 MM FROM THE ADJACENT WALL OR COLUMN, UNLESS NOTED OTHERWISE.

C. INTERIOR PARTITIONS SHALL BE 200 MM CMU. SEE STRUCTURAL DRAWINGS FOR LOCATION OF CONCRETE SHEAR WALLS.

D. COSMETIC REPAIR OF MINOR DEFECTS: REPAIR OR FILL MORTAR JOINTS AND MINOR DEFECTS, INCLUDING BUT NOT LIMITED TO SPALLS, IN ACCORDANCE WITH MANUFACTURER'S RECOMMENDATIONS AND PRIOR TO COATING APPLICATION. SURFACES TO BE PAINTED SHALL BE CLEAN AND FREE OF FOREIGN MATTER BEFORE APPLICATION OF PAINT. CLEANING SHALL BE SCHEDULED SO THAT DUST AND OTHER CONTAMINANTS WILL NOT FALL ON NEWLY PAINTED SURFACES.

E. CONCRETE, PLASTER AND MASONRY SURFACES SHALL BE ALLOWED TO CURE FOR AT LEAST 30 DAYS BEFORE PAINTING. CONCRETE SLABS–ON–GRADE SHALL BE ALLOWED TO CURE 90 DAYS BEFORE STAINING OR SEALING.

F. DO NOT USE PAINT MATERIALS CONTAINING LEAD CONTENT IN EXCESS OF 0.009 PERCENT OF THE WEIGHT OF THE TOTAL NONVOLATILE CONTENT OF THE PAINT OR THE WEIGHT OF THE DRIED PAINT FILM.

G. DO NOT USE ANY ASBESTOS CONTAINING MATERIALS (ACM) IN PROJECT. ACM IS DEFINED AS 1% OR MORE BY VOLUME.

H. DO NOT USE PAINT MATERIALS CONTAINING MERCURIAL FUNGICIDES.

I. FACTORY PRIMED METAL DOORS AND FRAMES SHALL RECEIVE TWO COATS OF PAINT.

J. FILL REMAINING SPACE AT PENETRATIONS IN FIRE–RATED FLOORS, PARTITIONS AND CEILINGS WITH APPROPRIATE FIRESTOPPING MATERIALS.

K. ALL CEILING FINISHES SHALL BE PAINTED STRUCTURE, UNLESS OTHERWISE NOTED.

L. ALL WALL FINISHES SHALL BE PAINTED STRUCTURE, UNLESS OTHERWISE NOTED.

M. ALL FLOOR FINISHES SHALL BE EPOXY SEALED CONCRETE.

KEY NOTES: (X)

1. LINE OF ROOF OVERHANG ABOVE.
2. CONCRETE STOOP WITH GRATE – SEE DETAIL 1/A–503.
3. BOLLARD – SEE STRUCTURAL DRAWINGS FOR TYPICAL DETAIL
4. CANOPY – SEE DETAIL 2/A–504.
5. OFFICE WALLS & CEILING TO BE PAINTED PLASTER.
6. LOUVER – SEE SHEET M–101.

LEGEND:

(XXX) DOOR FRAME AND HARDWARE TYPE, SEE SHEET A–601

(A) WINDOW TYPE, SEE SHEET A–601

(X) KEY NOTE

ABBREVIATIONS:

COMM	COMMUNICATIONS	JAN	JANITOR
ELEC	ELECTRICAL	CLOS	CLOSET
MECH	MECHANICAL		

LINEAR DIMENSIONS SHOWN ARE IN MILLIMETERS (MM), UNLESS OTHERWISE NOTED

0 2000 4000
SCALE: 1:100

APPROVED:

A/E DESIGNER OF RECORD

SEAL:

US ARMY CORPS OF ENGINEERS
AFGHANISTAN ENGINEER DISTRICT

Mark	Description	Date	Appr.

Rev: 0
Date: 2/23/10
Design file no.
Drawing code:
File name: AA36T08X-101
Plot date: 6/3/2010
Plot scale: 6/4

Designed by: KRC
Drawn by: EBB
Cad by: NLJ
Reviewed by: LHM
Submitted by: BAKER

U.S. ARMY CORPS OF ENGINEERS
AFGHANISTAN ENGINEER DISTRICT
APO AE 96338

Michael Baker Jr, Inc
A unit of Michael Baker Corporation
Airside Business Park
100 Airport Drive
Moon Township, PA 15108
www.mbakercorp.com

STANDARD DESIGN
VARIOUS PROJECTS
VARIOUS LOCATIONS, AFGHANISTAN

RMTC STORAGE

FLOOR PLAN

Sheet reference number:
A–101

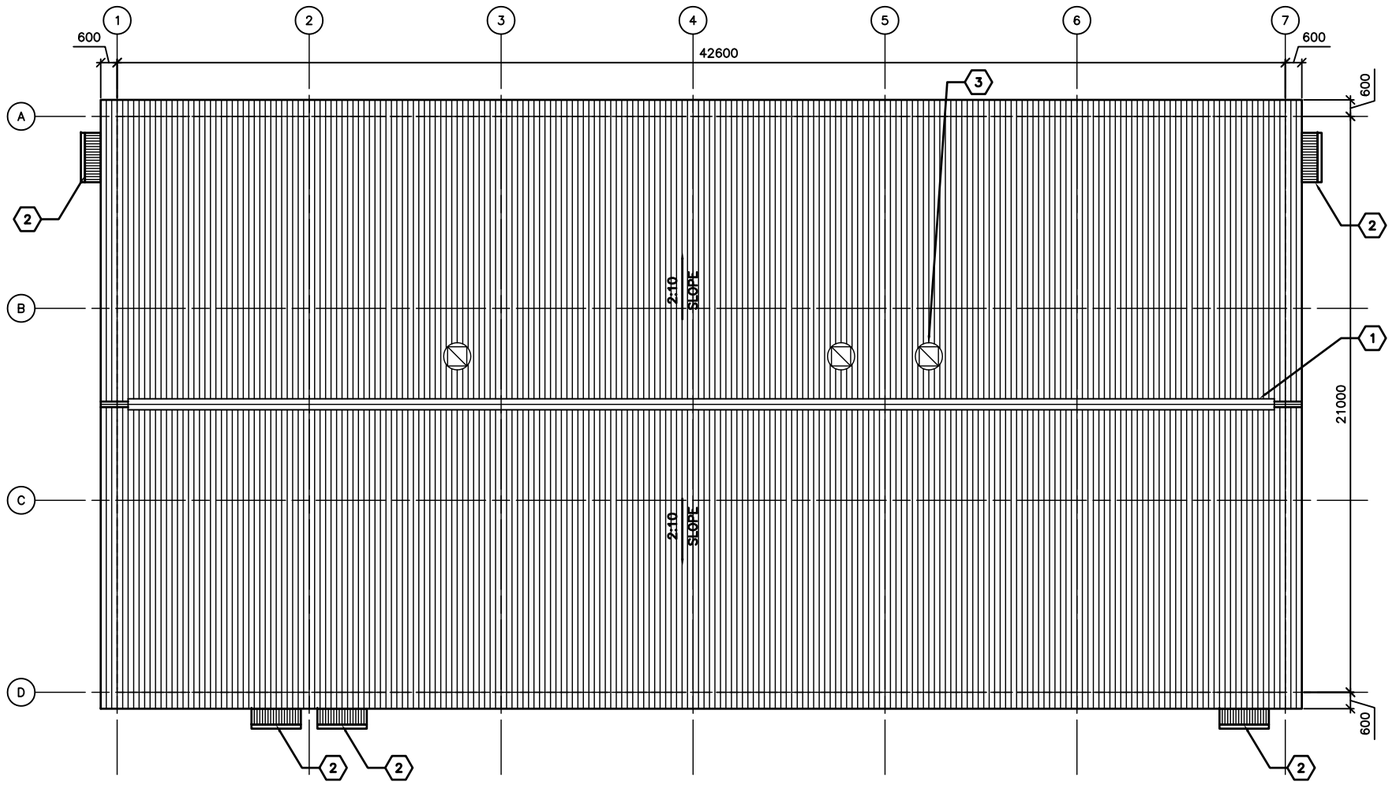

1 A-102 ROOF PLAN
SCALE: 1:100

GENERAL NOTES:

A. THE APPROXIMATE LOCATION OF ROOF DEVICES AND PENETRATIONS ARE SHOWN ON THE ROOF PLAN FOR INFORMATION ONLY. THE CONTRACTOR SHALL BE RESPONSIBLE FOR UNDERSTANDING THE ACTUAL LOCATION OF THESE AND ALL OTHER ITEMS PRIOR TO BEGINNING CONSTRUCTION. COORDINATE ALL ROOF PENETRATIONS WITH STRUCTURAL, MECHANICAL AND PLUMBING WORK.

B. UNLESS OTHERWISE NOTED, NOTES, DETAILS OR FEATURES INDICATED FOR ONE CONDITION SHALL BE APPLICABLE FOR ALL ALIKE AND SIMILAR CONDITIONS.

C. STOCKPILING OF MATERIALS, EQUIPMENT AND ANY OTHER ITEMS ON THE ROOF IS PROHIBITED.

D. ROOFS SHALL BE CORRUGATED METAL ROOF PANELS ON COLD-FORMED METAL FRAMING ON CONCRETE SLAB.

KEY NOTES: (X)

1. CONTINUOUS METAL RIDGE VENT SEE DETAIL 4/A-501.
2. CANOPY – SEE DETAIL 2/A-504.
3. EXHAUST FAN – SEE SHEET M-101.

LINEAR DIMENSIONS SHOWN ARE IN MILLIMETERS (MM), UNLESS OTHERWISE NOTED

0 2000 4000
SCALE: 1:100

APPROVED:

A/E DESIGNER OF RECORD

SEAL:

US ARMY CORPS OF ENGINEERS
AFGHANISTAN ENGINEER DISTRICT

Mark	Description	Date	Appr.	Mark	Description	Date	Appr.

Designed by: KRC
Dwn by: EBB
Ckd by: NLJ
Reviewed by: LHM
Submitted by: BAKER
Date: 2/23/10
Rev: 0
Design file no.
Drawing code:
File name: ANASTORA-102
Plot date: 6/3/2010
Plot scale: X:X

U.S. ARMY CORPS OF ENGINEERS
AFGHANISTAN ENGINEER DISTRICT
APO AE 96338

Michael Baker Jr., Inc
A unit of Michael Baker Corporation
Airside Business Park
100 Airside Drive
Moon Township PA 15108
www.mbakercorp.com

STANDARD DESIGN
VARIOUS PROJECTS
VARIOUS LOCATIONS, AFGHANISTAN

RMTC STORAGE

ROOF PLAN

Sheet reference number:
A-102

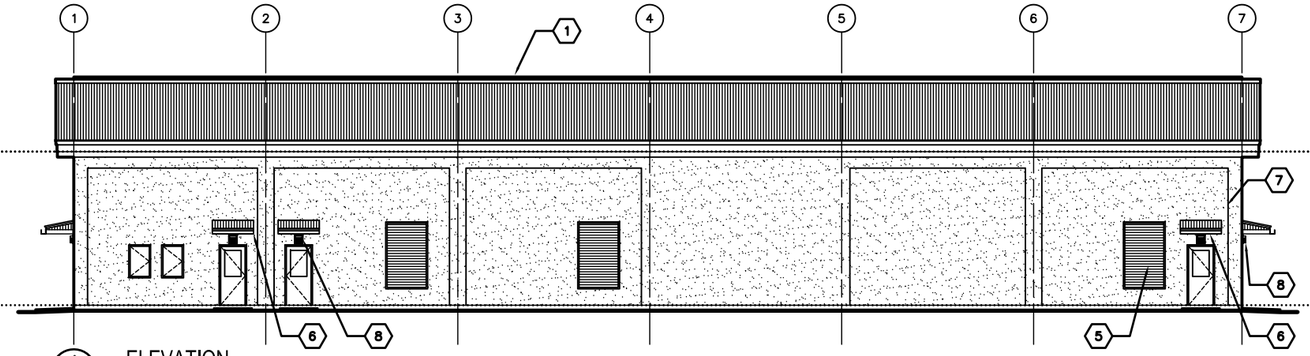

1 A-201 ELEVATION
SCALE: 1:100

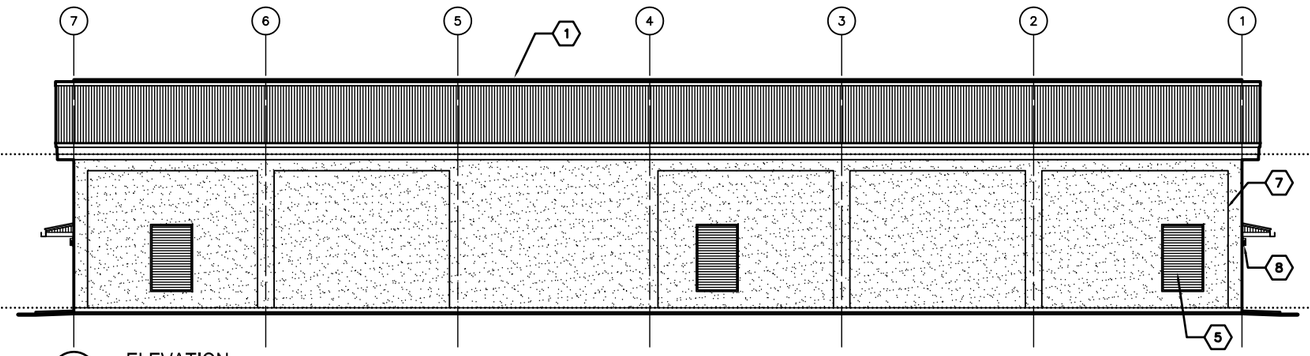

2 A-201 ELEVATION
SCALE: 1:100

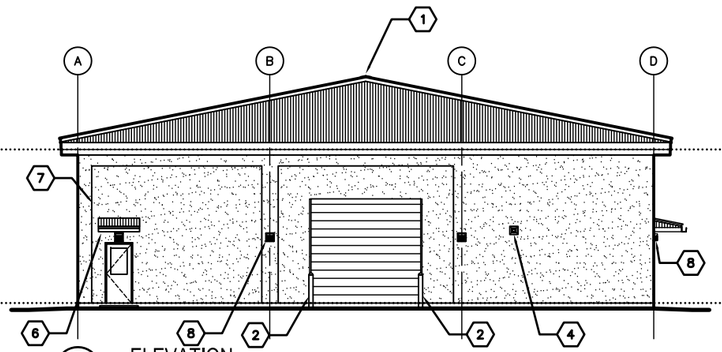

3 A-201 ELEVATION
SCALE: 1:100

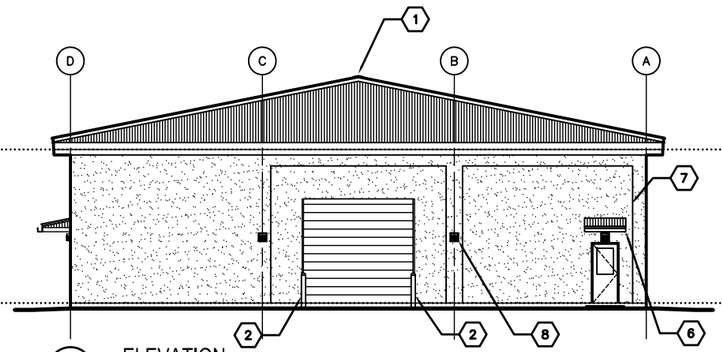

4 A-201 ELEVATION
SCALE: 1:100

GENERAL NOTES:

A. COORDINATE SIZE AND LOCATION OF OPENINGS FOR MECHANICAL ITEMS WITH MECHANICAL DRAWINGS.

B. PROVIDE STRUCTURAL LINTELS AS REQUIRED – SEE STRUCTURAL DRAWINGS

C. ALL EXTERIOR WALL FINISHES SHALL BE STUCCO OVER CMU AND CONCRETE SUBSTRATES. PROVIDE CONTROL JOINTS IN STUCCO WALL FINISH.

D. ROOF SHALL BE CORRUGATED METAL ROOF PANELS ON COLD–FORMED METAL FRAMING ON CONCRETE SLAB.

KEY NOTES: (X)

1. CONTINUOUS METAL RIDGE VENT – SEE DETAIL 4/A–501.
2. BOLLARD – SEE STRUCTURAL DRAWINGS FOR TYPICAL DETAIL
3. NOT USED.
4. EXHAUST FAN, LOCATE TOP OF WALL PENETRATION 2800 MM ABOVE FINISHED FLOOR – SEE MECHANICAL DRAWINGS.
5. LOUVER 600 AFF – SEE SHEET M–101.
6. CANOPY – SEE DETAIL 1/A–504.
7. STUCCO CONTROL JOINT – SEE DETAIL 2A/A–501.
8. EXTERIOR LIGHT FIXTURE – SEE EXTERIOR

LINEAR DIMENSIONS SHOWN ARE IN MILLIMETERS (MM), UNLESS OTHERWISE NOTED

0 2000 4000
SCALE: 1:100

APPROVED:

A/E DESIGNER OF RECORD

SEAL:

US ARMY CORPS OF ENGINEERS
AFGHANISTAN ENGINEER DISTRICT

Mark	Description	Date	Appr.

Mark	Description	Date	Appr.

Designed by: KRC
Dwn by: EBB
Ckd by: NLJ
Reviewed by: LHM
Submitted by: BAKER
Date: 2/23/10
Design file no.
Drawing code:
File name: ANASTORA-201
Plot date: 6/3/2010
Plot scale: X:X
Rev: 0

U.S. ARMY CORPS OF ENGINEERS
AFGHANISTAN ENGINEER DISTRICT
APO AE 96338

Michael Baker Jr., Inc
A unit of Michael Baker Corporation
Airside Business Park
100 Airside Drive
Moon Township PA 15108
www.mbakercorp.com

STANDARD DESIGN
VARIOUS PROJECTS
VARIOUS LOCATIONS, AFGHANISTAN

RMTC STORAGE

ELEVATIONS

Sheet reference number:
A–201

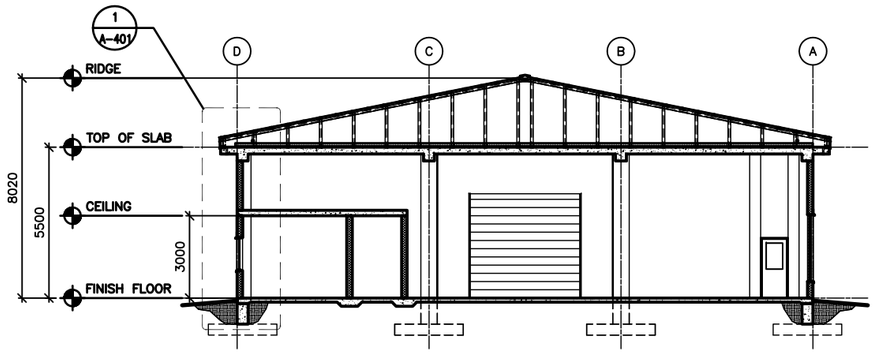

1 A-301 BUILDING SECTION
SCALE: 1:100

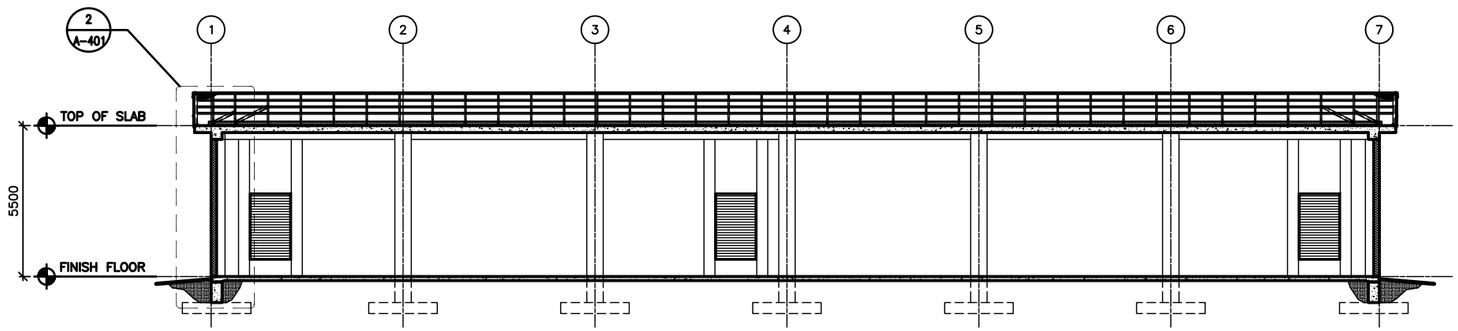

2 A-301 BUILDING SECTION
SCALE: 1:100

LINEAR DIMENSIONS SHOWN ARE IN MILLIMETERS (MM), UNLESS OTHERWISE NOTED

0 2000 4000
SCALE: 1:100

APPROVED:

A/E DESIGNER OF RECORD

SEAL:

US ARMY CORPS OF ENGINEERS
AFGHANISTAN ENGINEER DISTRICT

Mark	Description	Date	Appr.	Mark	Description	Date	Appr.

Designed by: KRC
Dwn by: EBB
Ckd by: NLJ
Reviewed by: LHM
Submitted by: BAKER
Date: 2/23/10
Rev: 0
Design file no.
Drawing code:
File name: ANASTORA-001
Plot date: 6/3/2010
Plot scale: X:X

U.S. ARMY CORPS OF ENGINEERS
AFGHANISTAN ENGINEER DISTRICT
APO AE 96338

Michael Baker Jr., Inc.
A unit of Michael Baker Corporation
Airside Business Park
100 Airside Drive
Moon Township PA 15108
www.mbakercorp.com

STANDARD DESIGN
VARIOUS PROJECTS
VARIOUS LOCATIONS, AFGHANISTAN

RMTC STORAGE

BUILDING SECTIONS

Sheet reference number:
A-301

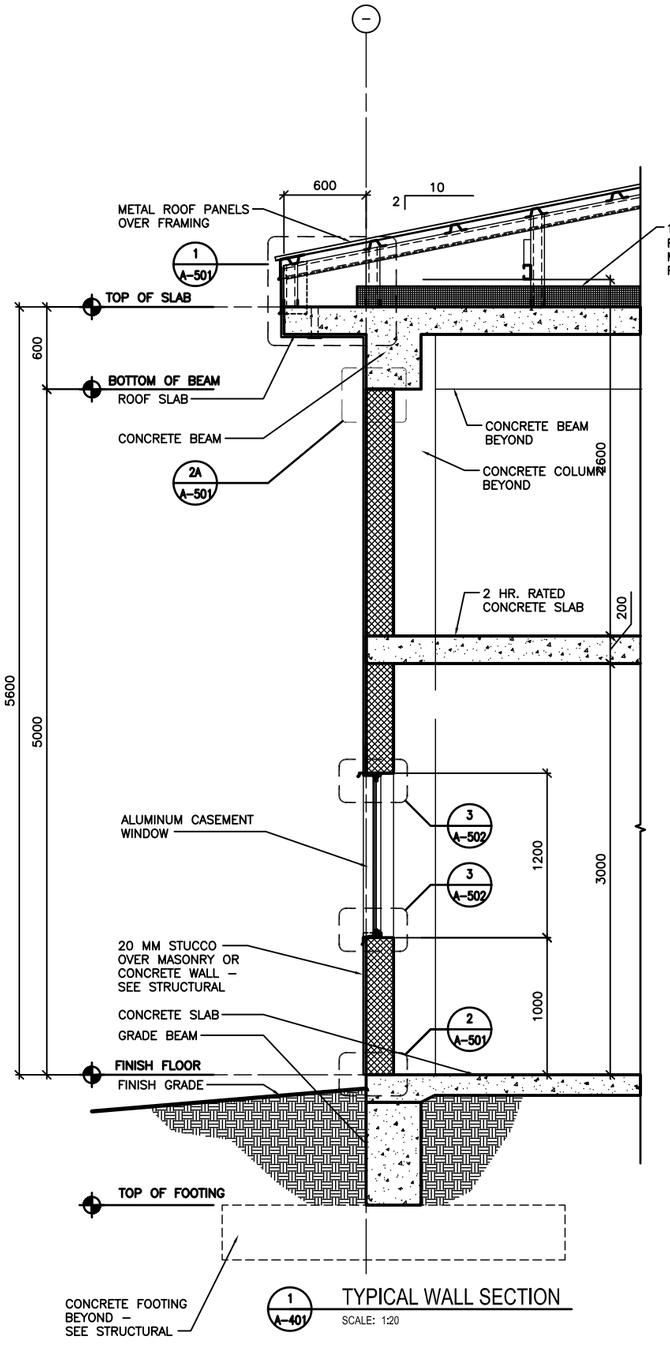

1 A-401 TYPICAL WALL SECTION
SCALE: 1:20

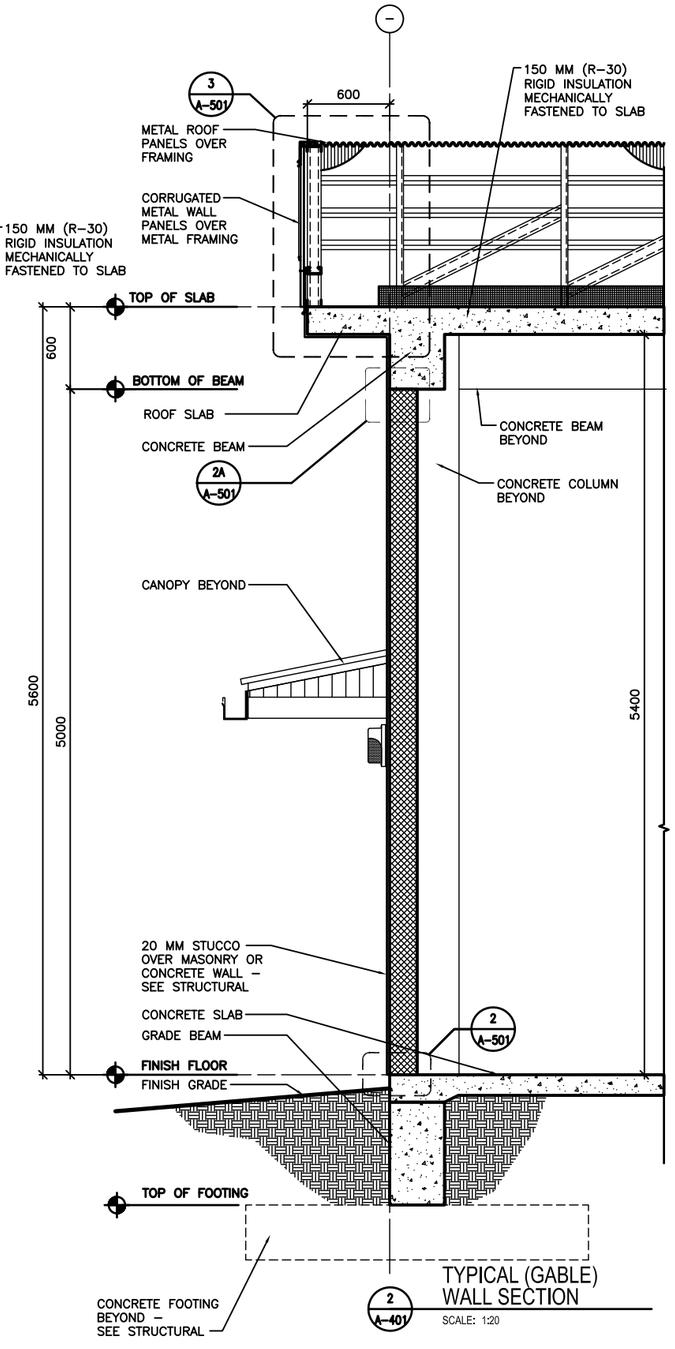

2 A-401 TYPICAL (GABLE) WALL SECTION
SCALE: 1:20

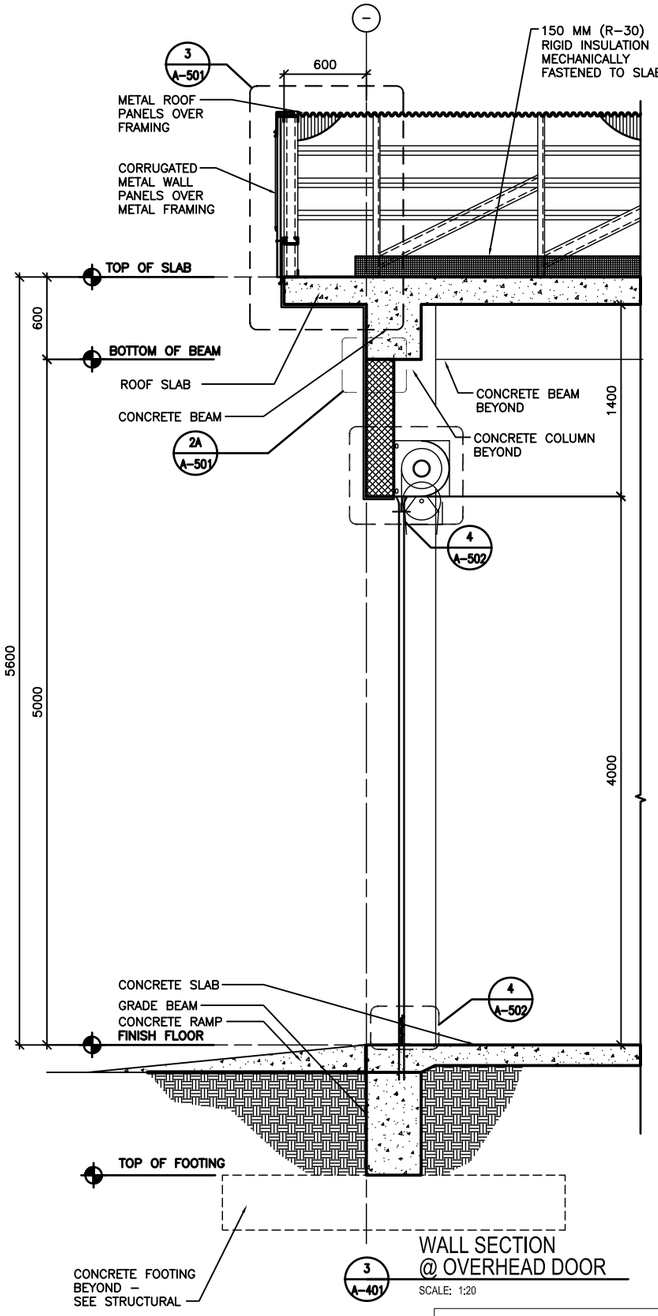

3 A-401 WALL SECTION @ OVERHEAD DOOR
SCALE: 1:20

LINEAR DIMENSIONS SHOWN ARE IN MILLIMETERS (MM), UNLESS OTHERWISE NOTED

0 400 800
SCALE: 1:20

APPROVED:

A/E DESIGNER OF RECORD

SEAL:

US ARMY CORPS OF ENGINEERS
AFGHANISTAN ENGINEER DISTRICT

Mark	Description	Date	Appr.	Mark	Description	Date	Appr.

Designed by: KRC
Dwn by: EBB
Ckd by: NLJ
Reviewed by: LHM
Submitted by: BAKER
Date: 2/23/10
Rev: 0
Design file no.
Drawing code:
File name: ANASTORA-401
Plot date: 6/3/2010
Plot scale: X:X

U.S. ARMY CORPS OF ENGINEERS
AFGHANISTAN ENGINEER DISTRICT
APO AE 96338

Michael Baker Jr., Inc
A unit of Michael Baker Corporation
Airside Business Park
100 Airside Drive
Moon Township PA 15108
www.mbakercorp.com

STANDARD DESIGN
VARIOUS PROJECTS
VARIOUS LOCATIONS, AFGHANISTAN

RMTC STORAGE

WALL SECTIONS

Sheet reference number:
A-401

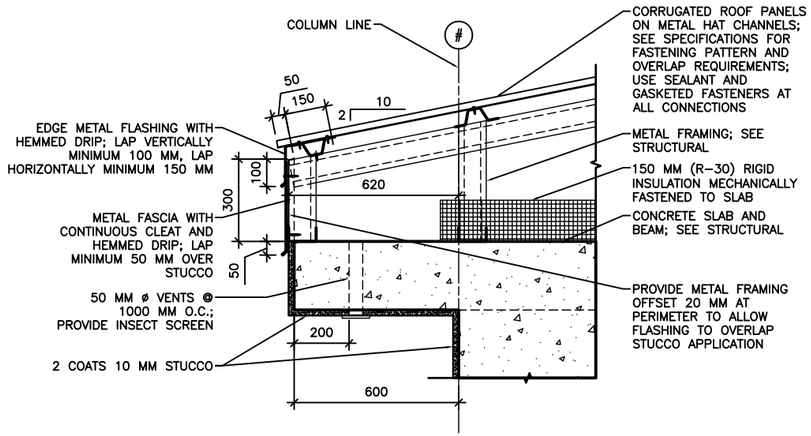

1 A-501 EAVE DETAIL
SCALE: 1:10

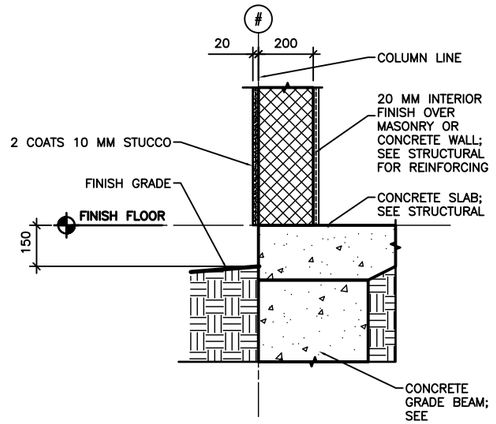

2 A-501 STUCCO BASE DETAIL
SCALE: 1:10

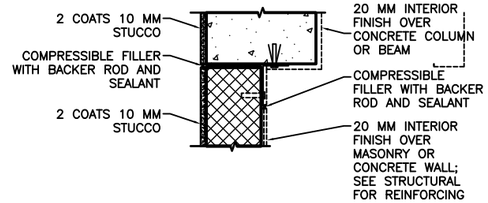

NOTE: DETAIL TYPICAL AT ALL WALL/COLUMN AND WALL/BEAM LOCATIONS, SEE ALTERNATE BRACING DETAIL BELOW 2B/A-501.

2A A-501 STUCCO JOINT DETAIL
SCALE: 1:10

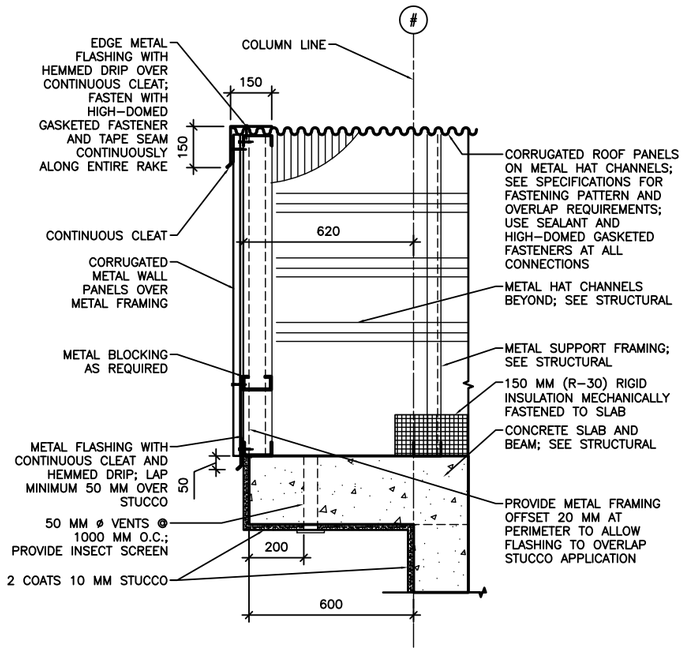

3 A-501 RAKE/EAVE DETAIL
SCALE: 1:10

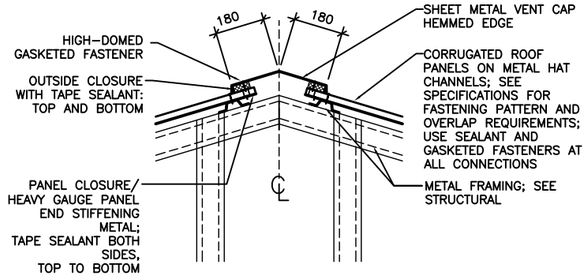

4 A-501 RIDGE VENT DETAIL
SCALE: 1:10

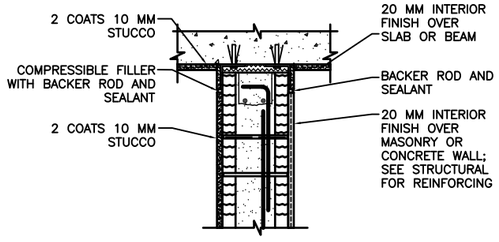

INTERIOR WALL/BEAM

2B A-501 ALTERNATE BRACING DETAIL
SCALE: 1:10

LINEAR DIMENSIONS SHOWN ARE IN MILLIMETERS (MM), UNLESS OTHERWISE NOTED

0 200 400
SCALE: 1:10

APPROVED:

A/E DESIGNER OF RECORD

SEAL:

US ARMY CORPS OF ENGINEERS
AFGHANISTAN ENGINEER DISTRICT

Mark	Description	Date	Appr.

Date: 2/23/10 Rev: 0
Designed by: KRC Cad by: EBR Design file no.
Reviewed by: LHM Drawing code:
Submitted by: BAKER File name: ANASTORA-001 Plot date: 6/3/2010 Plot scale: X:X

U.S. ARMY CORPS OF ENGINEERS
AFGHANISTAN ENGINEER DISTRICT
APO AE 96338

Michael Baker Jr., Inc
A unit of Michael Baker Corporation
Airside Business Park
100 Airport Dr.
Moon Township, PA 15108
www.mbakercorp.com

STANDARD DESIGN
VARIOUS PROJECTS
VARIOUS LOCATIONS, AFGHANISTAN

RMTC STORAGE

EXTERIOR DETAILS

Sheet reference number:
A-501

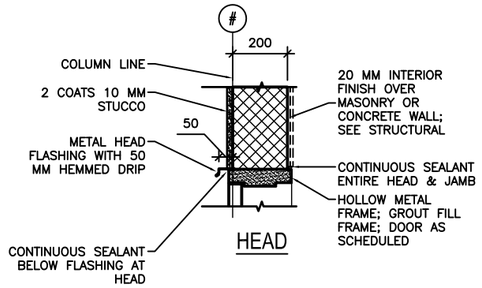

HEAD

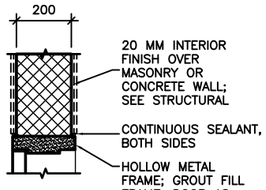

HEAD

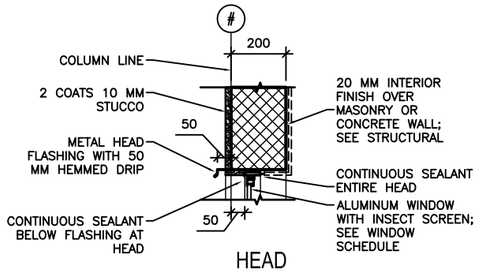

HEAD

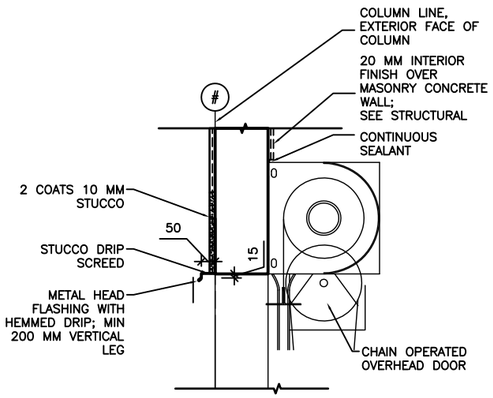

HEAD

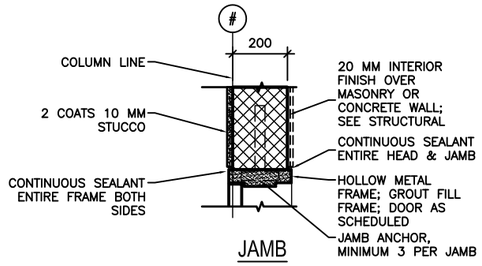

JAMB

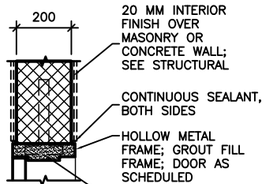

JAMB

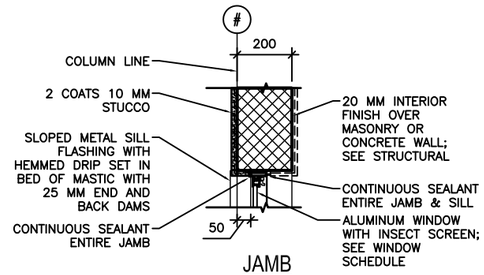

JAMB

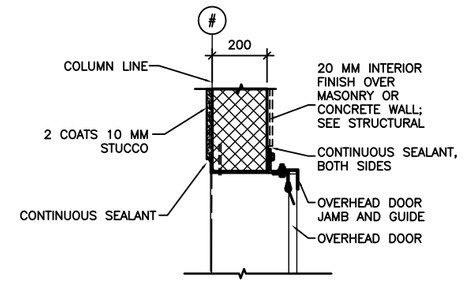

JAMB

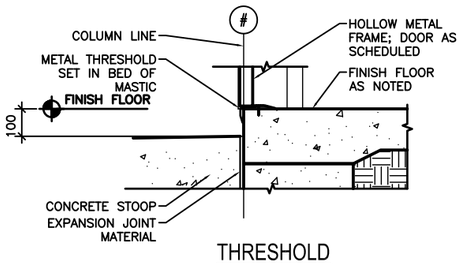

THRESHOLD

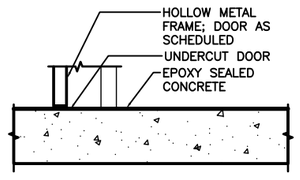

THRESHOLD

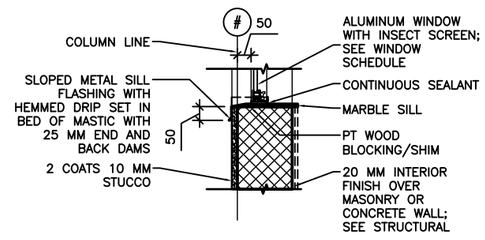

SILL

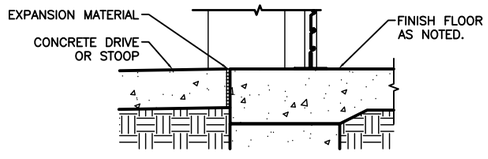

THRESHOLD

1 A-502 EXTERIOR DOOR DETAILS
SCALE: 1:10

2 A-502 INTERIOR DOOR DETAILS
SCALE: 1:10

3 A-502 EXTERIOR WINDOW DETAILS
SCALE: 1:10

4 A-502 OVERHEAD DOOR DETAILS
SCALE: 1:10

LINEAR DIMENSIONS SHOWN ARE IN MILLIMETERS (MM), UNLESS OTHERWISE NOTED

0 200 400
SCALE: 1:10

APPROVED:

A/E DESIGNER OF RECORD

SEAL:

US ARMY CORPS OF ENGINEERS
AFGHANISTAN ENGINEER DISTRICT

Mark	Description	Date	Appr.	Mark	Description	Date	Appr.

Designed by: KRC
Drawn by: EBB
Reviewed by: LHM
Submitted by: BAKER

Date: 2/23/10
Rev: 0
Ckd by: NLJ
Design file no.
Drawing code:
File name: AN4STOR4-502
Plot date: 6/3/2010
Plot scale: 1:1

U.S. ARMY CORPS OF ENGINEERS
AFGHANISTAN ENGINEER DISTRICT
APO AE 96338

Michael Baker Jr., Inc.
A unit of Michael Baker Corporation
Airside Business Park
100 Airport Drive
Moon Township, PA 15108
www.mbakercorp.com

STANDARD DESIGN
VARIOUS PROJECTS
VARIOUS LOCATIONS; AFGHANISTAN

RMTC STORAGE

HEAD, JAMB & SILL DETAILS

Sheet reference number:
A-502

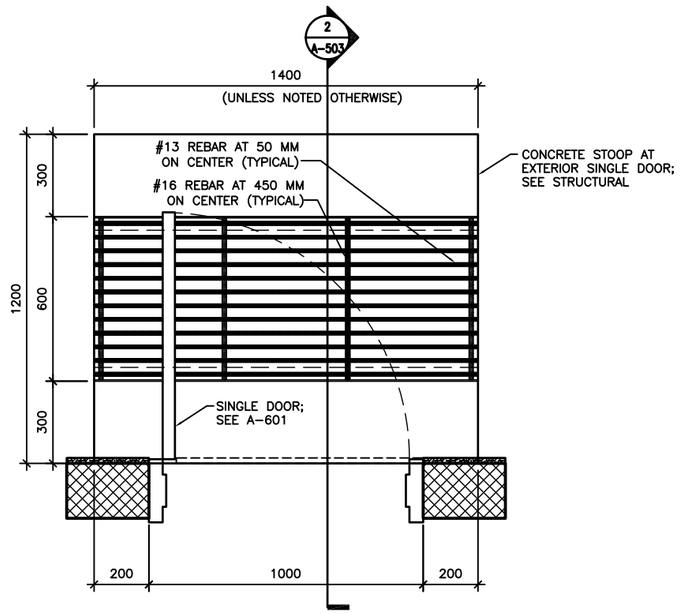

1 A-503 DOOR STOOP PLAN (WITH GRATE)

SCALE: 1:10

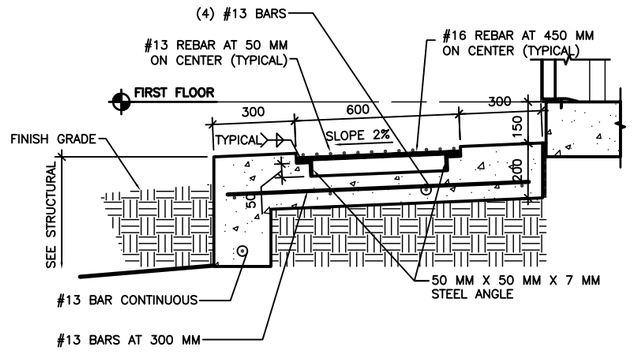

2 A-503 DOOR STOOP DETAIL

SCALE: 1:10

LINEAR DIMENSIONS SHOWN ARE IN MILLIMETERS (MM), UNLESS OTHERWISE NOTED

0 200 400

SCALE: 1:10

APPROVED:

A/E DESIGNER OF RECORD

SEAL:

US ARMY CORPS OF ENGINEERS
AFGHANISTAN ENGINEER DISTRICT

Mark	Description	Date	Appr.

Mark	Description	Date	Appr.

Date: 2/23/10 Rev: 0
Design file no.
Drawing code:
File name: AN-STDR-003
Plot date: 6/3/2010
Plot scale: 0.5

Designed by: KFC
Drawn by: EBB
Chd by: NLJ
Reviewed by: LHM
Submitted by:

U.S. ARMY CORPS OF ENGINEERS
AFGHANISTAN ENGINEER DISTRICT
APO AE 96338

Michael Baker Jr., Inc.
A unit of Michael Baker Corporation
Airside Business Park
100 Airport Drive
Moon Township, PA 15108
www.mbakercorp.com

BAKER

STANDARD DESIGN
VARIOUS PROJECTS
VARIOUS LOCATIONS, AFGHANISTAN

RMTC STORAGE

STOOP DETAILS

Sheet reference number:
A-503

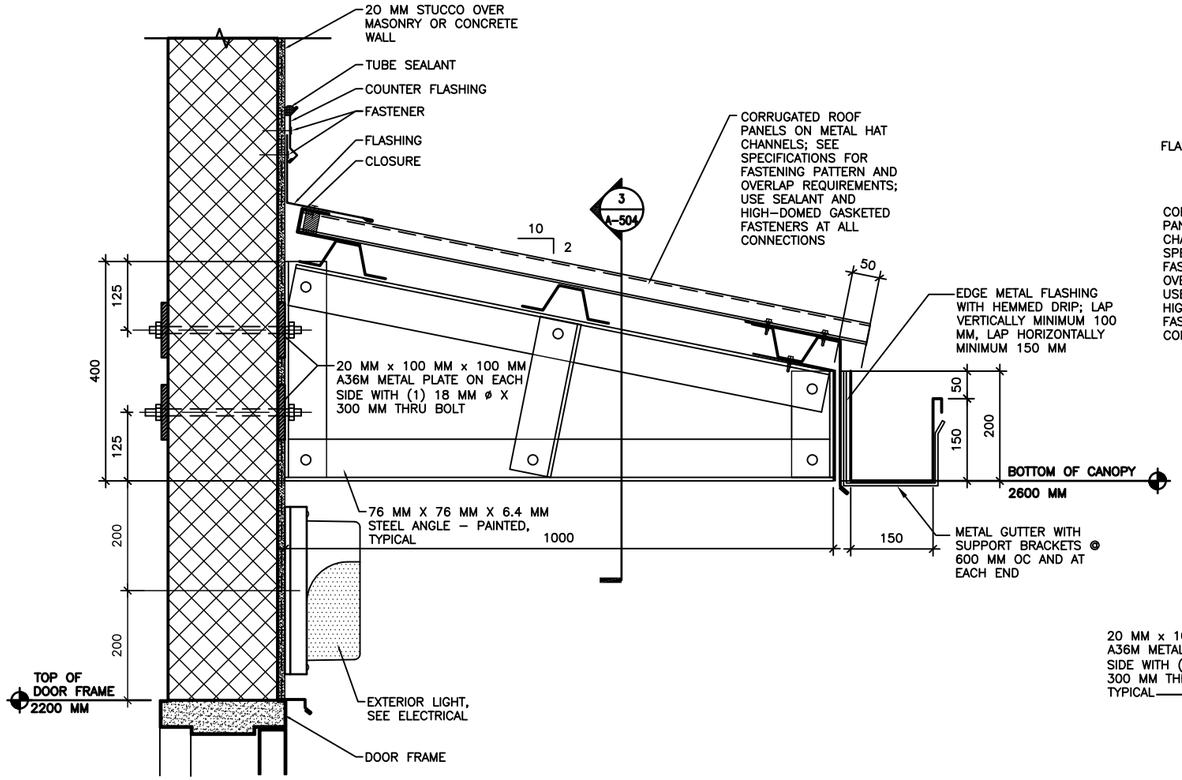

1 A-504 CANOPY CONNECTION DETAILS

SCALE: 1:5

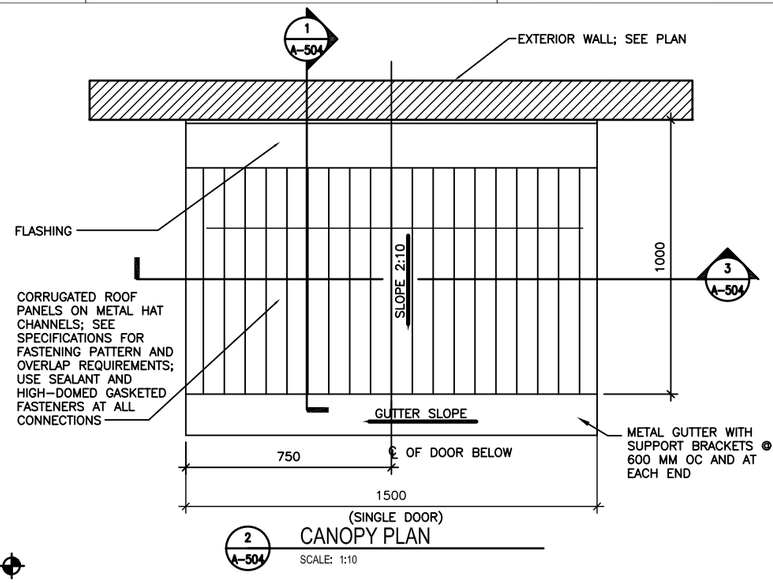

2 A-504 CANOPY PLAN

SCALE: 1:10

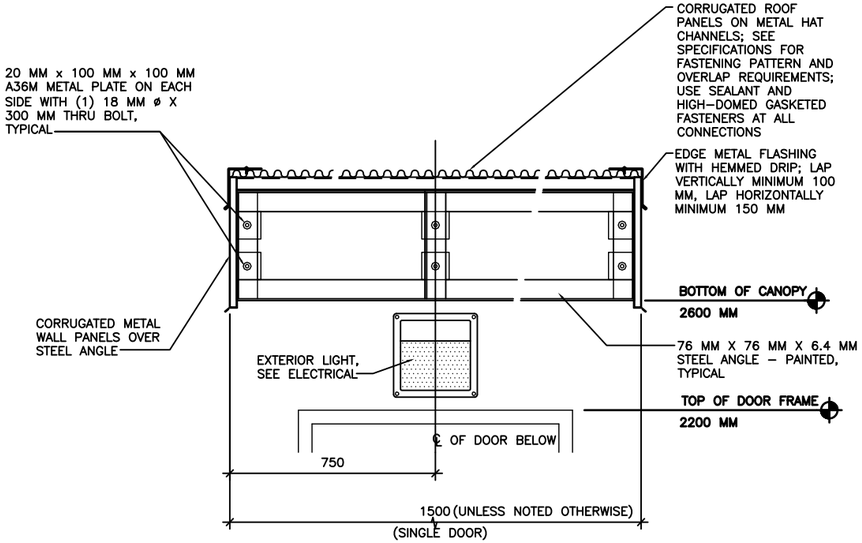

3 A-504 CANOPY CONNECTION DETAILS

SCALE: 1:10

SHEET NOTES:

1. SEE A–101 FOR FLOOR PLANS AND CANOPY LOCATIONS.

LINEAR DIMENSIONS SHOWN ARE IN MILLIMETERS (MM), UNLESS OTHERWISE NOTED

0 100 200

SCALE: 1:5

APPROVED:

A/E DESIGNER OF RECORD

SEAL:

US ARMY CORPS OF ENGINEERS
AFGHANISTAN ENGINEER DISTRICT

Mark	Description	Date	Appr.

Designed by: KRC
Drawn by: EB
Checked by:
Reviewed by: LHM
Submitted by: BAKER

Date: 2/23/10
Design file no.
Drawing code:
Plot date: 6/3/2010
Plot scale: 1:1

Rev: 0

U.S. ARMY CORPS OF ENGINEERS
AFGHANISTAN ENGINEER DISTRICT
APO AE 96338

Michael Baker Jr., Inc.
A unit of Michael Baker Corporation
Airside Business Park
100 Airport Drive
Moon Township, PA 15108
www.mbakercorp.com

STANDARD DESIGN
VARIOUS PROJECTS
VARIOUS LOCATIONS; AFGHANISTAN

RMTC STORAGE

CANOPY DETAILS

Sheet reference number:
A–504

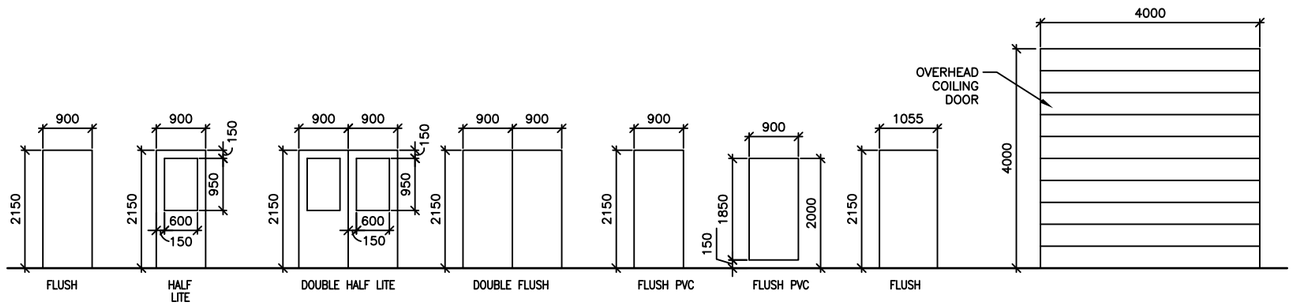

1 A-601 DOOR TYPES
SCALE: 1:50

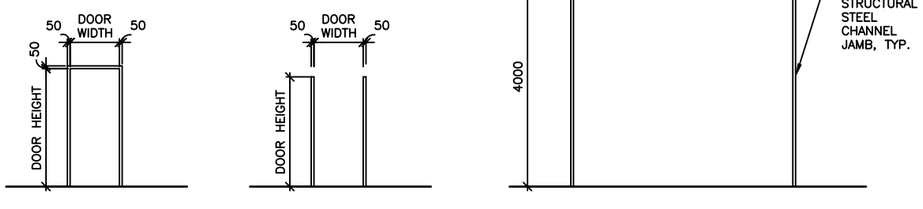

2 A-601 FRAME TYPES
SCALE: 1:50

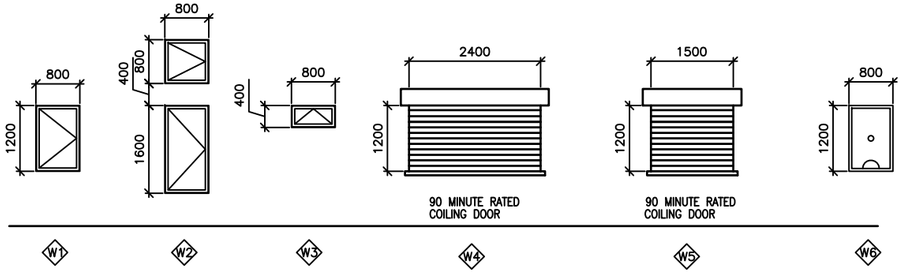

3 A-601 WINDOW TYPES
SCALE: 1:50

WINDOW TYPE NOTES:

1. ALL EXTERIOR WINDOWS SHALL BE ALUMINUM WITH INSECT SCREENS. WINDOWS SHALL BE COMMERCIAL GRADE.
2. ALL EXTERIOR WINDOWS SHALL BE OPERABLE.

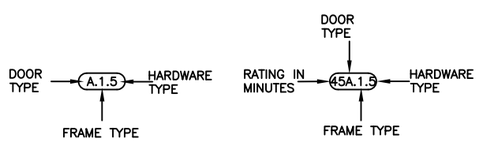

4 A-601 DOOR TAG
SCALE: NTS

5 A-601 RATED DOOR TAG
SCALE: NTS

DOOR TAG NOTES:

1. THE DOOR TAG INDICATES THE DOOR TYPE, FRAME TYPE AND HARDWARE SET FOR EACH DOOR.
2. THE DOOR TAG FOR RATED DOORS INCLUDES THE RATING OF THE DOOR IN MINUTES.

EXTERIOR DOOR HARDWARE TYPES:

HW-1 1-1/2 PR HINGES, A5112 114 X 114
1 EA RIM EXIT DEVICE, TYPE 1
1 EA CYLINDER. E09221A, GRADE 1
1 EA OVERHEAD CLOSER, C02061, LOW RESISTANCE
1 EA THRESHOLD, J32130
3 EA DOOR SILENCERS, L03011

HW-2 1-1/2 PR HINGES, A5112 114 X 114
1 EA LOCKSET, F13 ENTRY LOCK W/LEVER HANDLES, GRADE 1
1 EA OVERHEAD CLOSER, C02061, LOW RESISTANCE
1 EA THRESHOLD, J32130
3 EA DOOR SILENCERS, L03011

HW-3 3 PR HINGES, A5112 114 X 114
2 EA RIM EXIT DEVICE, TYPE 1
2 EA CYLINDER. GRADE 1
2 EA OVERHEAD CLOSER, C02061, LOW RESISTANCE
1 EA DOOR COORDINATOR, TYPE 21
1 EA ASTRAGAL
1 EA THRESHOLD, J32130
2 EA DOOR SILENCERS, L03011

HW-4 3 PR HINGES, A5112 114 X 114
1 EA LOCKSET W/LEVER HANDLES. GRADE 1, F13
1 EA OVERHEAD CLOSER, C02061, LOW RESISTANCE
2 EA MAGNETIC HOLDER PIN, ATTACHED TO DOOR LEAF
2 EA MAGNETIC HOLDER RECEIVER, ATTACHED TO STOOP
2 EA LEVER EXTENSION FLUSH BOLTS, L04081
1 EA ASTRAGAL
1 EA THRESHOLD, J32130
2 EA DOOR SILENCERS, L03011

DOOR AND HARDWARE NOTES:

1. INTERIOR AND EXTERIOR METAL DOORS AND FRAME COLORS SHALL MATCH ADJACENT WALL COLORS AS SELECTED BY THE CONTRACTING OFFICER.
2. FRAMES, EXCEPT FIRE-RATED FRAMES, SHALL BE MOUNTED AND ADJUSTED IN ACCORDANCE WITH MANUFACTURER'S INSTRUCTIONS. FRAMES SHALL BE FASTENED WITH MINIMUM OF THREE ANCHORS PER JAMB AT EQUAL INTERVALS.
3. DIMENSIONS SHOWN ON DOOR TYPES DETAIL ARE BASED UPON MODULAR MASONRY (OR ROUGH OPENING), HEIGHT OF 2200 MM FOR STANDARD PERSONNEL DOORS. CONTRACTOR SHALL COORDINATE WITH DOOR SUPPLIER TO ENSURE THAT DIMENSIONS OF DOORS AND FRAMES PROVIDED ARE COMPATIBLE WITH DOOR OPENING DIMENSIONS.
4. HARDWARE SHALL BE HEAVY DUTY, COMMERCIAL GRADE, STAINLESS STEEL WITH A SATIN OR BRUSHED FINISH.
5. HARDWARE TYPES INCLUDE BUILDERS HARDWARE MANUFACTURERS ASSOCIATION (BMHA) NUMBER.
6. DOORS IN 2 HOUR RATED PARTITIONS SHALL BE 1.5 HOUR (90 MINUTE) RATED DOORS IN ACCORDANCE WITH NFPA 101, TABLE 8.3.4.2.
7. DOORS AT STAIR ENCLOSURES SHALL BE 1 HOUR (60 MINUTE) RATED AT 1 HOUR WALL IN ACCORDANCE WITH NFPA 101, TABLE 8.3.4.2.
8. DOORS IN 1 HOUR RATED WALLS SHALL BE 3/4 HOUR (45 MINUTE) RATED DOORS IN ACCORDANCE WITH NFPA 101, TABLE 8.3.4.2.
9. DOORS IN 1 HOUR RATED CORRIDOR WALLS SHALL BE 1/3 HOUR (20 MINUTE) IN ACCORDANCE WITH NFPA 101, TABLE 8.3.4.2.
10. PROVIDE DOOR STOPS TO PROTECT WALLS ON LOCATIONS WHERE DOOR SWING WILL STRIKE WALL.

THIS SHEET IS STANDARD AND IS INCLUSIVE OF ALL THE DOOR/ WINDOW/ HARDWARE TYPES FOR THE ENTIRE RMTC CONTRACT. NOT ALL DOOR/ WINDOW/ HARDWARE TYPES ARE USED FOR ANY PARTICULAR BUILDING DESIGN. CONTRACTOR SHALL REFER TO THE FLOOR PLAN FOR THE TYPES BEING USED.

INTERIOR DOOR HARDWARE TYPES:

HW-5 1-1/2 PR HINGES, A8133 114 X 114
1 EA LOCKSET W/LEVER HANDLES, F08, GRADE 1
1 EA WALL STOP, L02101 OR L02161
3 EA DOOR SILENCERS, L03011

HW-6 1-1/2 PR HINGES, A8112 114 X 114
1 EA LOCKSET W/LEVER HANDLES, F08, GRADE 1
1 EA WALL STOP, L02101 OR L02161
1 EA OVERHEAD CLOSER, C02061, LOW RESISTANCE
3 EA DOOR SILENCERS, L03011

HW-7 1-1/2 PR HINGES, A8133
1 EA LOCKSET W/LEVER HANDLES, F13 GRADE 1
1 EA WALL STOP, L02101 OR L02161
2 EA MOP PLATE, J103
3 EA DOOR SILENCERS, L03011

HW-8 1-1/2 PR HINGES, A8112
1 EA LOCKSET W/LEVER HANDLES, F13 GRADE 1
1 EA WALL STOP, L02101 OR L02161
2 EA MOP PLATE, J103
1 EA OVERHEAD CLOSER, C02061, LOW RESISTANCE
3 EA DOOR SILENCERS, L03011

HW-9 1-1/2 PR HINGES, A5112 114 X 114
1 EA RIM EXIT DEVICE, TYPE 1
1 EA CYLINDER. E09221A, GRADE 1
1 EA OVERHEAD CLOSER, C02061, LOW RESISTANCE
3 EA DOOR SILENCERS, L03011

HW-10 3 PR HINGES, A5112 114 X 114
1 EA LOCKSET W/LEVER HANDLES. GRADE 1, F13
2 EA LEVER EXTENSION FLUSH BOLTS, L04081
1 EA ASTRAGAL
2 EA DOOR SILENCERS, L03011

HW-11 1-1/2 PR HINGES, A8112 114 X 114
1 EA LOCKSET W/LEVER HANDLES, F13, GRADE 1
1 EA WALL STOP, L02101 OR L02161
1 EA OVERHEAD CLOSER, C02061, LOW RESISTANCE
3 EA DOOR SILENCERS, L03011
1 EA ROBE HOOK

HW-12 1-1/2 PR HINGES, A8133
1 EA LATCHSET W/LEVER HANDLES, F76 GRADE 1
1 EA WALL STOP, L02101 OR L02161
2 EA MOP PLATE, J103
3 EA DOOR SILENCERS, L03011
1 EA ROBE HOOK

HW-13 3 PR HINGES, A5112 114 X 114
1 EA LOCKSET W/LEVER HANDLES. GRADE 1, F13
1 EA OVERHEAD CLOSER, C02061, LOW RESISTANCE
2 EA LEVER EXTENSION FLUSH BOLTS, L04081
1 EA ASTRAGAL
2 EA DOOR SILENCERS, L03011

HW-14 3 PR HINGES, A5112 114 X 114
2 EA RIM EXIT DEVICE, TYPE 1
2 EA CYLINDER. GRADE 1
2 EA OVERHEAD CLOSER, C02061, LOW RESISTANCE
1 EA DOOR COORDINATOR, TYPE 21
1 EA ASTRAGAL
2 EA DOOR SILENCERS, L03011

APPROVED:

A/E DESIGNER OF RECORD

SEAL:

US ARMY CORPS OF ENGINEERS
AFGHANISTAN ENGINEER DISTRICT

Mark	Description	Date	Appr.

Rev: 0
Date: 2/23/10
Design file no.:
Drawing code: AAASTD0X-001
File name: AAASTD0X-001
Plot date: 6/2/2010
Plot scale: xx
Designed by: KRC
Drawn by: EBB
Chkd by: NLJ
Reviewed by: LHM
Submitted by:
BAKER

U.S. ARMY CORPS OF ENGINEERS
AFGHANISTAN ENGINEER DISTRICT
APO AE 96338

Michael Baker Jr, Inc
A unit of Michael Baker Corporation
Airside Business Park
100 Airport Drive
Moon Township, PA 15108
www.mbakercorp.com

STANDARD DESIGN
VARIOUS PROJECTS
VARIOUS LOCATIONS, AFGHANISTAN

RMTC STORAGE

WINDOW AND DOOR SCHEDULES

Sheet reference number:
A-601

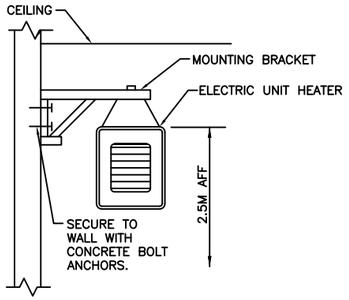

1 M-101 ELECTRIC UNIT HEATER MOUNTING DETAIL
N.T.S.

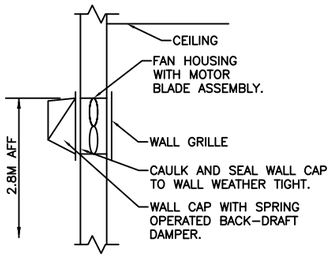

2 M-101 WALL EXHAUST FAN DETAIL
N.T.S.

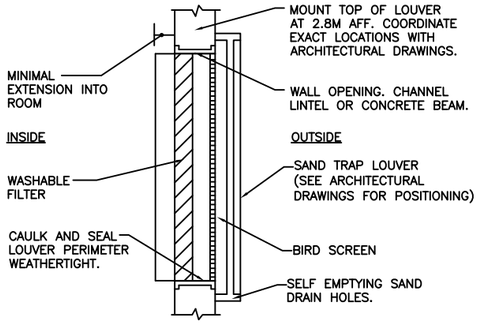

3 M-101 FILTERED SAND TRAP LOUVER
N.T.S.

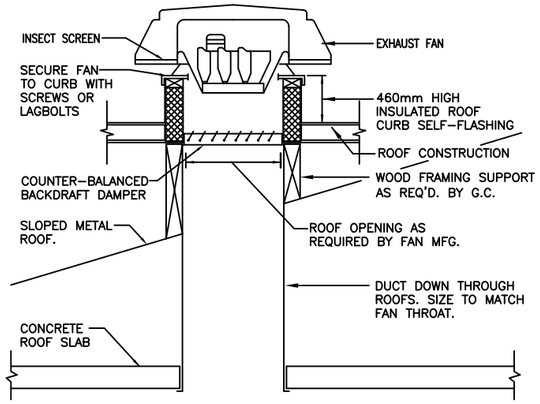

4 M-101 ROOF MOUNTED EXHAUST FAN
N.T.S.

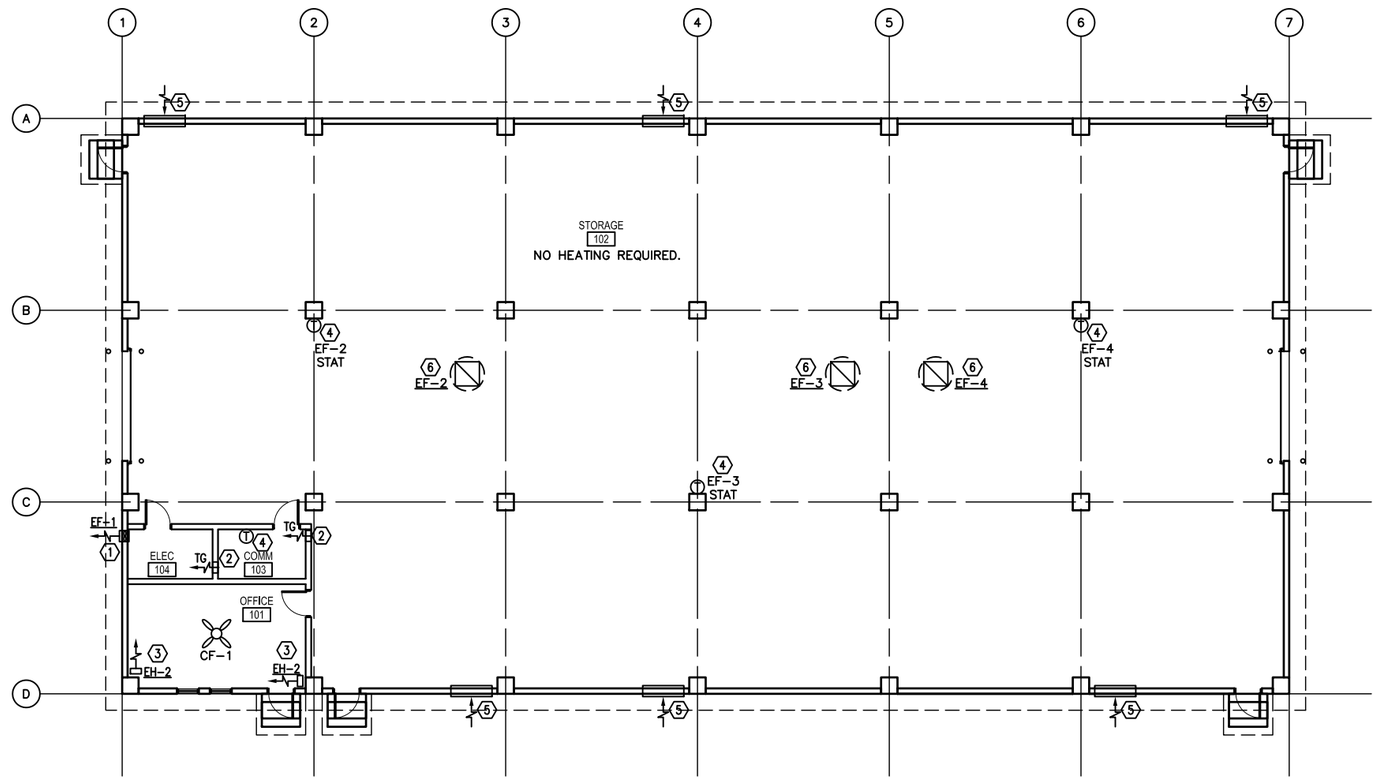

1 M-101 FLOOR PLAN - HVAC
SCALE: 1:100

GENERAL NOTES:

1. DO NOT SCALE DRAWINGS – ALL DIMENSIONS AND CONDITIONS SHALL BE CHECKED AND VERIFIED BY THE CONTRACTOR AT THE SITE.
2. ALL WORK PERFORMED ON THIS BUILDING SHALL BE IN COMPLIANCE WITH ALL PERTINENT CODES, RULES, ORDINANCES AND REGULATIONS OF THE GOVERNING AUTHORITIES.
3. ALL WORK PERFORMED UNDER AND IN CONNECTION WITH THESE DRAWINGS AND SPECIFICATIONS SHALL BE IN STRICT COMPLIANCE WITH THE LATEST SAFETY AND HEALTH STANDARDS.

SYMBOLS:

- (X) KEY NOTE
- (.050) AIR VOLUME IN CUBIC METERS PER SECOND (CMS)
- ¬ VOLUME DAMPER
- (T) THERMOSTAT WITH LOCKING COVER
- UC DOOR UNDERCUT
- TG TRANSFER GRILLE

ABBREVIATIONS:

AFF	ABOVE FINISH FLOOR
CF	CEILING FANS
CMS	CUBIC METERS PER SECOND
STATS	THERMOSTATS

KEY NOTE:

1. WALL EXHAUST FAN WITH SPRING OPERATED BACK-DRAFT DAMPER.
2. 200x150 (8x6) TRANSFER GRILLE. MOUNT GRILLE 800mm BELOW CEILING. COORDINATE LOCATION IN FIELD WITH EC.
3. UNIT HEATER SECURED FROM WALL. SEE DETAIL THIS SHEET.
4. THERMOSTAT MOUNTED 2M (6.5') AFF, STAT SHALL BE INTERLOCKED WITH CORRESPONDING EXHAUST FAN, SET FAN TO ENERGIZE ON RISE IN TEMPERATURE ABOVE 30°C (86°F).
5. (2) 1.5x1.2 (60x48) INTAKE LOUVERS 1 STACKED ON TOP OF THE OTHER. SEE ARCHITECTURAL ELEVATIONS FOR EXACT LOCATIONS HOLD BOTTOM LOUVER 600mm AFF. PROVIDE WEATHER PROOF LOUVERS W/ 50mm (2") WASHABLE FILTER AND SAND TRAP. SEE DETAIL 3 THIS SHEET.
6. ROOF MOUNTED EXHAUST FAN ON FACTORY CURB. EXTEND DUCT DOWN THROUGH CONCRETE ROOF SLAB. DUCT SIZE SHALL MATCH FAN THROAT.

ELECTRIC UNIT HEATER SCHEDULE

NO.	CMS	KW	F.A.T. °C	ELECT. CHAR.	MOUNTING
EH-2	0.200	2.6	38	380/1/50	WALL HUNG

NOTES:
1. UNIT HEATERS SHALL HAVE TAMPER PROOF INTEGRAL STATS.
2. COORDINATE LOCATION AND ORIENTATION IN FIELD.

EXHAUST FAN SCHEDULE

NO.	TYPE	FAN CMS	DRIVE	HP	SP mmH2O	ELECTRICAL DATA	SWITCH
EF-1	WALL	0.045	DIRECT	FRACT	13	220/1/50	W/ STAT
EF-2	ROOF	3.300	DIRECT	3	9.5	220/1/50	W/ STAT
EF-3	ROOF	3.300	DIRECT	3	9.5	220/1/50	W/ STAT
EF-4	ROOF	3.300	DIRECT	3	9.5	220/1/50	W/ STAT

NOTE:
1. FANS SHALL HAVE SPRING OPERATED BACK DRAFT DAMPER.

CEILING FAN

NO.	BLADE SIZE mm	BLADE SIZE IN	VOLTAGE	SWITCH	REMARKS
CF-1	1320	52	220/1/50	@ WALL	3 SPEED REVERSIBLE MOTOR

NOTES:
1. INSTALL FANS 2.5M AFF.
2. PROVIDE WITH OUT LIGHT FIXTURE.
3. PROVIDE WITH REMOTE MOUNTED ON-OFF SWITCH SHOWN ON ELECTRICAL DRAWINGS.

LINEAR DIMENSIONS SHOWN ARE IN MILLIMETERS (MM), UNLESS OTHERWISE NOTED

0 2000 4000
SCALE: 1:100

APPROVED:

A/E DESIGNER OF RECORD

SEAL:

US ARMY CORPS OF ENGINEERS
AFGHANISTAN ENGINEER DISTRICT

Mark	Description	Date	Appr.

Date: 02/23/10
Design file no.
Drawing code:
Rev: D
File name: AANSTORM-101
Plot date: 02/25/2010
Pat. code: 11450

Designed by: RML
Drn. by: JJN
Chkd. by: CJM
Reviewed by: MRS
Submitted by: BAKER

U.S. ARMY CORPS OF ENGINEERS
AFGHANISTAN ENGINEER DISTRICT
APO AE 96338

Michael Baker Jr., Inc.
A unit of Michael Baker Corporation
Airside Business Park
100 Airport Drive
Moon Township, PA 15108
www.mbakercorp.com

STANDARD DESIGN
VARIOUS PROJECTS
VARIOUS LOCATIONS, AFGHANISTAN

RMTC STORAGE

HVAC – FLOOR PLAN, SCHEDULES AND DETAILS

Sheet reference number:
M-101

POWER

- DISTRIBUTION PANELBOARD
- NEW PANELBOARD – SURFACE
- NEW PANELBOARD – RECESSED
- GENERATOR
- TRANSFORMER (DRAWN TO SIZE)
- JUNCTION BOX
- JUNCTION BOX – CEILING
- FUSIBLE SAFETY SWITCH
- MOTOR
- ^{M} MOTOR STARTING SWITCH – 220V, 20A RATED UNLESS OTHERWISE NOTED
- ELECTRIC WATER HEATER
- CEILING FAN – REFER TO SPECIFICATION SECTION 26 20 00

RECEPTACLES

- DUPLEX 20A TYPE CEE 7/7 "SCHUKO STYLE" UNSWITCHED RECEPTACLE
- ^{GF} DUPLEX 20A TYPE CEE 7/7 "SCHUKO STYLE" UNSWITCHED RECEPTACLES – 10mA GROUND FAULT INTERRUPTER TYPE
- ^{WP} DUPLEX 20A TYPE CEE 7/7 "SCHUKO STYLE" UNSWITCHED TYPE WITH WEATHERPROOF COVER – 10mA GROUND FAULT INTERRUPTER TYPE
- ^{EXP} DUPLEX 20A TYPE CEE 7/7 "SCHUKO STYLE" UNSWITCHED RECEPTACLES – EXPLOSION PROOF
- * INDICATES MOUNT DEVICE ABOVE COUNTERTOP OR AT 1070mm ABOVE FINISHED FLOOR WHERE NO COUNTER IS TO BE INSTALLED.

LIGHTNING PROTECTION

- AIR TERMINAL 20mm O.D. X 450mm SOLID COPPER, NICKEL PLATED ON ADHESIVE BASE
- EQ EQUIPMENT AIR TERMINAL
- TEST WELL WITH GROUND ROD(S)
- GROUND ROD
- G GROUND PLATE
- MAIN GROUND CONDUCTER CONCEALED WITHIN CONSTRUCTION
- MAIN GROUND CONDUCTOR EXPOSED ON EXPOSED ON BUILDING EXTERIOR SURFACE
- GROUND CONDUCTOR CAD WELDED TO GROUND CABLE OR EQUIPMENT
- GROUND ROD TRIPOD, SPACED 3 METERS APART.
- LEVEL TO LEVEL CABLE

LIGHTING

- LIGHTING FIXTURE – SEE FIXTURE SCHEDULE FOR MORE INFORMATION
- EMERGENCY LIGHTING FIXTURE – SEE FIXTURE SCHEDULE FOR MORE INFORMATION
- DOWNLIGHT
- LIGHTING FIXTURE ON NORMAL/EMERGENCY
- WALL MOUNTED LIGHT FIXTURE
- E EXIT SIGN – DIRECTIONAL ARROWS AS INDICATED ON DRAWINGS
- REMOTE HEAD FOR BATTERY PACK
- $ SINGLE POLE SWITCH – 20A RATED
- ^{3} 3–WAY SWITCH – 20A RATED
- ^{4} 4–WAY SWITCH – 20A RATED

- LC LIGHTING CONTACTOR
- POLE MOUNTED SITE LIGHTING FIXTURE– NUMBER OF FIXTURES PER POLE AS INDICATED ON DRAWINGS
- EXTERIOR DIRECTIONAL LIGHTING FIXTURE
- a SMALL CASE LETTERS REPRESENTS LAMP(S) / SWITCHES.

TELECOMMUNICATIONS

- ▼ TELEPHONE OUTLET(S) @ 45cm AFF. U.N.O. WITH 20mm RACEWAY TERMINATED TO TELEDATA TERMINAL BOARD.
- ▽ DATA OUTLET(S) @ 45cm AFF. U.N.O. WITH 20mm RACEWAY TERMINATED TO TELEDATA TERMINAL BOARD.

TELECOMMUNICATIONS (CONTINUED)

- COMBINATION TELEPHONE/DATA OUTLET(S) @ 45cm AFF. U.N.O. WITH 27mm RACEWAY TERMINATED TO TELEDATA TERMINAL AREA.
- WALL MTD. TELEPHONE OUTLET WITH 20mm RACEWAY TO TELEDATA TERMINAL BOARD.
- (x)T INDICATES NUMBER OF TELEPHONE OUTLET(S) AND ASSOCIATED CABLING
- (x)D INDICATES NUMBER OF DATA OUTLET(S) AND ASSOCIATED CABLING
- (x)TF INDICATES NUMBER OF TELEPHONE OUTLETS AND ASSOCIATED CABLING WITH 1 OUTLET AND CABLE DEDICATED FOR FAX

SINGLE LINE SYMBOLS

- SWITCH
- BREAKER
- FUSE
- TRANSFORMER
- GROUND
- CONTACT (NORMALLY OPEN)
- CONTACT (NORMALLY CLOSED)
- TRANSFER SWITCH
- CURRENT TRANSFORMER
- INDICATES NEW ELECTRICAL EQUIPMENT
- C INDICATES NEW CONTROL WIRING AND CONDUIT
- EQUIPMENT OUTLINE

MISCELLANEOUS

- BRANCH CIRCUIT WIRING, SURFACE MOUNTED ON WALLS
- BRANCH CIRCUIT WIRING – 6mm^{2}
- BRANCH CIRCUIT WIRING – UNDER FLOOR
- HOME RUN BACK TO PANEL
- CONDUIT TURNED DOWN
- CONDUIT TURNED UP
- LV LOW VOLTAGE WIRING AND CONDUIT
- ~ INDICATES CONTINUATION OF LINE

FIRE ALARM

- FACP FIRE ALARM CONTROL PANEL WITH BATTERY BACKUP
- F FIRE ALARM PULL STATION

FIRE ALARM (CONTINUED)

- F FIRE ALARM STROBE – WALL MOUNTED
- F FIRE ALARM AUDIBLE/STROBE – WALL MOUNTED
- F FIRE ALARM HORN/STROBE – WALL MOUNTED
- S SMOKE DETECTOR
- H HEAT DETECTOR CEILING MOUNTED
- D DUCT DETECTOR – PROVIDED BY EC, INSTALLED BY MC AND CONNECTED BY EC

DENOTATIONS & ABBREVIATIONS

AFF	ABOVE FINISHED FLOOR
C	CEILING MOUNTED
E	EMERGENCY
EC	ELECTRICAL CONTRACTOR
EPO	EMERGENCY POWER OFF
EXP	EXPLOSION PROOF
F	FIRE ALARM
FF	FLUSH FLOOR MOUNTED
FL	FLUORESCENT
FO	FIBER OPTIC
FSS	FUSED SAFETY SWITCH
GF	GROUND FAULT INTERRUPTER
GC	GENERAL CONTRACTOR
IG	ISOLATED GROUND
K	KEY
LV	LOW VOLTAGE
M	MOTOR
MC	MECHANICAL CONTRACTOR
NE	NORMAL/EMERGENCY
NFSS	NON–FUSED SAFETY SWITCH
PA	PAGING SYSTEM
PLC	PLUMBING CONTRACTOR
SL	SINGLE LINE
T	TELEPHONE

DENOTATIONS & ABBREVIATIONS (CONT.)

TP	TAMPER PROOF
UE	UNDERGROUND ELECTRIC
W	WALL MOUNTED
WP	WEATHERPROOF WITH GROUND FAULT INTERRUPTION
WT	WATER TIGHT

GENERAL PROJECT NOTES:

G1. UNLESS OTHERWISE NOTED, PROVIDE ALL EQUIPMENT SHOWN ON THE PLANS. THE ELECTRICAL CONTRACTOR SHALL COORDINATE ALL SYMBOLS SHOWN ON THE PLANS WITH THE SYMBOL LIST. IT SHALL BE THE RESPONSIBILITY OF THE CONTRACTOR TO VERIFY THE INTENT OF ANY SYMBOL THAT IS SHOWN ON THE PLANS AND NOT INDICATED ON THE SYMBOL LIST WITH THE ENGINEER PRIOR TO BID.

G2. THE CONTRACTOR SHALL VERIFY THE LOCATION OF ALL UNDERGROUND UTILITIES WITHIN THE CONSTRUCTION AREA THREE (3) WORKING DAYS NOTICE BEFORE COMMENCING DIGGING. NOTIFY THE LOCAL AUTHORITY HAVING JURISDICTION AND WAIT THE REQUIRED TIME BEFORE COMMENCING TO DIG.

G3. THE CONTRACTOR SHALL COORDINATE CONDUIT RUNS, LIGHTING FIXTURES AND OTHER EQUIPMENT LOCATIONS WITH THE OTHER TRADE CONTRACTORS TO AVOID CONFLICTS.

G4. WHERE VOLTAGES AND FREQUENCIES ON THE DRAWINGS AND IN THE SPECIFICATIONS DIFFER FROM THE LOCAL ONES, ALL WORK SHALL BE PERFORMED USING THE LOCAL VOLTAGES AND FREQUENCIES.

G5. THE MINIMUM WIRE SIZE ON THE PROJECT SHALL BE 4mm^{2}. THE MINIMUM CONDUIT SIZE SHALL BE 20mm. THE MINIMUM BREAKER SIZE SHALL BE 20 AMPS.

G6. THE CONTRACTOR SHALL PUT A MAXIMUM OF 6 DUPLEX RECEPTACLES ON A 20A SINGLE POLE CIRCUIT.

G7. WHERE THE 1010 SCOPE REVIEW, 1015 TECHNICAL REVIEW, DRAWINGS, AND SPECIFICATIONS DIFFER FROM AMERICAN CODES OR STANDARDS, THE 1010, 1015, DRAWINGS, AND SPECIFICATIONS SHALL RULE.

G8. ALL CONDUIT AND DEVICES SHALL BE SURFACE MOUNTED UNLESS OTHERWISE INDICATED.

G9. CONTRACTOR SHALL COORDINATE ALL WORK WITH ALL OTHER TRADES TO ENSURE ALL WORK IS COMPLETED IN A PROFESSIONAL, WORKMAN–LIKE MANNER.

APPROVED:

A/E DESIGNER OF RECORD

SEAL:

US ARMY CORPS OF ENGINEERS
AFGHANISTAN ENGINEER DISTRICT

Mark	Description	Date	Appr.	Mark	Description	Date	Appr.

Date: 2/23/10
Rev:
Design file no.
Drawing code:
File name: ANASTORE-E01
Plot date:
Plot scale:

Designed by: KJR
Drawn by: BJB
Checked by: JRG
Reviewed by: JRG
Submitted by: BAKER

U.S. ARMY CORPS OF ENGINEERS
AFGHANISTAN ENGINEER DISTRICT
APO AE 96338

Michael Baker Jr., Inc.
A unit of Michael Baker Corporation
Airside Business Park
100 Airside Drive
Moon Township PA 15108
www.mbakercorp.com

STANDARD DESIGN
VARIOUS PROJECTS
VARIOUS LOCATIONS, AFGHANISTAN

RMTC STORAGE
ELECTRICAL SYMBOLS & ABBREVIATIONS

Sheet reference number:
E–001

C:\DOCUMENTS AND SETTINGS\W2AENRAD\DESKTOP\STANDARD\ANASTORE–001.DWG

GENERAL NOTES:

1. REFER TO DRAWING #E-001 FOR THE ELECTRICAL SYMBOLS LIST.
2. EXIT SIGNS SHALL BE WIRED AHEAD OF ANY LOCAL SWITCHING ON CIRCUITS. SEE WIRING DIAGRAM DETAIL 8, ON DRAWING #E-501.
3. REFER TO DRAWING #E-601 FOR THE LIGHTING FIXTURE SCHEDULE.
4. REFER TO DRAWING #E-501 FOR THE POWER RISER.
5. REFER TO DRAWING #E-602 FOR PANEL SCHEDULES.
6. LIGHT FIXTURES INDICATED AS EMERGENCY SHALL BE PROVIDED WITH A BATTERY BACKUP BALLAST. WIRING DIAGRAM DETAIL 7, ON DRAWING #E-501.

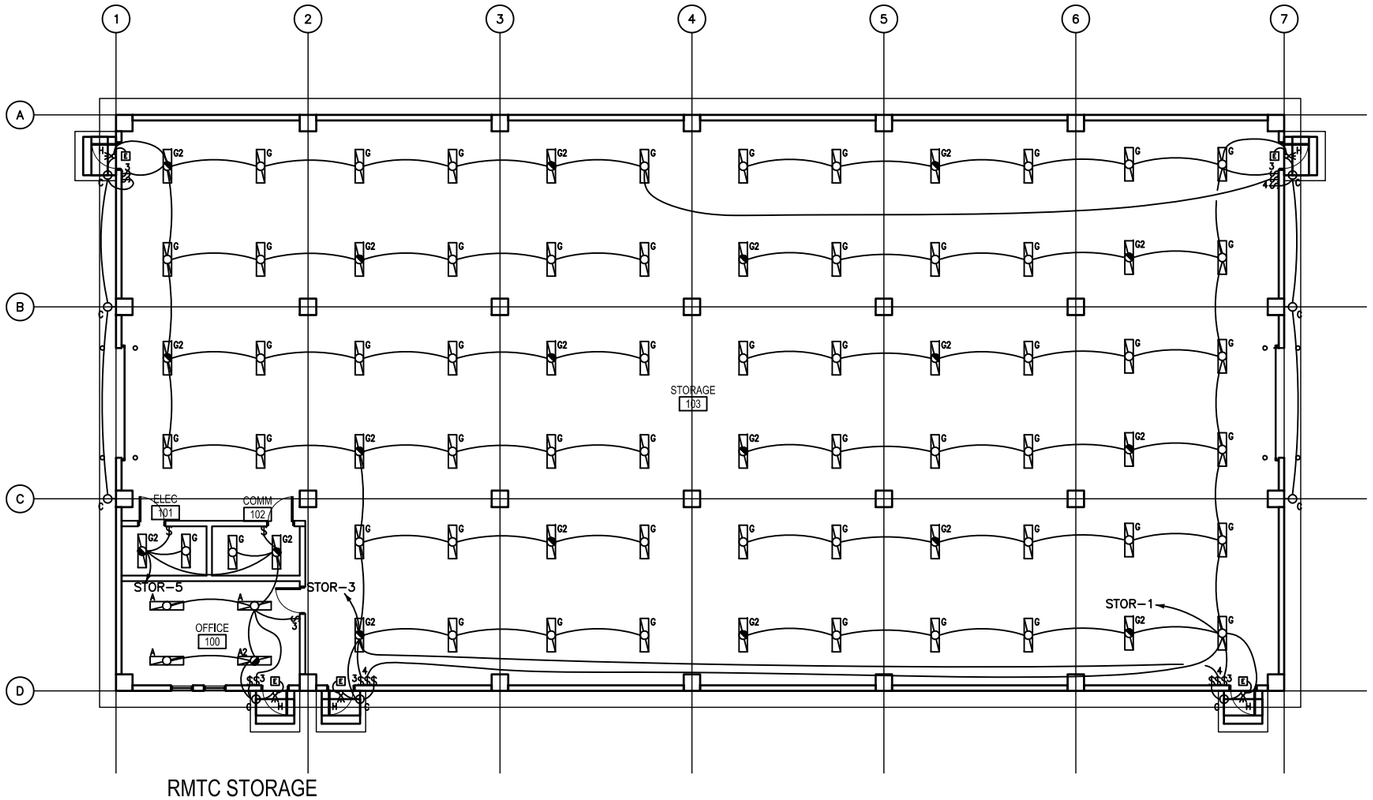

RMTC STORAGE
FLOOR PLAN - LIGHTING

1
E-101

SCALE: 1:100

0 2000 4000
SCALE: 1:100

APPROVED:

A/E DESIGNER OF RECORD

SEAL:

US ARMY CORPS OF ENGINEERS
AFGHANISTAN ENGINEER DISTRICT

Mark	Description	Date	Appr.	Mark	Description	Date	Appr.

Rev: 0

Date: 2/23/10
Design file no.
Drawing code:
File name:
Plot date:
Plot scale:

Designed by: KMT
Drawn by: BJB
Checked by: JRG
Reviewed by: JRG
Submitted by: BAKER

U.S. ARMY CORPS OF ENGINEERS
AFGHANISTAN ENGINEER DISTRICT
APO AE 96338

Michael Baker Jr, Inc.
A unit of Michael Baker Corporation
Airside Business Park
100 Airport Drive
Moon Township, PA 15108
www.mbakercorp.com

STANDARD DESIGN
VARIOUS PROJECTS
VARIOUS LOCATIONS, AFGHANISTAN

RMTC STORAGE
ELECTRICAL LIGHTING PLAN

Sheet reference number:
E-101

GENERAL NOTES:

1. REFER TO DRAWING #E-001 FOR THE ELECTRICAL SYMBOLS LIST.
2. REFER TO DRAWING #E-501 FOR THE POWER RISER.
3. REFER TO DRAWING #E-602 FOR PANEL SCHEDULES.
4. COORDINATE EXACT MOUNTING LOCATION OF DISCONNECTING MEANS FOR MECHANICAL AND PLUMBING EQUIPMENT IN THE FIELD.
5. FUSIBLE SAFETY SWITCHES THAT ARE NOT OTHERWISE IDENTIFIED SHALL BE 380V, 1P, 30A FUSED SAFETY SWITCHES WITH 20A FUSES.

NUMBERED NOTES:

1. PANEL STOR.
2. PROVIDE A 1200mm X 2400mm SHEET OF PLYWOOD PAINTED WITH FIRE RESISTANTPAINT FOR MOUNTING TELECOMMUNICATIONS EQUIPMENT.
3. PROVIDE CONDUIT STUB UP IN THE ROOM FOR INCOMING TELECOMMUNICATIONS SERVICES FROM THE CENTRAL COMMUNICATIONS SYSTEM IN THE GARRISON.
4. PROVIDE POWER CONNECTION TO EXHAUST FANS. SEE DRAWINGS #M-101 AND #E-602 FOR MORE INFORMATION.
5. PROVIDE POWER CONNECTION TO ELECTRIC UNIT HEATER #2. SEE DRAWINGS #M-101 AND #E-602 FOR MORE INFORMATION.
6. CONTRACTOR SHALL PROVIDE WEATHER PROOF RECEPTACLE AT 18" ABOVE FINISHED ROOF MOUNTED TO MECHANICAL EQUIPMENT HOUSING. RECEPTACLE SHALL BE WITHIN 7M OF ALL ROOFTOP EQUIPMENT.
7. PROVIDE 220V, 1P, 30A FUSED SAFETY SWITCH WITH 30A FUSES.

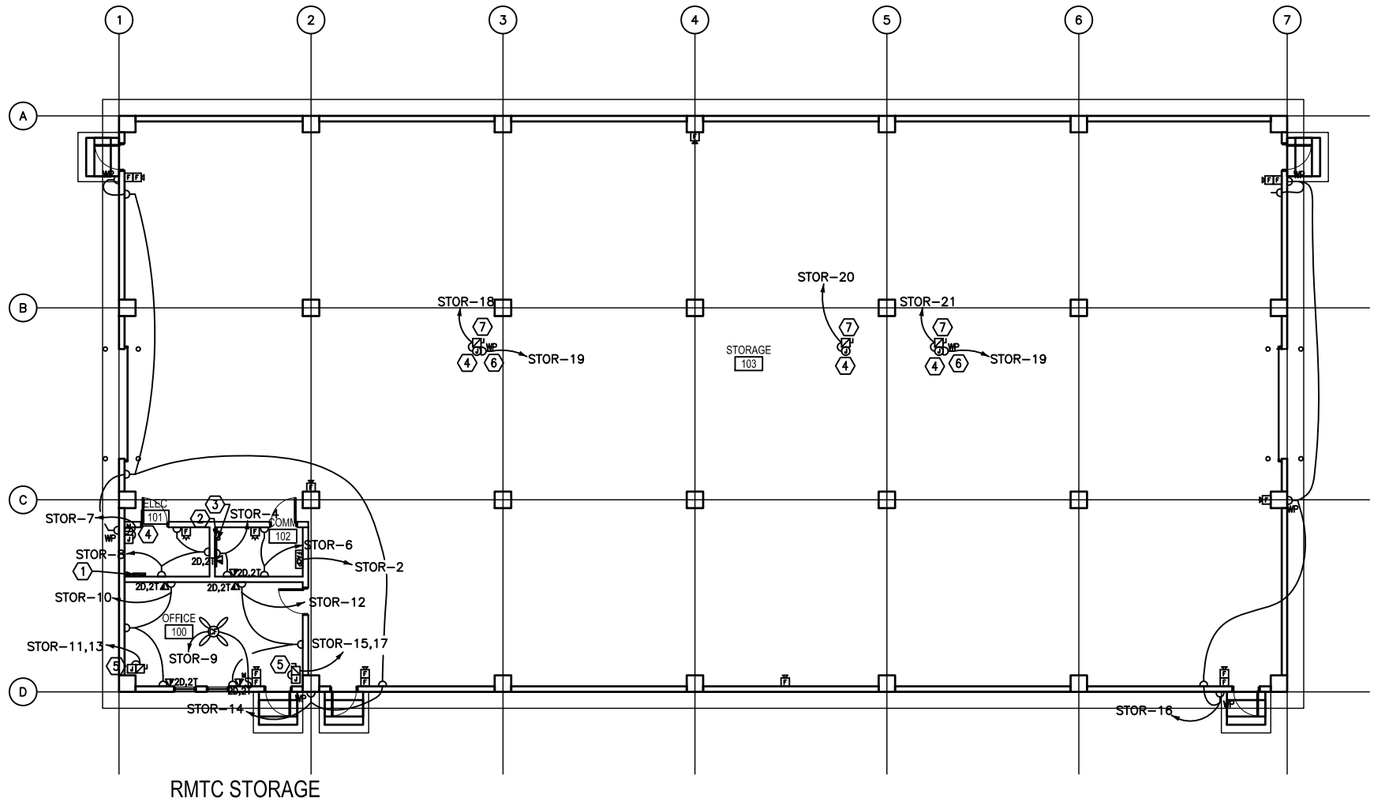

RMTC STORAGE
FLOOR PLAN - POWER & SYSTEMS

1 / E-102

SCALE: 1:100

0 2000 4000
SCALE: 1:100

APPROVED:

A/E DESIGNER OF RECORD

SEAL:

US ARMY CORPS OF ENGINEERS
AFGHANISTAN ENGINEER DISTRICT

Mark	Description	Date	Appr.

Mark	Description	Date	Appr.

Rev: 0

Date: 2/23/10
Design file no.
Drawing code:
File name:
Plot date:
Plot scale:

Designed by: KAT
Drawn by: BJB
Reviewed by: JRG
Submitted by: BAKER

U.S. ARMY CORPS OF ENGINEERS
AFGHANISTAN ENGINEER DISTRICT
APO AE 96338

Michael Baker Jr, Inc.
A unit of Michael Baker Corporation
Airside Business Park
100 Airport Drive
Moon Township, PA 15108
www.mbakercorp.com

STANDARD DESIGN
VARIOUS PROJECTS
VARIOUS LOCATIONS, AFGHANISTAN

RMTC STORAGE

ELECTRICAL POWER AND SYSTEMS PLAN

Sheet reference number:
E-102

GENERAL NOTES:

1. REFER TO DRAWING #E-001 FOR THE ELECTRICAL SYMBOLS LIST.

NUMBERED NOTES:

1. (1) 120.0mm² BARE, TINNED, COPPER COUNTERPOISE GROUND 700mm BELOW GRADE.
2. INSTALL DOWN CONDUCTOR IN 25mm SCHEDULE 80 PVC CONDUIT TO 20mm DIAMETER X 3 METERS SOLID COPPER TINNED GROUND ROD. (TYPICAL)
3. CADWELD TO BUILDING STRUCTURE AT 18 METERS ON CENTER AROUND THE ENTIRE PERIMETER OF THE BUILDING. (TYPICAL)
4. 120mm² LIGHTNING PROTECTION CABLE.
5. AIR TERMINAL. TERMINALS SHALL BE PLACED AT A MAXIMUM OF 6M ON CENTER PER NFPA 780 PARA. 7.8.2.1, AND WITHIN 0.6M OF RIDGE ENDS PER NFPA 780 PARA. 4.8 (TYPICAL)
6. 700mm MIN. (TYP) BETWEEN FOUNDATION AND GROUND LOOP.
7. AIR TERMINAL ON ROOFTOP FAN.

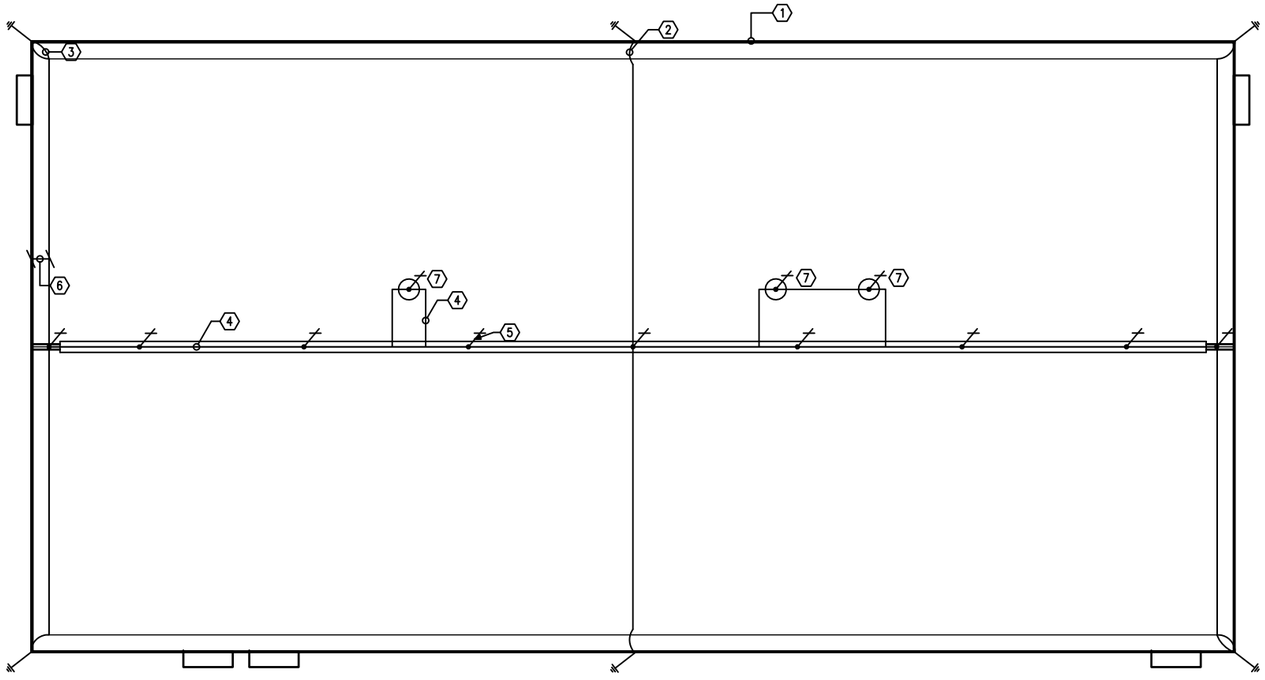

1 / E-103 RMTC STORAGE
FLOOR PLAN - LIGHTNING PROTECTION
SCALE: 1:100

0 2000 4000
SCALE: 1:100

APPROVED:

A/E DESIGNER OF RECORD

SEAL:

US ARMY CORPS OF ENGINEERS
AFGHANISTAN ENGINEER DISTRICT

Mark	Description	Date	Appr.

Mark	Description	Date	Appr.

Date: 2/23/10 | Rev: 0
Design file no.
Drawing code:
File name:
Plot date:
Plot scale:

Designed by: KJR | Drawn by: BJB | Chd by: JRG
Reviewed by: JRG | Submitted by: BAKER

U.S. ARMY CORPS OF ENGINEERS
AFGHANISTAN ENGINEER DISTRICT
APO, AE 96338

Michael Baker Jr., Inc
A unit of Michael Baker Corporation
Airside Business Park
100 Airside Drive
Moon Township, PA 15108
www.mbakercorp.com

STANDARD DESIGN
VARIOUS PROJECTS
VARIOUS LOCATIONS, AFGHANISTAN

RMTC STORAGE
ELECTRICAL LIGHTNING PROTECTION PLAN

Sheet reference number:
E-103

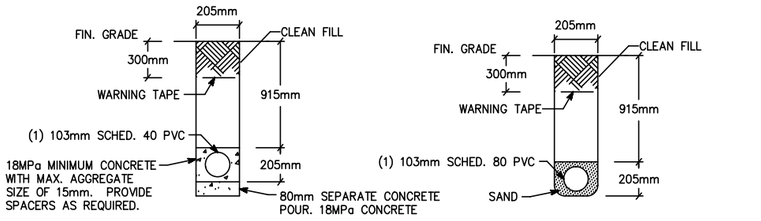

NOTE: PVC CONDUIT SHALL BE DIRECT BURIED SCHEDULE 80 FOR NO TRAFFIC AREAS AND CONCRETE-ENCASED SCHEDULE 40 FOR UNDER ROADWAYS OR TRAFFIC AREAS.

1 / E-501 TYPICAL DUCT BANK DETAILS FOR CONDUIT IN SAND OR CONCRETE

SCALE: N.T.S.

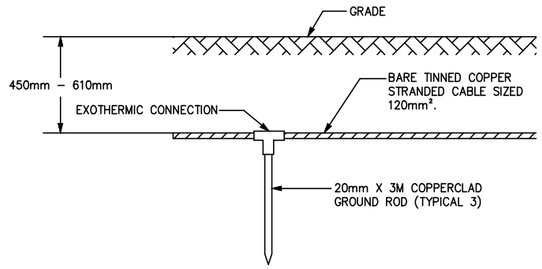

2 / E-501 GROUND TRIPOD SYSTEM DETAIL - ELEVATION

SCALE: N.T.S.

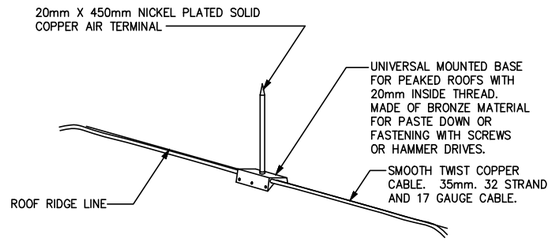

3 / E-501 LIGHTNING PROTECTION AIR TERMINAL DETAIL

SCALE: N.T.S.

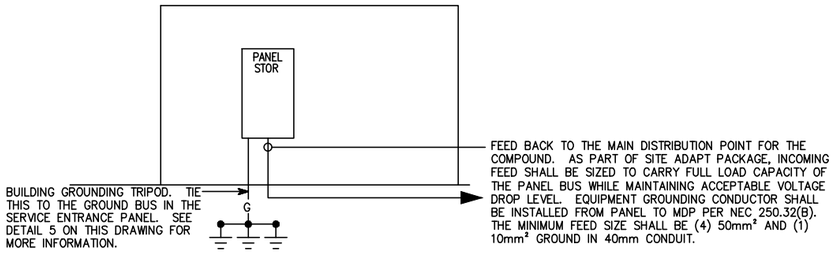

4 / E-501 STOR RISER DIAGRAM

SCALE: N.T.S.

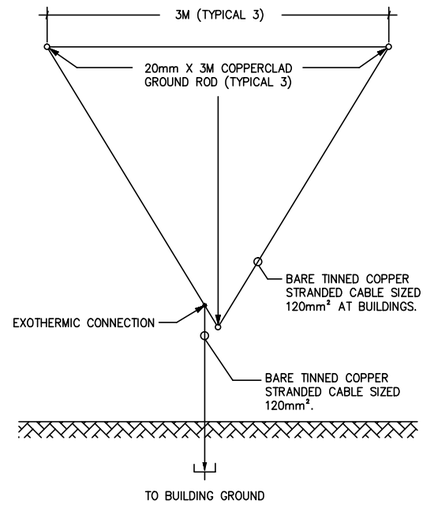

5 / E-501 GROUND TRIPOD SYSTEM DETAIL - PLAN

SCALE: N.T.S.

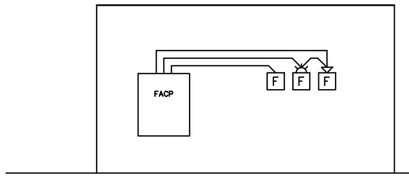

6 / E-501 TYPICAL ONE STORY FIRE ALARM RISER

SCALE: N.T.S.

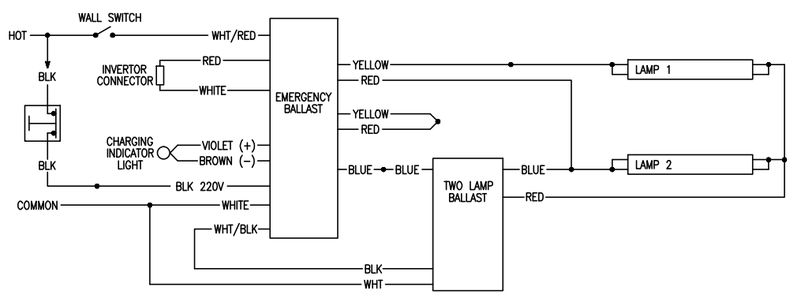

7 / E-501 EMERGENCY FIXTURE WIRING DIAGRAM

SCALE: N.T.S.

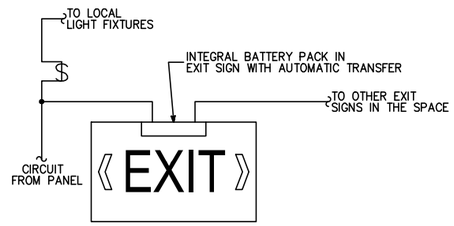

8 / E-501 EXIT SIGN WIRING DIAGRAM

SCALE: N.T.S.

APPROVED:

A/E DESIGNER OF RECORD

SEAL:

US ARMY CORPS OF ENGINEERS
AFGHANISTAN ENGINEER DISTRICT

Mark	Description	Date	Appr.

Rev:

Date: 2/23/10
Design file no.
Drawing code:
File name: ANASTORE-501
Plot date:
Plot scale:

Designed by: KJR
Drn. by: BJB
Chkd by: JRG
Reviewed by: JRG
Submitted by: BAKER

U.S. ARMY CORPS OF ENGINEERS
AFGHANISTAN ENGINEER DISTRICT
APO AE 96338

Michael Baker Jr, Inc.
A unit of Michael Baker Corporation
Airside Business Park
100 Airside Drive
Moon Township PA 15108
www.mbakercorp.com

STANDARD DESIGN
VARIOUS PROJECTS
VARIOUS LOCATIONS, AFGHANISTAN

RMTC STORAGE
ELECTRICAL DETAILS

Sheet reference number:
E-501

C:\DOCUMENTS AND SETTINGS\WZAENRAD\DESKTOP\STANDARD\ANASTORE-501.DWG

Ⓐ LARGER OF THE TWO SIZES GIVEN IN THE TABLES BELOW	
GROUNDING ELECTRODE CONDUCTOR (BASED ON AIC RATING)	
AIC RATING OF SERVICE EQUIPMENT	NECESSARY GROUNDING ELECTRODE CONDUCTOR SIZE
10K	(1) 35mm²
14K	(1) 50mm²
18K	(1) 70mm²
22K	(1) 70mm²
25K	(1) 70mm²
30K	(1) 95mm²
35K	(1) 120mm²
42K	(1) 150mm²
65K	(1) 185mm²
100K	(1) 300mm²
125K	(2) 185mm²
200K	(2) 300mm²
GROUNDING ELECTRODE CONDUCTOR (BASED ON NEC TABLE 250.66)	
SIZE OF LARGEST UNGROUNDED SERVICE CONDUCTOR OR EQUIVALENT AREA FOR PARALLEL CONDUCTORS	NECESSARY GROUNDING ELECTRODE CONDUCTOR SIZE
350 kcmil OR SMALLER	35mm²
OVER 350 kcmil TO 600 kcmil	70mm²
OVER 600 kcmil TO 1100 kcmil	70mm²
OVER 1100 kcmil	95mm²
NOTE: ALL SIZES ARE BASED ON COPPER CONDUCTORS.	

Ⓑ EQUIPMENT GROUNDING CONDUCTOR	
RATING OR SETTING OF AUTOMATIC OVERCURRENT DEVICE IN CIRCUIT AHEAD OF EQUIPMENT, CONDUIT, ETC. NOT EXCEEDING (AMPERES)	NECESSARY EQUIPMENT GROUNDING CONDUCTOR SIZE
15	2.5mm²
20	4.0mm²
30	6.0mm²
40	6.0mm²
60	6.0mm²
100	10mm²
200	16mm²
300	25mm²
400	25mm²
500	35mm²
600	50mm²
800	70mm²
1000	70mm²
1200	95mm²
1600	120mm²
2000	150mm²
2500	185mm²
3000	240mm²
4000	300mm²
5000	400mm²
6000	400mm²
NOTE: ALL SIZES ARE BASED ON COPPER CONDUCTORS.	

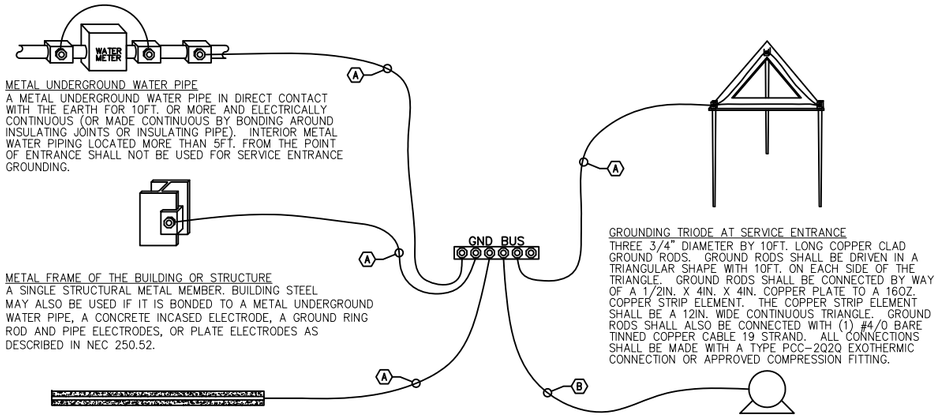

METAL UNDERGROUND WATER PIPE
A METAL UNDERGROUND WATER PIPE IN DIRECT CONTACT WITH THE EARTH FOR 10FT. OR MORE AND ELECTRICALLY CONTINUOUS (OR MADE CONTINUOUS BY BONDING AROUND INSULATING JOINTS OR INSULATING PIPE). INTERIOR METAL WATER PIPING LOCATED MORE THAN 5FT. FROM THE POINT OF ENTRANCE SHALL NOT BE USED FOR SERVICE ENTRANCE GROUNDING.

METAL FRAME OF THE BUILDING OR STRUCTURE
A SINGLE STRUCTURAL METAL MEMBER. BUILDING STEEL MAY ALSO BE USED IF IT IS BONDED TO A METAL UNDERGROUND WATER PIPE, A CONCRETE INCASED ELECTRODE, A GROUND RING ROD AND PIPE ELECTRODES, OR PLATE ELECTRODES AS DESCRIBED IN NEC 250.52.

CONCRETE ENCASED ELECTRODE
AN ELECTRODE ENCASED BY AT LEAST 2IN. OF CONCRETE , LOCATED WITHIN AND NEAR THE BOTTOM OF A CONCRETE FOUNDATION OR FOOTING THAT IS IN DIRECT CONTACT WITH THE EARTH, CONSISTING OF AT LEAST 20FT. OF ONE OR MORE BARE OR ZINC GALVANIZED OR OTHER ELECTRICALLY CONDUCTIVE COATED STEEL REINFORCING BARS OR RODS OF NOT LESS THAN 1/2" DIAMETER OR BARE COPPER CONDUCTOR NOT SMALLER THAN 4AWG.

GROUNDING TRIODE AT SERVICE ENTRANCE
THREE 3/4" DIAMETER BY 10FT. LONG COPPER CLAD GROUND RODS. GROUND RODS SHALL BE DRIVEN IN A TRIANGULAR SHAPE WITH 10FT. ON EACH SIDE OF THE TRIANGLE. GROUND RODS SHALL BE CONNECTED BY WAY OF A 1/2IN. X 4IN. X 4IN. COPPER PLATE TO A 16OZ. COPPER STRIP ELEMENT. THE COPPER STRIP ELEMENT SHALL BE A 12IN. WIDE CONTINUOUS TRIANGLE. GROUND RODS SHALL ALSO BE CONNECTED WITH (1) #4/0 BARE TINNED COPPER CABLE 19 STRAND. ALL CONNECTIONS SHALL BE MADE WITH A TYPE PCC-2Q2Q EXOTHERMIC CONNECTION OR APPROVED COMPRESSION FITTING.

LOAD OR DOWNSTREAM PANEL
ALL LOADS IN THE BUILDING SHALL HAVE AN EQUIPMENT GROUNDING CONDUCTOR PULLED TO THEM.

1 / E-502 SERVICE ENTRANCE GROUNDING DETAIL
SCALE: N.T.S.

US ARMY CORPS OF ENGINEERS
AFGHANISTAN ENGINEER DISTRICT

Mark	Description	Date	Appr.

Mark	Description	Date	Appr.

Date: 2/23/10 Rev: 0
Design file no.
Drawing code:
File name:
Plot date:
Plot scale:

Designed by: KJK
Drawn by: BJB
Ckd by: JRG
Reviewed by: JRG
Submitted by: BAKER

U.S. ARMY CORPS OF ENGINEERS
AFGHANISTAN ENGINEER DISTRICT
APO AE 96338

Michael Baker Jr., Inc.
A unit of Michael Baker Corporation
Airside Business Park
100 Airport Drive
Moon Township, PA 15108
www.mbakercorp.com

APPROVED:

A/E DESIGNER OF RECORD

SEAL:

STANDARD DESIGN
VARIOUS PROJECTS
VARIOUS LOCATIONS, AFGHANISTAN

RMTC STORAGE
ELECTRICAL DETAILS

Sheet reference number:
E-502

LIGHT FIXTURE SCHEDULE

FIXTURE MARK	STYLE NUMBER AND TYPE	NUMBER AND TYPE OF LAMPS	VOLTAGE	MOUNTING	NOTES
A	PARABOLIC SURFACE/PENDANT MOUNTED 300MM X 1200MM FLUORESCENT FIXTURE WITH ELECTRONIC BALLAST	(2) 32W 3500K	220V – 1ø 50HZ	SURFACE MOUNTED	FURNISHED WITH ELECTRONIC BALLAST. PARABOLIC LOUVER SHALL BE SPECULAR LENS IRADESCENCE TYPE.
A2	SAME AS FIXTURE 'A' WITH EMERGENCY BALLAST	(2) 32W 3500K	220V – 1ø 50HZ	SURFACE MOUNTED	FURNISHED WITH ELECTRONIC BALLAST. PARABOLIC LOUVER SHALL BE SPECULAR LENS IRADESCENCE TYPE. EMERGENCY BALLAST SELF TEST.
C	INCANDESCENT ONE PIECE W/ APPROVED LENS STABILIZED HIGH IMPACT POLY CARBONATE.	(1) A19 – 100W INCANDESCENT	220V – 1ø 50HZ	WALL MOUNTED ABOVE EXTERIOR DOORS	
G	WRAP AROUND SURFACE/PENDANT MOUNTED FLUORESCENT FIXTURE WITH PRISMATIC ACRYLIC LENS AND ELECTRONIC BALLAST	(2) 32W 3500K	220V – 1ø 50HZ	SURFACE MOUNTED	FURNISHED WITH ELECTRONIC BALLAST, VIRGIN ACRYLIC WRAP AROUND LENS.
G2	SAME AS FIXTURE 'G' WITH EMERGENCY BALLAST	(2) 32W 3500K	220V – 1ø 50HZ	SURFACE MOUNTED	FURNISHED WITH ELECTRONIC BALLAST, VIRGIN ACRYLIC WRAP AROUND LENS. EMERGENCY BALLAST WITH SELF TEST SWITCH.
H	REMOTE HEAD EXTERIOR LIGHT HEAD POWERED FROM EXIT SIGN BATTERY– 12V DOUBLE HEAD CORROSION RESISTANT WITH UL34 WEATHERPROOF CONSTRUCTION	(2) 12W/12V HALOGEN LAMP	12V – 1ø 50HZ	EXTERIOR WALL MOUNTED AT TOP OF DOOR HEIGHT	
[E]	UNIVERSAL MOUNT ENGINEER GRADE THERMOPLASTIC HOUSING EXIT SIGN WITH LED LAMPS, RED LETTERS 6" IN HEIGHT WITH ARROWS AS INDICATED, WITH 12V CADMIUM BATTERY WITH REMOTE HEAD CAPABILITY	LED LAMPS	220V – 1ø 50HZ	UNIVERSAL MOUNTING	

FIXTURE MARK 'A'

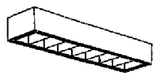

FIXTURE MARK 'C'

FIXTURE MARK 'G'

FIXTURE MARK 'H'

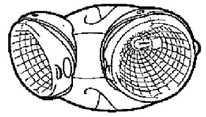

FIXTURE MARK '[E]'

APPROVED:

A/E DESIGNER OF RECORD

SEAL:

US ARMY CORPS OF ENGINEERS
AFGHANISTAN ENGINEER DISTRICT

Mark	Description	Date	Appr.

Mark	Description	Date	Appr.

U.S. ARMY CORPS OF ENGINEERS
AFGHANISTAN ENGINEER DISTRICT
APO AE 96338

Michael Baker Jr, Inc.
A unit of Michael Baker Corporation
Airside Business Park
100 Airside Drive
Moon Township PA 15108
www.mbakercorp.com

Designed by: KJR	Date: 2/23/10
Dwn. by: BJB	Chkd by: JRG
Reviewed by: JRG	Design file no.
Submitted by: BAKER	Drawing code:
	File name: ANASTORE-601
	Plot date:
	Plot scale:

STANDARD DESIGN
VARIOUS LOCATIONS, AFGHANISTAN

RMTC STORAGE

ELECTRICAL LIGHTING FIXTURE SCHEDULE

Sheet reference number:
E–601

C:\DOCUMENTS AND SETTINGS\N2AENRAD\DESKTOP\STANDARD\ANASTORE-601.DWG

PANELBOARD STOR SURFACE MOUNTED
AMP. MAIN LUGS (OR) 100 AMP. MAIN BREAKER W/ 100 AMP. TRIP
CIRCUIT BREAKER TYPE 380/220 VOLTS 3 PHASE 4 WIRE 50 HZ 100 AMP. BUS

CKT. NO.	TRIP AMPS	NO. POLES	WIRE MM 2	GND MM2	CONDUIT MM	LOAD SERVED	LOAD-KVA AØ	LOAD-KVA BØ	LOAD-KVA CØ	LOAD-KVA AØ	LOAD-KVA BØ	LOAD-KVA CØ	LOAD SERVED	CONDUIT MM	GND MM2	WIRE MM2	NO. POLES	TRIP AMPS	CKT. NO.
1	20	1	4.0	4.0	20	LIGHTING – RM 103	2.6			0.5			FACP – RM 102	20	4.0	4.0	1	20	2
3	20	1	4.0	4.0	20	LIGHTING – RM 103, EXTERIOR		2.3			0.6		RECEPTACLES – RM 102	20	4.0	4.0	1	20	4
5	20	1	4.0	4.0	20	LIGHTING – RM 100–102			0.7			0.4	RECEPTACLES – RM 102	20	4.0	4.0	1	20	6
7	20	1	4.0	4.0	20	EXHAUST FAN #1 – RM 101	0.5			0.6			RECEPTACLES – RM 101	20	4.0	4.0	1	20	8
9	20	1	4.0	4.0	20	CEILING FAN – RM 100		0.3			0.6		RECEPTACLES – RM 100	20	4.0	4.0	1	20	10
11	20	2	4.0	4.0	20	ELECTRIC HEAT #2 – RM 100			1.3			0.6	RECEPTACLES – RM 100	20	4.0	4.0	1	20	12
13							1.3			1.2			RECEPTACLES – 103, EXTERIOR	20	4.0	4.0	1	20	14
15	20	2	4.0	4.0	20	ELECTRIC HEAT #2 – RM 100		1.3			1.0		RECEPTACLES – 103, EXTERIOR	20	4.0	4.0	1	20	16
17									1.3			3.9	EXHAUST FAN #2 – RM 103	20	6.0	6.0	1	30	18
19	20	1	4.0	4.0	20	ROOFTOP RECEPTACLES	0.4			3.9			EXHAUST FAN #3 – RM 104	20	6.0	6.0	1	30	20
21	30	1	6.0	6.0	20	EXHAUST FAN #4 – RM 104		3.9					SPARE				1	20	22
23	20	1				SPARE							SPARE				1	20	24
							4.8	7.8	3.3	6.2	2.2	4.9	TOTAL CONN. LOAD PER PHASE (KVA): AØ 11.0 BØ 10.0 CØ 8.2						

TOTAL CONN. LOAD 29.2 KVA. 70 % DEMAND = ESTIMATED DEMAND LOAD 20.44

• MAIN BREAKER SHALL BE 3P EARTH GROUND TYPE

APPROVED:

A/E DESIGNER OF RECORD

SEAL:

US ARMY CORPS OF ENGINEERS
AFGHANISTAN ENGINEER DISTRICT

Mark	Description	Date	Appr.	Mark	Description	Date	Appr.

Date: 2/23/10 Rev: 0
Design file no.
Drawing code:
File name:
Plot date:
Plot scale:

Designed by: KJK
Drawn by: BJB
Checked by: JRG
Reviewed by: JRG
Submitted by: BAKER

U.S. ARMY CORPS OF ENGINEERS
AFGHANISTAN ENGINEER DISTRICT
APO AE 96338

Michael Baker Jr., Inc.
A unit of Michael Baker Corporation
Airside Business Park
100 Airport Drive
Moon Township, PA 15108
www.mbakercorp.com

STANDARD DESIGN
VARIOUS PROJECTS
VARIOUS LOCATIONS, AFGHANISTAN

RMTC STORAGE
ELECTRICAL PANEL SCHEDULES

Sheet reference number:
E–602

AFGHAN NATIONAL POLICE

STANDARD BUILDING DESIGNS

SECURE STORAGE

SHEET INDEX

G1 COVER SHEET

S1 GENERAL NOTES
S2 DESIGN CRITERIA
S3 FOUNDATION PLAN
S4 ROOF FRAMING PLAN
S5 SECTIONS GENERAL NOTES
S6 TYPICAL DETAILS

A1 FLOOR AND ROOF PLANS
A2 EXTERIOR ELEVATIONS, BUILDING SECTIONS, AND WALL SECTIONS
A3 DOOR & WINDOW TYPES & DETAILS

M1 HVAC PLAN

E0 ELECTRICAL SYMBOLS AND ABBREVIATIONS
E1 LIGHTING AND POWER PLAN
E2 DETAILS
E3 LIGHT FIXTURE SCHEDULE
E4 PANEL SCHEDULES AND RISER DIAGRAM

US Army Corps of Engineers
Afghanistan Engineer District

SYMBOL	DESCRIPTION	DATE	APP.

DESIGNED BY: JDS
DWN BY: JDS
CHK BY: JDS
DATE: 09-30-09
SUBMITTED BY: BAKER
FILE NO.: ANPSDG-001XXX

Michael Baker Jr., Inc
A unit of Michael Baker Corporation
Airside Business Park
100 Airside Drive
Moon Township, PA 15108
www.mbakercorp.com

AFGHAN NATIONAL POLICE
STANDARD DESIGN
SECURE STORAGE

COVER SHEET

SHEET REFERENCE NUMBER:
G1

100% SUBMISSION

STRUCTURAL ABBREVIATIONS:

ACI	AMERICAN CONCRETE INSTITUTE
AISC	AMERICAN INSTITUTE OF STEEL CONSTRUCTION
ALT	ALTERNATE
ASTM	AMERICAN SOCIETY FOR TESTING AND MATERIALS
AWS	AMERICAN WELDING SOCIETY
ARCH	ARCHITECTURAL
B	BOTTOM
BLDG	BUILDING
BOTT	BOTTOM
℄	CENTER LINE
CFMF	COLD FORM METAL FRAME
CFS	COLD FORMED STEEL
CIP	CAST IN PLACE
CIPL	CAST-IN-PLACE LINTEL
CJ	CONTROL JOINT
CLR	CLEAR
CMU	CONCRETE MASONRY UNIT
COEFF	COEFFICIENT
COL	COLUMN
CONC	CONCRETE
CONT	CONTINUOUS
COORD	COORDINATE
CSJ	CONSTRUCTION JOINT
CTJ	CONTROL JOINT
DIA	DIAMETER
DIAG	DIAGONAL
DIM	DIMENSION
DWG	DRAWING
DWL	DOWEL
EA	EACH
ELEC	ELECTRICAL
ELEV	ELEVATION
EMBED	EMBEDMENT
EQUIV	EQUIVALENT
ETC	ET CETERA
EW	EACH WAY
EXT	EXTERIOR
FTG	FOOTING
GA	GAUGE
HORIZ	HORIZONTAL
HRS	HOURS
IBC	INTERNATIONAL BUILDING CODE
INT	INTERIOR
Kg	KILOGRAM
KIP	KIPS (1 KIP = 1,000 POUNDS)
kN	KILONEWTON
kPa	KILOPASCAL
L#	ANGLE (# INDICATES SIZE)
LLV	LONG LEG VERTICAL
M	METER
MAX	MAXIMUM
MBM	METAL BUILDING MANUFACTURER
MECH	MECHANICAL
MFG	MANUFACTURER
MID	MIDDLE
MIN	MINIMUM
MISC	MISCELLANEOUS
MM	MILLIMETER
MPa	MEGAPASCAL
MTL	METAL
MWFRS	MAIN WIND FORCE RESISTING SYSTEM
N	NEWTON
N	NORTH
N/A	NOT APPLICABLE
#	NUMBER SYMBOL FOR REBAR SIZE
NTS	NOT TO SCALE
OC	ON CENTER
OPNG	OPENING
P℄ or PL	PLATE
PRE-ENG	PRE-ENGINEERED
REINF	REINFORCED
REQ'D	REQUIRED
SIM	SIMILAR
SPECS	SPECIFICATIONS
STD	STANDARD
STRUCT	STRUCTURAL
T	TOP
T/	TOP OF
T/ELEV	TOP ELEVATION
T&B	TOP AND BOTTOM
THK	THICK
TM	TRADE MARK
TYP	TYPICAL
UON	UNLESS OTHERWISE NOTED
VERT	VERTICAL
W	WIDTH
W/	WITH

GENERAL NOTES

1.0 THIS PROJECT HAS BEEN DESIGNED FOR THE WEIGHTS AND MATERIALS INDICATED ON THE SHEETS AND FOR THE LIVE LOADS INDICATED IN THE DESIGN DATA. IT IS THE CONTRACTOR'S RESPONSIBILITY TO DETERMINE ALLOWABLE CONSTRUCTION LOADS AND TO PROVIDE PROPER DESIGN AND CONSTRUCTION OF FALSEWORK, FORMWORK, STAGING, BRACING, SHEETING AND SHORING, ETC.

1.1 COORDINATE THESE SHEETS WITH THE ARCHITECTURAL, MECHANICAL, ELECTRICAL, PLUMBING, AND CIVIL SHEETS. ALL DIMENSIONS SHOWN ON THE SHEETS ARE MILLIMETERS UNLESS NOTED OTHERWISE.

1.2 THE CONTRACTOR SHALL VERIFY AND COORDINATE ALL FLOOR AND ROOF OPENING SIZES AND LOCATIONS, EQUIPMENT PAD SIZES AND LOCATIONS, ANCHOR BOLT LAYOUTS, ETC WITH EQUIPMENT SELECTED. THE CONTRACTOR SHALL MAKE ANY REQUIRED MODIFICATIONS AT NO ADDITIONAL COST.

1.3 THE CONTRACTOR SHALL REFER TO THE ARCHITECTURAL, MECHANICAL, ELECTRICAL AND PLUMBING SHEETS FOR SLEEVES, CURBS, INSERTS OR OPENINGS, ETC. NOT HEREIN INDICATED.

1.4 SLAB OPENINGS SMALLER THAN 250mm DIA TO BE CORE DRILLED IN FIELD UON. SEE MECHANICAL, ELECTRICAL AND PLUMBING SHEETS FOR LOCATIONS OF THESE OPENINGS.

1.5 WORK NOT INCLUDED ON THE SHEETS BUT IMPLIED TO BE SIMILAR TO THAT SHOWN AT CORRESPONDING PLACES ELSEWHERE ON THE SHEETS SHALL BE REPEATED.

1.6 IN CASE OF CONFLICT BETWEEN THE NOTES, DETAILS AND SPECIFICATIONS THE MOST RIGID REQUIREMENTS SHALL GOVERN.

1.7 SEE ARCHITECTURAL SHEETS FOR LOCATIONS OF MASONRY AND DRYWALL NON-LOAD BEARING PARTITIONS. PROVIDE COMPRESSIBLE FIRESAFING AT TOP OF WALL AS REQUIRED BY ARCHITECTURAL SHEETS.

1.8 COORDINATE FINISHED FLOOR DATUM ELEVATION 0.0m WITH THE CIVIL SHEETS.

2.0 FOUNDATION NOTES

2.1 THE GEOTECHNICAL ANALYSIS FOR THIS PROJECT IS THE RESPONSIBILITY OF THE CONTRACTOR AWARDED THE WORK. DESIGN VALUES USED IN THE STRUCTURAL ANALYSIS OF THE BUILDINGS HEREIN INDICATED HAVE BEEN ASSUMED AND SHALL BE CONFIRMED AND VERIFIED AS PART OF THE GEOTECHNICAL INVESTIGATION. VALUES WHICH DO NOT MEET THE REQUIREMENTS INDICATED ON SHEET S2 SHALL BE IMMEDIATELY BROUGHT TO THE ATTENTION OF THE CONTRACTING OFFICER FOR CONSIDERATION AND DETERMINATION ON THE NEXT APPROPRIATE COURSE OF ACTION.

2.2 SEE THE SPECIFICATION FOR ADDITIONAL REQUIREMENTS TO THOSE OUTLINED IN THE GEOTECHNICAL INVESTIGATION FOR EXCAVATION AND PREPARATION OF THE FOUNDATION AND THE SLAB ON GRADE SUBGRADE INCLUDING COMPACTION PROCEDURES.

2.3 EXCAVATIONS FOR FOOTINGS SHALL HAVE THE SIDES AND BOTTOMS TEMPORARILY LINED WITH 0.25mm POLYETHYLENE IF PLACEMENT OF CONCRETE DOES NOT OCCUR WITHIN 24 HRS OF THE EXCAVATION OF THE FOOTING.

2.4 FOUNDATION CONDITIONS NOTED DURING CONSTRUCTION WHICH DIFFER FROM THOSE DESCRIBED IN THE GEOTECHNICAL REPORT SHALL BE REPORTED TO THE GENERAL CONTRACTOR BEFORE FURTHER CONSTRUCTION IS ATTEMPTED. SEE PROJECT SPECIFICATIONS.

2.5 NO FOOTINGS OR SLABS SHALL BE POURED INTO OR AGAINST SUBGRADE CONTAINING FREE WATER, FROST, ICE OR LOOSE MATERIAL. FROST DEPTH ASSUMED TO BE 800MM

2.6 ALL SLAB-ON-GRADE, TRENCH BOTTOMS AND OTHER ON-GRADE INTERIOR HORIZONTAL SURFACES SHALL BE PLACED OVER A 0.25mm VAPOR RETARDER OVER A 100mm #57 STONE WATER BARRIER PLACED ON SUBGRADE PROPERLY PREPARED IN ACCORDANCE WITH THE CONTRACT SPECIFICATIONS. (UON)

2.7 SEE PLUMBING, ELECTRICAL & CIVIL SHEETS FOR REQUIRED UNDERSLAB UTILITIES.

2.8 SEE ARCHITECTURAL SHEETS FOR ALL WATERPROOFING DETAILS AND MATERIALS.

2.9 IF UNDERMINING OF FOOTINGS OCCURS, FILL VOIDS WITH 15MPa CONCRETE. DO NOT ATTEMPT TO REPLACE AND RECOMPACT SOIL.

3.0 CONCRETE

3.1 CONCRETE SHALL HAVE THE UNIT WEIGHT AND THE MINIMUM COMPRESSIVE STRENGTHS (f'c) AT 28 DAYS AS SHOWN IN THE CONCRETE MATERIALS SCHEDULE ON THIS SHEET. SEE SPECIFICATIONS FOR ADDITIONAL INFORMATION. ENTRAIN AIR TO PRODUCE TOTAL AIR CONTENT ACCORDING TO THE SPECIFICATIONS FOR CONCRETE EXPOSED TO FREEZING TEMPERATURES (EXTERIOR FOOTINGS, SLAB TURNDOWNS, EXTERIOR SLABS AND SLABS-ON-GRADE, EXTERIOR RETAINING WALLS, AND EXTERIOR GRADE BEAMS.)

3.2 GROUT FOR BASE PLATES SHALL BE NON-SHRINKABLE GROUT AND SHALL HAVE A MINIMUM SPECIFIED COMPRESSIVE STRENGTH AT 28 DAYS OF 35MPa, UNLESS NOTED OTHERWISE.

3.3 NO CALCIUM CHLORIDE SHALL BE USED IN ANY CONCRETE.

3.4 MIXING, TRANSPORTING AND PLACING OF CONCRETE SHALL CONFORM TO ACI 301M-05.

3.5 ALL CONCRETE WORK SHALL CONFORM TO THE REQUIREMENTS OF THE AMERICAN CONCRETE INSTITUTE (ACI) 318M MANUAL (metric), "BUILDING CODE REQUIREMENTS FOR REINFORCED CONCRETE", AND REQUIREMENTS OUTLINED IN THE CONTRACT SPECIFICATIONS. WHEN THERE IS A CONFLICT BETWEEN ACI AND THE SPECIFICATIONS, THE MORE STRINGENT SHALL GOVERN.

3.6 CHAMFER ALL EXPOSED EXTERNAL CORNERS OF CONCRETE WITH 20mm x45 DEGREE CHAMFER UON.

3.7 CONCRETE REINFORCEMENT BARS SHALL CONFORM TO ASTM A615M, GRADE 420, REINFORCING BARS SHALL NOT BE TACK WELDED, WELDED, HEATED OR CUT, UNLESS INDICATED ON THE CONTRACT DOCUMENTS. ALL LAP SPLICES SHALL BE CLASS "B" UON.

3.8 HORIZONTAL FOOTING AND HORIZONTAL WALL REINFORCEMENT SHALL BE CONTINUOUS AND SHALL HAVE 90 DEGREE BENDS AND EXTENSIONS, OR CORNER BARS OF EQUIVALENT SIZE LAPPED WITH A CLASS B TENSION SPLICE AT CORNERS AND INTERSECTIONS. TOP BAR CRITERIA SHALL APPLY IF 300mm OR MORE OF FRESH CONCRETE IS PLACED BELOW BAR.

3.9 SLABS-ON-GRADE SHALL HAVE CONSTRUCTION JOINTS OR CRACK CONTROL JOINTS AS SHOWN ON THE SHEETS. CONSTRUCTION JOINTS CAN BE USED AT CONTROL JOINT LOCATIONS AT CONTRACTORS OPTION. SEE SLAB PLANS & JOINT DETAILS FOR ADDITIONAL INFORMATION. FOR AREAS NOT SHOWN ON THE SHEETS, THE MAXIMUM SPACING OF CONSTRUCTION/ CRACK CONTROL JOINTS SHALL BE 4800 mm.

3.10 SEE SPECIFICATIONS FOR ALL WATERPROOFING/DAMPPROOFING REQUIREMENT.

3.11 ALL CONCRETE REINFORCEMENT SHALL BE DETAILED, FABRICATED, LABELED, SUPPORTED, AND SPACED IN FORMS AND SECURED IN PLACE IN ACCORDANCE WITH THE PROCEDURES AND REQUIREMENTS OUTLINED IN THE LATEST EDITION OF THE "BUILDING CODE REQUIREMENTS FOR REINFORCED CONCRETE", ACI 318M, AND THE "MANUAL OF STANDARD PRACTICE FOR DETAILING REINFORCED CONCRETE STRUCTURES", ACI 315M, LATEST EDITION.

3.12 SHOP DRAWINGS SHOWING REINFORCING DETAILS, INCLUDING STEEL SIZES, SPACING AND PLACEMENT, SHALL BE SUBMITTED FOR REVIEW PRIOR TO FABRICATION.

3.13 ALL DOWELS SHALL MATCH SIZE AND NUMBER OF MAIN REINFORCING, UNLESS NOTED OTHERWISE ON THE SHEETS.

3.14 ADDITIONAL BARS SHALL BE PROVIDED AROUND ALL FLOOR AND WALL OPENINGS AS SHOWN ON THE SHEETS.

3.15 SEE ARCHITECTURAL SHEETS FOR TYPE AND LOCATION OF ALL FLOOR FINISHES.

3.16 THE CONTRACTOR SHALL COORDINATE ADDITIONAL WALL/SLAB OPENINGS NOT SHOWN ON STRUCTURAL SHEETS. SEE MECHANICAL, ELECTRICAL, PLUMBING AND CIVIL SHEETS.

3.17 THE SUB-CONTRACTOR SHALL VERIFY ALL OPENINGS, PAD SIZES, AND ANCHOR BOLTS WITH EQUIPMENT SELECTED.

3.18 FOR ALL WALLS & PIERS, PROVIDE DOWELS INTO FOOTING AT EACH VERT REINF BAR, UON DOWEL SIZE SHALL BE SAME AS VERT REINF.

3.19 ALL REINFORCING INDICATED TO BE WELDED SHALL BE IN ACCORDANCE WITH ASTM A706M. "LOW ALLOY STEEL DEFORMED BARS FOR CONCRETE REINFORCEMENT". ANY INSTALLATIONS USING MANUFACTURER'S EQUIPMENT SHALL BE PER MANUFACTURER'S RECOMMENDATIONS.

3.20 PROVIDE CONCRETE POUR STOPS OR FORMED AS REQUIRED FOR INSTALLATION OF ALL CONCRETE WORK.

3.21 PROVIDE ADDITIONAL (2)-#13 x 600mm REINFORCING BARS IN SLAB-ON GRADE AT ALL RE-ENTRANT CORNERS. PLACE BARS AT MID-DEPTH OF SLAB WITH A CLEARANCE OF 50mm FROM CORNER UON.

4.0 CONCRETE MASONRY

4.1 MASONRY CONSTRUCTION AND MATERIALS SHALL CONFORM TO ALL REQUIREMENTS OF THESE CONTRACT DOCUMENTS AND THE PROJECT SPECIFICATIONS.

4.2 THE SPECIFIED ULTIMATE COMPRESSIVE STRENGTH OF CONCRETE MASONRY (f'm) ON THE NET AREA IS A MINIMUM OF 10.4 MPa.

4.3 PROVIDE TWO #16 BARS CONTINUOUS IN ALL CMU AND CAST-IN-PLACE BOND BEAMS UON ON THE SHEETS. BOND BEAM REINFORCING SHALL BE CONTINUOUS AND SPACED AT A MAXIMUM OF 1200mm OC VERTICALLY. PROVIDE BOND BEAM STARTER COURSE AT BOTTOM OF FIRST COURSE ON ALL MASONRY WALLS AND PARTITIONS. ALL BOND BEAMS SHALL BE A MINIMUM OF 200mm IN DEPTH WITH REINFORCING BEING CONTINUOUS AND HAVING STANDARD ACI HOOKS AT EACH END. PROVIDE STANDARD BAR SPLICES AS SPECIFIED.

4.4 FOR WALL REINFORCING SEE "MIN CMU WALL REINFORCING" DETAILS ON SHEET S6. PROVIDE STANDARD BAR SPLICES AS SPECIFIED. ALL VERTICAL REINFORCEMENT EXTENDS FULL HEIGHT OF WALL.

4.5 CMU CELLS THAT REQUIRE VERTICAL REINFORCING BARS AS INDICATED ON THE CONTRACT DRAWINGS AND/OR SPECS SHALL HAVE REINF BARS PLACED IN CENTERS OF CMU CELLS AND CONTINUOUSLY GROUTED UON.

4.6 PROVIDE LADDER TYPE JOINT REINFORCEMENT AT (200mm EXTERIOR & 400mm INTERIOR) ON CENTER MAXIMUM UON MINIMUM ROD SIZE USED SHALL BE 9 GA. DEFORMED WIRE AND CONFORM TO ASTM A82M, UON.

4.7 PROVIDE CONTROL JOINTS AS INDICATED ON THE ARCHITECTURAL SHEETS.

4.8 GROUT FOR MASONRY SHALL BE NORMAL WEIGHT AND HAVE A MINIMUM COMPRESSIVE STRENGTH OF 25 MPa AT 28 DAYS. GROUT SHALL CONFORM TO ASTM C476M. GROUT LIFTS SHALL NOT EXCEED 1400mm.

4.9 USE MORTAR TYPE S CONFORMING TO ASTM C270M, SEE SPECIFICATIONS.

4.10 CONCRETE MASONRY UNITS SHALL BE NORMAL WEIGHT AND CONFORM TO ASTM C90M.

4.11 ALL CMU CELLS, OPEN CAVITIES, AND AIR SPACES SHALL BE GROUTED TO STOP FRAGMENTS FROM MORTAR BLAST

4.12 BOND BEAM REINFORCING SHALL BE DISCONTINUOUS AT CONTROL JOINTS (UON). MAXIMUM CONTROL JOINT SPACING SHALL BE AS INDICATED ON THE ARCHITECTURAL SHEETS.

4.13 CONTRACTOR SHALL COORDINATE LOCATION OF ALL OPENINGS SEE ARCH, MECH, ELEC, AND PLUMBING SHEETS. FOR SIZE AND LOCATION OF OPENINGS.

4.14 MASONRY WALLS SHALL NOT BE BACK FILLED PRIOR TO THE MORTAR AND GROUT ATTAINING THEIR RESPECTIVE MAXIMUM DESIGN STRENGTHS PER SPECIFICATIONS.

MASONRY REINFORCING MINIMUM LAP SPLICES

BAR SIZE	BASIC LAP SPLICE Ld FOR CMU REINFORCING
#10	450
#13	600
#16	750

MINIMUM LAP SPLICES OF REINFORCING BARS IN TENSION (PER ACI 318M-05)

f'c = 28 MPa CONCRETE

BAR SIZE \ CENTER TO CENTER BAR SPACING	(---TOP BARS--) LESS THAN 4db	(---TOP BARS--) 4db OR MORE	(--OTHER BARS--) LESS THAN 4db	(--OTHER BARS--) 4db OR MORE	4db
#10	460	460	410	410	40
#13	660	610	510	480	50
#16	1020	760	790	580	60

NOTES:

1. LAP SPLICES ABOVE ARE IN MILLIMETERS UON.
2. YIELD STRENGTH OF REINFORCEMENT, fy, IS 420MPa (LAP SPLICE LENGTH IS IN MILLIMETERS).
3. CONCRETE IS NORMAL WEIGHT (2400Kg/m^3).
4. TOP BAR INDICATES HORIZONTAL REINFORCEMENT WHICH IS PLACED ABOVE 300mm OR MORE OF FRESH CONCRETE.
5. SEE COLUMN SCHEDULE FOR COLUMN AND SHEAR WALL VERTICAL LAP SPLICE.
6. STRAIGHT DEVELOPMENT LENGTH OF AN UNLAPPED BAR IS EQUAL TO VALUE FROM TABLE DIVIDED BY 1.3.
7. CATEGORY FOR BARS SPACED LESS THAN 4d, OR ON CENTER CORRESPONDS TO CATEGORY 1 IN THE CRSI HANDBOOK WHEREAS FOR BARS SPACED 4d, OR MORE ON CENTER CORRESPOND TO CRSI CATEGORY 5.

CONCRETE MATERIALS SCHEDULE

STRUCTURAL ELEMENT	f'c CONCRETE COMPRESSIVE STRENGTH @ 28 DAYS (MPa)
SLAB-ON-GRADE/TURN-DOWN SLABS	28
ROOF AND FLOOR SLABS	28
ALL FOOTINGS (UON)	28
MISC. CURBS, WALLS AND PADS UON	28
CAST-IN-PLACE LINTEL	28

NOTES:
1. ALL CONCRETE SHALL BE NORMAL WEIGHT CONCRETE. (2400 Kg/m^3 UON)
2. ALL CONCRETE SHALL HAVE A WATER-CEMENT RATIO OF 0.45.

STANDARD HOOKS IN TENSION PER (ACI 318M-05)

HOOK DEVELOPMENT LENGTH Ldh (mm)	
BAR SIZE	f'c 28 MPa
#10	180
#13	250
#16	300
#19	380
#22	430
#25	480
#29	560
#32	610
#36	690

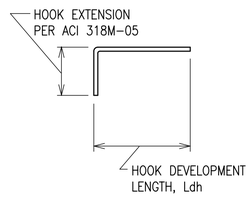

NOTES:
1. CONCRETE IS NORMAL WEIGHT CONCRETE.
2. BAR YIELD STRENGTH, fy = 420 MPa
3. SIDE COVER REQUIREMENTS OF ACI SECT. 12.5.3.2 ARE ASSUMED TO NOT BE MET.
4. TIE OR STIRRUP REQUIREMENTS OF ACI SECT. 12.5.3.2 ARE ASSUMED TO NOT BE MET.
5. REDUCTION FOR EXCESS REINFORCEMENT IS NOT TAKEN.
6. HOOK DEVELOPMENT LENGTH IS VALID FOR 180° HOOKS ALSO.

US Army Corps of Engineers
Afghanistan Engineer District

SYMBOL	DESCRIPTION	DATE	APP

DESIGNED BY: GDH	DWN BY: MDB	CHK BY: CWW
DATE: 09-30-09	SUBMITTED BY: BAKER	FILE NO.: ANPSDS-001XXX

Michael Baker Jr, Inc
A unit of Michael Baker Corporation
Airside Business Park
100 Airside Drive
Moon Township, PA 15108
www.mbakercorp.com

AFGHAN NATIONAL POLICE
STANDARD DESIGN
SECURE STORAGE

GENERAL NOTES

SHEET REFERENCE NUMBER:
S1

100% SUBMISSION

STRUCTURAL DESIGN CRITERIA

ALL DESIGNS SHALL CONFORM TO THE PROVISIONS OF THE IBC 2006 AS APPLICABLE

1.0 DESIGN LOADS

1.1 DEAD LOADS

1.1.1 ROOF DEAD LOADS

	MAXIMUM GRAVITY LOAD	MINIMUM GRAVITY LOAD
MISC	0.05 KPa	0.00 KPa
	0.05 KPa	0.00 KPa

1.1.2 ROOF DEAD LOADS – CONCRETE FRAMING

	MAXIMUM GRAVITY LOAD
CONC FLAT SLAB	6.00 KPa
MISC	0.05 KPa
	6.05 KPa

1.2 LIVE LOADS (PER IBC 2006)

1.2.1 ROOF LIVE LOADS: ALL BUILDINGS

GREATER OF 1.0 KPa MINIMUM OR SNOW LOAD

1.2.2 SLAB–ON–GRADE LIVE LOADS

LIVE LOAD 12.0 KPa

1.3 SNOW LOADS (PER IBC 2006)

1.3.1 DESIGN PARAMETERS

GROUND SNOW LOAD (per UFC 3–310–01)	PER LOCAL CONDITION
SNOW IMPORTANCE FACTOR	1.0 KPa
SNOW EXPOSURE FACTOR	1.0 KPa

1.4 SEISMIC LOADS (PER IBC 2006 & UFC 3–310–04)

1.4.1 SEISMIC PARAMETERS – LOAD BEARING MASONRY

SEISMIC OCCUPANCY CATEGORY	II
SEISMIC IMPORTANCE FACTOR (I)	1.0
SEISMIC SITE CLASS	D
Ss	1.280
S1	0.510
Sds	0.853
Sd1	0.510
SEISMIC DESIGN CATEGORY	D
SEISMIC RESISTING SYSTEM	BEARING WALL SYSTEM SPECIAL REINF SHEAR WALLS
RESPONSE MODIFICATION FACTOR (R)	5.0
RESPONSE COEFFICIENT (Cs)	0.170
SEISMIC ANALYTICAL PROCEDURE	EQUIV LATERAL FORCE
SEISMIC BASE SHEAR	284.7kN

1.5 WIND LOADS (PER IBC 2006)

1.5.1 DESIGN PARAMETERS

BASIC WIND SPEED	137 Km/h
WIND IMPORTANCE FACTOR	1.0
WIND EXPOSURE CATEGORY	D
DIRECTIONALITY COEFFICIENT (Kd)	0.85
TOPOGRAPHIC FACTOR (Kzt)	1.0

1.5.2 DESIGN WIND PRESSURE – MAIN WINDFORCE RESISTING SYSTEM

LOCATION	CORNER ZONE WIDTH "a"	MEAN ROOF HEIGHT "h"	WINDWARD WALL (@ MEAN ROOF HEIGHT)	LEEWARD WALL (@ MEAN ROOF HEIGHT)	ROOF
FIELD ZONE	N/A	3790mm	508 N/m^2	286 N/m^2	867 N/m^2
CORNER ZONE	900mm	3790mm	776 N/m^2	421 N/m^2	–1340 N/m^2

a = 10% OF LEAST HORIZONTAL DIMENSION OR 0.4h, WHICHEVER IS SMALLER, BUT NOT LESS THAN EITHER 4% OF LEAST HORIZONTAL DIMENSION OR 0.9M.
h = MEAN ROOF HIEGHT, IN METERS, EXCEPT THAT EAVE HIEGHT SHALL BE USED FOR ANGLE GREATER THAN 10°.

1.5.3 DESIGN WIND PRESSURE – WALL COMPONENTS AND CLADDING

EXTERIOR WALL SYSTEMS & THEIR ATTACHMENTS TO THE PRIMARY STRUCTURE SHALL BE DESIGNED FOR THE PRESSURES SHOWN IN THE DIAGRAM BELOW:

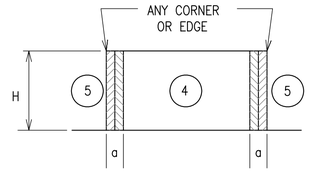

LOCATION	WINDWARD PRESSURE N/m^2 (inward)		LEEWARD PRESSURE N/m^2 (outward)		a
	④	⑤	④	⑤	
MAIN BUILDING					(mm)
AREA = 1 m^2	909	909	–986	–1216	900
AREA = 2 m^2	867	867	–948	–1134.8	900
AREA = 5 m^2	804	804	–885	–1010	900
AREA = 10 m^2	804	804	–885	–1010	900

NOTES:
1. DESIGN WIND PRESSURES ABOVE REPRESENT THE NET PRESSURE (SUM OF INTERNAL AND EXTERNAL PRESSURE) APPLIED NORMAL TO ALL SURFACES.
2. LINEAR INTERPOLATION BETWEEN VALUES OF TRIBUTARY AREA IS PERMISSIBLE.
3. PLUS AND MINUS SIGNS SIGNIFY PRESSURE TOWARD AND AWAY FROM THE EXTERIOR SURFACE, RESPECTIVELY.

1.5 WIND LOADS (CON'T)

1.5.4 DESIGN WIND PRESSURE – ROOF COMPONENTS AND CLADDING

ROOF COMPONENTS & THEIR ATTACHMENTS SHALL BE DESIGNED FOR THE PRESSURES SHOWN IN THE ADJACENT DIAGRAM & TABLE BELOW:

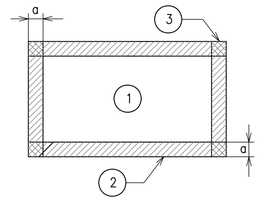

ROOF MEAN HEIGHT

LOCATION	GROSS UPLIFT PRESSURE N/m^2 (upward)			a
	①	②	③	
MAIN BUILDING				(mm)
AREA = 1 m^2	–838	–1460	–1460	900
AREA = 2 m^2	–838	–1460	–1460	900
AREA = 5 m^2	–838	–1460	–1460	900
AREA = 10 m^2	–838	–1460	–1460	900

NOTES:
1. DESIGN WIND PRESSURES ABOVE REPRESENT THE NET PRESSURE (SUM OF INTERNAL AND EXTERNAL PRESSURE) APPLIED NORMAL TO ALL SURFACES.
2. LINEAR INTERPOLATION BETWEEN VALUES OF TRIBUTARY AREA IS PERMISSIBLE.
3. PLUS AND MINUS SIGNS SIGNIFY PRESSURE TOWARD AND AWAY FROM THE EXTERIOR SURFACE, RESPECTIVELY.

2.0 FOUNDATION DESIGN CRITERIA (TO BE CONFIRMED BY THE CONTRACTOR)

THE GEOTECHNICAL ANALYSIS FOR THIS PROJECT IS THE RESPONSIBILITY OF THE CONTRACTOR AWARDED THE WORK. DESIGN VALUES USED IN THE STRUCTURAL ANALYSIS OF THE BUILDINGS HEREIN INDICATED HAVE BEEN ASSUMED AND SHALL BE CONFIRMED AND VERIFIED AS PART OF THE GEOTECHNICAL INVESTIGATION. VALUES WHICH DO NOT MEET THE REQUIREMENTS INDICATED BELOW SHALL BE IMMEDIATELY BROUGHT TO THE ATTENTION OF THE CONTRACTING OFFICER FOR CONSIDERATION AND DETERMINATION ON THE NEXT APPROPRIATE COURSE OF ACTION.

2.1.1 SOIL DESIGN PARAMETERS

NET ALLOWABLE SOIL BEARING CAPACITY	96.0 KPa
UNIT WEIGHT OF SOIL (moist)	1800 Kg/m^3
COEFF ACTIVE EARTH PRESSURE (Kpa)	0.30
COEFF PASSIVE EARTH PRESSURE (Kpp)	3.33
COEFF AT–REST EARTH PRESSURE (Kpr)	.55
COEFF OF SOIL FRICTION	.35
SUBGRADE MODULUS	4120 g/m^3
MINIMUM BEARING DEPTH BELOW GRADE	800mm
SEISMIC SITE CLASS (based on in–situ soil)	D

CONCRETE COVER SCHEDULE

MINIMUM CONCRETE COVER PROTECTION FOR REINFORCEMENT BARS SHALL BE AS FOLLOWS: (SEE ACI 318M–05, SECTION 7.7 FOR CONDITIONS NOT NOTED). DIMENSIONS FOR BAR PLACEMENT GIVEN IN SECTIONS AND DETAILS SHALL SUPERSEDE MINIMUM COVER REQUIREMENTS GIVEN HERE. DIMENSIONS ARE IN mm.

FOOTINGS (EARTH FORMED)		70
COLUMNS / PIERS (TO TIES)		40
GRADE BEAMS OR SLAB TURNED DOWN EDGES:		
TOP		40
BOTTOM (EARTH FORMED)		70
SIDES (EARTH FORMED)		70
SIDES (BOARD FORMED)	#16 BAR & SMALLER	40
	#19 THRU #36 BAR	50
ELEVATED BEAMS & SLABS:		
BEAM TIES & STIRRUPS (NOT EXPOSED TO WEATHER)		40
BEAM TIES & STIRRUPS (EXPOSED TO WEATHER)		50
FLOOR SLABS (NOT EXPOSED TO WEATHER)		20
FLOOR SLABS (EXPOSED TO WEATHER)		
#19 & LARGER		50
#13 & SMALLER		40
ROOF SLAB BARS		25
SLABS–ON–GRADE (NO EXPOSURE TO WEATHER) FROM TOP		20
SLABS–ON–GRADE (EXPOSURE TO WEATHER) FROM TOP		40
UTILITY TUNNEL WALLS, RETAINING WALLS AND SHEAR WALLS, (NO SURFACES SHALL BE EARTH FORMED) EARTH SIDE AND FRONT SIDE (EXPOSED TO WEATHER):		
#16 BAR AND SMALLER		40
#19 THRU #36 BAR		50

PROVIDE STANDARD BAR CHAIRS AND SPACERS AS REQUIRED TO MAINTAIN CONCRETE PROTECTION SPECIFIED.

CMU LINTEL SCHEDULE

OPENING TYPE OR SIZE, BEAM LOCATION OR TYPE	MAX SPAN (mm)	BEAM DEPTH (mm)	MAIN REINFORCING			SHEAR REINF STIRRUPS
			TOP	BOTTOM	OTHER	
INT WALL OPENING, NON–BEARING	1800	400		(2)–#13		----
INT WALL OPENING, NON–BEARING	900	200		(2)–#13		----

1. STRUCTURAL DRAWINGS DO NOT INDICATE ALL OPENINGS IN MASONRY WALLS. VERIFY NUMBER, SIZE AND LOCATION OF ALL OPENINGS IN MASONRY WALLS FROM ARCHITECTURAL SHEETS AND APPROVED PLUMBING, MECHANICAL, AND ELECTRICAL SHOP DRAWINGS.
2. PROVIDE 200mm BEARING EA END FOR 200mm DEEP CMU LINTEL PROVIDE 400mm BEARING EA END FOR 400mm DEEP CMU LINTEL.
3. FOR HEAD DETAILS REFER TO ARCHITECTURAL SHEETS.
4. REINFORCING SHALL BE ASTM A615M, GRADE 420. CONCRETE FOR CAST–IN–PLACE BEAMS SHALL HAVE A MINIMUM COMPRESSIVE STRENGTH OF 28 MPa AT 28 DAYS.
5. CONTRACTOR SHALL SUBMIT FOR APPROVAL SHOP DRAWINGS AND SCHEDULES SHOWING SIZE, DETAILS, LOCATIONS, ETC FOR ALL CAST–IN–PLACE BEAMS IN CMU WALLS.

US Army Corps of Engineers
Afghanistan Engineer District

APP	
DATE	
DESCRIPTION	
SYMBOL	

DESIGNED BY: GDH	DATE: 09–30–09
DWN BY: MDB	SUBMITTED BY: BAKER
CHK BY: CWW	FILE NO.: ANPSDS–002XXX

Michael Baker Jr, Inc
A unit of Michael Baker Corporation
Airside Business Park
100 Airside Drive
Moon Township, PA 15108
www.mbakercorp.com

AFGHAN NATIONAL POLICE
STANDARD DESIGN
SECURE STORAGE

DESIGN CRITERIA

SHEET REFERENCE NUMBER:
S2

100% SUBMISSION

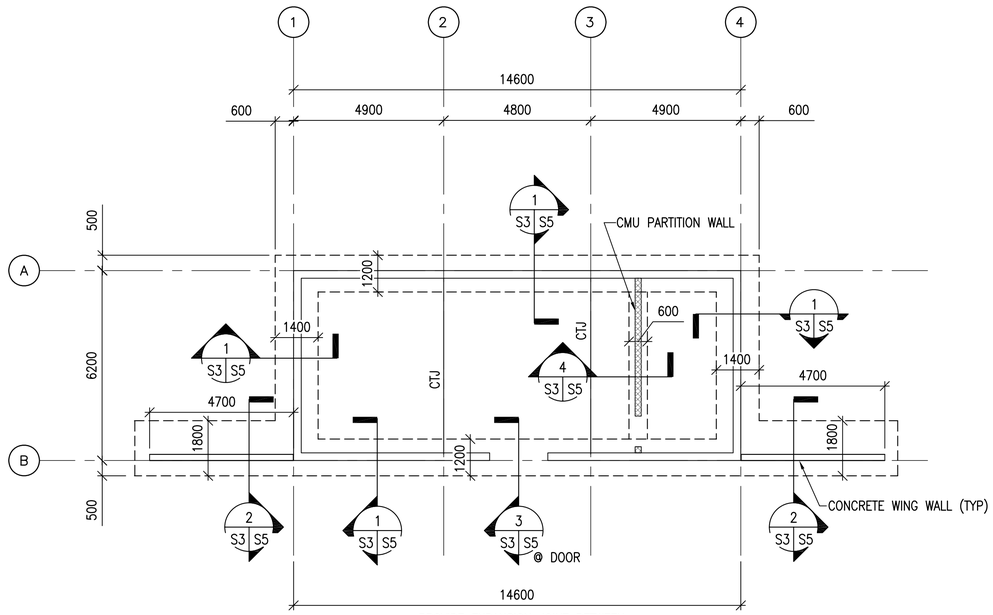

1 / S3 S3 FOUNDATION PLAN

SCALE: 1:100

N

NOTES:

1. FINISH FIRST FLOOR ELEVATION SHALL BE (DATUM 0.0) ALL PLUS OR MINUS DIMENSIONS INDICATED ON PLAN OR REFERRED TO IN NOTES RELATE TO FINISH FIRST FLOOR ELEVATION.
2. TOP OF EXTERIOR FOOTINGS SHALL BE −500 UNLESS OTHERWISE INDICATED.
3. UNLESS OTHERWISE INDICATED, FLOORS SHALL BE 150 THICK CONCRETE SLAB−ON−GRADE W/ 13 DIA REBAR @ 250 OC EW (38 CLR TOP) OVER 100 COMPACTED POROUS FILL (#57 STONE)
4. REFER TO SHEETS S1 & S2 FOR STRUCTURAL NOTES, BASIS OF DESIGN, SYMBOLS AND ABBREVIATIONS.
5. CTJ AND CJ INDICATES SLAB CONTROL OR CONSTRUCTION JOINTS RESPECTIVELY REFER TO SHEET S6 FOR SECTIONS & DETAILS.
6. REFER TO ARCHITECTURAL SHEETS FOR MASONRY PARTITION TYPES AND SHEET S6 FOR REINFORCEMENT.
7. SEE MECHANICAL AND ELECTRICAL SHEETS FOR CONCRETE PAD LOCATIONS, SIZES, AND THICKNESS NOT SHOWN. SEE SHEET S6 FOR DETAILS.
8. CONCRETE ROOF STRUCTURE SHALL BE POURED−IN−PLACE IN ONE CONTINUOUS OPERATION AND SHORED AS REQUIRED UNTIL THE CONCRETE REACHES 75% OF ITS DESIGN STRENGTH AS A MINIMUM.
9. CONCRETE WALLS OF THE BUILDING SHALL NOT HAVE BACKFILL PLACED AGAINST THEM UNTIL THE SLAB−ON−GRADE AND CONCRETE ROOF STRUCTURES ARE IN PLACE AND ALL CONCRETE HAS ACHIEVED 75% OF ITS DESIGN STRENGTH AS A MINIMUM.

UNLESS OTHERWISE NOTED, LINEAR DIMENSIONS SHOWN ARE IN MILLIMETERS (MM)

0 2000 4000 8000

SCALE: 1: 100

US Army Corps of Engineers

Afghanistan Engineer District

SYMBOL	DESCRIPTION	DATE	APP.

DESIGNED BY: GDH	DATE: 09-30-09
DWN BY: MDB	SUBMITTED BY: BAKER
CHK BY: CWW	FILE NO.: ANPSDS-103XXX

Michael Baker Jr, Inc
A unit of Michael Baker Corporation
Airside Business Park
100 Airside Drive
Moon Township, PA 15108
www.mbakercorp.com

AFGHAN NATIONAL POLICE
STANDARD DESIGN
SECURE STORAGE

FOUNDATION PLAN

SHEET REFERENCE NUMBER:

S3

100% SUBMISSION

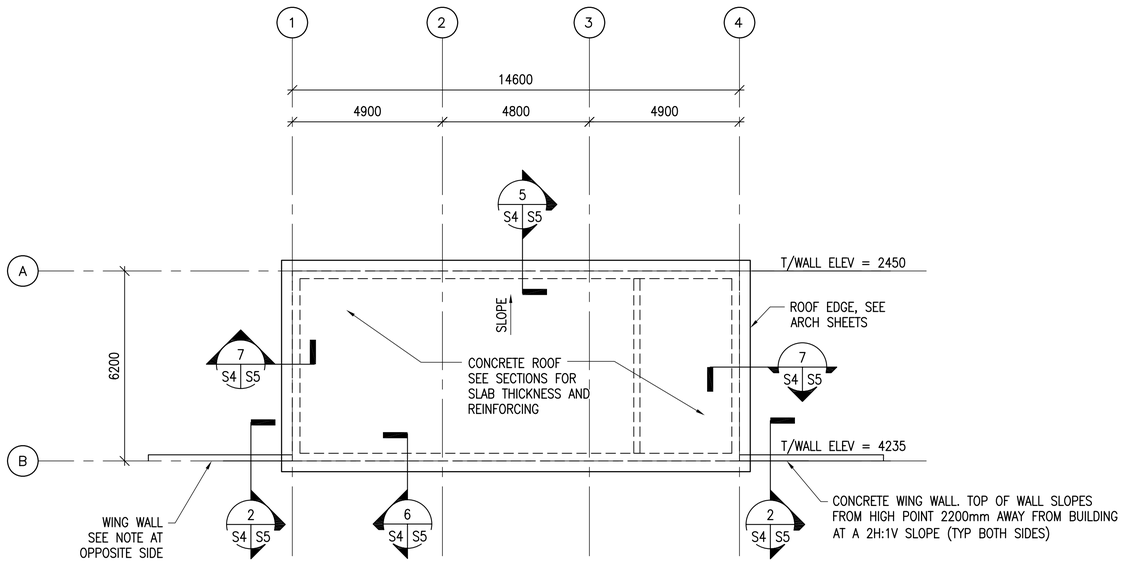

1 S4 S4 ROOF FRAMING PLAN

SCALE: 1:100

N

NOTES :

1. REFER TO SHEET S3 FOR PLAN NOTES.

UNLESS OTHERWISE NOTED, LINEAR DIMENSIONS SHOWN ARE IN MILLIMETERS (MM)

0 2000 4000 8000

SCALE: 1: 100

US Army Corps of Engineers

Afghanistan Engineer District

SYMBOL	DESCRIPTION	DATE	APP'D

DESIGNED BY: GDH	DATE: 09-30-09		
DWN BY: MDB	SUBMITTED BY: BAKER	CHK BY: CWW	FILE NO.: ANPSDS-104XXX

Michael Baker Jr., Inc.
A unit of Michael Baker Corporation
Airside Business Park
100 Airside Drive
Moon Township, PA 15108
www.mbakercorp.com

AFGHAN NATIONAL POLICE
STANDARD DESIGN
SECURE STORAGE

ROOF FRAMING PLAN

SHEET REFERENCE NUMBER:

S4

100% SUBMISSION

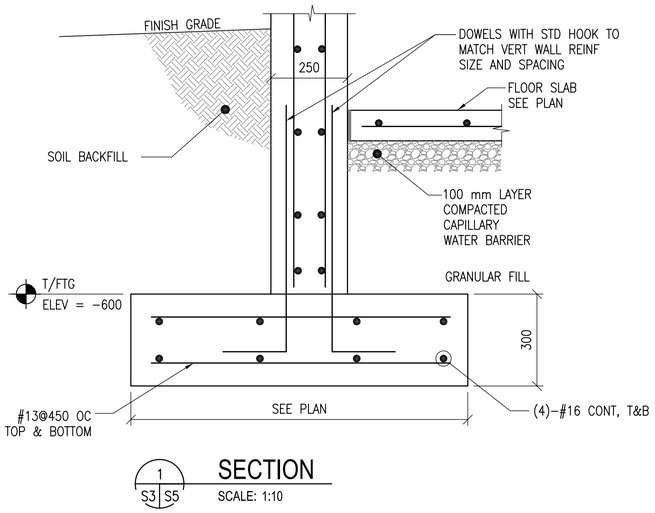

1 S3 S5 **SECTION**
SCALE: 1:10

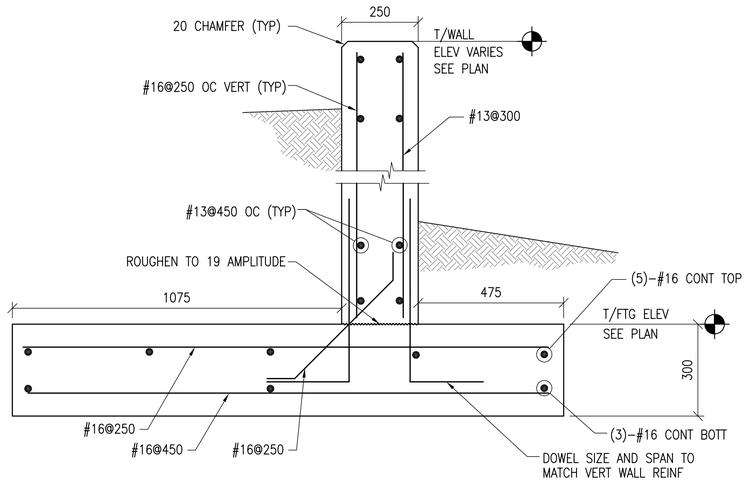

2 S3,S4 S5 **SECTION**
SCALE: 1:10

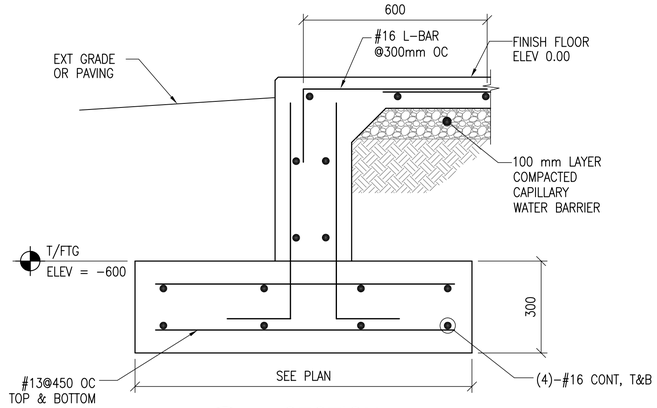

3 S3 S5 **SECTION**
SCALE: 1:10

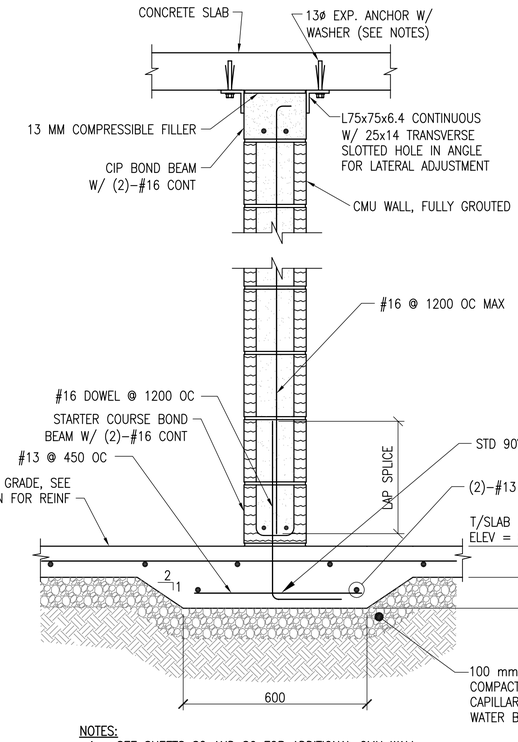

NOTES:
1. SEE SHEETS S2 AND S6 FOR ADDITIONAL CMU WALL REINFORCING REQUIREMENTS.
2. EMBED EXPANSION ANCHOR 82 MINIMUM INTO SOLID CONCRETE.
3. INSTALL 13 MM ISOLATION JOINT VERTICALLY AT WALL ENDS THAT ARE ADJACENT TO CONCRETE WALLS.
4. USE STEEL WASHER BETWEEN ANCHOR HEAD AND ANGLE. NOMINAL WASHER INSIDE AND OUTSIDE DIAMETER TO BE 14 & 35 RESPECTIVELY.

4 S3 S5 **SECTION**
SCALE: 1:10

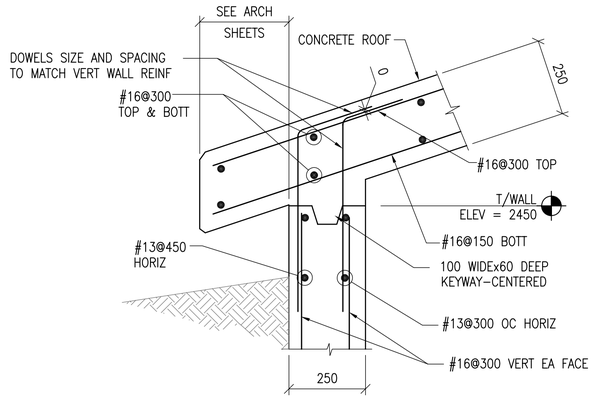

5 S4 S5 **SECTION**
SCALE: 1:10

7 S4 S5 **SECTION**
SCALE: 1:10

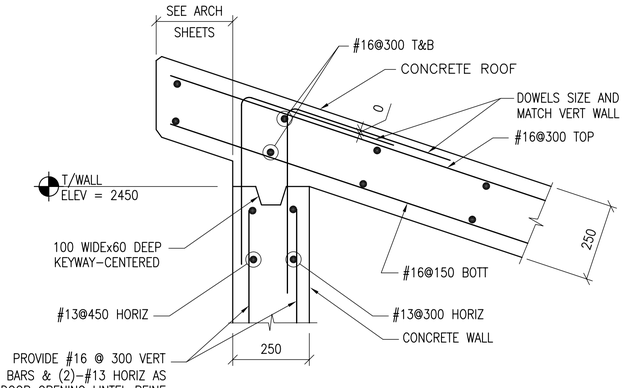

6 S4 S5 **SECTION**
SCALE: 1:10

UNLESS OTHERWISE NOTED, LINEAR DIMENSIONS SHOWN ARE IN MILLIMETERS (MM)

0 200 400 800

SCALE: 1: 10

US Army Corps of Engineers
Afghanistan Engineer District

SYMBOL	DESCRIPTION	DATE	APP

DESIGNED BY: GDH	DWN BY: MDB	CHK BY: CWW	DATE: 09-30-09
SUBMITTED BY: BAKER	FILE NO.: ANPSDS-305XXX		

Michael Baker Jr, Inc
A unit of Michael Baker Corporation
Airside Business Park
100 Airside Drive
Moon Township, PA 15108
www.mbakercorp.com

AFGHAN NATIONAL POLICE
STANDARD DESIGN
SECURE STORAGE

SECTIONS
GENERAL NOTES

SHEET REFERENCE NUMBER:
S5

100% SUBMISSION

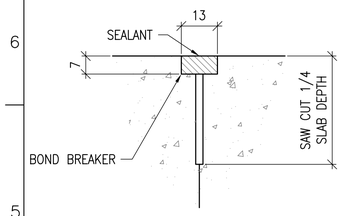

CONTROL JOINT DETAIL

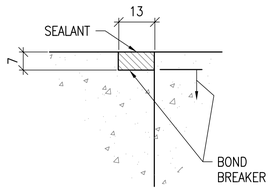

CONSTRUCTION JOINT DETAIL

1 S6 TYPICAL CONCRETE SLAB JOINT FINISH DETAIL

SCALE: NTS

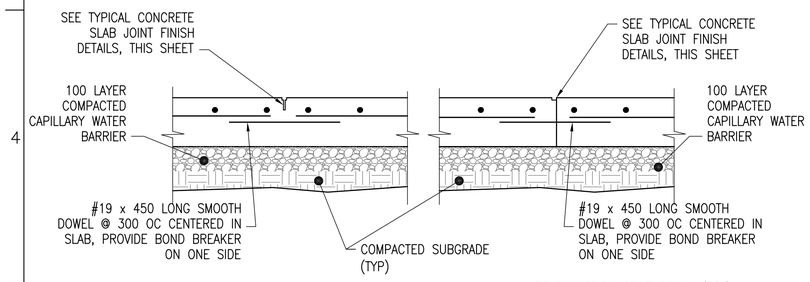

CONTROL JOINT DETAIL (CTJ) CONSTRUCTION JOINT DETAIL (CSJ)

2 S6 TYPICAL SLAB ON GRADE JOINT DETAILS

SCALE: NTS

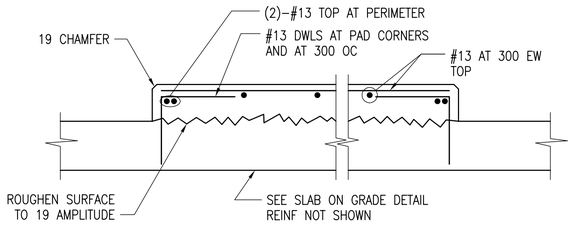

3 S6 INTERIOR EQUIPMENT PAD DETAIL

SCALE: NTS

DETAIL NOTE:
1. COORDINATE EQUIPMENT PAD SIZE AND LOCATIONS W/ ELECTRICAL/MECHANICAL SHEETS AND EQUIPMENT MANUFACTURER.

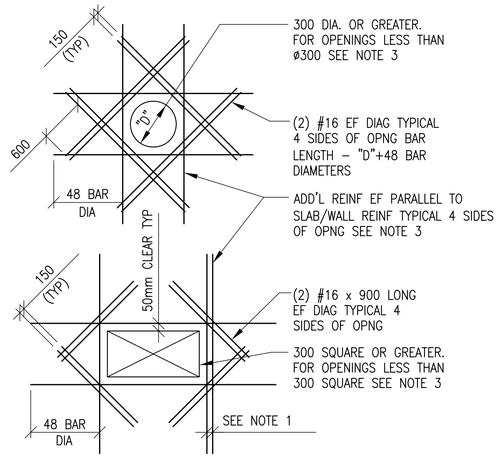

SLAB OPENINGS

4 S6 ADD'L REINFORCEMENT DETAILS

SCALE: NTS

DETAIL NOTES:
1. WHERE MORE THAN ONE ADDITIONAL BAR IS REQUIRED PARALLEL TO THE EXISTING SLAB/WALL REINFORCING THE ADDITIONAL REINFORCING BARS SHALL BE SPACED AT 100 ON CENTER.
2. ADDITIONAL REINFORCING PARALLEL TO THE SLAB/WALL REINFORCING SHALL BE #15 BARS THAT PROVIDE A STEEL AREA ON EACH SIDE OF THE OPENING EQUAL TO 1/2 THE AREA OF THE REINFORCING CUT BY THE OPENING.
3. FOR OPENINGS WITH SIDES OR DIAMETERS LESS THAN 300 SPREAD THE SLAB/WALL REINFORCING TO CLEAR THE OPENING.

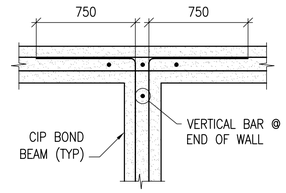

BOND BEAM INTERSECTION

5 S6 CIP BOND BEAM DETAIL

SCALE: NTS

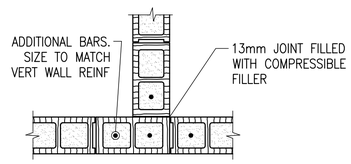

INTERSECTION

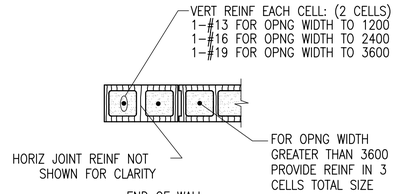

END OF WALL

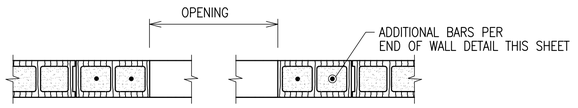

MASONRY OPENING W/ LINTEL

NOTES:
1. OPENING WIDTH SHALL NOT EXCEED 3600 FOR THIS TYPE OF JAMB
2. ALL CMU CELLS FULLY GROUTED

6 S6 TYPICAL CMU DETAILS

SCALE: NTS

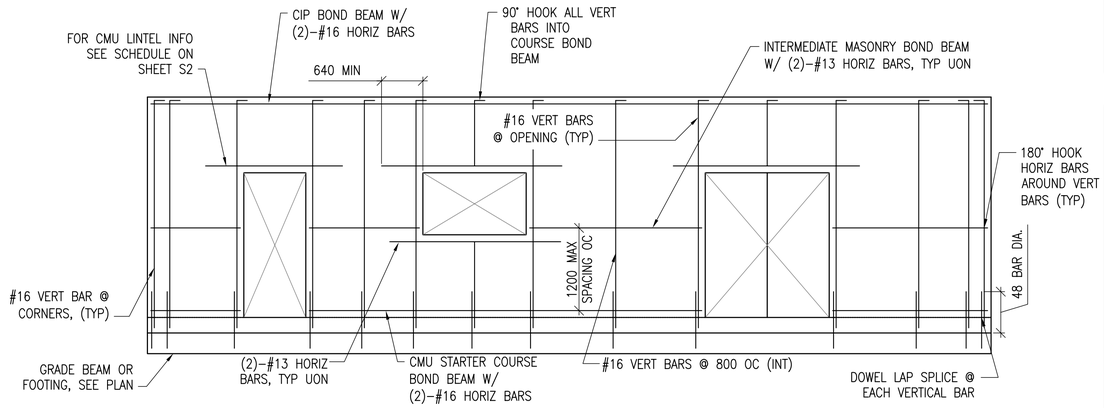

7 S6 MIN CMU WALL REINFORCING

SCALE: NTS

LINTEL NOTES:
CMU LINTEL REINFORCEMENT AS PER SCHEDULE ON SHEET S2

UNLESS OTHERWISE NOTED, LINEAR DIMENSIONS SHOWN ARE IN MILLIMETERS (MM)

US Army Corps of Engineers
Afghanistan Engineer District

SYMBOL	DESCRIPTION	DATE	APP'D

DESIGNED BY: GDH	DWN BY: RCG	CHK BY: CWW
DATE: 09-30-09	SUBMITTED BY: BAKER	FILE NO.: ANPSDS-506XXX

Michael Baker Jr., Inc
A unit of Michael Baker Corporation
Airside Business Park
100 Airside Drive
Moon Township, PA 15108
www.mbakercorp.com

AFGHAN NATIONAL POLICE
STANDARD DESIGN
SECURE STORAGE

TYPICAL DETAILS

SHEET REFERENCE NUMBER:
S6

100% SUBMISSION

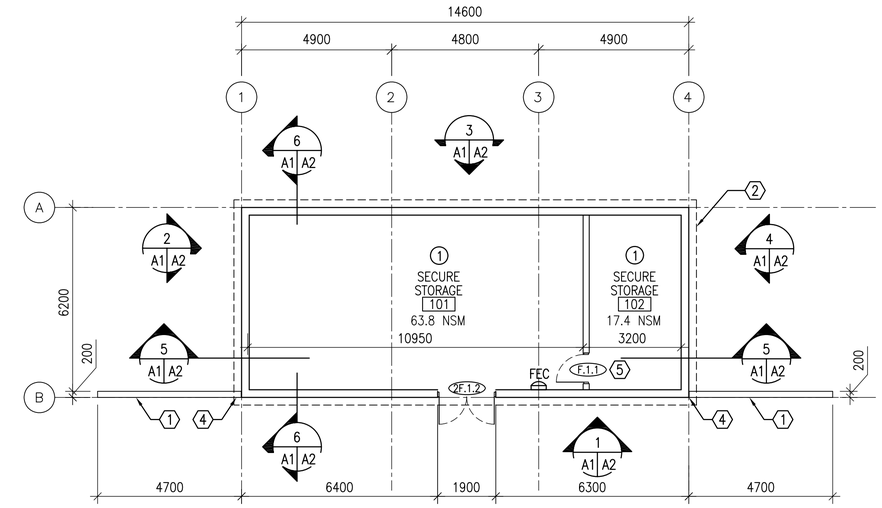

1 A1 A1 **FLOOR PLAN**
SCALE: 1:100
90.5 GSM

N

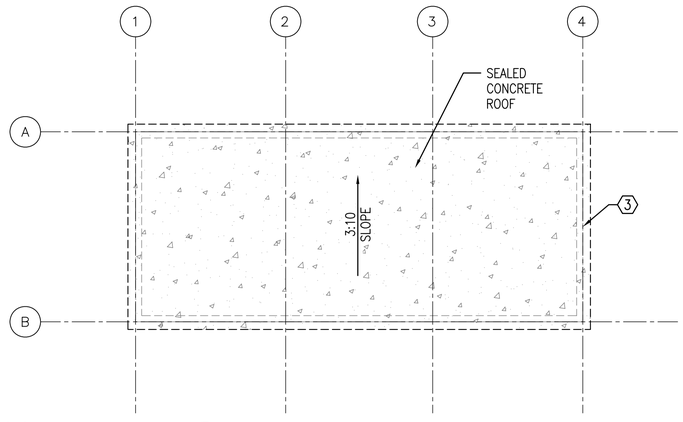

2 A1 A1 **ROOF PLAN**
SCALE: 1:100

N

GENERAL NOTES:

A. INTERIOR PARTITION SHALL BE 200 MM CMU UNLESS NOTED OTHERWISE.

B. OPENINGS FOR DOORS SHALL BE LOCATED 200 MM FROM THE ADJACENT WALL UNLESS NOTED OTHERWISE.

C. SURFACES TO BE PAINTED SHALL BE CLEAN AND FREE OF FOREIGN MATTER BEFORE APPLICATION OF PAINT. CLEANING SHALL BE SCHEDULED SO THAT DUST AND OTHER CONTAMINANTS WILL NOT FALL ON WET, NEWLY PAINTED SURFACES.

D. CONCRETE AND INTERIOR MASONRY SURFACES GROUTED SOLID SHALL BE ALLOWED TO DRY AT LEAST 30 DAYS BEFORE PAINTING EXCEPT CONCRETE SLAB ON GRADE WHICH SHALL BE ALLOWED TO CURE 90 DAYS BEFORE PAINTING.

E. PAINTS CONTAINING LEAD IN EXCESS OF 0.06 PERCENT BY WEIGHT OF THE TOTAL NONVOLATILE CONTENT SHALL NOT BE USED.

F. MERCURIAL FUNGICIDES SHALL NOT BE USED IN OIL–BASE PAINT.

G. REMOVE LOOSE DIRT AND CLEAN SURFACES BEFORE PAINTING. APPLY PAINT TO INTERIOR STRUCTURAL RIGID FRAMINGS AND CEILINGS AND TEST FOR ADHESION. PRIMER COAT FOR MASONRY. INITIAL FIRST COAT WITH AN ACRYLIC LATEX PAINT FOR EXTERIOR SURFACES AND A SECOND COAT WITH A WATER REPELLENT ACRYLIC LATEX PAINT.

H. METAL DOORS AND FRAMES SHALL RECEIVE A PRIMER COAT PLUS TWO COATS OF PAINT.

I. DIMENSIONS ARE TO STRUCTURAL COLUMN GRID, EDGE OF WINDOW OPENINGS, AND TO HINGE SIDE OF DOOR OPENINGS.

KEY NOTES: (X)

1. CONCRETE WING WALL
2. LINE OF ROOF OVERHANG ABOVE
3. LINE OF BUILDING WALL BELOW
4. EXPANSION JOINT BETWEEN BUILDING WALL AND WING WALLS.
5. PROVIDE UNDERCUT INTERIOR DOOR BETWEEN ROOMS 101 AND 102. RE: MECHANICAL

LEGEND:

F.1.4 DOOR TYPE, SEE SHEET A3

(X) KEY NOTE

FEC FIRE EXTINGUISHER CABINET

(1) ROOM FINISH TYPE DESIGNATION

(X)

ROOM FINISHES:

1. WALLS: PAINTED PLASTER,
   FLOOR: SEALED CONCRETE
   CEILING: PAINTED PLASTER APPLIED TO STRUCTURE

UNLESS OTHERWISE NOTED, LINEAR DIMENSIONS SHOWN ARE IN MILLIMETERS (MM)

0 2000 4000 8000
SCALE: 1: 100

US Army Corps of Engineers
Afghanistan Engineer District

SYMBOL	DESCRIPTION	DATE	APP

DESIGNED BY: BAKER
DWN BY: JEB
CHK BY: NLJ
DATE: 09-30-09
SUBMITTED BY: BAKER
FILE NO.: ANPSDA-101XXX

Michael Baker Jr, Inc
A unit of Michael Baker Corporation
Airside Business Park
100 Airside Drive
Moon Township, PA 15108
www.mbakercorp.com

AFGHAN NATIONAL POLICE
STANDARD DESIGN
SECURE STORAGE

FLOOR AND ROOF PLANS

SHEET REFERENCE NUMBER:
A1

100% SUBMISSION

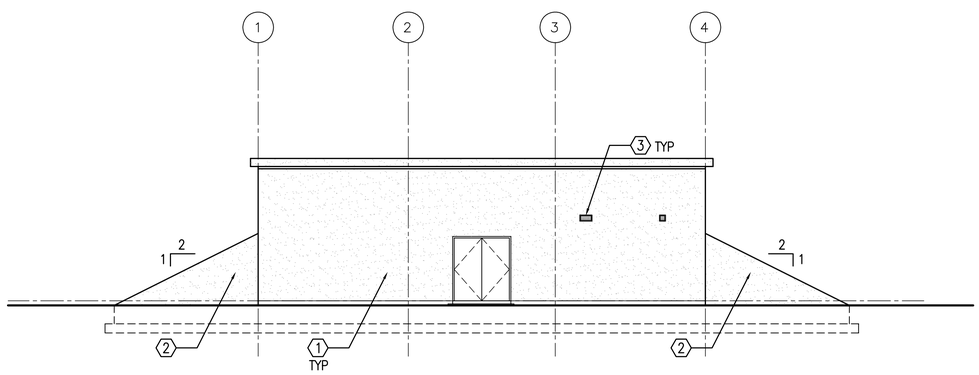

1 / A1 | A2 — EAST ELEVATION
SCALE: 1:100

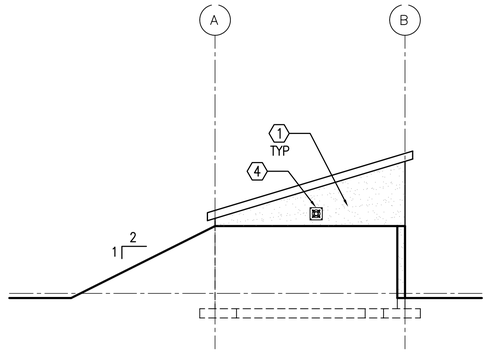

2 / A1 | A2 — SOUTH ELEVATION
SCALE: 1:100

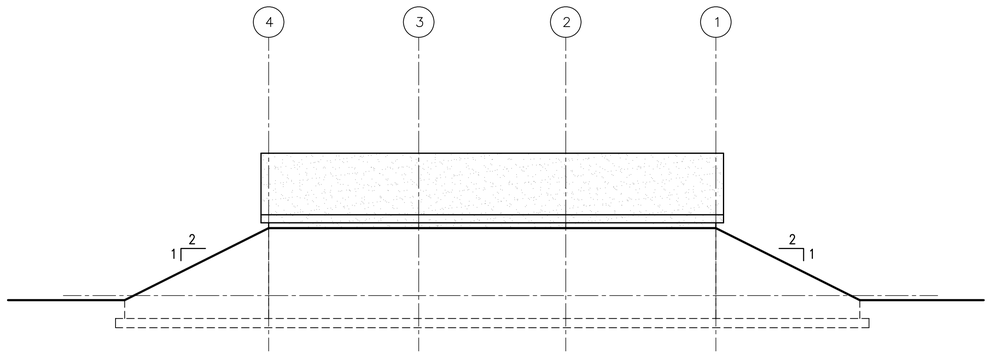

3 / A1 | A2 — WEST ELEVATION
SCALE: 1:100

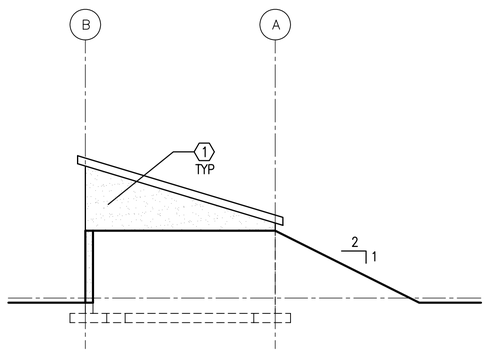

4 / A1 | A2 — NORTH ELEVATION
SCALE: 1:100

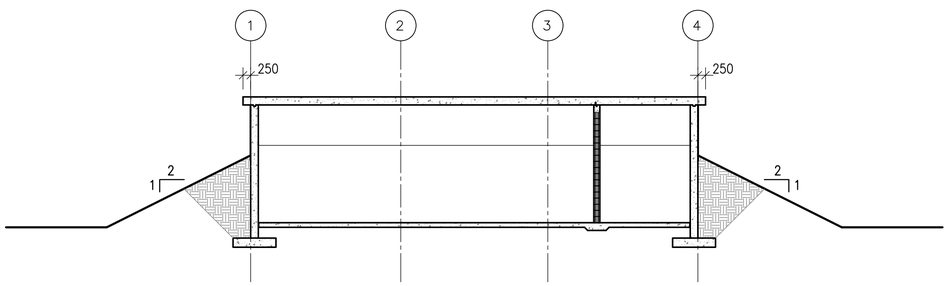

5 / A1 | A2 — LONGITUDINAL BUILDING SECTION
SCALE: 1:100

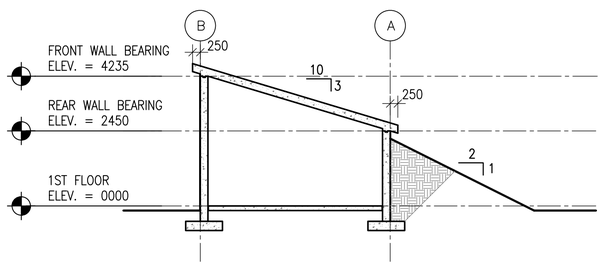

6 / A1 | A2 — TRANSVERSE BUILDING SECTION
SCALE: 1:100

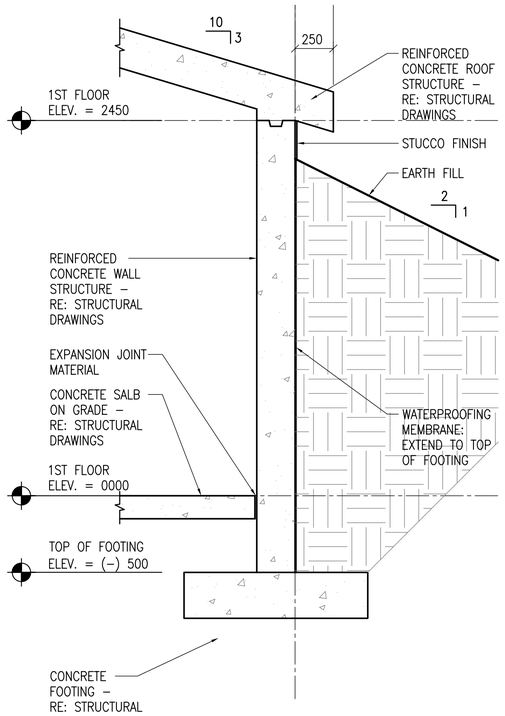

7 / A2 | A2 — WALL SECTION
SCALE: 1:20

KEY NOTES:

1. STUCCO ON CONCRETE WALLS
2. STUCCO ON CONCRETE WING WALLS
3. LOUVER – RE: MECHANICAL
4. EXHAUST FAN – RE: MECHANICAL

UNLESS OTHERWISE NOTED, LINEAR DIMENSIONS SHOWN ARE IN MILLIMETERS (MM)

0 400 800 1600
SCALE: 1: 20

0 2000 4000 8000
SCALE: 1: 100

US Army Corps of Engineers
Afghanistan Engineer District

SYMBOL	DESCRIPTION	DATE	APP'D

DESIGNED BY: BAKER	DWN BY: JEB	CHK BY: NLJ	DATE: 09-30-09
SUBMITTED BY: BAKER	FILE NO.: ANPSDA-102XXX		

Michael Baker Jr., Inc
A unit of Michael Baker Corporation
Airside Business Park
100 Airside Drive
Moon Township, PA 15108
www.mbakercorp.com

AFGHAN NATIONAL POLICE
STANDARD DESIGN
SECURE STORAGE

EXTERIOR ELEVATIONS,
BUILDING SECTIONS & WALL SECTION

SHEET REFERENCE NUMBER:
A2

100% SUBMISSION

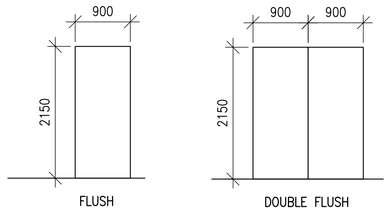

F 2F

1 A3 A3 DOOR TYPES

SCALE: 1:50

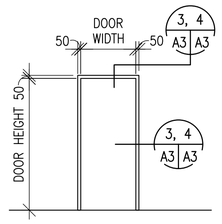

1

2 A3 A3 FRAME TYPES

SCALE: 1:50

DOOR TYPES NOTES:

1. INTERIOR AND EXTERIOR METAL DOORS AND FRAME COLORS SHALL MATCH ADJACENT WALL COLORS AS SELECTED BY THE CONTRACTING OFFICER.
2. HARDWARE SHALL BE HEAVY DUTY, COMMERCIAL GRADE, STAINLESS STEEL WITH A MATTE FINISH.
3. FRAMES, EXCEPT FIRE-RATED FRAMES, SHALL BE MOUNTED AND ADJUSTED IN ACCORDANCE WITH MANUFACTURER'S INSTRUCTIONS. FRAMES SHALL BE FASTENED WITH MINIMUM OF THREE FASTENING POINTS PER SIDE AT REGULAR INTERVALS.
4. DIMENSIONS SHOWN ON DOOR SCHEDULE ARE BASED UPON MODULAR MASONRY (OR ROUGH OPENING), HEIGHT OF 2200mm FOR STANDARD PERSONNEL DOORS. CONTRACTOR SHALL COORDINATE WITH DOOR SUPPLIER TO ENSURE THAT DIMENSIONS OF DOORS AND FRAMES PROVIDED ARE COMPATIBLE WITH DOOR OPENING DIMENSIONS.

HARDWARE TYPES:

HW-1 1-1/2 PR HINGES
1 EA LOCKSET W/LEVERS. GRADE 1, F93
1 EA CYLINDER, GRADE 1
1 EA HEAVY DUTY HASP, WELDED TO EXTERIOR FACE
1 EA THRESHOLD J32130

HW-2 3 PR HINGES
1 EA LOCKSET W/LEVERS. GRADE 1, F93
1 EA CYLINDER. GRADE 1
1 EA HEAVY DUTY HASP WELDED TO EXTERIOR FACE
2 EA FLSUH BOLTS
1 EA REMOVEABLE ASTRAGAL
1 EA THRESHOLD J32130

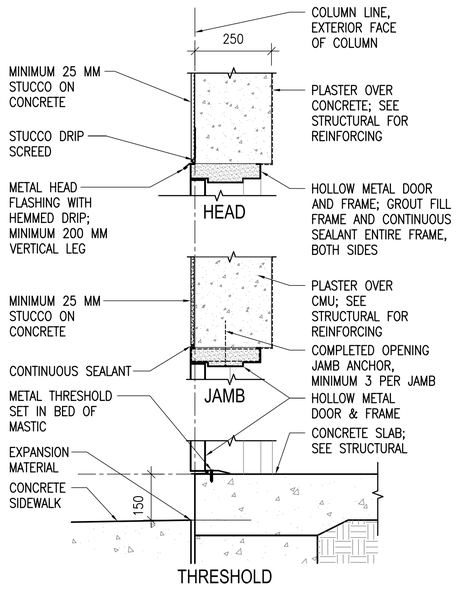

3 A3 A3 EXTERIOR DOOR DETAILS

SCALE: 1:10

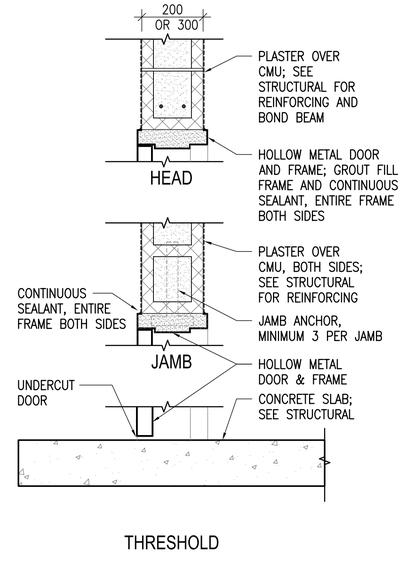

4 A3 A3 INTERIOR DOOR DETAILS

SCALE: 1:10

UNLESS OTHERWISE NOTED, LINEAR DIMENSIONS SHOWN ARE IN MILLIMETERS (MM)

0 200 400 800

SCALE: 1: 10

0 1000 2000 4000

SCALE: 1: 50

US Army Corps of Engineers
Afghanistan Engineer District

SYMBOL	DESCRIPTION	DATE	APP'D

DESIGNED BY: BAKER	DATE: 09-30-09
DWN BY: AR	SUBMITTED BY: BAKER
CHK BY: KRC	FILE NO.: ANPSDA-303XXX

Michael Baker Jr., Inc
A unit of Michael Baker Corporation
Airside Business Park
100 Airside Drive
Moon Township, PA 15108
www.mbakercorp.com

AFGHAN NATIONAL POLICE
STANDARD DESIGN
SECURE STORAGE

DOOR & WINDOW TYPES & DETAILS

SHEET REFERENCE NUMBER:
A3

100% SUBMISSION

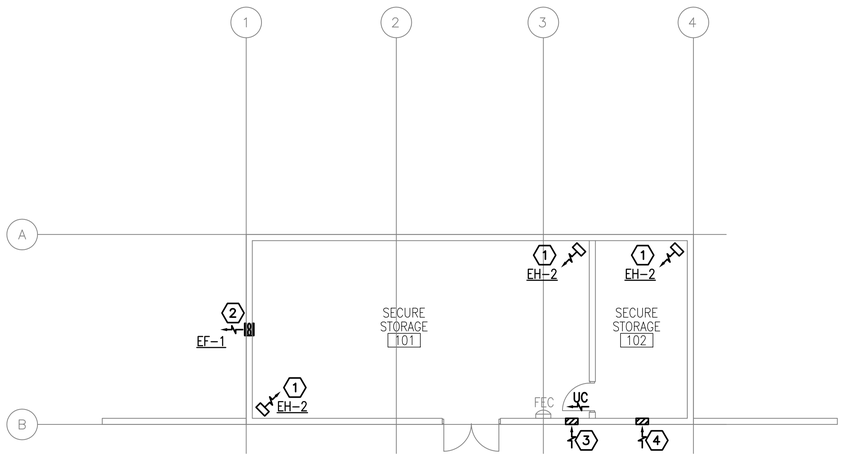

1 M1 M1 HVAC PLAN

SCALE: 1:100

N

GENERAL NOTES:

1. DO NOT SCALE DRAWINGS – ALL DIMENSIONS AND CONDITIONS SHALL BE CHECKED AND VERIFIED BY THE CONTRACTOR AT THE SITE.
2. ALL WORK PERFORMED ON THIS BUILDING SHALL BE IN COMPLIANCE WITH ALL PERTINENT CODES, RULES, ORDINANCES AND REGULATIONS OF THE GOVERNING AUTHORITIES.
3. ALL WORK PERFORMED UNDER AND IN CONNECTION WITH THESE DRAWINGS AND SPECIFICATIONS SHALL BE IN STRICT COMPLIANCE WITH THE LATEST SAFETY AND HEALTH STANDARDS.
4. UC – UNDERCUT DOOR (20mm).

NUMBERED NOTE:

1. EXPLOSION PROOF ELECTRIC UNIT HEATER SUSPENDED FROM STRUCTURE ABOVE.
2. WALL MOUNTED EXHAUST FAN.
3. 200x400 (8x16) LOW LEAKAGE GRAVITY WALL LOUVER FOR INTAKE. PROVIDE WEATHER PROOF LOUVER W/0.05mm (2") WASH DOWN FILTER AND SAND TRAP.
4. 200x200 (8x8) GRAVITY LOW LEAKAGE EXTERIOR LOUVER. SUPPLIED AND INSTALLED BY EC.

EXHAUST FAN SCHEDULE

NO.	TYPE	FAN CMS	DRIVE	HP	SP mmH20	ELECT. CHAR.	SWITCH
EF-1	WALL	0.100	DIRECT	FRACT	13	220/1/50	W/ STAT

NOTES:
1. WALL MOUNTED EXHAUST FAN MOUNT AT 600mm BELOW CEILING.
2. FANS SHALL HAVE LOW LEAKAGE GRAVITY LOUVER AND SECURITY GRILLE.
3. FANS SHALL BE EXPLOSION PROOF.

ELECTRIC UNIT HEATER SCHEDULE

NO.	CMS	KW	F.A.T. °C	ELECT. CHAR.	MOUNTING
EH-2	.200	2.6	33	370/1/50	CEILING HUNG

NOTES:
1. HEATERS SHALL BE EXPLOSION PROOF.

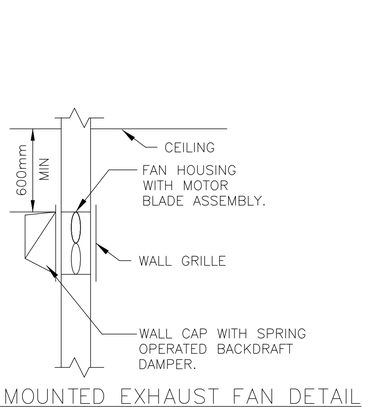

WALL MOUNTED EXHAUST FAN DETAIL
N.T.S.

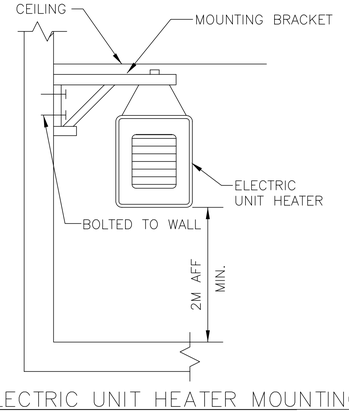

ELECTRIC UNIT HEATER MOUNTING
N.T.S.

US Army Corps of Engineers
Afghanistan Engineer District

SYMBOL	DESCRIPTION	DATE	APP'D

DESIGNED BY: RML	DATE: 09-30-09
DWN BY: JJN	SUBMITTED BY: BAKER
CHK BY: CJM	FILE NO.: ANPSDM-101XXX

Michael Baker Jr., Inc
A unit of Michael Baker Corporation
Airside Business Park
100 Airside Drive
Moon Township, PA 15108
www.mbakercorp.com

AFGHAN NATIONAL POLICE
STANDARD DESIGN
SECURE STORAGE

HVAC PLAN

SHEET REFERENCE NUMBER:
M1

100% SUBMISSION

POWER

- DISTRIBUTION PANELBOARD
- NEW PANELBOARD – SURFACE
- NEW PANELBOARD – RECESSED
- EXISTING PANELBOARD
- (G) GENERATOR
- TVSS TRANSIENT VOLTAGE SURGE SURPRESSOR
- TRANSFORMER (DRAWN TO SIZE)
- PS POWER SUPPLY
- CP CONTROL PANEL
- TC TIME CLOCK
- TIM ASTRONOMICAL TIME CLOCK– "SEE SPEC."
- R RELAY WITH RATING AND NUMBER OF POLES AS NOTED ON DRAWINGS– "SEE SPEC."
- J JUNCTION BOX
- (J) JUNCTION BOX – CEILING
- PB PULL BOX
- BD BUS DUCT HORIZONTAL
- BUS DUCT VERTICAL
- EMERGENCY POWER OFF PUSH BUTTON
- NON–FUSIBLE SAFETY SWITCH
- FUSIBLE SAFETY SWITCH
- (M) MOTOR
- ^{M} MOTOR STARTING SWITCH – 20A RATED
- ^{K} KEY SWITCH – 20A RATED
- FC FAN COIL – FURNISHED BY MECHANICAL CONTRACTOR, ELECTRICAL CONTRACTOR SHALL INSTALL AND PROVIDE POWER CONNECTION
- UH UNIT HEATER – FURNISHED BY MECHANICAL CONTRACTOR, ELECTRICAL CONTRACTOR SHALL INSTALL AND PROVIDE POWER CONNECTION
- D JUNCTION BOX FOR CONNECTION TO GARBAGE DISPOSAL
- CF LIGHT/HEATER/FAN – FURNISHED BY MECHANICAL CONTRACTOR, ELECTRICAL CONTRACTOR SHALL INSTALL AND PROVIDE POWER CONNECTION
- ELECTRIC WATER HEATER
- EPO WEATHERPROOF / EXPLOSION PROOF EMERGENCY POWER OFF PUSH–BUTTON TO BE INTERCONNECTED WITH GENERATOR SHUT DOWN CONTROL
- CF CEILING FAN – REFER TO SPECIFICATION SECTION 26 20 00

RECEPTACLES

- DUPLEX 20A BRITISH STANDARD UNSWITCHED SOCKETS
- GF DUPLEX 20A BRITISH STANDARD UNSWITCHED SOCKETS – 10mA GROUND FAULT INTERRUPTER TYPE
- WPGF DUPLEX 20A BRITISH STANDARD UNSWITCHED SOCKETS – 10mA GROUND FAULT INTERRUPTER TYPE WITH WEATHERPROOF COVER
- EXP DUPLEX 20A BRITISH STANDARD UNSWITCHED SOCKETS – EXPLOSION PROOF
- * INDICATES MOUNT DEVICE ABOVE COUNTER TOP

LIGHTNING PROTECTION

- AIR TERMINAL 20mm O.D. X 4m SOLID COPPER, NICKEL PLATED ON ADHESIVE BASE.
- EQ EQUIPMENT AIR TERMINAL
- TEST WELL WITH GROUND ROD(S)
- GROUND ROD
- G GROUND PLATE
- MAIN GROUND CONDUCTER CONCEALED WITHIN CONSTRUCTION
- MAIN GROUND CONDUCTOR EXPOSED ON EXPOSED ON BUILDING EXTERIOR SURFACE
- GROUND CONDUCTOR CAD WELDED TO GROUND CABLE OR EQUIPMENT
- GROUND CONDUCTOR CAD WELDED TO BUILDING STEEL COLUMN
- GROUND ROD TRIPOD, SPACED 10 FEET APART.
- LEVEL TO LEVEL CABLE

LIGHTING

- LIGHTING FIXTURE – SEE FIXTURE SCHEDULE FOR MORE INFORMATION
- LIGHTING FIXTURE – SEE FIXTURE SCHEDULE FOR MORE INFORMATION
- DOWNLIGHT
- LIGHTING FIXTURE ON NORMAL/EMERGENCY
- WALL MOUNTED LIGHT FIXTURE
- E EXIT SIGN – DIRECTIONAL ARROWS AS INDICATED ON DRAWINGS
- B BATTERY PACK WITH HEADS AS INDICATED ON DRAWINGS
- REMOTE HEAD FOR BATTERY PACK
- $ SINGLE POLE SWITCH – 20A RATED
- ^{3} 3–WAY SWITCH – 20A RATED
- ^{4} 4–WAY SWITCH – 20A RATED
- PC PHOTOCELL VOLTAGE TO MATCH CIRCUITRY
- LC LIGHTING CONTACTOR
- POLE MOUNTED SITE LIGHTING FIXTURE– NUMBER OF FIXTURES PER POLE AS INDICATED ON DRAWINGS
- EXTERIOR DIRECTIONAL LIGHTING FIXTURE
- a SMALL CASE LETTERS REPRESENTS LAMP(S) / SWITCHES. WHEN USED WITH AN OCCUPANCY SENSOR THIS INDICATES SENSOR WITH MANUAL OVERRIDE SWITCH

TELECOMMUNICATIONS

- TELEPHONE OUTLET(S) @ 18" AFF. U.N.O. WITH 3/4" RACEWAY TERMINATED ABOVE NEAREST ACCESSIBLE CEILING OR TO TELEPHONE TERMINAL BOARD IF NO ACCESSIBLE CEILING AVAILABLE. SEE TELE/DATA RISER DIAGRAM FOR OUTLET AND CABLE DESCRIPTION
- DATA OUTLET(S) @ 18" AFF. U.N.O. WITH 3/4" RACEWAY TERMINATED ABOVE NEAREST ACCESSIBLE CEILING OR TO DATA EQUIPMENT RACK IF NO ACCESSIBLE CEILING AVAILABLE. SEE TELE/DATA RISER DIAGRAM FOR OUTLET AND CABLE DESCRIPTION

TELECOMMUNICATIONS (CONTINUED)

- COMBINATION TELEPHONE/DATA OUTLET(S) @ 18" AFF. U.N.O. WITH 1" RACEWAY TERMINATED ABOVE NEAREST ACCESSIBLE CEILING OR TO TELE/DATA TERMINAL AREA IF NO ACCESSIBLE CEILING AVAILABLE. SEE TELE/DATA RISER DIAGRAM FOR OUTLET AND CABLE DESCRIPTION
- W WALL MTD. TELEPHONE OUTLET WITH 3/4" RACEWAY TERMINATED ABOVE NEAREST ACCESSIBLE CEILING OR TO TELEPHONE TERMINAL BOARD IF NO ACCESSIBLE CEILING AVAILABLE. SEE TELE/DATA RISER DIAGRAM FOR OUTLET AND CABLE DESCRIPTION
- (x)T INDICATES NUMBER OF TELEPHONE OUTLET(S) AND ASSOCIATED CABLING
- (x)D INDICATES NUMBER OF DATA OUTLET(S) AND ASSOCIATED CABLING
- (x)TF INDICATES NUMBER OF TELEPHONE OUTLETS AND ASSOCIATED CABLING WITH 1 OUTLET AND CABLE DEDICATED FOR FAX

SINGLE LINE SYMBOLS

- SWITCH
- BREAKER
- FUSE
- TRANSFORMER
- CAPACITOR
- GROUND
- CONTACT (NORMALLY OPEN)
- CONTACT (NORMALLY CLOSED)
- AUTOMATIC TRANSFER SWITCH
- MANUAL DOUBLE THROW SWITCH
- CURRENT TRANSFORMER
- INDICATES NEW ELECTRICAL EQUIPMENT
- C INDICATES NEW CONTROL WIRING AND CONDUIT
- EQUIPMENT OUTLINE

MISCELLANEOUS

- BRANCH CIRCUIT WIRING CONCEALED ABOVE CEILINGS, SURFACE MOUNTED ON WALLS
- BRANCH CIRCUIT WIRING – #10 AWG
- BRANCH CIRCUIT WIRING – UNDER FLOOR
- HOME RUN BACK TO PANEL
- CONDUIT TURNED DOWN
- CONDUIT TURNED UP
- LV LOW VOLTAGE WIRING AND CONDUIT
- CT–X CABLE TRAY ("X" DENOTES WIDTH)
- INDICATES CONTINUATION OF LINE

FIRE ALARM

- FACP FIRE ALARM CONTROL PANEL WITH BATTERY BACKUP
- F FIRE ALARM PULL STATION

FIRE ALARM (CONTINUED)

- F FIRE ALARM STROBE – WALL MOUNTED
- F FIRE ALARM AUDIBLE/STROBE – WM
- F FIRE ALARM HORN/STROBE – WM
- S SMOKE DETECTOR
- H HEAT DETECTOR CEILING MOUNTED
- D DUCT DETECTOR – PROVIDED BY EC, INSTALLED BY MC AND CONNECTED BY EC

DENOTATIONS & ABBREVIATIONS

AFF	ABOVE FINISHED FLOOR
C	CEILING MOUNTED
E	EMERGENCY
EC	ELECTRICAL CONTRACTOR
EPO	EMERGENCY POWER OFF
EXP	EXPLOSION PROOF
F	FIRE ALARM
FF	FLUSH FLOOR MOUNTED
FL	FLUORESCENT
FO	FIBER OPTIC
FSS	FUSED SAFETY SWITCH
G	GROUND FAULT INTERRUPTER
GC	GENERAL CONTRACTOR
HOA	HAND–OFF AUTO
I	INFRARED
ICD	INCANDESCENT
IG	ISOLATED GROUND
K	KEY
LV	LOW VOLTAGE
M	MOTOR
MC	MECHANICAL CONTRACTOR
NE	NORMAL/EMERGENCY
NFSS	NON–FUSED SAFETY SWITCH
PA	PAGING SYSTEM
PLC	PLUMBING CONTRACTOR
REL	RELOCATE
RED	RELOCATED
SL	SINGLE LINE
SS	SURGE SUPPRESSION
T	TELEPHONE
TL	TWIST LOCK

DENOTATIONS & ABBREVIATIONS (CONT.)

TP	TAMPER PROOF
UE	UNDERGROUND ELECTRIC
UF	UNDERGROUND FIBER
UT	UNDERGROUND TELEPHONE
W	WALL MOUNTED
WG	WIRE GUARD
WP	WEATHERPROOF
WPG	WEATHERPROOF/GROUND FAULT INTERRUPTER
WT	WATER TIGHT

GENERAL PROJECT NOTES:

G1. UNLESS OTHERWISE NOTED, PROVIDE ALL EQUIPMENT SHOWN ON THE PLANS. THE ELECTRICAL CONTRACTOR SHALL COORDINATE ALL SYMBOLS SHOWN ON THE PLANS WITH THE SYMBOL LIST. IT SHALL BE THE RESPONSIBILITY OF THE CONTRACTOR TO VERIFY THE INTENT OF ANY SYMBOL THAT IS SHOWN ON THE PLANS AND NOT INDICATED ON THE SYMBOL LIST WITH THE ENGINEER PRIOR TO BID.

G2. COORDINATE THE FINAL LOCATIONS OF ALL LIGHT FIXTURES WITH THE ARCHITECT'S REFLECTED CEILING PLANS. REPORT ANY DISCREPANCIES TO THE ARCHITECT PRIOR TO INSTALLATION.

G3. THE CONTRACTOR SHALL VERIFY THE LOCATION OF ALL UNDERGROUND UTILITIES WITHIN THE CONSTRUCTION AREA THREE (3) WORKING DAYS NOTICE BEFORE COMMENCE DIGGING. NOTIFY THE LOCAL OR STATE AUTHORITY HAVING JURISDICTION AND WAIT THE REQUIRED TIME BEFORE COMMENCING TO DIG.

G4. THE CONTRACTOR SHALL COORDINATE CONDUIT RUNS, CABLE TRAY, LIGHTING FIXTURES AND OTHER EQUIPMENT LOCATIONS WITH THE OTHER TRADE CONTRACTORS TO AVOID CONFLICTS.

G5. WHERE VOLTAGES AND FREQUENCIES ON THE DRAWINGS AND IN THE SPECIFICATIONS DIFFER FROM THE LOCAL ONES, ALL WORK SHALL BE PERFORMED USING THE LOCAL VOLTAGES AND FREQUENCIES.

G6. THE MINIMUM WIRE SIZE ON THE PROJECT SHALL BE 4mm2. THE MINIMUM CONDUIT SIZE SHALL BE 20mm. THE MINIMUM BREAKER SIZE SHALL BE 20 AMPS.

G7. THE CONTRACTOR SHALL PUT A MAXIMUM OF 6 DUPLEX SOCKETS ON A 20A SINGLE POLE CIRCUIT.

G8. WHERE THE 1010 SCOPE REVIEW, 1015 TECHNICAL REVIEW, DRAWINGS, AND SPECIFICATIONS DIFFER FROM AMERICAN CODES OR STANDARDS THE 1010, 1015, DRAWINGS, AND SPECIFICATIONS SHALL RULE.

G9. WORK FOR THE SECURE STORAGE SHALL BE DONE IN ACCORDANCE WITH DEPARTMENT OF DEFENSE STANDARD DOD 6055.9–STD.

G10. ALL CONDUIT AND DEVICES SHALL BE SURFACE MOUNTED UNLESS OTHERWISE INDICATED.

US Army Corps of Engineers
Afghanistan Engineer District

SYMBOL	DESCRIPTION	DATE	APP

DESIGNED BY: JRG
DWN BY: JRG
CHK BY: JRG
DATE: 09-30-09
SUBMITTED BY: BAKER
FILE NO.: ANPSDE-000XXX

Michael Baker Jr, Inc
A unit of Michael Baker Corporation
Airside Business Park
100 Airside Drive
Moon Township, PA 15108
www.mbakercorp.com

AFGHAN NATIONAL POLICE
STANDARD DESIGN
SECURE STORAGE

ELECTRICAL SYMBOLS AND ABBREVIATIONS

SHEET REFERENCE NUMBER:
E0

100% SUBMISSION

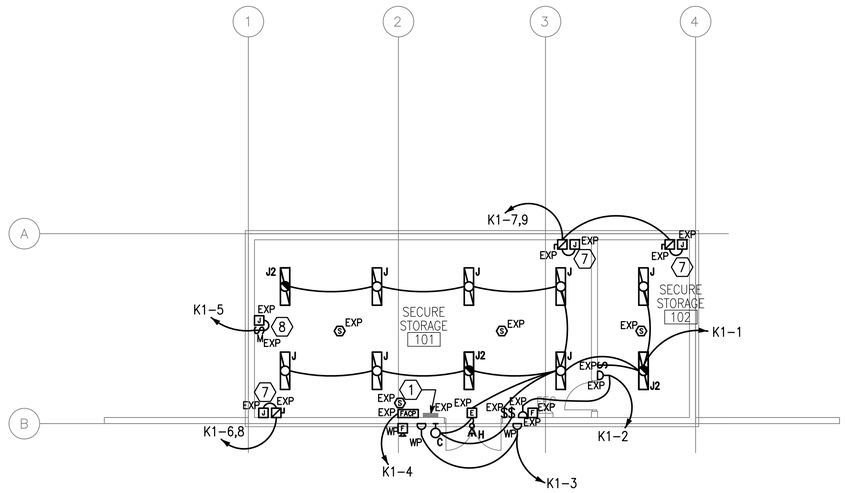

1 E1 E1 LIGHTING AND POWER PLAN

SCALE: 1:100

N

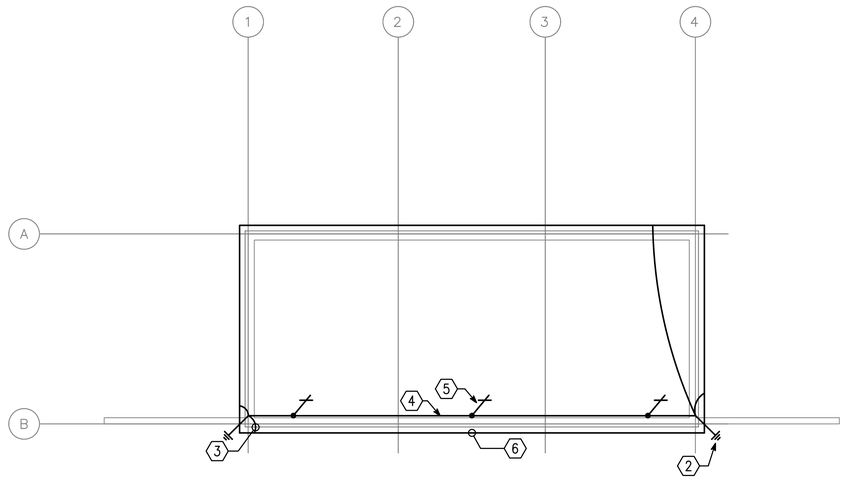

2 E1 E1 ROOF LIGHTNING PROTECTION PLAN

SCALE: 1:100

N

GENERAL NOTES:

1. REFER TO DRAWING #E0 FOR THE ELECTRICAL SYMBOLS LIST.
2. EXIT SIGNS SHALL BE WIRED AHEAD OF ANY LOCAL SWITCHING ON CIRCUITS.
3. REFER TO DRAWING #E3 FOR THE LIGHTING FIXTURE SCHEDULE.
4. REFER TO DRAWING #E2 FOR THE POWER RISER.
5. REFER TO DRAWING #E4 FOR PANEL SCHEDULES.
6. LIGHT FIXTURES INDICATED AS EMERGENCY SHALL BE PROVIDED WITH A BATTERY BACKUP BALLAST.
7. COORDINATE EXACT MOUNTING LOCATION OF DISCONNECTING MEANS FOR MECHANICAL AND PLUMBING EQUIPMENT IN THE FIELD.
8. FUSIBLE SAFETY SWITCHES THAT ARE NOT OTHERWISE IDENTIFIED SHALL BE 380V, 1P, 30A FUSED SAFETY SWITCHES WITH 20A FUSES.
9. ALL PANELS, DEVICES, EQUIPMENT, ETC. SHALL BE EXPLOSION–PROOF OR SHALL BE PROVIDED WITH AN EXPLOSION–PROOF ENCLOSURE. ALL WORK IN THIS BUILDING SHALL BE IN ACCORDANCE WITH NEC ARTICLE 511. EXPLOSION PROOF EQUIPMENT SHALL BE USED FOR ALL FIXTURES AND DEVICES. PROVIDE CONDUIT SEALS WHERE REQUIRED. ALL WIRING SHALL BE IN ACCORDANCE WITH NEC ARTICLE 501. FOR CLASS I LOCATIONS.

NUMBERED NOTES:

1. PANEL K1 WITH NEMA 4X EXPLOSION–PROOF COVER.
2. INSTALL DOWN CONDUCTOR IN 25MM SCHEDULE 80 PVC CONDUIT TO 20MM DIAMETER X 3 METERS SOLID COPPER TINNED GROUND ROD. (TYPICAL)
3. CADWELD TO BUILDING STRUCTURE AT 18 METERS ON CENTER AROUND THE ENTIRE PERIMETER OF THE BUILDING. (TYPICAL)
4. 120mm LIGHTNING PROTECTION CABLE.
5. AIR TERMINAL. (TYPICAL)
6. (1) 120.0MM2 BARE, TINNED, COPPER COUNTERPOISE GROUND 700MM BELOW GRADE.
7. PROVIDE POWER CONNECTION TO ELECTRIC UNIT HEATER #2. SEE DRAWINGS #M1 AND #E4 FOR MORE INFORMATION.
8. PROVIDE POWER CONNECTION TO EXHAUST FANS. SEE DRAWINGS #M1 AND #E4 FOR MORE INFORMATION.

UNLESS OTHERWISE NOTED, LINEAR DIMENSIONS SHOWN ARE IN MILLIMETERS (MM)

1 0 1 2 3 4 5 6 7 8 9

1:100

US Army Corps of Engineers

Afghanistan Engineer District

SYMBOL	DESCRIPTION	DATE	APP.

DESIGNED BY:	DATE:
JRG	09-30-09
DWN BY:	SUBMITTED BY:
JRG	BAKER
CHK BY:	FILE NO.:
JRG	ANPSDE-101XXX

Michael Baker Jr., Inc
A unit of Michael Baker Corporation
Airside Business Park
100 Airside Drive
Moon Township, PA 15108
www.mbakercorp.com

AFGHAN NATIONAL POLICE
STANDARD DESIGN
SECURE STORAGE

LIGHTING AND POWER PLAN

SHEET REFERENCE NUMBER:

E1

100% SUBMISSION

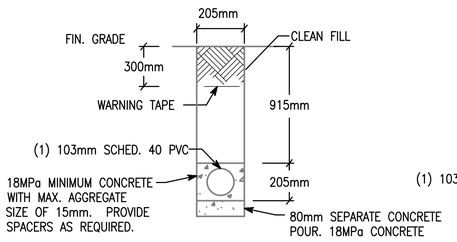

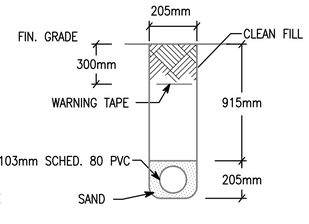

NOTE: PVC CONDUIT SHALL BE DIRECT BURIED SCHEDULE 80 FOR NO TRAFFIC AREAS AND CONCRETE-ENCASED SCHEDULE 40 FOR UNDER ROADWAYS OR TRAFFIC AREAS.

1 E2 | E2 TYPICAL DUCT BANK DETAILS FOR CONDUIT IN SAND OR CONCRETE

SCALE: N.T.S.

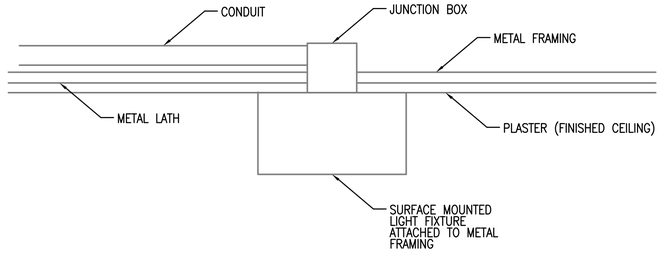

2 E2 | E2 TYPICAL DETAIL FOR SURFACE MOUNTED LIGHT FIXTURES

SCALE: N.T.S.

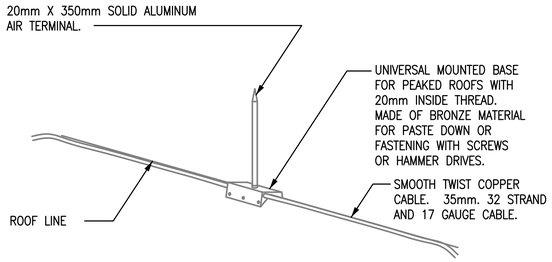

3 E2 | E2 LIGHTNING PROTECTION AIR TERMINAL DETAIL

SCALE: N.T.S.

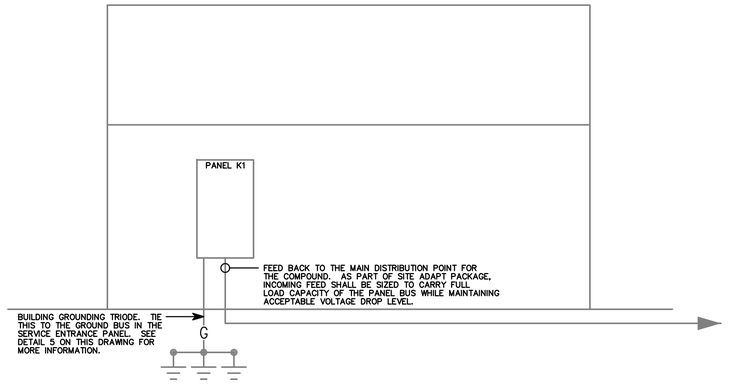

4 E2 | E2 B.1 RISER DIAGRAM

SCALE: N.T.S.

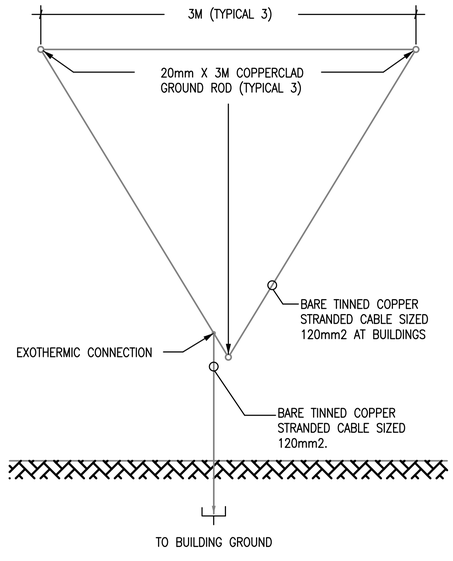

5 E2 | E2 GROUND TRIPOD SYSTEM DETAIL - PLAN

SCALE: N.T.S.

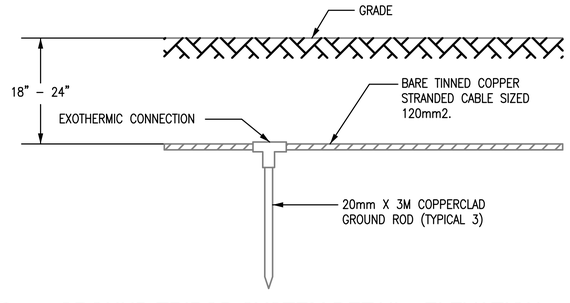

6 E2 | E2 GROUND TRIPOD SYSTEM DETAIL - ELEVATION

SCALE: N.T.S.

US Army Corps of Engineers
Afghanistan Engineer District

SYMBOL	DESCRIPTION	DATE	APR

DESIGNED BY: JRG	DATE: 09-30-09
DWN BY: JRG	SUBMITTED BY: BAKER
CHK BY: JRG	FILE NO.: ANPSDE-502XXX

Michael Baker Jr., Inc
A unit of Michael Baker Corporation
Airside Business Park
100 Airside Drive
Moon Township, PA 15108
www.mbakercorp.com

AFGHAN NATIONAL POLICE
STANDARD DESIGN
SECURE STORAGE

DETAILS

SHEET REFERENCE NUMBER:
E2

100% SUBMISSION

LIGHTING FIXTURE SCHEDULE

FIXTURE MARK	STYLE NUMBER AND TYPE	NUMBER AND TYPE OF LAMPS	VOLTAGE	MOUNTING	NOTES
C	INCANDESCENT ONE PIECE W/ APPROVED LENS STABILIZED HIGH IMPACT POLY CARBONATE.	(1) A19 – 100W INCANDESCENT	220V – 1ø 50HZ	WALL MOUNTED ABOVE EXTERIOR DOORS	
H	REMOTE HEAD EXTERIOR LIGHT HEAD POWERED FROM EXIT SIGN BATTERY– 12V DOUBLE HEAD CORROSION RESISTANT WITH UL34 WEATHERPROOF CONSTRUCTION	(2) 12W/12V HALOGEN LAMP	12V – 1ø 50HZ	EXTERIOR WALL MOUNTED AT TOP OF DOOR HEIGHT	
J	EXPLOSION–PROOF (2) LAMP FIXTURE PROVIDED WITH LAMPS. COPPER FREE, ALUMINUM HOUSING, TEMPERED BOROSILICATE GLASS, AND BIAX LAMPS WITH WIRE GUARD	(2) 40W 3500K BIAX FLUORESCENT LAMPS	220V – 1ø 50HZ	PENDANT MOUNTED FROM SLOPED CEILINGS	FURNISHED WITH LAMPS AND WIRE GUARD
J2	SAME AS FIXTURE 'A' WITH EMERGENCY BALLAST	(2) 40W 3500K BIAX FLUORESCENT LAMPS	220V – 1ø 50HZ	PENDANT MOUNTED FROM SLOPED CEILINGS	FURNISHED WITH LAMPS, WIRE GUARD, EMERGENCY BALLAST WITH SELF TEST SWITCH
[E]	UNIVERSAL MOUNT ENGINEER GRADE THERMOPLASTIC HOUSING EXIT SIGN WITH LED LAMPS, RED LETTERS 6" IN HEIGHT WITH ARROWS AS INDICATED, WITH 12V CADMIUM BATTERY WITH REMOTE HEAD CAPABILITY	LED LAMPS	220V – 1ø 50HZ	UNIVERSAL MOUNTING	

FIXTURE MARK 'C'

INCANDESCENT ONE PIECE WITH APPROVED LENS, STABILIZED HIGH IMPACT POLY CARBONATE

FIXTURE MARK 'H'

REMOTE HEAD EXTERIOR LIGHT HEAD POWERED FROM EXIT SIGN BATTERY– 12V DOUBLE HEAD CORROSION RESISTANT WITH UL34 WEATHERPROOF CONSTRUCTION

FIXTURE MARK '[E]'

UNIVERSAL MOUNT ENGINEER GRADE THERMOPLASTIC HOUSING EXIT SIGN WITH LED LAMPS, RED LETTERS 6" IN HEIGHT WITH ARROWS AS INDICATED, WITH 12V CADMIUM BATTERY

FIXTURE MARK 'J'

EXPLOSION–PROOF (2) LAMP FIXTURE PROVIDED WITH LAMPS. COPPER FREE, ALUMINUM HOUSING, TEMPERED BOROSILICATE GLASS, AND BIAX LAMPS WITH WIRE GUARD

FIXTURE MARK 'J2':
SAME FIXTURE AS 'J' WITH EMERGENCY BALLAST.

US Army Corps of Engineers
Afghanistan Engineer District

SYMBOL	DESCRIPTION	DATE	APP.

DESIGNED BY:	DATE:
JRG	09-30-09
DWN BY:	SUBMITTED BY:
JRG	BAKER
CHK BY:	FILE NO.:
JRG	ANPSDE-603XXX

Michael Baker Jr., Inc
A unit of Michael Baker Corporation
Airside Business Park
100 Airside Drive
Moon Township, PA 15108
www.mbakercorp.com

AFGHAN NATIONAL POLICE
STANDARD DESIGN
SECURE STORAGE

LIGHT FIXTURE SCHEDULE

SHEET REFERENCE NUMBER:
E3

100% SUBMISSION

PANELBOARD K1 SURFACE MOUNTED ASYM. A.I.C. MIN.

AMP. MAIN LUGS (OR) 100 AMP. MAIN BREAKER W/ 100 AMP. TRIP

CIRCUIT BREAKER TYPE 380/220 VOLTS 3 PHASE 4 WIRE 50 HZ 100 AMP. BUS

CKT. NO.	TRIP AMPS	NO. POLES	WIRE MM²	GND MM²	CONDUIT MM	LOAD SERVED	LOAD-V.A. AØ	LOAD-V.A. BØ	LOAD-V.A. CØ	LOAD-V.A. AØ	LOAD-V.A. BØ	LOAD-V.A. CØ	LOAD SERVED	CONDUIT MM	GND MM²	WIRE MM²	NO. POLES	TRIP AMPS	CKT. NO.
1	20	1	4.0	4.0	20	LIGHTING - 101, 102	0.6			0.6			RECEPTACLES - 102	20	4.0	4.0	1	20	2
3	20	1	4.0	4.0	20	RECEPTACLES-OUTDOOR		0.6			0.5		F.A.C.P.	20	4.0	4.0	1	20	4
5	20	1	4.0	4.0	20	EF-1			0.2			1.3	EH-2	20	4.0	4.0	2	20	6
7	20	2	4.0	4.0	20	EH-2	1.3			1.3								20	8
9	20							1.3					SPARE				1	20	10
11	20	1				SPARE							SPARE				1	20	12
							1.9	1.9	0.2	1.9	0.5	1.3							

TOTAL CONN. LOAD PER PHASE (KVA): AØ 3.8 BØ 2.4 CØ 1.5

TOTAL CONN. LOAD 7.7 KVA. 70 % DEMAND = ESTIMATED DEMAND LOAD 5.4 SUPPLIED FROM MAIN SWITCHGEAR DISTRIBUTION

• MAIN BREAKER SHALL BE 3P EARTH GROUND TYPE

US Army Corps of Engineers

Afghanistan Engineer District

SYMBOL	DESCRIPTION	DATE	APP.

DESIGNED BY: JRG	DATE: 09-30-09
DWN BY: JRG	SUBMITTED BY: BAKER
CHK BY: JRG	FILE NO.: ANPSDE-604XXX

Michael Baker Jr., Inc
A unit of Michael Baker Corporation
Airside Business Park
100 Airside Drive
Moon Township, PA 15108
www.mbakercorp.com

AFGHAN NATIONAL POLICE
STANDARD DESIGN
SECURE STORAGE

PANEL SCHEDULES AND RISER DIAGRAM

SHEET REFERENCE NUMBER:

E4

100% SUBMISSION

STANDARD BUILDING DESIGN

L01 -LATRINE BUILDING - SMALL

SHEET INDEX

G-001 COVER SHEET

STRUCTURAL

S-001 GENERAL NOTES & DESIGN CRITERIA
S-101 FOUNDATION/SLAB & ROOF FRAMING PLANS
S-401 BUILDING SECTIONS
S-501 FOUNDATION SECTIONS
S-502 FRAMING SECTIONS
S-503 BEAM AND COLUMN DETAILS
S-504 BEAM AND COLUMN DETAILS
S-601 SCHEDULES
S-701 TYPICAL DETAILS
S-702 TYPICAL DETAILS

ARCHITECTURAL

A-001 LIFE SAFETY PLAN
A-101 FLOOR PLAN
A-102 ROOF PLAN
A-201 ELEVATIONS
A-301 BUILDING SECTIONS
A-401 WALL SECTIONS
A-501 EXTERIOR DETAILS
A-502 HEAD, JAMB, & SILL DETAILS
A-503 STOOP DETAILS
A-504 TOILET, LAVATORY & ABLUTION DETAILS
A-601 WINDOW & DOOR SCHEDULES

MECHANICAL

P-101 FLOOR PLAN-PLUMBING
P-501 PLUMBING DETAILS
P-502 PLUMBING DETAILS
P-503 PLUMBING DETAILS
P-901 PLUMBING ISOMETRICS
P-902 PLUMBING ISOMETRICS

M-101 HVAC FLOOR PLAN, SCHEDULES, & DETAILS

ELECTRICAL

E-001 ELECTRICAL SYMBOLS & ABBREVIATIONS
E-101 ELECTRICAL LIGHTING PLAN
E-102 ELECTRICAL POWER & SYSTEMS PLAN
E-501 ELECTRICAL DETAILS
E-502 ELECTRICAL DETAILS
E-601 ELECTRICAL LIGHT FIXTURE SCHEDULE
E-602 ELECTRICAL PANEL SCHEDULES

US Army Corps of Engineers®
AFGHANISTAN ENGINEER DISTRICT

MARK	DESCRIPTION	DATE	APPR.

MARK	DESCRIPTION	DATE	APPR.

U.S. ARMY CORPS OF ENGINEERS
AFGHANISTAN DISTRICT
APO AE 96338

DESIGNED BY: | DATE:
DWN BY: | CKD BY: | SOLICITATION NO.:
SUBMITTED BY: | CONTRACT NO.:
PLOT SCALE: 1:1 | PLOT DATE: 02/12/2011 | FILE NUMBER:
SIZE: ANSI D | FILE NAME: L01_G-001.dwg

STANDARD DESIGNS
VARIOUS PROJECTS
VARIOUS SITES, VARIOUS LOCATIONS

L01 - LATRINE - SMALL
COVER SHEET

SHEET IDENTIFICATION
G-001
SHEET 1 OF 36

STRUCTURAL ABBREVIATIONS:

ACI	AMERICAN CONCRETE INSTITUTE
ADD'L	ADDITIONAL
AISC	AMERICAN INSTITUTE OF STEEL CONSTRUCTION
AISI	AMERICAN IRON AND STEEL INSTITUTE
ASTM	AMERICAN SOCIETY FOR TESTING AND MATERIALS
ARCH	ARCHITECTURAL
B	BOTTOM
BLDG	BUILDING
BOTT	BOTTOM
℄	CENTER LINE
CFMRF	COLD FORM METAL ROOF FRAME
CFMF	COLD FORM METAL FRAME
CFS	COLD FORMED STEEL
CIP	CAST-IN-PLACE
CIPL	CAST-IN-PLACE LINTEL
CJ	CONTROL JOINT
CLR	CLEAR
CMU	CONCRETE MASONRY UNIT
COEFF	COEFFICIENT
COL	COLUMN
CONC	CONCRETE
CONT	CONTINUOUS
COORD	COORDINATE
CSJ	CONSTRUCTION JOINT
CRSI	CONCRETE REINFORCING STEEL INSTITUTE
DIA	DIAMETER
DIAG	DIAGONAL
DIM	DIMENSION
DWG	DRAWING
DWL	DOWEL
EA	EACH
EF	EACH FACE
ELEC	ELECTRICAL
ELEV	ELEVATION
EMBED	EMBEDMENT
EQUIV	EQUIVALENT
ETC	ET CETERA
EW	EACH WAY
EXP	EXPANSION
EXT	EXTERIOR
FTG	FOOTING
GA	GAUGE
GB	GRADE BEAM
HORIZ	HORIZONTAL
h	HOUR
HRS	HOURS
IBC	INTERNATIONAL BUILDING CODE
INFO	INFORMATION
INT	INTERIOR
kg	KILOGRAM
km	KILOMETER
kN	KILONEWTON
kPa	KILOPASCAL
L#	ANGLE (# INDICATES SIZE)
LONG	LONGITUDINAL
LLV	LONG LEG VERTICAL
m	METER
MAX	MAXIMUM
MECH	MECHANICAL
MFG	MANUFACTURER
MID	MIDDLE
MIN	MINIMUM
MISC	MISCELLANEOUS
mm	MILLIMETER
MPa	MEGAPASCAL
MTL	METAL
MWFRS	MAIN WIND FORCE RESISTING SYSTEM
N	NEWTON
N	NORTH
N/A	NOT APPLICABLE
#	NUMBER SYMBOL FOR REBAR SIZE
NTS	NOT TO SCALE
OC	ON CENTER
OD	OUTSIDE DIAMETER
OPNG	OPENING
℄ or PL	PLATE
PRE-ENG	PRE-ENGINEERED
REINF	REINFORCED
REQ'D	REQUIRED
RB	ROOF BEAM
SIM	SIMILAR
SPECS	SPECIFICATIONS
STD	STANDARD
STRUCT	STRUCTURAL
SW	SHEAR WALL
T	TOP
T/	TOP OF
T/ELEV	TOP ELEVATION
T/SLAB	TOP OF SLAB
T&B	TOP AND BOTTOM
THK	THICK
TYP	TYPICAL
UFC	UNIFIED FACILITIES CRITERIA
UON	UNLESS OTHERWISE NOTED
VERT	VERTICAL
W	WIDTH
W/	WITH

1.0 GENERAL NOTES:

1.1 THIS PROJECT HAS BEEN DESIGNED FOR THE WEIGHTS AND MATERIALS INDICATED ON THE SHEETS AND FOR THE LIVE LOADS INDICATED IN THE DESIGN DATA. IT IS THE CONTRACTOR'S RESPONSIBILITY TO DETERMINE ALLOWABLE CONSTRUCTION LOADS AND TO PROVIDE PROPER DESIGN AND CONSTRUCTION OF FALSEWORK, FORMWORK, STAGING, BRACING, SHEETING AND SHORING, ETC.

1.1 COORDINATE THESE SHEETS WITH THE ARCHITECTURAL, MECHANICAL, ELECTRICAL, PLUMBING, AND CIVIL SHEETS. ALL DIMENSIONS SHOWN ON THE SHEETS ARE MILLIMETERS UNLESS NOTED OTHERWISE.

1.2 THE CONTRACTOR SHALL VERIFY AND COORDINATE ALL FLOOR AND ROOF OPENING SIZES AND LOCATIONS, EQUIPMENT PAD SIZES AND LOCATIONS, ANCHOR BOLT LAYOUTS, ETC WITH EQUIPMENT SELECTED. THE CONTRACTOR SHALL MAKE ANY REQUIRED MODIFICATIONS AT NO ADDITIONAL COST.

1.3 THE CONTRACTOR SHALL REFER TO THE ARCHITECTURAL, MECHANICAL, ELECTRICAL AND PLUMBING SHEETS FOR SLEEVES, CURBS, INSERTS OR OPENINGS, ETC. NOT HEREIN INDICATED.

1.4 SLAB OPENINGS SMALLER THAN 250mm DIA TO BE CORE DRILLED IN FIELD UON. SEE MECHANICAL, ELECTRICAL AND PLUMBING SHEETS FOR LOCATIONS OF THESE OPENINGS.

1.5 WORK NOT INCLUDED ON THE SHEETS BUT IMPLIED TO BE SIMILAR TO THAT SHOWN AT CORRESPONDING PLACES ELSEWHERE ON THE SHEETS SHALL BE REPEATED.

1.6 IN CASE OF CONFLICT BETWEEN THE NOTES, DETAILS AND SPECIFICATIONS THE MOST RIGID REQUIREMENTS SHALL GOVERN.

1.7 SEE ARCHITECTURAL SHEETS FOR LOCATIONS OF MASONRY AND NON-LOAD BEARING PARTITIONS. PROVIDE COMPRESSIBLE FIRESAFING AT TOP OF WALL AS REQUIRED BY ARCHITECTURAL SHEETS.

1.8 COORDINATE FINISHED FLOOR DATUM ELEVATION 0.0m WITH THE CIVIL SHEETS.

2.0 FOUNDATION NOTES

2.1 THE GEOTECHNICAL ANALYSIS FOR THIS PROJECT IS THE RESPONSIBILITY OF THE CONTRACTOR AWARDED THE WORK. AN ASSUMED ALLOWABLE SOIL BEARING VALUE OF 72 kPa HAS BEEN USED IN THE STRUCTURAL ANALYSIS OF THE BUILDING HEREIN AND SHALL BE CONFIRMED AND VERIFIED AS PART OF THE GEOTECHNICAL INVESTIGATION. VALUES WHICH DO NOT MEET THE REQUIREMENTS INDICATED ON THE BASIS OF DESIGN SHEET SHALL BE IMMEDIATELY BROUGHT TO THE ATTENTION OF THE CONTRACTING OFFICER FOR CONSIDERATION AND DETERMINATION ON THE NEXT APPROPRIATE COURSE OF ACTION.

2.2 SEE THE SPECIFICATION FOR ADDITIONAL REQUIREMENTS TO THOSE OUTLINED IN THE GEOTECHNICAL INVESTIGATION FOR EXCAVATION AND PREPARATION OF THE FOUNDATION AND THE SLAB ON GRADE SUBGRADE INCLUDING COMPACTION PROCEDURES.

2.3 EXCAVATIONS FOR FOOTINGS SHALL HAVE THE SIDES AND BOTTOMS TEMPORARILY LINED WITH 0.25mm POLYETHYLENE IF PLACEMENT OF CONCRETE DOES NOT OCCUR WITHIN 24 HRS OF THE EXCAVATION OF THE FOOTING.

2.4 FOUNDATION CONDITIONS NOTED DURING CONSTRUCTION WHICH DIFFER FROM THOSE DESCRIBED IN THE GEOTECHNICAL REPORT SHALL BE REPORTED TO THE GENERAL CONTRACTOR BEFORE FURTHER CONSTRUCTION IS ATTEMPTED. SEE PROJECT SPECIFICATIONS.

2.5 NO FOOTINGS OR SLABS SHALL BE POURED INTO OR AGAINST SUBGRADE CONTAINING FREE WATER, FROST, ICE OR LOOSE MATERIAL. FROST DEPTH ASSUMED TO BE 800mm.

2.6 ALL SLAB-ON-GRADE, TRENCH BOTTOMS AND OTHER ON-GRADE INTERIOR HORIZONTAL SURFACES SHALL BE PLACED OVER A 0.25mm POLYETHYLENE VAPOR RETARDER OVER A 100mm #57 STONE WATER CAPILLARY BARRIER PLACED ON SUBGRADE PROPERLY PREPARED IN ACCORDANCE WITH THE CONTRACT SPECIFICATIONS. (UON)

2.7 PRIOR TO START OF FOUNDATION OR SLAB-ON-GRADE CONSTRUCTION, EXISTING SUBGRADES SHALL BE COMPACTED TO MINIMUM OF 95% MAXIMUM DRY DENSITY OBTAINED THRU ASTM D 1557 MODIFIED PROCTOR TESTING.

2.8 SEE PLUMBING, ELECTRICAL & CIVIL SHEETS FOR REQUIRED UNDERSLAB UTILITIES.

2.9 SEE ARCHITECTURAL SHEETS FOR ALL WATERPROOFING DETAILS AND MATERIALS.

2.10 IF UNDERMINING OF FOOTINGS OCCURS, FILL VOIDS WITH 18 MPa CONCRETE. DO NOT ATTEMPT TO REPLACE AND RE-COMPACT SOIL.

3.0 CONCRETE

3.1 CONCRETE SHALL HAVE THE UNIT WEIGHT OF 2400 kg/m³ AND A MINIMUM COMPRESSIVE STRENGTH (f'c) OF 28 MPa AT 28 DAYS. ALL CONCRETE SHALL HAVE A WATER-CEMENT RATIO OF 0.45. SEE SPECIFICATIONS FOR ADDITIONAL INFORMATION. ENTRAIN AIR TO PRODUCE TOTAL AIR CONTENT ACCORDING TO THE SPECIFICATIONS FOR CONCRETE EXPOSED TO FREEZING TEMPERATURES (EXTERIOR FOOTINGS, SLAB TURNDOWNS, EXTERIOR SLABS AND SLABS-ON-GRADE, EXTERIOR RETAINING WALLS, AND EXTERIOR GRADE BEAMS.)

3.2 NO CALCIUM CHLORIDE SHALL BE USED IN ANY CONCRETE.

3.3 MIXING, TRANSPORTING AND PLACING OF CONCRETE SHALL CONFORM TO ACI 301M-05.

3.4 ALL CONCRETE WORK SHALL CONFORM TO THE REQUIREMENTS OF THE AMERICAN CONCRETE INSTITUTE (ACI) 318M MANUAL (metric), "BUILDING CODE REQUIREMENTS FOR REINFORCED CONCRETE", AND REQUIREMENTS OUTLINED IN THE CONTRACT SPECIFICATIONS. WHEN THERE IS A CONFLICT BETWEEN ACI AND THE SPECIFICATIONS, THE MORE STRINGENT SHALL GOVERN.

3.5 CHAMFER ALL EXPOSED EXTERNAL CORNERS OF CONCRETE WITH 20mm x45 DEGREE CHAMFER UON.

3.6 CONCRETE REINFORCEMENT BARS SHALL CONFORM TO ASTM A615M-96a, GRADE 420 MPa, REINFORCING BARS SHALL NOT BE TACK WELDED, WELDED, HEATED OR CUT, UNLESS INDICATED ON THE CONTRACT DOCUMENTS. ALL LAP SPLICES SHALL BE CLASS "B" UON.

3.7 HORIZONTAL FOOTING AND HORIZONTAL WALL REINFORCEMENT SHALL BE CONTINUOUS AND SHALL HAVE 90 DEGREE BENDS AND EXTENSIONS, OR CORNER BARS OF EQUIVALENT SIZE LAPPED WITH A CLASS B TENSION SPLICE AT CORNERS AND INTERSECTIONS. TOP BAR CRITERIA SHALL APPLY IF 300mm OR MORE OF FRESH CONCRETE IS PLACED BELOW BAR.

3.8 SLABS-ON-GRADE SHALL HAVE CONSTRUCTION JOINTS OR CRACK CONTROL JOINTS AS SHOWN ON THE DRAWINGS. CONSTRUCTION JOINTS CAN BE USED AT CONTROL JOINT LOCATIONS AT CONTRACTORS OPTION. SEE SLAB PLANS & JOINT DETAILS FOR ADDITIONAL INFORMATION. FOR AREAS NOT SHOWN ON DWGS, THE MAXIMUM SPACING OF CONSTRUCTION/ CRACK CONTROL JOINTS SHALL BE 4800mm

3.9 ALL CONCRETE REINFORCEMENT SHALL BE DETAILED, FABRICATED, LABELED, SUPPORTED, AND SPACED IN FORMS AND SECURED IN PLACE IN ACCORDANCE WITH THE PROCEDURES AND REQUIREMENTS OUTLINED IN THE LATEST EDITION OF THE "BUILDING CODE REQUIREMENTS FOR REINFORCED CONCRETE", ACI 318M, AND THE "MANUAL OF STANDARD PRACTICE FOR DETAILING REINFORCED CONCRETE STRUCTURES", ACI 315M, LATEST EDITION. BASED ON IN COUNTRY REINFORCEMENT AVAILABILITY, IT IS THE CONTRACTOR'S OPTION TO ROUND DESIGNATED ODD NUMBERED REINFORCEMENT SIZES UP (1) ONE BAR SIZE.

3.10 ALL DOWELS SHALL MATCH SIZE AND NUMBER OF MAIN REINFORCING, UNLESS NOTED OTHERWISE ON THE SHEETS.

3.11 ADDITIONAL BARS SHALL BE PROVIDED AROUND ALL FLOOR AND WALL OPENINGS AS SHOWN ON THE SHEETS.

3.12 SEE ARCHITECTURAL SHEETS FOR TYPE AND LOCATION OF ALL FLOOR FINISHES.

3.13 THE CONTRACTOR SHALL COORDINATE ADDITIONAL WALL/SLAB OPENINGS NOT SHOWN ON STRUCTURAL SHEETS. SEE MECHANICAL, ELECTRICAL, PLUMBING AND CIVIL SHEETS.

3.14 UNLESS NOTED OTHERWISE, ALL CURBS SHALL BE REINFORCED WITH AT LEAST (1)-#13 CONTINUOUS AND #13 AT 300mm O.C. DOWELS TO STRUCTURE BELOW.

3.15 THE CONTRACTOR SHALL VERIFY ALL OPENINGS, PAD SIZES, AND ANCHOR BOLTS WITH EQUIPMENT SELECTED.

3.16 FOR ALL WALLS & PIERS, PROVIDE DOWELS INTO FOOTING AT EACH VERT REINF BAR, UON DOWEL SIZE SHALL BE SAME AS VERT REINF.

3.17 PROVIDE CONCRETE POUR STOPS OR FORMED AS REQUIRED FOR INSTALLATION OF ALL CONCRETE WORK.

3.18 PROVIDE ADDITIONAL (2)-#13 x 600mm REINFORCING BARS IN SLAB-ON GRADE AT ALL RE-ENTRANT CORNERS. PLACE BARS AT MID-DEPTH OF SLAB WITH A CLEARANCE OF 50mm FROM CORNER UON.

3.19 COLD-WEATHER PLACEMENT: COMPLY WITH ACI 306.1 AND AS FOLLOWS. PROTECT CONCRETE WORK FROM PHYSICAL DAMAGE OR REDUCED STRENGTH THAT COULD BE CAUSED BY FROST, FREEZING ACTIONS, OR LOW TEMPERATURES. SUBMIT A COLD WEATHER CONCRETING PLAN FOR APPROVAL.

3.20 PROVIDE BONDING COMPOUND PER ASTM C 1059-99: SPECIFICATION FOR LATEX AGENTS FOR BONDING FRESH CONCRETE (GROUT) TO HARDENED CONCRETE.

3.21 THE FORMED SURFACES FOR REINFORCED CONCRETE SHALL ACHIEVE A "CLASS A" FINISH WHEN RECEIVING PAINT OR A "CLASS B" FINISH WHEN RECEIVING PLASTER OR TILE AS PER SPECIFICATION SECTION 03 31 00 CAST-IN-PLACE STRUCTURAL CONCRETE.

3.22 AT INTERSECTING GRADE BEAMS AND SHEAR WALLS, PROVIDE CORNER BARS AT INTERSECTIONS WITH SAME QUANTITY, SIZE AND SPACING AS HORIZONTAL BARS WITH LEG LENGTH = 50db.

3.23 REFER TO S-800 SERIES REINFORCING BAR PLACEMENT DRAWINGS DEFINING LENGTHS, BENDS, AND SPACINGS FOR ALL STRUCTURAL CONCRETE. THE S-800 SERIES DRAWING ARE BASED ON THE S-400, S-500, S-600, AND S-700 SERIES DRAWING SCHEDULES, DETAILS, AND DIAGRAMS.

4.0 CONCRETE MASONRY

4.1 MASONRY CONSTRUCTION SHALL CONFORM TO SPECIFICATION FOR MASONRY STRUCTURES (ACI 530.1) UON.

4.2 STRENGTH OF MASONRY MATERIALS SHALL BE AS FOLLOWS:

a. CONCRETE MASONRY UNITS SHALL BE NORMAL WEIGHT, GRADE N, TYPE 1, CONFORMING TO ASTM C-90 AND HAVE A MINIMUM COMPRESSIVE STRENGTH OF 10.4 MPa ON THE NET AREA.

b. MORTAR SHALL CONFORM TO ASTM C-270 TYPE S.

c. GROUT FOR MASONRY SHALL BE NORMAL WEIGHT AND HAVE A MINIMUM COMPRESSIVE STRENGTH OF 14 MPa AT 28 DAYS. GROUT SHALL CONFORM TO ASTM C476M. GROUT LIFTS SHALL NOT EXCEED 1,400mm.

d. REINFORCED MASONRY SHALL HAVE A STRENGTH F'm = 10 MPa. (F'm IS THE COMPRESSIVE STRENGTH OF THE MASONRY AT 28 DAYS AS DETERMINED BY PRISM TESTS).

4.3 ALL VERTICAL REINFORCEMENT FOR CONCRETE MASONRY SHALL BE ASTM A615M-96a, GRADE 420 MPa. ALL SPLICES SHALL BE LAPPED 48 BAR DIAMETERS MINIMUM.

4.4 BOND BEAMS SHALL BE SPACED AT 1200mm OC VERTICALLY. BOND BEAM REINFORCING SHALL BE CONTINUOUS AND PROVIDED AT WALL INTERSECTIONS AND WALL CORNERS (REFERENCE CONCRETE MASONRY NOTE 4.11). ALL BOND BEAM REINFORCING SHALL BE CONTINUOUS AND HAVE STANDARD ACI HOOKS AT EACH END. PROVIDE STANDARD BAR SPLICES AS SPECIFIED. AS AN ALTERNATE TO CMU BOND BEAMS, IT IS THE CONTRACTOR'S OPTION TO PROVIDE 200mm x 200mm CONTINUOUS CAST-IN-PLACE CONCRETE BOND BEAMS WITH (2)-#16 IN LIEU OF CMU BOND BEAMS INDICATED ON THE DRAWINGS.

4.5 SEE TYPICAL DETAILS FOR MINIMUM REINFORCEMENT REQUIREMENTS FOR CMU WALLS. PROVIDE STANDARD BAR SPLICES AS SPECIFIED. ALL VERTICAL REINFORCEMENT EXTENDS FULL HEIGHT OF WALL.

4.6 CMU CELLS THAT REQUIRE VERTICAL REINFORCING BARS AS INDICATED ON THE CONTRACT DRAWINGS AND/OR SPECS SHALL HAVE REINF BARS PLACED IN CENTERS OF CMU CELLS AND CONTINUOUSLY GROUTED UON.

4.7 ALL CMU CELLS, OPEN CAVITIES, AND AIR SPACES OF ALL EXTERIOR WALLS SHALL BE GROUTED TO STOP FRAGMENTS FROM MORTAR BLAST.

4.8 CONTRACTOR SHALL COORDINATE LOCATION OF ALL OPENINGS SEE ARCH, MECH, ELEC, AND PLUMBING SHEETS FOR SIZE AND LOCATION OF OPENINGS.

4.9 MASONRY WALLS SHALL NOT BE BACK FILLED PRIOR TO THE MORTAR AND GROUT ATTAINING THEIR RESPECTIVE MAXIMUM DESIGN STRENGTHS PER SPECIFICATIONS.

4.10 PROVIDE GALVANIZED MORTAR/GROUT SCREEN W/ 3mm MESH WHERE CELLS BELOW ARE NOT GROUTED.

4.11 AT INTERSECTING BOND BEAMS, PROVIDE CORNER BAR FOR EACH HORIZONTAL BAR IN BOND BEAMS AT INTERSECTING WALLS. USE SAME SIZE AND SPACING AS HORIZONTAL BARS WITH LEG LENGTH = 50db.

4.12 THE ALTERNATE CMU BRACE DETAILS SHOWN ON S-701 CAN BE UTILIZED AT THE CONTRACTOR'S OPTION IN PLACE OF THE "FLOATING PIN" WALL BRACE CONNECTIONS AT TOP OF CMU WALLS DEPICTED ON S-400 AND S-500 SERIES DRAWINGS THESE ALTERNATE DETAILS ALSO SHOW ALTERNATE CAST-IN-PLACE WALL BOND BEAMS THAT CAN BE UTILIZED AT THE CONTRACTOR'S OPTION IN PLACE OF THE STANDARD CMU BOND BEAMS CONSTRUCTED OF CMU BLOCKS.

5.0 COLD-FORMED METAL FRAMING

5.1 ALL COLD-FORMED METAL FRAMING MEMBERS SHALL CONFORM TO ASTM A1003M, STRUCTURAL GRADE ST340 (MPa), WITH A GALVANIZED COATING OF Z275 OR BETTER IN ACCORDANCE WITH ASTM A653M.

5.2 ALL COLD-FORMED METAL FRAMING MEMBERS SHALL HAVE THE FOLLOWING MINIMUM PROPERTIES:

a. MINIMUM METAL THICKNESS:
TRACK = 1.37mm;
STUD/OTHER = 1.09mm

b. MINIMUM FLANGE WIDTH;
TRACK = 38mm;
STUD/OTHER = 35mm

c. MINIMUM MEMBER DEPTH;
ALL SECTIONS = 152.2mm

d. PURLIN (HAT CHANNEL)
DEPTHxWIDTH(FLAT TOP)xTHICK = 25mmx42mmx1.59mm

5.3 ALL CONNECTIONS SHALL BE MADE WITH CORROSION RESISTANT (ASTM A153M), SELF-DRILLING, SELF-TAPPING STEEL DRILL SCREWS IN ACCORDANCE WITH ASTM C1513. SCREWS SHALL HAVE A LOW PROFILE HEAD BENEATH ROOF DECK, AND STANDARD HEAD ALL OTHER LOCATIONS.

5.4 FABRICATE COLD FORMED METAL FRAMING AND ACCESSORIES PLUMB, SQUARE AND TRUE TO LINE, WITH CONNECTIONS SECURELY FASTENED ACCORDING TO AISI STANDARD FOR COLD FORMED STEEL FRAMING.

5.5 CUT FRAMING MEMBERS BY SAWING OR SHEATHING, DO NOT TORCH CUT.

5.6 INSTALL FRAMING MEMBERS IN ONE-PIECE LENGTHS UNLESS SPLICE CONNECTIONS ARE INDICATED FOR TRACK OR TENSION MEMBERS

5.7 INSTALL TEMPORARY BRACING AND SUPPORTS TO SECURE FRAMING DURING CONSTRUCTION. MAINTAIN BRACING AND SUPPORTS IN PLACE UNTIL THE STRUCTURE HAS BEEN COMPLETED WITH ALL CONNECTIONS AND PERMANENT BRACING SECURED.

6.0 STRUCTURAL DESIGN CRITERIA

6.1 ALL DESIGNS SHALL CONFORM TO THE PROVISIONS OF THE IBC 2006 AND UFC AS APPLICABLE.

6.2 DESIGN LOADS

6.2.1 DEAD LOADS (PER IBC 2006 & UFC 3-310-01)

MECH/ELEC/PLUMBING	0.20 kPa
MISCELLANEOUS	0.15 kPa
COLD-FORMED FRAMING	0.20 kPa
INSULATION	0.10 kPa
METAL ROOF PANEL	0.14 kPa
	0.79 kPa
FLOOR PARTITION ALLOWANCE	0.96 kPa

6.2.2 LIVE LOADS (PER IBC 2006 & UFC 3-310-01)

ROOF	1.00 kPa
CORRIDOR (2-STORY BLDG ONLY)	4.80 kPa
ALL OTHERS (2-STORY BLDG ONLY)	2.40 kPa
SLAB ON GRADE	4.80 kPa

6.2.3 SNOW LOADS (PER IBC 2006 & UFC 3-310-01)

GROUND SNOW LOAD (Pg)	1.2 kPa
SNOW IMPORTANCE FACTOR (I)	1.0
SNOW EXPOSURE FACTOR (Ce)	1.0
THERMAL FACTOR (Ct)	1.0

6.2.4 WIND LOADS (PER IBC 2006)

BASIC WIND SPEED	137 km/h
WIND IMPORTANCE FACTOR	1.0
WIND EXPOSURE CATEGORY	D
DIRECTIONALITY COEFFICIENT (Kd)	0.85
TOPOGRAPHIC FACTOR (Kzt)	1.0

6.2.5 SEISMIC LOADS (PER IBC 2006 & UFC 3-310-04)

OCCUPANCY USE CATEGORY	II
SEISMIC IMPORTANCE FACTOR (Ie)	1.0
SEISMIC SITE CLASS	D
S_s = 1.50 (REDUCED FROM 2.40 PER ASCE 7-05, 12.8.1.3 FOR A BUILDING WITHOUT IRREGULARITIES)	
S_1 = 1.20	
S_{DS} = 1.00	
S_{D1} = 1.20	
SEISMIC DESIGN CATEGORY	E
SEISMIC RESISTING SYSTEM: -SPECIAL REINFORCED CONCRETE SHEAR WALL	
RESPONSE MODIFICATION FACTOR (R)	6
RESPONSE COEFFICIENT (Cs)	0.167
SEISMIC ANALYTICAL PROCEDURE =	EQUIV LATERAL FORCE
SEISMIC BASE SHEAR	363 kN

US Army Corps of Engineers
AFGHANISTAN ENGINEER DISTRICT

MARK	DESCRIPTION	DATE	APPR.

DESIGNED BY:
DWN BY:
CHD BY:
SUBMITTED BY:
DATE:
SOLICITATION NO.:
CONTRACT NO.:
PLOT SCALE
PLOT DATE/TIME
FILE NAME:
SIZE: ANSI D
L01_S001.dwg

U.S. ARMY CORPS OF ENGINEERS
AFGHANISTAN DISTRICT
APO AE 96338

STANDARD DESIGNS
VARIOUS PROJECTS
VARIOUS SITES, VARIOUS LOCATIONS

L01 - LATRINE - SMALL
GENERAL NOTES & DESIGN CRITERIA

SHEET IDENTIFICATION
S-001
SHEET 2 OF 36

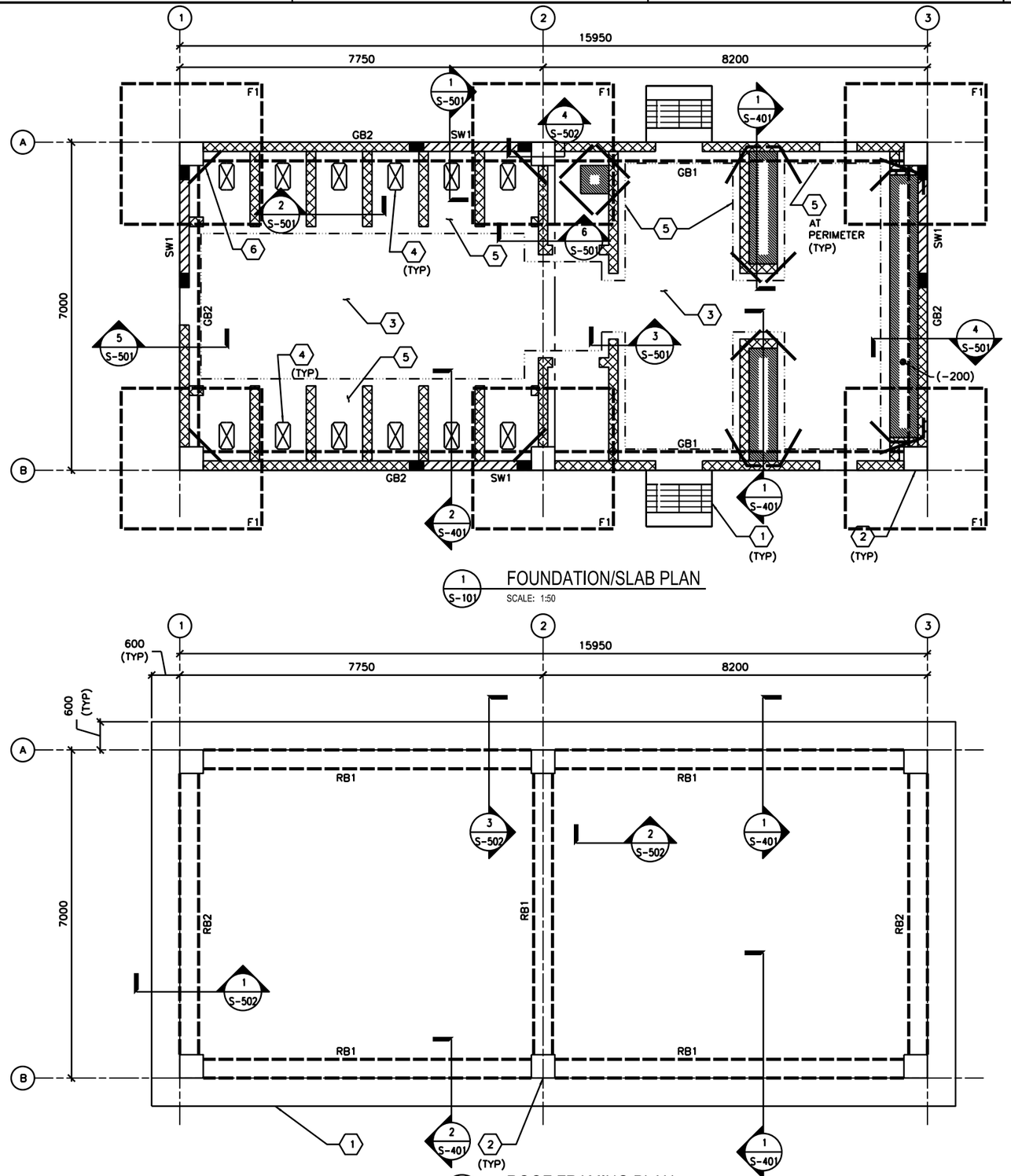

1 S-101 FOUNDATION/SLAB PLAN

SCALE: 1:50

2 S-101 ROOF FRAMING PLAN

SCALE: 1:50

FOUNDATION/SLAB PLAN NOTES:

1. REFER TO SHEET S-001 FOR STRUCTURAL NOTES AND DESIGN CRITERIA.
2. FINISH FIRST FLOOR ELEVATION SHALL BE (DATUM 0.00) ALL PLUS OR MINUS DIMENSIONS INDICATED ON PLAN OR REFERRED TO IN NOTES RELATE TO FINISH FIRST FLOOR ELEVATION.
3. SLAB-ON-GRADE IS 150 WITH #13 @ 300 OC EW LOCATED 38 FROM T/SLAB UON. WHERE NOTED, 300 SLAB ON GRADE SHALL BE REINF W/ #13 @ 300 OC EW T&B. DEPRESS ALL SLABS 65 EXCEPT WHERE INDICATED.
4. TOP OF EXTERIOR FOOTINGS SHALL BE -950 UNLESS OTHERWISE INDICATED.
5. COLUMN FOOTINGS INDICATED BY F# ON PLAN. REFER TO COLUMN FOOTING SCHEDULE ON SHEET S-601.
6. REFER TO COLUMN SCHEDULE ON SHEET S-601.
7. GRADE BEAM INDICATED BY GB# ON PLAN, REFER TO BEAM SCHEDULE ON SHEET S-601.
8. SHEARWALL INDICATED BY SW# ON PLAN, REFER TO SHEARWALL SCHEDULE ON SHEET S-601.
9. SEE TYP EXTERIOR AND INTERIOR CMU WALL REINF DETAILS ON SHEET S-701.
10. SEE MECHANICAL AND ELECTRICAL SHEETS FOR CONCRETE PAD LOCATIONS, SIZES, AND THICKNESS NOT SHOWN. SEE SHEET S-701 FOR DETAILS.

FOUNDATION/SLAB PLAN KEY NOTES: (X)

1. CONC PAD (ENTRANCE)-SEE ARCH DWGS FOR INFORMATION
2. REINF CONC COLUMN
3. REINF CONC SLAB-ON-GRADE
4. SLAB OPENING - COORDINATE W/ ARCH AND PLUMBING DWGS
5. 300 SLAB-ON-GRADE
6. (2)-#13 @ RE-ENTRANT CORNERS - SEE S-701 FOR INFORMATION

FOUNDATION/SLAB PLAN LEGEND:

- REINF CONC SHEAR WALL
- REINF CMU WALL
- CONTROL JOINT
- INDICATES DROP SLAB 200 BELOW FINISH FLOOR
- TRANSITION BETWEEN 150 AND 300 THICK SLAB AREAS
- SLAB OPENING. SEE SHEET S-701 FOR ADDITIONAL SLAB REINF AT OPENING

ROOF FRAMING PLAN NOTES:

1. REFER TO SHEETS S-001 FOR STRUCTURAL NOTES AND DESIGN CRITERIA.
2. TOP OF SLAB ELEVATION = 3500 UNLESS NOTED OTHERWISE.
3. ROOF SLAB IS 250 WITH #19 @ 300 OC EW T&B.
4. ROOF BEAM INDICATED BY RB# ON PLAN. REFER TO BEAM SCHEDULE ON SHEET S-601.
5. COORDINATE WITH ARCHITECTURAL SHEETS FOR COLD-FORMED STEEL OVERBUILT FRAMING ABOVE ROOF SLAB.
6. COLD-FORMED METAL OVERBUILD ROOF FRAMING NOT SHOWN FOR CLARITY. SEE OVERBUILD ROOF FRAMING DETAILS AND SECTIONS ON SHEET S-702.
7. CMU PARTITION WALLS (BELOW ROOF SLAB) NOT SHOWN FOR CLARITY.
8. OVERHANG AREAS OF ROOF SLAB CONTAIN ROOF VENT PENETRATIONS. REFERENCE ARCHITECTURAL DRAWINGS FOR INFORMATION.

ROOF FRAMING PLAN KEY NOTES: (X)

1. CONC ROOF SLAB (BELOW ROOF OVERBUILD)
2. REINF CONC COLUMN (BELOW CONC ROOF SLAB)

0 1000 2000

SCALE: 1:50

UNLESS OTHERWISE NOTED, LINEAR DIMENSIONS SHOWN ON DRAWINGS ARE IN MILLIMETERS (mm)

US Army Corps of Engineers
AFGHANISTAN ENGINEER DISTRICT

MARK	DESCRIPTION	DATE	APPR.
MARK	DESCRIPTION	DATE	APPR.

DESIGNED BY:
DWN BY:
CHD BY:
SUBMITTED BY:
DATE:
SOLICITATION NO.:
CONTRACT NO.:
PLOT SCALE: AS SHOWN
PLOT DATE: AS SHOWN
FILE NUMBER:
SIZE: ANSI D
FILE NAME: L01_S-101.dwg

U.S. ARMY CORPS OF ENGINEERS
AFGHANISTAN DISTRICT
APO AE 96338

STANDARD DESIGNS
VARIOUS PROJECTS
VARIOUS SITES, VARIOUS LOCATIONS

L01 - LATRINE - SMALL

FOUNDATION/SLAB & ROOF FRAMING PLANS

SHEET IDENTIFICATION
S-101
SHEET 3 OF 36

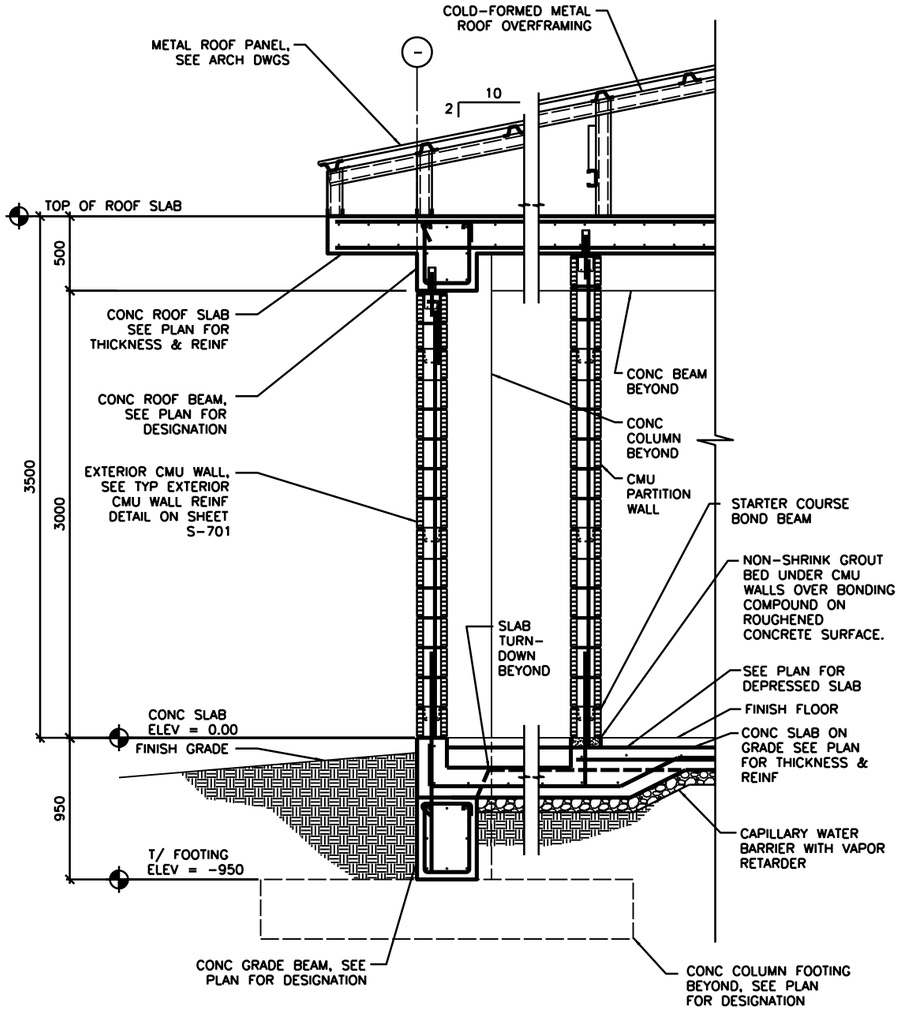

1 S-101 TYPICAL WALL SECTION AT EXTERIOR MASONRY WALL

SCALE: 1:20

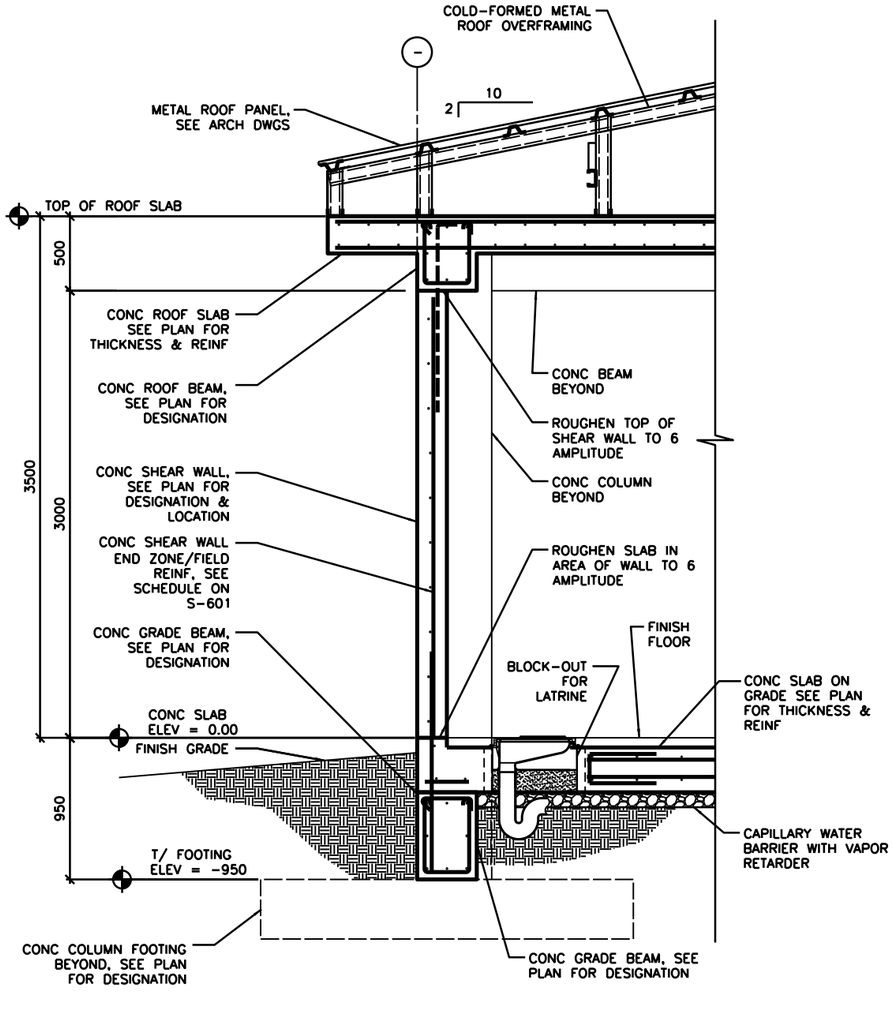

2 S-101 TYPICAL WALL SECTION AT CONCRETE SHEAR WALL

SCALE: 1:20

0 400 800

SCALE: 1:20

UNLESS OTHERWISE NOTED, LINEAR DIMENSIONS SHOWN ON DRAWINGS ARE IN MILLIMETERS (mm)

US Army Corps of Engineers®
AFGHANISTAN ENGINEER DISTRICT

MARK	DESCRIPTION	DATE	APPR.
MARK	DESCRIPTION	DATE	APPR.

DESIGNED BY:
DWN BY:
SUBMITTED BY:
PLOT SCALE: 1:1
PLOT DATE: 6/2/2015
FILE NAME: L01_S-401.dwg
DATE:
SOLICITATION NO.:
CONTRACT NO.:
FILE NUMBER:

U.S. ARMY CORPS OF ENGINEERS
AFGHANISTAN DISTRICT
APO AE 96338

STANDARD DESIGNS
VARIOUS PROJECTS
VARIOUS SITES: VARIOUS LOCATIONS

L01 - LATRINE - SMALL
BUILDING SECTIONS

SHEET IDENTIFICATION
S-401
SHEET 4 OF 36

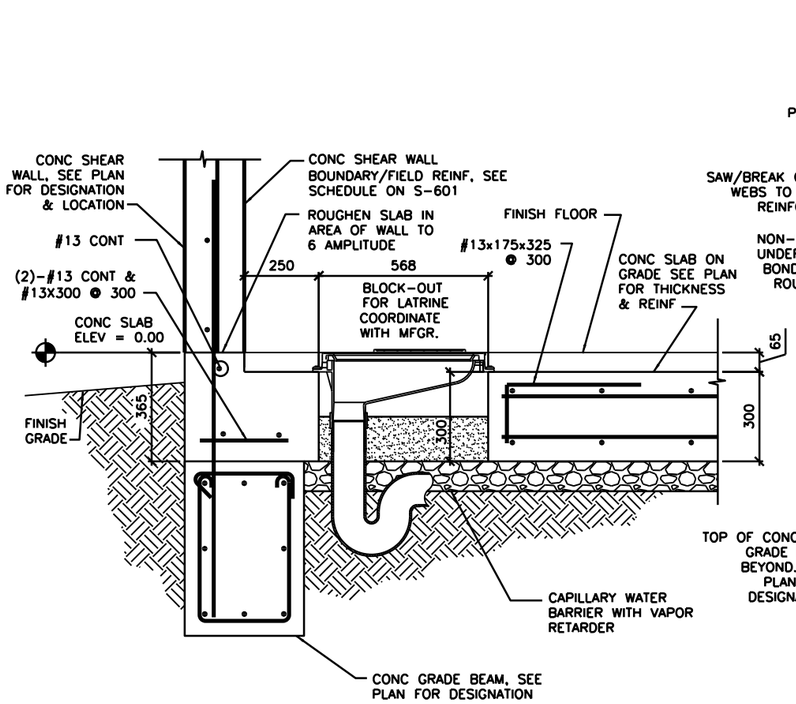

1 SECTION
S-101 SCALE: 1:10

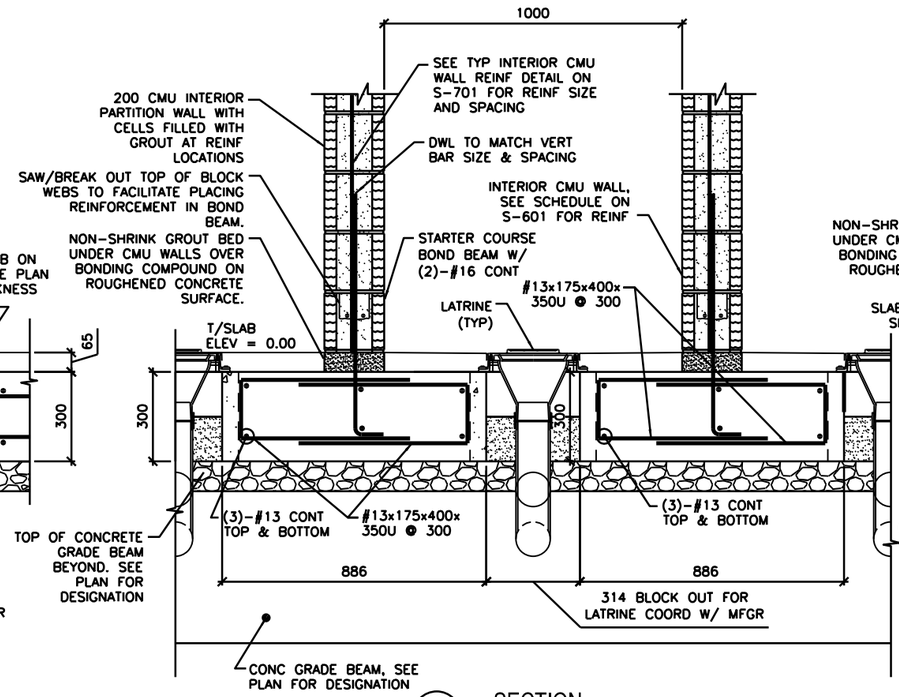

2 SECTION
S-101 SCALE: 1:10

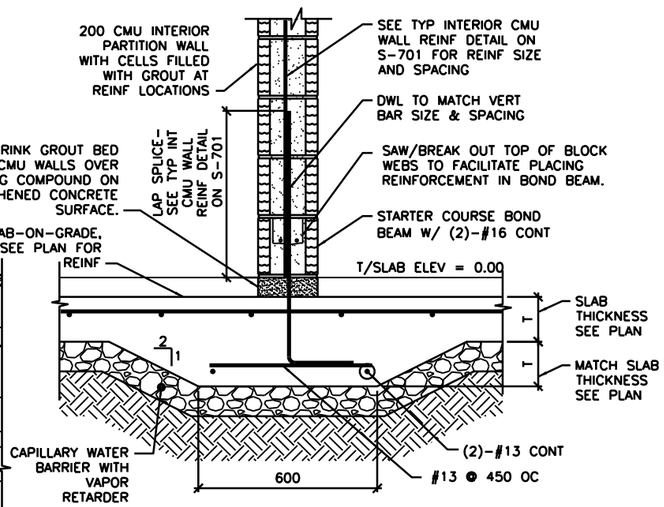

3 SECTION
S-101 SCALE: 1:10

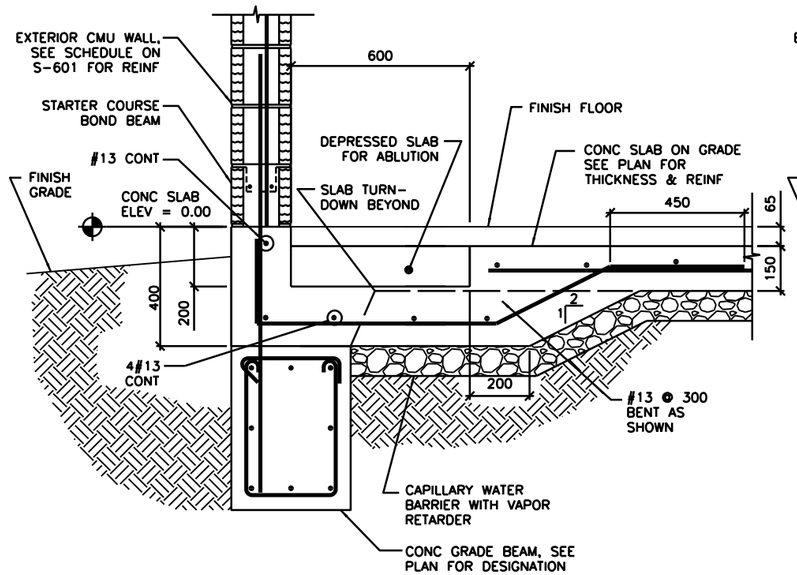

4 SECTION
S-101 SCALE: 1:10

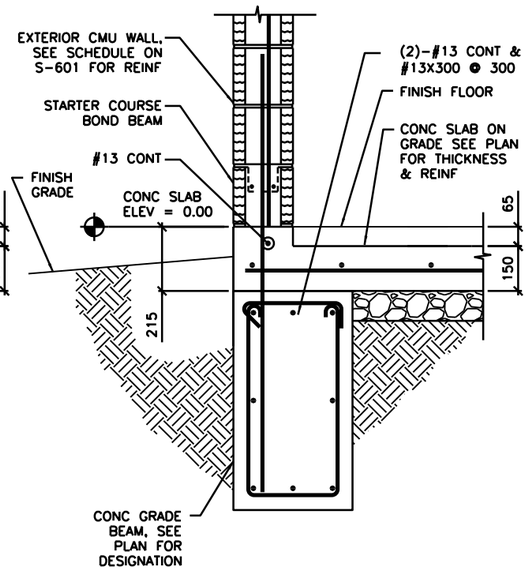

5 SECTION
S-101 SCALE: 1:10

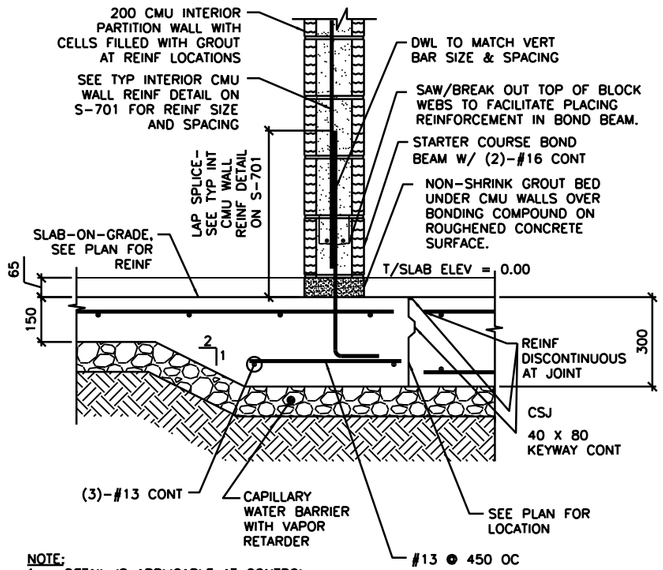

NOTE:
1. DETAIL IS APPLICABLE AT CONTROL JOINTS RUNNING PARALLEL TO CMU WALLS AND WITHIN 300 OF FACE OF WALL.

6 SECTION
S-101 SCALE: 1:10

0 200 400
SCALE: 1:10

UNLESS OTHERWISE NOTED, LINEAR DIMENSIONS SHOWN ON DRAWINGS ARE IN MILLIMETERS (mm)

US Army Corps of Engineers
AFGHANISTAN ENGINEER DISTRICT

MARK	DESCRIPTION	DATE	APPR.

DESIGNED BY:
DWN BY:
CKD BY:
SUBMITTED BY:
DATE:
SOLICITATION NO.:
CONTRACT NO.:
PLOT SCALE: As noted
PLOT DATE:
FILE NUMBER:
SIZE: ANSI D
FILE NAME: L01_S-501.dwg

U.S. ARMY CORPS OF ENGINEERS
AFGHANISTAN DISTRICT
APO AE 96338

STANDARD DESIGNS
VARIOUS PROJECTS
VARIOUS SITES, VARIOUS LOCATIONS

L01 - LATRINE - SMALL
FOUNDATION SECTIONS

SHEET IDENTIFICATION
S-501
SHEET 5 OF 36

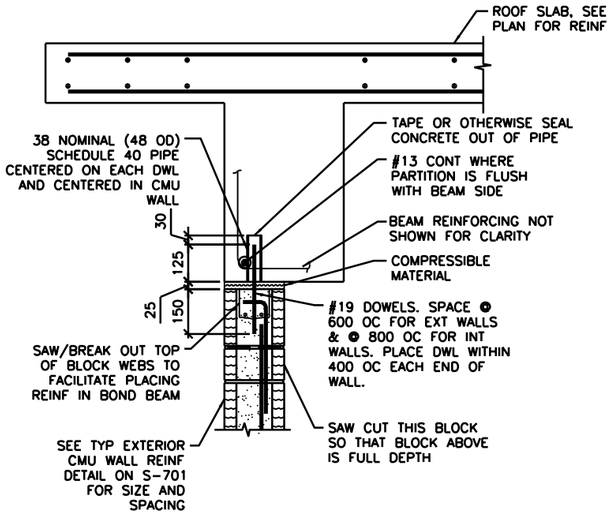

NOTES:
1. EXTEND DOWEL REINF TO 25 CLEAR FROM TOP OF CMU WALL.

1 S-101 SECTION
SCALE: 1:10

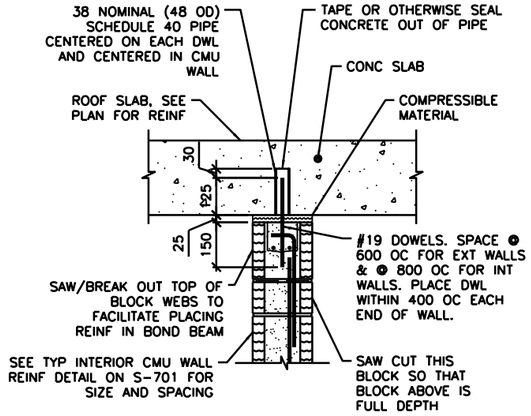

NOTES:
1. EXTEND DOWEL REINF TO 25 CLEAR FROM TOP OF CMU WALL.
2. SLAB REINF NOT SHOWN FOR CLARITY.

2 S-101 SECTION
SCALE: 1:10

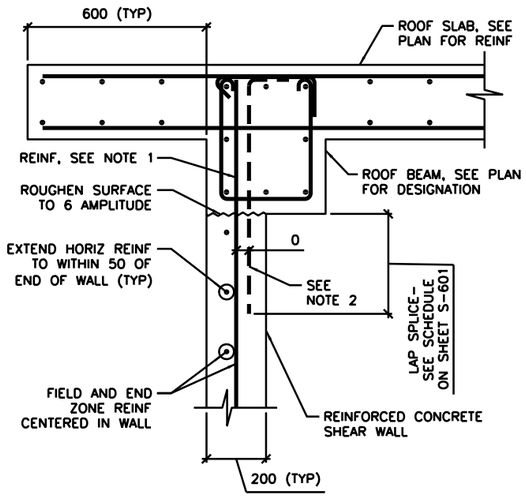

NOTES:
1. TERMINATE "FIELD" VERT REINF & END ZONE REINF @ 50 CLEAR FROM TOP OF ROOF SLAB.
2. WHERE END ZONE REINFORCING CANNOT BE DEVELOPED IN BEAM DEPTH, PROVIDE HOOKED DWLS SAME SIZE & SPACING. PROVIDE TENSION LAP BELOW ROOF BEAM.
3. SEE SHEET S-601 AND SHEET S-702 FOR SCHEDULED FIELD AND END ZONE REINF.

3 S-101 SECTION
SCALE: 1:10

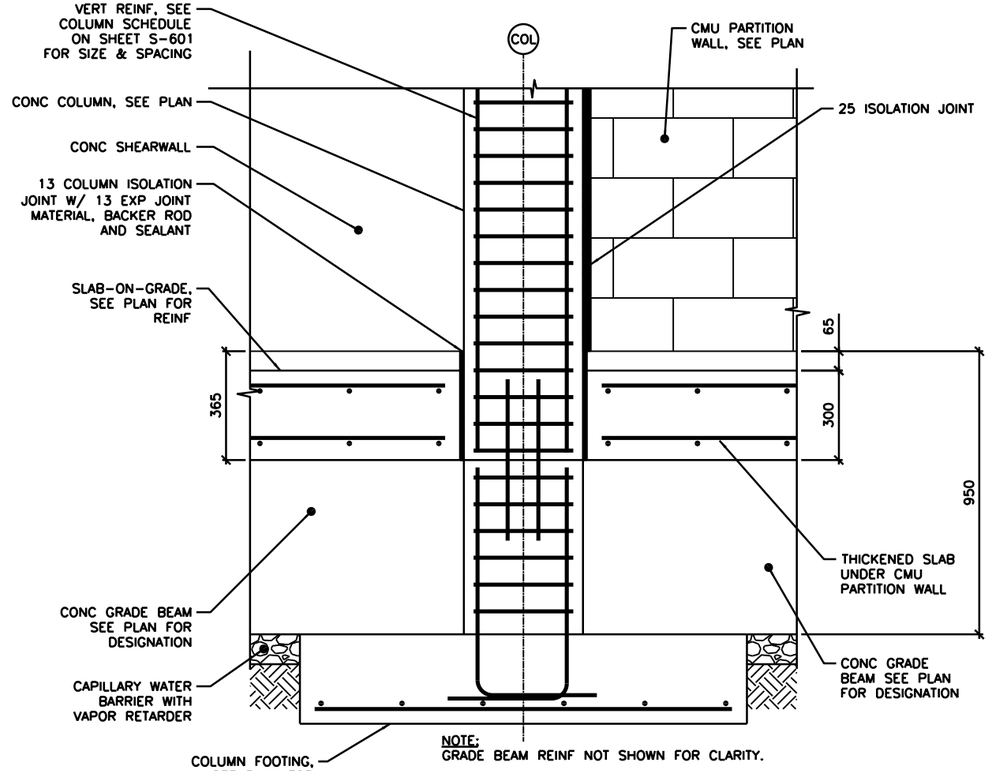

NOTE:
GRADE BEAM REINF NOT SHOWN FOR CLARITY.

4 S-101 SECTION
SCALE: 1:10

0 200 400
SCALE: 1:10

UNLESS OTHERWISE NOTED, LINEAR DIMENSIONS SHOWN ON DRAWINGS ARE IN MILLIMETERS (mm)

US Army Corps of Engineers
AFGHANISTAN ENGINEER DISTRICT

MARK	DESCRIPTION	DATE	APPR.
MARK	DESCRIPTION	DATE	APPR.

DESIGNED BY:
DWN BY:
CKD BY:
SUBMITTED BY:
DATE:
SOLICITATION NO.:
CONTRACT NO.:
PLOT SCALE: AS NOTED
PLOT DATE: AS NOTED
FILE NUMBER:
SIZE: ANSI D
FILE NAME: L01_S-502.dwg

U.S. ARMY CORPS OF ENGINEERS
AFGHANISTAN DISTRICT
APO AE 96338

STANDARD DESIGNS
VARIOUS PROJECTS
VARIOUS SITES, VARIOUS LOCATIONS

L01 - LATRINE - SMALL
FRAMING SECTIONS

SHEET IDENTIFICATION
S-502
SHEET 6 OF 36

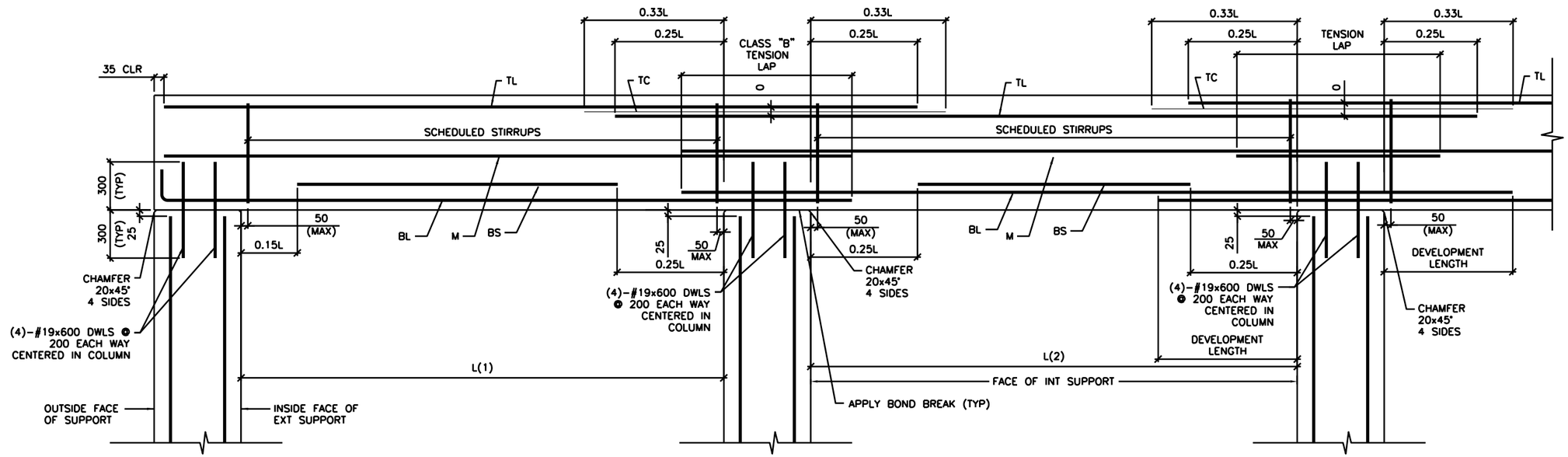

DETAIL NOTE:
1. WORK THIS DETAIL WITH BEAM SCHEDULE ON SHEET S-601.
2. L=GREATEST OF ADJACENT SPANS L(1) OR L(2)
3. ONLY COLUMN CORNER BARS ARE SHOWN

1 S-503 ROOF BEAM REINFORCING DETAIL
SCALE: NTS

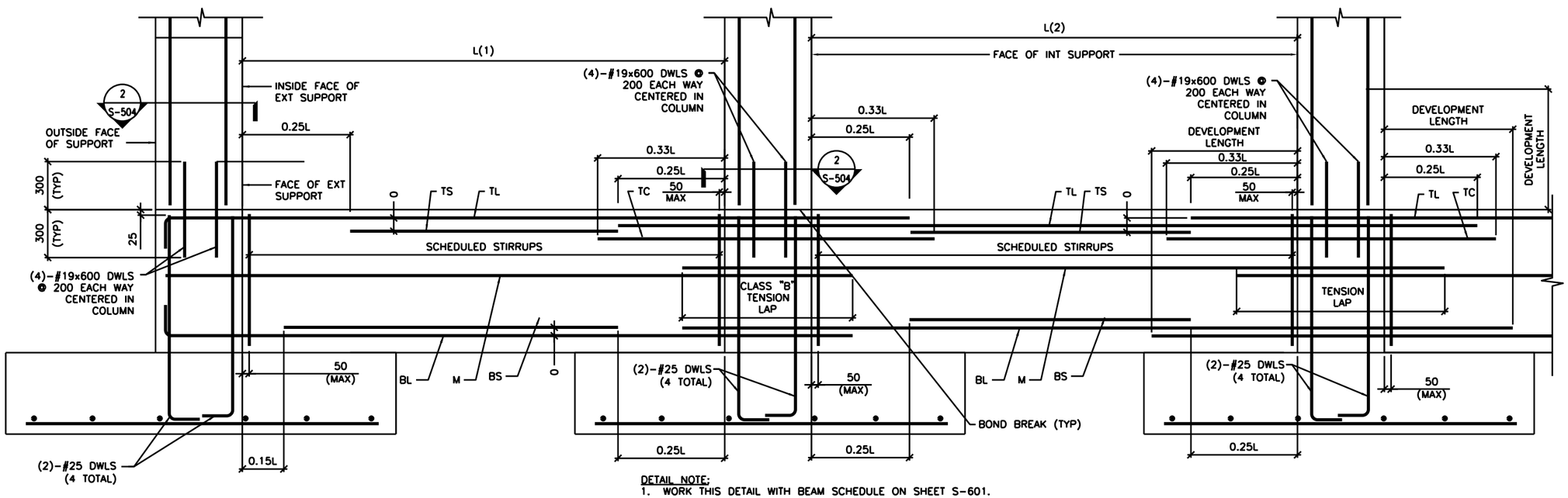

DETAIL NOTE:
1. WORK THIS DETAIL WITH BEAM SCHEDULE ON SHEET S-601.
2. L=GREATEST OF ADJACENT SPANS L(1) OR L(2)
3. ONLY COLUMN CORNER BARS ARE SHOWN.

2 S-503 GRADE BEAM REINFORCING DETAIL
SCALE: NTS

UNLESS OTHERWISE NOTED, LINEAR DIMENSIONS SHOWN ON DRAWINGS ARE IN MILLIMETERS (mm)

US Army Corps of Engineers®
AFGHANISTAN ENGINEER DISTRICT

MARK	DESCRIPTION	DATE	APPR.

MARK	DESCRIPTION	DATE	APPR.

DESIGNED BY: | DATE:
DWN BY: | CKD BY: | SOLICITATION NO.:
SUBMITTED BY: | CONTRACT NO.:
PLOT SCALE: 1:1 | PLOT DATE: 02/12/2011 | FILE NUMBER:
SIZE: ANSI D | FILE NAME: L01_S-503.dwg

U.S. ARMY CORPS OF ENGINEERS
AFGHANISTAN DISTRICT
APO AE 96338

STANDARD DESIGNS
VARIOUS PROJECTS
VARIOUS SITES, VARIOUS LOCATIONS

L01 - LATRINE - SMALL
BEAM AND COLUMN DETAILS

SHEET IDENTIFICATION
S-503
SHEET 7 OF 36

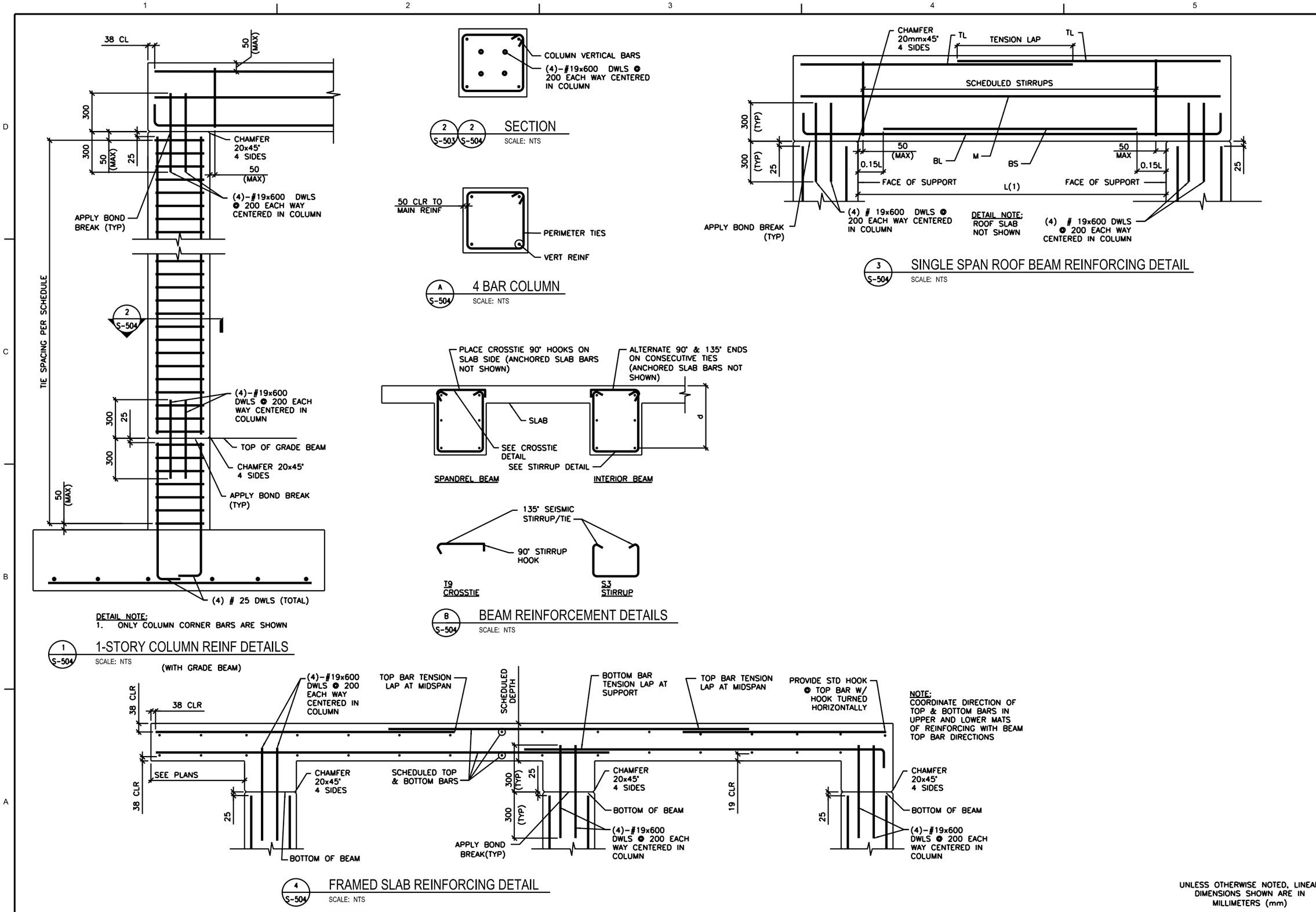

UNLESS OTHERWISE NOTED, LINEAR DIMENSIONS SHOWN ARE IN MILLIMETERS (mm)

US Army Corps of Engineers®
AFGHANISTAN ENGINEER DISTRICT

MARK	DESCRIPTION	DATE	APPR.	MARK	DESCRIPTION	DATE	APPR.

DESIGNED BY: | DATE:
DWN BY: | CKD BY: | SOLICITATION NO.:
SUBMITTED BY: | CONTRACT NO.:
PLOT SCALE: 1:1 | PLOT DATE: 02/12/2011 | FILE NUMBER:
SIZE: ANSI D | FILE NAME: L01_S-504.dwg

U.S. ARMY CORPS OF ENGINEERS
AFGHANISTAN DISTRICT
APO AE 96338

STANDARD DESIGNS
VARIOUS PROJECTS
VARIOUS SITES, VARIOUS LOCATIONS

L01 - LATRINE - SMALL
BEAM AND COLUMN DETAILS

SHEET IDENTIFICATION
S-504
SHEET 8 OF 36

CONCRETE REINFORCEMENT TENSION DEVELOPMENT/LAP SPLICE SCHEDULE

f'c = 28 MPa	LAP CLASS	UNCOATED BARS			
		TOP BARS		OTHER BARS	
BAR SIZES		CASE 1	CASE 2	CASE 1	CASE 2
#10 TO #19	A	50 BAR DIA	74 BAR DIA	38 BAR DIA	57 BAR DIA
	B	64 BAR DIA	96 BAR DIA	50 BAR DIA	74 BAR DIA
#22 TO #57	A	62 BAR DIA	93 BAR DIA	48 BAR DIA	71 BAR DIA
	B	80 BAR DIA	121 BAR DIA	62 BAR DIA	93 BAR DIA

NOTES:
1. TABULATED TENSION DEVELOPMENT LENGTH VALUES ARE TAKEN FROM CRSI DESIGN HANDBOOK 2008 10TH ED.
2. TENSION DEVELOPMENT & TENSION LAP SPLICE LENGTHS ARE EXPRESSED AS MULTIPLES OF BAR DIAMETERS.
3. TABULATED VALUES ARE BASED ON MINIMUM YIELD STRENGTH OF REINFORCEMENT, fy, OF 420MPa.
4. CONCRETE IS NORMAL WEIGHT (2400Kg/m^3) AND 28 DAY COMPRESSIVE STRENGTH = 28MPa.
5. TABULATED VALUES FOR BEAMS & COLUMNS ARE BASED ON TRANSVERSE REINFORCEMENT AND CONCRETE COVER MEETING MINIMUM CODE REQUIREMENTS.
6. CASES 1 & 2, WHICH DEPEND ON THE TYPE OF STRUCTURAL MEMBER, CONCRETE COVER, AND CENTER-TO-CENTER SPACING OF THE BARS ARE DEFINED IN THE TABLE BELOW.
7. LAP SPLICE LENGTHS (MINIMUM 300mm) ARE MULTIPLES OF TENSION DEVELOPMENT LENGTHS: CLASS A = 1.0(TENSION DEVELOPMENT LENGTH) & CLASS B = 1.3(TENSION DEVELOPMENT LENGTH)
8. TOP BARS ARE HORIZONTAL REINFORCEMENT WITH MORE THAN 300mm OF CONCRETE CAST BELOW THE BARS.
9. IT SHALL BE PERMISSIBLE TO CALCULATE WALL AND SLAB REINFORCEMENT TENSION DEVELOPMENT/SPLICE LENGTHS IN ACCORDANCE WITH ACI 12.2.3 OR TABLE 5.3(b) OF CRSI 2008 IN LIEU OF VALUES TABULATED ABOVE.

BEAMS, COLUMNS	CASE 1	CONCRETE COVER AT LEAST 1 BAR DIA AND CENTER-TO-CENTER SPACING AT LEAST 2 BAR DIA
	CASE 2	CONCRETE COVER LESS THAN 1 BAR DIA OR CENTER-TO-CENTER SPACING LESS THAN 2 BAR DIA
ALL OTHERS	CASE 1	CONCRETE COVER AT LEAST 1 BAR DIA AND CENTER-TO-CENTER SPACING AT LEAST 3 BAR DIA
	CASE 2	CONCRETE COVER LESS THAN 1 BAR DIA OR CENTER-TO-CENTER SPACING LESS THAN 3 BAR DIA

CONCRETE COVER SCHEDULE

MINIMUM CONCRETE COVER PROTECTION FOR REINFORCEMENT BARS SHALL BE AS LISTED BELOW: (SEE ACI 318M-05, SECTION 7.7 FOR CONDITIONS NOT NOTED). DIMENSIONS FOR BAR PLACEMENT GIVEN IN SECTIONS AND DETAILS SHALL SUPERSEDE MINIMUM COVER REQUIREMENTS GIVEN HERE. DIMENSIONS ARE IN mm. PROVIDE STANDARD BAR CHAIRS AND SUPPORT BARS @1200mm MAXIMUM AS REQUIRED TO MAINTAIN CONCRETE PROTECTION SPECIFIED.

FOOTINGS (EARTH FORMED):		70
COLUMNS / PIERS (TO TIES)		40
GRADE BEAMS OR SLAB TURNED DOWN EDGES:		
TOP		40
BOTTOM (EARTH FORMED)		70
SIDES (EARTH FORMED)		70
SIDES (BOARD FORMED)	#16 BAR & SMALLER	40
	#19 THRU #36 BAR	50
ELEVATED BEAMS & SLABS:		
BEAM TIES & STIRRUPS (NOT EXPOSED TO WEATHER)		40
BEAM TIES & STIRRUPS (EXPOSED TO WEATHER)		50
FLOOR SLABS (NOT EXPOSED TO WEATHER)		20
FLOOR SLABS (EXPOSED TO WEATHER)		
#19 & LARGER		50
#13 & SMALLER		40
ROOF SLAB BARS		25
SLABS ON GRADE		
NOT EXPOSED TO WEATHER (FROM TOP)		20
EXPOSED TO WEATHER (FROM TOP)		40
UTILITY TUNNEL WALLS, RETAINING WALLS AND SHEAR WALLS. (NO SURFACES SHALL BE EARTH FORMED)		
EARTH SIDE AND FRONT SIDE (EXPOSED TO WEATHER)		
#16 BAR AND SMALLER		40
#19 THRU #36 BAR		50

COLUMN FOOTING SCHEDULE

MARK	FOOTING SIZE (mm)			FOOTING REINFORCING	REMARKS
	LENGTH	WIDTH	THICKNESS		
F1	3000	3000	300	(9)-#19 EW BOTT	-----

CONCRETE SHEAR WALL SCHEDULE

MARK	TYPE	WALL LENGTH (L) (mm)	WALL REINFORCEMENT		REMARKS
			END ZONE	FIELD	
SW1	B	2600	(4)-#16 @ 150mm OC	#13 @ 300mm OC	-----

NOTES:
1. WORK THIS SCHEDULE WITH SHEAR WALL DETAILS ON SHEETS S-702
2. SEE PLAN FOR LOCATION OF SHEAR WALL(S).
3. VERTICAL "FIELD" BARS MAY BE OMITTED IN LOCATION OF "END ZONE" REINFORCEMENT.
4. WALL FIELD REINF LISTED APPLIES TO VERT & HORIZ BARS.
5. WALL FIELD REINFORCEMENT CENTERED IN WALL.

STANDARD HOOKS IN TENSION PER (ACI 318M-05)

HOOK DEVELOPMENT LENGTH (mm)	
BAR SIZE	f'c 28 MPa
#10	180
#13	250
#16	300
#19	380
#22	430
#25	480
#29	560
#32	610
#36	690

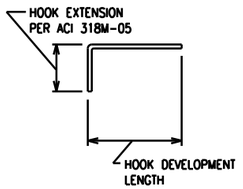

NOTES:
1. CONCRETE IS NORMAL WEIGHT CONCRETE.
2. BAR YIELD STRENGTH, fy = 420 MPa
3. SIDE COVER REQUIREMENTS OF ACI SECT. 12.5.3 ARE ASSUMED TO NOT BE MET.
4. TIE OR STIRRUP REQUIREMENTS OF ACI SECT. 12.5.3 ARE ASSUMED TO NOT BE MET.
5. REDUCTION FOR EXCESS REINFORCEMENT IS NOT TAKEN.
6. HOOK DEVELOPMENT LENGTH IS VALID FOR 180° HOOKS ALSO.

BEAM SCHEDULE

MARK	BEAM SIZE (mm)		BEAM REINFORCING						STIRRUPS			REMARKS
	DEPTH	WIDTH	BL	BS	TL	TS	TC	M	SIZE	TYPE	SPACING	
GRADE BEAMS												
GB1	735/550	400	(2)-#25	(1)-#25	(2)-#19	---	---	#22 EF	#13	S3+T9	d/2	LOWER TOP TO 550 BETWEEN A2-A3 & B2-B3
GB2	735/585 /550	400	(2)-#29	(2)-#29	(2)-#19	---	---	#22 EF	#13	S3+T9	d/2	LOWER TOP TO 585 BETWEEN A1-A2 & B1-B2; TO 550 BETWEEN A3-B3
ROOF BEAMS												
RB1	500	400	(2)-#25	(1)-#25	(2)-#25	---	---	---	#13	S3+T9	d/2	-----
RB2	500	400	(2)-#29	(1)-#29	(2)-#25	---	---	---	#13	S3+T9	d/2	-----

NOTES:
1. WORK THIS SCHEDULE WITH BEAM REINFORCING DETAILS ON SHEETS S-503 AND S-504.
2. HOOKS SHOWN ON SECTIONS AND DETAILS SHALL BE 90° STD UON.
3. USE ONLY (1) TC AT BEAM COLUMN INTERSECTION WHERE REQ'D.

COLUMN SCHEDULE

DESCRIPTION \ COLUMN MARK	TYP UON	---	---	---
TYPE	4-BAR	---	---	---
DIMENSIONS	500mm SQ	---	---	---
VERTICAL REINFORCEMENT	(4)-#29	---	---	---
TIES	#13 @ d/2	---	---	---
TOP OF ROOF ELEVATION	3500mm	---	---	---
TOP OF GRADE BEAM ELEVATION	-200mm	---	---	---
TOP OF FOOTING ELEVATION	-950mm	---	---	---

NOTES:
1. WORK THIS SCHEDULE WITH COLUMN DETAILS ON SHEET S-504.
2. SEE FOOTING SCHEDULE THIS SHEET FOR FOOTING INFORMATION
3. COLUMN TIES: INTERIOR TIES TO MATCH SIZE & SPACING OF PERIMETER TIES.
4. HOOKS SHOWN ON SECTIONS & DETAILS SHALL BE 90° STD UON

CMU OR CAST IN PLACE CONC LINTEL SCHEDULE (TYP)

OPENING TYPE OR SIZE, BEAM LOCATION OR TYPE	MAX SPAN (mm)	LINTEL DEPTH (mm)	REINFORCING BOTTOM
WALL OPENING	4000	600	(2)-#16 T&B
WALL OPENING	1900	400	(2)-#16 T&B
WALL OPENING	1000	400	(2)-#13 B

1. STRUCTURAL SHEETS DO NOT INDICATE ALL OPENINGS IN MASONRY WALLS. VERIFY NUMBER, SIZE AND LOCATION OF ALL OPENINGS IN MASONRY WALLS FROM ARCHITECTURAL SHEETS AND APPROVED PLUMBING, MECHANICAL, AND ELECTRICAL SHOP DRAWINGS.
2. PROVIDE 200mm BEARING EA END.
3. FOR HEAD DETAILS REFER TO ARCHITECTURAL SHEETS.
4. REINFORCING SHALL BE ASTM A615M, GRADE 420. GROUT FOR CMU LINTELS SHALL HAVE A MINIMUM COMPRESSIVE STRENGTH OF 14 MPa AT 28 DAYS.
5. CONTRACTOR SHALL SUBMIT FOR APPROVAL SHOP DRAWINGS AND SCHEDULES SHOWING SIZE, SPAN, REINFORCEMENT, DETAILS, LOCATIONS, ETC.

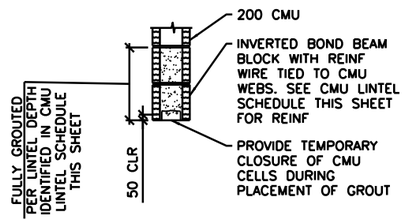

A S-601 LINTEL DETAIL
SCALE: NTS

UNLESS OTHERWISE NOTED, LINEAR DIMENSIONS SHOWN ON DRAWINGS ARE IN MILLIMETERS (mm)

US Army Corps of Engineers
AFGHANISTAN ENGINEER DISTRICT

MARK	DESCRIPTION	DATE	APPR.

MARK	DESCRIPTION	DATE	APPR.

DESIGNED BY: | DATE: | SOLICITATION NO.:
DWN BY: | CKD BY: | CONTRACT NO.:
SUBMITTED BY: | | FILE NUMBER:
PLOT SCALE: 1:1 | PLOT DATE: 2009/11/11
SIZE: ANSI D | FILE NAME: L01_S601.dwg

U.S. ARMY CORPS OF ENGINEERS
AFGHANISTAN DISTRICT
APO AE 96338

STANDARD DESIGNS
VARIOUS PROJECTS
VARIOUS SITES, VARIOUS LOCATIONS

L01 - LATRINE - SMALL
SCHEDULES

SHEET IDENTIFICATION
S-601
SHEET 9 OF 36

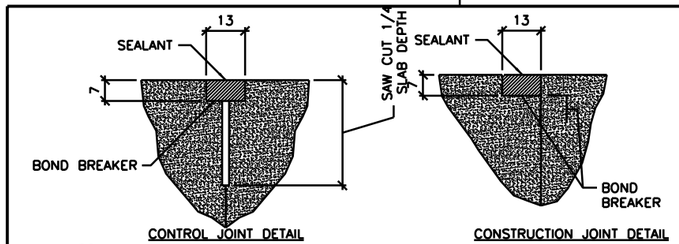

1 S-701 TYPICAL CONCRETE SLAB JOINT FINISH DETAILS

SCALE: NTS

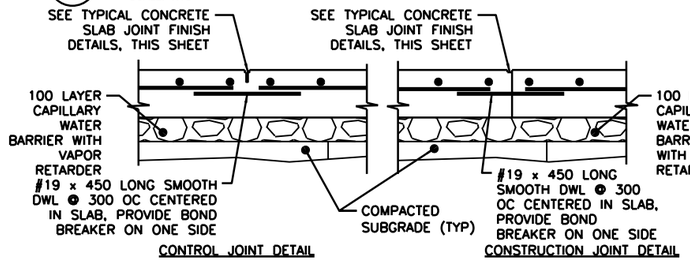

2 S-701 TYPICAL SLAB ON GRADE JOINT DETAIL

SCALE: NTS

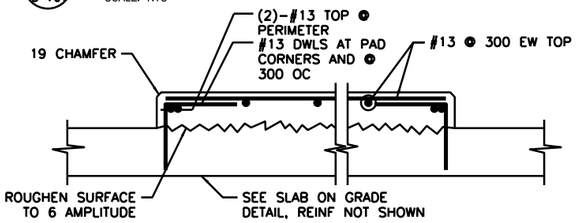

3 S-701 INTERIOR EQUIPMENT PAD DETAIL

SCALE: NTS

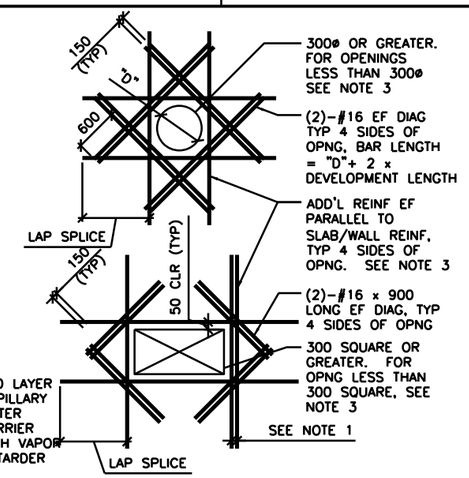

DETAIL NOTES:
1. WHERE MORE THAN ONE ADDITIONAL BAR IS REQUIRED PARALLEL TO THE EXISTING SLAB/WALL REINFORCING THE ADDITIONAL REINFORCING BARS SHALL BE SPACED AT 100 ON CENTER.
2. ADDITIONAL REINFORCING PARALLEL TO THE SLAB/WALL REINFORCING SHALL BE #16 BARS THAT PROVIDE A STEEL AREA ON EACH SIDE OF THE OPENING EQUAL TO 1/2 THE AREA OF THE REINFORCING CUT BY THE OPENING.
3. FOR OPENINGS WITH SIDES OR DIAMETERS LESS THAN 300 SPREAD THE SLAB/WALL REINFORCING TO CLEAR THE OPENING.

4 S-701 ADD'L CONCRETE REINFORCEMENT DETAILS

SCALE: NTS

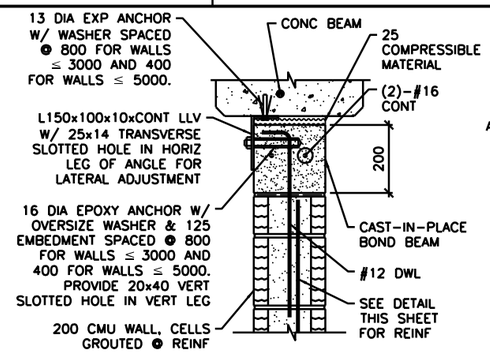

NOTE:
1. AT ANCHOR BOLTS, ADD AN ADDITIONAL 25 COMPRESSIBLE MATERIAL BELOW EXP ANCHOR HEAD.

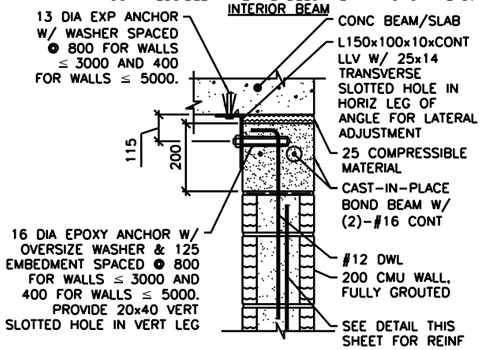

NOTES:
1. THIS DETAIL IS AN ALTERNATE TOP OF WALL ANCHORAGE DETAIL TO BE USED AT THE CONTRACTOR'S OPTION IN LIEU OF DETAILS SHOWN ON S-400 & S-500 DRAWINGS.
2. CAST-IN-PLACE BOND BEAM SHOWN AT TOP OF WALL IS ALSO APPLICABLE FOR INTERMEDIATE AND STARTER COURSE BOND BEAMS WITHIN WALL.

5 S-701 ALTERNATE TOP OF CMU WALL BRACING DETAILS

SCALE: NTS

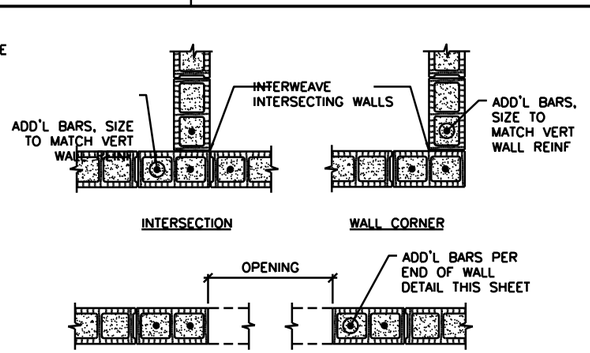

NOTES:
1. OPENING WIDTH SHALL NOT EXCEED 3600 FOR THIS TYPE OF JAMB.
2. ALL CELLS FULLY GROUTED AT EXTERIOR WALLS. AT INTERIOR WALLS, ONLY GROUT CELLS CONTAINING REINF.

6 S-701 TYP CMU DETAILS

SCALE: NTS

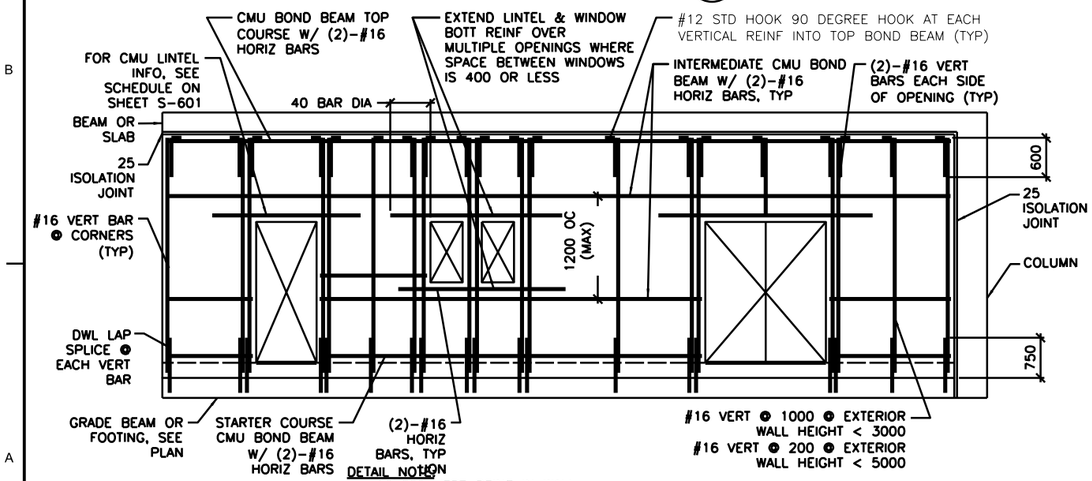

DETAIL NOTES:
1. CENTER VERT REINF IN WALL.
2. GROUT ALL CMU CELLS.
3. REFERENCE ARCH DWGS FOR JOINT INFORMATION
4. DOWELS BETWEEN TOP BOND BEAM AND BEAM/SLAB ABOVE (INCLUDING EMBEDDED PIPE SLEEVE) NOT SHOWN FOR CLARITY. SEE SPECIFIC S-500 SERIES DWGS FOR INFO.
5. FOR INFORMATION ON ALTERNATE CAST-IN-PLACE WALL BOND BEAMS, REFERENCE ALTERNATE TOP OF CMU WALL BRACING DETAILS THIS SHEET.

7 S-701 TYP EXTERIOR CMU WALL REINF DETAIL

SCALE: NTS

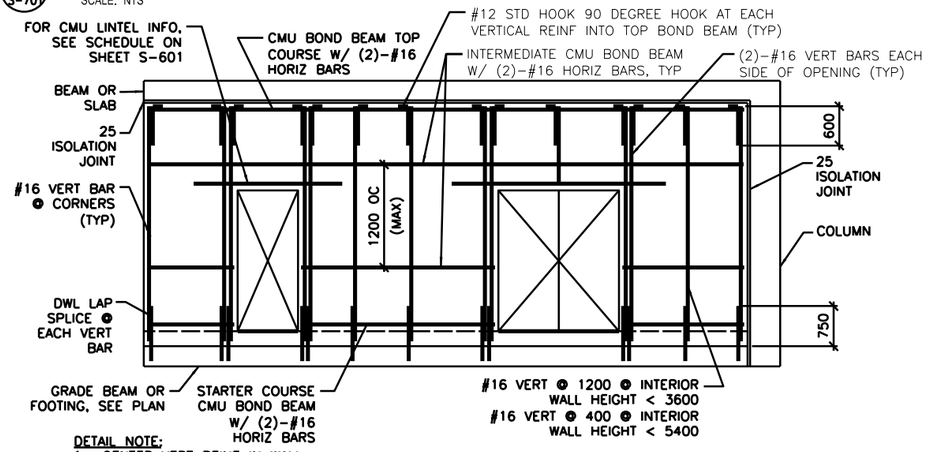

DETAIL NOTE:
1. CENTER VERT REINF IN WALL.
2. GROUT ALL CMU CELLS.
3. REFERENCE ARCH DWGS FOR JOINT INFORMATION
4. DOWELS BETWEEN TOP BOND BEAM AND BEAM/SLAB ABOVE (INCLUDING EMBEDDED PIPE SLEEVE) NOT SHOWN FOR CLARITY. SEE SPECIFIC S-500 SERIES DWGS FOR INFO.
5. FOR INFORMATION ON ALTERNATE CAST-IN-PLACE WALL BOND BEAMS, REFERENCE ALTERNATE TOP OF CMU WALL BRACING DETAILS THIS SHEET.

8 S-701 TYP INTERIOR CMU WALL REINF DETAIL

SCALE: NTS

UNLESS OTHERWISE NOTED, LINEAR DIMENSIONS SHOWN ON DRAWINGS ARE IN MILLIMETERS (mm)

US Army Corps of Engineers
AFGHANISTAN ENGINEER DISTRICT

MARK	DESCRIPTION	DATE	APPR.

DESIGNED BY:
DWN BY:
CKD BY:
SUBMITTED BY:
DATE:
SOLICITATION NO.:
CONTRACT NO.:
PLOT SCALE
PLOT DATE:
FILE NUMBER:
SIZE: ANSI D
FILE NAME: L01_S-701.dwg

U.S. ARMY CORPS OF ENGINEERS
AFGHANISTAN DISTRICT
APO AE 96338

STANDARD DESIGNS
VARIOUS PROJECTS
VARIOUS SITES-VARIOUS LOCATIONS
TYPICAL DETAILS

L01 - LATRINE - SMALL
TYPICAL DETAILS

SHEET IDENTIFICATION
S-701
SHEET 10 OF 36

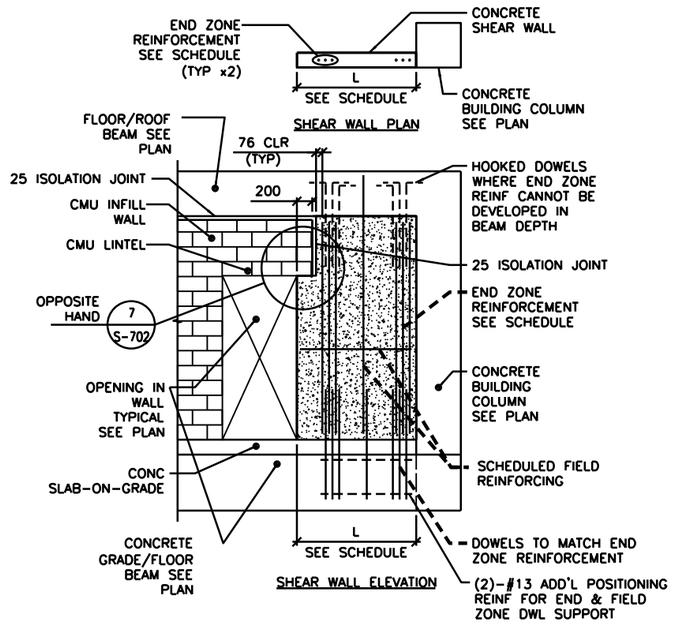

DETAIL NOTES:
1. FIELD REINFORCEMENT IN SHEAR WALL NOT SHOWN COMPLETELY FOR CLARITY.
2. FIELD REINFORCEMENT CENTERED IN WALL.
3. MINIMUM CONC CLEAR DISTANCE FOR END ZONE REINF = 76
4. SEE CONC SHEAR WALL SCHEDULE ON SHEET S-601
5. SEE ARCH DWGS FOR JOINT INFORMATION

TYPE "B" SHEAR WALL DETAIL

1 / S-702

SCALE: NTS

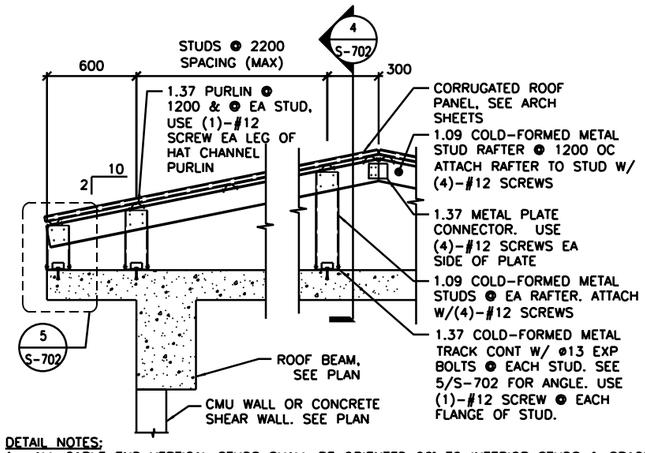

DETAIL NOTES:
1. ALL GABLE END VERTICAL STUDS SHALL BE ORIENTED 90° TO INTERIOR STUDS & SPACED @ 600 OC. GABLE END RAFTER SHALL BE 1.37 METAL TRACK SPANNING CONTINUOUSLY OVER GABLE END STUDS. INSET GIRTS AT GABLE END SHALL BE 1.09 COLD-FORMED METAL STUDS @ 1200 OC ATTACHED VIA 1.37 THICKNESS CLIP ANGLE W/ (2) #12 SCREWS EA LEG.
2. ALL INTERIOR, NON-GABLE END VERTICAL STUDS GREATER THAN 2400 IN LENGTH SHALL BE BACK-TO-BACK W/ #12 SCREWS @ 200 OC STAGGERED.

TYPICAL OVERBUILT ROOF FRAMING DETAIL

2 / S-702

SCALE: NTS

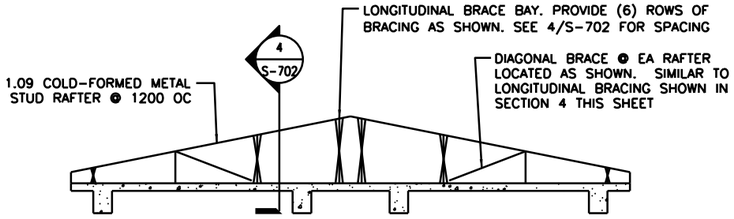

TYPICAL ROOF BRACE LAYOUT

3 / S-702

SCALE: NTS

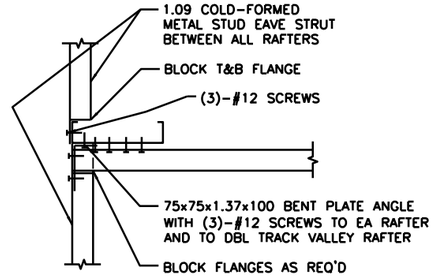

SECTION

6 / S-702

SCALE: NTS

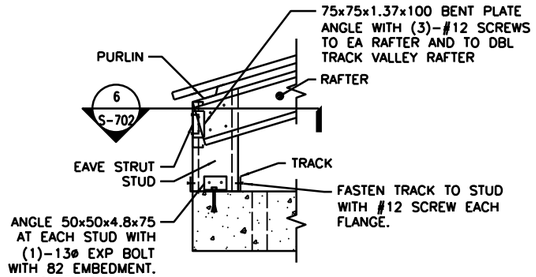

DETAIL

5 / S-702

SCALE: NTS

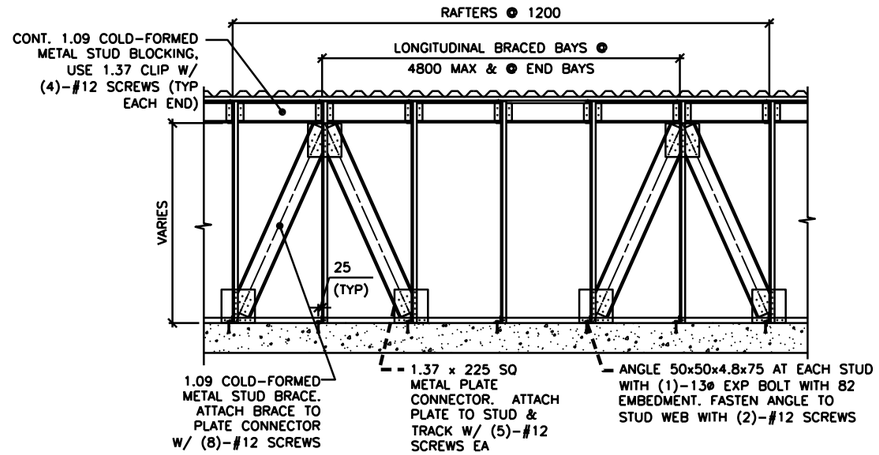

SECTION

4 / S-702

SCALE: NTS

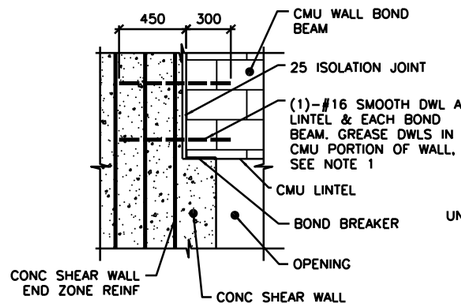

NOTE:
1. TIE SMOOTH DOWEL ROD TO SHEAR WALL END ZONE REINF FOR EACH BOND BEAM AND LINTEL.

SECTION

7 / S-702

SCALE: NTS

UNLESS OTHERWISE NOTED, LINEAR DIMENSIONS SHOWN ARE IN MILLIMETERS (mm)

US Army Corps of Engineers
AFGHANISTAN ENGINEER DISTRICT

MARK	DESCRIPTION	DATE	APPR.

U.S. ARMY CORPS OF ENGINEERS
AFGHANISTAN DISTRICT
APO AE 96338

DESIGNED BY:
DWN BY:
SUBMITTED BY:
DATE:
SOLICITATION NO.:
CKD BY:
CONTRACT NO.:
PLOT SCALE: 1:2
PLOT DATE: 03/12/2011
FILE NUMBER:
SIZE: ANSI D
FILE NAME: L01_S702.dwg

STANDARD DESIGNS
VARIOUS PROJECTS
VARIOUS SITES, VARIOUS LOCATIONS

L01 - LATRINE - SMALL
TYPICAL DETAILS

SHEET IDENTIFICATION
S-702
SHEET 11 OF 36

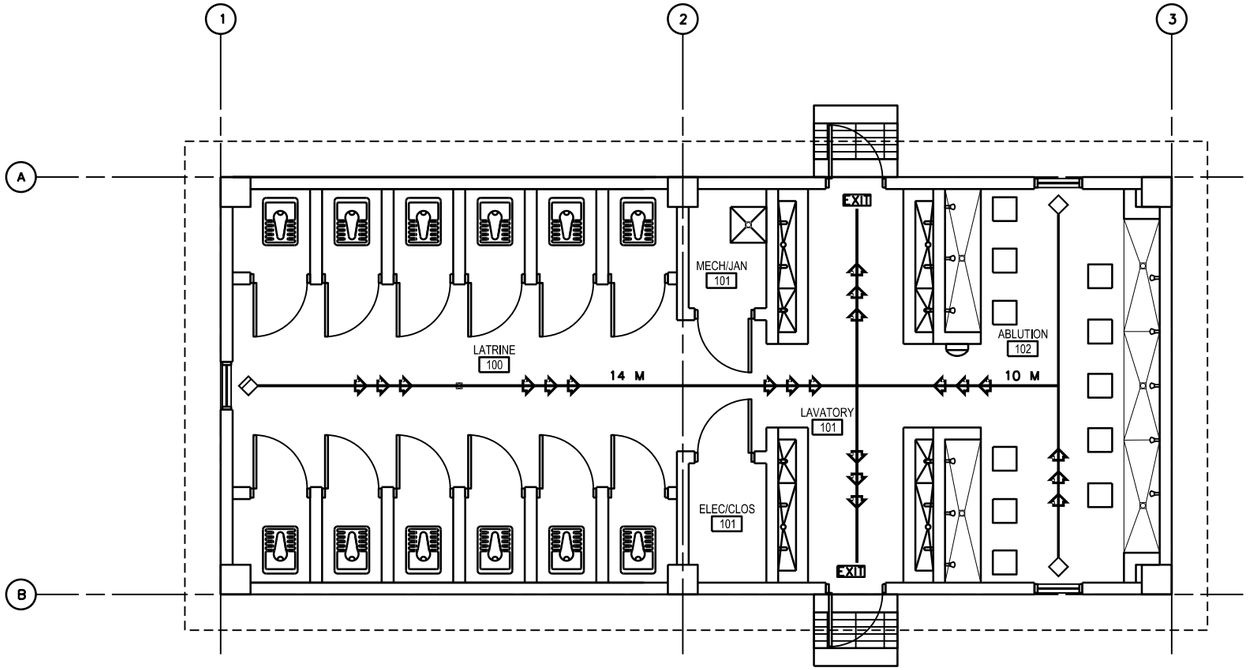

1 A-001 LIFE SAFETY PLAN
SCALE: 1:50

CODE ANALYSIS:

1. REFERENCES:
   2006 INTERNATIONAL BUILDING CODE (2006 IBC)
   2006 LIFE SAFETY CODE (2006 NFPA 101)

2. IBC OCCUPANCY CLASSIFICATION:
   GROUP U UTILITY AND MISCELLANEOUS (ASSEMBLY ≤300 NFPA 101 6.1.2 AND CHAPTER 12)

3. TYPE OF CONSTRUCTION (IBC): TYPE II-B (UNPROTECTED/NONSPRINKLERED)

4. IBC TABLE 503: ALLOWABLE HEIGHT AND BUILDING AREAS:
   GROUP U
   ALLOWABLE AREA: 789 SM
   ALLOWABLE HEIGHT: 2 STORIES (<16 M)

   GROUP U
   PROPOSED AREA: 112 SM
   PROPOSED HEIGHT: 1 STORY (<16 M)

5. IBC TABLE 601 & 602: FIRE RESISTANCE RATING REQUIREMENTS FOR BUILDING ELEMENTS FOR TYPE II-B

BUILDING ELEMENT		RATING (HOUR)	REFERENCE
STRUCTURAL FRAME (COLUMNS, GIRDERS & TRUSSES)		0	TABLE 601
BEARING WALLS	EXTERIOR	0	TABLE 601
	INTERIOR	0	TABLE 601
NONBEARING WALLS & PARTITIONS	INTERIOR	0	TABLE 601
FLOOR CONSTRUCTION		0	TABLE 601
ROOF CONSTRUCTION		0	TABLE 601
EXTERIOR WALL		0	TABLE 602

6. IBC TABLE 803.5 – INTERIOR WALL AND CEILING FINISH REQUIREMENTS FOR U OCCUPANCY/NONSPRINKLERED

GROUP	EXIT ENCLOSURES AND EXIT PASSAGEWAY	CORRIDORS	ROOMS AND ENCLOSED SPACES
U	NO RESTRICTIONS	NO RESTRICTIONS	NO RESTRICTIONS

7. NFPA 101 TABLE 7.3.1.2 – OCCUPANT LOAD
   ASSEMBLY ≤ 300 = 1.4 NET SM/PERSON CALCULATED = 80 OCCUPANTS
   ACTUAL = 35 OCCUPANTS

8. NFPA 101 TABLE 7.3.3.1 – EGRESS CAPACITY
   ASSEMBLY = 5 MM PER OCCUPANT

REQUIRED: 400 MM (80 OCCUPANTS x 5 MM PER OCCUPANT)
PROPOSED EGRESS CAPACITY: 1800 MM: (2) 900 MM DOORS

9. NFPA 101 PARAGRAPH 12.2.6 – EXIT ACCESS TRAVEL DISTANCE
   REQUIRED: 60 METERS
   PROPOSED: 14 METERS

10. NFPA 101 PARAGRAPH 12.3.6 (1) – CORRIDOR FIRE-RESISTANCE RATING (HOUR)
    CORRIDORS ARE NOT REQUIRED AS DOORS EXIT DIRECTLY TO OUTSIDE

11. NFPA 101 PARAGRAPH 12.2.4.1 AND 7.4.1.1 – MINIMUM NUMBER OF EXITS
    REQUIRED: 2 MINIMUM
    PROPOSED: 2 EXITS

12. NFPA 101 PARAGRAPH 12.3.2.1.2 – PROTECTION FROM HAZARDS
    SEPARATION AT STORAGE NOT REQUIRED. STORAGE ROOMS WILL NOT CONTAIN QUANTITIES OR MATERIALS DEEMED HAZARDOUS.

    INCIDENTAL USE AREAS: IBC TABLES 508.2
    1 HOUR SEPARATION FOR STORAGE ROOMS OVER 9.3 SM
    STORAGE AREAS ARE 3 SM EACH, SO SEPARATION IS NOT REQUIRED

LEGEND:

- DENOTES PATHS OF EXIT TRAVEL
- EXIT — DENOTES DOOR AS AN EMERGENCY EXIT
- DENOTES STARTING POINT FOR TRAVEL DISTANCE
- DENOTES FIRE EXTINGUISHER LOCATIONS

0 1000 2000
SCALE: 1:50

LINEAR DIMENSIONS SHOWN ARE IN MILLIMETERS (MM), UNLESS OTHERWISE NOTED

US Army Corps of Engineers®
AFGHANISTAN ENGINEER DISTRICT

MARK	DESCRIPTION	DATE	APPR.

MARK	DESCRIPTION	DATE	APPR.

DESIGNED BY: | DATE:
DWN BY: | CKD BY: | SOLICITATION NO.:
SUBMITTED BY: | CONTRACT NO.:
PLOT SCALE: 1:50 | PLOT DATE: 02/12/2011 | FILE NUMBER:
SIZE: ANSI D | FILE NAME: L01_A-001.dwg

U.S. ARMY CORPS OF ENGINEERS
AFGHANISTAN DISTRICT
APO AE 96338

STANDARD DESIGNS
VARIOUS PROJECTS
VARIOUS SITES, VARIOUS LOCATIONS

L01 - LATRINE - SMALL
LIFE SAFETY PLAN

SHEET IDENTIFICATION
A-001
SHEET 12 OF 36

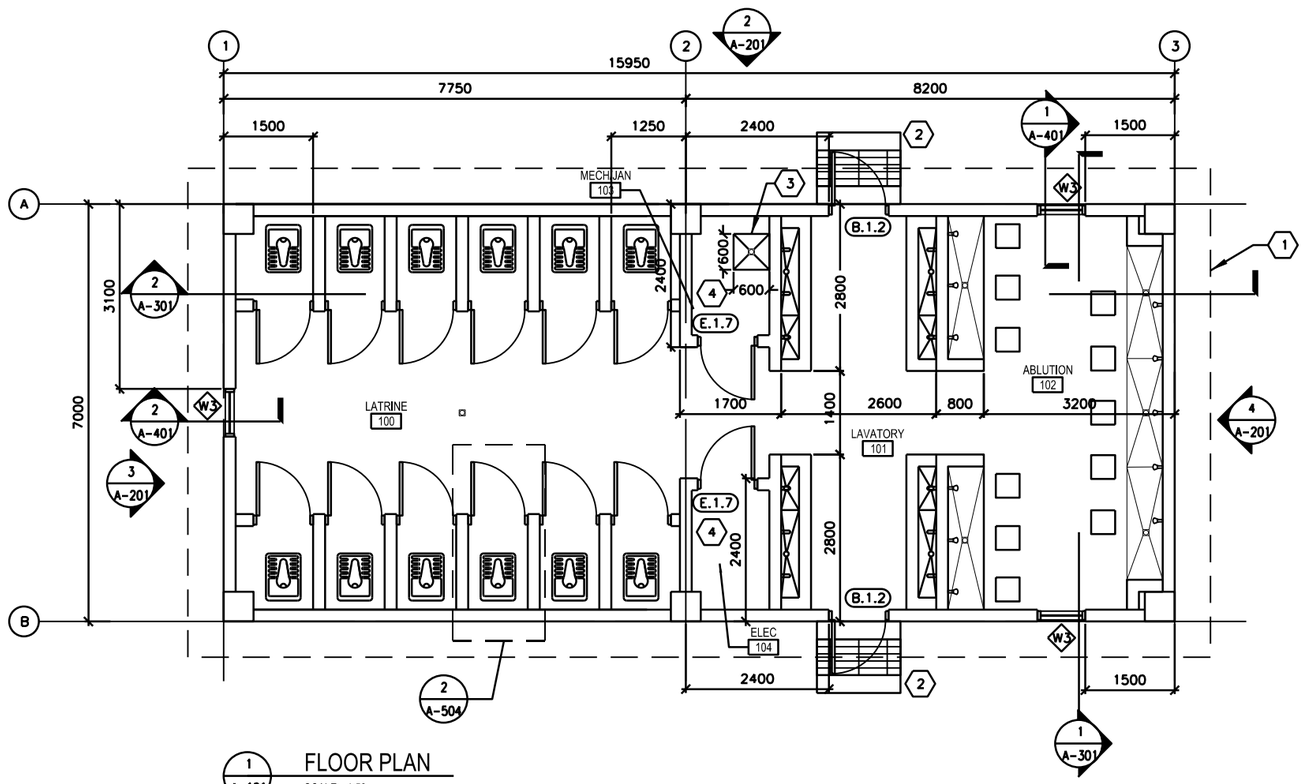

1 A-101 FLOOR PLAN
SCALE: 1:50

GENERAL NOTES:

A. DIMENSIONS ARE SHOWN TO OUTER EDGE OF EXTERIOR STRUCTURAL COLUMNS, STRUCTURAL COLUMN GRID, EDGE OF INTERIOR PARTITIONS, EDGE OF WINDOW OPENINGS, AND TO HINGED SIDE OF DOOR FRAME OPENINGS.

B. OPENINGS FOR DOORS AND FRAMES SHALL BE LOCATED 200 MM FROM THE ADJACENT WALL OR COLUMN, UNLESS NOTED OTHERWISE.

C. INTERIOR PARTITIONS SHALL BE 200 MM CMU. SEE STRUCTURAL DRAWINGS FOR LOCATION OF CONCRETE SHEAR WALLS.

D. COSMETIC REPAIR OF MINOR DEFECTS: REPAIR OR FILL MORTAR JOINTS AND MINOR DEFECTS, INCLUDING BUT NOT LIMITED TO SPALLS, IN ACCORDANCE WITH MANUFACTURER'S RECOMMENDATIONS AND PRIOR TO COATING APPLICATION. SURFACES TO BE PAINTED OR PLASTERED SHALL BE CLEAN AND FREE OF FOREIGN MATTER BEFORE APPLICATION OF PAINT. CLEANING SHALL BE SCHEDULED SO THAT DUST AND OTHER CONTAMINANTS WILL NOT FALL ON NEWLY PAINTED SURFACES.

E. CONCRETE, PLASTER AND MASONRY SURFACES SHALL BE ALLOWED TO CURE FOR AT LEAST 30 DAYS BEFORE PAINTING OR TILING. CONCRETE SLABS-ON-GRADE SHALL BE ALLOWED TO CURE 90 DAYS BEFORE STAINING OR SEALING.

F. DO NOT USE PAINT MATERIALS CONTAINING LEAD CONTENT IN EXCESS OF 0.009 PERCENT OF THE WEIGHT OF THE TOTAL NONVOLATILE CONTENT OF THE PAINT OR THE WEIGHT OF THE DRIED PAINT FILM.

G. DO NOT USE ANY ASBESTOS CONTAINING MATERIALS (ACM) IN PROJECT. ACM IS DEFINED AS 1% OR MORE BY VOLUME.

H. DO NOT USE PAINT MATERIALS CONTAINING MERCURIAL FUNGICIDES.

I. FACTORY PRIMED METAL DOORS AND FRAMES SHALL RECEIVE TWO COATS OF PAINT.

J. FILL REMAINING SPACE AT PENETRATIONS IN FIRE-RATED FLOORS, PARTITIONS AND CEILINGS WITH APPROPRIATE FIRESTOPPING MATERIALS.

K. ALL CEILING FINISHES SHALL BE PAINTED PLASTER APPLIED TO STRUCTURE.

L. ALL WALL FINISHES SHALL BE CERAMIC TILE TO 2000 MM WITH PAINTED PLASTER APPLIED TO STRUCTURE ABOVE, UNLESS NOTED OTHERWISE.

M. ALL FLOOR FINISHES SHALL BE TERRAZZO TILE.

N. PROVIDE TILE FINISHES AS INDICATED IN DETAILS.

O. ALL TOILET STALL DOORS, FRAMES & HARDWARE TYPE SHALL BE F.2.12

P. HEIGHT OF ALL TOILET PARTITIONS SHALL BE 2000 MM ABOVE FINISHED FLOOR.

Q. PROVIDE POLISHED STAINLESS STEEL MIRROR 600 X 900 ABOVE EVERY LAVATORY FAUCET.

LEGEND:

XXX DOOR FRAME AND HARDWARE TYPE, SEE SHEET A-601

A WINDOW TYPE, SEE SHEET A-601

X KEY NOTE

ABBREVIATIONS:

COMM	COMMUNICATIONS
ELEC	ELECTRICAL
MECH	MECHANICAL
JAN	JANITOR
CLOS	CLOSET

KEY NOTES:

X

1. LINE OF ROOF OVERHANG ABOVE.
2. CONCRETE STOOP WITH GRATE – SEE DETAIL 1/A-503.
3. RECESSED TROUGH – SEE DETAIL 7/A-504.
4. WALL FINISH: PAINTED PLASTER APPLIED TO STRUCTURE.

0 1000 2000
SCALE: 1:50

LINEAR DIMENSIONS SHOWN ARE IN MILLIMETERS (MM), UNLESS OTHERWISE NOTED

US Army Corps of Engineers®
AFGHANISTAN ENGINEER DISTRICT

MARK	DESCRIPTION	DATE	APPR.

MARK	DESCRIPTION	DATE	APPR.

DESIGNED BY: | DATE:
DWN BY: | CKD BY: | SOLICITATION NO.:
SUBMITTED BY: | CONTRACT NO.:
PLOT SCALE: 1:50 | PLOT DATE: 02/12/2011 | FILE NUMBER:
SIZE: ANSI D | FILE NAME: L01_A-101.dwg

U.S. ARMY CORPS OF ENGINEERS
AFGHANISTAN DISTRICT
APO AE 96338

STANDARD DESIGNS
VARIOUS PROJECTS
VARIOUS SITES, VARIOUS LOCATIONS

L01 - LATRINE - SMALL
FLOOR PLAN

SHEET IDENTIFICATION
A-101
SHEET 13 OF 36

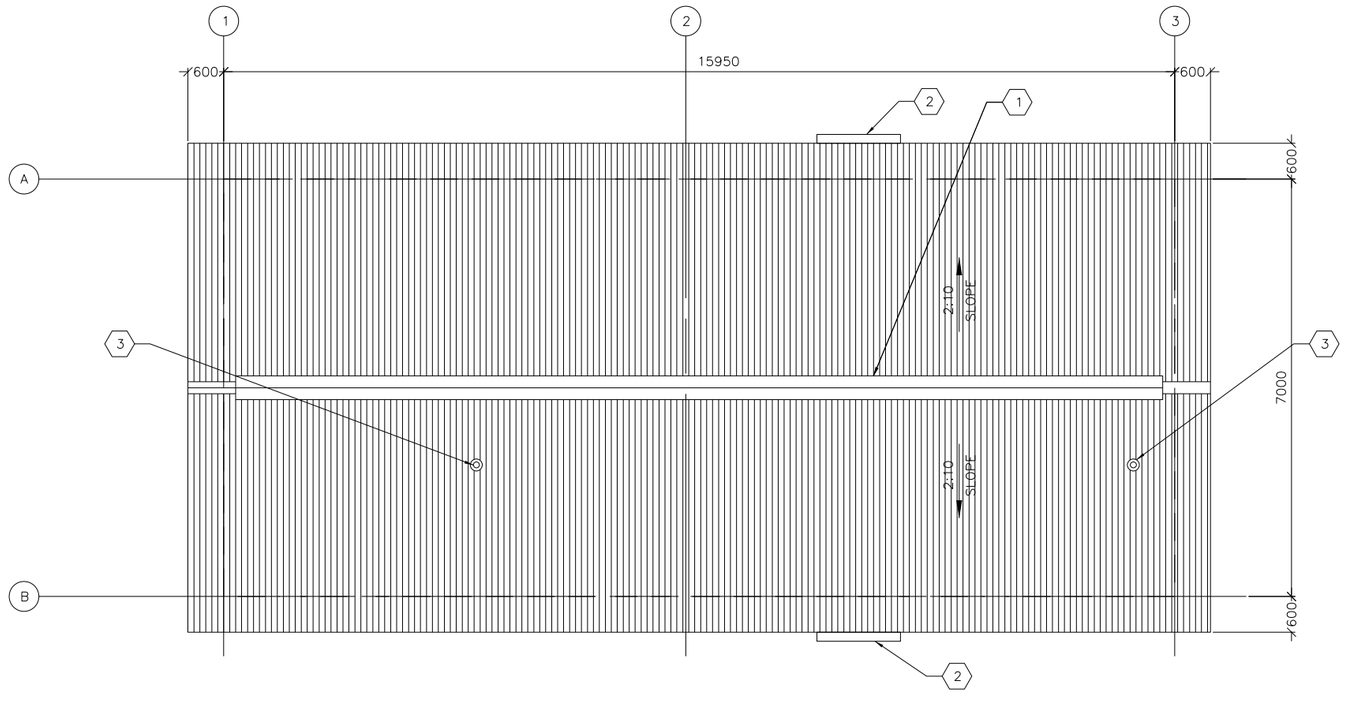

1 A-102 ROOF PLAN
SCALE: 1:50

GENERAL NOTES:

A. THE APPROXIMATE LOCATION OF ROOF DEVICES AND PENETRATIONS ARE SHOWN ON THE ROOF PLAN FOR INFORMATION ONLY. THE CONTRACTOR SHALL BE RESPONSIBLE FOR UNDERSTANDING THE ACTUAL LOCATION OF THESE AND ALL OTHER ITEMS PRIOR TO BEGINNING CONSTRUCTION. COORDINATE ALL ROOF PENETRATIONS WITH STRUCTURAL, MECHANICAL AND PLUMBING WORK.

B. PLUMBING VENT PENETRATIONS SHALL TERMINATE 300 MM MINIMUM ABOVE THE ROOF.

C. UNLESS OTHERWISE NOTED, NOTES, DETAILS OR FEATURES INDICATED FOR ONE CONDITION SHALL BE APPLICABLE FOR ALL ALIKE AND SIMILAR CONDITIONS.

D. STOCKPILING OF MATERIALS, EQUIPMENT AND ANY OTHER ITEMS ON THE ROOF IS PROHIBITED.

E. ROOFS SHALL BE CORRUGATED METAL ROOF PANELS ON COLD-FORMED METAL FRAMING ON CONCRETE SLAB.

KEY NOTES:

X

1. CONTINUOUS METAL RIDGE VENT SEE DETAIL 4/A-501.
2. METAL GUTTER, CENTER ON DOOR, 1400 MM – SEE DETAIL 1A/A-501.
3. PLUMBING VENT – SEE DETAIL 5/A-501.

0 1000 2000
SCALE: 1:50

LINEAR DIMENSIONS SHOWN ARE IN MILLIMETERS (MM), UNLESS OTHERWISE NOTED

US Army Corps of Engineers®
AFGHANISTAN ENGINEER DISTRICT

MARK	DESCRIPTION	DATE	APPR.	MARK	DESCRIPTION	DATE	APPR.

DESIGNED BY: | DATE:
DWN BY: | CKD BY: | SOLICITATION NO.:
SUBMITTED BY: | CONTRACT NO.:
PLOT SCALE: 1:50 | PLOT DATE: 02/12/2011 | FILE NUMBER:
SIZE: ANSI D | FILE NAME: L01_A-102.dwg

U.S. ARMY CORPS OF ENGINEERS
AFGHANISTAN DISTRICT
APO AE 96338

STANDARD DESIGNS
VARIOUS PROJECTS
VARIOUS SITES, VARIOUS LOCATIONS

L01 - LATRINE - SMALL
ROOF PLAN

SHEET IDENTIFICATION
A-102
SHEET 14 OF 36

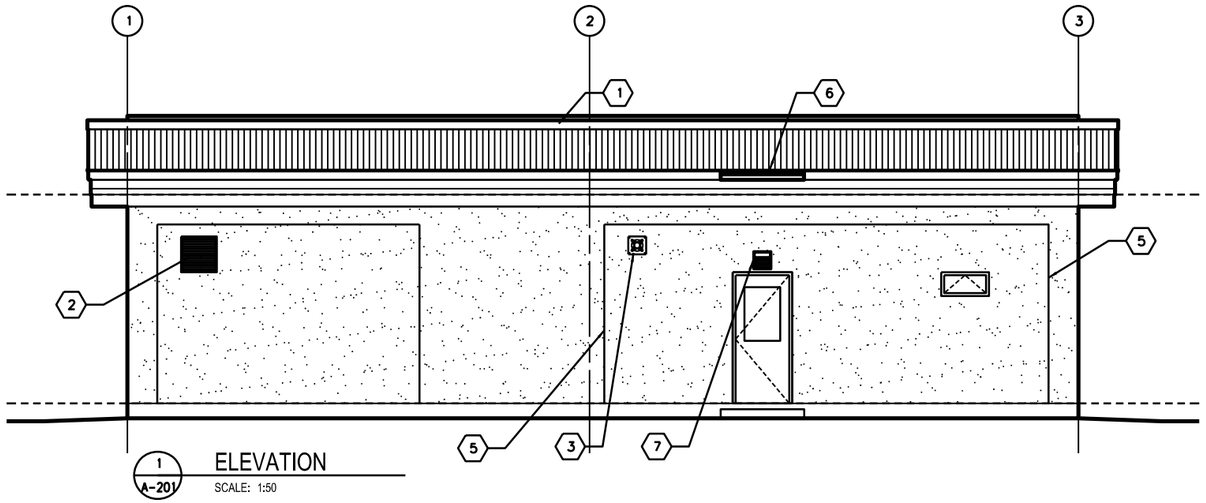

1 A-201 ELEVATION
SCALE: 1:50

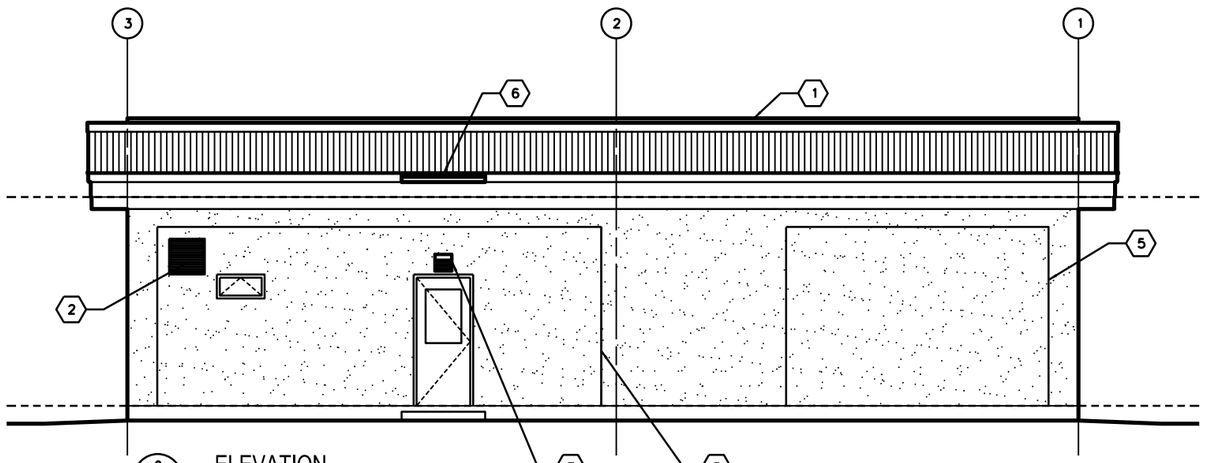

2 A-201 ELEVATION
SCALE: 1:50

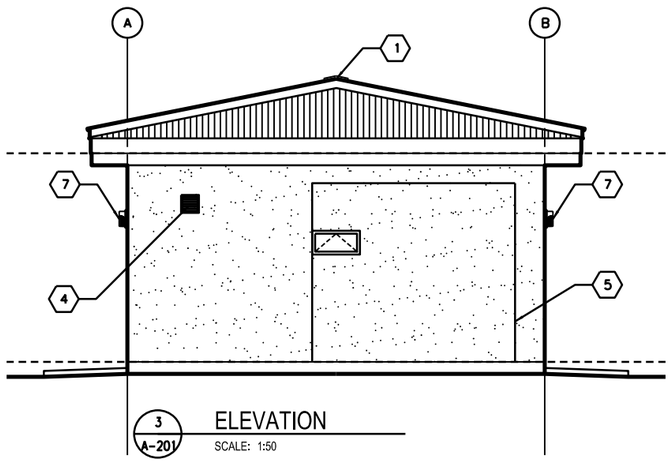

3 A-201 ELEVATION
SCALE: 1:50

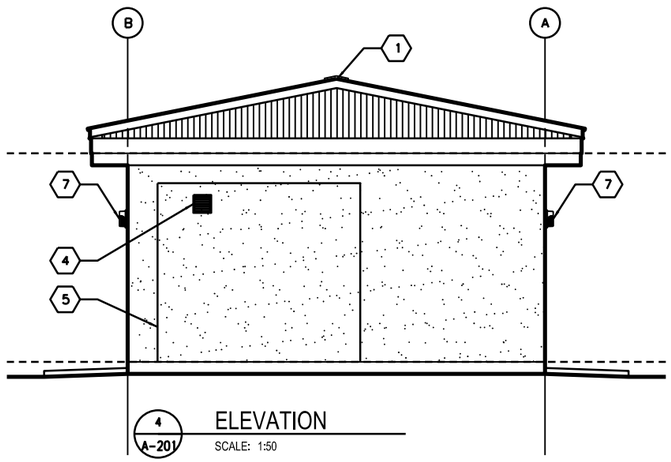

4 A-201 ELEVATION
SCALE: 1:50

GENERAL NOTES:

A. COORDINATE SIZE AND LOCATION OF OPENINGS FOR MECHANICAL ITEMS WITH MECHANICAL DRAWINGS.

B. PROVIDE STRUCTURAL LINTELS AS REQUIRED – SEE STRUCTURAL DRAWINGS

C. ALL EXTERIOR WALL FINISHES SHALL BE STUCCO OVER CMU AND CONCRETE SUBSTRATES. PROVIDE CONTROL JOINTS IN STUCCO WALL FINISH AS NOTED.

D. ROOF SHALL BE CORRUGATED METAL ROOF PANELS ON COLD-FORMED METAL FRAMING ON CONCRETE SLAB.

KEY NOTES:

1. CONTINUOUS METAL RIDGE VENT – SEE DETAIL 4/A-501.
2. LOUVER, LOCATE TOP OF WALL PENETRATION 2800 MM ABOVE FINISHED FLOOR – SEE MECHANICAL DRAWINGS.
3. EXHAUST FAN, LOCATE TOP OF WALL PENETRATION 2800 MM ABOVE FINISHED FLOOR – SEE MECHANICAL DRAWINGS.
4. WALL GRILL, LOCATE TOP OF WALL PENETRATION 2800 MM ABOVE FINISHED FLOOR – SEE MECHANICAL DRAWINGS.
5. STUCCO CONTROL JOINT – SEE DETAIL 2A/A-501.
6. METAL GUTTER, CENTER ON DOOR, 1400 MM – SEE DETAIL 1A/A501.
7. EXTERIOR LIGHT FIXTURE – SEE ELECTRICAL.

0 1000 2000
SCALE: 1:50

LINEAR DIMENSIONS SHOWN ARE IN MILLIMETERS (MM), UNLESS OTHERWISE NOTED

US Army Corps of Engineers®
AFGHANISTAN ENGINEER DISTRICT

MARK	DESCRIPTION	DATE	APPR.

MARK	DESCRIPTION	DATE	APPR.

U.S. ARMY CORPS OF ENGINEERS
AFGHANISTAN DISTRICT
APO AE 96338

DESIGNED BY: | DATE:
DWN BY: | CKD BY: | SOLICITATION NO.:
SUBMITTED BY: | CONTRACT NO.:
PLOT SCALE: 1:50 | PLOT DATE: 02/12/2011 | FILE NUMBER:
SIZE: ANSI D | FILE NAME: L01_A-201.dwg

STANDARD DESIGNS
VARIOUS PROJECTS
VARIOUS SITES, VARIOUS LOCATIONS

L01 - LATRINE - SMALL
ELEVATIONS

SHEET IDENTIFICATION
A-201
SHEET 15 OF 36

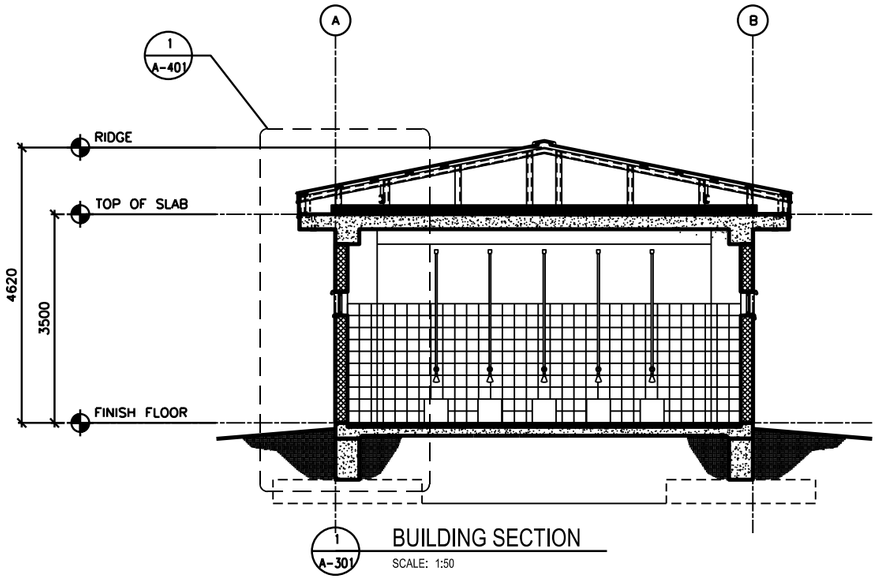

1 A-301 BUILDING SECTION

SCALE: 1:50

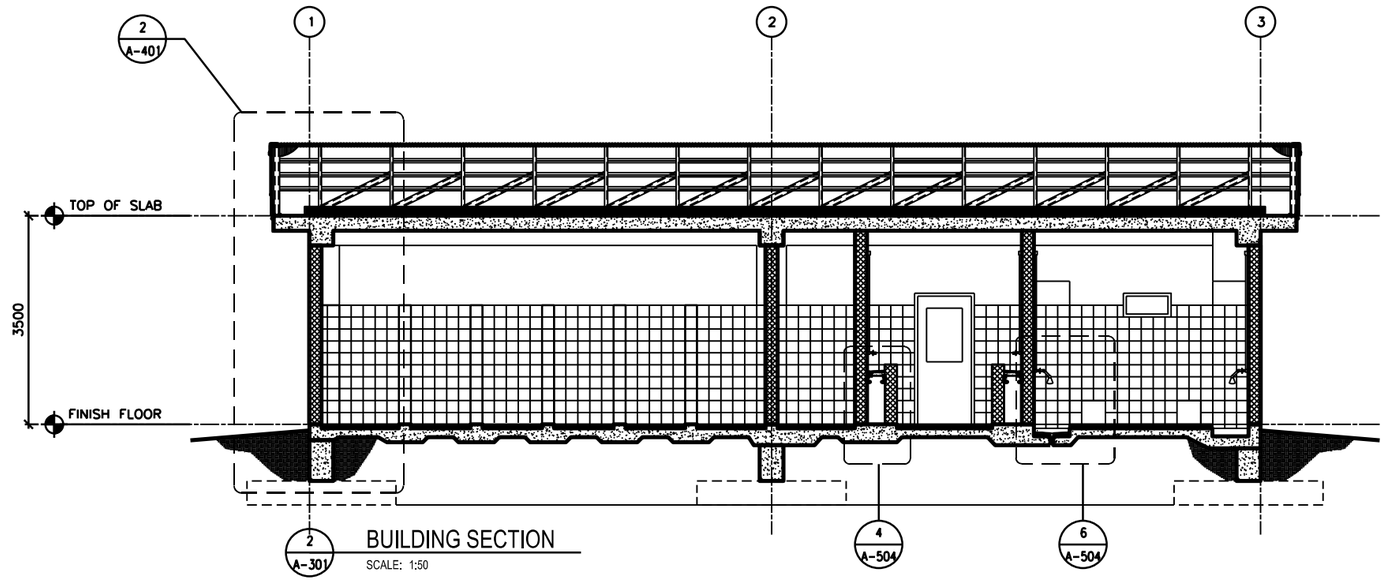

2 A-301 BUILDING SECTION

SCALE: 1:50

0 1000 2000

SCALE: 1:50

LINEAR DIMENSIONS SHOWN ARE IN MILLIMETERS (MM), UNLESS OTHERWISE NOTED

US Army Corps of Engineers®
AFGHANISTAN ENGINEER DISTRICT

MARK	DESCRIPTION	DATE	APPR.
MARK	DESCRIPTION	DATE	APPR.

U.S. ARMY CORPS OF ENGINEERS
AFGHANISTAN DISTRICT
APO AE 96338

DESIGNED BY:
DWN BY:
CKD BY:
SUBMITTED BY:
DATE:
SOLICITATION NO.:
CONTRACT NO.:
PLOT SCALE: AS SHOWN
PLOT DATE:
FILE NUMBER:
SIZE: ANSI D
FILE NAME: L01_A-301.dwg

STANDARD DESIGNS
VARIOUS PROJECTS
VARIOUS SITES, VARIOUS LOCATIONS

L01 - LATRINE - SMALL
BUILDING SECTIONS

SHEET IDENTIFICATION
A-301
SHEET 16 OF 36

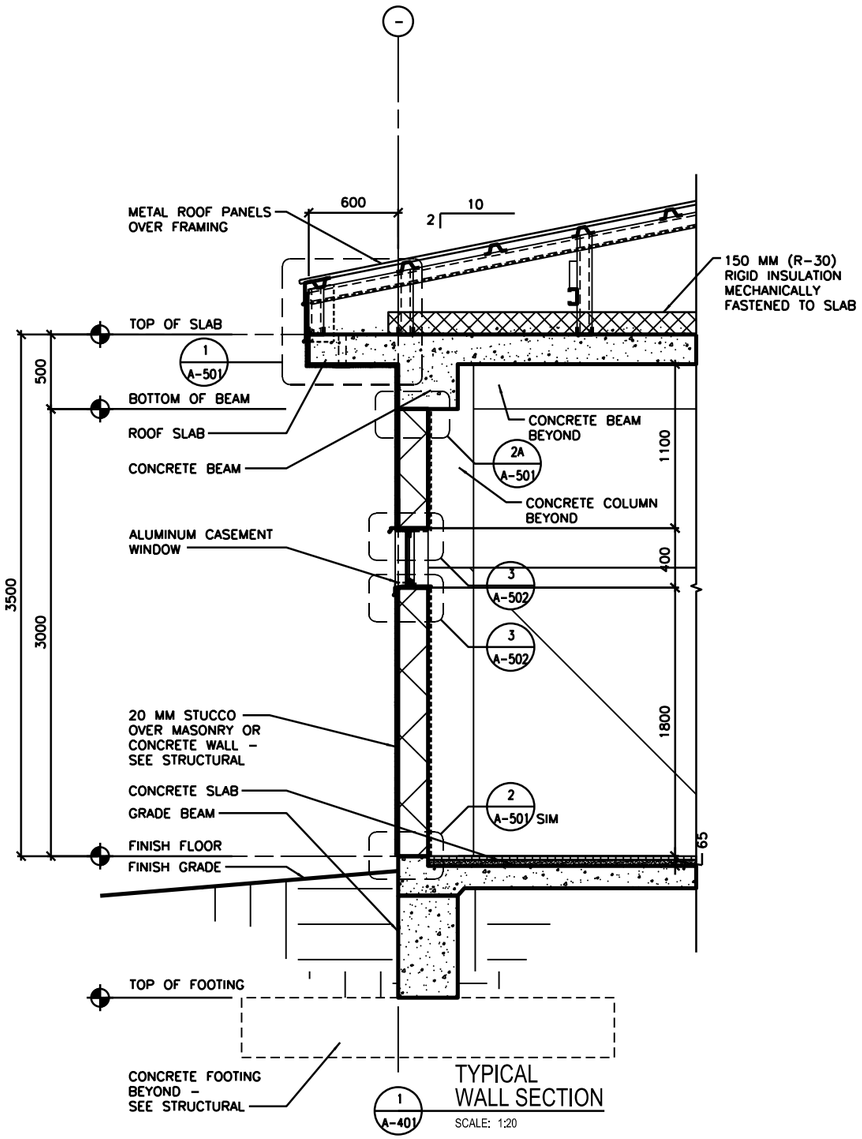

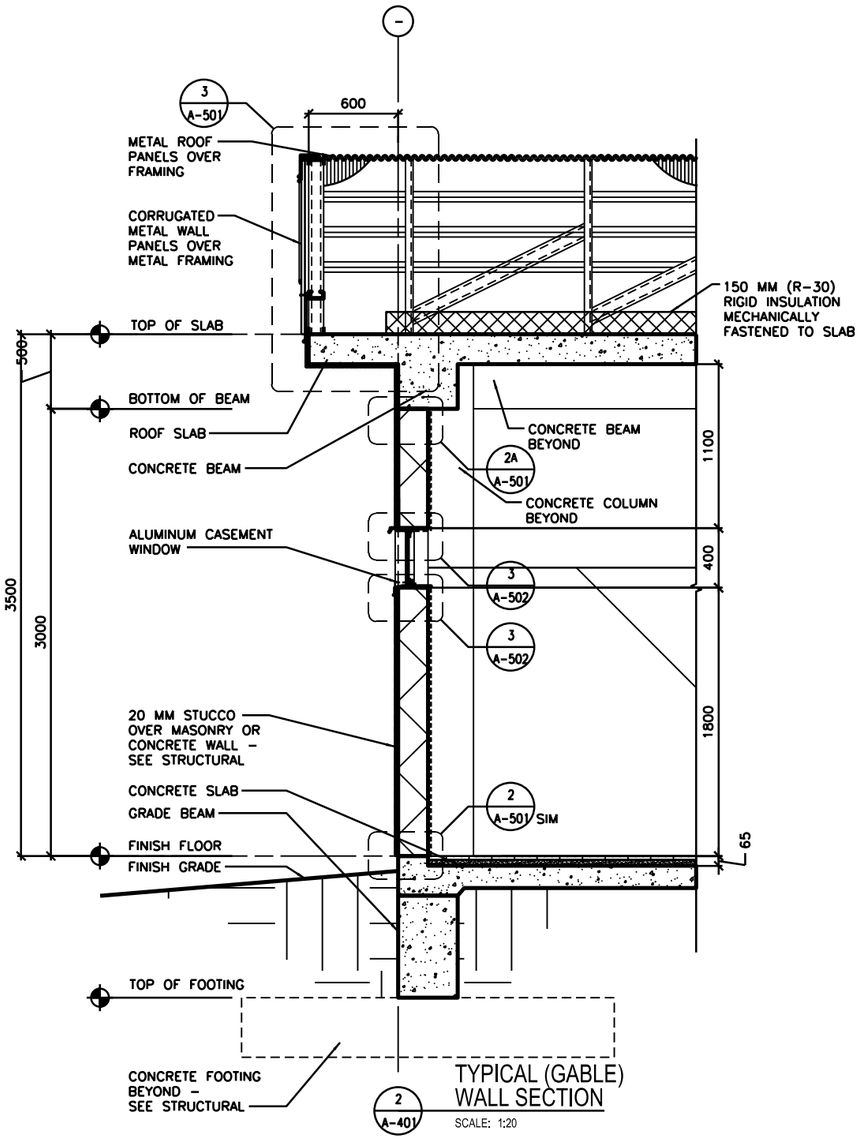

0 400 800
SCALE: 1:20

LINEAR DIMENSIONS SHOWN ARE IN MILLIMETERS (MM), UNLESS OTHERWISE NOTED

US Army Corps of Engineers
AFGHANISTAN ENGINEER DISTRICT

MARK	DESCRIPTION	DATE	APPR.
MARK	DESCRIPTION	DATE	APPR.

U.S. ARMY CORPS OF ENGINEERS
AFGHANISTAN DISTRICT
APO AE 96338

DESIGNED BY:
DWN BY:
CKD BY:
SUBMITTED BY:
DATE:
SOLICITATION NO.:
CONTRACT NO.:
PLOT DATE:
PLOT SCALE:
FILE NUMBER:
SIZE: ANSI D
FILE NAME: L01_A-401.dwg

STANDARD DESIGNS
VARIOUS PROJECTS
VARIOUS SITES, VARIOUS LOCATIONS

L01 - LATRINE - SMALL

WALL SECTIONS

SHEET IDENTIFICATION
A-401
SHEET 17 OF 36

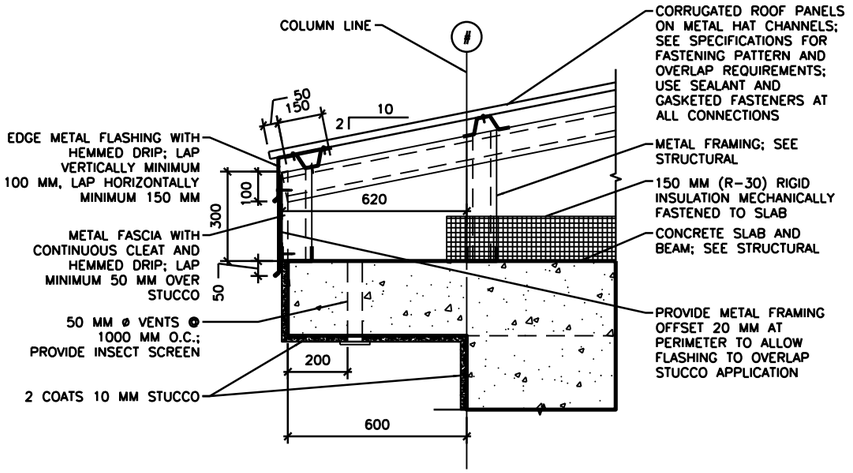

1 A-501 EAVE DETAIL

SCALE: 1:10

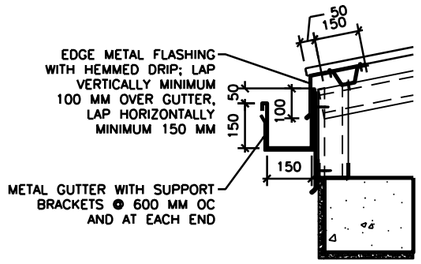

1A A-501 GUTTER DETAIL

SCALE: 1:10

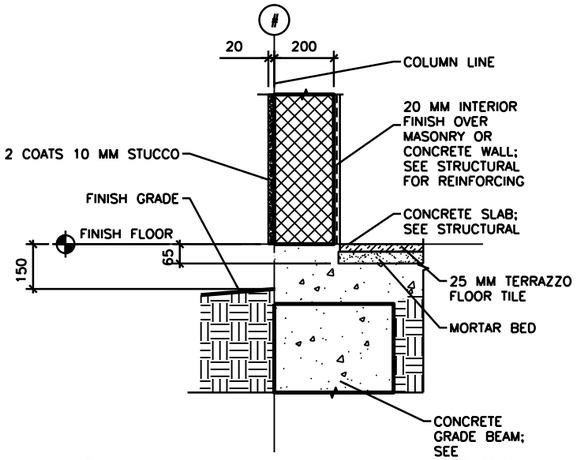

2 A-501 STUCCO BASE DETAIL

SCALE: 1:10

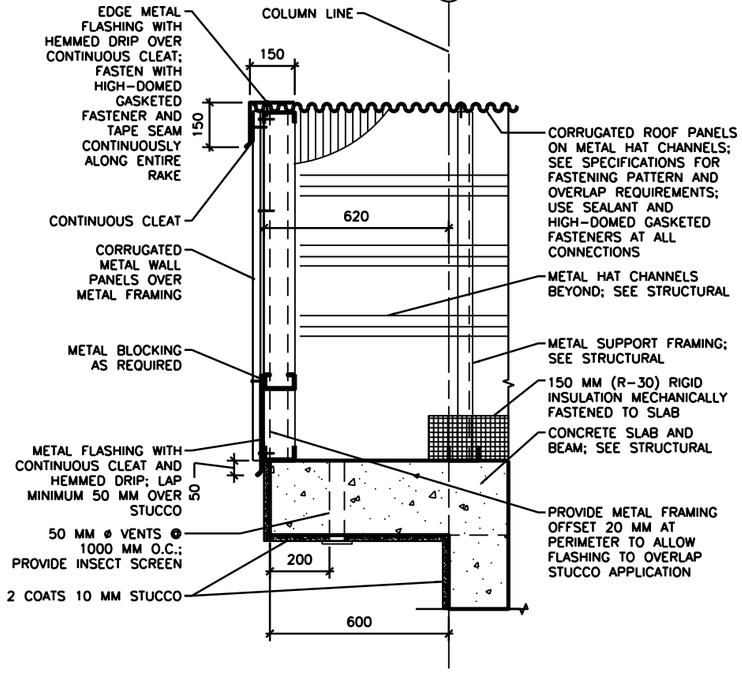

3 A-501 RAKE/EAVE DETAIL

SCALE: 1:10

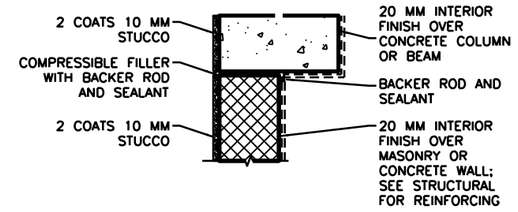

NOTE: DETAIL TYPICAL AT ALL WALL/COLUMN AND WALL/BEAM LOCATIONS, ALTERNATE BRACING DETAIL BELOW 2B/A-501.

2A A-501 STUCCO JOINT DETAIL

SCALE: 1:10

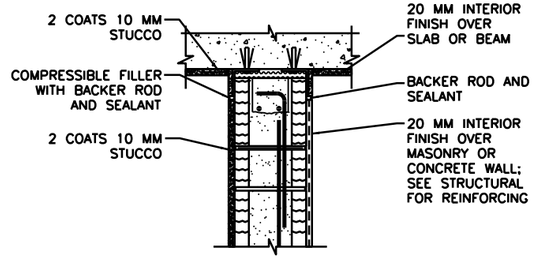

INTERIOR WALL/BEAM

2B A-501 ALTERNATE BRACING DETAIL

SCALE: 1:10

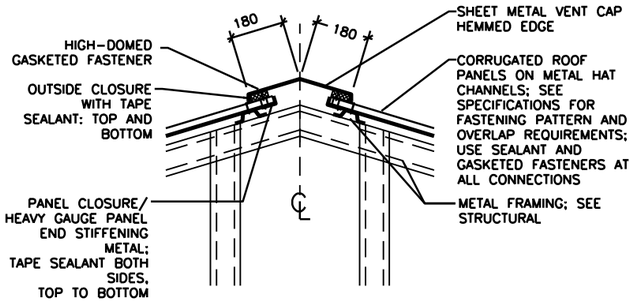

4 A-501 RIDGE VENT DETAIL

SCALE: 1:10

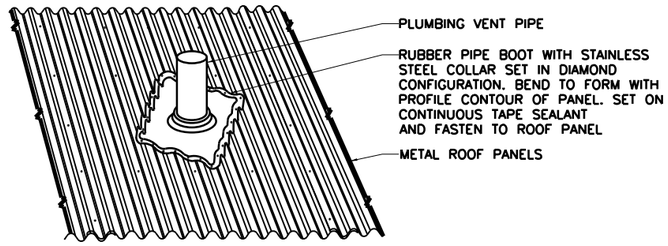

5 A-501 PLUMBING VENT DETAIL

SCALE: NTS

0 200 400

SCALE: 1:10

LINEAR DIMENSIONS SHOWN ARE IN MILLIMETERS (MM), UNLESS OTHERWISE NOTED

US Army Corps of Engineers
AFGHANISTAN ENGINEER DISTRICT

MARK	DESCRIPTION	DATE	APPR.

DESIGNED BY:
DWN BY:
CKD BY:
SUBMITTED BY:
DATE:
SOLICITATION NO.:
CONTRACT NO.:
PLOT SCALE: 1:1
PLOT DATE:
FILE NAME: L01_A-501.dwg
FILE NUMBER:
SIZE: ANSI D

U.S. ARMY CORPS OF ENGINEERS
AFGHANISTAN DISTRICT
APO AE 96338

STANDARD DESIGNS
VARIOUS PROJECTS
VARIOUS SITES, VARIOUS LOCATIONS

L01 - LATRINE - SMALL
EXTERIOR DETAILS

SHEET IDENTIFICATION
A-501
SHEET 18 OF 36

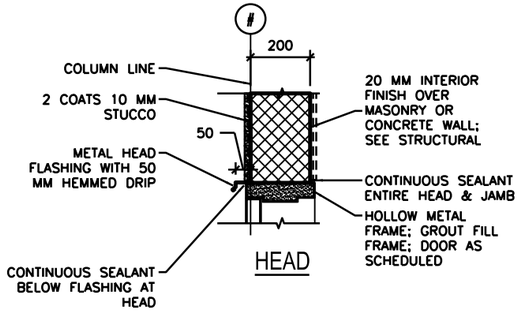

HEAD

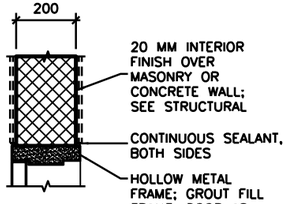

HEAD

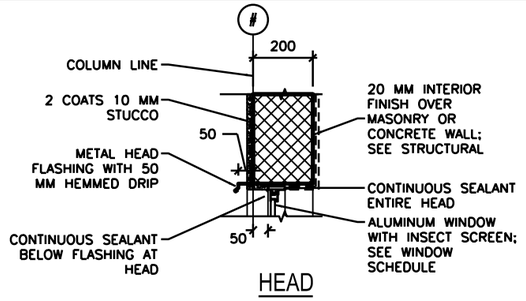

HEAD

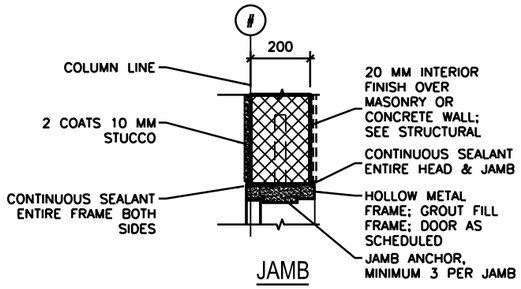

JAMB

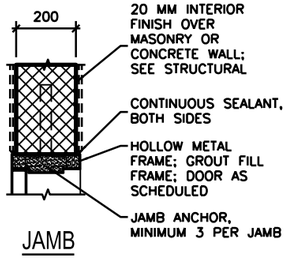

JAMB

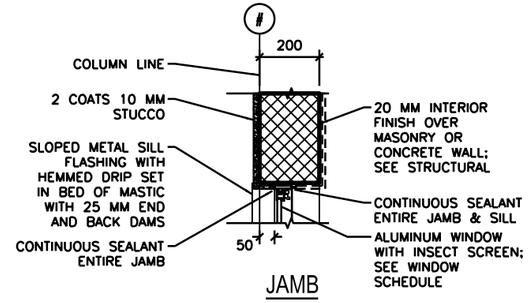

JAMB

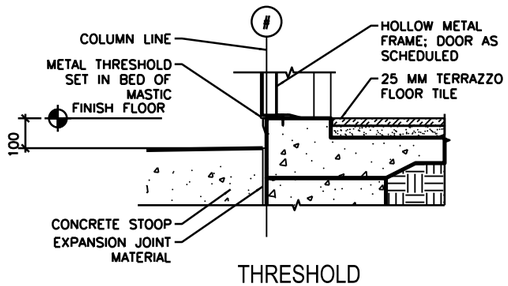

THRESHOLD

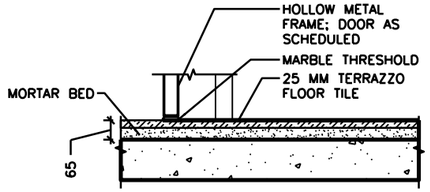

THRESHOLD

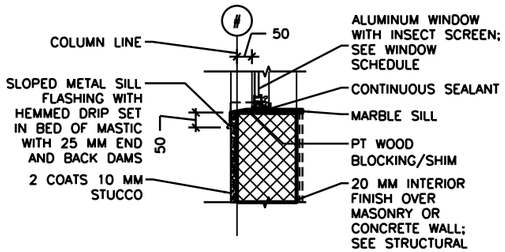

SILL

1 / A-502 EXTERIOR DOOR DETAILS
SCALE: 1:10

2 / A-502 INTERIOR DOOR DETAILS
SCALE: 1:10

3 / A-502 EXTERIOR WINDOW DETAILS
SCALE: 1:10

0 200 400
SCALE: 1:10

LINEAR DIMENSIONS SHOWN ARE IN MILLIMETERS (MM), UNLESS OTHERWISE NOTED

US Army Corps of Engineers
AFGHANISTAN ENGINEER DISTRICT

MARK	DESCRIPTION	DATE	APPR.

MARK	DESCRIPTION	DATE	APPR.

DESIGNED BY:
DWN BY:
CKD BY:
SUBMITTED BY:
DATE:
SOLICITATION NO.:
CONTRACT NO.:
PLOT SCALE: AS NOTED
PLOT DATE: 2019
SIZE: ANSI D
FILE NUMBER:
FILE NAME: L01_A-502.dwg

U.S. ARMY CORPS OF ENGINEERS
AFGHANISTAN DISTRICT
APO AE 96338

STANDARD DESIGNS
VARIOUS PROJECTS
VARIOUS SITES, VARIOUS LOCATIONS

L01 - LATRINE - SMALL
HEAD, JAMB & SILL DETAILS

SHEET IDENTIFICATION
A-502
SHEET 19 OF 36

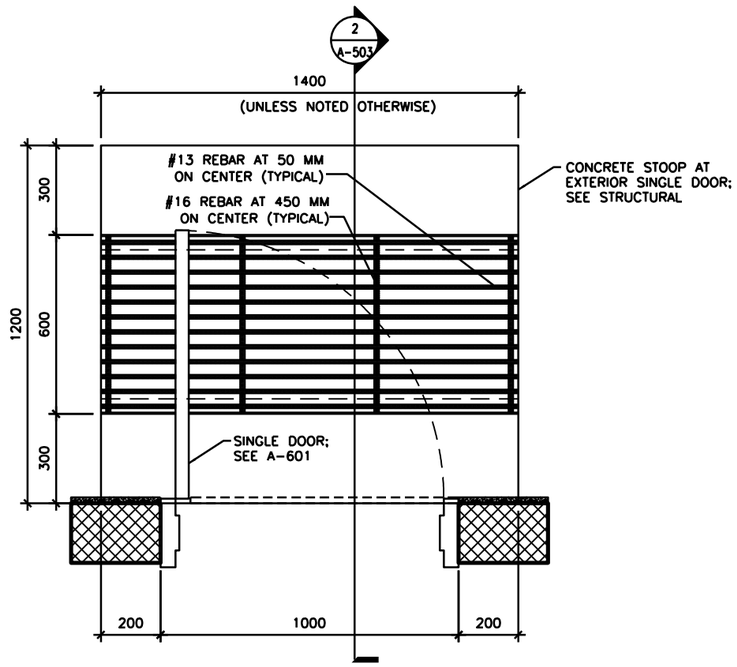

1 A-503 DOOR STOOP PLAN (WITH GRATE)

SCALE: 1:10

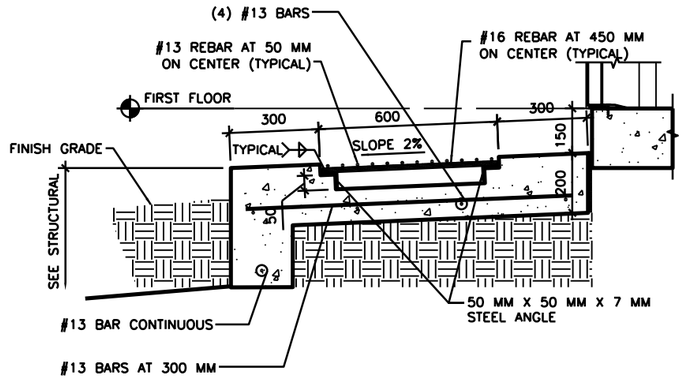

2 A-503 DOOR STOOP DETAIL

SCALE: 1:10

0 200 400

SCALE: 1:10

LINEAR DIMENSIONS SHOWN ARE IN MILLIMETERS (MM). UNLESS OTHERWISE NOTED

US Army Corps of Engineers®
AFGHANISTAN ENGINEER DISTRICT

MARK	DESCRIPTION	DATE	APPR.

MARK	DESCRIPTION	DATE	APPR.

DESIGNED BY:
DWN BY:
CKD BY:
SUBMITTED BY:
DATE:
SOLICITATION NO.:
CONTRACT NO.:
PLOT SCALE: 1:1
PLOT DATE: 8/27/2021
FILE NUMBER:
SIZE: ANSI D
FILE NAME: L01_A-503.dwg

U.S. ARMY CORPS OF ENGINEERS
AFGHANISTAN DISTRICT
APO AE 96338

STANDARD DESIGNS
VARIOUS PROJECTS
VARIOUS SITES, VARIOUS LOCATIONS

L01 - LATRINE - SMALL
STOOP DETAILS

SHEET IDENTIFICATION
A-503
SHEET 20 OF 36

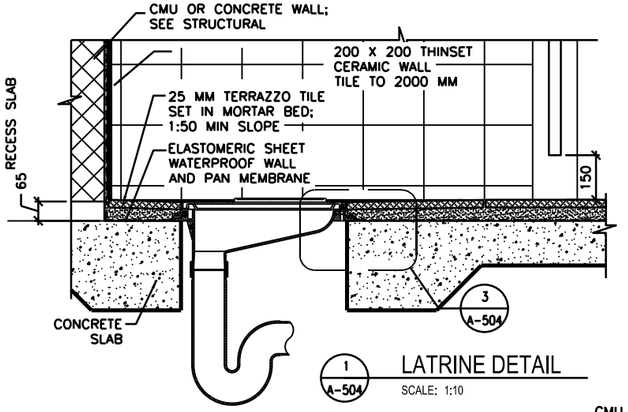

1 A-504 LATRINE DETAIL
SCALE: 1:10

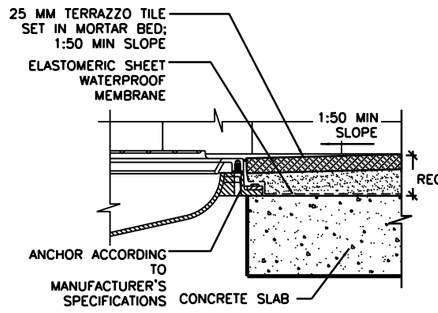

3 A-504 MOUNTING DETAIL
SCALE: 1:5

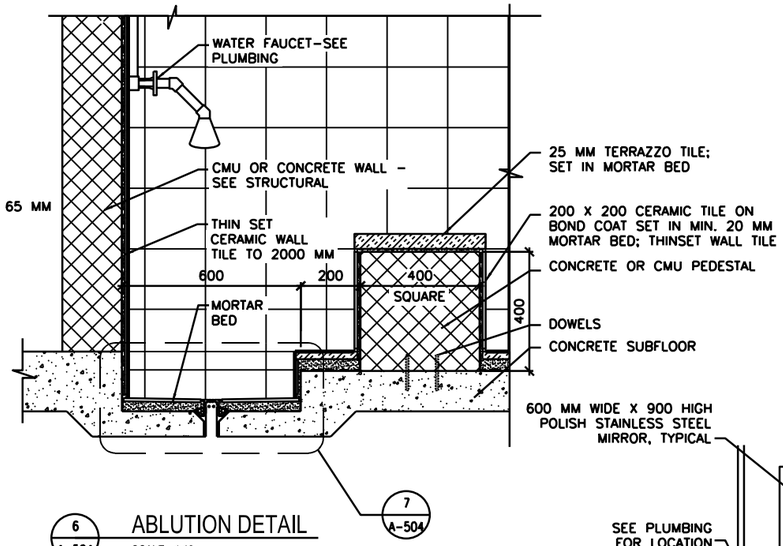

6 A-504 ABLUTION DETAIL
SCALE: 1:10

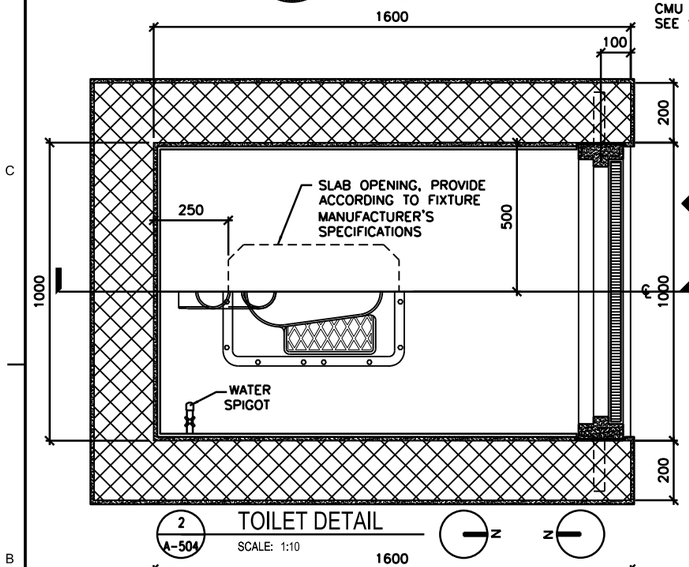

2 A-504 TOILET DETAIL
SCALE: 1:10

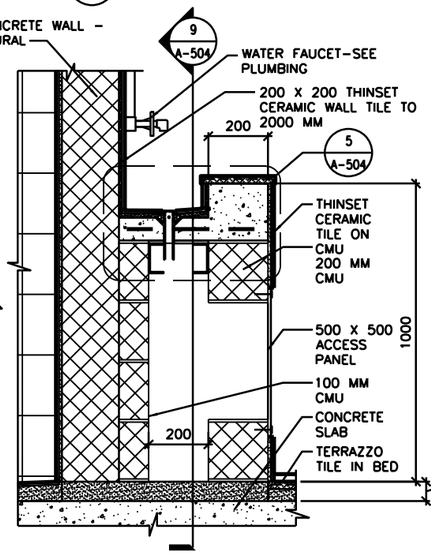

4 A-504 LAVATORY SECTION
SCALE: 1:10

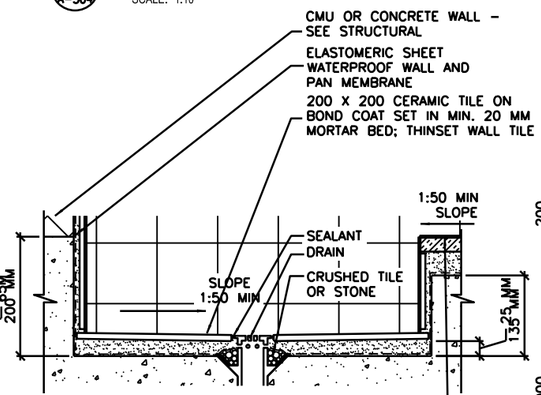

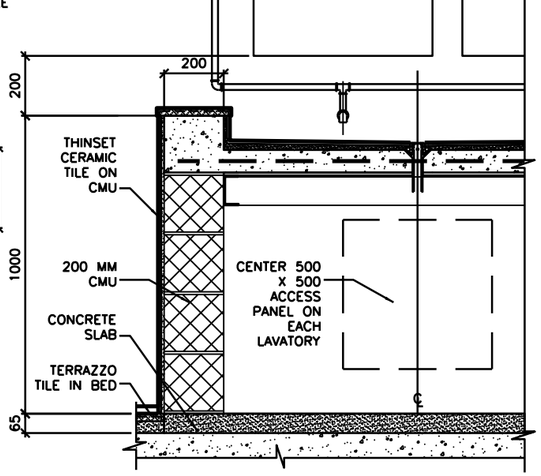

9 A-504 LAVAROTY SECTION
SCALE: 1:10

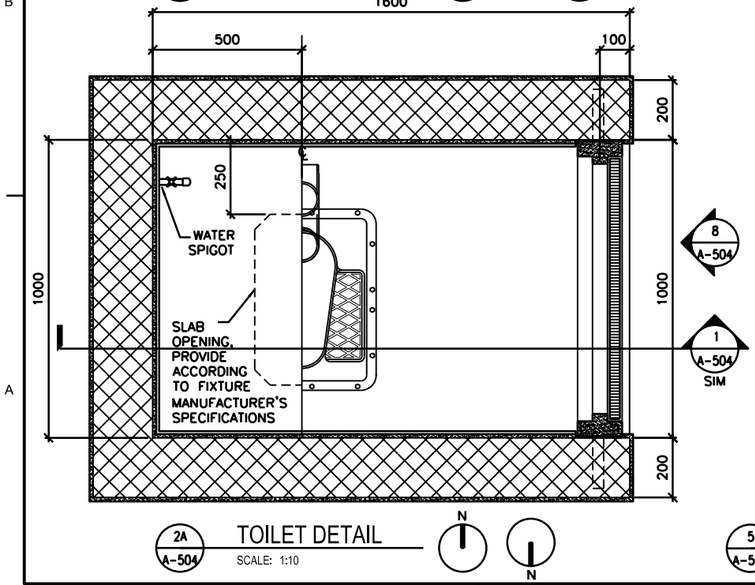

2A A-504 TOILET DETAIL
SCALE: 1:10

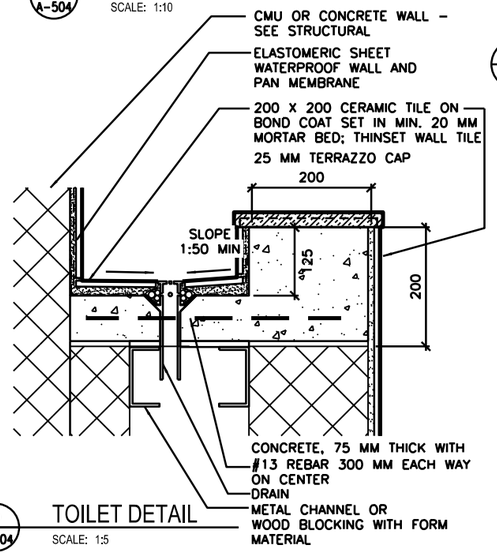

5 A-504 TOILET DETAIL
SCALE: 1:5

7 A-504 RECESSED TROUGH
SCALE: 1:5

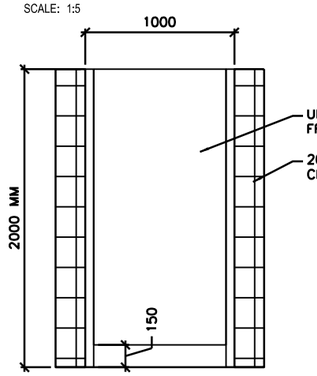

8 A-504 TOILET PARTITION DOOR ELEVATION
SCALE: 1:20

LINEAR DIMENSIONS SHOWN ARE IN MILLIMETERS (MM), UNLESS OTHERWISE NOTED

0 100 200
SCALE: 1:5

0 200 400
SCALE: 1:10

0 400 800
SCALE: 1:20

US Army Corps of Engineers
AFGHANISTAN ENGINEER DISTRICT

MARK	DESCRIPTION	DATE	APPR.	MARK	DESCRIPTION	DATE	APPR.

DESIGNED BY:
DWN BY:
CKD BY:
SUBMITTED BY:
DATE:
SOLICITATION NO.:
CONTRACT NO.:
FILE NUMBER:
PLOT SCALE: 1:1
PLOT DATE:
SIZE: ANSI D
FILE NAME: L01_A-504.dwg

U.S. ARMY CORPS OF ENGINEERS
AFGHANISTAN DISTRICT
APO AE 96338

STANDARD DESIGNS
VARIOUS PROJECTS
VARIOUS SITES, VARIOUS LOCATIONS

L01 - LATRINE - SMALL
TOILET, LAVATORY & ABLUTION DETAILS

SHEET IDENTIFICATION
A-504
SHEET 21 OF 36

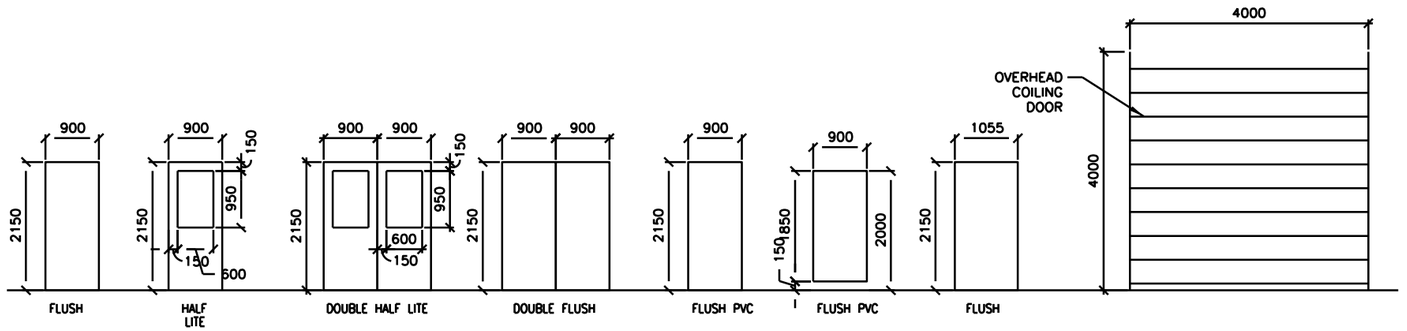

1 A-601 DOOR TYPES
SCALE: 1:50

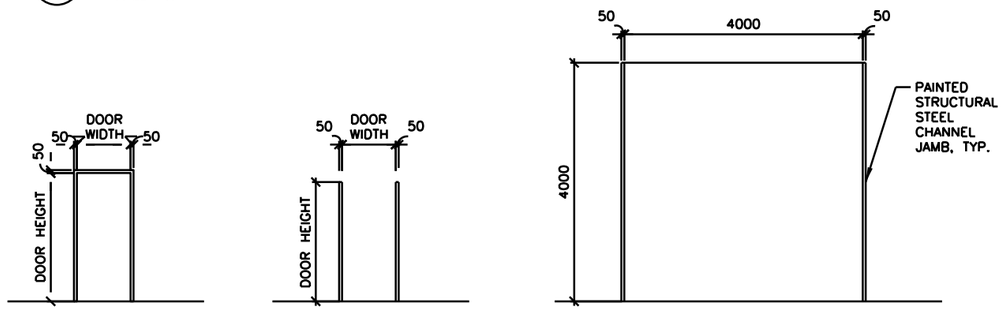

2 A-601 FRAME TYPES
SCALE: 1:50

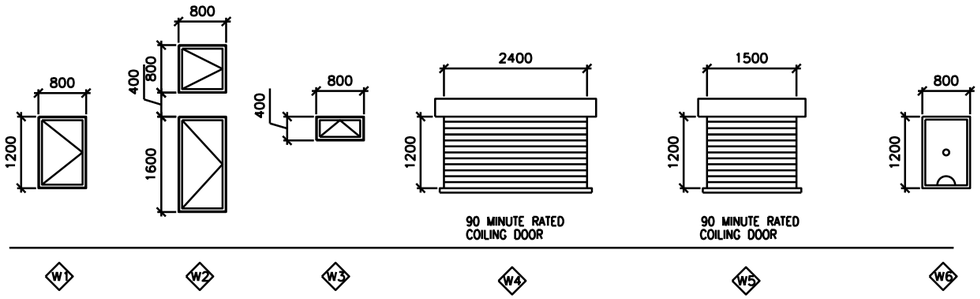

3 A-601 WINDOW TYPES
SCALE: 1:50

4 A-601 DOOR TAG
SCALE: NTS

5 A-601 RATED DOOR TAG
SCALE: NTS

WINDOW TYPE NOTES:

1. ALL EXTERIOR WINDOWS SHALL BE ALUMINUM WITH INSECT SCREENS. WINDOWS SHALL BE COMMERCIAL GRADE.
2. ALL EXTERIOR WINDOWS SHALL BE OPERABLE.

DOOR TAG NOTES:

1. THE DOOR TAG INDICATES THE DOOR TYPE, FRAME TYPE AND HARDWARE SET FOR EACH DOOR.
2. THE DOOR TAG FOR RATED DOORS INCLUDES THE RATING OF THE DOOR IN MINUTES.

THIS SHEET IS STANDARD AND IS INCLUSIVE OF ALL THE DOOR/ WINDOW/ HARDWARE TYPES FOR THE ENTIRE RMTC CONTRACT. NOT ALL DOOR/ WINDOW/ HARDWARE TYPES ARE USED FOR ANY PARTICULAR BUILDING DESIGN. CONTRACTOR SHALL REFER TO THE FLOOR PLAN FOR THE TYPES BEING USED.

EXTERIOR DOOR HARDWARE TYPES:

HW-1
1-1/2 PR HINGES, A5112 114 X 114
1 EA RIM EXIT DEVICE, TYPE 1
1 EA CYLINDER. E09221A, GRADE 1
1 EA OVERHEAD CLOSER, C02061, LOW RESISTANCE
1 EA THRESHOLD, J32130
3 EA DOOR SILENCERS, L03011

HW-2
1-1/2 PR HINGES, A5112 114 X 114
1 EA LOCKSET, F13 ENTRY LOCK W/LEVER HANDLES, GRADE 1
1 EA OVERHEAD CLOSER, C02061, LOW RESISTANCE
1 EA THRESHOLD, J32130
3 EA DOOR SILENCERS, L03011

HW-3
3 PR HINGES, A5112 114 X 114
2 EA RIM EXIT DEVICE, TYPE 1
2 EA CYLINDER. GRADE 1
2 EA OVERHEAD CLOSER, C02061, LOW RESISTANCE
1 EA DOOR COORDINATOR, TYPE 21
1 EA ASTRAGAL
1 EA THRESHOLD, J32130
2 EA DOOR SILENCERS, L03011

HW-4
3 PR HINGES, A5112 114 X 114
1 EA LOCKSET W/LEVER HANDLES. GRADE 1, F13
1 EA OVERHEAD CLOSER, C02061, LOW RESISTANCE
2 EA MAGNETIC HOLDER PIN, ATTACHED TO DOOR LEAF
2 EA MAGNETIC HOLDER RECEIVER, ATTACHED TO STOOP
2 EA LEVER EXTENSION FLUSH BOLTS, L04081
1 EA ASTRAGAL
1 EA THRESHOLD, J32130
2 EA DOOR SILENCERS, L03011

DOOR AND HARDWARE NOTES:

1. INTERIOR AND EXTERIOR METAL DOORS AND FRAME COLORS SHALL MATCH ADJACENT WALL COLORS AS SELECTED BY THE CONTRACTING OFFICER.
2. FRAMES, EXCEPT FIRE-RATED FRAMES, SHALL BE MOUNTED AND ADJUSTED IN ACCORDANCE WITH MANUFACTURER'S INSTRUCTIONS. FRAMES SHALL BE FASTENED WITH MINIMUM OF THREE ANCHORS PER JAMB AT EQUAL INTERVALS.
3. DIMENSIONS SHOWN ON DOOR TYPES DETAIL ARE BASED UPON MODULAR MASONRY (OR ROUGH OPENING), HEIGHT OF 2200 MM FOR STANDARD PERSONNEL DOORS. CONTRACTOR SHALL COORDINATE WITH DOOR SUPPLIER TO ENSURE THAT DIMENSIONS OF DOORS AND FRAMES PROVIDED ARE COMPATIBLE WITH DOOR OPENING DIMENSIONS.
4. HARDWARE SHALL BE HEAVY DUTY, COMMERCIAL GRADE, STAINLESS STEEL WITH A SATIN OR BRUSHED FINISH.
5. HARDWARE TYPES INCLUDE BUILDERS HARDWARE MANUFACTURERS ASSOCIATION (BMHA) NUMBER.
6. DOORS IN 2 HOUR RATED PARTITIONS SHALL BE 1.5 HOUR (90 MINUTE) RATED DOORS IN ACCORDANCE WITH NFPA 101, TABLE 8.3.4.2.
7. DOORS AT STAIR ENCLOSURES SHALL BE 1 HOUR (60 MINUTE) RATED AT 1 HOUR WALL IN ACCORDANCE WITH NFPA 101, TABLE 8.3.4.2.

DOOR AND HARDWARE NOTES (CONT'D):

8. DOORS IN 1 HOUR RATED WALLS SHALL BE 3/4 HOUR (45 MINUTE) RATED DOORS IN ACCORDANCE WITH NFPA 101, TABLE 8.3.4.2.
9. DOORS IN 1 HOUR RATED CORRIDOR WALLS SHALL BE 1/3 HOUR (20 MINUTE) IN ACCORDANCE WITH NFPA 101, TABLE 8.3.4.2.
10. PROVIDE DOOR STOPS TO PROTECT WALLS ON LOCATIONS WHERE DOOR SWING WILL STRIKE WALL.

EXTERIOR DOOR HARDWARE TYPES:

HW-5
1-1/2 PR HINGES, A8133 114 X 114
1 EA LOCKSET W/LEVER HANDLES, F08, GRADE 1
1 EA WALL STOP, L02101 OR L02161
3 EA DOOR SILENCERS, L03011

HW-6
1-1/2 PR HINGES, A8112 114 X 114
1 EA LOCKSET W/LEVER HANDLES, F08, GRADE 1
1 EA WALL STOP, L02101 OR L02161
1 EA OVERHEAD CLOSER, C02061, LOW RESISTANCE
3 EA DOOR SILENCERS, L03011

HW-7
1-1/2 PR HINGES, A8133
1 EA LOCKSET W/LEVER HANDLES, F13 GRADE 1
1 EA WALL STOP, L02101 OR L02161
2 EA MOP PLATE, J103
3 EA DOOR SILENCERS, L03011

HW-8
1-1/2 PR HINGES, A8112
1 EA LOCKSET W/LEVER HANDLES, F13 GRADE 1
1 EA WALL STOP, L02101 OR L02161
2 EA MOP PLATE, J103
1 EA OVERHEAD CLOSER, C02061, LOW RESISTANCE
3 EA DOOR SILENCERS, L03011

HW-9
1-1/2 PR HINGES, A5112 114 X 114
1 EA RIM EXIT DEVICE, TYPE 1
1 EA CYLINDER. E09221A, GRADE 1
1 EA OVERHEAD CLOSER, C02061, LOW RESISTANCE
3 EA DOOR SILENCERS, L03011

HW-10
3 PR HINGES, A5112 114 X 114
1 EA LOCKSET W/LEVER HANDLES. GRADE 1, F13
2 EA LEVER EXTENSION FLUSH BOLTS, L04081
1 EA ASTRAGAL
2 EA DOOR SILENCERS, L03011

HW-11
1-1/2 PR HINGES, A8112 114 X 114
1 EA LOCKSET W/LEVER HANDLES, F13, GRADE 1
1 EA WALL STOP, L02101 OR L02161
1 EA OVERHEAD CLOSER, C02061, LOW RESISTANCE
3 EA DOOR SILENCERS, L03011
1 EA ROBE HOOK

HW-12
1-1/2 PR HINGES, A8133
1 EA LATCHSET W/LEVER HANDLES, F76 GRADE 1
1 EA WALL STOP, L02101 OR L02161
2 EA MOP PLATE, J103
3 EA DOOR SILENCERS, L03011
1 EA ROBE HOOK

HW-13
3 PR HINGES, A5112 114 X 114
1 EA LOCKSET W/LEVER HANDLES. GRADE 1, F13
1 EA OVERHEAD CLOSER, C02061, LOW RESISTANCE
2 EA LEVER EXTENSION FLUSH BOLTS, L04081
1 EA ASTRAGAL
2 EA DOOR SILENCERS, L03011

HW-14
3 PR HINGES, A5112 114 X 114
2 EA RIM EXIT DEVICE, TYPE 1
2 EA CYLINDER. GRADE 1
2 EA OVERHEAD CLOSER, C02061, LOW RESISTANCE
1 EA DOOR COORDINATOR, TYPE 21
1 EA ASTRAGAL
2 EA DOOR SILENCERS, L03011

US Army Corps of Engineers
AFGHANISTAN ENGINEER DISTRICT

MARK	DESCRIPTION	DATE	APPR.

DESIGNED BY:
DWN BY:
CKD BY:
SUBMITTED BY:
DATE:
SOLICITATION NO.:
CONTRACT NO.:
PLOT SCALE:
PLOT DATE: 8/2/2011
FILE NUMBER:
SIZE: ANSI D
FILE NAME: L01_A-601.dwg

U.S. ARMY CORPS OF ENGINEERS
AFGHANISTAN DISTRICT
APO AE 96338

STANDARD DESIGNS
VARIOUS PROJECTS
VARIOUS SITES, VARIOUS LOCATIONS

L01 - LATRINE - SMALL
WINDOW & DOOR SCHEDULES

SHEET IDENTIFICATION
A-601
SHEET 22 OF 36

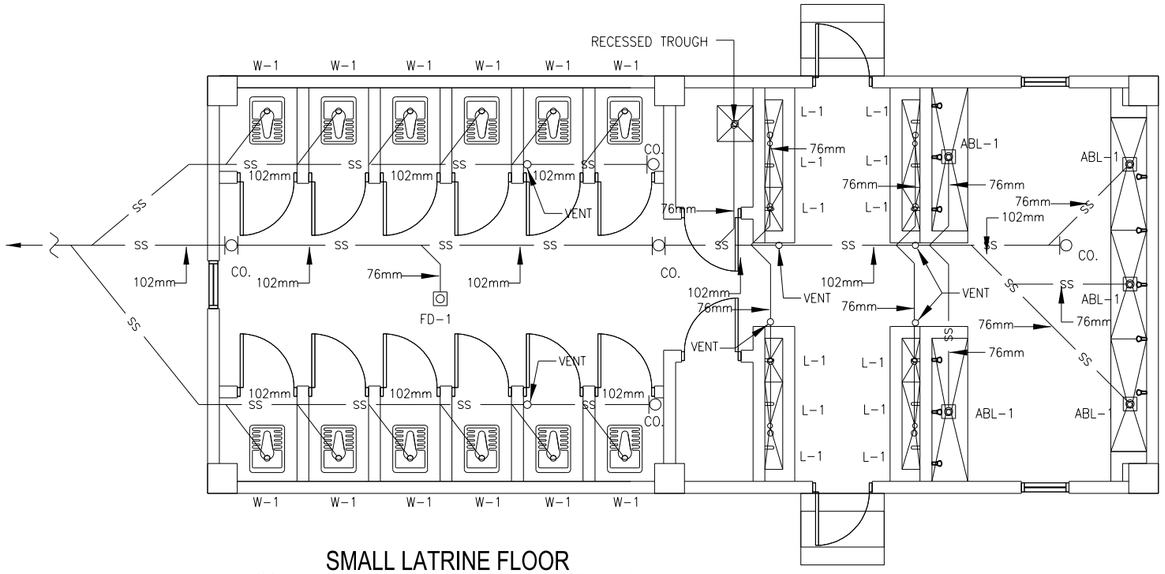

1 / P-101 SMALL LATRINE FLOOR PLAN - PLUMBING (SANITARY)

SCALE: 1:50

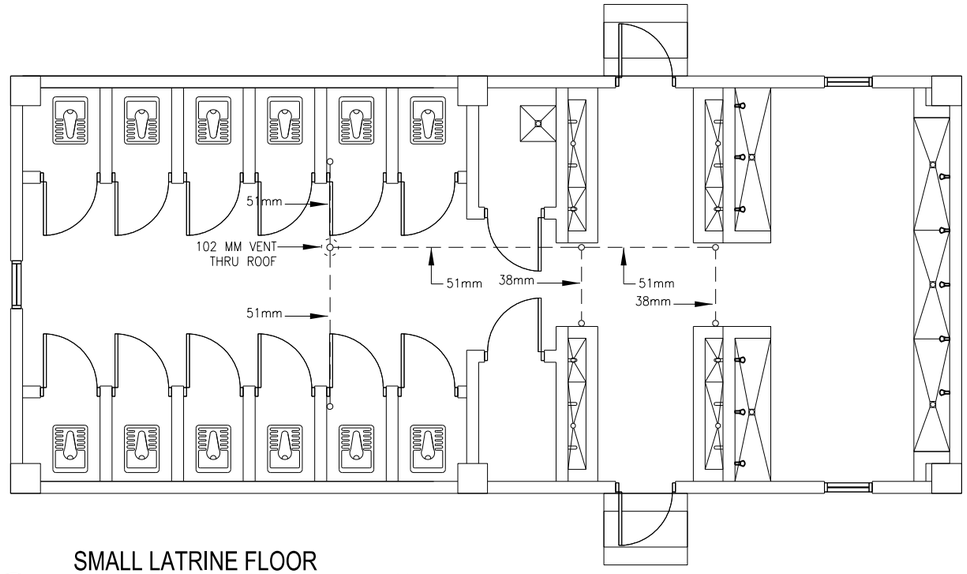

2 / P-101 SMALL LATRINE FLOOR PLAN - PLUMBING (VENT PIPING)

SCALE: 1:50

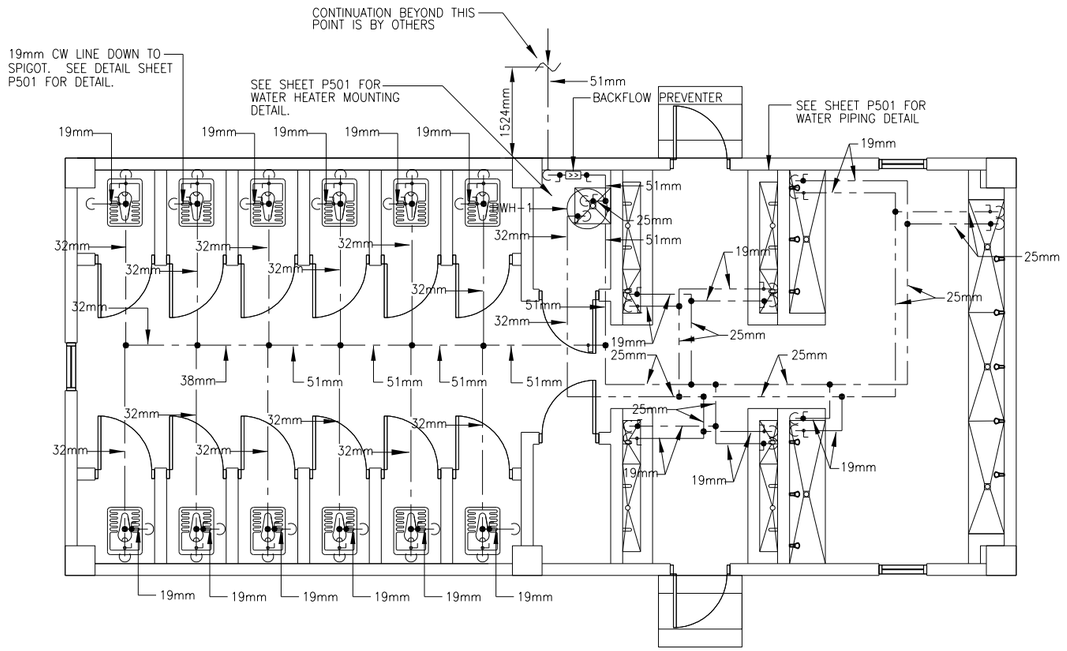

3 / P-101 SMALL LATRINE FLOOR PLAN - PLUMBING (HOT & COLD WATER)

SCALE: 1:50

FLOOR PLAN NOTES:

1. DO NOT SCALE DRAWINGS – ALL DIMENSIONS AND CONDITIONS SHALL BE CHECKED AND VERIFIED BY THE CONTRACTOR AT THE SITE.
2. ALL WORK PERFORMED ON THIS BUILDING SHALL BE IN COMPLIANCE WITH ALL PERTINENT CODES, RULES, ORDINANCES AND REGULATIONS OF THE GOVERNING AUTHORITIES.
3. ALL WORK PERFORMED UNDER AND IN CONNECTION WITH THESE DRAWINGS AND SPECIFICATIONS SHALL BE IN STRICT COMPLIANCE WITH THE LATEST SAFETY AND HEALTH STANDARDS.
4. REPORT ANY DISCREPANCIES FOUND IN THE PLUMBING DRAWINGS AND/OR IN THE SPECIFICATIONS DURING THE BIDDING PROCESS FOR CLARIFICATION BY THE ENGINEER.
5. ALL EASTERN STYLE WATER CLOSETS IN THIS FACILITY ARE TO HAVE THE FIXTURE DESIGNATION OF W-1. EACH FIXTURE SHALL HAVE A 25mm (1 INCH) COLD WATER LINE EXTENDED TO IT AND THEN BE REDUCED TO 13mm (1/2 INCH) FOR A FINAL CONNECTION TO THE FLUSH TANK AND A 102mm (4) INCH SANITARY CONNECTION.
6. ALL TROUGH FIXTURES IN THIS FACILITY ARE TO HAVE THE FIXTURE DESIGNATION OF L-1. EACH FIXTURE SHALL HAVE A 13mm (1/2 INCH) COLD WATER, 13mm (1/2 INCH) HOT WATER CONNECTION AND A 76mm (3 INCH) SANITARY CONNECTION.
7. ALL ABLUTION FIXTURES IN THIS FACILITY ARE TO HAVE THE FIXTURE DESIGNATION OF ABL-1. EACH FIXTURE SHALL HAVE A 13mm (1/2 INCH) COLD WATER, 13mm (1/2 INCH) HOT WATER CONNECTION AND A 76mm (3 INCH) SANITARY CONNECTION.
8. REFER TO SHEET P501 & P502 FOR DETAILS AND SYMBOLS.
9. ALL WATER, SANITARY AND VENT LINES TO BE EXPOSED. RUN LINES TIGHT TO CEILING AND WALL.
10. CONTRACTOR TO COORDINATE ALL WORK WITH MECHANICAL AND ELECTRICAL DRAWINGS.
11. L-1 DESIGNATION REPRESENTS THE NUMBER OF FAUCETS FOR THE TROUGH FIXTURE.
12. CONTRACTOR TO COORDINATE WATER PIPING MOUNTING LOCATION WITH BOTH MECHANICAL & ELECTRICAL DRAWINGS.

PLUMBING SYMBOLS

- SS — SANITARY SEWER PIPING (BELOW GROUND)
- SS — SANITARY SEWER PIPING (ABOVE GROUND)
- VENT PIPING (V)
- COLD WATER PIPING (CW)
- HOT WATER PIPING (HW)
- BALL VALVE
- BACKFLOW PREVENTER
- OR — CLEANOUT (CO.)
- ROOF PENETRATION

0 1000 2000

SCALE: 1:50

LINEAR DIMENSIONS SHOWN ARE IN MILLIMETERS (MM), UNLESS OTHERWISE NOTED

US Army Corps of Engineers®
AFGHANISTAN ENGINEER DISTRICT

MARK	DESCRIPTION	DATE	APPR.

MARK	DESCRIPTION	DATE	APPR.

DESIGNED BY:
DWN BY:
CKD BY:
SUBMITTED BY:
DATE:
SOLICITATION NO.:
CONTRACT NO.:
FILE NUMBER:
PLOT SCALE: 1:1 PLOT DATE: 8/29/2013
SIZE: ANSI D
FILE NAME: L01_P-101.dwg

U.S. ARMY CORPS OF ENGINEERS
AFGHANISTAN DISTRICT
APO AE 96338

STANDARD DESIGNS
VARIOUS PROJECTS
VARIOUS SITES, VARIOUS LOCATIONS

L01 - LATRINE - SMALL
FLOOR PLAN - PLUMBING

SHEET IDENTIFICATION
P-101
SHEET 23 OF 36

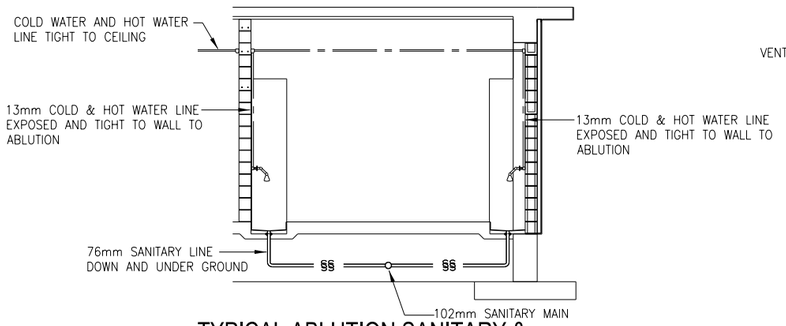

TYPICAL ABLUTION SANITARY & WATER INSTALLATION SCHEMATIC

SCALE: N.T.S.

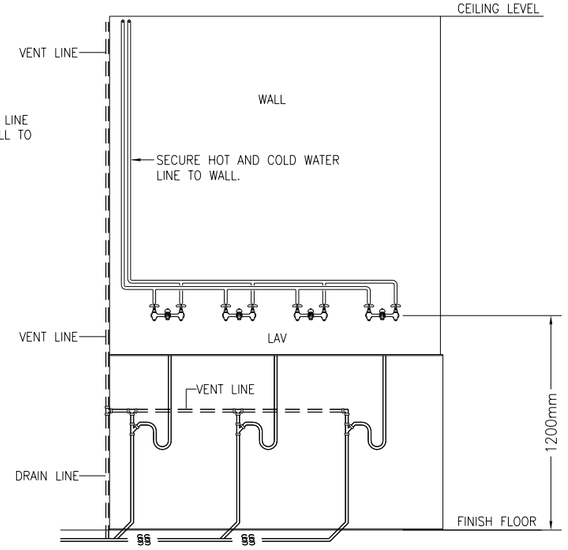

LAVATORY ELEVATION PLAN - PLUMBING

SCALE: N.T.S.

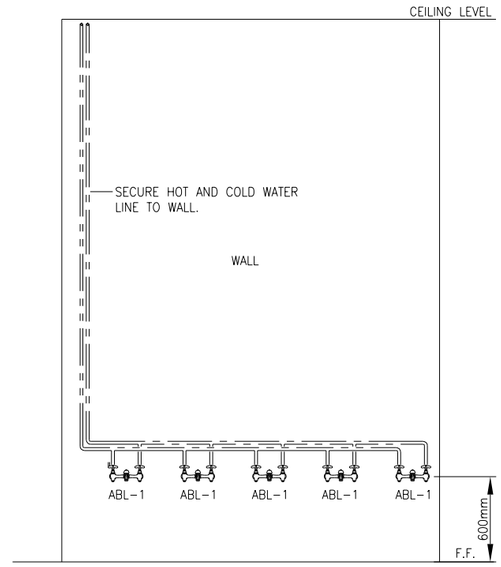

TYPICAL ABLUTION ELEVATION PLUMBING PLAN - WATER INSTALLATION SCHEMATIC

SCALE: N.T.S.

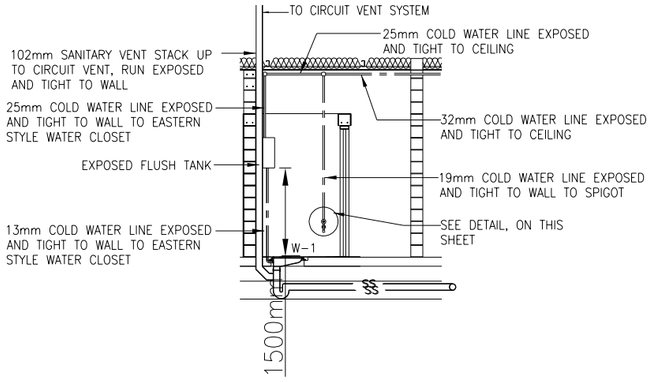

TYPICAL EASTERN STYLE WATER CLOSET SANITARY & WATER INSTALLATION SCHEMATIC

SCALE: N.T.S.

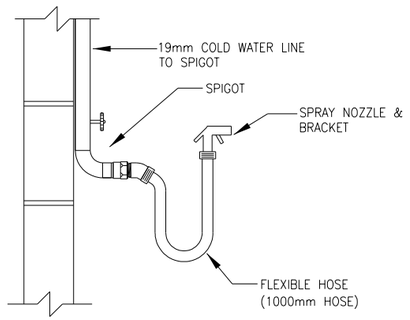

TYPICAL DETAIL - SPIGOT, FLEXIBLE HOSE, AND SPRAY NOZZLE

SCALE: N.T.S.

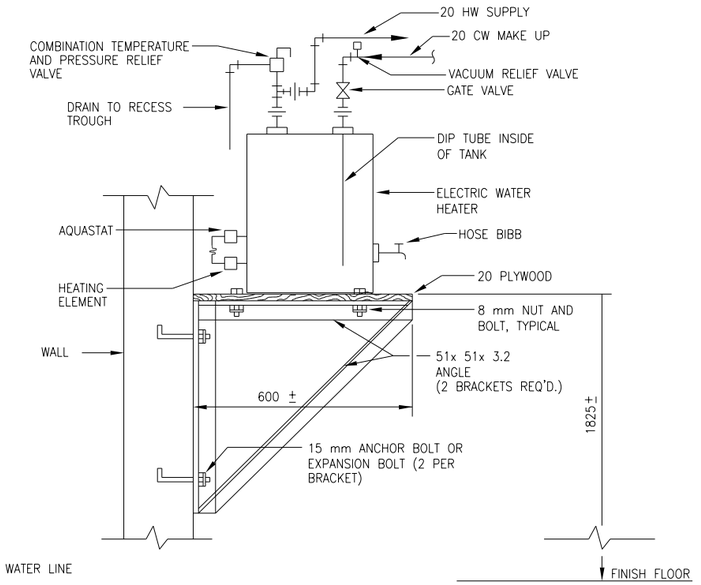

WALL MOUNTED ELECTRIC WATER HEATER DETAIL

SCALE: N.T.S.

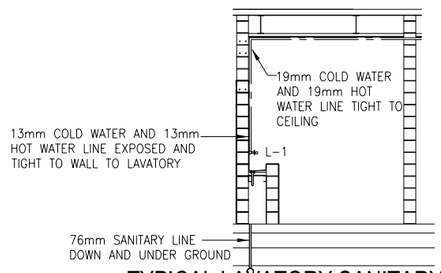

TYPICAL LAVATORY SANITARY & WATER INSTALLATION SCHEMATIC

SCALE: N.T.S.

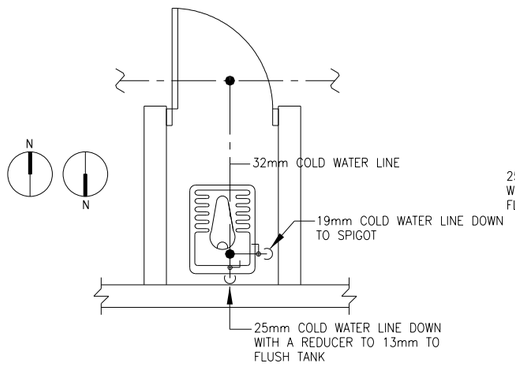

TYPICAL EASTERN STYLE WATER CLOSET WITH SPIGOT WATER PIPING DETAIL

SCALE: N.T.S.

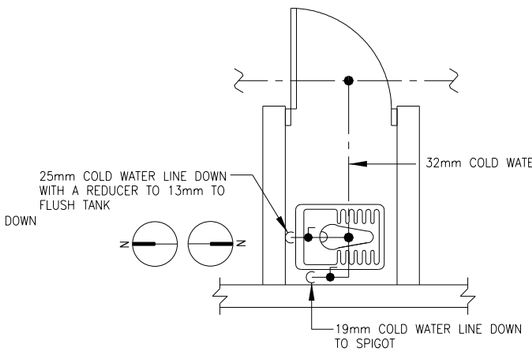

TYPICAL EASTERN STYLE WATER CLOSET WITH SPIGOT WATER PIPING DETAIL

SCALE: N.T.S.

US Army Corps of Engineers
AFGHANISTAN ENGINEER DISTRICT

MARK	DESCRIPTION	DATE	APPR.

DESIGNED BY:
DWN BY:
CKD BY:
SUBMITTED BY:
DATE:
SOLICITATION NO.:
CONTRACT NO.:
FILE NUMBER:
PLOT SCALE: AS PDF DOCUMENT
PLOT DATE:
FILE NAME: L01_P501.dwg
SIZE: ANSI D

U.S. ARMY CORPS OF ENGINEERS
AFGHANISTAN DISTRICT
APO AE 96338

STANDARD DESIGNS
VARIOUS PROJECTS
VARIOUS SITES, VARIOUS LOCATIONS

L01 - LATRINE - SMALL
PLUMBING DETAILS

SHEET IDENTIFICATION
P-501
SHEET 24 OF 36

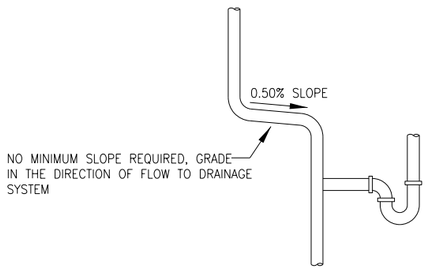

TYPICAL VENT SLOPE DETAIL

SCALE: N.T.S.

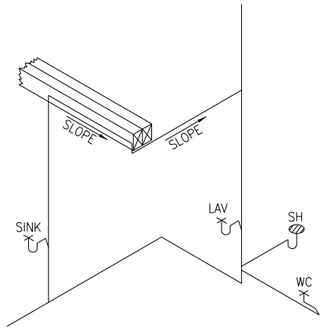

TYPICAL VENT SLOPE DETAIL

SCALE: N.T.S.

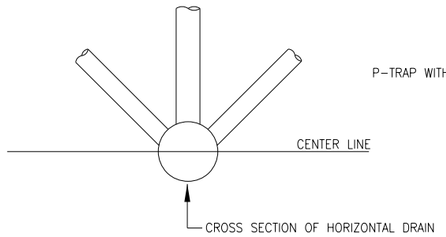

ACCEPTABLE VENT CONNECTIONS TO HORIZONTAL DRAIN - DETAIL

SCALE: N.T.S.

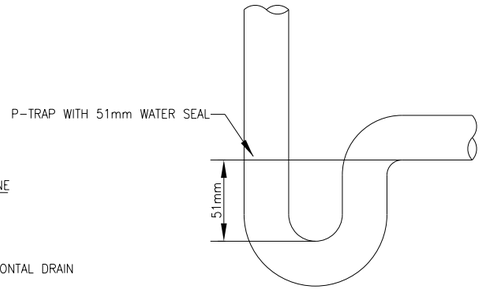

P-TRAP WITH 51mm WATER SEAL DETAIL

SCALE: N.T.S.

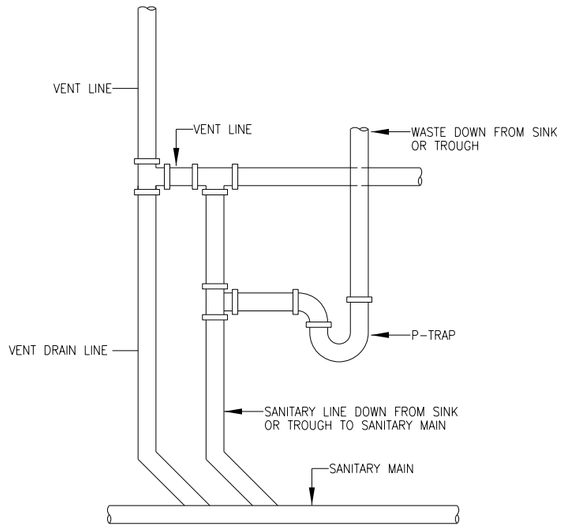

TYPICAL LAVATORY/LAUNDRY VENT DETAIL

SCALE: N.T.S.

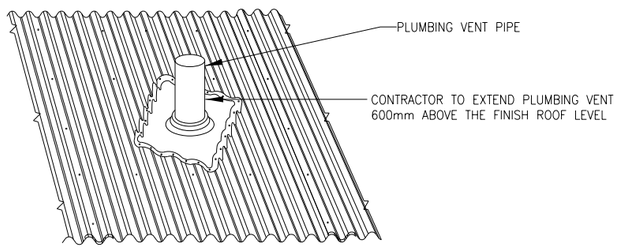

PLUMBING VENT THRU ROOF DETAIL

SCALE: NTS

FIXTURE LIST

TYPE	ITEM	SOIL & WASTE	VENT	COLD WATER	HOT WATER	REMARKS	REMARKS 2
W-1	EASTERN STYLE WATER CLOSET	102mm	51mm	13mm	------	FLUSH TANK	LOW FLOW EFFICIENT TYPE
L-1	TROUGH FIXTURE	38mm	38mm	13mm	13mm	FABRICATED IN FIELD	LOW FLOW EFFICIENT TYPE
ABL-1	ABLUTION	FLOOR DRAIN	------	13mm	13mm	FABRICATED IN FIELD	----------
HWH-1	WATER HEATER	---	---	SEE DWG.	SEE DWG.	151 LITER ELECTRIC WATER HEATER, 380/3ø, 9KW	----------

US Army Corps of Engineers®
AFGHANISTAN ENGINEER DISTRICT

MARK	DESCRIPTION	DATE	APPR.

MARK	DESCRIPTION	DATE	APPR.

U.S. ARMY CORPS OF ENGINEERS
AFGHANISTAN DISTRICT
APO AE 96338

DESIGNED BY: | DATE:
DWN BY: | CKD BY: | SOLICITATION NO.:
SUBMITTED BY: | CONTRACT NO.:
PLOT SCALE: 1:50 | PLOT DATE: 02/12/2011 | FILE NUMBER:
SIZE: ANSI D | FILE NAME: L01_P-502.dwg

STANDARD DESIGNS
VARIOUS PROJECTS
VARIOUS SITES, VARIOUS LOCATIONS

L01 - LATRINE - SMALL
PLUMBING DETAILS

SHEET IDENTIFICATION
P-502
SHEET 25 OF 36

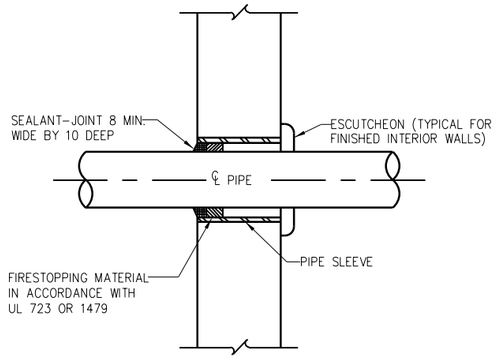

TYPICAL WALL PENETRATION DETAIL

SCALE: N.T.S.

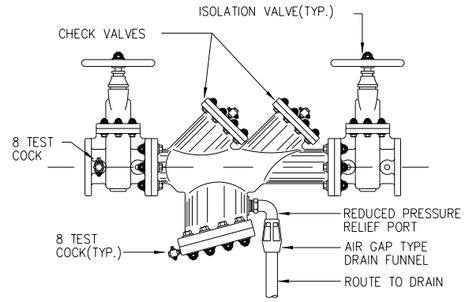

TYPICAL BACKFLOW PREVENTER DETAIL

SCALE: N.T.S.

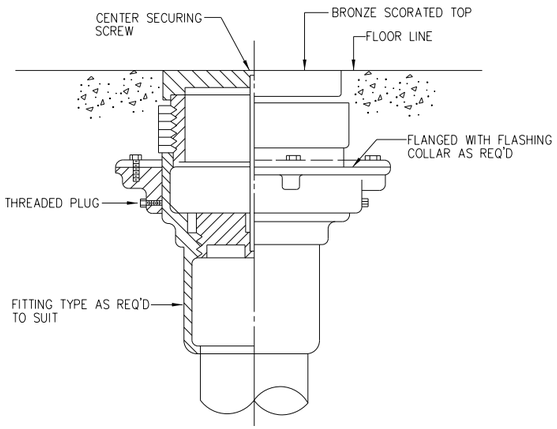

TYPICAL FLOOR CLEANOUT DETAIL

SCALE: N.T.S.

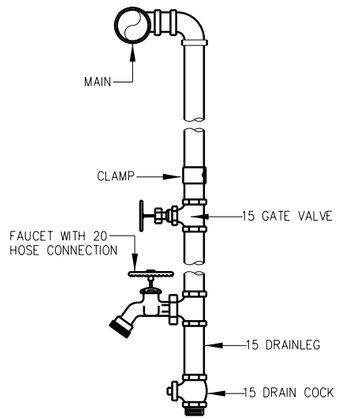

TYPICAL WATER DROP DETAIL

SCALE: N.T.S.

US Army Corps of Engineers®
AFGHANISTAN ENGINEER DISTRICT

MARK	DESCRIPTION	DATE	APPR.	MARK	DESCRIPTION	DATE	APPR.

U.S. ARMY CORPS OF ENGINEERS
AFGHANISTAN DISTRICT
APO AE 96338

DESIGNED BY: | DATE:
DWN BY: | CKD BY: | SOLICITATION NO.:
SUBMITTED BY: | CONTRACT NO.:
PLOT SCALE: 1:50 | PLOT DATE: 02/12/2011 | FILE NUMBER:
SIZE: ANSI D | FILE NAME: L01_P-503.dwg

STANDARD DESIGNS
VARIOUS PROJECTS
VARIOUS SITES, VARIOUS LOCATIONS

L01 - LATRINE - SMALL
PLUMBING DETAILS

SHEET IDENTIFICATION
P-503
SHEET 26 OF 36

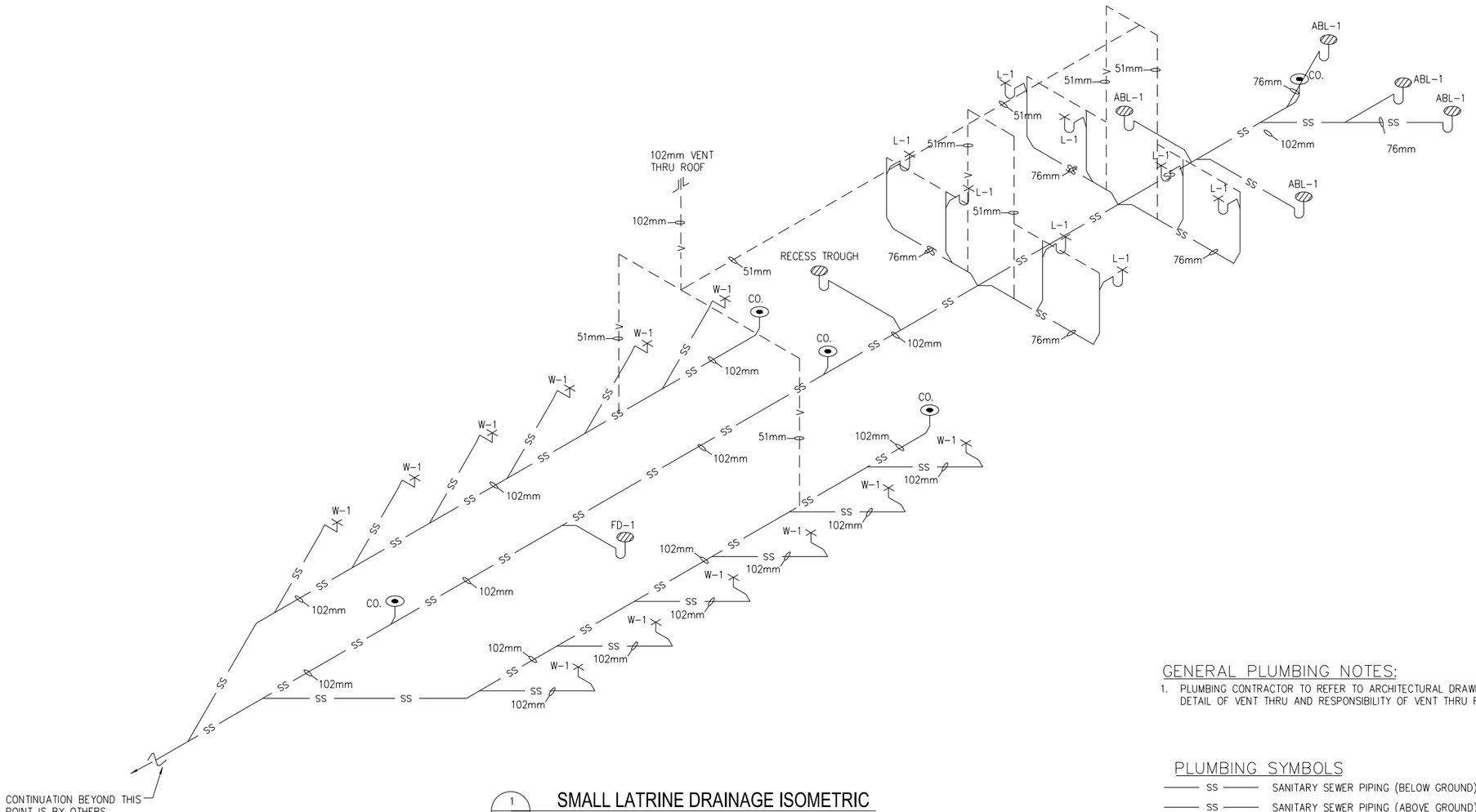

1 P-901 SMALL LATRINE DRAINAGE ISOMETRIC

SCALE: N.T.S.

GENERAL PLUMBING NOTES:

1. PLUMBING CONTRACTOR TO REFER TO ARCHITECTURAL DRAWINGS FOR DETAIL OF VENT THRU AND RESPONSIBILITY OF VENT THRU ROOF.

PLUMBING SYMBOLS

- SS — SANITARY SEWER PIPING (BELOW GROUND)
- SS — SANITARY SEWER PIPING (ABOVE GROUND)
- VENT PIPING (V)
- COLD WATER PIPING (CW)
- HOT WATER PIPING (HW)
- BALL VALVE
- BACKFLOW PREVENTER
- OR — CLEANOUT (CO.)
- ROOF PENETRATION

US Army Corps of Engineers®
AFGHANISTAN ENGINEER DISTRICT

MARK	DESCRIPTION	DATE	APPR.

MARK	DESCRIPTION	DATE	APPR.

U.S. ARMY CORPS OF ENGINEERS
AFGHANISTAN DISTRICT
APO AE 96338

DESIGNED BY: | DATE:
DWN BY: | CKD BY: | SOLICITATION NO.:
SUBMITTED BY: | CONTRACT NO.:
PLOT SCALE: 1:20 | PLOT DATE: 02/12/2011 | FILE NUMBER:
SIZE: ANSI D | FILE NAME: L01_P-901.dwg

STANDARD DESIGNS
VARIOUS PROJECTS
VARIOUS SITES, VARIOUS LOCATIONS

L01 - LATRINE - SMALL
PLUMBING ISOMETRICS

SHEET IDENTIFICATION
P-901
SHEET 27 OF 36

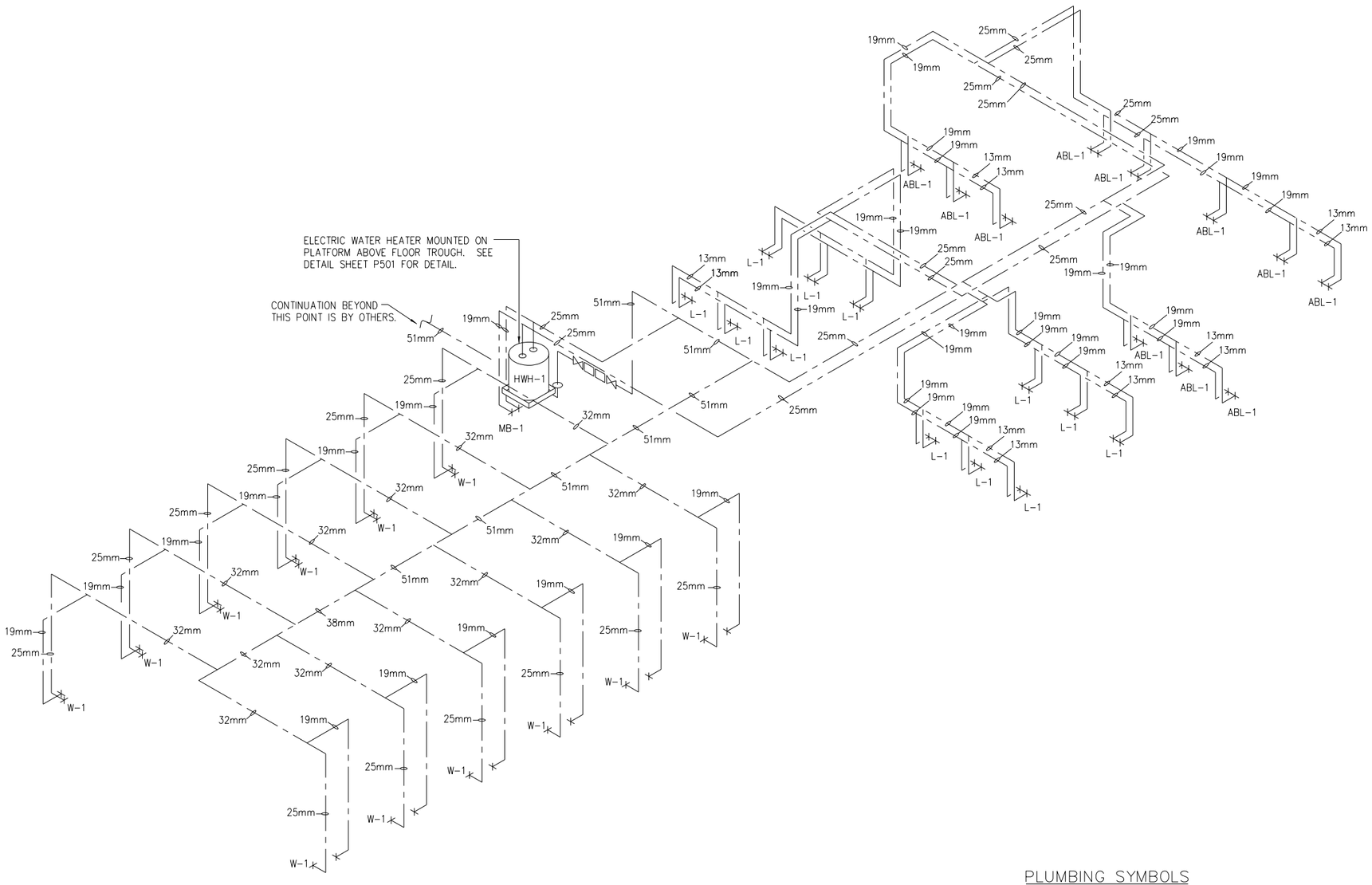

1 P-902 SMALL LATRINE HOT AND COLD WATER ISOMETRIC

SCALE: N.T.S.

PLUMBING SYMBOLS

SS	SANITARY SEWER PIPING (BELOW GROUND)
SS	SANITARY SEWER PIPING (ABOVE GROUND)
	VENT PIPING (V)
	COLD WATER PIPING (CW)
	HOT WATER PIPING (HW)
	BALL VALVE
	BACKFLOW PREVENTER
OR	CLEANOUT (CO.)
	ROOF PENETRATION

US Army Corps of Engineers®
AFGHANISTAN ENGINEER DISTRICT

MARK	DESCRIPTION	DATE	APPR.	MARK	DESCRIPTION	DATE	APPR.

U.S. ARMY CORPS OF ENGINEERS
AFGHANISTAN DISTRICT
APO AE 96338

DESIGNED BY: | DATE:
DWN BY: | CKD BY: | SOLICITATION NO.:
SUBMITTED BY: | CONTRACT NO.:
PLOT SCALE: 1:50 | PLOT DATE: 02/12/2011 | FILE NUMBER:
SIZE: ANSI D | FILE NAME: L01_P-902.dwg

STANDARD DESIGNS
VARIOUS PROJECTS
VARIOUS SITES, VARIOUS LOCATIONS

L01 - LATRINE - SMALL
PLUMBING ISOMETRICS

SHEET IDENTIFICATION
P-902
SHEET 28 OF 36

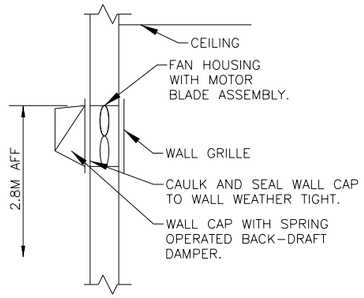

2 M-101 **WALL EXHAUST FAN DETAIL**
N.T.S.

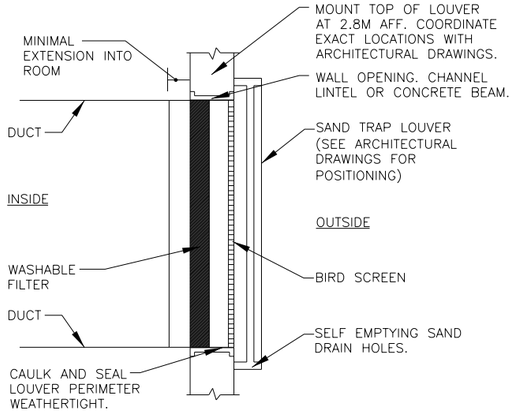

3 M-101 **FILTERED SAND TRAP LOUVER**
N.T.S.

EXHAUST FAN SCHEDULE

NO.	TYPE	FAN CMS	DRIVE	HP	SP mmH2O	ELECTRICAL DATA	SWITCH
EF-1	INLINE	0.250	DIRECT	1/8	13	220/1/50	@ WALL
EF-2	INLINE	0.250	DIRECT	1/8	13	220/1/50	@ WALL
EF-3	WALL	0.035	DIRECT	FRACT	9.5	220/1/50	W/ STAT

NOTE:
1. FANS SHALL BE CORROSION RESISTANT.
2. FANS SHALL HAVE SPRING OPERATED BACK DRAFT DAMPER.

MAKE UP AIR HEATERS

NO.	BLOWER CMS	FUSE	KW	MIN. TEMP RISE °C	SP mmH2O	ELECTRICAL DATA	CONTROL
MUA-1	0.284	60	10	20	13	220/1/50	REMOTE
MUA-2	0.142	30	5	20	13	220/1/50	REMOTE

NOTES:
1. PROVIDE REMOTE MOUNTED THERMOSTAT WITH LOCKING COVER.
2. INTERLOCK MUA-1 BLOWER OPERATION WITH EF-1 AND THERMOSTAT.
3. INTERLOCK MUA-2 BLOWER OPERATION WITH EF-2 AND THERMOSTAT.
4. BLOWER SHALL BE SET TO ENERGIZE WITH EXHAUST FAN(S) AND OR THERMOSTAT(S), HEAT SHALL BE CONTROLLED BY THERMOSTAT. PROVIDE AIR SENSING SWITCH FOR HEATING OPERATION.

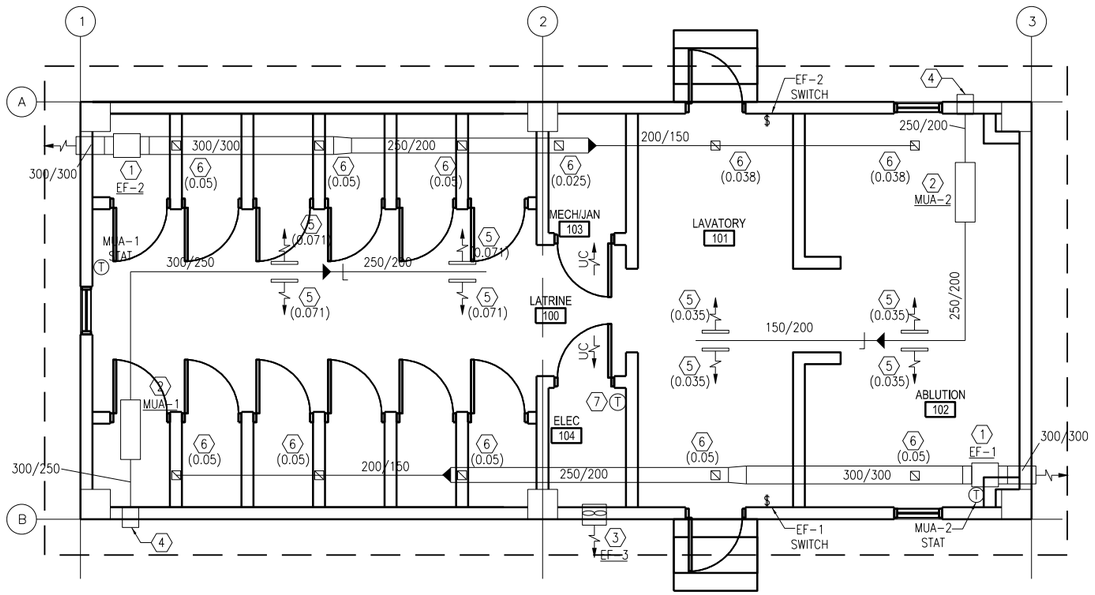

1 M-101 **FLOOR PLAN - HVAC**
SCALE: 1:50

GENERAL NOTES:

1. DO NOT SCALE DRAWINGS – ALL DIMENSIONS AND CONDITIONS SHALL BE CHECKED AND VERIFIED BY THE CONTRACTOR AT THE SITE.
2. ALL WORK PERFORMED ON THIS BUILDING SHALL BE IN COMPLIANCE WITH ALL PERTINENT CODES, RULES, ORDINANCES AND REGULATIONS OF THE GOVERNING AUTHORITIES.
3. ALL WORK PERFORMED UNDER AND IN CONNECTION WITH THESE DRAWINGS AND SPECIFICATIONS SHALL BE IN STRICT COMPLIANCE WITH THE LATEST SAFETY AND HEALTH STANDARDS.

SYMBOLS:

- (X) KEY NOTE
- (0.050) AIR VOLUME IN CUBIC METERS PER SECOND (CMS)
- ¬ VOLUME DAMPER
- (T) THERMOSTAT WITH LOCKING COVER
- UC DOOR UNDERCUT
- TG TRANSFER GRILLE

ABBREVIATIONS:

AFF	ABOVE FINISH FLOOR
CF	CEILING FANS
CMS	CUBIC METERS PER SECOND
STATS	THERMOSTATS

KEY NOTE:

1. INLINE EXHAUST FAN DUCTED TO WALL CAP WITH LOW LEAKAGE GRAVITY BACK-DRAFT DAMPER. SECURE FAN TO STRUCTURE ABOVE AND INTERLOCK WITH MAKE UP AIR HEATER.
2. ELECTRIC MAKE UP AIR HEATER SECURED TO STRUCTURE ABOVE. BLOWER SHALL BE SET TO ENERGIZE WITH CORRESPONDING EXHAUST FAN AND OR THE THERMOSTAT, HEAT SHALL BE CONTROLLED BY THERMOSTAT. COORDINATE DUCT AND LIGHT LOCATIONS WITH OTHER TRADES.
3. WALL EXHAUST FAN WITH LOW SPRING OPERATED BACK-DRAFT DAMPER. SEE DETAIL 2 THIS SHEET.
4. 600X600 (24X24) INTAKE LOUVER WITH BACK-DRAFT DAMPER FOR MAKE UP AIR UNIT. PROVIDE WEATHER PROOF LOUVER WITH 50mm (2") WASHABLE FILTER AND SAND TRAP. SEE DETAIL 3 THIS SHEET.
5. 200x150 (8x6) ALUMINUM DUCT MOUNTED SUPPLY GRILLE WITH ADJUSTABLE OPPOSED BLADE DAMPERS. BALANCE TO CMS IN PARENTHESIS.
6. 150x150 (6x6) ALUMINUM DUCT MOUNTED EXHAUST GRILLE WITH ADJUSTABLE OPPOSED BLADE DAMPERS. BALANCE TO CMS IN PARENTHESIS.
7. THERMOSTAT MOUNTED AS HIGH AS POSSIBLE. INTERLOCK STAT WITH CORRESPONDING EXHAUST FAN, SET FAN TO ENERGIZE ON RISE IN TEMPERATURE ABOVE 25°C (77°F).

0 1000 2000
SCALE: 1:50

LINEAR DIMENSIONS SHOWN ARE IN MILLIMETERS (MM), UNLESS OTHERWISE NOTED

US Army Corps of Engineers®
AFGHANISTAN ENGINEER DISTRICT

MARK | DESCRIPTION | DATE | APPR.

DESIGNED BY: | DRAWN BY: | SUBMITTED BY: | DATE: | SOLICITATION NO.: | CONTRACT NO.: | FILE NUMBER: | PLOT SCALE: 1:100 | PLOT DATE: 2/7/2013 | SIZE: ANSI D | FILE NAME: L01_M-101.dwg

U.S. ARMY CORPS OF ENGINEERS
AFGHANISTAN DISTRICT
APO AE 96338

STANDARD DESIGNS
VARIOUS PROJECTS
VARIOUS SITES, VARIOUS LOCATIONS

L01 - LATRINE - SMALL
HVAC FLOOR PLAN, SCHEDULES, & DETAILS

SHEET IDENTIFICATION
M-101
SHEET 29 OF 36

POWER

- DISTRIBUTION PANELBOARD
- NEW PANELBOARD – SURFACE
- NEW PANELBOARD – RECESSED
- (G) GENERATOR
- TRANSFORMER (DRAWN TO SIZE)
- [J] JUNCTION BOX
- (J) JUNCTION BOX – CEILING
- FUSIBLE SAFETY SWITCH
- (M) MOTOR
- ^{M} MOTOR STARTING SWITCH – 220V, 20A RATED UNLESS OTHERWISE NOTED
- ELECTRIC WATER HEATER
- (CF) CEILING FAN – REFER TO SPECIFICATION SECTION 26 20 00

RECEPTACLES

- DUPLEX 20A TYPE CEE 7/7 "SCHUKO STYLE" UNSWITCHED RECEPTACLE
- ^{GF} DUPLEX 20A TYPE CEE 7/7 "SCHUKO STYLE" UNSWITCHED RECEPTACLES – 10mA GROUND FAULT INTERRUPTER TYPE
- ^{WP} DUPLEX 20A TYPE CEE 7/7 "SCHUKO STYLE" UNSWITCHED TYPE WITH WEATHERPROOF COVER – 10mA GROUND FAULT INTERRUPTER TYPE
- ^{EXP} DUPLEX 20A TYPE CEE 7/7 "SCHUKO STYLE" UNSWITCHED RECEPTACLES – EXPLOSION PROOF
- * INDICATES MOUNT DEVICE ABOVE COUNTERTOP OR AT 1070mm ABOVE FINISHED FLOOR WHERE NO COUNTER IS TO BE INSTALLED.

LIGHTING

- LIGHTING FIXTURE – SEE FIXTURE SCHEDULE FOR MORE INFORMATION
- EMERGENCY LIGHTING FIXTURE – SEE FIXTURE SCHEDULE FOR MORE INFORMATION
- DOWNLIGHT
- LIGHTING FIXTURE ON NORMAL/EMERGENCY
- WALL MOUNTED LIGHT FIXTURE
- [E] EXIT SIGN – DIRECTIONAL ARROWS AS INDICATED ON DRAWINGS
- REMOTE HEAD FOR BATTERY PACK
- $ SINGLE POLE SWITCH – 20A RATED
- ^{3} 3-WAY SWITCH – 20A RATED
- ^{4} 4-WAY SWITCH – 20A RATED
- [C] LIGHTING CONTACTOR
- POLE MOUNTED SITE LIGHTING FIXTURE– NUMBER OF FIXTURES PER POLE AS INDICATED ON DRAWINGS
- EXTERIOR DIRECTIONAL LIGHTING FIXTURE
- a SMALL CASE LETTERS REPRESENTS LAMP(S) / SWITCHES.

TELECOMMUNICATIONS

- ▼ TELEPHONE OUTLET(S) @ 45cm AFF. U.N.O. WITH 20mm RACEWAY TERMINATED TO TELEDATA TERMINAL BOARD.
- ▽ DATA OUTLET(S) @ 45cm AFF. U.N.O. WITH 20mm RACEWAY TERMINATED TO TELEDATA TERMINAL BOARD.

TELECOMMUNICATIONS (CONTINUED)

- ▼▽ COMBINATION TELEPHONE/DATA OUTLET(S) @ 45cm AFF. U.N.O. WITH 27mm RACEWAY TERMINATED TO TELEDATA TERMINAL BOARD.
- *▼ WALL MTD. TELEPHONE OUTLET WITH 20mm RACEWAY TO TELEDATA TERMINAL BOARD.
- (x)T INDICATES NUMBER OF TELEPHONE OUTLET(S) AND ASSOCIATED CABLING
- (x)D INDICATES NUMBER OF DATA OUTLET(S) AND ASSOCIATED CABLING
- (x)TF INDICATES NUMBER OF TELEPHONE OUTLETS AND ASSOCIATED CABLING WITH 1 OUTLET AND CABLE DEDICATED FOR FAX

SINGLE LINE SYMBOLS

- SWITCH
- BREAKER
- FUSE
- TRANSFORMER
- GROUND
- CONTACT (NORMALLY OPEN)
- CONTACT (NORMALLY CLOSED)
- TRANSFER SWITCH
- CURRENT TRANSFORMER
- INDICATES NEW ELECTRICAL EQUIPMENT
- —C— INDICATES NEW CONTROL WIRING AND CONDUIT
- EQUIPMENT OUTLINE

MISCELLANEOUS

- BRANCH CIRCUIT WIRING, SURFACE MOUNTED ON WALLS
- BRANCH CIRCUIT WIRING – 6mm²
- BRANCH CIRCUIT WIRING – UNDER FLOOR
- HOME RUN BACK TO PANEL
- CONDUIT TURNED DOWN
- CONDUIT TURNED UP
- —LV— LOW VOLTAGE WIRING AND CONDUIT
- ~ INDICATES CONTINUATION OF LINE

FIRE ALARM

- [FACP] FIRE ALARM CONTROL PANEL WITH BATTERY BACKUP
- [F] FIRE ALARM PULL STATION

FIRE ALARM (CONTINUED)

- [F] FIRE ALARM STROBE – WALL MOUNTED
- [F] FIRE ALARM AUDIBLE/STROBE – WALL MOUNTED
- [F] FIRE ALARM HORN/STROBE – WALL MOUNTED
- (S) SMOKE DETECTOR
- (H) HEAT DETECTOR CEILING MOUNTED
- —(D) DUCT DETECTOR – PROVIDED BY EC, INSTALLED BY MC AND CONNECTED BY EC

DENOTATIONS & ABBREVIATIONS

AFF	ABOVE FINISHED FLOOR
C	CEILING MOUNTED
E	EMERGENCY
EC	ELECTRICAL CONTRACTOR
EPO	EMERGENCY POWER OFF
EXP	EXPLOSION PROOF
F	FIRE ALARM
FF	FLUSH FLOOR MOUNTED
FL	FLUORESCENT
FO	FIBER OPTIC
FSS	FUSED SAFETY SWITCH
GF	GROUND FAULT INTERRUPTER
GC	GENERAL CONTRACTOR
IG	ISOLATED GROUND
K	KEY
LV	LOW VOLTAGE
M	MOTOR
MC	MECHANICAL CONTRACTOR
NE	NORMAL/EMERGENCY
NFSS	NON-FUSED SAFETY SWITCH
PA	PAGING SYSTEM
PLC	PLUMBING CONTRACTOR
SL	SINGLE LINE
T	TELEPHONE

DENOTATIONS & ABBREVIATIONS (CONT.)

TP	TAMPER PROOF
UE	UNDERGROUND ELECTRIC
W	WALL MOUNTED
WP	WEATHERPROOF WITH GROUND FAULT INTERRUPTION
WT	WATER TIGHT

GENERAL PROJECT NOTES:

G1. UNLESS OTHERWISE NOTED, PROVIDE ALL EQUIPMENT SHOWN ON THE PLANS. THE ELECTRICAL CONTRACTOR SHALL COORDINATE ALL SYMBOLS SHOWN ON THE PLANS WITH THE SYMBOL LIST. IT SHALL BE THE RESPONSIBILITY OF THE CONTRACTOR TO VERIFY THE INTENT OF ANY SYMBOL THAT IS SHOWN ON THE PLANS AND NOT INDICATED ON THE SYMBOL LIST WITH THE ENGINEER PRIOR TO BID.

G2. THE CONTRACTOR SHALL VERIFY THE LOCATION OF ALL UNDERGROUND UTILITIES WITHIN THE CONSTRUCTION AREA THREE (3) WORKING DAYS NOTICE BEFORE COMMENCING DIGGING. NOTIFY THE LOCAL AUTHORITY HAVING JURISDICTION AND WAIT THE REQUIRED TIME BEFORE COMMENCING TO DIG.

G3. THE CONTRACTOR SHALL COORDINATE CONDUIT RUNS, LIGHTING FIXTURES AND OTHER EQUIPMENT LOCATIONS WITH THE OTHER TRADE CONTRACTORS TO AVOID CONFLICTS.

G4. WHERE VOLTAGES AND FREQUENCIES ON THE DRAWINGS AND IN THE SPECIFICATIONS DIFFER FROM THE LOCAL ONES, ALL WORK SHALL BE PERFORMED USING THE LOCAL VOLTAGES AND FREQUENCIES.

G5. THE MINIMUM WIRE SIZE ON THE PROJECT SHALL BE 4mm². THE MINIMUM CONDUIT SIZE SHALL BE 20mm. THE MINIMUM BREAKER SIZE SHALL BE 20 AMPS.

G6. THE CONTRACTOR SHALL PUT A MAXIMUM OF 6 DUPLEX RECEPTACLES ON A 20A SINGLE POLE CIRCUIT.

G7. WHERE THE 1010 SCOPE REVIEW, 1015 TECHNICAL REVIEW, DRAWINGS, AND SPECIFICATIONS DIFFER FROM AMERICAN CODES OR STANDARDS, THE 1010, 1015, DRAWINGS, AND SPECIFICATIONS SHALL RULE.

G8. ALL CONDUIT AND DEVICES SHALL BE SURFACE MOUNTED UNLESS OTHERWISE INDICATED.

G9. CONTRACTOR SHALL COORDINATE ALL WORK WITH ALL OTHER TRADES TO ENSURE ALL WORK IS COMPLETED IN A PROFESSIONAL, WORKMAN-LIKE MANNER.

US Army Corps of Engineers®
AFGHANISTAN ENGINEER DISTRICT

MARK	DESCRIPTION	DATE	APPR.

MARK	DESCRIPTION	DATE	APPR.

DESIGNED BY:
DWN BY:
CHD BY:
SUBMITTED BY:
DATE:
SOLICITATION NO.:
CONTRACT NO.:
PLOT SCALE: 1:1
PLOT DATE: 20070711
FILE NUMBER:
SIZE: ANSI D
FILE NAME: L01_E001.dwg

U.S. ARMY CORPS OF ENGINEERS
AFGHANISTAN DISTRICT
APO AE 96338

STANDARD DESIGNS
VARIOUS PROJECTS
VARIOUS SITES, VARIOUS LOCATIONS

L01 - LATRINE - SMALL
ELECTRICAL SYMBOLS & ABBREVIATIONS

SHEET IDENTIFICATION
E-001
SHEET 30 OF 36

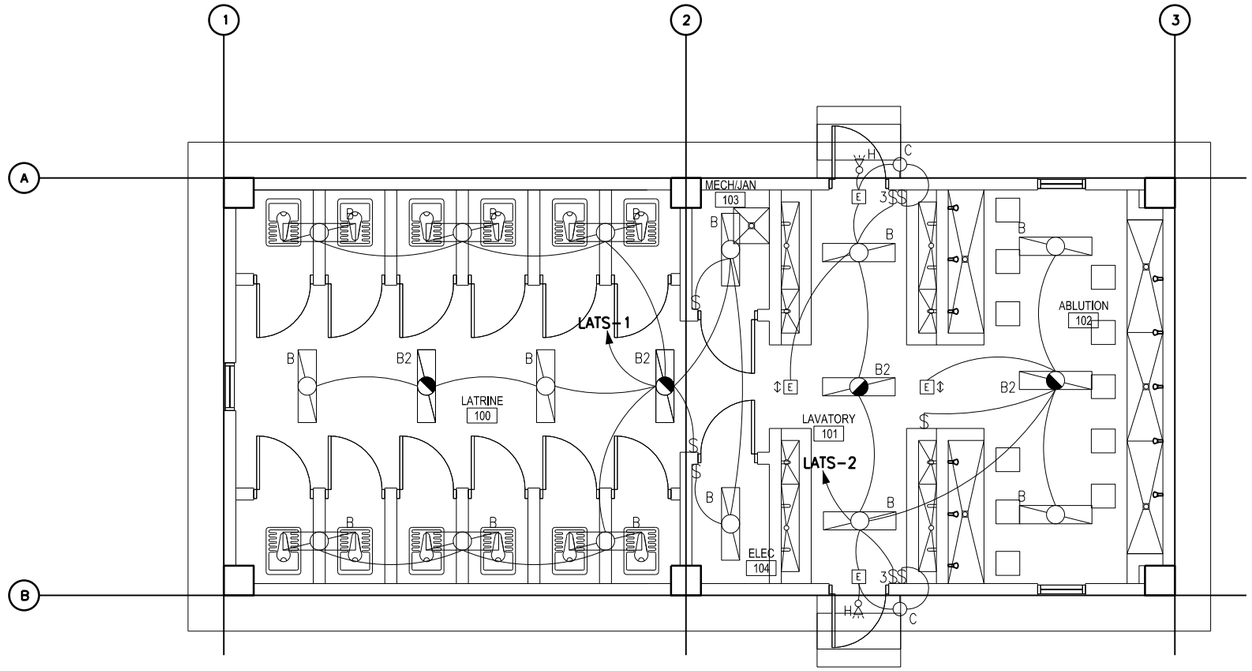

1
E-101

SMALL LATRINE
FLOOR PLAN - LIGHTING

SCALE: 1:50

GENERAL NOTES:

1. REFER TO DRAWING #E-001 FOR THE ELECTRICAL SYMBOLS LIST.
2. EXIT SIGNS SHALL BE WIRED AHEAD OF ANY LOCAL SWITCHING ON CIRCUITS. SEE WIRING DIAGRAM DETAIL 6, ON DRAWING #E-501.
3. REFER TO DRAWING #E-601 FOR THE LIGHTING FIXTURE SCHEDULE.
4. REFER TO DRAWING #E-501 FOR THE POWER RISER.
5. REFER TO DRAWING #E-602 FOR PANEL SCHEDULES.
6. LIGHT FIXTURES INDICATED AS EMERGENCY SHALL BE PROVIDED WITH A BATTERY BACKUP BALLAST. SEE WIRING DIAGRAM DETAIL 5, ON DRAWING #E-501.
7. COORDINATE THE LOCATIONS OF LIGHT FIXTURES WITH THE LOCATION OF DUCTWORK PRIOR TO INSTALLATION.

0 1000 2000
SCALE: 1:50

US Army Corps of Engineers®
AFGHANISTAN ENGINEER DISTRICT

MARK	DESCRIPTION	DATE	APPR.

MARK	DESCRIPTION	DATE	APPR.

U.S. ARMY CORPS OF ENGINEERS
AFGHANISTAN DISTRICT
APO AE 96338

DESIGNED BY: | DATE:
DWN BY: | CKD BY: | SOLICITATION NO.:
SUBMITTED BY: | CONTRACT NO.:
PLOT SCALE: 1:50 | PLOT DATE: 02/12/2011 | FILE NUMBER:
SIZE: ANSI D | FILE NAME: L01_E-101.dwg

STANDARD DESIGNS
VARIOUS PROJECTS
VARIOUS SITES, VARIOUS LOCATIONS

L01 - LATRINE - SMALL
ELECTRICAL LIGHTING PLAN

SHEET IDENTIFICATION
E-101
SHEET 30 OF 36

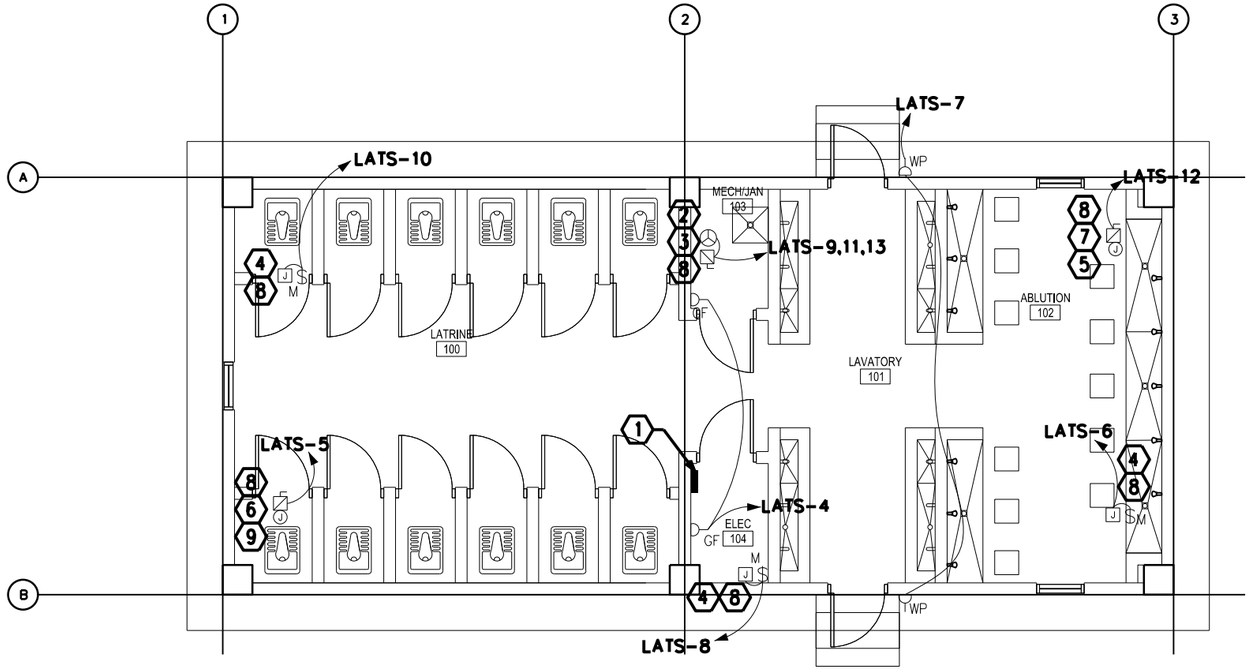

SMALL LATRINE
FLOOR PLAN - POWER & SYSTEMS

1 / E-102

SCALE: 1:50

GENERAL NOTES:

1. REFER TO DRAWING #E-001 FOR THE ELECTRICAL SYMBOLS LIST.
2. REFER TO DRAWING #E-501 FOR THE POWER RISER.
3. REFER TO DRAWING #E-602 FOR PANEL SCHEDULES.
4. COORDINATE EXACT MOUNTING LOCATION OF DISCONNECTING MEANS FOR MECHANICAL AND PLUMBING EQUIPMENT IN THE FIELD.
5. FUSIBLE SAFETY SWITCHES THAT ARE NOT OTHERWISE IDENTIFIED SHALL BE 380V, 1P, 30A FUSED SAFETY SWITCHES WITH 20A FUSES.

NUMBERED NOTES:

1. PANEL LATS.
2. NEMA 3R, 380V, 3P, 30A FUSED DISCONNECT FUSED AT 30A. SEE PLUMBING DRAWINGS FOR EXACT LOCATION OF WATER HEATER.
3. SEE DRAWING #E-602 FOR WIRE AND CONDUIT SIZE.
4. PROVIDE POWER CONNECTION TO EXHAUST FANS. SEE DRAWINGS #M-101 AND #E-602 FOR MORE INFORMATION.
5. NEMA 3R, 220V, 1P, 30A FUSED DISCONNECT FUSED AT 30A. SEE MECHANICAL DRAWINGS FOR EXACT LOCATION OF MUA-2.
6. PROVIDE POWER CONNECTION TO MAKE UP AIR UNIT #1. SEE DRAWINGS #M-101 AND #E-602 FOR MORE INFORMATION.
7. PROVIDE POWER CONNECTION TO MAKE UP AIR UNIT #2. SEE DRAWINGS #M-101 AND #E-602 FOR MORE INFORMATION.
8. THE DISCONNECTING MEANS FOR THIS PIECE OF EQUIPMENT SHALL BE IN A NEMA 3R ENCLOSURE.
9. NEMA 3R, 220V, 1P, 60A FUSED DISCONNECT FUSED AT 60A. SEE MECHANICAL DRAWINGS FOR EXACT LOCATION OF MUA-1.

0 1000 2000
SCALE: 1:50

US Army Corps of Engineers®
AFGHANISTAN ENGINEER DISTRICT

MARK	DESCRIPTION	DATE	APPR.

MARK	DESCRIPTION	DATE	APPR.

DESIGNED BY: | DATE:
DWN BY: | CKD BY: | SOLICITATION NO.:
SUBMITTED BY: | CONTRACT NO.:
PLOT SCALE: 1:50 | PLOT DATE: 02/12/2011 | FILE NUMBER:
SIZE: ANSI D | FILE NAME: L01_E-102

U.S. ARMY CORPS OF ENGINEERS
AFGHANISTAN DISTRICT
APO AE 96338

STANDARD DESIGNS
VARIOUS PROJECTS
VARIOUS SITES, VARIOUS LOCATIONS

L01 - LATRINE - SMALL
ELECTRICAL POWER & SYSTEMS PLAN

SHEET IDENTIFICATION
E-102
SHEET 32 OF 36

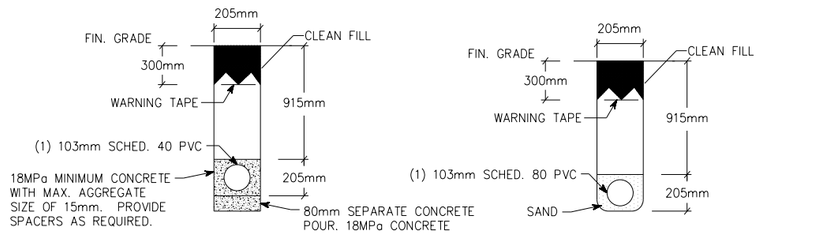

NOTE: PVC CONDUIT SHALL BE DIRECT BURIED SCHEDULE 80 FOR NO TRAFFIC AREAS AND CONCRETE-ENCASED SCHEDULE 40 FOR UNDER ROADWAYS OR TRAFFIC AREAS.

1 / E-501 TYPICAL DUCT BANK DETAILS FOR CONDUIT IN SAND OR CONCRETE

SCALE: N.T.S.

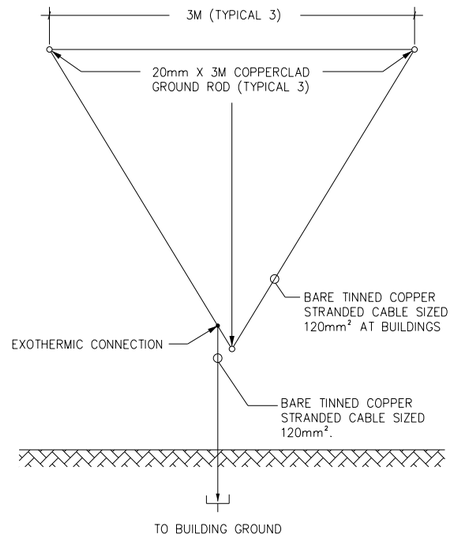

2 / E-501 GROUND TRIPOD SYSTEM DETAIL - PLAN

SCALE: N.T.S.

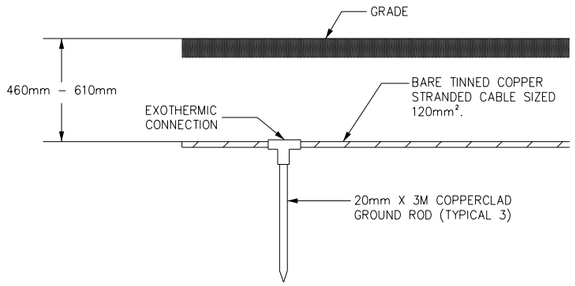

3 / E-501 GROUND TRIPOD SYSTEM DETAIL - ELEVATION

SCALE: N.T.S.

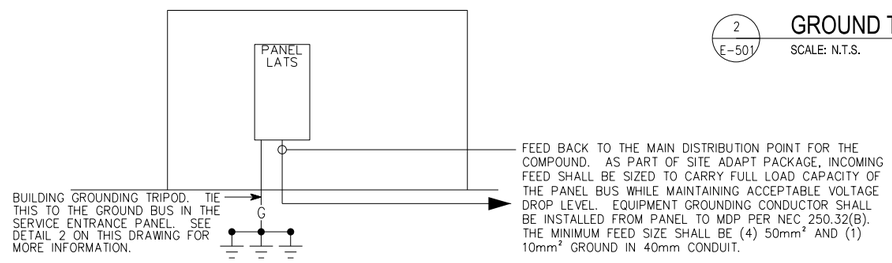

4 / E-501 LATS RISER DIAGRAM

SCALE: N.T.S.

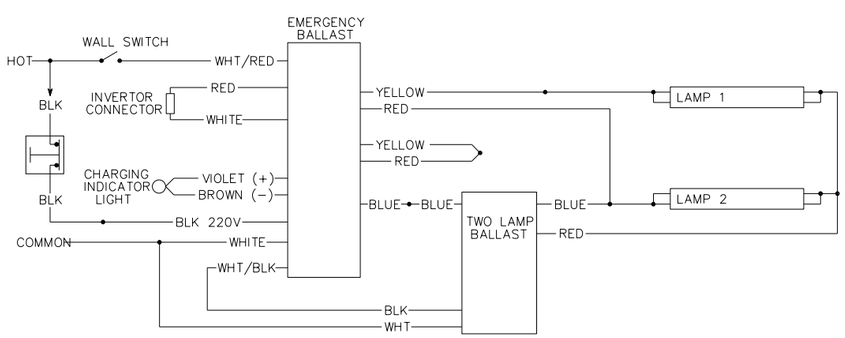

6 / E-501 EMERGENCY FIXTURE WIRING DIAGRAM

SCALE: N.T.S.

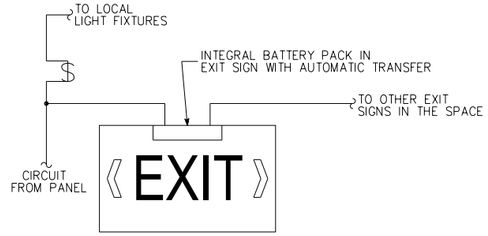

6 / E-501 EXIT SIGN WIRING DIAGRAM

SCALE: N.T.S.

US Army Corps of Engineers®
AFGHANISTAN ENGINEER DISTRICT

MARK	DESCRIPTION	DATE	APPR.

MARK	DESCRIPTION	DATE	APPR.

DESIGNED BY: | DATE:
DWN BY: | CKD BY: | SOLICITATION NO.:
SUBMITTED BY: | CONTRACT NO.:
PLOT SCALE: 1:100 | PLOT DATE: 2/12/2011 | FILE NUMBER:
SIZE: ANSI D | FILE NAME: L01_E-501.dwg

U.S. ARMY CORPS OF ENGINEERS
AFGHANISTAN DISTRICT
APO AE 96338

STANDARD DESIGNS
VARIOUS PROJECTS
VARIOUS SITES, VARIOUS LOCATIONS

L01 - LATRINE - SMALL
ELECTRICAL DETAILS

SHEET IDENTIFICATION
E-501
SHEET 33 OF 36

Ⓐ LARGER OF THE TWO SIZES GIVEN IN THE TABLES BELOW	
GROUNDING ELECTRODE CONDUCTOR (BASED ON AIC RATING)	
AIC RATING OF SERVICE EQUIPMENT	NECESSARY GROUNDING ELECTRODE CONDUCTOR SIZE
10K	(1) 35mm²
14K	(1) 50mm²
18K	(1) 70mm²
22K	(1) 70mm²
25K	(1) 70mm²
30K	(1) 95mm²
35K	(1) 120mm²
42K	(1) 150mm²
65K	(1) 185mm²
100K	(1) 300mm²
125K	(2) 185mm²
200K	(2) 300mm²

GROUNDING ELECTRODE CONDUCTOR (BASED ON NEC TABLE 250.66)	
SIZE OF LARGEST UNGROUNDED SERVICE CONDUCTOR OR EQUIVALENT AREA FOR PARALLEL CONDUCTORS	NECESSARY GROUNDING ELECTRODE CONDUCTOR SIZE
350 kcmil OR SMALLER	35mm²
OVER 350 kcmil TO 600 kcmil	70mm²
OVER 600 kcmil TO 1100 kcmil	70mm²
OVER 1100 kcmil	95mm²

NOTE: ALL SIZES ARE BASED ON COPPER CONDUCTORS.

Ⓑ EQUIPMENT GROUNDING CONDUCTOR	
RATING OR SETTING OF AUTOMATIC OVERCURRENT DEVICE IN CIRCUIT AHEAD OF EQUIPMENT, CONDUIT, ETC, NOT EXCEEDING (AMPERES)	NECESSARY EQUIPMENT GROUNDING CONDUCTOR SIZE
15	2.5mm²
20	4.0mm²
30	6.0mm²
40	6.0mm²
60	6.0mm²
100	10mm²
200	16mm²
300	25mm²
400	25mm²
500	35mm²
600	50mm²
800	70mm²
1000	70mm²
1200	95mm²
1600	120mm²
2000	150mm²
2500	185mm²
3000	240mm²
4000	300mm²
5000	400mm²
6000	400mm²

NOTE: ALL SIZES ARE BASED ON COPPER CONDUCTORS.

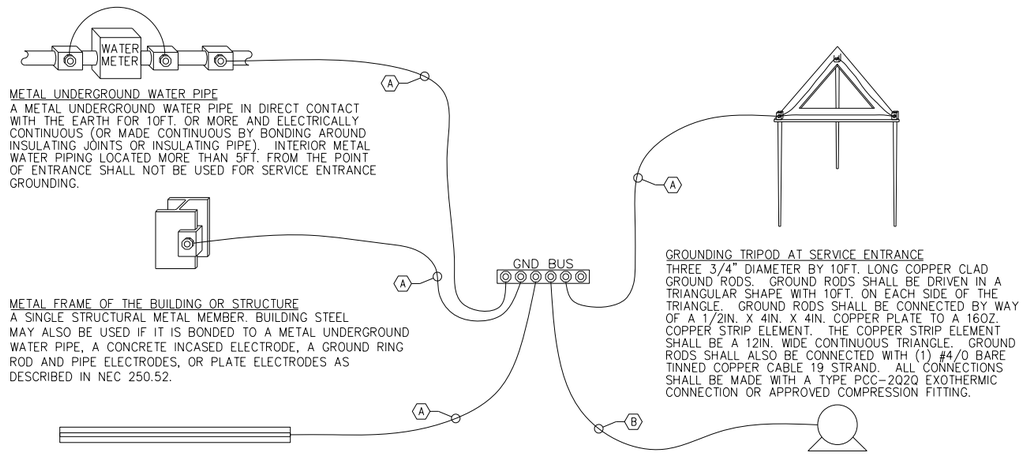

METAL UNDERGROUND WATER PIPE
A METAL UNDERGROUND WATER PIPE IN DIRECT CONTACT WITH THE EARTH FOR 10FT. OR MORE AND ELECTRICALLY CONTINUOUS (OR MADE CONTINUOUS BY BONDING AROUND INSULATING JOINTS OR INSULATING PIPE). INTERIOR METAL WATER PIPING LOCATED MORE THAN 5FT. FROM THE POINT OF ENTRANCE SHALL NOT BE USED FOR SERVICE ENTRANCE GROUNDING.

METAL FRAME OF THE BUILDING OR STRUCTURE
A SINGLE STRUCTURAL METAL MEMBER. BUILDING STEEL MAY ALSO BE USED IF IT IS BONDED TO A METAL UNDERGROUND WATER PIPE, A CONCRETE INCASED ELECTRODE, A GROUND RING ROD AND PIPE ELECTRODES, OR PLATE ELECTRODES AS DESCRIBED IN NEC 250.52.

CONCRETE ENCASED ELECTRODE
AN ELECTRODE ENCASED BY AT LEAST 2IN. OF CONCRETE , LOCATED WITHIN AND NEAR THE BOTTOM OF A CONCRETE FOUNDATION OR FOOTING THAT IS IN DIRECT CONTACT WITH THE EARTH, CONSISTING OF AT LEAST 20FT. OF ONE OR MORE BARE OR ZINC GALVANIZED OR OTHER ELECTRICALLY CONDUCTIVE COATED STEEL REINFORCING BARS OR RODS OF NOT LESS THAN 1/2" DIAMETER OR BARE COPPER CONDUCTOR NOT SMALLER THAN 4AWG.

GROUNDING TRIPOD AT SERVICE ENTRANCE
THREE 3/4" DIAMETER BY 10FT. LONG COPPER CLAD GROUND RODS. GROUND RODS SHALL BE DRIVEN IN A TRIANGULAR SHAPE WITH 10FT. ON EACH SIDE OF THE TRIANGLE. GROUND RODS SHALL BE CONNECTED BY WAY OF A 1/2IN. X 4IN. X 4IN. COPPER PLATE TO A 16OZ. COPPER STRIP ELEMENT. THE COPPER STRIP ELEMENT SHALL BE A 12IN. WIDE CONTINUOUS TRIANGLE. GROUND RODS SHALL ALSO BE CONNECTED WITH (1) #4/0 BARE TINNED COPPER CABLE 19 STRAND. ALL CONNECTIONS SHALL BE MADE WITH A TYPE PCC-2Q2Q EXOTHERMIC CONNECTION OR APPROVED COMPRESSION FITTING.

LOAD OR DOWNSTREAM PANEL
ALL LOADS IN THE BUILDING SHALL HAVE AN EQUIPMENT GROUNDING CONDUCTOR PULLED TO THEM.

1 / E-502 SERVICE ENTRANCE GROUNDING DETAIL

SCALE: N.T.S.

US Army Corps of Engineers®
AFGHANISTAN ENGINEER DISTRICT

MARK	DESCRIPTION	DATE	APPR.
MARK	DESCRIPTION	DATE	APPR.

DESIGNED BY:
DWN BY:
CKD BY:
SUBMITTED BY:
PLOT SCALE: AS NOTED
SIZE: ANSI D
PLOT DATE: AUTOCAD
FILE NAME: L01_E-502.dwg
DATE:
SOLICITATION NO.:
CONTRACT NO.:
FILE NUMBER:

U.S. ARMY CORPS OF ENGINEERS
AFGHANISTAN DISTRICT
APO AE 96338

STANDARD DESIGNS
VARIOUS PROJECTS
VARIOUS SITES, VARIOUS LOCATIONS

L01 - LATRINE - SMALL
ELECTRICAL DETAILS

SHEET IDENTIFICATION
E-502
SHEET 34 OF 36

FIXTURE MARK 'B' & 'B2'

FIXTURE MARK 'C'

FIXTURE MARK 'H'

FIXTURE MARK E

LIGHTING FIXTURE SCHEDULE

FIXTURE MARK	STYLE NUMBER AND TYPE	NUMBER AND TYPE OF LAMPS	VOLTAGE	MOUNTING	NOTES
B	WET LOCATION WRAP AROUND SURFACE MOUNTED FLUORESCENT FIXTURE WITH PRISMATIC ACRYLIC LENS AND ELECTRONIC BALLAST	(2) 32W 3500K	220V – 1ø 50HZ	SURFACE MOUNTED	FURNISHED WITH ELECTRONIC BALLAST, VIRGIN ACRYLIC WRAP AROUND LENS.
B2	SAME AS FIXTURE 'B' WITH EMERGENCY BALLAST	(2) 32W 3500K	220V – 1ø 50HZ	SURFACE MOUNTED	FURNISHED WITH ELECTRONIC BALLAST, VIRGIN ACRYLIC WRAP AROUND LENS. EMERGENCY BALLAST WITH SELF TEST SWITCH.
C	INCANDESCENT ONE PIECE W/ APPROVED LENS STABILIZED HIGH IMPACT POLY CARBONATE.	(1) A19 – 100W INCANDESCENT	220V – 1ø 50HZ	WALL MOUNTED ABOVE EXTERIOR DOORS	
H	REMOTE HEAD EXTERIOR LIGHT HEAD POWERED FROM EXIT SIGN BATTERY– 12V DOUBLE HEAD CORROSION RESISTANT WITH UL34 WEATHERPROOF CONSTRUCTION	(2) 12W/12V HALOGEN LAMP	12V – 1ø 50HZ	EXTERIOR WALL MOUNTED AT TOP OF DOOR HEIGHT	
E	UNIVERSAL MOUNT ENGINEER GRADE THERMOPLASTIC HOUSING EXIT SIGN WITH LED LAMPS, RED LETTERS 155mm IN HEIGHT WITH ARROWS AS INDICATED, WITH 12V CADMIUM BATTERY WITH REMOTE HEAD CAPABILITY	LED LAMPS	220V – 1ø 50HZ	UNIVERSAL MOUNTING	

US Army Corps of Engineers®
AFGHANISTAN ENGINEER DISTRICT

MARK	DESCRIPTION	DATE	APPR.

MARK	DESCRIPTION	DATE	APPR.

U.S. ARMY CORPS OF ENGINEERS
AFGHANISTAN DISTRICT
APO AE 96338

DESIGNED BY: | DATE:
DWN BY: | CKD BY: | SOLICITATION NO.:
SUBMITTED BY: | CONTRACT NO.:
PLOT SCALE: 1:100 | PLOT DATE: 02/12/2011 | FILE NUMBER:
SIZE: ANSI D | FILE NAME: L01_E-601.dwg

STANDARD DESIGNS
VARIOUS PROJECTS
VARIOUS SITES, VARIOUS LOCATIONS

L01 - LATRINE - SMALL
ELECTRICAL LIGHT FIXTURE SCHEDULE

SHEET IDENTIFICATION
E-601
SHEET 35 OF 36

PANELBOARD LATS SURFACE MOUNTED

_____ AMP. MAIN LUGS (OR) 100 AMP. MAIN BREAKER W/ 100 AMP. TRIP

CIRCUIT BREAKER TYPE 380/220 VOLTS 3 PHASE 4 WIRE 50 HZ 100 AMP. BUS

CKT. NO.	TRIP AMPS	NO. POLES	WIRE MM²	GND MM²	CONDUIT MM	LOAD SERVED	LOAD-KVA A0	LOAD-KVA B0	LOAD-KVA C0	LOAD-KVA A0	LOAD-KVA B0	LOAD-KVA C0	LOAD SERVED	CONDUIT MM	GND MM²	WIRE MM²	NO. POLES	TRIP AMPS	CKT. NO.
1	20	1	4.0	4.0	20	LIGHTING – RM 100, 103, 104	0.9			0.5			LIGHTING – RM 101, 102	20	4.0	4.0	1	20	2
3	20	1				SPARE					0.4		RECEPTACLES – RM 103, 104	20	4.0	4.0	1	20	4
5	60	1	25.0	6.0	25	MAKE UP AIR #1 – RM 100			10.0			0.5	EXHAUST FAN #1 – RM 102	20	4.0	4.0	1	20	6
7	20	1	4.0	4.0	20	EXTERIOR RECEPT	0.4			0.5			EXHAUST FAN #3 – RM 101	20	4.0	4.0	1	20	8
9	30	3	6.0	6.0	20	WATER HEATER – RM 103		3.0			0.5		EXHAUST FAN #2 – RM 100	20	4.0	4.0	1	20	10
11									3.0			5.0	MAKE UP AIR #2 – RM 102	20	6.0	6.0	1	30	12
13							3.0						SPARE				1	20	14
15	20	1				SPARE							SPARE				1	20	16
17	20	1				SPARE							SPARE				1	20	18
19	20	1				SPARE							SPARE				1	20	20
21	20	1				SPARE							SPARE				1	20	22
23	20	1				SPARE							SPARE				1	20	24
25	20	1				SPARE							SPARE				1	20	26
27	20	1				SPARE							SPARE				1	20	28
29	20	1				SPARE							SPARE				1	20	30
							4.3	3.0	13.0	1.0	0.9	5.5							

TOTAL CONN. LOAD PER PHASE (KVA): A0 5.3 B0 3.9 C0 18.5

TOTAL CONN. LOAD 27.7 KVA. 70 % DEMAND = ESTIMATED DEMAND LOAD 19.39

* MAIN BREAKER SHALL BE 3P EARTH GROUND TYPE

US Army Corps of Engineers®
AFGHANISTAN ENGINEER DISTRICT

MARK	DESCRIPTION	DATE	APPR.

MARK	DESCRIPTION	DATE	APPR.

U.S. ARMY CORPS OF ENGINEERS
AFGHANISTAN DISTRICT
APO AE 96338

DESIGNED BY: | DATE:
DWN BY: | CKD BY: | SOLICITATION NO.:
SUBMITTED BY: | CONTRACT NO.:
PLOT SCALE: 1:100 | PLOT DATE: 02/12/2011 | FILE NUMBER:
SIZE: ANSI D | FILE NAME: L01_E-602.dwg

STANDARD DESIGNS
VARIOUS PROJECTS
VARIOUS SITES, VARIOUS LOCATIONS

L01 - LATRINE - SMALL
ELECTRICAL PANEL SCHEDULE

SHEET IDENTIFICATION
E-602
SHEET 36 OF 36

AFGHAN NATIONAL POLICE

STANDARD BUILDING DESIGNS

GATE HOUSE

SHEET INDEX

G1	COVER SHEET
S1	GENERAL NOTES
S2	DESIGN CRITERIA
S3	FOUNDATION & ROOF FRAMING PLANS
S4	SECTIONS & DETAILS
S5	TYPICAL DETAILS
A1	FLOOR AND ROOF PLANS AND DETAILS
A2	EXTERIOR ELEVATIONS, BUILDING & WALL SECTIONS
A3	DOOR, WINDOW & FINISH TYPES & DETAILS
E0	ELECTRICAL SYMBOLS AND ABBREVIATIONS
E1	LIGHTING AND POWER PLAN
E2	DETAILS
E3	LIGHT FIXTURE SCHEDULE
E4	PANEL SCHEDULES AND RISER DIAGRAM

US Army Corps of Engineers
Afghanistan Engineer District

SYMBOL	DESCRIPTION	DATE	APP'D

DESIGNED BY: JDS | DATE: 09-30-09
DWN BY: JDS | SUBMITTED BY: BAKER
CHK BY: JDS | FILE NO.: ANPSDG-001XXX

Michael Baker Jr., Inc
A unit of Michael Baker Corporation
Airside Business Park
100 Airside Drive
Moon Township, PA 15108
www.mbakercorp.com

AFGHAN NATIONAL POLICE
STANDARD DESIGN
GATE HOUSE
WOOD FIRED HEAT OPTION
COVER SHEET

SHEET REFERENCE NUMBER:
G1

100% SUBMISSION

STRUCTURAL ABBREVIATIONS:

ACI	AMERICAN CONCRETE INSTITUTE
AISC	AMERICAN INSTITUTE OF STEEL CONSTRUCTION
ALT	ALTERNATE
ASTM	AMERICAN SOCIETY FOR TESTING AND MATERIALS
AWS	AMERICAN WELDING SOCIETY
ARCH	ARCHITECTURAL
B	BOTTOM
BLDG	BUILDING
BOTT	BOTTOM
℄	CENTER LINE
CFMF	COLD FORM METAL FRAME
CFS	COLD FORMED STEEL
CIP	CAST IN PLACE
CIPL	CAST-IN-PLACE LINTEL
CJ	CONTROL JOINT
CLR	CLEAR
CMU	CONCRETE MASONRY UNIT
COEFF	COEFFICIENT
COL	COLUMN
CONC	CONCRETE
CONT	CONTINUOUS
COORD	COORDINATE
CSJ	CONSTRUCTION JOINT
CTJ	CONTROL JOINT
DIA	DIAMETER
DIAG	DIAGONAL
DIM	DIMENSION
DWG	DRAWING
DWL	DOWEL
EA	EACH
ELEC	ELECTRICAL
ELEV	ELEVATION
EMBED	EMBEDMENT
EQUIV	EQUIVALENT
ETC	ET CETERA
EW	EACH WAY
EXT	EXTERIOR
FTG	FOOTING
GA	GAUGE
HORIZ	HORIZONTAL
HRS	HOURS
IBC	INTERNATIONAL BUILDING CODE
INT	INTERIOR
Kg	KILOGRAM
KIP	KIPS (1 KIP = 1,000 POUNDS)
kN	KILONEWTON
kPa	KILOPASCAL
L#	ANGLE (# INDICATES SIZE)
LLV	LONG LEG VERTICAL
M	METER
MAX	MAXIMUM
MBM	METAL BUILDING MANUFACTURER
MECH	MECHANICAL
MFG	MANUFACTURER
MID	MIDDLE
MIN	MINIMUM
MISC	MISCELLANEOUS
MM	MILLIMETER
MPa	MEGAPASCAL
MTL	METAL
MWFRS	MAIN WIND FORCE RESISTING SYSTEM
N	NEWTON
N	NORTH
N/A	NOT APPLICABLE
#	NUMBER SYMBOL FOR REBAR SIZE
NTS	NOT TO SCALE
OC	ON CENTER
OPNG	OPENING
P or PL	PLATE
PRE-ENG	PRE-ENGINEERED
REINF	REINFORCED
REQ'D	REQUIRED
SIM	SIMILAR
SPECS	SPECIFICATIONS
STD	STANDARD
STRUCT	STRUCTURAL
SW	SHEAR WALL
T	TOP
T/	TOP OF
T/ELEV	TOP ELEVATION
T&B	TOP AND BOTTOM
THK	THICK
TM	TRADE MARK
TYP	TYPICAL
UON	UNLESS OTHERWISE NOTED
VERT	VERTICAL
W	WIDTH
W/	WITH

GENERAL NOTES

1.0 THIS PROJECT HAS BEEN DESIGNED FOR THE WEIGHTS AND MATERIALS INDICATED ON THE SHEETS AND FOR THE LIVE LOADS INDICATED IN THE DESIGN DATA. IT IS THE CONTRACTOR'S RESPONSIBILITY TO DETERMINE ALLOWABLE CONSTRUCTION LOADS AND TO PROVIDE PROPER DESIGN AND CONSTRUCTION OF FALSEWORK, FORMWORK, STAGING, BRACING, SHEETING AND SHORING, ETC.

1.1 COORDINATE THESE SHEETS WITH THE ARCHITECTURAL, MECHANICAL, ELECTRICAL, PLUMBING, AND CIVIL SHEETS. ALL DIMENSIONS SHOWN ON THE SHEETS ARE MILLIMETERS UNLESS NOTED OTHERWISE.

1.2 THE CONTRACTOR SHALL VERIFY AND COORDINATE ALL FLOOR AND ROOF OPENING SIZES AND LOCATIONS, EQUIPMENT PAD SIZES AND LOCATIONS, ANCHOR BOLT LAYOUTS, ETC WITH EQUIPMENT SELECTED. THE CONTRACTOR SHALL MAKE ANY REQUIRED MODIFICATIONS AT NO ADDITIONAL COST.

1.3 THE CONTRACTOR SHALL REFER TO THE ARCHITECTURAL, MECHANICAL, ELECTRICAL AND PLUMBING SHEETS FOR SLEEVES, CURBS, INSERTS OR OPENINGS, ETC. NOT HEREIN INDICATED.

1.4 SLAB OPENINGS SMALLER THAN 250mm DIA TO BE CORE DRILLED IN FIELD UON. SEE MECHANICAL, ELECTRICAL AND PLUMBING SHEETS FOR LOCATIONS OF THESE OPENINGS.

1.5 WORK NOT INCLUDED ON THE SHEETS BUT IMPLIED TO BE SIMILAR TO THAT SHOWN AT CORRESPONDING PLACES ELSEWHERE ON THE SHEETS SHALL BE REPEATED.

1.6 IN CASE OF CONFLICT BETWEEN THE NOTES, DETAILS AND SPECIFICATIONS THE MOST RIGID REQUIREMENTS SHALL GOVERN.

1.7 SEE ARCHITECTURAL SHEETS FOR LOCATIONS OF MASONRY AND DRYWALL NON-LOAD BEARING PARTITIONS. PROVIDE COMPRESSIBLE FIRESAFING AT TOP OF WALL AS REQUIRED BY ARCHITECTURAL SHEETS.

1.8 COORDINATE FINISHED FLOOR DATUM ELEVATION 0.0m WITH THE CIVIL SHEETS.

2.0 FOUNDATION NOTES

2.1 THE GEOTECHNICAL ANALYSIS FOR THIS PROJECT IS THE RESPONSIBILITY OF THE CONTRACTOR AWARDED THE WORK. DESIGN VALUES USED IN THE STRUCTURAL ANALYSIS OF THE BUILDINGS HEREIN INDICATED HAVE BEEN ASSUMED AND SHALL BE CONFIRMED AND VERIFIED AS PART OF THE GEOTECHNICAL INVESTIGATION. VALUES WHICH DO NOT MEET THE REQUIREMENTS INDICATED ON SHEET S2 SHALL BE IMMEDIATELY BROUGHT TO THE ATTENTION OF THE CONTRACTING OFFICER FOR CONSIDERATION AND DETERMINATION ON THE NEXT APPROPRIATE COURSE OF ACTION.

2.2 SEE THE SPECIFICATION FOR ADDITIONAL REQUIREMENTS TO THOSE OUTLINED IN THE GEOTECHNICAL INVESTIGATION FOR EXCAVATION AND PREPARATION OF THE FOUNDATION AND THE SLAB ON GRADE SUBGRADE INCLUDING COMPACTION PROCEDURES.

2.3 EXCAVATIONS FOR FOOTINGS SHALL HAVE THE SIDES AND BOTTOMS TEMPORARILY LINED WITH 0.25mm POLYETHYLENE IF PLACEMENT OF CONCRETE DOES NOT OCCUR WITHIN 24 HRS OF THE EXCAVATION OF THE FOOTING.

2.4 FOUNDATION CONDITIONS NOTED DURING CONSTRUCTION WHICH DIFFER FROM THOSE DESCRIBED IN THE GEOTECHNICAL REPORT SHALL BE REPORTED TO THE GENERAL CONTRACTOR BEFORE FURTHER CONSTRUCTION IS ATTEMPTED. SEE PROJECT SPECIFICATIONS.

2.5 NO FOOTINGS OR SLABS SHALL BE POURED INTO OR AGAINST SUBGRADE CONTAINING FREE WATER, FROST, ICE OR LOOSE MATERIAL. FROST DEPTH ASSUMED TO BE 800MM

2.6 ALL SLAB-ON-GRADE, TRENCH BOTTOMS AND OTHER ON-GRADE INTERIOR HORIZONTAL SURFACES SHALL BE PLACED OVER A 0.25mm VAPOR RETARDER OVER A 100mm #57 STONE WATER BARRIER PLACED ON SUBGRADE PROPERLY PREPARED IN ACCORDANCE WITH THE CONTRACT SPECIFICATIONS. (UON)

2.7 SEE PLUMBING, ELECTRICAL & CIVIL SHEETS FOR REQUIRED UNDERSLAB UTILITIES.

2.8 SEE ARCHITECTURAL SHEETS FOR ALL WATERPROOFING DETAILS AND MATERIALS.

2.9 IF UNDERMINING OF FOOTINGS OCCURS, FILL VOIDS WITH 15MPa CONCRETE. DO NOT ATTEMPT TO REPLACE AND RECOMPACT SOIL.

3.0 CONCRETE

3.1 CONCRETE SHALL HAVE THE UNIT WEIGHT AND THE MINIMUM COMPRESSIVE STRENGTHS (f'c) AT 28 DAYS AS SHOWN IN THE CONCRETE MATERIALS SCHEDULE ON THIS SHEET. SEE SPECIFICATIONS FOR ADDITIONAL INFORMATION. ENTRAIN AIR TO PRODUCE TOTAL AIR CONTENT ACCORDING TO THE SPECIFICATIONS FOR CONCRETE EXPOSED TO FREEZING TEMPERATURES (EXTERIOR FOOTINGS, SLAB TURNDOWNS, EXTERIOR SLABS AND SLABS-ON-GRADE, EXTERIOR RETAINING WALLS, AND EXTERIOR GRADE BEAMS.)

3.2 GROUT FOR BASE PLATES SHALL BE NON-SHRINKABLE GROUT AND SHALL HAVE A MINIMUM SPECIFIED COMPRESSIVE STRENGTH AT 28 DAYS OF 35MPa, UNLESS NOTED OTHERWISE.

3.3 NO CALCIUM CHLORIDE SHALL BE USED IN ANY CONCRETE.

3.4 MIXING, TRANSPORTING AND PLACING OF CONCRETE SHALL CONFORM TO ACI 301M-05.

3.5 ALL CONCRETE WORK SHALL CONFORM TO THE REQUIREMENTS OF THE AMERICAN CONCRETE INSTITUTE (ACI) 318M MANUAL (metric), "BUILDING CODE REQUIREMENTS FOR REINFORCED CONCRETE", AND REQUIREMENTS OUTLINED IN THE CONTRACT SPECIFICATIONS. WHEN THERE IS A CONFLICT BETWEEN ACI AND THE SPECIFICATIONS, THE MORE STRINGENT SHALL GOVERN.

3.6 CHAMFER ALL EXPOSED EXTERNAL CORNERS OF CONCRETE WITH 20mm x45 DEGREE CHAMFER UON.

3.7 CONCRETE REINFORCEMENT BARS SHALL CONFORM TO ASTM A615M, GRADE 420, REINFORCING BARS SHALL NOT BE TACK WELDED, WELDED, HEATED OR CUT, UNLESS INDICATED ON THE CONTRACT DOCUMENTS. ALL LAP SPLICES SHALL BE CLASS "B" UON.

3.8 HORIZONTAL FOOTING AND HORIZONTAL WALL REINFORCEMENT SHALL BE CONTINUOUS AND SHALL HAVE 90 DEGREE BENDS AND EXTENSIONS, OR CORNER BARS OF EQUIVALENT SIZE LAPPED WITH A CLASS B TENSION SPLICE AT CORNERS AND INTERSECTIONS. TOP BAR CRITERIA SHALL APPLY IF 300mm OR MORE OF FRESH CONCRETE IS PLACED BELOW BAR.

3.9 SLABS-ON-GRADE SHALL HAVE CONSTRUCTION JOINTS OR CRACK CONTROL JOINTS AS SHOWN ON THE SHEETS. CONSTRUCTION JOINTS CAN BE USED AT CONTROL JOINT LOCATIONS AT CONTRACTORS OPTION. SEE SLAB PLANS & JOINT DETAILS FOR ADDITIONAL INFORMATION. FOR AREAS NOT SHOWN ON THE SHEETS, THE MAXIMUM SPACING OF CONSTRUCTION/ CRACK CONTROL JOINTS SHALL BE 4800 mm.

3.10 SEE SPECIFICATIONS FOR ALL WATERPROOFING/DAMPPROOFING REQUIREMENT.

3.11 ALL CONCRETE REINFORCEMENT SHALL BE DETAILED, FABRICATED, LABELED, SUPPORTED, AND SPACED IN FORMS AND SECURED IN PLACE IN ACCORDANCE WITH THE PROCEDURES AND REQUIREMENTS OUTLINED IN THE LATEST EDITION OF THE "BUILDING CODE REQUIREMENTS FOR REINFORCED CONCRETE", ACI 318M, AND THE "MANUAL OF STANDARD PRACTICE FOR DETAILING REINFORCED CONCRETE STRUCTURES", ACI 315M, LATEST EDITION.

3.12 SHOP DRAWINGS SHOWING REINFORCING DETAILS, INCLUDING STEEL SIZES, SPACING AND PLACEMENT, SHALL BE SUBMITTED FOR REVIEW PRIOR TO FABRICATION.

3.13 ALL DOWELS SHALL MATCH SIZE AND NUMBER OF MAIN REINFORCING, UNLESS NOTED OTHERWISE ON THE SHEETS.

3.14 ADDITIONAL BARS SHALL BE PROVIDED AROUND ALL FLOOR AND WALL OPENINGS AS SHOWN ON THE SHEETS.

3.15 SEE ARCHITECTURAL SHEETS FOR TYPE AND LOCATION OF ALL FLOOR FINISHES.

3.16 THE CONTRACTOR SHALL COORDINATE ADDITIONAL WALL/SLAB OPENINGS NOT SHOWN ON STRUCTURAL SHEETS. SEE MECHANICAL, ELECTRICAL, PLUMBING AND CIVIL SHEETS.

3.17 THE SUB-CONTRACTOR SHALL VERIFY ALL OPENINGS, PAD SIZES, AND ANCHOR BOLTS WITH EQUIPMENT SELECTED.

3.18 FOR ALL WALLS & PIERS, PROVIDE DOWELS INTO FOOTING AT EACH VERT REINF BAR, UON DOWEL SIZE SHALL BE SAME AS VERT REINF.

3.19 ALL REINFORCING INDICATED TO BE WELDED SHALL BE IN ACCORDANCE WITH ASTM A706M. "LOW ALLOY STEEL DEFORMED BARS FOR CONCRETE REINFORCEMENT". ANY INSTALLATIONS USING MANUFACTURER'S EQUIPMENT SHALL BE PER MANUFACTURER'S RECOMMENDATIONS.

3.20 PROVIDE CONCRETE POUR STOPS OR FORMED AS REQUIRED FOR INSTALLATION OF ALL CONCRETE WORK.

3.21 PROVIDE ADDITIONAL (2)-#13 x 600mm REINFORCING BARS IN SLAB-ON GRADE AT ALL RE-ENTRANT CORNERS. PLACE BARS AT MID-DEPTH OF SLAB WITH A CLEARANCE OF 50mm FROM CORNER UON.

4.0 CONCRETE MASONRY

4.1 MASONRY CONSTRUCTION AND MATERIALS SHALL CONFORM TO ALL REQUIREMENTS OF THESE CONTRACT DOCUMENTS AND THE PROJECT SPECIFICATIONS.

4.2 THE SPECIFIED ULTIMATE COMPRESSIVE STRENGTH OF CONCRETE MASONRY (f'm) ON THE NET AREA IS A MINIMUM OF 10.4 MPa.

4.3 PROVIDE TWO #16 BARS CONTINUOUS IN ALL CMU AND CAST-IN-PLACE BOND BEAMS UON ON THE SHEETS. BOND BEAMS SHALL BE CONTINUOUS AND SPACED AT A MAXIMUM OF 1200mm OC VERTICALLY. PROVIDE BOND BEAM STARTER COURSE AT BOTTOM OR FIRST COURSE ON ALL MASONRY WALLS AND PARTITIONS. ALL BOND BEAMS SHALL BE A MINIMUM OF 200mm IN DEPTH WITH REINFORCING BEING CONTINUOUS AND HAVING STANDARD ACI 180° HOOKS AT EACH END. PROVIDE STANDARD BAR SPLICES AS SPECIFIED.

4.4 FOR WALL REINFORCING, SEE DETAIL 7 ON SHEET S5

4.5 CMU CELLS THAT REQUIRE VERTICAL REINFORCING BARS AS INDICATED ON THE CONTRACT DRAWINGS AND/OR SPECS SHALL HAVE REINF BARS PLACED IN CENTERS OF CMU CELLS AND CONTINUOUSLY GROUTED UON.

4.6 PROVIDE LADDER TYPE JOINT REINFORCEMENT AT (200mm EXTERIOR & 400mm INTERIOR) ON CENTER MAXIMUM UON MINIMUM ROD SIZE USED SHALL BE 9 GA. DEFORMED WIRE AND CONFORM TO ASTM A82M, UON.

4.7 PROVIDE CONTROL JOINTS AS INDICATED ON THE ARCHITECTURAL SHEETS.

4.8 GROUT FOR MASONRY SHALL BE NORMAL WEIGHT AND HAVE A MINIMUM COMPRESSIVE STRENGTH OF 25 MPa AT 28 DAYS. GROUT SHALL CONFORM TO ASTM C476M. GROUT LIFTS SHALL NOT EXCEED 1400mm.

4.9 USE MORTAR TYPE S CONFORMING TO ASTM C270M, SEE SPECIFICATIONS.

4.10 CONCRETE MASONRY UNITS SHALL BE NORMAL WEIGHT AND CONFORM TO ASTM C90M.

4.11 ALL CMU CELLS, OPEN CAVITIES, AND AIR SPACES SHALL BE GROUTED TO STOP FRAGMENTS FROM MORTAR BLAST

4.12 BOND BEAM REINFORCING SHALL BE DISCONTINUOUS AT CONTROL JOINTS (UON). MAXIMUM CONTROL JOINT SPACING SHALL BE AS INDICATED ON THE ARCHITECTURAL SHEETS.

4.13 CONTRACTOR SHALL COORDINATE LOCATION OF ALL OPENINGS SEE ARCH, MECH, ELEC, AND PLUMBING SHEETS. FOR SIZE AND LOCATION OF OPENINGS.

4.14 MASONRY WALLS SHALL NOT BE BACK FILLED PRIOR TO THE MORTAR AND GROUT ATTAINING THEIR RESPECTIVE MAXIMUM DESIGN STRENGTHS PER SPECIFICATIONS.

5.0 CFMRF – COLD FORM METAL ROOF FRAMING SYSTEM

5.1 CFMF SHALL BE DESIGNED BY CFMF MANUFACTURER'S ENGINEER FOR ALL LOADING PER CODE AND AS INDICATED ON THE SHEETS.

5.2 FOR WIND LOADS, SEE THE DESIGN CRITERIA ON SHEET S2.

5.3 SUBMIT VENDOR'S PUBLISHED LITERATURE, TEST DATA AND INSTALLATION INSTRUCTIONS FOR METAL STUD ASSEMBLY AND ACCESSORIES INCLUDING OTHER DATA AS MAY BE REQUIRED TO CERTIFY COMPLIANCE WITH PERFORMANCE REQUIREMENTS SPECIFIED HEREIN.

5.4 SHOP DRAWINGS AND DESIGN ANALYSIS SHALL BE STAMPED AND APPROVED BY A LICENSED PROFESSIONAL ENGINEER.

5.5 CONNECTIONS AND GAUGE SIZES ARE MINIMUM AND SHALL BE INCREASED AS NECESSARY TO PROVIDE A STRUCTURALLY ADEQUATE SYSTEM. KICKERS MAY BE ADDED TO REDUCE THE STUD HEIGHTS WHERE ACCEPTABLE AND COORDINATED WITH THE ARCHITECTURAL DRAWINGS.

5.6 CRMRF SHALL HAVE THE FOLLOWING MINIMUM PROPERTIES:

STUD/RAFTER/EAVE STRUT/BRACE/BLOCKING:
Fy = 344 MPa
GAUGE = 18
DEPTH = 152.3 mm
WIDTH = 34.8 mm
MOMENT OF INERTIA, Ix = 847x10^3 mm^4
SECTION MODULUS, Sx = 11.2x10^3 mm^3

TRACK:
Fy = 344 MPa
GAUGE = 16
DEPTH = 152.3 mm
WIDTH = 38 mm
MOMENT OF INERTIA, Ix = 1083x10^3 mm^4
SECTION MODULUS, Sx = 13.8x10^3 mm^3

PURLIN/SUBGIRT:
Fy = 393 MPa
GAUGE = 16
MOMENT OF INERTIA (TOP COMPRESSION), Ixt = 23.7x10^3 mm^4
MOMENT OF INERTIA (BOTT COMPRESSION), Ixb = 22.7x10^3 mm^4
SECTION MODULUS (TOP COMPRESSION), Sxt = 1.8x10^3 mm^3
SECTION MODULUS (BOTT COMPRESSION), Sxb = 1.7x10^3 mm^3

MINIMUM LAP SPLICES OF REINFORCING BARS IN TENSION (PER ACI 318M-05)

f'c = 28 MPa CONCRETE

BAR SIZE / CENTER TO CENTER BAR SPACING	(---TOP BARS--) LESS THAN 4db	(---TOP BARS--) 4db OR MORE	(--OTHER BARS--) LESS THAN 4db	(--OTHER BARS--) 4db OR MORE	4db
#10	460	460	410	410	40
#13	660	610	510	480	50
#16	1020	760	790	580	60

NOTES:

1. LAP SPLICES ABOVE ARE IN MILLIMETERS UON.
2. YIELD STRENGTH OF REINFORCEMENT, fy, IS 420MPa (LAP SPLICE LENGTH IS IN MILLIMETERS).
3. CONCRETE IS NORMAL WEIGHT (2400Kg/m^3).
4. TOP BAR INDICATES HORIZONTAL REINFORCEMENT WHICH IS PLACED ABOVE 300mm OR MORE OF FRESH CONCRETE.
5. SEE COLUMN SCHEDULE FOR COLUMN AND SHEAR WALL VERTICAL LAP SPLICE.
6. STRAIGHT DEVELOPMENT LENGTH OF AN UNLAPPED BAR IS EQUAL TO VALUE FROM TABLE DIVIDED BY 1.3.
7. CATEGORY FOR BARS SPACED LESS THAN 4d, OR ON CENTER CORRESPONDS TO CATEGORY 1 IN THE CRSI HANDBOOK WHEREAS FOR BARS SPACED 4d, OR MORE ON CENTER CORRESPOND TO CRSI CATEGORY 5.

CONCRETE MATERIALS SCHEDULE

STRUCTURAL ELEMENT	f'c CONCRETE COMPRESSIVE STRENGTH @ 28 DAYS (MPa)
SLAB-ON-GRADE/TURN-DOWN SLABS	28
ROOF AND FLOOR SLABS	28
ALL FOOTINGS (UON)	28
MISC. CURBS, WALLS AND PADS UON	28
CAST-IN-PLACE LINTEL	28

NOTES:
1. ALL CONCRETE SHALL BE NORMAL WEIGHT CONCRETE. (2400 Kg/m^3 UON)
2. ALL CONCRETE SHALL HAVE A WATER-CEMENT RATIO OF 0.45.

MASONRY REINFORCING MINIMUM LAP SPLICES

BAR SIZE	BASIC LAP SPLICE Ld FOR CMU REINFORCING(mm)
#10	450
#13	600
#16	750

STANDARD HOOKS IN TENSION PER (ACI 318M-05)

HOOK DEVELOPMENT LENGTH Ldh (mm)	
BAR SIZE	f'c 28 MPa
#10	180
#13	250
#16	300
#19	380
#22	430
#25	480
#29	560
#32	610
#36	690

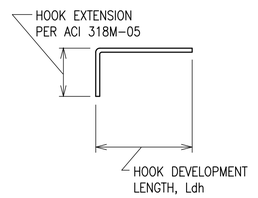

NOTES:
1. CONCRETE IS NORMAL WEIGHT CONCRETE.
2. BAR YIELD STRENGTH, fy = 420 MPa
3. SIDE COVER REQUIREMENTS OF ACI SECT. 12.5.3 ARE ASSUMED TO NOT BE MET.
4. TIE OR STIRRUP REQUIREMENTS OF ACI SECT. 12.5.3 ARE ASSUMED TO NOT BE MET.
5. REDUCTION FOR EXCESS REINFORCEMENT IS NOT TAKEN.
6. HOOK DEVELOPMENT LENGTH IS VALID FOR 180° HOOKS ALSO.

US Army Corps of Engineers
Afghanistan Engineer District

	DESCRIPTION	DATE	APP
SYMBOL			

DESIGNED BY: GDH
DATE: 09-30-09
DWN BY: MDB
SUBMITTED BY: BAKER
CHK BY: CWW
FILE NO.: ANPSDS-001XXX

Michael Baker Jr., Inc
A unit of Michael Baker Corporation
Airside Business Park
100 Airside Drive
Moon Township, PA 15108
www.mbakercorp.com

AFGHAN NATIONAL POLICE
STANDARD DESIGN
GATE HOUSE
WOOD FIRED HEAT OPTION

GENERAL NOTES

SHEET REFERENCE NUMBER:
S1

100% SUBMISSION

STRUCTURAL DESIGN CRITERIA

ALL DESIGNS SHALL CONFORM TO THE PROVISIONS OF THE IBC 2006 AS APPLICABLE

1.0 DESIGN LOADS

1.1 DEAD LOADS

1.1.1 ROOF DEAD LOADS – CONVENTIONAL FRAMING

	MAXIMUM GRAVITY LOAD	MINIMUM GRAVITY LOAD
LIGHT GUAGE FRAMING	0.20 KPa	0.15 KPa
METAL ROOFING	0.14 KPa	0.05 KPa
INSULATION (batt)	0.10 KPa	0.05 KPa
MISC	0.05 KPa	0.00 KPa
	0.49 KPa	0.25 KPa

1.1.2 ROOF DEAD LOADS – CONCRETE FRAMING

	MAXIMUM GRAVITY LOAD
CONC FLAT SLAB	4.80 KPa
MECH/ELEC/PLUMBING	0.15 KPa
MISC	0.05 KPa
	5.00 KPa

1.2 LIVE LOADS (PER IBC 2006)

1.2.1 ROOF LIVE LOADS: ALL BUILDINGS

GREATER OF 1.0 KPa MINIMUM OR SNOW LOAD

1.2.2 SLAB–ON–GRADE LIVE LOADS

ALL BUILDINGS 4.80 KPa

1.3 SNOW LOADS (PER IBC 2006)

1.3.1 DESIGN PARAMETERS

GROUND SNOW LOAD (per UFC 3–310–01)	PER LOCAL CONDITION
SNOW IMPORTANCE FACTOR	1.0 KPa
SNOW EXPOSURE FACTOR	1.0 KPa

1.4 SEISMIC LOADS (PER IBC 2006 & UFC 3–310–04)

1.4.1 SEISMIC PARAMETERS – LOAD BEARING MASONRY

SEISMIC OCCUPANCY CATEGORY	II
SEISMIC IMPORTANCE FACTOR (I)	1.0
SEISMIC SITE CLASS	D
Ss	1.280
S1	0.510
Sds	0.853
Sd1	0.510
SEISMIC DESIGN CATEGORY	D
SEISMIC RESISTING SYSTEM	BEARING WALL SYSTEM SPECIAL REINF MASONRY SHEAR WALLS
RESPONSE MODIFICATION FACTOR (R)	5.0
RESPONSE COEFFICIENT	0.171
SEISMIC ANALYTICAL PROCEDURE	EQUIV LATERAL FORCE
SEISMIC BASE SHEAR	102.2 kN

1.5 WIND LOADS (PER IBC 2006)

1.5.1 DESIGN PARAMETERS

BASIC WIND SPEED	137 Km/h
WIND IMPORTANCE FACTOR	1.0
WIND EXPOSURE CATEGORY	D
DIRECTIONALITY COEFFICIENT (Kd)	0.85
TOPOGRAPHIC FACTOR (Kzt)	1.0

1.5.2 DESIGN WIND PRESSURE – MAIN WINDFORCE RESISTING SYSTEM

LOCATION	CORNER ZONE WIDTH "a"	MEAN ROOF HEIGHT "h"	WINDWARD WALL (@ MEAN ROOF HEIGHT)	LEEWARD WALL (@ MEAN ROOF HEIGHT)	ROOF
FIELD ZONE	N/A	3220mm	514 N/m^2	–286 N/m^2	–803 N/m^2
CORNER ZONE	1440mm	2850mm	780 N/m^2	–426 N/m^2	–1244 N/m^2

a = 10% OF LEAST HORIZONTAL DIMENSION OR 0.4h, WHICHEVER IS SMALLER, BUT NOT LESS THAN EITHER 4% OF LEAST HORIZONTAL DIMENSION OR 0.9M.
h = MEAN ROOF HIEGHT, IN METERS, EXCEPT THAT EAVE HIEGHT SHALL BE USED FOR ANGLE GREATER THAN 10°.

1.5.3 DESIGN WIND PRESSURE – WALL COMPONENTS AND CLADDING

EXTERIOR WALL SYSTEMS & THEIR ATTACHMENTS TO THE PRIMARY STRUCTURE SHALL BE DESIGNED FOR THE PRESSURES SHOWN IN THE DIAGRAM BELOW:

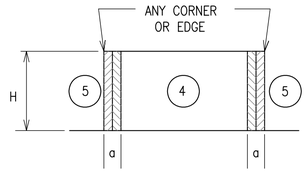

LOCATION	WINDWARD PRESSURE N/m^2 (inward)		LEEWARD PRESSURE N/m^2 (outward)		a
	④	⑤	④	⑤	
MAIN BUILDING					(mm)
AREA = 1 m^2	909	909	–986	–1216	900
AREA = 2 m^2	867	867	–948	–1134.8	900
AREA = 5 m^2	824	824	–900	–1039	900
AREA = 10 m^2	824	824	–900	–1039	900

NOTES:
1. DESIGN WIND PRESSURES ABOVE REPRESENT THE NET PRESSURE (SUM OF INTERNAL AND EXTERNAL PRESSURE) APPLIED NORMAL TO ALL SURFACES.
2. LINEAR INTERPOLATION BETWEEN VALUES OF TRIBUTARY AREA IS PERMISSIBLE.
3. PLUS AND MINUS SIGNS SIGNIFY PRESSURE TOWARD AND AWAY FROM THE EXTERIOR SURFACE, RESPECTIVELY.

1.5 WIND LOADS (CONT)

1.5.4 DESIGN WIND PRESSURE – ROOF COMPONENTS AND CLADDING

ROOF COMPONENTS & THEIR ATTACHMENTS SHALL BE DESIGNED FOR THE PRESSURES SHOWN IN THE ADJACENT DIAGRAM & TABLE BELOW:

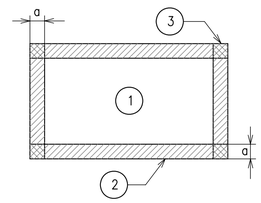

ROOF MEAN HEIGHT

LOCATION	GROSS UPLIFT PRESSURE N/m^2 (upward)			a
	①	②	③	
MAIN BUILDING				(mm)
AREA = 1 m^2	–838	–1460	–1460	900
AREA = 2 m^2	–838	–1460	–1460	900
AREA = 5 m^2	–838	–1460	–1460	900
AREA = 10 m^2	–838	–1460	–1460	900

NOTES:
1. DESIGN WIND PRESSURES ABOVE REPRESENT THE NET PRESSURE (SUM OF INTERNAL AND EXTERNAL PRESSURE) APPLIED NORMAL TO ALL SURFACES.
2. LINEAR INTERPOLATION BETWEEN VALUES OF TRIBUTARY AREA IS PERMISSIBLE.
3. PLUS AND MINUS SIGNS SIGNIFY PRESSURE TOWARD AND AWAY FROM THE EXTERIOR SURFACE, RESPECTIVELY.

2.0 FOUNDATION DESIGN CRITERIA (TO BE CONFIRMED BY THE CONTRACTOR)

THE GEOTECHNICAL ANALYSIS FOR THIS PROJECT IS THE RESPONSIBILITY OF THE CONTRACTOR AWARDED THE WORK. DESIGN VALUES USED IN THE STRUCTURAL ANALYSIS OF THE BUILDINGS HEREIN INDICATED HAVE BEEN ASSUMED AND SHALL BE CONFIRMED AND VERIFIED AS PART OF THE GEOTECHNICAL INVESTIGATION. VALUES WHICH DO NOT MEET THE REQUIREMENTS INDICATED BELOW SHALL BE IMMEDIATELY BROUGHT TO THE ATTENTION OF THE CONTRACTING OFFICER FOR CONSIDERATION AND DETERMINATION ON THE NEXT APPROPRIATE COURSE OF ACTION.

2.1.1 SOIL DESIGN PARAMETERS

NET ALLOWABLE SOIL BEARING CAPACITY	96.0 KPa
UNIT WEIGHT OF SOIL (moist)	1800 Kg/m^3
COEFF ACTIVE EARTH PRESSURE (Kpa)	0.30
COEFF PASSIVE EARTH PRESSURE (Kpp)	3.33
COEFF AT–REST EARTH PRESSURE (Kpr)	.55
COEFF OF SOIL FRICTION	.35
SUBGRADE MODULUS	4120 g/m^3
MINIMUM BEARING DEPTH BELOW GRADE	800mm
SEISMIC SITE CLASS (based on in–situ soil)	D

MASONRY CONCRETE LINTEL SCHEDULE

OPENING TYPE OR SIZE, BEAM LOCATION OR TYPE	MAX SPAN (mm)	BEAM DEPTH (mm)	MAIN REINFORCING			SHEAR REINF STIRRUPS
			TOP	BOTTOM	OTHER	
EXT WINDOW OR DOOR	900	400	(2)–#13	(2)–#13		----
INT WALL OPENING, NON–BEARING	1800	400		(2)–#13		----
INT WALL OPENING, NON–BEARING	900	200		(2)–#13		----

1. STRUCTURAL DRAWINGS DO NOT INDICATE ALL OPENINGS IN MASONRY WALLS. VERIFY NUMBER, SIZE AND LOCATION OF ALL OPENINGS IN MASONRY WALLS FROM ARCHITECTURAL SHEETS AND APPROVED PLUMBING, MECHANICAL, AND ELECTRICAL SHOP DRAWINGS.
2. PROVIDE 200mm BEARING EA END FOR 200mm DEEP CIP BB PROVIDE 400mm BEARING EA END FOR 400mm DEEP CIPL.
3. FOR HEAD DETAILS REFER TO ARCHITECTURAL SHEETS.
4. REINFORCING SHALL BE ASTM A615M, GRADE 420. CONCRETE FOR CAST–IN–PLACE BEAMS SHALL HAVE A MINIMUM COMPRESSIVE STRENGTH OF 21 MPa AT 28 DAYS.
5. CONTRACTOR SHALL SUBMIT FOR APPROVAL SHOP DRAWINGS AND SCHEDULES SHOWING SIZE, DETAILS, LOCATIONS, ETC FOR ALL CAST–IN–PLACE BEAMS IN CMU WALLS.

CONCRETE COVER SCHEDULE

MINIMUM CONCRETE COVER PROTECTION FOR REINFORCEMENT BARS SHALL BE AS FOLLOWS: (SEE ACI 318M–05, SECTION 7.7 FOR CONDITIONS NOT NOTED). DIMENSIONS FOR BAR PLACEMENT GIVEN IN SECTIONS AND DETAILS SHALL SUPERSEDE MINIMUM COVER REQUIREMENTS GIVEN HERE. DIMENSIONS ARE IN mm.

FOOTINGS (EARTH FORMED)		70
COLUMNS / PIERS		40
GRADE BEAMS OR SLAB TURNED DOWN EDGES:		
TOP		40
BOTTOM (EARTH FORMED)		70
SIDES (EARTH FORMED)		70
SIDES (BOARD FORMED)	#16 BAR & SMALLER	40
	#19 THRU #36 BAR	50
		40
SLABS–ON–GRADE (NO EXPOSURE TO WEATHER) FROM TOP		20
SLABS–ON–GRADE (EXPOSURE TO WEATHER) FROM TOP		40
UTILITY TUNNEL WALLS, RETAINING WALLS AND SHEAR WALLS, (NO SURFACES SHALL BE EARTH FORMED) EARTH SIDE AND FRONT SIDE (EXPOSED TO WEATHER):		
#16 BAR AND SMALLER		40
#19 THRU #36 BAR		50

PROVIDE STANDARD BAR CHAIRS AND SPACERS AS REQUIRED TO MAINTAIN CONCRETE PROTECTION SPECIFIED.

US Army Corps of Engineers
Afghanistan Engineer District

SYMBOL	DESCRIPTION	DATE	APP'D

DESIGNED BY: GDH	DWN BY: MDB	CHK BY: CWW
DATE: 09–30–09	SUBMITTED BY: BAKER	FILE NO.: ANPSDS–002XXX

Michael Baker Jr., Inc.
A unit of Michael Baker Corporation
Airside Business Park
100 Airside Drive
Moon Township, PA 15108
www.mbakercorp.com

AFGHAN NATIONAL POLICE
STANDARD DESIGN
GATE HOUSE
WOOD FIRED HEAT OPTION

DESIGN CRITERIA

SHEET REFERENCE NUMBER:
S2

100% SUBMISSION

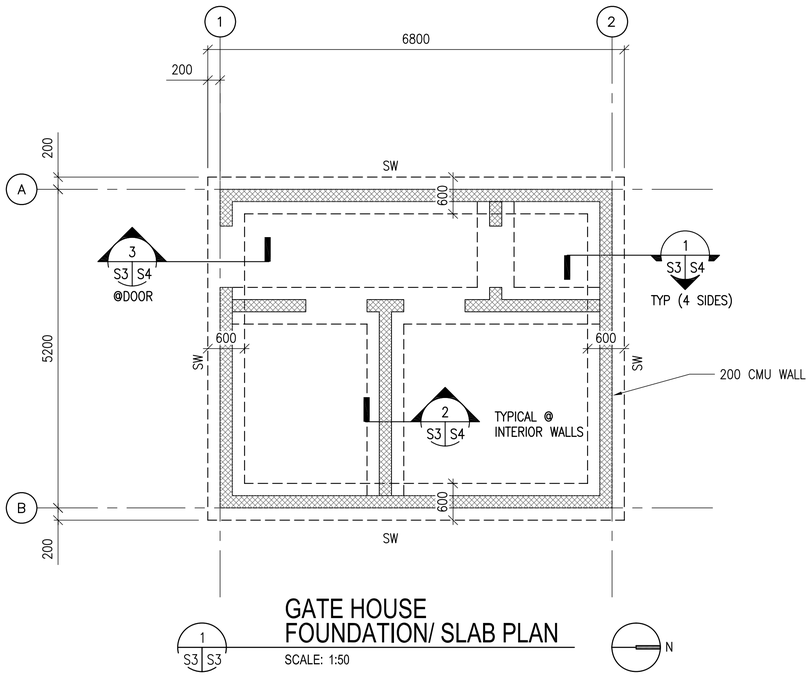

GATE HOUSE
FOUNDATION/ SLAB PLAN

1 S3 S3

SCALE: 1:50

N

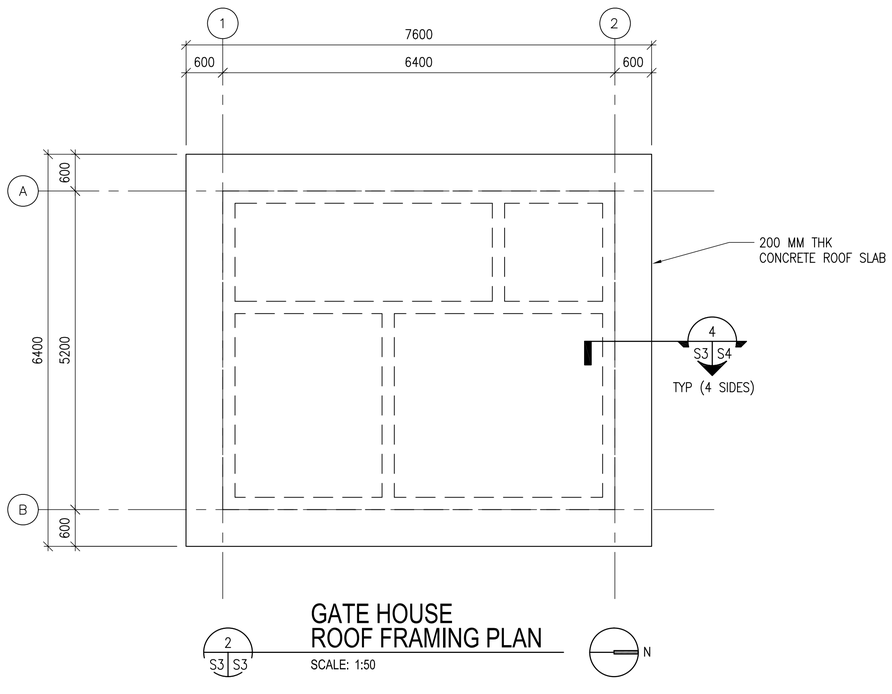

GATE HOUSE
ROOF FRAMING PLAN

2 S3 S3

SCALE: 1:50

N

NOTES:

1. FINISH FIRST FLOOR ELEVATION SHALL BE (DATUM 0.0) ALL PLUS OR MINUS DIMENSIONS INDICATED ON PLAN OR REFERRED TO IN NOTES RELATE TO FINISH FIRST FLOOR ELEVATION.
2. TOP OF EXTERIOR FOOTINGS SHALL BE –600 UNLESS OTHERWISE INDICATED.
3. UNLESS OTHERWISE INDICATED, FLOORS SHALL BE 150 THICK CONCRETE SLAB–ON–GRADE W/ 13 DIA REBAR @ 450 OC EW (38 CLR TOP)
4. REFER TO ARCHITECTURAL SHEETS FOR MASONRY PARTITION TYPES AND SHEET S5 FOR REINFORCEMENT.
5. SEE MECHANICAL AND ELECTRICAL SHEETS FOR CONCRETE PAD LOCATIONS, SIZES, AND THICKNESS NOT SHOWN. SEE SHEET S5 FOR DETAILS.
6. COORD W/ ARCHITECHURAL SHEETS FOR COLD–FORMED STEEL OVERBUILT FRAMING ABOVE ROOF SLAB.
7. COLD–FORMED METAL OVERBUILT ROOF FRAMING NOT SHOWN FOR CLARITY. SEE OVERBUILT ROOF FRAMING DETAILS AND SECTIONS ON SHEET S4.

UNLESS OTHERWISE NOTED, LINEAR DIMENSIONS SHOWN ARE IN MILLIMETERS (MM)

0 1000 2000 4000

SCALE: 1: 50

US Army Corps of Engineers
Afghanistan Engineer District

SYMBOL	DESCRIPTION	DATE	APP'D

DESIGNED BY: GDH	DWN BY: MDB	CHK BY: CWW	
DATE: 09-30-09	SUBMITTED BY: BAKER	FILE NO.: ANPSDS-103XXX	

Michael Baker Jr., Inc
A unit of Michael Baker Corporation
Airside Business Park
100 Airside Drive
Moon Township, PA 15108
www.mbakercorp.com

AFGHAN NATIONAL POLICE
STANDARD DESIGN
GATE HOUSE
WOOD FIRED HEAT OPTION

FOUNDATION & ROOF FRAMING PLANS

SHEET REFERENCE NUMBER:

S3

100% SUBMISSION

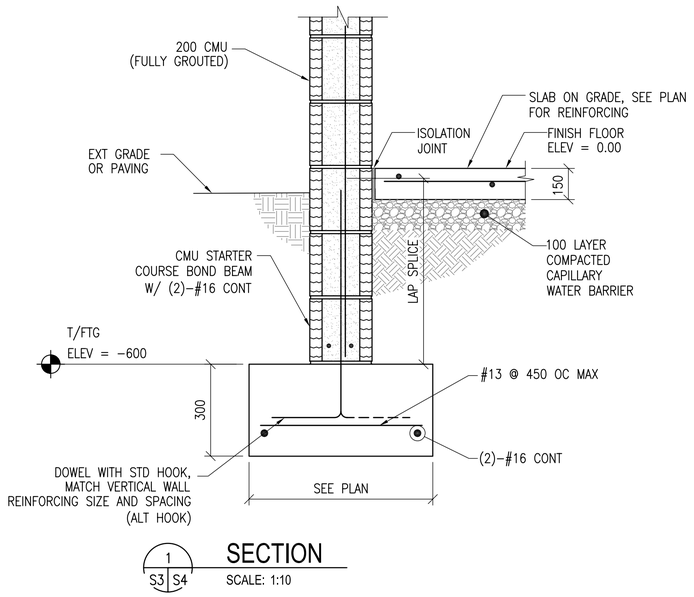

1 S3 S4 **SECTION**
SCALE: 1:10

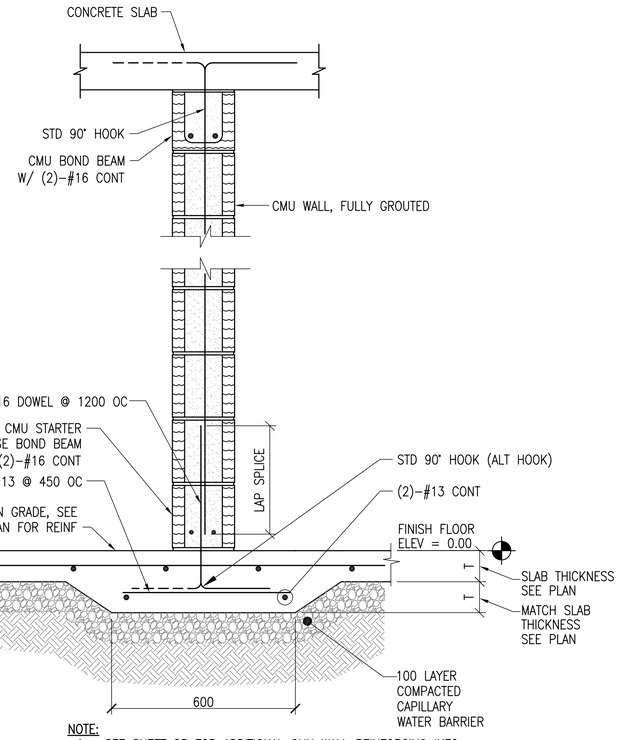

NOTE:
1. SEE SHEET S5 FOR ADDITIONAL CMU WALL REINFORCING INFO.

2 S3 S4 **SECTION**
SCALE: 1:10

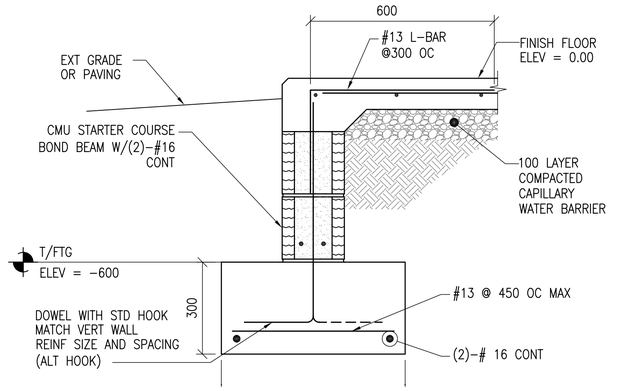

3 S3 S4 **SECTION**
SCALE: 1:10

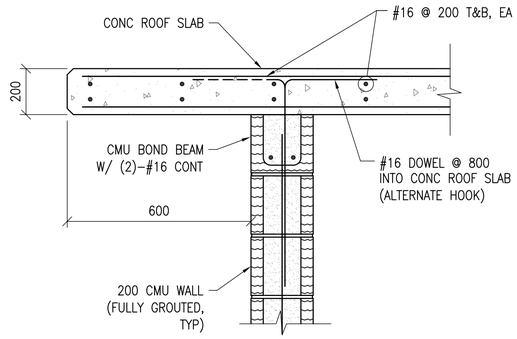

4 S3,S5 S4 **SECTION**
SCALE: 1:10

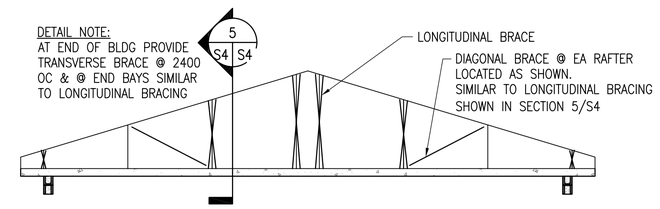

B S4 S4 **TYPICAL ROOF BRACE LAYOUT DETAIL**
SCALE: NTS

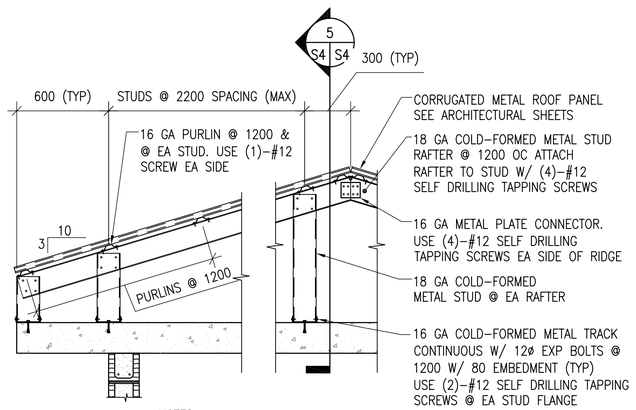

NOTES:
1. SEE NOTES ON SHEET S1 FOR OVERBUILT ROOF FRAMING MEMBER SECTION PROPERTY MINIMUM REQUIREMENTS
2. AT END OF BLDG PROVIDE TRANSVERSE BRACE @ 2400 OC & @ END BAYS SIMILAR TO LONGITUDINAL BRACING
3. SECTION THROUGH END OF BLDG IS SIMILAR EXCEPT HIP REPLACES RIDGE

A S4 S4 **TYPICAL OVERBUILT ROOF FRAMING DETAIL**
SCALE: 1:20

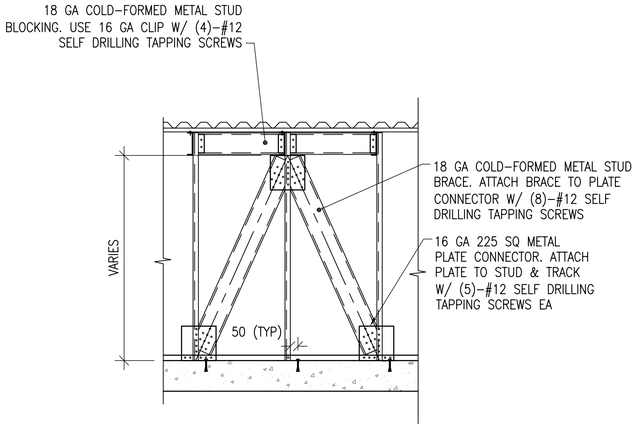

5 S4 S4 **SECTION**
SCALE: NTS

UNLESS OTHERWISE NOTED, LINEAR DIMENSIONS SHOWN ARE IN MILLIMETERS (MM)

0 200 400 800
SCALE: 1: 10

0 400 800 1600
SCALE: 1: 20

US Army Corps of Engineers
Afghanistan Engineer District

SYMBOL	DESCRIPTION	DATE	APP

DESIGNED BY: GDH	DATE: 09-30-09
DWN BY: MDB	SUBMITTED BY: BAKER
CHK BY: CWW	FILE NO.: ANPSDS-304XXX

Michael Baker Jr., Inc
A unit of Michael Baker Corporation
Airside Business Park
100 Airside Drive
Moon Township, PA 15108
www.mbakercorp.com

AFGHAN NATIONAL POLICE
STANDARD DESIGN
GATE HOUSE
WOOD FIRED HEAT OPTION

SECTIONS AND DETAILS

SHEET REFERENCE NUMBER:
S4

100% SUBMISSION

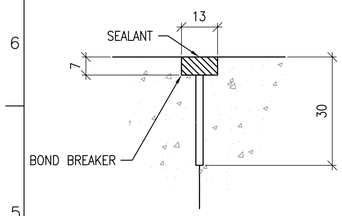

CONTROL JOINT DETAIL

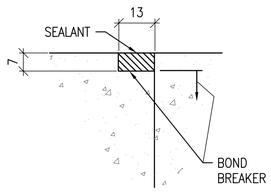

CONSTRUCTION JOINT DETAIL

1 S5 TYPICAL CONCRETE SLAB JOINT FINISH DETAIL

SCALE: NTS

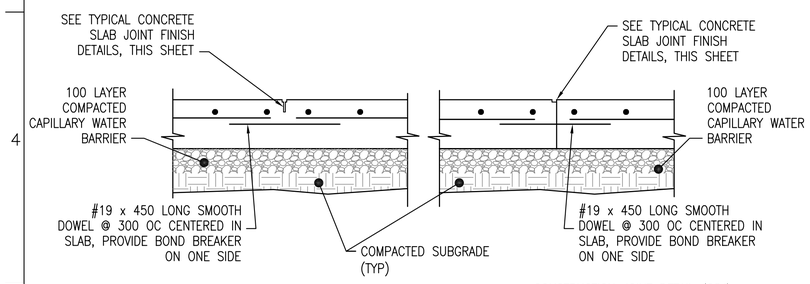

CONTROL JOINT DETAIL (CTJ)

CONSTRUCTION JOINT DETAIL (CSJ)

2 S5 TYPICAL SLAB ON GRADE JOINT DETAILS

SCALE: NTS

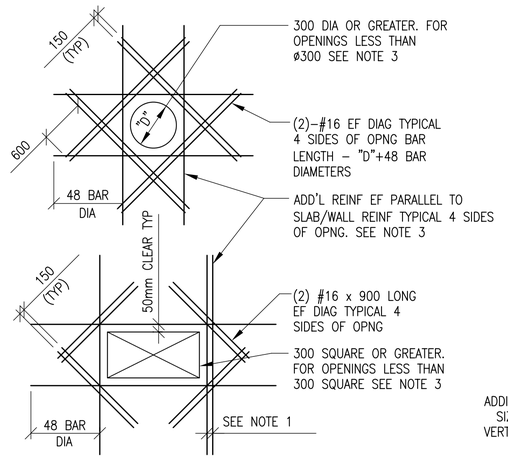

SLAB OPENINGS

4 S5 ADD'L REINFORCEMENT DETAILS

SCALE: NTS

DETAIL NOTES:

1. WHERE MORE THAN ONE ADDITIONAL BAR IS REQUIRED PARALLEL TO THE EXISTING SLAB/WALL REINFORCING THE ADDITIONAL REINFORCING BARS SHALL BE SPACED AT 100 ON CENTER.
2. ADDITIONAL REINFORCING PARALLEL TO THE SLAB/WALL REINFORCING SHALL BE #16 BARS THAT PROVIDE A STEEL AREA ON EACH SIDE OF THE OPENING EQUAL TO 1/2 THE AREA OF THE REINFORCING CUT BY THE OPENING.
3. FOR OPENINGS WITH SIDES OR DIAMETERS LESS THAN 300 SPREAD THE SLAB/WALL REINFORCING TO CLEAR THE OPENING.

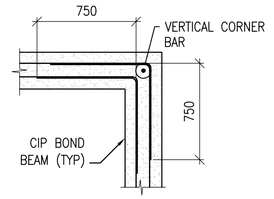

BOND BEAM CORNER

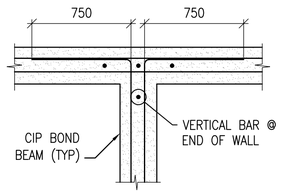

BOND BEAM INTERSECTION

5 S5 CIP BOND BEAM DETAILS

SCALE: NTS

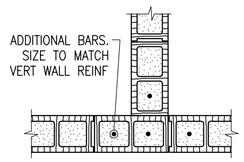

INTERSECTION

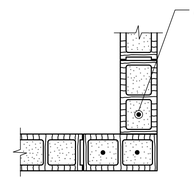

WALL CORNER

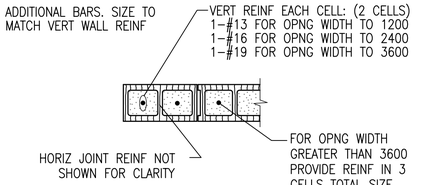

END OF WALL

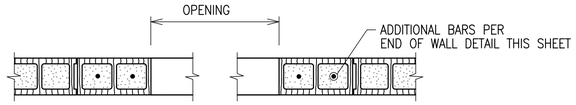

MASONRY OPENING W/ LINTEL

NOTES:

1. OPENING WIDTH SHALL NOT EXCEED 3600 FOR THIS TYPE OF JAMB
2. ALL CELLS FULLY GROUTED

6 S5 TYPICAL CMU DETAILS

SCALE: NTS

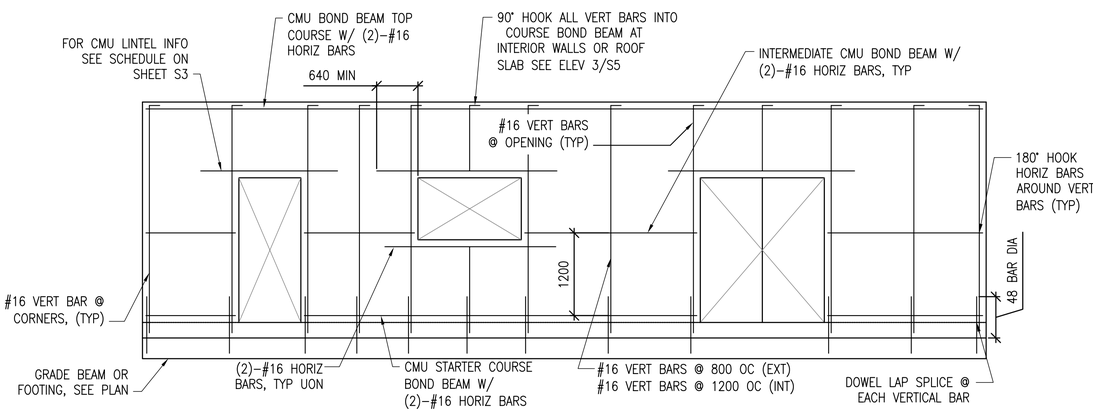

7 S5 MIN CMU WALL REINFORCING

SCALE: NTS

LINTEL NOTES:
MASONRY LINTEL REINFORCEMENT AS PER SCHEDULE ON SHEET S3

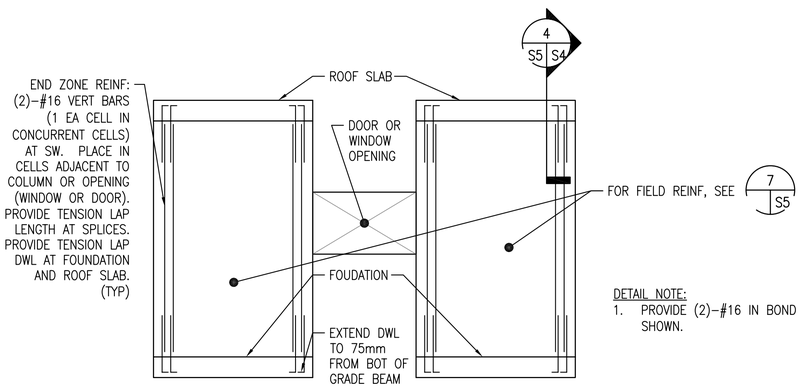

DETAIL NOTE:

1. PROVIDE (2)-#16 IN BOND BEAMS AT 1200 OC, NOT SHOWN.

3 S5 SPECIAL REINFORCED MASONRY SHEAR WALL ELEVATION

SCALE: NTS

UNLESS OTHERWISE NOTED, LINEAR DIMENSIONS SHOWN ARE IN MILLIMETERS (MM)

US Army Corps of Engineers
Afghanistan Engineer District

SYMBOL	DESCRIPTION	DATE	APP

DESIGNED BY: GDH	DATE: 09-30-09	
DWN BY: RCG	SUBMITTED BY: BAKER	
CHK BY: CWW	FILE NO.: ANPSDS-505XXX	

Michael Baker Jr., Inc
A unit of Michael Baker Corporation
Airside Business Park
100 Airside Drive
Moon Township, PA 15108
www.mbakercorp.com

AFGHAN NATIONAL POLICE
STANDARD DESIGN
GATE HOUSE
WOOD FIRED HEAT OPTION

TYPICAL DETAILS

SHEET REFERENCE NUMBER:
S5

100% SUBMISSION

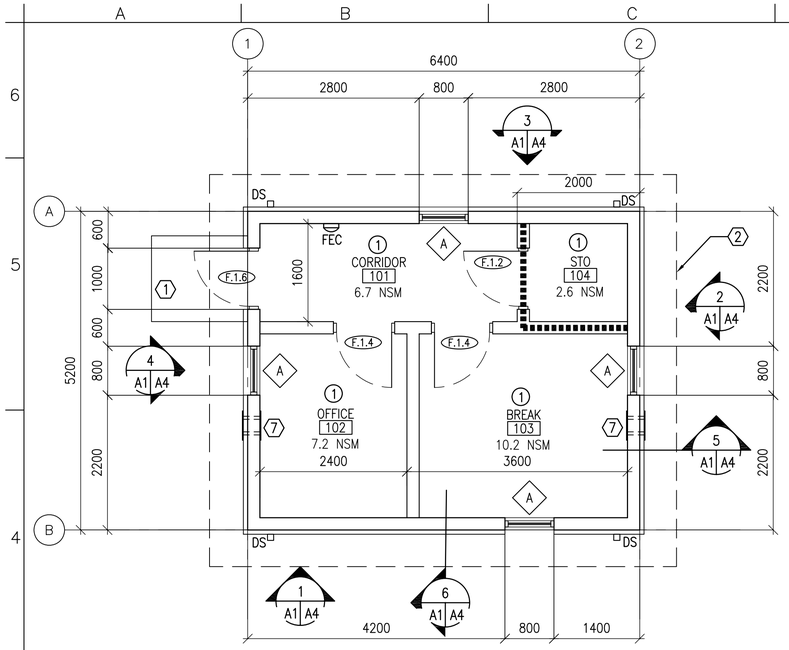

1 A1 A1 FLOOR PLAN
SCALE: 1:50
33.3 GSM

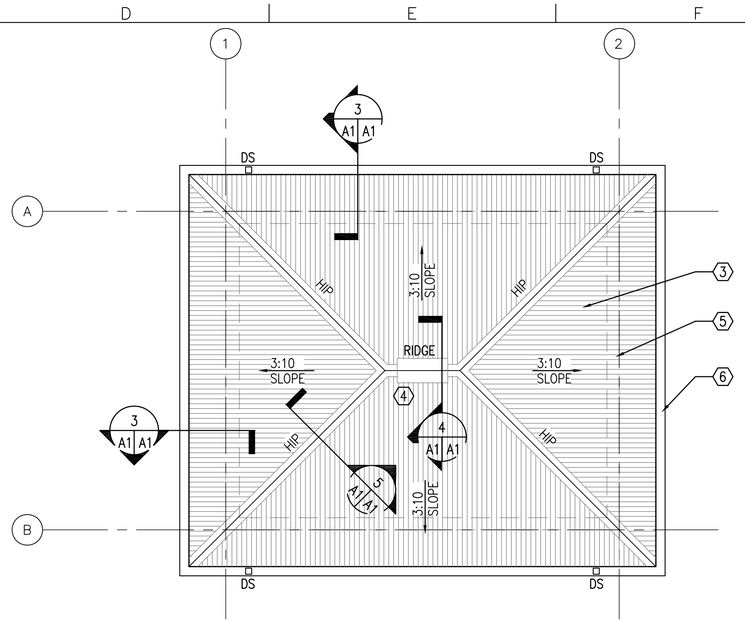

2 A1 A1 ROOF PLAN
SCALE: 1:50

GENERAL NOTES:

A. INTERIOR PARTITIONS SHALL BE 200 MM CMU UNLESS NOTED OTHERWISE.

B. OPENINGS FOR DOORS SHALL BE LOCATED 200 MM FROM THE ADJACENT WALL UNLESS NOTED OTHERWISE.

C. SURFACES TO BE PAINTED SHALL BE CLEAN AND FREE OF FOREIGN MATTER BEFORE APPLICATION OF PAINT. CLEANING SHALL BE SCHEDULED SO THAT DUST AND OTHER CONTAMINANTS WILL NOT FALL ON WET, NEWLY PAINTED SURFACES.

D. CONCRETE AND INTERIOR MASONRY SURFACES GROUTED SOLID SHALL BE ALLOWED TO DRY AT LEAST 30 DAYS BEFORE PAINTING EXCEPT CONCRETE SLAB ON GRADE WHICH SHALL BE ALLOWED TO CURE 90 DAYS BEFORE PAINTING.

E. PAINTS CONTAINING LEAD IN EXCESS OF 0.06 PERCENT BY WEIGHT OF THE TOTAL NONVOLATILE CONTENT SHALL NOT BE USED.

F. MERCURIAL FUNGICIDES SHALL NOT BE USED IN OIL–BASE PAINT.

G. REMOVE LOOSE DIRT AND CLEAN SURFACES BEFORE PAINTING. APPLY PAINT TO INTERIOR STRUCTURAL RIGID FRAMINGS AND CEILINGS AND TEST FOR ADHESION. PRIMER COAT FOR MASONRY. INITIAL FIRST COAT WITH AN ACRYLIC LATEX PAINT FOR EXTERIOR SURFACES AND A SECOND COAT WITH A WATER REPELLENT ACRYLIC LATEX PAINT.

H. METAL DOORS AND FRAMES SHALL RECEIVE A PRIMER COAT PLUS TWO COATS OF PAINT.

I. DIMENSIONS ARE TO STRUCTURAL COLUMN GRID, EDGE OF WINDOW OPENINGS, AND TO HINGE SIDE OF DOOR OPENINGS.

KEY NOTES: (X)

1. CONCRETE STOOP – RE: DETAIL 8/A3
2. LINE OF ROOF OVERHANG ABOVE
3. CORRUGATED METAL ROOF ON COLD–FORMED METAL FRAMING
4. RIDGE VENT
5. LINE OF BUILDING WALL, BELOW
6. METAL GUTTER
7. TWO–PIECE WALL THIMBLE AND TRIM PLATE FOR OPTIONAL WOOD BURNING STOVE CHIMNEY PIPE. STOVE AND PIPE BY OTHERS.

ROOM FINISHES: (X)

1. WALLS: PAINTED PLASTER,
   FLOOR: SEALED CONCRETE
   CEILING: PAINTED PLASTER APPLIED TO STRUCTURE

LEGEND:

- F.1.4 — DOOR TYPE, SEE SHEET A3
- A — WINDOW TYPE, SEE SHEET A3
- (X) — KEY NOTE
- FEC — FIRE EXTINGUISHER CABINET
- 1–HOUR RATED PARTITION
- (1) — ROOM FINISH TYPE DESIGNATION

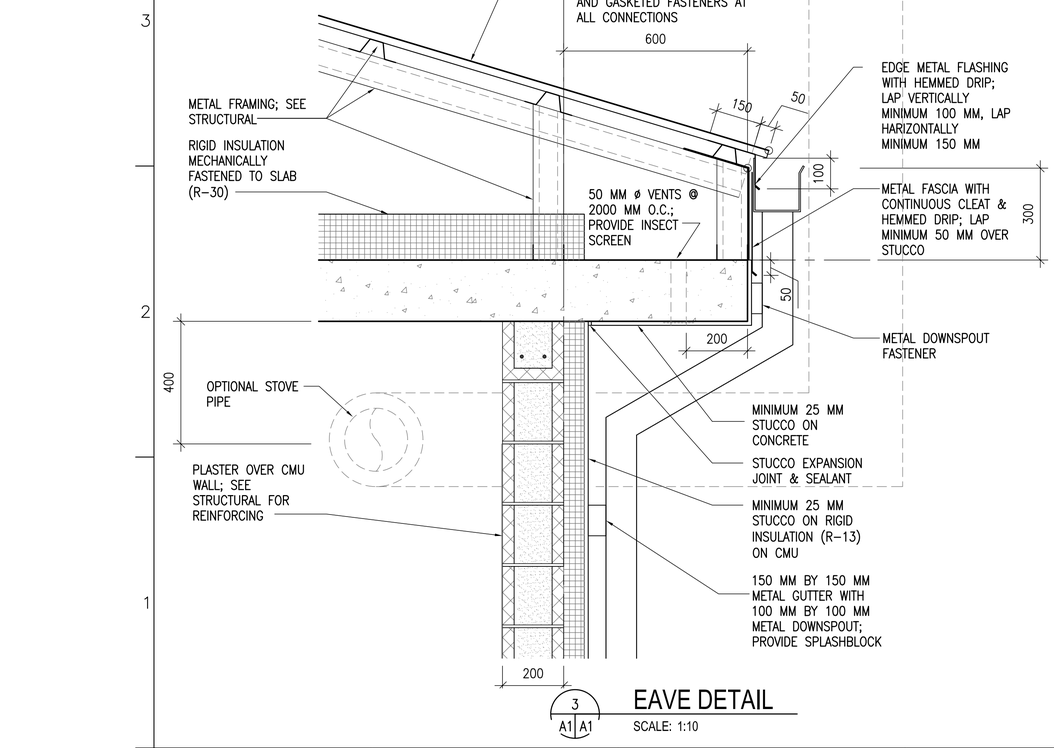

3 A1 A1 EAVE DETAIL
SCALE: 1:10

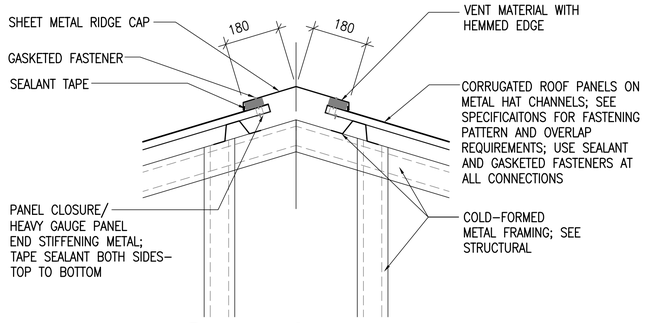

4 A1 A1 RIDGE VENT DETAIL
SCALE: 1:10

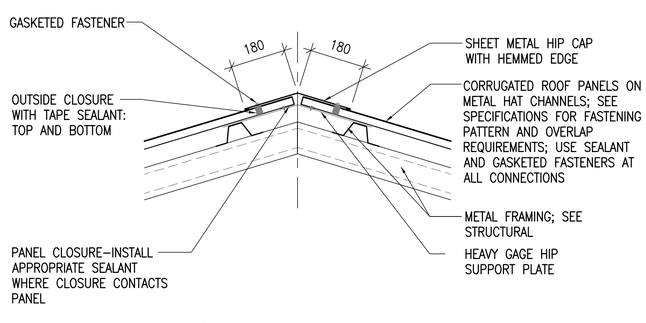

5 A1 A1 HIP DETAIL
SCALE: 1:10

UNLESS OTHERWISE NOTED, LINEAR DIMENSIONS SHOWN ARE IN MILLIMETERS (MM)

0 200 400 800
SCALE: 1: 10

0 1000 2000 4000
SCALE: 1: 50

US Army Corps of Engineers
Afghanistan Engineer District

SYMBOL	DESCRIPTION	DATE	APP

DESIGNED BY: PFF	DATE: 09–30–09	CHK BY: NLJ	FILE NO.: ANPSDA–101XXX
DWN BY: ECN	SUBMITTED BY: BAKER		

Michael Baker Jr., Inc
A unit of Michael Baker Corporation
Airside Business Park
100 Airside Drive
Moon Township, PA 15108
www.mbakercorp.com

AFGHAN NATIONAL POLICE
STANDARD DESIGN
GATE HOUSE
WOOD FIRED HEAT OPTION

FLOOR AND ROOF PLANS AND DETAILS

SHEET REFERENCE NUMBER:
A1

100% SUBMISSION

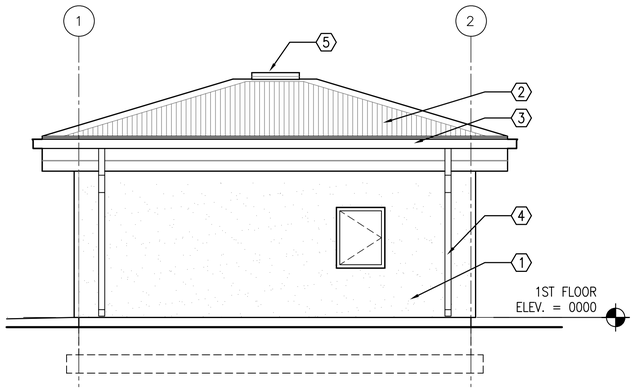

1 A1 A2 EAST ELEVATION

SCALE: 1:50

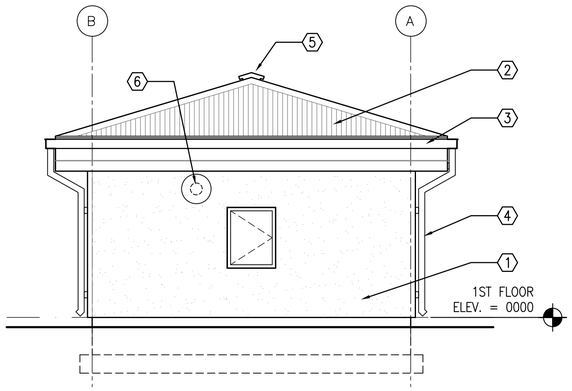

2 A1 A2 NORTH ELEVATION

SCALE: 1:50

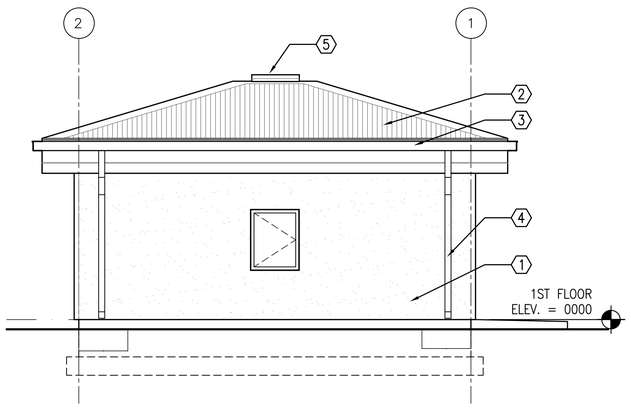

3 A1 A2 WEST ELEVATION

SCALE: 1:50

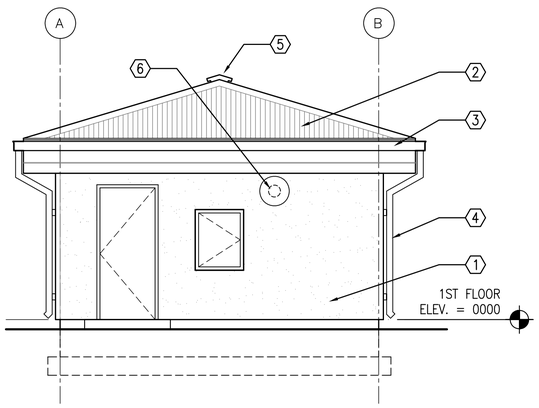

4 A1 A2 SOUTH ELEVATION

SCALE: 1:50

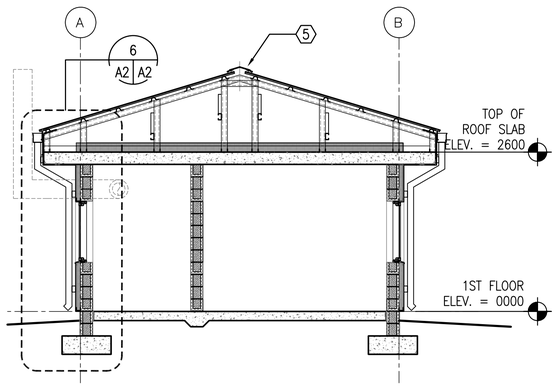

5 A1 A2 BUILDING SECTION

SCALE: 1:50

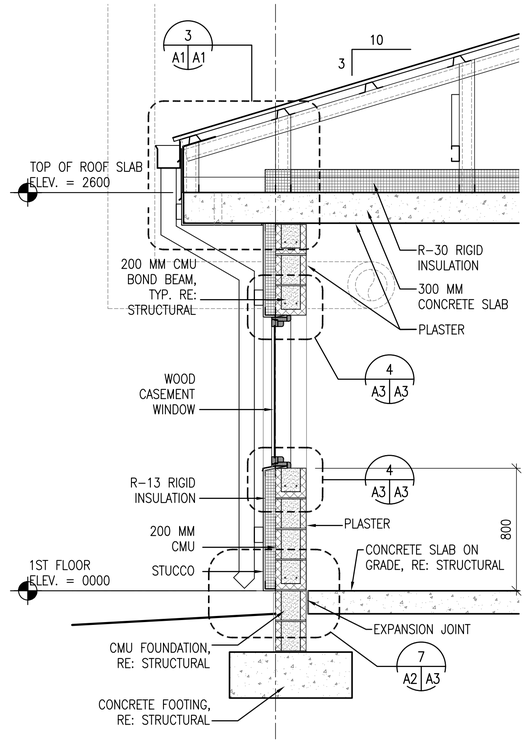

6 A2 A2 WALL SECTION

SCALE: 1:20

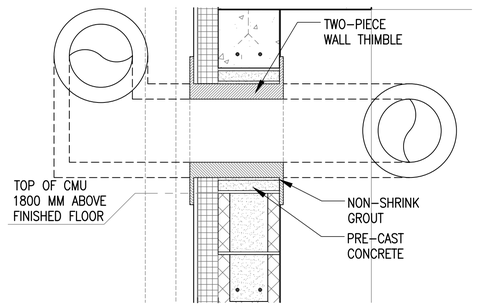

7 A2 A2 THIMBLE DETAIL, TYPICAL

SCALE: 1:10

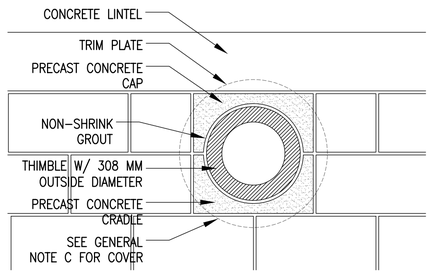

8 A1 A2 THIMBLE DETAIL, TYPICAL

SCALE: 1:10

GENERAL NOTES:

A. COORDINATE SIZE AND LOCATION OF OPENINGS FOR MECHANICAL ITEMS WITH MECHANICAL DRAWINGS.
B. PROVIDE STRUCTURAL LINTELS AS REQUIRED – RE: STRUCT
C. PROVIDE 480 MM SQUARE, 1.5 MM THICK GALVANIZED SHEET METAL COVER WITH 13 MM HEMMED EDGE FOR WALL THIMBLE UNTIL STOVE PIPE IS PROVIDED. INSTALL COVER ON EXTERIOR FACE OF THIMBLE TRIM PLATE. COVER SHALL BE BE SET IN SILICONE SEALANT AND FASTENED WITH 4 STAINLESS STEEL SCREWS. ALIGN FASTENER LOCATIONS WITH COVER PLATE FASTENER OPENINGS SO ADDITIONAL FASTENER PENETRATIONS ARE NOT CREATED IN EXTERIOR FINISH.

KEY NOTES: (X)

1. STUCCO AND RIGID INSULATION SYSTEM ON CMU
2. CORRUGATED METAL ROOF PANELS ON COLD-FORMED METAL FRAMING
3. METAL GUTTER
4. METAL DOWNSPOUT WITH SPLASH BLOCK
5. RIDGE VENT
6. TWO-PIECE WALL THIMBLE AND TRIM PLATE FOR OPTIONAL WOOD BURNING STOVE CHIMNEY PIPE. STOVE AND PIPE BY OTHER

UNLESS OTHERWISE NOTED, LINEAR DIMENSIONS SHOWN ARE IN MILLIMETERS (MM)

0 200 400 800
SCALE: 1: 10

0 400 800 1600
SCALE: 1: 20

0 1000 2000 4000
SCALE: 1: 50

US Army Corps of Engineers
Afghanistan Engineer District

SYMBOL	DESCRIPTION	DATE	APP'D

DESIGNED BY: PFF	DWN BY: ECN	CHK BY: NLJ	
DATE: 09-30-09	SUBMITTED BY: BAKER	FILE NO.: ANPSDA-202XXX	

Michael Baker Jr., Inc
A unit of Michael Baker Corporation
Airside Business Park
100 Airside Drive
Moon Township, PA 15108
www.mbakercorp.com

AFGHAN NATIONAL POLICE
STANDARD DESIGN
GATE HOUSE
WOOD FIRED HEAT OPTION
EXTERIOR ELEVATIONS,
BUILDING AND WALL SECTIONS

SHEET REFERENCE NUMBER:
A2

100% SUBMISSION

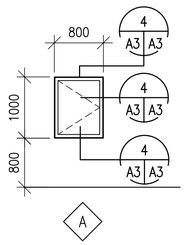

1 A3 A3 WINDOW TYPES
SCALE: 1:50

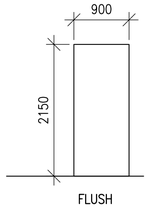

F

2 A3 A3 DOOR TYPES
SCALE: 1:50

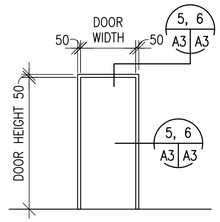

1

3 A3 A3 FRAME TYPES
SCALE: 1:50

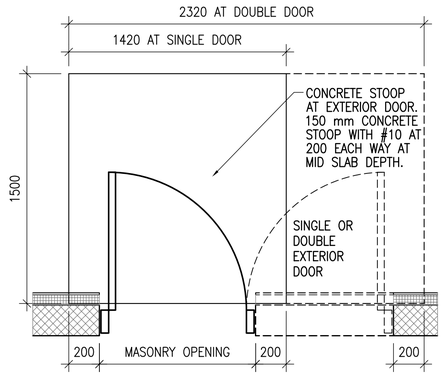

8 A3 A3 CONCRETE STOOP PLAN DETAIL
SCALE: 1:20

WINDOW TYPES NOTES:

1. ALL EXTERIOR WINDOWS SHALL BE WOOD WITH INSECT SCREENS. WINDOWS SHALL BE COMMERCIAL GRADE.
2. GLAZING SHALL BE ACRYLIC SHEET.

DOOR TYPES NOTES:

1. INTERIOR AND EXTERIOR METAL DOORS AND FRAME COLORS SHALL MATCH ADJACENT WALL COLORS AS SELECTED BY THE CONTRACTING OFFICER.
2. HARDWARE SHALL BE HEAVY DUTY, COMMERCIAL GRADE, STAINLESS STEEL WITH A MATTE FINISH.
3. FRAMES, EXCEPT FIRE-RATED FRAMES, SHALL BE MOUNTED AND ADJUSTED IN ACCORDANCE WITH MANUFACTURER'S INSTRUCTIONS. FRAMES SHALL BE FASTENED WITH MINIMUM OF THREE FASTENING POINTS PER SIDE AT REGULAR INTERVALS.
4. DIMENSIONS SHOWN ON DOOR SCHEDULE ARE BASED UPON MODULAR MASONRY (OR ROUGH OPENING), HEIGHT OF 2200mm FOR STANDARD PERSONNEL DOORS. CONTRACTOR SHALL COORDINATE WITH DOOR SUPPLIER TO ENSURE THAT DIMENSIONS OF DOORS AND FRAMES PROVIDED ARE COMPATIBLE WITH DOOR OPENING DIMENSIONS.
5. DOORS SHALL BE 45 MINUTE DOORS AS REQUIRED IN 1 HOUR RATED WALLS. (IBC TABLE 715.4).

HARDWARE TYPES:

HW-2 1-1/2 PR HINGES
1 EA LOCKSET W/LEVERS. GRADE 1, F93
1 EA DOOR CLOSER, C02061,LOW RESISTANCE

HW-4 1-1/2 PR HINGES
1 EA LOCKSET W/LEVERS. GRADE 1
1 EA STOP L02101 OR L02161

HW-6 1-1/2 PR HINGES
1 EA LOCKSET,F04 ENTRY LOCK W/LEVERS. GRADE 1
1 EA DOOR CLOSER, C02061,LOW RESISTANCE
1 EA THRESHOLD J32130

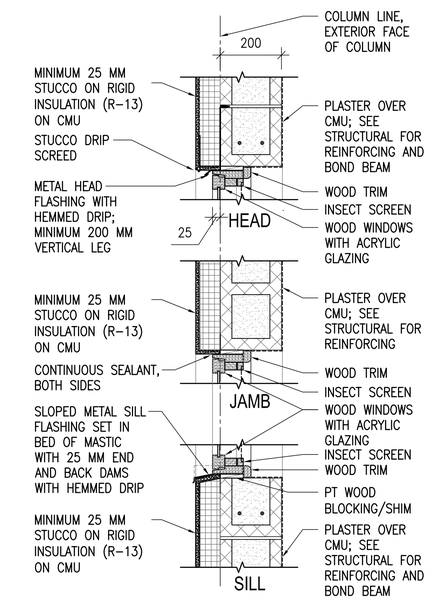

4 A3 A3 WINDOW DETAILS
SCALE: 1:10

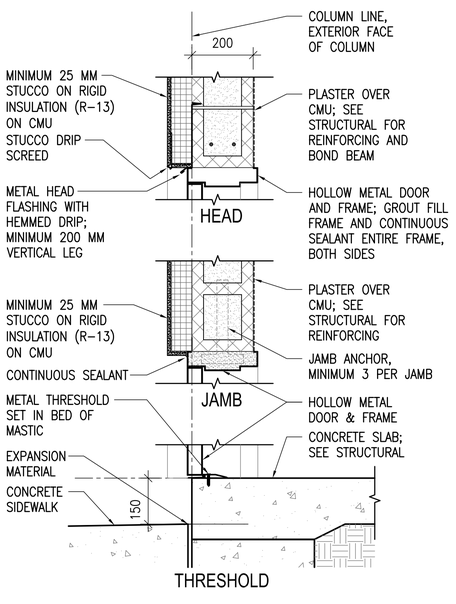

5 A3 A3 EXTERIOR DOOR DETAILS
SCALE: 1:10

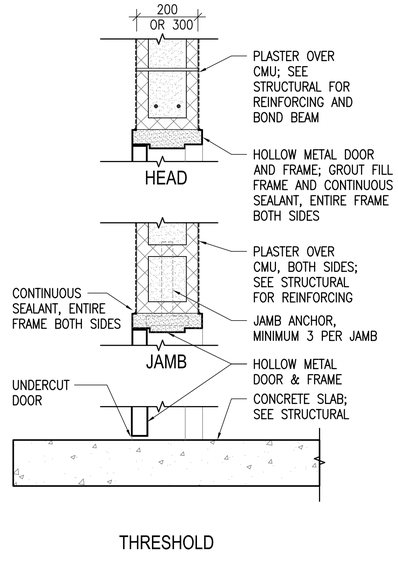

6 A3 A3 INTERIOR DOOR DETAILS
SCALE: 1:10

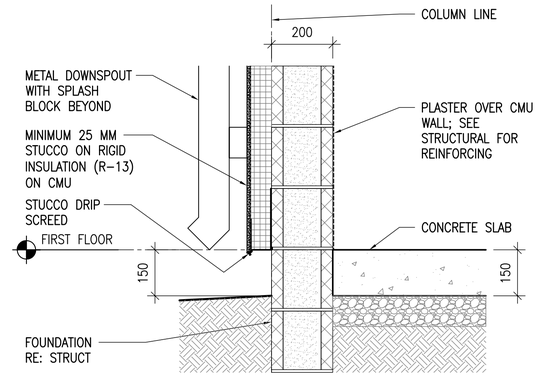

7 A3 A3 STUCCO BASE DETAIL
SCALE: 1:10

UNLESS OTHERWISE NOTED, LINEAR DIMENSIONS SHOWN ARE IN MILLIMETERS (MM)

0 200 400 800
SCALE: 1: 10

0 400 800 1600
SCALE: 1: 20

0 1000 2000 4000
SCALE: 1: 50

US Army Corps of Engineers
Afghanistan Engineer District

SYMBOL	DESCRIPTION	DATE	APP

DESIGNED BY: PFF	DATE: 09-30-09
DWN BY: ECN	SUBMITTED BY: BAKER
CHK BY: NLJ	FILE NO.: ANPSDA-503XXX

Michael Baker Jr., Inc
A unit of Michael Baker Corporation
Airside Business Park
100 Airside Drive
Moon Township, PA 15108
www.mbakercorp.com

AFGHAN NATIONAL POLICE
STANDARD DESIGN
GATE HOUSE
WOOD FIRED HEAT OPTION

DOOR, WINDOW & FINISH TYPES & DETAILS

SHEET REFERENCE NUMBER:
A3

100% SUBMISSION

POWER

- DISTRIBUTION PANELBOARD
- NEW PANELBOARD – SURFACE
- NEW PANELBOARD – RECESSED
- EXISTING PANELBOARD
- (G) GENERATOR
- TVSS TRANSIENT VOLTAGE SURGE SURPRESSOR
- TRANSFORMER (DRAWN TO SIZE)
- PS POWER SUPPLY
- CP CONTROL PANEL
- TC TIME CLOCK
- TIM ASTRONOMICAL TIME CLOCK– "SEE SPEC."
- R RELAY WITH RATING AND NUMBER OF POLES AS NOTED ON DRAWINGS– "SEE SPEC."
- J JUNCTION BOX
- (J) JUNCTION BOX – CEILING
- PB PULL BOX
- BD BUS DUCT HORIZONTAL
- BUS DUCT VERTICAL
- EMERGENCY POWER OFF PUSH BUTTON
- NON–FUSIBLE SAFETY SWITCH
- FUSIBLE SAFETY SWITCH
- (M) MOTOR
- ^{M} MOTOR STARTING SWITCH – 20A RATED
- ^{K} KEY SWITCH – 20A RATED
- FC FAN COIL – FURNISHED BY MECHANICAL CONTRACTOR, ELECTRICAL CONTRACTOR SHALL INSTALL AND PROVIDE POWER CONNECTION
- UH UNIT HEATER – FURNISHED BY MECHANICAL CONTRACTOR, ELECTRICAL CONTRACTOR SHALL INSTALL AND PROVIDE POWER CONNECTION
- D JUNCTION BOX FOR CONNECTION TO GARBAGE DISPOSAL
- CF LIGHT/HEATER/FAN – FURNISHED BY MECHANICAL CONTRACTOR, ELECTRICAL CONTRACTOR SHALL INSTALL AND PROVIDE POWER CONNECTION
- ELECTRIC WATER HEATER
- EPO WEATHERPROOF / EXPLOSION PROOF EMERGENCY POWER OFF PUSH–BUTTON TO BE INTERCONNECTED WITH GENERATOR SHUT DOWN CONTROL
- CF CEILING FAN – REFER TO SPECIFICATION SECTION 26 20 00

RECEPTACLES

- DUPLEX 20A BRITISH STANDARD UNSWITCHED SOCKETS
- $_{GF}$ DUPLEX 20A BRITISH STANDARD UNSWITCHED SOCKETS – 10mA GROUND FAULT INTERRUPTER TYPE
- $_{WP}$ DUPLEX 20A BRITISH STANDARD UNSWITCHED SOCKETS – 10mA GROUND FAULT INTERRUPTER TYPE WITH WEATHERPROOF COVER
- $_{EXP}$ DUPLEX 20A BRITISH STANDARD UNSWITCHED SOCKETS – EXPLOSION PROOF
- * INDICATES MOUNT DEVICE ABOVE COUNTER TOP

LIGHTNING PROTECTION

- AIR TERMINAL 20mm O.D. X 4m SOLID COPPER, NICKEL PLATED ON ADHESIVE BASE.
- EQ EQUIPMENT AIR TERMINAL
- TEST WELL WITH GROUND ROD(S)
- GROUND ROD
- G GROUND PLATE
- MAIN GROUND CONDUCTER CONCEALED WITHIN CONSTRUCTION
- MAIN GROUND CONDUCTOR EXPOSED ON EXPOSED ON BUILDING EXTERIOR SURFACE
- GROUND CONDUCTOR CAD WELDED TO GROUND CABLE OR EQUIPMENT
- GROUND CONDUCTOR CAD WELDED TO BUILDING STEEL COLUMN
- GROUND ROD TRIPOD, SPACED 10 FEET APART.
- LEVEL TO LEVEL CABLE

LIGHTING

- LIGHTING FIXTURE – SEE FIXTURE SCHEDULE FOR MORE INFORMATION
- LIGHTING FIXTURE – SEE FIXTURE SCHEDULE FOR MORE INFORMATION
- DOWNLIGHT
- LIGHTING FIXTURE ON NORMAL/EMERGENCY
- WALL MOUNTED LIGHT FIXTURE
- E EXIT SIGN – DIRECTIONAL ARROWS AS INDICATED ON DRAWINGS
- B BATTERY PACK WITH HEADS AS INDICATED ON DRAWINGS
- REMOTE HEAD FOR BATTERY PACK
- $ SINGLE POLE SWITCH – 20A RATED
- ^{3} 3–WAY SWITCH – 20A RATED
- ^{4} 4–WAY SWITCH – 20A RATED
- PC PHOTOCELL VOLTAGE TO MATCH CIRCUITRY
- LC LIGHTING CONTACTOR
- POLE MOUNTED SITE LIGHTING FIXTURE– NUMBER OF FIXTURES PER POLE AS INDICATED ON DRAWINGS
- EXTERIOR DIRECTIONAL LIGHTING FIXTURE
- a SMALL CASE LETTERS REPRESENTS LAMP(S) / SWITCHES. WHEN USED WITH AN OCCUPANCY SENSOR THIS INDICATES SENSOR WITH MANUAL OVERRIDE SWITCH

TELECOMMUNICATIONS

- TELEPHONE OUTLET(S) @ 18" AFF. U.N.O. WITH 3/4" RACEWAY TERMINATED ABOVE NEAREST ACCESSIBLE CEILING OR TO TELEPHONE TERMINAL BOARD IF NO ACCESSIBLE CEILING AVAILABLE. SEE TELE/DATA RISER DIAGRAM FOR OUTLET AND CABLE DESCRIPTION
- DATA OUTLET(S) @ 18" AFF. U.N.O. WITH 3/4" RACEWAY TERMINATED ABOVE NEAREST ACCESSIBLE CEILING OR TO DATA EQUIPMENT RACK IF NO ACCESSIBLE CEILING AVAILABLE. SEE TELE/DATA RISER DIAGRAM FOR OUTLET AND CABLE DESCRIPTION

TELECOMMUNICATIONS (CONTINUED)

- COMBINATION TELEPHONE/DATA OUTLET(S) @ 18" AFF. U.N.O. WITH 1" RACEWAY TERMINATED ABOVE NEAREST ACCESSIBLE CEILING OR TO TELE/DATA TERMINAL AREA IF NO ACCESSIBLE CEILING AVAILABLE. SEE TELE/DATA RISER DIAGRAM FOR OUTLET AND CABLE DESCRIPTION
- W WALL MTD. TELEPHONE OUTLET WITH 3/4" RACEWAY TERMINATED ABOVE NEAREST ACCESSIBLE CEILING OR TO TELEPHONE TERMINAL BOARD IF NO ACCESSIBLE CEILING AVAILABLE. SEE TELE/DATA RISER DIAGRAM FOR OUTLET AND CABLE DESCRIPTION
- (x)T INDICATES NUMBER OF TELEPHONE OUTLET(S) AND ASSOCIATED CABLING
- (x)D INDICATES NUMBER OF DATA OUTLET(S) AND ASSOCIATED CABLING
- (x)TF INDICATES NUMBER OF TELEPHONE OUTLETS AND ASSOCIATED CABLING WITH 1 OUTLET AND CABLE DEDICATED FOR FAX

SINGLE LINE SYMBOLS

- SWITCH
- BREAKER
- FUSE
- TRANSFORMER
- CAPACITOR
- GROUND
- CONTACT (NORMALLY OPEN)
- CONTACT (NORMALLY CLOSED)
- AUTOMATIC TRANSFER SWITCH
- MANUAL DOUBLE THROW SWITCH
- CURRENT TRANSFORMER
- INDICATES NEW ELECTRICAL EQUIPMENT
- C INDICATES NEW CONTROL WIRING AND CONDUIT
- EQUIPMENT OUTLINE

MISCELLANEOUS

- BRANCH CIRCUIT WIRING CONCEALED ABOVE CEILINGS, SURFACE MOUNTED ON WALLS
- BRANCH CIRCUIT WIRING – #10 AWG
- BRANCH CIRCUIT WIRING – UNDER FLOOR
- HOME RUN BACK TO PANEL
- CONDUIT TURNED DOWN
- CONDUIT TURNED UP
- LV LOW VOLTAGE WIRING AND CONDUIT
- CT–X CABLE TRAY ("X" DENOTES WIDTH)
- INDICATES CONTINUATION OF LINE

FIRE ALARM

- FACP FIRE ALARM CONTROL PANEL WITH BATTERY BACKUP
- F FIRE ALARM PULL STATION

FIRE ALARM (CONTINUED)

- F FIRE ALARM STROBE – WALL MOUNTED
- F FIRE ALARM AUDIBLE/STROBE – WM
- F FIRE ALARM HORN/STROBE – WM
- S SMOKE DETECTOR
- H HEAT DETECTOR CEILING MOUNTED
- D DUCT DETECTOR – PROVIDED BY EC, INSTALLED BY MC AND CONNECTED BY EC

DENOTATIONS & ABBREVIATIONS

AFF	ABOVE FINISHED FLOOR
C	CEILING MOUNTED
E	EMERGENCY
EC	ELECTRICAL CONTRACTOR
EPO	EMERGENCY POWER OFF
EXP	EXPLOSION PROOF
F	FIRE ALARM
FF	FLUSH FLOOR MOUNTED
FL	FLUORESCENT
FO	FIBER OPTIC
FSS	FUSED SAFETY SWITCH
G	GROUND FAULT INTERRUPTER
GC	GENERAL CONTRACTOR
HOA	HAND–OFF AUTO
I	INFRARED
ICD	INCANDESCENT
IG	ISOLATED GROUND
K	KEY
LV	LOW VOLTAGE
M	MOTOR
MC	MECHANICAL CONTRACTOR
NE	NORMAL/EMERGENCY
NFSS	NON–FUSED SAFETY SWITCH
PA	PAGING SYSTEM
PLC	PLUMBING CONTRACTOR
REL	RELOCATE
RED	RELOCATED
SL	SINGLE LINE
SS	SURGE SUPPRESSION
T	TELEPHONE
TL	TWIST LOCK

DENOTATIONS & ABBREVIATIONS (CONT.)

TP	TAMPER PROOF
UE	UNDERGROUND ELECTRIC
UF	UNDERGROUND FIBER
UT	UNDERGROUND TELEPHONE
W	WALL MOUNTED
WG	WIRE GUARD
WP	WEATHERPROOF
WPG	WEATHERPROOF/GROUND FAULT INTERRUPTER
WT	WATER TIGHT

GENERAL PROJECT NOTES:

G1. UNLESS OTHERWISE NOTED, PROVIDE ALL EQUIPMENT SHOWN ON THE PLANS. THE ELECTRICAL CONTRACTOR SHALL COORDINATE ALL SYMBOLS SHOWN ON THE PLANS WITH THE SYMBOL LIST. IT SHALL BE THE RESPONSIBILITY OF THE CONTRACTOR TO VERIFY THE INTENT OF ANY SYMBOL THAT IS SHOWN ON THE PLANS AND NOT INDICATED ON THE SYMBOL LIST WITH THE ENGINEER PRIOR TO BID.

G2. COORDINATE THE FINAL LOCATIONS OF ALL LIGHT FIXTURES WITH THE ARCHITECT'S REFLECTED CEILING PLANS. REPORT ANY DISCREPANCIES TO THE ARCHITECT PRIOR TO INSTALLATION.

G3. THE CONTRACTOR SHALL VERIFY THE LOCATION OF ALL UNDERGROUND UTILITIES WITHIN THE CONSTRUCTION AREA THREE (3) WORKING DAYS NOTICE BEFORE COMMENCE DIGGING. NOTIFY THE LOCAL OR STATE AUTHORITY HAVING JURISDICTION AND WAIT THE REQUIRED TIME BEFORE COMMENCING TO DIG.

G4. THE CONTRACTOR SHALL COORDINATE CONDUIT RUNS, CABLE TRAY, LIGHTING FIXTURES AND OTHER EQUIPMENT LOCATIONS WITH THE OTHER TRADE CONTRACTORS TO AVOID CONFLICTS.

G5. WHERE VOLTAGES AND FREQUENCIES ON THE DRAWINGS AND IN THE SPECIFICATIONS DIFFER FROM THE LOCAL ONES, ALL WORK SHALL BE PERFORMED USING THE LOCAL VOLTAGES AND FREQUENCIES.

G6. THE MINIMUM WIRE SIZE ON THE PROJECT SHALL BE 4mm2. THE MINIMUM CONDUIT SIZE SHALL BE 20mm. THE MINIMUM BREAKER SIZE SHALL BE 20 AMPS.

G7. THE CONTRACTOR SHALL PUT A MAXIMUM OF 6 DUPLEX SOCKETS ON A 20A SINGLE POLE CIRCUIT.

G8. WHERE THE 1010 SCOPE REVIEW, 1015 TECHNICAL REVIEW, DRAWINGS, AND SPECIFICATIONS DIFFER FROM AMERICAN CODES OR STANDARDS THE 1010, 1015, DRAWINGS, AND SPECIFICATIONS SHALL RULE.

G9. WORK FOR THE AMMUNITION SUPPLY POINT SHALL BE DONE IN ACCORDANCE WITH DEPARTMENT OF DEFENSE STANDARD DOD 6055.9–STD.

G10. ALL CONDUIT AND DEVICES SHALL BE SURFACE MOUNTED UNLESS OTHERWISE INDICATED.

US Army Corps of Engineers
Afghanistan Engineer District

SYMBOL	DESCRIPTION	DATE	APP

DESIGNED BY:	DATE:
JRG	09–30–09
DWN BY:	SUBMITTED BY:
JRG	BAKER
CHK BY:	FILE NO.:
JRG	ANPSDE–000XXX

Michael Baker Jr, Inc
A unit of Michael Baker Corporation
Airside Business Park
100 Airside Drive
Moon Township, PA 15108
www.mbakercorp.com

AFGHAN NATIONAL POLICE
STANDARD DESIGN
GATE HOUSE
WOOD FIRED HEAT OPTION

ELECTRICAL SYMBOLS AND ABBREVIATIONS

SHEET REFERENCE NUMBER:
E0

100% SUBMISSION

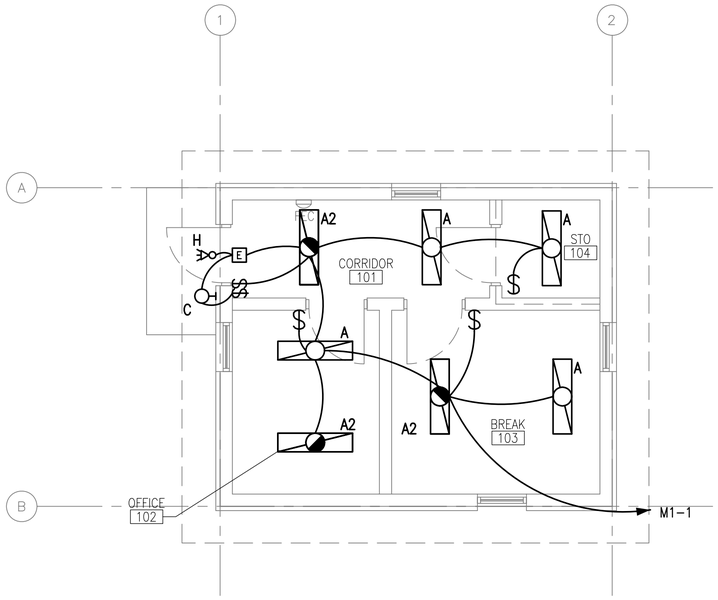

1 E1 E1 LIGHTING PLAN

SCALE: 1:50

N

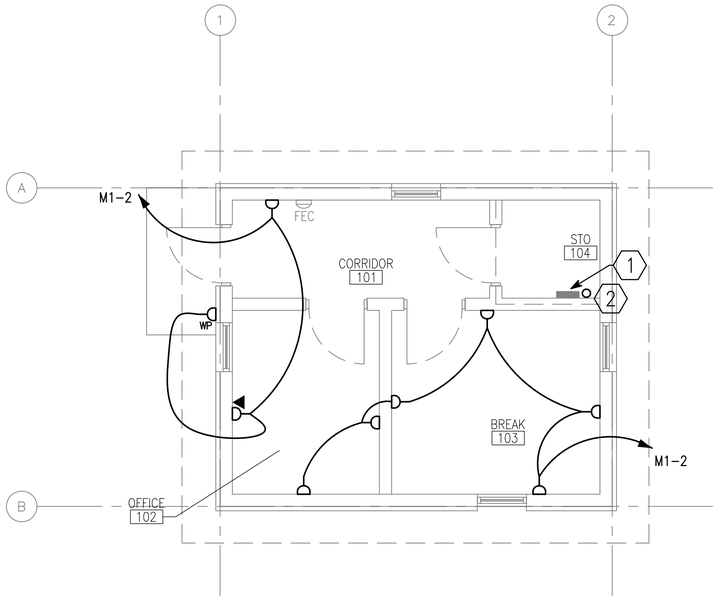

2 E1 E1 POWER AND SYSTEMS PLAN

SCALE: 1:50

N

GENERAL NOTES:

1. REFER TO DRAWING #E0 FOR THE ELECTRICAL SYMBOLS LIST.
2. EXIT SIGNS SHALL BE WIRED AHEAD OF ANY LOCAL SWITCHING ON CIRCUITS.
3. REFER TO DRAWING #E3 FOR THE LIGHTING FIXTURE SCHEDULE.
4. REFER TO DRAWING #E2 FOR THE POWER RISER.
5. REFER TO DRAWING #E4 FOR PANEL SCHEDULES.
6. LIGHT FIXTURES INDICATED AS EMERGENCY SHALL BE PROVIDED WITH A BATTERY BACKUP BALLAST.
7. COORDINATE EXACT MOUNTING LOCATION OF DISCONNECTING MEANS FOR MECHANICAL AND PLUMBING EQUIPMENT IN THE FIELD.
8. FUSIBLE SAFETY SWITCHES THAT ARE NOT OTHERWISE IDENTIFIED SHALL BE 380V, 1P, 30A FUSED SAFETY SWITCHES WITH 20A FUSES.

NUMBERED NOTES:

1. PANEL M1.
2. TELECOMMUNICATIONS CONDUIT STUB-UP.

UNLESS OTHERWISE NOTED, LINEAR DIMENSIONS SHOWN ARE IN MILLIMETERS (MM)

1 0 1 2 3 4 5 6 7 8 9

1:100

US Army Corps of Engineers

Afghanistan Engineer District

SYMBOL	DESCRIPTION	DATE	APP'D

DESIGNED BY:	DATE:
JRG	09-30-09
DWN BY:	SUBMITTED BY:
JRG	BAKER
CHK BY:	FILE NO.:
JRG	ANPSDE-101XXX

Michael Baker Jr., Inc
A unit of Michael Baker Corporation
Airside Business Park
100 Airside Drive
Moon Township, PA 15108
www.mbakercorp.com

AFGHAN NATIONAL POLICE
STANDARD DESIGN
GATE HOUSE
WOOD FIRED HEAT OPTION

LIGHTING AND POWER PLAN

SHEET REFERENCE NUMBER:

E1

100% SUBMISSION

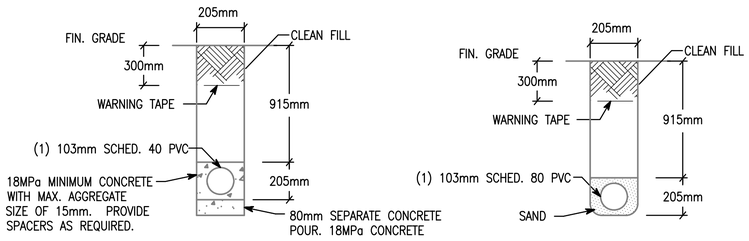

NOTE: PVC CONDUIT SHALL BE DIRECT BURIED SCHEDULE 80 FOR NO TRAFFIC AREAS AND CONCRETE-ENCASED SCHEDULE 40 FOR UNDER ROADWAYS OR TRAFFIC AREAS.

1 / E2 | E2 — TYPICAL DUCT BANK DETAILS FOR CONDUIT IN SAND OR CONCRETE

SCALE: N.T.S.

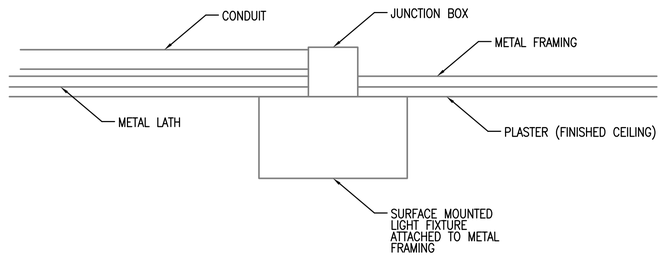

2 / E2 | E2 — TYPICAL DETAIL FOR SURFACE MOUNTED LIGHT FIXTURES

SCALE: N.T.S.

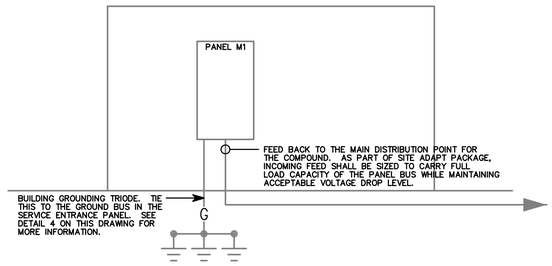

3 / E2 | E2 — GATE HOUSE RISER DIAGRAM

SCALE: N.T.S.

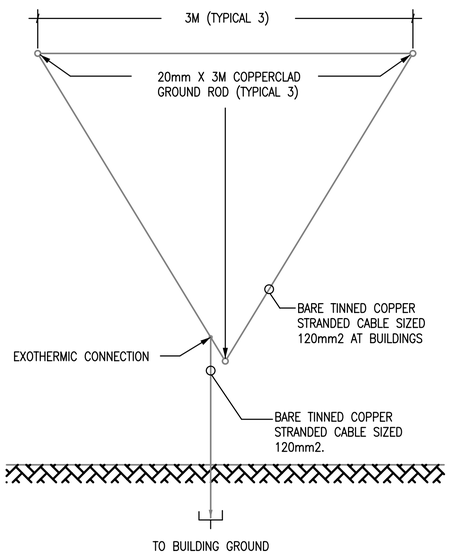

4 / E2 | E2 — GROUND TRIPOD SYSTEM DETAIL - PLAN

SCALE: N.T.S.

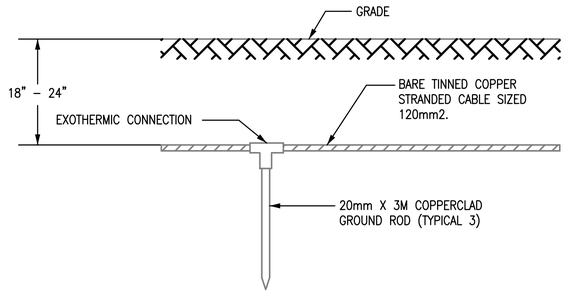

5 / E2 | E2 — GROUND TRIPOD SYSTEM DETAIL - ELEVATION

SCALE: N.T.S.

US Army Corps of Engineers
Afghanistan Engineer District

SYMBOL	DESCRIPTION	DATE	APP'D

DESIGNED BY: BAKER	DATE: 09-30-09		
DWN BY: JRG	SUBMITTED BY: BAKER	FILE NO.: ANPSDE-502XXX	
CHK BY: JRG			

Michael Baker Jr., Inc.
A unit of Michael Baker Corporation
Airside Business Park
100 Airside Drive
Moon Township, PA 15108
www.mbakercorp.com

AFGHAN NATIONAL POLICE
STANDARD DESIGN
GATE HOUSE
WOOD FIRED HEAT OPTION

DETAILS

SHEET REFERENCE NUMBER:
E2

100% SUBMISSION

FIXTURE MARK 'A'

PARABOLIC SURFACE/PENDANT MOUNTED 300MM x 1200MM FLUORESCET FIXTURE WITH ELECTRONIC BALLAST.

FIXTURE MARK 'A2':
SAME FIXTURE AS 'A' WITH EMERGENCY BALLAST.

FIXTURE MARK 'C'

INCANDESCENT ONE PIECE WITH APPROVED LENS, STABILIZED HIGH IMPACT POLY CARBONATE

FIXTURE MARK 'H'

REMOTE HEAD EXTERIOR LIGHT HEAD POWERED FROM EXIT SIGN BATTERY– 12V DOUBLE HEAD CORROSION RESISTANT WITH UL34 WEATHERPROOF CONSTRUCTION

FIXTURE MARK 'E'

UNIVERSAL MOUNT ENGINEER GRADE THERMOPLASTIC HOUSING EXIT SIGN WITH LED LAMPS, RED LETTERS 6" IN HEIGHT WITH ARROWS AS INDICATED, WITH 12V CADMIUM BATTERY

LIGHTING FIXTURE SCHEDULE

FIXTURE MARK	STYLE NUMBER AND TYPE	NUMBER AND TYPE OF LAMPS	VOLTAGE	MOUNTING	NOTES
A	PARABOLIC SURFACE/PENDANT MOUNTED 300MM X 1200MM FLUORESCENT FIXTURE WITH ELECTRONIC BALLAST	(2) 32W 3500K	220V – 1ø 50HZ	PENDANT MOUNTED FROM SLOPED CEILINGS	FURNISHED WITH ELECTRONIC BALLAST. PARABOLIC LOUVER SHALL BE SPECULAR LENS IRADESCENCE TYPE.
A2	SAME AS FIXTURE 'A' WITH EMERGENCY BALLAST	(2) 32W 3500K	220V – 1ø 50HZ	PENDANT MOUNTED FROM SLOPED CEILINGS	FURNISHED WITH ELECTRONIC BALLAST. PARABOLIC LOUVER SHALL BE SPECULAR LENS IRADESCENCE TYPE. EMERGENCY BALLAST SELF TEST.
C	INCANDESCENT ONE PIECE W/ APPROVED LENS STABILIZED HIGH IMPACT POLY CARBONATE.	(1) A19 – 100W INCANDESCENT	220V – 1ø 50HZ	WALL MOUNTED ABOVE EXTERIOR DOORS	
H	REMOTE HEAD EXTERIOR LIGHT HEAD POWERED FROM EXIT SIGN BATTERY– 12V DOUBLE HEAD CORROSION RESISTANT WITH UL34 WEATHERPROOF CONSTRUCTION	(2) 12W/12V HALOGEN LAMP	12V – 1ø 50HZ	EXTERIOR WALL MOUNTED AT TOP OF DOOR HEIGHT	
E	UNIVERSAL MOUNT ENGINEER GRADE THERMOPLASTIC HOUSING EXIT SIGN WITH LED LAMPS, RED LETTERS 6" IN HEIGHT WITH ARROWS AS INDICATED, WITH 12V CADMIUM BATTERY WITH REMOTE HEAD CAPABILITY	LED LAMPS	220V – 1ø 50HZ	UNIVERSAL MOUNTING	

US Army Corps of Engineers
Afghanistan Engineer District

SYMBOL	DESCRIPTION	DATE	APP'D

DESIGNED BY: JRG
DWN BY: JRG
CHK BY: JRG
DATE: 09-30-09
SUBMITTED BY: BAKER
FILE NO.: ANPSDE-603XXX

Michael Baker Jr., Inc
A unit of Michael Baker Corporation
Airside Business Park
100 Airside Drive
Moon Township, PA 15108
www.mbakercorp.com

AFGHAN NATIONAL POLICE
STANDARD DESIGN
GATE HOUSE
WOOD FIRED HEAT OPTION

LIGHT FIXTURE SCHEDULE

SHEET REFERENCE NUMBER:
E3

100% SUBMISSION

PANELBOARD M1 SURFACE MOUNTED ASYM. A.I.C. MIN.
AMP. MAIN LUGS (OR) 100 AMP. MAIN BREAKER W/ 100 AMP. TRIP
CIRCUIT BREAKER TYPE 380/220 VOLTS 3 PHASE 4 WIRE 50 HZ 100 AMP. BUS

CKT. NO.	TRIP AMPS	NO. POLES	WIRE MM ²	GND MM²	CONDUIT MM	LOAD SERVED	LOAD-V.A. AØ	LOAD-V.A. BØ	LOAD-V.A. CØ	LOAD-V.A. AØ	LOAD-V.A. BØ	LOAD-V.A. CØ	LOAD SERVED	CONDUIT MM	GND MM²	WIRE MM²	NO. POLES	TRIP AMPS	CKT. NO.
1	20	1	4.0	4.0	20	LIGHTING - 101-104	0.8			1.2			RECEPTACLES - 103	20	4.0	4.0	1	20	2
3	20	2				SPARE					0.6		RECEPTACLES - 101, 102, EXT.	20	4.0	4.0	1	20	4
5													SPARE				1	20	6
7	20	1				SPARE							SPARE				1	20	8
9	20	1				SPARE							SPARE				1	20	10
11	20	1				SPARE							SPARE				1	20	12
							0.8	0.0	0.0	1.2	0.6	0.0							

TOTAL CONN. LOAD PER PHASE (KVA): AØ 2.0 BØ 0.6 CØ 0.0

TOTAL CONN. LOAD 2.6 KVA. 70 % DEMAND = ESTIMATED DEMAND LOAD 1.8 SUPPLIED FROM MAIN SWITCHGEAR DISTRIBUTION

* MAIN BREAKER SHALL BE 3P EARTH GROUND TYPE.
** PANEL SHALL BE PROVIDE WITH FEED THRU LUGS.

US Army Corps of Engineers
Afghanistan Engineer District

SYMBOL	DESCRIPTION	DATE	APP.

DESIGNED BY: JRG	DATE: 09-30-09
DWN BY: JRG	SUBMITTED BY: BAKER
CHK BY: JRG	FILE NO.: ANPSDE-604XXX

Michael Baker Jr., Inc
A unit of Michael Baker Corporation
Airside Business Park
100 Airside Drive
Moon Township, PA 15108
www.mbakercorp.com

AFGHAN NATIONAL POLICE
STANDARD DESIGN
GATE HOUSE
WOOD FIRED HEAT OPTION

PANEL SCHEDULES AND RISER DIAGRAM

SHEET REFERENCE NUMBER:
E4

100% SUBMISSION

AFGHAN NATIONAL POLICE

STANDARD BUILDING DESIGNS

GUARD SHACK

SHEET INDEX

G1 COVER SHEET

S1 GENERAL NOTES
S2 DESIGN CRITERIA & SCHEDULES
S3 FOUNDATION & ROOF FRAMING PLANS
S4 SECTIONS AND DETAILS
S5 TYPICAL DETAILS

A1 FLOOR AND ROOF PLANS AND DETAILS
A2 EXTERIOR ELEVATIONS, BUILDING AND WALL SECTIONS
A3 DOOR, WINDOW & FINISH TYPES & DETAILS

E0 ELECTRICAL SYMBOLS AND ABBREVIATIONS
E1 LIGHTING AND POWER PLAN
E2 DETAILS
E3 LIGHT FIXTURE SCHEDULE
E4 PANEL SCHEDULES AND RISER DIAGRAM

US Army Corps of Engineers
Afghanistan Engineer District

SYMBOL	DESCRIPTION	DATE	APP'D

DESIGNED BY: JDS
DWN BY: JDS
CHK BY: JDS
DATE: 09-30-09
SUBMITTED BY: BAKER
FILE NO.: ANPSDG-001XXX

Michael Baker Jr., Inc
A unit of Michael Baker Corporation
Airside Business Park
100 Airside Drive
Moon Township, PA 15108
www.mbakercorp.com

AFGHAN NATIONAL POLICE
STANDARD DESIGN
GUARD SHACK

COVER SHEET

SHEET REFERENCE NUMBER:
G1

100% SUBMISSION

STRUCTURAL ABBREVIATIONS:

ACI	AMERICAN CONCRETE INSTITUTE
AISC	AMERICAN INSTITUTE OF STEEL CONSTRUCTION
ALT	ALTERNATE
ASTM	AMERICAN SOCIETY FOR TESTING AND MATERIALS
AWS	AMERICAN WELDING SOCIETY
ARCH	ARCHITECTURAL
B	BOTTOM
BLDG	BUILDING
BOTT	BOTTOM
℄	CENTER LINE
CFMF	COLD FORM METAL FRAME
CFS	COLD FORMED STEEL
CIP	CAST IN PLACE
CIPL	CAST-IN-PLACE LINTEL
CJ	CONTROL JOINT
CLR	CLEAR
CMU	CONCRETE MASONRY UNIT
COEFF	COEFFICIENT
COL	COLUMN
CONC	CONCRETE
CONT	CONTINUOUS
COORD	COORDINATE
CSJ	CONSTRUCTION JOINT
CTJ	CONTROL JOINT
DIA	DIAMETER
DIAG	DIAGONAL
DIM	DIMENSION
DWG	DRAWING
DWL	DOWEL
EA	EACH
ELEC	ELECTRICAL
ELEV	ELEVATION
EMBED	EMBEDMENT
EQUIV	EQUIVALENT
ETC	ET CETERA
EW	EACH WAY
EXT	EXTERIOR
FTG	FOOTING
GA	GAUGE
HORIZ	HORIZONTAL
HRS	HOURS
IBC	INTERNATIONAL BUILDING CODE
INT	INTERIOR
Kg	KILOGRAM
KIP	KIPS (1 KIP = 1,000 POUNDS)
kN	KILONEWTON
kPa	KILOPASCAL
L#	ANGLE (# INDICATES SIZE)
LLV	LONG LEG VERTICAL
M	METER
MAX	MAXIMUM
MBM	METAL BUILDING MANUFACTURER
MECH	MECHANICAL
MFG	MANUFACTURER
MID	MIDDLE
MIN	MINIMUM
MISC	MISCELLANEOUS
MM	MILLIMETER
MPa	MEGAPASCAL
MTL	METAL
MWFRS	MAIN WIND FORCE RESISTING SYSTEM
N	NEWTON
N	NORTH
N/A	NOT APPLICABLE
#	NUMBER SYMBOL FOR REBAR SIZE
NTS	NOT TO SCALE
OC	ON CENTER
OPNG	OPENING
P or PL	PLATE
PRE-ENG	PRE-ENGINEERED
REINF	REINFORCED
REQ'D	REQUIRED
SW	SHEAR WALL
SIM	SIMILAR
SPECS	SPECIFICATIONS
STD	STANDARD
STRUCT	STRUCTURAL
T	TOP
T/	TOP OF
T/ELEV	TOP ELEVATION
T&B	TOP AND BOTTOM
THK	THICK
TM	TRADE MARK
TYP	TYPICAL
UON	UNLESS OTHERWISE NOTED
VERT	VERTICAL
W	WIDTH
W/	WITH

GENERAL NOTES

1.0 THIS PROJECT HAS BEEN DESIGNED FOR THE WEIGHTS AND MATERIALS INDICATED ON THE SHEETS AND FOR THE LIVE LOADS INDICATED IN THE DESIGN DATA. IT IS THE CONTRACTOR'S RESPONSIBILITY TO DETERMINE ALLOWABLE CONSTRUCTION LOADS AND TO PROVIDE PROPER DESIGN AND CONSTRUCTION OF FALSEWORK, FORMWORK, STAGING, BRACING, SHEETING AND SHORING, ETC.

1.1 COORDINATE THESE SHEETS WITH THE ARCHITECTURAL, MECHANICAL, ELECTRICAL, PLUMBING, AND CIVIL SHEETS. ALL DIMENSIONS SHOWN ON THE SHEETS ARE MILLIMETERS UNLESS NOTED OTHERWISE.

1.2 THE CONTRACTOR SHALL VERIFY AND COORDINATE ALL FLOOR AND ROOF OPENING SIZES AND LOCATIONS, EQUIPMENT PAD SIZES AND LOCATIONS, ANCHOR BOLT LAYOUTS, ETC WITH EQUIPMENT SELECTED. THE CONTRACTOR SHALL MAKE ANY REQUIRED MODIFICATIONS AT NO ADDITIONAL COST.

1.3 THE CONTRACTOR SHALL REFER TO THE ARCHITECTURAL, MECHANICAL, ELECTRICAL AND PLUMBING SHEETS FOR SLEEVES, CURBS, INSERTS OR OPENINGS, ETC. NOT HEREIN INDICATED.

1.4 SLAB OPENINGS SMALLER THAN 250mm DIA TO BE CORE DRILLED IN FIELD UON. SEE MECHANICAL, ELECTRICAL AND PLUMBING SHEETS FOR LOCATIONS OF THESE OPENINGS.

1.5 WORK NOT INCLUDED ON THE SHEETS BUT IMPLIED TO BE SIMILAR TO THAT SHOWN AT CORRESPONDING PLACES ELSEWHERE ON THE SHEETS SHALL BE REPEATED.

1.6 IN CASE OF CONFLICT BETWEEN THE NOTES, DETAILS AND SPECIFICATIONS THE MOST RIGID REQUIREMENTS SHALL GOVERN.

1.7 SEE ARCHITECTURAL SHEETS FOR LOCATIONS OF MASONRY AND DRYWALL NON-LOAD BEARING PARTITIONS. PROVIDE COMPRESSIBLE FIRESAFING AT TOP OF WALL AS REQUIRED BY ARCHITECTURAL SHEETS.

1.8 COORDINATE FINISHED FLOOR DATUM ELEVATION 0.0m WITH THE CIVIL SHEETS.

2.0 FOUNDATION NOTES

2.1 THE GEOTECHNICAL ANALYSIS FOR THIS PROJECT IS THE RESPONSIBILITY OF THE CONTRACTOR AWARDED THE WORK. DESIGN VALUES USED IN THE STRUCTURAL ANALYSIS OF THE BUILDINGS HEREIN INDICATED HAVE BEEN ASSUMED AND SHALL BE CONFIRMED AND VERIFIED AS PART OF THE GEOTECHNICAL INVESTIGATION. VALUES WHICH DO NOT MEET THE REQUIREMENTS INDICATED ON SHEET S2 SHALL BE IMMEDIATELY BROUGHT TO THE ATTENTION OF THE CONTRACTING OFFICER FOR CONSIDERATION AND DETERMINATION ON THE NEXT APPROPRIATE COURSE OF ACTION.

2.2 SEE THE SPECIFICATION FOR ADDITIONAL REQUIREMENTS TO THOSE OUTLINED IN THE GEOTECHNICAL INVESTIGATION FOR EXCAVATION AND PREPARATION OF THE FOUNDATION AND THE SLAB ON GRADE SUBGRADE INCLUDING COMPACTION PROCEDURES.

2.3 EXCAVATIONS FOR FOOTINGS SHALL HAVE THE SIDES AND BOTTOMS TEMPORARILY LINED WITH 0.25mm POLYETHYLENE IF PLACEMENT OF CONCRETE DOES NOT OCCUR WITHIN 24 HRS OF THE EXCAVATION OF THE FOOTING.

2.4 FOUNDATION CONDITIONS NOTED DURING CONSTRUCTION WHICH DIFFER FROM THOSE DESCRIBED IN THE GEOTECHNICAL REPORT SHALL BE REPORTED TO THE GENERAL CONTRACTOR BEFORE FURTHER CONSTRUCTION IS ATTEMPTED. SEE PROJECT SPECIFICATIONS.

2.5 NO FOOTINGS OR SLABS SHALL BE POURED INTO OR AGAINST SUBGRADE CONTAINING FREE WATER, FROST, ICE OR LOOSE MATERIAL. FROST DEPTH ASSUMED TO BE 800MM

2.6 ALL SLAB-ON-GRADE, TRENCH BOTTOMS AND OTHER ON-GRADE INTERIOR HORIZONTAL SURFACES SHALL BE PLACED OVER A 0.25mm VAPOR RETARDER OVER A 100mm #57 STONE WATER BARRIER PLACED ON SUBGRADE PROPERLY PREPARED IN ACCORDANCE WITH THE CONTRACT SPECIFICATIONS. (UON)

2.7 SEE PLUMBING, ELECTRICAL & CIVIL SHEETS FOR REQUIRED UNDERSLAB UTILITIES.

2.8 SEE ARCHITECTURAL SHEETS FOR ALL WATERPROOFING DETAILS AND MATERIALS.

2.9 IF UNDERMINING OF FOOTINGS OCCURS, FILL VOIDS WITH 15MPa CONCRETE. DO NOT ATTEMPT TO REPLACE AND RECOMPACT SOIL.

3.0 CONCRETE

3.1 CONCRETE SHALL HAVE THE UNIT WEIGHT AND THE MINIMUM COMPRESSIVE STRENGTHS (f'c) AT 28 DAYS AS SHOWN IN THE CONCRETE MATERIALS SCHEDULE ON THIS SHEET. SEE SPECIFICATIONS FOR ADDITIONAL INFORMATION. ENTRAIN AIR TO PRODUCE TOTAL AIR CONTENT ACCORDING TO THE SPECIFICATIONS FOR CONCRETE EXPOSED TO FREEZING TEMPERATURES (EXTERIOR FOOTINGS, SLAB TURNDOWNS, EXTERIOR SLABS AND SLABS-ON-GRADE, EXTERIOR RETAINING WALLS, AND EXTERIOR GRADE BEAMS.)

3.2 GROUT FOR BASE PLATES SHALL BE NON-SHRINKABLE GROUT AND SHALL HAVE A MINIMUM SPECIFIED COMPRESSIVE STRENGTH AT 28 DAYS OF 35MPa, UNLESS NOTED OTHERWISE.

3.3 NO CALCIUM CHLORIDE SHALL BE USED IN ANY CONCRETE.

3.4 MIXING, TRANSPORTING AND PLACING OF CONCRETE SHALL CONFORM TO ACI 301M-05.

3.5 ALL CONCRETE WORK SHALL CONFORM TO THE REQUIREMENTS OF THE AMERICAN CONCRETE INSTITUTE (ACI) 318M MANUAL (metric), "BUILDING CODE REQUIREMENTS FOR REINFORCED CONCRETE", AND REQUIREMENTS OUTLINED IN THE CONTRACT SPECIFICATIONS. WHEN THERE IS A CONFLICT BETWEEN ACI AND THE SPECIFICATIONS, THE MORE STRINGENT SHALL GOVERN.

3.6 CHAMFER ALL EXPOSED EXTERNAL CORNERS OF CONCRETE WITH 20mm x45 DEGREE CHAMFER UON.

3.7 CONCRETE REINFORCEMENT BARS SHALL CONFORM TO ASTM A615M, GRADE 420, REINFORCING BARS SHALL NOT BE TACK WELDED, WELDED, HEATED OR CUT, UNLESS INDICATED ON THE CONTRACT DOCUMENTS. ALL LAP SPLICES SHALL BE CLASS "B" UON.

3.8 HORIZONTAL FOOTING AND HORIZONTAL WALL REINFORCEMENT SHALL BE CONTINUOUS AND SHALL HAVE 90 DEGREE BENDS AND EXTENSIONS, OR CORNER BARS OF EQUIVALENT SIZE LAPPED WITH A CLASS B TENSION SPLICE AT CORNERS AND INTERSECTIONS. TOP BAR CRITERIA SHALL APPLY IF 300mm OR MORE OF FRESH CONCRETE IS PLACED BELOW BAR.

3.9 SLABS-ON-GRADE SHALL HAVE CONSTRUCTION JOINTS OR CRACK CONTROL JOINTS AS SHOWN ON THE SHEETS. CONSTRUCTION JOINTS CAN BE USED AT CONTROL JOINT LOCATIONS AT CONTRACTORS OPTION. SEE SLAB PLANS & JOINT DETAILS FOR ADDITIONAL INFORMATION. FOR AREAS NOT SHOWN ON THE SHEETS, THE MAXIMUM SPACING OF CONSTRUCTION/ CRACK CONTROL JOINTS SHALL BE 4800 mm.

3.10 SEE SPECIFICATIONS FOR ALL WATERPROOFING/DAMPPROOFING REQUIREMENT.

3.11 ALL CONCRETE REINFORCEMENT SHALL BE DETAILED, FABRICATED, LABELED, SUPPORTED, AND SPACED IN FORMS AND SECURED IN PLACE IN ACCORDANCE WITH THE PROCEDURES AND REQUIREMENTS OUTLINED IN THE LATEST EDITION OF THE "BUILDING CODE REQUIREMENTS FOR REINFORCED CONCRETE", ACI 318M, AND THE "MANUAL OF STANDARD PRACTICE FOR DETAILING REINFORCED CONCRETE STRUCTURES", ACI 315M, LATEST EDITION.

3.12 SHOP DRAWINGS SHOWING REINFORCING DETAILS, INCLUDING STEEL SIZES, SPACING AND PLACEMENT, SHALL BE SUBMITTED FOR REVIEW PRIOR TO FABRICATION.

3.13 ALL DOWELS SHALL MATCH SIZE AND NUMBER OF MAIN REINFORCING, UNLESS NOTED OTHERWISE ON THE SHEETS.

3.14 ADDITIONAL BARS SHALL BE PROVIDED AROUND ALL FLOOR AND WALL OPENINGS AS SHOWN ON THE SHEETS.

3.15 SEE ARCHITECTURAL SHEETS FOR TYPE AND LOCATION OF ALL FLOOR FINISHES.

3.16 THE CONTRACTOR SHALL COORDINATE ADDITIONAL WALL/SLAB OPENINGS NOT SHOWN ON STRUCTURAL SHEETS. SEE MECHANICAL, ELECTRICAL, PLUMBING AND CIVIL SHEETS.

3.17 THE SUB-CONTRACTOR SHALL VERIFY ALL OPENINGS, PAD SIZES, AND ANCHOR BOLTS WITH EQUIPMENT SELECTED.

3.18 FOR ALL WALLS & PIERS, PROVIDE DOWELS INTO FOOTING AT EACH VERT REINF BAR, UON DOWEL SIZE SHALL BE SAME AS VERT REINF.

3.19 ALL REINFORCING INDICATED TO BE WELDED SHALL BE IN ACCORDANCE WITH ASTM A706M. "LOW ALLOY STEEL DEFORMED BARS FOR CONCRETE REINFORCEMENT". ANY INSTALLATIONS USING MANUFACTURER'S EQUIPMENT SHALL BE PER MANUFACTURER'S RECOMMENDATIONS.

3.20 PROVIDE CONCRETE POUR STOPS OR FORMED AS REQUIRED FOR INSTALLATION OF ALL CONCRETE WORK.

3.21 PROVIDE ADDITIONAL (2)-#13 x 600mm REINFORCING BARS IN SLAB-ON GRADE AT ALL RE-ENTRANT CORNERS. PLACE BARS AT MID-DEPTH OF SLAB WITH A CLEARANCE OF 50mm FROM CORNER UON.

4.0 CONCRETE MASONRY

4.1 MASONRY CONSTRUCTION AND MATERIALS SHALL CONFORM TO ALL REQUIREMENTS OF THESE CONTRACT DOCUMENTS AND THE PROJECT SPECIFICATIONS.

4.2 THE SPECIFIED ULTIMATE COMPRESSIVE STRENGTH OF CONCRETE MASONRY (f'm) ON THE NET AREA IS A MINIMUM OF 10.4 MPa.

4.3 PROVIDE TWO #16 BARS CONTINUOUS IN ALL CMU AND CAST-IN-PLACE BOND BEAMS UON ON THE SHEETS. BOND BEAMS SHALL BE CONTINUOUS AND SPACED AT A MAXIMUM OF 1200mm OC VERTICALLY. PROVIDE BOND BEAM STARTER COURSE AT BOTTOM OR FIRST COURSE ON ALL MASONRY WALLS AND PARTITIONS. ALL BOND BEAMS SHALL BE A MINIMUM OF 200mm IN DEPTH WITH REINFORCING BEING CONTINUOUS AND HAVING STANDARD ACI 180° HOOKS AT EACH END. PROVIDE STANDARD BAR SPLICES AS SPECIFIED.

4.4 FOR WALL REINFORCING, SEE DETAIL 7 ON SHEET S5

4.5 CMU CELLS THAT REQUIRE VERTICAL REINFORCING BARS AS INDICATED ON THE CONTRACT DRAWINGS AND/OR SPECS SHALL HAVE REINF BARS PLACED IN CENTERS OF CMU CELLS AND CONTINUOUSLY GROUTED UON.

4.6 PROVIDE LADDER TYPE JOINT REINFORCEMENT AT (200mm EXTERIOR & 400mm INTERIOR) ON CENTER MAXIMUM UON MINIMUM ROD SIZE USED SHALL BE 9 GA. DEFORMED WIRE AND CONFORM TO ASTM A82M, UON.

4.7 PROVIDE CONTROL JOINTS AS INDICATED ON THE ARCHITECTURAL SHEETS.

4.8 GROUT FOR MASONRY SHALL BE NORMAL WEIGHT AND HAVE A MINIMUM COMPRESSIVE STRENGTH OF 25 MPa AT 28 DAYS. GROUT SHALL CONFORM TO ASTM C476M. GROUT LIFTS SHALL NOT EXCEED 1400mm.

4.9 USE MORTAR TYPE S CONFORMING TO ASTM C270M, SEE SPECIFICATIONS.

4.10 CONCRETE MASONRY UNITS SHALL BE NORMAL WEIGHT AND CONFORM TO ASTM C90M.

4.11 ALL CMU CELLS, OPEN CAVITIES, AND AIR SPACES SHALL BE GROUTED TO STOP FRAGMENTS FROM MORTAR BLAST

4.12 BOND BEAM REINFORCING SHALL BE DISCONTINUOUS AT CONTROL JOINTS (UON). MAXIMUM CONTROL JOINT SPACING SHALL BE AS INDICATED ON THE ARCHITECTURAL SHEETS.

4.13 CONTRACTOR SHALL COORDINATE LOCATION OF ALL OPENINGS SEE ARCH, MECH, ELEC, AND PLUMBING SHEETS. FOR SIZE AND LOCATION OF OPENINGS.

4.14 MASONRY WALLS SHALL NOT BE BACK FILLED PRIOR TO THE MORTAR AND GROUT ATTAINING THEIR RESPECTIVE MAXIMUM DESIGN STRENGTHS PER SPECIFICATIONS.

5.0 CFMRF - COLD FORM METAL ROOF FRAMING SYSTEM

5.1 CFMF SHALL BE DESIGNED BY CFMF MANUFACTURER'S ENGINEER FOR ALL LOADING PER CODE AND AS INDICATED ON THE SHEETS.

5.2 FOR WIND LOADS, SEE THE DESIGN CRITERIA ON SHEET S2.

5.3 SUBMIT VENDOR'S PUBLISHED LITERATURE, TEST DATA AND INSTALLATION INSTRUCTIONS FOR METAL STUD ASSEMBLY AND ACCESSORIES INCLUDING OTHER DATA AS MAY BE REQUIRED TO CERTIFY COMPLIANCE WITH PERFORMANCE REQUIREMENTS SPECIFIED HEREIN.

5.4 SHOP DRAWINGS AND DESIGN ANALYSIS SHALL BE STAMPED AND APPROVED BY A LICENSED PROFESSIONAL ENGINEER.

5.5 CONNECTIONS AND GAUGE SIZES ARE MINIMUM AND SHALL BE INCREASED AS NECESSARY TO PROVIDE A STRUCTURALLY ADEQUATE SYSTEM. KICKERS MAY BE ADDED TO REDUCE THE STUD HEIGHTS WHERE ACCEPTABLE AND COORDINATED WITH THE ARCHITECTURAL DRAWINGS.

5.6 CRMRF SHALL HAVE THE FOLLOWING MINIMUM PROPERTIES:

STUD/RAFTER/EAVE STRUT/BRACE/BLOCKING:
Fy = 344 MPa
GAUGE = 18
DEPTH = 152.3 mm
WIDTH = 34.8 mm
MOMENT OF INERTIA, Ix = 847x10^3 mm^4
SECTION MODULUS, Sx = 11.2x10^3 mm^3

TRACK:
Fy = 344 MPa
GAUGE = 16
DEPTH = 152.3 mm
WIDTH = 38 mm
MOMENT OF INERTIA, Ix = 1083x10^3 mm^4
SECTION MODULUS, Sx = 13.8x10^3 mm^3

PURLIN/SUBGIRT:
Fy = 393 MPa
GAUGE = 16
MOMENT OF INERTIA (TOP COMPRESSION), Ixt = 23.7x10^3 mm^4
MOMENT OF INERTIA (BOTT COMPRESSION), Ixb = 22.7x10^3 mm^4
SECTION MODULUS (TOP COMPRESSION), Sxt = 1.8x10^3 mm^3
SECTION MODULUS (BOTT COMPRESSION), Sxb = 1.7x10^3 mm^3

MINIMUM LAP SPLICES OF REINFORCING BARS IN TENSION (PER ACI 318M-05)

f'c = 28 MPa CONCRETE

BAR SIZE / CENTER TO CENTER BAR SPACING	(---TOP BARS--) LESS THAN 4db	(---TOP BARS--) 4db OR MORE	(--OTHER BARS--) LESS THAN 4db	(--OTHER BARS--) 4db OR MORE	(--OTHER BARS--) 4db
#10	460	460	410	410	40
#13	660	610	510	480	50
#16	1020	760	790	580	60

NOTES:

1. LAP SPLICES ABOVE ARE IN MILLIMETERS UON.
2. YIELD STRENGTH OF REINFORCEMENT, fy, IS 420MPa (LAP SPLICE LENGTH IS IN MILLIMETERS).
3. CONCRETE IS NORMAL WEIGHT (2400Kg/m^3).
4. TOP BAR INDICATES HORIZONTAL REINFORCEMENT WHICH IS PLACED ABOVE 300mm OR MORE OF FRESH CONCRETE.
5. SEE COLUMN SCHEDULE FOR COLUMN AND SHEAR WALL VERTICAL LAP SPLICE.
6. STRAIGHT DEVELOPMENT LENGTH OF AN UNLAPPED BAR IS EQUAL TO VALUE FROM TABLE DIVIDED BY 1.3.
7. CATEGORY FOR BARS SPACED LESS THAN 4d, OR ON CENTER CORRESPONDS TO CATEGORY 1 IN THE CRSI HANDBOOK WHEREAS FOR BARS SPACED 4d, OR MORE ON CENTER CORRESPOND TO CRSI CATEGORY 5.

CONCRETE MATERIALS SCHEDULE

STRUCTURAL ELEMENT	f'c CONCRETE COMPRESSIVE STRENGTH @ 28 DAYS (MPa)
SLAB-ON-GRADE/TURN-DOWN SLABS	28
ROOF AND FLOOR SLABS	28
ALL FOOTINGS (UON)	28
MISC. CURBS, WALLS AND PADS UON	28
CAST-IN-PLACE LINTEL	28

NOTES:
1. ALL CONCRETE SHALL BE NORMAL WEIGHT CONCRETE. (2400 Kg/m^3 UON)
2. ALL CONCRETE SHALL HAVE A WATER-CEMENT RATIO OF 0.45.

MASONRY REINFORCING MINIMUM LAP SPLICES

BAR SIZE	BASIC LAP SPLICE Ld FOR CMU REINFORCING(mm)
#10	450
#13	600
#16	750

STANDARD HOOKS IN TENSION PER (ACI 318M-05)

HOOK DEVELOPMENT LENGTH Ldh (mm)	
BAR SIZE	f'c 28 MPa
#10	180
#13	250
#16	300
#19	380
#22	430
#25	480
#29	560
#32	610
#36	690

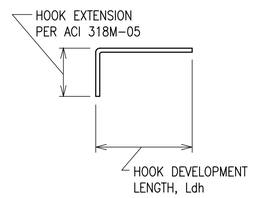

NOTES:
1. CONCRETE IS NORMAL WEIGHT CONCRETE.
2. BAR YIELD STRENGTH, fy = 420 MPa
3. SIDE COVER REQUIREMENTS OF ACI SECT. 12.5.3 ARE ASSUMED TO NOT BE MET.
4. TIE OR STIRRUP REQUIREMENTS OF ACI SECT. 12.5.3 ARE ASSUMED TO NOT BE MET.
5. REDUCTION FOR EXCESS REINFORCEMENT IS NOT TAKEN.
6. HOOK DEVELOPMENT LENGTH IS VALID FOR 180° HOOKS ALSO.

US Army Corps of Engineers
Afghanistan Engineer District

	DESCRIPTION	DATE	APP
SYMBOL			

DESIGNED BY: GDH | DATE: 09-30-09
DWN BY: MDB | SUBMITTED BY: BAKER
CHK BY: CWW | FILE NO.: ANPSDS-001XXX

Michael Baker Jr., Inc
A unit of Michael Baker Corporation
Airside Business Park
100 Airside Drive
Moon Township, PA 15108
www.mbakercorp.com

AFGHAN NATIONAL POLICE
STANDARD DESIGN
GUARD SHACK

GENERAL NOTES

SHEET REFERENCE NUMBER:
S1

100% SUBMISSION

STRUCTURAL DESIGN CRITERIA

ALL DESIGNS SHALL CONFORM TO THE PROVISIONS OF THE IBC 2006 AS APPLICABLE

1.0 DESIGN LOADS

1.1 DEAD LOADS

1.1.1 ROOF DEAD LOADS – CONVENTIONAL FRAMING

	MAXIMUM GRAVITY LOAD	MINIMUM GRAVITY LOAD
LIGHT GAUGE FRAMING	0.20 KPa	0.15 KPa
METAL ROOFING	0.14 KPa	0.05 KPa
INSULATION	0.10 KPa	0.05 KPa
MISC	0.05 KPa	0.00 KPa
	0.49 KPa	0.25 KPa

1.1.2 ROOF DEAD LOADS – CONCRETE FRAMING

	MAXIMUM GRAVITY LOAD
CONC FLAT SLAB	4.80 KPa
MECH/ELEC/PLUMBING	0.15 KPa
MISC	0.05 KPa
	5.00 KPa

1.2 LIVE LOADS (PER IBC 2006)

1.2.1 ROOF LIVE LOADS: ALL BUILDINGS

GREATER OF 1.0 KPa MINIMUM OR SNOW LOAD

1.2.2 SLAB-ON-GRADE LIVE LOADS

ALL BUILDINGS 4.80 KPa

1.3 SNOW LOADS (PER IBC 2006)

1.3.1 DESIGN PARAMETERS

GROUND SNOW LOAD (per UFC 3-310-01)	PER LOCAL CONDITION
SNOW IMPORTANCE FACTOR	1.0 KPa
SNOW EXPOSURE FACTOR	1.0 KPa

1.4 SEISMIC LOADS (PER IBC 2006 & UFC 3-310-04)

1.4.1 SEISMIC PARAMETERS – LOAD BEARING MASONRY

SEISMIC OCCUPANCY CATEGORY	II
SEISMIC IMPORTANCE FACTOR (I)	1.0
SEISMIC SITE CLASS	D
Ss	1.280
S1	0.510
Sds	0.853
Sd1	0.510
SEISMIC DESIGN CATEGORY	D
SEISMIC RESISTING SYSTEM	BEARING WALL SYSTEM
	SPECIAL REINF MASONRY SHEAR WALLS
RESPONSE MODIFICATION FACTOR (R)	5.0
RESPONSE COEFFICIENT (Cs)	0.120
SEISMIC ANALYTICAL PROCEDURE	EQUIV LATERAL FORCE
SEISMIC BASE SHEAR	44.5kN

1.6 WIND LOADS (PER IBC 2006)

1.6.1 DESIGN PARAMETERS

BASIC WIND SPEED	137 Km/h
WIND IMPORTANCE FACTOR	1.0
WIND EXPOSURE CATEGORY	D
DIRECTIONALITY COEFFICIENT (Kd)	0.85
TOPOGRAPHIC FACTOR (Kzt)	1.0

1.6.2 DESIGN WIND PRESSURE – MAIN WINDFORCE RESISTING SYSTEM

LOCATION	CORNER ZONE WIDTH "a"	MEAN ROOF HEIGHT "h"	WINDWARD WALL (@ MEAN ROOF HEIGHT)	LEEWARD WALL (@ MEAN ROOF HEIGHT)	ROOF
FIELD ZONE	N/A	3405mm	582 N/m^2	−463 N/m^2	−803 N/m^2
CORNER ZONE	1440mm	3405mm	883 N/m^2	−689 N/m^2	−1244 N/m^2

a = 10% OF LEAST HORIZONTAL DIMENSION OR 0.4h, WHICHEVER IS SMALLER, BUT NOT LESS THAN EITHER 4% OF LEAST HORIZONTAL DIMENSION OR 0.9M.
h = MEAN ROOF HIEGHT, IN METERS, EXCEPT THAT EAVE HIEGHT SHALL BE USED FOR ANGLE GREATER THAN 10°.

1.6.3 DESIGN WIND PRESSURE – WALL COMPONENTS AND CLADDING

EXTERIOR WALL SYSTEMS & THEIR ATTACHMENTS TO THE PRIMARY STRUCTURE SHALL BE DESIGNED FOR THE PRESSURES SHOWN IN THE DIAGRAM BELOW:

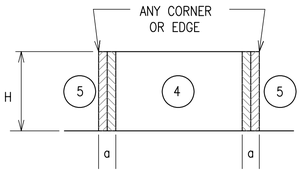

LOCATION	WINDWARD PRESSURE N/m^2 (inward)		LEEWARD PRESSURE N/m^2 (outward)		a
	④	⑤	④	⑤	
MAIN BUILDING					(mm)
AREA = 1 m^2	627	627	−986	−1216	900
AREA = 2 m^2	589	589	−948	−1134.8	900
AREA = 5 m^2	565	565	−910	−1086.9	900
AREA = 10 m^2	565	565	−910	−1086.9	900

NOTES:
1. DESIGN WIND PRESSURES ABOVE REPRESENT THE NET PRESSURE (SUM OF INTERNAL AND EXTERNAL PRESSURE) APPLIED NORMAL TO ALL SURFACES.
2. LINEAR INTERPOLATION BETWEEN VALUES OF TRIBUTARY AREA IS PERMISSIBLE.
3. PLUS AND MINUS SIGNS SIGNIFY PRESSURE TOWARD AND AWAY FROM THE EXTERIOR SURFACE, RESPECTIVELY.

1.6.4 DESIGN WIND PRESSURE – ROOF COMPONENTS AND CLADDING

ROOF COMPONENTS & THEIR ATTACHMENTS SHALL BE DESIGNED FOR THE PRESSURES SHOWN IN THE ADJACENT DIAGRAM & TABLE BELOW:

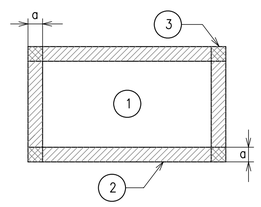

ROOF MEAN HEIGHT

1.6 WIND LOADS (CON'T)

LOCATION	GROSS UPLIFT PRESSURE N/m^2 (upward)			a
	①	②	③	
MAIN BUILDING				(mm)
AREA = 1 m^2	−838	−1460	−1460	900
AREA = 2 m^2	−838	−1460	−1460	900
AREA = 5 m^2	−838	−1460	−1460	900
AREA = 10 m^2	−838	−1460	−1460	900

NOTES:
1. DESIGN WIND PRESSURES ABOVE REPRESENT THE NET PRESSURE (SUM OF INTERNAL AND EXTERNAL PRESSURE) APPLIED NORMAL TO ALL SURFACES.
2. LINEAR INTERPOLATION BETWEEN VALUES OF TRIBUTARY AREA IS PERMISSIBLE.
3. PLUS AND MINUS SIGNS SIGNIFY PRESSURE TOWARD AND AWAY FROM THE EXTERIOR SURFACE, RESPECTIVELY.

2.0 FOUNDATION DESIGN CRITERIA (TO BE CONFIRMED BY THE CONTRACTOR)

THE GEOTECHNICAL ANALYSIS FOR THIS PROJECT IS THE RESPONSIBILITY OF THE CONTRACTOR AWARDED THE WORK. DESIGN VALUES USED IN THE STRUCTURAL ANALYSIS OF THE BUILDINGS HEREIN INDICATED HAVE BEEN ASSUMED AND SHALL BE CONFIRMED AND VERIFIED AS PART OF THE GEOTECHNICAL INVESTIGATION. VALUES WHICH DO NOT MEET THE REQUIREMENTS INDICATED BELOW SHALL BE IMMEDIATELY BROUGHT TO THE ATTENTION OF THE CONTRACTING OFFICER FOR CONSIDERATION AND DETERMINATION ON THE NEXT APPROPRIATE COURSE OF ACTION.

2.1.1 SOIL DESIGN PARAMETERS

NET ALLOWABLE SOIL BEARING CAPACITY	96.0 KPa
UNIT WEIGHT OF SOIL (moist)	1800 Kg/m^3
COEFF ACTIVE EARTH PRESSURE (Kpa)	0.30
COEFF PASSIVE EARTH PRESSURE (Kpp)	3.33
COEFF AT-REST EARTH PRESSURE (Kpr)	.55
COEFF OF SOIL FRICTION	.35
SUBGRADE MODULUS	4120 g/m^3
MINIMUM BEARING DEPTH BELOW GRADE	800mm
SEISMIC SITE CLASS (based on in-situ soil)	D

CMU LINTEL SCHEDULE

OPENING TYPE OR SIZE, BEAM LOCATION OR TYPE	MAX SPAN (mm)	BEAM DEPTH (mm)	MAIN REINFORCING			SHEAR REINF STIRRUPS
			TOP	BOTTOM	OTHER	
EXT WINDOW OR DOOR	900	400	(2)-#13	(2)-#13		----
INT WALL OPENING, NON-BEARING	1800	400		(2)-#13		----
INT WALL OPENING, NON-BEARING	900	200		(2)-#13		----

1. STRUCTURAL DRAWINGS DO NOT INDICATE ALL OPENINGS IN MASONRY WALLS. VERIFY NUMBER, SIZE AND LOCATION OF ALL OPENINGS IN MASONRY WALLS FROM ARCHITECTURAL SHEETS AND APPROVED PLUMBING, MECHANICAL, AND ELECTRICAL SHOP DRAWINGS.
2. PROVIDE 200mm BEARING EA END FOR 200mm DEEP CMU LINTEL. PROVIDE 400mm BEARING EA END FOR 400mm DEEP CMU LINTEL.
3. FOR HEAD DETAILS REFER TO ARCHITECTURAL SHEETS.
4. REINFORCING SHALL BE ASTM A615M, GRADE 420. CONCRETE FOR CAST-IN-PLACE BOND BEAMS SHALL HAVE A MINIMUM COMPRESSIVE STRENGTH OF 28 MPa AT 28 DAYS.
5. CONTRACTOR SHALL SUBMIT FOR APPROVAL SHOP DRAWINGS AND SCHEDULES SHOWING SIZE, DETAILS, LOCATIONS, ETC FOR ALL CAST-IN-PLACE BEAMS IN CMU WALLS.

CONCRETE COVER SCHEDULE

MINIMUM CONCRETE COVER PROTECTION FOR REINFORCEMENT BARS SHALL BE AS FOLLOWS: (SEE ACI 318M-05, SECTION 7.7 FOR CONDITIONS NOT NOTED). DIMENSIONS FOR BAR PLACEMENT GIVEN IN SECTIONS AND DETAILS SHALL SUPERSEDE MINIMUM COVER REQUIREMENTS GIVEN HERE. DIMENSIONS ARE IN mm.

FOOTINGS (EARTH FORMED)		70
COLUMNS / PIERS (TO TIES)		40
GRADE BEAMS OR SLAB TURNED DOWN EDGES:		
TOP		40
BOTTOM (EARTH FORMED)		70
SIDES (EARTH FORMED)		70
SIDES (BOARD FORMED)	#16 BAR & SMALLER	40
	#19 THRU #36 BAR	50
ELEVATED BEAMS & SLABS:		
BEAM TIES & STIRRUPS (NOT EXPOSED TO WEATHER)		40
BEAM TIES & STIRRUPS (EXPOSED TO WEATHER)		50
FLOOR SLABS (NOT EXPOSED TO WEATHER)		20
FLOOR SLABS (EXPOSED TO WEATHER)		
#19 & LARGER		50
#13 & SMALLER		40
ROOF SLAB BARS		25
SLABS-ON-GRADE (NO EXPOSURE TO WEATHER) FROM TOP		20
SLABS-ON-GRADE (EXPOSURE TO WEATHER) FROM TOP		40
UTILITY TUNNEL WALLS, RETAINING WALLS AND SHEAR WALLS, (NO SURFACES SHALL BE EARTH FORMED) EARTH SIDE AND FRONT SIDE (EXPOSED TO WEATHER):		
#16 BAR AND SMALLER		40
#19 THRU #36 BAR		50

PROVIDE STANDARD BAR CHAIRS AND SPACERS AS REQUIRED TO MAINTAIN CONCRETE PROTECTION SPECIFIED.

US Army Corps of Engineers
Afghanistan Engineer District

SYMBOL	DESCRIPTION	DATE	APP

DESIGNED BY: GDH	DWN BY: MDB	CHK BY: CWW	DATE: 09-30-09
SUBMITTED BY: BAKER	FILE NO.: ANPSDS-002XXX		

Michael Baker Jr., Inc
A unit of Michael Baker Corporation
Airside Business Park
100 Airside Drive
Moon Township, PA 15108
www.mbakercorp.com

AFGHAN NATIONAL POLICE
STANDARD DESIGN
GUARD SHACK

DESIGN CRITERIA & SCHEDULES

SHEET REFERENCE NUMBER:
S2

100% SUBMISSION

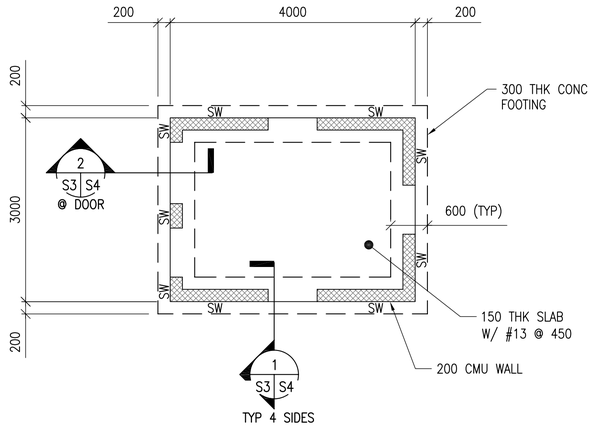

1 S3 S3 **FOUNDATION/SLAB PLAN** N

SCALE: 1:50

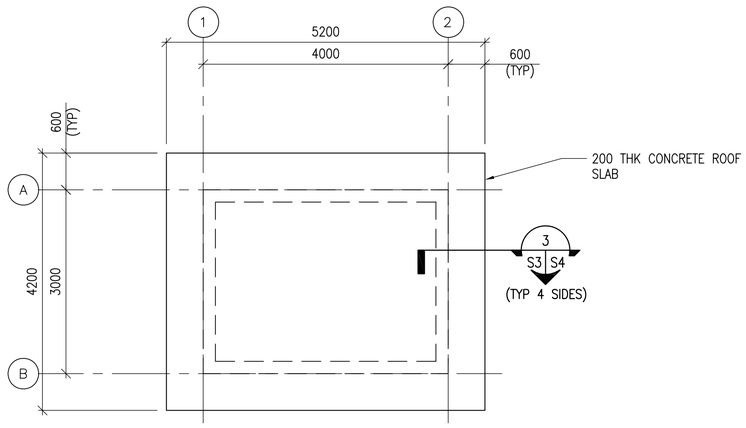

2 S3 S3 **ROOF FRAMING PLAN** N

SCALE: 1:50

NOTES:

1. FINISH FIRST FLOOR ELEVATION SHALL BE (DATUM 0.0) ALL PLUS OR MINUS DIMENSIONS INDICATED ON PLAN OR REFERRED TO IN NOTES RELATE TO FINISH FIRST FLOOR ELEVATION.
2. TOP OF EXTERIOR FOOTINGS SHALL BE –600 UNLESS OTHERWISE INDICATED.
3. UNLESS OTHERWISE INDICATED, FLOORS SHALL BE 150 THICK CONCRETE SLAB–ON–GRADE W/ 13 DIA REBAR @ 450 OC EW (38 CLR TOP) OVER 100 COMPACTED POROUS FILL (#57 STONE)
4. REFER TO SHEETS S1 & S2 FOR STRUCTURAL NOTES, ABBREVIATIONS AND SYMBOLS.
5. REFER TO ARCHITECTURAL SHEETS FOR MASONRY PARTITION TYPES AND SHEET S5 FOR REINFORCEMENT.
6. SEE MECHANICAL AND ELECTRICAL SHEETS FOR CONCRETE PAD LOCATIONS, SIZES, AND THICKNESS NOT SHOWN. SEE SHEET S5 FOR DETAILS.
7. REFER TO SHEET S5 FOR TYPICAL MASONRY WALL DETAILS.
8. COORD W/ ARCHITECTURAL SHEETS FOR COLD–FORMED STEEL OVERBUILT FRAMING ABOVE ROOF SLAB.
9. COLD–FORMED METAL OVERBUILT ROOF FRAMING NOT SHOWN FOR CLARITY. SEE FRAMING DETAILS AND SECTIONS ON SHEET S4.
10. "SW#" DENOTES MASONRY SHEAR WALL LOCATIONS. SEE "SPECIAL REINFORCED MASONRY SHEAR WALL ELEVATION ON SHEET S5 FOR REINFORCEMENT INFORMATION.

UNLESS OTHERWISE NOTED, LINEAR DIMENSIONS SHOWN ARE IN MILLIMETERS (MM)

0 1000 2000 4000

SCALE: 1: 50

US Army Corps of Engineers

Afghanistan Engineer District

SYMBOL	DESCRIPTION	DATE	APP'D

DESIGNED BY:	DATE:
GDH	09–30–09
DWN BY:	SUBMITTED BY:
MDB	BAKER
CHK BY:	FILE NO.:
CWW	ANPSDS–103XXX

Michael Baker Jr., Inc
A unit of Michael Baker Corporation
Airside Business Park
100 Airside Drive
Moon Township, PA 15108
www.mbakercorp.com

AFGHAN NATIONAL POLICE
STANDARD DESIGN
GUARD SHACK

FOUNDATION & ROOF FRAMING PLANS

SHEET REFERENCE NUMBER:

S3

100% SUBMISSION

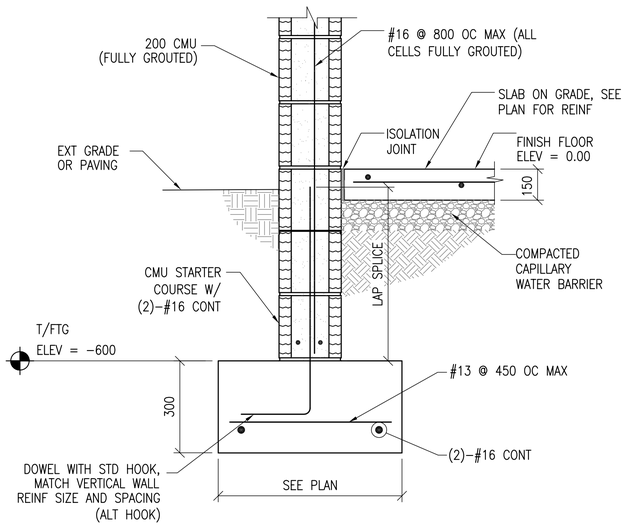

1 S3 S4 SECTION
SCALE: 1:10

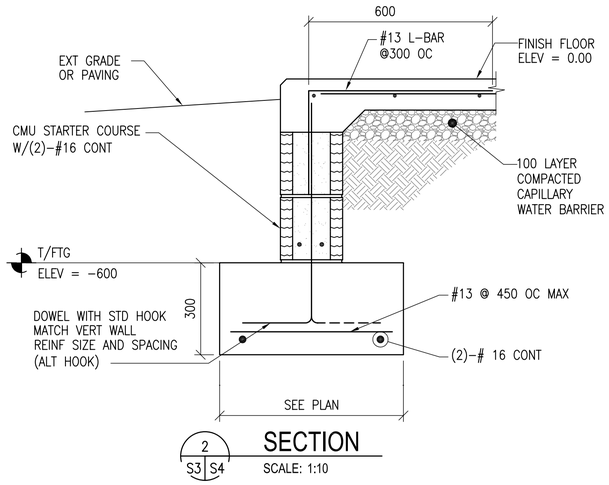

2 S3 S4 SECTION
SCALE: 1:10

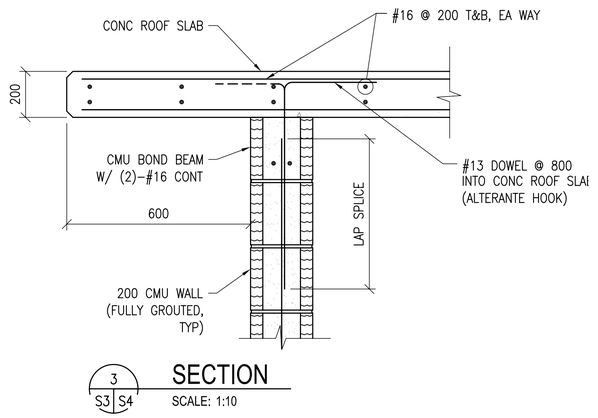

3 S3 S4 SECTION
SCALE: 1:10

4 S4 S4
600 (TYP) STUDS @ 2200 SPACING (MAX)
300 (TYP)
16 GA PURLIN @ 1200 &
@ EA STUD. USE (1)–#12
SCREW EA SIDE
CORRUGATED METAL ROOF PANEL
SEE ARCHITECTURAL SHEETS
18 GA COLD–FORMED METAL STUD
RAFTER @ 1200 OC ATTACH
RAFTER TO STUD W/ (4)–#12
SELF DRILLING TAPPING SCREWS
16 GA METAL PLATE CONNECTOR.
USE (4)–#12 SELF DRILLING
TAPPING SCREWS EA SIDE OF RIDGE
18 GA COLD–FORMED
METAL STUD @ EA RAFTER
16 GA COLD–FORMED METAL TRACK
CONTINUOUS W/ 12ø EXP BOLTS @
1200 W/ 80 EMBEDMENT (TYP)
USE (2)–#12 SELF DRILLING TAPPING
SCREWS @ EA STUD FLANGE

C S4 S4
10
3
PURLINS @ 1200

NOTES:
1. SEE NOTES ON SHEET S1 FOR OVERBUILT ROOF FRAMING MEMBER SECTION PROPERTY MINIMUM REQUIREMENTS
2. AT END OF BLDG PROVIDE TRANSVERSE BRACE @ 2400 OC & @ END BAYS SIMILAR TO LONGITUDINAL BRACING
3. SECTION THROUGH END OF BLDG IS SIMILAR EXCEPT HIP

A S4 S4 TYPICAL OVERBUILT ROOF FRAMING DETAIL
SCALE: 1:20

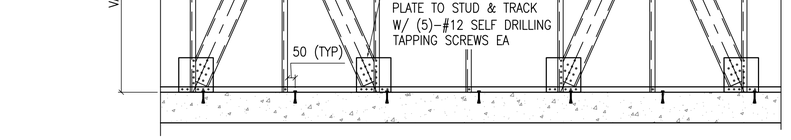

4 S4 S4 SECTION
SCALE: NTS

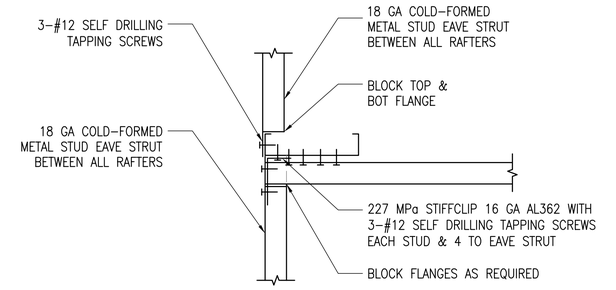

5 S4 S4 SECTION
SCALE: 1:5

DETAIL NOTE:
AT END OF BLDG PROVIDE
TRANSVERSE BRACE @ 2400
OC & @ END BAYS SIMILAR
TO LONGITUDINAL BRACING

4 S4 S4
LONGITUDINAL BRACE
DIAGONAL BRACE @ EA RAFTER
LOCATED AS SHOWN.
SIMILAR TO LONGITUDINAL BRACING
SHOWN IN SECTION 5/S4

B S4 S4 TYPICAL ROOF BRACE LAYOUT DETAIL
SCALE: NTS

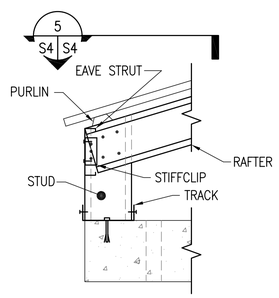

C S4 S4 DETAIL
SCALE: 1:10

DOUBLE LEDGE MEMBERS ARE 18 GA
COLD–FORMED METAL TRACK.
FY = 344 MPa
DEPTH = 88.9mm
WIDTH = 34.8mm
MOMENT OF INERTIA, Ix = 236x103 mm4
SECTION MODULUS, SX = 5.3x103 mm3

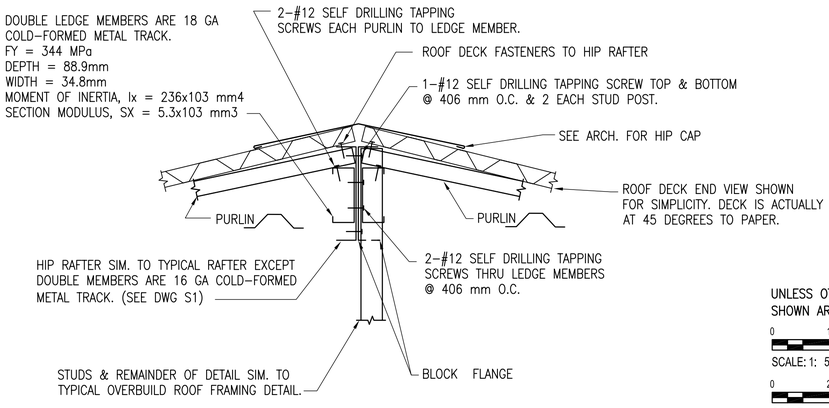

TYPICAL HIP FRAMING DETAIL
SCALE: 1:5

UNLESS OTHERWISE NOTED, LINEAR DIMENSIONS SHOWN ARE IN MILLIMETERS (MM)

0 100 200 400
SCALE: 1: 5

0 200 400 800
SCALE: 1: 10

0 400 800 1600
SCALE: 1: 20

US Army Corps of Engineers
Afghanistan Engineer District

DESIGNED BY: GDH	DATE: 09–30–09
DWN BY: MDB	SUBMITTED BY: BAKER
CHK BY: CWW	FILE NO.: ANPSDS–304XXX

SYMBOL	DESCRIPTION	DATE	APP

Michael Baker Jr., Inc
A unit of Michael Baker Corporation
Airside Business Park
100 Airside Drive
Moon Township, PA 15108
www.mbakercorp.com

AFGHAN NATIONAL POLICE
STANDARD DESIGN
GUARD SHACK

SECTIONS AND DETAILS

SHEET REFERENCE NUMBER:
S4

100% SUBMISSION

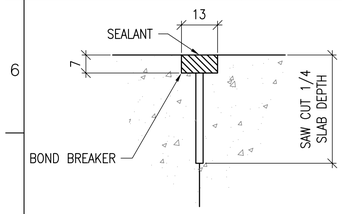

CONTROL JOINT DETAIL

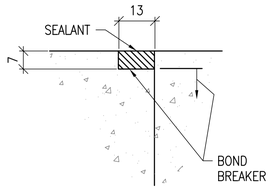

CONSTRUCTION JOINT DETAIL

1 S5 TYPICAL CONCRETE SLAB JOINT FINISH DETAIL

SCALE: NTS

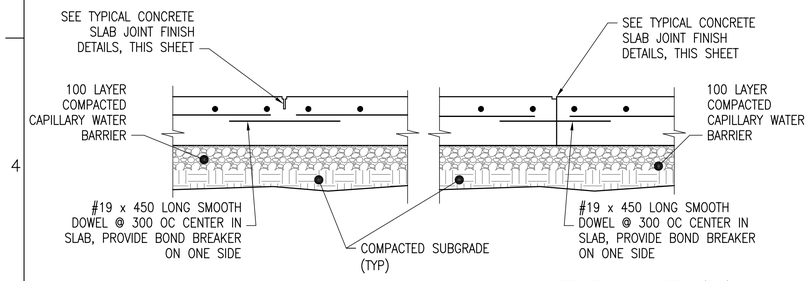

CONTROL JOINT DETAIL (CTJ)

CONSTRUCTION JOINT DETAIL (CSJ)

2 S5 TYPICAL SLAB ON GRADE JOINT DETAILS

SCALE: NTS

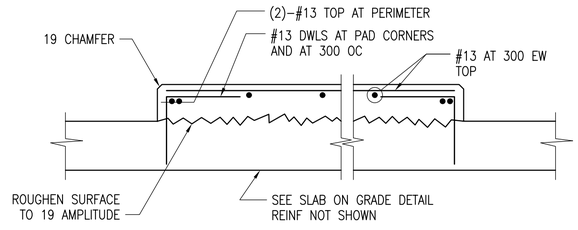

3 S5 INTERIOR EQUIPMENT PAD DETAIL

SCALE: NTS

DETAIL NOTE:
1. COORDINATE EQUIPMENT PAD SIZE AND LOCATIONS W/ ELECTRICAL/MECHANICAL SHEETS AND EQUIPMENT MANUFACTURER.

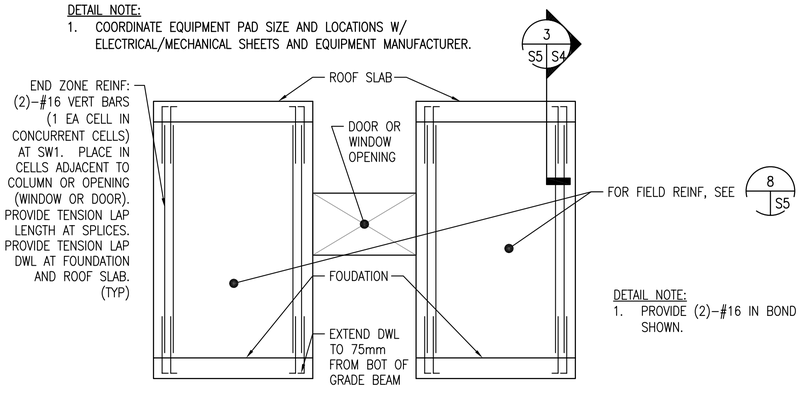

DETAIL NOTE:
1. PROVIDE (2)–#16 IN BOND BEAMS AT 1200 OC, NOT SHOWN.

4 S5 SPECIAL REINFORCED MASONRY SHEAR WALL ELEVATION

SCALE: NTS

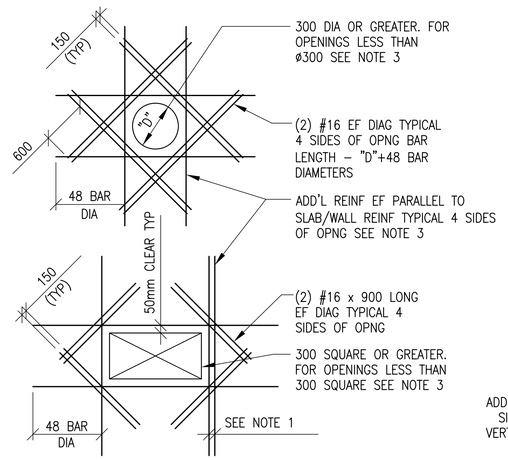

SLAB OPENINGS

5 S5 ADD'L REINFORCEMENT DETAILS

SCALE: NTS

DETAIL NOTES:
1. WHERE MORE THAN ONE ADDITIONAL BAR IS REQUIRED PARALLEL TO THE EXISTING SLAB/WALL REINFORCING THE ADDITIONAL REINFORCING BARS SHALL BE SPACED AT 100 ON CENTER.
2. ADDITIONAL REINFORCING PARALLEL TO THE SLAB/WALL REINFORCING SHALL BE #15 BARS THAT PROVIDE A STEEL AREA ON EACH SIDE OF THE OPENING EQUAL TO 1/2 THE AREA OF THE REINFORCING CUT BY THE OPENING.
3. FOR OPENINGS WITH SIDES OR DIAMETERS LESS THAN 300 SPREAD THE SLAB/WALL REINFORCING TO CLEAR THE OPENING.

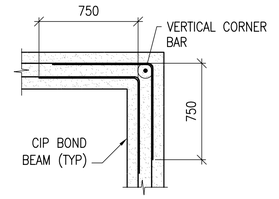

BOND BEAM CORNER

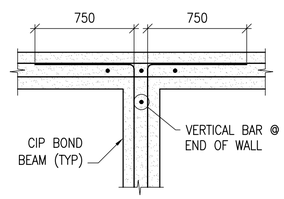

BOND BEAM INTERSECTION

6 S5 CIP BOND BEAM DETAILS

SCALE: NTS

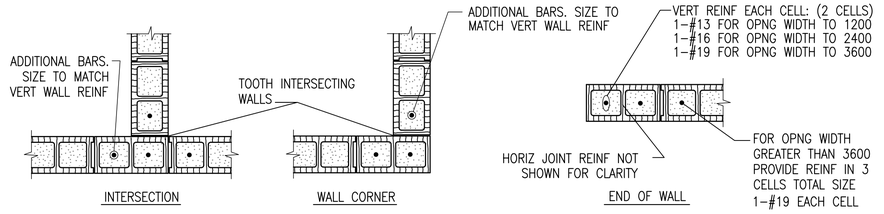

INTERSECTION

WALL CORNER

END OF WALL

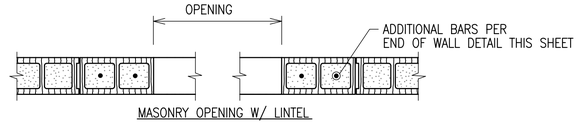

MASONRY OPENING W/ LINTEL

NOTES:
1. OPENING WIDTH SHALL NOT EXCEED 3600 FOR THIS TYPE OF JAMB
2. ALL CELLS FULLY GROUTED

7 S5 TYPICAL CMU DETAILS

SCALE: NTS

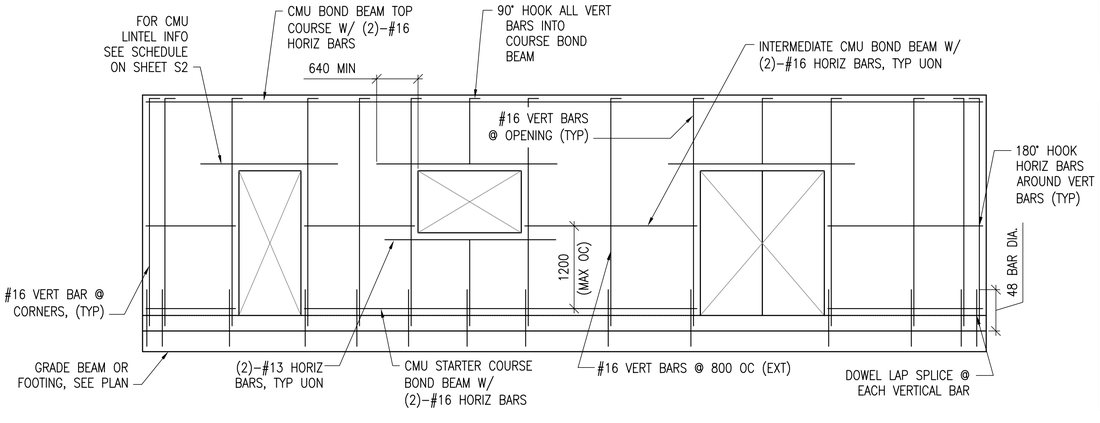

8 S5 MIN CMU WALL REINFORCING

SCALE: NTS

UNLESS OTHERWISE NOTED, LINEAR DIMENSIONS SHOWN ARE IN MILLIMETERS (MM)

US Army Corps of Engineers
Afghanistan Engineer District

SYMBOL	DESCRIPTION	DATE	APP'D

DESIGNED BY: GDH	DATE: 09-30-09	
DWN BY: RCG	SUBMITTED BY: BAKER	
CHK BY: CWW	FILE NO.: ANPSDS-505XXX	

Michael Baker Jr., Inc
A unit of Michael Baker Corporation
Airside Business Park
100 Airside Drive
Moon Township, PA 15108
www.mbakercorp.com

AFGHAN NATIONAL POLICE
STANDARD DESIGN
GUARD SHACK

TYPICAL DETAILS

SHEET REFERENCE NUMBER:
S5

100% SUBMISSION

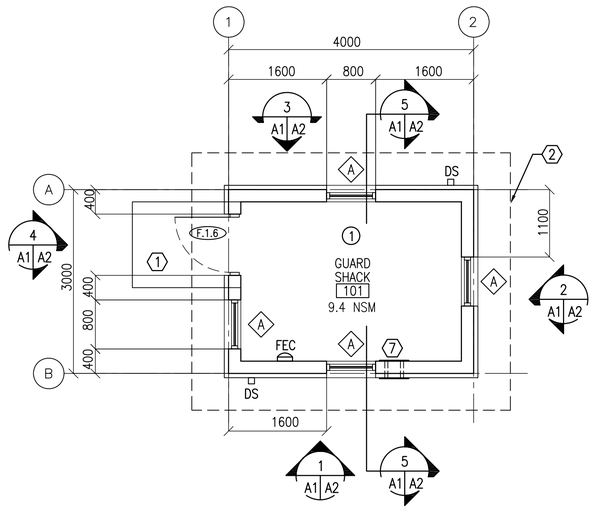

1 A1 A1 **FLOOR PLAN**
SCALE: 1:50
12.0 GSM

N

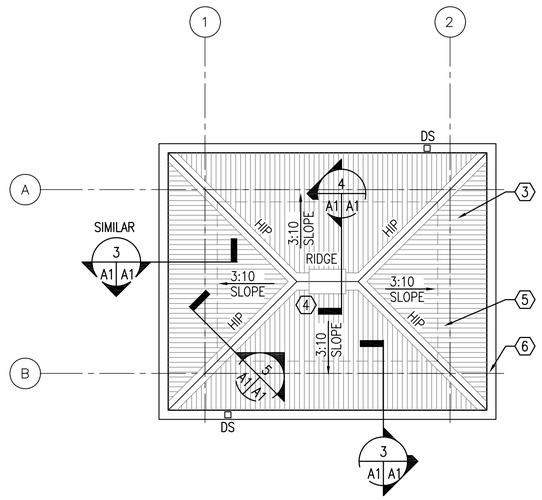

2 A1 A1 **ROOF PLAN**
SCALE: 1:50

N

GENERAL NOTES:

A. OPENINGS FOR DOORS SHALL BE LOCATED 200 MM FROM THE ADJACENT WALL UNLESS NOTED OTHERWISE

B. SURFACES TO BE PAINTED SHALL BE CLEAN AND FREE OF FOREIGN MATTER BEFORE APPLICATION OF PAINT. CLEANING SHALL BE SCHEDULED SO THAT DUST AND OTHER CONTAMINANTS WILL NOT FALL ON WET, NEWLY PAINTED SURFACES.

C. CONCRETE AND INTERIOR MASONRY SURFACES GROUTED SOLID SHALL BE ALLOWED TO DRY AT LEAST 30 DAYS BEFORE PAINTING EXCEPT CONCRETE SLAB ON GRADE WHICH SHALL BE ALLOWED TO CURE 90 DAYS BEFORE PAINTING.

D. PAINTS CONTAINING LEAD IN EXCESS OF 0.06 PERCENT BY WEIGHT OF THE TOTAL NONVOLATILE CONTENT SHALL NOT BE USED.

E. MERCURIAL FUNGICIDES SHALL NOT BE USED IN OIL–BASE PAINT.

F. REMOVE LOOSE DIRT AND CLEAN SURFACES BEFORE PAINTING. APPLY PAINT TO INTERIOR STRUCTURAL RIGID FRAMINGS AND CEILINGS AND TEST FOR ADHESION. PRIMER COAT FOR MASONRY. INITIAL FIRST COAT WITH AN ACRYLIC LATEX PAINT FOR EXTERIOR SURFACES AND A SECOND COAT WITH A WATER REPELLENT ACRYLIC LATEX PAINT.

G. METAL DOORS AND FRAMES SHALL RECEIVE A PRIMER COAT PLUS TWO COATS OF PAINT.

H. DIMENSIONS ARE TO STRUCTURAL COLUMN GRID, EDGE OF WINDOW OPENINGS, AND TO HINGE SIDE OF DOOR OPENINGS.

KEY NOTES: (X)

1. CONCRETE STOOP – RE: DETAIL 7/A3
2. LINE OF ROOF OVERHANG ABOVE
3. CORRUGATED METAL ROOF PANELS ON COLD–FORMED METAL FRAMING.
4. RIDGE VENT
5. LINE OF BUILDING WALL, BELOW
6. METAL GUTTER
7. TWO–PIECE WALL THIMBLE AND TRIM PLATE FOR OPTIONAL WOOD BURNING STOVE CHIMNEY PIPE. STOVE AND PIPE BY OTHERS.

ROOM FINISHES: (X)

1. WALLS: PAINTED PLASTER,
   FLOOR: SEALED CONCRETE
   CEILING: PAINTED PLASTER APPLIED TO STRUCTURE

LEGEND:

- F.1.4 — DOOR TYPE, SEE SHEET A3
- A — WINDOW TYPE, SEE SHEET A3
- X — KEY NOTE
- FEC — FIRE EXTINGUISHER CABINET
- 1 — ROOM FINISH TYPE DESIGNATION

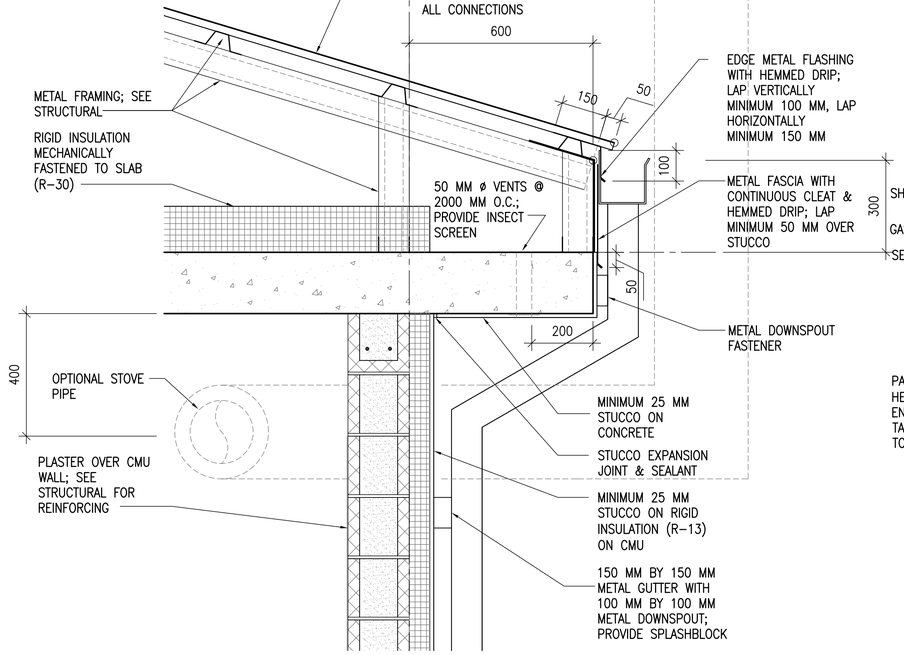

3 A1 A1 **EAVE DETAIL**
SCALE: 1:10

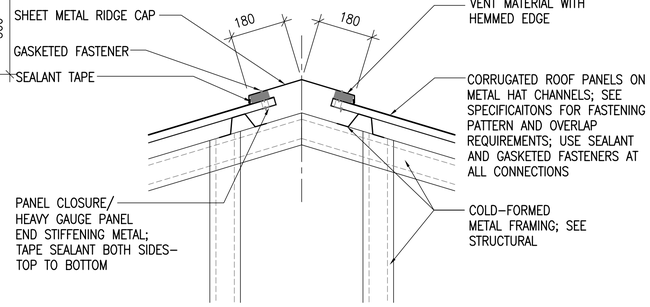

4 A1 A1 **RIDGE VENT DETAIL**
SCALE: 1:10

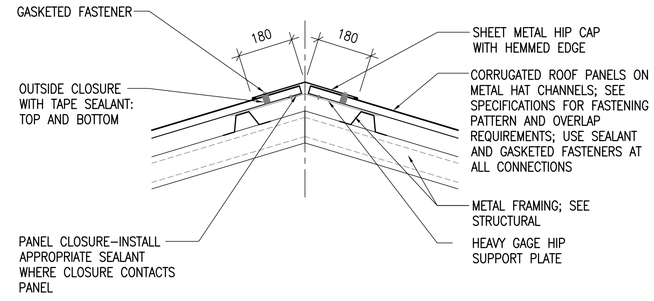

5 A1 A1 **HIP DETAIL**
SCALE: 1:10

UNLESS OTHERWISE NOTED, LINEAR DIMENSIONS SHOWN ARE IN MILLIMETERS (MM)

0 200 400 800
SCALE: 1: 10

0 1000 2000 4000
SCALE: 1: 50

US Army Corps of Engineers
Afghanistan Engineer District

SYMBOL	DESCRIPTION	DATE	APP'D

DESIGNED BY: PFF	DWN BY: ECN	CHK BY: NLJ
DATE: 09–30–09	SUBMITTED BY: BAKER	FILE NO.: ANPSDA–101XXX

Michael Baker Jr., Inc
A unit of Michael Baker Corporation
Airside Business Park
100 Airside Drive
Moon Township, PA 15108
www.mbakercorp.com

AFGHAN NATIONAL POLICE
STANDARD DESIGN
GUARD SHACK

FLOOR AND ROOF PLANS AND DETAILS

SHEET REFERENCE NUMBER:
A1

100% SUBMISSION

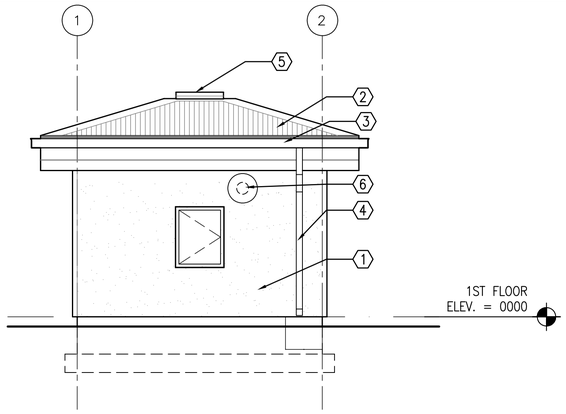

1 A1 A2 EAST ELEVATION

SCALE: 1:50

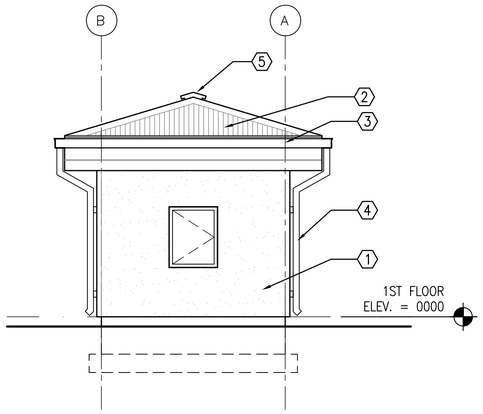

2 A1 A2 NORTH ELEVATION

SCALE: 1:50

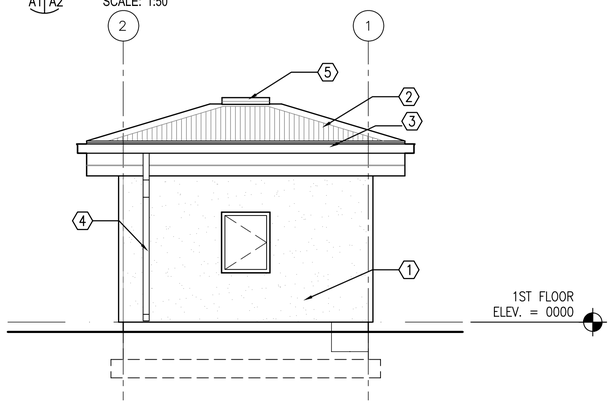

3 A1 A2 WEST ELEVATION

SCALE: 1:50

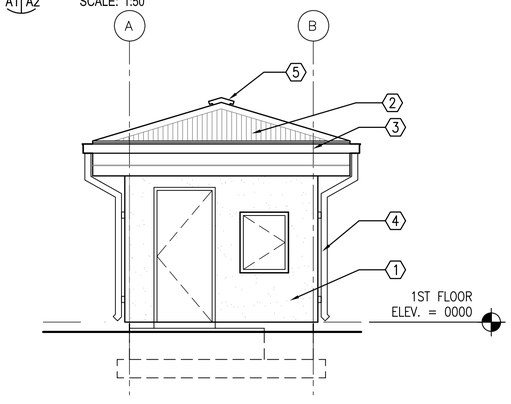

4 A1 A2 SOUTH ELEVATION

SCALE: 1:50

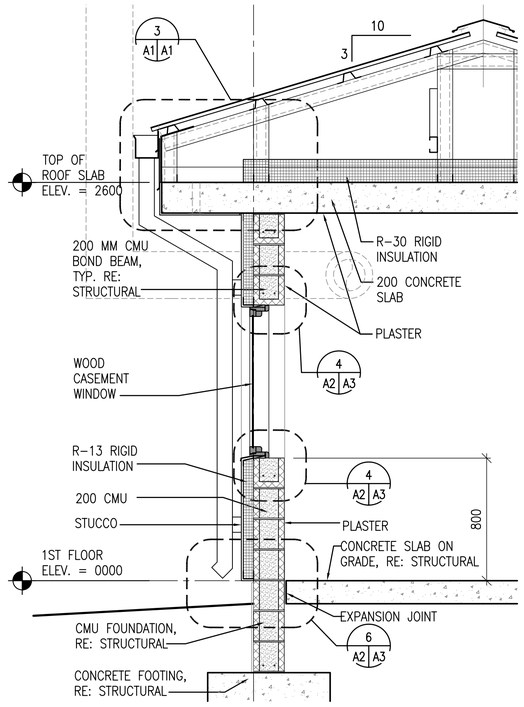

6 A2 A2 WALL SECTION

SCALE: 1:20

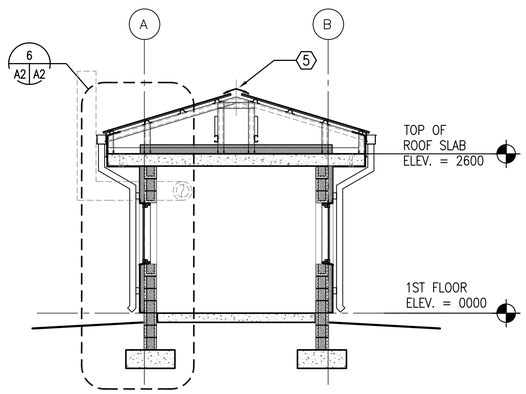

5 A1 A2 BUILDING SECTION

SCALE: 1:50

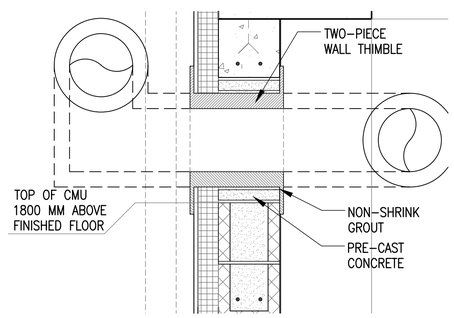

7 A2 A2 THIMBLE DETAIL, TYPICAL

SCALE: 1:10

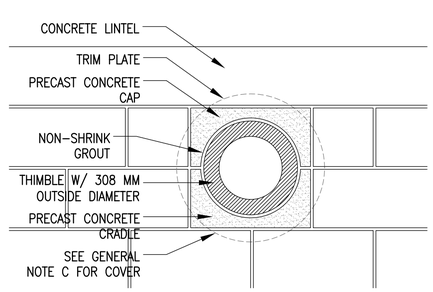

8 A2 A2 THIMBLE DETAIL, TYPICAL

SCALE: 1:10

GENERAL NOTES:

A. COORDINATE SIZE AND LOCATION OF OPENINGS FOR MECHANICAL ITEMS WITH MECHANICAL DRAWINGS.
B. PROVIDE STRUCTURAL LINTELS AS REQUIRED – RE: STRUCT
C. PROVIDE 480 MM SQUARE, 1.5 MM THICK GALVANIZED SHEET METAL COVER WITH 13 MM HEMMED EDGE FOR WALL THIMBLE UNTIL STOVE PIPE IS PROVIDED. INSTALL COVER ON EXTERIOR FACE OF THIMBLE TRIM PLATE. COVER SHALL BE BE SET IN SILICONE SEALANT AND FASTENED WITH 4 STAINLESS STEEL SCREWS. ALIGN FASTENER LOCATIONS WITH COVER PLATE FASTENER OPENINGS SO ADDITIONAL FASTENER PENETRATIONS ARE NOT CREATED IN EXTERIOR FINISH.

KEY NOTES: (X)

1. STUCCO AND RIGID INSULATION SYSTEM ON CMU
2. CORRUGATED METAL ROOF PANELS ON COLD-FORMED METAL FRAMING
3. METAL GUTTER
4. METAL DOWNSPOUT WITH SPLASH BLOCK
5. RIDGE VENT
6. TWO-PIECE WALL THIMBLE AND TRIM PLATE FOR OPTIONAL WOOD BURNING STOVE CHIMNEY PIPE. STOVE AND PIPE BY OTHER

UNLESS OTHERWISE NOTED, LINEAR DIMENSIONS SHOWN ARE IN MILLIMETERS (MM)

0 200 400 800
SCALE: 1: 10

0 400 800 1600
SCALE: 1: 20

0 1000 2000 4000
SCALE: 1: 50

US Army Corps of Engineers
Afghanistan Engineer District

SYMBOL	DESCRIPTION	DATE	APP'D

DESIGNED BY:	DATE:
PFF	09-30-09
DWN BY:	SUBMITTED BY:
ECN	BAKER
CHK BY:	FILE NO.:
NLJ	ANPSDA-202XXX

Michael Baker Jr., Inc
A unit of Michael Baker Corporation
Airside Business Park
100 Airside Drive
Moon Township, PA 15108
www.mbakercorp.com

AFGHAN NATIONAL POLICE
STANDARD DESIGN
GUARD SHACK

EXTERIOR ELEVATIONS,
BUILDING AND WALL SECTIONS

SHEET REFERENCE NUMBER:
A2

100% SUBMISSION

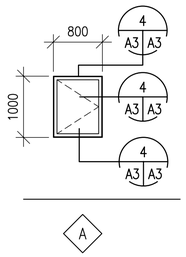

1 A3 A3 WINDOW TYPES
SCALE: 1:50

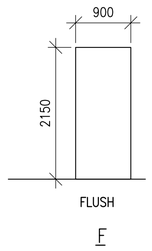

2 A3 A3 DOOR TYPES
SCALE: 1:50

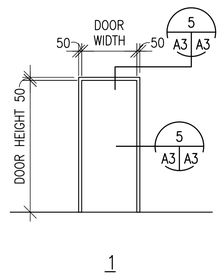

3 A3 A3 FRAME TYPES
SCALE: 1:50

WINDOW TYPES NOTES:

1. ALL EXTERIOR WINDOWS SHALL BE WOOD WITH INSECT SCREENS. WINDOWS SHALL BE COMMERCIAL GRADE.
2. GLAZING SHALL BE ACRYLIC SHEET.

DOOR TYPES NOTES:

1. INTERIOR AND EXTERIOR METAL DOORS AND FRAME COLORS SHALL MATCH ADJACENT WALL COLORS AS SELECTED BY THE CONTRACTING OFFICER.
2. HARDWARE SHALL BE HEAVY DUTY, COMMERCIAL GRADE, STAINLESS STEEL WITH A MATTE FINISH.
3. FRAMES, EXCEPT FIRE-RATED FRAMES, SHALL BE MOUNTED AND ADJUSTED IN ACCORDANCE WITH MANUFACTURER'S INSTRUCTIONS. FRAMES SHALL BE FASTENED WITH MINIMUM OF THREE FASTENING POINTS PER SIDE AT REGULAR INTERVALS.
4. DIMENSIONS SHOWN ON DOOR SCHEDULE ARE BASED UPON MODULAR MASONRY (OR ROUGH OPENING), HEIGHT OF 2200mm FOR STANDARD PERSONNEL DOORS. CONTRACTOR SHALL COORDINATE WITH DOOR SUPPLIER TO ENSURE THAT DIMENSIONS OF DOORS AND FRAMES PROVIDED ARE COMPATIBLE WITH DOOR OPENING DIMENSIONS.

HARDWARE TYPES:

HW-6 1-1/2 PR HINGES
1 EA LOCKSET,F04 ENTRY LOCK W/LEVERS. GRADE 1
1 EA DOOR CLOSER, C02061,LOW RESISTANCE
1 EA THRESHOLD J32130

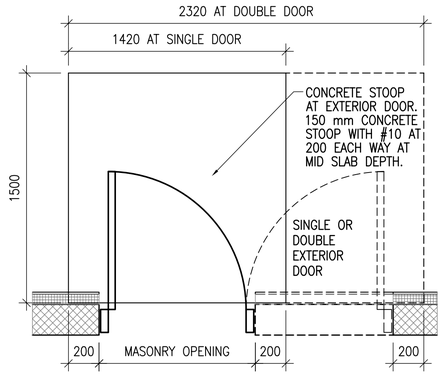

7 A3 A3 CONCRETE STOOP PLAN DETAIL
SCALE: 1:20

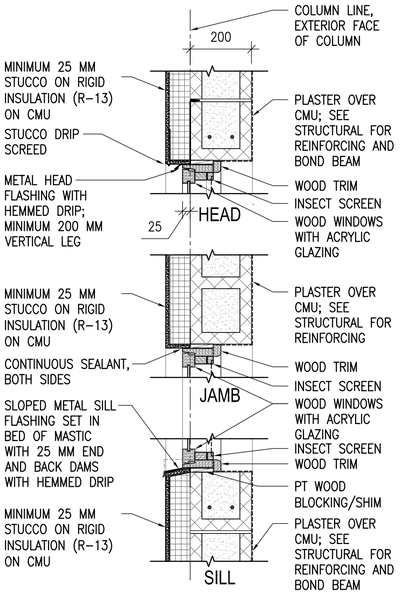

4 A2 A3 WINDOW DETAILS
SCALE: 1:10

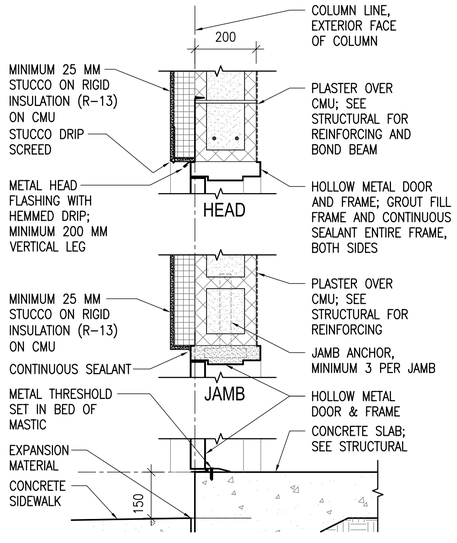

5 A3 A3 EXTERIOR DOOR DETAILS
SCALE: 1:10

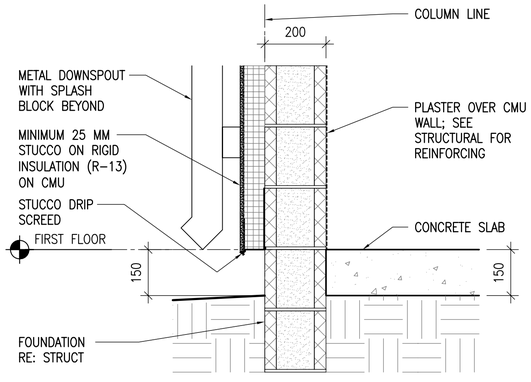

6 A2 A3 STUCCO BASE DETAIL
SCALE: 1:10

UNLESS OTHERWISE NOTED, LINEAR DIMENSIONS SHOWN ARE IN MILLIMETERS (MM)

0 200 400 800
SCALE: 1: 10

0 1000 2000 4000
SCALE: 1: 50

US Army Corps of Engineers
Afghanistan Engineer District

SYMBOL	DESCRIPTION	DATE	APP'D

DESIGNED BY: PFF	DWN BY: ECN	CHK BY: NLJ	
DATE: 09-30-09	SUBMITTED BY: BAKER	FILE NO.: ANPSDA-503XXX	

Michael Baker Jr., Inc
A unit of Michael Baker Corporation
Airside Business Park
100 Airside Drive
Moon Township, PA 15108
www.mbakercorp.com

AFGHAN NATIONAL POLICE
STANDARD DESIGN
GUARD SHACK

DOOR, WINDOW & FINISH TYPES & DETAILS

SHEET REFERENCE NUMBER:
A3

100% SUBMISSION

POWER

- DISTRIBUTION PANELBOARD
- NEW PANELBOARD – SURFACE
- NEW PANELBOARD – RECESSED
- EXISTING PANELBOARD
- (G) GENERATOR
- TVSS TRANSIENT VOLTAGE SURGE SURPRESSOR
- TRANSFORMER (DRAWN TO SIZE)
- PS POWER SUPPLY
- CP CONTROL PANEL
- TC TIME CLOCK
- TIM ASTRONOMICAL TIME CLOCK– "SEE SPEC."
- R RELAY WITH RATING AND NUMBER OF POLES AS NOTED ON DRAWINGS– "SEE SPEC."
- J JUNCTION BOX
- (J) JUNCTION BOX – CEILING
- PB PULL BOX
- BD BUS DUCT HORIZONTAL
- BUS DUCT VERTICAL
- EMERGENCY POWER OFF PUSH BUTTON
- NON–FUSIBLE SAFETY SWITCH
- FUSIBLE SAFETY SWITCH
- (M) MOTOR
- ^{M} MOTOR STARTING SWITCH – 20A RATED
- ^{K} KEY SWITCH – 20A RATED
- FC FAN COIL – FURNISHED BY MECHANICAL CONTRACTOR, ELECTRICAL CONTRACTOR SHALL INSTALL AND PROVIDE POWER CONNECTION
- UH UNIT HEATER – FURNISHED BY MECHANICAL CONTRACTOR, ELECTRICAL CONTRACTOR SHALL INSTALL AND PROVIDE POWER CONNECTION
- D JUNCTION BOX FOR CONNECTION TO GARBAGE DISPOSAL
- CF LIGHT/HEATER/FAN – FURNISHED BY MECHANICAL CONTRACTOR, ELECTRICAL CONTRACTOR SHALL INSTALL AND PROVIDE POWER CONNECTION
- ELECTRIC WATER HEATER
- EPO WEATHERPROOF / EXPLOSION PROOF EMERGENCY POWER OFF PUSH–BUTTON TO BE INTERCONNECTED WITH GENERATOR SHUT DOWN CONTROL
- CF CEILING FAN – REFER TO SPECIFICATION SECTION 26 20 00

RECEPTACLES

- DUPLEX 20A BRITISH STANDARD UNSWITCHED SOCKETS
- GF DUPLEX 20A BRITISH STANDARD UNSWITCHED SOCKETS – 10mA GROUND FAULT INTERRUPTER TYPE
- WP DUPLEX 20A BRITISH STANDARD UNSWITCHED SOCKETS – 10mA GROUND FAULT INTERRUPTER TYPE WITH WEATHERPROOF COVER
- EXP DUPLEX 20A BRITISH STANDARD UNSWITCHED SOCKETS – EXPLOSION PROOF
- * INDICATES MOUNT DEVICE ABOVE COUNTER TOP

LIGHTNING PROTECTION

- AIR TERMINAL 20mm O.D. X 4m SOLID COPPER, NICKEL PLATED ON ADHESIVE BASE.
- EQ EQUIPMENT AIR TERMINAL
- TEST WELL WITH GROUND ROD(S)
- GROUND ROD
- G GROUND PLATE
- MAIN GROUND CONDUCTER CONCEALED WITHIN CONSTRUCTION
- MAIN GROUND CONDUCTOR EXPOSED ON EXPOSED ON BUILDING EXTERIOR SURFACE
- GROUND CONDUCTOR CAD WELDED TO GROUND CABLE OR EQUIPMENT
- GROUND CONDUCTOR CAD WELDED TO BUILDING STEEL COLUMN
- GROUND ROD TRIPOD, SPACED 10 FEET APART.
- LEVEL TO LEVEL CABLE

LIGHTING

- LIGHTING FIXTURE – SEE FIXTURE SCHEDULE FOR MORE INFORMATION
- LIGHTING FIXTURE – SEE FIXTURE SCHEDULE FOR MORE INFORMATION
- DOWNLIGHT
- LIGHTING FIXTURE ON NORMAL/EMERGENCY
- WALL MOUNTED LIGHT FIXTURE
- E EXIT SIGN – DIRECTIONAL ARROWS AS INDICATED ON DRAWINGS
- B BATTERY PACK WITH HEADS AS INDICATED ON DRAWINGS
- REMOTE HEAD FOR BATTERY PACK
- $ SINGLE POLE SWITCH – 20A RATED
- ^{3} 3–WAY SWITCH – 20A RATED
- ^{4} 4–WAY SWITCH – 20A RATED
- PC PHOTOCELL VOLTAGE TO MATCH CIRCUITRY
- LC LIGHTING CONTACTOR
- POLE MOUNTED SITE LIGHTING FIXTURE– NUMBER OF FIXTURES PER POLE AS INDICATED ON DRAWINGS
- EXTERIOR DIRECTIONAL LIGHTING FIXTURE
- a SMALL CASE LETTERS REPRESENTS LAMP(S) / SWITCHES. WHEN USED WITH AN OCCUPANCY SENSOR THIS INDICATES SENSOR WITH MANUAL OVERRIDE SWITCH

TELECOMMUNICATIONS

- TELEPHONE OUTLET(S) @ 18" AFF. U.N.O. WITH 3/4" RACEWAY TERMINATED ABOVE NEAREST ACCESSIBLE CEILING OR TO TELEPHONE TERMINAL BOARD IF NO ACCESSIBLE CEILING AVAILABLE. SEE TELE/DATA RISER DIAGRAM FOR OUTLET AND CABLE DESCRIPTION
- DATA OUTLET(S) @ 18" AFF. U.N.O. WITH 3/4" RACEWAY TERMINATED ABOVE NEAREST ACCESSIBLE CEILING OR TO DATA EQUIPMENT RACK IF NO ACCESSIBLE CEILING AVAILABLE. SEE TELE/DATA RISER DIAGRAM FOR OUTLET AND CABLE DESCRIPTION

TELECOMMUNICATIONS (CONTINUED)

- COMBINATION TELEPHONE/DATA OUTLET(S) @ 18" AFF. U.N.O. WITH 1" RACEWAY TERMINATED ABOVE NEAREST ACCESSIBLE CEILING OR TO TELE/DATA TERMINAL AREA IF NO ACCESSIBLE CEILING AVAILABLE. SEE TELE/DATA RISER DIAGRAM FOR OUTLET AND CABLE DESCRIPTION
- W WALL MTD. TELEPHONE OUTLET WITH 3/4" RACEWAY TERMINATED ABOVE NEAREST ACCESSIBLE CEILING OR TO TELEPHONE TERMINAL BOARD IF NO ACCESSIBLE CEILING AVAILABLE. SEE TELE/DATA RISER DIAGRAM FOR OUTLET AND CABLE DESCRIPTION
- (x)T INDICATES NUMBER OF TELEPHONE OUTLET(S) AND ASSOCIATED CABLING
- (x)D INDICATES NUMBER OF DATA OUTLET(S) AND ASSOCIATED CABLING
- (x)TF INDICATES NUMBER OF TELEPHONE OUTLETS AND ASSOCIATED CABLING WITH 1 OUTLET AND CABLE DEDICATED FOR FAX

SINGLE LINE SYMBOLS

- SWITCH
- BREAKER
- FUSE
- TRANSFORMER
- CAPACITOR
- GROUND
- CONTACT (NORMALLY OPEN)
- CONTACT (NORMALLY CLOSED)
- AUTOMATIC TRANSFER SWITCH
- MANUAL DOUBLE THROW SWITCH
- CURRENT TRANSFORMER
- INDICATES NEW ELECTRICAL EQUIPMENT
- C INDICATES NEW CONTROL WIRING AND CONDUIT
- EQUIPMENT OUTLINE

MISCELLANEOUS

- BRANCH CIRCUIT WIRING CONCEALED ABOVE CEILINGS, SURFACE MOUNTED ON WALLS
- BRANCH CIRCUIT WIRING – #10 AWG
- BRANCH CIRCUIT WIRING – UNDER FLOOR
- HOME RUN BACK TO PANEL
- CONDUIT TURNED DOWN
- CONDUIT TURNED UP
- LV LOW VOLTAGE WIRING AND CONDUIT
- CT–X CABLE TRAY ("X" DENOTES WIDTH)
- INDICATES CONTINUATION OF LINE

FIRE ALARM

- FACP FIRE ALARM CONTROL PANEL WITH BATTERY BACKUP
- F FIRE ALARM PULL STATION

FIRE ALARM (CONTINUED)

- F FIRE ALARM STROBE – WALL MOUNTED
- F FIRE ALARM AUDIBLE/STROBE – WM
- F FIRE ALARM HORN/STROBE – WM
- S SMOKE DETECTOR
- H HEAT DETECTOR CEILING MOUNTED
- D DUCT DETECTOR – PROVIDED BY EC, INSTALLED BY MC AND CONNECTED BY EC

DENOTATIONS & ABBREVIATIONS

AFF	ABOVE FINISHED FLOOR
C	CEILING MOUNTED
E	EMERGENCY
EC	ELECTRICAL CONTRACTOR
EPO	EMERGENCY POWER OFF
EXP	EXPLOSION PROOF
F	FIRE ALARM
FF	FLUSH FLOOR MOUNTED
FL	FLUORESCENT
FO	FIBER OPTIC
FSS	FUSED SAFETY SWITCH
G	GROUND FAULT INTERRUPTER
GC	GENERAL CONTRACTOR
HOA	HAND–OFF AUTO
I	INFRARED
ICD	INCANDESCENT
IG	ISOLATED GROUND
K	KEY
LV	LOW VOLTAGE
M	MOTOR
MC	MECHANICAL CONTRACTOR
NE	NORMAL/EMERGENCY
NFSS	NON–FUSED SAFETY SWITCH
PA	PAGING SYSTEM
PLC	PLUMBING CONTRACTOR
REL	RELOCATE
RED	RELOCATED
SL	SINGLE LINE
SS	SURGE SUPPRESSION
T	TELEPHONE
TL	TWIST LOCK

DENOTATIONS & ABBREVIATIONS (CONT.)

TP	TAMPER PROOF
UE	UNDERGROUND ELECTRIC
UF	UNDERGROUND FIBER
UT	UNDERGROUND TELEPHONE
W	WALL MOUNTED
WG	WIRE GUARD
WP	WEATHERPROOF
WPG	WEATHERPROOF/GROUND FAULT INTERRUPTER
WT	WATER TIGHT

GENERAL PROJECT NOTES:

G1. UNLESS OTHERWISE NOTED, PROVIDE ALL EQUIPMENT SHOWN ON THE PLANS. THE ELECTRICAL CONTRACTOR SHALL COORDINATE ALL SYMBOLS SHOWN ON THE PLANS WITH THE SYMBOL LIST. IT SHALL BE THE RESPONSIBILITY OF THE CONTRACTOR TO VERIFY THE INTENT OF ANY SYMBOL THAT IS SHOWN ON THE PLANS AND NOT INDICATED ON THE SYMBOL LIST WITH THE ENGINEER PRIOR TO BID.

G2. COORDINATE THE FINAL LOCATIONS OF ALL LIGHT FIXTURES WITH THE ARCHITECT'S REFLECTED CEILING PLANS. REPORT ANY DISCREPANCIES TO THE ARCHITECT PRIOR TO INSTALLATION.

G3. THE CONTRACTOR SHALL VERIFY THE LOCATION OF ALL UNDERGROUND UTILITIES WITHIN THE CONSTRUCTION AREA THREE (3) WORKING DAYS NOTICE BEFORE COMMENCE DIGGING. NOTIFY THE LOCAL OR STATE AUTHORITY HAVING JURISDICTION AND WAIT THE REQUIRED TIME BEFORE COMMENCING TO DIG.

G4. THE CONTRACTOR SHALL COORDINATE CONDUIT RUNS, CABLE TRAY, LIGHTING FIXTURES AND OTHER EQUIPMENT LOCATIONS WITH THE OTHER TRADE CONTRACTORS TO AVOID CONFLICTS.

G5. WHERE VOLTAGES AND FREQUENCIES ON THE DRAWINGS AND IN THE SPECIFICATIONS DIFFER FROM THE LOCAL ONES, ALL WORK SHALL BE PERFORMED USING THE LOCAL VOLTAGES AND FREQUENCIES.

G6. THE MINIMUM WIRE SIZE ON THE PROJECT SHALL BE 4mm2. THE MINIMUM CONDUIT SIZE SHALL BE 20mm. THE MINIMUM BREAKER SIZE SHALL BE 20 AMPS.

G7. THE CONTRACTOR SHALL PUT A MAXIMUM OF 6 DUPLEX SOCKETS ON A 20A SINGLE POLE CIRCUIT.

G8. WHERE THE 1010 SCOPE REVIEW, 1015 TECHNICAL REVIEW, DRAWINGS, AND SPECIFICATIONS DIFFER FROM AMERICAN CODES OR STANDARDS THE 1010, 1015, DRAWINGS, AND SPECIFICATIONS SHALL RULE.

G9. WORK FOR THE AMMUNITION SUPPLY POINT SHALL BE DONE IN ACCORDANCE WITH DEPARTMENT OF DEFENSE STANDARD DOD 6055.9–STD.

G10. ALL CONDUIT AND DEVICES SHALL BE SURFACE MOUNTED UNLESS OTHERWISE INDICATED.

US Army Corps of Engineers
Afghanistan Engineer District

SYMBOL	DESCRIPTION	DATE	APP

DESIGNED BY:	DATE:
JRG	09–30–09
DWN BY:	SUBMITTED BY:
JRG	BAKER
CHK BY:	FILE NO.:
JRG	ANPSDE–000XXX

Michael Baker Jr, Inc
A unit of Michael Baker Corporation
Airside Business Park
100 Airside Drive
Moon Township, PA 15108
www.mbakercorp.com

AFGHAN NATIONAL POLICE
STANDARD DESIGN
GUARD SHACK

ELECTRICAL SYMBOLS AND ABBREVIATIONS

SHEET REFERENCE NUMBER:
E0

100% SUBMISSION

GENERAL NOTES:

1. REFER TO DRAWING #E0 FOR THE ELECTRICAL SYMBOLS LIST.
2. EXIT SIGNS SHALL BE WIRED AHEAD OF ANY LOCAL SWITCHING ON CIRCUITS.
3. REFER TO DRAWING #E3 FOR THE LIGHTING FIXTURE SCHEDULE.
4. REFER TO DRAWING #E2 FOR THE POWER RISER.
5. REFER TO DRAWING #E4 FOR PANEL SCHEDULES.
6. LIGHT FIXTURES INDICATED AS EMERGENCY SHALL BE PROVIDED WITH A BATTERY BACKUP BALLAST.
7. COORDINATE EXACT MOUNTING LOCATION OF DISCONNECTING MEANS FOR MECHANICAL AND PLUMBING EQUIPMENT IN THE FIELD.
8. FUSIBLE SAFETY SWITCHES THAT ARE NOT OTHERWISE IDENTIFIED SHALL BE 380V, 1P, 30A FUSED SAFETY SWITCHES WITH 20A FUSES.

NUMBERED NOTES:

(1) PANEL L.

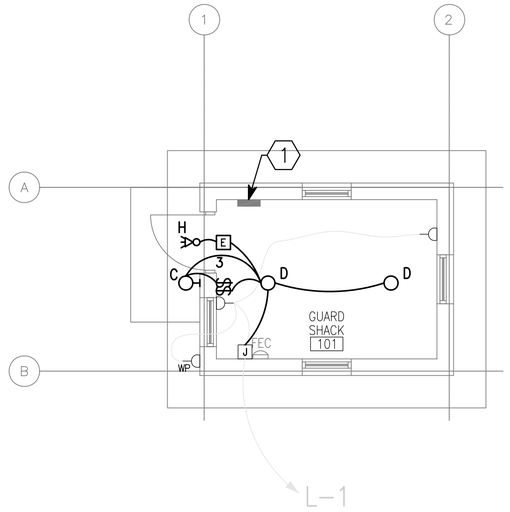

1 / E1 | E1 LIGHTING AND POWER PLAN

SCALE: 1:50

N

UNLESS OTHERWISE NOTED, LINEAR DIMENSIONS SHOWN ARE IN MILLIMETERS (MM)

1 0 1 2 3 4

1:50

US Army Corps of Engineers

Afghanistan Engineer District

SYMBOL	DESCRIPTION	DATE	APP'D

DESIGNED BY: JRG	DWN BY: JRG	CHK BY: JRG	
DATE: 09-30-09	SUBMITTED BY: BAKER	FILE NO.: ANPSDE-101XXX	

Michael Baker Jr., Inc
A unit of Michael Baker Corporation
Airside Business Park
100 Airside Drive
Moon Township, PA 15108
www.mbakercorp.com

AFGHAN NATIONAL POLICE
STANDARD DESIGN
GUARD SHACK

LIGHTING AND POWER PLAN

SHEET REFERENCE NUMBER:

E1

100% SUBMISSION

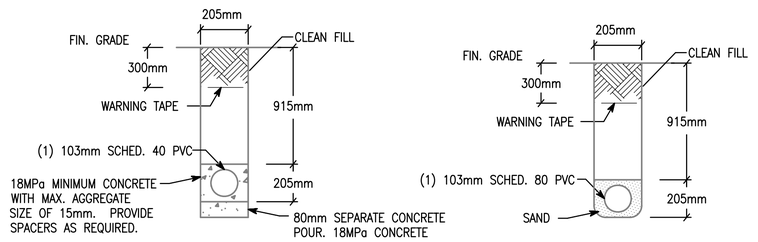

NOTE: PVC CONDUIT SHALL BE DIRECT BURIED SCHEDULE 80 FOR NO TRAFFIC AREAS AND CONCRETE-ENCASED SCHEDULE 40 FOR UNDER ROADWAYS OR TRAFFIC AREAS.

1 E2 | E2 **TYPICAL DUCT BANK DETAILS FOR CONDUIT IN SAND OR CONCRETE**

SCALE: N.T.S.

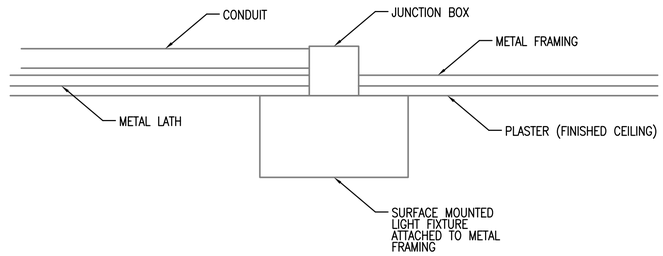

2 E2 | E2 **TYPICAL DETAIL FOR SURFACE MOUNTED LIGHT FIXTURES**

SCALE: N.T.S.

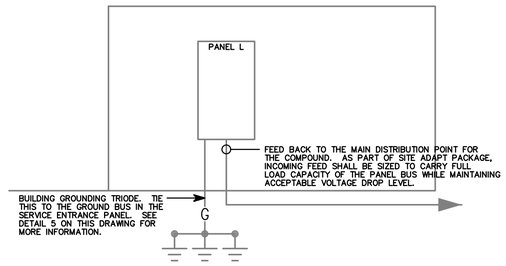

3 E2 | E2 **L RISER DIAGRAM**

SCALE: N.T.S.

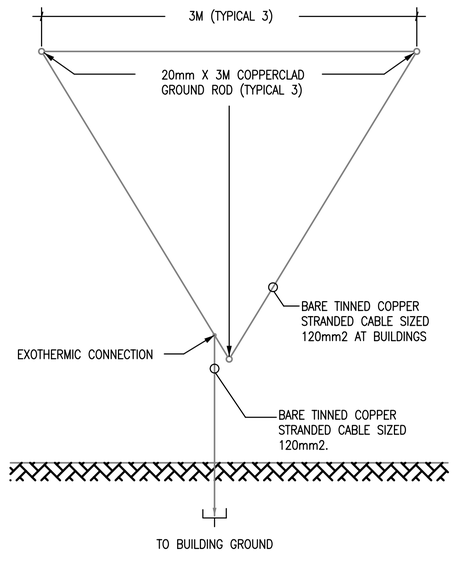

4 E2 | E2 **GROUND TRIPOD SYSTEM DETAIL - PLAN**

SCALE: N.T.S.

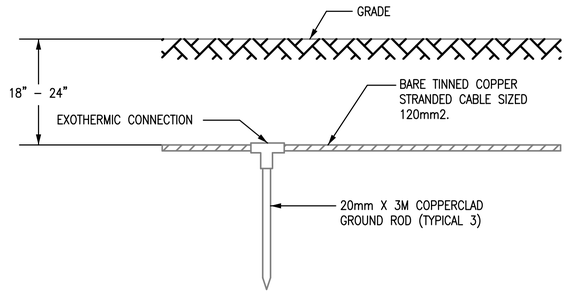

5 E2 | E2 **GROUND TRIPOD SYSTEM DETAIL - ELEVATION**

SCALE: N.T.S.

US Army Corps of Engineers
Afghanistan Engineer District

SYMBOL	DESCRIPTION	DATE	APP'D

DESIGNED BY:	DATE:
JRG	09-30-09
DWN BY:	SUBMITTED BY:
JRG	BAKER
CHK BY:	FILE NO.:
JRG	ANPSDE-502XXX

Michael Baker Jr., Inc.
A unit of Michael Baker Corporation
Airside Business Park
100 Airside Drive
Moon Township, PA 15108
www.mbakercorp.com

AFGHAN NATIONAL POLICE
STANDARD DESIGN
GUARD SHACK

DETAILS

SHEET REFERENCE NUMBER:

E2

100% SUBMISSION

FIXTURE MARK 'C'

INCANDESCENT ONE PIECE WITH APPROVED LENS, STABILIZED HIGH IMPACT POLY CARBONATE

FIXTURE MARK 'D'

SURFACE MOUNTED, SINGLE LAMP 220–240V INCANDESCENT FIXTURE RATED FOR 100W LAMPS. GLASS GLOBE SHALL BE VAPOR TIGHT JELLY JAR TYPE WITH WIRE GUARD. NOMINAL DIMENSIONS ARE 111MMx251MM

FIXTURE MARK 'H'

REMOTE HEAD EXTERIOR LIGHT HEAD POWERED FROM EXIT SIGN BATTERY– 12V DOUBLE HEAD CORROSION RESISTANT WITH UL34 WEATHERPROOF CONSTRUCTION

FIXTURE MARK 'E'

UNIVERSAL MOUNT ENGINEER GRADE THERMOPLASTIC HOUSING EXIT SIGN WITH LED LAMPS, RED LETTERS 6" IN HEIGHT WITH ARROWS AS INDICATED, WITH 12V CADMIUM BATTERY

LIGHTING FIXTURE SCHEDULE

FIXTURE MARK	STYLE NUMBER AND TYPE	NUMBER AND TYPE OF LAMPS	VOLTAGE	MOUNTING	NOTES
C	INCANDESCENT ONE PIECE W/ APPROVED LENS STABILIZED HIGH IMPACT POLY CARBONATE.	(1) A19 – 100W INCANDESCENT	220V – 1ø 50HZ	WALL MOUNTED ABOVE EXTERIOR DOORS	
D	SURFACE MOUNTED SINGLE LAMP 220–240V INCANDESCENT FIXTURE RATED FOR 100W LAMPS. GLASS GLOBE SHALL BE VAPOR TIGHT JELLY JAR WITH WIRE GUARD. 111MM–251MM	(1) A21 – 100W COATED INCANDESCENT	220V – 1ø 50HZ	SURFACE MOUNTED FROM ROOF STRUCTURE	MEETS INTERNATIONAL STANDARDS WITH ENCLOSED AND GASKETED RED LENS.
H	REMOTE HEAD EXTERIOR LIGHT HEAD POWERED FROM EXIT SIGN BATTERY– 12V DOUBLE HEAD CORROSION RESISTANT WITH UL34 WEATHERPROOF CONSTRUCTION	(2) 12W/12V HALOGEN LAMP	12V – 1ø 50HZ	EXTERIOR WALL MOUNTED AT TOP OF DOOR HEIGHT	
E	UNIVERSAL MOUNT ENGINEER GRADE THERMOPLASTIC HOUSING EXIT SIGN WITH LED LAMPS, RED LETTERS 6" IN HEIGHT WITH ARROWS AS INDICATED, WITH 12V CADMIUM BATTERY WITH REMOTE HEAD CAPABILITY	LED LAMPS	220V – 1ø 50HZ	UNIVERSAL MOUNTING	

US Army Corps of Engineers
Afghanistan Engineer District

SYMBOL	DESCRIPTION	DATE	APP'D

DESIGNED BY: JRG
DWN BY: JRG
CHK BY: JRG
DATE: 09-30-09
SUBMITTED BY: BAKER
FILE NO.: ANPSDE-603XXX

Michael Baker Jr., Inc
A unit of Michael Baker Corporation
Airside Business Park
100 Airside Drive
Moon Township, PA 15108
www.mbakercorp.com

AFGHAN NATIONAL POLICE
STANDARD DESIGN
GUARD SHACK

LIGHT FIXTURE SCHEDULE

SHEET REFERENCE NUMBER:
E3

100% SUBMISSION

PANELBOARD L SURFACE MOUNTED ASYM. A.I.C. MIN.
AMP. MAIN LUGS (OR) 100 AMP. MAIN BREAKER W/ 100 AMP. TRIP
CIRCUIT BREAKER TYPE 380/220 VOLTS 3 PHASE 4 WIRE 50 HZ 100 AMP. BUS

CKT. NO.	TRIP AMPS	NO. POLES	WIRE MM²	GND MM²	CONDUIT MM	LOAD SERVED	LOAD-V.A. AØ	LOAD-V.A. BØ	LOAD-V.A. CØ	LOAD-V.A. AØ	LOAD-V.A. BØ	LOAD-V.A. CØ	LOAD SERVED	CONDUIT MM	GND MM²	WIRE MM²	NO. POLES	TRIP AMPS	CKT. NO.
1	20	1	4.0	4.0	20	LIGHTING AND RECEPTACLES- 101	1.0						SPARE				1	20	2
3	20	1				SPARE							SPARE				1	20	4
5	20	1				SPARE							SPARE				1	20	6
7	20	1				SPARE							SPARE				1	20	8
9	20	1				SPARE							SPARE				1	20	10
11	20	1				SPARE							SPARE				1	20	12
							0.6	0.5	0.0	0.6	0.0	0.0							

TOTAL CONN. LOAD PER PHASE (KVA): AØ 1.0 BØ 0.0 CØ 0.0

TOTAL CONN. LOAD 1.0 KVA. 70 % DEMAND = ESTIMATED DEMAND LOAD 0.7 SUPPLIED FROM MAIN SWITCHGEAR DISTRIBUTION

• MAIN BREAKER SHALL BE 3P EARTH GROUND TYPE

US Army Corps of Engineers
Afghanistan Engineer District

SYMBOL	DESCRIPTION	DATE	APP.

DESIGNED BY: JRG	DATE: 09-30-09
DWN BY: JRG	SUBMITTED BY: BAKER
CHK BY: JRG	FILE NO.: ANPSDE-604XXX

Michael Baker Jr., Inc
A unit of Michael Baker Corporation
Airside Business Park
100 Airside Drive
Moon Township, PA 15108
www.mbakercorp.com

AFGHAN NATIONAL POLICE
STANDARD DESIGN
GUARD SHACK

PANEL SCHEDULES AND RISER DIAGRAM

SHEET REFERENCE NUMBER:
E4

100% SUBMISSION

AFGHAN NATIONAL POLICE

STANDARD BUILDING DESIGNS

GUARD TOWER

SHEET INDEX

G1 COVER SHEET

S1 GENERAL NOTES
S2 DESIGN CRITERIA & SCHEDULES
S3 FOUNDATION, FLOOR, FRAMING AND ROOF PLANS
S4 SECTIONS AND DETAILS
S5 TYPICAL DETAILS

A1 FLOOR PLANS
A2 ROOF PLAN AND DETAILS
A3 EXTERIOR ELEVATIONS
A4 BUILDING AND WALL SECTIONS
A5 DOOR, WINDOW & FINISH TYPES & DETAILS
A6 SECTION DETAILS

E0 ELECTRICAL SYMBOLS AND ABBREVIATIONS
E1 TOWER LIGHTING, POWER, AND SYSTEMS PLANS
E2 DETAILS
E3 LIGHT FIXTURE SCHEDULE
E4 PANEL SCHEDULES AND RISER DIAGRAM

US Army Corps of Engineers
Afghanistan Engineer District

SYMBOL	DESCRIPTION	DATE	APP'D

DESIGNED BY: JDS
DWN BY: JDS
CHK BY: JDS
DATE: 09-30-09
SUBMITTED BY: BAKER
FILE NO.: ANPSDG-001XXX

Michael Baker Jr., Inc
A unit of Michael Baker Corporation
Airside Business Park
100 Airside Drive
Moon Township, PA 15108
www.mbakercorp.com

AFGHAN NATIONAL POLICE
STANDARD DESIGN
GUARD TOWER

COVER SHEET

SHEET REFERENCE NUMBER:
G1

100% SUBMISSION

STRUCTURAL ABBREVIATIONS:

ACI	AMERICAN CONCRETE INSTITUTE
AISC	AMERICAN INSTITUTE OF STEEL CONSTRUCTION
ALT	ALTERNATE
ASTM	AMERICAN SOCIETY FOR TESTING AND MATERIALS
AWS	AMERICAN WELDING SOCIETY
ARCH	ARCHITECTURAL
B	BOTTOM
BLDG	BUILDING
BOTT	BOTTOM
℄	CENTER LINE
CFMF	COLD FORM METAL FRAME
CFS	COLD FORMED STEEL
CIP	CAST IN PLACE
CIPL	CAST-IN-PLACE LINTEL
CJ	CONTROL JOINT
CLR	CLEAR
CMU	CONCRETE MASONRY UNIT
COEFF	COEFFICIENT
COL	COLUMN
CONC	CONCRETE
CONT	CONTINUOUS
COORD	COORDINATE
CSJ	CONSTRUCTION JOINT
CTJ	CONTROL JOINT
DIA	DIAMETER
DIAG	DIAGONAL
DIM	DIMENSION
DWG	DRAWING
DWL	DOWEL
EA	EACH
ELEC	ELECTRICAL
ELEV	ELEVATION
EMBED	EMBEDMENT
EQUIV	EQUIVALENT
ETC	ET CETERA
EW	EACH WAY
EXT	EXTERIOR
FTG	FOOTING
GA	GAUGE
HORIZ	HORIZONTAL
HRS	HOURS
IBC	INTERNATIONAL BUILDING CODE
INT	INTERIOR
Kg	KILOGRAM
KIP	KIPS (1 KIP = 1,000 POUNDS)
kN	KILONEWTON
kPa	KILOPASCAL
L#	ANGLE (# INDICATES SIZE)
LLV	LONG LEG VERTICAL
M	METER
MAX	MAXIMUM
MBM	METAL BUILDING MANUFACTURER
MECH	MECHANICAL
MFG	MANUFACTURER
MID	MIDDLE
MIN	MINIMUM
MISC	MISCELLANEOUS
MM	MILLIMETER
MPa	MEGAPASCAL
MTL	METAL
MWFRS	MAIN WIND FORCE RESISTING SYSTEM
N	NEWTON
N	NORTH
N/A	NOT APPLICABLE
#	NUMBER SYMBOL FOR REBAR SIZE
NTS	NOT TO SCALE
OC	ON CENTER
OPNG	OPENING
℗ or PL	PLATE
PRE-ENG	PRE-ENGINEERED
REINF	REINFORCED
REQ'D	REQUIRED
SIM	SIMILAR
SPECS	SPECIFICATIONS
STD	STANDARD
STRUCT	STRUCTURAL
T	TOP
T/	TOP OF
T/ELEV	TOP ELEVATION
T&B	TOP AND BOTTOM
THK	THICK
TM	TRADE MARK
TYP	TYPICAL
UON	UNLESS OTHERWISE NOTED
VERT	VERTICAL
W	WIDTH
W/	WITH

GENERAL NOTES

1.0 THIS PROJECT HAS BEEN DESIGNED FOR THE WEIGHTS AND MATERIALS INDICATED ON THE SHEETS AND FOR THE LIVE LOADS INDICATED IN THE DESIGN DATA. IT IS THE CONTRACTOR'S RESPONSIBILITY TO DETERMINE ALLOWABLE CONSTRUCTION LOADS AND TO PROVIDE PROPER DESIGN AND CONSTRUCTION OF FALSEWORK, FORMWORK, STAGING, BRACING, SHEETING AND SHORING, ETC.

1.1 COORDINATE THESE SHEETS WITH THE ARCHITECTURAL, MECHANICAL, ELECTRICAL, PLUMBING, AND CIVIL SHEETS. ALL DIMENSIONS SHOWN ON THE SHEETS ARE MILLIMETERS UNLESS NOTED OTHERWISE.

1.2 THE CONTRACTOR SHALL VERIFY AND COORDINATE ALL FLOOR AND ROOF OPENING SIZES AND LOCATIONS, EQUIPMENT PAD SIZES AND LOCATIONS, ANCHOR BOLT LAYOUTS, ETC WITH EQUIPMENT SELECTED. THE CONTRACTOR SHALL MAKE ANY REQUIRED MODIFICATIONS AT NO ADDITIONAL COST.

1.3 THE CONTRACTOR SHALL REFER TO THE ARCHITECTURAL, MECHANICAL, ELECTRICAL AND PLUMBING SHEETS FOR SLEEVES, CURBS, INSERTS OR OPENINGS, ETC. NOT HEREIN INDICATED.

1.4 SLAB OPENINGS SMALLER THAN 250mm DIA TO BE CORE DRILLED IN FIELD UON. SEE MECHANICAL, ELECTRICAL AND PLUMBING SHEETS FOR LOCATIONS OF THESE OPENINGS.

1.5 WORK NOT INCLUDED ON THE SHEETS BUT IMPLIED TO BE SIMILAR TO THAT SHOWN AT CORRESPONDING PLACES ELSEWHERE ON THE SHEETS SHALL BE REPEATED.

1.6 IN CASE OF CONFLICT BETWEEN THE NOTES, DETAILS AND SPECIFICATIONS THE MOST RIGID REQUIREMENTS SHALL GOVERN.

1.7 SEE ARCHITECTURAL SHEETS FOR LOCATIONS OF MASONRY AND DRYWALL NON-LOAD BEARING PARTITIONS. PROVIDE COMPRESSIBLE FIRESAFING AT TOP OF WALL AS REQUIRED BY ARCHITECTURAL SHEETS.

1.8 COORDINATE FINISHED FLOOR DATUM ELEVATION 0.0m WITH THE CIVIL SHEETS.

2.0 FOUNDATION NOTES

2.1 THE GEOTECHNICAL ANALYSIS FOR THIS PROJECT IS THE RESPONSIBILITY OF THE CONTRACTOR AWARDED THE WORK. DESIGN VALUES USED IN THE STRUCTURAL ANALYSIS OF THE BUILDINGS HEREIN INDICATED HAVE BEEN ASSUMED AND SHALL BE CONFIRMED AND VERIFIED AS PART OF THE GEOTECHNICAL INVESTIGATION. VALUES WHICH DO NOT MEET THE REQUIREMENTS INDICATED ON SHEET S2 SHALL BE IMMEDIATELY BROUGHT TO THE ATTENTION OF THE CONTRACTING OFFICER FOR CONSIDERATION AND DETERMINATION ON THE NEXT APPROPRIATE COURSE OF ACTION.

2.2 SEE THE SPECIFICATION FOR ADDITIONAL REQUIREMENTS TO THOSE OUTLINED IN THE GEOTECHNICAL INVESTIGATION FOR EXCAVATION AND PREPARATION OF THE FOUNDATION AND THE SLAB ON GRADE SUBGRADE INCLUDING COMPACTION PROCEDURES.

2.3 EXCAVATIONS FOR FOOTINGS SHALL HAVE THE SIDES AND BOTTOMS TEMPORARILY LINED WITH 0.25mm POLYETHYLENE IF PLACEMENT OF CONCRETE DOES NOT OCCUR WITHIN 24 HRS OF THE EXCAVATION OF THE FOOTING.

2.4 FOUNDATION CONDITIONS NOTED DURING CONSTRUCTION WHICH DIFFER FROM THOSE DESCRIBED IN THE GEOTECHNICAL REPORT SHALL BE REPORTED TO THE GENERAL CONTRACTOR BEFORE FURTHER CONSTRUCTION IS ATTEMPTED. SEE PROJECT SPECIFICATIONS.

2.5 NO FOOTINGS OR SLABS SHALL BE POURED INTO OR AGAINST SUBGRADE CONTAINING FREE WATER, FROST, ICE OR LOOSE MATERIAL. FROST DEPTH ASSUMED TO BE 800MM

2.6 ALL SLAB-ON-GRADE, TRENCH BOTTOMS AND OTHER ON-GRADE INTERIOR HORIZONTAL SURFACES SHALL BE PLACED OVER A 0.25mm VAPOR RETARDER OVER A 100mm #57 STONE WATER BARRIER PLACED ON SUBGRADE PROPERLY PREPARED IN ACCORDANCE WITH THE CONTRACT SPECIFICATIONS. (UON)

2.7 SEE PLUMBING, ELECTRICAL & CIVIL SHEETS FOR REQUIRED UNDERSLAB UTILITIES.

2.8 SEE ARCHITECTURAL SHEETS FOR ALL WATERPROOFING DETAILS AND MATERIALS.

2.9 IF UNDERMINING OF FOOTINGS OCCURS, FILL VOIDS WITH 15MPa CONCRETE. DO NOT ATTEMPT TO REPLACE AND RECOMPACT SOIL.

3.0 CONCRETE

3.1 CONCRETE SHALL HAVE THE UNIT WEIGHT AND THE MINIMUM COMPRESSIVE STRENGTHS (f'c) AT 28 DAYS AS SHOWN IN THE CONCRETE MATERIALS SCHEDULE ON THIS SHEET. SEE SPECIFICATIONS FOR ADDITIONAL INFORMATION. ENTRAIN AIR TO PRODUCE TOTAL AIR CONTENT ACCORDING TO THE SPECIFICATIONS FOR CONCRETE EXPOSED TO FREEZING TEMPERATURES (EXTERIOR FOOTINGS, SLAB TURNDOWNS, EXTERIOR SLABS AND SLABS-ON-GRADE, EXTERIOR RETAINING WALLS, AND EXTERIOR GRADE BEAMS.)

3.2 GROUT FOR BASE PLATES SHALL BE NON-SHRINKABLE GROUT AND SHALL HAVE A MINIMUM SPECIFIED COMPRESSIVE STRENGTH AT 28 DAYS OF 35MPa, UNLESS NOTED OTHERWISE.

3.3 NO CALCIUM CHLORIDE SHALL BE USED IN ANY CONCRETE.

3.4 MIXING, TRANSPORTING AND PLACING OF CONCRETE SHALL CONFORM TO ACI 301M-05.

3.5 ALL CONCRETE WORK SHALL CONFORM TO THE REQUIREMENTS OF THE AMERICAN CONCRETE INSTITUTE (ACI) 318M MANUAL (metric), "BUILDING CODE REQUIREMENTS FOR REINFORCED CONCRETE", AND REQUIREMENTS OUTLINED IN THE CONTRACT SPECIFICATIONS. WHEN THERE IS A CONFLICT BETWEEN ACI AND THE SPECIFICATIONS, THE MORE STRINGENT SHALL GOVERN.

3.6 CHAMFER ALL EXPOSED EXTERNAL CORNERS OF CONCRETE WITH 20mm x45 DEGREE CHAMFER UON.

3.7 CONCRETE REINFORCEMENT BARS SHALL CONFORM TO ASTM A615M, GRADE 420, REINFORCING BARS SHALL NOT BE TACK WELDED, WELDED, HEATED OR CUT, UNLESS INDICATED ON THE CONTRACT DOCUMENTS. ALL LAP SPLICES SHALL BE CLASS "B" UON.

3.8 HORIZONTAL FOOTING AND HORIZONTAL WALL REINFORCEMENT SHALL BE CONTINUOUS AND SHALL HAVE 90 DEGREE BENDS AND EXTENSIONS, OR CORNER BARS OF EQUIVALENT SIZE LAPPED WITH A CLASS B TENSION SPLICE AT CORNERS AND INTERSECTIONS. TOP BAR CRITERIA SHALL APPLY IF 300mm OR MORE OF FRESH CONCRETE IS PLACED BELOW BAR.

3.9 SLABS-ON-GRADE SHALL HAVE CONSTRUCTION JOINTS OR CRACK CONTROL JOINTS AS SHOWN ON THE SHEETS. CONSTRUCTION JOINTS CAN BE USED AT CONTROL JOINT LOCATIONS AT CONTRACTORS OPTION. SEE SLAB PLANS & JOINT DETAILS FOR ADDITIONAL INFORMATION. FOR AREAS NOT SHOWN ON THE SHEETS, THE MAXIMUM SPACING OF CONSTRUCTION/ CRACK CONTROL JOINTS SHALL BE 4800 mm.

3.10 SEE SPECIFICATIONS FOR ALL WATERPROOFING/DAMPPROOFING REQUIREMENT.

3.11 ALL CONCRETE REINFORCEMENT SHALL BE DETAILED, FABRICATED, LABELED, SUPPORTED, AND SPACED IN FORMS AND SECURED IN PLACE IN ACCORDANCE WITH THE PROCEDURES AND REQUIREMENTS OUTLINED IN THE LATEST EDITION OF THE "BUILDING CODE REQUIREMENTS FOR REINFORCED CONCRETE", ACI 318M, AND THE "MANUAL OF STANDARD PRACTICE FOR DETAILING REINFORCED CONCRETE STRUCTURES", ACI 315M, LATEST EDITION.

3.12 SHOP DRAWINGS SHOWING REINFORCING DETAILS, INCLUDING STEEL SIZES, SPACING AND PLACEMENT, SHALL BE SUBMITTED FOR REVIEW PRIOR TO FABRICATION.

3.13 ALL DOWELS SHALL MATCH SIZE AND NUMBER OF MAIN REINFORCING, UNLESS NOTED OTHERWISE ON THE SHEETS.

3.14 ADDITIONAL BARS SHALL BE PROVIDED AROUND ALL FLOOR AND WALL OPENINGS AS SHOWN ON THE SHEETS.

3.15 SEE ARCHITECTURAL SHEETS FOR TYPE AND LOCATION OF ALL FLOOR FINISHES.

3.16 THE CONTRACTOR SHALL COORDINATE ADDITIONAL WALL/SLAB OPENINGS NOT SHOWN ON STRUCTURAL SHEETS. SEE MECHANICAL, ELECTRICAL, PLUMBING AND CIVIL SHEETS.

3.17 THE SUB-CONTRACTOR SHALL VERIFY ALL OPENINGS, PAD SIZES, AND ANCHOR BOLTS WITH EQUIPMENT SELECTED.

3.18 FOR ALL WALLS & PIERS, PROVIDE DOWELS INTO FOOTING AT EACH VERT REINF BAR, UON DOWEL SIZE SHALL BE SAME AS VERT REINF.

3.19 ALL REINFORCING INDICATED TO BE WELDED SHALL BE IN ACCORDANCE WITH ASTM A706M. "LOW ALLOY STEEL DEFORMED BARS FOR CONCRETE REINFORCEMENT". ANY INSTALLATIONS USING MANUFACTURER'S EQUIPMENT SHALL BE PER MANUFACTURER'S RECOMMENDATIONS.

3.20 PROVIDE CONCRETE POUR STOPS OR FORMED AS REQUIRED FOR INSTALLATION OF ALL CONCRETE WORK.

3.21 PROVIDE ADDITIONAL (2)-#13 x 600mm REINFORCING BARS IN SLAB-ON GRADE AT ALL RE-ENTRANT CORNERS. PLACE BARS AT MID-DEPTH OF SLAB WITH A CLEARANCE OF 50mm FROM CORNER UON.

4.0 CONCRETE MASONRY

4.1 MASONRY CONSTRUCTION AND MATERIALS SHALL CONFORM TO ALL REQUIREMENTS OF THESE CONTRACT DOCUMENTS AND THE PROJECT SPECIFICATIONS.

4.2 THE SPECIFIED ULTIMATE COMPRESSIVE STRENGTH OF CONCRETE MASONRY (f'm) ON THE NET AREA IS A MINIMUM OF 10.4 MPa.

4.3 PROVIDE TWO #16 BARS CONTINUOUS IN ALL CMU AND CAST-IN-PLACE BOND BEAMS UON ON THE SHEETS. BOND BEAMS SHALL BE CONTINUOUS AND SPACED AT A MAXIMUM OF 1200mm OC VERTICALLY. PROVIDE BOND BEAM STARTER COURSE AT BOTTOM OR FIRST COURSE ON ALL MASONRY WALLS AND PARTITIONS. ALL BOND BEAMS SHALL BE A MINIMUM OF 200mm IN DEPTH WITH REINFORCING BEING CONTINUOUS AND HAVING STANDARD ACI 180° HOOKS AT EACH END. PROVIDE STANDARD BAR SPLICES AS SPECIFIED.

4.4 FOR WALL REINFORCING, SEE DETAIL 7 ON SHEET S5

4.5 CMU CELLS THAT REQUIRE VERTICAL REINFORCING BARS AS INDICATED ON THE CONTRACT DRAWINGS AND/OR SPECS SHALL HAVE REINF BARS PLACED IN CENTERS OF CMU CELLS AND CONTINUOUSLY GROUTED UON.

4.6 PROVIDE LADDER TYPE JOINT REINFORCEMENT AT (200mm EXTERIOR & 400mm INTERIOR) ON CENTER MAXIMUM UON MINIMUM ROD SIZE USED SHALL BE 9 GA. DEFORMED WIRE AND CONFORM TO ASTM A82M, UON.

4.7 PROVIDE CONTROL JOINTS AS INDICATED ON THE ARCHITECTURAL SHEETS.

4.8 GROUT FOR MASONRY SHALL BE NORMAL WEIGHT AND HAVE A MINIMUM COMPRESSIVE STRENGTH OF 25 MPa AT 28 DAYS. GROUT SHALL CONFORM TO ASTM C476M. GROUT LIFTS SHALL NOT EXCEED 1400mm.

4.9 USE MORTAR TYPE S CONFORMING TO ASTM C270M, SEE SPECIFICATIONS.

4.10 CONCRETE MASONRY UNITS SHALL BE NORMAL WEIGHT AND CONFORM TO ASTM C90M.

4.11 ALL CMU CELLS, OPEN CAVITIES, AND AIR SPACES SHALL BE GROUTED TO STOP FRAGMENTS FROM MORTAR BLAST

4.12 BOND BEAM REINFORCING SHALL BE DISCONTINUOUS AT CONTROL JOINTS (UON). MAXIMUM CONTROL JOINT SPACING SHALL BE AS INDICATED ON THE ARCHITECTURAL SHEETS.

4.13 CONTRACTOR SHALL COORDINATE LOCATION OF ALL OPENINGS SEE ARCH, MECH, ELEC, AND PLUMBING SHEETS. FOR SIZE AND LOCATION OF OPENINGS.

4.14 MASONRY WALLS SHALL NOT BE BACK FILLED PRIOR TO THE MORTAR AND GROUT ATTAINING THEIR RESPECTIVE MAXIMUM DESIGN STRENGTHS PER SPECIFICATIONS.

5.0 CFMRF - COLD FORM METAL ROOF FRAMING SYSTEM

5.1 CFMF SHALL BE DESIGNED BY CFMF MANUFACTURER'S ENGINEER FOR ALL LOADING PER CODE AND AS INDICATED ON THE SHEETS.

5.2 FOR WIND LOADS, SEE THE DESIGN CRITERIA ON SHEET S2.

5.3 SUBMIT VENDOR'S PUBLISHED LITERATURE, TEST DATA AND INSTALLATION INSTRUCTIONS FOR METAL STUD ASSEMBLY AND ACCESSORIES INCLUDING OTHER DATA AS MAY BE REQUIRED TO CERTIFY COMPLIANCE WITH PERFORMANCE REQUIREMENTS SPECIFIED HEREIN.

5.4 SHOP DRAWINGS AND DESIGN ANALYSIS SHALL BE STAMPED AND APPROVED BY A LICENSED PROFESSIONAL ENGINEER.

5.5 CONNECTIONS AND GAUGE SIZES ARE MINIMUM AND SHALL BE INCREASED AS NECESSARY TO PROVIDE A STRUCTURALLY ADEQUATE SYSTEM. KICKERS MAY BE ADDED TO REDUCE THE STUD HEIGHTS WHERE ACCEPTABLE AND COORDINATED WITH THE ARCHITECTURAL DRAWINGS.

5.6 CRMRF SHALL HAVE THE FOLLOWING MINIMUM PROPERTIES:

STUD/RAFTER/EAVE STRUT/BRACE/BLOCKING:
Fy = 344 MPa
GAUGE = 18
DEPTH = 152.3 mm
WIDTH = 34.8 mm
MOMENT OF INERTIA, Ix = 847x10^3 mm^4
SECTION MODULUS, Sx = 11.2x10^3 mm^3

TRACK:
Fy = 344 MPa
GAUGE = 16
DEPTH = 152.3 mm
WIDTH = 38 mm
MOMENT OF INERTIA, Ix = 1083x10^3 mm^4
SECTION MODULUS, Sx = 13.8x10^3 mm^3

PURLIN/SUBGIRT:
Fy = 393 MPa
GAUGE = 16
MOMENT OF INERTIA (TOP COMPRESSION), Ixt = 23.7x10^3 mm^4
MOMENT OF INERTIA (BOTT COMPRESSION), Ixb = 22.7x10^3 mm^4
SECTION MODULUS (TOP COMPRESSION), Sxt = 1.8x10^3 mm^3
SECTION MODULUS (BOTT COMPRESSION), Sxb = 1.7x10^3 mm^3

MINIMUM LAP SPLICES OF REINFORCING BARS IN TENSION (PER ACI 318M-05)

f'c = 28 MPa CONCRETE

BAR SIZE / CENTER TO CENTER BAR SPACING	(---TOP BARS--) LESS THAN 4db	(---TOP BARS--) 4db OR MORE	(--OTHER BARS--) LESS THAN 4db	(--OTHER BARS--) 4db OR MORE	4db
#10	460	460	410	410	40
#13	660	610	510	480	50
#16	1020	760	790	580	60

NOTES:

1. LAP SPLICES ABOVE ARE IN MILLIMETERS UON.
2. YIELD STRENGTH OF REINFORCEMENT, fy, IS 420MPa (LAP SPLICE LENGTH IS IN MILLIMETERS).
3. CONCRETE IS NORMAL WEIGHT (2400Kg/m^3).
4. TOP BAR INDICATES HORIZONTAL REINFORCEMENT WHICH IS PLACED ABOVE 300mm OR MORE OF FRESH CONCRETE.
5. SEE COLUMN SCHEDULE FOR COLUMN AND SHEAR WALL VERTICAL LAP SPLICE.
6. STRAIGHT DEVELOPMENT LENGTH OF AN UNLAPPED BAR IS EQUAL TO VALUE FROM TABLE DIVIDED BY 1.3.
7. CATEGORY FOR BARS SPACED LESS THAN 4d, OR ON CENTER CORRESPONDS TO CATEGORY 1 IN THE CRSI HANDBOOK WHEREAS FOR BARS SPACED 4d, OR MORE ON CENTER CORRESPOND TO CRSI CATEGORY 5.

CONCRETE MATERIALS SCHEDULE

STRUCTURAL ELEMENT	f'c CONCRETE COMPRESSIVE STRENGTH @ 28 DAYS (MPa)
SLAB-ON-GRADE/TURN-DOWN SLABS	28
ROOF AND FLOOR SLABS	28
ALL FOOTINGS (UON)	28
MISC. CURBS, WALLS AND PADS UON	28
CAST-IN-PLACE LINTEL	28

NOTES:
1. ALL CONCRETE SHALL BE NORMAL WEIGHT CONCRETE. (2400 Kg/m^3 UON)
2. ALL CONCRETE SHALL HAVE A WATER-CEMENT RATIO OF 0.45.

MASONRY REINFORCING MINIMUM LAP SPLICES

BAR SIZE	BASIC LAP SPLICE Ld FOR CMU REINFORCING(mm)
#10	450
#13	600
#16	750

STANDARD HOOKS IN TENSION PER (ACI 318M-05)

HOOK DEVELOPMENT LENGTH Ldh (mm)	
BAR SIZE	f'c 28 MPa
#10	180
#13	250
#16	300
#19	380
#22	430
#25	480
#29	560
#32	610
#36	690

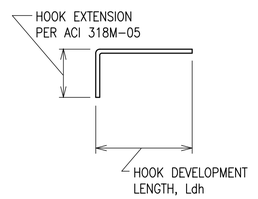

NOTES:
1. CONCRETE IS NORMAL WEIGHT CONCRETE.
2. BAR YIELD STRENGTH, fy = 420 MPa
3. SIDE COVER REQUIREMENTS OF ACI SECT. 12.5.3 ARE ASSUMED TO NOT BE MET.
4. TIE OR STIRRUP REQUIREMENTS OF ACI SECT. 12.5.3 ARE ASSUMED TO NOT BE MET.
5. REDUCTION FOR EXCESS REINFORCEMENT IS NOT TAKEN.
6. HOOK DEVELOPMENT LENGTH IS VALID FOR 180° HOOKS ALSO.

US Army Corps of Engineers
Afghanistan Engineer District

SYMBOL	DESCRIPTION	DATE	APP

DESIGNED BY: GDH | DATE: 09-30-09
DWN BY: MDB | SUBMITTED BY: BAKER
CHK BY: CWW | FILE NO.: ANPSDS-001XXX

Michael Baker Jr., Inc
A unit of Michael Baker Corporation
Airside Business Park
100 Airside Drive
Moon Township, PA 15108
www.mbakercorp.com

AFGHAN NATIONAL POLICE
STANDARD DESIGN
GUARD TOWER

GENERAL NOTES

SHEET REFERENCE NUMBER:
S1

100% SUBMISSION

STRUCTURAL DESIGN CRITERIA

ALL DESIGNS SHALL CONFORM TO THE PROVISIONS OF THE IBC 2006 AS APPLICABLE

1.0 DESIGN LOADS

1.1 DEAD LOADS

1.1.1 ROOF DEAD LOADS – CONVENTIONAL FRAMING

	MAXIMUM GRAVITY LOAD	MINIMUM GRAVITY LOAD
LIGHT GAUAGE FRAMING	0.20 KPa	0.15 KPa
METAL ROOFING	0.14 KPa	0.05 KPa
INSULATION (batt)	0.10 KPa	0.05 KPa
MISC	0.05 KPa	0.00 KPa
	0.49 KPa	0.25 KPa

1.1.2 ROOF DEAD LOADS – CONCRETE FRAMING

	MAXIMUM GRAVITY LOAD
CONC FLAT SLAB	4.80 KPa
MECH/ELEC/PLUMBING	0.15 KPa
MISC	0.05 KPa
	5.00 KPa

1.2 LIVE LOADS (PER IBC 2006)

1.2.1 ROOF LIVE LOADS: ALL BUILDINGS

GREATER OF 1.0 KPa MINIMUM OR SNOW LOAD

1.2.2 ELEVATED FLOOR UNIFORM LIVE LOADS

GUARD TOWER 4.80 KPa

1.2.3 SLAB–ON–GRADE LIVE LOADS

ALL BUILDINGS 4.80 KPa

1.3 SNOW LOADS (PER IBC 2006)

1.3.1 DESIGN PARAMETERS

GROUND SNOW LOAD (per UFC 3–310–01)	PER LOCAL CONDITION
SNOW IMPORTANCE FACTOR	1.0 KPa
SNOW EXPOSURE FACTOR	1.0 KPa

1.4 SEISMIC LOADS (PER IBC 2006 & UFC 3–310–04)

1.4.1 SEISMIC PARAMETERS – LOAD BEARING MASONRY

SEISMIC OCCUPANCY CATEGORY	II
SEISMIC IMPORTANCE FACTOR (I)	1.0
SEISMIC SITE CLASS	D
Ss	1.280
S1	0.510
Sds	0.853
Sd1	0.510
SEISMIC DESIGN CATEGORY	D
SEISMIC RESISTING SYSTEM	MOMENT RESISTING FRAME SYSTEM SPECIAL REINF CONC MOMENT FRAME
RESPONSE MODIFICATION FACTOR (R)	8.0
RESPONSE COEFFICIENT (Cs)	0.133
SEISMIC ANALYTICAL PROCEDURE	EQUIV LATERAL FORCE
SEISMIC BASE SHEAR	75.6 kN

1.5 WIND LOADS (PER IBC 2006)

1.5.1 DESIGN PARAMETERS

BASIC WIND SPEED	137 Km/h
WIND IMPORTANCE FACTOR	1.0
WIND EXPOSURE CATEGORY	D
DIRECTIONALITY COEFFICIENT (Kd)	0.85
TOPOGRAPHIC FACTOR (Kzt)	1.0

1.5.2 DESIGN WIND PRESSURE – MAIN WINDFORCE RESISTING SYSTEM

LOCATION	CORNER ZONE WIDTH "a"	MEAN ROOF HEIGHT "h"	WINDWARD WALL (@ MEAN ROOF HEIGHT)	LEEWARD WALL (@ MEAN ROOF HEIGHT)	ROOF
FIELD ZONE	N/A	6025mm	528 N/m^2	298 N/m^2	803 N/m^2
CORNER ZONE	900mm	6025mm	800 N/m^2	515 N/m^2	–1244 N/m^2

a = 10% OF LEAST HORIZONTAL DIMENSION OR 0.4h, WHICHEVER IS SMALLER, BUT NOT LESS THAN EITHER 4% OF LEAST HORIZONTAL DIMENSION OR 0.9M.
h = MEAN ROOF HIEGHT, IN METERS, EXCEPT THAT EAVE HIEGHT SHALL BE USED FOR ANGLE GREATER THAN 10°.

1.5.3 DESIGN WIND PRESSURE – WALL COMPONENTS AND CLADDING

EXTERIOR WALL SYSTEMS & THEIR ATTACHMENTS TO THE PRIMARY STRUCTURE SHALL BE DESIGNED FOR THE PRESSURES SHOWN IN THE DIAGRAM BELOW:

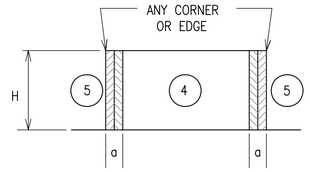

LOCATION	WINDWARD PRESSURE N/m^2 (inward)		LEEWARD PRESSURE N/m^2 (outward)		a
	④	⑤	④	⑤	
MAIN BUILDING					(mm)
AREA = 1 m^2	943	943	–1020	–1264	900
AREA = 2 m^2	900	900	–982	–1173	900
AREA = 5 m^2	804	804	–886	–981	900
AREA = 10 m^2	804	804	–886	–981	900

NOTES:
1. DESIGN WIND PRESSURES ABOVE REPRESENT THE NET PRESSURE (SUM OF INTERNAL AND EXTERNAL PRESSURE) APPLIED NORMAL TO ALL SURFACES.
2. LINEAR INTERPOLATION BETWEEN VALUES OF TRIBUTARY AREA IS PERMISSIBLE.
3. PLUS AND MINUS SIGNS SIGNIFY PRESSURE TOWARD AND AWAY FROM THE EXTERIOR SURFACE, RESPECTIVELY.

1.5 WIND LOADS (CONT)

1.5.4 DESIGN WIND PRESSURE – ROOF COMPONENTS AND CLADDING

ROOF COMPONENTS & THEIR ATTACHMENTS SHALL BE DESIGNED FOR THE PRESSURES SHOWN IN THE ADJACENT DIAGRAM & TABLE BELOW:

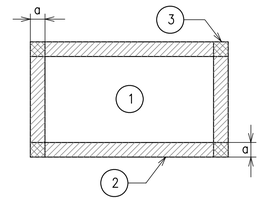

ROOF MEAN HEIGHT

LOCATION	GROSS UPLIFT PRESSURE N/m^2 (upward)			a
	①	②	③	
MAIN BUILDING				(mm)
AREA = 1 m^2	–866	–1513	–1513	900
AREA = 2 m^2	–866	–1513	–1513	900
AREA = 5 m^2	–866	–1513	–1513	900
AREA = 10 m^2	–866	–1513	–1513	900

NOTES:
1. DESIGN WIND PRESSURES ABOVE REPRESENT THE NET PRESSURE (SUM OF INTERNAL AND EXTERNAL PRESSURE) APPLIED NORMAL TO ALL SURFACES.
2. LINEAR INTERPOLATION BETWEEN VALUES OF TRIBUTARY AREA IS PERMISSIBLE.
3. PLUS AND MINUS SIGNS SIGNIFY PRESSURE TOWARD AND AWAY FROM THE EXTERIOR SURFACE, RESPECTIVELY.

2.0 FOUNDATION DESIGN CRITERIA (TO BE CONFIRMED BY THE CONTRACTOR)

THE GEOTECHNICAL ANALYSIS FOR THIS PROJECT IS THE RESPONSIBILITY OF THE CONTRACTOR AWARDED THE WORK. DESIGN VALUES USED IN THE STRUCTURAL ANALYSIS OF THE BUILDINGS HEREIN INDICATED HAVE BEEN ASSUMED AND SHALL BE CONFIRMED AND VERIFIED AS PART OF THE GEOTECHNICAL INVESTIGATION. VALUES WHICH DO NOT MEET THE REQUIREMENTS INDICATED BELOW SHALL BE IMMEDIATELY BROUGHT TO THE ATTENTION OF THE CONTRACTING OFFICER FOR CONSIDERATION AND DETERMINATION ON THE NEXT APPROPRIATE COURSE OF ACTION.

2.1.1 SOIL DESIGN PARAMETERS

NET ALLOWABLE SOIL BEARING CAPACITY	96.0 KPa
UNIT WEIGHT OF SOIL (moist)	1800 Kg/m^3
COEFF ACTIVE EARTH PRESSURE (Kpa)	0.30
COEFF PASSIVE EARTH PRESSURE (Kpp)	3.33
COEFF AT–REST EARTH PRESSURE (Kpr)	.55
COEFF OF SOIL FRICTION	.35
SUBGRADE MODULUS	4120 g/m^3
MINIMUM BEARING DEPTH BELOW GRADE	800mm
SEISMIC SITE CLASS (based on in–situ soil)	D

CONCRETE COVER SCHEDULE

MINIMUM CONCRETE COVER PROTECTION FOR REINFORCEMENT BARS SHALL BE AS FOLLOWS: (SEE ACI 318M–05, SECTION 7.7 FOR CONDITIONS NOT NOTED). DIMENSIONS FOR BAR PLACEMENT GIVEN IN SECTIONS AND DETAILS SHALL SUPERSEDE MINIMUM COVER REQUIREMENTS GIVEN HERE. DIMENSIONS ARE IN mm.

FOOTINGS (EARTH FORMED)		70
COLUMNS / PIERS (TO TIES)		40
GRADE BEAMS OR SLAB TURNED DOWN EDGES:		
TOP		40
BOTTOM (EARTH FORMED)		70
SIDES (EARTH FORMED)		70
SIDES (BOARD FORMED)	#16 BAR & SMALLER	40
	#19 THRU #36 BAR	50
ELEVATED BEAMS & SLABS:		
BEAM TIES & STIRRUPS (NOT EXPOSED TO WEATHER)		40
BEAM TIES & STIRRUPS (EXPOSED TO WEATHER)		50
FLOOR SLABS (NOT EXPOSED TO WEATHER)		20
FLOOR SLABS (EXPOSED TO WEATHER)		
#19 & LARGER		50
#13 & SMALLER		40
ROOF SLAB BARS		25
SLABS–ON–GRADE (NO EXPOSURE TO WEATHER) FROM TOP		20
SLABS–ON–GRADE (EXPOSURE TO WEATHER) FROM TOP		40
UTILITY TUNNEL WALLS, RETAINING WALLS AND SHEAR WALLS, (NO SURFACES SHALL BE EARTH FORMED) EARTH SIDE AND FRONT SIDE (EXPOSED TO WEATHER):		
#16 BAR AND SMALLER		40
#19 THRU #36 BAR		50

PROVIDE STANDARD BAR CHAIRS AND SPACERS AS REQUIRED TO MAINTAIN CONCRETE PROTECTION SPECIFIED.

CONCRETE BEAM SCHEDULE

FLOOR BEAM

MARK	SIZE (mm) (BxH)	REINFORCING TOP	BOTTOM	STIRRUPS	MIDBAR	REMARKS
FB1	400x400	(2)–#25	(2)–#25	#13 @ 250	N/A	TOP BAR LAP AT CENTER BOTT BAR LAP PAST COL

ROOF BEAM

MARK	SIZE (mm) (BxH)	REINFORCING TOP	BOTTOM	STIRRUPS	MIDBAR	REMARKS
RB1	400x400	(2)–#16	(2)–#16	#13 @ 250	N/A	TOP BAR LAP AT CENTER BOTT BAR LAP PAST COL

MASONRY CONCRETE LINTEL SCHEDULE

OPENING TYPE OR SIZE, BEAM LOCATION OR TYPE	MAX SPAN (mm)	BEAM DEPTH (mm)	MAIN REINFORCING TOP	BOTTOM	OTHER	SHEAR REINF STIRRUPS
INT WALL OPENING, NON–BEARING	1800	400		(2)–#13		----
INT WALL OPENING, NON–BEARING	900	200		(2)–#13		----

1. STRUCTURAL DRAWINGS DO NOT INDICATE ALL OPENINGS IN MASONRY WALLS. VERIFY NUMBER, SIZE AND LOCATION OF ALL OPENINGS IN MASONRY WALLS FROM ARCHITECTURAL SHEETS AND APPROVED PLUMBING, MECHANICAL, AND ELECTRICAL SHOP DRAWINGS.
2. PROVIDE 200mm BEARING EA END FOR 200mm DEEP MASONRY LINTEL PROVIDE 400mm BEARING EA END FOR 400mm DEEP CIPL.
3. FOR HEAD DETAILS REFER TO ARCHITECTURAL SHEETS.
4. REINFORCING SHALL BE ASTM A615M, GRADE 420. CONCRETE FOR CAST–IN–PLACE BEAMS SHALL HAVE A MINIMUM COMPRESSIVE STRENGTH OF 28 MPa AT 28 DAYS.
5. CONTRACTOR SHALL SUBMIT FOR APPROVAL SHOP DRAWINGS AND SCHEDULES SHOWING SIZE, DETAILS, LOCATIONS, ETC FOR ALL CAST–IN–PLACE BEAMS IN CMU WALLS.

CONCRETE COLUMN SCHEDULE

MARK	SIZE (LxW)	REINFORCING VERT BARS	TIES
C1	400x400	(8)–#25	#16 @ 100 (CORE OF EXT & CORNER COLUMNS) #13 @ 150 (CORE OF INTERIOR COLUMNS) #13 @ 200 (OTHER)

NOTE:
1. DIMENSIONS NOTED ARE MILLIMETERS (mm) UON.
2. SECOND STORY COLUMNS ARE SAME AS FIRST STORY COLUMNS.
3. CORE INDICATES THE AREA OF COLUMN & BEAM INTERSECTION
4. TIE INDICATES PERIMETER & CROSS TIE COMBINED

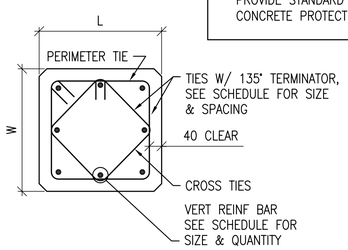

1 / S2 | S2 COLUMN DETAIL
SCALE: 1:10

US Army Corps of Engineers
Afghanistan Engineer District

DESIGNED BY: GDH	DWN BY: MDB	CHK BY: CWW
DATE: 09–30–09	SUBMITTED BY: BAKER	FILE NO.: ANPSDS–002XXX

APP | DATE | DESCRIPTION | SYMBOL

Michael Baker Jr, Inc
A unit of Michael Baker Corporation
Airside Business Park
100 Airside Drive
Moon Township, PA 15108
www.mbakercorp.com

AFGHAN NATIONAL POLICE
STANDARD DESIGN
GUARD TOWER

DESIGN CRITERIA & SCHEDULES

SHEET REFERENCE NUMBER:
S2

100% SUBMISSION

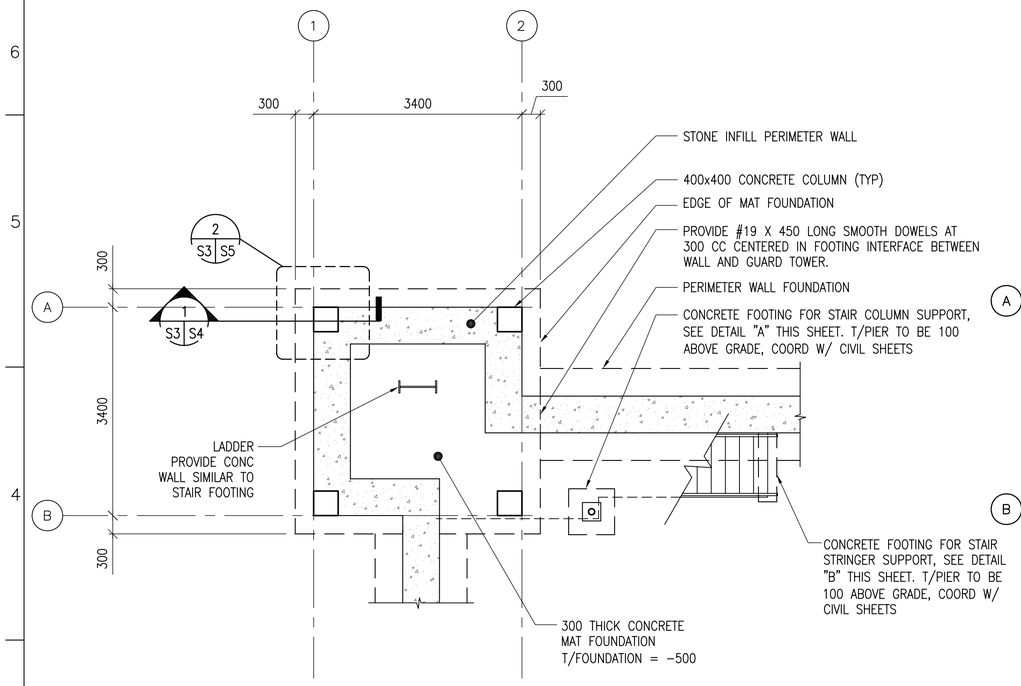

1 S3 S3 GUARD TOWER FOUNDATION PLAN

SCALE: 1:50

N

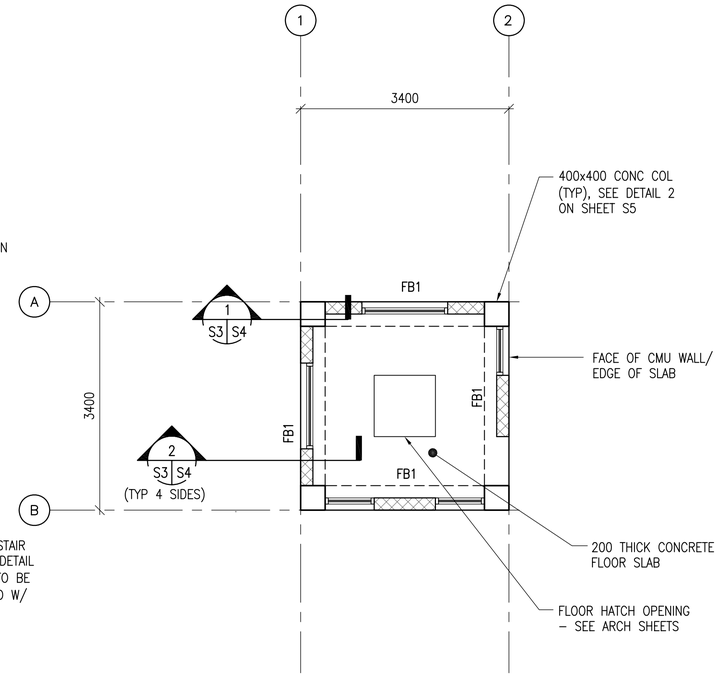

2 S3 S3 GUARD TOWER ELEVATED FLOOR FRAMING PLAN

SCALE: 1:50

N

NOTES:

1. FINISH GRADE ELEVATION SHALL BE (DATUM 0.0) ALL PLUS OR MINUS DIMENSIONS INDICATED ON PLAN OR REFERRED TO IN NOTES RELATE TO FINISH GRADE ELEVATION.
2. TOP OF FOOTINGS: SEE PLAN
3. REFER TO SHEETS S1 AND S2 FOR STRUCTURAL NOTES, BASIS OF DESIGN, SYMBOLS AND ABBREVIATIONS.
4. REFER TO ARCHITECTURAL SHEETS FOR MASONRY PARTITION TYPES
5. ALL CMU CELLS TO BE FULLY GROUTED. SEE SHEET S5 FOR REINF SIZE, SPACING & DETAILS.
6. CONCRETE ROOF AND FLOOR STRUCTURE SHALL BE POURED-IN-PLACE IN ONE CONTINUOUS OPERATION AND SHORED AS REQUIRED UNTIL THE CONCRETE REACHES 75% OF ITS STRENGTH AS A MINIMUM.
7. COORD W/ ARCHITECTURAL SHEETS FOR COLD-FORMED STEEL OVERBUILT FRAMING ABOVE ROOF SLAB.
8. COLD-FORMED METAL OVERBUILT ROOF FRAMING NOT SHOWN FOR CLARITY. SEE OVERBUILT ROOF FRAMING DETAILS AND SECTIONS ON SHEET S4.

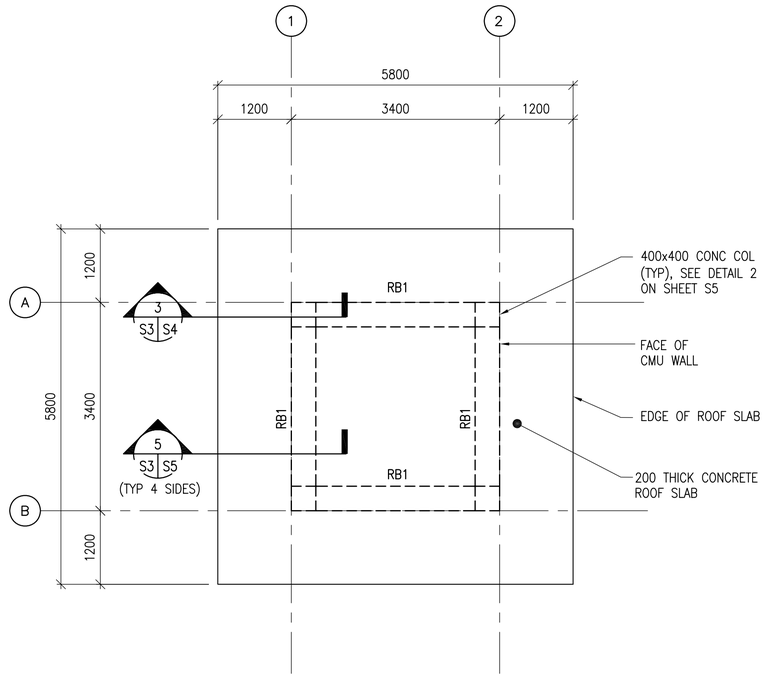

3 S3 S3 GUARD TOWER ROOF FRAMING PLAN

SCALE: 1:50

N

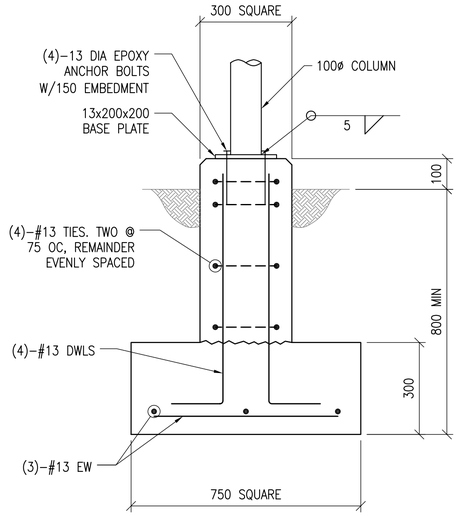

NOTE: AT WEST STAIR COLUMN FOUNDATION OMIT FOOTER & DOWEL INTO PERIMETER WALL FOUNDATION

A S3 S3 DETAIL

SCALE: 1:10

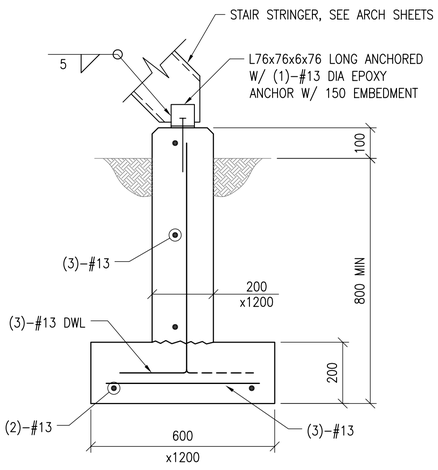

NOTE:

1. USE SIMILAR DETAIL FOR LADDER.

B S3 S3 DETAIL

SCALE: 1:10

UNLESS OTHERWISE NOTED, LINEAR DIMENSIONS SHOWN ARE IN MILLIMETERS (MM)

0 200 400 800

SCALE: 1: 10

0 1000 2000 4000

SCALE: 1: 50

US Army Corps of Engineers

Afghanistan Engineer District

SYMBOL	DESCRIPTION	DATE	APP'D

DESIGNED BY: GDH	DATE: 09-30-09	
DWN BY: MDB	SUBMITTED BY: BAKER	
CHK BY: CWW	FILE NO.: ANPSDS-103XXX	

Michael Baker Jr., Inc
A unit of Michael Baker Corporation
Airside Business Park
100 Airside Drive
Moon Township, PA 15108
www.mbakercorp.com

AFGHAN NATIONAL POLICE
STANDARD DESIGN
GUARD TOWER

FOUNDATION, FLOOR FRAMING AND ROOF PLANS

SHEET REFERENCE NUMBER:

S3

100% SUBMISSION

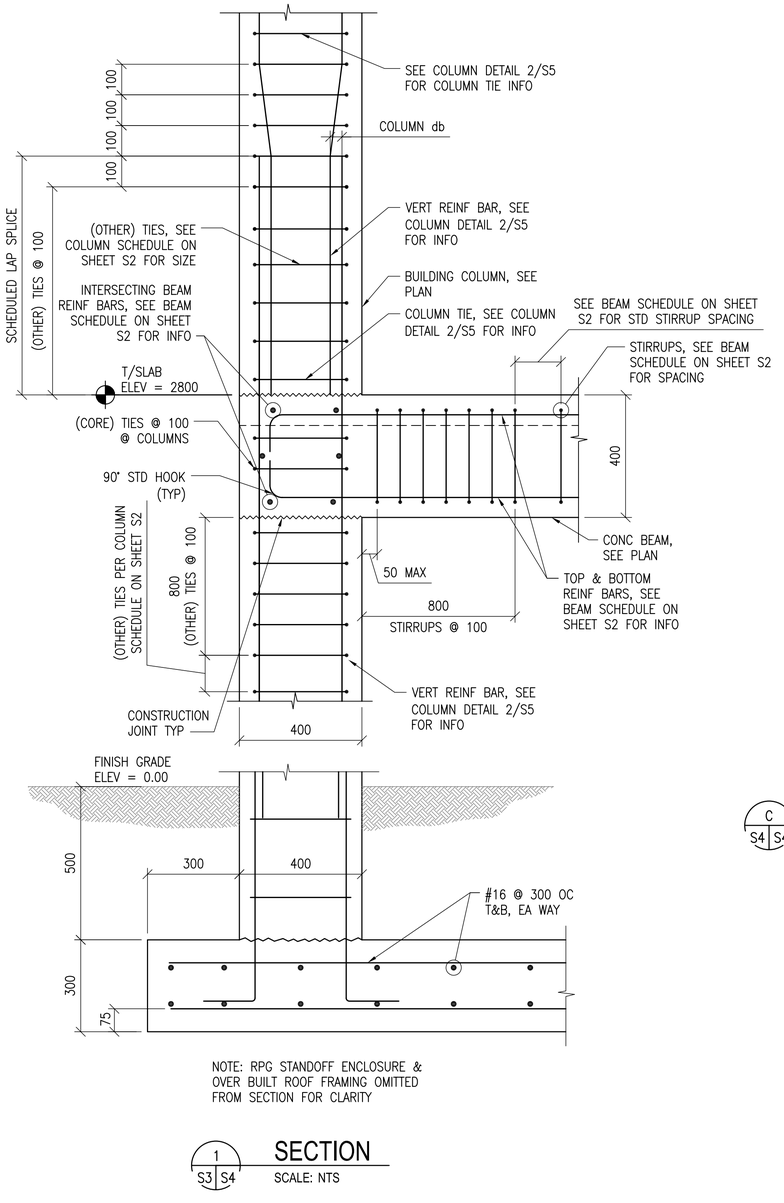

NOTE: RPG STANDOFF ENCLOSURE & OVER BUILT ROOF FRAMING OMITTED FROM SECTION FOR CLARITY

1 S3 S4 **SECTION**
SCALE: NTS

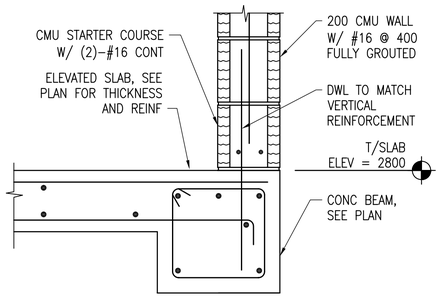

2 S3 S4 **SECTION**
SCALE: 1:10

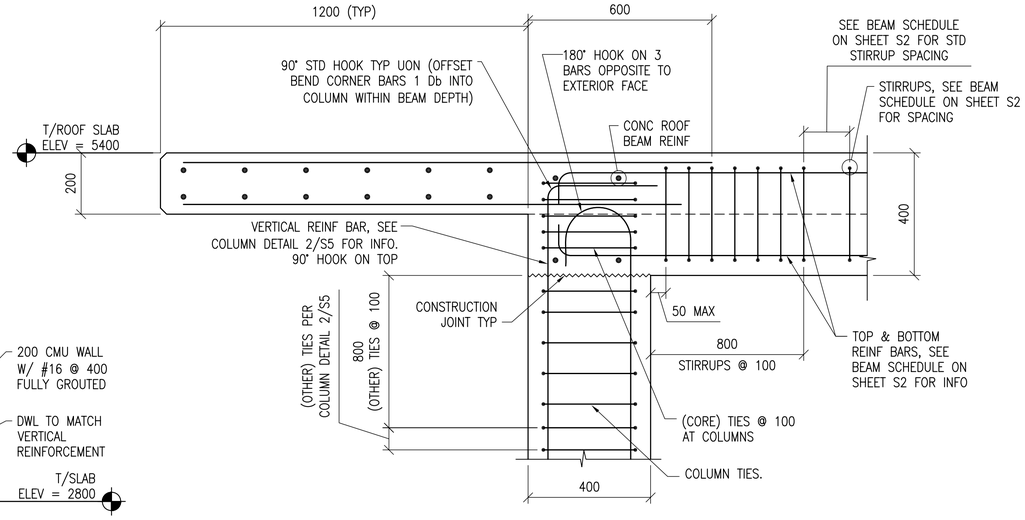

3 S3 S4 **SECTION**
SCALE: 1:10

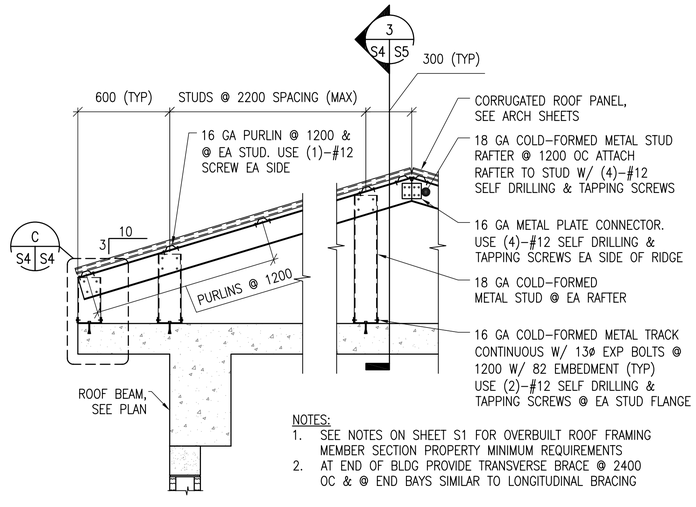

NOTES:
1. SEE NOTES ON SHEET S1 FOR OVERBUILT ROOF FRAMING MEMBER SECTION PROPERTY MINIMUM REQUIREMENTS
2. AT END OF BLDG PROVIDE TRANSVERSE BRACE @ 2400 OC & @ END BAYS SIMILAR TO LONGITUDINAL BRACING

A S4 S4 **TYPICAL OVERBUILT ROOF FRAMING DETAIL**
SCALE: 1:20

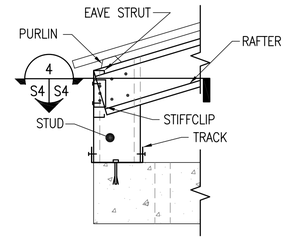

C S4 S4 **DETAIL**
SCALE: 1:10

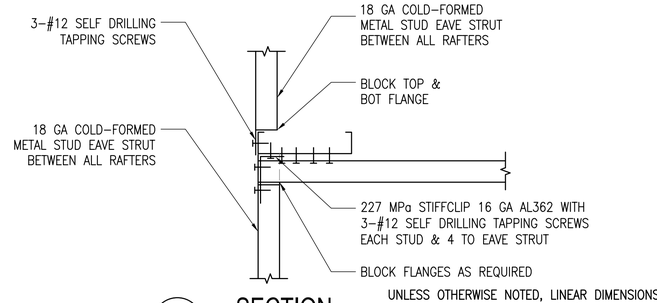

4 S4 S4 **SECTION**
SCALE: 1:5

UNLESS OTHERWISE NOTED, LINEAR DIMENSIONS SHOWN ARE IN MILLIMETERS (MM)

0 100 200 400
SCALE: 1: 5

0 200 400 800
SCALE: 1: 10

0 400 800 1600
SCALE: 1: 20

US Army Corps of Engineers
Afghanistan Engineer District

SYMBOL	DESCRIPTION	DATE	APP'D

DESIGNED BY: GDH	DATE: 09-30-09	FILE NO.: ANPSDS-304XXX
DWN BY: MDB	SUBMITTED BY: BAKER	
CHK BY: CWW		

Michael Baker Jr., Inc
A unit of Michael Baker Corporation
Airside Business Park
100 Airside Drive
Moon Township, PA 15108
www.mbakercorp.com

AFGHAN NATIONAL POLICE
STANDARD DESIGN
GUARD TOWER

SECTIONS AND DETAILS

SHEET REFERENCE NUMBER:
S4

100% SUBMISSION

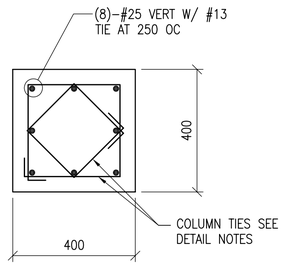

TYPICAL COLUMN REINFORCING DETAIL

1 / S3 S5 — SCALE: 1:10

DETAIL NOTES:
1. PROVIDE #16 CLUMN TIES @ 100 WITHIN COLUMN CORE, OTHERWISE PROVIDE #13 TIES @ 200.
2. COLUMN CORE INDICATES AREA OF COLUMN BETWEEN THE TOP AND BOTTOM OF AN INTERSECTING BEAM.

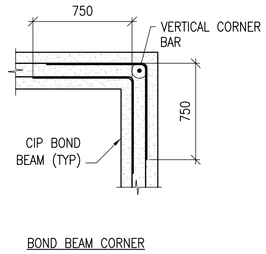

BOND BEAM CORNER

CIP BOND BEAM DETAILS

2 / S5 — SCALE: NTS

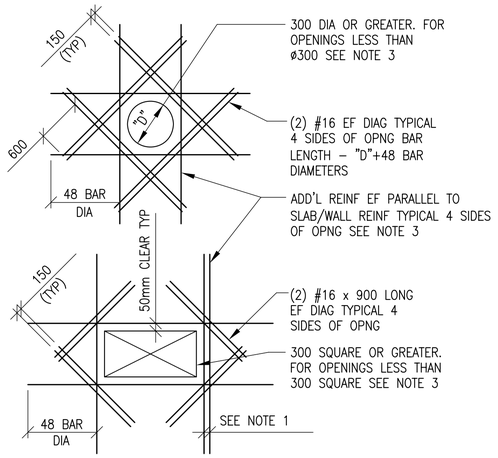

SLAB OPENINGS

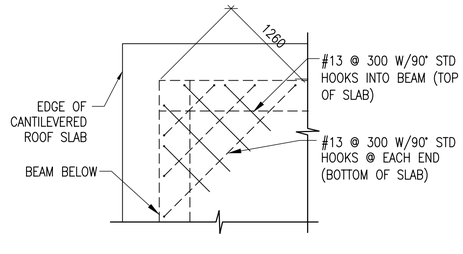

ELEVATED SLAB CORNERS

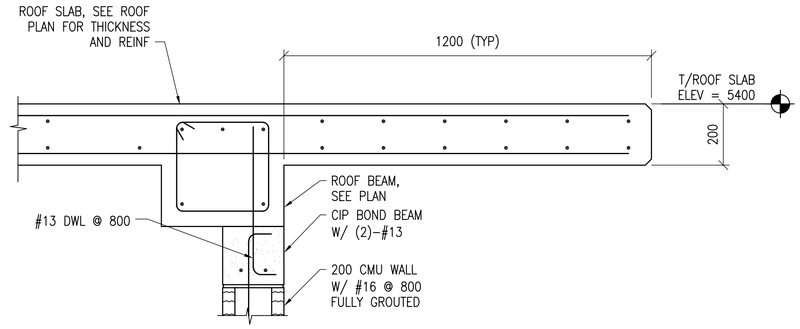

SECTION

5 / S3 S5 — SCALE: NTS

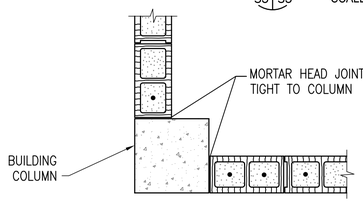

WALL END AT COLUMN

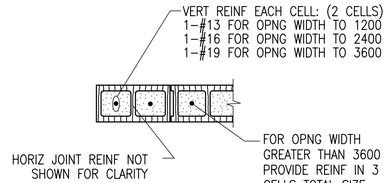

END OF WALL

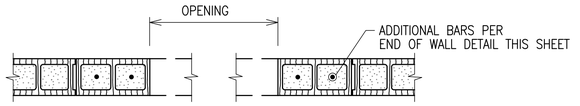

MASONRY OPENING W/ LINTEL

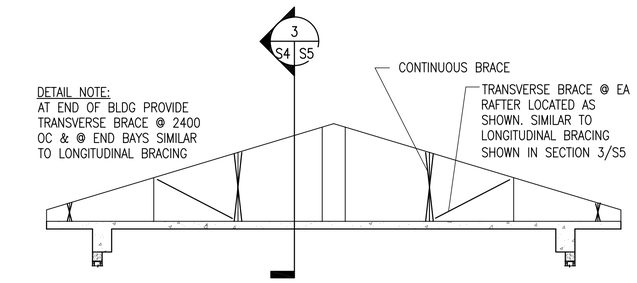

TYPICAL ROOF BRACE LAYOUT DETAIL

B / S4 S4 — SCALE: NTS

ADD'L REINFORCEMENT DETAILS

4 / S5 — SCALE: NTS

DETAIL NOTES:
1. WHERE MORE THAN ONE ADDITIONAL BAR IS REQUIRED PARALLEL TO THE EXISTING SLAB/WALL REINFORCING THE ADDITIONAL REINFORCING BARS SHALL BE SPACED AT 100 ON CENTER.
2. ADDITIONAL REINFORCING PARALLEL TO THE SLAB/WALL REINFORCING SHALL BE #15 BARS THAT PROVIDE A STEEL AREA ON EACH SIDE OF THE OPENING EQUAL TO 1/2 THE AREA OF THE REINFORCING CUT BY THE OPENING.
3. FOR OPENINGS WITH SIDES OR DIAMETERS LESS THAN 300 SPREAD THE SLAB/WALL REINFORCING TO CLEAR THE OPENING.

NOTE:
1. ALL CMU CELLS FULLY GROUTED.

TYPICAL CMU DETAILS

6 / S5 — SCALE: NTS

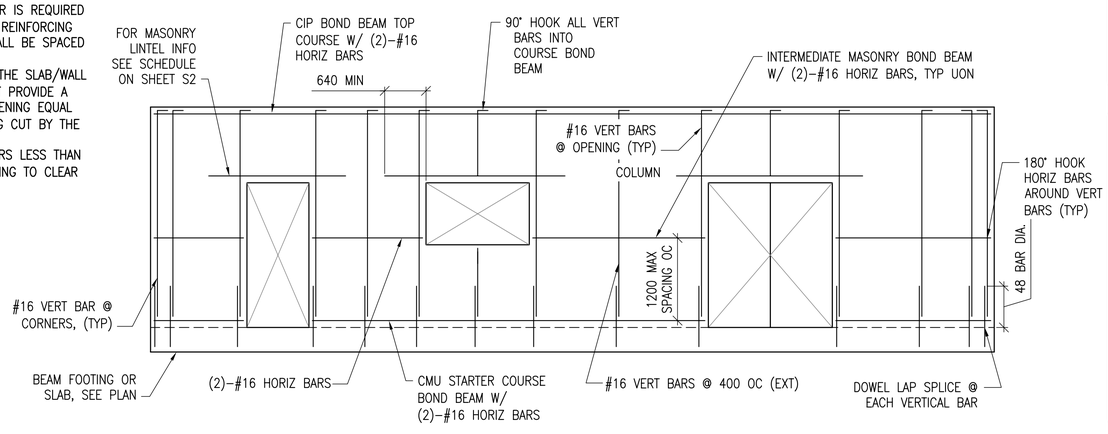

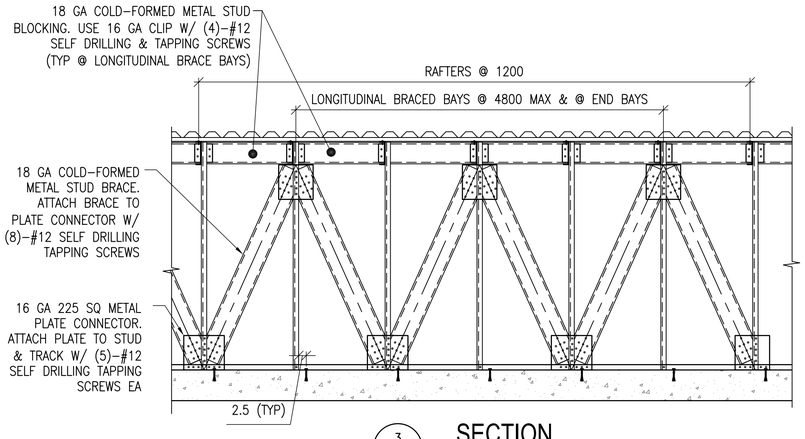

SECTION

3 / S4 S4 — SCALE: NTS

TYPICAL HIP FRAMING DETAIL

SCALE: 1:5

MIN CMU WALL REINFORCING

7 / S5 — SCALE: NTS

UNLESS OTHERWISE NOTED, LINEAR DIMENSIONS SHOWN ARE IN MILLIMETERS (MM)

0 200 400 800

SCALE: 1: 10

US Army Corps of Engineers
Afghanistan Engineer District

SYMBOL	DESCRIPTION	DATE	APP'D

DESIGNED BY: GDH	DATE: 09-30-09	FILE NO.: ANPSDS-505XXX
DWN BY: RCG	SUBMITTED BY: BAKER	
CHK BY: CWW		

Michael Baker Jr, Inc
A unit of Michael Baker Corporation
Airside Business Park
100 Airside Drive
Moon Township, PA 15108
www.mbakercorp.com

AFGHAN NATIONAL POLICE
STANDARD DESIGN
GUARD TOWER

TYPICAL DETAILS

SHEET REFERENCE NUMBER:
S5

100% SUBMISSION

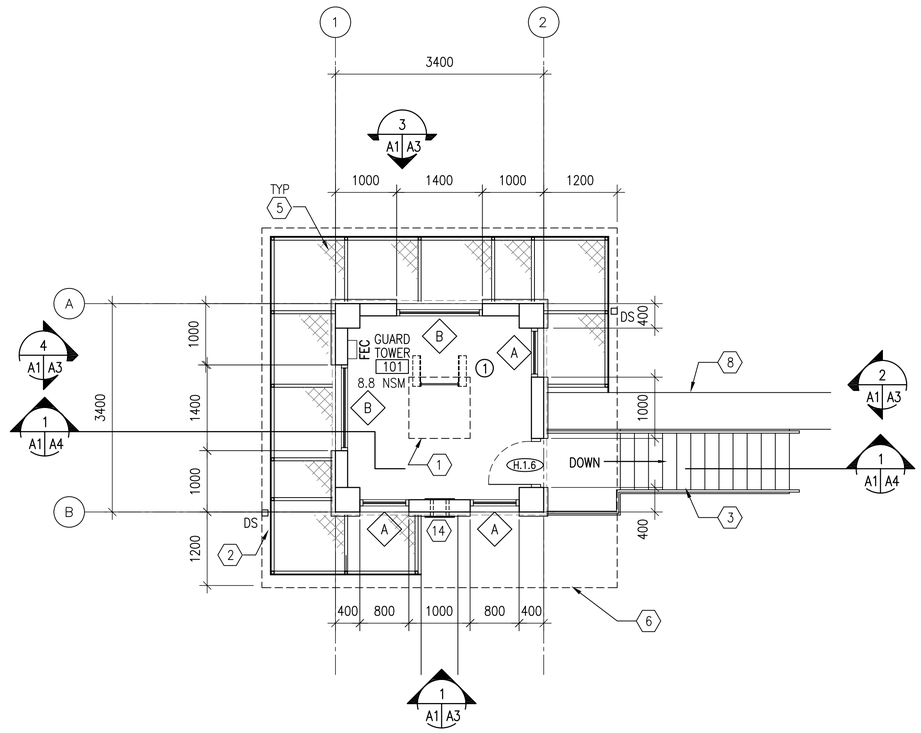

FIRST FLOOR PLAN

SCALE: 1:50
11.6 GSM

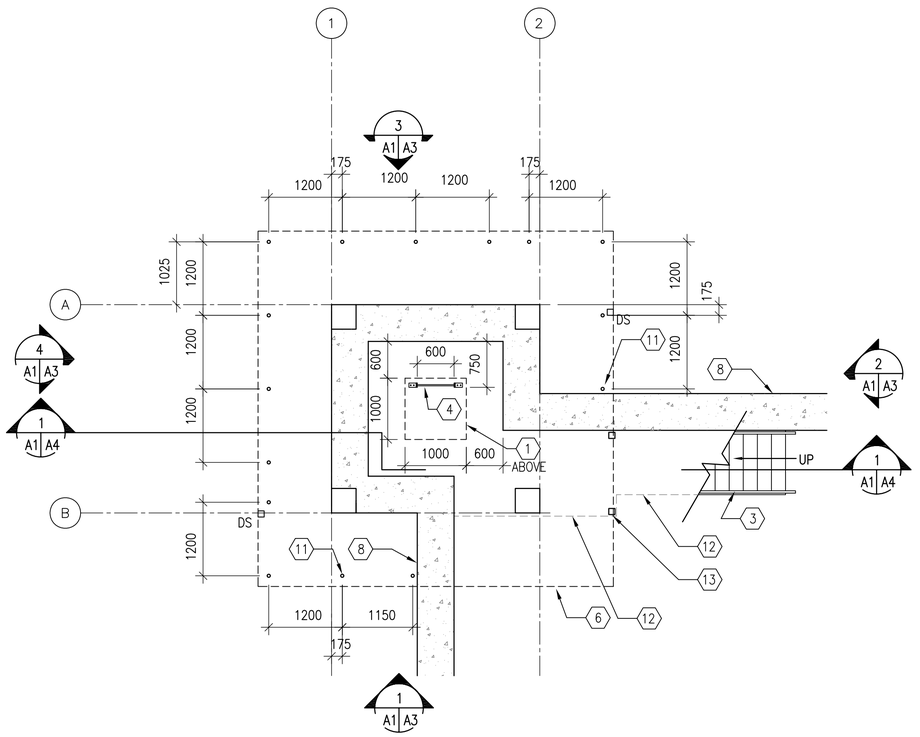

GROUND FLOOR PLAN

SCALE: 1:50

GENERAL NOTES:

A. OPENINGS FOR DOORS SHALL BE LOCATED 200 MM FROM THE ADJACENT WALL UNLESS NOTED OTHERWISE.

B. SURFACES TO BE PAINTED SHALL BE CLEAN AND FREE OF FOREIGN MATTER BEFORE APPLICATION OF PAINT. CLEANING SHALL BE SCHEDULED SO THAT DUST AND OTHER CONTAMINANTS WILL NOT FALL ON WET, NEWLY PAINTED SURFACES.

C. CONCRETE AND INTERIOR MASONRY SURFACES GROUTED SOLID SHALL BE ALLOWED TO DRY AT LEAST 30 DAYS BEFORE PAINTING EXCEPT CONCRETE SLAB ON GRADE WHICH SHALL BE ALLOWED TO CURE 90 DAYS BEFORE PAINTING.

D. PAINTS CONTAINING LEAD IN EXCESS OF 0.06 PERCENT BY WEIGHT OF THE TOTAL NONVOLATILE CONTENT SHALL NOT BE USED.

E. MERCURIAL FUNGICIDES SHALL NOT BE USED IN OIL–BASE PAINT.

F. REMOVE LOOSE DIRT AND CLEAN SURFACES BEFORE PAINTING. APPLY PAINT TO INTERIOR STRUCTURAL RIGID FRAMINGS AND CEILINGS AND TEST FOR ADHESION. PRIMER COAT FOR MASONRY. INITIAL FIRST COAT WITH AN ACRYLIC LATEX PAINT FOR EXTERIOR SURFACES AND A SECOND COAT WITH A WATER REPELLENT ACRYLIC LATEX PAINT.

G. METAL DOORS AND FRAMES SHALL RECEIVE A PRIMER COAT PLUS TWO COATS OF PAINT.

H. DIMENSIONS ARE TO STRUCTURAL COLUMN GRID, EDGE OF WINDOW OPENINGS, AND TO HINGE SIDE OF DOOR OPENINGS.

KEY NOTES: (X)

1. 900 MM x 900 MM FLOOR HATCH – RE: DETAIL 1/A6.
2. RPG STANDOFF SCREEN
3. EXTERIOR STEEL STAIR.
4. LADDER – RE: DETAIL 3/A6.
5. RETURN FENCE HORIZONTALLY TO FACE OF WALL.
6. LINE OF ROOF OVERHANG, ABOVE.
7. NOT USED
8. STONE FORCE PROTECTION WALL.
9. NOT USED
10. NOT USED
11. 50 MM DIAMETER GALVANIZED STEEL PIPE SUPPORT.
12. LINE OF STEEL STAIR AND PLATFORM ABOVE.
13. STEEL STAIR COLUMN.
14. TWO–PIECE WALL THIMBLE AND TRIM PLATE FOR OPTIONAL WOOD BURNING STOVE CHIMNEY PIPE. STOVE AND PIPE BY OTHERS.

ROOM FINISHES: (X)

1.	WALLS:	PAINTED PLASTER,
	FLOOR:	SEALED CONCRETE
	CEILING:	PAINTED PLASTER APPLIED TO STRUCTURE

LEGEND:

- F.1.4 — DOOR TYPE, SEE SHEET A5
- A — WINDOW TYPE, SEE SHEET A5
- X — KEY NOTE
- FEC — FIRE EXTINGUISHER CABINET
- 1 — ROOM FINISH TYPE DESIGNATION

UNLESS OTHERWISE NOTED, LINEAR DIMENSIONS SHOWN ARE IN MILLIMETERS (MM)

0 1000 2000 4000

SCALE: 1: 50

US Army Corps of Engineers
Afghanistan Engineer District

SYMBOL	DESCRIPTION	DATE	APP'D

DESIGNED BY: PFF	DWN BY: PFF	CHK BY: NLJ	
DATE: 09–30–09	SUBMITTED BY: BAKER	FILE NO.: ANPSDA–101XXX	

Michael Baker Jr, Inc
A unit of Michael Baker Corporation
Airside Business Park
100 Airside Drive
Moon Township, PA 15108
www.mbakercorp.com

AFGHAN NATIONAL POLICE
STANDARD DESIGN
GUARD TOWER

FLOOR PLANS

SHEET REFERENCE NUMBER:
A1

100% SUBMISSION

KEY NOTES:

1. LINE OF BUILDING WALL, BELOW
2. CORRUGATED METAL ROOF PANELS ON COLD-FORMED METAL FRAMING
3. METAL GUTTER

LEGEND:

(X) KEY NOTE

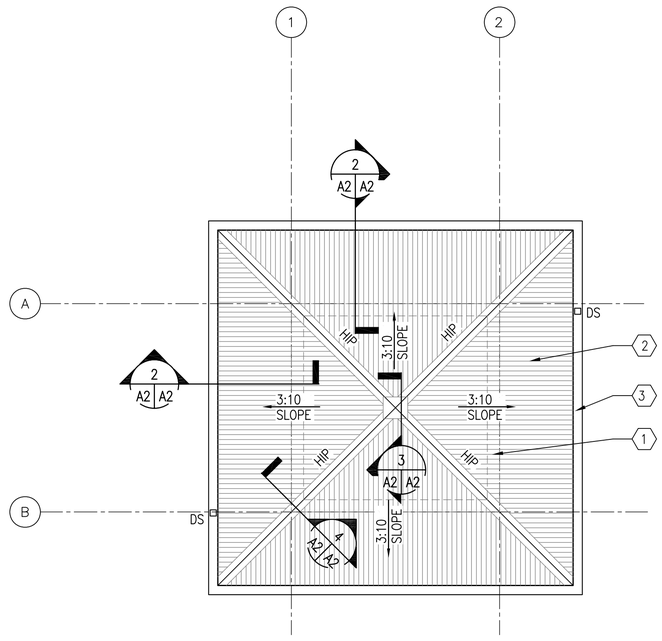

1 A2 A2 ROOF PLAN
SCALE: 1:50

N

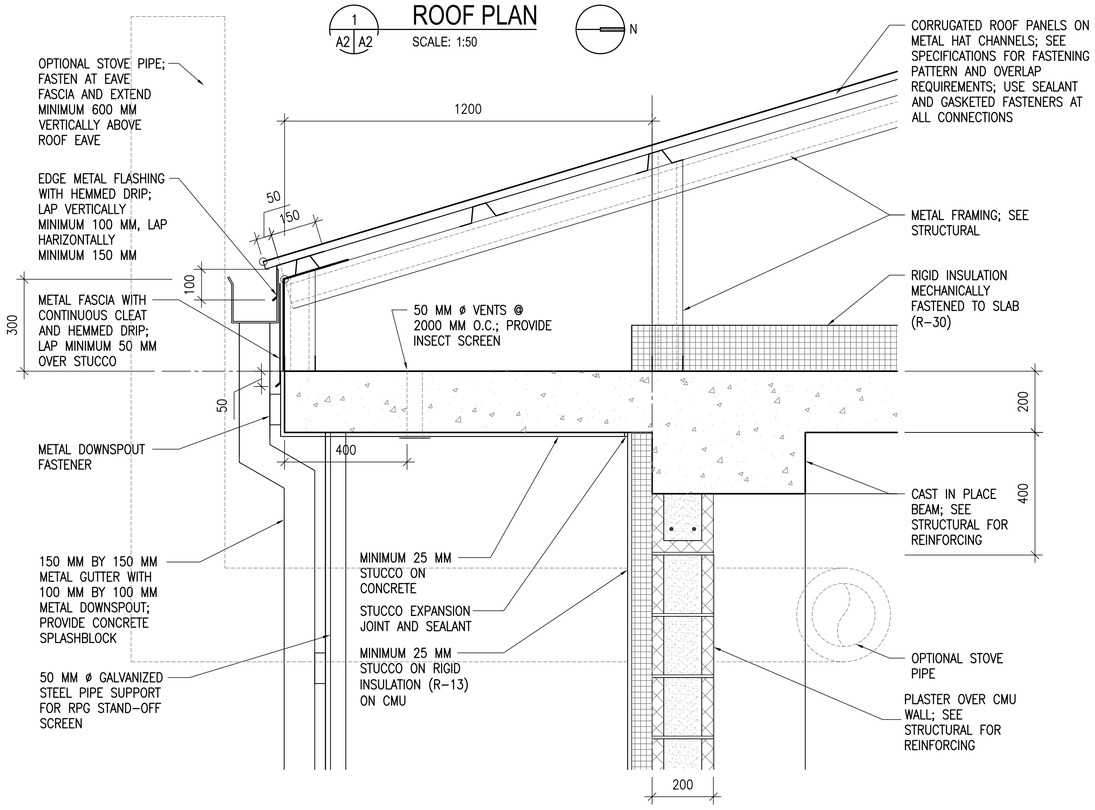

2 A2 A2 EAVE DETAIL
SCALE: 1:10

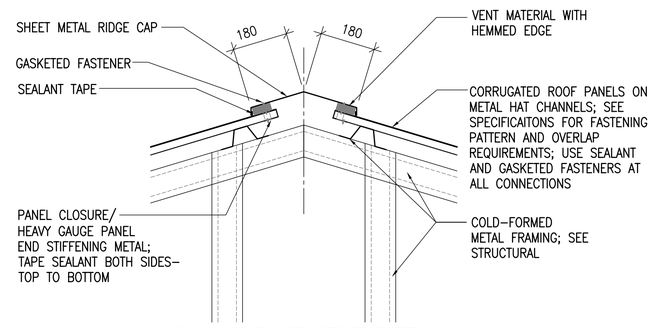

3 A2 A2 RIDGE VENT DETAIL
SCALE: 1:10

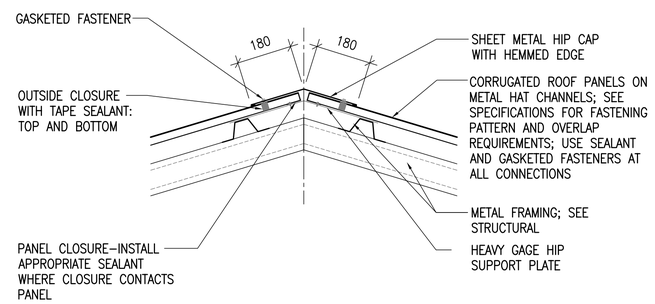

4 A2 A2 HIP DETAIL
SCALE: 1:10

UNLESS OTHERWISE NOTED, LINEAR DIMENSIONS SHOWN ARE IN MILLIMETERS (MM)

0 200 400 800
SCALE: 1: 10

0 1000 2000 4000
SCALE: 1: 50

US Army Corps of Engineers
Afghanistan Engineer District

DATE	DESCRIPTION	APP'D

DESIGNED BY: PFF	DATE: 09-30-09
DWN BY: PFF	SUBMITTED BY: BAKER
CHK BY: NLJ	FILE NO.: ANPSDA-102XXX

Michael Baker Jr., Inc
A unit of Michael Baker Corporation
Airside Business Park
100 Airside Drive
Moon Township, PA 15108
www.mbakercorp.com

AFGHAN NATIONAL POLICE
STANDARD DESIGN
GUARD TOWER

ROOF PLAN AND DETAILS

SHEET REFERENCE NUMBER:
A2

100% SUBMISSION

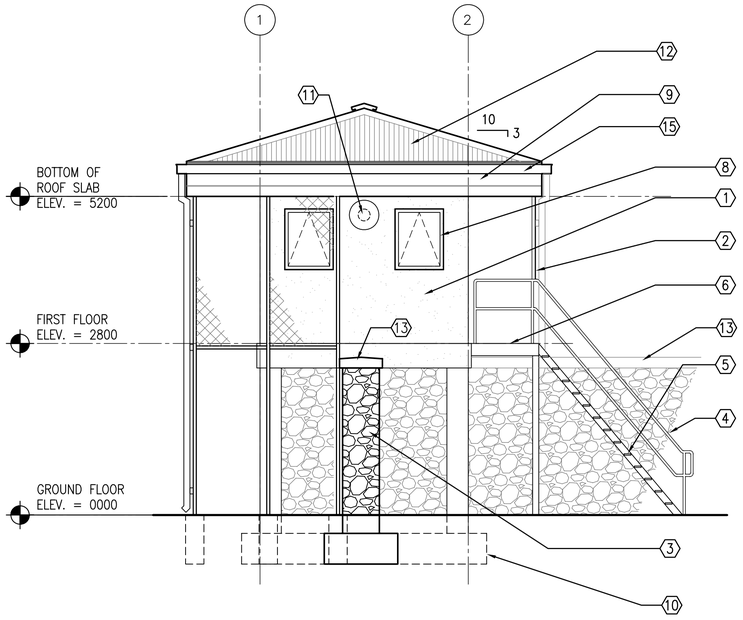

1 A1 A3 EAST ELEVATION

SCALE: 1:50

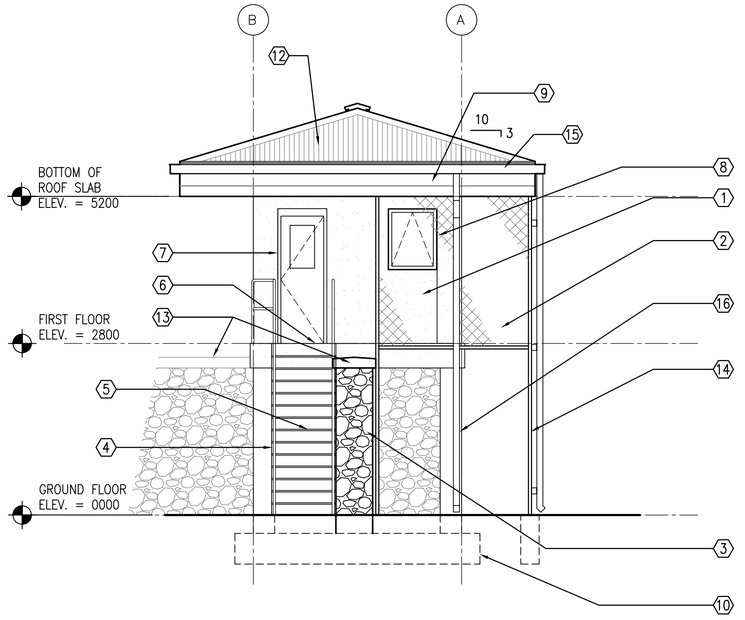

2 A1 A3 NORTH ELEVATION

SCALE: 1:50

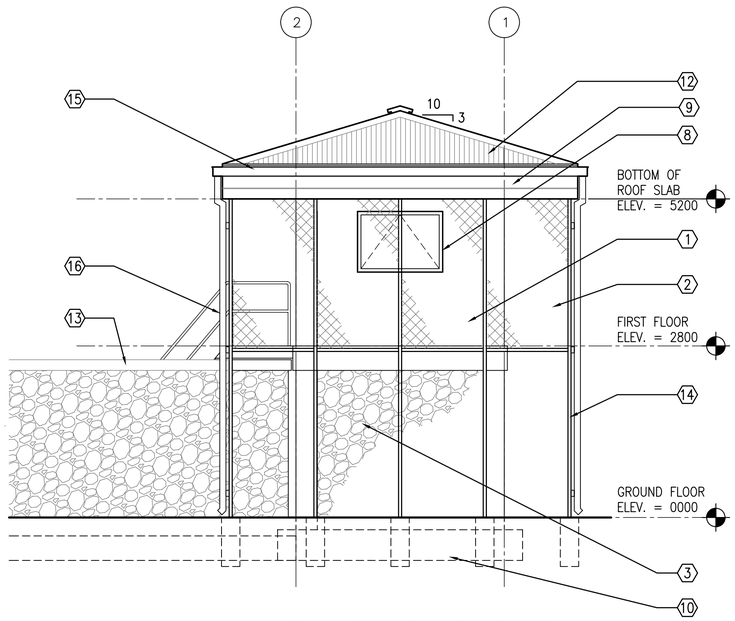

3 A1 A3 WEST ELEVATION

SCALE: 1:50

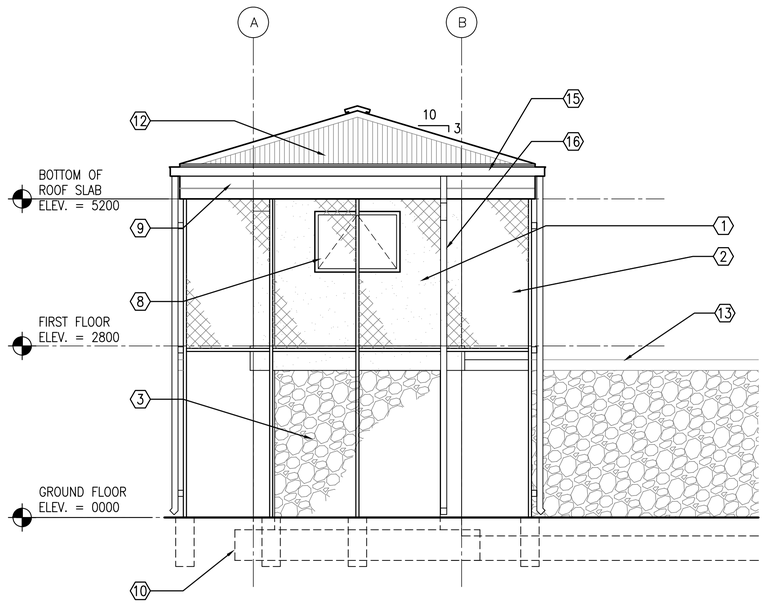

4 A1 A3 SOUTH ELEVATION

SCALE: 1:50

KEY NOTES: (X)

1. STUCCO AND RIGID INSULATION SYSTEM ON CMU AND CONCRETE
2. RPG STANDOFF SCREEN
3. STONE FORCE PROTECTION WALL, BEYOND
4. STEEL PIPE RAILING
5. STEEL STAIR TREADS
6. STEEL DIAMOND PLATE PLATFORM
7. STEEL FRAME AND DOOR WITH PLEXI GLASS LITE
8. WOOD AWNING WINDOW
9. STEEL FASCIA
10. SEE STRUCTURAL DRAWINGS FOR CONCRETE FOOTING
11. TWO-PIECE WALL THIMBLE AND TRIM PLATE FOR OPTIONAL WOOD BURNING STOVE CHIMNEY PIPE. STOVE AND PIPE BY OTHERS.
12. CORRUGATED METAL ROOF PANELS ON COLD-FORMED METAL FRAMING
13. CAST CONCRETE WALL CAP
14. 50 DIAMETER GALVANIZED STEEL PIPE SUPPORTS
15. METAL GUTTER
16. METAL DOWNSPOUT WITH SPLASH BLOCK

UNLESS OTHERWISE NOTED, LINEAR DIMENSIONS SHOWN ARE IN MILLIMETERS (MM)

0 1000 2000 4000

SCALE: 1: 50

US Army Corps of Engineers
Afghanistan Engineer District

SYMBOL	DESCRIPTION	DATE	APP

DESIGNED BY: PFF	DWN BY: PFF	CHK BY: NLJ	
DATE: 09-30-09	SUBMITTED BY: BAKER	FILE NO.: ANPSDA-203XXX	

Michael Baker Jr, Inc
A unit of Michael Baker Corporation
Airside Business Park
100 Airside Drive
Moon Township, PA 15108
www.mbakercorp.com

AFGHAN NATIONAL POLICE
STANDARD DESIGN
GUARD TOWER

EXTERIOR ELEVATIONS

SHEET REFERENCE NUMBER:
A3

100% SUBMISSION

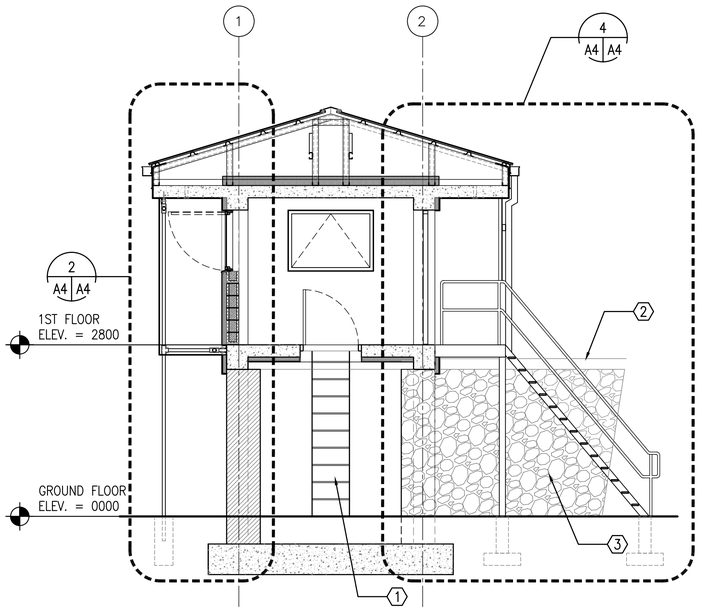

1 A1 A4 BUILDING SECTION

SCALE: 1:50

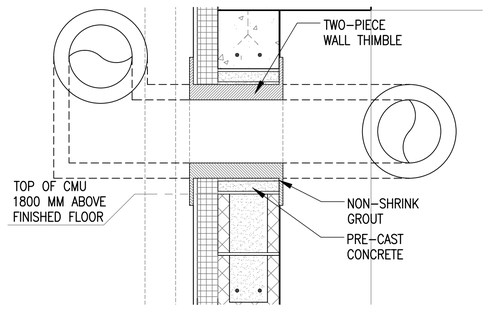

4 A4 A4 THIMBLE DETAIL, TYPICAL

SCALE: 1:10

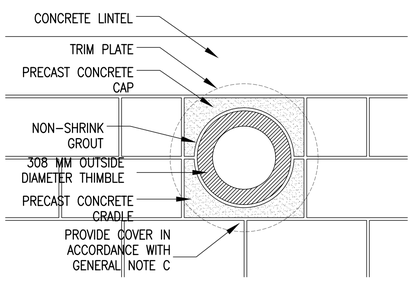

5 A4 A4 THIMBLE DETAIL, TYPICAL

SCALE: 1:10

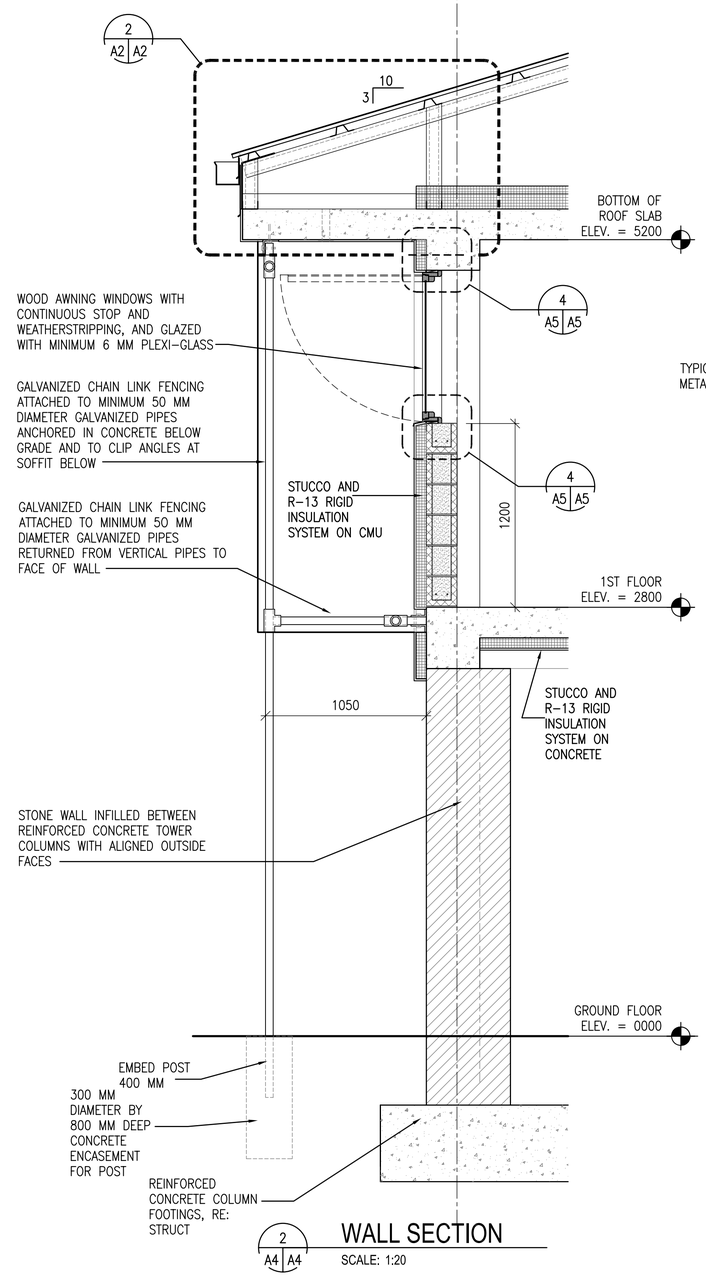

2 A4 A4 WALL SECTION

SCALE: 1:20

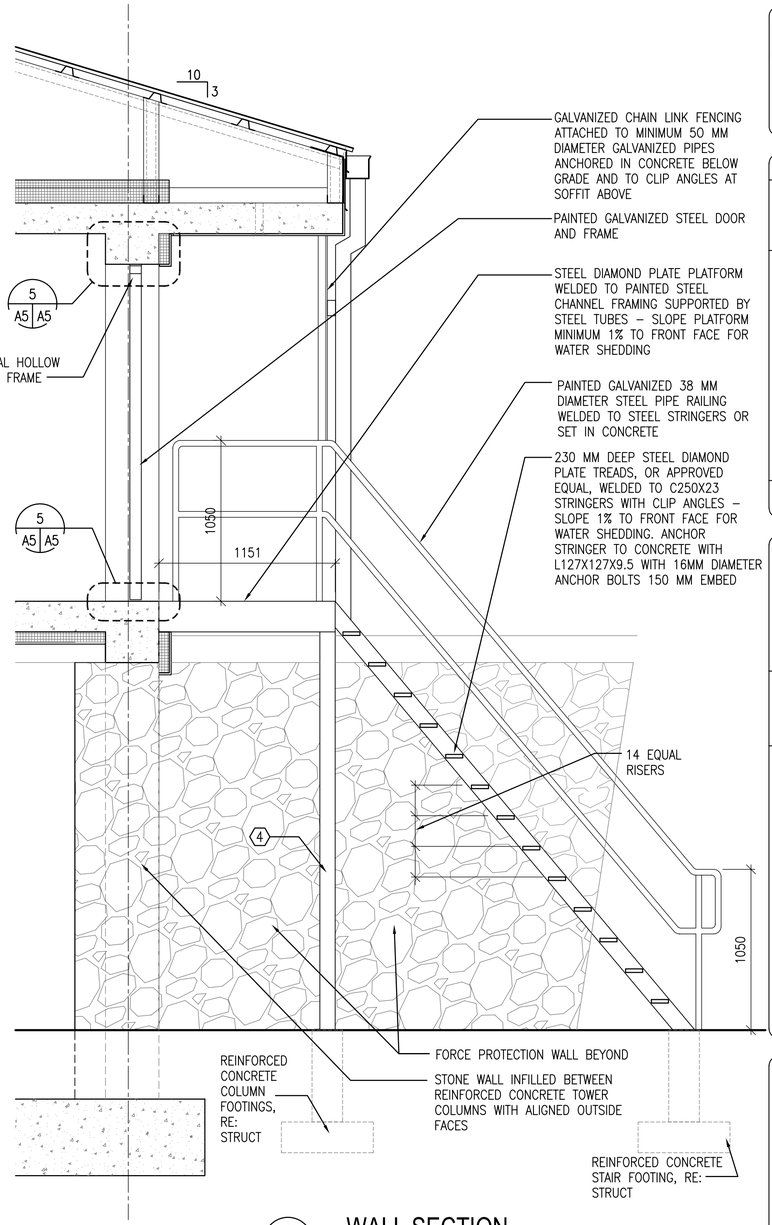

4 A4 A4 WALL SECTION

SCALE: 1:20

GENERAL NOTES:

A. COORDINATE SIZE AND LOCATION OF OPENINGS FOR MECHANICAL ITEMS WITH MECHANICAL DRAWINGS.
B. PROVIDE STRUCTURAL LINTELS AS REQUIRED – RE: STRUCT
C. PROVIDE 480 MM SQUARE, 1.5 MM THICK GALVANIZED SHEET METAL COVER WITH 13 MM HEMMED EDGE FOR WALL THIMBLE UNTIL STOVE PIPE IS PROVIDED. INSTALL COVER ON EXTERIOR FACE OF THIMBLE TRIM PLATE. COVER SHALL BE BE SET IN SILICONE SEALANT AND FASTENED WITH 4 STAINLESS STEEL SCREWS. ALIGN FASTENER LOCATIONS WITH COVER PLATE FASTENER OPENINGS SO ADDITIONAL FASTENER PENETRATIONS ARE NOT CREATED IN EXTERIOR FINISH.

KEY NOTES: (X)

1. STEEL LADDER; REFER TO 3/A6
2. CAST CONCRETE WALL CAP
3. STONE FORCE PROTECTION WALL
4. STEEL STAIR COLUMN.

UNLESS OTHERWISE NOTED, LINEAR DIMENSIONS SHOWN ARE IN MILLIMETERS (MM)

0 400 800 1600

SCALE: 1: 20

0 1000 2000 4000

SCALE: 1: 50

US Army Corps of Engineers
Afghanistan Engineer District

SYMBOL	DESCRIPTION	DATE	APP

DESIGNED BY: PFF	DATE: 09–30–09	FILE NO.: ANPSDA–304XXX
DWN BY: PFF	SUBMITTED BY: BAKER	
CHK BY: NLJ		

Michael Baker Jr., Inc
A unit of Michael Baker Corporation
Airside Business Park
100 Airside Drive
Moon Township, PA 15108
www.mbakercorp.com

AFGHAN NATIONAL POLICE
STANDARD DESIGN
GUARD TOWER

BUILDING AND WALL SECTIONS

SHEET REFERENCE NUMBER: A4

100% SUBMISSION

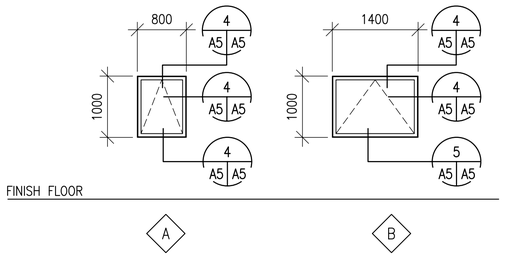

1 A5 A5 WINDOW TYPES
SCALE: 1:50

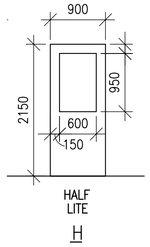

2 A5 A5 DOOR TYPE
SCALE: 1:50

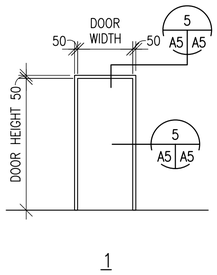

3 A5 A5 FRAME TYPE
SCALE: 1:50

WINDOW TYPES NOTES:

1. ALL EXTERIOR WINDOWS SHALL BE WOOD WITH INSECT SCREENS. WINDOWS SHALL BE COMMERCIAL GRADE.
2. GLAZING SHALL BE ACRYLIC SHEET.

DOOR TYPES NOTES:

1. EXTERIOR METAL DOORS AND FRAME COLORS SHALL MATCH ADJACENT WALL COLORS AS SELECTED BY THE CONTRACTING OFFICER.
2. HARDWARE SHALL BE HEAVY DUTY, COMMERCIAL GRADE, STAINLESS STEEL WITH A MATTE FINISH.
3. FRAMES, EXCEPT FIRE-RATED FRAMES, SHALL BE MOUNTED AND ADJUSTED IN ACCORDANCE WITH MANUFACTURER'S INSTRUCTIONS. FRAMES SHALL BE FASTENED WITH MINIMUM OF THREE FASTENING POINTS PER SIDE AT REGULAR INTERVALS.
4. DIMENSIONS SHOWN ON DOOR SCHEDULE ARE BASED UPON MODULAR MASONRY (OR ROUGH OPENING), HEIGHT OF 2200mm FOR STANDARD PERSONNEL DOORS. CONTRACTOR SHALL COORDINATE WITH DOOR SUPPLIER TO ENSURE THAT DIMENSIONS OF DOORS AND FRAMES PROVIDED ARE COMPATIBLE WITH DOOR OPENING DIMENSIONS.

HARDWARE TYPES:

HW-6 1-1/2 PR HINGES
1 EA LOCKSET,F04 ENTRY LOCK W/LEVERS. GRADE 1
1 EA DOOR CLOSER, C02061,LOW RESISTANCE
1 EA THRESHOLD J32130

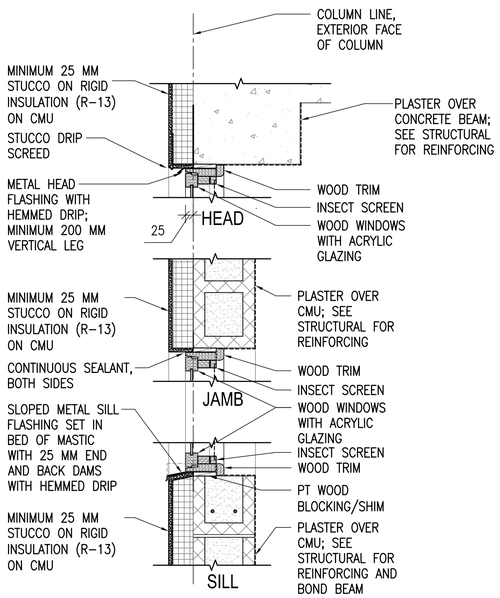

4 A5 A5 WINDOW DETAILS
SCALE: 1:10

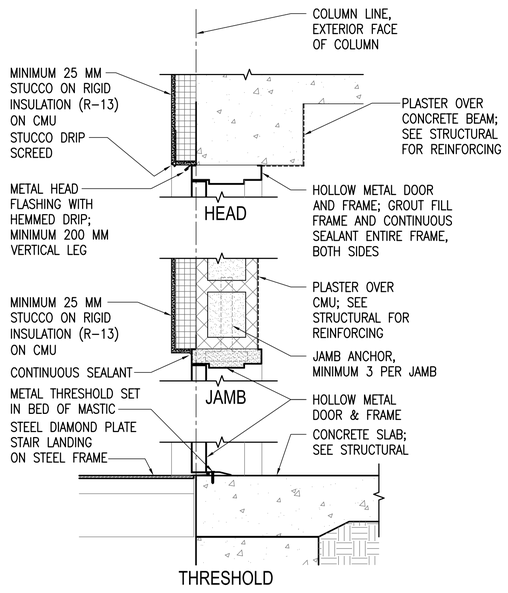

5 A5 A5 EXTERIOR DOOR DETAILS
SCALE: 1:10

UNLESS OTHERWISE NOTED, LINEAR DIMENSIONS SHOWN ARE IN MILLIMETERS (MM)

0 200 400 800
SCALE: 1: 10

0 1000 2000 4000
SCALE: 1: 50

US Army Corps of Engineers
Afghanistan Engineer District

SYMBOL	DESCRIPTION	DATE	APP

DESIGNED BY: PFF	DWN BY: PFF	CHK BY: NLJ	DATE: 09-30-09
SUBMITTED BY: BAKER	FILE NO.: ANPSDA-505XXX		

Michael Baker Jr., Inc
A unit of Michael Baker Corporation
Airside Business Park
100 Airside Drive
Moon Township, PA 15108
www.mbakercorp.com

AFGHAN NATIONAL POLICE
STANDARD DESIGN
GUARD TOWER

DOOR, WINDOW & FINISH TYPES & DETAILS

SHEET REFERENCE NUMBER:
A5

100% SUBMISSION

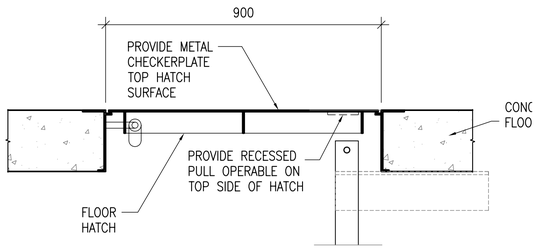

1 A4 A6 FLOOR HATCH DETAIL

SCALE: 1:10

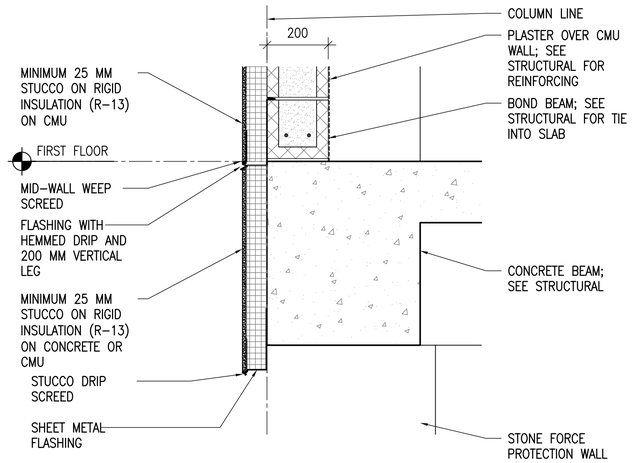

2 A6 A6 STUCCO JOINT DETAIL

SCALE: 1:10

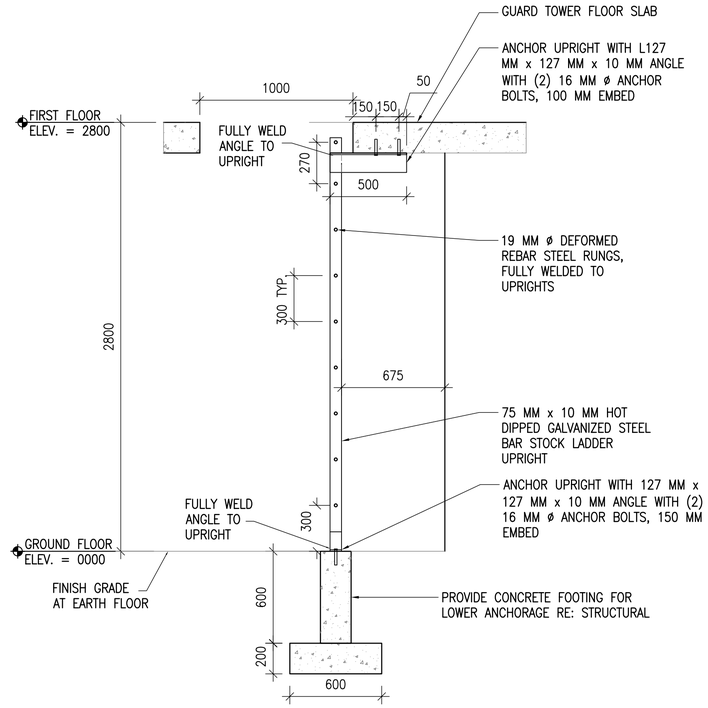

3 A6 A6 LADDER DETAIL

SCALE: 1:20

UNLESS OTHERWISE NOTED, LINEAR DIMENSIONS SHOWN ARE IN MILLIMETERS (MM)

0 200 40 800

SCALE: 1: 10

0 400 800 1600

SCALE: 1: 20

US Army Corps of Engineers

Afghanistan Engineer District

SYMBOL	DESCRIPTION	DATE	APP

DESIGNED BY: PFF	DATE: 09-30-09		
DWN BY: PFF	SUBMITTED BY: BAKER	CHK BY: NLJ	FILE NO.: ANPSDA-506XXX

Michael Baker Jr., Inc
A unit of Michael Baker Corporation
Airside Business Park
100 Airside Drive
Moon Township, PA 15108
www.mbakercorp.com

AFGHAN NATIONAL POLICE
STANDARD DESIGN
GUARD TOWER

SECTION DETAILS

SHEET REFERENCE NUMBER:

A6

100% SUBMISSION

POWER

- DISTRIBUTION PANELBOARD
- NEW PANELBOARD – SURFACE
- NEW PANELBOARD – RECESSED
- EXISTING PANELBOARD
- (G) GENERATOR
- TVSS TRANSIENT VOLTAGE SURGE SURPRESSOR
- TRANSFORMER (DRAWN TO SIZE)
- PS POWER SUPPLY
- CP CONTROL PANEL
- TC TIME CLOCK
- TIM ASTRONOMICAL TIME CLOCK– "SEE SPEC."
- R RELAY WITH RATING AND NUMBER OF POLES AS NOTED ON DRAWINGS– "SEE SPEC."
- J JUNCTION BOX
- (J) JUNCTION BOX – CEILING
- PB PULL BOX
- BD BUS DUCT HORIZONTAL
- BUS DUCT VERTICAL
- EMERGENCY POWER OFF PUSH BUTTON
- NON–FUSIBLE SAFETY SWITCH
- FUSIBLE SAFETY SWITCH
- (M) MOTOR
- ^{M} MOTOR STARTING SWITCH – 20A RATED
- ^{K} KEY SWITCH – 20A RATED
- FC FAN COIL – FURNISHED BY MECHANICAL CONTRACTOR, ELECTRICAL CONTRACTOR SHALL INSTALL AND PROVIDE POWER CONNECTION
- UH UNIT HEATER – FURNISHED BY MECHANICAL CONTRACTOR, ELECTRICAL CONTRACTOR SHALL INSTALL AND PROVIDE POWER CONNECTION
- D JUNCTION BOX FOR CONNECTION TO GARBAGE DISPOSAL
- CF LIGHT/HEATER/FAN – FURNISHED BY MECHANICAL CONTRACTOR, ELECTRICAL CONTRACTOR SHALL INSTALL AND PROVIDE POWER CONNECTION
- ELECTRIC WATER HEATER
- EPO WEATHERPROOF / EXPLOSION PROOF EMERGENCY POWER OFF PUSH–BUTTON TO BE INTERCONNECTED WITH GENERATOR SHUT DOWN CONTROL
- CF CEILING FAN – REFER TO SPECIFICATION SECTION 26 20 00

RECEPTACLES

- DUPLEX 20A BRITISH STANDARD UNSWITCHED SOCKETS
- ^{GF} DUPLEX 20A BRITISH STANDARD UNSWITCHED SOCKETS – 10mA GROUND FAULT INTERRUPTER TYPE
- ^{WP} DUPLEX 20A BRITISH STANDARD UNSWITCHED SOCKETS – 10mA GROUND FAULT INTERRUPTER TYPE WITH WEATHERPROOF COVER
- ^{EXP} DUPLEX 20A BRITISH STANDARD UNSWITCHED SOCKETS – EXPLOSION PROOF
- * INDICATES MOUNT DEVICE ABOVE COUNTER TOP

LIGHTNING PROTECTION

- AIR TERMINAL 20mm O.D. X 4m SOLID COPPER, NICKEL PLATED ON ADHESIVE BASE.
- EQ EQUIPMENT AIR TERMINAL
- TEST WELL WITH GROUND ROD(S)
- GROUND ROD
- G GROUND PLATE
- MAIN GROUND CONDUCTER CONCEALED WITHIN CONSTRUCTION
- MAIN GROUND CONDUCTOR EXPOSED ON EXPOSED ON BUILDING EXTERIOR SURFACE
- GROUND CONDUCTOR CAD WELDED TO GROUND CABLE OR EQUIPMENT
- GROUND CONDUCTOR CAD WELDED TO BUILDING STEEL COLUMN
- GROUND ROD TRIPOD, SPACED 10 FEET APART.
- LEVEL TO LEVEL CABLE

LIGHTING

- LIGHTING FIXTURE – SEE FIXTURE SCHEDULE FOR MORE INFORMATION
- LIGHTING FIXTURE – SEE FIXTURE SCHEDULE FOR MORE INFORMATION
- DOWNLIGHT
- LIGHTING FIXTURE ON NORMAL/EMERGENCY
- WALL MOUNTED LIGHT FIXTURE
- E EXIT SIGN – DIRECTIONAL ARROWS AS INDICATED ON DRAWINGS
- B BATTERY PACK WITH HEADS AS INDICATED ON DRAWINGS
- REMOTE HEAD FOR BATTERY PACK
- $ SINGLE POLE SWITCH – 20A RATED
- ^{3} 3–WAY SWITCH – 20A RATED
- ^{4} 4–WAY SWITCH – 20A RATED
- PC PHOTOCELL VOLTAGE TO MATCH CIRCUITRY
- LC LIGHTING CONTACTOR
- POLE MOUNTED SITE LIGHTING FIXTURE– NUMBER OF FIXTURES PER POLE AS INDICATED ON DRAWINGS
- EXTERIOR DIRECTIONAL LIGHTING FIXTURE
- a SMALL CASE LETTERS REPRESENTS LAMP(S) / SWITCHES. WHEN USED WITH AN OCCUPANCY SENSOR THIS INDICATES SENSOR WITH MANUAL OVERRIDE SWITCH

TELECOMMUNICATIONS

- TELEPHONE OUTLET(S) @ 18" AFF. U.N.O. WITH 3/4" RACEWAY TERMINATED ABOVE NEAREST ACCESSIBLE CEILING OR TO TELEPHONE TERMINAL BOARD IF NO ACCESSIBLE CEILING AVAILABLE. SEE TELE/DATA RISER DIAGRAM FOR OUTLET AND CABLE DESCRIPTION
- DATA OUTLET(S) @ 18" AFF. U.N.O. WITH 3/4" RACEWAY TERMINATED ABOVE NEAREST ACCESSIBLE CEILING OR TO DATA EQUIPMENT RACK IF NO ACCESSIBLE CEILING AVAILABLE. SEE TELE/DATA RISER DIAGRAM FOR OUTLET AND CABLE DESCRIPTION

TELECOMMUNICATIONS (CONTINUED)

- COMBINATION TELEPHONE/DATA OUTLET(S) @ 18" AFF. U.N.O. WITH 1" RACEWAY TERMINATED ABOVE NEAREST ACCESSIBLE CEILING OR TO TELE/DATA TERMINAL AREA IF NO ACCESSIBLE CEILING AVAILABLE. SEE TELE/DATA RISER DIAGRAM FOR OUTLET AND CABLE DESCRIPTION
- W WALL MTD. TELEPHONE OUTLET WITH 3/4" RACEWAY TERMINATED ABOVE NEAREST ACCESSIBLE CEILING OR TO TELEPHONE TERMINAL BOARD IF NO ACCESSIBLE CEILING AVAILABLE. SEE TELE/DATA RISER DIAGRAM FOR OUTLET AND CABLE DESCRIPTION
- (x)T INDICATES NUMBER OF TELEPHONE OUTLET(S) AND ASSOCIATED CABLING
- (x)D INDICATES NUMBER OF DATA OUTLET(S) AND ASSOCIATED CABLING
- (x)TF INDICATES NUMBER OF TELEPHONE OUTLETS AND ASSOCIATED CABLING WITH 1 OUTLET AND CABLE DEDICATED FOR FAX

SINGLE LINE SYMBOLS

- SWITCH
- BREAKER
- FUSE
- TRANSFORMER
- CAPACITOR
- GROUND
- CONTACT (NORMALLY OPEN)
- CONTACT (NORMALLY CLOSED)
- AUTOMATIC TRANSFER SWITCH
- MANUAL DOUBLE THROW SWITCH
- CURRENT TRANSFORMER
- INDICATES NEW ELECTRICAL EQUIPMENT
- C INDICATES NEW CONTROL WIRING AND CONDUIT
- EQUIPMENT OUTLINE

MISCELLANEOUS

- BRANCH CIRCUIT WIRING CONCEALED ABOVE CEILINGS, SURFACE MOUNTED ON WALLS
- BRANCH CIRCUIT WIRING – #10 AWG
- BRANCH CIRCUIT WIRING – UNDER FLOOR
- HOME RUN BACK TO PANEL
- CONDUIT TURNED DOWN
- CONDUIT TURNED UP
- LV LOW VOLTAGE WIRING AND CONDUIT
- CT–X CABLE TRAY ("X" DENOTES WIDTH)
- INDICATES CONTINUATION OF LINE

FIRE ALARM

- FACP FIRE ALARM CONTROL PANEL WITH BATTERY BACKUP
- F FIRE ALARM PULL STATION

FIRE ALARM (CONTINUED)

- F FIRE ALARM STROBE – WALL MOUNTED
- F FIRE ALARM AUDIBLE/STROBE – WM
- F FIRE ALARM HORN/STROBE – WM
- S SMOKE DETECTOR
- H HEAT DETECTOR CEILING MOUNTED
- D DUCT DETECTOR – PROVIDED BY EC, INSTALLED BY MC AND CONNECTED BY EC

DENOTATIONS & ABBREVIATIONS

AFF	ABOVE FINISHED FLOOR
C	CEILING MOUNTED
E	EMERGENCY
EC	ELECTRICAL CONTRACTOR
EPO	EMERGENCY POWER OFF
EXP	EXPLOSION PROOF
F	FIRE ALARM
FF	FLUSH FLOOR MOUNTED
FL	FLUORESCENT
FO	FIBER OPTIC
FSS	FUSED SAFETY SWITCH
G	GROUND FAULT INTERRUPTER
GC	GENERAL CONTRACTOR
HOA	HAND–OFF AUTO
I	INFRARED
ICD	INCANDESCENT
IG	ISOLATED GROUND
K	KEY
LV	LOW VOLTAGE
M	MOTOR
MC	MECHANICAL CONTRACTOR
NE	NORMAL/EMERGENCY
NFSS	NON–FUSED SAFETY SWITCH
PA	PAGING SYSTEM
PLC	PLUMBING CONTRACTOR
REL	RELOCATE
RED	RELOCATED
SL	SINGLE LINE
SS	SURGE SUPPRESSION
T	TELEPHONE
TL	TWIST LOCK

DENOTATIONS & ABBREVIATIONS (CONT.)

TP	TAMPER PROOF
UE	UNDERGROUND ELECTRIC
UF	UNDERGROUND FIBER
UT	UNDERGROUND TELEPHONE
W	WALL MOUNTED
WG	WIRE GUARD
WP	WEATHERPROOF
WPG	WEATHERPROOF/GROUND FAULT INTERRUPTER
WT	WATER TIGHT

GENERAL PROJECT NOTES:

G1. UNLESS OTHERWISE NOTED, PROVIDE ALL EQUIPMENT SHOWN ON THE PLANS. THE ELECTRICAL CONTRACTOR SHALL COORDINATE ALL SYMBOLS SHOWN ON THE PLANS WITH THE SYMBOL LIST. IT SHALL BE THE RESPONSIBILITY OF THE CONTRACTOR TO VERIFY THE INTENT OF ANY SYMBOL THAT IS SHOWN ON THE PLANS AND NOT INDICATED ON THE SYMBOL LIST WITH THE ENGINEER PRIOR TO BID.

G2. COORDINATE THE FINAL LOCATIONS OF ALL LIGHT FIXTURES WITH THE ARCHITECT'S REFLECTED CEILING PLANS. REPORT ANY DISCREPANCIES TO THE ARCHITECT PRIOR TO INSTALLATION.

G3. THE CONTRACTOR SHALL VERIFY THE LOCATION OF ALL UNDERGROUND UTILITIES WITHIN THE CONSTRUCTION AREA THREE (3) WORKING DAYS NOTICE BEFORE COMMENCE DIGGING. NOTIFY THE LOCAL OR STATE AUTHORITY HAVING JURISDICTION AND WAIT THE REQUIRED TIME BEFORE COMMENCING TO DIG.

G4. THE CONTRACTOR SHALL COORDINATE CONDUIT RUNS, CABLE TRAY, LIGHTING FIXTURES AND OTHER EQUIPMENT LOCATIONS WITH THE OTHER TRADE CONTRACTORS TO AVOID CONFLICTS.

G5. WHERE VOLTAGES AND FREQUENCIES ON THE DRAWINGS AND IN THE SPECIFICATIONS DIFFER FROM THE LOCAL ONES, ALL WORK SHALL BE PERFORMED USING THE LOCAL VOLTAGES AND FREQUENCIES.

G6. THE MINIMUM WIRE SIZE ON THE PROJECT SHALL BE 4mm2. THE MINIMUM CONDUIT SIZE SHALL BE 20mm. THE MINIMUM BREAKER SIZE SHALL BE 20 AMPS.

G7. THE CONTRACTOR SHALL PUT A MAXIMUM OF 6 DUPLEX SOCKETS ON A 20A SINGLE POLE CIRCUIT.

G8. WHERE THE 1010 SCOPE REVIEW, 1015 TECHNICAL REVIEW, DRAWINGS, AND SPECIFICATIONS DIFFER FROM AMERICAN CODES OR STANDARDS THE 1010, 1015, DRAWINGS, AND SPECIFICATIONS SHALL RULE.

G9. WORK FOR THE AMMUNITION SUPPLY POINT SHALL BE DONE IN ACCORDANCE WITH DEPARTMENT OF DEFENSE STANDARD DOD 6055.9–STD.

G10. ALL CONDUIT AND DEVICES SHALL BE SURFACE MOUNTED UNLESS OTHERWISE INDICATED.

US Army Corps of Engineers
Afghanistan Engineer District

SYMBOL	DESCRIPTION	DATE	APP

DESIGNED BY:	DATE:
JRG	09–30–09
DWN BY:	SUBMITTED BY:
JRG	BAKER
CHK BY:	FILE NO.:
JRG	ANPSDE–000XXX

Michael Baker Jr, Inc
A unit of Michael Baker Corporation
Airside Business Park
100 Airside Drive
Moon Township, PA 15108
www.mbakercorp.com

AFGHAN NATIONAL POLICE
STANDARD DESIGN
GUARD TOWER

ELECTRICAL SYMBOLS AND ABBREVIATIONS

SHEET REFERENCE NUMBER:
E0

100% SUBMISSION

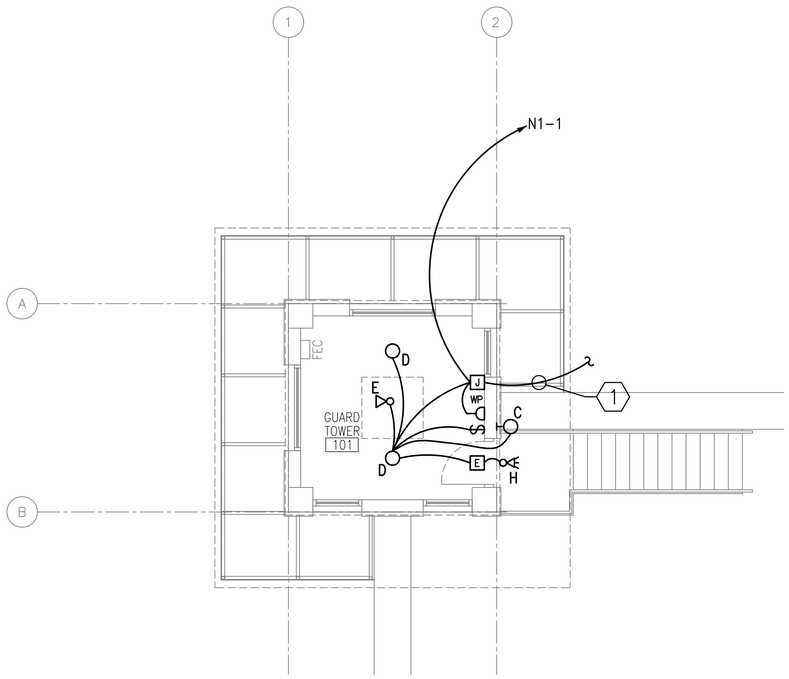

1 E1 E1 UPPER LEVEL LIGHTING, POWER, AND SYSTEMS PLAN

SCALE: 1:50

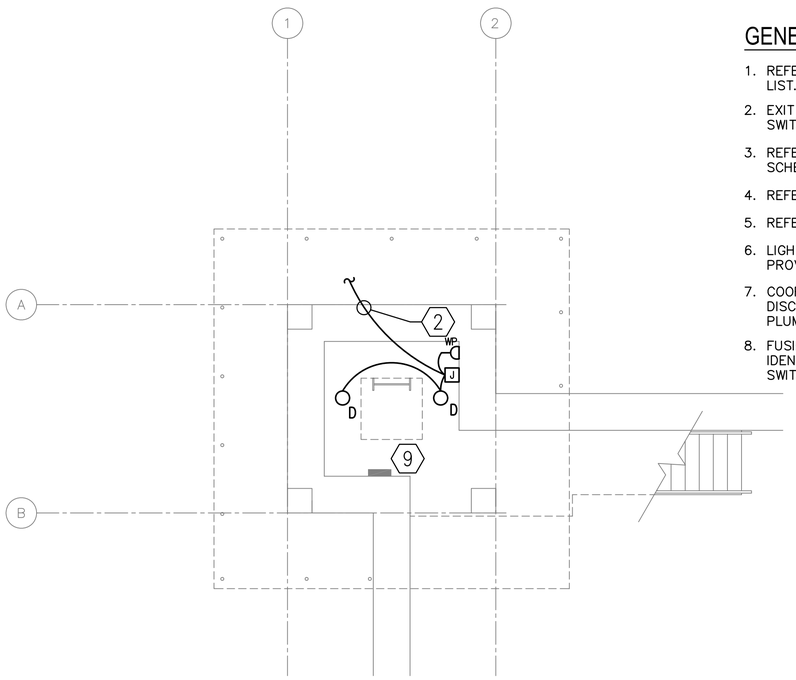

2 E1 E1 LOWER LEVEL LIGHTING, POWER, AND SYSTEMS PLAN

SCALE: 1:50

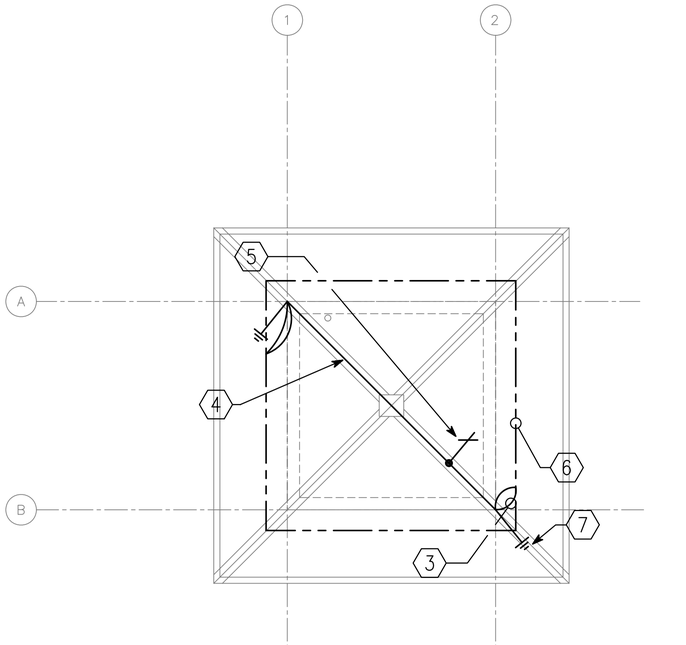

3 E1 E1 ROOF LIGHTNING PROTECTION PLAN

SCALE: 1:50

GENERAL NOTES:

1. REFER TO DRAWING #E0 FOR THE ELECTRICAL SYMBOLS LIST.
2. EXIT SIGNS SHALL BE WIRED AHEAD OF ANY LOCAL SWITCHING ON CIRCUITS.
3. REFER TO DRAWING #E3 FOR THE LIGHTING FIXTURE SCHEDULE.
4. REFER TO DRAWING #E2 FOR THE POWER RISER.
5. REFER TO DRAWING #E4 FOR PANEL SCHEDULES.
6. LIGHT FIXTURES INDICATED AS EMERGENCY SHALL BE PROVIDED WITH A BATTERY BACKUP BALLAST.
7. COORDINATE EXACT MOUNTING LOCATION OF DISCONNECTING MEANS FOR MECHANICAL AND PLUMBING EQUIPMENT IN THE FIELD.
8. FUSIBLE SAFETY SWITCHES THAT ARE NOT OTHERWISE IDENTIFIED SHALL BE 380V, 1P, 30A FUSED SAFETY SWITCHES WITH 20A FUSES.

NUMBERED NOTE:

1. TO LEVEL BELOW.
2. TO LEVEL ABOVE.
3. CADWELD TO BUILDING STRUCTURE AT 18 METERS O.C. AROUND ENTIRE PERIMETER OF BUILDING. (TYPICAL).
4. 120mm2 LIGHTNING PROTECTION CABLE.
5. AIR TERMINAL (TYPICAL). THE AIR TERMINAL SHALL BE OFFSET TO THE RIDGE ON THE SIDE OF THE ROOF LOCATED TOWARDS THE INTERIOR OF THE COMPOUND. THE AIR TERMINAL SHALL BE 0.5 METERS MINIMUM HIGHER THAN THE TOP OF THE SEARCH LIGHT.
6. 1 120.0mm2 BARE, TINNED COPPER COUNTERPOISE GROUND 700mm BELOW GRADE.
7. INSTALL DOWN CONDUCTOR IN 25mm SCHEDULE 80 PVC CONDUIT TO 20mm DIAMETER x 3 METERS SOLID COPPER TINNED GROUND ROD. (TYPICAL).
8. CONTRACTOR SHALL ENSURE THAT THE MOUNTING HARDWARE FOR THE SEARCHLIGHT CREATES A WEATHERPROOF SEAL WITH THE ROOF. CONTRACTOR SHALL PROVIDE ANY NECESSARY GASKETING TO ENSURE THERE IS

UNLESS OTHERWISE NOTED, LINEAR DIMENSIONS SHOWN ARE IN MILLIMETERS (MM)

1 0 1 2 3 4
1:50

US Army Corps of Engineers
Afghanistan Engineer District

SYMBOL	DESCRIPTION	DATE	APP'D

DESIGNED BY:	DATE:	SUBMITTED BY:	FILE NO.:
JRG	09-30-09	BAKER	ANPSDE-101XXX
DWN BY:		CHK BY:	
JRG		JRG	

Michael Baker Jr., Inc.
A unit of Michael Baker Corporation
Airside Business Park
100 Airside Drive
Moon Township, PA 15108
www.mbakercorp.com

AFGHAN NATIONAL POLICE
STANDARD DESIGN
GUARD TOWER

TOWER LIGHTING, POWER, AND SYSTEMS PLANS

SHEET REFERENCE NUMBER:
E1

100% SUBMISSION

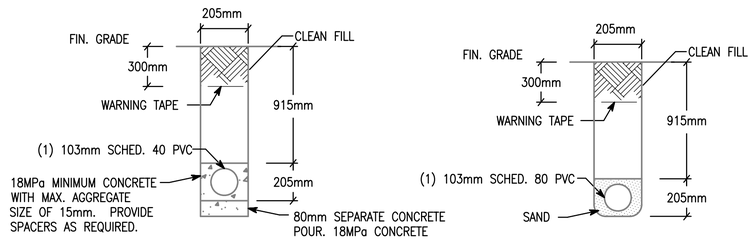

NOTE: PVC CONDUIT SHALL BE DIRECT BURIED SCHEDULE 80 FOR NO TRAFFIC AREAS AND CONCRETE-ENCASED SCHEDULE 40 FOR UNDER ROADWAYS OR TRAFFIC AREAS.

1 E2 E2 **TYPICAL DUCT BANK DETAILS FOR CONDUIT IN SAND OR CONCRETE** N

SCALE: N.T.S.

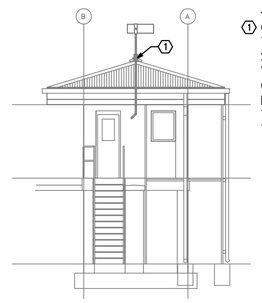

TOWER NUMBERED NOTE

1. CONTRACTOR SHALL ENSURE THAT THE MOUNTING HARDWARE FOR THE SEARCHLIGHT CREATES A WEATHERPROOF SEAL WITH THE ROOF. CONTRACTOR SHALL PROVIDE ANY NECESSARY GASKETING TO ENSURE THERE IS NO WATER LEAKAGE INTO THE GUARD TOWER.

2 E2 E2 **GUARD TOWER ELEVATION** N

SCALE: N.T.S.

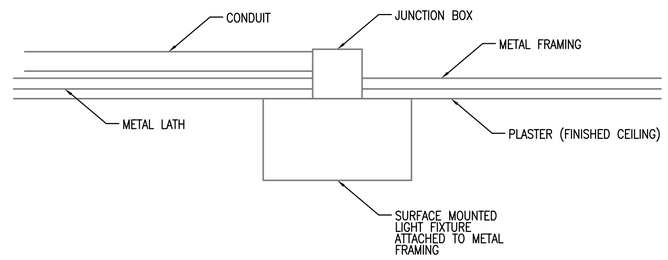

3 E2 E2 **TYPICAL DETAIL FOR SURFACE MOUNTED LIGHT FIXTURES** N

SCALE: N.T.S.

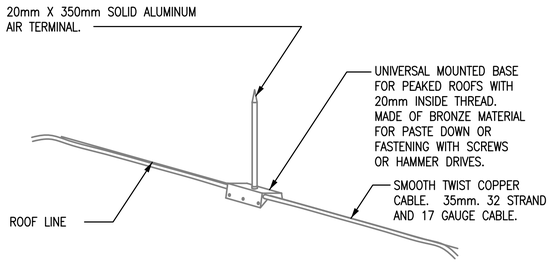

4 E2 E2 **LIGHTNING PROTECTION AIR TERMINAL DETAIL** N

SCALE: N.T.S.

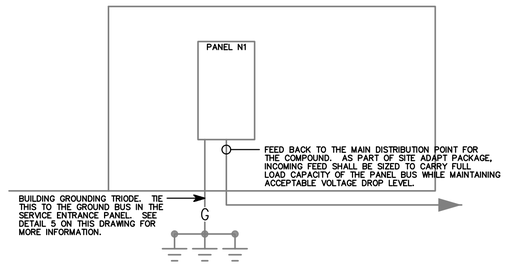

5 E2 E2 **N.1 RISER DIAGRAM** N

SCALE: N.T.S.

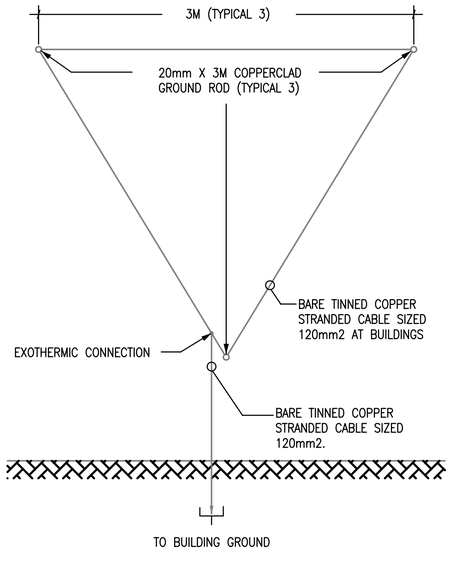

6 E2 E2 **GROUND TRIPOD SYSTEM DETAIL - PLAN** N

SCALE: N.T.S.

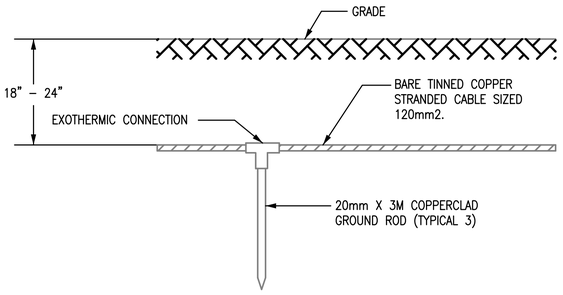

7 E2 E2 **GROUND TRIPOD SYSTEM DETAIL - ELEVATION** N

SCALE: N.T.S.

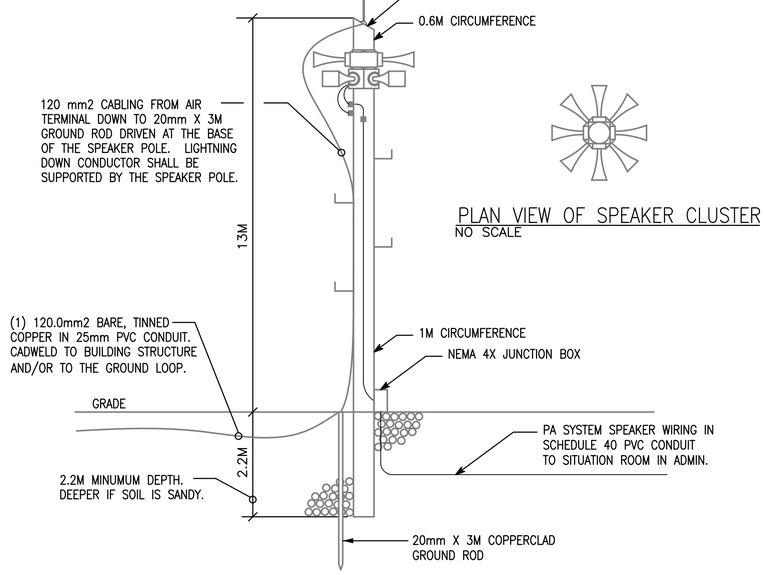

PLAN VIEW OF SPEAKER CLUSTER
NO SCALE

NOTE: FLAG POLES SHALL BE PROVIDED WITH THE SAME LIGHTNING PROTECTION SYSTEM CONSISTING OF AN AIR TERMINAL, DOWN CONDUCTOR, GROUND ROD, AND ALL NECESSARY CONNECTIONS FOR A COMPLETE LIGHTNING PROTECTION SYSTEM.

8 E2 E2 **POLE DETAIL - PA SYSTEM** N

SCALE: N.T.S.

US Army Corps of Engineers
Afghanistan Engineer District

SYMBOL	DESCRIPTION	DATE	APP

DESIGNED BY: JRG	DATE: 09-30-09
DWN BY: JRG	SUBMITTED BY: BAKER
CHK BY: JRG	FILE NO.: ANPSDE-502XXX

Michael Baker Jr, Inc
A unit of Michael Baker Corporation
Airside Business Park
100 Airside Drive
Moon Township, PA 15108
www.mbakercorp.com

AFGHAN NATIONAL POLICE
STANDARD DESIGN
GUARD TOWER

DETAILS

SHEET REFERENCE NUMBER:
E2

100% SUBMISSION

LIGHTING FIXTURE SCHEDULE

FIXTURE MARK	STYLE NUMBER AND TYPE	NUMBER AND TYPE OF LAMPS	VOLTAGE	MOUNTING	NOTES
C	INCANDESCENT ONE PIECE W/ APPROVED LENS STABILIZED HIGH IMPACT POLY CARBONATE.	(1) A19 – 100W INCANDESCENT	220V – 1ø 50HZ	WALL MOUNTED ABOVE EXTERIOR DOORS	
D	SURFACE MOUNTED SINGLE LAMP 220–240V INCANDESCENT FIXTURE RATED FOR 100W LAMPS. GLASS GLOBE SHALL BE VAPOR TIGHT JELLY JAR WITH WIRE GUARD. 111MM–251MM	(1) A21 – 100W COATED INCANDESCENT	220V – 1ø 50HZ	SURFACE MOUNTED FROM ROOF STRUCTURE	MEETS INTERNATIONAL STANDARDS WITH ENCLOSED AND GASKETED RED LENS.
E	SEALED BEAM SPOTLIGHT MOUNTED TO GUARD TOWER ROOF WITH 1000W HALOGEN NARROW SPOT LAMP	(1) PAR 56 1000W HALOGEN NARROW SPOT LAMP	220V – 1ø 50HZ	MOUNTED TO GUARD TOWER ROOF	SEE FIXTURE/TOWER DETAIL FOR SPOTLIGHT MOUNTING.
H	REMOTE HEAD EXTERIOR LIGHT HEAD POWERED FROM EXIT SIGN BATTERY– 12V DOUBLE HEAD CORROSION RESISTANT WITH UL34 WEATHERPROOF CONSTRUCTION	(2) 12W/12V HALOGEN LAMP	12V – 1ø 50HZ	EXTERIOR WALL MOUNTED AT TOP OF DOOR HEIGHT	
[E]	UNIVERSAL MOUNT ENGINEER GRADE THERMOPLASTIC HOUSING EXIT SIGN WITH LED LAMPS, RED LETTERS 6" IN HEIGHT WITH ARROWS AS INDICATED, WITH 12V CADMIUM BATTERY WITH REMOTE HEAD CAPABILITY	LED LAMPS	220V – 1ø 50HZ	UNIVERSAL MOUNTING	

FIXTURE MARK 'C'

INCANDESCENT ONE PIECE WITH APPROVED LENS, STABILIZED HIGH IMPACT POLY CARBONATE

FIXTURE MARK 'D'

SURFACE MOUNTED, SINGLE LAMP 220–240V INCANDESCENT FIXTURE RATED FOR 100W LAMPS. GLASS GLOBE SHALL BE VAPOR TIGHT JELLY JAR TYPE WITH WIRE GUARD. NOMINAL DIMENSIONS ARE 111MMx251MM

FIXTURE MARK 'E'

SEALED BEAM SPOTLIGHT MOUNTED TO GUARD TOWER ROOF WITH 1000W HALOGEN NARROW SPOT PAR 56 LAMP. FIXTURE SHALL BE PROVIDED WITH TWIST LEVER CONTROL, MIN. 254MM DIAMETER LIGHT HEAD WORKING RANGE OF ½ MILE, RATED FOR OUTDOOR ROUGH SERVICE WITH ANTI–SHOCK LAMP HOLDER

FIXTURE MARK 'H'

REMOTE HEAD EXTERIOR LIGHT HEAD POWERED FROM EXIT SIGN BATTERY– 12V DOUBLE HEAD CORROSION RESISTANT WITH UL34 WEATHERPROOF CONSTRUCTION

FIXTURE MARK '[E]'

UNIVERSAL MOUNT ENGINEER GRADE THERMOPLASTIC HOUSING EXIT SIGN WITH LED LAMPS, RED LETTERS 6" IN HEIGHT WITH ARROWS AS INDICATED, WITH 12V CADMIUM BATTERY

US Army Corps of Engineers
Afghanistan Engineer District

SYMBOL	DESCRIPTION	DATE	APP'D

DESIGNED BY:	DATE:
JRG	09-30-09
DWN BY:	SUBMITTED BY:
JRG	BAKER
CHK BY:	FILE NO.:
JRG	ANPSDE-603XXX

Michael Baker Jr., Inc
A unit of Michael Baker Corporation
Airside Business Park
100 Airside Drive
Moon Township, PA 15108
www.mbakercorp.com

AFGHAN NATIONAL POLICE
STANDARD DESIGN
GUARD TOWER

LIGHT FIXTURE SCHEDULE

SHEET REFERENCE NUMBER:
E3

100% SUBMISSION

PANELBOARD N1 SURFACE MOUNTED ASYM. A.I.C. MIN.
AMP. MAIN LUGS (OR) 100 AMP. MAIN BREAKER W/ 100 AMP. TRIP
CIRCUIT BREAKER TYPE 380/220 VOLTS 3 PHASE 4 WIRE 50 HZ 100 AMP. BUS

CKT. NO.	TRIP AMPS	NO. POLES	WIRE MM ²	GND MM²	CONDUIT MM	LOAD SERVED	LOAD-V.A. AØ	LOAD-V.A. BØ	LOAD-V.A. CØ	LOAD-V.A. AØ	LOAD-V.A. BØ	LOAD-V.A. CØ	LOAD SERVED	CONDUIT MM	GND MM²	WIRE MM²	NO. POLES	TRIP AMPS	CKT. NO.
1	20	1	4.0	4.0	20	LIGHTING AND RECEPTACLES	2.0						SPARE				1	20	2
3	20	1				SPARE							SPARE				1	20	4
5	20	1				SPARE							SPARE				1	20	6
7	20	1				SPARE							SPARE				1	20	8
9	20	1				SPARE							SPARE				1	20	10
11	20	1				SPARE							SPARE				1	20	12
							2.0	0.0	0.0	0.0	0.0	0.0							

TOTAL CONN. LOAD
PER PHASE (KVA): AØ 2.0 BØ 0.0 CØ 0.0

TOTAL CONN. LOAD 2.0 KVA. 70 % DEMAND = ESTIMATED DEMAND LOAD 1.4 SUPPLIED FROM MAIN SWITCHGEAR DISTRIBUTION

• MAIN BREAKER SHALL BE 3P EARTH GROUND TYPE

US Army Corps of Engineers
Afghanistan Engineer District

SYMBOL	DESCRIPTION	DATE	APP'D

DESIGNED BY: JRG	DATE: 09-30-09
DWN BY: JRG	SUBMITTED BY: BAKER
CHK BY: JRG	FILE NO.: ANPSDE-604XXX

Michael Baker Jr., Inc
A unit of Michael Baker Corporation
Airside Business Park
100 Airside Drive
Moon Township, PA 15108
www.mbakercorp.com

AFGHAN NATIONAL POLICE
STANDARD DESIGN
GUARD TOWER

PANEL SCHEDULES AND RISER DIAGRAM

SHEET REFERENCE NUMBER:
E4

100% SUBMISSION

AFGHAN NATIONAL POLICE

STANDARD BUILDING DESIGNS

TRASH POINT

SHEET INDEX

G1	COVER SHEET
C1	TRASH POINT, LAYOUT, ELEVATION AND DETAILS

US ARMY CORPS OF ENGINEERS
AFGHANISTAN ENGINEER DISTRICT

SYMBOL	DESCRIPTION	DATE	APPR.

SYMBOL	DESCRIPTION	DATE	APPR.

DESIGNED BY:
DWN BY:
CKD BY:
REVIEWED BY:
SUBMITTED BY:
DATE: XX-XX-XX
DESIGN FILE NO.:
DRAWING CODE:
FILE NAME:
PLOT SCALE:
PLOT DATE: XX-XX-XX
REV: —

U.S. ARMY ENGINEER DISTRICT, AFGHANISTAN
CORPS OF ENGINEERS
APO AE 96338

ENGINEERING AND CONSTRUCTION DIVISION

AFGHAN NATIONAL POLICE
STANDARD DESIGN
TRASH POINT

TRASH POINT LAYOUT ELEVATIONS, & DETAILS

SHEET REFERENCE NUMBER:
G1
SHEET 1 OF 2

A1 Size 594mm x 841mm

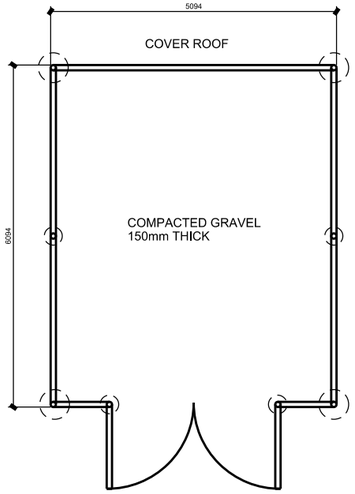

1 FLOOR PLAN
TS-C-101 SCALE: 1=50

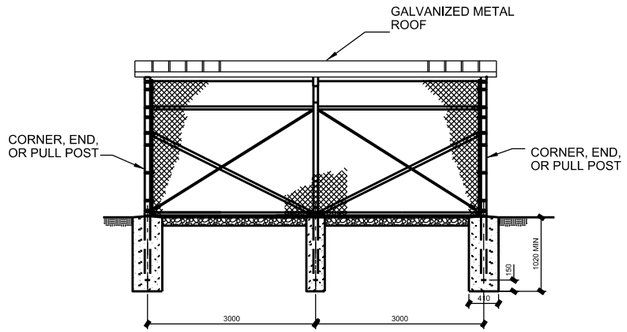

2 FRONT ELEVATION
TS-C-101 SCALE: 1=50

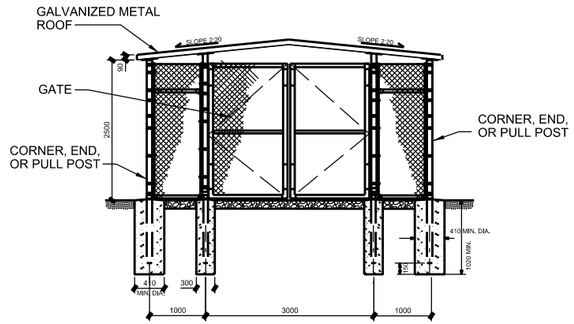

3 SIDE ELEVATION
TS-C-101 SCALE: 1=50

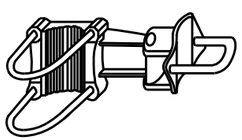

STANDARD HINGE

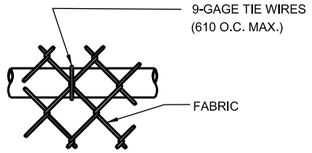

TOP OR BRACE RAIL ATTACHMENT

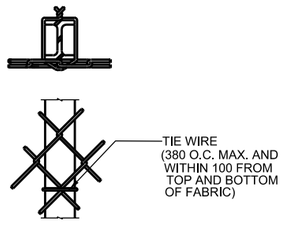

H-BEAM

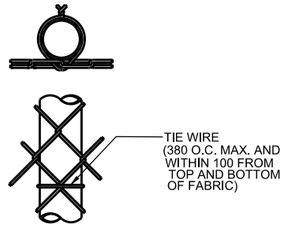

ROUND POST

4 LINE POSTS ATTACHMENTS
TS-C-101 NTS

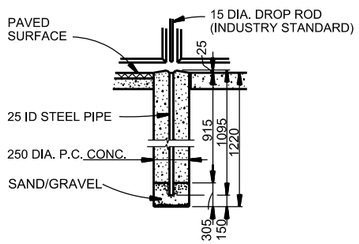

DROP ROD FOUNDATION

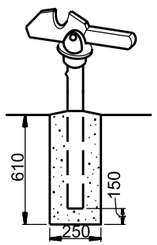

GATE KEEPER
(TO HOLD GATE OPEN)

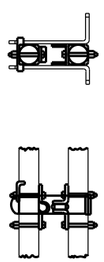

LATCH ASSEMBLY

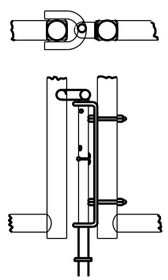

DROP ROD ASSEMBLY

5 SWING GATE DETAILS
TS-C-101 NTS

US ARMY CORPS
OF ENGINEERS
AFGHANISTAN
ENGINEER DISTRICT

SYMBOL	DESCRIPTION	DATE	APPR.
SYMBOL	DESCRIPTION	DATE	APPR.

REV.: —
DATE: XX-XX-XX
DESIGN FILE NO.:
DRAWING CODE:
FILE NAME: ——
PLOT SCALE: ——
PLOT DATE: XX-XX-XX
DESIGNED BY:
DWN BY:
CKD BY:
REVIEWED BY:
SUBMITTED BY:

U.S. ARMY ENGINEER DISTRICT, AFGHANISTAN
CORPS OF ENGINEERS
APO AE 96338

ENGINEERING AND
CONSTRUCTION DIVISION

AFGHAN NATIONAL POLICE
STANDARD DESIGN
TRASH POINT

TRASH POINT LAYOUT ELEVATIONS, & DETAILS

SHEET REFERENCE NUMBER:
C1
SHEET 2 OF 2

A1 Size 594mm x 841mm

AFGHAN NATIONAL POLICE

STANDARD BUILDING DESIGNS

WAREHOUSE BUILDING

SHEET INDEX

G1 COVER SHEET

S1 GENERAL NOTES & DESIGN CRITERIA
S2 DESIGN CRITERIA & SCHEDULES
S3 SCHEDULES
S4 FOUNDATION & ROOF FRAMING PLANS
S5 FOUNDATION SECTIONS & DETAILS
S6 SECTIONS AND DETAILS
S7 TYPICAL DETAILS

A1 FLOOR AND ROOF PLANS AND DETAILS
A2 EXTERIOR ELEVATIONS
A3 DOOR & WINDOW & FINISH TYPES & DETAILS
A4 SECTION DETAILS

E0 ELECTRICAL SYMBOLS AND ABBREVIATIONS
E1 LIGHTING AND POWER PLAN
E2 DETAILS
E3 LIGHT FIXTURE SCHEDULE
E4 PANEL SCHEDULES AND RISER DIAGRAM

US Army Corps of Engineers
Afghanistan Engineer District

SYMBOL	DESCRIPTION	DATE	APP'D

DESIGNED BY: JDS
DWN BY: JDS
CHK BY: JDS
DATE: 09-30-09
SUBMITTED BY: BAKER
FILE NO.: ANPSDG-001XXX

Michael Baker Jr., Inc
A unit of Michael Baker Corporation
Airside Business Park
100 Airside Drive
Moon Township, PA 15108
www.mbakercorp.com

AFGHAN NATIONAL POLICE
STANDARD DESIGN
WAREHOUSE BUILDING
COVER SHEET

SHEET REFERENCE NUMBER:
G1

100% SUBMISSION

STRUCTURAL ABBREVIATIONS:

ACI	AMERICAN CONCRETE INSTITUTE
AISC	AMERICAN INSTITUTE OF STEEL CONSTRUCTION
ASTM	AMERICAN SOCIETY FOR TESTING AND MATERIALS
ARCH	ARCHITECTURAL
B	BOTTOM
BLDG	BUILDING
BOTT	BOTTOM
℄	CENTER LINE
CFMRF	COLD FORM METAL ROOF FRAME
CFMF	COLD FORM METAL FRAME
CFS	COLD FORMED STEEL
CIP	CAST-IN-PLACE
CIPL	CAST-IN-PLACE LINTEL
CJ	CONTROL JOINT
CLR	CLEAR
CMU	CONCRETE MASONRY UNIT
COEFF	COEFFICIENT
COL	COLUMN
CONC	CONCRETE
CONT	CONTINUOUS
COORD	COORDINATE
CSJ	CONSTRUCTION JOINT
CTJ	CONTROL JOINT
DIA	DIAMETER
DIAG	DIAGONAL
DIM	DIMENSION
DWG	DRAWING
DWL	DOWEL
EA	EACH
EF	EACH FACE
ELEC	ELECTRICAL
ELEV	ELEVATION
EMBED	EMBEDMENT
EQUIV	EQUIVALENT
ETC	ET CETERA
EW	EACH WAY
EXP	EXPANSION
EXT	EXTERIOR
FTG	FOOTING
GA	GAUGE
HORIZ	HORIZONTAL
HRS	HOURS
IBC	INTERNATIONAL BUILDING CODE
INFO	INFORMATION
INT	INTERIOR
Kg	KILOGRAM
Km	KILOMETER
kPa	KILOPASCAL
L#	ANGLE (# INDICATES SIZE)
LONG	LONGITUDINAL
LLV	LONG LEG VERTICAL
M	METER
MAX	MAXIMUM
MBM	METAL BUILDING MANUFACTURER
MECH	MECHANICAL
MFG	MANUFACTURER
MID	MIDDLE
MIN	MINIMUM
MISC	MISCELLANEOUS
MM	MILLIMETER
MPa	MEGAPASCAL
MTL	METAL
MWFRS	MAIN WIND FORCE RESISTING SYSTEM
N	NEWTON
N	NORTH
N/A	NOT APPLICABLE
#	NUMBER SYMBOL FOR REBAR SIZE
NTS	NOT TO SCALE
O.C.	ON CENTER
OPNG	OPENING
P̲L or PL	PLATE
PRE-ENG	PRE-ENGINEERED
REINF	REINFORCED
REQ'D	REQUIRED
SIM	SIMILAR
SPECS	SPECIFICATIONS
STD	STANDARD
STRUCT	STRUCTURAL
T	TOP
T/	TOP OF
T/ELEV	TOP ELEVATION
T&B	TOP AND BOTTOM
THK	THICK
TYP	TYPICAL
SW	SHEAR WALL
UFC	UNIFIED FACILITIES CRITERIA
UON	UNLESS OTHERWISE NOTED
VERT	VERTICAL
W	WIDTH
W/	WITH

GENERAL NOTES

1.0 THIS PROJECT HAS BEEN DESIGNED FOR THE WEIGHTS AND MATERIALS INDICATED ON THE SHEETS AND FOR THE LIVE LOADS INDICATED IN THE DESIGN DATA. IT IS THE CONTRACTOR'S RESPONSIBILITY TO DETERMINE ALLOWABLE CONSTRUCTION LOADS AND TO PROVIDE PROPER DESIGN AND CONSTRUCTION OF FALSEWORK, FORMWORK, STAGING, BRACING, SHEETING AND SHORING, ETC.

1.1 COORDINATE THESE SHEETS WITH THE ARCHITECTURAL, MECHANICAL, ELECTRICAL, PLUMBING, AND CIVIL SHEETS. ALL DIMENSIONS SHOWN ON THE SHEETS ARE MILLIMETERS UNLESS NOTED OTHERWISE.

1.2 THE CONTRACTOR SHALL VERIFY AND COORDINATE ALL FLOOR AND ROOF OPENING SIZES AND LOCATIONS, EQUIPMENT PAD SIZES AND LOCATIONS, ANCHOR BOLT LAYOUTS, ETC WITH EQUIPMENT SELECTED. THE CONTRACTOR SHALL MAKE ANY REQUIRED MODIFICATIONS AT NO ADDITIONAL COST.

1.3 THE CONTRACTOR SHALL REFER TO THE ARCHITECTURAL, MECHANICAL, ELECTRICAL AND PLUMBING SHEETS FOR SLEEVES, CURBS, INSERTS OR OPENINGS, ETC. NOT HEREIN INDICATED.

1.4 SLAB OPENINGS SMALLER THAN 250mm DIA TO BE CORE DRILLED IN FIELD UON. SEE MECHANICAL, ELECTRICAL AND PLUMBING SHEETS FOR LOCATIONS OF THESE OPENINGS.

1.5 WORK NOT INCLUDED ON THE SHEETS BUT IMPLIED TO BE SIMILAR TO THAT SHOWN AT CORRESPONDING PLACES ELSEWHERE ON THE SHEETS SHALL BE REPEATED.

1.6 IN CASE OF CONFLICT BETWEEN THE NOTES, DETAILS AND SPECIFICATIONS THE MOST RIGID REQUIREMENTS SHALL GOVERN.

1.7 SEE ARCHITECTURAL SHEETS FOR LOCATIONS OF MASONRY AND DRYWALL NON-LOAD BEARING PARTITIONS. PROVIDE COMPRESSIBLE FIRESAFING AT TOP OF WALL AS REQUIRED BY ARCHITECTURAL SHEETS.

1.8 COORDINATE FINISHED FLOOR DATUM ELEVATION 0.0m WITH THE CIVIL SHEETS.

2.0 FOUNDATION NOTES

2.1 THE GEOTECHNICAL ANALYSIS FOR THIS PROJECT IS THE RESPONSIBILITY OF THE CONTRACTOR AWARDED THE WORK. DESIGN VALUES USED IN THE STRUCTURAL ANALYSIS OF THE BUILDINGS HEREIN INDICATED HAVE BEEN ASSUMED AND SHALL BE CONFIRMED AND VERIFIED AS PART OF THE GEOTECHNICAL INVESTIGATION. VALUES WHICH DO NOT MEET THE REQUIREMENTS INDICATED ON THE BASIS OF DESIGN SHEET SHALL BE IMMEDIATELY BROUGHT TO THE ATTENTION OF THE CONTRACTING OFFICER FOR CONSIDERATION AND DETERMINATION ON THE NEXT APPROPRIATE COURSE OF ACTION.

2.2 SEE THE SPECIFICATION FOR ADDITIONAL REQUIREMENTS TO THOSE OUTLINED IN THE GEOTECHNICAL INVESTIGATION FOR EXCAVATION AND PREPARATION OF THE FOUNDATION AND THE SLAB ON GRADE SUBGRADE INCLUDING COMPACTION PROCEDURES.

2.3 EXCAVATIONS FOR FOOTINGS SHALL HAVE THE SIDES AND BOTTOMS TEMPORARILY LINED WITH 0.25mm POLYETHYLENE IF PLACEMENT OF CONCRETE DOES NOT OCCUR WITHIN 24 HRS OF THE EXCAVATION OF THE FOOTING.

2.4 FOUNDATION CONDITIONS NOTED DURING CONSTRUCTION WHICH DIFFER FROM THOSE DESCRIBED IN THE GEOTECHNICAL REPORT SHALL BE REPORTED TO THE GENERAL CONTRACTOR BEFORE FURTHER CONSTRUCTION IS ATTEMPTED. SEE PROJECT SPECIFICATIONS.

2.5 NO FOOTINGS OR SLABS SHALL BE POURED INTO OR AGAINST SUBGRADE CONTAINING FREE WATER, FROST, ICE OR LOOSE MATERIAL. FROST DEPTH ASSUMED TO BE 800MM

2.6 ALL SLAB-ON-GRADE, TRENCH BOTTOMS AND OTHER ON-GRADE INTERIOR HORIZONTAL SURFACES SHALL BE PLACED OVER A 0.25mm VAPOR RETARDER OVER A 100mm #57 STONE WATER BARRIER PLACED ON SUBGRADE PROPERLY PREPARED IN ACCORDANCE WITH THE CONTRACT SPECIFICATIONS. (UON)

2.7 SEE PLUMBING, ELECTRICAL & CIVIL SHEETS FOR REQUIRED UNDERSLAB UTILITIES.

2.8 SEE ARCHITECTURAL SHEETS FOR ALL WATERPROOFING DETAILS AND MATERIALS.

2.9 IF UNDERMINING OF FOOTINGS OCCURS, FILL VOIDS WITH 15MPa CONCRETE. DO NOT ATTEMPT TO REPLACE AND RECOMPACT SOIL.

3.0 CONCRETE

3.1 CONCRETE SHALL HAVE THE UNIT WEIGHT AND THE MINIMUM COMPRESSIVE STRENGTHS (f'c) AT 28 DAYS AS SHOWN IN THE CONCRETE MATERIALS SCHEDULE ON SHEET S3. SEE SPECIFICATIONS FOR ADDITIONAL INFORMATION. ENTRAIN AIR TO PRODUCE TOTAL AIR CONTENT ACCORDING TO THE SPECIFICATIONS FOR CONCRETE EXPOSED TO FREEZING TEMPERATURES (EXTERIOR FOOTINGS, SLAB TURNDOWNS, EXTERIOR SLABS AND SLABS-ON-GRADE, EXTERIOR RETAINING WALLS, AND EXTERIOR GRADE BEAMS.)

3.2 NO CALCIUM CHLORIDE SHALL BE USED IN ANY CONCRETE.

3.3 MIXING, TRANSPORTING AND PLACING OF CONCRETE SHALL CONFORM TO ACI 301M-05.

3.4 ALL CONCRETE WORK SHALL CONFORM TO THE REQUIREMENTS OF THE AMERICAN CONCRETE INSTITUTE (ACI) 318M MANUAL (metric), "BUILDING CODE REQUIREMENTS FOR REINFORCED CONCRETE", AND REQUIREMENTS OUTLINED IN THE CONTRACT SPECIFICATIONS. WHEN THERE IS A CONFLICT BETWEEN ACI AND THE SPECIFICATIONS, THE MORE STRINGENT SHALL GOVERN.

3.5 CHAMFER ALL EXPOSED EXTERNAL CORNERS OF CONCRETE WITH 20mm x45 DEGREE CHAMFER UON.

3.6 CONCRETE REINFORCEMENT BARS SHALL CONFORM TO ASTM A615M-96a, GRADE 420 MPa, REINFORCING BARS SHALL NOT BE TACK WELDED, WELDED, HEATED OR CUT, UNLESS INDICATED ON THE CONTRACT DOCUMENTS. ALL LAP SPLICES SHALL BE CLASS "B" UON.

3.7 HORIZONTAL FOOTING AND HORIZONTAL WALL REINFORCEMENT SHALL BE CONTINUOUS AND SHALL HAVE 90 DEGREE BENDS AND EXTENSIONS, OR CORNER BARS OF EQUIVALENT SIZE LAPPED WITH A CLASS B TENSION SPLICE AT CORNERS AND INTERSECTIONS. TOP BAR CRITERIA SHALL APPLY IF 300mm OR MORE OF FRESH CONCRETE IS PLACED BELOW BAR.

3.8 SLABS-ON-GRADE SHALL HAVE CONSTRUCTION JOINTS OR CRACK CONTROL JOINTS AS SHOWN ON THE DRAWINGS. CONSTRUCTION JOINTS CAN BE USED AT CONTROL JOINT LOCATIONS AT CONTRACTORS OPTION. SEE SLAB PLANS & JOINT DETAILS FOR ADDITIONAL INFORMATION. FOR AREAS NOT SHOWN ON DWGS, THE MAXIMUM SPACING OF CONSTRUCTION/ CRACK CONTROL JOINTS SHALL BE 4800mm

3.9 SEE SPECIFICATIONS FOR ALL WATERPROOFING/DAMPPROOFING REQUIREMENT.

3.10 ALL CONCRETE REINFORCEMENT SHALL BE DETAILED, FABRICATED, LABELED, SUPPORTED, AND SPACED IN FORMS AND SECURED IN PLACE IN ACCORDANCE WITH THE PROCEDURES AND REQUIREMENTS OUTLINED IN THE LATEST EDITION OF THE "BUILDING CODE REQUIREMENTS FOR REINFORCED CONCRETE", ACI 318M, AND THE "MANUAL OF STANDARD PRACTICE FOR DETAILING REINFORCED CONCRETE STRUCTURES", ACI 315M, LATEST EDITION.

3.11 SHOP DRAWINGS SHOWING REINFORCING DETAILS, INCLUDING STEEL SIZES, SPACING AND PLACEMENT, SHALL BE SUBMITTED FOR REVIEW PRIOR TO FABRICATION.

3.12 ALL DOWELS SHALL MATCH SIZE AND NUMBER OF MAIN REINFORCING, UNLESS NOTED OTHERWISE ON THE SHEETS.

3.13 ADDITIONAL BARS SHALL BE PROVIDED AROUND ALL FLOOR AND WALL OPENINGS AS SHOWN ON THE SHEETS.

3.14 SEE ARCHITECTURAL SHEETS FOR TYPE AND LOCATION OF ALL FLOOR FINISHES.

3.15 THE CONTRACTOR SHALL COORDINATE ADDITIONAL WALL/SLAB OPENINGS NOT SHOWN ON STRUCTURAL SHEETS. SEE MECHANICAL, ELECTRICAL, PLUMBING AND CIVIL SHEETS.

3.16 UNLESS NOTED OTHERWISE, ALL CURBS SHALL BE REINFORCED WITH AT LEAST (1)-#13 CONTINUOUS AND #13 AT 300mm O.C. DOWELS TO STRUCTURE BELOW.

3.17 THE SUB-CONTRACTOR SHALL VERIFY ALL OPENINGS, PAD SIZES, AND ANCHOR BOLTS WITH EQUIPMENT SELECTED.

3.18 FOR ALL WALLS & PIERS, PROVIDE DOWELS INTO FOOTING AT EACH VERT REINF BAR, UON DOWEL SIZE SHALL BE SAME AS VERT REINF.

3.19 ALL DEFORMED BAR ANCHORS SHALL BE TRS NELSON DIVISION OR EQUAL 15mm DIA (UON) CONFORMING TO ASTM A-496M WITH A MINIMUM TENSILE STRENGTH OF 550 MPa. INSTALL ANCHORS IN ACCORDANCE WITH MANUFACTURERS RECOMMENDATIONS BY AUTOMATIC END WELDING AS INDICATED ON THE DRAWINGS. NO UNAUTHORIZED OR FIELD WELDING SHALL BE MADE WITHOUT AUTHORIZATION FROM THE MANUFACTURER.

3.20 ALL REINFORCING INDICATED TO BE WELDED SHALL BE IN ACCORDANCE WITH ASTM A706M. "LOW ALLOY STEEL DEFORMED BARS FOR CONCRETE REINFORCEMENT". ANY INSTALLATIONS USING MANUFACTURER'S EQUIPMENT SHALL BE PER MANUFACTURER'S RECOMMENDATIONS.

3.21 PROVIDE CONCRETE POUR STOPS OR FORMED AS REQUIRED FOR INSTALLATION OF ALL CONCRETE WORK.

3.22 PROVIDE ADDITIONAL (2)-#13 x 600mm REINFORCING BARS IN SLAB-ON GRADE AT ALL RE-ENTRANT CORNERS. PLACE BARS AT MID-DEPTH OF SLAB WITH A CLEARANCE OF 50mm FROM CORNER UON.

4.0 CONCRETE MASONRY

4.1 MASONRY CONSTRUCTION AND MATERIALS SHALL CONFORM TO ALL REQUIREMENTS OF THESE CONTRACT DOCUMENTS AND THE PROJECT SPECIFICATIONS.

4.2 THE SPECIFIED ULTIMATE COMPRESSIVE STRENGTH OF CONCRETE MASONRY (f'm) ON THE NET AREA IS A MINIMUM OF 10.4 MPa.

4.3 PROVIDE TWO #16 BARS CONTINUOUS IN ALL MASONRY LINTELS UON ON THE SHEETS. BOND BEAM REINFORCING SHALL BE CONTINUOUS AND SPACED AT A MAXIMUM OF 1200mm OC VERTICALLY. ALL BOND BEAMS SHALL BE A MINIMUM OF 200mm IN DEPTH WITH REINFORCING BEING CONTINUOUS AND HAVING STANDARD ACI HOOKS AT EACH END. PROVIDE STANDARD BAR SPLICES AS SPECIFIED.

4.4 FOR WALL REINFORCING SEE "MIN CMU WALL REINFORCING" DETAILS ON SHEET S7. PROVIDE STANDARD BAR SPLICES AS SPECIFIED. ALL VERTICAL REINFORCEMENT EXTENDS FULL HEIGHT OF WALL.

4.5 CMU CELLS THAT REQUIRE VERTICAL REINFORCING BARS AS INDICATED ON THE CONTRACT DRAWINGS AND/OR SPECS SHALL HAVE REINF BARS PLACED IN CENTERS OF CMU CELLS AND CONTINUOUSLY GROUTED UON.

4.6 PROVIDE LADDER TYPE JOINT REINFORCEMENT AT 200 EXTERIOR, & 400 INTERIOR ON CENTER MAXIMUM, UON MINIMUM ROD SIZE USED SHALL BE 9 GA. DEFORMED WIRE AND CONFORM TO ASTM A82M, UON.

4.7 PROVIDE CONTROL JOINTS AS INDICATED ON THE ARCHITECTURAL SHEETS.

4.8 GROUT FOR MASONRY SHALL BE NORMAL WEIGHT AND HAVE A MINIMUM COMPRESSIVE STRENGTH OF 25 MPa AT 28 DAYS. GROUT SHALL CONFORM TO ASTM C476. GROUT LIFTS SHALL NOT EXCEED 1400mm.

4.9 USE MORTAR TYPE S CONFORMING TO ASTM C270M, SEE SPECIFICATIONS.

4.10 CONCRETE MASONRY UNITS SHALL BE NORMAL WEIGHT AND CONFORM TO ASTM C90.

4.11 ALL CMU CELLS, OPEN CAVITIES, AND AIR SPACES SHALL BE GROUTED TO STOP FRAGMENTS FROM MORTAR BLAST

4.12 BOND BEAM REINFORCING SHALL BE DISCONTINUOUS AT CONTROL JOINTS (UON). MAXIMUM CONTROL JOINT SPACING SHALL BE AS INDICATED ON THE ARCHITECTURAL SHEETS.

4.13 CONTRACTOR SHALL COORDINATE LOCATION OF ALL OPENINGS SEE ARCH, MECH, ELEC, AND PLUMBING SHEETS FOR SIZE AND LOCATION OF OPENINGS.

4.14 MASONRY WALLS SHALL NOT BE BACK FILLED PRIOR TO THE MORTAR AND GROUT ATTAINING THEIR RESPECTIVE MAXIMUM DESIGN STRENGTHS PER SPECIFICATIONS.

5.0 CFMRF - COLD FORM METAL ROOF FRAMING SYSTEM

5.1 CFMF SHALL BE DESIGNED BY CFMF MANUFACTURER'S ENGINEER FOR ALL LOADING PER CODE AND AS INDICATED ON THE SHEETS.

5.2 FOR WIND LOADS, SEE THE DESIGN CRITERIA ON SHEET S2.

5.3 SUBMIT VENDOR'S PUBLISHED LITERATURE, TEST DATA AND INSTALLATION INSTRUCTIONS FOR METAL STUD ASSEMBLY AND ACCESSORIES INCLUDING OTHER DATA AS MAY BE REQUIRED TO CERTIFY COMPLIANCE WITH PERFORMANCE REQUIREMENTS SPECIFIED HEREIN.

5.4 SHOP DRAWINGS AND DESIGN ANALYSIS SHALL BE STAMPED AND APPROVED BY A LICENSED PROFESSIONAL ENGINEER.

5.5 CONNECTIONS AND GAUGE SIZES ARE MINIMUM AND SHALL BE INCREASED AS NECESSARY TO PROVIDE A STRUCTURALLY ADEQUATE SYSTEM. KICKERS MAY BE ADDED TO REDUCE THE STUD HEIGHTS WHERE ACCEPTABLE AND COORDINATED WITH THE ARCHITECTURAL DRAWINGS.

5.6 CRMRF SHALL HAVE THE FOLLOWING MINIMUM PROPERTIES:

STUD/RAFTER/EAVE STRUT/BRACE/BLOCKING:
Fy = 344 MPa
GAUGE = 16
DEPTH = 152.3 mm
WIDTH = 34.8 mm
MOMENT OF INERTIA, Ix = $847x10^3$ mm^4
SECTION MODULUS, Sx = $11.2x10^3$ mm^3

TRACK:
Fy = 344 MPa
GAUGE = 16
DEPTH = 152.3 mm
WIDTH = 38 mm
MOMENT OF INERTIA, Ix = $1083x10^3$ mm^4
SECTION MODULUS, Sx = $13.8x10^3$ mm^3

PURLIN:
Fy = 393 MPa
GAUGE = 16
MOMENT OF INTERTIA (TOP COMPRESSION), Ixt = $23.7x10^3$ mm^4
MOMENT OF INTERTIA (BOTT COMPRESSION), Ixb = $22.7x10^3$ mm^4
SECTION MODULUS (TOP COMPRESSION), Sxt = $1.8x10^3$ mm^3
SECTION MODULUS (BOTT COMPRESSION), Sxb = $1.7x10^3$ mm^3

STRUCTURAL DESIGN CRITERIA

ALL DESIGNS SHALL CONFORM TO THE PROVISIONS OF THE IBC 2006 AS APPLICABLE

1.0 DESIGN LOADS

1.1 DEAD LOADS

1.1.1 ROOF DEAD LOADS - CONCRETE FRAMING

	MAXIMUM GRAVITY LOAD
CONC FLAT SLAB	4.80 KPa
MECH/ELEC/PLUMBING	0.15 KPa
MISC	0.05 KPa
	5.00 KPa

1.1.2 ROOF DEAD LOADS - CONVENTIONAL LIGHT FRAMING

	MAXIMUM GRAVITY LOAD	MINIMUM GRAVITY LOAD
LIGHT GAUGE FRAMING	0.20 KPa	0.15 KPa
INSULATION	0.10 KPa	0.05 KPa
METAL ROOFING	0.14 KPa	0.05 KPa
	0.44 KPa	0.25 KPa

1.2 LIVE LOADS (PER IBC 2006)

1.2.1 ROOF LIVE LOADS: ALL BUILDINGS

GREATER OF 1.0 KPa MINIMUM OR SNOW LOAD

1.2.2 ELEVATED FLOOR UNIFORM LIVE LOADS

OFFICE	2.40 KPa
CORRIDOR	4.80 KPa

1.2.3 SLAB-ON-GRADE LIVE LOADS

ALL BUILDINGS	4.80 KPa

1.3 SNOW LOADS (PER IBC 2006)

1.3.1 DESIGN PARAMETERS

GROUND SNOW LOAD (per UFC 3-310-01)	1.0 KPa
SNOW IMPORTANCE FACTOR	1.0
SNOW EXPOSURE FACTOR	1.0

1.4 SEISMIC LOADS (PER IBC 2006 & UFC 3-310-04)

1.4.1 SEISMIC PARAMETERS - CAST-IN-PLACE CONCRETE STRUCTURES

SEISMIC OCCUPANCY CATEGORY	II
SEISMIC IMPORTANCE FACTOR (I)	1.0
SEISMIC SITE CLASS	D
Ss	1.28
S1	0.51
Sds	0.853
Sd1	0.51
SEISMIC DESIGN CATEGORY	D
SEISMIC RESISTING SYSTEM	SPECIAL REINFORCED MASONRY SHEAR WALLS
RESPONSE MODIFICATION FACTOR (R)	5.0
RESPONSE COEFFICIENT (CS)	0.17
SEISMIC ANALYTICAL PROCEDURE	EQUIV LATERAL FORCE
SEISMIC BASE SHEAR	209kN

US Army Corps of Engineers
Afghanistan Engineer District

SYMBOL	DESCRIPTION	DATE	APP

DESIGNED BY: KMP | DRN BY: RCG | CHK BY: CWW | DATE: 09-30-09 | SUBMITTED BY: BAKER | FILE NO.: ANPSDS-001XXX

Michael Baker Jr., Inc
A unit of Michael Baker Corporation
Airside Business Park
100 Airside Drive
Moon Township, PA 15108
www.mbakercorp.com

AFGHAN NATIONAL POLICE
STANDARD DESIGN
WAREHOUSE BUILDING

GENERAL NOTES & DESIGN CRITERIA

SHEET REFERENCE NUMBER:
S1

100% SUBMISSION

STRUCTURAL DESIGN CRITERIA (CONT)

ALL DESIGNS SHALL CONFORM TO THE PROVISIONS OF THE IBC 2006 AS APPLICABLE

1.6 WIND LOADS (PER IBC 2006)

1.6.1 DESIGN PARAMETERS

BASIC WIND SPEED	137 Km/h
WIND IMPORTANCE FACTOR	1.0
WIND EXPOSURE CATEGORY	D
DIRECTIONALITY COEFFICIENT (Kd)	0.85
TOPOGRAPHIC FACTOR (Kzt)	1.0

1.6.2 DESIGN WIND PRESSURE – MAIN WINDFORCE RESISTING SYSTEM

LOCATION	CORNER ZONE WIDTH "a"	MEAN ROOF HEIGHT (h)	WINDWARD WALL (@ MEAN ROOF HEIGHT)	LEEWARD WALL (@ MEAN ROOF HEIGHT)	ROOF
FIELD ZONE	N/A	4080mm	680 N/m^2	−480 N/m^2	−470 N/m^2
CORNER ZONE	1440mm	4080mm	800 N/m^2	−418 N/m^2	−750 N/m^2

a = 10% OF LEAST HORIZONTAL DIMENSION OR 0.4h, WHICHEVER IS SMALLER, BUT NOT LESS THAN EITHER 4% OF LEAST HORIZONTAL DIMENSION OR 0.9M.
h = MEAN ROOF HIEGHT, IN METERS, EXCEPT THAT EAVE HIEGHT SHALL BE USED FOR ANGLE GREATER THAN 10°.

1.5.3 DESIGN WIND PRESSURE – WALL COMPONENTS AND CLADDING

EXTERIOR WALL SYSTEMS & THEIR ATTACHMENTS TO THE PRIMARY STRUCTURE SHALL BE DESIGNED FOR THE PRESSURES SHOWN IN THE DIAGRAM BELOW:

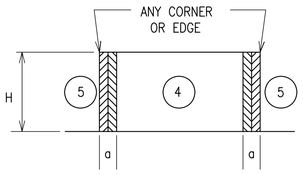

LOCATION	WINDWARD PRESSURE N/m^2 (inward)		LEEWARD PRESSURE N/m^2 (outward)		a
	④	⑤	④	⑤	
MAIN BUILDING					(mm)
AREA = 1 m^2	788	788	−850	−1050	1440
AREA = 2 m^2	748	748	−815	−967	1440
AREA = 5 m^2	700	700	−765	−880	1440
AREA = 10 m^2	648	648	−715	−750	1440

NOTES:
1. DESIGN WIND PRESSURES ABOVE REPRESENT THE NET PRESSURE (SUM OF INTERNAL AND EXTERNAL PRESSURE) APPLIED NORMAL TO ALL SURFACES.
2. LINEAR INTERPOLATION BETWEEN VALUES OF TRIBUTARY AREA IS PERMISSIBLE.
3. PLUS AND MINUS SIGNS SIGNIFY PRESSURE TOWARD AND AWAY FROM THE EXTERIOR SURFACE, RESPECTIVELY.

1.6 WIND LOADS (CONT)

1.6.4 DESIGN WIND PRESSURE – ROOF COMPONENTS AND CLADDING

ROOF COMPONENTS & THEIR ATTACHMENTS SHALL BE DESIGNED FOR THE PRESSURES SHOWN IN THE ADJACENT DIAGRAM & TABLE BELOW:

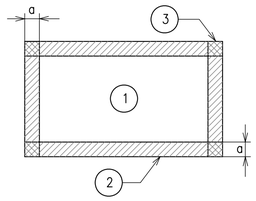

ROOF MEAN HEIGHT

LOCATION	GROSS UPLIFT PRESSURE N/m^2 (upward)			a
	①	②	③	
MAIN BUILDING				(mm)
AREA = 1 m^2	−787	−931	−1738	1440
AREA = 2 m^2	−787	−931	−1738	1440
AREA = 5 m^2	−787	−931	−1738	1440
AREA = 10 m^2	−787	−931	−1738	1440

NOTES:
1. DESIGN WIND PRESSURES ABOVE REPRESENT THE NET PRESSURE (SUM OF INTERNAL AND EXTERNAL PRESSURE) APPLIED NORMAL TO ALL SURFACES.
2. LINEAR INTERPOLATION BETWEEN VALUES OF TRIBUTARY AREA IS PERMISSIBLE.
3. PLUS AND MINUS SIGNS SIGNIFY PRESSURE TOWARD AND AWAY FROM THE EXTERIOR SURFACE, RESPECTIVELY.

2.0 FOUNDATION DESIGN CRITERIA (TO BE CONFIRMED BY THE CONTRACTOR)

THE GEOTECHNICAL ANALYSIS FOR THIS PROJECT IS THE RESPONSIBILITY OF THE CONTRACTOR AWARDED THE WORK. DESIGN VALUES USED IN THE STRUCTURAL ANALYSIS OF THE BUILDINGS HEREIN INDICATED HAVE BEEN ASSUMED AND SHALL BE CONFIRMED AND VERIFIED AS PART OF THE GEOTECHNICAL INVESTIGATION. VALUES WHICH DO NOT MEET THE REQUIREMENTS INDICATED BELOW SHALL BE IMMEDIATELY BROUGHT TO THE ATTENTION OF THE CONTRACTING OFFICER FOR CONSIDERATION AND DETERMINATION ON THE NEXT APPROPRIATE COURSE OF ACTION.

2.1.1 SOIL DESIGN PARAMETERS

NET ALLOWABLE SOIL BEARING CAPACITY	96.0 KPa
UNIT WEIGHT OF SOIL (moist)	1800 Kg/m^3
COEFF ACTIVE EARTH PRESSURE (Kpa)	0.30
COEFF PASSIVE EARTH PRESSURE (Kpp)	3.33
COEFF AT-REST EARTH PRESSURE (Kpr)	.55
COEFF OF SOIL FRICTION	.35
SUBGRADE MODULUS	4120 g/cm^3
MINIMUM BEARING DEPTH BELOW GRADE	800mm
SEISMIC SITE CLASS (based on in-situ soil)	D

CONCRETE BEAM SCHEDULE

GRADE BEAM						
MARK	SIZE (BxH)	REINFORCING TOP	REINFORCING BOTTOM	STIRRUPS	MIDBAR	REMARKS
GB1	400x750	(3)−#22	(3)−#22	#13 @ 200	(1) #22 EF	TOP BAR LAP AT CENTER BOT BAR LAP PAST COL

ROOF BEAM						
MARK	SIZE (BxH)	REINFORCING TOP	REINFORCING BOTTOM	STIRRUPS	MIDBAR	REMARKS
RB1	400x600	(2)−#19	(2)−#19	#13 @ 250	N/A	TOP BAR LAP AT CENTER BOT BAR LAP PAST COL

NOTE:
1. DIMENSIONS NOTED ARE MILLIMETERS (mm) UON.

CONCRETE COLUMN SCHEDULE

MARK	SIZE (LxW)	REINFORCING VERT BARS	REINFORCING TIES
C1	400x400	(8)−#25	#13 @ 100 (CORE OF EXT & CORNER COLUMNS) #13 @ 150 (CORE OF INTERIOR COLUMNS) #13 @ 200 (OTHER)

NOTE:
1. DIMENSIONS NOTED ARE MILLIMETERS (mm) UON.
2. SECOND STORY COLUMNS ARE SAME AS FIRST STORY COLUMNS.
3. CORE INDICATES THE AREA OF COLUMN & BEAM INTERSECTION.
4. TIE INDICATES PERIMETER & CROSS TIE COMBINED.

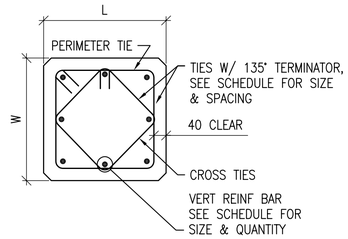

1 S2 S2 COLUMN DETAIL
SCALE: 1:10

SPREAD FOOTING SCHEDULE

MARK	FOOTING SIZE (mm) LENGTH	WIDTH	THICKNESS	FOOTING REINFORCING	REMARKS
F1	1700	1700	300	(6)−#16 EW BOTT	-----
F2	1800	1800	300	(6)−#16 EW BOTT	-----

NOTES:
1. DIMENSIONS NOTED ARE MILLIMETERS (mm) UON.

US Army Corps of Engineers
Afghanistan Engineer District

SYMBOL	DESCRIPTION	DATE	APP

DESIGNED BY: KMP | DATE: 09-30-09
DWN BY: RCG | SUBMITTED BY: BAKER
CHK BY: CWW | FILE NO.: ANPSDS-002XXX

Michael Baker Jr., Inc
A unit of Michael Baker Corporation
Airside Business Park
100 Airside Drive
Moon Township, PA 15108
www.mbakercorp.com

AFGHAN NATIONAL POLICE
STANDARD DESIGN
WAREHOUSE BUILDING

DESIGN CRITERIA & SCHEDULES

SHEET REFERENCE NUMBER:
S2

100% SUBMISSION

MINIMUM LAP SPLICES OF REINFORCING BARS IN TENSION (PER ACI 318M-05)

f'c = 28 MPa CONCRETE

BAR SIZE / CENTER TO CENTER BAR SPACING	(---TOP BARS--) LESS THAN 4db	(---TOP BARS--) 4db OR MORE	(--OTHER BARS--) LESS THAN 4db	(--OTHER BARS--) 4db OR MORE	4db
#10	460	460	410	410	40
#13	660	610	510	480	50
#16	1020	760	790	580	60
#19	1450	910	1120	710	80
#22	1960	1090	1500	840	90
#25	2590	1450	1980	1120	100
#29	3280	1830	2510	1420	110
#32	4140	2340	3200	1780	130
#36	5080	2840	3910	2180	140

NOTES:

1. LAP SPLICES ABOVE ARE IN MILLIMETERS UON.
2. YIELD STRENGTH OF REINFORCEMENT, fy, IS 420MPa (LAP SPLICE LENGTH IS IN MILLIMETERS).
3. CONCRETE IS NORMAL WEIGHT (2400Kg/m³).
4. TOP BAR INDICATES HORIZONTAL REINFORCEMENT WHICH IS PLACED ABOVE 300mm OR MORE OF FRESH CONCRETE.
5. SEE COLUMN SCHEDULE FOR COLUMN AND SHEAR WALL VERTICAL LAP SPLICE.
6. STRAIGHT DEVELOPMENT LENGTH OF AN UNLAPPED BAR IS EQUAL TO VALUE FROM TABLE DIVIDED BY 1.3.
7. CATEGORY FOR BARS SPACED LESS THAN 4d, OR ON CENTER CORRESPONDS TO CATEGORY 1 IN THE CRSI HANDBOOK WHEREAS FOR BARS SPACED 4d, OR MORE ON CENTER CORRESPOND TO CRSI CATEGORY 5.

CONCRETE COVER SCHEDULE

MINIMUM CONCRETE COVER PROTECTION FOR REINFORCEMENT BARS SHALL BE AS FOLLOWS: (SEE ACI 318M-05, SECTION 7.7 FOR CONDITIONS NOT NOTED). DIMENSIONS FOR BAR PLACEMENT GIVEN IN SECTIONS AND DETAILS SHALL SUPERSEDE MINIMUM COVER REQUIREMENTS GIVEN HERE. DIMENSIONS ARE IN mm.

FOOTINGS (EARTH FORMED)		70
COLUMNS / PIERS (TO TIES)		40
GRADE BEAMS OR SLAB TURNED DOWN EDGES:		
TOP		40
BOTTOM (EARTH FORMED)		70
SIDES (EARTH FORMED)		70
SIDES (BOARD FORMED)	#16 BAR & SMALLER	40
	#19 THRU #36 BAR	50
ELEVATED BEAMS & SLABS:		
BEAM TIES & STIRRUPS (NOT EXPOSED TO WEATHER)		40
BEAM TIES & STIRRUPS (EXPOSED TO WEATHER)		50
FLOOR SLABS (NOT EXPOSED TO WEATHER)		20
FLOOR SLABS (EXPOSED TO WEATHER)		
#19 & LARGER		50
#13 & SMALLER		40
ROOF SLAB BARS		25
SLABS-ON-GRADE (NO EXPOSURE TO WEATHER) FROM TOP		20
SLABS-ON-GRADE (EXPOSURE TO WEATHER) FROM TOP		40
UTILITY TUNNEL WALLS, RETAINING WALLS AND SHEAR WALLS, (NO SURFACES SHALL BE EARTH FORMED) EARTH SIDE AND FRONT SIDE (EXPOSED TO WEATHER):		
#16 BAR AND SMALLER		40
#19 THRU #36 BAR		50

PROVIDE STANDARD BAR CHAIRS AND SPACERS AS REQUIRED TO MAINTAIN CONCRETE PROTECTION SPECIFIED.

MASONRY CONCRETE LINTEL SCHEDULE

OPENING TYPE OR SIZE, BEAM LOCATION OR TYPE	MAX SPAN (mm)	BEAM DEPTH (mm)	MAIN REINFORCING TOP	MAIN REINFORCING BOTTOM	MAIN REINFORCING OTHER	SHEAR REINF STIRRUPS
EXT WINDOW OR DOOR	900	400	(2)-#13	(2)-#13		----
INT WALL OPENING, NON-BEARING	1800	400		(2)-#13		----
INT WALL OPENING, NON-BEARING	900	200		(2)-#13		----

NOTES:

1. STRUCTURAL DRAWINGS DO NOT INDICATE ALL OPENINGS IN MASONRY WALLS. VERIFY NUMBER, SIZE AND LOCATION OF ALL OPENINGS IN MASONRY WALLS FROM ARCHITECTURAL DRAWINGS AND APPROVED PLUMBING, MECHANICAL, AND ELECTRICAL SHOP DRAWINGS.
2. PROVIDE 200mm BEARING EA END FOR 200mm DEEP MASONRY LINTEL. PROVIDE 400mm BEARING EA END FOR 400mm DEEP MASONRY LINTEL.
3. FOR HEAD DETAILS REFER TO ARCHITECTURAL DRAWINGS.
4. REINFORCING SHALL BE ASTM A615M, GRADE 420. CONCRETE FOR CAST-IN-PLACE BEAMS SHALL HAVE A MINIMUM COMPRESSIVE STRENGTH OF 28 MPa AT 28 DAYS.
5. CONTRACTOR SHALL SUBMIT FOR APPROVAL SHOP DRAWINGS AND SCHEDULES SHOWING SIZE, DETAILS, LOCATIONS, ETC FOR ALL CAST-IN-PLACE BEAMS IN CMU WALLS.

TYPICAL CMU WALL REINFORCING SCHEDULE

WALL TYPE OR LOCATION	WALL THICKNESS (mm)	CONT. VERT. REINF. (CENTERED IN CMU, UON)	CONT. CAST IN PLACE LINTEL (CIP BB) DEPTH (mm)	REINF (BOTT UON)	MAX CIPL VERT SPACING (mm)	REMARKS
ALL PERIMETER/EXTERIOR WALLS (UON)	200	1-#16 @ 800	200	2-#16	1200	-----
NON-LOAD BEARING INTERIOR WALLS WITH TOP AND BOTT. SUPPORTS	200	1-#13 @ 1200	200	2-#16	1200	-----

NOTES:

1. REINFORCING SIZES AND SPACING GIVEN IN SECTIONS AND DETAILS SHALL SUPERSEDE THE ABOVE SCHEDULE REQUIREMENTS.
2. PROVIDE CONTINUOUS CAST IN PLACE CONCRETE BOND BEAM AT ALL WALL LATERAL SUPPORT LOCATIONS.
3. REINFORCING INDICATED SHALL BE CONTINUOUS FOR FULL EXTENT OF SPLICE FOLLOWING THE REQUIREMENTS OF THE LAP SPLICE TABLE SHOWN ON THIS SHEET.
4. WALLS HAVE BEEN DESIGNATED AS VERTICALLY SPANNING UON AND THEREFORE MUST BE TEMPORARILY SUPPORTED DURING CONSTRUCTION UNTIL THE SUPPORTING DIAPHRAGMS (FLOOR AND ROOF SYSTEMS) HAVE BEEN COMPLETELY INSTALLED. SHORING IS THE RESPONSIBILITY OF THE CONTRACTOR.
5. ALL CMU WALLS SHALL BE FULLY GROUTED IN LIFTS NOT EXCEEDING THOSE BY CODE (UON)
6. SEE TYPICAL CMU WALL DETAILS ON SHEET S7.

CONCRETE MATERIALS SCHEDULE

STRUCTURAL ELEMENT	f'c CONCRETE COMPRESSIVE STRENGTH @ 28 DAYS (MPa)
SLAB-ON-GRADE/TURN-DOWN SLABS	28
ROOF AND FLOOR SLABS	28
ALL FOOTINGS (UON)	28
MISC. CURBS, WALLS AND PADS (UON)	28
CAST-IN-PLACE LINTEL	28
CONCRETE FRAMING - BEAMS AND COLUMNS	28

NOTES:

1. ALL CONCRETE SHALL BE NORMAL WEIGHT CONCRETE. (2400 Kg/m³ UON)
2. ALL CONCRETE SHALL HAVE A MAX WATER-CEMENT RATIO OF 0.45.

STANDARD HOOKS IN TENSION PER (ACI 318M-05)

BAR SIZE	HOOK DEVELOPMENT LENGTH Ldh (mm) f'c 28 MPa
#10	180
#13	250
#16	300
#19	380
#22	430
#25	480
#29	560
#32	610
#36	690

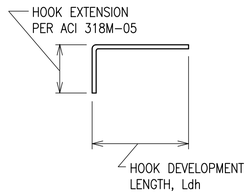

NOTES:

1. CONCRETE IS NORMAL WEIGHT CONCRETE.
2. BAR YIELD STRENGTH, fy = 420 MPa
3. SIDE COVER REQUIREMENTS OF ACI SECT. 12.5.3 ARE ASSUMED TO NOT BE MET.
4. TIE OR STIRRUP REQUIREMENTS OF ACI SECT. 12.5.3 ARE ASSUMED TO NOT BE MET.
5. REDUCTION FOR EXCESS REINFORCEMENT IS NOT TAKEN.
6. HOOK DEVELOPMENT LENGTH IS VALID FOR 180° HOOKS ALSO.

MASONRY REINFORCING MINIMUM LAP SPLICES

BAR SIZE	BASIC LAP SPLICE Ld FOR CMU REINFORCING
#10	450
#13	600
#16	750
#19	900
#22	1050
#25	1200

MAXIMUM CMU WALL UNSUPPORTED HEIGHT OR LENGTH

	WALL THICKNESS (mm)	EXTERIOR WALL NON-LOAD BEARING (mm)	INTERIOR NON-LOAD BEARING WALL (mm)
MAX HEIGHT OR LENGTH BETWEEN SUPPORTS	200	4800	7200

NOTE: CMU WALL MAXIMUM LATERAL SUPPORT SPACING GIVEN IN SECTIONS AND DETAILS SHALL SUPERSEDE THE ABOVE SCHEDULE REQUIREMENTS.

US Army Corps of Engineers
Afghanistan Engineer District

SYMBOL	DESCRIPTION	DATE	APP

DESIGNED BY: KMP
DWN BY: RCG
CHK BY: CWW
DATE: 09-30-09
SUBMITTED BY: BAKER
FILE NO.: ANPSDS-003XXX

Michael Baker Jr., Inc
A unit of Michael Baker Corporation
Airside Business Park
100 Airside Drive
Moon Township, PA 15108
www.mbakercorp.com

AFGHAN NATIONAL POLICE
STANDARD DESIGN
WAREHOUSE BUILDING

SCHEDULES

SHEET REFERENCE NUMBER:
S3

100% SUBMISSION

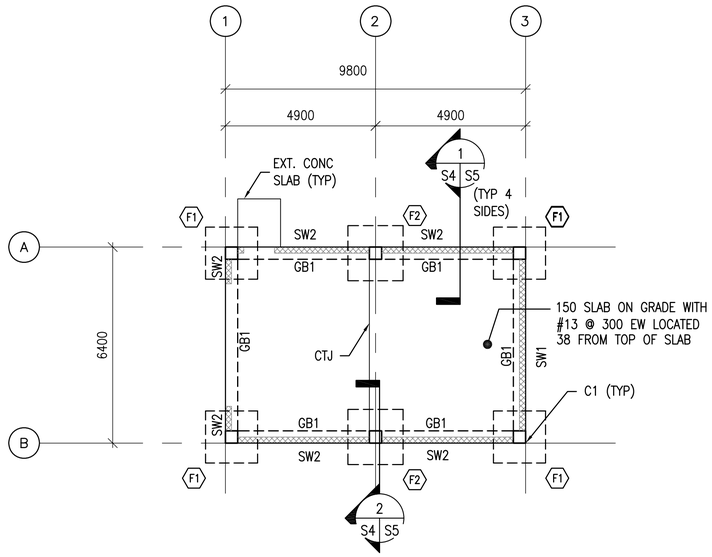

1 S4 S4 **FOUNDATION PLAN**

SCALE: 1:100

N

FOUNDATION PLAN NOTES:

1. FINISH FIRST FLOOR ELEVATION SHALL BE (DATUM 0.0). ALL PLUS OR MINUS DIMENSIONS INDICATED ON PLAN OR REFERRED TO IN NOTES RELATE TO FINISH FIRST FLOOR ELEVATION.
2. TOP OF EXTERIOR FOOTINGS SHALL BE –950 UNLESS OTHERWISE INDICATED.
3. SPREAD FOOTINGS INDICATED BY F# ON PLAN. REFER TO SPREAD FOOTING SCHEDULE ON SHEET S2.
4. COLUMNS INDICATED THUS C# ON PLAN. REFER TO COLUMN SCHEDULE ON SHEET S2.
5. REFER TO DRAWINGS S1TO S3 FOR STRUCTURAL NOTES AND BASIS OF DESIGN.
6. CTJ & CSJ INDICATES SLAB CONTROL OR CONSTRUCTION JOINTS. RESPECTIVELY, REFER TO SHEET S7 FOR DETAILS.
7. SEE CMU WALL REINFORCING SCHEDULE ON SHEET S3.
8. REFER TO ARCHITECTURAL SHEETS FOR MASONRY PARTITION TYPES.
9. SEE MECHANICAL AND ELECTRICAL SHEETS FOR CONCRETE PAD LOCATIONS, SIZES, AND THICKNESS NOT SHOWN. SEE SHEET S7 FOR DETAILS.

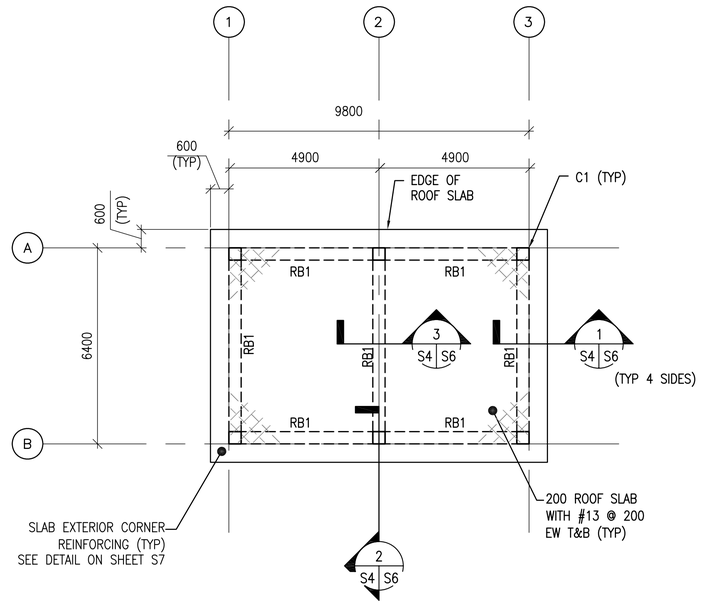

2 S4 S4 **ROOF FRAMING PLAN**

SCALE: 1:100

N

PLAN NOTES:

1. TOP OF SLAB ELEVATION = 3600 UNLESS NOTED OTHERWISE
2. RB# DENOTES ROOF BEAM TYPE. SEE BEAM SCHEDULE ON SHEET S2.
3. REFER TO SHEETS S1 TO S3 FOR STRUCTURAL NOTES AND BASIS OF DESIGN.
4. COORD W/ ARCHITECTURAL SHEETS FOR COLD–FORMED STEEL OVERBUILT FRAMING ABOVE ROOF SLAB.
5. COLD–FORMED METAL OVERBUILT ROOF FRAMING NOT SHOWN FOR CLARITY. SEE OVERBUILT ROOF FRAMING DETAILS AND SECTIONS ON SHEET S6

UNLESS OTHERWISE NOTED, LINEAR DIMENSIONS SHOWN ARE IN MILLIMETERS (MM)

0 2000 4000 8000

SCALE: 1: 100

US Army Corps of Engineers
Afghanistan Engineer District

APP.	DATE	DESCRIPTION	SYMBOL

DESIGNED BY: KMP	DATE: 09–30–09		
DWN BY: MDB	SUBMITTED BY: BAKER	CHK BY: CWW	FILE NO.: ANPSDS–104XXX

Michael Baker Jr., Inc
A unit of Michael Baker Corporation
Airside Business Park
100 Airside Drive
Moon Township, PA 15108
www.mbakercorp.com

AFGHAN NATIONAL POLICE
STANDARD DESIGN
WAREHOUSE BUILDING

FOUNDATION PLAN & ROOF PLANS

SHEET REFERENCE NUMBER:

S4

100% SUBMISSION

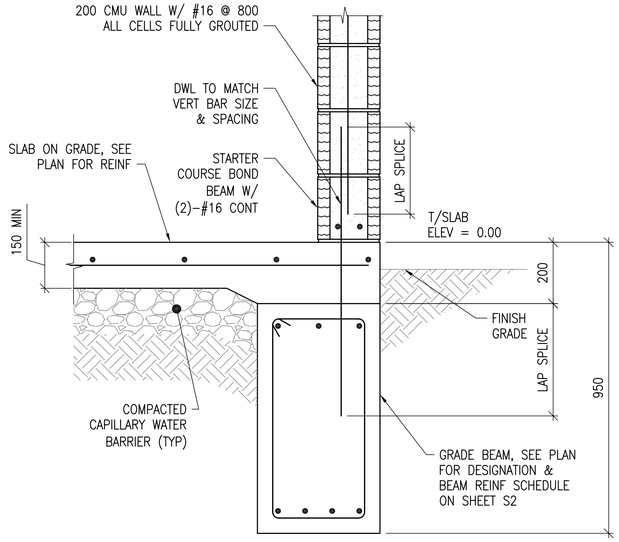

1 S4 S5 **SECTION**
SCALE: 1:10

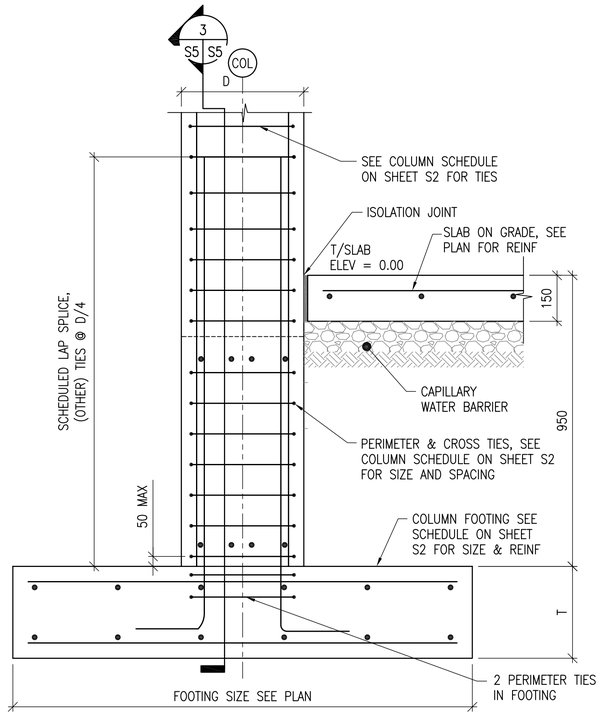

2 S4 S5 **SECTION**
SCALE: NTS

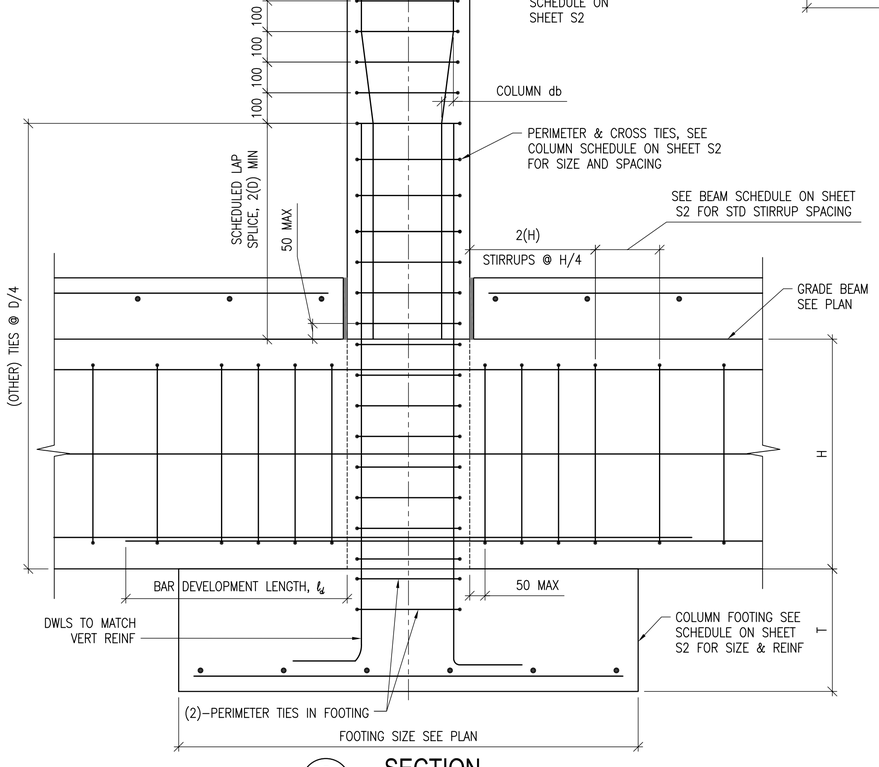

3 S5 S5 **SECTION**
SCALE: NTS

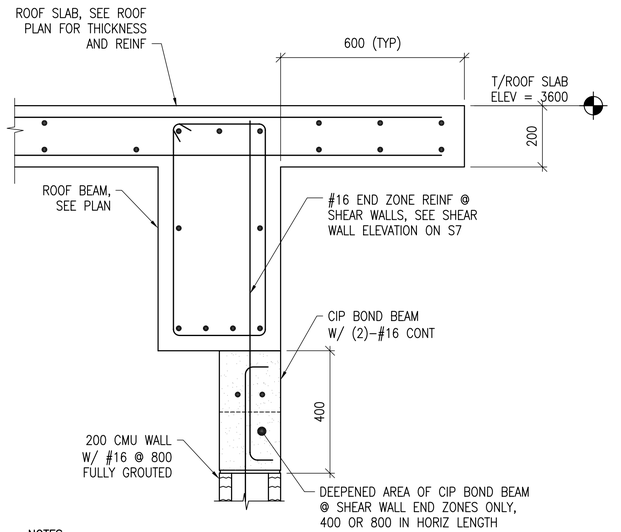

NOTES:
1. REFERENCE SHEET S6 FOR OVERFRAMING ABOVE ROOF SLAB.

4 S7 S5 **SECTION**
SCALE: 1:10

UNLESS OTHERWISE NOTED, LINEAR DIMENSIONS SHOWN ARE IN MILLIMETERS (MM)

0 200 400 800

SCALE: 1: 10

US Army Corps of Engineers
Afghanistan Engineer District

SYMBOL	DESCRIPTION	DATE	APP'D

DESIGNED BY: KMP	DATE: 09-30-09
DWN BY: RCG	SUBMITTED BY: BAKER
CHK BY: CWW	FILE NO.: ANPSDS-305XXX

Michael Baker Jr., Inc
A unit of Michael Baker Corporation
Airside Business Park
100 Airside Drive
Moon Township, PA. 15108
www.mbakercorp.com

AFGHAN NATIONAL POLICE
STANDARD DESIGN
WAREHOUSE BUILDING

FOUNDATION SECTIONS & DETAILS

SHEET REFERENCE NUMBER:
S5

100% SUBMISSION

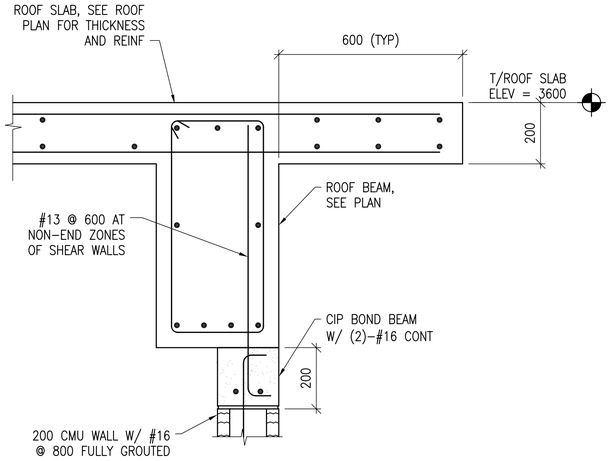

NOTES:
1. REFERENCE THIS SHEET FOR OVERFRAMING ABOVE ROOF SLAB.

1 S4 S6 SECTION
SCALE: 1:10

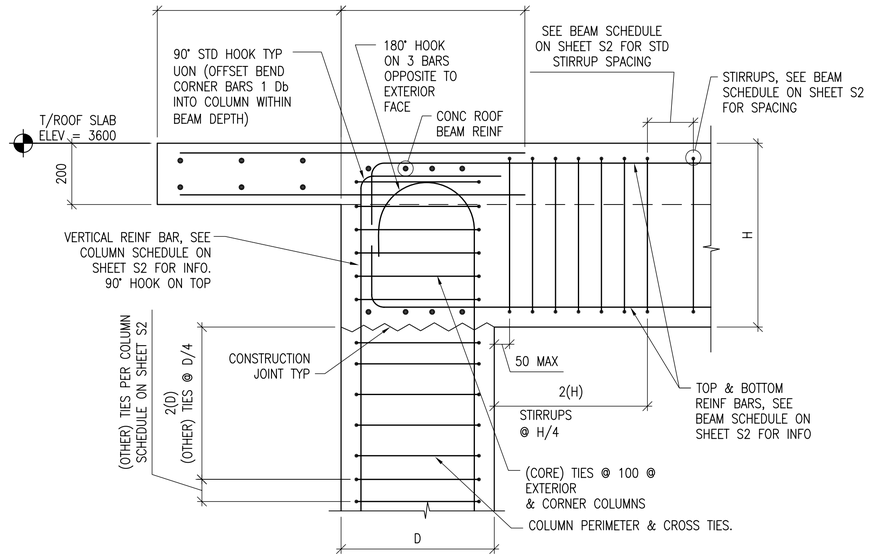

2 S4 S6 SECTION
SCALE: 1:10

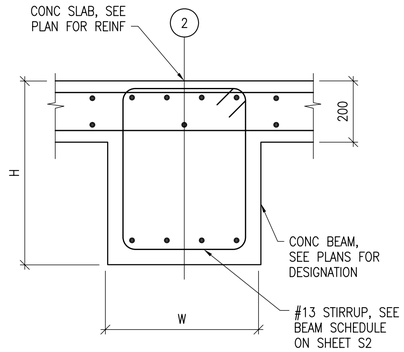

3 S4 S6 SECTION
SCALE: 1:10

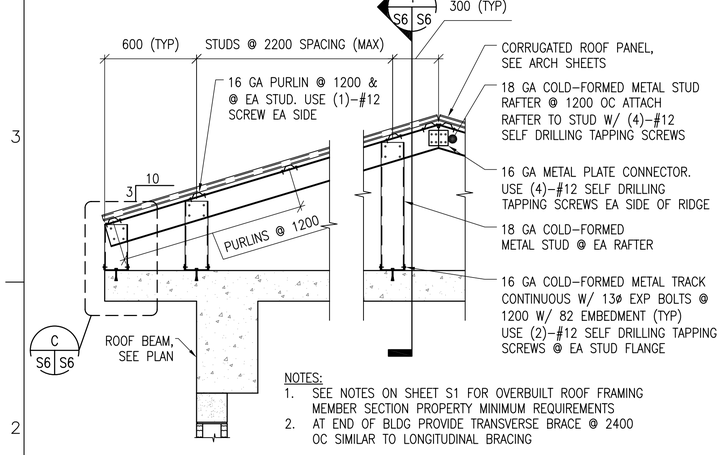

NOTES:
1. SEE NOTES ON SHEET S1 FOR OVERBUILT ROOF FRAMING MEMBER SECTION PROPERTY MINIMUM REQUIREMENTS
2. AT END OF BLDG PROVIDE TRANSVERSE BRACE @ 2400 OC SIMILAR TO LONGITUDINAL BRACING

A S6 S6 TYPICAL OVERBUILT ROOF FRAMING DETAIL
SCALE: 1:20

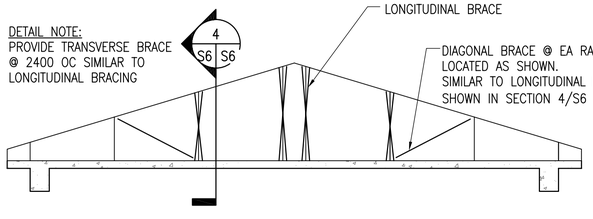

B S6 S6 TYPICAL ROOF BRACE LAYOUT DETAIL
SCALE: NTS

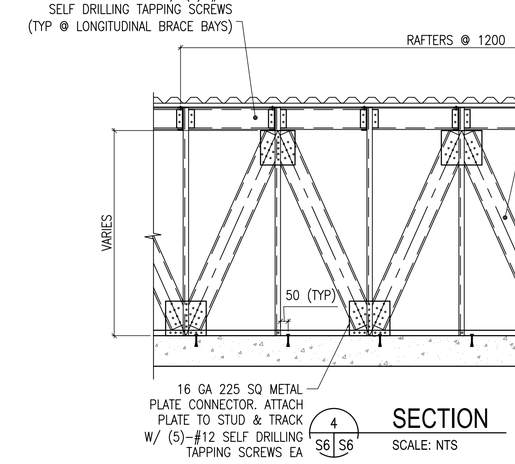

4 S6 S6 SECTION
SCALE: NTS

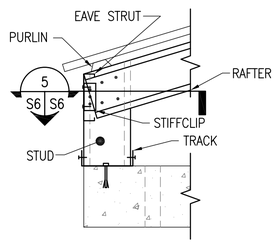

C S6 S6 DETAIL
SCALE: 1:10

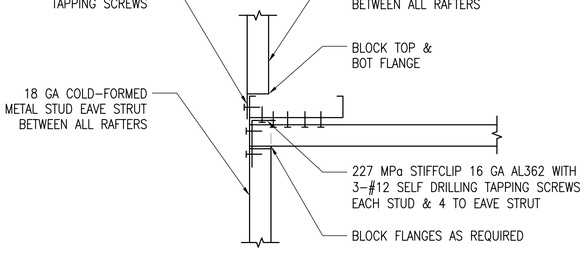

5 S6 S6 SECTION
SCALE: 1:5

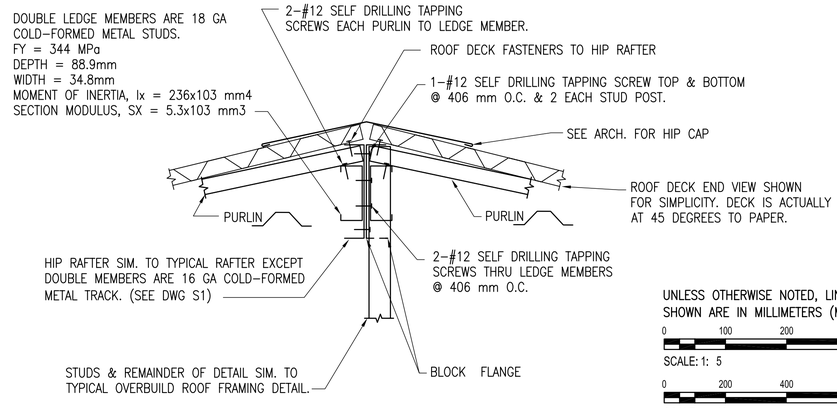

TYPICAL HIP FRAMING DETAIL
SCALE: 1:5

UNLESS OTHERWISE NOTED, LINEAR DIMENSIONS SHOWN ARE IN MILLIMETERS (MM)

0 100 200 400
SCALE: 1: 5

0 200 400 800
SCALE: 1: 10

0 400 800 1600
SCALE: 1: 20

US Army Corps of Engineers
Afghanistan Engineer District

SYMBOL	DESCRIPTION	DATE	APP

DESIGNED BY: KMP | DATE: 09-30-09
DWN BY: RCG | SUBMITTED BY: BAKER
CHK BY: CWW | FILE NO.: ANPSDS-306XXX

Michael Baker Jr., Inc
A unit of Michael Baker Corporation
Airside Business Park
100 Airside Drive
Moon Township, PA 15108
www.mbakercorp.com

AFGHAN NATIONAL POLICE
STANDARD DESIGN
WAREHOUSE BUILDING

SECTIONS & DETAILS

SHEET REFERENCE NUMBER:
S6

100% SUBMISSION

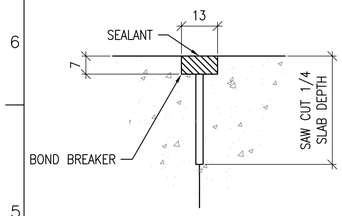

CONTROL JOINT DETAIL

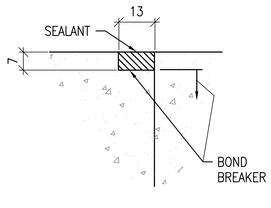

CONSTRUCTION JOINT DETAIL

1 S7 TYPICAL CONCRETE SLAB JOINT FINISH DETAIL

SCALE: NTS

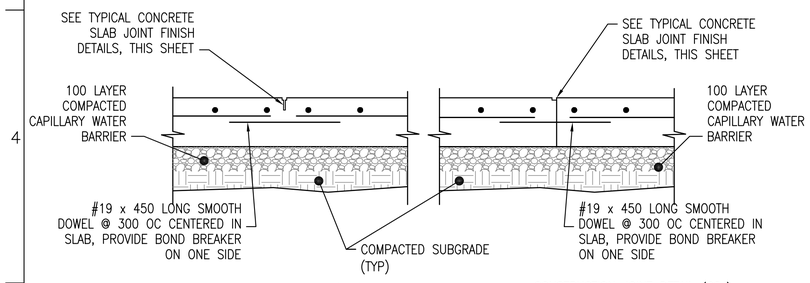

CONTROL JOINT DETAIL (CTJ)

CONSTRUCTION JOINT DETAIL (CSJ)

2 S7 TYPICAL SLAB ON GRADE JOINT DETAILS

SCALE: NTS

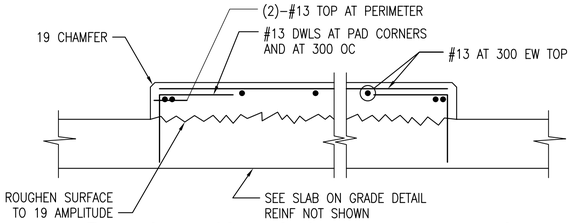

3 S7 INTERIOR EQUIPMENT PAD DETAIL

SCALE: NTS

DETAIL NOTE:

1. COORDINATE EQUIPMENT PAD SIZE AND LOCATIONS W/ ELECTRICAL/MECHANICAL SHEETS AND EQUIPMENT
2. MANUFACTURER.

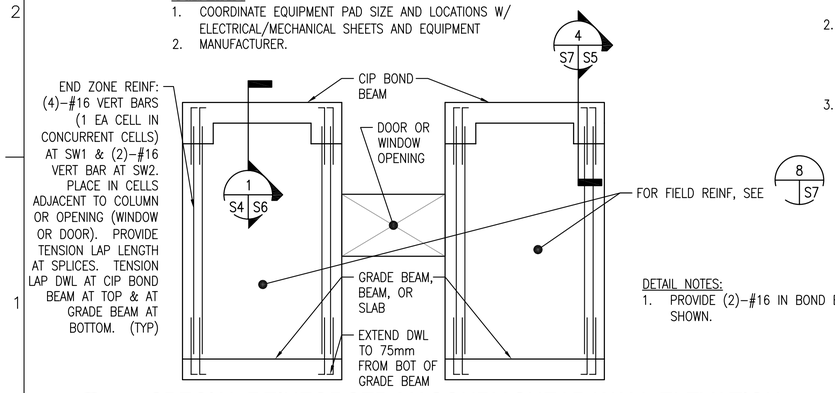

DETAIL NOTES:

1. PROVIDE (2)–#16 IN BOND BEAMS AT 1200 OC, NOT SHOWN.

4 S7 SPECIAL REINFORCED MASONRY SHEAR WALL ELEVATION

SCALE: NTS

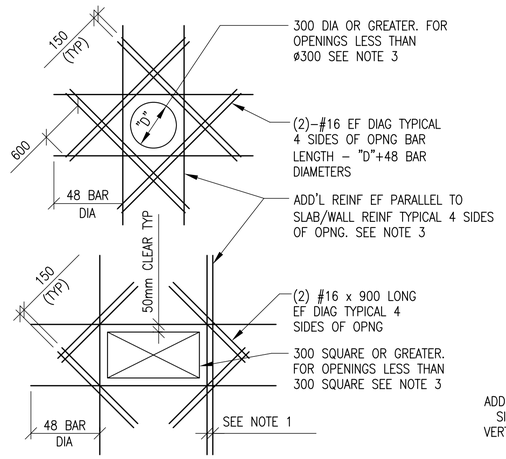

SLAB OPENINGS

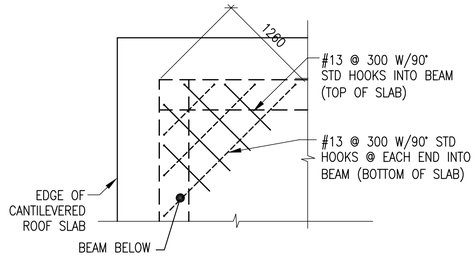

ELEVATED SLAB CORNERS

5 S7 ADD'L REINFORCEMENT DETAILS

SCALE: NTS

DETAIL NOTES:

1. WHERE MORE THAN ONE ADDITIONAL BAR IS REQUIRED PARALLEL TO THE EXISTING SLAB/WALL REINFORCING THE ADDITIONAL REINFORCING BARS SHALL BE SPACED AT 100 ON CENTER.
2. ADDITIONAL REINFORCING PARALLEL TO THE SLAB/WALL REINFORCING SHALL BE #16 BARS THAT PROVIDE A STEEL AREA ON EACH SIDE OF THE OPENING EQUAL TO 1/2 THE AREA OF THE REINFORCING CUT BY THE OPENING.
3. FOR OPENINGS WITH SIDES OR DIAMETERS LESS THAN 300 SPREAD THE SLAB/WALL REINFORCING TO CLEAR THE OPENING.

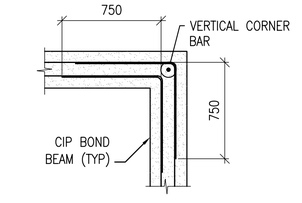

BOND BEAM CORNER

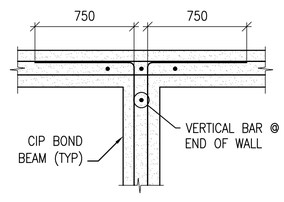

BOND BEAM INTERSECTION

6 S7 CIP BOND BEAM DETAILS

SCALE: NTS

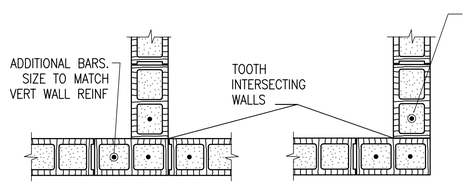

INTERSECTION

WALL CORNER

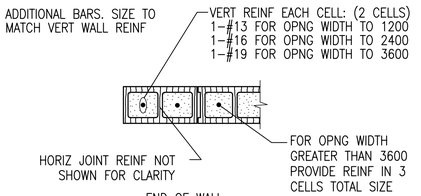

END OF WALL

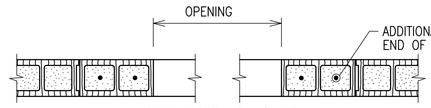

MASONRY OPENING W/ LINTEL

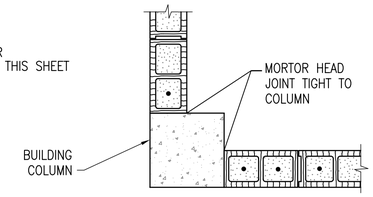

WALL END AT COLUMN

NOTES:

1. OPENING WIDTH SHALL NOT EXCEED 3600 FOR THIS TYPE OF JAMB
2. ALL CMU CELLS TO BE FULLY GROUTED

7 S7 TYPICAL CMU DETAILS

SCALE: NTS

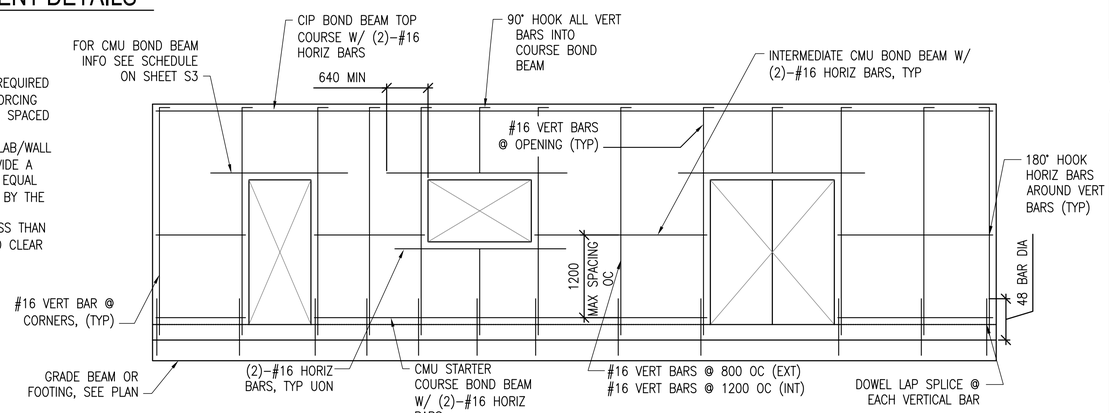

8 S7 MIN CMU WALL REINFORCING

SCALE: NTS

LINTEL NOTES:
CMU LINTEL REINFORCEMENT AS PER SCHEDULE ON SHEET S3

UNLESS OTHERWISE NOTED, LINEAR DIMENSIONS SHOWN ARE IN MILLIMETERS (MM)

US Army Corps of Engineers
Afghanistan Engineer District

SYMBOL	DESCRIPTION	DATE	APP

DESIGNED BY: KMP	DATE: 09-30-09	
DWN BY: RCG	SUBMITTED BY: BAKER	
CHK BY: CWW	FILE NO.: ANPSDS-507XXX	

Michael Baker Jr., Inc.
A unit of Michael Baker Corporation
Airside Business Park
100 Airside Drive
Moon Township, PA 15108
www.mbakercorp.com

AFGHAN NATIONAL POLICE
STANDARD DESIGN
WAREHOUSE BUILDING

TYPICAL DETAILS

SHEET REFERENCE NUMBER:
S7

100% SUBMISSION

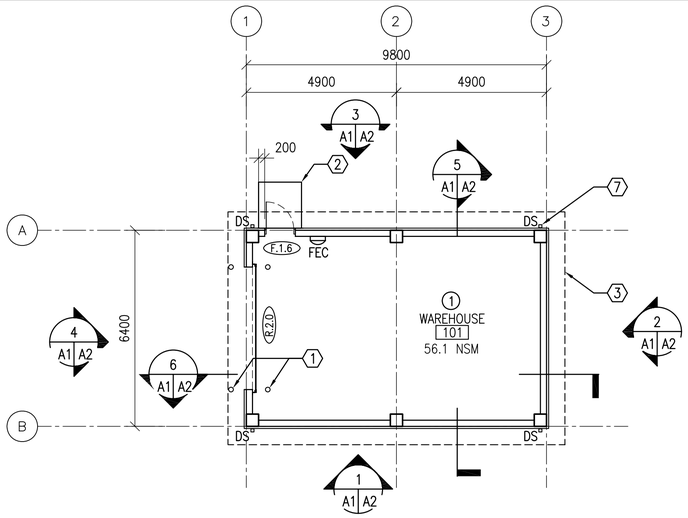

1 A1 A1 **FLOOR PLAN**

SCALE: 1:100

65.0 GSM

N

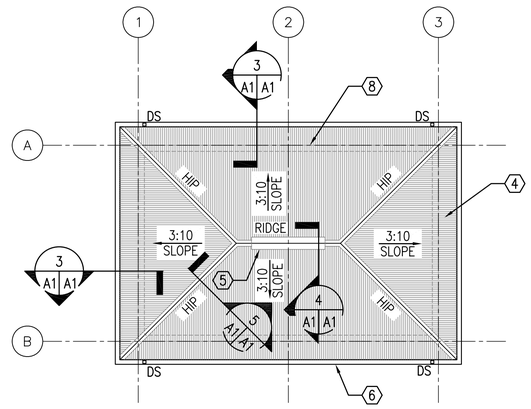

2 A1 A1 **ROOF PLAN**

SCALE: 1:100

N

GENERAL NOTES:

A. OPENINGS FOR DOORS SHALL BE LOCATED 200 MM FROM THE ADJACENT WALL UNLESS NOTED OTHERWISE

B. SURFACES TO BE PAINTED SHALL BE CLEAN AND FREE OF FOREIGN MATTER BEFORE APPLICATION OF PAINT. CLEANING SHALL BE SCHEDULED SO THAT DUST AND OTHER CONTAMINANTS WILL NOT FALL ON WET, NEWLY PAINTED SURFACES.

C. CONCRETE AND INTERIOR MASONRY SURFACES GROUTED SOLID SHALL BE ALLOWED TO DRY AT LEAST 30 DAYS BEFORE PAINTING EXCEPT CONCRETE SLAB ON GRADE WHICH SHALL BE ALLOWED TO CURE 90 DAYS BEFORE PAINTING.

D. PAINTS CONTAINING LEAD IN EXCESS OF 0.06 PERCENT BY WEIGHT OF THE TOTAL NONVOLATILE CONTENT SHALL NOT BE USED.

E. MERCURIAL FUNGICIDES SHALL NOT BE USED IN OIL–BASE PAINT.

F. REMOVE LOOSE DIRT AND CLEAN SURFACES BEFORE PAINTING. APPLY PAINT TO INTERIOR STRUCTURAL RIGID FRAMINGS AND CEILINGS AND TEST FOR ADHESION. PRIMER COAT FOR MASONRY. INITIAL FIRST COAT WITH AN ACRYLIC LATEX PAINT FOR EXTERIOR SURFACES AND A SECOND COAT WITH A WATER REPELLENT ACRYLIC LATEX PAINT.

G. METAL DOORS AND FRAMES SHALL RECEIVE A PRIMER COAT PLUS TWO COATS OF PAINT.

H. DIMENSIONS ARE TO STRUCTURAL COLUMN GRID, EDGE OF WINDOW OPENINGS, AND TO HINGE SIDE OF DOOR OPENINGS.

KEY NOTES: (X)

1. STEEL PIPE BOLLARD – RE: DETAIL 3/A4
2. CONCRETE STOOP – RE: DETAIL 2/A4
3. LINE OF ROOF OVERHANG ABOVE
4. CORRUGATED METAL ROOF PANELS ON COLD–FORMED METAL FRAMING
5. CONTINUOUS RIDGE VENT
6. METAL GUTTER
7. METAL DOWNSPOUT WITH SPLASH BLOCK
8. LINE OF BUILDING WALL BELOW

ROOM FINISHES: (X)

1. WALLS: PAINTED PLASTER,
   FLOOR: SEALED CONCRETE
   CEILING: PAINTED PLASTER APPLIED TO STRUCTURE

LEGEND:

- F.1.4 — DOOR TYPE, SEE SHEET A3
- (X) — KEY NOTE
- FEC — FIRE EXTINGUISHER CABINET
- (1) — ROOM FINISH DESIGNATION

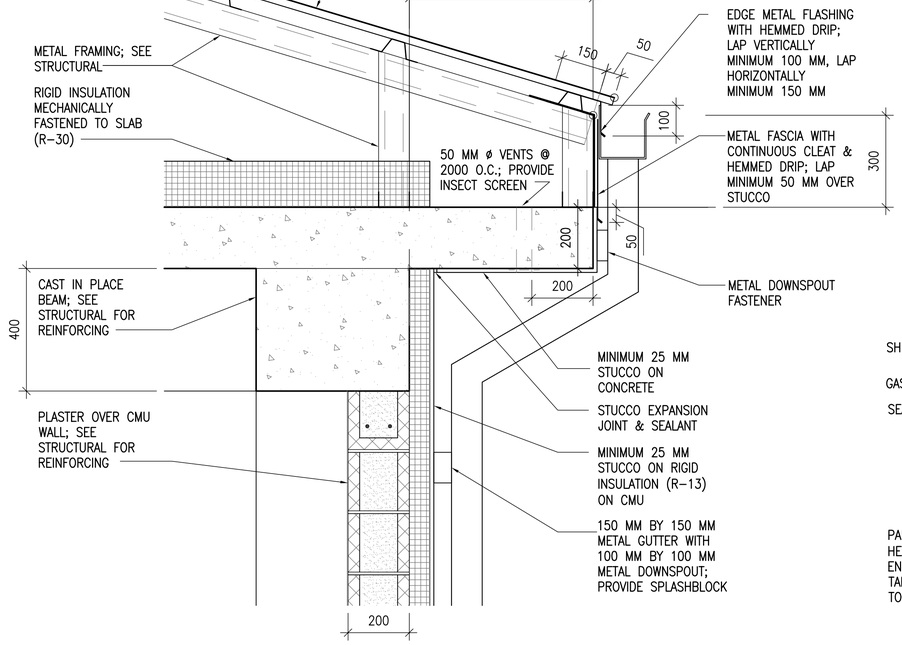

3 A1 A1 **EAVE DETAIL**

SCALE: 1:10

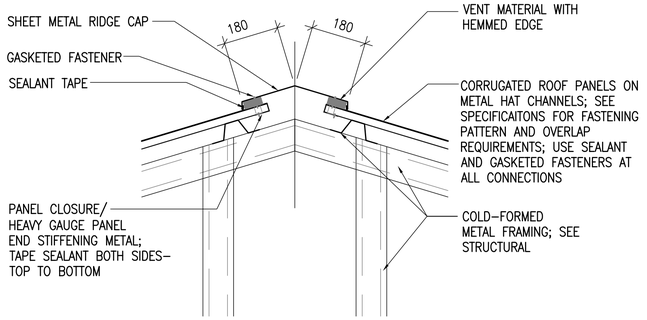

4 A1 A1 **RIDGE VENT DETAIL**

SCALE: 1:10

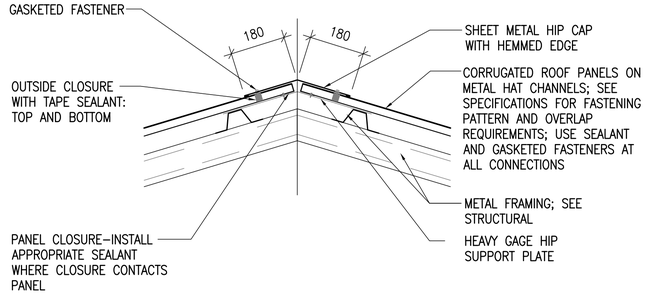

5 A1 A1 **HIP DETAIL**

SCALE: 1:10

UNLESS OTHERWISE NOTED, LINEAR DIMENSIONS SHOWN ARE IN MILLIMETERS (MM)

0 200 400 800

SCALE: 1: 10

0 2000 4000 8000

SCALE: 1: 100

US Army Corps of Engineers
Afghanistan Engineer District

SYMBOL	DESCRIPTION	DATE	APP'D

DESIGNED BY:	DATE:
PFF	09–30–09
DWN BY:	SUBMITTED BY:
ECN	BAKER
CHK BY:	FILE NO.:
NLJ	ANPSDA–101XXX

Michael Baker Jr., Inc.
A unit of Michael Baker Corporation
Airside Business Park
100 Airside Drive
Moon Township, PA 15108
www.mbakercorp.com

AFGHAN NATIONAL POLICE
STANDARD DESIGN
WAREHOUSE BUILDING

FLOOR AND ROOF PLANS AND DETAILS

SHEET REFERENCE NUMBER:

A1

100% SUBMISSION

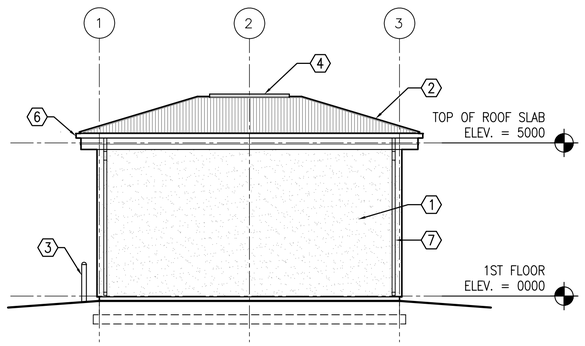

1 A1 A2 EAST ELEVATION

SCALE: 1:100

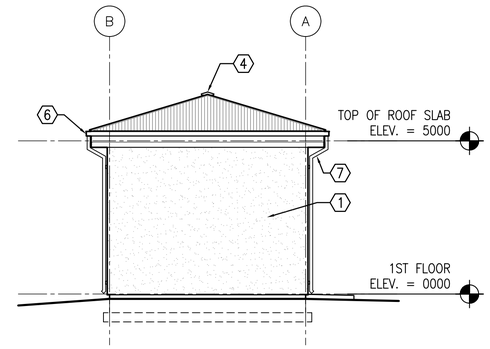

2 A1 A2 NORTH ELEVATION

SCALE: 1:100

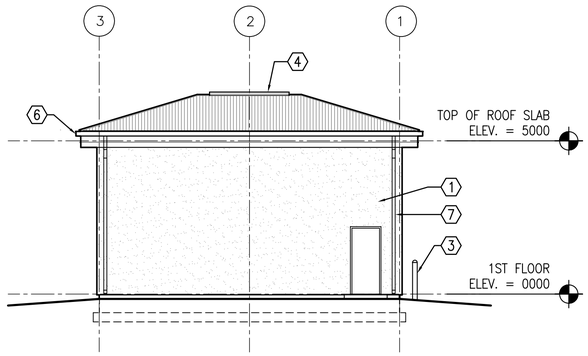

3 A1 A2 WEST ELEVATION

SCALE: 1:100

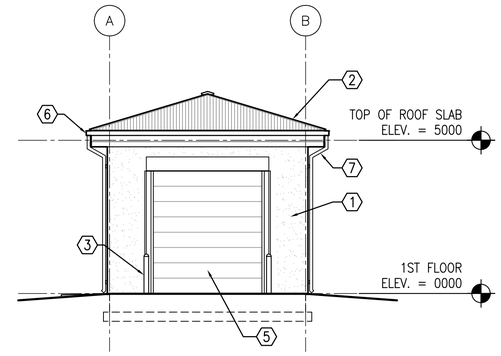

4 A1 A2 SOUTH ELEVATION

SCALE: 1:100

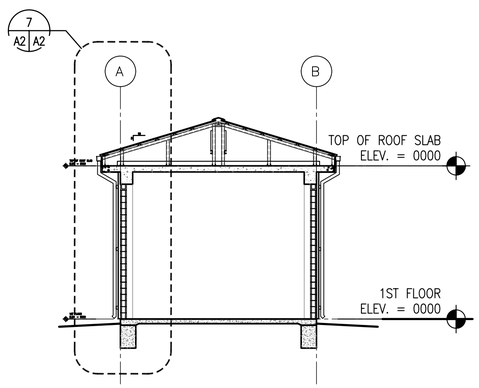

5 A1 A2 BUILDING SECTION

SCALE: 1:100

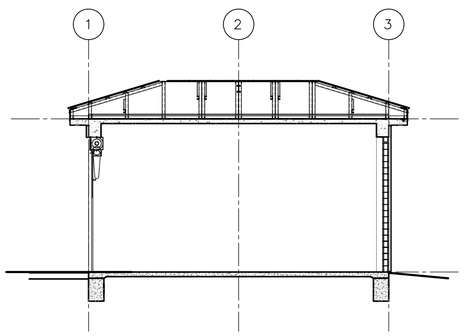

6 A1 A2 BUILDING SECTION

SCALE: 1:100

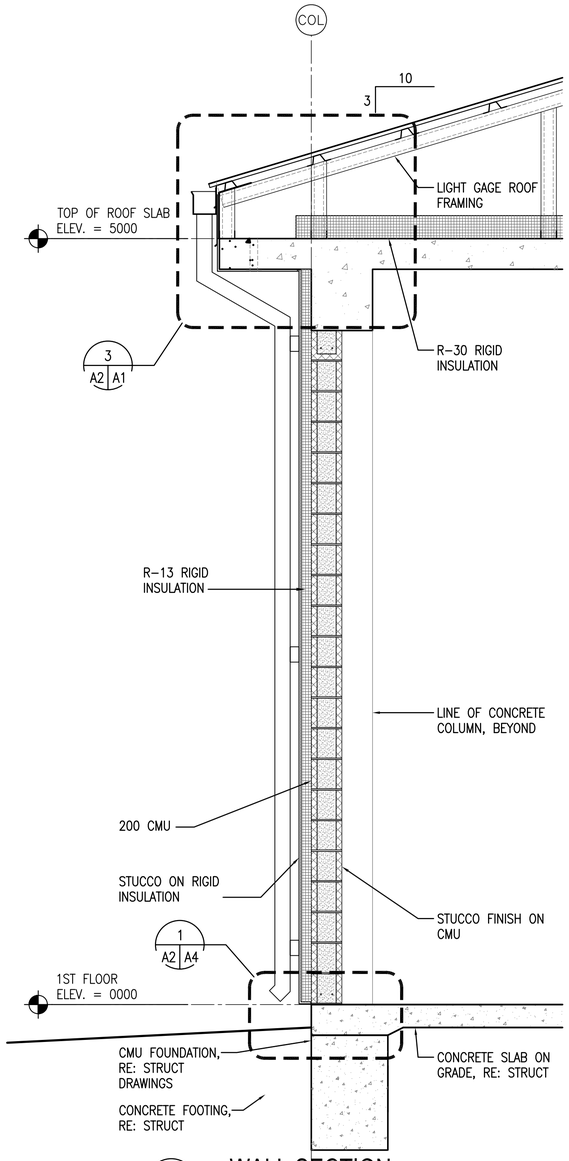

7 A2 A2 WALL SECTION

SCALE: 1:20

KEY NOTES:

1. STUCCO AND RIGID INSULATION SYSTEM OVER CMU AND CONCRETE.
2. CORRUGATED METAL ROOF PANELS ON COLD-FORMED METAL FRAMING.
3. GALVANIZED STEEL PIPE BOLLARD FILLED WITH CONCRETE ON EACH SIDE OF ROLL UP DOOR.
4. CONTINUOUS RIDGE VENT
5. OVERHEAD COILING DOOR
6. METAL GUTTER
7. METAL DOWNSPOUT WITH SPLASH BLOCK

GENERAL NOTES:

A. COORDINATE SIZE AND LOCATION OF OPENINGS FOR MECHANICAL ITEMS WITH MECHANICAL DRAWINGS.

B. PROVIDE STRUCTURAL LINTELS AS REQUIRED – RE: STRUCT

UNLESS OTHERWISE NOTED, LINEAR DIMENSIONS SHOWN ARE IN MILLIMETERS (MM)

0 400 800 1600

SCALE: 1: 20

0 2000 4000 8000

SCALE: 1: 100

US Army Corps of Engineers

Afghanistan Engineer District

SYMBOL	DESCRIPTION	DATE	APP'D

DESIGNED BY: PFF	DWN BY: ECN	CHK BY: NLJ	DATE: 09-30-09
SUBMITTED BY: BAKER	FILE NO.: ANPSDA-202XXX		

Michael Baker Jr., Inc
A unit of Michael Baker Corporation
Airside Business Park
100 Airside Drive
Moon Township, PA 15108
www.mbakercorp.com

AFGHAN NATIONAL POLICE
STANDARD DESIGN
WAREHOUSE BUILDING

EXTERIOR ELEVATIONS

SHEET REFERENCE NUMBER:

A2

100% SUBMISSION

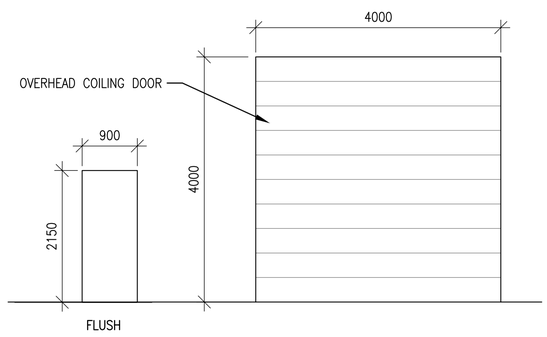

F R

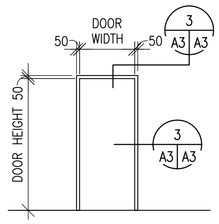

1

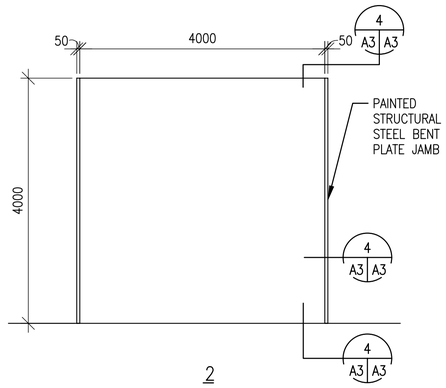

2

DOOR TYPES NOTES:

1. INTERIOR AND EXTERIOR METAL DOORS AND FRAME COLORS SHALL MATCH ADJACENT WALL COLORS AS SELECTED BY THE CONTRACTING OFFICER.
2. HARDWARE SHALL BE HEAVY DUTY, COMMERCIAL GRADE, STAINLESS STEEL WITH A MATTE FINISH.
3. FRAMES, EXCEPT FIRE-RATED FRAMES, SHALL BE MOUNTED AND ADJUSTED IN ACCORDANCE WITH MANUFACTURER'S INSTRUCTIONS. FRAMES SHALL BE FASTENED WITH MINIMUM OF THREE FASTENING POINTS PER SIDE AT REGULAR INTERVALS.
4. DIMENSIONS SHOWN ON DOOR SCHEDULE ARE BASED UPON MODULAR MASONRY (OR ROUGH OPENING), HEIGHT OF 2200mm FOR STANDARD PERSONNEL DOORS. CONTRACTOR SHALL COORDINATE WITH DOOR SUPPLIER TO ENSURE THAT DIMENSIONS OF DOORS AND FRAMES PROVIDED ARE COMPATIBLE WITH DOOR OPENING DIMENSIONS.

HARDWARE TYPES:

HW-6 1-1/2 PR HINGES
1 EA LOCKSET,F04 ENTRY LOCK W/LEVERS. GRADE 1
1 EA DOOR CLOSER, C02061,LOW RESISTANCE
1 EA THRESHOLD J32130

1 A3 A3 DOOR TYPES
SCALE: 1:50

2 A3 A3 FRAME TYPES
SCALE: 1:50

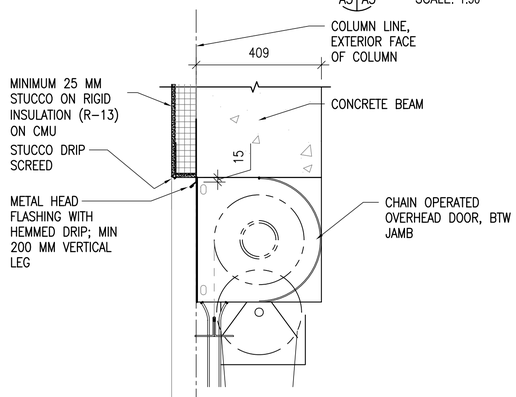

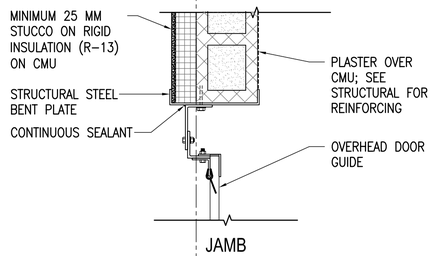

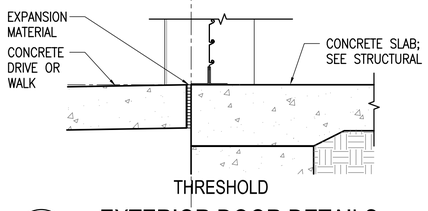

4 A3 A3 EXTERIOR DOOR DETAILS
SCALE: 1:10

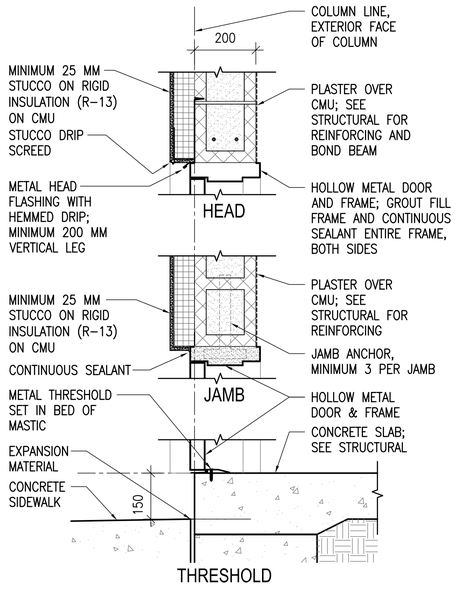

3 A3 A3 EXTERIOR DOOR DETAILS
SCALE: 1:10

UNLESS OTHERWISE NOTED, LINEAR DIMENSIONS SHOWN ARE IN MILLIMETERS (MM)

0 1000 2000 4000
SCALE: 1: 50

0 200 400 800
SCALE: 1: 10

US Army Corps of Engineers
Afghanistan Engineer District

SYMBOL	DESCRIPTION	DATE	APP'D

DESIGNED BY: PFF
DWN BY: ECN
CHK BY: NLJ
DATE: 09-30-09
SUBMITTED BY: BAKER
FILE NO.: ANPSDA-503XXX

Michael Baker Jr., Inc
A unit of Michael Baker Corporation
Airside Business Park
100 Airside Drive
Moon Township, PA 15108
www.mbakercorp.com

AFGHAN NATIONAL POLICE
STANDARD DESIGN
WAREHOUSE BUILDING

DOOR, WINDOW & FINISH TYPES & DETAILS

SHEET REFERENCE NUMBER:
A3

100% SUBMISSION

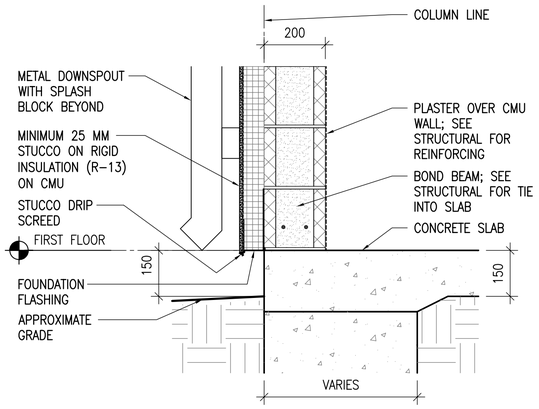

1 A4 A4 **STUCCO BASE DETAIL**

SCALE: 1:10

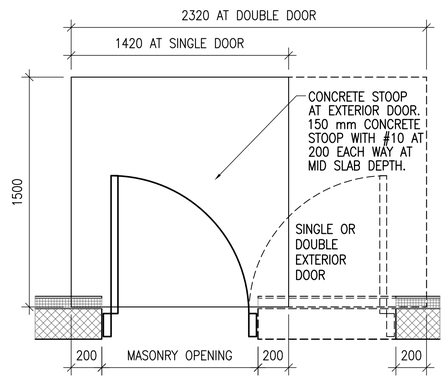

2 A4 A4 **CONCRETE STOOP PLAN DETAIL**

SCALE: 1:20

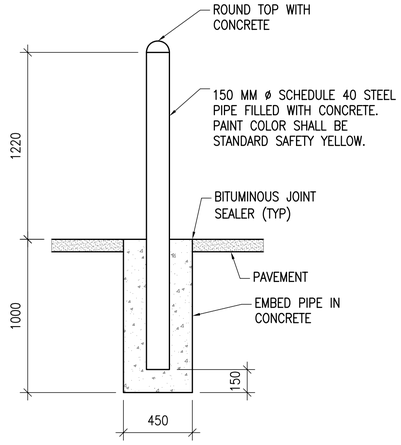

3 A4 A4 **STEEL PIPE BOLLARD DETAIL**

SCALE: 1:20

UNLESS OTHERWISE NOTED, LINEAR DIMENSIONS SHOWN ARE IN MILLIMETERS (MM)

0 200 400 800

SCALE: 1: 10

0 400 800 1600

SCALE: 1: 20

US Army Corps of Engineers

Afghanistan Engineer District

SYMBOL	DESCRIPTION	DATE	APP'D

DESIGNED BY: PFF	DATE: 09-30-09		
DWN BY: ECN	SUBMITTED BY: BAKER	CHK BY: NLJ	FILE NO.: ANPSDA-504XXX

Michael Baker Jr., Inc
A unit of Michael Baker Corporation
Airside Business Park
100 Airside Drive
Moon Township, PA 15108
www.mbakercorp.com

AFGHAN NATIONAL POLICE
STANDARD DESIGN
WAREHOUSE BUILDING

SECTION DETAILS

SHEET REFERENCE NUMBER:

A4

100% SUBMISSION

POWER

- DISTRIBUTION PANELBOARD
- NEW PANELBOARD – SURFACE
- NEW PANELBOARD – RECESSED
- EXISTING PANELBOARD
- (G) GENERATOR
- TVSS TRANSIENT VOLTAGE SURGE SURPRESSOR
- TRANSFORMER (DRAWN TO SIZE)
- PS POWER SUPPLY
- CP CONTROL PANEL
- TC TIME CLOCK
- TIM ASTRONOMICAL TIME CLOCK– "SEE SPEC."
- R RELAY WITH RATING AND NUMBER OF POLES AS NOTED ON DRAWINGS– "SEE SPEC."
- J JUNCTION BOX
- (J) JUNCTION BOX – CEILING
- PB PULL BOX
- BD BUS DUCT HORIZONTAL
- BUS DUCT VERTICAL
- EMERGENCY POWER OFF PUSH BUTTON
- NON–FUSIBLE SAFETY SWITCH
- FUSIBLE SAFETY SWITCH
- (M) MOTOR
- ^{M} MOTOR STARTING SWITCH – 20A RATED
- ^{K} KEY SWITCH – 20A RATED
- FC FAN COIL – FURNISHED BY MECHANICAL CONTRACTOR, ELECTRICAL CONTRACTOR SHALL INSTALL AND PROVIDE POWER CONNECTION
- UH UNIT HEATER – FURNISHED BY MECHANICAL CONTRACTOR, ELECTRICAL CONTRACTOR SHALL INSTALL AND PROVIDE POWER CONNECTION
- D JUNCTION BOX FOR CONNECTION TO GARBAGE DISPOSAL
- CF LIGHT/HEATER/FAN – FURNISHED BY MECHANICAL CONTRACTOR, ELECTRICAL CONTRACTOR SHALL INSTALL AND PROVIDE POWER CONNECTION
- ELECTRIC WATER HEATER
- EPO WEATHERPROOF / EXPLOSION PROOF EMERGENCY POWER OFF PUSH–BUTTON TO BE INTERCONNECTED WITH GENERATOR SHUT DOWN CONTROL
- CF CEILING FAN – REFER TO SPECIFICATION SECTION 26 20 00

RECEPTACLES

- DUPLEX 20A BRITISH STANDARD UNSWITCHED SOCKETS
- $_{GF}$ DUPLEX 20A BRITISH STANDARD UNSWITCHED SOCKETS – 10mA GROUND FAULT INTERRUPTER TYPE
- $_{WP}$ DUPLEX 20A BRITISH STANDARD UNSWITCHED SOCKETS – 10mA GROUND FAULT INTERRUPTER TYPE WITH WEATHERPROOF COVER
- $_{EXP}$ DUPLEX 20A BRITISH STANDARD UNSWITCHED SOCKETS – EXPLOSION PROOF
- * INDICATES MOUNT DEVICE ABOVE COUNTER TOP

LIGHTNING PROTECTION

- AIR TERMINAL 20mm O.D. X 4m SOLID COPPER, NICKEL PLATED ON ADHESIVE BASE.
- EQ EQUIPMENT AIR TERMINAL
- TEST WELL WITH GROUND ROD(S)
- GROUND ROD
- G GROUND PLATE
- MAIN GROUND CONDUCTER CONCEALED WITHIN CONSTRUCTION
- MAIN GROUND CONDUCTOR EXPOSED ON EXPOSED ON BUILDING EXTERIOR SURFACE
- GROUND CONDUCTOR CAD WELDED TO GROUND CABLE OR EQUIPMENT
- GROUND CONDUCTOR CAD WELDED TO BUILDING STEEL COLUMN
- GROUND ROD TRIPOD, SPACED 10 FEET APART.
- LEVEL TO LEVEL CABLE

LIGHTING

- LIGHTING FIXTURE – SEE FIXTURE SCHEDULE FOR MORE INFORMATION
- LIGHTING FIXTURE – SEE FIXTURE SCHEDULE FOR MORE INFORMATION
- DOWNLIGHT
- LIGHTING FIXTURE ON NORMAL/EMERGENCY
- WALL MOUNTED LIGHT FIXTURE
- E EXIT SIGN – DIRECTIONAL ARROWS AS INDICATED ON DRAWINGS
- B BATTERY PACK WITH HEADS AS INDICATED ON DRAWINGS
- REMOTE HEAD FOR BATTERY PACK
- $ SINGLE POLE SWITCH – 20A RATED
- ^{3} 3–WAY SWITCH – 20A RATED
- ^{4} 4–WAY SWITCH – 20A RATED
- PC PHOTOCELL VOLTAGE TO MATCH CIRCUITRY
- LC LIGHTING CONTACTOR
- POLE MOUNTED SITE LIGHTING FIXTURE– NUMBER OF FIXTURES PER POLE AS INDICATED ON DRAWINGS
- EXTERIOR DIRECTIONAL LIGHTING FIXTURE
- a SMALL CASE LETTERS REPRESENTS LAMP(S) / SWITCHES. WHEN USED WITH AN OCCUPANCY SENSOR THIS INDICATES SENSOR WITH MANUAL OVERRIDE SWITCH

TELECOMMUNICATIONS

- TELEPHONE OUTLET(S) @ 18" AFF. U.N.O. WITH 3/4" RACEWAY TERMINATED ABOVE NEAREST ACCESSIBLE CEILING OR TO TELEPHONE TERMINAL BOARD IF NO ACCESSIBLE CEILING AVAILABLE. SEE TELE/DATA RISER DIAGRAM FOR OUTLET AND CABLE DESCRIPTION
- DATA OUTLET(S) @ 18" AFF. U.N.O. WITH 3/4" RACEWAY TERMINATED ABOVE NEAREST ACCESSIBLE CEILING OR TO DATA EQUIPMENT RACK IF NO ACCESSIBLE CEILING AVAILABLE. SEE TELE/DATA RISER DIAGRAM FOR OUTLET AND CABLE DESCRIPTION

TELECOMMUNICATIONS (CONTINUED)

- COMBINATION TELEPHONE/DATA OUTLET(S) @ 18" AFF. U.N.O. WITH 1" RACEWAY TERMINATED ABOVE NEAREST ACCESSIBLE CEILING OR TO TELE/DATA TERMINAL AREA IF NO ACCESSIBLE CEILING AVAILABLE. SEE TELE/DATA RISER DIAGRAM FOR OUTLET AND CABLE DESCRIPTION
- W WALL MTD. TELEPHONE OUTLET WITH 3/4" RACEWAY TERMINATED ABOVE NEAREST ACCESSIBLE CEILING OR TO TELEPHONE TERMINAL BOARD IF NO ACCESSIBLE CEILING AVAILABLE. SEE TELE/DATA RISER DIAGRAM FOR OUTLET AND CABLE DESCRIPTION
- (x)T INDICATES NUMBER OF TELEPHONE OUTLET(S) AND ASSOCIATED CABLING
- (x)D INDICATES NUMBER OF DATA OUTLET(S) AND ASSOCIATED CABLING
- (x)TF INDICATES NUMBER OF TELEPHONE OUTLETS AND ASSOCIATED CABLING WITH 1 OUTLET AND CABLE DEDICATED FOR FAX

SINGLE LINE SYMBOLS

- SWITCH
- BREAKER
- FUSE
- TRANSFORMER
- CAPACITOR
- GROUND
- CONTACT (NORMALLY OPEN)
- CONTACT (NORMALLY CLOSED)
- AUTOMATIC TRANSFER SWITCH
- MANUAL DOUBLE THROW SWITCH
- CURRENT TRANSFORMER
- INDICATES NEW ELECTRICAL EQUIPMENT
- C INDICATES NEW CONTROL WIRING AND CONDUIT
- EQUIPMENT OUTLINE

MISCELLANEOUS

- BRANCH CIRCUIT WIRING CONCEALED ABOVE CEILINGS, SURFACE MOUNTED ON WALLS
- BRANCH CIRCUIT WIRING – #10 AWG
- BRANCH CIRCUIT WIRING – UNDER FLOOR
- HOME RUN BACK TO PANEL
- CONDUIT TURNED DOWN
- CONDUIT TURNED UP
- LV LOW VOLTAGE WIRING AND CONDUIT
- CT–X CABLE TRAY ("X" DENOTES WIDTH)
- INDICATES CONTINUATION OF LINE

FIRE ALARM

- FACP FIRE ALARM CONTROL PANEL WITH BATTERY BACKUP
- F FIRE ALARM PULL STATION

FIRE ALARM (CONTINUED)

- F FIRE ALARM STROBE – WALL MOUNTED
- F FIRE ALARM AUDIBLE/STROBE – WM
- F FIRE ALARM HORN/STROBE – WM
- S SMOKE DETECTOR
- H HEAT DETECTOR CEILING MOUNTED
- D DUCT DETECTOR – PROVIDED BY EC, INSTALLED BY MC AND CONNECTED BY EC

DENOTATIONS & ABBREVIATIONS

AFF	ABOVE FINISHED FLOOR
C	CEILING MOUNTED
E	EMERGENCY
EC	ELECTRICAL CONTRACTOR
EPO	EMERGENCY POWER OFF
EXP	EXPLOSION PROOF
F	FIRE ALARM
FF	FLUSH FLOOR MOUNTED
FL	FLUORESCENT
FO	FIBER OPTIC
FSS	FUSED SAFETY SWITCH
G	GROUND FAULT INTERRUPTER
GC	GENERAL CONTRACTOR
HOA	HAND–OFF AUTO
I	INFRARED
ICD	INCANDESCENT
IG	ISOLATED GROUND
K	KEY
LV	LOW VOLTAGE
M	MOTOR
MC	MECHANICAL CONTRACTOR
NE	NORMAL/EMERGENCY
NFSS	NON–FUSED SAFETY SWITCH
PA	PAGING SYSTEM
PLC	PLUMBING CONTRACTOR
REL	RELOCATE
RED	RELOCATED
SL	SINGLE LINE
SS	SURGE SUPPRESSION
T	TELEPHONE
TL	TWIST LOCK

DENOTATIONS & ABBREVIATIONS (CONT.)

TP	TAMPER PROOF
UE	UNDERGROUND ELECTRIC
UF	UNDERGROUND FIBER
UT	UNDERGROUND TELEPHONE
W	WALL MOUNTED
WG	WIRE GUARD
WP	WEATHERPROOF
WPG	WEATHERPROOF/GROUND FAULT INTERRUPTER
WT	WATER TIGHT

GENERAL PROJECT NOTES:

G1. UNLESS OTHERWISE NOTED, PROVIDE ALL EQUIPMENT SHOWN ON THE PLANS. THE ELECTRICAL CONTRACTOR SHALL COORDINATE ALL SYMBOLS SHOWN ON THE PLANS WITH THE SYMBOL LIST. IT SHALL BE THE RESPONSIBILITY OF THE CONTRACTOR TO VERIFY THE INTENT OF ANY SYMBOL THAT IS SHOWN ON THE PLANS AND NOT INDICATED ON THE SYMBOL LIST WITH THE ENGINEER PRIOR TO BID.

G2. COORDINATE THE FINAL LOCATIONS OF ALL LIGHT FIXTURES WITH THE ARCHITECT'S REFLECTED CEILING PLANS. REPORT ANY DISCREPANCIES TO THE ARCHITECT PRIOR TO INSTALLATION.

G3. THE CONTRACTOR SHALL VERIFY THE LOCATION OF ALL UNDERGROUND UTILITIES WITHIN THE CONSTRUCTION AREA THREE (3) WORKING DAYS NOTICE BEFORE COMMENCE DIGGING. NOTIFY THE LOCAL OR STATE AUTHORITY HAVING JURISDICTION AND WAIT THE REQUIRED TIME BEFORE COMMENCING TO DIG.

G4. THE CONTRACTOR SHALL COORDINATE CONDUIT RUNS, CABLE TRAY, LIGHTING FIXTURES AND OTHER EQUIPMENT LOCATIONS WITH THE OTHER TRADE CONTRACTORS TO AVOID CONFLICTS.

G5. WHERE VOLTAGES AND FREQUENCIES ON THE DRAWINGS AND IN THE SPECIFICATIONS DIFFER FROM THE LOCAL ONES, ALL WORK SHALL BE PERFORMED USING THE LOCAL VOLTAGES AND FREQUENCIES.

G6. THE MINIMUM WIRE SIZE ON THE PROJECT SHALL BE 4mm2. THE MINIMUM CONDUIT SIZE SHALL BE 20mm. THE MINIMUM BREAKER SIZE SHALL BE 20 AMPS.

G7. THE CONTRACTOR SHALL PUT A MAXIMUM OF 6 DUPLEX SOCKETS ON A 20A SINGLE POLE CIRCUIT.

G8. WHERE THE 1010 SCOPE REVIEW, 1015 TECHNICAL REVIEW, DRAWINGS, AND SPECIFICATIONS DIFFER FROM AMERICAN CODES OR STANDARDS THE 1010, 1015, DRAWINGS, AND SPECIFICATIONS SHALL RULE.

G9. WORK FOR THE AMMUNITION SUPPLY POINT SHALL BE DONE IN ACCORDANCE WITH DEPARTMENT OF DEFENSE STANDARD DOD 6055.9–STD.

G10. ALL CONDUIT AND DEVICES SHALL BE SURFACE MOUNTED UNLESS OTHERWISE INDICATED.

US Army Corps of Engineers
Afghanistan Engineer District

SYMBOL	DESCRIPTION	DATE	APR

DESIGNED BY: JRG
DWN BY: JRG
CHK BY: JRG
DATE: 09-30-09
SUBMITTED BY: BAKER
FILE NO.: ANPSDE-000XXX

Michael Baker Jr, Inc
A unit of Michael Baker Corporation
Airside Business Park
100 Airside Drive
Moon Township, PA 15108
www.mbakercorp.com

AFGHAN NATIONAL POLICE
STANDARD DESIGN
WAREHOUSE BUILDING

ELECTRICAL SYMBOLS AND ABBREVIATIONS

SHEET REFERENCE NUMBER:
E0

100% SUBMISSION

GENERAL NOTES:

1. REFER TO DRAWING #E0 FOR THE ELECTRICAL SYMBOLS LIST.
2. EXIT SIGNS SHALL BE WIRED AHEAD OF ANY LOCAL SWITCHING ON CIRCUITS.
3. REFER TO DRAWING #E3 FOR THE LIGHTING FIXTURE SCHEDULE.
4. REFER TO DRAWING #E2 FOR THE POWER RISER.
5. REFER TO DRAWING #E4 FOR PANEL SCHEDULES.
6. LIGHT FIXTURES INDICATED AS EMERGENCY SHALL BE PROVIDED WITH A BATTERY BACKUP BALLAST.
7. COORDINATE EXACT MOUNTING LOCATION OF DISCONNECTING MEANS FOR MECHANICAL AND PLUMBING EQUIPMENT IN THE FIELD.
8. FUSIBLE SAFETY SWITCHES THAT ARE NOT OTHERWISE IDENTIFIED SHALL BE 380V, 1P, 30A FUSED SAFETY SWITCHES WITH 20A FUSES.

NUMBERED NOTES:

(1) PANEL R1.

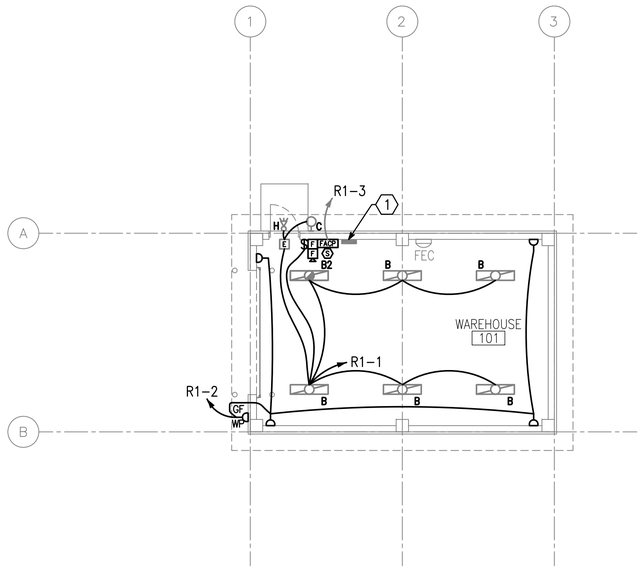

1 / E1 | E1 LIGHTING AND POWER PLAN

SCALE: 1:100

N

UNLESS OTHERWISE NOTED, LINEAR DIMENSIONS SHOWN ARE IN MILLIMETERS (MM)

1 0 1 2 3 4 5 6 7 8 9

1:100

US Army Corps of Engineers

Afghanistan Engineer District

SYMBOL	DESCRIPTION	DATE	APP'D

DESIGNED BY:	DATE:
JRG	09-30-09
DWN BY:	SUBMITTED BY:
JRG	BAKER
CHK BY:	FILE NO.:
JRG	ANPSDE-101XXX

Michael Baker Jr., Inc
A unit of Michael Baker Corporation
Airside Business Park
100 Airside Drive
Moon Township, PA 15108
www.mbakercorp.com

AFGHAN NATIONAL POLICE
STANDARD DESIGN
WAREHOUSE BUILDING

LIGHTING AND POWER PLAN

SHEET REFERENCE NUMBER:

E1

100% SUBMISSION

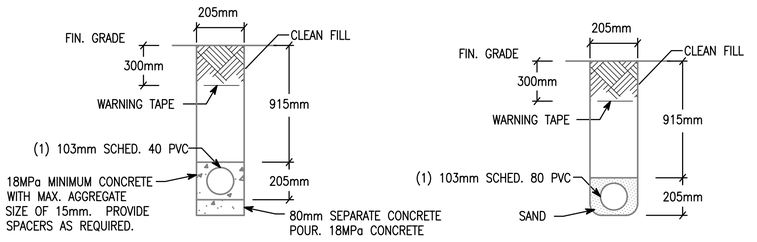

NOTE: PVC CONDUIT SHALL BE DIRECT BURIED SCHEDULE 80 FOR NO TRAFFIC AREAS AND CONCRETE-ENCASED SCHEDULE 40 FOR UNDER ROADWAYS OR TRAFFIC AREAS.

1 E2 E2 TYPICAL DUCT BANK DETAILS FOR CONDUIT IN SAND OR CONCRETE
SCALE: N.T.S.

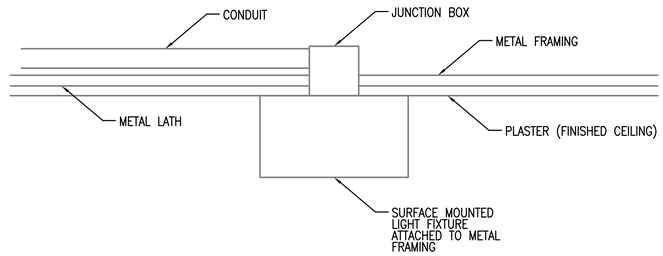

2 E2 E2 TYPICAL DETAIL FOR SURFACE MOUNTED LIGHT FIXTURES
SCALE: N.T.S.

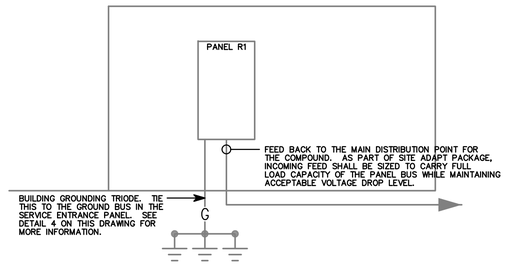

3 E2 E2 WAREHOUSE RISER DIAGRAM
SCALE: N.T.S.

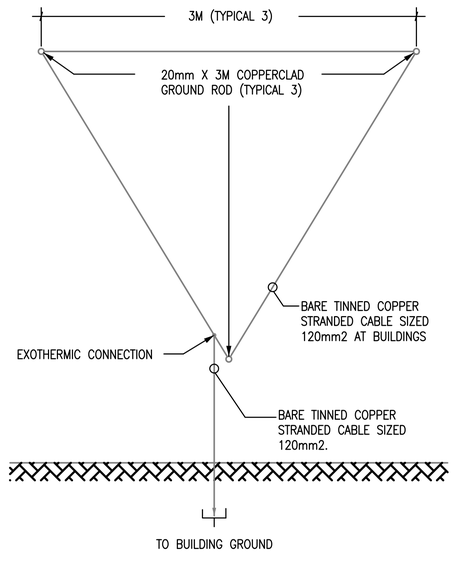

4 E2 E2 GROUND TRIPOD SYSTEM DETAIL - PLAN
SCALE: N.T.S.

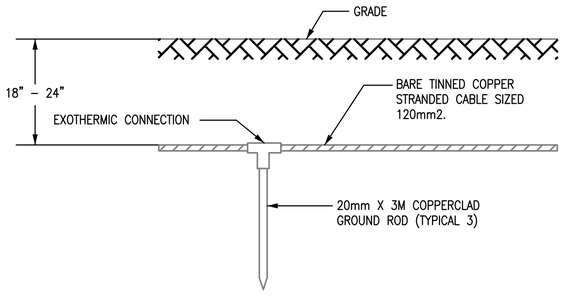

5 E2 E2 GROUND TRIPOD SYSTEM DETAIL - ELEVATION
SCALE: N.T.S.

US Army Corps of Engineers
Afghanistan Engineer District

SYMBOL	DESCRIPTION	DATE	APR

DESIGNED BY: JRG
DATE: 09-30-09
DWN BY: JRG
SUBMITTED BY: JRG
CHK BY: JRG
FILE NO.: ANPS[illegible]XXX

Michael Baker Jr., Inc
A unit of Michael Baker Corporation
Airside Business Park
100 Airside Drive
Moon Township PA 15108
www.mbakercorp.com

AFGHAN NATIONAL POLICE
STANDARD DESIGN
WAREHOUSE BUILDING

DETAILS

SHEET REFERENCE NUMBER:
E2

100% SUBMISSION

LIGHTING FIXTURE SCHEDULE

FIXTURE MARK	STYLE NUMBER AND TYPE	NUMBER AND TYPE OF LAMPS	VOLTAGE	MOUNTING	NOTES
B	WET LOCATION WRAP AROUND SURFACE/PENDANT MOUNTED FLUORESCENT FIXTURE WITH PRISMATIC ACRYLIC LENS AND ELECTRONIC BALLAST	(2) 32W 3500K	220V – 1ø 50HZ	PENDANT MOUNTED FROM SLOPED CEILINGS	FURNISHED WITH ELECTRONIC BALLAST, VIRGIN ACRYLIC WRAP AROUND LENS.
B2	SAME AS FIXTURE 'B' WITH EMERGENCY BALLAST	(2) 32W 3500K	220V – 1ø 50HZ	PENDANT MOUNTED FROM SLOPED CEILINGS	FURNISHED WITH ELECTRONIC BALLAST, VIRGIN ACRYLIC WRAP AROUND LENS. EMERGENCY BALLAST WITH SELF TEST SWITCH.
C	INCANDESCENT ONE PIECE W/ APPROVED LENS STABILIZED HIGH IMPACT POLY CARBONATE.	(1) A19 – 100W INCANDESCENT	220V – 1ø 50HZ	WALL MOUNTED ABOVE EXTERIOR DOORS	
H	REMOTE HEAD EXTERIOR LIGHT HEAD POWERED FROM EXIT SIGN BATTERY– 12V DOUBLE HEAD CORROSION RESISTANT WITH UL34 WEATHERPROOF CONSTRUCTION	(2) 12W/12V HALOGEN LAMP	12V – 1ø 50HZ	EXTERIOR WALL MOUNTED AT TOP OF DOOR HEIGHT	
[E]	UNIVERSAL MOUNT ENGINEER GRADE THERMOPLASTIC HOUSING EXIT SIGN WITH LED LAMPS, RED LETTERS 6" IN HEIGHT WITH ARROWS AS INDICATED, WITH 12V CADMIUM BATTERY WITH REMOTE HEAD CAPABILITY	LED LAMPS	220V – 1ø 50HZ	UNIVERSAL MOUNTING	

FIXTURE MARK 'B'

WET LOCATION WRAP AROUND SURFACE/PENDANT MOUNTED FLUORESCENT FIXTURE WITH PRISMATIC ACRYLIC LENS AND ELECTRONIC BALLAST.

FIXTURE MARK 'B2':
SAME FIXTURE AS 'B' WITH EMERGENCY BALLAST.

FIXTURE MARK 'C'

INCANDESCENT ONE PIECE WITH APPROVED LENS, STABILIZED HIGH IMPACT POLY CARBONATE

FIXTURE MARK 'H'

REMOTE HEAD EXTERIOR LIGHT HEAD POWERED FROM EXIT SIGN BATTERY– 12V DOUBLE HEAD CORROSION RESISTANT WITH UL34 WEATHERPROOF CONSTRUCTION

FIXTURE MARK '[E]'

UNIVERSAL MOUNT ENGINEER GRADE THERMOPLASTIC HOUSING EXIT SIGN WITH LED LAMPS, RED LETTERS 6" IN HEIGHT WITH ARROWS AS INDICATED, WITH 12V CADMIUM BATTERY

US Army Corps of Engineers
Afghanistan Engineer District

SYMBOL	DESCRIPTION	DATE	APP.

DESIGNED BY:	DATE:
JRG	09-30-09
DWN BY:	SUBMITTED BY:
JRG	BAKER
CHK BY:	FILE NO.:
JRG	ANPSDE-603XXX

Michael Baker Jr., Inc
A unit of Michael Baker Corporation
Airside Business Park
100 Airside Drive
Moon Township, PA 15108
www.mbakercorp.com

AFGHAN NATIONAL POLICE
STANDARD DESIGN
WAREHOUSE BUILDING

LIGHT FIXTURE SCHEDULE

SHEET REFERENCE NUMBER:
E3

100% SUBMISSION

PANELBOARD R1 SURFACE MOUNTED ASYM. A.I.C. MIN.
AMP. MAIN LUGS (OR) 100 AMP. MAIN BREAKER W/ 100 AMP. TRIP
CIRCUIT BREAKER TYPE 380/220 VOLTS 3 PHASE 4 WIRE 50 HZ 100 AMP. BUS

CKT. NO.	TRIP AMPS	NO. POLES	WIRE MM²	GND MM²	CONDUIT MM	LOAD SERVED	LOAD-V.A. AØ	LOAD-V.A. BØ	LOAD-V.A. CØ	LOAD-V.A. AØ	LOAD-V.A. BØ	LOAD-V.A. CØ	LOAD SERVED	CONDUIT MM	GND MM²	WIRE MM²	NO. POLES	TRIP AMPS	CKT. NO.
1	20	1	4.0	4.0	20	LIGHTING - 101	0.6			0.6			RECEPTACLES - 101	20	4.0	4.0	1	20	2
3	20	1	4.0	4.0	20	F. A. C. P.		0.5					SPARE				1	20	4
5	20	1				SPARE							SPARE				1	20	6
7	20	1				SPARE							SPARE				1	20	8
9	20	1				SPARE							SPARE				1	20	10
11	20	1				SPARE							SPARE				1	20	12
							0.6	0.5	0.0	0.6	0.0	0.0							

TOTAL CONN. LOAD PER PHASE (KVA): AØ 1.2 BØ 0.5 CØ 0.0

TOTAL CONN. LOAD 1.7 KVA. 70 % DEMAND = ESTIMATED DEMAND LOAD 1.2 SUPPLIED FROM MAIN SWITCHGEAR DISTRIBUTION

• MAIN BREAKER SHALL BE 3P EARTH GROUND TYPE

US Army Corps of Engineers
Afghanistan Engineer District

SYMBOL	DESCRIPTION	DATE	APR

DESIGNED BY:	DATE:
JRG	09-30-09
DWN BY:	SUBMITTED BY:
JRG	BAKER
CHK BY:	FILE NO.:
JRG	ANPSDE-604XXX

Michael Baker Jr., Inc
A unit of Michael Baker Corporation
Airside Business Park
100 Airside Drive
Moon Township, PA 15108
www.mbakercorp.com

AFGHAN NATIONAL POLICE
STANDARD DESIGN
WAREHOUSE BUILDING

PANEL SCHEDULES AND RISER DIAGRAM

SHEET REFERENCE NUMBER:
E4

100% SUBMISSION

AFGHAN NATIONAL POLICE

STANDARD BUILDING DESIGNS

ENTRY CONTROL POINT CANOPY

SHEET INDEX

G1 COVER SHEET

S1 GENERAL NOTES
S2 BASIS OF DESIGN
S3 MATERIAL SCHEDULES
S4 FOUNDATION / SLAB / ROOF FRAMING PLAN

A1 FLOOR AND ROOF PLANS
A2 CANOPY PLAN, ELEVATIONS, AND SECTIONS

US Army Corps of Engineers
Afghanistan Engineer District

SYMBOL	DESCRIPTION	DATE	APP'D

DESIGNED BY: JDS
DWN BY: JDS
CHK BY: JDS
DATE: 09-30-09
SUBMITTED BY: BAKER
FILE NO.: ANPSDG-001XXX

Michael Baker Jr., Inc
A unit of Michael Baker Corporation
Airside Business Park
100 Airside Drive
Moon Township, PA 15108
www.mbakercorp.com

AFGHAN NATIONAL POLICE
STANDARD DESIGN
ENTRY CONTROL POINT CANOPY

COVER SHEET

SHEET REFERENCE NUMBER:
G1

100% SUBMISSION

STRUCTURAL ABBREVIATIONS:

ACI	AMERICAN CONCRETE INSTITUTE
AISC	AMERICAN INSTITUTE OF STEEL CONSTRUCTION
ALT	ALTERNATE
ASTM	AMERICAN SOCIETY FOR TESTING AND MATERIALS
AWS	AMERICAN WELDING SOCIETY
ARCH	ARCHITECTURAL
B	BOTTOM
BLDG	BUILDING
BOTT	BOTTOM
℄	CENTER LINE
CFMF	COLD FORM METAL FRAME
CFS	COLD FORMED STEEL
CIP	CAST IN PLACE
CIPL	CAST-IN-PLACE LINTEL
CJ	CONTROL JOINT
CLG	CEILING
CLR	CLEAR
CMU	CONCRETE MASONRY UNIT
COEFF	COEFFICIENT
COL	COLUMN
CONC	CONCRETE
CONT	CONTINUOUS
COORD	COORDINATE
CSJ	CONSTRUCTION JOINT
CTJ	CONTROL JOINT
DIA	DIAMETER
DIAG	DIAGONAL
DIM	DIMENSION
DWG	DRAWING
DWL	DOWEL
EA	EACH
ELEC	ELECTRICAL
ELEV	ELEVATION
EMBED	EMBEDMENT
EQUIV	EQUIVALENT
ETC	ET CETERA
E.W.	EACH WAY
EXT	EXTERIOR
FTG	FOOTING
GA	GAUGE
HORIZ	HORIZONTAL
HRS	HOURS
IBC	INTERNATIONAL BUILDING CODE
INT	INTERIOR
Kg	KILOGRAM
KIP	KIPS (1 KIP = 1,000 POUNDS)
kN	KILONEWTON
kPa	KILOPASCAL
L#	ANGLE (# INDICATES SIZE)
LLV	LONG LEG VERTICAL
M	METER
MAX	MAXIMUM
MBM	METAL BUILDING MANUFACTURER
MBMA	METAL BUILDING MANUFACTURERS ASSOCIATION
MECH	MECHANICAL
MFG	MANUFACTURER
MID	MIDDLE
MIN	MINIMUM
MISC	MISCELLANEOUS
MM	MILLIMETER
MPa	MEGAPASCAL
MTL	METAL
MWFRS	MAIN WIND FORCE RESISTING SYSTEM
N	NEWTON
N	NORTH
N/A	NOT APPLICABLE
#	NUMBER SYMBOL FOR REBAR SIZE
NTS	NOT TO SCALE
O.C.	ON CENTER
OPNG	OPENING
ℙ or PL	PLATE
PRE-ENG	PRE-ENGINEERED
REINF	REINFORCED
REQ'D	REQUIRED
SIM	SIMILAR
SPECS	SPECIFICATIONS
STD	STANDARD
STRUCT	STRUCTURAL
T	TOP
T/	TOP OF
T/ELEV	TOP ELEVATION
T&B	TOP AND BOTTOM
THK	THICK
TM	TRADE MARK
TYP	TYPICAL
UFC	UNIFIED FACILITIES CRITERIA
UON	UNLESS OTHERWISE NOTED
VERT	VERTICAL
W	WIDTH
W/	WITH

GENERAL NOTES

1.0 THIS PROJECT HAS BEEN DESIGNED FOR THE WEIGHTS AND MATERIALS INDICATED ON THE DRAWINGS AND FOR THE LIVE LOADS INDICATED IN THE DESIGN DATA. IT IS THE CONTRACTOR'S RESPONSIBILITY TO DETERMINE ALLOWABLE CONSTRUCTION LOADS AND TO PROVIDE PROPER DESIGN AND CONSTRUCTION OF FALSEWORK, FORMWORK, STAGING, BRACING, SHEETING AND SHORING, ETC.

1.1 COORDINATE THESE DRAWINGS WITH THE ARCHITECTURAL, MECHANICAL, ELECTRICAL, PLUMBING, AND CIVIL DRAWINGS. ALL DIMENSIONS SHOWN ON THE DRAWINGS ARE MILLIMETERS UNLESS NOTED OTHERWISE.

1.2 THE CONTRACTOR SHALL VERIFY AND COORDINATE ALL FLOOR AND ROOF OPENING SIZES AND LOCATIONS, EQUIPMENT PAD SIZES AND LOCATIONS, ANCHOR BOLT LAYOUTS, ETC WITH EQUIPMENT SELECTED. THE CONTRACTOR SHALL MAKE ANY REQUIRED MODIFICATIONS AT NO ADDITIONAL COST.

1.3 THE CONTRACTOR SHALL REFER TO THE ARCHITECTURAL, MECHANICAL, ELECTRICAL AND PLUMBING DRAWINGS FOR SLEEVES, CURBS, INSERTS OR OPENINGS, ETC. NOT HEREIN INDICATED.

1.4 NOT USED

1.5 SLAB OPENINGS SMALLER THAN 250mm DIA TO BE CORE DRILLED IN FIELD UNO. SEE MECHANICAL, ELECTRICAL AND PLUMBING DRAWINGS FOR LOCATIONS OF THESE OPENINGS.

1.6 WORK NOT INCLUDED ON THE DRAWINGS BUT IMPLIED TO BE SIMILAR TO THAT SHOWN AT CORRESPONDING PLACES ELSEWHERE ON THE DRAWINGS SHALL BE REPEATED.

1.7 IN CASE OF CONFLICT BETWEEN THE NOTES, DETAILS AND SPECIFICATIONS THE MOST RIGID REQUIREMENTS SHALL GOVERN.

1.8 COORDINATE FINISHED FLOOR DATUM ELEVATION 0.0m WITH THE CIVIL DRAWINGS.

2.0 FOUNDATION NOTES

2.1 THE GEOTECHNICAL ANALYSIS FOR THIS PROJECT IS THE RESPONSIBILITY OF THE CONTRACTOR AWARDED THE WORK. DESIGN VALUES USED IN THE STRUCTURAL ANALYSIS OF THE BUILDINGS HEREIN INDICATED HAVE BEEN ASSUMED AND SHALL BE CONFIRMED AND VERIFIED AS PART OF THE GEOTECHNICAL INVESTIGATION. VALUES WHICH DO NOT MEET THE REQUIREMENTS INDICATED ON THE BASIS OF DESIGN SHEET SHALL BE IMMEDIATELY BROUGHT TO THE ATTENTION OF THE ENGINEER-OF-RECORD FOR CONSIDERATION AND DETERMINATION ON THE NEXT APPROPRIATE COURSE OF ACTION.

2.2 SEE THE SPECIFICATION FOR ADDITIONAL REQUIREMENTS TO THOSE OUTLINED IN THE GEOTECHNICAL INVESTIGATION FOR EXCAVATION AND PREPARATION OF THE FOUNDATION AND THE SLAB ON GRADE SUBGRADE INCLUDING COMPACTION PROCEDURES.

2.3 EXCAVATIONS FOR FOOTINGS SHALL HAVE THE SIDES AND BOTTOMS TEMPORARILY LINED WITH 0.15mm POLYETHYLENE IF PLACEMENT OF CONCRETE DOES NOT OCCUR WITHIN 24 HRS OF THE EXCAVATION OF THE FOOTING.

2.4 FOUNDATION CONDITIONS NOTED DURING CONSTRUCTION WHICH DIFFER FROM THOSE DESCRIBED IN THE GEOTECHNICAL REPORT SHALL BE REPORTED TO THE GENERAL CONTRACTOR BEFORE FURTHER CONSTRUCTION IS ATTEMPTED. SEE PROJECT SPECIFICATIONS.

2.5 NO FOOTINGS OR SLABS SHALL BE POURED INTO OR AGAINST SUBGRADE CONTAINING FREE WATER, FROST, ICE OR LOOSE MATERIAL. FROST DEPTH ASSUMED TO BE 800MM

2.6 ALL SLAB-ON-GRADE, TRENCH BOTTOMS AND OTHER ON-GRADE INTERIOR HORIZONTAL SURFACES SHALL BE PLACED OVER A 0.15mm VAPOR BARRIER OVER A 100mm #57 STONE WATER BARRIER PLACED ON SUBGRADE PROPERLY PREPARED IN ACCORDANCE WITH THE CONTRACT SPECIFICATIONS. (UNO)

2.7 SEE PLUMBING, ELECTRICAL & CIVIL DRAWINGS FOR REQUIRED UNDERSLAB UTILITIES.

2.8 SEE ARCHITECTURAL DRAWINGS FOR ALL WATERPROOFING DETAILS AND MATERIALS.

2.9 IF UNDERMINING OF FOOTINGS OCCURS, FILL VOIDS WITH 15MPa CONCRETE. DO NOT ATTEMPT TO REPLACE AND RECOMPACT SOIL.

3.0 CONCRETE

3.1 CONCRETE SHALL HAVE THE UNIT WEIGHT AND THE MINIMUM COMPRESSIVE STRENGTHS (f'c) AT 28 DAYS AS SHOWN IN THE CONCRETE MATERIALS SCHEDULE ON THE BASIS OF DESIGN SHEET. SEE SPECIFICATIONS FOR ADDITIONAL INFORMATION. ENTRAIN AIR TO PRODUCE TOTAL AIR CONTENT ACCORDING TO THE SPECIFICATIONS FOR CONCRETE EXPOSED TO FREEZING TEMPERATURES (EXTERIOR FOOTINGS, SLAB TURNDOWNS, EXTERIOR SLABS AND SLABS-ON-GRADE, EXTERIOR RETAINING WALLS, AND EXTERIOR GRADE BEAMS.)

3.2 GROUT FOR BASE PLATES SHALL BE NON-SHRINKABLE GROUT AND SHALL HAVE A MINIMUM SPECIFIED COMPRESSIVE STRENGTH AT 28 DAYS OF 35MPa, UNLESS NOTED OTHERWISE.

3.3 NO CALCIUM CHLORIDE SHALL BE USED IN ANY CONCRETE.

3.4 MIXING, TRANSPORTING AND PLACING OF CONCRETE SHALL CONFORM TO AC1-301-89

3.5 ALL CONCRETE WORK SHALL CONFORM TO THE REQUIREMENTS OF THE AMERICAN CONCRETE INSTITUTE (ACI) 318M MANUAL (metric), "BUILDING CODE REQUIREMENTS FOR REINFORCED CONCRETE", AND REQUIREMENTS OUTLINED IN THE CONTRACT SPECIFICATIONS. WHEN THERE IS A CONFLICT BETWEEN ACI AND THE SPECIFICATIONS, THE MORE STRINGENT SHALL GOVERN.

3.6 CHAMFER ALL EXPOSED EXTERNAL CORNERS OF CONCRETE WITH 20mm x45 DEGREE CHAMFER UNO.

3.7 CONCRETE REINFORCEMENT BARS SHALL CONFORM TO ASTM A615M-96a, GRADE 60, REINFORCING BARS SHALL NOT BE TACK WELDED, WELDED, HEATED OR CUT, UNLESS INDICATED ON THE CONTRACT DOCUMENTS. ALL LAP SPLICES SHALL BE CLASS "B" U.N.O.

3.8 HORIZONTAL FOOTING AND HORIZONTAL WALL REINFORCEMENT SHALL BE CONTINUOUS AND SHALL HAVE 90 DEGREE BENDS AND EXTENSIONS, OR CORNER BARS OF EQUIVALENT SIZE LAPPED WITH A CLASS B TENSION SPLICE AT CORNERS AND INTERSECTIONS. TOP BAR CRITERIA SHALL APPLY IF 300mm OR MORE OF FRESH CONCRETE IS PLACED BELOW BAR.

3.9 SLABS-ON-GRADE SHALL HAVE CONSTRUCTION JOINTS OR CRACK CONTROL JOINTS AS SHOWN ON THE DRAWINGS. CONSTRUCTION JOINTS CAN BE USED AT CONTROL JOINT LOCATIONS AT CONTRACTORS OPTION. SEE SLAB PLANS & JOINT DETAILS FOR ADDITIONAL INFORMATION. FOR AREAS NOT SHOWN ON DWGS, THE MAXIMUM SPACING OF CONSTRUCTION / CRACK CONTROL JOINTS SHALL BE 4800 mm

3.10 ALL CONCRETE REINFORCEMENT SHALL BE DETAILED, FABRICATED, LABELED, SUPPORTED, AND SPACED IN FORMS AND SECURED IN PLACE IN ACCORDANCE WITH THE PROCEDURES AND REQUIREMENTS OUTLINED IN THE LATEST EDITION OF THE "BUILDING CODE REQUIREMENTS FOR REINFORCED CONCRETE", ACI 318, AND THE "MANUAL OF STANDARD PRACTICE FOR DETAILING REINFORCED CONCRETE STRUCTURES", ACI 315, LATEST EDITION.

3.11 SHOP DRAWINGS SHOWING REINFORCING DETAILS, INCLUDING STEEL SIZES, SPACING AND PLACEMENT, SHALL BE SUBMITTED FOR REVIEW PRIOR TO FABRICATION.

3.12 NOT USED.

3.13 ALL DOWELS SHALL MATCH SIZE AND NUMBER OF MAIN REINFORCING, UNLESS NOTED OTHERWISE ON DRAWINGS.

3.14 ADDITIONAL BARS SHALL BE PROVIDED AROUND ALL FLOOR AND WALL OPENINGS AS SHOWN ON THE DWGS.

3.15 SEE ARCHITECTURAL DRAWINGS FOR TYPE AND LOCATION OF ALL FLOOR FINISHES.

3.16 THE CONTRACTOR SHALL COORDINATE ADDITIONAL WALL/SLAB OPENINGS NOT SHOWN ON STRUCTURAL DRAWINGS. SEE MECHANICAL, ELECTRICAL, PLUMBING AND CIVIL DRAWINGS.

3.17 UNLESS NOTED OTHERWISE, ALL CURBS SHALL BE REINFORCED WITH AT LEAST (1) #13 CONTINUOUS AND #13 AT 300mm OC DOWELS TO STRUCTURE BELOW.

3.18 THE SUB-CONTRACTOR SHALL VERIFY ALL OPENINGS, PAD SIZES, AND ANCHOR BOLTS WITH EQUIPMENT SELECTED.

3.19 FOR ALL WALLS & PIERS, PROVIDE DOWELS INTO FOOTING AT EACH VERT REINF BAR, U.N.O. DOWEL SIZE SHALL BE SAME AS VERT REINF.

3.20 ALL DEFORMED BAR ANCHORS SHALL BE TRS NELSON DIVISION OR EQUAL 15mm DIA (UNO) CONFORMING TO ASTM A-496M WITH A MINIMUM TENSILE STRENGTH OF 550 MPa. ANCHOR DIMENSIONS SHALL BE IN ACCORDANCE WITH ASTM D-19. INSTALL ANCHORS IN ACCORDANCE WITH MANUFACTURERS RECOMMENDATIONS BY AUTOMATIC ND WELDING AS INDICATED ON THE DRAWINGS. NO UNAUTHORIZED OR FIELD WELDING SHALL BE MADE WITHOUT AUTHORIZATION FROM THE MANUFACTURER.

3.21 ALL REINFORCING INDICATED TO BE WELDED SHALL BE IN ACCORDANCE WITH ASTM A706M. "LOW ALLOY STEEL DEFORMED BARS FOR CONCRETE REINFORCEMENT". ANY INSTALLATIONS USING MANUFACTURER'S EQUIPMENT SHALL BE PER MANUFACTURER'S RECOMMENDATIONS.

3.22 PROVIDE CONCRETE POUR STOPS OR FORMED AS REQUIRED FOR INSTALLATION OF ALL CONCRETE WORK.

3.23 PROVIDE ADDITIONAL 2-#13 x 600mm REINFORCING BARS IN SLAB-ON GRADE AT ALL RE-ENTRANT CORNERS. PLACE BARS AT MID-DEPTH OF SLAB WITH A CLEARANCE OF 50mm FROM CORNER UNO.

US Army Corps of Engineers
Afghanistan Engineer District

SYMBOL	DESCRIPTION	DATE	APP

DESIGNED BY: BAKER	DATE: 09-30-09		
DWN BY: JAC	SUBMITTED BY: BAKER		
CHK BY: RTD	FILE NO.: ANPSDS-001XXX		

Michael Baker Jr, Inc
A unit of Michael Baker Corporation
Airside Business Park
100 Airside Drive
Moon Township, PA 15108
www.mbakercorp.com

AFGHAN NATIONAL POLICE
STANDARD DESIGN
ENTRY CONTROL POINT CANOPY

STRUCTURAL GENERAL NOTES

SHEET REFERENCE NUMBER:
S1

100% SUBMISSION

STRUCTURAL DESIGN CRITERIA

ALL DESIGNS SHALL CONFORM TO THE PROVISIONS OF THE IBC 2006 AND UFC 4-010-01 AS APPLICABLE

1.0 DESIGN LOADS

1.1 DEAD LOADS

1.1.2 ROOF DEAD LOADS – PRE-ENGINEERED FRAMING

	MAXIMUM GRAVITY LOAD	MINIMUM GRAVITY LOAD
STEEL FRAMING	0.20 KPa	0.15 KPa
METAL DECKING/ROOFING	0.14 KPa	0.05 KPa
MECH / ELEC / PLUMBING	0.15 KPa	0.10 KPa
METAL PANEL CEILING	0.15 KPa	0.15 KPa
MISC	0.40 KPa	0.00 KPa
	1.00 KPa	0.45 KPa

1.3 LIVE LOADS (PER IBC 2006)

1.3.1 ROOF LIVE LOADS: ALL BUILDINGS

GREATER OF 1.0 KPa MINIMUM OR SNOW LOAD

1.3.3 SLAB-ON-GRADE LIVE LOADS

ALL BUILDINGS 4.80 KPa

1.4 SNOW LOADS (PER IBC 2006)

1.3.1 DESIGN PARAMETERS

GROUND SNOW LOAD (per UFC 3-310-01)	PER LOCAL CONDITION
SNOW IMPORTANCE FACTOR	1.0 KPa
SNOW EXPOSURE FACTOR	1.0 KPa

1.5 SEISMIC LOADS (PER IBC 2006 & TM 5-809-10)

1.5.2 SEISMIC PARAMETERS – PRE-ENGINEERED BUILDINGS

SEISMIC OCCUPANCY CATEGORY	II
SEISMIC IMPORTANCE FACTOR (I)	1.0
SEISMIC SITE CLASS	D
Ss	1.28
S1	0.51
Sds	0.853
Sd1	0.510
SEISMIC DESIGN CATEGORY	D
SEISMIC RESISTING SYSTEM	MOMENT RESISTING FRAME INTERMEDIATE STEEL MOMENT FRAMES
RESPONSE MODIFICATION FACTOR (R)	3.5
SEISMIC ANALYTICAL PROCEDURE	EQUIV LATERAL FORCE

1.6 WIND LOADS (PER IBC 2006)

1.6.1 DESIGN PARAMETERS

BASIC WIND SPEED	145 Km/h
WIND IMPORTANCE FACTOR	1.0
WIND EXPOSURE CATEGORY	D
DIRECTIONALITY COEFFICIENT (Kd)	0.85
TOPOGRAPHIC FACTOR (Kzt)	1.0

1.6.2 DESIGN WIND PRESSURE – MAIN WINDFORCE RESISTING SYSTEM

LOCATION	CORNER ZONE WIDTH "a"	WINDWARD (@ MEAN ROOF HEIGHT)	LEEWARD (@ MEAN ROOF HEIGHT)	ROOF
FIELD ZONE	N/A	964 N/m^2	-604 N/m^2	-1340 N/m^2
CORNER ZONE	1440mm	1127 N/m^2	-588 N/m^2	-1355 N/m^2

1.6.3 DESIGN WIND PRESSURE – WALL COMPONENTS AND CLADDING

EXTERIOR WALL SYSTEMS & THEIR ATTACHMENTS TO THE PRIMARY STRUCTURE SHALL BE DESIGNED FOR THE PRESSURES SHOWN IN THE DIAGRAM BELOW:

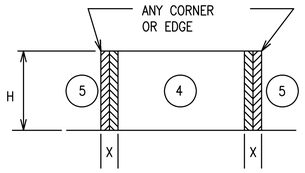

LOCATION	WINDWARD PRESSURE N/m^2 (inward)		LEEWARD PRESSURE N/m^2 (outward)		X
	(4)	(5)	(4)	(5)	
MAIN BUILDING					(mm)
AREA = 1 m^2	1513	1513	-1634	-2017	1440
AREA = 2 m^2	1438	1438	-1567	1859	1440
AREA = 5 m^2	1345	1345	-1469	-1691	1440
AREA = 10 m^2	1246	1246	-1370	-1444	1400

NOTES:
1. DESIGN WIND PRESSURES ABOVE REPRESENT THE NET PRESSURE (SUM OF INTERNAL AND EXTERNAL PRESSURE) APPLIED NORMAL TO ALL SURFACES.
2. LINEAR INTERPOLATION BETWEEN VALUES OF TRIBUTARY AREA IS PERMISSIBLE.
3. PLUS AND MINUS SIGNS SIGNIFY PRESSURE TOWARD AND AWAY FROM THE EXTERIOR SURFACE, RESPECTIVELY.

1.6.4 DESIGN WIND PRESSURE – ROOF COMPONENTS AND CLADDING

ROOF COMPONENTS & THEIR ATTACHMENTS SHALL BE DESIGNED FOR THE PRESSURES SHOWN IN THE ADJACENT DIAGRAM & TABLE BELOW:

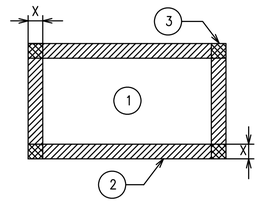

ROOF MEAN HEIGHT

LOCATION	GROSS UPLIFT PRESSURE N/m^2 (upward)			X
	(1)	(2)	(3)	
MAIN BUILDING				(mm)
AREA = 1 m^2	-1513	-1790	-3342	-1440
AREA = 2 m^2	-1513	-1790	-3342	-1440
AREA = 5 m^2	-1513	-1790	-3342	-1440
AREA = 10 m^2	-1513	-1790	-3342	-1440

NOTES:
1. DESIGN WIND PRESSURES ABOVE REPRESENT THE NET PRESSURE (SUM OF INTERNAL AND EXTERNAL PRESSURE) APPLIED NORMAL TO ALL SURFACES.
2. LINEAR INTERPOLATION BETWEEN VALUES OF TRIBUTARY AREA IS PERMISSIBLE.
3. PLUS AND MINUS SIGNS SIGNIFY PRESSURE TOWARD AND AWAY FROM THE EXTERIOR SURFACE, RESPECTIVELY.

STRUCTURAL DESIGN CRITERIA

2.0 FOUNDATION DESIGN CRITERIA (TO BE CONFIRMED BT THE CONTRACTOR)

THE GEOTECHNICAL ANALYSIS FOR THIS PROJECT IS THE RESPONSIBILITY OF THE CONTRACTOR AWARDED THE WORK. DESIGN VAULUES USED IN THE STRUCTURAL ANALYSIS OF THE BUILDINGS HEREIN INDICATED HAVE BEEN ASSUMED AND SHALL BE CONFIRMED AND VERIFIED AS PART OF THE GEOTECHNICAL INVESTIGATION. VAULES WHICH DO NOT MEET THE REQUIREMENTS INDICATED BELOW SHALL BE IMMEDIATELY BROUGHT TO THE ATTENTION OF THE ENGINEER-OF-RECORD FOR CONSIDERATION AND DETERMINATION ON THE NEXT APPROPRIATE COURSE OF ACTION.

2.1.1 SOIL DESIGN PARAMETERS

NET ALLOWABLE SOIL BEARING CAPACITY	96.0 KPa
UNIT WEIGHT OF SOIL (moist)	1800 Kg/m^3
COEFF ACTIVE EARTH PRESSURE (Kpa)	0.30
COEFF PASSIVE EARTH PRERSSURE (Kpp)	3.33
COEFF AT-REST EARTH PRESSURE (Kpr)	.55
COEFF OF SOIL FRICTION	.35
SUBGRADE MODULUS	4120 g/m^3
MINIMUM BEARING DEPTH BELOW GRADE	800mm
SEISMIC SITE CLASS (based on in-situ soil)	0

US Army Corps of Engineers
Afghanistan Engineer District

SYMBOL	DESCRIPTION	DATE	APP

DESIGNED BY: BAKER
DRN BY: RCG
CHK BY: RTD
DATE: 09-30-09
SUBMITTED BY: BAKER
FILE NO.: ANPSDS-002XXX

Michael Baker Jr., Inc.
A unit of Michael Baker Corporation
Airside Business Park
100 Airside Drive
Moon Township, PA 15108
www.mbakercorp.com

AFGHAN NATIONAL POLICE
STANDARD DESIGN
ENTRY CONTROL POINT CANOPY

STRUCTURAL BASIS OF DESIGN

SHEET REFERENCE NUMBER:
S2

100% SUBMISSION

MINIMUM LAP SPLICES OF REINFORCING BARS IN TENSION (PER ACI 318)					
f'c = 27.5MPa CONCRETE					
BAR SIZE / CENTER TO CENTER BAR SPACING	(---TOP BARS--)		(--OTHER BARS--)		
	LESS THAN 4db	4db OR MORE	LESS THAN 4db	4db OR MORE	4db
#10	460	460	410	410	40
#13	660	610	510	480	50
#16	1020	760	790	580	60
#19	1450	910	1120	710	80
#22	1960	1090	1500	840	90
#25	2590	1450	1980	1120	100
#29	3280	1830	2510	1420	110
#32	4140	2340	3200	1780	130
#36	5080	2840	3910	2180	140

NOTES:

1. LAP SPLICES ABOVE ARE IN MILLIMETERS UNO.
2. YIELD STRENGTH OF REINFORCEMENT, fy, IS 400MPa (LAP SPLICE LENGTH IS IN MILLIMETERS).
3. CONCRETE IS NORMAL WEIGHT (2400Kg/m).
4. TOP BAR INDICATES HORIZONTAL REINFORCEMENT WHICH IS PLACED ABOVE 300mm OR MORE OF FRESH CONCRETE.
5. SEE COLUMN SCHEDULE FOR COLUMN AND SHEAR WALL VERTICAL LAP SPLICE.
6. STRAIGHT DEVELOPMENT LENGTH OF AN UNLAPPED BAR IS EQUAL TO VALUE FROM TABLE DIVIDED BY 1.3.
7. CATEGORY FOR BARS SPACED LESS THAN 4d, OR ON CENTER CORRESPONDS TO CATEGORY 1 IN THE CRSI HANDBOOK WHEREAS FOR BARS SPACED 4d, OR MORE ON CENTER CORRESPOND TO CRSI CATEGORY 5.

STEEL MATERIALS SCHEDULE		
STRUCTURAL ELEMENT	FY YIELD STRENGTH (MPa)	REMARKS
BEAMS & GIRDERS	250	ASTM A36M ASTM A6M
COLUMNS	240	ASTM A53–95 GRADE B ASTM A6M
MISC BRACING	250	ASTM A572M ASTM A6M
CONNECTIONS, PLATES, & ALL OTHERS	250	ASTM A36M ASTM A6M
ANCHOR BOLTS	–	ASTM A36M or A307M ASTM A6M
PIPES	240	ASTM A53–95 GRADE B ASTM A6M
TUBING	345	ASTM A500–93 GRADE C ASTM A6M
HIGH STRENGTH BOLTS	–	ASTM A325M–N
WELDING ELECTRODES	–	AWS D1.1–90 E70xx

CONCRETE COVER SCHEDULE

MINIMUM CONCRETE COVER PROTECTION FOR REINFORCEMENT BARS SHALL BE AS FOLLOWS: (SEE ACI 318–89M, SECTION 7.7 FOR CONDITIONS NOT NOTED). DIMENSIONS FOR BAR PLACEMENT GIVEN IN SECTIONS AND DETAILS SHALL SUPERSEDE MINIMUM COVER REQUIREMENTS GIVEN HERE. DIMENSIONS ARE IN mm.

FOOTINGS (EARTH FORMED)		70
COLUMNS / PIERS		40
GRADE BEAMS OR SLAB TURNED DOWN EDGES:		
TOP		40
BOTTOM (EARTH FORMED)		70
SIDES (EARTH FORMED)		70
SIDES (BOARD FORMED)	#16 BAR & SMALLER	40
	#19 THRU #36 BAR	50
		40
SLABS–ON–GRADE (NO EXPOSURE TO WEATHER) FROM TOP		20
SLABS–ON–GRADE (EXPOSURE TO WEATHER) FROM TOP		40

UTILITY TUNNEL WALLS, RETAINING WALLS AND SHEAR WALLS, (NO SURFACES SHALL BE EARTH FORMED)
EARTH SIDE AND FRONT SIDE (EXPOSED TO WEATHER):

#16 BAR AND SMALLER	40
#19 THRU #36 BAR	50

PROVIDE STANDARD BAR CHAIRS AND SPACERS AS REQUIRED TO MAINTAIN CONCRETE PROTECTION SPECIFIED.

SPREAD FOOTING AND PIER SCHEDULE

MARK	FOOTING SIZE			FOOTING REINFORCING	PIER				REMARKS
	LENGTH	WIDTH	THICKNESS		SIZE	T/PIER	VERT. BARS	TIES	
F2	2500	2500	300	7–#16 E.W., T & B	450	0.0	8–#19	2 SETS #10 @ 125	HAIRPINS REQ'D. SEE DETAILS

NOTES:

1. DIMENSIONS NOTED ARE MILLIMETERS (mm) U.N.O.
2. T/PIER EL GIVEN IN REFERENCE TO 0.0 mm DATUM OR FINISH FLOOR EL/SLAB EL, DISTANCE ABOVE OR BELOW INDICATED AS NEGATIVE OR POSITIVE.
3. PIER SIZE INDICATED IS SQUARE (DIMENSION SAME IN BOTH DIRECTIONS) U.N.O.

CONCRETE MATERIALS SCHEDULE	
STRUCTURAL ELEMENT	f'c CONCRETE COMPRESSIVE STRENGTH @ 28 DAYS (MPa)
SLAB-ON-GRADE/TURN-DOWN SLABS	27.5
ROOF AND FLOOR SLABS	27.5
ALL FOOTINGS (U.N.O.)	20
MISC. CURBS, WALLS AND PADS UNO	27.5
CAST-IN-PLACE LINTEL	20
CONCRETE FRAMING - BEAMS AND COLUMNS	27.5

NOTES:
1. ALL CONCRETE SHALL BE NORMAL WEIGHT CONCRETE. (2400 Kg/m^3 UNO)

STANDARD HOOKS IN TENSION PER (ACI 318–89)		
HOOK DEVELOPMENT LENGTH Ldh (mm)		
BAR SIZE	f'c 20 MPa	f'c 27.5 MPa
#10	230	180
#13	280	250
#16	360	300
#19	430	380
#22	480	430
#25	560	480
#29	640	560
#32	710	610
#36	790	690

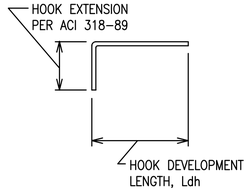

NOTES:

1. CONCRETE IS NORMAL WEIGHT CONCRETE.
2. BAR YIELD STRENGTH, fy = 400 MPa
3. SIDE COVER REQUIREMENTS OF ACI SECT. 12.5.3.2 ARE ASSUMED TO NOT BE MET.
4. TIE OR STIRRUP REQUIREMENTS OF ACI SECT. 12.5.3.2 ARE ASSUMED TO NOT BE MET.
5. REDUCTION FOR EXCESS REINFORCEMENT IS NOT TAKEN.
6. HOOK DEVELOPMENT LENGTH IS VALID FOR 180^ HOOKS ALSO.
7. FOR 35 MPa CONCRETE, USE VALUES FOR 30 MPa

US Army Corps of Engineers
Afghanistan Engineer District

APP.	DATE	DESCRIPTION	SYMBOL

DESIGNED BY: BAKER
DWN BY: RCG
CHK BY: RTD
DATE: 09-30-09
SUBMITTED BY: BAKER
FILE NO.: ANPSDS-003XXX

Michael Baker Jr., Inc
A unit of Michael Baker Corporation
Airside Business Park
100 Airside Drive
Moon Township, PA 15108
www.mbakercorp.com

AFGHAN NATIONAL POLICE
STANDARD DESIGN
ENTRY CONTROL POINT CANOPY

STRUCTURAL MATERIAL SCHEDULES

SHEET REFERENCE NUMBER:
S3

100% SUBMISSION

PORTAL FRAMING – DESIGNATED LOCATION FOR PRE-ENGINEERED PORTAL FRAMING. PORTAL FRAMING COLUMNS SHALL BE COMBINED WITH THE RIGID FRAME COLUMNS IN THESE 4 LOCATIONS, REINFORCED OR UPSIZED AS REQUIRED TO HANDLE THE PORTAL FRAME LATERAL LOADS. PROVIDE COMBINED BASE PLATE AS REQ'D TO FIT ONTO TYPICAL F2 FOOTING PIER.

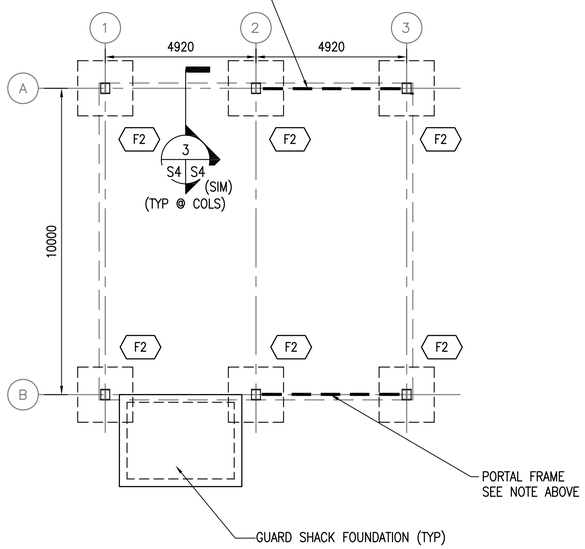

1 S4 S4 ENTRY CONTROL POINT FOUNDATION / SLAB PLAN

SCALE: 1:100

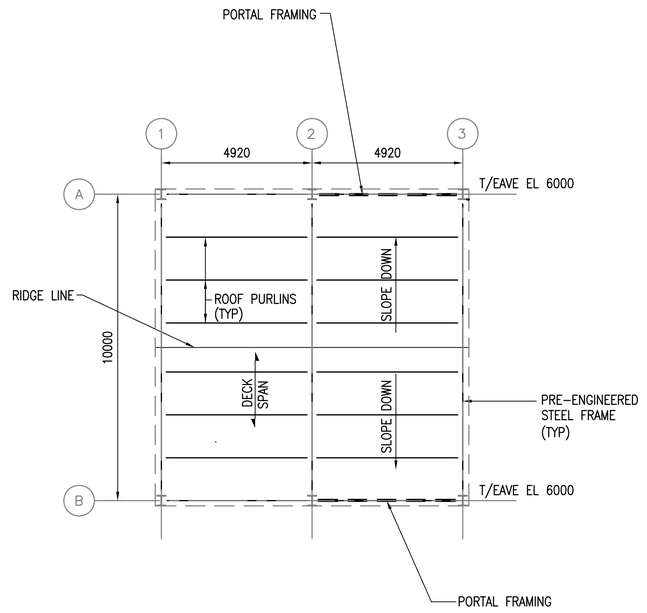

2 S4 S4 ENTRY CONTROL POINT ROOF FRAMING PLAN

SCALE: 1:100

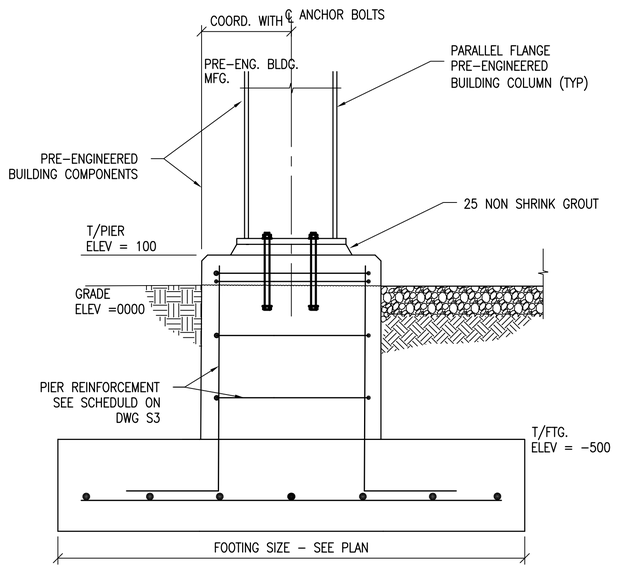

3 S4 S4 SECTION

SCALE: 1:10

NOTES :

1. FINISH GRADE ELEVATION SHALL BE (DATUM 0.0) ALL PLUS OR MINUS DIMENSIONS INDICATED ON PLAN OR REFERRED TO IN NOTES RELATE TO FINISH GRADE ELEVATION.
2. TOP OF EXTERIOR FOOTINGS SHALL BE –500 UNLESS OTHERWISE INDICATED.
3. SPREAD FOOTINGS INDICATED THUS (XXXX) ON PLAN. REFER TO SPREAD FOOTING SCHEDULE ON DRAWING S3.
4. REFER TO DRAWINGS S1 TO S3 FOR STRUCTURAL NOTES, BASIS OF DESIGN, SYMBOLS AND ABBREVIATIONS.
5. PRIOR TO CONSTRUCTION OF FOUNDATIONS, THE CONTRACTOR SHALL COORDINATE THE LOCATIONS OF ALL FOOTINGS, PIERS, AND TURN DOWN SLAB EDGES WITH THE PRE-ENGINEERED BUILDING DRAWINGS AND REVISE AS NECESSARY.
6. PRE-ENGINEERED COLUMN BASES SHALL BE DESIGNED AS PINNED ONLY.
7. LOCATIONS OF LATERAL RESISTING SYSTEMS (PORTAL FRAMES, X-BRACING) HAS BEEN SHOWN IN PLAN AND SHALL NOT BE MODIFIED UNLESS APPROVED BY THE ENGINEER OF RECORD.
8. ALL PIERS FOR PRE-ENGINEERED BUILDING COLUMNS SHALL HAVE HAIR-PIN TIES AS INDICATED IN THE DETAILS.
9. ANCHOR BOLTS FOR PRE-ENGINEERED BUILDING COLUMNS SHALL BE (4)-20 DIA A307M ANCHOR BOLTS WITH 300 EMBED MIN.
10. TOP OF PIER ELEVATION SET AT +100. COORDINATE BOTT/BASE PLATE AND GROUT REQUIREMENTS WITH PRE-ENGINEERED BUILDING MANUFACTURER.
11. THE PRE-ENGINEERED BUILDING MANUFACTURER SHALL COORDINATE ALL LOADING REQUIREMENTS INDICATED ON THE DRAWINGS AND SPECIFICATIONS WITH ARCH., STRUCT., MECH., AND ELEC.
12. THE PRE-ENGINEERED BUILDING MANUFACTURER SHALL COORDINATE ALL HANGING LOADING FROM EQUIPMENT OR ARCHITECTURAL ELEMENTS AND INCLUDE IN THE DESIGN OF THE FRAMING.
13. SEE SPECIFICATION FOR LATERAL DRIFT REQUIREMENTS.
14. METAL ROOF DECKING DESIGN AND PROVIDED BY PRE-ENGINEERED BUILDING MANUFACTURER.

0 .20 .40 .60 .80 1.00
1:10

1 0 1 2 3 4 5 6 7 8 9
1:100

US Army Corps of Engineers
Afghanistan Engineer District

SYMBOL	DESCRIPTION	DATE	APP'D

DESIGNED BY: MMS	DATE: 09-30-09
DWN BY: TML	SUBMITTED BY: BAKER
CHK BY: RTD	FILE NO.: ANPSDS-104XXX

Michael Baker Jr., Inc
A unit of Michael Baker Corporation
Airside Business Park
100 Airside Drive
Moon Township, PA 15108
www.mbakercorp.com

AFGHAN NATIONAL POLICE
STANDARD DESIGN
ENTRY CONTROL POINT CANOPY

FOUNDATION / SLAB / ROOF FRAMING PLAN

SHEET REFERENCE NUMBER:
S4

100% SUBMISSION

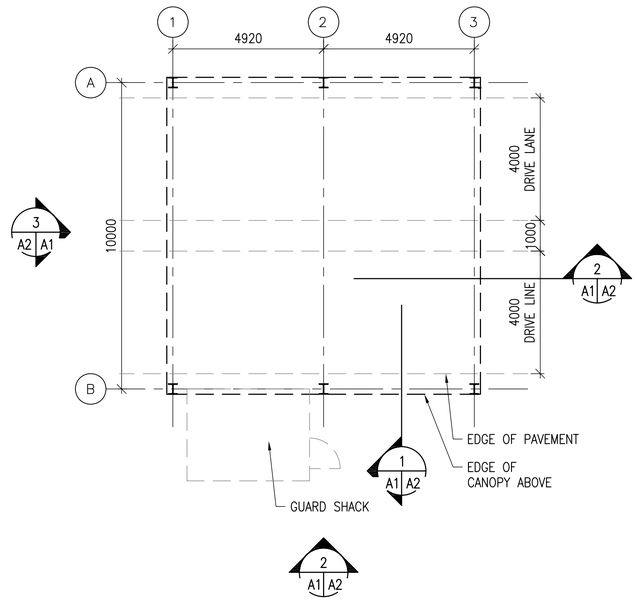

1 A1 A1 CANOPY PLAN

SCALE: 1:100

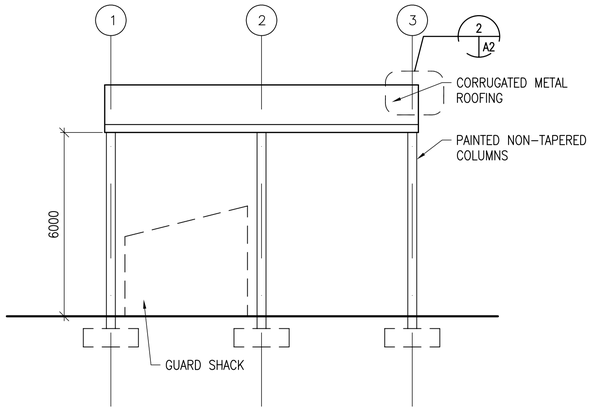

2 A1 A1 CANOPY ELEVATION

SCALE: 1:100

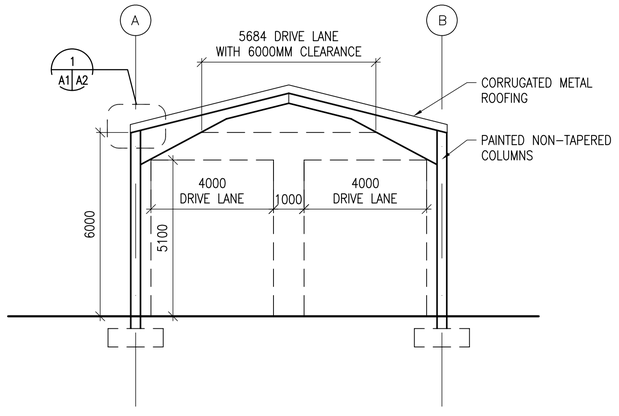

3 A1 A1 CANOPY ELEVATION

SCALE: 1:100

CANOPY NOTES:

1. STRUCTURE SHALL BE PRE-ENGINEERED METAL BUILDING SYSTEM

2. SURFACES TO BE PAINTED SHALL BE CLEAN AND FREE OF FOREIGN MATTER BEFORE APPLICATION OF PAINT. CLEANING SHALL BE SCHEDULED SO THAT DUST AND OTHER CONTAMINANTS WILL NOT FALL ON WET, NEWLY PAINTED SURFACES.

3. PAINTS CONTAINING LEAD IN EXCESS OF 0.06 PERCENT BY WEIGHT OF THE TOTAL NONVOLATILE CONTENT SHALL NOT BE USED.

4. MERCURIAL FUNGICIDES SHALL NOT BE USED IN OIL-BASE PAINT.

5. REMOVE LOOSE DIRT AND CLEAN SURFACES BEFORE PAINTING. APPLY PAINT TO INTERIOR STRUCTURAL RIGID FRAMINGS AND CEILINGS AND TEST FOR ADHESION. PRIMER COAT FOR MASONRY. INITIAL FIRST COAT WITH AN ACRYLIC LATEX PAINT FOR EXTERIOR SURFACES AND A SECOND COAT WITH A WATER REPELLANT ACRYLIC LATEX PAINT.

1 0 1 2 3 4 5 6 7 8 9
1:100

US Army Corps of Engineers
Afghanistan Engineer District

SYMBOL	DESCRIPTION	DATE	APP'D

DESIGNED BY: BAKER	DATE: 09-30-09		
DWN BY: JDS	SUBMITTED BY: BAKER		
CHK BY: RTD	FILE NO.: ANPSDA-101XXX		

Michael Baker Jr., Inc
A unit of Michael Baker Corporation
Airside Business Park
100 Airside Drive
Moon Township, PA 15108
www.mbakercorp.com

AFGHAN NATIONAL POLICE
STANDARD DESIGN
ENTRY CONTROL POINT CANOPY

CANOPY PLAN, ELEVATIONS, AND SECTIONS

SHEET REFERENCE NUMBER:
A1

100% SUBMISSION

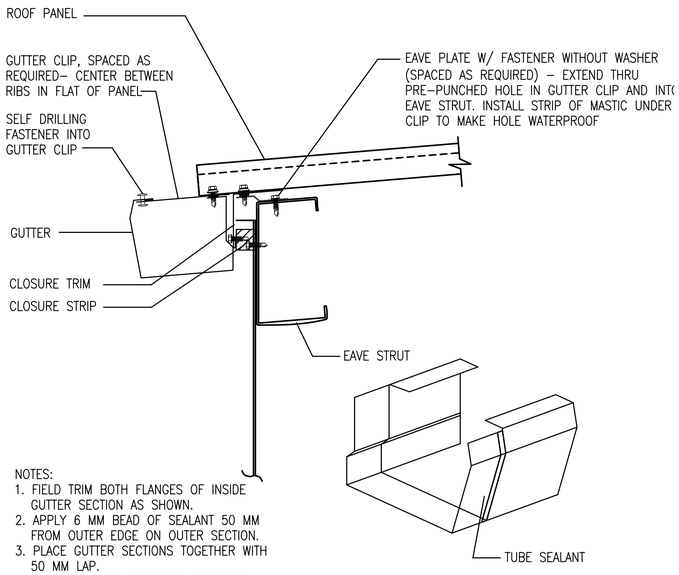

NOTES:
1. FIELD TRIM BOTH FLANGES OF INSIDE GUTTER SECTION AS SHOWN.
2. APPLY 6 MM BEAD OF SEALANT 50 MM FROM OUTER EDGE ON OUTER SECTION.
3. PLACE GUTTER SECTIONS TOGETHER WITH 50 MM LAP.
4. SECURE GUTTER SECTIONS TOGETHER WITH POP RIVETS.

GUTTER SPLICE ASSEMBLY

1 A1 A2 EAVE DETAIL WITH GUTTER

SCALE: NONE

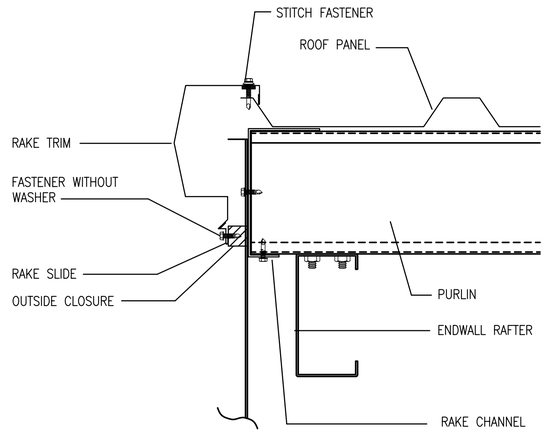

2 A1 A2 RAKE TRIM DETAIL

SCALE: NONE

1:100

US Army Corps of Engineers
Afghanistan Engineer District

SYMBOL	DESCRIPTION	DATE	APP'D

DESIGNED BY: BAKER	DATE: 09-30-09
DWN BY: JDS	SUBMITTED BY: BAKER
CHK BY: RTD	FILE NO.: ANPSDA-102XXX

Michael Baker Jr., Inc
A unit of Michael Baker Corporation
Airside Business Park
100 Airside Drive
Moon Township, PA 15108
www.mbakercorp.com

AFGHAN NATIONAL POLICE
STANDARD DESIGN
ENTRY CONTROL POINT CANOPY

CANOPY PLAN, ELEVATIONS, AND SECTIONS

SHEET REFERENCE NUMBER:
A2

100% SUBMISSION

AFGHAN NATIONAL POLICE

STANDARD BUILDING DESIGNS

DROP ARM BARRIER

SHEET INDEX

G1 COVER SHEET
C1 GENERAL NOTES
C2 ELEVATION COLUMN AND FOOTING
C3 DETAILS
C4 DETAILS

US ARMY CORPS OF ENGINEERS
AFGHANISTAN ENGINEER DISTRICT

SYMBOL	DESCRIPTION	DATE	APPR.

SYMBOL	DESCRIPTION	DATE	APPR.

DESIGNED BY:
DWN BY:
CKD BY:
REVIEWED BY:
SUBMITTED BY:
DATE: XX-XX-XX
DESIGN FILE NO.:
DRAWING CODE:
FILE NAME:
PLOT SCALE:
PLOT DATE: XX-XX-XX
REV.

U.S. ARMY ENGINEER DISTRICT, AFGHANISTAN
CORPS OF ENGINEERS
APO AE 96338

ENGINEERING AND CONSTRUCTION DIVISION

AFGHAN NATIONAL POLICE
STANDARD DESIGN
DROP ARM BARRIER

TRASH POINT LAYOUT ELEVATIONS, & DETAILS

SHEET REFERENCE NUMBER:
G1

A1 Size 594mm x 841mm

GENERAL NOTES

1.0 ALL DIMENSIONS SHOWN ON THE DRAWINGS ARE MILLIMETERS UNLESS NOTED OTHERWISE.

1.1 IN CASE OF CONFLICT BETWEEN THE NOTES, DETAILS AND SPECIFICATIONS THE MOST RIGID REQUIREMENTS SHALL GOVERN.

2.0 FOUNDATION NOTES

2.1 THE GEOTECHNICAL ANALYSIS FOR THIS PROJECT IS THE RESPONSIBILITY OF THE CONTRACTOR AWARDED THE WORK. DESIGN VALUES USED IN THE STRUCTURAL ANALYSIS OF THE BUILDINGS HEREIN INDICATED HAVE BEEN ASSUMED AND SHALL BE CONFIRMED AND VERIFIED AS PART OF THE GEOTECHNICAL INVESTIGATION. VALUES WHICH DO NOT MEET THE REQUIREMENTS INDICATED ON THE BASIS OF DESIGN SHEET SHALL BE IMMEDIATELY BROUGHT TO THE ATTENTION OF THE ENGINEER-OF-RECORD FOR CONSIDERATION AND DETERMINATION ON THE NEXT APPROPRIATE COURSE OF ACTION. THE DESIGN IS BASED ON AN ASSUMED ALLOWABLE SOIL BEARING CAPACITY OF 0.75 kg/cm²

2.2 EXCAVATIONS FOR FOOTINGS SHALL HAVE THE SIDES AND BOTTOMS TEMPORARILY LINED WITH 0.15mm POLYETHYLENE IF PLACEMENT OF CONCRETE DOES NOT OCCUR WITHIN 24 HRS OF THE EXCAVATION OF THE FOOTING.

2.3 NO FOOTINGS OR SLABS SHALL BE POURED INTO OR AGAINST SUBGRADE CONTAINING FREE WATER, FROST, ICE OR LOOSE MATERIAL. FROST DEPTH ASSUMED TO BE 950MM

2.4 ALL SLAB-ON-GRADE, TRENCH BOTTOMS AND OTHER ON-GRADE INTERIOR HORIZONTAL SURFACES SHALL BE PLACED OVER A 100mm #57 STONE WATER BARRIER PLACED ON SUBGRADE PROPERLY PREPARED IN ACCORDANCE WITH THE CONTRACT SPECIFICATIONS. (UNO).

2.5 IF UNDERMINING OF FOOTINGS OCCURS, FILL VOIDS WITH 28MPa CONCRETE. DO NOT ATTEMPT TO REPLACE AND RECOMPACT SOIL.

3.0 CONCRETE

3.1 CONCRETE SHALL BE NORMAL WEIGHT WITH A MINIMUM COMPRESSIVE STRENGTHS (f'c) AT 28 DAYS OF 28 MPa. SEE SPECIFICATIONS FOR ADDITIONAL INFORMATION. ENTRAIN AIR TO PRODUCE TOTAL AIR CONTENT ACCORDING TO THE SPECIFICATIONS FOR CONCRETE EXPOSED TO FREEZING TEMPERATURES.

3.2 NO CALCIUM CHLORIDE SHALL BE USED IN ANY CONCRETE.

3.3 MIXING, TRANSPORTING AND PLACING OF CONCRETE SHALL CONFORM TO AC1-301-89.

3.4 ALL CONCRETE WORK SHALL CONFORM TO THE REQUIREMENTS OF THE AMERICAN CONCRETE INSTITUTE (ACI) 318M MANUAL (metric), "BUILDING CODE REQUIREMENTS FOR REINFORCED CONCRETE", AND REQUIREMENTS OUTLINED IN THE CONTRACT SPECIFICATIONS. WHEN THERE IS A CONFLICT BETWEEN ACI AND THE SPECIFICATIONS, THE MORE STRINGENT SHALL GOVERN.

3.5 CONCRETE REINFORCEMENT BARS SHALL CONFORM TO ASTM A615M-96a, GRADE 60, REINFORCING BARS SHALL NOT BE TACK WELDED, WELDED, HEATED OR CUT, UNLESS INDICATED ON THE CONTRACT DOCUMENTS. ALL LAP SPLICES SHALL BE CLASS "B" U.N.O.

3.6 SEE SPECIFICATIONS FOR ALL WATERPROOFING/DAMPPROOFING REQUIREMENT.

3.7 ALL CONCRETE REINFORCEMENT SHALL BE DETAILED, FABRICATED, LABELED, SUPPORTED, AND SPACED IN FORMS AND SECURED IN PLACE IN ACCORDANCE WITH THE PROCEDURES AND REQUIREMENTS OUTLINED IN THE LATEST EDITION OF THE "BUILDING CODE REQUIREMENTS FOR REINFORCED CONCRETE", ACI 318, AND THE "MANUAL OF STANDARD PRACTICE FOR DETAILING REINFORCED CONCRETE STRUCTURES", ACI SP-66, LATEST EDITION.

3.8 PROVIDE CONCRETE POUR STOPS OR FORMED AS REQUIRED FOR INSTALLATION OF ALL CONCRETE WORK.

4.0 STRUCTURAL STEEL

4.1 STRUCTURAL STEEL ROLLED SHAPES AND PLATES SHALL CONFORM TO THE MATERIAL INFORMATION SCHEDULE. DIMENSIONS AND PROPERTIES SHALL BE IN ACCORDANCE TO ASTM A36.

4.2 DETAILING OF STRUCTURAL STEEL CONNECTIONS MUST BE CONSISTENT WITH RECOGNIZED, PUBLISHED METHODS SUCH AS IN THE AISC "MANUAL OF STEEL CONSTRUCTION", 9th EDITION; "ENGINEERING FOR STEEL CONSTRUCTION", OR "VOLUME II CONNECTIONS MANUAL OF STEEL CONSTRUCTION".

4.3 THE CODE OF STANDARD PRACTICE OF AISC 9TH EDITION ASD IS AMENDED SUCH THAT THE FABRICATOR/DETAILER IS RESPONSIBLE FOR THE DESIGN AND DETAILING OF ALL CONNECTIONS.

4.4 CALCULATIONS FOR DETAILS MUST SHOW A RATIONAL ANALYSIS OF A COMPLETE LOAD PATH, INCLUDING LOCAL EFFECTS ON WEBS, FLANGES, ETC. OF THE CONNECTED MEMBERS AND THE DEVICES (PLATES, SEATS, BRACKETS, BOLTS, WEBS, ETC) AFFECTING ALL CONNECTIONS. FAILURE TO SUBMIT SUCH CALCULATIONS FOR REVIEW CONCURRENT WITH SHOP DRAWING ERECTION PLANS AND DETAILS WILL BE CAUSE FOR REJECTION OF THAT SUBMITTAL.

4.5 STRUCTURAL STEEL DETAILING, FABRICATION AND ERECTION SHALL CONFORM TO THE AISC "SPECIFICATION FOR STRUCTURAL STEEL BUILDINGS - ALLOWABLE STRESS DESIGN AND PLASTIC DESIGN" AND THE AISC "CODE OF STANDARD PRACTICE FOR STEEL BUILDINGS AND BRIDGES" - LATEST EDITIONS.

4.6 WELDING SHALL CONFORM TO THE AMERICAN WELDING SOCIETY STRUCTURAL WELDING CODE AWS D1.1. ELECTRODES FOR SHOP AND FIELD WELDS SHALL BE CLASS E70XX. ALL WELDING SHALL BE DONE BY QUALIFIED, CERTIFIED WELDERS PER THE ABOVE STANDARD.

4.7 SHOP AND FIELD TESTING OF WELDS AND BOLTS SHALL BE AS OUTLINED IN THE SPECIFICATIONS.

4.8 ALL FILLET WELDS SHALL BE A MINIMUM OF 5mm UNLESS NOTED OTHERWISE.

4.9 THERE SHALL BE NO FIELD CUTTING OF STRUCTURAL STEEL MEMBERS FOR THE WORK OF OTHER TRADES WITHOUT PRIOR APPROVAL OF THE STRUCTURAL ENGINEER.

4.10 ALL STRUCTURAL STEEL SHALL BE PRIMED AS PER THE SPECIFICATIONS.

MINIMUM LAP SPLICES OF REINFORCING BARS IN TENSION (PER ACI 318-89M)

f'c = 28.0 MPa CONCRETE

BAR SIZE / CENTER TO CENTER BAR SPACING	(---TOP BARS--) LESS THAN 4db	(---TOP BARS--) 4db OR MORE	(--OTHER BARS--) LESS THAN 4db	(--OTHER BARS--) 4db OR MORE	4db
#10	460	460	410	410	40
#13	660	610	510	480	50
#16	1020	760	790	580	60
#19	1450	910	1120	710	80
#22	1960	1090	1500	840	90
#25	2590	1450	1980	1120	100
#29	3280	1830	2510	1420	110
#32	4140	2340	3200	1780	130
#36	5080	2840	3910	2180	140

NOTES:

1. LAP SPLICES ABOVE ARE IN MILLIMETERS UNO.
2. YIELD STRENGTH OF REINFORCEMENT, fy, IS 400MPa (LAP SPLICE LENGTH IS IN MILLIMETERS).
3. CONCRETE IS NORMAL WEIGHT (2400Kg/m).
4. TOP BAR INDICATES HORIZONTAL REINFORCEMENT WHICH IS PLACED ABOVE 300mm OR MORE OF FRESH CONCRETE.
5. STRAIGHT DEVELOPMENT LENGTH OF AN UNLAPPED BAR IS EQUAL TO VALUE FROM TABLE DIVIDED BY 1.3.
6. CATEGORY FOR BARS SPACED LESS THAN 4d, OR ON CENTER CORRESPONDS TO CATEGORY 1 IN THE CRSI HANDBOOK WHEREAS FOR BARS SPACED 4d, OR MORE ON CENTER CORRESPOND TO CRSI CATEGORY 5.

STANDARD HOOKS IN TENSION PER (ACI 318-89)

BAR SIZE	HOOK DEVELOPMENT LENGTH Ldh (mm) f'c 20 MPa	f'c 28.0 MPa
#10	230	180
#13	280	250
#16	360	300
#19	430	380
#22	480	430
#25	560	480
#29	640	560
#32	710	610
#36	790	690

NOTES:

1. CONCRETE IS NORMAL WEIGHT CONCRETE.
2. BAR YIELD STRENGTH, fy = 400 MPa.
3. SIDE COVER REQUIREMENTS OF ACI SECT. 12.5.3.2 ARE ASSUMED TO NOT BE MET.
4. TIE OR STIRRUP REQUIREMENTS OF ACI SECT. 12.5.3.2 ARE ASSUMED TO NOT BE MET.
5. REDUCTION FOR EXCESS REINFORCEMENT IS NOT TAKEN.
6. HOOK DEVELOPMENT LENGTH IS VALID FOR 180° HOOKS ALSO.
7. FOR 35 MPa CONCRETE, USE VALUES FOR 30 MPa

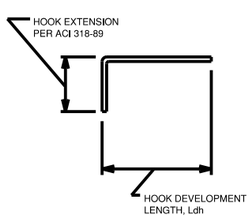

CONCRETE COVER SCHEDULE

MINIMUM CONCRETE COVER PROTECTION FOR REINFORCEMENT BARS SHALL BE AS FOLLOWS: (SEE ACI 318-89M, SECTION 7.7 FOR CONDITIONS NOT NOTED). DIMENSIONS FOR BAR PLACEMENT GIVEN IN SECTIONS AND DETAILS SHALL SUPERCEDE MINIMUM COVER REQUIREMENTS GIVEN HERE. DIMENSIONS ARE IN mm.

FOOTINGS (EARTH FORMED)		75
COLUMNS / PIERS		40
GRADE BEAMS OR SLAB TURNED DOWN EDGES:		
TOP		40
BOTTOM (EARTH FORMED)		75
SIDES (EARTH FORMED)		75
SIDES (BOARD FORMED)	#16 BAR & SMALLER	40
	#19 THRU #36 BAR	50
		40
SLABS-ON-GRADE (NO EXPOSURE TO WEATHER) FROM TOP		20
SLABS-ON-GRADE (EXPOSURE TO WEATHER) FROM TOP		40
UTILITY TUNNEL WALLS, RETAINING WALLS AND SHEAR WALLS, (NO SURFACES SHALL BE EARTH FORMED) EARTH SIDE AND FRONT SIDE (EXPOSED TO WEATHER):		
#16 BAR AND SMALLER		40
#19 THRU #36 BAR		50

PROVIDE STANDARD BAR CHAIRS AND SPACERS AS REQUIRED TO MAINTAIN CONCRETE PROTECTION SPECIFIED.

US ARMY CORPS OF ENGINEERS
AFGHANISTAN ENGINEER DISTRICT

REV.	DATE	DESCRIPTION
1	4/2006	ISSUED
2	4/2006	DESCRIPTION

DESIGNED BY: AED
DRWN BY: AED
CKD BY:
REVIEWED BY:
SUBMITTED BY:

DATE:
DESIGN FILE NO.
DRAWING CODE:
FILE NAME:
PLOT SCALE:
PLOT DATE:

U.S. ARMY ENGINEER DISTRICT, AFGHANISTAN
CORPS OF ENGINEERS
APO AE 96338

AFGHAN NATIONAL POLICE
STANDARD DESIGN
DROP ARM BARRIER

GENERAL NOTES

SHEET REFERENCE NUMBER:
C1

TITLE SHEET
SCHEDULE OF DRAWINGS

X-XXX

A1 Size 594mm x 841mm

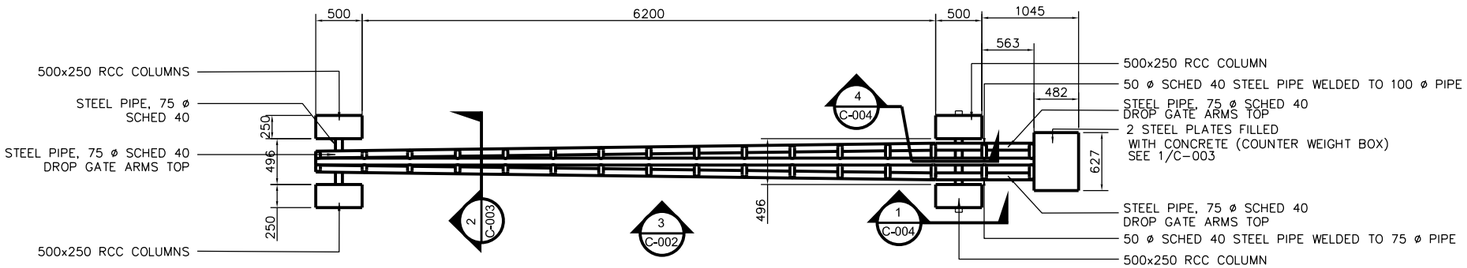

1 C-002 PLAN 1:30

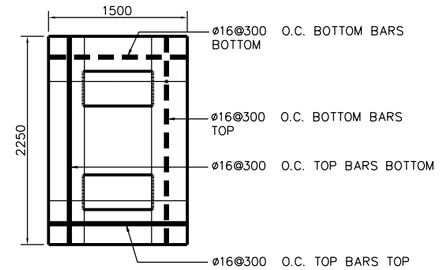

2 C-002 DETAIL NTS

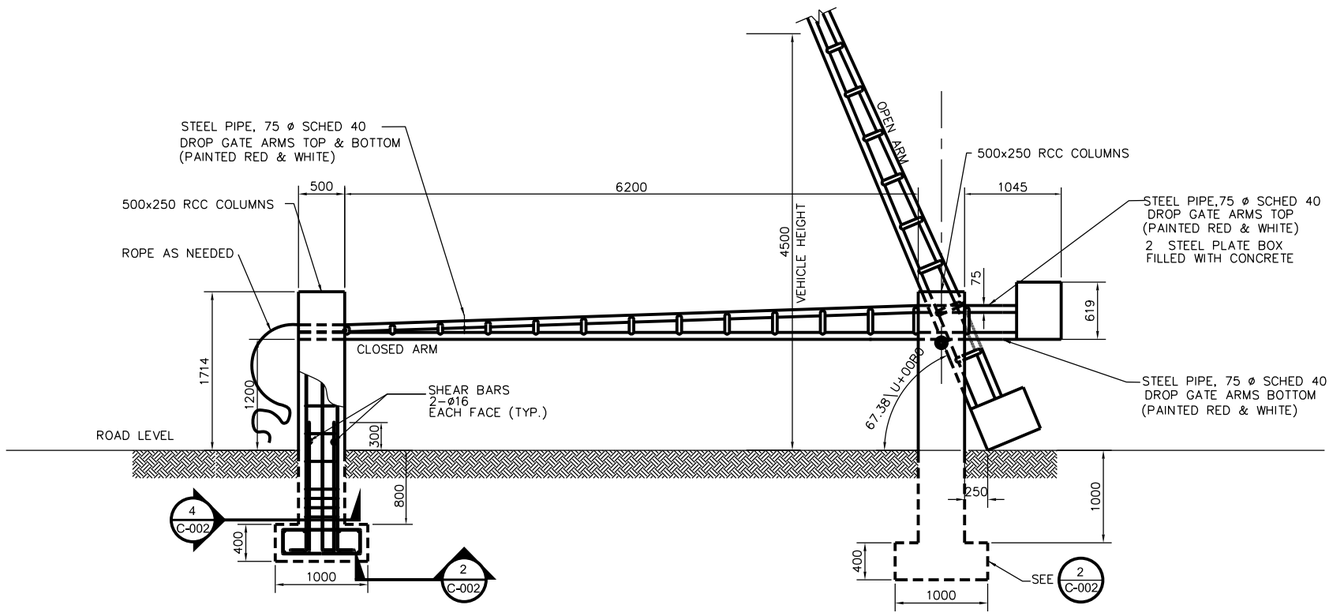

3 C-002 ELEVATION 1:30

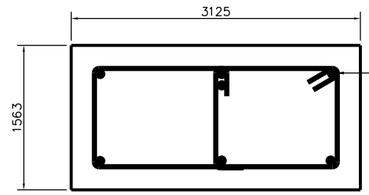

4 C-002 DETAIL NTS

NOTE: ALL DIMENSIONS ARE IN MILLIMETERS (MM) UNLESS NOTED OTHERWISE.

US ARMY CORPS OF ENGINEERS AFGHANISTAN ENGINEER DISTRICT

NUMBER	DESCRIPTION	DATE	APPR.
NUMBER	DESCRIPTION	DATE	APPR.

DESIGNED BY: AED
DRAWN BY: AED
REVIEWED BY:
CKD BY:
SUBMITTED BY:
DATE:
DESIGN FILE NO.
DRAWING CODE:
FILE NAME:
PLOT SCALE:
PLOT DATE:
REV:

U.S. ARMY ENGINEER DISTRICT, AFGHANISTAN
CORPS OF ENGINEERS
APO AE 96338

AFGHAN NATIONAL POLICE
STANDARD DESIGN
DROP ARM BARRIER

ELEVATION, COLUMN AND FOOTING

SHEET REFERENCE NUMBER:
C2

TITLE SHEET
SCHEDULE OF DRAWINGS

X-XXX

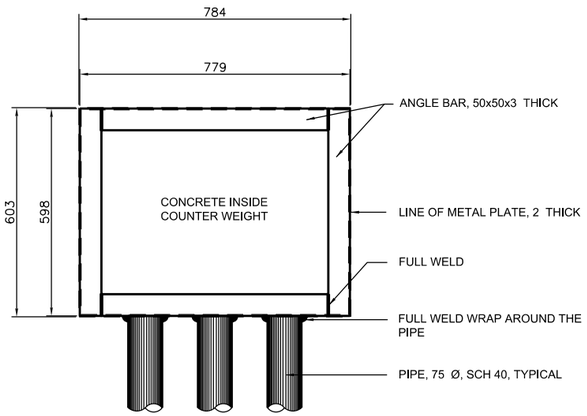

TOP VIEW

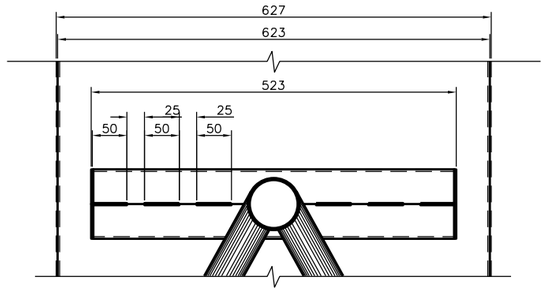

SPOT DETAIL "A"

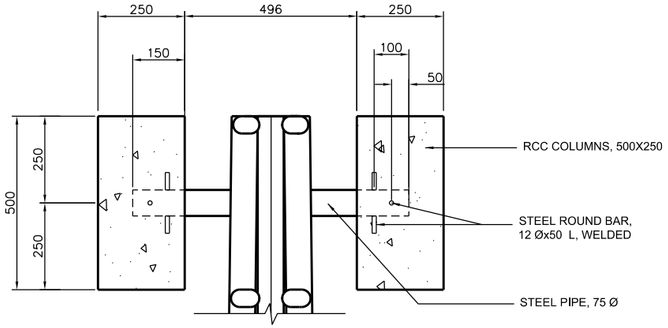

TOP VIEW

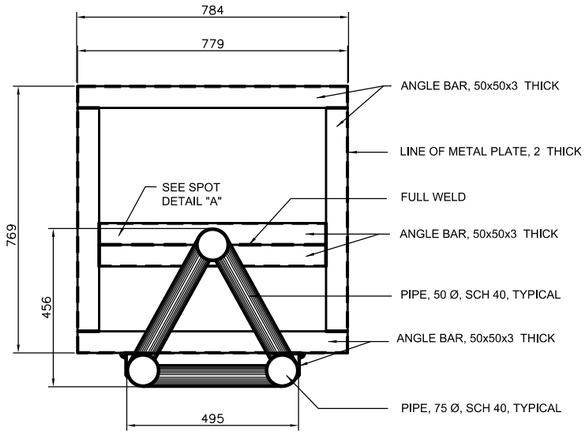

FRONT VIEW

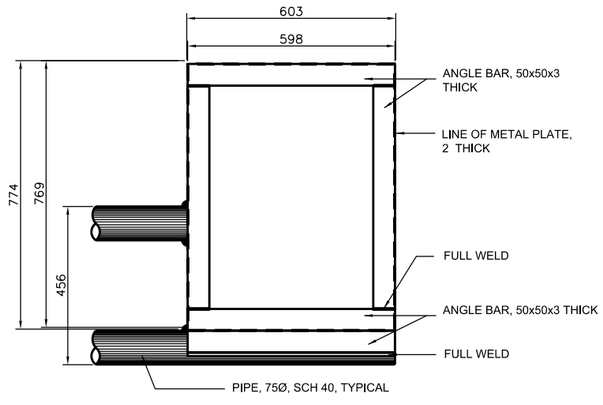

TOP VIEW

1 C-003 ANGLE BAR FRAMING OF COUNTER WEIGHT BOX
NTS

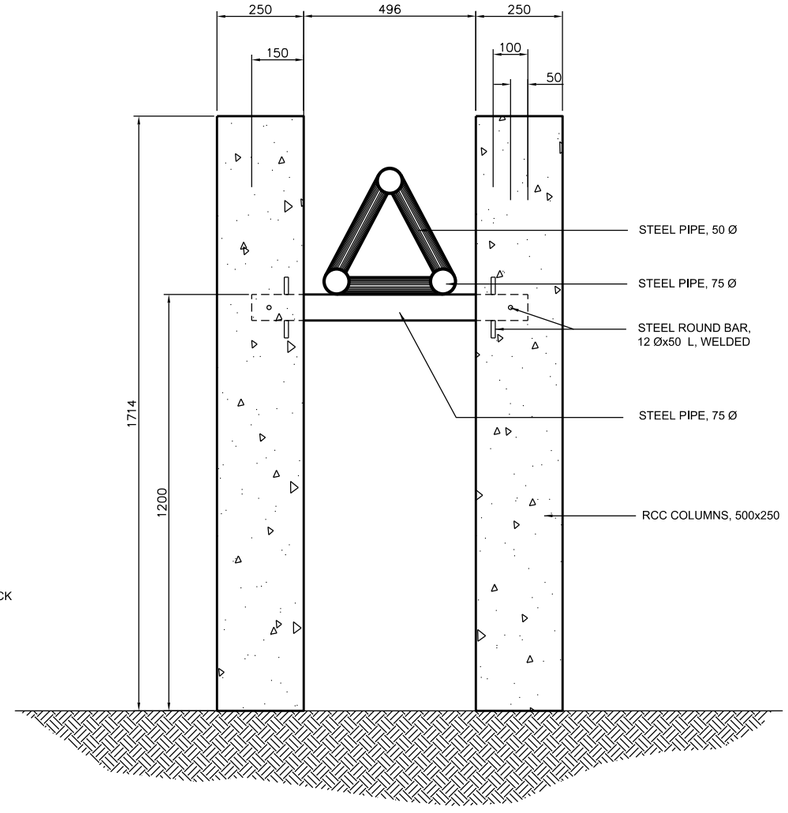

FRONT VIEW

2 C-003 SECTION "F" DROP ARM
NTS

NOTE: ALL DIMENSIONS ARE IN MILLIMETER (MM) UNLESS NOTED OTHERWISE.

US ARMY CORPS
OF ENGINEERS
AFGHANISTAN
ENGINEER DISTRICT

NUMBER	DESCRIPTION	DATE	APPR.
NUMBER	DESCRIPTION	DATE	APPR.

DESIGNED BY: AED
DRAWN BY:
REVIEWED BY:
SUBMITTED BY:
DATE:
CKD BY:
DESIGN FILE NO.
DRAWING CODE:
FILE NAME:
PLOT SCALE:
PLOT DATE:
REV:

U.S. ARMY ENGINEER DISTRICT, AFGHANISTAN
CORPS OF ENGINEERS
APO AE 96338

AFGHAN NATIONAL POLICE
STANDARD DESIGN
DROP ARM BARRIER

DETAILS

SHEET REFERENCE NUMBER:
C3

TITLE SHEET
SCHEDULE OF DRAWINGS

X-XXX

A1 Size 594mm x 841mm

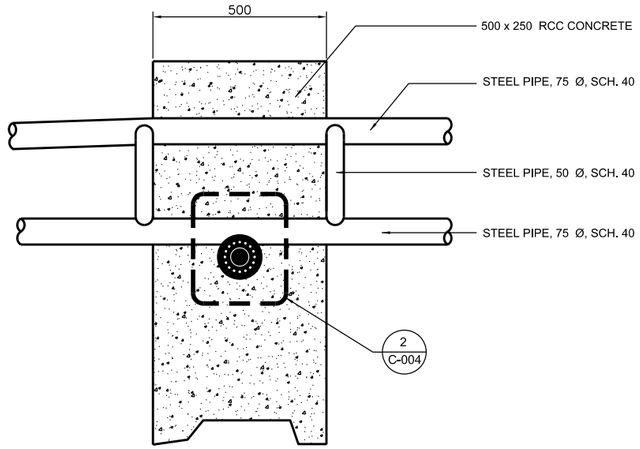

1 C-004 DROP ARM SECTION
NTS

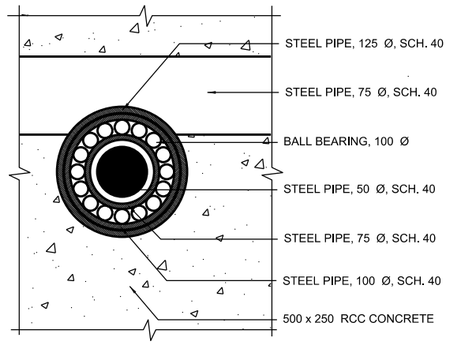

2 C-004 DROP ARM DETAIL
NTS

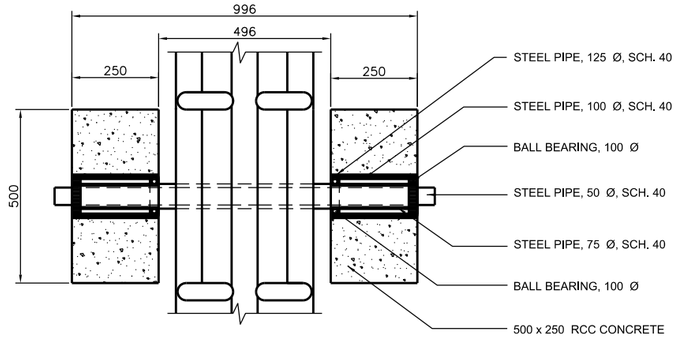

3 C-004 DROP ARM PLAN SECTION
NTS

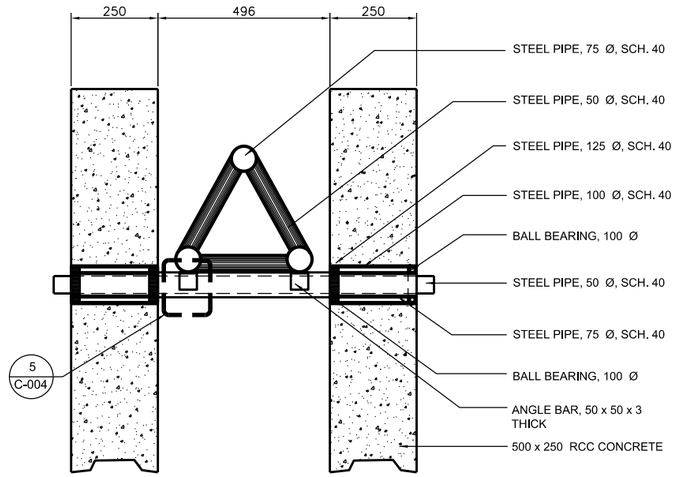

4 C-004 DROP ARM SECTION
NTS

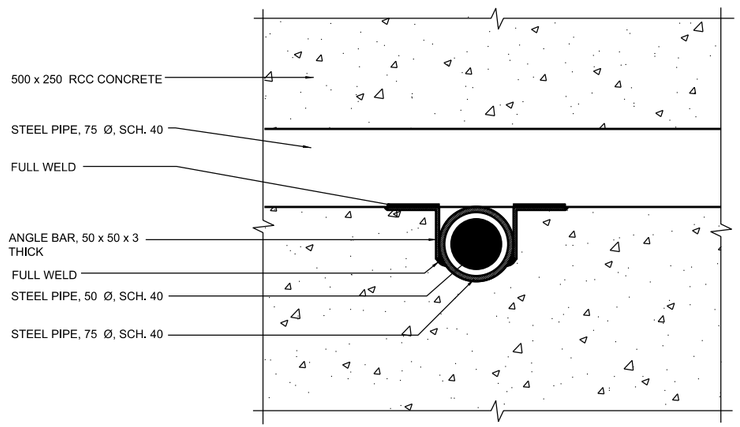

5 C-004 DROP ARM SECTION
NTS

NOTE: ALL DIMENSIONS ARE IN MILLIMETER (MM) UNLESS NOTED OTHERWISE.

A1 Size 594mm x 841mm

US ARMY CORPS OF ENGINEERS AFGHANISTAN ENGINEER DISTRICT

NUMBER	DESCRIPTION	DATE	APPR.

DESIGNED BY: AED
DRAWN BY: AED
REVIEWED BY:
SUBMITTED BY:
CKD BY:
DATE:
DESIGN FILE NO.
DRAWING CODE:
FILE NAME:
PLOT SCALE:
PLOT DATE:
REV:

U.S. ARMY ENGINEER DISTRICT, AFGHANISTAN
CORPS OF ENGINEERS
APO AE 96338

AFGHAN NATIONAL POLICE
STANDARD DESIGN
DROP ARM BARRIER

DETAILS

SHEET REFERENCE NUMBER:
C4

TITLE SHEET
SCHEDULE OF DRAWINGS

X-XXX

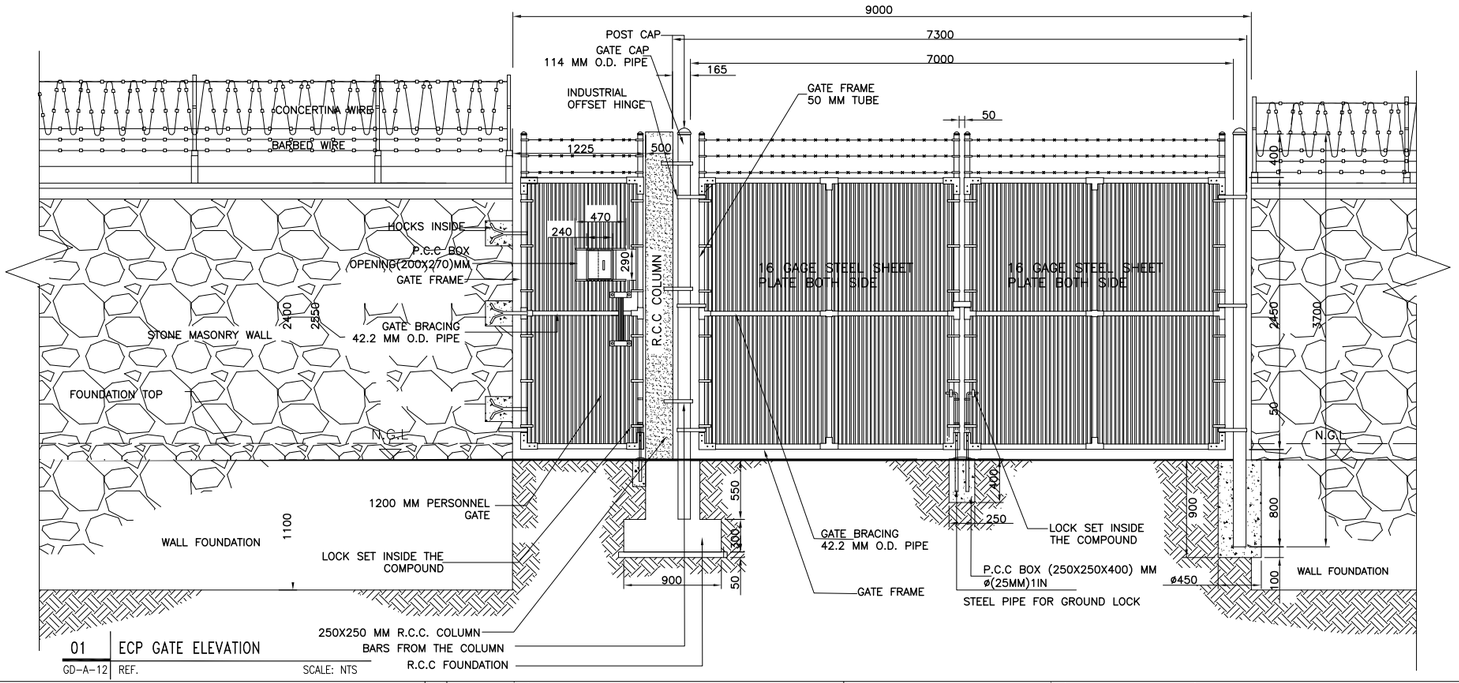

01 ECP GATE ELEVATION
GD-A-12 REF. SCALE: NTS

NOTES

GATE POST	115MMX115MM WALL THK.
GATE FRAME	50MMX50MM WALL THK.
GATE BRACING	40MMX50MM WALL THK.
INFILL-FABRIC	30MMX30MM GALVANIZED
BARBED WIRE	STANDARD-GALVANIZED
FITTINGS	GALVANIZED

1)FITTINGS:-GALVANIZED

2)STEEL TUBE:ALL PIPES ARE GALVANIZED, CONFORMS TO ASTM A 53, SCH-40

3)BARBED WIRE:GALVANIZED BARBED WIRE "IOWA" PATTERN, 2PLY, 4 POINT STRAND WIRE 2.5 MM DIA, BARBING WIRE 2.0 MM DIA GALV., SPACING BETWEEN BARBS 101 MM

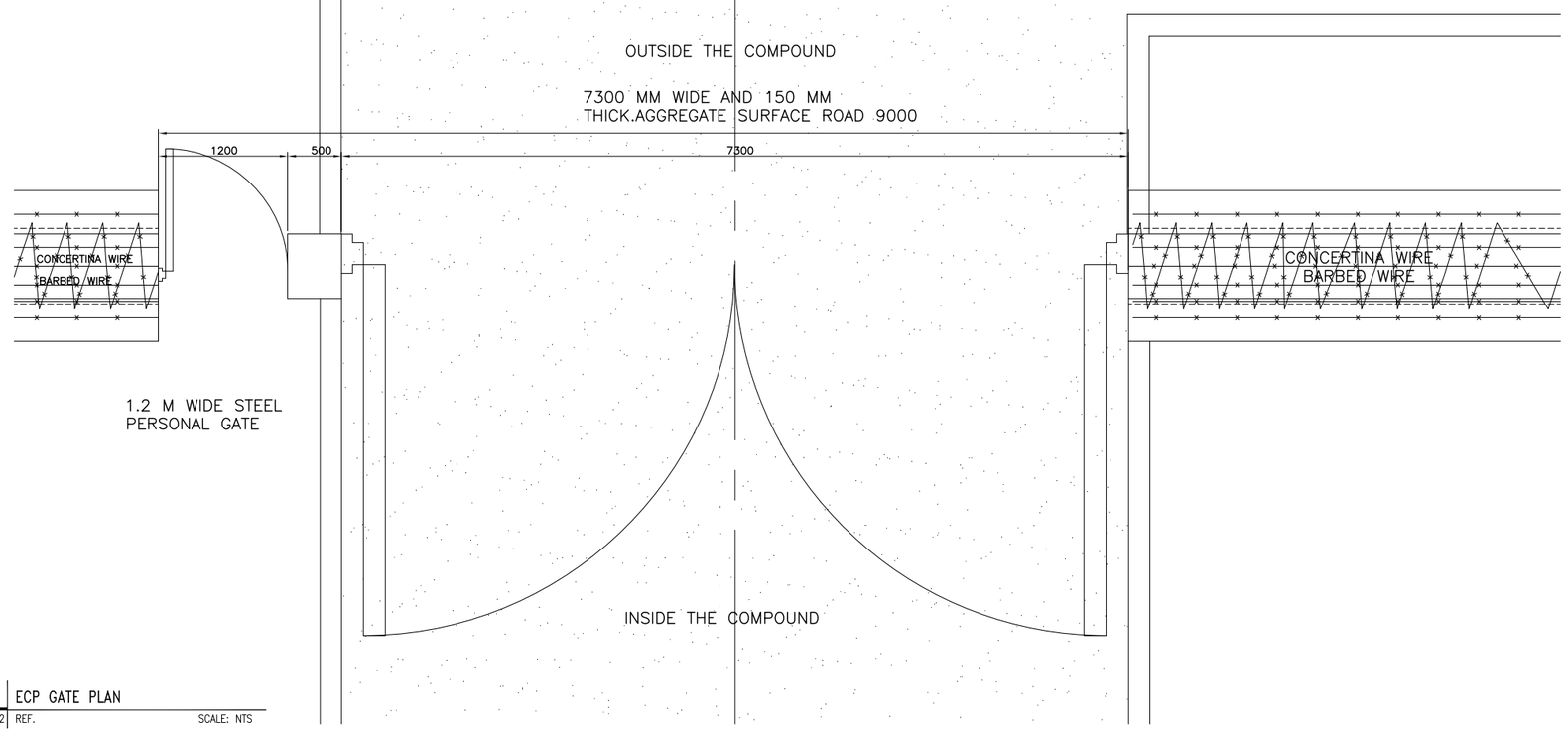

02 ECP GATE PLAN
GD-A-12 REF. SCALE: NTS

US Army Corps of Engineers
Afghanistan Engineer District

Symbol	Description	Date	Appr.	Symbol	Description	DATE	Appr.

Designed BY: -- | Drawn BY: -- | Contract Date: --
Reviewed by: -- | Draw Code: CIVIL | FILE NAME: --
Submitted by: -- | Plot Date: APR-10-2011
Plot Scale: 1:150
Solicitation No: -- | Contract No: --

US ARMY CORPS OF ENGINEERS
AFGHANISTAN ENGINEER DISTRICT SOUTH
HERAT, AFGHANISTAN

Contractor:
Designer:

ANP (AFGHAN NATIONAL POLICE)

STANDARD DESIGN DRAWING
ENTRY CONTROL POINT (ECP) GATE

Sheet reference number:
--

STANDARD BUILDING DESIGN

FP06 - PERSONNEL BUNKER

SHEET INDEX

G-001 COVER SHEET

CIVIL

C-101 PLAN, ELEVATIONS, AND SECTION

US Army Corps of Engineers
AFGHANISTAN ENGINEER DISTRICT

MARK	DESCRIPTION	DATE	APPR.

MARK	DESCRIPTION	DATE	APPR.

U.S. ARMY CORPS OF ENGINEERS
AFGHANISTAN DISTRICT
APO AE 96338

DESIGNED BY:
DWN BY:
CKD BY:
SUBMITTED BY:
PLOT SCALE: 1=1
PLOT DATE: 11/07/2011
FILE NAME: FP06_G-001.dwg
SIZE: ANSI D
DATE:
SOLICITATION NO.:
CONTRACT NO.:
FILE NUMBER:

SITE ADAPT DESIGN
FP06 - PERSONNEL BUNKER

COVER SHEET

SHEET IDENTIFICATION
G-001
SHEET 1 OF 2

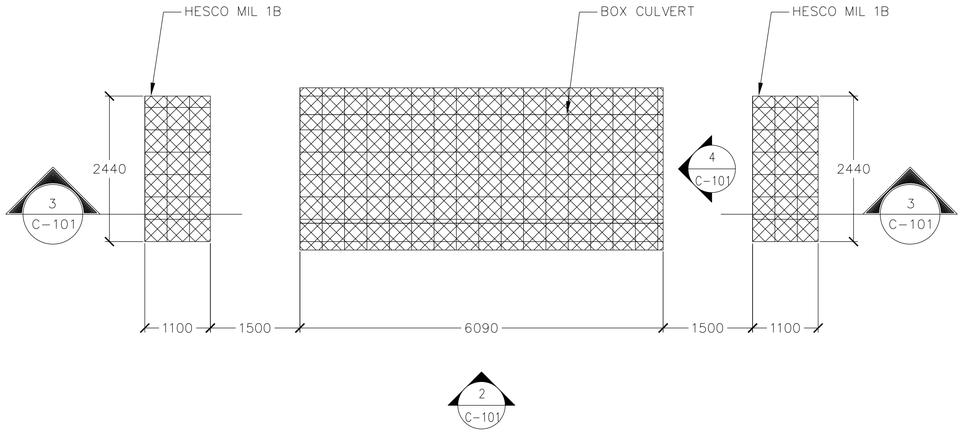

1 C-101 **PLAN VIEW**
SCALE: 1:50

NOTES:
1. PROVIDE CEMENTITIOUS COATING TO SANDBAG EXTERIOR CONSISTING OF A PORTLAND CEMENT SLURRY OR OTHER APPROVED COATING.
2. REINFORCED CONCRETE BOX CULVERT SHALL MEET THE REQUIREMENTS OF ASTM 1433.

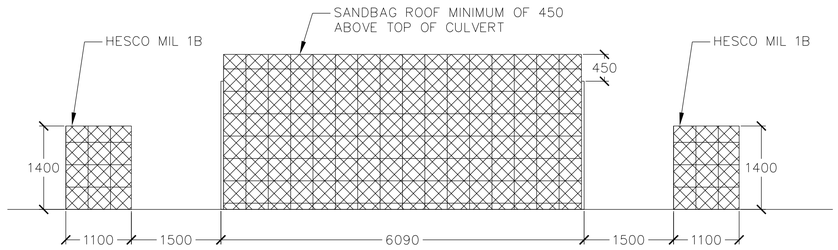

2 C-101 **SIDE ELEVATION**
SCALE: 1:50

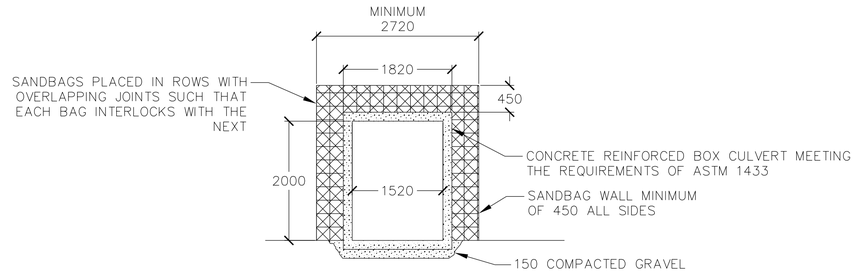

4 C-101 **FRONT ELEVATION**
SCALE: 1:50

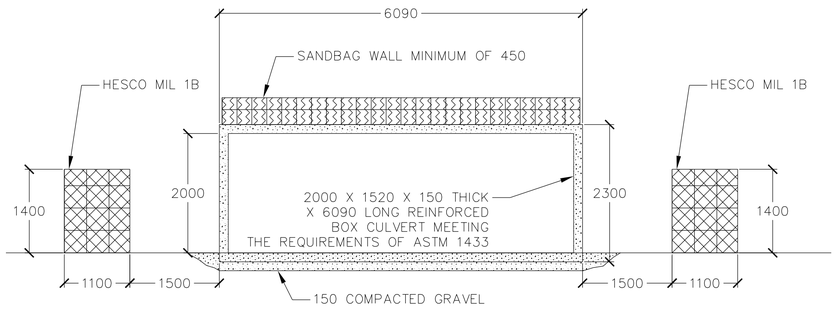

3 C-101 **SECTION**
SCALE: 1:50

NOTE: ALL DIMENSIONS ARE IN MILLIMETERS UNLESS OTHERWISE NOTED

0 500 1000 2000
SCALE: 1: 50

US Army Corps of Engineers®
AFGHANISTAN ENGINEER DISTRICT

MARK	DESCRIPTION	DATE	APPR.

MARK	DESCRIPTION	DATE	APPR.

DESIGNED BY:
DWN BY:
CKD BY:
SUBMITTED BY:
DATE:
SOLICITATION NO.:
CONTRACT NO.:
FILE NUMBER:
PLOT SCALE: 1:1
PLOT DATE: 11/3/2021
SIZE: ANSI D
FILE NAME: FP06_C-101.dwg

U.S. ARMY CORPS OF ENGINEERS
AFGHANISTAN DISTRICT
APO AE 96338

SITE ADAPT DESIGN
FP06 - PERSONNEL BUNKER

PLAN, ELEVATIONS, AND SECTION

SHEET IDENTIFICATION
C-101
SHEET 2 OF 2

AFGHAN NATIONAL POLICE

STANDARD BUILDING DESIGNS

SITE DETAILS

SHEET INDEX

G1	COVER SHEET
C1	CIVIL DETAILS
C2	CIVIL DETAILS
C3	CIVIL DETAILS
C4	CIVIL DETAILS
C5	CIVIL DETAILS
C6	CIVIL DETAILS
C7	CIVIL DETAILS
C8	CIVIL DETAILS

US Army Corps of Engineers
Afghanistan Engineer District

SYMBOL	DESCRIPTION	DATE	APP'D

DESIGNED BY: JDS	SUBMITTED BY: BAKER	DATE: 09-30-09	
DWN BY: JDS		FILE NO.: ANPSDG-001XXX	
CHK BY: JDS			

Michael Baker Jr., Inc
A unit of Michael Baker Corporation
Airside Business Park
100 Airside Drive
Moon Township, PA 15108
www.mbakercorp.com

AFGHAN NATIONAL POLICE
STANDARD DESIGN
SITE DETAILS

COVER SHEET

SHEET REFERENCE NUMBER:
G1

100% SUBMISSION

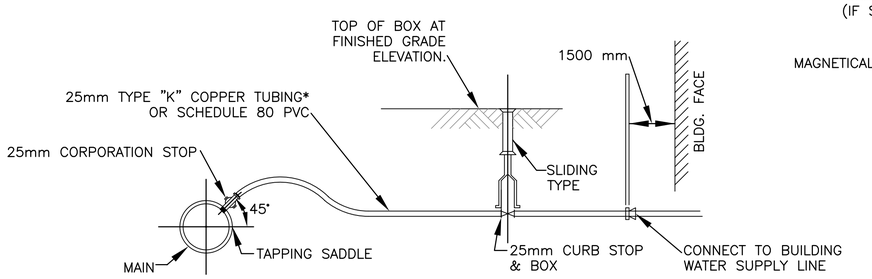

*DETAIL TYPICAL FOR 20mm THRU 50mm CONNECTIONS, SIZE OF COPORATION STOP, TUBING AND CURB STOP SHALL BE SIZED ACCORDINGLY. BLOWOFF VALVES LOCATED AT DEAD ENDS OF WATER MAINS SHALL CONSIST OF 50mm CONNECTION WITH TAP NEAR END OF PIPE, DISCHARGE TO SURFACE DRAINAGE. AND ANTI FREEZING PROVISIONS WHERE APPLICABLE.

WATER SERVICE CONNECTION DETAIL

N.T.S.

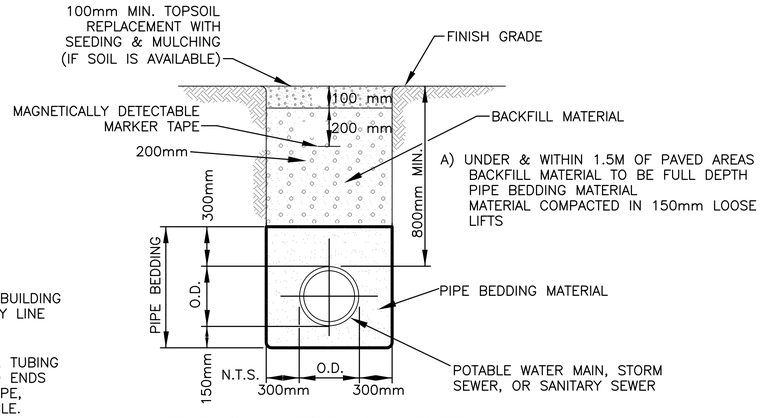

TYPICAL TRENCH DETAIL

N.T.S.

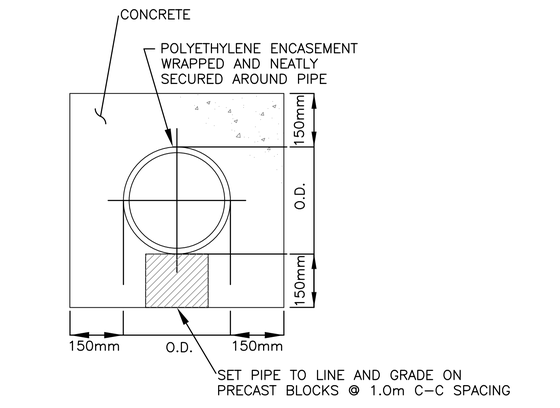

NOTE: REQUIRED FOR ROAD CROSSINGS WITH LESS THAN 1.2m COVER OR WHERE SANITARY AND WATER MAIN SEPARATION CANNOT BE MET.

PIPE CONCRETE ENCASEMENT DETAIL

N.T.S.

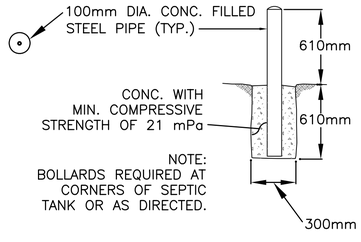

TYPICAL BOLLARDS

N.T.S.

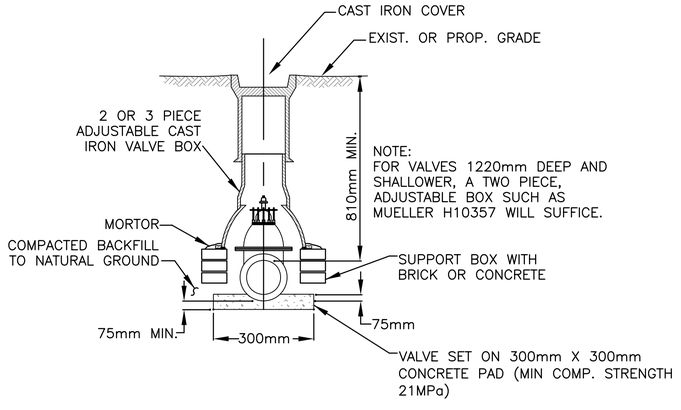

VALVE BOX INSTALLATION

N.T.S.

US Army Corps of Engineers
Afghanistan Engineer District

SYMBOL	DESCRIPTION	DATE	APP'D

DESIGNED BY: BAKER	DATE: 09-30-09		
DWN BY: JDS	SUBMITTED BY: BAKER	FILE NO.: ANPSDC-501XXX	
CHK BY: GPH			

Michael Baker Jr., Inc
A unit of Michael Baker Corporation
Airside Business Park
100 Airside Drive
Moon Township, PA 15108
www.mbakercorp.com

AFGHAN NATIONAL POLICE
STANDARD DESIGN
SITE DETAILS

CIVIL DETAILS

SHEET REFERENCE NUMBER:
C1

100% SUBMISSION

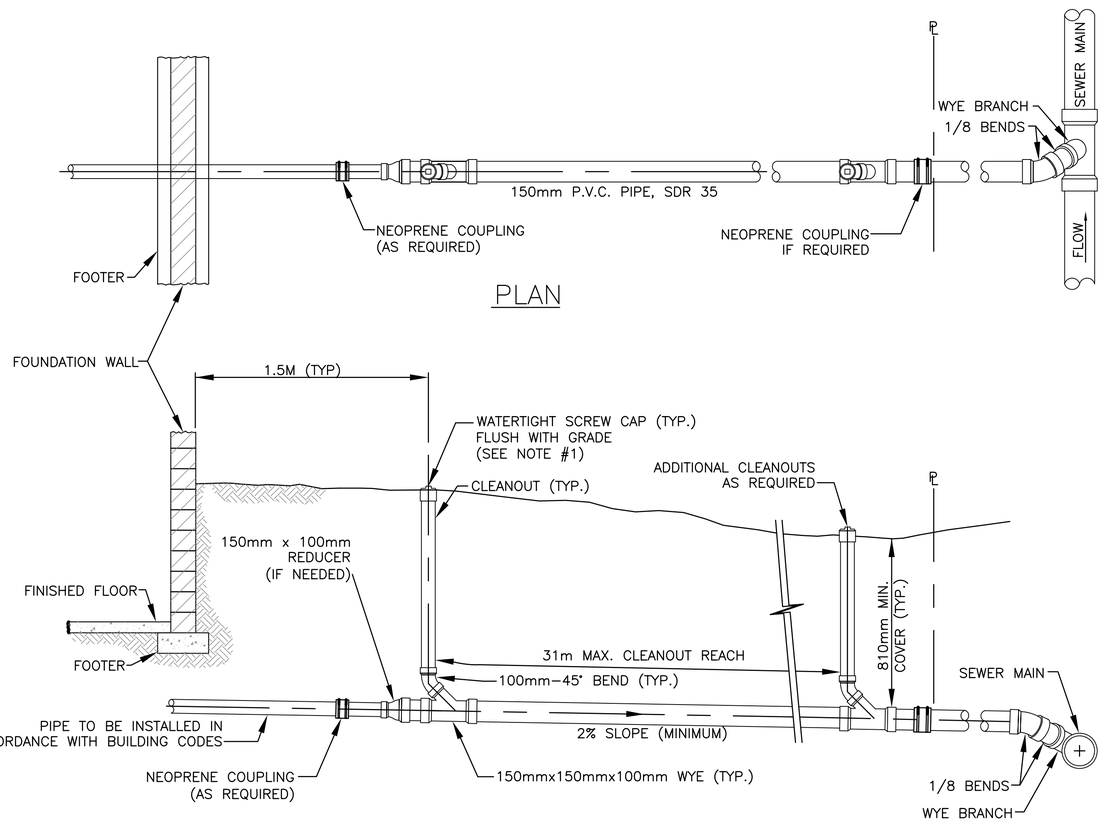

PLAN

PROFILE

NOTES:

1. PLUGS AND CLEANOUT RISERS SHALL BE PVC IF LOCATED OUTSIDE OF PAVED AREAS, AND SHALL BE CAST IRON IF LOCATED WITHIN PAVED AREAS.
2. A TEE MUST BE PROVIDED FOR AIR TESTING OF THE LATERAL.
3. NO STORM WATER PIPING MAY BE CONNECTED TO THE LATERAL.

SANITARY SEWER – BUILDING SERVICE LATERAL

N.T.S.

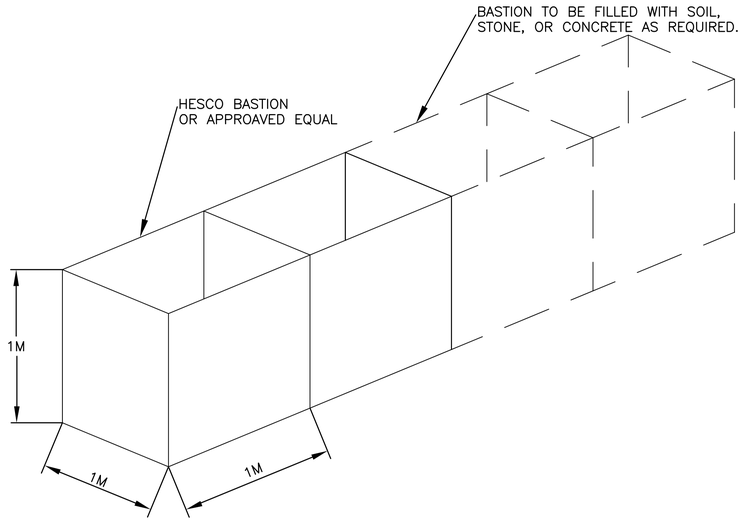

PASSIVE BARRIER

N.T.S.

US Army Corps of Engineers
Afghanistan Engineer District

NO.	DESCRIPTION	DATE	APP'D

DESIGNED BY: BAKER
DWN BY: JDS
CHK BY: GPH
DATE: 09-30-09
SUBMITTED BY: BAKER
FILE NO.: ANPSDC-502XXX

Michael Baker Jr., Inc
A unit of Michael Baker Corporation
Airside Business Park
100 Airside Drive
Moon Township, PA 15108
www.mbakercorp.com

AFGHAN NATIONAL POLICE
STANDARD DESIGN
SITE DETAILS

CIVIL DETAILS

SHEET REFERENCE NUMBER:
C2

100% SUBMISSION

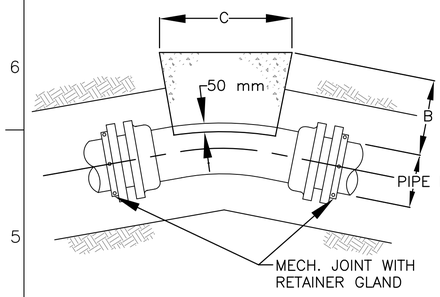

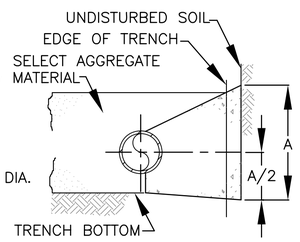

PLAN SECTION

	PIPE DIAMETER			
	100&150	200	250	300
A	510	560	610	660
B	300	300	355	380
C	300	400	480	530

WRAP FITTINGS & JOINT WITH TAR PAPER PRIOR TO POURING CONCRETE

CONCRETE ANCHORS FOR HORIZONTAL 22-1/2° & 11-1/4° BENDS

N.T.S.

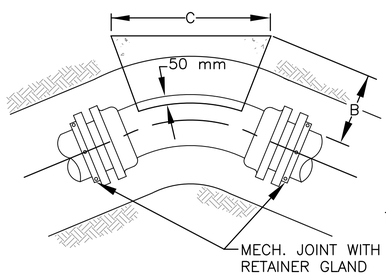

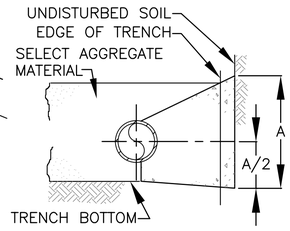

PLAN SECTION

	PIPE DIAMETER			
	100&150	200	250	300
A	460	530	610	710
B	300	300	355	380
C	380	510	640	710

WRAP FITTINGS & JOINT WITH TAR PAPER PRIOR TO POURING CONCRETE

CONCRETE ANCHORS FOR HORIZONTAL 45° BENDS

N.T.S.

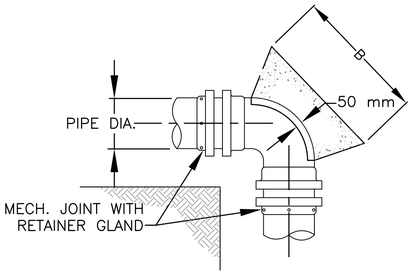

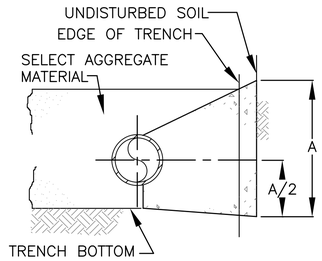

PLAN SECTION

	PIPE DIAMETER			
	100&150	200	250	300
A	460	610	710	920
B	610	710	710	920

WRAP FITTINGS & JOINT WITH TAR PAPER PRIOR TO POURING CONCRETE

CONCRETE ANCHORS FOR HORIZONTAL 90° BENDS

N.T.S.

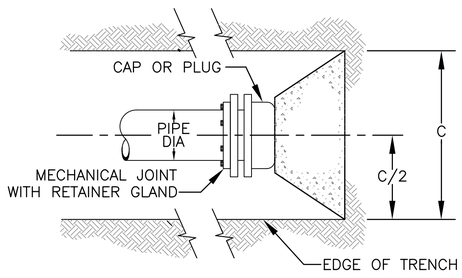

PLAN

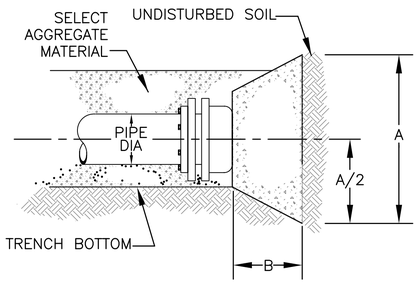

ELEVATION

	PIPE DIAMETER			
	100&150	200	250	300
A	460	610	760	760
B	300	380	460	460
C	460	610	1000	1000

WRAP FITTINGS & JOINT WITH TAR PAPER PRIOR TO POURING CONCRETE

CONCRETE ANCHORS FOR DEAD ENDS

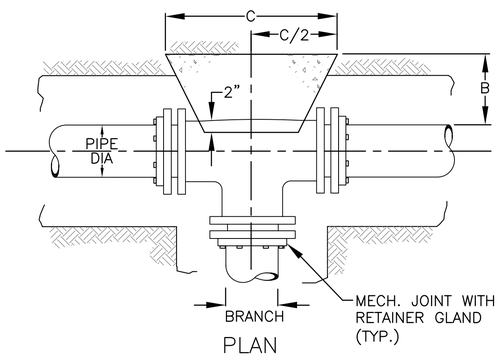

PLAN

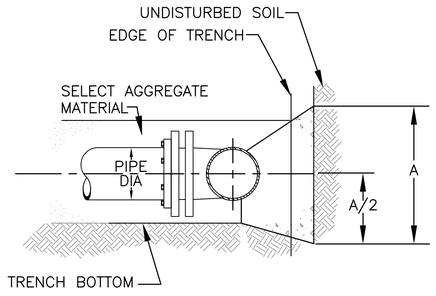

ELEVATION

	PIPE DIAMETER			
	100&150	200	250	300
A	460	610	760	920
B	300	380	380	380
C	460	610	760	920

WRAP FITTINGS & JOINT WITH TAR PAPER PRIOR TO POURING CONCRETE

D = APPROX. VOLUME OF CONC. IN C.Y.

CONCRETE ANCHORS FOR TEES

N.T.S.

NOTES:
1. ALL UNITS IN MILLIMETERS UNLESS OTHERWISE SPECIFIED.
2. THRUST BLOCK SIZES SHOWN ARE BASED ON 1034 KPa WATER PRESSURE AND 120 KPA UNDISTURBED SOIL BEARING.

US Army Corps of Engineers
Afghanistan Engineer District

SYMBOL	DESCRIPTION	DATE	APP

DESIGNED BY: BAKER
DWN BY: JDS
CHK BY: GPH
DATE: 09-30-09
SUBMITTED BY: BAKER
FILE NO.: ANPSDC-503XXX

Michael Baker Jr, Inc
A unit of Michael Baker Corporation
Airside Business Park
100 Airside Drive
Moon Township, PA 15108
www.mbakercorp.com

AFGHAN NATIONAL POLICE
STANDARD DESIGN
SITE DETAILS

CIVIL DETAILS

SHEET REFERENCE NUMBER:
C3

100% SUBMISSION

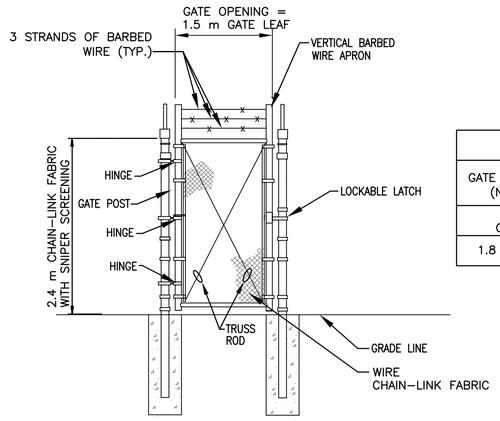

MAN GATE
NTS

GATE POST SCHEDULE	
GATE LEAF WIDTH (NOMINAL)	OUTSIDE DIMENSION (NOMINAL)
1.8 m OR LESS	75 mm O.D.
1.8 m TO 4 m	100 mm O.D.

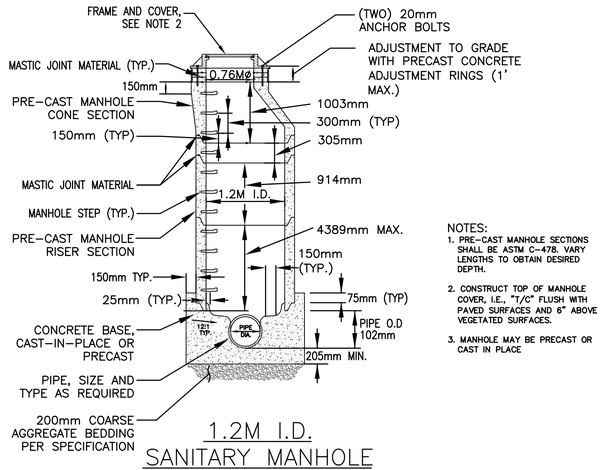

NOTES:
1. PRE-CAST MANHOLE SECTIONS SHALL BE ASTM C-478. VARY LENGTHS TO OBTAIN DESIRED DEPTH.
2. CONSTRUCT TOP OF MANHOLE COVER, I.E., "T/C" FLUSH WITH PAVED SURFACES AND 6" ABOVE VEGETATED SURFACES.
3. MANHOLE MAY BE PRECAST OR CAST IN PLACE

1.2M I.D.
SANITARY MANHOLE
NTS

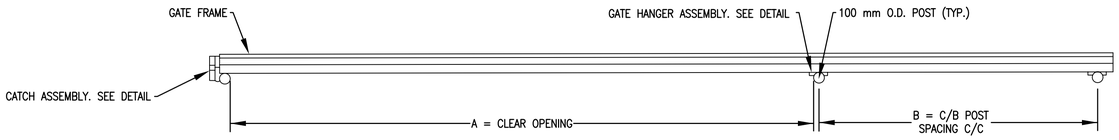

PLAN VIEW

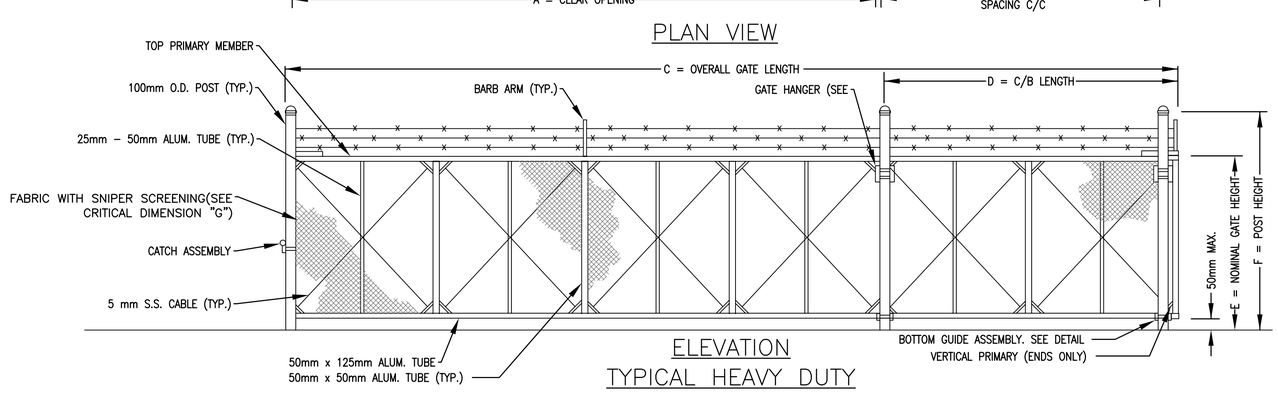

ELEVATION
TYPICAL HEAVY DUTY
CANTILEVER SLIDE GATE
N.T.S.

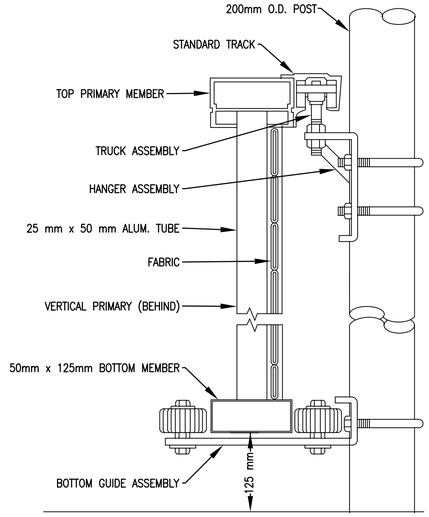

ASSEMBLY SECTION
N.T.S.

GATE NOTES:

DETAILS SHOWN ARE TO CLARIFY REQUIREMENTS AND ARE NOT INTENDED TO LIMIT OTHER TYPE OF FENCE SECTIONS AND METHODS OF INSTALLATION.

SWING GATES SHALL BE CONSTRUCTED WITH DROP RODS, PADLOCKS, LATCH ASSEMBLY AND GATE KEEPERS EXCEPT AS NOTED.

ALL GATE FRAMES SHALL BE A MINIMUM 50 mm NOMINAL (ROUND) OR 50 mm NOMINAL (SQUARE). GATE FRAMES SHALL BE OF WELDED CONSTRUCTION OR SHALL BE ASSEMBLED USING HEAVY FITTINGS. AT CONTRACTOR'S OPTION A WELDED HORIZONTAL BRACE MAY BE USED IN LIEU OF TRUSS RODS TO BRACE ALL WELDED GATE FRAMES. THE CONTRACTOR SHALL BE RESPONSIBLE FOR THE PROPER RIGID CONSTRUCTION OF ALL GATES SUPPLIED.

CONTRACTOR SHALL FOLLOW MANUFACTURER'S SPECIFICATIONS AND GUIDELINES FOR INSTALLATION.

NOTES:

1. BARB ARMS ARE OPTIONAL

2. GATE ELEVATION IS VIEWED FROM THE OUTSIDE OF THE SECURE AREA LOOKING IN.

CRITICAL DIMENSION CHART		
A	CLEAR OPENING	7.3 m
B	COUNTERBALANCE POST SPACING C/C	*
C	OVERALL GATE LENGTH	*
D	COUNTERBALANCE LENGTH	*
E	NOMINAL GATE HEIGHT	2.4m
F	POST HEIGHT	*
G	FABRIC HEIGHT	*

*CRITICAL DIMENSIONS TO BE DETERMINED BY MANUFACTURER. CONTRACTOR TO VERIFY AND COORDINATE MANUFACTURER'S SPECIFICATIONS PRIOR TO PURCHASE AND SHALL FOLLOW MANUFACTURER GUIDELINES DURING INSTALLATION.

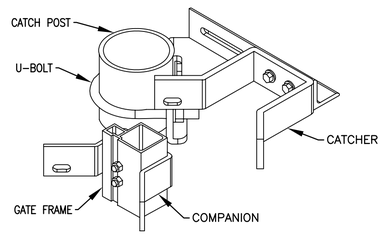

CATCH ASSEMBLY
N.T.S.

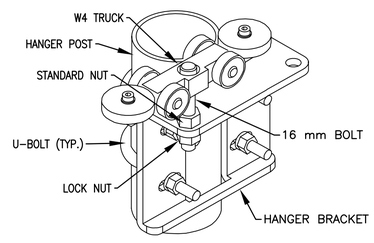

GATE HANGER ASSEMBLY
N.T.S.

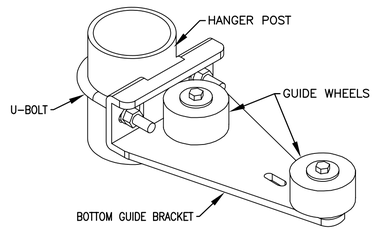

BOTTOM GUIDE ASSEMBLY
N.T.S.

US Army Corps of Engineers
Afghanistan Engineer District

DESIGNED BY: BAKER	DATE: 09-30-09
DWN BY: JDS	SUBMITTED BY: BAKER
CHK BY: GPH	FILE NO.: ANPSDC-504XXX

SYMBOL	DESCRIPTION	DATE	APP

Michael Baker Jr., Inc
A unit of Michael Baker Corporation
Airside Business Park
100 Airside Drive
Moon Township, PA 15108
www.mbakercorp.com

AFGHAN NATIONAL POLICE
STANDARD DESIGN
SITE DETAILS

CIVIL DETAILS

SHEET REFERENCE NUMBER:
C4

100% SUBMISSION

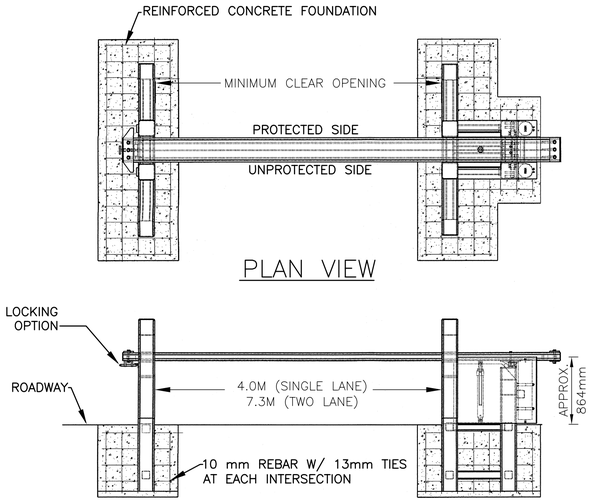

FRONT VIEW
MANUAL BEAM BARRIER
N.T.S.

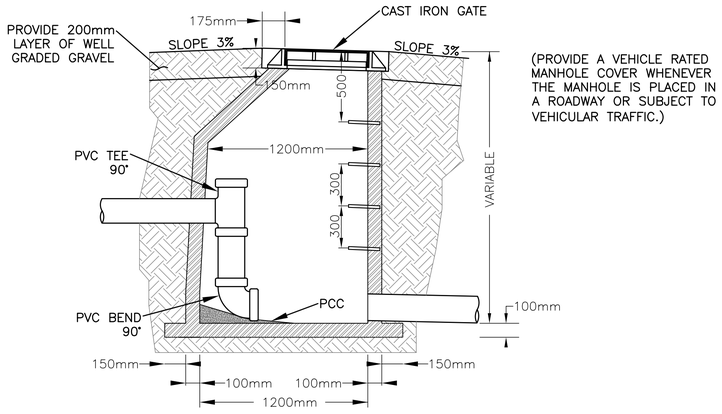

(PROVIDE A VEHICLE RATED MANHOLE COVER WHENEVER THE MANHOLE IS PLACED IN A ROADWAY OR SUBJECT TO VEHICULAR TRAFFIC.)

SEWER DROP MANHOLE
N.T.S.

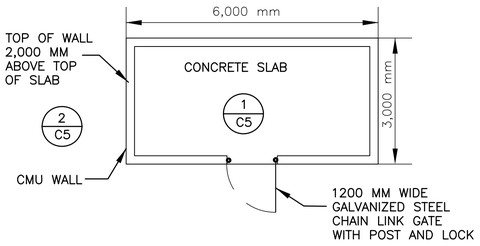

NOTES:
1) THE CMU WALLS SHALL RECEIVE STUCCO ON BOTH SIDES AND TOP.
2) PROPANE STORAGE AREA TO BE LOCATED NO LESS THAN 6.1 METERS FROM ANY STRUCTURE.

PROPANE STORAGE
N.T.S.

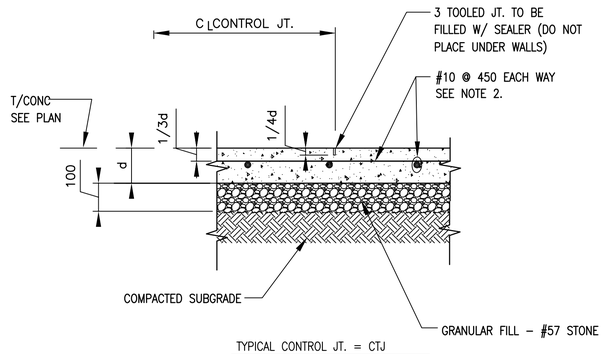

TYPICAL CONTROL JT. = CTJ

NOTE:
1. d = SLAB THICKNESS (SEE PLAN)
2. STOP 2/3 OF BARS 25MM BACK FROM EA. SIDE OF JOINT.
3. TOOL SLAB JOINTS AS SOON AS CONCRETE WILL SUPPORT EQUIPMENT AND NOT MORE THAN (4) HOURS AFTER PLACEMENT.

1 C5 C5 SECTION
SCALE: NTS
CONTROL JOINT DETAIL

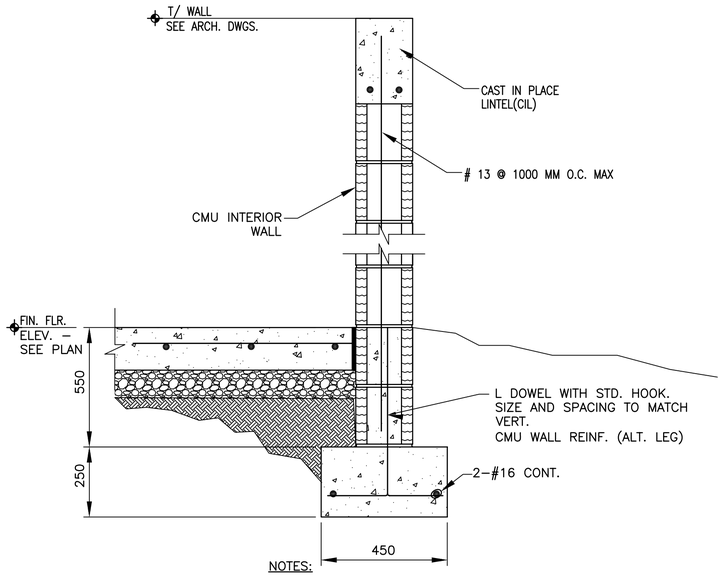

NOTES:
1. VERT. CMU WALL REINF. NOT SHOWN FOR CLARITY.
2. REQUIRED AT INTERIOR CMU WALL LENGTHS THAT EXCEED 3600mm BETWEEN OPPOSING CMU WALLS THAT ARE TIED.

2 C5 C5 SECTION
SCALE: NTS

US Army Corps of Engineers
Afghanistan Engineer District

SYMBOL	DESCRIPTION	DATE	APP'D

DESIGNED BY: BAKER
DWN BY: JDS
CHK BY: GPH
DATE: 09-30-09
SUBMITTED BY: BAKER
FILE NO.: ANPSDC-505XXX

Michael Baker Jr., Inc
A unit of Michael Baker Corporation
Airside Business Park
100 Airside Drive
Moon Township, PA 15108
www.mbakercorp.com

AFGHAN NATIONAL POLICE
STANDARD DESIGN
SITE DETAILS
CIVIL DETAILS

SHEET REFERENCE NUMBER:
C5

100% SUBMISSION

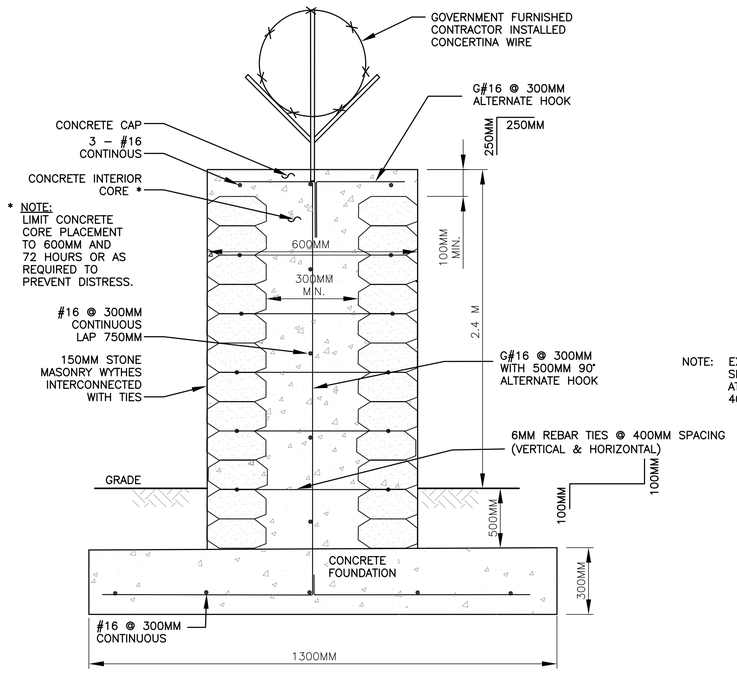

SECTION A
NOT TO SCALE

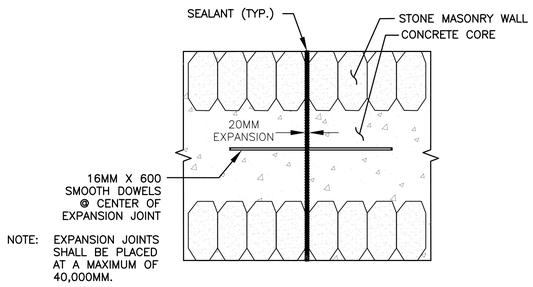

STONE WALL
EXPANSION JOINT DETAIL
NOT TO SCALE

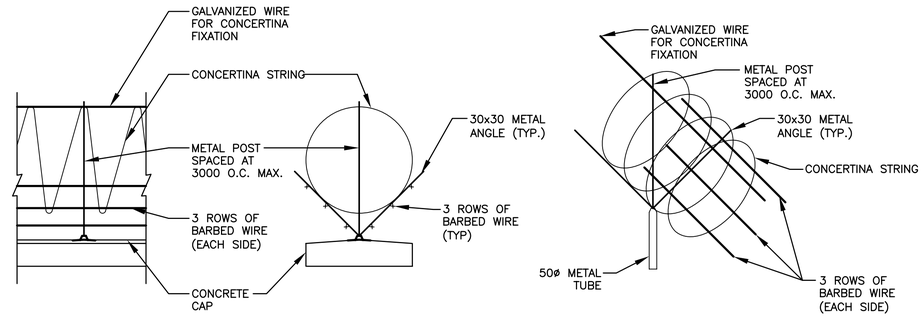

ELEVATION SECTION ISOMETRIC VIEW

CONCERTINA STRING & BARBED WIRE
DETAILS
NOT TO SCALE

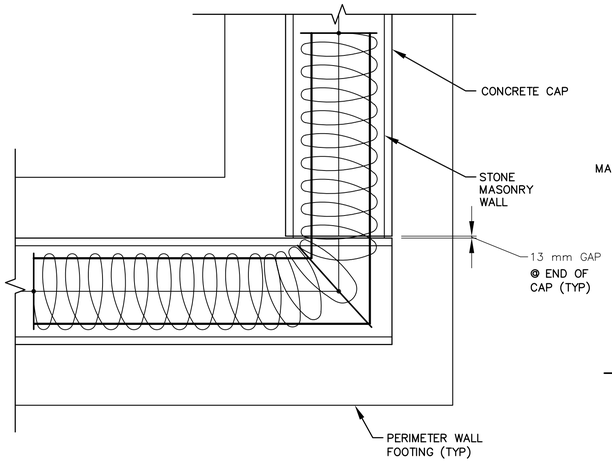

PERIMETER – STONE WALL CORNER – PLAN
(END CONDITION SIMILAR)
NOT TO SCALE

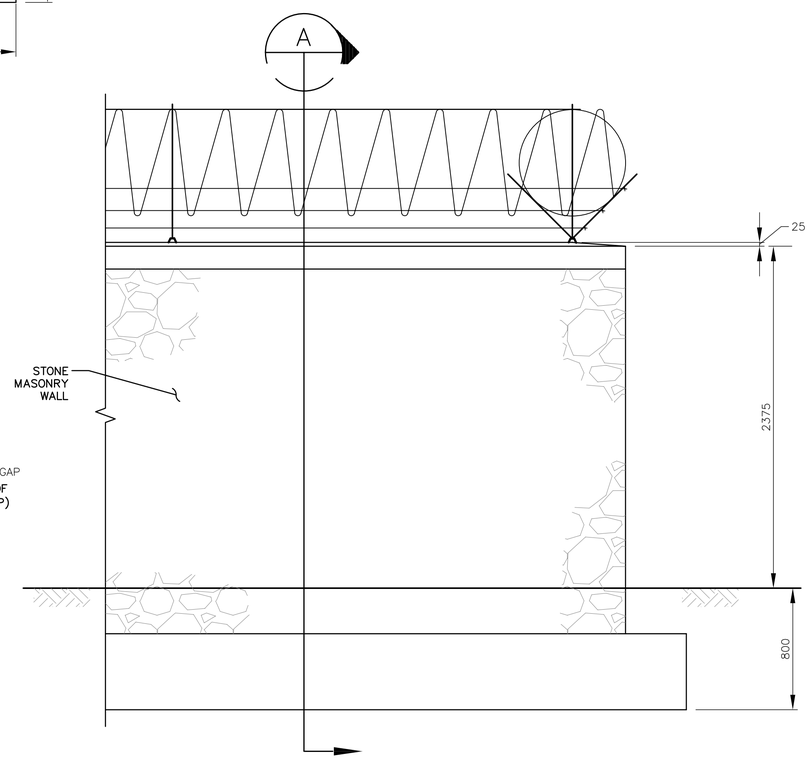

ELEVATION B
NOT TO SCALE

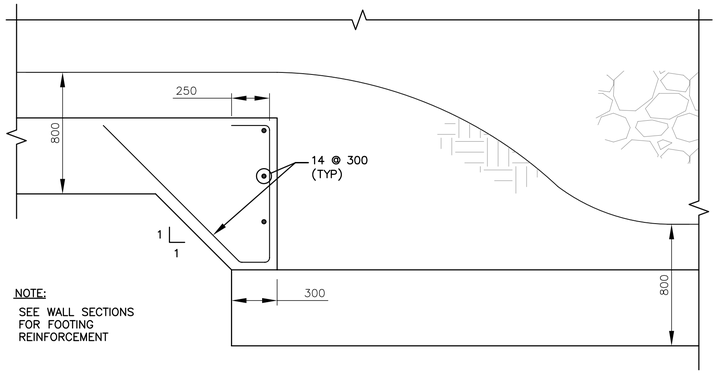

STEPPED FOOTING DETAIL FOR
GRADE CHANGE GREATER THAN 15 DEGREES
NOT TO SCALE

US Army Corps of Engineers
Afghanistan Engineer District

SYMBOL	DESCRIPTION	DATE	APP

DESIGNED BY: BAKER	DATE: 09-30-09		
DWN BY: JDS	SUBMITTED BY: BAKER		
CHK BY: GPH	FILE NO.: ANPSDC-507XXX		

Michael Baker Jr., Inc
A unit of Michael Baker Corporation
Airside Business Park
100 Airside Drive
Moon Township, PA 15108
www.mbakercorp.com

AFGHAN NATIONAL POLICE
STANDARD DESIGN
SITE DETAILS

CIVIL DETAILS

SHEET REFERENCE NUMBER:
C7

100% SUBMISSION

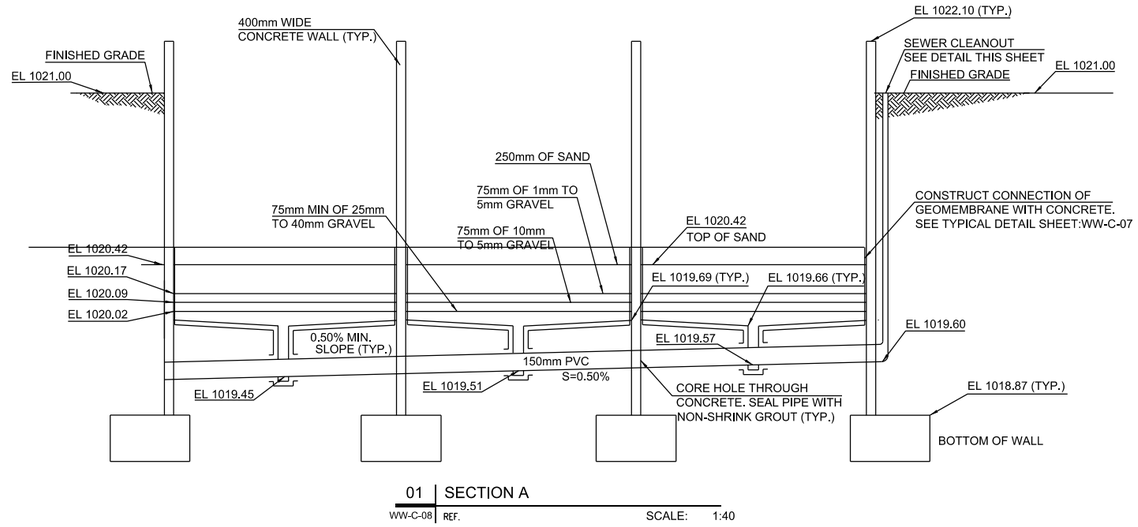

01 | SECTION A
WW-C-08 | REF. SCALE: 1:40

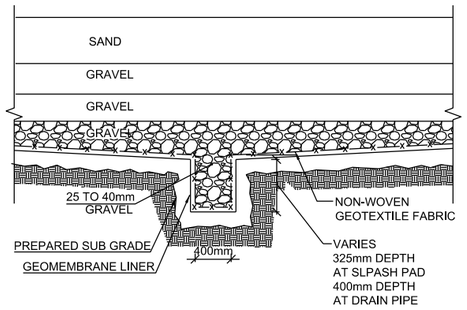

02 | SECTION B
WW-C-08 | REF. SCALE: 1:60

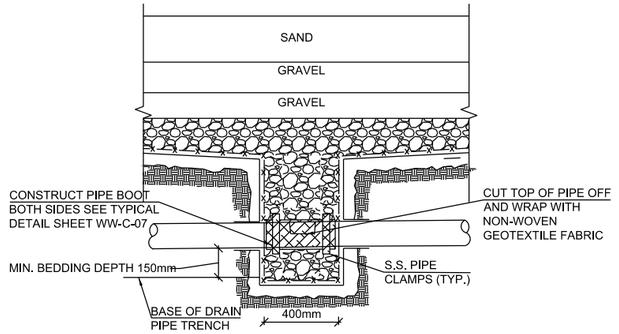

03 | SECTION C
WW-C-08 | REF. SCALE: 1:60

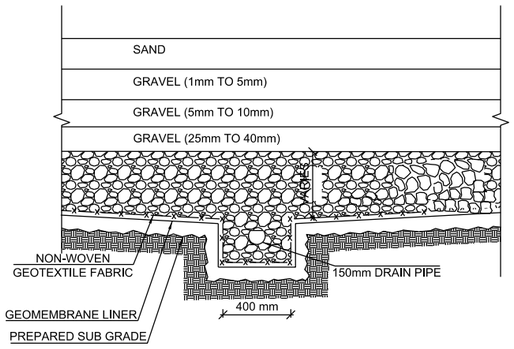

04 | SECTION D
WW-C-08 | REF. SCALE: 1:60

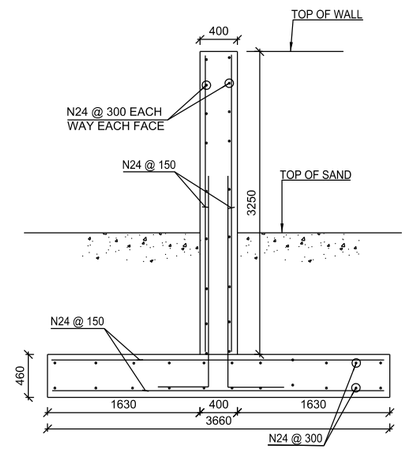

05 | INTERIOR WALL SECTION E
WW-C-08 | REF. SCALE: 1:60

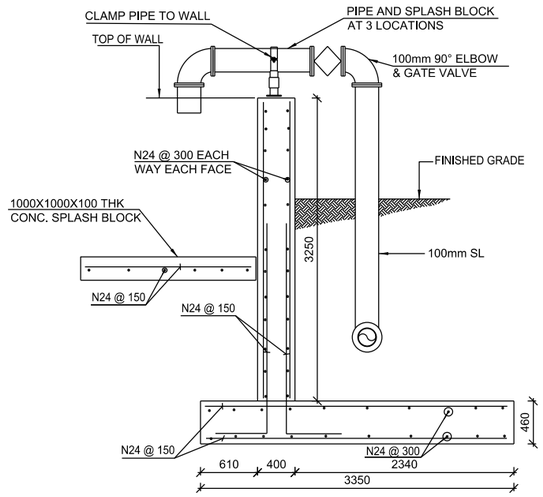

06 | EXTERIOR WALL SECTION F
WW-C-08 | REF. SCALE: 1:60

US ARMY CORPS
OF ENGINEERS
AFGHANISTAN
ENGINEER DISTRICT

SYMBOL	DESCRIPTION	DATE	APPR.

DESIGNED BY:
DWN BY: CKD BY:
REVIEWED BY:
SUBMITTED BY:

DATE: REV:
xx-xxx-xx —
DESIGN FILE NO.
DRAWING CODE:
FILE NAME:
PLOT SCALE:
PLOT DATE: xx-xx-xx

U.S. ARMY ENGINEER DISTRICT, AFGHANISTAN
CORPS OF ENGINEERS
APO AE 96338

ENGINEERING AND
CONSTRUCTION DIVISION

AFGHAN NATIONAL CIVIL ORDER POLICE
ANCOP
VARIOUS LOCATION

CONCEPTUAL SLUDGE DRYING
DETAILS AND SECTION

SHEET
REFERENCE
NUMBER:

WW-C-08

ENGINEERING AND CONSTRUCTION DIVISION
US ARMY ENGINEER DISTRICT, AFGHANISTAN
APO AE, 09356

WOMEN'S BARRACKS

APPENDIX A

VARIOUS LOCATIONS, AFGHANISTAN

SECTION/DETAIL CROSS REFERENCING CONVENTIONS

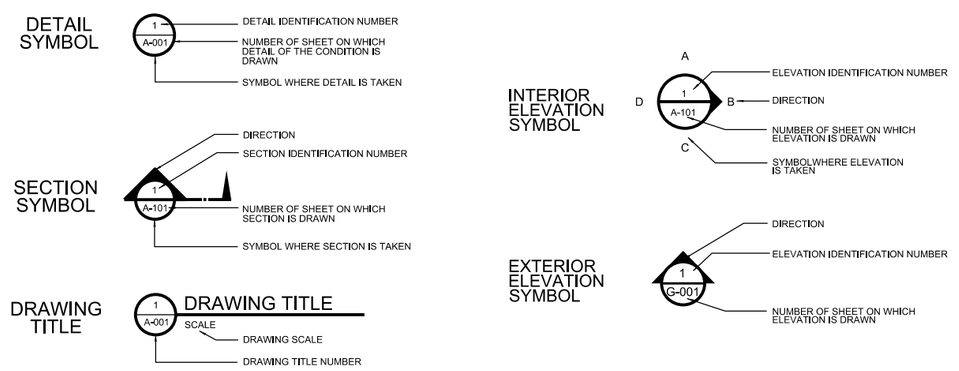

SCHEDULE OF DRAWINGS

SHEET NO	DWG CODE	SHEET REFERENCE NO	DESCRIPTION	REV STATUS
			GENERAL	
1		G-001	TITLE SHEET & SCHEDULE OF DRAWINGS	
			STRUCTURAL	
		S-001	GENERAL NOTES & DESIGN CRITERIA	
		S-101	FOUNDATION / SLAB & ROOF FRAMING PLANS	
		S-401	BUILDING SECTIONS	
		S-501	FOUNDATION SECTIONS	
		S-502	FRAMING SECTIONS	
		S-503	BEAM & COLUMN DETAILS	
		S-504	BEAM & COLUMN DETAILS	
		S-601	SCHEDULES	
		S-701	TYPICAL DETAILS	
		S-702	TYPICAL DETAILS	
			ARCHITECTURAL	
		A-001	LIFE SAFETY PLAN	
		A-101	FLOOR PLAN	
		A-102	ROOF PLAN	
		A-201	ELEVATIONS	
		A-401	WALL SECTIONS	
		A-501	EXTERIOR DETAILS	
		A-502	HEAD, JAMB & SILL DETAILS	
		A-503	STOOP DETAILS	
		A-601	WINDOW AND DOOR SCHEDULES	
			MECHANICAL	
		M-101	HVAC PLAN	
		P-101	HOT & COLD WATER PIPING	
		P-102	SANITARY DRAINING & VENT	

SHEET NO	DWG CODE	SHEET REFERENCE NO	DESCRIPTION	REV STATUS
			ELECTRICAL	
		E-001	ELECTRICAL SYMBOLS & ABBREVIATIONS	
		E-101	LIGHTING PLAN	
		E-102	RECEPTACLE PLAN	
		E-103	ELECTRICAL POWER PLAN	
		E-104	FIRE ALARM PLAN	
		E-501	ELECTRICAL DETAILS	
		E-601	PANEL SCHEDULES	

SHEET NO	DWG CODE	SHEET REFERENCE NO	DESCRIPTION	REV STATUS

PROJECT COORDINATION

U.S. ARMY ENGINEER DISTRICT, AFGHANISTAN

PROJECT MANAGER _____ DATE _____

CHIEF, DESIGN BRANCH _____ DATE _____

THIS PROJECT WAS DESIGNED BY AFGHANASTAN ENGINEER DISTRICT OF THE U.S ARMY CORPS OF ENGINEERS, THE INITIALS OR SIGNATURES AND REGISTRATION DESIGNATIONS OF INDIVIDUALS APPEAR ON THESE DOCUMENTS WITHIN THE SCOPE OF THEIR EMPLOYMENT AS REQUIRED BY ER 1110-1-8152.

US ARMY CORPS OF ENGINEERS AFGHANISTAN NORTH DISTRICT

SYMBOL	DESCRIPTION	DATE	APPR.
SYMBOL	DESCRIPTION	DATE	APPR.

DESIGNED BY: | DRAWN BY: | CKD BY: | REVIEWED BY: | SUBMITTED BY:
DATE: XX-XXX-XX | DESIGN FILE NO. | DRAWING CODE: | FILE NAME: GTS.DGN | PLOT SCALE: ____ | PLOT DATE: XX-XXX-XX
REV.: ___

U.S. ARMY ENGINEER DISTRICT, AFGHANISTAN
CORPS OF ENGINEERS
APO AE 96338

ENGINEERING AND CONSTRUCTION DIVISION

WOMEN'S BARRACK'S
VARIOUS LOCATIONS

TITLE SHEET
SCHEDULE OF DRAWINGS

SHEET REFERENCE NUMBER:
G-001
SHEET 1 OF –

STRUCTURAL ABBREVIATIONS:

ACI	AMERICAN CONCRETE INSTITUTE
ADD'L	ADDITIONAL
AISC	AMERICAN INSTITUTE OF STEEL CONSTRUCTION
AISI	AMERICAN IRON AND STEEL INSTITUTE
ASTM	AMERICAN SOCIETY FOR TESTING AND MATERIALS
ARCH	ARCHITECTURAL
B	BOTTOM
BLDG	BUILDING
BOTT	BOTTOM
℄	CENTER LINE
CFMRF	COLD FORM METAL ROOF FRAME
CFMF	COLD FORM METAL FRAME
CFS	COLD FORMED STEEL
CIP	CAST-IN-PLACE
CIPL	CAST-IN-PLACE LINTEL
CJ	CONTROL JOINT
CLR	CLEAR
CMU	CONCRETE MASONRY UNIT
COEFF	COEFFICIENT
COL	COLUMN
CONC	CONCRETE
CONT	CONTINUOUS
COORD	COORDINATE
CRSI	CONCRETE REINFORCING STEEL INSTITUTE
CSJ	CONSTRUCTION JOINT
DIA	DIAMETER
DIAG	DIAGONAL
DIM	DIMENSION
DWG	DRAWING
DWL	DOWEL
EA	EACH
EF	EACH FACE
ELEC	ELECTRICAL
ELEV	ELEVATION
EMBED	EMBEDMENT
EQUIV	EQUIVALENT
ETC	ET CETERA
EW	EACH WAY
EXP	EXPANSION
EXT	EXTERIOR
FTG	FOOTING
GA	GAUGE
GB	GRADE BEAM
HORIZ	HORIZONTAL
h	HOUR
HRS	HOURS
IBC	INTERNATIONAL BUILDING CODE
ID	INSIDE DIAMETER
INFO	INFORMATION
INT	INTERIOR
kg	KILOGRAM
km	KILOMETER
kN	KILONEWTON
kPa	KILOPASCAL
L#	ANGLE (# INDICATES SIZE)
LONG	LONGITUDINAL
LLV	LONG LEG VERTICAL
m	METER
MAX	MAXIMUM
MECH	MECHANICAL
MFG	MANUFACTURER
MID	MIDDLE
MIN	MINIMUM
MISC	MISCELLANEOUS
mm	MILLIMETER
MPa	MEGAPASCAL
MTL	METAL
MWFRS	MAIN WIND FORCE RESISTING SYSTEM
N	NEWTON
N	NORTH
N/A	NOT APPLICABLE
#	NUMBER SYMBOL FOR REBAR SIZE
NTS	NOT TO SCALE
OC	ON CENTER
OD	OUTSIDE DIAMETER
OPNG	OPENING
℄ or PL	PLATE
PRE-ENG	PRE-ENGINEERED
RB	ROOF BEAM
REINF	REINFORCED
REQ'D	REQUIRED
SIM	SIMILAR
SPECS	SPECIFICATIONS
STD	STANDARD
STRUCT	STRUCTURAL
SW	SHEAR WALL
T	TOP
T/	TOP OF
T/ELEV	TOP ELEVATION
T/SLAB	TOP OF SLAB
T&B	TOP AND BOTTOM
THK	THICK
TYP	TYPICAL
UFC	UNIFIED FACILITIES CRITERIA
UON	UNLESS OTHERWISE NOTED
VERT	VERTICAL
W	WIDTH
W/	WITH

1.0 GENERAL NOTES:

1.1 THIS PROJECT HAS BEEN DESIGNED FOR THE WEIGHTS AND MATERIALS INDICATED ON THE SHEETS AND FOR THE LIVE LOADS INDICATED IN THE DESIGN DATA. IT IS THE CONTRACTOR'S RESPONSIBILITY TO DETERMINE ALLOWABLE CONSTRUCTION LOADS AND TO PROVIDE PROPER DESIGN AND CONSTRUCTION OF FALSEWORK, FORMWORK, STAGING, BRACING, SHEETING AND SHORING, ETC.

1.1 COORDINATE THESE SHEETS WITH THE ARCHITECTURAL, MECHANICAL, ELECTRICAL, PLUMBING, AND CIVIL SHEETS. ALL DIMENSIONS SHOWN ON THE SHEETS ARE MILLIMETERS UNLESS NOTED OTHERWISE.

1.2 THE CONTRACTOR SHALL VERIFY AND COORDINATE ALL FLOOR AND ROOF OPENING SIZES AND LOCATIONS, EQUIPMENT PAD SIZES AND LOCATIONS, ANCHOR BOLT LAYOUTS, ETC WITH EQUIPMENT SELECTED. THE CONTRACTOR SHALL MAKE ANY REQUIRED MODIFICATIONS AT NO ADDITIONAL COST.

1.3 THE CONTRACTOR SHALL REFER TO THE ARCHITECTURAL, MECHANICAL, ELECTRICAL AND PLUMBING SHEETS FOR SLEEVES, CURBS, INSERTS OR OPENINGS, ETC. NOT HEREIN INDICATED.

1.4 WORK NOT INCLUDED ON THE SHEETS BUT IMPLIED TO BE SIMILAR TO THAT SHOWN AT CORRESPONDING PLACES ELSEWHERE ON THE SHEETS SHALL BE REPEATED.

1.5 IN CASE OF CONFLICT BETWEEN THE NOTES, DETAILS AND SPECIFICATIONS THE MOST RIGID REQUIREMENTS SHALL GOVERN.

1.6 SEE ARCHITECTURAL SHEETS FOR LOCATIONS OF MASONRY AND NON-LOAD BEARING PARTITIONS. PROVIDE COMPRESSIBLE FIRESAFING AT TOP OF WALL AS REQUIRED BY ARCHITECTURAL SHEETS.

1.7 COORDINATE FINISHED FLOOR DATUM ELEVATION 0.0m WITH THE CIVIL SHEETS.

2.0 FOUNDATION NOTES

2.1 THE GEOTECHNICAL ANALYSIS FOR THIS PROJECT IS THE RESPONSIBILITY OF THE CONTRACTOR AWARDED THE WORK. AN ASSUMED ALLOWABLE SOIL BEARING VALUE OF 72 kPa HAS BEEN USED IN THE STRUCTURAL ANALYSIS OF THE BUILDING HEREIN AND SHALL BE CONFIRMED AND VERIFIED AS PART OF THE GEOTECHNICAL INVESTIGATION. VALUES WHICH DO NOT MEET THE REQUIREMENTS INDICATED ON THE BASIS OF DESIGN SHEET SHALL BE IMMEDIATELY BROUGHT TO THE ATTENTION OF THE CONTRACTING OFFICER FOR CONSIDERATION AND DETERMINATION ON THE NEXT APPROPRIATE COURSE OF ACTION.

2.2 SEE THE SPECIFICATION FOR ADDITIONAL REQUIREMENTS TO THOSE OUTLINED IN THE GEOTECHNICAL INVESTIGATION FOR EXCAVATION AND PREPARATION OF THE FOUNDATION AND THE SLAB ON GRADE SUBGRADE INCLUDING COMPACTION PROCEDURES.

2.3 EXCAVATIONS FOR FOOTINGS SHALL HAVE THE SIDES AND BOTTOMS TEMPORARILY LINED WITH 0.25mm POLYETHYLENE IF PLACEMENT OF CONCRETE DOES NOT OCCUR WITHIN 24 HRS OF THE EXCAVATION OF THE FOOTING.

2.4 FOUNDATION CONDITIONS NOTED DURING CONSTRUCTION WHICH DIFFER FROM THOSE DESCRIBED IN THE GEOTECHNICAL REPORT SHALL BE REPORTED TO THE GENERAL CONTRACTOR BEFORE FURTHER CONSTRUCTION IS ATTEMPTED. SEE PROJECT SPECIFICATIONS.

2.5 NO FOOTINGS OR SLABS SHALL BE POURED INTO OR AGAINST SUBGRADE CONTAINING FREE WATER, FROST, ICE OR LOOSE MATERIAL. FROST DEPTH ASSUMED TO BE 800mm.

2.6 ALL SLAB-ON-GRADE, TRENCH BOTTOMS AND OTHER ON-GRADE INTERIOR HORIZONTAL SURFACES SHALL BE PLACED OVER A 0.25mm POLYETHYLENE VAPOR RETARDER OVER A 100mm #57 STONE WATER CAPILLARY BARRIER PLACED ON SUBGRADE PROPERLY PREPARED IN ACCORDANCE WITH THE CONTRACT SPECIFICATIONS. (UON)

2.7 PRIOR TO START OF FOUNDATION OR SLAB-ON-GRADE CONSTRUCTION, EXISTING SUBGRADES SHALL BE COMPACTED TO MINIMUM OF 95% MAXIMUM DRY DENSITY OBTAINED THRU ASTM D 1557 MODIFIED PROCTOR TESTING.

2.8 SEE PLUMBING, ELECTRICAL & CIVIL SHEETS FOR REQUIRED UNDERSLAB UTILITIES.

2.9 SEE ARCHITECTURAL SHEETS FOR ALL WATERPROOFING DETAILS AND MATERIALS.

2.10 IF UNDERMINING OF FOOTINGS OCCURS, FILL VOIDS WITH 18 MPa CONCRETE. DO NOT ATTEMPT TO REPLACE AND RE-COMPACT SOIL.

3.0 CONCRETE

3.1 CONCRETE SHALL HAVE THE UNIT WEIGHT OF 2400 kg/m^3 AND A MINIMUM COMPRESSIVE STRENGTH (f'c) OF 28 MPa AT 28 DAYS. ALL CONCRETE SHALL HAVE A WATER-CEMENT RATIO OF 0.45. SEE SPECIFICATIONS FOR ADDITIONAL INFORMATION. ENTRAIN AIR TO PRODUCE TOTAL AIR CONTENT ACCORDING TO THE SPECIFICATIONS FOR CONCRETE EXPOSED TO FREEZING TEMPERATURES (EXTERIOR FOOTINGS, SLAB TURNDOWNS, EXTERIOR SLABS AND SLABS-ON-GRADE, EXTERIOR RETAINING WALLS, AND EXTERIOR GRADE BEAMS.)

3.2 NO CALCIUM CHLORIDE SHALL BE USED IN ANY CONCRETE.

3.3 MIXING, TRANSPORTING AND PLACING OF CONCRETE SHALL CONFORM TO ACI 301M-05.

3.4 ALL CONCRETE WORK SHALL CONFORM TO THE REQUIREMENTS OF THE AMERICAN CONCRETE INSTITUTE (ACI) 318M MANUAL (metric), "BUILDING CODE REQUIREMENTS FOR REINFORCED CONCRETE", AND REQUIREMENTS OUTLINED IN THE CONTRACT SPECIFICATIONS. WHEN THERE IS A CONFLICT BETWEEN ACI AND THE SPECIFICATIONS, THE MORE STRINGENT SHALL GOVERN.

3.5 CHAMFER ALL EXPOSED EXTERNAL CORNERS OF CONCRETE WITH 20mm x45 DEGREE CHAMFER UON.

3.6 CONCRETE REINFORCEMENT BARS SHALL CONFORM TO ASTM A615M-96a, GRADE 420 MPa, REINFORCING BARS SHALL NOT BE TACK WELDED, WELDED, HEATED OR CUT, UNLESS INDICATED ON THE CONTRACT DOCUMENTS. ALL LAP SPLICES SHALL BE CLASS "B" UON.

3.7 HORIZONTAL FOOTING AND HORIZONTAL WALL REINFORCEMENT SHALL BE CONTINUOUS AND SHALL HAVE 90 DEGREE BENDS AND EXTENSIONS, OR CORNER BARS OF EQUIVALENT SIZE LAPPED WITH A CLASS B TENSION SPLICE AT CORNERS AND INTERSECTIONS. TOP BAR CRITERIA SHALL APPLY IF 300mm OR MORE OF FRESH CONCRETE IS PLACED BELOW BAR.

3.8 SLABS-ON-GRADE SHALL HAVE CONSTRUCTION JOINTS OR CRACK CONTROL JOINTS AS SHOWN ON THE DRAWINGS. CONSTRUCTION JOINTS CAN BE USED AT CONTROL JOINT LOCATIONS AT CONTRACTORS OPTION. SEE SLAB PLANS & JOINT DETAILS FOR ADDITIONAL INFORMATION. FOR AREAS NOT SHOWN ON DWGS, THE MAXIMUM SPACING OF CONSTRUCTION/ CRACK CONTROL JOINTS SHALL BE 4800mm

3.9 ALL CONCRETE REINFORCEMENT SHALL BE DETAILED, FABRICATED, LABELED, SUPPORTED, AND SPACED IN FORMS AND SECURED IN PLACE IN ACCORDANCE WITH THE PROCEDURES AND REQUIREMENTS OUTLINED IN THE LATEST EDITION OF THE "BUILDING CODE REQUIREMENTS FOR REINFORCED CONCRETE", ACI 318M, AND THE "MANUAL OF STANDARD PRACTICE FOR DETAILING REINFORCED CONCRETE STRUCTURES", ACI 315M, LATEST EDITION. BASED ON IN COUNTRY REINFORCEMENT AVAILABILITY, IT IS THE CONTRACTOR'S OPTION TO ROUND DESIGNATED ODD NUMBERED REINFORCEMENT SIZES UP (1) ONE BAR SIZE.

3.10 ALL DOWELS SHALL MATCH SIZE AND NUMBER OF MAIN REINFORCING, UNLESS NOTED OTHERWISE ON THE SHEETS.

3.11 ADDITIONAL BARS SHALL BE PROVIDED AROUND ALL FLOOR AND WALL OPENINGS AS SHOWN ON THE SHEETS.

3.12 SEE ARCHITECTURAL SHEETS FOR TYPE AND LOCATION OF ALL FLOOR FINISHES.

3.13 THE CONTRACTOR SHALL COORDINATE ADDITIONAL WALL/SLAB OPENINGS NOT SHOWN ON STRUCTURAL SHEETS. SEE MECHANICAL, ELECTRICAL, PLUMBING AND CIVIL SHEETS.

3.14 UNLESS NOTED OTHERWISE, ALL CURBS SHALL BE REINFORCED WITH AT LEAST (1)-#13 CONTINUOUS AND #13 AT 300mm O.C. DOWELS TO STRUCTURE BELOW.

3.15 THE CONTRACTOR SHALL VERIFY ALL OPENINGS, PAD SIZES, AND ANCHOR BOLTS WITH EQUIPMENT SELECTED.

3.16 FOR ALL WALLS & PIERS, PROVIDE DOWELS INTO FOOTING AT EACH VERT REINF BAR, UON DOWEL SIZE SHALL BE SAME AS VERT REINF.

3.17 PROVIDE CONCRETE POUR STOPS OR FORMED AS REQUIRED FOR INSTALLATION OF ALL CONCRETE WORK.

3.18 PROVIDE ADDITIONAL (2)-#13 x 600mm REINFORCING BARS IN SLAB-ON GRADE AT ALL RE-ENTRANT CORNERS. PLACE BARS AT MID-DEPTH OF SLAB WITH A CLEARANCE OF 50mm FROM CORNER UON.

3.19 COLD-WEATHER PLACEMENT: COMPLY WITH ACI 306.1 AND AS FOLLOWS. PROTECT CONCRETE WORK FROM PHYSICAL DAMAGE OR REDUCED STRENGTH THAT COULD BE CAUSED BY FROST, FREEZING ACTIONS, OR LOW TEMPERATURES. SUBMIT A COLD WEATHER CONCRETING PLAN FOR APPROVAL.

3.20 PROVIDE BONDING COMPOUND PER ASTM C 1059-99: SPECIFICATION FOR LATEX AGENTS FOR BONDING FRESH CONCRETE (GROUT) TO HARDENED CONCRETE.

3.21 THE FORMED SURFACES FOR REINFORCED CONCRETE SHALL ACHIEVE A "CLASS A" FINISH WHEN RECEIVING PAINT OR A "CLASS B" FINISH WHEN RECEIVING PLASTER OR TILE AS PER SPECIFICATION SECTION 03 31 00 CAST-IN-PLACE STRUCTURAL CONCRETE.

3.22 AT INTERSECTING GRADE BEAMS AND SHEAR WALLS, PROVIDE CORNER BARS AT INTERSECTIONS WITH SAME QUANTITY, SIZE AND SPACING AS HORIZONTAL BARS WITH LEG LENGTH = 50db.

3.23 REFER TO S-800 SERIES REINFORCING BAR PLACEMENT DRAWINGS DEFINING LENGTHS, BENDS, AND SPACINGS FOR ALL STRUCTURAL CONCRETE. THE S-800 SERIES DRAWING ARE BASED ON THE S-400, S-500, S-600, AND S-700 SERIES DRAWING SCHEDULES, DETAILS, AND DIAGRAMS.

4.0 CONCRETE MASONRY

4.1 MASONRY CONSTRUCTION SHALL CONFORM TO SPECIFICATION FOR MASONRY STRUCTURES (ACI 530.1) UON.

4.2 STRENGTH OF MASONRY MATERIALS SHALL BE AS FOLLOWS:

a. CONCRETE MASONRY UNITS SHALL BE NORMAL WEIGHT, GRADE N, TYPE 1, CONFORMING TO ASTM C-90 AND HAVE A MINIMUM COMPRESSIVE STRENGTH OF 10.4 MPa ON THE NET AREA.

b. MORTAR SHALL CONFORM TO ASTM C-270 TYPE S.

c. GROUT FOR MASONRY SHALL BE NORMAL WEIGHT AND HAVE A MINIMUM COMPRESSIVE STRENGTH OF 14 MPa AT 28 DAYS. GROUT SHALL CONFORM TO ASTM C476M. GROUT LIFTS SHALL NOT EXCEED 1,400mm.

d. REINFORCED MASONRY SHALL HAVE A STRENGTH F'm = 10 MPa. (F'm IS THE COMPRESSIVE STRENGTH OF THE MASONRY AT 28 DAYS AS DETERMINED BY PRISM TESTS).

4.3 ALL VERTICAL REINFORCEMENT FOR CONCRETE MASONRY SHALL BE ASTM A615M-96a, GRADE 420 MPa. ALL SPLICES SHALL BE LAPPED 48 BAR DIAMETERS MINIMUM.

4.4 BOND BEAMS SHALL BE SPACED AT 1200mm OC VERTICALLY. BOND BEAM REINFORCING SHALL BE CONTINUOUS AND PROVIDED AT WALL INTERSECTIONS AND WALL CORNERS (REFERENCE CONCRETE MASONRY NOTE 4.11). ALL BOND BEAM REINFORCING SHALL BE CONTINUOUS AND HAVE STANDARD ACI HOOKS AT EACH END. PROVIDE STANDARD BAR SPLICES AS SPECIFIED. AS AN ALTERNATE TO CMU BOND BEAMS, IT IS THE CONTRACTOR'S OPTION TO PROVIDE 200mm x 200mm CONTINUOUS CAST-IN-PLACE CONCRETE BOND BEAMS WITH (2)-#16 IN LIEU OF CMU BOND BEAMS INDICATED ON THE DRAWINGS.

4.5 SEE TYPICAL DETAILS FOR MINIMUM REINFORCEMENT REQUIREMENTS FOR CMU WALLS. PROVIDE STANDARD BAR SPLICES AS SPECIFIED. ALL VERTICAL REINFORCEMENT EXTENDS FULL HEIGHT OF WALL.

4.6 CMU CELLS THAT REQUIRE VERTICAL REINFORCING BARS AS INDICATED ON THE CONTRACT DRAWINGS AND/OR SPECS SHALL HAVE REINF BARS PLACED IN CENTERS OF CMU CELLS AND CONTINUOUSLY GROUTED UON.

4.7 ALL CMU CELLS, OPEN CAVITIES, AND AIR SPACES OF ALL EXTERIOR WALLS SHALL BE GROUTED TO STOP FRAGMENTS FROM MORTAR BLAST.

4.8 CONTRACTOR SHALL COORDINATE LOCATION OF ALL OPENINGS SEE ARCH, MECH, ELEC, AND PLUMBING SHEETS FOR SIZE AND LOCATION OF OPENINGS.

4.9 MASONRY WALLS SHALL NOT BE BACK FILLED PRIOR TO THE MORTAR AND GROUT ATTAINING THEIR RESPECTIVE MAXIMUM DESIGN STRENGTHS PER SPECIFICATIONS.

4.10 PROVIDE GALVANIZED MORTAR/GROUT SCREEN W/ 3mm MESH WHERE CELLS BELOW ARE NOT GROUTED.

4.11 AT INTERSECTING BOND BEAMS, PROVIDE CORNER BAR FOR EACH HORIZONTAL BAR IN BOND BEAMS AT INTERSECTING WALLS. USE SAME SIZE AND SPACING AS HORIZONTAL BARS WITH LEG LENGTH = 50db.

4.12 THE ALTERNATE TOP OF CMU WALL BRACING DETAIL(S) SHOWN ON S-701 CAN BE UTILIZED AT THE CONTRACTOR'S OPTION IN PLACE OF THE "SLEEVED DOWEL" WALL CONNECTIONS DEPICTED ON S-400 AND S-500 SERIES DRAWINGS. IN ADDITION, ALTERNATE DETAIL(S) SHOW CAST-IN-PLACE WALL BOND BEAMS THAT CAN BE UTILIZED AT THE CONTRACTOR'S OPTION IN PLACE OF THE STANDARD CMU BOND BEAMS CONSTRUCTED OF CMU BLOCKS.

5.0 COLD-FORMED METAL FRAMING

5.1 ALL COLD-FORMED METAL FRAMING MEMBERS SHALL CONFORM TO ASTM A1003M, STRUCTURAL GRADE ST340 (MPa), WITH A GALVANIZED COATING OF Z275 OR BETTER IN ACCORDANCE WITH ASTM A653M.

5.2 ALL COLD-FORMED METAL FRAMING MEMBERS SHALL HAVE THE FOLLOWING MINIMUM PROPERTIES:

a. MINIMUM METAL THICKNESS:
TRACK = 1.37mm;
STUD/OTHER = 1.09mm

b. MINIMUM FLANGE WIDTH:
TRACK = 38mm;
STUD/OTHER = 35mm

c. MINIMUM MEMBER DEPTH:
ALL SECTIONS = 152.2mm

d. PURLIN (HAT CHANNEL)
DEPTHxWIDTH(FLAT TOP)xTHICK = 25mmx42mmx1.59mm

5.3 ALL CONNECTIONS SHALL BE MADE WITH CORROSION RESISTANT (ASTM A153M), SELF-DRILLING, SELF-TAPPING STEEL DRILL SCREWS IN ACCORDANCE WITH ASTM C1513. SCREWS SHALL HAVE A LOW PROFILE HEAD BENEATH ROOF DECK, AND STANDARD HEAD ALL OTHER LOCATIONS.

5.4 FABRICATE COLD FORMED METAL FRAMING AND ACCESSORIES PLUMB, SQUARE AND TRUE TO LINE, WITH CONNECTIONS SECURELY FASTENED ACCORDING TO AISI STANDARD FOR COLD FORMED STEEL FRAMING.

5.5 CUT FRAMING MEMBERS BY SAWING OR SHEATHING, DO NOT TORCH CUT.

5.6 INSTALL FRAMING MEMBERS IN ONE-PIECE LENGTHS UNLESS SPLICE CONNECTIONS ARE INDICATED FOR TRACK OR TENSION MEMBERS

5.7 INSTALL TEMPORARY BRACING AND SUPPORTS TO SECURE FRAMING DURING CONSTRUCTION. MAINTAIN BRACING AND SUPPORTS IN PLACE UNTIL THE STRUCTURE HAS BEEN COMPLETED WITH ALL CONNECTIONS AND PERMANENT BRACING SECURED.

6.0 STRUCTURAL DESIGN CRITERIA

6.1 ALL DESIGNS SHALL CONFORM TO THE PROVISIONS OF THE IBC 2006 AND UFC AS APPLICABLE.

6.2 DESIGN LOADS

6.2.1 DEAD LOADS (PER IBC 2006 & UFC 3-310-01)

MECH/ELEC/PLUMBING	0.20 kPa
MISCELLANEOUS	0.15 kPa
COLD-FORMED FRAMING	0.20 kPa
INSULATION	0.10 kPa
METAL ROOF PANEL	0.14 kPa
	0.79 kPa
FLOOR PARTITION ALLOWANCE	0.96 kPa

6.2.2 LIVE LOADS (PER IBC 2006 & UFC 3-310-01)

ROOF	1.00 kPa
CORRIDOR (2-STORY BLDG ONLY)	4.80 kPa
ALL OTHERS (2-STORY BLDG ONLY)	2.40 kPa
SLAB ON GRADE	4.80 kPa

6.2.3 SNOW LOADS (PER IBC 2006 & UFC 3-310-01)

GROUND SNOW LOAD (Pg)	1.2 kPa
SNOW IMPORTANCE FACTOR (I)	1.0
SNOW EXPOSURE FACTOR (Ce)	1.0
THERMAL FACTOR (Ct)	1.0

6.2.4 WIND LOADS (PER IBC 2006)

BASIC WIND SPEED	137 km/h
WIND IMPORTANCE FACTOR	1.0
WIND EXPOSURE CATEGORY	D
DIRECTIONALITY COEFFICIENT (Kd)	0.85
TOPOGRAPHIC FACTOR (Kzt)	1.0

6.2.5 SEISMIC LOADS (PER IBC 2006 & UFC 3-310-04)

OCCUPANCY USE CATEGORY	II
SEISMIC IMPORTANCE FACTOR (Ie)	1.0
SEISMIC SITE CLASS	D
S_s = 1.50 (REDUCED FROM 2.40 PER ASCE 7-05, 12.8.1.3 FOR A BUILDING WITHOUT IRREGULARITIES)	
S_1 = 1.20	
S_{DS} = 1.0	
S_{D1} = 1.20	
SEISMIC DESIGN CATEGORY	E
SEISMIC RESISTING SYSTEM: -SPECIAL REINFORCED CONCRETE SHEAR WALL	
RESPONSE MODIFICATION FACTOR (R)	6
RESPONSE COEFFICIENT (Cs)	0.167
SEISMIC ANALYTICAL PROCEDURE =	EQUIV LATERAL FORCE
SEISMIC BASE SHEAR	595 kN

US ARMY CORPS OF ENGINEERS
AFGHANISTAN ENGINEER DISTRICT

Mark	Description	Date	Appr.

Date:	5-26-10
Design file no.	
Drawing code:	
File name:	
Plot date:	
Plot scale:	X:X
Rev:	0

Designed by:	KMP/MMY
Dwn by:	RCG
Ckd by:	CWW
Reviewed by:	LHM
Submitted by:	

U.S. ARMY CORPS OF ENGINEERS
AFGHANISTAN ENGINEER DISTRICT
APO AE 96338

WOMEN'S BARRACKS
VARIOUS LOCATIONS

GENERAL NOTES & DESIGN CRITERIA

Sheet reference number:
S-001

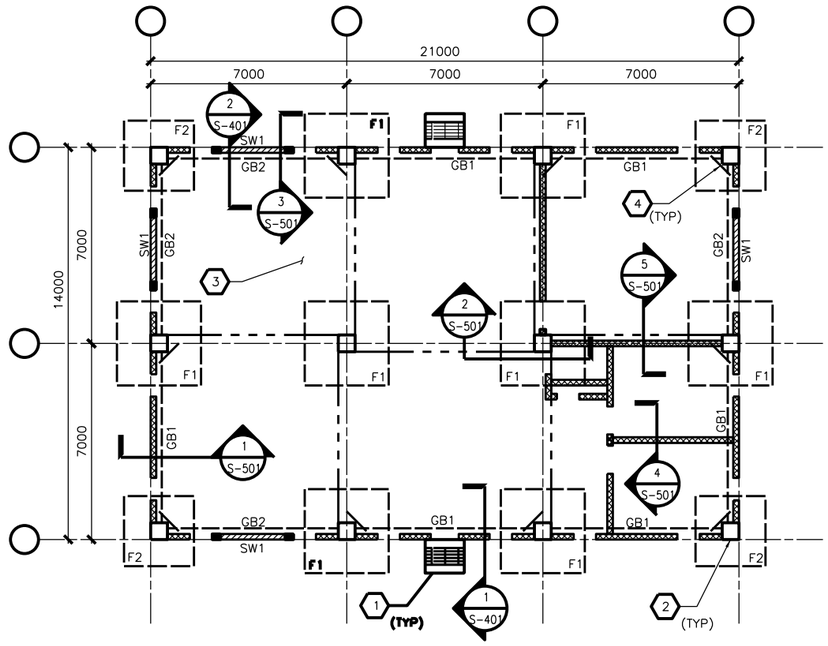

1 S-101 FOUNDATION/SLAB PLAN
SCALE: 1:100

FOUNDATION/SLAB PLAN NOTES:

1. REFER TO SHEET S-001 FOR STRUCTURAL NOTES AND DESIGN CRITERIA.
2. FINISH FIRST FLOOR ELEVATION SHALL BE (DATUM 0.00) ALL PLUS OR MINUS DIMENSIONS INDICATED ON PLAN OR REFERRED TO IN NOTES RELATE TO FINISH FLOOR ELEVATION.
3. SLAB-ON-GRADE IS 150 WITH #13 @ 300 OC EW LOCATED 38 FROM T/SLAB.
4. TOP OF EXTERIOR FOOTINGS SHALL BE -950 UNLESS OTHERWISE INDICATED.
5. TOP OF INTERIOR FOOTINGS WITHOUT GRADE BEAM ABOVE SHALL BE -600.
6. COLUMN FOOTINGS INDICATED BY F# ON PLAN. REFER TO COLUMN FOOTING SCHEDULE ON SHEET S-601.
7. REFER TO COLUMN SCHEDULE ON SHEET S-601.
8. GRADE BEAM INDICATED BY GB# ON PLAN, REFER TO BEAM SCHEDULE ON SHEET S-601.
9. SHEARWALL INDICATED BY SW# ON PLAN, REFER TO SHEARWALL SCHEDULE ON SHEET S-601.
10. SEE TYP EXTERIOR AND INTERIOR CMU WALL REINFORCING DETAILS ON SHEET S-701.
11. SEE MECHANICAL AND ELECTRICAL SHEETS FOR CONCRETE PAD LOCATIONS, SIZES, AND THICKNESS NOT SHOWN. SEE SHEET S-701 FOR DETAILS.
12. THICKENED SLAB UNDER CMU PERIMETER & PARTITION WALLS NOT SHOWN FOR CLARITY.

FOUNDATION/SLAB PLAN KEY NOTES: (X)

1. CONC SLAB (ENTRANCE)-SEE ARCH DWGS FOR INFORMATION
2. REINF CONC COLUMN
3. REINF CONC SLAB-ON-GRADE
4. (2)-#13 RE-ENTRANT CORNER BARS (TYP) - SEE S-701 FOR INFORMATION

FOUNDATION/SLAB PLAN LEGEND:

REINF CONC SHEAR WALL

REINF CMU WALL

CONTROL JOINT

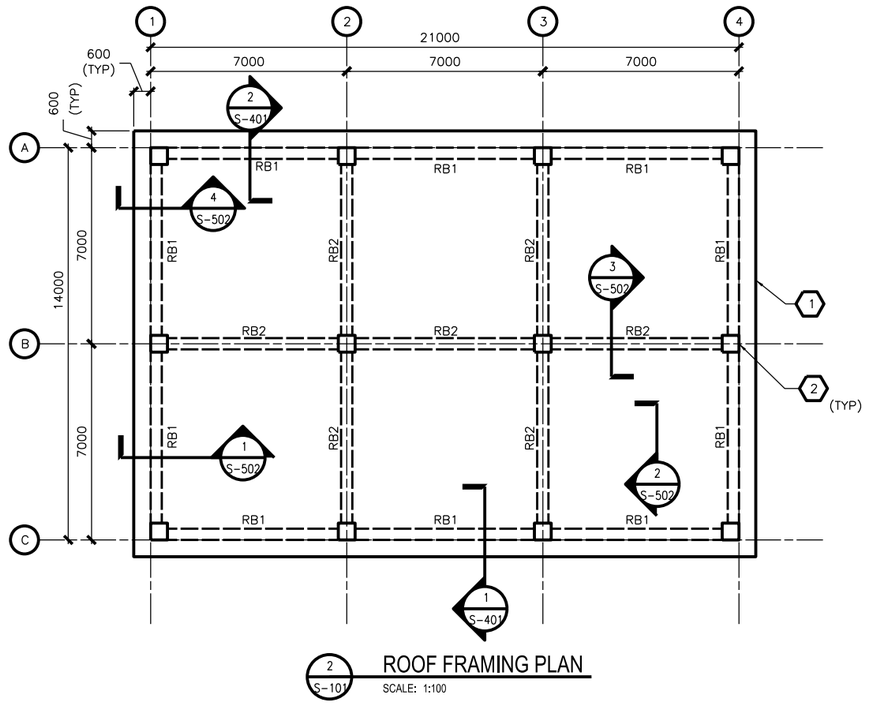

2 S-101 ROOF FRAMING PLAN
SCALE: 1:100

ROOF FRAMING PLAN NOTES:

1. REFER TO SHEETS S-001 FOR STRUCTURAL NOTES AND DESIGN CRITERIA.
2. TOP OF SLAB ELEVATION = 3600 UNLESS NOTED OTHERWISE.
3. ROOF SLAB IS 250 WITH #16 @ 300 OC EW T&B.
4. ROOF BEAM INDICATED BY RB# ON PLAN. REFER TO BEAM SCHEDULE ON SHEET S-601.
5. COORDINATE WITH ARCHITECTURAL SHEETS FOR COLD-FORMED STEEL OVERBUILD FRAMING ABOVE ROOF SLAB.
6. COLD-FORMED METAL OVERBUILD ROOF FRAMING NOT SHOWN FOR CLARITY. SEE OVERBUILD ROOF FRAMING DETAILS AND SECTIONS ON SHEET S-702.
7. CMU PARTITION WALLS (BELOW ROOF SLAB) NOT SHOWN FOR CLARITY.
8. OVERHANG AREAS OF ROOF SLAB CONTAIN ROOF VENT PENETRATIONS. REFERENCE ARCHITECTURAL DRAWINGS FOR INFORMATION.

ROOF FRAMING KEY NOTES: (X)

1. CONC ROOF SLAB (BELOW ROOF OVERBUILD)
2. REINF CONC COLUMN (BELOW CONC ROOF SLAB)

0 2000 4000
SCALE: 1:100

UNLESS OTHERWISE NOTED, LINEAR DIMENSIONS SHOWN ON DRAWINGS ARE IN MILLIMETERS (mm)

US ARMY CORPS OF ENGINEERS
AFGHANISTAN ENGINEER DISTRICT

No.	Description	Date
0		

Date: 5-26-10
Designed by: KMP/MMY
Drawn by: RCG
Checked by: CWW
Reviewed by: LHM
Submitted by:
Drawing Scale:
As noted
Plot date: 26 MAY 2010

U.S. ARMY CORPS OF ENGINEERS
AFGHANISTAN ENGINEER DISTRICT
APO AE 09356

WOMEN'S BARRACKS
VARIOUS LOCATIONS

FOUNDATION/SLAB & ROOF FRAMING PLANS

Sheet reference number:
S-101

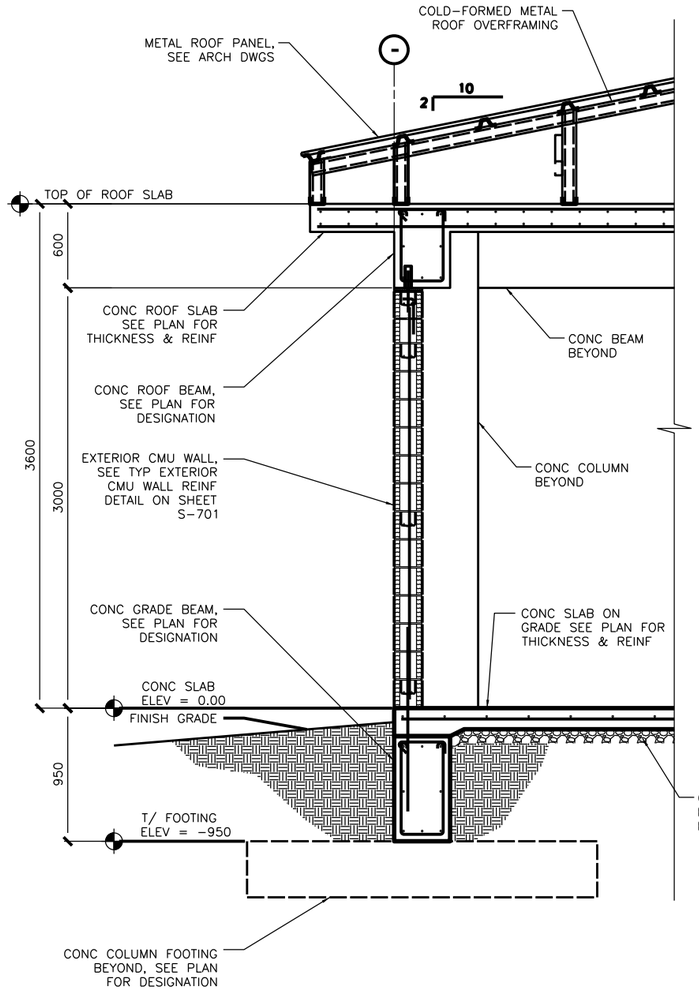

1 S-101 TYPICAL WALL SECTION AT EXTERIOR MASONRY WALL

SCALE: 1:20

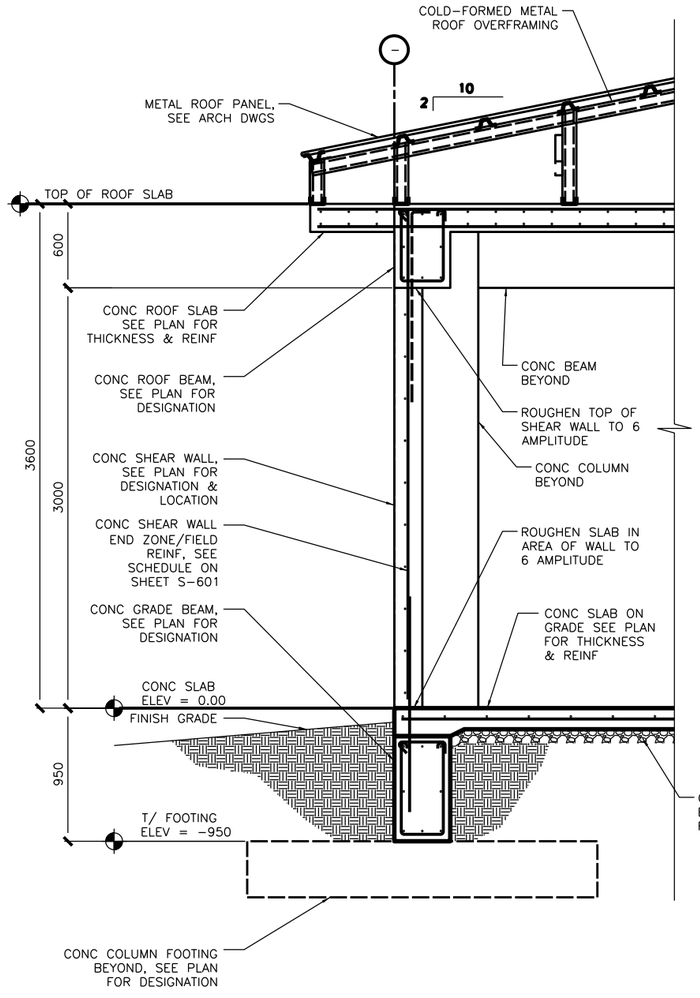

2 S-101 TYPICAL WALL SECTION AT CONCRETE SHEAR WALL

SCALE: 1:20

0 400 800

SCALE: 1:20

UNLESS OTHERWISE NOTED, LINEAR DIMENSIONS SHOWN ON DRAWINGS ARE IN MILLIMETERS (mm)

US ARMY CORPS OF ENGINEERS
AFGHANISTAN ENGINEER DISTRICT

Mark	Date	Description
0	5-26-10	

Designed by: KMP/AMAY
Drawn by: CWW
Date by: RCG
Reviewed by: LHM
Submitted by:

U.S. ARMY CORPS OF ENGINEERS
AFGHANISTAN ENGINEER DISTRICT
APO AE 09356

WOMEN'S BARRACKS
VARIOUS LOCATIONS

BUILDING SECTIONS

Sheet reference number:
S-401

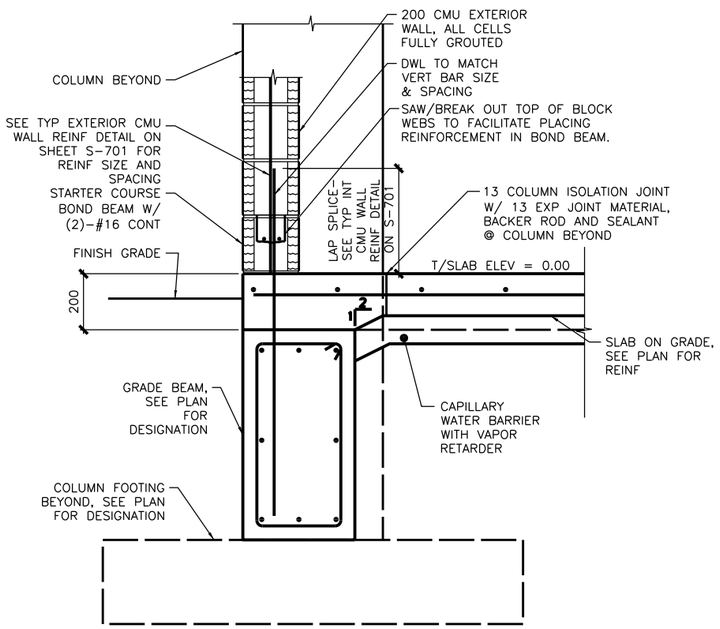

NOTE:
1. SECTION IS SIMILAR FOR INTERIOR CMU PARTITIONS OVER GRADE BEAMS SHOWING THICKENED 200 CONC SLAB AREA.

1 S-101 SECTION
SCALE: 1:10

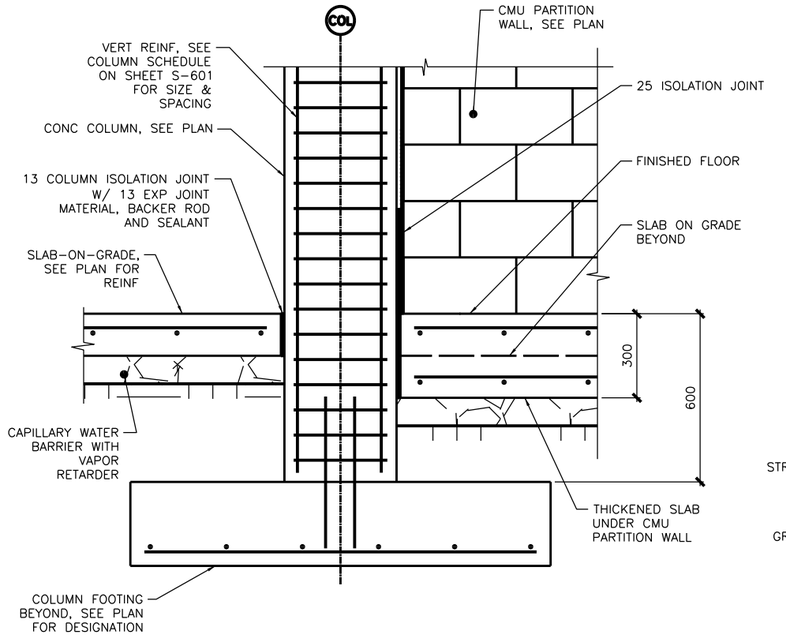

2 S-101 SECTION
SCALE: 1:10

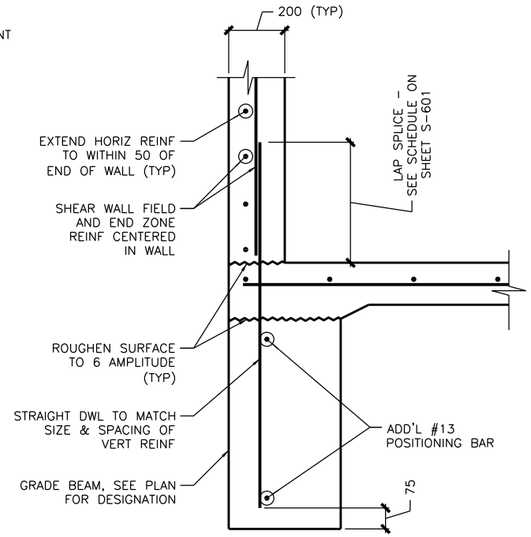

NOTE:
1. SECTION DEPICTS SHEAR WALL TERMINATION ONLY. GRADE BEAM REINFORCING NOT SHOWN FOR CLARITY
2. SEE SHEET S-601 AND SHEET S-702 FOR SCHEDULED FIELD AND END ZONE REINF.

3 S-101 SECTION
SCALE: 1:10

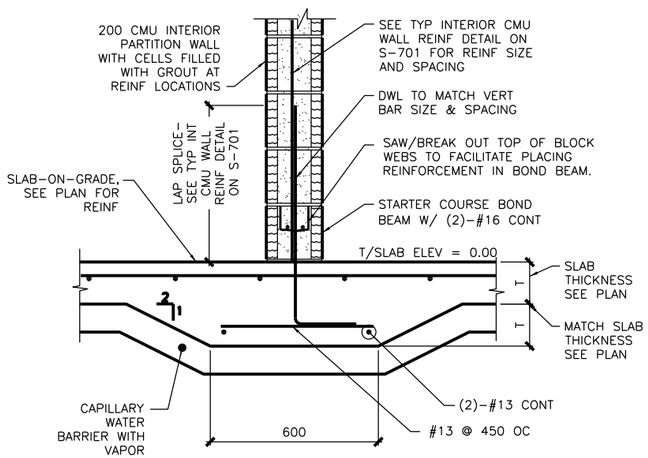

4 S-101 SECTION
SCALE: 1:10

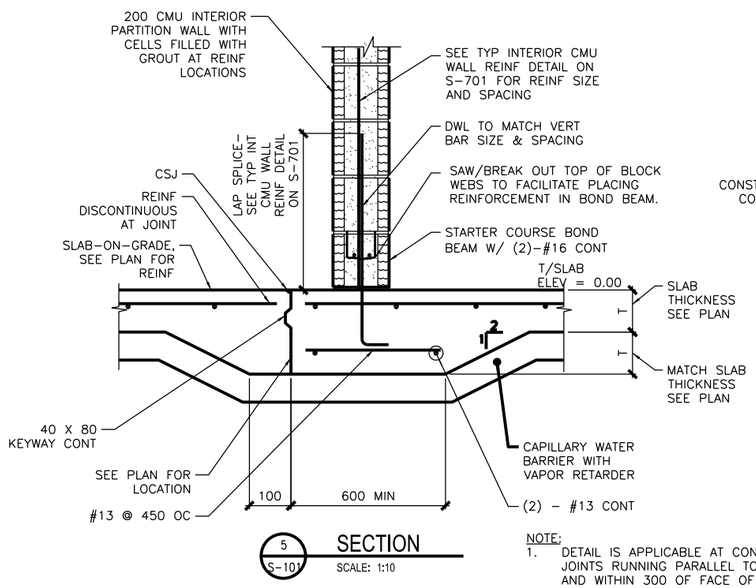

5 S-101 SECTION
SCALE: 1:10

NOTE:
1. DETAIL IS APPLICABLE AT CONTROL JOINTS RUNNING PARALLEL TO CMU WALLS AND WITHIN 300 OF FACE OF WALL.

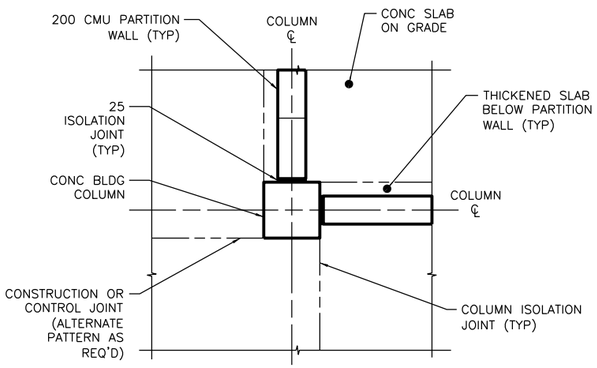

A S-501 COLUMN ISOLATION JOINT DETAIL
SCALE: NTS

UNLESS OTHERWISE NOTED, LINEAR DIMENSIONS SHOWN ON DRAWINGS ARE IN MILLIMETERS (mm)

US ARMY CORPS OF ENGINEERS
AFGHANISTAN ENGINEER DISTRICT

No.	Description	Date
0		5-26-10

Designed by: KCP/ARMY
Drawn by: RCG
Checked by: CMW
Reviewed by: LHM
Submitted by:
Design Agency: U.S. ARMY CORPS OF ENGINEERS AFGHANISTAN ENGINEER DISTRICT APO AE 09356
Drawing code:
Project name: WOMEN'S BARRACKS
Project code: VARIOUS LOCATIONS

FOUNDATION SECTIONS

Sheet reference number: S-501

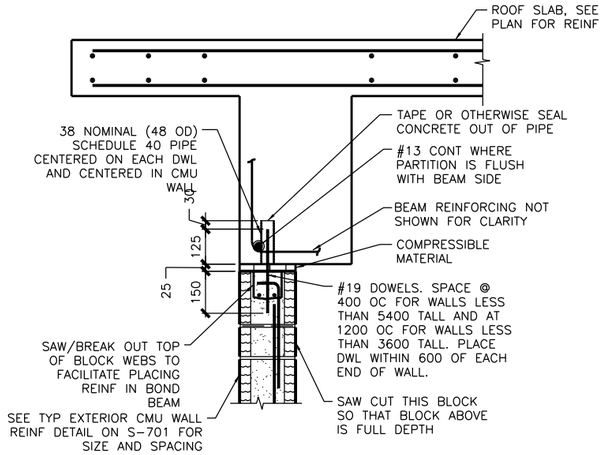

NOTES:
1. EXTEND DOWEL REINF TO 25 CLEAR FROM TOP OF CMU WALL.

1 S-101 SECTION
SCALE: 1:10

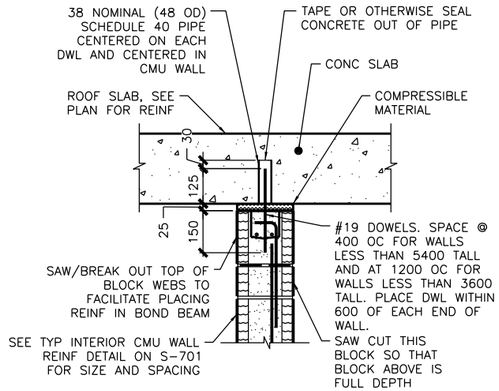

NOTES:
1. EXTEND DOWEL REINF TO 25 CLEAR FROM TOP OF CMU WALL.
2. SLAB REINF NOT SHOWN FOR CLARITY.

2 S-101 SECTION
SCALE: 1:10

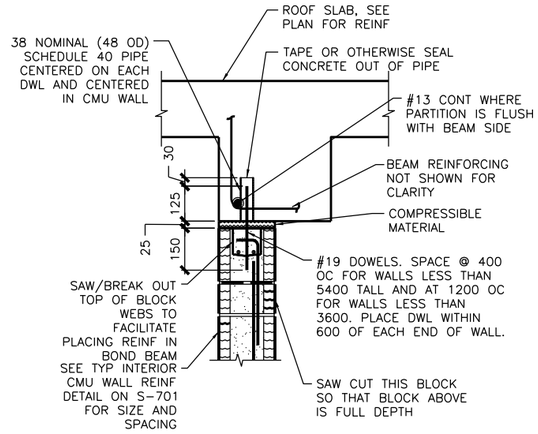

NOTES:
1. EXTEND DOWEL REINF TO 25 CLEAR FROM TOP OF CMU WALL.
2. PARTITION WALL MAY BE CENTERED UNDER THE BEAM OR FLUSH AS SHOWN. SEE PLAN FOR LOCATION.
3. SLAB REINF NOT SHOWN FOR CLARITY.

3 S-101 SECTION
SCALE: 1:10

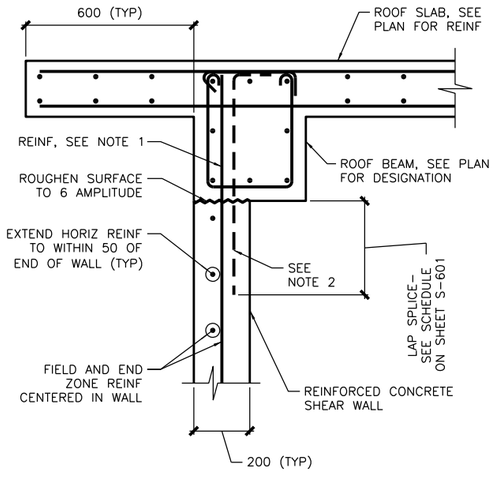

NOTES:
1. TERMINATE "FIELD" VERT REINF & END ZONE REINF @ 50 CLEAR FROM TOP OF ROOF SLAB.
2. WHERE END ZONE REINFORCING CANNOT BE DEVELOPED IN BEAM DEPTH, PROVIDE HOOKED DWLS SAME SIZE & SPACING. PROVIDE TENSION LAP BELOW ROOF BEAM.
3. SEE SHEET S-601 AND SHEET S-702 FOR SCHEDULED FIELD AND END ZONE REINF.

4 S-101 SECTION
SCALE: 1:10

0 200 400
SCALE: 1:10

UNLESS OTHERWISE NOTED, LINEAR DIMENSIONS SHOWN ON DRAWINGS ARE IN MILLIMETERS (mm)

US ARMY CORPS OF ENGINEERS
AFGHANISTAN ENGINEER DISTRICT

No.	Description	Date
0		5-26-10

Designed by: KMP/MMY
Drawn by: CWW
Checked by: RCG
Reviewed by: LHM
Submitted by:

U.S. ARMY CORPS OF ENGINEERS AFGHANISTAN ENGINEER DISTRICT APO AE 09356

Design file no.:
Drawing file no.:
Drawing name:
File name:
Plot date:

WOMEN'S BARRACKS
VARIOUS LOCATIONS

FRAMING SECTIONS

Sheet reference number:
S-502

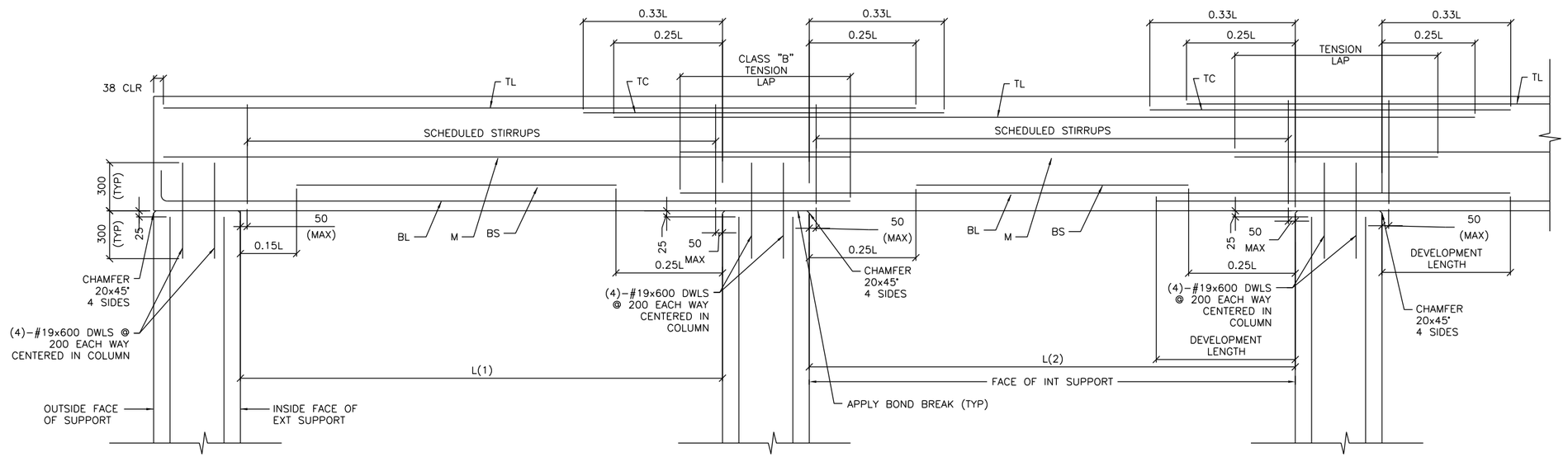

DETAIL NOTE:
1. WORK THIS DETAIL WITH BEAM SCHEDULE ON SHEET S-601.
2. L=GREATEST OF ADJACENT SPANS L(1) OR L(2)
3. ONLY COLUMN CORNER BARS ARE SHOWN

1 S-503 ROOF BEAM REINFORCING DETAIL
SCALE: NTS

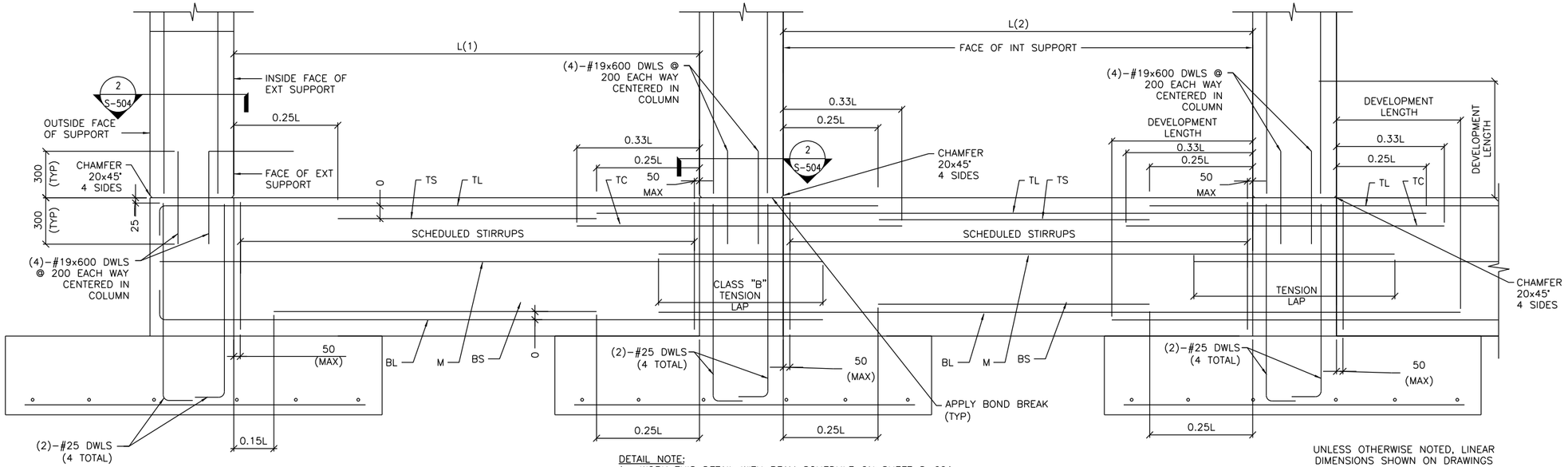

DETAIL NOTE:
1. WORK THIS DETAIL WITH BEAM SCHEDULE ON SHEET S-601.
2. L=GREATEST OF ADJACENT SPANS L(1) OR L(2)
3. ONLY COLUMN CORNER BARS ARE SHOWN.

UNLESS OTHERWISE NOTED, LINEAR DIMENSIONS SHOWN ON DRAWINGS ARE IN MILLIMETERS (mm)

2 S-503 GRADE BEAM REINFORCING DETAIL
SCALE: NTS

US ARMY CORPS OF ENGINEERS
AFGHANISTAN ENGINEER DISTRICT

Mark	Description	Date	Appr.	Mark	Description	Date	Appr.

Designed by: KMP/MMY
Dwn by: RCG
Ckd by: CWW
Reviewed by: LHM
Submitted by:
Date: 5-26-10
Rev: 0
Design file no.
Drawing code:
File name:
Plot date:
Plot scale: X:X

U.S. ARMY CORPS OF ENGINEERS
AFGHANISTAN ENGINEER DISTRICT
APO AE 96338

WOMEN'S BARRACKS
VARIOUS LOCATIONS
BEAM & COLUMN DETAILS

Sheet reference number:
S-503

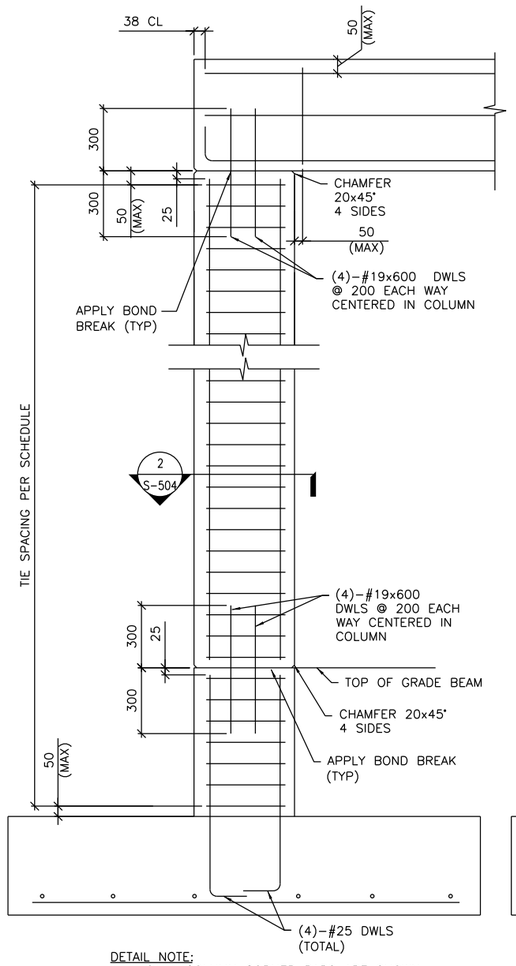

DETAIL NOTE:
1. ONLY COLUMN CORNER BARS ARE SHOWN

1 S-504 **1-STORY COLUMN REINF DETAILS**
SCALE: NTS
(WITH GRADE BEAM)

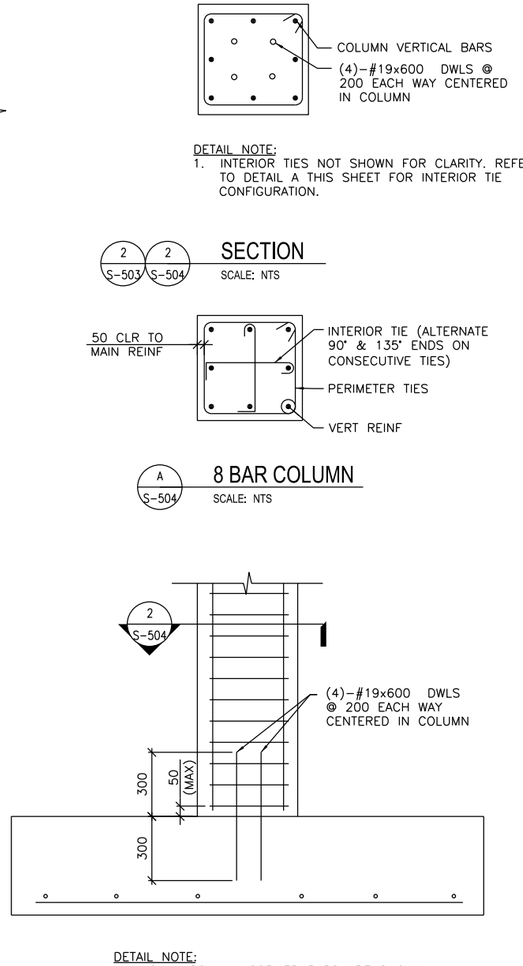

DETAIL NOTE:
1. ONLY COLUMN CORNER BARS ARE SHOWN

1 S-504 **1-STORY COLUMN REINF DETAILS**
SCALE: NTS
(WITHOUT GRADE BEAM)

DETAIL NOTE:
1. INTERIOR TIES NOT SHOWN FOR CLARITY. REFER TO DETAIL A THIS SHEET FOR INTERIOR TIE CONFIGURATION.

2 S-503 2 S-504 **SECTION**
SCALE: NTS

A S-504 **8 BAR COLUMN**
SCALE: NTS

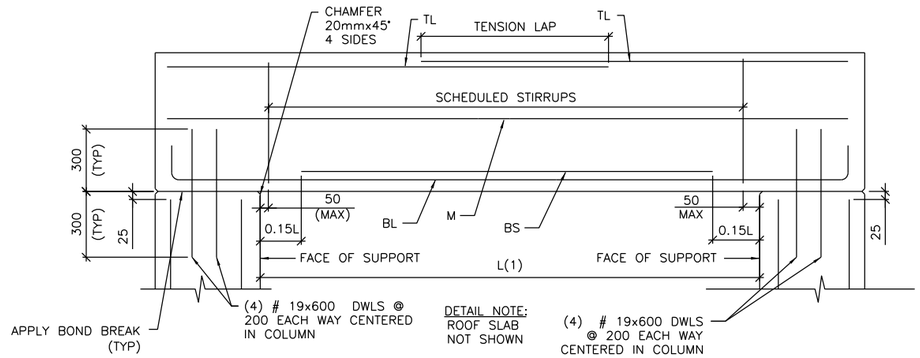

3 S-504 **SINGLE SPAN ROOF BEAM REINFORCING DETAIL**
SCALE: NTS

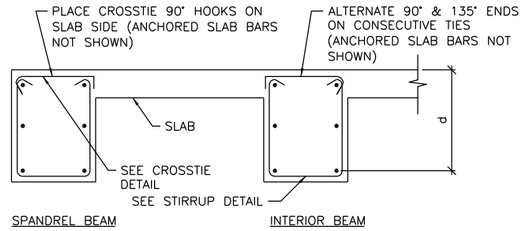

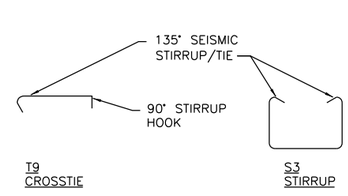

B S-504 **BEAM REINFORCEMENT DETAILS**
SCALE: NTS

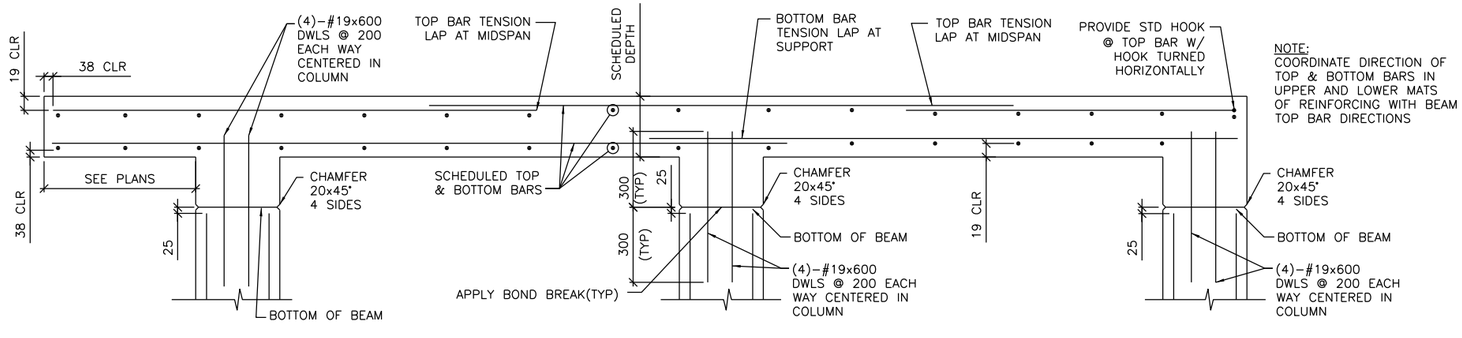

NOTE:
COORDINATE DIRECTION OF TOP & BOTTOM BARS IN UPPER AND LOWER MATS OF REINFORCING WITH BEAM TOP BAR DIRECTIONS

4 S-504 **FRAMED SLAB REINFORCING DETAIL**
SCALE: NTS

UNLESS OTHERWISE NOTED, LINEAR DIMENSIONS SHOWN ARE IN MILLIMETERS (mm)

US ARMY CORPS OF ENGINEERS
AFGHANISTAN ENGINEER DISTRICT

Mark	Description	Date	Appr.

Date: 5-26-10
Design file no.
Drawing code:
File name:
Plot date:
Plot scale: X:X
Rev: 0

Designed by: KMP/MMY
Drn by: RCG
Chd by: CWW
Reviewed by: LHM
Submitted by: BAKER

U.S. ARMY CORPS OF ENGINEERS
AFGHANISTAN ENGINEER DISTRICT
APO AE 96338

WOMEN'S BARRACKS
VARIOUS LOCATIONS

BEAM & COLUMN DETAILS

Sheet reference number:
S-504

CONCRETE REINFORCEMENT TENSION DEVELOPMENT/LAP SPLICE SCHEDULE

f'c = 28 MPa	LAP CLASS	UNCOATED BARS			
		TOP BARS		OTHER BARS	
BAR SIZES		CASE 1	CASE 2	CASE 1	CASE 2
#10 TO #19	A	50 BAR DIA	74 BAR DIA	38 BAR DIA	57 BAR DIA
	B	64 BAR DIA	96 BAR DIA	50 BAR DIA	74 BAR DIA
#22 TO #57	A	62 BAR DIA	93 BAR DIA	48 BAR DIA	71 BAR DIA
	B	80 BAR DIA	121 BAR DIA	62 BAR DIA	93 BAR DIA

NOTES:
1. TABULATED TENSION DEVELOPMENT LENGTH VALUES ARE TAKEN FROM CRSI DESIGN HANDBOOK 2008 10TH ED.
2. TENSION DEVELOPMENT & TENSION LAP SPLICE LENGTHS ARE EXPRESSED AS MULTIPLES OF BAR DIAMETERS.
3. TABULATED VALUES ARE BASED ON MINIMUM YIELD STRENGTH OF REINFORCEMENT, fy, OF 420MPa.
4. CONCRETE IS NORMAL WEIGHT (2400Kg/m^3) AND 28 DAY COMPRESSIVE STRENGTH = 28MPa.
5. TABULATED VALUES FOR BEAMS & COLUMNS ARE BASED ON TRANSVERSE REINFORCEMENT AND CONCRETE COVER MEETING MINIMUM CODE REQUIREMENTS.
6. CASES 1 & 2, WHICH DEPEND ON THE TYPE OF STRUCTURAL MEMBER, CONCRETE COVER, AND CENTER-TO-CENTER SPACING OF THE BARS ARE DEFINED IN THE TABLE BELOW.
7. LAP SPLICE LENGTHS (MINIMUM 300mm) ARE MULTIPLES OF TENSION DEVELOPMENT LENGTHS: CLASS A = 1.0(TENSION DEVELOPMENT LENGTH) & CLASS B = 1.3(TENSION DEVELOPMENT LENGTH)
8. TOP BARS ARE HORIZONTAL REINFORCEMENT WITH MORE THAN 300mm OF CONCRETE CAST BELOW THE BARS.
9. IT SHALL BE PERMISSIBLE TO CALCULATE WALL AND SLAB REINFORCEMENT TENSION DEVELOPMENT/SPLICE LENGTHS IN ACCORDANCE WITH ACI 12.2.3 OR TABLE 5.3(b) OF CRSI 2008 IN LIEU OF VALUES TABULATED ABOVE.

BEAMS, COLUMNS	CASE 1	CONCRETE COVER AT LEAST 1 BAR DIA AND CENTER-TO-CENTER SPACING AT LEAST 2 BAR DIA
	CASE 2	CONCRETE COVER LESS THAN 1 BAR DIA OR CENTER-TO-CENTER SPACING LESS THAN 2 BAR DIA
ALL OTHERS	CASE 1	CONCRETE COVER AT LEAST 1 BAR DIA AND CENTER-TO-CENTER SPACING AT LEAST 3 BAR DIA
	CASE 2	CONCRETE COVER LESS THAN 1 BAR DIA OR CENTER-TO-CENTER SPACING LESS THAN 3 BAR DIA

CONCRETE COVER SCHEDULE

MINIMUM CONCRETE COVER PROTECTION FOR REINFORCEMENT BARS SHALL BE AS LISTED BELOW: (SEE ACI 318M-05, SECTION 7.7 FOR CONDITIONS NOT NOTED). DIMENSIONS FOR BAR PLACEMENT GIVEN IN SECTIONS AND DETAILS SHALL SUPERSEDE MINIMUM COVER REQUIREMENTS GIVEN HERE. DIMENSIONS ARE IN mm. PROVIDE STANDARD BAR CHAIRS AND SUPPORT BARS @1200mm MAXIMUM AS REQUIRED TO MAINTAIN CONCRETE PROTECTION SPECIFIED.

FOOTINGS (EARTH FORMED):		70
COLUMNS / PIERS (TO TIES)		40
GRADE BEAMS OR SLAB TURNED DOWN EDGES:		
TOP		40
BOTTOM (EARTH FORMED)		70
SIDES (EARTH FORMED)		70
SIDES (BOARD FORMED)	#16 BAR & SMALLER	40
	#19 THRU #36 BAR	50
ELEVATED BEAMS & SLABS:		
BEAM TIES & STIRRUPS (NOT EXPOSED TO WEATHER)		40
BEAM TIES & STIRRUPS (EXPOSED TO WEATHER)		50
FLOOR SLABS (NOT EXPOSED TO WEATHER)		20
FLOOR SLABS (EXPOSED TO WEATHER)		
#19 & LARGER		50
#13 & SMALLER		40
ROOF SLAB BARS		25
SLABS ON GRADE		
NOT EXPOSED TO WEATHER (FROM TOP)		20
EXPOSED TO WEATHER (FROM TOP)		40
UTILITY TUNNEL WALLS, RETAINING WALLS AND SHEAR WALLS. (NO SURFACES SHALL BE EARTH FORMED)		
EARTH SIDE AND FRONT SIDE (EXPOSED TO WEATHER)		
#16 BAR AND SMALLER		40
#19 THRU #36 BAR		50

COLUMN FOOTING SCHEDULE

MARK	FOOTING SIZE (mm)			FOOTING REINFORCING	REMARKS
	LENGTH	WIDTH	THICKNESS		
F1	3000	3000	300	(8)-#22 EW BOTT	-----
F2	2500	2500	250	(7)-#19 EW BOTT	-----

CONCRETE SHEAR WALL SCHEDULE

MARK	TYPE	WALL LENGTH (L) (mm)	WALL REINFORCEMENT		REMARKS
			END ZONE	FIELD	
SW1	A	2900	(5)-#19 @ 220mm OC	#13 @ 300mm OC	-----

NOTES:
1. WORK THIS SCHEDULE WITH SHEAR WALL DETAILS ON SHEETS S-702
2. SEE PLAN FOR LOCATION OF SHEAR WALL(S).
3. VERTICAL "FIELD" BARS MAY BE OMITTED IN LOCATION OF "END ZONE" REINFORCEMENT.
4. WALL FIELD REINF LISTED APPLIES TO VERT & HORIZ BARS.
5. WALL FIELD REINFORCEMENT CENTERED IN WALL.

STANDARD HOOKS IN TENSION PER (ACI 318M-05)

HOOK DEVELOPMENT LENGTH (mm)

BAR SIZE	f'c 28 MPa
#10	180
#13	250
#16	300
#19	380
#22	430
#25	480
#29	560
#32	610
#36	690

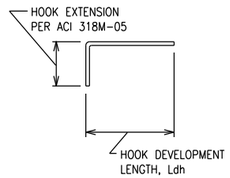

NOTES:
1. CONCRETE IS NORMAL WEIGHT CONCRETE.
2. BAR YIELD STRENGTH, fy = 420 MPa
3. SIDE COVER REQUIREMENTS OF ACI SECT. 12.5.3 ARE ASSUMED TO NOT BE MET.
4. TIE OR STIRRUP REQUIREMENTS OF ACI SECT. 12.5.3 ARE ASSUMED TO NOT BE MET.
5. REDUCTION FOR EXCESS REINFORCEMENT IS NOT TAKEN.
6. HOOK DEVELOPMENT LENGTH IS VALID FOR 180° HOOKS ALSO.

CMU OR CAST IN PLACE CONC LINTEL SCHEDULE (TYP)

OPENING TYPE OR SIZE, BEAM LOCATION OR TYPE	MAX SPAN (mm)	LINTEL DEPTH (mm)	REINFORCING BOTTOM
WALL OPENING	4000	600	(2)-#16 T&B
WALL OPENING	1900	400	(2)-#16 T&B
WALL OPENING	1000	400	(2)-#13 B

1. STRUCTURAL SHEETS DO NOT INDICATE ALL OPENINGS IN MASONRY WALLS. VERIFY NUMBER, SIZE AND LOCATION OF ALL OPENINGS IN MASONRY WALLS FROM ARCHITECTURAL SHEETS AND APPROVED PLUMBING, MECHANICAL, AND ELECTRICAL SHOP DRAWINGS.
2. PROVIDE 200mm BEARING EA END.
3. FOR HEAD DETAILS REFER TO ARCHITECTURAL SHEETS.
4. REINFORCING SHALL BE ASTM A615M, GRADE 420. GROUT FOR CMU LINTELS SHALL HAVE A MINIMUM COMPRESSIVE STRENGTH OF 14 MPa AT 28 DAYS.
5. CONTRACTOR SHALL SUBMIT FOR APPROVAL SHOP DRAWINGS AND SCHEDULES SHOWING SIZE, SPAN, REINFORCEMENT, DETAILS, LOCATIONS, ETC.

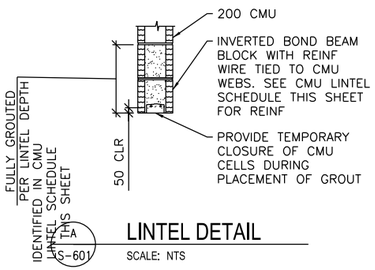

LINTEL DETAIL
SCALE: NTS

BEAM SCHEDULE

MARK	BEAM SIZE (mm)		BEAM REINFORCING						STIRRUPS			REMARKS
	DEPTH	WIDTH	BL	BS	TL	TS	TC	M	SIZE	TYPE	SPACING	
GRADE BEAMS												
GB1	750	400	(2)-#16	(1)-#16	(2)-#16	---	---	---	#13	S3 + T9	d/2	-----
GB2	750	400	(2)-#25	(1)-#25	(2)-#25	---	---	---	#13	S3 + T9	d/2	-----
ROOF BEAMS												
RB1	600	400	(2)-#22	(1)-#22	(2)-#19	---	---	---	#13	S3 + T9	d/2	-----
RB2	600	400	(2)-#19	(1)-#19	(2)-#19	---	---	---	#13	S3 + T9	d/2	OMIT "M" BARS IN INTERIOR BEAMS

NOTES:
1. WORK THIS SCHEDULE WITH BEAM REINFORCING DETAILS ON SHEETS S-503 AND S-504.
2. HOOKS SHOWN ON SECTIONS AND DETAILS SHALL BE 90° STD UON.
3. USE ONLY (1) TC AT BEAM COLUMN INTERSECTION WHERE REQ'D.

COLUMN SCHEDULE

DESCRIPTION \ COLUMN MARK	TYP UON	---	---	---
TYPE	8-BAR	---	---	---
DIMENSIONS	600mm SQ	---	---	---
VERTICAL REINFORCEMENT	(8)-#25	---	---	---
TIES	#13 @ d/2	---	---	---
TOP OF ROOF ELEVATION	3600mm	---	---	---
TOP OF GRADE BEAM ELEVATION	-200mm	---	---	---
TOP OF FOOTING ELEVATION	-950mm	---	---	---

NOTES:
1. WORK THIS SCHEDULE WITH COLUMN DETAILS ON SHEET S-504.
2. SEE FOOTING SCHEDULE ON THIS SHEET FOR FOOTING INFORMATION.
3. COLUMN TIES: INTERIOR TIES TO MATCH SIZE & SPACING OF PERIMETER TIES.
4. HOOKS SHOWN ON SECTIONS & DETAILS SHALL BE 90° STD UON.

UNLESS OTHERWISE NOTED, LINEAR DIMENSIONS SHOWN ARE IN MILLIMETERS (mm)

US ARMY CORPS OF ENGINEERS
AFGHANISTAN ENGINEER DISTRICT

Mark	Description	Date	Appr.

Designed by: KMP/MMY
Drn by: RCG
Ckd by: CWW
Reviewed by: LHM
Submitted by: BAKER

U.S. ARMY CORPS OF ENGINEERS
AFGHANISTAN ENGINEER DISTRICT
APO AE 96338

Michael Baker Jr., Inc.
A unit of Michael Baker Corporation
Airside Business Park
100 Airport Drive
Moon Township PA 15108
www.mbakercorp.com

Date: 2/23/10
Design file no.:
Drawing code:
File name: Drawing1
Plot date: 10/29/2009
Plot scale: X/A

Rev: 0

WOMEN'S BARRACKS
VARIOUS LCATIONS

SCHEDULES

Sheet reference number:
S-601

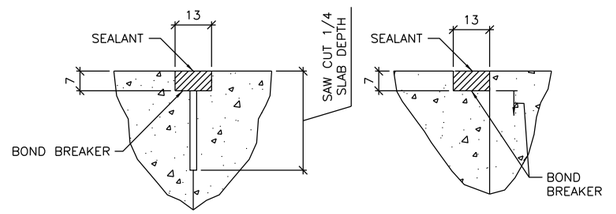

CONTROL JOINT DETAIL | CONSTRUCTION JOINT DETAIL

TYPICAL CONCRETE SLAB JOINT FINISH DETAILS

1 / S-701 SCALE: NTS

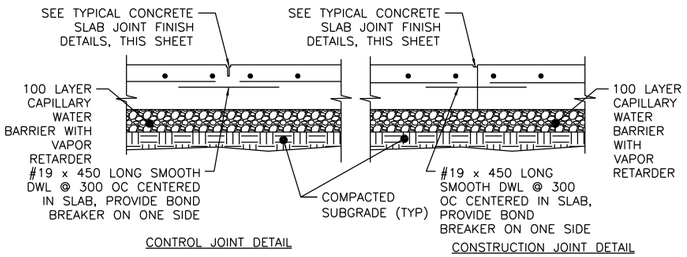

CONTROL JOINT DETAIL | CONSTRUCTION JOINT DETAIL

TYPICAL SLAB ON GRADE JOINT DETAIL

2 / S-701 SCALE: NTS

INTERIOR EQUIPMENT PAD DETAIL

3 / S-701 SCALE: NTS

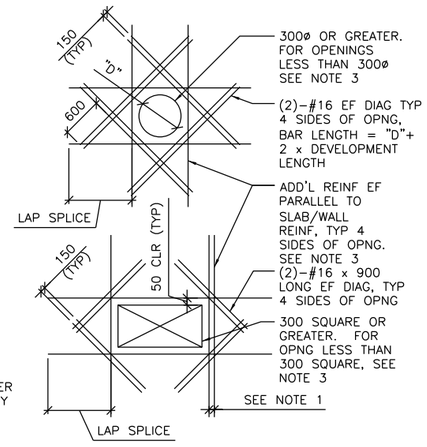

SHEAR WALL/SLAB OPENINGS

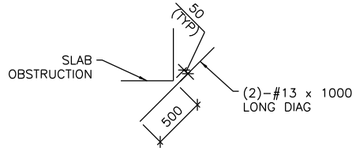

RE–ENTRANT CORNERS

DETAIL NOTES:
1. WHERE MORE THAN ONE ADDITIONAL BAR IS REQUIRED PARALLEL TO THE EXISTING SLAB/WALL REINFORCING THE ADDITIONAL REINFORCING BARS SHALL BE SPACED AT 100 ON CENTER.
2. ADDITIONAL REINFORCING PARALLEL TO THE SLAB/WALL REINFORCING SHALL BE #16 BARS THAT PROVIDE A STEEL AREA ON EACH SIDE OF THE OPENING EQUAL TO 1/2 THE AREA OF THE REINFORCING CUT BY THE OPENING.
3. FOR OPENINGS WITH SIDES OR DIAMETERS LESS THAN 300 SPREAD THE SLAB/WALL REINFORCING TO CLEAR THE OPENING.

ADD'L CONCRETE REINFORCEMENT DETAILS

4 / S-701 SCALE: NTS

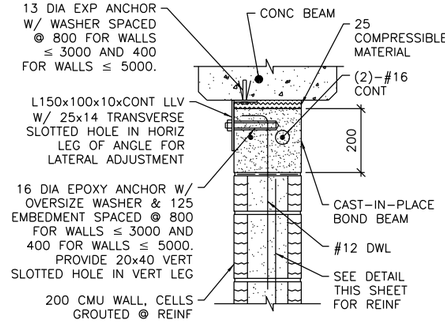

NOTE:
1. AT ANCHOR BOLTS, ADD AN ADDITIONAL 25 COMPRESSIBLE MATERIAL BELOW EXP ANCHOR HEAD.

INTERIOR BEAM

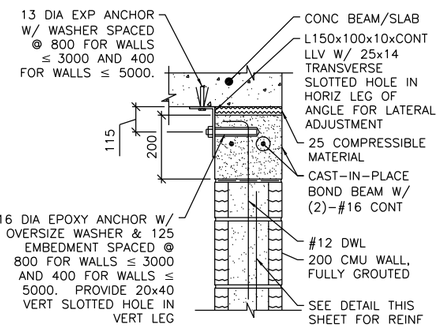

EXTERIOR WALL OR SLAB

NOTES:
1. THIS DETAIL IS AN ALTERNATE TOP OF WALL ANCHORAGE DETAIL TO BE USED AT THE CONTRACTOR'S OPTION IN LIEU OF DETAILS SHOWN ON S–400 & S–500 DRAWINGS.
2. CAST–IN–PLACE BOND BEAM SHOWN AT TOP OF WALL IS ALSO APPLICABLE FOR INTERMEDIATE AND STARTER COURSE BOND BEAMS WITHIN WALL.

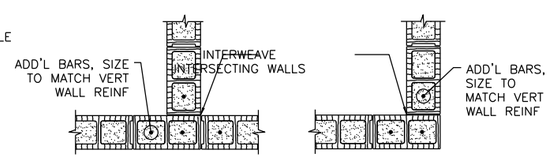

INTERSECTION | WALL CORNER

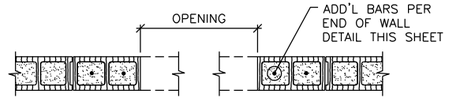

MASONRY OPENING W/ LINTEL

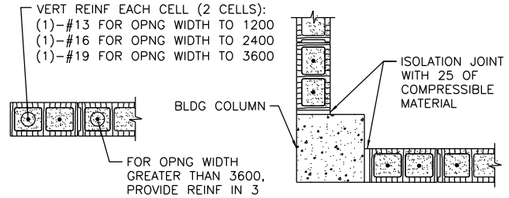

END OF WALL | END OF WALL @ COLUMN

NOTES:
1. OPENING WIDTH SHALL NOT EXCEED 3600 FOR THIS TYPE OF JAMB.
2. ALL CELLS FULLY GROUTED AT EXTERIOR WALLS. AT INTERIOR WALLS, ONLY GROUT CELLS CONTAINING REINF.

TYP CMU DETAILS

6 / S-701 SCALE: NTS

ALTERNATE TOP OF CMU WALL BRACING DETAILS

5 / S-701 SCALE: NTS

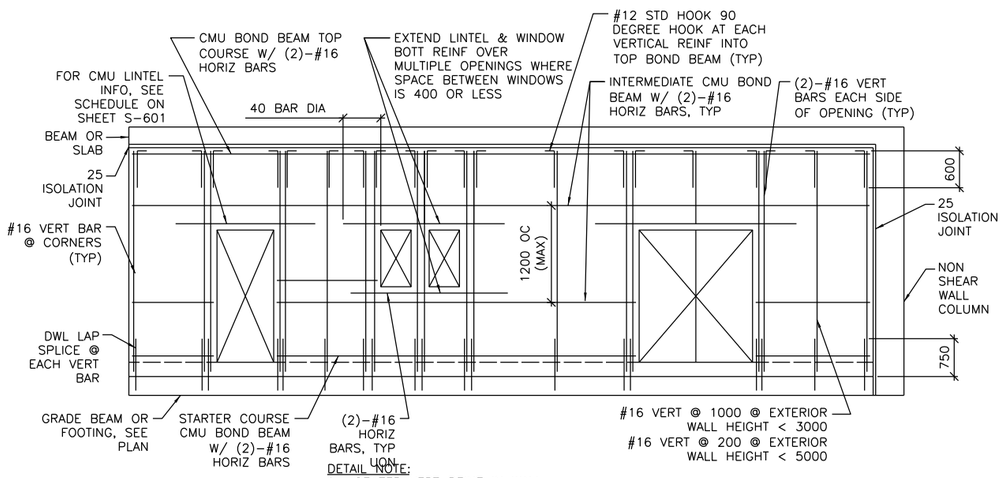

DETAIL NOTE:
1. CENTER VERT REINF IN WALL.
2. GROUT ALL CMU CELLS.
3. REFERENCE ARCH DWGS FOR JOINT INFORMATION
4. DOWELS BETWEEN TOP BOND BEAM AND BEAM/SLAB ABOVE (INCLUDING EMBEDDED PIPE SLEEVE) NOT SHOWN FOR CLARITY. SEE SPECIFIC S–500 SERIES DWGS FOR INFO.
5. FOR INFORMATION ON ALTERNATE CAST–IN–PLACE WALL BOND BEAMS, REFERENCE ALTERNATE TOP OF CMU WALL BRACING DETAILS THIS SHEET.

TYP EXTERIOR CMU WALL REINF DETAIL

7 / S-701 SCALE: NTS

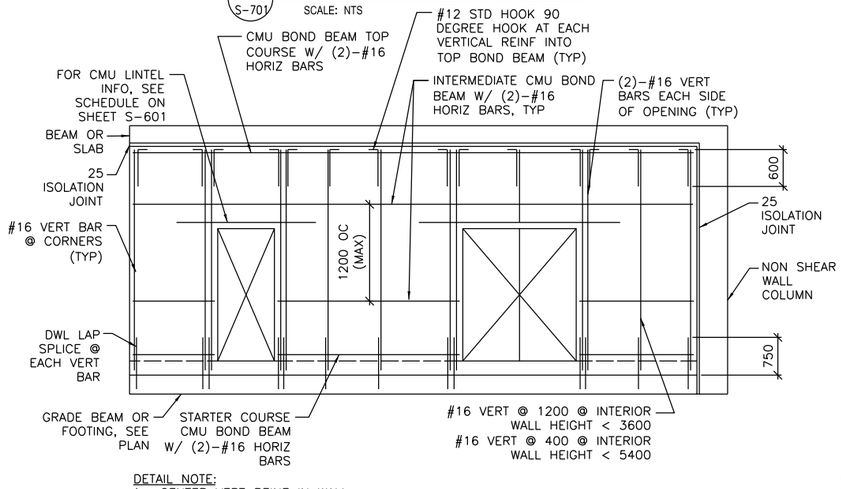

DETAIL NOTE:
1. CENTER VERT REINF IN WALL.
2. GROUT ALL CMU CELLS.
3. REFERENCE ARCH DWGS FOR JOINT INFORMATION
4. DOWELS BETWEEN TOP BOND BEAM AND BEAM/SLAB ABOVE (INCLUDING EMBEDDED PIPE SLEEVE) NOT SHOWN FOR CLARITY. SEE SPECIFIC S–500 SERIES DWGS FOR INFO.
5. FOR INFORMATION ON ALTERNATE CAST–IN–PLACE WALL BOND BEAMS, REFERENCE ALTERNATE TOP OF CMU WALL BRACING DETAILS THIS SHEET.

TYP INTERIOR CMU WALL REINF DETAIL

8 / S-701 SCALE: NTS

UNLESS OTHERWISE NOTED, LINEAR DIMENSIONS SHOWN ARE IN MILLIMETERS (mm)

US ARMY CORPS OF ENGINEERS
AFGHANISTAN ENGINEER DISTRICT

Mark	Description	Date	Appr.

Rev. 0
File no.
Drawing code:
File name:
Plot date:
Plot scale: xx
Date: 5-26-10
Design file no.
Designed by: KMP/MMY
Drawn by: RCG
Chkd by: CWW
Reviewed by: LHM
Submitted by: BAKER

U.S. ARMY CORPS OF ENGINEERS
AFGHANISTAN ENGINEER DISTRICT
APO AE 96338

WOMEN'S BARRACKS
VARIOUS LOCATIONS

TYPICAL DETAILS

Sheet reference number:
S–701

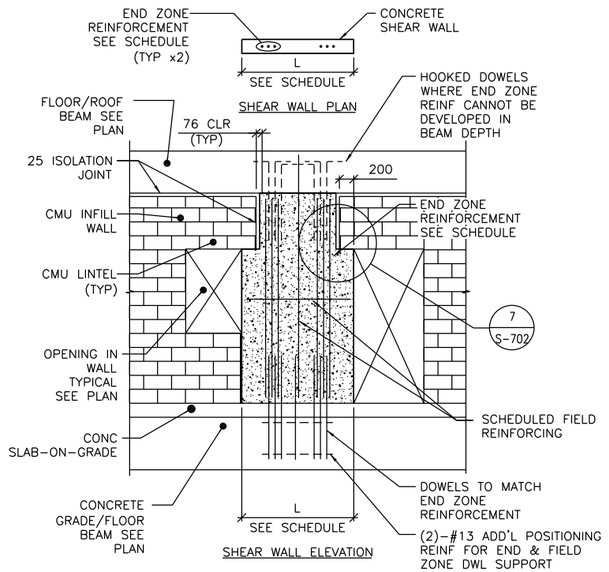

DETAIL NOTES:
1. FIELD REINFORCEMENT IN SHEAR WALL NOT SHOWN FOR CLARITY.
2. FIELD REINFORCEMENT CENTERED IN WALL.
3. MINIMUM CONC CLEAR DISTANCE FOR END ZONE REINF = 76
4. SEE CONC SHEAR WALL SCHEDULE ON SHEET S-601
5. SEE ARCH DWGS FOR JOINT INFORMATION

TYPE "A" SHEAR WALL DETAIL

1 / S-702 — SCALE: NTS

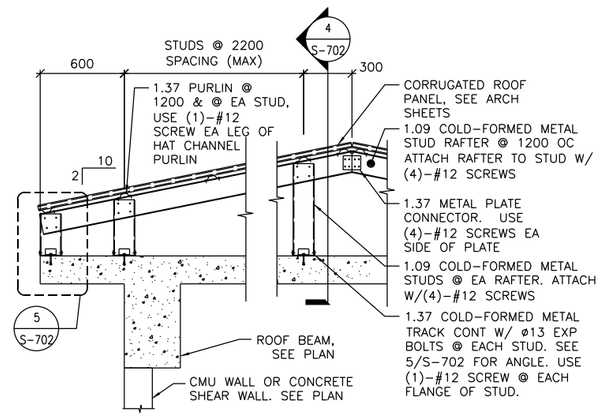

DETAIL NOTES:
1. ALL GABLE END VERTICAL STUDS SHALL BE ORIENTED 90° TO INTERIOR STUDS & SPACED @ 600 OC. GABLE END RAFTER SHALL BE 1.37 METAL TRACK SPANNING CONTINUOUSLY OVER GABLE END STUDS. INSET GIRTS AT GABLE END SHALL BE 1.09 COLD-FORMED METAL STUDS @ 1200 OC ATTACHED VIA 1.37 THICKNESS CLIP ANGLE W/ (2) #12 SCREWS EA LEG.
2. ALL INTERIOR, NON-GABLE END VERTICAL STUDS GREATER THAN 2400 IN LENGTH SHALL BE BACK-TO-BACK W/ #12 SCREWS @ 200 OC STAGGERED.

TYPICAL OVERBUILT ROOF FRAMING DETAIL

2 / S-702 — SCALE: NTS

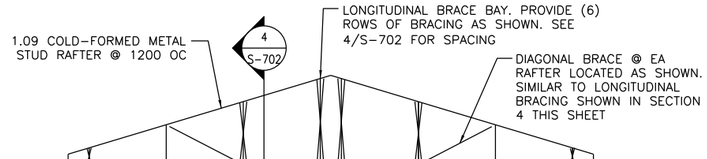

TYPICAL ROOF BRACE LAYOUT

3 / S-702 — SCALE: NTS

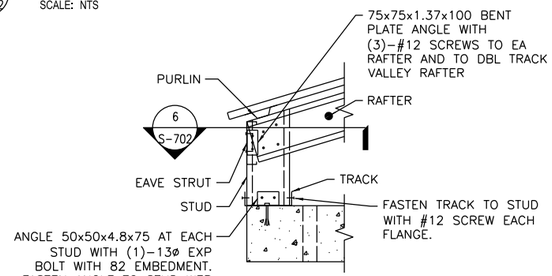

DETAIL

5 / S-702 — SCALE: NTS

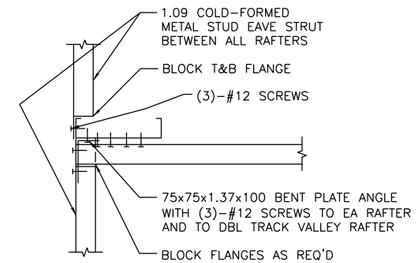

SECTION

6 / S-702 — SCALE: NTS

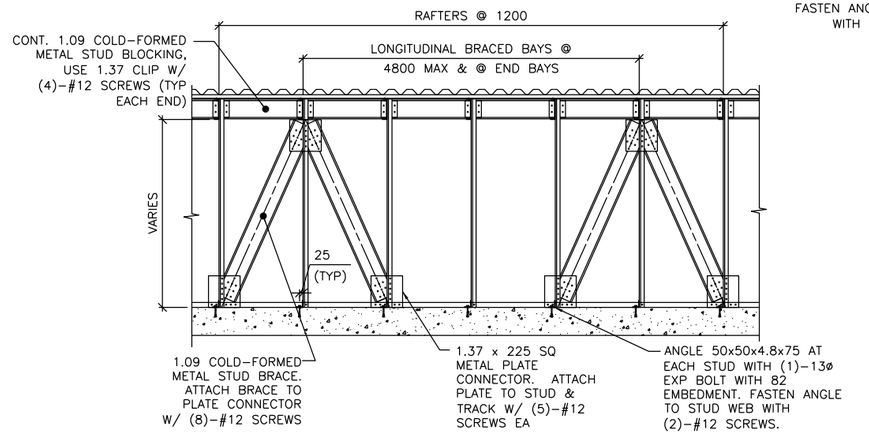

SECTION

4 / S-702 — SCALE: NTS

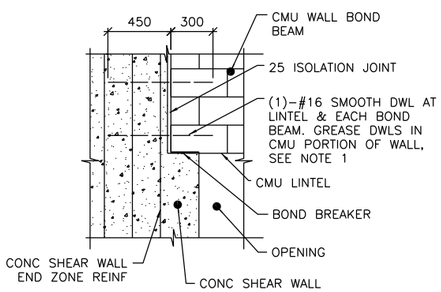

NOTE:
1. TIE SMOOTH DOWEL ROD TO SHEAR WALL END ZONE REINF FOR EACH BOND BEAM AND LINTEL.

SECTION

7 / S-702 — SCALE: NTS

UNLESS OTHERWISE NOTED, LINEAR DIMENSIONS SHOWN ARE IN MILLIMETERS (mm)

US ARMY CORPS OF ENGINEERS
AFGHANISTAN ENGINEER DISTRICT

Mark	Description	Date	Appr.

Date: 5-26-10 | Rev: 0
Designed by: KMP/MMY | Drawn by: RCG | Checked by: CWW | Reviewed by: LHM
Design file no.
Drawing code:
File name:
Plot date:
Plot scale: X:X
Submitted by: BAKER

U.S. ARMY CORPS OF ENGINEERS
AFGHANISTAN ENGINEER DISTRICT
APO AE 96338

WOMEN'S BARRACKS
VARIOUS LOCATIONS

TYPICAL DETAILS

Sheet reference number:
S-702

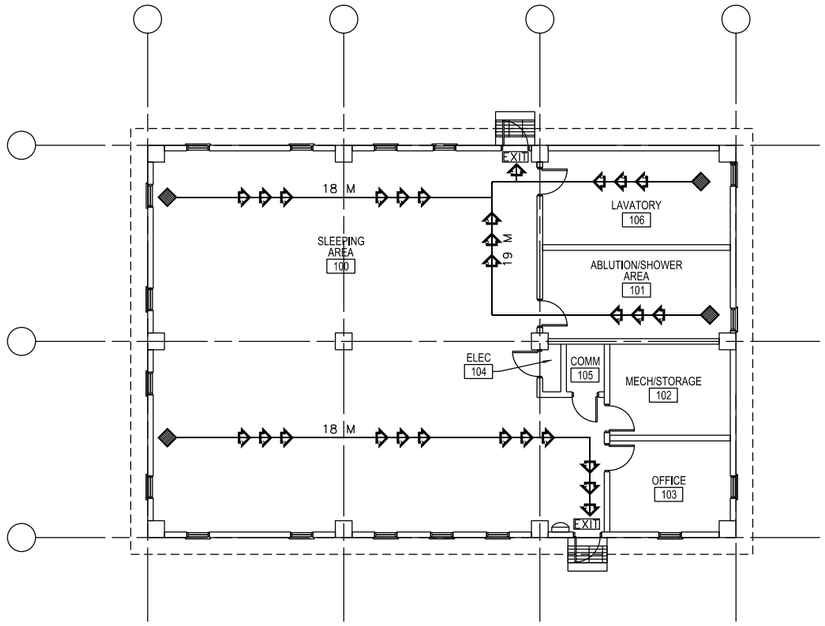

1 A-001 LIFE SAFETY PLAN
SCALE: 1:100

CODE ANALYSIS:

1. REFERENCES:
   2006 INTERNATIONAL BUILDING CODE (2006 IBC)
   2006 LIFE SAFETY CODE (2006 NFPA 101)

2. IBC OCCUPANCY CLASSIFICATION:
   GROUP B (BUSINESS NFPA 101 6.1.11 AND CHAPTER 38)

3. TYPE OF CONSTRUCTION (IBC): TYPE II–B (UNPROTECTED/NONSPRINKLERED)

4. IBC TABLE 503: ALLOWABLE HEIGHT AND BUILDING AREAS:
GROUP B
ALLOWABLE AREA: 2,137 SM
ALLOWABLE HEIGHT: 3 STORIES (16 M)

GROUP B
PROPOSED AREA: 294 SM
PROPOSED HEIGHT: 1 STORY (<16 M)

5. IBC TABLE 601 & 602: FIRE RESISTANCE RATING REQUIREMENTS FOR BUILDING ELEMENTS FOR TYPE II–B

BUILDING ELEMENT	RATING (HOUR)	REFERENCE
STRUCTURAL FRAME (COLUMNS, GIRDERS & TRUSSES)	0	TABLE 601
BEARING WALLS		
EXTERIOR	0	TABLE 601
INTERIOR	0	TABLE 601
NONBEARING WALLS & PARTITIONS		
INTERIOR	0	TABLE 601
FLOOR CONSTRUCTION	0	TABLE 601
ROOF CONSTRUCTION	0	TABLE 601
EXTERIOR WALL	0	TABLE 602

6. IBC TABLE 803.5 – INTERIOR WALL AND CEILING FINISH REQUIREMENTS FOR B OCCUPANCY/NONSPRINKLERED

GROUP	EXIT ENCLOSURES AND EXIT PASSAGEWAY	CORRIDORS	ROOMS AND ENCLOSED SPACES
B	A	B	C

7. NFPA 101 TABLE 7.3.1.2 – OCCUPANT LOAD
   BUSINESS = 9.3 SM/PERSON BUSINESS PROPOSED = 32 OCCUPANTS

8. NFPA 101 TABLE 7.3.3.1 – EGRESS CAPACITY
   BUSINESS = 5 MM PER OCCUPANT

REQUIRED: 160 MM (32 OCCUPANTS x 5 MM PER OCCUPANT)
PROPOSED EGRESS CAPACITY: 900 MM: (2) 900 MM DOORS

9. NFPA 101 PARAGRAPH 38.2.6.2 – EXIT ACCESS TRAVEL DISTANCE (NONSPRINKLERED)
REQUIRED: 60 METERS
PROPOSED: 19 METERS

10. NFPA 101 PARAGRAPH 38.3.6.1(1) & (2) – CORRIDORS
NO RATED CORRIDOR REQUIRED (NONSPRINKLERED):
(1) ALL EXITS ARE AVAILABLE FROM AN OPEN FLOOR AREA
(2) SPACE IS OCCUPIED BY A SINGLE TENANT

11. NFPA 101 PARAGRAPH 38.2.4.1 – NUMBER OF EXITS
BUSINESS REQUIRED: 1 MINIMUM
BUSINESS PROPOSED: 2 EXITS

LEGEND:

- DENOTES PATHS OF EXIT TRAVEL
- EXIT — DENOTES DOOR AS AN EMERGENCY EXIT
- DENOTES STARTING POINT FOR TRAVEL DISTANCE
- DENOTES FIRE EXTINGUISHER LOCATIONS

LINEAR DIMENSIONS SHOWN ARE IN MILLIMETERS (MM), UNLESS OTHERWISE NOTED

0 2000 4000
SCALE: 1:100

US ARMY CORPS OF ENGINEERS
AFGHANISTAN ENGINEER DISTRICT

Mark	Description	Date	Appr.

Rev: 0
Date: 5-26-10
Design file no.
Drawing code:
File name:
Plot date:
Plot scale: X:X

Designed by: KRC
Drn. by: EBB
Chkd by: NLJ
Reviewed by: LHM
Submitted by: BAKER

U.S. ARMY CORPS OF ENGINEERS
AFGHANISTAN ENGINEER DISTRICT
APO AE 96338

WOMEN'S BARRACKS
VARIOUS LOCATIONS

LIFE SAFETY PLAN

Sheet reference number:
A–001

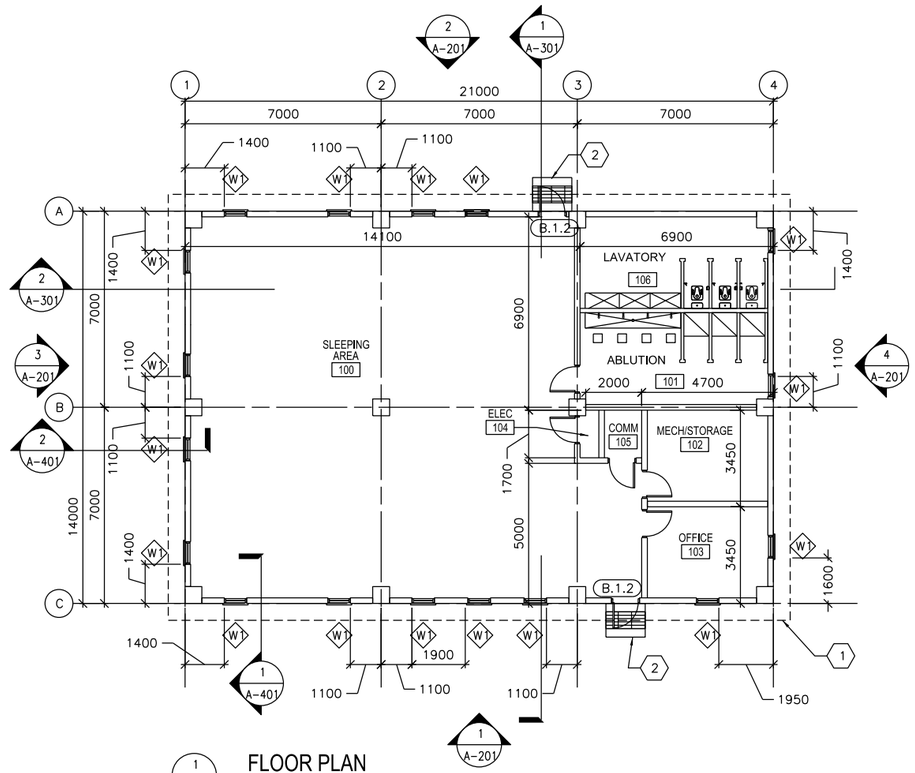

1 A-101 FLOOR PLAN
SCALE: 1:100

GENERAL NOTES:

A. DIMENSIONS ARE SHOWN TO OUTER EDGE OF EXTERIOR STRUCTURAL COLUMNS, STRUCTURAL COLUMN GRID, EDGE OF INTERIOR PARTITIONS, EDGE OF WINDOW OPENINGS, AND TO HINGE SIDE OF DOOR FRAME OPENINGS.

B. HINGE SIDE OF OPENINGS FOR DOORS AND FRAMES SHALL BE LOCATED 200 MM FROM THE ADJACENT WALL OR COLUMN, UNLESS NOTED OTHERWISE.

C. INTERIOR PARTITIONS SHALL BE 200 MM CMU. SEE STRUCTURAL DRAWINGS FOR LOCATION OF CONCRETE SHEAR WALLS.

D. COSMETIC REPAIR OF MINOR DEFECTS: REPAIR OR FILL MORTAR JOINTS AND MINOR DEFECTS, INCLUDING BUT NOT LIMITED TO SPALLS, IN ACCORDANCE WITH MANUFACTURER'S RECOMMENDATIONS AND PRIOR TO COATING APPLICATION. SURFACES TO BE PAINTED SHALL BE CLEAN AND FREE OF FOREIGN MATTER BEFORE APPLICATION OF PAINT. CLEANING SHALL BE SCHEDULED SO THAT DUST AND OTHER CONTAMINANTS WILL NOT FALL ON NEWLY PAINTED SURFACES.

E. CONCRETE, PLASTER AND MASONRY SURFACES SHALL BE ALLOWED TO CURE FOR AT LEAST 30 DAYS BEFORE PAINTING. CONCRETE SLABS-ON-GRADE SHALL BE ALLOWED TO CURE 90 DAYS BEFORE STAINING OR SEALING.

F. DO NOT USE PAINT MATERIALS CONTAINING LEAD CONTENT IN EXCESS OF 0.009 PERCENT OF THE WEIGHT OF THE TOTAL NONVOLATILE CONTENT OF THE PAINT OR THE WEIGHT OF THE DRIED PAINT FILM.

G. DO NOT USE ANY ASBESTOS CONTAINING MATERIALS (ACM) IN PROJECT. ACM IS DEFINED AS 1% OR MORE BY VOLUME.

H. DO NOT USE PAINT MATERIALS CONTAINING MERCURIAL FUNGICIDES.

I. FACTORY PRIMED METAL DOORS AND FRAMES SHALL RECEIVE TWO COATS OF PAINT.

J. FILL REMAINING SPACE AT PENETRATIONS IN FIRE-RATED FLOORS, PARTITIONS AND CEILINGS WITH APPROPRIATE FIRESTOPPING MATERIALS.

K. ALL CEILING FINISHES SHALL BE PAINTED PLASTER APPLIED TO STRUCTURE.

L. ALL WALL FINISHES SHALL BE PAINTED PLASTER APPLIED TO STRUCTURE.

M. ALL FLOOR FINISHES SHALL BE EPOXY SEALED CONCRETE.

N. ALL DOOR FRAMES & HARDWARE TYPES SHALL BE A.1.5 UNLESS NOTED OTHERWISE.

KEY NOTES:

1. LINE OF ROOF OVERHANG ABOVE.
2. CONCRETE STOOP WITH GRATE - SEE DETAIL 1/A-503

LEGEND:

XXX DOOR FRAME AND HARDWARE TYPE, SEE SHEET A-601

A WINDOW TYPE, SEE SHEET A-601

X KEY NOTE

ABBREVIATIONS:

ELEC	ELECTRICAL
MECH	MECHANICAL
JAN	JANITOR
CLOS	CLOSET
COMM	COMMUNICATIONS

LINEAR DIMENSIONS SHOWN ARE IN MILLIMETERS (MM), UNLESS OTHERWISE NOTED

0 2000 4000
SCALE: 1:100

US ARMY CORPS OF ENGINEERS
AFGHANISTAN ENGINEER DISTRICT

Mark	Description	Date	Appr.	Mark	Description	Date	Appr.

Designed by: Dwn by: Ckd by: Reviewed by: Submitted by:
Date: 5-26-10 Rev: 0
Design file no.
Drawing code:
File name:
Plot date:
Plot scale: X:X

U.S. ARMY CORPS OF ENGINEERS
AFGHANISTAN ENGINEER DISTRICT
APO AE 96338

WOMEN'S BARRACKS
VARIOUS LOCATIONS

FLOOR PLAN

Sheet reference number:
A-101

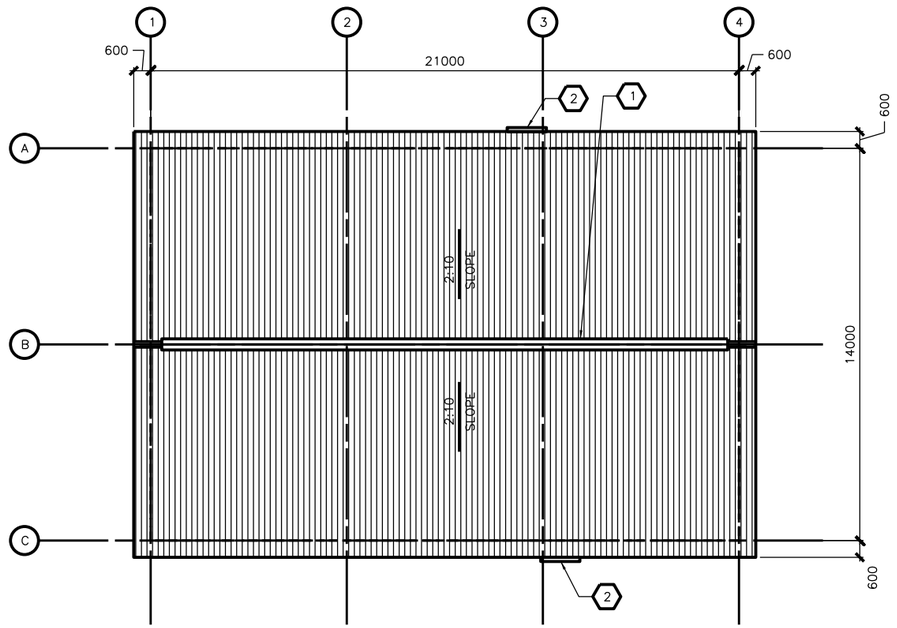

1 A-201 ROOF PLAN
SCALE: 1:100

GENERAL NOTES:

A. THE APPROXIMATE LOCATION OF ROOF DEVICES AND PENETRATIONS ARE SHOWN ON THE ROOF PLAN FOR INFORMATION ONLY. THE CONTRACTOR SHALL BE RESPONSIBLE FOR UNDERSTANDING THE ACTUAL LOCATION OF THESE AND ALL OTHER ITEMS PRIOR TO BEGINNING CONSTRUCTION. COORDINATE ALL ROOF PENETRATIONS WITH STRUCTURAL, MECHANICAL AND PLUMBING WORK.

B. UNLESS OTHERWISE NOTED, NOTES, DETAILS OR FEATURES INDICATED FOR ONE CONDITION SHALL BE APPLICABLE FOR ALL ALIKE AND SIMILAR CONDITIONS.

C. STOCKPILING OF MATERIALS, EQUIPMENT AND ANY OTHER ITEMS ON THE ROOF IS PROHIBITED.

D. ROOFS SHALL BE CORRUGATED METAL ROOF PANELS ON COLD-FORMED METAL FRAMING ON CONCRETE SLAB.

KEY NOTES:

X

1. CONTINUOUS METAL RIDGE VENT SEE DETAIL 4/A-501.
2. METAL GUTTER, 1400 MM – SEE DETAIL 1A/A-501.

LINEAR DIMENSIONS SHOWN ARE IN MILLIMETERS (MM), UNLESS OTHERWISE NOTED

0 2000 4000
SCALE: 1:100

US ARMY CORPS OF ENGINEERS
AFGHANISTAN ENGINEER DISTRICT

Item	Description	Date	Appr.	Item	Description	Date	Appr.

Designed by:
Date: 5-26-10
Rev: 0
Dwn by:
Ckd by: NLJ
Design file no.
Revised by:
Drawing code:
Submitted by:
File name: ANAAIOFA-102
Plot date: 10/29/2009
Plot scale: 0.0

U.S. ARMY CORPS OF ENGINEERS
AFGHANISTAN ENGINEER DISTRICT
APO AE 96338

WOMEN'S BARRACKS
VARIOUS LOCATIONS
ROOF PLAN

Sheet reference number:
A-102

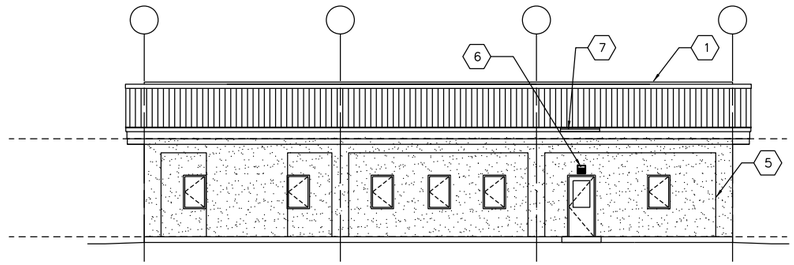

1 A-201 ELEVATION
SCALE: 1:100

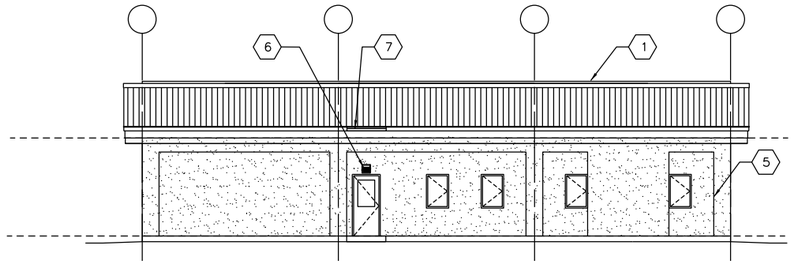

2 A-201 ELEVATION
SCALE: 1:100

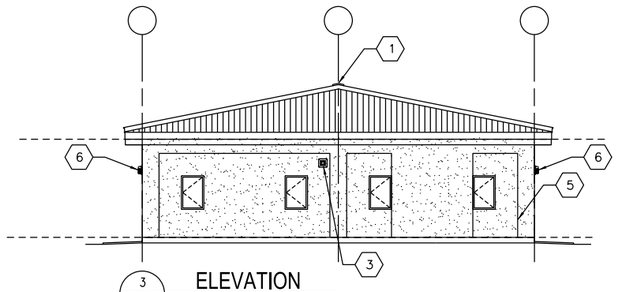

3 A-201 ELEVATION
SCALE: 1:100

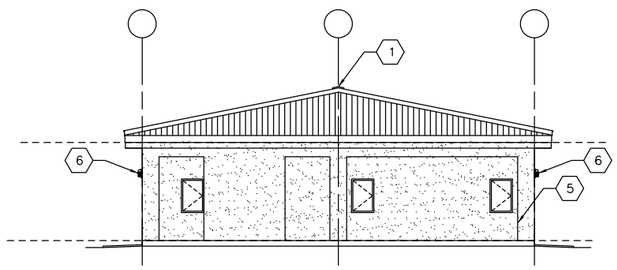

4 A-201 ELEVATION
SCALE: 1:100

GENERAL NOTES:

A. COORDINATE SIZE AND LOCATION OF OPENINGS FOR MECHANICAL ITEMS WITH MECHANICAL DRAWINGS.

B. PROVIDE STRUCTURAL LINTELS AS REQUIRED – SEE STRUCTURAL DRAWINGS.

C. ALL EXTERIOR WALL FINISHES SHALL BE STUCCO OVER CMU AND CONCRETE SUBSTRATES. PROVIDE CONTROL JOINTS IN STUCCO WALL FINISH AS NOTED.

D. ROOF SHALL BE CORRUGATED METAL ROOF PANELS ON COLD-FORMED METAL FRAMING ON CONCRETE SLAB.

KEY NOTES:

1. CONTINUOUS METAL RIDGE VENT – SEE DETAIL 4/A-501.
2. NOT USED
3. EXHAUST FAN, LOCATE TOP OF WALL PENETRATION 2800 MM ABOVE FINISHED FLOOR – SEE MECHANICAL DRAWINGS.
4. NOT USED
5. STUCCO CONTROL JOINT – SEE DETAIL 2A/A-501.
6. EXTERIOR LIGHT – SEE ELECTRICAL.
7. METAL GUTTER, CENTER ON DOOR, 1400 MM – SEE DETAIL 1A/A-501.

LINEAR DIMENSIONS SHOWN ARE IN MILLIMETERS (MM), UNLESS OTHERWISE NOTED

0 2000 4000
SCALE: 1:100

US ARMY CORPS OF ENGINEERS
AFGHANISTAN ENGINEER DISTRICT

Mark	Description	Date	Appr.	Mark	Description	Date	Appr.

Designed by: KRC
Dwn by: KJG
Ckd by: NLJ
Reviewed by: LHM
Submitted by: BAKER
Date: 5-26-10
Rev: 0
Design file no.
Drawing code:
File name:
Plot date:
Plot scale:

U.S. ARMY CORPS OF ENGINEERS
AFGHANISTAN ENGINEER DISTRICT
APO AE 96338

WOMEN'S BARRACKS
VARIOUS LOCATIONS
ELEVATIONS

Sheet reference number:
A-201

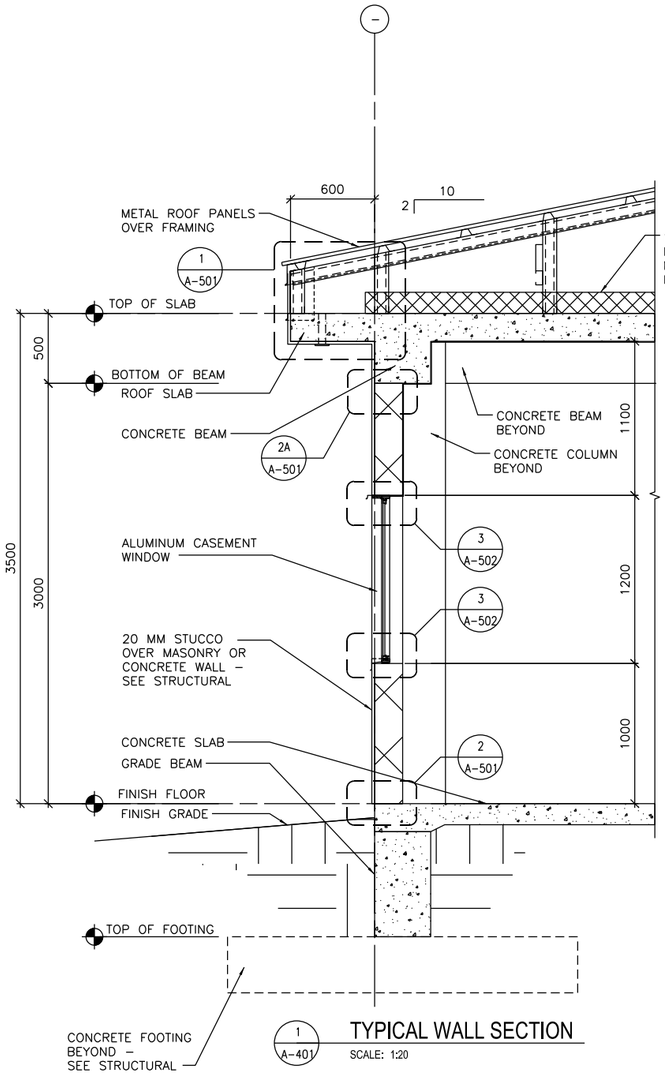

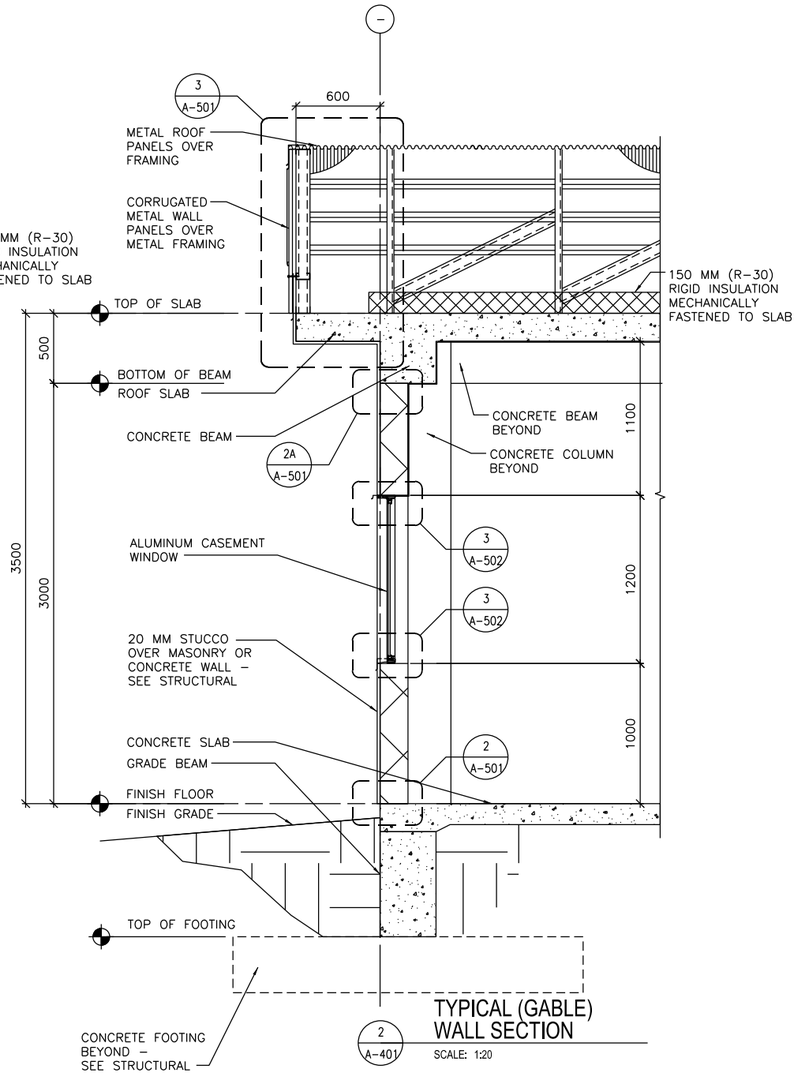

LINEAR DIMENSIONS SHOWN ARE IN MILLIMETERS (MM). UNLESS OTHERWISE NOTED

0 400 800
SCALE: 1:20

US ARMY CORPS OF ENGINEERS
AFGHANISTAN ENGINEER DISTRICT

Mark	Description	Date	Appr.

U.S. ARMY CORPS OF ENGINEERS
AFGHANISTAN ENGINEER DISTRICT
APO AE 96338

Designed by:
Dwn by: Chd by: NLJ
Reviewed by:
Submitted by:

Date: 5-26-10
Design file no.
Drawing code:
File name:
Plot date:
Plot scale: xx

Rev: 0

WOMEN'S BARRACKS
VARIOUS LOCATIONS

WALL SECTIONS

Sheet reference number:
A-401

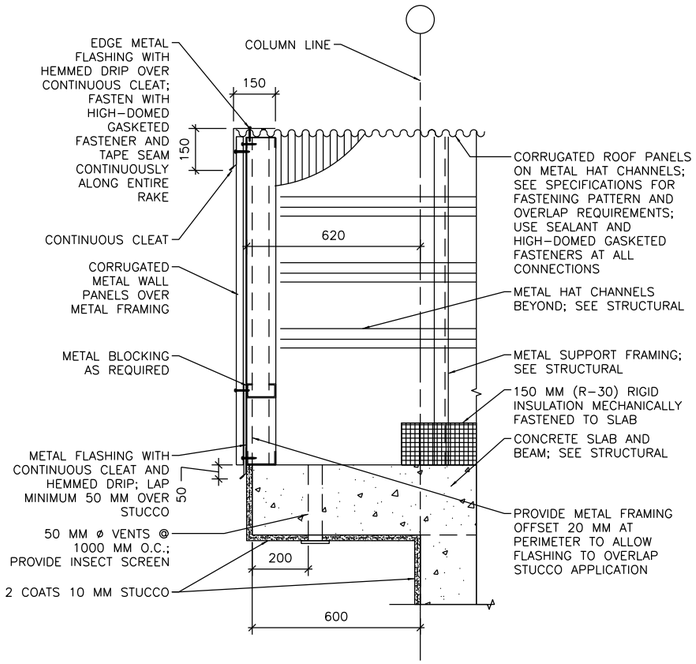

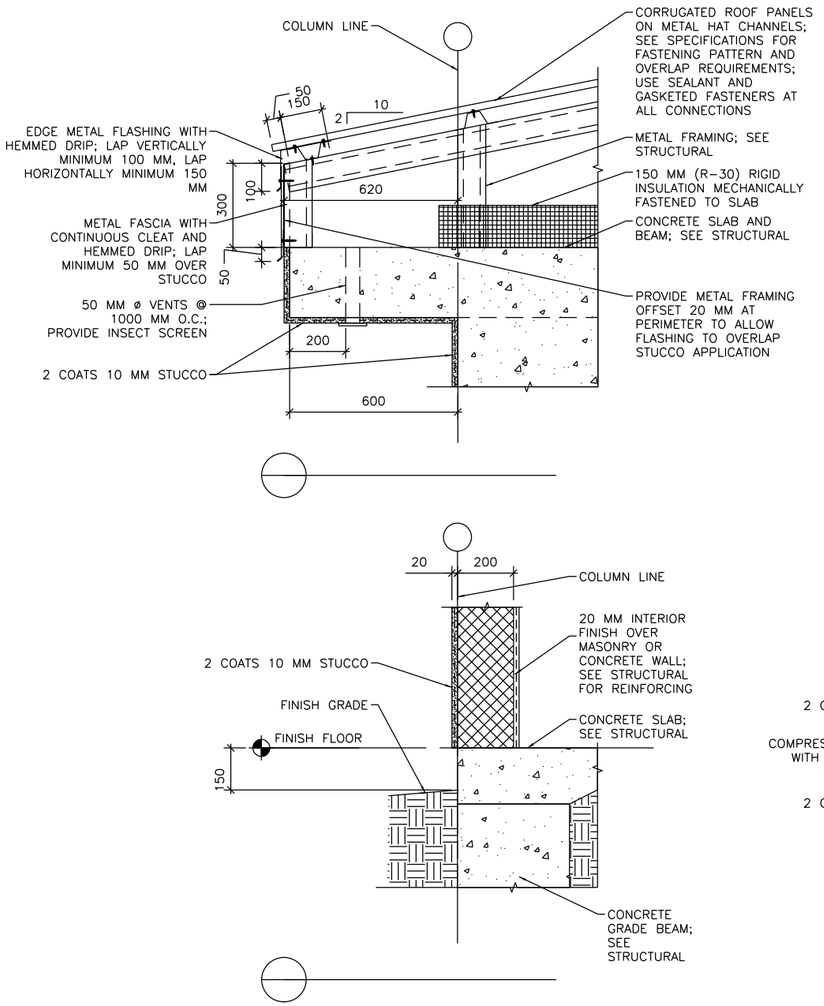

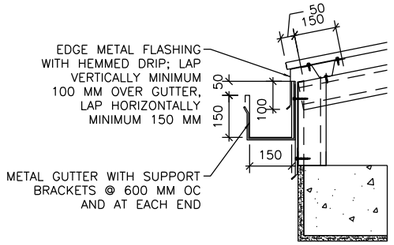

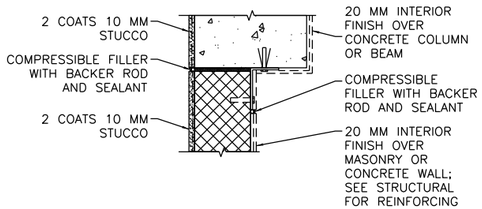

NOTE: DETAIL TYPICAL AT ALL WALL/COLUMN AND WALL/BEAM LOCATIONS, SEE ALTERNATE BRACING DETAIL BELOW 2B/A-501.

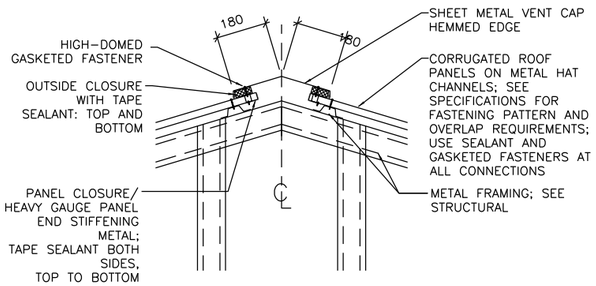

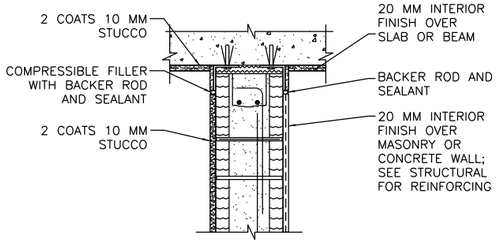

INTERIOR WALL/BEAM

LINEAR DIMENSIONS SHOWN ARE IN MILLIMETERS (MM), UNLESS OTHERWISE NOTED

0 200 400
SCALE: 1:10

US ARMY CORPS OF ENGINEERS
AFGHANISTAN ENGINEER DISTRICT

Mark	Description	Date	Appr.

Rev: 0
Date: 5-26-10
Design file no.
Drawing code:
File name:
Plot scale: X:X

Designed by: KRC
Dwn by: EBB
Ckd by: NLJ
Reviewed by: LHM
Submitted by:

U.S. ARMY CORPS OF ENGINEERS
AFGHANISTAN ENGINEER DISTRICT
APO AE 96338

WOMEN'S BARRACKS
VARIOUS LOCATIONS

EXTERIOR DETAILS

Sheet reference number:
A-501

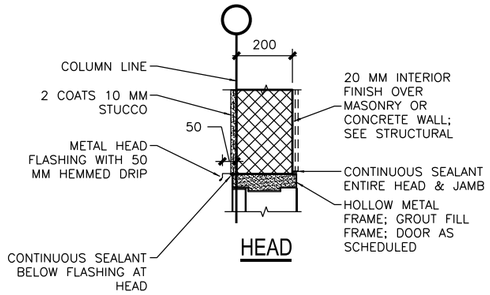

HEAD

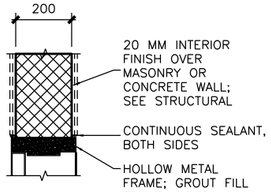

HEAD

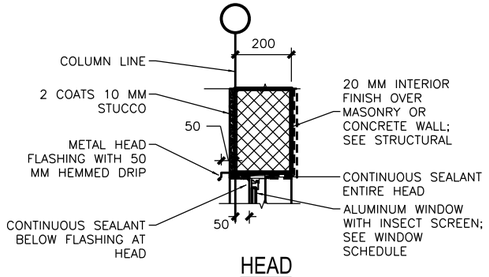

HEAD

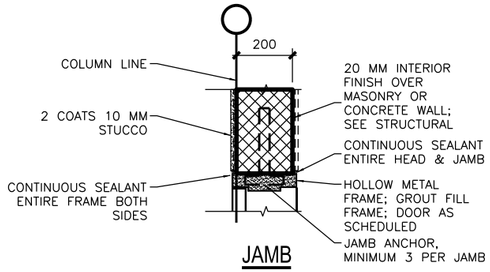

JAMB

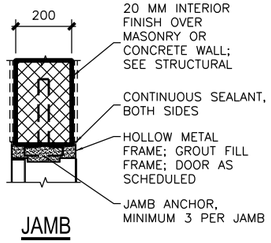

JAMB

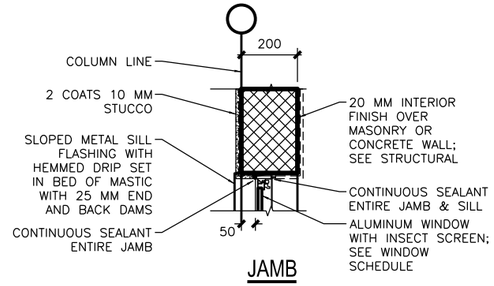

JAMB

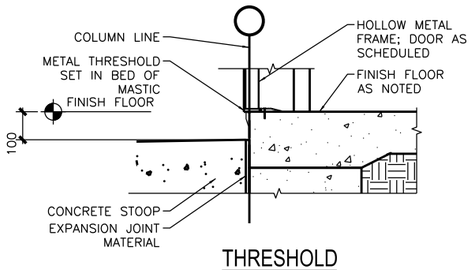

THRESHOLD

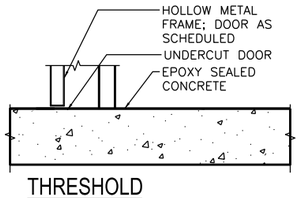

THRESHOLD

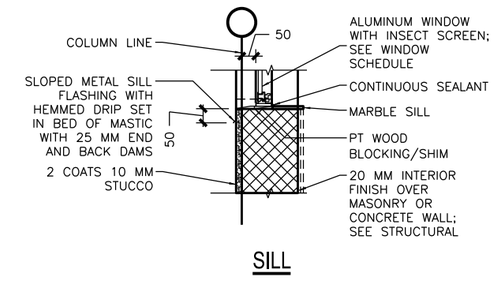

SILL

SCALE:

SCALE:

SCALE:

:

LINEAR DIMENSIONS SHOWN ARE IN MILLIMETERS (MM), UNLESS OTHERWISE NOTED

0 200 400
SCALE: 1:10

US ARMY CORPS OF ENGINEERS
AFGHANISTAN ENGINEER DISTRICT

No.	Description	Date
0		5-26-10

Designed by: KRC
Drawn by: EBB
Checked by: NLJ
Reviewed by: LHM
Submitted by: BAKER

U.S. ARMY CORPS OF ENGINEERS
AFGHANISTAN ENGINEER DISTRICT
APO AE 09356

WOMEN'S BARRACKS
VARIOUS LOCATIONS

HEAD, JAMB & SILL DETAILS

Sheet reference number:
A-502

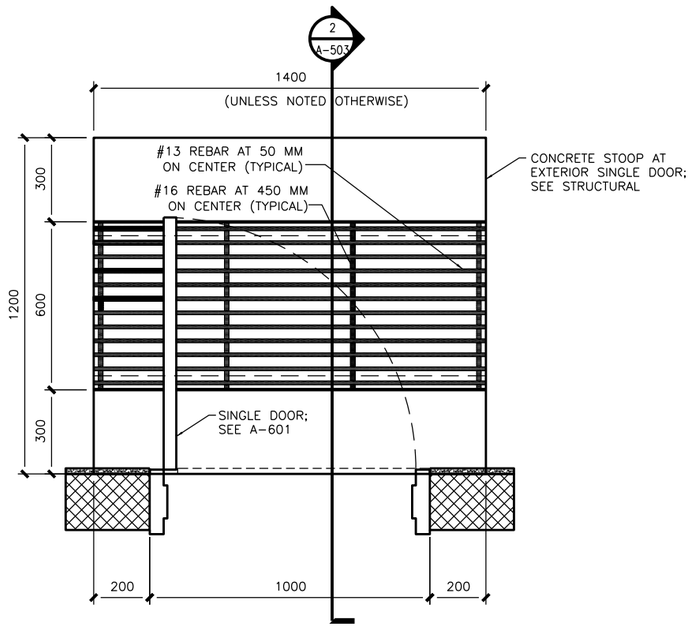

1 A-503 DOOR STOOP PLAN (WITH GRATE)

SCALE: 1:10

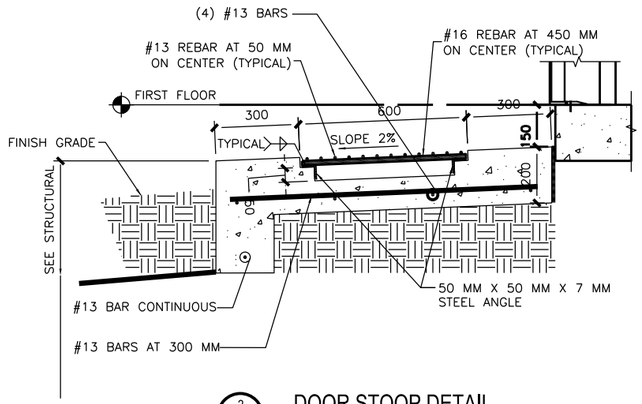

2 A-503 DOOR STOOP DETAIL

SCALE: 1:10

LINEAR DIMENSIONS SHOWN ARE IN MILLIMETERS (MM), UNLESS OTHERWISE NOTED

0 200 400

SCALE: 1:10

US ARMY CORPS OF ENGINEERS
AFGHANISTAN ENGINEER DISTRICT

Item	Description	Date	Appr.

U.S. ARMY CORPS OF ENGINEERS
AFGHANISTAN ENGINEER DISTRICT
APO AE 96338

Designed by:
Dwn by: Chd by: NLJ
Reviewed by:
Submitted by:
Date: 5-26-10
Rev: 0
Design file no.
Drawing code:
File name:
Plot date:
Plot scale: 0.0

WOMEN'S BARRACKS

VARIOUS LOCATIONS

STOOP DETAILS

Sheet reference number:

A-503

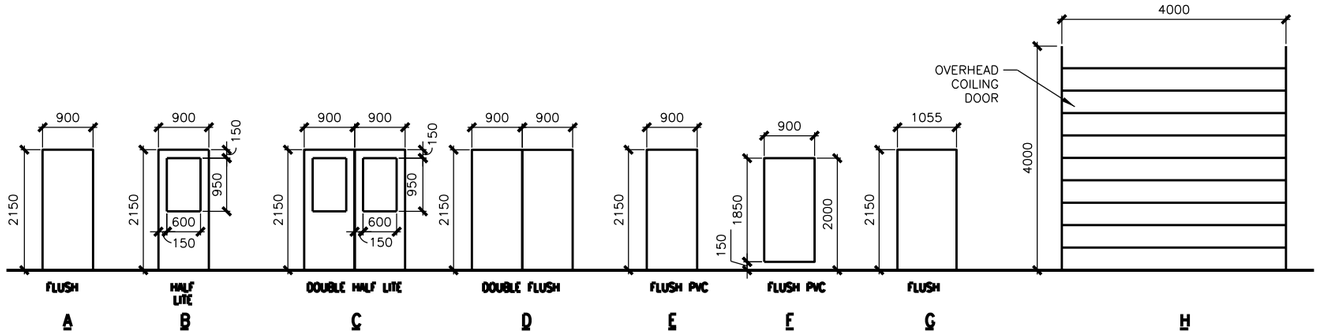

SCALE:

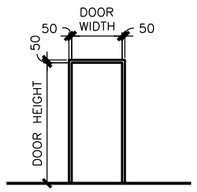

1

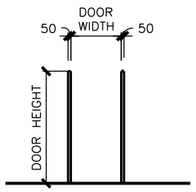

2

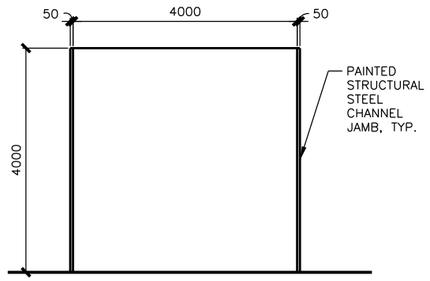

3

SCALE:

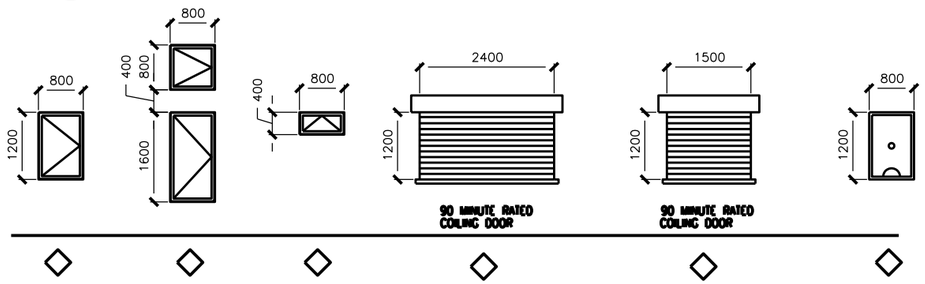

SCALE:

WINDOW TYPE NOTES:

1. ALL EXTERIOR WINDOWS SHALL BE ALUMINUM WITH INSECT SCREENS. WINDOWS SHALL BE COMMERCIAL GRADE.
2. ALL EXTERIOR WINDOWS SHALL BE OPERABLE.

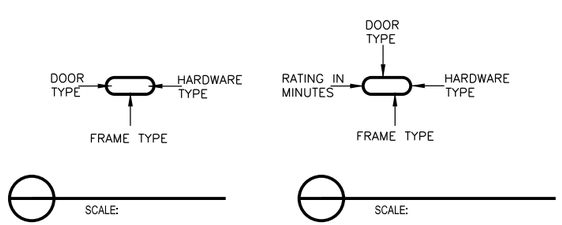

SCALE:

SCALE:

DOOR TAG NOTES:

1. THE DOOR TAG INDICATES THE DOOR TYPE, FRAME TYPE AND HARDWARE SET FOR EACH DOOR.

2. THE DOOR TAG FOR RATED DOORS INCLUDES THE RATING OF THE DOOR IN MINUTES.

EXTERIOR DOOR HARDWARE TYPES:

HW-1 1-1/2 PR HINGES, A5112 114 X 114
1 EA RIM EXIT DEVICE, TYPE 1
1 EA CYLINDER. E09221A, GRADE 1
1 EA OVERHEAD CLOSER, C02061, LOW RESISTANCE
1 EA THRESHOLD, J32130
3 EA DOOR SILENCERS, L03011

HW-2 1-1/2 PR HINGES, A5112 114 X 114
1 EA LOCKSET, F13 ENTRY LOCK W/LEVER HANDLES, GRADE 1
1 EA OVERHEAD CLOSER, C02061, LOW RESISTANCE
1 EA THRESHOLD, J32130
3 EA DOOR SILENCERS, L03011

HW-3 3 PR HINGES, A5112 114 X 114
2 EA RIM EXIT DEVICE, TYPE 1
2 EA CYLINDER. GRADE 1
2 EA OVERHEAD CLOSER, C02061, LOW RESISTANCE
1 EA DOOR COORDINATOR, TYPE 21
1 EA ASTRAGAL
1 EA THRESHOLD, J32130
2 EA DOOR SILENCERS, L03011

HW-4 3 PR HINGES, A5112 114 X 114
1 EA LOCKSET W/LEVER HANDLES. GRADE 1, F13
1 EA OVERHEAD CLOSER, C02061, LOW RESISTANCE
2 EA MAGNETIC HOLDER PIN, ATTACHED TO DOOR LEAF
2 EA MAGNETIC HOLDER RECEIVER, ATTACHED TO STOOP
2 EA LEVER EXTENSION FLUSH BOLTS, L04081
1 EA ASTRAGAL
1 EA THRESHOLD, J32130
2 EA DOOR SILENCERS, L03011

DOOR AND HARDWARE NOTES:

1. INTERIOR AND EXTERIOR METAL DOORS AND FRAME COLORS SHALL MATCH ADJACENT WALL COLORS AS SELECTED BY THE CONTRACTING OFFICER.

2. FRAMES, EXCEPT FIRE-RATED FRAMES, SHALL BE MOUNTED AND ADJUSTED IN ACCORDANCE WITH MANUFACTURER'S INSTRUCTIONS. FRAMES SHALL BE FASTENED WITH MINIMUM OF THREE ANCHORS PER JAMB AT EQUAL INTERVALS.

3. DIMENSIONS SHOWN ON DOOR TYPES DETAIL ARE BASED UPON MODULAR MASONRY (OR ROUGH OPENING), HEIGHT OF 2200 MM FOR STANDARD PERSONNEL DOORS. CONTRACTOR SHALL COORDINATE WITH DOOR SUPPLIER TO ENSURE THAT DIMENSIONS OF DOORS AND FRAMES PROVIDED ARE COMPATIBLE WITH DOOR OPENING DIMENSIONS.

4. HARDWARE SHALL BE HEAVY DUTY, COMMERCIAL GRADE, STAINLESS STEEL WITH A SATIN OR BRUSHED FINISH.

5. HARDWARE TYPES INCLUDE BUILDERS HARDWARE MANUFACTURERS ASSOCIATION (BMHA) NUMBER.

6. DOORS IN 2 HOUR RATED PARTITIONS SHALL BE 1.5 HOUR (90 MINUTE) RATED DOORS IN ACCORDANCE WITH NFPA 101, TABLE 8.3.4.2.

7. DOORS AT STAIR ENCLOSURES SHALL BE 1 HOUR (60 MINUTE) RATED AT 1 HOUR WALL IN ACCORDANCE WITH NFPA 101, TABLE 8.3.4.2.

8. DOORS IN 1 HOUR RATED WALLS SHALL BE 3/4 HOUR (45 MINUTE) RATED DOORS IN ACCORDANCE WITH NFPA 101, TABLE 8.3.4.2.

9. DOORS IN 1 HOUR RATED CORRIDOR WALLS SHALL BE 1/3 HOUR (20 MINUTE) IN ACCORDANCE WITH NFPA 101, TABLE 8.3.4.2.

10. PROVIDE DOOR STOPS TO PROTECT WALLS ON LOCATIONS WHERE DOOR SWING WILL STRIKE WALL.

THIS SHEET IS STANDARD AND IS INCLUSIVE OF ALL THE DOOR/ WINDOW/ HARDWARE TYPES FOR THE ENTIRE RMTC CONTRACT. NOT ALL DOOR/ WINDOW/ HARDWARE TYPES ARE USED FOR ANY PARTICULAR BUILDING DESIGN. CONTRACTOR SHALL REFER TO THE FLOOR PLAN FOR THE TYPES BEING USED.

INTERIOR DOOR HARDWARE TYPES:

HW-5 1-1/2 PR HINGES, A8133 114 X 114
1 EA LOCKSET W/LEVER HANDLES, F08, GRADE 1
1 EA WALL STOP, L02101 OR L02161
3 EA DOOR SILENCERS, L03011

HW-6 1-1/2 PR HINGES, A8112 114 X 114
1 EA LOCKSET W/LEVER HANDLES, F08, GRADE 1
1 EA WALL STOP, L02101 OR L02161
1 EA OVERHEAD CLOSER, C02061, LOW RESISTANCE
3 EA DOOR SILENCERS, L03011

HW-7 1-1/2 PR HINGES, A8133
1 EA LOCKSET W/LEVER HANDLES, F13 GRADE 1
1 EA WALL STOP, L02101 OR L02161
2 EA MOP PLATE, J103
3 EA DOOR SILENCERS, L03011

HW-8 1-1/2 PR HINGES, A8112
1 EA LOCKSET W/LEVER HANDLES, F13 GRADE 1
1 EA WALL STOP, L02101 OR L02161
2 EA MOP PLATE, J103
1 EA OVERHEAD CLOSER, C02061, LOW RESISTANCE
3 EA DOOR SILENCERS, L03011

HW-9 1-1/2 PR HINGES, A5112 114 X 114
1 EA RIM EXIT DEVICE, TYPE 1
1 EA CYLINDER. E09221A, GRADE 1
1 EA OVERHEAD CLOSER, C02061, LOW RESISTANCE
3 EA DOOR SILENCERS, L03011

HW-10 3 PR HINGES, A5112 114 X 114
1 EA LOCKSET W/LEVER HANDLES. GRADE 1, F13
2 EA LEVER EXTENSION FLUSH BOLTS, L04081
1 EA ASTRAGAL
2 EA DOOR SILENCERS, L03011

HW-11 1-1/2 PR HINGES, A8112 114 X 114
1 EA LOCKSET W/LEVER HANDLES, F13, GRADE 1
1 EA WALL STOP, L02101 OR L02161
1 EA OVERHEAD CLOSER, C02061, LOW RESISTANCE
3 EA DOOR SILENCERS, L03011
1 EA ROBE HOOK

HW-12 1-1/2 PR HINGES, A8133
1 EA LATCHSET W/LEVER HANDLES, F76 GRADE 1
1 EA WALL STOP, L02101 OR L02161
2 EA MOP PLATE, J103
3 EA DOOR SILENCERS, L03011
1 EA ROBE HOOK

HW-13 3 PR HINGES, A5112 114 X 114
1 EA LOCKSET W/LEVER HANDLES. GRADE 1, F13
1 EA OVERHEAD CLOSER, C02061, LOW RESISTANCE
2 EA LEVER EXTENSION FLUSH BOLTS, L04081
1 EA ASTRAGAL
2 EA DOOR SILENCERS, L03011

HW-14 3 PR HINGES, A5112 114 X 114
2 EA RIM EXIT DEVICE, TYPE 1
2 EA CYLINDER. GRADE 1
2 EA OVERHEAD CLOSER, C02061, LOW RESISTANCE
1 EA DOOR COORDINATOR, TYPE 21
1 EA ASTRAGAL
2 EA DOOR SILENCERS, L03011

US ARMY CORPS OF ENGINEERS
AFGHANISTAN ENGINEER DISTRICT

No.	Description	Date

Rev: 0
Date: 5-26-10
Design by: KRC
Drawn by: EBB
Chkd by: NLJ
Reviewed by: LHM
Submitted by:
Drawing code:
File name:
Proj mgr:

U.S. ARMY CORPS OF ENGINEERS
AFGHANISTAN ENGINEER DISTRICT
APO AE 09356

WOMEN'S BARRACKS
VARIOUS LOCATIONS

WINDOW AND DOOR SCHEDULES

Sheet reference number:
A-601

EF EXHAUST FAN
EUH ELECTRIC UNIT HEATER
CF CEILING FAIN
DL DOOR LOUVER
UC UNDER CUT

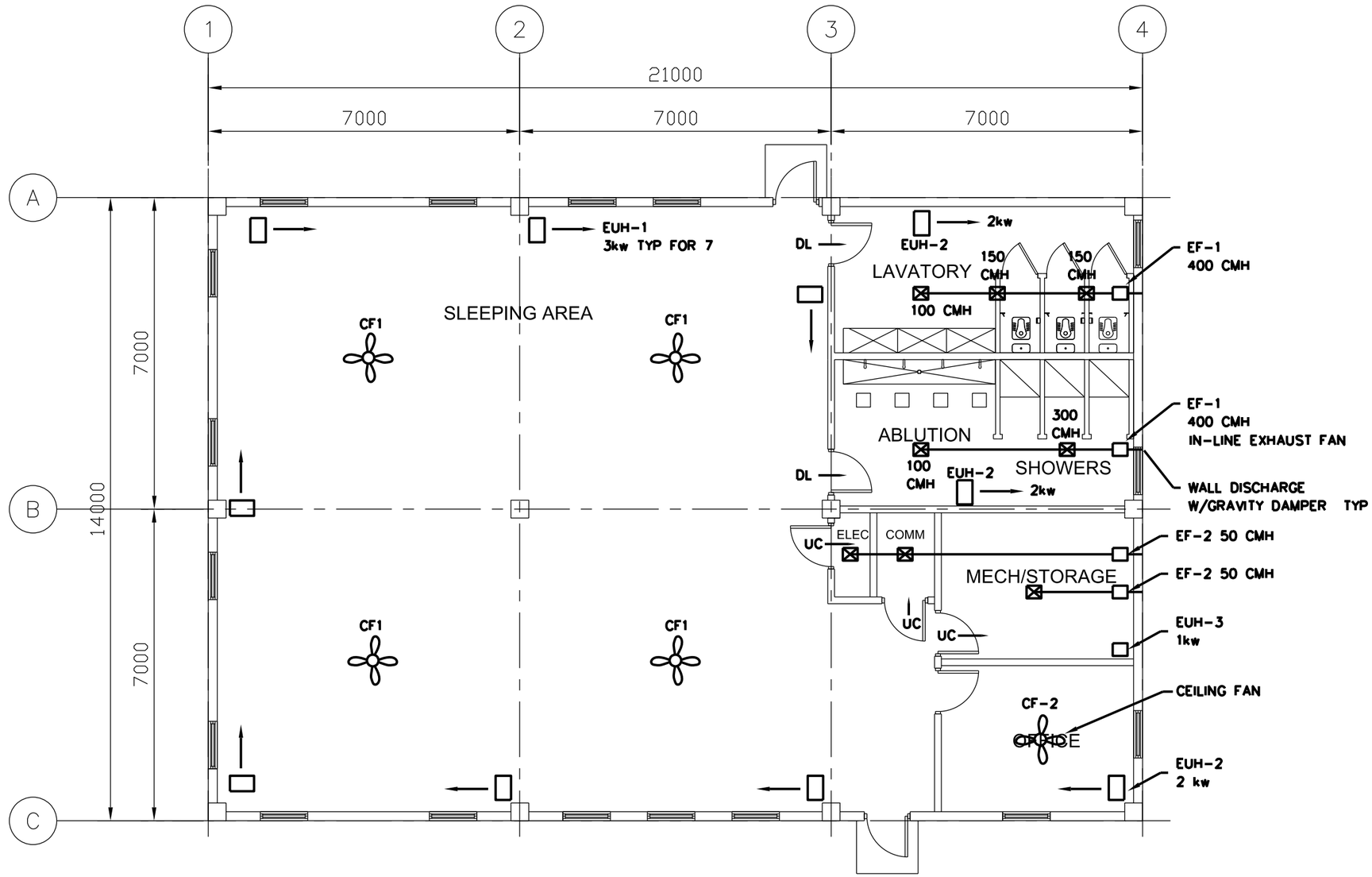

1 0 1 2 3 4
1:50

A1 Size 594mm x 841mm

US ARMY CORPS OF ENGINEERS
AFGHANISTAN ENGINEER DISTRICT

SYMBOL	DESCRIPTION	DATE	APPR.	SYMBOL	DESCRIPTION	DATE	APPR.

DESIGNED BY:
DRAWN BY:
REVIEWED BY:
SUBMITTED BY:
DATE: XX-XX-XX
DESIGN FILE NO.
CHKD BY:
DRAWING CODE:
CHKD BY:
FILE NAME:
PLOT SCALE:
PLOT DATE: XX-XX-XX
REV. 1

U.S. ARMY ENGINEER DISTRICT, AFGHANISTAN
CORPS OF ENGINEERS
APO AE 96338

ENGINEERING AND CONSTRUCTION DIVISION

WOMEN'S BARRACKS
VARIOUS LOCATIONS

HVAC PLAN

SHEET REFERENCE NUMBER:
M-101

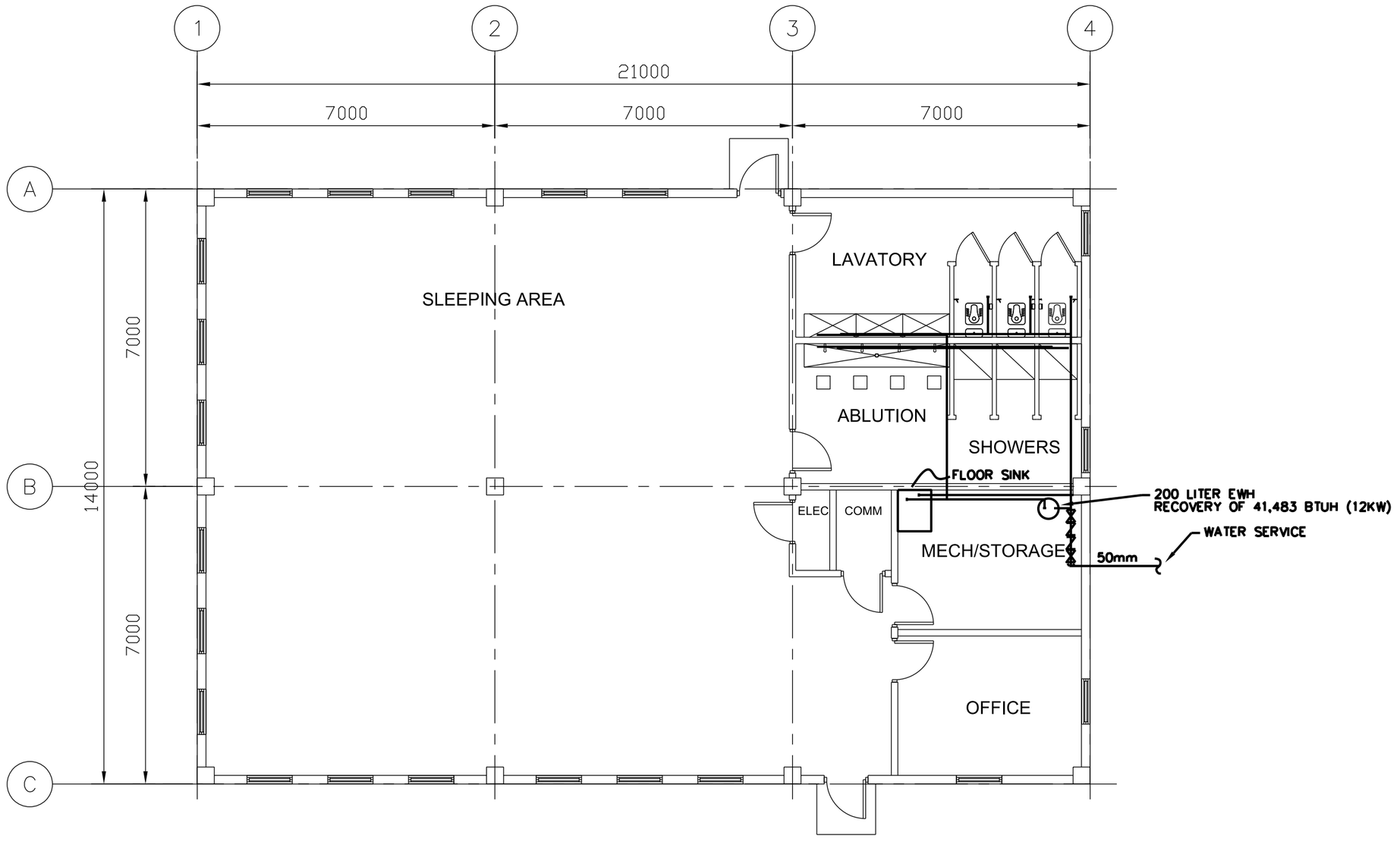

1:50

US ARMY CORPS OF ENGINEERS AFGHANISTAN ENGINEER DISTRICT

SYMBOL	DESCRIPTION	DATE	APPR.

SYMBOL	DESCRIPTION	DATE	APPR.

DESIGNED BY: DATE: xx-xx-xx REV.
DWN BY: CKD BY: DESIGN FILE NO.
REVIEWED BY: DRAWING CODE:
SUBMITTED BY: FILE NAME:
PLOT SCALE:
PLOT DATE: xx-xx-xx

U.S. ARMY ENGINEER DISTRICT, AFGHANISTAN
CORPS OF ENGINEERS
APO AE 96338

ENGINEERING AND CONSTRUCTION DIVISION

WOMEN'S BARRACKS
VARIOUS LOCATIONS

HOT & COLD WATER PIPING

SHEET REFERENCE NUMBER:
P-101

A1 Size 594mm x 841mm

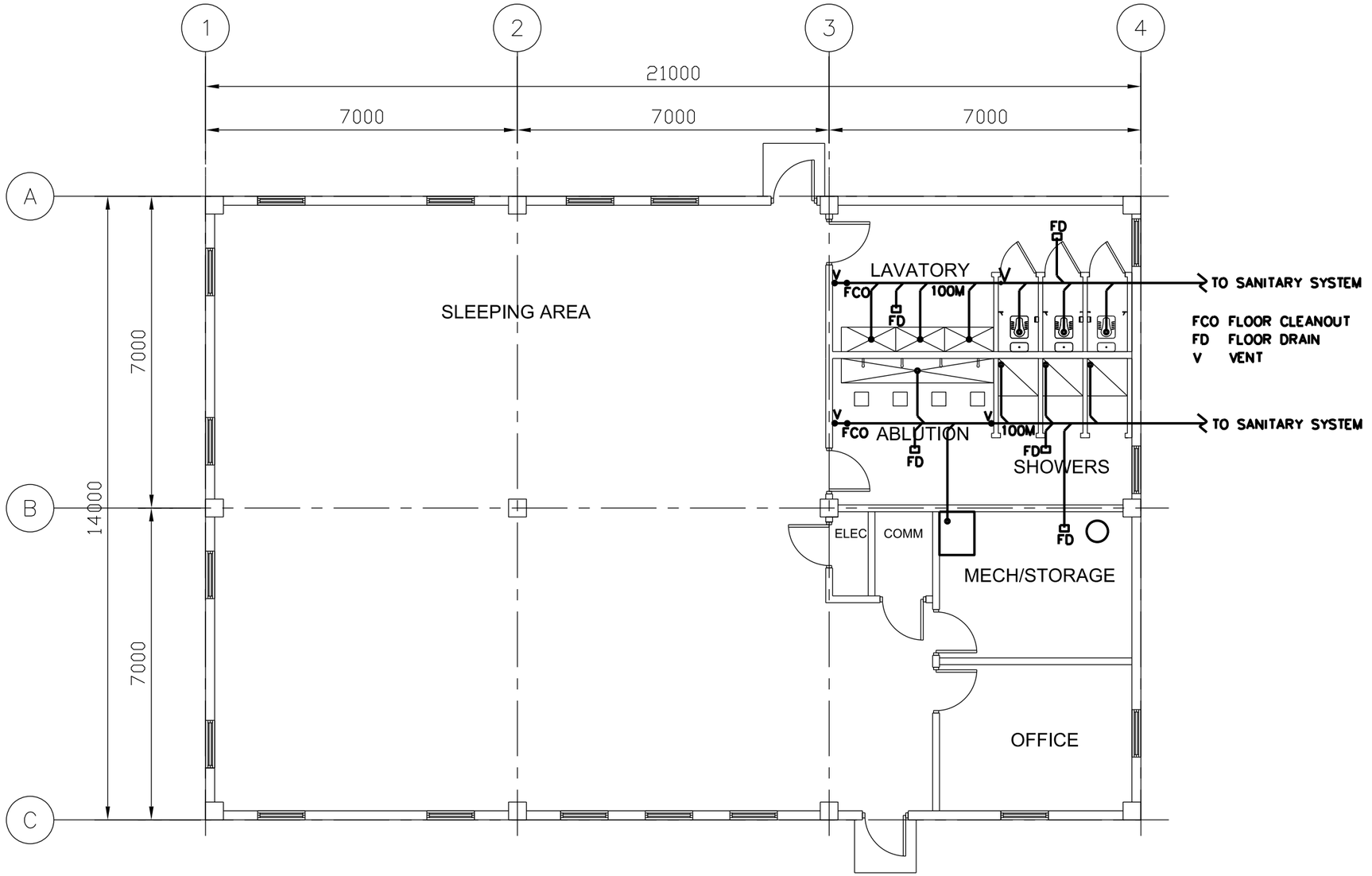

1 0 1 2 3 4
1:50

US ARMY CORPS OF ENGINEERS AFGHANISTAN ENGINEER DISTRICT

SYMBOL	DESCRIPTION	DATE	APPR.

SYMBOL	DESCRIPTION	DATE	APPR.

DESIGNED BY: DATE: xx-xx-xx
DWN BY: CKD BY: DESIGN FILE NO.
REVIEWED BY: DRAWING CODE:
SUBMITTED BY: FILE NAME:
PLOT SCALE:
PLOT DATE: xx-xx-xx
REV.

U.S. ARMY ENGINEER DISTRICT, AFGHANISTAN
CORPS OF ENGINEERS
APO AE 96338

ENGINEERING AND CONSTRUCTION DIVISION

WOMEN'S BARRACKS
VARIOUS LOCATIONS

SANITARY DRAING & VENT

SHEET REFERENCE NUMBER:
P-102

A1 Size 594mm x 841mm

POWER

- DISTRIBUTION PANELBOARD
- NEW PANELBOARD – SURFACE
- NEW PANELBOARD – RECESSED
- (G) GENERATOR
- TRANSFORMER (DRAWN TO SIZE)
- (J) JUNCTION BOX
- (J) JUNCTION BOX – CEILING
- FUSIBLE SAFETY SWITCH
- (M) MOTOR
- ^{M} MOTOR STARTING SWITCH – 220V, 20A RATED UNLESS OTHERWISE NOTED.
- ELECTRIC WATER HEATER
- CEILING FAN – REFER TO SPECIFICATION SECTION 26 20 00

RECEPTACLES

- DUPLEX 20A TYPE CEE 7/7 "SCHUKO STYLE" UNSWITCHED RECEPTACLE
- $_{GF}$ DUPLEX 20A TYPE CEE 7/7 "SCHUKO STYLE" UNSWITCHED RECEPTACLES – 10mA GROUND FAULT INTERRUPTER TYPE
- $_{WP}$ DUPLEX 20A TYPE CEE 7/7 "SCHUKO STYLE" UNSWITCHED TYPE WITH WEATHERPROOF COVER – 10mA GROUND FAULT INTERRUPTER TYPE
- $_{EXP}$ DUPLEX 20A TYPE CEE 7/7 "SCHUKO STYLE" UNSWITCHED RECEPTACLES – EXPLOSION PROOF
- * INDICATES MOUNT DEVICE ABOVE COUNTERTOP OR AT 1070mm ABOVE FINISHED FLOOR WHERE NO COUNTER IS TO BE INSTALLED.

LIGHTING

- LIGHTING FIXTURE – SEE FIXTURE SCHEDULE FOR MORE INFORMATION
- EMERGENCY LIGHTING FIXTURE – SEE FIXTURE SCHEDULE FOR MORE INFORMATION
- DOWNLIGHT
- LIGHTING FIXTURE ON NORMAL/EMERGENCY
- WALL MOUNTED LIGHT FIXTURE
- E EXIT SIGN – DIRECTIONAL ARROWS AS INDICATED ON DRAWINGS
- REMOTE HEAD FOR BATTERY PACK
- $ SINGLE POLE SWITCH – 20A RATED
- ^{3} 3-WAY SWITCH – 20A RATED
- ^{4} 4-WAY SWITCH – 20A RATED
- LC LIGHTING CONTACTOR
- POLE MOUNTED SITE LIGHTING FIXTURE– NUMBER OF FIXTURES PER POLE AS INDICATED ON DRAWINGS
- EXTERIOR DIRECTIONAL LIGHTING FIXTURE
- SMALL CASE LETTERS REPRESENTS LAMP(S) / SWITCHES.

TELECOMMUNICATIONS

- ▼ TELEPHONE OUTLET(S) @ 45cm AFF. U.N.O. WITH 20mm RACEWAY TERMINATED TO TELEDATA TERMINAL BOARD.
- ▽ DATA OUTLET(S) @ 45cm AFF. U.N.O. WITH 20mm RACEWAY TERMINATED TO TELEDATA TERMINAL BOARD.

TELECOMMUNICATIONS (CONTINUED)

- ▼▽ COMBINATION TELEPHONE/DATA OUTLET(S) @ 45cm AFF. U.N.O. WITH 27mm RACEWAY TERMINATED TO TELEDATA TERMINAL BOARD.
- "▼ WALL MTD. TELEPHONE OUTLET WITH 20mm RACEWAY TO TELEDATA TERMINAL BOARD.
- (x)T INDICATES NUMBER OF TELEPHONE OUTLET(S) AND ASSOCIATED CABLING
- (x)D INDICATES NUMBER OF DATA OUTLET(S) AND ASSOCIATED CABLING
- (x)TF INDICATES NUMBER OF TELEPHONE OUTLETS AND ASSOCIATED CABLING WITH 1 OUTLET AND CABLE DEDICATED FOR FAX

SINGLE LINE SYMBOLS

- SWITCH
- BREAKER
- FUSE
- TRANSFORMER
- GROUND
- CONTACT (NORMALLY OPEN)
- CONTACT (NORMALLY CLOSED)
- TRANSFER SWITCH
- CURRENT TRANSFORMER
- INDICATES NEW ELECTRICAL EQUIPMENT
- —C— INDICATES NEW CONTROL WIRING AND CONDUIT
- EQUIPMENT OUTLINE

MISCELLANEOUS

- BRANCH CIRCUIT WIRING, SURFACE MOUNTED ON WALLS
- BRANCH CIRCUIT WIRING – 6mm²
- BRANCH CIRCUIT WIRING – UNDER FLOOR
- HOME RUN BACK TO PANEL
- CONDUIT TURNED DOWN
- CONDUIT TURNED UP
- —LV— LOW VOLTAGE WIRING AND CONDUIT
- ~ INDICATES CONTINUATION OF LINE

FIRE ALARM

- FACP FIRE ALARM CONTROL PANEL WITH BATTERY BACKUP
- F FIRE ALARM PULL STATION

FIRE ALARM (CONTINUED)

- F FIRE ALARM STROBE – WALL MOUNTED
- F FIRE ALARM AUDIBLE/STROBE – WALL MOUNTED
- F FIRE ALARM HORN/STROBE – WALL MOUNTED
- S SMOKE DETECTOR
- H HEAT DETECTOR CEILING MOUNTED
- D DUCT DETECTOR – PROVIDED BY EC, INSTALLED BY MC AND CONNECTED BY EC

DENOTATIONS & ABBREVIATIONS

AFF	ABOVE FINISHED FLOOR
C	CEILING MOUNTED
E	EMERGENCY
EC	ELECTRICAL CONTRACTOR
EPO	EMERGENCY POWER OFF
EXP	EXPLOSION PROOF
F	FIRE ALARM
FF	FLUSH FLOOR MOUNTED
FL	FLUORESCENT
FO	FIBER OPTIC
FSS	FUSED SAFETY SWITCH
GF	GROUND FAULT INTERRUPTER
GC	GENERAL CONTRACTOR
IG	ISOLATED GROUND
K	KEY
LV	LOW VOLTAGE
M	MOTOR
MC	MECHANICAL CONTRACTOR
NE	NORMAL/EMERGENCY
NFSS	NON-FUSED SAFETY SWITCH
PA	PAGING SYSTEM
PLC	PLUMBING CONTRACTOR
SL	SINGLE LINE
T	TELEPHONE

DENOTATIONS & ABBREVIATIONS (CONT.)

TP	TAMPER PROOF
UE	UNDERGROUND ELECTRIC
W	WALL MOUNTED
WP	WEATHERPROOF WITH GROUND FAULT INTERRUPTION
WT	WATER TIGHT

GENERAL PROJECT NOTES:

G1. UNLESS OTHERWISE NOTED, PROVIDE ALL EQUIPMENT SHOWN ON THE PLANS. THE ELECTRICAL CONTRACTOR SHALL COORDINATE ALL SYMBOLS SHOWN ON THE PLANS WITH THE SYMBOL LIST. IT SHALL BE THE RESPONSIBILITY OF THE CONTRACTOR TO VERIFY THE INTENT OF ANY SYMBOL THAT IS SHOWN ON THE PLANS AND NOT INDICATED ON THE SYMBOL LIST WITH THE ENGINEER PRIOR TO BID.

G2. THE CONTRACTOR SHALL VERIFY THE LOCATION OF ALL UNDERGROUND UTILITIES WITHIN THE CONSTRUCTION AREA THREE (3) WORKING DAYS NOTICE BEFORE COMMENCING DIGGING. NOTIFY THE LOCAL AUTHORITY HAVING JURISDICTION AND WAIT THE REQUIRED TIME BEFORE COMMENCING TO DIG.

G3. THE CONTRACTOR SHALL COORDINATE CONDUIT RUNS, LIGHTING FIXTURES AND OTHER EQUIPMENT LOCATIONS WITH THE OTHER TRADE CONTRACTORS TO AVOID CONFLICTS.

G4. WHERE VOLTAGES AND FREQUENCIES ON THE DRAWINGS AND IN THE SPECIFICATIONS DIFFER FROM THE LOCAL ONES, ALL WORK SHALL BE PERFORMED USING THE LOCAL VOLTAGES AND FREQUENCIES.

G5. THE MINIMUM WIRE SIZE ON THE PROJECT SHALL BE 4mm². THE MINIMUM CONDUIT SIZE SHALL BE 20mm. THE MINIMUM BREAKER SIZE SHALL BE 20 AMPS.

G6. THE CONTRACTOR SHALL PUT A MAXIMUM OF 6 DUPLEX RECEPTACLES ON A 20A SINGLE POLE CIRCUIT.

G7. WHERE THE 1010 SCOPE REVIEW, 1015 TECHNICAL REVIEW, DRAWINGS, AND SPECIFICATIONS DIFFER FROM AMERICAN CODES OR STANDARDS, THE 1010, 1015, DRAWINGS, AND SPECIFICATIONS SHALL RULE.

G8. ALL CONDUIT AND DEVICES SHALL BE SURFACE MOUNTED UNLESS OTHERWISE INDICATED.

G9. CONTRACTOR SHALL COORDINATE ALL WORK WITH ALL OTHER TRADES TO ENSURE ALL WORK IS COMPLETED IN A PROFESSIONAL, WORKMAN-LIKE MANNER.

US ARMY CORPS OF ENGINEERS
AFGHANISTAN ENGINEER DISTRICT

Rev	Description	Date
0		

Designed by: QJB
Drawn by: JRC
Checked by: JRC
Date: 5-26-10
Design file name:
Drawing scale:
File name:
Plot date:
Submitted by:

U.S. ARMY CORPS OF ENGINEERS
AFGHANISTAN ENGINEER DISTRICT
APO AE 09356

WOMEN'S BARRACKS
VARIOUS LOCATIONS

ELECTRICAL SYMBOLS & ABBREVIATIONS

Sheet reference number:
E-001

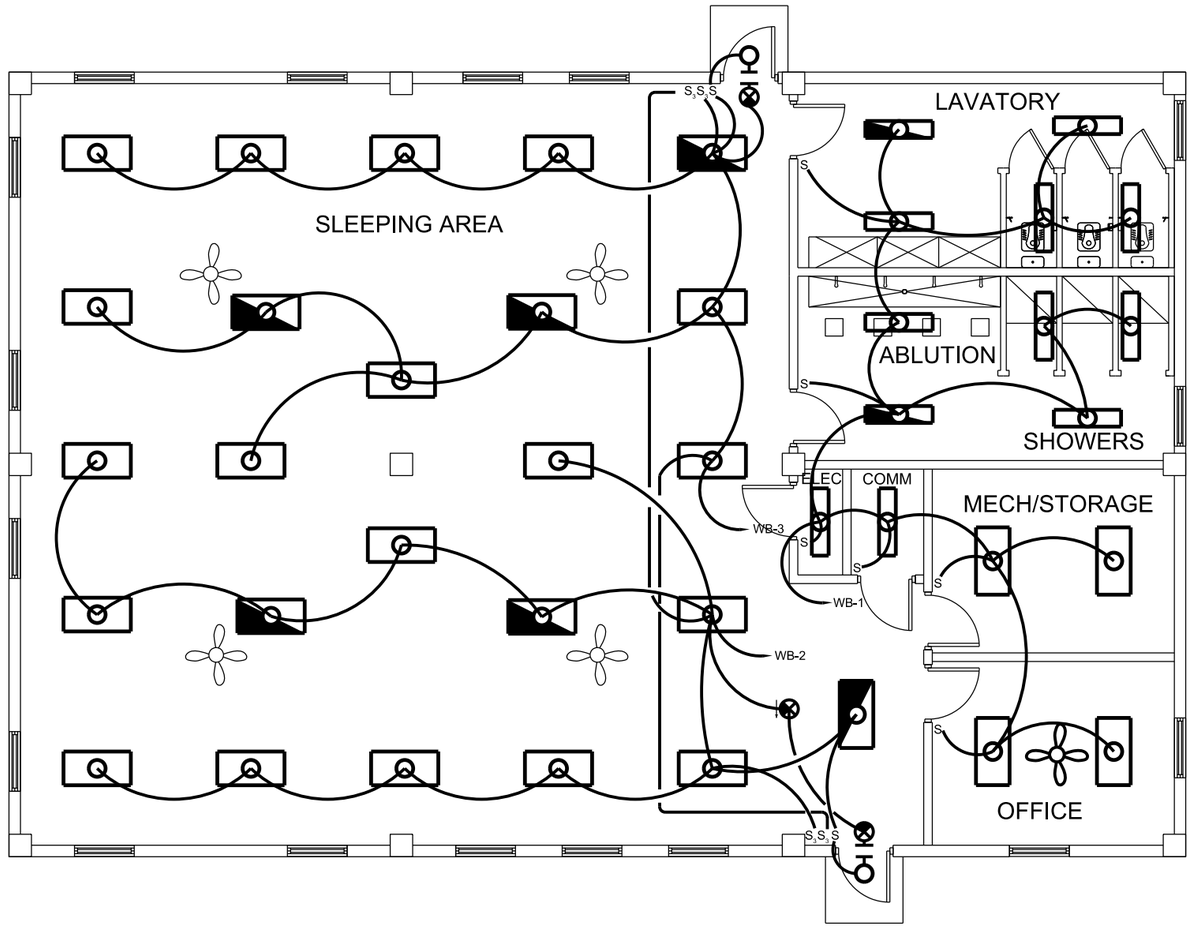

LEGEND

- 300mm x 1200mm SURFACE MTD WRAP-AROUND FLUORESCENT FIXTURE WITH PRISMATIC ACRYLIC LENS, ELECTRONIC BALLAST, AND 2-32W T8 LAMPS
- SAME AS ABOVE FIXTURE WITH EMERGENCY BALLAST AND BATTERY PACK
- 600mm x 1200mm SURFACE MTD LENSED FLUORESCENT FIXTURE WITH PRISMATIC ACRYLIC LENS, ELECTRONIC BALLAST, AND 4-32W T8 LAMPS
- SAME AS ABOVE WITH EMERGENCY BALLAST AND BATTERY PACK
- 150W HPS ROUGH-SERVICE EXTERIOR BUILDING LIGHT
- SINGLE-FACE, WALL MOUNT EXIT LIGHT 152mm RED LETTERS
- SINGLE-FACE, CEILING MOUNT EXIT LIGHT 152mm RED LETTERS WITH DIRECTIONAL CHEVRON
- S SINGLE POLE, SINGLE THROW 250V LIGHT SWITCH
- S_3 THREE-WAY 250V LIGHT SWITCH

GENERAL NOTES

1. EXTERIOR LIGHT FIXTURES AND LIGHT FIXTURES IN BATHROOMS SHALL BE SUITABLE FOR WET LOCATIONS.
2. ALL LIGHT FIXTURES SHALL HAVE ELECTRONIC BALLASTS.
3. EXIT SIGNS AND EMERGENCY BATTERY PACKS SHALL BE WIRED TO AN UNSWITCHED CONDUCTOR. OPERATION OF ANY LIGHT SWITCH SHALL NOT AFFECT BATTERY CHARGING.

US ARMY CORPS OF ENGINEERS
AFGHANISTAN ENGINEER DISTRICT

SYMBOL	DESCRIPTION	DATE	APPR.	SYMBOL	DESCRIPTION	DATE	APPR.

REV. __
DATE: xx-xx-xx
DESIGN FILE NO.:
DRAWING CODE:
FILE NAME:
PLOT SCALE: ___ = ___
PLOT DATE: xx-xx-xx

DESIGNED BY:
DWN BY:
CKD BY:
REVIEWED BY:
SUBMITTED BY:

U.S. ARMY ENGINEER DISTRICT, AFGHANISTAN
CORPS OF ENGINEERS
APO AE 96338

ENGINEERING AND CONSTRUCTION DIVISION

WOMEN'S BARRACKS
VARIOUS LOCATIONS

LIGHTING PLAN

SHEET REFERENCE NUMBER:
E-101
SHEET --- OF ---

A1 Size 594mm x 841mm

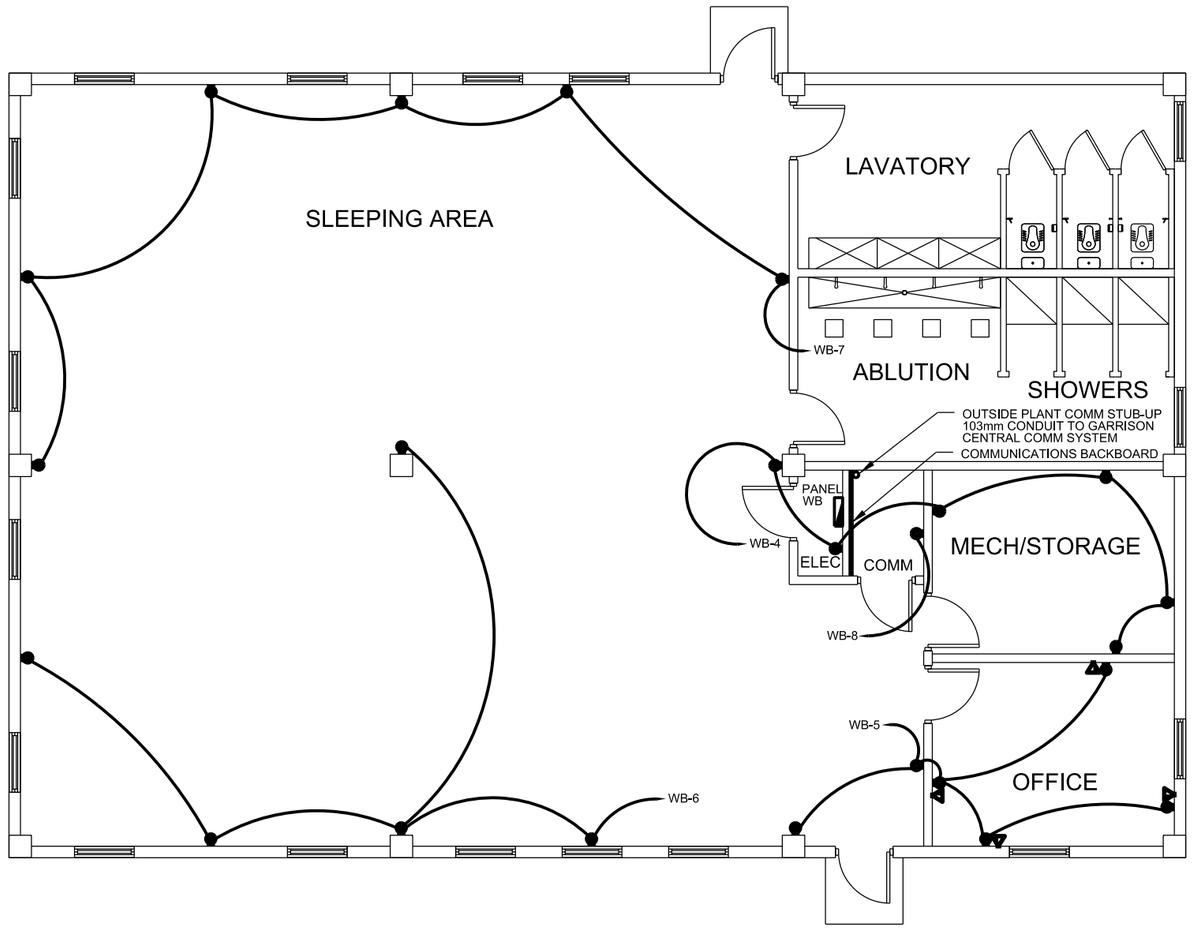

LEGEND

- DOUBLE CEE 7/7 "SCHUKO" STYLE RECEPTACLE. MOUNT AT 450mm A.F.F.
- A COMBINATION DATA/TELEPHONE OUTLET. 2-8P8C JACKS. MOUNT AT 450mm A.F.F.

GENERAL NOTES

1. EACH DATA/TELEPHONE OUTLET SHALL HAVE NONMETALLIC RACEWAY WITH PULL STRING HOMERUN TO BACKBOARD IN COMM ROOM. CATEGORY 6 CABLE WILL BE PROVIDED IN FUTURE BY OTHERS.
2. POWER WIRING SHALL BE SEPARATED AT LEAST 150mm FROM COMMUNICATIONS RACEWAY. POWER WIRING SHALL BE INSTALLED IN EMT CONDUIT. NONMETALLIC RACEWAY SHALL NOT BE USED FOR POWER WIRING.
3. PROVIDE 1200mm X 2400mm SHEET OF PLYWOOD PAINTED WITH FIRE RESISTANT PAINT FOR MOUNTING TELECOMMUNICATIONS EQUIPMENT.

US ARMY CORPS OF ENGINEERS
AFGHANISTAN ENGINEER DISTRICT

SYMBOL	DESCRIPTION	DATE	APPR.	SYMBOL	DESCRIPTION	DATE	APPR.

DESIGNED BY:
DRAWN BY:
CKD BY:
REVIEWED BY:
SUBMITTED BY:
DATE: XX-XX-XX
DESIGN FILE NO.
DRAWING CODE:
FILE NAME:
PLOT SCALE:
PLOT DATE: XX-XX-XX
REV. __

U.S. ARMY ENGINEER DISTRICT, AFGHANISTAN
CORPS OF ENGINEERS
APO AE 96338

ENGINEERING AND CONSTRUCTION DIVISION

WOMEN'S BARRACKS
VARIOUS LOCATIONS

RECEPTACLE PLAN

SHEET REFERENCE NUMBER:
E-102
SHEET --- OF ---

A1 Size 594mm x 841mm

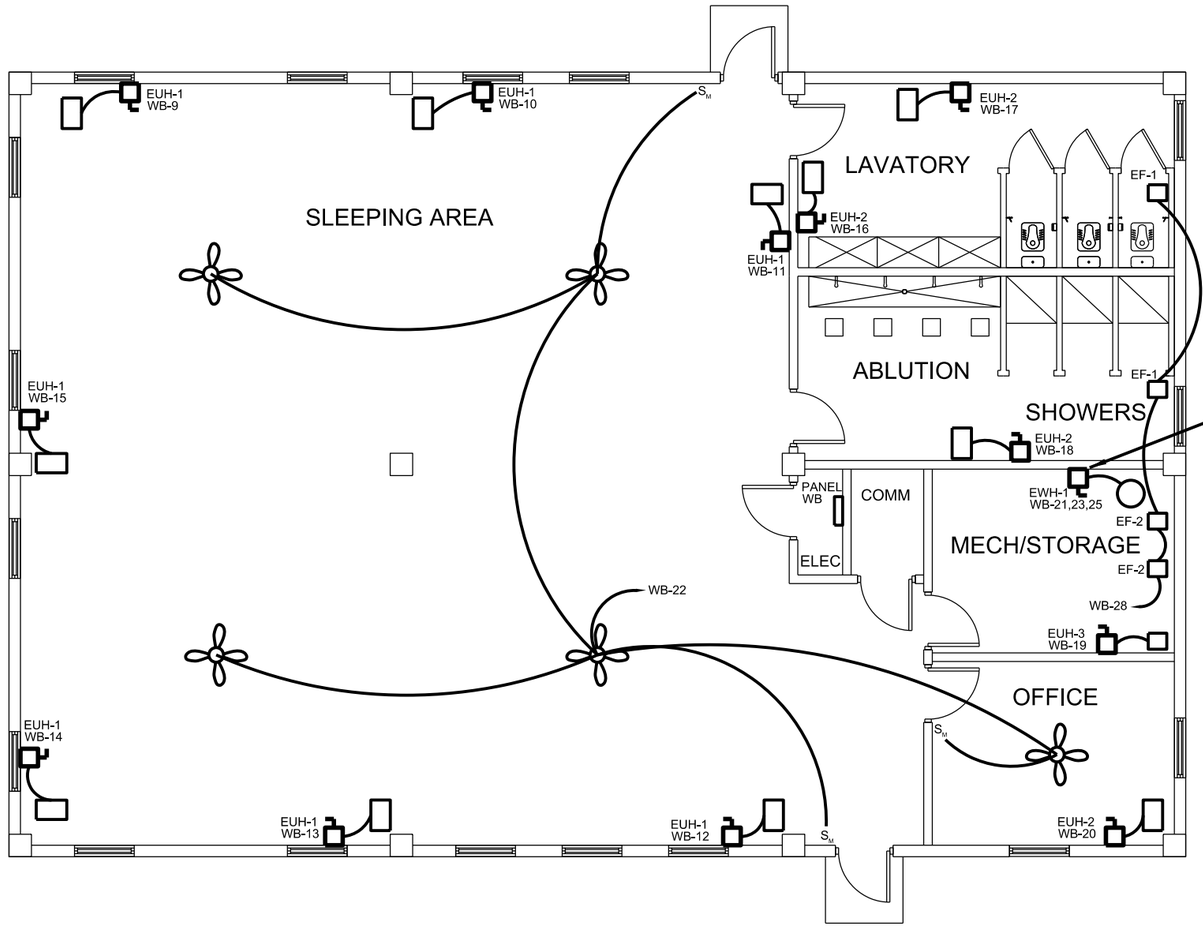

LEGEND

30A, 1P, 250V, NON-FUSED DISCONNECT (SAFETY) SWITCH UNLESS NOTED OTHERWISE

S_M MOTOR-RATED SWITCH. 250V, 1P.

US ARMY CORPS OF ENGINEERS
AFGHANISTAN ENGINEER DISTRICT

SYMBOL	DESCRIPTION	DATE	APPR.

DESIGNED BY:
DWN BY:
CKD BY:
REVIEWED BY:
SUBMITTED BY:
DATE: XX-XX-XX
DESIGN FILE NO.:
DRAWING CODE:
FILE NAME:
PLOT SCALE:
PLOT DATE: XX-XX-XX
REV. __

U.S. ARMY ENGINEER DISTRICT, AFGHANISTAN
CORPS OF ENGINEERS
APO AE 96338

ENGINEERING AND CONSTRUCTION DIVISION

WOMEN'S BARRACKS
VARIOUS LOCATIONS

ELECTRICAL POWER PLAN

SHEET REFERENCE NUMBER:
E-103
SHEET --- OF ---

A1 Size 594mm x 841mm

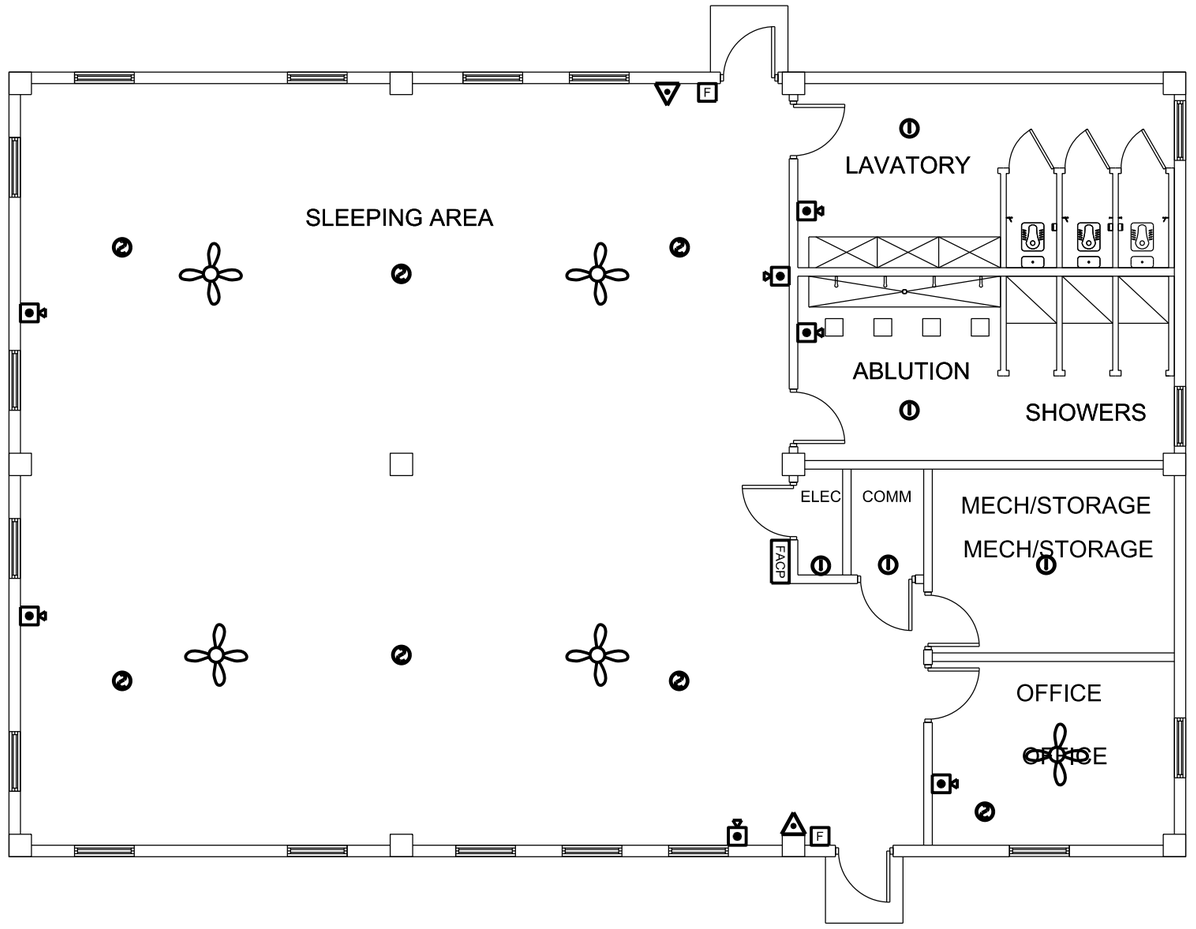

LEGEND

- F — FIRE ALARM PULL STATION. +1300mm A.F.F.
- DUAL-SENSOR (PHOTOELECTRIC AND IONIZATION) SMOKE DETECTOR
- DUAL-SENSOR (PHOTOELECTRIC AND IONIZATION) SMOKE DETECTOR WITHOUT AUDIBLE ALARM
- FACP — COMMERCIALLY AVAILABLE FIRE ALARM CONTROL PANEL. FIRE ALARM SYSTEM, AT A MINIMUM, SHALL HAVE CLASS B, STYLE 4 WIRING PER NFPA 72.
- HORN/STROBE COMBO. 30cd MIN. +2100mm A.F.F.
- 5 KG. ABC DRY-CHEMICAL EXTINGUISHER

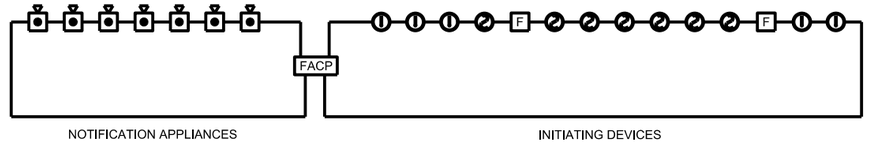

2 / E-104 WOMEN'S BARRACKS FIRE ALARM SYSTEM DIAGRAM
N.T.S.

US ARMY CORPS OF ENGINEERS
AFGHANISTAN ENGINEER DISTRICT

SYMBOL	DESCRIPTION	DATE	APPR.	SYMBOL	DESCRIPTION	DATE	APPR.

DESIGNED BY: | DRAWN BY: | CHKD BY: | REVIEWED BY: | SUBMITTED BY:
DATE: XX-XX-XX | DESIGN FILE NO.: | DRAWING CODE: | FILE NAME: | PLOT SCALE: | PLOT DATE: XX-XX-XX | REV.: __

U.S. ARMY ENGINEER DISTRICT, AFGHANISTAN
CORPS OF ENGINEERS
APO AE 96338

ENGINEERING AND CONSTRUCTION DIVISION

WOMEN'S BARRACKS
VARIOUS LOCATIONS

FIRE ALARM PLAN

SHEET REFERENCE NUMBER:
E-104
SHEET --- OF ---

A1 Size 594mm x 841mm

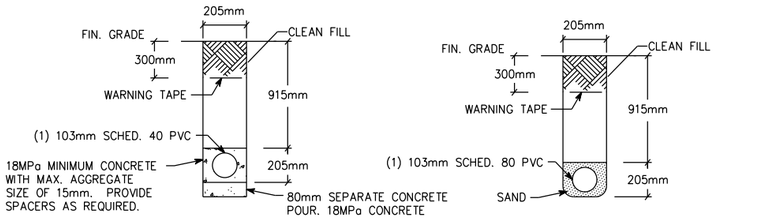

NOTE: PVC CONDUIT SHALL BE DIRECT BURIED SCHEDULE 80 FOR NO TRAFFIC AREAS AND CONCRETE-ENCASED SCHEDULE 40 FOR UNDER ROADWAYS OR TRAFFIC AREAS.

1 / E-501 **TYPICAL DUCT BANK DETAILS FOR CONDUIT IN SAND OR CONCRETE**

SCALE: N.T.S.

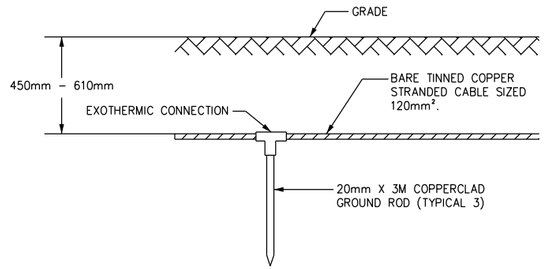

2 / E-501 **GROUND TRIPOD SYSTEM DETAIL - ELEVATION**

SCALE: N.T.S.

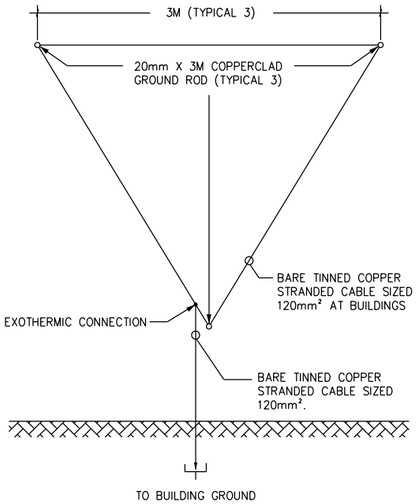

3 / E-501 **GROUND TRIPOD SYSTEM DETAIL - PLAN**

SCALE: N.T.S.

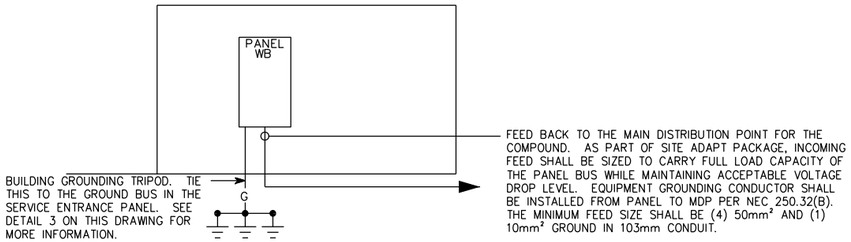

4 / E-501 **ADMIN INSTRUCTORS OFFICE (AIOF) RISER DIAGRAM**

SCALE: N.T.S.

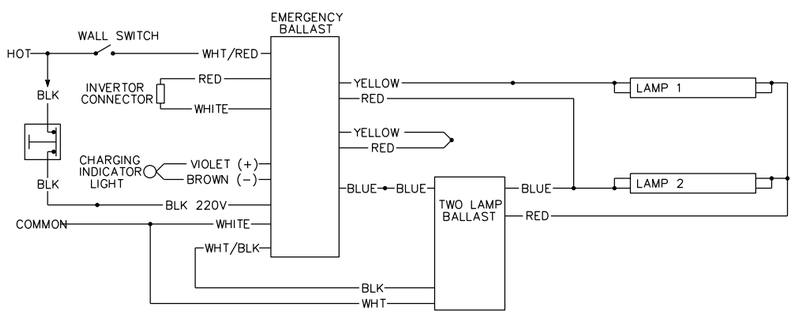

5 / E-501 **EMERGENCY FIXTURE WIRING DIAGRAM**

SCALE: N.T.S.

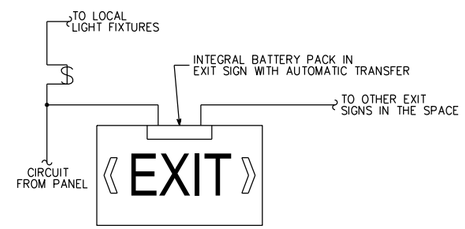

6 / E-501 **EXIT SIGN WIRING DIAGRAM**

SCALE: N.T.S.

US ARMY CORPS OF ENGINEERS
AFGHANISTAN ENGINEER DISTRICT

SYMBOL	DESCRIPTION	DATE	APPR.	SYMBOL	DESCRIPTION	DATE	APPR.

DATE: XX-XX-XX
DESIGN FILE NO.
DRAWING CODE:
FILE NAME:
PLOT SCALE: ____
PLOT DATE: XX-XX-XX
REV. ___

DESIGNED BY:
DRAWN BY:
CKD BY:
REVIEWED BY:
SUBMITTED BY:

U.S. ARMY ENGINEER DISTRICT, AFGHANISTAN
CORPS OF ENGINEERS
APO AE 96338

ENGINEERING AND CONSTRUCTION DIVISION

WOMEN'S BARRACKS
VARIOUS LOCATIONS

ELECTRICAL DETAILS

SHEET REFERENCE NUMBER:
E-501
SHEET --- OF ---

PANEL: WB			VOLTS: 380Y/220			PHASE/WIRE: 3/4			LOCATION: Women's Barracks								
MAIN BUS: 100AMP			MAIN CB: 100AMP			NEUTRAL: 100%											FAULT DUTY: 22 kAIC MIN.
LOAD INFORMATION			VOLTAMPS			BREAKER RATING /POLES						VOLTAMPS			LOAD INFORMATION		
LOAD	NOTE	TYPE	PH-A	PH-B	PH-C	CKT	P	CB	PH	CB	P	CKT	PH-A	PH-B	PH-C	TYPE	NOTE	LOAD
Lighting Office, Util, Lavatory		L	1,704			1	1	20	A	20	1	2	1,705			L		Lighting Sleeping Area 1
Lighting Sleeping Area 2		L		1,550		3	1	20	B	20	1	4		1,080		R		Recepts Elec, Mech
Recepts Office		R			1,080	5	1	20	C	20	1	6			900	R		Recepts Sleeping Area 1
Recepts Sleeping Area 2		R	1,080			7	1	20	A	20	1	8	1,000			R		Dedicated Comm Circuit
EUH-1 Sleeping Area		RH		3,000		9	1	20	B	20	1	10		3,000		RH		EUH-1 Sleeping Area
EUH-1 Sleeping Area		RH			3,000	11	1	20	C	20	1	12			3,000	RH		EUH-1 Sleeping Area
EUH-1 Sleeping Area		RH	3,000			13	1	20	A	20	1	14	3,000			RH		EUH-1 Sleeping Area
EUH-1 Sleeping Area		RH		3,000		15	1	20	B	20	1	16		2,000		RH		EUH-2 Lavatory
EUH-2 Lavatory		RH			2,000	17	1	20	C	20	1	18			2,000	RH		EUH-2 Shower Area
EUH-3 Mech/Storage		RH	1,000			19	1	20	A	20	1	20	2,000			RH		EUH-2 Office
EWH-1		RH		4,000		21	3	25	B	20	1	22		500		M2		Ceiling Fans
		RH			4,000	23			C	20	1	24			1,000	S		SPARE
		RH	4,000			25			A	20	1	26	1,000			S		SPARE
SPARE		S		1,000		27	1	20	B	20	1	28		400		M2		Exhaust Fans
SPARE		S			1,000	29	1	20	C	20	1	30			1,000	S		SPARE
Space						31			A			32						Space
Space						33			B			34						Space
Space						35			C			36						Space
Space						37			A			38						Space
Space						39			B			40						Space
Space						41			C			42						Space
MOUNTING: SURFACE			10,784	12,550	11,080				A	B	C		8,705	6,980	7,900			
ENCLOSURE: NEMA 1			CONNECTED PHASE (VA):						19,489	19,530	18,980							
			CONNECTED CURRENT (A):						88.59	88.77	86.27							

NOTES:

1. Type Notes here

TYPE	VA	DF	VAxDF
L	4,959	1.00	4,959
M1	-	0.60	-
M2	900	0.30	270
O	-	0.80	-
R	5,140	1.00	5,140
R	-	0.50	-
RH	42,000	0.80	33,600
IF	-	0.90	-
AC	-	0.65	-
RC	-	0.70	-
S	5,000	0.50	2,500
CND	57,999	EMD	46,469
EMD (Amps)			70.60

LOAD TYPES:

L - LIGHTING
M1 - LARGEST MOTOR
M2 - MOTOR LOAD
O - MISC OR OTHER TYPE LOADS
R - RECEPTACLE (First 10,000 VA per NEC)
R - RECEPTACLE (over 10,000 VA per NEC)
RH- RESISTANCE OVENS, HEATERS, AND FURNACES
IF - INDUCTION FURNANCES
AC- AIR CONDITIONING EQUIPMENT
RC-REFRIGERATION COMPRESSORS
S - SPARE

form:panelsch.xls: 3PHFORM dated: 28 February 2005

US ARMY CORPS OF ENGINEERS
AFGHANISTAN ENGINEER DISTRICT

SYMBOL	DESCRIPTION	DATE	APPR.

REV. —
DATE: XX-XX-XX
DESIGN FILE NO.:
DRAWING CODE:
FILE NAME:
PLOT SCALE:
PLOT DATE: XX-XX-XX
DESIGNED BY:
DRWN BY:
CKD BY:
REVIEWED BY:
SUBMITTED BY:

U.S. ARMY ENGINEER DISTRICT, AFGHANISTAN
CORPS OF ENGINEERS
APO AE 96338

ENGINEERING AND CONSTRUCTION DIVISION

WOMEN'S BARRACKS
VARIOUS LOCATIONS

PANEL SCHEDULE

SHEET REFERENCE NUMBER:
E-601
SHEET --- OF ---