APPENDIX B – LIST OF APPLICABLE GUIDE SPECIFICATIONS, INDUSTRY STANDARDS, CODES, AND US ARMY CORPS OF ENGINEERS PUBLICATIONS

Note: There are many Industry Standards and US Army Corps of Engineers Publications referenced within the specifications that have the same weight as if they were listed here in Appendix B.

INSTITUTE OF ELECTRICAL AND ELECTRONICS ENGINEERS (IEEE)

IEEE C2 (2007, Errata 2007; INT 2008) National Electrical Safety Code

ILLUMINATING ENGINEERING SOCIETY (IES)

IES Lighting Handbook, 9th edition

NATIONAL FIRE PROTECTION ASSOCIATION (NFPA)

NFPA 70 (2011) National Electrical Code

NATIONAL ELECTRICAL MANUFACTURES ASSOCIATION (NEMA)

NEMA 250 (2008) Enclosures for Electrical Equipment (1000 Volts maximum)

NEMA ICS 1 (2000, R 2008) Industrial Control and Systems General Requirements

NEMA ICS 2 (2000, R 2005) Industrial Control and Systems Controllers, Contactors and Overload Relays Rated 600 Volts

NEMA ICS 5 (2000, R 2010) Industrial Control and Systems Control-Circuit and Pilot Devices

NEMA ICS 8 (2000, R 2005) Industrial Control and Systems Crane and Hoist Controllers

NEMA RN 1 (2005) Polyvinyl Chloride (PVC) Externally Coated Galvanized Rigid Steel Conduit and Intermediate Metal Conduit

NEMA WC 70 (2009) Non-Shielded Power Cable 2000V or Less for the Distribution of Electrical Energy

UNIFIED FACILITIES CRITERIA

UFC 3-320-07N (2004; R 2007) Weight Handling Equipment

ASME DESIGN CODE

B30.2-2005 Overhead and Gantry Cranes

USACE ENGINEERING MANUALS & REGULATIONS

EM 385-1-1 (2008) Safety and Health Requirements Manual, including Changes in effect at the time of advertisement.

EM 1110-2-1009 (2002) Engineering and Design - Structural Deformation Surveying

EM 1110-2-1602 (1980) Engineering and Design - Hydraulic Design of Reservoir Outlet Works

EM 1110-1-1802 Geophysical Exploration for Engineering and Environmental Investigations

EM 1110-1-1804 Geotechnical Investigations, ENG 1836, ENG 1836A

EM 1110-2-1908 (1995) Engineering and Design - Instrumentation of Embankment Dams and Levees

EM 1110-2-4300 (1980) Engineering and Design - Instrumentation for Concrete Structures

EM 1110-2-2105 (1994) Design of Hydraulic Steel Structures Change 1

EM 1110-2-2701 (1997) Vertical Lift Gates

ER 1110-2-110 Instrumentation for Safety Evaluation of Civil Works Projects

ER 1110-2-1807 Procedures for Drilling in Earth Embankments

ER 1110-2-110 (1985) Instrumentation for Safety - Evaluations of Civil Works Projects

ER 1110-1-1807 Procedures for Drilling in Earth Embankments

ASTM STANDARDS

ASTM D1586 Standard Test Method for Standard Penetration Test (SPT) and Split-Barrel Sampling of Soils

ASTM D 2487-06 Standard Practice for Classification of Soils for Engineering Purposes (Unified Soil Classification System)

ASTM D5092 Standard Practice for Design and Installation of Ground Water Monitoring Wells

ASTM D5731 Standard Test Method for Determination of the Point Load Strength Index of Rock and Application to Rock Strength Classifications

UNDERWRITERS LABORATORIES

UL 6 (2007; R 2010) Electrical Rigid Metal Conduit - Steel

USACE TECHNICAL MANUALS

TM 5-811-1 (1995) Electrical Power Supply and Distribution

INTERNATIONAL CODE COUNCIL (ICC)

2009 International Building Code (IBC 2009)

UNITED STATES GEOLOGICAL SURVEY (USGS)

Open-File Report 2007-1137: Preliminary Earthquake Hazard Map of Afghanistan (Version1, Posted May 2007), available at: http://pubs.usgs.gov/of/2007/1137/.

The publications utilized shall be those of the most recent editions.

UFGS GUIDES

26 00 00.00 20	BASIC ELECTRICAL MATERIALS AND METHODS
26 05 00.00 40	COMMON WORK RESULTS FOR ELECTRICAL
26 05 19.00 10	INSULATED WIRE AND CABLE
26 28 00.00 10	MOTOR CONTROL CENTERS, SWITCHBOARDS AND PANELBOARDS
26 32 14.00 10	DIESEL-GENERATOR SET, STATIONARY 15-300 KW, STANDBY APPS.
26 51 00	INTERIOR LIGHTING
33 70 01.00	ELECTRICAL DISTRIBUTION SYSTEM, AERIAL
33 70 02.00	ELECTRICAL DISTRIBUTION SYSTEM, UNDERGROUND
01 74 19	CONST & DEMO WASTE MANAGEMENT; 33
01 50 00	TEMPORARY CONSTRUCTION FACILITIES AND CONTROL
05 05 23	WELDING, STRUCTURAL
05 59 13	FABRICATION OF HYDRAULIC STEEL STRUCTURES
09 97 02	PAINTING: HYDRAULIC STEEL STRUCTURES

U.S. BUREAU OF RECLAMATION GUIDE

(1996) Inspection of Steel Penstocks and Pressure Conduits

FACILITIES INSTRUCTIONS,
STANDARDS, AND TECHNIQUES
VOLUME 2-8

INSPECTION OF STEEL PENSTOCKS AND PRESSURE CONDUITS

Internet Version of This Manual Created
August 2000

Bill McStraw

September 1996

**HYDROELECTRIC RESEARCH AND
TECHNICAL SERVICES GROUP**

*The Appearance of the Internet Version of This Manual
May Differ From the Original, but the Contents Do Not*

**UNITED STATES DEPARTMENT OF THE INTERIOR
BUREAU OF RECLAMATION
DENVER, COLORADO**

TABLE OF CONTENTS

Section *Page*

1. Introduction . . . 1
   1.1 Purpose . . . 1
   1.2 Inspection procedures . . . 1
   1.3 Frequency of inspections . . . 2
   1.4 Inspection records . . . 3
2. Pre-inspection work . . . 4
   2.1 Inspection plan . . . 4
   2.2 Scheduling . . . 4
   2.3 Safety plan . . . 4
   2.4 Background information . . . 6
      2.4.1 Design and construction history . . . 6
      2.4.2 Operational history . . . 6
      2.4.3 Previous inspection and maintenance reports . . . 6
3. Initial (visual) assessment . . . 7
   3.1 Penstock shell . . . 7
      3.1.1 Dimensions and shape . . . 7
         3.1.1.1 Alignment . . . 7
         3.1.1.2 Ovalization/out-of-roundness . . . 7
         3.1.1.3 Wall thickness determination . . . 8
      3.1.2 Interior surfaces . . . 8
         3.1.2.1 Dewatering . . . 8
         3.1.2.2 Linings . . . 9
         3.1.2.3 Organic growth . . . 9
         3.1.2.4 Corrosion, erosion, and cavitation . . . 9
      3.1.3 Exterior surfaces . . . 9
         3.1.3.1 Coatings . . . 10
         3.1.3.2 Corrosion . . . 10
         3.1.3.3 Localized buckling . . . 10
         3.1.3.4 Voids in backfill or concrete-encased penstock sections . . . 10
   3.2 Penstock supports . . . 11
      3.2.1 Ring girder supports . . . 11
      3.2.2 Saddle supports . . . 11
   3.3 Anchor/thrust blocks . . . 14
   3.4 Unrestrained joints (expansion joints and bolted sleeve-type couplings) 14
   3.5 Restrained or fixed joints . . . 14
      3.5.1 Riveted joints . . . 14
      3.5.2 Forge-welded joints . . . 14
      3.5.3 Welded joints . . . 14
   3.6 Stiffener rings . . . 18
   3.7 Appurtenances . . . 18
   3.8 Penetrations . . . 18
   3.9 Drains . . . 18
   3.10 Operating equipment . . . 18
      3.10.1 Standpipes and vent pipes . . . 18
      3.10.2 Surge tanks '. . . . 20
      3.10.3 Gates and valves . . . 20
      3.10.4 Piezometer taps . . . 20
      3.10.5 Air valves . . . 20

TABLE OF CONTENTS - CONTINUED

Section *Page*

3.11 Vibration 21
3.12 Geotechnical considerations 21
3.12.1 Ground movements 21
3.12.2 Water-related effects 22
3.12.3 Surrounding slopes 22
3.12.4 Rock and soil tension members 23
3.12.5 Tunnel portals 23
4. Detailed assessment 24
4.1 Penstock shell 24
4.1.1 Material properties 24
4.1.2 Cracks 25
4.2 Penstock supports 25
4.3 Concrete anchor/thrust blocks 25
4.3.1 Direct measuring techniques 25
4.3.2 Indirect measuring techniques 26
4.4 Unrestrained joints 27
4.4.1 Expansion joints 27
4.4.2 Bolted sleeve-type couplings 27
4.5 Restrained or fixed joints 27
4.5.1 Riveted joints 27
4.5.2 Forge-welded joints 27
4.5.3 Welded joints 27
4.6 Casting defects in appurtenances 30
4.7 Penetrations 30
4.8 Vibration 30
4.9 Geotechnical considerations 30
5. Simulation of emergency control system operations 32
5.1 Emergency gate tests 32
6. Load rejection tests and readjustment of governor 33
6.1 Hydraulic transient analysis 33
6.2 Load rejection tests 33
6.3 Readjustment of governor 34
7. Penstock evaluation 35
8. References 36

Appendix: Penstock inspection checklist 37

TABLE OF CONTENTS-CONTINUED

FIGURES

Figure *Page*

1 Steel pipe on ring support and rocker assembly 12
2 Rocker assembly detail 13
3 Welded joints for steel pipe 15
4 Flanged joint 16
5 Riveted butt strap 17
6 Wye branch with reinforcing crotch plates 19
7 Cross section of expansion joint 28
8 Sleeve-type coupling 29

INSPECTION OF PENSTOCKS AND PRESSURE CONDUITS

1. INTRODUCTION

1.1 Purpose

Many of the penstocks and pressure conduits at Bureau of Reclamation (Reclamation) facilities are over 40 years old. Corrosion and erosion have reduced the strength of these structures to values less than original design strength, and changes in capacity or operations have resulted in more severe service than was originally anticipated.

The Federal Energy Regulatory Commission (FERC) has become increasingly concerned about the number of penstock failures or other potentially dangerous incidents that have occurred in the operation of penstocks. The FERC has recognized the potential for loss of life and damage to the environment and has mandated inspection and testing of penstocks for private utilities. The purpose of this document is to provide inspection and testing guidelines that meet or exceed the FERC mandate and to avoid the occurrence of a penstock failure.

The main purpose for implementing a penstock inspection program is to ensure that each penstock is safely and efficiently operated and maintained. Some of the benefits that result from regularly scheduled penstock inspections are listed below:

- Improvement of facility and safety of personnel and public
- Prevention of damage to the environment
- Improvement of reliability
- Reduction of operation and maintenance costs
- Minimization of unscheduled outages
- Minimization of liability

Much of the material presented in this document was obtained from several publications written by the American Society of Civil Engineers (ASCE) Hydropower Committee. These documents include: *Steel Penstocks* (ASCE, 1993), *Guidelines for Evaluating Aging Penstocks* (ASCE, 1995), and *Guidelines for Inspection and Monitoring of In-Service Penstocks* (ASCE, in preparation).

1.2 Inspection Procedures

The procedures for inspection of a penstock or pressure conduit are listed below in sequential order:

1. Perform an initial assessment, which includes a thorough visual examination of the following items: penstock shell condition (interior and exterior), welds, bolts

and rivets, expansion joints and sleeve-type couplings, air valves and vents, control valves, manholes and other penetrations, anchor blocks and supports, appurtenances, linings and coatings, and instrumentation.

2. Record penstock shell thickness measurements using non-destructive examination (NDE) methods (usually ultrasonic) at selected locations along the penstock. This task could be combined with the initial assessment described above.

3. Perform a detailed assessment using NDE techniques for specific items of concern that were observed during the visual examination.

4. Simulate the emergency control system operation to ensure the emergency gates or valves will close and that documentation (physical test or calculations) exists to indicate they will completely close.

5. Perform load rejection tests for comparison against hydraulic transient analysis results and design criteria to ensure safe operating conditions.

6. Readjust the governor to establish a safe wicket gate timing to prevent over-pressurization of the penstock and to ensure maximum response capability.

7. Have design personnel evaluate the data obtained during the penstock inspection. This evaluation should typically include tasks associated with data and stress analysis and a determination if the penstock is in accordance with defined acceptance criteria.

1.3 Frequency of Inspections

The inspection frequency may vary from 1 to 5 years, but should not exceed 5 years. Factors to be considered in recommending the next inspection date include:

- Accessibility for inspection
- Overall condition of the penstock or pressure conduit
- Type of design and the age of the penstock or conduit
- Existence of significant public safety concerns
- Existence of significant environmental concerns
- The need to document the condition of the penstock or pressure conduit
- Criticality of the facility to power production and water operations

Once these and other pertinent factors have been addressed, the inspection frequency can be established. Minimal guidelines for inspection frequency are as follows:

- Monthly inspection: A visual observation of exposed penstocks should be performed through a monthly walkdown by operations personnel. If this observation is not practical because of excessive length, rough terrain, etc., then the walkdown should be performed at least once a year.

- The interior and exterior surfaces of penstocks and pressure conduits should be visually examined every 2 to 3 years to note the condition of the linings and coatings.

- A thorough penstock inspection, which includes the procedures described in section 1.2,should be. performed every 5 years.

1.4 Inspection Records

To establish an accurate representation of the penstock condition at a given hydroelectric facility, the in-service inspection program must be well documented and implemented by facility personnel.

A log should be established at the plant to record the date, type of inspection performed, and results of all inspections performed on penstocks. Inspection results should be forwarded to the engineering staff or other appropriate personnel for review and evaluation. These records must be maintained for future reference. A documented chronology of inspections, results, evaluations, and repairs will help identify the development of any adverse trends and is essential for the proper maintenance of safe penstocks.

An inspection report should be prepared by one or more members of the inspection team. The report shall document the following items:

- Dates of inspection

- Inspection participants

- Names of facilities inspected

- Description of inspection activities

- All technical investigations, data analyses, and design studies

- All recommendations made during or as a result of the inspection

Inspection reports should be distributed to all inspection participants and groups associated with the facility. The reports should be kept on file by the responsible office for a minimum of 10 years.

2. PRE-INSPECTION WORK

2.1 Inspection Plan

The inspection plan is a key element of a successful penstock assessment. should include the following items:

1. Scope and goal of the inspection

2. List of personnel involved or required

3. A checklist of the items to be inspected

4. Dates and times of the inspection

5. List of clearance points and equipment to be locked out/tagged out to ensure a safe penstock inspection.

2.2 Scheduling

Penstock inspections need to be planned and scheduled to minimize down time of the turbine units. If possible, the penstock inspection should be performed during a scheduled unit outage.

2.3 Safety Plan

A safety and hazard analysis should be prepared for the penstock inspection. Make certain that all personnel working at the site receive a copy of the safety hazard analysis and acknowledge that they have read the contents, understand the safety requirements for the tasks they are performing, and will implement the safety requirements at all times during the field work.

Some items which should be a part of the safety hazard analysis for a penstock inspection are listed below:

1. List the contacts for reporting accidents.

2. List emergency telephone numbers.

3. List addresses and directions for local hospitals.

4. Highlight the facility's safety manual that pertains to site investigation activities.

5. Field review the site working conditions and possible safety hazards. A safety checklist containing some, but not all, important safety items appears below:

- All equipment and facilities should have safety tags placed on the controls, doors, and entrances by authorized personnel. These tags cannot be removed

by anyone else. Personnel wanting to enter or use the equipment must first check with the tag holders. Equipment that is out of service must be locked in the off position or open in the case of a hatchway. Gates or valves which control the entry of water into a dewatered space should be mechanically locked in the closed position.

- Be sure that all operational clearances are obtained before entering penstocks, climbing ladders, or even walking through the plant.

- Go over a checklist of safety items with the person holding the operations clearance and the plant safety officer or equivalent.

- Vertical ladders normally require platforms every 30 feet; ladder heights more than 20 feet require safety cages or safety climbs. Temporary staging or ladders should be properly assembled and secured before personnel use. Personnel should use a safety harness or safety line.

- Do not climb vertical or steep ladders too fast. As you climb, check the ladder anchorage and be aware of the location of the top of the ladder.

- When climbing on or inside of large penstocks, a safety belt should be used together with a secured safety line.

- The air in vaults and penstocks should be tested for oxygen content and toxic gasses before and during entry. Inspection of an enclosed space requires an air source and an air circulator. If in doubt concerning the air quality, wear a self-contained breathing pack. A person should always stand by on the outside at all times when personnel are working in an enclosed space. If an emergency occurs, this person should obtain help rather than go inside.

- Penstock inverts are usually inclined and slippery. Falls are common. Wear rubber boots with safety soles and steel toes; take a buddy with you and always proceed with caution.

- Use caution when walking on top of penstocks and pressurized conduits. Be careful near pressurized water escaping from leaks. Do a visual inspection first from a distance. Probe the leakage with a piece of wood. Never enter leakage spray or a leakage water jet. These situations can cause serious injury.

- Be careful when running your hand over bare metal edges are often sharp.

- Adequate lighting should always be provided.

2.4 Background Information

2.4.1 Design and Construction History

Before inspecting a penstock or pressure conduit, the design and construction history must be understood. This preparation includes a review of the design drawings, design criteria, geology and soils (foundation information), design calculations, supplier information, construction maintenance, and operation and safety information.

2.4.2 Operational History

Each penstock will experience different loadings and changing conditions during its operation history. After years of operation, a penstock undergoes loading cycles from dewatering, watering, partial filling conditions, water hammer, equipment operations, and hydraulic turbine loading and unloading. Hydraulic equipment will change with turbine capacities. Internal pressure will increase as dams are raised in height. Pumping pressures could increase to meet irrigation and public water supply demands. Each change of condition is part of the operation history.

The operating characteristics of the penstock and the equipment which control the penstock pressure must be fully understood. A careful inventory is necessary of the intake, venting, flow conduit restrictions, surge devices, turbine and governor characteristics, gates and operators, valves and operators, and draft tube and tailrace characteristics.

The steady state and transient flow conditions need to be defined as well. A hydraulic analysis should be performed and the following items should be reviewed to define the steady state and transient flow conditions:

1. Steady state conditions:
   a. Operating records
   b. Reservoir rule curves
   c. Headwater and tailwater rating curves
   d. Generating or pumping station use
      (i) Base
      (ii)Peaking

2. Transient flow conditions:
   a. Load acceptance and rejection tests
   b. Valve opening/closing times
   c. Water column separation

2.4.3 Previous Inspection and Maintenance Reports

The monitoring and maintenance records of facility personnel should be reviewed for documentation of any leakage, settlement, movement, geometric changes, or equipment modifications or changes.

3. INITIAL (VISUAL) ASSESSMENT

An initial assessment is performed to determine the current physical condition and geometry of the Penstock. Information obtained during this initial stage is used to plan a more detailed assessment at a later date. An example of a penstock inspection checklist is included at the end of this document in the appendix.

3.1 Penstock Shell

3.1.1 Dimensions and Shape

Measurements of the physical dimensions and shape of the penstock should be undertaken during a field inspection to verify information shown on the design drawings.

3.1.1.1 Alignment

Penstock alignment should be checked to verify substantial agreement with the original design drawings. Penstock misalignment could indicate slope movement and settlement that could cause a penstock rupture if the movements were of sufficient magnitude to allow joints to open up or rupture to occur.

The inspector should look for signs of misalignment, including cracked thrust blocks, ovaling of the penstock, and cracks in the earth surrounding the penstock. Pipe movement may also cause misalignment of bolted sleeve-type couplings. Coupling misalignment can stress the gaskets, resulting in leakage.

3.1.1.2 Ovalization/Out-of-Roundness

Measurements of the penstock diameter should be taken to determine the penstock roundness. Horizontal and vertical measurements of the diameter should be taken. A certain amount of out-of-roundness may be acceptable. If the measurements differ, indicating ovaling of the penstock, an investigation of the cause of ovaling should be undertaken.

Thin-walled penstocks are most susceptible to losing their shape and becoming out of round. However, penstocks with an acceptable wall thickness also can lose their shape. Some of the most common causes of penstock ovalization are listed below:

1. When the normal internal pressures are low and the wall thickness calculations have not included the effect of the fluid weight on the penstock shell, the penstock typically will not maintain it's shape under normal operating conditions. For low-head sections, the stiffening effect associated with pressurizing the conduit may not be sufficient to offset the weight of the fluid acting downward to flatten out the pipe.

2. Improper installation of buried or partially-buried penstocks can cause the penstock to lose its shape. Typically, either improper compaction or the application of excessive surcharge loads can cause the penstock to lose

its shape. Proper compaction from penstock invert to springline is essential for proper installation. Over-compaction at the springline can deflect the penstock sides inwardly, and under-compaction can cause the sides to splay outward. Exceeding the design surcharge or external pressure design loading (e.g., under road crossings) can also result in ovalization of the penstock.

3. Penstock sections that have not been designed for external loads and that are backfilled in soil or encased in concrete can become ovalized.

3.1.1.3 Wall Thickness Determination

The structural condition of the penstock should be assessed by determining integrity and available wall thickness. Penstock shell thickness measurements are taken and recorded at selected locations along the penstock. A detailed wall thickness survey will allow an accurate structural assessment of the penstock. A history of these readings may indicate the expected yearly decrease in shell thickness. These readings can be taken easily on the outside of an exposed penstock, eliminating the need for dewatering. For a buried penstock, shell thickness readings can be taken from the inside during dewatered periods. These thickness readings can be compared to the minimum acceptable plate thickness specified by design criteria to determine if corrective action is needed.

3.1.2 Interior Surfaces

3.1.2.1 Dewatering

Dewatering is preferred for penstock interior inspection. Caution should be taken when dewatering a penstock because several problems may occur. For instance, if the grout curtain at the upstream end of the penstock is not completely effective or if the penstock has excessive leakage, water pressure can build up behind a tunnel liner or buried penstock. Water pressure on the outside of a buried penstock or tunnel liner could become high enough to buckle the penstock after dewatering. If this condition is a possibility, the penstock can be dewatered slowly to allow the external water pressure to decrease before a problem develops. Another potential problem to be aware of is a clogged vent line (or a closed valve on the vent line) at the upstream end of the penstock. Excessive negative internal pressures could develop when attempting to dewater, which may result in collapsing or buckling the penstock.

If dewatering is not economically or technically feasible, i.e., if the penstock was not designed for this condition, a submersible remote operated vehicle (ROV) might offer one feasible method of inspecting the interior. Use of remote-controlled video equipment or penstock-inspecting robots is relatively new technology. These devices can perform inspections rapidly and safely inside slippery, steeply inclined penstocks. Internal paint, rust, and erosion conditions are monitored on an external cathode ray tube (CRT) linked to a camera mounted on the inspection unit. However, use of an ROV may not be as effective as performing a hands-on inspection after dewatering of the penstock. An ROV inspection may be of limited use if turbidity of the water causes poor visibility.

3.1.2.2 Linings

The penstock interior may be lined or unlined. A penstock lining will hide any defects or cracks in the steel. Look for areas of distress in the lining, such as stretching or broken areas, which could indicate further problems such as cracks in the base metal hidden underneath the lining. The present condition of the lining is important to the longevity of the penstock. Even small areas of pinhole leaks or degraded lining will allow water to seep between the lining and the base metal, trapping moisture and increasing the rate of corrosion. The presence of rust or stains indicates that the lining is not performing as intended. The inside surfaces of the penstock should be examined to verify that the original surface is smooth and that the lining, if present, is intact. The condition of the inside surface or lining affects head loss. The lining should be examined to verify that it is protecting the penstock structural material. A determination should be made if any lining is missing or if the surface is rough or smooth. If operating conditions have caused layers of deposits, like calcium carbonate, that have been allowed to remain in place, a determination should be made as to whether such deposits are detrimental to the base metal underneath.

3.1.2.3 Organic Growth

The interior surfaces of the penstock may have become fouled with organic growth over a period of time, thus restricting water flow. Also, marine organisms such as freshwater clams or zebra mussels can reduce hydraulic capacity of a penstock.

3.1.2.4 Corrosion, Erosion, and Cavitation

The degree of erosion and corrosion, as well as the condition of the lining, are important. Erosion or cavitation inside the penstock can be caused by turbulent water (typically occurring at discontinuities and bends), high velocity, or scouring damage caused by abrasive material carried in the water (typically occurring along the penstock invert). Mismatched surfaces at inside joints should be checked to verify their integrity. Corrosion can occur on the inside of a penstock. Pinhole leaks may occur at any location, although general corrosion and deep pitting is more likely to occur in relatively horizontal penstock regions and in crevices. Also, look for rust streaks or discoloration which may indicate penstock deterioration. The extent of wall thinning caused by uniform corrosion and erosion may be difficult to measure visually, so further testing may be necessary to determine the average wall thickness.

3.1.3 Exterior Surfaces

Preferably, the exterior surface of the penstock is inspected while the penstock is under hydrostatic pressure and in operation to aid in observing leaks. Before starting the inspection, all debris or slides covering the penstock should be removed. Any leakage observed should be investigated and the source identified. Leakage must be evaluated immediately upon discovery by appropriate personnel and, based upon the severity, should be repaired at the first practical opportunity.

3.1.3.1 Coatings

Penstock coatings will hide any defects or cracks in the steel. Look for areas of distress in the coating, such as stretching or broken areas, which could indicate further problems such as cracks in the base metal hidden underneath the coating. The present condition of the coating is important to the longevity of the penstock. Even small areas of pinhole leaks or degraded coating will allow water to seep between the coating and the base metal, trapping moisture and increasing the rate of corrosion. Small rust blisters or stains could indicate small pinhole leaks caused by pitting, leakage past rivets, etc. The coating should be examined to verify that it is protecting the penstock structural material.

3.1.3.2 Corrosion

Corrosion can occur on the outside of a penstock. Pinhole leaks may occur at any location, although general corrosion and deep pitting is more likely to occur in relatively horizontal penstock regions and in crevices. Also look for rust streaks or discoloration which may indicate penstock deterioration. The extent of wall thinning caused by uniform corrosion may be difficult to measure visually, so further testing using ultrasonic techniques may be necessary to determine the average wall thickness.

3.1.3.3 Localized Buckling

Localized circumferential buckling is an indication of longitudinal overstressing of the penstock. This phenomena only occurs if inadequate provisions have been made for expansion and contraction. This defect is most commonly caused by thermal changes that affect a section of penstock between two fixed points, such as anchor blocks. This phenomenon is most likely to occur when the penstock has been dewatered and the ambient temperatures exceed the penstock's normal operating temperatures. Therefore, dewatering of the penstock for prolonged periods must be avoided during the warmest seasons of the year.

3.1.3.4 Voids in Backfill or Concrete-Encased Penstock Sections

For buried or concrete-encased penstock sections, voids may be present in the backfill or concrete. The external pressure from surrounding ground water in the area of these voids can cause the penstock shell to partially collapse in the form of an inward bulge.

Voids in backfill are typically caused by ground-water erosion of the backfill material near the invert of the penstock. Prolonged erosion of the backfill can undermine the penstock foundation, leading to differential settlement and potential failure. This type of defect can usually be detected by striking the penstock shell with a hammer at multiple locations and listening for a hollow sound.

Voids in concrete are caused by poor consolidation of the fresh concrete during concrete placement or by the trapping of excess water in the concrete "bleed water" near the penstock invert. Typically, these type of voids are localized and

relatively small. However, voids large enough to cause damage to the penstock can occur. The detection of voids in concrete is similar to the detection of voids in backfill.

3.2 Penstock Supports

3.2.1 Ring Girders

Ring girders, which are used to support long span elevated penstocks, are constructed by welding steel plate rings to penstocks. All loads are transferred from the penstock to the ring girder and support legs. The support legs are welded to the ring girder, then attached to bearing plates. The bearing plates are attached to a concrete foundation.

Ring girders should be visually inspected for signs of deterioration and distortion. Inspection of ring girders should also include the condition of the .coatings. The potential for premature coating failure is greater at ring girders than at adjacent smooth penstock surfaces because ring girder surfaces are irregular.

Often, ring girder supports must allow penstock movement caused by changes in temperature. This movement is usually accommodated in bearings located under the support legs. -Rocker, roller, and low friction slide bearings are commonly used for ring girder support (figs. I and 2). The bearings should be inspected to verify their integrity. They should be clean and well maintained to allow full penstock movement throughout the full range of design temperatures. Clean, well maintained bearings will help minimize forces in the penstock and anchorages.

3.2.2 Saddle Supports

Saddle supported penstocks typically span shorter distances between supports than ring girder supported penstocks discussed above. Stress concentrations occur at the tip of the saddle where "horn stresses" result in the penstock shell becoming unsupported. Saddles are usually constructed from reinforced concrete and support the lower 120-degree arc at the penstock invert. However, saddle supports may also be fabricated from rolled steel plate. Sheet packing that may be lubricated with graphite can be used as a cushion between the saddle support and the penstock. The sheet packing also permits limited movement of the penstock relative to the support as a result of temperature changes.

If required, the penstock shell at saddle supports is stiffened by welding steel rings to the shell at each side of the saddle support.

Saddle support inspection should include a coating inspection and inspection for signs of deterioration and high stress areas similar to ring girders. Localized buckling or distortion can occur at the penstock's upper contact points with a saddle support. In addition, the condition of the concrete saddles should be noted and investigated for any signs of settlement or concrete deterioration. Inspection of the surfaces between the saddle and the shell is difficult, but important, because significant corrosion may be occurring in the contact area.

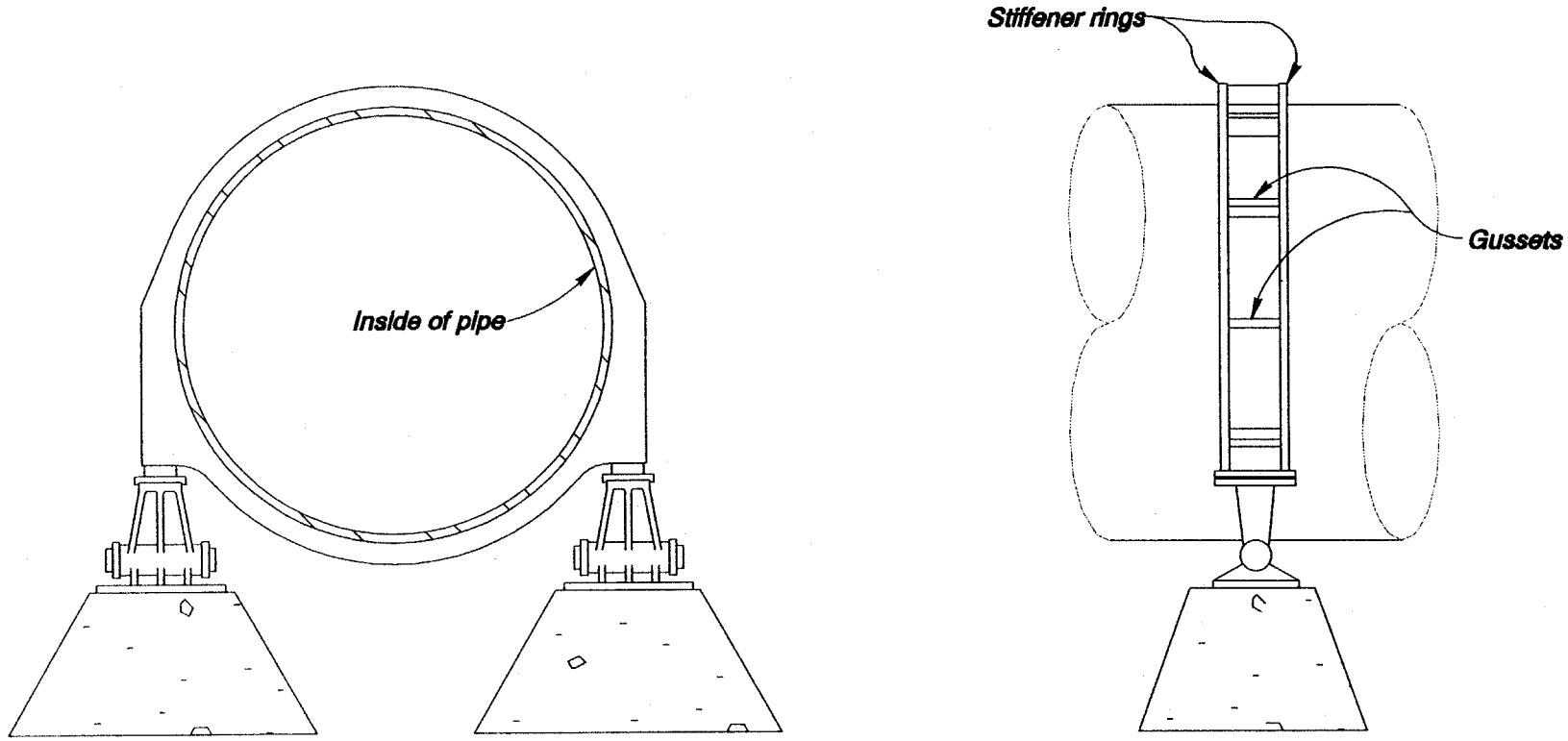

Figure 1. - Steel pipe on ring support and rocker assembly.

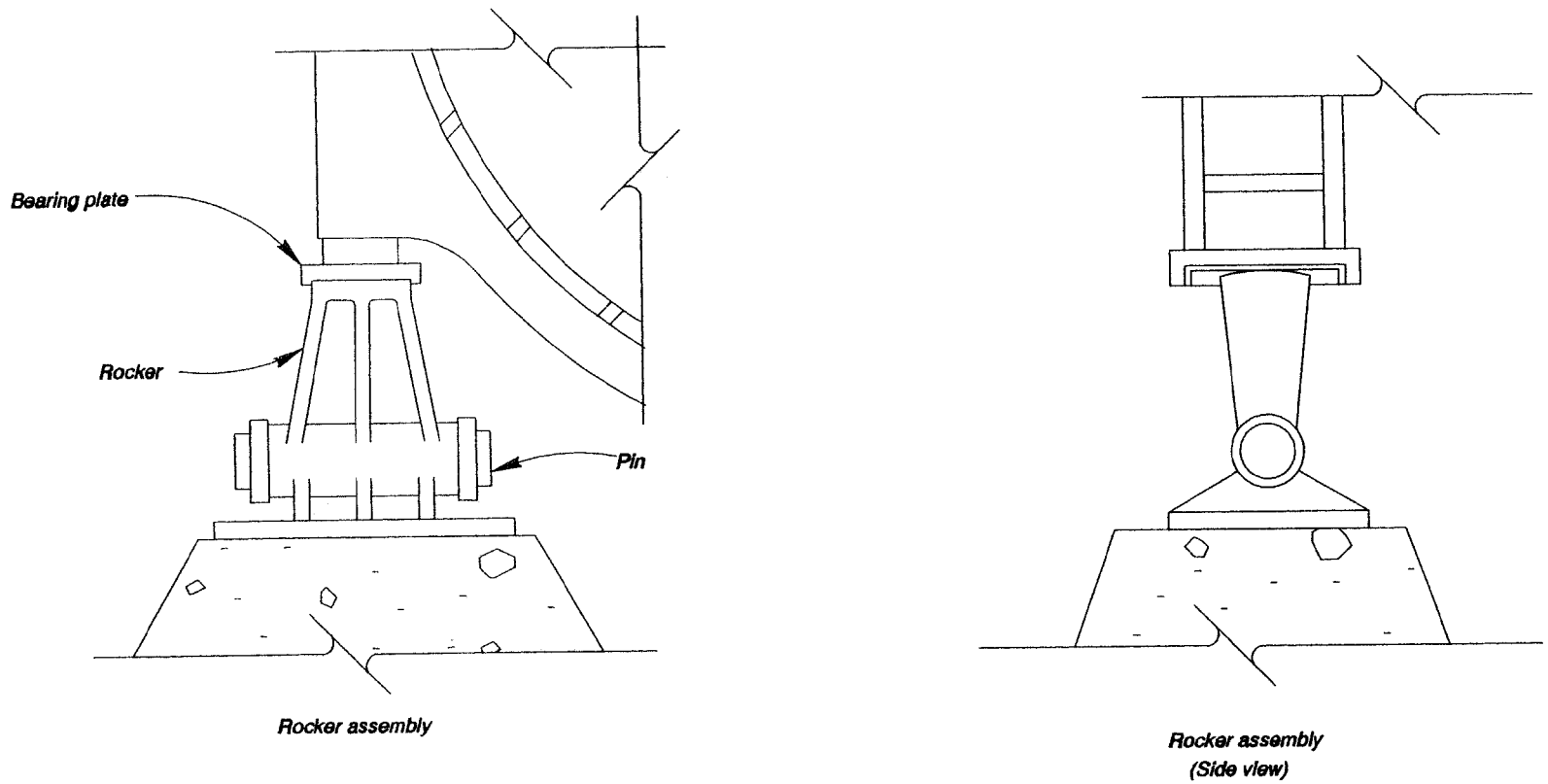

Figure 2. - Rocker assembly details.

3.3 Anchor/Thrust Blocks

Anchor/thrust blocks are designed to provide restraint to exposed penstocks at changes in alignment. They should be assessed to verify their support function has not been compromised. Thrust blocks should be examined for signs of settlement and movement and for any cracking or spalling of concrete.

3.4 Unrestrained Joints (Expansion Joints and Bolted Sleeve-Type Couplings)

Unrestrained joints include expansion joints and bolted sleeve-type couplings. Typically, unrestrained joints are not working if any water is leaking past the seal or if the joint is seized. Look for leakage, cracked welds, base metal flaws, loose or missing bolts, and heavily corroded areas. In unrestrained joints, scrape marks or unpainted surfaces may be visible where the pipe has moved in relation to the follower ring.

3.5 Restrained or Fixed Joints

Some basic types of restrained joints include lap welds, butt welds, flanges, butt straps, and various rubber-gasketed joints (figs. 3 and 4). Several methods used to attach these types of connections include rivets, forged welds, and arc-welds. Corrosion, erosion, and flaws in the original construction can affect the condition of structural welds, bolts, and rivets in the penstock.

3.5.1 Riveted Joints

In riveted joints, examine the rivet head, butt strap, plate, and caulked edge conditions (fig. 5). Look for leakage past the rivets or the edges of the bands. Rivets may be missing, broken, or may have corroded or abraded heads. The base metal may also be corroded to the extent that rivets can pull through and be ineffective.

3.5.2 Forge-Welded Joints

Experience with forge-welded joints has not been good. Flaws and other fabrication defects, such as lack of fusion and slag, may be prevalent. The welding process used in forge-welded penstocks, in which the steel is heated to about 2000 EF, produces a loss of carbon, which makes the steel more susceptible to corrosion. As a result, if forge-welded joints are not well protected, corrosion may occur faster in the joints than in the base metal.

3.5.3 Welded Joints

A representative portion of all structural welding performed on the inside and outside of the penstock is visually examined for signs of rusting, pitting, or other structural defects. For welded joints, look for cracked base metal or welds, surface flaws, etc. Flaws in welds during construction can occur from high carbon content of the base material, embrittlement of the heat affected zone, improper preheat, and improper rate of cooling after welding. Typically, these problems are more likely to occur as the plate becomes thicker or when the joint is made under adverse construction conditions.

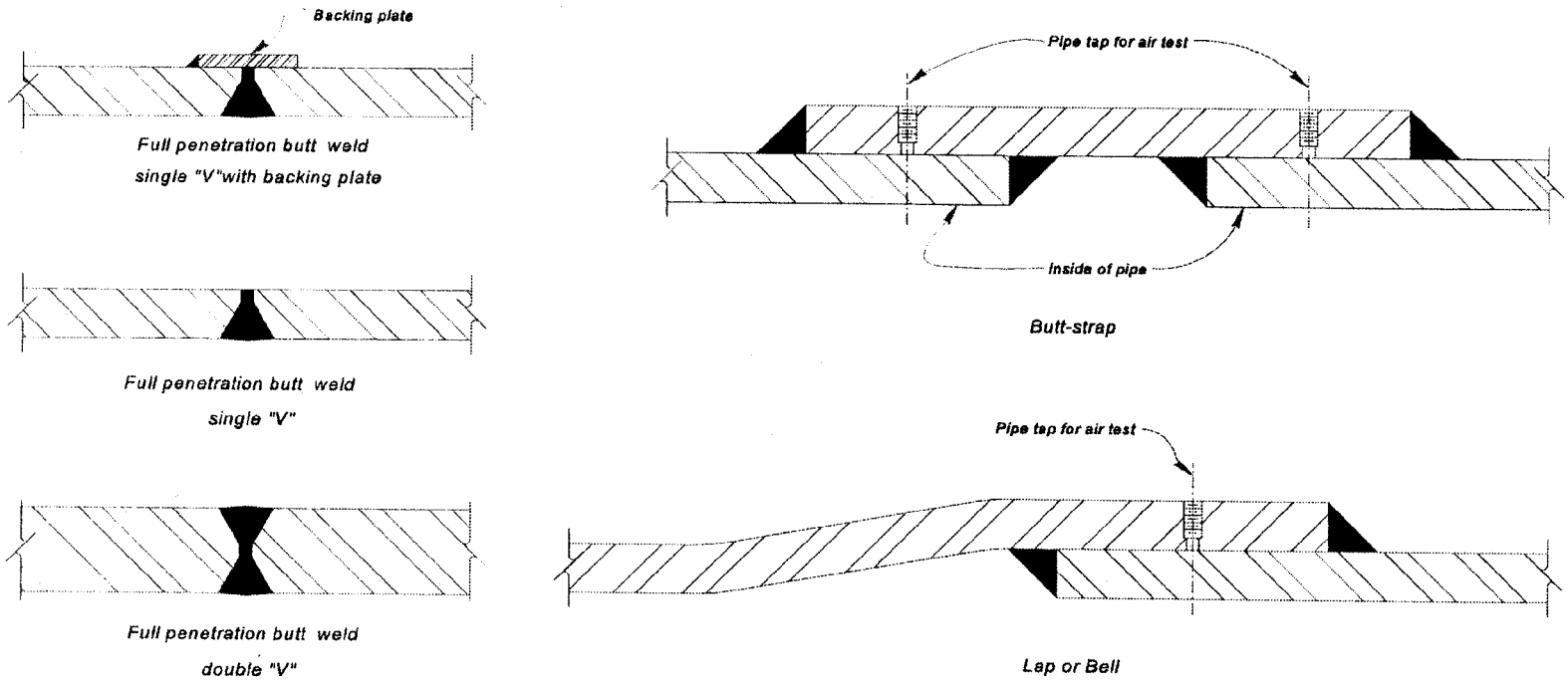

Figure 3. - Welded joints for steel pipe.

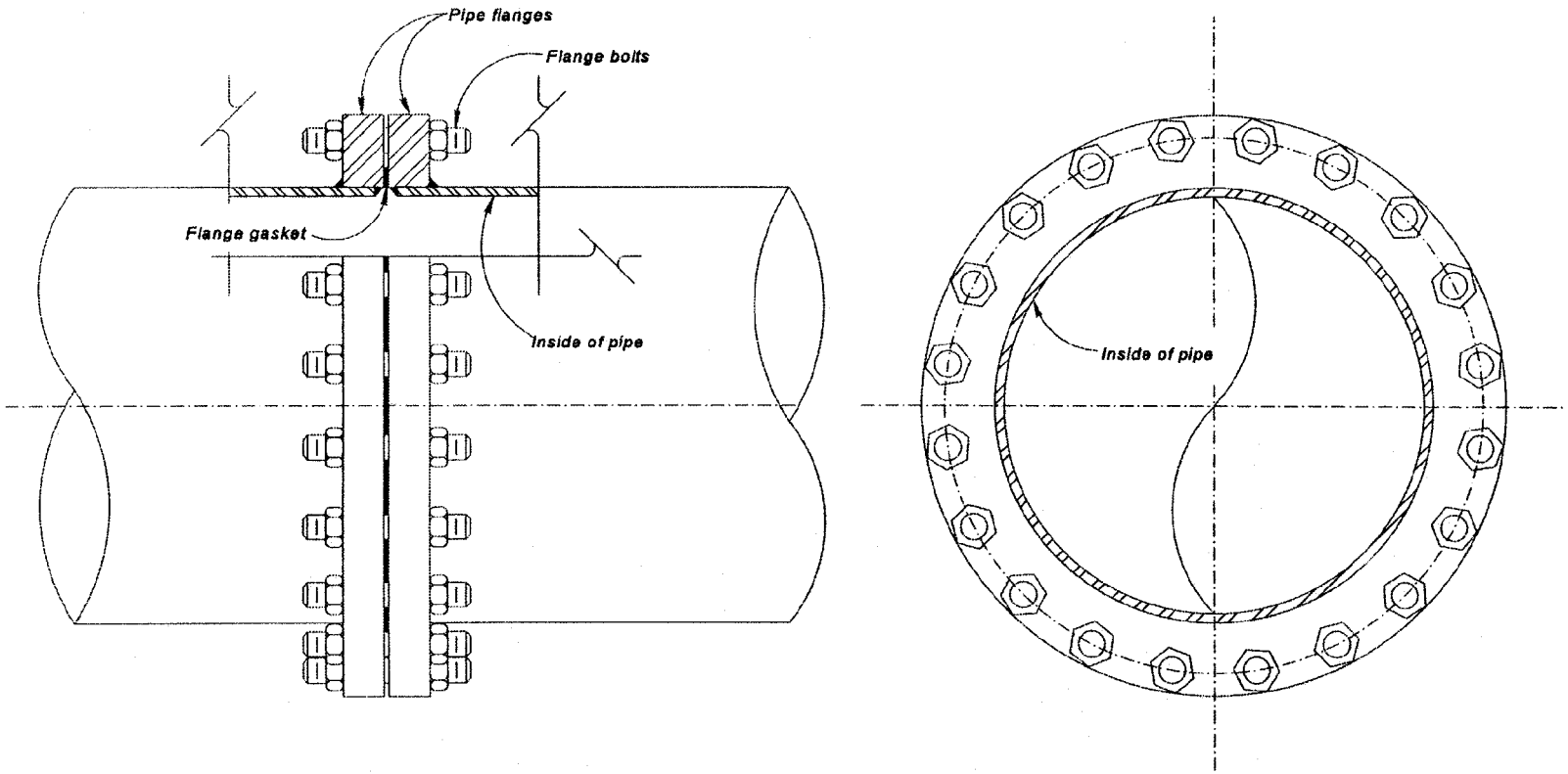

Figure 4. - Flanged joint.

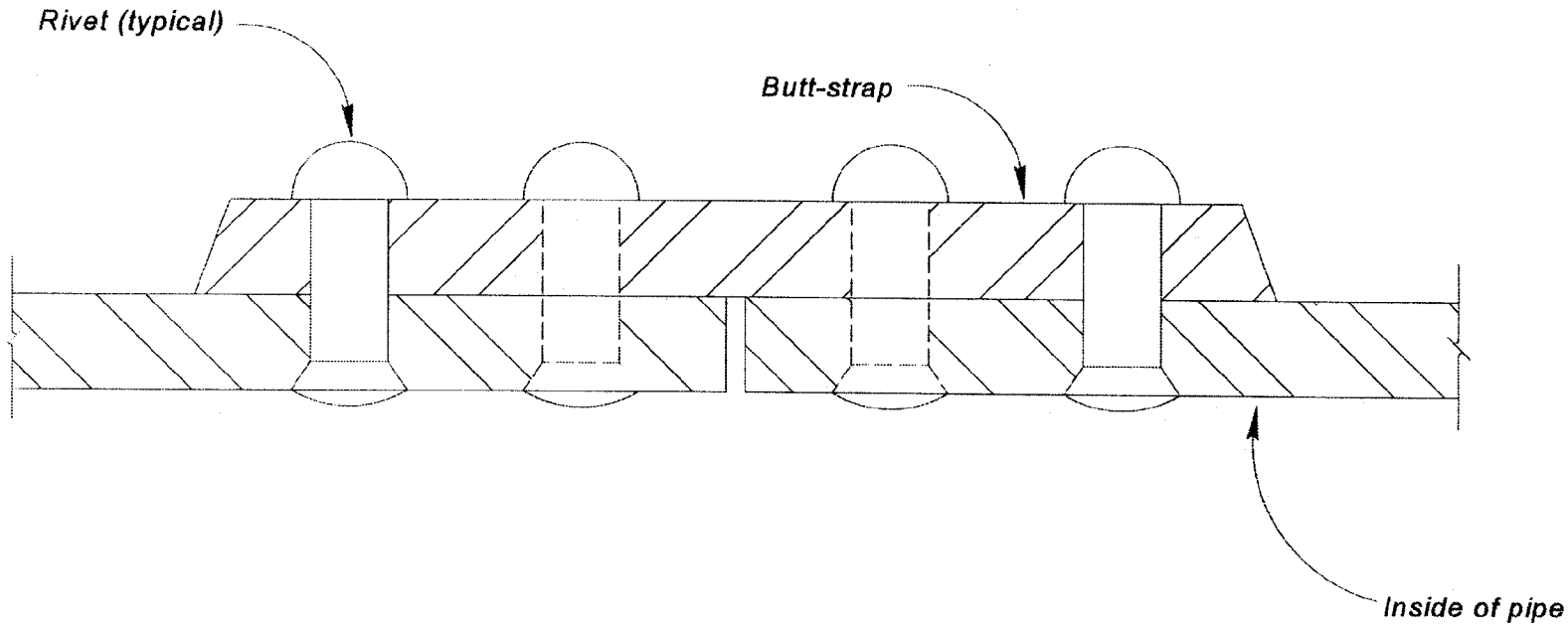

Riveted butt-strap

Figure 5. - Riveted butt strap.

3.6 Stiffener Rings

Look for flawed welds, including undercut, base metal flaws, and heavily corroded areas.

3.7 Appurtenances

Appurtenances, which include bifurcations, transitions, bends, tees, elbows, and reducers, may be particularly susceptible to vibration, aging, and lining loss. Look for damage to the lining, cracked welds, loose or missing rivets, damage from cavitation, broken tie rods, and heavily corroded areas (fig. 6). Casting defects, which include porosity, cracks, slag, and sand, may also be present.

3.8 Penetrations

Penetrations would include items directly attached to the penstocks and exposed to the internal pressure carried by the penstock. Some examples of penetrations are: manhole, air vent connection, filling line connection, etc. Look for damaged or missing parts, cracked welds, cracked or broken castings on valve bodies, broken or missing bolts and rivets, heavy corrosion, and leakage from gasketed joints, packings, flanges, couplings, and manholes. Check the surface of all penetrations for distortions, cracks, and other defects, paying particular attention to the welds or riveting used for attaching such parts and their reinforcement.

3.9 Drains

Penstock dewatering drains, located typically at low points along the penstock profile, should be examined to verify that they are in working condition and are not leaking. Valves that control these drains should be examined. Overtightened packing gland bolts could lead to bolt failure and packing gland rupture. Also, the drains must safely discharge water away from the penstock to prevent undermining of the penstock foundation during dewatering.

Drainage systems for penstocks that are located in tunnels should be checked, if possible, to verify proper operation. Drainage systems that are installed to relieve water pressure against the penstock, thus protecting the penstock from possible collapse, can become blocked over time. Blockage consisting of debris or waterborne minerals such as rock fines or calcium can render the drains ineffective. The drains should be maintained and cleaned on a regular basis.

3.10 Operating Equipment

Penstock operating equipment includes standpipes and vent pipes, surge tanks, gates, and valves, including bypass valves, filling valves, shutoff valves, piezometer taps, and air valves.

3.10.1 Standpipes and Vent Pipes

Standpipes and vent pipes are usually located at high points along the penstock profile and immediately downstream from gates. They should provide unrestricted

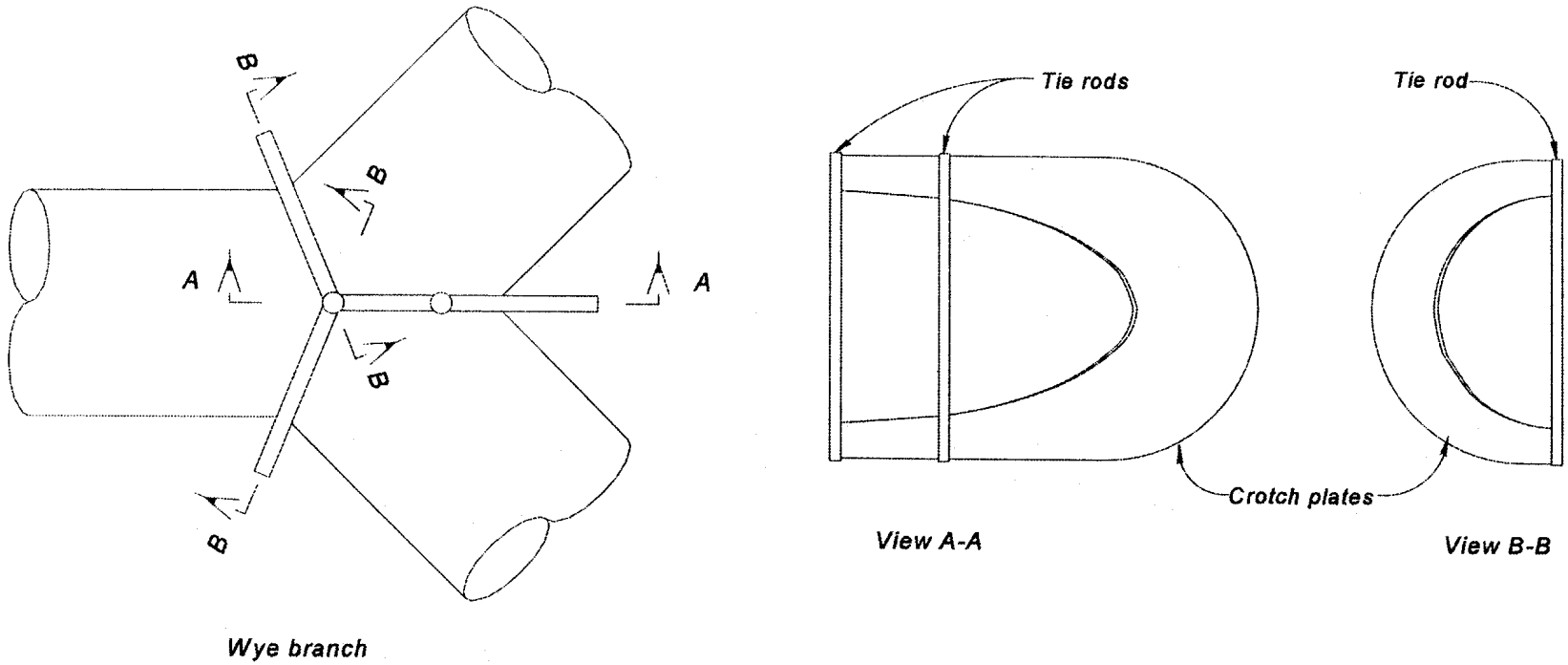

Figure 6. - Wye branch with reinforcing crotch plates.

air inlet or air release to the penstock. In cold climates, the pipes should be inspected for ice blockage. Standpipes and vent pipes should be inspected regularly to verify they have not become blocked.

3.10.2 Surge Tanks

Surge tanks are installed to limit pressure rise and fall in penstocks. Surge tanks are fabricated of steel plate, wood, or reinforced concrete.

Surge tank assessment must consider the type of surge tank, condition of tank coatings and linings, and tank mechanical appurtenances. Surge tanks often have roofs and vents that can become blocked similar to standpipes. The condition of the ladders, handrails, grating, and other surge tank access equipment should also be noted.

3.10.3 Gates and Valves

Gates are normally provided to shut off water flow to the penstocks and are usually located at the upstream end of the penstock. Penstock installations incorporate many different types of gates to control flow into the penstock.

Because most gates are of steel construction, assessment techniques used for inspection of steel penstocks may be appropriate. Inspectors should pay particular attention to the condition of the coatings. Gate seals, which are often fabricated from rubber but are also fabricated from alloy metals, tend to wear out. The condition of the seals should be noted and the amount of leakage past the emergency gates while in the closed position should be noted and documented.

Bypass, filling, and shutoff valves are often installed in penstocks for the purpose of filling, dewatering, or redirecting flows. Butterfly, globe, and gate valves are typical for bypass and shutoff applications. In addition to coating condition, assessment should include the condition of the valve operators, packing glands, and moving and stationary parts that may experience wear.

3.10.4 Piezometer Taps

Piezometer taps are typically located in the penstock several pipe diameters upstream from the turbine and are used to measure flow. The taps, which are often forged steel pipe couplings less than I inch in diameter, are welded through the penstock shell; four taps located 90 degrees apart are common. The taps are often equipped with petcocks or gate valves and are connected by copper tubing to a flow measuring location in the powerhouse. Assessment should include verifying that the piezometers are not blocked and that the taps, tubing, and valves are not leaking.

3.10.5 Air Valves

Air and vacuum release valve assemblies are installed along the penstock to vent air to and from the penstock under service conditions and also during penstock filling and draining. To permit isolation and servicing, air and vacuum relief valves are

normally equipped with a ball, gate, or butterfly shutoff valve. Malfunctioning of these air valves could result in penstock rupture if, for example, they are installed to mitigate transient pressures. Thus, assessment of air and vacuum release valve assemblies must verify they are not plugged, restricted, or leaking, and that they are operating properly and are in good working condition. In cold climates, the valves should be protected from freezing. Where employed, heaters should be operational.

3.11 Vibration

Penstocks should be assessed for both flow-induced and equipment-induced vibrations. Resonant vibrations can cause material fatigue and may cause penstock problems if not corrected. The penstock should be inspected while operational, and operators or maintenance personnel should document abnormal vibration. If excessive vibration appears to exist, instrumentation should be used to record vibration frequency and relative amplitude.

3.12 Geotechnical Considerations

Frequently, vegetation growth and changes to the area adjacent to the penstock alignment affect the penstock and its foundation. Drainage can become restricted. Adjacent soil and rock slopes move or settle. Topographical and alignment information should be collected.

The inspector should note the type and location of penstock joints and any noticeable misalignments. Span distances and ground elevations between penstock supports should be checked and compared with the as-built drawings. Frequently, joint leakage, distortion, or misalignment can indicate other problems that might require further field and analytical evaluation.

Penstock foundations should be assessed for deterioration and movement. Foundation movement may cause structural distress along the penstock itself. For example, foundation settlement can overstress steel penstocks with welded steel joints that are supported by steel ring girder foundations.

3.12.1 Ground Movements

The ground immediately surrounding the foundations should be evaluated for signs of distress or movement relative to the foundation. Evidence of ground movement or distress includes cracking, slumping, or vertical displacement of the ground. Concrete slabs or shotcrete applied on the ground provide excellent indications of tensile or shearing movements. Paint lines that do not match the edge they were originally applied against or ground that pulls away from foundations may indicate settlement, shrinkage, or heaving. Foundations should be checked to ensure that surfaces have remained level or plumb. Buckling metal structural elements or spalling concrete can indicate excessive loads caused by movements of the penstock foundations.

In rocky areas, look for open joints, unstable blocks of rocks, shear zones, or rock that exhibits severe weathering. Freshly exposed rock will have a different color than the surrounding rock. Displaced rock or soil at the bottom of slopes indicate

unstable or eroding formations on the slope above. Look for deformation or leaning of retaining walls.

The evaluator should look for changes in the ground surface near the penstock that have occurred since construction. A variety of factors could cause these changes. Once in service, ground excavation near the penstock foundation could have caused permanent deformation, even if the excavation was properly backfilled. Erosion of soil from around footings may undermine them and cause failure.

New construction or surcharging nearby may have caused increased loads to the penstock foundation. Appurtenant structures that have been hung from the existing foundations or parallel penstocks that have been constructed in close proximity to the penstock will add loads to the bearing material.

3.12.2 Water. Related Effects

The effects of water on the foundations or the surrounding ground should be noted. Signs of piping, subsurface erosion, or ground collapse include slumps and cracks or craters with eroded edges that appear to have had water flowing into them. Unchecked erosion could destabilize the foundation. Look for seeps, springs, and areas that are continuously wet or support water-loving plants. Leakage from the penstock may have caused these wet areas. On slopes, these wet areas indicate barriers to flow or the high ground-water levels that are often associated with landslides.

Often, drains may be installed to dewater slopes that have potential instability problems. Monitoring the flows from these drains will provide an indication of their effectiveness at intercepting ground water and controlling its level within the slope. A stopwatch and a measured volume container, such as a bucket, provide the simplest way to measure flow from a drain pipe. When flows from individual drains cannot be measured, the flows can be collected on the ground and monitored at a common weir. Weir flows are determined by measuring the height of the backwater behind the weir and calculating the corresponding flow for the type of weir. This measurement is done most simply with a staff gage placed in the backwater. Weirs can also be automated by placing a pressure transducer in the backwater.

Where slope instability problems exist, changes in the water level within the slide mass should be correlated to other measurements of the slide movement. Year-to-year comparisons of piezometer readings will indicate changes in overall groundwater levels and response times to precipitation events. An overall rise in groundwater level may indicate drain system failure or an increase in the amount of leakage into the slope. These changes may also indicate plugged piezometers.

3.12.3 Surrounding Slopes

A thorough geotechnical examination will also consider the slopes surrounding the penstock. Slopes above the facility should be inspected for possible rockfalls or landslides that could damage the penstock. Large slope movement features are often difficult to discern from the ground. Aerial fly-overs or inspection of aerial photographs may be useful. Unstable slopes are often barren of vegetation or have

younger vegetation than the surrounding slopes. They may exhibit fresh scars or head scarps where materials have moved downslope. Slowly moving ground will often have rock strata that bend downslope or tree trunks with bottoms that curve upward. Evidence of small rockfalls includes dents on metal, spalls on concrete structures, and material piled on the uphill sides of structures.

3.12.4 Rock and Soil Tension Members

The exposed ends of rock and soil anchors should be inspected where possible. The anchor metal may corrode with time. Suspected corrosion calls for load testing or exposure of bolts for inspection. In soil and in certain weak rock formations, deadmen or anchors under constant load can creep, allowing the foundation to move. Tensioned anchors with free, unbonded portions may be tested to determine if the locked-in load has changed since construction and to verify the design capacity.

3.12.5 Tunnel Portals

The exposed section of the penstock should be inspected where entering or exiting tunnel portals. This penstock section can show signs of corrosion and local stress concentration.

4. DETAILED ASSESSMENT

A detailed assessment is only required if information obtained from the initial assessment indicates an area of concern. Information obtained during the initial stage is used to plan a more detailed assessment. Based upon this information, the base material and welds of certain steel components may require examination with appropriate NDE techniques. Destructive testing methods may be required in some instances but should be avoided if possible.

The following NDE techniques may be used to evaluate discontinuities in the base material or welded joints of the penstock shell and its various components:

1. Liquid Penetrant Examination (PT) - A PT is used to detect small flaws such as cracks and pores which are open to the surface of the material being inspected.

2. Magnetic Particle Examination (MT) - An MT can detect cracks, porosity, seams, inclusions, lack of fusion, and other discontinuities in carbon and low alloy steels.

3. Radiographic Examination (RT) - An RT is used to detect porosity, inclusions, cracks, and voids in the interior of castings, welds, and other structures. An RT provides a permanent film record of defects that is easy to interpret. Radiography is limited by the direction of the discontinuity and accessibility, and the film process is very slow and expensive.

4. Ultrasonic Examination (UT) - A UT is used to detect surface and subsurface discontinuities. Ultrasonic examination can locate all internal flaws located by other NDE methods. A UT allows very accurate detection, location, and mapping of discontinuities within base material, welded joints, and heat affected zones.

4.1 Penstock Shell

A reduction in wall thickness usually is attributed to uniform corrosion, localized corrosion or pits, cavitation at sharp boundary edges, or scour and abrasion via hydraulic transport of sediment. Corrosion and pitting can occur on exterior or interior surfaces and can be caused by chemical or microbiological induced corrosion (MIC).

To determine the extent of material loss, wall thickness measurements should be obtained using NDE techniques, usually ultrasonic examination. Thickness measurements should and can be taken during the same period as the initial visual assessment. From these data, a baseline wall thickness survey can be established, and the associated stress levels in the pipe shell can be determined and compared against the original design criteria and acceptable safety margins.

4.1.1 Material Properties

Often, particularly for older penstocks, a penstock shell material with unknown composition may require evaluation or repair. This evaluation may require that a sample be taken from the penstock and taken to a laboratory for analysis. Tests can be performed to determine the chemical composition, weldability, tensile properties, and toughness of the material.

4.1.2 Cracks

Cracks develop at areas of high localized stress because of inherent material or weld defects or excessive loading. Once formed, certain types of cracks tend to propagate because of in-service conditions. Factors such as chemical composition, material properties, fracture toughness, crack geometry, and applied loading (frequency) determine whether or not a crack will propagate. To determine if repairs are required or even possible, both a fracture mechanics and a metallurgical evaluation should be performed.

4.2 Penstock Supports

The components and welds associated with ring girder and saddle supports can be examined with various NDE techniques. If corrosion is occurring, ultrasonic examination techniques can be used to help determine the amount of sound metal path remaining.

Radiographic examination can be used to evaluate interior pitting or plate/weld cracking and corrosion between the penstock shell and concrete saddles. The film must be placed between the steel and concrete, and the radiographic source must be placed on the other side of the penstock. The penstock must be dewatered; otherwise, exposure time becomes excessive.

4.3 Concrete Anchor/Thrust Blocks

Non-destructive examination techniques can be used to further evaluate the condition of concrete anchor and thrust blocks as well as concrete penstocks. The following techniques may be considered.

4.3.1 Direct Measuring Techniques

Direct measuring techniques can be used to determine the compressive strength of concrete or to locate steel reinforcement within the concrete.

Devices which measure compressive strengths of concrete record the impact or energy applied to the surface of the concrete and relate that value to the compressive strength of the concrete. The methods used consist of the Schmidt Hammer and the Windsor Probe.

1. **Schmidt Hammer Technique** - The Schrnidt Hammer consists of a spring driven plunger which strikes the surface of the concrete and records the rebound of the plunger, which is related to the compressive strength of concrete on a built-in scale on the hammer side. This instrument is best used to quickly determine the uniformity of in-place concrete. The accuracy of the measurements improves with calibration against compression tests of drilled core samples. The test method is described in American Society for Testing Material (ASTM) C805 (ASTM, 1990).

2. **Windsor Probe Technique** - The Windsor Probe uses a gun which drives a probe into the concrete and produces a specific energy. The protruding ends of three probes driven at a particular location are measured and related to the compressive strength of concrete. The test method is described in ASTM C803 (ASTM, 1990).

3. **Reinforcing Steel Locators** - Small, hand-held electromagnetic indicators have been used to locate reinforcing steel within concrete. The meters can determine the amount of cover over reinforcing steel and the bar size within an accuracy of one bar.

4.3.2 Indirect Measuring Techniques

1. **Sonic/Seismic Technique** - The sonic/seismic technique uses an applied energy source (impact) on the surface of the concrete, the value of which is recorded by sensors placed on the concrete surface at designated intervals. The sensors record the compression and shear wave velocities resulting from the impact. The resulting measured waves are used to determine the dynamic elastic properties, Young's modulus of elasticity, bulk modulus, and Poisson's ratio. Competent concrete has high compression and shear wave velocities. Cracking, deterioration caused by weathering, or defects are indicated by low velocity values.

2. **Ground Penetrating Radar Technique** - Ground penetrating radar uses an electromagnetic pulse and an antenna to receive the echoes from the pulse. The technique is capable of detecting water concentrations in delaminations, cracks, and voids within a concrete lining, reinforcing steel, or other steel locations.

3. **Electrical Resistivity Technique** - Electrical resistivity measurements can be made in concrete by introducing a current through two electrodes and measuring the potential drop across two other electrodes. The configuration of the electrodes and spacing can be varied to produce the best information. The profiling of resistivity measurements has the advantage of evaluating the relative quality of the concrete. Unwatered concrete penstocks can be inspected by electrical resistivity techniques to define cracks which have higher water content caused by leakage.

4. **Destructive Examination** - If the quality of the concrete is questionable, destructive testing may be required to gather more data. Concrete cores can be cut from selected locations to obtain representative samples of the suspect material. Strength tests can be made on the cores, or the cores can be examined by a petrographer. From microscopic analysis and various chemical tests, a petrographer can determine the air content of hardened concrete, estimate the cement content, find evidence of carbonation or other reactions, and detect admixtures or contaminating substances that may have been present during construction. A petrographer may also make general observations about water-cement ratio, degree of cement hydration, early frost damage, excessive bleeding, and similar phenomena.

4.4 Unrestrained Joints

4.4.1 Expansion Joints

Ultrasonic techniques can be used to take thickness measurements of the expansion joint inner sleeve, outer sleeve, and gland sleeve to determine if any wall thinning has occurred (fig. 7). A stress analysis can then be performed to determine if wall thinning has compromised the design strength of the expansion joint.

4.4.2 Bolted Sleeve-Type Couplings

Ultrasonic techniques can be used to take thickness measurements of the sleeve-type coupling middle ring to determine if any wall thinning has occurred (fig. 8). A stress analysis can then be performed to determine if wall thinning has compromised the design strength of the sleeve-type coupling.

4.5 Restrained or Fixed Joints

Accurate determination of joint efficiency is critical to stress analysis. Causes of reductions in joint efficiencies can be characterized by the type of joint or connection. The most common connections and associated problems are described below.

4.5.1 Riveted Joints

Design joint efficiencies for riveted connections usually range from 46 to 95 percent. Reductions in design joint efficiency or, conversely, an increased stress distribution across the joint, can be caused by improper installation of the rivet or corrosion of the rivet shanks. Scour or abrasion of a rivet head is indicative of a loss of plate thickness. Ultrasonic techniques can be used to help determine plate thickness of bands and to evaluate rivet shanks. Destructive testing methods may be required to determine the true tensile properties and efficiencies of riveted connections.

4.5.2 Forge-Welded Joints

Problems with forge-welded joints include variable joint efficiency and accelerated joint corrosion. To verify the efficiency of a forge-welded joint, "coupons" may be removed and tested. From these data, an acceptable joint efficiency can be determined and used to ascertain the necessity of repair or replacement schemes. If tested joint efficiencies are low, a fracture mechanics evaluation can be performed to demonstrate that certain flaw sizes and orientations are acceptable for the service operating loads. In addition, if the design steel specification is unknown, a metallurgical evaluation must be performed to determine the material's chemical composition and ascertain if weld repairs may be appropriate.

4.5.3 Welded Joints

Typically, joint efficiency for welded connections is established during the original design phase. The joint efficiency will vary depending upon the NDE technique used to evaluate the welds. Any of the NDE techniques discussed at the beginning of Chapter 4 may be used to evaluate possible defects in the welded joint.

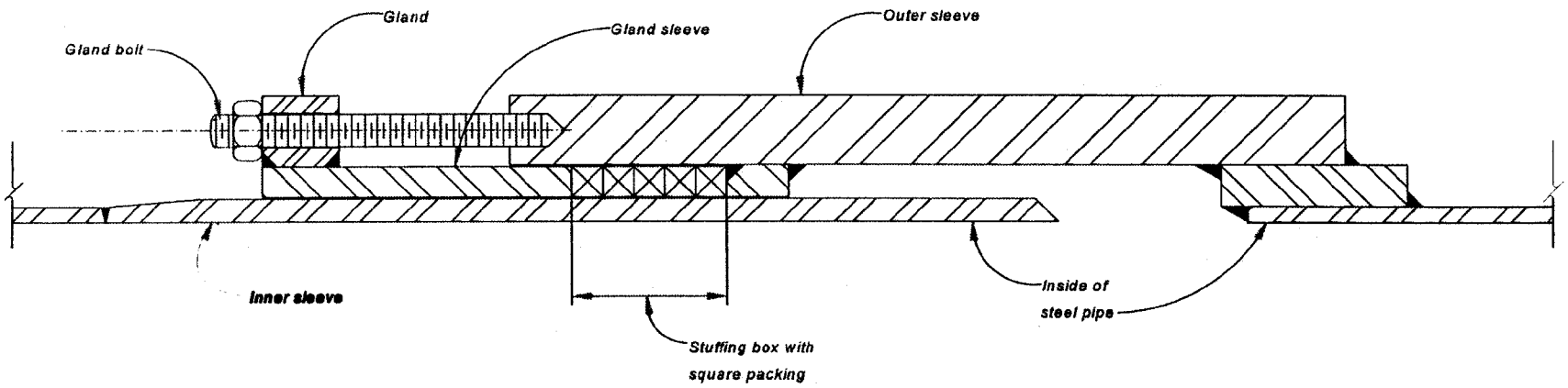

Figure 7. - Cross section of expansion joint.

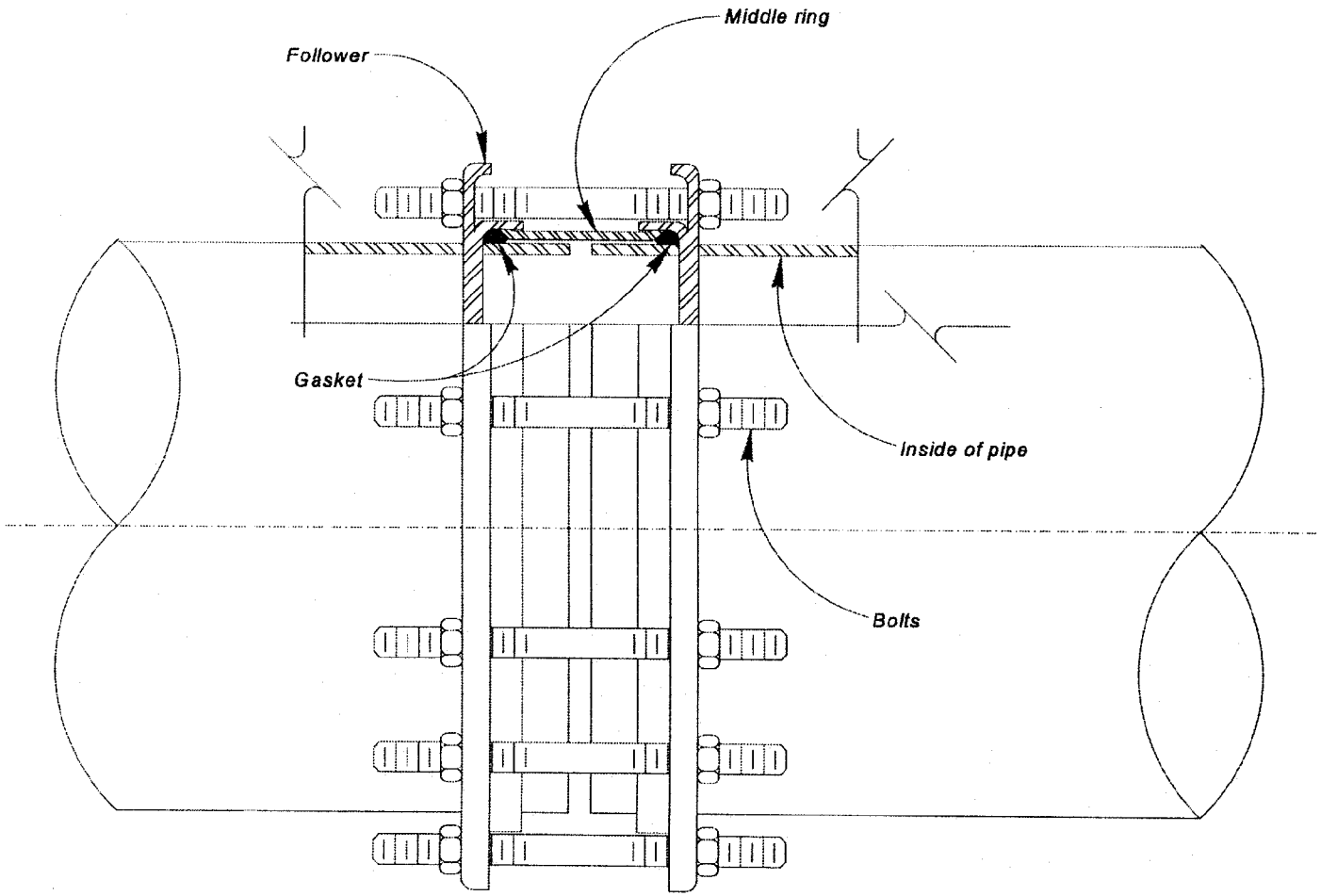

Figure 8. - Sleeve-type coupling.

4.6 Casting Defects in Appurtenances

Old steel castings are typically associated with penstock elbow, tee, transition, and wye branch sections. Casting defects range from superficial lineation and blemishes to structural defects, such as cracks associated with shrinkage during cooling near discontinuities, inclusions of foreign material in the casting, and poor chemical or crystal grain structure. Ultrasonic or radiograph techniques may be useful in evaluating discontinuities associated with casting defects.

4.7 Penetrations

Ultrasonic techniques may be used to determine the actual thickness of the reinforcement pads. Other NDE techniques may be used to examine the welds.

4.8 Vibration

A vibrometer can be used to measure the vibration frequency of the penstock. The deformations associated with the vibration of the penstock can be monitored using strain gages to determine the incremental dynamic stress changes created between peak amplitudes of circumferential deformation in the radial direction. In addition, the maximum peak radial deformations should be located and measured for evaluation purposes. Vibration is considered excessive when the associated incremental dynamic stress exceeds 20 percent of the design stress or when the amplitude of the measured radial deformation exceeds D/1000, where D is the penstock internal diameter in inches. Remedial measures must be considered when excessive vibration is present. As an alternative to remedial measures, a fatigue assessment, as described in the American Society of Mechanical Engineers (ASME) Code (ASME, 1992), section VIII, division 2, is recommended.

4.9 Geotechnical Considerations

Evidence of foundation failure or slope movement requires a more detailed geotechnical investigation to determine the nature of the problem and a range of possible solutions. A detailed geotechnical investigation may require soil or rock borings, laboratory testing of the soil or rock, geophysical surveys, an instrumentation program, and detailed geologic mapping. Gradual downslope movement or settlement may require a long term monitoring program to determine the extent and rate of occurrence of deformation.

Positive identification of a slope stability problem under or near a penstock usually requires determination of the volumetric extent of the sliding mass and the rate of movement. The inclinometer is most commonly used to make this assessment. The inclinometer measures the changes in inclination of a cased boring that extends through a slide mass. Inclinometer casings are normally read manually, but in-place accelerometers allow automatic monitoring. The three-dimensional nature of inclinometer data hinders interpretation of the results. Experienced personnel should evaluate the results of inclinometer readings.

Extensometers, tiltmeters, and surveying can also be used to monitor slope movement. Because ground water often has a significant impact on slide movements, piezometers may be installed in a suspected slide mass to monitor the piezometric level.

Evaluators should monitor geotechnical instrumentation on a regular basis. The time interval between readings should be based upon the rapidity with which the measured physical phenomena will change and its importance to penstock integrity.

Instruments used to make readings must undergo regular calibration against known standards. This calibration is particularly important for long term monitoring because present readings may have to be compared to future readings made by different instruments.

The rates and timing of the movement of the slide mass, as determined from the instrumentation program, can often provide clues to the sliding mechanism. Sliding that occurs at a nearly constant rate throughout the year probably indicates a creeping movement controlled primarily by slope geometry and gravity. Periodic movements, especially if they coincide with periods of high precipitation or high ground water, may indicate transitory ground-water level as a major contributor to the sliding.

Normally, for most soils, the settlement rate of structures will peak immediately after construction and will decrease with time. Cases where settlement rate remains constant or increases with time may require an assessment of the foundation conditions to determine the causes.

Slope movements that accelerate with time often indicate incipient, large scale failure. The potential impact of such movements on the penstock integrity requires immediate evaluation.

5. SIMULATION OF EMERGENCY CONTROL SYSTEM OPERATION

Testing and simulation of the emergency control system is essential to ensure fast and remote closure of the emergency gates in case of failure or damage to a penstock between the service gates and the wicket gates. The emergency closure system will:

- Prevent rapid dewatering of the penstock
- Minimize the loss of water from the upper reservoir
- Minimize the resulting property damage or loss of life
- Provide a means for regaining control of the hydraulic system

5.1 Emergency Gate Tests

A critical part of testing the emergency control system is the testing of the penstock emergency gates. Prior to any gate tests, an air vent analysis should be performed to ensure that adequate venting capacity is available in the event of an emergency closure to prevent collapse of the penstock shell.

Performance of a balanced head closure test of the penstock emergency gates is recommended on an annual basis. The gates should open and close freely without binding. For fixed wheel gates, the wheels should bear against the rails and roll freely as the gate moves up and down. Critical data related to the gate tests, such as opening/closing times and operating pressures, should be recorded. These data will allow comparison to future gate tests to assist in determining if a problem may be occurring as evidenced by an increase in opening/closing times and operating pressures.

Performance of a full flow, unbalanced head closure test of the penstock emergency gates is recommended about every 5 years and no less than every 10 years. Critical data related to the gate tests, such as opening/closing times and operating pressures, should be recorded. These data will allow comparison to future gate tests to assist in determining if a problem may be occurring as evidenced by an increase in opening/closing times and operating pressures.

6. LOAD REJECTION TESTS AND READJUSTMENT OF GOVERNOR

6.1 Hydraulic Transient Analysis

Prior to performing load rejection tests, a hydraulic transient analysis should be performed. The transient analysis consists of a computer simulation of the penstock to calculate pressures at all critical locations along the penstock. The magnitude of the hydraulic transients or water hammer that occurs during rapid load changes or load rejection depends largely on the full rate closing and opening wicket gate timing.

Reclamation uses a general computer program, named WHAMO, developed by the U.S. Army Corps of Engineers, to simulate water hammer and mass oscillation in the penstocks and water conduits. The programmer specifies the components, boundary conditions, schedule of the gate or valve position and turbomachinery operating conditions, and parameters which initiate and control the hydraulic transient. The output of the program, as used by Reclamation, consists of gate position, unit speed, and penstock or spiral case pressure versus time graphs for various initial conditions and rates of gate closure.

The program is used to predict optimum full rate wicket gate timing very accurately prior to testing. The results of the program can then be verified with tests at less than worst case conditions to minimize the risk of damage and equipment wear.

6.2 Load Rejection Tests

A full series of load rejection tests should be performed and the results documented. These tests should include all conditions that can occur during the full range of operation. The data from these tests are needed to determine the maximum and minimum operating pressures and unit speeds.

Based upon data obtained from the hydraulic transient analysis, stop nuts on the governor main distributing valve servomotor are then set to limit the full rate opening and closing times of the wicket gates with the turbines unwatered, the governor in "main valve," and the shutdown solenoids blocked in the running position. Rapid operation of the gate limit between 0 and 100 percent will then cause the gates to operate at maximum rate. Experience has indicated that full rate closure under actual operating conditions tends to be about 10 percent faster than the unwatered setting.

To set the gate timing accurately, the stopwatch has been replaced with a position transducer attached to the servomotor and a strip chart recorder. Minimum test equipment for the load rejection tests, if required to verify the computer model, includes:

1. Results of the hydraulic transient study to allow safe initial adjustments.

2. Pressure transducers on the penstock and/or spiral case.

3. A tachometer to measure unit overspeed.

4. A position transducer on the wicket gates.

5. A voltage transducer to measure the generator voltage transient.

6. A strip chart recorder with at least 4 channels.

An outline for a load rejection test procedure and a load rejection test data sheet are supplied in "Mechanical Governors for Hydroelectric Units" (Reclamation, 1990).

6.3 Readjustment of Governor

Based upon the information obtained from the load rejection tests or hydraulic transient study, the governor should be adjusted and calibrated to optimize unit performance within the power system, provide smooth synchronizing capability, and optimize the capability of the unit to carry an isolated load.

A detailed description of governor tests and adjustments is contained in "Mechanical Governors for Hydroelectric Units" (Reclamation, 1990).

7. PENSTOCK EVALUATION

Once the initial and detailed assessments have been completed and all the pertinent data obtained, a penstock evaluation should be performed by a qualified individual with substantial experience in analyzing and designing penstocks or pressure conduits. The following analyses should be performed:

- Lower bound allowable stress determination
- Lower bound wall thickness determination
- Lower bound joint efficiency determination
- Maximum pressure at critical locations determination
- Stress analysis of related penstock components (shell, joints, supports, anchor blocks, etc.)
- Factors of safety determination

8. REFERENCES

American Society for Testing Material, C805--Standard Test Method for Penetration Resistance of Hardened Concrete, 1990.

American Society for Testing Material, C803--Standard Test Method for Rebound Number of Hardened Concrete, 1990.

American Society of Civil Engineers, *Steel Penstocks,* ASCE Manuals and Reports on Engineering Practice No. 79, 1993.

American Society of Civil Engineers, *Guidelines for Evaluating Aging Penstocks,* 1995.

American Society of Civil Engineers, *Guidelines for Inspection and Monitoring of In-Service Penstocks,* in preparation.

American Society of Mechanical Engineers Boiler and Pressure Vessel Code, Section VIII, Division 2, 1992.

American Welding Society, *Welding Handbook,* eighth edition, volume 1, Welding Technology, third printing, 1991

Bureau of Reclamation, "Mechanical Governors for Hydroelectric Units," Facilities Instructions, Standards, and Techniques, volume 2-3, November 1990.

Cary, Howard B., *Modern Welding Technology,* Second Edition, Prentice Hall, 1989.

APPENDIX - PENSTOCK INSPECTION CHECKLIST

General Information

Date_____

Name of Plant _____ Number of Units_____

Exposed Length _____ ft. Buried Length _____ ft.

Penstock Diameter _____ in.

Penstock Intake Centerline Elevation _____ ft.

Turbine Unit Scrollcase Centerline Elevation _____ ft.

Maximum Reservoir Elevation _____ ft.

Reservoir Elevation at Time of Inspection _____ ft.

Inspection Team _____

_____

_____

Inspection Objective _____

_____

_____

Previous Inspection Problem Areas _____

_____

_____

Safety Plan/Job Hazard Analysis Completed: YES _____

Proper Clearances Obtained: YES _____

Safety Plan and Clearances Reviewed: YES _____

Air Quality in Penstock Tested: YES _____

Exterior Inspection of Exposed Penstocks

Misalignment: YES ____ NO ____ LOCATION _____

Sagging: YES ____ NO ____ LOCATION _____

Leakage: YES ____ NO ____ LOCATION _____

Excessive Vibration: YES ____ NO ____ LOCATION _____

Penstock Shell

Wall Thickness Measurements YES ____ NO ____
Distortions/Flat Spots YES ____ NO ____ LOCATION _____
Cracks YES ____ NO ____ LOCATION _____

Joints

Loose Fasteners YES ____ NO ____ LOCATION _____
Broken Welds YES ____ NO ____ LOCATION _____
Movement YES ____ NO ____ LOCATION _____

Supports,

Bearings/Rollers Clean YES ____ NO ____ LOCATION _____
Loose Fasteners YES ____ NO ____ LOCATION _____
Broken Welds YES ____ NO ____ LOCATION _____
Concrete Damage YES ____ NO ____ LOCATION _____

Coatings

Peeling YES ____ NO ____ LOCATION _____
Blisters YES ____ NO ____ LOCATION _____
Cracks YES ____ NO ____ LOCATION _____
Corrosion/Pitting YES ____ NO ____ LOCATION _____

Geotechnical

Excessive Vegetation YES ____ NO ____ LOCATION _____
Erosion YES ____ NO ____ LOCATION _____
Topography Changes YES ____ NO ____ LOCATION _____
Ground Movement YES ____ NO ____ LOCATION _____
Water Related Effects YES ____ NO ____ LOCATION _____
Slope Stability Problem YES ____ NO ____ LOCATION _____

Interior Inspection of Penstocks

Erosion YES ____ NO ____ LOCATION _____

Cavitation Damage YES ____ NO ____ LOCATION _____

Ponding of Water YES ____ NO ____ LOCATION _____

Drains Functioning YES ____ NO ____ LOCATION _____

Air valve/vent connections
free of debris YES ____ NO ____ LOCATION _____

Leakage past emergency gate/valve _____ gal/min

Penstock Shell

Wall Thickness Measurements YES ____ NO ____ LOCATION _____
Distortions/Bulges YES ____ NO ____ LOCATION _____
Cracks YES ____ NO ____ LOCATION _____

Linings

Peeling YES ____ NO ____ LOCATION _____
Blisters YES ____ NO ____ LOCATION _____
Cracks YES ____ NO ____ LOCATION _____
Corrosion/Pitting YES ____ NO ____ LOCATION _____

Detailed Inspection Recommendations:

	NDE Technique	Description of Item	Location
1.	_____	_____	_____
2.	_____	_____	_____
3.	_____	_____	_____
4.	_____	_____	_____

Comments

_____
_____
_____
_____
_____
_____

DEPARTMENT OF THE ARMY
U.S. Army Corps of Engineers
Washington, DC 20314-1000

ER 1110-2-8157

CECW-CE
CECW-CO

Regulation
No. 1110-2-8157

15 June 2009

Engineering and Design
RESPONSIBILITY FOR HYDRAULIC STEEL STRUCTURES

1. Purpose. This regulation defines engineering responsibilities for design, construction and operation of hydraulic steel structures. ER 1110-2-100 requires periodic inspection of completed Civil Works Structures by Engineering Division personnel, but contains only general requirements applicable to all project features. Specific requirements for management and inspection of hydraulic steel structures are described herein.

2. Applicability. This regulation applies to all USACE commands having responsibility for Civil Works projects.

3. Distribution Statement. Approved for public release; distribution is unlimited.

4. References.

a. ER 1110-1-12, Quality Management.

b. ER 1110-2-100, Periodic Inspection and Continuing Evaluation of Completed Civil Works Structures.

c. ER 1110-2-101, Reporting Evidence of Distress of Civil Works Structures.

d. ER 1110-2-112, Required Visits to Construction Sites by Design Personnel.

e. ER 1110-2-401, Operation, Maintenance, Repair, Replacement, and Rehabilitation Manual for Projects and Separable Elements Managed by Project Sponsors.

f. ER 1130-2-500, Partners and Support (Work Management Policies); Chapter 2 Project Manuals.

g. ER 1110-2-1150, Engineering and Design for Civil Works Projects.

h. EM 1110-2-2105, Design of Hydraulic Steel Structures.

i. EM 1110-2-6054, Inspection Evaluation and Repair of Hydraulic Steel Structures.

j. Federal Highway Administration (FHWA) 1986. Inspection of Fracture Critical Bridge Members, Supplement to the Bridge Inspector's Training Manual. Report No. FHWA-IP-86-26.

k. American Welding Society (AWS) 2008. D1.1 "Structural Welding Code – Steel," Miami, FL 33126.

l. American Welding Society (AWS) 2008. D1.5 "Bridge Welding Code," Miami, FL 33126.

m. British Standards Institution (BSI) 2005. BS 7910:2005 "Guide to methods for assessing the acceptability of flaws in metallic structures," London, England W4 4AL.

5. Background.

a. There have been incidents of significant distress in hydraulic steel structures at Civil Works projects. In some cases the distress has been so severe as to warrant complete replacement of the structure (Ice Harbor Lock, lift gate, 1994, $6 million) and, in at least one case, to cause collapse of a structure under hydrostatic load, nearly resulting in loss of life (Coffeeville Lock, maintenance stop logs, 1994). Other lift gates have been replaced due to severe cracking (Melvin Price Lock and Upper Mississippi River Lock 27), miter gates have been investigated and repaired due to cracking (Markland Lock), and there has been a failure of a tainter gate (Folsom Dam, Bureau of Reclamation). There have also been a number of failures of operating equipment, including wire rope, machinery anchorage and hydraulic gate-operating systems.

b. In many cases, the primary form of distress has been fatigue damage and fracture. The most common causes of fatigue cracking have been a lack of proper detailing during design, poor weld quality during fabrication and poor detailing and execution of repairs. Recent inspections by districts have indicated that a significant number of stop logs and bulkheads had deficient welds which required repairs. Many of these deficiencies were the result of ineffective quality control during the original fabrication welding of the structures. Corrosion is also a common form of distress, but is often more readily apparent before resulting in failure than fatigue cracking or incipient fracture.

6. Policy.

a. Definition of Hydraulic Steel Structures. Hydraulic steel structures (HSS) are structures which control or regulate water and are typically part of a larger navigation, hydropower or flood control project. Typical HSS are lock gates, dam spillway gates, tainter gates, tainter valves, bulkheads and stoplogs, vertical lift gates, components of hydroelectric and pumping plants, and miscellaneous structures such as lock wall accessories, flood protection gates, lifting beams used for installing other HSS, and outlet works gates. This regulation applies to all HSS being designed, fabricated, operated or inspected by the district with the exception of small size, low head, standard

manufacturer's designs. Many components of the operating machinery are designed and function integrally with the structural components of the HSS. To the extent possible, the provisions of this regulation shall also apply to such components.

b. Responsibility. The District's Chief of Engineering Division (or Engineering function for multi-function Divisions) is responsible for ensuring that new HSS are adequately designed, and that appropriate engineering support is provided for quality control, quality assurance, fabrication, erection, operation, inspection, and maintenance of each new and existing HSS. The District's Chief of Engineering Division will designate a qualified Engineer to be responsible for each HSS activity identified herein. For purposes of this regulation, Engineer shall be defined as the individual designated by and acting on behalf of the District's Chief of Engineering Division on all engineering responsibilities within the scope of this regulation. Funding and scheduling for these actions should be accomplished through normal budgetary procedures.

c. Qualifications. The Engineer shall be a licensed professional engineer, be a structural engineer, have continuing education that includes structural steel design, welding, fatigue and fracture analysis, and fabrication methods, and at least five years experience in the design, inspection and evaluation of HSS. Where a particular expertise or experience is lacking in an area of design, inspection, or evaluation, the Engineer shall obtain it from within the District or USACE Regions, or from other agencies or qualified A-E firms. The Engineer is responsible for direct oversight of the design or evaluation. An engineer conducting or leading the team conducting quality control or quality assurance shall have at least the same qualifications as the Engineer.

d. Required Actions. Quality management in accordance with ER 1110-1-12 shall be performed to ensure compliance with the requirements described herein during the following phases of the project.

7. Design Phase.

a. Design Criteria. Design of HSS shall be in accordance with EM 1110-2-2105. The Engineer shall ensure that the following types of design requirements are satisfied: strength, serviceability, fatigue and fracture, corrosion and wear. Sufficient analyses must be performed to ensure a safe, functional and reliable design. This includes sizing of members, connection detailing and compatibility with adjacent features. Analyses shall be performed and checked as required herein.

b. Fracture and Fatigue Control. Fracture and fatigue control requirements are defined in EM 1110-2-2105. The Engineer shall ensure that all cyclically loaded components have been designed to meet the fatigue design requirements. This includes all attachments and connections to cyclically loaded members. The Engineer shall also ensure, as required by the EM, that all fracture critical members (FCM) have been specified to meet minimum material toughness criteria and, for welded structures, the fabrication and inspection requirements follow a Fracture Control Plan (FCP). Fatigue and fracture control are critically affected by the quality of fabrication and

construction procedures. Therefore, engineering requirements for fabrication and construction procedures should be provided to construction personnel as outlined in paragraph 8.

(1) Fracture critical members or member components are tension members or tension components of bending members (including those subject to reversal of stress), the failure of which would be expected to result in collapse or partial collapse of the structure. The designation "FCM" shall mean fracture critical member or member component. Any attachment welded to a tension zone of an FCM member shall be considered an FCM when any dimension of the attachment exceeds 4 in. in the direction parallel to the calculated tensile stress in the FCM. All welds to FCMs shall be considered fracture critical. Welds to compression members or compression areas of bending members shall not be defined as fracture critical. For new designs, designers should avoid structural systems containing FCMs whenever possible.

(2) Fracture Control Plan (FCP). The Engineer shall develop an FCP for fabrication of FCM. The FCP shall include provisions for controlling parameters that influence fatigue and fracture including: material toughness in base metals and consumables, hydrogen control in consumables, heat input and cooling rates, limits of discontinuities in welds and base metals, welding processes and procedures, repairs of welded connections and base metal, qualifications of fabricators, welders, welding operators, tack welders, and inspectors, and any other parameters that affect embrittlement of materials and introduce discontinuities. The AASHTO/AWS Fracture Control Plan (FCP) for Nonredundant Members provided in AASHTO/AWS D1.5M/D1.5 was developed specifically for the fabrication of new bridges but provides guidance on process and material controls that can be applied to other types of structures. The Engineer may apply certain or all sections of these provisions as they apply to a particular HSS as long as the Engineer understands fully the development of these provisions and how they apply to the specific conditions of the design.

(3) Welding Criteria. The Engineer shall be responsible for, or review and approve, all welding requirements for HSS including welding processes and procedures, weld quality, weld details, material requirements, inspection requirements, weld acceptance criteria, and qualifications of fabricator and fabricator personnel. The Engineer shall apply the provisions of either AWS D1.1/D1.1M or AASHTO/AWS D1.5M/D1.5 as applicable to the weld or member type; i.e., statically or cyclically loaded, FCM, or other critical member or connection. Alternatively, the Engineer can conduct a Fitness For Service (FFS) evaluation (see references h, i, and m) to determine acceptable criteria.

c. Plans and Specifications. Plans and specifications (P&S) shall be prepared in accordance with ER 1110-2-1150. The P&S are the final products of all the preceding design and review efforts. They define legal requirements for the contractor and are the basis for construction bids. The Engineer shall ensure that the P&S include all necessary requirements governing fabrication and erection of the HSS and that submittal requirements are clearly defined. The Engineer will specify design analysis submission requirements for any structural steel components designed by the

contractor such as supplier designed sluice gates, mechanical equipment supports, etc. Generally, all structural submittals for the HSS should be reviewed by the Engineer. Guide specifications may be used as a tool for preparing project specifications, however, the Engineer must ensure that guide specifications are properly adapted to reflect specific project requirements. The following information shall be included in the P&S.

(1) All connections shall be detailed by the designer, not the steel fabricator.

(2) All FCM shall be clearly identified on the drawings, and the material toughness requirements for these members shall be defined in the specifications.

(3) Requirements for weld inspections shall be clearly defined in the P&S. All welds require at least a visual inspection. The Engineer shall also require additional non-destructive testing (NDT) of welds on FCM as required by the FCP. The drawings and specifications should also identify other critical connections (in addition to FCM) that require NDT beyond visual inspection. The specifications should also require NDT of a sampling of other welds on critical connections.

d. Design-Build. When a design-build acquisition strategy is deemed necessary to meet mission requirements, the Engineer shall ensure that the Request For Proposal (RFP) clearly indicates all of the applicable criteria, tasks and controls necessary to design, fabricate, and construct a quality HSS, and that submittal requirements are well defined. The Engineer shall review all submittals necessary to verify compliance with the RFP and recommend approval or disapproval. All relevant documentation shall be maintained in a project file.

e. Technical Review. Technical review is a key element in design quality control plans. The engineer responsible for the HSS shall ensure that an adequate review is performed, in accordance with current USACE policy, and that issues identified by the review are fully resolved.

f. Certification. The Chief of Engineering shall certify that each HSS has been designed, evaluated, and/or repaired in accordance with current USACE policy, received an appropriate technical review by a qualified engineer, and all substantive issues arising during the review have been resolved to meet the provisions of current USACE policy.

g. Operation and Maintenance. Operation and Maintenance (O&M) or Operation, Repair, Replacement & Rehabilitation (OMRR&R) are interchangeable for this paragraph but the regulation for O&M Manuals for projects with Corps O&M is ER 1130-2-500, and the regulation for OMRR&R Manuals for projects operated by non-Federal sponsors is ER 1110-2-401. As a continuation of the design process, or during the construction phase, the District's Engineering Division will prepare information specific to the HSS for inclusion in the appropriate section of the Project O&M Manual. The Engineer should include information in the O&M manual identifying all FCM, and other

highly stressed tension members, in each HSS. To control fatigue and fracture, the O&M manual will require coordination with the Engineer or his representative, use of qualified welders, and applicable welding specifications and procedures when welding to any HSS element. The information should include recommendations for future inspection procedures and frequency of inspections for the FCM and other critical connections. Where HSS are turned over to local sponsors, the OMRR&R manual must clearly identify and require inspection methods and frequency. Any OMRR&R responsibilities shall be identified to the sponsor throughout the project development process, not just when the project is turned over.

8. Construction Phase.

a. General. The Engineer shall provide engineering support for the HSS during construction of the project. Areas of involvement include shop drawing and other construction submittal reviews, contract modifications, value engineering (VE) proposals, construction site visits, consultation with office and field construction personnel on interpreting the P&S, and on procedures to be used for fabrication and erection.

b. Engineering Considerations and Instructions for Field Personnel. As required by ER 1110-2-1150, the District's Engineering Division shall transmit a report to Construction Division, and to the Area/Resident Engineer, to aid them in supervision and inspection of the construction contract. A meeting among designers, district construction personnel and contractor personnel prior to construction is beneficial for identifying and discussing contract requirements and establishing a partnering relationship. As a minimum, the coverage of HSS in the report and meeting should include materials, welding procedures, quality control (QC) testing and quality assurance (QA) that are part of the fatigue design and fracture control plan, any special construction sequences that must be followed, critical tolerances that must be met, and submittals requiring design engineer review including critical structural shop drawings and contractor performed extensions-of-design. Submittals to be reviewed by the Engineer will be so indicated on the Submittal Register. Also, as required by ER1110-2-112, the schedule of field visits by design personnel should be included. This schedule will identify what structural steel details the Engineer should observe during construction, and at what stage of construction the visit should occur.

c. Design During Construction. Typically, during the construction phase, the only design analyses performed by the Engineer are those required to resolve field problems. All design actions during construction are subject to the same technical review requirements as for new designs. The Engineer shall be involved in evaluating contract modifications to assure that both design criteria and construction concerns are satisfied.

d. Review of Submittals. The Engineer must coordinate with Construction Division to receive HSS submittals designated for Engineering review. The Engineer shall be involved in all modifications and deviations to the contract plans.

e. Contractor Designed Components. The Engineer shall review and approve the design for these items to assure that they result in a structure that meets functional and technical requirements specified in the P&S.

f. Contractor Value Engineering Submissions. VE proposals for HSS that involve changes to the contract P&S shall be reviewed and approved by the Engineer. Review shall ensure that proposed changes comply with the original design criteria established for the project.

g. Final Inspection of Completed Construction. The Engineer shall participate in the final inspection of the HSS with construction personnel and shall provide a recommendation on final acceptance.

h. Permanent Records. Records that document the materials and quality of construction are important for future evaluation and maintenance of the HSS. Engineering and Construction Divisions shall assemble a copy of items including mill certificates, weld inspection records, welding procedure records, and details of contractor designed items, and shall forward them to the appropriate Project Field Office to be retained as permanent records along with the design documents, as-built drawings and specifications. Copies of all documents shall be stored at a central location, accessible to the Engineer for future reference. Consideration will be given for electronic storage of these documents.

i. Supply Contracts. Some of the usual construction contract administration procedures are not applicable when a HSS is procured by a supply contract. For supply contracts, the Engineer must coordinate with Contracting to ensure that appropriate requirements are included in the contract. The Engineer must also coordinate with Construction to define applicable QA/QC requirements, and to determine appropriate USACE inspection actions.

9. Operation Phase.

a. General. Communication and a good working relationship between engineering and operations personnel are essential. Operations personnel continuously observe project features and are often the first to become aware of actual or potential problems that may warrant a special inspection. For scheduled inspections, the Engineer must coordinate with Operations Division to develop at least a 5-year inspection plan, including schedule and budget. This plan should be reviewed and updated annually. The Engineer shall coordinate with Operations Division to execute the inspection plan and provide technical support for maintenance and repairs. Where project operation is the responsibility of the local sponsor, the O&M Manual should identify the sponsor's inspection responsibilities.

b. Modifications/Repairs. All modifications and repairs to HSS and any modification or repair to a FCM shall be designed by the Engineer and shall conform to the

applicable requirements of paragraph 7. Execution of the repairs shall be subject to the applicable requirements of paragraph 8, whether contractor or project personnel perform the repair. Repaired groove welds in FCMs shall be inspected by ultrasonic testing (UT). Fillet weld repairs on FCMs shall be inspected by magnetic particle testing (MT). Documentation of the repair shall be included in the permanent project files.

c. Inspection Methods. The primary purpose of the engineering inspection of HSS is to evaluate structural adequacy, rather than the general maintenance condition. The focus of the inspection should be on the critical structural members and connections and those most susceptible to various forms of degradation, particularly cracking on critical tension members. Detailed guidance on inspection methods and identification of critical areas is provided in EM 1110-2-6054. Detection of cracks requires a thorough visual inspection, and possibly additional non-destructive testing (NDT) to determine the extent of the discontinuity. Visual inspection involves close physical contact with the member, and may require special access equipment and cleaning of areas with potential cracks. Use of additional NDT beyond visual inspection should also be considered for other critical elements when their failure would result in loss of life or large economic losses. The Engineer shall determine the weld acceptance criteria and weld inspection requirements, in addition to those described in this section, in accordance with paragraph 7.b(3).

d. Inspection Plan. An inspection plan should be developed for each HSS. The plan should be specific to the type of engineering inspection being performed (see paragraph 8.e.) and should identify the members, joints, connections and welds that are to be inspected and the type of inspection (visual or additional NDT) each is to receive. The plan should identify any equipment needed to provide safe access to the members. The extent of inspection will depend upon member importance, the type of HSS and its function and the purpose of the inspection. Drawings, design analyses, inspection reports and O&M records are useful in developing the inspection plan. Those that require additional NDT beyond visual inspection will cost more and take longer than those requiring only a close visual inspection. The plan should prioritize inspection of members, including adjacent joints, in the following order:

(1) FCMS with life safety impacts;

(2) Other FCMS;

(3) Primary tension members or tension flanges;

(4) Primary compression members or compression flanges;

(5) Secondary structural members;

(6) Non-structural items.

e. Types and Frequencies of Engineering Inspections. HSS may be inspected at the same time as other project features during a periodic inspection, or may be inspected at times which will maximize the effectiveness or efficiency of the inspection. The Engineer must coordinate each HSS inspection in accordance with the following schedules. To ensure that these schedules are followed, it will be necessary to mark and record a permanent identifying number on each HSS. This will permit identification when HSS are moved or interchanged. When a problem is discovered during an inspection, the Engineer shall determine the need to revise inspection schedules for similar HSS and shall determine the scope of those inspections.

(1) Periodic Inspections. A periodic inspection is a regularly scheduled inspection required by ER 1110-2-100. HSS should be included as part of the periodic inspection program. It shall consist of sufficient observations to determine the physical and functional condition of the HSS, to note any changes from previously recorded conditions, to identify any changes in loading or use, to identify any developing problems, and to ensure that the structure continues to satisfy service requirements. For HSS whose failure could result in loss of life, the critical components should be subjected to at least a thorough visual examination during each inspection. NDT shall be done on critical connections where cracks are suspected.

(2) In-Depth Inspection. An In-Depth inspection is required for each FCM on all existing HSS where failure of the FCM would result in probable loss of life. In-Depth inspection of stoplogs and bulkheads used for dewatering, and for related lifting beams, shall be completed prior to their next use. The purpose of this inspection is to ensure that there are no defects that could result in failure. This inspection is required to be performed at least once during the life of the HSS. The requirement may be waived if fabrication and inspection of FCMs in accordance with an acceptable FCP is documented. All welds on FCMs shall be visually inspected. Fillet welds on FCM shall be inspected by NDT other than visual. Paint shall be removed from the joint being tested only when a clear indication cannot be obtained through the paint. All butt joints subject to tensile stress in FCMs shall be inspected by ultrasonic testing (UT). All groove welds in "T" and corner joints subject to tensile stress in FCMs shall be inspected by UT. Welds meeting the acceptance criteria of 7.b(3) shall satisfy the requirements of this inspection. Welds not meeting the acceptance criteria may be repaired or evaluated for fitness. In no case shall an HSS with known defects in FCMs be placed into service without repair or an evaluation indicating satisfactory performance for its intended purpose. In many cases, welds with moderate profile defects and volumetric defects such as porosity may be fit for service. Guidance on performing evaluations can be found in British Standard 7910:2005 (BSI 2005) and in EM 1110-2-6054.

(3) Special Inspections. A Special inspection may be required to assess structural damage resulting from natural causes, accidents, or normal wear. It may follow a specific damaging event, or be a more detailed inspection following identification of distress during a periodic inspection. The scope of inspection must be sufficient to determine whether to continue operation of the HSS, the need for emergency repairs to

ensure safety, and to assess the level of effort necessary for temporary or permanent repairs. The amount of effort expended on this type of inspection will vary significantly depending upon the extent of the damage and urgency of continued operation. If major damage has occurred, inspectors must evaluate fractured members and section loss and make measurements for misalignment of members. It may be necessary to make on-site analyses and decisions to establish emergency operation procedures. A refined analysis may be necessary to establish or adjust interim operational procedures. NDT may be required where fatigue or other damage is suspected. When documenting Special inspections, the Engineer should be aware of any potential for litigation.

(4) Following the initial in-depth inspection, all FCMs should be subjected to a thorough visual inspection every 5 years. When dewatering is required to perform these subsequent inspections, the Engineer shall decide whether such inspections are required. This decision will be based on an evaluation of the previous condition of the FCM, the number and magnitude of load cycles since the last inspection, consequences of potential failure, and the difficulty and cost associated with dewatering. Each HSS must be thoroughly dewatered (if necessary) and inspected at least every 25 years. More frequent HSS inspections may be required based upon paint system, life expectancy, operational problems (vibration, noise, deflections, damage, etc.), and past performance of similar structures. When several of the same type of HSS exist at a project, at least one of each type of HSS must be inspected as part of each periodic inspection. A different HSS should be selected for each inspection. This selection should be based on the time since the HSS was last inspected, and which HSS has experienced more loading cycles or more severe operating conditions. If the HSS cannot be dewatered for this inspection, the portion above water should be inspected.

(5) If practicable without compromising safety, HSS inspections should be scheduled when the project is already being dewatered for another purpose and activities requiring dewatering should be scheduled to minimize dewaterings. When a HSS cannot be dewatered for a normally scheduled inspection, it should be inspected whenever it is dewatered prior or subsequent to the scheduled inspection. This may occur when Operations Division schedules painting or repairs. The Engineer must coordinate with Operations Division to arrange for such inspections.

f. Inspection Evaluation. Whenever distress of a HSS is noted during inspection or at any other time, the Engineer shall thoroughly evaluate the adequacy of the structure to ensure safety and reliable project function. ER 1110-2-101 defines procedures to be followed when reporting evidence of distress. When a problem is discovered during an inspection, the Engineer shall determine the need to inspect similar project HSS and shall determine the scope of the inspection.

g. Inspection Report. For each HSS inspection, other than operations inspections, a report shall be prepared. The report should identify the structure, inspection date, results of inspection and evaluation, and recommendations. Recommendations should include a description of the problem, budgetary cost to address, potential consequence if not addressed and/or relative priority. Reports should also describe all modifications

and repairs, including weld inspection results that have been made on the structure since the last engineering inspection. All NDT reports, photographs, and radiographs should be included in the inspection report, so that they may be compared with subsequent NDT reports. The report shall include a certification, by the Engineer, that the inspection and evaluation was adequately performed by a qualified engineer. Copies of completed reports shall be provided to the District's Dam Safety Officer, Dam Safety Program Manager, and the Operations Manager for the project that the HSS is associated with. A summary of findings and deficiencies shall be prepared and included in the next project Periodic Inspection Report. All inspection reports, records, and photographs will be maintained throughout the life of the HSS.

FOR THE COMMANDER:

S.L. Hill
STEPHEN L. HILL
Colonel, Corps of Engineers
Chief of Staff