RECEIVED
JUL 22 1953
M-K-A, Inc.
KANDAHAR

KAJAKAI DAM PROJECT

AFGHANISTAN

MORRISON-KNUDSEN AFGHANISTAN INCORPORATED

PURCHASE ORDER NUMBER 11.5031

OPERATION AND MAINTENANCE INSTRUCTIONS

FOR

S. MORGAN SMITH COMPANY ORDERS:

69687 - Three (3) - 84" diameter Rotovalves of steel construction, 125# standard A.S.A. flanges, 115 psi working pressure, for water service. Special assembly. No controls or special equipment. Serial nos. VB-1844, VB-1845, VB-1846.

69688 - One (1) oil pressure unit for 500 psi working pressure consisting of a sump tank, two (2) motor driven pumps, control panel, controls and control piping with in/on the various pieces of equipment but not including the inter-connecting piping between them.

SECTION 1. Description of Rotovalve Operation

SECTION 2. Description of Oil Pressure System and Controls

SECTION 3. List of Drawings

SECTION 4. Recommended Spare Parts List

SECTION 5. Tools

SECTION 6. Maintenance and Lubrication

SECTION 1: - DESCRIPTION OF ROTOVALVE OPERATION

The basic principle of the Rotovalve is essentially that of a plug cock which is first raised from its seats, rotated to a desired position, and then reseated by rewedging. Normally the valve will be rotated thru an angle of 90°, that is, from a "closed" to an "open" position, or by reversing the direction of rotation from "open" to "close". However, as the functions of lifting and rotating are entirely separate and act independently with the type of mechanism employed it is possible to reseat the valve plug in any intermediate position between "close" and "open". Any intermediate position will produce a throttling effect upon the flowing medium. When in the "open" position, the opening thru the circular plug is identical to the opening thru the adjoining pipe line. This passageway is closed by rotating the plug orifice 90°, or perpendicular to the orifice in the valve body. The plug is forced into the body so that the monel seat rings on the plug engage mating seat rings on the body. The operating mechanism and actuating cylinders provide a vibration free valve plug at all times. ?

By referring to drawings 6084-E-1, 6084-F-1 and 6084-G-1, Sectional Assembly and Sectional Plan, the operation of the Rotovalve mechanism is readily discernible. The lifting and rotating of the plug proper is directly controlled by the plug shaft which extends thru the upper head and into the mechanism support.

The lifting of the plug is accomplished by means of a sleeve, partially threaded on the O.D., which is loosely fitted on the I.D. to the plug shaft and is free to rotate, but fixed in an axial plane by a shoulder on the lower side and a nut on the upper. The threads of this sleeve are engaged in stationary mating threads in the mechanism support. The sleeve is rotated in these threads by means of a lever attached to the partially threaded sleeve with sliding keys. This lever is connected to the piston rod of the 12" diameter "lift" cylinder. Consequently, as the cylinder is operated in one direction plug shaft and plug move in an axial direction. When the piston travel is reversed the plug is lowered and wedges in place on the seats.

The rotation of the plug thru 90°, to open or close the Rotovalve, is accomplished by means of a large lever directly keyed to the plug shaft. The key ways in the shaft are such as to permit axial lifting movement of the shaft without affecting the axial alignment of the rotator lever. The rotator lever is actuated by the 20" diameter rotating cylinder whose predetermined stroke assures alignment of the plug seats with the body seats in both "open" and "close" positions.

SECTION 2: - DESCRIPTION OF OIL PRESSURE SYSTEM AND CONTROLS

The oil pressure system consists of a sump tank for storage of the operating fluid (S.A.E. 10 hydraulic oil recommended, two motor driven pumps (rated at 30 G.P.M. at 500 psi operating pressure), a control panel and various control valves.

Mounted on the control panel are the pump push button stations (including indicating lights) and six pilot valves which control, thru the main control valves on the Rotovalves, the lifting or rotating action of the Rotovalve plug.

Drawings number 6084-AA-1 and 4850-ARX-3 show the control piping details and a schematic diagram of the hydraulic system, and its function. The two pumps are so connected as to be used interchangeably by selection at the push button stations located on the control panel. The pump takes oil from the sump tank and discharges into the common 1-1/4" pressure line and thence to the pressure ports of the hydraulically operated four-way main control valves which control the "lift" cylinders. Three of the manual operated four-way pilot valves on the control panel govern the lifting or seating of the Rotovalves. Control pressure is tapped off the 1-1/4" pressure line near the pumps, goes to the pilot valves on the control panel and then to the proper ports of the control cylinders on the main control valves. Thus by operating the pilot valve on the control panel, the four-way main control valves on the Rotovalves will direct pressure to one port or the other of the "lift" cylinder and consequently lift or seat the Rotovalve as desired.

When the Rotovalve plug attains a full lifted position, clearing the seat rings, the shaft will come in contact with and actuate a roller operated four way interlock valve, which is mounted directly over the plug shaft. As pressure passes thru the four-way "lifting" main control valve to the lift cylinder some fluid is by-passed to the pressure port of this roller operated interlock valve. When the lift cylinder has reached the end of its stroke and the roller operated valve is actuated the pressure is then permitted to pass thru the roller operated interlock valve to the pressure port of the pilot controlled four-way main control valve governing the "rotating" cylinder. The purpose of this roller operated valve is to act as an interlock which prevents pressure reaching the main control valve for the "rotating" cylinder, except when the plug seats are definitely clear and free of the body seats, that is, after the lift cylinder has functioned.

The procedure for operating the "rotating" cylinder is similar to that used for the "lifting" cylinder. There is provided, on the panel, two pilot valves for each Rotovalve, one for "lifting" and one for "rotating".

To regulate the timing, or speed of lifting, rotating or reseating, a throttling valve has been placed in the common exhaust line from both four-way main control valves. By adjusting this valve the time for a cycle may be varied but it should be noted that the time of lifting and rotating cannot be varied separately.

SECTION 3: LIST OF DRAWINGS

1. Sectional Assembly No. 1 ---------- 6084-E-1
2. Sectional Assembly No. 2---------- 6084-F-1
3. Sectional Plan---------- 6084-G-1

4. Sump Tank Detail---------- 6084-BD-1
5. Control Panel Detail---------- 6084-BG-1
6. Motor Mounting Detail---------- 6084-AD-3
7. List of Material for Control Piping------- 6084-BE-3

8. Schematic Diagram of Hydraulic System----- 4850-ARX-3
9. Control Piping Detail----------6084-AA-1

10. Plug Trunnion Lubrication---------- 6084-BA-1
11. Tools and Tool Cabinet---------- 4680-HN-3
12. Assembly Procedure and Clearance Drawing-- P5200-ALD-2

SECTION 4: RECOMMENDED SPARE PARTS LIST

| QUANTITY REQUIRED PER VALVE | MASTER NO. ITEM NO. | PART NAME | DRAWING |
|---|---|---|---|
| 1 ring | 4 - 41 | 1" sq. Packing Garlock #730 | 6084-D-2 |
| 4 rings | 4 - 42 | 1" sq. Packing Garlock #926 | 6084-D-2 |
| 2 | 20 - 4 | 3/16 dia. seal ring | 6084-AN-1 |
| 1 set | 24 - 6 | 1/2" Chevron Packing Garlock #431 | 6084-AQ-2 |
| 2 | 30 - 4 | 3/16 dia. seal ring | 6084-AS-1 |
| 1 set | 34 - 6 | 1/2" Chevron Packing Garlock #431 | 6084-AV-2 |
| 3 rings | 21 - 2 | Piston Ring 20" dia. x 5/8 step seal | 6084-AO-2 |
| 3 rings | 31 - 2 | Piston Ring 12" dia. x 7/16 step seal | 6084-AT-2 |

SECTION 5: TOOLS

Special tools, including a tool cabinet, are provided as listed on drawing number 4680-HN-3. These tools are furnished for use in dis-manteling and reassembling the hydraulic cylinders and the operating mechanisms of the Rotovalves.

## SECTION 6: MAINTENANCE AND LUBRICATION

The Rotovalves are assembled in the shop to meet field conditions; that is, with the proper amount of wedging action to seat the valve tightly under working pressures and no immediate seating adjustment should be required in the field. If the service is extremely severe, slight wear may occur on the seats and more wedging action be required to make the valve tight. To accomplish this, it will be necessary to remove the rear head on the lift cylinder and machine some of the projecting lip away so as to increase the stroke and allow more wedging.

The valve should give years of service without any major adjustments or replacements. In the event that difficulties in operation are experienced, it is best to consult the factory for advice, stating the nature of such difficulties. If at any time, repair parts are needed, they should be identified by part name or master and item number. We also recommend that the serial number of the valve, which is stamped on the name plate, be noted on the requisition.

Included with the tools listed under Section 5 is a lever type Alemite grease gun, 70-3. Atlantic Number 16 or an equal lubricant should be used in this gun for lubricating all parts of the mechanism and cylinders provided with Alemite fittings. By referring to Sectional Assembly drawing 6084-E-1 and Sectional Plan 6084-G-1, these places may be readily located. Fittings 5-28, located in the two trunnions, 20-2 and 30-2, of each rotating and lifting cylinders allows for lubricating these bearings, 5-15 and 5-50. Fittings, 22-7 and 32-2, at the pin joints connecting the piston rods to the lifting and rotating levers also permits lubrication of the enclosed bearings, 26-10 and 26-11. In the lift nut casting, 6-1, two fittings, 6-5 are provided, one to feed up to the lift lever bearing, 14-4 and thrust rings, 14-2, and also thru the threaded collar, 14-5, into the shaft, 12-1. The other fitting, 6-5, is provided to feed downward, lubricating the shaft bearings, 11-1, the guide keys, 9-5, in the shaft and the thrust washers, 9-2 for the rotator lever, 9-1. Both points contribute to the lubrication of the lift threads. In the top thrust plate, 14-1, fitting, 14-5, is provided to insure lubrication of the thrust washer, 14-3, for the lift lever, 7-1, and the excess grease enters the guide key slots in the threaded collar, 14-5. Drawing 6084-BA-1 shows the details of the lubrication to the upper and lower plug trunnion bushings, 2-33, 3-22 and 4-20. Drawing 6084-G-1 indicates where the alemite fittings, 40-1, for the trunnions are located near the outer edge of the upper head flange, 4-3. Trunnions should be lubricated prior to operating the valve.*

* See WAH note on inspection report of K.V. Atkinson dated 8/18/53

# Class 9001—Type T
# Oil-Tight Push Buttons, Selector Switches, Pilot Lights and Combinations

## Selector Switches

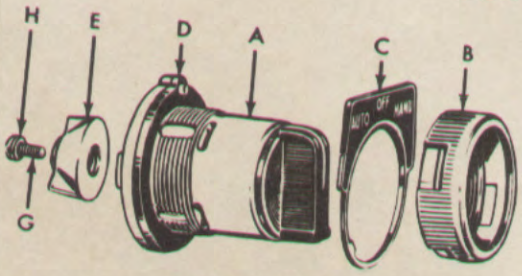


Selector Switch
Type TS1-6

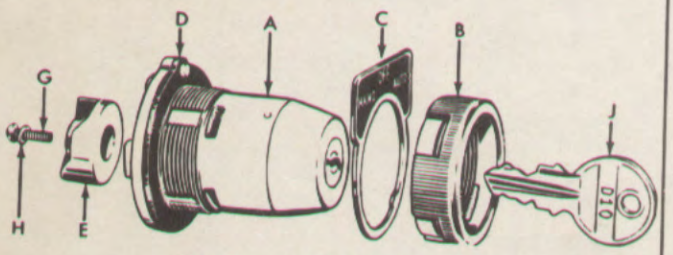


Key Operated Selector Switch
Type TS1K-6K

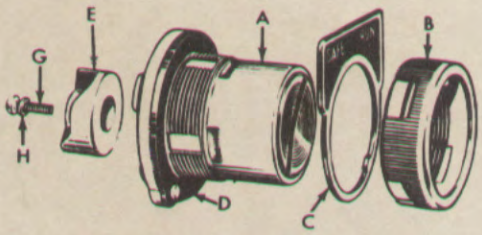


Coin Slot Selector Switch
Type TSA1-6

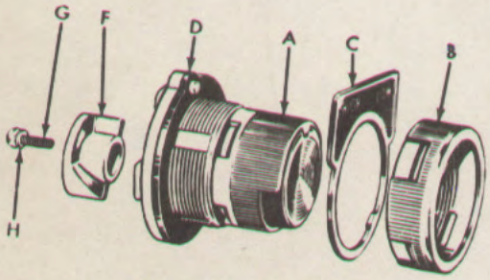


Selector Push Button
Type TQ1-10

| Photo No. | Description | Part Number | QUANTITY REQUIRED | | | | | | | |
|---|---|---|---|---|---|---|---|---|---|---|
| | | | TS1 TS1K TSA1 | TS2 TS2K TSA2 | TS3 TS3K TSA3 | TS4 TS4K TSA4 | TS5 TS5K TSA5 | TS6 TS6K TSA6 | TQ-1 TQ-6 | TQ2-5 TQ7-10 |
| A | Selector Switch Sub Assembly | See Class 9001 Type "T" Catalog Sheet | 1 | 1 | 1 | 1 | 1 | 1 | 1 | 1 |
| B | Ring Nut | 2358-C1-X1 | 1 | 1 | 1 | 1 | 1 | 1 | 1 | 1 |
| C | Legend Plate | See Class 9001 Type "T" Catalog Sheet | 1 | 1 | 1 | 1 | 1 | 1 | 1 | 1 |
| D | Gasket | 2358-X8 | 1 | 1 | 1 | 1 | 1 | 1 | 1 | 1 |
| E | Cam—A | 2359-C1-X1 | 1 | ... | ... | ... | ... | ... | ... | ... |
| E | Cam—B | 2359-C2-X1 | ... | 1 | ... | ... | ... | ... | ... | ... |
| E | Cam—C | 2359-C3-X1 | ... | ... | 1 | ... | ... | ... | ... | ... |
| E | Cam—D | 2359-C4-X1 | ... | ... | ... | 1 | ... | ... | ... | ... |
| E | Cam—E | 2359-C5-X1 | ... | ... | ... | ... | 1 | ... | ... | ... |
| E | Cam—F | 2359-C6-X1 | ... | ... | ... | ... | ... | 1 | ... | ... |
| F | Cam—Z | 2358-C3-X1 | ... | ... | ... | ... | ... | ... | 1 | ... |
| F | Cam—Y | 2358-C2-X1 | ... | ... | ... | ... | ... | ... | ... | 1 |
| G | R.I.M.S. #4-40 x 3/8" | 1001-W0812 | 1 | 1 | 1 | 1 | 1 | 1 | 1 | 1 |
| H | L.W. #4 | 3701-W08 | 1 | 1 | 1 | 1 | 1 | 1 | 1 | 1 |
| J | Keys | See Note Below | ... | ... | ... | ... | ... | ... | ... | ... |

NOTE: When ordering keys for the key operated selector switch, give Class and Type No. of device and No. stamped on keys. For Example — 2 keys for 9001TS2K10A, keys stamped D10.



SQUARE D COMPANY
4041 N. Richards St.
Milwaukee 12, Wis.



80

9

# OIL-TIGHT PILOT LIGHTS



## PARTS LIST FOR PILOT LIGHTS

| Photo No. | Description | Part Number | TP1 | TP2 | TP3 | TP4 | TP5 | TP6 | TP7 | TP8 | TP9 | TP10 | TP11 | TP12 | TP13 | TP14 | TP15 | TP16 | TP17 | TP18 | TP19 | TP20 |
|---|---|---|---|---|---|---|---|---|---|---|---|---|---|---|---|---|---|---|---|---|---|---|
| | | | QUANTITY REQUIRED | | | | | | | | | | | | | | | | | | | |
| A | Color Cap | See table on Page 3 | 1 | 1 | 1 | 1 | 1 | 1 | 1 | 1 | 1 | 1 | 1 | 1 | 1 | 1 | 1 | 1 | 1 | 1 | 1 | 1 |
| B | Ring Nut | 2358-C1-X1 | 1 | 1 | 1 | 1 | 1 | 1 | 1 | 1 | 1 | 1 | 1 | 1 | 1 | 1 | 1 | 1 | 1 | 1 | 1 | 1 |
| C | Gasket | 2358-X8 | 1 | 1 | 1 | 1 | 1 | 1 | 1 | 1 | 1 | 1 | 1 | 1 | 1 | 1 | 1 | 1 | 1 | 1 | 1 | 1 |
| D | Legend Plate | See 9001 Type "T" Catalog Sheet | | | | | | | | | | | | | | | | | | | | |
| E | Bulb #44 | 5501-W12 | | | | | | | | | | | | | | | | | | | | |
| F | Bulb #NE-45 | 5501-W3 | 1 | 1 | 1 | 1 | 1 | 1 | | | | | | | | | | | | | | |
| F | Bulb 14 Volts | 5501-W14 | | | | | | | 1 | 1 | 1 | 1 | 1 | 1 | | | | | | | | |
| F | Bulb 18 Volts | 5501-W4 | | | | | | | | | | | | | 1 | | | | | | | |
| F | Bulb 24 Volts | 5501-W10 | | | | | | | | | | | | | | 1 | | | | | | |
| F | Bulb 32 Volts | 5501-W15 | | | | | | | | | | | | | | | 1 | | | | | |
| F | Bulb 40 Volts | 5501-W16 | | | | | | | | | | | | | | | | 1 | | | | |
| F | Bulb 55 Volts | 5501-W17 | | | | | | | | | | | | | | | | | 1 | | | |
| F | Bulb 120 Volts | 5501-W18 | | | | | | | | | | | | | | | | | | 1 | | |
| G | Base Assy | 2361-D3-G1 | 1 | 1 | 1 | 1 | 1 | 1 | | | | | | | | | | | | | | |
| H | Base Assy | 2361-D3-G2 | | | | | | | | | | | | | | | | | | | 1 | |
| J | Sub Base 115 Volts | 2361-C5-G1 | | | | | | | 1 | 1 | 1 | 1 | 1 | 1 | | | | | | | | 1 |
| J | Sub Base 230 Volts | 2361-C5-G2 | | | | | | | 1 | | | | | | 1 | 1 | 1 | 1 | 1 | 1 | 1 | |
| J | Sub Base 380 Volts | 2361-C6-G1 | | | | | | | | 1 | | | | | | | | | | | | 1 |
| J | Sub Base 440 Volts | 2361-C6-G2 | | | | | | | | | 1 | | | | | | | | | | | |
| J | Sub Base 550 Volts | 2361-C6-G3 | | | | | | | | | | 1 | | | | | | | | | | |
| J | Sub Base | 2361-C8-G1 | | | | | | | | | | | 1 | | | | | | | | | |
| J | Sub Base | 2361-C9-G1 | | | | | | | | | | | | 1 | | | | | | | | |
| K | Insulating Washer | 2361-X2 | | | | | | | | | | | | | 1 | 1 | 1 | 1 | 1 | 1 | 1 | |
| L | Spring Terminal | 2361-X1 | 1 | 1 | 1 | 1 | 1 | 1 | | | | | | | | | | | | | | |
| M | Socket Terminal | 2361-D1-X1 | 1 | 1 | 1 | 1 | 1 | 1 | | | | | | | | | | | | | | |
| N | Transformer 110 V.—50/60 Cy. | 2361-C7-G1 | 1 | 1 | 1 | 1 | 1 | 1 | | | | | 1 | | | | | | | | | 1 |
| N | Transformer 110 V.—25/30 Cy. | 2361-C7-G2 | 1 | | | | | | | | | | 1 | | | | | | | | | |
| N | Transformer 220 V.—50/60 Cy. | 2361-C7-G3 | | 1 | | | | | | | | | 1 | | | | | | | | | |
| N | Transformer 220 V.—25/30 Cy. | 2361-C7-G4 | | | 1 | | | | | | | | | | | | | | | | | |
| N | Transformer 380/440 V.—50/60 Cy. | 2361-C7-G5 | | | | 1 | | | | | | | | | | | | | | | | |
| N | Transformer 550 V.—50/60 Cy. | 2361-C7-G6 | | | | | 1 | | | | | | | | | | | | | | | |
| O | Insulating Sleeve | 153-X41 | | | | | | 1 | | | | | | | | | | | | | | |
| O | Insulating Sleeve | 153-X42 | 2 | 2 | 2 | | | | | | | | | | | | | | | | | |
| P | Insulating Bushing | 2361-C1-X1 | | | | 2 | 2 | 2 | | | | | | | | | | | | | | |
| Q | Spacer | 344-X19 | 2 | 2 | 2 | 2 | 2 | 2 | | | | | | | | | | | | | | |
| R | Terminal Post | 2361-X4 | | | | | | | | | | | | | | | | | | | | |
| R | Terminal Post | 2361-X7 | 2 | 2 | 2 | | | | | | | | | | | | | | | | | |
| S | Terminal Post | 2361-X6 | | | | | | | | | | | 2 | | | | | | | | | |
| T | Br. Cup Washer #6 | 3901-W12 | | | | 2 | 2 | 2 | | | | | | | | | | | | | | |
| U | Br. Bind. Hd. Screw #6-32 x 1/8" | 214-X14 | 2 | 2 | 2 | | | | | | | | | | | | | | | | | |
| V | Resistor | 6101W15101 | 2 | 2 | 2 | 2 | 2 | 2 | 2 | 2 | 2 | 2 | 2 | 2 | 2 | 2 | 2 | 2 | 2 | 2 | 2 | 2 |
| W | Asbestos Washer | 153-D16-X4 | 2 | 2 | 2 | 2 | 2 | 2 | 2 | 2 | 2 | 2 | 2 | 2 | 2 | 2 | 2 | 2 | 2 | 2 | 2 | 2 |
| | | | | | | | | | | | | | | | | | | | | | 2 | 2 |
| | | | | | | | | | | | | | | | | | | | | | 1 | 1 |
| | | | | | | | | | | | | | | | | | | | | | 1 | 1 |



SQUARE D COMPANY
4041 N. Richards St.
Milwaukee 12, Wis.

Supersedes 54AS, dated November, 1948

10

8

# Class 9001—Type T
# Oil-Tight Push Buttons and Pilot Lights

## Push Button Operators

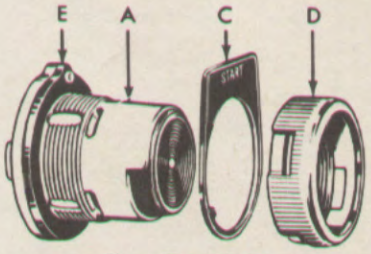


Type TR1 & TR2

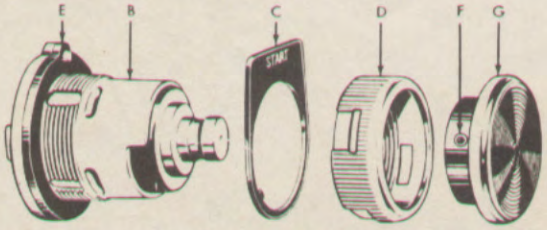


Type TR3 & TR4

**PUSH BUTTON OPERATORS**

| Photo No. | Description | Part Number | QUANTITY REQUIRED TR-1 | TR-2 | TR-3 | TR-4 |
|---|---|---|---|---|---|---|
| A | Push Button Operator Sub Assy.—"Black" | See Class 9001 Type "T" Cat. Sheet | 1 | | | |
| A | Push Button Operator Sub Assy.—"Red" | See Class 9001 Type "T" Cat. Sheet | | 1 | | |
| B | Push Button Operator Sub Assy. | 2358-C7-G1 | | | 1 | 1 |
| C | Legend Plate | See Class 9001 Type "T" Cat. Sheet | 1 | 1 | 1 | 1 |
| D | Ring Nut | 2358-C1-X1 | 1 | 1 | 1 | 1 |
| E | Gasket | 2358-X8 | 1 | 1 | 1 | 1 |
| F | Allen Hd. Set Screw #8-32 x 1/4" | 2903-W1408 | | | 1 | 1 |
| G | Mushroom Knob "Black" | 2358-C6-X3 | | | 1 | |
| G | Mushroom Knob "Red" | 2358-C6-X2 | | | | 1 |

**PILOT LIGHT COLOR CAP TABLE**

| Color | Part Number |
|---|---|
| Clear | 2361-C2-X1 |
| White | 2361-C2-X2 |
| Red | 2361-C2-X3 |
| Amber | 2361-C2-X4 |
| Green | 2361-C2-X5 |
| Blue | 2361-C2-X6 |

## Pilot Lights

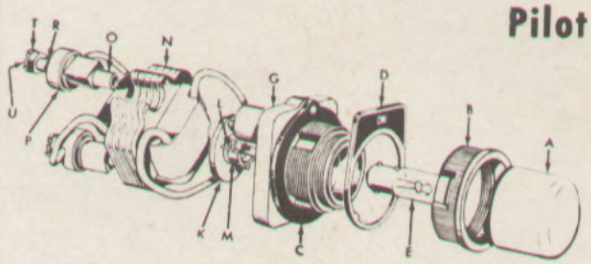


Class 9001 TP1-6

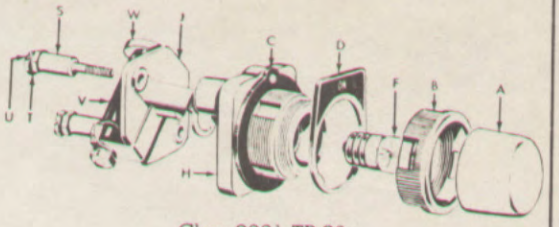


Class 9001 TP-20

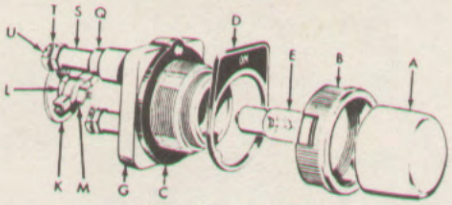


Class 9001 TP-12

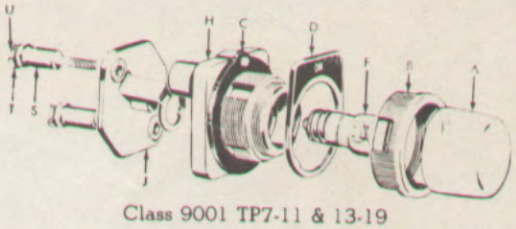


Class 9001 TP7-11 & 13-19



11

82

# SQUARE D COMPANY

INDUSTRIAL CONTROLLER DIVISION, MILWAUKEE, WIS., U. S. A.

| | | |
|---|---|---|
| DRAWN R.E.J. | ENCLOSURE FOR 3-UNIT PUSH BUTTON | TYPE SEE BELOW |
| CHECKED F.E.F. | OUTLINE DIMENSIONS | CLASS 9001 |
| APPROVED | | FILE |

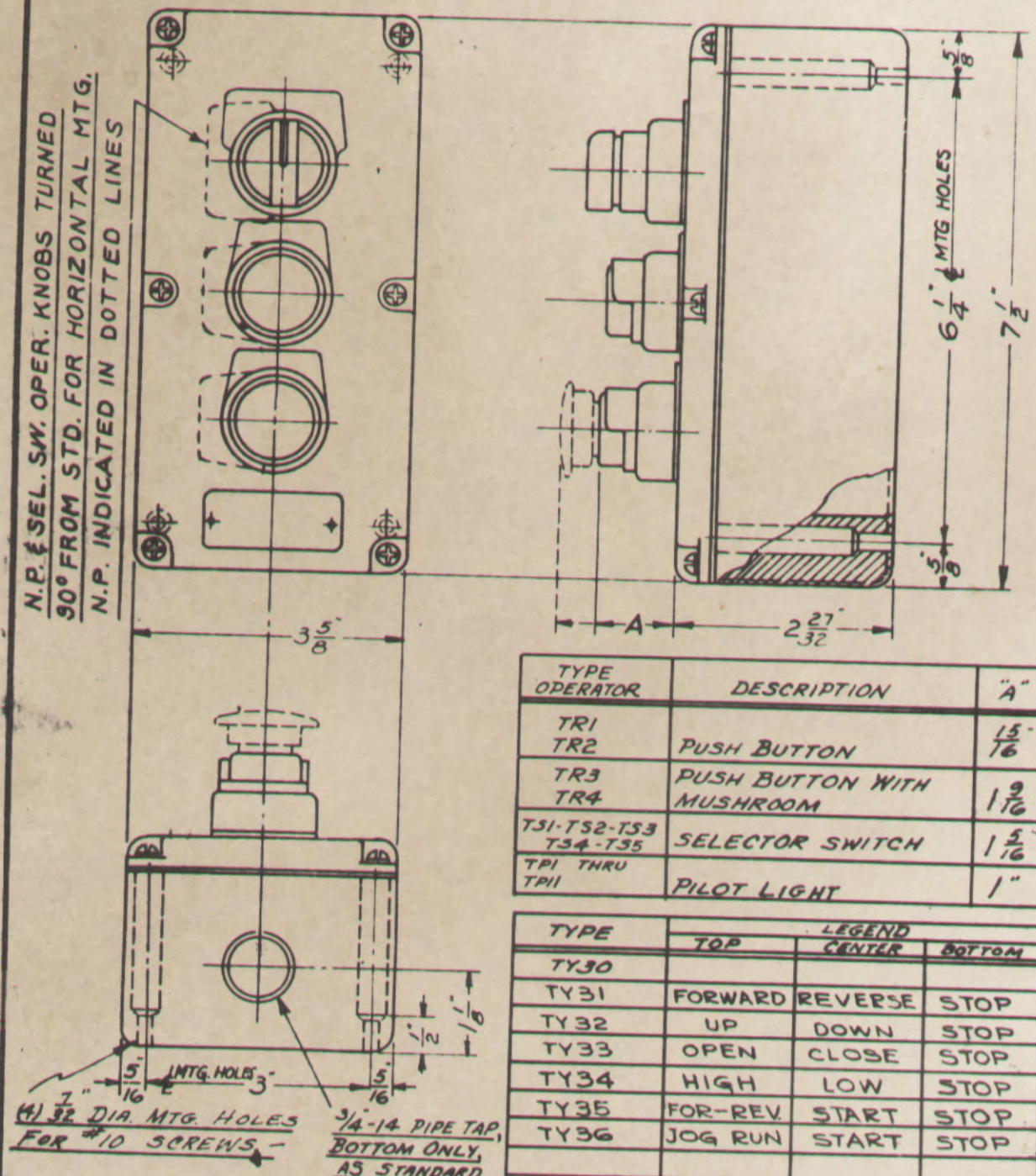


| TYPE OPERATOR | DESCRIPTION | "A" |
|---|---|---|
| TR1 TR2 | PUSH BUTTON | 15/16" |
| TR3 TR4 | PUSH BUTTON WITH MUSHROOM | 1 9/16 |
| TS1-TS2-TS3 TS4-TS5 | SELECTOR SWITCH | 1 5/16" |
| TP1 THRU TP11 | PILOT LIGHT | 1" |

| TYPE | LEGEND TOP | CENTER | BOTTOM |
|---|---|---|---|
| TY30 | | | |
| TY31 | FORWARD | REVERSE | STOP |
| TY32 | UP | DOWN | STOP |
| TY33 | OPEN | CLOSE | STOP |
| TY34 | HIGH | LOW | STOP |
| TY35 | FOR-REV. | START | STOP |
| TY36 | JOG RUN | START | STOP |
| | | | |
| | | | |

| | | | | | | | | |
|---|---|---|---|---|---|---|---|---|
| DATE | 1-11-46 | 3-12-46 | 6-5-47 | 10-15-48 | | | | DRAWING No. 2470-D5 |
| REVISION | R.O. | R1 | R2 | R3 | | | | |

R.O. THE MTG. HOLES WERE NOT SHOWN
R1 TYPE NO TY3 THRU TY36 WERE NOT SHOWN D.S.B
R2-HORIZ. MTG. NOT SHOWN T.S.

12

10-

83

TABLE NO. 1

| ITEM | DESCRIPTION |
|---|---|
| 100 | PUMP SUCTION & OIL RETURN MANIFOLD |
| 101 | PUMP DISCHARGE MANIFOLD |
| 102 | HAND PUMP SUCTION MANIFOLD |
| 103 | HAND PUMP DISCHARGE MANIFOLD |
| 104 | OIL SUPPLY MANIFOLD |
| 105 | VENT CONNECTION PIPING |
| 106 | POWER PUMP DISCHARGE |
| 107 | PRESSURE GAGE PIPING |

APPARATUS 84" HOLLOW JET VALVE — SHEET NO. 3

PUMPING SYSTEM

DWG. SV-55A-43 SUB. 1 & 2 — FINISH CHART

| SYM. | ITEM | DESCRIPTION — MATERIAL DIMENSIONS IN INCHES | PATT. No. OR REF. DWG. | FIN. CH. LINE No. | A.W.S. STYLE No. | SYM. GR. | 1 | 2 | 3 | 4 | 5 |
|---|---|---|---|---|---|---|---|---|---|---|---|
| | 54 | NIPPLE 2" STD. x 4" LG. | | | | | 1 | | | | |
| | 55 | FLANGE, SCREWED 2-300# | | | | | 2 | | | | |
| | 56 | GASKET RING TYPE 2-300# | | | | | | | | | |
| | | 2" x 3 1/4 x 3/8 THICK | | | | | 2 | | | | |
| | 57 | STUD BOLTS 3/8" x 3 1/2" LG. | | | 25-N-310 | | 16 | | | | |
| | 58 | NUTS HEX. 3/8" x 3/4" LG. | | | | | 32 | | | | |
| | 59 | NIPPLE 2" x 12" x 3/8" LG. | | | | | 1 | | | | |
| | 60 | NIPPLE 2" STD. 4 1/2" LG. | | | | | 1 | | | | |
| | 61 | MAGNETIC OIL STRAINER 2" (SEE NOTE 3) | | | | | 1 | | | | |
| | 62 | HEX. BUSHING 2" x 1" | | | | | 1 | | | | |
| | 63 | CLOSE NIPPLE 1" | | | | | 1 | | | | |
| | 64 | GATE VALVE 1" (BRASS MOUNTED) | | | | | | | | | |
| | | COUPLING (BRASS MOUNTED) 1" | | | | | 1 | | | | |
| | 65 | CLOSE NIPPLE 1" | | | | | 4 | | | | |
| | 66 | PIPE PLUG - 1/4" | | | | | 1 | | | | |
| | 67 | HEX. BUSHING 2" x 1" | | | | | 1 | | | | |
| | 68 | NIPPLE 1" x 2" LG. | | | | | 1 | | | | |
| | 69 | EL. 90° - 1" 300# | | | | | 1 | | | | |
| | 70 | NIPPLE 1" x 18" LG. | | | | | 1 | | | | |
| | 71 | COUPLING 1" | | | | | 1 | | | | |
| | 72 | NIPPLE 2" STD. 9" LG. | | | | | 2 | | | | |

APPARATUS 84" HOLLOW JET VALVE

PUMPING SYSTEM

DWG. SV-5A-43 SUB. 1 & 2 — 1 & 2 — 3 & 4 — 5 — 6 — 7 — 8

| SYM. | ITEM | DESCRIPTION — MATERIAL DIMENSIONS IN INCHES | PATT. No. OR REF. DWG. | FIN. CH. LINE No. | A.W.S. STYLE No. |
|---|---|---|---|---|---|
| | 1 | OIL STORAGE TANK | | | |
| | 2 | PUMP BEDPLATE (SEE NOTE 5) | | | |
| | 3 | NIPPLE 2" STD. 3 1/2" LG. | | | |
| | 4 | TEE 2" 300# | | | |
| △ | 5 | NIPPLE 2" STD. 23" LG. | | | |
| | 6 | HEX BUSHING 2" x 2" | | | |
| | 7 | GATE VALVE 2" | | | |
| | 8 | NIPPLE 2" STD. 3 1/2" LG. | | | |
| △ | 9 | MOTOR (SEE NOTE 4) | | | |
| △ | 10 | UNION 2" 300# | | | |
| △ | 11 | EL. 90° - 2" 300# | | | |
| | 12 | NIPPLE 2" STD. 4 1/2" LG. | | | |
| | 13 | NIPPLE 1 1/2" STD. 5 1/2" LG. | | | |
| | 14 | GATE VALVE 1 1/2" CROSS GUIDE | | | |
| | 15 | NIPPLE 1 1/2" STD. 3 1/2" LG. | | | |
| | 16 | UNION 1 1/2" 300# | | | |
| | 17 | NIPPLE 2" STD. 7 1/2" LG. | | | |
| | 18 | OIL PUMP (SEE NOTE 6) | | | |
| | 19 | PIPE 2" STD. 2'-10 1/2" LG. | | | |
| | 20 | NIPPLE 2" STD. 5" LG. | | | |
| | 21 | COUPLING GROOVED (SEE NOTE 7) | | | |
| | 22 | CLOSE NIPPLE 2" | | | |
| | 23 | NIPPLE 2" STD. 7 1/2" LG. | | | |
| | 24 | NIPPLE 2" STD. 3 1/2" LG. | | | |
| | 25 | CHECK VALVE 2" 300# | | | |
| | 26 | NIPPLE 2" STD. 11 1/2" LG. | | | |
| | 27 | NIPPLE 2" STD. 10 1/2" LG. | | | |
| △ | 28 | HEX BUSHING 2" x 1 1/2" | | | |
| △ | 29 | NIPPLE 1 1/2" STD. 1 1/2" LG. | | | |
| | 30 | TEE 1 1/2" 300# | | | |
| △ | 31 | HEX BUSHING 2" x 1 1/2" 300# | | | |
| | 32 | NIPPLE 2" STD. 3 1/2" LG. | | | |
| △ | 33 | RELIEF VALVE 2" (NOTE 3) | | | |
| △ △ | 34 | NIPPLE STD. 1 1/2" x 2 1/2" LG. | | | |
| | 35 | HEX BUSHING 1 1/2" x 1" | | | |
| △ | 36 | PRESSURE CONTROL (SEE NOTE 8) | | | |

APPARATUS 84" HOLLOW JET VALVE

PUMPING SYSTEM

DWG. SV-5A-43 SUB. 1 & 2

| SYM. | ITEM | DESCRIPTION — MATERIAL DIMENSIONS IN INCHES | PATT. No. OR REF. DWG. | FIN. CH. LINE No. | A.W.S. STYLE No. |
|---|---|---|---|---|---|
| | 37 | NIPPLE 1 1/2" STD. 4 1/2" LG. | | | |
| | 38 | EL. 90° - 1 1/2" 300# | | | |
| | 39 | NIPPLE 1 1/2" STD. 5 1/2" LG. | | | |
| | 40 | NIPPLE 1 1/2" STD. 4 1/2" LG. | | | |
| | 41 | REDUCER 1 1/2" TO 1" | | | |
| | 42 | CLOSE NIPPLE 1" | | | |
| | 43 | NIPPLE 1" STD. 2 1/2" LG. | | | |
| | 44 | NIPPLE 1" STD. 3 1/2" LG. | | | |
| | 45 | NIPPLE 1" STD. 5 1/2" LG. | | | |
| | 46 | PUMP PUMP (SEE NOTE 6) | | | |
| | 47 | NIPPLE 2" STD. 6 1/2" LG. | | | |
| | 48 | NIPPLE 2" STD. 4 1/2" LG. | | | |
| | 49 | NIPPLE 2" STD. 5 1/2" LG. | | | |
| | 50 | NIPPLE 2" STD. 2 1/2" LG. | | | |
| | 51 | NIPPLE 2" STD. 3 1/2" LG. | | | |
| | 52 | CONTROL PRESSURE SWITCH | | | |
| | | SOLENOID VALVE 2" 300# (SEE NOTE 9) | | | |
| | 53 | NIPPLE 2" STD. 3" LG. | | | |

CONTROL GAGE 2" WARNER
ONE MANUAL
ONE MOTOR
ONE PUMP
2 [illegible]
[illegible]

△ 3. RELIEF VALVE [illegible]
△ 4. WESTINGHOUSE ELECTRIC MOTOR [illegible]
LINE START - CLASS II - TYPE [illegible]
BEARINGS - 440 VOLTS - 50 CYCLES [illegible]
5. BEDPLATE FOR [illegible] 100 PUMP [illegible]
6. PUMP COMPLETE WITH COUPLING [illegible]
△ 7. CLAVAL #50 COMBINATION [illegible]
SEAL TO KEEP [illegible]
CONSTANT DUTY
8. MAGNETIC OIL STRAINER [illegible]
500 PSI TEST [illegible]
CALIFORNIA

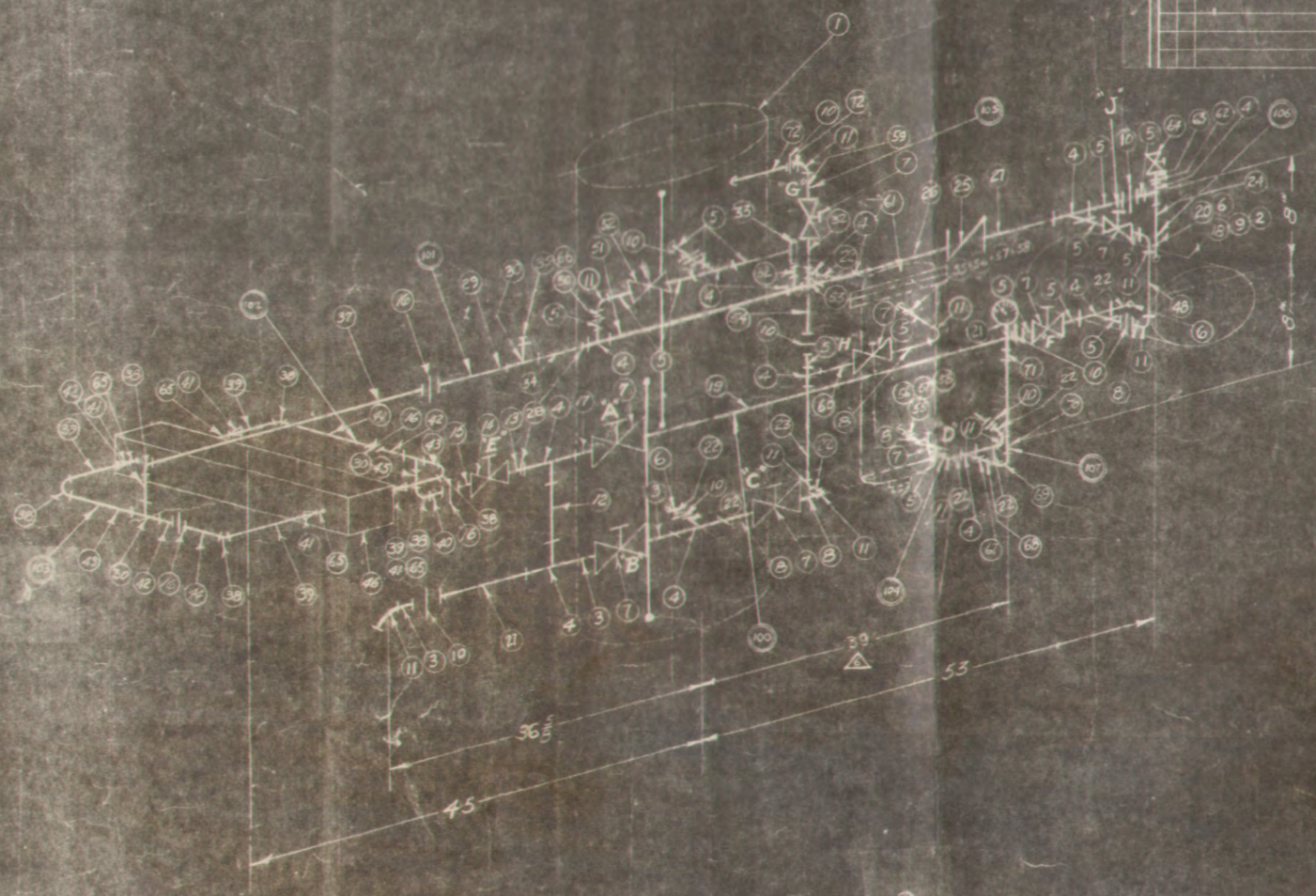


WESTINGHOUSE ELECTRIC CORPORATION

TITLE PUMPING SYSTEM 84" HOLLOW JET VALVE

DIMENSIONS IN INCHES — SCALE

DETAIL — CHECKED — DATE — DRAWN — DATE — SV-5A-43

SV-5A-43

PUMP
MODEL "F" SERIES
VARIABLE VOLUME
PRESSURE COMPENSATING
GOVERNOR
FLANGE MOUNTED
RIGHT HAND ROTATION

| | |
|---|---|
| MAXIMUM WORKING PRESSURE | 1000 P.S.I. |
| MAXIMUM RECOMMENDED SPEED | 1450 R.P.M. |
| MINIMUM RECOMMENDED SPEED | 500 R.P.M. |
| RATED DELIVERY IN GPM AT | 1200 R.P.M. |
| NUMBER 2 PUMP | 12 G.P.M. |
| NUMBER 4 PUMP | 20 G.P.M. |
| NUMBER 6 PUMP | 30 G.P.M. |
| SHIPPING WEIGHT | 118 POUNDS |

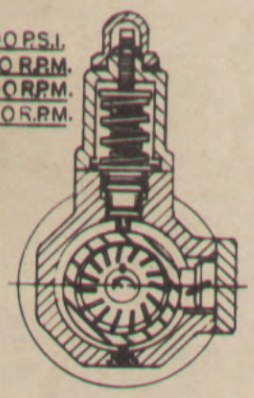

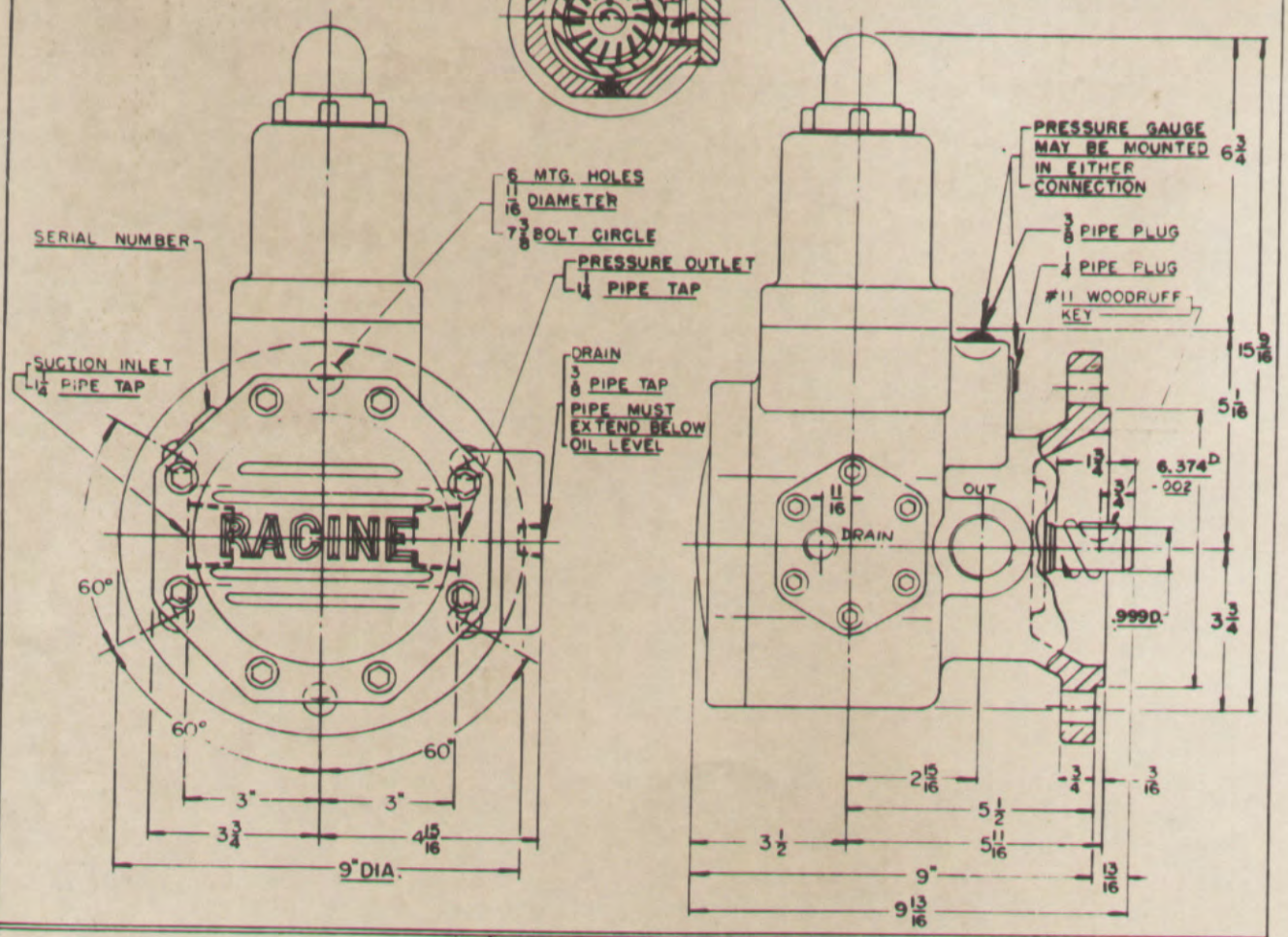


The RACINE Variable Volume Vane type pump can be used for continuous operation at pressures up to 1000 psi. The pump shown here is equipped with a pressure compensating governor which automatically controls the amount of oil delivered to the hydraulic system so as to maintain a constant pressure on the system within the volume range of the pump. No relief valves are needed with this pump since the pressure compensating governor automatically regulates the maximum pressure and provides safe and adequate over-pressure protection.

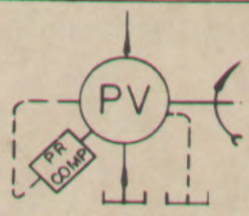


VARIABLE VOLUME PUMP
PRESSURE COMPENSATING
GOVERNOR
(J.I.C. SYMBOL SHOWN)

**Recommended hydraulic fluid**

Good clean hydraulic oil for ambient temperatures above 60° F. Viscosity 200-250 S.S.U. @100° F. For ambient temperatures below 60° F. lighter oil is advisable.

The pressure compensating governor shown here can be replaced by various other governors to suit your circuit requirements. These governors include different types of adjustable volume controls, 2-pressure compensating controls, 2-volume controls and many others. Many of these are illustrated in the succeeding pages of this catalog. Consult your local RACINE Engineering Representative for other governors to meet your requirements.

# 1000 P.S.I. WORKING PRESSURE

ROTARY TYPE PILOT VALVES

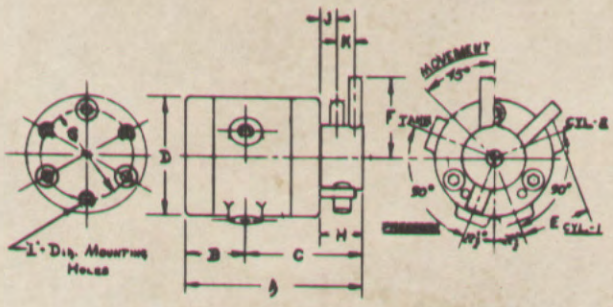


## STYLE - A

BOTTOM CAP MOUNTED TYPE - PILOT VALVE

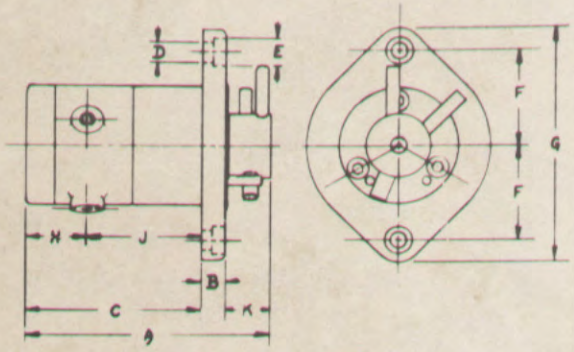

## STYLE - B

FLANGE TOP CAP MOUNTED TYPE - PILOT VALVE

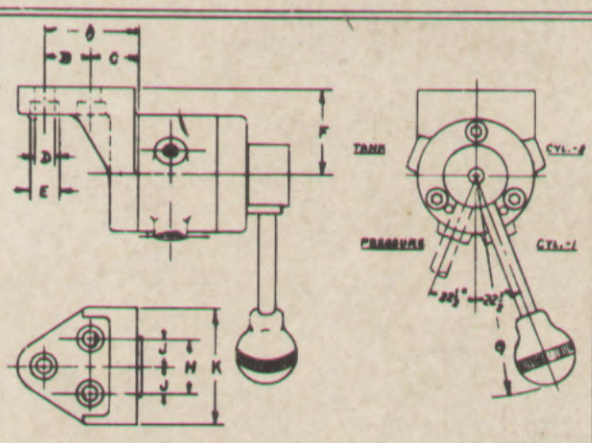


## STYLE - C

ANGLE BOTTOM CAP MOUNTED TYPE PILOT VALVE

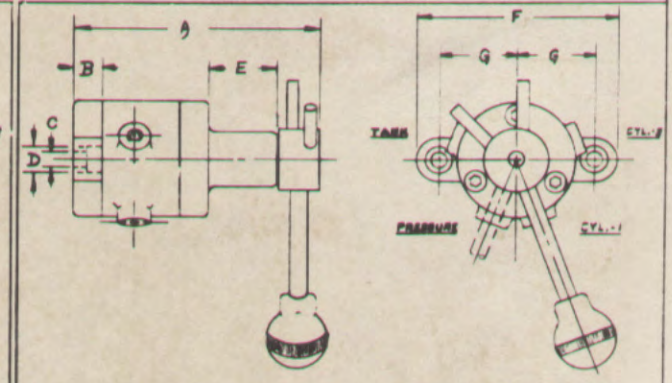


## STYLE - D

FLANGE BOTTOM CAP MOUNTED TYPE PILOT VALVE

| Type | A | B | C | D | E | F | G | H | J | K | L |
|---|---|---|---|---|---|---|---|---|---|---|---|
| Style-A | 3 29/32 | 1 5/16 | 2 19/32 | 2 5/8 | 1 1/2 | 1 3/4 | 2 | 13/16 | 3/8 | 3/8 | 5/16 |
| Style-B | 5 13/32 | 19/32 | 3 13/16 | 13/32 | 19/32 | 2 1/8 | 5 1/8 | 1 3/16 | 2 1/2 | 1 11/32 | |
| Style-C | 2 5/8 | 1 | 1 1/16 | 13/32 | 19/32 | 1 13/16 | 5 | 1 1/4 | 5/8 | 2 5/8 | |
| Style-D | 5 13/32 | 3/8 | 13/32 | 19/32 | 1 1/2 | 4 1/4 | 1 11/16 | | | | |

The Racine rotary type pilot valve is normally used to control pilot operated 4-way valves in a reciprocating circuit.

These rotary 4-way valves can be supplied in any of the four styles shown above or any combination of these four models.

To obtain combinations of the above models, specify required operating end and required opposing end.

The standard valve spool normally furnished in these valves is a blocked pressure, blocked cylinder spool in center position. Blocked pressure open cylinder spools are available for use with spring centered pilot operated 4-way valves if desired.

420 Mkt. YU-25188

RACINE HYDRAULICS & MACHINERY, INC.
2000 ALBERT STREET, RACINE, WISCONSIN — U.S.A.



PRINTED IN U.S.A.

13

86

# 4-WAY VALVE

DOUBLE
PILOT OPERATED
2 POSITION
FOOT MOUNTED

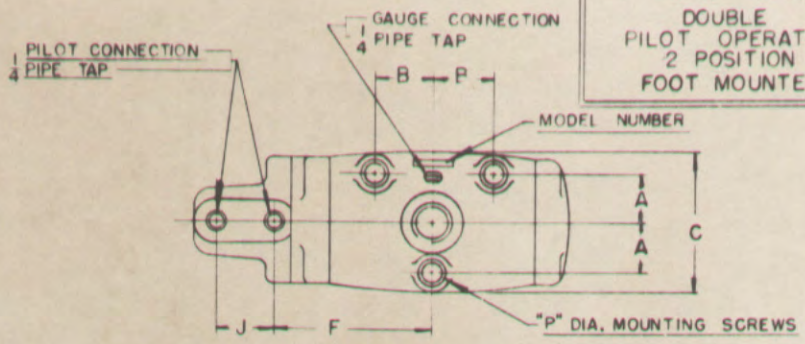


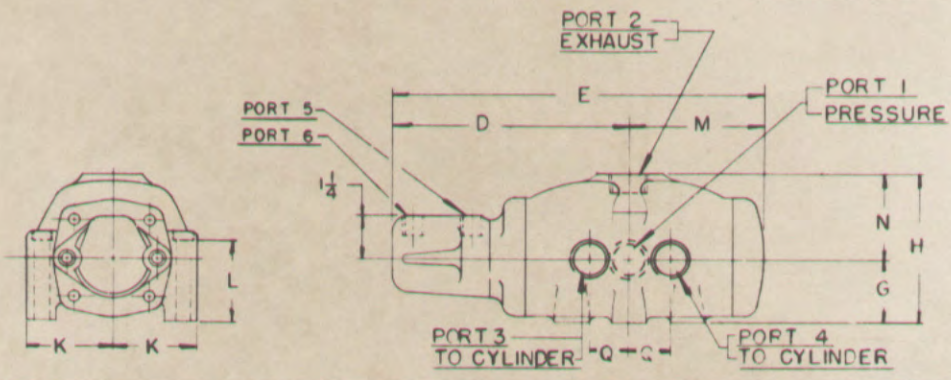


| Valve Size | Valve Weight | G.P.M. @ 15 Ft./Sec. | Area Sq. Inches | A | B | C | D | E | F | G | H | J | K | L | M | N | P | Q |
|---|---|---|---|---|---|---|---|---|---|---|---|---|---|---|---|---|---|---|
| ½ | 19 lbs. | 10.5 | .231 | 1 7/16 | 1½ | 3⅞ | 6⅝ | 10⅛ | 4 7/16 | 1 15/16 | 4⅛ | 1¾ | 1 15/16 | 2⅞ | 3½ | 2 3/16 | ⅜ | 1 |
| ¾ | 22 lbs. | 19 | .425 | 1½ | 1¾ | 4 | 7 | 10⅞ | 4⅝ | 1 15/16 | 4 7/16 | 1¾ | 2 | 2⅞ | 3⅞ | 2½ | ⅜ | 1 3/16 |
| 1 | 31 lbs. | 32 | .710 | 1¾ | 2 | 4⅝ | 8 19/32 | 13 3/32 | 5 3/32 | 2⅛ | 4⅞ | 2 13/16 | 2 5/16 | 3¼ | 4 9/16 | 2¾ | ½ | 1 7/16 |
| 1¼ | 46 lbs. | 57 | 1.271 | 2⅛ | 2¾ | 5⅜ | 9½ | 15 | 6 | 2⅛ | 5⅝ | 2 13/16 | 2 11/16 | 3¾ | 5½ | 3½ | ½ | 1⅞ |
| 1½ | 58 lbs. | 78 | 1.753 | 2⅜ | 3⅛ | 5⅞ | 10 5/32 | 16 5/16 | 6 21/32 | 2⅛ | 6 | 2 13/16 | 2 13/16 | 4 | 6 5/32 | 3⅞ | ½ | 2 3/16 |

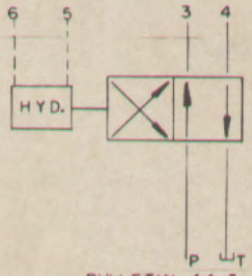


BULLETIN 44-2
STANDARD PORTING
(J.I.C. SYMBOL SHOWN)

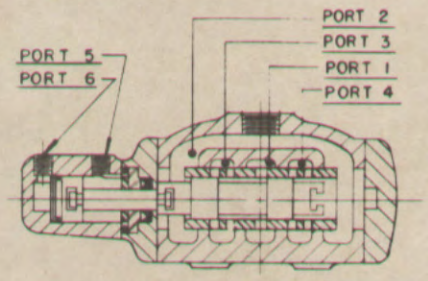


BULLETIN 44-2
STANDARD PORTING

This valve is usually controlled by a small 4-way pilot valve whose cylinder ports are connected to port 5 and port 6 of main valve. When the pilot valve connects a pressure line to one of the pilot connections and the other pilot connection to an exhaust line, oil flows from the pressure line of the main valve to one cylinder port and from the other cylinder port to the exhaust line. This flow of oil through the main valve is reversed by interchanging pressure and exhaust connections to the pilot connections. When both connections are connected to exhaust, the main valve will remain in whatever position it is in at the time.

When ordering RACINE valves specify:

1 — Bulletin number
2 — Desired pipe size
3 — Operating pressure
4 — Porting modifications (refer to Bulletin No. 10)
5 — Special features for your requirements

The spool and sleeve construction of RACINE 4-way valves allows innumerable porting modifications to help simplify your hydraulic circuit. See Bulletin No. 10 for examples of standard modifications. Consult your local RACINE Engineering Representative for other modifications to meet your requirements.

Circuits may often be simplified by equipping directional control valves with various combinations of operating and opposing end caps. A pilot-operated valve can be equipped with solenoid, roller, lever or other type of opposing end cap. Refer to Bulletin No. 20 for examples of standard combinations. Consult your local RACINE Engineering Representative for other combinations to meet your requirements.

RACINE HYDRAULICS & MACHINERY, INC.
7000 ALBERT STREET · RACINE · WISCONSIN · U.S.A.



IN U.S.A.

87

# 4-WAY VALVE
ROLLER OPERATED
2 POSITION
SPRING RETURN
FOOT MOUNTED

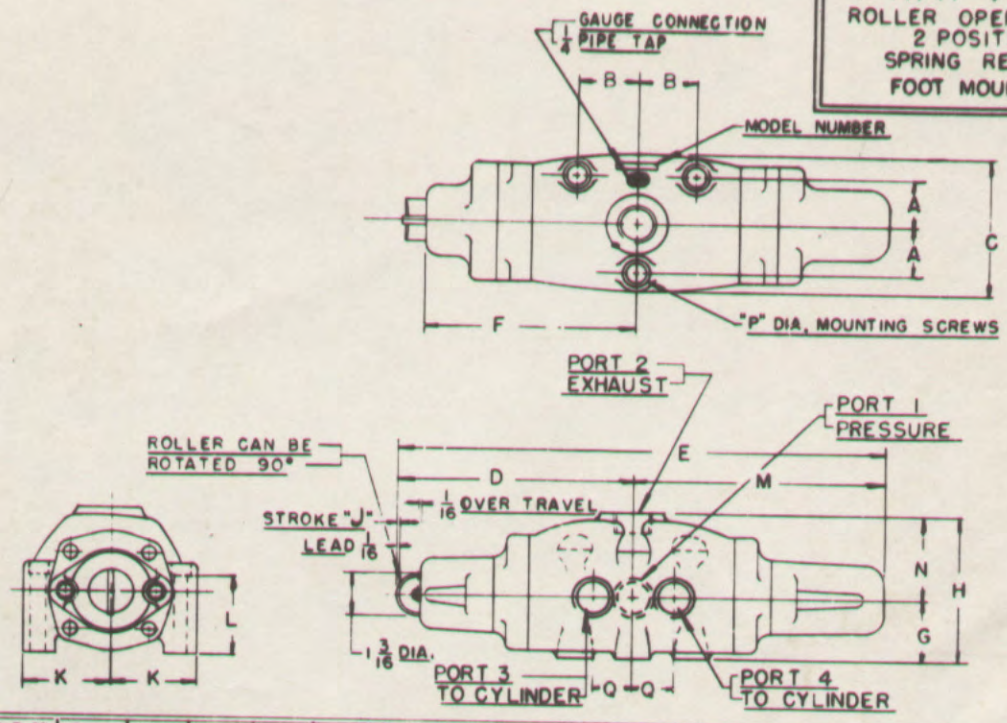


| Valve Size | Valve Weight, Lbs. | G.P.M. @ 15 Ft./Sec. | Area Sq. Inches | A | B | C | D | E | F | G | H | J | K | L | M | N | P | Q |
|---|---|---|---|---|---|---|---|---|---|---|---|---|---|---|---|---|---|---|
| ½ | 20 | 10.5 | .231 | 1 7/16 | 1½ | 3⅞ | 6⅝ | 13⅝ | 6¾ | 1 15/16 | 4⅛ | 11/32 | 1 15/16 | 2⅞ | 7 | 2¾ | ⅜ | 1 |
| ¾ | 23 | 19 | .425 | 1½ | 1¾ | 4 | 7 | 14⅜ | 6⅝ | 1 15/16 | 4⅞ | 5/16 | 2 | 2⅞ | 7⅜ | 2½ | ⅜ | 1 3/16 |
| 1 | 31 | 32 | .710 | 1¾ | 2 | 4⅝ | 7½ | 15 5/16 | 6 27/32 | 2⅛ | 4⅞ | 21/32 | 2¾ | 3¼ | 7 11/16 | 2¾ | ½ | 1 7/16 |
| 1¼ | 45 | 57 | 1.271 | 2⅛ | 2¾ | 5⅜ | 9⅝ | 15⅛ | 8½ | 2⅛ | 5⅝ | ⅞ | 2 11/16 | 3¾ | 5½ | 3½ | ½ | 1⅞ |
| 1½ | 57 | 78 | 1.753 | 2⅝ | 3⅛ | 5⅞ | 10 5/32 | 16 7/16 | 9 5/32 | 2⅛ | 6 | 1 | 2 15/16 | 4 | 6 5/32 | 3⅞ | ½ | 2¾ |

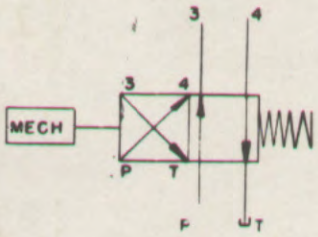


BULLETIN 38 – 2
STANDARD PORTING
(J.I.C. SYMBOL SHOWN)

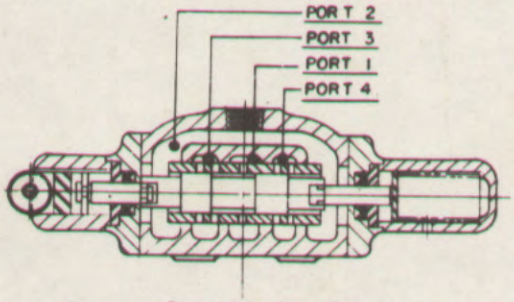


BULLETIN 38 – 2
STANDARD PORTING

The RACINE roller-operated 2-position spring returned 4-way Valve provides directional control of oil flow at pressures to 1500 PSI. In the normal position, oil flows from the pressure line into one cylinder port and from the other cylinder port to the exhaust line. To reverse the flow of oil, a cam will contact the roller causing the valve piston to move against light spring tension. When the roller rides off the cam, the valve will return to its normal position.

When ordering RACINE valves specify:

1 — Bulletin number
2 — Desired pipe size
3 — Operating pressure
4 — Porting modifications (refer to Bulletin No. 10)
5 — Special features for your requirements

The spool and sleeve construction of RACINE 4-way valves allows innumerable porting modifications to help simplify your hydraulic circuit. See Bulletin No. 10 for examples of standard modifications. Consult your local RACINE Engineering Representative for other modifications to meet your requirements.

Circuits may often be simplified by equipping directional control valves with various combinations of operating and opposing end caps. A roller-operated valve can be equipped with solenoid, lever, pilot or other type of opposing end cap. Refer to Bulletin No. 20 for examples of standard combinations. Consult your local RACINE Engineering Representative for other combinations to meet your requirements.

WESTINGHOUSE ELECTRIC & MFG. CO., NEWARK, N. J., U. S.

SYNCH. POSITION INDICATING MOTOR TYPE A.D.S.

DIMENSIONS IN INCHES OUTLINE & DRILLING PLAN SCALE 1:1

DWG. NO. 64-C-700 BILL OF MATERIAL SUB. NO. 11

| | ITEM | DESCRIPTION AND MATERIAL | FIN. NO. | STYLE NO. | REQ. | REF. DWG. OR PAT. NO. | TOOL NO. |
|---|---|---|---|---|---|---|---|
| * | 1 | MOTOR-120 V.-60 CYC. | | 1099231 | 1 | | |
| * | 2 | MOTOR-240 V.-60 CYC. | | 1099232 | 1 | | |
| * | 3 | MOTOR-120 V.-25 CYC. | | 1099233 | 1 | | |
| * | 4 | MOTOR-240 V.-25 CYC. | | 1099234 | 1 | | |
| * | 5 | MOTOR-120 V.-50 CYC. | | 1333764 | 1 | | |
| * | 6 | MOTOR-240 V.-50 CYC. | | 1333765 | 1 | | |

* = TYPE A.D.S.-SUPPLIED BY LIMA WORKS. MOTOR PERFORMANCE TO BE PER TEST SPEC. 345623

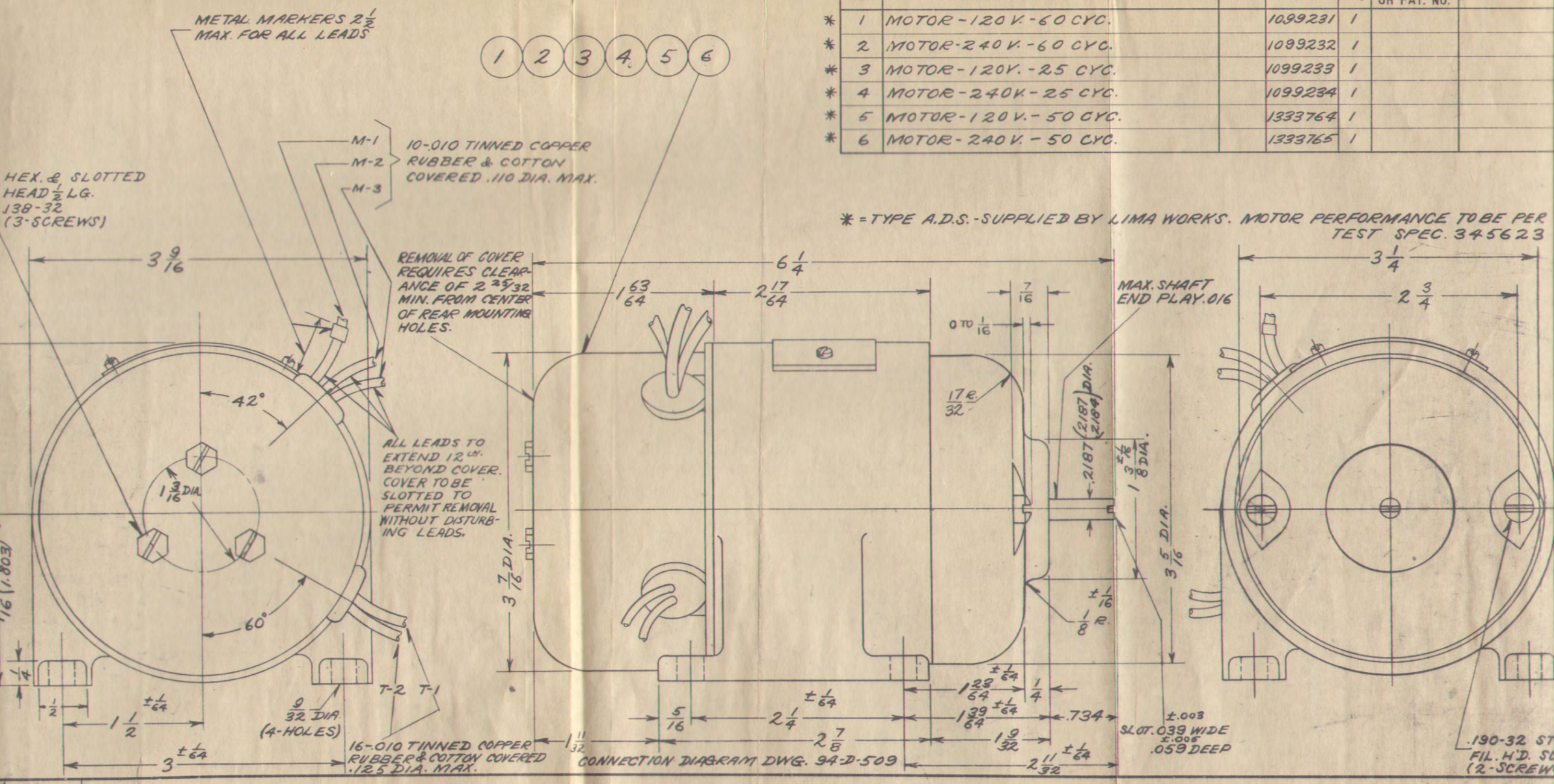


64-C-700

renewal
parts data

MORRISON KNUDSEN - AFGHANISTAN INC.

KAJAKAI AREA

SUBJECT: KAJAKAI - HOLLOW JET VALVES RUBBER SEALS

DATE: March 4, 1954

TO: G. J. Gavin

From: John Du Mont

On March 3 number 2 hollow jet valves was closed and an inspection of the rubber seal jacking mechanism was made. It was found that a considerable amount of water was escaping from the seal through the joint formed by items #2, 11 and 9 as presently installed. (See enclosed sketch and Westinghouse drawing S-1395) This joint does not have full bearing on the circumference allowing water to escape one side. There was also some water coming from item #5 indicating that water is following the cable through items #2 and #3. Except for water coming through the mechanism there was no visible leakage around the valve seat.

Due to the amount of water coming from the mechanism I decided to open #2 valve and close #3 valve thinking that there might be less water, allowing a closer inspection. The same condition as in number 2 was found only worse. The rubber seal in one area was torn and there was some leakage. Seeing this condition I opened the valve and closed #3 roto-valve in order to make a closer check on the seal. The rubber covering the cord for a distance of about 6" was peeled off the seal. This could have been caused by some foriegn material passing through the valve or perhaps from low internal pressures as stated by Mr. Mundal.

From these observations on #2 and #3 valves I think it would be best if the jacking mechanism could be reassembled as intended. This of course would mean some kind of alteration. Unless otherwise instructed I will not fully close the jet valves with the seals in their present condition. The closing of the valves on March 3 was the second time they were closed with the new seals. The previous closing was for the regular monthly operation in February.

You will note that on the enclosed rough sketch I only put 3 dimensions. In order to get accurate dimensions showing the inside position of the seal shoe nozzle or the angle at which the hole was drilled it would be necessary to dismantle the jacking mechanism and perhaps the seal. The jig sent by the manufacture was used to drill the holes however a slight variation would make a difference in the hole length. From outside appearances at this time the mechanism looks as though it had been assembled according to instructions. Dismantling the mechanism would no doubt relieve the tension and change the nozzle position slightly. I have reason to believe that the nozzle and the extension nut are tight against each other. This is what looked like would happen during assembly. If the dimensions that I put on the sketch are consistent around the whole valve and if all the seals were the same the only reason the nozzle does not protrude far enough would be that the hole is not at 45 degrees. I would like to suggest taking one seal off and making a thorough check of all dimensions.

John Du Mont

John Du Mont

## heaters for Life-Linestarters

Each heater is identified by a code marking stamped on one terminal near the mounting hole. The number in the code marking is the approximate heater trip current. The heater application table indicates the range of full load motor current to which a given heater may be applied. This range is so selected that the current to produce ultimate tripping of the relay will be approximately 110% to 125% of the rated motor current.

The current rating of the relay is based on an ambient temperature of 40°C. Standard motor ratings are also based on an ambient temperature of 40°C. For protection of the motor when it and the relay are operated in a common ambient temperature, heaters should be applied according to heater table no. 15.

Confining the relay in a small space, such as a starter cabinet, with other apparatus which dissipates heat will raise its ambient temperature, affecting thereby its tripping value, thus heaters for enclosed starters should be applied according to heater table no. 16.

**full load current of motor**

| table 15 open starter | table 16 in enclosure | heater code marking | style number of heater |
|---|---|---|---|
| 0.45 to 0.49 | 0.39 to 0.43 | X .49 | 1129 372 |
| 0.50 to 0.56 | 0.44 to 0.49 | Y .55 | 1129 373 |
| 0.57 to 0.62 | 0.50 to 0.56 | Z .63 | 1129 374 |
| 0.63 to 0.71 | 0.57 to 0.65 | AA .71 | 966 465 |
| 0.72 to 0.79 | 0.66 to 0.73 | AB .82 | 966 466 |
| 0.80 to 0.89 | 0.74 to 0.81 | AC .93 | 966 467 |
| 0.90 to 0.99 | 0.82 to 0.92 | AD 1.0 | 966 468 |
| 1.00 to 1.07 | 0.93 to 1.02 | AE 1.1 | 966 469 |
| 1.08 to 1.18 | 1.03 to 1.11 | AF 1.2 | 966 470 |
| 1.19 to 1.32 | 1.12 to 1.21 | AG 1.4 | 966 471 |
| 1.33 to 1.49 | 1.22 to 1.36 | AH 1.5 | 966 472 |
| 1.50 to 1.71 | 1.37 to 1.53 | AI 1.7 | 966 473 |
| 1.72 to 1.89 | 1.54 to 1.76 | AK 1.9 | 966 474 |
| 1.90 to 2.09 | 1.77 to 1.95 | AL 2.1 | 966 475 |
| 2.10 to 2.35 | 1.96 to 2.15 | AM 2.5 | 966 476 |
| 2.36 to 2.65 | 2.16 to 2.42 | AN 2.7 | 966 477 |
| 2.66 to 2.98 | 2.43 to 2.73 | AO 3.0 | 966 478 |
| 2.99 to 3.35 | 2.74 to 3.07 | AP 3.4 | 966 479 |
| 3.36 to 3.75 | 3.08 to 3.45 | AR 3.8 | 966 480 |
| 3.76 to 4.21 | 3.46 to 3.86 | AS 4.3 | 966 481 |
| 4.22 to 4.71 | 3.87 to 4.33 | AT 4.8 | 966 482 |
| 4.72 to 5.33 | 4.34 to 4.85 | AU 5.4 | 966 483 |
| 5.34 to 5.94 | 4.86 to 5.49 | AW 6.1 | 966 484 |
| 5.95 to 6.63 | 5.50 to 6.13 | AX 6.8 | 966 485 |
| 6.64 to 7.52 | 6.14 to 6.83 | AY 7.7 | 966 486 |
| 7.53 to 8.51 | 6.84 to 7.74 | AZ 8.5 | 966 487 |
| 8.52 to 9.31 | 7.75 to 8.75 | BA 9.6 | 966 488 |
| 9.32 to 10.5 | 8.76 to 9.57 | BB 11 | 966 489 |
| 10.6 to 11.5 | 9.58 to 10.7 | BC 12 | 966 490 |
| 11.6 to 12.4 | 10.8 to 11.8 | BD 13 | 966 491 |
| 12.5 to 13.4 | 11.9 to 12.8 | BE 14 | 966 492 |
| 13.5 to 14.9 | 12.9 to 13.8 | BF 16 | 966 493 |
| 15.0 to 17.5 | 13.9 to 15.4 | BG 18 | 966 494 |
| 17.6 to 18.2 | 15.5 to 16.8 | BH 19 | 966 495 |
| 18.3 to 19.5 | 16.9 to 18.4 | BI 21 | 966 496 |
| 19.6 to 20.5 | 18.5 to 20.1 | BK 23 | 966 497 |
| 20.6 to 22.6 | 20.2 to 21.3 | BL 25 | 966 498 |
| 22.7 to 25.7 | 21.4 to 23.3 | BM 27 | 966 499 |
| 25.8 to 28.4 | 23.4 to 24.9 | BN 29 | 1040 588 |
| 28.5 to 32.7 | 25.0 to 28.4 | BO 31 | 974 084 |
| 32.8 to 37.1 | 28.5 to 32.2 | BR 36 | 1040 589 |
| 37.2 to 43.1 | 32.3 to 36.7 | BS 40 | 1040 590 |



91