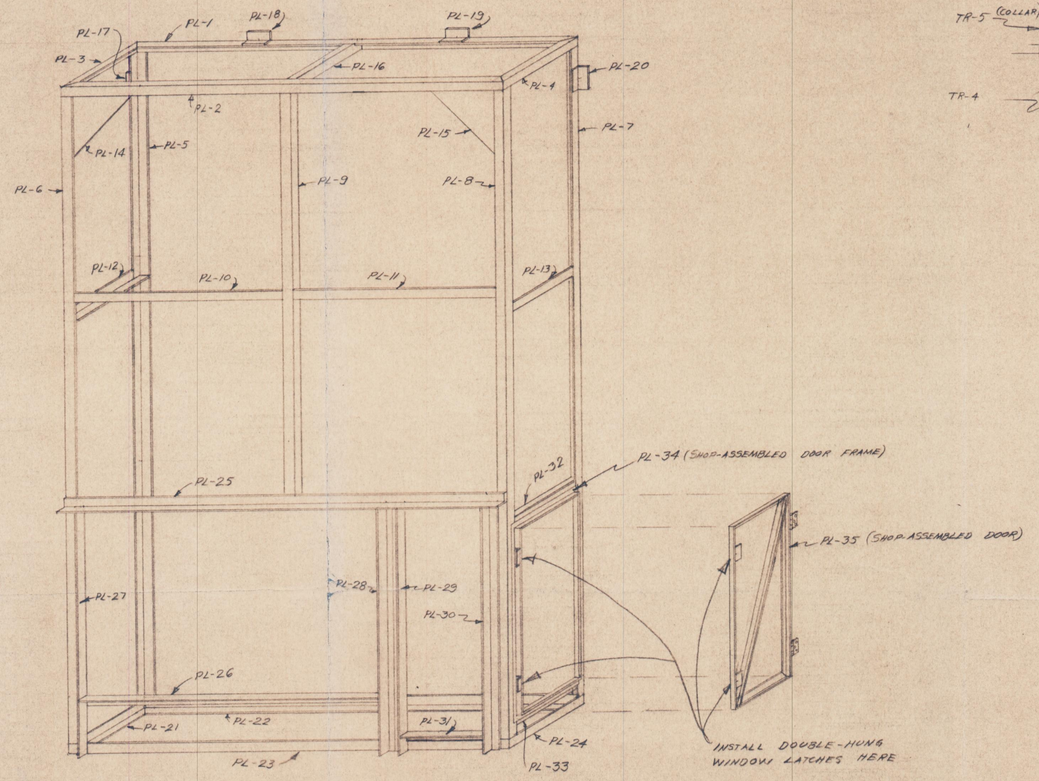

SKETCH OF INTAKE PLENUM FRAMEWORK, SHOWING IDENTIFICATION MARKINGS

NOT TO SCALE

NOTE: FOR DIMENSIONS & DETAILS, REFER TO M-K DWG. No. 15-F-60. THIS SKETCH IS NOT INTENDED TO SHOW CONSTRUCTION DETAILS.

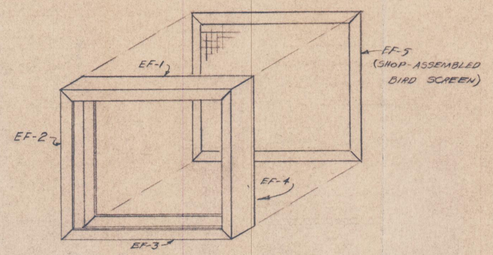

SKETCH OF TOILET ROOM EXHAUST FAN MOUNTING, SHOWING IDENTIFICATION MARKINGS

NOT TO SCALE

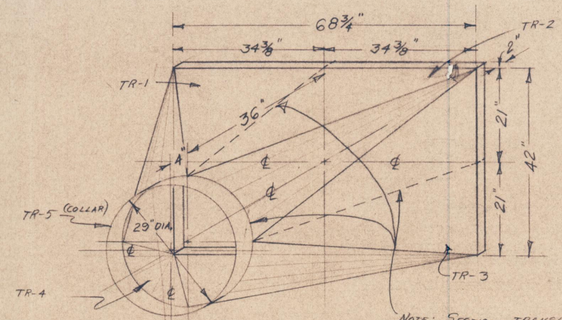

NOTE: SECTION TRANSITIONS ALONG DOTTED LINES FOR EASE OF SHIPPING. — TRANSITIONS TO BE FASTENED TOGETHER W/3# TINNERS' RIVETS @ 2" CENTERS THRU 1" OVERLAPPING JOINT — RIVET HOLES TO BE PUNCHED IN CORRECT LOCATIONS IN SHOP — SEE DETAIL BELOW.

INTAKE TRANSITION FOR ROTOVALVE CHAMBER SUPPLY FAN

NOT TO SCALE

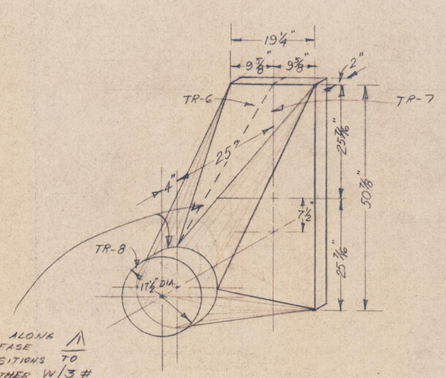

INTAKE TRANSITION FOR VALVE HOUSE SUPPLY FAN

NOT TO SCALE

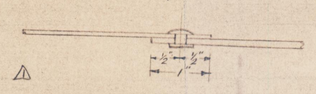

TYPICAL DETAIL OF SEAMS IN TRANSITION PIECES

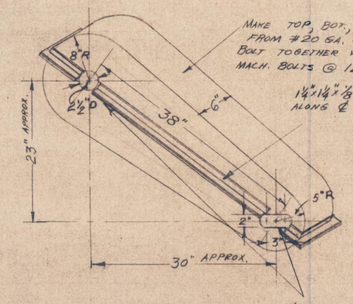

OP'GS. IN FRONT FOR MEASUREMENT OF FAN & MOTOR RPM — (MAKE OP'GS IN BACK SAME SIZE FOR FAN & MOTOR SHAFTS)

DETAIL OF BELT GUARD FOR ROTOVALVE CHAMBER SUPPLY FAN

NOT TO SCALE

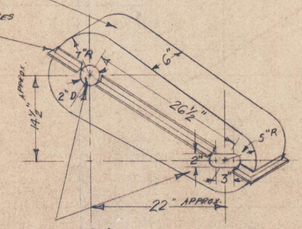

DETAIL OF BELT GUARD FOR VALVE HOUSE SUPPLY FAN

NOT TO SCALE

on 15 series drawing list

APPROVED
EXCEPT AS NOTED
INTERNATIONAL ENGINEERING COMPANY, INC.
BY [illegible] DATE [illegible]

REV. 1	ADDED NOTE & DETAIL	7/31/52
KAJAKAI DAM IRRIGATION TUNNEL VENTILATING SYSTEM		
SCALE: NONE	APPROVED BY:	DRAWN BY: SWH
DATE: 7/22/52		REVISED
MISC. DETAILS		
SCOTT CO. ~ MECH. CONTR.		DRAWING NUMBER KAJ-V-3

84X36 PRINTED ON NO. 1000H CLEARPRINT